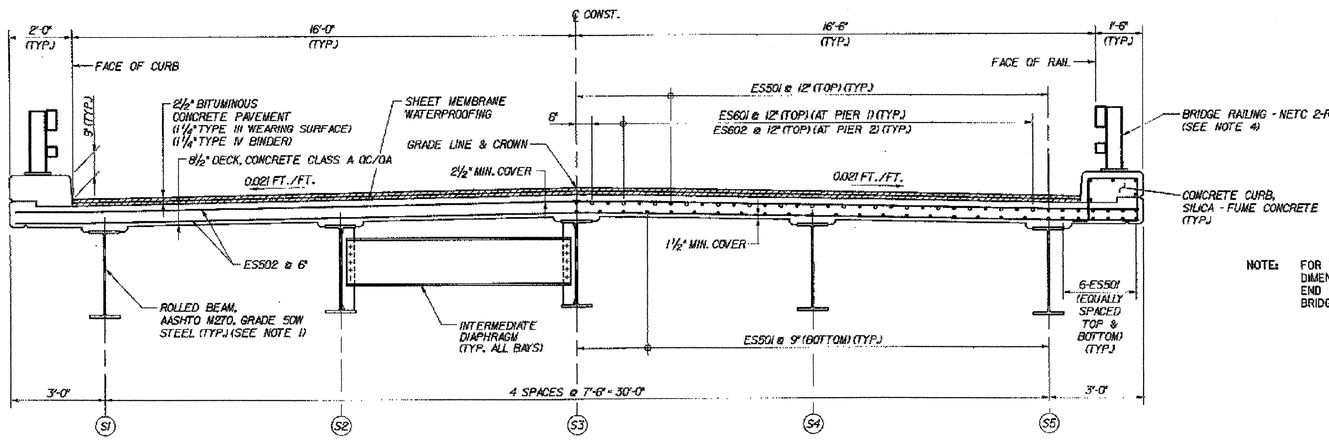


## TRANSVERSE SECTION

SCALE: ½" = 1'-0"

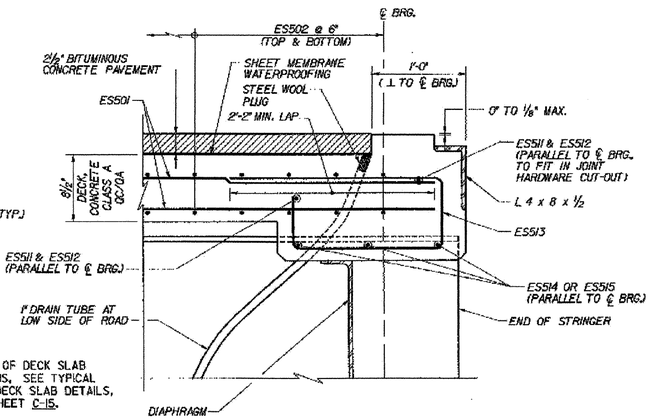


NOTE: FOR END OF DECK SLAB DIMENSIONS, SEE TYPICAL END OF DECK SLAB DETAILS, BRIDGE SHEET C-15.

## END OF DECK SLAB REINFORCEMENT DETAIL

(EXP. END)

SCALE: 1½" = 1'-0"

MIDDLESEX - WATERBURY
ST-IM 089-2(42)
SHEET 9 OF 25
BRIDGES 43 N & S
FOR REFERENCE ONLY

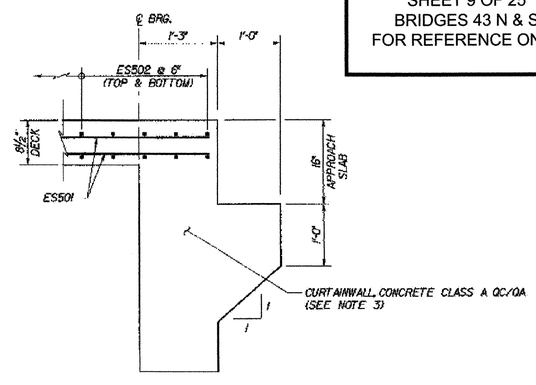


## END OF DECK SLAB REINFORCEMENT DETAIL

(FIXED END)

SCALE: 1" = 1'-0"

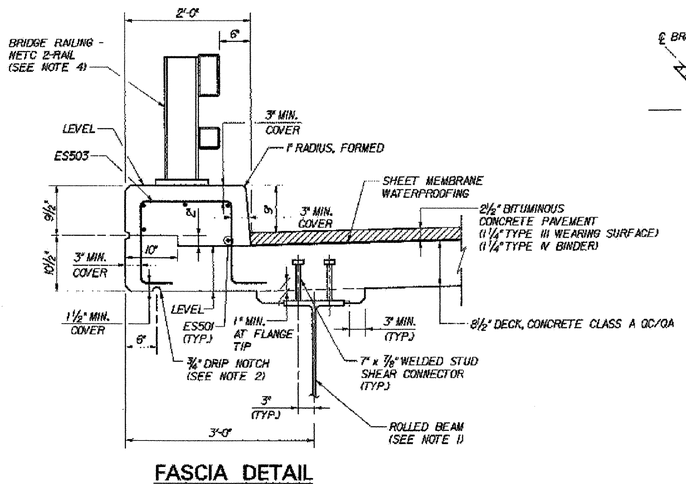


## FASCIA DETAIL

SCALE: 1"=1'-0"

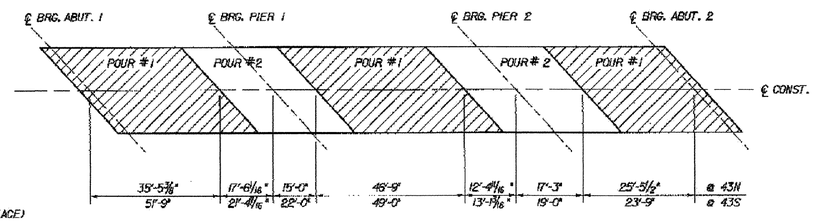


## DECK POUR SEQUENCE

N.T.S.

BRIDGE 43N AND S WERE DONE IN A SINGLE POUR WITH NO CONSTRUCTION JOINTS

## DECK SLAB PLACEMENT NOTES

A. EACH CONCRETE DECK POUR SHALL BE PLACED CONTINUOUSLY WITHIN ONE EIGHT HOUR WORKING DAY. THERE SHALL BE A MINIMUM DELAY PERIOD OF 96 HOURS AFTER COMPLETION OF EACH POUR BEFORE BEGINNING ANOTHER POUR. INDIVIDUAL POUR NUMBERS AS SHOWN MAY BE COMBINED INTO A SINGLE POUR IF APPROVED BY THE VAOT STRUCTURES ENGINEER.

B. THE DECK CONCRETE SHALL BE RETARDED SUFFICIENTLY TO REMAIN PLASTIC UNTIL EACH POUR IS COMPLETE. THE QUANTITY OF RETARDANT SHALL BE APPROVED BY THE CONCRETE ENGINEER PRIOR TO PLACEMENT. ANY DEVIATIONS FROM THIS PROCEDURE MUST BE APPROVED BY THE VAOT STRUCTURES ENGINEER IN WRITING BEFORE THE POUR BEGINS.

## NOTES:

1. FOR ROLLED BEAM SIZES, SEE STRINGER ELEVATION (43N&S), BRIDGE SHEET BR43-10.
2. END DRIP NOTCH 5 FEET BEFORE END OF SLAB AT "DOWNHILL" ABUTMENTS AT 45°.
3. FOR CURTAINWALL DETAILS AND REINFORCEMENT LAYOUT, SEE TYPICAL CURTAINWALL DETAILS, BRIDGE SHEET C-42.
4. FOR DETAILS OF NETC BRIDGE RAIL AND APPROACH SECTION, SEE STANDARD SHEETS BRI-97 AND BR3-97, AND GUARD RAIL APPROACH SECTION, NETC 2 RAIL, BRIDGE SHEETS C-46A AND C-46B.

TVGA ENGINEERING, SURVEYING, P.C.

STATE OF VERMONT
AGENCY OF TRANSPORTATION

| | | | |
|---|---|---|---|
| Town Of MIDDLESEX-BOLTON | | Bridge No. 43N&S | |
| Highway No. I-89 | | Log Sta. / Surv. Sta. | |
| I-89 OVER U.S. ROUTE 2 | | | |
| TRANSVERSE SECTION (43N&S) | | | |
| Designed By P.W. SZUSTAK | | Drawn By R.A. BOTZENHART | |
| Checked By J.P. HALSTEAD | Date 10/99 | Bridge Design Supervisor J.P. HALSTEAD | Date 10/99 |
| PROJECT MIDDLESEX-BOLTON | | PROJECT NO. IM-089-2(26) | |
| TVGA CAD Drawing No. 43tsect | | Date 10/99 | |
| Bridge Sheet No. BR43-4 | | Sheet 50 of 307 | |