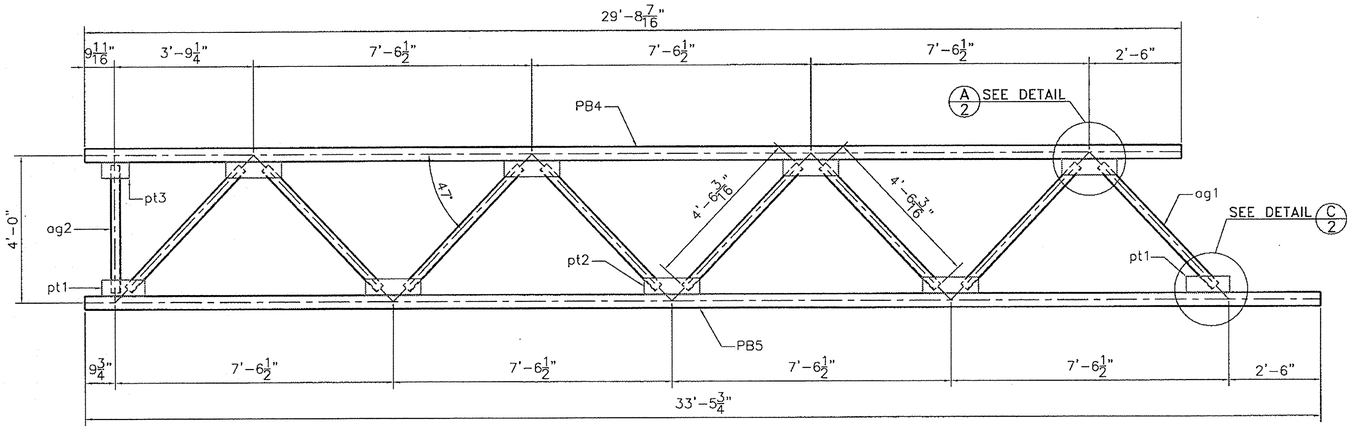

VIEW Q/–

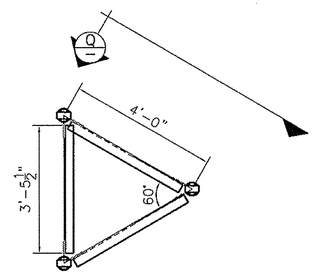

SIDE VIEW

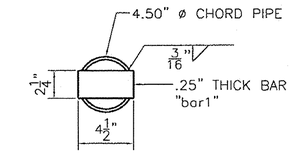

PIPE PLUG DETAIL
"EACH END OF TRUSS CHORD"

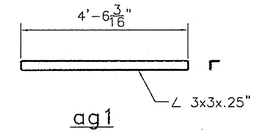

ag1

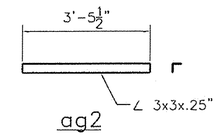

ag2

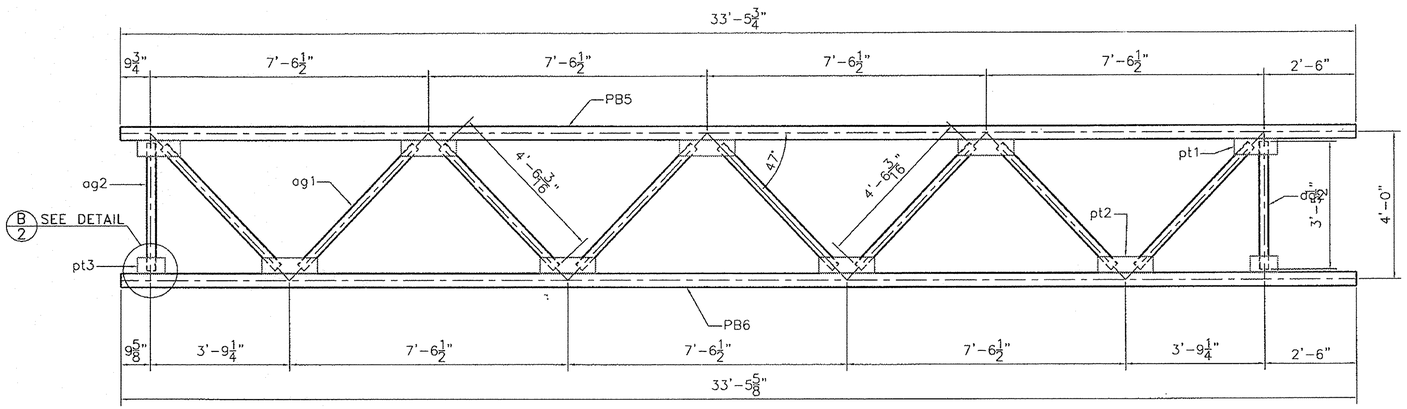

FRONT VIEW

TRUSS TB2

No.	Remarks	Date
0	Initial submittal	03-04-10

REVISIONS

HIGHWAY SAFETY CORP
GLASTONBURY, CT
860-633-9445

TRI CHORD OVERHEAD SIGN STRUCTURE
INTERCHANGE #19
PROJECT NUMBER IMG SIGN(17)
COLCHESTER - HIGHGATE
VERMONT AGENCY OF TRANSPORTATION

HSC CERTIFIED FABRICATOR

GENERAL CONTRACTOR: .
SUB CONTRACTOR: F.R. Lafayette

HSC JOB NO. 1738
SHEET NO. 3 of 6

DRAWN	CHECKED	DATE	SCALE	SIZE
BJB		03-04-10	N.T.S.	D