STATE OF VERMONT
AGENCY OF TRANSPORTATION

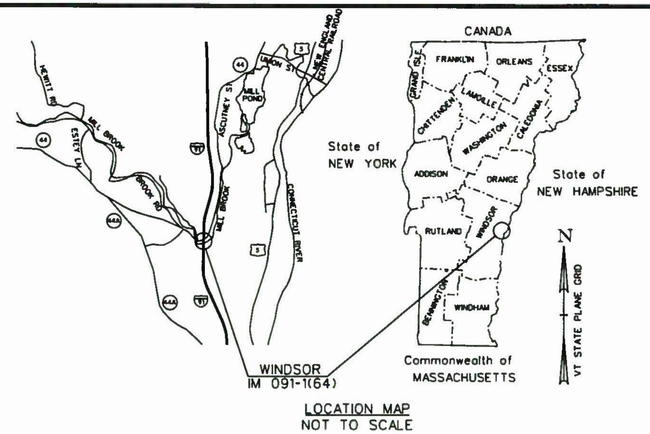

LOCATION MAP
NOT TO SCALE

PROPOSED IMPROVEMENT
BRIDGE PROJECT

TOWN OF WINDSOR
COUNTY OF WINDSOR
INTERSTATE 91, BRIDGES NO. 33N & 33S

PROJECT LOCATION: LOCATED IN THE COUNTY OF WINDSOR, TOWN OF WINDSOR, VT
INTERSTATE 91 (RURAL PRINCIPAL ARTERIAL): BRIDGE NOS. 33N & 33S OVER MILL BROOK AND VT ROUTE 44.

PROJECT DESCRIPTION: INSTALL TRAFFIC CONTROL, REPLACE BRIDGE NOS. 33N & 33S AND WIDEN APPROACHES, REMOVE TRAFFIC CONTROL.

LENGTH OF STRUCTURES: 33N = 645.00 FEET
33S = 645.00 FEET

LENGTH OF ROADWAY: NORTHBOUND = 4775.00 FEET
SOUTHBOUND = 5650.00 FEET

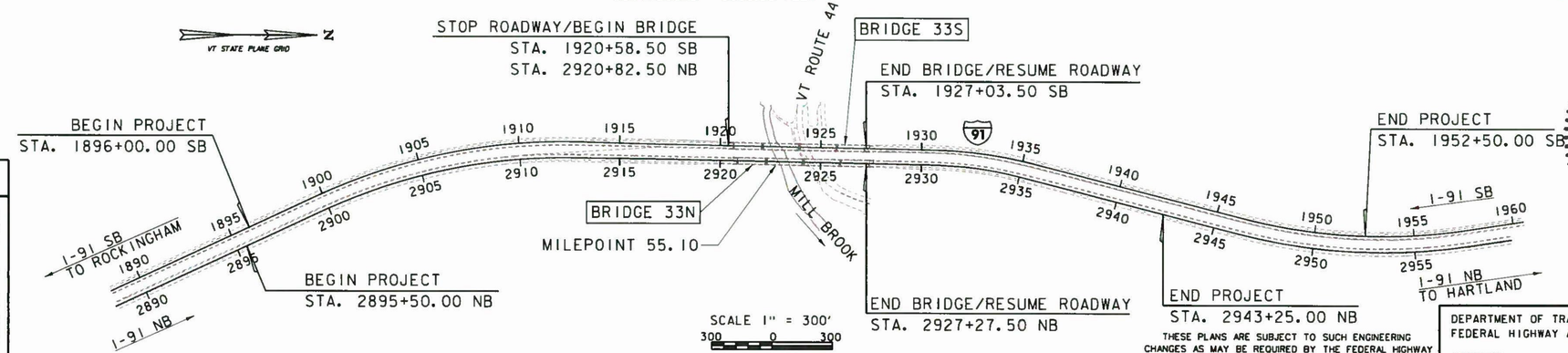

CONVENTIONAL SYMBOLS

COUNTY LINE
TOWN LINE
LIMITS OF ACCESS
POINT OF ACCESS
FENCE LINE
STONE WALL
TRAVELED WAY
GUARD RAIL
RAILROAD
SURVEY LINE
CULVERT
POWER POLE
TELEPHONE POLE
TREES
CONTROL OF ACCESS
PROPERTY LINE
R.O.W. TAKING LINE
SLOPE RIGHTS
TOP OF CUT
TOE OF SLOPE

SURVEYED BY : VERMONT SURVEY & ENGINEERING, INC
SURVEYED DATE : FEBRUARY 1, 2013

DATUM
VERTICAL NAVD88
HORIZONTAL NAD 83 (07)

AS-BUILT PLANS (BRIDGES 33N & 33S)
JULY 2015

THESE PLANS ARE SUBJECT TO SUCH ENGINEERING CHANGES AS MAY BE REQUIRED BY THE FEDERAL HIGHWAY ADMINISTRATION OR THE DIRECTOR OF PROGRAM DEVELOPMENT.
CONSTRUCTION IS TO BE CARRIED ON IN ACCORDANCE WITH THESE PLANS AND THE STANDARD SPECIFICATIONS FOR CONSTRUCTION DATED 2006, AS APPROVED BY THE FEDERAL HIGHWAY ADMINISTRATION ON JUNE 15, 2006 FOR USE ON THIS PROJECT, INCLUDING ALL SUBSEQUENT REVISIONS AND SUCH REVISED SPECIFICATIONS AND SPECIAL PROVISIONS AS ARE INCORPORATED IN THESE PLANS.

LANE / JACOBS

STATE OF VERMONT
MICHAEL R. DEBROCHERS
NO. 94425
CIVIL
LICENSED
PROFESSIONAL ENGINEER
7-31-15
MICHAEL R. DEBROCHERS, P.E.

STATE OF VERMONT
JOHN J. WILSON
NO. 9081
CIVIL
LICENSED
PROFESSIONAL ENGINEER
7-31-15
JOHN J. WILSON, P.E.

JACOBS

DEPARTMENT OF TRANSPORTATION
FEDERAL HIGHWAY ADMINISTRATOR
APPROVED _____ DATE _____

DIRECTOR OF PROGRAM DEVELOPMENT
APPROVED _____ DATE _____

PROJECT MANAGER : TODD SUMNER, P.E.

PROJECT NAME : WINDSOR
PROJECT NUMBER : IM 091-1(64)

SHEET 1 OF 156 SHEETS

STATE OF VERMONT
AGENCY OF TRANSPORTATION

PRELIMINARY INFORMATION SHEET (BRIDGE)

Version 11.06.15

LRFD

INDEX OF SHEETS

PLAN SHEETS

1	TITLE SHEET
2 - 3	PRELIMINARY INFORMATION SHEETS 1-2
4	TYPICAL BRIDGE SECTIONS
5 - 6	TYPICAL ROADWAY SECTIONS
7 - 10	MISCELLANEOUS ROADWAY DETAILS 1-4
11 - 13	TIE SHEETS 1-3
14 - 26	LAYOUT SHEETS 1-13
27 - 34	PROFILE SHEETS - I-91 SOUTHBOUND 1-8
35 - 42	PROFILE SHEETS - I-91 NORTHBOUND 1-8
43	ITEM DETAIL AND DRAINAGE SHEET
44	SITE PLAN
45	BORING INFORMATION SHEET
46 - 54	BORING LOG INFORMATION SHEETS 1-9
55	PLAN - BRIDGE 33S
56	PLAN - BRIDGE 33N
57	BRIDGE ELEVATIONS - 33S & 33N
58	BRIDGE SEQUENCE OF CONSTRUCTION
59	BRIDGE 33S DECK REINFORCEMENT
60	BRIDGE 33N DECK REINFORCEMENT
61	DECK PLACEMENT SEQUENCE AND DETAILS
62	TYPICAL DECK DETAILS
63	BARRIER AND CONDUIT DETAILS
64	FRAMING PLAN - BRIDGE 33S
65	FRAMING PLAN - BRIDGE 33N
66 - 71	GIRDER DETAILS 1 - 6
72 - 73	SUPERSTRUCTURE ELEV. TABLES - 33S 1 - 2
74 - 75	SUPERSTRUCTURE ELEV. TABLES - 33N 1 - 2
76	SUPERSTRUCTURE DETAILS
77	BRIDGE BEARING DETAILS - PIERS
78	BRIDGE BEARING DETAILS - ABUTMENTS
79 - 80	EXPANSION JOINT DETAILS 1 - 2
81 - 82	BRIDGE DRAINAGE SHEETS 1 - 2
83	APPROACH SLAB DETAILS
84 - 85	F-SHAPE BARRIER TRANSITION DETAILS
86	ABUTMENT 1 PLAN
87	ABUTMENT 1 ELEVATION & SECTION
88	ABUTMENT 1 FOOTING PLAN
89	ABUTMENT 1 WINGWALLS
90 - 91	ABUTMENT 1 REINFORCEMENT SHEETS 1-2
92	ABUTMENT 1 WINGWALL REINFORCEMENT
93	ABUTMENT 2 PLAN
94	ABUTMENT 2 ELEVATION
95	ABUTMENT 2 SECTION
96	ABUTMENT 2 FOOTING PLAN
97	ABUTMENT 2 WINGWALLS
98 - 99	ABUTMENT 2 REINFORCEMENT SHEETS 1-2
100 - 101	ABUTMENT 2 WINGWALL REINFORCEMENT SHEETS 1-2
102	PIER 1 FOOTING PLAN & SECTION
103	PIER 1 ELEVATION & SECTION
104	PIER 1 REINFORCEMENT
105	PIER 2 FOOTING PLAN & SECTION
106	PIER 2 ELEVATION & SECTION
107	PIER 2 REINFORCEMENT
108	PIER 3 FOOTING PLAN & SECTION
109	PIER 3 ELEVATION & SECTION
110	PIER 3 REINFORCEMENT
111 - 113	SB ABUTMENT DETAILS SHEETS 1-3
114 - 117	SB PIER DETAILS SHEETS 1-4
118	ABUTMENT 3 PLAN
119	ABUTMENT 3 ELEVATION & SECTION
120	ABUTMENT 3 FOOTING PLAN
121	ABUTMENT 3 WINGWALLS
122 - 123	ABUTMENT 3 REINFORCEMENT SHEETS 1-2
124	ABUTMENT 3 WINGWALL REINFORCEMENT
125	ABUTMENT 4 PLAN
126	ABUTMENT 4 ELEVATION
127	ABUTMENT 4 SECTION
128	ABUTMENT 4 FOOTING PLAN
129	ABUTMENT 4 WINGWALLS
130 - 131	ABUTMENT 4 REINFORCEMENT SHEETS 1-2
132 - 133	ABUTMENT 4 WINGWALL REINFORCEMENT SHEETS 1-2
134	PIER 4 FOOTING PLAN & SECTION
135	PIER 4 ELEVATION & SECTION
136	PIER 4 REINFORCEMENT
137	PIER 5 FOOTING PLAN & SECTION
138	PIER 5 ELEVATION & SECTION
139	PIER 5 REINFORCEMENT
140	PIER 6 FOOTING PLAN & SECTION
141	PIER 6 ELEVATION & SECTION
142	PIER 6 REINFORCEMENT
143 - 145	NB ABUTMENT DETAILS SHEETS 1-3
146 - 149	NB PIER DETAILS SHEETS 1-4
150 - 152	CROSS SECTIONS - I-91 SOUTHBOUND 1-3
153 - 156	CROSS SECTIONS - I-91 NORTHBOUND 1-4

STANDARDS LIST

B-5	SLOPE GRADING, EMBANKMENTS, MUCK	06-01-1994
C-10	CURBING	02-11-2008
D-3	TREATED GUTTERS	06-01-1994
D-6	REINFORCED CONCRETE DROP INLET W/GRATE (DITCHES)	06-01-1994
D-10	REINFORCED CONCRETE DROP INLET TOP FOR BITUMINOUS CONCRETE CURB & C	06-01-1994
D-11	STEEL OR IRON GRATES& COVERS (TYPE A)	06-01-1994
D-16	DRAINAGE DETAILS INCLUDING DROP INLETS, IRON GRATE TYPE B&C, CONC END	06-01-1994
E-108A	CONSTRUCTION ZONE LONGITUDINAL DROP OFFS FOR PAVING	06-08-2009
E-111	MINOR MAINTENANCE OPERATIONS	03-11-1997
E-120	STANDARD SIGN PLACEMENT - EXPRESSWAY & FREEWAY	08-08-1995
E-134	BRIDGE NUMBER PLAQUE	08-08-1995
E-139	MILE MARKER DETAILS - INTERSTATE	05-01-2004
E-150	WARNING SIGN DETAILS	05-01-2004
E-160	FLANGED CHANNEL STEEL SIGN POST	05-20-1999
E-161	W-SHAPED STEEL SIGN POST	08-18-1995
E-162	TUBULAR ALUMINUM SIGN POST	05-20-1999
E-163	TUBULAR STEEL SIGN POST	05-20-1999
E-193	PAVEMENT MARKING DETAILS	08-18-1995
E-198	DELINEATOR SAND MILE POSTS	04-01-2005
E-199	DELINEATOR AND MILE POST MOUNTING ON BRIDGE RAIL	04-01-2005
G-1	STEEL BEAM GUARDRAIL DETAILS (POST, DELINEATOR, TYPICALS)	01-03-2000
G-1D	STEEL BEAM GUARDRAIL DETAILS (END TERMINAL, ANCHOR, MEDIAN)	01-03-2000
G-19	GENERIC GRADING PLANS FOR GUARDRAIL END TERMINALS	11-15-2002
S-352D	GUARDRAIL APPR SECT TO CONCRETE COMBINATION BRIDGE RAIL, TL-3	
S-363	GUARDRAIL APPROACH SECTION, GALVANIZED NETC 2 & 4 RAIL	

TRAFFIC DATA - I-91 NB						
YEAR	ADT	DHV	% D	% T	ADTT	20 year ESAL for flexible pavement from 2013 to 2033: 8,891,000
2013	7300	1200	100	15.2	1200	40 year ESAL for flexible pavement from 2013 to 2053: 21,668,000
2033	8900	1400	100	22.2	2100	Design Speed: 65 mph
TRAFFIC DATA I-91 SB						
YEAR	ADT	DHV	% D	% T	ADTT	20 year ESAL for flexible pavement from 2013 to 2033: 11,397,000
2013	7300	1500	100	10.8	1300	40 year ESAL for flexible pavement from 2013 to 2053: 27,825,000
2033	8900	1900	100	15.4	2200	Design Speed: 65 mph

Concrete Materials Summary	
Unit	Material Grade
Bridge Deck	HPC Class A Low Cement (see special provisions)
Barrier	HPC, Low Shrinkage (see special provisions)
Prestressed Beams	HPC, Class SCC
Abutments	HPC, Class A
Wings	HPC, Class A
Footings	HPC, Class B
Columns	HPC, Class B
Pier Caps	HPC, Class B
Subfootings	Concrete Class C
Approach Slab	HPC, Class B

AS BUILT "REBAR" DETAIL

LEVEL I	LEVEL II	LEVEL III
TYPE:	TYPE:	TYPE:
GRADE:	GRADE:	GRADE:

TEMPORARY BRIDGE PROFILE ALONG TEMP CL

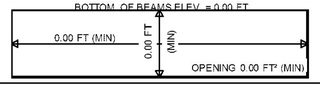

FINAL HYDRAULIC REPORT

HYDROLOGIC DATA

Date: 02/27/2013

DRAINAGE AREA : 42.6 Sq. Mi.
CHARACTER OF TERRAIN : Wooded, Steep slopes
STREAM CHARACTERISTICS : Sinuous channel, 0.6% avg slope in work area
NATURE OF STREAMBED : Gravel and cobbles

PEAK FLOW DATA

Q 2.33 =	2200 cfs	Q 50 =	4980 cfs
Q 10 =	3300 cfs	Q 100 =	5860 cfs
Q 25 =	4180 cfs	Q 500 =	8125 cfs

DATE OF FLOOD OF RECORD: Unknown
ESTIMATED DISCHARGE: Unknown
WATER SURFACE ELEV.: Unknown
NATURAL STREAM VELOCITY : Unknown
ICE CONDITIONS : Minimal
DEBRIS: Minimal
DOES THE STREAM REACH MAXIMUM HIGHWATER ELEV. RAPIDLY? YES
IS ORDINARY RISE RAPID? YES
IS STAGE AFFECTED BY UPSTREAM OR DOWNSTREAM CONDITIONS? NO
IF YES, DESCRIBE:

WATERSHED STORAGE: N/A
HEADWATERS:
UNIFORM:
IMMEDIATELY ABOVE SITE:

EXISTING STRUCTURE INFORMATION

STRUCTURE TYPE: Abutments, Piers and Deck
YEAR BUILT: 1965
CLEAR SPAN(NORMAL TO STREAM): approx. 175' to piers at Span 2; approx 630' to abuts
VERTICAL CLEARANCE ABOVE STREAMBED: 77' at SB bridge
WATERWAY OF FULL OPENING: N/A, Since existing structure not modeled
DISPOSITION OF STRUCTURE: to be removed above existing ground
TYPE OF MATERIAL UNDER SUBSTRUCTURE: sand and gravel

WATER SURFACE ELEVATIONS AT:

Q2.33 =	399.1	VELOCITY =	5.6 fps
Q10 =	400.2	"	6.6 fps
Q25 =	401.0	"	7.2 fps
Q50 =	401.6	"	7.7 fps
Q100 =	402.2	"	8.1 fps

LONG TERM STREAMBED CHANGES: Stream was relocated during construction of exist. bridges. Channel remained relatively stable. Right bank scour at bend upstream of I-91 bridges.

IS THE ROADWAY OVERTOPPED BELOW Q100: NO
FREQUENCY:
RELIEF ELEVATION:
DISCHARGE OVER ROAD @Q100:

UPSTREAM STRUCTURE

TOWN: Not Modeled
DISTANCE:
HIGHWAY # :
STRUCTURE #:
CLEAR SPAN:
CLEAR HEIGHT:
YEAR BUILT:
FULL WATERWAY:
STRUCTURE TYPE:

DOWNSTREAM STRUCTURE

TOWN: Not Modeled
DISTANCE:
HIGHWAY # :
STRUCTURE #:
CLEAR SPAN:
CLEAR HEIGHT:
YEAR BUILT:
FULL WATERWAY:
STRUCTURE TYPE:

LRFR LOAD RATING FACTORS

LOADING LEVELS	TRUCK						
	H-20	HL-93	3S2	6 AXLE	3A. STR.	4A. STR.	5A. SEMI
TONNAGE	**20**	**36**	**36**	**66**	**30**	**34.5**	**38**
INVENTORY	1.822	1.051					
POSTING							
OPERATING	2.362	1.362	1.838	1.695	3.295	2.899	2.763
COMMENTS:							

PILE DRIVING AND TESTING REQUIREMENTS

1. NOMINAL PILE DRIVING CAPACITY	R_{ndr}:	SEE TABLE
2. PILE TEST RESISTANCE FACTOR	ϕ:	SEE TABLE
3. MINIMUM PILE TIP ELEVATION		SEE TABLE
4. 0		

PROPOSED STRUCTURE

STRUCTURE TYPE: Twin 4-Span Prestressed Concrete Girder Bridge

CLEAR SPAN(NORMAL TO STREAM): 152' at span 2, 625' to abutments
VERTICAL CLEARANCE ABOVE STREAMBED: 77' at SB bridge
WATERWAY OF FULL OPENING: 29,382 SF

WATER SURFACE ELEVATIONS AT:

Q2.33 =	399.1	VELOCITY=	5.6 fps
Q10 =	400.2	"	6.6 fps
Q25 =	401.0	"	7.2 fps
Q50 =	401.6	"	7.7 fps
Q100 =	402.2	"	8.1 fps

IS THE ROADWAY OVERTOPPED BELOW Q100: NO
FREQUENCY:
RELIEF ELEVATION:
DISCHARGE OVER ROAD @Q100: 0 cfs (typ)

AVERAGE LOW ELEVATION OF SUPERSTRUCTURE: 470
VERTICAL CLEARANCE: @ Q100 = 66'

SCOUR: Piers are designed with unsupported pile length for protection against scour
REQUIRED CHANNEL PROTECTION: Stone fill on south bank

PERMIT INFORMATION

AVERAGE DAILY FLOW:	84.4 cfs	DEPTH OR ELEVATION:
ORDINARY LOW WATER:	11.0 cfs	El. 394.0
ORDINARY HIGH WATER:	1468 cfs	El. 398.0

TEMPORARY BRIDGE REQUIREMENTS

STRUCTURE TYPE: Not required, a temporary trestle is to be used for construction
CLEAR SPAN (NORMAL TO STREAM): N/A
VERTICAL CLEARANCE ABOVE STREAMBED: N/A
WATERWAY AREA OF FULL OPENING: N/A

ADDITIONAL INFORMATION

Information presented at midpoint between Southbound and Northbound bridges.

TRAFFIC MAINTENANCE NOTES

1. MAINTAIN TRAFFIC ON A BRIDGE.
2. TRAFFIC SIGNALS ARE NOT NECESSARY.
3. SIDEWALKS ARE NOT NECESSARY
4. THE APPROACHES FOR THE BRIDGE SHALL BE PAVED.

DESIGN VALUES

1. DESIGN LIVE LOAD		HL-93
2. FUTURE PAVEMENT	d_p:	3.0 INCH
3. DESIGN SPAN L: 158.50 FT-160.00 FT-160.00 FT-158.50 FT		
4. MIN. MID-SPAN POS. CAMBER @ RELEASE (PRESTRESSED UNITS)	Δ:	- - -
5. PRESTRESSING STRAND (0.60 INCH DIAMETER - LOW RELAX)	f_y:	270 KSI
6. PRESTRESSED CONCRETE STRENGTH (HPC, CLASS SCC)	f'_c:	8.0 KSI
7. PRESTRESSED CONCRETE RELEASE STRENGTH	f'_{ci}:	6.0 KSI
8. CONCRETE, HIGH PERFORMANCE CLASS AA	f'_c:	N/A
9. CONCRETE, HIGH PERFORMANCE CLASS A	f'_c:	4.0 KSI
10. CONCRETE, HIGH PERFORMANCE CLASS B	f'_c:	3.5 KSI
11. CONCRETE, CLASS C	f'_c:	3.0 KSI
12. REINFORCING STEEL	f_y:	60 KSI
13. STRUCTURAL STEEL AASHTO M270	f_y:	- - -
14. SOIL UNIT WEIGHT	γ:	SEE TABLE
15. NOMINAL BEARING RESISTANCE OF BEDROCK	q_n:	50.0 KSF
16. BEDROCK BEARING RESISTANCE FACTOR (REFER TO AASHTO LRFD	ϕ:	0.45
17. NOMINAL BEARING RESISTANCE OF ROCK	q_n:	NA
18. ROCK BEARING RESISTANCE FACTOR (REFER TO AASHTO LRFD)	ϕ:	NA
19. NOMINAL AXIAL PILE RESISTANCE	q_p:	1273.0 KIPS
20. PILE YIELD STRENGTH ASTM A572	f_y:	50 KSI
21. PILE SIZE		HP 14X102
22. PILE EMBEDMENT LENGTH	L_p:	SEE TABLE
23. PILE STRUCTURAL RESISTANCE FACTOR (REFER TO AASHTO LRFD)	ϕ_c	0.50
24. LATERAL PILE DEFLECTION	Δ:	SEE TABLE
25. BASIC WIND SPEED	V_{3s}:	100 MPH
26. MINIMUM GROUND SNOW LOAD	p_g:	N/A
27. SEISMIC DATA A_s: 0.125	S_{os}:	0.256
	S_{o1}:	0.108

PROJECT NAME: **WINDSOR**
PROJECT NUMBER: **IM 091-1(64)**

FILE NAME: **z10a188PI**
PROJECT LEADER: **J. WILSON**
DESIGNED BY: **S. BOYINGTON**
PRELIMINARY INFORMATION SHEET 1

PLOT DATE: 7/30/2015
DRAWN BY: **S. GUNN**
CHECKED BY: **S. HALLORAN**
SHEET **2** OF 156

STATE OF VERMONT
AGENCY OF TRANSPORTATION

PRELIMINARY INFORMATION SHEET (BRIDGE)

LRFD

Nominal Pile Driving Capacity and Resistance Factor			
Proposed Substructure	Nominal Pile Driving Capacity (kips)	Pile Test Resistance Factor	Governing Loading Condition
Abutments 1 & 3	583	0.65	Strength Ib (compression)
Abutment 1 & 3 Wingwall	320	1	Extreme IIb (compression)
Piers 1, 2, 4 & 5	798	0.65	Strength III (compression)

Geotechnical Soil Parameters	
Soil Type	Effective Unit Weight, g' (pcf)
Abutment Wingwall Backfill (Dry)	140
Medium Dense Sand (Dry)	120
Medium Dense Sand (Submerged)	57.6
Dense Sand (Submerged)	62.6
Weathered Rock (Submerged)	77.6
Bedrock (Submerged)	87.6

Maximum Pile Deflections		
Proposed Substructure	Lateral Pile Deflection, d_y	Lateral Pile Deflection, d_z
Abutments 1 & 3 (fixed connection)	0.57	0
Abutments 1 & 3 (pinned connection)	1.18	0
Abutment 1 & 3 Wingwall (fixed connection)	0.23	0
Abutment 1 & 3 Wingwall (pinned connection)	0.52	0
Piers 1, 2, 4 & 5 (fixed connection)	0.19	0.13
Piers 1, 2, 4 & 5 (pinned connection)	0.5	0.41

Note: 1) Pile group lateral deformation (d_y and d_z) calculated based upon the Service loading condition.

Pile Tip Elevation Summary				
Pier/Abutment	Proposed Bottom of Footing Elevation (ft)	Estimated Pile Tip Elevation to Achieve Nominal Axial Resistance (ft)	Estimated Pile Embedment Length (ft)	Minimum Pile Tip Elevation (ft)
Pier 1	390	323	67	360
Pier 2	390	344	46	360
Pier 4	388	335	53	358
Pier 5	388	345	43	358
Abutment 1	461	356	105	436
Abutment 3	461	356	105	436
Abutment 1 Wingwall	465	390	75	440
Abutment 3 Wingwall	465	390	75	440

Note: 1) Minimum pile tip elevations were based on the depth to lateral stability (or lateral fixity) estimated from GROUP analysis. However, it is expected that the final pile tip elevations will be govened by the nominal axial resistance of the piles.

PROJECT NAME: WINDSOR
PROJECT NUMBER: IM 091-1(64)

FILE NAME: z10o188PI.dgn
PROJECT LEADER: J. WILSON
DESIGNED BY: S. BOYINGTON
PRELIMINARY INFORMATION SHEET 2

PLOT DATE: 7/31/2015
DRAWN BY: S. GUNN
CHECKED BY: S. HALLORAN
SHEET 3 OF 156

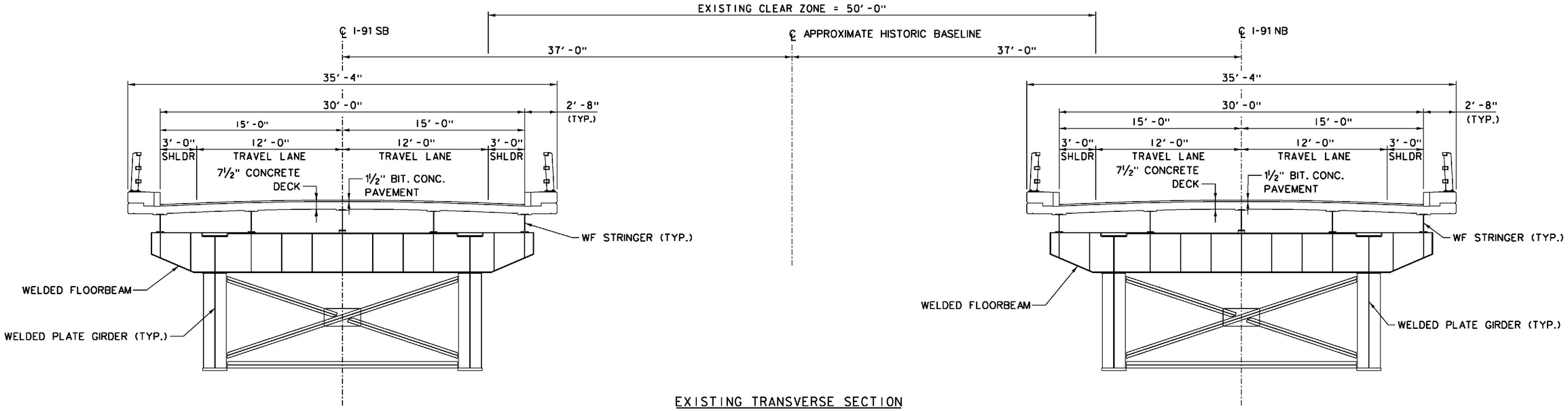

EXISTING TRANSVERSE SECTION

SCALE ¼" = 1'-0"

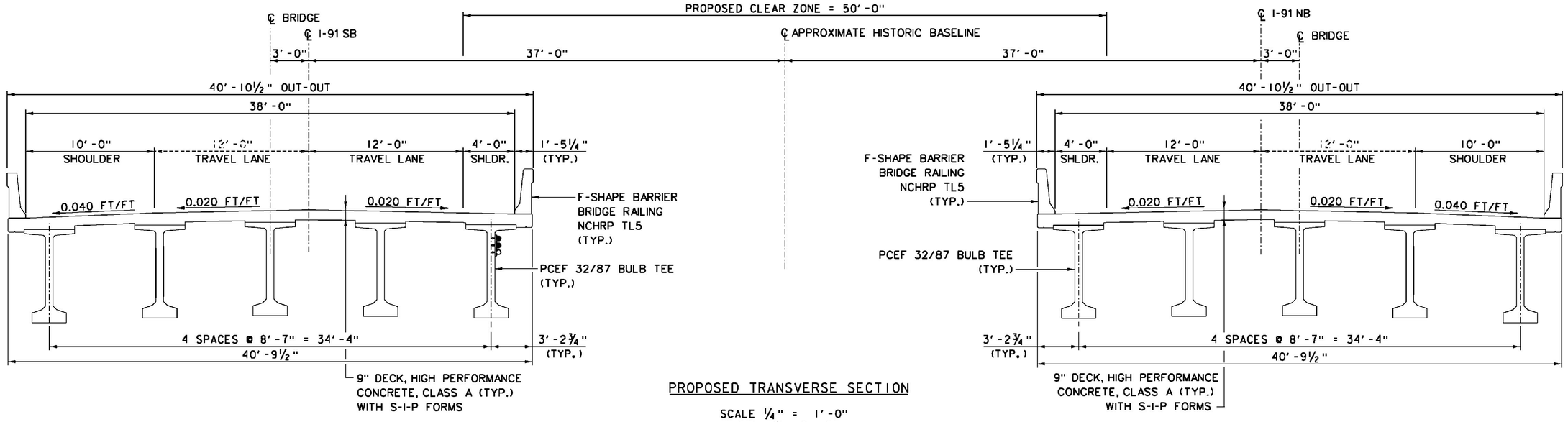

PROPOSED TRANSVERSE SECTION

SCALE ¼" = 1'-0"

PROJECT NAME: WINDSOR	
PROJECT NUMBER: IM 091-1(64)	
FILE NAME: z10o188BSect.dgn	PLOT DATE: 7/30/2015
PROJECT LEADER: J. WILSON	DRAWN BY: N. GARCIA III
DESIGNED BY: R. PEIN	CHECKED BY: S. HALLORAN
TYPICAL BRIDGE SECTIONS	SHEET 4 OF156

ITEMS USED ON THESE SHEET	
ITEM NO.	DESCRIPTION
203.31	SAND BORROW
210.10	COLD PLANING, BITUMINOUS
301.35	DENSE GRADED CRUSHED STONE
404.65	EMULSIFIED ASPHALT
490.30	SUPERPAVE BITUMINOUS CONCRETE PAVEMENT
613.11	STONE FILL, TYPE II
613.12	STONE FILL, TYPE III
616.305	BITUMINOUS CONCRETE CURB, TYPE A
649.31	GEOTEXTILE UNDER STONE FILL
651.15	SEED
651.18	FERTILIZER
651.25	HAY MULCH
651.35	TOPSOIL

AS-BUILT NOTES:

1. THERE IS AN EXISTING ½" TO ¾" LAYER OF "SHIM PAVE" WITHIN THE PROPOSED LIMITS OF COLD PLANE AND PAVE. PAVE THICKNESS REMAINS AT 1¾"; COLD PLANE ADJUSTED TO 2¼" SO FINISHED PAVE IS CLOSER TO FLUSH WITH EXISTING SHOULDER.

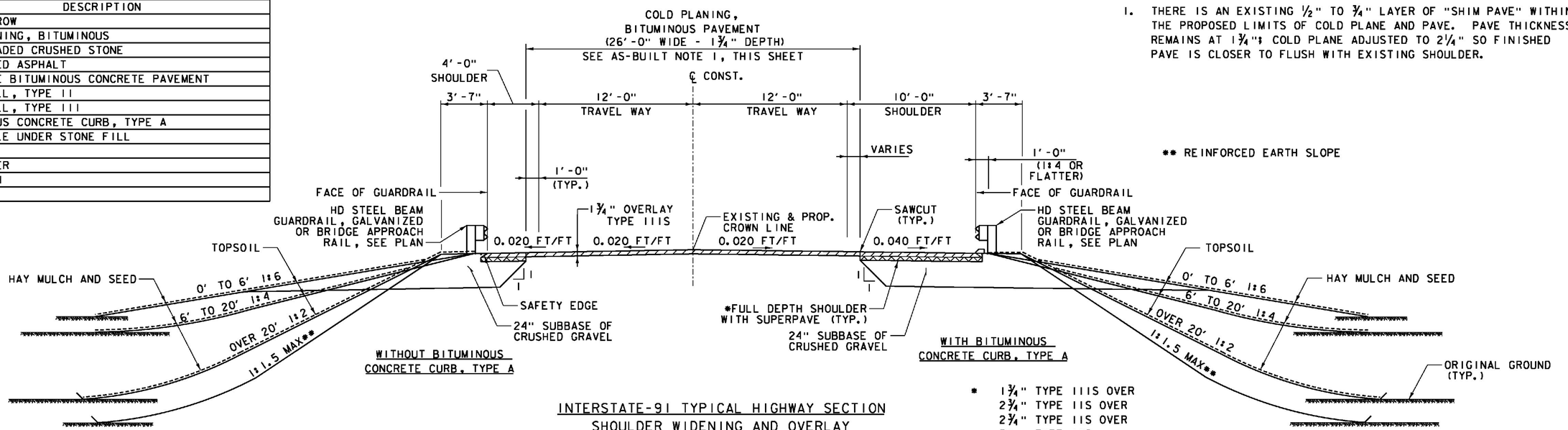

** REINFORCED EARTH SLOPE

* 1¾" TYPE IIIS OVER
2¾" TYPE IIS OVER
2¾" TYPE IIS OVER
3" TYPE IIS

INTERSTATE-91 TYPICAL HIGHWAY SECTION
SHOULDER WIDENING AND OVERLAY
SCALE ¼" = 1'-0"
1 0 2 4 6

NOTES:

1. RUMBLE STRIPS TO BE CONSTRUCTED IN SHOULDER AREAS.
2. TYPICALS SHOWN IN DIRECTION OF TRAFFIC.
3. SEE EPSC DRAWINGS FOR SEED MIX.

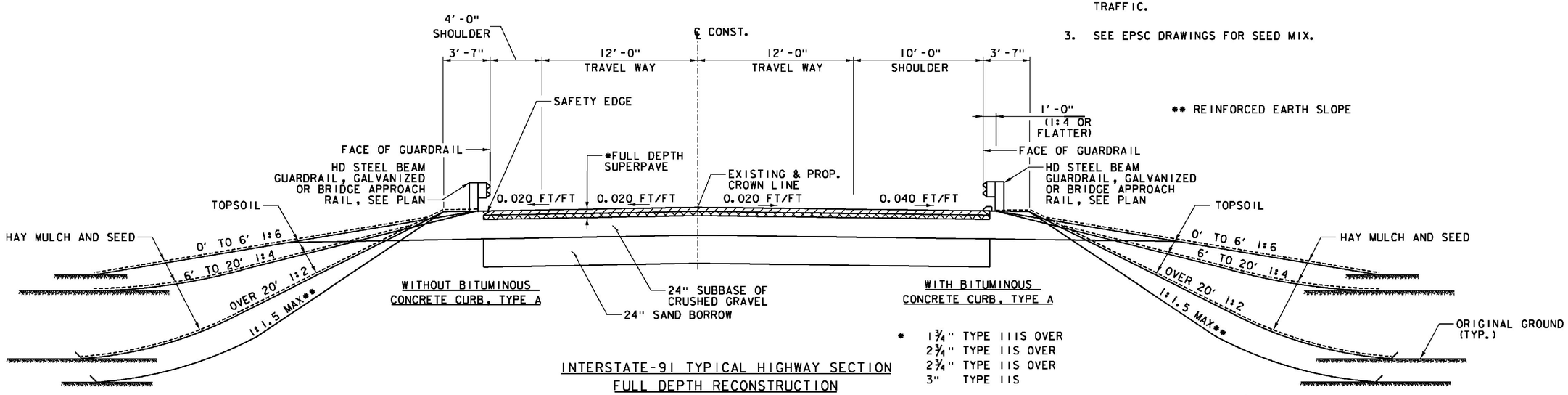

** REINFORCED EARTH SLOPE

* 1¾" TYPE IIIS OVER
2¾" TYPE IIS OVER
2¾" TYPE IIS OVER
3" TYPE IIS

INTERSTATE-91 TYPICAL HIGHWAY SECTION
FULL DEPTH RECONSTRUCTION
SCALE ¼" = 1'-0"
1 0 2 4 6

PROJECT NAME: WINDSOR
PROJECT NUMBER: IM 091-1(64)

FILE NAME: z10o188RTYP1.dgn
PROJECT LEADER: J. WILSON
DESIGNED BY: H. FULLER
TYPICAL ROADWAY SECTIONS - SHEET 1

PLOT DATE: 7/30/2015
DRAWN BY: S. GUNN
CHECKED BY: T. MORIN
SHEET 5 OF 156

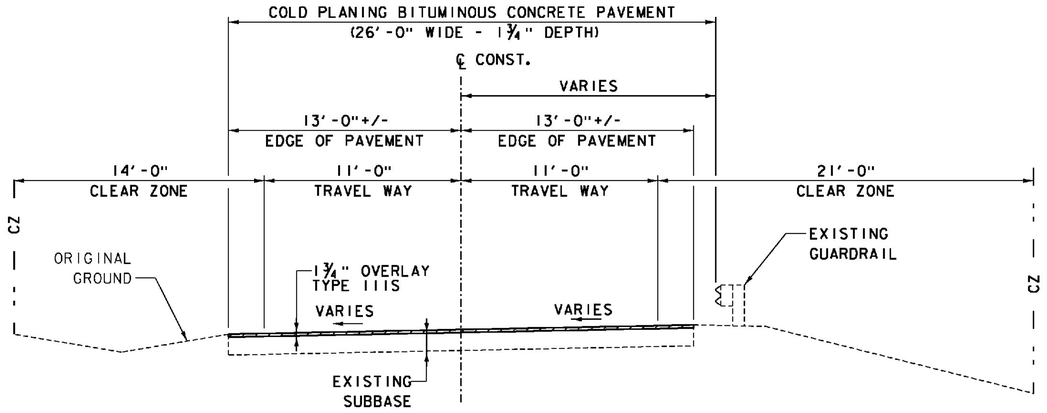

VT. ROUTE 44 TYPICAL ROADWAY SECTION

SCALE ¼" = 1'-0"

MATERIAL ITEM	TOLERANCE
PAVEMENT	+/- ¼" TOTAL THICKNESS
AGGREGATE SURFACE COURSE	+/- ½"
BASE COURSE	+/- ½"
SUBBASE	+/- 1"
SAND BORROW	+/- 1"
GRANULAR BORROW	+/- 1"

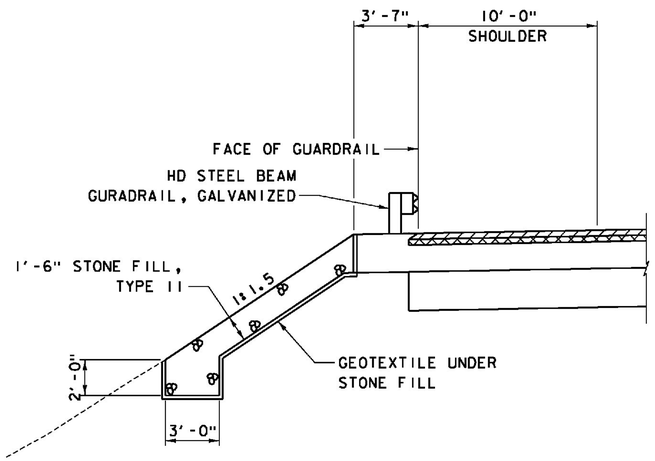

REINFORCED EARTH SLOPE - STONE FILL TYPE II

I-91 SB: STA. 1918+40 - STA. 1919+25 LT.

SCALE ¼" = 1'-0"

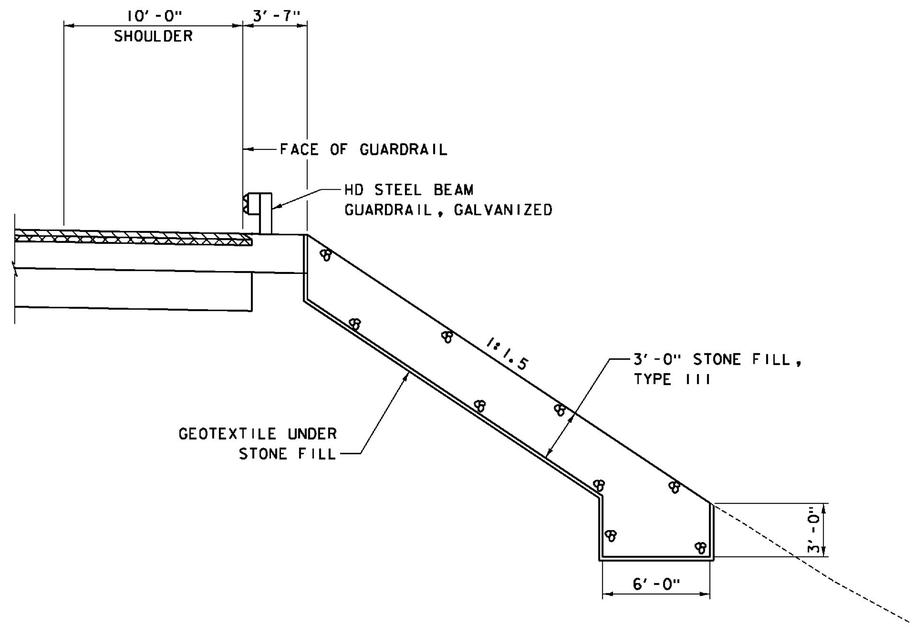

REINFORCED EARTH SLOPE - STONE FILL TYPE III

I-91 NB: STA. 2918+40 - STA. 2920+60 RT.

I-91 NB: STA. 2927+92 - STA. 2928+25 RT.

SCALE ¼" = 1'-0"

PROJECT NAME: WINDSOR

PROJECT NUMBER: IM 091-1(64)

FILE NAME: z10o188RTYP2.dgn | PLOT DATE: 7/30/2015

PROJECT LEADER: J. WILSON | DRAWN BY: S. GUNN

DESIGNED BY: H. FULLER | CHECKED BY: T. MORIN

TYPICAL ROADWAY SECTIONS - SHEET 2 | SHEET 6 OF 156

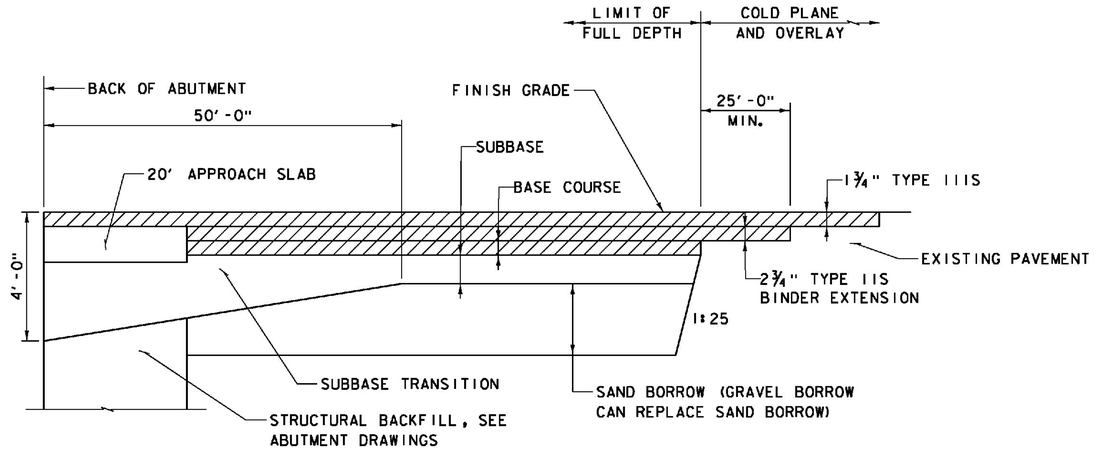

SUBBASE TAPER DETAIL AT BRIDGE
NOT TO SCALE

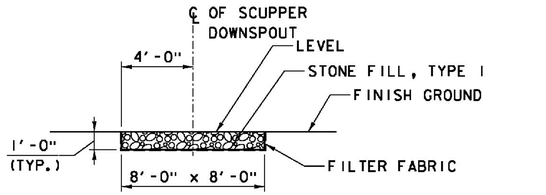

SCUPPER SPLASH PAD
SCALE ¼" = 1'-0"
1 0 2 4 6

NOTE: SEE SHEET 17 FOR LOCATIONS

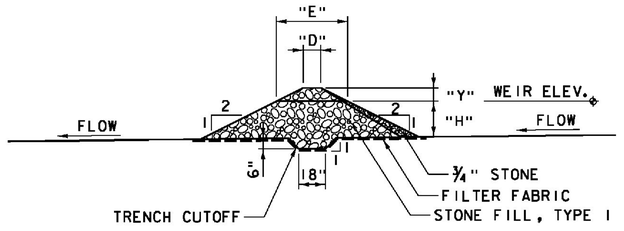

SECTION A-A

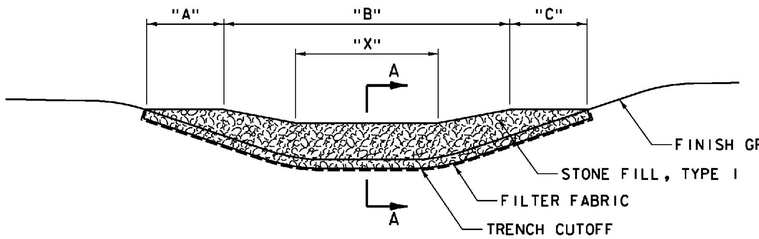

ELEVATION

CHECK DAM WITHIN DRY SWALE
SCALE ¼" = 1'-0"
1 0 2 4 6

STONE CHECK DAMS										
CHECK DAM	STA. I-91 SB	"X"	"Y"	"H"	WEIR ELEV	"A"	"B"	"C"	"D"	"E"
A	1919+90	8'-0"	12"	12"	477.60	4'-0"	12'-0"	4'-0"	12"	48"
B	1917+80	8'-0"	12"	24"	476.50	5'-0"	16'-0"	5'-0"	12"	48"

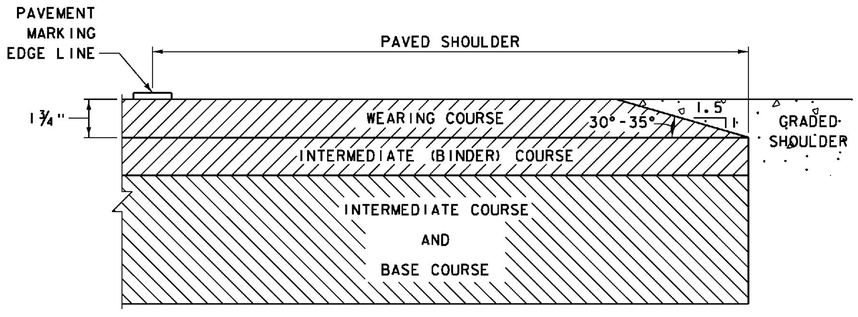

SAFETY EDGE DETAIL
NOT TO SCALE

ITEMS USED ON THIS SHEET	
ITEM NO.	DESCRIPTION
613.10	STONE FILL, TYPE I
649.31	GEOTEXTILE UNDER STONE FILL

PROJECT NAME: WINDSOR
PROJECT NUMBER: IM 091-1(64)

FILE NAME: z10a188RDTL1.dgn
PROJECT LEADER: J. WILSON
DESIGNED BY: H. FULLER
MISC. ROADWAY DETAILS - SHEET 1

PLOT DATE: 7/30/2015
DRAWN BY: S. GUNN
CHECKED BY: T. MORIN
SHEET 7 OF 156

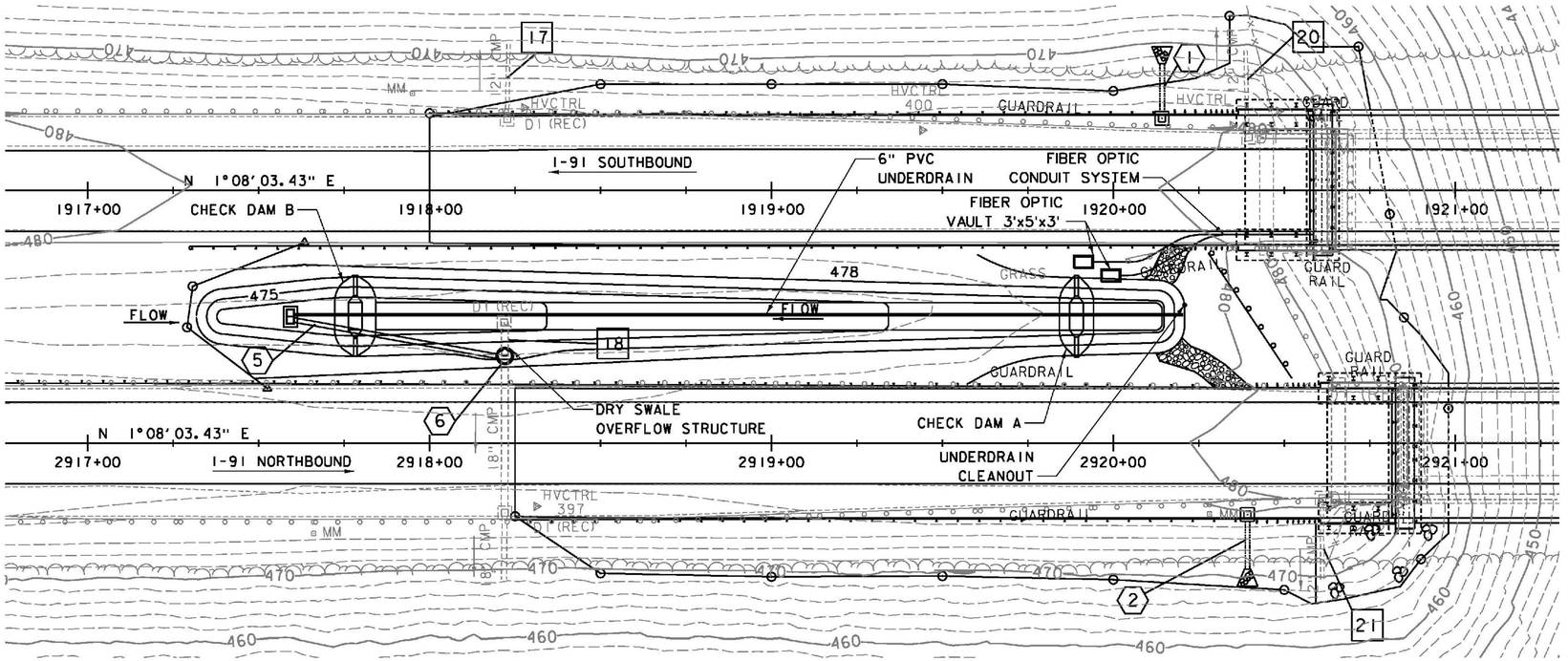

DRY SWALE PLAN

SCALE 1" = 20'-0"

20 0 20

VT STATE PLANE GRID

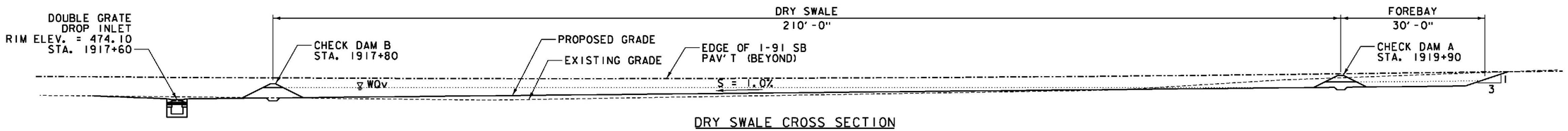

DRY SWALE CROSS SECTION

SCALE 1" = 10'-0"

10 0 10

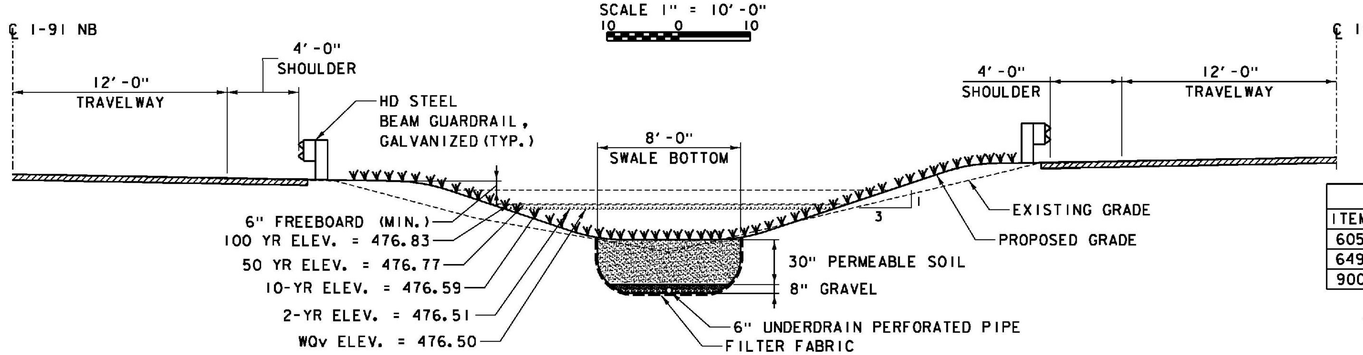

DRY SWALE CROSS SECTION

(LOOKING DOWN STATION)

SCALE 1/4" = 1'-0"

1 0 2 4 6

ITEMS USED ON THIS SHEET	
ITEM NO.	DESCRIPTION
605.10	6 INCH UNDERDRAIN PIPE
649.41	GEOTEXTILE FOR UNDERDRAIN TRENCH LINING
900.645	DRY SWALE

PROJECT NAME: WINDSOR

PROJECT NUMBER: IM 091-1(64)

FILE NAME: z10a188RDTL2.dgn
PROJECT LEADER: J. WILSON
DESIGNED BY: H. FULLER
MISC. ROADWAY DETAILS - SHEET 2

PLOT DATE: 7/30/2015
DRAWN BY: S. GUNN
CHECKED BY: T. MORIN
SHEET 8 OF 156

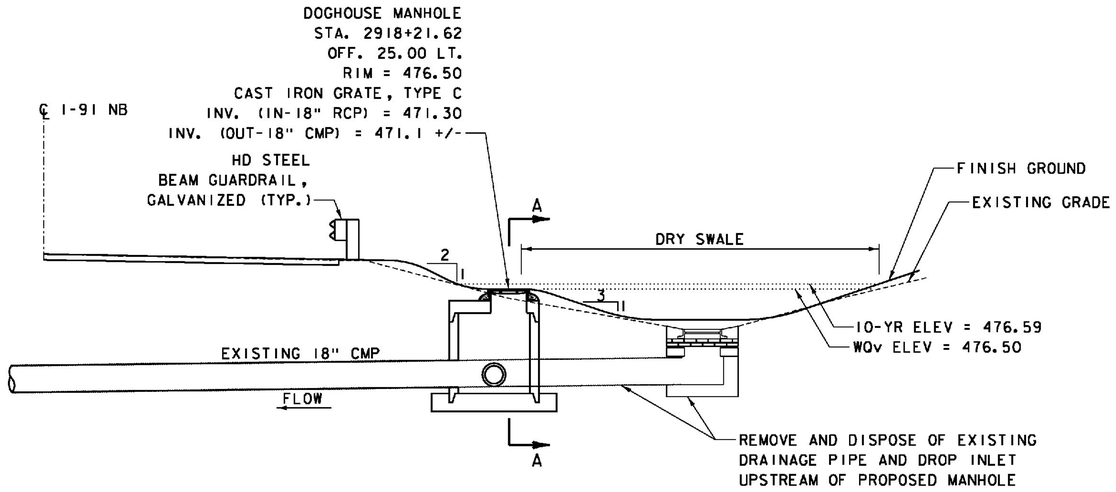

DRY SWALE OVERFLOW STRUCTURE
(LOOKING DOWN STATION)
SCALE 1/4" = 1'-0"
0 2 4 6

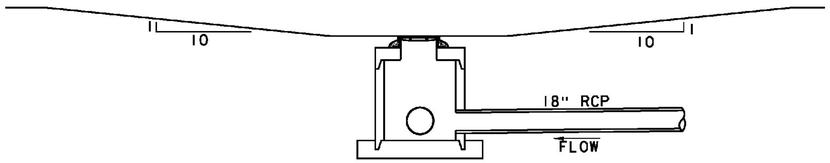

SECTION A-A

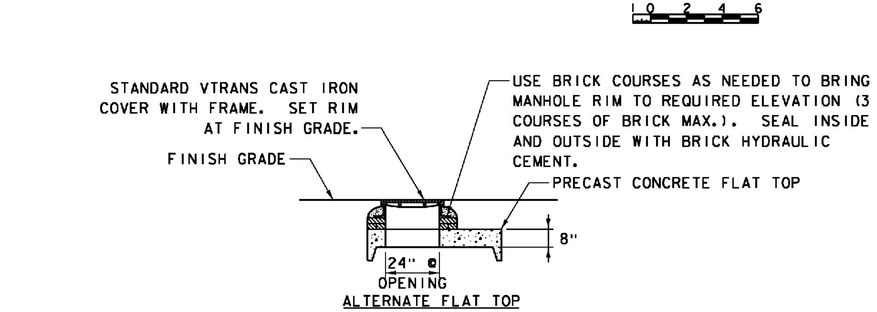

ALTERNATE FLAT TOP

DOGHOUSE MANHOLE
NOT TO SCALE

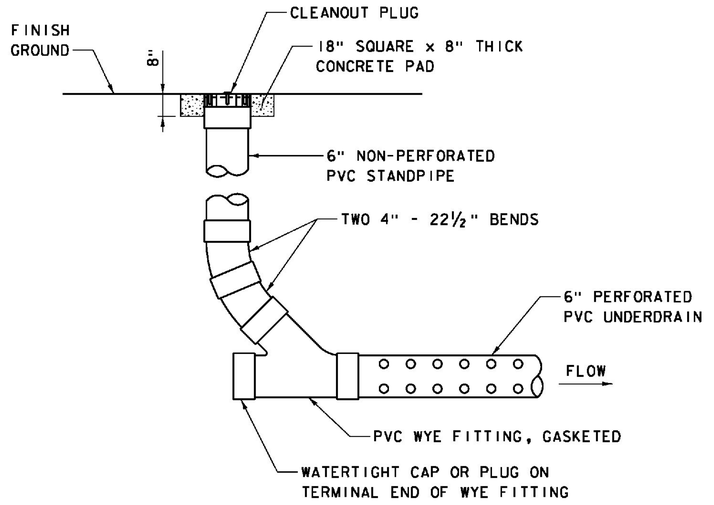

UNDERDRAIN CLEANOUT
NOT TO SCALE

ITEMS USED ON THIS SHEET	
ITEM NO.	DESCRIPTION
541.25	CONCRETE, CLASS B
604.21	PRECAST REINFORCED CONCRETE MANHOLE WITH CAST IRON COVER
604.49	CAST IRON GRATE, TYPE C
605.10	6 INCH UNDERDRAIN PIPE

PROJECT NAME: WINDSOR
PROJECT NUMBER: IM 091-1(64)

FILE NAME: z10a188RDTL3.dgn
PROJECT LEADER: J. WILSON
DESIGNED BY: H. FULLER
MISC. ROADWAY DETAILS - SHEET 3

PLOT DATE: 7/30/2015
DRAWN BY: S. GUNN
CHECKED BY: T. MORIN
SHEET 9 OF156

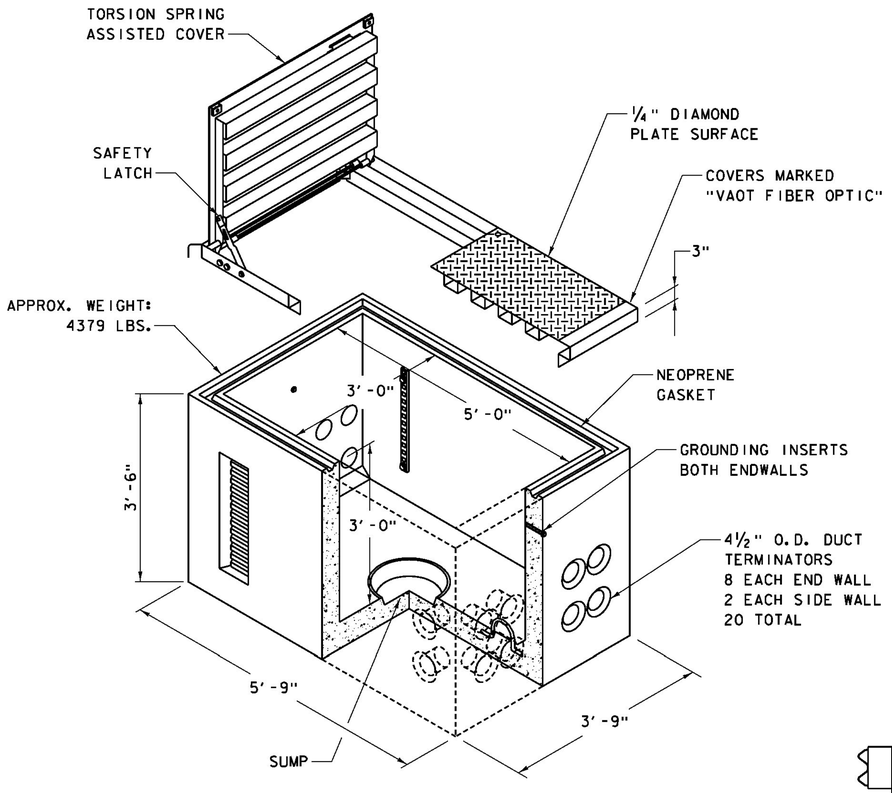

FIBER OPTIC VAULT DETAIL
NOT TO SCALE

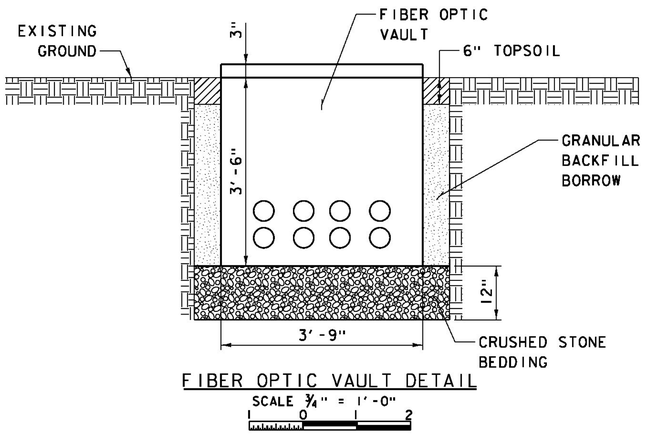

FIBER OPTIC VAULT DETAIL
SCALE 3/4" = 1'-0"
0 1 2

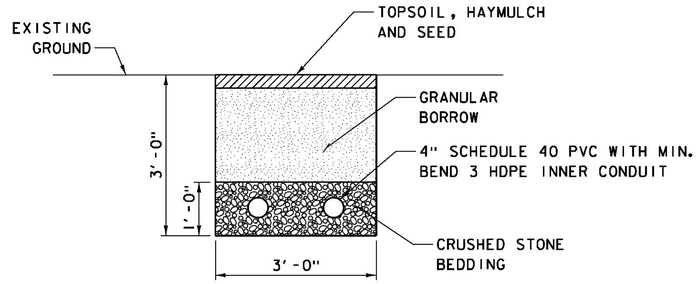

TYPICAL TRENCH (IN GRASS)
SCALE 3/4" = 1'-0"
0 1 2

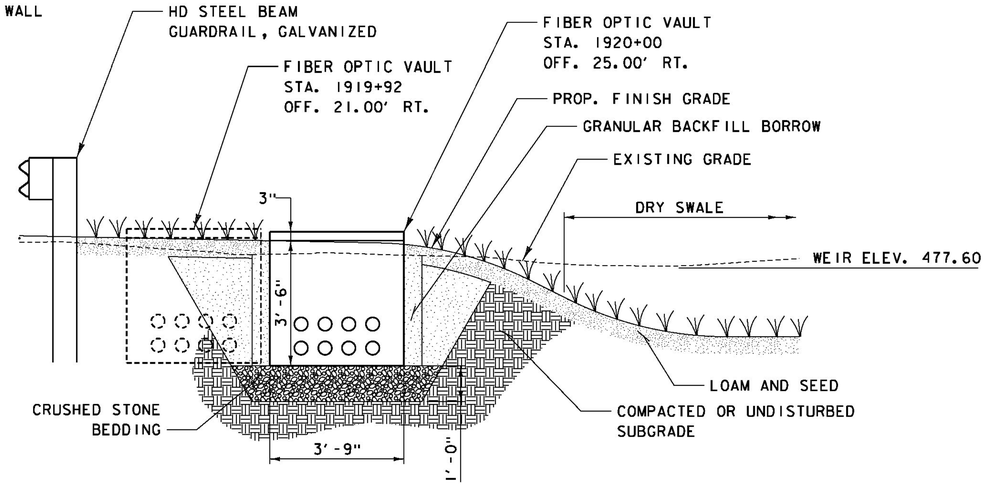

FIBER OPTIC VAULT AT DRY SWALE
SCALE 1/2" = 1'-0"
0 1 2

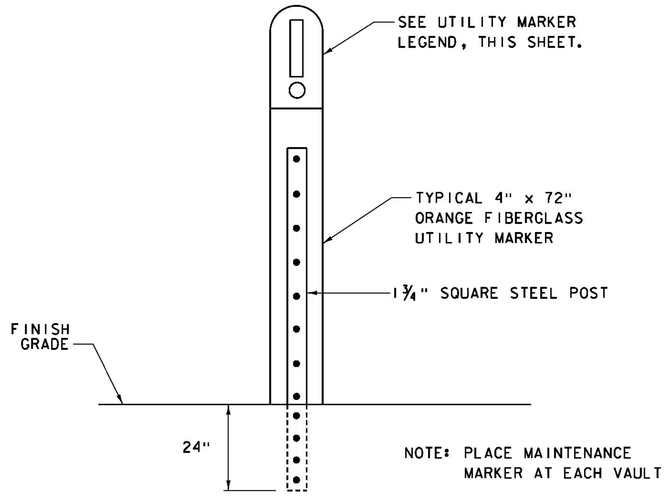

MAINTENANCE MARKER DETAIL
NOT TO SCALE

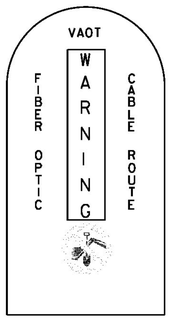

UTILITY MARKER LEGEND
NOT TO SCALE

ITEMS USED ON THIS SHEET	
ITEM NO.	DESCRIPTION
203.32	GRANULAR BORROW
629.54	CRUSHED STONE BEDDING
900.620	INSTALLATION OF MULTI-DUCT CONDUIT SYSTEM FOR THE ACCOMMODATION OF FIBER CABLE

PROJECT NAME: WINDSOR
PROJECT NUMBER: IM 091-1(64)

FILE NAME: z10o188RDTL4.dgn
PROJECT LEADER: J. WILSON
DESIGNED BY: H. FULLER
MISC. ROADWAY DETAILS - SHEET 4

PLOT DATE: 7/30/2015
DRAWN BY: S. GUNN
CHECKED BY: T. MORIN
SHEET 10 OF 156

GPS CONTROL POINTS

HVCTRL #1
FARLEY
NORTH = 347975.525
EAST = 1663585.669
ELEV. = 501.306

GENERAL LOCATION, WINDSOR, VT. OWNERSHIP, JANET FARLEY, 120 DAIRY LANE, WINDSOR, VT.

TO REACH FROM THE INTERSECTION OF US ROUTE 5 AND VT ROUTE 44 IN THE VILLAGE OF WINDSOR, GO WEST ALONG VT ROUTE 44 FOR 0.5 MI (0.8 KM) TO A Y-INTERSECTION. TURN LEFT AND GO SOUTH ALONG VT ROUTE 44 FOR 2.0 MI (3.2 KM) TO THE CENTER OF THE I-91 BRIDGES OVERHEAD. CONTINUE WEST ALONG VT ROUTE 44 FOR 0.3 MI (0.5 KM) TO THE INTERSECTION OF DAIRY LANE LEFT. TURN LEFT AND GO SOUTH ALONG DAIRY LANE FOR 0.1 MI (0.2 KM) TO A ROTARY AT THE END OF THE ROAD AND THE SITE OF THE MARK IN THE CENTER OF THE GRASS AREA WITHIN THE ROTARY.

THE MARK IS SET 15 CM (6 INCHES) BELOW GROUND SURFACE IN THE TOP OF A FENO STYLE MONUMENT.

IT IS 13.5 M (44.3 FT) NORTH OF AND ABOUT LEVEL WITH THE CENTERLINE OF THE SOUTH END OF THE ROTARY, 32.9 M (107.9 FT) NORTH-NORTHEAST OF THE NORTHEAST CORNER OF HOUSE NO 96, 28.3 M (92.8 FT) WEST-SOUTHWEST OF THE SOUTHWEST CORNER OF HOUSE NO 120, 19.7 M (64.6 FT) NORTH-NORTHWEST OF A 30 CM (12 INCH) DIAMETER APPLE AT THE EAST END OF A SPLIT RAIL WOODEN FENCE AND 2.5 M (8.2 FT) EAST-NORTHEAST OF POLE NO 122-2A/7IC AND A FIBERGLASS WITNESS POST.

HVCTRL #33
WINDSOR REC
NORTH = 353234.707
EAST = 1665788.243
ELEV. = 446.786

GENERAL LOCATION, WINDSOR, VT. OWNERSHIP, WINDSOR TOWN OFFICE, POINT OF CONTACT, HARRY LADUE.

TO REACH FROM THE INTERSECTION OF US ROUTE 5 AND VT ROUTE 44 IN THE VILLAGE OF WINDSOR, GO WEST ALONG VT ROUTE 44 FOR 0.5 MI (0.8 KM) TO A Y-INTERSECTION. TURN LEFT AND GO SOUTH ALONG VT ROUTE 44 FOR 0.8 MI (1.3 KM) TO THE SOUTHWEST END OF A RECREATION FIELD AND THE SITE OF THE MARK ON THE LEFT IN THE GRASS AREA BETWEEN THE PARKING AREA AND A BALL FIELD. IT IS ABOUT 60 M (196.9 FT) NORTHEAST OF THE VERMONT NATIONAL GUARD ARMORY BUILDING.

THE MARK IS SET 10 CM (4 INCHES) BELOW GROUND SURFACE IN THE TOP OF A FENO STYLE MONUMENT.

IT IS 40.2 M (131.9 FT) SOUTHEAST OF AND ABOUT LEVEL WITH THE CENTERLINE OF VT ROUTE 44, 34.1 M (111.9 FT) NORTHEAST OF THE NORTHWEST CORNER OF A CHAIN LINK FENCE FOR THE BALL FIELD, 28.5 M (93.5 FT) SOUTHWEST OF THE NORTHWEST CORNER OF A CONCRETE BLOCK STORAGE BUILDING, 5.5 M (18.0 FT) NORTHWEST OF THE FENCE, 5.1 M (16.7 FT) SOUTHEAST OF A ROW OF BOULDERS LINING THE EDGE OF THE PARKING AREA AND 40.7 M (133.5 FT) EAST OF POLE NO 47A AND A FIBERGLASS WITNESS POST.

ALIGNMENT TIES

P.T. 1912+77.02 SB
NORTH = 346422.0147
EAST = 1665068.6262
ELEV. =

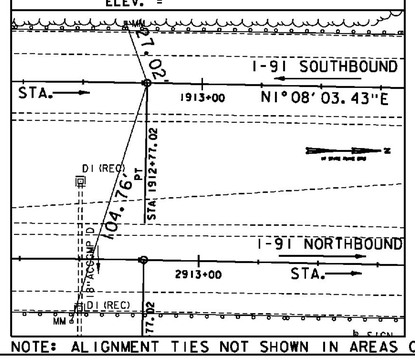

P.C. 1930+84.76 SB
NORTH = 348229.4039
EAST = 1665104.4118
ELEV. =

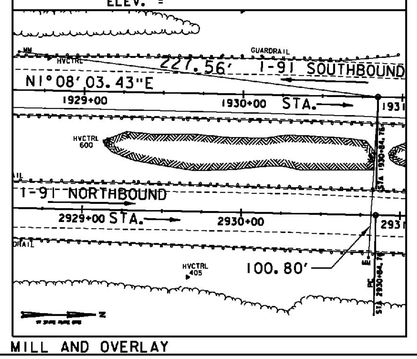

P.T. 2912+77.02 NB
NORTH = 346420.5498
EAST = 1665142.6117
ELEV. =

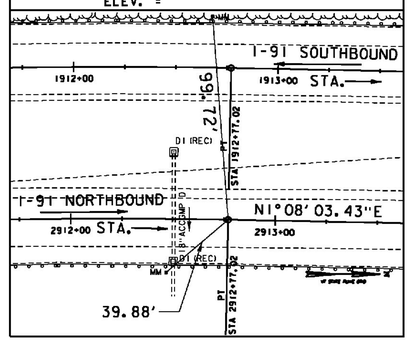

P.C. 2930+84.76 NB
NORTH = 348227.9390
EAST = 1665178.3973
ELEV. =

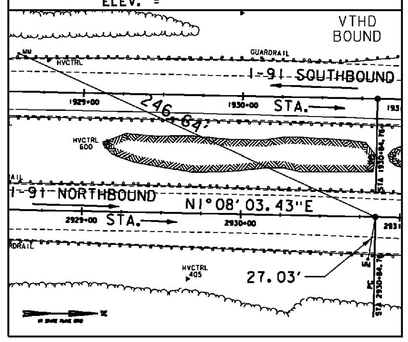

NORTH =
EAST =
ELEV. =

NOTE: ALIGNMENT TIES NOT SHOWN IN AREAS OF MILL AND OVERLAY

ALIGNMENT TIES

NORTH =	NORTH =	NORTH =	NORTH =	NORTH =
EAST =	EAST =	EAST =	EAST =	EAST =
ELEV. =	ELEV. =	ELEV. =	ELEV. =	ELEV. =

DATUM
VERTICAL NAVD 88
HORIZONTAL NAD 83 (07)
ADJUSTMENT COMPASS

ALL TIES NOT SHOWN TO SCALE

PROJECT NAME: WINDSOR
PROJECT NUMBER: IM 091-1(64)

FILE NAME: z10a188TI.dgn
PROJECT LEADER: J. WILSON
DESIGNED BY: H. FULLER
TIE SHEET 1

PLOT DATE: 7/30/2015
DRAWN BY: S. GUNN
CHECKED BY: T. MORIN
SHEET 11 OF 156

TRAVERSE TIES

HVCTRL 41
NORTH = 347894.322
EAST = 1665077.861
ELEV. = 488.137

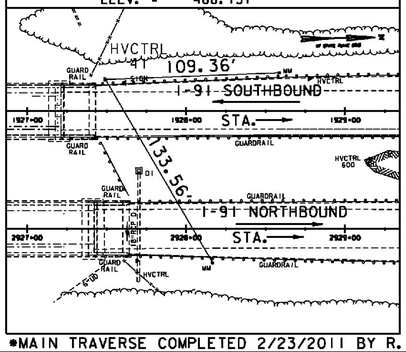

HVCTRL 397
NORTH = 346974.265
EAST = 1665172.143
ELEV. = 477.583

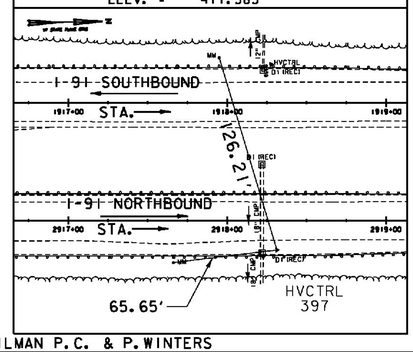

HVCTRL 398
NORTH = 346231.398
EAST = 1665164.095
ELEV. = 495.581

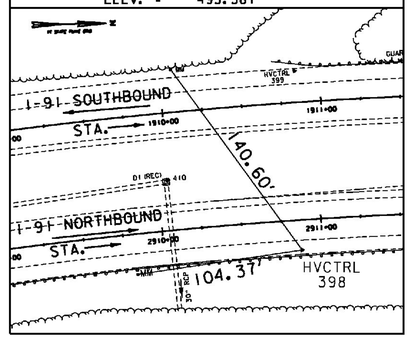

HVCTRL 399
NORTH = 346228.689
EAST = 1665051.419
ELEV. = 502.451

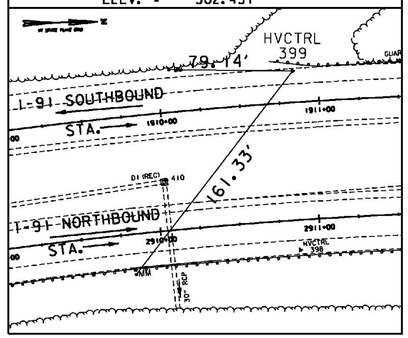

HVCTRL 400
NORTH = 347089.300
EAST = 1665064.302
ELEV. = 478.444

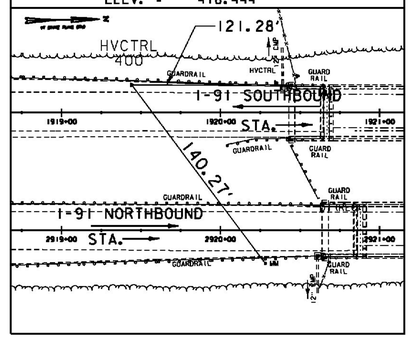

*MAIN TRAVERSE COMPLETED 2/23/2011 BY R. GILMAN P.C. & P. WINTERS

TRAVERSE TIES

HVCTRL 401
NORTH = 348143.973
EAST = 1665050.448
ELEV. = 495.096

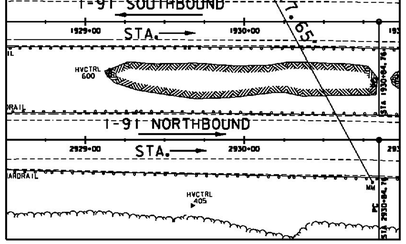

HVCTRL 402
NORTH = 347515.367
EAST = 1664929.471
ELEV. = 412.675

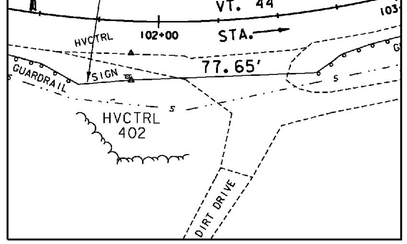

HVCTRL 403
NORTH = 347682.968
EAST = 1665355.760
ELEV. = 401.120

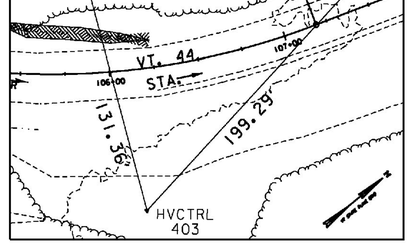

HVCTRL 404
NORTH = 348017.305
EAST = 1665311.623
ELEV. = 428.201

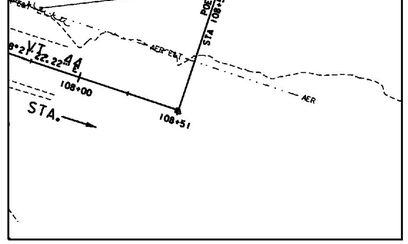

HVCTRL 405
NORTH = 348109.634
EAST = 1665217.375
ELEV. = 489.080

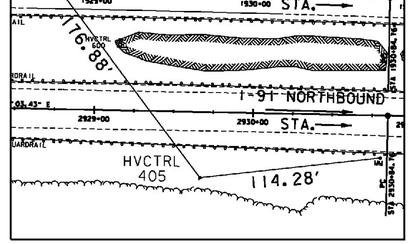

TRAVERSE TIES

HVCTRL 407
NORTH = 349659.834
EAST = 1665441.566
ELEV. = 576.219

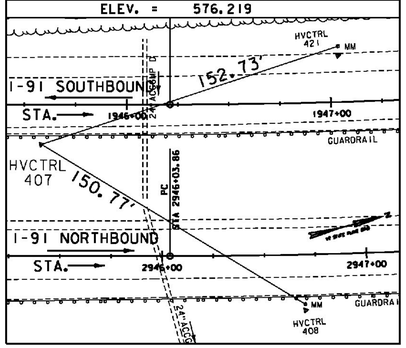

HVCTRL 408
NORTH = 349764.703
EAST = 1665552.440
ELEV. = 574.314

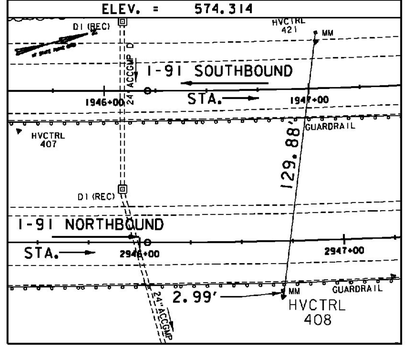

HVCTRL 409
NORTH = 346644.881
EAST = 1665113.986
ELEV. = 477.968

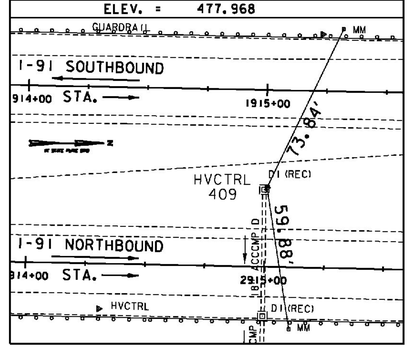

HVCTRL 411
NORTH = 345588.604
EAST = 1665306.730
ELEV. = 524.032

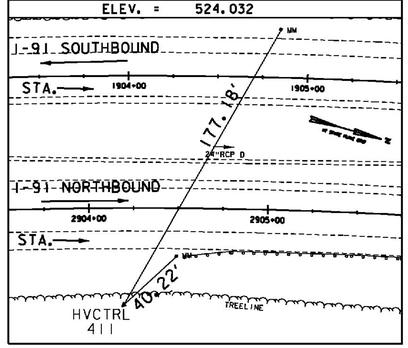

HVCTRL 412
NORTH = 345370.127
EAST = 1665194.208
ELEV. = 530.243

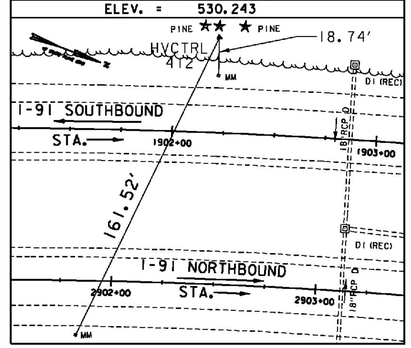

DATUM
VERTICAL NAVD 88
HORIZONTAL NAD 83 (07)
ADJUSTMENT COMPASS

ALL TIES NOT SHOWN TO SCALE

PROJECT NAME: WINDSOR
PROJECT NUMBER: IM 091-1(64)

FILE NAME: z10o188TI.dgn
PROJECT LEADER: J. WILSON
DESIGNED BY: H. FULLER
TIE SHEET 2

PLOT DATE: 7/30/2015
DRAWN BY: S. GUNN
CHECKED BY: T. MORIN
SHEET 12 OF 156

TRAVERSE TIES

HVCTRL 413

NORTH = 344815.876
EAST = 1665443.648
ELEV. = 529.662

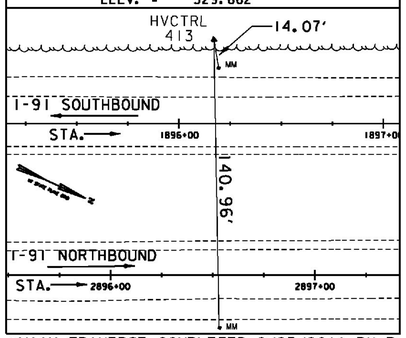

HVCTRL 420

NORTH = 347536.892
EAST = 1664822.127
ELEV. = 415.145

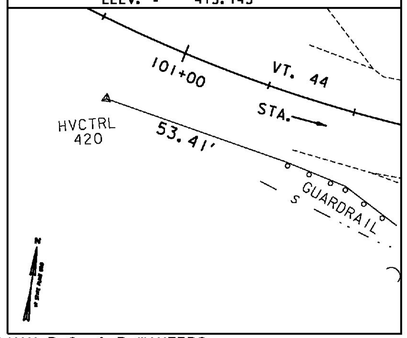

HVCTRL 421

NORTH = 349811.253
EAST = 1665436.057
ELEV. = 581.380

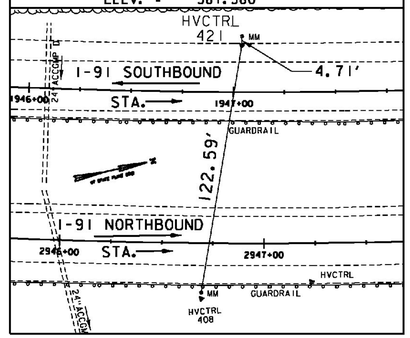

HVCTRL 422

NORTH = 349017.862
EAST = 1665234.380
ELEV. = 540.367

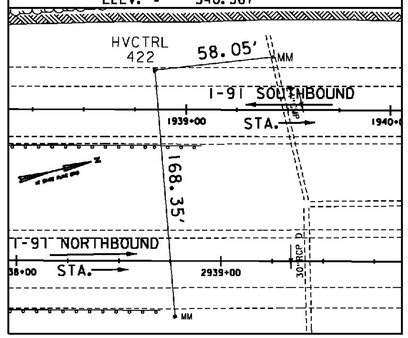

HVCTRL 427

NORTH = 348413.651
EAST = 1665211.438
ELEV. = 503.465

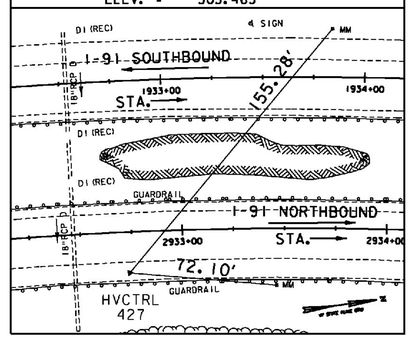

*MAIN TRAVERSE COMPLETED 2/23/2011 BY R. GILMAN P.C. & P. WINTERS

TRAVERSE TIES

HVCTRL 428

NORTH = 349251.291
EAST = 1665412.561
ELEV. = 548.475

HVCTRL 600

NORTH = 348059.706
EAST = 1665131.223
ELEV. = 495.769

NORTH = / EAST = / ELEV. =

NORTH = / EAST = / ELEV. =

NORTH = / EAST = / ELEV. =

TRAVERSE TIES

NORTH = / EAST = / ELEV. =

NORTH = / EAST = / ELEV. =

NORTH = / EAST = / ELEV. =

NORTH = / EAST = / ELEV. =

NORTH = / EAST = / ELEV. =

DATUM
VERTICAL NAVD 88
HORIZONTAL NAD 83 (07)
ADJUSTMENT COMPASS

ALL TIES NOT SHOWN TO SCALE

PROJECT NAME: WINDSOR
PROJECT NUMBER: IM 091-1(64)

FILE NAME: z10a188TI.dgn
PROJECT LEADER: J. WILSON
DESIGNED BY: H. FULLER
TIE SHEET 3

PLOT DATE: 7/30/2015
DRAWN BY: S. GUNN
CHECKED BY: T. MORIN
SHEET 13 OF 156

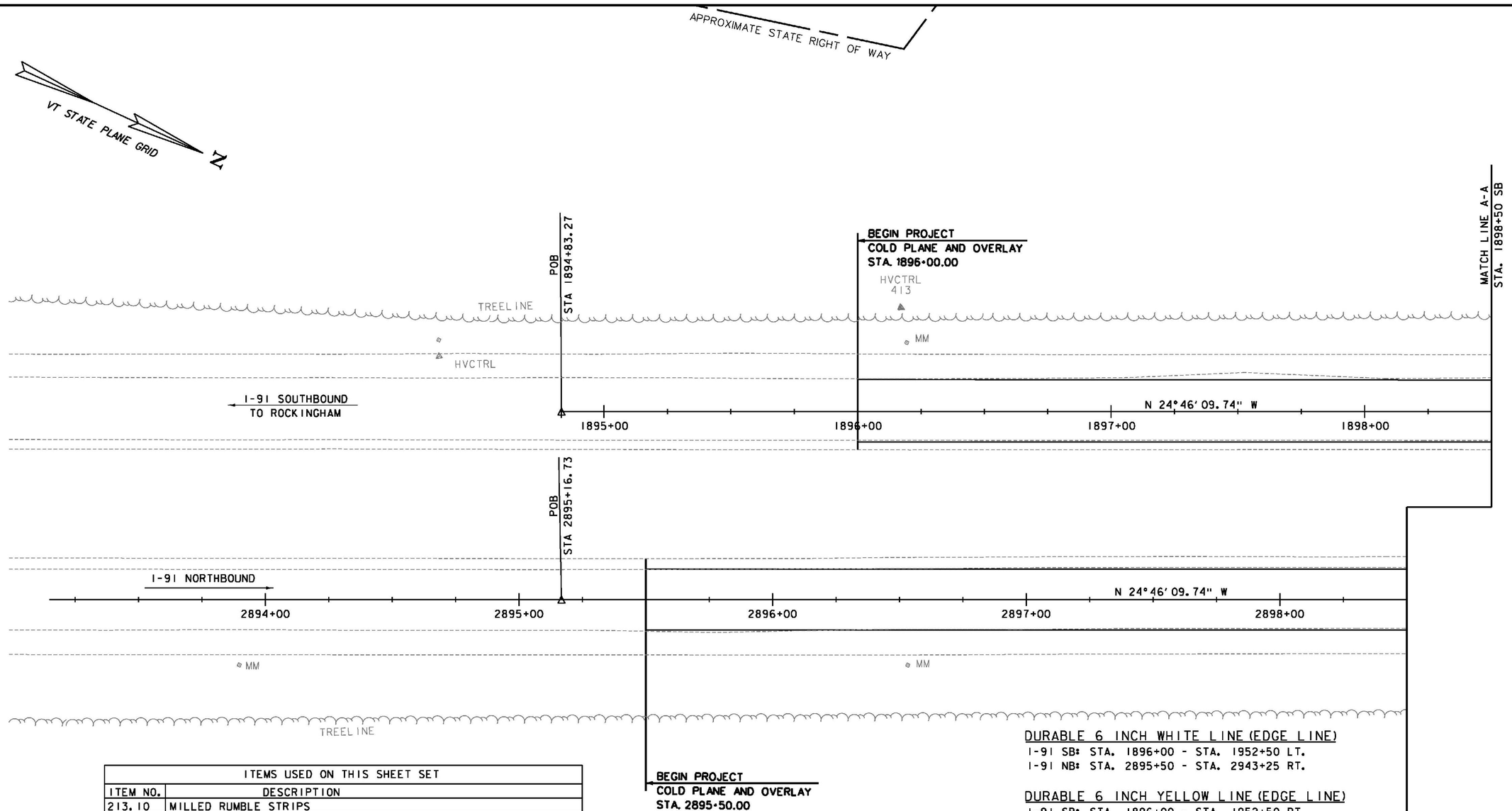

ITEMS USED ON THIS SHEET SET	
ITEM NO.	DESCRIPTION
213.10	MILLED RUMBLE STRIPS
621.21	HD STEEL BEAM GUARDRAIL, GALVANIZED
621.218	STEEL BEAM GUARDRAIL DELINEATOR
621.50	MANUFACTURED TERMINAL SECTION, FLARED
621.53	TERMINAL CONNECTOR FOR STEEL BEAM GUARDRAIL
621.747	GUARDRAIL APPROACH SECTION TO CONCRETE BRIDGE RAILING, TL3
646.420	DURABLE 6 INCH WHITE LINE
646.430	DURABLE 6 INCH YELLOW LINE
675.20	TRAFFIC SIGN, TYPE A

* FOR DRAINAGE ITEMS SEE ITEM DETAIL DRAINAGE SHEET AND MISC. ROADWAY DETAILS
FOR PAVEMENT AND EMBANKMENT ITEMS, SEE TYPICAL SECTIONS
FOR SEED MIX ITEMS, SEE EPSC SHEETS

DURABLE 6 INCH WHITE LINE (EDGE LINE)
I-91 SB: STA. 1896+00 - STA. 1952+50 LT.
I-91 NB: STA. 2895+50 - STA. 2943+25 RT.

DURABLE 6 INCH YELLOW LINE (EDGE LINE)
I-91 SB: STA. 1896+00 - STA. 1952+50 RT.
I-91 NB: STA. 2895+50 - STA. 2943+25 LT.

DURABLE 6 INCH WHITE (CENTERLINE)
I-91 SB: STA. 1896+00 - STA. 1952+50
I-91 NB: STA. 2895+50 - STA. 2943+25

MILLED RUMBLE STRIPS
I-91 SB: STA. 1918+00 - STA. 1920+10 LT.
I-91 SB: STA. 1927+50 - STA. 1929+75 LT.
I-91 NB: STA. 2918+25 - STA. 2920+30 RT.
I-91 NB: STA. 2927+80 - STA. 2930+25 RT.

SCALE 1" = 20'-0"
20 0 20

DATUM
VERTICAL NAVD88
HORIZONTAL NAD 83 (07)

PROJECT NAME: WINDSOR
PROJECT NUMBER: IM 091-1(64)

FILE NAME: z10a188bdr.dgn
PROJECT LEADER: J. WILSON
DESIGNED BY: H. FULLER
LAYOUT SHEET 1

PLOT DATE: 7/30/2015
DRAWN BY: S. GUNN
CHECKED BY: T. MORIN
SHEET 14 OF156

VT STATE PLANE GRID

N

MATCH LINE A-A
STA. 1898+50 SB

MATCH LINE B-B
STA. 1903+50 SB

CURVE #1 I-91 SB
DELTA = 25°54' 13" RT
D = 1°58' 28"
R = 2901.78'
T = 667.36'
L = 1311.91'
E = 75.75'
BANK = EXISTING

PINE
PINE
PINE
HVCTRL
412

MM
MM

DI (REC)

I-91 SOUTHBOUND

N 24°46' 09.74" W

1899+00
1900+00
1901+00
1902+00
1903+00

18" RCP

6
8

PC
STA 1899+65.11

GRASS

I-91 NORTHBOUND

N 24°46' 09.74" W

2899+00
2900+00
2901+00
2902+00
2903+00

18" RCP

DI (REC)

MM

7

PC
STA 2899+98.57

DI (REC)

CURVE #1 I-91 NB
DELTA = 25°54' 13" RT
D = 2°01' 34"
R = 2827.78'
T = 650.34'
L = 1278.45'
E = 73.82'
BANK = EXISTING

APPROXIMATE STATE RIGHT OF WAY

DATUM
VERTICAL NAVD88
HORIZONTAL NAD 83 (07)

SCALE 1" = 20'-0"
20 0 20

PROJECT NAME: WINDSOR
PROJECT NUMBER: IM 091-1(64)

FILE NAME: z10a188bdr.dgn
PROJECT LEADER: J. WILSON
DESIGNED BY: H. FULLER
LAYOUT SHEET 2

PLOT DATE: 7/30/2015
DRAWN BY: S. GUNN
CHECKED BY: T. MORIN
SHEET 15 OF 156

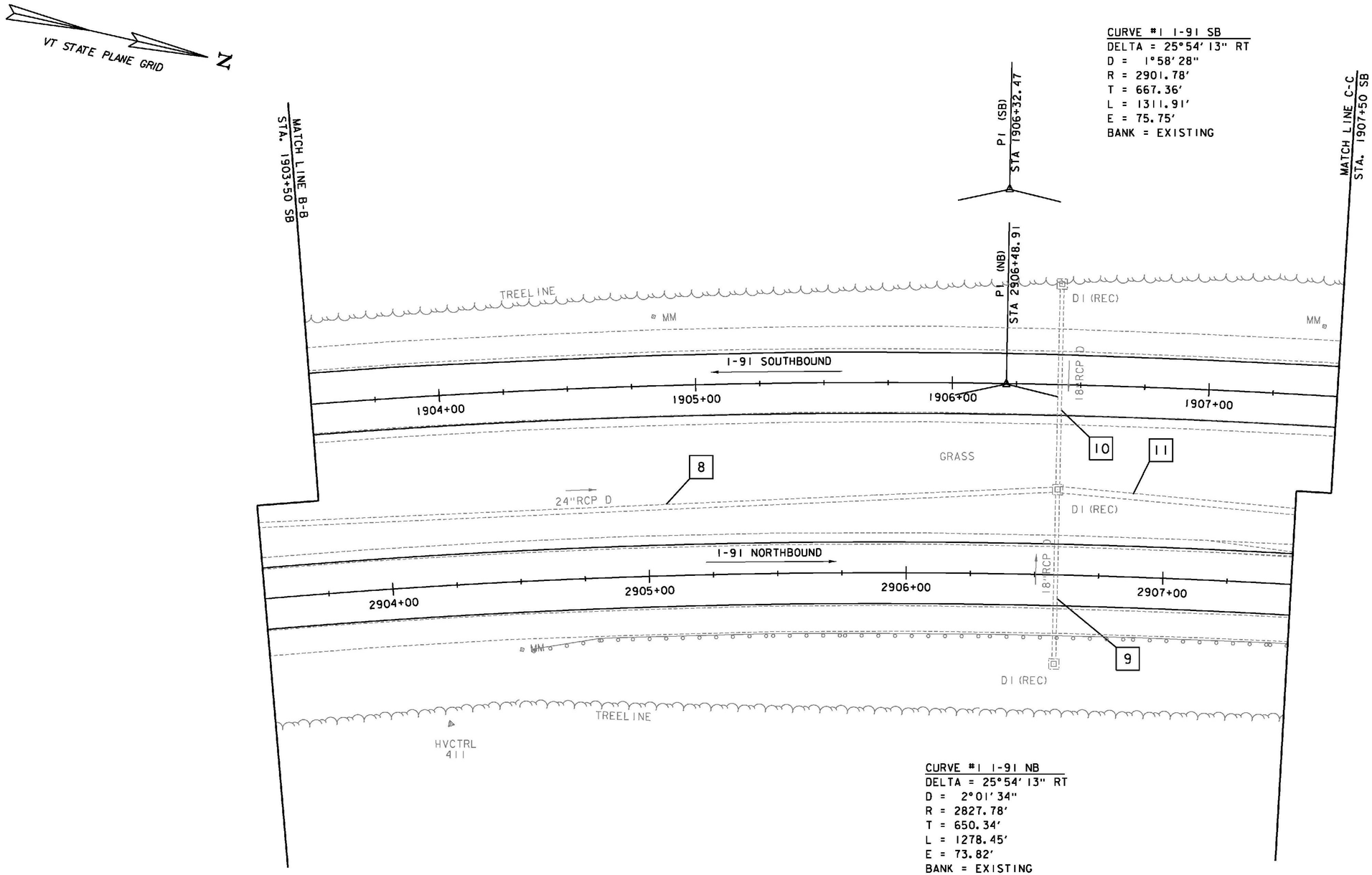

DATUM
VERTICAL NAVD88
HORIZONTAL NAD 83 (07)

SCALE 1" = 20'-0"
20 0 20

PROJECT NAME: WINDSOR
PROJECT NUMBER: IM 091-1(64)

FILE NAME: z10o188bdr.dgn
PROJECT LEADER: J. WILSON
DESIGNED BY: H. FULLER
LAYOUT SHEET 3

PLOT DATE: 7/30/2015
DRAWN BY: S. GUNN
CHECKED BY: T. MORIN
SHEET 16 OF 156

N

VT STATE PLANE GRID

CURVE #1 I-91 SB
DELTA = 25°54' 13" RT
D = 1°58' 28"
R = 2901.78'
T = 667.36'
L = 1311.91'
E = 75.75'
BANK = EXISTING

MATCH LINE C-C
STA. 1907+50 SB

MATCH LINE D-D
STA. 1913+50 SB

GUARDRAIL

HVCTRL
399

I-91 SOUTHBOUND

1908+00 1909+00 1910+00 1911+00 1912+00 1913+00

N 1°08' 03.43" E

11

30" ACCGMP

DI (REC) 410

PT
STA 1912+77.02

GRASS

I-91 NORTHBOUND

2908+00 2909+00 2910+00 2911+00 2912+00 2913+00

N 1°08' 03.43" E

HVCTRL
398

HVCTRL

GUARDRAIL

MM

12

30" RCP

13

30" ACCGMP

DI (REC)

PT
STA 2912+77.02

HVCTRL

14

CURVE #1 I-91 NB
DELTA = 25°54' 13" RT
D = 2°01' 34"
R = 2827.78'
T = 650.34'
L = 1278.45'
E = 73.82'
BANK = EXISTING

SCALE 1" = 20'-0"
20 0 20

DATUM
VERTICAL NAVD88
HORIZONTAL NAD 83 (07)

PROJECT NAME: WINDSOR
PROJECT NUMBER: IM 091-1(64)

FILE NAME: z10o188bdr.dgn
PROJECT LEADER: J. WILSON
DESIGNED BY: H. FULLER
LAYOUT SHEET 4

PLOT DATE: 7/30/2015
DRAWN BY: S. GUNN
CHECKED BY: T. MORIN
SHEET 17 OF156

N

VT STATE PLANE GRID

LEGEND
ALL SIGNS AND POSTS WILL BE NEW UNLESS OTHERWISE NOTED:
N - NEW
R - REMOVE
R&S - REMOVE & SALVAGE
RET - RETAIN

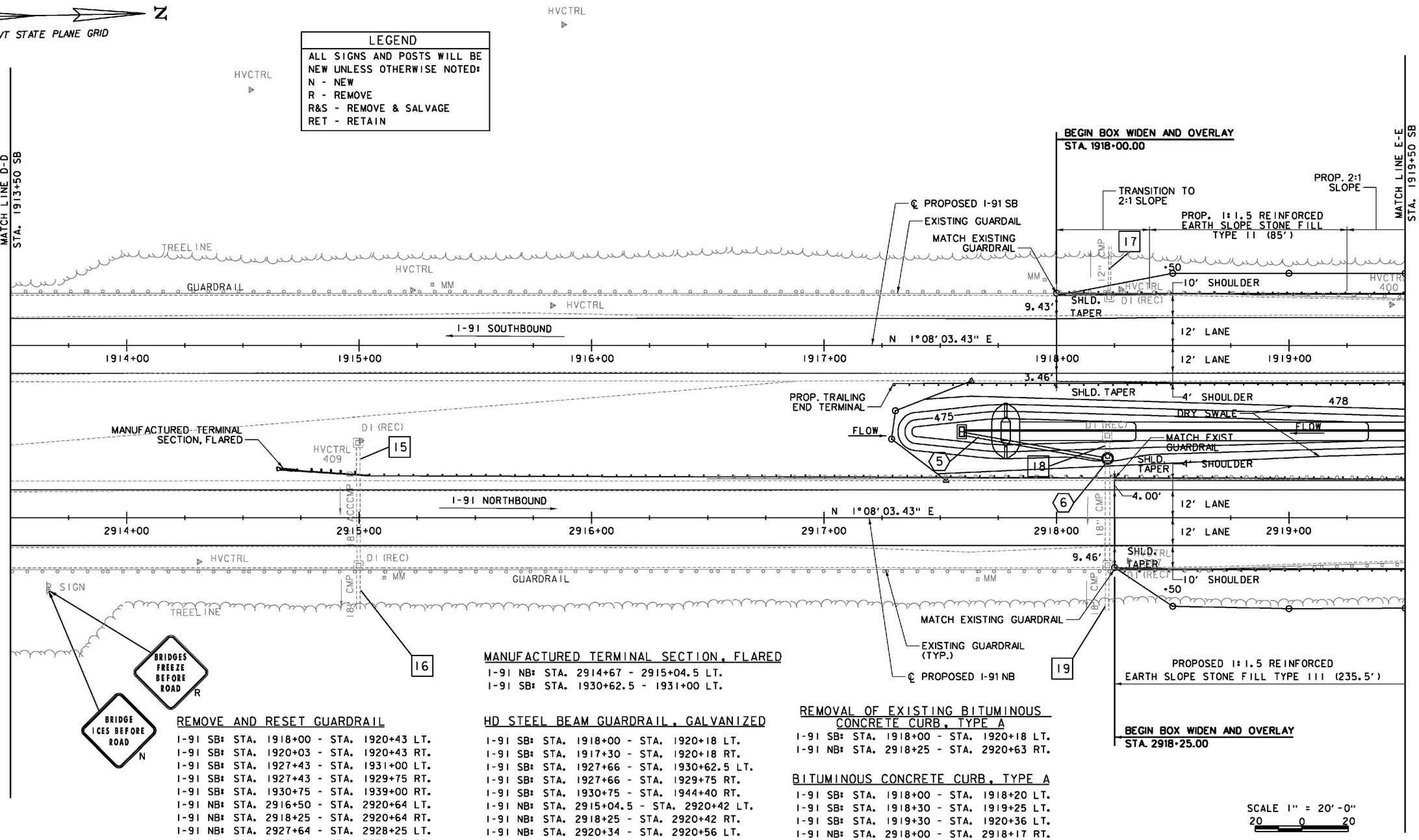

SCALE 1" = 20'-0"
20 0 20

MANUFACTURED TERMINAL SECTION, FLARED

I-91 NB: STA. 2914+67 - 2915+04.5 LT.
I-91 SB: STA. 1930+62.5 - 1931+00 LT.

REMOVE AND RESET GUARDRAIL

I-91 SB: STA. 1918+00 - STA. 1920+43 LT.
I-91 SB: STA. 1920+03 - STA. 1920+43 RT.
I-91 SB: STA. 1927+43 - STA. 1931+00 LT.
I-91 SB: STA. 1927+43 - STA. 1929+75 RT.
I-91 SB: STA. 1930+75 - STA. 1939+00 RT.
I-91 NB: STA. 2916+50 - STA. 2920+64 LT.
I-91 NB: STA. 2918+25 - STA. 2920+64 RT.
I-91 NB: STA. 2927+64 - STA. 2928+25 LT.
I-91 NB: STA. 2927+64 - STA. 2930+25 RT.

HD STEEL BEAM GUARDRAIL, GALVANIZED

I-91 SB: STA. 1918+00 - STA. 1920+18 LT.
I-91 SB: STA. 1917+30 - STA. 1920+18 RT.
I-91 SB: STA. 1927+66 - STA. 1930+62.5 LT.
I-91 SB: STA. 1927+66 - STA. 1929+75 RT.
I-91 SB: STA. 1930+75 - STA. 1944+40 RT.
I-91 NB: STA. 2915+04.5 - STA. 2920+42 LT.
I-91 NB: STA. 2918+25 - STA. 2920+42 RT.
I-91 NB: STA. 2920+34 - STA. 2920+56 LT.
I-91 NB: STA. 2927+56 - STA. 2927+66 LT.
I-91 NB: STA. 2927+73 - STA. 2928+25 LT.
I-91 NB: STA. 2928+10 - STA. 2930+25 RT.

REMOVING SIGNS

I-91 NB: STA. 2913+67 RT.

REMOVAL OF EXISTING BITUMINOUS CONCRETE CURB, TYPE A

I-91 SB: STA. 1918+00 - STA. 1920+18 LT.
I-91 NB: STA. 2918+25 - STA. 2920+63 RT.

BITUMINOUS CONCRETE CURB, TYPE A

I-91 SB: STA. 1918+00 - STA. 1918+20 LT.
I-91 SB: STA. 1918+30 - STA. 1919+25 LT.
I-91 SB: STA. 1919+30 - STA. 1920+36 LT.
I-91 NB: STA. 2918+00 - STA. 2918+17 RT.
I-91 NB: STA. 2918+27 - STA. 2919+25 RT.
I-91 NB: STA. 2919+30 - STA. 2920+60 RT.

DATUM
VERTICAL NAVD88
HORIZONTAL NAD 83 (07)

PROJECT NAME: WINDSOR
PROJECT NUMBER: IM 091-1(64)

FILE NAME: z10a188bdr.dgn
PROJECT LEADER: J. WILSON
DESIGNED BY: H. FULLER
LAYOUT SHEET 5
PLOT DATE: 7/30/2015
DRAWN BY: S. GUNN
CHECKED BY: T. MORIN
SHEET 18 OF 156

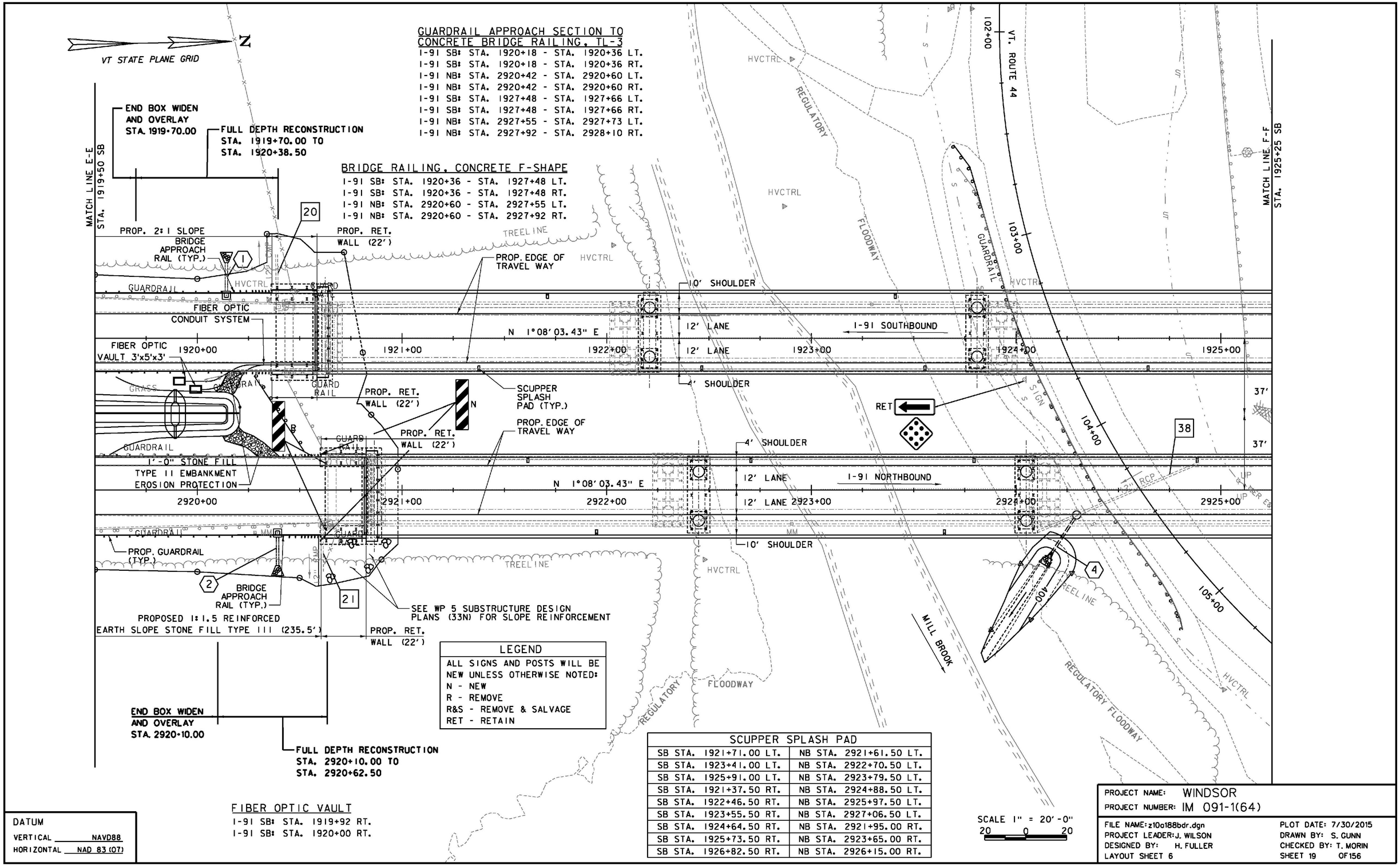

LEGEND

ALL SIGNS AND POSTS WILL BE NEW UNLESS OTHERWISE NOTED:
N - NEW
R - REMOVE
R&S - REMOVE & SALVAGE
RET - RETAIN

FIBER OPTIC VAULT
1-91 SB: STA. 1919+92 RT.
1-91 SB: STA. 1920+00 RT.

SCUPPER SPLASH PAD

SB STA. 1921+71.00 LT.	NB STA. 2921+61.50 LT.
SB STA. 1923+41.00 LT.	NB STA. 2922+70.50 LT.
SB STA. 1925+91.00 LT.	NB STA. 2923+79.50 LT.
SB STA. 1921+37.50 RT.	NB STA. 2924+88.50 LT.
SB STA. 1922+46.50 RT.	NB STA. 2925+97.50 LT.
SB STA. 1923+55.50 RT.	NB STA. 2927+06.50 LT.
SB STA. 1924+64.50 RT.	NB STA. 2921+95.00 RT.
SB STA. 1925+73.50 RT.	NB STA. 2923+65.00 RT.
SB STA. 1926+82.50 RT.	NB STA. 2926+15.00 RT.

DATUM
VERTICAL NAVD88
HORIZONTAL NAD 83 (07)

SCALE 1" = 20'-0"
20 0 20

PROJECT NAME: WINDSOR
PROJECT NUMBER: IM 091-1(64)

FILE NAME: z10a188bdr.dgn
PROJECT LEADER: J. WILSON
DESIGNED BY: H. FULLER
LAYOUT SHEET 6

PLOT DATE: 7/30/2015
DRAWN BY: S. GUNN
CHECKED BY: T. MORIN
SHEET 19 OF 156

N

VT STATE PLANE GRID

APPROXIMATE STATE RIGHT OF WAY

VTHD BOUND

VTHD BOUND

REMOVING SIGNS
I-91 SB: STA. 1927+46 LT. & RT.
I-91 NB: STA. 2927+64 LT. & RT.

FIBER OPTIC VAULT
I-91 SB: STA. 1927+92 RT.
I-91 SB: STA. 1928+00 RT.

LEGEND
ALL SIGNS AND POSTS WILL BE NEW UNLESS OTHERWISE NOTED:
N - NEW
R - REMOVE
R&S - REMOVE & SALVAGE
RET - RETAIN

MATCH LINE F-F
STA. 1925+25 SB

MATCH LINE G-G
STA. 1930+50 SB

FULL DEPTH RECONSTRUCTION
STA. 1927+23.50 TO
STA. 1927+70.00

BEGIN BOX WIDEN AND OVERLAY
STA. 1927+70.00

END BOX WIDEN AND OVERLAY
STA. 1929+75.00

TREELINE

6" CMP

6" UD

N

R

BRIDGE APPROACH RAIL (TYP.)

PROP. RET. WALL (44')

PROP. 2:1 SLOPE

PROP. EDGE OF TRAVEL WAY

PROP. GUARDRAIL (TYP.)

EXISTING GUARDRAIL

MATCH EXISTING GUARDRAIL

HVCTRL 401

REPLACE EXISTING GUARDRAIL

℄ PROPOSED I-91 SB GUARDRAIL

PROP. EDGE OF PAVEMENT

10' SHOULDER

12' LANE

12' LANE

4' SHOULDER

SCUPPER SPLASH PAD (TYP.)

PROP. RET. WALL (35')

PROP. RET. WALL (27')

4' SHOULDER

12' LANE

12' LANE

10' SHOULDER

GUARD RAIL

HVCTRL

SIGN

MM

1926+00

1927+00

1928+00

1929+00

1930+00

I-91 SOUTHBOUND

N 1°08'03.43" E

FIBER OPTIC CONDUIT SYSTEM

FIBER OPTIC VAULT 3'x5'x3'

GUARDRAIL

HVCTRL 600

SHLD. TAPER

3.06'

4'

LEDGE

GRASS

MATCH EXISTING GUARDRAIL

EXISTING GUARDRAIL

+80

SHLD. TAPER

3.4'

4'

22

3

DI

8" RIP

2926+00

2927+00

R 2928+00

I-91 NORTHBOUND

2929+00

2930+00

℄ PROPOSED I-91 NB

10'

HVCTRL 405

MATCH EXISTING GUARDRAIL

EXISTING AERIAL AND UNDERGROUND UTILITIES SHALL BE PROTECTED; SLIGHT RELOCATION WILL BE NECESSARY TO AVOID CONFLICT WITH PROPOSED PIER

SEE WP5 SUBSTRUCTURE DESIGN PLANS (33N) FOR SLOPE REINFORCEMENT

PROPOSED RET. WALL (64')

PROPOSED 1:1.5 REINFORCED EARTH SLOPE STONE FILL TYPE III (33')

PROPOSED 2:1 SLOPE

BEGIN BOX WIDEN AND OVERLAY
STA. 2928+00.00

FULL DEPTH RECONSTRUCTION
STA. 2927+47.50 TO
STA. 2928+00.00

END BOX WIDEN AND OVERLAY
STA. 2930+25.00

AER E&T

UP

106+00

PT
STA 107+18.81

108+00

POE STA 108+13

APPROXIMATE STATE

SCALE 1" = 20'-0"
20 0 20

DATUM
VERTICAL NAVD88
HORIZONTAL NAD 83 (07)

PROJECT NAME: WINDSOR
PROJECT NUMBER: IM 091-1(64)

FILE NAME: z10a188bdr.dgn
PROJECT LEADER: J. WILSON
DESIGNED BY: H. FULLER
LAYOUT SHEET 7

PLOT DATE: 7/30/2015
DRAWN BY: S. GUNN
CHECKED BY: T. MORIN
SHEET 20 OF 156

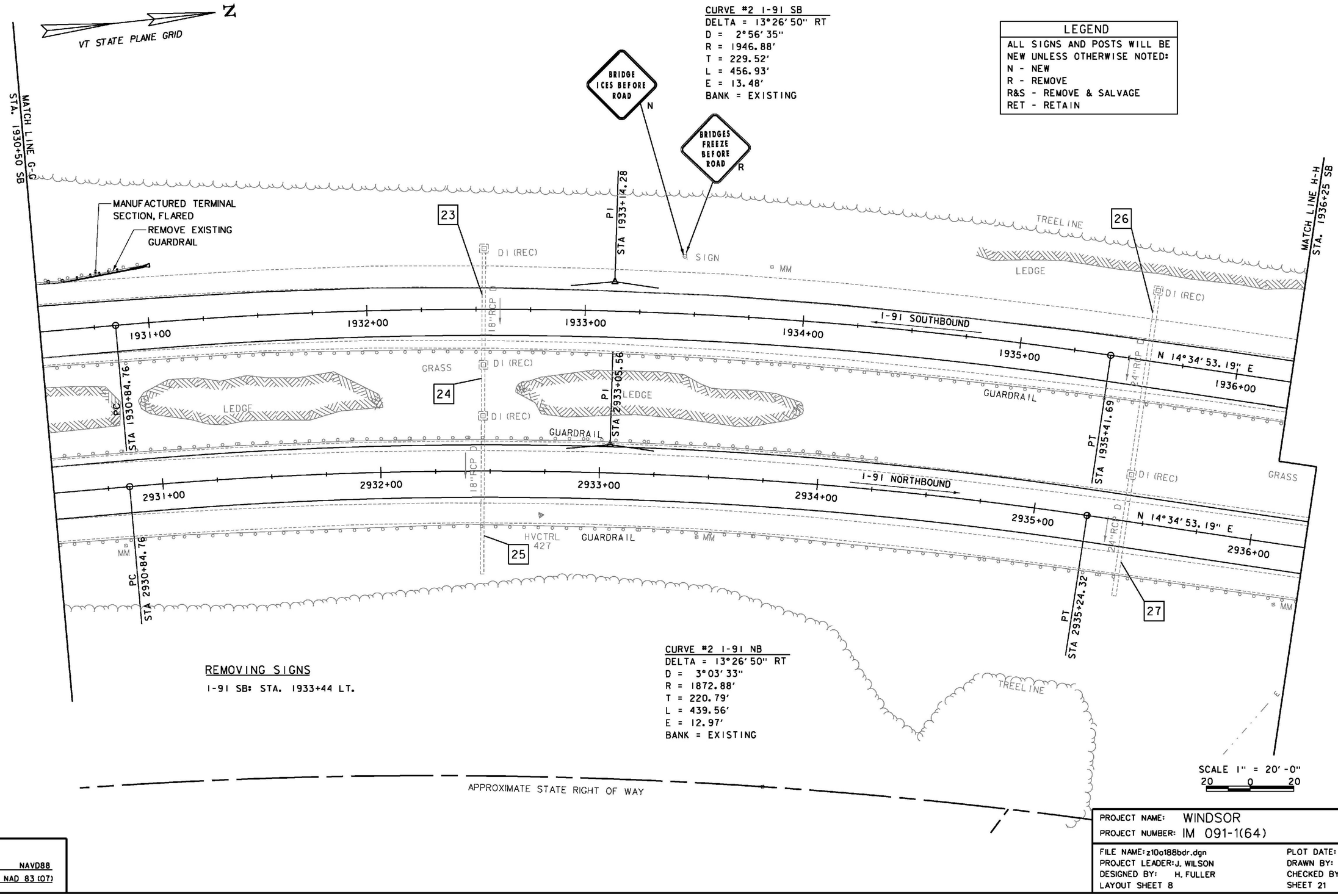

CURVE #2 I-91 SB
DELTA = 13°26'50" RT
D = 2°56'35"
R = 1946.88'
T = 229.52'
L = 456.93'
E = 13.48'
BANK = EXISTING

LEGEND
ALL SIGNS AND POSTS WILL BE NEW UNLESS OTHERWISE NOTED:
N - NEW
R - REMOVE
R&S - REMOVE & SALVAGE
RET - RETAIN

REMOVING SIGNS

I-91 SB: STA. 1933+44 LT.

CURVE #2 I-91 NB
DELTA = 13°26'50" RT
D = 3°03'33"
R = 1872.88'
T = 220.79'
L = 439.56'
E = 12.97'
BANK = EXISTING

DATUM
VERTICAL NAVD88
HORIZONTAL NAD 83 (07)

PROJECT NAME: WINDSOR
PROJECT NUMBER: IM 091-1(64)

FILE NAME: z10o188bdr.dgn
PROJECT LEADER: J. WILSON
DESIGNED BY: H. FULLER
LAYOUT SHEET 8
PLOT DATE: 7/30/2015
DRAWN BY: S. GUNN
CHECKED BY: T. MORIN
SHEET 21 OF156

N

VT STATE PLANE GRID

MATCH LINE H-H
STA. 1936+25 SB

MATCH LINE I-I
STA. 1941+50 SB

28

LEDGE

LEDGE

MM

HVCTRL
422

MM

I-91 SOUTHBOUND

24"CMP

N 14°34'53.19" E

1937+00 1938+00 1939+00 1940+00 1941+00

406

GRASS

GRASS

30

DI (REC)

24"RCP D

LEDGE

I-91 NORTHBOUND

30"RCP

N 14°34'53.19" E

2937+00 2938+00 2939+00 2940+00 2941+00

MM

HVCTRL
428

MM

29

APPROXIMATE STATE RIGHT OF WAY

DATUM
VERTICAL NAVD88
HORIZONTAL NAD 83 (07)

SCALE 1" = 20'-0"
20 0 20

PROJECT NAME: WINDSOR
PROJECT NUMBER: IM 091-1(64)

FILE NAME: z10a188bdr.dgn
PROJECT LEADER: J. WILSON
DESIGNED BY: H. FULLER
LAYOUT SHEET 9

PLOT DATE: 7/30/2015
DRAWN BY: S. GUNN
CHECKED BY: T. MORIN
SHEET 22 OF 156

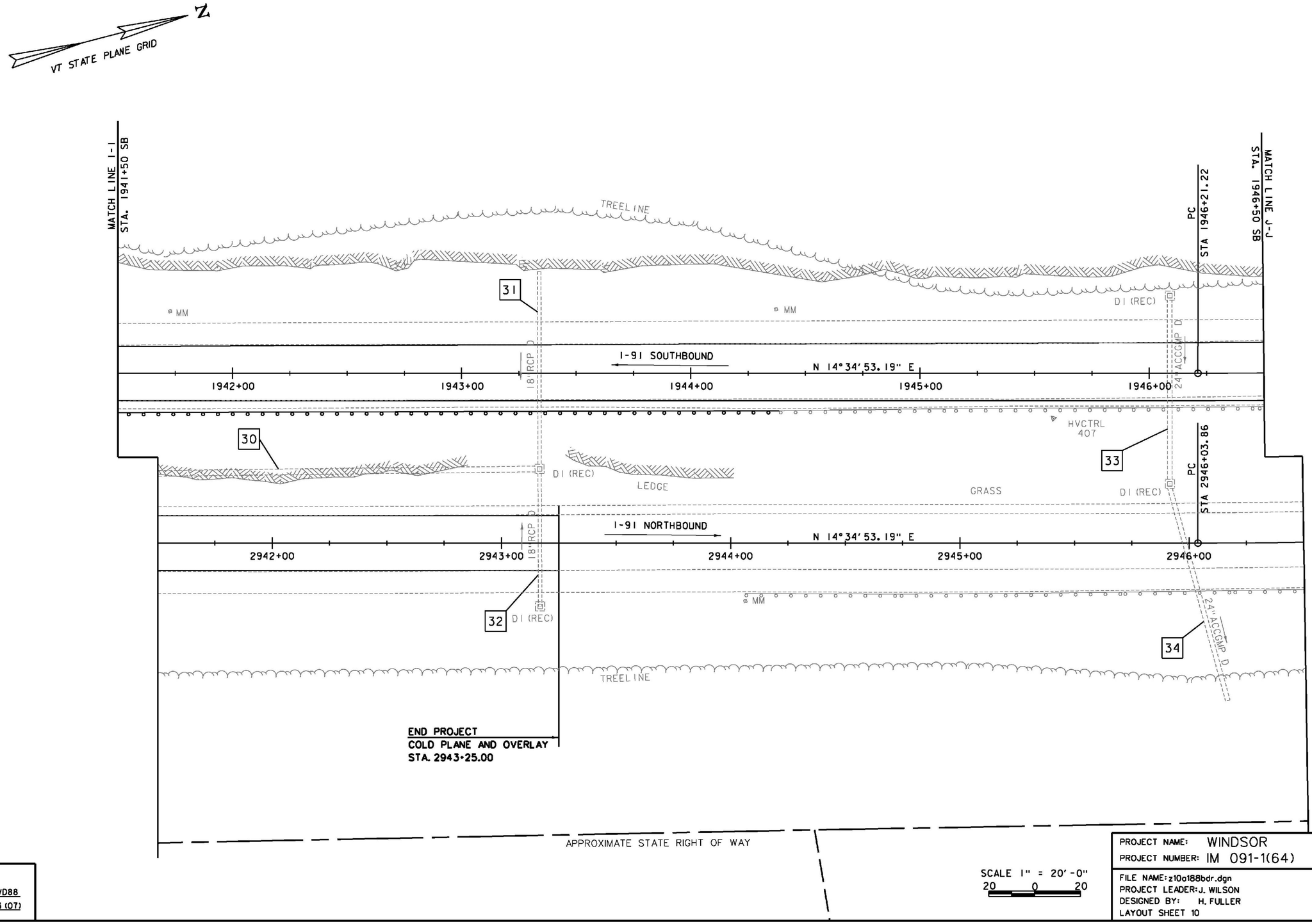

DATUM
VERTICAL NAVD88
HORIZONTAL NAD 83 (07)

PROJECT NAME: WINDSOR
PROJECT NUMBER: IM 091-1(64)

FILE NAME: z10a188bdr.dgn
PROJECT LEADER: J. WILSON
DESIGNED BY: H. FULLER
LAYOUT SHEET 10

PLOT DATE: 7/30/2015
DRAWN BY: S. GUNN
CHECKED BY: T. MORIN
SHEET 23 OF 156

N

VT STATE PLANE GRID

CURVE #3 I-91 SB
DELTA = 23°18'53" LT
D = 2°01'34"
R = 2827.79'
T = 583.41'
L = 1150.68'
E = 59.56'
BANK = EXISTING

MATCH LINE J-J
STA. 1946+50 SB

MATCH LINE K-K
STA. 1951+50 SB

LEDGE

HVCTRL
421

MM

MM

I-91 SOUTHBOUND

1947+00 1948+00 1949+00 1950+00 1951+00

36" ACCGMP D

GUARDRAIL

35

D1 (REC)

36" ACCGMP D

I-91 NORTHBOUND

2947+00 2948+00 2949+00 2950+00 2951+00

HVCTRL

MM

GUARDRAIL

HVCTRL
408

MM

36

CURVE #3 I-91 NB
DELTA = 23°18'53" LT
D = 1°58'28"
R = 2901.79'
T = 598.68'
L = 1180.80'
E = 61.11'
BANK = EXISTING

APPROXIMATE STATE RIGHT OF WAY

SCALE 1" = 20'-0"
20 0 20

DATUM
VERTICAL NAVD88
HORIZONTAL NAD 83 (07)

PROJECT NAME: WINDSOR
PROJECT NUMBER: IM 091-1(64)

FILE NAME: z10a188bdr.dgn
PROJECT LEADER: J. WILSON
DESIGNED BY: H. FULLER
LAYOUT SHEET 11

PLOT DATE: 7/30/2015
DRAWN BY: S. GUNN
CHECKED BY: T. MORIN
SHEET 24 OF 156

N

VT STATE PLANE GRID

CURVE #3 I-91 SB
DELTA = 23°18'53" LT
D = 2°01'34"
R = 2827.79'
T = 583.41'
L = 1150.68'
E = 59.56'
BANK = EXISTING

MATCH LINE K-K
STA. 1951+50 SB

END PROJECT
COLD PLANE & OVERLAY
STA. 1952+50.00

LEDGE
MM
TREELINE
MM
HVCTRL
1-91 SOUTHBOUND
1952+00
1953+00
1954+00
1955+00
1956+00
GUARDRAIL
LEDGE
LEDGE
37
DI (REC)
DI
1-91 NORTHBOUND
TO HARTLAND
2952+00
2953+00
2954+00
2955+00
2956+00
MM
18" ACCOM D
PI
STA 1952+04.64
HVCTRL
MM
GUARDRAIL
TREELINE
PI
STA 2952+02.54

CURVE #3 I-91 NB
DELTA = 23°18'53" LT
D = 1°58'28"
R = 2901.79'
T = 598.68'
L = 1180.80'
E = 61.11'
BANK = EXISTING

APPROXIMATE STATE RIGHT OF WAY

SCALE 1" = 20'-0"
20 0 20

DATUM
VERTICAL NAVD88
HORIZONTAL NAD 83 (07)

PROJECT NAME: WINDSOR
PROJECT NUMBER: IM 091-1(64)

FILE NAME: z10a188bdr.dgn
PROJECT LEADER: J. WILSON
DESIGNED BY: H. FULLER
LAYOUT SHEET 12

PLOT DATE: 7/30/2015
DRAWN BY: S. GUNN
CHECKED BY: T. MORIN
SHEET 25 OF 156

N

VT STATE PLANE GRID

CURVE #1 VT. 44
DELTA = 99°57'45" LT
D = 13°28'53"
R = 412.00'
T = 490.68'
L = 718.81'
E = 228.71'
BANK = EXISTING

LEGEND
ALL SIGNS AND POSTS WILL BE NEW UNLESS OTHERWISE NOTED:
N - NEW
R - REMOVE
R&S - REMOVE & SALVAGE
RET - RETAIN

APPROXIMATE STATE RIGHT OF WAY

CONSTRUCTION ACCESS ROAD TO BE RETAINED BY VTRANS

NEW ACCESS GATE

PC STA 100+00.00

VT. ROUTE 44 TO BROWNSVILLE

BEGIN COLD PLANE AND OVERLAY STA. 101+00.00

SAWCUT

13'

13'

SCUPPER SPLASH PAD (TYP.)

PROPOSED GUARDRAIL

EXISTING AERIAL AND UNDERGROUND UTILITIES SHALL BE PROTECTED: SLIGHT RELOCATION WILL BE NECESSARY TO AVOID CONFLICT WITH PROPOSED PIER

PT STA 107+18.81

END COLD PLANE AND OVERLAY STA. 106+75.00

SAWCUT

VT. ROUTE 44 TO WINDSOR CENTER

EXISTING GUARDRAIL

REGULATORY FLOODWAY

APPROXIMATE STATE RIGHT OF WAY

EXISTING 8" FORCED MAIN SEWER TO BE COORDINATED IN THE FIELD WITH UTILITY OWNER

I-91 SOUTHBOUND

I-91 NORTHBOUND

MILL BROOK

REMOVE AND RESET GUARDRAIL
VT. RTE. 44: STA. 102+62 - STA. 105+10 RT.
AS REQUIRED

HD STEEL BEAM GUARDRAIL, GALVANIZED
VT. RTE. 44: STA. 102+49 - STA. 105+10 RT.

DURABLE 6 INCH WHITE LINE (EDGE LINE)
VT. RTE. 44: STA. 101+00 - STA. 106+75 RT.
VT. RTE. 44: STA. 101+00 - STA. 106+75 LT.

DURABLE 6 INCH YELLOW LINE (DOUBLE LINE)
VT. RTE. 44: STA. 101+00 - STA. 106+75

DATUM
VERTICAL NAVD88
HORIZONTAL NAD 83 (07)

SCALE 1" = 20'-0"
20 0 20

PROJECT NAME: WINDSOR
PROJECT NUMBER: IM 091-1(64)

FILE NAME: z10a188bdr.dgn
PROJECT LEADER: J. WILSON
DESIGNED BY: H. FULLER
LAYOUT SHEET 13

PLOT DATE: 7/30/2015
DRAWN BY: S. GUNN
CHECKED BY: T. MORIN
SHEET 26 OF 156

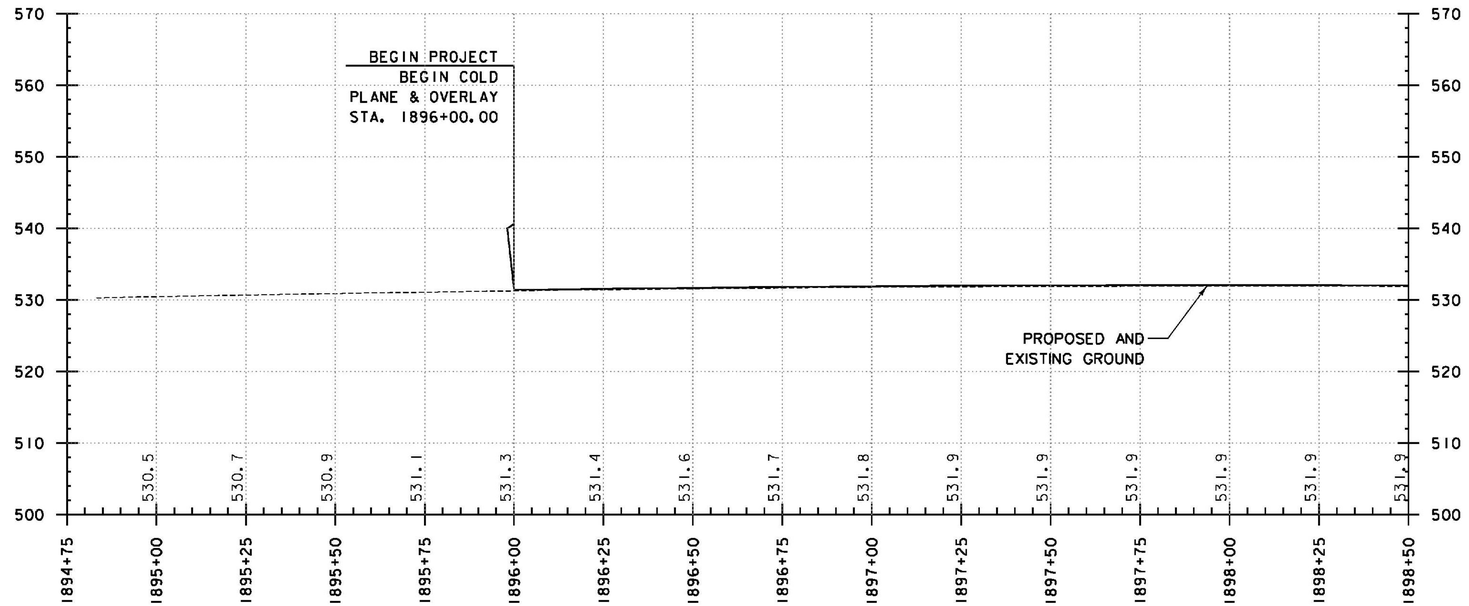

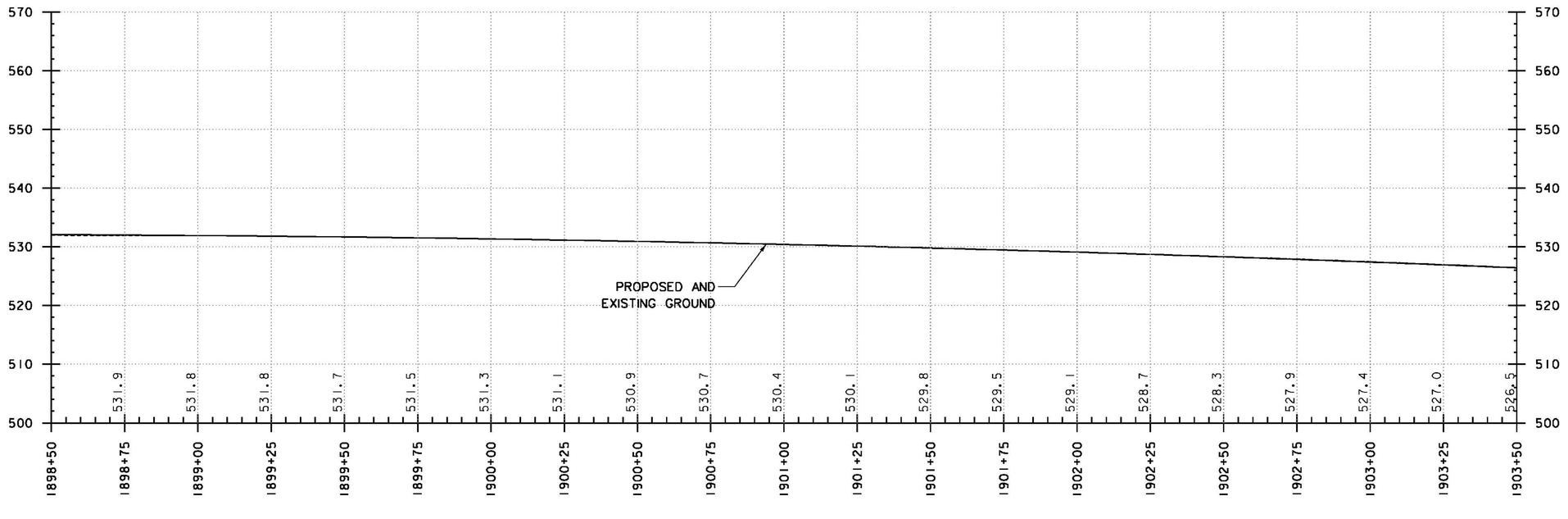

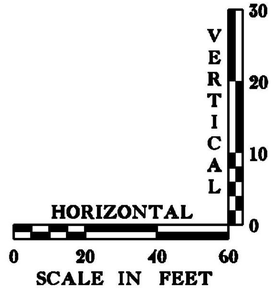

DATUM
VERTICAL NAVD88
HORIZONTAL NAD 83 (07)

THE GRADES SHOWN TO THE NEAREST TENTH ARE THE ORIGINAL GROUND ELEVATIONS ALONG THE PROPOSED ALIGNMENT. THE GRADES SHOWN TO THE NEAREST HUNDREDTH ARE THE PROPOSED GRADES FOR THE NEW ALIGNMENT.

I-91 SOUTHBOUND PROFILE

PROJECT NAME: WINDSOR
PROJECT NUMBER: IM 091-1(64)

FILE NAME: z20a188bdr PRO-SB.dgn
PROJECT LEADER: J. WILSON
DESIGNED BY: H. FILLER
PROFILE SHEET 1 - I-91 SOUTHBOUND

PLOT DATE: 7/30/2015
DRAWN BY: S. GUNN
CHECKED BY: T. MORIN
SHEET 27 OF156

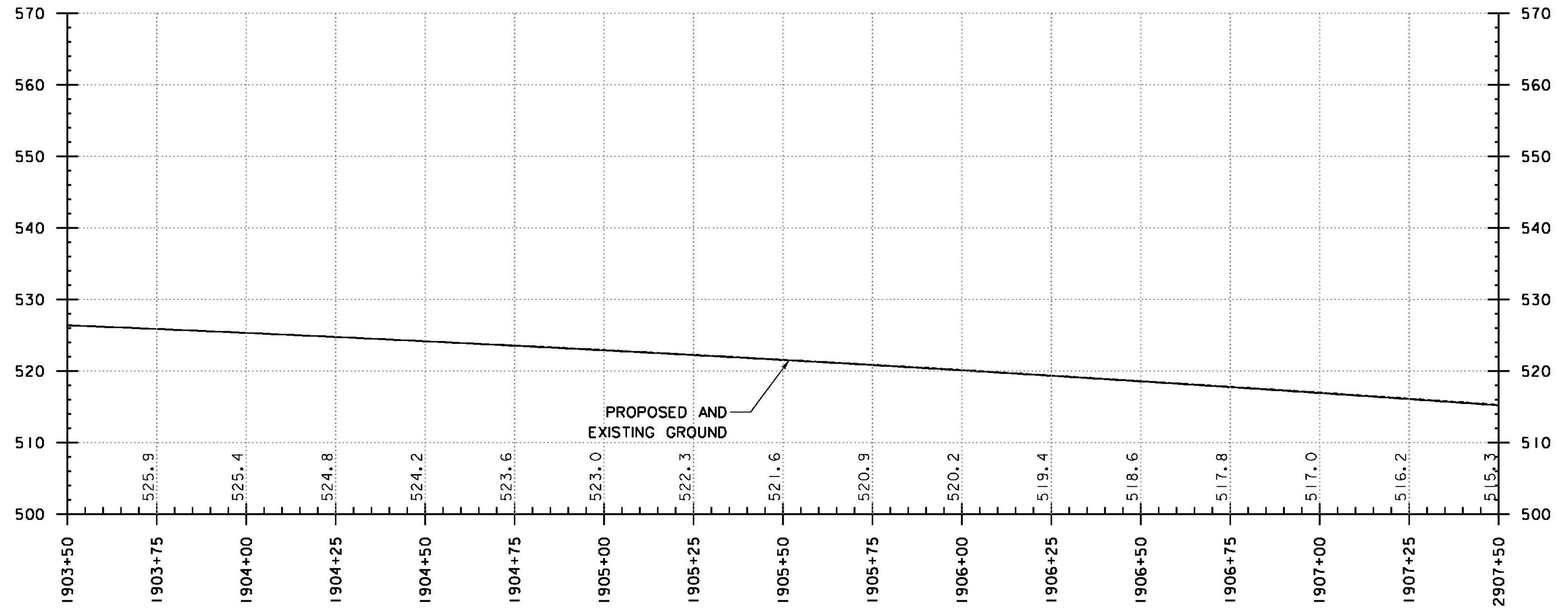

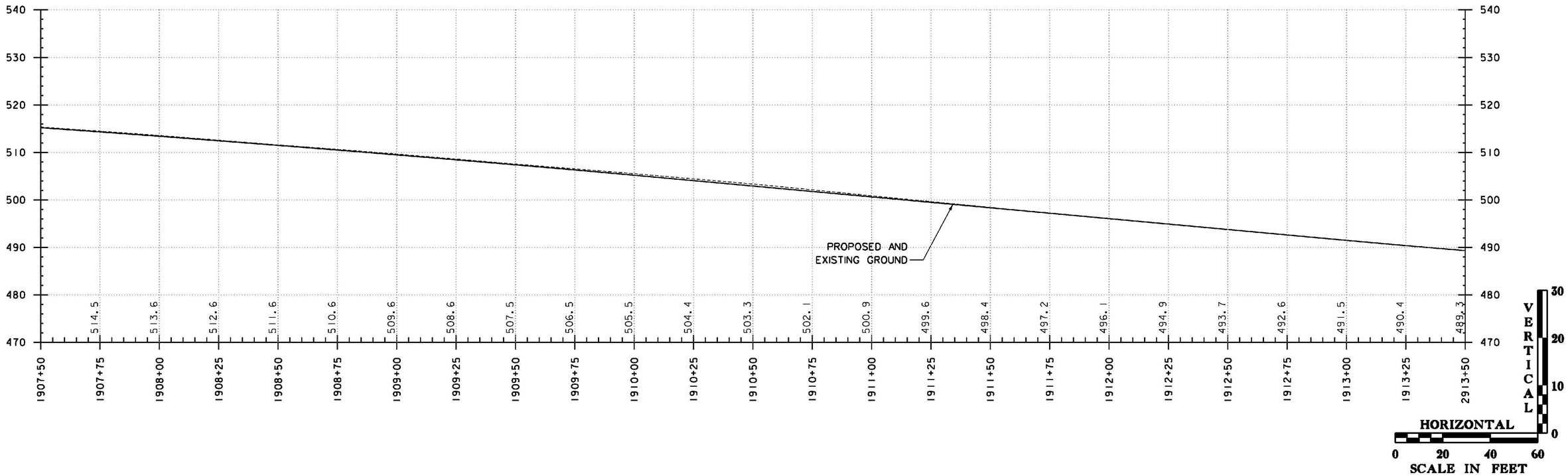

DATUM
VERTICAL NAVD88
HORIZONTAL NAD 83 (07)

THE GRADES SHOWN TO THE NEAREST TENTH ARE THE ORIGINAL GROUND ELEVATIONS ALONG THE PROPOSED ALIGNMENT. THE GRADES SHOWN TO THE NEAREST HUNDREDTH ARE THE PROPOSED GRADES FOR THE NEW ALIGNMENT.

I-91 SOUTHBOUND PROFILE

PROJECT NAME: WINDSOR
PROJECT NUMBER: IM 091-1(64)

FILE NAME: z20a188bdr PRO-SB.dgn
PROJECT LEADER: J. WILSON
DESIGNED BY: H. FILLER
PROFILE SHEET 2 - I-91 SOUTHBOUND

PLOT DATE: 7/30/2015
DRAWN BY: S. GUNN
CHECKED BY: T. MORIN
SHEET 28 OF 156

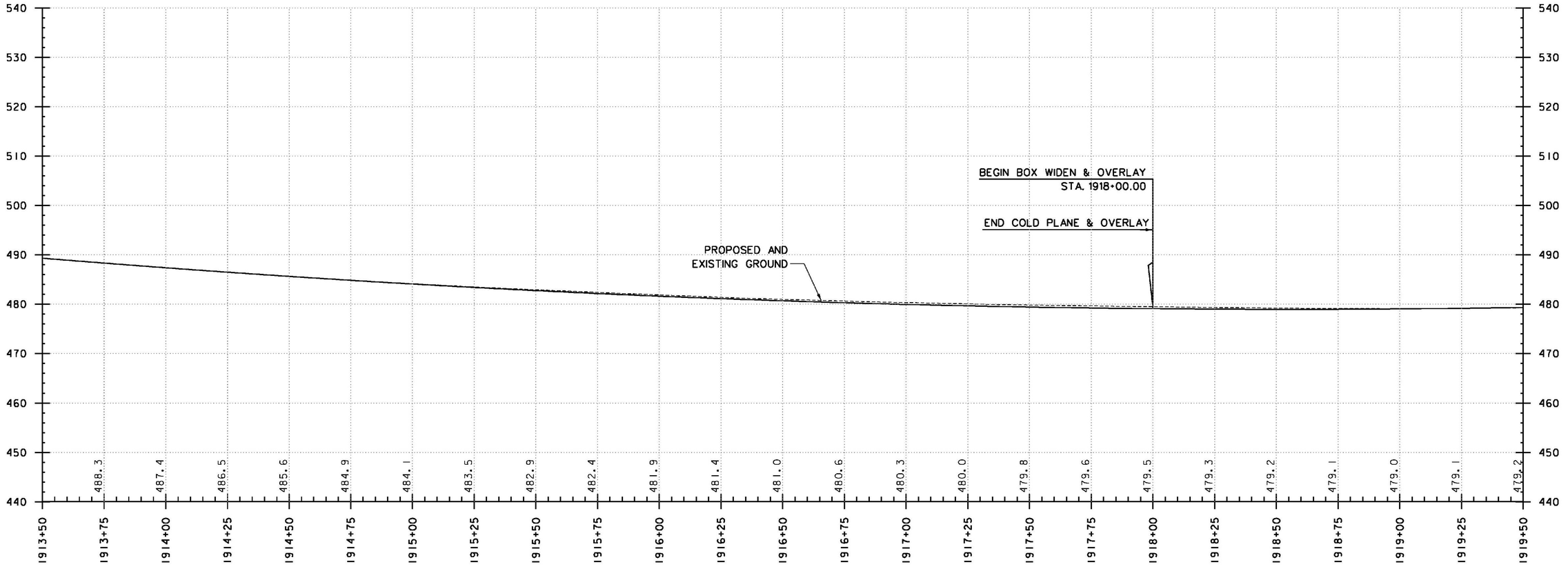

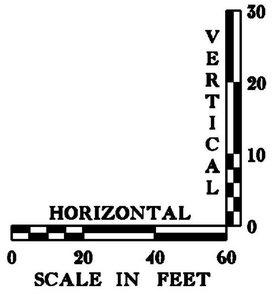

DATUM

VERTICAL NAVD88

HORIZONTAL NAD 83 (07)

THE GRADES SHOWN TO THE NEAREST TENTH ARE THE ORIGINAL GROUND ELEVATIONS ALONG THE PROPOSED ALIGNMENT. THE GRADES SHOWN TO THE NEAREST HUNDREDTH ARE THE PROPOSED GRADES FOR THE NEW ALIGNMENT.

I-91 SOUTHBOUND PROFILE

PROJECT NAME: WINDSOR

PROJECT NUMBER: IM 091-1(64)

FILE NAME: z20a188bdr PRO-SB.dgn
PROJECT LEADER: J. WILSON
DESIGNED BY: H. FILLER
PROFILE SHEET 3 - I-91 SOUTHBOUND

PLOT DATE: 7/30/2015
DRAWN BY: S. GUNN
CHECKED BY: T. MORIN
SHEET 29 OF 156

END BOX WIDEN & OVERLAY
BEGIN FULL DEPTH RECONSTRUCTION
STA. 1919+70.00
EL. 479.41

BEGIN BRIDGE
STA. 1920+58.50

P11 1920+10.00
ELEV 479.91

℄ BRG. PROPOSED ABUT. 1

158'-6" SPAN 1

℄ PROPOSED PIER 1

160'-0" SPAN 2

℄ PROPOSED PIER 2

160'-0" SPAN 3

1.2527%

PROPOSED GROUND

MILL BROOK

REGULATORY FLOOD

Q_{100} (EL 402.2)

℄ VT. RTE. 44 STA. 103+54.27-
I-91 SB STA. 1924+21.68

1919+50	1919+75	1920+00	1920+25	1920+50	1920+75	1921+00	1921+25	1921+50	1921+75	1922+00	1922+25	1922+50	1922+75	1923+00	1923+25	1923+50	1923+75	1924+00	1924+25	1924+50	1924+75	1925+00	1925+25
479.2	479.5	479.8	480.2 / 480.10	480.6 / 480.41	466.5 / 480.72	456.5 / 481.04	444.2 / 481.35	432.3 / 481.66	419.7 / 481.98	408.9 / 482.29	403.7 / 482.60	393.1 / 482.92	393.1 / 483.23	393.1 / 483.54	396.6 / 483.86	402.1 / 484.17	405.7 / 484.48	407.0 / 484.80	405.9 / 485.11	403.6 / 485.42	402.9 / 485.73	404.3 / 486.05	407.5 / 486.36

VERTICAL 0 10 20 30
HORIZONTAL 0 20 40 60
SCALE IN FEET

THE GRADES SHOWN TO THE NEAREST TENTH ARE THE ORIGINAL GROUND ELEVATIONS ALONG THE PROPOSED ALIGNMENT. THE GRADES SHOWN TO THE NEAREST HUNDREDTH ARE THE PROPOSED GRADES FOR THE NEW ALIGNMENT.

DATUM
VERTICAL NAVD88
HORIZONTAL NAD 83 (07)

I-91 SOUTHBOUND PROFILE

PROJECT NAME: WINDSOR
PROJECT NUMBER: IM 091-1(64)

FILE NAME: z20a188bdr PRO-SB.dgn
PROJECT LEADER: J. WILSON
DESIGNED BY: H. FILLER
PROFILE SHEET 4 - I-91 SOUTHBOUND

PLOT DATE: 7/30/2015
DRAWN BY: S. GUNN
CHECKED BY: T. MORIN
SHEET 30 OF156

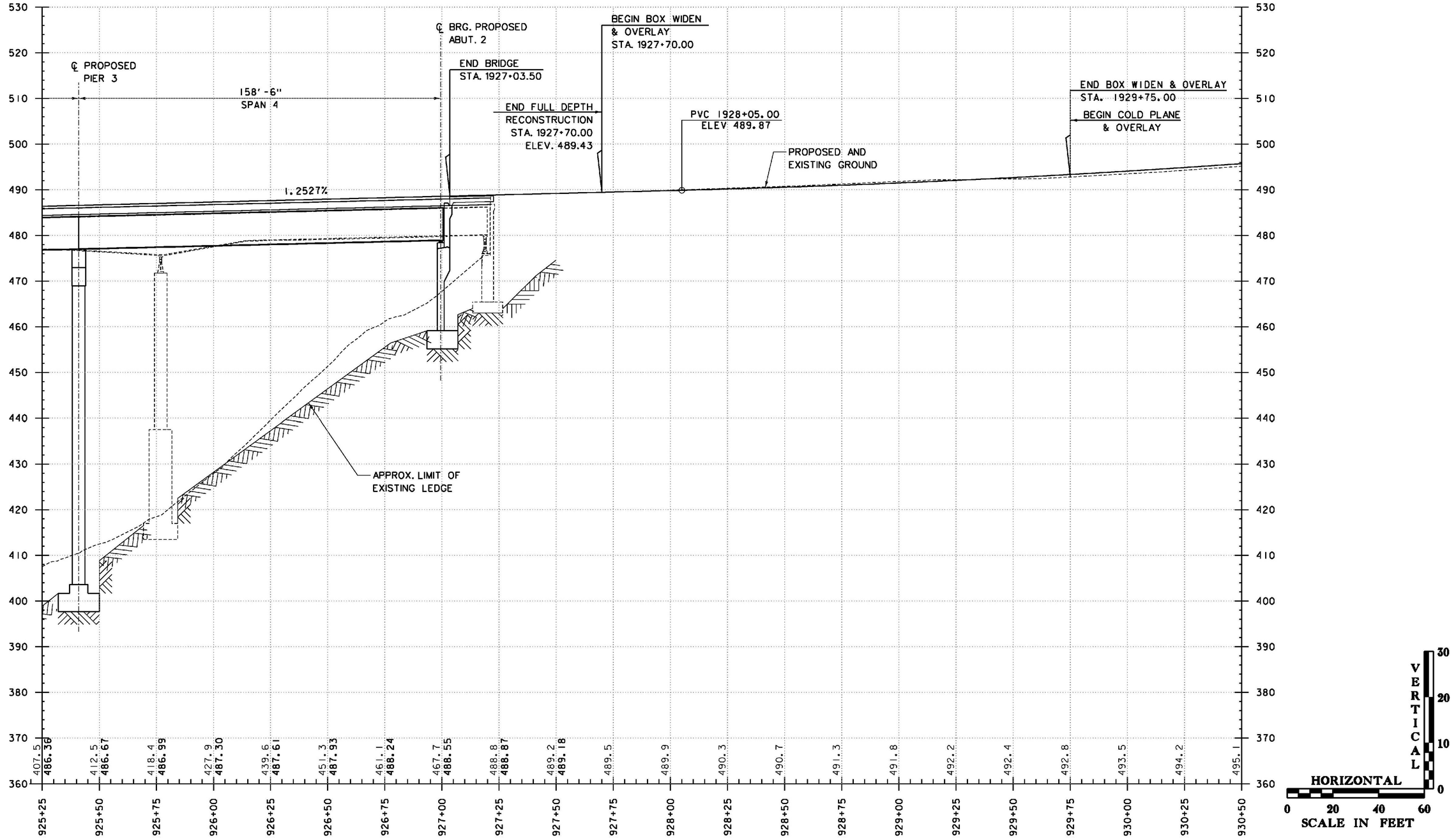

THE GRADES SHOWN TO THE NEAREST TENTH ARE THE ORIGINAL GROUND ELEVATIONS ALONG THE PROPOSED ALIGNMENT. THE GRADES SHOWN TO THE NEAREST HUNDREDTH ARE THE PROPOSED GRADES FOR THE NEW ALIGNMENT.

DATUM
VERTICAL NAVD88
HORIZONTAL NAD 83 (07)

I-91 SOUTHBOUND PROFILE

PROJECT NAME: WINDSOR
PROJECT NUMBER: IM 091-1(64)

FILE NAME: z20a188bdr PRO-SB.dgn
PROJECT LEADER: J. WILSON
DESIGNED BY: H. FILLER
PROFILE SHEET 5 - I-91 SOUTHBOUND

PLOT DATE: 7/30/2015
DRAWN BY: S. GUNN
CHECKED BY: T. MORIN
SHEET 31 OF156

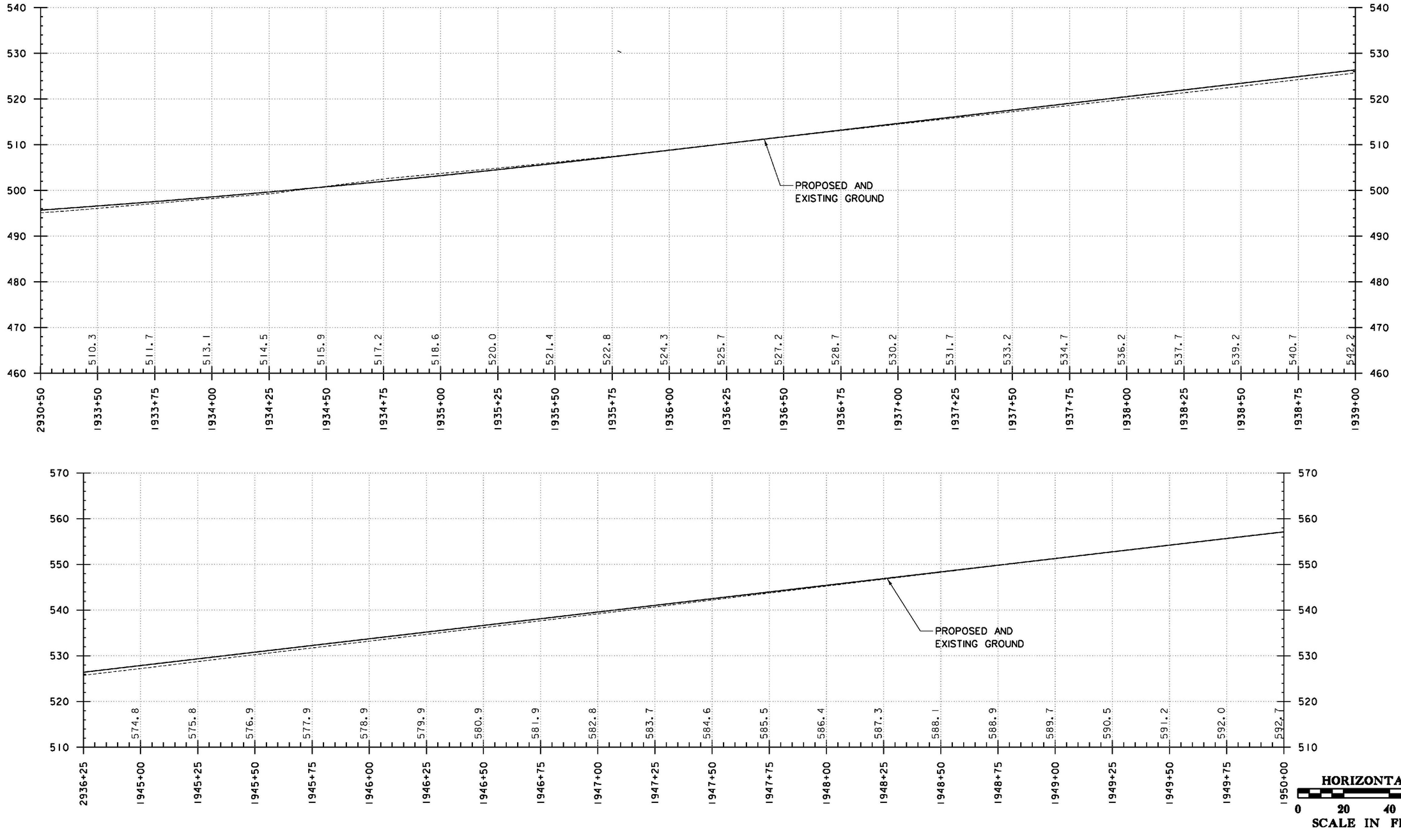

THE GRADES SHOWN TO THE NEAREST TENTH ARE THE ORIGINAL GROUND ELEVATIONS ALONG THE PROPOSED ALIGNMENT. THE GRADES SHOWN TO THE NEAREST HUNDREDTH ARE THE PROPOSED GRADES FOR THE NEW ALIGNMENT.

DATUM
VERTICAL NAVD88
HORIZONTAL NAD 83 (07)

I-91 SOUTHBOUND PROFILE

PROJECT NAME: WINDSOR
PROJECT NUMBER: IM 091-1(64)

FILE NAME: z20a188bdr PRO-SB.dgn
PROJECT LEADER: J. WILSON
DESIGNED BY: H. FULLER
PROFILE SHEET 6 - I-91 SOUTHBOUND

PLOT DATE: 7/30/2015
DRAWN BY: S. GUNN
CHECKED BY: T. MORIN
SHEET 32 OF156

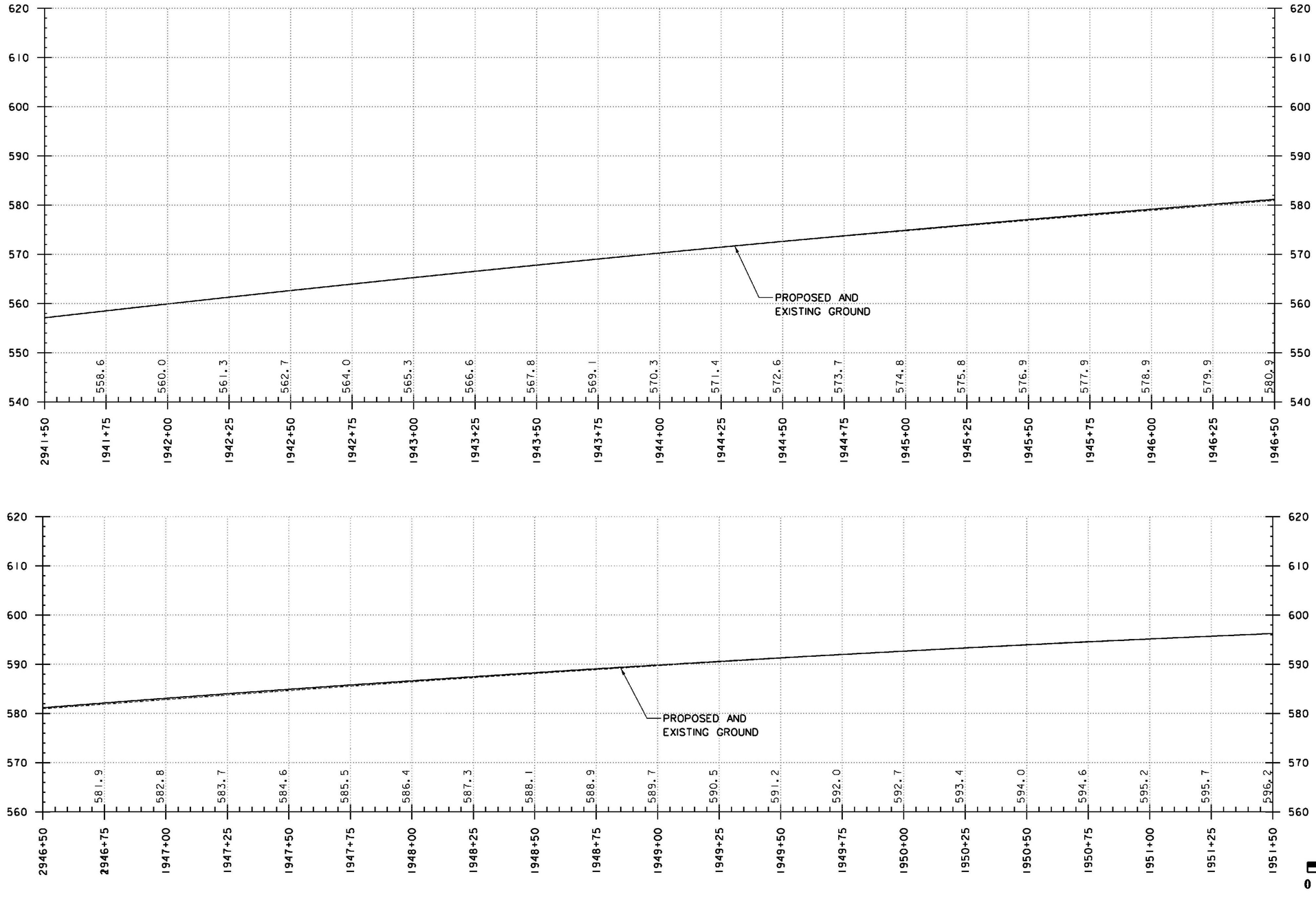

DATUM

VERTICAL NAVD88

HORIZONTAL NAD 83 (07)

THE GRADES SHOWN TO THE NEAREST TENTH ARE THE ORIGINAL GROUND ELEVATIONS ALONG THE PROPOSED ALIGNMENT. THE GRADES SHOWN TO THE NEAREST HUNDREDTH ARE THE PROPOSED GRADES FOR THE NEW ALIGNMENT.

I-91 SOUTHBOUND PROFILE

PROJECT NAME: WINDSOR

PROJECT NUMBER: IM 091-1(64)

FILE NAME: z20a188bdr PRO-SB.dgn
PROJECT LEADER: J. WILSON
DESIGNED BY: H. FILLER
PROFILE SHEET 7 - I-91 SOUTHBOUND

PLOT DATE: 7/30/2015
DRAWN BY: S. GUNN
CHECKED BY: T. MORIN
SHEET 33 OF 156

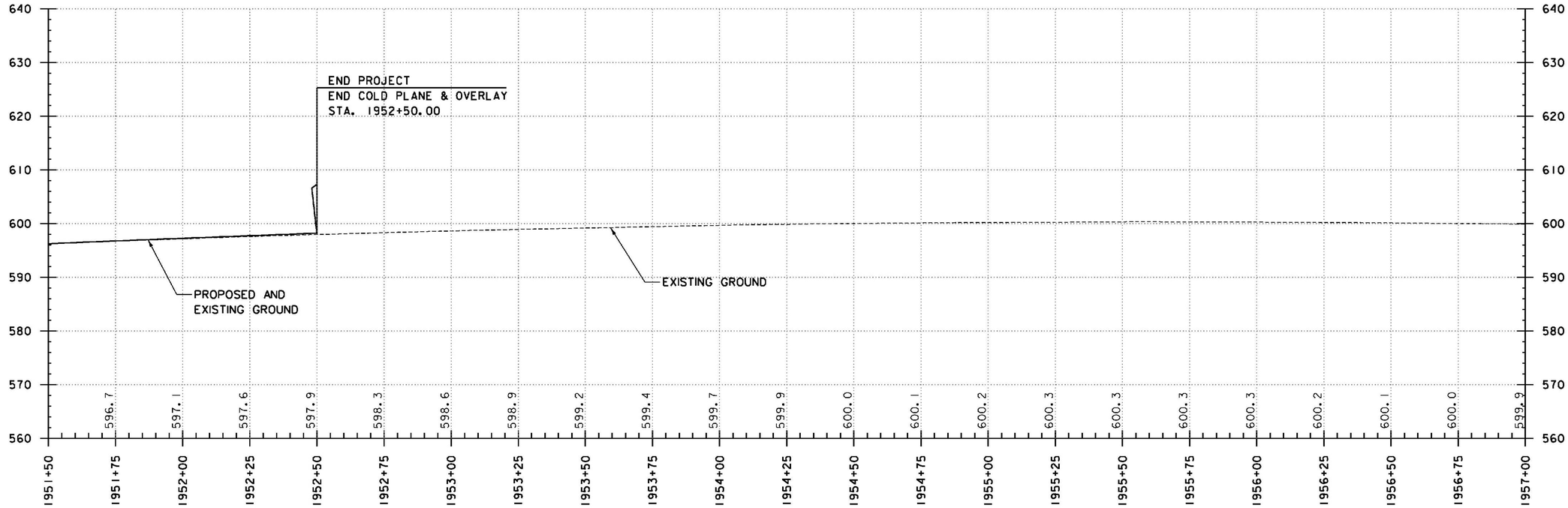

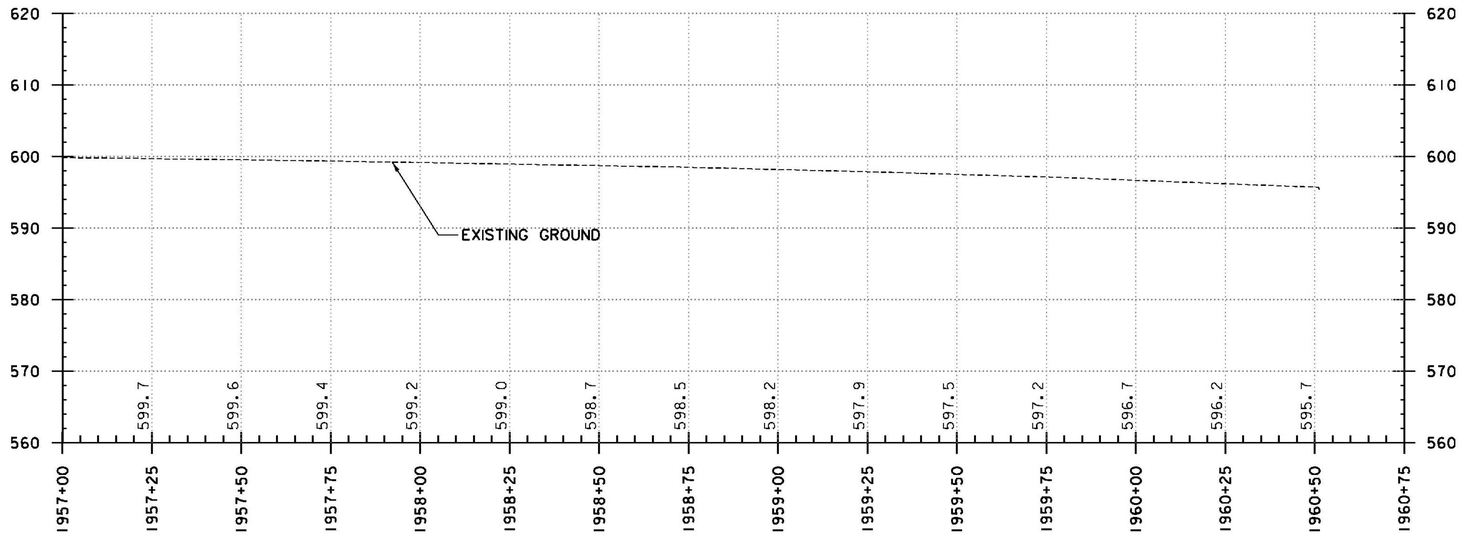

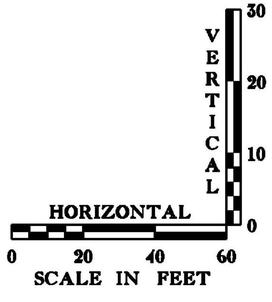

DATUM
VERTICAL NAVD88
HORIZONTAL NAD 83 (07)

THE GRADES SHOWN TO THE NEAREST TENTH ARE THE ORIGINAL GROUND ELEVATIONS ALONG THE PROPOSED ALIGNMENT. THE GRADES SHOWN TO THE NEAREST HUNDREDTH ARE THE PROPOSED GRADES FOR THE NEW ALIGNMENT.

I-91 SOUTHBOUND PROFILE

PROJECT NAME: WINDSOR
PROJECT NUMBER: IM 091-1(64)

FILE NAME: z20a188bdr PRO-SB.dgn
PROJECT LEADER: J. WILSON
DESIGNED BY: H. FILLER
PROFILE SHEET 8 - I-91 SOUTHBOUND

PLOT DATE: 7/30/2015
DRAWN BY: S. GUNN
CHECKED BY: T. MORIN
SHEET 34 OF 156

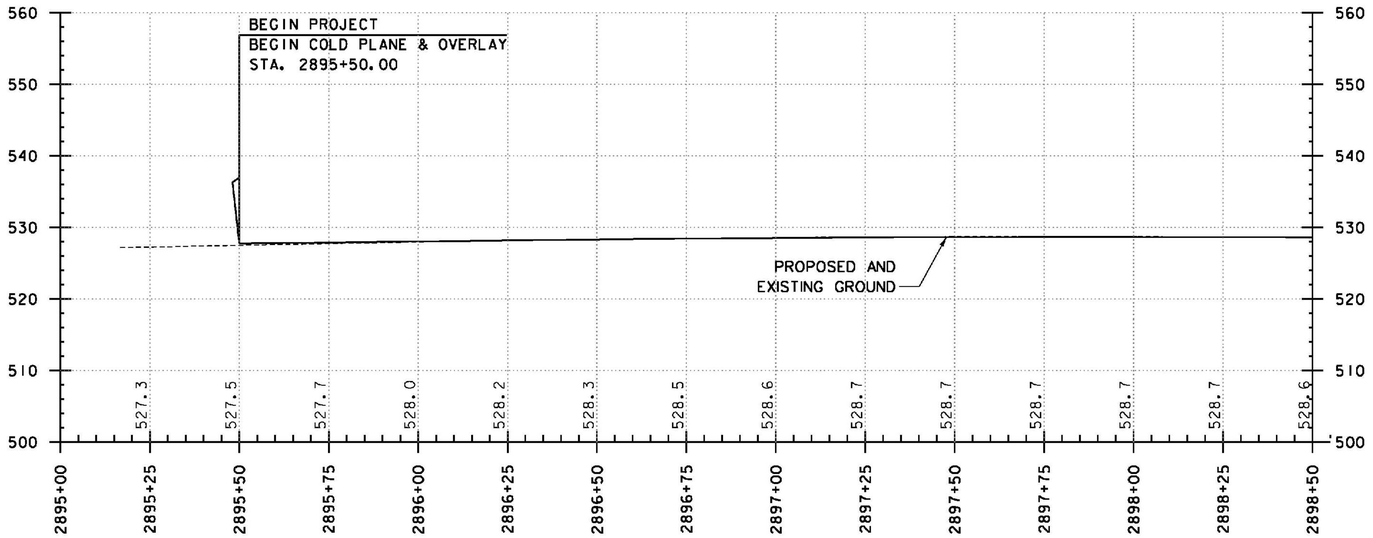

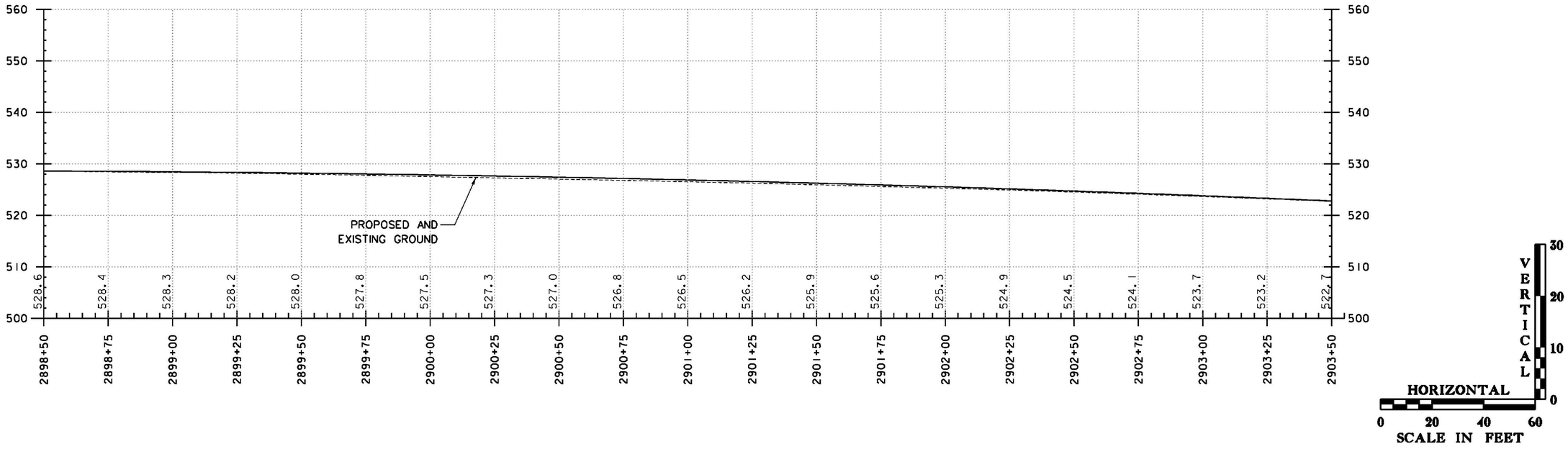

DATUM
VERTICAL NAVD88
HORIZONTAL NAD 83 (07)

THE GRADES SHOWN TO THE NEAREST TENTH ARE THE ORIGINAL GROUND ELEVATIONS ALONG THE PROPOSED ALIGNMENT. THE GRADES SHOWN TO THE NEAREST HUNDREDTH ARE THE PROPOSED GRADES FOR THE NEW ALIGNMENT.

I-91 NORTHBOUND PROFILE

PROJECT NAME: WINDSOR
PROJECT NUMBER: IM 091-1(64)

FILE NAME: z10o188PRO-NB.dgn
PROJECT LEADER: J. WILSON
DESIGNED BY: H. FULLER
PROFILE SHEET 1 - I-91 NORTHBOUND

PLOT DATE: 7/30/2015
DRAWN BY: S. GUNN
CHECKED BY: T. MORIN
SHEET 35 OF156

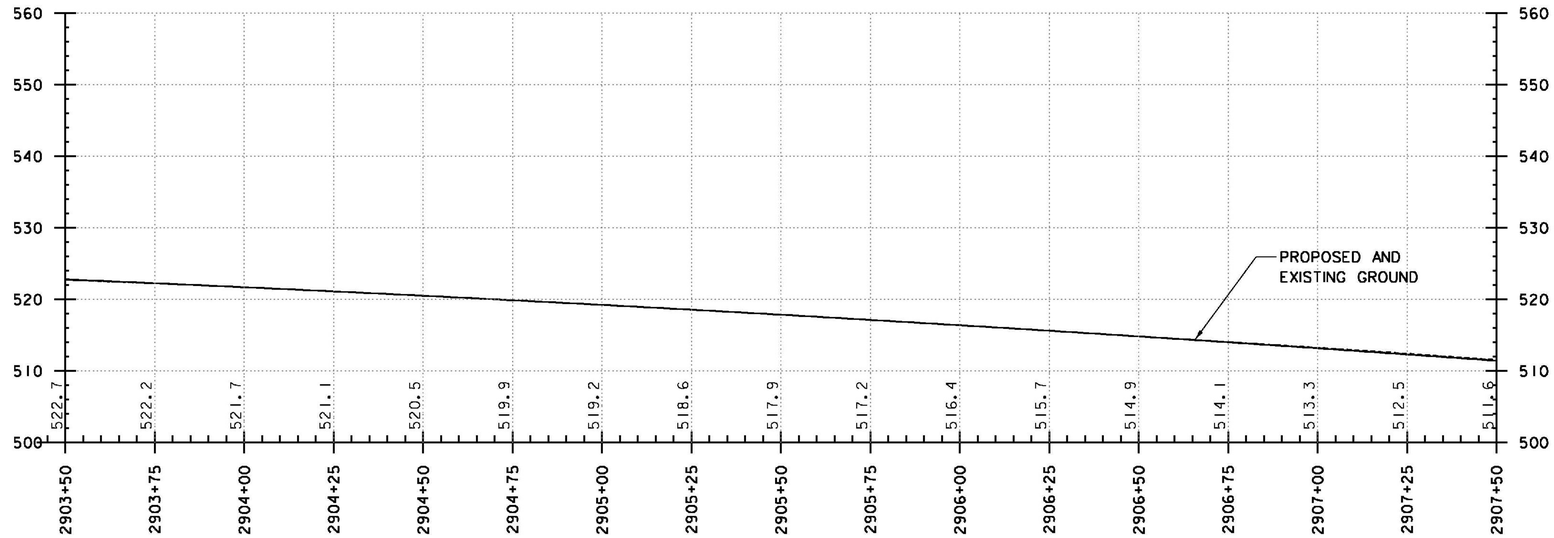

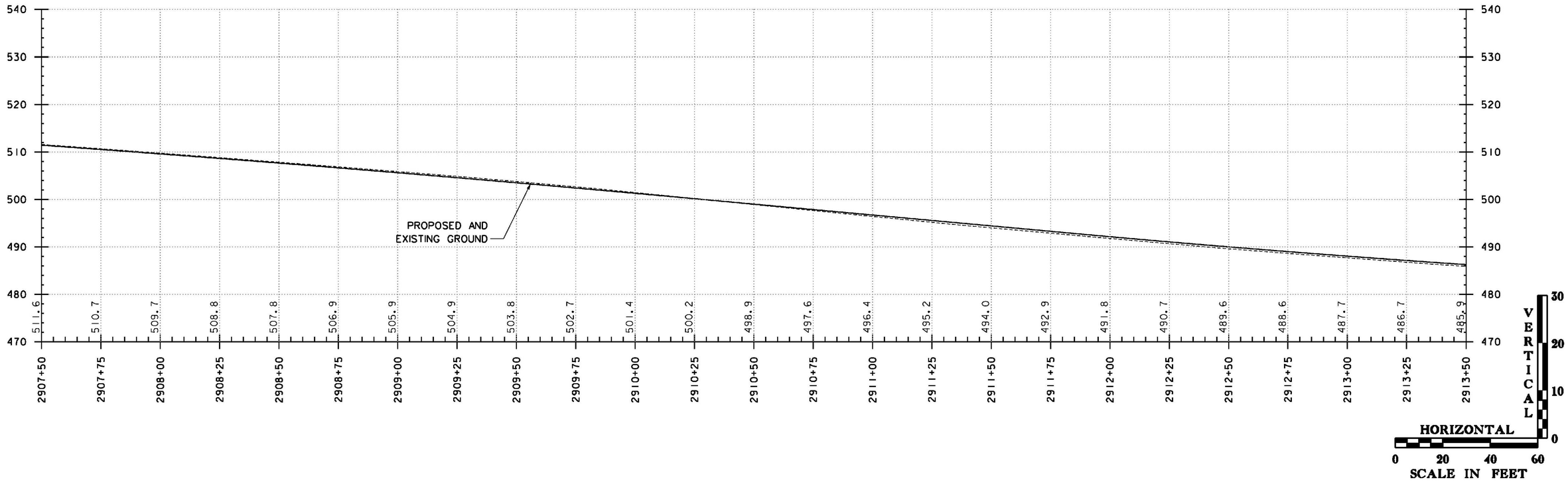

DATUM
VERTICAL NAVD88
HORIZONTAL NAD 83 (07)

THE GRADES SHOWN TO THE NEAREST TENTH ARE THE ORIGINAL GROUND ELEVATIONS ALONG THE PROPOSED ALIGNMENT. THE GRADES SHOWN TO THE NEAREST HUNDREDTH ARE THE PROPOSED GRADES FOR THE NEW ALIGNMENT.

I-91 NORTHBOUND PROFILE

PROJECT NAME: WINDSOR
PROJECT NUMBER: IM 091-1(64)

FILE NAME: z10a188PRO-NB.dgn
PROJECT LEADER: J. WILSON
DESIGNED BY: H. FULLER
PROFILE SHEET 2 - I-91 NORTHBOUND

PLOT DATE: 7/30/2015
DRAWN BY: S. GUNN
CHECKED BY: T. MORIN
SHEET 36 OF156

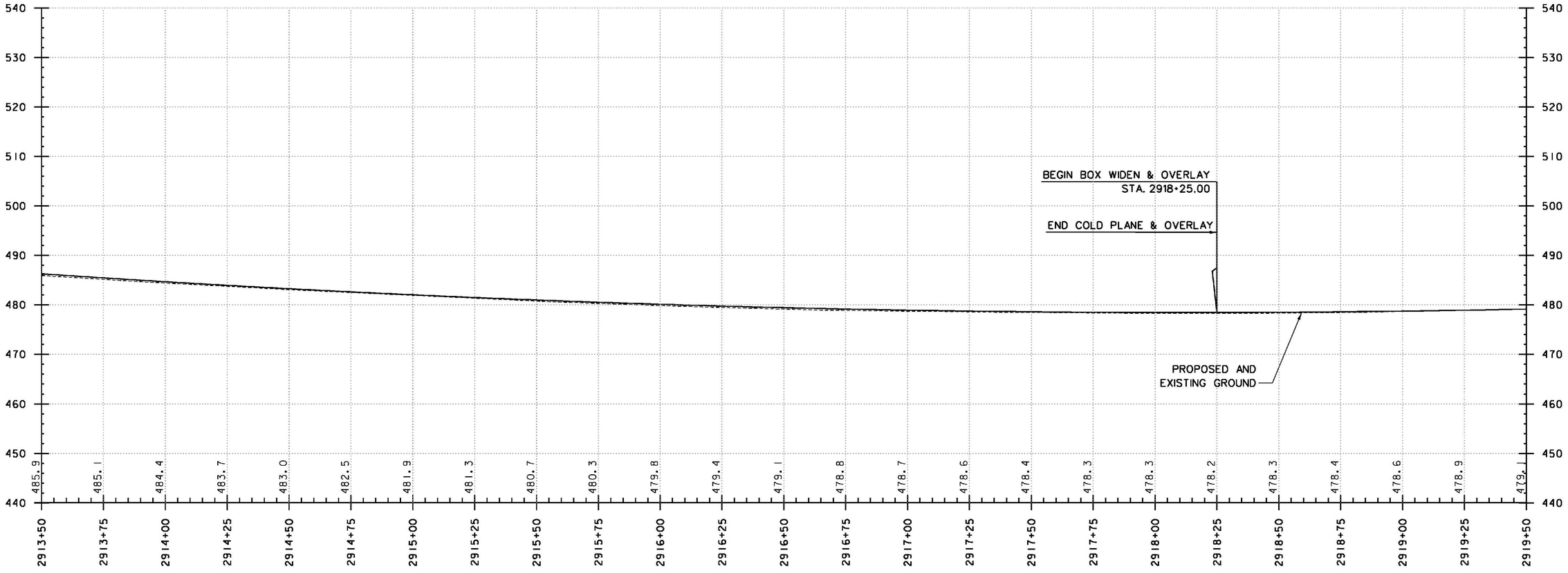

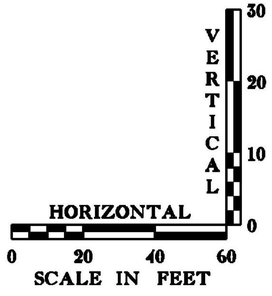

DATUM

VERTICAL NAVD88

HORIZONTAL NAD 83 (07)

THE GRADES SHOWN TO THE NEAREST TENTH ARE THE ORIGINAL GROUND ELEVATIONS ALONG THE PROPOSED ALIGNMENT. THE GRADES SHOWN TO THE NEAREST HUNDREDTH ARE THE PROPOSED GRADES FOR THE NEW ALIGNMENT.

I-91 NORTHBOUND PROFILE

PROJECT NAME: WINDSOR

PROJECT NUMBER: IM 091-1(64)

FILE NAME: z10a188PRO-NB.dgn
PROJECT LEADER: J. WILSON
DESIGNED BY: H. FULLER
PROFILE SHEET 3 - I-91 NORTHBOUND

PLOT DATE: 7/30/2015
DRAWN BY: S. GUNN
CHECKED BY: T. MORIN
SHEET 37 OF 156

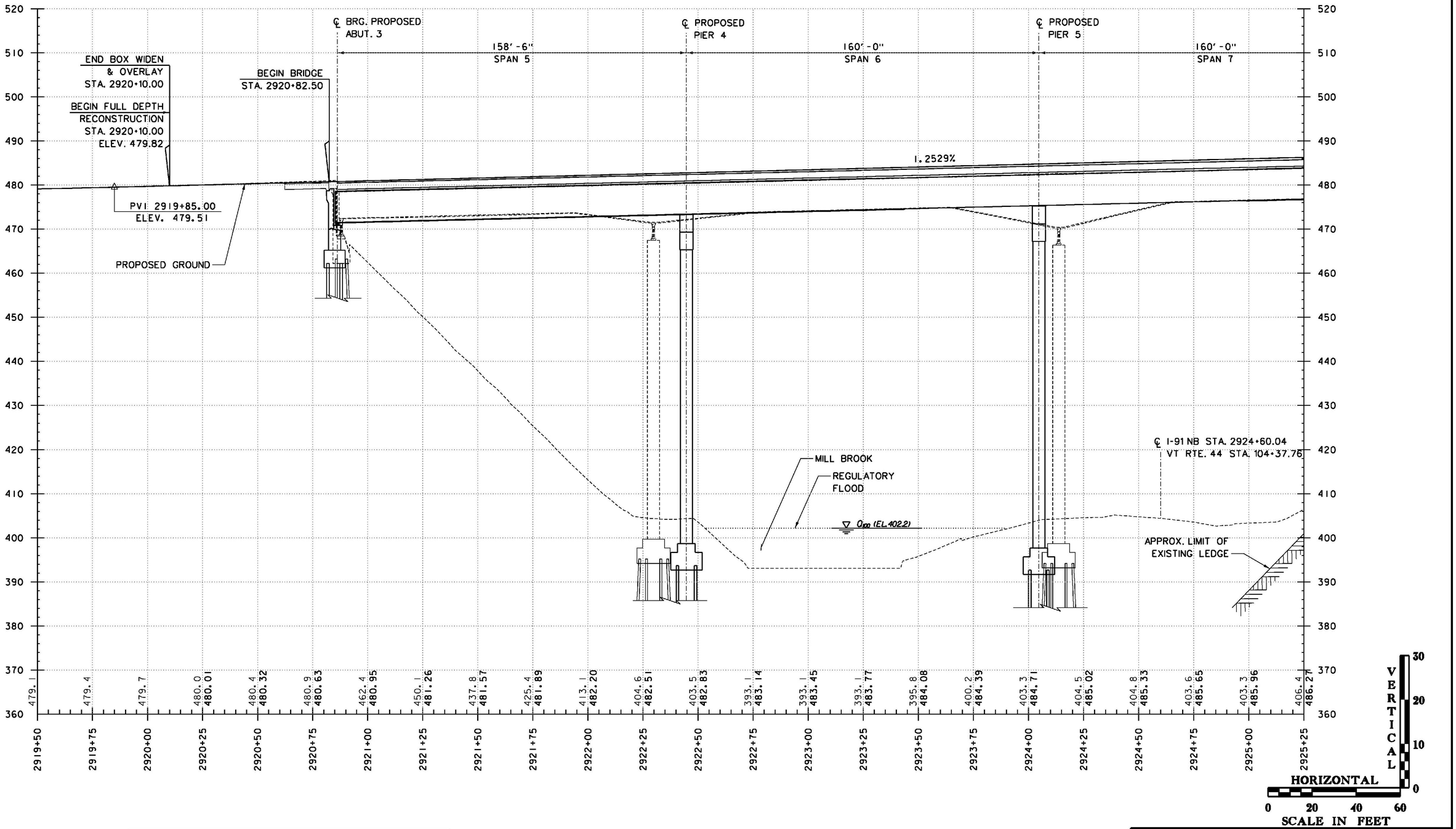

THE GRADES SHOWN TO THE NEAREST TENTH ARE THE ORIGINAL GROUND ELEVATIONS ALONG THE PROPOSED ALIGNMENT. THE GRADES SHOWN TO THE NEAREST HUNDREDTH ARE THE PROPOSED GRADES FOR THE NEW ALIGNMENT.

DATUM
VERTICAL NAVD88
HORIZONTAL NAD 83 (07)

I-91 NORTHBOUND PROFILE

PROJECT NAME: WINDSOR
PROJECT NUMBER: IM 091-1(64)

FILE NAME: z10o188PRO-NB.dgn
PROJECT LEADER: J. WILSON
DESIGNED BY: H. FULLER
PROFILE SHEET 4 - I-91 NORTHBOUND

PLOT DATE: 7/30/2015
DRAWN BY: S. GUNN
CHECKED BY: T. MORIN
SHEET 38 OF 156

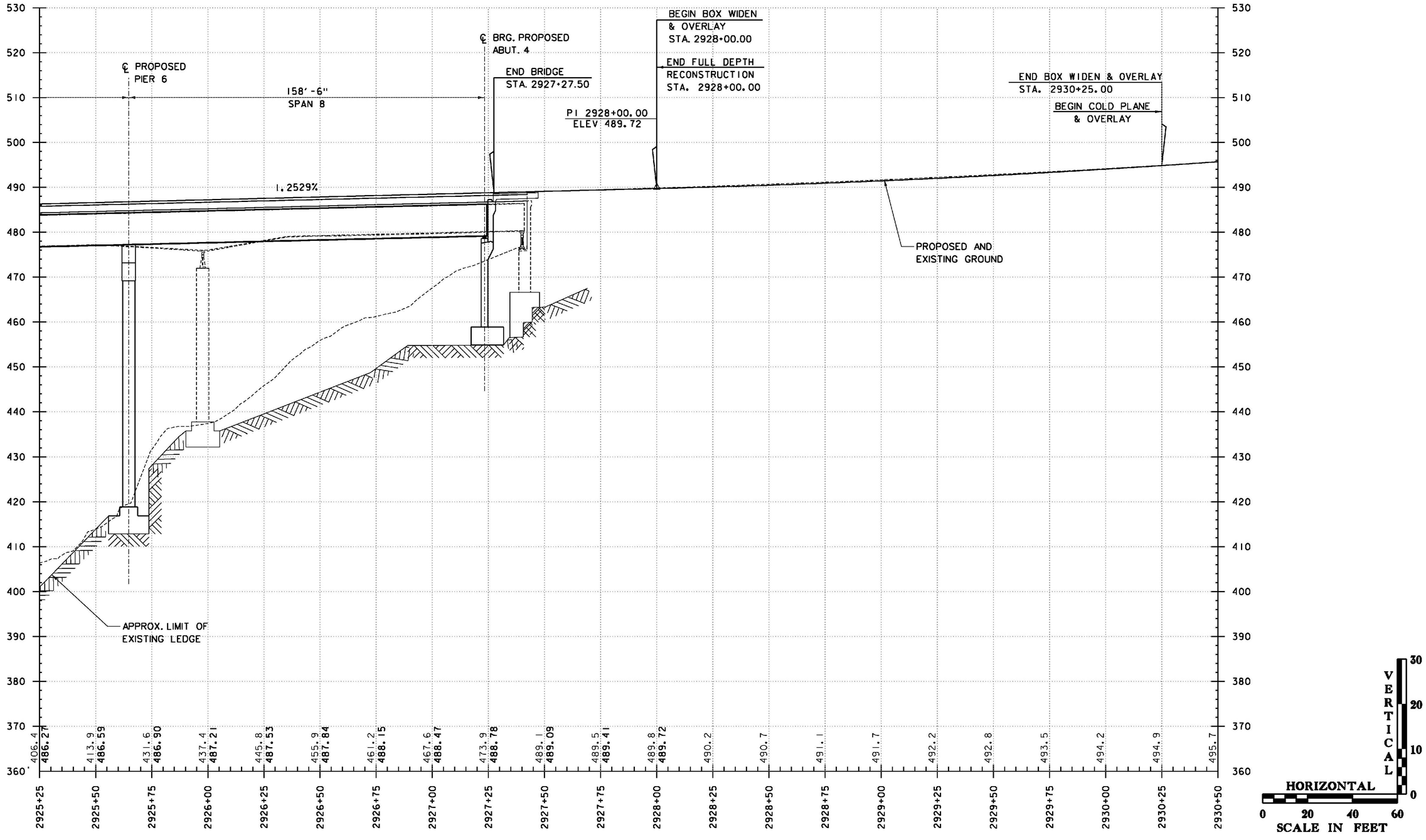

THE GRADES SHOWN TO THE NEAREST TENTH ARE THE ORIGINAL GROUND ELEVATIONS ALONG THE PROPOSED ALIGNMENT. THE GRADES SHOWN TO THE NEAREST HUNDREDTH ARE THE PROPOSED GRADES FOR THE NEW ALIGNMENT.

DATUM
VERTICAL NAVD88
HORIZONTAL NAD 83 (07)

I-91 NORTHBOUND PROFILE

PROJECT NAME: WINDSOR
PROJECT NUMBER: IM 091-1(64)

FILE NAME: z10o188PRO-NB.dgn
PROJECT LEADER: J. WILSON
DESIGNED BY: H. FULLER
PROFILE SHEET 5 - I-91 NORTHBOUND

PLOT DATE: 7/30/2015
DRAWN BY: S. GUNN
CHECKED BY: T. MORIN
SHEET 39 OF156

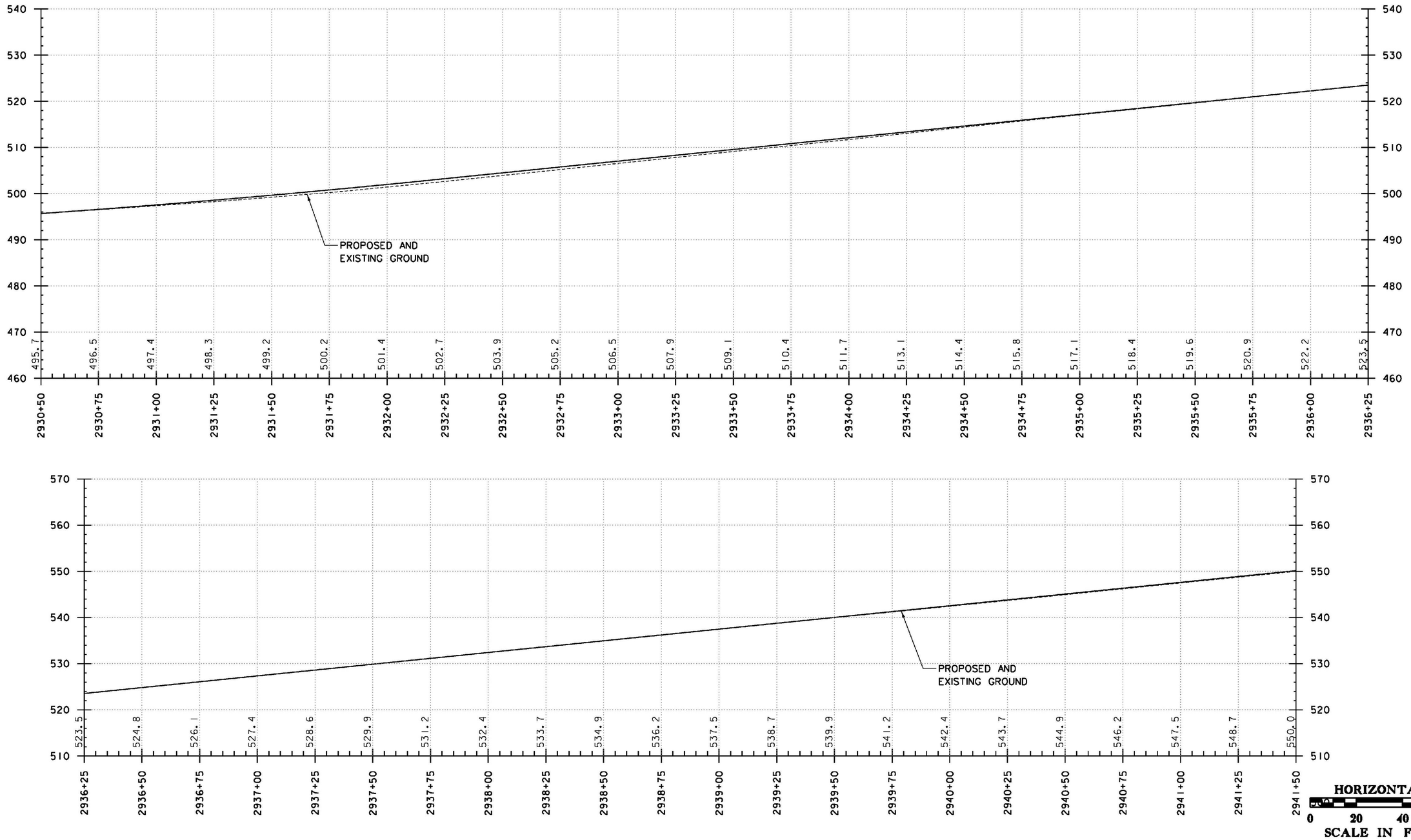

THE GRADES SHOWN TO THE NEAREST TENTH ARE THE ORIGINAL GROUND ELEVATIONS ALONG THE PROPOSED ALIGNMENT. THE GRADES SHOWN TO THE NEAREST HUNDREDTH ARE THE PROPOSED GRADES FOR THE NEW ALIGNMENT.

DATUM
VERTICAL NAVD88
HORIZONTAL NAD 83 (07)

I-91 NORTHBOUND PROFILE

PROJECT NAME: WINDSOR
PROJECT NUMBER: IM 091-1(64)

FILE NAME: z10a188PRO-NB.dgn
PROJECT LEADER: J. WILSON
DESIGNED BY: H. FULLER
PROFILE SHEET 6 - I-91 NORTHBOUND

PLOT DATE: 7/30/2015
DRAWN BY: S. GUNN
CHECKED BY: T. MORIN
SHEET 40 OF156

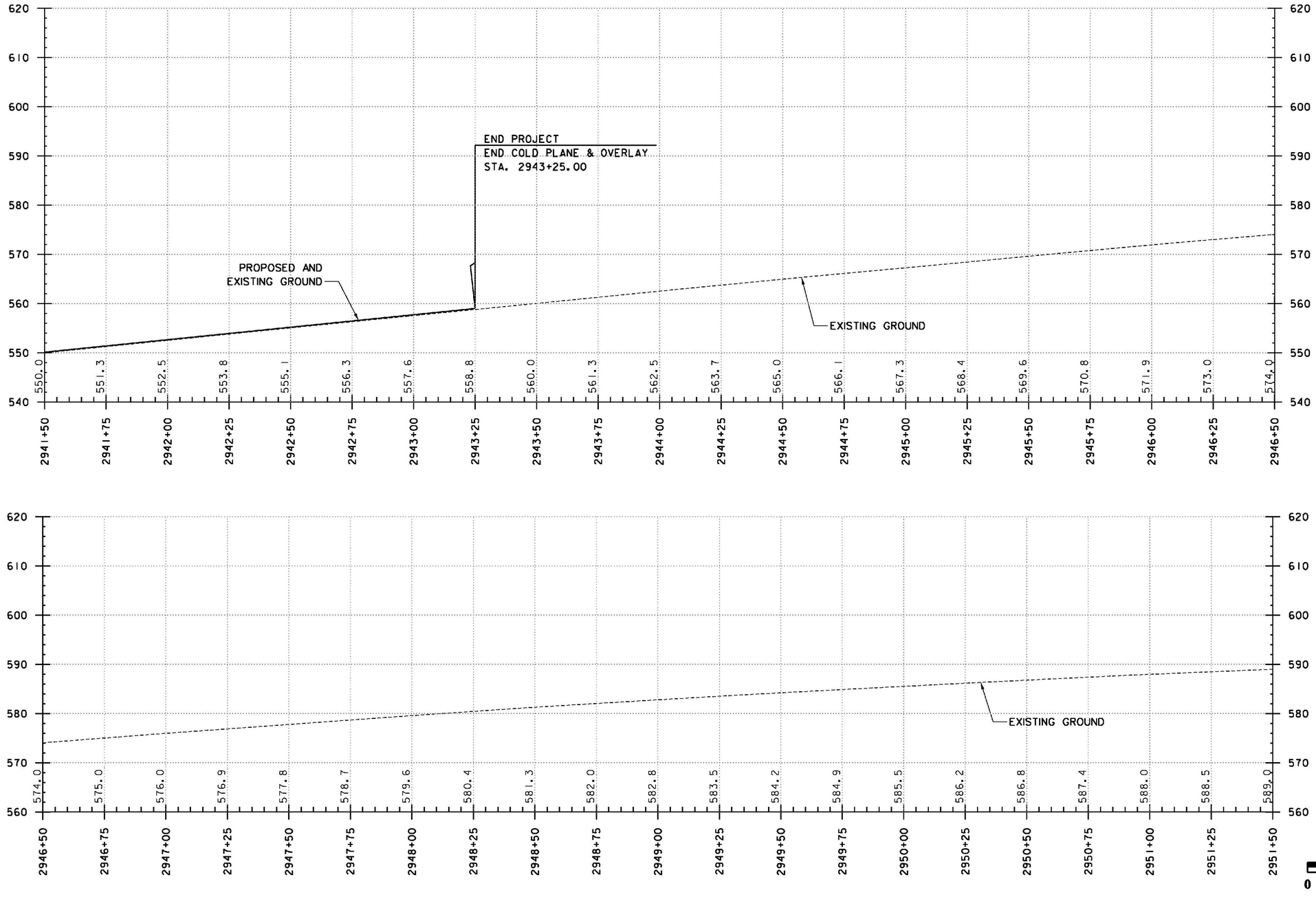

THE GRADES SHOWN TO THE NEAREST TENTH ARE THE ORIGINAL GROUND ELEVATIONS ALONG THE PROPOSED ALIGNMENT. THE GRADES SHOWN TO THE NEAREST HUNDREDTH ARE THE PROPOSED GRADES FOR THE NEW ALIGNMENT.

DATUM
VERTICAL NAVD88
HORIZONTAL NAD 83 (07)

I-91 NORTHBOUND PROFILE

PROJECT NAME: WINDSOR
PROJECT NUMBER: IM 091-1(64)

FILE NAME: z10a188PRO-NB.dgn
PROJECT LEADER: J. WILSON
DESIGNED BY: H. FULLER
PROFILE SHEET 7 - I-91 NORTHBOUND

PLOT DATE: 7/30/2015
DRAWN BY: S. GUNN
CHECKED BY: T. MORIN
SHEET 41 OF156

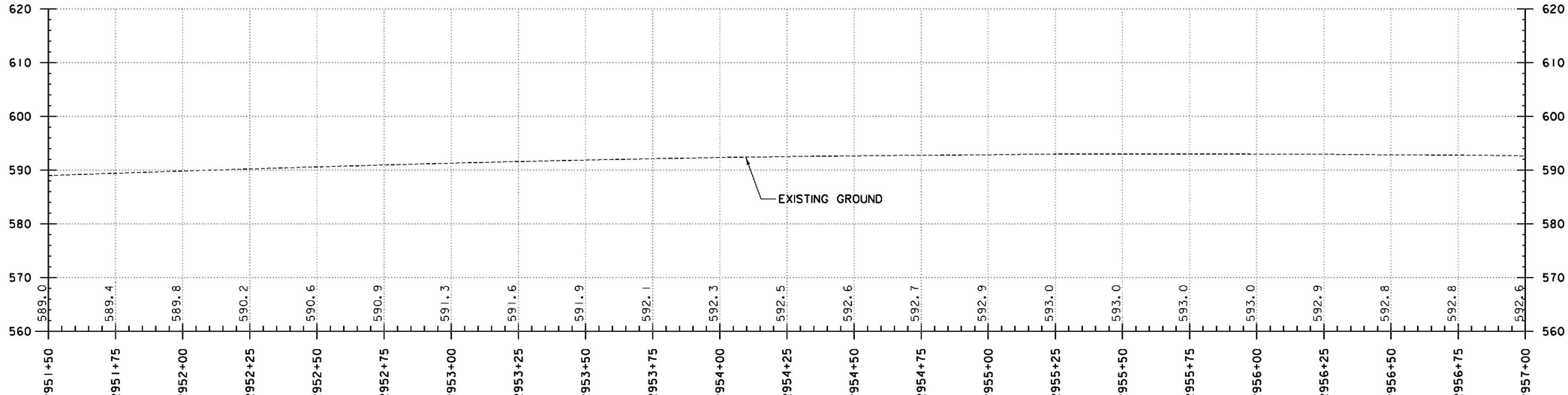

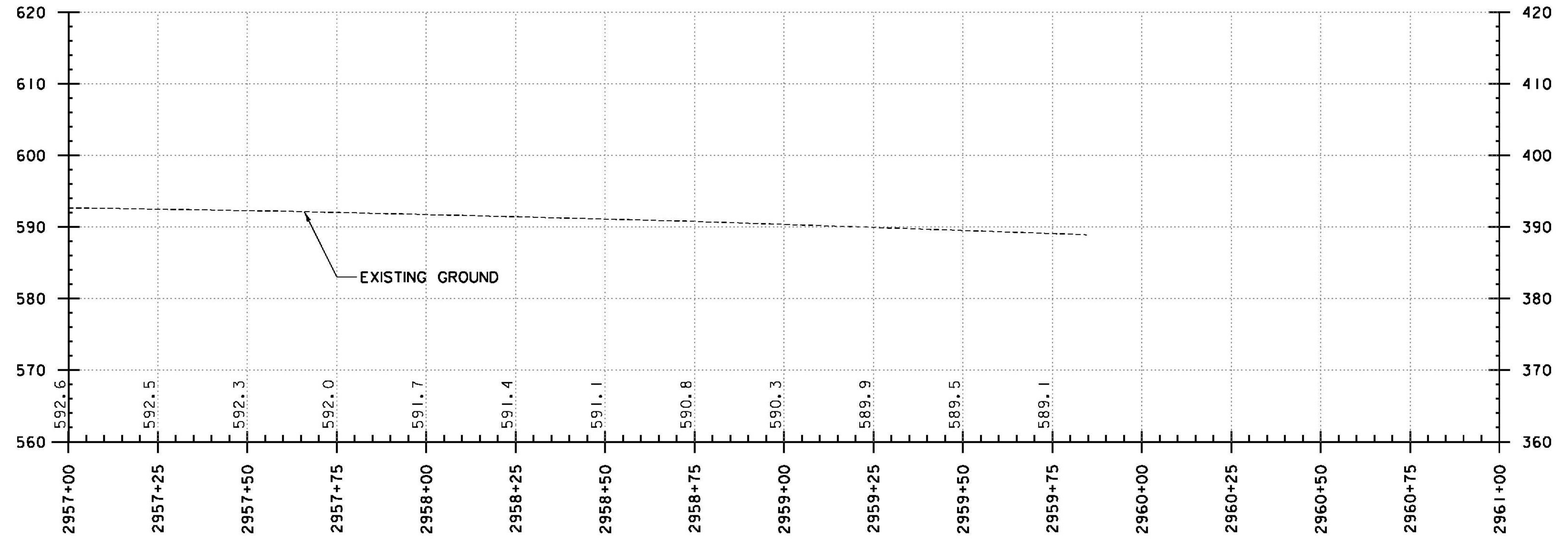

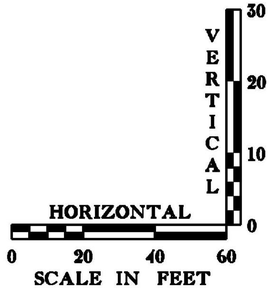

THE GRADES SHOWN TO THE NEAREST TENTH ARE THE ORIGINAL GROUND ELEVATIONS ALONG THE PROPOSED ALIGNMENT. THE GRADES SHOWN TO THE NEAREST HUNDREDTH ARE THE PROPOSED GRADES FOR THE NEW ALIGNMENT.

DATUM
VERTICAL NAVD88
HORIZONTAL NAD 83 (07)

I-91 NORTHBOUND PROFILE

PROJECT NAME: WINDSOR
PROJECT NUMBER: IM 091-1(64)

FILE NAME: z10a188PRO-NB.dgn
PROJECT LEADER: J. WILSON
DESIGNED BY: H. FULLER
PROFILE SHEET 8 - I-91 NORTHBOUND
PLOT DATE: 7/30/2015
DRAWN BY: S. GUNN
CHECKED BY: T. MORIN
SHEET 42 OF156

STATE OF VERMONT
AGENCY OF TRANSPORTATION

ITEM DETAIL AND DRAINAGE SHEET

STATION	STATION	POS.	ASKEW	INLET/OUTLET TYPE		PIPE		ALLOWABLE OPTIONS				PIPE ELBOW	ES	CB	"C"	DEPTH DI	CONC CLASS B	REINF STEEL	DI GRATE	CHAN ELEV	CRM	TRENCH EXCAVATION		GRAN BKFILL STRUCT	EROS MATT	STONE FILL		MARKER POSTS		DRAINAGE FLAG	REMARKS
				INLET	OUTLET	D	L	PCCSP	CAAP	CPEP	RCP											EARTH	ROCK					LT	RT		
			NO. DEG.			IN	FT	TH	TH	SL	CL	NO. DEG.	EA	EA		FT	CY	LBS	TYPE	EA	CY	CY	CY	CY	SY	CY	TYPE	EA	EA		
I-91 DRAINAGE																															
1902+87	2903+13	LT.-LT.				18																								6	RETAIN EXIST. PIPE & DROP INLETS
2903+13	2903+13	RT.-LT.				18																								7	RETAIN EXIST. PIPE & DROP INLETS
2903+13	2906+58	LT.-LT.				24																								8	RETAIN EXIST. PIPE & DROP INLETS
2906+58	2906+58	RT.-LT.				18																								9	RETAIN EXIST. PIPE & DROP INLETS
1906+42	2906+58	LT.-LT.				18																								10	RETAIN EXIST. PIPE & DROP INLETS.
2906+58	2910+03	LT.-LT.				30																								11	RETAIN EXIST. PIPE & DROP INLETS. COVER INLET GRATE DURING STAGE 1 CONSTR.
2910+03	2909+71	LT.-RT.				30																								12	RETAIN EXIST. PIPE & DROP INLETS. COVER INLET GRATE DURING STAGE 1 CONSTR.
2912+50	2912+51	LT.-RT.				18																								13	RETAIN EXIST. PIPE & DROP INLETS. COVER INLET GRATE DURING STAGE 2 CONSTR.
2912+51	2912+51	RT.-RT.				18																								14	RETAIN EXIST. PIPE & DROP INLETS
2915+00	2915+00	LT.-RT.				18																								15	RETAIN EXIST. PIPE & DROP INLETS
2915+00	2915+00	RT.-RT.				18																								16	RETAIN EXIST. PIPE & DROP INLETS
1917+60	2918+22	RT.-LT.		PRCDI	MH	18	62				III				X				A											5	6'X4' DOUBLE GRATE DI.
																															INLET RIM ELEV. = 474.10
																															INLET INVERT ELEV. = 471.70 / OUTLET INVERT ELEV. = 471.30
																														6	DOGHOUSE MH BUILT OVER EXISTING DRAINAGE PIPE.
																															RIM ELEV. = 476.50 / OUTLET INVERT ELEV. = 471.20
1918+22	1918+22	LT.-LT.				18																								17	RETAIN EXIST. PIPE & DROP INLETS
2918+22	2918+22	LT.-RT.				24																								18	REMOVE EXIST. DI & PIPE UPSTREAM OF NEW DOGHOUSE MH DURING STAGE 2 CONS
2918+22	2918+22	RT.-RT.				24																								19	RETAIN EXIST. PIPE & DROP INLETS
1920+15	1920+15	LT.-LT.		PRCDI	ES	18	15				III		1		X				E								3.5			1	TYPE 1 STONE PAD @ OUTLET
																															INLET RIM ELEV. = 479.97
																															INLET INVERT ELEV. = 474.75 / OUTLET INVERT ELEV. = 474.00
2920+40	2920+40	RT.-RT.		PRCDI	ES	18	15				III		1		X				E								3.5			2	TYPE 1 STONE PAD @ OUTLET
																															INLET RIM ELEV. = 479.52
																															INLET INVERT ELEV. = 475.00 / OUTLET INVERT ELEV. = 474.25
1920+40	1920+40	LT.-LT.				18																								20	REMOVE EXISTING PIPE AND DROP INLET
2920+61	2920+62	RT.-RT.				18																								21	REMOVE EXISTING PIPE AND DROP INLET DURING STAGE 2 CONSTR.
2927+94	2927+94	LT.-RT.		PRCDI	ES	18	72				III		1		X				A								3.5			3	TYPE 1 STONE PAD @ OUTLET
																															INLET RIM ELEV. = 487.25
																															INLET INVERT ELEV. = 482.75 / OUTLET INVERT ELEV. = 482.00
2927+70	2927+70	LT.-RT.				18																								22	REMOVE EXISTING PIPE AND DROP INLET DURING STAGE 2 CONSTR.
1932+54	1932+53	LT.-RT.				18																								23	RETAIN EXIST. PIPE & DROP INLETS
1932+53	2932+47	RT.-LT.				18																								24	RETAIN EXIST. PIPE & DROP INLETS. COVER INLET GRATE DURING STAGE 2 CONSTR.
2932+47	2932+46	LT.-RT.				18																								25	RETAIN EXIST. PIPE & DROP INLETS.
1935+59	2935+42	LT.-LT.				24																								26	RETAIN EXIST. PIPE & DROP INLETS
2935+42	2935+42	LT.-RT.				24																								27	RETAIN EXIST. PIPE & DROP INLETS. COVER INLET GRATE DURING STAGE 1 CONSTR.
1939+41	2939+42	LT.-LT.				24																								28	RETAIN EXIST. PIPE & DROP INLETS
2939+42	2939+44	LT.-RT.				30																								29	RETAIN EXIST. PIPE & DROP INLETS
2943+17	2939+42	LT.-LT.				24																								30	RETAIN EXIST. PIPE & DROP INLETS
1943+34	2943+17	LT.-LT.				18																								31	RETAIN EXIST. PIPE & DROP INLETS
2943+17	2943+17	RT.-LT.				18																								32	RETAIN EXIST. PIPE & DROP INLETS
1946+09	2945+92	LT.-LT.				24																								33	RETAIN EXIST. PIPE & DROP INLETS
2945+92	2946+17	LT.-RT.				24																								34	RETAIN EXIST. PIPE & DROP INLETS
1949+55	2949+46	LT.-LT.				36																								35	RETAIN EXIST. PIPE & DROP INLETS
2949+46	2949+46	LT.-RT.				36																								36	RETAIN EXIST. PIPE & DROP INLETS
2951+99	2952+00	LT.-RT.				18																								37	RETAIN EXIST. PIPE & DROP INLETS
VT RTE. 44																															
104+43	104+30	LT.-RT.		ES	ES	12							1																	38	RETAIN EXIST. PIPE & DROP INLETS.
104+32	104+41	RT.-RT.		PRCM	ES	12	22				III																1.5			4	TYPE 1 STONE PAD @ OUTLET. CONSTRUCT DOGHOUSE MANHOLE OVER EXISTING PIPE AND REMOVED EXISTING DOWNSTREAM MH RIM ELEV. = 404.50 MH INVERT ELEV. = 398.10 OUTLET INVERT ELEV. = 397.70
TOTALS						12 18	22 164						4		4												12.0					

FOR FINAL DRAINAGE: SEE 20 SCALE LAYOUT SHEETS 11-23

NOTE: FINAL LOCATION AND ELEVATION OF DRAINAGE ITEMS MAY BE ADJUSTED IN THE FIELD AS DEEMED NECESSARY BY THE RESIDENT ENGINEER.

ITEM NUMBER	ITEMS
204.20	TRENCH EXCAVATION OF EARTH
601.0815	18" RCP CLASS III
601.0817	18" RCP CLASS V
601.6815	18" RCPES CLASS III
604.18	PRECAST REINFORCED CONCRETE DROP INLET WITH CAST IRON GRATE
604.21	PRECAST REINFORCED CONCRETE MANHOLE WITH CAST IRON COVER
604.412	REHAB. DROP INLETS, CATCH BASINS, OR MANHOLES, CLASS I
613.10	STONE FILL, TYPE I

GUARDRAIL

BEGIN STATION	END STATION	POSITION		END TREATMENT	
		LEFT FT	RIGHT FT	LEFT FT	RIGHT FT
TOTALS					

UNDERDRAIN

EGIN STATI	END STATIO	POSITION	TYPE	DIA IN.	LENGTH FT	TRENCH EARTH CY.	TRENCH ROCK CY.	GRAN BKFILL CF	FB EA	MRK. POST EA
TOTALS										

PROJECT NAME: **WINDSOR**
PROJECT NUMBER: **IM 091-1(64)**

FILE NAME: **z10a188DI.dgn**
PROJECT LEADER: **J. WILSON**
DESIGNED BY: **P. CROWLEY**
ITEM DETAIL AND DRAINAGE SHEET

PLOT DATE: **4/25/2013**
DRAWN BY: **S. GUNN**
CHECKED BY: **T. MORIN**
SHEET **43** OF **156**

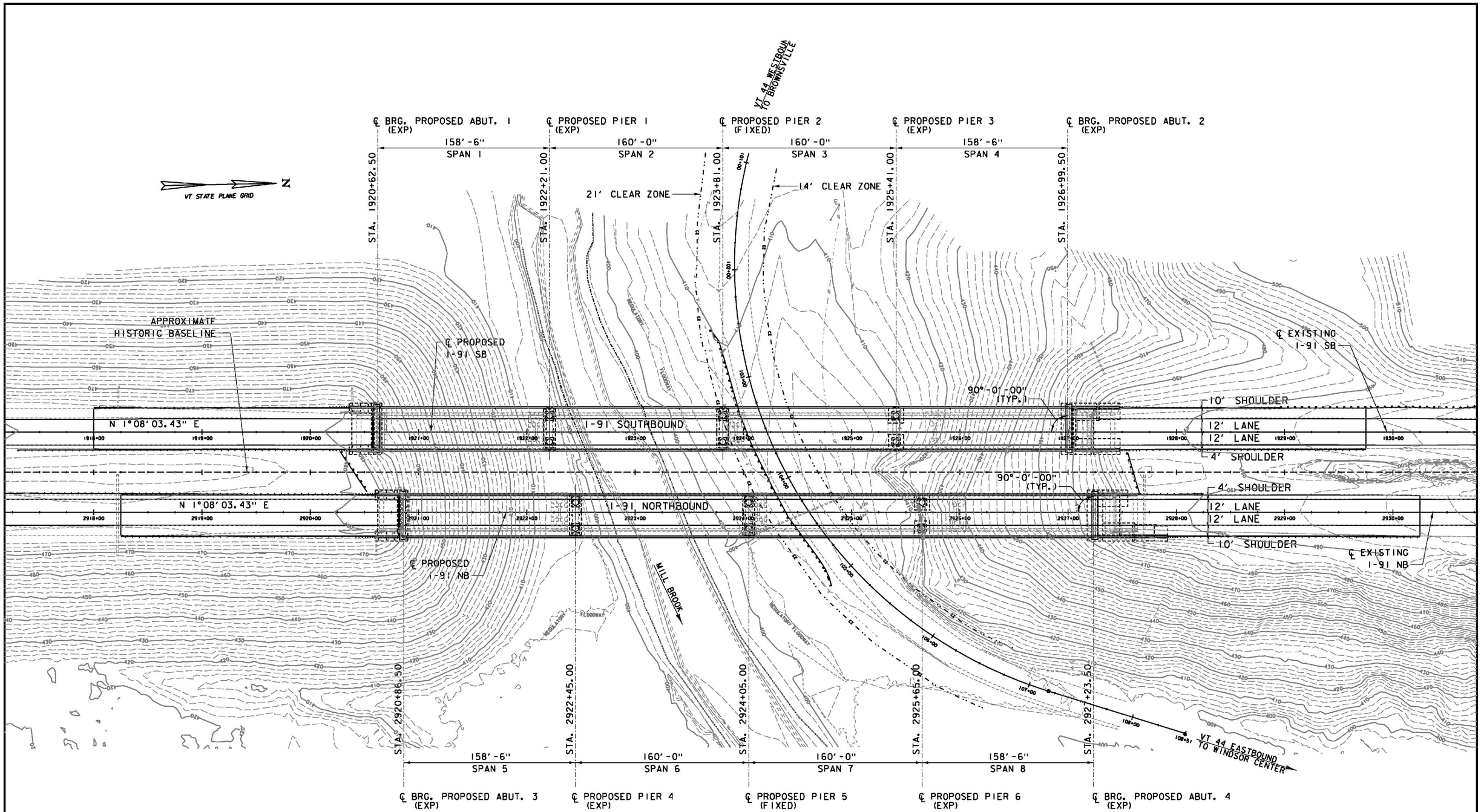

SITE PLAN

SCALE 1" = 40'-0"

40 0 40

PROJECT NAME:	WINDSOR
PROJECT NUMBER:	IM 091-1(64)
FILE NAME: z10a188Site.dgn	PLOT DATE: 7/30/2015
PROJECT LEADER: J. WILSON	DRAWN BY: N. GARCIA III
DESIGNED BY: R. PEIN	CHECKED BY: G. WALKER
SITE PLAN	SHEET 44 OF 156

SOIL CLASSIFICATION

AASHTO	
A1	Gravel and Sand
A3	Fine Sand
A2	Silty or Clayey Gravel and Sand
A4	Silty Soil - Low Compressibility
A5	Silty Soil - Highly Compressible
A6	Clayey Soil - Low Compressibility
A7	Clayey Soil - Highly Compressible

ROCK QUALITY DESIGNATION

R.Q.D. (%)	ROCK DESCRIPTION
<25	Very Poor
25 to 50	Poor
51 to 75	Fair
76 to 90	Good
>90	Excellent

SHEAR STRENGTH

UNDRAINED SHEAR STRENGTH IN P.S.F.	CONSISTENCY
<250	Very Soft
250-500	Soft
500-1000	Med. Stiff
1000-2000	Stiff
2000-4000	Very Stiff
>4000	Hard

CORRELATION GUIDE OF "N" TO DENSITY/CONSISTENCY

DENSITY (GRANULAR SOILS) N	DESCRIPTIVE TERM	CONSISTENCY (COHESIVE SOILS) N	DESCRIPTIVE TERM
<5	Very Loose	<2	Very Soft
5-10	Loose	2-4	Soft
11-24	Med. Dense	5-8	Med. Stiff
25-50	Dense	9-15	Stiff
>50	Very Dense	16-30	Very Stiff
		31-60	Hard
		>60	Very Hard

COMMONLY USED SYMBOLS

▼	Water Elevation
⊗	Standard Penetration Boring
⊕	Auger Boring
⊙	Rod Sounding
S	Sample
N	Standard Penetration Test Blow Count Per Foot For: 2" O. D. Sampler 1 3/8" I. D. Sampler Hammer Weight Of 140 Lbs. Hammer Fall Of 30"
VS	Field Vane Shear Test
US	Undisturbed Soil Sample
B	Blast
DC	Diamond Core
MD	Mud Drill
WA	Wash Ahead
HSA	Hollow Stem Auger
AX	Core Size 1 1/8"
BX	Core Size 1 5/8"
NX	Core Size 2 1/8"
M	Double Tube Core Barrel Used
LL	Liquid Limit
PL	Plastic Limit
PI	Plasticity Index
NP	Non Plastic
w	Moisture Content (Dry Wgt. Basis)
D	Dry
M	Moist
MTW	Moist To Wet
W	Wet
Sat	Saturated
Bo	Boulder
Gr	Gravel
Sa	Sand
Si	Silt
Cl	Clay
HP	Hardpan
Le	Ledge
NLTD	No Ledge To Depth
CNPF	Can Not Penetrate Further
TLOB	Top of Ledge Or Boulder
NR	No Recovery
Rec.	Recovery
%Rec.	Percent Recovery
RQD	Rock Quality Designation
CBR	California Bearing Ratio
<	Less Than
>	Greater Than
R	Refusal (N > 100)
VTSPG	NAD83 - See Note 7

COLOR

blk	Black	pnk	Pink
bl	Blue	pu	Purple
brn	Brown	rd	Red
dk	Dark	tn	Tan
gry	Gray	wh	White
gn	Green	yel	Yellow
lt	Light	mltc	Multicolored
or	Orange		

KEY

SB-1	BORING
C-1	PAVEMENT CORE
GS-1	GRAB SAMPLE
TP-1	TEST PITS
B-1	EXISTING BORING

DEFINITIONS (AASHTO)

BEDROCK (LEDGE) Rock in its native location of indefinite thickness.

BOULDER - A rock fragment with an average dimension > 12 inches.

COBBLE - Rock fragments with an average dimension between 3 and 12 inches.

GRAVEL - Rounded particles of rock < 3" and > 0.0787" (#10 sieve).

SAND - Particles of rock < 0.0787" (#10 sieve) and > 0.0029" (#200 sieve).

SILT - Soil < 0.0029" (#200 sieve), non or slightly plastic and exhibits no strength when air-dried.

CLAY - Fine grained soil, exhibits plasticity when moist and considerable strength when air-dried.

VARVED - Alternate layers of silt and clay.

HARDPAN - Extremely dense soil, cemented layer, not softened when wet.

MUCK - Soft organic soil (containing > 10% organic material.

MOISTURE CONTENT - Weight of water divided by dry weight of soil.

FLOWING SAND - Granular soil so saturated (loose) that it flows into drill casing during extraction of wash rod.

STRIKE - Angle from magnetic north to line of intersection of bed with a horizontal plane.

DIP - Inclination of bed with a horizontal plane.

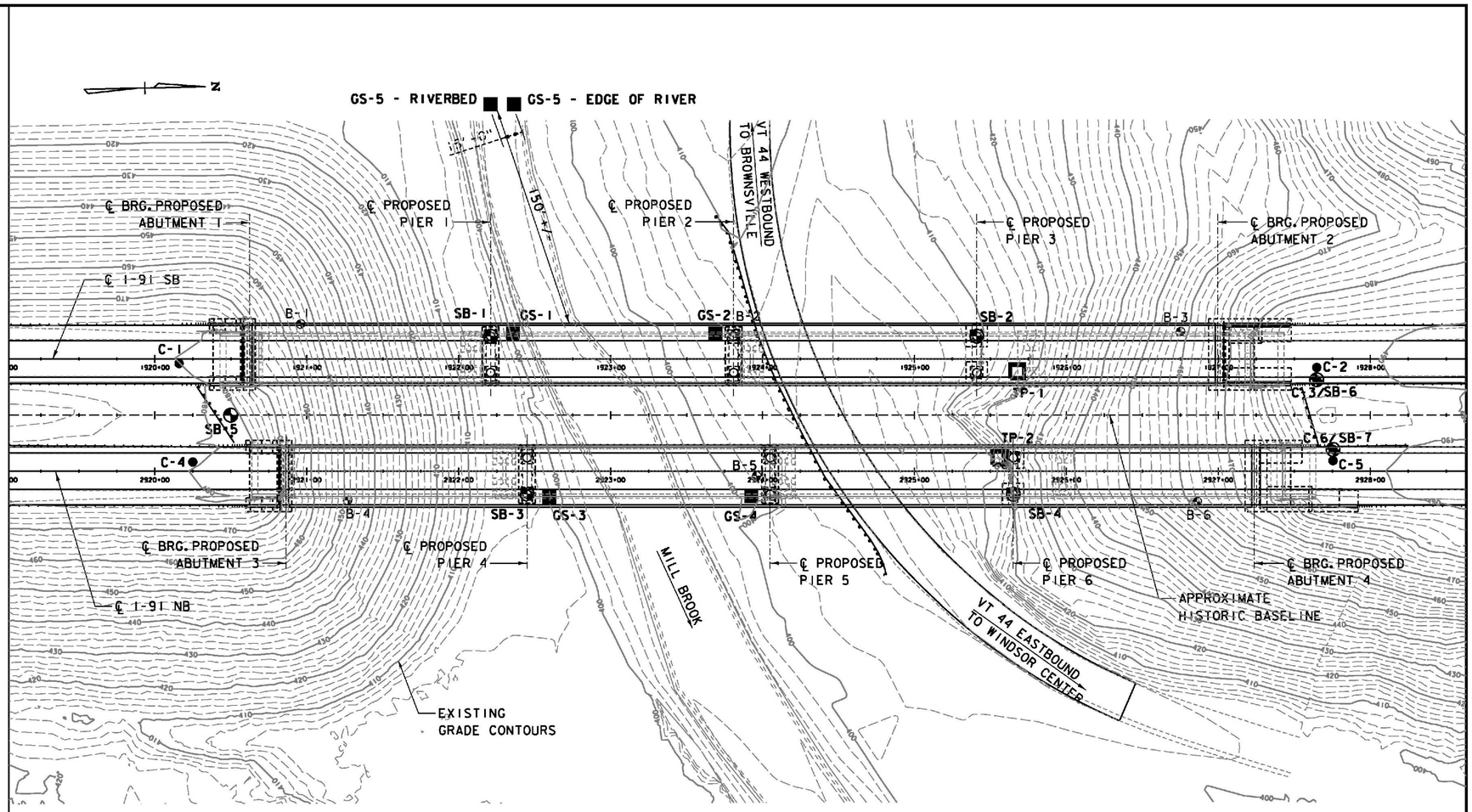

BORING LAYOUT PLAN

SCALE 1" = 40'-0"

40 0 40

BORING NOTES:

1. THE EXISTING BORINGS WERE PERFORMED FROM AUGUST TO SEPTEMBER, 2011 BY NEW HAMPSHIRE BORINGS, INC., AND OBSERVED AND LOGGED BY TERRACON PERSONNEL.
2. THE SUPPLEMENTAL BORINGS AND TEST PITS WERE PERFORMED IN JANUARY, 2013 BY NEW HAMPSHIRE BORING, INC., AND WERE OBSERVED AND LOGGED BY JACOBS PERSONNEL.
3. REFER TO THE RFP DOCUMENTS FOR ADDITIONAL BORING INFORMATION FOR PRIOR SUBSURFACE INVESTIGATION.
4. ADDITIONAL NOTES TO BE ADDED UPON COMPLETION OF FINAL GEOTECHNICAL REPORT.
5. SUBSEQUENT TO DEVELOPMENT OF BORING LOGS BASELINE STATIONING FOR I-91 SB WAS REVISED TO REFLECT 1000 SERIES STATIONS RATHER THAN 2000 SERIES. STATIONS REPORTED IN BORING LOGS ON I-91 ARE 1000 HIGHER THAN ACTUAL CENTERLINE I-91SB STATIONS.

PROJECT NAME: WINDSOR
PROJECT NUMBER: IM 091-1(64)

FILE NAME: z10a188BORI.dgn
PROJECT LEADER: J. WILSON
DESIGNED BY: D. HA
BORING INFORMATION SHEET

PLOT DATE: 7/30/2015
DRAWN BY: S. GUNN
CHECKED BY: P. MURPHY
SHEET 45 OF 156

STATE OF VERMONT
AGENCY OF TRANSPORTATION

BORING LOG INFORMATION

C-1

STATE OF VERMONT
AGENCY OF TRANSPORTATION
MATERIALS & RESEARCH SECTION
SUBSURFACE INFORMATION

BORING LOG
Windsor
IM 091-1 (64)
I-91 Bridges 33N & 33S

Boring No.: C-1
Page No.: 1 of 1
Pin No.:
Checked By: TT

Boring Crew: D. Palmer, NHB, D. Melcher, JEG
Date Started: 1/14/13 Date Finished: 1/14/13
VTSPG NAD83: N 347176.26 ft E 1665090.83 ft
Station: 2920+31.56 Offset: RT 7.28' I-91 SB
Ground Elevation: 480.1 ft

	Casing	Sampler
Type:	WB	SS
I.D.:	4 in	2.5 in
Hammer Wt:	300 lb.	140 lb.
Hammer Fall:	30 in.	30 in.
Hammer/Rod Type:		Safety
Rig:	Diedrich D50	C_E = 1.0

Groundwater Observations

Date	Depth (ft)	Notes
01/14/13		Not Encountered

Depth (ft)	Strata (1)	CLASSIFICATION OF MATERIALS (Description)	Blows/6" (N Value)	Moisture Content %	Gravel %	Sand %	Fines %
		ASPHALT, cored through pavement, 0.0 ft - 0.63 ft					
		S-1: WELL GRADED GRAVEL with SILT and SAND; fine to coarse angular gravel, some fine to coarse sand, trace silt, dry, very dense, gray, No Recovery after 100 blows/5", redrove spoon w/300 lb hammer for recovery following initial refusal w/140 lb hammer, Rec. = 2.0 ft, 1.0 ft - 3.0 ft	100/5"		75.0	19.0	6.0
		S-2: WELL GRADED SAND with GRAVEL; fine to medium sand, little coarse sand, some fine to coarse angular gravel, dry, very dense, brown, Rec. = 1.83 ft, 3.0 ft - 4.83 ft	56-99-95-100/4" (194)				
		Hole stopped @ 4.83 ft					

Notes:
1. Stratification lines represent approximate boundary between material types. Transition may be gradual.
2. N Values have not been corrected for hammer energy. C_E is the hammer energy correction factor.
3. Water level readings have been made at times and under conditions stated. Fluctuations of groundwater may occur due to other factors than those present at the time measurements were made.

2010 COPY - VTRANS BORING LOGS.GPJ - VERMONT AOT.GDT - 3/6/13

C-2

STATE OF VERMONT
AGENCY OF TRANSPORTATION
MATERIALS & RESEARCH SECTION
SUBSURFACE INFORMATION

BORING LOG
Windsor
IM 091-1 (64)
I-91 Bridges 33N & 33S

Boring No.: C-2
Page No.: 1 of 1
Pin No.:
Checked By: TT

Boring Crew: D. Palmer, NHB, D. Melcher, JEG
Date Started: 1/14/13 Date Finished: 1/14/13
VTSPG NAD83: N 347910.49 ft E 1685104.06 ft
Station: 2927+65.90 Offset: RT 5.96' I-91 SB
Ground Elevation: 489.3 ft

	Casing	Sampler
Type:	WB	SS
I.D.:	4 in	2.5 in
Hammer Wt:	300 lb.	140 lb.
Hammer Fall:	30 in.	30 in.
Hammer/Rod Type:		Safety
Rig:	Diedrich D50	C_E = 1.0

Groundwater Observations

Date	Depth (ft)	Notes
01/14/13		Not Encountered

Depth (ft)	Strata (1)	CLASSIFICATION OF MATERIALS (Description)	Blows/6" (N Value)	Moisture Content %	Gravel %	Sand %	Fines %
		ASPHALT, cored through pavement, 0.0 ft - 0.45 ft					
		S-1: WELL GRADED GRAVEL with SILT and SAND; fine to coarse angular gravel, some fine to coarse sand, trace silt, dry, very dense, gray, Rec. = 1.5 ft, 1.0 ft - 3.0 ft	75-64-64-82 (126)		71.0	23.0	6.0
		S-2: WELL GRADED SAND with GRAVEL; fine to coarse sand, little fine to coarse subangular to angular gravel, trace silt, dry, very dense, grayish brown, Rec. = 0.67 ft, 3.0 ft - 3.8 ft	61-100/4"				
		Hole stopped @ 3.8 ft					

Notes:
1. Stratification lines represent approximate boundary between material types. Transition may be gradual.
2. N Values have not been corrected for hammer energy. C_E is the hammer energy correction factor.
3. Water level readings have been made at times and under conditions stated. Fluctuations of groundwater may occur due to other factors than those present at the time measurements were made.

2010 COPY - VTRANS BORING LOGS.GPJ - VERMONT AOT.GDT - 3/6/13

C-3/SB-6

STATE OF VERMONT
AGENCY OF TRANSPORTATION
MATERIALS & RESEARCH SECTION
SUBSURFACE INFORMATION

BORING LOG
Windsor
IM 091-1 (64)
I-91 Bridges 33N & 33S

Boring No.: C-3/SB-6
Page No.: 1 of 1
Pin No.:
Checked By: TT

Boring Crew: D. Palmer, NHB, D. Melcher, JEG
Date Started: 1/14/13 Date Finished: 1/14/13
VTSPG NAD83: N 347910.00 ft E 1685111.07 ft
Station: 2927+65.56 Offset: RT 12.99' I-91 SB
Ground Elevation: 489.2 ft

	Casing	Sampler
Type:	WB	SS
I.D.:	4 in	2.5 in
Hammer Wt:	300 lb.	140 lb.
Hammer Fall:	30 in.	30 in.
Hammer/Rod Type:		Safety
Rig:	Diedrich D50	C_E = 1.0

Groundwater Observations

Date	Depth (ft)	Notes
01/14/13		Not encountered

Depth (ft)	Strata (1)	CLASSIFICATION OF MATERIALS (Description)	Run (Dip deg.)	Core Rec. % (RQD %)	Unit Rate (min/ft)	Blows/6" (N Value)	Moisture Content %	Gravel %	Sand %	Fines %
		ASPHALT, cored through pavement, 0.0 ft - 0.4 ft								
		S-1: WELL GRADED GRAVEL with SILT and SAND; fine to coarse angular to subangular gravel, some fine to coarse sand, trace silt, dry, very dense, gray, Rec. = 1.58 ft, 1.0 ft - 3.0 ft				35-31-40-32 (71)		69.0	23.0	8.0
		S-2: (0-12") WELL GRADED GRAVEL with SAND; fine to coarse angular to subangular gravel, some fine to coarse sand, dry, very dense, gray (12-16") POORLY GRADED SAND, fine to medium sand, trace fine to coarse rounded gravel, dry, very dense, brown, Rec. = 1.33 ft, 3.0 ft - 5.0 ft				33-33-35-34 (68)				
		S-3: POORLY GRADED SAND, fine sand, little medium sand, trace coarse sand, trace fine subrounded to rounded gravel, dry, medium dense, brown, Rec. = 1.17 ft, 5.0 ft - 7.0 ft				15-14-11-8 (25)				
		S-4: POORLY GRADED SAND, fine to medium sand, trace coarse sand, trace fine subrounded to rounded gravel, trace silt, dry, very dense, brown, Rec. = 0.5 ft, 10.0 ft - 10.67 ft	C-1 98 (57)		7 8 7 7 7	10-100/2"				
		10.67 ft - 15.67 ft, C-1: SCHIST, hard, slightly weathered to fresh, slightly fractured, gray, fine grained, close, moderately dipping joints. NXDC								
		15.67 ft - 20.67 ft, C-2: SCHIST; medium to hard, slightly weathered to fresh, slightly fractured, gray, fine grained, close, moderately dipping joints, iron staining at joints. NXDC	C-2 95 (78)		6 6 6 6 7					
		Hole stopped @ 20.67 ft								

Notes:
1. Stratification lines represent approximate boundary between material types. Transition may be gradual.
2. N Values have not been corrected for hammer energy. C_E is the hammer energy correction factor.
3. Water level readings have been made at times and under conditions stated. Fluctuations of groundwater may occur due to other factors than those present at the time measurements were made.

2010 COPY - VTRANS BORING LOGS.GPJ - VERMONT AOT.GDT - 3/6/13

PROJECT NAME: WINDSOR
PROJECT NUMBER: IM 091-1(64)

FILE NAME: z10o188BOR.dgn
PROJECT LEADER: J. WILSON
DESIGNED BY: C. BAISLY
BORING LOG INFORMATION SHEET #1

PLOT DATE: 7/30/2015
DRAWN BY: S. GUNN
CHECKED BY: D. HA
SHEET 46 OF 156

STATE OF VERMONT
AGENCY OF TRANSPORTATION

BORING LOG INFORMATION

C-4

STATE OF VERMONT
AGENCY OF TRANSPORTATION
MATERIALS & RESEARCH SECTION
SUBSURFACE INFORMATION

BORING LOG
Windsor
IM 091-1 (64)
I-91 Bridges 33N & 33S

Boring No.: C-4
Page No.: 1 of 1
Pin No.:
Checked By: TT

Boring Crew: D. Palmer, NHB, D. Melcher, JEG
Date Started: 1/15/13 Date Finished: 1/15/13
VTSPG NAD83: N 347177.22 ft E 1665150.84 ft
Station: 2920+33.71 Offset: LT 8.75' I-91 NB
Ground Elevation: 480.1 ft

	Casing	Sampler
Type:	WB	SS
I.D.:	4 in	2.5 in
Hammer Wt:	300 lb.	140 lb.
Hammer Fall:	30 in.	30 in.
Hammer/Rod Type:	Safety	
Rig:	Diedrich D50	C_E = 1.0

Groundwater Observations

Date	Depth (ft)	Notes
01/15/13		Not encountered

Depth (ft)	Strata (1)	CLASSIFICATION OF MATERIALS (Description)	Blows/6" (N Value)	Moisture Content %	Gravel %	Sand %	Fines %
		ASPHALT, cored through pavement, 0.0 ft - 0.29 ft					
		S-1: WELL GRADED SAND with SILT and GRAVEL; fine to coarse sand, some fine to coarse rounded to angular gravel, trace silt, dry, very dense, brown, Rec. = 1.42 ft, 1.0 ft - 3.0 ft	49-60-53-50 (113)		30.0	61.0	9.0
		S-2: POORLY GRADED SAND with GRAVEL; fine to medium sand, little coarse sand, some fine to coarse rounded to angular gravel, gravel highly weathered to fresh, dry, very dense, brown, Rec. = 1.5 ft, 3.0 ft - 4.92 ft	60-61-72-100/5" (133)				
		Hole stopped @ 4.92 ft					

Notes:
1. Stratification lines represent approximate boundary between material types. Transition may be gradual.
2. N Values have not been corrected for hammer energy. C_E is the hammer energy correction factor.
3. Water level readings have been made at times and under conditions stated. Fluctuations of groundwater may occur due to other factors than those present at the time measurements were made.

2009 COPY VTRANS BORING LOGS.GPJ VERMONT AGT.GDT 3/5/13

C-5

STATE OF VERMONT
AGENCY OF TRANSPORTATION
MATERIALS & RESEARCH SECTION
SUBSURFACE INFORMATION

BORING LOG
Windsor
IM 091-1 (64)
I-91 Bridges 33N & 33S

Boring No.: C-5
Page No.: 1 of 1
Pin No.:
Checked By: TT

Boring Crew: D. Palmer, NHB, D. Melcher, JEG
Date Started: 1/15/13 Date Finished: 1/15/13
VTSPG NAD83: N 347917.21 ft E 1665185.83 ft
Station: 2927+73.85 Offset: LT 6.42' I-91 NB
Ground Elevation: 489.4 ft

	Casing	Sampler
Type:	WB	SS
I.D.:	4 in	2.5 in
Hammer Wt:	300 lb.	140 lb.
Hammer Fall:	30 in.	30 in.
Hammer/Rod Type:	Safety	
Rig:	Diedrich D50	C_E = 1.0

Groundwater Observations

Date	Depth (ft)	Notes
01/15/13		Not encountered

Depth (ft)	Strata (1)	CLASSIFICATION OF MATERIALS (Description)	Blows/6" (N Value)	Moisture Content %	Gravel %	Sand %	Fines %
		ASPHALT, cored through pavement, 0.0 ft - 0.75 ft					
		S-1: WELL GRADED GRAVEL with SILT and SAND; fine to coarse subangular to angular gravel, some fine to coarse sand, trace silt, dry, very dense, grayish brown, Rec. = 2.0 ft, 1.0 ft - 3.0 ft	56-77-95-61 (172)		63.0	31.0	6.0
		S-2: POORLY GRADED SAND; fine sand, little medium sand, trace coarse, trace fine to coarse rounded to angular gravel, dry, very dense, brown, Rec. = 2.0 ft, 3.0 ft - 5.0 ft	98-67-41-35 (108)				
		Hole stopped @ 5.0 ft					

Notes:
1. Stratification lines represent approximate boundary between material types. Transition may be gradual.
2. N Values have not been corrected for hammer energy. C_E is the hammer energy correction factor.
3. Water level readings have been made at times and under conditions stated. Fluctuations of groundwater may occur due to other factors than those present at the time measurements were made.

2009 COPY VTRANS BORING LOGS.GPJ VERMONT AGT.GDT 3/5/13

C-6/SB-7

STATE OF VERMONT
AGENCY OF TRANSPORTATION
MATERIALS & RESEARCH SECTION
SUBSURFACE INFORMATION

BORING LOG
Windsor
IM 091-1 (64)
I-91 Bridges 33N & 33S

Boring No.: C-6/SB-7
Page No.: 1 of 1
Pin No.:
Checked By: TT

Boring Crew: D. Palmer, NHB, D. Melcher, JEG
Date Started: 1/15/13 Date Finished: 1/15/13
VTSPG NAD83: N 347917.23 ft E 1665159.60 ft
Station: 2927+73.75 Offset: LT 12.64' I-91 NB
Ground Elevation: 489.3 ft

	Casing	Sampler
Type:	WB	SS
I.D.:	4 in	2.5 in
Hammer Wt:	300 lb.	140 lb.
Hammer Fall:	30 in.	30 in.
Hammer/Rod Type:	Safety	
Rig:	Diedrich D50	C_E = 1.0

Groundwater Observations

Date	Depth (ft)	Notes
01/15/13		Not encountered

Depth (ft)	Strata (1)	CLASSIFICATION OF MATERIALS (Description)	Blows/6" (N Value)	Moisture Content %	Gravel %	Sand %	Fines %
		ASPHALT, cored through pavement, 0.0 ft - 0.58 ft					
		S-1: WELL GRADED GRAVEL with SILT and SAND; fine to coarse angular to sub angular gravel, some fine to coarse sand, trace silt, dry, very dense, grayish brown, Rec. = 1.67 ft, 1.0 ft - 3.0 ft	74-47-73-51 (120)		72.0	22.0	6.0
		S-2: POORLY GRADED SAND with GRAVEL; fine to medium sand, little coarse sand, little fine rounded gravel, trace coarse rounded gravel, dry, very dense, brown, Rec. = 1.67 ft, 3.0 ft - 5.0 ft	42-50-58-35 (108)				
		S-3: POORLY GRADED SAND with GRAVEL; fine to medium sand, little coarse sand, little fine to coarse rounded gravel, trace silt, dry, medium dense, brown, Rec. = 1.0 ft, 5.0 ft - 7.0 ft	10-9-6-6 (15)				
		S-4: POORLY GRADED SAND; fine to medium sand, trace coarse sand, trace fine rounded gravel, dry, medium dense, brown, Rec. = 1.0 ft, 10.0 ft - 12.0 ft	11-14-13-10 (27)				
		13.5' Top of Bedrock; via roller bit, angular gray schist in cuttings, 13.5 ft - 14.0 ft					
		Hole stopped @ 14.0 ft					

Notes:
1. Stratification lines represent approximate boundary between material types. Transition may be gradual.
2. N Values have not been corrected for hammer energy. C_E is the hammer energy correction factor.
3. Water level readings have been made at times and under conditions stated. Fluctuations of groundwater may occur due to other factors than those present at the time measurements were made.

2009 COPY VTRANS BORING LOGS.GPJ VERMONT AGT.GDT 3/5/13

PROJECT NAME: WINDSOR
PROJECT NUMBER: IM 091-1(64)

FILE NAME: z10o188BOR.dgn
PROJECT LEADER: J. WILSON
DESIGNED BY: C. BAISLY
BORING LOG INFORMATION SHEET #2

PLOT DATE: 7/30/2015
DRAWN BY: S. GUNN
CHECKED BY: D. HA
SHEET 47 OF 156

STATE OF VERMONT
AGENCY OF TRANSPORTATION

BORING LOG INFORMATION

SB-1

STATE OF VERMONT
AGENCY OF TRANSPORTATION
MATERIALS & RESEARCH SECTION
SUBSURFACE INFORMATION

BORING LOG
Windsor
IM 091-1 (64)
I-91 Bridges 33N & 33S

Boring No.: SB-1
Page No.: 1 of 2
Pin No.:
Checked By: TT

Boring Crew: D. Palmer, NHB, D. Melcher, JEG
Date Started: 1/17/13 Date Finished: 1/23/13
VTSPG NAD83: N 347365.94 ft E 1665073.90 ft
Station: 2922+20.87 Offset: LT, 13.43' I-91 SB
Ground Elevation: 404.9 ft

	Casing	Sampler
Type:	WB	SS
I.D.:	4 in	1.38 in
Hammer Wt:	300 lb.	140 lb.
Hammer Fall:	30 in.	30 in.
Hammer/Rod Type:	Safety	
Rig:	Diedrich D50	C_E = 1.0

Groundwater Observations

Date	Depth (ft)	Notes
01/21/13	9.95	
01/22/13	9.86	

Depth (ft)	Strata (1)	CLASSIFICATION OF MATERIALS (Description)	Run (Dpi deg.)	Core Rec.% (RQD %)	Drill Rate minutes/ft	Blows/6" (N Value)	Moisture Content %	Gravel %	Sand %	Fines %
		S-1: WELL GRADED GRAVEL with SAND; fine to coarse angular gravel, some fine to coarse sand, dry, dense, gray, Rec. = 2.0 ft, 0.0 ft - 2.0 ft				19-17-31-32 (48)				
5		S-2: WELL GRADED GRAVEL with SAND and SILT; fine to coarse angular gravel, some fine to coarse sand, little silt, dry, medium dense, grayish brown, Rec. = 1.0 ft, 4.0 ft - 5.0 ft				46-7-14-19 (21)				
10		S-3: WELL GRADED SAND with GRAVEL and SILT; fine to coarse sand, some fine to coarse subrounded to angular gravel, little silt, wet, medium dense, brown, Rec. = 1.33 ft, 9.0 ft - 11.0 ft				10-14-16-16 (30)				
15		S-4: WELL GRADED GRAVEL with SAND and SILT; fine to coarse subrounded to subangular gravel, some fine sand, trace medium to coarse sand, little silt, wet, very dense, brown, Rec. = 0.5 ft, 15.0 ft - 17.0 ft				37-35-22-22 (57)				
20		S-5: NO RECOVERY; multiple attempts to recover soil, Rec. = 0.0 ft, 19.0 ft - 21.0 ft				12-14-15-12 (29)				
25		S-6: POORLY GRADED SAND; fine sand, some medium sand, trace coarse sand, trace fine to coarse rounded gravel, wet, medium dense, brown, Rec. = 2.0 ft, 24.0 ft - 26.0 ft				9-10-14-14 (24)				
30		S-7: POORLY GRADED SAND; fine sand, some medium sand, trace coarse sand, trace fine rounded gravel, wet, medium dense, brown, Rec. = 1.33 ft, 29.0 ft - 31.0 ft				9-12-11-14 (23)				
35		S-8: POORLY GRADED SAND; fine to medium sand, trace coarse sand, trace fine rounded gravel, wet, medium dense, brown, Rec. = 1.5 ft, 34.0 ft - 36.0 ft				4-8-9-9 (17)				
40		S-9: POORLY GRADED SAND; fine sand, little medium sand, trace coarse sand, wet, medium dense, brown, Rec. = 1.0 ft, 39.0 ft - 41.0 ft				13-15-12-13 (27)				
45		S-10: POORLY GRADED SAND; fine sand, little medium sand, wet, medium dense, brown, Rec. = 1.0 ft, 44.0 ft - 46.0 ft				11-12-12-11 (24)				
		S-11: POORLY GRADED SAND; fine sand, wet, medium dense,				10-11-				

Notes:
1. Stratification lines represent approximate boundary between material types. Transition may be gradual.
2. N Values have not been corrected for hammer energy. C_E is the hammer energy correction factor.
3. Water level readings have been made at times and under conditions stated. Fluctuations of groundwater may occur due to other factors than those present at the time measurements were made.

2010 COPY, VTRANS BORING LOGS.GPJ, VERMONT AGT.GDT, 3/5/13

SB-1 (CONT.)

STATE OF VERMONT
AGENCY OF TRANSPORTATION
MATERIALS & RESEARCH SECTION
SUBSURFACE INFORMATION

BORING LOG
Windsor
IM 091-1 (64)
I-91 Bridges 33N & 33S

Boring No.: SB-1
Page No.: 2 of 2
Pin No.:
Checked By: TT

Boring Crew: D. Palmer, NHB, D. Melcher, JEG
Date Started: 1/17/13 Date Finished: 1/23/13
VTSPG NAD83: N 347365.94 ft E 1665073.90 ft
Station: 2922+20.87 Offset: LT, 13.43' I-91 SB
Ground Elevation: 404.9 ft

	Casing	Sampler
Type:	WB	SS
I.D.:	4 in	1.38 in
Hammer Wt:	300 lb.	140 lb.
Hammer Fall:	30 in.	30 in.
Hammer/Rod Type:	Safety	
Rig:	Diedrich D50	C_E = 1.0

Groundwater Observations

Date	Depth (ft)	Notes
01/21/13	9.95	
01/22/13	9.86	

Depth (ft)	Strata (1)	CLASSIFICATION OF MATERIALS (Description)	Run (Dpi deg.)	Core Rec.% (RQD %)	Drill Rate minutes/ft	Blows/6" (N Value)	Moisture Content %	Gravel %	Sand %	Fines %
		brown, Rec. = 1.17 ft, 49.0 ft - 51.0 ft				15-12 (26)				
55		S-12: POORLY GRADED SAND, fine sand, some medium sand, little coarse sand, trace fine rounded gravel, wet, medium dense, brown, Rec. = 1.33 ft, 54.0 ft - 56.0 ft				9-9-11-11 (20)				
60		S-13: POORLY GRADED SAND; fine sand, little medium sand, trace coarse sand, wet, medium dense, brown, Rec. = 1.5 ft, 59.0 ft - 61.0 ft				9-11-12-15 (23)				
65		S-14: POORLY GRADED SAND, fine sand, trace medium sand, wet, medium dense, brown, Rec. = 1.33 ft, 64.0 ft - 66.0 ft				15-14-15-24 (29)				
70		S-15: POORLY GRADED SAND, fine sand, trace medium sand, wet, medium dense, brown, Rec. = 1.33 ft, 69.0 ft - 71.0 ft				10-11-11-13 (22)				
75		S-16: POORLY GRADED SAND; fine sand, little medium sand, trace coarse sand, wet, medium dense, brown, Rec. = 1.0 ft, 74.0 ft - 76.0 ft				14-18-14-17 (30)				
80		S-17: WELL GRADED GRAVEL with SAND and SILT; fine to coarse subrounded to angular gravel, some fine to coarse sand, little silt, wet, very dense, brown, TILL, Rec. = 1.5 ft, 79.0 ft - 81.0 ft				40-47-62-32 (109)				
		TOP OF BEDROCK, via roller bit, 82.0 ft - 83.0 ft								
85		83.0 ft - 88.0 ft, C-1: SCHIST; hard, very slightly weathered to fresh, slightly fractured, gray, fine grained, close, moderately dipping joints. NXDC	C-1	97 (97)		4 6 8 8 10				
90		88.0 ft - 93.0 ft, C-2: SCHIST; hard, very slightly weathered to fresh, slightly fractured, gray, fine grained, close, moderately dipping joints, pyrite inclusions. NXDC	C-2	100 (90)		6 7 6 8 11				
95		Hole stopped @ 93.0 ft								

Notes:
1. Stratification lines represent approximate boundary between material types. Transition may be gradual.
2. N Values have not been corrected for hammer energy. C_E is the hammer energy correction factor.
3. Water level readings have been made at times and under conditions stated. Fluctuations of groundwater may occur due to other factors than those present at the time measurements were made.

2010 COPY, VTRANS BORING LOGS.GPJ, VERMONT AGT.GDT, 3/5/13

SB-2

STATE OF VERMONT
AGENCY OF TRANSPORTATION
MATERIALS & RESEARCH SECTION
SUBSURFACE INFORMATION

BORING LOG
Windsor
IM 091-1 (64)
I-91 Bridges 33N & 33S

Boring No.: SB-2
Page No.: 1 of 1
Pin No.:
Checked By: TT

Boring Crew: B. Thompson, NHB, T. Telesco, JEG
Date Started: 1/18/13 Date Finished: 1/18/13
VTSPG NAD83: N 347885.30 ft E 1685083.24 ft
Station: 2925+40.34 Offset: LT, 10.40' I-91 SB
Ground Elevation: 409.3 ft

	Casing	Sampler
Type:	WB	SS
I.D.:	4 in	1.38 in
Hammer Wt:	300 lb.	140 lb.
Hammer Fall:	30 in.	30 in.
Hammer/Rod Type:	Auto	
Rig:	CME 550X	C_E = 1.2

Groundwater Observations

Date	Depth (ft)	Notes
01/18/13	10.0	Upon completion

Depth (ft)	Strata (1)	CLASSIFICATION OF MATERIALS (Description)	Run (Dpi deg.)	Core Rec.% (RQD %)	Drill Rate minutes/ft	Blows/6" (N Value)	Moisture Content %	Gravel %	Sand %	Fines %
		S-1: SILTY SAND, fine to medium sand, trace coarse sand, little silt, trace gravel, possible weathered rock in tip of spoon, moist, loose, brown, Rec. = 1.25 ft, 0.0 ft - 2.0 ft				3-3-6-9 (9)				
		Hard drilling at 3.5 feet, roller bit to 5 feet, attempt spoon, 3.5 ft - 5.0 ft								
5		S-2: NO RECOVERY; refusal, bedrock encountered, Rec. = 0.0 ft, 5.0 ft - 5.08 ft	C-1	99 (87)	3 4 4 7 5	50/1"				
10		5.08 ft - 10.08 ft, C-1: SCHIST; very hard to hard, very slightly weathered to slightly weathered, fine grained, gray, moderately close, moderately dipping fractures, very thin moderately dipping bedding in bottom 29", pyrite inclusions at joints and within core length. NXDC	C-2	80 (80)	6 5 5 5 5					
		10.08 ft - 15.08 ft, C-2: SCHIST; very hard, very slightly weathered, slightly fractured, moderately close, moderately dipping fractures, very severe weathering at one joint, pyrite inclusions at joints and within core length. NXDC								
15		Hole stopped @ 15.08 ft								

Notes:
1. Stratification lines represent approximate boundary between material types. Transition may be gradual.
2. N Values have not been corrected for hammer energy. C_E is the hammer energy correction factor.
3. Water level readings have been made at times and under conditions stated. Fluctuations of groundwater may occur due to other factors than those present at the time measurements were made.

2010 COPY, VTRANS BORING LOGS.GPJ, VERMONT AGT.GDT, 3/5/13

PROJECT NAME: WINDSOR
PROJECT NUMBER: IM 091-1(64)

FILE NAME: z10o188BOR.dgn
PROJECT LEADER: J. WILSON
DESIGNED BY: C. BAISLY
BORING LOG INFORMATION SHEET #3

PLOT DATE: 7/30/2015
DRAWN BY: S. GUNN
CHECKED BY: D. HA
SHEET 48 OF 156

STATE OF VERMONT
AGENCY OF TRANSPORTATION

BORING LOG INFORMATION

SB-3

STATE OF VERMONT
AGENCY OF TRANSPORTATION
MATERIALS & RESEARCH SECTION
SUBSURFACE INFORMATION

BORING LOG
Windsor
IM 091-1 (64)
I-91 Bridges 33N & 33S

Boring No.: SB-3
Page No.: 1 of 2
Pin No.:
Checked By: TT

Boring Crew: D. Palmer, NHB, D. Melcher, JEG
Date Started: 1/15/13 Date Finished: 1/17/13
VTSPG NAD83: N 347388.60 ft E 1665167.40 ft
Station: 2922+45.36 Offset: RT, 5.60' I-91 NB
Ground Elevation: 404.4 ft

	Casing	Sampler
Type:	WB	SS
I.D.:	4 in	1.38 in
Hammer Wt:	300 lb.	140 lb.
Hammer Fall:	30 in.	30 in.
Hammer/Rod Type:		Safety
Rig:	Diedrich D50	C_E = 1.0

Groundwater Observations

Date	Depth (ft)	Notes
01/17/13	10.6	

Depth (ft)	Strata (1)	CLASSIFICATION OF MATERIALS (Description)	Run (Dpr deg.)	Core Rec.; % (RQD,%)	Drill Rate minutes/ft	Blows/6" (N Value)	Moisture Content %	Gravel %	Sand %	Fines %
		S-1: POORLY GRADED SAND with GRAVEL; fine sand, little medium to coarse sand, some fine to coarse rounded to angular gravel, trace silt, medium dense, Rec. = 2.0 ft, 0.0 ft - 2.0 ft				4-14-11 (25)				
		Boulders & Cobbles (via roller bit), 3.0 ft - 7.0 ft								
5										
		S-2: WELL GRADED GRAVEL with SAND; fine to coarse angular gravel, some fine to coarse sand, trace silt, dry, very dense, gray, Rec. = 1.0 ft, 7.0 ft - 8.48 ft				45-23-100/5" (123)				
10		S-3: WELL GRADED GRAVEL with SAND and SILT; fine to coarse rounded to angular gravel, some fine to coarse sand, little silt, wet, very dense, brown, Rec. = 1.0 ft, 10.0 ft - 12.0 ft				48-30-30-35 (60)				
15		S-4: POORLY GRADED SAND; fine to medium sand, trace coarse sand, wet, medium dense, brown, Rec. = 0.83 ft, 14.0 ft - 16.0 ft				22-8-8-8 (16)				
20		S-5: POORLY GRADED SAND; fine, some medium sand, trace coarse sand, wet, medium dense, brown, Rec. = 1.0 ft, 19.0 ft - 21.0 ft				7-5-6-6 (11)				
25		S-6: POORLY GRADED SAND; fine sand, some medium sand, trace coarse sand, trace fine rounded gravel, wet, medium dense, brown, Rec. = 1.25 ft, 24.0 ft - 26.0 ft				6-6-8-8 (14)				
30		S-7: POORLY GRADED SAND; fine sand, little medium sand, wet, medium dense, brown, Rec. = 0.92 ft, 29.0 ft - 31.0 ft				9-9-9-13 (18)				
35		S-8: POORLY GRADED SAND; fine sand, little medium sand, trace coarse sand, wet, medium dense, brown, Rec. = 1.0 ft, 34.0 ft - 36.0 ft				14-11-11-10 (22)				
40		S-9: POORLY GRADED SAND with GRAVEL; fine sand, little medium to coarse sand, little fine to coarse rounded to subangular gravel, trace silt, wet, medium dense, brown, Rec. = 1.0 ft, 39.0 ft - 41.0 ft				31-15-14-11 (29)				
45		S-10: POORLY GRADED SAND with GRAVEL; fine sand, some medium to coarse sand, little fine rounded gravel, trace coarse rounded gravel, trace silt, wet, medium dense, brown, Rec. = 1.5 ft, 44.0 ft - 46.0 ft				12-9-10-11 (19)				
		S-11: POORLY GRADED SAND with GRAVEL; fine sand, some				10-10-				

Notes:
1. Stratification lines represent approximate boundary between material types. Transition may be gradual.
2. N Values have not been corrected for hammer energy. C_E is the hammer energy correction factor.
3. Water level readings have been made at times and under conditions stated. Fluctuations of groundwater may occur due to other factors than those present at the time measurements were made.

2010 COPY, VTRANS BORING LOGS GPJ, VERMONT AOT GDT 3/5/13

SB-3 (CONT.)

STATE OF VERMONT
AGENCY OF TRANSPORTATION
MATERIALS & RESEARCH SECTION
SUBSURFACE INFORMATION

BORING LOG
Windsor
IM 091-1 (64)
I-91 Bridges 33N & 33S

Boring No.: SB-3
Page No.: 2 of 2
Pin No.:
Checked By: TT

Boring Crew: D. Palmer, NHB, D. Melcher, JEG
Date Started: 1/15/13 Date Finished: 1/17/13
VTSPG NAD83: N 347388.60 ft E 1665167.40 ft
Station: 2922+45.36 Offset: RT, 5.60' I-91 NB
Ground Elevation: 404.4 ft

	Casing	Sampler
Type:	WB	SS
I.D.:	4 in	1.38 in
Hammer Wt:	300 lb.	140 lb.
Hammer Fall:	30 in.	30 in.
Hammer/Rod Type:		Safety
Rig:	Diedrich D50	C_E = 1.0

Groundwater Observations

Date	Depth (ft)	Notes
01/17/13	10.6	

Depth (ft)	Strata (1)	CLASSIFICATION OF MATERIALS (Description)	Run (Dpr deg.)	Core Rec.; % (RQD,%)	Drill Rate minutes/ft	Blows/6" (N Value)	Moisture Content %	Gravel %	Sand %	Fines %
		medium to coarse sand, little fine rounded gravel, trace silt, wet, medium dense, brown, Rec. = 1.33 ft, 49.0 ft - 51.0 ft				11-11 (21)				
55		S-12: POORLY GRADED SAND, fine, little medium; trace coarse, wet, medium dense, brown, Rec. = 1.5 ft, 54.0 ft - 56.0 ft				8-9-9-10 (18)				
60		S-13: POORLY GRADED SAND, fine sand, little medium sand, wet, dense, brown, Rec. = 1.58 ft, 59.0 ft - 61.0 ft Coarse material (cobbles & boulders) via roller bit, 61.0 ft - 64.0 ft				16-14-18-21 (32)				
65		S-14: POORLY GRADED SAND; fine sand, little medium sand, trace silt, wet, dense, brown, Rec. = 1.67 ft, 64.0 ft - 66.0 ft				16-14-17-26 (31)				
		Top Bedrock (via rollerbit), 68.5 ft - 70.0 ft								
70		70.0 ft - 75.0 ft, C-1: SCHIST; hard, slightly weathered to fresh, slightly fractured, gray, fine grained, close, moderately dipping joints, pyrite inclusions. NXDC	C-1	93 (53)	10 8 6 6 10					
75		75.0 ft - 80.0 ft, C-2: SCHIST; moderately hard to hard, moderately weathered to fresh, slightly to moderately fractured, gray, fine grained, close, moderately dipping joints, iron staining at some joints. NXDC	C-2	97 (80)	8 13 9 10 12					
80		Hole stopped @ 80.0 ft								
85										
90										
95										

Notes:
1. Stratification lines represent approximate boundary between material types. Transition may be gradual.
2. N Values have not been corrected for hammer energy. C_E is the hammer energy correction factor.
3. Water level readings have been made at times and under conditions stated. Fluctuations of groundwater may occur due to other factors than those present at the time measurements were made.

2010 COPY, VTRANS BORING LOGS GPJ, VERMONT AOT GDT 3/5/13

SB-4

STATE OF VERMONT
AGENCY OF TRANSPORTATION
MATERIALS & RESEARCH SECTION
SUBSURFACE INFORMATION

BORING LOG
Windsor
IM 091-1 (64)
I-91 Bridges 33N & 33S

Boring No.: SB-4
Page No.: 1 of 1
Pin No.:
Checked By: TT

Boring Crew: B. Thompson, NHB, T. Telesco, JEG
Date Started: 1/18/13 Date Finished: 1/18/13
VTSPG NAD83: N 347693.05 ft E 1665182.80 ft
Station: 2925+50.06 Offset: RT, 14.99' I-91 NB
Ground Elevation: 410.6 ft

	Casing	Sampler
Type:	WB	SS
I.D.:	4 in	1.38 in
Hammer Wt:	300 lb.	140 lb.
Hammer Fall:	30 in.	30 in.
Hammer/Rod Type:		Auto
Rig:	CME 550X	C_E = 1.2

Groundwater Observations

Date	Depth (ft)	Notes
01/18/13	8.5	Upon completion

Depth (ft)	Strata (1)	CLASSIFICATION OF MATERIALS (Description)	Run (Dpr deg.)	Core Rec.; % (RQD,%)	Drill Rate minutes/ft	Blows/6" (N Value)	Moisture Content %	Gravel %	Sand %	Fines %
		S-1: (0-16") SILTY SAND; fine to coarse sand, little silt, trace fine gravel, moist, loose, TOPSOIL. (16-13") WEATHERED ROCK; gray., Rec. = 1.08 ft, 0.0 ft - 1.83 ft (Roller bit ahead to 4 feet, hard drilling, attempt core), 2.0 ft				2-3-6-50/4" (9)				
5		4.0 ft - 9.0 ft, C-1: SCHIST; very hard, slightly weathered, slightly to moderately fractured, fine grained, gray, moderately close, moderately dipping fractures. NXDC	C-1	100 (95)	4 3 4 4 4					
10		9.0 ft - 14.0 ft, C-2: SCHIST; very hard, very slightly weathered, slightly to moderately fractured, fine grained gray, very thin sub-horizontal bedding in top 24", moderately close, sub-horizontal fractures. NXDC	C-2	95 (75)	4 5 5 4 5					
15		Hole stopped @ 14.0 ft								
20										
25										
30										
35										
40										
45										

Notes:
1. Stratification lines represent approximate boundary between material types. Transition may be gradual.
2. N Values have not been corrected for hammer energy. C_E is the hammer energy correction factor.
3. Water level readings have been made at times and under conditions stated. Fluctuations of groundwater may occur due to other factors than those present at the time measurements were made.

2010 COPY, VTRANS BORING LOGS GPJ, VERMONT AOT GDT 3/5/13

PROJECT NAME: WINDSOR
PROJECT NUMBER: IM 091-1(64)

FILE NAME: z10o188BOR.dgn
PROJECT LEADER: J. WILSON
DESIGNED BY: C. BAISLY
BORING LOG INFORMATION SHEET #4

PLOT DATE: 7/30/2015
DRAWN BY: S. GUNN
CHECKED BY: D. HA
SHEET 49 OF 156

STATE OF VERMONT
AGENCY OF TRANSPORTATION

BORING LOG INFORMATION

SB-5

STATE OF VERMONT
AGENCY OF TRANSPORTATION
MATERIALS & RESEARCH SECTION
SUBSURFACE INFORMATION

BORING LOG
Windsor
IM 091-1 (64)
I-91 Bridges 33N & 33S

Boring No.: SB-5
Page No.: 1 of 3
Pin No.:
Checked By: TT

Boring Crew: B. Thompson, NHB, T. Telesco, JEG
Date Started: 1/14/13 Date Finished: 1/17/13
VTSPG NAD83: N 347177.71 ft E 1685124.50 ft
Station: 2920+33.67 Offset: RT 40.90' I-91 SB
Ground Elevation: 480.22 ft

	Casing	Sampler
Type:	WB	SS
I.D.:	4 in	1.38 in
Hammer Wt:	300 lb.	140 lb.
Hammer Fall:	30 in.	30 in.
Hammer/Rod Type:	Auto	
Rig:	CME-550X	C_E = 1.2

Groundwater Observations

Date	Depth (ft)	Notes
01/15/13		Dry to 70 ft
01/17/13	86.0	Settled since 1/15

Depth (ft)	Strata (1)	CLASSIFICATION OF MATERIALS (Description)	Blows/6" (N Value)	Moisture Content %	Gravel %	Sand %	Fines %
		S-1: WELL GRADED SAND w/ GRAVEL; fine to coarse sand, some subangular gravel, moist, medium dense, dark gray, top 6" is silty topsoil; FILL, Rec. = 1.33 ft, 0.0 ft - 2.0 ft	3-9-7-8 (16)				
5		S-2: WELL GRADED SAND w/ GRAVEL; fine to coarse sand, some fine subangular gravel, moist, medium dense, dark gray/brown, FILL, Rec. = 0.83 ft, 4.0 ft - 5.0 ft	15-10-16-21 (26)				
10		S-3: POORLY GRADED SAND w/ GRAVEL; coarse sand, little fine angular to subangular gravel, wet, medium dense, dark gray, FILL, Rec. = 0.75 ft, 9.0 ft - 11.0 ft	8-7-8-8 (15)				
15		S-4: WELL GRADED SAND w/ GRAVEL; fine to coarse sand, some fine to coarse subangular gravel, cobbles, wet, very dense, dark brown, FILL, Rec. = 1.0 ft, 14.0 ft - 16.0 ft	14-60-11-29 (71)				
20		S-5: WELL GRADED SAND; fine to coarse sand, trace fine gravel, moist, dense, brown, FILL, Rec. = 1.17 ft, 19.0 ft - 21.0 ft	14-19-16-19 (35)				
25		S-6: (0-5") WELL GRADED SAND; fine to coarse sand, trace fine gravel, moist, medium dense, brown, (5-10") POORLY GRADED SAND; fine sand, moist, medium dense, brown, FILL, Rec. = 0.83 ft, 24.0 ft - 26.0 ft	12-13-14-14 (27)				
		START USING DRILLING MUD, 27.0 ft					
30		S-7: WELL GRADED SAND w/ GRAVEL; fine to coarse sand, some fine to coarse subangular gravel, trace silt, cobbles, wet, dense, brown, FILL, Rec. = 1.17 ft, 29.0 ft - 31.0 ft	10-19-12-12 (31)				
35		S-8: POORLY GRADED SAND; fine sand, trace silt, moist, medium dense, brown, FILL, Rec. = 1.25 ft, 34.0 ft - 36.0 ft	10-11-12-15 (23)				
40		S-9: POORLY GRADED SAND; mostly fine sand, trace coarse sand, trace fine gravel, moist, medium dense, brown, FILL, Rec. = 1.33 ft, 39.0 ft - 41.0 ft	8-10-10-14 (20)				
45		S-10: POORLY GRADED SAND; fine sand, moist, dense, brown, FILL, Rec. = 1.17 ft, 44.0 ft - 46.0 ft	17-21-23-21 (44)				
		S-11: POORLY GRADED SAND; fine sand, trace silt, moist, dense, brown, FILL, Rec. =	13-16-				

Notes:
1. Stratification lines represent approximate boundary between material types. Transition may be gradual.
2. N Values have not been corrected for hammer energy. C_E is the hammer energy correction factor.
3. Water level readings have been made at times and under conditions stated. Fluctuations of groundwater may occur due to other factors than those present at the time measurements were made.

2016 COPY, VTRANS BORING LOGS.GPJ, VERMONT ADT.GDT 3/5/13

SB-5 (CONT.)

STATE OF VERMONT
AGENCY OF TRANSPORTATION
MATERIALS & RESEARCH SECTION
SUBSURFACE INFORMATION

BORING LOG
Windsor
IM 091-1 (64)
I-91 Bridges 33N & 33S

Boring No.: SB-5
Page No.: 2 of 3
Pin No.:
Checked By: TT

Boring Crew: B. Thompson, NHB, T. Telesco, JEG
Date Started: 1/14/13 Date Finished: 1/17/13
VTSPG NAD83: N 347177.71 ft E 1685124.50 ft
Station: 2920+33.67 Offset: RT 40.90' I-91 SB
Ground Elevation: 480.22 ft

	Casing	Sampler
Type:	WB	SS
I.D.:	4 in	1.38 in
Hammer Wt:	300 lb.	140 lb.
Hammer Fall:	30 in.	30 in.
Hammer/Rod Type:	Auto	
Rig:	CME-550X	C_E = 1.2

Groundwater Observations

Date	Depth (ft)	Notes
01/15/13		Dry to 70 ft
01/17/13	86.0	Settled since 1/15

Depth (ft)	Strata (1)	CLASSIFICATION OF MATERIALS (Description)	Blows/6" (N Value)	Moisture Content %	Gravel %	Sand %	Fines %
		1.58 ft, 49.0 ft - 51.0 ft	19-23 (35)				
		(Continued on 1/15/13), 52.0 ft					
55		S-12: POORLY GRADED SAND, fine sand, moist, dense, brown, FILL, Rec. = 0.92 ft, 54.0 ft - 56.0 ft	18-21-29-30 (50)				
		(Attempt to advance boring open hole), 57.0 ft					
60		S-13: POORLY GRADED SAND; medium sand, wet, very dense, brown, FILL, Rec. = 1.42 ft, 59.0 ft - 61.0 ft	23-20-28-34 (57)				
65		S-14: POORLY GRADED SAND; fine sand, lenses of medium sand, wet, medium dense, brown, FILL, Rec. = 1.0 ft, 64.0 ft - 66.0 ft	8-8-10-12 (18)				
70		S-15: POORLY GRADED SAND; fine sand, trace medium sand, wet, dense, brown, FILL, Rec. = 1.42 ft, 69.0 ft - 71.0 ft	18-20-19-16 (39)				
75		S-16: POORLY GRADED SAND; fine sand, trace medium sand, wet, medium dense, brown, FILL, Rec. = 1.0 ft, 74.0 ft - 76.0 ft	18-16-14-11 (30)				
		(Complete loss of drilling water; advance casing; Cobbles encountered 76-79 ft), 77.0 ft					
80		S-17: POORLY GRADED SAND; fine sand, spoon contains pieces of fractured cobbles, moist, dense, brown, FILL, Rec. = 0.83 ft, 79.0 ft - 81.0 ft	12-16-19-8 (35)				
85		S-18: POORLY GRADED SAND; fine to medium sand, trace coarse sand, moist, very dense, brown, Rec. = 1.0 ft, 84.0 ft - 86.0 ft	31-34-42-51 (76)				
90		S-19: WELL GRADED GRAVEL w/ SAND; fine to coarse subangular gravel, some fine to coarse sand, wet, very dense, dark brown, Rec. = 1.0 ft, 89.0 ft - 91.0 ft	31-27-81-85 (108)				
		(Casing breaks at 89 ft, continue open hole), 92.0 ft					
95		S-20: POORLY GRADED SAND; fine sand, trace medium and coarse sand, top 3" contains fractured rock, possible cobbles, wet, very dense, brown, Rec. = 0.83 ft, 94.0 ft - 96.0 ft	35-33-21-17 (54)				
		S-21: POORLY GRADED SAND; fine to medium sand, trace coarse sand, trace silt, wet,	17-16-				

Notes:
1. Stratification lines represent approximate boundary between material types. Transition may be gradual.
2. N Values have not been corrected for hammer energy. C_E is the hammer energy correction factor.
3. Water level readings have been made at times and under conditions stated. Fluctuations of groundwater may occur due to other factors than those present at the time measurements were made.

2016 COPY, VTRANS BORING LOGS.GPJ, VERMONT ADT.GDT 3/5/13

SB-5 (CONT.)

STATE OF VERMONT
AGENCY OF TRANSPORTATION
MATERIALS & RESEARCH SECTION
SUBSURFACE INFORMATION

BORING LOG
Windsor
IM 091-1 (64)
I-91 Bridges 33N & 33S

Boring No.: SB-5
Page No.: 3 of 3
Pin No.:
Checked By: TT

Boring Crew: B. Thompson, NHB, T. Telesco, JEG
Date Started: 1/14/13 Date Finished: 1/17/13
VTSPG NAD83: N 347177.71 ft E 1685124.50 ft
Station: 2920+33.67 Offset: RT 40.90' I-91 SB
Ground Elevation: 480.22 ft

	Casing	Sampler
Type:	WB	SS
I.D.:	4 in	1.38 in
Hammer Wt:	300 lb.	140 lb.
Hammer Fall:	30 in.	30 in.
Hammer/Rod Type:	Auto	
Rig:	CME-550X	C_E = 1.2

Groundwater Observations

Date	Depth (ft)	Notes
01/15/13		Dry to 70 ft
01/17/13	86.0	Settled since 1/15

Depth (ft)	Strata (1)	CLASSIFICATION OF MATERIALS (Description)	Blows/6" (N Value)	Moisture Content %	Gravel %	Sand %	Fines %
		dense, dark brown, Rec. = 1.33 ft, 99.0 ft - 101.0 ft	15-16 (31)				
105		S-22: WELL GRADED SAND; fine to coarse sand, little fine subrounded to rounded gravel, wet, very dense, dark brown, Rec. = 1.33 ft, 104.0 ft - 106.0 ft	27-28-28-28 (56)				
110		S-23: POORLY GRADED SAND; fine sand, trace coarse sand, trace silt, wet, dense, dark brown, Rec. = 1.17 ft, 109.0 ft - 111.0 ft	21-23-22-23 (45)				
		Hole stopped @ 111.0 ft					
115							
120							
125							
130							
135							
140							
145							

Notes:
1. Stratification lines represent approximate boundary between material types. Transition may be gradual.
2. N Values have not been corrected for hammer energy. C_E is the hammer energy correction factor.
3. Water level readings have been made at times and under conditions stated. Fluctuations of groundwater may occur due to other factors than those present at the time measurements were made.

2016 COPY, VTRANS BORING LOGS.GPJ, VERMONT ADT.GDT 3/5/13

PROJECT NAME: WINDSOR
PROJECT NUMBER: IM 091-1(64)

FILE NAME: z10a188BOR.dgn
PROJECT LEADER: J. WILSON
DESIGNED BY: C. BAISLY
BORING LOG INFORMATION SHEET #5

PLOT DATE: 7/30/2015
DRAWN BY: S. GUNN
CHECKED BY: D. HA
SHEET 50 OF 156

STATE OF VERMONT
AGENCY OF TRANSPORTATION

BORING LOG INFORMATION

B – 1

STATE OF VERMONT
AGENCY OF TRANSPORTATION
MATERIALS & RESEARCH SECTION
SUBSURFACE INFORMATION

BORING LOG
WINDSOR
IM-091-1 (64)

Boring No.: **B-1**
Page No.: 1 of 3
Pin No.:
Checked By: SMC

Boring Crew: New Hampshire Boring, Inc., IKC
Date Started: 9/08/11 Date Finished: 9/15/11
VTSPG NAD83:
Station: 2920+96.00 Offset: 60LT
Ground Elevation: 455.0 ft

	Casing	Sampler
Type:	WB	SS
I.D.:	4. in	1.38 in
Hammer Wt:	300	140 lb.
Hammer Fall:	24	30 in.
Hammer/Rod Type:	Safety/N	
Rig:	Diedrich D-25	C_E = 1.0

Groundwater Observations

Date	Depth (ft)	Notes
09/12/11	74.0	

Depth (ft)	Strata (1)	CLASSIFICATION OF MATERIALS (Description)	Run (Dip deg.)	Core Rec. % (RQD %)	Blows/6" (N Value)	Moisture Content %	Gravel %	Sand %	Fines %
		Medium to fine SAND, some Silt, little Gravel, moist, medium dense, brown, Rec. = 1.0 ft, 0.0 ft - 2.0 ft			1-7-9-8 (16)				
5		GRAVEL, trace medium to fine Sand, moist, medium dense, gray, Rec. = 0.2 ft, 4.0 ft - 6.0 ft			4-15-14-11 (29)				
10		GRAVEL, trace medium to fine Sand, moist, medium dense, gray, Rec. = 0.3 ft, 9.0 ft - 11.0 ft			7-11-10-13 (21)				
15		GRAVEL, some medium to fine Sand, moist, medium dense, gray, Rec. = 0.5 ft, 14.0 ft - 16.0 ft			3-12-21-24 (33)				
20		Fine SAND, trace Silt, moist very dense, brown, Rec. = 1.0 ft, 19.0 ft - 21.0 ft			21-24-26-53 (50)				
25		Medium to fine SAND, some Gravel, little Silt, moist, dense, gray/brown, Rec. = 0.5 ft, 24.0 ft - 26.0 ft			22-28-18-40 (46)				
30		A-2-4, moist, dense, light brown, Rec. = 1.7 ft, 29.0 ft - 31.0 ft			45-14-16-20 (30)	18.4	13.0	76.0	11.0
35		A-3, moist, medium dense, light brown, Rec. = 1.2 ft, 34.0 ft - 36.0 ft			11-8-10-12 (18)	23.6	1.0	91.4	7.6
40		Medium to fine SAND, and Gravel, trace Silt, moist, dense, gray/brown, Rec. = 0.5 ft, 39.0 ft - 41.0 ft			19-26-11-15 (37)				
45		A-2-4, moist, medium dense, gray/brown, Rec. = 0.8 ft, 44.0 ft - 46.0 ft			18-17-11-11 (28)	18.2	22.0	64.0	14.0
		Medium to fine SAND, trace silt, moist, medium dense, light brown, Rec. = 1.3 ft,			11-7-				

Notes:
1. Stratification lines represent approximate boundary between material types. Transition may be gradual.
2. N Values have not been corrected for hammer energy. C_E is the hammer energy correction factor. C_E is an estimated value.
3. Water level readings have been made at times and under conditions stated. Fluctuations of groundwater may occur due to other factors than those present at the time measurements were made.

2010.CORP. J11151A0.GPJ \ VERMONT AOT.GDT - 11/9/11

B – 1 (CONT.)

STATE OF VERMONT
AGENCY OF TRANSPORTATION
MATERIALS & RESEARCH SECTION
SUBSURFACE INFORMATION

BORING LOG
WINDSOR
IM-091-1 (64)

Boring No.: **B-1**
Page No.: 2 of 3
Pin No.:
Checked By: SMC

Boring Crew: New Hampshire Boring, Inc., IKC
Date Started: 9/08/11 Date Finished: 9/15/11
VTSPG NAD83:
Station: 2920+96.00 Offset: 60LT
Ground Elevation: 455.0 ft

	Casing	Sampler
Type:	WB	SS
I.D.:	4. in	1.38 in
Hammer Wt:	300	140 lb.
Hammer Fall:	24	30 in.
Hammer/Rod Type:	Safety/N	
Rig:	Diedrich D-25	C_E = 1.0

Groundwater Observations

Date	Depth (ft)	Notes
09/12/11	74.0	

Depth (ft)	Strata (1)	CLASSIFICATION OF MATERIALS (Description)	Run (Dip deg.)	Core Rec. % (RQD %)	Blows/6" (N Value)	Moisture Content %	Gravel %	Sand %	Fines %
		49.0 ft - 51.0 ft			11-16 (18)				
55		Medium to fine SAND, little Silt, trace Gravel, moist, very dense, Rec. = 1.0 ft, 54.0 ft - 56.0 ft			49-28-26-34 (54)				
		58.0 ft, Drill action suggests cobble/rock fill 58 to 59 feet.							
60		Medium to fine SAND, little Silt, trace Gravel, moist, dense, gray, Rec. = 0.8 ft, 59.0 ft - 61.0 ft			7-15-22-16 (37)				
		63.0 ft, Drill action suggests cobble/rock fill 63 to 64 feet.							
65		Medium to fine SAND, trace silt, trace gravel, moist, medium dense, light brown, Rec. = 0.8 ft, 64.0 ft - 66.0 ft			32-24-20-28 (44)				
70		Medium to fine SAND, trace silt, trace gravel, moist, very dense, light brown, Rec. = 0.8 ft, 69.0 ft - 71.0 ft			37-30-32-35 (62)				
75		Medium to fine SAND, trace silt, wet, dense, brown, Rec. = 1.0 ft, 74.0 ft - 76.0 ft			21-19-19-19 (38)				
80		Medium to fine SAND, trace silt, wet, very dense, brown, Rec. = 0.7 ft, 79.0 ft - 81.0 ft			28-32-31-32 (63)				
		82.5 ft, Drill action suggests cobble/gravel 82.5 to 83.5 feet.							
85		Medium to fine SAND, trace silt, trace gravel, wet, Rec. = 1.2 ft, 84.0 ft - 86.0 ft			37-26-27-32 (53)				
90		A-1-b, wet, very dense, brown, Rec. = 1.0 ft, 89.0 ft - 91.0 ft			58-60-61-110 (121)	13.1	41.0	47.0	12.0
		91.0 ft, Drill action suggests cobble/gravel 91 to 94 feet.							
95		Medium to fine SAND, little Gravel, trace Silt, wet, very dense, brown, Rec. = 0.8 ft, 94.0 ft - 96.0 ft			43-53-46-55 (99)				
		Medium to fine SAND, little Gravel, trace Silt, wet, very dense, brown, Rec. = 1.2			39-34-				

Notes:
1. Stratification lines represent approximate boundary between material types. Transition may be gradual.
2. N Values have not been corrected for hammer energy. C_E is the hammer energy correction factor. C_E is an estimated value.
3. Water level readings have been made at times and under conditions stated. Fluctuations of groundwater may occur due to other factors than those present at the time measurements were made.

2010.CORP. J11151A0.GPJ \ VERMONT AOT.GDT - 11/9/11

B – 1 (CONT.)

STATE OF VERMONT
AGENCY OF TRANSPORTATION
MATERIALS & RESEARCH SECTION
SUBSURFACE INFORMATION

BORING LOG
WINDSOR
IM-091-1 (64)

Boring No.: **B-1**
Page No.: 3 of 3
Pin No.:
Checked By: SMC

Boring Crew: New Hampshire Boring, Inc., IKC
Date Started: 9/08/11 Date Finished: 9/15/11
VTSPG NAD83:
Station: 2920+96.00 Offset: 60LT
Ground Elevation: 455.0 ft

	Casing	Sampler
Type:	WB	SS
I.D.:	4. in	1.38 in
Hammer Wt:	300	140 lb.
Hammer Fall:	24	30 in.
Hammer/Rod Type:	Safety/N	
Rig:	Diedrich D-25	C_E = 1.0

Groundwater Observations

Date	Depth (ft)	Notes
09/12/11	74.0	

Depth (ft)	Strata (1)	CLASSIFICATION OF MATERIALS (Description)	Run (Dip deg.)	Core Rec. % (RQD %)	Blows/6" (N Value)	Moisture Content %	Gravel %	Sand %	Fines %
		ft, 99.0 ft - 101.0 ft			31-43 (65)				
105		Coarse to fine SAND, trace Silt, trace Gravel, wet, very dense, brown, Rec. = 1.0 ft, 104.0 ft - 106.0 ft			30-35-52-80 (87)				
110		Coarse to fine SAND, trace Silt, trace Gravel, wet, very dense, brown, Rec. = 1.2 ft, 109.0 ft - 111.0 ft			36-29-28-33 (57)				
115		Coarse to fine SAND, trace Silt, trace Gravel, wet, very dense, brown, Rec. = 1.3 ft, 114.0 ft - 116.0 ft			28-26-33-40 (59)				
120		Medium to fine SAND, trace silt, trace gravel, wet, very dense, brown, Rec. = 1.0 ft, 119.0 ft - 121.0 ft			35-25-25-26 (50)				
125		Medium to fine SAND, some Silt, trace Gravel, wet, very dense, brown, Rec. = 0.8 ft, 124.0 ft - 124.8 ft 125.5 ft, Drill action suggests weathered rock 125.5 to 131 feet.			92-100/3" (100+)				
130		131.0 ft - 136.0 ft, Begin NX rock core at 131 feet. Gray, SCHIST, hard, slightly weathered. Joints low to high angle, close to very close spacing, rough, stepped to undulating, moderately open to open.	1	63 (0)					
135		136.0 ft - 141.0 ft, Gray, SCHIST, hard, slightly weathered to fresh. Joints low to high angle, close to very close spacing, rough, stepped to undulating, moderately open to open.	2	96 (13)					
140		Hole stopped @ 141.0 ft							
145									

Notes:
1. Stratification lines represent approximate boundary between material types. Transition may be gradual.
2. N Values have not been corrected for hammer energy. C_E is the hammer energy correction factor. C_E is an estimated value.
3. Water level readings have been made at times and under conditions stated. Fluctuations of groundwater may occur due to other factors than those present at the time measurements were made.

2010.CORP. J11151A0.GPJ \ VERMONT AOT.GDT - 11/9/11

PROJECT NAME: WINDSOR
PROJECT NUMBER: IM 091-1(64)

FILE NAME: z10o188BOR.dgn
PROJECT LEADER: J. WILSON
DESIGNED BY: C. BAISLY
BORING LOG INFORMATION SHEET #6

PLOT DATE: 7/30/2015
DRAWN BY: S. GUNN
CHECKED BY: D. HA
SHEET 51 OF 156

STATE OF VERMONT
AGENCY OF TRANSPORTATION

BORING LOG INFORMATION

B-2

STATE OF VERMONT
AGENCY OF TRANSPORTATION
MATERIALS & RESEARCH SECTION
SUBSURFACE INFORMATION

BORING LOG
WINDSOR
IM-091-1 (64)

Boring No.: B-2
Page No.: 1 of 2
Pin No.:
Checked By: SMC

Boring Crew: New Hampshire Boring, Inc., IKC
Date Started: 8/25/11 Date Finished: 8/26/11
VTSPG NAD83:
Station: 2923+82.00 Offset: 54LT
Ground Elevation: 406.0 ft

	Casing	Sampler
Type:	WB	SS
I.D.:	4. in	1.38 in
Hammer Wt:	300	140 lb.
Hammer Fall:	24	30 in.
Hammer/Rod Type:		Safety/N
Rig:	Diedrich D-50	C_E = 1.0

Groundwater Observations

Date	Depth (ft)	Notes
		Post Tropical
08/26/11	8.9	Storm Irene

Depth (ft)	Strata (1)	CLASSIFICATION OF MATERIALS (Description)	Run (Dip deg.)	Core Rec. % (RQD %)	Blows/6" (N Value)	Moisture Content %	Gravel %	Sand %	Fines %
		Medium to fine SAND, little Silt, little Gravel, moist, medium dense, brown, Rec. = 1.5 ft, 0.0 ft - 2.0 ft			4-11-10-26 (21)				
5		Medium to fine SAND, little Silt, little Gravel, moist, medium dense, brown, Rec. = 0.7 ft, 4.0 ft - 6.0 ft			7-10-8-6 (18)				
		8.0 ft, Drill action suggests cobbles/gravel 8 to 9 feet.							
10		Medium to fine SAND, some Silt, little Gravel, moist, very dense, brown, Rec. = 0.7 ft, 9.0 ft - 11.0 ft			25-36-39-75/3" (75)				
		12.0 ft, Drill action suggests cobbles/gravel 12 to 14 feet.							
15		No recovery, gravel lodged in tip of sampler, Rec. = 0.1 ft, 14.0 ft - 16.0 ft			30-14-13-13 (27)				
20		A-1-b, wet, dense, brown, Rec. = 1.0 ft, 19.0 ft - 21.0 ft	13.9	22.0	9-15-19-18 (34)		69.4	8.6	
25		Medium to fine SAND, some Silt, wet, dense, brown, Rec. = 1.0 ft, 24.0 ft - 26.0 ft			11-12-16-20 (28)				
30		Fine SAND, little Silt, wet, dense, brown, Rec. = 0.8 ft, 29.0 ft - 31.0 ft			11-12-17-21 (29)				
35		Fine SAND, little Silt, wet, dense, brown, Rec. = 0.7 ft, 34.0 ft - 36.0 ft			16-16-19-23 (35)				
40		A-3, wet, dense, brown, Rec. = 1.0 ft, 39.0 ft - 41.0 ft	21.1		13-12-18-21 (30)		90.0	10.0	
45		Medium to fine SAND, little Silt, wet, medium dense, brown, Rec. = 0.7 ft, 44.0 ft - 46.0 ft			12-11-16-18 (27)				
		Medium to fine SAND, little Silt, wet, medium dense, brown, Rec. = 1.0 ft, 49.0 ft			14-13-				

Notes:
1. Stratification lines represent approximate boundary between material types. Transition may be gradual.
2. N Values have not been corrected for hammer energy. C_E is the hammer energy correction factor. C_E is an estimated value.
3. Water level readings have been made at times and under conditions stated. Fluctuations of groundwater may occur due to other factors than those present at the time measurements were made.

2010.DGPV J11154B.GPJ VERMONT_ADT.GDT 11/9/11

B-2 (CONT.)

STATE OF VERMONT
AGENCY OF TRANSPORTATION
MATERIALS & RESEARCH SECTION
SUBSURFACE INFORMATION

BORING LOG
WINDSOR
IM-091-1 (64)

Boring No.: B-2
Page No.: 2 of 2
Pin No.:
Checked By: SMC

Boring Crew: New Hampshire Boring, Inc., IKC
Date Started: 8/25/11 Date Finished: 8/26/11
VTSPG NAD83:
Station: 2923+82.00 Offset: 54LT
Ground Elevation: 406.0 ft

	Casing	Sampler
Type:	WB	SS
I.D.:	4. in	1.38 in
Hammer Wt:	300	140 lb.
Hammer Fall:	24	30 in.
Hammer/Rod Type:		Safety/N
Rig:	Diedrich D-50	C_E = 1.0

Groundwater Observations

Date	Depth (ft)	Notes
		Post Tropical
08/26/11	8.9	Storm Irene

Depth (ft)	Strata (1)	CLASSIFICATION OF MATERIALS (Description)	Run (Dip deg.)	Core Rec. % (RQD %)	Blows/6" (N Value)	Moisture Content %	Gravel %	Sand %	Fines %
		- 51.0 ft			19-23 (32)				
55		Medium to fine SAND, little Silt, wet, very dense, brown, Rec. = 1.2 ft, 54.0 ft - 56.0 ft			15-20-31-37 (51)				
60		Medium to fine SAND, little Silt, wet, very dense, brown, Rec. = 1.3 ft, 59.0 ft - 61.0 ft			31-33-40-68 (73)				
		Note:, Top of bedrock at 61.5 feet.							
		Note:, Begin NX rock core at 62.7 feet.	1	87 (66)					
65		62.7 ft - 63.7 ft, Gray, SCHIST, hard, fresh, Joints, high angle to moderately dipping, close spacing, rough, stepped to undulating, moderately open to slightly open.	2	80 (65)					
		64.0 ft - 67.0 ft, Gray, SCHIST, hard, fresh, Joints, high angle to moderately dipping, close spacing, rough, stepped to undulating, moderately open to slightly open.							
70		68.0 ft - 73.0 ft, Gray, SCHIST, hard, fresh, Joints, high angle to moderately dipping, close spacing, rough, stepped to undulating, moderately open to slightly open.	3	60 (0)					
75		73.0 ft - 78.0 ft, Gray, SCHIST, hard, fresh, Joints, high angle to moderately dipping, close spacing, rough, stepped to undulating, moderately open to slightly open.	4	60 (0)					
		Hole stopped @ 78.0 ft							

Notes:
1. Stratification lines represent approximate boundary between material types. Transition may be gradual.
2. N Values have not been corrected for hammer energy. C_E is the hammer energy correction factor. C_E is an estimated value.
3. Water level readings have been made at times and under conditions stated. Fluctuations of groundwater may occur due to other factors than those present at the time measurements were made.

2010.DGPV J11154B.GPJ VERMONT_ADT.GDT 11/9/11

B-3

STATE OF VERMONT
AGENCY OF TRANSPORTATION
MATERIALS & RESEARCH SECTION
SUBSURFACE INFORMATION

BORING LOG
WINDSOR
IM-091-1 (64)

Boring No.: B-3
Page No.: 1 of 1
Pin No.:
Checked By: SMC

Boring Crew: New Hampshire Boring, Inc., IKC
Date Started: 8/24/11 Date Finished: 8/24/11
VTSPG NAD83:
Station: 2926+80.00 Offset: 55LT
Ground Elevation: 462.0 ft

	Casing	Sampler
Type:	WB	SS
I.D.:	4. in	1.38 in
Hammer Wt:	300	140 lb.
Hammer Fall:	24	30 in.
Hammer/Rod Type:		Safety/N
Rig:	Diedrich D-50	C_E = 1.0

Groundwater Observations

Date	Depth (ft)	Notes
08/24/11		Not encountered

Depth (ft)	Strata (1)	CLASSIFICATION OF MATERIALS (Description)	Run (Dip deg.)	Core Rec. % (RQD %)	Blows/6" (N Value)	Moisture Content %	Gravel %	Sand %	Fines %
		Medium to fine SAND, some Silt, little Gravel, moist, very dense, brown, 0.0 ft - 2.0 ft			6-21-33-17 (54)				
5		4.0 ft - 8.7 ft, Gray, SCHIST, hard, fresh, Joints, high angle, close, smooth to rough, stepped to undulating, fresh to discolored, tight to moderately open.	1	91 (80)					
10		8.7 ft - 13.7 ft, Gray, SCHIST, hard, fresh, Joints, high angle, close, smooth to rough, stepped to undulating, fresh to discolored, tight to moderately open.	2	100 (93)					
		Hole stopped @ 13.7 ft							

Notes:
1. Stratification lines represent approximate boundary between material types. Transition may be gradual.
2. N Values have not been corrected for hammer energy. C_E is the hammer energy correction factor. C_E is an estimated value.
3. Water level readings have been made at times and under conditions stated. Fluctuations of groundwater may occur due to other factors than those present at the time measurements were made.

2010.DGPV J11154B.GPJ VERMONT_ADT.GDT 11/9/11

PROJECT NAME: WINDSOR
PROJECT NUMBER: IM 091-1(64)

FILE NAME: z10a188BOR.dgn
PROJECT LEADER: J. WILSON
DESIGNED BY: C. BAISLY
BORING LOG INFORMATION SHEET #7

PLOT DATE: 7/30/2015
DRAWN BY: S. GUNN
CHECKED BY: D. HA
SHEET 52 OF 156

STATE OF VERMONT
AGENCY OF TRANSPORTATION

BORING LOG INFORMATION

B-4

STATE OF VERMONT
AGENCY OF TRANSPORTATION
MATERIALS & RESEARCH SECTION
SUBSURFACE INFORMATION

BORING LOG
WINDSOR
IM-091-1 (64)

Boring No.: B-4
Page No.: 1 of 3
Pin No.:
Checked By: SMC

Boring Crew: New Hampshire Boring, Inc., IKC
Date Started: 9/21/11 Date Finished: 9/30/11
VTSPG NAD83:
Station: 2921+27.00 Offset: 56RT
Ground Elevation: 449.0 ft

	Casing	Sampler
Type:	WB	SS
I.D.:	4. in	1.38 in
Hammer Wt:	300	140 lb.
Hammer Fall:	24	30 in.
Hammer/Rod Type:	Safety/N	
Rig:	Diedrich D-25	C_E = 1.0

Groundwater Observations		
Date	Depth (ft)	Notes
09/23/11	49.0	During drilling.

Depth (ft)	Strata (1)	CLASSIFICATION OF MATERIALS (Description)	Run (Dip deg.)	Core Rec. % (RQD %)	Blows/6" (N Value)	Moisture Content %	Gravel %	Sand %	Fines %
		Coarse to fine SAND, trace Silt, trace Gravel, moist, dense, brown, Rec. = 0.8 ft, 0.0 ft - 2.0 ft			5-5-8-11 (13)				
5		Coarse to fine SAND, trace Silt, trace Gravel, moist, very dense, brown, Rec. = 1.0 ft, 4.0 ft - 6.0 ft			7-15-30-30 (45)				
10		GRAVEL, trace Sand, trace Silt, moist, medium dense, gray, Rec. = 0.3 ft, 9.0 ft - 11.0 ft			11-13-12-15 (25)				
15		A-3, moist, loose, brown, Rec. = 0.5 ft, 14.0 ft - 16.0 ft		12.8	10-3-4-2 (7)	16.0	75.4	8.6	
		17.5 ft, Drill action suggests cobbles/gravel 17.5 to 19 feet.							
20		A-1-a, moist, very dense, gray, Rec. = 0.3 ft, 19.0 ft - 21.0 ft		3.2	18-62-60-42 (122)	79.0	14.2	6.8	
		21.0 ft, Drill action suggests cobbles 21 to 24 feet. Possible 6 inch void at 24 feet.							
25		GRAVEL, trace Sand, trace Silt, moist, medium dense, gray, Rec. = 0.5 ft, 24.5 ft - 26.5 ft			11-7-12-20 (19)				
		26.5 ft, Drill action suggests cobbles/gravel 26.5 to 29 feet.							
30		No recovery, gravel lodged in tip of sampler, Rec. = 0.0 ft, 29.0 ft - 31.0 ft			18-12-8-8 (20)				
		31.0 ft, Drill action suggests cobbles/gravel 31 to 34 feet.							
35		No recovery, gravel lodged in tip of sampler, Rec. = 0.0 ft, 34.0 ft - 36.0 ft			100/5" (100+)				
40		GRAVEL, some medium to fine Sand, trace Silt, moist, dense, gray/brown, Rec. = 0.5 ft, 39.0 ft - 41.0 ft			20-18-13-15 (32)				
45		Medium to fine SAND, little Silt, moist, medium dense, brown, Rec. = 0.3 ft, 44.0 ft - 46.0 ft			10-6-7-13 (13)				
		47.0 ft, Drill action suggests cobbles 47 to 48.5 feet.							
		Medium to fine SAND, trace Silt, wet, loose, brown, Rec. = 0.3 ft, 49.0 ft - 51.0 ft			1-2-7-				

Notes:
1. Stratification lines represent approximate boundary between material types. Transition may be gradual.
2. N Values have not been corrected for hammer energy. C_E is the hammer energy correction factor. C_E is an estimated value.
3. Water level readings have been made at times and under conditions stated. Fluctuations of groundwater may occur due to other factors than those present at the time measurements were made.

2010.CORP_J11514B.GPJ \ VERMONT_AOT.GDT 11/9/11

B-4 (CONT.)

STATE OF VERMONT
AGENCY OF TRANSPORTATION
MATERIALS & RESEARCH SECTION
SUBSURFACE INFORMATION

BORING LOG
WINDSOR
IM-091-1 (64)

Boring No.: B-4
Page No.: 2 of 3
Pin No.:
Checked By: SMC

Boring Crew: New Hampshire Boring, Inc., IKC
Date Started: 9/21/11 Date Finished: 9/30/11
VTSPG NAD83:
Station: 2921+27.00 Offset: 56RT
Ground Elevation: 449.0 ft

	Casing	Sampler
Type:	WB	SS
I.D.:	4. in	1.38 in
Hammer Wt:	300	140 lb.
Hammer Fall:	24	30 in.
Hammer/Rod Type:	Safety/N	
Rig:	Diedrich D-25	C_E = 1.0

Groundwater Observations		
Date	Depth (ft)	Notes
09/23/11	49.0	During drilling.

Depth (ft)	Strata (1)	CLASSIFICATION OF MATERIALS (Description)	Run (Dip deg.)	Core Rec. % (RQD %)	Blows/6" (N Value)	Moisture Content %	Gravel %	Sand %	Fines %
					19 (5)				
55		Medium to fine SAND, trace Silt, trace Gravel, trace organic matter, wet, very dense, brown, Rec. = 0.7 ft, 54.0 ft - 56.0 ft			14-16-14-55 (30)				
60		GRAVEL, some coarse to fine Sand, trace Silt, wet, very dense, gray/brown, Rec. = 0.5 ft, 59.0 ft - 61.0 ft			40-85-25-28 (110)				
65		Medium to fine SAND, trace Silt, wet, very dense, brown, Rec. = 0.3 ft, 64.0 ft - 66.0 ft			18-23-25-36 (48)				
70		Medium to fine SAND, trace Silt, trace Gravel, wet, very dense, brown, Rec. = 0.5 ft, 69.0 ft - 71.0 ft			38-53-100/5" (100+)				
75		Medium to fine SAND, trace Silt, trace Gravel, wet, very dense, brown, Rec. = 0.2 ft, 74.0 ft - 76.0 ft			37-53-100/5" (100+)				
80		Medium to fine SAND, little Gravel, trace Silt, wet, very dense, brown, Rec. = 0.2 ft, 79.0 ft - 81.0 ft			31-27-67-88 (94)				
85		Medium to fine SAND, little Gravel, some Silt, wet, very dense, brown, Rec. = 0.2 ft, 84.0 ft - 86.0 ft			100/4" (100+)				
		87.0 ft, Telescoped 3-inch casing.							
90		Medium to fine SAND, little Gravel, some Silt, wet, very dense, brown, Rec. = 0.7 ft, 89.0 ft - 91.0 ft			49-65-43-41 (108)				
95		GRAVEL, and medium to fine Sand, trace Silt, wet, very dense, brown, Rec. = 0.3 ft, 94.0 ft - 96.0 ft			64-37-27-32 (64)				
		Medium to fine SAND, some Gravel, trace Silt, wet, very dense, brown, Rec. =			99-83-				

Notes:
1. Stratification lines represent approximate boundary between material types. Transition may be gradual.
2. N Values have not been corrected for hammer energy. C_E is the hammer energy correction factor. C_E is an estimated value.
3. Water level readings have been made at times and under conditions stated. Fluctuations of groundwater may occur due to other factors than those present at the time measurements were made.

2010.CORP_J11514B.GPJ \ VERMONT_AOT.GDT 11/9/11

B-4 (CONT.)

STATE OF VERMONT
AGENCY OF TRANSPORTATION
MATERIALS & RESEARCH SECTION
SUBSURFACE INFORMATION

BORING LOG
WINDSOR
IM-091-1 (64)

Boring No.: B-4
Page No.: 3 of 3
Pin No.:
Checked By: SMC

Boring Crew: New Hampshire Boring, Inc., IKC
Date Started: 9/21/11 Date Finished: 9/30/11
VTSPG NAD83:
Station: 2921+27.00 Offset: 56RT
Ground Elevation: 449.0 ft

	Casing	Sampler
Type:	WB	SS
I.D.:	4. in	1.38 in
Hammer Wt:	300	140 lb.
Hammer Fall:	24	30 in.
Hammer/Rod Type:	Safety/N	
Rig:	Diedrich D-25	C_E = 1.0

Groundwater Observations		
Date	Depth (ft)	Notes
09/23/11	49.0	During drilling.

Depth (ft)	Strata (1)	CLASSIFICATION OF MATERIALS (Description)	Run (Dip deg.)	Core Rec. % (RQD %)	Blows/6" (N Value)	Moisture Content %	Gravel %	Sand %	Fines %
		0.7 ft, 99.0 ft - 101.0 ft			100/5" (100+)				
105		Medium to fine SAND, trace Silt, trace Gravel, wet, very dense, brown, Rec. = 0.4 ft, 104.0 ft - 105.3 ft			51-45-100/3"-5 (100+)				
		105.3 ft - 107.0 ft, Top of rock at 105.3 feet.							
		Begin 8X rock core at 107 feet.							
110		107.0 ft - 111.0 ft, Gray, SCHIST, weathered.	1	8 (0)					
115		111.0 ft - 116.0 ft, Gray, SCHIST, weathered.	2	8 (0)					
		Hole stopped @ 116.0 ft							
120									
125									
130									
135									
140									
145									

Notes:
1. Stratification lines represent approximate boundary between material types. Transition may be gradual.
2. N Values have not been corrected for hammer energy. C_E is the hammer energy correction factor. C_E is an estimated value.
3. Water level readings have been made at times and under conditions stated. Fluctuations of groundwater may occur due to other factors than those present at the time measurements were made.

2010.CORP_J11514B.GPJ \ VERMONT_AOT.GDT 11/9/11

PROJECT NAME:	WINDSOR
PROJECT NUMBER:	IM 091-1(64)
FILE NAME: z10a188BOR.dgn	PLOT DATE: 7/30/2015
PROJECT LEADER: J. WILSON	DRAWN BY: S. GUNN
DESIGNED BY: C. BAISLY	CHECKED BY: D. HA
BORING LOG INFORMATION SHEET #8	SHEET 53 OF 156

STATE OF VERMONT
AGENCY OF TRANSPORTATION

BORING LOG INFORMATION

B-5

STATE OF VERMONT
AGENCY OF TRANSPORTATION
MATERIALS & RESEARCH SECTION
SUBSURFACE INFORMATION

BORING LOG
WINDSOR
IM-091-1 (64)

Boring No.: B-5
Page No.: 1 of 2
Pin No.:
Checked By: SMC

Boring Crew: New Hampshire Boring, Inc., IKC
Date Started: 8/30/11 Date Finished: 8/31/11
VTSPG NAD83:
Station: 2923+96.00 Offset: 40LT
Ground Elevation: 403.0 ft

	Casing	Sampler
Type:	WB	SS
I.D.:	4. in	1.38 in
Hammer Wt:	300	140 lb.
Hammer Fall:	24	30 in.
Hammer/Rod Type:		Safety/N
Rig:	Diedrich D-50	C_E = 1.0

Groundwater Observations		
Date	Depth (ft)	Notes
		Post Tropical
08/30/11	5.5	Storm Irene

Depth (ft)	Strata (1)	CLASSIFICATION OF MATERIALS (Description)	Run (Dip deg.)	Core Rec. % (RQD %)	Blows/ft* (N Value)	Moisture Content %	Gravel %	Sand %	Fines %
		Medium to fine SAND, some Silt, moist, medium dense, brown, Rec. = 1.3 ft, 0.0 ft - 2.0 ft			2-5-11-15 (16)				
5		Medium to fine SAND, some Silt, little Gravel, wet, very dense, brown, Rec. = 1.5 ft, 4.0 ft - 6.0 ft			12-16-40-30 (96)				
		7.5 ft, Note Drill action suggests cobbles/gravel 7.5 to 9 feet.							
10		GRAVEL and medium to fine SAND, little Silt, wet, very dense, brown. Rec. = 0.3 ft, 9.0 ft - 11.0 ft			21-19-26-27 (45)				
		12.5 ft, Note Drill action suggests cobble12.5 to 13 feet.							
15		A-2-4, wet, medium dense, brown, Rec. = 1.0 ft, 14.0 ft - 16.0 ft			7-5-7-10 (12)	23.7	1.0	87.0	12.0
20		Medium to fine SAND, little Silt, wet, medium dense, brown, Rec. = 1.2 ft, 19.0 ft - 21.0 ft			6-6-7-11 (13)				
25		Medium to fine SAND, little Silt, wet, medium dense, brown, Rec. = 0.7 ft, 24.0 ft - 26.0 ft			8-10-10-11 (20)				
30		Medium to fine SAND, little Silt, wet, medium dense, brown, Rec. = 0.8 ft, 29.0 ft - 31.0 ft			5-5-7-8 (12)				
35		Medium to fine SAND, little Silt, wet, medium dense, brown, Rec. = 1.0 ft, 34.0 ft - 36.0 ft			6-8-12-15 (20)				
40		Medium to fine SAND, little Silt, wet, medium dense, brown, Rec. = 0.3 ft, 39.0 ft - 41.0 ft			8-9-10-11 (19)				
45		Medium to fine SAND, trace Silt, wet, dense, brown, Rec. = 1.3 ft, 44.0 ft - 46.0 ft			11-19-22-33 (41)				
		Medium to fine SAND, trace Silt, wet, dense, brown, Rec. = 1.7 ft, 49.0 ft - 51.0			6-12-				

Notes:
1. Stratification lines represent approximate boundary between material types. Transition may be gradual.
2. N Values have not been corrected for hammer energy. C_E is the hammer energy correction factor. C_E is an estimated value.
3. Water level readings have been made at times and under conditions stated. Fluctuations of groundwater may occur due to other factors than those present at the time measurements were made.

2010.GDPJ J11514B.GPJ VERMONT AOT.GDT 11/9/11

B-5 (CONT.)

STATE OF VERMONT
AGENCY OF TRANSPORTATION
MATERIALS & RESEARCH SECTION
SUBSURFACE INFORMATION

BORING LOG
WINDSOR
IM-091-1 (64)

Boring No.: B-5
Page No.: 2 of 2
Pin No.:
Checked By: SMC

Boring Crew: New Hampshire Boring, Inc., IKC
Date Started: 8/30/11 Date Finished: 8/31/11
VTSPG NAD83:
Station: 2923+96.00 Offset: 40LT
Ground Elevation: 403.0 ft

	Casing	Sampler
Type:	WB	SS
I.D.:	4. in	1.38 in
Hammer Wt:	300	140 lb.
Hammer Fall:	24	30 in.
Hammer/Rod Type:		Safety/N
Rig:	Diedrich D-50	C_E = 1.0

Groundwater Observations		
Date	Depth (ft)	Notes
		Post Tropical
08/30/11	5.5	Storm Irene

Depth (ft)	Strata (1)	CLASSIFICATION OF MATERIALS (Description)	Run (Dip deg.)	Core Rec. % (RQD %)	Blows/ft* (N Value)	Moisture Content %	Gravel %	Sand %	Fines %
		ft			25-70 (37)				
55		Medium to fine SAND, some Gravel, trace Silt, wet, dense, brown, Rec. = 1.2 ft, 54.0 ft - 56.0 ft			43-50-47-36 (97)				
		58.0 ft - 59.0 ft, Top of bedrock at 58 feet. Begin NX rock core at 59 feet.							
60		59.0 ft - 64.0 ft, Gray, SCHIST, hard, fresh. Joints, low angle to moderately dipping, close spacing, rough, stepped to undulating, fresh to discolored, moderately open to open.	1	96 (81)					
65		64.0 ft - 69.0 ft, Gray, SCHIST, hard, fresh. Joints, low angle to moderately dipping, close spacing, rough, stepped to undulating, fresh to discolored, moderately open to open.	2	100 (81)					
		Hole stopped @ 69.0 ft							
70									
75									
80									
85									
90									
95									

Notes:
1. Stratification lines represent approximate boundary between material types. Transition may be gradual.
2. N Values have not been corrected for hammer energy. C_E is the hammer energy correction factor. C_E is an estimated value.
3. Water level readings have been made at times and under conditions stated. Fluctuations of groundwater may occur due to other factors than those present at the time measurements were made.

2010.GDPJ J11514B.GPJ VERMONT AOT.GDT 11/9/11

B-6

STATE OF VERMONT
AGENCY OF TRANSPORTATION
MATERIALS & RESEARCH SECTION
SUBSURFACE INFORMATION

BORING LOG
WINDSOR
IM-091-1 (64)

Boring No.: B-6
Page No.: 1 of 1
Pin No.:
Checked By: SMC

Boring Crew: New Hampshire Boring, Inc., IKC
Date Started: 8/24/11 Date Finished: 8/24/11
VTSPG NAD83:
Station: 2926+86.00 Offset: 57RT
Ground Elevation: 462.0 ft

	Casing	Sampler
Type:	WB	SS
I.D.:	4. in	1.38 in
Hammer Wt:	300	140 lb.
Hammer Fall:	24	30 in.
Hammer/Rod Type:		Safety/N
Rig:	Diedrich D-50	C_E = 1.0

Groundwater Observations		
Date	Depth (ft)	Notes
08/29/11		Not encountered

Depth (ft)	Strata (1)	CLASSIFICATION OF MATERIALS (Description)	Run (Dip deg.)	Core Rec. % (RQD %)	Blows/ft* (N Value)	Moisture Content %	Gravel %	Sand %	Fines %
		Medium to fine SAND, some Silt, little Gravel, moist, very dense, brown, Rec. = 1.0 ft, 0.0 ft - 2.0 ft			1-7-50-17 (57)				
5		A-1-b, moist, medium dense, brown, Rec. = 1.0 ft, 4.0 ft - 6.0 ft			10-17-18-20 (35)	12.0	5.0	86.6	8.4
10		Medium to fine SAND, some Silt, little Gravel, moist, very dense, gray. Rec. = 0.1 ft, 9.0 ft - 9.1 ft	1	53 (82)	75/1" (75+)				
		9.1 ft - 14.1 ft, Gray, SCHIST, hard, fresh. Joints, high angle, close spacing, smooth to rough, stepped to undulating, fresh to discolored, tight to moderately open.							
15		14.1 ft - 19.1 ft, Gray, SCHIST, hard, fresh. Joints, high angle, close spacing, smooth to rough, stepped to undulating, fresh to discolored, tight to moderately open.	2	100 (90)					
		Hole stopped @ 19.1 ft							
20									
25									
30									
35									
40									
45									

Notes:
1. Stratification lines represent approximate boundary between material types. Transition may be gradual.
2. N Values have not been corrected for hammer energy. C_E is the hammer energy correction factor. C_E is an estimated value.
3. Water level readings have been made at times and under conditions stated. Fluctuations of groundwater may occur due to other factors than those present at the time measurements were made.

2010.GDPJ J11514B.GPJ VERMONT AOT.GDT 11/9/11

PROJECT NAME: WINDSOR
PROJECT NUMBER: IM 091-1(64)

FILE NAME: z10a188BOR.dgn
PROJECT LEADER: J. WILSON
DESIGNED BY: C. BAISLY
BORING LOG INFORMATION SHEET #9

PLOT DATE: 7/30/2015
DRAWN BY: S. GUNN
CHECKED BY: D. HA
SHEET 54 OF 156

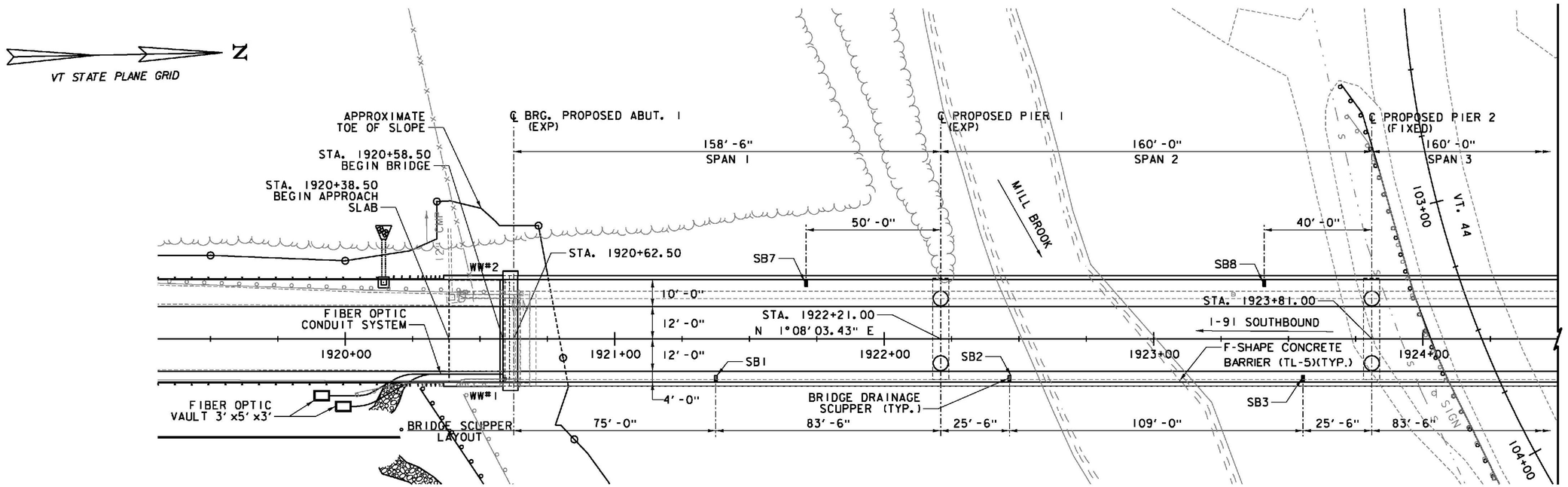

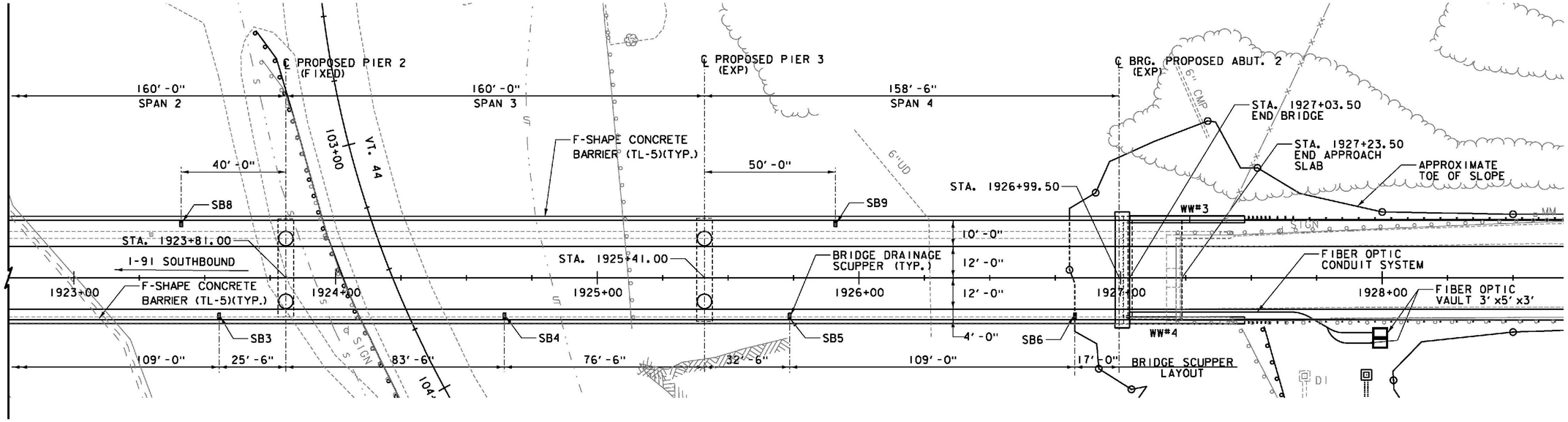

PLAN
SCALE 1" = 20'-0"
20 0 20

NOTE:
FOR LOCATION AND DETAIL OF SPLASH PAD BELOW SCUPPERS, SEE ROADWAY DRAWINGS.

DATUM
VERTICAL NAVD88
HORIZONTAL NAD 83 (07)

PROJECT NAME: WINDSOR
PROJECT NUMBER: IM 091-1(64)

FILE NAME: z10o188BLA.dgn
PROJECT LEADER: J. WILSON
DESIGNED BY: S. BOYINGTON
PLAN - BRIDGE 33S
PLOT DATE: 7/30/2015
DRAWN BY: S. GUNN
CHECKED BY: S. HALLORAN
SHEET 55 OF156

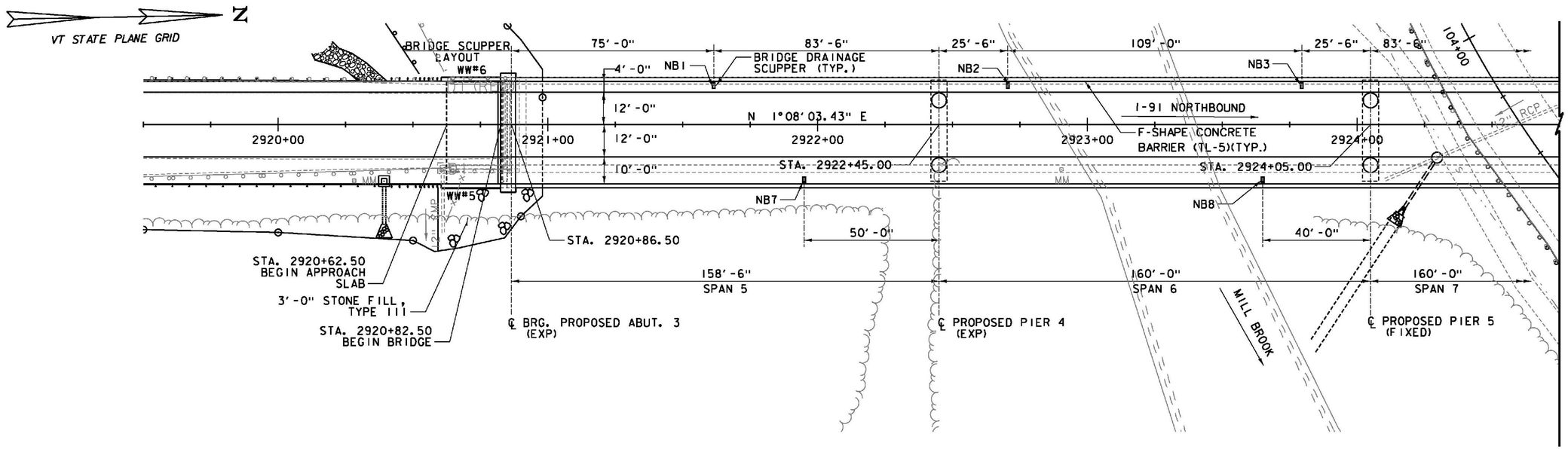

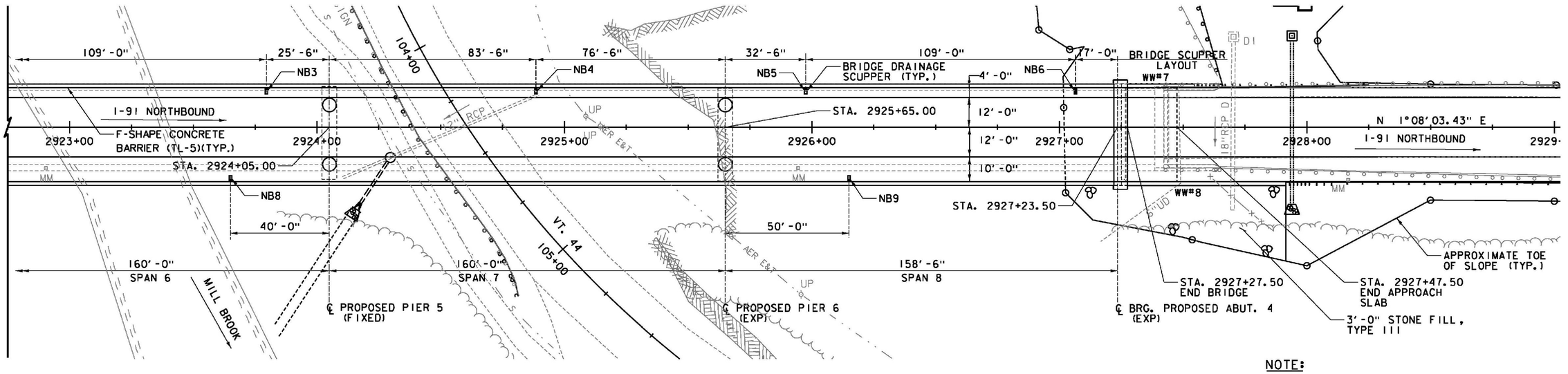

PLAN
SCALE 1" = 20'-0"
20 0 20

NOTE:
FOR LOCATION AND DETAILS OF SPLASH PAD BELOW SCUPPERS, SEE ROADWAY DRAWINGS.

DATUM
VERTICAL NAVD88
HORIZONTAL NAD 83 (07)

PROJECT NAME: WINDSOR
PROJECT NUMBER: IM 091-1(64)

FILE NAME: z10o188BLA.dgn
PROJECT LEADER: J. WILSON
DESIGNED BY: S. BOYINGTON
PLAN - BRIDGE 33N
PLOT DATE: 7/30/2015
DRAWN BY: S. GUNN
CHECKED BY: S. HALLORAN
SHEET 56 OF156

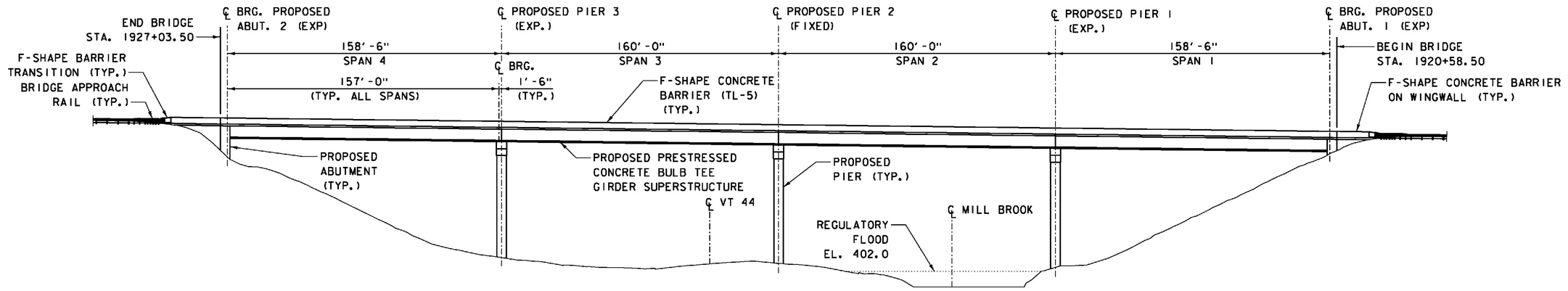

ELEVATION - SOUTHBOUND BRIDGE 33S (LOOKING EAST)

SCALE 1" = 30'-0"

30 0 30

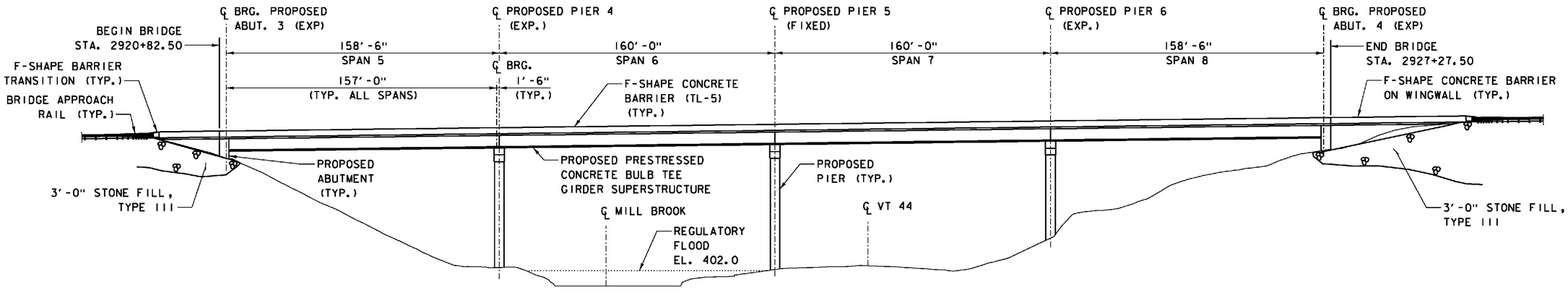

ELEVATION - NORTHBOUND BRIDGE 33N (LOOKING WEST)

SCALE 1" = 30'-0"

30 0 30

PROJECT NAME: WINDSOR
PROJECT NUMBER: IM 091-1(64)

FILE NAME: z10o188BEL.dgn
PROJECT LEADER: J. WILSON
DESIGNED BY: R. PEIN
BRIDGE ELEVATIONS - 33S & 33N

PLOT DATE: 7/30/2015
DRAWN BY: N. GARCIA III
CHECKED BY: S. HALLORAN
SHEET 57 OF156

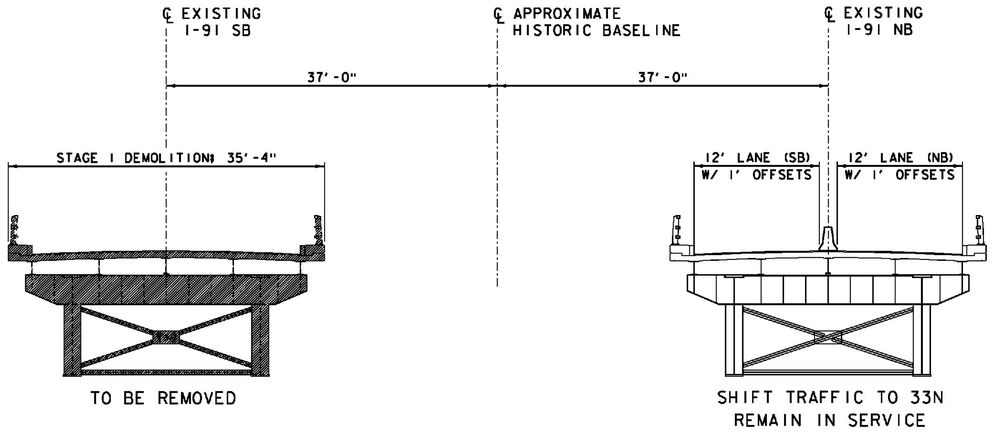

STAGE 1 DEMOLITION

SCALE 1/8" = 1'-0"

0 1 0 2 4 6 8

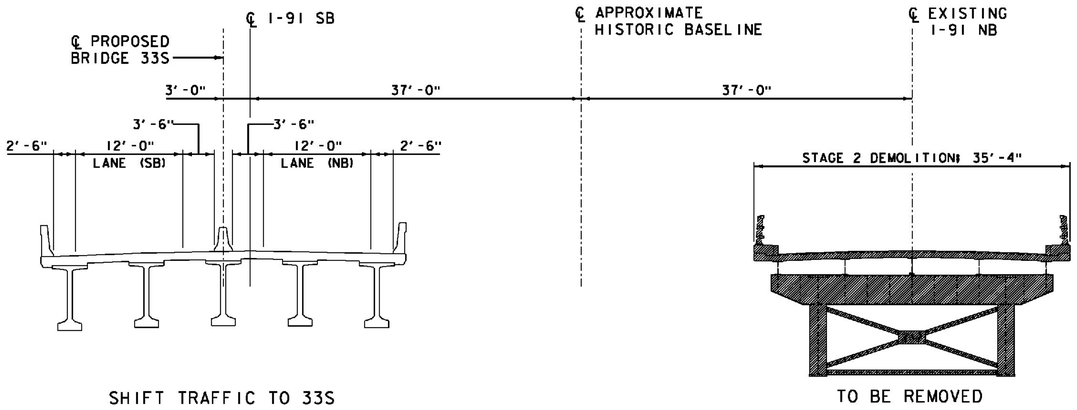

STAGE 2 DEMOLITION

SCALE 1/8" = 1'-0"

0 1 0 2 4 6 8

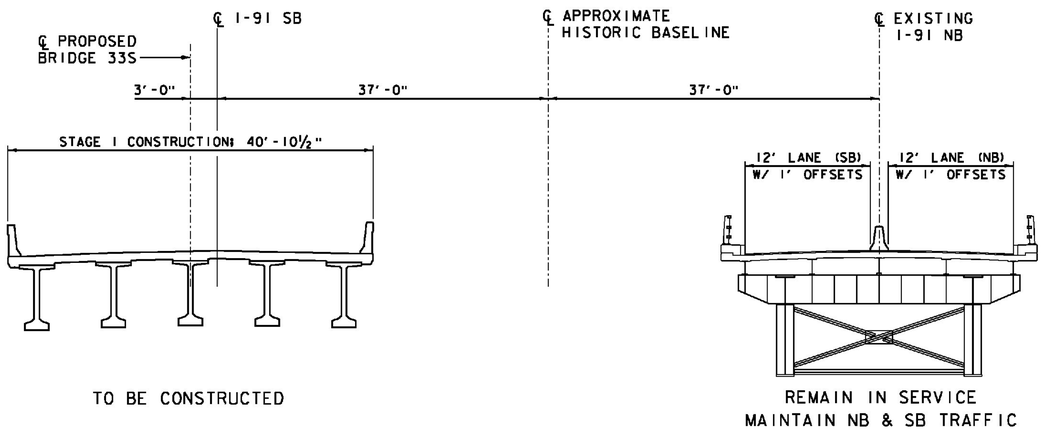

STAGE 1 CONSTRUCTION

SCALE 1/8" = 1'-0"

0 1 0 2 4 6 8

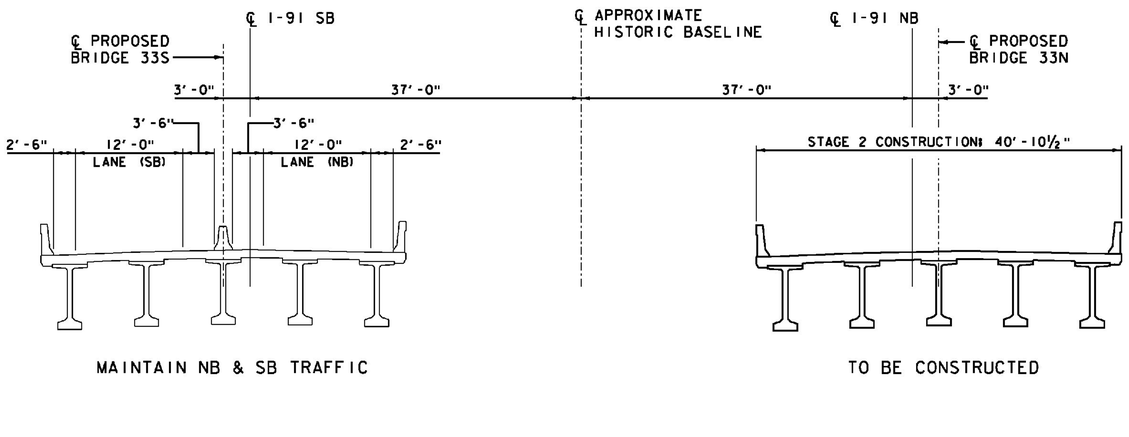

STAGE 2 CONSTRUCTION

SCALE 1/8" = 1'-0"

0 1 0 2 4 6 8

PROJECT NAME: WINDSOR
PROJECT NUMBER: IM 091-1(64)

FILE NAME: z10o188BCS.dgn
PROJECT LEADER: J. WILSON
DESIGNED BY: R. PEIN
BRIDGE SEQUENCE OF CONSTRUCTION

PLOT DATE: 7/30/2015
DRAWN BY: N. GARCIA III
CHECKED BY: S. HALLORAN
SHEET 58 OF 156

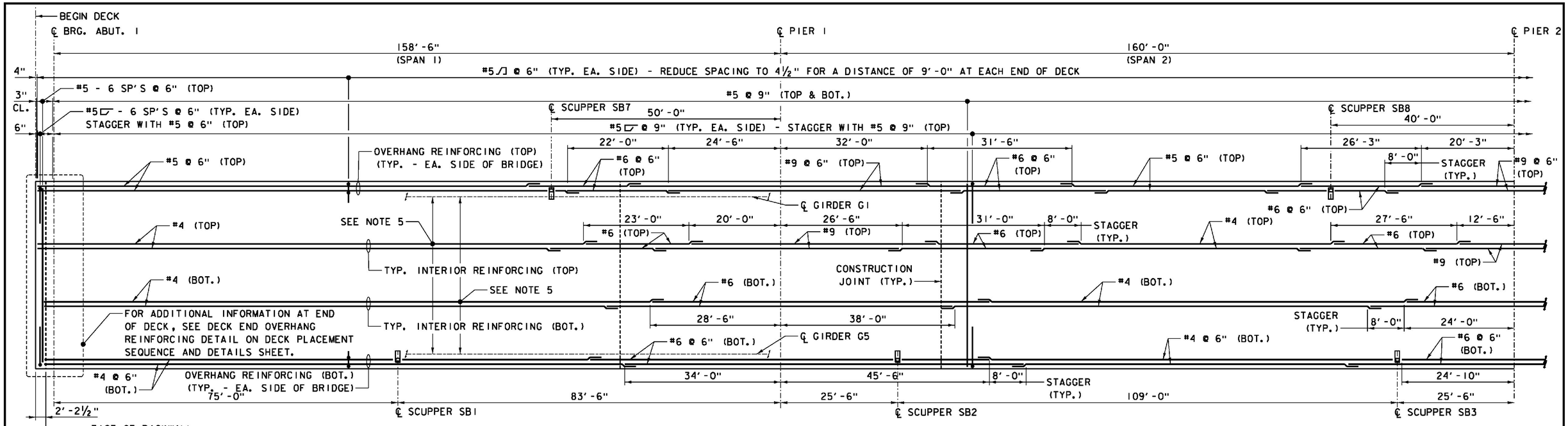

SPANS 1 & 2 REINFORCEMENT PLAN - SOUTHBOUND BRIDGE (33S)

NOTE: SEE REBAR DETAIL SHOP DRAWINGS DEVELOPED BY DIMENSION FOR ACTUAL BAR SPLICE LOCATIONS

VT STATE PLANE GRID N

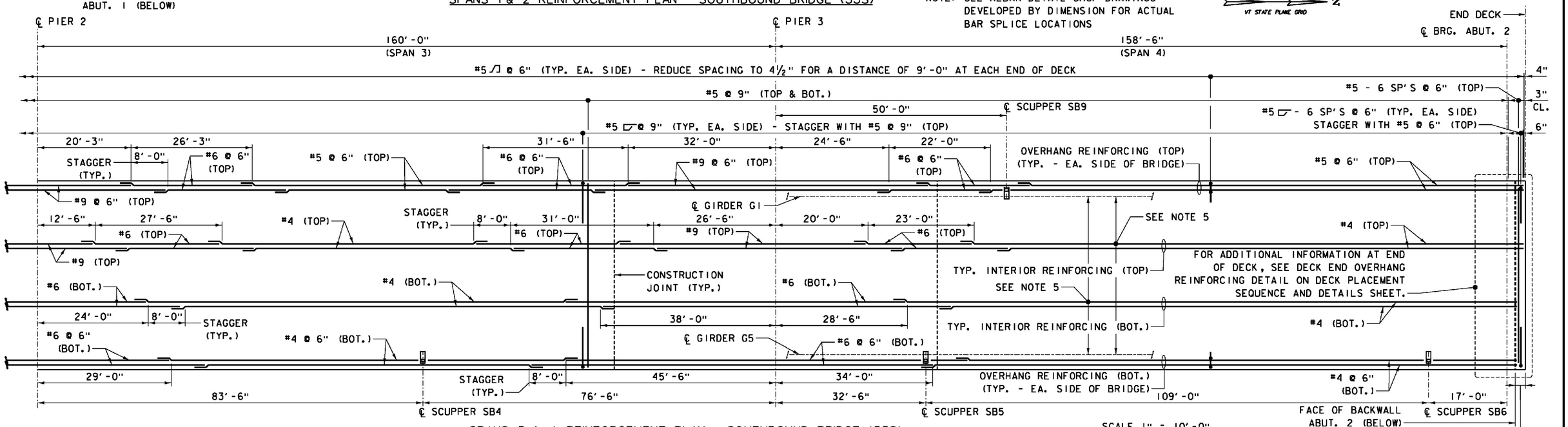

SPANS 3 & 4 REINFORCEMENT PLAN - SOUTHBOUND BRIDGE (33S)

SCALE 1" = 10'-0"

NOTES:

1. ALL REINFORCEMENT STEEL IN CAST-IN-PLACE DECK SHALL BE STAINLESS STEEL AND CONFORM TO ASTM A995M, GRADE 420 (GRADE 60).
2. FOR DECK CONSTRUCTION JOINT LOCATIONS, SEE DECK PLACEMENT SEQUENCE AND DETAILS SHEET.
3. FOR TYPICAL SECTION AT ABUTMENTS, SEE GIRDER DETAILS 3 SHEET.
4. FOR ADDITIONAL REINFORCEMENT AT SCUPPERS, SEE DECK PLACEMENT SEQUENCE AND DETAILS SHEET.
5. FOR TYPICAL LONGITUDINAL REINFORCING LAYOUT SPACING, SEE TYPICAL DECK DETAILS SHEET.
6. FOR ADDITIONAL LONGITUDINAL REINFORCING AT SCUPPERS, SEE DETAILS ON BRIDGE DRAINAGE-SHEET 2.

LAP SPLICE TABLE	
BAR SIZE	MIN. LENGTH LAP
4	2'-0"
5	2'-6"
6	3'-0"
9	4'-8"

ITEMS USED ON THIS SHEET	
ITEM NO.	DESCRIPTION
900.608	HIGH PERFORMANCE CONCRETE, CLASS A, LOW CEMENT
900.620	BRIDGE SCUPPER ASSEMBLY
900.635	STAINLESS STEEL REINFORCING

PROJECT NAME: WINDSOR
PROJECT NUMBER: IM 091-1(64)

FILE NAME: z10o188DECKR SB.dgn
PROJECT LEADER: J. WILSON
DESIGNED BY: R. PEIN
BRIDGE 33S DECK REINFORCEMENT

PLOT DATE: 7/30/2015
DRAWN BY: N. GARCIA III
CHECKED BY: S. HALLORAN
SHEET 59 OF156

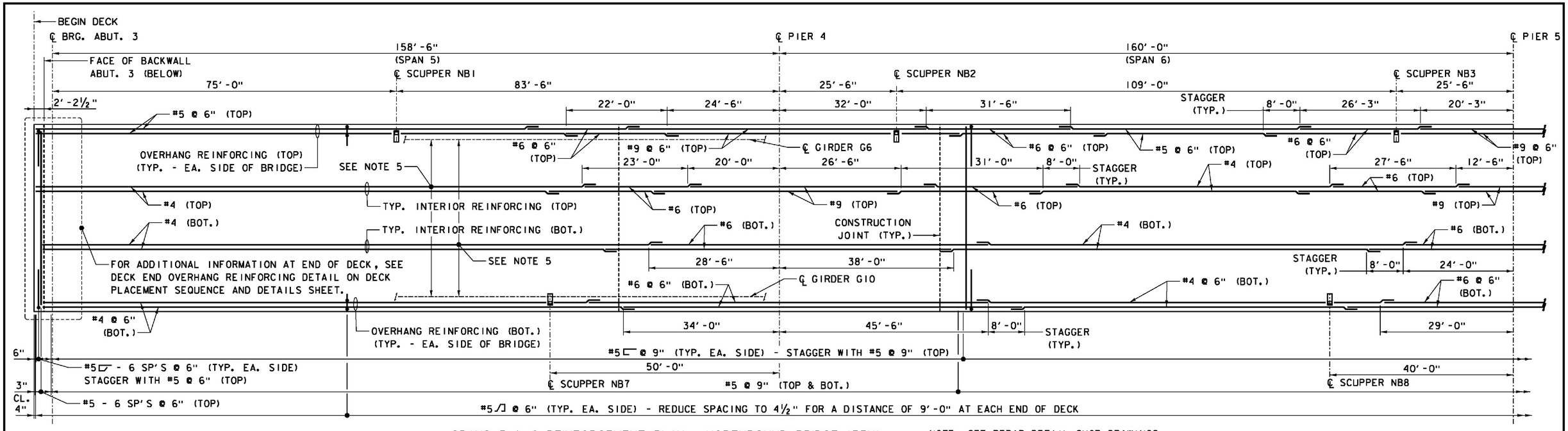

SPANS 5 & 6 REINFORCEMENT PLAN - NORTHBOUND BRIDGE (33N)

NOTE: SEE REBAR DETAIL SHOP DRAWINGS DEVELOPED BY DIMENSION FOR ACTUAL BAR SPLICE LOCATIONS

N
VT STATE PLANE GRID

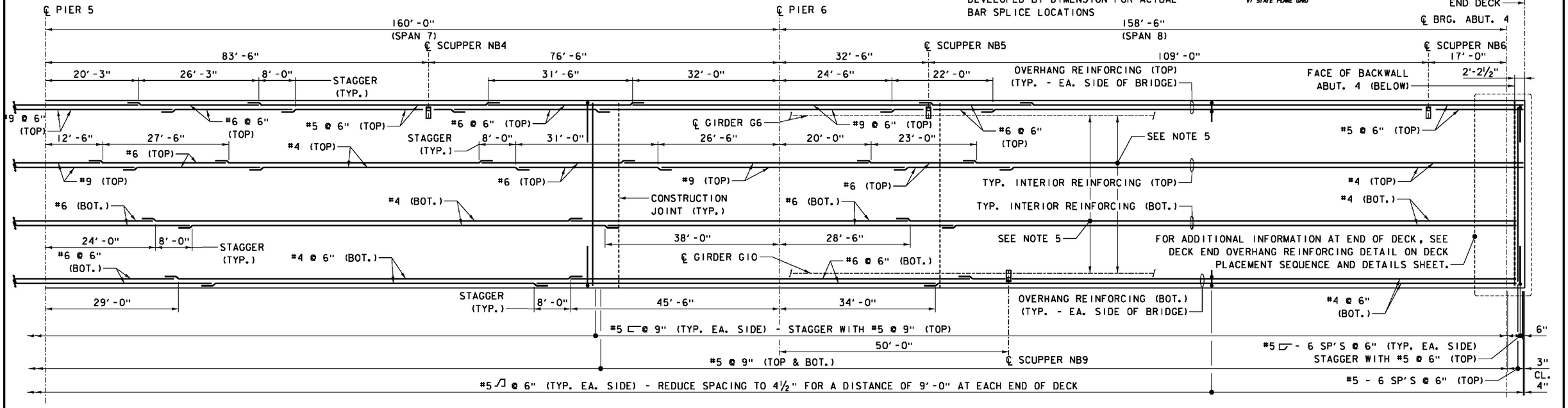

SPANS 7 & 8 REINFORCEMENT PLAN - NORTHBOUND BRIDGE (33N)

SCALE 1" = 10'-0"
10 0 10

NOTES:

1. ALL REINFORCEMENT STEEL IN CAST-IN-PLACE DECK SHALL BE STAINLESS STEEL AND CONFORM TO ASTM A995M, GRADE 420 (GRADE 60).
2. FOR DECK CONSTRUCTION JOINT LOCATIONS, SEE DECK PLACEMENT SEQUENCE AND DETAILS SHEET.
3. FOR TYPICAL SECTION AT ABUTMENTS, SEE GIRDER DETAILS 3 SHEET.
4. FOR ADDITIONAL REINFORCEMENT AT SCUPPERS, SEE DECK PLACEMENT SEQUENCE AND DETAILS SHEET.
5. FOR TYPICAL LONGITUDINAL REINFORCING LAYOUT SPACING, SEE TYPICAL DECK DETAILS SHEET.
6. FOR ADDITIONAL LONGITUDINAL REINFORCING AT SCUPPERS, SEE DETAILS ON BRIDGE DRAINAGE-SHEET 2.

LAP SPLICE TABLE	
BAR SIZE	MIN. LENGTH LAP
4	2'-0"
5	2'-6"
6	3'-0"
9	4'-8"

ITEMS USED ON THIS SHEET	
ITEM NO.	DESCRIPTION
900.608	HIGH PERFORMANCE CONCRETE, CLASS A, LOW CEMENT
900.620	BRIDGE SCUPPER ASSEMBLY
900.635	STAINLESS STEEL REINFORCING

PROJECT NAME: WINDSOR
PROJECT NUMBER: IM 091-1(64)

FILE NAME: z10a188DECKR NB.dgn
PROJECT LEADER: J. WILSON
DESIGNED BY: R. PEIN
BRIDGE 33N DECK REINFORCEMENT

PLOT DATE: 7/30/2015
DRAWN BY: N. GARCIA III
CHECKED BY: S. HALLORAN
SHEET 60 OF 156

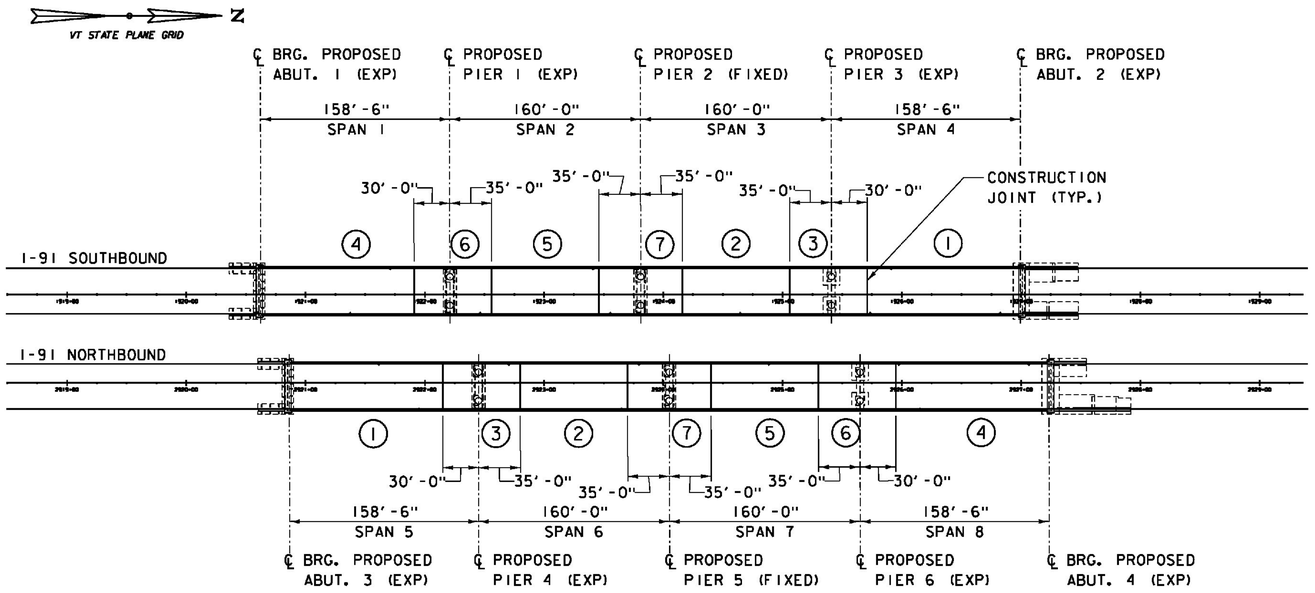

DECK PLACEMENT SEQUENCE

SCALE 1" = 60'-0"

60 0 60

(#) DENOTES CONCRETE PLACEMENT SEQUENCE

DECK PLACEMENT NOTES:

1. CONCRETE PLACEMENT AND FINISHING OPERATIONS FOR A SPECIFIC AREA SHALL BE PERFORMED AND COMPLETED IN A MANNER THAT WILL ELIMINATE THE POSSIBILITY OF SETTING OF ANY OF THE CONCRETE PLACED PRIOR TO COMPLETION OF WORK IN THAT AREA. CONCRETE PLACEMENT OPERATIONS SHALL PROVIDE FOR ADEQUATE LABOR, EQUIPMENT AND MATERIAL SUPPLY TO COMPLETE PLACEMENT OF CONCRETE IN A SPECIFIED DECK PLACEMENT AREA WITHIN AN EIGHT HOUR PERIOD.

2. LONGITUDINAL CONSTRUCTION JOINTS WILL NOT BE PERMITTED.

3. A PRE-PLACEMENT CONFERENCE WILL BE MANDATORY AND SCHEDULED A MINIMUM OF TWO WEEKS PRIOR TO THE FIRST PLACEMENT.

4. CONCRETE PLACEMENT NUMBERS 1 & 2 MAY BE PLACED DURING THE SAME DAY OR IN OPPOSITE ORDER. DECK PLACEMENTS 1 & 2 SHALL RECEIVE A MINIMUM OF 72 HOURS OF ACCEPTABLE CURING PRIOR TO PLACEMENT OF CONCRETE IN DECK AREA 3. CONCRETE PLACEMENT NUMBERS 4 & 5 MAY BE PLACED DURING THE SAME DAY OR IN OPPOSITE ORDER. DECK PLACEMENTS 4 & 5 SHALL RECEIVE A MINIMUM OF 72 HOURS OF ACCEPTABLE CURING PRIOR TO PLACEMENT IN DECK AREA 6. DECK PLACEMENTS 1 THROUGH 6 SHALL RECEIVE A MINIMUM OF 72 HOURS OF ACCEPTABLE CURING PRIOR TO PLACEMENT OF CONCRETE IN DECK AREA 7.

5. DIAPHRAGMS AT PIERS 1 & 6 SHALL BE PLACED AFTER POUR 5; DIAPHRAGMS AT PIERS 3 & 4 SHALL BE PLACED AFTER POUR 2. DECK POURS 3 & 6 CANNOT BE POURED UNTIL THE PIER 1, 3, 4 & 6 DIAPHRAGMS HAVE ATTAINED 85% STRENGTH AND ADJACENT DECK POURS HAVE RECEIVED A MINIMUM OF 72 HOURS OF ACCEPTABLE CURING. DIAPHRAGMS AT PIERS 2 & 5 MUST BE PLACED WITH DECK POUR 7. ABUTMENT DIAPHRAGMS SHALL BE PLACED PRIOR TO DECK POURS 1 & 4 AND ACHIEVE 85% DESIGN STRENGTH PRIOR TO THE DECK POUR.

6. ALL PRESTRESSED CONCRETE BRIDGE GIRDERS SHALL HAVE A MINIMUM AGE OF 60 DAYS AT THE TIME OF CONCRETE DECK PLACEMENT.

7. AN EPOXY BONDING COMPOUND SUITABLE FOR BONDING FRESH CONCRETE TO HARDENED CONCRETE FOR LOAD BEARING APPLICATIONS SHALL BE USED. THE EPOXY BONDING COMPOUND SHALL CONFORM TO GENERAL SPECIAL PROVISIONS SECTION 719, AASHTO M 235 TYPE V AND SHALL BE APPLIED IN ACCORDANCE WITH THE MANUFACTURERS RECOMMENDATIONS.

8. FOR TRANSVERSE BRIDGE SLAB CONSTRUCTION JOINT, SEE DETAILS THIS SHEET. THE HYDROPHILIC WATERSTOP SHALL BE PLACED ON THE COMPLETED POUR PRIOR TO PLACEMENT OF THE ADJACENT POUR. THE HYDROPHILIC WATERSTOP SHALL TERMINATE 1'-0" FROM BRIDGE FASCIAS, AND BE PLACED ON A SMOOTH SURFACE, FASTENER ATTACHMENTS ARE NOT ALLOWED.

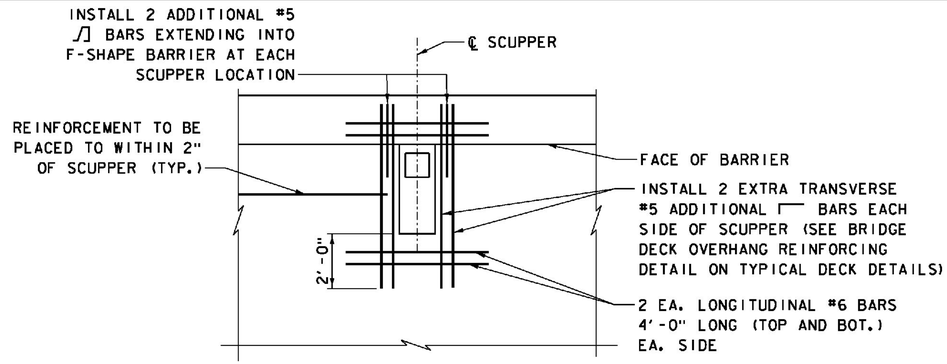

NOTE: DETAIL IS TYPICAL FOR ALL SCUPPER LOCATIONS

ADDITIONAL REINFORCEMENT AT SCUPPER

NOT TO SCALE

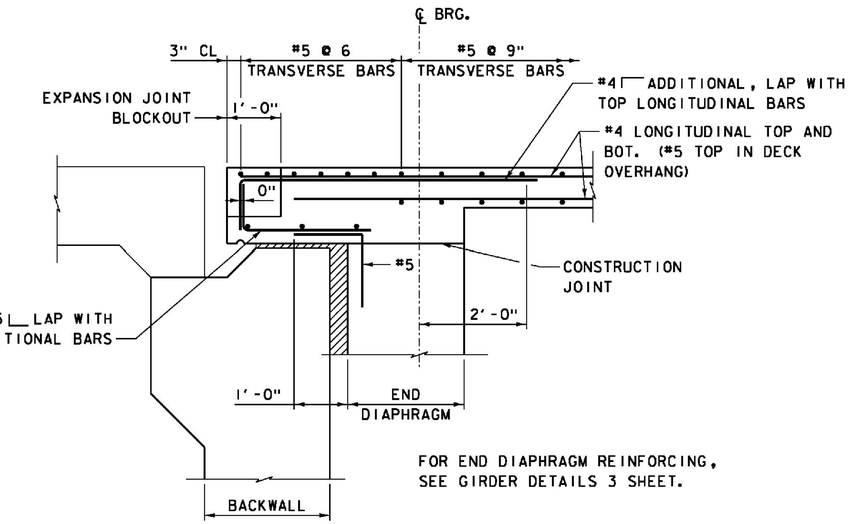

FOR END DIAPHRAGM REINFORCING, SEE GIRDER DETAILS 3 SHEET.

DECK END OVERHANG REINFORCING DETAIL

SCALE 3/4" = 1'-0"

0 1 2

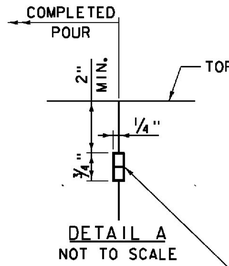

DETAIL A

NOT TO SCALE

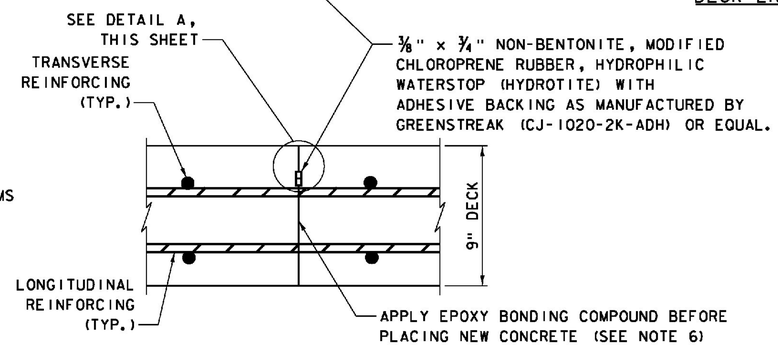

TRANSVERSE BRIDGE SLAB CONSTRUCTION JOINT DETAILS

NOT TO SCALE

ITEMS USED ON THIS SHEET	
ITEM NO.	DESCRIPTION
900.608	HIGH PERFORMANCE CONCRETE, CLASS A, LOW CEMENT
900.635	STAINLESS STEEL REINFORCING

PROJECT NAME: WINDSOR
PROJECT NUMBER: IM 091-1(64)

FILE NAME: z10a188DECK DTL1.dgn
PROJECT LEADER: J. WILSON
DESIGNED BY: R. PEIN
DECK PLACEMENT SEQUENCE AND DETAILS

PLOT DATE: 7/30/2015
DRAWN BY: N. GARCIA III
CHECKED BY: S. HALLORAN
SHEET 61 OF 156

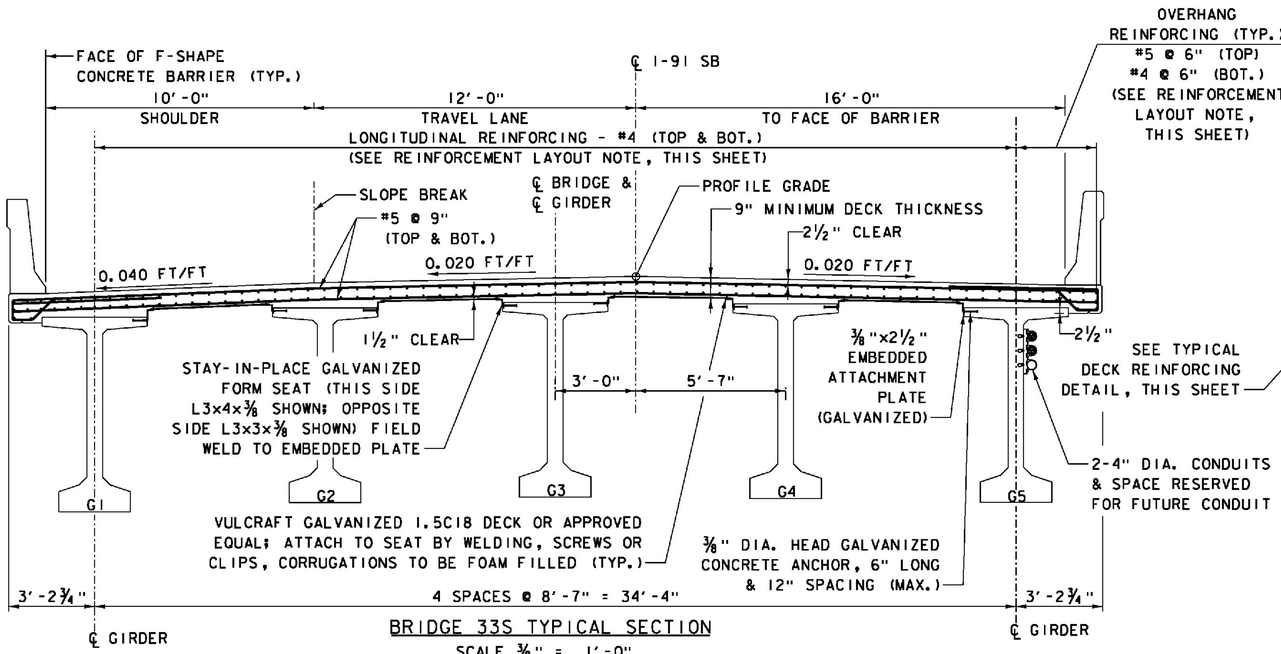

BRIDGE 33S TYPICAL SECTION

SCALE ⅜" = 1'-0"

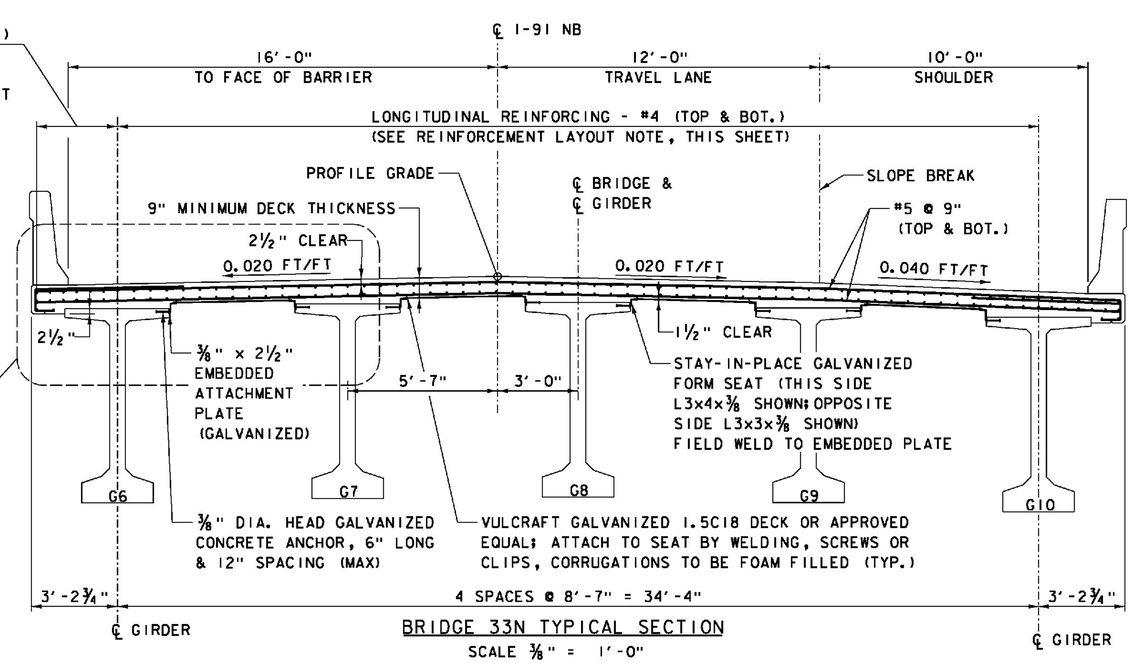

BRIDGE 33N TYPICAL SECTION

SCALE ⅜" = 1'-0"

REINFORCEMENT LAYOUT NOTE:

LONGITUDINAL DECK REINFORCING BAR SIZES VARY ALONG THE LENGTH OF THE BRIDGE. FOR BAR SIZE LIMITS AND SPLICING REQUIREMENTS, SEE DECK REINFORECEMENT PLANS. FOR TYPICAL SPACING BETWEEN GIRDERS, SEE TYPICAL DECK REINFORCING DETAIL, THIS SHEET.

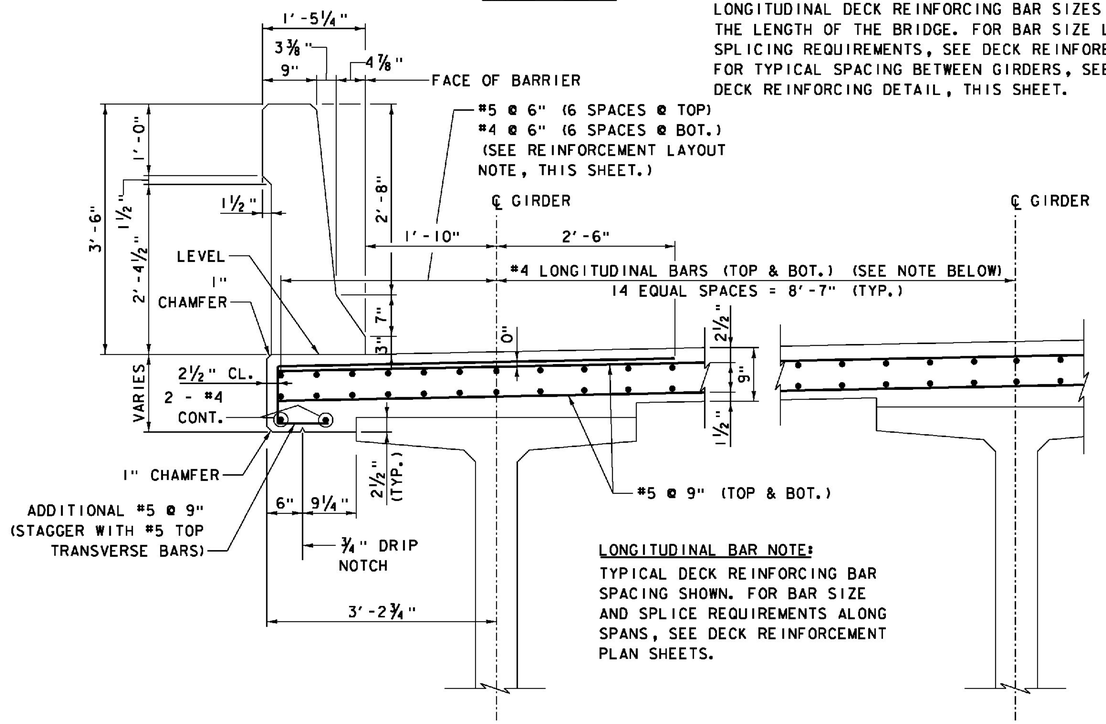

TYPICAL DECK REINFORCING DETAIL

SCALE 1" = 1'-0"

LONGITUDINAL BAR NOTE:

TYPICAL DECK REINFORCING BAR SPACING SHOWN. FOR BAR SIZE AND SPLICE REQUIREMENTS ALONG SPANS, SEE DECK REINFORCEMENT PLAN SHEETS.

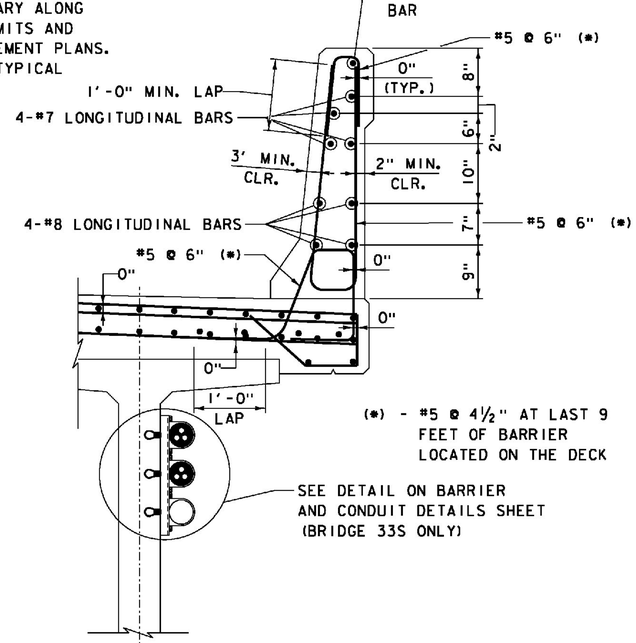

CONCRETE BARRIER REINFORCING DETAIL

SCALE 1" = 1'-0"

NOTES:

1. ALL REINFORCEMENT STEEL IN CAST-IN-PLACE DECK AND CONCRETE BARRIER SHALL BE SOLID STAINLESS STEEL IN CONFORMANCE WITH ASTM A995M, GRADE 420.
2. DECK AND GIRDER DESIGN INCLUDES CAPACITY FOR FUTURE ADDITIONAL 3" THICK HMA PAVEMENT WEARING SURFACE.
3. BRIDGE DECKS SHALL BE CONSTRUCTED WITH LONGITUDINAL DECK GROOVING IN ACCORDANCE WITH THE SPECIAL PROVISIONS.
4. SEE SUPERSTRUCTURE ELEVATION TABLE SHEETS FOR TOP OF FORM ELEVATIONS.
5. SEE SUPERSTRUCTURE ELEVATION DETAILS SHEET FOR STAY-IN-PLACE FORM DETAILS AND BLOCKING DISTANCE INFORMATION.
6. ALL EXPOSED EDGES OF CONCRETE SHALL BE CHAMFERED 1" x 1".
7. GALVANIZED SURFACES OF CONDUIT OR SUPPORTS DAMAGED DURING CONSTRUCTION SHALL BE REPAIRED IN CONFORMANCE WITH THE REQUIREMENTS OF ASTM A780.

ITEMS USED ON THIS SHEET	
ITEM NO.	DESCRIPTION
900.608	HIGH PERFORMANCE CONCRETE, CLASS A, LOW CEMENT
900.635	STAINLESS STEEL REINFORCING
900.640	BRIDGE RAILING, F-SHAPE CONCRETE
900.675	LONGITUDINAL DECK GROOVING

PROJECT NAME: WINDSOR
PROJECT NUMBER: IM 091-1(64)

FILE NAME: s10o188DECK DTL2.dgn
PROJECT LEADER: J. WILSON
DESIGNED BY: R. PEIN
TYPICAL DECK DETAILS

PLOT DATE: 7/30/2015
DRAWN BY: N.GARCIA III
CHECKED BY: G. WALKER
SHEET 62 OF156

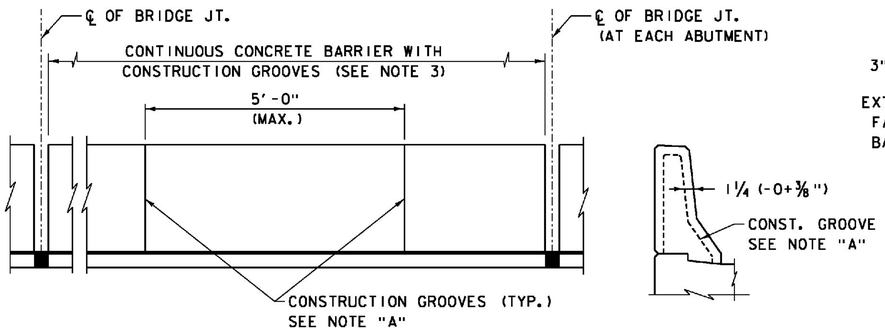

ELEVATION

TYPICAL SECTION THROUGH BARRIER

CONCRETE BARRIER GROOVE SPACING
NOT TO SCALE

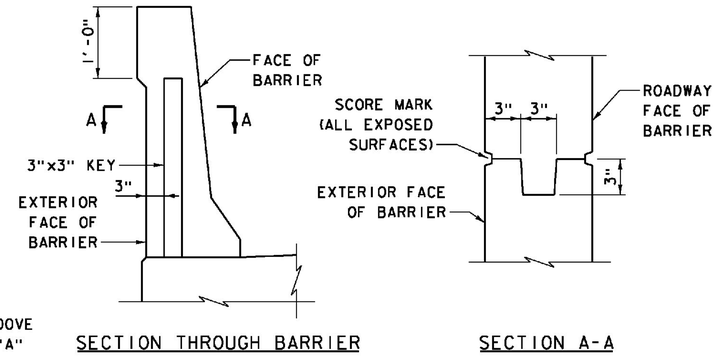

SECTION THROUGH BARRIER

SECTION A-A

BARRIER CONSTRUCTION JOINT DETAILS
NOT TO SCALE

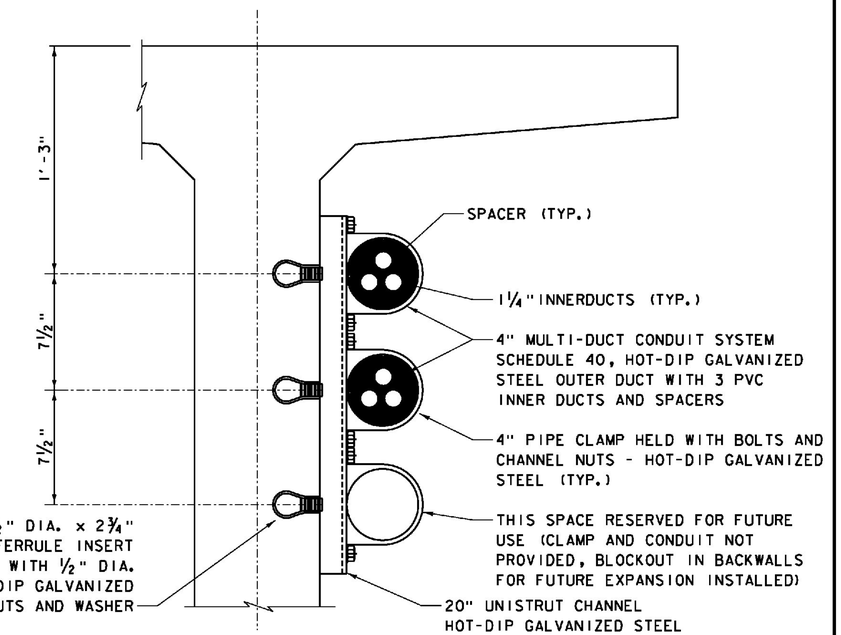

CONDUIT ATTACHMENT ASSEMBLY DETAIL
SCALE 3" = 1'-0"

NOTE "A":

CONSTRUCTION GROOVES SHALL BE MADE BY:

1. FORMING FOR CAST-IN PLACE CONSTRUCTED FORMS.
2. SAWING THE SET CONCRETE WITHIN 8 HOURS OF PLACEMENT FOR CAST-IN-PLACE SLIP FORM.
3. CUTTING THE PLASTIC CONCRETE.

COMBINATION OF THESE METHODS MAY BE EMPLOYED.
THE DEPTH OF THE GROOVES SHALL BE 1¼" (+/- ⅜") CONSTANT DEPTH 45° CHAMFERS AT THE SURFACE. THE LONGITUDINAL REINFORCING BARS FOR THE CONCRETE BARRIERS SHALL BE CONTINUOUS BETWEEN BRIDGE EXPANSION JOINTS. WHERE SPLICES ARE REQUIRED, THE LENGTH OF THE LAP SHALL BE SUFFICIENT TO DEVELOP EACH BAR.

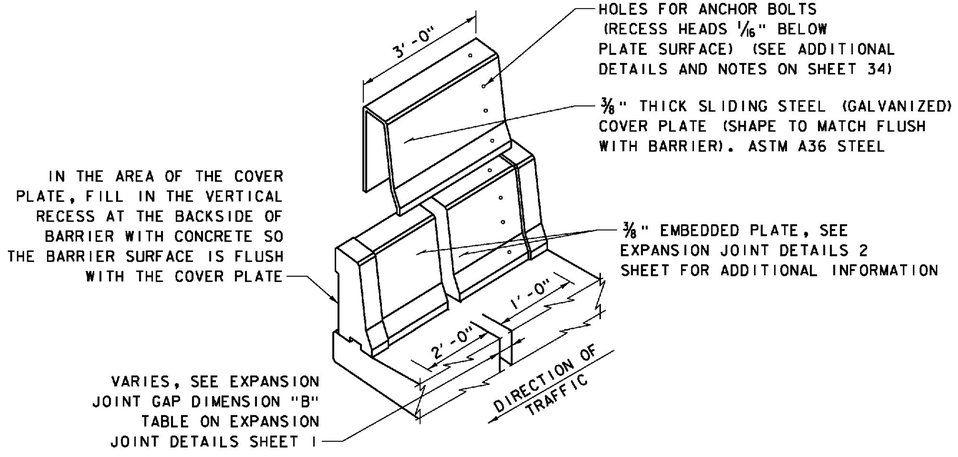

COVER PLATE DETAIL FOR F-SHAPED CONCRETE BARRIER
NOT TO SCALE

CONCRETE BARRIER NOTES:

1. COVER PLATES SHALL BE INSTALLED WITH THE EDGE OF THE RECESS ON THE BOLTED SIDE TO ALLOW CLEARANCE DURING BRIDGE TEMPERATURE EXPANSION.
2. FOR ADDITIONAL DETAILS AT DECK EXPANSION JOINTS, SEE EXPANSION JOINT DETAILS SHEET 2.
3. A CONSTRUCTION JOINT SHALL BE FORMED IN THE F-SHAPED BARRIER AT THE CENTERLINE OF EACH PIER. SEE DETAIL THIS SHEET. THE SCORE MARK IDENTIFIED ON THE CONSTRUCTION JOINT DETAIL SHALL BE MODIFIED TO REPLICATE THE PROFILE OF STANDARD CONCRETE BARRIER GROOVES.
4. ALL STEEL PLATES AND SHAPES SHALL BE HOT-DIP GALVANIZED IN CONFORMANCE WITH AASHTO M111 (ASTM A123).
5. ALL STEEL INSERTS SHALL BE HOT-DIP GALVANIZED IN CONFORMANCE WITH AASHTO M232 (ASTM A153).

MULTI-DUCT CONDUIT SYSTEM NOTES:

1. FOR VAULT LOCATION AND DETAILS, SEE ROADWAY PLANS.
2. FOR BACKWALL BLOCKOUT DETAILS, SEE BRIDGE 33S SUBSTRUCTURE PLANS.
3. CONDUIT EXPANSION JOINTS WILL BE PLACED AT ONE OR BOTH ABUTMENT 1 AND/OR ABUTMENT 2 LOCATIONS.
4. A WORK PACKAGE WILL BE DEVELOPED TO INCLUDE ALL NECESSARY DETAILS OF THE ENTIRE CONDUIT AND VAULT SYSTEM.
5. GALVANIZED SURFACES OF CONDUIT, BARRIER COVER PLATE OR SUPPORTS DAMAGED DURING CONSTRUCTION SHALL BE REPAIRED IN CONFORMANCE WITH THE REQUIREMENTS OF ASTM A780.

ITEMS USED ON THIS SHEET

ITEM NO.	DESCRIPTION
900.620	INSTALLATION OF MULTI-DUCT CONDUIT SYSTEM FOR THE ACCOMODATION OF FIBER OPTIC CABLE
900.640	BRIDGE RAILING, F-SHAPE BARRIER
900.640	BRIDGE EXPANSION JOINT, STRIP SEAL

PROJECT NAME: WINDSOR
PROJECT NUMBER: IM 091-1(64)

FILE NAME: s10o188DECK DTL3.dgn
PROJECT LEADER: J. WILSON
DESIGNED BY: R. PEIN
BARRIER AND CONDUIT DETAILS

PLOT DATE: 7/30/2015
DRAWN BY: N.GARCIA III
CHECKED BY: G. WALKER
SHEET 63 OF 156

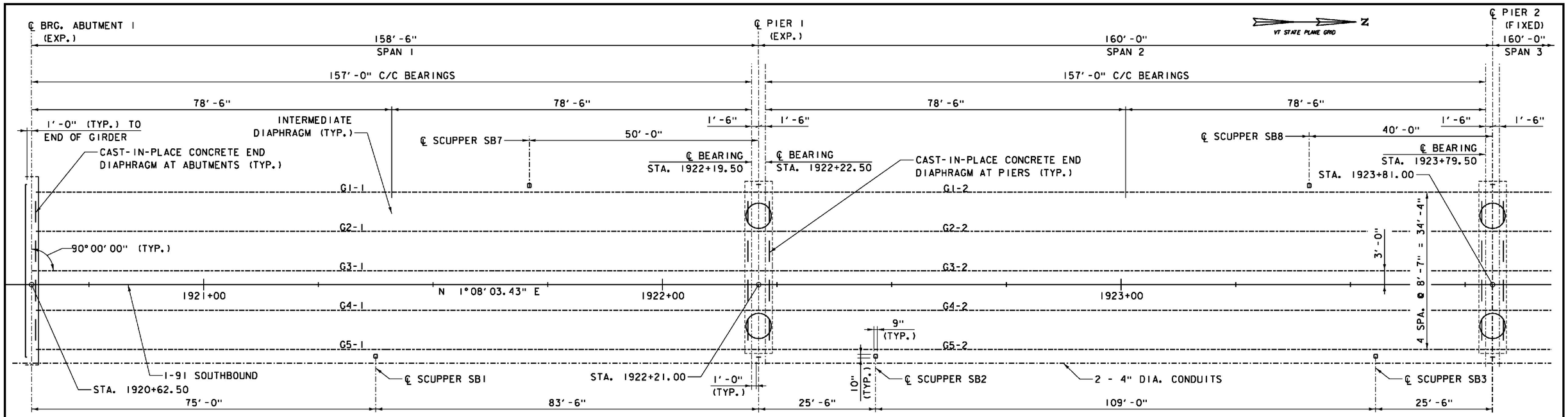

PARTIAL FRAMING PLAN - BRIDGE 33S

SCALE 1" = 10'-0"

10 0 10

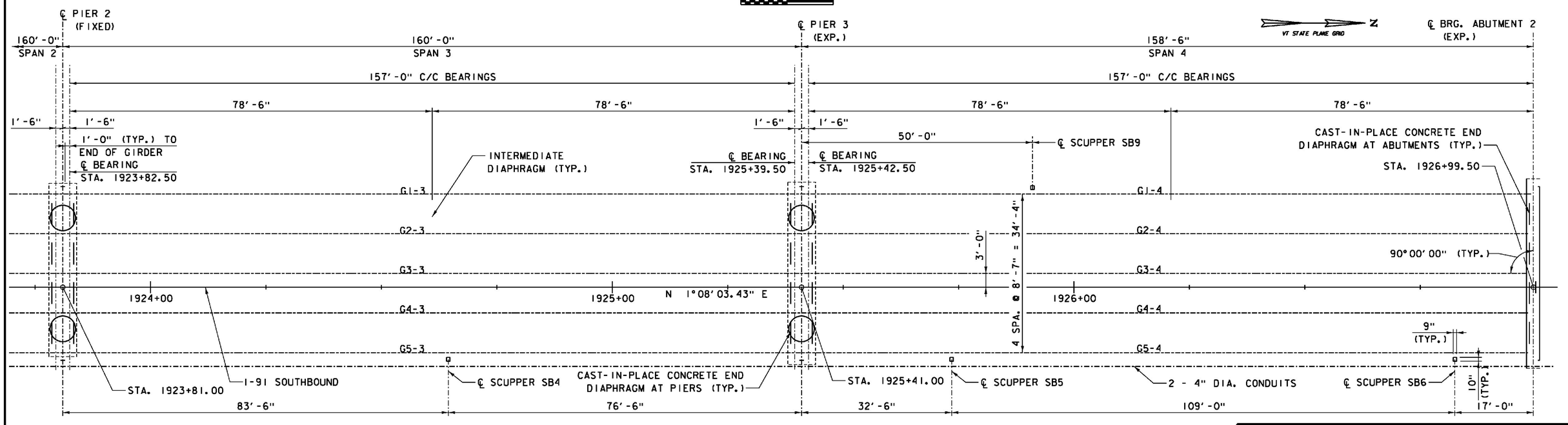

PARTIAL FRAMING PLAN - BRIDGE 33S

SCALE 1" = 10'-0"

10 0 10

NOTES:

1. FOR CONDUIT ATTACHMENT ASSEMBLY DETAIL, SEE BARRIER AND CONDUIT DETAILS SHEET.
2. SB1 DENOTES SCUPPER LOCATION.
3. FOR SCUPPER DETAILS, SEE BRIDGE DRAINAGE SHEETS.
4. FOR DETAILS OF GIRDER FLANGE BLOCKOUT FOR SCUPPER DOWNSPOUT, SEE GIRDER DETAILS 6 SHEET.

PROJECT NAME: WINDSOR	
PROJECT NUMBER: IM 091-1(64)	
FILE NAME: z10a188BFR.dgn	PLOT DATE: 7/30/2015
PROJECT LEADER: J. WILSON	DRAWN BY: N. GARCIA III
DESIGNED BY: R. PEIN	CHECKED BY: G. WALKER
FRAMING PLAN - BRIDGE 33S	SHEET 64 OF156

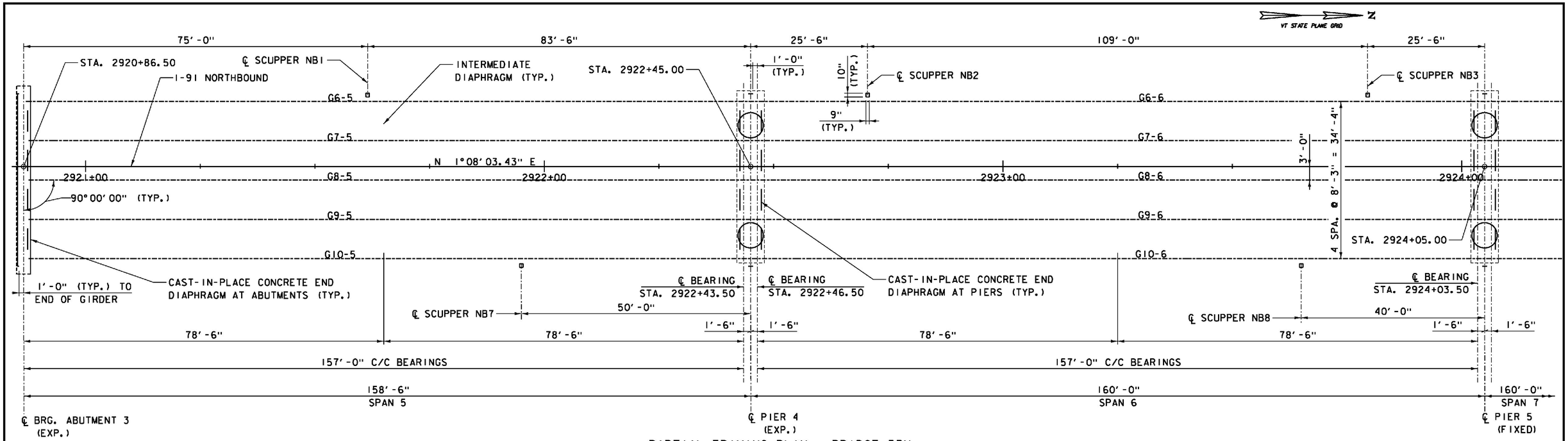

PARTIAL FRAMING PLAN - BRIDGE 33N

SCALE 1" = 10'-0"

10 0 10

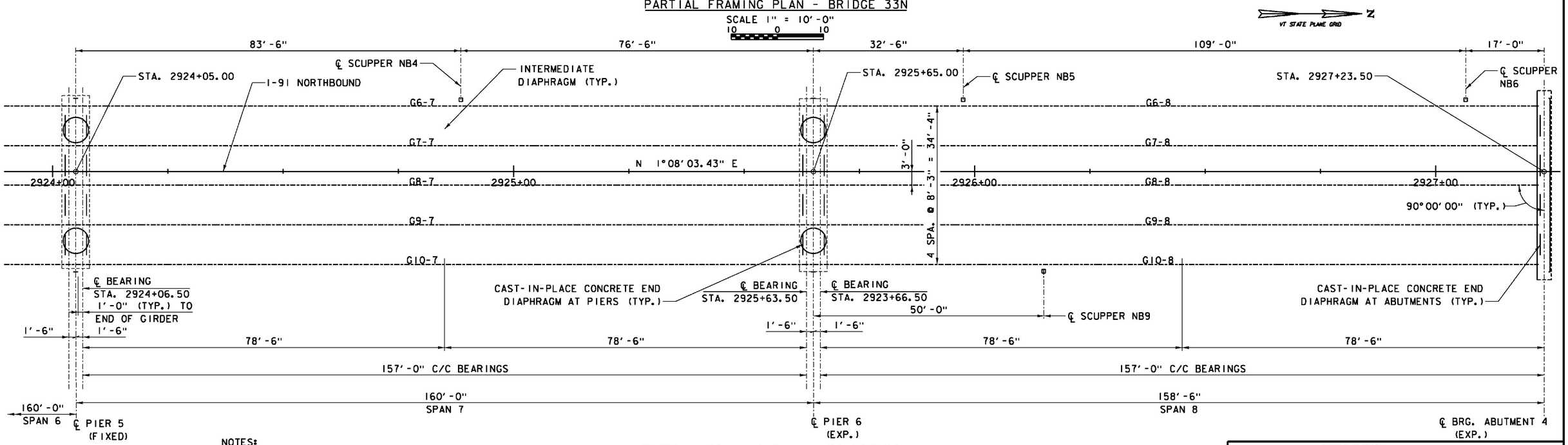

PARTIAL FRAMING PLAN - BRIDGE 33N

SCALE 1" = 10'-0"

10 0 10

NOTES:

1. NB 1 DENOTES SCUPPER LOCATION.
2. FOR SCUPPER DETAILS, SEE BRIDGE DRAINAGE SHEETS.
3. FOR DETAILS OF GIRDER FLANGE BLOCKOUT FOR SCUPPER DOWNSPOUT, SEE GIRDER DETAILS 6 SHEET.

PROJECT NAME: WINDSOR	
PROJECT NUMBER: IM 091-1(64)	
FILE NAME: z10o188BFR.dgn	PLOT DATE: 7/30/2015
PROJECT LEADER: J. WILSON	DRAWN BY: N. GARCIA III
DESIGNED BY: R. PEIN	CHECKED BY:
FRAMING PLAN - BRIDGE 33N	SHEET 65 OF156

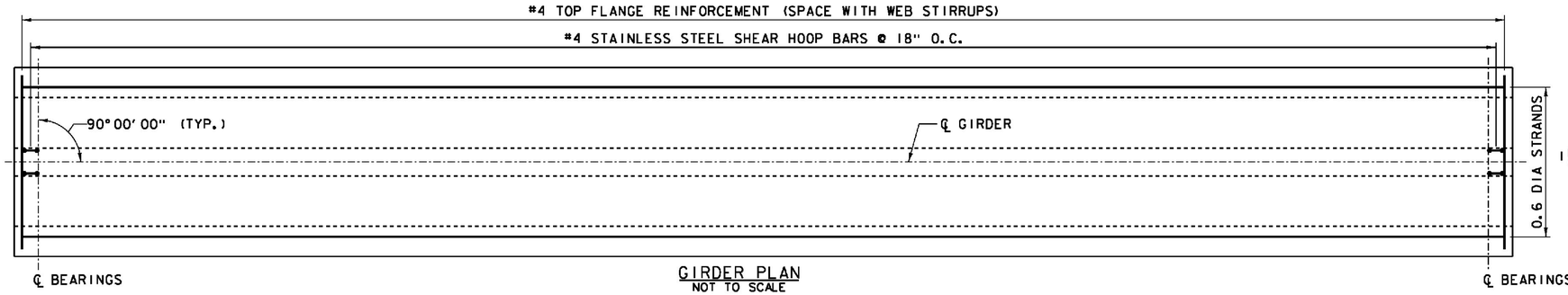

GIRDER PLAN
NOT TO SCALE

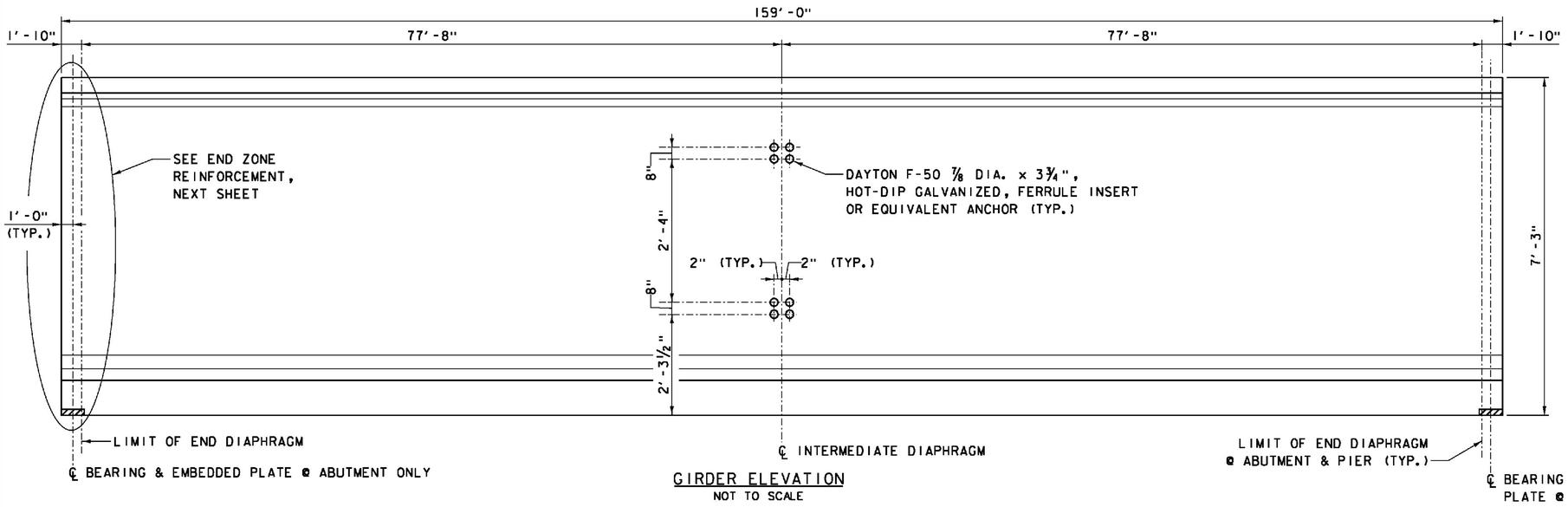

GIRDER ELEVATION
NOT TO SCALE

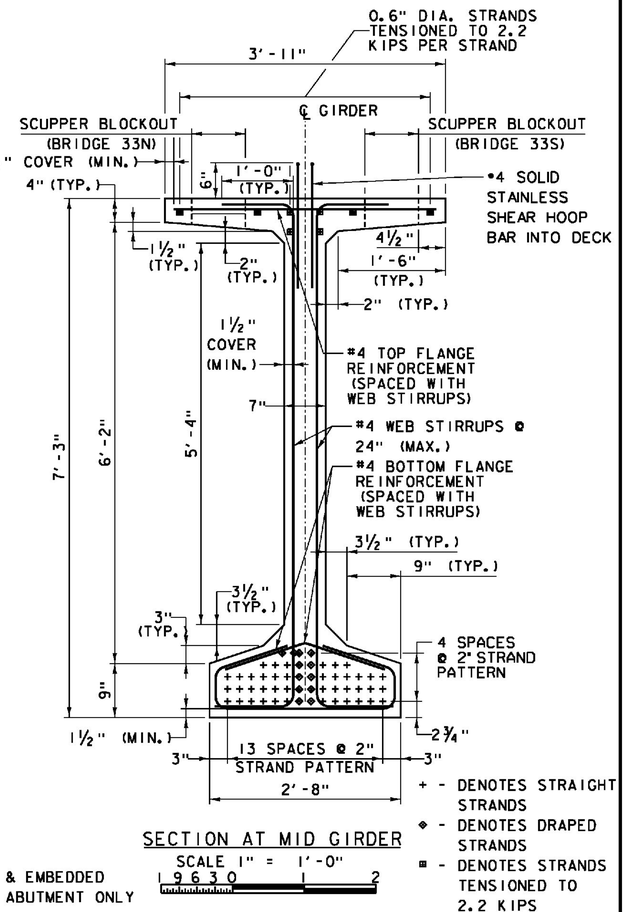

SECTION AT MID GIRDER
SCALE 1" = 1'-0"

+ - DENOTES STRAIGHT STRANDS
◆ - DENOTES DRAPED STRANDS
▣ - DENOTES STRANDS TENSIONED TO 2.2 KIPS

PRESTRESSED CONCRETE PCEF REINFORCEMENT

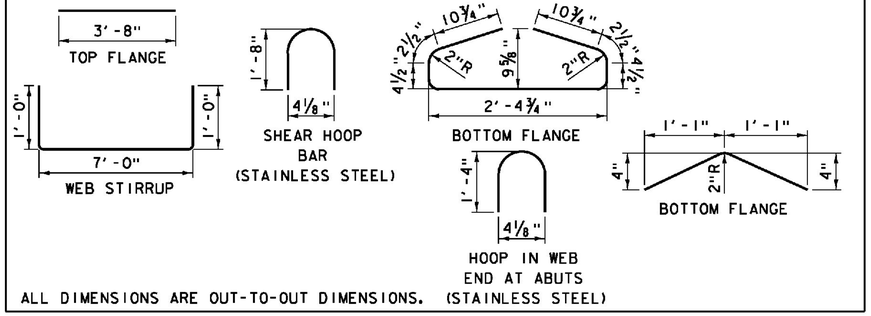

ALL DIMENSIONS ARE OUT-TO-OUT DIMENSIONS.

ITEMS USED ON THIS SHEET	
ITEM NO.	DESCRIPTION
507.17	EPOXY COATED REINFORCING STEEL
510.23	PRESTRESSED CONCRETE GIRDERS
900.635	STAINLESS STEEL REINFORCING

NOTES:

1. THE PRESTRESSING STRANDS SHALL BE 0.6" DIAMETER-UNCOATED, SEVEN-WIRE LOW RELAXATION STEEL CONFORMING TO AASTHO M203/M203M [ASTM A416/A416M] WITH A MININUM GUARANTEED ULTIMATE STRENGTH OF 270 KSI. JACKING FORCE = 43.8 KIPS PER STRAND UNLESS OTHERWISE NOTED. JACKING FORCE SHALL BE ROUNDED TO THE NEAREST 0.1 KIPS AND SHALL BE THE SAME FOR ALL PRESTRESSED UNITS IN A BRIDGE.
2. ALL EXPOSED CORNERS, EXCEPT THE TOP, SHALL BE CHAMFERED ¾".
3. BAR REINFORCEMENT SHALL BE ASTM A615, GRADE 60, EPOXY COATED UNLESS OTHERWISE NOTED.
4. THE TOPS OF PRESTRESSED UNITS SHALL RECEIVE A TRANSVERSE STIFF BROOM FINISH.
5. DETAILS ON THE DRAWINGS LABELED AS "NOT TO SCALE" ARE INTENTIONALLY DRAWN NOT TO SCALE FOR VISUAL CLARITY. ALL OTHER DETAILS, FOR WHICH NO SCALE IS SHOWN, ARE DRAWN PROPORTIONAL AND ARE FULLY DIMENSIONED.
6. COMPOSITE SHEAR HOOP BARS EXTENDING INTO DECK AND HOOPS AT GIRDER WEB ENDS AT ABUTMENT SHALL BE STAINLESS STEEL IN CONFORMANCE WITH ASTM A955M, GRADE 420 (GRADE 60).
7. FOR EMBEDDED PLATE DETAILS, SEE BRIDGE BEARING DETAILS SHEET.
8. ALL STEEL INSERTS SHALL BE HOT-DIP GALVANIZED IN CONFORMANCE WITH AASHTO M232 (ASTM A153).
9. TYPE OF CONCRETE SHALL BE HIGH PERFORMANCE, CLASS SCC. REQUIRED MINIMUM CONCRETE STRENGTH AT TRANSFER = 6.0 KSI. REQUIRED MINIMUM CONCRETE STRENGTH AT 28 DAYS = 8.0 KSI.
10. THE FABRICATOR SHALL PROVIDE DESIGN OF THE LIFTING DEVICES IN THE SHOP DRAWINGS.
11. FOR EMBEDDED STAY-IN-PLACE FORM ATTACHMENT DETAIL, SEE SUPERSTRUCTURE ELEV. DETAILS SHEET.

PROJECT NAME: WINDSOR
PROJECT NUMBER: IM 091-1(64)

FILE NAME: z10o188GirdDtl1.dgn
PROJECT LEADER: J. WILSON
DESIGNED BY: R. PEIN
GIRDER DETAILS 1

PLOT DATE: 7/30/2015
DRAWN BY: N. GARCIA III
CHECKED BY: G. WALKER
SHEET 66 OF156

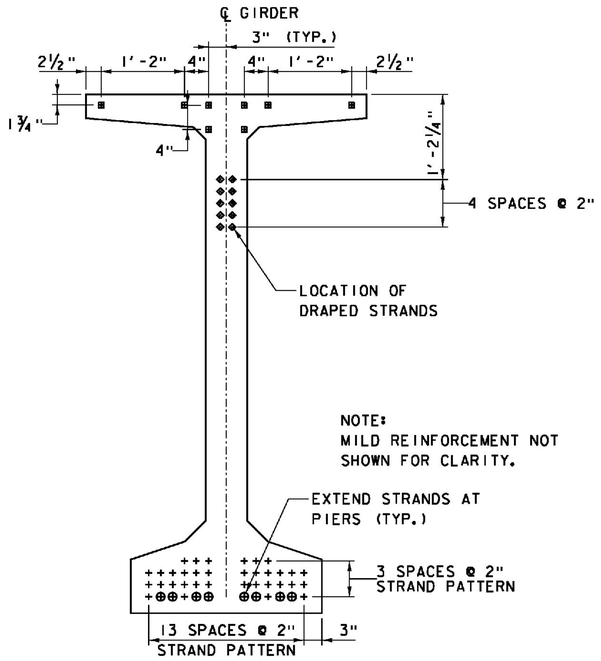

TYPICAL SECTION @ BEARINGS
USING DRAPED STRANDS

SCALE 1" = 1'-0"
1 9 6 3 0 1 2

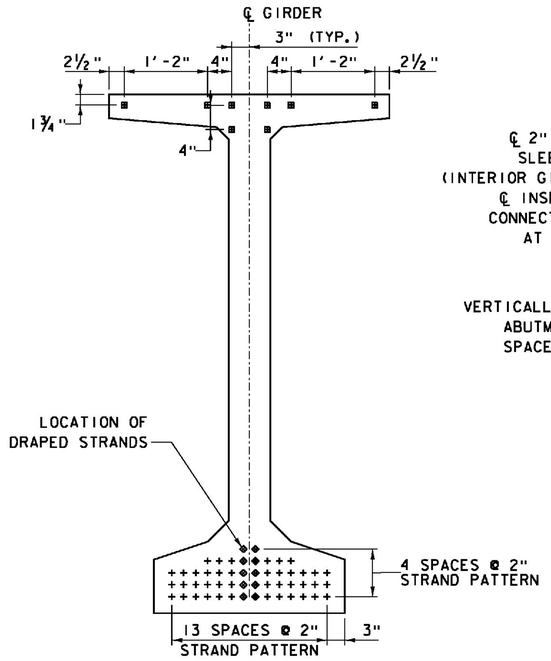

TYPICAL SECTION @ MIDSPAN
USING DRAPED STRANDS

SCALE 1" = 1'-0"
1 9 6 3 0 1 2

\+ DENOTES STRAIGHT STRANDS

◆ DENOTES DRAPED STRANDS

▪ DENOTES STRANDS TENSIONED TO 2.2 KIPS

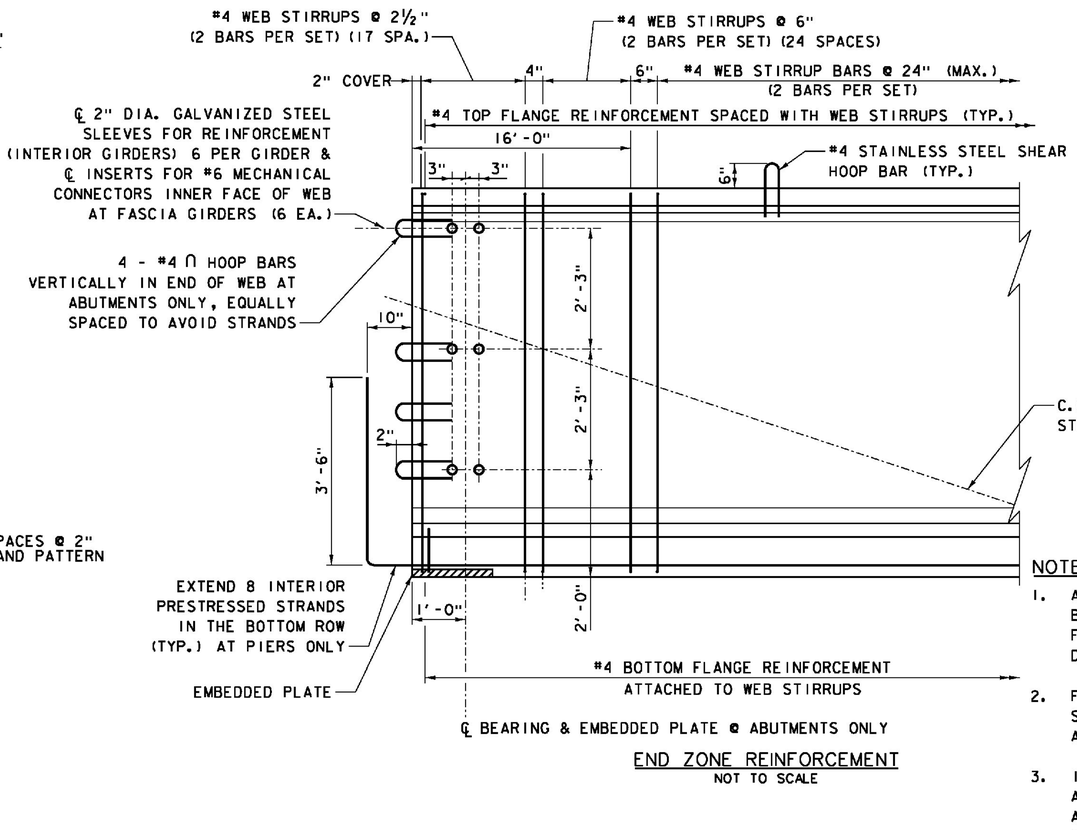

END ZONE REINFORCEMENT
NOT TO SCALE

NOTES:

1. ALL STAINLESS STEEL SHEAR BARS NOT SHOWN FOR CLARITY. FOR LAYOUT, SEE GIRDER DETAILS 1 SHEET.
2. FOR EMBEDDED PLATE DETAIL, SEE BRIDGE BEARING DETAILS - ABUTMENT SHEET.
3. IN THE ZONE WHERE STIRRUPS ARE SPACED AT 6" OR LESS ATTACH THE TOP FLANGE HORIZONTAL BARS TO ALTERNATE STIRRUPS.

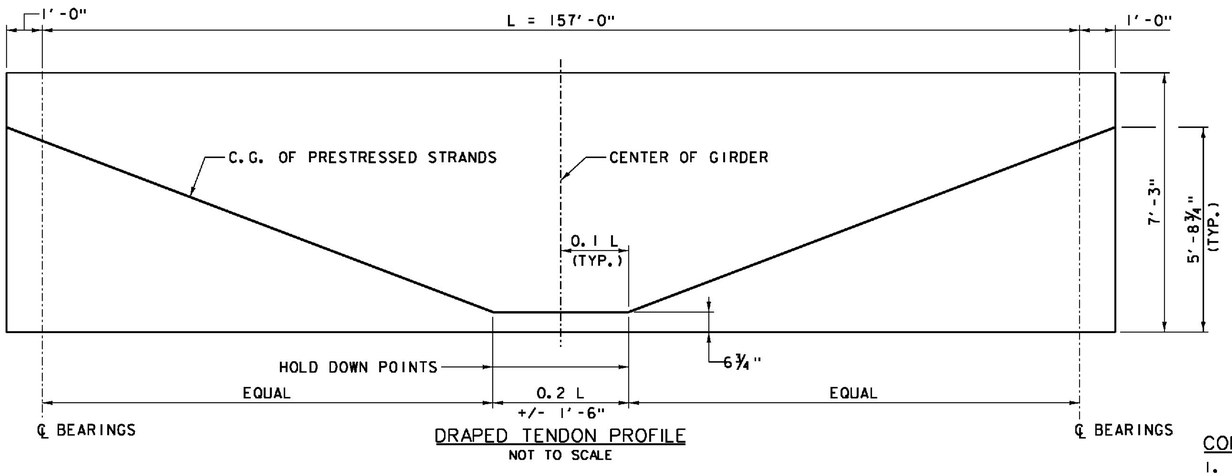

DRAPED TENDON PROFILE
NOT TO SCALE

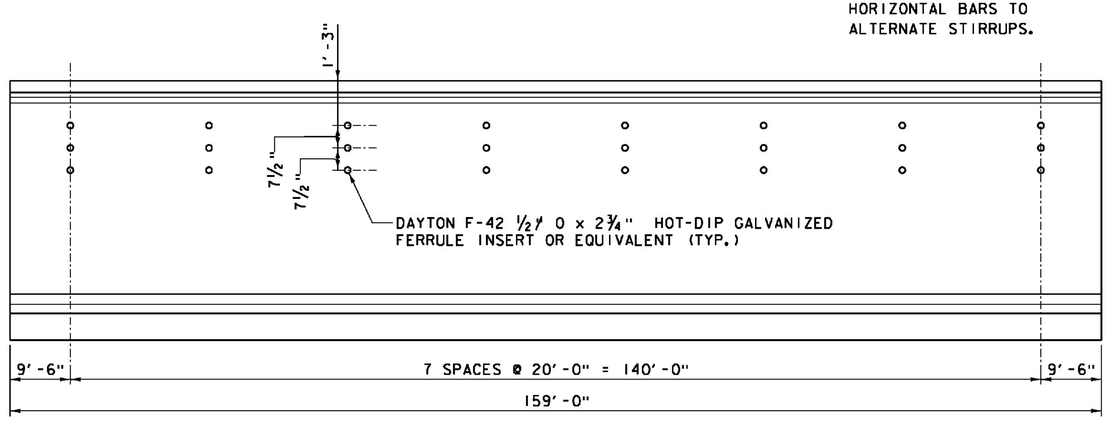

CONDUIT ASSEMBLY INSERT DETAIL
NOT TO SCALE

CONDUIT ASSEMBLY INSERT NOTES:

1. FOR CONDUIT ATTACHMENT ASSEMBLY DETAIL, SEE BARRIER AND CONDUIT DETAIL SHEET.
2. INSTALL INSERTS ON EXTERIOR FACE OF GIRDERS G5-1 THRU G5-4 ONLY.
3. ALL STEEL INSERTS SHALL BE HOT-DIP GALVANIZED CONFORMANCE WITH AASHTO M232 (ASTM A153)

PROJECT NAME: WINDSOR
PROJECT NUMBER: IM 091-1(64)

FILE NAME: z10a188GirdDtl2.dgn
PROJECT LEADER: J. WILSON
DESIGNED BY: R. PEIN
GIRDER DETAILS 2

PLOT DATE: 7/30/2015
DRAWN BY: N. GARCIA III
CHECKED BY: G. WALKER
SHEET 67 OF156

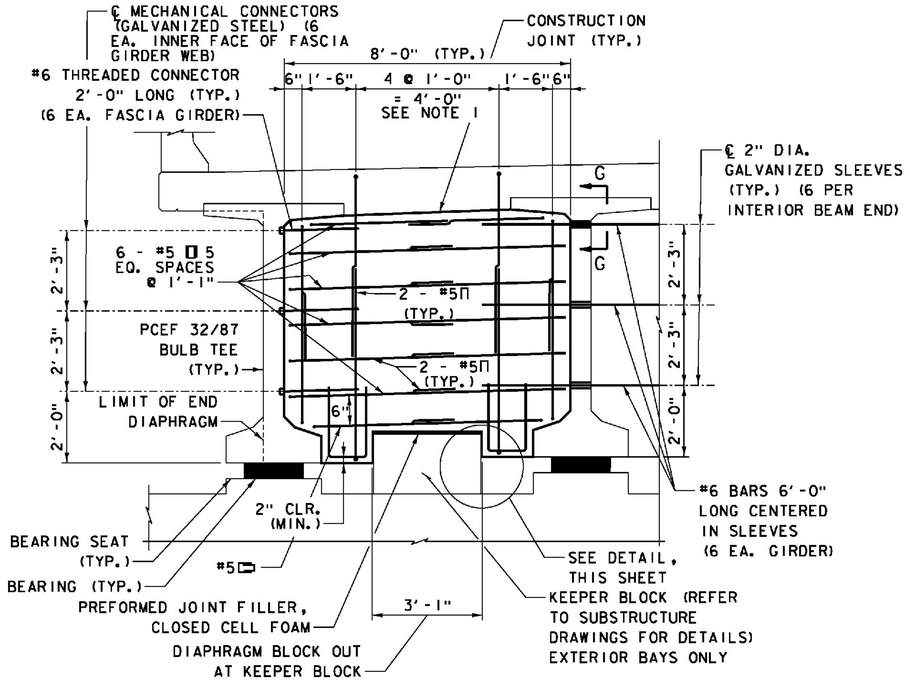

END DIAPHRAGM ELEVATION - ABUTMENT

SCALE ½" = 1'-0"

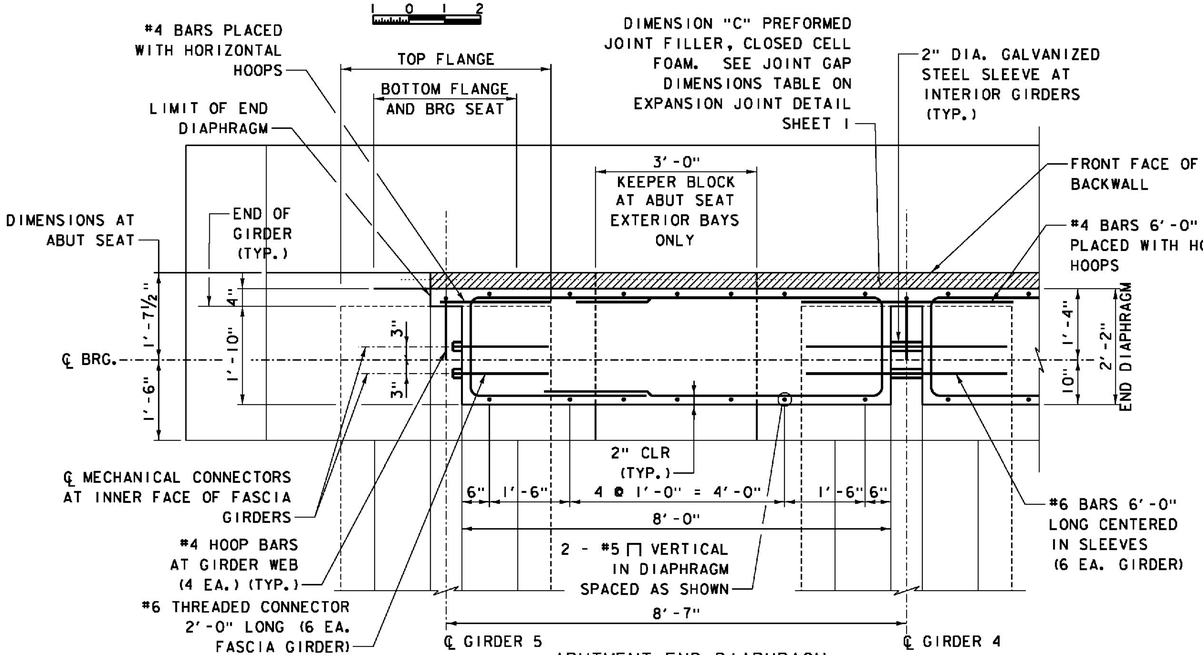

ABUTMENT END DIAPHRAGM
HORIZONTAL SECTION LOOKING DOWN

SCALE ¾" = 1'-0"

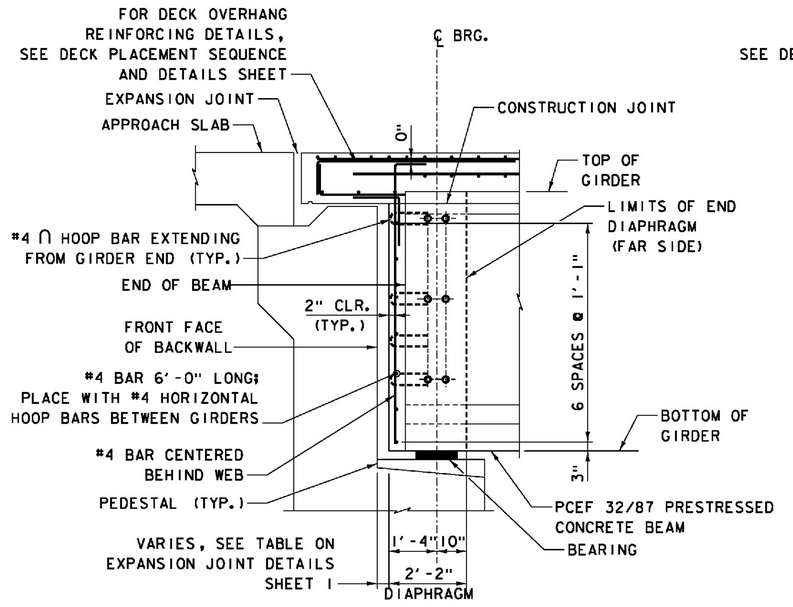

ABUTMENT END DIAPHRAGM
SECTION AT GIRDERS

SCALE ½" = 1'-0"

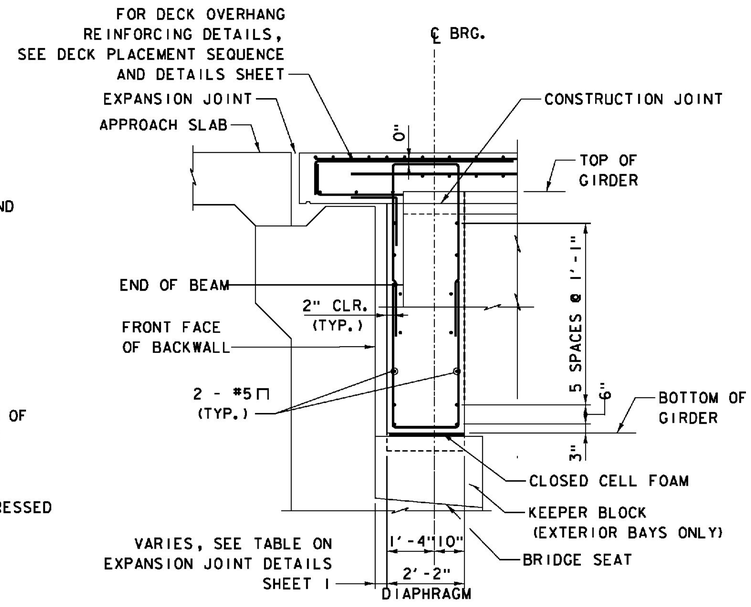

ABUTMENT END DIAPHRAGM
SECTION BETWEEN GIRDERS

SCALE ½" = 1'-0"

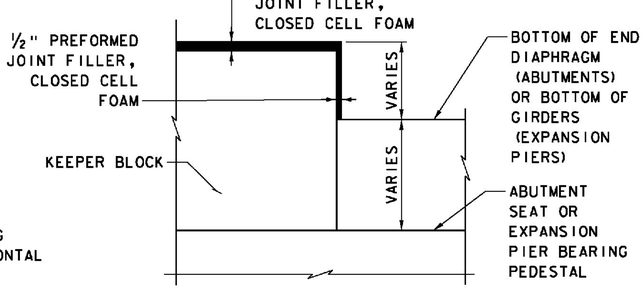

NOTE: APPLICABLE TO ABUTMENTS AND EXPANSION PIERS. (SEE SUBSTRUCTURE PLANS FOR ADDITIONAL INFORMATION.)

KEEPER BLOCK DETAIL

SCALE 1 ½" = 1'-0"

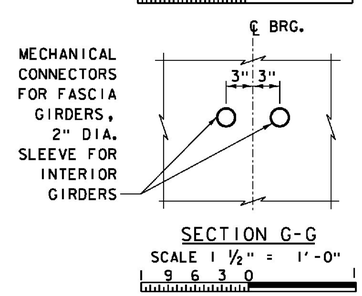

SECTION G-G

SCALE 1 ½" = 1'-0"

NOTES:

1. CONCRETE FOR END DIAPHRAGMS SHALL BE HPC, CLASS A, LOW CEMENT.
2. REINFORCING STEEL IN END DIAPHRAGM, EXCEPT BARS EXTENDING INTO DECK, SHALL BE ASTM A615 GRADE 60, EPOXY COATED.
3. ALL DIAPRAGHM REINFORCEMENT EXTENDING INTO THE DECK SHALL BE SOLID STAINLESS STEEL CONFORMING TO ASTM A995M, GRADE 420.
4. DIAPHRAGM DIMENSIONS AND REINFORCING ARE SHOWN IN ONE EXTERIOR GIRDER BAY. ALL INTERIOR GIRDER BAYS ARE SIMILAR.
5. FOR GIRDER BEARINGS, SEE BRIDGE BEARING DETAILS - PIER SHEET.
6. FOR PREFORMED JOINT FILLER MATERIAL INFORMATION, SEE GIRDER DETAILS 4 SHEET, NOTE 7.

ITEMS USED ON THIS SHEET	
ITEM NO.	DESCRIPTION
507.17	EPOXY COATED REINFORCING STEEL
510.23	PRESTRESSED CONCRETE GIRDERS
900.608	HIGH PERFORMANCE CONCRETE, CLASS A, LOW CEMENT
900.635	STAINLESS STEEL REINFORCING

PROJECT NAME: WINDSOR
PROJECT NUMBER: IM 091-1(64)

FILE NAME: s10o188GirdDtl3.dgn
PROJECT LEADER: J. WILSON
DESIGNED BY: R. PEIN
GIRDER DETAILS 3

PLOT DATE: 7/30/2015
DRAWN BY: N. GARCIA III
CHECKED BY: G. WALKER
SHEET 68 OF 156

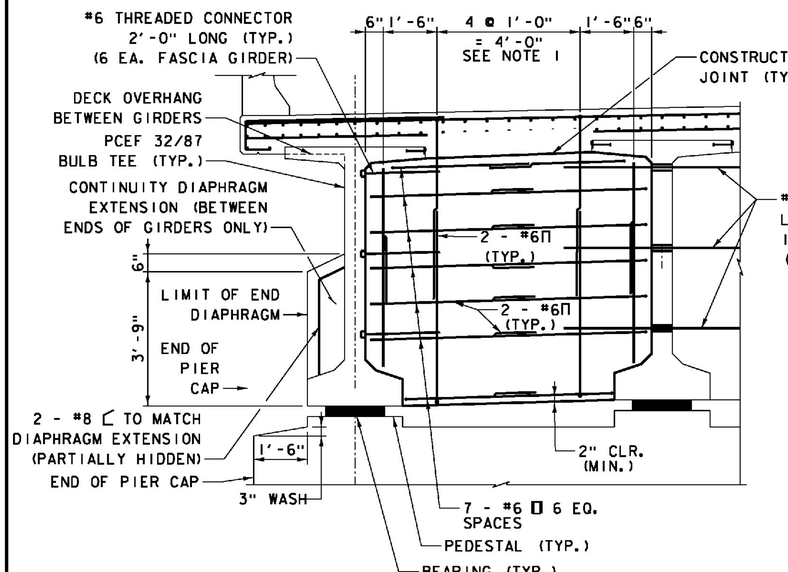

END DIAPHRAGM ELEVATION - EXPANSION PIERS

SCALE ½" = 1'-0"

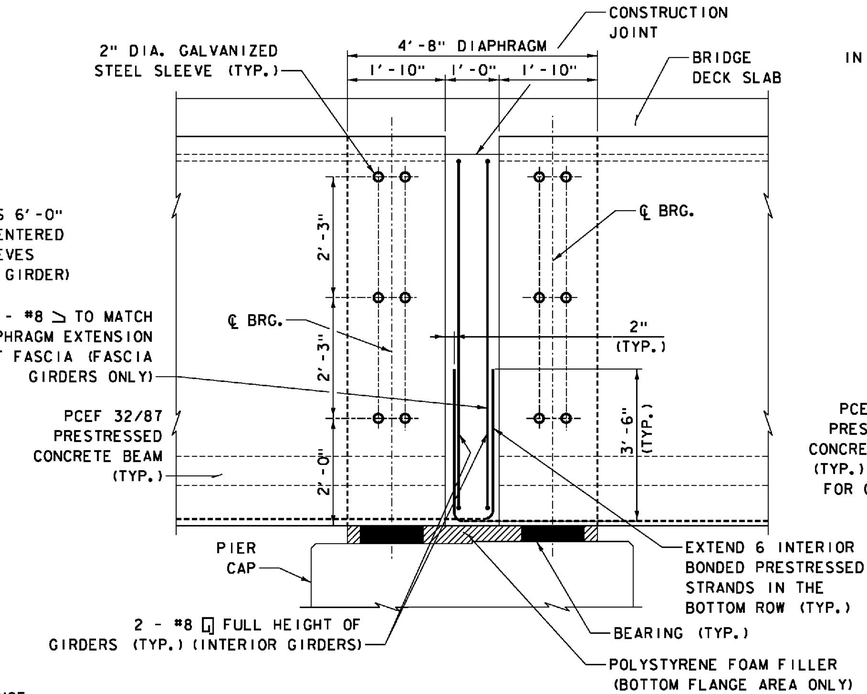

EXPANSION PIERS END DIAPHRAGM SECTION AT GIRDERS

SCALE ¾" = 1'-0"

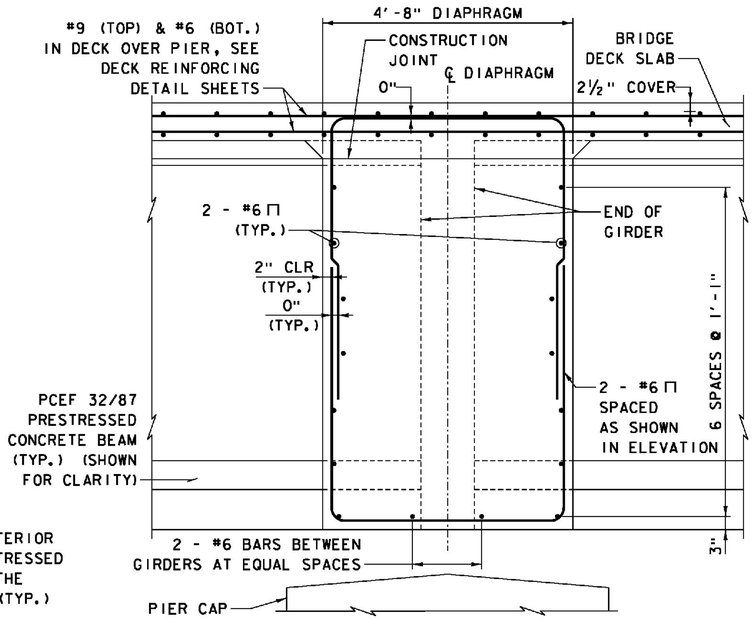

EXPANSION PIERS END DIAPHRAGM SECTION BETWEEN GIRDERS

SCALE ¾" = 1'-0"

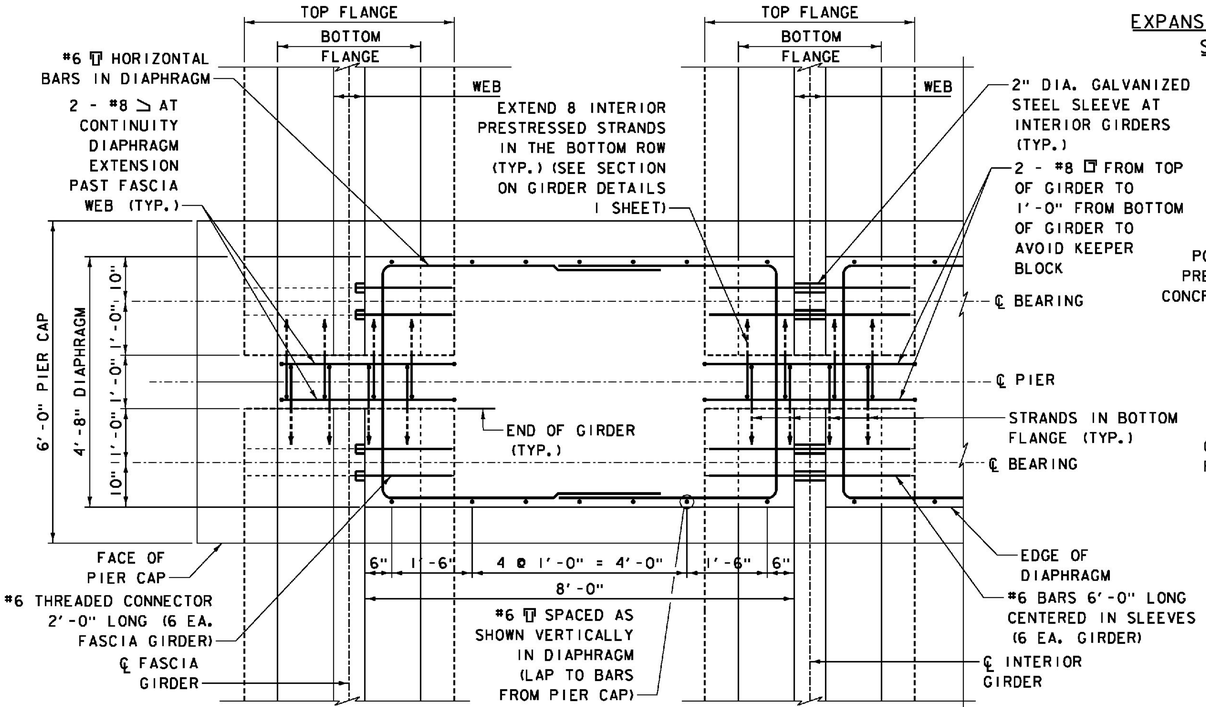

EXPANSION PIERS END DIAPHRAGM HORIZONTAL SECTION LOOKING DOWN

SCALE ¾" = 1'-0"

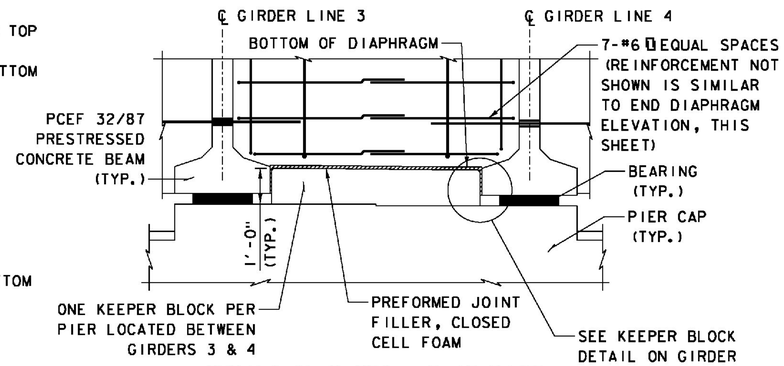

EXPANSION PIERS - DIAPHRAGM AT KEEPER BLOCK

SCALE ½" = 1'-0"

NOTES:

1. CONCRETE FOR END DIAPHRAGMS SHALL BE HPC, CLASS A, LOW CEMENT.
2. REINFORCING STEEL IN END DIAPHRAGM, EXCEPT BARS EXTENDING INTO DECK, SHALL BE ASTM A615 GRADE 60, EPOXY COATED.
3. ALL DIAPRAGHM REINFORCEMENT EXTENDING INTO THE DECK SHALL BE SOLID STAINLESS STEEL CONFORMING TO ASTM A995M, GRADE 420.
4. DIAPHRAGM DIMENSIONS AND REINFORCING ARE SHOWN IN ONE EXTERIOR GIRDER BAY. ALL INTERIOR GIRDER BAYS ARE SIMILAR.
5. FOR GIRDER BEARINGS, SEE BRIDGE BEARING DETAILS - PIER SHEET.
6. FOR HORIZONTAL CONSTRUCTION JOINT DETAIL, SEE GIRDER DETAILS 5 SHEET.
7. PREFORMED JOINT FILLER, CLOSED CELL FOAM SHALL BE W.R. MEADOWS CERAMAR FLEXIBLE FOAM EXPANSION JOINT, OR APPROVED EQUAL, MEETING REQUIREMENTS OF ASTM D1752 (SECTIONS 5.1 THROUGH 5.4).

ITEMS USED ON THIS SHEET	
ITEM NO.	DESCRIPTION
507.17	EPOXY COATED REINFORCING STEEL
510.23	PRESTRESSED CONCRETE GIRDERS
900.608	HIGH PERFORMANCE CONCRETE, CLASS A, LOW CEMENT
900.635	STAINLESS STEEL REINFORCING

PROJECT NAME: WINDSOR
PROJECT NUMBER: IM 091-1(64)

FILE NAME: s10a188GirdDtl4.dgn
PROJECT LEADER: J. WILSON
DESIGNED BY: R. PEIN
GIRDER DETAILS 4

PLOT DATE: 7/30/2015
DRAWN BY: N. GARCIA III
CHECKED BY: G. WALKER
SHEET 69 OF 156

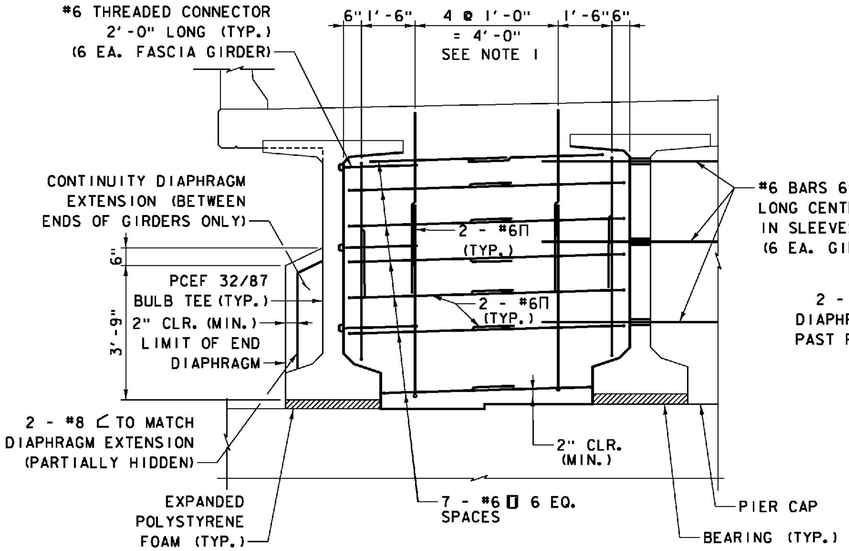

END DIAPHRAGM ELEVATION - FIXED PIERS

SCALE ½" = 1'-0"

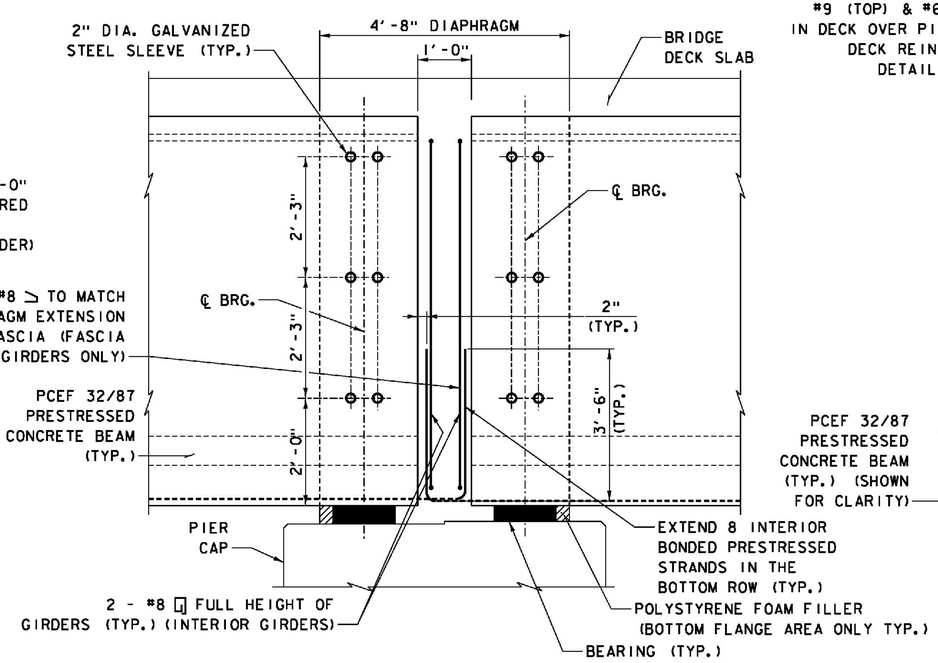

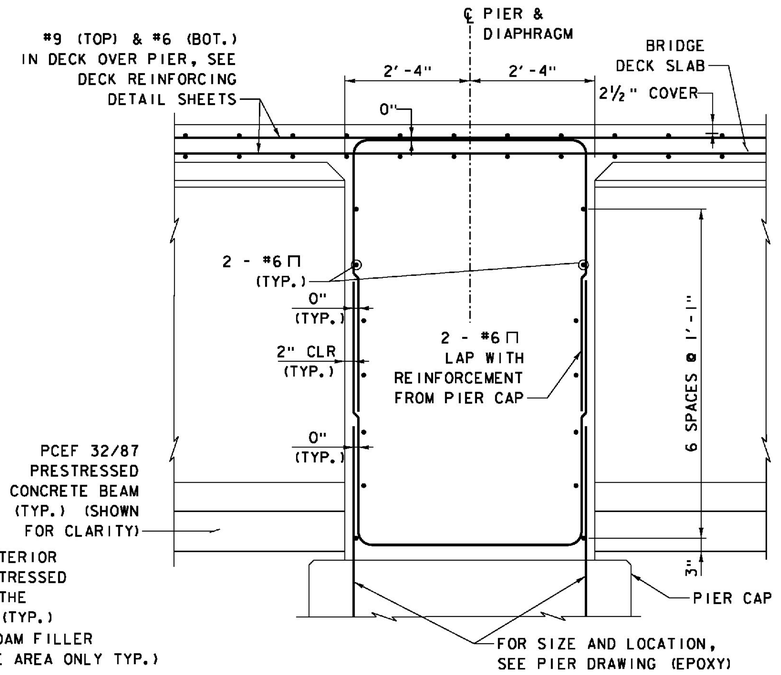

FIXED PIERS END DIAPHRAGM SECTION BETWEEN GIRDERS

SCALE ¾" = 1'-0"

FIXED PIERS END DIAPHRAGM SECTION AT GIRDERS

SCALE ¾" = 1'-0"

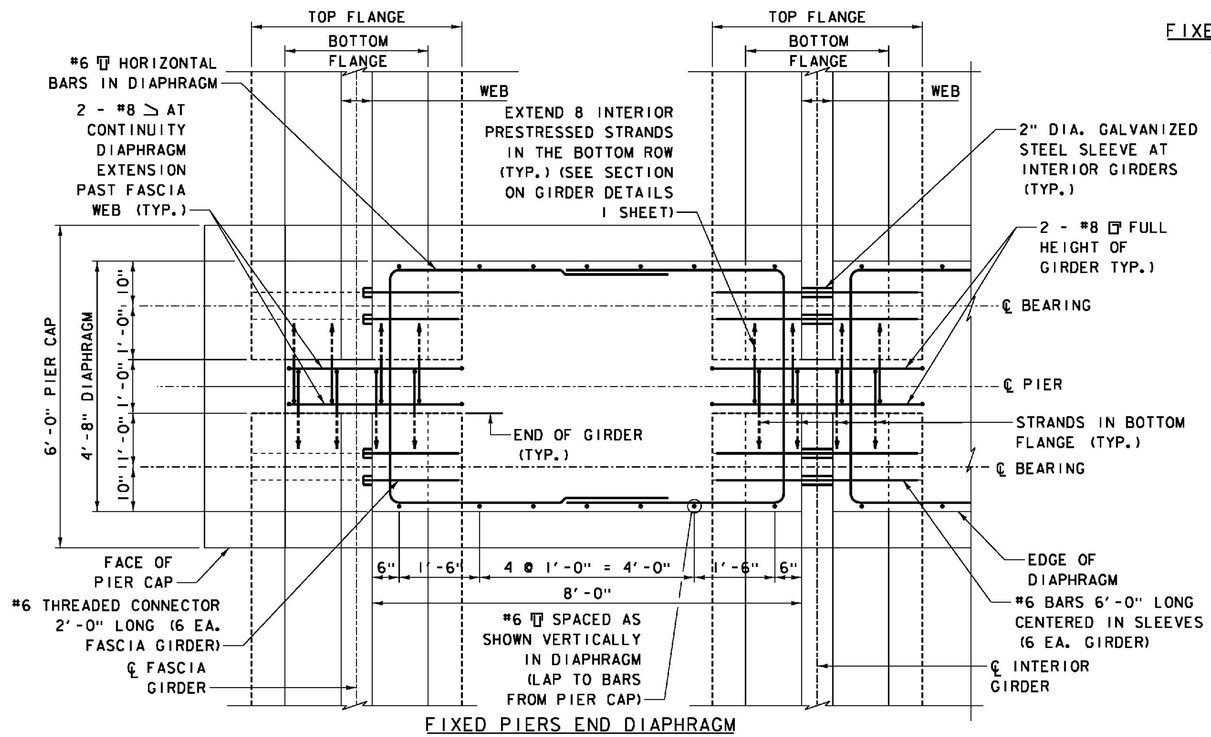

FIXED PIERS END DIAPHRAGM HORIZONTAL SECTION LOOKING DOWN

SCALE ¾" = 1'-0"

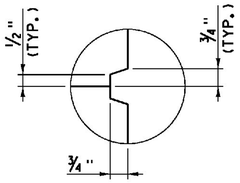

SCORE MARK DETAIL

NOT TO SCALE

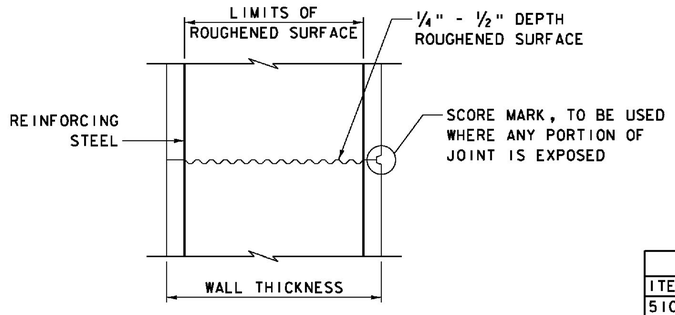

TYPICAL HORIZONTAL CONSTRUCTION JOINT

NOT TO SCALE

1. THE SURFACE OF THE CONCRETE CONSTRUCTION JOINTS SHALL BE CLEANED AND FREE OF LAITANCE.
2. IMMEDIATELY BEFORE NEW CONCRETE IS PLACED, ALL CONSTRUCTION JOINTS SHALL BE WETTED AND STANDING WATER REMOVED.

NOTES:

1. CONCRETE FOR END DIAPHRAGMS SHALL BE HPC, CLASS A, LOW CEMENT.
2. ALL FIXED PIER DIAPRAGHM REINFORCEMENT SHALL BE SOLID STAINLESS STEEL CONFORMING TO ASTM A995M, GRADE 420.
3. DIAPHRAGM DIMENSIONS AND REINFORCING ARE SHOWN IN ONE EXTERIOR GIRDER BAY. ALL INTERIOR GIRDER BAYS ARE SIMILAR.
4. FOR GIRDER BEARINGS, SEE BRIDGE BEARING DETAILS - PIER SHEET.

ITEMS USED ON THIS SHEET	
ITEM NO.	DESCRIPTION
510.23	PRESTRESSED CONCRETE GIRDERS
900.608	HIGH PERFORMANCE CONCRETE, CLASS A, LOW CEMENT
900.635	STAINLESS STEEL REINFORCING

PROJECT NAME: WINDSOR
PROJECT NUMBER: IM 091-1(64)

FILE NAME: s10o188GirdDtl5.dgn
PROJECT LEADER: J. WILSON
DESIGNED BY: S. BOYINGTON
GIRDER DETAILS 5

PLOT DATE: 7/30/2015
DRAWN BY: S. GUNN
CHECKED BY: S. HALLORAN
SHEET 70 OF 156

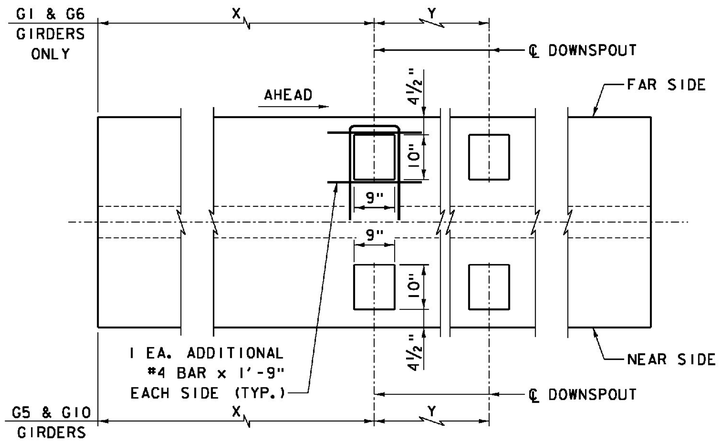

GIRDER	X	Y	GIRDER	X	Y
G1-1	109'-0"	-	G6-5	76'-0"	-
G1-2	119'-6"	-	G6-6	25'-0"	109'-0"
G1-4	49'-6"	-	G6-7	83'-0"	-
G5-1	76'-0"	-	G6-8	32'-0"	109'-0"
G5-2	25'-0"	109'-0"	G10-5	109'-0"	-
G5-3	83'-0"	-	G10-6	119'-6"	-
G5-4	32'-0"	109'-0"	G10-8	49'-6"	-

NOTE: ADJUST GIRDER TOP FLANGE AND WEB STIRRUP REINFORCEMENT AROUND OPENING

OPENINGS FOR SCUPPER DOWNSPOUTS - PLAN

SCALE ¾" = 1'-0"

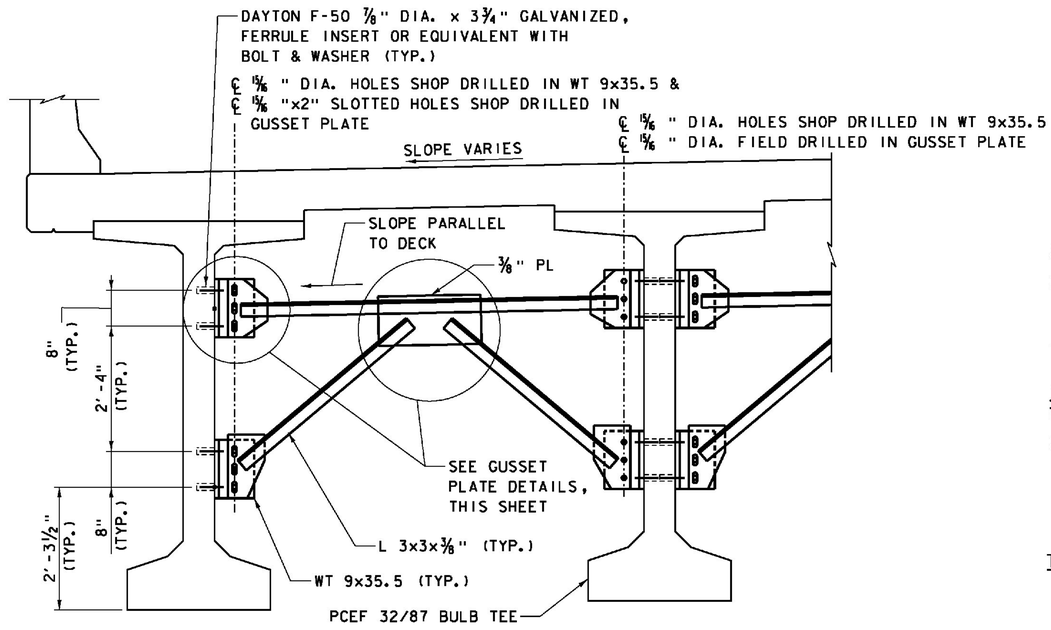

PARTIAL SECTION - INTERMEDIATE DIAPHRAGM

SCALE ¾" = 1'-0"

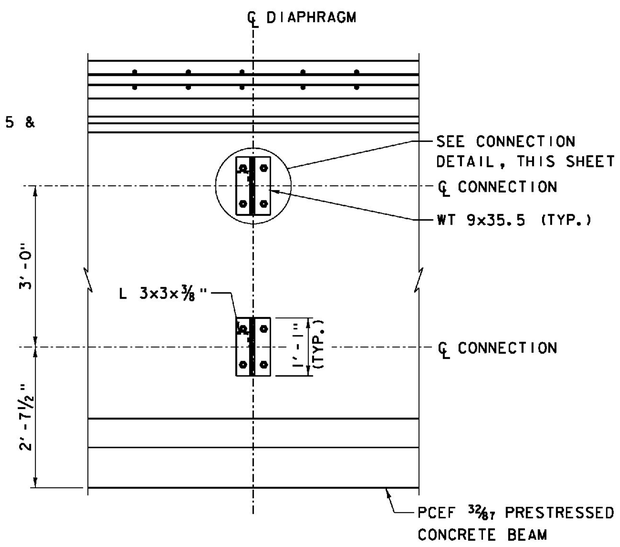

TYPICAL SECTION AT INTERMEDIATE DIAPHRAGM

SCALE ¾" = 1'-0"

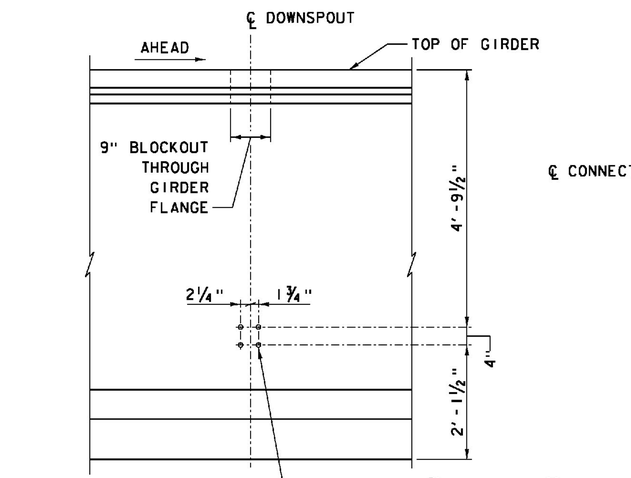

NOTES: FOR SCUPPER LAYOUT, SEE PLAN - BRIDGE 33S AND PLAN - BRIDGE 33N SHEETS.
FOR SCUPPER DETAILS, SEE BRIDGE DRAINAGE SHEETS.

OPENINGS FOR SCUPPER DOWNSPOUTS - ELEVATION

SCALE ¾" = 1'-0"

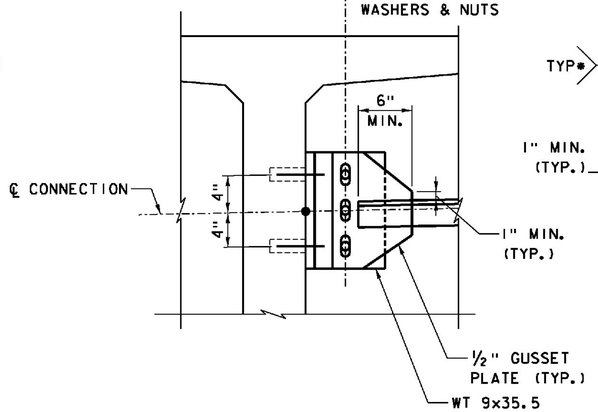

GUSSET PLATE DETAILS
NOT TO SCALE

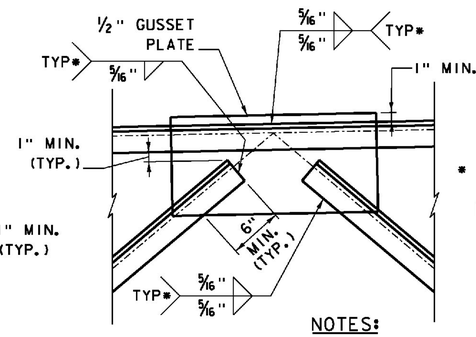

* TERMINATE FILLET WELDS ½" SHORT OF ALL PLATE EDGES

NOTE: ALL HOLES IN BOTH GUSSET PLATES AND CONNECTION WT SECTIONS ON NB BRIDGE WERE FIELD DRILLED.

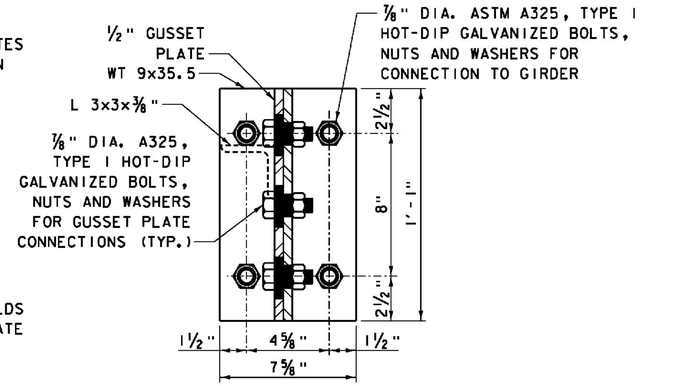

CONNECTION DETAIL
NOT TO SCALE

NOTES:

1. STRUCTURAL STEEL FOR INTERMEDIATE DIAPHRAGM AND CONNECTION BRACKETS SHALL CONFORM TO AASHTO M270 GRADE 36.
2. ALL BOLTS FOR DIAPHRAGM CONNECTIONS SHALL CONFORM TO AASHTO M164 (ASTM A325), TYPE 1. HEAVY HEX NUTS AND HARDENED WASHERS SHALL CONFORM TO AASHTO M292 AND M293, REPECTIVELY.
3. ALL STEEL PLATES AND SHAPES SHALL BE HOT-DIP GALVANIZED IN CONFORMANCE WITH AASHTO M111 (ASTM A123).
4. ALL STEEL THREADED INSERTS, NUTS AND WASHERS SHALL BE HOT-DIP GALVANIZED IN CONFORMANCE WITH AASHTO M232 (ASTM A153).
5. FIELD DRILLED HOLES AND GALVANIZED SURFACES DAMAGED DURING CONSTRUCTION SHALL BE REPAIRED WITH FIELD APPLIED CORROSION RESISTANT COATING IN CONFORMANCE WITH THE REQUIREMENTS OF ASTM A780 PRIOR TO INSTALLING BOLTS. REAM FIELD DRILLED HOLES AS REQUIRED FOR BOLT CLEARANCE PRIOR TO FIELD APPLIED GALVANIZING REPAIR.

ITEMS USED ON THIS SHEET	
ITEM NO.	DESCRIPTION
506.60	STRUCTURAL STEEL
510.23	PRESTRESSED CONCRETE GIRDERS

PROJECT NAME: WINDSOR
PROJECT NUMBER: IM 091-1(64)

FILE NAME: s10o188GirdDtl6.dgn
PROJECT LEADER: J. WILSON
DESIGNED BY: R. PEIN
GIRDER DETAILS 6

PLOT DATE: 7/30/2015
DRAWN BY: N. GARCIA III
CHECKED BY: G. WALKER
SHEET 71 OF156

BRIDGE 33S TOP OF FORM TABLES

SPAN 1																					
GIRDER NO.	POINT	CENTERLINE BEARING ABUT. 1	1/20 PT.	2/20 PT.	3/20 PT.	4/20 PT.	5/20 PT.	6/20 PT.	7/20 PT.	8/20 PT.	9/20 PT.	10/20 PT.	11/20 PT.	12/20 PT.	13/20 PT.	14/20 PT.	15/20 PT.	16/20 PT.	17/20 PT.	18/20 PT.	19/20 PT.	CENTERLINE BEARING PIER 1
CENTERLINE I-91 SB STATION		1920+62.50	1920+70.35	1920+78.20	1920+86.05	1920+93.90	1921+01.75	1921+09.60	1921+17.45	1921+25.30	1921+33.15	1921+41.00	1921+48.85	1921+56.70	1921+64.55	1921+72.40	1921+80.25	1921+88.10	1921+95.95	1922+03.80	1922+11.65	1922+19.50
G1-1	TOP OF PAVEMENT ELEV.	480.00	480.10	480.20	480.30	480.39	480.49	480.59	480.69	480.79	480.89	480.98	481.08	481.18	481.28	481.38	481.48	481.57	481.67	481.77	481.87	481.97
	DEFLECTION - CS	0.00	0.03	0.06	0.09	0.12	0.14	0.16	0.18	0.19	0.20	0.20	0.20	0.19	0.18	0.16	0.14	0.12	0.09	0.06	0.03	0.00
	DEFLECTION - SDL	0.00	0.01	0.01	0.01	0.02	0.02	0.02	0.03	0.03	0.03	0.03	0.03	0.02	0.02	0.02	0.01	0.01	0.01	0.00	0.00	0.00
	TOP OF FORM ELEV.	**479.25**	**479.38**	**479.52**	**479.65**	**479.78**	**479.90**	**480.03**	**480.14**	**480.26**	**480.36**	**480.46**	**480.55**	**480.65**	**480.73**	**480.81**	**480.88**	**480.95**	**481.02**	**481.09**	**481.15**	**481.22**
G2-1	TOP OF PAVEMENT ELEV.	480.34	480.43	480.53	480.63	480.73	480.83	480.93	481.02	481.12	481.22	481.32	481.42	481.52	481.61	481.71	481.81	481.91	482.01	482.11	482.20	482.30
	DEFLECTION - CS	0.00	0.03	0.06	0.09	0.13	0.15	0.17	0.19	0.20	0.21	0.21	0.21	0.20	0.19	0.17	0.15	0.13	0.09	0.06	0.03	0.00
	DEFLECTION - SDL	0.00	0.01	0.01	0.01	0.02	0.02	0.02	0.02	0.03	0.03	0.03	0.02	0.02	0.02	0.02	0.01	0.01	0.01	0.00	0.00	0.00
	TOP OF FORM ELEV.	**479.59**	**479.72**	**479.86**	**479.99**	**480.12**	**480.25**	**480.37**	**480.49**	**480.60**	**480.71**	**480.81**	**480.90**	**480.99**	**481.07**	**481.15**	**481.22**	**481.30**	**481.36**	**481.42**	**481.49**	**481.55**
G3-1	TOP OF PAVEMENT ELEV.	480.51	480.61	480.70	480.80	480.90	481.00	481.10	481.20	481.29	481.39	481.49	481.59	481.69	481.79	481.88	481.98	482.08	482.18	482.28	482.38	482.47
	DEFLECTION - CS	0.00	0.03	0.06	0.09	0.13	0.15	0.17	0.19	0.20	0.21	0.21	0.21	0.20	0.19	0.17	0.15	0.13	0.09	0.06	0.03	0.00
	DEFLECTION - SDL	0.00	0.01	0.01	0.01	0.02	0.02	0.02	0.02	0.03	0.03	0.03	0.02	0.02	0.02	0.02	0.01	0.01	0.01	0.00	0.00	0.00
	TOP OF FORM ELEV.	**479.76**	**479.89**	**480.03**	**480.16**	**480.29**	**480.42**	**480.54**	**480.66**	**480.77**	**480.88**	**480.98**	**481.07**	**481.16**	**481.24**	**481.32**	**481.40**	**481.47**	**481.53**	**481.60**	**481.66**	**481.72**
G4-1	TOP OF PAVEMENT ELEV.	480.46	480.55	480.65	480.75	480.85	480.95	481.05	481.14	481.24	481.34	481.44	481.54	481.64	481.73	481.83	481.93	482.03	482.13	482.23	482.32	482.42
	DEFLECTION - CS	0.00	0.03	0.06	0.09	0.13	0.15	0.17	0.19	0.20	0.21	0.21	0.21	0.20	0.19	0.17	0.15	0.13	0.09	0.06	0.03	0.00
	DEFLECTION - SDL	0.00	0.01	0.01	0.01	0.02	0.02	0.02	0.02	0.03	0.03	0.03	0.02	0.02	0.02	0.02	0.01	0.01	0.01	0.00	0.00	0.00
	TOP OF FORM ELEV.	**479.71**	**479.84**	**479.98**	**480.11**	**480.24**	**480.37**	**480.49**	**480.61**	**480.72**	**480.83**	**480.93**	**481.02**	**481.11**	**481.19**	**481.27**	**481.34**	**481.42**	**481.48**	**481.54**	**481.61**	**481.67**
G5-1	TOP OF PAVEMENT ELEV.	480.28	480.38	480.48	480.58	480.68	480.78	480.87	480.97	481.07	481.17	481.27	481.37	481.46	481.56	481.66	481.76	481.86	481.96	482.05	482.15	482.25
	DEFLECTION - CS	0.00	0.03	0.06	0.09	0.12	0.14	0.16	0.18	0.19	0.20	0.20	0.20	0.19	0.18	0.16	0.14	0.12	0.09	0.06	0.03	0.00
	DEFLECTION - SDL	0.00	0.01	0.01	0.01	0.02	0.02	0.02	0.03	0.03	0.03	0.03	0.03	0.02	0.02	0.02	0.01	0.01	0.01	0.00	0.00	0.00
	TOP OF FORM ELEV.	**479.53**	**479.67**	**479.80**	**479.93**	**480.06**	**480.19**	**480.31**	**480.42**	**480.54**	**480.64**	**480.75**	**480.84**	**480.93**	**481.01**	**481.09**	**481.16**	**481.24**	**481.30**	**481.37**	**481.44**	**481.50**

SPAN 2																					
GIRDER NO.	POINT	CENTERLINE BEARING PIER 1	1/20 PT.	2/20 PT.	3/20 PT.	4/20 PT.	5/20 PT.	6/20 PT.	7/20 PT.	8/20 PT.	9/20 PT.	10/20 PT.	11/20 PT.	12/20 PT.	13/20 PT.	14/20 PT.	15/20 PT.	16/20 PT.	17/20 PT.	18/20 PT.	19/20 PT.	CENTERLINE BEARING PIER 2
CENTERLINE I-91 SB STATION		1922+22.50	1922+30.35	1922+38.20	1922+46.05	1922+53.90	1922+61.75	1922+69.60	1922+77.45	1922+85.30	1922+93.15	1923+01.00	1923+08.85	1923+16.70	1923+24.55	1923+32.40	1923+40.25	1923+48.10	1923+55.95	1923+63.80	1923+71.65	1923+79.50
G1-2	TOP OF PAVEMENT ELEV.	482.01	482.10	482.20	482.30	482.40	482.50	482.60	482.69	482.79	482.89	482.99	483.09	483.19	483.28	483.38	483.48	483.58	483.68	483.78	483.87	483.97
	DEFLECTION - CS	0.00	0.03	0.05	0.07	0.10	0.11	0.13	0.14	0.16	0.16	0.16	0.16	0.16	0.14	0.13	0.11	0.10	0.07	0.05	0.03	0.00
	DEFLECTION - SDL	0.00	0.00	0.00	0.00	0.00	0.00	0.00	0.01	0.01	0.01	0.01	0.01	0.01	0.01	0.01	0.01	0.00	0.00	0.00	0.00	0.00
	TOP OF FORM ELEV.	**481.26**	**481.38**	**481.50**	**481.63**	**481.75**	**481.86**	**481.98**	**482.09**	**482.20**	**482.31**	**482.41**	**482.50**	**482.60**	**482.68**	**482.77**	**482.85**	**482.93**	**483.00**	**483.08**	**483.15**	**483.22**
G2-2	TOP OF PAVEMENT ELEV.	482.34	482.44	482.54	482.64	482.73	482.83	482.93	483.03	483.13	483.23	483.32	483.42	483.52	483.62	483.72	483.82	483.91	484.01	484.11	484.21	484.31
	DEFLECTION - CS	0.00	0.03	0.05	0.08	0.10	0.12	0.14	0.15	0.16	0.17	0.17	0.17	0.16	0.15	0.14	0.12	0.10	0.08	0.05	0.03	0.00
	DEFLECTION - SDL	0.00	0.00	0.00	0.00	0.00	0.00	0.00	0.01	0.01	0.01	0.01	0.01	0.01	0.01	0.01	0.01	0.00	0.00	0.00	0.00	0.00
	TOP OF FORM ELEV.	**481.59**	**481.72**	**481.84**	**481.96**	**482.09**	**482.21**	**482.32**	**482.44**	**482.55**	**482.65**	**482.75**	**482.85**	**482.94**	**483.03**	**483.11**	**483.19**	**483.27**	**483.34**	**483.42**	**483.49**	**483.56**
G3-2	TOP OF PAVEMENT ELEV.	482.51	482.61	482.71	482.81	482.91	483.00	483.10	483.20	483.30	483.40	483.50	483.59	483.69	483.79	483.89	483.99	484.09	484.18	484.28	484.38	484.48
	DEFLECTION - CS	0.00	0.03	0.05	0.08	0.10	0.12	0.14	0.15	0.16	0.17	0.17	0.17	0.16	0.15	0.14	0.12	0.10	0.08	0.05	0.03	0.00
	DEFLECTION - SDL	0.00	0.00	0.00	0.00	0.00	0.00	0.00	0.01	0.01	0.01	0.01	0.01	0.01	0.01	0.01	0.01	0.00	0.00	0.00	0.00	0.00
	TOP OF FORM ELEV.	**481.76**	**481.89**	**482.01**	**482.14**	**482.26**	**482.38**	**482.50**	**482.61**	**482.72**	**482.82**	**482.93**	**483.02**	**483.11**	**483.20**	**483.29**	**483.36**	**483.44**	**483.51**	**483.59**	**483.66**	**483.73**
G4-2	TOP OF PAVEMENT ELEV.	482.46	482.56	482.66	482.76	482.85	482.95	483.05	483.15	483.25	483.35	483.44	483.54	483.64	483.74	483.84	483.94	484.03	484.13	484.23	484.33	484.43
	DEFLECTION - CS	0.00	0.03	0.05	0.08	0.10	0.12	0.14	0.15	0.16	0.17	0.17	0.17	0.16	0.15	0.14	0.12	0.10	0.08	0.05	0.03	0.00
	DEFLECTION - SDL	0.00	0.00	0.00	0.00	0.00	0.00	0.00	0.01	0.01	0.01	0.01	0.01	0.01	0.01	0.01	0.01	0.00	0.00	0.00	0.00	0.00
	TOP OF FORM ELEV.	**481.71**	**481.84**	**481.96**	**482.08**	**482.21**	**482.33**	**482.44**	**482.56**	**482.67**	**482.77**	**482.87**	**482.97**	**483.06**	**483.15**	**483.23**	**483.31**	**483.39**	**483.46**	**483.54**	**483.61**	**483.68**
G5-2	TOP OF PAVEMENT ELEV.	482.29	482.39	482.49	482.58	482.68	482.78	482.88	482.98	483.08	483.17	483.27	483.37	483.47	483.57	483.67	483.76	483.86	483.96	484.06	484.16	484.26
	DEFLECTION - CS	0.00	0.03	0.05	0.07	0.10	0.11	0.13	0.14	0.16	0.16	0.16	0.16	0.16	0.14	0.13	0.11	0.10	0.07	0.05	0.03	0.00
	DEFLECTION - SDL	0.00	0.00	0.00	0.00	0.00	0.00	0.00	0.01	0.01	0.01	0.01	0.01	0.01	0.01	0.01	0.01	0.00	0.00	0.00	0.00	0.00
	TOP OF FORM ELEV.	**481.54**	**481.66**	**481.79**	**481.91**	**482.03**	**482.15**	**482.27**	**482.38**	**482.49**	**482.59**	**482.69**	**482.79**	**482.88**	**482.97**	**483.05**	**483.13**	**483.21**	**483.29**	**483.36**	**483.43**	**483.51**

NOTES:

1. AFTER THE GIRDERS ARE ERECTED BUT BEFORE THE FORMS ARE BUILT, ELEVATIONS ON THE TOP OF THE FLANGE OF THE GIRDERS ARE TO BE OBTAINED AT THE POINTS INDICATED IN THE TABLE. THE DIFFERENCE BETWEEN THE ELEVATIONS OBTAINED AND THOSE SHOWN IN THE TABLE GIVES THE THEORETICAL BLOCKING DISTANCE FROM THE TOP OF GIRDER TO THE BOTTOM OF SLAB AT CENTER LINE OF BEAM. SEE HAUNCH DETAIL ON SUPERSTRUCTURE ELEVATIONS DETAIL SHEET.

2. LEGEND FOR DEFLECTION VALUES
   CS - CONCRETE SLAB
   SDL - SUPERIMPOSED DEADLOADS
   POSITIVE SIGN INDICATES A DOWNLOAD DEFLECTION.

3. VALUES IN THE TOP OF FORM TABLE ARE IN FEET.

4. TOP OF FORM ELEVATIONS ARE COMPUTED AT 1/20 POINTS ALONG THE TOP CENTERLINE OF EACH GIRDER.

PROJECT NAME: WINDSOR
PROJECT NUMBER: IM 091-1(64)

FILE NAME: s10o188SuperStDet1.dgn
PROJECT LEADER: J. WILSON
DESIGNED BY: R. PEIN
SUPERSTRUCTURE ELEV. TABLES 33S 1

PLOT DATE: 7/30/2015
DRAWN BY: N. GARCIA III
CHECKED BY: G. WALKER
SHEET 72 OF 156

BRIDGE 33S TOP OF FORM TABLES

SPAN 3																					
GIRDER NO.	POINT	CENTERLINE BEARING PIER 2	1/20 PT.	2/20 PT.	3/20 PT.	4/20 PT.	5/20 PT.	6/20 PT.	7/20 PT.	8/20 PT.	9/20 PT.	10/20 PT.	11/20 PT.	12/20 PT.	13/20 PT.	14/20 PT.	15/20 PT.	16/20 PT.	17/20 PT.	18/20 PT.	19/20 PT.	CENTERLINE BEARING PIER 3
CENTERLINE I-91 SB STATION		1923+82.50	1923+90.35	1923+98.20	1924+06.05	1924+13.90	1924+21.75	1924+29.60	1924+37.45	1924+45.30	1924+53.15	1924+61.00	1924+68.85	1924+76.70	1924+84.55	1924+92.40	1925+00.25	1925+08.10	1925+15.95	1925+23.80	1925+31.65	1925+39.50
G1-3	TOP OF PAVEMENT ELEV.	484.01	484.11	484.21	484.31	484.40	484.50	484.60	484.70	484.80	484.90	484.99	485.09	485.19	485.29	485.39	485.49	485.58	485.68	485.78	485.88	485.98
	DEFLECTION - CS	0.00	0.03	0.05	0.07	0.10	0.11	0.13	0.14	0.16	0.16	0.16	0.16	0.16	0.14	0.13	0.11	0.10	0.07	0.05	0.03	0.00
	DEFLECTION - SDL	0.00	0.00	0.00	0.00	0.00	0.01	0.01	0.01	0.01	0.01	0.01	0.01	0.01	0.01	0.00	0.00	0.00	0.00	0.00	0.00	0.00
	TOP OF FORM ELEV.	**483.26**	**483.38**	**483.51**	**483.63**	**483.75**	**483.87**	**483.99**	**484.10**	**484.21**	**484.31**	**484.41**	**484.51**	**484.60**	**484.69**	**484.77**	**484.85**	**484.93**	**485.01**	**485.08**	**485.15**	**485.23**
G2-3	TOP OF PAVEMENT ELEV.	484.35	484.44	484.54	484.64	484.74	484.84	484.94	485.03	485.13	485.23	485.33	485.43	485.53	485.62	485.72	485.82	485.92	486.02	486.12	486.21	486.31
	DEFLECTION - CS	0.00	0.03	0.05	0.08	0.10	0.12	0.14	0.15	0.16	0.17	0.17	0.17	0.16	0.15	0.14	0.12	0.10	0.08	0.05	0.03	0.00
	DEFLECTION - SDL	0.00	0.00	0.00	0.00	0.00	0.01	0.01	0.01	0.01	0.01	0.01	0.01	0.01	0.01	0.00	0.00	0.00	0.00	0.00	0.00	0.00
	TOP OF FORM ELEV.	**483.60**	**483.72**	**483.85**	**483.97**	**484.09**	**484.21**	**484.33**	**484.44**	**484.55**	**484.66**	**484.76**	**484.85**	**484.95**	**485.03**	**485.12**	**485.19**	**485.27**	**485.35**	**485.42**	**485.49**	**485.56**
G3-3	TOP OF PAVEMENT ELEV.	484.52	484.62	484.71	484.81	484.91	485.01	485.11	485.21	485.30	485.40	485.50	485.60	485.70	485.80	485.89	485.99	486.09	486.19	486.29	486.39	486.48
	DEFLECTION - CS	0.00	0.03	0.05	0.08	0.10	0.12	0.14	0.15	0.16	0.17	0.17	0.17	0.16	0.15	0.14	0.12	0.10	0.08	0.05	0.03	0.00
	DEFLECTION - SDL	0.00	0.00	0.00	0.00	0.00	0.01	0.01	0.01	0.01	0.01	0.01	0.01	0.01	0.01	0.00	0.00	0.00	0.00	0.00	0.00	0.00
	TOP OF FORM ELEV.	**483.77**	**483.89**	**484.02**	**484.14**	**484.27**	**484.38**	**484.50**	**484.61**	**484.72**	**484.83**	**484.93**	**485.02**	**485.12**	**485.20**	**485.29**	**485.37**	**485.44**	**485.52**	**485.59**	**485.66**	**485.73**
G4-3	TOP OF PAVEMENT ELEV.	484.47	484.56	484.66	484.76	484.86	484.96	485.06	485.15	485.25	485.35	485.45	485.55	485.65	485.74	485.84	485.94	486.04	486.14	486.24	486.33	486.43
	DEFLECTION - CS	0.00	0.03	0.05	0.08	0.10	0.12	0.14	0.15	0.16	0.17	0.17	0.17	0.16	0.15	0.14	0.12	0.10	0.08	0.05	0.03	0.00
	DEFLECTION - SDL	0.00	0.00	0.00	0.00	0.00	0.01	0.01	0.01	0.01	0.01	0.01	0.01	0.01	0.01	0.00	0.00	0.00	0.00	0.00	0.00	0.00
	TOP OF FORM ELEV.	**483.72**	**483.84**	**483.97**	**484.09**	**484.21**	**484.33**	**484.45**	**484.56**	**484.67**	**484.78**	**484.88**	**484.97**	**485.07**	**485.15**	**485.24**	**485.31**	**485.39**	**485.47**	**485.54**	**485.61**	**485.68**
G5-3	TOP OF PAVEMENT ELEV.	484.29	484.39	484.49	484.59	484.69	484.79	484.88	484.98	485.08	485.18	485.28	485.38	485.47	485.57	485.67	485.77	485.87	485.97	486.06	486.16	486.26
	DEFLECTION - CS	0.00	0.03	0.05	0.07	0.10	0.11	0.13	0.14	0.16	0.16	0.16	0.16	0.16	0.14	0.13	0.11	0.10	0.07	0.05	0.03	0.00
	DEFLECTION - SDL	0.00	0.00	0.00	0.00	0.00	0.00	0.00	0.01	0.01	0.01	0.01	0.01	0.01	0.01	0.01	0.01	0.00	0.00	0.00	0.00	0.00
	TOP OF FORM ELEV.	**483.54**	**483.67**	**483.79**	**483.91**	**484.03**	**484.15**	**484.27**	**484.38**	**484.49**	**484.59**	**484.70**	**484.79**	**484.89**	**484.97**	**485.06**	**485.14**	**485.22**	**485.29**	**485.37**	**485.44**	**485.51**

SPAN 4																					
GIRDER NO.	POINT	CENTERLINE BEARING PIER 3	1/20 PT.	2/20 PT.	3/20 PT.	4/20 PT.	5/20 PT.	6/20 PT.	7/20 PT.	8/20 PT.	9/20 PT.	10/20 PT.	11/20 PT.	12/20 PT.	13/20 PT.	14/20 PT.	15/20 PT.	16/20 PT.	17/20 PT.	18/20 PT.	19/20 PT.	CENTERLINE BEARING ABUT. 2
CENTERLINE I-91 SB STATION		1925+42.50	1925+50.35	1925+58.20	1925+66.05	1925+73.90	1925+81.75	1925+89.60	1925+97.45	1926+05.30	1926+13.15	1926+21.00	1926+28.85	1926+36.70	1926+44.55	1926+52.40	1926+60.25	1926+68.10	1926+75.95	1926+83.80	1926+91.65	1926+99.50
G1-4	TOP OF PAVEMENT ELEV.	486.01	486.11	486.21	486.31	486.41	486.51	486.60	486.70	486.80	486.90	487.00	487.10	487.19	487.29	487.39	487.49	487.59	487.69	487.78	487.88	487.98
	DEFLECTION - CS	0.00	0.03	0.06	0.09	0.12	0.14	0.16	0.18	0.19	0.20	0.20	0.20	0.19	0.18	0.16	0.14	0.12	0.09	0.06	0.03	0.00
	DEFLECTION - SDL	0.00	0.00	0.00	0.01	0.01	0.01	0.02	0.02	0.02	0.03	0.03	0.03	0.03	0.03	0.02	0.02	0.02	0.01	0.01	0.01	0.00
	TOP OF FORM ELEV.	**485.26**	**485.40**	**485.53**	**485.66**	**485.79**	**485.91**	**486.03**	**486.15**	**486.27**	**486.37**	**486.48**	**486.57**	**486.66**	**486.75**	**486.83**	**486.90**	**486.97**	**487.04**	**487.10**	**487.17**	**487.23**
G2-4	TOP OF PAVEMENT ELEV.	486.35	486.45	486.55	486.64	486.74	486.84	486.94	487.04	487.14	487.23	487.33	487.43	487.53	487.63	487.73	487.82	487.92	488.02	488.12	488.22	488.32
	DEFLECTION - CS	0.00	0.03	0.06	0.09	0.13	0.15	0.17	0.19	0.20	0.21	0.21	0.21	0.20	0.19	0.17	0.15	0.13	0.09	0.06	0.03	0.00
	DEFLECTION - SDL	0.00	0.00	0.00	0.01	0.01	0.01	0.02	0.02	0.02	0.02	0.03	0.03	0.03	0.02	0.02	0.02	0.02	0.01	0.01	0.01	0.00
	TOP OF FORM ELEV.	**485.60**	**485.73**	**485.86**	**486.00**	**486.13**	**486.25**	**486.38**	**486.50**	**486.61**	**486.72**	**486.82**	**486.92**	**487.01**	**487.09**	**487.17**	**487.24**	**487.32**	**487.38**	**487.44**	**487.51**	**487.57**
G3-4	TOP OF PAVEMENT ELEV.	486.52	486.62	486.72	486.82	486.91	487.01	487.11	487.21	487.31	487.41	487.50	487.60	487.70	487.80	487.90	488.00	488.09	488.19	488.29	488.39	488.49
	DEFLECTION - CS	0.00	0.03	0.06	0.09	0.13	0.15	0.17	0.19	0.20	0.21	0.21	0.21	0.20	0.19	0.17	0.15	0.13	0.09	0.06	0.03	0.00
	DEFLECTION - SDL	0.00	0.00	0.00	0.01	0.01	0.01	0.02	0.02	0.02	0.02	0.03	0.03	0.03	0.02	0.02	0.02	0.02	0.01	0.01	0.01	0.00
	TOP OF FORM ELEV.	**485.77**	**485.90**	**486.04**	**486.17**	**486.30**	**486.43**	**486.55**	**486.67**	**486.78**	**486.89**	**486.99**	**487.09**	**487.18**	**487.26**	**487.34**	**487.42**	**487.49**	**487.55**	**487.62**	**487.68**	**487.74**
G4-4	TOP OF PAVEMENT ELEV.	486.47	486.57	486.67	486.76	486.86	486.96	487.06	487.16	487.26	487.35	487.45	487.55	487.65	487.75	487.85	487.94	488.04	488.14	488.24	488.34	488.44
	DEFLECTION - CS	0.00	0.03	0.06	0.09	0.13	0.15	0.17	0.19	0.20	0.21	0.21	0.21	0.20	0.19	0.17	0.15	0.13	0.09	0.06	0.03	0.00
	DEFLECTION - SDL	0.00	0.00	0.00	0.01	0.01	0.01	0.02	0.02	0.02	0.02	0.03	0.03	0.03	0.02	0.02	0.02	0.02	0.01	0.01	0.01	0.00
	TOP OF FORM ELEV.	**485.72**	**485.85**	**485.98**	**486.12**	**486.25**	**486.37**	**486.50**	**486.62**	**486.73**	**486.84**	**486.94**	**487.04**	**487.13**	**487.21**	**487.29**	**487.36**	**487.44**	**487.50**	**487.56**	**487.63**	**487.69**
G5-4	TOP OF PAVEMENT ELEV.	486.30	486.40	486.49	486.59	486.69	486.79	486.89	486.99	487.08	487.18	487.28	487.38	487.48	487.58	487.67	487.77	487.87	487.97	488.07	488.17	488.26
	DEFLECTION - CS	0.00	0.03	0.06	0.09	0.12	0.14	0.16	0.18	0.19	0.20	0.20	0.20	0.19	0.18	0.16	0.14	0.12	0.09	0.06	0.03	0.00
	DEFLECTION - SDL	0.00	0.00	0.00	0.01	0.01	0.01	0.02	0.02	0.02	0.03	0.03	0.03	0.03	0.03	0.02	0.02	0.02	0.01	0.01	0.01	0.00
	TOP OF FORM ELEV.	**485.55**	**485.68**	**485.81**	**485.94**	**486.07**	**486.19**	**486.32**	**486.43**	**486.55**	**486.65**	**486.76**	**486.85**	**486.95**	**487.03**	**487.11**	**487.18**	**487.26**	**487.32**	**487.39**	**487.45**	**487.51**

NOTES:

1. AFTER THE GIRDERS ARE ERECTED BUT BEFORE THE FORMS ARE BUILT, ELEVATIONS ON THE TOP OF THE FLANGE OF THE GIRDERS ARE TO BE OBTAINED AT THE POINTS INDICATED IN THE TABLE. THE DIFFERENCE BETWEEN THE ELEVATIONS OBTAINED AND THOSE SHOWN IN THE TABLE GIVES THE THEORETICAL BLOCKING DISTANCE FROM THE TOP OF GIRDER TO THE BOTTOM OF SLAB AT CENTER LINE OF BEAM. SEE HAUNCH DETAIL ON SUPERSTRUCTURE ELEVATIONS DETAIL SHEET.

2. LEGEND FOR DEFLECTION VALUES
   CS - CONCRETE SLAB
   SDL - SUPERIMPOSED DEADLOADS
   POSITIVE SIGN INDICATES A DOWNLOAD DEFLECTION.

3. VALUES IN THE TOP OF FORM TABLE ARE IN FEET.

4. TOP OF FORM ELEVATIONS ARE COMPUTED AT 1/20 POINTS ALONG THE TOP CENTERLINE OF EACH GIRDER.

PROJECT NAME: WINDSOR
PROJECT NUMBER: IM 091-1(64)

FILE NAME: s10o188SuperStDet2.dgn
PROJECT LEADER: J. WILSON
DESIGNED BY: R. PEIN
SUPERSTRUCTURE ELEV. TABLES 33S 2

PLOT DATE: 7/30/2015
DRAWN BY: N. GARCIA III
CHECKED BY: G. WALKER
SHEET 73 OF 156

BRIDGE 33N TOP OF FORM TABLES

SPAN 5																					
GIRDER NO.	POINT	CENTERLINE BEARING ABUT. 3	1/20 PT.	2/20 PT.	3/20 PT.	4/20 PT.	5/20 PT.	6/20 PT.	7/20 PT.	8/20 PT.	9/20 PT.	10/20 PT.	11/20 PT.	12/20 PT.	13/20 PT.	14/20 PT.	15/20 PT.	16/20 PT.	17/20 PT.	18/20 PT.	19/20 PT.	CENTERLINE BEARING PIER 4
CENTERLINE I-91 SB STATION		2920+86.50	2920+94.35	2921+02.20	2921+10.05	2921+17.90	2921+25.75	2921+33.60	2921+41.45	2921+49.30	2921+57.15	2921+65.00	2921+72.85	2921+80.70	2921+88.55	2921+96.40	2922+04.25	2922+12.10	2922+19.95	2922+27.80	2922+35.65	2922+43.50
G6-5	TOP OF PAVEMENT ELEV.	480.50	480.60	480.69	480.79	480.89	480.99	481.09	481.19	481.28	481.38	481.48	481.58	481.68	481.78	481.88	481.97	482.07	482.17	482.27	482.37	482.47
	DEFLECTION - CS	0.00	0.03	0.06	0.09	0.12	0.14	0.16	0.18	0.19	0.20	0.20	0.20	0.19	0.18	0.16	0.14	0.12	0.09	0.06	0.03	0.00
	DEFLECTION - SDL	0.00	0.01	0.01	0.01	0.02	0.02	0.02	0.03	0.03	0.03	0.03	0.03	0.02	0.02	0.02	0.01	0.01	0.01	0.00	0.00	0.00
	TOP OF FORM ELEV.	**479.75**	**479.88**	**480.01**	**480.15**	**480.28**	**480.40**	**480.52**	**480.64**	**480.75**	**480.86**	**480.96**	**481.05**	**481.14**	**481.22**	**481.31**	**481.38**	**481.45**	**481.52**	**481.58**	**481.65**	**481.72**
G7-5	TOP OF PAVEMENT ELEV.	480.67	480.77	480.87	480.96	481.06	481.16	481.26	481.36	481.46	481.55	481.65	481.75	481.85	481.95	482.05	482.15	482.24	482.34	482.44	482.54	482.64
	DEFLECTION - CS	0.00	0.03	0.06	0.09	0.13	0.15	0.17	0.19	0.20	0.21	0.21	0.21	0.20	0.19	0.17	0.15	0.13	0.09	0.06	0.03	0.00
	DEFLECTION - SDL	0.00	0.01	0.01	0.01	0.02	0.02	0.02	0.02	0.03	0.03	0.03	0.02	0.02	0.02	0.02	0.01	0.01	0.01	0.00	0.00	0.00
	TOP OF FORM ELEV.	**479.92**	**480.06**	**480.19**	**480.32**	**480.46**	**480.58**	**480.71**	**480.82**	**480.94**	**481.04**	**481.14**	**481.23**	**481.33**	**481.41**	**481.49**	**481.56**	**481.63**	**481.69**	**481.76**	**481.82**	**481.89**
G8-5	TOP OF PAVEMENT ELEV.	480.72	480.82	480.92	481.02	481.11	481.21	481.31	481.41	481.51	481.61	481.70	481.80	481.90	482.00	482.10	482.20	482.30	482.39	482.49	482.59	482.69
	DEFLECTION - CS	0.00	0.03	0.06	0.09	0.13	0.15	0.17	0.19	0.20	0.21	0.21	0.21	0.20	0.19	0.17	0.15	0.13	0.09	0.06	0.03	0.00
	DEFLECTION - SDL	0.00	0.01	0.01	0.01	0.02	0.02	0.02	0.02	0.03	0.03	0.03	0.02	0.02	0.02	0.02	0.01	0.01	0.01	0.00	0.00	0.00
	TOP OF FORM ELEV.	**479.97**	**480.11**	**480.24**	**480.38**	**480.51**	**480.63**	**480.76**	**480.87**	**480.99**	**481.09**	**481.19**	**481.29**	**481.38**	**481.46**	**481.54**	**481.61**	**481.68**	**481.75**	**481.81**	**481.87**	**481.94**
G9-5	TOP OF PAVEMENT ELEV.	480.55	480.65	480.75	480.84	480.94	481.04	481.14	481.24	481.34	481.43	481.53	481.63	481.73	481.83	481.93	482.03	482.12	482.22	482.32	482.42	482.52
	DEFLECTION - CS	0.00	0.03	0.06	0.09	0.13	0.15	0.17	0.19	0.20	0.21	0.21	0.21	0.20	0.19	0.17	0.15	0.13	0.09	0.06	0.03	0.00
	DEFLECTION - SDL	0.00	0.01	0.01	0.01	0.02	0.02	0.02	0.02	0.03	0.03	0.03	0.02	0.02	0.02	0.02	0.01	0.01	0.01	0.00	0.00	0.00
	TOP OF FORM ELEV.	**479.80**	**479.94**	**480.07**	**480.20**	**480.34**	**480.46**	**480.59**	**480.70**	**480.82**	**480.92**	**481.02**	**481.11**	**481.21**	**481.29**	**481.37**	**481.44**	**481.51**	**481.57**	**481.64**	**481.70**	**481.77**
G10-5	TOP OF PAVEMENT ELEV.	480.21	480.31	480.41	480.51	480.61	480.71	480.80	480.90	481.00	481.10	481.20	481.30	481.39	481.49	481.59	481.69	481.79	481.89	481.99	482.08	482.18
	DEFLECTION - CS	0.00	0.03	0.06	0.09	0.12	0.14	0.16	0.18	0.19	0.20	0.20	0.20	0.19	0.18	0.16	0.14	0.12	0.09	0.06	0.03	0.00
	DEFLECTION - SDL	0.00	0.01	0.01	0.01	0.02	0.02	0.02	0.03	0.03	0.03	0.03	0.03	0.02	0.02	0.02	0.01	0.01	0.01	0.00	0.00	0.00
	TOP OF FORM ELEV.	**479.46**	**479.60**	**479.73**	**479.86**	**479.99**	**480.12**	**480.24**	**480.36**	**480.47**	**480.57**	**480.68**	**480.77**	**480.86**	**480.94**	**481.02**	**481.09**	**481.17**	**481.23**	**481.30**	**481.37**	**481.43**

SPAN 6																					
GIRDER NO.	POINT	CENTERLINE BEARING PIER 4	1/20 PT.	2/20 PT.	3/20 PT.	4/20 PT.	5/20 PT.	6/20 PT.	7/20 PT.	8/20 PT.	9/20 PT.	10/20 PT.	11/20 PT.	12/20 PT.	13/20 PT.	14/20 PT.	15/20 PT.	16/20 PT.	17/20 PT.	18/20 PT.	19/20 PT.	CENTERLINE BEARING PIER 5
CENTERLINE I-91 SB STATION		2922+46.50	2922+54.35	2922+62.20	2922+70.05	2922+77.90	2922+85.75	2922+93.60	2923+01.45	2923+09.30	2923+17.15	2923+25.00	2923+32.85	2923+40.70	2923+48.55	2923+56.40	2923+64.25	2923+72.10	2923+79.95	2923+87.80	2923+95.65	2924+03.50
G6-6	TOP OF PAVEMENT ELEV.	482.50	482.60	482.70	482.80	482.90	482.99	483.09	483.19	483.29	483.39	483.49	483.58	483.68	483.78	483.88	483.98	484.08	484.17	484.27	484.37	484.47
	DEFLECTION - CS	0.00	0.03	0.05	0.07	0.10	0.11	0.13	0.14	0.16	0.16	0.16	0.16	0.16	0.14	0.13	0.11	0.10	0.07	0.05	0.03	0.00
	DEFLECTION - SDL	0.00	0.00	0.00	0.00	0.00	0.00	0.00	0.01	0.01	0.01	0.01	0.01	0.01	0.01	0.01	0.01	0.00	0.00	0.00	0.00	0.00
	TOP OF FORM ELEV.	**481.75**	**481.88**	**482.00**	**482.12**	**482.24**	**482.36**	**482.48**	**482.59**	**482.70**	**482.80**	**482.91**	**483.00**	**483.10**	**483.18**	**483.27**	**483.35**	**483.43**	**483.50**	**483.57**	**483.65**	**483.72**
G7-6	TOP OF PAVEMENT ELEV.	482.67	482.77	482.87	482.97	483.07	483.17	483.26	483.36	483.46	483.56	483.66	483.76	483.85	483.95	484.05	484.15	484.25	484.35	484.44	484.54	484.64
	DEFLECTION - CS	0.00	0.03	0.05	0.08	0.10	0.12	0.14	0.15	0.16	0.17	0.17	0.17	0.16	0.15	0.14	0.12	0.10	0.08	0.05	0.03	0.00
	DEFLECTION - SDL	0.00	0.00	0.00	0.00	0.00	0.00	0.00	0.01	0.01	0.01	0.01	0.01	0.01	0.01	0.01	0.01	0.00	0.00	0.00	0.00	0.00
	TOP OF FORM ELEV.	**481.92**	**482.05**	**482.18**	**482.30**	**482.42**	**482.54**	**482.66**	**482.77**	**482.88**	**482.98**	**483.09**	**483.18**	**483.28**	**483.36**	**483.45**	**483.53**	**483.60**	**483.68**	**483.75**	**483.82**	**483.89**
G8-6	TOP OF PAVEMENT ELEV.	482.73	482.82	482.92	483.02	483.12	483.22	483.32	483.41	483.51	483.61	483.71	483.81	483.91	484.00	484.10	484.20	484.30	484.40	484.50	484.59	484.69
	DEFLECTION - CS	0.00	0.03	0.05	0.08	0.10	0.12	0.14	0.15	0.16	0.17	0.17	0.17	0.16	0.15	0.14	0.12	0.10	0.08	0.05	0.03	0.00
	DEFLECTION - SDL	0.00	0.00	0.00	0.00	0.00	0.00	0.00	0.01	0.01	0.01	0.01	0.01	0.01	0.01	0.01	0.01	0.00	0.00	0.00	0.00	0.00
	TOP OF FORM ELEV.	**481.98**	**482.10**	**482.23**	**482.35**	**482.47**	**482.59**	**482.71**	**482.82**	**482.93**	**483.04**	**483.14**	**483.23**	**483.33**	**483.41**	**483.50**	**483.58**	**483.66**	**483.73**	**483.80**	**483.87**	**483.94**
G9-6	TOP OF PAVEMENT ELEV.	482.55	482.65	482.75	482.85	482.95	483.05	483.14	483.24	483.34	483.44	483.54	483.64	483.73	483.83	483.93	484.03	484.13	484.23	484.32	484.42	484.52
	DEFLECTION - CS	0.00	0.03	0.05	0.08	0.10	0.12	0.14	0.15	0.16	0.17	0.17	0.17	0.16	0.15	0.14	0.12	0.10	0.08	0.05	0.03	0.00
	DEFLECTION - SDL	0.00	0.00	0.00	0.00	0.00	0.00	0.00	0.01	0.01	0.01	0.01	0.01	0.01	0.01	0.01	0.01	0.00	0.00	0.00	0.00	0.00
	TOP OF FORM ELEV.	**481.80**	**481.93**	**482.06**	**482.18**	**482.30**	**482.42**	**482.54**	**482.65**	**482.76**	**482.86**	**482.97**	**483.06**	**483.16**	**483.24**	**483.33**	**483.41**	**483.48**	**483.56**	**483.63**	**483.70**	**483.77**
G10-6	TOP OF PAVEMENT ELEV.	482.22	482.32	482.42	482.51	482.61	482.71	482.81	482.91	483.01	483.10	483.20	483.30	483.40	483.50	483.60	483.69	483.79	483.89	483.99	484.09	484.19
	DEFLECTION - CS	0.00	0.03	0.05	0.07	0.10	0.11	0.13	0.14	0.16	0.16	0.16	0.16	0.16	0.14	0.13	0.11	0.10	0.07	0.05	0.03	0.00
	DEFLECTION - SDL	0.00	0.00	0.00	0.00	0.00	0.00	0.00	0.01	0.01	0.01	0.01	0.01	0.01	0.01	0.01	0.01	0.00	0.00	0.00	0.00	0.00
	TOP OF FORM ELEV.	**481.47**	**481.59**	**481.72**	**481.84**	**481.96**	**482.08**	**482.20**	**482.31**	**482.42**	**482.52**	**482.62**	**482.72**	**482.81**	**482.90**	**482.98**	**483.06**	**483.14**	**483.22**	**483.29**	**483.36**	**483.44**

NOTES:

1. AFTER THE GIRDERS ARE ERECTED BUT BEFORE THE FORMS ARE BUILT, ELEVATIONS ON THE TOP OF THE FLANGE OF THE GIRDERS ARE TO BE OBTAINED AT THE POINTS INDICATED IN THE TABLE. THE DIFFERENCE BETWEEN THE ELEVATIONS OBTAINED AND THOSE SHOWN IN THE TABLE GIVES THE THEORETICAL BLOCKING DISTANCE FROM THE TOP OF GIRDER TO THE BOTTOM OF SLAB AT CENTER LINE OF BEAM. SEE HAUNCH DETAIL ON SUPERSTRUCTURE ELEVATIONS DETAIL SHEET.

2. LEGEND FOR DEFLECTION VALUES
   CS - CONCRETE SLAB
   SDL - SUPERIMPOSED DEADLOADS
   POSITIVE SIGN INDICATES A DOWNLOAD DEFLECTION.

3. VALUES IN THE TOP OF FORM TABLE ARE IN FEET.

4. TOP OF FORM ELEVATIONS ARE COMPUTED AT 1/20 POINTS ALONG THE TOP CENTERLINE OF EACH GIRDER.

PROJECT NAME: WINDSOR
PROJECT NUMBER: IM 091-1(64)

FILE NAME: s10o188SuperStDet3.dgn
PROJECT LEADER: J. WILSON
DESIGNED BY: R. PEIN
SUPERSTRUCTURE ELEV. TABLES 33N 1

PLOT DATE: 7/30/2015
DRAWN BY: N. GARCIA III
CHECKED BY: G. WALKER
SHEET 74 OF 156

BRIDGE 33N TOP OF FORM TABLES

SPAN 7																					
GIRDER NO.	POINT	CENTERLINE BEARING PIER 5	1/20 PT.	2/20 PT.	3/20 PT.	4/20 PT.	5/20 PT.	6/20 PT.	7/20 PT.	8/20 PT.	9/20 PT.	10/20 PT.	11/20 PT.	12/20 PT.	13/20 PT.	14/20 PT.	15/20 PT.	16/20 PT.	17/20 PT.	18/20 PT.	19/20 PT.	CENTERLINE BEARING PIER 6
CENTERLINE I-91 SB STATION		2924+06.50	2924+14.35	2924+22.20	2924+30.05	2924+37.90	2924+45.75	2924+53.60	2924+61.45	2924+69.30	2924+77.15	2924+85.00	2924+92.85	2925+00.70	2925+08.55	2925+16.40	2925+24.25	2925+32.10	2925+39.95	2925+47.80	2925+55.65	2925+63.50
G6-7	TOP OF PAVEMENT ELEV.	484.51	484.61	484.70	484.80	484.90	485.00	485.10	485.20	485.29	485.39	485.49	485.59	485.69	485.79	485.88	485.98	486.08	486.18	486.28	486.38	486.47
	DEFLECTION - CS	0.00	0.03	0.05	0.07	0.10	0.11	0.13	0.14	0.16	0.16	0.16	0.16	0.16	0.14	0.13	0.11	0.10	0.07	0.05	0.03	0.00
	DEFLECTION - SDL	0.00	0.00	0.00	0.00	0.00	0.01	0.01	0.01	0.01	0.01	0.01	0.01	0.01	0.01	0.00	0.00	0.00	0.00	0.00	0.00	0.00
	TOP OF FORM ELEV.	**483.76**	**483.88**	**484.01**	**484.13**	**484.25**	**484.37**	**484.49**	**484.60**	**484.71**	**484.81**	**484.91**	**485.00**	**485.10**	**485.18**	**485.27**	**485.35**	**485.43**	**485.50**	**485.58**	**485.65**	**485.72**
G7-7	TOP OF PAVEMENT ELEV.	484.68	484.78	484.88	484.97	485.07	485.17	485.27	485.37	485.47	485.56	485.66	485.76	485.86	485.96	486.06	486.15	486.25	486.35	486.45	486.55	486.65
	DEFLECTION - CS	0.00	0.03	0.05	0.08	0.10	0.12	0.14	0.15	0.16	0.17	0.17	0.17	0.16	0.15	0.14	0.12	0.10	0.08	0.05	0.03	0.00
	DEFLECTION - SDL	0.00	0.00	0.00	0.00	0.00	0.01	0.01	0.01	0.01	0.01	0.01	0.01	0.01	0.01	0.00	0.00	0.00	0.00	0.00	0.00	0.00
	TOP OF FORM ELEV.	**483.93**	**484.05**	**484.18**	**484.30**	**484.43**	**484.55**	**484.66**	**484.78**	**484.89**	**484.99**	**485.09**	**485.19**	**485.28**	**485.36**	**485.45**	**485.53**	**485.61**	**485.68**	**485.75**	**485.82**	**485.90**
G8-7	TOP OF PAVEMENT ELEV.	484.73	484.83	484.93	485.03	485.12	485.22	485.32	485.42	485.52	485.62	485.71	485.81	485.91	486.01	486.11	486.21	486.30	486.40	486.50	486.60	486.70
	DEFLECTION - CS	0.00	0.03	0.05	0.08	0.10	0.12	0.14	0.15	0.16	0.17	0.17	0.17	0.16	0.15	0.14	0.12	0.10	0.08	0.05	0.03	0.00
	DEFLECTION - SDL	0.00	0.00	0.00	0.00	0.00	0.01	0.01	0.01	0.01	0.01	0.01	0.01	0.01	0.01	0.00	0.00	0.00	0.00	0.00	0.00	0.00
	TOP OF FORM ELEV.	**483.98**	**484.11**	**484.23**	**484.36**	**484.48**	**484.60**	**484.72**	**484.83**	**484.94**	**485.04**	**485.14**	**485.24**	**485.33**	**485.42**	**485.50**	**485.58**	**485.66**	**485.73**	**485.81**	**485.88**	**485.95**
G9-7	TOP OF PAVEMENT ELEV.	484.56	484.66	484.76	484.85	484.95	485.05	485.15	485.25	485.35	485.44	485.54	485.64	485.74	485.84	485.94	486.03	486.13	486.23	486.33	486.43	486.53
	DEFLECTION - CS	0.00	0.03	0.05	0.08	0.10	0.12	0.14	0.15	0.16	0.17	0.17	0.17	0.16	0.15	0.14	0.12	0.10	0.08	0.05	0.03	0.00
	DEFLECTION - SDL	0.00	0.00	0.00	0.00	0.00	0.01	0.01	0.01	0.01	0.01	0.01	0.01	0.01	0.01	0.00	0.00	0.00	0.00	0.00	0.00	0.00
	TOP OF FORM ELEV.	**483.81**	**483.93**	**484.06**	**484.18**	**484.31**	**484.43**	**484.54**	**484.66**	**484.77**	**484.87**	**484.97**	**485.07**	**485.16**	**485.24**	**485.33**	**485.41**	**485.49**	**485.56**	**485.63**	**485.70**	**485.78**
G10-7	TOP OF PAVEMENT ELEV.	484.22	484.32	484.42	484.52	484.62	484.72	484.81	484.91	485.01	485.11	485.21	485.31	485.40	485.50	485.60	485.70	485.80	485.90	485.99	486.09	486.19
	DEFLECTION - CS	0.00	0.03	0.05	0.07	0.10	0.11	0.13	0.14	0.16	0.16	0.16	0.16	0.16	0.14	0.13	0.11	0.10	0.07	0.05	0.03	0.00
	DEFLECTION - SDL	0.00	0.00	0.00	0.00	0.00	0.01	0.01	0.01	0.01	0.01	0.01	0.01	0.01	0.01	0.00	0.00	0.00	0.00	0.00	0.00	0.00
	TOP OF FORM ELEV.	**483.47**	**483.60**	**483.72**	**483.85**	**483.97**	**484.08**	**484.20**	**484.31**	**484.42**	**484.53**	**484.63**	**484.72**	**484.82**	**484.90**	**484.99**	**485.07**	**485.15**	**485.22**	**485.30**	**485.37**	**485.44**

SPAN 8																					
GIRDER NO.	POINT	CENTERLINE BEARING PIER 6	1/20 PT.	2/20 PT.	3/20 PT.	4/20 PT.	5/20 PT.	6/20 PT.	7/20 PT.	8/20 PT.	9/20 PT.	10/20 PT.	11/20 PT.	12/20 PT.	13/20 PT.	14/20 PT.	15/20 PT.	16/20 PT.	17/20 PT.	18/20 PT.	19/20 PT.	CENTERLINE BEARING ABUT. 4
CENTERLINE I-91 SB STATION		2925+66.50	2925+74.35	2925+82.20	2925+90.05	2925+97.90	2926+05.75	2926+13.60	2926+21.45	2926+29.30	2926+37.15	2926+45.00	2926+52.85	2926+60.70	2926+68.55	2926+76.40	2926+84.25	2926+92.10	2926+99.95	2927+07.80	2927+15.65	2927+23.50
G6-8	TOP OF PAVEMENT ELEV.	486.51	486.61	486.71	486.81	486.90	487.00	487.10	487.20	487.30	487.40	487.49	487.59	487.69	487.79	487.89	487.99	488.08	488.18	488.28	488.38	488.48
	DEFLECTION - CS	0.00	0.03	0.06	0.09	0.12	0.14	0.16	0.18	0.19	0.20	0.20	0.20	0.19	0.18	0.16	0.14	0.12	0.09	0.06	0.03	0.00
	DEFLECTION - SDL	0.00	0.00	0.00	0.01	0.01	0.01	0.02	0.02	0.02	0.03	0.03	0.03	0.03	0.03	0.02	0.02	0.02	0.01	0.01	0.01	0.00
	TOP OF FORM ELEV.	**485.76**	**485.89**	**486.02**	**486.15**	**486.28**	**486.41**	**486.53**	**486.65**	**486.76**	**486.87**	**486.97**	**487.07**	**487.16**	**487.24**	**487.32**	**487.40**	**487.47**	**487.54**	**487.60**	**487.66**	**487.73**
G7-8	TOP OF PAVEMENT ELEV.	486.68	486.78	486.88	486.98	487.08	487.17	487.27	487.37	487.47	487.57	487.67	487.76	487.86	487.96	488.06	488.16	488.26	488.35	488.45	488.55	488.65
	DEFLECTION - CS	0.00	0.03	0.06	0.09	0.13	0.15	0.17	0.19	0.20	0.21	0.21	0.21	0.20	0.19	0.17	0.15	0.13	0.09	0.06	0.03	0.00
	DEFLECTION - SDL	0.00	0.00	0.00	0.01	0.01	0.01	0.02	0.02	0.02	0.02	0.03	0.03	0.03	0.02	0.02	0.02	0.02	0.01	0.01	0.01	0.00
	TOP OF FORM ELEV.	**485.93**	**486.07**	**486.20**	**486.33**	**486.46**	**486.59**	**486.71**	**486.83**	**486.95**	**487.05**	**487.16**	**487.25**	**487.34**	**487.42**	**487.51**	**487.58**	**487.65**	**487.71**	**487.78**	**487.84**	**487.90**
G8-8	TOP OF PAVEMENT ELEV.	486.73	486.83	486.93	487.03	487.13	487.23	487.32	487.42	487.52	487.62	487.72	487.82	487.91	488.01	488.11	488.21	488.31	488.41	488.50	488.60	488.70
	DEFLECTION - CS	0.00	0.03	0.06	0.09	0.13	0.15	0.17	0.19	0.20	0.21	0.21	0.21	0.20	0.19	0.17	0.15	0.13	0.09	0.06	0.03	0.00
	DEFLECTION - SDL	0.00	0.00	0.00	0.01	0.01	0.01	0.02	0.02	0.02	0.02	0.03	0.03	0.03	0.02	0.02	0.02	0.02	0.01	0.01	0.01	0.00
	TOP OF FORM ELEV.	**485.98**	**486.12**	**486.25**	**486.38**	**486.51**	**486.64**	**486.76**	**486.88**	**487.00**	**487.10**	**487.21**	**487.30**	**487.39**	**487.48**	**487.56**	**487.63**	**487.70**	**487.77**	**487.83**	**487.89**	**487.95**
G9-8	TOP OF PAVEMENT ELEV.	486.56	486.66	486.76	486.86	486.96	487.05	487.15	487.25	487.35	487.45	487.55	487.64	487.74	487.84	487.94	488.04	488.14	488.23	488.33	488.43	488.53
	DEFLECTION - CS	0.00	0.03	0.06	0.09	0.13	0.15	0.17	0.19	0.20	0.21	0.21	0.21	0.20	0.19	0.17	0.15	0.13	0.09	0.06	0.03	0.00
	DEFLECTION - SDL	0.00	0.00	0.00	0.01	0.01	0.01	0.02	0.02	0.02	0.02	0.03	0.03	0.03	0.02	0.02	0.02	0.02	0.01	0.01	0.01	0.00
	TOP OF FORM ELEV.	**485.81**	**485.95**	**486.08**	**486.21**	**486.34**	**486.47**	**486.59**	**486.71**	**486.83**	**486.93**	**487.04**	**487.13**	**487.22**	**487.30**	**487.39**	**487.46**	**487.53**	**487.59**	**487.66**	**487.72**	**487.78**
G10-8	TOP OF PAVEMENT ELEV.	486.23	486.33	486.42	486.52	486.62	486.72	486.82	486.92	487.01	487.11	487.21	487.31	487.41	487.51	487.60	487.70	487.80	487.90	488.00	488.10	488.19
	DEFLECTION - CS	0.00	0.03	0.06	0.09	0.12	0.14	0.16	0.18	0.19	0.20	0.20	0.20	0.19	0.18	0.16	0.14	0.12	0.09	0.06	0.03	0.00
	DEFLECTION - SDL	0.00	0.00	0.00	0.01	0.01	0.01	0.02	0.02	0.02	0.03	0.03	0.03	0.03	0.03	0.02	0.02	0.02	0.01	0.01	0.01	0.00
	TOP OF FORM ELEV.	**485.48**	**485.61**	**485.74**	**485.87**	**486.00**	**486.12**	**486.25**	**486.36**	**486.48**	**486.58**	**486.69**	**486.78**	**486.88**	**486.96**	**487.04**	**487.11**	**487.19**	**487.25**	**487.32**	**487.38**	**487.44**

NOTES:

1. AFTER THE GIRDERS ARE ERECTED BUT BEFORE THE FORMS ARE BUILT, ELEVATIONS ON THE TOP OF THE FLANGE OF THE GIRDERS ARE TO BE OBTAINED AT THE POINTS INDICATED IN THE TABLE. THE DIFFERENCE BETWEEN THE ELEVATIONS OBTAINED AND THOSE SHOWN IN THE TABLE GIVES THE THEORETICAL BLOCKING DISTANCE FROM THE TOP OF GIRDER TO THE BOTTOM OF SLAB AT CENTER LINE OF BEAM. SEE HAUNCH DETAIL ON SUPERSTRUCTURE ELEVATIONS DETAIL SHEET.

2. LEGEND FOR DEFLECTION VALUES
   CS - CONCRETE SLAB
   SDL - SUPERIMPOSED DEADLOADS
   POSITIVE SIGN INDICATES A DOWNLOAD DEFLECTION.

3. VALUES IN THE TOP OF FORM TABLE ARE IN FEET.

4. TOP OF FORM ELEVATIONS ARE COMPUTED AT 1/20 POINTS ALONG THE TOP CENTERLINE OF EACH GIRDER.

PROJECT NAME: WINDSOR
PROJECT NUMBER: IM 091-1(64)

FILE NAME: s10o188SuperStDet4.dgn
PROJECT LEADER: J. WILSON
DESIGNED BY: R. PEIN
SUPERSTRUCTURE ELEV. TABLES 33N 2

PLOT DATE: 7/30/2015
DRAWN BY: N. GARCIA III
CHECKED BY: G. WALKER
SHEET 75 OF 156

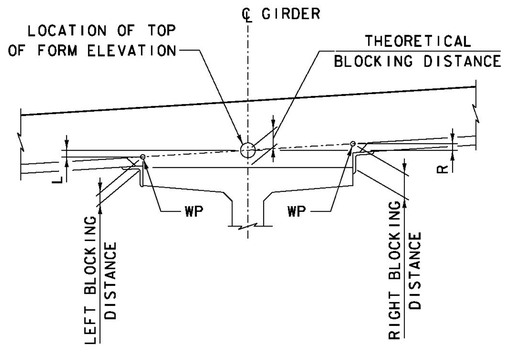

CROSS SLOPE ADJUSTMENT		
GIRDER	L	R
G1	0.08	-0.08
G2	0.07	-0.04
G3	0.04	-0.04
G4 & G5	-0.04	0.04
G6 & G7	0.04	-0.04
G8	-0.04	0.04
G9	-0.04	0.07
G10	-0.08	0.08

POSITIVE VALUES ARE DOWNWARD
VALUES ARE IN FEET.

BLOCKING DISTANCE AT CENTERLINE BEARINGS (INCHES)				
BRIDGE 33S GIRDER	SPAN 1	SPAN 2	SPAN 3	SPAN 4
1	4 1/2	4 3/4	4 3/4	4 1/2
2	4 1/4	4 1/2	4 1/2	4 1/4
3	3 7/8	4 1/8	4 1/8	3 7/8
4	3 7/8	4 1/8	4 1/8	3 7/8
5	4 1/8	4 1/4	4 1/4	4 1/8
BRIDGE 33N GIRDER	SPAN 5	SPAN 6	SPAN 7	SPAN 8
6	4 1/8	4 1/4	4 1/4	4 1/8
7	3 7/8	4 1/8	4 1/8	3 7/8
8	3 7/8	4 1/8	4 1/8	3 7/8
9	4 1/4	4 1/2	4 1/2	4 1/4
10	4 1/2	4 3/4	4 3/4	4 1/2

TABLE VALUES REPRESENT BLOCKING DISTANCES AT CENTERLINE OF GIRDER AND CENTERLINE OF BEARINGS AT EACH END OF SPAN. BLOCKING DISTANCE VALUES ARE BASED ON A CALCULATED GIRDER CAMBER OF 4.84" (0.40'). PRIOR TO FORMING THE BEARING SEATS, THE CONTRACTOR SHALL MEASURE THE ACTUAL CAMBER OF EACH GIRDER. IF THE ACTUAL MEASURED CAMBER VALUES VARY BY MORE THAN +/- 0.5" FROM THE CALCULATED, THE BLOCKING VALUES (AND BEARING SEAT ELEVATIONS) SHALL BE ADJUSTED.

GIRDER BLOCKING NOTES:

1. THE RIGHT AND LEFT ORIENTATION IS TAKEN LOOKING UPSTATION ALONG BEAM.

2. RIGHT BLOCKING DISTANCE = THEORETICAL BLOCKING DISTANCE "R"
   LEFT BLOCKING DISTANCE = THEORETICAL BLOCKING DISTANCE "L"

3. SEE BLOCKING DISTANCE TABLE, THIS SHEET, FOR BLOCKING DISTANCE AT CENTERLINE OF GIRDERS AND CENTERLINE OF BEARINGS.

HAUNCH DETAIL
NOT TO SCALE

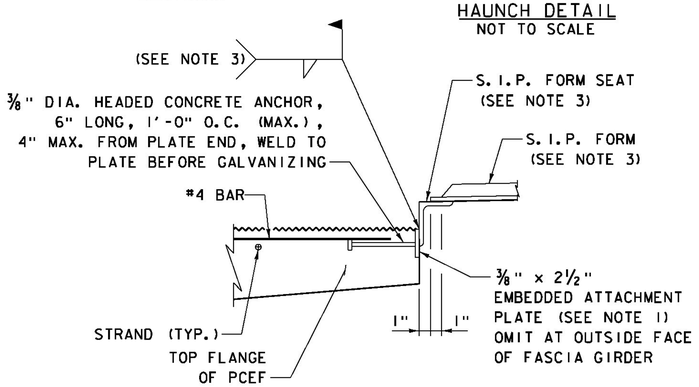

STAY-IN-PLACE FORM ATTACHMENT DETAIL
NOT TO SCALE

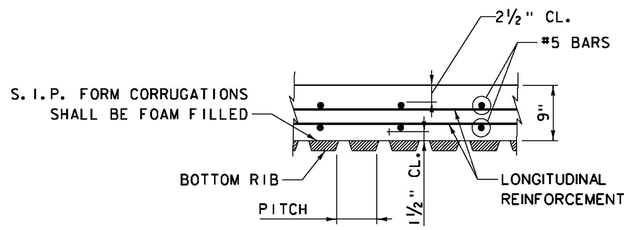

SECTION THROUGH STAY-IN-PLACE FORM
NOT TO SCALE

STAY-IN-PLACE FORM NOTES:

1. EMBEDDED ATTACHMENT PLATES SHALL BE HOT-DIP GALVANIZED AASHTO M270 GRADE 36 STEEL. THE PLATES SHALL BE IN LENGTHS FROM 3'-0" TO 12'-0" WITH PIECES BUTTED TOGETHER WITHOUT END CONNECTIONS FOR FULL LENGTH OF BEAM. THE HEADED ANCHORS SHALL BE ATTACHED TO THE PLATES PRIOR TO GALVANIZING. ADJUST STUD LOCATIONS AT OPENINGS FOR SCUPPER DOWNSPOUTS. DETAIL ON GIRDER DETAIL 6 SHEET.

2. HEADED ANCHORS SHALL CONFORM TO THE REQUIREMENTS OF SUBSECTION 714.10.

3. S.I.P. FORM ATTACHMENT DETAILS SHOWN ARE SCHEMATIC. DETAILS AND DESIGN OF ACTUAL S.I.P. FORMS AND ATTACHMENTS SHALL BE SUBMITTED AS A SHOP DRAWING FOR APPROVAL. S.I.P. FORM SYSTEM STEEL SHALL BE GALVANIZED AFTER FABRICATION IN CONFORMANCE WITH ASTM A123.

4. THE CONTRACTOR SHALL BE RESPONSIBLE FOR REMOVING THE CONCRETE LAITANCE FROM THE ATTACHMENT PLATE BEFORE INSTALLING THE S.I.P. FORMS.

5. FORM ENDS SHALL BE CRIMPED CLOSED IN A TAPERED MANNER. SEPARATE END CLOSURE PIECES WILL NOT BE ALLOWED.

6. SUPPORT ANGLES SHALL BE PLACED IN THE "LEG DOWN" POSITION WHERE POSSIBLE. WHERE "LEG UP" POSITION IS NECESSARY, THE UPPER MOST PORTION OF THE ANGLE SHALL NOT PROJECT MORE THAN 1" ABOVE THE TOP FLANGE OR COVER PLATE. THE CONTRACTOR SHALL HAVE AN ASSORTMENT OF ANGLES OF VARIOUS SIZES AVAILABLE ON THE SITE TO CONFORM TO THIS REQUIREMENT.

7. S.I.P. FORM SHALL NOT BE USED AT SLAB OVERHANG. DECK OVERHANG FORMWORK AND SUPPORT SYSTEM SHALL BE SUBMITTED AS A SHOP DRAWING FOR APPROVAL.

8. GALVANIZED SURFACES DAMAGED DURING CONSTRUCTION SHALL BE REPAIRED IN CONFORMANCE WITH THE REQUIREMENTS OF ASTM A780.

ITEMS USED ON THIS SHEET	
ITEM NO.	DESCRIPTION
501.33	HIGH PERFORMANCE CONCRETE, CLASS A
900.608	HIGH PERFORMANCE CONCRETE, CLASS A, LOW CEMENT

PROJECT NAME: WINDSOR
PROJECT NUMBER: IM 091-1(64)

FILE NAME: s10a188SuperStDet5.dgn
PROJECT LEADER: J. WILSON
DESIGNED BY: R. PEIN
SUPERSTRUCTURE DETAILS

PLOT DATE: 7/30/2015
DRAWN BY: N. GARCIA III
CHECKED BY: S. HALLORAN
SHEET 76 OF 156

BEARING NOTES:

1. SHOP DRAWINGS CONFORMING TO SUBSECTION 531.03 SHALL BE SUBMITTED AND INCLUDE ANY NECESSARY WELDING OR BONDING PROCEDURES. THE SHOP DRAWINGS SUBMITTAL SHALL ALSO INCLUDE ALL APPLICABLE CERTIFICATIONS FOR ELASTOMERIC MATERIAL.

2. ALL STEEL PLATES IN BEARING DEVICES EXCEPT AS NOTED SHALL CONFORM TO THE REQUIREMENTS OF AASHTO M 270 GRADE 36. 1/8" STEEL LAMINATE REINFORCING PLATES SHALL CONFORM TO THE REQUIREMENTS OF ASTM A1011 GRADE 36 OR HIGHER.

3. ALL INTERNAL STEEL PLATES SHALL BE SAND BLASTED AND FREE OF COATINGS, RUST AND MILL SCALE. THE PLATES SHALL BE FREE OF SHARP EDGES AND BURRS.

4. ANCHOR BOLTS AND NUTS SHALL CONFORM TO THE REQUIREMENTS OF AASHTO M 164 (ASTM A325 AND A449) AND SHALL BE GALVANIZED IN CONFORMANCE WITH AASHTO M 232. ALL WASHERS SHALL CONFORM TO THE REQUIREMENTS OF AASHTO M 270 GRADE 345, AND SHALL BE GALVANIZED IN CONFORMANCE WITH AASHTO M111.

5. ALL STEEL COMPONENTS SHALL BE GALVANIZED AS PER SECTION 531.04(b) AND 506.15. ALL WASHERS SHALL SHALL BE 3/8" PLATE MINIMUM. ANCHOR BOLTS, NUTS AND WASHERS SHALL BE GALVANIZED PER AASHTO M 232/M 232M.

6. PROVIDE HOT-DIP GALVANIZED, FLAT COUNTERSUNK HEAD CAP SCREWS IN ACCORDANCE WITH ASTM F 835. HOT-DIP GALVANIZED SHALL BE IN CONFORMANCE WITH AASHTO M 232 (ASTM A153). PROVIDE STEEL HOT-DIP GALVANIZED CAPS WITH 1/2" MIN. TO 1 1/2" MAX. HEIGHT AND NOMINAL 1" INSIDE DIAMETER.

7. STEEL REINFORCED ELASTOMERIC BEARINGS SHALL HAVE A MINIMUM OF 1/8" EDGE SEAL AND 1/4" TOP AND BOTTOM COVER OF ELASTOMER INTEGRAL WITH THE BEARING OVER ALL INTERNAL PLATES.

8. FOR ELASTOMERIC BEARINGS, ALL MATERIALS AND FABRICATION SHALL BE IN ACCORDANCE WITH SECTION 14 OF THE AASHTO LRFD BRIDGE DESIGN SPECIFICATIONS AND SECTION 18 OF THE AASHTO LRFD BRIDGE CONSTRUCTION SPECIFICATIONS. ALL FABRICATION SHALL MEET THE REQUIREMENTS OF AASHTO M251 EXCEPT THAT THE ACCEPTANCE SAMPLING AND TESTING REQUIREMENTS OF PARTS 8 AND 9 ARE WAIVED. THE RAW ELASTOMER SHALL BE VIRGIN NEOPRENE OR NATURAL RUBBER CLASSIFIED AS LOW TEMPERATURE GRADE 4 AS DEFINED IN SECTION 18 OF THE AASHTO LRFD BRIDGE CONSTRUCTION SPECIFICATIONS. THE ELASTOMER SHALL HAVE A NOMINAL HARDNESS OF 55 (+/- 5) DUROMETER ON SHORE 'A' SCALE AND A SHEAR MODULUS BETWEEN 80 AND 175 PSI. NO FABRIC REINFORCEMENT WILL BE ALLOWED IN ELASTOMERIC PADS.

9. ALTERNATE CONFIGURATIONS FOR BEARINGS MAY BE SUBMITTED FOR APPROVAL. THE ALTERNATE SHALL MAINTAIN THE ANCHORAGE SYSTEM SHOWN AND SHALL BE DESIGNED PER AASHTO LRFD BRIDGE DESIGN SPECIFICATIONS 5TH EDITION.

10. BRIDGE SEAT ELEVATIONS MAY BE REVISED TO ACCOMMODATE AN ALTERNATIVE CONFIGURATION.

11. PREFORMED FABRIC BEARING PADS SHALL BE MANUFACTURED FROM ALL NEW MATERIALS COMPRISED OF HIGH QUALITY ELASTOMER WITH A RANDOM DISTRIBUTION OF SYNTHETIC FIBERS IN PROPER PROPORTION TO MAINTAIN STRENGTH AND STABILITY. THE FINISHED PRODUCT SHALL WITHSTAND A COMPRESSIVE LOAD PERPENDICULAR TO THE PLANE OF LAMINATIONS OF 48.2 MPa (7000 psi). THE SURFACE HARDNESS SHALL HAVE A SHORE A DUROMETER OF 80 +/- 10 IN ACCORDANCE WITH ASTM D 2240.

12. THE STEEL LOAD PLATES AND MASONRY PLATES SHALL BE HOT BONDED TO THE REINFORCED ELASTOMERIC PAD DURING THE VULCANIZATION PROCESS. THE STEEL SURFACES TO BE BONDED TO THE PAD SHALL NOT BE GALVANIZED.

13. THE BEARING TOLERANCES SHALL MEET THOSE GIVEN IN SECTION 18 OF THE AASHTO LRFD BRIDGE CONSTRUCTION SPECIFICATIONS.

BEARING PAD AND LOAD PLATE DATA

SOUTHBOUND BRIDGE					NORTHBOUND BRIDGE				
LOCATION	T_1	T_2	A	B	LOCATION	T_1	T_2	A	B
PIER 1, BACK	1/2"	5/8"	3 1/2"	3 5/8"	PIER 4, BACK	1/2"	5/8"	3 1/2"	3 5/8"
PIER 1, AHEAD	1/2"	3/4"	3 1/2"	3 3/4"	PIER 4, AHEAD	1/2"	3/4"	3 1/2"	3 3/4"
PIER 2, BACK	1/2"	5/8"	2 7/8"	3"	PIER 5, BACK	1/2"	5/8"	2 7/8"	3"
PIER 2, AHEAD	1/2"	3/4"	2 7/8"	3 1/8"	PIER 5, AHEAD	1/2"	3/4"	2 7/8"	3 1/8"
PIER 3, BACK	1/2"	5/8"	3 1/2"	3 5/8"	PIER 6, BACK	1/2"	5/8"	3 1/2"	3 5/8"
PIER 3, AHEAD	1/2"	3/4"	3 1/2"	3 3/4"	PIER 6, AHEAD	1/2"	3/4"	3 1/2"	3 3/4"

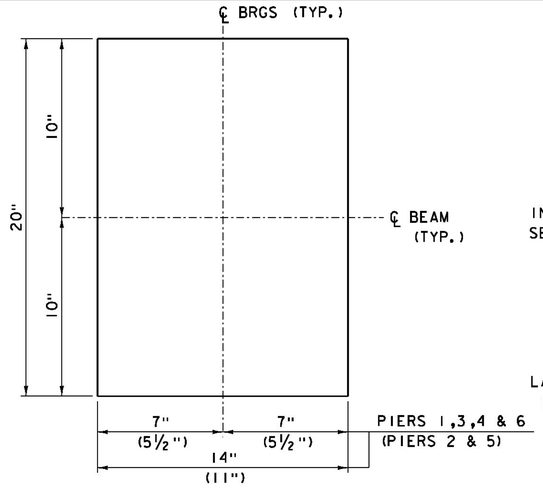

TYPICAL BEARING PLAN
SCALE 3" = 1'-0"

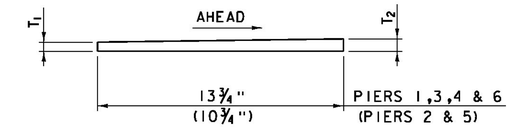

INTERNAL LOAD PLATE DETAIL
SCALE 3" = 1'-0"

ITEMS USED ON THIS SHEET	
ITEM NO.	DESCRIPTION
531.11	BEARING DEVICE ASSEMBLY, ELASTOMERIC PAD

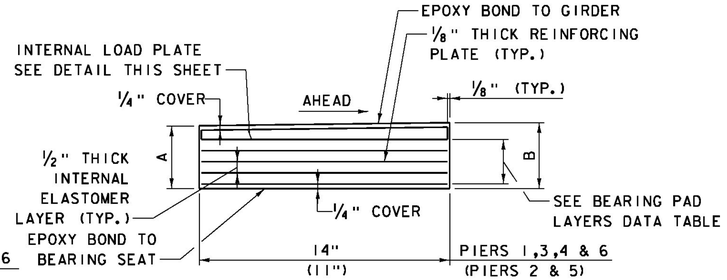

TYPICAL BEARING SECTION AT PIERS
SCALE 3" = 1'-0"

BEARING PAD LAYERS DATA

PIER NUMBER	NO. INTERNAL ELASTOMER LAYERS	NO. REINFORCING PLATES
PIERS 1,3,4 & 6	4	4
PIERS 2 & 5	3	3

BEARING DETAILS AT PIERS

BEARING SEAT ELEVATIONS								
BRIDGE 33S GIRDERS	BEARING LOCATIONS							
	ABUT 1	PIER 1 SPAN 1	PIER 1 SPAN 2	PIER 2 SPAN 2	PIER 2 SPAN 3	PIER 3 SPAN 3	PIER 3 SPAN 4	ABUT 2
1	471.05	473.29	473.32	475.35	475.36	477.28	477.31	479.04
2	471.41	473.65	473.68	475.70	475.72	477.64	477.67	479.40
3	471.61	473.85	473.88	475.91	475.92	477.84	477.87	479.60
4	471.56	473.80	473.83	475.85	475.87	477.79	477.82	479.55
5	471.38	473.61	473.65	475.67	475.68	477.60	477.64	479.36
BRIDGE 33N GIRDERS	BEARING LOCATIONS							
	ABUT 3	PIER 4 SPAN 5	PIER 4 SPAN 6	PIER 5 SPAN 6	PIER 5 SPAN 7	PIER 6 SPAN 7	PIER 6 SPAN 8	ABUT 4
6	471.57	473.91	473.91	475.96	475.96	477.90	477.90	479.58
7	471.75	474.09	474.09	476.15	476.15	478.08	478.08	479.76
8	471.80	474.14	474.14	476.20	476.20	478.13	478.13	479.81
9	471.61	473.94	473.94	476.00	476.00	477.93	477.93	479.61
10	471.23	473.59	473.59	475.64	475.64	477.58	477.58	479.26

TABLE VALUES REPRESENT A LEVEL BEAM SEAT ELEVATION AT EACH END OF EACH GIRDER. BEARING SEAT ELEVATIONS ARE BASED ON A CALCULATED GIRDER CAMBER OF 4.84" (0.40'). PRIOR TO FORMING THE BEARING SEATS, THE CONTRACTOR SHALL MEASURE THE ACTUAL CAMBER FOR EACH GIRDER. IF THE ACTUAL MEASURED CAMBER VALUES VARY BY MORE THAN +/- 0.50" FROM THE CALCULATED, THE BEARING SEAT ELEVATIONS (AND BLOCKING VALUES AT THE CENTERLINE OF BEARINGS) SHALL BE ADJUSTED.

PROJECT NAME: WINDSOR
PROJECT NUMBER: IM 091-1(64)

FILE NAME: z10o188BRG P.dgn
PROJECT LEADER: J. WILSON
DESIGNED BY: R. PEIN
BRIDGE BEARING DETAILS - PIERS

PLOT DATE: 7/30/2015
DRAWN BY: N. GARCIA III
CHECKED BY: S. HALLORAN
SHEET 77 OF 156

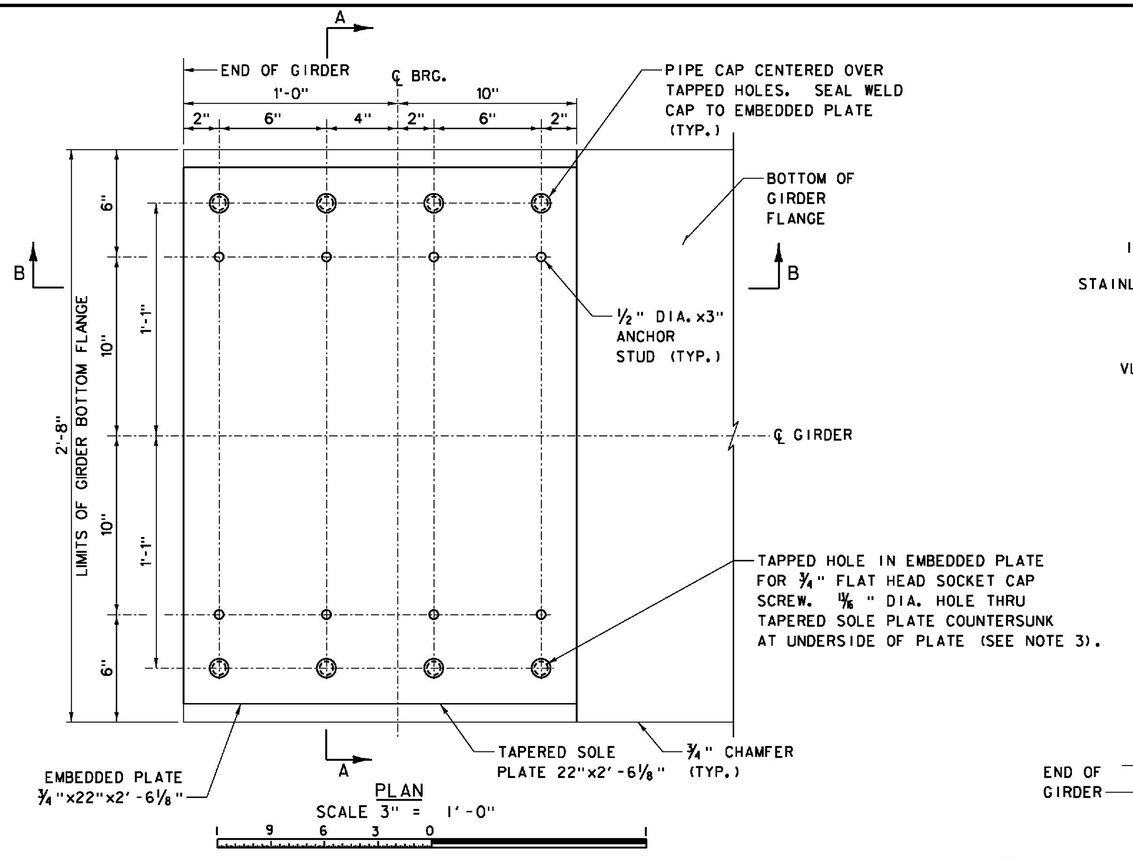

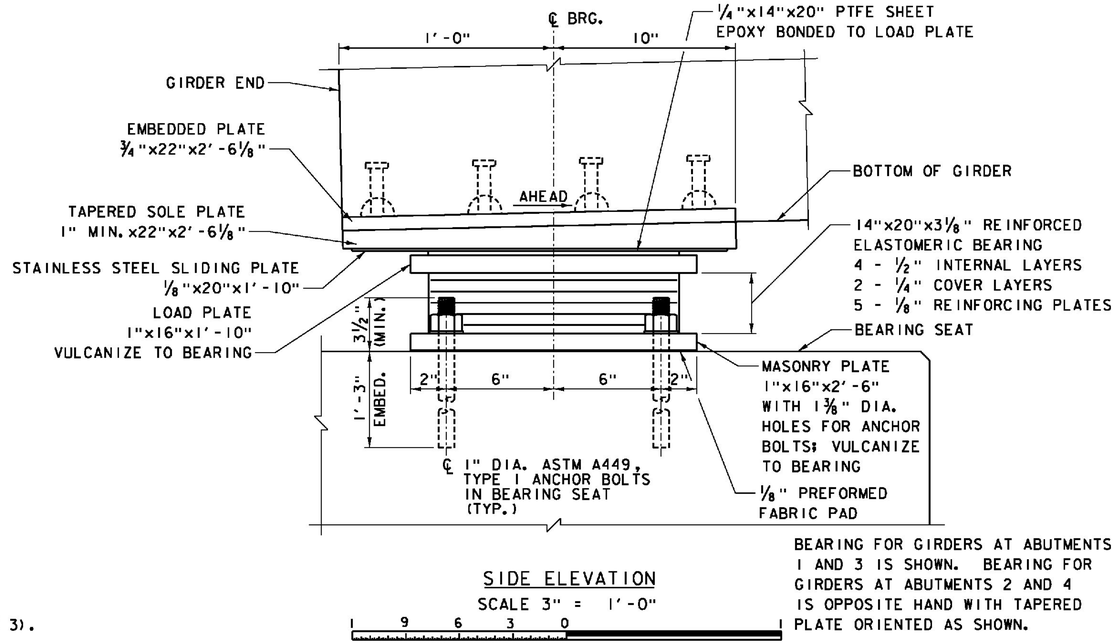

SIDE ELEVATION
SCALE 3" = 1'-0"
9 6 3 0

BEARING FOR GIRDERS AT ABUTMENTS 1 AND 3 IS SHOWN. BEARING FOR GIRDERS AT ABUTMENTS 2 AND 4 IS OPPOSITE HAND WITH TAPERED PLATE ORIENTED AS SHOWN.

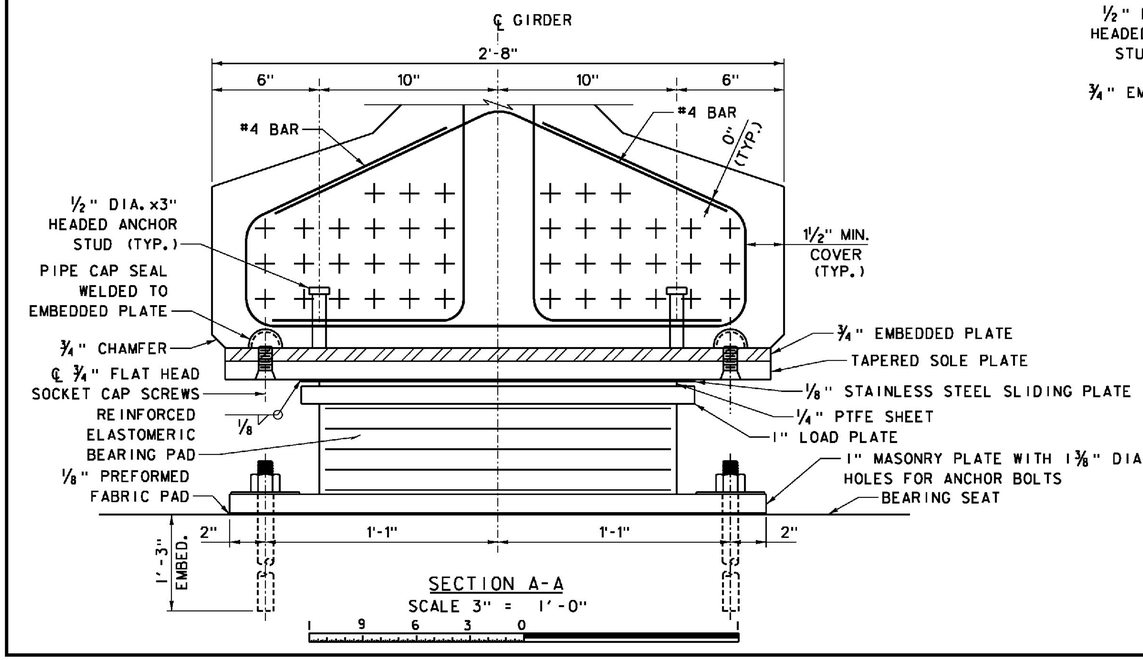

SECTION A-A
SCALE 3" = 1'-0"
9 6 3 0

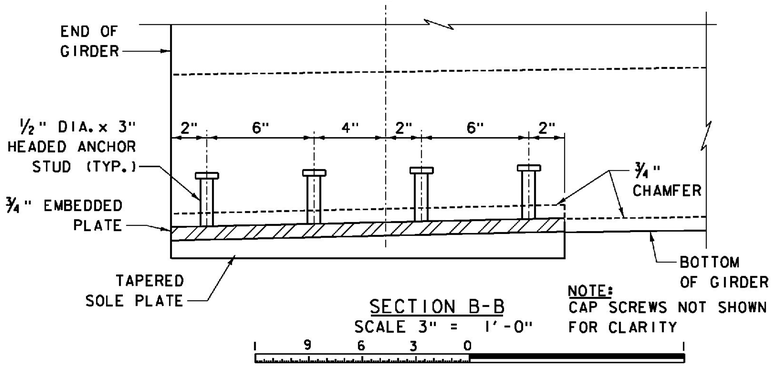

SECTION B-B
SCALE 3" = 1'-0"
9 6 3 0

NOTE: CAP SCREWS NOT SHOWN FOR CLARITY

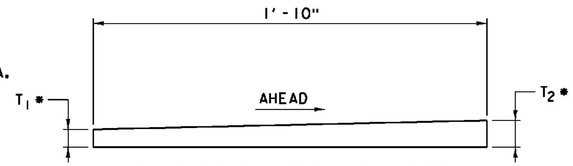

TAPERED SOLE PLATE SECTION
SCALE 3" = 1'-0"
9 6 3 0

* THICKNESS DOES NOT INCLUDE STAINLESS STEEL SLIDING PLATE

TAPERED SOLE PLATE DIMENSIONS		
ABUTMENT NO.	T_1	T_2
1	1"	1⅜"
2	1"	1 3/16"
3	1"	1⅜"
4	1"	1 3/16"

NOTES:

1. FOR BEARING NOTES, SEE BRIDGE BEARING DETAILS - PIERS SHEET.
2. FOR GIRDER DETAILS, SEE GIRDER DETAILS SHEETS.
3. EMBEDDED PLATE AND TAPERED SOLE PLATE SHALL BE DRILLED AS AN ASSEMBLED UNIT. HOLES IN TAPERED SOLE PLATE AND THREADS TAPPED IN EMBEDDED PLATE MAY BE ALIGNED PERPENDICULAR TO THE BOTTOM OF SOLE PLATE OR EMBEDDED PLATE. DRILLING SHALL BE COMPLETED PRIOR TO HOT-DIP GALVANIZING OF PLATES.
4. GALVANIZED SURFACES DAMAGED DURING CONSTRUCTION SHALL BE REPAIRED IN CONFORMANCE WITH THE REQUIREMENTS OF ASTM A780.

ITEMS USED ON THIS SHEET	
ITEM NO.	DESCRIPTION
531.11	BEARING DEVICE ASSEMBLY, ELASTOMERIC PAD

PROJECT NAME: WINDSOR
PROJECT NUMBER: IM 091-1(64)

FILE NAME: z10o188BRG A.dgn
PROJECT LEADER: J. WILSON
DESIGNED BY: R. PEIN
BRIDGE BEARING DETAILS - ABUTMENTS

PLOT DATE: 7/30/2015
DRAWN BY: N. GARCIA III
CHECKED BY: S. HALLORAN
SHEET 78 OF156

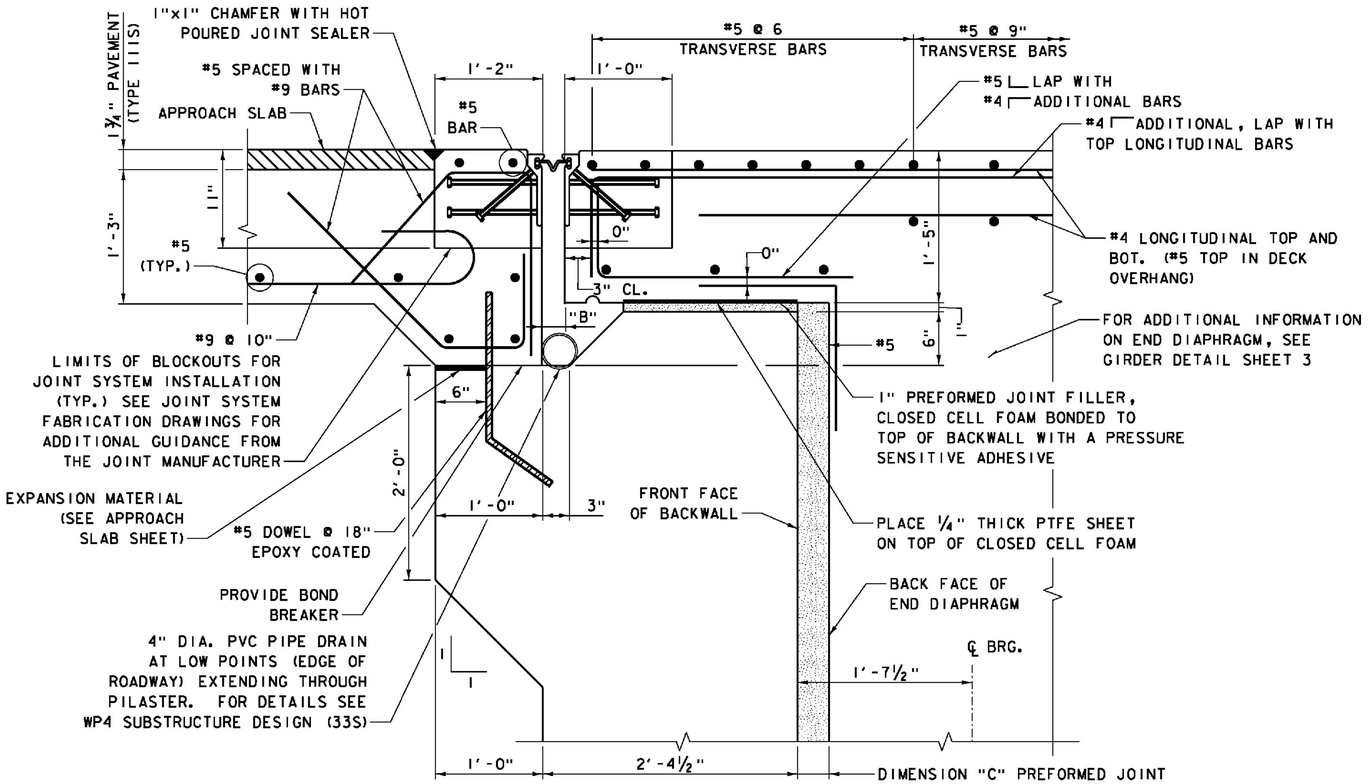

TYPICAL SECTION BETWEEN GIRDERS

SCALE 1 ½" = 1'-0"

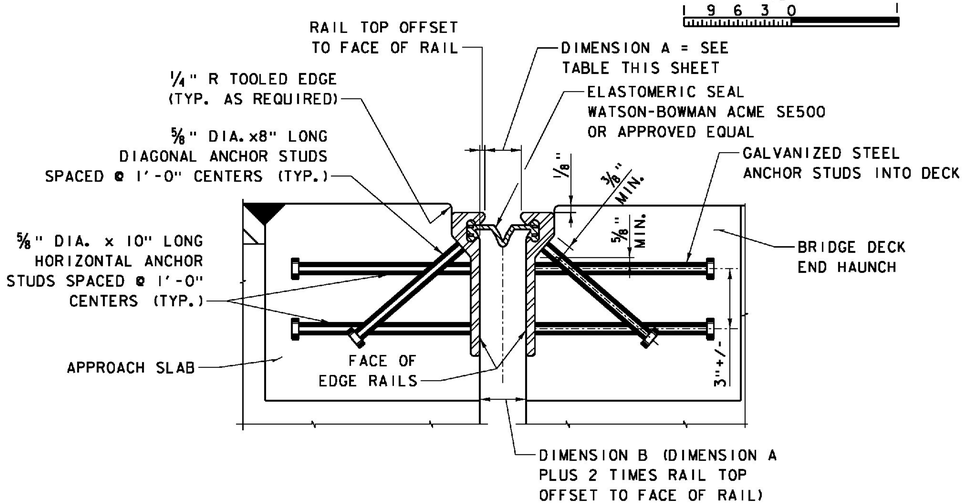

TYPICAL SECTION THRU STRIP SEAL EXPANSION JOINT

SCALE 3" = 1'-0"

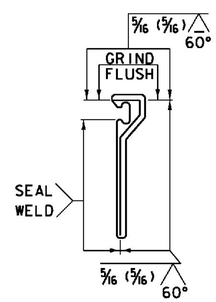

SHOP SPLICE DETAIL

SCALE 3" = 1'-0"

ITEMS USED ON THIS SHEET	
ITEM NO.	DESCRIPTION
900.640	BRIDGE EXPANSION JOINT, STRIP SEAL
524.21	JOINT SEALER, POLYURETHANE

GENERAL NOTES:

1. EXPANSION JOINT EDGE RAILS DETAILED ON THIS DRAWING ARE BASED ON WATSON-BOWMAN ACME STEEL EDGE MEMBER P. ACTUAL STRIP SEAL EXPANSION JOINT SYSTEM SHALL BE SUBMITTED AS A SHOP DRAWING FOR APPROVAL. SEE ITEM 900.640 SPECIAL PROVISION (BRIDGE EXPANSION JOINT, STRIP SEAL) FOR EXPANSION JOINT SYSTEM REQUIREMENTS.
2. RECESS THE EDGE RAIL ⅛" BELOW THE DECK SURFACE AS SHOWN.
3. ALL REINFORCEMENT STEEL IN THE DECK SHALL BE SOLID STAINLESS STEEL IN CONFORMANCE WITH ASTM A955M, GRADE 420 (GRADE 60). REINFORCEMENT IN THE APPROACH SLAB SHALL BE ASTM A615 GRADE 60, EPOXY COATED.
4. PREFORMED JOINT FILLER, CLOSED CELL FOAM SHALL BE W.R. MEADOWS CERAMAR FLEXIBLE FOAM EXPANSION JOINT OR APPROVED EQUAL. IT SHALL HAVE A COMPACTED CLOSED CELL STRUCTURE COMPOSED OF SYNTHETIC ISOMERIC POLYMERS AND SHALL BE GRAY IN COLOR. IT SHALL OFFER SUFFICIENT HEAT RESISTANCE SO THAT IT IS COMPATIBLE WITH HOT APPLIED SEALING COMPOUNDS. IT SHALL MEET THE REQUIREMENTS OF SECTION 5.1 THROUGH 5.4 OF ASTM D1752, WITH THE COMPRESSION REQUIREMENT MODIFIED TO 10 psi MINIMUM TO 25 psi MAXIMUM. TYPICAL PHYSICAL PROPERTIES, AS DETERMINED USING TEST METHOD ASTM D545, SHALL BE AS FOLLOWS:
   COMPRESSION, 50%.....13 psi
   EXTRUSION.....0.1 inch
   RECOVERY.....99.2%
   WATER ABSORPTION, VOLUME.....0.246%
5. FURNISHING AND INSTALLING THE EXPANSION JOINT SHALL BE IN ACCORDANCE WITH ITEM 900.640 SPECIAL PROVISION (BRIDGE EXPANSION JOINT, STRIP SEAL) AND THE APPLICABLE REQUIREMENTS OF SECTION 516 OF THE 2006 VTRANS STANDARD SPECIFICATIONS.
6. THE JOINT SYSTEM SHALL BE LIFTED AND LOWERED INTO FINAL POSITION AND SUPPORTED FROM ABOVE USING STRONGBACKS AND LEVELING DEVICES AS SPECIFIED BY THE JOINT MANUFACTURER ON THE FABRICATION DRAWINGS.
7. THE ELASTOMERIC SEAL/GLAND SHALL HAVE A MOVEMENT RANGE OF 5 INCHES MINIMUM AND SHALL BE INSTALLED IN ONE CONTINUOUS PIECE PER MANUFACTURERS INSTRUCTIONS.
8. THE GAP BETWEEN FACE OF BACKWALL AND END DIAPHRAGM (DIMENSION "C") AND THE GAP BETWEEN DECK END OVERHANG AND APPROACH SLAB (DIMENSION "B") SHALL BE SET IN ACCORDANCE WITH THE JOINT GAP DIMENSION TABLE BELOW.

JOINT GAP DIMENSION TABLE		
TEMP (°F)	DIMENSION "A" (IN)	DIMENSION "C" (IN)
0	3⅞	5⅜
20	3⅜	4⅞
40	2⅝	4⅜
60	2⅞	3⅝
80	2	3½

NOTES:

1. DIMENSION "A" IS MEASURED PERPENDICULAR TO ℄ EXPANSION JOINT.
2. TEMPERATURE IS AVERAGE AMBIENT TEMPERATURE DURING THE 24 HOUR PERIOD IMMEDIATELY PRECEEDING FINAL SET OF JOINT INSTALLATION. THE USE OF CONCRETE THERMOMETERS SHALL BE UTILIZED TO DETERMINE AVERAGE CONCRETE TEMPERATURE OF THE DECK AND GIRDER TO COMPARE WITH THE AVERAGE 24-HOUR AMBIENT TEMPERATURE.
3. DIMENSION "C" IS THE ANTICIPATED GAP BETWEEN THE FRONT FACE OF BACKWALL AND THE END DIAPHRAGM AND MUST BE FOLLOWED TO ENSURE PROPER EXPANSION JOINT DESIGN.

PROJECT NAME: WINDSOR
PROJECT NUMBER: IM 091-1(64)

FILE NAME: z10a188ExpDet1.dgn
PROJECT LEADER: J. WILSON
DESIGNED BY: R. PEIN
EXPANSION JOINT DETAILS 1

PLOT DATE: 7/30/2015
DRAWN BY: N. GARCIA III
CHECKED BY: S. HALLORAN
SHEET 79 OF156

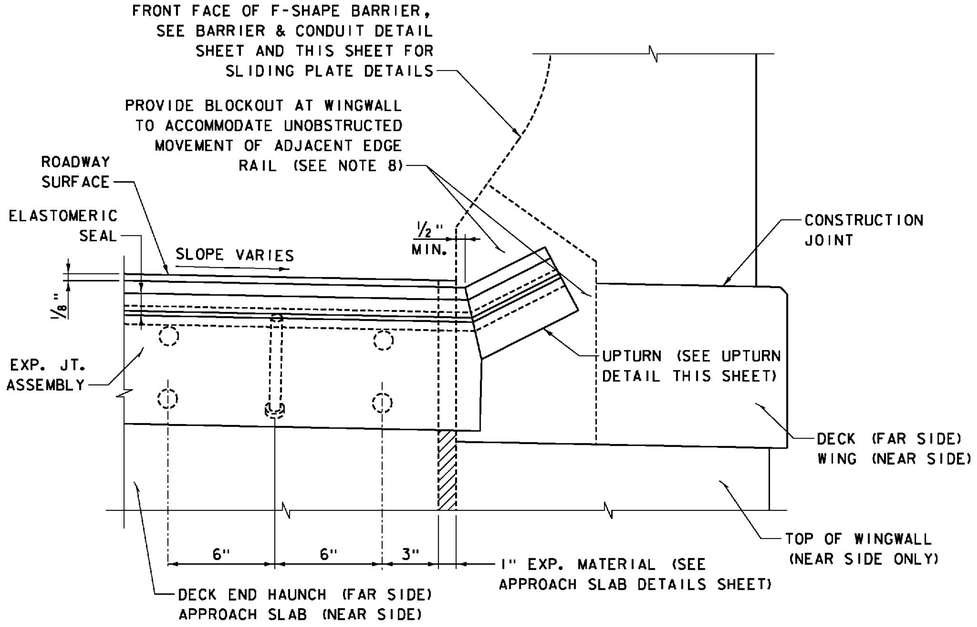

PARTIAL SECTION ALONG ℄ JOINT

NOT TO SCALE

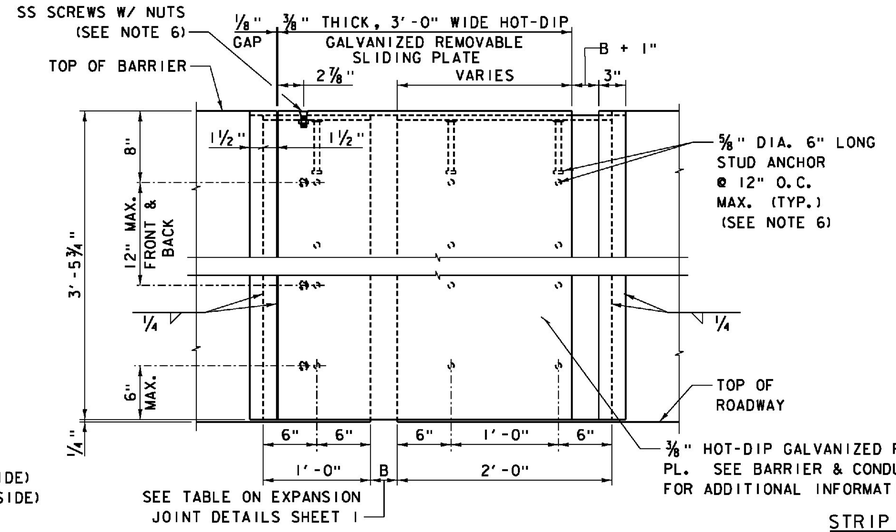

BARRIER SLIDING STEEL COVER PLATE - ELEVATION

NOT TO SCALE

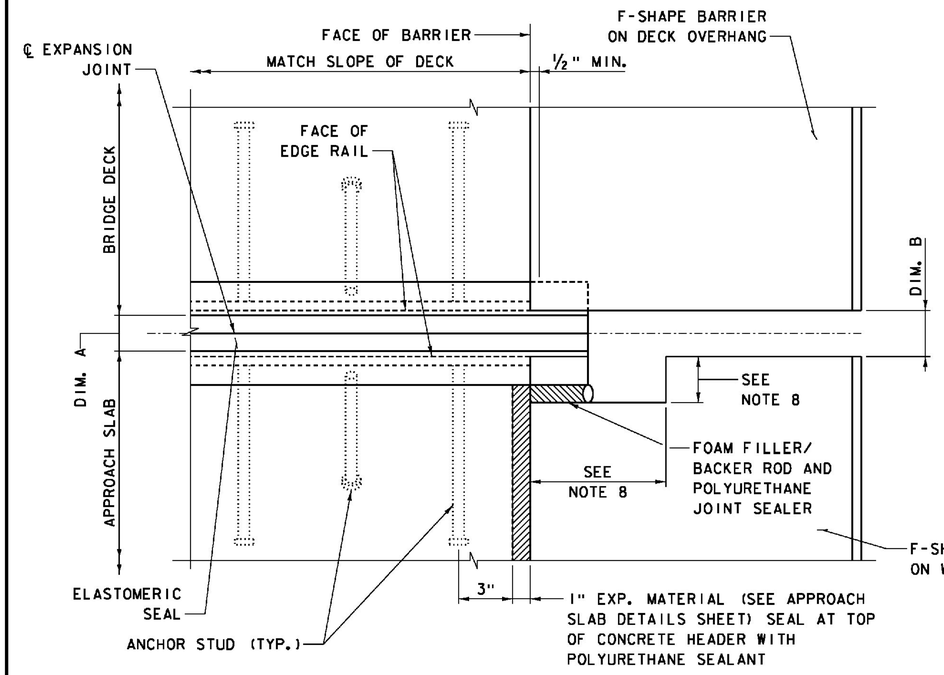

PARTIAL PLAN VIEW OF JOINT

NOT TO SCALE

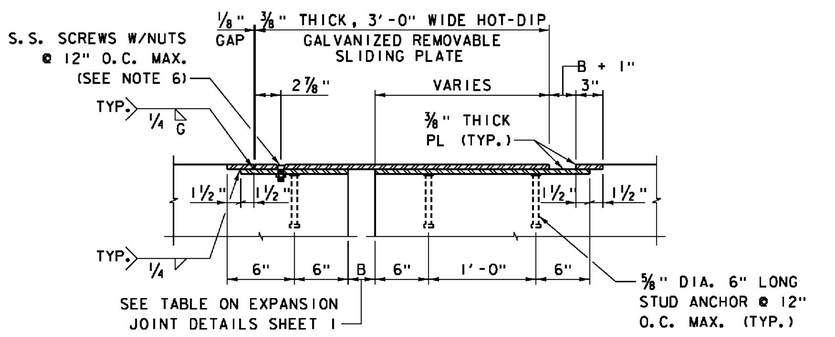

BARRIER SLIDING STEEL COVER PLATE - SECTION

NOT TO SCALE

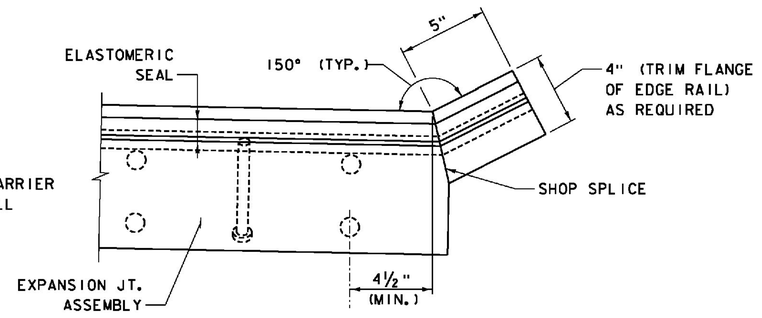

UPTURN DETAIL

NOT TO SCALE

STRIP SEAL EXPANSION JOINT NOTES:

1. THE DETAILS SHOWN HERE ARE INTENDED AS A GENERAL GUIDE FOR A TYPICAL GLANDULAR TYPE STRIP SEAL JOINT SYSTEM. SHOP DRAWINGS WHICH INCLUDE DETAILS OF THE GLAND SHAPE, STEEL EXTRUSION SHAPE, WELDING PROCEDURE SPECIFICATIONS, ANCHOR ARRANGEMENT, TEMPERATURE CORRECTION REQUIREMENTS, AND TEMPORARY SUPPORT DETAILS SHALL BE SUBMITTED FOR APPROVAL OF THE ENGINEER ACCORDING TO THE SPECIAL PROVISIONS.
2. ALL STRUCTURAL STEEL COMPONENTS SHALL CONFORM TO AASHTO M270 GRADE 36. AFTER THE COMPLETION OF ALL WELDING OPERATIONS, STEEL PLATE ASSEMBLIES SHALL BE HOT-DIP GALVANIZED IN CONFORMANCE WITH AASHTO M111.
3. CONCRETE BLOCKOUT SHALL BE SANDBLASTED, CLEANED WITH COMPRESSED OIL LESS AIR, AND PRIMED WITH BONDING COMPOUND PRIOR TO CASTING BLOCKOUT CONCRETE.
4. NEOPRENE STRIP SEAL SHALL BE BONDED TO STEEL EXTRUSION WITH APPROVED ADHESIVE.
5. INSTALL CONTINUOUS NEOPRENE STRIP SEAL IN THE FIELD. SPLICING OF SEAL IS NOT PERMITTED.
6. 3/4" DIA. STAINLESS STEEL FLAT HEAD MACHINE SCREWS & STAINLESS STEEL NUTS. RECESS 1/16" BELOW PLATE SURFACE. PRIOR TO PLACEMENT OF SAFETY CURB CONCRETE, LUBRICATE STAINLESS STEEL SCREWS WITH GRAPHITE AND SET SECURELY IN PLACE. MACHINE SCREWS TO BE TEMPORARILY REMOVED AFTER CONCRETE HAS ATTAINED FINAL SET.
7. NO WELDING OF PORTIONS OF STEEL EXTRUSIONS IN DIRECT CONTACT WITH NEOPRENE SEAL SHALL BE PERMITTED.
8. THE WINGWALL ADJACENT TO THE EXPANSION JOINT SHALL BE CONSTRUCTED TO INCLUDE A BLOCKOUT TO ACCOMMODATE DIFFERENTIAL MOVEMENT BETWEEN WINGWALL AND APPROACH SLAB. BLOCKOUT DIMENSIONS SHALL BE ESTABLISHED BASED ON THE ACTUAL EXPANSION JOINT SYSTEM BEING INSTALLED. REQUIRED BLOCKOUT DIMENSIONS SHALL BE INCLUDED ON EXPANSION JOINT SHOP DRAWINGS AND SUBMITTED FOR APPROVAL PRIOR TO CONSTRUCTION.

PROJECT NAME: WINDSOR	
PROJECT NUMBER: IM 091-1(64)	
FILE NAME: z10o188ExpDet2.dgn	PLOT DATE: 7/30/2015
PROJECT LEADER: J. WILSON	DRAWN BY: N. GARCIA III
DESIGNED BY: R. PEIN	CHECKED BY: S. HALLORAN
EXPANSION JOINT DETAILS 2	SHEET 80 OF 156

ITEMS USED ON THIS SHEET	
ITEM NO.	DESCRIPTION
900.620	BRIDGE SCUPPER ASSEMBLY

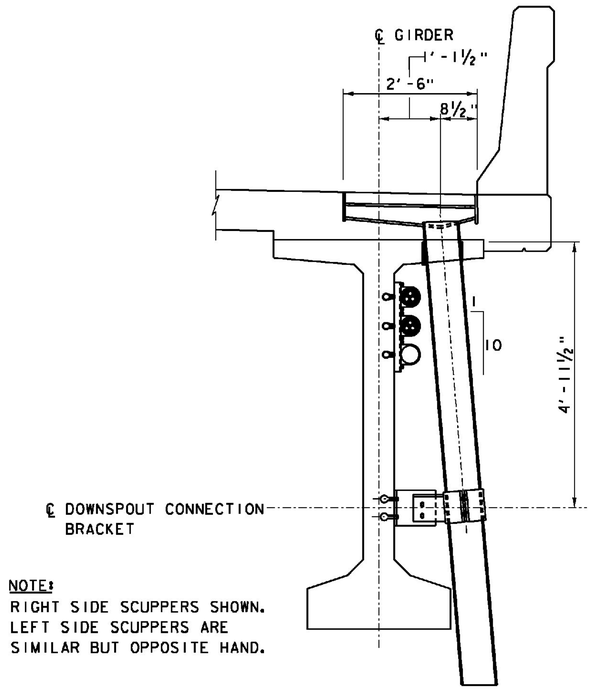

NOTE:
RIGHT SIDE SCUPPERS SHOWN.
LEFT SIDE SCUPPERS ARE
SIMILAR BUT OPPOSITE HAND.

SECTION AT BRIDGE SCUPPER - BRIDGE 33S

SCALE ¾" = 1'-0"

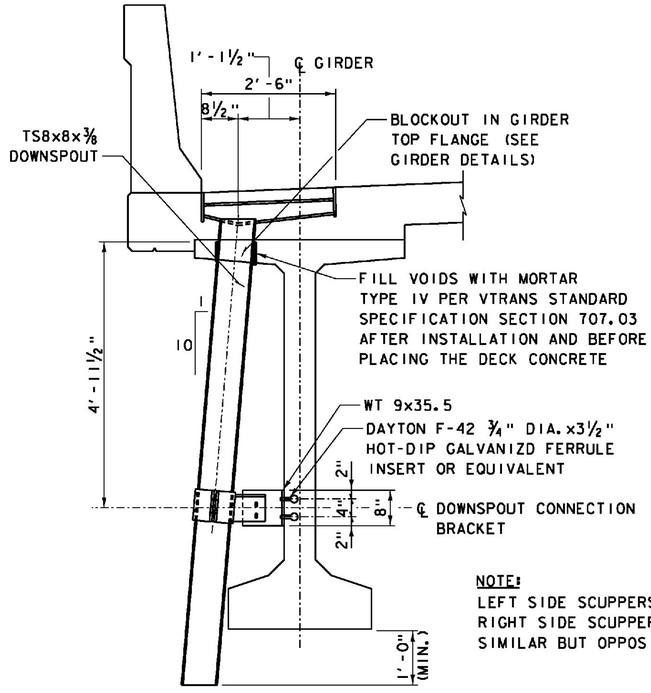

NOTE:
LEFT SIDE SCUPPERS SHOWN.
RIGHT SIDE SCUPPERS ARE
SIMILAR BUT OPPOSITE HAND.

SECTION AT BRIDGE SCUPPER - BRIDGE 33N

SCALE ¾" = 1'-0"

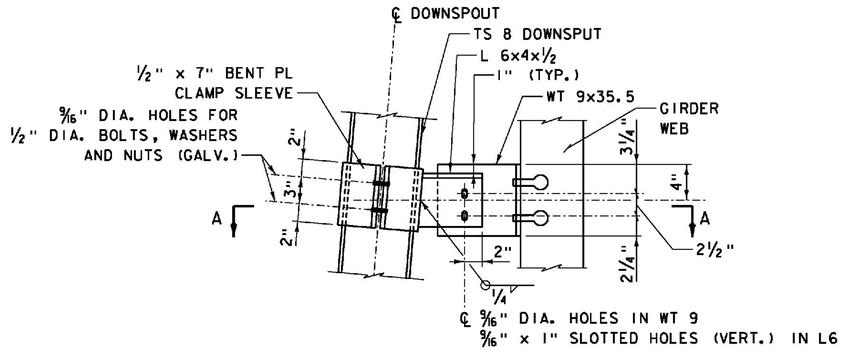

NOTE: THE FABRICATED CONNECTION BRACKET SHALL BE HOT-DIPPED GALVANIZED IN ACCORDANCE WITH VTRANS STANDARD SPECIFICATION SECTION 506.15.

DOWNSPOUT CONNECTION BRACKET DETAIL

SCALE 1½" = 1'-0"

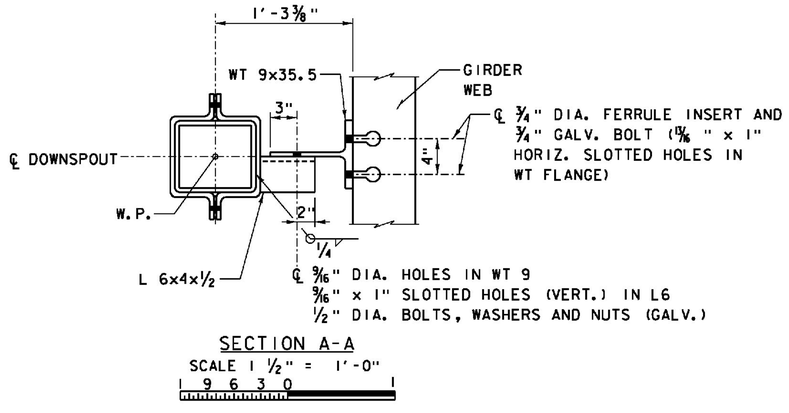

SECTION A-A

SCALE 1½" = 1'-0"

NOTES:

1. FOR SCUPPER LAYOUT, SEE PLAN - BRIDGE 33S AND PLAN - BRIDGE 33N SHEETS.
2. FOR ADDITIONAL SCUPPER DETAILS, SEE BRIDGE DRAINAGE SHEET 2.
3. ALL STEEL PLATES SHALL BE ASTM A 572 Gr50 OR ASTM A 588 AND SQUARE TUBE SHALL BE ASTM A 500 GRADE B.
4. ALL WELDS SHALL BE CONTINUOUS. ALL JOINTS SHALL BE WELDED USING TWO-SIDED ¼" FILLET WELDS OR ¼" PJP WELDS WITH A BACKING SEAL WELD, AS APPLICABLE.
5. ALL STEEL TO BE HOT-DIP GALVANIZED IN CONFORMANCE WITH AASHTO M11 (ASTM 123) AFTER FABRICATION.
6. THE SCUPPERS SHALL BE BLOCKED UP OFF THE FORMS SO AS TO LOCATE TOP OF SCUPPER ⅛" BELOW TOP SURFACE OF SLAB AS SHOWN.
7. STRUCTURAL SLAB CONCRETE IMMEDIATELY ADJACENT TO SCUPPERS SHALL BE THOROUGHLY VIBRATED DURING PLACEMENT TO ELIMINATE VOIDS WHICH COULD RESULT IN PREMATURE CONCRETE DETERIORATION.
8. GALVANIZED SURFACES DAMAGED DURING CONSTRUCTION SHALL BE REPAIRED IN CONFORMANCE WITH ASTM A780.
9. CONNECTION HOLES IN STEEL SHALL BE REAMED AS REQUIRED PRIOR TO GALVANIZING TO ACCOMMODATE BOLT INSTALLATION.
10. FOR LOCATION AND DETAILS OF SPLASH PAD BELOW SCUPPERS, SEE ROADWAY DRAWINGS.

PROJECT NAME:	WINDSOR
PROJECT NUMBER:	IM 091-1(64)
FILE NAME: z10a188BDRN1.dgn	PLOT DATE: 7/30/2015
PROJECT LEADER: J. WILSON	DRAWN BY: N. GARCIA III
DESIGNED BY: R. PEIN	CHECKED BY: S. HALLORAN
BRIDGE DRAINAGE - SHEET 1	SHEET 81 OF 156

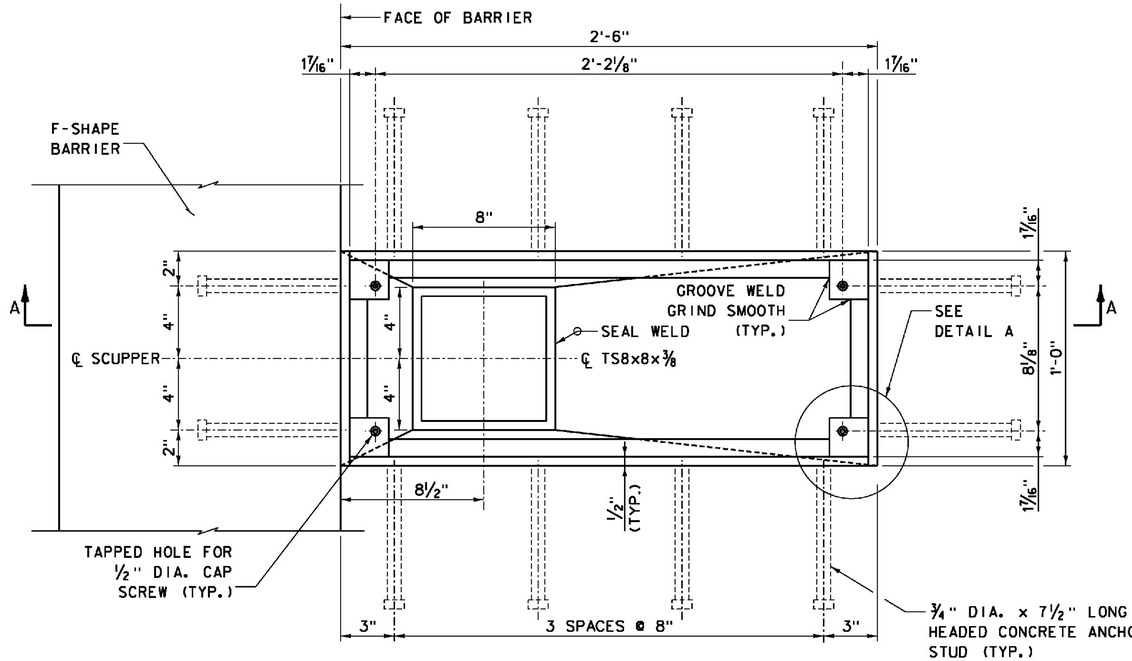

SCUPPER PLAN

SCALE 3" = 1'-0"

9 6 3 0

NOTE: GRATING NOT SHOWN, SEE SCUPPER GRATING DETAIL, THIS SHEET. FOR ADDITIONAL DOWNSPOUT DETAILS, SEE BRIDGE DRAINAGE - SHEET 1.

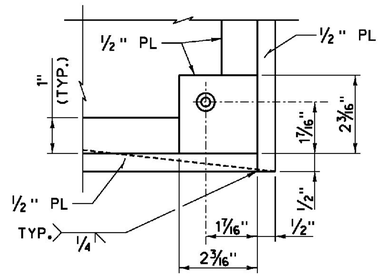

DETAIL A

NOT TO SCALE

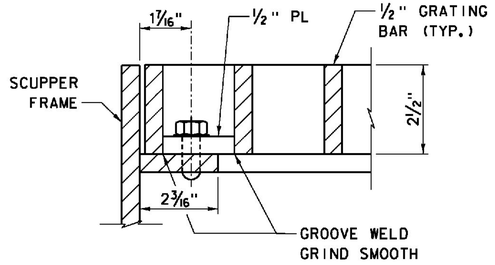

SECTION B-B

NOT TO SCALE

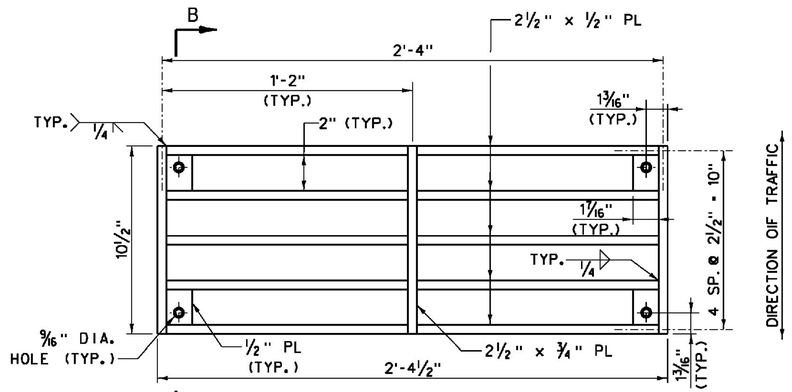

SCUPPER GRATING

SCALE 3" = 1'-0"

9 6 3 0

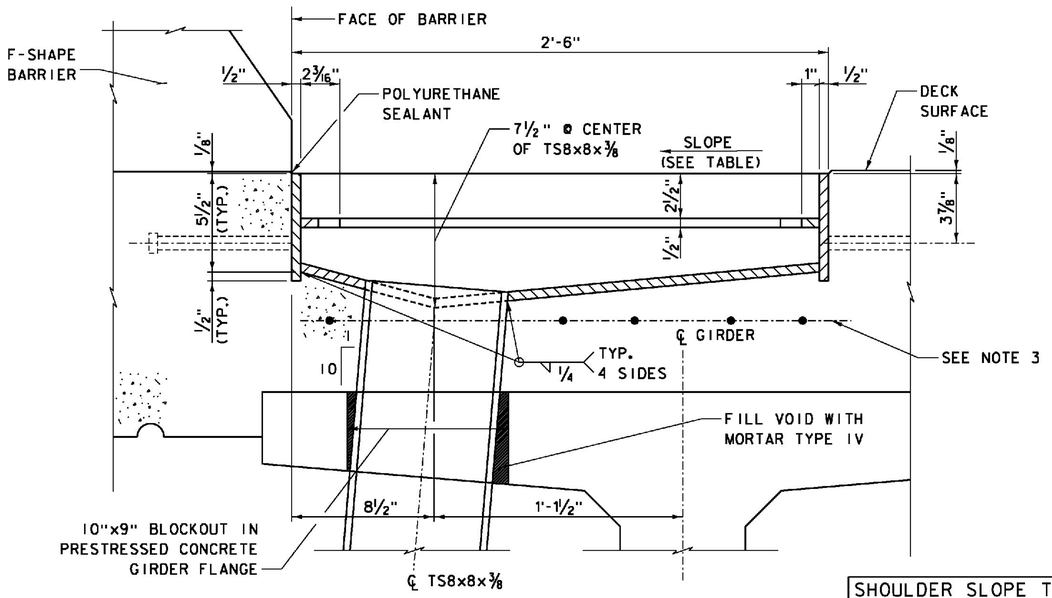

SECTION A-A

SCALE 3" = 1'-0"

9 6 3 0

SHOULDER SLOPE TABLE			
BRIDGE 33S		BRIDGE 33N	
LEFT	RIGHT	LEFT	RIGHT
4%	2%	2%	4%

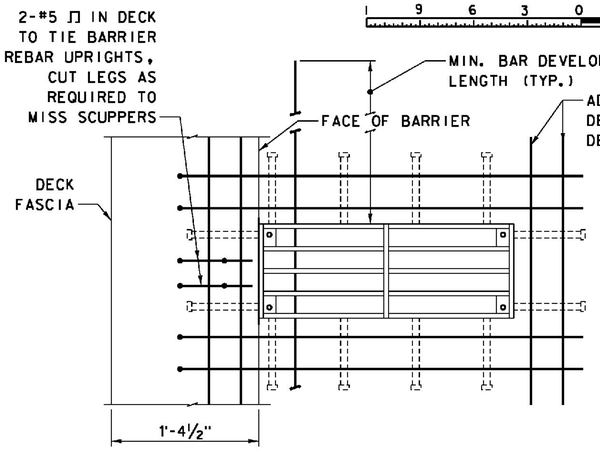

REINFORCEMENT PLAN AT SCUPPERS

SCALE 1 ½" = 1'-0"

9 6 3 0

NOTES:

1. UPON COMPLETION THE ENTIRE SCUPPER FABRICATION SHALL BE HOT-DIPPED GALVANIZED IN ACCORDANCE WITH VERMONT AGENCY OF TRANSPORTATION STANDARD SPECIFICATIONS FOR CONSTRUCTION SUBSECTION 506.15. SEE SPECIAL PROVISION.
2. REINFORCING BARS IN THE DECK SHALL BE STAINLESS STEEL CONFORMING TO THE REQUIREMENTS OF ASTM A955M GRADE 420 (GRADE 60).
3. ADD LONGITUDINAL REINFORCING BELOW SCUPPER EQUIVALENT TO CROSS-SECTIONAL AREA OF TOP AND BOTTOM DECK REINFORCING BARS INTERRUPTED BY SCUPPER BODY.

ITEMS USED ON THIS SHEET	
ITEM NO.	DESCRIPTION
900.620	BRIDGE SCUPPER ASSEMBLY

PROJECT NAME: WINDSOR
PROJECT NUMBER: IM 091-1(64)

FILE NAME: z10a188BDRN2.dgn
PROJECT LEADER: J. WILSON
DESIGNED BY: R. PEIN
BRIDGE DRAINAGE - SHEET 2

PLOT DATE: 7/31/2015
DRAWN BY: N. GARCIA III
CHECKED BY: S. HALLORAN
SHEET 82 OF 156

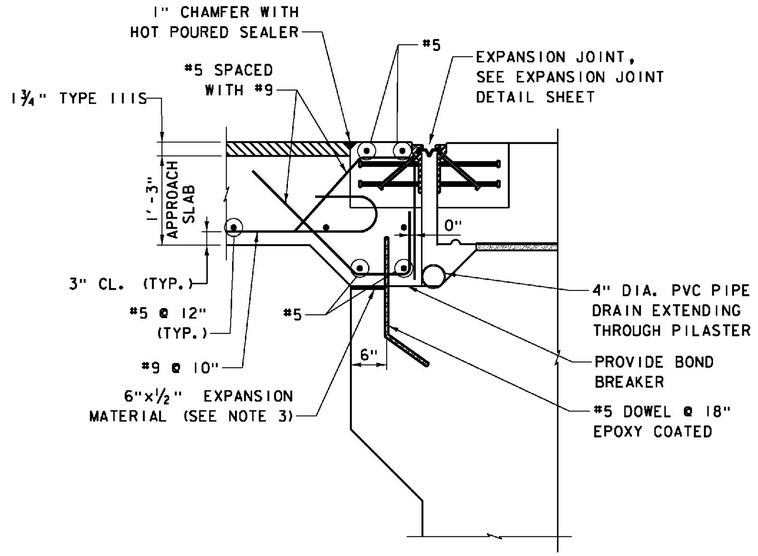

TYPICAL SECTION AT APPROACH SLAB SEAT

SCALE 1" = 1'-0"

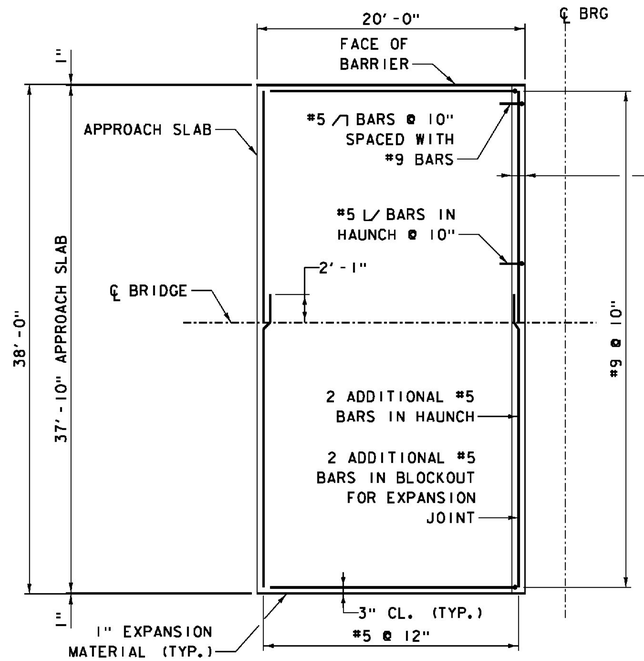

PROPOSED APPROACH SLAB REINFORCING PLAN
TYPICAL 4 LOCATIONS

SCALE 3/16" = 1'-0"

ITEMS USED ON THIS SHEET	
ITEM NO.	DESCRIPTION
490.30	SUPERPAVE BITUMINOUS CONCRETE PAVEMENT
501.34	CONCRETE, HPC B
507.17	EPOXY COATED REINFORCING STEEL
524.11	JOINT SEALER, HOT POURED

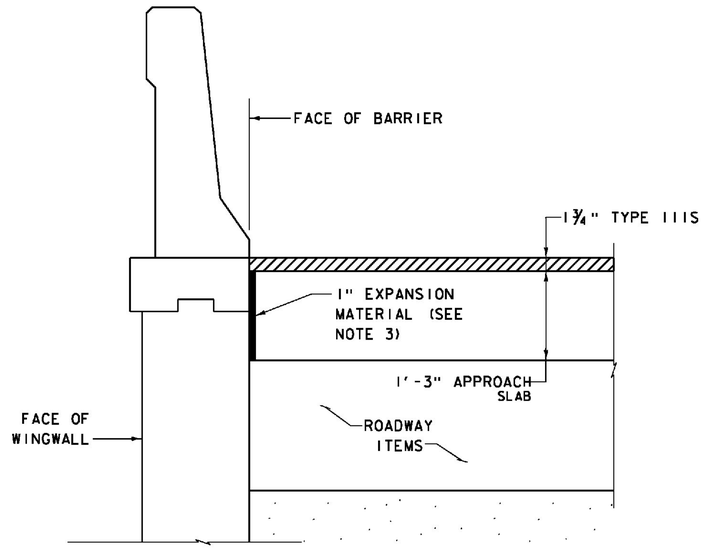

TYPICAL SECTION AT U-BACK WING

SCALE 1" = 1'-0"

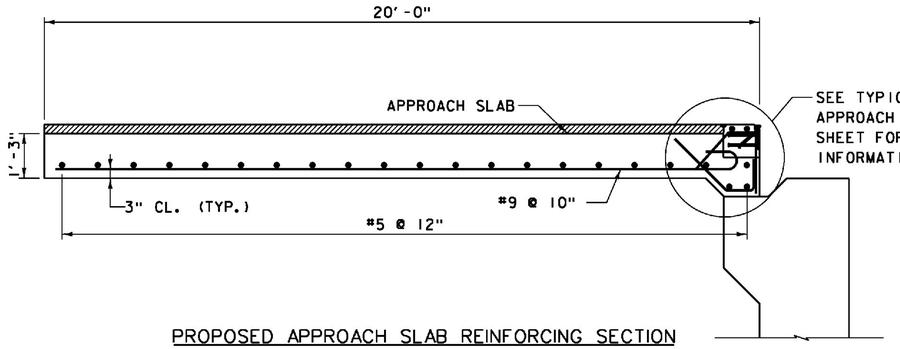

PROPOSED APPROACH SLAB REINFORCING SECTION

SCALE ½" = 1'-0"

NOTES:

1. CONCRETE FOR APPROACH SLABS SHALL BE HPC, CLASS B.
2. REINFORCING STEEL IN APPROACH SLAB SHALL BE ASTM A615 GRADE 60, EPOXY COATED.
3. EXPANSION MATERIAL INDICATED AT APPROACH SLAB SEAT AND BETWEEN ENDS OF APPROACH SLAB AND BACK OF WINGWALL SHALL BE PREFORMED SELF-EXPANDING CORK JOINT FILLER OR EQUAL IN CONFORMANCE WITH VTRANS STANDARD SPECIFICATIONS SECTION 707.08.

PROJECT NAME: WINDSOR
PROJECT NUMBER: IM 091-1(64)

FILE NAME: z10a188ASD1.dgn
PROJECT LEADER: J. WILSON
DESIGNED BY: S. BOYINGTON
APPROACH SLAB DETAILS

PLOT DATE: 7/30/2015
DRAWN BY: S. GUNN
CHECKED BY: S. HALLORAN
SHEET 83 OF 156

ITEMS USED ON THIS SHEET	
ITEM NO.	DESCRIPTION
900.608	BRIDGE RAILING, CONCRETE F-SHAPE

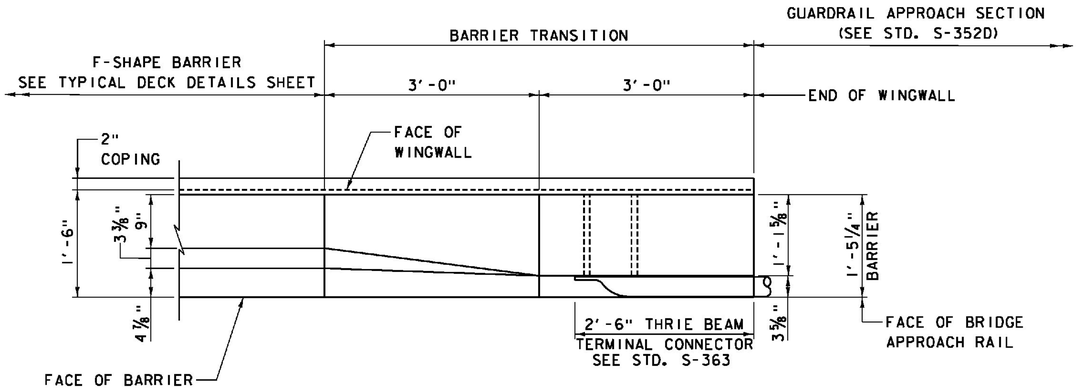

PLAN
F-SHAPE BARRIER TRANSITION AT WINGWALL
SCALE 1" = 1'-0"

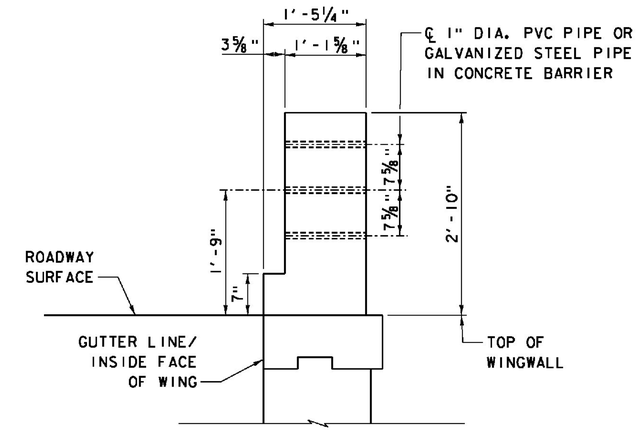

SECTION A-A
SCALE 1" = 1'-0"

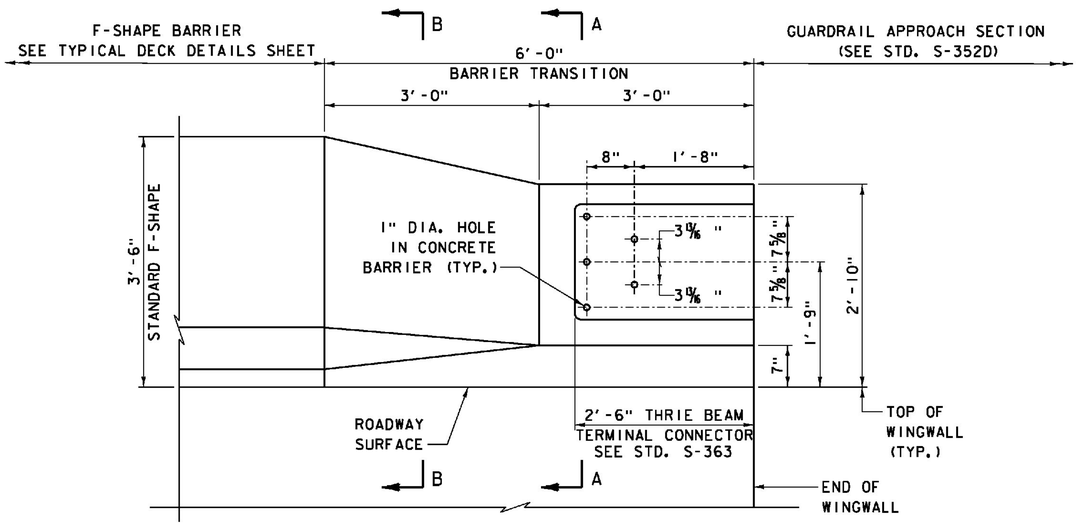

ELEVATION
F-SHAPE BARRIER TRANSITION AT WINGWALL
SCALE 1" = 1'-0"

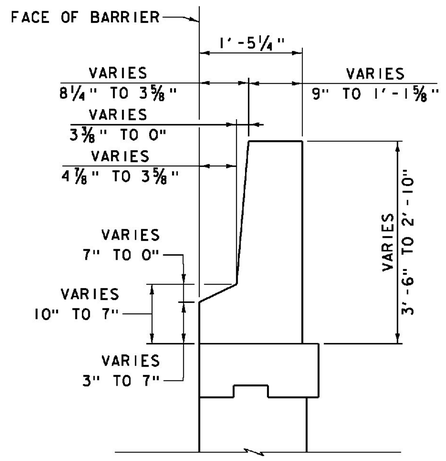

SECTION B-B
SCALE 1" = 1'-0"

NOTE:

1. CONCRETE FOR F-SHAPE BARRIER TRANSITION SHALL BE HPC, LOW SHRINKAGE.
2. REINFORCING STEEL IN F-SHAPE BARRIER SHALL BE SOLID STAINLESS STEEL CONFORMING TO ASTM A995M, GRADE 420 (GRADE 60).
3. SEE F-SHAPE BARRIER TRANSITION REINFORCEMENT DETAILS SHEET FOR ADDITIONAL INFORMATION.
4. FOR GUARDRAIL DETAILS, SEE WP 7A ROADWAY IMPROVEMENTS DESIGN.

PROJECT NAME: WINDSOR
PROJECT NUMBER: IM 091-1(64)

FILE NAME: z10a188FBD1.dgn
PROJECT LEADER: J. WILSON
DESIGNED BY: S. BOYINGTON
F-SHAPE BARRIER TRANSITION DETAILS 1

PLOT DATE: 7/30/2015
DRAWN BY: S. GUNN
CHECKED BY: S. HALLORAN
SHEET 84 OF 156

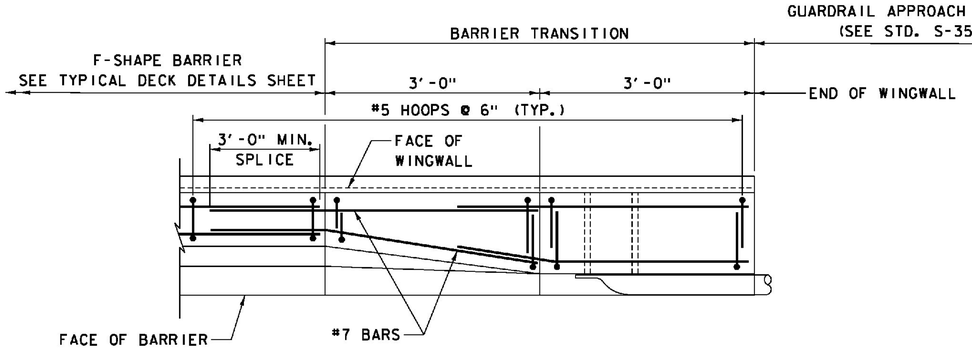

REINFORCING PLAN
F-SHAPE BARRIER TRANSITION AT WINGWALL
SCALE 1" = 1'-0"

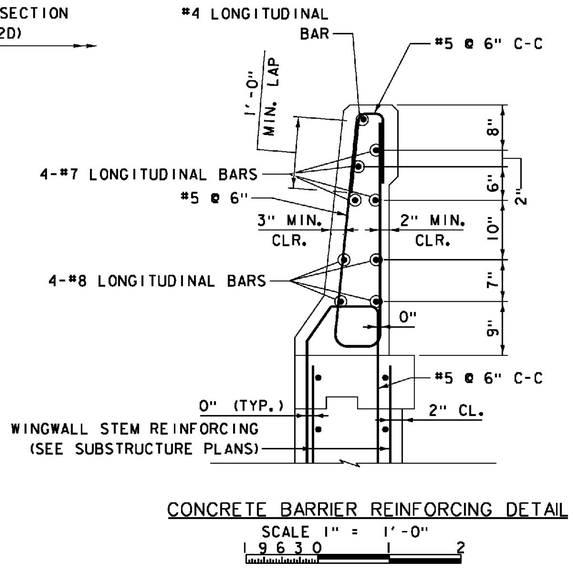

CONCRETE BARRIER REINFORCING DETAIL
SCALE 1" = 1'-0"

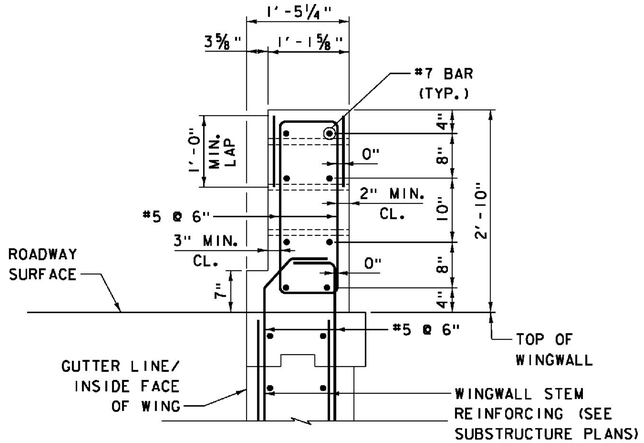

SECTION A-A
SCALE 1" = 1'-0"

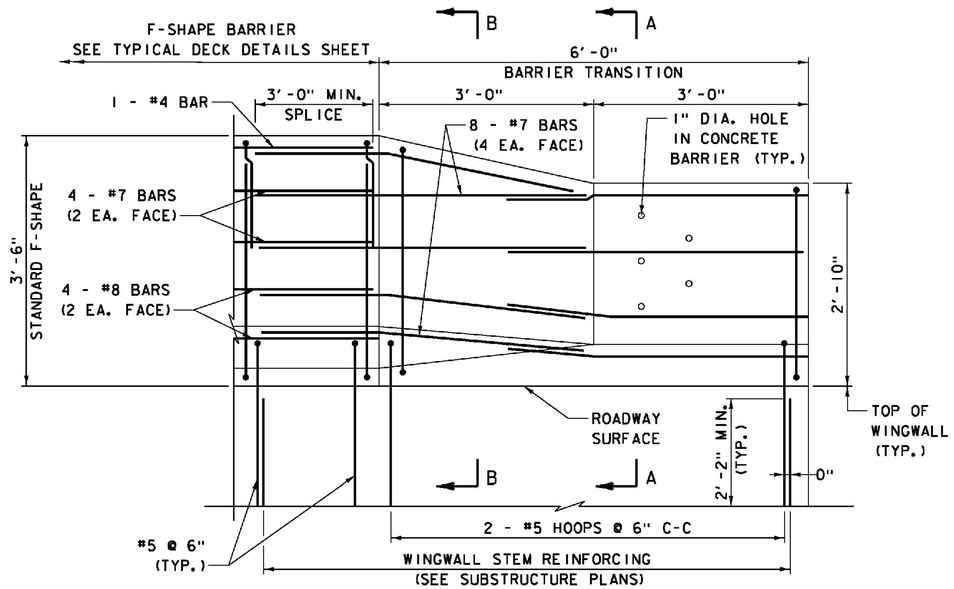

REINFORCING ELEVATION
F-SHAPE BARRIER TRANSITION AT WINGWALL
SCALE 1" = 1'-0"

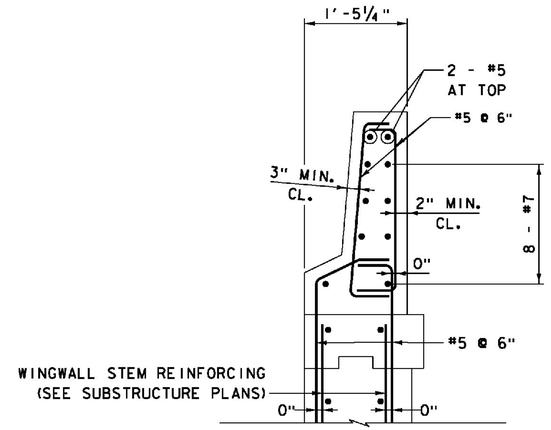

SECTION B-B
SCALE 1" = 1'-0"

NOTE:

1. SEE F-SHAPE BARRIER TRANSITION DETAILS 1 SHEET FOR TRANSITION GEOMETRY, MASONRY DETAILS AND NOTES.

PROJECT NAME: WINDSOR	
PROJECT NUMBER: IM 091-1(64)	
FILE NAME: z10a188FBD2.dgn	PLOT DATE: 7/30/2015
PROJECT LEADER: J. WILSON	DRAWN BY: S. GUNN
DESIGNED BY: S. BOYINGTON	CHECKED BY: S. HALLORAN
F-SHAPE BARRIER TRANSITION DETAILS 2	SHEET 85 OF 156

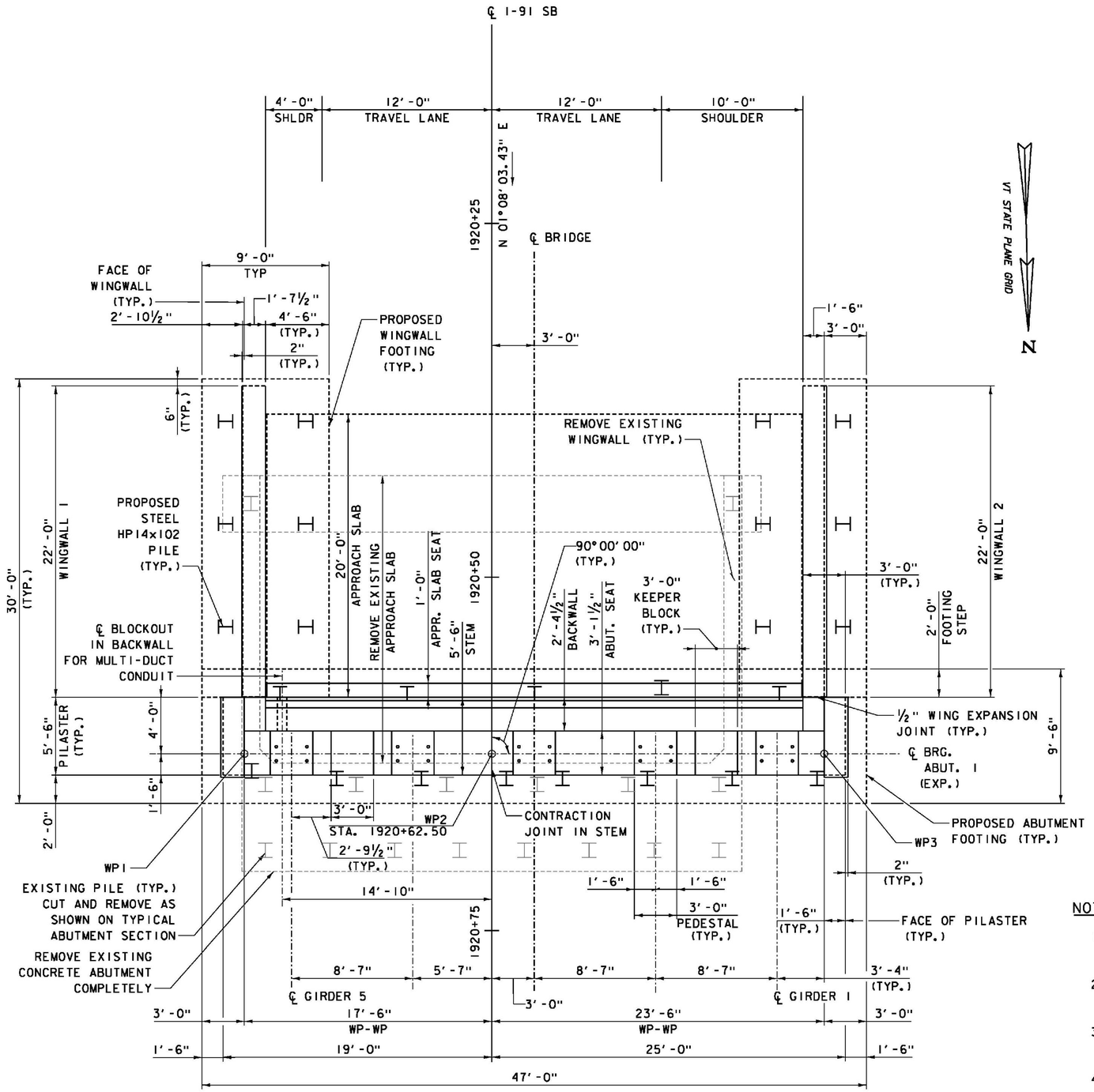

ABUTMENT 1 PLAN

SCALE ¼" = 1'-0"

WORKING POINT CONTROL			
LOCATION	STATION	NORTHING	EASTING
WP1	1920+62.50, 17.50' RT.	347206.9943	1665101.6719
WP2	1920+62.50, CL	347207.3408	1665084.1754
WP3	1920+62.50, 23.50' LT.	347207.8060	1665060.6800

SUBSTRUCTURE NOTES:

1. CONCRETE IN THE ABUTMENT STEMS AND BACKWALLS AND WINGWALL STEMS SHALL BE HIGH PERFORMANCE CONCRETE, CLASS A, IN CONFORMANCE WITH THE APPROVED MIX DESIGN SUBMITTAL.
2. CONCRETE IN ALL FOOTINGS (INCLUDING UNREINFORCED CONCRETE ON LEVELED BEDROCK), COLUMNS AND PIER CAPS SHALL BE HIGH PERFORMANCE CONCRETE, CLASS B, IN CONFORMANCE WITH THE APPROVED MIX DESIGN SUBMITTAL.
3. CONCRETE IN THE F-SHAPE BARRIER AND BARRIER TRANSITION ATOP WINGWALLS SHALL BE HIGH PERFORMANCE CONCRETE, LOW SHRINKAGE, IN CONFORMANCE WITH THE APPROVED MIX DESIGN SUBMITTAL.
4. REINFORCING STEEL IN THE CAST-IN-PLACE F-SHAPE BARRIER AND BARRIER TRANSITION SHALL BE STAINLESS STEEL AND CONFORM TO ASTM A995M, GRADE 420 (GRADE 60). MINIMUM CLEAR COVER AT THE ROADWAY FACE OF BARRIERS AND BARRIER TRANSITION IS 3 INCHES UNLESS OTHERWISE NOTED. MINIMUM CLEAR COVER AT THE EXTERIOR FACE OF BARRIERS AND BARRIER TRANSITION IS 2 INCHES UNLESS OTHERWISE NOTED.
5. REINFORCING STEEL IN THE ABUTMENT AND PIER FOOTINGS SHALL BE UNCOATED AND CONFORM TO ASTM A615, GRADE 60. MINIMUM CLEAR COVER IN THE FOOTINGS SHALL BE 3 INCHES UNLESS OTHERWISE NOTED. REINFORCING STEEL PLACED IN ABUTMENT, WINGWALL AND PIER FOOTINGS THAT EXTENDS ABOVE TOP OF FOOTING LEVEL SHALL BE EPOXY COATED.
6. REINFORCING STEEL IN THE PIER CAPS AND PIER COLUMNS SHALL CONFORM TO ASTM A615, GRADE 60 AND SHALL BE EPOXY COATED. MINIMUM CLEAR COVER IN THE PIER CAPS AND COLUMNS SHALL BE 3 INCHES UNLESS OTHERWISE NOTED.
7. REINFORCING STEEL IN THE ABUTMENT STEMS AND BACKWALLS AND WINGWALL STEMS SHALL CONFORM TO ASTM A615, GRADE 60 AND SHALL BE EPOXY COATED. MINIMUM CLEAR COVER IN THE ABUTMENT STEMS AND BACKWALLS AND WINGWALL STEMS SHALL BE 2 INCHES UNLESS OTHERWISE NOTED.
8. REINFORCING STEEL EXTENDING FROM WINGWALLS INTO F-SHAPE BARRIER AND BARRIER TRANSITION SHALL BE STAINLESS STEEL AND CONFORM TO ASTM A995M, GRADE 420 (GRADE 60).
9. REINFORCING STEEL EXTENDING FROM FIXED PIER CAPS INTO SUPERSTRUCTURE END DIAPHRAGMS SHALL BE STAINLESS STEEL AND CONFORM TO ASTM A995M, GRADE 420 (GRADE 60).
10. FOR PILE FOUNDATION NOTES, SEE ABUTMENT 1 FOOTING PLAN SHEET.
11. FOR SPREAD FOOTING ON BEDROCK FOUNDATION NOTES, SEE ABUTMENT 2 ELEVATION SHEET.
12. ALL EXPOSED CONCRETE SURFACES OF ABUTMENTS, WINGWALLS AND PIERS SHALL BE COATED WITH WATER REPELLENT, SILANE, IN ACCORDANCE WITH SECTION 514 OF THE PROJECT SPECIAL PROVISIONS. THE PRODUCT USED SHALL BE AS LISTED ON THE VTRANS APPROVED PRODUCTS LIST AND APPLIED PER MANUFACTURER'S RECOMMENDATIONS.

NOTES:

1. FOR ABUTMENT & WINGWALL PILE LAYOUT, SEE ABUTMENT 1 FOOTING PLAN.
2. FOR ADDITIONAL PILASTER & PEDESTAL DETAILS, SEE ABUTMENT DETAILS - SHEET 1.
3. FOR ABUTMENT 1 FOOTING REINFORCING DETAILS, SEE ABUTMENT 1 REINFORCEMENT - SHEET 1.
4. FOR ABUTMENT 1 STEM, SEAT AND BACKWALL REINFORCING DETAILS, SEE ABUTMENT 1 REINFORCEMENT - SHEET 2.
5. FOR KEEPER BLOCK DETAILS. SEE ABUTMENT DETAILS - SHEET 2.

PROJECT NAME: WINDSOR
PROJECT NUMBER: IM 091-1(64)

FILE NAME: z10a188Abut1P.dgn
PROJECT LEADER: J. WILSON
DESIGNED BY: S. BOYINGTON
ABUTMENT 1 PLAN

PLOT DATE: 7/30/2015
DRAWN BY: S. GUNN
CHECKED BY: S. HALLORAN
SHEET 86 OF156

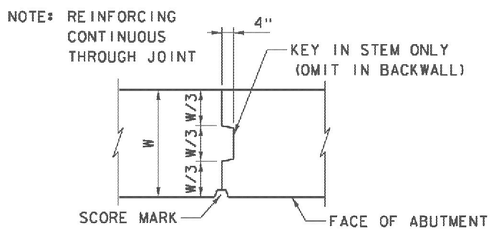

CONTRACTION JOINT DETAIL
NOT TO SCALE

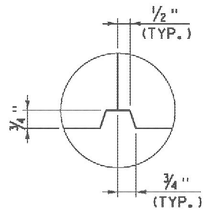

SCORE MARK DETAIL
NOT TO SCALE

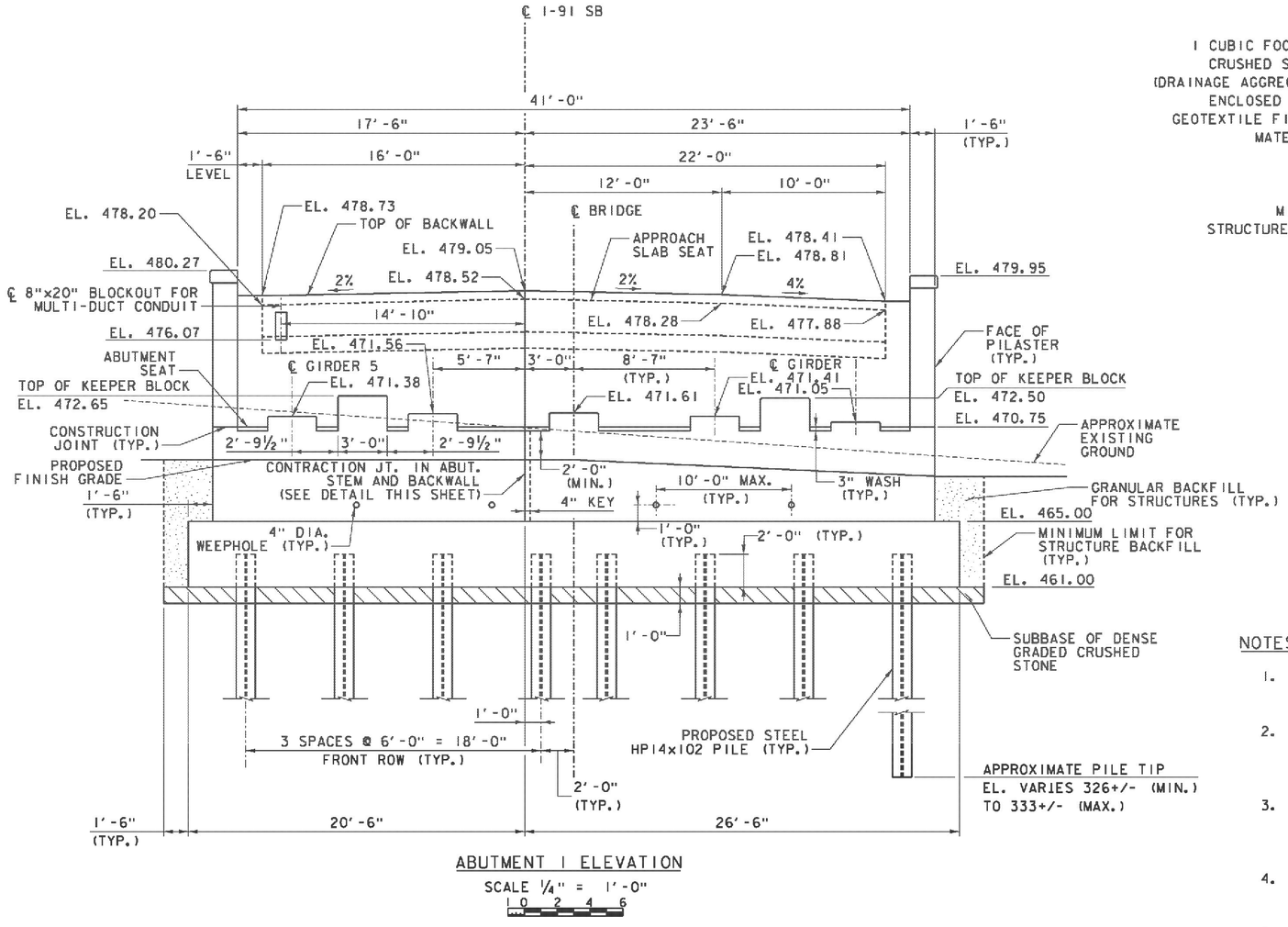

ABUTMENT 1 ELEVATION
SCALE 1/4" = 1'-0"
1 0 2 4 6

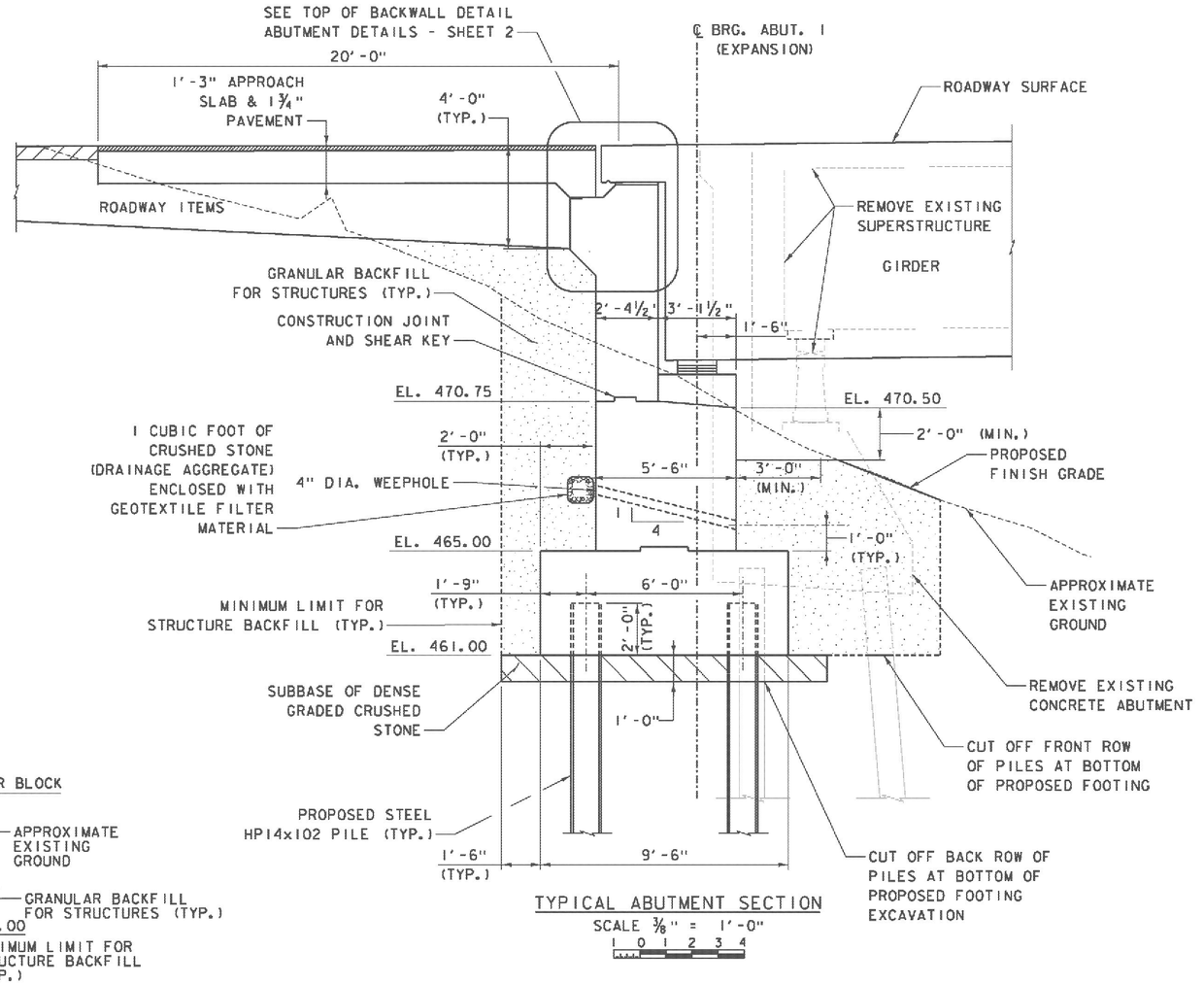

TYPICAL ABUTMENT SECTION
SCALE 3/8" = 1'-0"
1 0 1 2 3 4

NOTES:

1. FOR ABUTMENT PILE LAYOUT, SEE ABUTMENT 1 FOOTING PLAN.
2. FOR ABUTMENT 1 FOOTING REINFORCING DETAILS, SEE ABUT. 1 REINFORCEMENT - SHEETS 1 AND 2.
3. FOR ABUTMENT 1 STEM, SEAT AND BACKWALL REINFORCING DETAILS, SEE ABUT. 1 REINFORCEMENT - SHEET 2.
4. FOR KEEPER BLOCK AND CONSTRUCTION JOINT DETAILS, SEE ABUTMENT DETAILS - SHEET 2.
5. EMBANKMENT AREAS DISTURBED BY CONSTRUCTION SHALL BE RESTORED UPON COMPLETION OF THE WORK BY INSTALLING TOPSOIL, SEED AND HAY MULCH.

ITEMS USED ON THIS SHEET	
ITEM NO.	DESCRIPTION
204.25	STRUCTURE EXCAVATION
204.30	GRANULAR BACKFILL FOR STRUCTURES
301.35	SUBBASE OF DENSE GRADED CRUSHED STONE
490.30	SUPERPAVE BITUMINOUS CONCRETE PAVEMENT
501.33	CONCRETE, HIGH PERFORMANCE CLASS A
501.34	CONCRETE, HIGH PERFORMANCE CLASS B
505.19	STEEL PILING, HP14x102
514.10	WATER REPELLENT, SILANE
529.15	REMOVAL OF STRUCTURE
649.31	GEOTEXTILE UNDER STONE FILL
651.15	SEED
651.25	HAY MULCH
651.35	TOPSOIL

PROJECT NAME: WINDSOR
PROJECT NUMBER: IM 091-1(64)

FILE NAME: z10a188Abut1ES.dgn
PROJECT LEADER: J. WILSON
DESIGNED BY: S. BOYINGTON
ABUTMENT 1 ELEVATION & SECTION
PLOT DATE: 7/30/2015
DRAWN BY: S. GUNN
CHECKED BY: S. HALLORAN
SHEET 87 OF 156

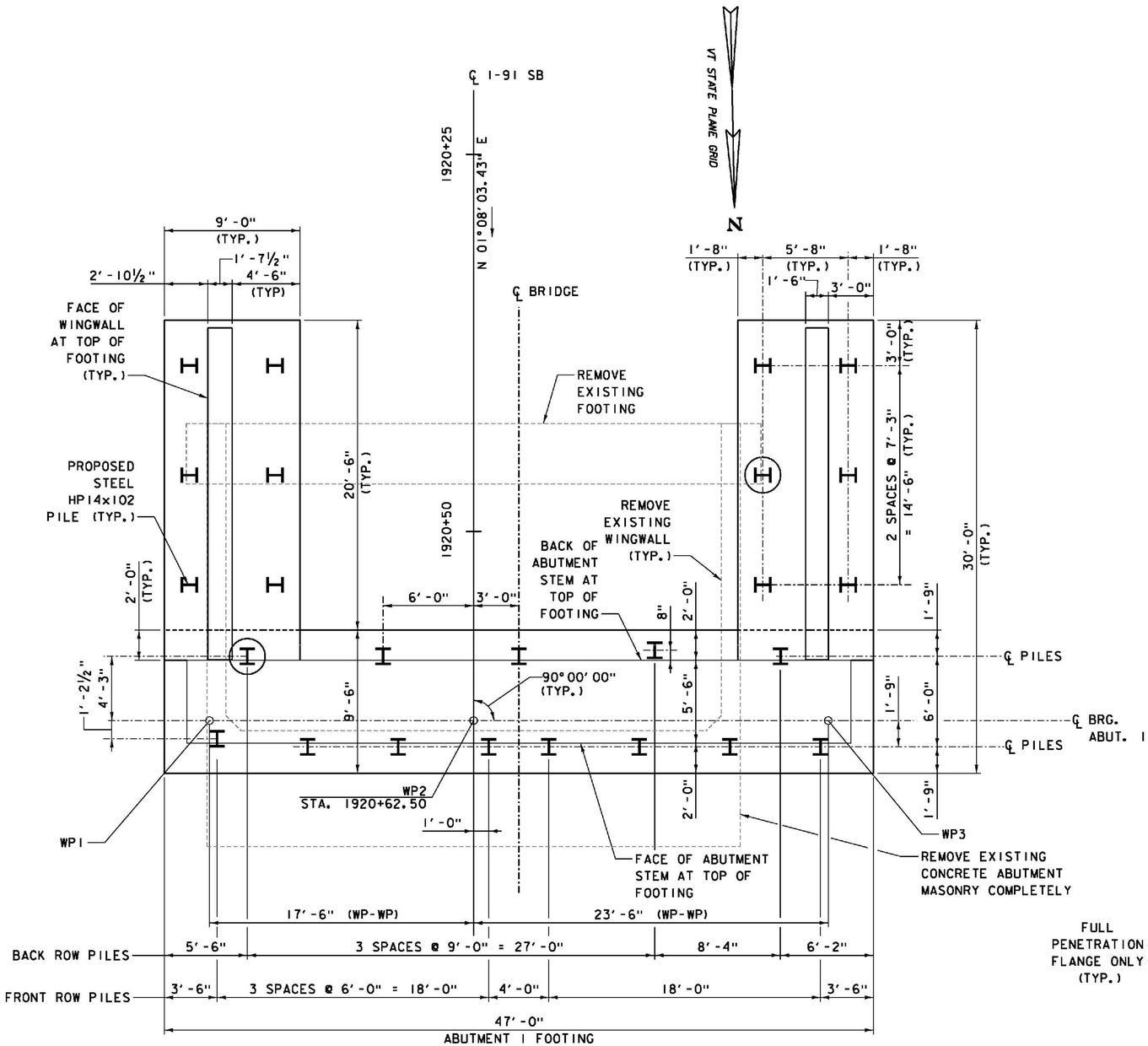

ABUTMENT 1 FOOTING PLAN

SCALE 1/4" = 1'-0"

1 0 2 4 6

LEGEND

(I) INDICATES PILE DESIGNATED FOR PDA TESTING

ITEMS USED ON THIS SHEET	
ITEM NO.	DESCRIPTION
501.34	CONCRETE, HIGH PERFORMANCE CLASS B
504.10	FURNISHING EQUIPMENT FOR DRIVING PILES
505.19	STEEL PILING, HP 14x102
505.45	DYNAMIC PILE LOADING TEST

PILE FOUNDATION NOTES:

1. THE PILE INSTALLATION AND PILE TESTING SHALL BE PERFORMED IN ACCORDANCE WITH THE APPROVED PILE DRIVING CRITERIA SUBMITTAL, THE REQUIREMENTS OF VTRANS STANDARD SPECIFICATIONS SECTIONS 504 AND 505, AND AS AMENDED BY THESE FOUNDATION NOTES.

2. AT ABUTMENT 1 AND ASSOCIATED WINGWALL FOUNDATION AREAS, EXCAVATION SHALL BE PERFORMED TO THE PROPOSED BOTTOM OF EXCAVATION AS SHOWN ON THE PLANS. THE EXPOSED SOIL SUBGRADE SHALL BE PROOF ROLLED WITH AT LEAST 6 PASSES OF A DOUBLE DRUM WALK BEHIND VIBRATORY ROLLER OR LARGE VIBRATORY PLATE COMPACTOR. ANY POCKETS OF EXCESSIVELY SOFT, WET OR DISTURBED SOIL OR UNSUITABLE SOIL SHALL BE REMOVED AND REPLACED WITH PROPERLY COMPACTED ¾" COARSE AGGREGATE FOR CONCRETE, WHICH HAS GRADATION LIMITS CONSISTENT WITH TABLE 704.02B OF THE VTRANS STANDARD SPECIFICATIONS.

3. AT THE PIER 1 AND 2 FOUNDATION AREAS, SUBGRADE ELEVATIONS ARE BELOW THE EXISTING GROUNDWATER LEVEL. THEREFORE, STEEL SHEET PILE COFFERDAMS AND DEWATERING SYSTEMS SHALL BE INSTALLED AND IN OPERATION BEFORE SUBGRADE EXCAVATION. TO MAINTAIN A STABLE SUBGRADE, DEWATER THE EXCAVATION TO AT LEAST TWO FEET BELOW THE PROPOSED BOTTOM OF EXCAVATION. SUBGRADE PROOF-COMPACTION USING NON-VIBRATORY METHODS MAY BE CONSIDERED IN THESE AREAS CONSISTENT WITH THE GEOTECHNICAL REPORT, IF REQUIRED TO LIMIT SUBGRADE DISTURBANCE.

4. SNOW OR ICE, IF EXISTING, SHALL BE COMPLETELY REMOVED PRIOR TO FOUNDATION CONCRETE PLACEMENT. FILL SHALL NOT BE PLACED OVER FROZEN SOIL. SOIL SUBGRADES SHALL BE PROTECTED AGAINST FROST BOTH DURING AND AFTER CONSTRUCTION.

5. PROPER DRAINAGE OF CONSTRUCTION AREAS SHALL BE PROVIDED TO PROTECT THE SUBGRADES FROM THE DETRIMENTAL EFFECTS OF WEATHER CONDITIONS. EXCAVATIONS SHALL BE MADE WITH AS FEW PASSES OF THE BACKHOE BUCKET AS POSSIBLE TO REDUCE DISTURBANCE OF THE SUBGRADE. THE EXPOSED BASE SHALL BE KEPT FREE OF STANDING WATER AT ALL TIMES. THE SITE SHALL BE GRADED TO CARRY ANY SURFACE RUNOFF AWAY FROM THE WORK AREAS. CONSTRUCTION TRAFFIC SHALL BE CONTROLLED TO PREVENT EXCESSIVE STRESSES AND DISTURBANCE TO THE SUBGRADE.

6. IF FOUNDATIONS ARE NOT CONSTRUCTED IMMEDIATELY AFTER GRADING, THE SUBGRADE SHALL BE SHAPED SO AS TO PREVENT PONDING. IF THE SUBGRADE IS DISTURBED, IT SHALL BE PROOF-ROLLED WITH HEAVY PLATE COMPACTOR. SOFT SPOTS OBSERVED DURING PROOF-COMPACTION OR INITIAL CONSTRUCTION SHALL BE REMOVED AND REPLACED WITH COMPACTED ¾" COARSE AGGREGATE FOR CONCRETE.

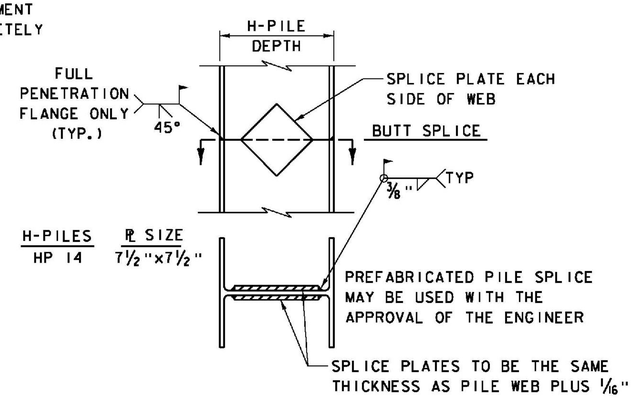

DETAIL OF PILE SPLICE

NOT TO SCALE

NOTES:

1. FOR ABUTMENT 1 FOOTING REINFORCING DETAILS, SEE ABUT. 1 REINFORCEMENT - SHEET 1.
2. FOR WINGWALL 1 AND 2 REINFORCING DETAILS, SEE ABUT. 1 WINGWALL REINFORCEMENT SHEET.
3. FOR ABUTMENT 1 STEM, SEAT AND BACKWALL REINFORCING DETAILS, SEE ABUT. 1 REINFORCEMENT - SHEET 2.
4. ALL FIELD WELDING OF PILES SHALL BE PERFORMED USING STICK-TYPE ELECTRODES AND SHALL BE IN ACCORDANCE WITH ANSI/AASHTO/AWS D1.5.

PROJECT NAME: WINDSOR
PROJECT NUMBER: IM 091-1(64)

FILE NAME: z10a188Abut1FP.dgn
PROJECT LEADER: J. WILSON
DESIGNED BY: S. BOYINGTON
ABUTMENT 1 FOOTING PLAN

PLOT DATE: 7/30/2015
DRAWN BY: S. GUNN
CHECKED BY: S. HALLORAN
SHEET 88 OF 156

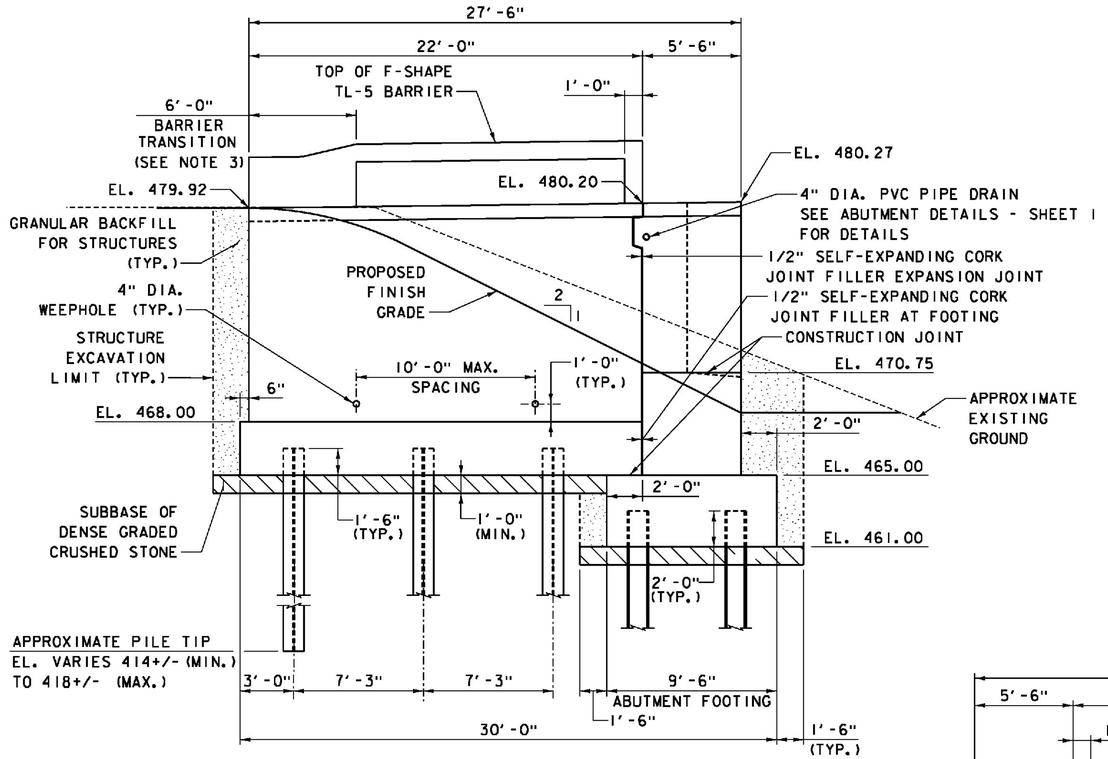

WINGWALL 1 ELEVATION
SCALE 1/4" = 1'-0"
1 0 2 4 6

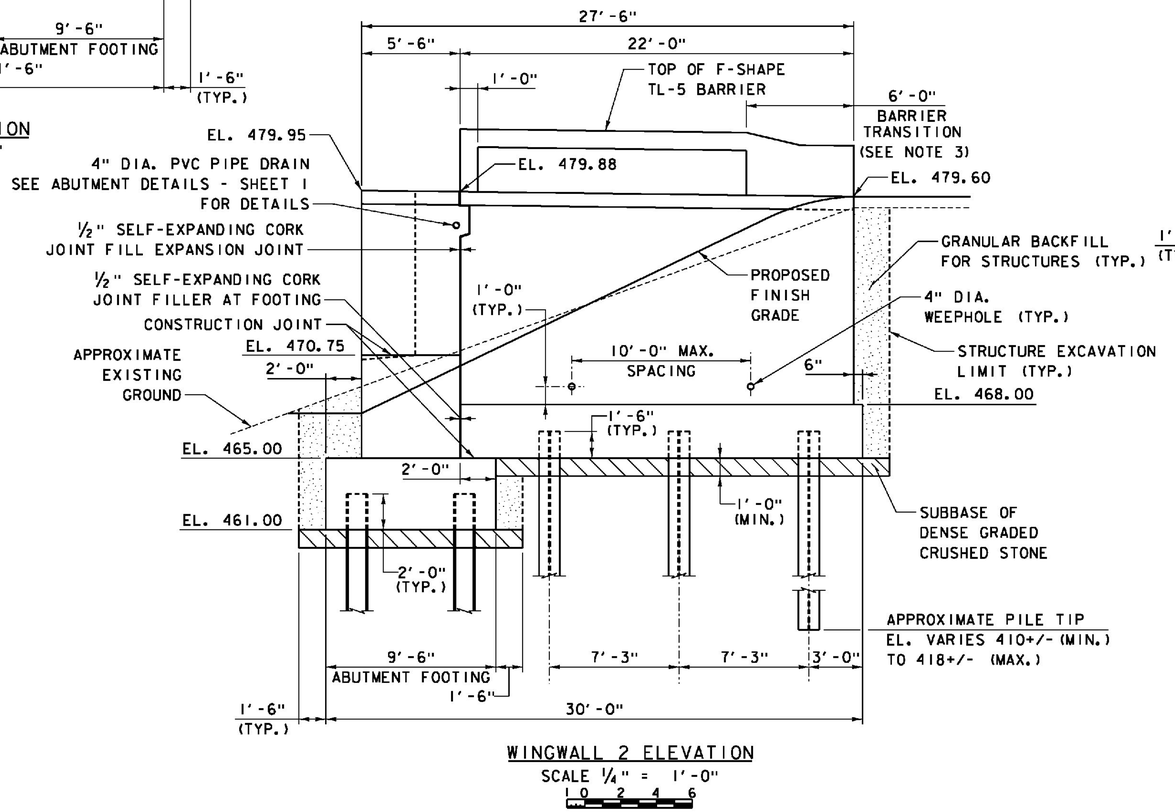

WINGWALL 2 ELEVATION
SCALE 1/4" = 1'-0"
1 0 2 4 6

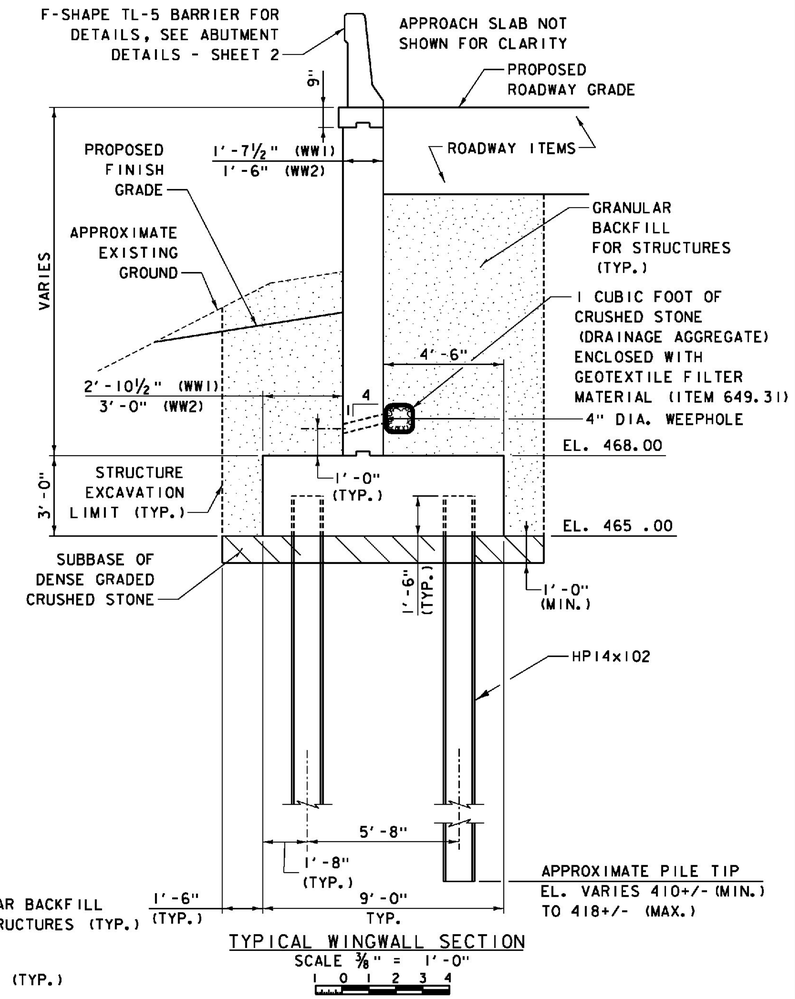

TYPICAL WINGWALL SECTION
SCALE 3/8" = 1'-0"
1 0 1 2 3 4

NOTES:

1. FOR ABUTMENT AND WINGWALL PILE LAYOUT, SEE ABUTMENT 1 FOOTING PLAN.
2. FOR WINGWALL 1 AND 2 REINFORCING DETAILS, SEE ABUT. 1 WINGWALL REINFORCEMENT.
3. FOR DETAILS OF BARRIER TRANSITION AT WING ENDS, SEE F-SHAPE BARRIER TRANSITION DETAIL SHEET INCLUDED IN SUPERSTRUCTURE DRAWINGS.
4. FOR DETAIL OF EXPANSION JOINT BETWEEN PILASTER AND WINGWALL, SEE ABUTMENT DETAILS - SHEET 1.
5. EMBANKMENT AREAS DISTURBED BY CONSTRUCTION SHALL BE RESTORED UPON COMPLETION OF THE WORK BY INSTALLING TOPSOIL, SEED AND HAY MULCH.

ITEMS USED ON THIS SHEET

ITEM NO.	DESCRIPTION
204.25	STRUCTURE EXCAVATION
204.30	GRANULAR BACKFILL FOR STRUCTURES
301.35	SUBBASE OF DENSE GRADED CRUSHED STONE
501.33	CONCRETE, HIGH PERFORMANCE CLASS A
501.34	CONCRETE, HIGH PERFORMANCE CLASS B
505.19	STEEL PILING, HP×102
514.10	WATER REPELLENT, SILANE
649.31	GEOTEXTILE UNDER STONE FILL
651.15	SEED
651.25	HAY MULCH
651.35	TOPSOIL
900.640	BRIDGE RAILING, F-SHAPE CONCRETE

PROJECT NAME: WINDSOR
PROJECT NUMBER: IM 091-1(64)

FILE NAME: z10o188Abut1WM.dgn
PROJECT LEADER: J. WILSON
DESIGNED BY: S. BOYINGTON
ABUTMENT 1 WINGWALLS

PLOT DATE: 7/30/2015
DRAWN BY: S. GUNN
CHECKED BY: S. HALLORAN
SHEET 89 OF 156

ITEMS USED ON THIS SHEET	
ITEM NO.	DESCRIPTION
501.34	CONCRETE, HIGH PERFORMANCE CLASS B
507.15	REINFORCING STEEL
507.17	EPOXY COATED REINFORCING STEEL

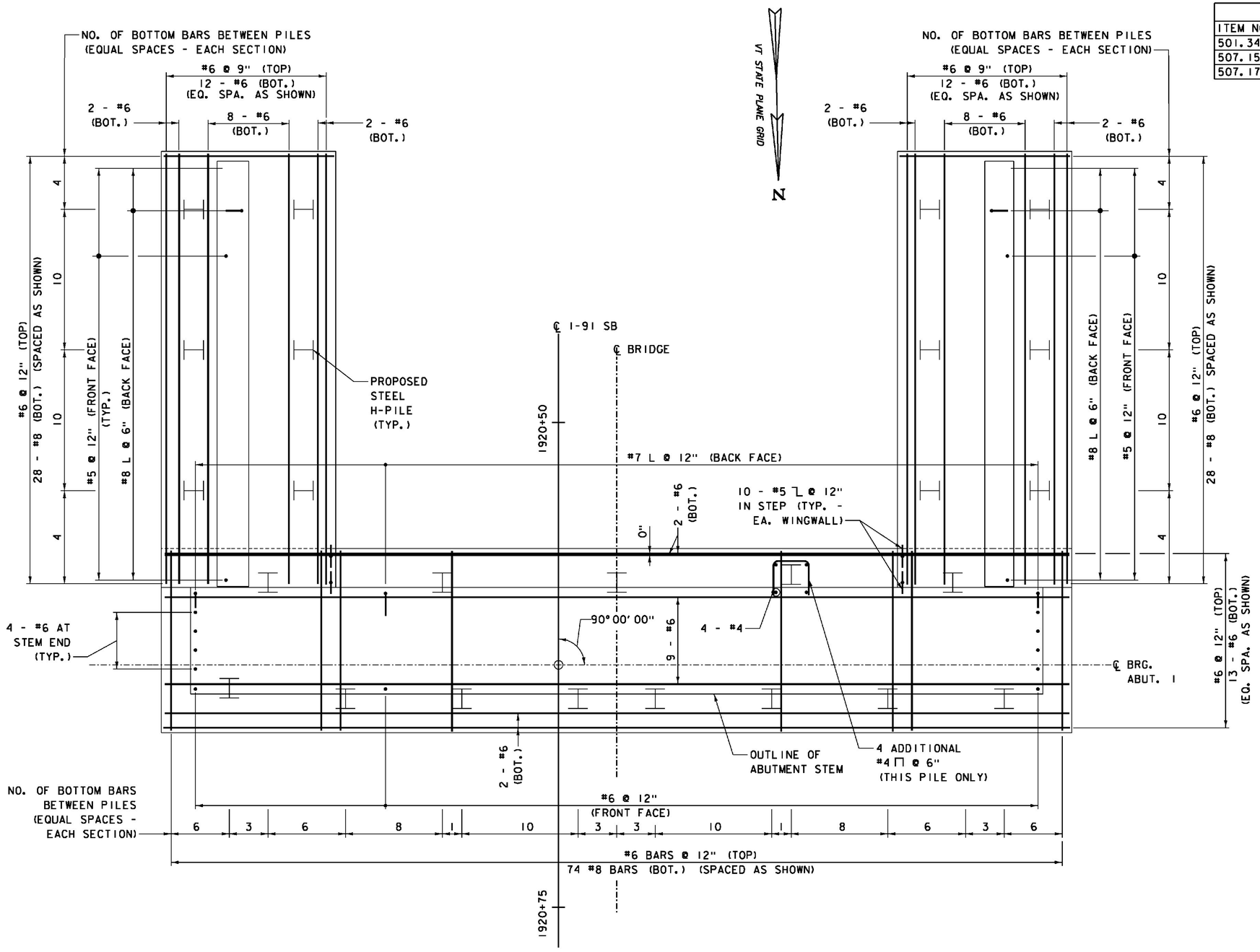

ABUTMENT 1 FOOTING REINFORCEMENT

SCALE 3/8" = 1'-0"

1 0 1 2 3 4

LEGEND
NF = NEAR FACE
FF = FAR FACE
EF = EACH FACE

NOTES:

1. FOR ABUTMENT AND WINGWALL PILE LAYOUT, SEE ABUTMENT 1 FOOTING PLAN.
2. FOR SUBSTRUCTURE NOTES, SEE ABUTMENT 1 PLAN SHEET.

PROJECT NAME: WINDSOR
PROJECT NUMBER: IM 091-1(64)

FILE NAME: z10a188Abut1RP.dgn
PROJECT LEADER: J. WILSON
DESIGNED BY: S. BOYINGTON
ABUT. 1 REINFORCEMENT - SHEET 1

PLOT DATE: 7/30/2015
DRAWN BY: S. GUNN
CHECKED BY: S. HALLORAN
SHEET 90 OF 156

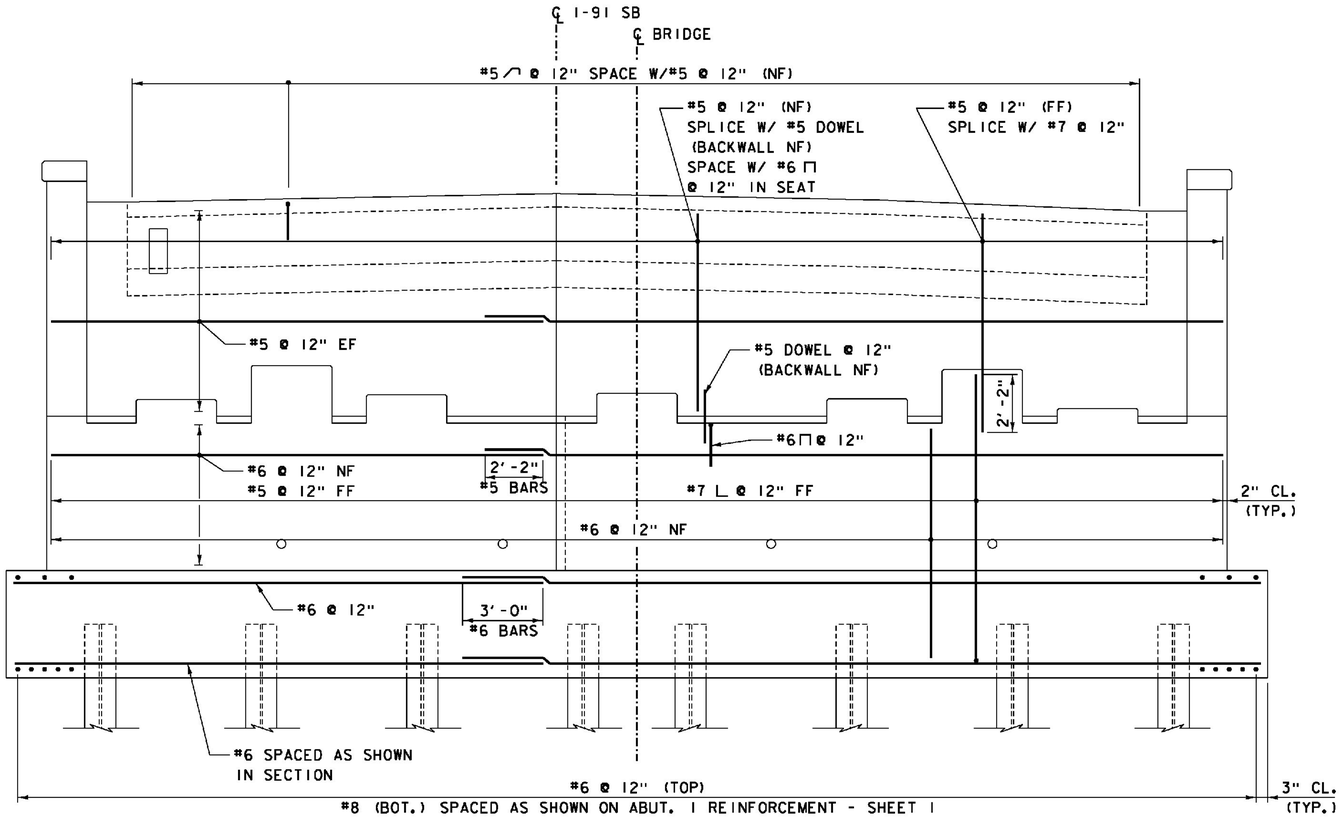

ABUTMENT 1 ELEVATION REINFORCEMENT

SCALE 3/8" = 1'-0"

ITEMS USED ON THIS SHEET	
ITEM NO.	DESCRIPTION
501.33	CONCRETE, HIGH PERFORMANCE CLASS A
501.34	CONCRETE, HIGH PERFORMANCE CLASS B
507.15	REINFORCING STEEL
507.17	EPOXY COATED REINFORCING STEEL

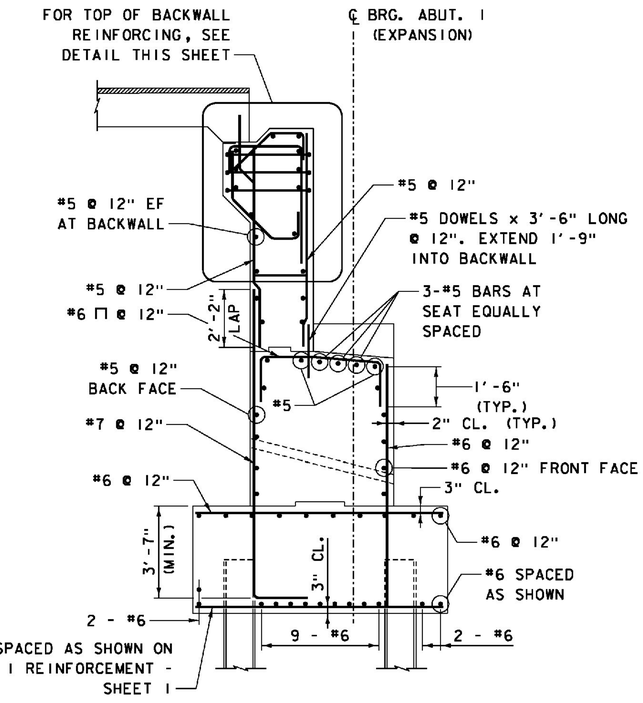

ABUTMENT 1 SECTION REINFORCEMENT

SCALE 3/8" = 1'-0"

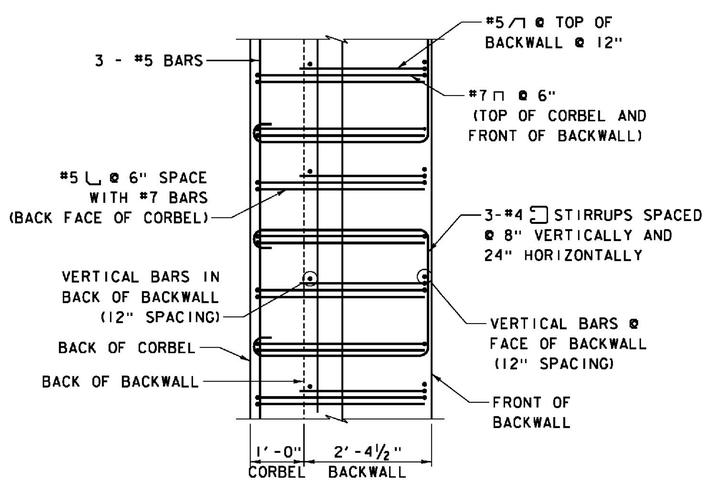

CORBEL REINFORCEMENT PLAN DETAIL

SCALE 3/4" = 1'-0"

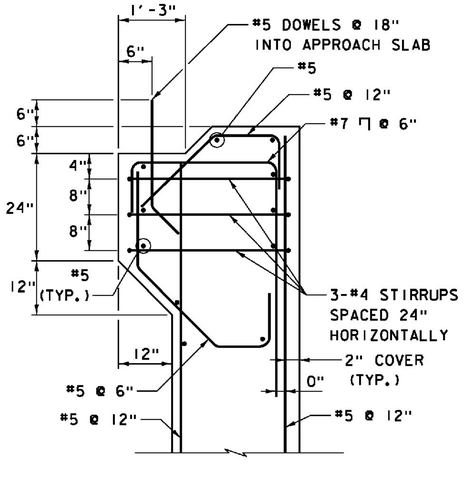

TOP OF BACKWALL REINFORCEMENT DETAIL

SCALE 3/4" = 1'-0"

NOTES:

1. FOR SUBSTRUCTURE NOTES SEE ABUTMENT 1 PLAN SHEET.
2. FOR REINFORCEMENT IN ABUTMENT PEDESTALS, SEE ABUTMENT DETAILS - SHEET 1.
3. FOR KEEPER BLOCK REINFORCING SEE ABUTMENT DETAILS - SHEET 2.

LEGEND
NF = NEAR FACE
FF = FAR FACE
EF = EACH FACE

PROJECT NAME: WINDSOR
PROJECT NUMBER: IM 091-1(64)

FILE NAME: z10a188Abut1RES.dgn
PROJECT LEADER: J. WILSON
DESIGNED BY: S. BOYINGTON
ABUT. 1 REINFORCEMENT - SHEET 2

PLOT DATE: 7/30/2015
DRAWN BY: S. GUNN
CHECKED BY: S. HALLORAN
SHEET 91 OF 156

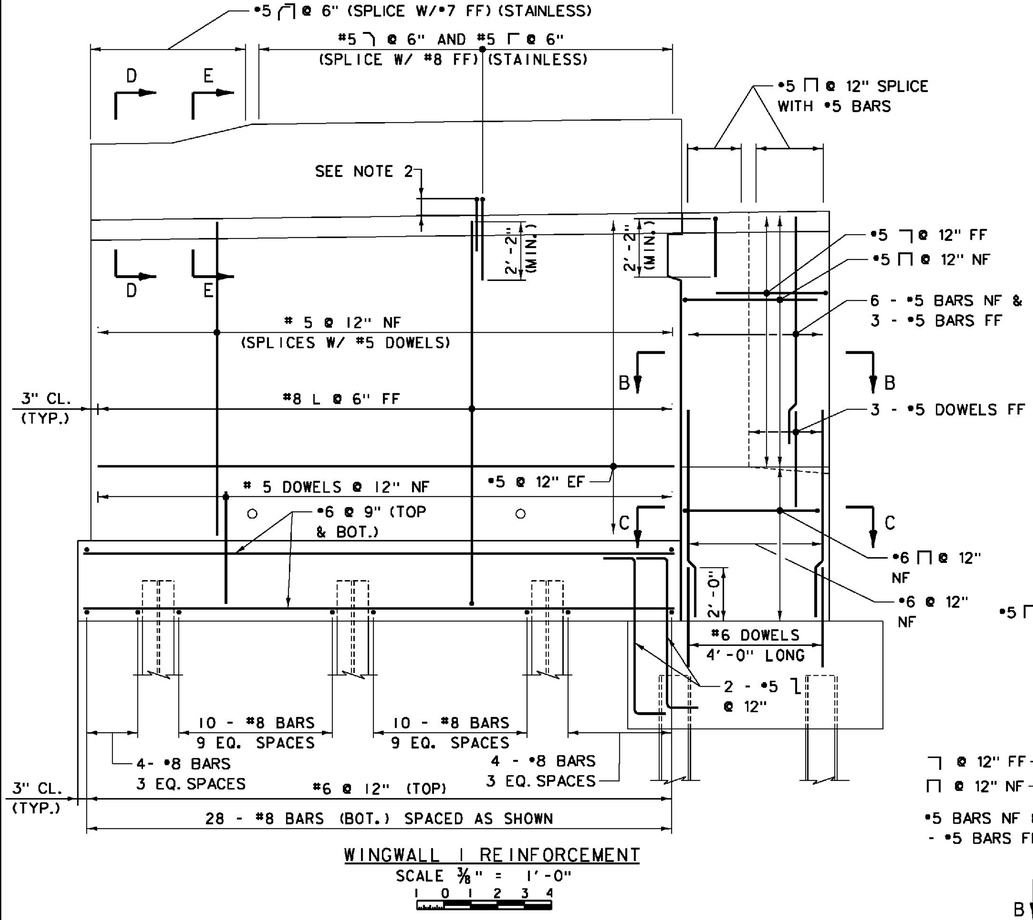

WINGWALL 1 REINFORCEMENT

SCALE 3/8" = 1'-0"

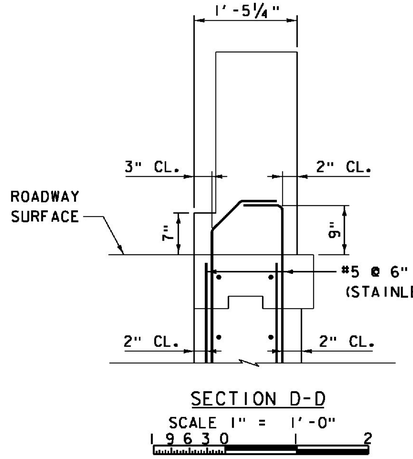

SECTION D-D

SCALE 1" = 1'-0"

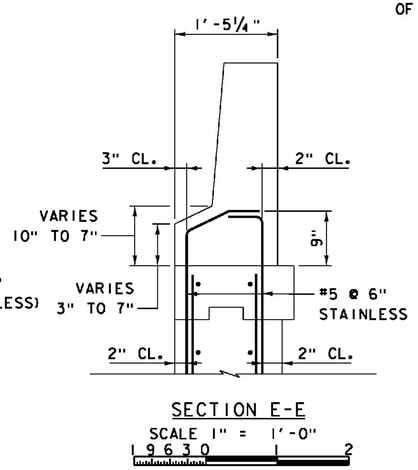

SECTION E-E

SCALE 1" = 1'-0"

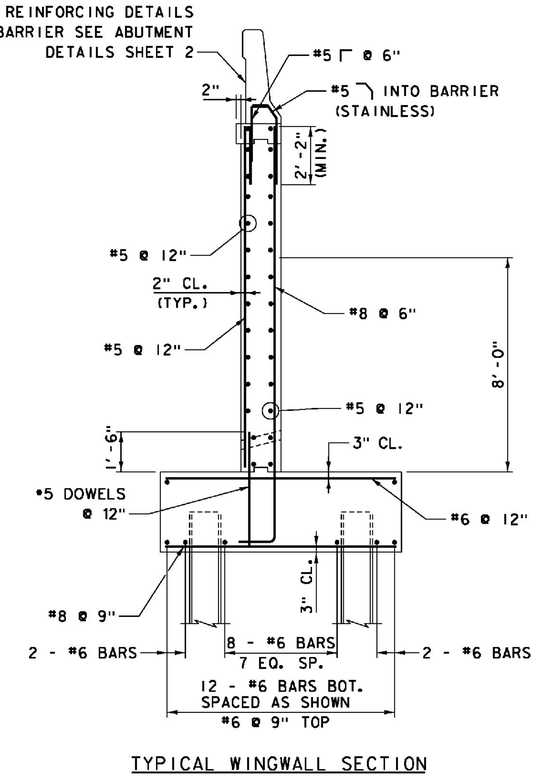

TYPICAL WINGWALL SECTION REINFORCEMENT

SCALE 3/8" = 1'-0"

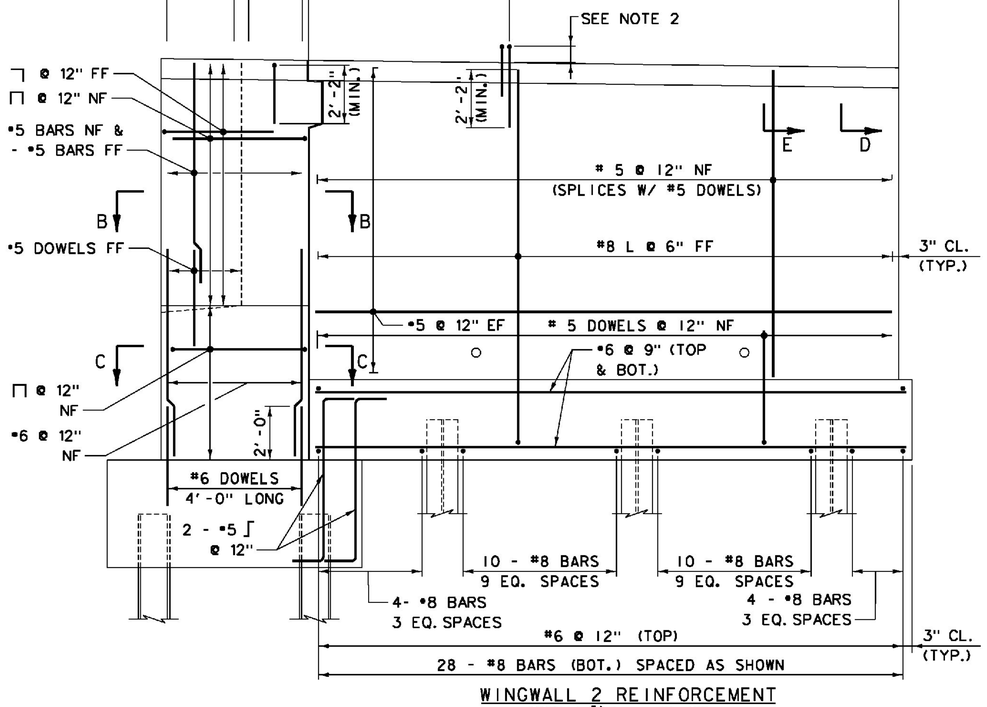

WINGWALL 2 REINFORCEMENT

SCALE 3/8" = 1'-0"

LEGEND
NF = NEAR FACE
FF = FAR FACE
EF = EACH FACE

ITEMS USED ON THIS SHEET	
ITEM NO.	DESCRIPTION
501.33	CONCRETE, HIGH PERFORMANCE CLASS A
501.34	CONCRETE, HIGH PERFORMANCE CLASS B
507.15	REINFORCING STEEL
507.17	EPOXY COATED REINFORCING STEEL
900.635	STAINLESS STEEL REINFORCING
900.640	BRIDGE RAILING, F-SHAPE CONCRETE

NOTES:

1. REINFORCEMENT ABOVE FOOTINGS TO BE EPOXY COATED; FOOTING REBAR IS UNCOATED; REINFORCEMENT IN AND INTO F-SHAPE BARRIER TO BE SOLID STAINLESS.
2. FOR F-SHAPE BARRIER AND BAR EXTENSION INTO BARRIER REINFORCING DETAILS, SEE ABUTMENT DETAILS - SHEET 2.
3. FOR SECTION B-B AND SECTION C-C PILASTER REINFORCING DETAILS, SEE ABUTMENT DETAILS - SHEET 3.
4. FOR ADDITIONAL DETAILS OF BARRIER TRANSITION AT END OF WINGWALLS, SEE SUPERSTRUCTURE PLANS.

PROJECT NAME: WINDSOR
PROJECT NUMBER: IM 091-1(64)

FILE NAME: z10o188Abut1RW.dgn
PROJECT LEADER: J. WILSON
DESIGNED BY: S. BOYINGTON
ABUT. 1 WINGWALL REINFORCEMENT

PLOT DATE: 7/30/2015
DRAWN BY: S. GUNN
CHECKED BY: S. HALLORAN
SHEET 92 OF 156

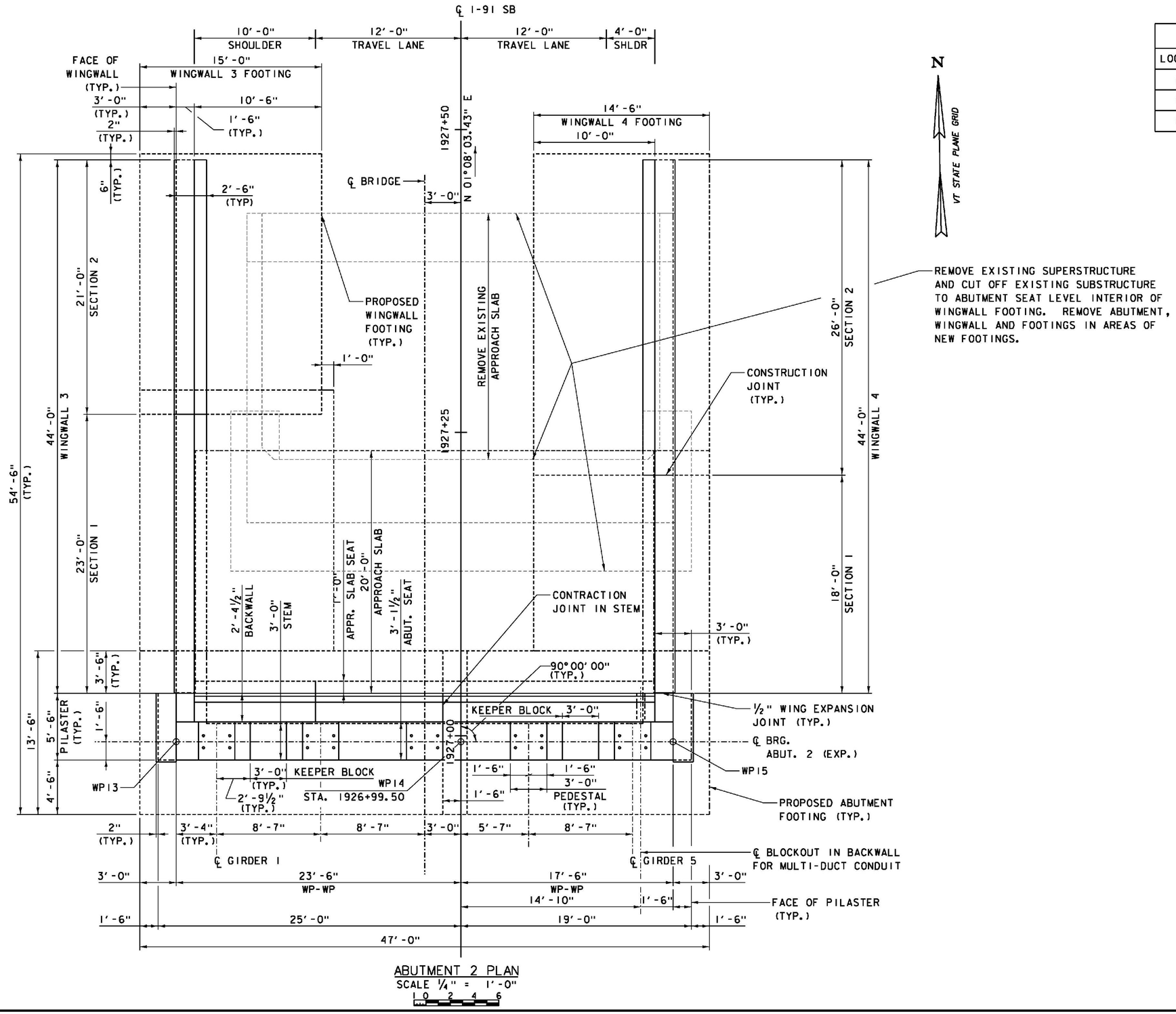

ABUTMENT 2 PLAN
SCALE 1/4" = 1'-0"
1 0 2 4 6

REMOVE EXISTING SUPERSTRUCTURE AND CUT OFF EXISTING SUBSTRUCTURE TO ABUTMENT SEAT LEVEL INTERIOR OF WINGWALL FOOTING. REMOVE ABUTMENT, WINGWALL AND FOOTINGS IN AREAS OF NEW FOOTINGS.

WORKING POINT CONTROL			
LOCATION	STATION	NORTHING	EASTING
WP13	1926+99.50, 23.50' LT.	347844.6811	1665073.2899
WP14	1926+99.50, CL	347844.2159	1665096.7852
WP15	1926+99.50, 17.50' RT.	347843.8695	1665114.2818

NOTES:

1. FOR SUBSTRUCTURE NOTES, SEE ABUTMENT 1 PLAN SHEET.
2. FOR ADDITIONAL PILASTER & PEDESTAL DETAILS, SEE ABUTMENT DETAILS - SHEET 1.
3. FOR ABUTMENT 2 WINGWALL FOOTING LAYOUT, SEE ABUTMENT 2 FOOTING PLAN SHEET.
4. FOR ABUTMENT 2 FOOTING REINFORCING DETAILS, SEE ABUTMENT 2 REINFORCEMENT SHEETS 1 & 2.
5. FOR ABUTMENT 2 STEM, SEAT AND BACKWALL REINFORCING DETAILS, SEE ABUTMENT 2 REINFORCEMENT - SHEET 2.
6. FOR KEEPER BLOCK DETAILS, SEE ABUTMENT DETAILS - SHEET 2.

PROJECT NAME: WINDSOR
PROJECT NUMBER: IM 091-1(64)

FILE NAME: z10a188Abut2P.dgn
PROJECT LEADER: J. WILSON
DESIGNED BY: S. BOYINGTON
ABUTMENT 2 PLAN
PLOT DATE: 7/30/2015
DRAWN BY: S. GUNN
CHECKED BY: S. HALLORAN
SHEET 93 OF 156

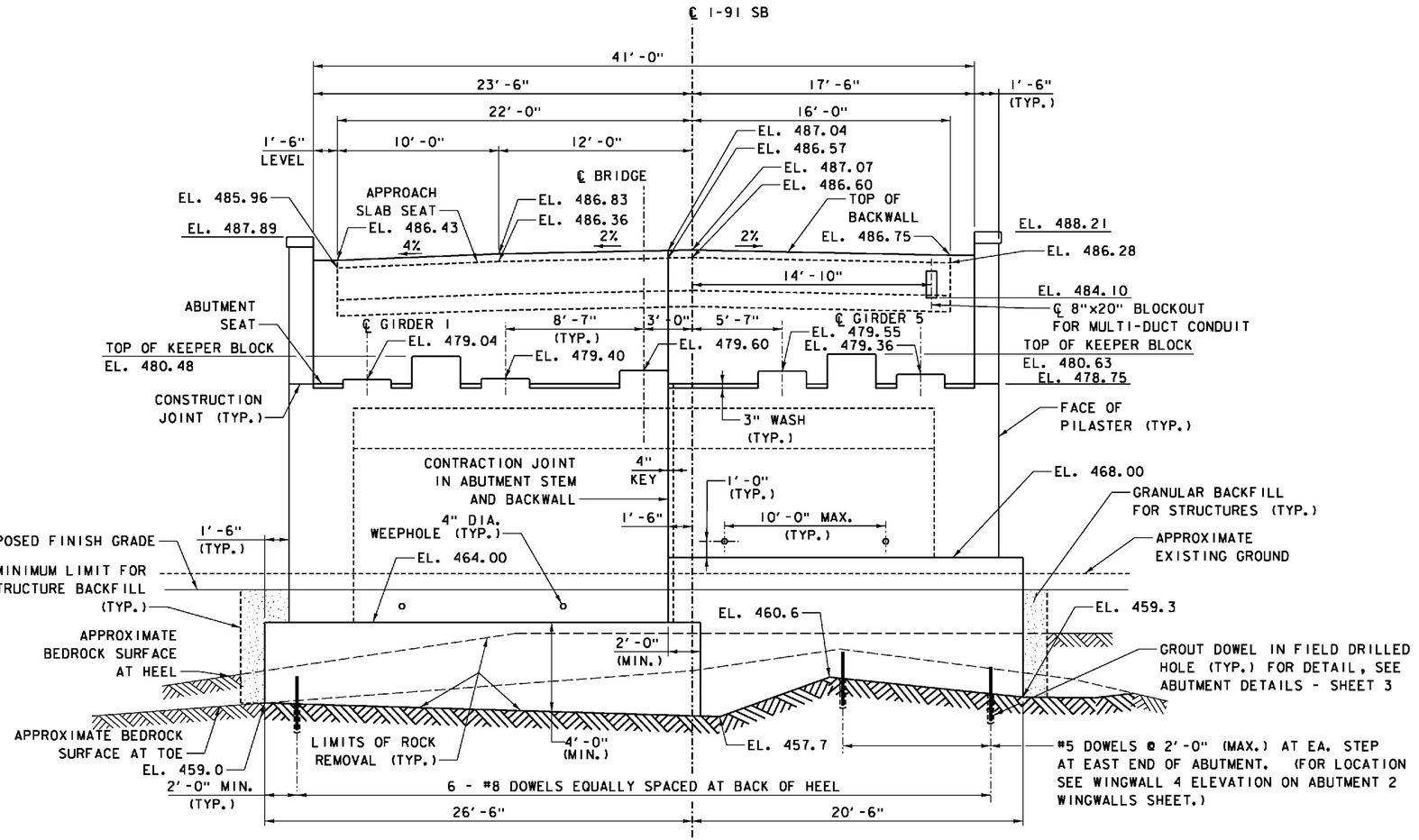

ABUTMENT 2 ELEVATION

SCALE 1/4" = 1'-0"

0 2 4 6

FOUNDATION NOTES - SPREAD FOOTING ON BEDROCK

1. EXCAVATION FOR THE CONSTRUCTION OF SPREAD FOOTINGS ON BEDROCK SHALL BE IN ACCORDANCE WITH THE REQUIREMENTS OF VTRANS STANDARD SPECIFICATIONS SECTION 204, AND AS AMENDED BY THESE FOUNDATION NOTES.

2. EXCAVATION SHALL BE PERFORMED TO THE BOTTOM OF THE FOOTING AS SHOWN ON THE PLANS, OR DEEPER AS REQUIRED TO BEAR ON COMPETENT BEDROCK. EXCAVATION SHALL EXTEND INTO BEDROCK TO PROVIDE THE MINIMUM FOOTING THICKNESSES IDENTIFIED ON THE PLANS. EXCAVATION SHALL BE SUFFICIENT TO EXPOSE A GENERALLY LEVEL COMPETENT BEDROCK SURFACE AS DETERMINED AND APPROVED BY THE ENGINEER.

3. ALL FOOTINGS SHALL BEAR ENTIRELY ON COMPETENT BEDROCK.

4. WEATHERED BEDROCK BELOW THE BOTTOM OF PROPOSED FOOTINGS SHALL BE COMPLETELY REMOVED. IF SLOPING BEDROCK IS ENCOUNTERED, THE BEDROCK SURFACE SHALL BE STEPPED IN ACCORDANCE WITH THE FOLLOWING: LOCALIZED AREAS OF REMOVAL BELOW THE BOTTOM OF PROPOSED FOOTING SHALL BE PREPARED SUCH THAT THE EXCAVATED ROCK FACE BETWEEN LEVEL AREAS IS BETWEEN 45 DEGREES FROM HORIZONTAL AND AS CLOSE TO VERTICAL AS PRACTICAL. THE LIMITS OF BEDROCK REMOVAL AND PREPARATION OF THE SURFACE SHALL BE OBSERVED AND APPROVED BY THE ENGINEER PRIOR TO PLACEMENT OF ANY FOOTING CONCRETE.

5. SNOW OR ICE, IF EXISTING, SHALL BE COMPLETELY REMOVED PRIOR TO FOUNDATION CONCRETE PLACEMENT.

6. HORIZONTAL LIMITS OF BEDROCK REMOVAL SHALL BE SUFFICIENT TO ACCOMMODATE THE DESIGN FOOTING DIMENSIONS. LOOSE OR WEATHERED BEDROCK ADJACENT TO THE FOOTING BUT ABOVE THE PROPOSED BOTTOM OF FOOTING NEED NOT BE REMOVED PROVIDED THAT IT IS STABLE AND WILL SUPPORT THE VERTICAL FACE OF THE FOOTING DURING CONCRETE PLACEMENT AND CURING.

7. THE AREAS OF BEDROCK REMOVAL BELOW THE PROPOSED BOTTOM OF FOOTING SHALL BE REPLACED WITH UNREINFORCED HIGH PERFORMANCE CONCRETE, CLASS B, PLACED AT THE SAME TIME AS THE FOOTINGS. REINFORCING STEEL SHALL BE PLACED AS SHOWN ON THE PLANS.

8. STEPPED FOOTING SEGMENTS AS SHOWN ON THE PLANS SHALL BE PLACED IN SEPARATE CONCRETE PLACEMENTS.

9. REINFORCING STEEL DOWELS SHALL BE CORRECTLY SPACED AND PLACED INTO THE PREPARED BEDROCK SURFACE EXTENDING INTO THE PROPOSED FOOTING CONCRETE WHERE INDICATED ON THE PLANS.

NOTES:

1. FOR ABUTMENT 2 FOOTING REINFORCING DETAILS, SEE ABUT. 2 REINFORCEMENT - SHEETS 1 AND 2.

2. FOR ABUTMENT 2 STEM, SEAT AND BACKWALL REINFORCING DETAILS, SEE ABUT. 2 REINFORCEMENT - SHEET 2.

3. FOR KEEPER BLOCK DETAILS, SEE ABUTMENT DETAILS - SHEET 2.

4. FOR ADDITIONAL PILASTER & PEDESTAL DETAILS, SEE ABUTMENT DETAILS - SHEET 1.

5. FOR CONTRACTION JOINT DETAIL, SEE ABUTMENT 1 ELEVATION AND SECTION SHEET.

6. EMBANKMENT AREAS DISTURBED BY CONSTRUCTION SHALL BE RESTORED UPON COMPLETION OF THE WORK BY INSTALLING TOPSOIL, SEED AND HAY MULCH.

ITEMS USED ON THIS SHEET	
ITEM NO.	DESCRIPTION
203.16	SOLID ROCK EXCAVATION
204.25	STRUCTURE EXCAVATION
204.30	GRANULAR BACKFILL FOR STRUCTURES
501.33	CONCRETE, HIGH PERFORMANCE CLASS A
501.34	CONCRETE, HIGH PERFORMANCE CLASS B
507.16	DRILLING AND GROUTING DOWELS
514.10	WATER REPELLENT, SILANE
651.15	SEED
651.25	HAY MULCH
651.35	TOPSOIL

PROJECT NAME: WINDSOR
PROJECT NUMBER: IM 091-1(64)

FILE NAME: z10a188Abut2E.dgn
PROJECT LEADER: J. WILSON
DESIGNED BY: S. BOYINGTON
ABUTMENT 2 ELEVATION

PLOT DATE: 7/30/2015
DRAWN BY: S. GUNN
CHECKED BY: S. HALLORAN
SHEET 94 OF 156

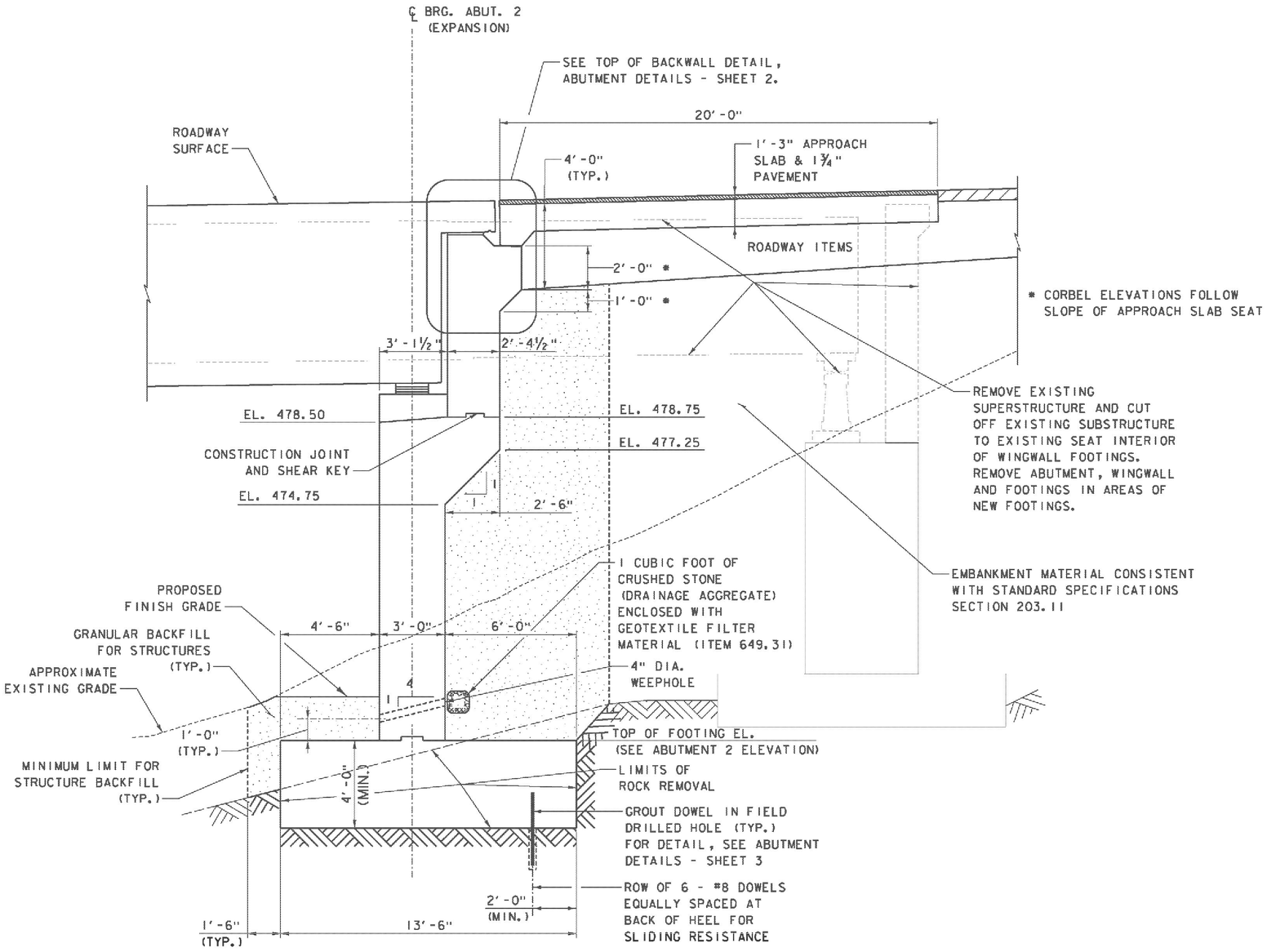

TYPICAL ABUTMENT SECTION

SCALE ⅜" = 1'-0"

1 0 1 2 3 4

ITEMS USED ON THIS SHEET	
ITEM NO.	DESCRIPTION
203.16	SOLID ROCK EXCAVATION
204.25	STRUCTURE EXCAVATION
204.30	GRANULAR BACKFILL FOR STRUCTURES
490.30	SUPERPAVE BITUMINOUS CONCRETE PAVEMENT
501.33	CONCRETE, HIGH PERFORMANCE CLASS A
501.34	CONCRETE, HIGH PERFORMANCE CLASS B
507.16	DRILLING AND GROUTING DOWELS
514.10	WATER REPELLENT, SILANE
529.15	REMOVAL OF STRUCTURE
649.31	GEOTEXTILE UNDER STONE FILL
651.15	SEED
651.25	HAY MULCH
651.35	TOPSOIL

NOTES:

1. FOR ABUTMENT 2 FOOTING REINFORCING DETAILS, SEE ABUT. 2 REINFORCEMENT - SHEET 1.
2. FOR ABUTMENT 2 STEM, SEAT AND BACKWALL REINFORCING DETAILS, SEE ABUT. 2 REINFORCEMENT - SHEET 2.
3. FOR CONSTRUCTION JOINT DETAILS, SEE ABUTMENT DETAILS - SHEET 2.
4. EMBANKMENT AREAS DISTURBED BY CONSTRUCTION SHALL BE RESTORED UPON COMPLETION OF THE WORK BY INSTALLING TOPSOIL, SEED AND HAY MULCH.

PROJECT NAME: WINDSOR
PROJECT NUMBER: IM 091-1(64)

FILE NAME: z10a188Abut2S.dgn
PROJECT LEADER: J. WILSON
DESIGNED BY: S. BOYINGTON
ABUTMENT 2 SECTION

PLOT DATE: 7/30/2015
DRAWN BY: S. GUNN
CHECKED BY: S. HALLORAN
SHEET 95 OF156

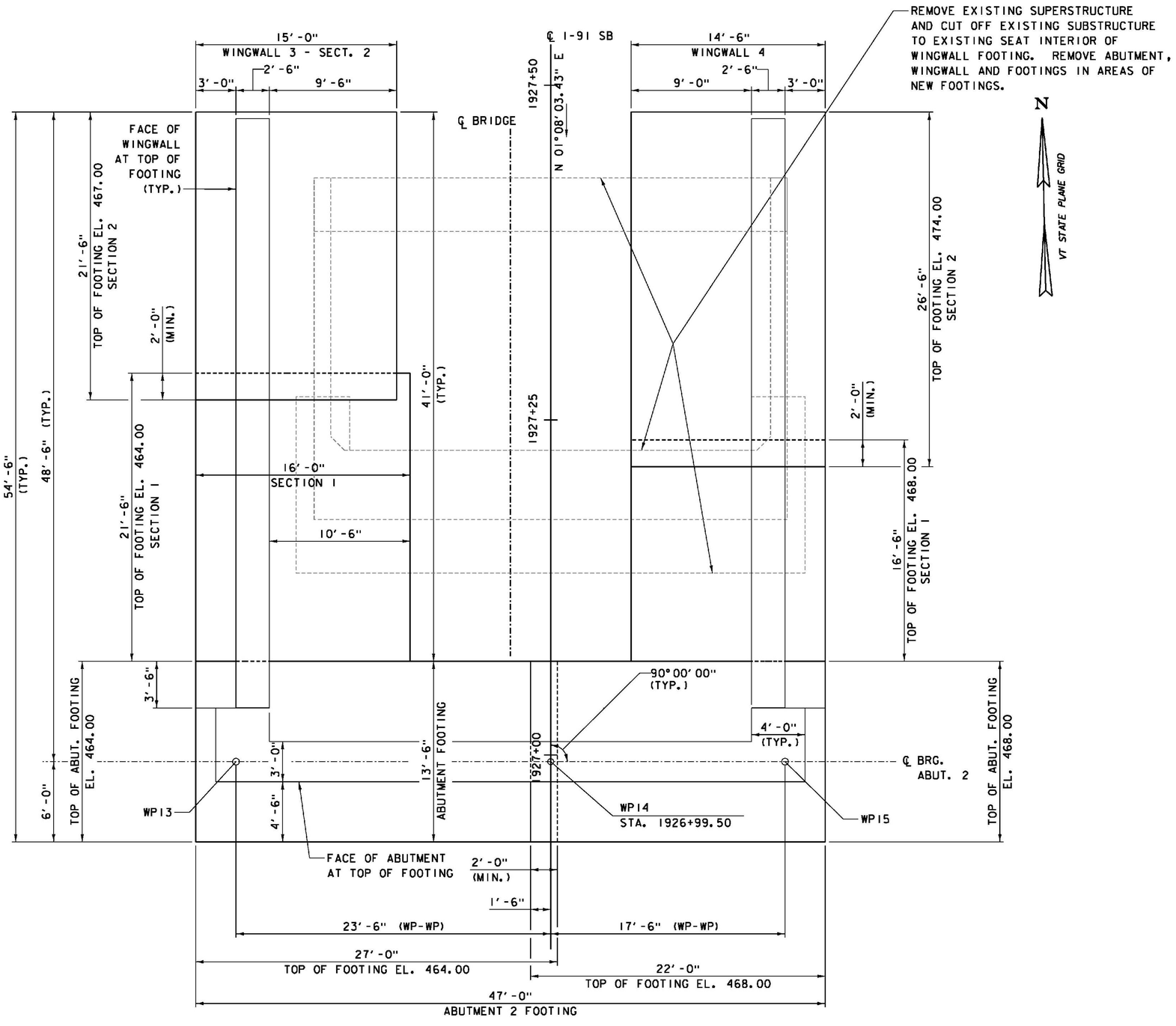

ABUTMENT 2 FOOTING PLAN

SCALE 1/4" = 1'-0"

0 2 4 6

ITEMS USED ON THIS SHEET	
ITEM NO.	DESCRIPTION
501.34	CONCRETE, HIGH PERFORMANCE CLASS B

NOTES:

1. FOR FOUNDATION NOTES, SEE ABUTMENT 2 ELEVATION SHEET.
2. FOR ABUTMENT 2 FOOTING REINFORCING DETAILS, SEE ABUT. 2 REINFORCEMENT - SHEET 1.
3. FOR WINGWALL 3 AND 4 REINFORCING DETAILS, SEE ABUT. 2 WINGWALL REINFORCEMENT.
4. FOR ABUTMENT 2 STEM, SEAT AND BACKWALL REINFORCING DETAILS, SEE ABUT. 2 REINFORCEMENT - SHEET 2.

PROJECT NAME: WINDSOR
PROJECT NUMBER: IM 091-1(64)

FILE NAME: z10a188Abut2FP.dgn
PROJECT LEADER: J. WILSON
DESIGNED BY: S. BOYINGTON
ABUTMENT 2 FOOTING PLAN

PLOT DATE: 7/30/2015
DRAWN BY: S. GUNN
CHECKED BY: S. HALLORAN
SHEET 96 OF 156

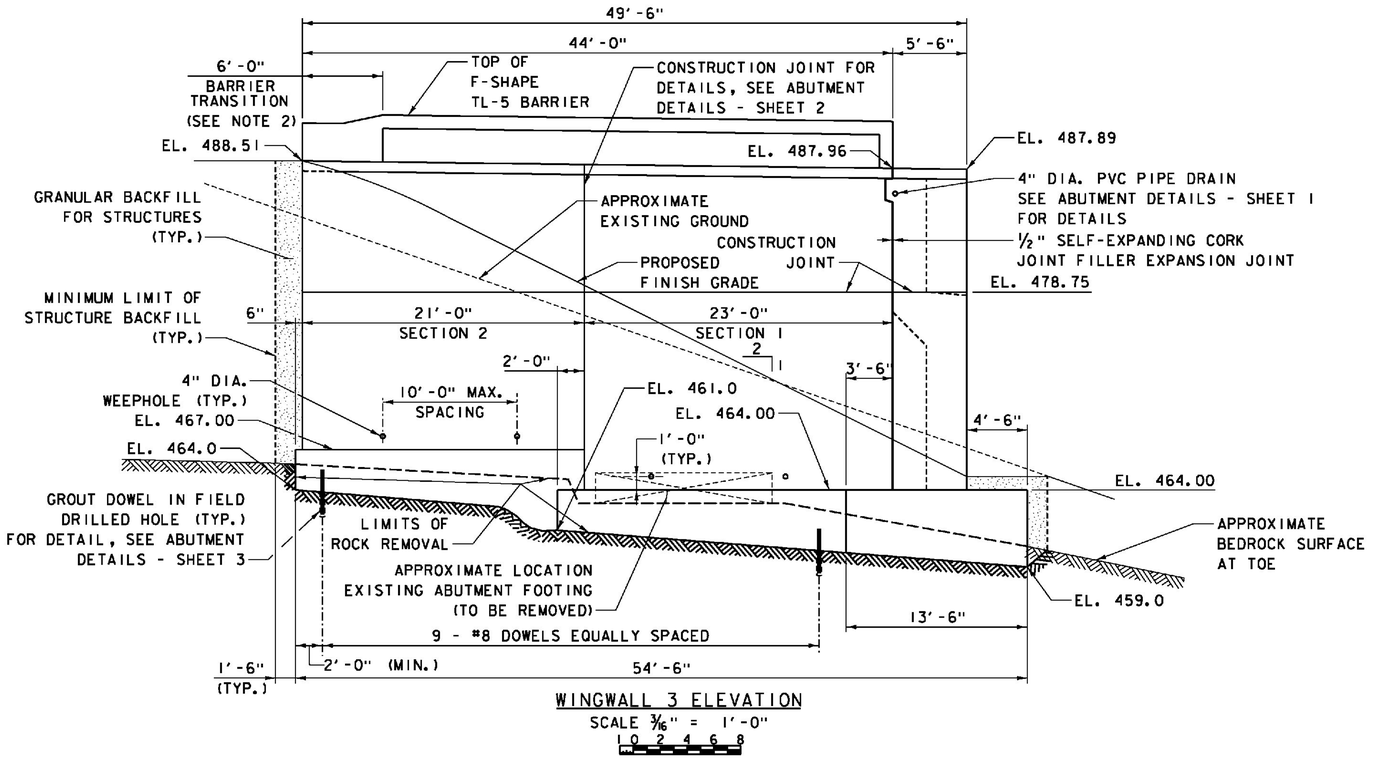

WINGWALL 3 ELEVATION

SCALE 3/16" = 1'-0"

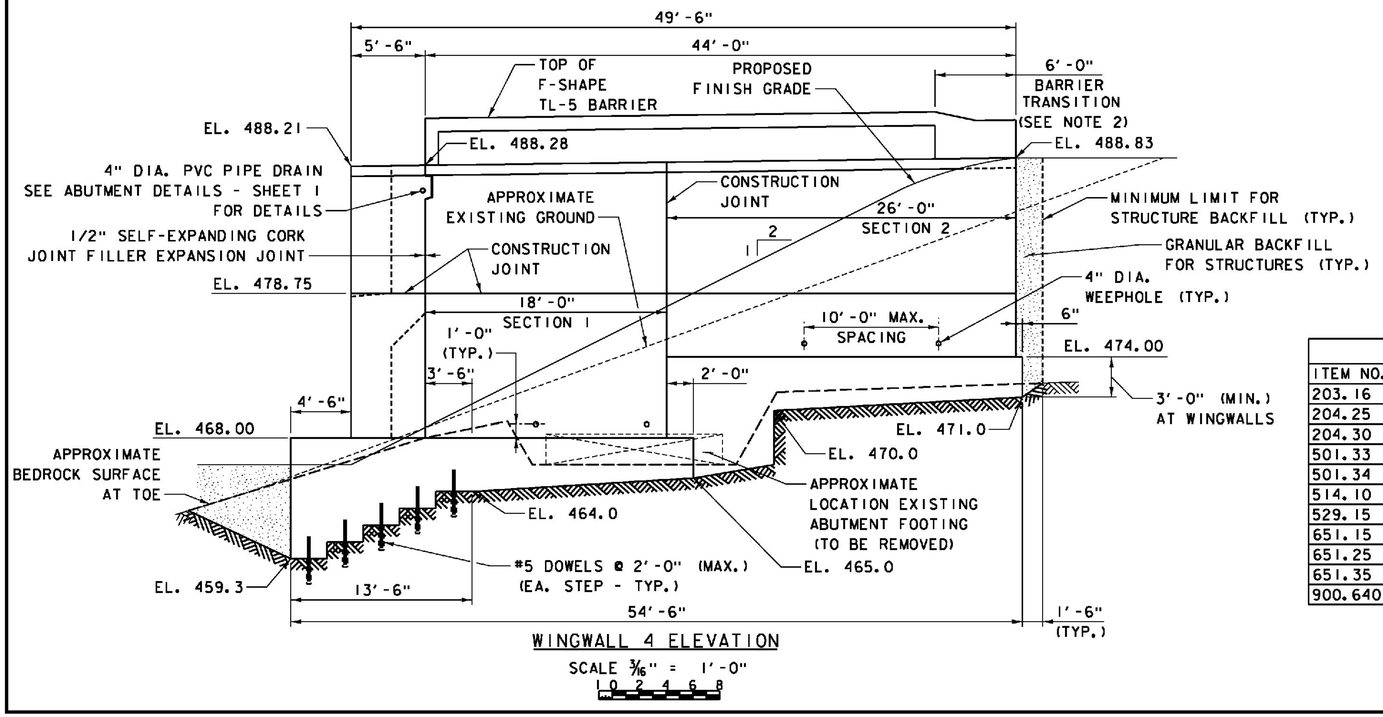

WINGWALL 4 ELEVATION

SCALE 3/16" = 1'-0"

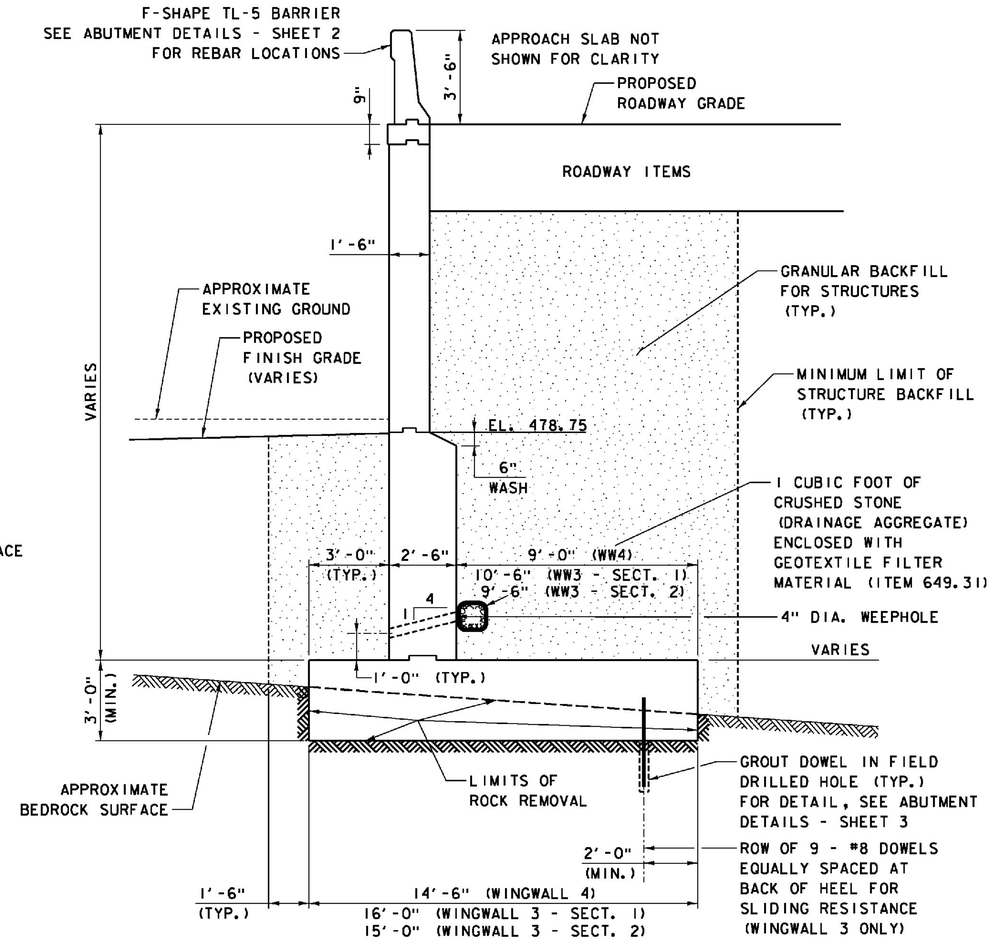

TYPICAL WINGWALL SECTION - ABUTMENT 2

SCALE 3/8" = 1'-0"

ITEMS USED ON THIS SHEET	
ITEM NO.	DESCRIPTION
203.16	SOLID ROCK EXCAVATION
204.25	STRUCTURE EXCAVATION
204.30	GRANULAR BACKFILL FOR STRUCTURES
501.33	CONCRETE, HIGH PERFORMANCE CLASS A
501.34	CONCRETE, HIGH PERFORMANCE CLASS B
514.10	WATER REPELLENT, SILANE
529.15	REMOVAL OF STRUCTURE
651.15	SEED
651.25	HAY MULCH
651.35	TOPSOIL
900.640	BRIDGE RAILING, F-SHAPE CONCRETE

NOTES:

1. FOR WINGWALL 3 AND 4 REINFORCING DETAILS, SEE ABUT. 2 WINGWALL REINFORCEMENT.
2. FOR DETAILS OF BARRIER TRANSITION AT WING ENDS, SEE F-SHAPE BARRIER TRANSITION DETAIL SHEET INCLUDED IN SUPERSTRUCTURE DRAWINGS.
3. FOR DETAIL OF EXPANSION JOINT BETWEEN PILASTER AND WINGWALL, SEE ABUTMENT DETAILS - SHEET 1.
4. EMBANKMENT AREAS DISTURBED BY CONSTRUCTION SHALL BE RESTORED UPON COMPLETION OF THE WORK BY INSTALLING TOPSOIL, SEED AND HAY MULCH.

PROJECT NAME: WINDSOR
PROJECT NUMBER: IM 091-1(64)

FILE NAME: z10o188Abut2WM.dgn
PROJECT LEADER: J. WILSON
DESIGNED BY: S. BOYINGTON
ABUTMENT 2 WINGWALLS

PLOT DATE: 7/30/2015
DRAWN BY: S. GUNN
CHECKED BY: S. HALLORAN
SHEET 97 OF 156

ITEMS USED ON THIS SHEET	
ITEM NO.	DESCRIPTION
507.15	REINFORCING STEEL
507.17	EPOXY COATED REINFORCING STEEL
501.34	CONCRETE, HIGH PERFORMANCE CLASS B
507.16	DRILLING AND GROUTING DOWELS

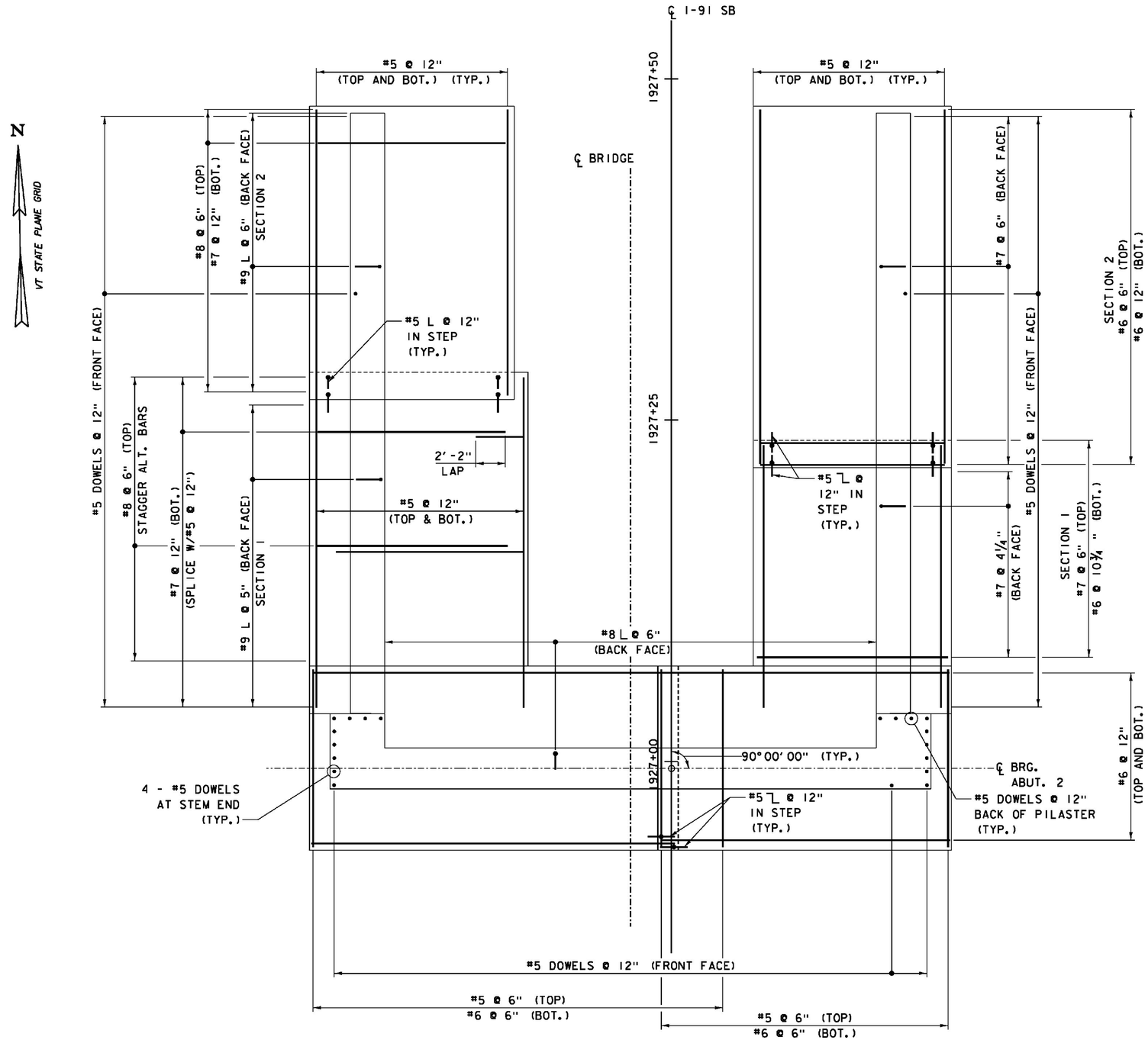

ABUTMENT 2 FOOTING REINFORCEMENT

SCALE ¼" = 1'-0"

1	0	2	4	6	

PROJECT NAME: WINDSOR
PROJECT NUMBER: IM 091-1(64)

FILE NAME: z10o188Abut2RP.dgn
PROJECT LEADER: J. WILSON
DESIGNED BY: S. BOYINGTON
ABUT. 2 REINFORCEMENT - SHEET 1

PLOT DATE: 7/30/2015
DRAWN BY: S. GUNN
CHECKED BY: S. HALLORAN
SHEET 98 OF 156

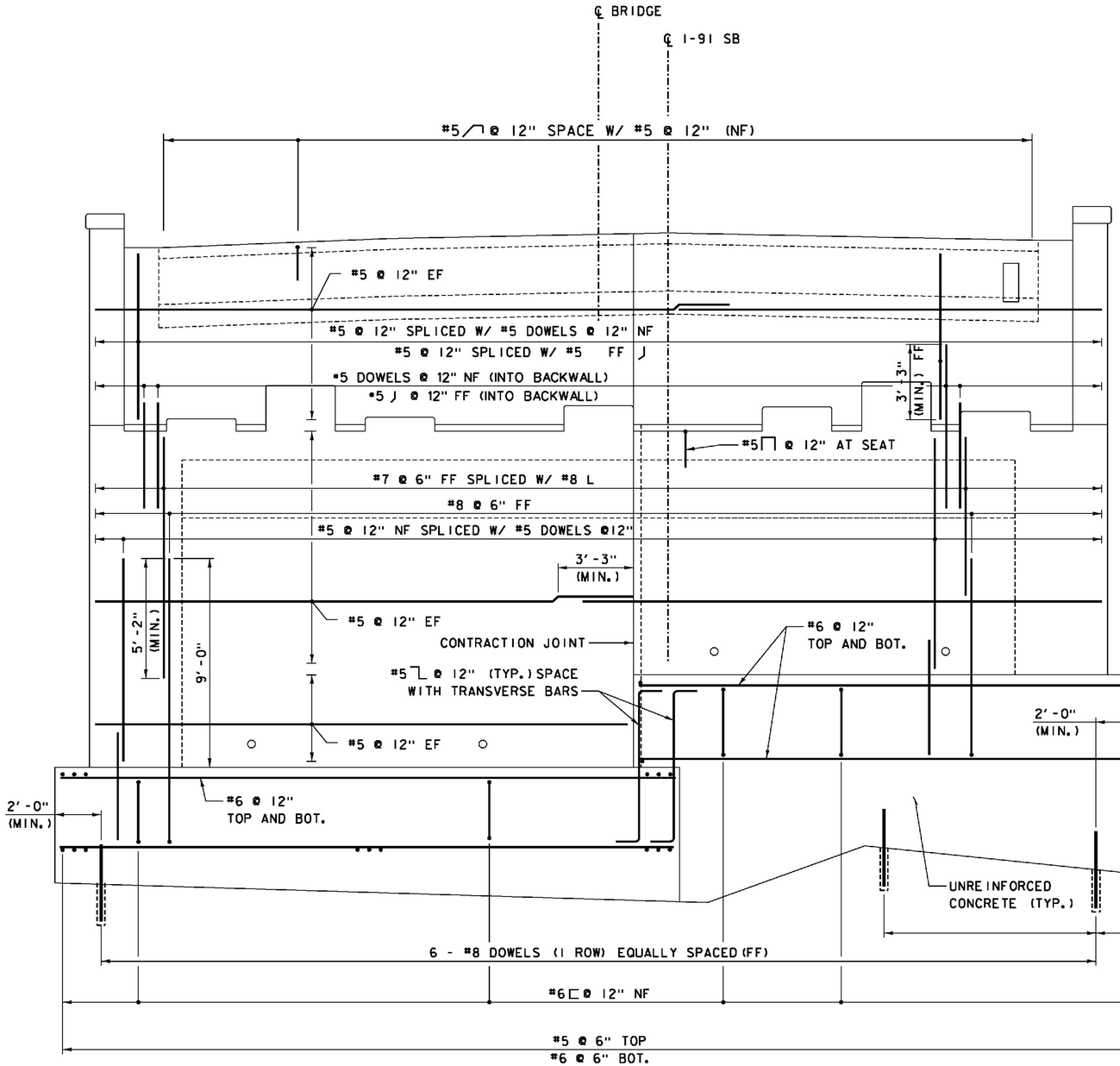

ABUTMENT 2 ELEVATION REINFORCEMENT

SCALE 3/8" = 1'-0"

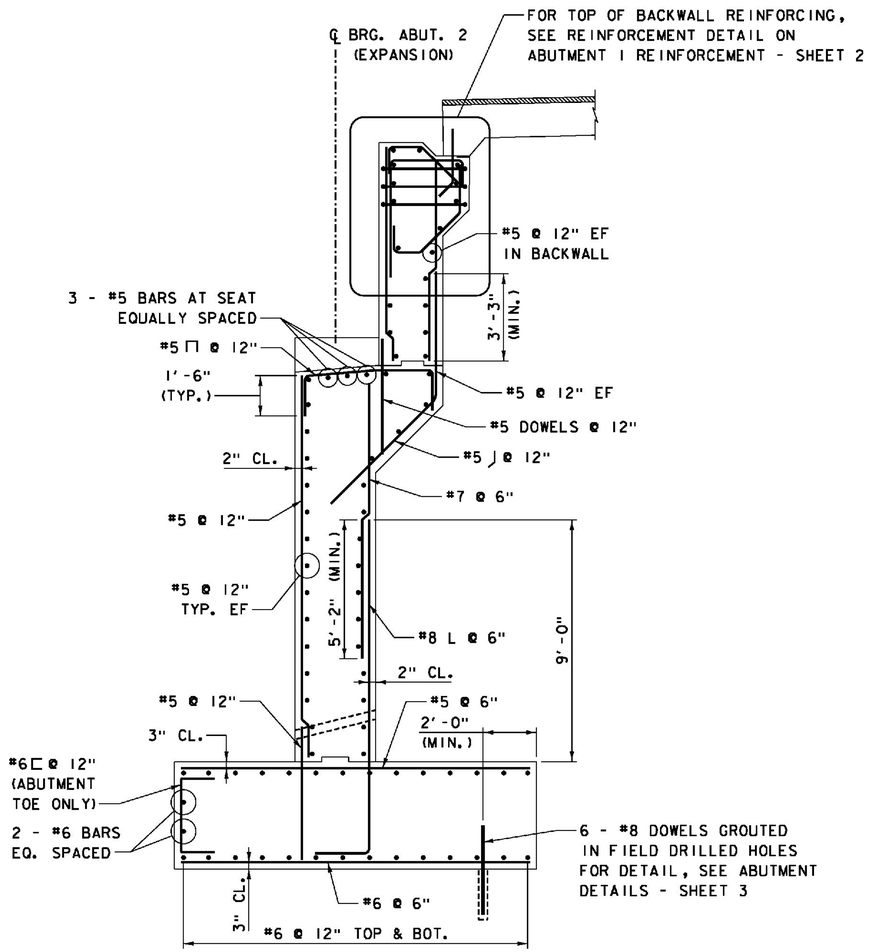

ABUTMENT 2 SECTION REINFORCEMENT

SCALE 3/8" = 1'-0"

NOTES:

1. FOR SUBSTRUCTURE NOTES, SEE ABUT. 1 PLAN SHEET.
2. FOR REINFORCEMENT IN ABUTMENT PEDESTALS, SEE ABUTMENT DETAILS - SHEET 1.
3. FOR KEEPER BLOCK REINFORCING, SEE ABUTMENT DETAILS - SHEET 2

ITEMS USED ON THIS SHEET	
ITEM NO.	DESCRIPTION
501.33	CONCRETE, HIGH PERFORMANCE CLASS A
501.34	CONCRETE, HIGH PERFORMANCE CLASS B
507.15	REINFORCING STEEL
507.16	DRILLING AND GROUTING DOWELS
507.17	EPOXY COATED REINFORCING STEEL

LEGEND
NF = NEAR FACE
FF = FAR FACE
EF = EACH FACE

PROJECT NAME: WINDSOR
PROJECT NUMBER: IM 091-1(64)

FILE NAME: z10a188Abut2RES.dgn
PROJECT LEADER: J. WILSON
DESIGNED BY: S. BOYINGTON
ABUT. 2 REINFORCEMENT - SHEET 2

PLOT DATE: 7/30/2015
DRAWN BY: S. GUNN
CHECKED BY: S. HALLORAN
SHEET 99 OF156

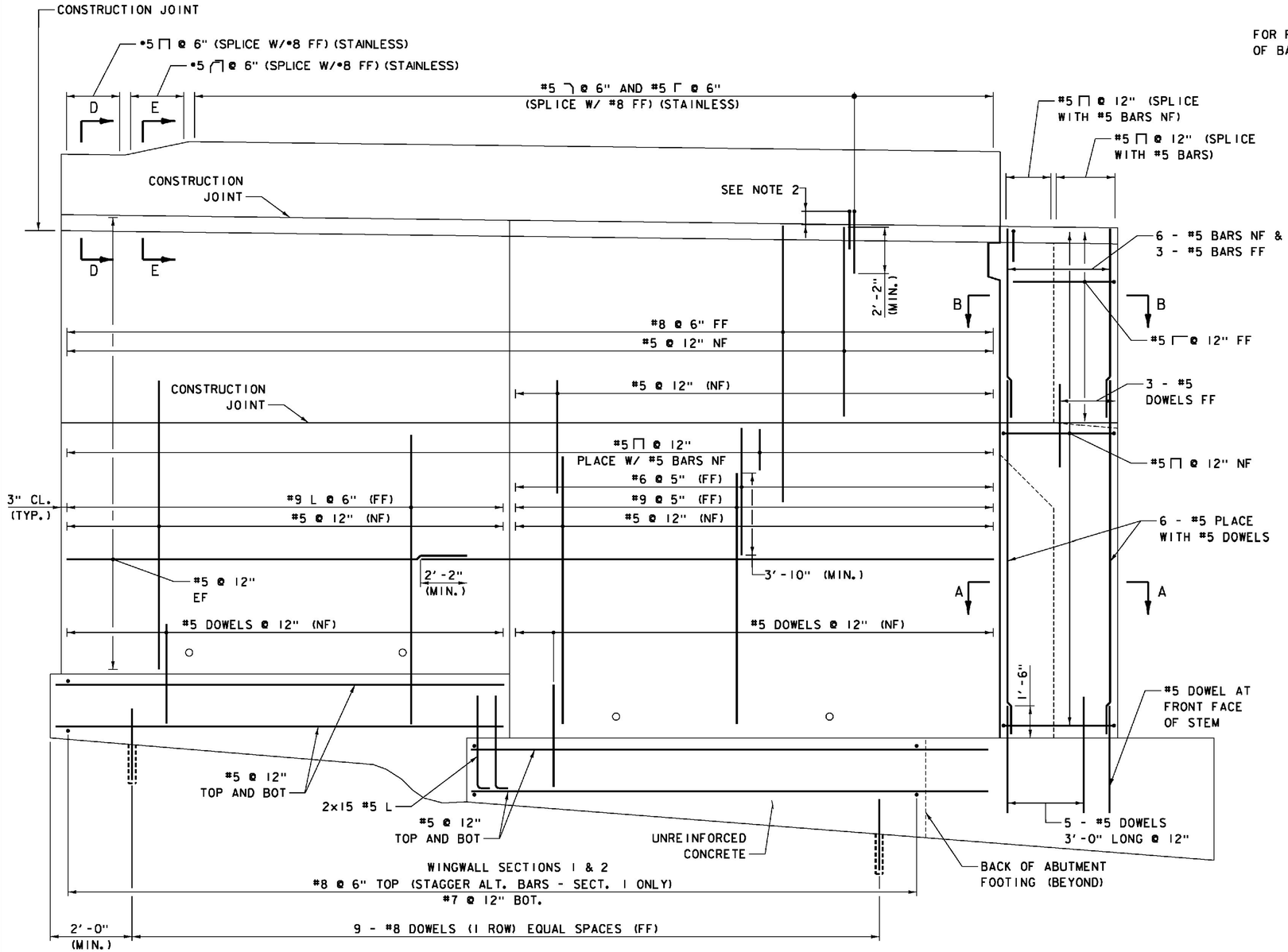

WINGWALL 3 REINFORCEMENT

SCALE 3/8" = 1'-0"

LEGEND
NF = NEAR FACE
FF = FAR FACE
EF = EACH FACE

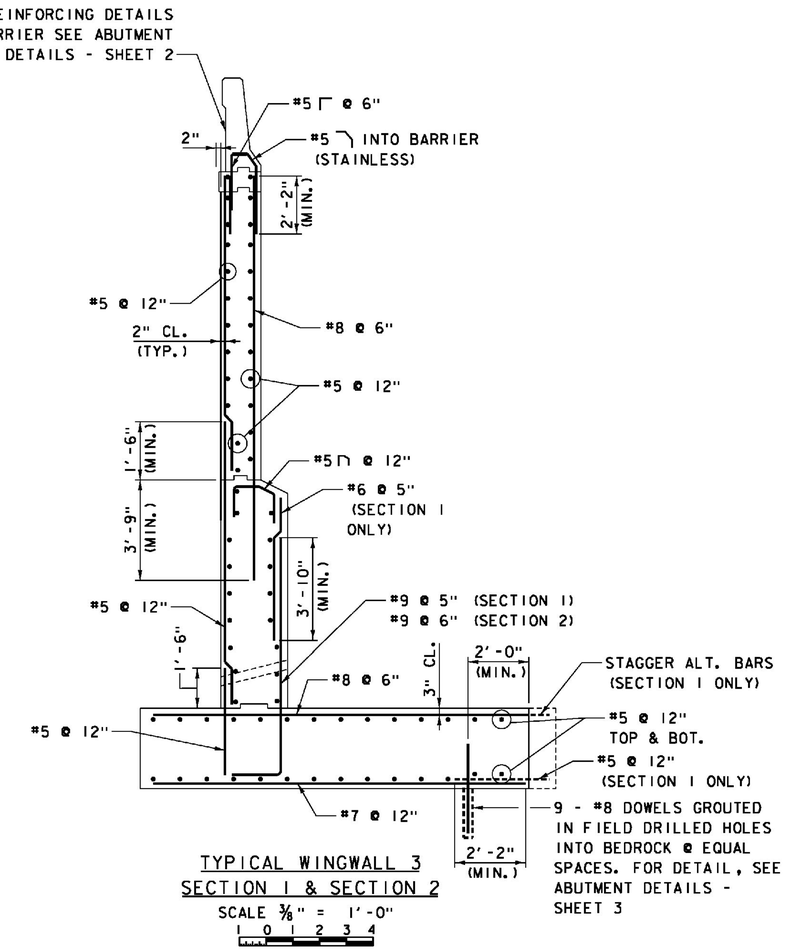

TYPICAL WINGWALL 3 SECTION 1 & SECTION 2

SCALE 3/8" = 1'-0"

NOTES:

1. REINFORCEMENT ABOVE FOOTINGS TO BE EPOXY COATED; FOOTING REBAR IS UNCOATED; REINFORCEMENT IN AND INTO F-SHAPE BARRIER TO BE SOLID STAINLESS.
2. FOR F-SHAPE BARRIER REINFORCING DETAILS, SEE ABUTMENT DETAILS - SHEET 2.
3. FOR SECTION A-A & SECTION B-B PILASTER REINFORCING DETAILS, SEE ABUTMENT DETAILS - SHEET 3.
4. FOR SECTION D-D AND SECTION E-E, SEE ABUTMENT 1 WINGWALL REINFORCEMENT SHEET.

ITEMS USED ON THIS SHEET

ITEM NO.	DESCRIPTION
501.33	CONCRETE, HIGH PERFORMANCE CLASS A
501.34	CONCRETE, HIGH PERFORMANCE CLASS B
507.15	REINFORCING STEEL
507.16	DRILLING AND GROUTING DOWELS
507.17	EPOXY COATED REINFORCING STEEL
900.635	STAINLESS STEEL REINFORCING
900.640	BRIDGE RAILING, F-SHAPE CONCRETE

PROJECT NAME: WINDSOR
PROJECT NUMBER: IM 091-1(64)

FILE NAME: z10a188Abut2RW1.dgn
PROJECT LEADER: J. WILSON
DESIGNED BY: S. BOYINGTON
ABUT. 2 WINGWALL REINFORCEMENT - 1

PLOT DATE: 7/30/2015
DRAWN BY: S. GUNN
CHECKED BY: S. HALLORAN
SHEET 100 OF156

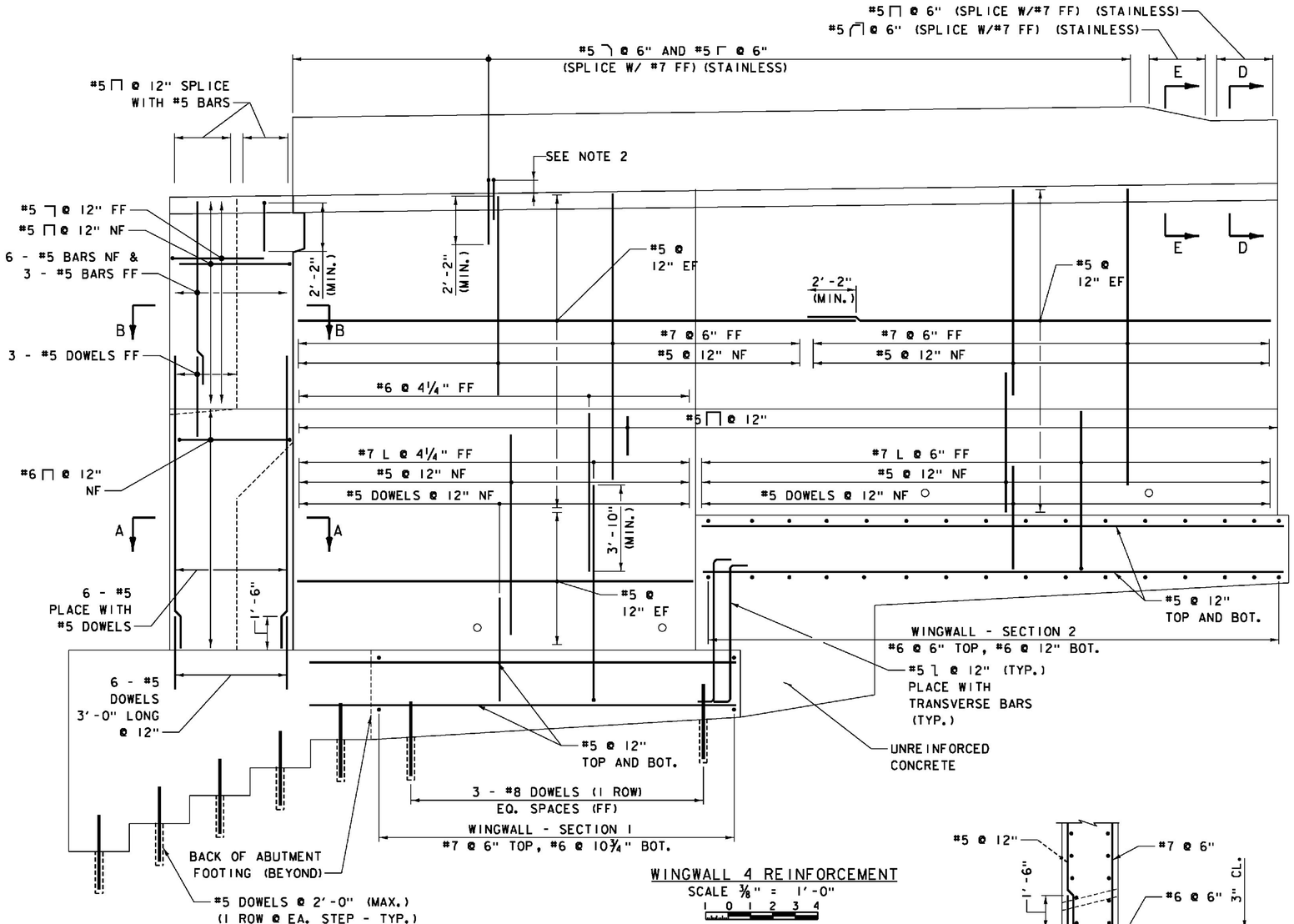

WINGWALL 4 REINFORCEMENT
SCALE ⅜" = 1'-0"
1 0 1 2 3 4

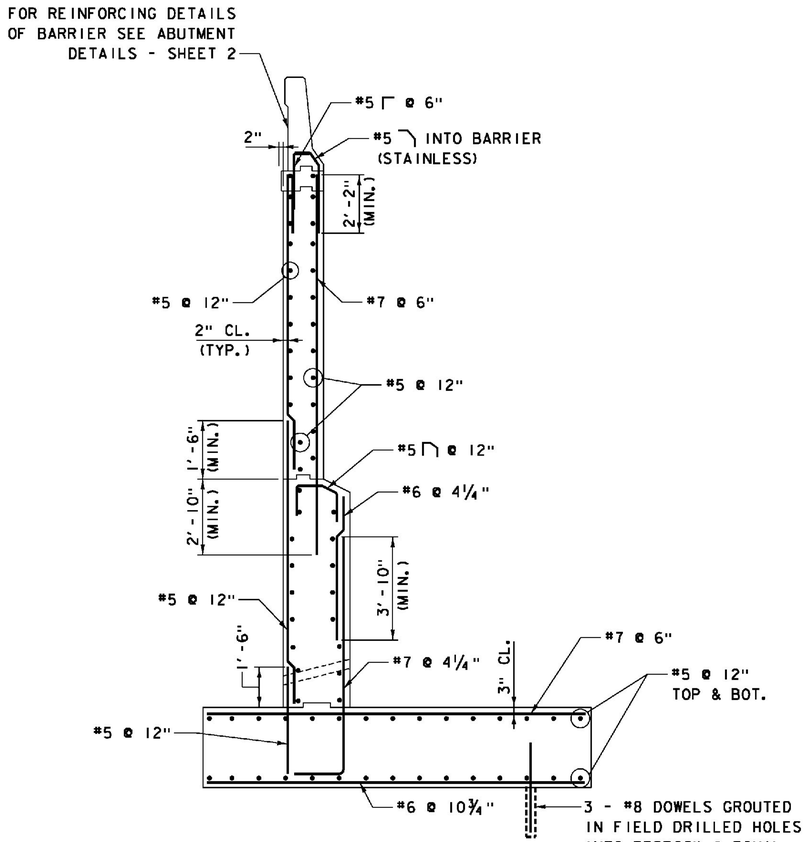

WINGWALL 4 - SECTION 1
REINFORCEMENT
SCALE ⅜" = 1'-0"
1 0 1 2 3 4

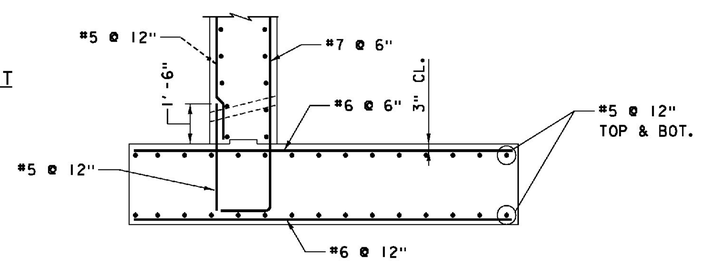

WINGWALL 4 - SECTION 2
REINFORCEMENT
SCALE ⅜" = 1'-0"
1 0 1 2 3 4

LEGEND
NF = NEAR FACE
FF = FAR FACE
EF = EACH FACE

NOTES:

1. REINFORCEMENT ABOVE FOOTINGS SHALL BE EPOXY COATED; FOOTING REBAR SHALL BE UNCOATED; REINFORCEMENT IN AND INTO F-SHAPE BARRIER SHALL BE SOLID STAINLESS.
2. FOR F-SHAPE BARRIER REINFORCING DETAILS, SEE ABUTMENT DETAILS - SHEET 2.
3. FOR SECTION B-B & SECTION C-C PILASTER REINFORCING DETAILS, SEE ABUTMENT DETAILS - SHEET 3.
4. FOR SECTION D-D AND SECTION E-E, SEE ABUTMENT 1 WINGWALL REINFORCEMENT SHEET.

ITEMS USED ON THIS SHEET	
ITEM NO.	DESCRIPTION
501.33	CONCRETE, HIGH PERFORMANCE CLASS A
501.34	CONCRETE, HIGH PERFORMANCE CLASS B
507.15	REINFORCING STEEL
507.17	EPOXY COATED REINFORCING STEEL
900.635	STAINLESS STEEL REINFORCING
900.640	BRIDGE RAILING, F-SHAPE CONCRETE

PROJECT NAME: WINDSOR
PROJECT NUMBER: IM 091-1(64)

FILE NAME: z10a188Abut2RW2.dgn
PROJECT LEADER: J. WILSON
DESIGNED BY: S. BOYINGTON
ABUT. 2 WINGWALL REINFORCEMENT - 2

PLOT DATE: 7/30/2015
DRAWN BY: S. GUNN
CHECKED BY: S. HALLORAN
SHEET 101 OF156

WORKING POINT CONTROL			
LOCATION	STATION	NORTHING	EASTING
WP4	1922+21.00, 15.00' LT.	347366.1066	1665072.3159
WP5	1922+21.00, CL	347365.8097	1665087.3130
WP6	1922+21.00, 9.00' RT.	347365.6315	1665096.3112

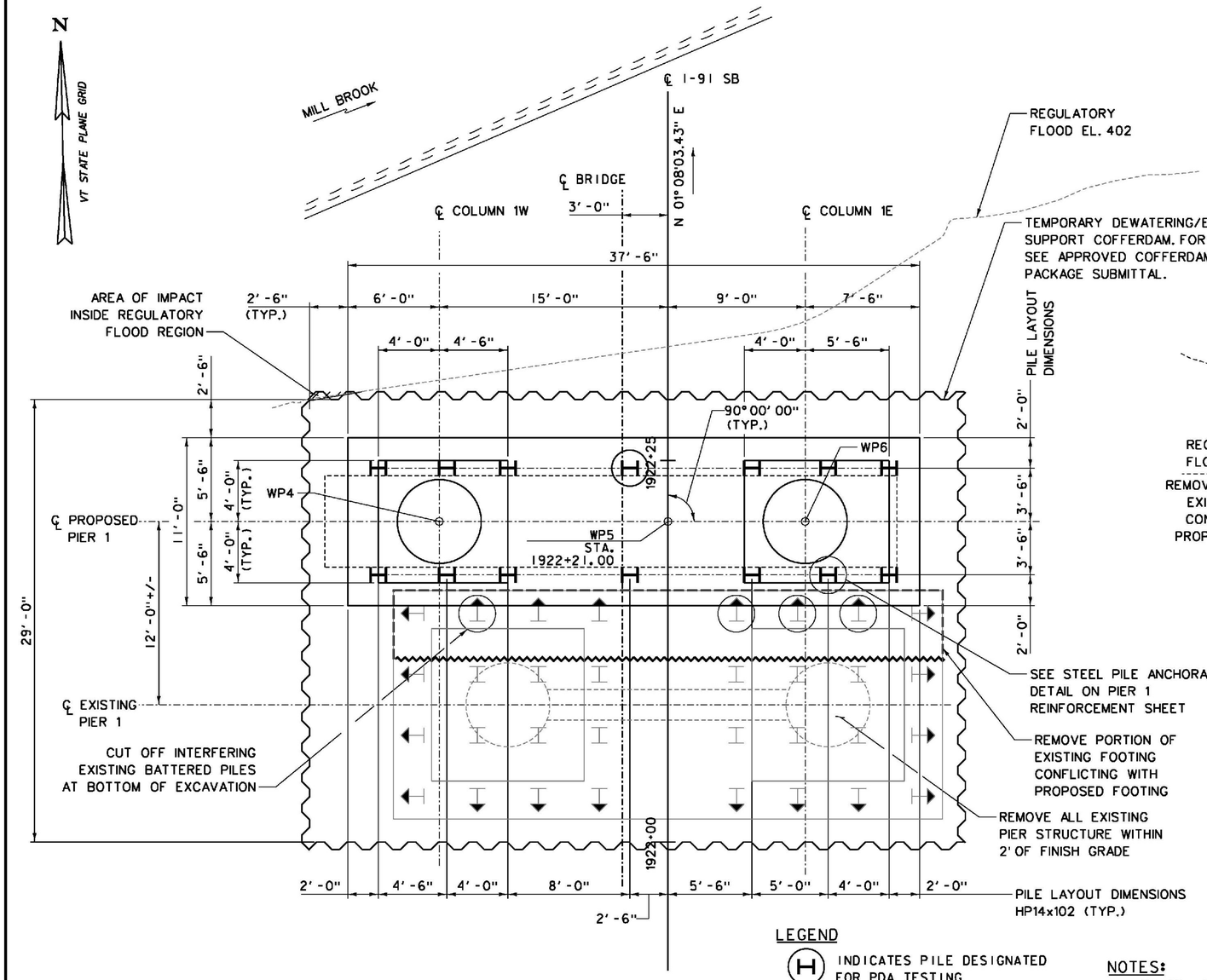

PIER 1 FOOTING PLAN

SCALE 1/4" = 1'-0"

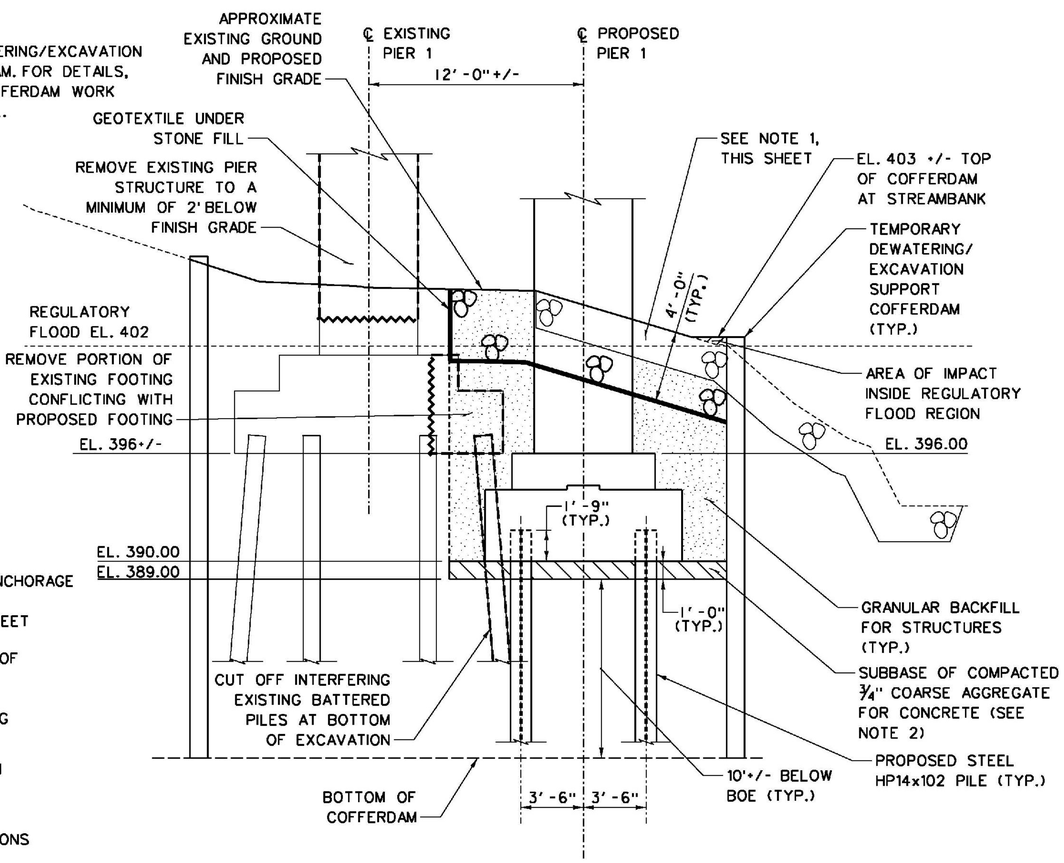

PIER 1 FOOTING SECTION

SCALE 1/4" = 1'-0"

LEGEND

(H) INDICATES PILE DESIGNATED FOR PDA TESTING

ITEMS USED ON THIS SHEET	
ITEM NO.	DESCRIPTION
204.25	STRUCTURE EXCAVATION
204.30	GRANULAR BACKFILL FOR STRUCTURES
208.40	COFFERDAM
501.34	CONCRETE, HIGH PERFORMANCE CLASS B
504.10	FURNISHING EQUIPMENT FOR PILE DRIVING
505.19	STEEL PILING, HP14x102
505.45	DYNAMIC PILE LOADING TEST
529.15	REMOVAL OF STRUCTURE
613.13	STONE FILL, TYPE IV
649.31	GEOTEXTILE UNDER STONE FILL
651.15	SEED
651.25	HAY MULCH
651.35	TOPSOIL

NOTES:

1. EXISTING RIPRAP SHALL BE REMOVED WITHIN LIMITS OF COFFERDAM. UPON COMPLETION OF WORK, 4' THICKNESS OF STONE FILL TYPE IV SHALL BE CONSTRUCTED TO THE LIMITS FOR STRUCTURE BACKFILL TO RESTORE THE PROTECTED BANK. REMAINING EMBANKMENT AREAS DISTURBED BY CONSTRUCTION SHALL BE RESTORED BY INSTALLING TOPSOIL, SEED AND HAY MULCH.
2. COMPACTED MATERIAL BENEATH PIER FOOTINGS SHALL MEET THE GRADATION REQUIREMENTS OF TABLE 704.02B OF THE VTRANS STANDARD SPECIFICATIONS.
3. AFTER THE ACTUAL LOCATION OF EXISTING PILES ADJACENT TO NEW PIER FOUNDATION IS DISCOVERED, ANY REQUIRED ADJUSTMENT IN PROPOSED PILE LOCATION SHALL BE COORDINATED WITH THE DESIGNER.

PROJECT NAME: WINDSOR
PROJECT NUMBER: IM 091-1(64)

FILE NAME: z10a188Pier1P.dgn
PROJECT LEADER: J. WILSON
DESIGNED BY: S. BOYINGTON
PIER 1 FOOTING PLAN & SECTION

PLOT DATE: 7/30/2015
DRAWN BY: S. GUNN
CHECKED BY: S. HALLORAN
SHEET 102 OF 156

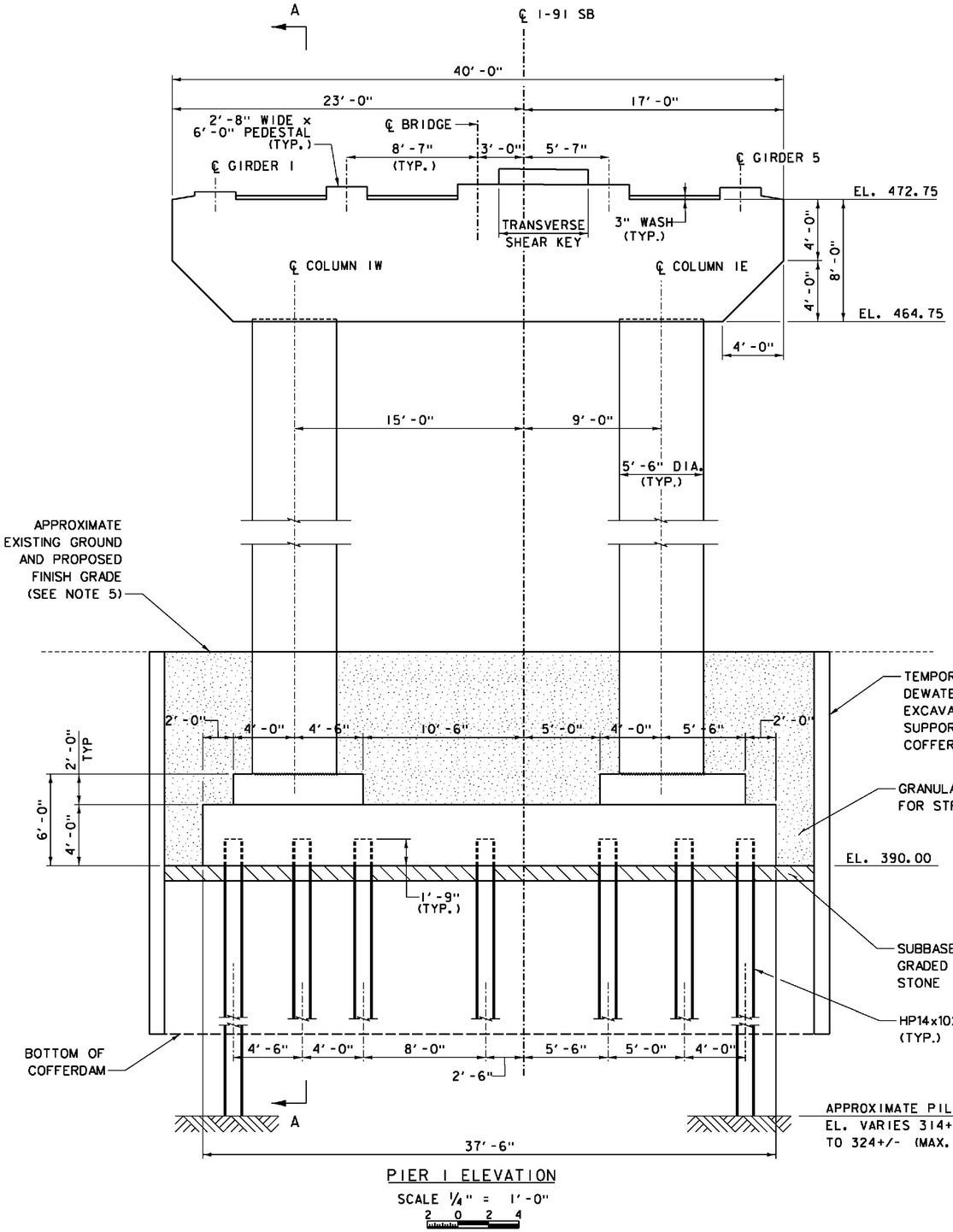

PIER 1 ELEVATION

SCALE 1/4" = 1'-0"

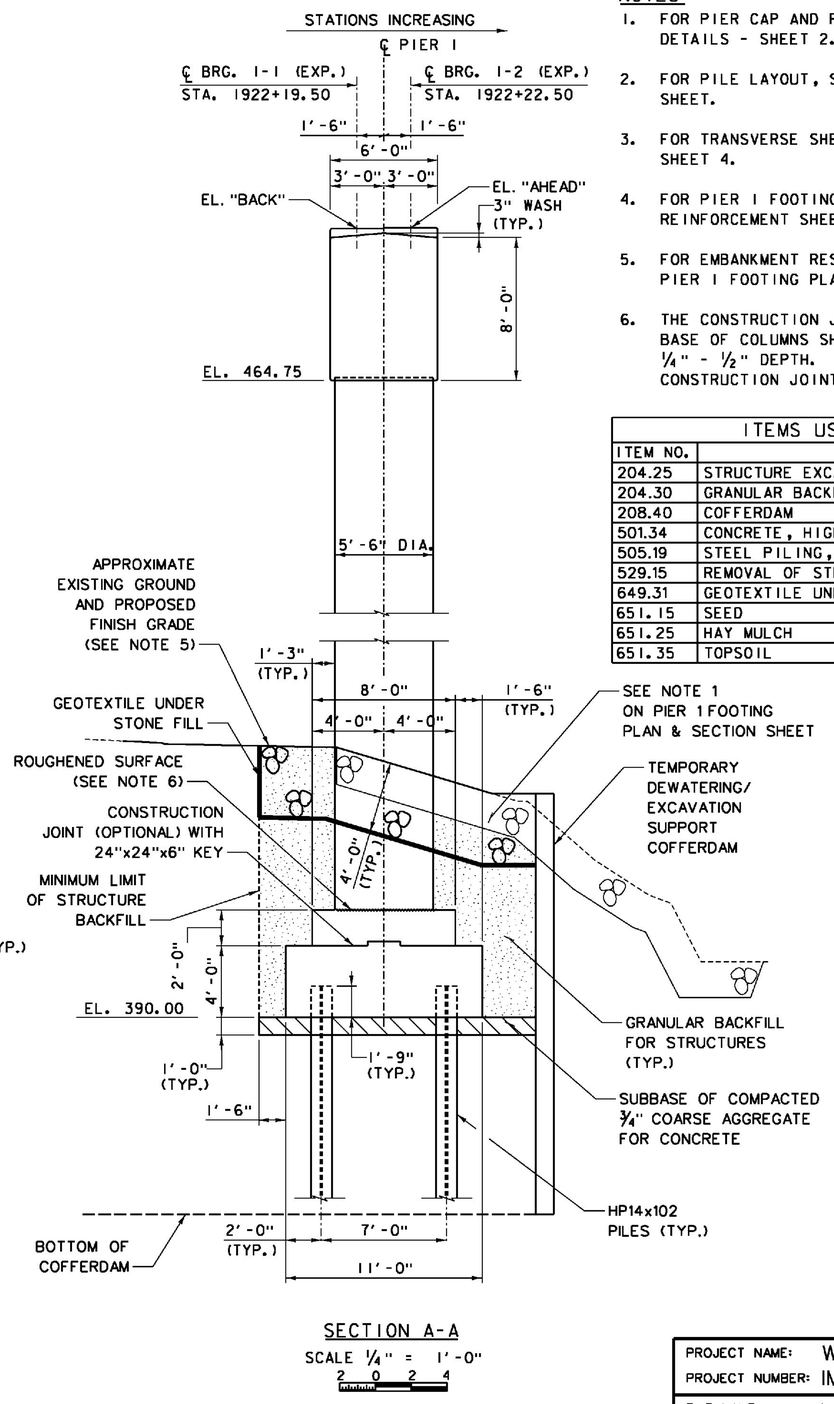

SECTION A-A

SCALE 1/4" = 1'-0"

NOTES:

1. FOR PIER CAP AND PEDESTAL DETAILS, SEE PIER DETAILS - SHEET 2.
2. FOR PILE LAYOUT, SEE PIER 1 FOOTING PLAN & SECTION SHEET.
3. FOR TRANSVERSE SHEAR KEY DETAILS, SEE PIER DETAILS - SHEET 4.
4. FOR PIER 1 FOOTING REINFORCING DETAILS, SEE PIER 1 REINFORCEMENT SHEET.
5. FOR EMBANKMENT RESTORATION INFORMATION, SEE NOTE 1 ON PIER 1 FOOTING PLAN AND SECTION SHEET.
6. THE CONSTRUCTION JOINT BETWEEN FOOTING PEDESTALS AND BASE OF COLUMNS SHALL BE INTENTIONALLY ROUGHENED TO 1/4" - 1/2" DEPTH. FOR DETAILS OF TYPICAL HORIZONTAL CONSTRUCTION JOINT, SEE ABUTMENT DETAILS - SHEET 2.

ITEMS USED ON THIS SHEET	
ITEM NO.	DESCRIPTION
204.25	STRUCTURE EXCAVATION
204.30	GRANULAR BACKFILL FOR STRUCTURES
208.40	COFFERDAM
501.34	CONCRETE, HIGH PERFORMANCE CLASS B
505.19	STEEL PILING, HP14x102
529.15	REMOVAL OF STRUCTURE
649.31	GEOTEXTILE UNDER STONE FILL
651.15	SEED
651.25	HAY MULCH
651.35	TOPSOIL

PEDESTAL ELEVATIONS		
GIRDER	EL. "BACK"	EL. "AHEAD"
1	473.29	473.32
2	473.65	473.68
3	473.85	473.88
4	473.80	473.83
5	473.61	473.65

PROJECT NAME: WINDSOR
PROJECT NUMBER: IM 091-1(64)

FILE NAME: z10a188Pier1ES.dgn
PROJECT LEADER: J. WILSON
DESIGNED BY: S. BOYINGTON
PIER 1 ELEVATION & SECTION

PLOT DATE: 7/30/2015
DRAWN BY: S. GUNN
CHECKED BY: S. HALLORAN
SHEET 103 OF156

ITEMS USED ON THIS SHEET	
ITEM NO.	DESCRIPTION
501.34	CONCRETE, HIGH PERFORMANCE CLASS B
507.15	REINFORCING STEEL
507.17	EPOXY COATED REINFORCING STEEL

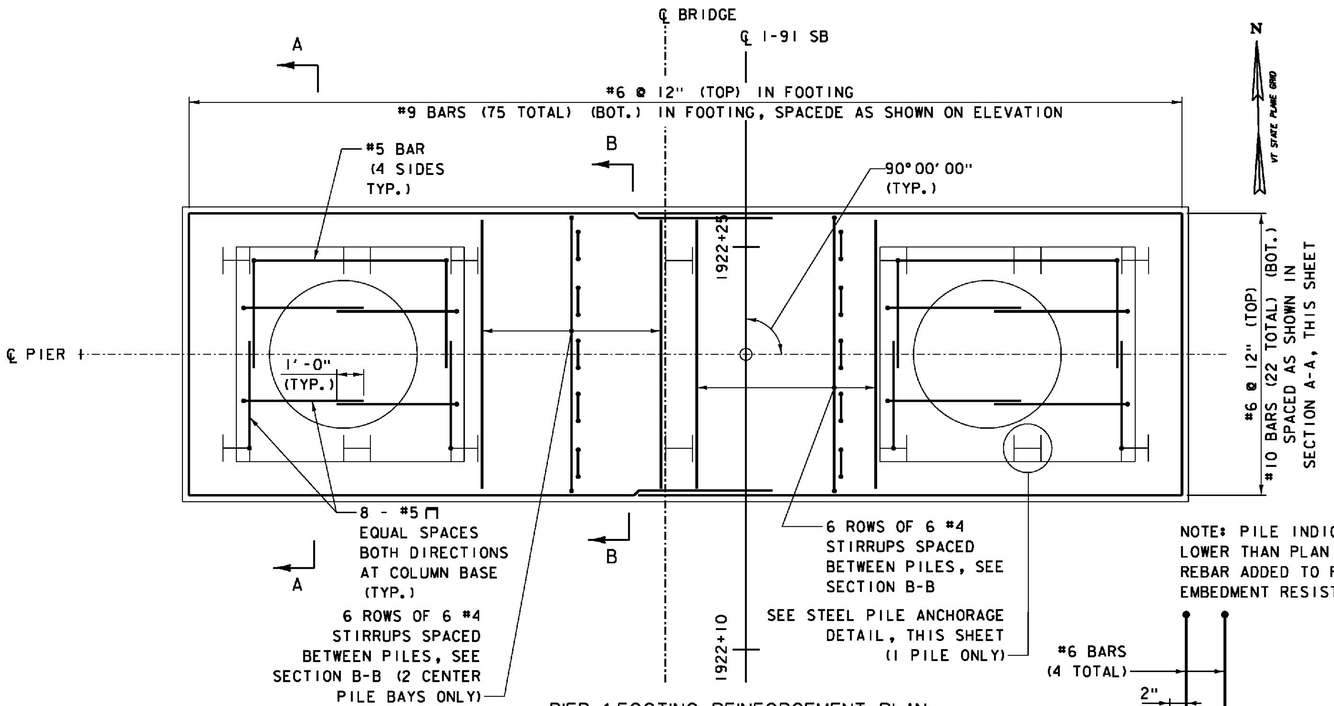

PIER 1 FOOTING REINFORCEMENT PLAN

SCALE 3/8" = 1'-0"

NOTE: PILE INDICATED IN PLAN CUT 4" LOWER THAN PLAN ELEVATION. ADDITIONAL REBAR ADDED TO PROVIDE NECESSARY EMBEDMENT RESISTANCE.

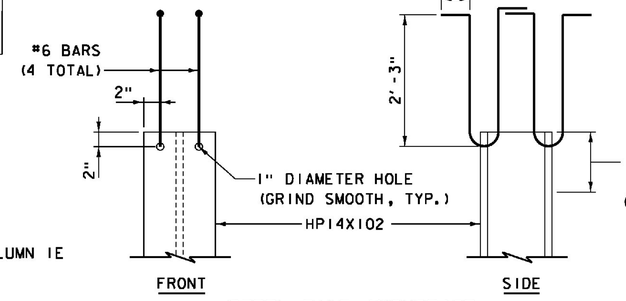

STEEL PILE ANCHORAGE

NOT TO SCALE

NOTE:
SPIRAL REINFORCING IN COLUMN AND EXTENDING INTO FOOTING ARE NOT SHOWN FOR CLARITY. FOR DETAILS AND LIMITS, SEE TYPICAL COLUMN REINFORCING DETAILS ON PIER DETAILS - SHEET 1.

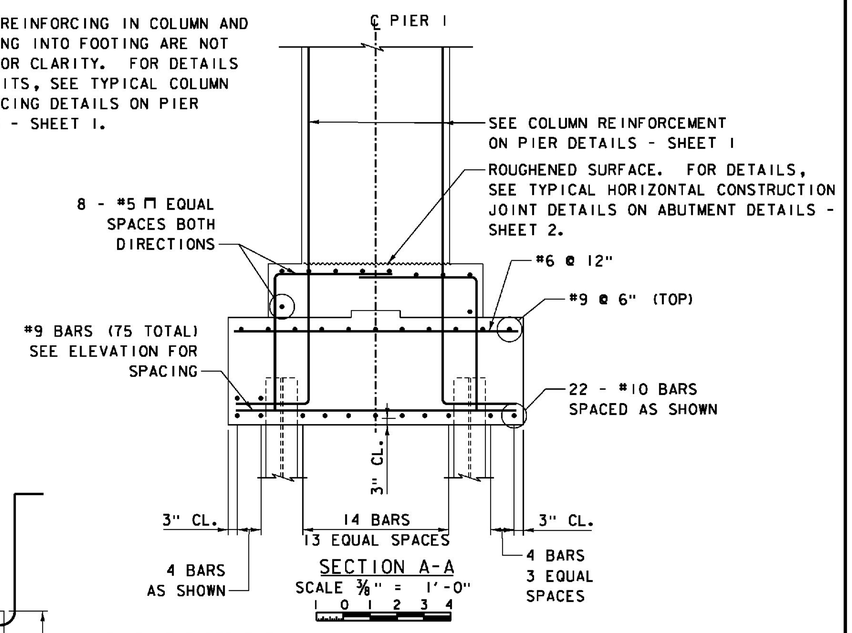

SECTION A-A

SCALE 3/8" = 1'-0"

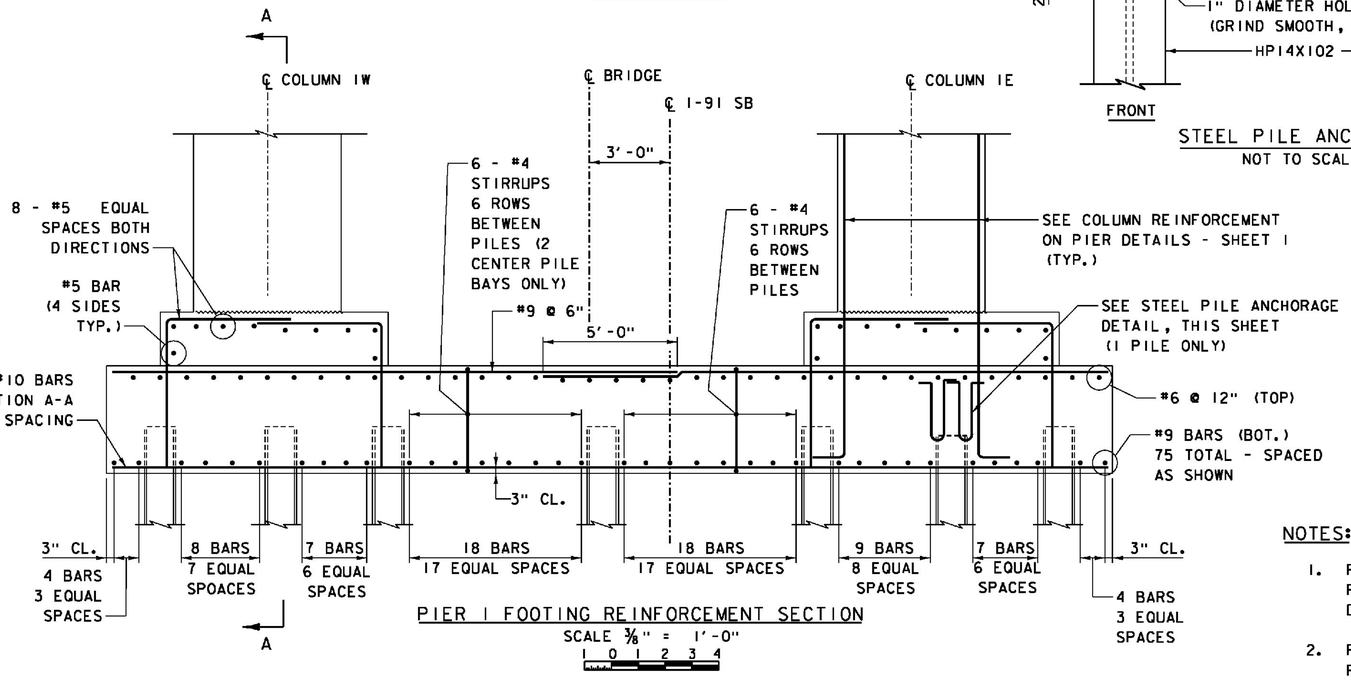

PIER 1 FOOTING REINFORCEMENT SECTION

SCALE 3/8" = 1'-0"

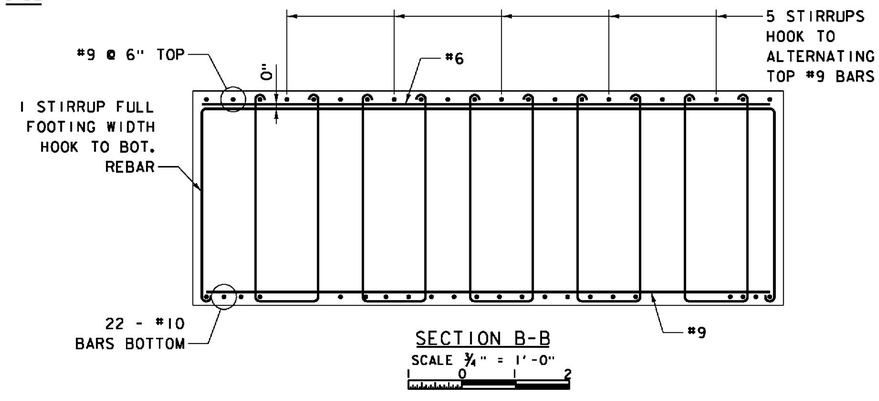

SECTION B-B

SCALE 3/4" = 1'-0"

NOTES:

1. FOR ADDITIONAL COLUMN MASONRY AND REINFORCING DETAILS, SEE PIER DETAILS - SHEET 1.
2. FOR ADDITIONAL PIER CAP MASONRY AND REINFORCING DETAILS, SEE PIER DETAILS - SHEET 2.

PROJECT NAME: WINDSOR
PROJECT NUMBER: IM 091-1(64)

FILE NAME: z10o188Pier1RES.dgn
PROJECT LEADER: J. WILSON
DESIGNED BY: S. BOYINGTON
PIER 1 REINFORCEMENT

PLOT DATE: 7/30/2015
DRAWN BY: S. GUNN
CHECKED BY: S. HALLORAN
SHEET 104 OF 156

WORKING POINT CONTROL			
LOCATION	STATION	NORTHING	EASTING
WP7	1923+81.00, 15.00' LT.	347526.0753	1665075.4833
WP8	1923+81.00, CL	347525.7784	1665090.4803
WP9	1923+81.00, 9.00' RT.	347525.6002	1665099.4785

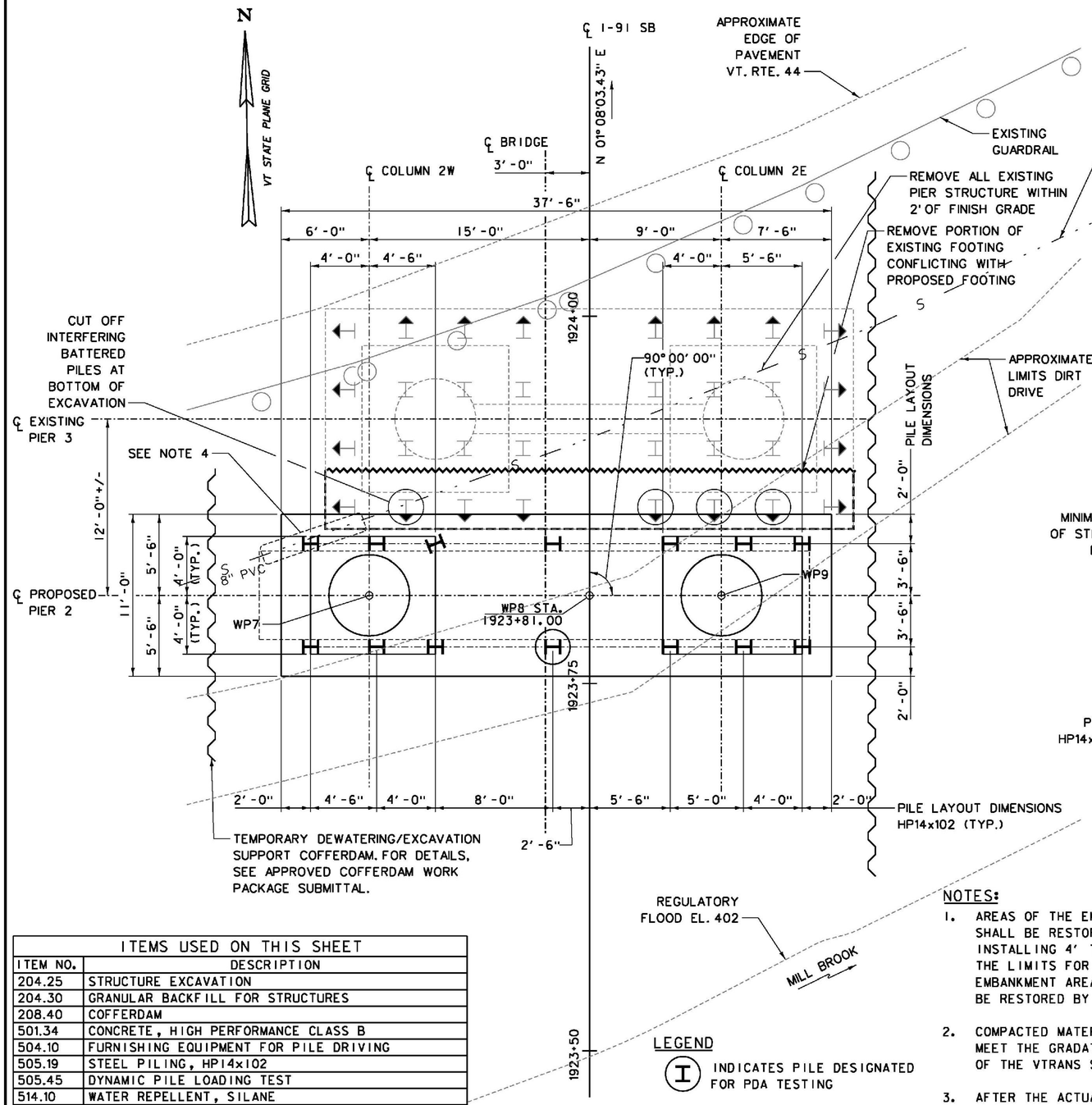

PIER 2 FOOTING PLAN

SCALE 1/4" = 1'-0"

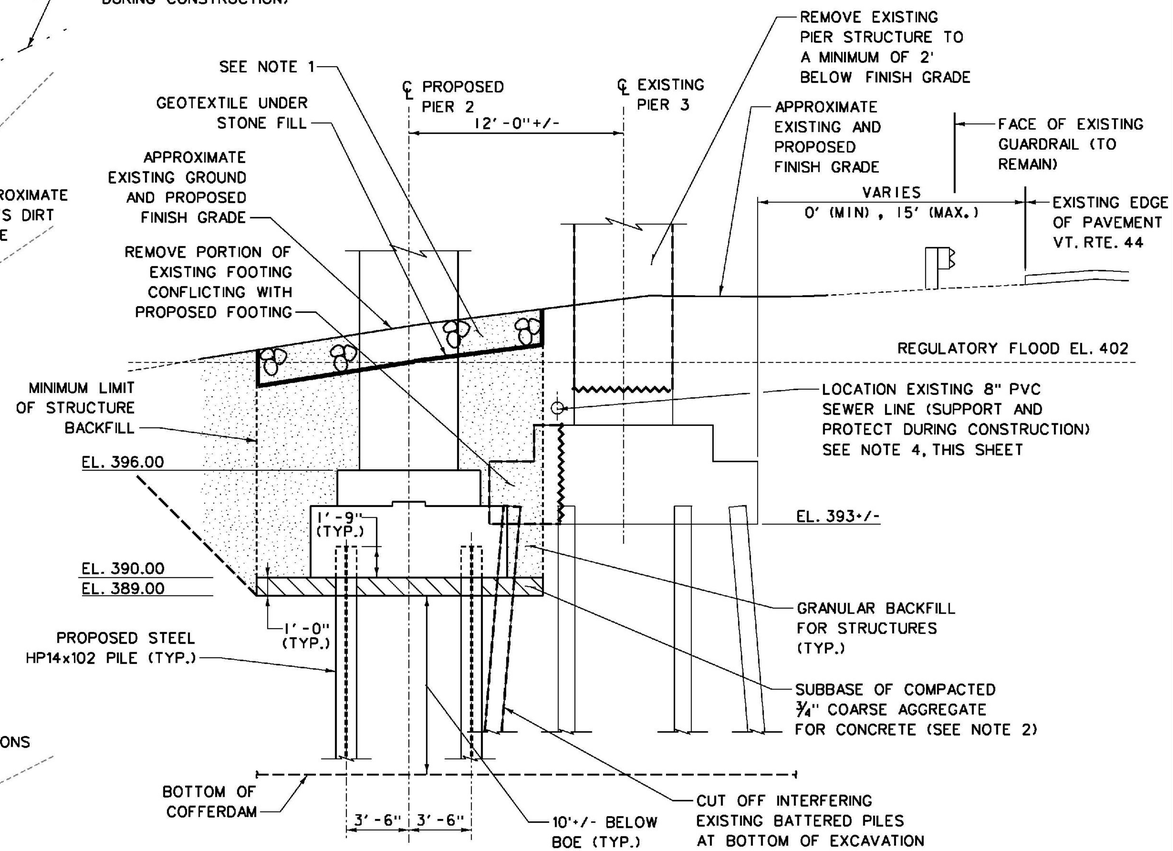

PIER 2 FOOTING SECTION

SCALE 1/4" = 1'-0"

ITEMS USED ON THIS SHEET	
ITEM NO.	DESCRIPTION
204.25	STRUCTURE EXCAVATION
204.30	GRANULAR BACKFILL FOR STRUCTURES
208.40	COFFERDAM
501.34	CONCRETE, HIGH PERFORMANCE CLASS B
504.10	FURNISHING EQUIPMENT FOR PILE DRIVING
505.19	STEEL PILING, HP14x102
505.45	DYNAMIC PILE LOADING TEST
514.10	WATER REPELLENT, SILANE
529.15	REMOVAL OF STRUCTURE
613.13	STONE FILL, TYPE IV
649.31	GEOTEXTILE UNDER STONE FILL
651.15	SEED
651.25	HAY MULCH
651.35	TOPSOIL

LEGEND

(I) INDICATES PILE DESIGNATED FOR PDA TESTING

NOTES:

1. AREAS OF THE EMBANKMENT DISTURBED BY CONSTRUCTION SHALL BE RESTORED UPON COMPLETION OF THE WORK BY INSTALLING 4' THICKNESS OF STONE FILL, TYPE IV TO THE LIMITS FOR STRUCTURE BACKFILL. REMAINING EMBANKMENT AREAS DISTURBED BY CONSTRUCTION SHALL BE RESTORED BY INSTALLING TOPSOIL, SEED AND HAY MULCH.
2. COMPACTED MATERIAL BENEATH PIER FOOTINGS SHALL MEET THE GRADATION REQUIREMENTS OF TABLE 704.02B OF THE VTRANS STANDARD SPECIFICATIONS.
3. AFTER THE ACTUAL LOCATION OF EXISTING PILES ADJACENT TO NEW PIER FOUNDATION IS DISCOVERED, ANY REQUIRED ADJUSTMENT IN PROPOSED PILE LOCATION SHALL BE COORDINATED WITH THE DESIGNER.
4. TEMPORARILY REMOVE PORTION OF EXISTING SEWER LINE DURING SHORT-TERM CLOSURE.

PROJECT NAME: WINDSOR
PROJECT NUMBER: IM 091-1(64)

FILE NAME: z10a188Pier2P.dgn
PROJECT LEADER: J. WILSON
DESIGNED BY: S. BOYINGTON
PIER 2 FOOTING PLAN & SECTION

PLOT DATE: 7/30/2015
DRAWN BY: S. GUNN
CHECKED BY: S. HALLORAN
SHEET 105 OF 156

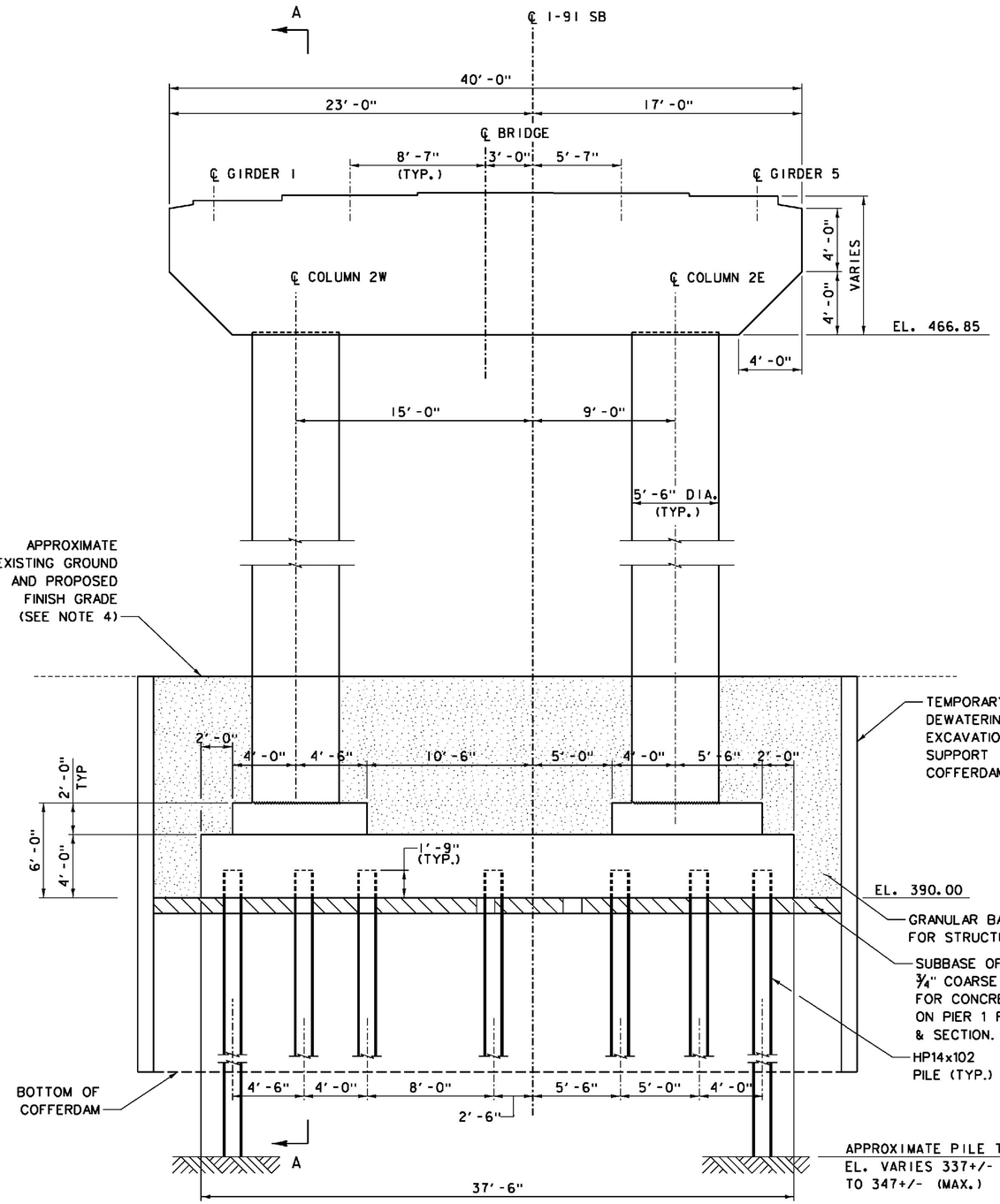

PIER 2 ELEVATION

SCALE ¼" = 1'-0"

2 0 2 4

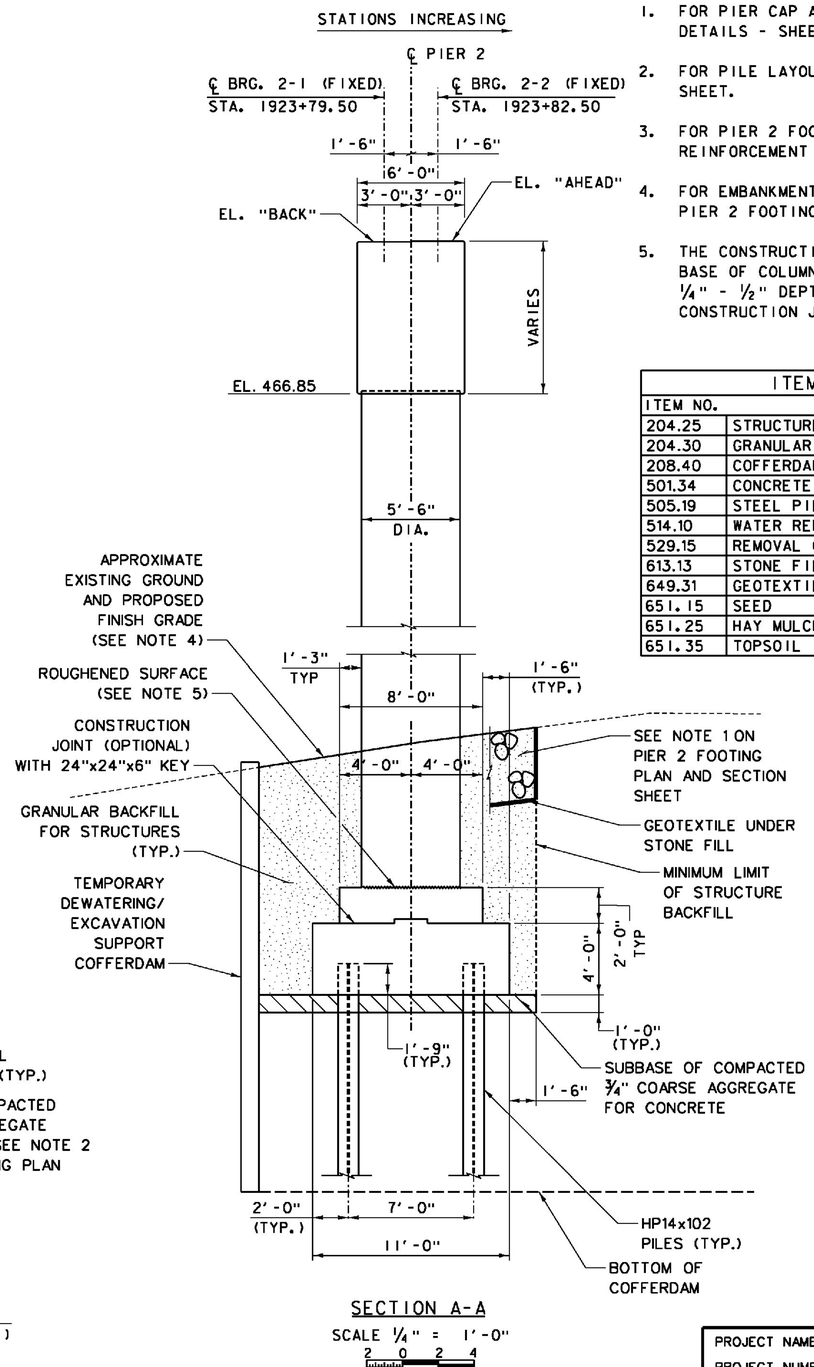

SECTION A-A

SCALE ¼" = 1'-0"

2 0 2 4

NOTES:

1. FOR PIER CAP AND PEDESTAL DETAILS, SEE PIER DETAILS - SHEET 3.
2. FOR PILE LAYOUT, SEE PIER 2 FOOTING PLAN & SECTION SHEET.
3. FOR PIER 2 FOOTING REINFORCING DETAILS, SEE PIER 2 REINFORCEMENT SHEET.
4. FOR EMBANKMENT RESTORATION INFORMATION, SEE NOTE 1 ON PIER 2 FOOTING PLAN AND SECTION SHEET.
5. THE CONSTRUCTION JOINT BETWEEN FOOTING PEDESTALS AND BASE OF COLUMNS SHALL BE INTENTIONALLY ROUGHENED TO ¼" - ½" DEPTH. FOR DETAILS OF TYPICAL HORIZONTAL CONSTRUCTION JOINT, SEE ABUTMENT DETAILS - SHEET 2.

ITEMS USED ON THIS SHEET	
ITEM NO.	DESCRIPTION
204.25	STRUCTURE EXCAVATION
204.30	GRANULAR BACKFILL FOR STRUCTURES
208.40	COFFERDAM
501.34	CONCRETE, HIGH PERFORMANCE CLASS B
505.19	STEEL PILING, HP14x102
514.10	WATER REPELLENT, SILANE
529.15	REMOVAL OF STRUCTURE
613.13	STONE FILL, TYPE IV
649.31	GEOTEXTILE UNDER STONE FILL
651.15	SEED
651.25	HAY MULCH
651.35	TOPSOIL

PEDESTAL ELEVATIONS		
GIRDER	EL. "BACK"	EL. "AHEAD"
1	475.35	475.36
2	475.70	475.72
3	475.91	475.92
4	475.85	475.87
5	475.67	475.68

PROJECT NAME: WINDSOR
PROJECT NUMBER: IM 091-1(64)

FILE NAME: z10a188Pier2ES.dgn
PROJECT LEADER: J. WILSON
DESIGNED BY: S. BOYINGTON
PIER 2 ELEVATION & SECTION

PLOT DATE: 7/30/2015
DRAWN BY: S. GUNN
CHECKED BY: S. HALLORAN
SHEET 106 OF 156

ITEMS USED ON THIS SHEET	
ITEM NO.	DESCRIPTION
501.34	CONCRETE, HIGH PERFORMANCE CLASS B
507.15	REINFORCING STEEL
507.17	EPOXY COATED REINFORCING STEEL

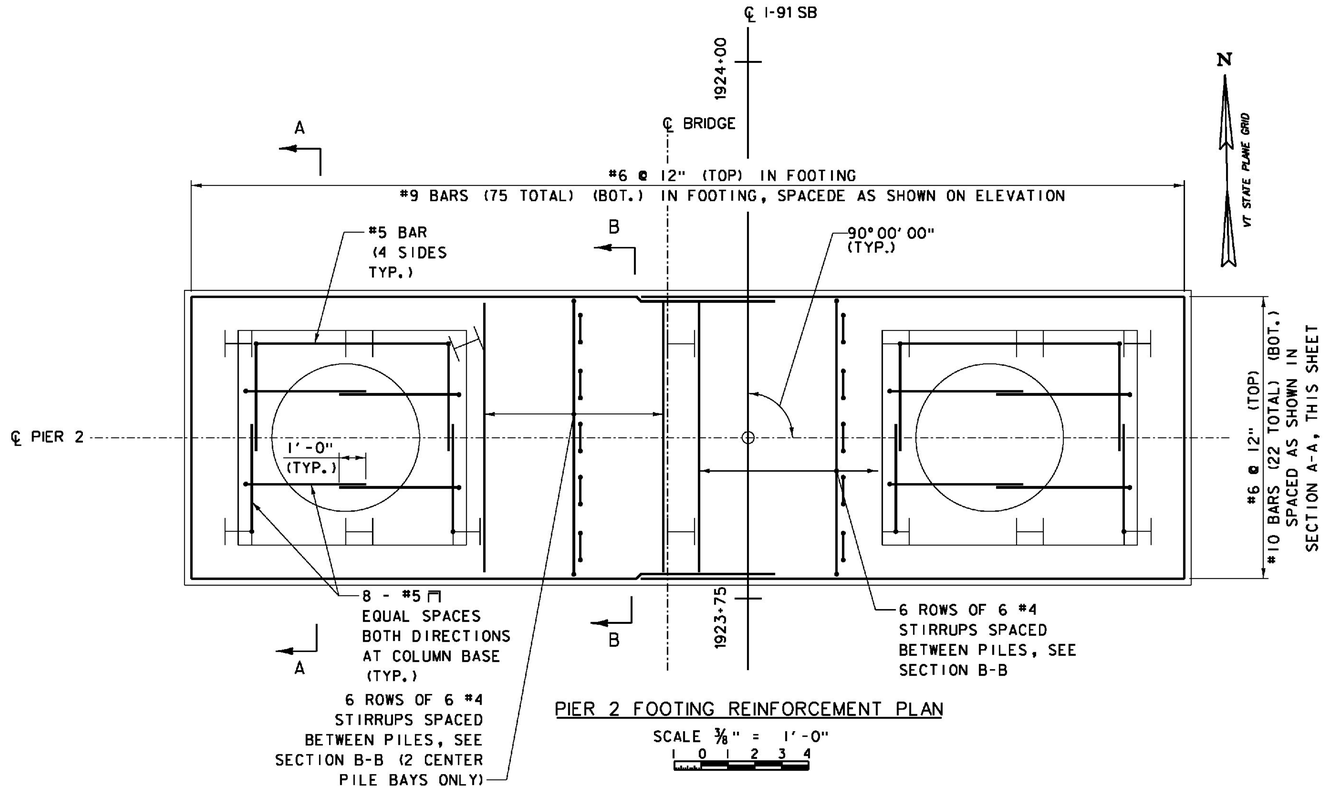

PIER 2 FOOTING REINFORCEMENT PLAN

SCALE 3/8" = 1'-0"

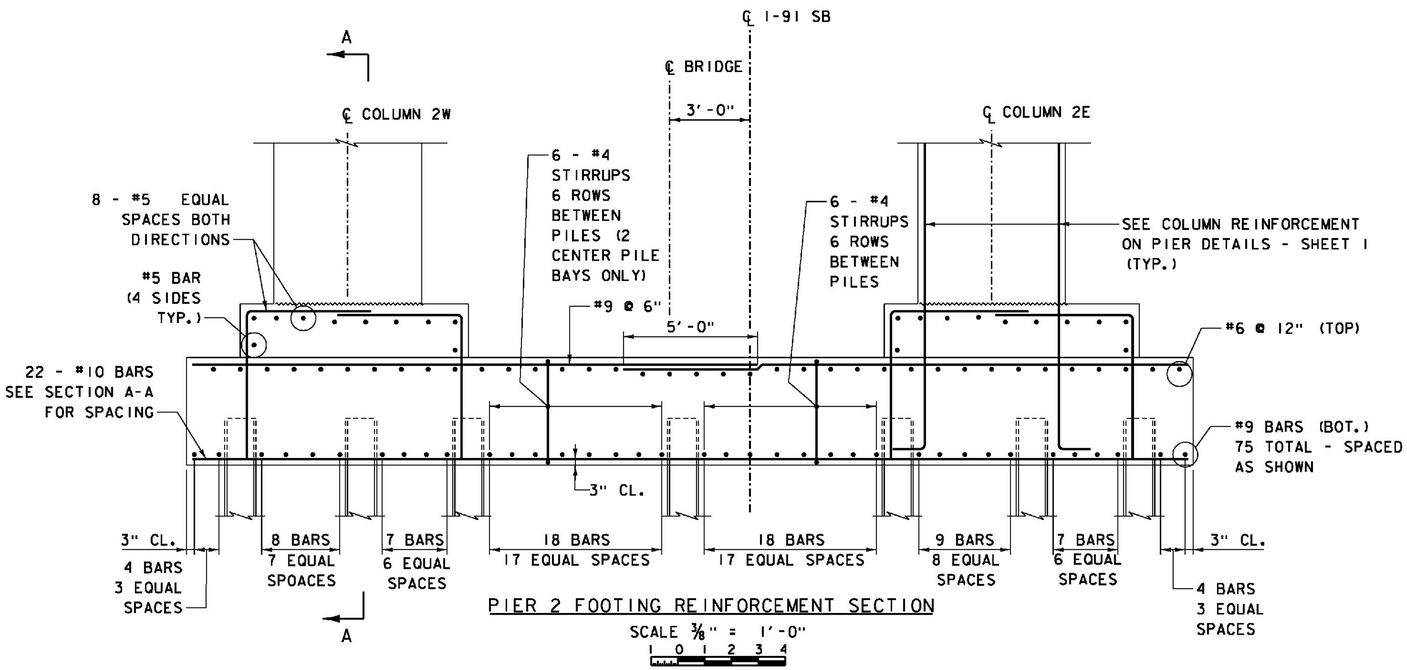

PIER 2 FOOTING REINFORCEMENT SECTION

SCALE 3/8" = 1'-0"

NOTE:
SPIRAL REINFORCING IN COLUMN AND EXTENDING INTO FOOTING ARE NOT SHOWN FOR CLARITY. FOR DETAILS AND LIMITS, SEE TYPICAL COLUMN REINFORCING DETAILS ON PIER DETAILS - SHEET 1.

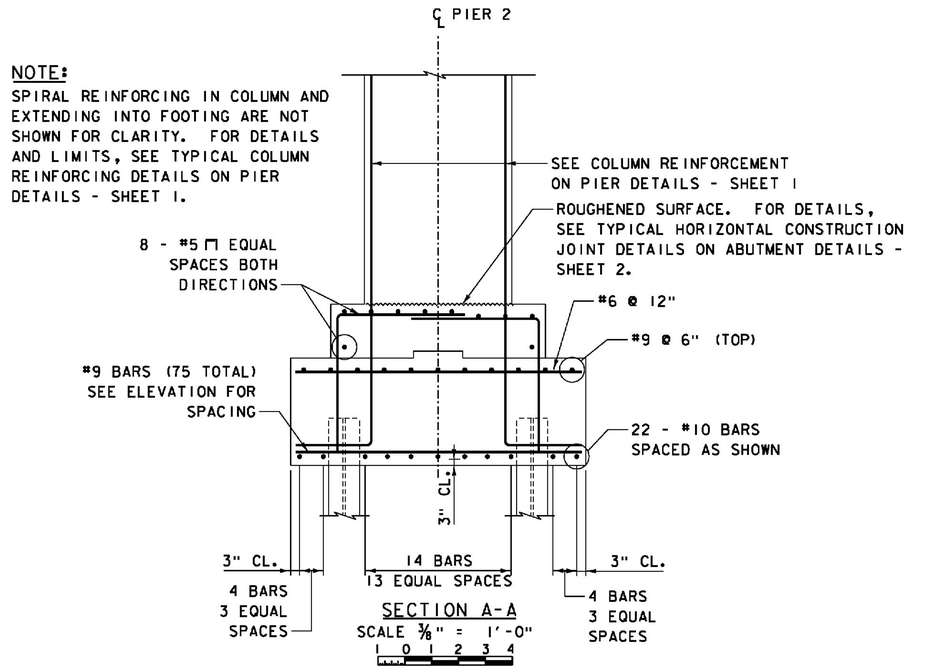

SECTION A-A

SCALE 3/8" = 1'-0"

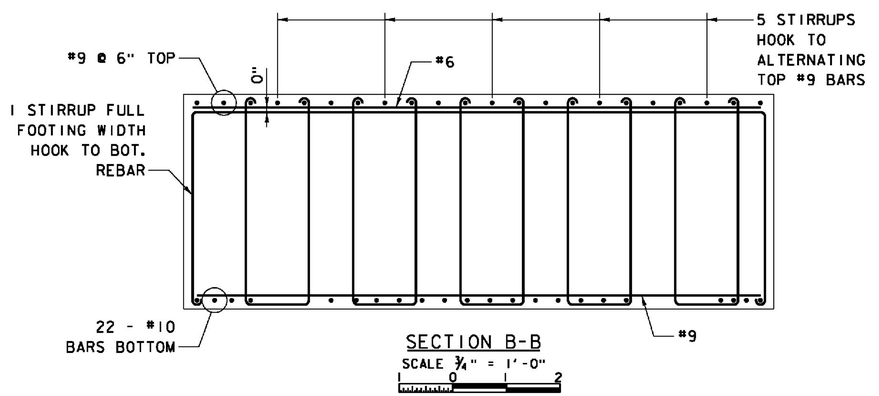

SECTION B-B

SCALE 3/4" = 1'-0"

NOTES:

1. FOR ADDITIONAL COLUMN MASONRY AND REINFORCING DETAILS, SEE PIER DETAILS - SHEET 1.
2. FOR ADDITIONAL PIER CAP MASONRY AND REINFORCING DETAILS, SEE PIER DETAILS - SHEET 3.

PROJECT NAME: WINDSOR
PROJECT NUMBER: IM 091-1(64)

FILE NAME: z10a188Pier2RES.dgn
PROJECT LEADER: J. WILSON
DESIGNED BY: S. BOYINGTON
PIER 2 REINFORCEMENT

PLOT DATE: 7/30/2015
DRAWN BY: S. GUNN
CHECKED BY: S. HALLORAN
SHEET 107 OF 156

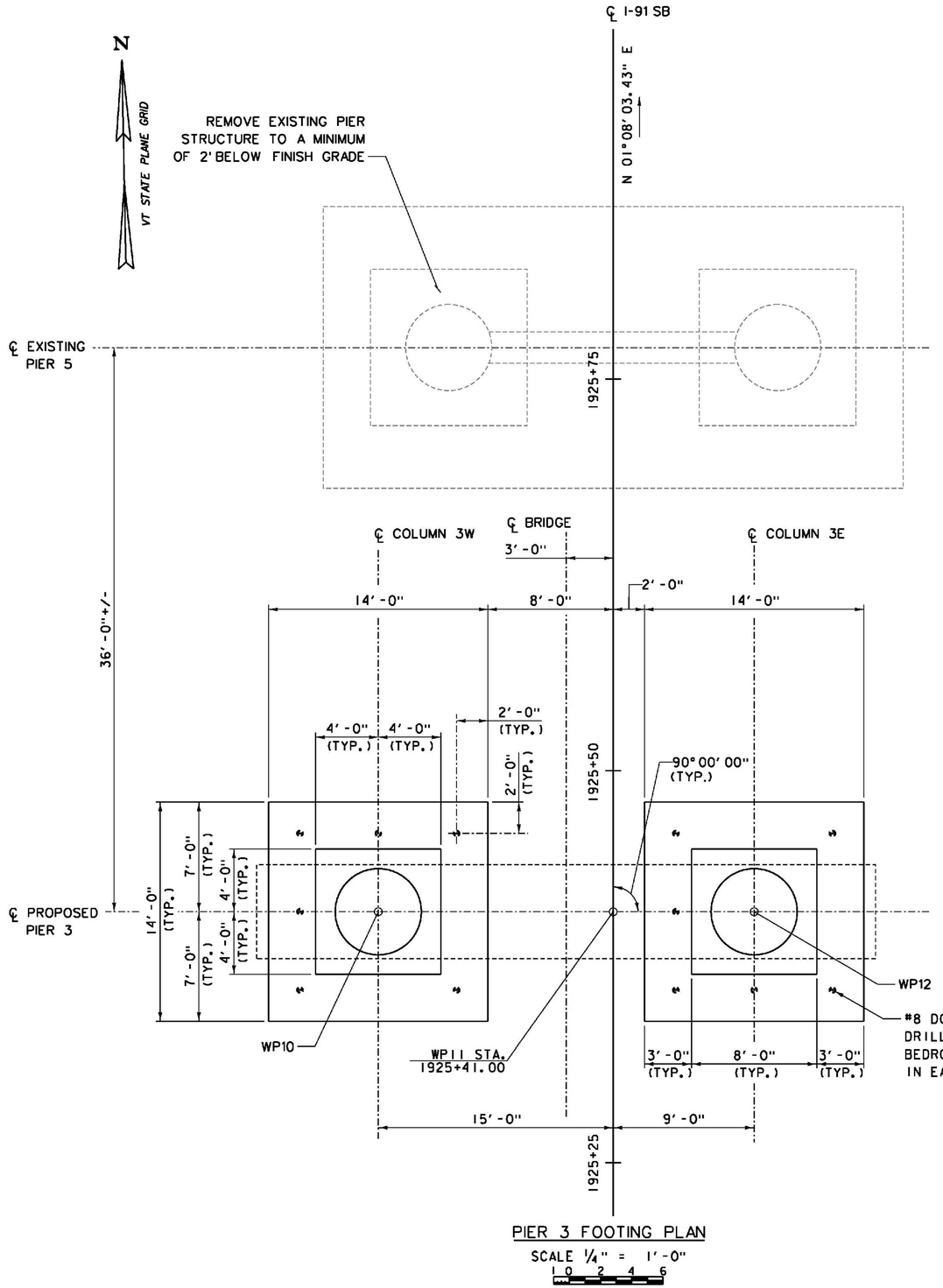

PIER 3 FOOTING PLAN

SCALE 1/4" = 1'-0"

WORKING POINT CONTROL			
LOCATION	STATION	NORTHING	EASTING
WP10	1925+41.00, 15.00' LT.	347686.0439	1665078.6506
WP11	1925+41.00, CL	347685.7470	1665093.6476
WP12	1925+41.00, 9.00' RT.	347685.5688	1665102.6459

#8 DOWEL GROUTED IN FIELD DRILLED HOLE IN PREPARED BEDROCK SURFACE. (6 DOWELS IN EACH COLUMN FOOTING)

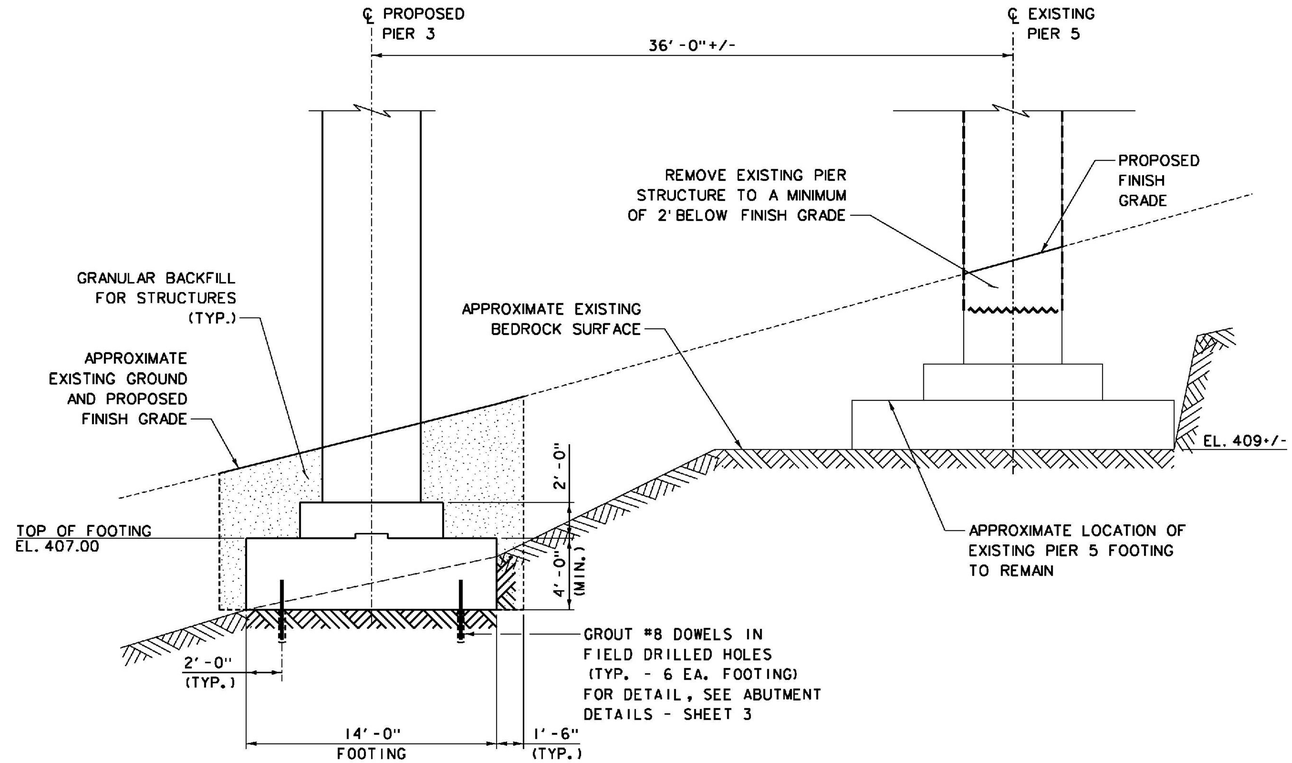

PIER 3 FOOTING SECTION (AT ℄ COLUMN 3E)

SCALE 1/4" = 1'-0"

ITEMS USED ON THIS SHEET	
ITEM NO.	DESCRIPTION
204.25	STRUCTURE EXCAVATION
204.30	GRANULAR BACKFILL FOR STRUCTURES
501.34	CONCRETE, HIGH PERFORMANCE CLASS B
507.16	DRILLING AND GROUTING DOWELS
529.15	REMOVAL OF STRUCTURE
651.15	SEED
651.25	HAY MULCH
651.35	TOPSOIL

NOTE:

1. EMBANKMENT AREAS DISTURBED BY CONSTRUCTION SHALL BE RESTORED UPON COMPLETION OF THE WORK BY INSTALLING TOPSOIL, SEED AND HAY MULCH.

PROJECT NAME: WINDSOR
PROJECT NUMBER: IM 091-1(64)

FILE NAME: z10a188Pier3P.dgn
PROJECT LEADER: J. WILSON
DESIGNED BY: S. BOYINGTON
PIER 3 FOOTING PLAN & SECTION

PLOT DATE: 7/30/2015
DRAWN BY: S. GUNN
CHECKED BY: S. HALLORAN
SHEET 108 OF156

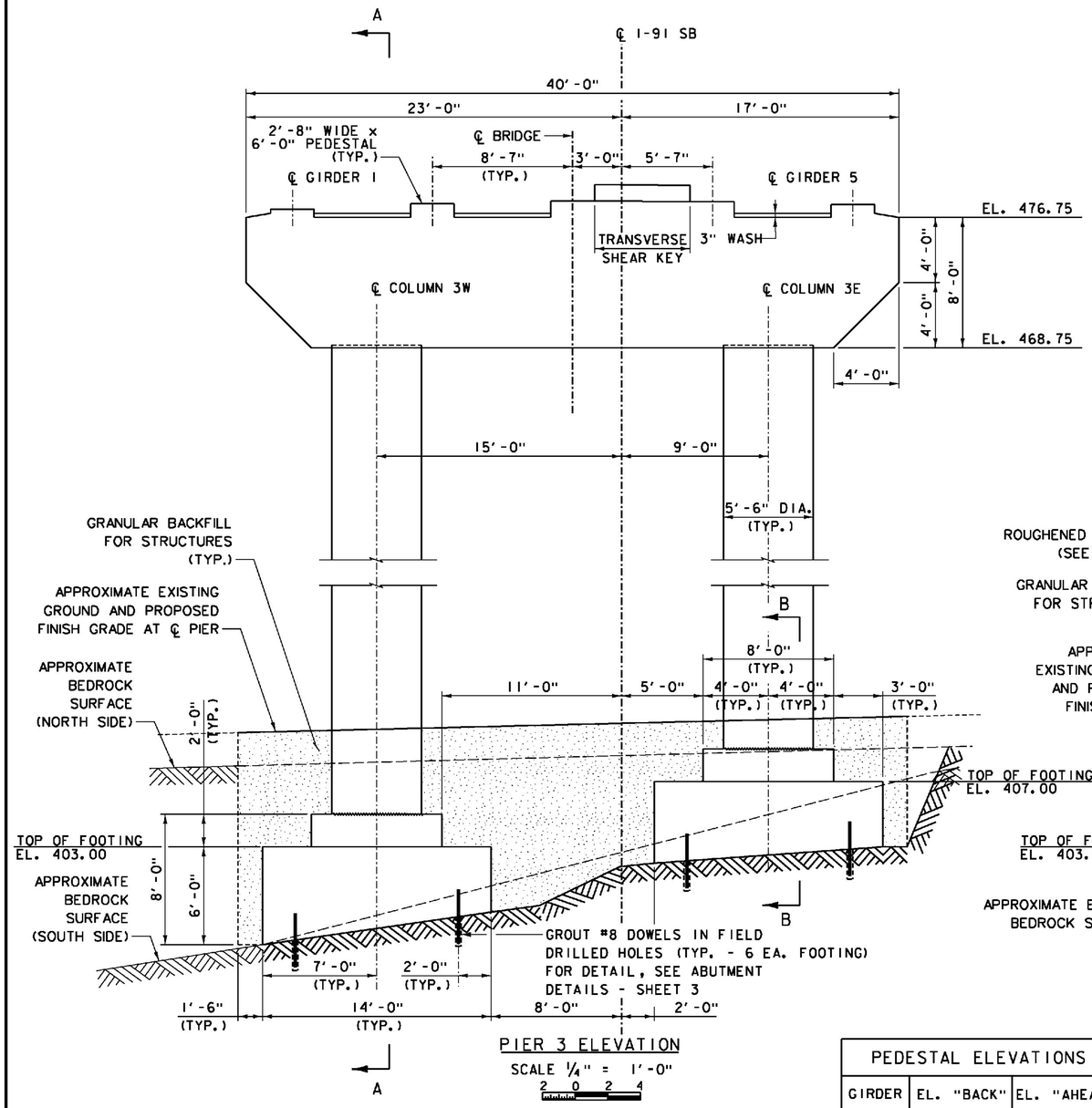

PIER 3 ELEVATION
SCALE 1/4" = 1'-0"

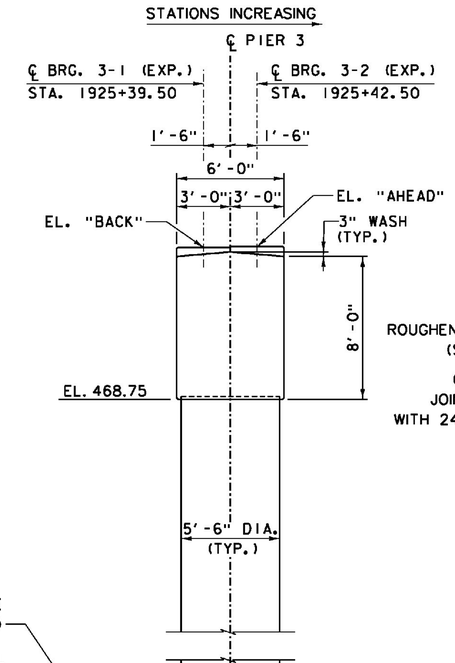

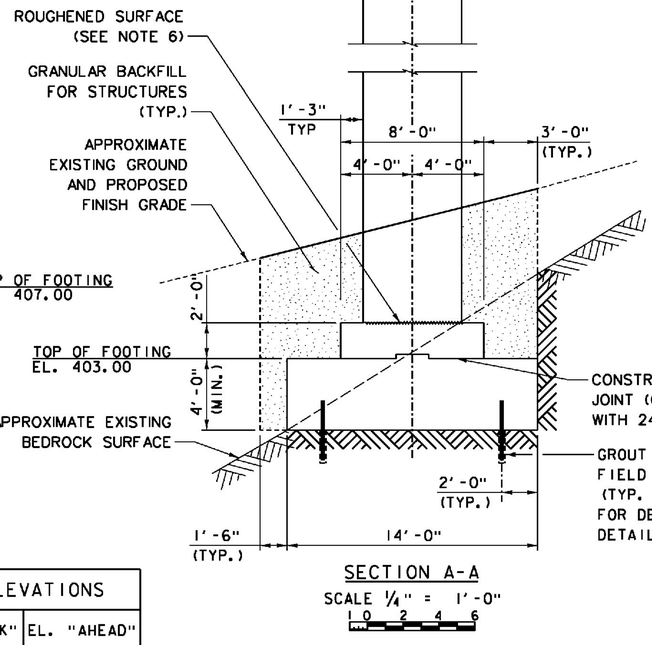

SECTION A-A
SCALE 1/4" = 1'-0"

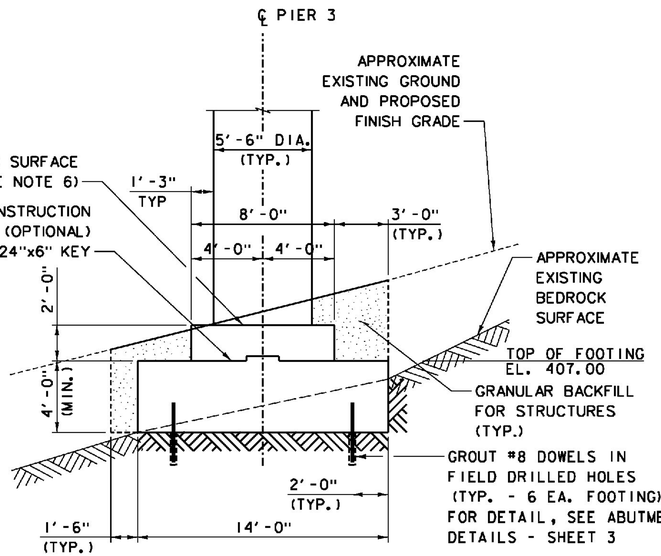

SECTION B-B
SCALE 1/4" = 1'-0"

ITEMS USED ON THIS SHEET	
ITEM NO.	DESCRIPTION
204.25	STRUCTURE EXCAVATION
204.30	GRANULAR BACKFILL FOR STRUCTURES
501.34	CONCRETE, HIGH PERFORMANCE CLASS B
507.16	DRILLING AND GROUTING DOWELS
529.15	REMOVAL OF STRUCTURE
651.15	SEED
651.25	HAY MULCH
651.35	TOPSOIL

PEDESTAL ELEVATIONS		
GIRDER	EL. "BACK"	EL. "AHEAD"
1	477.28	477.31
2	477.64	477.67
3	477.84	477.87
4	477.79	477.82
5	477.60	477.64

NOTES:

1. FOR PIER CAP AND PEDESTAL DETAILS, SEE PIER DETAILS - SHEET 2.
2. FOR TRANSVERSE SHEAR KEY DETAILS, SEE PIER DETAILS - SHEET 4.
3. FOR PIER 3 FOOTING REINFORCING DETAILS, SEE PIER 3 REINFORCEMENT.
4. FOR FOUNDATION ON BEDROCK NOTES, SEE ABUTMENT 2 ELEVATION SHEET.
5. EMBANKMENT AREAS DISTURBED BY CONSTRUCTION SHALL BE RESTORED UPON COMPLETION OF THE WORK BY INSTALLING TOPSOIL, SEED AND HAY MULCH.
6. THE CONSTRUCTION JOINT BETWEEN FOOTING PEDESTALS AND BASE OF COLUMNS SHALL BE INTENTIONALLY ROUGHENED TO 1/4" - 1/2" DEPTH. FOR DETAILS OF TYPICAL HORIZONTAL CONSTRUCTION JOINT, SEE ABUTMENT DETAILS - SHEET 2.

PROJECT NAME: WINDSOR
PROJECT NUMBER: IM 091-1(64)

FILE NAME: z10a188Pier3ES.dgn
PROJECT LEADER: J. WILSON
DESIGNED BY: S. BOYINGTON
PIER 3 ELEVATION & SECTION

PLOT DATE: 7/30/2015
DRAWN BY: S. GUNN
CHECKED BY: S. HALLORAN
SHEET 109 OF 156

ITEMS USED ON THIS SHEET	
ITEM NO.	DESCRIPTION
501.34	CONCRETE, HIGH PERFORMANCE CLASS B
507.15	REINFORCING STEEL
507.16	DRILLING AND GROUTING DOWELS
507.17	EPOXY COATED REINFORCING STEEL

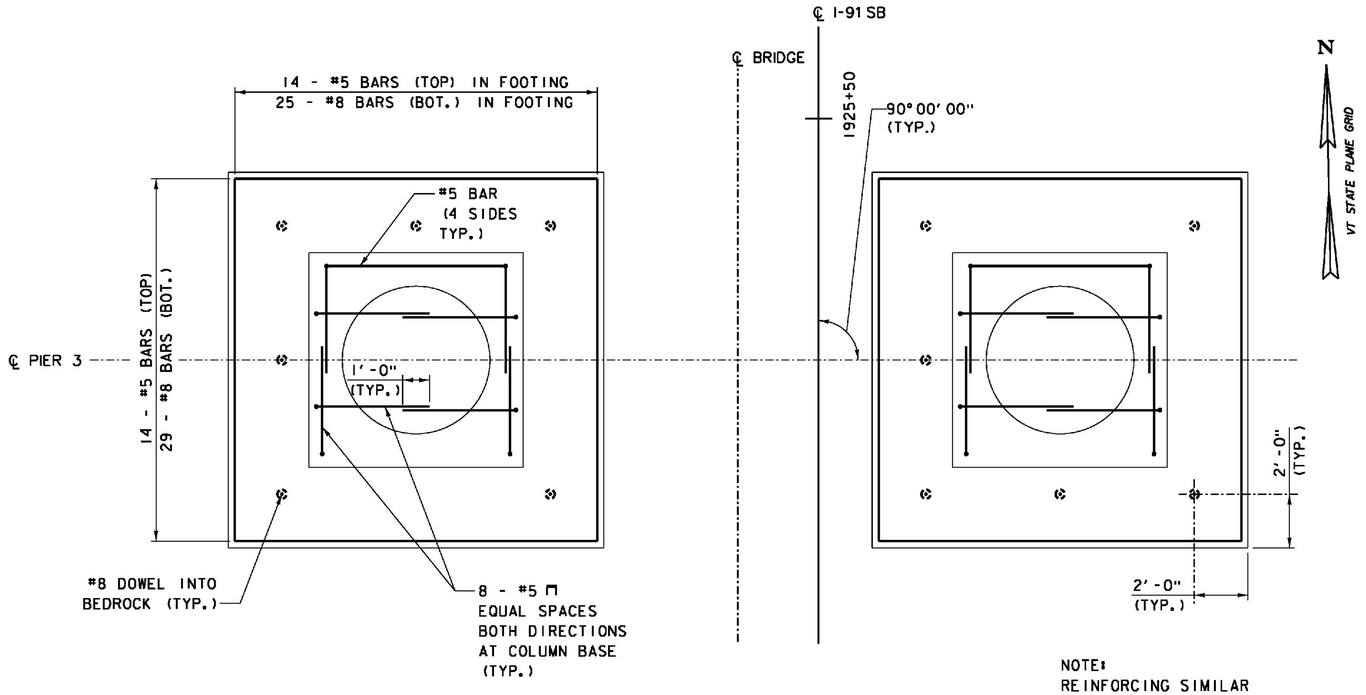

NOTE:
REINFORCING SIMILAR FOR BOTH FOOTINGS.

PIER 3 FOOTING REINFORCEMENT PLAN

SCALE 3/8" = 1'-0"

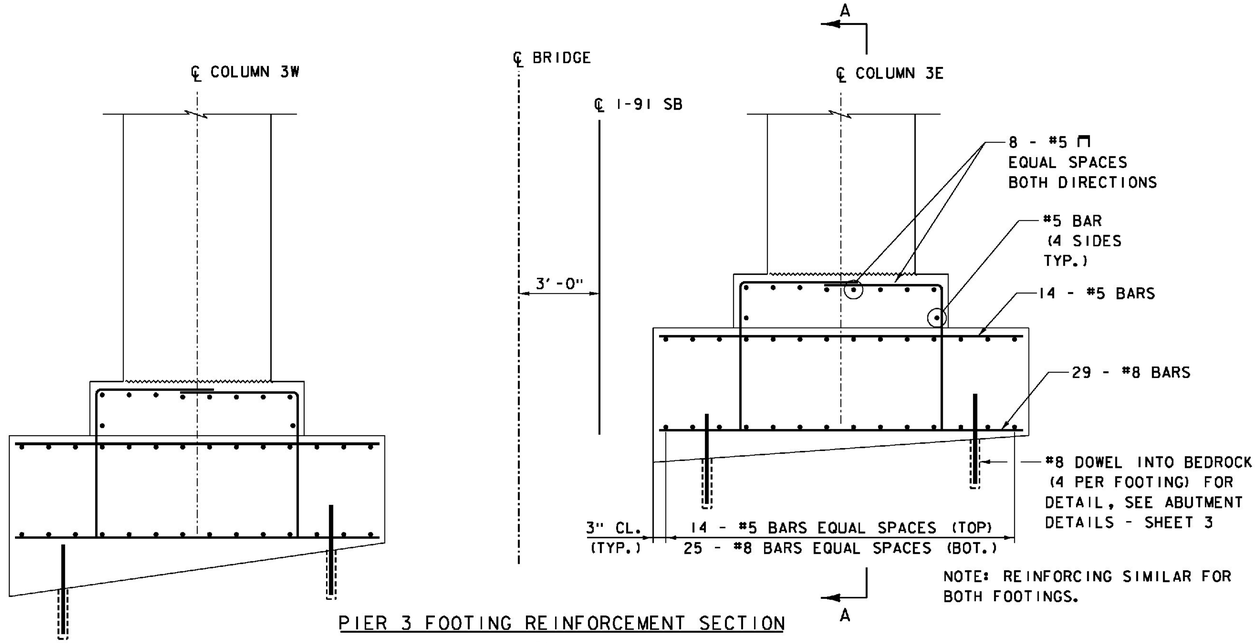

NOTE: REINFORCING SIMILAR FOR BOTH FOOTINGS.

PIER 3 FOOTING REINFORCEMENT SECTION

SCALE 3/8" = 1'-0"

NOTE:
SPIRAL REINFORCING IN COLUMN AND EXTENDING INTO FOOTING ARE NOT SHOWN FOR CLARITY. FOR DETAILS AND LIMITS, SEE TYPICAL COLUMN REINFORCING DETAILS ON PIER DETAILS - SHEET 1.

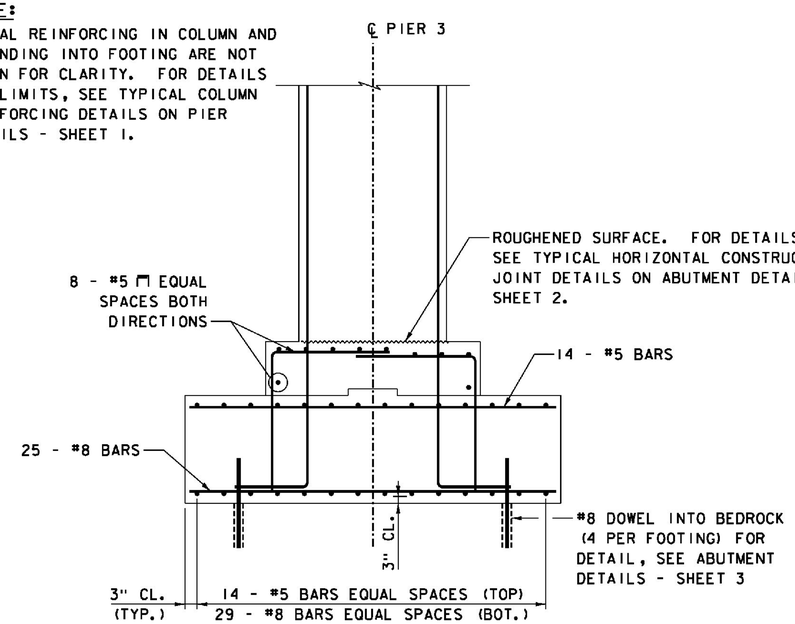

SECTION A-A

SCALE 3/8" = 1'-0"

NOTES:

1. FOR ADDITIONAL COLUMN MASONRY AND REINFORCING DETAILS, SEE PIER DETAILS - SHEET 1.
2. FOR ADDITIONAL PIER CAP MASONRY AND REINFORCING DETAILS, SEE PIER DETAILS - SHEET 2.

PROJECT NAME: WINDSOR
PROJECT NUMBER: IM 091-1(64)

FILE NAME: z10a188Pier3RES.dgn
PROJECT LEADER: J. WILSON
DESIGNED BY: S. BOYINGTON
PIER 3 REINFORCEMENT

PLOT DATE: 7/30/2015
DRAWN BY: S. GUNN
CHECKED BY: S. HALLORAN
SHEET 110 OF 156

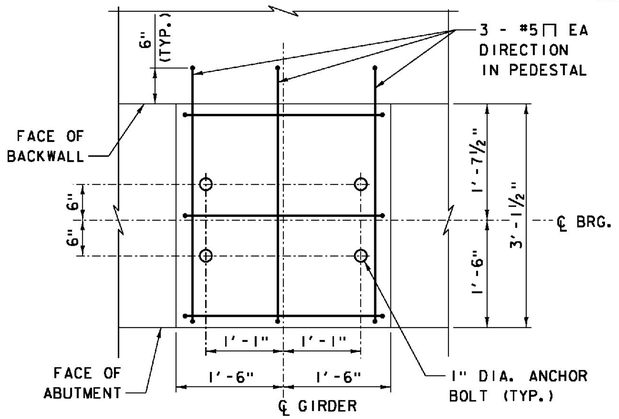

TYPICAL ABUTMENT PEDESTAL PLAN

SCALE 1" = 1'-0"

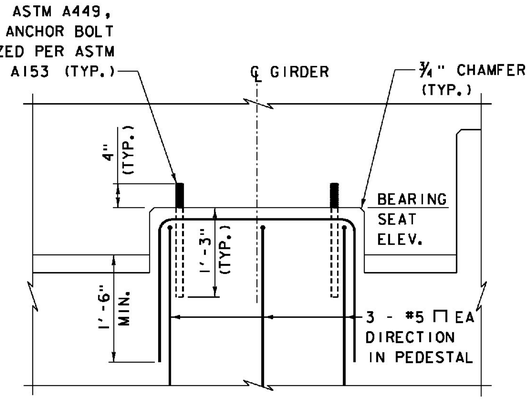

NOTE: FOR BEARING SEAT ELEVATIONS, SEE ABUTMENT ELEVATION SHEETS

TYPICAL ABUTMENT PEDESTAL ELEVATION

SCALE 1" = 1'-0"

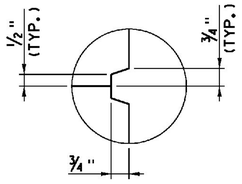

SCORE MARK DETAIL

NOT TO SCALE

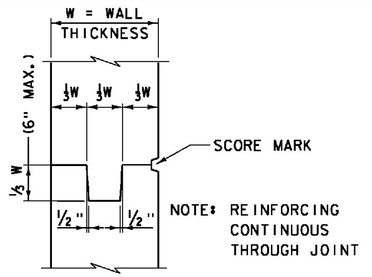

TYPICAL VERTICAL CONSTRUCTION JOINT

NOT TO SCALE

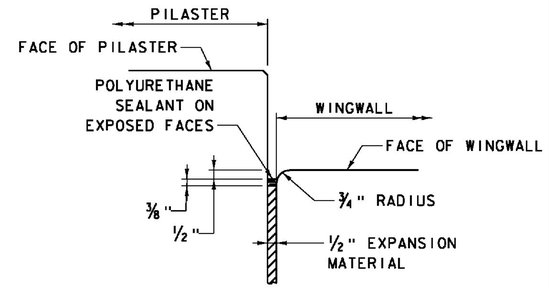

JOINT BETWEEN PILASTER AND WINGWALL

NOT TO SCALE

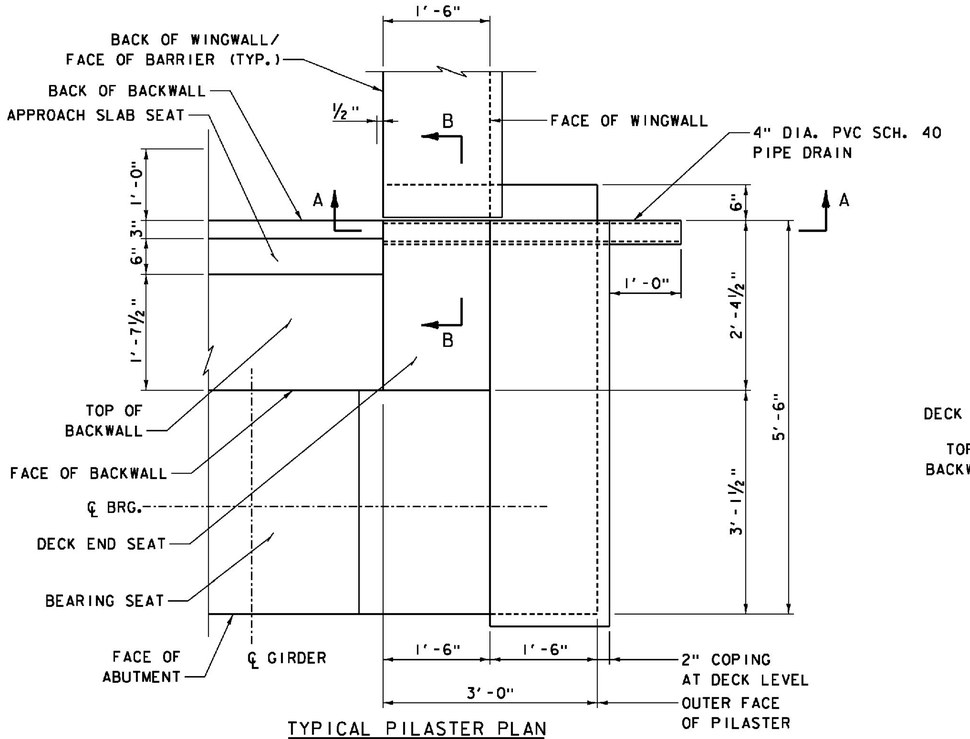

TYPICAL PILASTER PLAN

WEST PILASTER AT ABUTMENT 1 SHOWN; EAST PILASTER SIMILAR BUT OPP HAND

SCALE 1" = 1'-0"

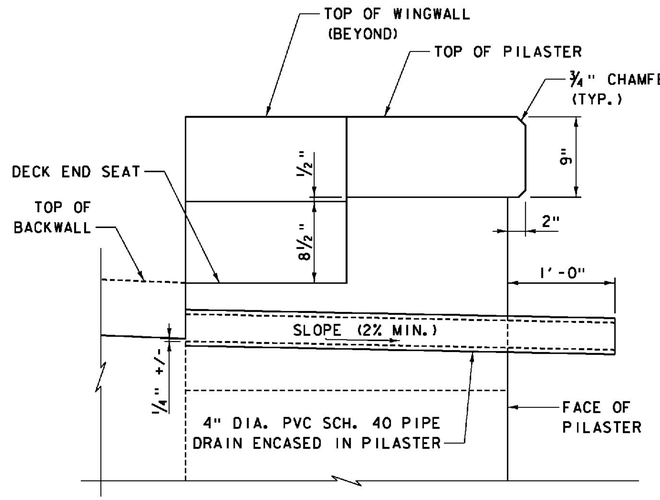

SECTION A-A

SCALE 1 ½" = 1'-0"

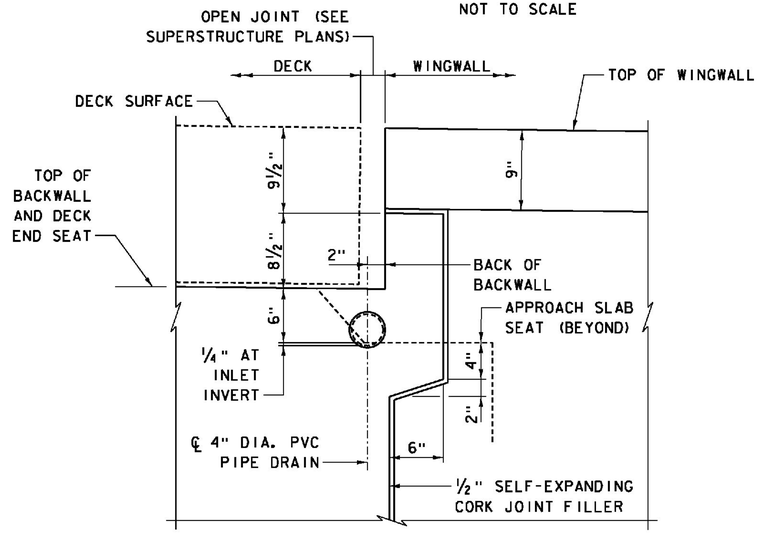

SECTION B-B

SCALE 1 ½" = 1'-0"

PROJECT NAME: WINDSOR	
PROJECT NUMBER: IM 091-1(64)	
FILE NAME: z10o188AD1.dgn	PLOT DATE: 7/30/2015
PROJECT LEADER: J. WILSON	DRAWN BY: S. GUNN
DESIGNED BY: S. BOYINGTON	CHECKED BY: S. HALLORAN
SB ABUTMENT DETAILS - SHEET 1	SHEET 111 OF156

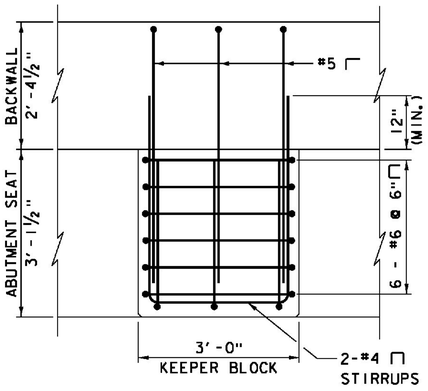

PLAN

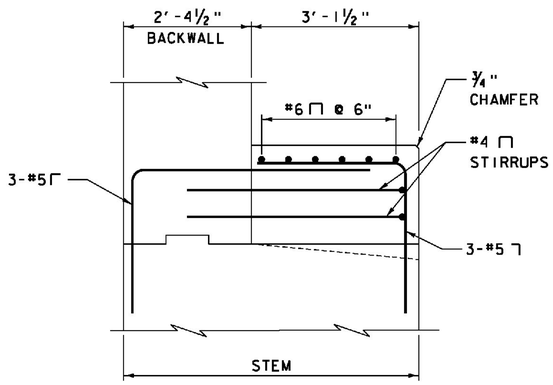

SECTION

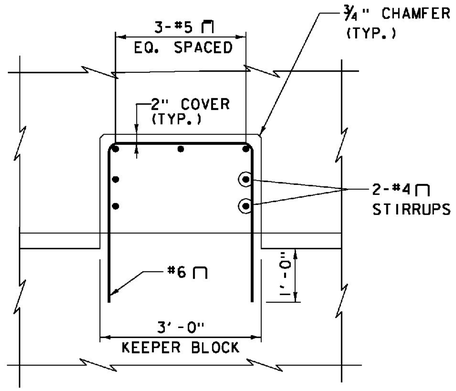

ELEVATION

KEEPER BLOCK REINFORCEMENT DETAILS

SCALE ¾" = 1'-0"

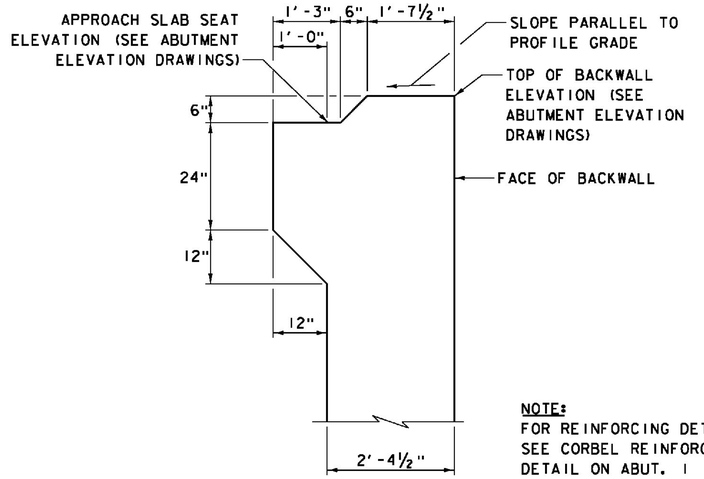

TOP OF BACKWALL

SCALE ¾" = 1'-0"

NOTE:
FOR REINFORCING DETAILS, SEE CORBEL REINFORCEMENT DETAIL ON ABUT. 1 REINFORCEMENT - SHEET 2

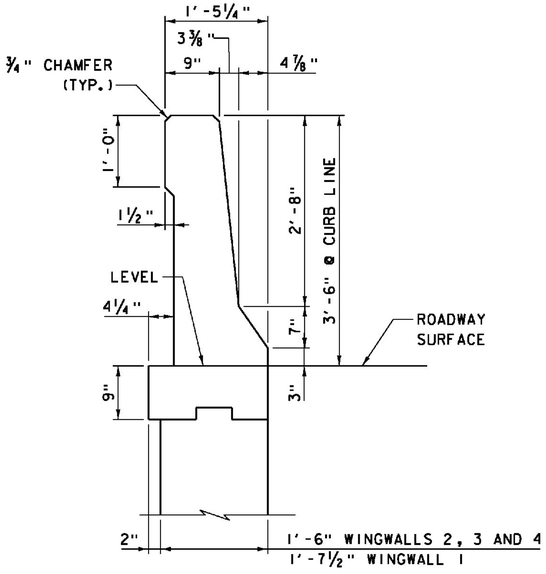

F-SHAPE BARRIER ON WINGWALL DETAIL

SCALE 1" = 1'-0"

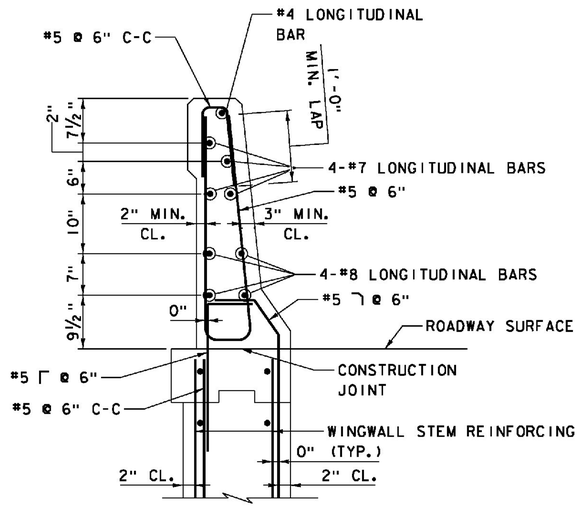

F-SHAPE BARRIER ON WINGWALL - REINFORCEMENT

SCALE 1" = 1'-0"

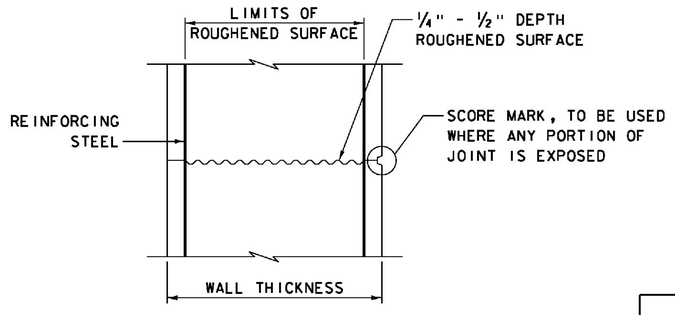

TYPICAL HORIZONTAL CONSTRUCTION JOINT

NOT TO SCALE

1. THE SURFACE OF THE CONCRETE CONSTRUCTION JOINTS SHALL BE CLEANED AND FREE OF LAITANCE.
2. IMMEDIATELY BEFORE NEW CONCRETE IS PLACED, ALL CONSTRUCTION JOINTS SHALL BE WETTED AND STANDING WATER REMOVED.

ITEMS USED ON THIS SHEET	
ITEM NO.	DESCRIPTION
501.33	CONCRETE, HIGH PERFORMANCE CLASS A
507.17	EPOXY COATED REINFORCING STEEL
900.635	STAINLESS STEEL REINFORCING
900.640	BRIDGE RAILING, F-SHAPE CONCRETE

PROJECT NAME: WINDSOR
PROJECT NUMBER: IM 091-1(64)

FILE NAME: z10o188AD2.dgn
PROJECT LEADER: J. WILSON
DESIGNED BY: S. BOYINGTON
SB ABUTMENT DETAILS - SHEET 2

PLOT DATE: 7/30/2015
DRAWN BY: S. GUNN
CHECKED BY: S. HALLORAN
SHEET 112 OF156

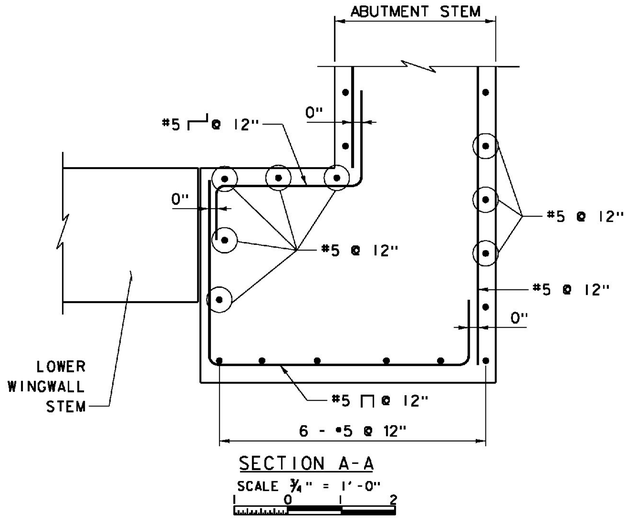

SECTION A-A

SCALE 3/4" = 1'-0"

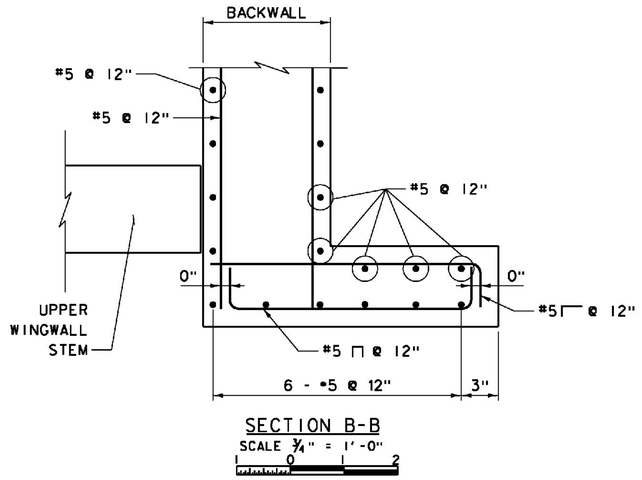

SECTION B-B

SCALE 3/4" = 1'-0"

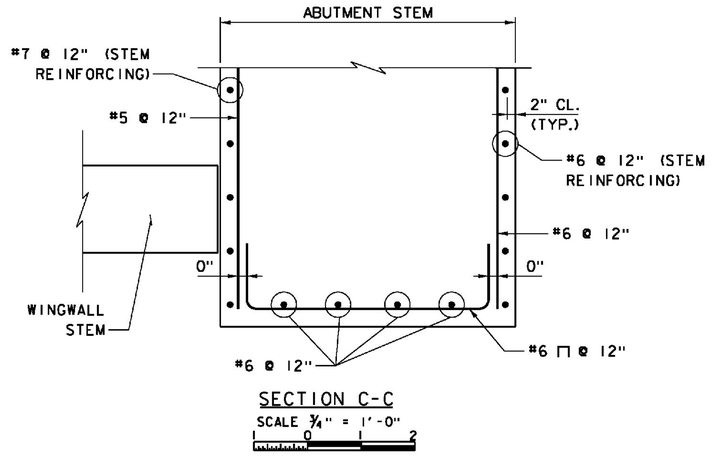

SECTION C-C

SCALE 3/4" = 1'-0"

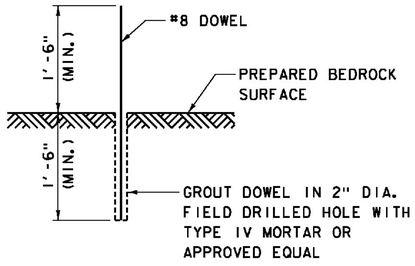

TYPICAL FOOTING DOWEL DETAIL

NOT TO SCALE

PROJECT NAME: WINDSOR	
PROJECT NUMBER: IM 091-1(64)	
FILE NAME: z10a188AD3.dgn	PLOT DATE: 7/30/2015
PROJECT LEADER: J. WILSON	DRAWN BY: S. GUNN
DESIGNED BY: S. BOYINGTON	CHECKED BY: S. HALLORAN
SB ABUTMENT DETAILS - SHEET 3	SHEET 113 OF156

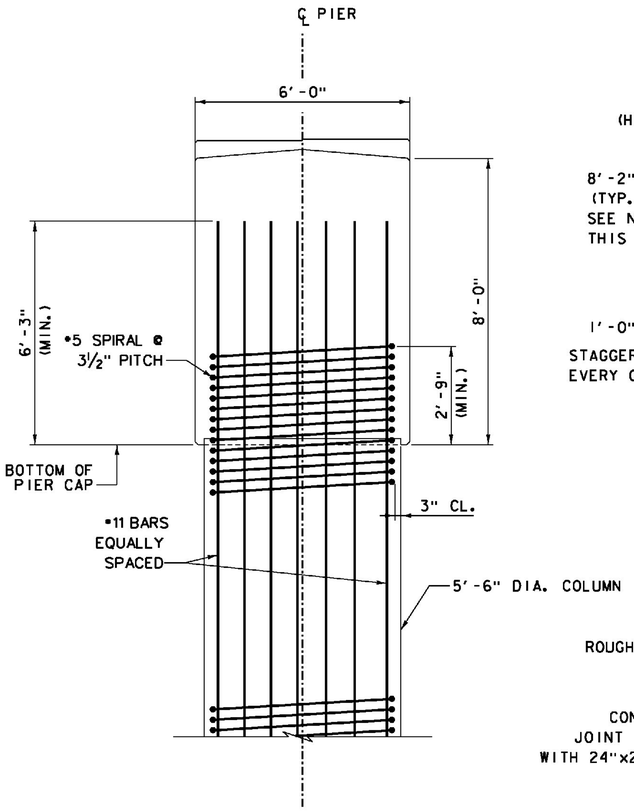

TYPICAL PIER CAP TO COLUMN REINFORCING

SCALE ½" = 1'-0"

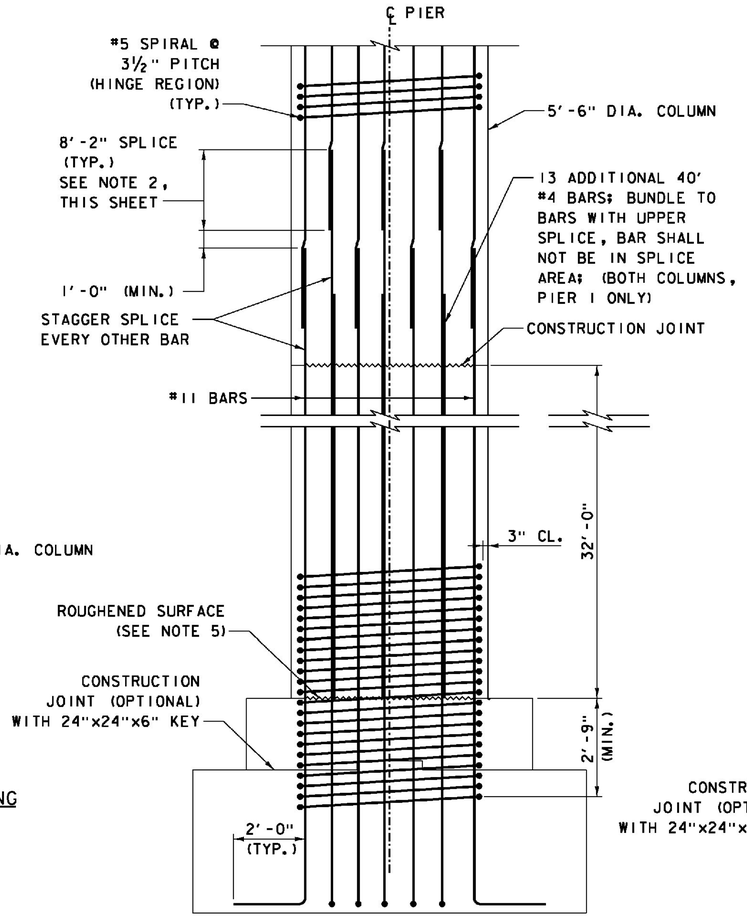

TYPICAL COLUMN REINFORCING WITH LAP SPLICES

NOT TO SCALE

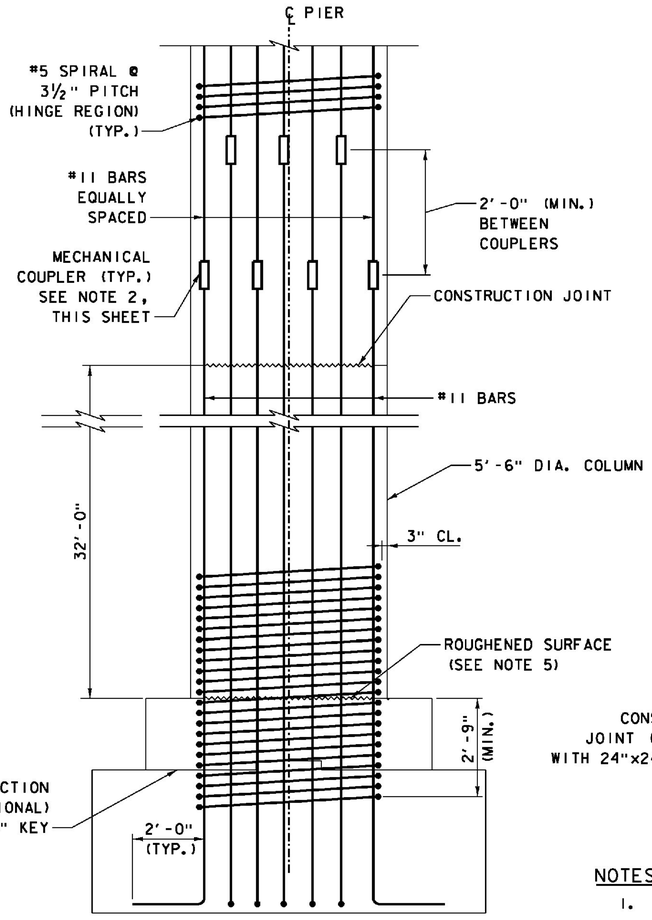

TYPICAL COLUMN REINFORCING WITH MECHANICAL COUPLERS

NOT TO SCALE

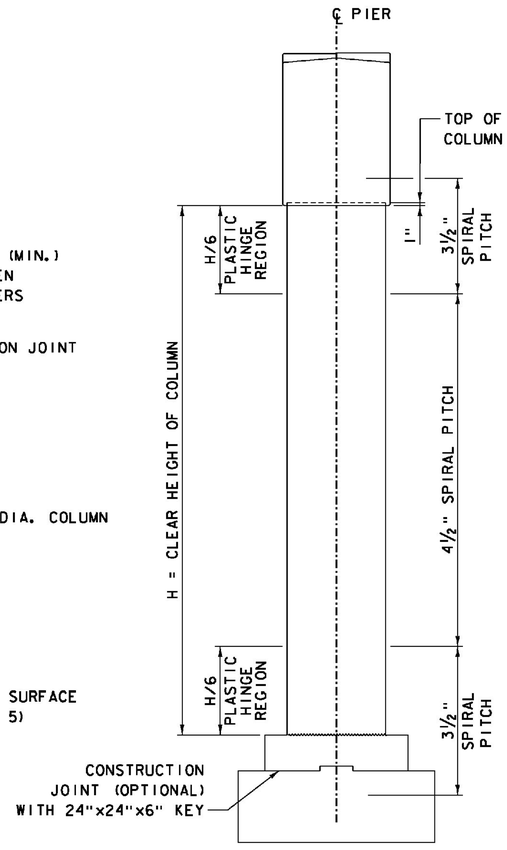

TYPICAL COLUMN ELEVATION

NOT TO SCALE

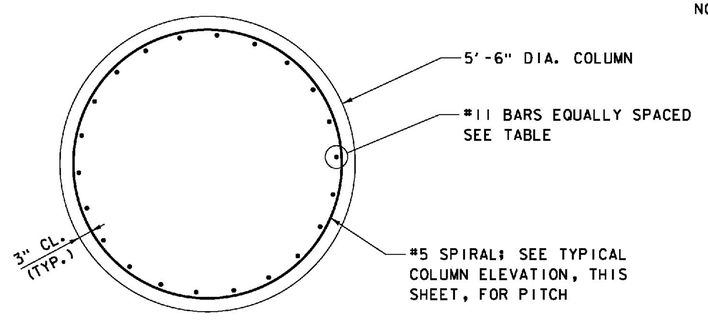

TYPICAL COLUMN REINFORCING

SCALE ¾" = 1'-0"

LONGITUDINAL REINFORCING TABLE				
PIER	COLUMN	TOTAL #11 BARS	H (FT.)	H/6 (FT.)
1	1W	26	68.75	11.46
	1E	26	68.75	11.46
2	2W	30	70.85	11.81
	2E	30	70.85	11.81
3	3W	22	62.75	10.46
	3E	22	58.75	9.79

ITEMS USED ON THIS SHEET	
ITEM NO.	DESCRIPTION
501.34	CONCRETE, HIGH PERFORMANCE CLASS B
507.17	EPOXY COATED REINFORCING STEEL

NOTES:

1. REINFORCING SPIRAL SHALL BE SPLICED WITH MECHANICAL COUPLERS.
2. LAP SPLICES OR MECHANICAL COUPLERS ON LONGITUDINAL BARS ARE NOT ALLOWED WITHIN PLASTIC HINGE REGIONS. SEE TYPICAL COLUMN ELEVATION, THIS SHEET.
3. DESIGN LAP SPLICE FOR LONGITUDINAL BARS IS 8'-2" MIN.
4. MECHANICAL SPLICES SHALL DEVELOP 125 PERCENT OF THE SPECIFIED YIELD STRENGTH OF THE BAR.
5. THE CONSTRUCTION JOINT BETWEEN FOOTING PEDESTALS AND BASE OF COLUMNS SHALL BE INTENTIONALLY ROUGHENED TO ¼" - ½" DEPTH. FOR DETAILS OF TYPICAL HORIZONTAL CONSTRUCTION JOINT, SEE ABUTMENT DETAILS - SHEET 2.

PROJECT NAME: WINDSOR
PROJECT NUMBER: IM 091-1(64)

FILE NAME: z10a188PD1.dgn
PROJECT LEADER: J. WILSON
DESIGNED BY: S. BOYINGTON
SB PIER DETAILS - SHEET 1

PLOT DATE: 7/30/2015
DRAWN BY: S. GUNN
CHECKED BY: S. HALLORAN
SHEET 114 OF 156

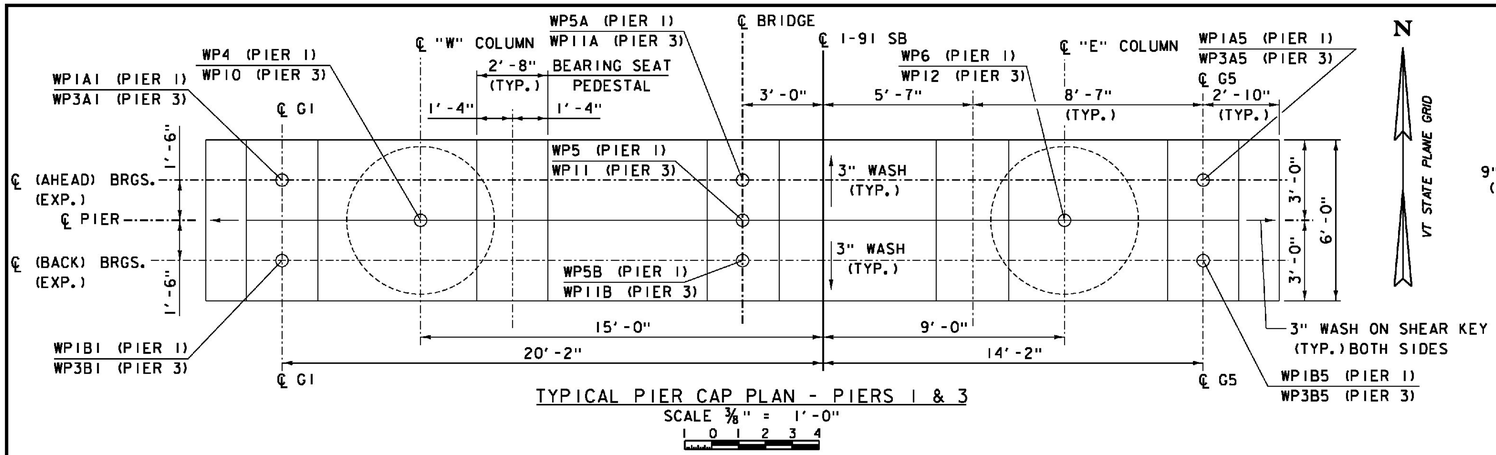

TYPICAL PIER CAP PLAN - PIERS 1 & 3

SCALE 3/8" = 1'-0"

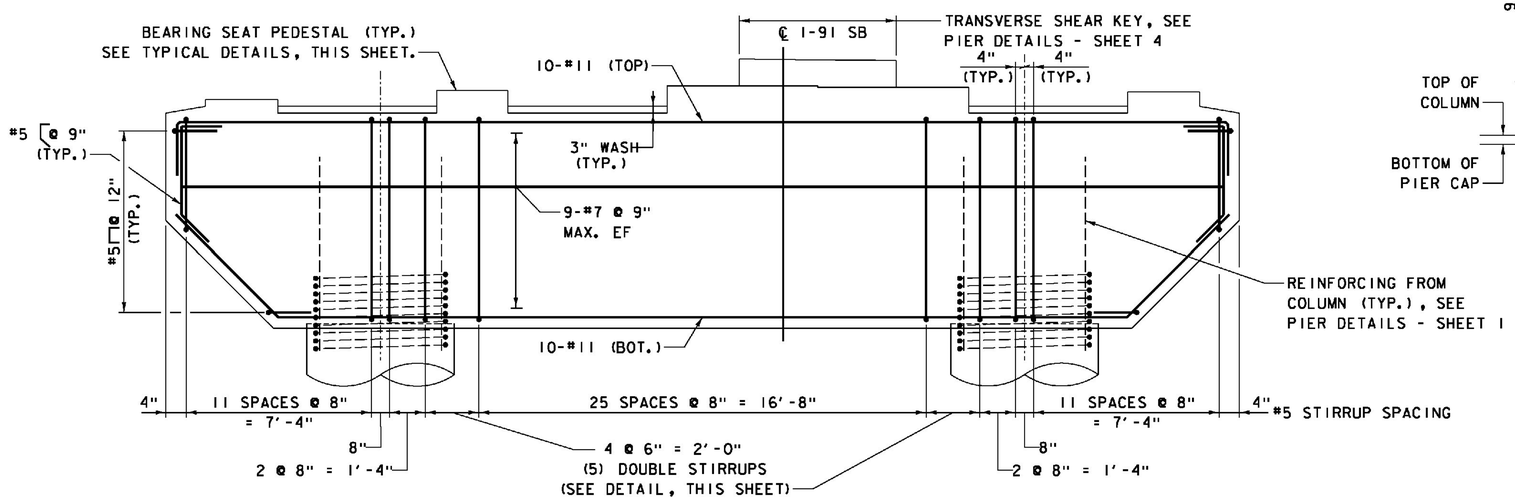

TYPICAL PIER CAP REINFORCING ELEVATION - PIERS 1 & 3

SCALE 3/8" = 1'-0"

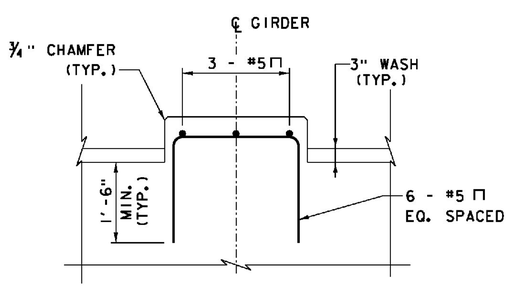

TYPICAL PEDESTAL ELEVATION

SCALE 3/4" = 1'-0"

NOTE: FOR BEARING SEAT ELEVATIONS, SEE SPECIFIC PIER ELEVATION AND SECTION SHEETS.

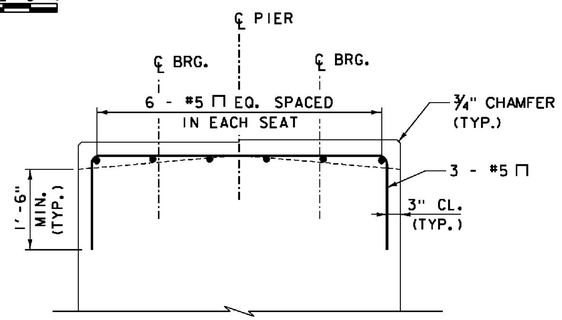

TYPICAL PEDESTAL SECTION

SCALE 3/4" = 1'-0"

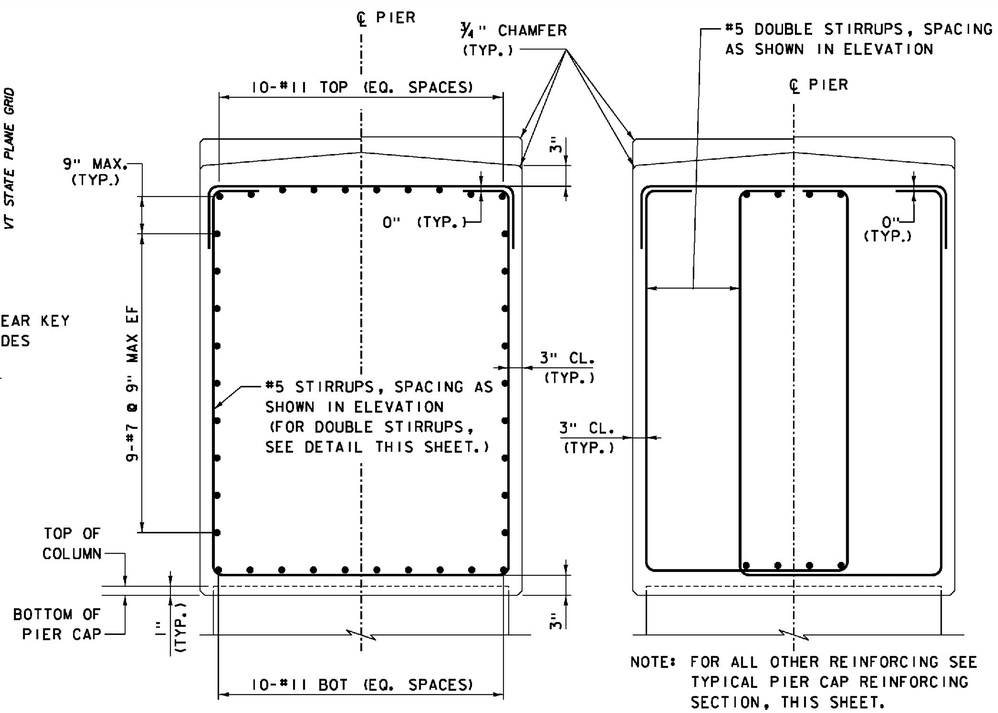

NOTE: FOR ALL OTHER REINFORCING SEE TYPICAL PIER CAP REINFORCING SECTION, THIS SHEET.

PIER CAP REINFORCING SECTION
PIERS 1 & 3

SCALE 3/4" = 1'-0"

DOUBLE STIRRUP DETAIL
PIERS 1 & 3

SCALE 3/4" = 1'-0"

WORKING POINT CONTROL				
PIER	POINT NO.	STATION	NORTHING	EASTING
1	WP1B1	1922+19.50, 20.17' LT.	347364.7092	1665067.1206
	WP5B	1922+19.50, CL	347364.3100	1665087.2833
	WP1B5	1922+19.50, 14.17' RT.	347364.0296	1665101.4472
	WP1A1	1922+22.50, 20.17' LT.	347367.7086	1665067.1800
	WP5A	1922+22.50, CL	347367.3094	1665087.3427
	WP1A5	1922+22.50, 14.17' RT.	347367.0290	1665101.5066
3	WP3B1	1925+39.50, 20.17' LT.	347684.6465	1665073.4552
	WP11B	1925+39.50, CL	347684.2473	1665093.6179
	WP3B5	1925+39.50, 14.17' RT.	347683.9669	1665107.7818
	WP3A1	1925+42.50, 20.17' LT.	347687.6459	1665073.5146
	WP11A	1925+42.50, CL	347687.2467	1665093.6773
	WP3A5	1925+42.50, 14.17' RT.	347686.9663	1665107.8412

ITEMS USED ON THIS SHEET	
ITEM NO.	DESCRIPTION
501.34	CONCRETE, HIGH PERFORMANCE CLASS B
507.17	EPOXY COATED REINFORCING STEEL

PROJECT NAME: WINDSOR
PROJECT NUMBER: IM 091-1(64)

FILE NAME: z10a188PD2.dgn
PROJECT LEADER: J. WILSON
DESIGNED BY: S. BOYINGTON
SB PIER DETAILS - SHEET 2

PLOT DATE: 7/30/2015
DRAWN BY: S. GUNN
CHECKED BY: S. HALLORAN
SHEET 115 OF156

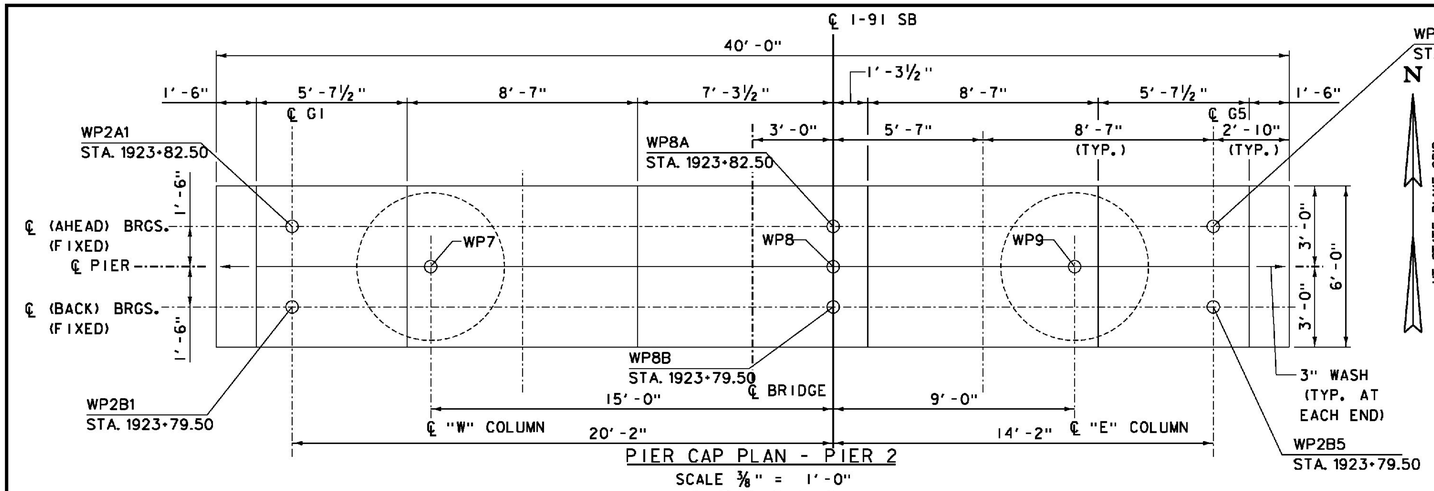

PIER CAP PLAN - PIER 2

SCALE ⅜" = 1'-0"

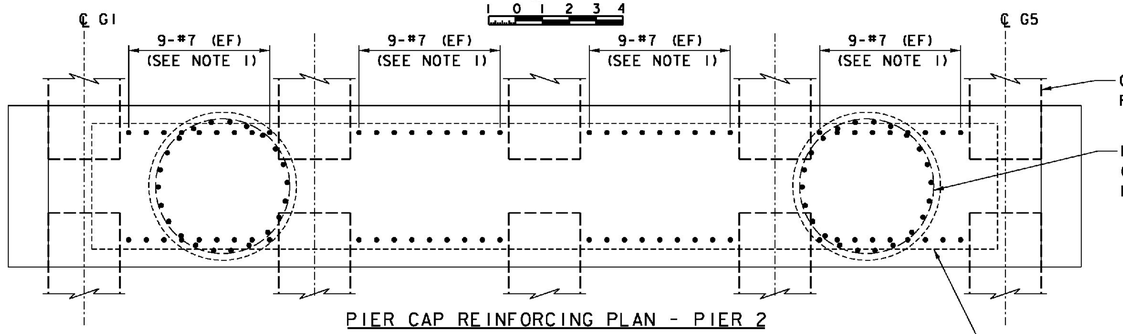

PIER CAP REINFORCING PLAN - PIER 2

SCALE ⅜" = 1'-0"

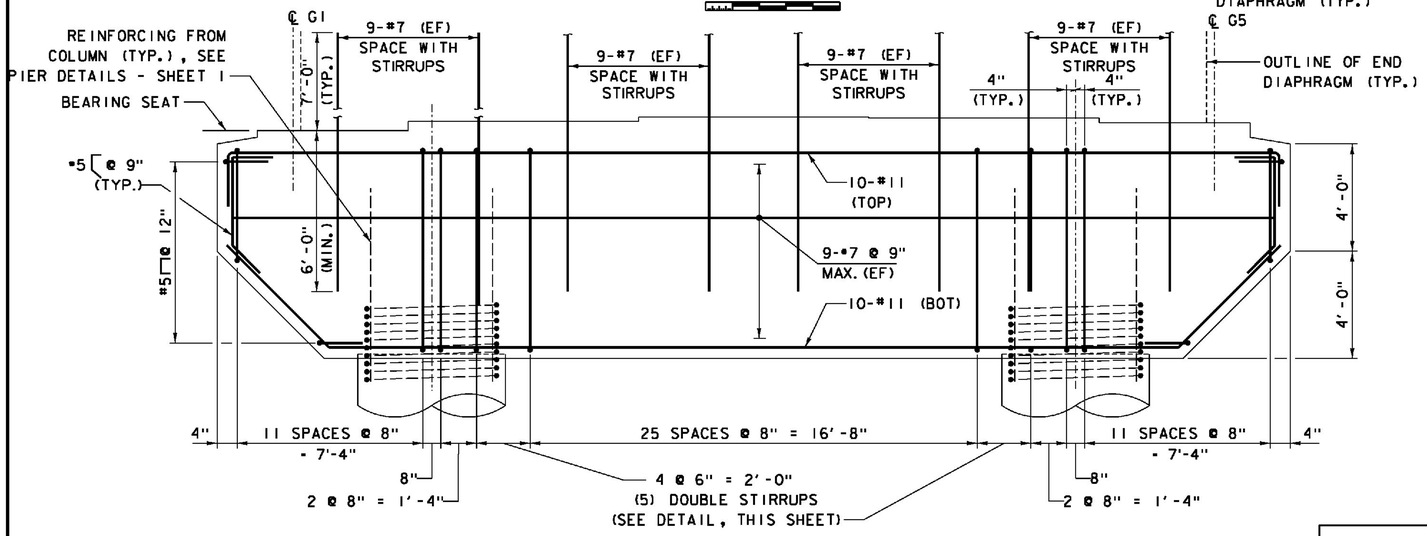

PIER CAP REINFORCING ELEVATION - -PIER 2

SCALE ⅜" = 1'-0"

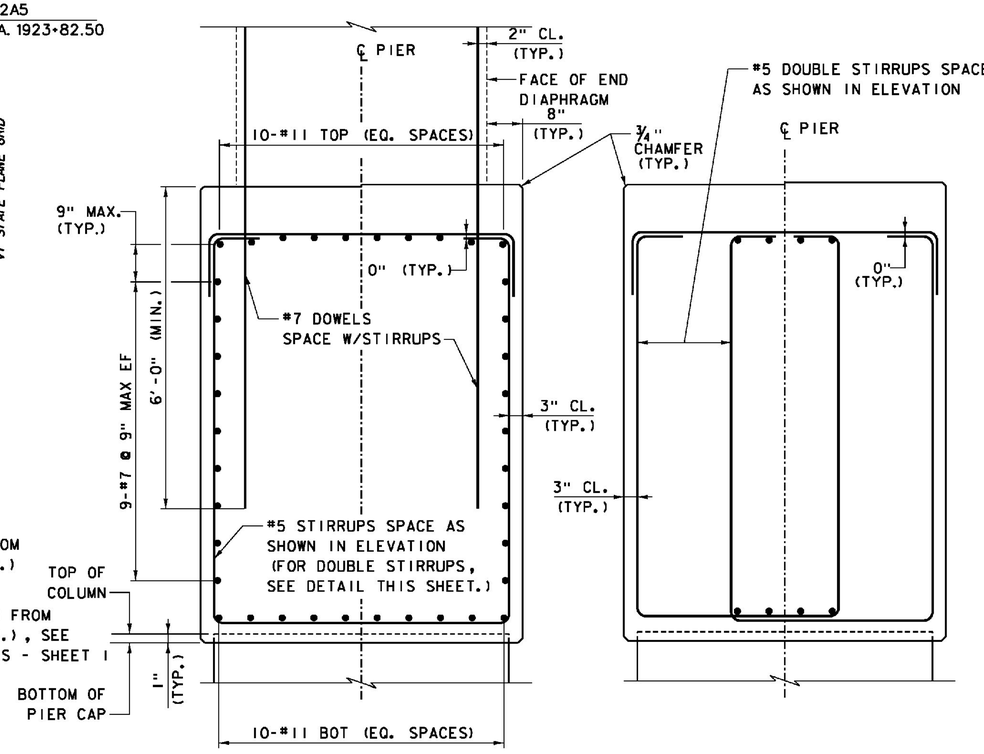

TYPICAL PIER CAP REINFORCING SECTION
PIER 2

SCALE ¾" = 1'-0"

DOUBLE STIRRUP DETAIL
PIER 2

SCALE ¾" = 1'-0"

NOTES:

1. REINFORCING STEEL DOWELS EXTENDING FROM PIER CAP INTO END DIAPHRAGM SHALL BE SPACED WITH STIRRUPS AS SHOWN. NINE DOWELS SHALL EXTEND FROM CAP BETWEEN BOTTOM FLANGES OF ADJACENT GIRDERS ON EACH SIDE OF CAP. ADJUST TO AVOID INTERFERENCE WITH COLUMN REINFORCING AS REQUIRED.

WORKING POINT CONTROL				
PIER	POINT NO.	STATION	NORTHING	EASTING
2	WP2B1	1923+79.50, 20.17' LT.	347524.6779	1665070.2879
	WP8B	1923+79.50, CL	347524.2786	1665090.4506
	WP2B5	1923+79.50, 14.17' RT.	347523.9982	1665104.6145
	WP2A1	1923+82.50, 20.17' LT.	347527.6773	1665070.3473
	WP8A	1923+82.50, CL	347527.2781	1665090.5100
	WP2A5	1923+82.50, 14.17' RT.	347526.9976	1665104.6739

ITEMS USED ON THIS SHEET	
ITEM NO.	DESCRIPTION
501.34	CONCRETE, HIGH PERFORMANCE CLASS B
507.17	EPOXY COATED REINFORCING STEEL
900.635	STAINLESS STEEL REINFORCING

PROJECT NAME: WINDSOR
PROJECT NUMBER: IM 091-1(64)

FILE NAME: z10a188PD3.dgn
PROJECT LEADER: J. WILSON
DESIGNED BY: S. BOYINGTON
SB PIER DETAILS - SHEET 3

PLOT DATE: 7/30/2015
DRAWN BY: S. GUNN
CHECKED BY: S. HALLORAN
SHEET 116 OF 156

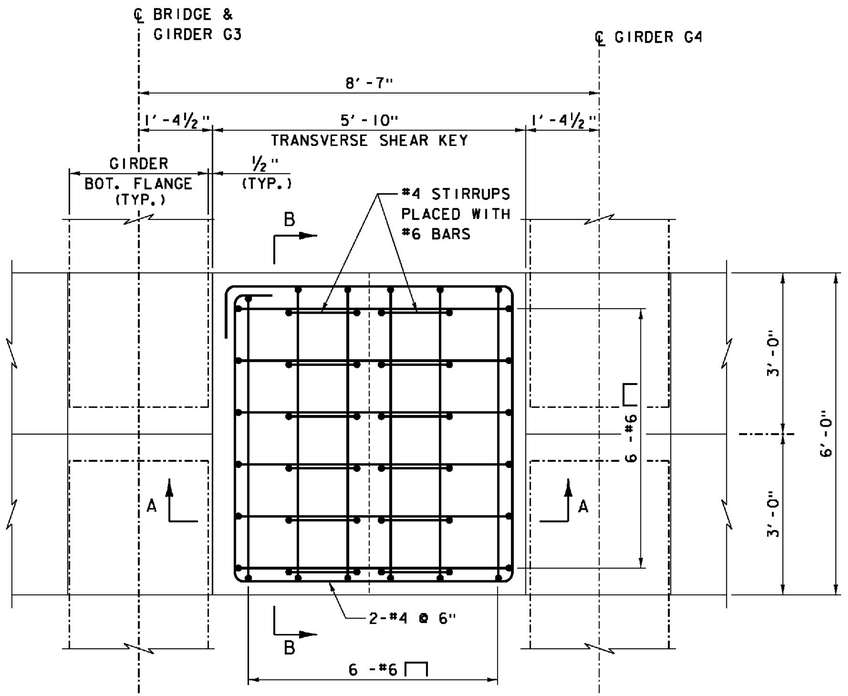

TRANSVERSE SHEAR KEY - PLAN

SCALE ¾" = 1'-0"

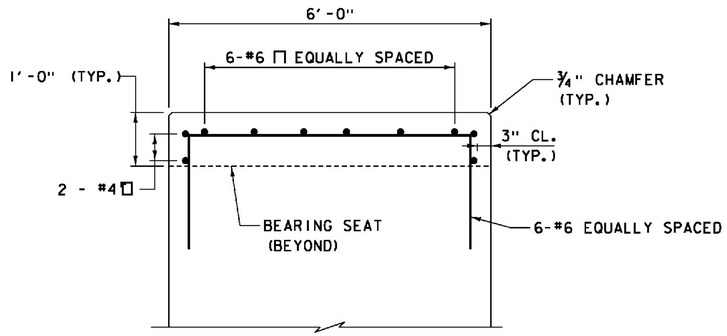

TRANSVERSE SHEAR KEY - SECTION B

SCALE ¾" = 1'-0"

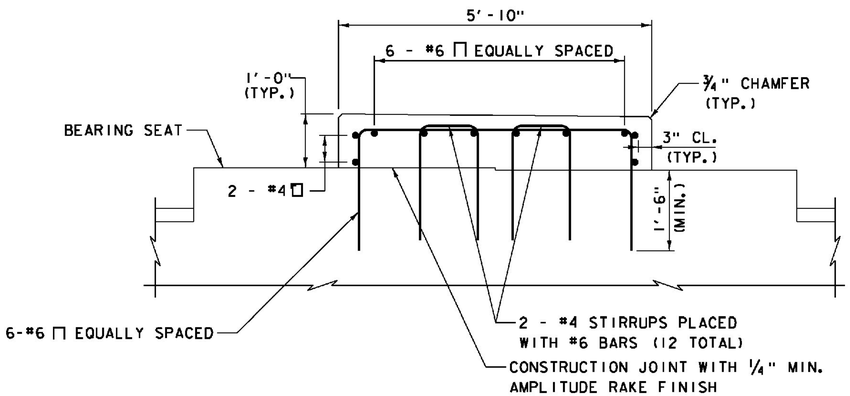

TRANSVERSE SHEAR KEY - SECTION A

SCALE ¾" = 1'-0"

PROJECT NAME: WINDSOR	
PROJECT NUMBER: IM 091-1(64)	
FILE NAME: z10o188PD4.dgn	PLOT DATE: 7/30/2015
PROJECT LEADER: J. WILSON	DRAWN BY: S. GUNN
DESIGNED BY: S. BOYINGTON	CHECKED BY: S. HALLORAN
SB PIER DETAILS - SHEET 4	SHEET 117 OF156

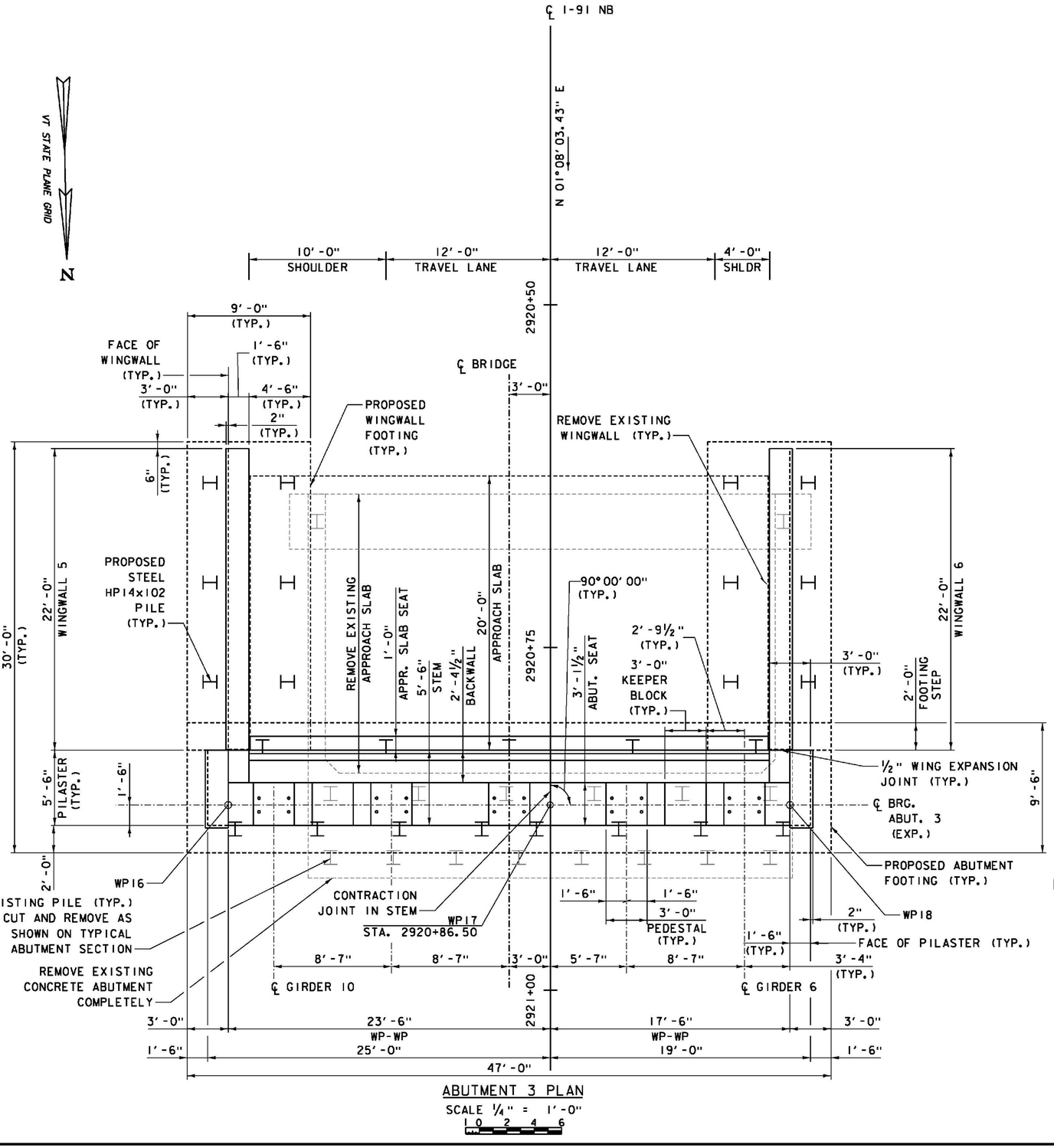

ABUTMENT 3 PLAN

SCALE 1/4" = 1'-0"

1 0 2 4 6

WORKING POINT CONTROL			
LOCATION	STATION	NORTHING	EASTING
WP16	2920+86.50, 23.50' RT.	347229.4060	1665182.1314
WP17	2920+86.50, CL	347229.8712	1665158.6360
WP18	2920+86.50, 17.50' LT.	347230.2176	1665141.1394

SUBSTRUCTURE NOTES:

1. CONCRETE IN THE ABUTMENT STEMS AND BACKWALLS AND WINGWALL STEMS SHALL BE HIGH PERFORMANCE CONCRETE, CLASS A, IN CONFORMANCE WITH THE APPROVED MIX DESIGN SUBMITTAL.
2. CONCRETE IN ALL FOOTINGS (INCLUDING UNREINFORCED CONCRETE ON LEVELED BEDROCK), COLUMNS AND PIER CAPS SHALL BE HIGH PERFORMANCE CONCRETE, CLASS B, IN CONFORMANCE WITH THE APPROVED MIX DESIGN SUBMITTAL.
3. CONCRETE IN THE F-SHAPE BARRIER AND BARRIER TRANSITION ATOP WINGWALLS SHALL BE HIGH PERFORMANCE CONCRETE, LOW SHRINKAGE, IN CONFORMANCE WITH THE APPROVED MIX DESIGN SUBMITTAL.
4. REINFORCING STEEL IN THE CAST-IN-PLACE F-SHAPE BARRIER AND BARRIER TRANSITION SHALL BE STAINLESS STEEL AND CONFORM TO ASTM A995M, GRADE 420 (GRADE 60). MINIMUM CLEAR COVER AT THE ROADWAY FACE OF BARRIERS AND BARRIER TRANSITION IS 3 INCHES UNLESS OTHERWISE NOTED. MINIMUM CLEAR COVER AT THE EXTERIOR FACE OF BARRIERS AND BARRIER TRANSITION IS 2 INCHES UNLESS OTHERWISE NOTED.
5. REINFORCING STEEL IN THE ABUTMENT AND PIER FOOTINGS SHALL BE UNCOATED AND CONFORM TO ASTM A615, GRADE 60. MINIMUM CLEAR COVER IN THE FOOTINGS SHALL BE 3 INCHES UNLESS OTHERWISE NOTED. REINFORCING STEEL PLACED IN ABUTMENT, WINGWALL AND PIER FOOTINGS THAT EXTENDS ABOVE TOP OF FOOTING LEVEL SHALL BE EPOXY COATED.
6. REINFORCING STEEL IN THE PIER CAPS AND PIER COLUMNS SHALL CONFORM TO ASTM A615, GRADE 60 AND SHALL BE EPOXY COATED. MINIMUM CLEAR COVER IN THE PIER CAPS AND COLUMNS SHALL BE 3 INCHES UNLESS OTHERWISE NOTED.
7. REINFORCING STEEL IN THE ABUTMENT STEMS AND BACKWALLS AND WINGWALL STEMS SHALL CONFORM TO ASTM A615, GRADE 60 AND SHALL BE EPOXY COATED. MINIMUM CLEAR COVER IN THE ABUTMENT STEMS AND BACKWALLS AND WINGWALL STEMS SHALL BE 2 INCHES UNLESS OTHERWISE NOTED.
8. REINFORCING STEEL EXTENDING FROM WINGWALLS INTO F-SHAPE BARRIER AND BARRIER TRANSITION SHALL BE STAINLESS STEEL AND CONFORM TO ASTM A995M, GRADE 420 (GRADE 60).
9. REINFORCING STEEL EXTENDING FROM FIXED PIER CAPS INTO SUPERSTRUCTURE END DIAPHRAGMS SHALL BE STAINLESS STEEL AND CONFORM TO ASTM A995M, GRADE 420 (GRADE 60).
10. FOR PILE FOUNDATION NOTES, SEE ABUTMENT 3 FOOTING PLAN SHEET.
11. FOR SPREAD FOOTING ON BEDROCK FOUNDATION NOTES, SEE ABUTMENT 4 ELEVATION SHEET.
12. ALL EXPOSED CONCRETE SURFACES OF ABUTMENTS, WINGWALLS AND PIERS SHALL BE COATED WITH WATER REPELLENT, SILANE, IN ACCORDANCE WITH SECTION 514 OF THE PROJECT SPECIAL PROVISIONS. THE PRODUCT USED SHALL BE AS LISTED ON THE VTRANS APPROVED PRODUCTS LIST AND APPLIED PER MANUFACTURER'S RECOMMENDATIONS.

NOTES:

1. FOR ABUTMENT & WINGWALL PILE LAYOUT, SEE ABUTMENT 3 FOOTING PLAN.
2. FOR ADDITIONAL PILASTER & PEDESTAL DETAILS, SEE ABUTMENT DETAILS - SHEET 1.
3. FOR ABUTMENT 3 FOOTING REINFORCING DETAILS, SEE ABUTMENT 3 REINFORCEMENT - SHEET 1.
4. FOR ABUTMENT 3 STEM, SEAT AND BACKWALL REINFORCING DETAILS, SEE ABUTMENT 3 REINFORCEMENT - SHEET 2.
5. FOR KEEPER BLOCK DETAILS. SEE ABUTMENT DETAILS - SHEET 2.

PROJECT NAME: WINDSOR
PROJECT NUMBER: IM 091-1(64)

FILE NAME: z10o188Abut3P.dgn
PROJECT LEADER: J. WILSON
DESIGNED BY: S. BOYINGTON
ABUTMENT 3 PLAN

PLOT DATE: 7/30/2015
DRAWN BY: S. GUNN
CHECKED BY: S. HALLORAN
SHEET 118 OF 156

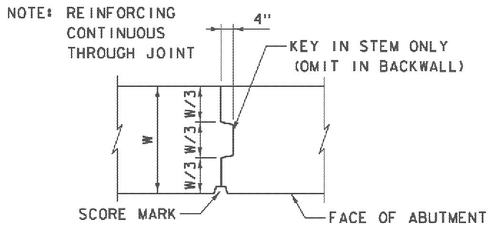

CONTRACTION JOINT DETAIL
NOT TO SCALE

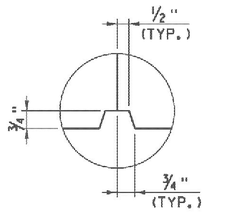

SCORE MARK DETAIL
NOT TO SCALE

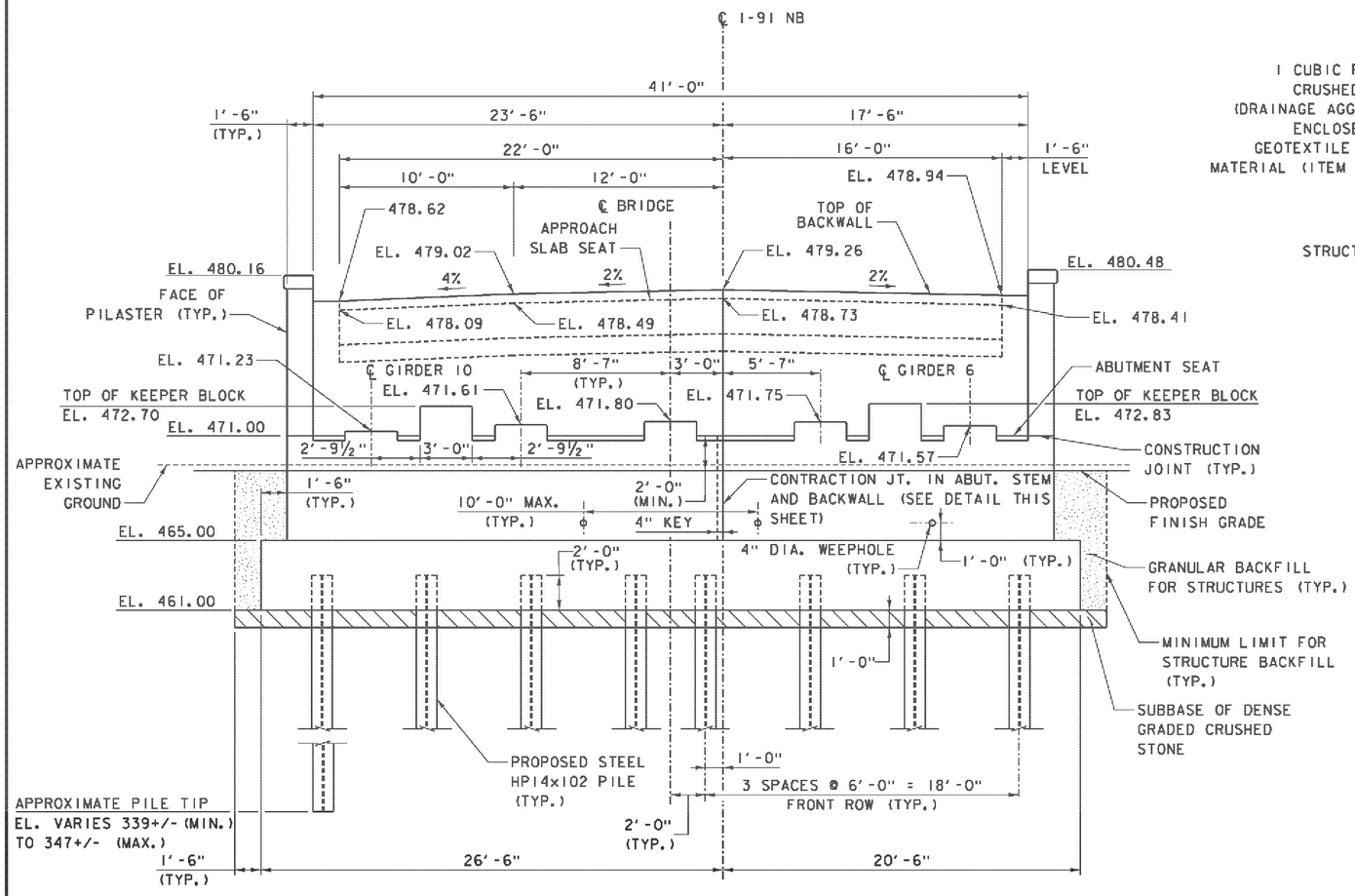

ABUTMENT 3 ELEVATION
SCALE ¼" = 1'-0"
1 0 2 4 6

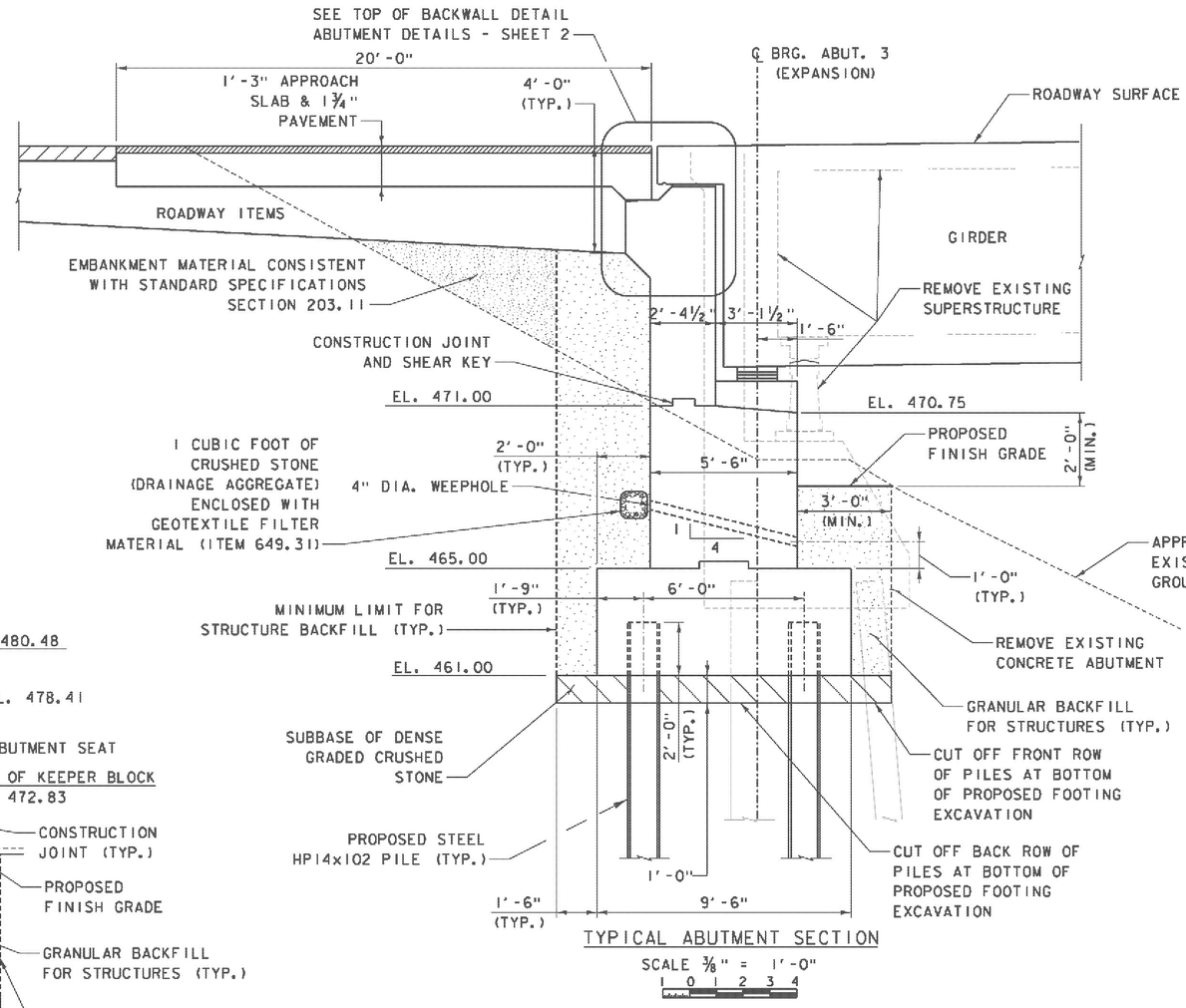

TYPICAL ABUTMENT SECTION
SCALE ⅜" = 1'-0"
1 0 1 2 3 4

NOTES:

1. FOR ABUTMENT PILE LAYOUT, SEE ABUTMENT 3 FOOTING PLAN.
2. FOR ABUTMENT 3 FOOTING REINFORCING DETAILS, SEE ABUT. 3 REINFORCEMENT - SHEETS 1 AND 2.
3. FOR ABUTMENT 3 STEM, SEAT AND BACKWALL REINFORCING DETAILS, SEE ABUT. 3 REINFORCEMENT - SHEET 2.
4. FOR CONSTRUCTION JOINT DETAILS, SEE ABUTMENT DETAILS - SHEET 1.
5. FOR KEEPER BLOCK DETAILS, SEE ABUTMENT DETAILS - SHEET 2.
6. EMBANKMENT AREAS DISTURBED BY CONSTRUCTION SHALL BE RESTORED UPON COMPLETION OF THE WORK BY INSTALLING TOPSOIL, SEED AND HAY MULCH.

ITEMS USED ON THIS SHEET

ITEM NO.	DESCRIPTION
204.25	STRUCTURE EXCAVATION
204.30	GRANULAR BACKFILL FOR STRUCTURES
301.35	SUBBASE OF DENSE GRADED CRUSHED STONE
490.30	SUPERPAVE BITUMINOUS CONCRETE PAVEMENT
501.33	CONCRETE, HIGH PERFORMANCE CLASS A
501.34	CONCRETE, HIGH PERFORMANCE CLASS B
505.19	STEEL PILING, HP14x102
514.10	WATER REPELLENT, SILANE
529.15	REMOVAL OF STRUCTURE
649.31	GEOTEXTILE UNDER STONE FILL
651.15	SEED
651.25	HAY MULCH
651.35	TOPSOIL

PROJECT NAME: WINDSOR
PROJECT NUMBER: IM 091-1(64)

FILE NAME: z10o188Abut3ES.dgn
PROJECT LEADER: J. WILSON
DESIGNED BY: S. BOYINGTON
ABUTMENT 3 ELEVATION & SECTION

PLOT DATE: 7/30/2015
DRAWN BY: S. GUNN
CHECKED BY: S. HALLORAN
SHEET 119 OF 156

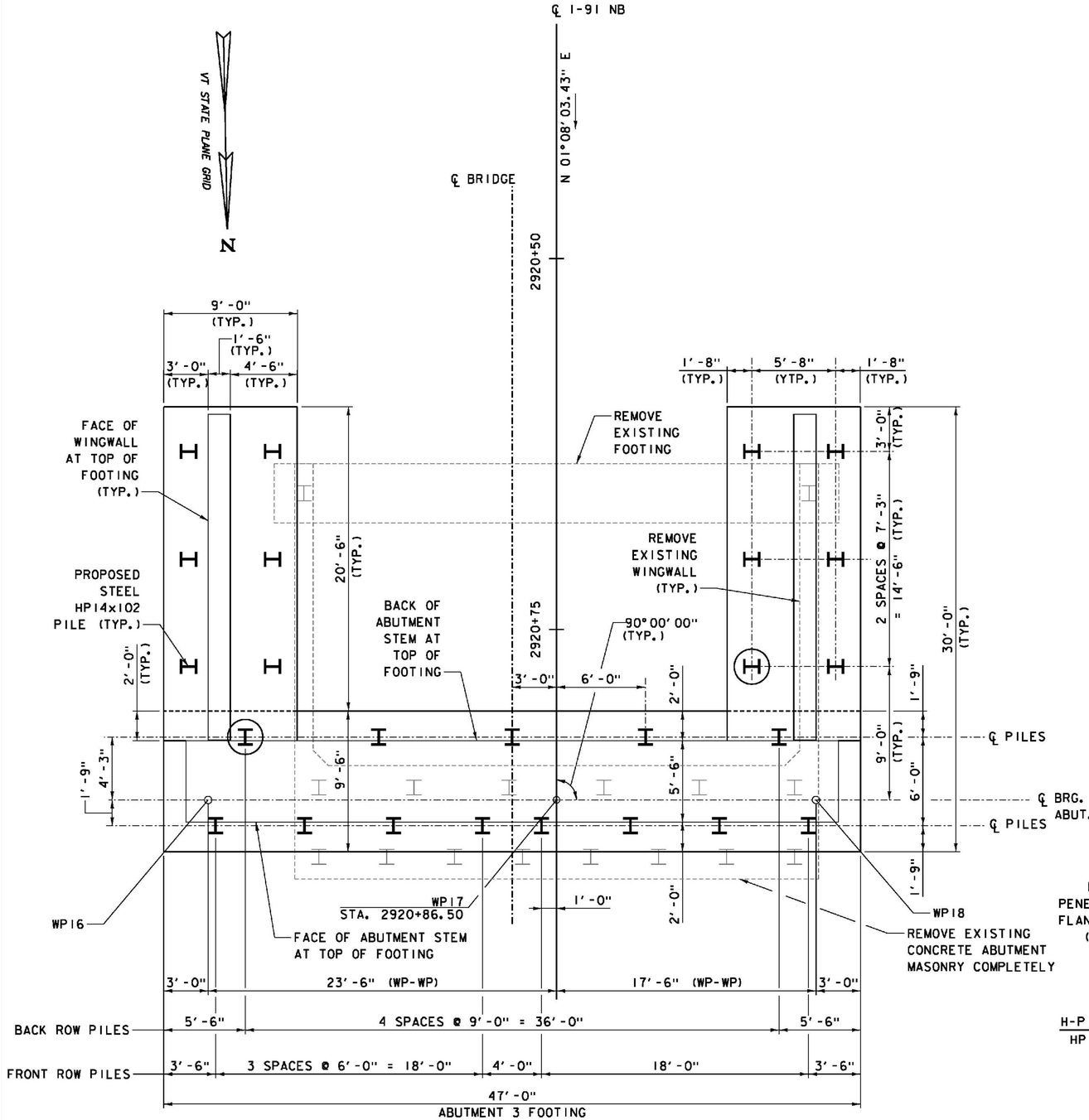

ABUTMENT 3 FOOTING PLAN

SCALE 1/4" = 1'-0"

0 2 4 6

LEGEND

(I) INDICATES PILE DESIGNATED FOR PDA TESTING

ITEMS USED ON THIS SHEET	
ITEM NO.	DESCRIPTION
501.34	CONCRETE, HIGH PERFORMANCE CLASS B
504.10	FURNISHING EQUIPMENT FOR DRIVING PILES
505.19	STEEL PILING, HP 14x102
505.45	DYNAMIC PILE LOADING TEST

PILE FOUNDATION NOTES:

1. THE PILE INSTALLATION AND PILE TESTING SHALL BE PERFORMED IN ACCORDANCE WITH THE APPROVED PILE DRIVING CRITERIA SUBMITTAL, THE REQUIREMENTS OF VTRANS STANDARD SPECIFICATIONS SECTIONS 504 AND 505, AND AS AMENDED BY THESE FOUNDATION NOTES.

2. AT ABUTMENT 3 AND ASSOCIATED WINGWALL FOUNDATION AREAS, EXCAVATION SHALL BE PERFORMED TO THE PROPOSED BOTTOM OF EXCAVATION AS SHOWN ON THE PLANS. THE EXPOSED SOIL SUBGRADE SHALL BE PROOF ROLLED WITH AT LEAST 6 PASSES OF A DOUBLE DRUM WALK BEHIND VIBRATORY ROLLER OR LARGE VIBRATORY PLATE COMPACTOR. ANY POCKETS OF EXCESSIVELY SOFT, WET OR DISTURBED SOIL OR UNSUITABLE SOIL SHALL BE REMOVED AND REPLACED WITH PROPERLY COMPACTED 3/4" COARSE AGGREGATE FOR CONCRETE, WHICH HAS GRADATION LIMITS CONSISTENT WITH TABLE 704.02B OF THE VTRANS STANDARD SPECIFICATIONS.

3. AT THE PIER 4 AND 5 FOUNDATION AREAS, SUBGRADE ELEVATIONS ARE BELOW THE EXISTING GROUNDWATER LEVEL. THEREFORE, STEEL SHEET PILE COFFERDAMS AND DEWATERING SYSTEMS SHALL BE INSTALLED AND IN OPERATION BEFORE SUBGRADE EXCAVATION. TO MAINTAIN A STABLE SUBGRADE, DEWATER THE EXCAVATION TO AT LEAST TWO FEET BELOW THE PROPOSED BOTTOM OF EXCAVATION. SUBGRADE PROOF-COMPACTION USING NON-VIBRATORY METHODS MAY BE CONSIDERED IN THESE AREAS CONSISTENT WITH THE GEOTECHNICAL REPORT, IF REQUIRED TO LIMIT SUBGRADE DISTURBANCE.

4. SNOW OR ICE, IF EXISTING, SHALL BE COMPLETELY REMOVED PRIOR TO FOUNDATION CONCRETE PLACEMENT. FILL SHALL NOT BE PLACED OVER FROZEN SOIL. SOIL SUBGRADES SHALL BE PROTECTED AGAINST FROST BOTH DURING AND AFTER CONSTRUCTION.

5. PROPER DRAINAGE OF CONSTRUCTION AREAS SHALL BE PROVIDED TO PROTECT THE SUBGRADES FROM THE DETRIMENTAL EFFECTS OF WEATHER CONDITIONS. EXCAVATIONS SHALL BE MADE WITH AS FEW PASSES OF THE BACKHOE BUCKET AS POSSIBLE TO REDUCE DISTURBANCE OF THE SUBGRADE. THE EXPOSED BASE SHALL BE KEPT FREE OF STANDING WATER AT ALL TIMES. THE SITE SHALL BE GRADED TO CARRY ANY SURFACE RUNOFF AWAY FROM THE WORK AREAS. CONSTRUCTION TRAFFIC SHALL BE CONTROLLED TO PREVENT EXCESSIVE STRESSES AND DISTURBANCE TO THE SUBGRADE.

6. IF FOUNDATIONS ARE NOT CONSTRUCTED IMMEDIATELY AFTER GRADING, THE SUBGRADE SHALL BE SHAPED SO AS TO PREVENT PONDING. IF THE SUBGRADE IS DISTURBED, IT SHALL BE PROOF-ROLLED WITH HEAVY PLATE COMPACTOR. SOFT SPOTS OBSERVED DURING PROOF-COMPACTION OR INITIAL CONSTRUCTION SHALL BE REMOVED AND REPLACED WITH COMPACTED 3/4" COARSE AGGREGATE FOR CONCRETE.

NOTES:

1. FOR ABUTMENT 3 FOOTING REINFORCING DETAILS, SEE ABUT. 3 REINFORCEMENT - SHEET 1.

2. FOR WINGWALL 5 AND 6 REINFORCING DETAILS, SEE ABUT. 3 WINGWALL REINFORCEMENT SHEET.

3. FOR ABUTMENT 3 STEM, SEAT AND BACKWALL REINFORCING DETAILS, SEE ABUT. 3 REINFORCEMENT - SHEET 2.

4. ALL FIELD WELDING OF PILES SHALL BE PERFORMED USING STICK-TYPE ELECTRODES AND SHALL BE IN ACCORDANCE WITH THE ANSI/AASHTO/AWS D1.5 BRIDGE WELDING CODE.

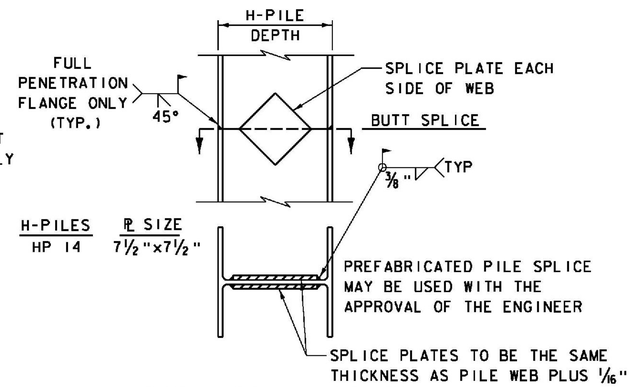

H-PILES	PL SIZE
HP 14	7 1/2" x 7 1/2"

DETAIL OF PILE SPLICE

NOT TO SCALE

PROJECT NAME: WINDSOR

PROJECT NUMBER: IM 091-1(64)

FILE NAME: z10a188Abut3FP.dgn
PROJECT LEADER: J. WILSON
DESIGNED BY: S. BOYINGTON
ABUTMENT 3 FOOTING PLAN

PLOT DATE: 7/30/2015
DRAWN BY: S. GUNN
CHECKED BY: S. HALLORAN
SHEET 120 OF 156

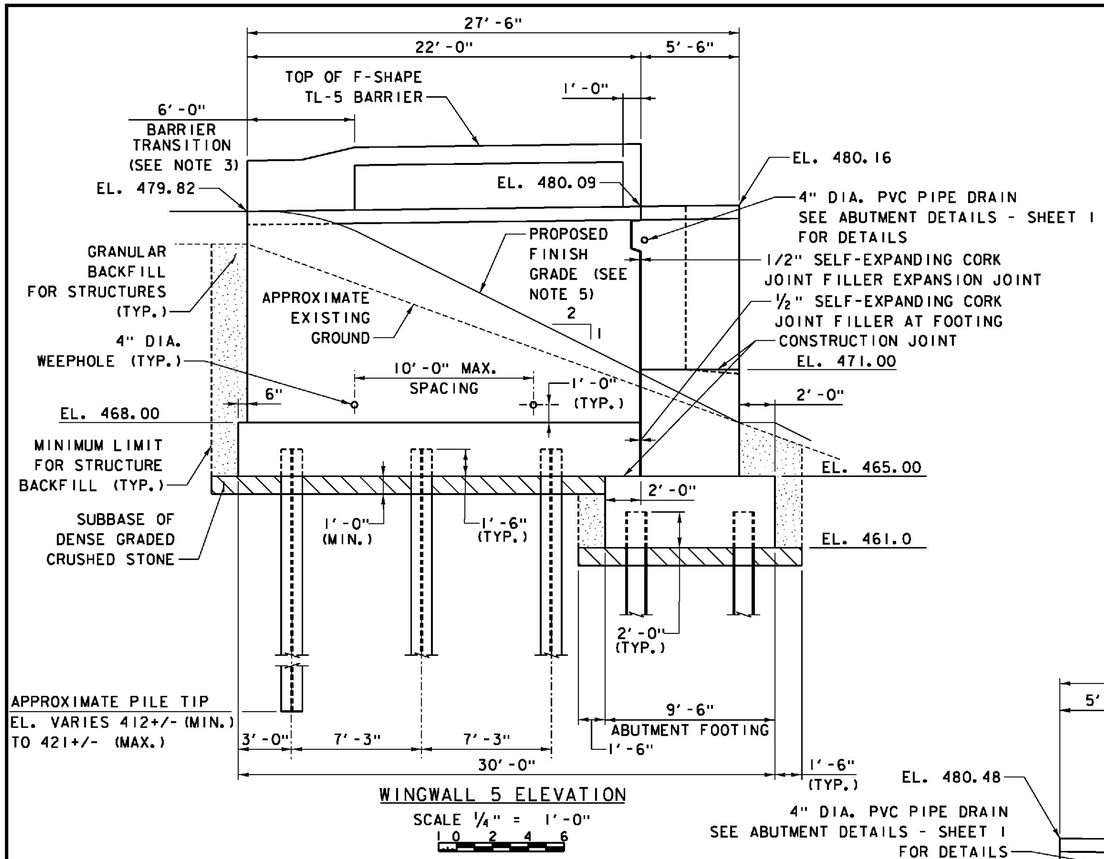

WINGWALL 5 ELEVATION

SCALE ¼" = 1'-0"

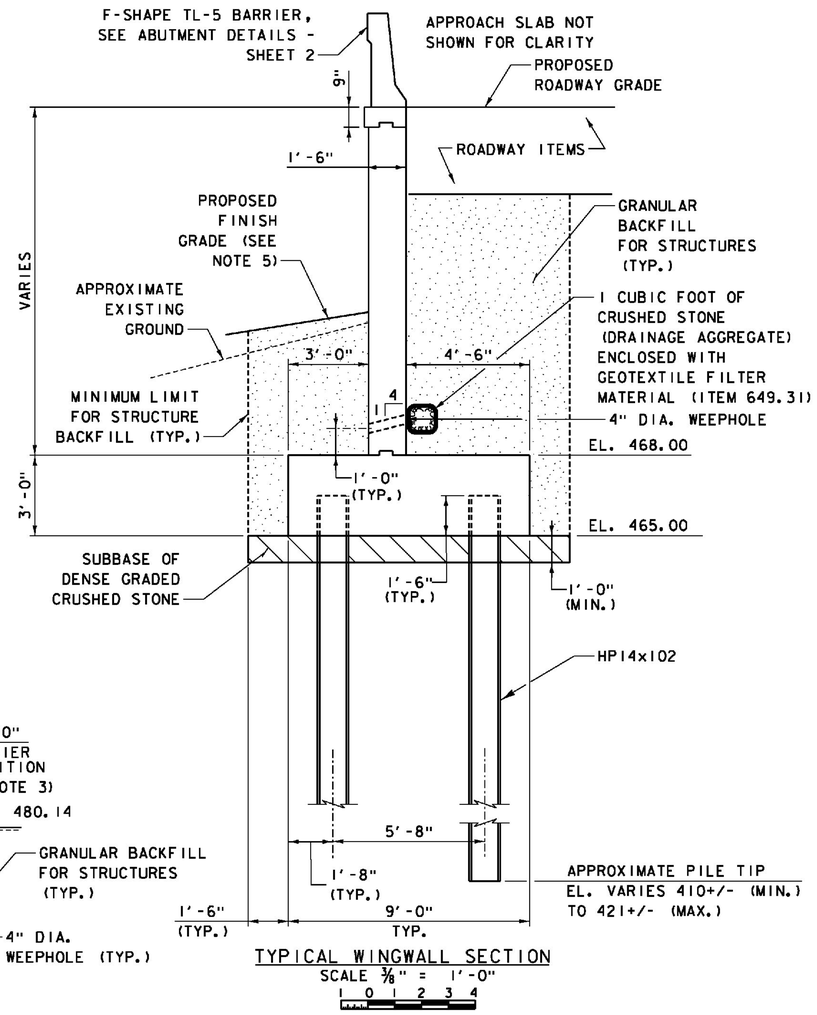

TYPICAL WINGWALL SECTION

SCALE ⅜" = 1'-0"

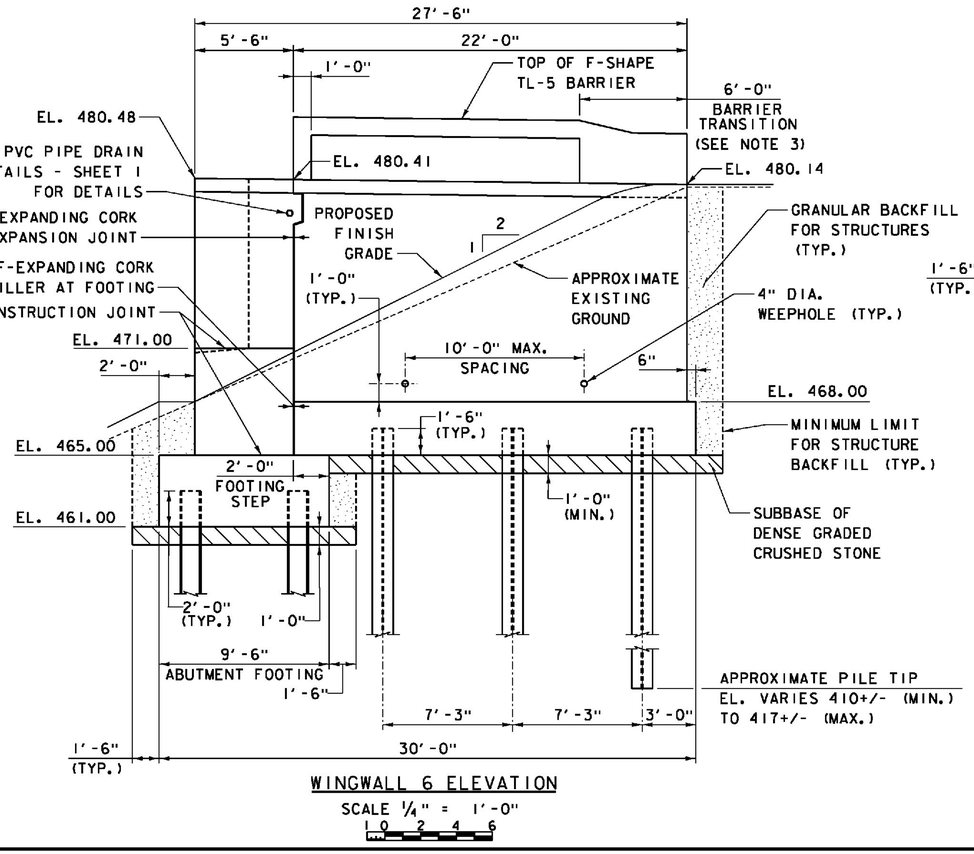

WINGWALL 6 ELEVATION

SCALE ¼" = 1'-0"

NOTES:

1. FOR ABUTMENT AND WINGWALL PILE LAYOUT, SEE ABUTMENT 3 FOOTING PLAN.
2. FOR WINGWALL 5 AND 6 REINFORCING DETAILS, SEE ABUT. 3 WINGWALL REINFORCEMENT.
3. FOR DETAILS OF BARRIER TRANSITION AT WING ENDS, SEE F-SHAPE BARRIER TRANSITION DETAIL SHEET INCLUDED IN SUPERSTRUCTURE DRAWINGS.
4. FOR DETAIL OF EXPANSION JOINT BETWEEN PILASTER AND WINGWALL, SEE ABUTMENT DETAILS - SHEET 1.
5. FOR REINFORCED SLOPE DETAIL AT WINGWALL 5, SEE ABUTMENT DETAILS - SHEET 3.
6. EMBANKMENT AREAS DISTURBED BY CONSTRUCTION SHALL BE RESTORED UPON COMPLETION OF THE WORK BY INSTALLING TOPSOIL, SEED AND HAY MULCH.

ITEMS USED ON THIS SHEET

ITEM NO.	DESCRIPTION
204.25	STRUCTURE EXCAVATION
204.30	GRANULAR BACKFILL FOR STRUCTURES
301.35	SUBBASE OF DENSE GRADED CRUSHED STONE
501.33	CONCRETE, HIGH PERFORMANCE CLASS A
501.34	CONCRETE, HIGH PERFORMANCE CLASS B
505.19	STEEL PILING, HP14x102
514.10	WATER REPELLENT, SILANE
649.31	GEOTEXTILE UNDER STONE FILL
651.15	SEED
651.25	HAY MULCH
651.35	TOPSOIL
900.640	BRIDGE RAILING, F-SHAPE CONCRETE

PROJECT NAME: WINDSOR
PROJECT NUMBER: IM 091-1(64)

FILE NAME: z10a188Abut3WM.dgn
PROJECT LEADER: J. WILSON
DESIGNED BY: S. BOYINGTON
ABUTMENT 3 WINGWALLS

PLOT DATE: 7/30/2015
DRAWN BY: S. GUNN
CHECKED BY: S. HALLORAN
SHEET 121 OF156

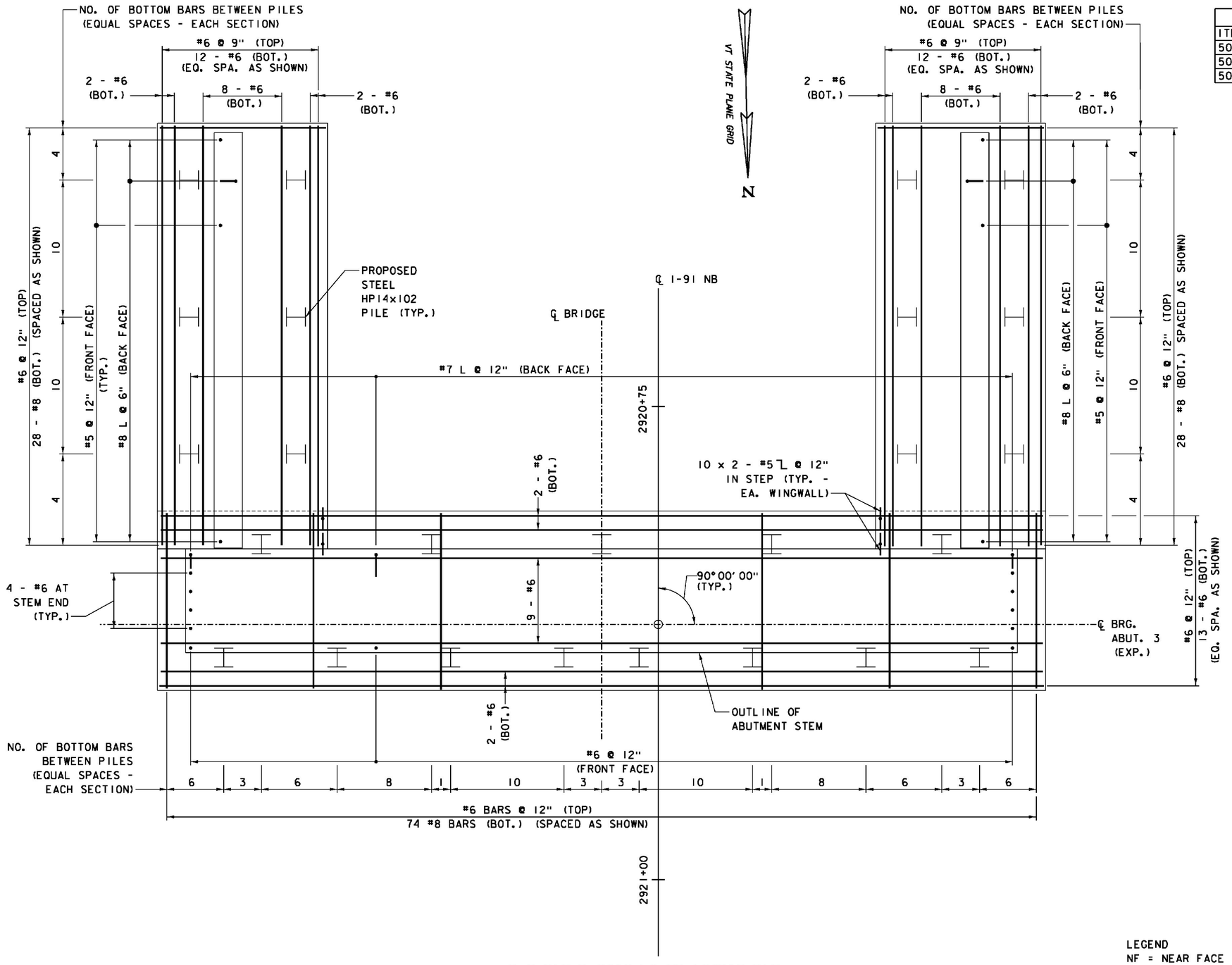

ABUTMENT 3 FOOTING REINFORCEMENT

SCALE 3/8" = 1'-0"

0 1 2 3 4

ITEMS USED ON THIS SHEET	
ITEM NO.	DESCRIPTION
501.34	CONCRETE, HIGH PERFORMANCE CLASS B
507.15	REINFORCING STEEL
507.17	EPOXY COATED REINFORCING STEEL

LEGEND
NF = NEAR FACE
FF = FAR FACE
EF = EACH FACE

NOTES:

1. FOR ABUTMENT AND WINGWALL PILE LAYOUT, SEE ABUTMENT 3 FOOTING PLAN.
2. FOR SUBSTRUCTURE NOTES, SEE ABUTMENT 3 PLAN SHEET.

PROJECT NAME: WINDSOR
PROJECT NUMBER: IM 091-1(64)

FILE NAME: z10a188Abut3RP.dgn
PROJECT LEADER: J. WILSON
DESIGNED BY: S. BOYINGTON
ABUT. 3 REINFORCEMENT - SHEET 1

PLOT DATE: 7/30/2015
DRAWN BY: S. GUNN
CHECKED BY: S. HALLORAN
SHEET 122 OF156

ITEMS USED ON THIS SHEET	
ITEM NO.	DESCRIPTION
501.33	CONCRETE, HIGH PERFORMANCE CLASS A
501.34	CONCRETE, HIGH PERFORMANCE CLASS B
507.15	REINFORCING STEEL
507.17	EPOXY COATED REINFORCING STEEL

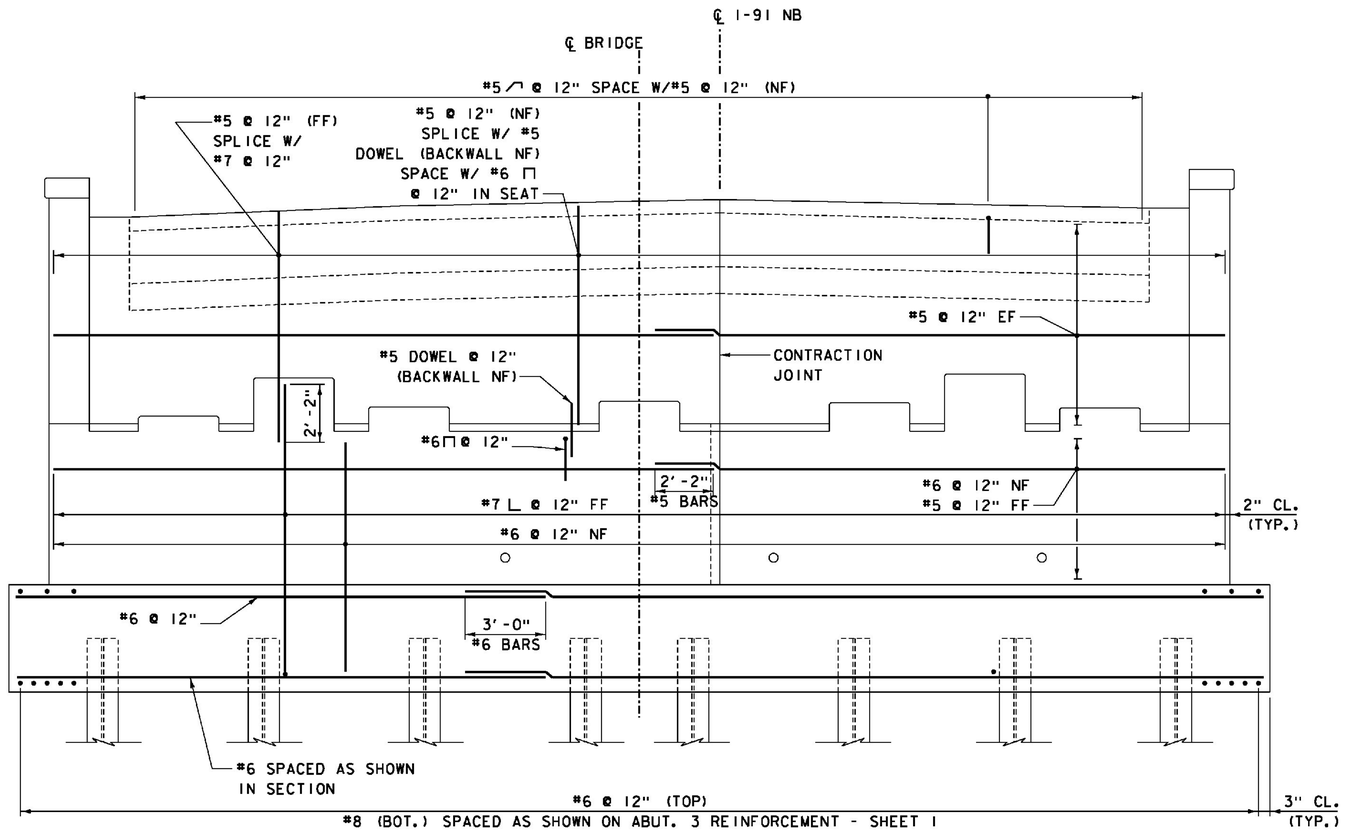

ABUTMENT 3 ELEVATION REINFORCEMENT

SCALE 3/8" = 1'-0"

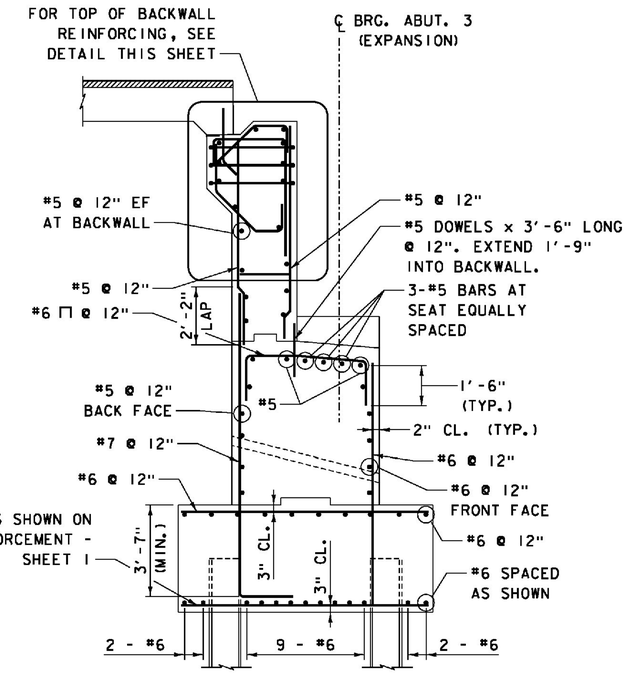

ABUTMENT 3 SECTION REINFORCEMENT

SCALE 3/8" = 1'-0"

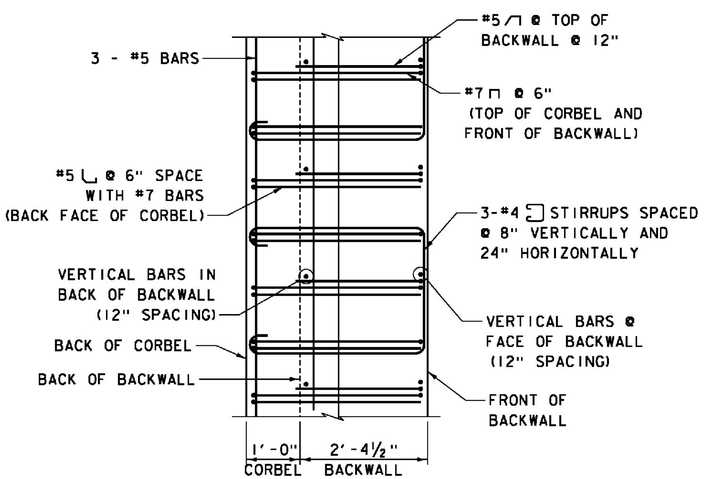

CORBEL REINFORCEMENT PLAN DETAIL

SCALE 3/4" = 1'-0"

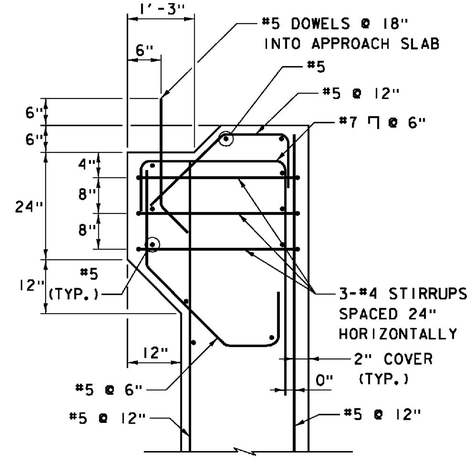

TOP OF BACKWALL REINFORCEMENT DETAIL

SCALE 3/4" = 1'-0"

NOTES:

1. FOR SUBSTRUCTURE NOTES SEE ABUTMENT 3 PLAN SHEET.
2. FOR REINFORCEMENT IN ABUTMENT PEDESTALS, SEE ABUTMENT DETAILS - SHEET 1.
3. FOR KEEPER BLOCK REINFORCING SEE ABUTMENT DETAILS - SHEET 2.

LEGEND
NF = NEAR FACE
FF = FAR FACE
EF = EACH FACE

PROJECT NAME: WINDSOR
PROJECT NUMBER: IM 091-1(64)

FILE NAME: z10a188Abut3RES.dgn
PROJECT LEADER: J. WILSON
DESIGNED BY: S. BOYINGTON
ABUT. 3 REINFORCEMENT - SHEET 2

PLOT DATE: 7/30/2015
DRAWN BY: S. GUNN
CHECKED BY: S. HALLORAN
SHEET 123 OF156

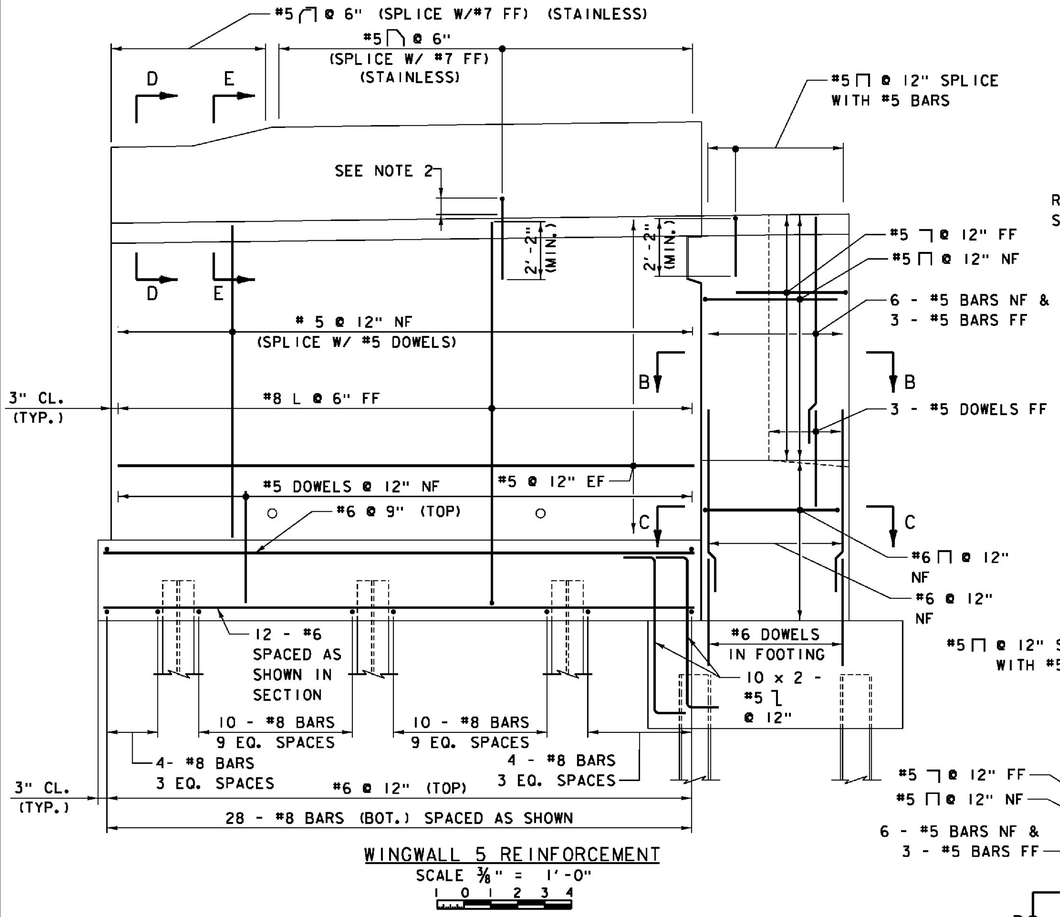

WINGWALL 5 REINFORCEMENT
SCALE 3/8" = 1'-0"

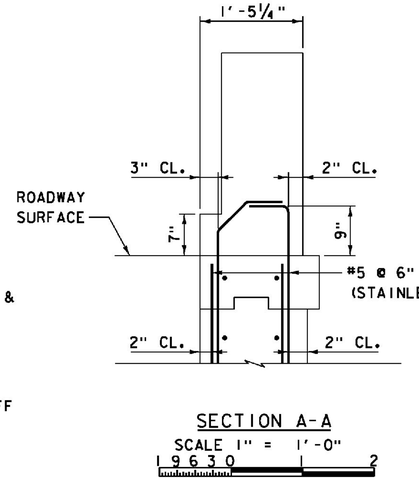

SECTION A-A
SCALE 1" = 1'-0"

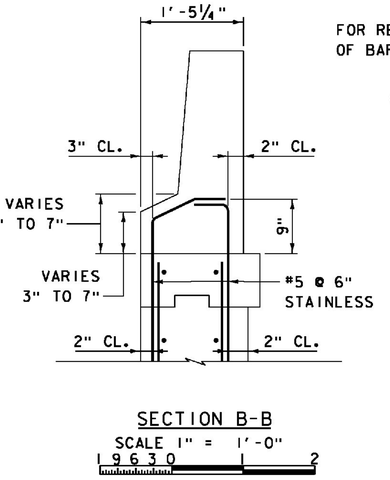

SECTION B-B
SCALE 1" = 1'-0"

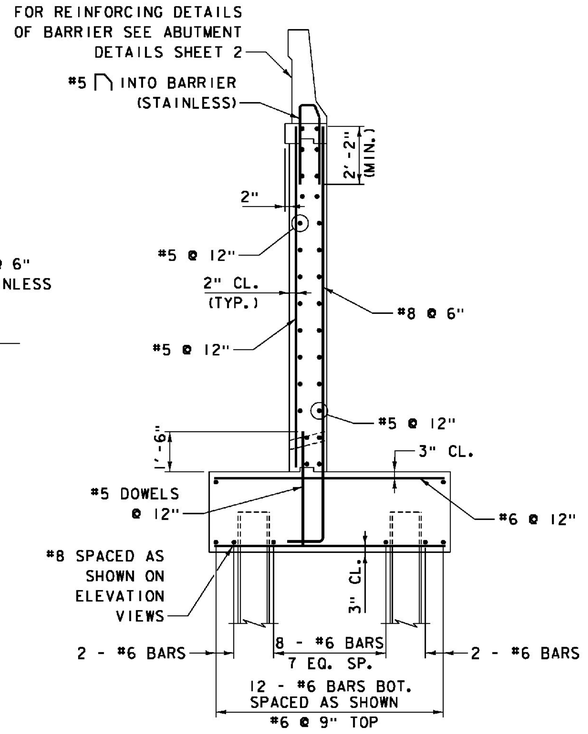

TYPICAL WINGWALL SECTION REINFORCEMENT
SCALE 3/8" = 1'-0"

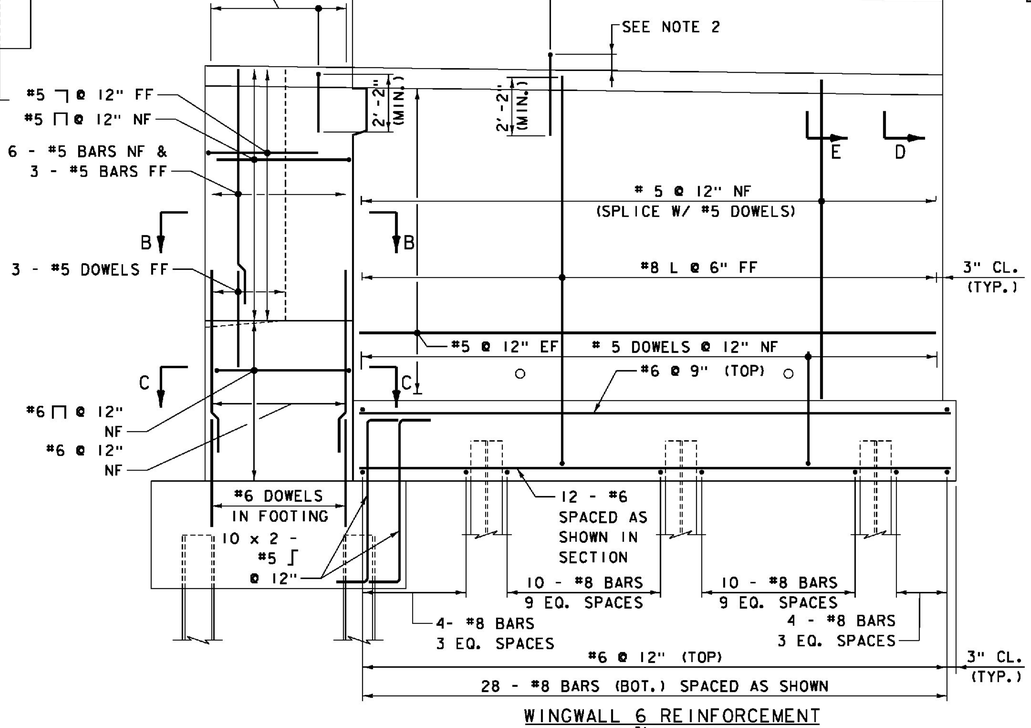

WINGWALL 6 REINFORCEMENT
SCALE 3/8" = 1'-0"

LEGEND
NF = NEAR FACE
FF = FAR FACE
EF = EACH FACE

ITEMS USED ON THIS SHEET	
ITEM NO.	DESCRIPTION
501.33	CONCRETE, HIGH PERFORMANCE CLASS A
501.34	CONCRETE, HIGH PERFORMANCE CLASS B
507.15	REINFORCING STEEL
507.17	EPOXY COATED REINFORCING STEEL
900.635	STAINLESS STEEL REINFORCING
900.640	BRIDGE RAILING, F-SHAPE CONCRETE

NOTES:

1. REINFORCEMENT ABOVE FOOTINGS SHALL BE EPOXY COATED. REINFORCEMENT IN FOOTING SHALL BE UNCOATED. REINFORCEMENT PLACED IN FOOTING AND EXTENDING ABOVE TOP OF FOOTING SHALL BE EPOXY COATED. REINFORCEMENT IN AND INTO F-SHAPE BARRIER SHALL BE SOLID STAINLESS.
2. FOR F-SHAPE BARRIER AND BAR EXTENSION INTO BARRIER REINFORCING DETAILS, SEE ABUTMENT DETAILS - SHEET 2.
3. FOR SECTION B-B AND SECTION C-C PILASTER REINFORCING DETAILS, SEE ABUTMENT DETAILS - SHEET 3.
4. FOR ADDITIONAL DETAILS OF BARRIER TRANSITION AT END OF WINGWALLS, SEE SUPERSTRUCTURE PLANS.

PROJECT NAME: WINDSOR
PROJECT NUMBER: IM 091-1(64)

FILE NAME: z10a188Abut3RW.dgn
PROJECT LEADER: J. WILSON
DESIGNED BY: S. BOYINGTON
ABUT. 3 WINGWALL REINFORCEMENT

PLOT DATE: 7/30/2015
DRAWN BY: S. GUNN
CHECKED BY: S. HALLORAN
SHEET 124 OF 156

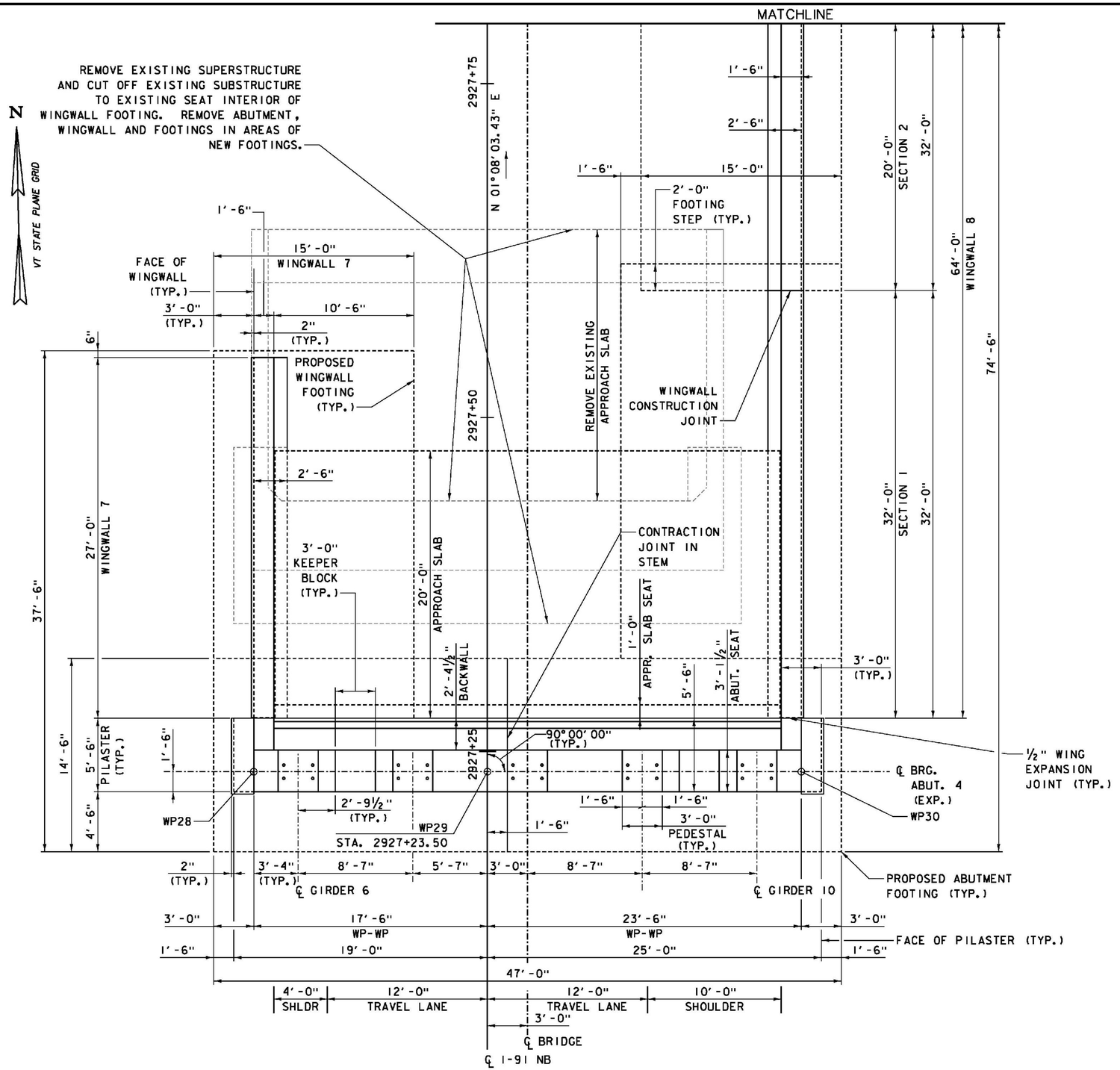

ABUTMENT 4 PLAN

SCALE 1/4" = 1'-0"

1 0 2 4 6

WORKING POINT CONTROL			
LOCATION	STATION	NORTHING	EASTING
WP28	2927+23.50, 17.50' LT.	347867.0928	1665153.7493
WP29	2927+23.50, CL	347866.7464	1665171.2458
WP30	2927+23.50, 23.50' RT.	347866.2812	1665194.7412

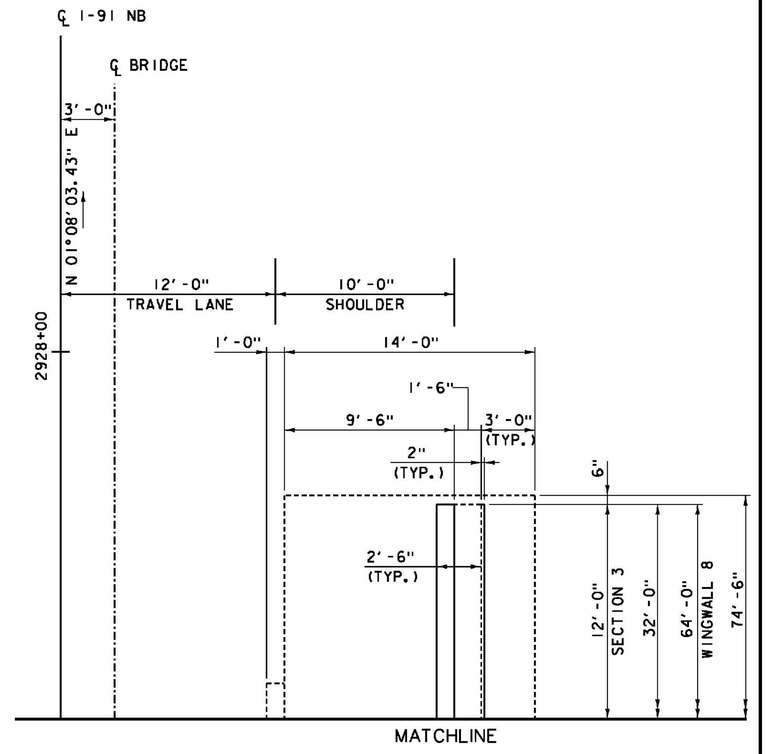

NOTES:

1. FOR SUBSTRUCTURE NOTES, SEE ABUTMENT 3 PLAN SHEET.
2. FOR ADDITIONAL PILASTER & PEDESTAL DETAILS, SEE ABUTMENT DETAILS - SHEET 1.
3. FOR ABUTMENT 4 WINGWALL FOOTING LAYOUT, SEE ABUTMENT 4 FOOTING PLAN SHEET.
4. FOR ABUTMENT 4 FOOTING REINFORCING DETAILS, SEE ABUTMENT 4 REINFORCEMENT SHEETS 1 & 2.
5. FOR ABUTMENT 4 STEM, SEAT AND BACKWALL REINFORCING DETAILS, SEE ABUTMENT 4 REINFORCEMENT - SHEET 2.
6. FOR KEEPER BLOCK DETAILS, SEE ABUTMENT DETAILS - SHEET 2.

PROJECT NAME: WINDSOR
PROJECT NUMBER: IM 091-1(64)

FILE NAME: z10a188Abut4P.dgn
PROJECT LEADER: J. WILSON
DESIGNED BY: S. BOYINGTON
ABUTMENT 4 PLAN

PLOT DATE: 7/30/2015
DRAWN BY: S. GUNN
CHECKED BY: S. HALLORAN
SHEET 125 OF156

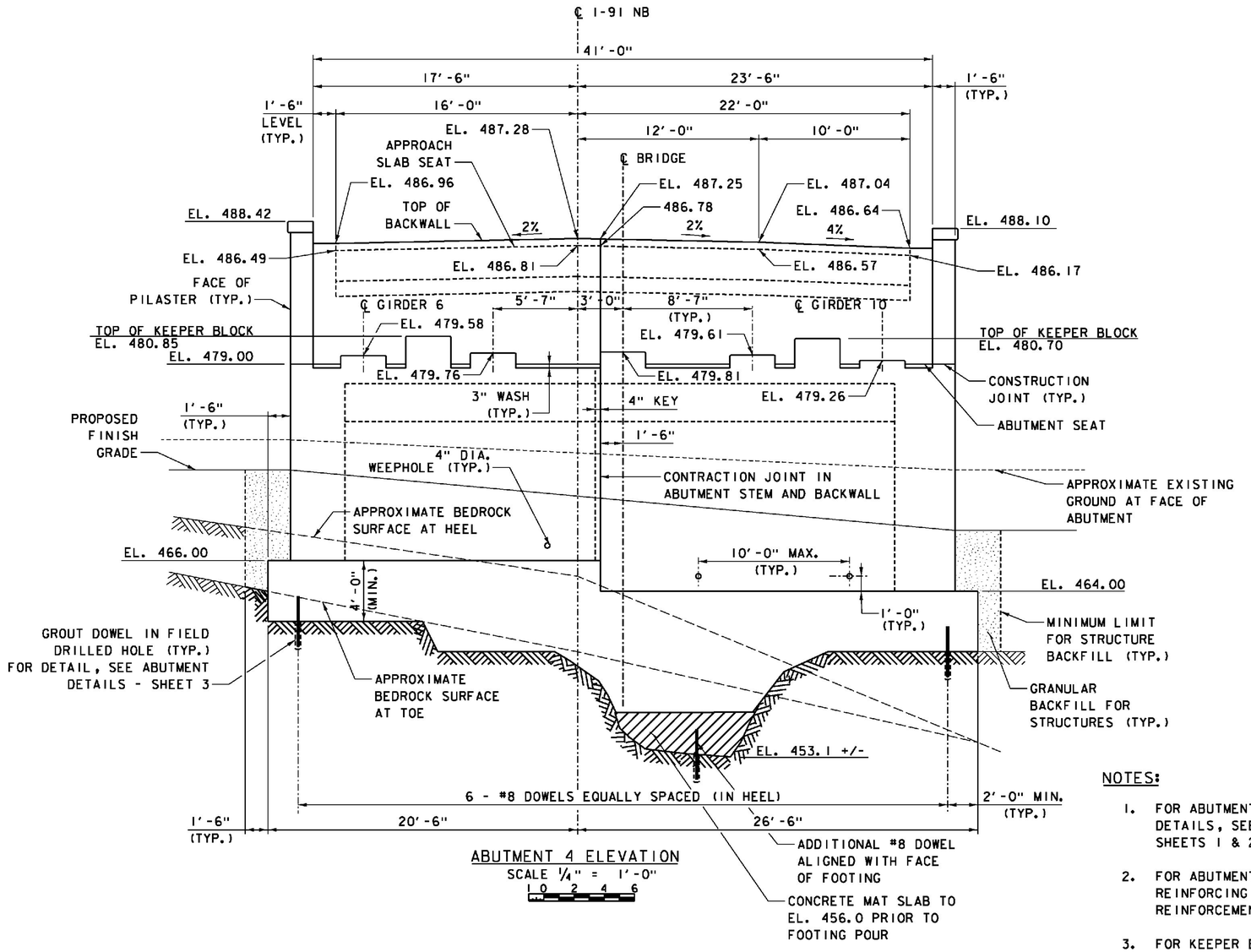

ABUTMENT 4 ELEVATION
SCALE 1/4" = 1'-0"
1 0 2 4 6

ITEMS USED ON THIS SHEET	
ITEM NO.	DESCRIPTION
203.16	SOLID ROCK EXCAVATION
204.25	STRUCTURE EXCAVATION
204.30	GRANULAR BACKFILL FOR STRUCTURES
501.33	CONCRETE, HIGH PERFORMANCE CLASS A
501.34	CONCRETE, HIGH PERFORMANCE CLASS B
507.16	DRILLING AND GROUTING DOWELS
514.10	WATER REPELLENT, SILANE
651.15	SEED
651.25	HAY MULCH
651.35	TOPSOIL

FOUNDATION NOTES - SPREAD FOOTING ON BEDROCK

1. EXCAVATION FOR THE CONSTRUCTION OF SPREAD FOOTINGS ON BEDROCK SHALL BE IN ACCORDANCE WITH THE REQUIREMENTS OF VTRANS STANDARD SPECIFICATIONS SECTION 204, AND AS AMENDED BY THESE FOUNDATION NOTES.

2. EXCAVATION SHALL BE PERFORMED TO THE BOTTOM OF THE FOOTING AS SHOWN ON THE PLANS, OR DEEPER AS REQUIRED TO BEAR ON COMPETENT BEDROCK. EXCAVATION SHALL EXTEND INTO BEDROCK TO PROVIDE THE MINIMUM FOOTING THICKNESSES IDENTIFIED ON THE PLANS. EXCAVATION SHALL BE SUFFICIENT TO EXPOSE A GENERALLY LEVEL COMPETENT BEDROCK SURFACE AS DETERMINED AND APPROVED BY THE ENGINEER.

3. ALL FOOTINGS SHALL BEAR ENTIRELY ON COMPETENT BEDROCK.

4. WEATHERED BEDROCK BELOW THE BOTTOM OF PROPOSED FOOTINGS SHALL BE COMPLETELY REMOVED. IF SLOPING BEDROCK IS ENCOUNTERED, THE BEDROCK SURFACE SHALL BE STEPPED IN ACCORDANCE WITH THE FOLLOWING: LOCALIZED AREAS OF REMOVAL BELOW THE BOTTOM OF PROPOSED FOOTING SHALL BE PREPARED SUCH THAT THE EXCAVATED ROCK FACE BETWEEN LEVEL AREAS IS BETWEEN 45 DEGREES FROM HORIZONTAL AND AS CLOSE TO VERTICAL AS PRACTICAL. THE LIMITS OF BEDROCK REMOVAL AND PREPARATION OF THE SURFACE SHALL BE OBSERVED AND APPROVED BY THE ENGINEER PRIOR TO PLACEMENT OF ANY FOOTING CONCRETE.

5. SNOW OR ICE, IF EXISTING, SHALL BE COMPLETELY REMOVED PRIOR TO FOUNDATION CONCRETE PLACEMENT.

6. HORIZONTAL LIMITS OF BEDROCK REMOVAL SHALL BE SUFFICIENT TO ACCOMMODATE THE DESIGN FOOTING DIMENSIONS. LOOSE OR WEATHERED BEDROCK ADJACENT TO THE FOOTING BUT ABOVE THE PROPOSED BOTTOM OF FOOTING NEED NOT BE REMOVED PROVIDED THAT IT IS STABLE AND WILL SUPPORT THE VERTICAL FACE OF THE FOOTING DURING CONCRETE PLACEMENT AND CURING.

7. THE AREAS OF BEDROCK REMOVAL BELOW THE PROPOSED BOTTOM OF FOOTING SHALL BE REPLACED WITH UNREINFORCED HIGH PERFORMANCE CONCRETE, CLASS B, PLACED AT THE SAME TIME AS THE FOOTINGS, UNLESS OTHERWISE SHOWN. REINFORCING STEEL SHALL BE PLACED AS SHOWN ON THE PLANS.

8. STEPPED FOOTING SEGMENTS AS SHOWN ON THE PLANS SHALL BE PLACED IN SEPARATE CONCRETE PLACEMENTS.

9. REINFORCING STEEL DOWELS SHALL BE CORRECTLY SPACED AND PLACED INTO THE PREPARED BEDROCK SURFACE EXTENDING INTO THE PROPOSED FOOTING CONCRETE WHERE INDICATED ON THE PLANS.

NOTES:

1. FOR ABUTMENT 4 FOOTING REINFORCING DETAILS, SEE ABUT. 4 REINFORCEMENT - SHEETS 1 & 2.

2. FOR ABUTMENT 4 STEM, SEAT AND BACKWALL REINFORCING DETAILS, SEE ABUT. 4 REINFORCEMENT - SHEET 2.

3. FOR KEEPER BLOCK DETAILS, SEE ABUTMENT DETAILS - SHEET 2.

4. FOR ADDITIONAL PILASTER, PEDESTAL AND CONSTRUCTION JOINT DETAILS, SEE ABUTMENT DETAILS - SHEET 1.

5. FOR CONTRACTION JOINT DETAIL, SEE ABUTMENT 3 ELEVATION AND SECTION SHEET.

6. EMBANKMENT AREAS DISTURBED BY CONSTRUCTION SHALL BE RESTORED UPON COMPLETION OF THE WORK BY INSTALLING TOPSOIL, SEED AND HAY MULCH.

PROJECT NAME: WINDSOR
PROJECT NUMBER: IM 091-1(64)

FILE NAME: z10a188Abut4E.dgn
PROJECT LEADER: J. WILSON
DESIGNED BY: S. BOYINGTON
ABUTMENT 4 ELEVATION

PLOT DATE: 7/30/2015
DRAWN BY: S. GUNN
CHECKED BY: S. HALLORAN
SHEET 126 OF156

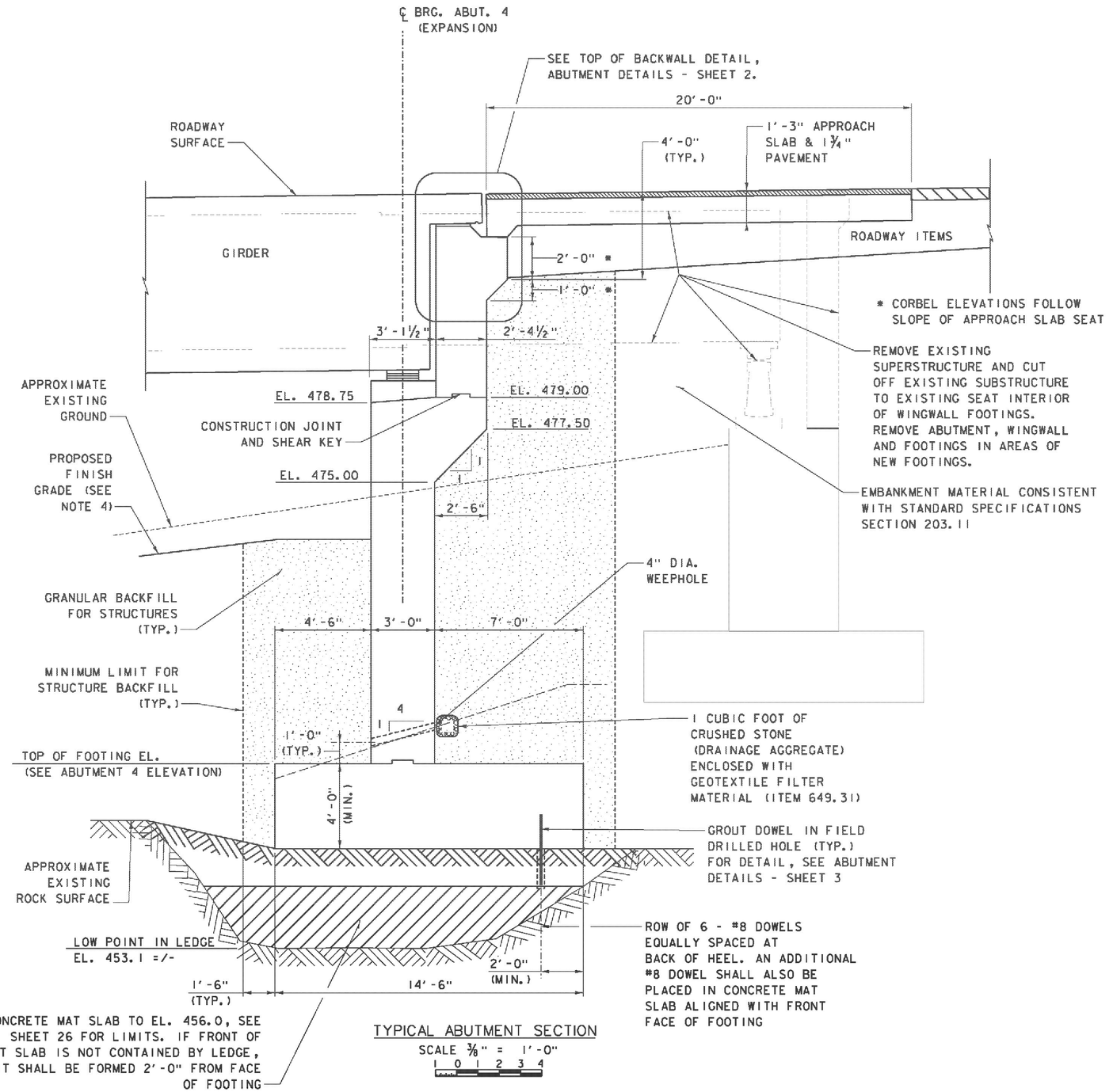

TYPICAL ABUTMENT SECTION

SCALE 3/8" = 1'-0"

1 0 1 2 3 4

ITEMS USED ON THIS SHEET	
ITEM NO.	DESCRIPTION
203.16	SOLID ROCK EXCAVATION
204.25	STRUCTURE EXCAVATION
204.30	GRANULAR BACKFILL FOR STRUCTURES
490.30	SUPERPAVE BITUMINOUS CONCRETE PAVEMENT
501.33	CONCRETE, HIGH PERFORMANCE CLASS A
501.34	CONCRETE, HIGH PERFORMANCE CLASS B
507.16	DRILLING AND GROUTING DOWELS
514.10	WATER REPELLENT, SILANE
529.15	REMOVAL OF STRUCTURE
649.31	GEOTEXTILE UNDER STONE FILL
651.15	SEED
651.25	HAY MULCH
651.35	TOPSOIL

NOTES:

1. FOR ABUTMENT 4 FOOTING REINFORCING DETAILS, SEE ABUT. 4 REINFORCEMENT - SHEET 1.
2. FOR ABUTMENT 4 STEM, SEAT AND BACKWALL REINFORCING DETAILS, SEE ABUT. 4 REINFORCEMENT - SHEET 2.
3. FOR CONSTRUCTION JOINT DETAILS, SEE ABUTMENT DETAILS - SHEET 1.
4. EMBANKMENT AREAS DISTURBED BY CONSTRUCTION SHALL BE RESTORED UPON COMPLETION OF THE WORK BY INSTALLING TOPSOIL, SEED AND HAY MULCH.

PROJECT NAME: WINDSOR
PROJECT NUMBER: IM 091-1(64)

FILE NAME: z10a188Abut4S.dgn
PROJECT LEADER: J. WILSON
DESIGNED BY: S. BOYINGTON
ABUTMENT 4 SECTION

PLOT DATE: 7/30/2015
DRAWN BY: S. GUNN
CHECKED BY: S. HALLORAN
SHEET 127 OF 156

ITEMS USED ON THIS SHEET	
ITEM NO.	DESCRIPTION
501.34	CONCRETE, HIGH PERFORMANCE CLASS B

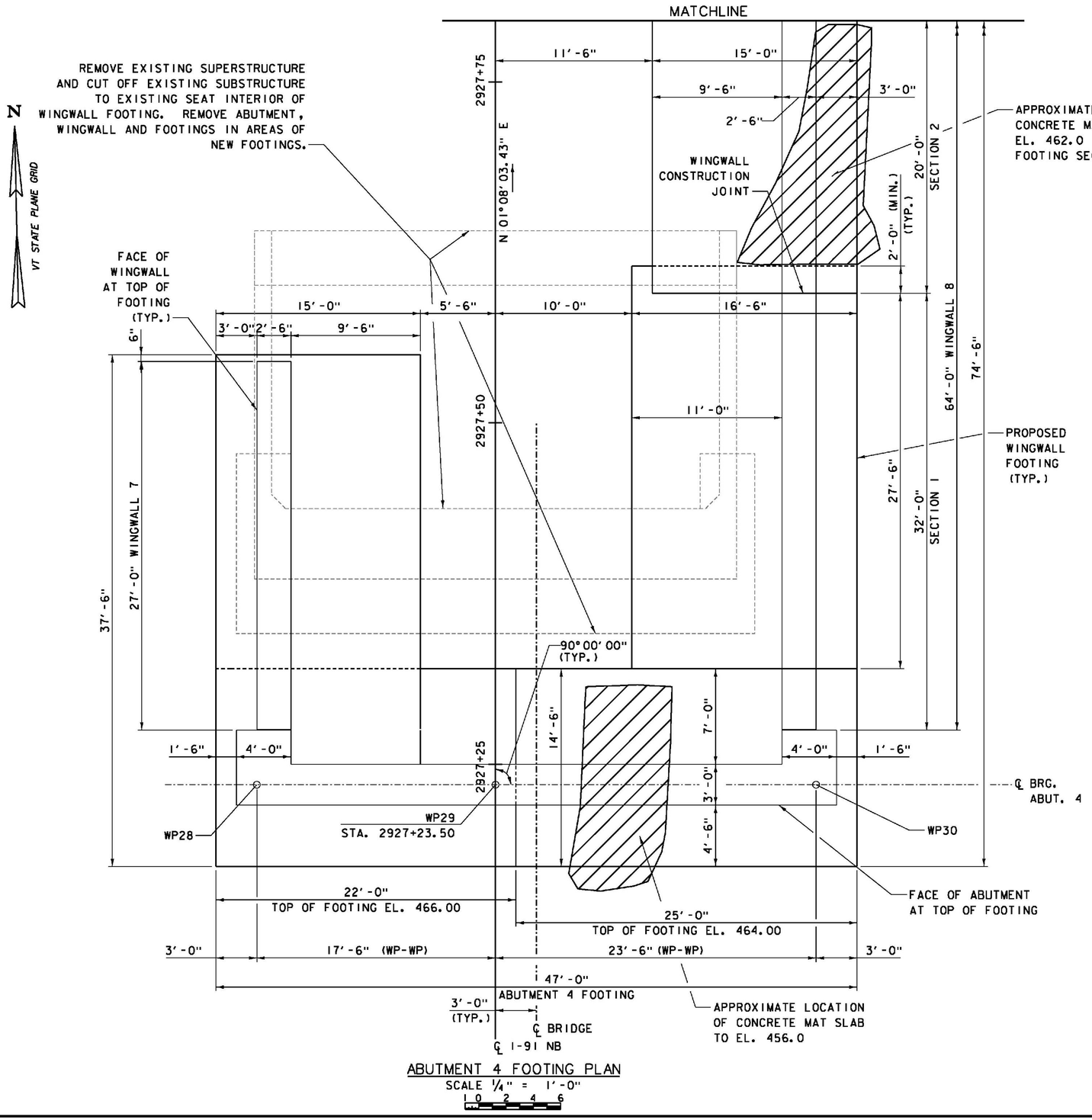

ABUTMENT 4 FOOTING PLAN
SCALE 1/4" = 1'-0"
1 0 2 4 6

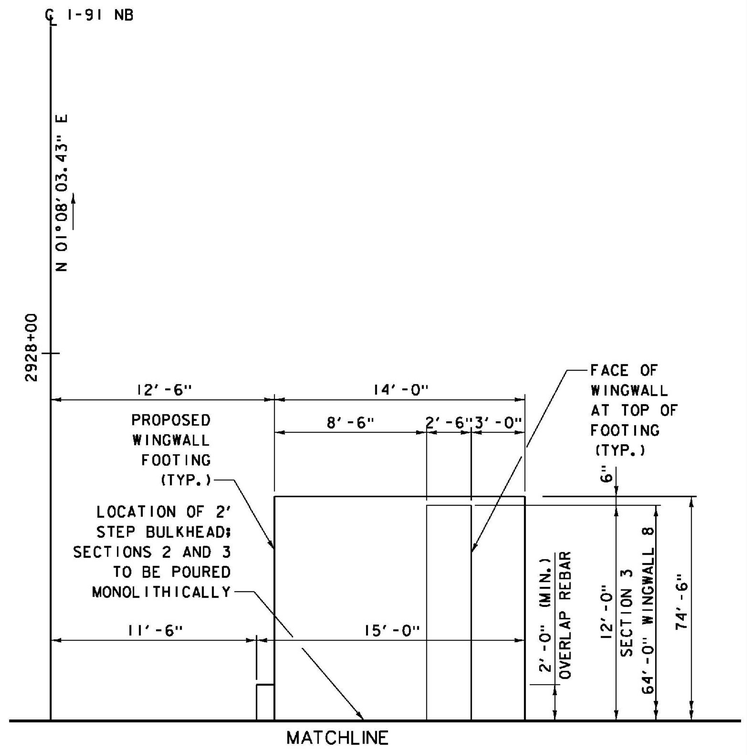

NOTES:

1. FOR FOUNDATION NOTES, SEE ABUTMENT 4 ELEVATION SHEET.
2. FOR ABUTMENT 4 FOOTING REINFORCING DETAILS, SEE ABUT. 4 REINFORCEMENT - SHEET 1.
3. FOR WINGWALL 7 AND 8 REINFORCING DETAILS, SEE ABUT. 4 WINGWALL REINFORCEMENT SHEETS.
4. FOR ABUTMENT 4 STEM, SEAT AND BACKWALL REINFORCING DETAILS, SEE ABUT. 4 REINFORCEMENT - SHEET 2.

PROJECT NAME: WINDSOR
PROJECT NUMBER: IM 091-1(64)

FILE NAME: z10a188Abut4FP.dgn
PROJECT LEADER: J. WILSON
DESIGNED BY: S. BOYINGTON
ABUTMENT 4 FOOTING PLAN

PLOT DATE: 7/30/2015
DRAWN BY: S. GUNN
CHECKED BY: S. HALLORAN
SHEET 128 OF156

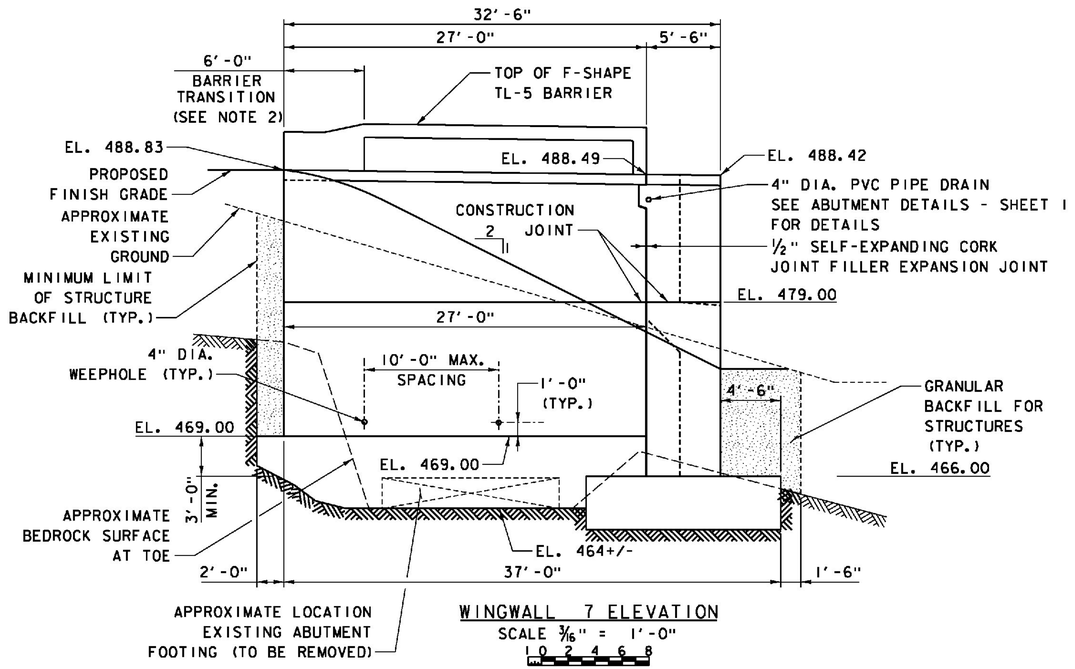

WINGWALL 7 ELEVATION

SCALE 3/16" = 1'-0"

WINGWALL FOOTING DIMENSIONS			
WINGWALL NO.	SECTION NO.	HEEL "A"	WIDTH "B"
7		9'-6"	15'-0"
8	1	11'-0"	16'-6"
8	2	9'-6"	15'-0"
8	3	8'-6"	14'-0"

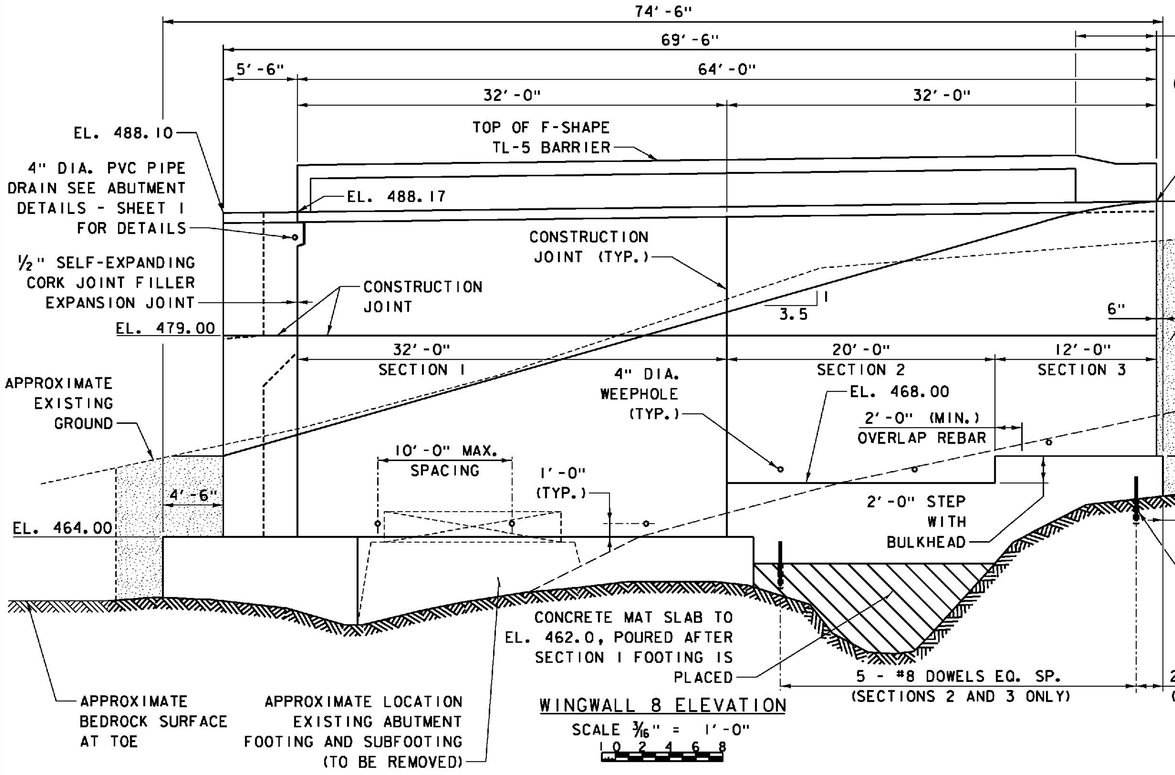

WINGWALL 8 ELEVATION

SCALE 3/16" = 1'-0"

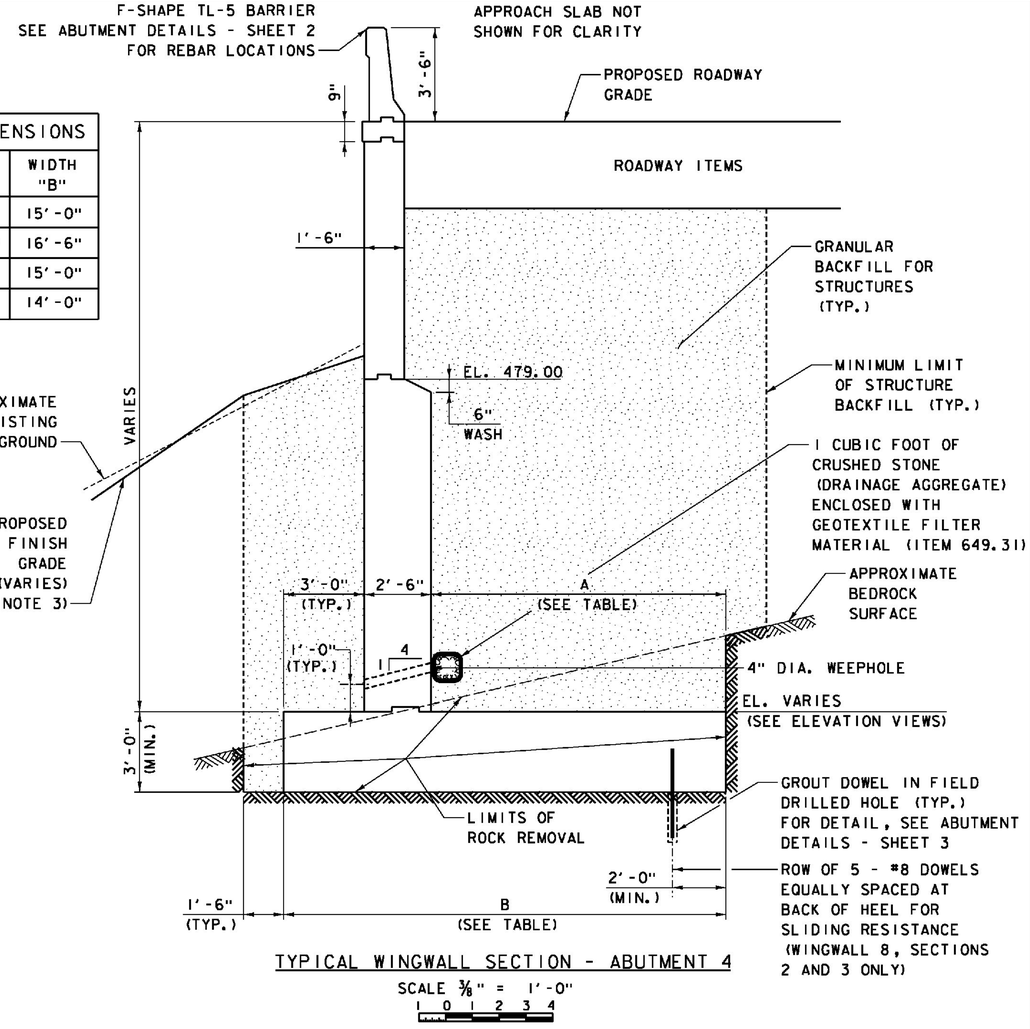

TYPICAL WINGWALL SECTION - ABUTMENT 4

SCALE 3/8" = 1'-0"

NOTES:

1. FOR WINGWALL 7 AND 8 REINFORCING DETAILS, SEE ABUT. 4 WINGWALL REINFORCEMENT.
2. FOR DETAILS OF BARRIER TRANSITION AT WING ENDS, SEE F-SHAPE BARRIER TRANSITION DETAIL SHEET INCLUDED IN SUPERSTRUCTURE DRAWINGS.
3. FOR REINFORCED SLOPE DETAIL AT WINGWALL 8, SEE DETAIL ON ABUTMENT DETAILS - SHEET 3.
4. FOR CONSTRUCTION AND EXPANSION JOINT DETAILS, SEE ABUTMENT DETAILS - SHEET 1.
5. FOR DETAILS OF EXPANSION JOINT BETWEEN PILASTER AND WINGWALL, AND CONSTRUCTION JOINTS, SEE ABUTMENT DETAILS - SHEET 1.
6. EMBANKMENT AREAS DISTURBED BY CONSTRUCTION SHALL BE RESTORED UPON COMPLETION OF THE WORK BY INSTALLING TOPSOIL, SEED AND HAY MULCH.

ITEMS USED ON THIS SHEET	
ITEM NO.	DESCRIPTION
203.16	SOLID ROCK EXCAVATION
204.25	STRUCTURE EXCAVATION
204.30	GRANULAR BACKFILL FOR STRUCTURES
501.33	CONCRETE, HIGH PERFORMANCE CLASS A
501.34	CONCRETE, HIGH PERFORMANCE CLASS B
514.10	WATER REPELLENT, SILANE
529.15	REMOVAL OF STRUCTURE
651.15	SEED
651.25	HAY MULCH
651.35	TOPSOIL
900.640	BRIDGE RAILING, F-SHAPE CONCRETE

PROJECT NAME: WINDSOR
PROJECT NUMBER: IM 091-1(64)

FILE NAME: z10a188Abut4WM.dgn
PROJECT LEADER: J. WILSON
DESIGNED BY: S. BOYINGTON
ABUTMENT 4 WINGWALLS

PLOT DATE: 7/30/2015
DRAWN BY: S. GUNN
CHECKED BY: S. HALLORAN
SHEET 129 OF 156

ITEMS USED ON THIS SHEET	
ITEM NO.	DESCRIPTION
507.15	REINFORCING STEEL
507.17	EPOXY COATED REINFORCING STEEL
501.34	CONCRETE, HIGH PERFORMANCE CLASS B
507.16	DRILLING AND GROUTING DOWELS

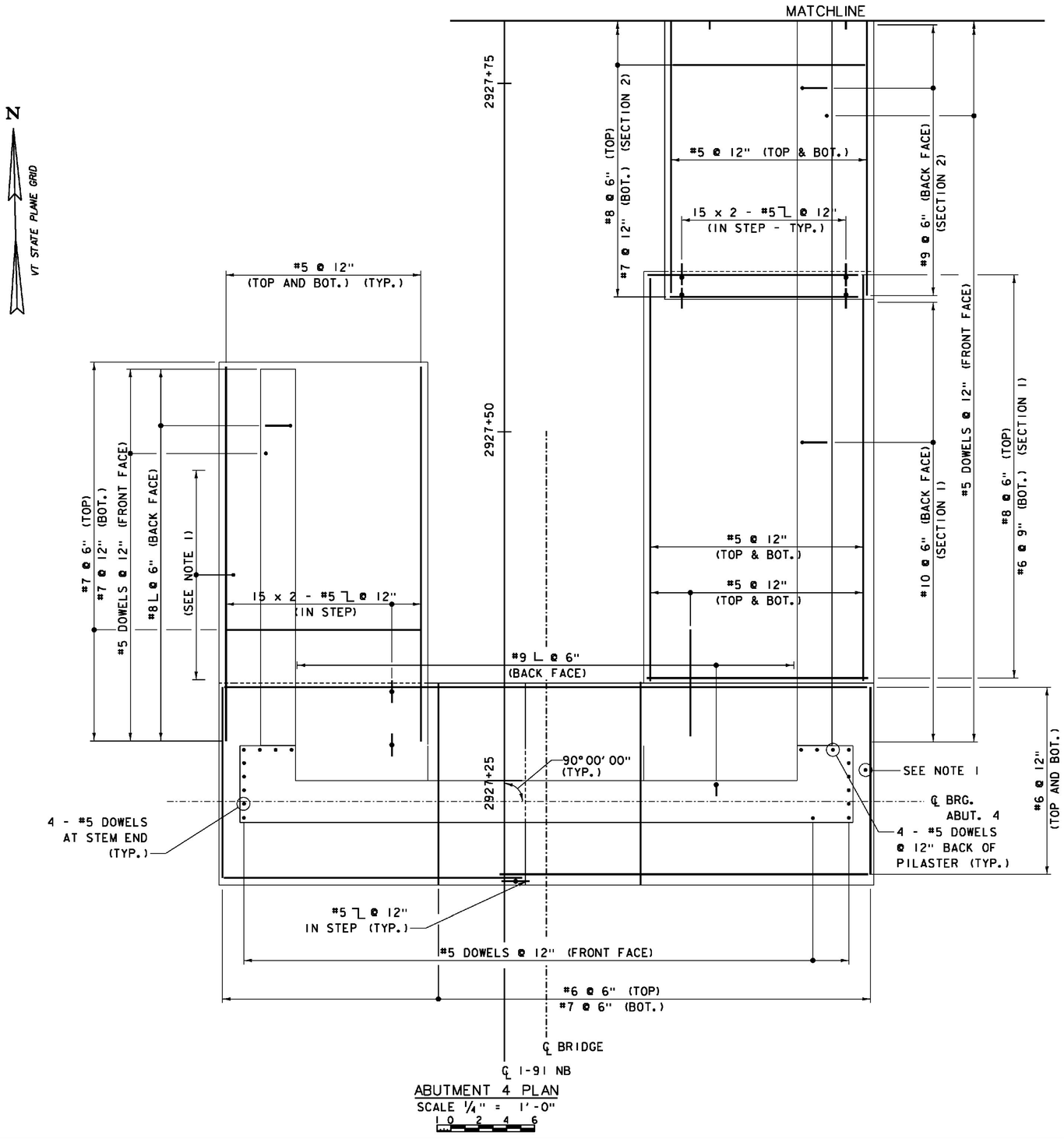

ABUTMENT 4 PLAN
SCALE 1/4" = 1'-0"
1 0 2 4 6

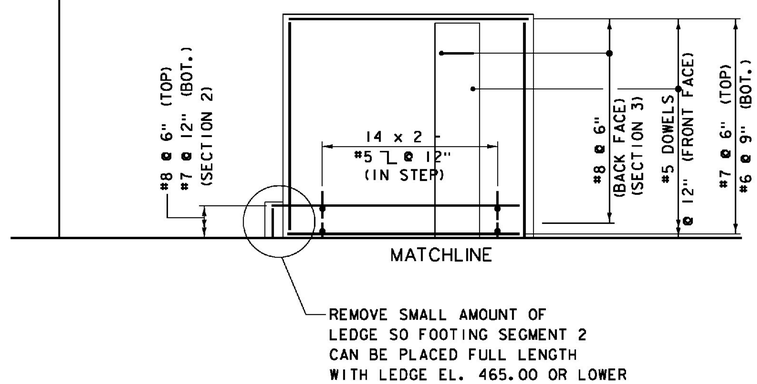

NOTES:

1. DRILL AND GROUT #5 DOWELS IN PREPARED BEDROCK SURFACE SPACED AT 2'-0" AT FACE OF UNREINFORCED FOOTING CONCRETE WITH A DEPTH GREATER THAN 2'-0". SPLICE #5 ⌐ AS SHOWN ON ABUTMENT AND WINGWALL REINFORCING DETAILS.

PROJECT NAME: WINDSOR
PROJECT NUMBER: IM 091-1(64)

FILE NAME: z10o188Abut4RP.dgn
PROJECT LEADER: J. WILSON
DESIGNED BY: S. BOYINGTON
ABUT. 4 REINFORCEMENT - SHEET 1

PLOT DATE: 7/30/2015
DRAWN BY: S. GUNN
CHECKED BY: S. HALLORAN
SHEET 130 OF156

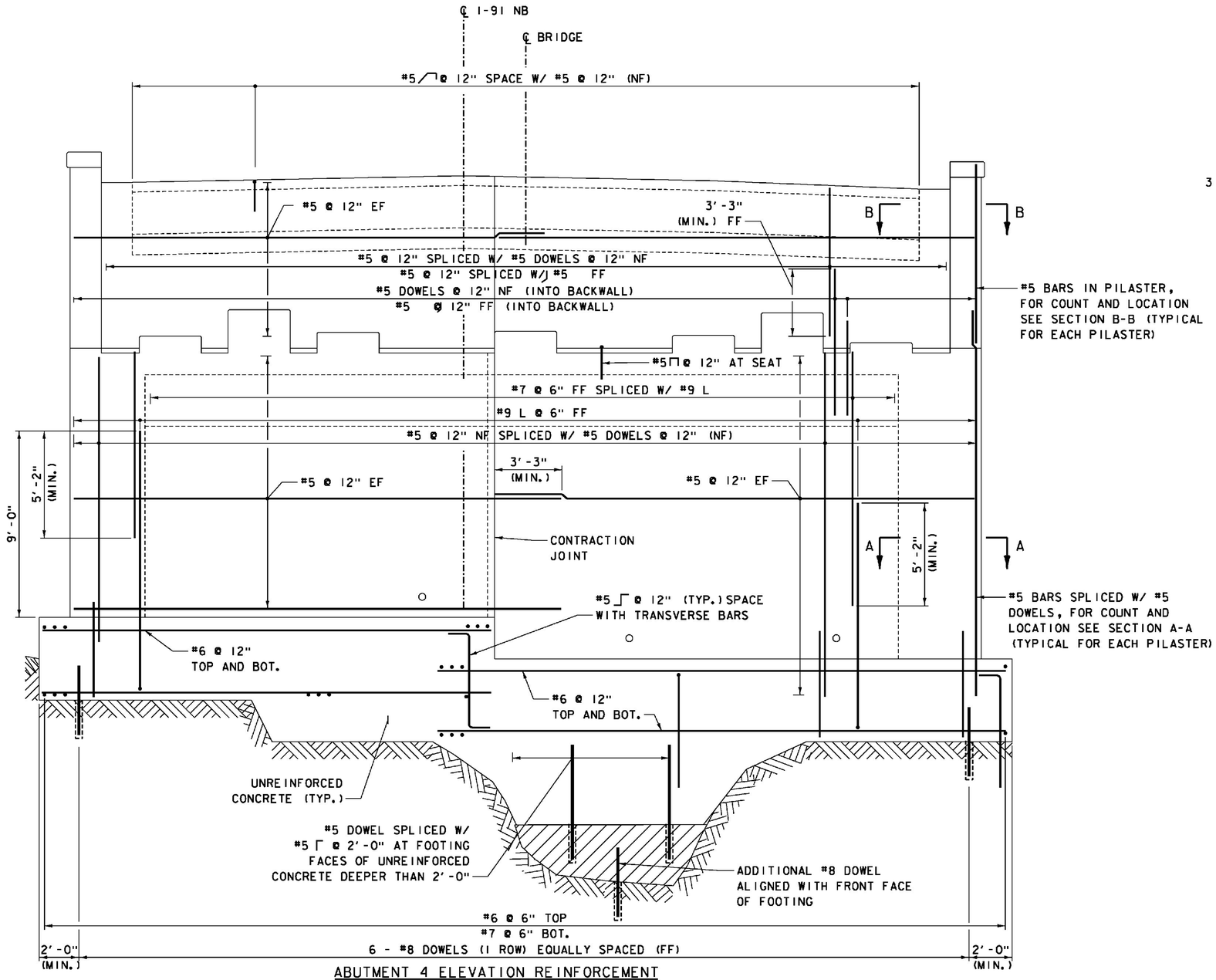

ABUTMENT 4 ELEVATION REINFORCEMENT

SCALE 3/8" = 1'-0"

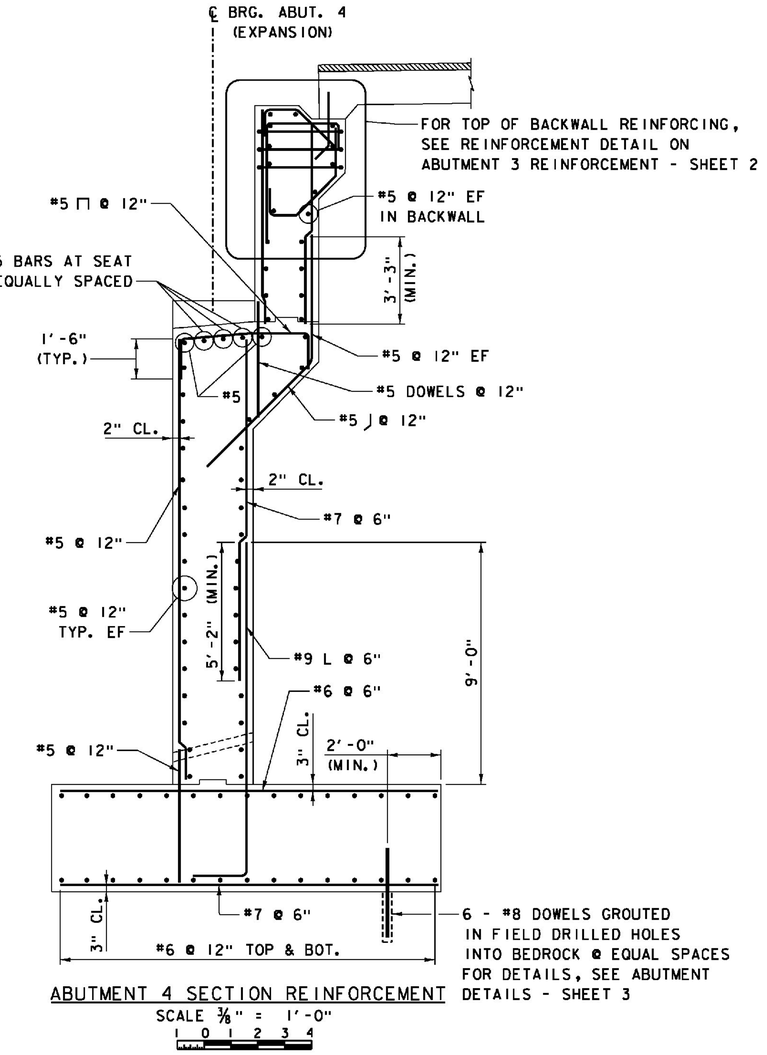

ABUTMENT 4 SECTION REINFORCEMENT

SCALE 3/8" = 1'-0"

NOTES:

1. FOR SUBSTRUCTURE NOTES, SEE ABUTMENT 3 PLAN SHEET.
2. FOR REINFORCEMENT IN ABUTMENT PEDESTALS, SEE ABUTMENT DETAILS - SHEET 1.
3. FOR KEEPER BLOCK REINFORCING, SEE ABUTMENT DETAILS - SHEET 2
4. FOR SECTION A-A AND SECTION B-B PILASTER REINFORCING DETAILS, SEE ABUTMENT DETAILS - SHEET 3.

LEGEND
NF = NEAR FACE
FF = FAR FACE
EF = EACH FACE

ITEMS USED ON THIS SHEET	
ITEM NO.	DESCRIPTION
501.33	CONCRETE, HIGH PERFORMANCE CLASS A
501.34	CONCRETE, HIGH PERFORMANCE CLASS B
507.15	REINFORCING STEEL
507.16	DRILLING AND GROUTING DOWELS
507.17	EPOXY COATED REINFORCING STEEL

PROJECT NAME: WINDSOR
PROJECT NUMBER: IM 091-1(64)

FILE NAME: z10a188Abut4RES.dgn
PROJECT LEADER: J. WILSON
DESIGNED BY: S. BOYINGTON
ABUT. 4 REINFORCEMENT - SHEET 2

PLOT DATE: 7/30/2015
DRAWN BY: S. GUNN
CHECKED BY: S. HALLORAN
SHEET 131 OF 156

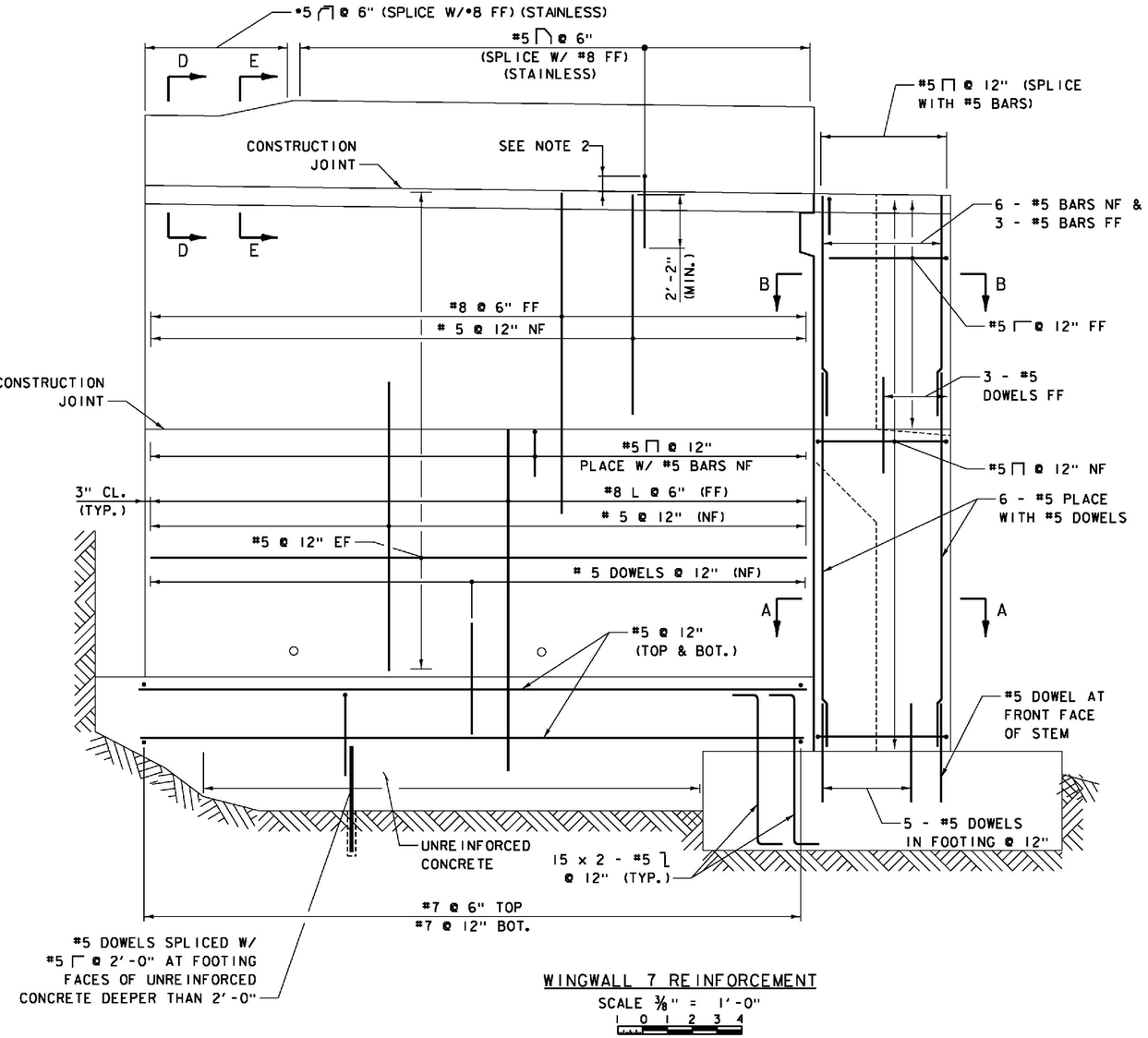

WINGWALL 7 REINFORCEMENT

SCALE 3/8" = 1'-0"

0 1 2 3 4

ABUTMENT 4 WINGWALL REINFORCEMENT					
WINGWALL NO.	SECTION NO.	BAR "A"	BAR "B"	BAR "C"	BAR "D"
7		#7 @ 12"	#7 @ 6"	#8 @ 6"	#8 @ 6"
8	1	#6 @ 9"	#8 @ 6"	#10 @ 6"	#8 @ 6"
8	2	#7 @ 12"	#8 @ 6"	#9 @ 6"	#8 @ 6"
8	3	#6 @ 9"	#7 @ 6"	#8 @ 6"	#8 @ 6"

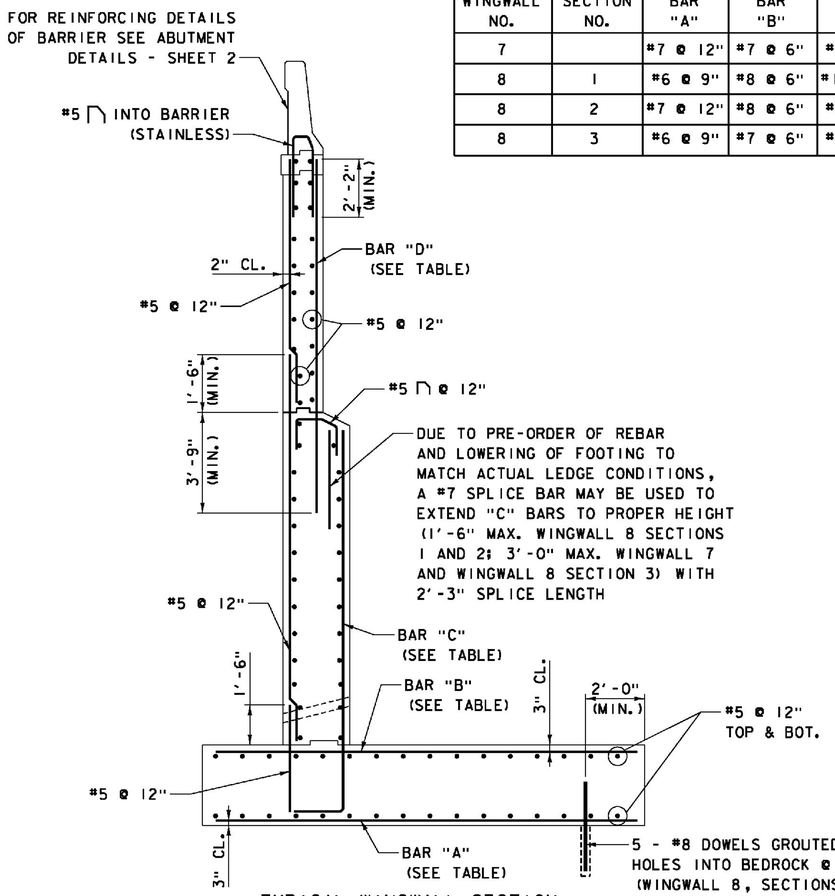

TYPICAL WINGWALL SECTION REINFORCEMENT

SCALE 3/8" = 1'-0"

0 1 2 3 4

NOTES:

1. REINFORCEMENT ABOVE FOOTINGS TO BE EPOXY COATED; FOOTING REBAR IS UNCOATED; REINFORCEMENT IN AND INTO F-SHAPE BARRIER TO BE SOLID STAINLESS.
2. FOR F-SHAPE BARRIER REINFORCING DETAILS, SEE ABUTMENT DETAILS - SHEET 2.
3. FOR SECTION A-A & SECTION B-B PILASTER REINFORCING DETAILS, SEE ABUTMENT DETAILS - SHEET 3.
4. FOR SECTION D-D AND SECTION E-E, SEE ABUTMENT 3 WINGWALL REINFORCEMENT SHEET.

LEGEND
NF = NEAR FACE
FF = FAR FACE
EF = EACH FACE

ITEMS USED ON THIS SHEET	
ITEM NO.	DESCRIPTION
501.33	CONCRETE, HIGH PERFORMANCE CLASS A
501.34	CONCRETE, HIGH PERFORMANCE CLASS B
507.15	REINFORCING STEEL
507.16	DRILLING AND GROUTING DOWELS
507.17	EPOXY COATED REINFORCING STEEL
900.635	STAINLESS STEEL REINFORCING
900.640	BRIDGE RAILING, F-SHAPE CONCRETE

PROJECT NAME: WINDSOR
PROJECT NUMBER: IM 091-1(64)

FILE NAME: z10o188Abut4RW1.dgn
PROJECT LEADER: J. WILSON
DESIGNED BY: S. BOYINGTON
ABUT. 4 WINGWALL REINFORCEMENT - 1

PLOT DATE: 7/30/2015
DRAWN BY: S. GUNN
CHECKED BY: S. HALLORAN
SHEET 132 OF156

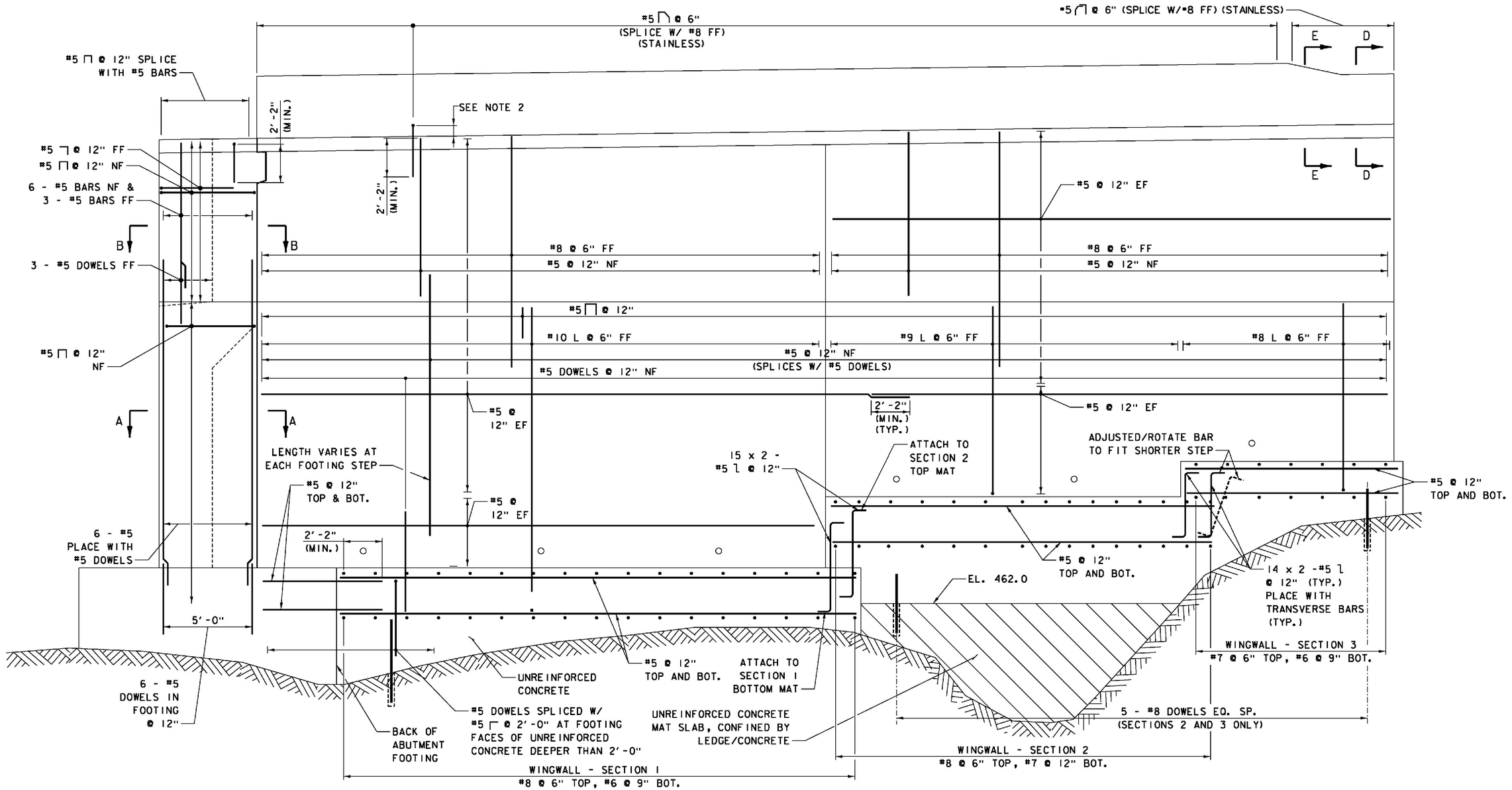

WINGWALL 8 REINFORCEMENT

SCALE 3/8" = 1'-0"

0 1 2 3 4

NOTES:

1. REINFORCEMENT ABOVE FOOTINGS SHALL BE EPOXY COATED. REINFORCEMENT IN FOOTING SHALL BE UNCOATED. REINFORCEMENT PLACED IN FOOTING AND EXTENDING ABOVE TOP OF FOOTING SHALL BE EPOXY COATED. REINFORCEMENT IN AND INTO F-SHAPE BARRIER SHALL BE SOLID STAINLESS.
2. FOR F-SHAPE BARRIER REINFORCING DETAILS, SEE ABUTMENT DETAILS - SHEET 2.
3. FOR SECTION A-A & SECTION B-B PILASTER REINFORCING DETAILS, SEE ABUTMENT DETAILS - SHEET 3.
4. FOR TYPICAL WINGWALL SECTION REINFORCEMENT, SEE ABUT. 4 WINGWALL REINFORCEMENT - 1.
5. FOR SECTION D-D AND SECTION E-E, SEE ABUTMENT 3 WINGWALL REINFORCEMENT SHEET.

ITEMS USED ON THIS SHEET	
ITEM NO.	DESCRIPTION
501.33	CONCRETE, HIGH PERFORMANCE CLASS A
501.34	CONCRETE, HIGH PERFORMANCE CLASS B
507.15	REINFORCING STEEL
507.17	EPOXY COATED REINFORCING STEEL
900.635	STAINLESS STEEL REINFORCING
900.640	BRIDGE RAILING, F-SHAPE CONCRETE

LEGEND
NF = NEAR FACE
FF = FAR FACE
EF = EACH FACE

PROJECT NAME: WINDSOR
PROJECT NUMBER: IM 091-1(64)

FILE NAME: z10a188Abut4RW2.dgn
PROJECT LEADER: J. WILSON
DESIGNED BY: S. BOYINGTON
ABUT. 4 WINGWALL REINFORCEMENT - 2

PLOT DATE: 7/30/2015
DRAWN BY: S. GUNN
CHECKED BY: S. HALLORAN
SHEET 133 OF156

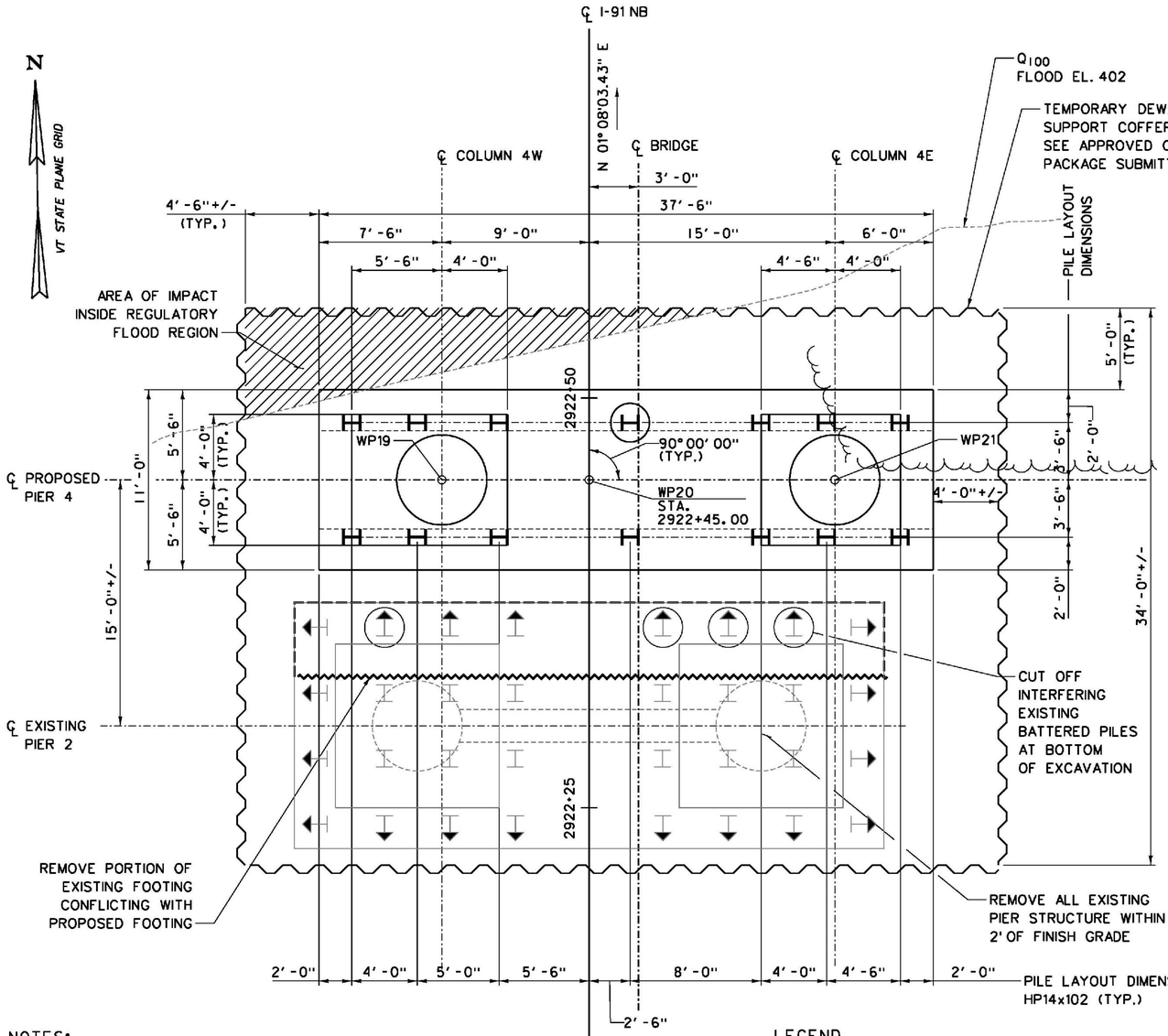

PIER 4 FOOTING PLAN
SCALE 1/4" = 1'-0"
1 0 2 4 6

WORKING POINT CONTROL			
LOCATION	STATION	NORTHING	EASTING
WP19	2922+45.00, 9.00' LT.	347388.5183	1665152.7754
WP20	2922+45.00, CL	347388.3401	1665161.7736
WP21	2922+45.00, 15.00' RT.	347388.0432	1665176.7707

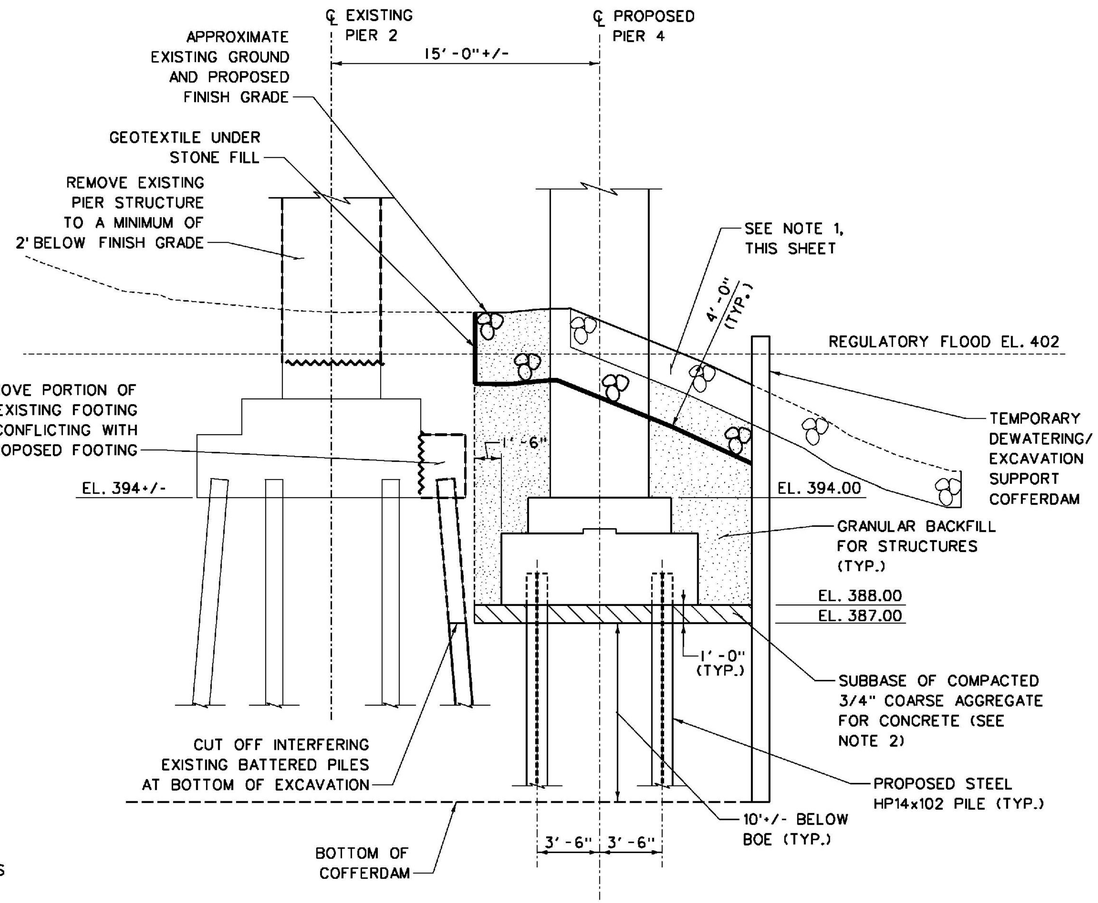

PIER 4 FOOTING SECTION
SCALE 1/4" = 1'-0"
1 0 2 4 6

NOTES:

1. EXISTING RIPRAP SHALL BE REMOVED WITHIN LIMITS OF COFFERDAM. UPON COMPLETION OF WORK, 4' THICKNESS OF STONE FILL TYPE IV SHALL BE CONSTRUCTED TO THE LIMITS FOR STRUCTURE BACKFILL TO RESTORE THE PROTECTED BANK. REMAINING EMBANKMENT AREAS DISTURBED BY CONSTRUCTION SHALL BE RESTORED BY INSTALLING TOPSOIL, SEED AND HAY MULCH.

2. COMPACTED MATERIAL BENEATH PIER FOOTINGS SHALL MEET THE GRADATION REQUIREMENTS OF TABLE 704.02B OF THE VTRANS STANDARD SPECIFICATIONS.

3. AFTER THE ACTUAL LOCATION OF EXISTING PILES ADJACENT TO NEW PIER FOUNDATION IS DISCOVERED, ANY REQUIRED ADJUSTMENT IN PROPOSED PILE LOCATION SHALL BE COORDINATED WITH THE DESIGN MANAGER.

LEGEND

(H) INDICATES PILE DESIGNATED FOR PDA TESTING

ITEMS USED ON THIS SHEET	
ITEM NO.	DESCRIPTION
204.25	STRUCTURE EXCAVATION
204.30	GRANULAR BACKFILL FOR STRUCTURES
208.40	COFFERDAM
501.34	CONCRETE, HIGH PERFORMANCE CLASS B
504.10	FURNISHING EQUIPMENT FOR PILE DRIVING
505.19	STEEL PILING, HP14x102
505.45	DYNAMIC PILE LOADING TEST
529.15	REMOVAL OF STRUCTURE
613.13	STONE FILL, TYPE IV
649.31	GEOTEXTILE UNDER STONE FILL
651.15	SEED
651.25	HAY MULCH
651.35	TOPSOIL

PROJECT NAME: WINDSOR
PROJECT NUMBER: IM 091-1(64)

FILE NAME: z10a188Pier4P.dgn
PROJECT LEADER: J. WILSON
DESIGNED BY: S. BOYINGTON
PIER 4 FOOTING PLAN & SECTION

PLOT DATE: 7/30/2015
DRAWN BY: S. GUNN
CHECKED BY: S. HALLORAN
SHEET 134 OF 156

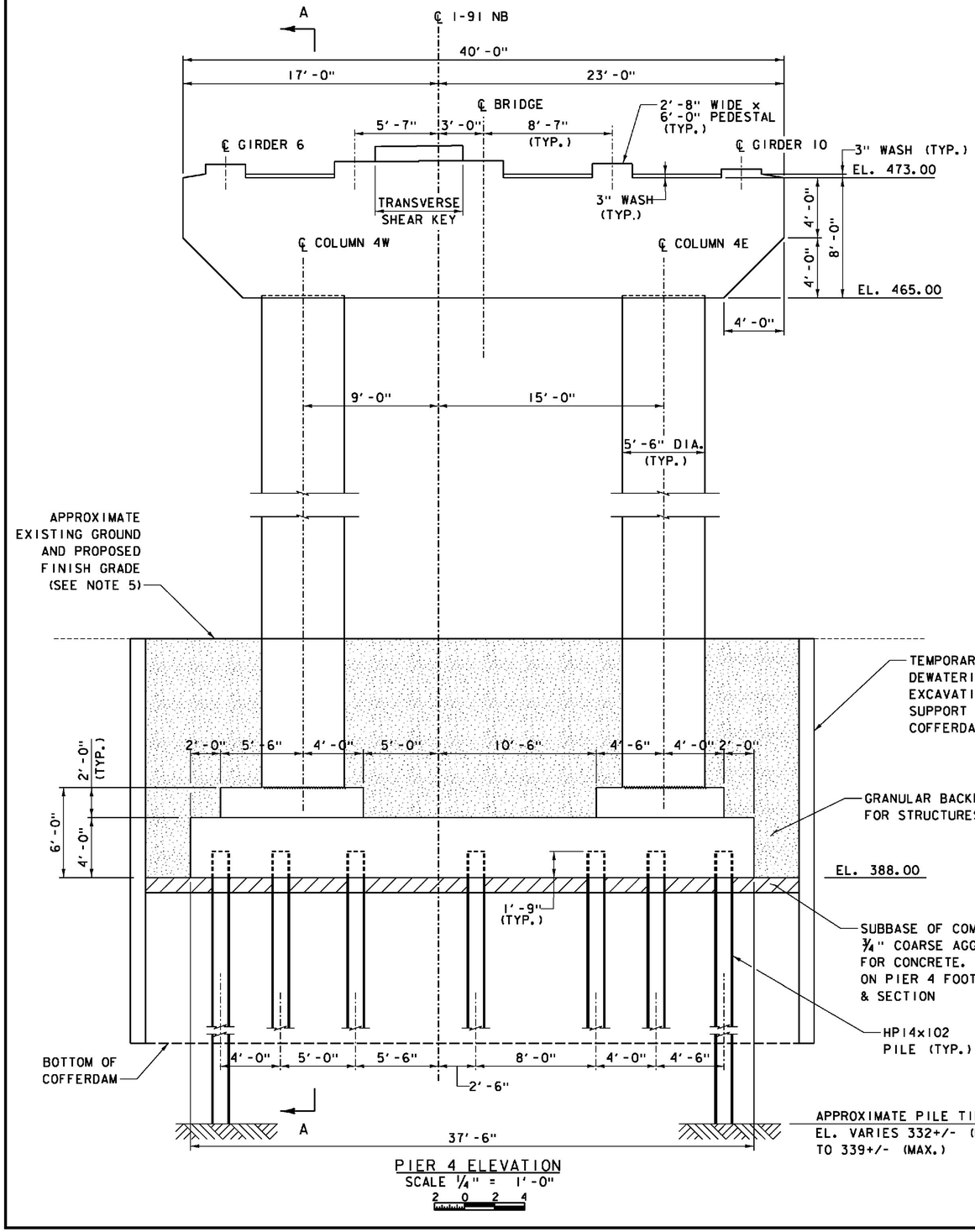

PIER 4 ELEVATION
SCALE ¼" = 1'-0"
2 0 2 4

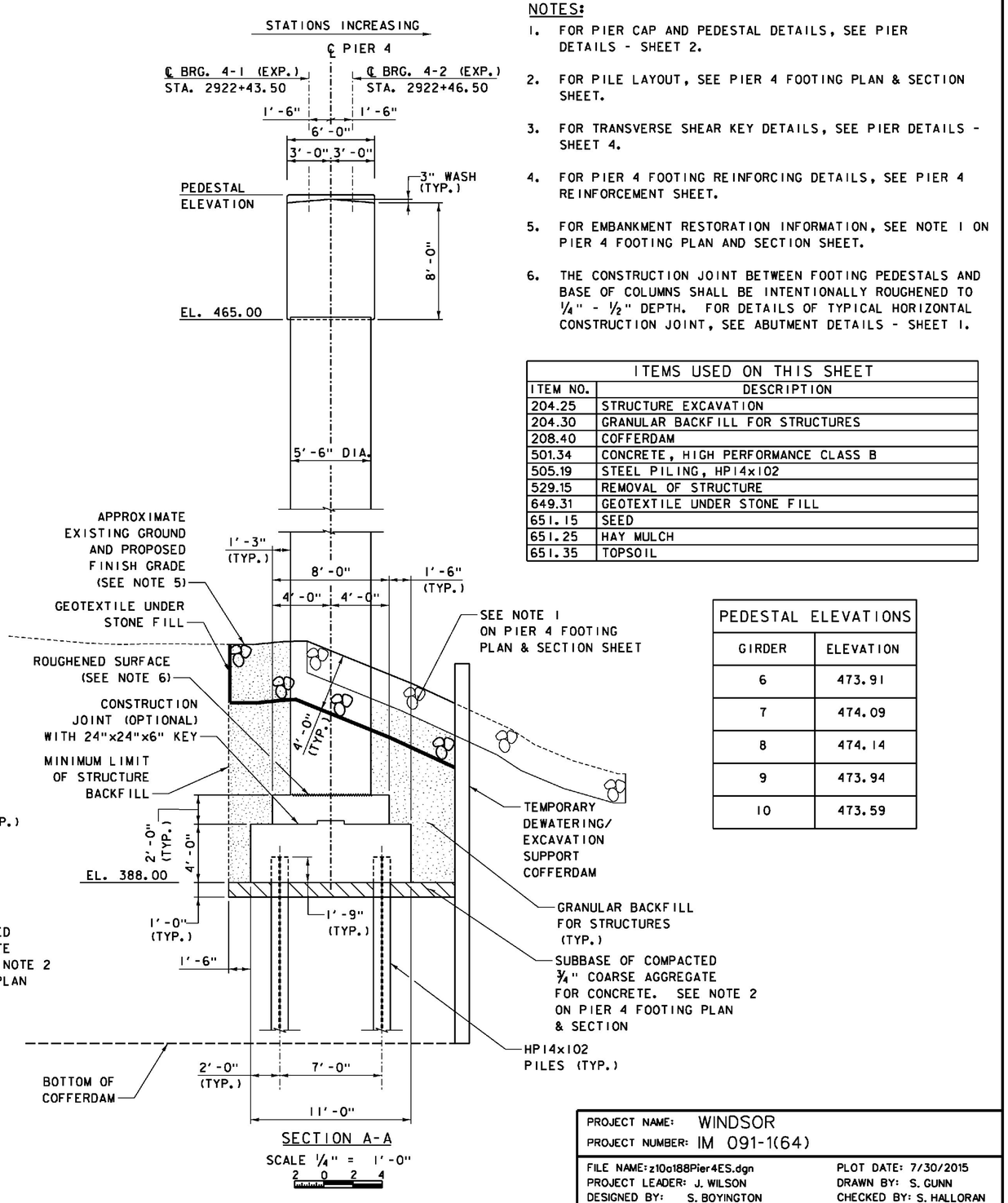

SECTION A-A
SCALE ¼" = 1'-0"
2 0 2 4

NOTES:

1. FOR PIER CAP AND PEDESTAL DETAILS, SEE PIER DETAILS - SHEET 2.
2. FOR PILE LAYOUT, SEE PIER 4 FOOTING PLAN & SECTION SHEET.
3. FOR TRANSVERSE SHEAR KEY DETAILS, SEE PIER DETAILS - SHEET 4.
4. FOR PIER 4 FOOTING REINFORCING DETAILS, SEE PIER 4 REINFORCEMENT SHEET.
5. FOR EMBANKMENT RESTORATION INFORMATION, SEE NOTE 1 ON PIER 4 FOOTING PLAN AND SECTION SHEET.
6. THE CONSTRUCTION JOINT BETWEEN FOOTING PEDESTALS AND BASE OF COLUMNS SHALL BE INTENTIONALLY ROUGHENED TO ¼" - ½" DEPTH. FOR DETAILS OF TYPICAL HORIZONTAL CONSTRUCTION JOINT, SEE ABUTMENT DETAILS - SHEET 1.

ITEMS USED ON THIS SHEET	
ITEM NO.	DESCRIPTION
204.25	STRUCTURE EXCAVATION
204.30	GRANULAR BACKFILL FOR STRUCTURES
208.40	COFFERDAM
501.34	CONCRETE, HIGH PERFORMANCE CLASS B
505.19	STEEL PILING, HP14x102
529.15	REMOVAL OF STRUCTURE
649.31	GEOTEXTILE UNDER STONE FILL
651.15	SEED
651.25	HAY MULCH
651.35	TOPSOIL

PEDESTAL ELEVATIONS	
GIRDER	ELEVATION
6	473.91
7	474.09
8	474.14
9	473.94
10	473.59

PROJECT NAME: WINDSOR
PROJECT NUMBER: IM 091-1(64)

FILE NAME: z10a188Pier4ES.dgn
PROJECT LEADER: J. WILSON
DESIGNED BY: S. BOYINGTON
PIER 4 ELEVATION & SECTION

PLOT DATE: 7/30/2015
DRAWN BY: S. GUNN
CHECKED BY: S. HALLORAN
SHEET 135 OF 156

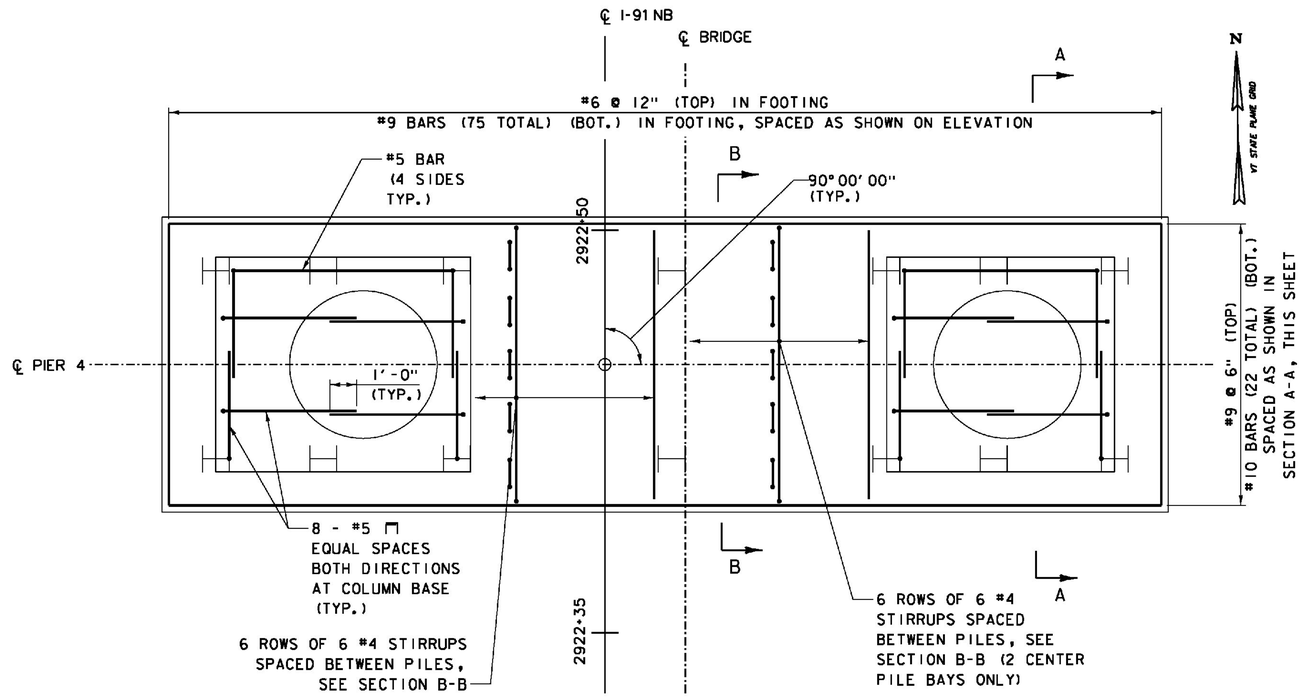

PIER 4 FOOTING REINFORCEMENT PLAN

SCALE 3/8" = 1'-0"

ITEMS USED ON THIS SHEET	
ITEM NO.	DESCRIPTION
501.34	CONCRETE, HIGH PERFORMANCE CLASS B
507.15	REINFORCING STEEL
507.17	EPOXY COATED REINFORCING STEEL

NOTE:
SPIRAL REINFORCING IN COLUMN AND EXTENDING INTO FOOTING ARE NOT SHOWN FOR CLARITY. FOR DETAILS AND LIMITS, SEE TYPICAL COLUMN REINFORCING DETAILS ON PIER DETAILS - SHEET 1.

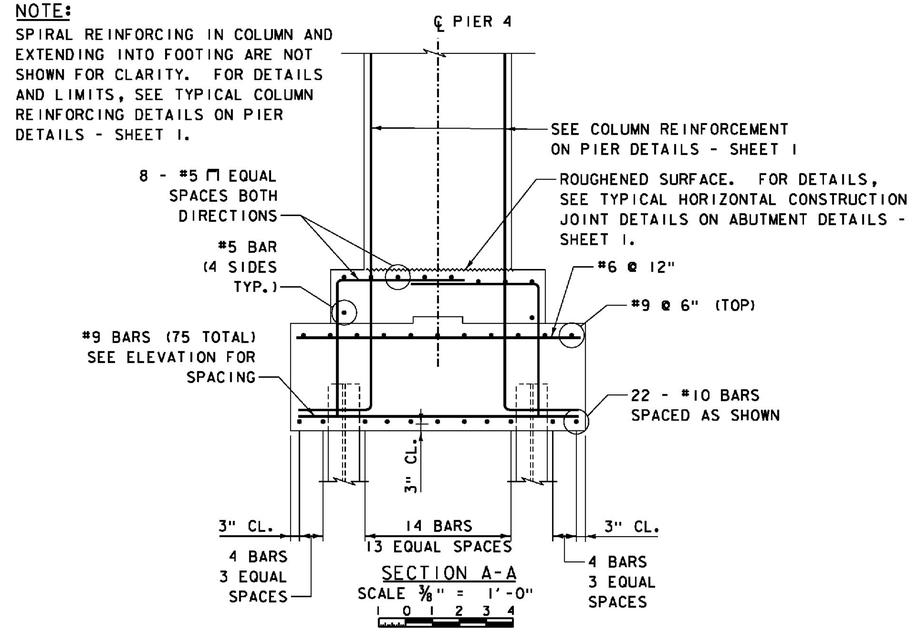

SECTION A-A

SCALE 3/8" = 1'-0"

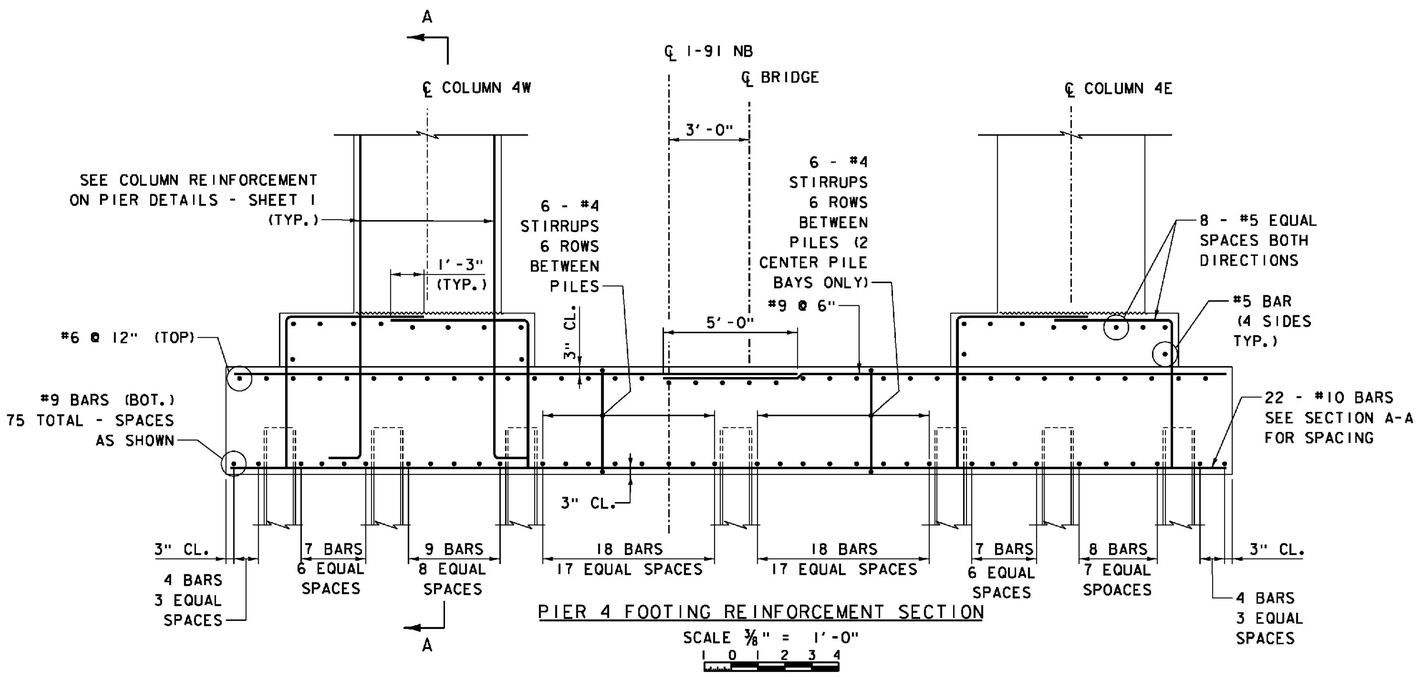

PIER 4 FOOTING REINFORCEMENT SECTION

SCALE 3/8" = 1'-0"

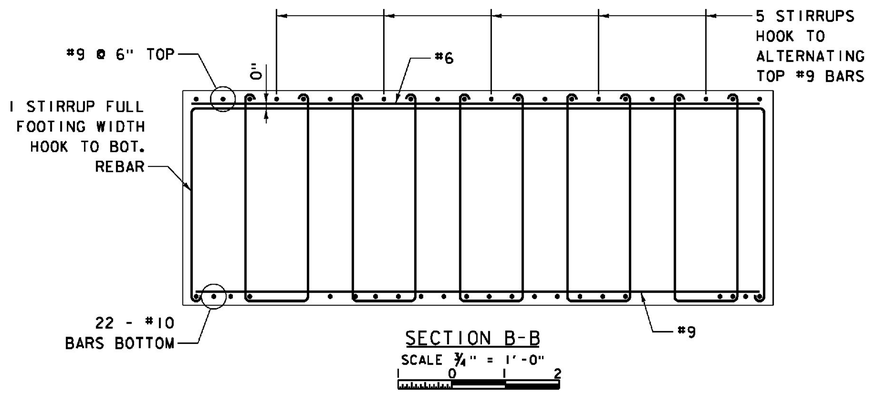

SECTION B-B

SCALE 3/4" = 1'-0"

NOTES:

1. FOR ADDITIONAL COLUMN MASONRY AND REINFORCING DETAILS, SEE PIER DETAILS - SHEET 1.
2. FOR ADDITIONAL PIER CAP MASONRY AND REINFORCING DETAILS, SEE PIER DETAILS - SHEET 2.

PROJECT NAME: WINDSOR
PROJECT NUMBER: IM 091-1(64)

FILE NAME: z10a188Pier4RES.dgn
PROJECT LEADER: J. WILSON
DESIGNED BY: S. BOYINGTON
PIER 4 REINFORCEMENT

PLOT DATE: 7/30/2015
DRAWN BY: S. GUNN
CHECKED BY: S.HALLORAN
SHEET 136 OF 156

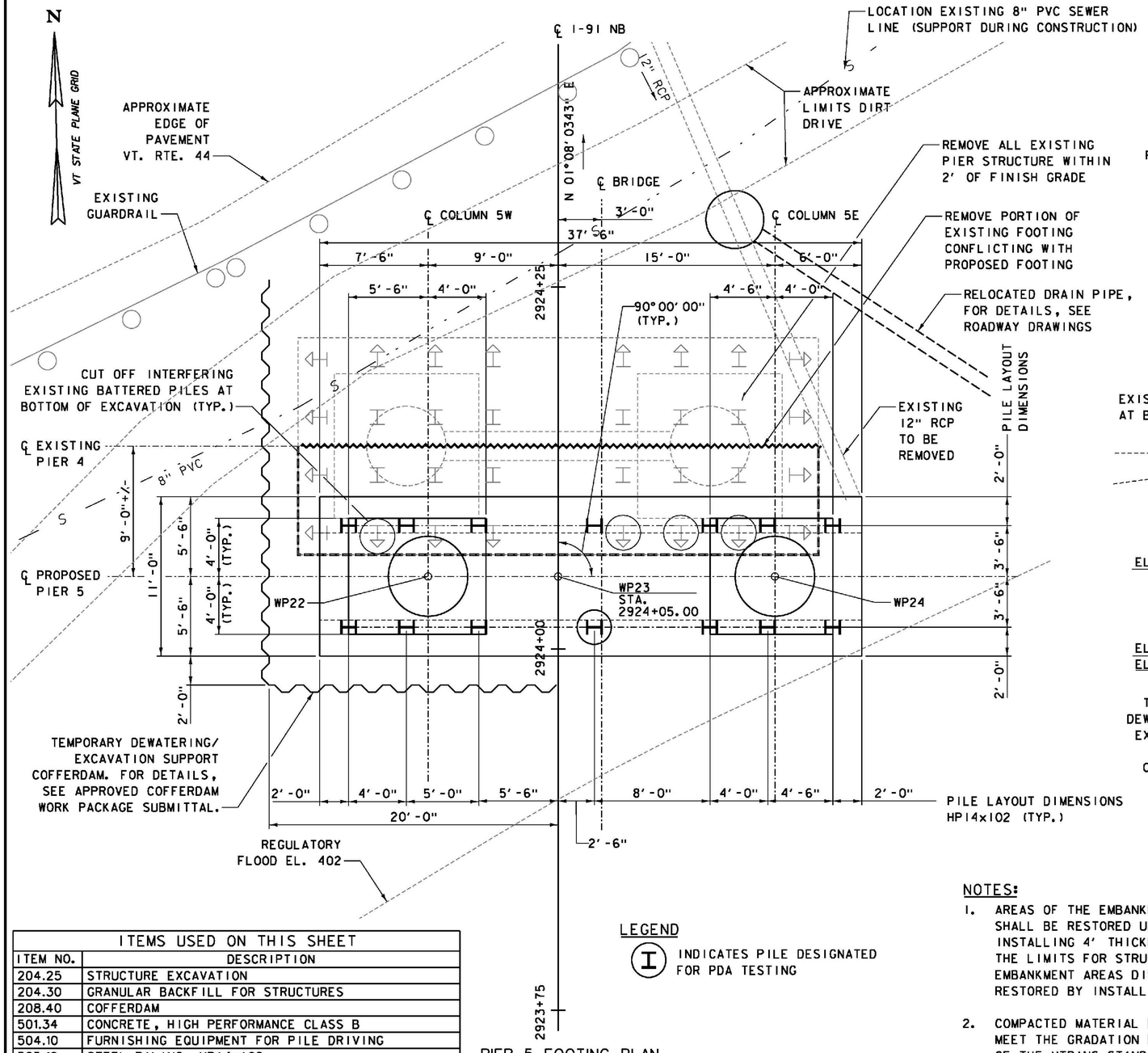

PIER 5 FOOTING PLAN

SCALE 1/4" = 1'-0"

WORKING POINT CONTROL			
LOCATION	STATION	NORTHING	EASTING
WP22	2924+05.00, 9.00' LT.	347548.4869	1665155.9427
WP23	2924+05.00, CL	347548.3088	1665164.9409
WP24	2924+05.00, 15.00' RT.	347548.0118	1665179.9380

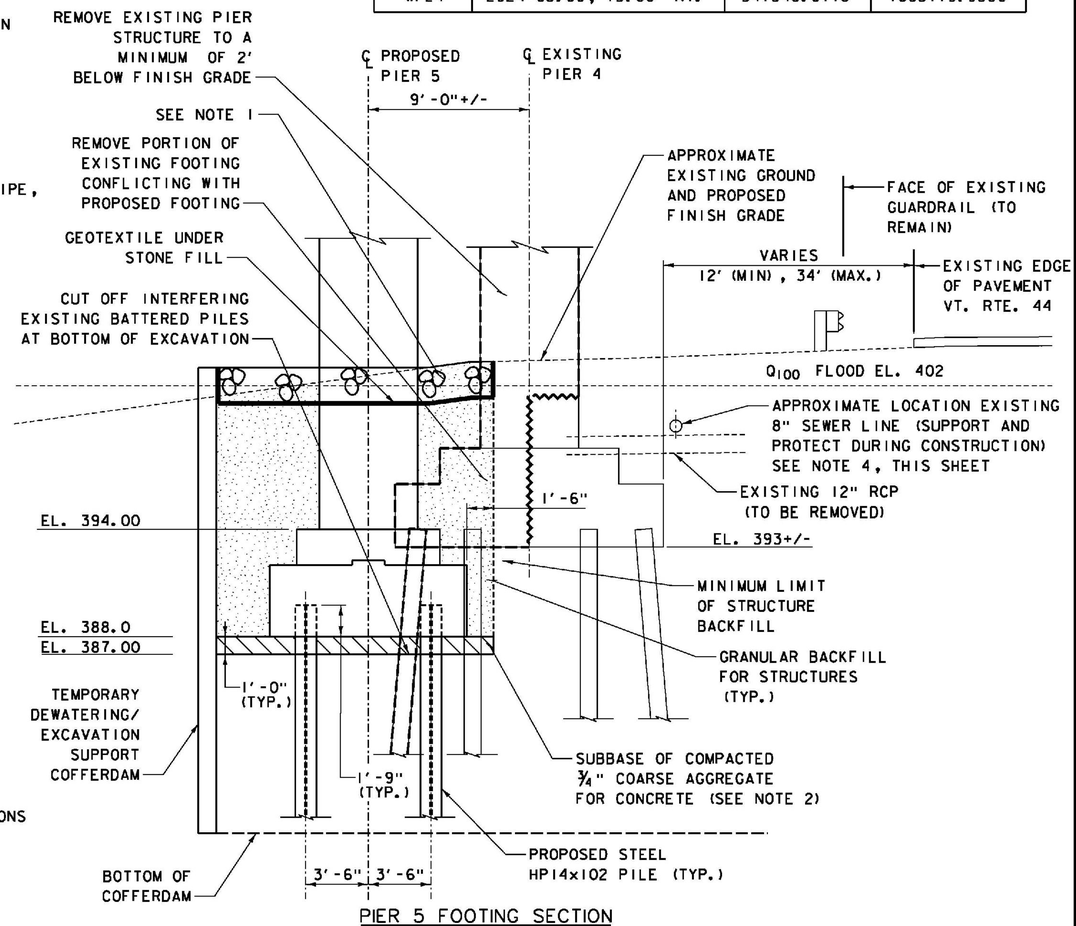

PIER 5 FOOTING SECTION

SCALE 1/4" = 1'-0"

ITEMS USED ON THIS SHEET	
ITEM NO.	DESCRIPTION
204.25	STRUCTURE EXCAVATION
204.30	GRANULAR BACKFILL FOR STRUCTURES
208.40	COFFERDAM
501.34	CONCRETE, HIGH PERFORMANCE CLASS B
504.10	FURNISHING EQUIPMENT FOR PILE DRIVING
505.19	STEEL PILING, HP14x102
505.45	DYNAMIC PILE LOADING TEST
514.10	WATER REPELLENT, SILANE
529.15	REMOVAL OF STRUCTURE
613.13	STONE FILL, TYPE IV
649.31	GEOTEXTILE UNDER STONE FILL
651.15	SEED
651.25	HAY MULCH
651.35	TOPSOIL

LEGEND

(I) INDICATES PILE DESIGNATED FOR PDA TESTING

NOTES:

1. AREAS OF THE EMBANKMENT DISTURBED BY CONSTRUCTION SHALL BE RESTORED UPON COMPLETION OF THE WORK BY INSTALLING 4' THICKNESS OF STONE FILL, TYPE IV TO THE LIMITS FOR STRUCTURE BACKFILL. REMAINING EMBANKMENT AREAS DISTURBED BY CONSTRUCTION SHALL BE RESTORED BY INSTALLING TOPSOIL, SEED AND HAY MULCH.
2. COMPACTED MATERIAL BENEATH PIER FOOTINGS SHALL MEET THE GRADATION REQUIREMENTS OF TABLE 704.02B OF THE VTRANS STANDARD SPECIFICATIONS.
3. AFTER THE ACTUAL LOCATION OF EXISTING PILES ADJACENT TO NEW PIER FOUNDATION IS DISCOVERED, ANY REQUIRED ADJUSTMENT IN PROPOSED PILE LOCATION SHALL BE COORDINATED WITH THE DESIGNER.
4. PROTECT AND MAINTAIN EXISTING SEWER LINE DURING DEMOLITION, COFFERDAM CONSTRUCTION AND EXCAVATION WORK.

PROJECT NAME: WINDSOR
PROJECT NUMBER: IM 091-1(64)

FILE NAME: z10o188Pier5P.dgn
PROJECT LEADER: J. WILSON
DESIGNED BY: S. BOYINGTON
PIER 5 FOOTING PLAN & SECTION

PLOT DATE: 7/30/2015
DRAWN BY: S. GUNN
CHECKED BY: S. HALLORAN
SHEET 137 OF 156

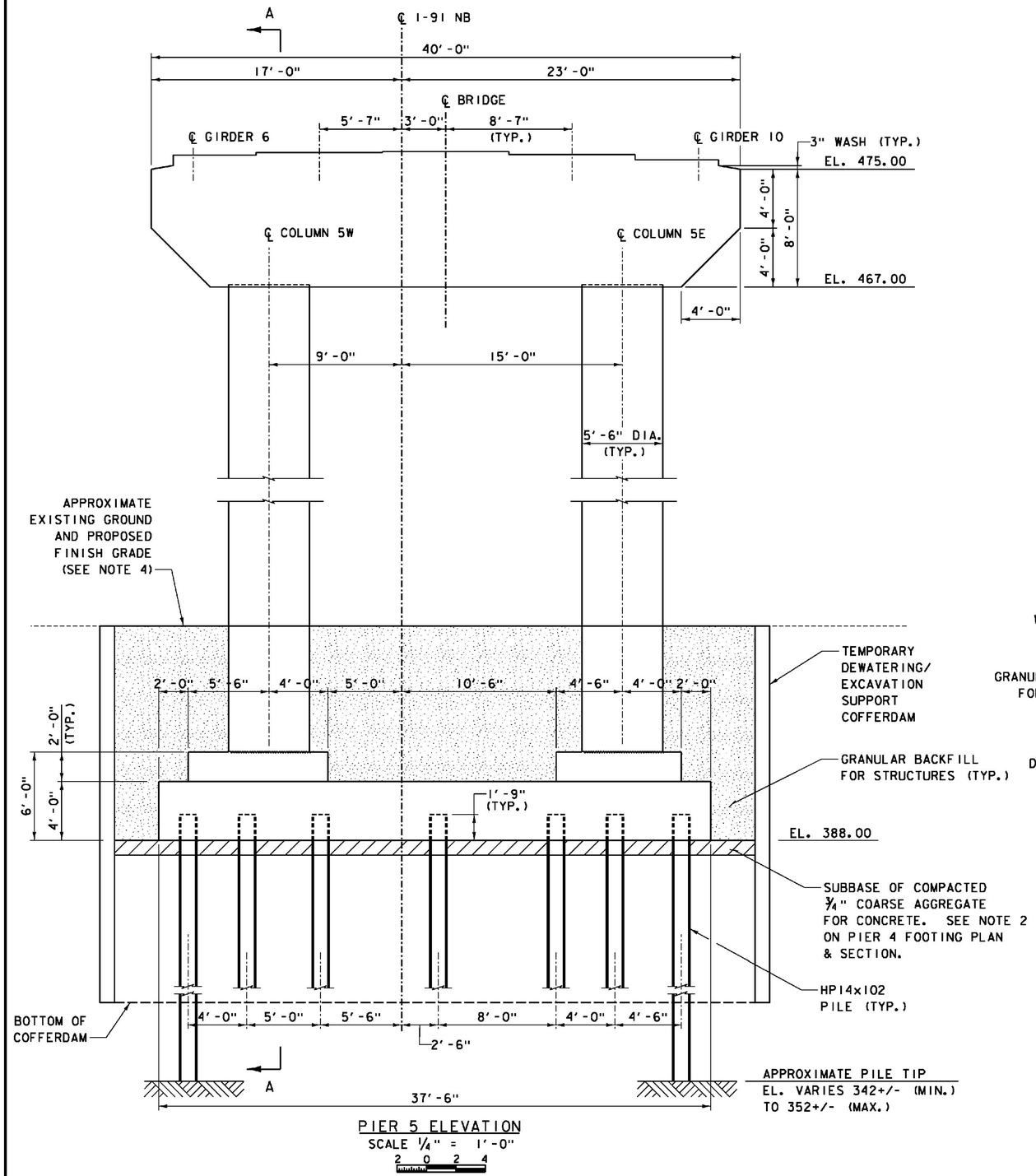

PIER 5 ELEVATION
SCALE ¼" = 1'-0"
2 0 2 4

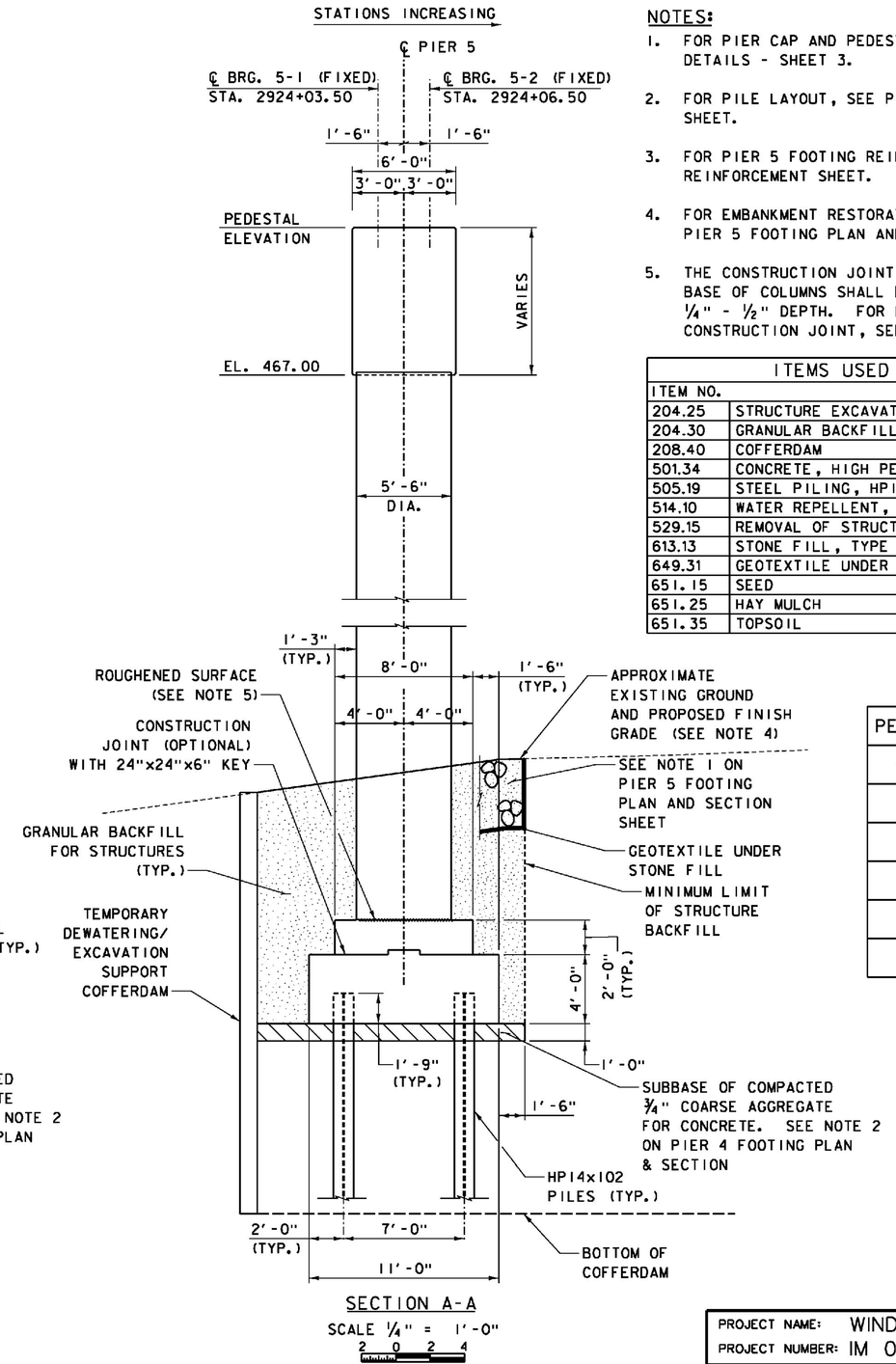

SECTION A-A
SCALE ¼" = 1'-0"
2 0 2 4

NOTES:

1. FOR PIER CAP AND PEDESTAL DETAILS, SEE PIER DETAILS - SHEET 3.
2. FOR PILE LAYOUT, SEE PIER 5 FOOTING PLAN & SECTION SHEET.
3. FOR PIER 5 FOOTING REINFORCING DETAILS, SEE PIER 5 REINFORCEMENT SHEET.
4. FOR EMBANKMENT RESTORATION INFORMATION, SEE NOTE 1 ON PIER 5 FOOTING PLAN AND SECTION SHEET.
5. THE CONSTRUCTION JOINT BETWEEN FOOTING PEDESTALS AND BASE OF COLUMNS SHALL BE INTENTIONALLY ROUGHENED TO ¼" - ½" DEPTH. FOR DETAILS OF TYPICAL HORIZONTAL CONSTRUCTION JOINT, SEE ABUTMENT DETAILS - SHEET 1.

ITEMS USED ON THIS SHEET	
ITEM NO.	DESCRIPTION
204.25	STRUCTURE EXCAVATION
204.30	GRANULAR BACKFILL FOR STRUCTURES
208.40	COFFERDAM
501.34	CONCRETE, HIGH PERFORMANCE CLASS B
505.19	STEEL PILING, HP14x102
514.10	WATER REPELLENT, SILANE
529.15	REMOVAL OF STRUCTURE
613.13	STONE FILL, TYPE IV
649.31	GEOTEXTILE UNDER STONE FILL
651.15	SEED
651.25	HAY MULCH
651.35	TOPSOIL

PEDESTAL ELEVATIONS	
GIRDER	ELEVATION
6	475.96
7	476.15
8	476.20
9	476.00
10	475.64

PROJECT NAME: WINDSOR
PROJECT NUMBER: IM 091-1(64)

FILE NAME: z10a188Pier5ES.dgn
PROJECT LEADER: J. WILSON
DESIGNED BY: S. BOYINGTON
PIER 5 ELEVATION & SECTION

PLOT DATE: 7/30/2015
DRAWN BY: S. GUNN
CHECKED BY: S. HALLORAN
SHEET 138 OF 156

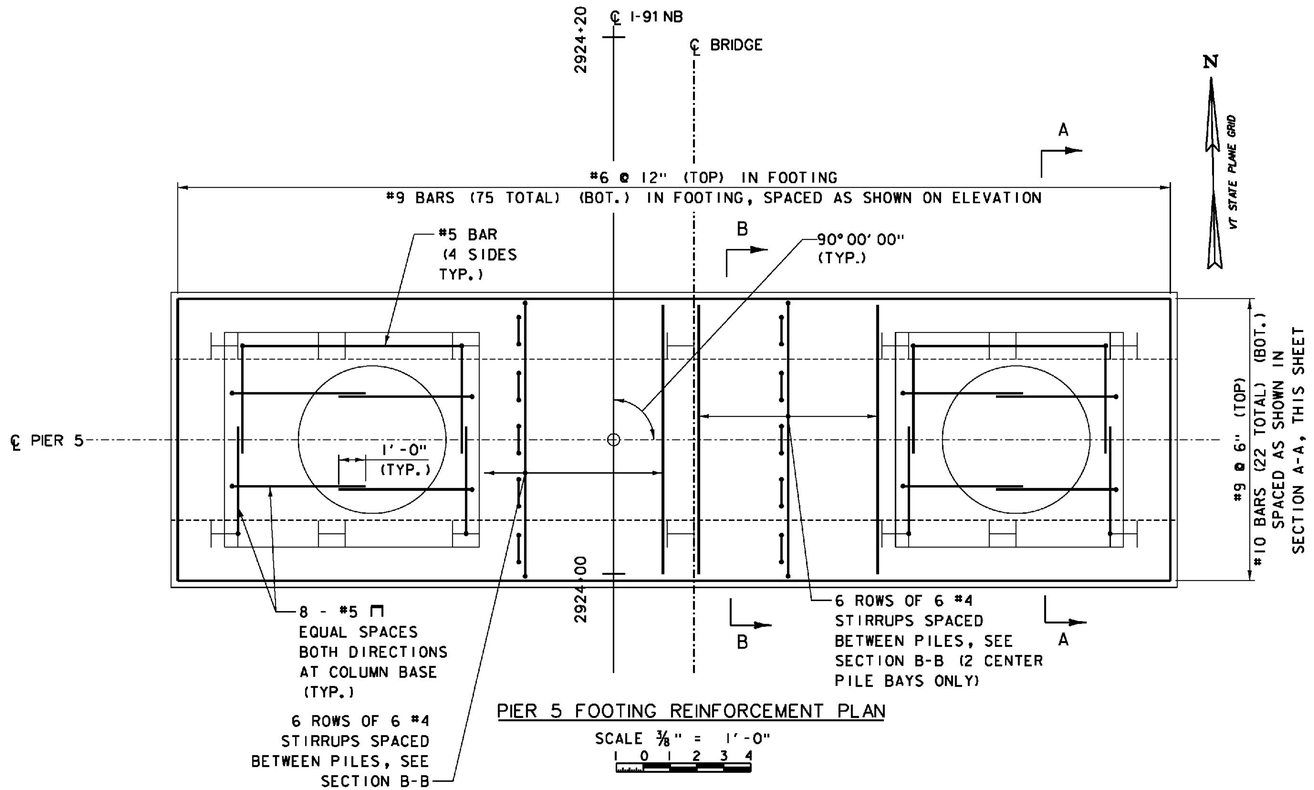

PIER 5 FOOTING REINFORCEMENT PLAN

SCALE 3/8" = 1'-0"

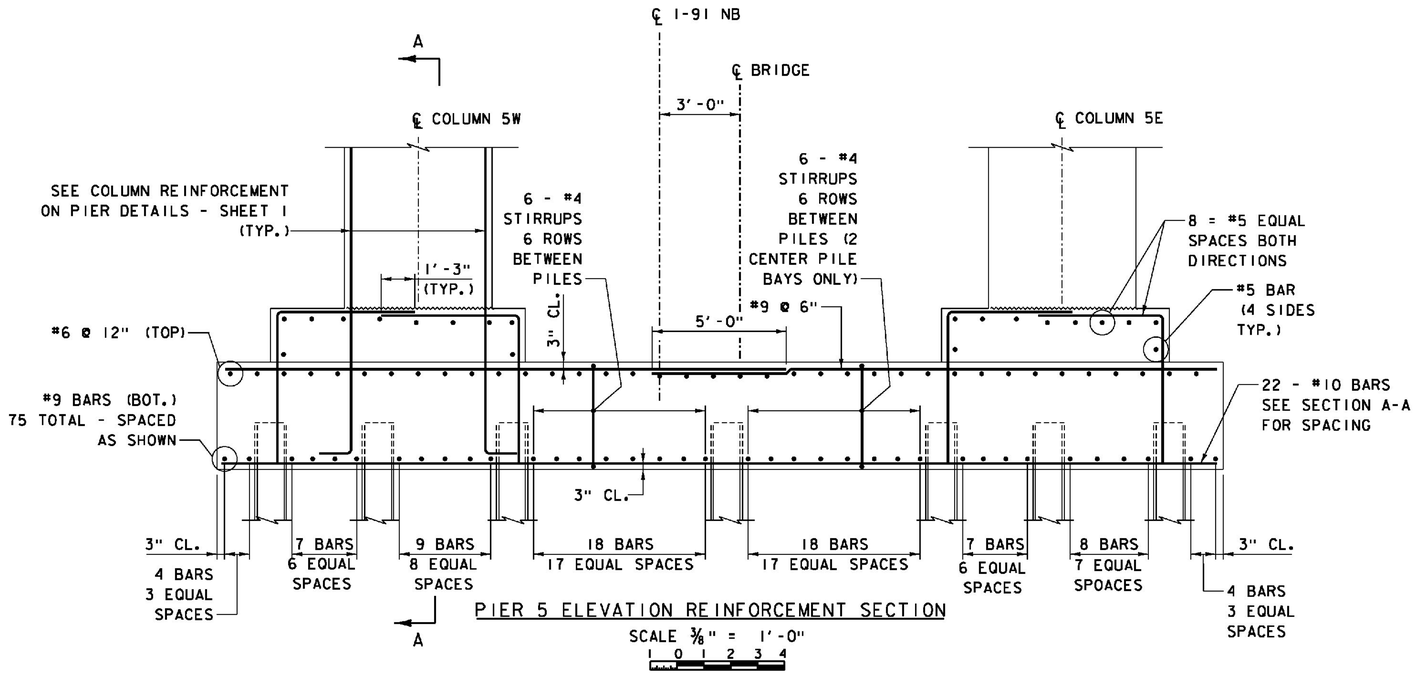

PIER 5 ELEVATION REINFORCEMENT SECTION

SCALE 3/8" = 1'-0"

ITEMS USED ON THIS SHEET	
ITEM NO.	DESCRIPTION
501.34	CONCRETE, HIGH PERFORMANCE CLASS B
507.15	REINFORCING STEEL
507.17	EPOXY COATED REINFORCING STEEL

NOTE:

SPIRAL REINFORCING IN COLUMN AND EXTENDING INTO FOOTING ARE NOT SHOWN FOR CLARITY. FOR DETAILS AND LIMITS, SEE TYPICAL COLUMN REINFORCING DETAILS ON PIER DETAILS - SHEET 1.

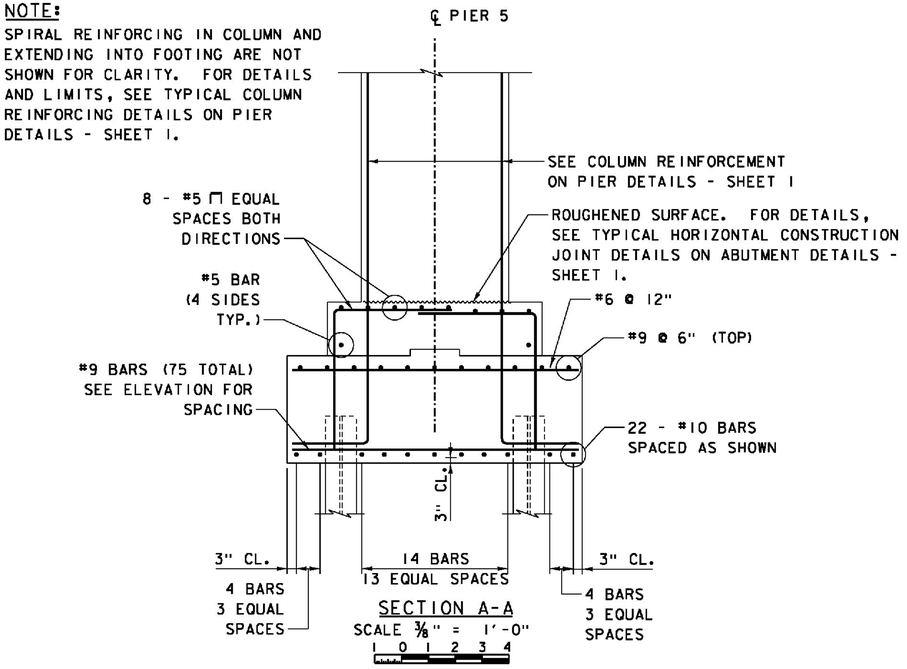

SECTION A-A

SCALE 3/8" = 1'-0"

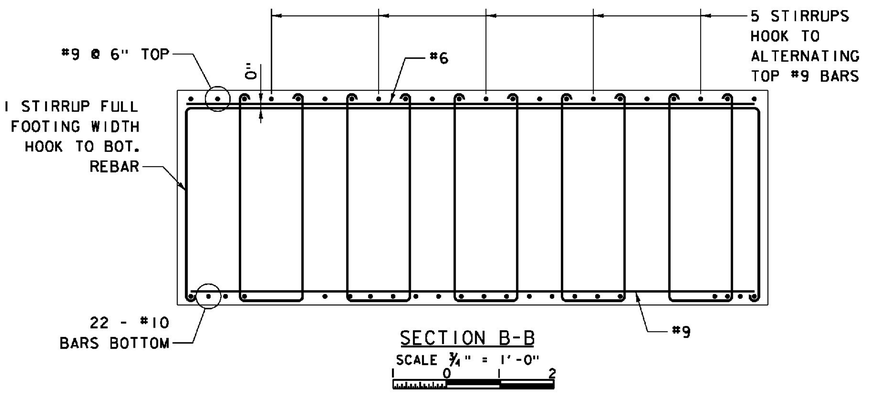

SECTION B-B

SCALE 3/4" = 1'-0"

NOTES:

1. FOR ADDITIONAL COLUMN MASONRY AND REINFORCING DETAILS, SEE PIER DETAILS - SHEET 1.
2. FOR ADDITIONAL PIER CAP MASONRY AND REINFORCING DETAILS, SEE PIER DETAILS - SHEET 3.

PROJECT NAME: WINDSOR
PROJECT NUMBER: IM 091-1(64)

FILE NAME: z10o188Pier5RES.dgn
PROJECT LEADER: J. WILSON
DESIGNED BY: S. BOYINGTON
PIER 5 REINFORCEMENT

PLOT DATE: 7/30/2015
DRAWN BY: S. GUNN
CHECKED BY: S. HALLORAN
SHEET 139 OF 156

ITEMS USED ON THIS SHEET	
ITEM NO.	DESCRIPTION
204.25	STRUCTURE EXCAVATION
501.34	CONCRETE, HIGH PERFORMANCE CLASS B
507.16	DRILLING AND GROUTING DOWELS
529.15	REMOVAL OF STRUCTURE
613.11	STONE FILL, TYPE II
651.15	SEED
651.25	HAY MULCH
651.35	TOPSOIL

BEDROCK EXCAVATION NOTES:

1. THESE NOTES SUPPLEMENT THE SPREAD FOOTING ON BEDROCK FOUNDATION NOTES ON ABUTMENT 4 ELEVATION SHEET.
2. THE PROCEDURE FOR EXCAVATION OF THE BEDROCK OUTCROP FOR THE PIER 6 FOUNDATION PREPARATION SHALL BE SUBMITTED FOR APPROVAL PRIOR TO THE WORK. THE USE OF EXPLOSIVES IS PROHIBITED. REFER TO THE GEOTECHNICAL REPORT FOR INFORMATION AND RECOMMENDATIONS FOR THE WORK IN THIS AREA.
3. THE EXCAVATION OF THE BEDROCK OUTCROP SHALL FOLLOW THE LINES SHOWN ON THE PLANS. THE EXCAVATED SURFACE SHALL BE GENERALLY UNIFORM, STABLE AND FREE OF ANY LOOSE ROCK.
4. A REPRESENTATIVE FROM JACOBS WILL BE ON SITE DURING THE EXCAVATION OF THE BEDROCK OUTCROP FOR INSPECTION OF THE FINAL EXCAVATED OUTCROP SURFACE. IF REQUIRED BASED ON THE CONDITION OF THE EXCAVATED SURFACE, A ROCK SLOPE SUPPORT SYSTEM SHALL BE CONSTRUCTED TO PREVENT FUTURE MOVEMENT OF BLOCKS OF ROCK FROM THE FACE.
5. SHOULD A ROCK SLOPE SUPPORT SYSTEM BE RECOMMENDED AND REQUIRED, INFORMATION ON THE SYSTEM SHALL BE SUBMITTED FOR APPROVAL AND SHALL INCLUDE A PLAN AND SECTION SHOWING ACTUAL EXCAVATED SURFACE, MATERIAL TO BE USED (PRODUCT INFORMATION) AND LOCATIONS OF SUPPORT ANCHORAGE.

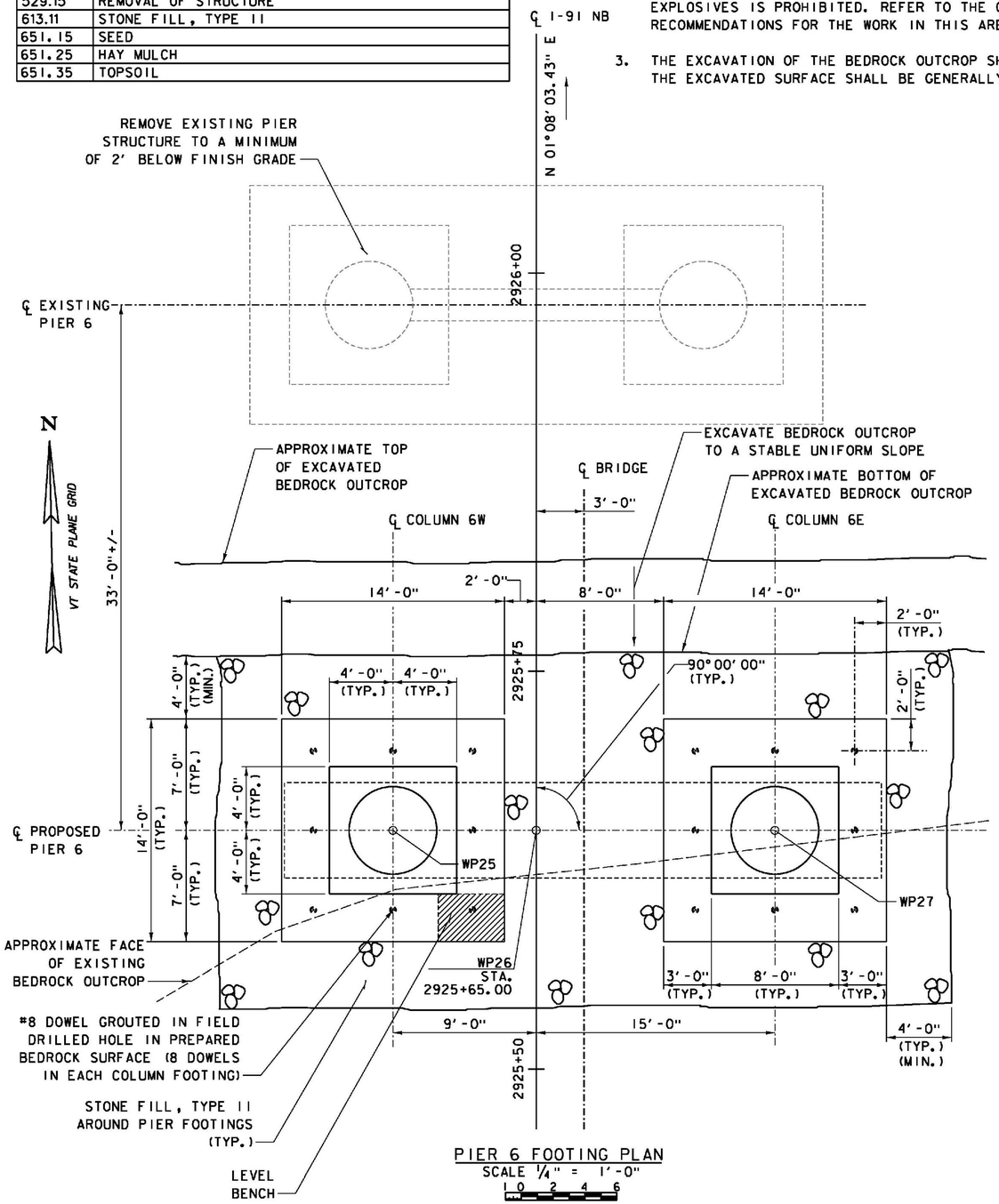

PIER 6 FOOTING PLAN
SCALE 1/4" = 1'-0"
1 0 2 4 6

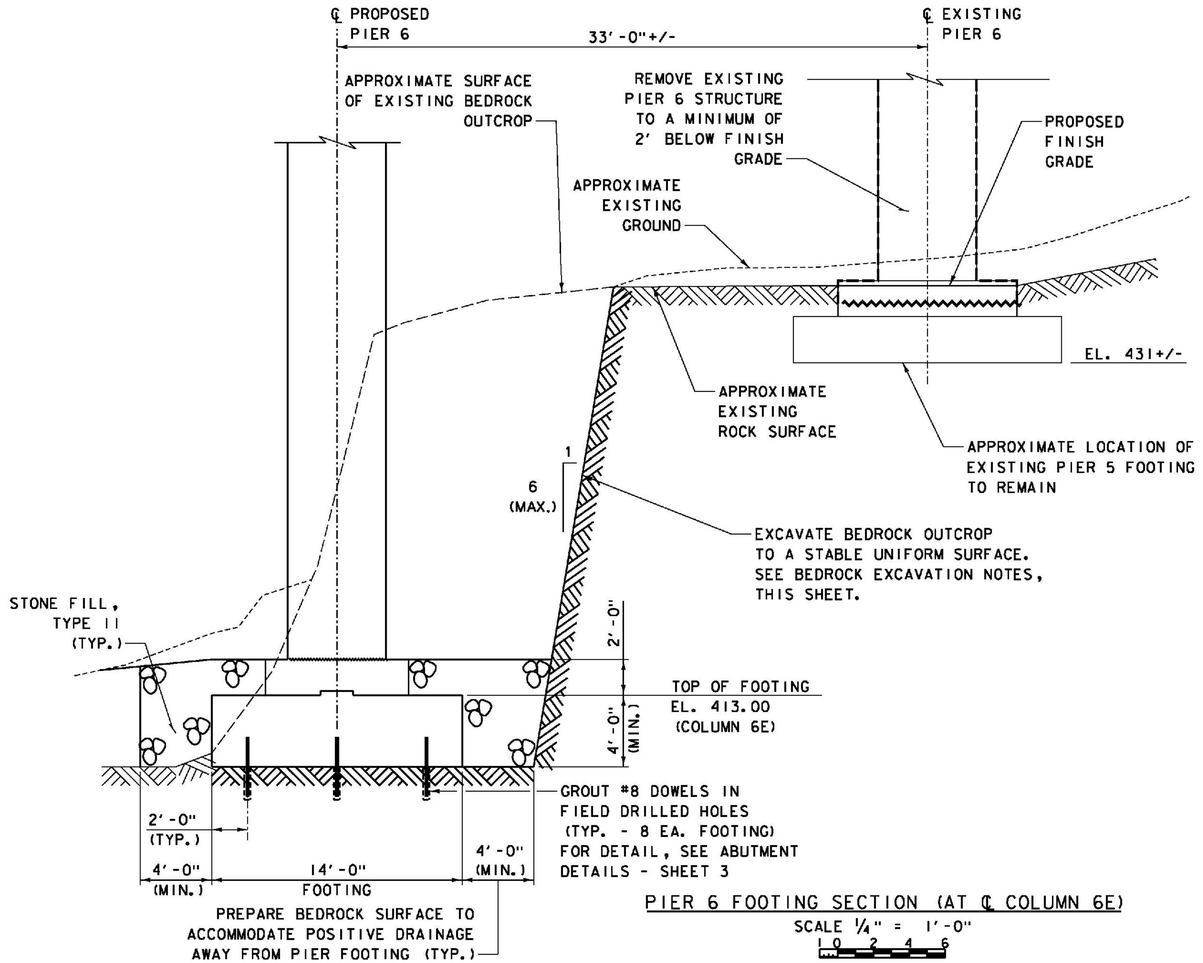

PIER 6 FOOTING SECTION (AT ℄ COLUMN 6E)
SCALE 1/4" = 1'-0"
1 0 2 4 6

WORKING POINT CONTROL			
LOCATION	STATION	NORTHING	EASTING
WP25	2925+65.00, 9.00' LT.	347708.4556	1665159.1100
WP26	2925+65.00, CL	347708.2774	1665168.1082
WP27	2925+65.00, 15.00' RT.	347707.9805	1665183.1053

NOTE:

1. EMBANKMENT AREAS DISTURBED BY CONSTRUCTION AND BEYOND THE LIMITS OF STONE FILL, TYPE II SHALL BE RESTORED UPON COMPLETION OF THE WORK BY INSTALLING TOPSOIL, SEED AND HAY MULCH.

PROJECT NAME: WINDSOR
PROJECT NUMBER: IM 091-1(64)

FILE NAME: z10a188Pier6P.dgn
PROJECT LEADER: J. WILSON
DESIGNED BY: S. BOYINGTON
PIER 6 FOOTING PLAN & SECTION
PLOT DATE: 7/30/2015
DRAWN BY: S. GUNN
CHECKED BY: S. HALLORAN
SHEET 140 OF 156

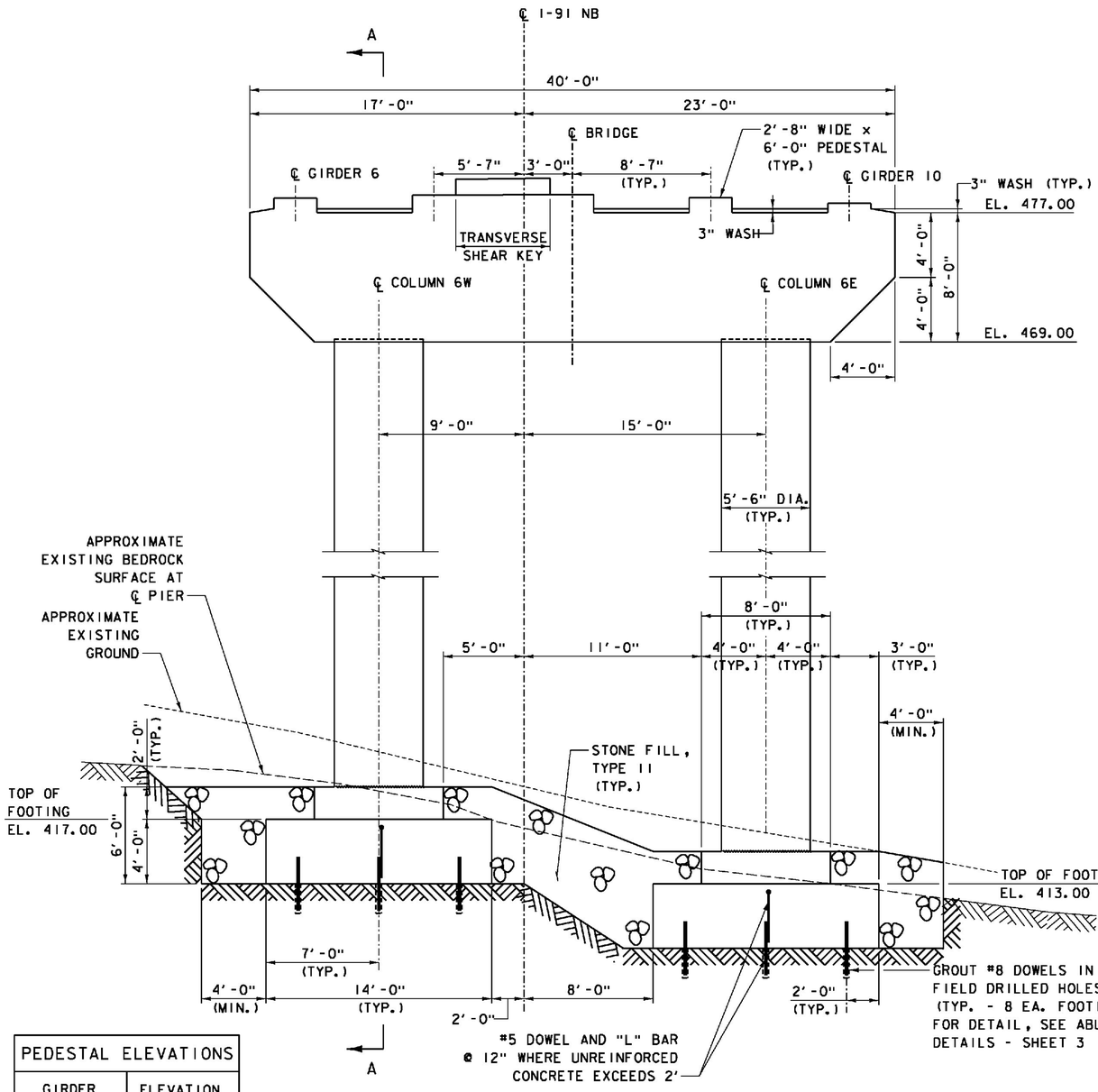

PIER 6 ELEVATION
SCALE 1/4" = 1'-0"
2 0 2 4

PEDESTAL ELEVATIONS	
GIRDER	ELEVATION
6	477.90
7	478.08
8	478.13
9	477.93
10	477.58

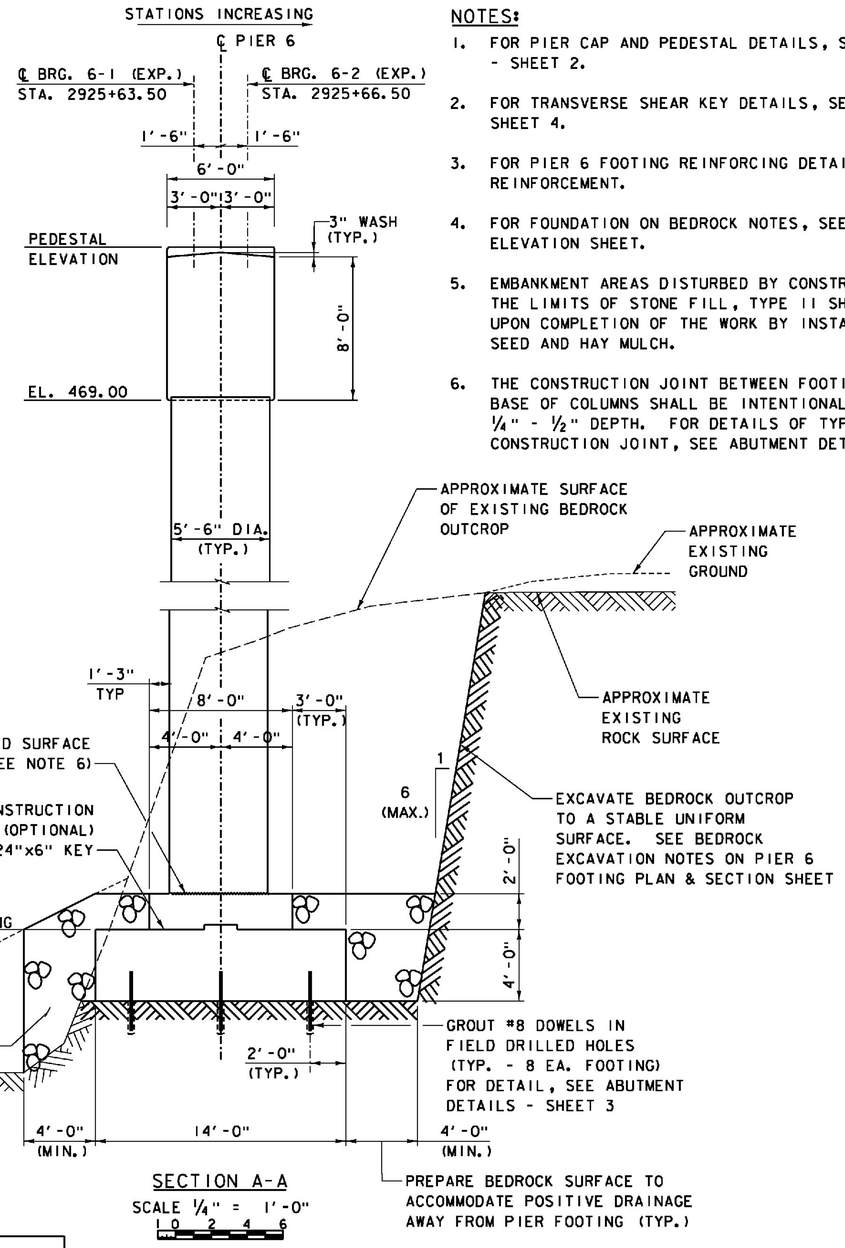

SECTION A-A
SCALE 1/4" = 1'-0"
1 0 2 4 6

NOTES:

1. FOR PIER CAP AND PEDESTAL DETAILS, SEE PIER DETAILS - SHEET 2.
2. FOR TRANSVERSE SHEAR KEY DETAILS, SEE PIER DETAILS - SHEET 4.
3. FOR PIER 6 FOOTING REINFORCING DETAILS, SEE PIER 6 REINFORCEMENT.
4. FOR FOUNDATION ON BEDROCK NOTES, SEE ABUTMENT 4 ELEVATION SHEET.
5. EMBANKMENT AREAS DISTURBED BY CONSTRUCTION BEYOND THE LIMITS OF STONE FILL, TYPE II SHALL BE RESTORED UPON COMPLETION OF THE WORK BY INSTALLING TOPSOIL, SEED AND HAY MULCH.
6. THE CONSTRUCTION JOINT BETWEEN FOOTING PEDESTALS AND BASE OF COLUMNS SHALL BE INTENTIONALLY ROUGHENED TO 1/4" - 1/2" DEPTH. FOR DETAILS OF TYPICAL HORIZONTAL CONSTRUCTION JOINT, SEE ABUTMENT DETAILS - SHEET 1.

ITEMS USED ON THIS SHEET	
ITEM NO.	DESCRIPTION
204.25	STRUCTURE EXCAVATION
501.34	CONCRETE, HIGH PERFORMANCE CLASS B
507.16	DRILLING AND GROUTING DOWELS
529.15	REMOVAL OF STRUCTURE
613.11	STONE FILL, TYPE II
651.15	SEED
651.25	HAY MULCH
651.35	TOPSOIL

PROJECT NAME: WINDSOR
PROJECT NUMBER: IM 091-1(64)

FILE NAME: z10a188Pier6ES.dgn
PROJECT LEADER: J. WILSON
DESIGNED BY: S. BOYINGTON
PIER 6 ELEVATION & SECTION

PLOT DATE: 7/30/2015
DRAWN BY: S. GUNN
CHECKED BY: S. HALLORAN
SHEET 141 OF156

ITEMS USED ON THIS SHEET	
ITEM NO.	DESCRIPTION
501.34	CONCRETE, HIGH PERFORMANCE CLASS B
507.15	REINFORCING STEEL
507.16	DRILLING AND GROUTING DOWELS
507.17	EPOXY COATED REINFORCING STEEL

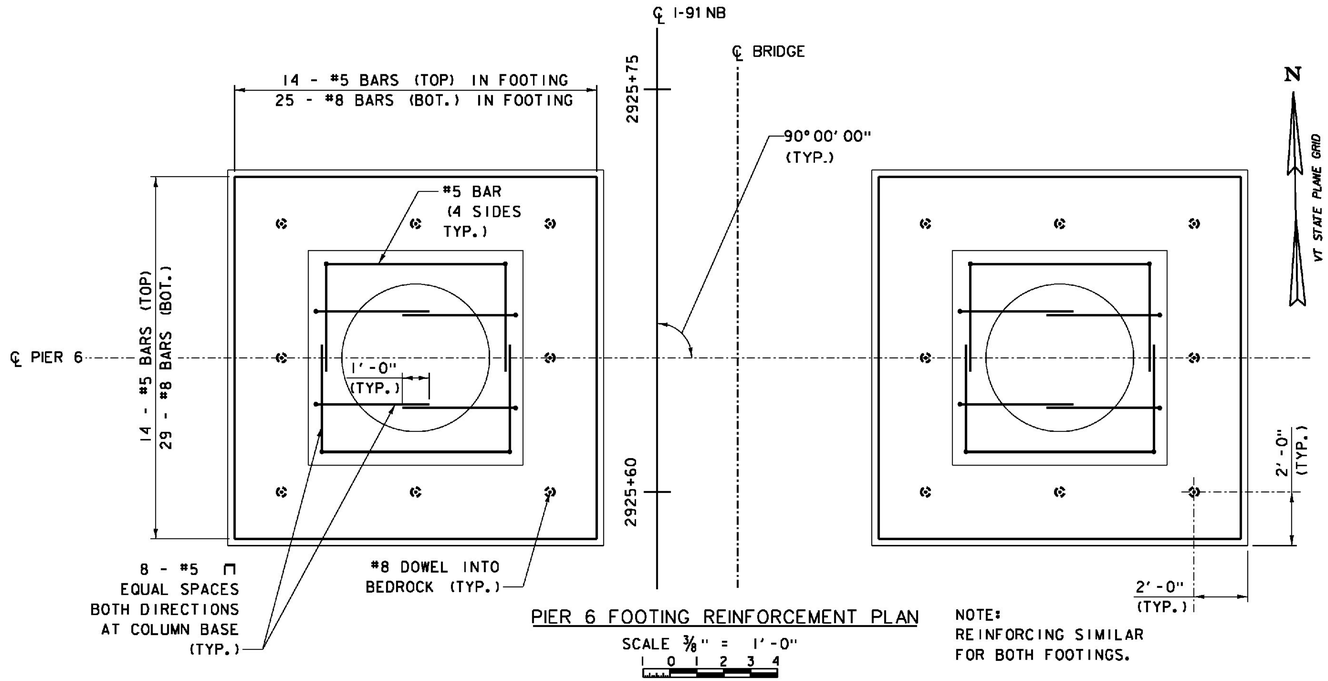

PIER 6 FOOTING REINFORCEMENT PLAN

SCALE 3/8" = 1'-0"

NOTE:
REINFORCING SIMILAR FOR BOTH FOOTINGS.

NOTE:
SPIRAL REINFORCING IN COLUMN AND EXTENDING INTO FOOTING ARE NOT SHOWN FOR CLARITY. FOR DETAILS AND LIMITS, SEE TYPICAL COLUMN REINFORCING DETAILS ON PIER DETAILS - SHEET 1.

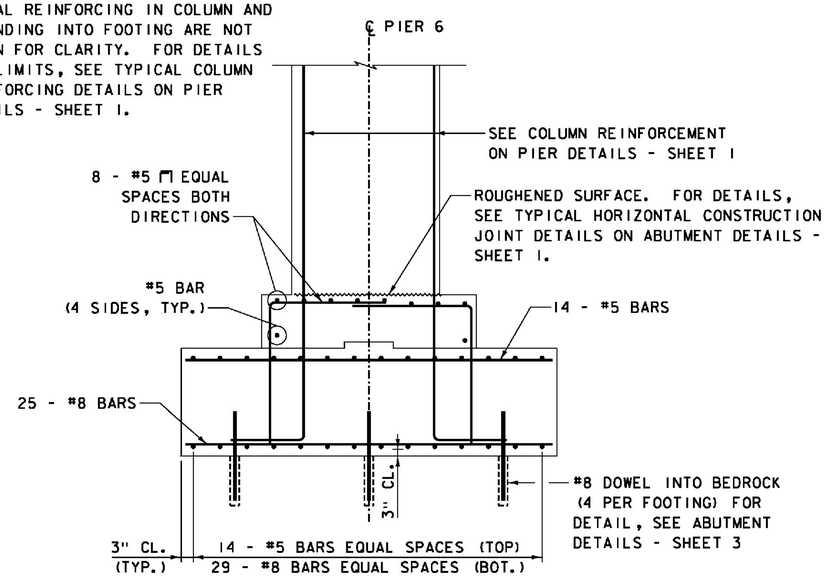

SECTION A-A

SCALE 3/8" = 1'-0"

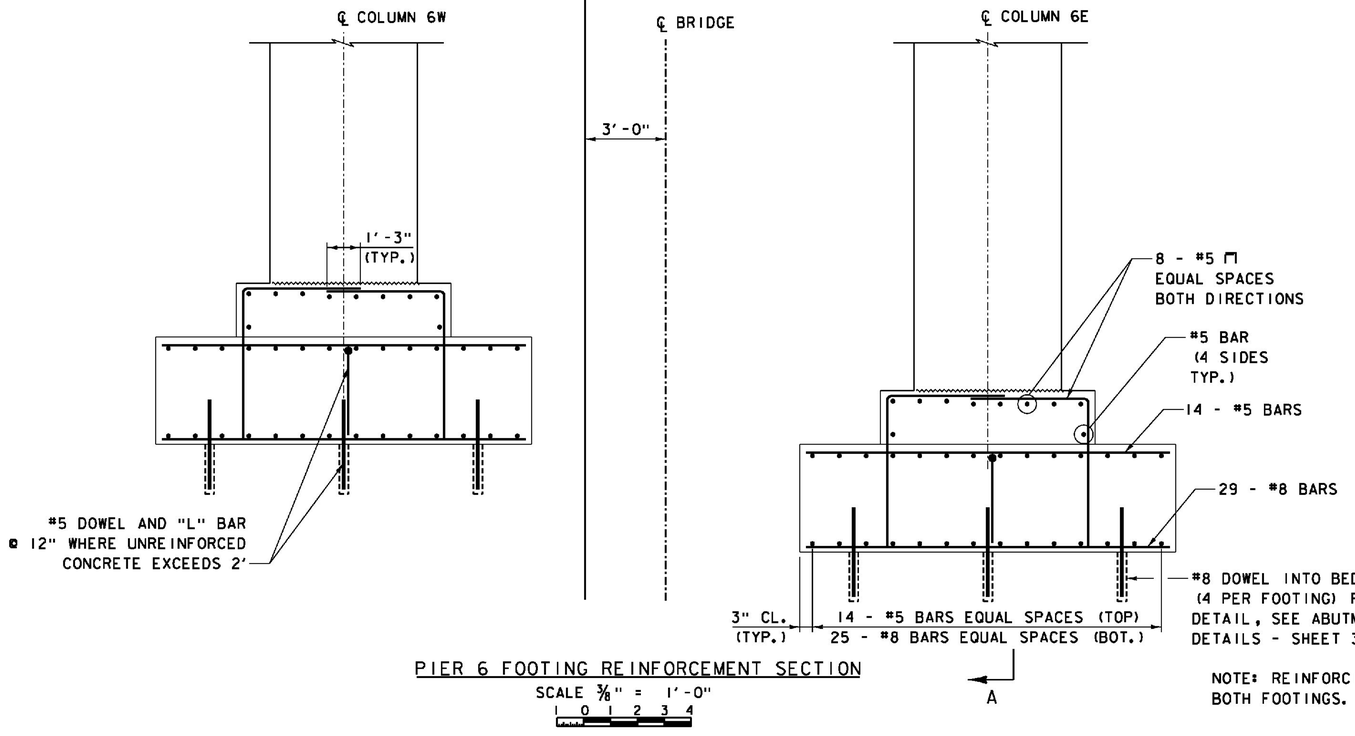

PIER 6 FOOTING REINFORCEMENT SECTION

SCALE 3/8" = 1'-0"

NOTE: REINFORCING SIMILAR FOR BOTH FOOTINGS.

NOTES:

1. FOR ADDITIONAL COLUMN MASONRY AND REINFORCING DETAILS, SEE PIER DETAILS - SHEET 1.
2. FOR ADDITIONAL PIER CAP MASONRY AND REINFORCING DETAILS, SEE PIER DETAILS - SHEET 2.

PROJECT NAME: WINDSOR
PROJECT NUMBER: IM 091-1(64)

FILE NAME: z10a188Pier6RES.dgn
PROJECT LEADER: J. WILSON
DESIGNED BY: S. BOYINGTON
PIER 6 REINFORCEMENT

PLOT DATE: 7/30/2015
DRAWN BY: S. GUNN
CHECKED BY: S. HALLORAN
SHEET 142 OF156

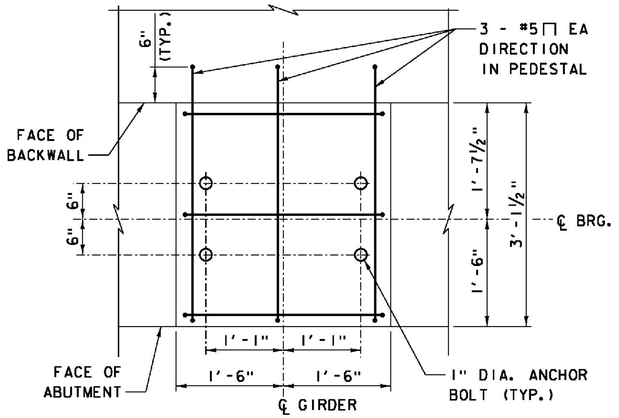

TYPICAL ABUTMENT PEDESTAL PLAN

SCALE 1" = 1'-0"

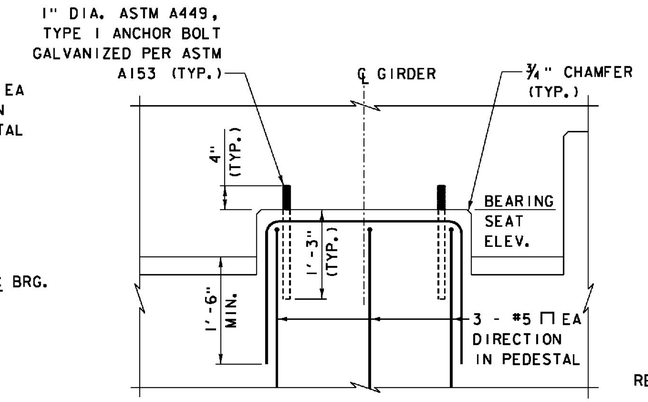

NOTE: FOR BEARING SEAT ELEVATIONS, SEE ABUTMENT ELEVATION SHEETS

TYPICAL ABUTMENT PEDESTAL ELEVATION

SCALE 1" = 1'-0"

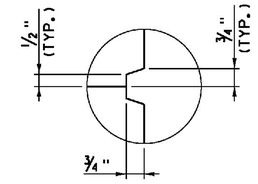

SCORE MARK DETAIL

NOT TO SCALE

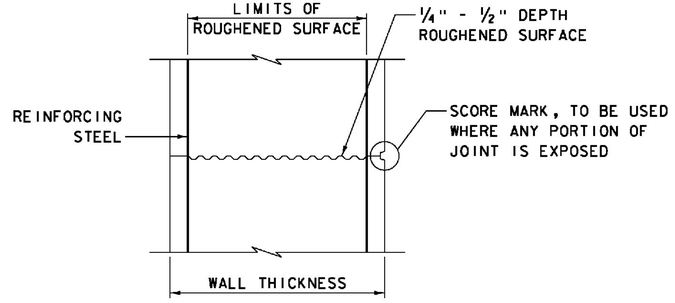

TYPICAL HORIZONTAL CONSTRUCTION JOINT

NOT TO SCALE

1. THE SURFACE OF THE CONCRETE CONSTRUCTION JOINTS SHALL BE CLEANED AND FREE OF LAITANCE.

2. IMMEDIATELY BEFORE NEW CONCRETE IS PLACED, ALL CONSTRUCTION JOINTS SHALL BE WETTED AND STANDING WATER REMOVED.

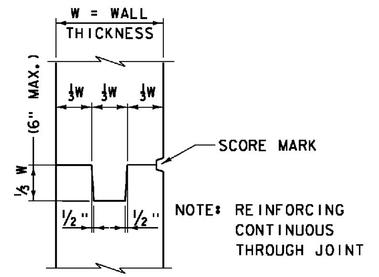

TYPICAL VERTICAL CONSTRUCTION JOINT

NOT TO SCALE

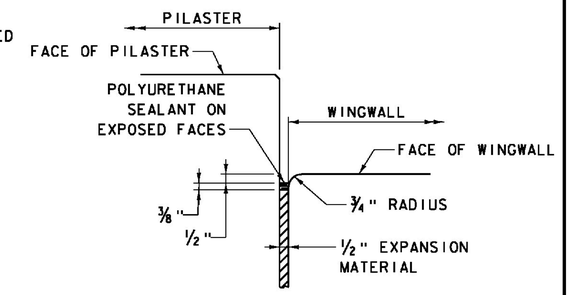

JOINT BETWEEN PILASTER AND WINGWALL

NOT TO SCALE

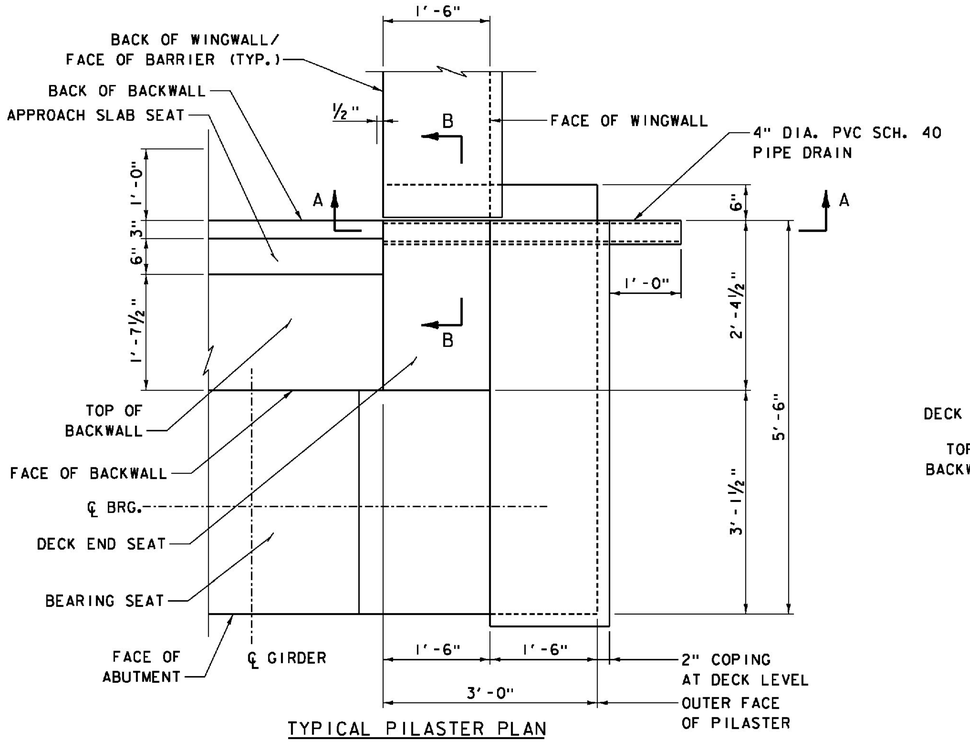

TYPICAL PILASTER PLAN

EAST PILASTER AT ABUTMENT 4 SHOWN; WEST PILASTER SIMILAR BUT OPP HAND

SCALE 1" = 1'-0"

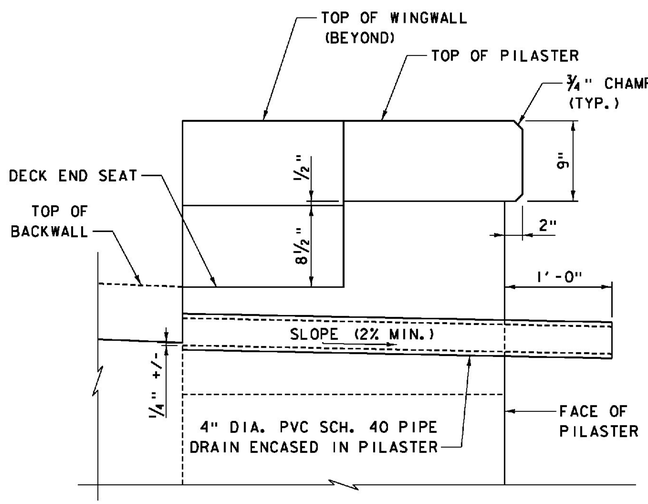

SECTION A-A

SCALE 1 ½" = 1'-0"

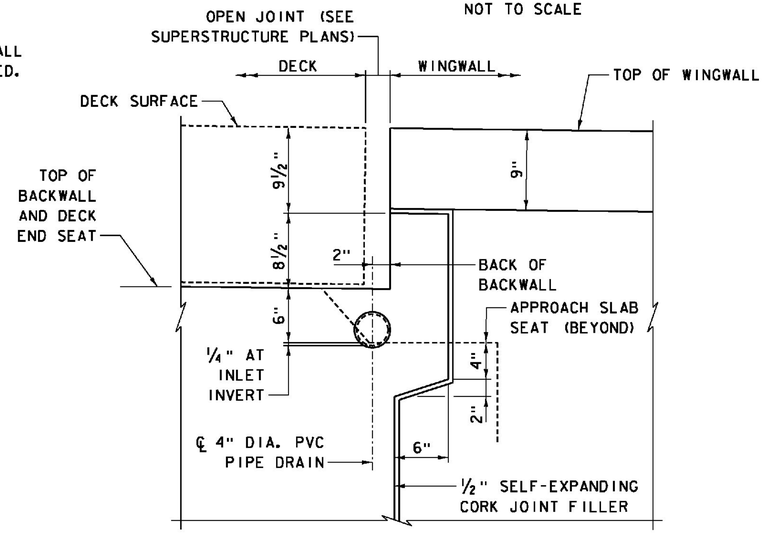

SECTION B-B

SCALE 1 ½" = 1'-0"

PROJECT NAME:	WINDSOR
PROJECT NUMBER:	IM 091-1(64)
FILE NAME: z10a188AD1.dgn	PLOT DATE: 7/30/2015
PROJECT LEADER: J. WILSON	DRAWN BY: S. GUNN
DESIGNED BY: S. BOYINGTON	CHECKED BY: S. HALLORAN
NB ABUTMENT DETAILS - SHEET 1	SHEET 143 OF 156

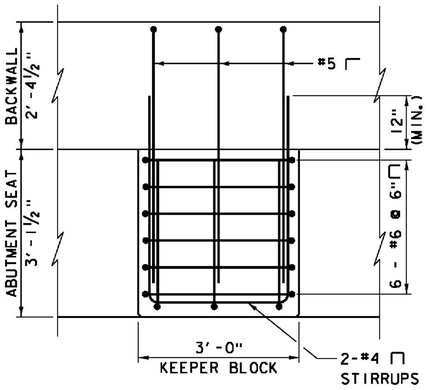

PLAN

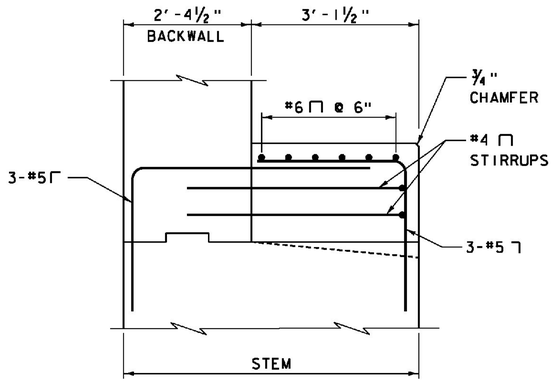

SECTION

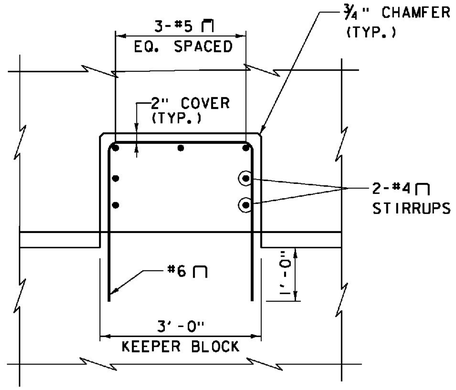

ELEVATION

KEEPER BLOCK REINFORCEMENT DETAILS

SCALE ¾" = 1'-0"

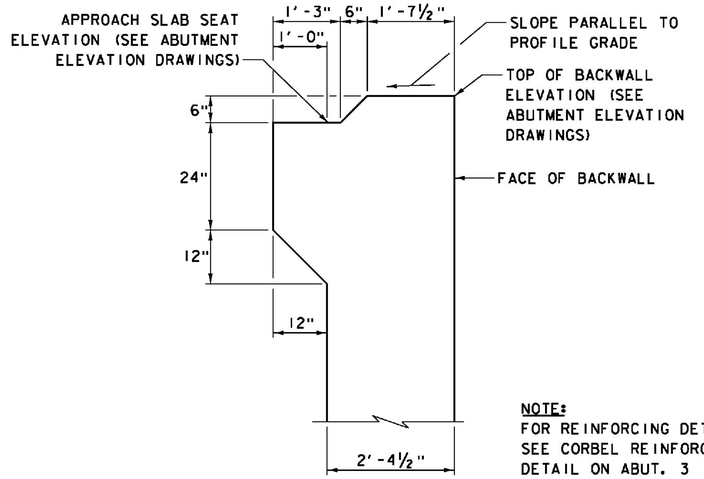

TOP OF BACKWALL

SCALE ¾" = 1'-0"

NOTE:
FOR REINFORCING DETAILS, SEE CORBEL REINFORCEMENT DETAIL ON ABUT. 3 REINFORCEMENT - SHEET 2

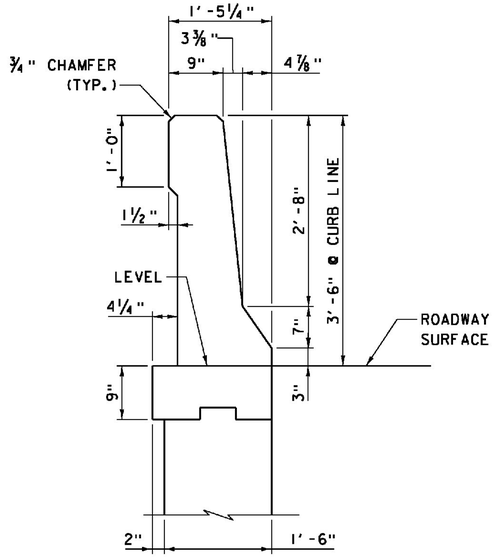

F-SHAPE BARRIER ON WINGWALL DETAIL

SCALE 1" = 1'-0"

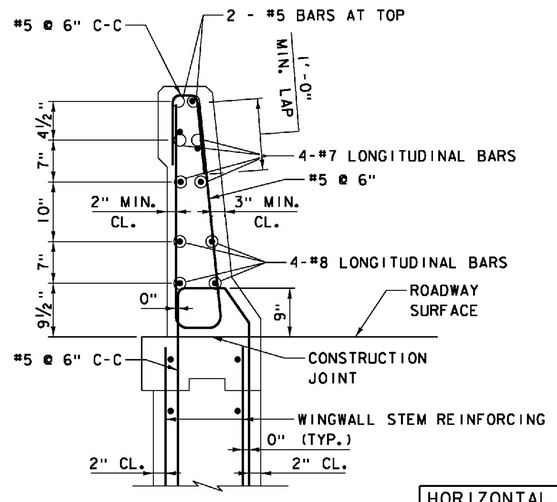

F-SHAPE BARRIER ON WINGWALL - REINFORCEMENT

SCALE 1" = 1'-0"

HORIZONTAL LAP SPLICES	
BAR SIZE	MIN. LENGTH LAP
#5	2'-7"
#7	3'-10"
#8	5'-1"

ITEMS USED ON THIS SHEET	
ITEM NO.	DESCRIPTION
501.33	CONCRETE, HIGH PERFORMANCE CLASS A
507.17	EPOXY COATED REINFORCING STEEL
900.635	STAINLESS STEEL REINFORCING
900.640	BRIDGE RAILING, F-SHAPE CONCRETE

PROJECT NAME: WINDSOR
PROJECT NUMBER: IM 091-1(64)

FILE NAME: z10o188AD2.dgn
PROJECT LEADER: J. WILSON
DESIGNED BY: S. BOYINGTON
NB ABUTMENT DETAILS - SHEET 2

PLOT DATE: 7/30/2015
DRAWN BY: S. GUNN
CHECKED BY: S. HALLORAN
SHEET 144 OF156

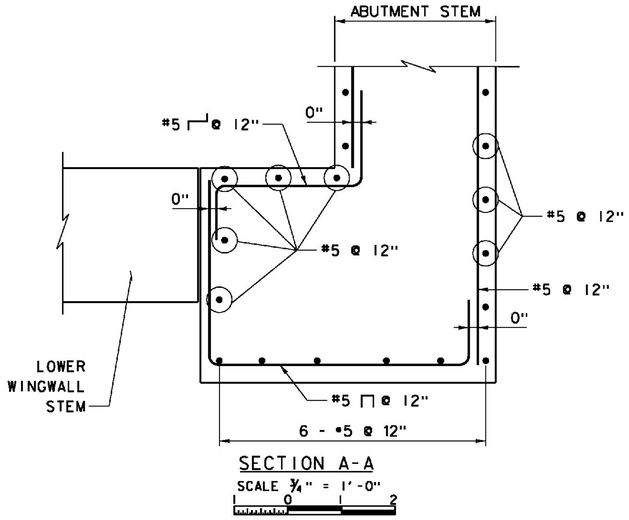

SECTION A-A

SCALE 3/4" = 1'-0"

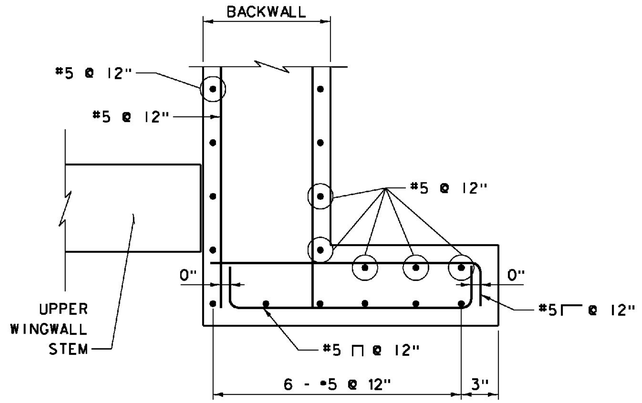

SECTION B-B

SCALE 3/4" = 1'-0"

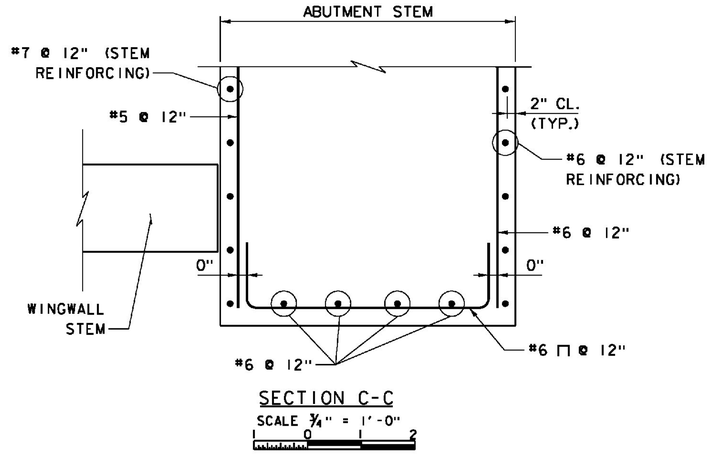

SECTION C-C

SCALE 3/4" = 1'-0"

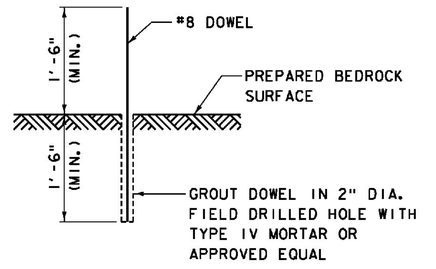

TYPICAL FOOTING DOWEL DETAIL

NOT TO SCALE

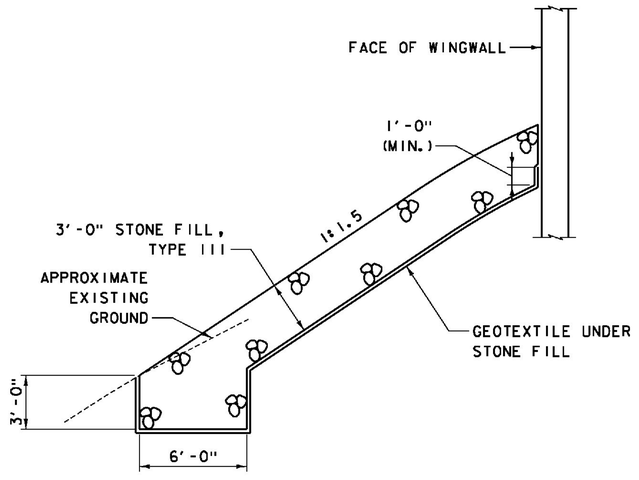

REINFORCED SLOPE DETAIL

SCALE 1/4" = 1'-0"

ITEMS USED ON THIS SHEET	
ITEM NO.	DESCRIPTION
501.33	CONCRETE, HIGH PERFORMANCE CLASS A
501.34	CONCRETE, HIGH PERFORMANCE CLASS B
507.16	DRILLING AND GROUTING DOWELS
507.17	EPOXY COATED REINFORCING STEEL
613.12	STONE FILL, TYPE III
649.31	GEOTEXTILE UNDER STONE FILL

PROJECT NAME: WINDSOR

PROJECT NUMBER: IM 091-1(64)

FILE NAME: z10o188AD3.dgn
PROJECT LEADER: J. WILSON
DESIGNED BY: S. BOYINGTON
NB ABUTMENT DETAILS - SHEET 3

PLOT DATE: 7/30/2015
DRAWN BY: S. GUNN
CHECKED BY: S. HALLORAN
SHEET 145 OF156

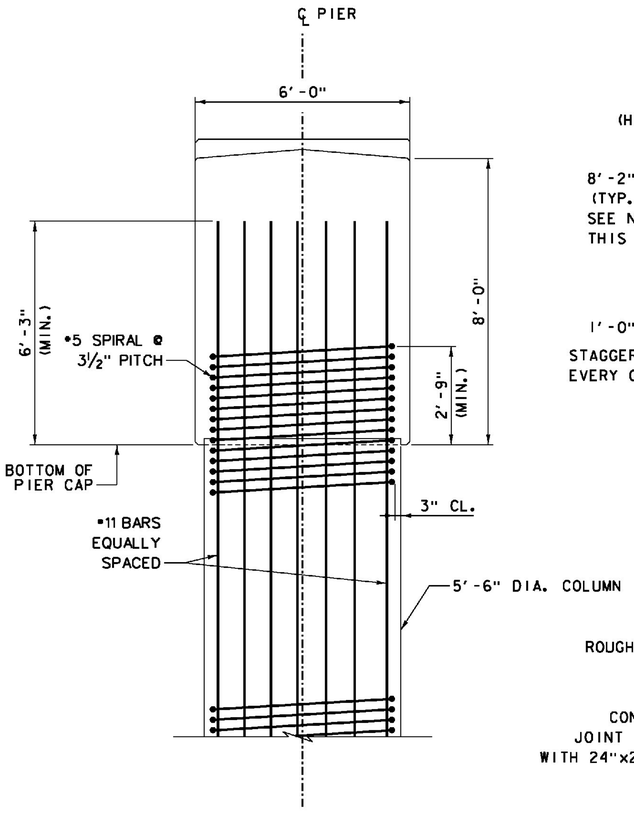

TYPICAL PIER CAP TO COLUMN REINFORCING

SCALE ½" = 1'-0"

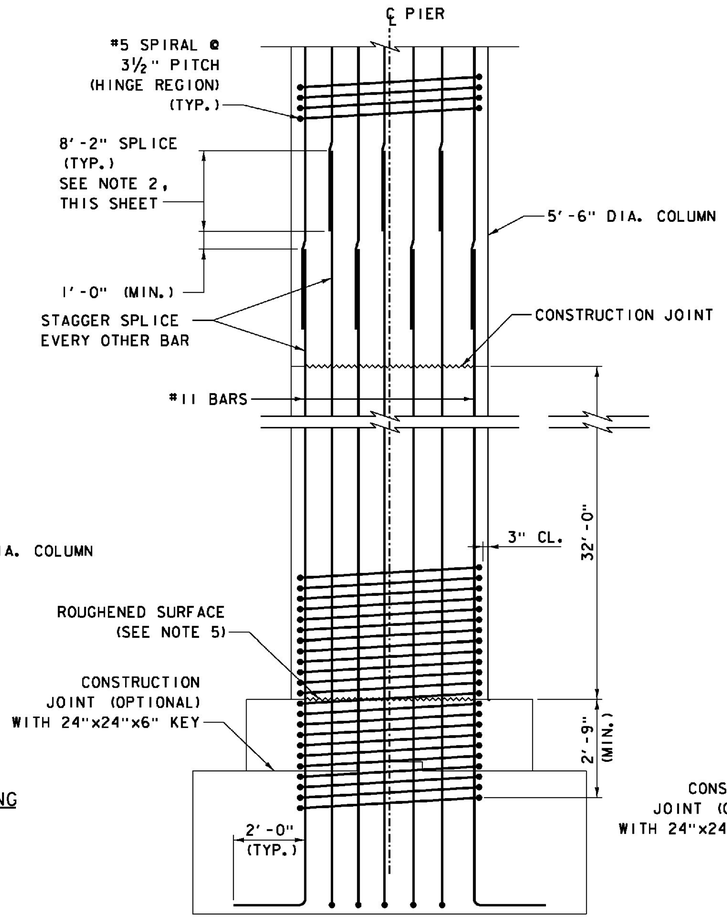

TYPICAL COLUMN REINFORCING WITH LAP SPLICES

NOT TO SCALE

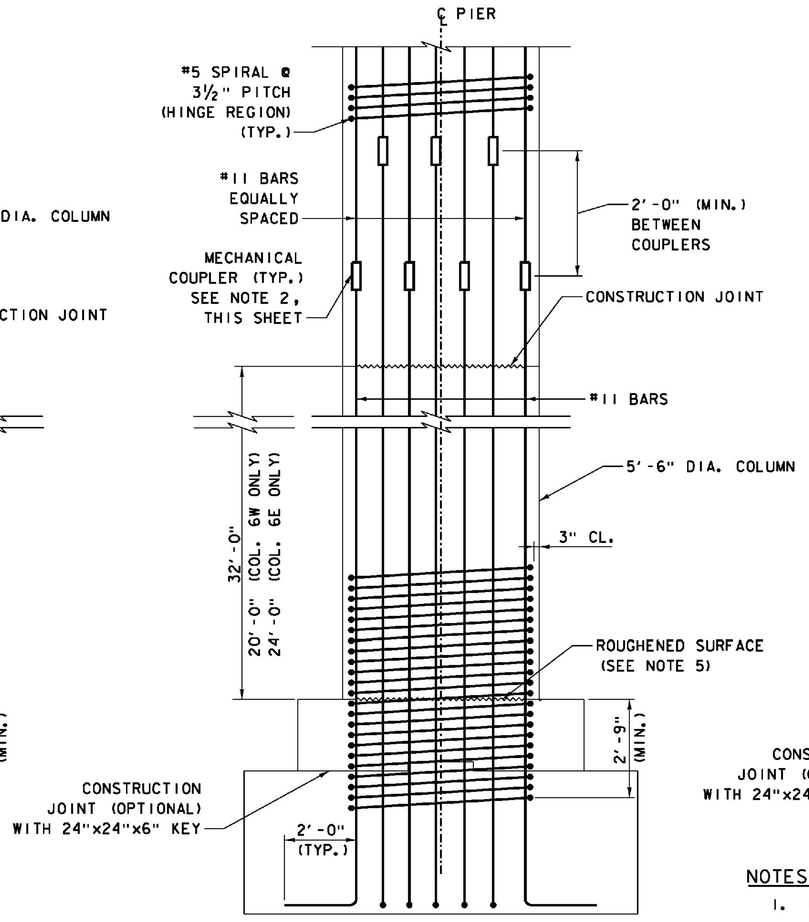

TYPICAL COLUMN REINFORCING WITH MECHANICAL COUPLERS

NOT TO SCALE

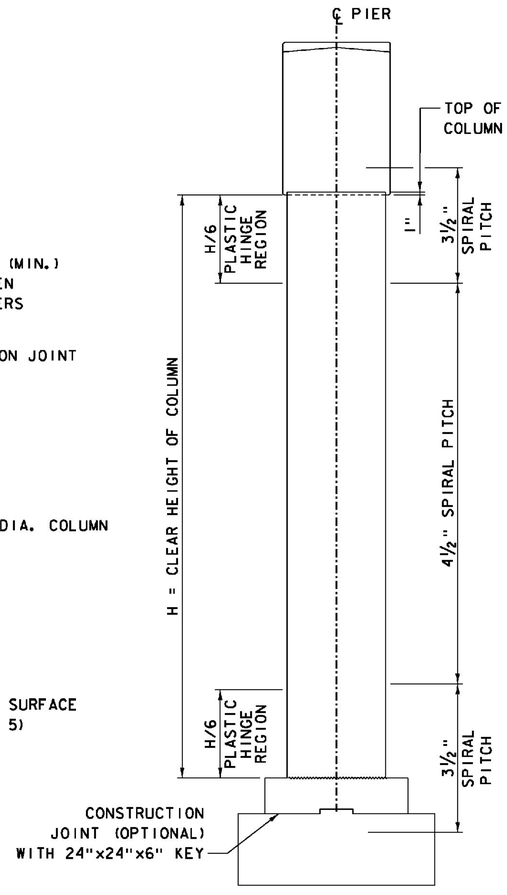

TYPICAL COLUMN ELEVATION

NOT TO SCALE

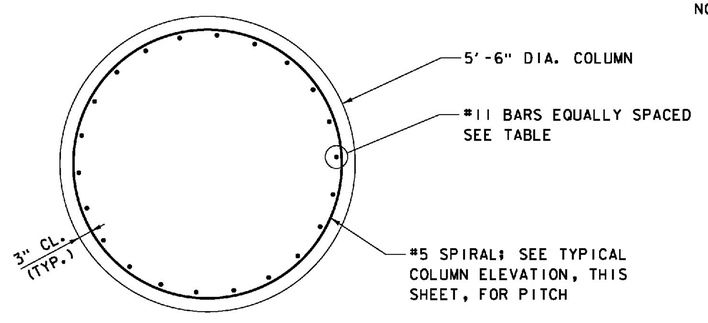

TYPICAL COLUMN REINFORCING

SCALE ¾" = 1'-0"

LONGITUDINAL REINFORCING TABLE				
PIER	COLUMN	TOTAL #11 BARS	H (FT.)	H/6 (FT.)
4	4W	32	71.00	11.83
	4E	32	71.00	11.83
5	5W	34	73.00	12.17
	5E	34	73.00	12.17
6	6W	22	50.00	8.33
	6E	22	54.00	9.00

ITEMS USED ON THIS SHEET	
ITEM NO.	DESCRIPTION
501.34	CONCRETE, HIGH PERFORMANCE CLASS B
507.17	EPOXY COATED REINFORCING STEEL

NOTES:

1. REINFORCING SPIRAL SHALL BE SPLICED WITH MECHANICAL COUPLERS.
2. LAP SPLICES OR MECHANICAL COUPLERS ON LONGITUDINAL BARS ARE NOT ALLOWED WITHIN PLASTIC HINGE REGIONS. SEE TYPICAL COLUMN ELEVATION, THIS SHEET.
3. DESIGN LAP SPLICE FOR LONGITUDINAL BARS IS 8'-2" MIN.
4. MECHANICAL SPLICES SHALL DEVELOP 125 PERCENT OF THE SPECIFIED YIELD STRENGTH OF THE BAR.
5. THE CONSTRUCTION JOINT BETWEEN FOOTING PEDESTALS AND BASE OF COLUMNS SHALL BE INTENTIONALLY ROUGHENED TO ¼" - ½" DEPTH. FOR DETAILS OF TYPICAL HORIZONTAL CONSTRUCTION JOINT, SEE ABUTMENT DETAILS - SHEET 2.

PROJECT NAME: WINDSOR
PROJECT NUMBER: IM 091-1(64)

FILE NAME: z10a188PD1.dgn
PROJECT LEADER: J. WILSON
DESIGNED BY: S. BOYINGTON
NB PIER DETAILS - SHEET 1

PLOT DATE: 7/30/2015
DRAWN BY: S. GUNN
CHECKED BY: S. HALLORAN
SHEET 146 OF156

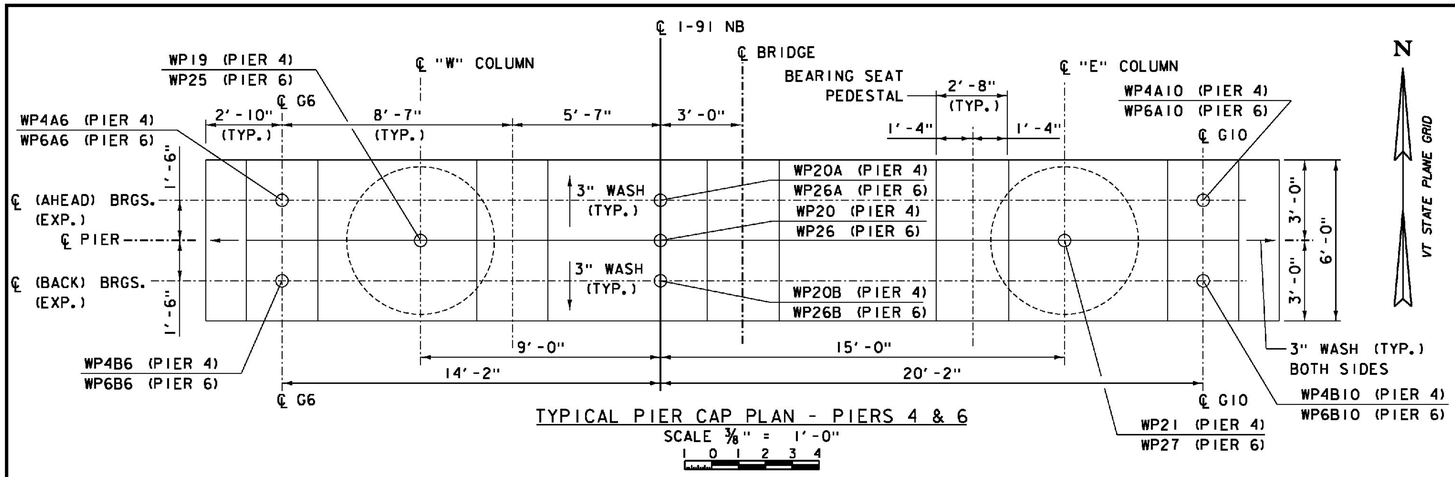

TYPICAL PIER CAP PLAN - PIERS 4 & 6

SCALE 3/8" = 1'-0"

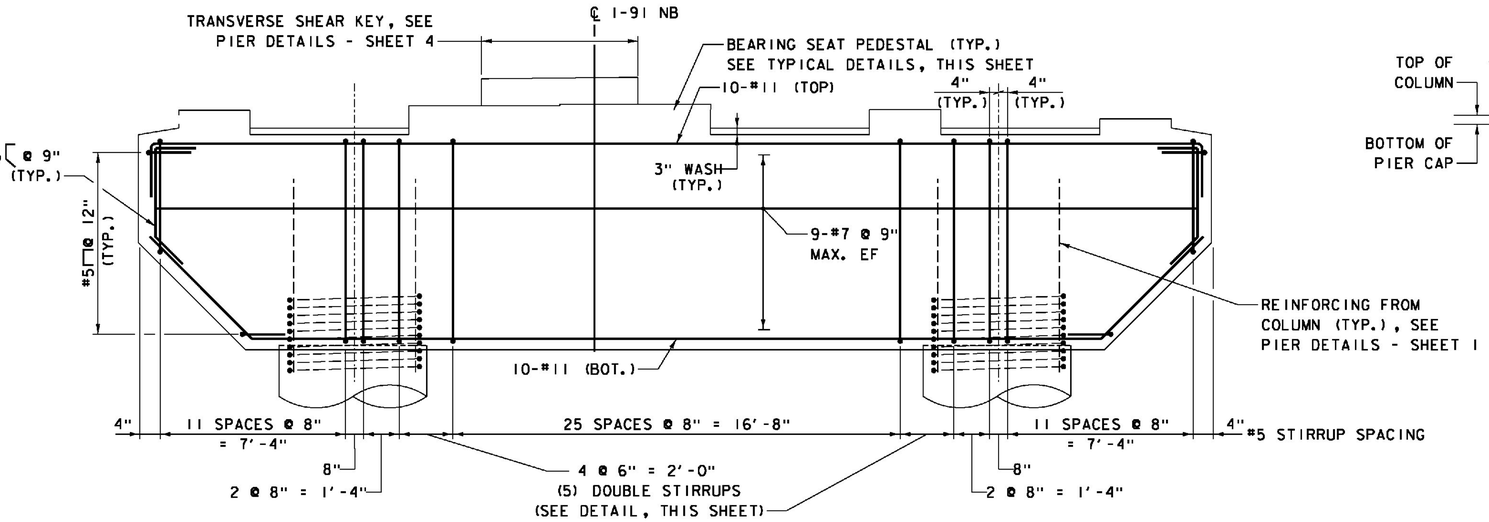

TYPICAL PIER CAP REINFORCING ELEVATION - PIERS 4 & 6

SCALE 3/8" = 1'-0"

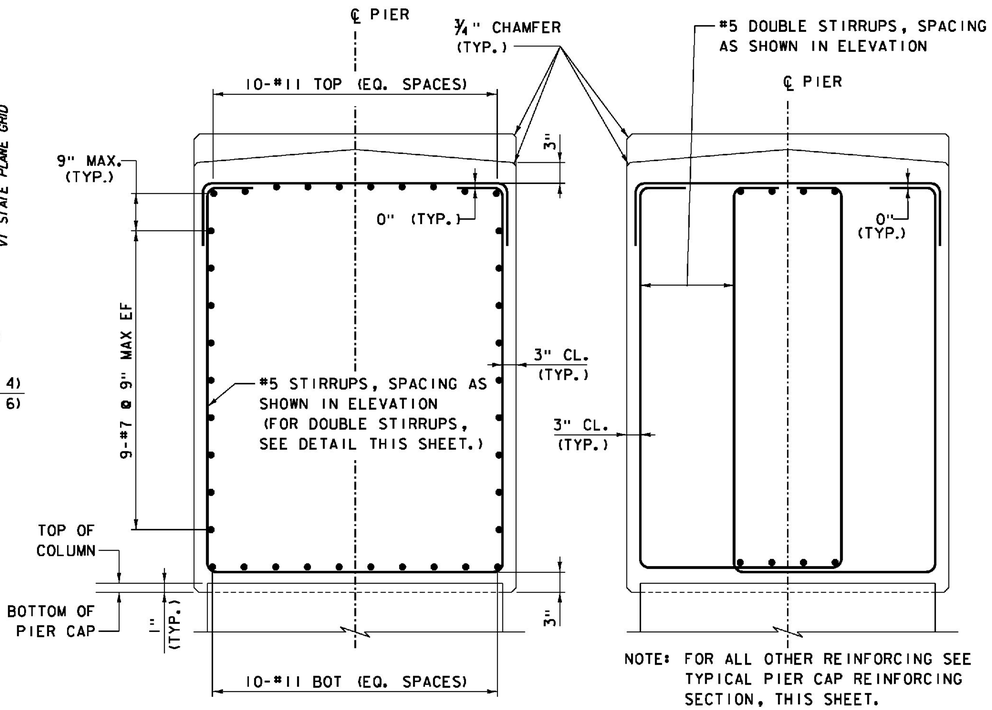

NOTE: FOR ALL OTHER REINFORCING SEE TYPICAL PIER CAP REINFORCING SECTION, THIS SHEET.

PIER CAP REINFORCING SECTION
PIERS 4 & 6

SCALE 3/4" = 1'-0"

DOUBLE STIRRUP DETAIL
PIERS 4 & 6

SCALE 3/4" = 1'-0"

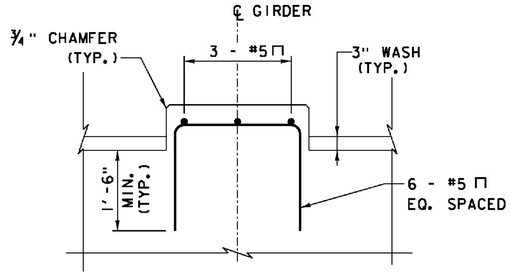

TYPICAL PEDESTAL ELEVATION

SCALE 3/4" = 1'-0"

NOTE: FOR BEARING SEAT ELEVATIONS, SEE SPECIFIC PIER ELEVATION AND SECTION SHEETS.

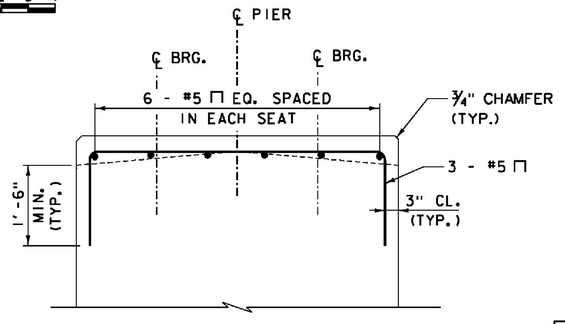

TYPICAL PEDESTAL SECTION

SCALE 3/4" = 1'-0"

WORKING POINT CONTROL				
PIER	POINT NO.	STATION	NORTHING	EASTING
4	WP4B6	2922+43.50, 14.17' LT.	347387.1209	1665147.5800
	WP20B	2922+43.50, CL	347386.8404	1665161.7439
	WP4B10	2922+43.50, 20.17' RT.	347386.4412	1665181.9066
	WP4A6	2922+46.50, 14.17' LT.	347390.1203	1665147.6394
	WP20A	2922+46.50, CL	347389.8398	1665161.8033
	WP4A10	2922+46.50, 20.17' RT.	347389.4406	1665181.9660
6	WP6B6	2925+63.50, 14.17' LT.	347707.0581	1665153.9146
	WP26B	2925+63.50, CL	347706.7777	1665168.0785
	WP6B10	2925+63.50, 20.17' RT.	347706.3785	1665188.2413
	WP6A6	2925+66.50, 14.17' LT.	347710.0576	1665153.9740
	WP26A	2925+66.50, CL	347709.7771	1665168.1379
	WP6A10	2925+66.50, 20.17' RT.	347709.3779	1665188.3007

ITEMS USED ON THIS SHEET	
ITEM NO.	DESCRIPTION
501.34	CONCRETE, HIGH PERFORMANCE CLASS B
507.17	EPOXY COATED REINFORCING STEEL

PROJECT NAME: WINDSOR
PROJECT NUMBER: IM 091-1(64)

FILE NAME: z10a188PD2.dgn
PROJECT LEADER: J. WILSON
DESIGNED BY: S. BOYINGTON
NB PIER DETAILS - SHEET 2

PLOT DATE: 7/30/2015
DRAWN BY: S. GUNN
CHECKED BY: S. HALLORAN
SHEET 147 OF 156

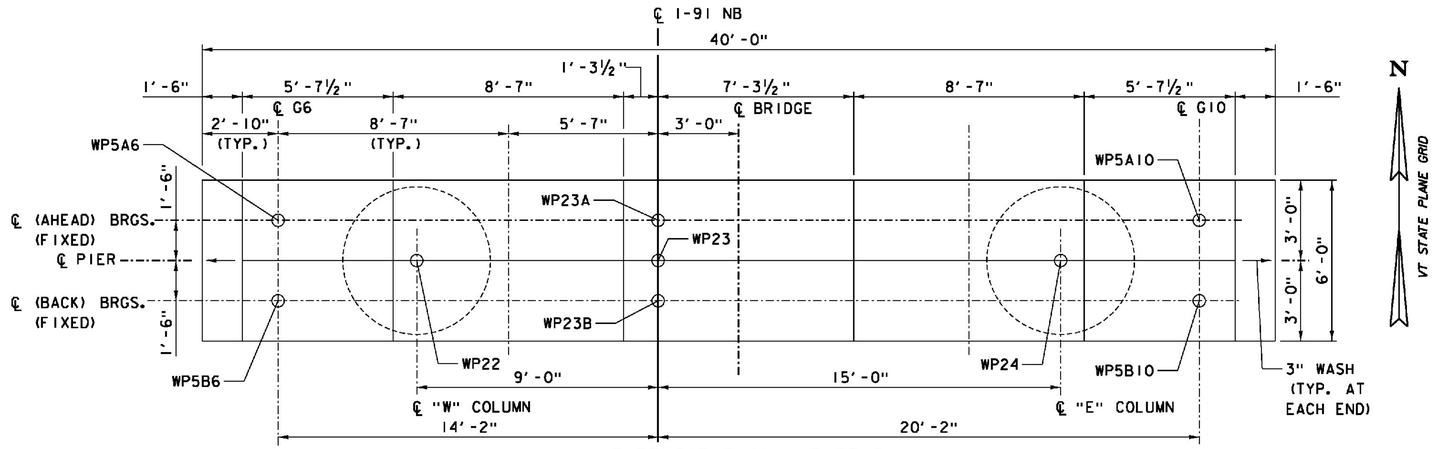

PIER CAP PLAN - PIER 5

SCALE ⅜" = 1'-0"

0 1 2 3 4

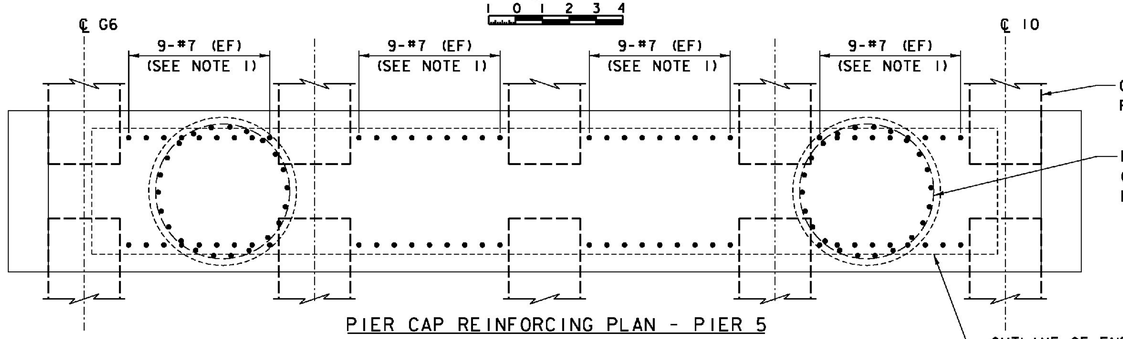

PIER CAP REINFORCING PLAN - PIER 5

SCALE ⅜" = 1'-0"

0 1 2 3 4

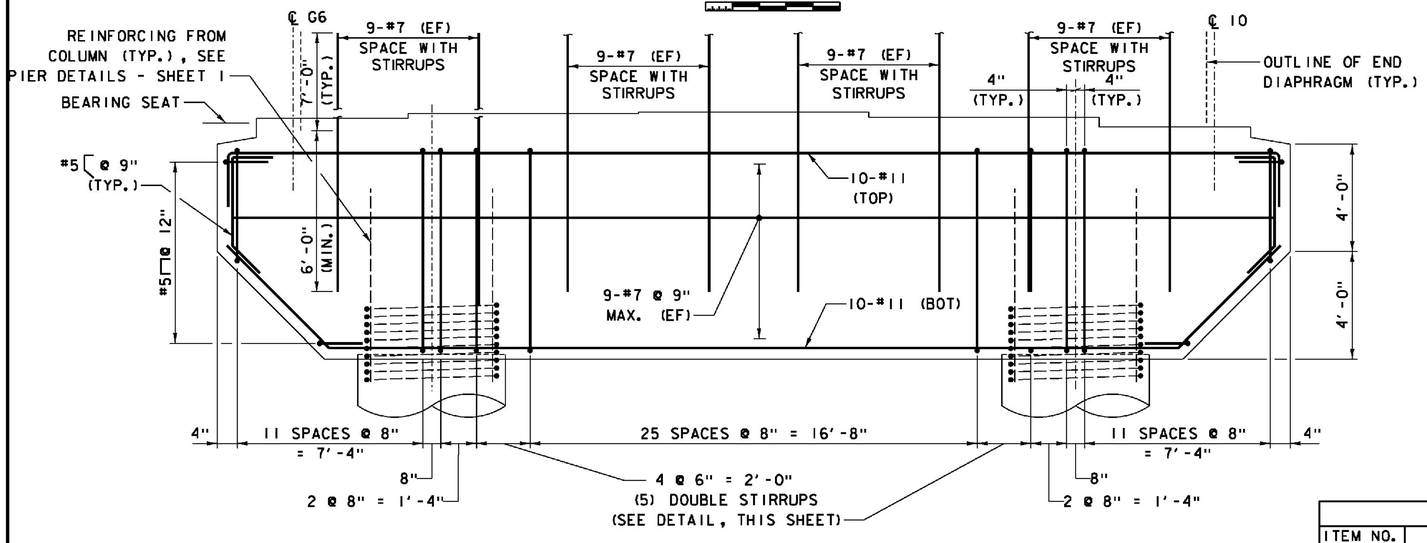

PIER CAP REINFORCING ELEVATION - -PIER 5

SCALE ⅜" = 1'-0"

0 1 2 3 4

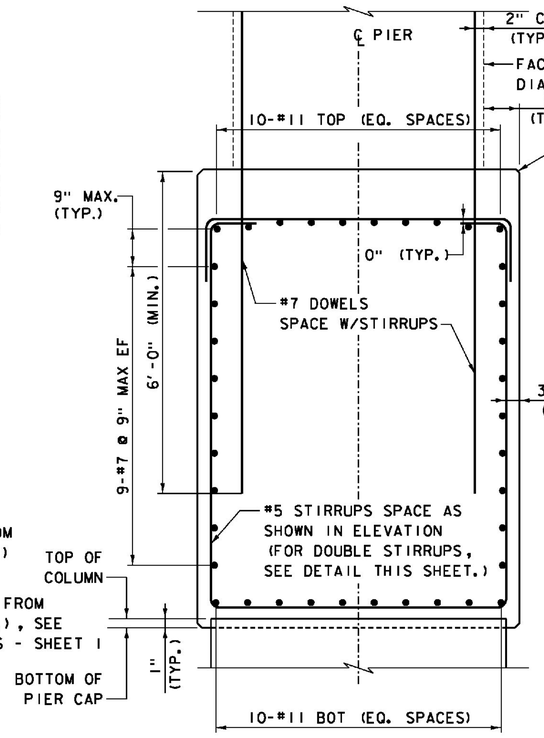

TYPICAL PIER CAP REINFORCING SECTION
PIER 5

SCALE ¾" = 1'-0"

0 1 2

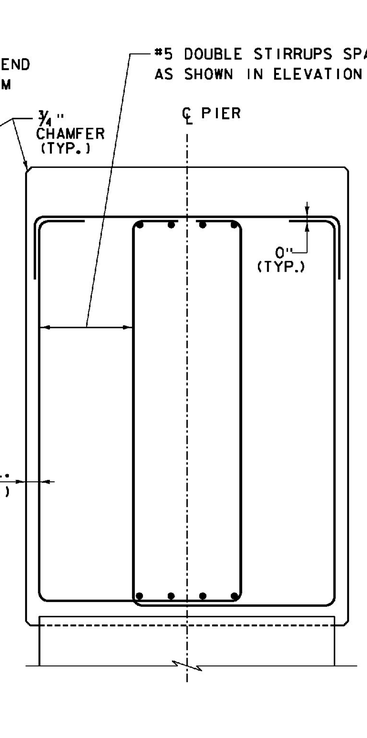

DOUBLE STIRRUP DETAIL
PIER 5

SCALE ¾" = 1'-0"

0 1 2

NOTES:

1. REINFORCING STEEL DOWELS EXTENDING FROM PIER CAP INTO END DIAPHRAGM SHALL BE SPACED WITH STIRRUPS AS SHOWN. NINE DOWELS SHALL EXTEND FROM CAP BETWEEN BOTTOM FLANGES OF ADJACENT GIRDERS ON EACH SIDE OF CAP. ADJUST TO AVOID INTERFERENCE WITH COLUMN REINFORCING AS REQUIRED.

WORKING POINT CONTROL				
PIER	POINT NO.	STATION	NORTHING	EASTING
5	WP5B6	2924+03.50, 14.17' LT.	347547.0895	1665150.7473
	WP23B	2924+03.50, CL	347546.8091	1665164.9112
	WP5B10	2924+03.50, 20.17' RT.	347546.4098	1665185.0740
	WP5A6	2924+06.50, 14.17' LT.	347550.0889	1665150.8067
	WP23A	2924+06.50, CL	347549.8085	1665164.9706
	WP5A10	2924+06.50, 20.17' RT.	347549.4093	1665185.1334

ITEMS USED ON THIS SHEET	
ITEM NO.	DESCRIPTION
501.34	CONCRETE, HIGH PERFORMANCE CLASS B
507.17	EPOXY COATED REINFORCING STEEL
900.635	STAINLESS STEEL REINFORCING

PROJECT NAME: WINDSOR
PROJECT NUMBER: IM 091-1(64)

FILE NAME: z10a188PD3.dgn
PROJECT LEADER: J. WILSON
DESIGNED BY: S. BOYINGTON
NB PIER DETAILS - SHEET 3

PLOT DATE: 7/30/2015
DRAWN BY: S. GUNN
CHECKED BY: S. HALLORAN

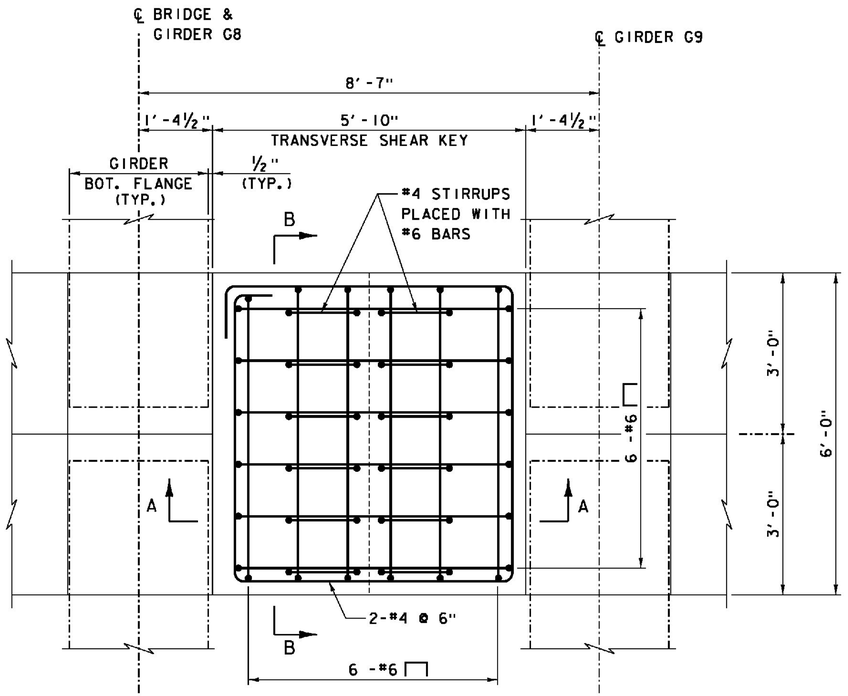

TRANSVERSE SHEAR KEY - PLAN

SCALE ¾" = 1'-0"

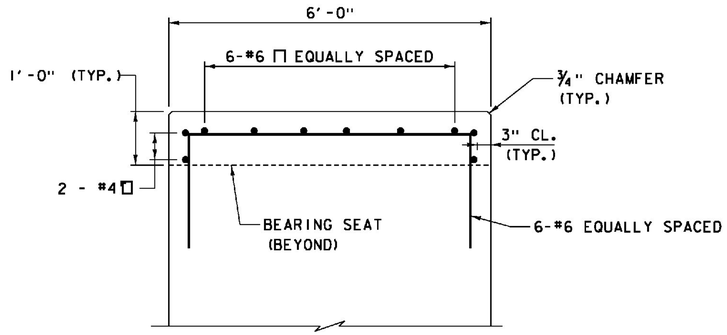

TRANSVERSE SHEAR KEY - SECTION B

SCALE ¾" = 1'-0"

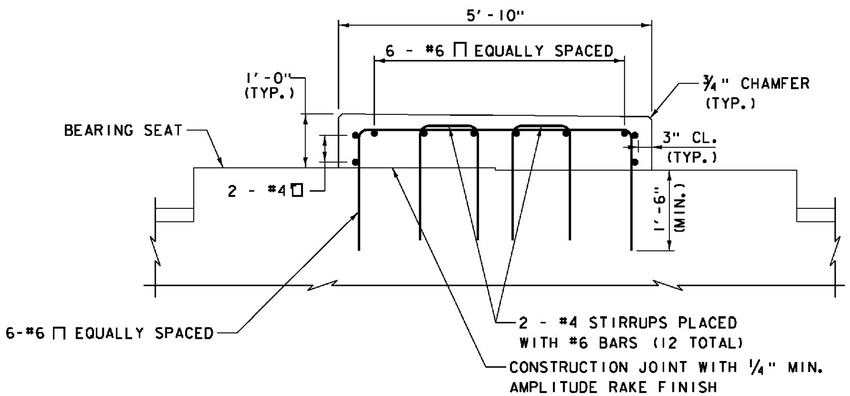

TRANSVERSE SHEAR KEY - SECTION A

SCALE ¾" = 1'-0"

PROJECT NAME: WINDSOR	
PROJECT NUMBER: IM 091-1(64)	
FILE NAME: z10o188PD4.dgn	PLOT DATE: 7/30/2015
PROJECT LEADER: J. WILSON	DRAWN BY: S. GUNN
DESIGNED BY: S. BOYINGTON	CHECKED BY: S. HALLORAN
NB PIER DETAILS - SHEET 4	SHEET 149 OF156

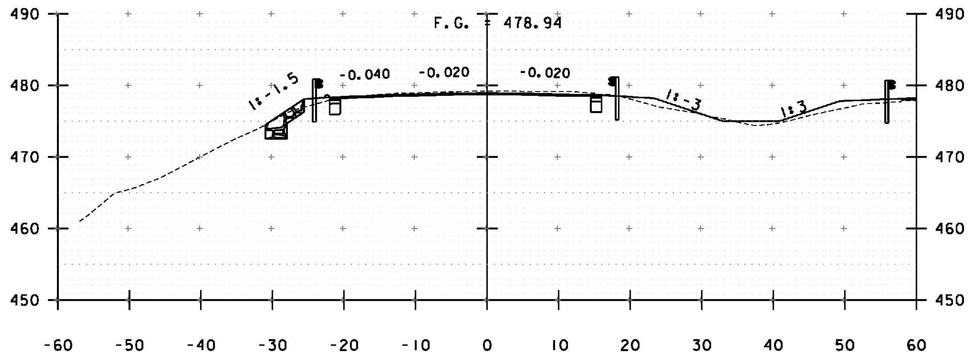

1918+50

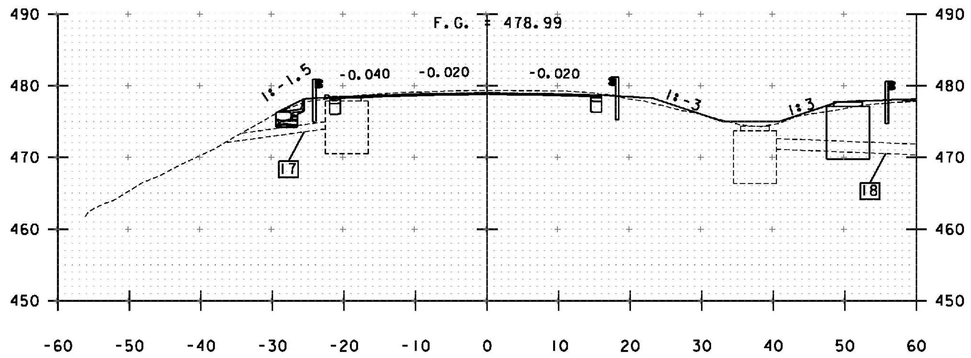

1918+20

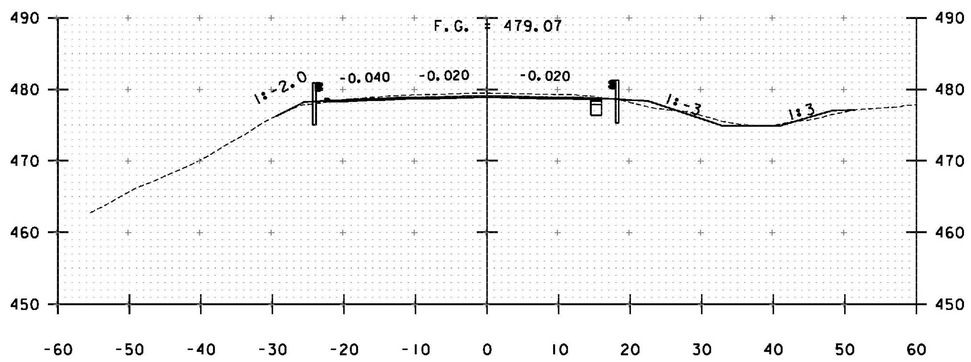

1918+00

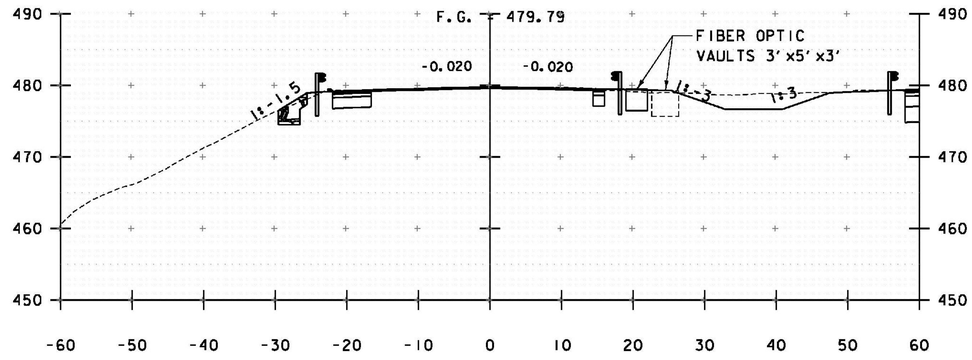

1920+00

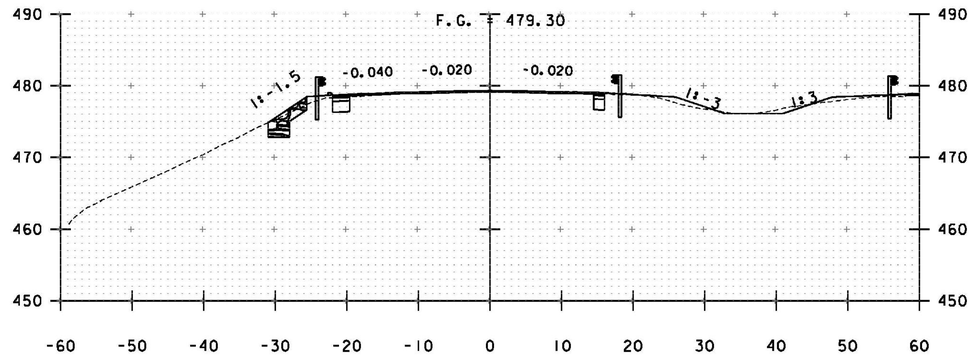

1919+50

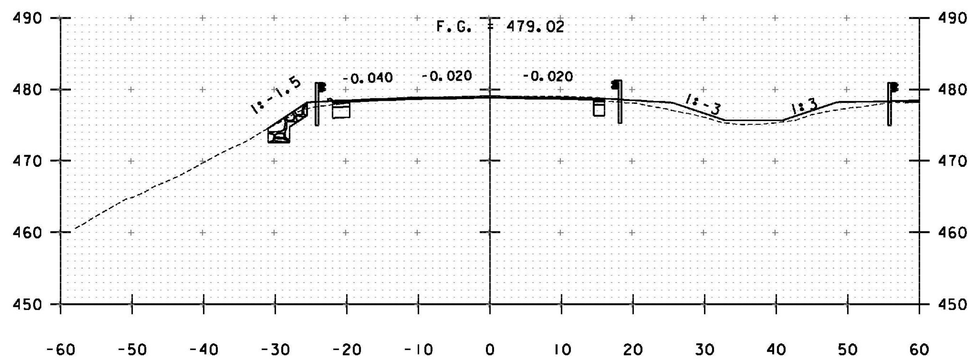

1919+00

STA. 1896+00 TO STA. 1918+00: COLD PLANE AND OVERLAY EXISTING ROADWAY
STA. 1929+75 TO STA. 1952+50: COLD PLANE AND OVERLAY EXISTING ROADWAY

STA. 1918+00 TO STA. 1920+00

PROJECT NAME: WINDSOR
PROJECT NUMBER: IM 091-1(64)

FILE NAME: z10a188XS SB.dgn
PROJECT LEADER: J. WILSON
DESIGNED BY: H. FULLER
CROSS SECTIONS- I-91 SOUTHBOUND 1

PLOT DATE: 7/30/2015
DRAWN BY: S. GUNN
CHECKED BY: T. MORIN
SHEET 150 OF 156

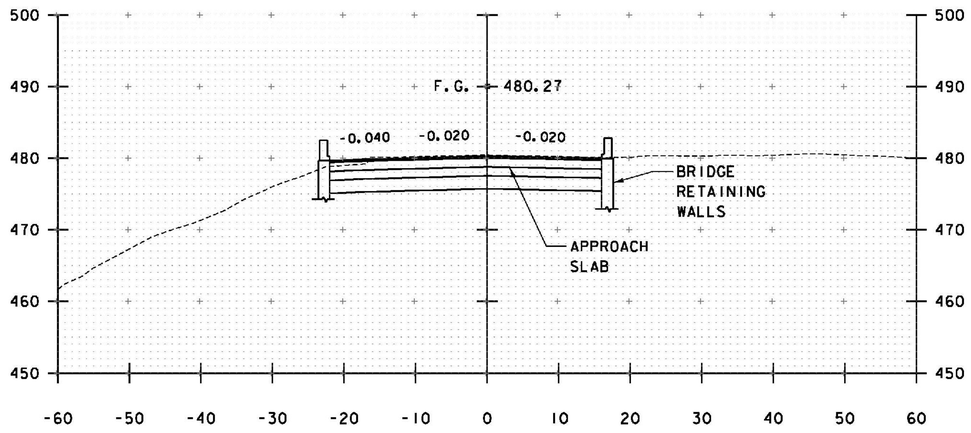

1920+38.5

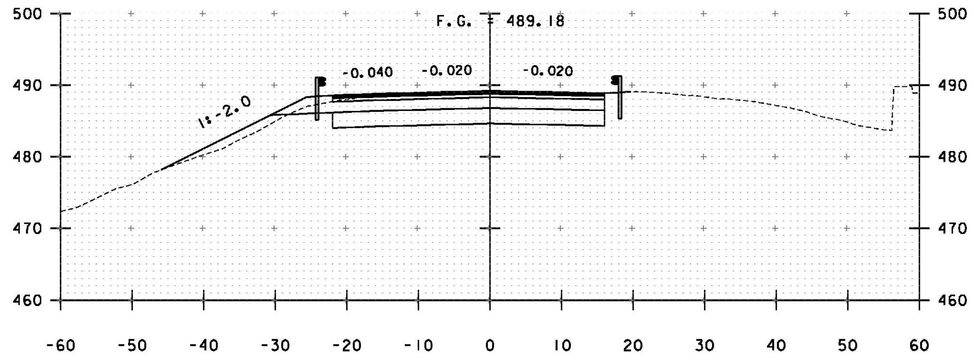

1927+50

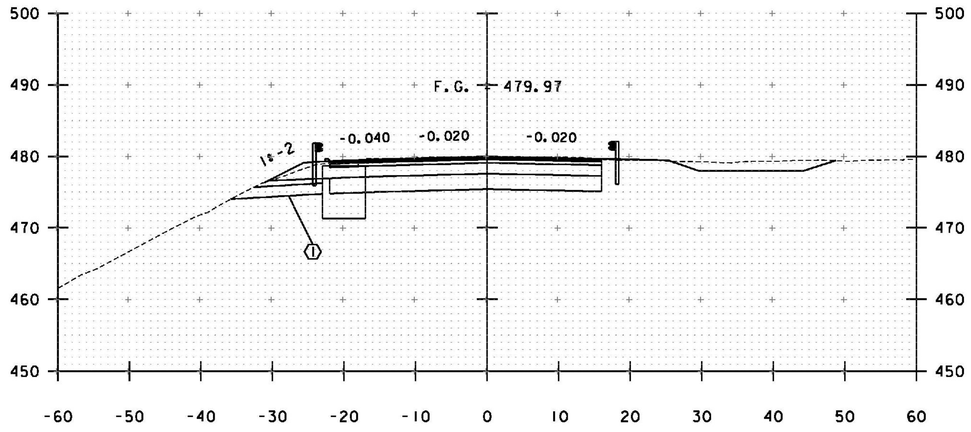

1920+15

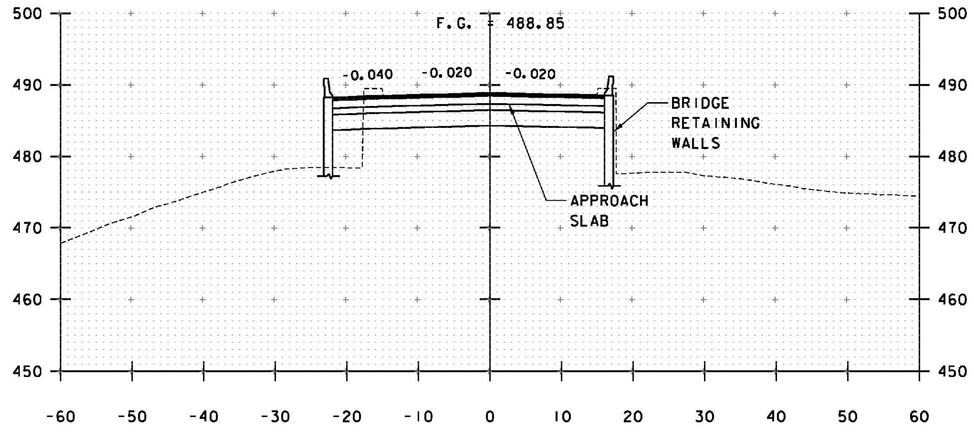

1927+23.5

NOTE:

SEE WP 4 SUBSTRUCTURE DESIGN PLANS (33S) FOR RETAINING WALL DETAILS.

STA. 1920+15 TO STA. 1927+50

PROJECT NAME: WINDSOR
PROJECT NUMBER: IM 091-1(64)

FILE NAME: z10a188XS SB.dgn
PROJECT LEADER: J. WILSON
DESIGNED BY: H. FULLER
CROSS SECTIONS- I-91 SOUTHBOUND 2

PLOT DATE: 7/30/2015
DRAWN BY: S. GUNN
CHECKED BY: T. MORIN
SHEET 151 OF156

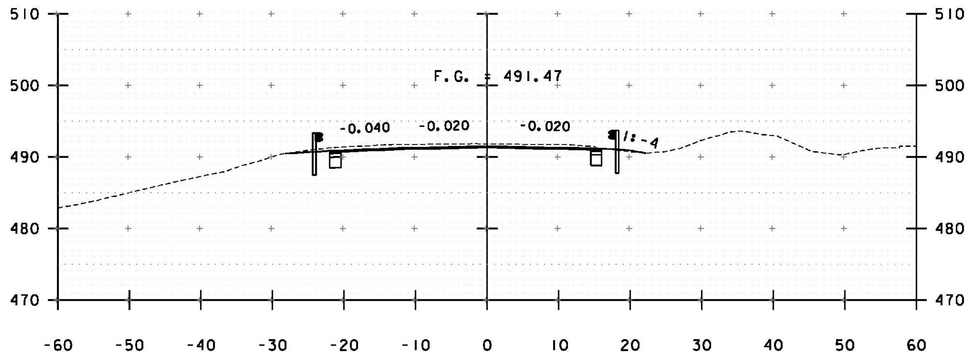

1929+00

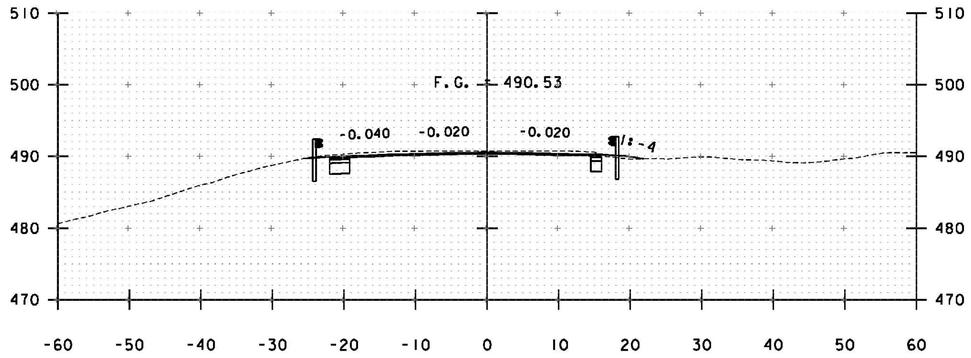

1928+50

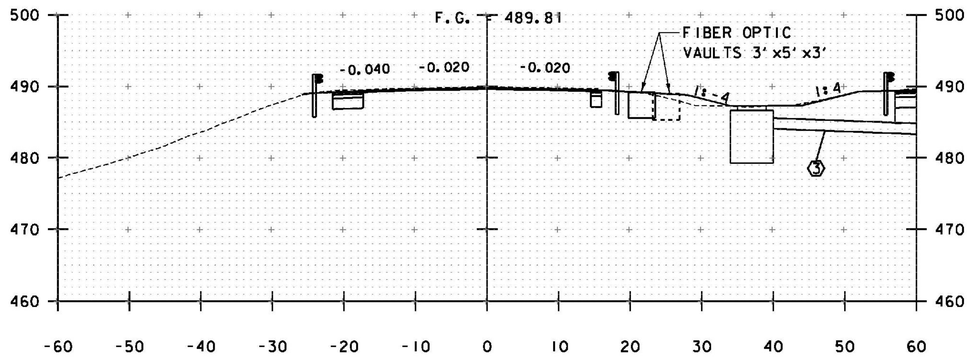

1928+00

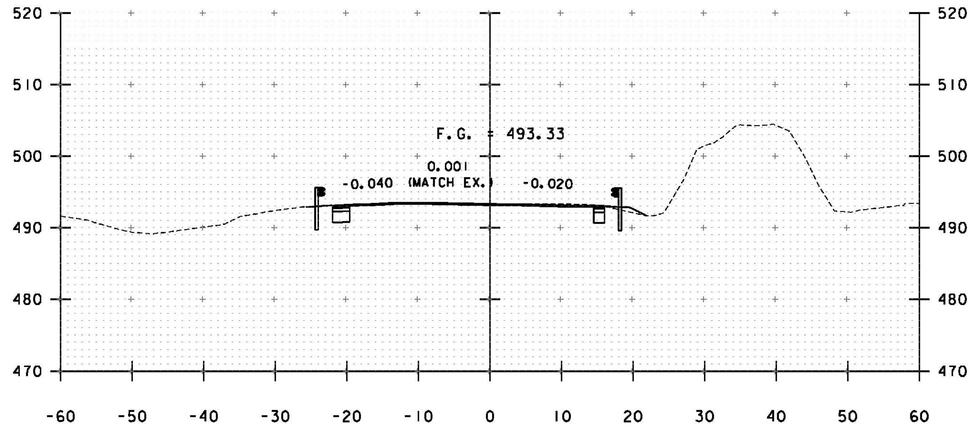

1929+75

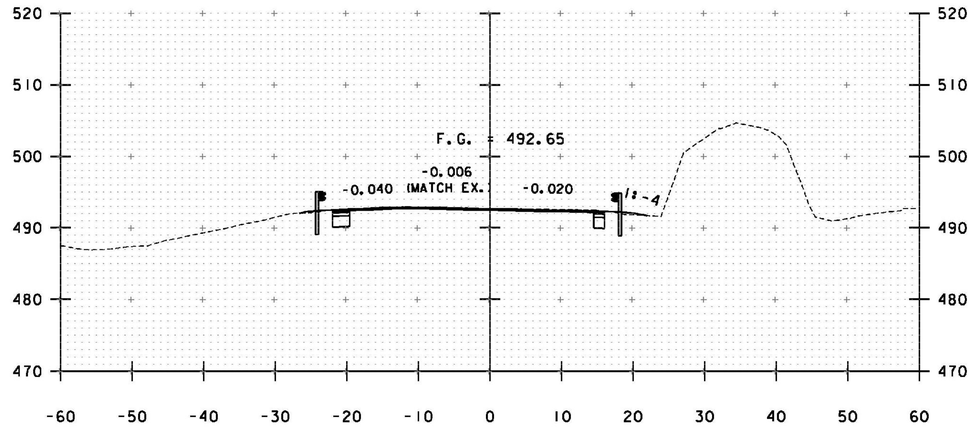

1929+50

STA. 1928+00 TO STA. 1929+75

PROJECT NAME: WINDSOR	
PROJECT NUMBER: IM 091-1(64)	
FILE NAME: z10a188XS SB.dgn	PLOT DATE: 7/30/2015
PROJECT LEADER: J. WILSON	DRAWN BY: S. GUNN
DESIGNED BY: H. FULLER	CHECKED BY: T. MORIN
CROSS SECTIONS- I-91 SOUTHBOUND 3	SHEET 152 OF156

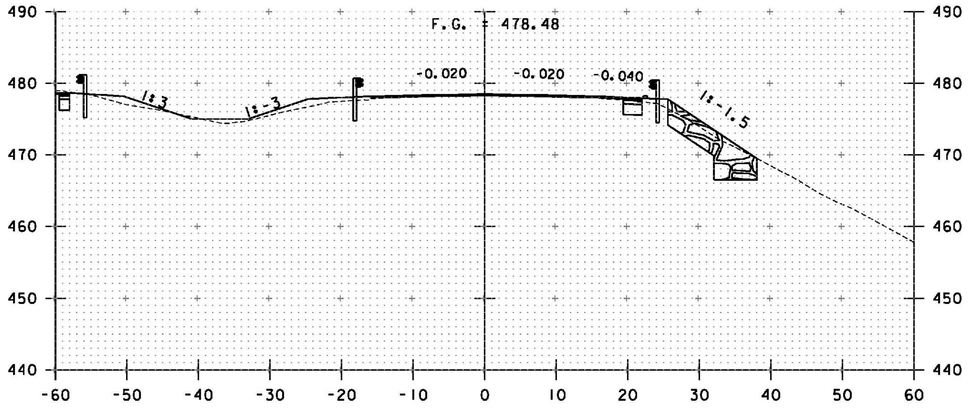

2918+50

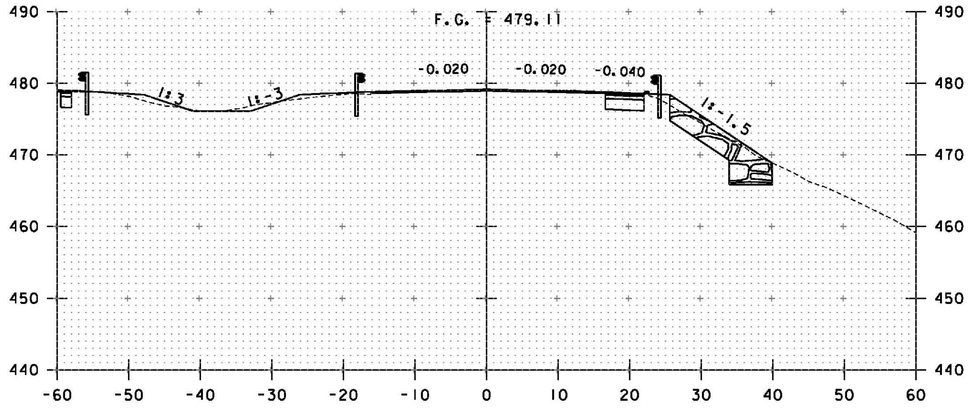

2919+50

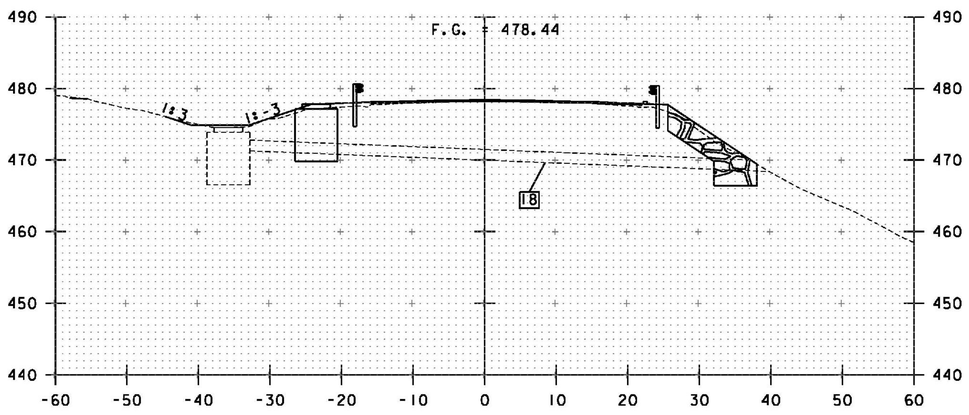

2918+25

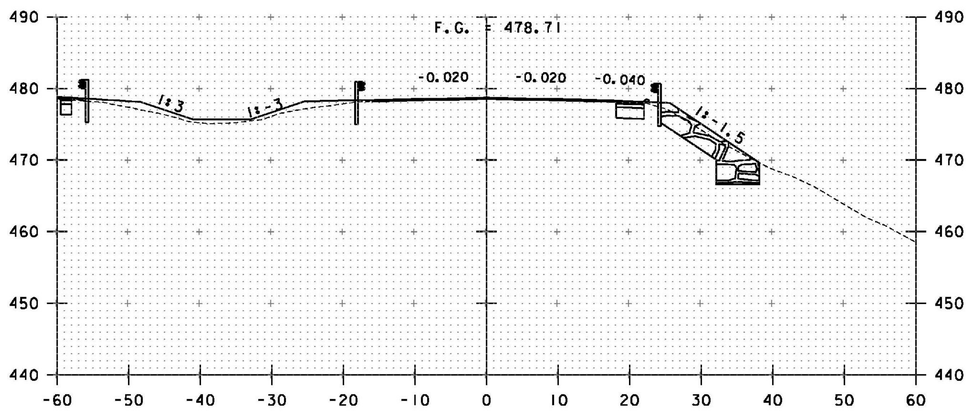

2919+00

STA. 2895+50 TO STA. 2918+25: COLD PLANE AND OVERLAY EXISTING ROADWAY
STA. 2930+25 TO STA. 2943+25: COLD PLANE AND OVERLAY EXISTING ROADWAY

STA. 2918+25 TO STA. 2919+50

PROJECT NAME: WINDSOR
PROJECT NUMBER: IM 091-1(64)

FILE NAME: z10a188XS1.dgn
PROJECT LEADER: J. WILSON
DESIGNED BY: H. FULLER
CROSS SECTIONS- I-91 NORTHBOUND 1

PLOT DATE: 7/30/2015
DRAWN BY: S. GUNN
CHECKED BY: T. MORIN
SHEET 153 OF 156

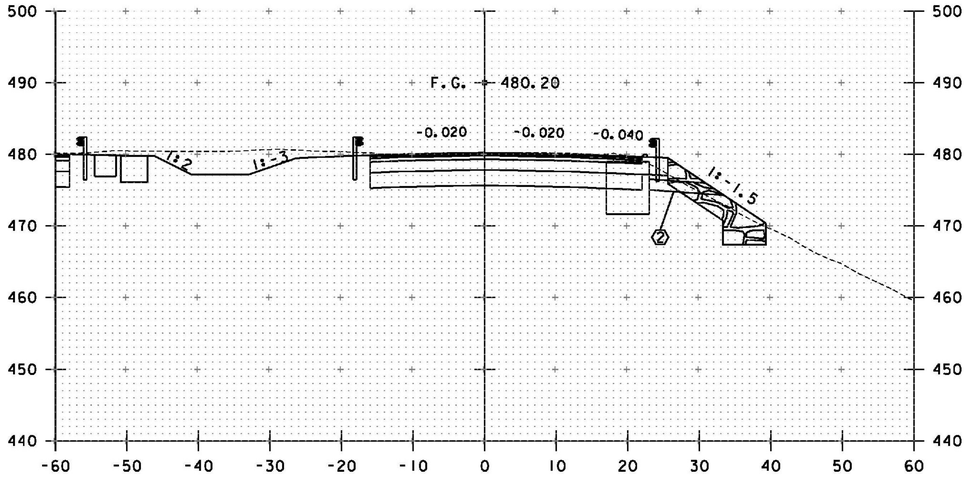

2920+40

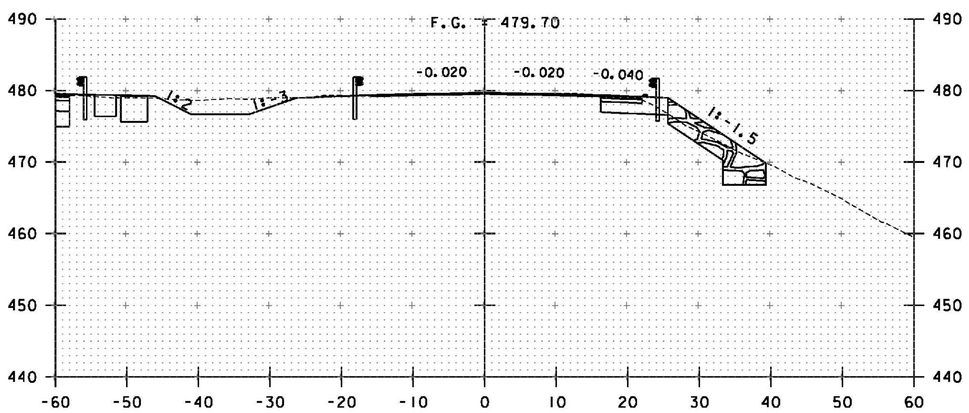

2920+00

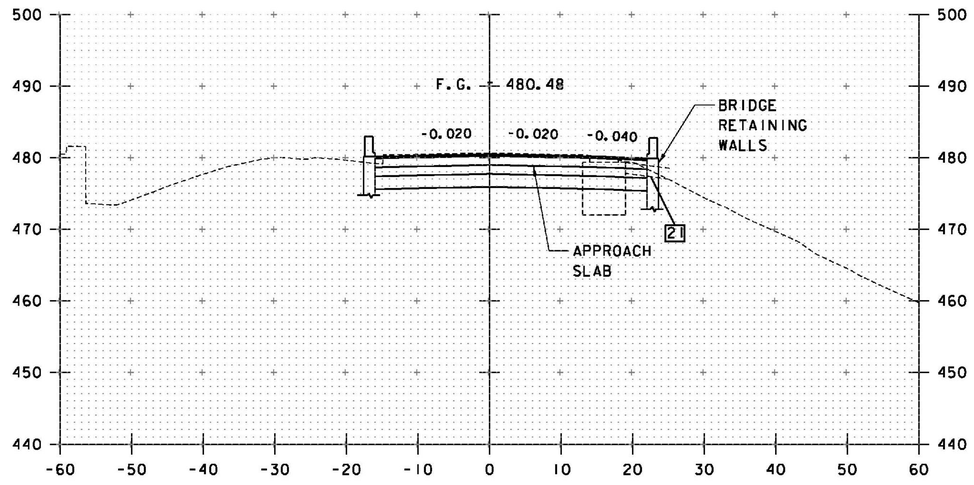

2920+62.5

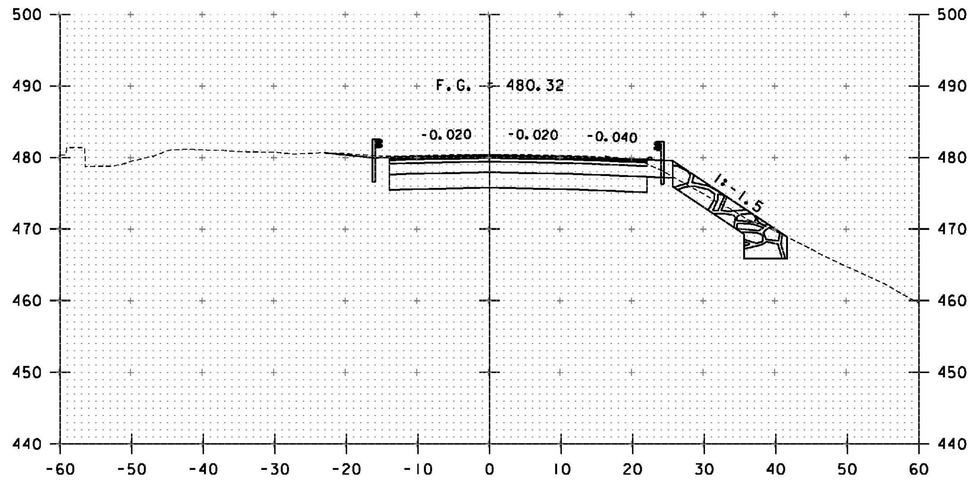

2920+50

NOTE:

SEE WP 5 SUBSTRUCTURE DESIGN PLANS (33N) FOR RETAINING WALL DETAILS.

STA. 2920+00 TO STA. 2920+61

PROJECT NAME: WINDSOR
PROJECT NUMBER: IM 091-1(64)

FILE NAME: z10o188XS1.dgn
PROJECT LEADER: J. WILSON
DESIGNED BY: H. FULLER
CROSS SECTIONS- I-91 NORTHBOUND 2

PLOT DATE: 7/30/2015
DRAWN BY: S. GUNN
CHECKED BY: T. MORIN
SHEET 154 OF156

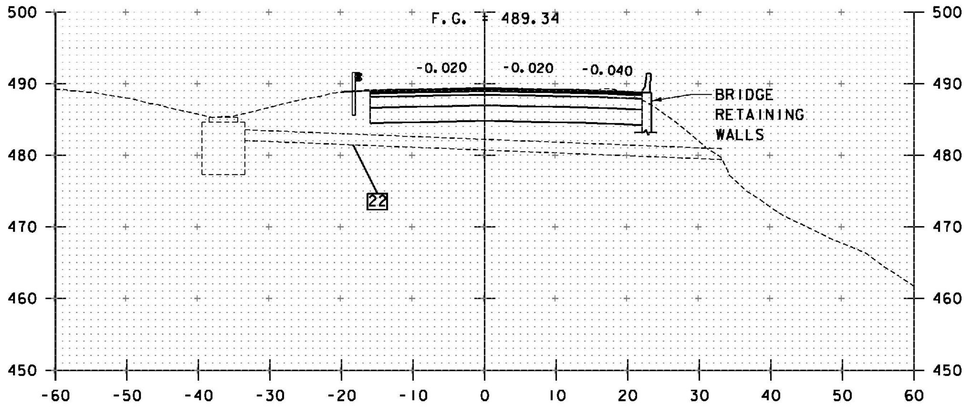

2927+70

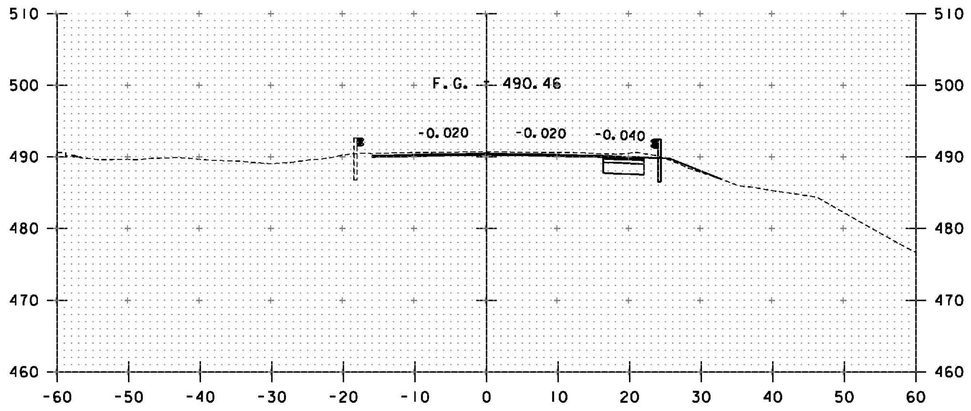

2928+50

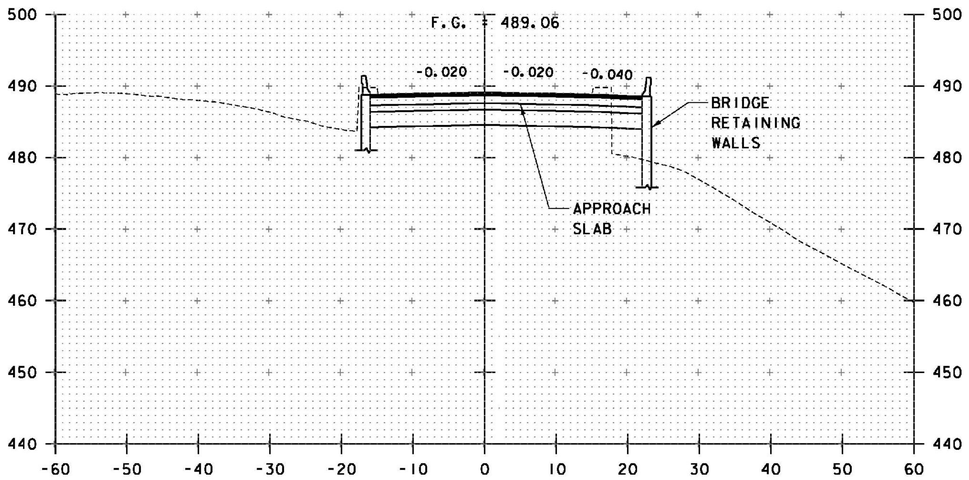

2927+47.5

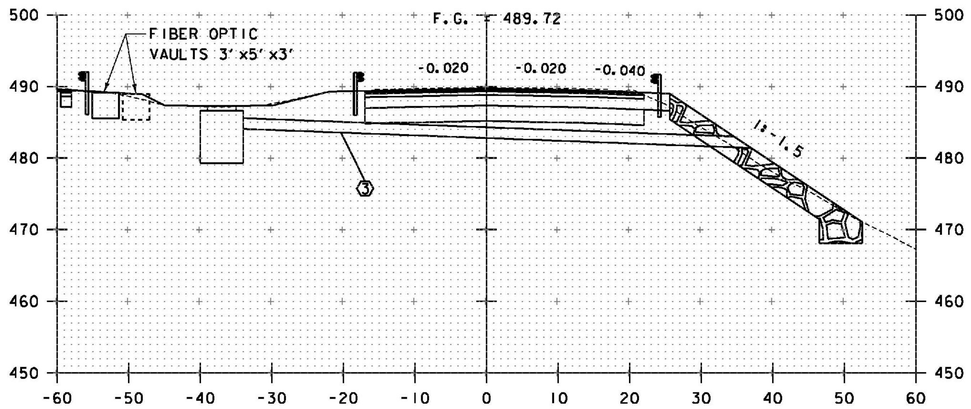

2927+94

NOTE:

SEE WP 5 SUBSTRUCTURE DESIGN PLANS (33N) FOR RETAINING WALL DETAILS.

STA. 2927+50 TO STA. 2928+50

PROJECT NAME: WINDSOR
PROJECT NUMBER: IM 091-1(64)

FILE NAME: z10o188XS1.dgn
PROJECT LEADER: J. WILSON
DESIGNED BY: H. FULLER
CROSS SECTIONS- I-91 NORTHBOUND 3

PLOT DATE: 7/30/2015
DRAWN BY: S. GUNN
CHECKED BY: T. MORIN
SHEET 155 OF156

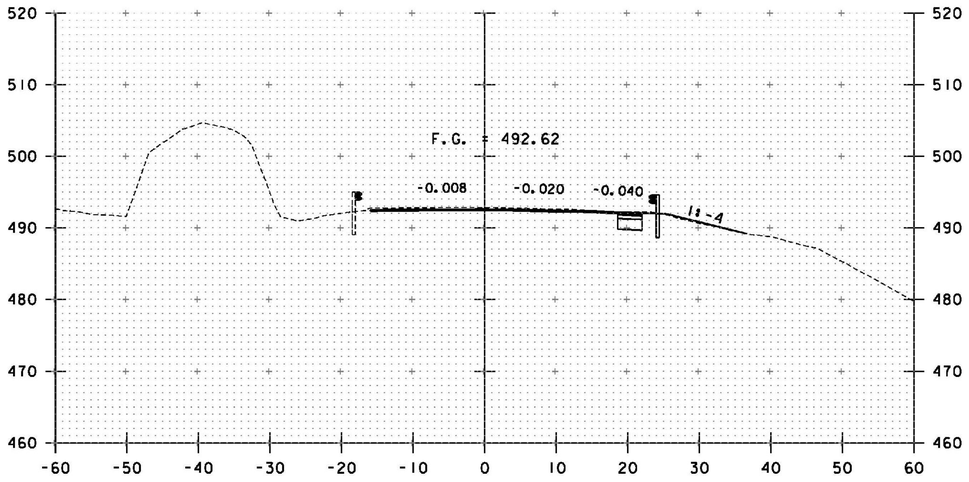

2929+50

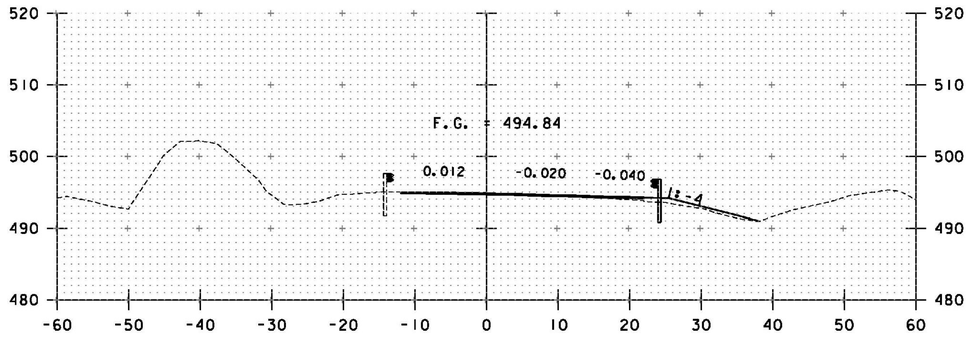

2930+25

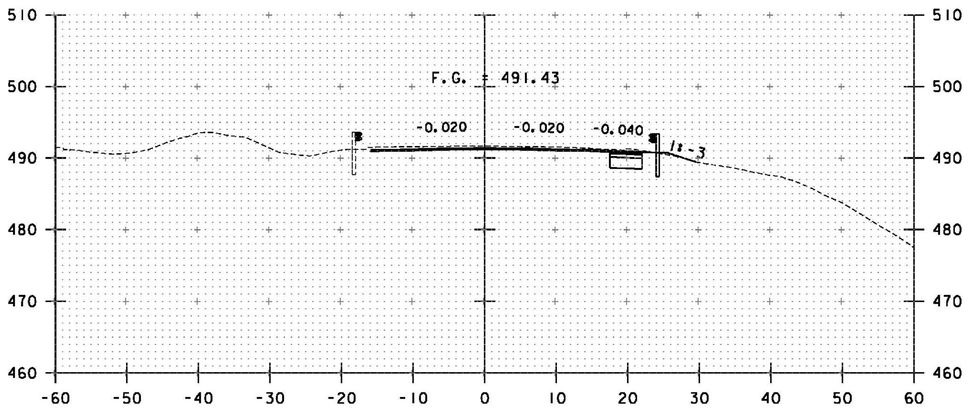

2929+00

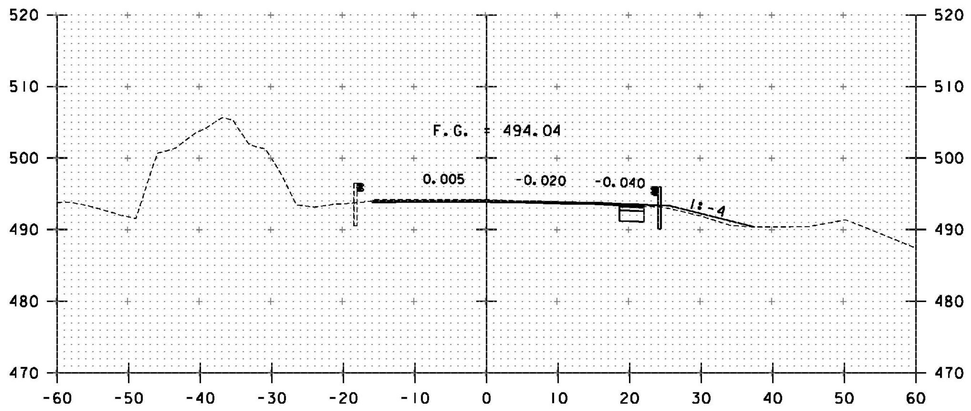

2930+00

STA. 2929+00 TO STA. 2930+25

PROJECT NAME: WINDSOR
PROJECT NUMBER: IM 091-1(64)

FILE NAME: z10o188XS1.dgn
PROJECT LEADER: J. WILSON
DESIGNED BY: H. FULLER
CROSS SECTIONS- I-91 NORTHBOUND 4

PLOT DATE: 7/30/2015
DRAWN BY: S. GUNN
CHECKED BY: T. MORIN
SHEET 156 OF156