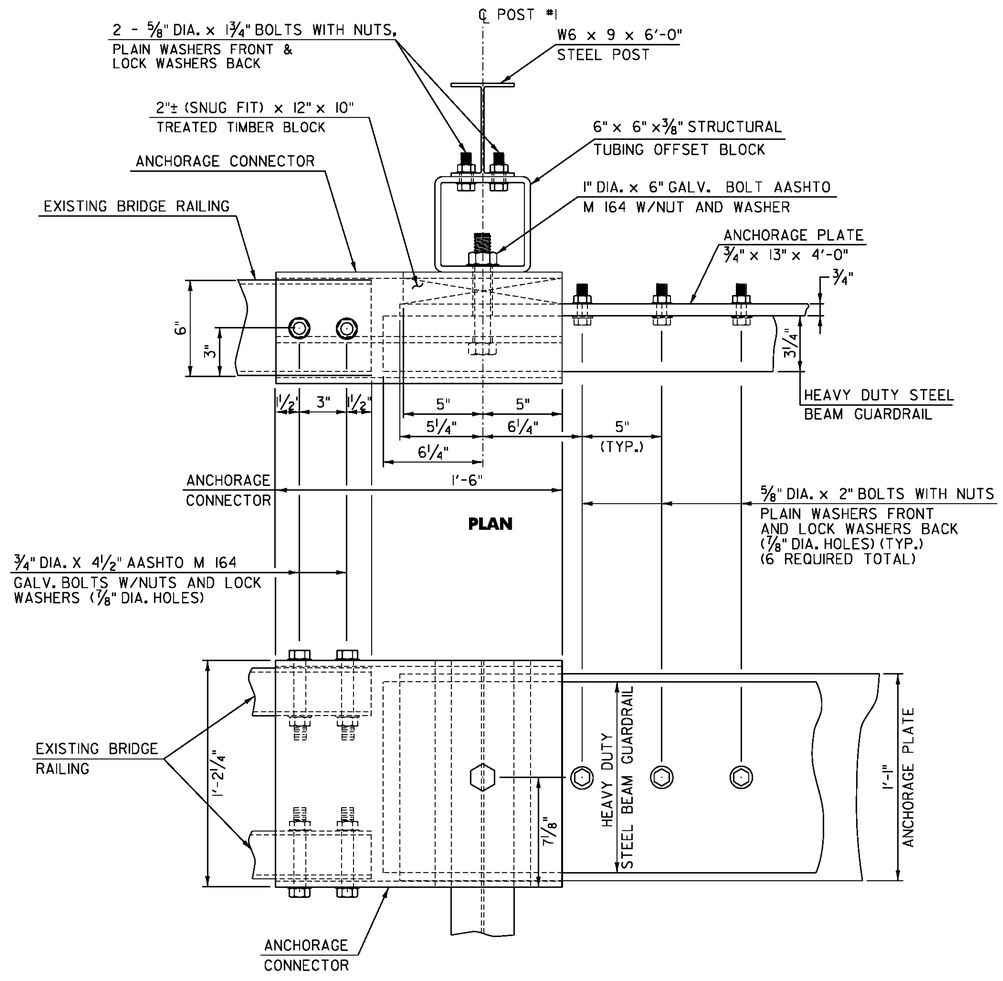

ELEVATION

CONNECTION DETAILS AT POST #1

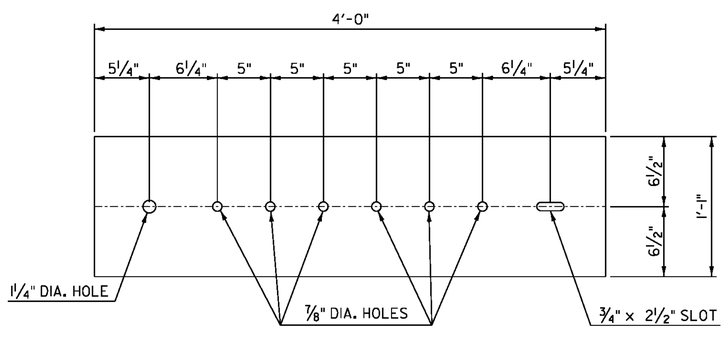

ANCHORAGE PLATE DETAIL

NOTES

1. REFER TO STANDARD G-1 FOR ADDITIONAL RAIL DETAILS.
2. ALL POSTS FOR HEAVY DUTY STEEL BEAM GUARDRAIL SHALL BE STEEL IN ACCORDANCE WITH SECTION 728 "GUARDRAIL, GUIDE POSTS AND BARRIERS" UNLESS OTHERWISE SPECIFIED IN THE CONTRACT.
3. APPROACH RAIL SPLICES SHALL LAP IN DIRECTION OF TRAFFIC FLOW.
4. ANCHORAGE CONNECTOR AND ANCHORAGE PLATE SHALL BE AASHTO M 270, GRADE 250 GALVANIZED TO AASHTO M 111 AFTER FABRICATION.
5. ALL BOLTS, NUTS AND WASHERS SHALL CONFORM TO THE VERMONT STANDARD SPECIFICATION 728.03 (c) (1) (2).
6. STRUCTURAL TUBING OFFSET BLOCK SHALL CONFORM TO VERMONT STANDARD SPECIFICATION 728.01 (c).
7. APPROACH RAILING SHALL BE HEAVY DUTY STEEL BEAM FOR 50'-0" FROM THE ℄ OF POST #1 FOR TYPE I AND 12'-6" FROM THE ℄ OF POST #1 FOR TYPE II.
8. ALLOWABLE DIMENSIONAL TOLERANCE FOR BENT SECTIONS IS ±1/16".
9. THE UNIT PRICES BID FOR EITHER TYPE OF GUARDRAIL APPROACH SECTION SHALL INCLUDE ANCHORAGE CONNECTOR, ANCHORAGE PLATE, HEAVY DUTY STEEL BEAM GUARDRAIL, POSTS, OFFSET BLOCKS, BLOCKING, BOLTS, AND ALL NECESSARY HARDWARE.

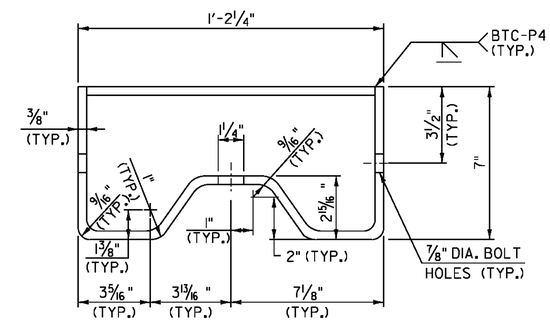

ANCHORAGE CONNECTOR DETAIL
(SEE NOTE 8)

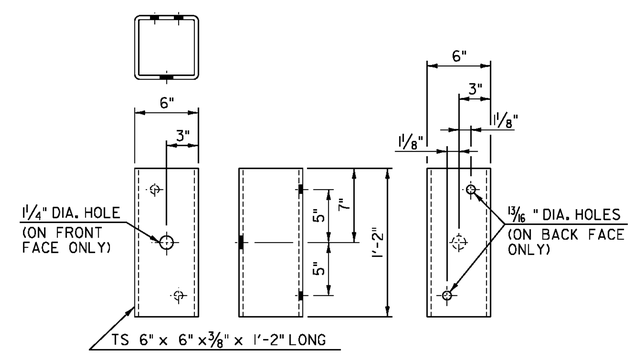

STRUCTURAL TUBING OFFSET BLOCK DETAILS
(OCCURS AT POST #1 WHEN USING APPROACH RAIL UTILIZING STEEL POSTS)

GUARDRAIL APPROACH SECTION DETAIL SHEET 2

PROJECT NAME: ST. JOHNSBURY-LYNDON	
PROJECT NUMBER: IM 091-3(50)	
FILE NAME: lla346/cos/zlla346frm.dgn	PLOT DATE: 10/17/2013
PROJECT LEADER: PTS	DRAWN BY: JLS
DESIGNED BY: NLL	CHECKED BY: PTS
IPARM FILE NAME: plla346_32	SHEET 32 OF 72