STATE OF VERMONT
AGENCY OF TRANSPORTATION

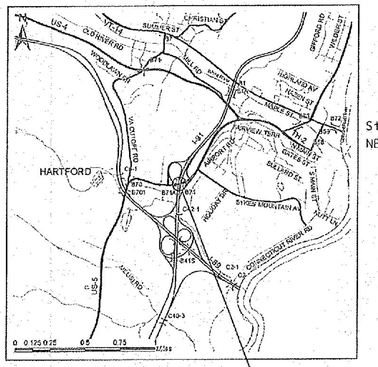
US-4
QUECHEE
WOODSTOCK
VT-12
HARTLAND
HARTLAND JCT
WEST HARTFORD
HARTFORD
WHITE RIVER JCT
I-91
I-89
I-89
I-91
I-91
I-91

STATE OF VERMONT
AGENCY OF TRANSPORTATION

PRELIMINARY INFORMATION SHEET (BRIDGE)

Version
LRFD

INDEX OF SHEETS

PLAN SHEETS

1	TITLE SHEET
2	BRIDGE 43S PRELIMINARY INFORMATION SHEET
3	BRIDGE 43N PRELIMINARY INFORMATION SHEET
4 - 6	GENERAL NOTES 1-3
7 - 10	QUANTITY SHEETS 1-4
11 - 12	BRIDGE QUANTITY SHEETS 1-2
13 - 15	TYPICAL SECTIONS 1-3
16	LEGEND SHEET
17	TIE SHEET
18 - 20	EXISTING CONDITIONS 1-3
21 - 23	LAYOUT SHEETS 1-3
24	SB PROFILE
25	NB PROFILE
26 - 28	US 5 LAYOUT SHEETS 1-3
29	US 5 PROFILE
30	RAMP A LAYOUT SHEET
31 - 34	1-91 SB TRAFFIC CONTROL PLANS 1-4
35 - 39	1-91 NB TRAFFIC CONTROL PLANS 1-5
40 - 41	RAMP C LAYOUT SHEETS 1-2
42 - 44	US 5 TRAFFIC CONTROL PLANS 1-3
45	SMART WORK ZONE LAYOUT
46	SMART WORK ZONE DETAILS
47 - 49	TEMPORARY TRAFFIC SIGNAL LAYOUT SHEETS 1-3
50	REGIONAL DETOUR LEGEND
51 - 53	DETOUR SCENARIO SHEETS 1-3
54	DRAINAGE LAYOUT SHEET
55	STAGING LAYOUT SHEET
56	UTILITY LAYOUT SHEET
57	SIGN AND PAVEMENT MARKINGS SHEET
58	TRAFFIC SIGN SUMMARY SHEET
59 - 61	US 5 SIGN & PAVEMENT MARKINGS SHEETS 1-3
62 - 63	US 5 TRAFFIC SIGN SUMMARY SHEETS 1-2
64 - 65	RAIL LAYOUT SHEETS 1-2
66 - 68	RAIL DETAILS 1-3
69	EXISTING BORING LAYOUT SHEET
70 - 71	EXISTING BORING LOGS 1-2
72	PROPOSED BORING LAYOUT SHEET
73 - 84	PROPOSED BORING LOGS 1-12
85	SUPERSTRUCTURE TYPICAL 43S
86	SUPERSTRUCTURE TYPICAL 43N
87	FRAMING PLAN BRIDGE 43S
88	FRAMING PLAN BRIDGE 43N
89	CAMBER & DEFLECTION
90	DECK REINFORCING PLAN 43S
91	DECK REINFORCING PLAN 43N
92	SUPERSTRUCTURE DETAILS
93	SUSPENDED BACKWALL DETAILS 43S
94	SUSPENDED BACKWALL DETAILS 43N
95	BEARING NOTES
96	BEARING DETAILS
97	APPROACH SLAB PLAN 43S
98	APPROACH SLAB PLAN 43N
99	APPROACH SLAB DETAILS
100	ABUTMENT TYPICALS
101	ABUTMENT 1
102	ABUTMENT 1 FOOTING
103 - 104	WING WALLS 1-2
105	ABUTMENT 2
106	ABUTMENT 2 FOOTING
107 - 108	WING WALLS 3-4
109	ABUTMENT 3
110	ABUTMENT 3 FOOTING
111 - 112	WING WALLS 5-6
113	ABUTMENT 4
114	ABUTMENT 4 FOOTING
115 - 116	WING WALLS 7-8
117 - 124	RETAINING WALLS 1-8
125	RSS SUPERSTRUCTURE 43S
126	RSS SUPERSTRUCTURE 43N
127 - 130	RSS ABUTMENTS 1-4
131	RSS RETAINING WALLS
132	EPSC NARRATIVE
133 - 134	EPSC PLAN DURING CONSTRUCTION SHEETS 1-2
135 - 136	EPSC PLAN FINAL CONDITIONS SHEETS 1-2
137	EPSC DETAILS
138	MATERIAL TRANSITION I-91
139	BANKING DIAGRAM 1-91
140	BANKING DIAGRAM US 5
141 - 145	I-91 SB CROSS SECTIONS
146 - 150	I-91 NB CROSS SECTIONS
151 - 166	US 5 CROSS SECTIONS

STANDARDS LIST

C-10	CURBING	02-11-2008
D-1	PRECAST REINFORCED CONCRETE DROP INLET DETAILS	06-01-1994
E-120	STANDARD SIGN PLACEMENT - EXPRESSWAY & FREEWAY	08-08-1995
E-123	GUIDE SIGN PLACEMENT - MISCELLANEOUS DETAILS	03-16-2004
E-171A	TRAFFIC CONTROL SIGNALS GENERAL NOTES & DETAILS	08-09-1995
E-171B	TRAFFIC CONTROL SIGNALS MISC. DETAILS	08-09-1995
E-172	VEHICLE DETECTOR LOOP DETAILS	08-09-1995
E-173	PULL BOXES AND JUNCTION BOXES	08-09-1995
E-175	POWER DROP STANCHIONS	06-08-2009
E-180A	STREET LIGHTING DETAILS	08-09-1995
E-180B	STREET LIGHTING DETAILS	08-09-1995
E-191	PAVEMENT MARKING DETAILS	02-01-1999
E-192	PAVEMENT MARKING DETAILS	10-12-2000
F-2	CHAIN LINK FENCE, TYPE I DETAILS	06-01-1994
G-1	STEEL BEAM GUARDRAIL DETAILS (POST, DELINEATOR, TYPICALS)	02-10-2014
G-1D	STEEL BEAM GUARDRAIL DETAILS (END TERMINAL, ANCHOR, MEDIAN)	02-10-2014
G-19	GENERIC GRADING PLANS FOR GUARDRAIL END TERMINALS	11-15-2002
S-363	THRIE BEAM TO STANDARD STEEL BEAM TRANSITION SECTION	04-23-2012
T-1	TRAFFIC CONTROL GENERAL NOTES	08-06-2012
T-11	CONSTRUCTION APPROACH SIGNING DIVIDED HIGHWAY ONE LANE CLOSED	08-06-2012
T-12	TRAFFIC CONTROL DIVIDED HIGHWAY ONE LANE CLOSED	08-06-2012
T-13	TRAFFIC CONTROL DIVIDED HIGHWAY ONE LANE CLOSED	08-06-2012
T-17	TRAFFIC CONTROL MISCELLANEOUS DETAILS	08-06-2012
T-20	TEMPORARY TERMINATION OF EXPRESSWAY & FREEWAY FACILITIES	08-06-2012
T-22	TRAFFIC CONTROL FOR PAVEMENT MARKING ON DIVIDED HIGHWAY	08-06-2012
T-23	TRAFFIC CONTROL FOR PAVEMENT MARKING ON DIVIDED HIGHWAY	08-06-2012
T-28	CONSTRUCTION SIGN DETAILS	08-06-2012
T-31	CONSTRUCTION SIGN DETAILS	08-06-2012
T-35	CONSTRUCTION ZONE LONGITUDINAL DROP-OFFS	08-06-2012
T-36	CONSTRUCTION ZONE LONGITUDINAL DROP-OFFS FOR PAVING	08-06-2012
T-40	DELINEATORS AND MILEPOSTS	01-02-2013
T-42	BRIDGE NUMBER PLAQUE	04-09-2014
T-43	FREEWAY - EXPRESSWAY DELINEATOR PLACEMENT	04-09-2014
T-45	SQUARE TUBE SIGN POST AND ANCHOR	01-02-2013

STRUCTURES DETAIL SHEETS

SD-501.00	CONCRETE DETAILS AND NOTES	5/7/2010
SD-502.00	CONCRETE DETAILS AND NOTES	5/7/2010
SD-516.10	BRIDGE JOINT ASHPALTIC PLUG	5/7/2010
SD-601.00	STRUCTURAL STEEL DETAILS AND NOTES	5/7/2010
SD-602.00	STRUCTURAL STEEL PLATE GIRDER DETAILS AND NOTES	5/7/2010

REVISION	DATE	DESCRIPTION	BY
1	12-17-2014	UPDATED SHEET INDEX	JS

AS BUILT "REBAR" DETAIL

LEVEL I	LEVEL II	LEVEL III
TYPE:	TYPE:	TYPE:
GRADE:	GRADE:	GRADE:

TRAFFIC DATA

YEAR	ADT	DHV	% D	% T	ADTT
2015	11500	1500	100	10.5	1200
2035	13900	1900	100	15.5	2200

20 year ESAL for flexible pavement from 2015 to 2035 : 7704000

40 year ESAL for flexible pavement from 2015 to 2055 : 18573000

Design Speed : 65 mph

FINAL HYDRAULIC REPORT

LRFR LOAD RATING FACTORS

LOADING LEVELS	TRUCK						
	H-20	HL-93	3S2	6 AXLE	3A. STR	4A. STR	5A. SEMI
TONNAGE	20	36	36	66	30	34.5	38
INVENTORY	3.07	1.25					
POSTING							
OPERATING	4.00	1.63	2.66	1.60	2.75	2.42	2.40
COMMENTS:							

DESIGN VALUES

1. DESIGN LIVE LOAD		HL-93
2. FUTURE PAVEMENT	d_p:	3.0 INCH
3. DESIGN SPAN	L:	128.00 FT
4. MIN. MID-SPAN POS. CAMBER @ RELEASE (PRESTRESSED UNITS)	Δ:	---
5. PRESTRESSING STRAND (0.375 INCH DIAMETER - LOW RELAX)	f_y:	270 KSI
6. PRESTRESSED CONCRETE STRENGTH	f'_c:	5.0 KSI
7. PRESTRESSED CONCRETE RELEASE STRENGTH	f'_{ci}:	4.0 KSI
8. CONCRETE, HIGH PERFORMANCE CLASS AA	f'_c:	4.0 KSI
9. CONCRETE, HIGH PERFORMANCE CLASS A	f'_c:	4.0 KSI
10. CONCRETE, HIGH PERFORMANCE CLASS B	f'_c:	3.5 KSI
11. CONCRETE, CLASS C	f'_c:	3.0 KSI
12. REINFORCING STEEL	f_y:	60 KSI
13. STRUCTURAL STEEL AASHTO M270 (WEATHERING)	f_y:	50 KSI
14. NOMINAL BEARING RESISTANCE OF SOIL	q_n:	30.4 KSF
15. SOIL BEARING RESISTANCE FACTOR (REFER TO AASHTO LRFD)	ϕ:	0.45
16. NOMINAL BEARING RESISTANCE OF ROCK	q_n:	120.0 KSF
17. ROCK BEARING RESISTANCE FACTOR (REFER TO AASHTO LRFD)	ϕ:	0.45
18. PILE RESISTANCE FACTOR	ϕ:	---
19. LATERAL PILE DEFLECTION	Δ:	---
20. BASIC WIND SPEED	V_{3s}:	---
21. MINIMUM GROUND SNOW LOAD	p_g:	---
22. SEISMIC DATA PGA: 0	S_s:	---
	S_1:	---
23.		---
24.		---
25.		---
26.		---

PROJECT NAME: **HARTFORD**

PROJECT NUMBER: **IM 091-2 (79)**

FILE NAME: **s12a132pi.dgn**
PROJECT LEADER: **K. HIGGINS**
DESIGNED BY: **W. LAMMER**
BRIDGE 43S PRELIMINARY INFORMATION SHEET

PLOT DATE: 12/17/2014
DRAWN BY: **K. FRIEDLAND**
CHECKED BY: **J. SALVATORI**

STATE OF VERMONT
AGENCY OF TRANSPORTATION

PRELIMINARY INFORMATION SHEET (BRIDGE)

Version
LRFD

INDEX OF SHEETS

PLAN SHEETS

STANDARDS LIST

FINAL HYDRAULIC REPORT

TRAFFIC DATA

YEAR	ADT	DHV	% D	% T	ADTT
2015	7600	1200	100	10	1000
2035	9100	1500	100	14.8	1800

20 year ESAL for flexible pavement from 2015 to 2035 : 7165000

40 year ESAL for flexible pavement from 2015 to 2055 : 17331000

Design Speed : 65 mph

AS BUILT "REBAR" DETAIL

LEVEL I	LEVEL II	LEVEL III
TYPE:	TYPE:	TYPE:
GRADE:	GRADE:	GRADE:

LRFR LOAD RATING FACTORS

LOADING LEVELS	TRUCK						
	H-20	HL-93	3S2	6 AXLE	3A. STR.	4A. STR.	5A. SEMI
TONNAGE	**20**	**36**	**36**	**66**	**30**	**34.5**	**38**
INVENTORY	3.21	1.31					
POSTING							
OPERATING	4.16	1.69	2.77	1.67	2.86	2.52	2.50
COMMENTS:							

TRAFFIC MAINTENANCE NOTES

1. MAINTAIN TRAFFIC ON AN OFF SITE DETOUR.
2. TRAFFIC SIGNALS ARE NOT NECESSARY.
3. SIDEWALKS ARE NOT NECESSARY

DESIGN VALUES

1. DESIGN LIVE LOAD		HL-93
2. FUTURE PAVEMENT	d_p:	3.0 INCH
3. DESIGN SPAN	L:	128.00 FT
4. MIN. MID-SPAN POS. CAMBER @ RELEASE (PRESTRESSED UNITS)	Δ:	---
5. PRESTRESSING STRAND (0.375 INCH DIAMETER - LOW RELAX)	f_y:	270 KSI
6. PRESTRESSED CONCRETE STRENGTH	f'_c:	5.0 KSI
7. PRESTRESSED CONCRETE RELEASE STRENGTH	f'_{ci}:	4.0 KSI
8. CONCRETE, HIGH PERFORMANCE CLASS AA	f'_c:	4.0 KSI
9. CONCRETE, HIGH PERFORMANCE CLASS A	f'_c:	4.0 KSI
10. CONCRETE, HIGH PERFORMANCE CLASS B	f'_c:	3.5 KSI
11. CONCRETE, CLASS C	f'_c:	3.0 KSI
12. REINFORCING STEEL	f_y:	60 KSI
13. STRUCTURAL STEEL AASHTO M270 (WEATHERING)	f_y:	50 & 70 KSI
14. NOMINAL BEARING RESISTANCE OF SOIL	q_n:	30.4 KSF
15. SOIL BEARING RESISTANCE FACTOR (REFER TO AASHTO LRFD)	ϕ:	0.45
16. NOMINAL BEARING RESISTANCE OF ROCK	q_n:	120.0 KSF
17. ROCK BEARING RESISTANCE FACTOR (REFER TO AASHTO LRFD)	ϕ:	0.45
18. PILE RESISTANCE FACTOR	ϕ:	---
19. LATERAL PILE DEFLECTION	Δ:	---
20. BASIC WIND SPEED	V_{3s}:	---
21. MINIMUM GROUND SNOW LOAD	p_g:	---
22. SEISMIC DATA PGA : 0	S_s:	---
	S_1:	---
23.		
24.		---
25.		---
26.		---

PROJECT NAME: **HARTFORD**

PROJECT NUMBER: **IM 091-2 (79)**

FILE NAME: **s12a132pi.dgn**
PROJECT LEADER: **K. HIGGINS**
DESIGNED BY: **W. LAMMER**
BRIDGE 43N PRELIMINARY INFORMATION SHEE'

PLOT DATE: 12/16/2014
DRAWN BY: **K. FRIEDLAND**
CHECKED BY: **J. SALVATORI**
SHEET 3 OF 166

GENERAL

1. ALL MATERIALS AND CONSTRUCTION SHALL CONFORM TO THE VERMONT AGENCY OF TRANSPORTATION 2011 STANDARD SPECIFICATIONS FOR CONSTRUCTION, 2012 AASHTO LRFD BRIDGE DESIGN SPECIFICATIONS, AND THEIR LATEST REVISIONS.

2. ON-SITE WORK SHALL NOT OCCUR BETWEEN DECEMBER 1ST AND MARCH 23ST AS PER THE PROJECT SPECIAL PROVISIONS. DEPLOYMENT OF THE SMART WORK ZONE COMPONENTS MAY BE INITIATED PRIOR TO MARCH 23RD.

3. THE CONTRACTOR WILL BE ALLOWED TO CLOSE EACH BRIDGE FOR ONE WEEKEND (TWO CONSECUTIVE DAYS), BEGINNING ON A FRIDAY AT 6PM AND ENDING THE FOLLOWING MONDAY AT 6 AM, TO PERFORM REPLACEMENT OF THE EXISTING SUPERSTRUCTURE. DURING EACH BRIDGE CLOSURE PERIOD (BCP) THE CONTRACTOR WILL BE ALLOWED TO WORK 24 HOURS PER DAY. APPROVED CLOSURE DATES AND FURTHER INFORMATION & REQUIREMENTS ARE IDENTIFIED IN THE PROJECT SPECIAL PROVISIONS.

4. FOR INFORMATION REGARDING UTILITIES, SEE THE PROJECT SPECIAL PROVISIONS.

5. ALL DIMENSIONS SHOWN IN THE PLANS ARE HORIZONTAL OR VERTICAL AND ARE GIVEN AT 68 DEGREES FAHRENHEIT, UNLESS NOTED OTHERWISE

6. ALL PRECAST CONCRETE ELEMENTS ARE TO BE FABRICATED TO THE SPECIFIED DIMENSIONS WITHIN THE TOLERANCES DICTATED IN THE PRECAST/PRESTRESSED CONCRETE INSTITUTE TOLERANCE MANUAL FOR PRECAST AND PRESTRESSED CONCRETE CONSTRUCTION, MNL 135-00, AND ITS LATEST REVISIONS.

7. THE CONTRACTOR IS RESPONSIBLE FOR MAINTANANCE OF THE BRIDGES AND APPROACHES TO THE SATISFACTION OF THE ENGINEER ONCE THEY BEGIN ANY DEMOLITION/DECONSTRUCTION OF THE EXISTING BRIDGE OR ITS COMPONENTS PRIOR TO THE BRIDGE CLOSURE PERIOD. EXAMPLES OF SUCH ACTIVITIES INLCUDE, BUT ARE NOT LIMITED TO SAWCUTTING, PAVEMENT REMOVAL, AND EXCAVATION OF THE EXISTING ROADWAY SUBBASE.

8. ORIGINAL GROUND ELEVATIONS ARE BASED ON LIDAR DATA SUPPLEMENTED BY GROUND SURVEY ON AND BELOW THE EXISTING BRIDGES. THE CONTRACTOR SHALL VERIFY ALL EXISTING ELEVATIONS AND NOTIFY THE RESIDENT ENGINEER OF ANY DISCREPANCIES.

EARTHWORK AND RELATED ITEMS

9. REMOVAL OF THE EXISTING SUPERSTRUCTURES SHALL BE PAID FOR UNDER ITEM 529.20 "PARTIAL REMOVAL OF STRUCTURE (SUPERTRUCTURE 43S)" OR ITEM 529.20 "PARTIAL REMOVAL OF STRUCTURE (SUPERTRUCTURE 43N)" AS APPLICABLE.

10. REMOVAL OF THE EXISTING SUBSTRUCTURES TO THE ELEVATIONS SPECIFIED IN THE PLANS SHALL BE PAID FOR UNDER ITEM 529.20 "PARTIAL REMOVAL OF STRUCTURE (SUBSTRUCTURE 43S)" OR ITEM 529.20 "PARTIAL REMOVAL OF STRUCTURE (SUBSTRUCTURE 43N)" AS APPLICABLE.

11. THE COST OF BEDROCK EXCAVATION SHALL BE PAID UNDER ITEM 204.25,"STRUCTURE EXCAVATION". ALL OVERBREAKAGE SHALL BE REPLACED WITH "CONCRETE, CLASS C". A MAXIMUM OF 6 INCHES AVERAGE OVERBREAKAGE DEPTH SHALL BE PAID FOR. ANY ADDITIONAL BEDROCK EXCAVATION OR CONCRETE SHALL BE AT THE CONTRACTOR'S EXPENSE. REFER TO "TYPICAL EARTHWORK SECTION FOR ABUTMENT ON SPREAD FOOTING" ON SHEET "TYPICAL SECTIONS 2".

STRUCTURAL STEEL

12. THE EXISTING STRUCTURAL STEEL IS PAINTED WITH A MATERIAL THAT MAY CONTAIN LEAD. THE CONTRACTOR SHALL FOLLOW ALL APPLICABLE REGULATIONS WHEN HANDLING AND WORKING WITH THIS STEEL. THE REMOVED STRUCTURAL STEEL IS THE PROPERTY OF THE CONTRACTOR. THE CONTRACTOR SHALL INDEMNIFY AND HOLD THE STATE, ITS OFFICERS, AND EMPLOYEES HARMLESS CONCERNING THE CONTRACTOR'S USE OR DISPOSITION OF THE REMOVED EXISTING STRUCTURAL STEEL.

13. THE BOTTOM FLANGE OF THE GIRDERS FOR BRIDGE 43N SHALL CONFORM TO ASTM A709 GRADE HPS 70W AND SHALL BE PAID UNDER SPECIAL PROVISION (STRUCTURAL STEEL, PLATE GIRDER, GRADE HPS 70W). ALL OTHER STRUCTURAL STEEL SHALL CONFORM TO AASHTO M270/M270M GRADE 50W AND SHALL BE PAID FOR UNDER ITEM 506.55, "STRUCTURAL STEEL (PLATE GIRDER)".

14. STRUCTURAL STEEL MEMBERS DESIGNATED "CVN" IN THE PLANS SHALL BE CHARPY V-NOTCH TESTED IN ACCORDANCE WITH SUBSECTION 714.01 OF THE STANDARD SPECIFICATIONS.

15. ALL FIELD CONNECTIONS SHALL BE MADE USING 7/8 INCH DIAMETER HIGH-STRENGTH BOLTS. UNLESS OTHERWISE NOTED, HOLE DIAMETER SHALL BE 15/16 INCH. ANY CONNECTIONS NOT DESIGNATED SHALL BE DETAILED BY THE FABRICATOR AND SUBMITTED TO THE PROJECT MANAGER FOR APPROVAL.

16. AFTER THE GIRDERS HAVE BEEN ERECTED, ELEVATIONS SHALL BE TAKEN ALONG THE TOP OF THE GIRDERS AS DIRECTED BY THE RESIDENT ENGINEER, FOR USE IN DETERMINING HEIGHT OF DECK PANEL BEDDING STRIPS. AFTER THE DECK PANELS HAVE BEEN SET AND BEFORE THE GROUT BED IS PLACED, THE CONTRACTOR SHALL RE-PROFILE THE TOP FLANGES OF THE GIRDERS AS DIRECTED BY THE RESIDENT ENGINEER, FOR USE IN DETERMINING SCREED RAIL ELEVATIONS AND CHAIR HEIGHTS FOR REINFORCING STEEL.

17. FLEMING BRACKETS OR SIMILAR FALSEWORK SHALL BE PLACED AT A MAXIMUM SPACING OF 4 FEET. THE BRACKETS SHALL BEAR NEAR THE BOTTOM FLANGE AND IN NO CASE SHALL THEY BEAR ABOVE THE BOTTOM QUARTER OF THE WEB. THE DESIGN OF FALSEWORK SHALL BE THE RESPONSIBILITY OF THE CONTRACTOR.

18. ANY BOLT HOLES IN THE WEBS OF FASCIA GIRDERS NOT OTHERWISE FILLED SHALL BE FILLED WITH BUTTON HEAD OR HEX HEAD BOLTS. THE BOLTS SHALL BE TIGHTENED IN ACCORDANCE WITH SUBSECTION 506.19 OF THE STANDARD SPECIFICATIONS.

19. GIRDER WEBS AND DIAPHRAGMS SHALL BE PLUMB IN FINAL POSITION. GIRDER ENDS SHALL BE VERTICAL IN FINAL POSITION.

20. THE CONTRACTOR IS RESPONSIBLE FOR LOCATING THE BEARING STIFFENERS FOR THE LATERAL SLIDE SUPPORT.

CONCRETE

21. SUBSTRUCTURE CONCRETE SHALL BE HIGH PERFORMANCE CLASS B AND SHALL BE PAID FOR UNDER ITEM 501.34, "CONCRETE, HIGH PERFORMANCE CLASS B".

22. DECK (INCLUDING CURTAIN WALLS AND APPROACH SLAB BRACKETS) AND CURB CONCRETE SHALL BE HIGH PERFORMANCE CLASS A AND SHALL BE PAID FOR UNDER ITEM 501.33, "CONCRETE, HIGH PERFORMANCE CLASS A".

23. APPROACH SLABS SHALL BE PRECAST CONCRETE PAID FOR UNDER ITEM 900.645, (SPECIAL PROVISION CONTRACTOR-FABRICATED PRECAST CONCRETE STRUCTURE)(APPROACH SLAB #1)- (APPROACH SLAB #4) AS APPROPRIATE.

24. CONCRETE FOR SUBFOOTING SHALL BE PAID FOR UNDER ITEM 541.30, "CONCRETE, CLASS C". PAYMENT FOR SUBFOOTING CONCRETE WILL BE MADE ONLY FOR CONCRETE WITHIN THE LIMITS FOR SUBFOOTING SHOWN ON THE PLANS.

25. CONCRETE FOR THE PREFABRICATED APPROACH SLAB CLOSURE POURS SHALL MEET THE REQUIREMENTS OF ITEM 900.608 "SPECIAL PROVISION (HIGH PERFORMANCE CONCRETE, RAPID SET)".

26. SURFACES OF BRIDGE SEATS UNDER BEARING DEVICES SHALL BE LEVEL. ALL OTHER AREAS OF BRIDGE SEATS SHALL BE SLOPED 1/2 INCH PER FOOT TOWARDS MIDSPAN. THE ENTIRE BRIDGE SEAT SURFACE SHALL BE GIVEN A FLOAT FINISH.

27. CONCRETE PORTIONS OF ABUTMENTS AND WINGWALLS ABOVE ADJACENT BRIDGE SEAT ELEVATIONS SHALL NOT BE PLACED UNTIL FINISH GRADES HAVE BEEN DETERMINED BY THE RESIDENT ENGINEER.

28. THE DECK IS TO BE POURED IN ONE CONTINUOUS POUR WITH A MAXIMUM DURATION OF EIGHT HOURS. IF CIRCUMSTANCES BEYOND THE CONTRACTOR'S CONTROL PREVENT THIS FROM BEING ACCOMPLISHED, A TRANSVERSE CONSTRUCTION JOINT SHALL BE USED BETWEEN ADJACENT POURS. A MINIMUM 96 HOUR DELAY BETWEEN ADJACENT POURS SHALL BE OBSERVED.

29. THE MINIMUM APPROACH SLAB JOINT DESIGN STRENGTH IS 4,000 PSI, WHICH SHALL BE OBTAINED PRIOR TO LOADING THE APPROACH SLABS. (REFER TO SPECIAL PROVISIONS)

30. CORRUGATED POST-TENSIONING DUCTS IN THE PRECAST APPROACH SLABS FOR DOWEL CONNECTIONS SHALL BE CONSTRUCTED FROM EITHER POLYETHYLENE OR POLYPROPYLENE. THE DUCT SHALL HAVE A MINIMUM MATERIAL THICKNESS OF 0.080 IN. +/- 0.010 IN. AND SHALL HAVE A WHITE COATING ON THE OUTSIDE OR SHALL BE OF WHITE MATERIAL WITH ULTRAVIOLET STABILIZERS ADDED. POLYETHYLENE DUCT SHALL BE FABRICATED FROM RESINS MEETING OR EXCEEDING THE REQUIREMENTS OF ASTM D 3350 WITH A CELL CLASSIFICATION OF 345464A. POLY PROPYLENE DUCT SHALL BE FABRICATED FROM RESINS MEETING OR EXCEEDING THE REQUIREMENTS OF ASTM D 4101 WITH A CELL CLASSIFICATION RANGE OF PP0340B44544 TO PP0340B65884. ALL COSTS ASSOCIATED WITH PLACING THE DUCTS SHALL BE INCLUDED IN THE BID PRICE FOR EACH 900.645, "SPECIAL PROVISION, (CONTRACTOR-FABRICATED PRECAST CONCRETE STRUCTURE)" CONTRACT ITEM AS APPROPRIATE.

31. GROUT USED TO FILL CORRUGATED POST-TENSIONING DUCTS IN THE PRECAST APPROACH SLABS FOR DOWEL CONNECTIONS SHALL BE MORTAR, TYPE IV IN ACCORDANCE WITH SECTION 540 – PRECAST CONCRETE. ALL COSTS ASSOCIATED WITH PROVIDING AND PLACING GROUT FOR APPROACH SLAB DOWEL CONNECTIONS SHALL BE INCLUDED IN THE BID PRICE FOR ITEM 900.645, SPECIAL PROVISION (CONTRACTOR-FABRICATED PRECAST CONCRETE STRUCTURE)(APPROACH SLAB #1)- (APPROACH SLAB #4) AS APPROPRIATE.

32. WATER REPELLENT, SILANE SHALL BE APPLIED TO ALL EXPOSED CONCRETE SURFACES, EXCEPT THE UNDERSIDE OF THE DECK BETWEEN DRIP NOTCHES.

33. JOINTS AND SCORE MARKS IN CONCRETE SHALL BE CONSTRUCTED AS SHOWN IN THE PLANS OR AS DIRECTED BY THE RESIDENT ENGINEER.

34. THE KEY IN CONCRETE CONSTRUCTION JOINTS SHALL BE MONOLITHIC AND CONTINUOUS FOR THE FULL LENGTH OF THE JOINT.

35. ALL REINFORCING STEEL IN THE CAST IN PLACE CONCRETE DECK, BACKWALL, AND WINGWALLS ABOVE THE HORIZONTAL CONSTRUCTION JOINT SHALL MEET THE REQUIREMENTS FOR LEVEL III CORROSION RESISTANCE, AND BE PAID FOR UNDER ITEM 507.13, "REINFORCING STEEL, LEVEL III".

36. ALL REINFORCING STEEL IN THE BRIDGE RAILING SHALL MEET THE REQUIREMENTS FOR LEVEL III CORROSION RESISTANCE, AND BE INCLUDED IN THE UNIT PRICE FOR ITEM 525.70, "BRIDGE RAILING, CONCRETE F-SHAPE".

37. ALL REINFORCING STEEL IN THE PRECAST PRESTRESSED DECK PANELS SHALL MEET THE REQUIREMENTS FOR LEVEL III CORROSION RESISTANCE, AND BE INCLUDED IN THE UNIT PRICE FOR ITEM 900.670, SPECIAL PROVISION (PRECAST PRESTRESSED CONCRETE DECK PANEL)(3 ½").

38. ALL REINFORCING STEEL IN THE PRECAST APPROACH SLABS SHALL MEET THE REQUIREMENTS OF LEVEL II CORROSION RESISTANCE OR HIGHER, AND BE INCLUDED IN THE UNIT PRICE FOR ITEM 900.645, SPECIAL PROVISION (CONTRACTOR-FABRICATED PRECAST CONCRETE STRUCTURE)(APPROACH SLAB #1)- (APPROACH SLAB #4) AS APPROPRIATE.

39. ALL REINFORCING STEEL IN THE ABUTMENT FOOTINGS, STEM, WINGWALLS BELOW THE HORIZONTAL CONSTRUCTION JOINT, AND THE INDEPENDENT RETAINING WALLS SHALL MEET THE REQUIREMENTS FOR LEVEL I CORROSION RESISTANCE, AND BE PAID FOR UNDER ITEM 507.11, "REINFORCING STEEL, LEVEL I".

40. CUTTING AND REPAIRING DAMAGED AREAS OF COATED REINFORCING STEEL SHALL BE PERFORMED IN ACCORDANCE WITH SUBSECTION 507.04 OF THE STANDARD SPECIFICATIONS.

41. MINIMUM COVER FOR REINFORCING STEEL SHALL BE AS INDICATED IN THE PLANS.

42. REINFORCING STEEL PLACEMENT TOLERANCES SHALL BE:
    SPACING: +/- 1 INCH
    CLEARANCE: +/- 1/4 INCH

PRECAST PRESTRESSED DECK PANELS

43. DESIGN VALUES:
    a. CONCRETE COMPRESSIVE STRENGTH: f'c = 5 KSI
    b. CONCRETE COMPRESSIVE STRENGTH AT RELEASE: f'ci = 4 KSI
    c. PRESTRESSING STRANDS: 0.375 INCH DIAMETER, 270 KSI, LOW-RELAXATION 7-WIRE STRANDS
    d. JACKING FORCE PER PRESTRESSING STRAND = 17.2 KIPS
    e. ASSUMED MODULUS OF ELASTICITY FOR THE STRAND IS 28,500 KSI.

44. BEDDING STRIPS ACTING AS TEMPORARY SUPPORTS FOR THE PANELS SHALL BE CUT TO THE REQUIRED HEIGHT AFTER THE GIRDERS HAVE BEEN ERECTED AND PROFILED.

45. THE MINIMUM HEIGHT OF THE BEDDING STRIPS IS 1". IF THIS CANNOT BE MET, THE PROFILE GRADE MUST BE ADJUSTED.

46. BEDDING STRIPS SHALL BE HIGH-DENSITY EXTRUDED POLYSTYRENE WITH A MINIMUM COMPRESSIVE STRENGTH OF 60 PSI MEETING THE REQUIREMENTS OF SUBSECTION 735.01.

47. BEDDING STRIPS SHALL BE ATTACHED TO THE TOP FLANGE OF THE GIRDERS WITH AN APPROVED HIGH STRENGTH ADHESIVE. THE ADHESIVE SHALL BE ALLOWED TO CURE PER THE MANUFACTURER'S INSTRUCTIONS BEFORE SETTING PANELS.

48. TEMPORARY BRACING BETWEEN PANELS SHALL BE PROVIDED AS REQUIRED TO PREVENT PANEL MOVEMENT TRANSVERSE TO THE GIRDERS.

49. PANELS SHALL NOT BE USED TO SUPPORT HEAVY LOADS UNTIL THE FULL DECK IS CAST AND CURED.

50. THE GROUT BED SUPPORTING THE PANELS SHALL BE ALLOWED TO CURE FOR A MINIMUM OF 3 DAYS PRIOR TO PLACING THE CONCRETE DECK.

PROJECT NAME: HARTFORD	
PROJECT NUMBER: IM 091-2(79)	
FILE NAME: sl2al32gen.dgn	PLOT DATE: 15-DEC-2014
PROJECT LEADER: K. HIGGINS	DRAWN BY: R. KLINEFELTER
DESIGNED BY: W. LAMMER	CHECKED BY: W. LAMMER
GENERAL NOTES SHEET 1	SHEET 4 OF 166

51. THE CONTRACTOR IS ADVISED THAT DURING THE PLACEMENT OF CONCRETE FOR THE TOP PORTION OF THE DECK, THE EXTERIOR GIRDERS MAY DEFLECT MORE THAN THE INTERIOR GIRDERS DUE TO THE PANEL DEAD LOAD DISTRIBUTION. ADJUSTMENTS TO THE SCREED MACHINE MAY BE NECESSARY TO ACCOUNT FOR THIS.

52. MORTAR, TYPE IV WITH EXPANSIVE ADDITIVES THAT REQUIRE ALL SURFACES TO BE CONFINED SHALL NOT BE USED FOR THE GROUT BEDS UNLESS THE CONTRACTOR PROVIDES A METHOD AND MEANS FOR CONFINEMENT THAT IS ACCEPTABLE TO THE ENGINEER.

53. IF THE CONTRACTOR ELECTS TO USE A TYPE IV MORTAR THAT IS NOT ON THE APPROVED PRODUCTS LIST OR OF THE STATED FORMULATION IN SECTION 707.03, THEN THE MIX MUST MEET 707.03 MORTAR, TYPE IV (c) PERFORMANCE REQUIREMENTS. SECTION 707.03(c)(2) MAY BE OMITTED IF THE MATERIAL WILL NOT HAVE DIRECT EXPOSURE TO MOISTURE IN FREEZE-THAW CONDITIONS. TESTING SHALL BE DONE BY AN INDEPENDENT LABORATORY ACCREDITED BY AMRL IN AASHTO T106 OR ASTM C109 AND IS CAPABLE OF PERFORMING ASTM C1090 AND AASHTO T106 (MODIFIED PER VAOT) OR ASTM C666 (MODIFIED PER VAOT). THE MIX SHALL BE TESTED AT THE MAXIMUM WATER/CEMENTIOUS RATIO.

54. ALL COSTS ASSOCIATED WITH PROVIDING AND PLACING BEDDING STRIPS AND MORTAR FOR GROUT BEDS SHALL BE INCLUDED IN THE BID PRICE FOR ITEM 900.670, SPECIAL PROVISION (PRECAST PRESTRESSED CONCRETE DECK PANEL)(3 ½").

GEOTECHNICAL INFORMATION

GEOTECHNICAL DESIGN PARAMETERS	SOIL	ROCK
NOMINAL BEARING RESISTANCE (KSF)	30.4	120.0
BEARING RESISTANCE FACTOR	0.45	0.45
RET. WALL FOUNDATION SOIL, UNIT WEIGHT (PCF)	125	---
RET. WALL FOUNDATION SOIL, FRICTION ANGLE (DEGREES)	40	---
GRANULAR BACKFILL FOR STRUCTURES, UNIT WEIGHT (PCF)	140	---
GRANULAR BACKFILL FOR STRUCTURES, FRICTION ANGLE (DEGREES)	34	---
EARTH PRESSURE COEFFICIENT, ACTIVE	0.28	---

SUBSTRUCTURES ON MICROPILES

55. ABUTMENTS #1 - #3 WILL BE CONSTRUCTED ON MICROPILES.

56. NO MICROPILE LOAD TESTING IS REQUIRED BASED ON THIS DESIGN.

57. THE MICORPILES SHALL BE TYPE A MICROPILES, GROUTED UNDER GRAVITY HEAD ONLY.

58. PLUNGE LENGTH, SEATING LENGTH AND UNCASED LENGTH SHALL BE IN COMPETENT ROCK.

59. THE BATTERED PILES SHALL INCLUDE A PLUNGE LENGTH. THIS PLUNGE LENGTH IS PART OF THE BOND ZONE. GROUT SHALL SURROUND THE CASING IN AN OVERSIZED HOLE FOR THE PLUNGE LENGTH.

60. GROUT SHALL HAVE A MINIMUM 28 DAY COMPRESSIVE STRENGTH OF 4500 PSI WHEN TESTED IN ACCORDANCE WITH AASHTO T106.

61. BEARING PLATES SHALL MEET THE REQUIREMENTS OF ASTM A709 GRADE 50.

62. THE #14 THREADED STEEL BAR SHALL HAVE A MINIMUM YIELD STRENGTH OF 75 KSI.

63. STATIC LOADS, SUCH AS FORMS, REINFORCING STEEL, OR OTHER MATERIALS NECESSARY FOR CONSTRUCTION, SHALL NOT BE PLACED ON THE MICROPILES UNTIL THE GROUT HAS OBTAINED A COMPRESSIVE STRENGTH OF 2000 PSI .

64. MICROPILE DESIGN VALUES:

	MAXIMUM FACTORED COMPRESSIVE AXIAL LOAD	
ABUTMENT	FRONT ROW (BATTERED)	BACK ROW (PLUMB)
ABUT 1	392 KIPS	128 KIPS
ABUT 2	503 KIPS	121 KIPS
ABUT 3	444 KIPS	179 KIPS

SUBSTRUCTURES ON BEDROCK

65. IT IS ANTICIPATED THAT BEDROCK WILL BE ENCOUNTERED AT ABUTMENT #4.

66. ABUTMENT #4 HAS BEEN DESIGNED FOR THE FOOTING ELEVATIONS SHOWN ON THE PLANS. THE INTENTION IS TO USE SUBFOOTINGS OF CONCRETE, CLASS "C" IN AREAS WHERE THE LEDGE IS MORE THAN 6 INCHES BELOW THE DESIGN BOTTOM OF FOOTING ELEVATIONS.

67. UPON COMPLETION OF THE EXCAVATION FOR SUBSTRUCTURES FOUNDED ON BEDROCK, AND PRIOR TO PLACING FORMWORK, THE RESIDENT ENGINEER SHALL NOTIFY PROJECT MANAGER AND THE VTRANS GEOLOGIST. THE SOILS AND FOUNDATION ENGINEER WILL DETERMINE IF THE BEDROCK IS COMPETENT TO OBTAIN THE NOMNAL BEARING RESISTANCE AS SHOWN ON THE PLANS. FIVE (5) WORKING DAYS FROM NOTICIFCATION SHALL BE ALLOWED TO MAKE THE INSPECTION AND THE DETERMINATION FOR THE COMPETENCY OF THE BEDROCK.

68. ONCE THE ELEVATION OF THE COMPETENT BEDROCK HAS BEEN DETERMINED, THE CONTRACTOR SHALL PROVIDE A BEDROCK PROFILE TO THE PROJECT MANAGER IN ORDER TO DETERMINE WHETHER THE DESIGN BOTTOM OF FOOTING ELEVATION SHALL BE LOWERED, AND WHETHER A SUBFOOTING SHALL BE REQUIRED. FOOTING ELEVATIONS SHALL NOT BE ADJUSTED WITHOUT APPROVAL OF THE PROJECT MANAGER. THREE (3) WORKING DAYS FROM RECEIPT OF THE BEDROCK PROFILE SHALL BE ALLOWED TO MAKE THIS DETERMINATION. NO WORK SHALL BE DONE ON THE FOOTINGS UNTIL A REPLY IS RECEIVED. THE MAXIMUM TOP OF FOOTING ELEVATION IS 548.00 FEET.

69. FOOTINGS OR SUBFOOTINGS FOR SUBSTRUCTURES FOUNDED ON BEDROCK SHALL BE PLACED ON CLEAN COMPETENT ROCK. ALL LOOSE ROCK AND DEBRIS SHALL BE REMOVED.

70. THE LIMITS OF ANY SUBFOOTING SHALL BE 1'-0" OUTSIDE OF THE HORIZONTAL LIMITS OF THE FOOTING. THE TOP SURFACE OF THE SUBFOOTING SHALL BE INTENTIONALLY ROUGHENED TO 1 / 4" AMPLITUDE TO HELP PREVENT SLIDING AT THE SUBFOOTING/FOOTING INTERFACE.

71. DOWELS SHALL BE DRILLED AND GROUTED INTO BEDROCK AS SHOWN ON THE PLANS. THE DOWELS SHALL HAVE A 2'-0" MINIMUM EMBEDMENT INTO COMPETENT BEDROCK AND SHALL EXTEND INTO THE FOOTING A MINIMUM OF 1'-6". IF A SUBFOOTING IS REQUIRED THE DOWELS SHALL EXTEND THROUGH THE SUBFOOTING INTO THE FOOTING. THE DOWELS SHALL MEET THE REQUIREMENTS FOR LEVEL III CORROSION RESISTANCE, AND BE PAID FOR UNDER ITEM 507.13, "REINFORCING STEEL, LEVEL III". VTRANS WILL PAY FOR 2 LINEAR FEET OF DRILLING AND GROUTING INTO BEDROCK AT EACH DOWEL LOCATION. IF THE CONTRACTOR ELECTS TO DRILL THE DOWELS THROUGH THE SUBFOOTING, IT WILL BE AT THEIR OWN EXPENSE.

72. ANY CONCRETE REQUIRED FOR SUBFOOTINGS SHALL BE PAID FOR AS ITEM 541.30 "CONCRETE, CLASS C". AN ESTIMATED QUANTITY OF CLASS C CONCRETE HAS BEEN INCLUDED IN THESE PLANS.

TRAFFIC CONTROL

73. THE CONTRACTOR SHALL BE RESPONSIBLE FOR SUPPLYING A SITE SPECIFIC TRAFFIC CONTROL PACKAGE IDENTIFYING CONSTRUCTION ACTIVITIES BEFORE, DURING, AND AFTER THE BRIDGE CLOSURE PERIOD. THE CONTRACTOR SHALL SUBMIT A DETAILED TRAFFIC CONTROL PLAN TO THE ENGINEER FOR ALL STAGES OF CONSTRUCTION, FOR APPROVAL PER SUBSECTION 105.03. ALL COSTS SHALL BE INCLUDED IN ITEM 641.10 "TRAFFIC CONTROL (I-91 NORTHBOUND)", ITEM 641.10 "TRAFFIC CONTROL (I-91 SOUTHBOUND)" AND ITEM 641.10 "TRAFFIC CONTROL (US RT 5)".

74. ALL ITEMS REQUIRED TO IMPLEMENT THE CONTRACTOR'S TRAFFIC CONTROL PLAN WILL NOT BE PAID FOR DIRECTLY BUT WILL BE CONSIDERED INCLUDED IN THE BID PRICE FOR ITEM 641.10 "TRAFFIC CONTROL (I-91 NORTHBOUND)", ITEM 641.10 "TRAFFIC CONTROL (I-91 SOUTHBOUND)" AND ITEM 641.10 "TRAFFIC CONTROL (US RT 5)". THOSE ITEMS ARE BUT NOT LIMITED TO:

- TYPE III BARRICADES
- TYPE III BARRICADES (MOD.)
- RETROREFLECTIVE PLASTIC DRUMS
- TRAFFIC CONES
- TEMPORARY PAVEMENT MARKINGS
- PAVEMENT MARKING REMOVAL
- TRAFFIC SIGNS, TYPE A
- SQUARE TUBE SIGN POST AND ANCHOR
- CHANNELIZING DEVICES
- ENERGY ABSORPTION ATTENUATOR
- SOLID BARRIER FENCE

75. ALL SIGNING SHALL BE IN ACCORDANCE WITH THE LATEST EDITION OF THE MUTCD. FOR ADDITIONAL SIGNING INSTRUCTIONS SEE THE T SERIES OF THE STANDARDS. WHERE CONFLICTS EXIST, THE MUTCD SHALL GOVERN.

76. THE CONTRACTOR SHALL ERECT AND MAINTAIN ALL TEMPORARY ON AND OFF PROJECT SIGNS AND TRAFFIC CONTROL DEVICES AS SHOWN IN THE PLANS AND DIRECTED BY THE ENGINEER. PAYMENT FOR THIS WORK SHALL BE CONSIDERED INCIDENTAL TO ITEM 641.10 "TRAFFIC CONTROL (I-91 NORTHBOUND)", ITEM 641.10 "TRAFFIC CONTROL (I-91 SOUTHBOUND)" AND ITEM 641.10 "TRAFFIC CONTROL (US RT 5)".

77. FULL ACCESS TO ALL SIDE ROAD AND DRIVES WITHIN THE PROJECT LIMITS SHALL BE MAINTAINED AT ALL TIMES. THIS WORK SHALL BE CONSIDERED INCIDENTAL TO ITEM 641.10 "TRAFFIC CONTROL (US RT 5)".

78. THE QUANTITY OF ITEM 621.90 TEMPORARY TRAFFIC BARRIER WAS CALCULATED BASED ON THE MAXIMUM AMOUNT OF BARRIER NECESSARY AT ANY ONE TIME DURING THE PROJECT DURATION. RE-USE OF THIS BARRIER FOR SUBSEQUENT PHASES OF CONSTRUCTION SHALL BE PAID AS ITEM 621.95 "REMOVE AND RESET TEMPORARY TRAFFIC BARRIER".

79. CONTINGENCY PLANS ARE PROVIDED IN THE TRANSPORTATION MANAGEMENT PLAN. IN THE EVENT OF AN INCIDENT IN THE WORK ZONE, THE CONTRACTOR SHALL IMPLEMENT THE APPROPRIATE CONTINGENCY PLAN WITHIN 30 MINUTES OF THE INCIDENT. ALL ITEMS ASSOCIATED WITH THE CONTINGENCY PLAN WILL BE PAID UNDER THE APPROPRIATE TRAFFIC CONTROL ITEM.

80. DURING EACH BRIDGE BCP A TOW TRUCK WILL BE ONSITE TO IMMEDIATELY REMOVE ANY DISABLED VEHICLES WITHIN THE PROJECT AREA. ALL COSTS SHALL BE INCLUDED IN ITEMS 641.10 TRAFFIC CONTROL (I-91 NORTHBOUND) AND TRAFFIC CONTROL (I-91 SOUTHBOUND)

81. A UTO SHALL BE STATIONED AT THE VA MEDICAL CENTER ENTRANCE (VETERANS DRIVE) AND US 5 WEEKDAYS FROM 4:00PM TO 5:00PM FOR THE DURATION OF THE PROJECT OR AS DIRECTED BY THE ENGINEER.

82. A UTO SHALL BE STATIONED AT THE INTERSECTION OF I-91 NORTHBOUND RAMPS AND US5 DURING THE DAYLIGHT HOURS FOR THE DURATION OF THE PROJECT OR AS DIRECTED BY THE ENGINEER.

83. SEE SPECIAL PROVISIONS FOR RESTRICTIONS ON TRAFFIC DELAYS.

84. A SOLID BARRIER FENCE SHALL BE INSTALLED DIRECTLY ON TOP OF THE TEMPORARY BARRIER ON EITHER SIDE OF US 5. THE FENCE SHALL HAVE A MINIMUM HEIGHT OF 6'-0".THIS WORK SHALL BE CONSIDERED INCIDENTAL TO ITEM 641.10 "TRAFFIC CONTROL (US RT 5)".

PEDESTRIAN TRAFFIC CONTROL

85. THE CONTRACTOR SHALL PROTECT PEDESTRIAN THROUGH MOVEMENTS FROM ONE END OF THE CONSTRUCTION AREA TO THE OTHER, ON AT LEAST ONE SIDE OF US 5 DURING CONSTRUCTION ALL TIMES WITH THE EXCEPTION OF EACH BCP. ALL COSTS SHALL BE INCLUDED IN ITEM 900.645, "SPECIAL PROVISION (PUBLIC PROTECTION FOR BRIDGE PROJECTS)".

86. THE SITE SPECIFIC TRAFFIC CONTROL PLANS FOR US 5 WILL INCLUDE ALL SIGNAGE FOR PEDESTRIAN MOBILITY. THIS WORK SHALL BE CONSIDERED INCIDENTAL TO ITEM 641.10 "TRAFFIC CONTROL (US RT 5)".

87. MAXIMUM PEDESTRIAN MOBILITY DELAYS SHALL BE AS IDENTIFIED IN THE SPECIAL PROVISIONS FOR TEMPORARY TRAFFIC DELAYS.

88. DURING EACH BCP, A SHUTTLE SHALL TRANSPORT PEDESTRIANS THRU THE WORK ZONE. THIS WORK SHALL BE PAID FOR UNDER ITEM 900.650 SPECIAL PROVISION (PEDESTRIAN SHUTTLE)(N.A.B.I.).

TEMPORARY TRAFFIC SIGNALS

89. THE BURN IN TIME FOR THE TEMPORARY SIGNALS SHALL BE REDUCED TO A WEEKEND FROM FRIDAY 6PM TO MONDAY 6AM. PCMS SHALL BE PLACED PRIOR TO SIGNALS DURING THE BURN IN TIME WARNING THE TRAVELLING PUBLIC.

90. ALL MATERIALS AND CONSTRUCTION SHALL CONFORM TO THE STATE OF VERMONT AGENCY OF TRANSPORTATION'S (VTrans) "STANDARD SPECIFICATIONS FOR CONSTRUCTION", DATED 2011, WITH CURRENT MODIFICATIONS.

91. TEMPORARY TRAFFIC SIGNAL SYSTEM SHALL BE DESIGNED AND INSTALLED IN ACCORDANCE WITH CONTRACT ITEM 678.40 – TEMPORARY TRAFFIC SIGNAL SYSTEM.

92. DESIGN OF THE SIGNAL SUPPORTS AND ANY REQUIRED GUYING SHALL BE THE RESPONSIBILITY OF THE CONTRACTOR.

93. SIGNAL FACES SHALL BE L.E.D AND CONSIST OF 12" LENSES (RED, YELLOW AND GREEN).

PROJECT NAME: HARTFORD
PROJECT NUMBER: IM 091-2(79)

FILE NAME: sl2al32gen.dgn
PROJECT LEADER: K. HIGGINS
DESIGNED BY: W. LAMMER
GENERAL NOTES SHEET 2

PLOT DATE: 15-DEC-2014
DRAWN BY: R. KLINEFELTER
CHECKED BY: W. LAMMER
SHEET 5 OF 166

94. THE BOTTOM OF THE HOUSING OF A SIGNAL FACE SUSPENDED OVER A ROADWAY SHALL NOT BE LESS THAN 16.5 FEET NOR MORE THAN 19.0 FEET ABOVE THE PAVEMENT GRADE AT THE CENTER OF THE ROADWAY. THE BOTTOM OF A SIGNAL FACE NOT MOUNTED OVER A ROADWAY SHALL NOT BE LESS THAN 8.0 FEET NOR MORE THAN 15.0 FEET ABOVE THE GROUND. CAUTION SHOULD BE USED TO ENSURE COMPLIANCE WITH THE HEIGHT REQUIREMENTS IN THE EVENT THE NEW APPROACH GRADES DIFFER SIGNIFICANTLY FROM THE OLD ROADWAY GRADE.

95. SIGNAL FACES FOR ANY ONE APPROACH SHALL NOT BE LESS THAN 8 FEET APART MEASURED HORIZONTALLY BETWEEN CENTER FACES.

96. SIGNAL HEADS MAY BE HUNG ON A SPAN WIRE OR ON A CANTILEVER MAST ARM. AT LEAST ONE SIGNAL HEAD SHALL BE UNMISTAKABLY IN LINE WITH THE CENTER OF APPROACHING TRAFFIC AT ALL TIMES. THE SECOND SIGNAL HEAD MAY BE POST MOUNTED, LOCATED AT A DISTANCE OF 14.5 FEET FROM THE CENTER OF THE APPROACH LANE WHEN THE STOP BAR IS 40 FEET FROM THE SIGNAL HEAD. CONSULT THE LATEST EDITION OF THE MUTCD FOR ADDITIONAL INFORMATION CONCERNING SIGNAL PLACEMENT.

97. SIGNAL HEAD PLACEMENT IS CRITICAL. HEADS SHALL BE ADJUSTED TO REFLECT LANE LOCATION CHANGES.

98. THE SIGNAL SYSTEM SHALL CONSIST OF POLES, SIGNS AND POSTS, WARNING SIGNS, LUMINAIRES, FLASHING BEACONS, ASSOCIATED PAVEMENT MARKINGS AND SIGNAL EQUIPMENT TO PROVIDE FOR AN ADEQUATE DESIGN. IT ALSO INCLUDES PERMITS AND COSTS ASSOCIATED WITH PROVIDING ELECTRICAL POWER.

99. INSTALL WIRING BETWEEN SIGNAL POLES TO PROVIDE FOR A SAFE INSTALLATION. ATTACHMENT TO UTILITY POLES SHALL BE COORDINATED BY THE CONTRACTOR WITH THE UTILITY COMPANY.

100. PLACE TEMPORARY POLES BEHIND GUARDRAIL OR OUTSIDE OF THE CLEAR ZONE.

101. POLES SUPPORTING SPAN WIRES AND/OR MAST ARMS SHALL BE ADEQUATELY BRACED OR GUYED AND SHALL NOT BE PLACED SO AS TO CREATE A HAZARD TO THE TRAVELING PUBLIC.

102. THE GPS TIME CLOCK INSTALLED AT THE INTERSECTION OF US RT 5 AND SYKES AVE SHALL REMAIN IN PLACE AFTER THE PROJECT IS COMPLETED. THIS WORK SHALL BE INCLUDED IN THE BID PRICE FOR ITEM 900.620 “SPECIAL PROVISION (GPS TIME CLOCK)”.

MISCELLANEOUS

103. EXISTING CONDITIONS SHEET HAS BEEN INCLUDED FOR THE CONTRACTOR TO USE FOR SUBMITTALS.

PROJECT NAME:	HARTFORD
PROJECT NUMBER:	IM 091-2(79)
FILE NAME: sl2al32gen.dgn	PLOT DATE: 15-DEC-2014
PROJECT LEADER: K. HIGGINS	DRAWN BY: R. KLINEFELTER
DESIGNED BY: W. LAMMER	CHECKED BY: W. LAMMER
GENERAL NOTES SHEET 3	SHEET 6 OF 166

STATE OF VERMONT
AGENCY OF TRANSPORTATION

QUANTITY SHEET 1

SUMMARY OF ESTIMATED QUANTITIES

ROADWAY 91S	TRAINING	EROSION CONTROL	BRIDGE 43S	FULL C.E. ITEMS	ROADWAY 91N	BRIDGE 43N	ROADWAY RT 5	ROADWAY COMMON	GRAND TOTAL	FINAL	UNIT	ITEMS	ITEM NUMBER	ROUND
1									1		LS	CLEARING AND GRUBBING, INCLUDING INDIVIDUAL TREES AND STUMPS	201.10	
550					600		1410		2560		CY	COMMON EXCAVATION	203.15	
							240		240		CY	SOLID ROCK EXCAVATION	203.16	
300									300		CY	EXCAVATION OF SURFACES AND PAVEMENTS	203.28	
							70		70		CY	SAND BORROW	203.31	
710					630		430		1770		CY	GRANULAR BORROW	203.32	
					25				25		CY	TRENCH EXCAVATION OF EARTH	204.20	
10					12				22		CY	TRENCH EXCAVATION OF ROCK	204.21	
1									1		CY	TRENCH EXCAVATION OF EARTH, EXPLORATORY (N.A.B.I.)	204.22	
						731.2			731.2		CY	STRUCTURE EXCAVATION (ABUTMENT #4)	204.25	
			1517.7			433.6			1951.3		CY	STRUCTURE EXCAVATION (ABUTMENTS #1- #3)	204.25	
			1305.4		15	1058.7			2379.1		CY	GRANULAR BACKFILL FOR STRUCTURES	204.30	
1000					800		8260		10060		SY	COLD PLANING, BITUMINOUS PAVEMENT	210.10	
190					700				890		LF	MILLED RUMBLE STRIPS	213.10	
960					1050		230		2240		CY	SUBBASE OF DENSE GRADED CRUSHED STONE	301.35	
50					85				135		CY	AGGREGATE SHOULDERS, IN PLACE	402.10	
16					13		60		89		CWT	EMULSIFIED ASPHALT	404.65	
								1	1		LU	PRICE ADJUSTMENT, ASPHALT CEMENT (N.A.B.I.)	406.50	
820					670		1000		2490		TON	SUPERPAVE BITUMINOUS CONCRETE PAVEMENT	490.30	
								1	1		LU	AIR VOIDS PAY ADJUSTMENT (N.A.B.I.)	490.31	
								1	1		LU	MAT DENSITY PAY ADJUSTMENT (N.A.B.I.)	490.32	
			193			177			370		CY	CONCRETE, HIGH PERFORMANCE CLASS A	501.33	
			800			695			1495		CY	CONCRETE, HIGH PERFORMANCE CLASS B	501.34	
						34682			34682		LB	STRUCTURAL STEEL, ROLLED BEAM (W30x90 DIAPHRAGM)	506.50	
			45832						45832		LB	STRUCTURAL STEEL, ROLLED BEAM (W40 x 149 DIAPHRAGM)	506.50	
			229060			139240			368300		LB	STRUCTURAL STEEL, PLATE GIRDER	506.55	
			73436			60744			134180		LB	REINFORCING STEEL, LEVEL I	507.11	
			63317			60310			123627		LB	REINFORCING STEEL, LEVEL III	507.13	
						144			144		LF	DRILLING AND GROUTING DOWELS	507.16	
			100			100			200		EACH	MECHANICAL BAR CONNECTOR	507.19	
			1						1		LS	SHEAR CONNECTORS (2634 EA. - 7/8" X 7")(BRIDGE 43S)	508.15	
						1			1		LS	SHEAR CONNECTORS (3072 EA. - 7/8" X 7")(BRIDGE 43N)	508.15	
			686			656			1342		SY	LONGITUDINAL DECK GROOVING	509.10	
			96			99			195		GAL	WATER REPELLENT, SILANE	514.10	
			100			95			195		LF	BRIDGE EXPANSION JOINT, ASPHALTIC PLUG	516.10	
			100			95			195		LF	JOINT SEALER, HOT POURED	524.11	
			277			277			554		LF	BRIDGE RAILING, CONCRETE F-SHAPE	525.70	
						1			1		EACH	PARTIAL REMOVAL OF STRUCTURE (SUBSTRUCTURE 43N)	529.20	
			1						1		EACH	PARTIAL REMOVAL OF STRUCTURE (SUBSTRUCTURE 43S)	529.20	
						1			1		EACH	PARTIAL REMOVAL OF STRUCTURE (SUPERSTRUCTURE 43N)	529.20	

DETAILED SUMMARY OF QUANTITIES

QUANTITIES	UNIT	ITEMS
		TRAFFIC CONTROL (I-91 NORTHBOUND)
288	SF	TRAFFIC SIGNS, TYPE A
540	LF	SQUARE TUBE SIGN POST AND ANCHOR
1700	LF	TEMPORARY 6 INCH WHITE LINE
1350	LF	TEMPORARY 6 INCH YELLOW LINE
2700	LF	PAVEMENT MARKING MASK
110	TON	TEMPORARY PAVEMENT
250	CY	COMMON EXCAVATION
225	CY	SUBBASE OF DENSE GRADED CRUSHED STONE
370	LF	GRANITE SLOPE EDGING
5	EA	DELINEATOR WITH STEEL POST
5	EA	REMOVAL OF EXISTING DELINEATOR
		TRAFFIC CONTROL (I-91 SOUTHBOUND)
900	SF	TRAFFIC SIGNS, TYPE A
1450	LF	SQUARE TUBE SIGN POST AND ANCHOR
		TRAFFIC CONTROL (US RT 5)
260	SF	TRAFFIC SIGNS, TYPE A
570	LF	SQUARE TUBE SIGN POST AND ANCHOR
3200	LF	TEMPORARY 4 INCH WHITE LINE
2625	LF	TEMPORARY 4 INCH YELLOW LINE
560	LF	TEMPORARY 8 INCH WHITE LINE
150	LF	TEMPORARY 24 INCH STOP BAR
26	EA	TEMPORARY LETTER OR SYMBOL
850	LF	REMOVAL OF EXISTING PAVEMENT MARKINGS

PROJECT NAME: HARTFORD
PROJECT NUMBER: IM 091-2(79)

FILE NAME: sl2al32qs.dgn
PROJECT LEADER: K. HIGGINS
DESIGNED BY: W. LAMMER
QUANTITY SHEET 1

PLOT DATE: 15-DEC-2014
DRAWN BY: K. FRIEDLAND
CHECKED BY: J. SALVATORI
SHEET 7 OF 166

STATE OF VERMONT
AGENCY OF TRANSPORTATION

QUANTITY SHEET 2

SUMMARY OF ESTIMATED QUANTITIES									TOTALS		DESCRIPTIONS			
ROADWAY 91S	TRAINING	EROSION CONTROL	BRIDGE 43S	FULL C.E. ITEMS	ROADWAY 91N	BRIDGE 43N	ROADWAY RT 5	ROADWAY COMMON	GRAND TOTAL	FINAL	UNIT	ITEMS	ITEM NUMBER	ROUND
			1						1		EACH	PARTIAL REMOVAL OF STRUCTURE (SUPERSTRUCTURE 43S)	529.20	
			12			12			24		EACH	BEARING DEVICE ASSEMBLY, ELASTOMERIC PAD W/ EXT. LOAD PLATES	531.18	
						50			50		CY	CONCRETE, CLASS C	541.30	
												BEGIN OPTION AA		
					30				30		LF	18" CSP .064 (2-2/3 X 1/2)	601.0015	
					30				30		LF	18" CAAP .060 (2-2/3 X 1/2)	601.0215	
					30				30		LF	18" PCCSP .079 (2-2/3 X 1/2)	601.0416	
					30				30		LF	18" RCP CLASS III	601.0815	
					30				30		LF	18" CPEP	601.0915	
					30				30		LF	18" CPPP (SL)	601.2815	
												END OPTION AA		
					1				1		EACH	PRECAST REINFORCED CONCRETE DROP INLET WITH CAST IRON GRATE	604.18	
1							1		2		EACH	CHANGING ELEVATION OF DROP INLETS, CATCH BASINS, OR MANHOLES	604.40	
							1		1		EACH	CAST IRON COVER WITH FRAME	604.55	
		280							280		MGAL	DUST CONTROL WITH WATER	609.10	
		2							2		TON	DUST AND ICE CONTROL WITH CALCIUM CHLORIDE	609.15	
90					2				92		CY	STONE FILL, TYPE II	613.11	
							648		648		LF	GRANITE SLOPE EDGING	616.20	
							362		362		LF	VERTICAL GRANITE CURB	616.21	
58					48				106		LF	BITUMINOUS CONCRETE CURB, TYPE A	616.305	
4					2		5		11		EACH	STEEL MARKER POSTS	619.16	
							90		90		LF	REMOVING AND RESETTING FENCE	620.50	
389.5					564.5				954		LF	STEEL BEAM GUARDRAIL, GALVANIZED	621.20	
					58				58		LF	STEEL BEAM GUARDRAIL, GALVANIZED W/8 FEET POSTS	621.205	
					1				1		EACH	MANUFACTURED TERMINAL SECTION, FLARED	621.50	
1					5				6		EACH	ANCHOR FOR STEEL BEAM RAIL	621.60	
4					4				8		EACH	GUARDRAIL APPROACH SECTION TO CONCRETE BRIDGE RAILING, TL-3	621.747	
100					75				175		LF	REMOVE AND RESET GUARDRAIL	621.75	
375					650		300		1325		LF	REMOVAL AND DISPOSAL OF GUARDRAIL	621.80	
					1310		1600		2910		LF	TEMPORARY TRAFFIC BARRIER	621.90	
810									810		LF	REMOVE AND RESET TEMPORARY TRAFFIC BARRIER	621.95	
2250					2250				4500		HR	FLAGGERS	630.15	
				1					1		LS	FIELD OFFICE, ENGINEERS	631.10	
				1					1		LS	TESTING EQUIPMENT, CONCRETE	631.16	
				1					1		LS	TESTING EQUIPMENT, BITUMINOUS	631.17	
				5000					5000		DL	FIELD OFFICE TELEPHONE (N.A.B.I.)	631.26	
	1040								1040		HR	EMPLOYEE TRAINEESHIP	634.10	
								1	1		LS	MOBILIZATION/DEMOBILIZATION	635.11	
					1				1		LS	TRAFFIC CONTROL (I-91 NORTHBOUND)	641.10	
1									1		LS	TRAFFIC CONTROL (I-91 SOUTHBOUND)	641.10	

DETAILED SUMMARY OF QUANTITIES		
QUANTITIES	UNIT	ITEMS

PROJECT NAME: HARTFORD
PROJECT NUMBER: IM 091-2(79)

FILE NAME: sl2al32qs.dgn
PROJECT LEADER: K. HIGGINS
DESIGNED BY: W. LAMMER
QUANTITY SHEET 2

PLOT DATE: 15-DEC-2014
DRAWN BY: K. FRIEDLAND
CHECKED BY: J. SALVATORI
SHEET 8 OF 166

STATE OF VERMONT
AGENCY OF TRANSPORTATION

QUANTITY SHEET 3

SUMMARY OF ESTIMATED QUANTITIES									TOTALS		DESCRIPTIONS				DETAILED SUMMARY OF QUANTITIES		
ROADWAY 91S	TRAINING	EROSION CONTROL	BRIDGE 43S	FULL C.E. ITEMS	ROADWAY 91N	BRIDGE 43N	ROADWAY RT 5	ROADWAY COMMON	GRAND TOTAL	FINAL	UNIT	ITEMS	ITEM NUMBER	ROUND	QUANTITIES	UNIT	ITEMS
							1		1		LS	TRAFFIC CONTROL (US RT 5)	641.10				
2					2		2		6		EACH	PORTABLE CHANGEABLE MESSAGE SIGN	641.15				
							3750		3750		LF	DURABLE 4 INCH WHITE LINE, POLYUREA	646.404				
							4040		4040		LF	DURABLE 4 INCH YELLOW LINE, POLYUREA	646.414				
861					654				1515		LF	DURABLE 6 INCH WHITE LINE, RECESSED POLYUREA	646.426				
550					528				1078		LF	DURABLE 6 INCH YELLOW LINE, RECESSED POLYUREA	646.436				
							835		835		LF	DURABLE 8 INCH WHITE LINE, POLYUREA	646.444				
							500		500		LF	DURABLE 8 INCH YELLOW LINE, POLYUREA	646.454				
50									50		LF	DURABLE 12 INCH WHITE LINE, RECESSED POLYUREA	646.466				
							60		60		LF	DURABLE 24 INCH STOP BAR, POLYUREA	646.484				
							49		49		EACH	DURABLE LETTER OR SYMBOL, POLYUREA	646.494				
825					800				1625		SY	GEOTEXTILE FOR ROADBED SEPARATOR	649.11				
180					3				183		SY	GEOTEXTILE UNDER STONE FILL	649.31				
		1600							1600		SY	GEOTEXTILE FOR SILT FENCE	649.51				
		105							105		LB	SEED	651.15				
		860							860		LB	FERTILIZER	651.18				
		4							4		TON	AGRICULTURAL LIMESTONE	651.20				
		4							4		TON	HAY MULCH	651.25				
		930							930		CY	TOPSOIL	651.35				
		1							1		LS	EPSC PLAN	652.10				
		200							200		HR	MONITORING EPSC PLAN	652.20				
		1							1		LU	MAINTENANCE OF EPSC PLAN (N.A.B.I.)	652.30				
		1425							1425		SY	TEMPORARY EROSION MATTING	653.20				
		20							20		CY	TEMPORARY STONE CHECK DAM, TYPE I	653.25				
		200							200		CY	VEHICLE TRACKING PAD	653.35				
		11							11		EACH	INLET PROTECTION DEVICE, TYPE I	653.40				
		3925							3925		LF	BARRIER FENCE	653.50				
4.66					4.66		68.63		77.95		SF	TRAFFIC SIGNS, TYPE A	675.20				
24					24		135		183		LF	SQUARE TUBE SIGN POST AND ANCHOR	675.341				
6					3		25		34		EACH	REMOVING SIGNS	675.50				
							8		8		EACH	ERECTING SALVAGED SIGNS	675.60				
					2				2		EACH	DELINEATOR WITH STEEL POST (BLUE)	676.10				
1					1				2		EACH	DELINEATOR WITH STEEL POST (GREEN)	676.10				
2					2				4		EACH	DELINEATOR WITH STEEL POST (YELLOW)	676.10				
2					3		6		11		EACH	REMOVAL OF EXISTING DELINEATOR	676.12				
							1		1		EACH	REMOVE AND RESET OVERHEAD TRAFFIC SIGN SUPPORT	677.25				
							2		2		EACH	TEMPORARY TRAFFIC SIGNAL SYSTEM	678.40				
							1		1		EACH	REMOVING AND RESETTING LIGHT POLE	679.25				
								1	1		LU	PRICE ADJUSTMENT, FUEL (N.A.B.I.)	690.50				
			2			2			4		CY	SPECIAL PROVISION (HIGH PERFORMANCE CONCRETE, RAPID SET)(FPQ)	900.608				

PROJECT NAME: HARTFORD
PROJECT NUMBER: IM 091-2(79)

FILE NAME: sl2al32qs.dgn
PROJECT LEADER: K. HIGGINS
DESIGNED BY: W. LAMMER
QUANTITY SHEET 3

PLOT DATE: 15-DEC-2014
DRAWN BY: K. FRIEDLAND
CHECKED BY: J. SALVATORI

STATE OF VERMONT
AGENCY OF TRANSPORTATION

QUANTITY SHEET 4

SUMMARY OF ESTIMATED QUANTITIES									TOTALS		DESCRIPTIONS				DETAILED SUMMARY OF QUANTITIES		
ROADWAY 91S	TRAINING	EROSION CONTROL	BRIDGE 43S	FULL C.E. ITEMS	ROADWAY 91N	BRIDGE 43N	ROADWAY RT 5	ROADWAY COMMON	GRAND TOTAL	FINAL	UNIT	ITEMS	ITEM NUMBER	ROUND	QUANTITIES	UNIT	ITEMS
						50000			50000		DL	SPECIAL PROVISION (INCENTIVE/DISINCENTIVE)(N.A.B.I.)(BRIDGE 43N)	900.615				
			50000						50000		DL	SPECIAL PROVISION (INCENTIVE/DISINCENTIVE)(N.A.B.I.)(BRIDGE 43S)	900.615				
							8625		8625		DL	SPECIAL PROVISION (PEDESTRIAN SHUTTLE)(N.A.B.I)	900.615				
110000					110000				220000		DL	SPECIAL PROVISION (UNIFORMED TRAFFIC OFFICERS)	900.615				
				8					8		EACH	SPECIAL PROVISION (CPM SCHEDULE)	900.620				
							1		1		EACH	SPECIAL PROVISION (GPS TIME CLOCK)	900.620				
			1			1			2		EACH	SPECIAL PROVISION (TEMPORARY SUPPORTS AND HORIZONTAL SLIDE)	900.620				
5					5				10		HR	SPECIAL PROVISION (JET DRYER)	900.630				
			20			20			40		HR	SPECIAL PROVISION (UNEXPECTED OBSTRUCTION DRILLING)	900.630				
						88470			88470		LB	SPECIAL PROVISION (STRUCTURAL STEEL, PLATE GIRDER, GRADE HPS 70W)	900.635				
			960			450			1410		LF	SPECIAL PROVISION (MICROPILE, CASED)(9.625")	900.640				
			235			95			330		LF	SPECIAL PROVISION (MICROPILE, UNCASED)(8.535")	900.640				
			1						1		LS	SPECIAL PROVISION (CONTRACTOR-FABRICATED PRECAST CONCRETE STRUCTURE)(APPROACH SLAB #1)	900.645				
			1						1		LS	SPECIAL PROVISION (CONTRACTOR-FABRICATED PRECAST CONCRETE STRUCTURE)(APPROACH SLAB #2)	900.645				
						1			1		LS	SPECIAL PROVISION (CONTRACTOR-FABRICATED PRECAST CONCRETE STRUCTURE)(APPROACH SLAB #3)	900.645				
						1			1		LS	SPECIAL PROVISION (CONTRACTOR-FABRICATED PRECAST CONCRETE STRUCTURE)(APPROACH SLAB #4)	900.645				
						1			1		LS	SPECIAL PROVISION (CPM SCHEDULE)(BRIDGE 43N)	900.645				
			1						1		LS	SPECIAL PROVISION (CPM SCHEDULE)(BRIDGE 43S)	900.645				
			1						1		LS	SPECIAL PROVISION (FURNISHING EQUIPMENT FOR INSTALLING MICROPILES)	900.645				
			1						1		LS	SPECIAL PROVISION (PUBLIC PROTECTION FOR BRIDGE PROJECTS)	900.645				
							1		1		LS	SPECIAL PROVISION (SMART WORK ZONE)	900.645				
			4402			4260			8662		SF	SPECIAL PROVISION (PRECAST PRESTRESSED CONCRETE DECK PANEL)(3 1/2")	900.670				

PROJECT NAME: HARTFORD
PROJECT NUMBER: IM 091-2(79)

FILE NAME: sl2al32qs.dgn
PROJECT LEADER: K. HIGGINS
DESIGNED BY: W. LAMMER
QUANTITY SHEET 4

PLOT DATE: 15-DEC-2014
DRAWN BY: K. FRIEDLAND
CHECKED BY: J. SALVATORI
SHEET 10 OF 166

STATE OF VERMONT
AGENCY OF TRANSPORTATION

BRIDGE QUANTITY SHEET 1

SUMMARY OF BRIDGE QUANTITIES									TOTALS	DESCRIPTIONS			DETAILED SUMMARY OF QUANTITIES		
					DECK	APP SLAB 3	APP SLAB 4	ABUT 3	ABUT 4	BRIDGE TOTAL	UNIT	ITEMS	ITEM NUMBER	QUANTITIES	UNIT	ITEMS
									731.2	731.2	CY	STRUCTURE EXCAVATION (ABUTMENT #4)	204.25			
								433.6		433.6	CY	STRUCTURE EXCAVATION (ABUTMENTS #1- #3)	204.25			
				1058.7						1058.7	CY	GRANULAR BACKFILL FOR STRUCTURES	204.30			
					177					177	CY	CONCRETE, HIGH PERFORMANCE CLASS A	501.33			
				695						695	CY	CONCRETE, HIGH PERFORMANCE CLASS B	501.34			
					34682					34682	LB	STRUCTURAL STEEL, ROLLED BEAM (W30x90 DIAPHRAGM)	506.50			
					139240					139240	LB	STRUCTURAL STEEL, PLATE GIRDER	506.55			
				60744						60744	LB	REINFORCING STEEL, LEVEL I	507.11			
				60310						60310	LB	REINFORCING STEEL, LEVEL III	507.13			
									144	144	LF	DRILLING AND GROUTING DOWELS	507.16			
								50	50	100	EACH	MECHANICAL BAR CONNECTOR	507.19			
					1					1	LS	SHEAR CONNECTORS (3072 EA. - 7/8" X 7")(BRIDGE 43N)	508.15			
					656					656	SY	LONGITUDINAL DECK GROOVING	509.10			
				99						99	GAL	WATER REPELLENT, SILANE	514.10			
					95					95	LF	BRIDGE EXPANSION JOINT, ASPHALTIC PLUG	516.10			
					95					95	LF	JOINT SEALER, HOT POURED	524.11			
					277					277	LF	BRIDGE RAILING, CONCRETE F-SHAPE	525.70			
								0.5	0.5	1	EACH	PARTIAL REMOVAL OF STRUCTURE (SUBSTRUCTURE 43N)	529.20			
					1					1	EACH	PARTIAL REMOVAL OF STRUCTURE (SUPERSTRUCTURE 43N)	529.20			
								6	6	12	EACH	BEARING DEVICE ASSEMBLY, ELASTOMERIC PAD W/ EXT. LOAD PLATES	531.18			
									50	50	CY	CONCRETE, CLASS C	541.30			
						1	1			2	CY	SPECIAL PROVISION (HIGH PERFORMANCE CONCRETE, RAPID SET)(FPQ)	900.608			
					50000					50000	DL	SPECIAL PROVISION (INCENTIVE/DISINCENTIVE)(N.A.B.I.)(BRIDGE 43N)	900.615			
				1						1	EACH	SPECIAL PROVISION (TEMPORARY SUPPORTS AND HORIZONTAL SLIDE)	900.620			
								20		20	HR	SPECIAL PROVISION (UNEXPECTED OBSTRUCTION DRILLING)	900.630			
					88470					88470	LB	SPECIAL PROVISION (STRUCTURAL STEEL, PLATE GIRDER, GRADE HPS 70W)	900.635			
								450		450	LF	SPECIAL PROVISION (MICROPILE, CASED)(9.625")	900.640			
								95		95	LF	SPECIAL PROVISION (MICROPILE, UNCASED)(8.535")	900.640			
						1				1	LS	SPECIAL PROVISION (CONTRACTOR-FABRICATED PRECAST CONCRETE STRUCTURE)(APPROACH SLAB #3)	900.645			
							1			1	LS	SPECIAL PROVISION (CONTRACTOR-FABRICATED PRECAST CONCRETE STRUCTURE)(APPROACH SLAB #4)	900.645			
					1					1	LS	SPECIAL PROVISION (CPM SCHEDULE)(BRIDGE 43N)	900.645			
					4260					4260	SF	SPECIAL PROVISION (PRECAST PRESTRESSED CONCRETE DECK PANEL)(3 1/2")	900.670			

PROJECT NAME: HARTFORD
PROJECT NUMBER: IM 091-2(79)

FILE NAME: sl2al32qs.dgn
PROJECT LEADER: K. HIGGINS
DESIGNED BY: W. LAMMER
BRIDGE QUANTITY SHEET 43N

PLOT DATE: 15-DEC-2014
DRAWN BY: K. FRIEDLAND
CHECKED BY: J. SALVATORI
SHEET 11 OF 166

STATE OF VERMONT
AGENCY OF TRANSPORTATION

BRIDGE QUANTITY SHEET 2

SUMMARY OF BRIDGE QUANTITIES										TOTALS	DESCRIPTIONS			DETAILED SUMMARY OF QUANTITIES		
					DECK	APP SLAB 1	APP SLAB 2	ABUT 1	ABUT 2	BRIDGE TOTAL	UNIT	ITEMS	ITEM NUMBER	QUANTITIES	UNIT	ITEMS
				1517.7						1517.7	CY	STRUCTURE EXCAVATION (ABUTMENTS #1- #3)	204.25			
				1305.4						1305.4	CY	GRANULAR BACKFILL FOR STRUCTURES	204.30			
					193					193	CY	CONCRETE, HIGH PERFORMANCE CLASS A	501.33			
				800						800	CY	CONCRETE, HIGH PERFORMANCE CLASS B	501.34			
					45832					45832	LB	STRUCTURAL STEEL, ROLLED BEAM (W40 x 149 DIAPHRAGM)	506.50			
					229060					229060	LB	STRUCTURAL STEEL, PLATE GIRDER	506.55			
				73436						73436	LB	REINFORCING STEEL, LEVEL I	507.11			
				63317						63317	LB	REINFORCING STEEL, LEVEL III	507.13			
								50	50	100	EACH	MECHANICAL BAR CONNECTOR	507.19			
					1					1	LS	SHEAR CONNECTORS (2634 EA. - 7/8" X 7")(BRIDGE 43S)	508.15			
					686					686	SY	LONGITUDINAL DECK GROOVING	509.10			
				96						96	GAL	WATER REPELLENT, SILANE	514.10			
					100					100	LF	BRIDGE EXPANSION JOINT, ASPHALTIC PLUG	516.10			
					100					100	LF	JOINT SEALER, HOT POURED	524.11			
					277					277	LF	BRIDGE RAILING, CONCRETE F-SHAPE	525.70			
								0.5	0.5	1	EACH	PARTIAL REMOVAL OF STRUCTURE (SUBSTRUCTURE 43S)	529.20			
					1					1	EACH	PARTIAL REMOVAL OF STRUCTURE (SUPERSTRUCTURE 43S)	529.20			
								6	6	12	EACH	BEARING DEVICE ASSEMBLY, ELASTOMERIC PAD W/ EXT. LOAD PLATES	531.18			
						1	1			2	CY	SPECIAL PROVISION (HIGH PERFORMANCE CONCRETE, RAPID SET)(FPQ)	900.608			
					50000					50000	DL	SPECIAL PROVISION (INCENTIVE/DISINCENTIVE)(N.A.B.I.)(BRIDGE 43S)	900.615			
					1					1	EACH	SPECIAL PROVISION (TEMPORARY SUPPORTS AND HORIZONTAL SLIDE)	900.620			
								10	10	20	HR	SPECIAL PROVISION (UNEXPECTED OBSTRUCTION DRILLING)	900.630			
				960						960	LF	SPECIAL PROVISION (MICROPILE, CASED)(9.625")	900.640			
				235						235	LF	SPECIAL PROVISION (MICROPILE, UNCASED)(8.535")	900.640			
						1				1	LS	SPECIAL PROVISION (CONTRACTOR-FABRICATED PRECAST CONCRETE STRUCTURE)(APPROACH SLAB #1)	900.645			
							1			1	LS	SPECIAL PROVISION (CONTRACTOR-FABRICATED PRECAST CONCRETE STRUCTURE)(APPROACH SLAB #2)	900.645			
					1					1	LS	SPECIAL PROVISION (CPM SCHEDULE)(BRIDGE 43S)	900.645			
								1		1	LS	SPECIAL PROVISION (FURNISHING EQUIPMENT FOR INSTALLING MICROPILES)	900.645			
					1					1	LS	SPECIAL PROVISION (PUBLIC PROTECTION FOR BRIDGE PROJECTS)	900.645			
					4402					4402	SF	SPECIAL PROVISION (PRECAST PRESTRESSED CONCRETE DECK PANEL)(3 1/2")	900.670			

PROJECT NAME: HARTFORD
PROJECT NUMBER: IM 091-2(79)

FILE NAME: sl2al32qs.dgn
PROJECT LEADER: K. HIGGINS
DESIGNED BY: W. LAMMER
BRIDGE QUANTITY SHEET 43S

PLOT DATE: 15-DEC-2014
DRAWN BY: K. FRIEDLAND
CHECKED BY: J. SALVATORI
SHEET 12 OF 166

* 1½" SUPERPAVE BITUMINOUS CONCRETE PAVEMENT, TYPE IVS OVER
½" SUPERPAVE BITUMINOUS CONCRETE PAVEMENT, TYPE IV SHIM

** 1½" SUPERPAVE BITUMINOUS CONCRETE PAVEMENT, TYPE IVS OVER
½" SUPERPAVE BITUMINOUS CONCRETE PAVEMENT SHIM, TYPE IVS OVER
2½" SUPERPAVE BITUMINOUS CONCRETE PAVEMENT, TYPE IIS OVER
2½" SUPERPAVE BITUMINOUS CONCRETE PAVEMENT, TYPE IIS

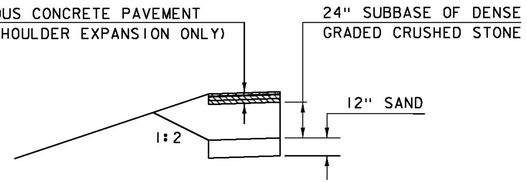

US ROUTE 5 SHOULDER EXPANSION

SCALE: ¼" = 1'-0"

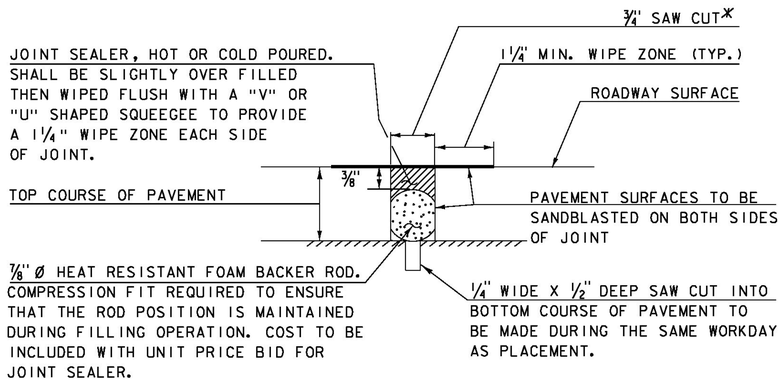

SAWED PAVEMENT JOINT DETAIL

(NOT TO SCALE)

*JOINT IS TO BE LOCATED ACCURATELY BY STRING LINING, OR OTHER MEANS, PRIOR TO PAVING, SO THAT THE SAW CUTS WILL BE MADE DIRECTLY OVER THE END OF CONCRETE DECK. JOINT SHALL BE CUT DRY IN A SINGLE PASS AND BE SEALED WITHIN 24 HOURS OR PRIOR TO EXPOSURE TO TRAFFIC. JOINT SHALL BE CLEANED PRIOR TO APPLYING THE JOINT SEALER.

US ROUTE 5 PROPOSED TYPICAL SECTION

SCALE: ¼" = 1'-0"

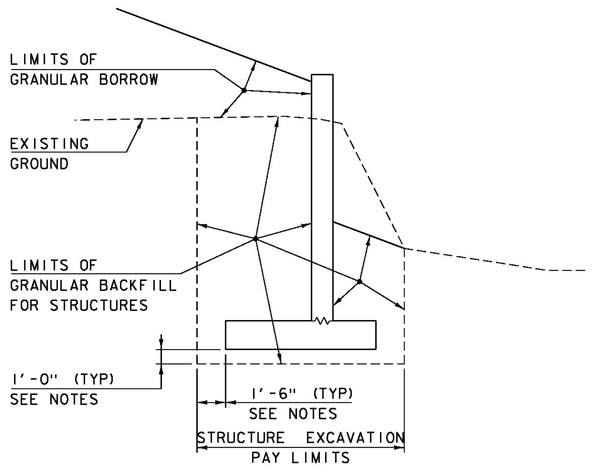

TYPICAL EARTHWORK SECTION FOR RETAINING WALL

NOT TO SCALE

PROJECT NAME:	HARTFORD
PROJECT NUMBER:	IM 091-2(79)
FILE NAME: sl2al32typical.dgn	PLOT DATE: 15-DEC-2014
PROJECT LEADER: K. HIGGINS	DRAWN BY: K. FRIEDLAND
DESIGNED BY: W. LAMMER	CHECKED BY: J. SALVATORI
TYPICAL SECTIONS 1	SHEET 13 OF 166

* 1½" SUPERPAVE BITUMINOUS CONCRETE PAVEMENT, TYPE IVS OVER
1½" SUPERPAVE BITUMINOUS CONCRETE PAVEMENT, TYPE IVS OVER
3¼" SUPERPAVE BITUMINOUS CONCRETE PAVEMENT, TYPE IIS OVER
3¼" SUPERPAVE BITUMINOUS CONCRETE PAVEMENT, TYPE IIS

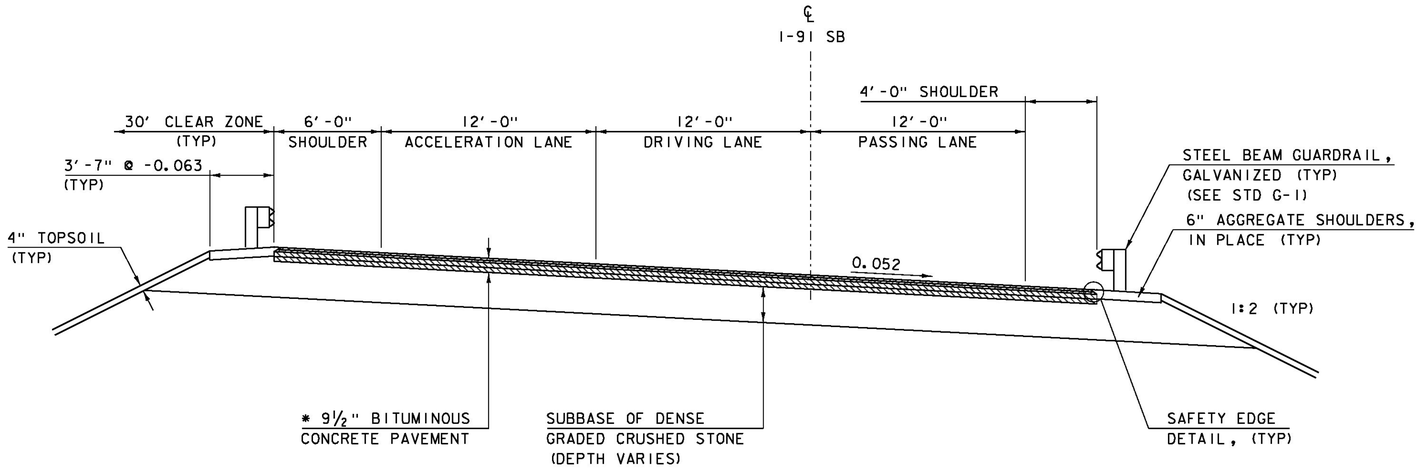

I-91 SOUTHBOUND TYPICAL SECTION

SCALE: ¼" = 1'-0"

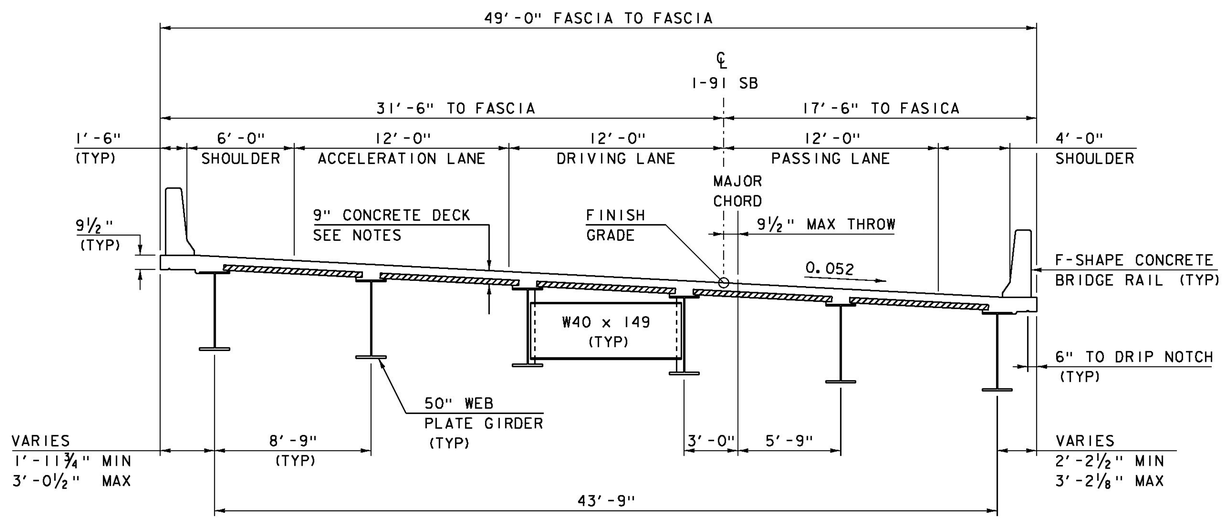

BRIDGE 43S TYPICAL SECTION

SCALE: ¼" = 1'-0"

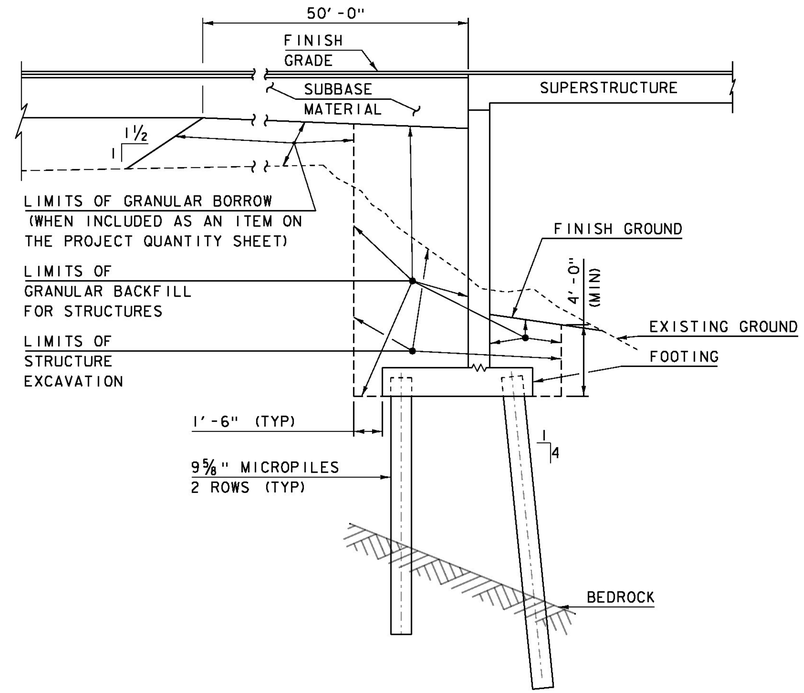

TYPICAL EARTHWORK SECTION FOR ABUTMENT ON MICROPILES

NOT TO SCALE

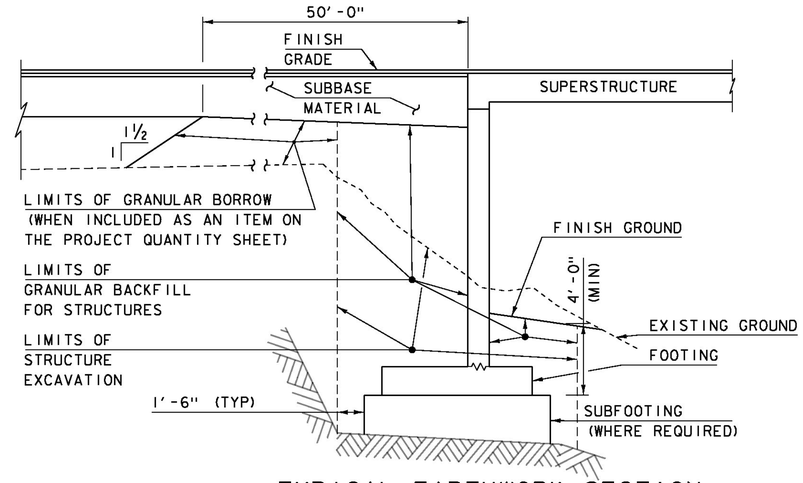

TYPICAL EARTHWORK SECTION FOR ABUTMENT ON SPREAD FOOTING

NOT TO SCALE

NOTES:

1) 9" DECK (3½" SPECIAL PROVISION "PRECAST PRESTRESSED CONCRETE DECK PANEL" AND 5½" HPC, CLASS A)

PROJECT NAME: HARTFORD	
PROJECT NUMBER: IM 091-2(79)	
FILE NAME: sl2al32typical.dgn	PLOT DATE: 15-DEC-2014
PROJECT LEADER: K. HIGGINS	DRAWN BY: K. FRIEDLAND
DESIGNED BY: W. LAMMER	CHECKED BY: J. SALVATORI
TYPICAL SECTIONS 2	SHEET 14 OF 166

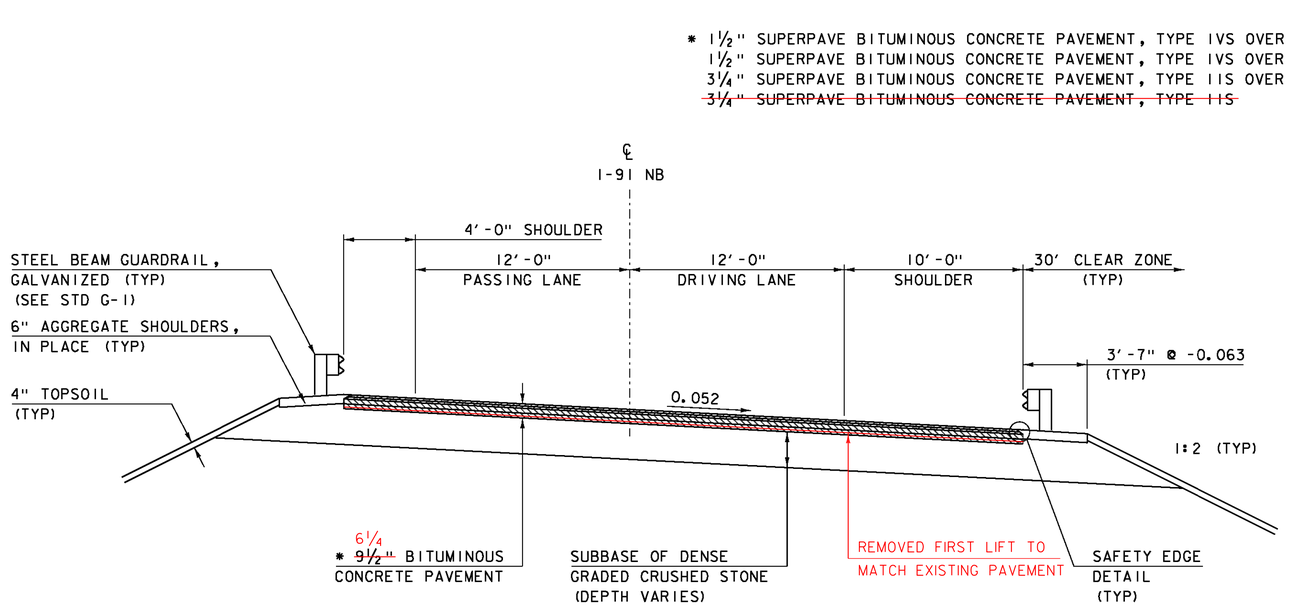

I-91 NORTHBOUND TYPICAL SECTION

SCALE: ¼" = 1'-0"

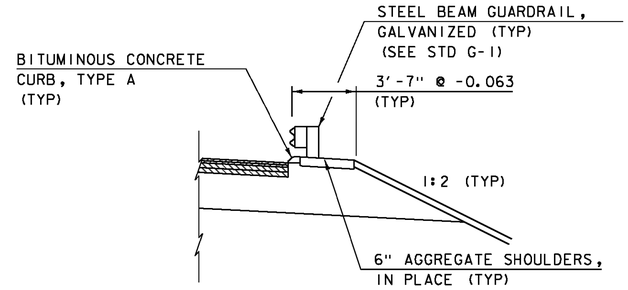

I-91 TYPICAL CURB SECTION

SCALE: ¼" = 1'-0"

MATERIAL TOLERANCES
(IF USED ON PROJECT)

SURFACE	
- PAVEMENT (TOTAL THICKNESS)	+/- ¼"
- AGGREGATE SURFACE COURSE	+/- ½"
SUBBASE	+/- 1"
SAND BORROW	+/- 1"

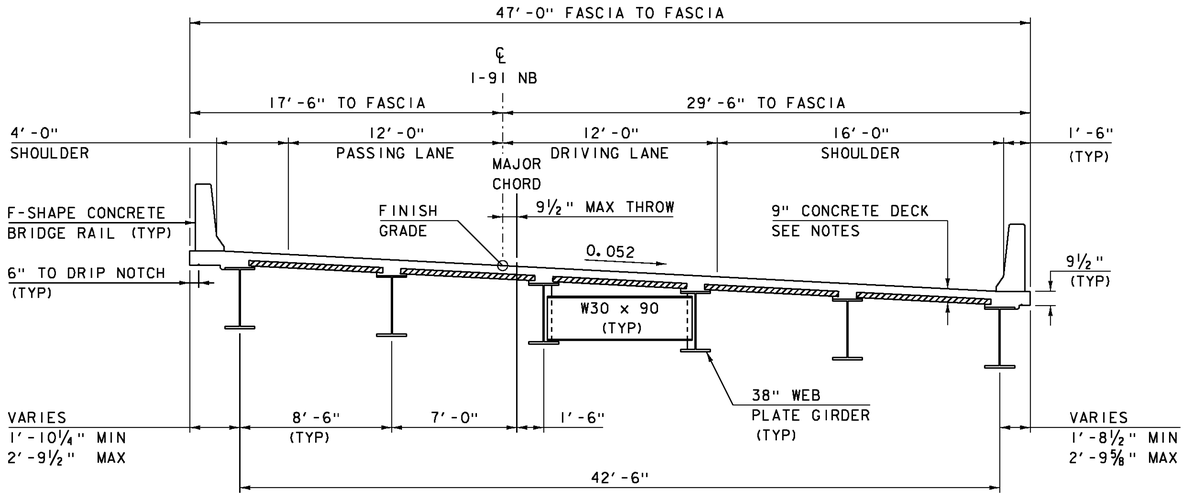

BRIDGE 43N TYPICAL SECTION

SCALE: ¼" = 1'-0"

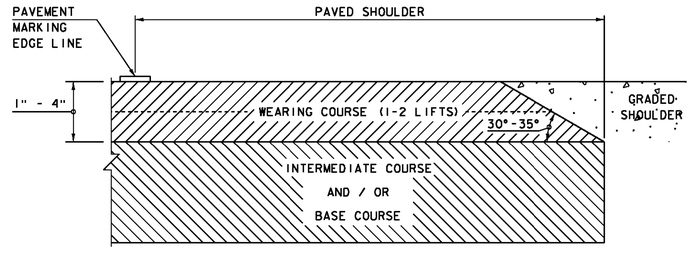

SAFETY EDGE DETAIL

NOT TO SCALE

NOTES:
1. LEVELING COURSE MAY INCLUDE THE "SAFETY EDGE" AT THE CONTRACTOR'S CHOICE.
2. THE EDGE OF PAVEMENT SHALL BE FORMED IN SUCH A WAY THAT THE BITUMINOUS CONCRETE PAVEMENT IS EXTRUDED OR COMPRESSED TO FORM THE 30 TO 35 DEGREE ANGLE. DEVICES THAT SIMPLY STRIKE-OFF THE MIX WITHOUT PROVIDING ANY COMPACTIVE EFFORT WILL NOT BE ALLOWED.

NOTES:

1) 9" DECK (3½" SPECIAL PROVISION "PRECAST PRESTRESSED CONCRETE DECK PANEL" AND 5½" HPC, CLASS A)

PROJECT NAME: HARTFORD
PROJECT NUMBER: IM 091-2(79)

FILE NAME: sl2al32typical.dgn
PROJECT LEADER: K. HIGGINS
DESIGNED BY: W. LAMMER
TYPICAL SECTIONS 3

PLOT DATE: 15-DEC-2014
DRAWN BY: K. FRIEDLAND
CHECKED BY: J. SALVATORI
SHEET 15 OF 166

GENERAL INFORMATION

SYMBOLOGY LEGEND NOTE

THE SYMBOLOGY ON THIS SHEET IS INTENDED TO COVER STANDARD CONVENTIONAL SYMBOLOGY. THE SYMBOLOGY IS USED FOR EXISTING & PROPOSED FEATURES WITH HEAVIER LINEWEIGHT, IN COMBINATION WITH PROJECT ANNOTATION, AS NOTED ON PROJECT PLAN SHEETS. THIS LEGEND SHEET COVERS THE BASICS. SYMBOLOGY ON PLANS MAY VARY, PLAN ANNOTATIONS AND NOTES SHOULD BE USED TO CLARIFY AS NEEDED.

R.O.W. ABBREVIATIONS (CODES) & SYMBOLS

POINT	CODE	DESCRIPTION
	CH	CHANNEL EASEMENT
	CONST	CONSTRUCTION EASEMENT
	CUL	CULVERT EASEMENT
	D&C	DISCONNECT & CONNECT
	DIT	DITCH EASEMENT
	DR	DRAINAGE EASEMENT
	DRIVE	DRIVEWAY EASEMENT
	EC	EROSION CONTROL
	HWY	HIGHWAY EASEMENT
	I&M	INSTALL & MAINTAIN EASEMENT
	LAND	LANDSCAPE EASEMENT
	R&RES	REMOVE & RESET
	R&REP	REMOVE & REPLACE
	SR	SLOPE RIGHT
	UE	UTILITY EASEMENT
	(P)	PERMANENT EASEMENT
	(T)	TEMPORARY EASEMENT
■	BNDNS	BOUND SET
⊡	BNDNS	BOUND TO BE SET
●	IPNS	IRON PIN SET
◎	IPNS	IRON PIN TO BE SET
⊠	CALC	EXISTING ROW POINT
○	PROW	PROPOSED ROW POINT
[LENGTH]		LENGTH CARRIED ON NEXT SHEET

COMMON TOPOGRAPHIC POINT SYMBOLS

POINT	CODE	DESCRIPTION
	APL	BOUND APPARENT LOCATION
	BM	BENCHMARK
	BND	BOUND
	CB	CATCH BASIN
	COMB	COMBINATION POLE
	DITHR	DROP INLET THROATED DNC
	EL	ELECTRIC POWER POLE
	FPOLE	FLAGPOLE
	GASFIL	GAS FILLER
	GP	GUIDE POST
	GSO	GAS SHUT OFF
	GUY	GUY POLE
	GUYW	GUY WIRE
	GV	GATE VALUE
	H	TREE HARDWOOD
	HCTRL	CONTROL HORIZONTAL
	HVCTRL	CONTROL HORIZ. & VERTICAL
	HYD	HYDRANT
	IP	IRON PIN
	IPIPE	IRON PIPE
	LI	LIGHT - STREET OR YARD
	MB	MAILBOX
	MH	MANHOLE (MH)
	MM	MILE MARKER
	PM	PARKING METER
	PMK	PROJECT MARKER
	POST	POST STONE/WOOD
	RRSIG	RAILROAD SIGNAL
	RRSL	RAILROAD SWITCH LEVER
	S	TREE SOFTWOOD
	SAT	SATELLITE DISH
	SHRUB	SHRUB
	SIGN	SIGN
	STUMP	STUMP
	TEL	TELEPHONE POLE
	TIE	TIE
	TSIGN	SIGN W/DOUBLE POST
	VCTRL	CONTROL VERTICAL
	WELL	WELL
	WSO	WATER SHUT OFF

THESE ARE COMMON VAOT SURVEY POINT SYMBOLS FOR EXISTING FEATURES, ALSO USED FOR PROPOSED FEATURES WITH HEAVIER LINEWEIGHT, IN COMBINATION WITH PROPOSED ANNOTATION.

PROPOSED GEOMETRY CODES

CODE	DESCRIPTION
PC	POINT OF CURVATURE
PI	POINT OF INTERSECTION
CC	CENTER OF CURVE
PT	POINT OF TANGENCY
PCC	POINT OF COMPOUND CURVE
PRC	POINT OF REVERSE CURVE
POB	POINT OF BEGINNING
POE	POINT OF ENDING
STA	STATION PREFIX
AH	AHEAD STATION SUFFIX
BK	BACK STATION SUFFIX
D	CURVE DEGREE OF (100FT)
R	CURVE RADUIS OF
T	CURVE TANGENT LENGTH
L	CURVE LENGTH OF
E	CURVE EXTERNAL DISTANCE

UTILITY SYMBOLOGY

UNDERGROUND UTILITIES

- UTILITY (GENERIC-UNKNOWN)
- UT — TELEPHONE
- UE — ELECTRIC
- UC — CABLE (TV)
- UEC — ELECTRIC+CABLE
- UET — ELECTRIC+TELEPHONE
- UCT — CABLE+TELEPHONE
- UECT — ELECTRIC+CABLE+TELEP.
- G — GAS LINE
- W — WATER LINE
- S — SANITARY SEWER (SEPTIC)

ABOVE GROUND UTILITIES (AERIAL)

- UTILITY (GENERIC-UNKNOWN)
- T — TELEPHONE
- E — ELECTRIC
- C — CABLE (TV)
- EC — ELECTRIC+CABLE
- ET — ELECTRIC+TELEPHONE
- AER E&T — ELECTRIC+TELEPHONE
- CT — CABLE+TELEPHONE
- ECT — ELECTRIC+CABLE+TELEP.
- UTILITY POLE GUY WIRE

PROJECT CONSTRUCTION SYMBOLOGY

PROJECT DESIGN & LAYOUT SYMBOLOGY

- CZ — CLEAR ZONE
- PLAN LAYOUT MATCHLINE

PROJECT CONSTRUCTION FEATURES

- TOP OF CUT SLOPE
- TOE OF FILL SLOPE
- STONE FILL
- BOTTOM OF DITCH ℄
- CULVERT PROPOSED
- STRUCTURE SUBSURFACE
- PDF — PDF — PROJECT DEMARCATION FENCE
- BF — BF — BARRIER FENCE
- TREE PROTECTION ZONE (TPZ)
- STRIPING LINE REMOVAL
- SHEET PILES

CONVENTIONAL BOUNDARY SYMBOLOGY

BOUNDARY LINES

- TOWN LINE — TOWN BOUNDARY LINE
- COUNTY LINE — COUNTY BOUNDARY LINE
- STATE LINE — STATE BOUNDARY LINE
- PROPOSED STATE R.O.W. (LIMITED ACCESS)
- PROPOSED STATE R.O.W.
- STATE ROW (LIMITED ACCESS)
- STATE ROW
- TOWN ROW
- PERMANENT EASEMENT LINE (P)
- TEMPORARY EASEMENT LINE (T)
- SURVEY LINE
- P/L — PROPERTY LINE (P/L)
- SR SR SR — SLOPE RIGHTS
- 6F — 6F — 6F PROPERTY BOUNDARY
- 4F — 4F — 4F PROPERTY BOUNDARY
- HAZ — HAZ — HAZARDOUS WASTE

EPSC LAYOUT PLAN SYMBOLOGY

EPSC MEASURES

- FILTER CURTAIN
- SILT FENCE
- SILT FENCE WOVEN WIRE
- CHECK DAM
- DISTURBED AREAS REQUIRING RE-VEGETATION
- EROSION MATTING

SEE EPSC DETAIL SHEETS FOR ADDITIONAL SYMBOLOGY

ENVIRONMENTAL RESOURCES

- WETLAND BOUNDARY
- RIPARIAN BUFFER ZONE
- WETLAND BUFFER ZONE
- SOIL TYPE BOUNDARY
- T&E — THREATENED & ENDANGERED SPECIES
- HAZ — HAZ — HAZARDOUS WASTE AREA
- AG — AGRICULTURAL LAND
- HABITAT — FISH & WILDLIFE HABITAT
- FLOOD PLAIN — FLOOD PLAIN
- OHW — ORDINARY HIGH WATER (OHW)
- STORM WATER
- USDA FOREST SERVICE LANDS
- WILDLIFE HABITAT SUIT/CONN

ARCHEOLOGICAL & HISTORIC

- ARCH — ARCHEOLOGICAL BOUNDARY
- HISTORIC DIST — HISTORIC DISTRICT BOUNDARY
- HISTORIC — HISTORIC AREA
- (H) HISTORIC STRUCTURE

CONVENTIONAL TOPOGRAPHIC SYMBOLOGY

EXISTING FEATURES

- ROAD EDGE PAVEMENT
- ROAD EDGE GRAVEL
- DRIVEWAY EDGE
- DITCH
- FOUNDATION
- FENCE (EXISTING)
- FENCE WOOD POST
- FENCE STEEL POST
- GARDEN
- ROAD GUARDRAIL
- RAILROAD TRACKS
- CULVERT (EXISTING)
- STONE WALL
- WALL
- WOOD LINE
- BRUSH LINE
- HEDGE
- BODY OF WATER EDGE
- LEDGE EXPOSED

PROJECT NAME: HARTFORD
PROJECT NUMBER: IM 091-2(79)

FILE NAME: 12al32/sl2al32excel.dgn
PROJECT LEADER: K. HIGGINS
DESIGNED BY: W. LAMMER
LEGEND SHEET

PLOT DATE: 15-DEC-2014
DRAWN BY: K. FRIEDLAND
CHECKED BY: J. SALVATORI
SHEET 16 OF 166

GPS CONTROL POINTS

PT #1 EXIT 4
NORTH = 416856.520
EAST = 1683631.840
ELEV. = 570.79

THE STATION IS LOCATED ABOUT 1.6 KM (1.00 MI) NORTH OF THE INTERSTATE 91 AND 89 INTERCHANGE IN HARTFORD, WHITE RIVER JUNCTION, AT THE DEPARTMENT OF TRANSPORTATION DISTRICT OFFICE. TO REACH FROM THE INTERSTATE HIGHWAY 91 BRIDGES OVER U.S. ROUTE 5 IN WHITE RIVER JUNCTION, GO NORTHEAST ALONG U.S. ROUTE 5 FOR 0.2 MI (0.3 KM) TO HOLIDAY INN DRIVE ON THE RIGHT. TURN RIGHT AND GO EAST 0.08 KM (0.05 MI) TO THE INTERSECTION OF BESWICK DRIVE ON THE RIGHT. TURN RIGHT AND GO SOUTH ON BESWICK DRIVE FOR 0.32 KM (0.20 MI) TO THE GATE TO THE VERMONT AGENCY OF TRANSPORTATION DISTRICT 4 OFFICE. PASS THROUGH GATE AND CONTINUE ON PAVED ROAD FOR 0.08 KM (0.05 MI) TO THE STATION ON THE LEFT, IN A GRASS AREA JUST NORTH OF THE STORAGE UTILITY BUILDING. STATION MARK IS A STATE OF VERMONT SURVEY MARK DISK SET IN THE TOP OF A ROCK OUTCROP FLUSH WITH GROUND SURFACE. IT IS 245 FT (74.7 M) SOUTHEAST OF THE SOUTHEAST CORNER OF THE DISTRICT 4 OFFICE, 27.5 FT (8.4 M) NORTHEAST OF THE NORTHWEST CORNER OF THE UTILITY STORAGE BUILDING, 44.7 FT (13.6 M) NORTHWEST OF THE NORTHEAST CORNER OF THE UTILITY STORAGE BUILDING, 55 FT (16.8 M) EAST OF THE EAST EDGE OF THE PAVED GARAGE YARD AND 5.7 FT (1.7 M) NORTH OF A CARSONITE WITNESS POST.

PT #10 E 56
NORTH = 418205.760
EAST = 1683404.010
ELEV. = 573.98

THE STATION IS LOCATED APPROXIMATELY 6.88 KM (4.25 MI) WEST OF LEBANON NEW HAMPSHIRE, 5.88 KM (3.65 MI) NORTH OF NORTH HARTLAND VERMONT, 1.63 KM (1.00 MI) WEST OF WHITE RIVER JUNCTION VERMONT, AND IS AT THE JUNCTION OF INTERSTATE 91 (EXIT 5) AND STATE HIGHWAY 5. TO REACH THE STATION FROM THE JUNCTION OF INTERSTATES 89 AND 91, PROCEED NORTH 0.35 MI (0.56 KM) ALONG INTERSTATE 91 TO THE JUNCTION OF INTERSTATE 91 (EXIT 5) AND STATE HIGHWAY 5. TURN LEFT FROM THE INTERSTATE 91 OFFRAMP, AND PROCEED SOUTHWEST 0.1 MI, (0.2 KM) PASSING UNDERNEATH INTERSTATE 91, TO THE ONRAMP FOR INTERSTATE 91 SOUTHBOUND ON THE RIGHT. TURN RIGHT AND PROCEED NORTHERLY AND THEN EASTERLY 0.3 MI (0.5 KM) ALONG THE ONRAMP TO THE STATION ON THE LEFT IN THE MEDIAN BETWEEN INTERSTATE 91 SOUTHBOUND AND THE ONRAMP. THE STATION IS AN STANDARD NGS VERTICAL CONTROL DISK STAMPED--E 56 1978-- SET FLUSH IN THE TOP OF A ROCK OUTCROP APPROXIMATELY 4 M (13.1 FT) BY 6 M (19.7 FT) IN SIZE AND PROJECTING 1.3 M (4.3 FT) ABOVE THE GROUND. THE STATION IS LOCATED 27.00 M (88.58 FT) ON A BEARING OF NORTH 15 DEGREES EAST FROM A CATCH BASIN NEAR THE JOINING OF THE ONRAMP AND THE HIGHWAY, 12.70 M (41.67FT) ON A BEARING OF NORTH 60 DEGREES WEST FROM THE EAST EDGE OF PAVEMENT OF THE ONRAMP, 11.75 M (38.55 FT) ON A BEARING OF NORTH 74 DEGREES EAST FROM THE WEST EDGE OF PAVEMENT OF THE HIGHWAY, 10.19 M (33.43 FT) ON A BEARING OF NORTH 12 DEGREES WEST FROM THE WEST POST OF A DOUBLE POSTED SIGN--MERGING LANE--, AND 1.14 M (3.74 FT) ON A BEARING OF NORTH 80 DEGREES EAST FROM A CARSONITE MARKER. ALL DISTANCES ARE SLOPE DISTANCES AND THE DIRECTIONS ARE MAGNETIC COMPASS BEARINGS.

TRAVERSE TIES

HVCTRL #2				
NORTH = 416899.63	NORTH =	NORTH =	NORTH =	NORTH =
EAST = 1683297.867	EAST =	EAST =	EAST =	EAST =
ELEV. = 566.447	ELEV. =	ELEV. =	ELEV. =	ELEV. =

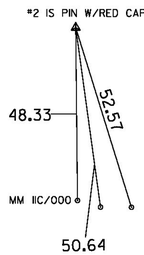

ALIGNMENT TIES

NORTH =	NORTH =	NORTH =	NORTH =	NORTH =
EAST =	EAST =	EAST =	EAST =	EAST =
ELEV. =	ELEV. =	ELEV. =	ELEV. =	ELEV. =

DATUM
VERTICAL NAVD88
HORIZONTAL NAD83(2011)
ADJUSTMENT COMPASS

PROJECT NAME: HARTFORD
PROJECT NUMBER: IM 091-2(79)

FILE NAME: X12A132T1.DGN
PROJECT LEADER: K. HIGGINS
DESIGNED BY: VTRANS
TIE SHEET

PLOT DATE: 15-DEC-2014
DRAWN BY: C. CYR
CHECKED BY: P. BEYOR

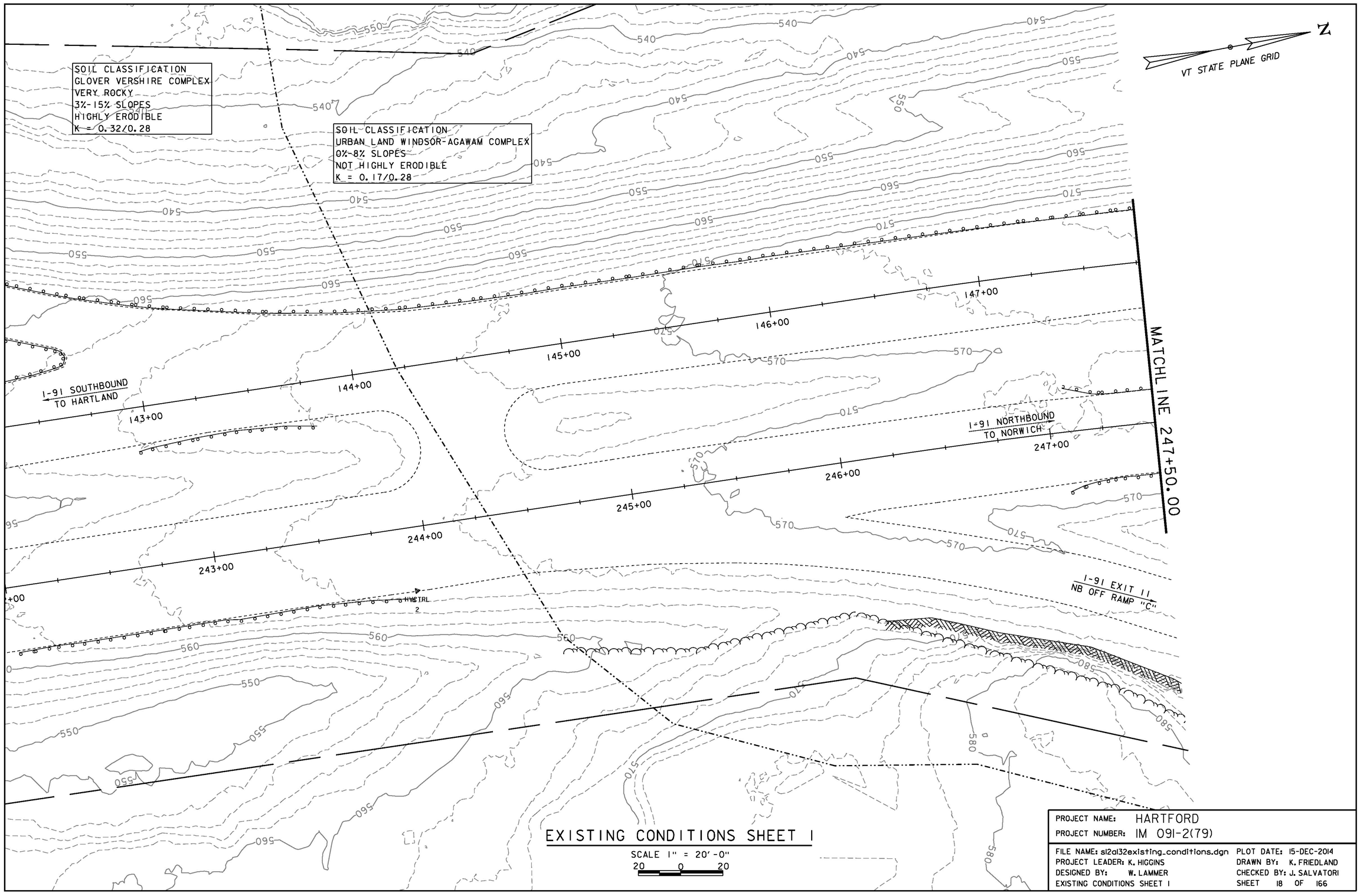

EXISTING CONDITIONS SHEET 1

SCALE 1" = 20'-0"
20 0 20

PROJECT NAME:	HARTFORD
PROJECT NUMBER:	IM 091-2(79)
FILE NAME: sl2al32existing_conditions.dgn	PLOT DATE: 15-DEC-2014
PROJECT LEADER: K. HIGGINS	DRAWN BY: K. FRIEDLAND
DESIGNED BY: W. LAMMER	CHECKED BY: J. SALVATORI
EXISTING CONDITIONS SHEET 1	SHEET 18 OF 166

SOIL CLASSIFICATION
GLOVER VERSHIRE COMPLEX
VERY ROCKY
15%-35% SLOPES
HIGHLY ERODIBLE
K = 0.32/0.28

VT STATE PLANE GRID

BENCHMARK
HIGHWAY DEPT.
BM-1912-2
ELEV.=577.34

US-5
TO HARTLAND

I-91 EXIT 11
SB ON-RAMP "A"

FENCE

I-91 SOUTHBOUND
TO HARTLAND

MATCHLINE 247+50.00

MATCHLINE 253+25.00

I-91 NORTHBOUND
TO NORWICH

I-91 EXIT 11
NB OFF RAMP "C"

US-5
TO NORWICH

EXISTING BRIDGE DATA
3 SPAN ROLLED BEAM
LENGTH = 202.0'
WIDTH 37.3' (43N) & 42' (43S)
BUILT IN 1966

SOIL CLASSIFICATION
URBAN LAND-WINDSOR-AGAWAM COMPLEX
0%-8% SLOPES
NOT HIGHLY ERODIBLE
K = 0.17/0.28

EXISTING CONDITIONS SHEET 2

SCALE 1" = 20'-0"
20 0 20

PROJECT NAME:	HARTFORD
PROJECT NUMBER:	IM 091-2(79)
FILE NAME: sl2al32existing_conditions.dgn	PLOT DATE: 15-DEC-2014
PROJECT LEADER: K. HIGGINS	DRAWN BY: K. FRIEDLAND
DESIGNED BY: W. LAMMER	CHECKED BY: J. SALVATORI
EXISTING CONDITIONS SHEET 2	SHEET 19 OF 166

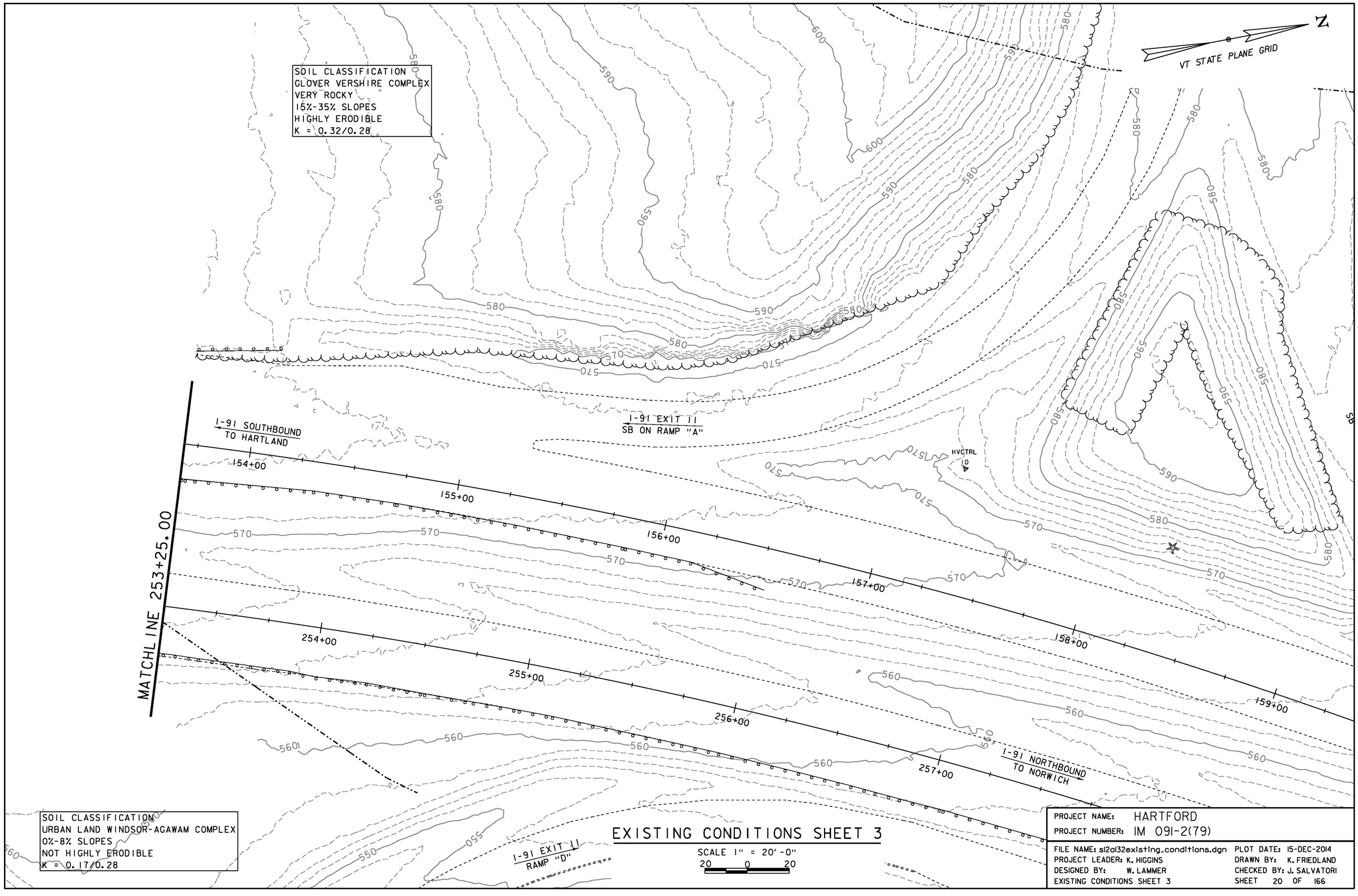

EXISTING CONDITIONS SHEET 3

SCALE 1" = 20'-0"
20 0 20

PROJECT NAME:	HARTFORD
PROJECT NUMBER:	IM 091-2(79)
FILE NAME: sl2al32existing_conditions.dgn	PLOT DATE: 15-DEC-2014
PROJECT LEADER: K. HIGGINS	DRAWN BY: K. FRIEDLAND
DESIGNED BY: W. LAMMER	CHECKED BY: J. SALVATORI
EXISTING CONDITIONS SHEET 3	SHEET 20 OF 166

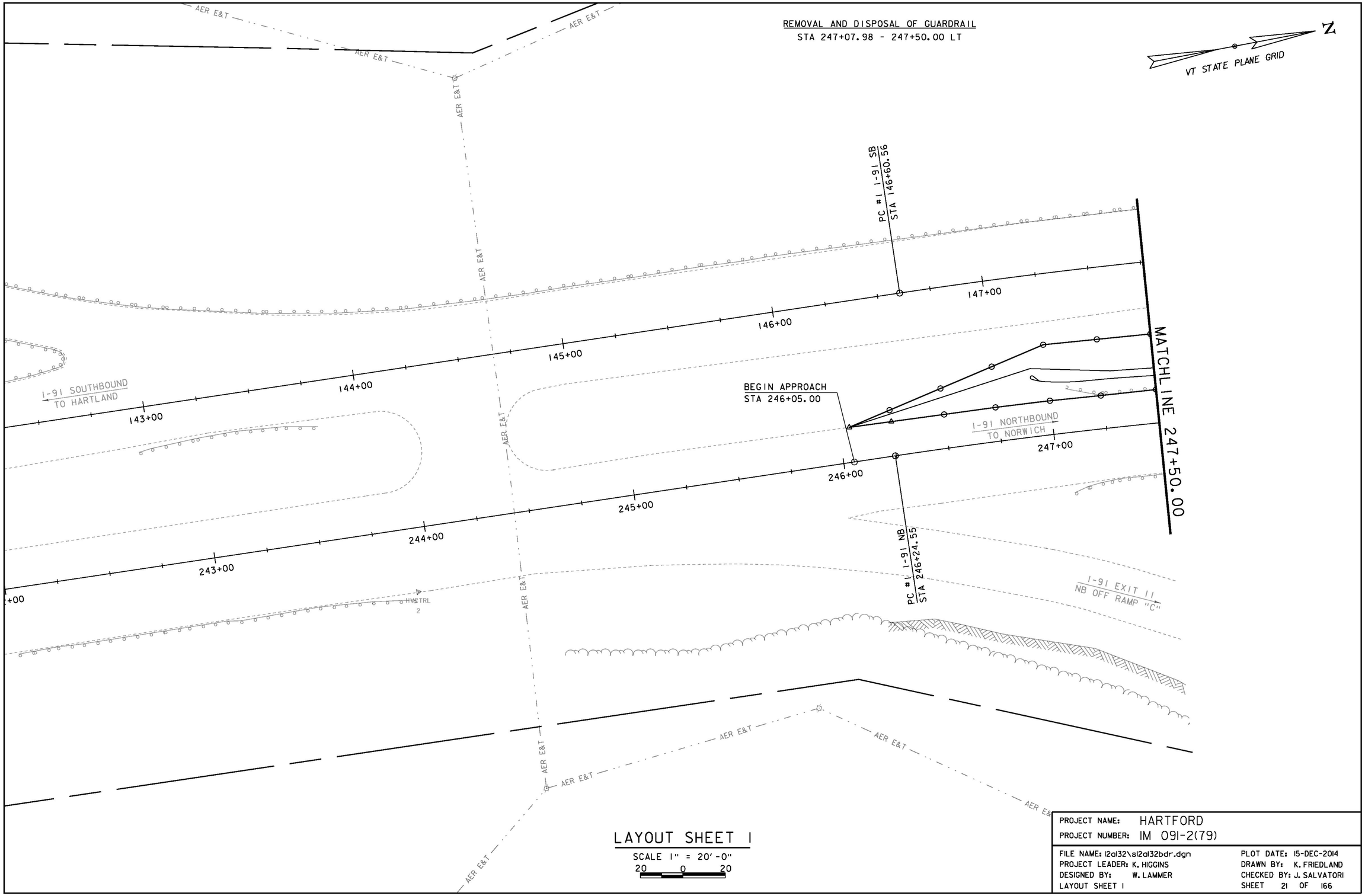

LAYOUT SHEET 1

SCALE 1" = 20'-0"

20 0 20

PROJECT NAME: HARTFORD	
PROJECT NUMBER: IM 091-2(79)	
FILE NAME: 12a132\s12a132bdr.dgn	PLOT DATE: 15-DEC-2014
PROJECT LEADER: K. HIGGINS	DRAWN BY: K. FRIEDLAND
DESIGNED BY: W. LAMMER	CHECKED BY: J. SALVATORI
LAYOUT SHEET 1	SHEET 21 OF 166

N

VT STATE PLANE GRID

BEGIN BRIDGE 43S
STA 149+97.96
FG = 575.13

BEGIN APPROACH / PAVEMENT
STA 148+00.00

BEGIN PROJECT
STA 149+50.00

CL BEARING
STA 150+02.00
FG = 575.15

CL BEARING
STA 151+30.00
FG = 575.44

STONE FILL, TYPE II (TYP)

BENCHMARK
HIGHWAY DEPT.
BM 1912 2
ELEV. = 577.34

END BRIDGE 43S
STA 151+34.12
FG = 575.44

END PROJECT
STA 151+75.00

END APPROACH / PAVEMENT
STA 153+50.00

GUIDE SIGN
(WOODSTOCK
RUTLAND
NEXT RIGHT)

I-91 SOUTHBOUND
TO HARTLAND

I-91 EXIT 11
SB ON RAMP "A"

US-5
TO HARTLAND

SIGN
DIRECTION GROUP

I-91 NORTHBOUND
TO NORWICH

US-5
TO NORWICH

MATCHLINE 247+50.00

MATCHLINE 253+25.00

BEGIN PAVEMENT
STA 247+75.00

BEGIN PROJECT
STA 249+50.00

BEGIN BRIDGE 43N
STA 249+89.46
FG = 572.67

CL BEARING
STA 249+93.50
FG = 572.64

CL BEARING
STA 251+21.50
FG = 571.78

END PROJECT
STA 251+75.00

END BRIDGE 43N
STA 251+25.62
FG = 571.74

END APPROACH / PAVEMENT
STA 253+00.00

REMOVAL AND DISPOSAL OF GUARDRAIL

STA 148+45.38 - 149+44.06 LT
STA 148+57.07 - 149+64.67 RT
STA 151+66.05 - 152+42.00 LT
STA 151+87.09 - 152+60.53 RT

STA 248+41.00 - 249+61.25 RT
STA 247+07.98 - 249+39.71 LT
STA 249+28.12 - 249+35.28 FLT
STA 251+50.58 - 251+60.14 FLT
STA 251+58.68 - 252+61.02 LT
STA 251+84.80 - 252+95.05 RT

BITUMINOUS CONCRETE CURB, TYPE A

STA 149+31.89 - 149+90.20 RT

STA 251+50.66 - 251+98.52 RT

NOTES:

1. FOR ADDITIONAL INFORMATION ON RAIL, UTILITIES DRAINAGE, SIGNS AND PAVEMENT MARKINGS, SEE THOSE INDIVIDUAL SHEETS.

LAYOUT SHEET 2

SCALE 1" = 20'-0"
20 0 20

PROJECT NAME: HARTFORD
PROJECT NUMBER: IM 091-2(79)

FILE NAME: 12a132\sl2a132bdr.dgn
PROJECT LEADER: K. HIGGINS
DESIGNED BY: W. LAMMER
LAYOUT SHEET 2

PLOT DATE: 15-DEC-2014
DRAWN BY: K. FRIEDLAND
CHECKED BY: J. SALVATORI
SHEET 22 OF 166

CURVE I-91 SOUTH	CURVE I-91 NORTH
DELTA = 39° 10' 51"	DELTA = 39° 14' 03"
D = 2° 12' 13"	D = 2° 13' 30"
R = 2600.00'	R = 2575.00'
T = 925.33'	T = 917.78'
L = 1777.98'	L = 1763.27'
E = 159.75'	E = 158.67'
e (max) = 0.06	e (max) = 0.06

N

VT STATE PLANE GRID

PI #1 I-91 SB
STA 155+85.89

PI #1 I-91 NB
STA 255+42.33

I-91 SOUTHBOUND
TO HARTLAND

I-91 EXIT 11
SB ON RAMP "A"

HVCTRL
10

MATCHLINE 253+25.00

154+00
155+00
156+00
157+00
158+00
159+00
254+00
255+00
256+00
257+00

I-91 NORTHBOUND
TO NORWICH

I-91 EXIT 11
RAMP "D"

LAYOUT SHEET 3

SCALE 1" = 20'-0"
20 0 20

PROJECT NAME:	HARTFORD
PROJECT NUMBER:	IM 091-2(79)
FILE NAME: l2al32\sl2al32bdr.dgn	PLOT DATE: 15-DEC-2014
PROJECT LEADER: K. HIGGINS	DRAWN BY: K. FRIEDLAND
DESIGNED BY: W. LAMMER	CHECKED BY: J. SALVATORI
LAYOUT SHEET 3	SHEET 23 OF 166

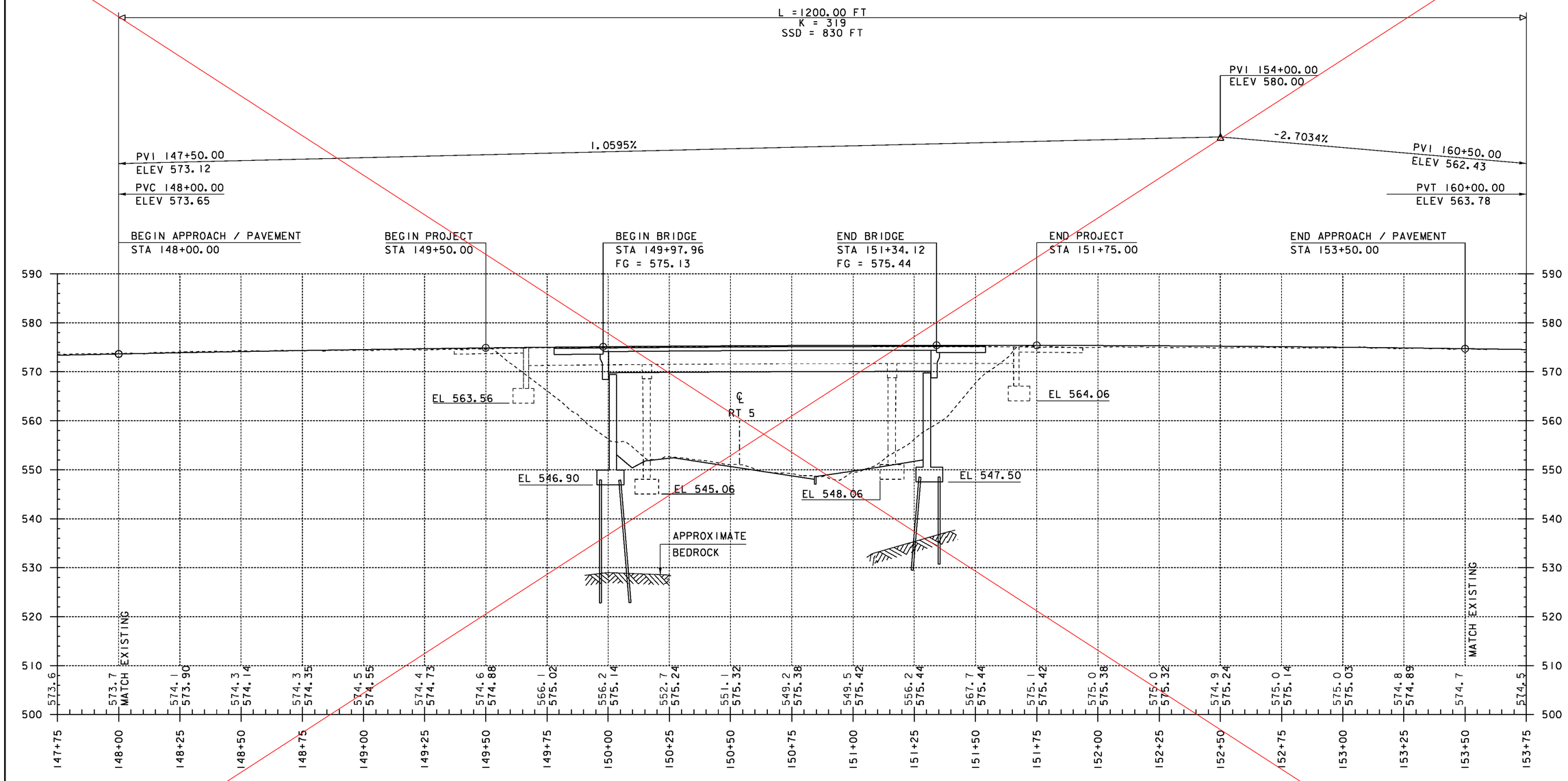

I-91 SB PROFILE

HOR. SCALE 1" = 20'-0"
VER. SCALE 1" = 10'-0"

EXISTING GROUND IS FROM LIDAR IMAGERY.

THE GRADES SHOWN TO THE NEAREST TENTH ARE THE EXISTING GROUND ELEVATIONS ALONG THE PROPOSED ALIGNMENT.

THE GRADES SHOWN TO THE NEAREST HUNDREDTH ARE THE FINISHED GROUND ELEVATIONS ALONG THE PROPOSED ALIGNMENT.

SEE SHEET 24-R

PROJECT NAME: HARTFORD
PROJECT NUMBER: IM 091-2(79)

FILE NAME: sl2al32profile.dgn
PROJECT LEADER: K. HIGGINS
DESIGNED BY: W. LAMMER
I-91 SOUTHBOUND PROFILE

PLOT DATE: 15-DEC-2014
DRAWN BY: K. FRIEDLAND
CHECKED BY: J. SALVATORI
SHEET 24 OF 166

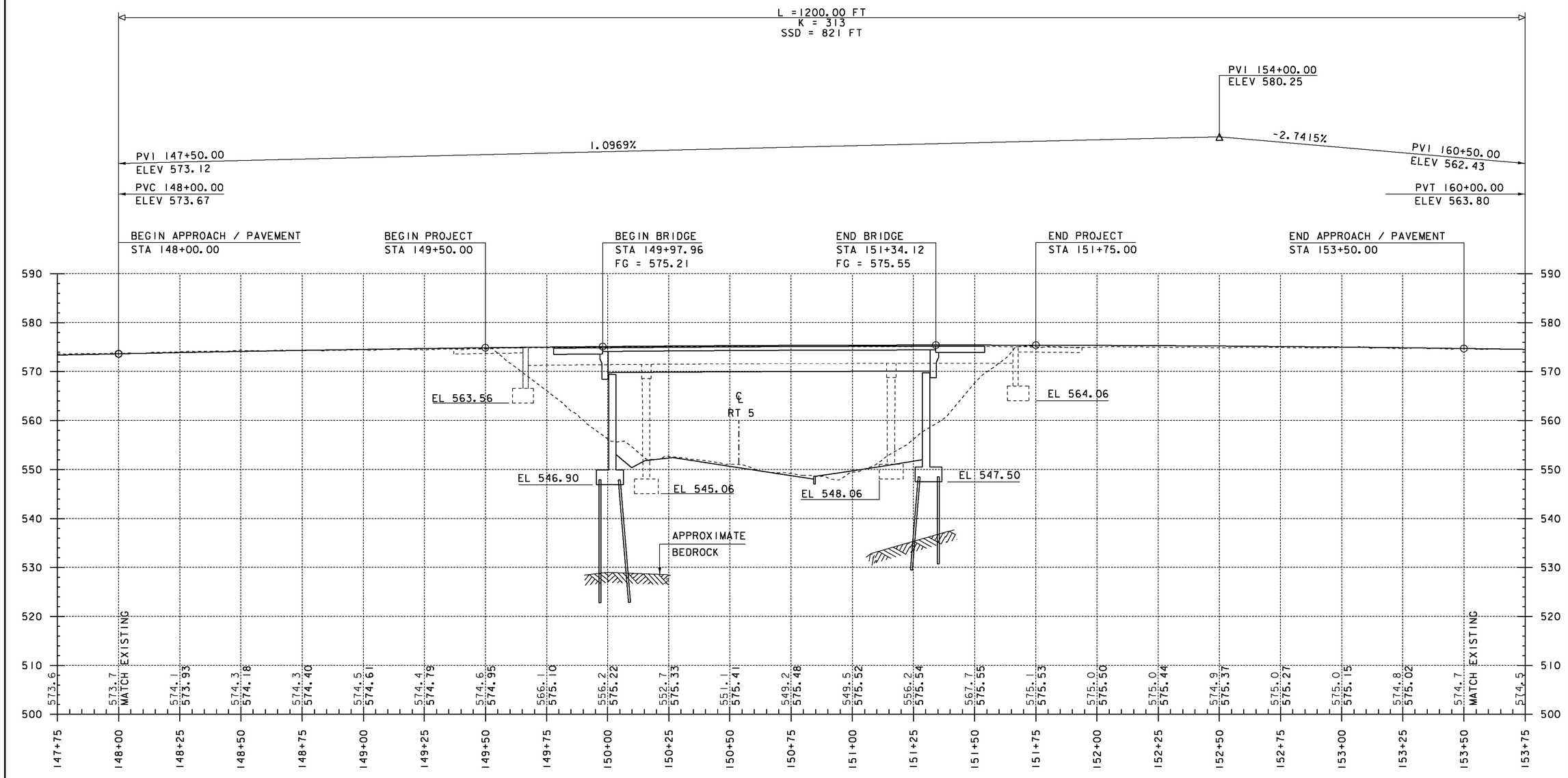

I-91 SB PROFILE

HOR. SCALE 1" = 20'-0"
VER. SCALE 1" = 10'-0"

EXISTING GROUND IS FROM LIDAR IMAGERY.

THE GRADES SHOWN TO THE NEAREST TENTH ARE THE EXISTING GROUND ELEVATIONS ALONG THE PROPOSED ALIGNMENT.

THE GRADES SHOWN TO THE NEAREST HUNDREDTH ARE THE FINISHED GROUND ELEVATIONS ALONG THE PROPOSED ALIGNMENT.

REVISION	DATE	DESCRIPTION	BY
1	06-29-2015	REVISED DUE TO BEAM PROFILES	JTS

PROJECT NAME: HARTFORD
PROJECT NUMBER: IM 091-2(79)

FILE NAME: sl2al32profile.dgn
PROJECT LEADER: K. HIGGINS
DESIGNED BY: W. LAMMER
I-91 SOUTHBOUND PROFILE

PLOT DATE: 29-JUN-2015
DRAWN BY: K. FRIEDLAND
CHECKED BY: J. SALVATORI
SHEET 24R OF 166

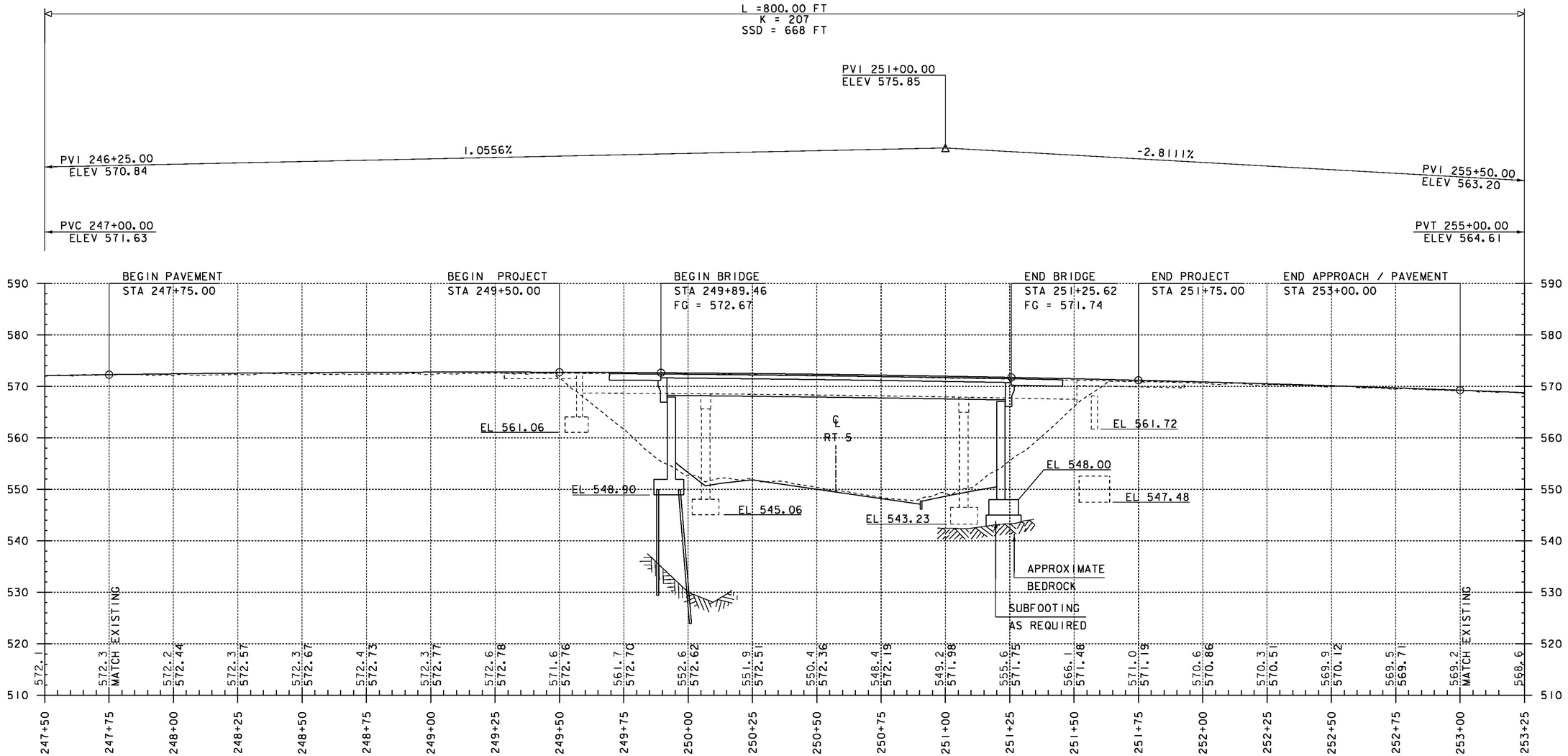

I-91 NB PROFILE

HOR. SCALE 1" = 20'-0"
VER. SCALE 1" = 10'-0"

EXISTING GROUND IS FROM LIDAR IMAGERY.

THE GRADES SHOWN TO THE NEAREST TENTH ARE THE EXISTING GROUND ELEVATIONS ALONG THE PROPOSED ALIGNMENT.

THE GRADES SHOWN TO THE NEAREST HUNDREDTH ARE THE FINISHED GROUND ELEVATIONS ALONG THE PROPOSED ALIGNMENT.

PROJECT NAME: HARTFORD
PROJECT NUMBER: IM 091-2(79)

FILE NAME: sl2al32profile.dgn
PROJECT LEADER: K. HIGGINS
DESIGNED BY: W. LAMMER
I-91 NORTHBOUND PROFILE

PLOT DATE: 15-DEC-2014
DRAWN BY: K. FRIEDLAND
CHECKED BY: J. SALVATORI
SHEET 25 OF 166

N

VT STATE PLANE GRID

R=50'

CZ

MATCHLINE 350+50.00

US5 PT #1
STA 346+42.03

US 5 SOUTHBOUND
TO HARTLAND

345+00
" E

346+00

347+00

348+00

349+00

350+00

US 5 NORTHBOUND
TO WILDER

BEGIN PAVEMENT
~~STA 348+00.00~~
STA 347+64.00

US 5 LAYOUT SHEET 1

SCALE 1" = 20'-0"
20 0 20

PROJECT NAME:	HARTFORD
PROJECT NUMBER:	IM 091-2(79)

FILE NAME: si2al32bdr_rte5.dgn	PLOT DATE: 15-DEC-2014
PROJECT LEADER: K. HIGGINS	DRAWN BY: K. FRIEDLAND
DESIGNED BY: W. LAMMER	CHECKED BY: J. SALVATORI
US 5 LAYOUT SHEET 1	SHEET 26 OF 166

REMOVAL AND DISPOSAL OF GUARDRAIL
STA 350+90.77 - 353+74.00 RT

REMOVING AND RESETTING LIGHT POLE
STA 351+78.39 RT

REMOVING AND RESETTING FENCE
STA 351+06.24 - 351+95.34 RT

VERTICAL GRANITE CURB
STA 351+00.00 + 354+75.00 LT

GRANITE SLOPE EDGING
STA 353+54.40 - 355+73.10 RT
STA 356+04.25 - 356+95.35 RT

N

VT STATE PLANE GRID

MATCHLINE 350+50.00

MATCHLINE 355+50.00

US5 PC#2
STA 350+97.02

US5 PT#3 / PC#4
STA 355+13.06

US 5 SOUTHBOUND
TO HARTLAND

US 5 NORTHBOUND
TO WILDER

351+00

352+00

353+00

354+00

355+00

S 89°37'44" E

N 67°58'17" E

R=3'-6"

R=1200'

US5 PI#2
STA 352+41.96

US5 PT#2
STA 353+83.19

US5 PC#3
STA 354+27.79

US5 PI#3
STA 354+70.45

FENCE

STREET LIGHT

152+00

151+00

252+00

150+00

250+00

149+00

249+00

US-5 CURVE (2)
DELTA = 22°24'00"
D = 7°49'38"
R = 732.00'
T = 144.94'
L = 286.18'
E = 14.21'

US-5 CURVE (3)
DELTA = 4°59'07"
D = 5°50'47"
R = 980.00'
T = 42.66'
L = 85.27'
E = 0.93'

US 5 LAYOUT SHEET 2

SCALE 1" = 20'-0"
20 0 20

PROJECT NAME:	HARTFORD
PROJECT NUMBER:	IM 091-2(79)
FILE NAME: sl2al32bdr_rte5.dgn	PLOT DATE: 15-DEC-2014
PROJECT LEADER: K. HIGGINS	DRAWN BY: K. FRIEDLAND
DESIGNED BY: W. LAMMER	CHECKED BY: J. SALVATORI
US 5 LAYOUT SHEET 2	SHEET 27 OF 166

GRANITE SLOPE EDGING
STA 356+03.75 - 356+95.86 RT
STA 355+50.00 - 355+74.51 RT

US-5 CURVE (4)
DELTA = 28°39'25"
D = 6°01'52"
R = 950.00'
T = 242.65'
L = 475.15'
E = 30.50'

N

VT STATE PLANE GRID

MATCHLINE 355+50.00

R=55'

R=55'

US 5 SOUTHBOUND
TO HARTLAND

R=225'

356+00

R=3'-6"

357+00

R=16' (TYP)

R=45'

R=5'

R=6'

R=5'

N 62°59'09" E

N 34°19'45" E

358+00

359+00

360+00

END PAVEMENT
~~STA 358+00.00~~ STA 358+60 & STA 359+00

US5 PT#4
STA 359+88.21

US5 POE
STA 360+00.00

US 5 NORTHBOUND
TO WILDER

US5 PI#4
STA 357+55.72

US 5 LAYOUT SHEET 3

SCALE 1" = 20'-0"
20 0 20

PROJECT NAME:	HARTFORD
PROJECT NUMBER:	IM 091-2(79)
FILE NAME: sl2al32bdr_rte5.dgn	PLOT DATE: 15-DEC-2014
PROJECT LEADER: K. HIGGINS	DRAWN BY: K. FRIEDLAND
DESIGNED BY: W. LAMMER	CHECKED BY: J. SALVATORI
US 5 LAYOUT SHEET 3	SHEET 28 OF 166

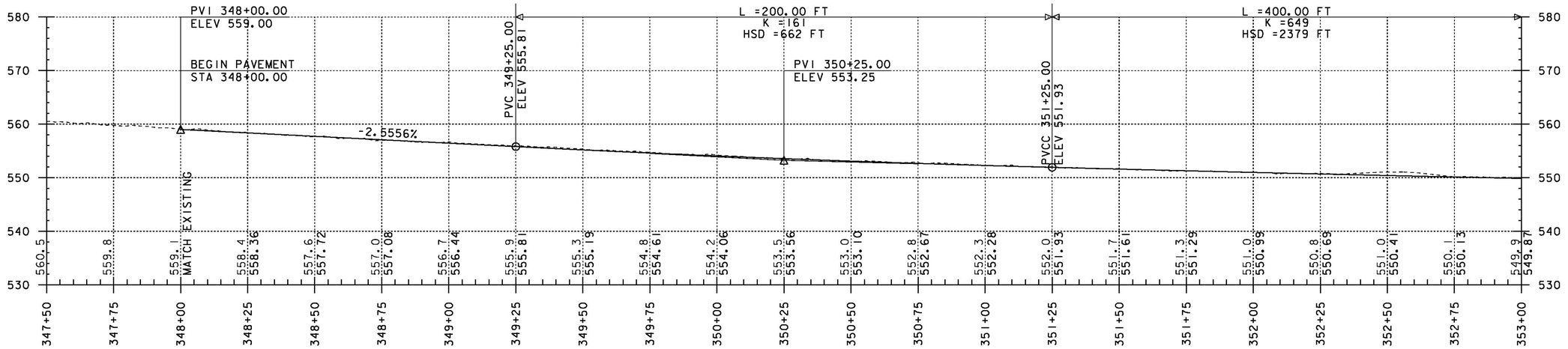

US 5 PROFILE
(STA 347+50 - 353+00)

HOR. SCALE 1" = 20'-0"
VER. SCALE 1" = 10'-0"

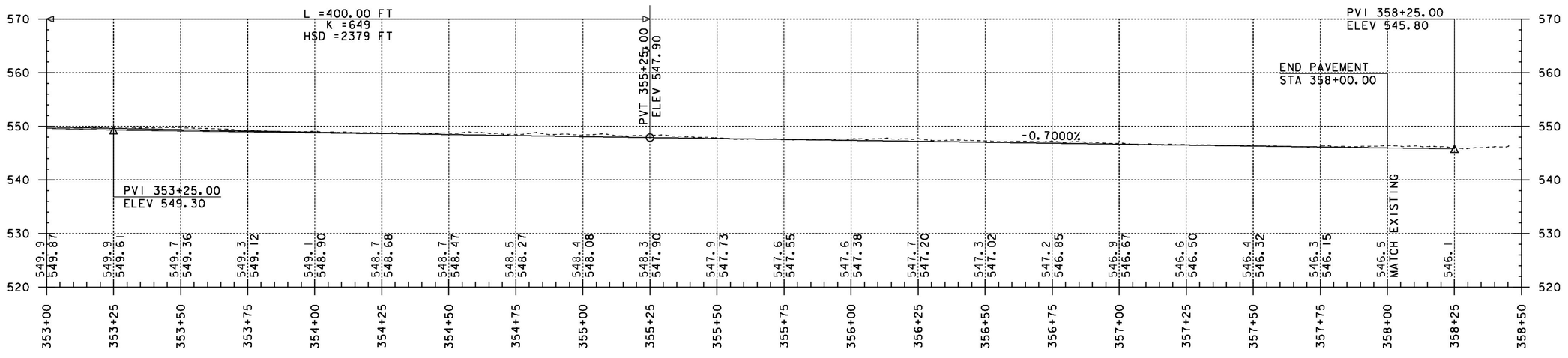

US 5 PROFILE
(STA 353+00 - 358+50)

HOR. SCALE 1" = 20'-0"
VER. SCALE 1" = 10'-0"

EXISTING GROUND IS FROM LIDAR IMAGERY.

THE GRADES SHOWN TO THE NEAREST TENTH ARE THE EXISTING GROUND ELEVATIONS ALONG THE PROPOSED ALIGNMENT.

THE GRADES SHOWN TO THE NEAREST HUNDREDTH ARE THE FINISHED GROUND ELEVATIONS ALONG THE PROPOSED ALIGNMENT.

PROJECT NAME: HARTFORD
PROJECT NUMBER: IM 091-2(79)

FILE NAME: s12a132profile.dgn
PROJECT LEADER: K. HIGGINS
DESIGNED BY: W. LAMMER
US 5 PROFILE

PLOT DATE: 15-DEC-2014
DRAWN BY: K. FRIEDLAND
CHECKED BY: J. SALVATORI
SHEET 29 OF 166

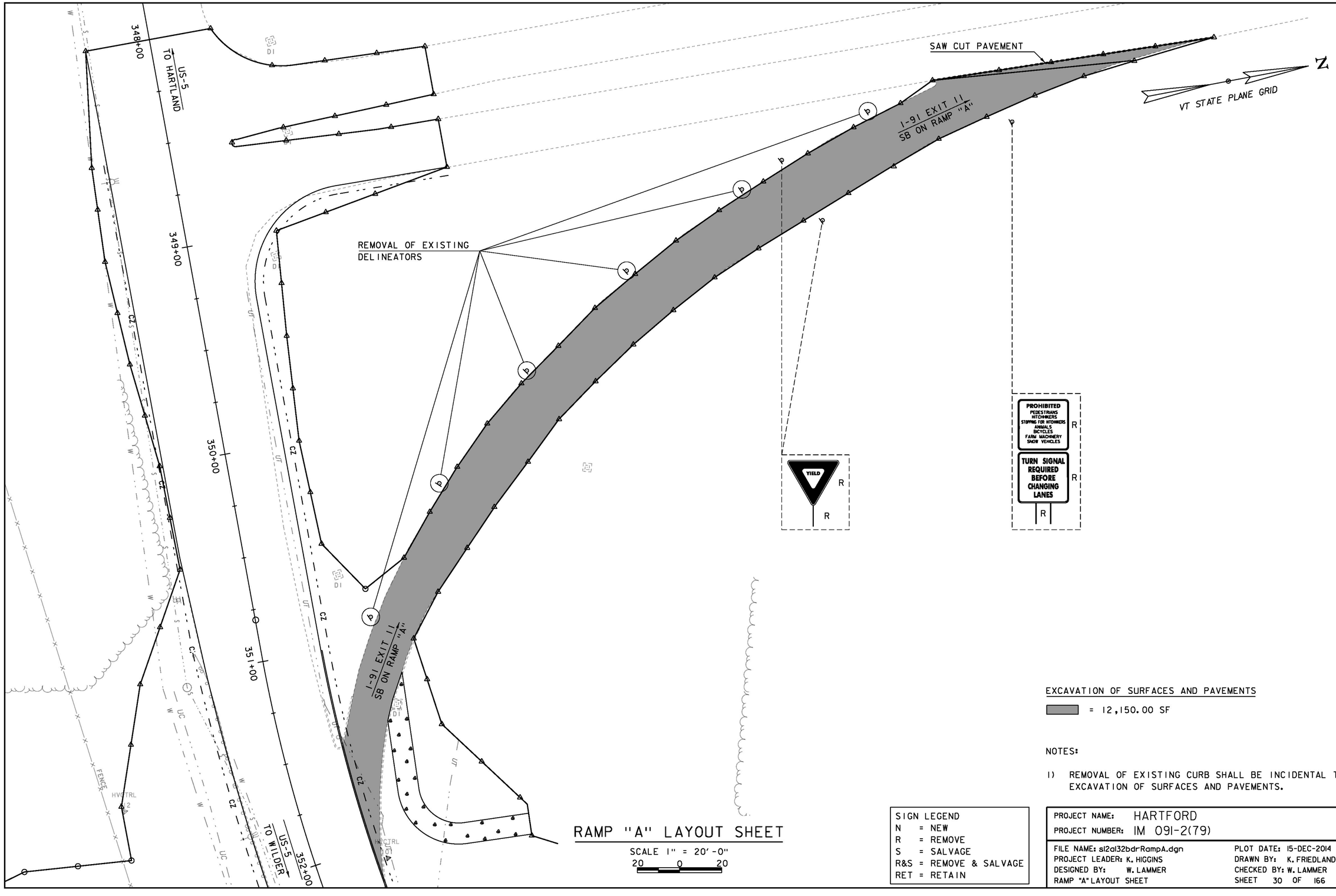

RAMP "A" LAYOUT SHEET

SCALE 1" = 20'-0"

20 0 20

EXCAVATION OF SURFACES AND PAVEMENTS

= 12,150.00 SF

NOTES:

1) REMOVAL OF EXISTING CURB SHALL BE INCIDENTAL TO EXCAVATION OF SURFACES AND PAVEMENTS.

SIGN LEGEND	
N	= NEW
R	= REMOVE
S	= SALVAGE
R&S	= REMOVE & SALVAGE
RET	= RETAIN

PROJECT NAME:	HARTFORD
PROJECT NUMBER:	IM 091-2(79)

FILE NAME: sl2al32bdrRampA.dgn	PLOT DATE: 15-DEC-2014
PROJECT LEADER: K. HIGGINS	DRAWN BY: K. FRIEDLAND
DESIGNED BY: W. LAMMER	CHECKED BY: W. LAMMER
RAMP "A" LAYOUT SHEET	SHEET 30 OF 166



⇨ FLOW OF TRAFFIC
● RETROREFLECTIVE PLASTIC DRUM
FLASHING ARROW PANEL
ENERGY ABSORPTION ATTENUATOR
TYPE III BARRICADE
TYPE III (MOD.) BARRICADE
PAVEMENT MARKING REMOVAL

I-91 SB TRAFFIC CONTROL PLAN 1

(LEFT LANE CLOSURE)

SCALE 1" = 50'-0"
50 0 50

NOTE TO REVIEWER. THIS SHEET IS FOR ESTIMATING PURPOSES ONLY. CONTRACTOR IS TO FOLLOW THE APPRORIATE T STANDARDS.

PROJECT NAME: HARTFORD
PROJECT NUMBER: IM 091-2(79)

FILE NAME: s12a132detour91_bdr_south.dgn
PROJECT LEADER: K. HIGGINS
DESIGNED BY: J. SALVATORI
I-91SB TRAFFIC CONTROL PLAN 1
PLOT DATE: 15-DEC-2014
DRAWN BY: J. SALVATORI
CHECKED BY: M. MILLER
SHEET 31 OF 166

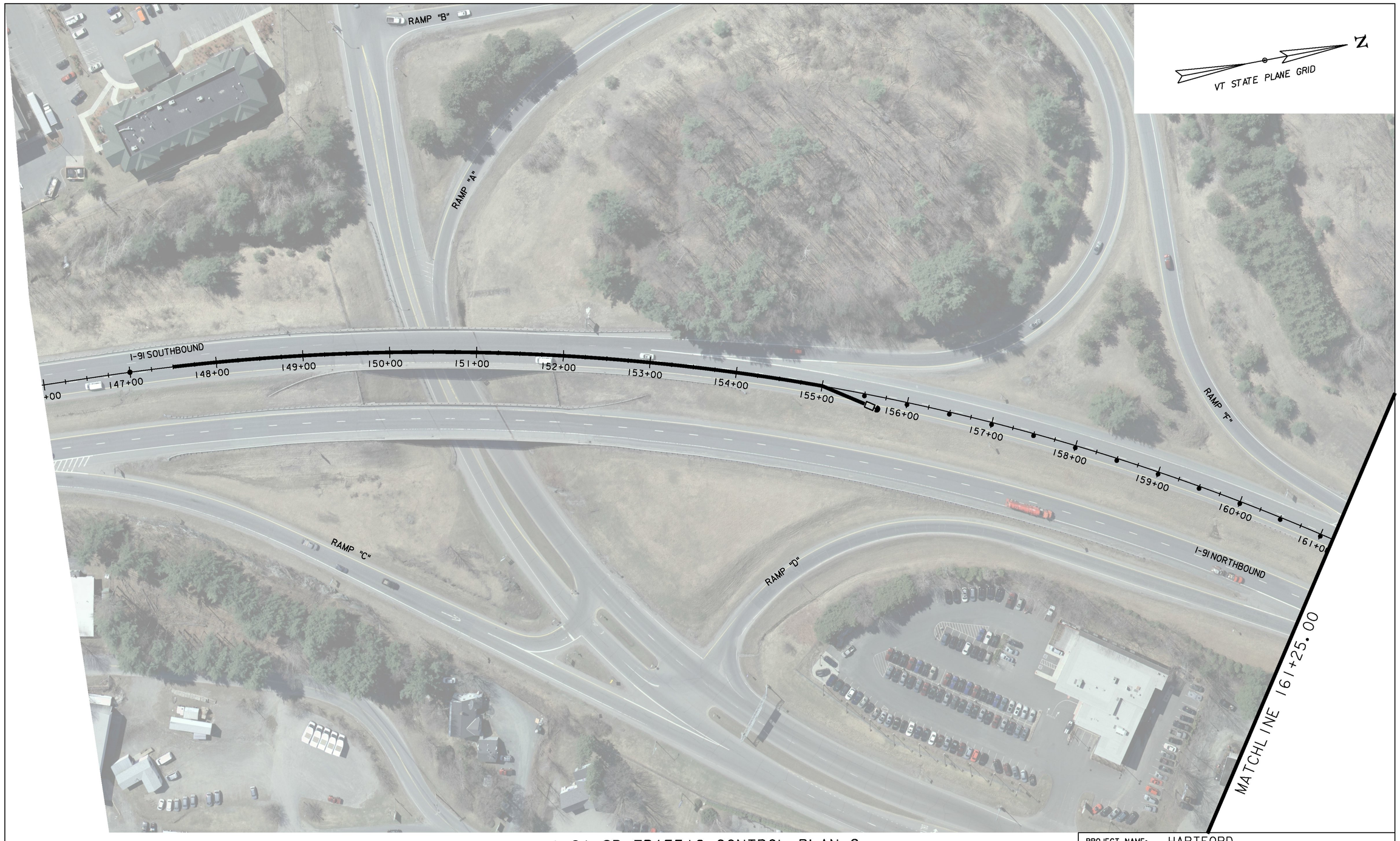

I-91 SB TRAFFIC CONTROL PLAN 2

(LEFT LANE CLOSURE)

SCALE 1" = 50'-0"

50 0 50

NOTE TO REVIEWER. THIS SHEET IS FOR ESTIMATING PURPOSES ONLY. CONTRACTOR IS TO FOLLOW THE APPRORIATE T STANDARDS.

PROJECT NAME: HARTFORD
PROJECT NUMBER: IM 091-2(79)

FILE NAME: sl2al32detour91_bdr_south.dgn
PROJECT LEADER: K. HIGGINS
DESIGNED BY: J. SALVATORI
I-91 SB TRAFFIC CONTROL PLAN 2

PLOT DATE: 15-DEC-2014
DRAWN BY: J. SALVATORI
CHECKED BY: M. MILLER
SHEET 32 OF 166



I-91 SB TRAFFIC CONTROL PLAN 3
(DURING BRIDGE CLOSURE)

SCALE 1" = 50'-0"
50 0 50

NOTE TO REVIEWER. THIS SHEET IS FOR ESTIMATING PURPOSES ONLY. CONTRACTOR IS TO FOLLOW THE APPRORIATE T STANDARDS.

PROJECT NAME:	HARTFORD
PROJECT NUMBER:	IM 091-2(79)
FILE NAME: s12a132detour91_bdr_south.dgn	PLOT DATE: 15-DEC-2014
PROJECT LEADER: K. HIGGINS	DRAWN BY: J. SALVATORI
DESIGNED BY: J. SALVATORI	CHECKED BY: M. MILLER
I-91 SB TRAFFIC CONTROL PLAN 3	SHEET 33 OF 166



FOR ADDITIONAL DETAILS SEE STANDARDS
T-1, T-20 AND T-28

I-91SB TRAFFIC CONTROL PLAN 4
(DURING BRIDGE CLOSURE)

SCALE 1" = 50'-0"
50 0 50

NOTE TO REVIEWER. THIS SHEET IS FOR ESTIMATING PURPOSES ONLY. CONTRACTOR IS TO FOLLOW THE APPRORIATE T STANDARDS.

PROJECT NAME: HARTFORD
PROJECT NUMBER: IM 091-2(79)

FILE NAME: s12a132detour91_bdr_south.dgn
PROJECT LEADER: K. HIGGINS
DESIGNED BY: J. SALVATORI
I-91 SB TRAFFIC CONTROL PLAN 4

PLOT DATE: 15-DEC-2014
DRAWN BY: J. SALVATORI
CHECKED BY: M. MILLER
SHEET 34 OF 166



FLOW OF TRAFFIC
RETROREFLECTIVE PLASTIC DRUM
FLASHING ARROW PANEL
ENERGY ABSORPTION ATTENUATOR
TYPE III BARRICADE
TYPE III (MOD.) BARRICADE
PAVEMENT MARKING REMOVAL

I-91 NB TRAFFIC CONTROL PLAN 1
(LEFT LANE CLOSURE)

SCALE 1" = 50'-0"
50 0 50

NOTE TO REVIEWER. THIS SHEET IS FOR ESTIMATING PURPOSES ONLY. CONTRACTOR IS TO FOLLOW THE APPRORIATE T STANDARDS.

PROJECT NAME: HARTFORD
PROJECT NUMBER: IM 091-2(79)

FILE NAME: sl2al32detour91_bdr_north.dgn
PROJECT LEADER: K. HIGGINS
DESIGNED BY: J. SALVATORI
I-91NB TRAFFIC CONTROL PLAN 1
PLOT DATE: 15-DEC-2014
DRAWN BY: J. SALVATORI
CHECKED BY: M. MILLER
SHEET 35 OF 166



FOR ADDITIONAL DETAILS SEE STANDARDS
T-1, T-11, T-12, T-13 AND T-31

I-91 NB TRAFFIC CONTROL PLAN 2
(LEFT LANE CLOSURE)

SCALE 1" = 50'-0"
50 0 50

NOTE TO REVIEWER. THIS SHEET IS FOR ESTIMATING PURPOSES ONLY. CONTRACTOR IS TO FOLLOW THE APPRORIATE T STANDARDS.

PROJECT NAME:	HARTFORD
PROJECT NUMBER:	IM 091-2(79)
FILE NAME: sl2al32detour91_bdr_north.dgn	PLOT DATE: 15-DEC-2014
PROJECT LEADER: K. HIGGINS	DRAWN BY: J. SALVATORI
DESIGNED BY: J. SALVATORI	CHECKED BY: M. MILLER
I-91NB TRAFFIC CONTROL PLAN 2	SHEET 36 OF 166

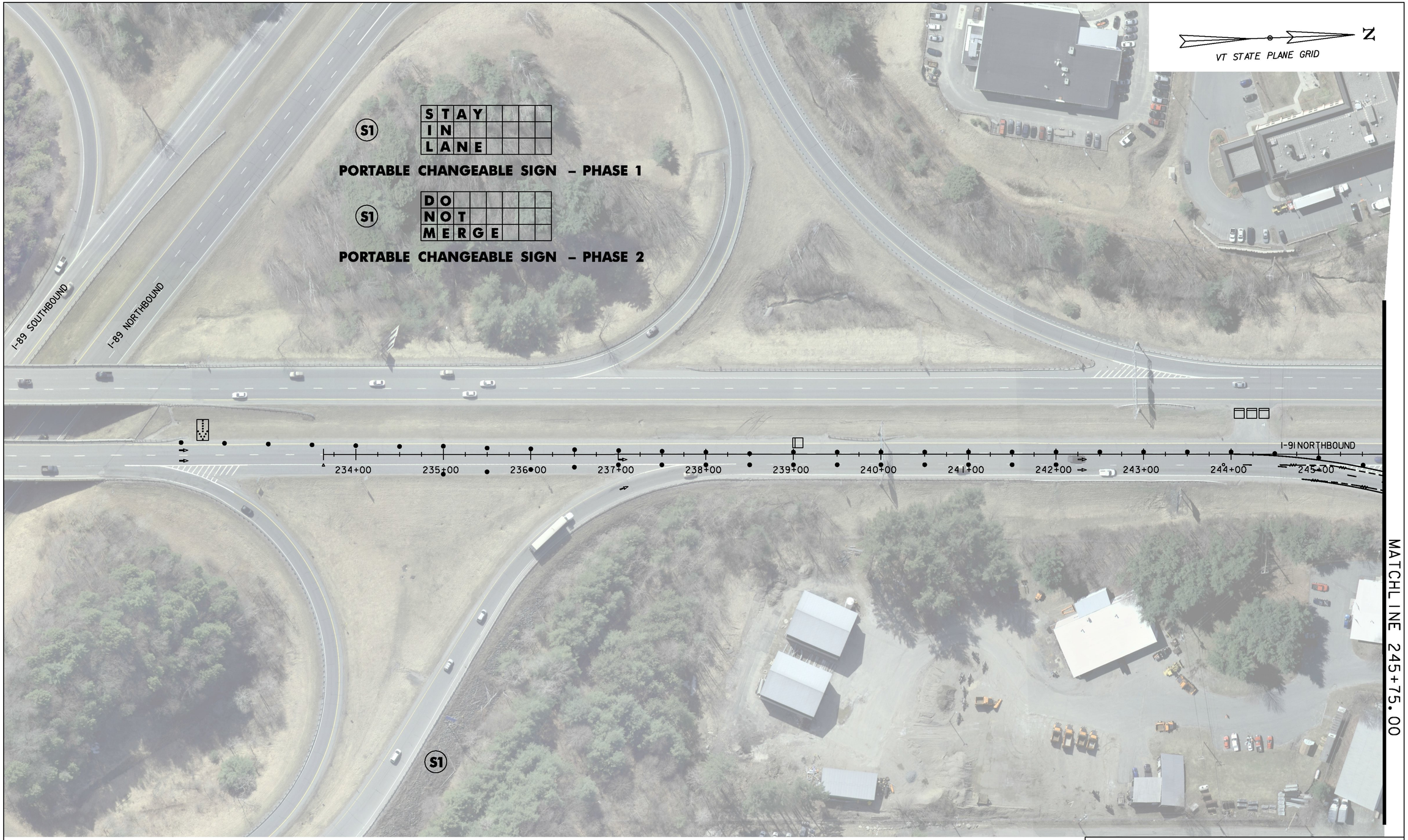

FOR ADDITIONAL DETAILS SEE STANDARDS
T-1, T-20 AND T-28

I-91 NB TRAFFIC CONTROL PLAN 3
(DURING BRIDGE CLOSURE)

SCALE 1" = 50'-0"
50 0 50

PROJECT NAME: HARTFORD
PROJECT NUMBER: IM 091-2(79)

FILE NAME: s12a132detour91_bdr_north.dgn
PROJECT LEADER: K. HIGGINS
DESIGNED BY: J. SALVATORI
I-91NB TRAFFIC CONTROL PLAN 3

PLOT DATE: 15-DEC-2014
DRAWN BY: J. SALVATORI
CHECKED BY: M. MILLER
SHEET 37 OF 166

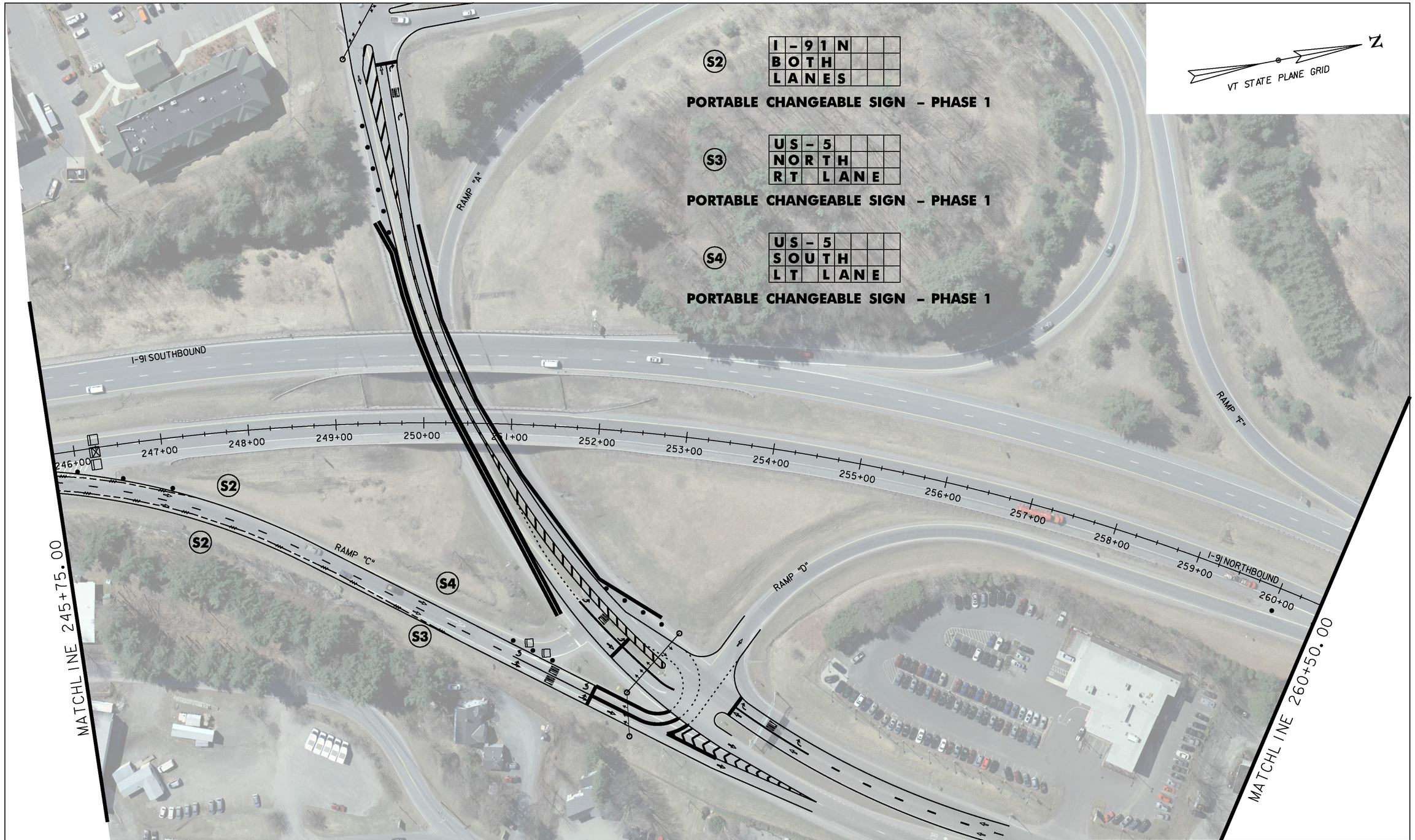

I-91 NB TRAFFIC CONTROL PLAN 4
(DURING BRIDGE CLOSURE)

SCALE 1" = 50'-0"

50 0 50

PROJECT NAME:	HARTFORD
PROJECT NUMBER:	IM 091-2(79)
FILE NAME: sl2al32detour91_bdr_north.dgn	PLOT DATE: 15-DEC-2014
PROJECT LEADER: K. HIGGINS	DRAWN BY: J. SALVATORI
DESIGNED BY: J. SALVATORI	CHECKED BY: M. MILLER
I-91NB TRAFFIC CONTROL PLAN 4	SHEET 38 OF 166



I-91 NB TRAFFIC CONTROL PLAN 5
(DURING BRIDGE CLOSURE)

SCALE 1" = 50'-0"
50 0 50

PROJECT NAME:	HARTFORD
PROJECT NUMBER:	IM 091-2(79)
FILE NAME: sl2al32detour91_bdr_north.dgn	PLOT DATE: 15-DEC-2014
PROJECT LEADER: K. HIGGINS	DRAWN BY: J. SALVATORI
DESIGNED BY: J. SALVATORI	CHECKED BY: M. MILLER
I-91 NB TRAFFIC CONTROL PLAN 5	SHEET 39 OF 166



RAMP C LAYOUT 1

SCALE 1" = 20'-0"
20 0 20

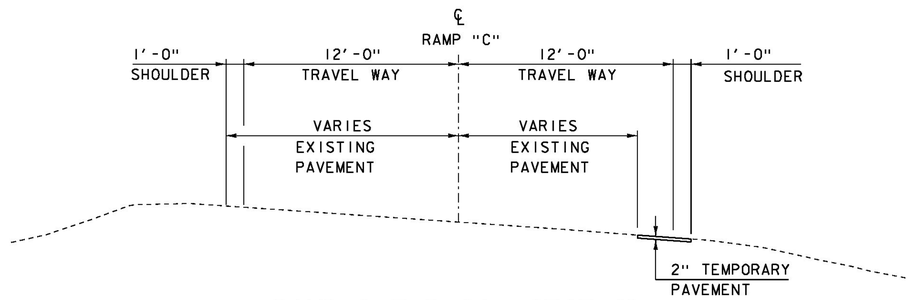

RAMP C TYPICAL SECTION

SCALE: 1/4" = 1'-0"

AREA OF TEMPORARY EXPANSION

PROJECT NAME: HARTFORD
PROJECT NUMBER: IM 091-2(79)

FILE NAME: sl2al32rampc.dgn
PROJECT LEADER: K. HIGGINS
DESIGNED BY: J. SALVATORI
RAMP C TEMPORARY EXPANSION 1

PLOT DATE: 15-DEC-2014
DRAWN BY: J. SALVATORI
CHECKED BY: ------
SHEET 40 OF 166

MATCHLINE STA 16+50

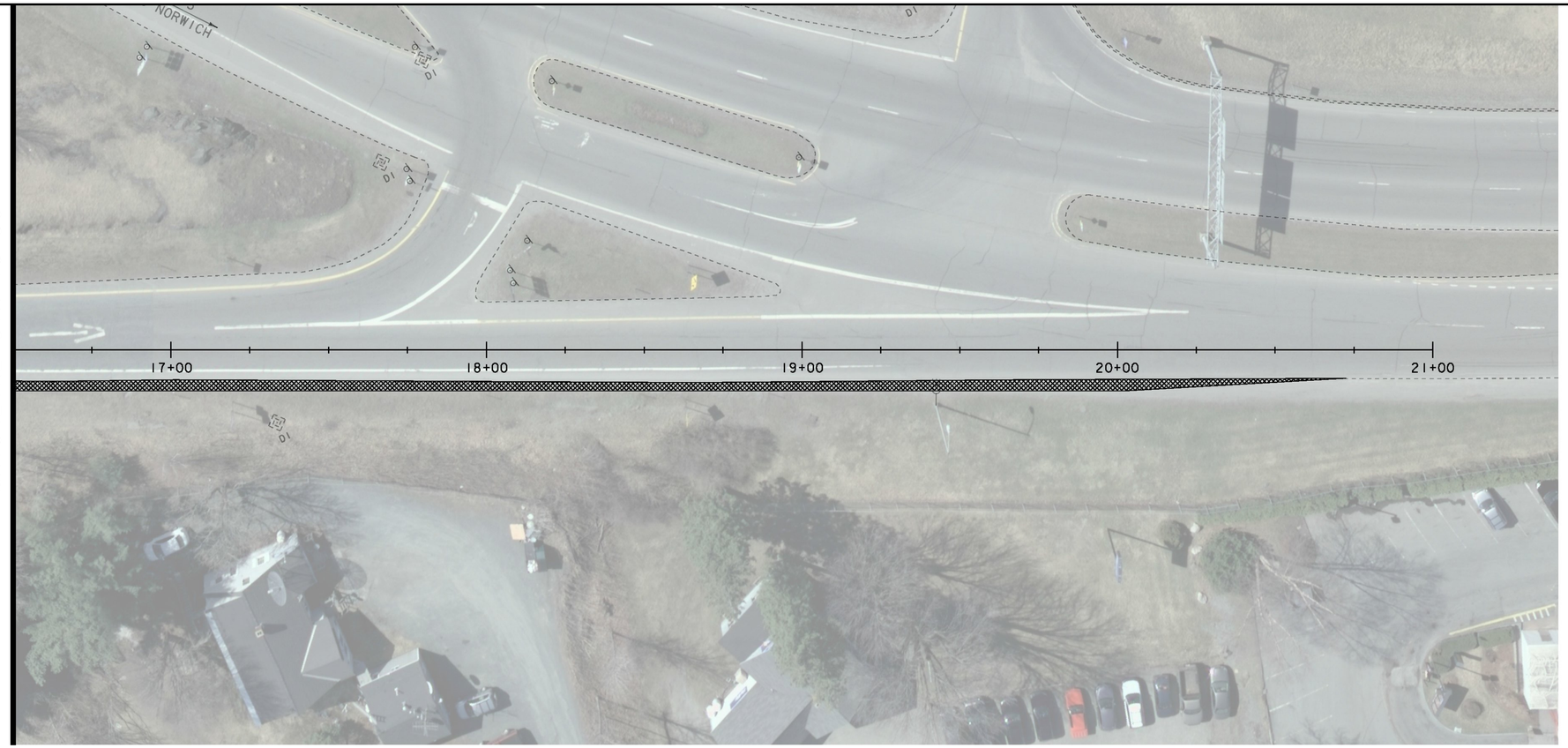

N

VT STATE PLANE GRID

RAMP C LAYOUT 2

SCALE 1" = 20'-0"
20 0 20

AREA OF TEMPORARY EXPANSION

PROJECT NAME: HARTFORD
PROJECT NUMBER: IM 091-2(79)

FILE NAME: s12a132rampc.dgn
PROJECT LEADER: K. HIGGINS
DESIGNED BY: J. SALVATORI
RAMP C TEMPORARY EXPANSION 2

PLOT DATE: 15-DEC-2014
DRAWN BY: J. SALVATORI
CHECKED BY: ------
SHEET 41 OF 166

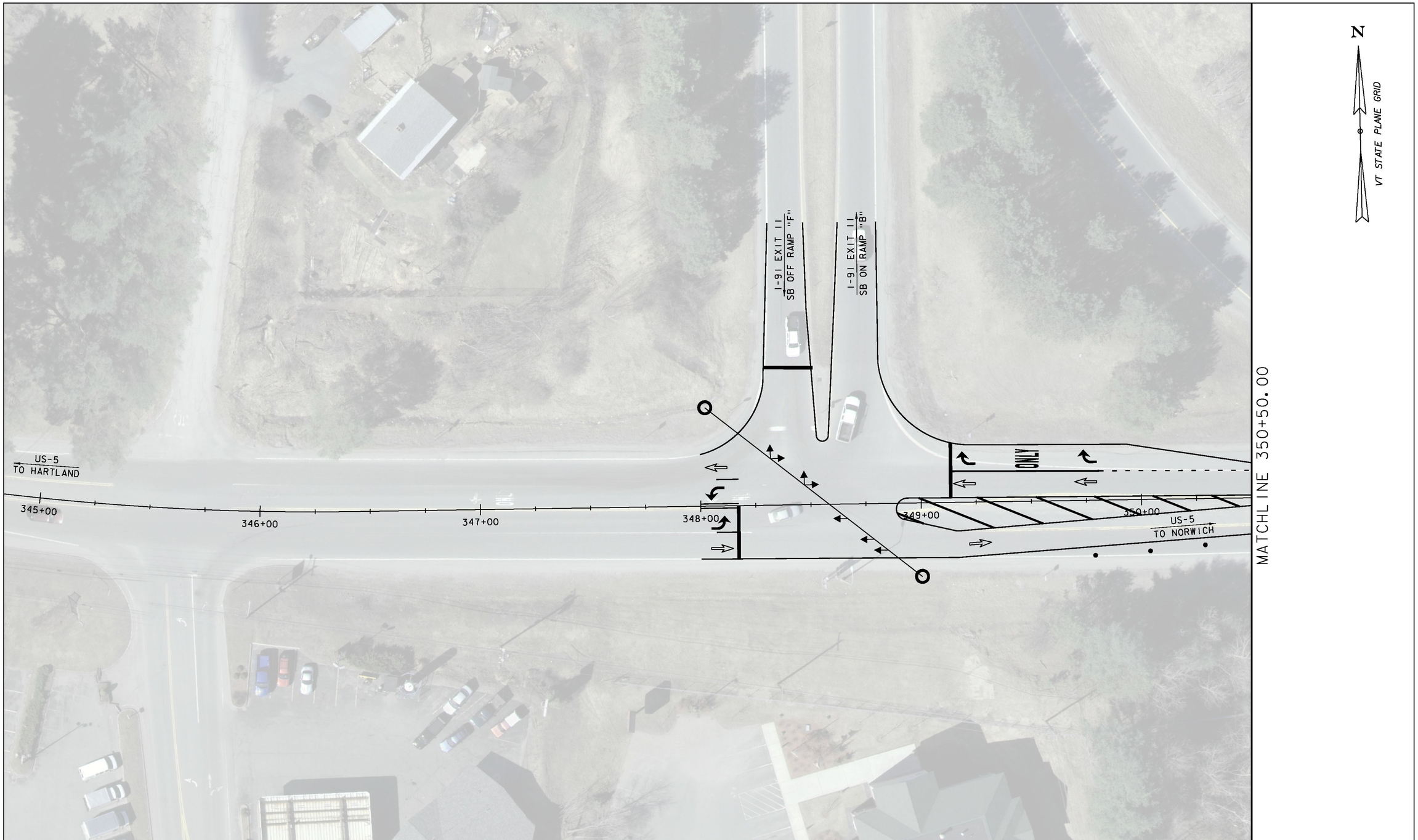

FLOW OF TRAFFIC
RETROREFLECTIVE PLASTIC DRUM
FLASHING ARROW PANEL
TYPE III BARRICADE
TYPE III (MOD.) BARRICADE
PAVEMENT MARKING REMOVAL

US5 TRAFFIC CONTROL PLAN 1
(DURING NON-CLOSURE)

SCALE 1" = 20'-0"
20 0 20

PROJECT NAME: HARTFORD
PROJECT NUMBER: IM 091-2(79)

FILE NAME: sl2al32bdr_rte5_tcp.dgn
PROJECT LEADER: K. HIGGINS
DESIGNED BY: J. SALVATORI
US5 TRAFFIC CONTROL PLAN 1

PLOT DATE: 15-DEC-2014
DRAWN BY: J. SALVATORI
CHECKED BY: M. MILLER
SHEET 42 OF 166

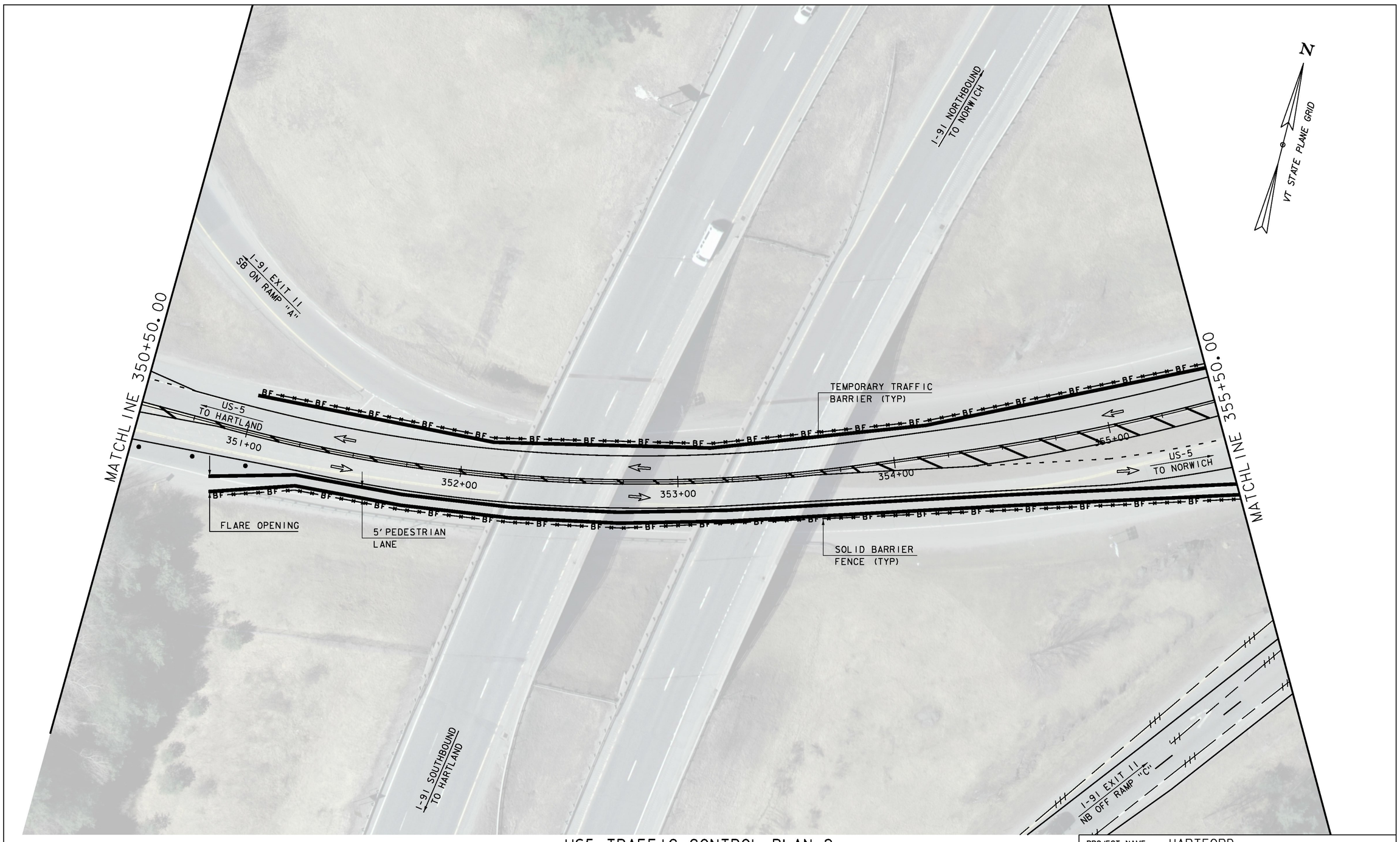

US5 TRAFFIC CONTROL PLAN 2
(DURING NON-CLOSURE)

SCALE 1" = 20'-0"
20 0 20

PROJECT NAME:	HARTFORD
PROJECT NUMBER:	IM 091-2(79)

FILE NAME: sl2al32bdr_rte5_tcp.dgn	PLOT DATE: 15-DEC-2014
PROJECT LEADER: K. HIGGINS	DRAWN BY: J. SALVATORI
DESIGNED BY: J. SALVATORI	CHECKED BY: M. MILLER
US5 TRAFFIC CONTROL PLAN 2	SHEET 43 OF 166

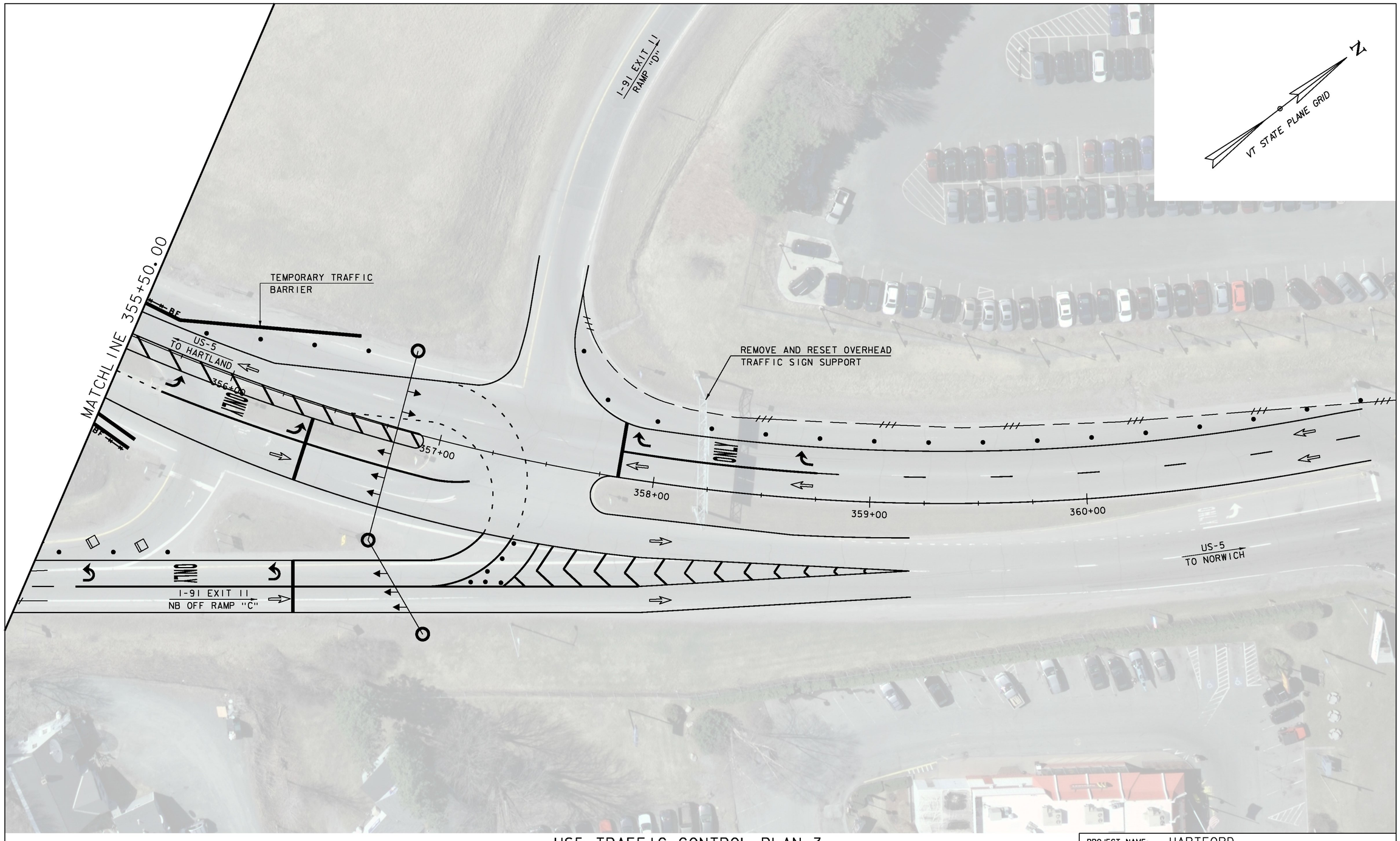

US5 TRAFFIC CONTROL PLAN 3
(DURING NON-CLOSURE)

SCALE 1" = 20'-0"
20 0 20

PROJECT NAME:	HARTFORD
PROJECT NUMBER:	IM 091-2(79)

FILE NAME: sl2al32bdr_rte5_tcp.dgn	PLOT DATE: 15-DEC-2014
PROJECT LEADER: K. HIGGINS	DRAWN BY: J. SALVATORI
DESIGNED BY: J. SALVATORI	CHECKED BY: M. MILLER
US5 TRAFFIC CONTROL PLAN 3	SHEET 44 OF 166

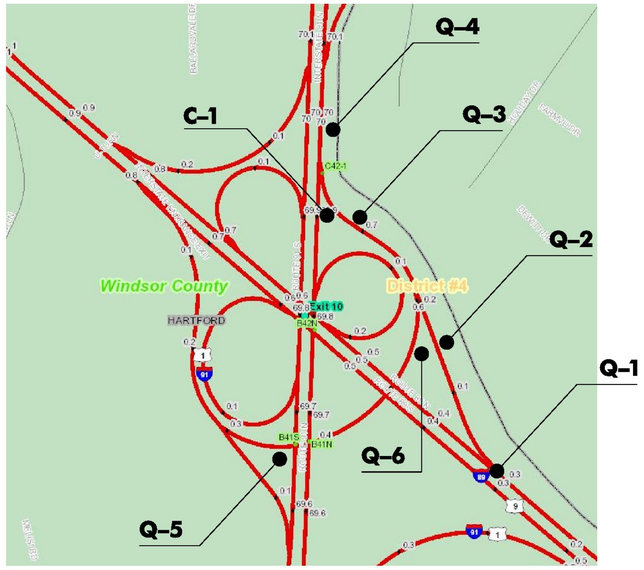

EXIT 10 INSET

NOT TO SCALE

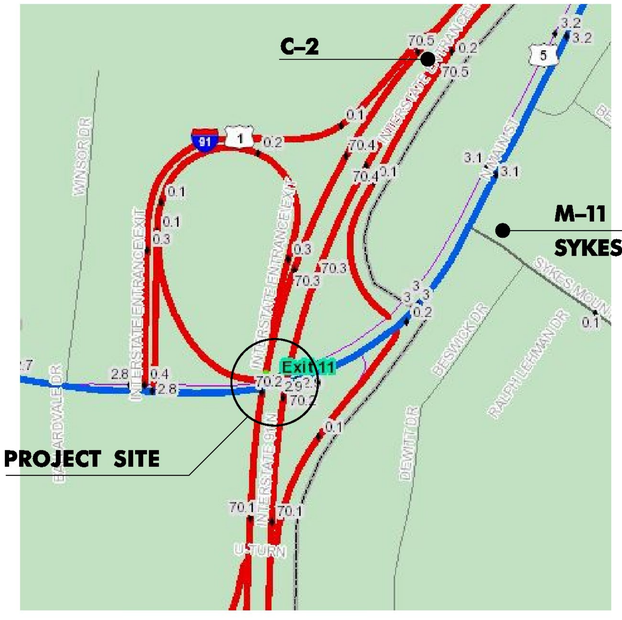

EXIT 11 INSET

NOT TO SCALE

(C) PORTABLE VIDEO TRAILER WITH PAN TILT ZOOM CAMERA (PTZ)

(M) PORTABLE CHANGEABLE MESSAGE SIGN (PCMS)

(Q) PORTABLE QUEUE TRAILER SENSOR (PQT)

SMART WORK ZONE LAYOUT

NOT TO SCALE

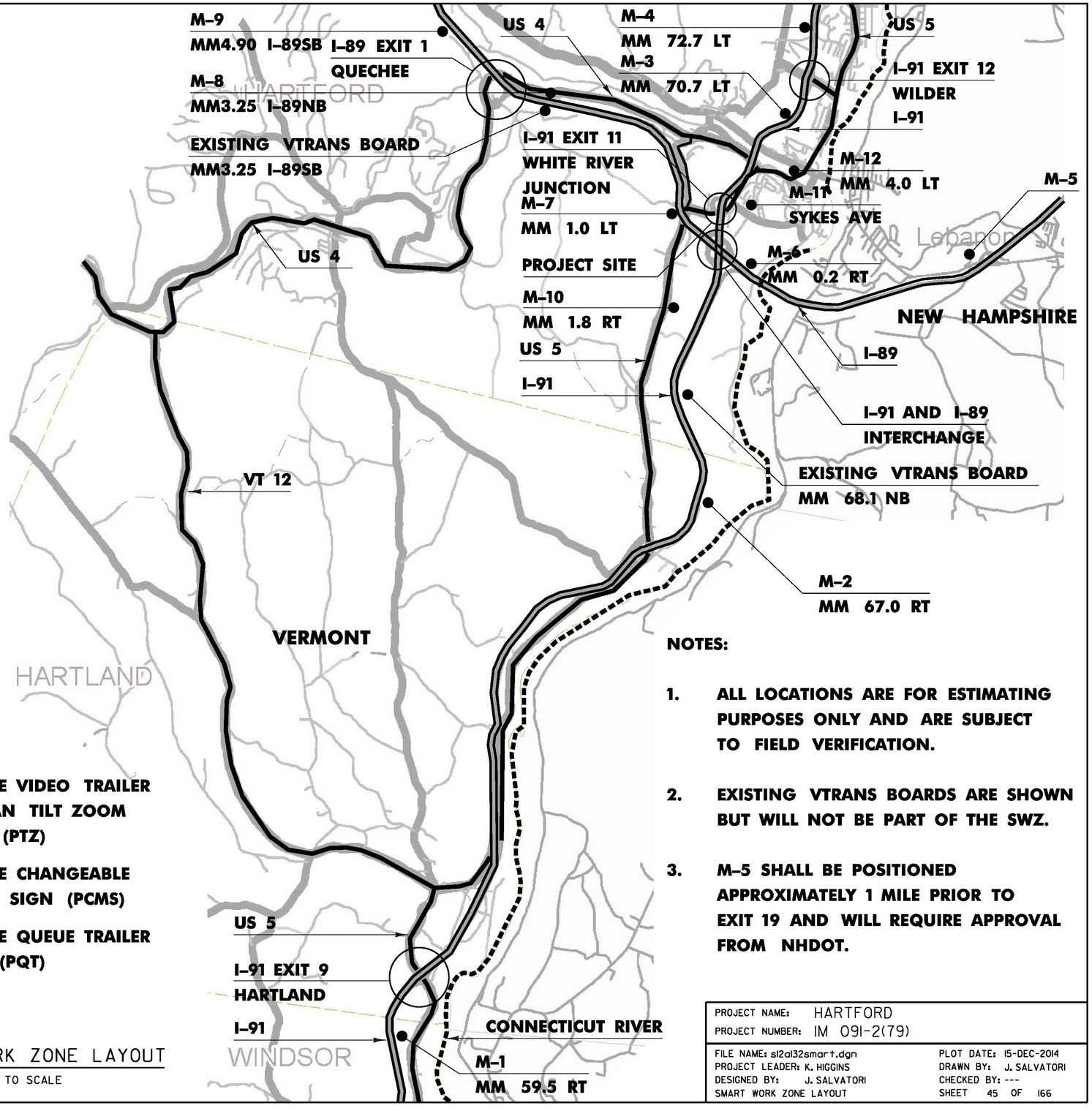

NOTES:

1. ALL LOCATIONS ARE FOR ESTIMATING PURPOSES ONLY AND ARE SUBJECT TO FIELD VERIFICATION.
2. EXISTING VTRANS BOARDS ARE SHOWN BUT WILL NOT BE PART OF THE SWZ.
3. M–5 SHALL BE POSITIONED APPROXIMATELY 1 MILE PRIOR TO EXIT 19 AND WILL REQUIRE APPROVAL FROM NHDOT.

PROJECT NAME:	HARTFORD
PROJECT NUMBER:	IM 091-2(79)
FILE NAME: sl2al32smart.dgn	PLOT DATE: 15-DEC-2014
PROJECT LEADER: K. HIGGINS	DRAWN BY: J. SALVATORI
DESIGNED BY: J. SALVATORI	CHECKED BY: ---
SMART WORK ZONE LAYOUT	SHEET 45 OF 166

MESSAGE 1

W	O	R	K				
Z	O	N	E				
A	H	E	A	D			

PHASE I

E	X	P	E	C	T		
D	E	L	A	Y	S		

PHASE II

MESSAGE SHALL BE SET AS DEFAULT MESSAGE AND SHALL BE DISPLAYED DURING WORK HOURS.

MESSAGE 2

C	R	A	S	H			
A	H	E	A	D			

PHASE I

B	E						
P	R	E	P	A	R	E	D
T	O		S	T	O	P	

PHASE II

MESSAGE SHALL BE DISPLAYED ON PCMS WHENEVER THERE IS A VEHICULAR CRASH WITHIN THE PROJECT LIMITS.

MESSAGE 3

U	S	E		I	-	8	9
E	X	I	T		1		
W	O	O	D	S	T	C	K

PHASE I

F	O	R		A	L	T	
R	O	U	T	E			
T	O		I	-	9	1	N

PHASE II

MESSAGE SHALL BE DISPLAYED ON I-89 NORTHBOUND PCMS (M-5 & M-6) WHENEVER TRAFFIC IS QUEUED AT INTERCHANGE ONTO I-89.

MESSAGE 4

N	O			L	E	F	T
T	U	R	N				

PHASE I

MESSAGE SHALL BE DISPLAYED ON SYKES AVE PCMS (M-11) WHENEVER TRAFFIC DELAYED ON ROUTE 5.

PROJECT NAME:	HARTFORD
PROJECT NUMBER:	IM 091-2(79)
FILE NAME: sl2al32smart.dgn	PLOT DATE: 15-DEC-2014
PROJECT LEADER: K. HIGGINS	DRAWN BY: J. SALVATORI
DESIGNED BY: J. SALVATORI	CHECKED BY: ---
SMART WORK ZONE DETAILS	SHEET 46 OF 166

LIST OF MAJOR EQUIPMENT

EQUIPMENT ITEM 678.40	QUANTITY
POWER METER ON STANCHION	1
BREAKER PANEL ON STANCHION	1
TRAFFIC SIGNAL CONTROLLER (NEMA TS2)	1
NEMA POLE MOUNTED CONTROLLER CABINET WITH ANCILLARY CONTROL EQUIPMENT	1
WESTERN RED CEDAR OR SOUTHERN PINE WOODEN STRAIN POLE	2
ONE WAY, 3-SECTION, 12-INCH POLYCARBONATE LED TRAFFIC SIGNAL HEAD WITH TUNNEL VISORS AND 5" LOUVERED BACK-PLATES	6
ONE WAY, 4-SECTION, 12-INCH POLYCARBONATE LED TRAFFIC SIGNAL HEAD WITH TUNNEL VISORS AND 5" LOUVERED BACK-PLATES	1
SPECIAL PROVISION, (GPS TIME CLOCK)	1
STOP BAR DETECTOR	3

CONTROLLER TIMING CHART

US ROUTE 5 & SOUTHBOUND RAMPS								
	5NL	5ST		91S		5NT		
PHASE	1	2	3	4	5	6	7	8
TRAFFIC MOVEMENT	↗	←		↙↘		→		
MINIMUM GREEN	5	10		7		10		
MAXIMUM 1 GREEN	15	45		20		45		
MAXIMUM 2 GREEN	30	50		20		50		
MAXIMUM 3 GREEN	25	40		60		40		
YELLOW CLEARANCE	4.0	4.0		4.0		4.0		
ALL RED CLEARANCE	2.0	2.0		2.0		2.0		
VEH. EXTENSION	3.0	3.0		3.0		3.0		
RECALL MODE	OFF	MIN		OFF		MIN		

NOTES:

1) CONTROLLER SHALL BE INITIALLY PROGRAMMED AND FINE-TUNED BASED ON PREVAILING FIELD CONDITIONS FOR MAXIMUM 1, MAXIMUM 2, AND COORDINATOR PROGRAMMING BY TIME-OF-DAY DURING NON-CLOSURE.

2 CONTROLLER SHALL BE INITIALLY PROGRAMMED AND FINE-TUNED BASED ON PREVAILING FIELD CONDITIONS FOR MAXIMUM 3 PROGRAMMING 24 / 7 DURING CLOSURE.

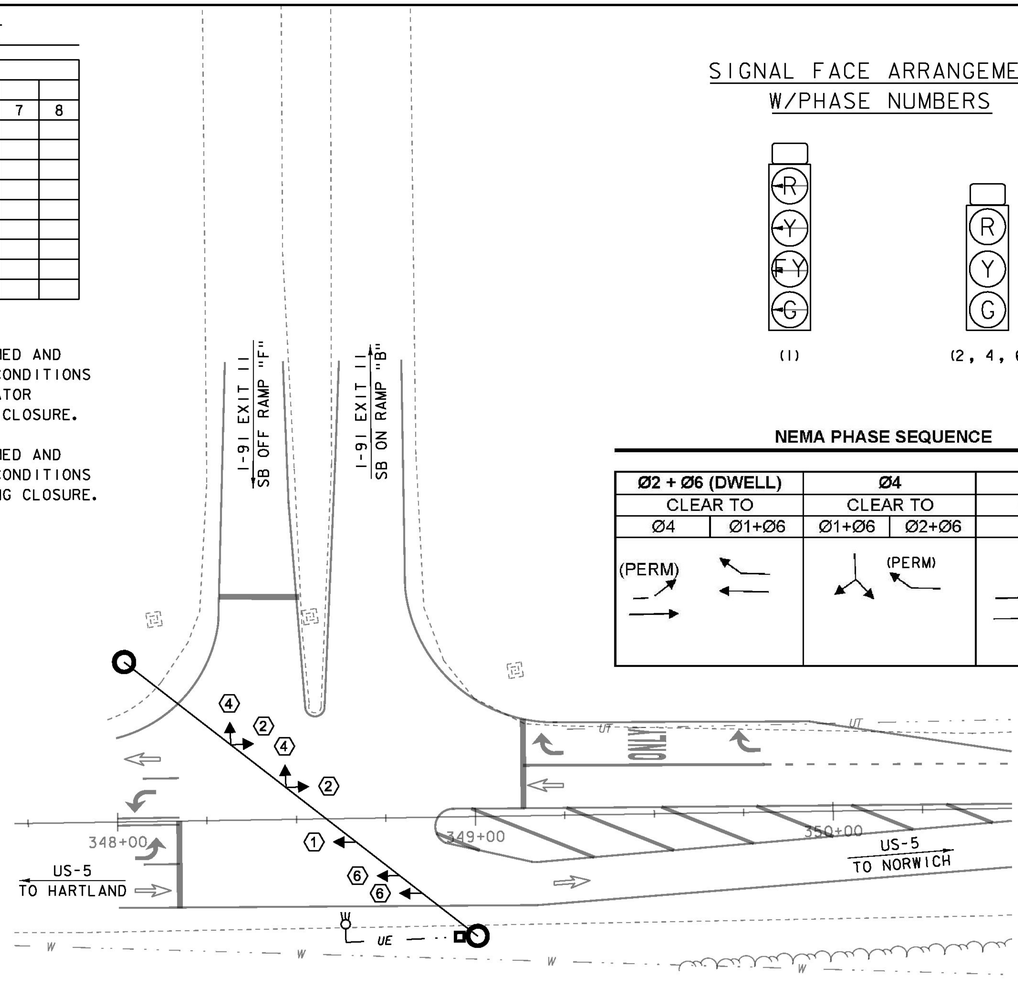

SIGNAL FACE ARRANGEMENT W/PHASE NUMBERS

N

VT STATE PLANE GRID

NEMA PHASE SEQUENCE

Ø2 + Ø6 (DWELL)		Ø4		Ø1 + Ø6
CLEAR TO		CLEAR TO		CLEAR TO
Ø4	Ø1+Ø6	Ø1+Ø6	Ø2+Ø6	Ø2+Ø6
(PERM)			(PERM)	

US 5/SB RAMPS — **NIC/TOD STEP PROGRAMMING PERIODS OF OPERATION (NON-CLOSURE)**

WEEK PROG	DAY OF WEEK SUN	MON	TUE	WED	THU	FRI	SAT
WEEK 1	5	6	6	6	6	6	5

STEP	PROGRAM	TIME	C/O/S	FL	MAX 2	MAX 3
1	5	0:00	0/0/1			
2	5	6:00	0/0/1		X	
3	5	10:00	2/1/1			
4	5	17:00	0/0/1		X	
5	6	0:00	0/0/1			
6	6	6:00	1/1/1			
7	6	9:00	2/1/1			
8	6	16:00	3/1/1			
9	6	18:00	0/0/1		X	

COORDINATOR C/O/S PROGRAMMING DATA

	C/O/S 1/1/1		C/O/S 2/1/1		C/O/S 3/1/1	
CYCLE LENGTH	80		80		110	
	SECS	%	SECS	%	SECS	%
OFFSET (Begin Green)	0	0%	13	16%	24	22%
SPLIT TIME Φ1	21	26%	21	26%	36	33%
SPLIT TIME Φ2	33	41%	36	45%	53	48%
SPLIT TIME Φ3	0	0%	0	0%	0	0%
SPLIT TIME Φ4	26	33%	23	29%	21	19%
SPLIT TIME Φ5	0	0%	0	0%	0	0%
SPLIT TIME Φ6	54	68%	57	71%	89	81%
SPLIT TIME Φ7	0	0%	0	0%	0	0%
SPLIT TIME Φ8	0	0%	0	0%	0	0%

COORDINATION NOTES:

1. OFFSET IS REFERENCED TO THE BEGINNING OF THE COORDINATED (Φ2+Φ6) PHASE GREEN.
2. FORCE OFFS SHALL BE SET TO FIXED.

US 5/SB RAMPS — **NIC/TOD STEP PROGRAMMING PERIODS OF OPERATION (CLOSURE)**

WEEK PROG	DAY OF WEEK SUN	MON	TUE	WED	THU	FRI	SAT
CLOSURER WEEK 2	2	2	2	2	2	2	2

STEP	PROGRAM	TIME	C/O/S	FL	MAX 2	MAX 3
10	2	0:00	0/0/1			X

LEGEND

- CONTROLLER CABINET
- EXISTING STREET LIGHT
- SIGNAL HEAD AND PHASE NUMBER
- STRAIN POLE
- UE — UNDERGROUND ELECTRICAL CONDUIT

US5 TEMPORARY TRAFFIC SIGNAL PLAN 1

SCALE 1" = 20'-0"
20 0 20

PROJECT NAME: HARTFORD
PROJECT NUMBER: IM 091-2(79)

FILE NAME: sl2al32bdr_rte5_sig.dgn
PROJECT LEADER: K. HIGGINS
DESIGNED BY: J. SALVATORI
US5 TEMPORARY TRAFFIC SIGNAL PLAN 1

PLOT DATE: 15-DEC-2014
DRAWN BY: J. SALVATORI
CHECKED BY: I. DEGUTIS
SHEET 47 OF 166

US 5/NB RAMPS

NIC/TOD STEP PROGRAMMING PERIODS OF OPERATION (NON-CLOSURE)

WEEK PROG	DAY OF WEEK SUN	MON	TUE	WED	THU	FRI	SAT
WEEK 1	5	6	6	6	6	6	5

STEP	PROGRAM	TIME	C/O/S	FL	MAX 2	MAX 3
1	5	0:00	0/0/1			
2	5	6:00	0/0/1		X	
3	5	10:00	2/1/1			
4	5	17:00	0/0/1		X	
5	6	0:00	0/0/1			
6	6	6:00	1/1/1			
7	6	9:00	2/1/1			
8	6	16:00	3/1/1			
9	6	18:00	0/0/1		X	

COORDINATOR C/O/S PROGRAMMING DATA

	C/O/S 1/1/1		C/O/S 2/1/1		C/O/S 3/1/1	
CYCLE LENGTH	80		80		110	
	SECS	%	SECS	%	SECS	%
OFFSET (Begin Green)	23	29%	22	28%	24	22%
SPLIT TIME Φ1	15	19%	16	20%	18	16%
SPLIT TIME Φ2	28	35%	34	43%	55	50%
SPLIT TIME Φ3	37	46%	30	38%	37	34%
SPLIT TIME Φ4	0	0%	0	0%	0	0%
SPLIT TIME Φ5	0	0%	0	0%	0	0%
SPLIT TIME Φ6	43	54%	50	63%	73	66%
SPLIT TIME Φ7	0	0%	0	0%	0	0%
SPLIT TIME Φ8	0	0%	0	0%	0	0%

COORDINATION NOTES:

1. OFFSET IS REFERENCED TO THE BEGINNING OF THE COORDINATED (Φ2+Φ6) PHASE GREEN.
2. FORCE OFFS SHALL BE SET TO FIXED.

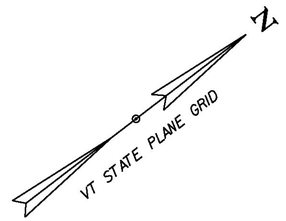

US 5/NB RAMPS

NIC/TOD STEP PROGRAMMING PERIODS OF OPERATION (CLOSURE)

WEEK PROG	DAY OF WEEK SUN	MON	TUE	WED	THU	FRI	SAT
CLOSURER WEEK 2	2	2	2	2	2	2	2

STEP	PROGRAM	TIME	C/O/S	FL	MAX 2	MAX 3
10	2	0:00	0/0/1			X

NEMA PHASE SEQUENCE

Ø2 + Ø6 (DWELL)		Ø3		Ø1 + Ø6
CLEAR TO		CLEAR TO		CLEAR TO
Ø3	Ø1+Ø6	Ø1+Ø6	Ø2+Ø6	Ø2+Ø6
(PERM)				

LIST OF MAJOR EQUIPMENT

EQUIPMENT ITEM 678.40	QUANTITY
POWER METER ON STANCHION	1
BREAKER PANEL ON STANCHION	1
TRAFFIC SIGNAL CONTROLLER (NEMA TS2)	1
NEMA POLE MOUNTED CONTROLLER CABINET WITH ANCILLARY CONTROL EQUIPMENT	1
WESTERN RED CEDAR OR SOUTHERN PINE WOODEN STRAIN POLE	3
ONE WAY, 3-SECTION, 12-INCH POLYCARBONATE LED TRAFFIC SIGNAL HEAD WITH TUNNEL VISORS AND 5" LOUVERED BACK-PLATES	7
ONE WAY, 4-SECTION, 12-INCH POLYCARBONATE LED TRAFFIC SIGNAL HEAD WITH TUNNEL VISORS AND 5" LOUVERED BACK-PLATES	1
SPECIAL PROVISION, (GPS TIME CLOCK)	1
STOP BAR DETECTOR	3

CONTROLLER TIMING CHART

US ROUTE 5 & NORTHBOUND RAMPS								
	5NL	5ST	9IN	9IN		5NT		
PHASE	1	2	3	3A		6	7	8
TRAFFIC MOVEMENT	↗	←	↖	→		→		
MINIMUM GREEN	5	10	10	10		10		
MAXIMUM 1 GREEN	10	40	30	30		40		
MAXIMUM 2 GREEN	15	50	35	35		50		
MAXIMUM 3 GREEN	15	40	60	60		40		
YELLOW CLEARANCE	4.0	4.0	4.0	4.0		4.0		
ALL RED CLEARANCE	2.0	2.0	2.0	2.0		2.0		
VEH. EXTENSION	3.0	3.0	3.0	3.0		3.0		
RECALL MODE	OFF	MIN	OFF	OFF		MIN		

NOTES:

1) CONTROLLER SHALL BE INITIALLY PROGRAMMED AND FINE-TUNED BASED ON PREVAILING FIELD CONDITIONS FOR MAXIMUM 1, MAXIMUM 2, AND COORDINATOR PROGRAMMING BY TIME-OF-DAY DURING NON-CLOSURE.

2) CONTROLLER SHALL BE INITIALLY PROGRAMMED AND FINE-TUNED BASED ON PREVAILING FIELD CONDITIONS FOR MAXIMUM 3 PROGRAMMING 24 / 7 DURING CLOSURE.

SIGNAL FACE ARRANGEMENT W/PHASE NUMBERS

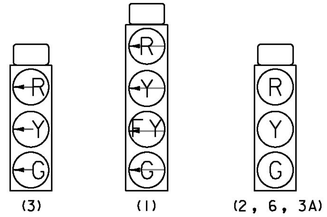

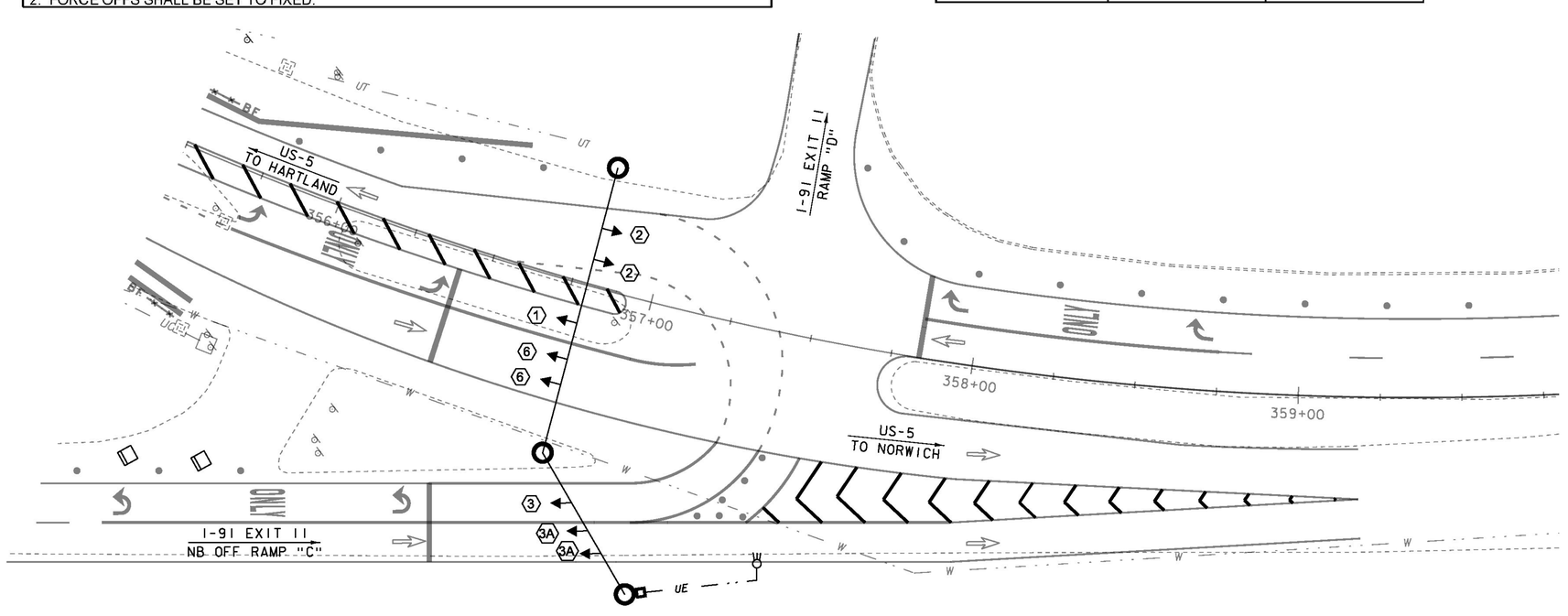

US5 TEMPORARY TRAFFIC SIGNAL PLAN 2

SCALE 1" = 20'-0"

20 0 20

PROJECT NAME:	HARTFORD
PROJECT NUMBER:	IM 091-2(79)
FILE NAME: sl2al32bdr_rte5_sig.dgn	PLOT DATE: 15-DEC-2014
PROJECT LEADER: K. HIGGINS	DRAWN BY: J. SALVATORI
DESIGNED BY: J. SALVATORI	CHECKED BY: I. DEGUTIS
US5 TEMPORARY TRAFFIC SIGNAL PLAN 2	SHEET 48 OF 166

US 5/SYKES AVE — NIC/TOD STEP PROGRAMMING PERIODS OF OPERATION (NON-CLOSURE)

WEEK PROG	DAY OF WEEK SUN	MON	TUE	WED	THU	FRI	SAT
WEEK 4	5	6	6	6	6	6	5

STEP	PROGRAM	TIME	C/O/S	FL	MAX 2	MAX 3
18	5	0:00	0/0/1	X		
19	5	6:00	0/0/1		X	
20	5	10:00	2/1/1			
21	5	17:00	0/0/1		X	
22	6	0:00	0/0/1	X		
23	6	6:00	1/1/1			
24	6	9:00	2/1/1			
25	6	16:00	3/1/1			
26	6	18:00	0/0/1		X	

COORDINATOR C/O/S PROGRAMMING DATA

	C/O/S 1/1/1		C/O/S 2/1/1		C/O/S 3/1/1	
CYCLE LENGTH	80		80		110	
	SECS	%	SECS	%	SECS	%
OFFSET (Begin Green)	0	0%	0	0%	0	0%
SPLIT TIME Φ1	13	16%	13	16%	16	15%
SPLIT TIME Φ2	39	49%	36	45%	44	40%
SPLIT TIME Φ3	0	0%	0	0%	0	0%
SPLIT TIME Φ4	28	35%	31	39%	50	45%
SPLIT TIME Φ5	21	26%	21	26%	26	24%
SPLIT TIME Φ6	31	39%	28	35%	34	31%
SPLIT TIME Φ7	0	0%	0	0%	0	0%
SPLIT TIME Φ8	28	35%	31	39%	50	45%

COORDINATION NOTES:

1. OFFSET IS REFERENCED TO THE BEGINNING OF THE COORDINATED (Φ2+Φ6) PHASE GREEN.
2. FORCE OFFS SHALL BE SET TO FIXED.

US 5/SYKES AVE — EXISTING NIC/TOD STEP PROGRAMMING PERIODS OF OPERATION (CLOSURE)

WEEK PROG	DAY OF WEEK SUN	MON	TUE	WED	THU	FRI	SAT
CLOSURER WEEK 3	2	4	4	4	4	4	2

STEP	PROGRAM	TIME	C/O/S	FL	MAX 2	MAX 3
1	1	0:00	0/0/1	X		
2	1	6:00	0/0/1			
3	1	9:00	0/0/1		X	
4	1	15:00	0/0/1			X
5	1	18:00	0/0/1		X	
6	2	0:00	0/0/1	X		
7	2	6:00	0/0/1		X	
8	3	5:00	0/0/1			
9	3	8:00	0/0/1		X	
10	3	14:00	0/0/1			X
11	3	17:00	0/0/1		X	
12	3	23:00	0/0/1	X		
13	4	1:00	0/0/1	X		
14	4	6:00	0/0/1			
15	4	10:00	0/0/1		X	
16	4	16:00	0/0/1			X
17	4	19:00	0/0/1		X	

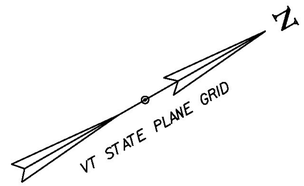

NEMA PHASE SEQUENCE

Ø2 + Ø6 (DWELL)		Ø4 + Ø8		Ø1 + Ø5
CLEAR TO		CLEAR TO		CLEAR TO
Ø4+Ø8	Ø1+Ø5	Ø1+Ø5	Ø2+Ø6	Ø2+Ø6

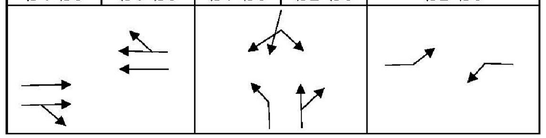

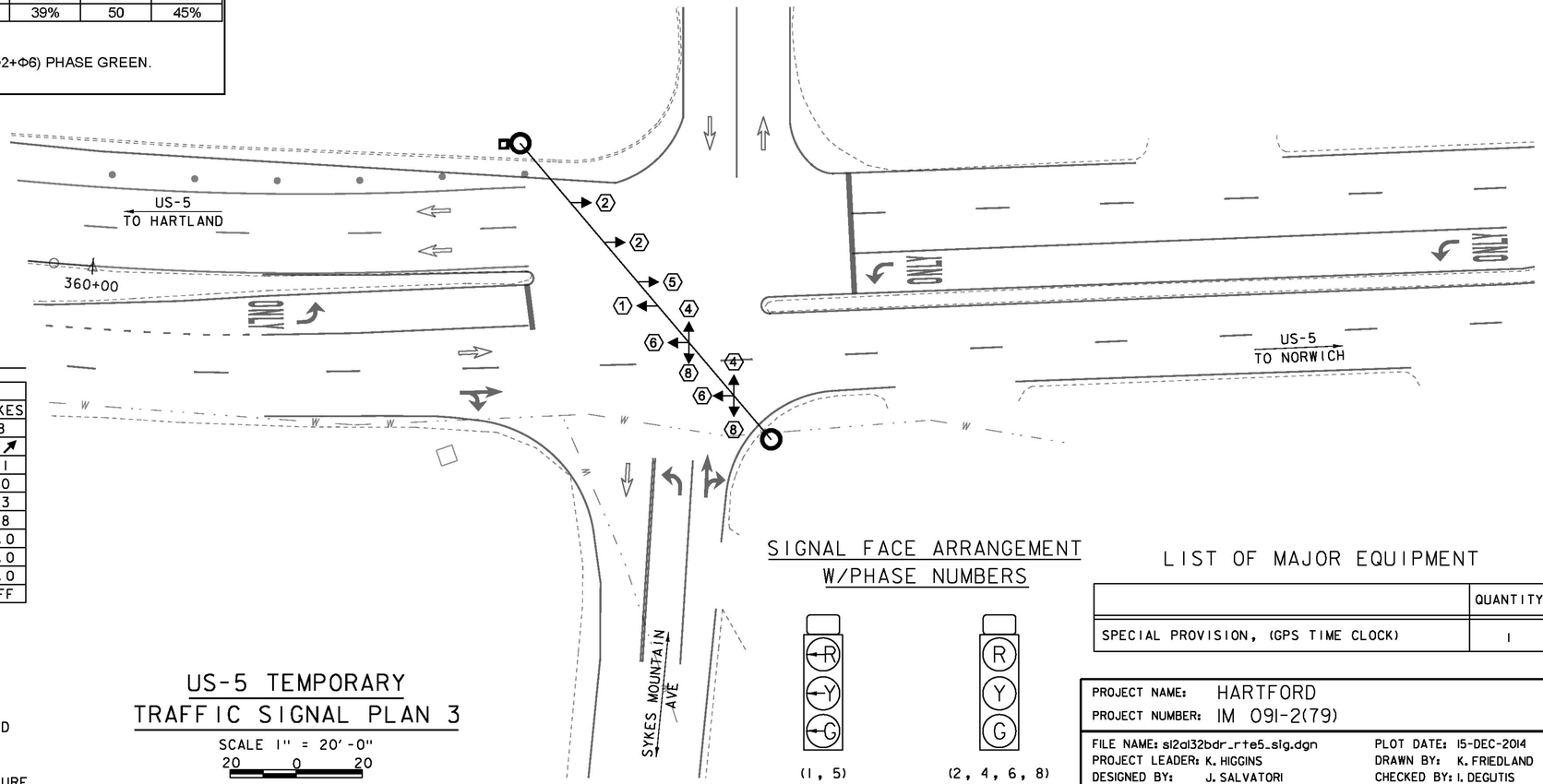

CONTROLLER TIMING CHART

US ROUTE 5 & SYKES MOUNTAIN AVENUE								
	5NL	5ST		UHAUL	5SL	5NT		SYKES
PHASE	1	2	3	4	5	6	7	8
TRAFFIC MOVEMENT	↗	←		↙ ↘	↙	→		↖ ↗
MINIMUM GREEN	6	11		11	6	11		11
MAXIMUM 1 GREEN	5	23		20	18	23		20
MAXIMUM 2 GREEN	5	22		23	15	22		23
MAXIMUM 3 GREEN	5	32		38	21	32		38
YELLOW CLEARANCE	4.0	4.0		4.0	4.0	4.0		4.0
ALL RED CLEARANCE	2.0	2.0		3.0	2.0	2.0		3.0
VEH. EXTENSION	1.0	2.0		2.0	1.0	2.0		2.0
RECALL MODE	OFF	MIN		OFF	OFF	MIN		OFF

NOTES:

1) CONTROLLER SHALL REVERT BACK TO EXISTING TIME-OF-DAY PROGRAMMING FOR MAXIMUM 1 OR FLASH, MAXIMUM 2, AND MAXIMUM 3 PROGRAMMING BY TIME-OF-DAY DURING CLOSURE.

2) CONTROLLER SHALL BE INITIALLY PROGRAMMED AND FINE-TUNED BASED ON PREVAILING FIELD CONDITIONS FOR MAXIMUM 1, OR FLASH (IF RETAINED AS EXISTING), MAXIMUM 2, AND COORDINATOR PROGRAMMING BY TIME-OF-DAY DURING NON-CLOSURE.

US-5 TEMPORARY TRAFFIC SIGNAL PLAN 3

SCALE 1" = 20'-0"
20 0 20

SIGNAL FACE ARRANGEMENT W/PHASE NUMBERS

LIST OF MAJOR EQUIPMENT

	QUANTITY
SPECIAL PROVISION, (GPS TIME CLOCK)	1

PROJECT NAME: HARTFORD
PROJECT NUMBER: IM 091-2(79)

FILE NAME: sl2al32bdr_rte5_sig.dgn
PROJECT LEADER: K. HIGGINS
DESIGNED BY: J. SALVATORI
US5 TEMPORARY TRAFFIC SIGNAL PLAN 3

PLOT DATE: 15-DEC-2014
DRAWN BY: K. FRIEDLAND
CHECKED BY: I. DEGUTIS
SHEET 49 OF 166

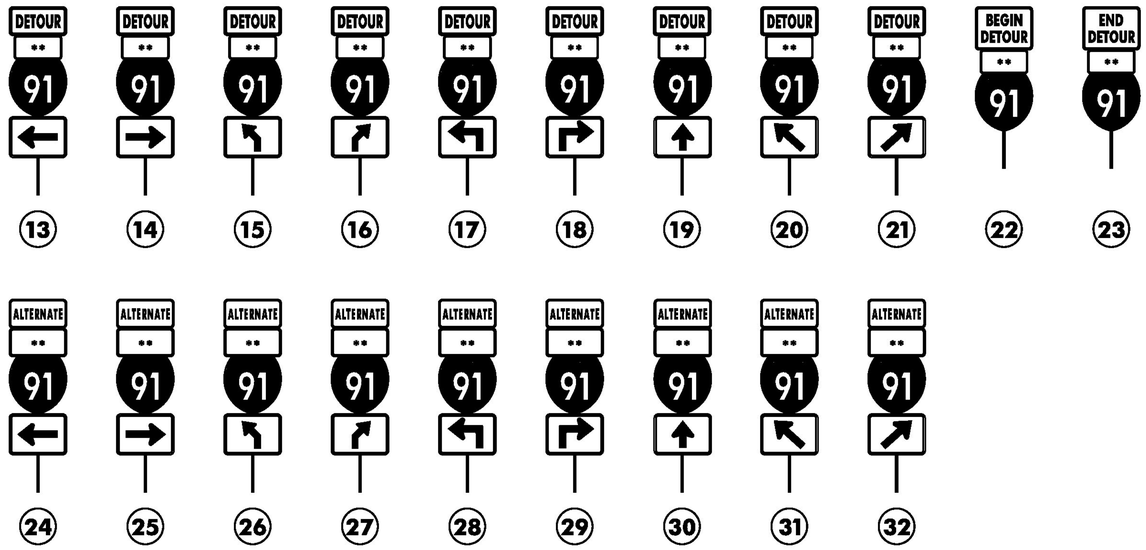





**N= NORTH OR S= SOUTH

DETOUR SIGN LEGEND

NOT TO SCALE

NOTES:

1. THE PORTABLE CHANGEABLE MESSAGE SIGNS SHALL BE FULLY OPERATIONAL A MINIMUM OF TWO WEEKS PRIOR TO THE CLOSURE OF I-91 OR US-5 AS APPLICABLE.
2. DURING ACTUAL CLOSURE, ELIMINATE PHASE 3 AND REMOVE "WILL BE" FROM PHASE 1.
3. DETOUR SIGNS SHALL BE LOCATED ADJACENT TO EXISTING INTERSECTION ROUTE MARKER ASSEMBLIES WHERE APPLICABLE.
4. CONFIRMATION ROUTE MARKERS SHALL BE INSTALLED IMMEDIATELY FOLLOWING EACH TURN AND AT ALL LOCATIONS ALONG DETOUR WHERE ROUTE MARKERS EXIST FOR THE PARENT ROUTE.
5. DETOUR SIGNING IS THE RESPONSIBILITY OF THE CONTRACTOR. PAYMENT FOR ALL TEMPORARY TRAFFIC CONTROL DEVICES FOR IMPLEMENTING THE DETOUR, INCLUDING BUT NOT LIMITED TO SIGNS, BARRICADES AND MESSAGE BOARDS, WILL BE INCLUDED IN THE UNIT PRICE BID FOR CONTRACT ITEM 900.645 SPECIAL PROVISION TRAFFIC CONTROL, ALL - INCLUSIVE).
6. THIS DETOUR PLAN IS A CONCEPTUAL OUTLINE ONLY AND THE CONTRACTOR SHALL SUBMIT A DETAILED PLAN OF EACH INTERSECTION SHOWING DETOUR SIGN LOCATIONS IN RELATION TO EXISTING SIGNS.

(S)

I-91				
WILL		BE		
CLOSED				

PORTABLE CHANGEABLE SIGN - PHASE 1

(S)

BETWEEN	
EXIT	11-
EXIT	10

PORTABLE CHANGEABLE SIGN - PHASE 2 SB

(S)

BETWEEN	
EXIT	11-
EXIT	12

PORTABLE CHANGEABLE SIGN - PHASE 2 NB

* M=MONTH D=DAY

(S)

* MMMM		DD	-			
* MMMM		DD				

PORTABLE CHANGEABLE SIGN - PHASE 3

PROJECT NAME:	HARTFORD
PROJECT NUMBER:	IM 091-2(79)
FILE NAME: sl2al32detour.dgn	PLOT DATE: 15-DEC-2014
PROJECT LEADER: K. HIGGINS	DRAWN BY: K. FRIEDLAND
DESIGNED BY: W. LAMMER	CHECKED BY: W. LAMMER
DETOUR SIGN LEGEND	SHEET 50 OF 166

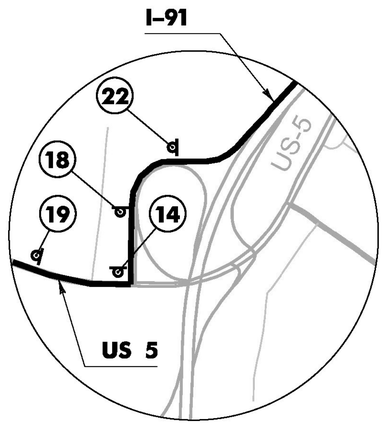

I-91 EXIT 11
WHITE RIVER
JUNCTION

INSET "A"
I-91 EXIT 11
WHITE RIVER JUNCTION
NOT TO SCALE

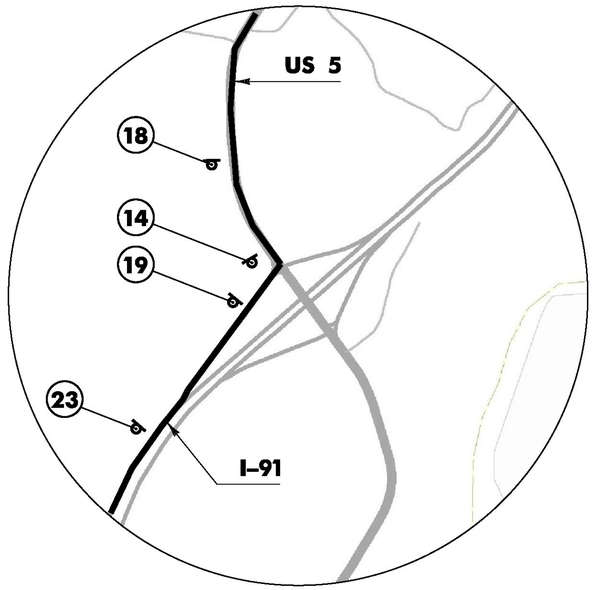

INSET "B"
I-91 EXIT 9
HARTLAND
NOT TO SCALE

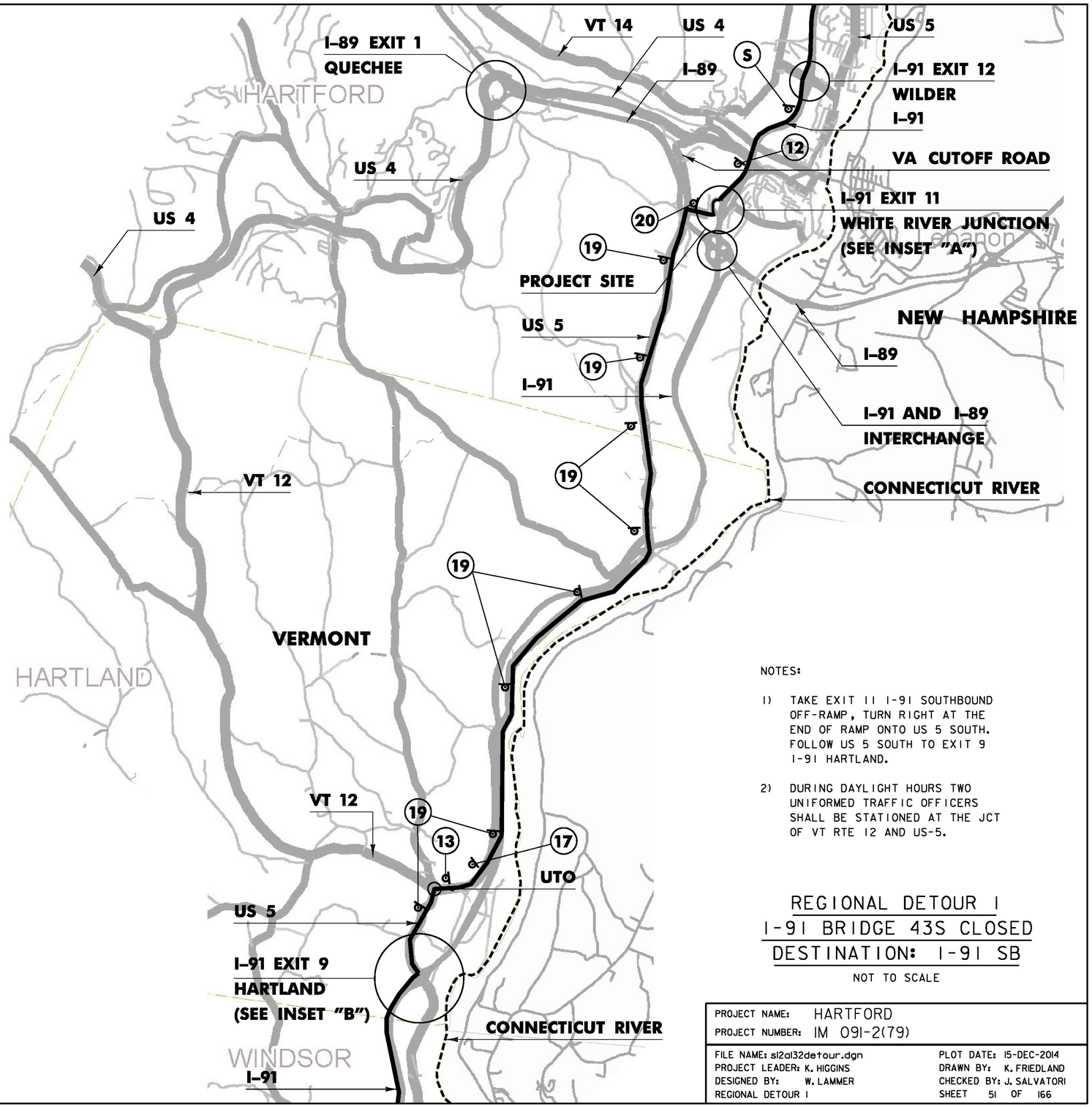

NOTES:

1) TAKE EXIT 11 I-91 SOUTHBOUND OFF-RAMP, TURN RIGHT AT THE END OF RAMP ONTO US 5 SOUTH. FOLLOW US 5 SOUTH TO EXIT 9 I-91 HARTLAND.

2) DURING DAYLIGHT HOURS TWO UNIFORMED TRAFFIC OFFICERS SHALL BE STATIONED AT THE JCT OF VT RTE 12 AND US-5.

REGIONAL DETOUR 1
I-91 BRIDGE 43S CLOSED
DESTINATION: I-91 SB
NOT TO SCALE

PROJECT NAME:	HARTFORD
PROJECT NUMBER:	IM 091-2(79)
FILE NAME: sl2al32detour.dgn	PLOT DATE: 15-DEC-2014
PROJECT LEADER: K. HIGGINS	DRAWN BY: K. FRIEDLAND
DESIGNED BY: W. LAMMER	CHECKED BY: J. SALVATORI
REGIONAL DETOUR 1	SHEET 51 OF 166

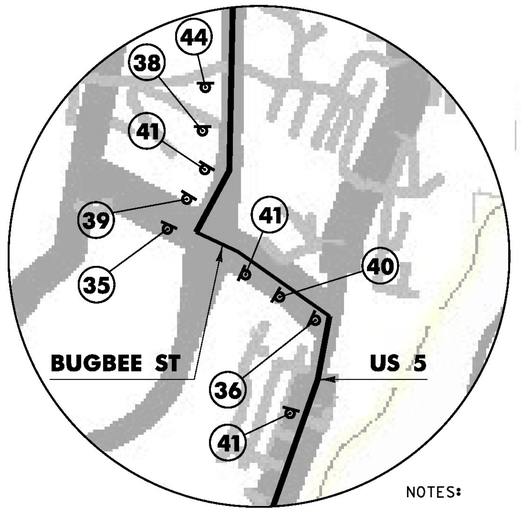

INSET "A"
I-91 EXIT 12
WILDER
NOT TO SCALE

NOTES:

1) TAKE EXIT 12 I-91 SOUTHBOUND OFF-RAMP. TURN LEFT AT THE END OF RAMP, FOLLOW 0.4 MILES TO US 5 SOUTH. FOLLOW US 5 SOUTH TO US 4 WEST. FOLLOW US 4 TO I-89 EXIT 1, NORTHBOUND OR SOUTHBOUND.

2) DURING DAYLIGHT HOURS ONE UNIFORMED TRAFFIC OFFICER SHALL BE STATIONED AT THE JCT OF US RT4 AND I-89 EXIT 1 SOUTH RAMPS AS SHOWN IN INSET "B".

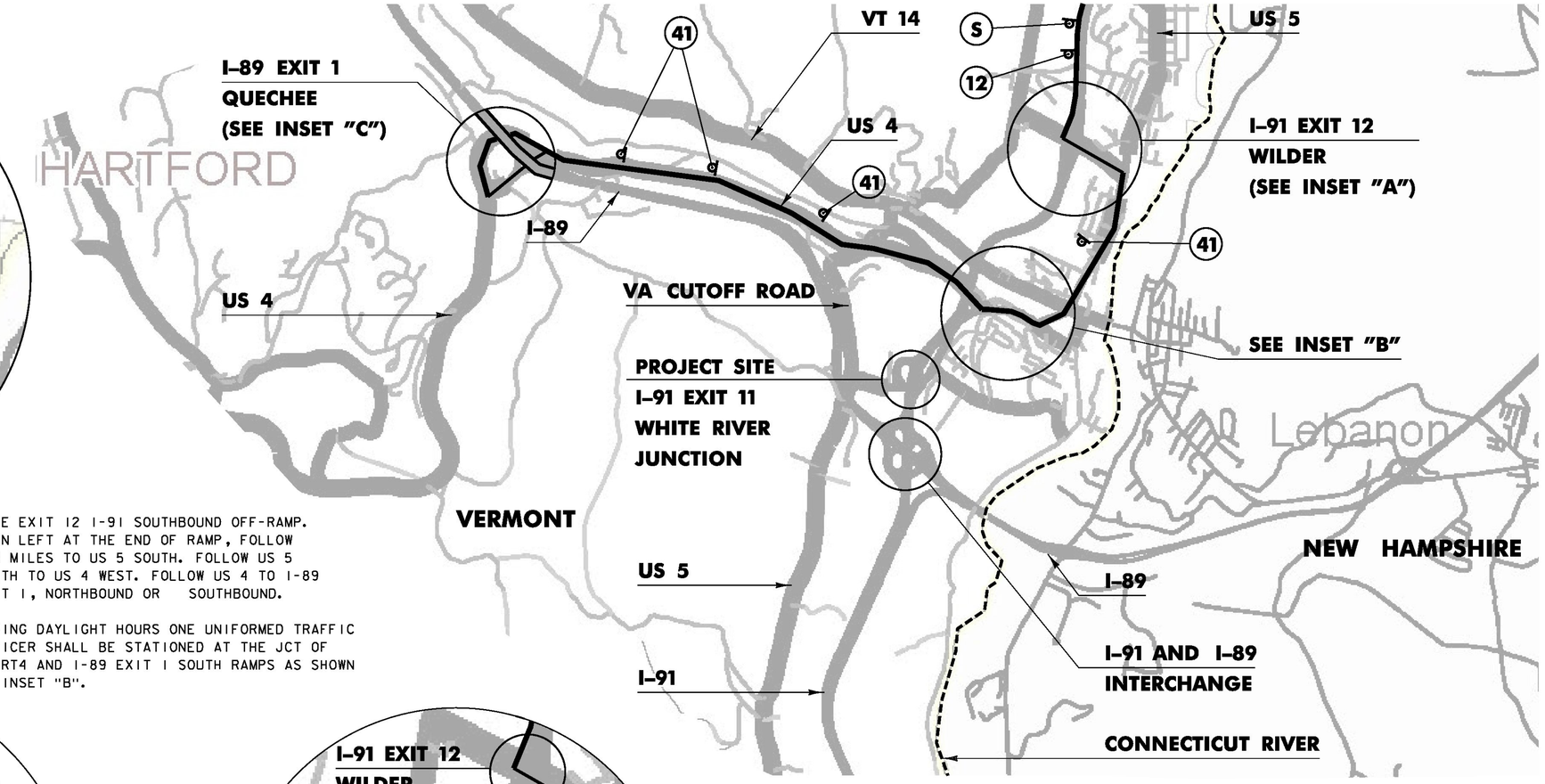

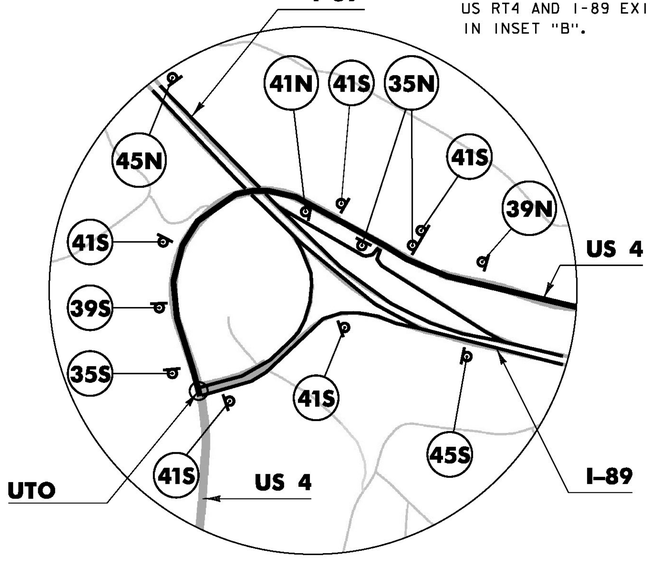

INSET "C"
I-89 EXIT 1
QUECHEE
NOT TO SCALE

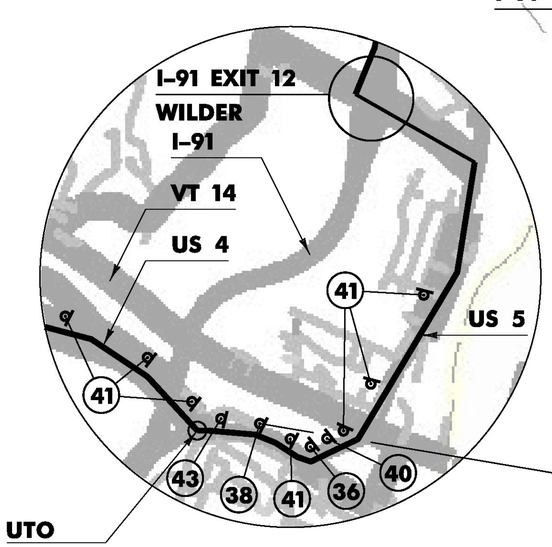

INSET "B"
NOT TO SCALE



REGIONAL DETOUR 2
I-91 BRIDGE 43S CLOSED
DESTINATION: I-89
NOT TO SCALE

PROJECT NAME: HARTFORD
PROJECT NUMBER: IM 091-2(79)

FILE NAME: si2al32detour.dgn
PROJECT LEADER: K. HIGGINS
DESIGNED BY: W. LAMMER
REGIONAL DETOUR 2

PLOT DATE: 15-DEC-2014
DRAWN BY: K. FRIEDLAND
CHECKED BY: J. SALVATORI
SHEET 52 OF 166

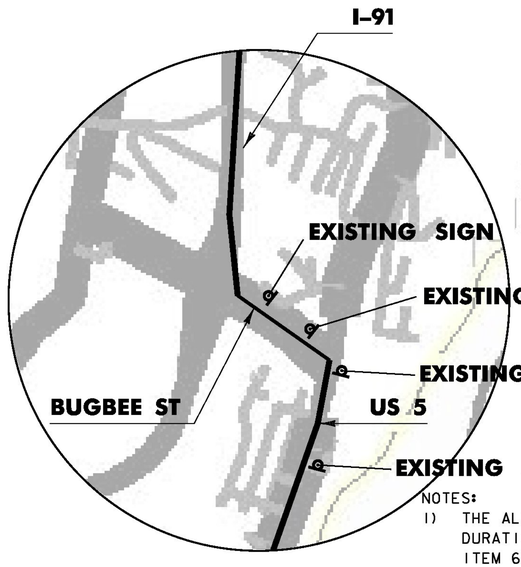

INSET "A"
I-91 EXIT 12
WILDER
NOT TO SCALE

NOTES:

1) THE ALTERNATE ROUTE SHALL BE SIGNED FOR THE DURATION OF THE PROJECT AND PAID FOR UNDER ITEM 641.10, "TRAFFIC CONTROL, (I-91 NORTHBOUND).

2) ALTERNATE ROUTE SHALL BE ACTIVATED AS PART OF THE SMART WORK ZONE WHEN EXTENDED QUEUES ARE EXPERIENCED AT THE INTERCHANGE.

3) I-89 NORTHBOUND OR SOUTHBOUND TRAFFIC WISHING TO TRAVEL I-91 NORTHBOUND SHALL PROCEED TO EXIT 1 I-89 NORTHBOUND OFF-RAMP. TURN RIGHT AT THE END OF RAMP, FOLLOW US 4 EAST TO US 5 NORTH. CONTINUE FOLLOWING US 5 NORTH TO EXIT 12 I-91 NORTHBOUND.

4) DURING DAYLIGHT HOURS ONE UNIFORMED TRAFFIC OFFICER SHALL BE STATIONED AT THE JCT OF US RT4 AND RT5 AS SHOWN IN INSET "B".

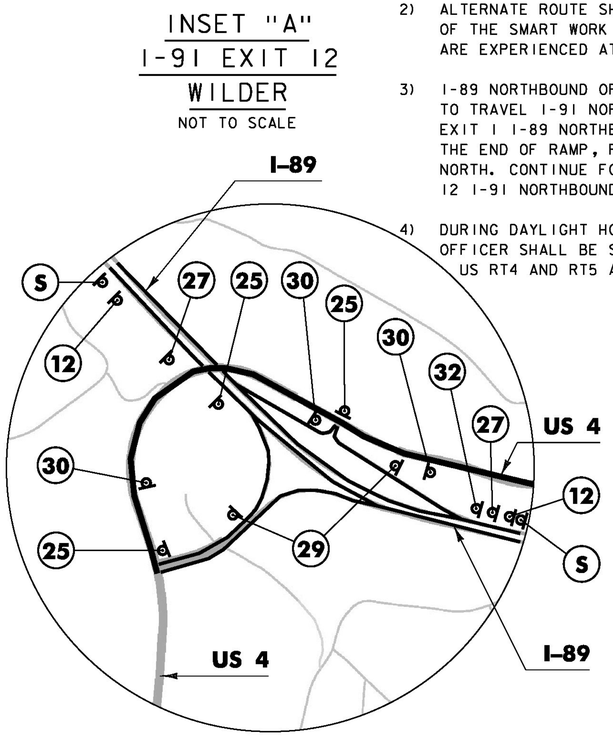

INSET "C"
I-89 EXIT 1
QUECHEE
NOT TO SCALE

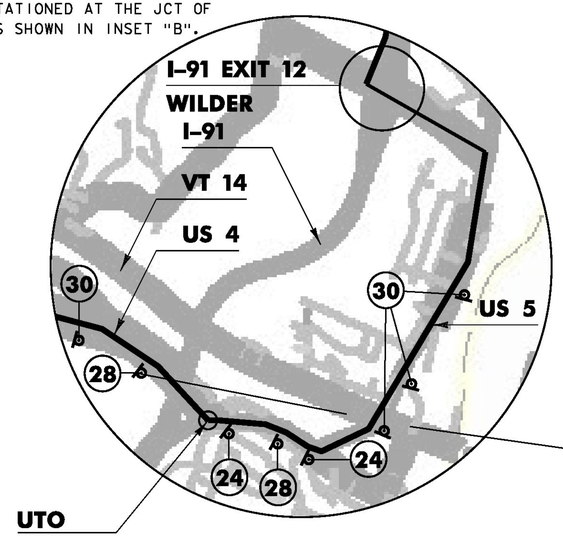

INSET "B"
NOT TO SCALE

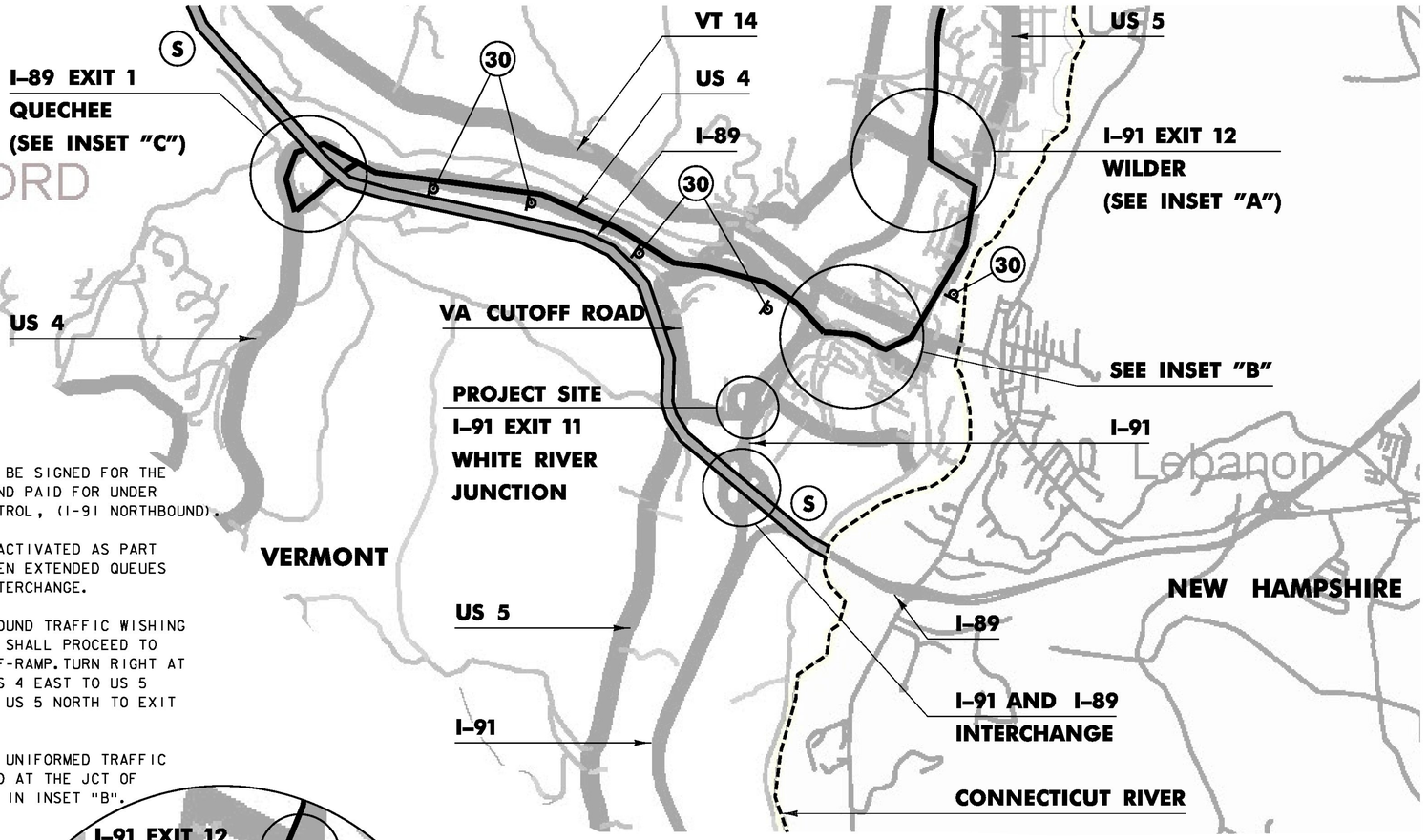



COVER
SIGN

ALTERNATE ROUTE TO I-91
NOT TO SCALE

PROJECT NAME: HARTFORD	
PROJECT NUMBER: IM 091-2(79)	
FILE NAME: sl2al32detour.dgn	PLOT DATE: 15-DEC-2014
PROJECT LEADER: K. HIGGINS	DRAWN BY: J. SALVATORI
DESIGNED BY: J. SALVATORI	CHECKED BY: M. MILLER
ALTERNATE ROUTE TO I-91	SHEET 53 OF 166

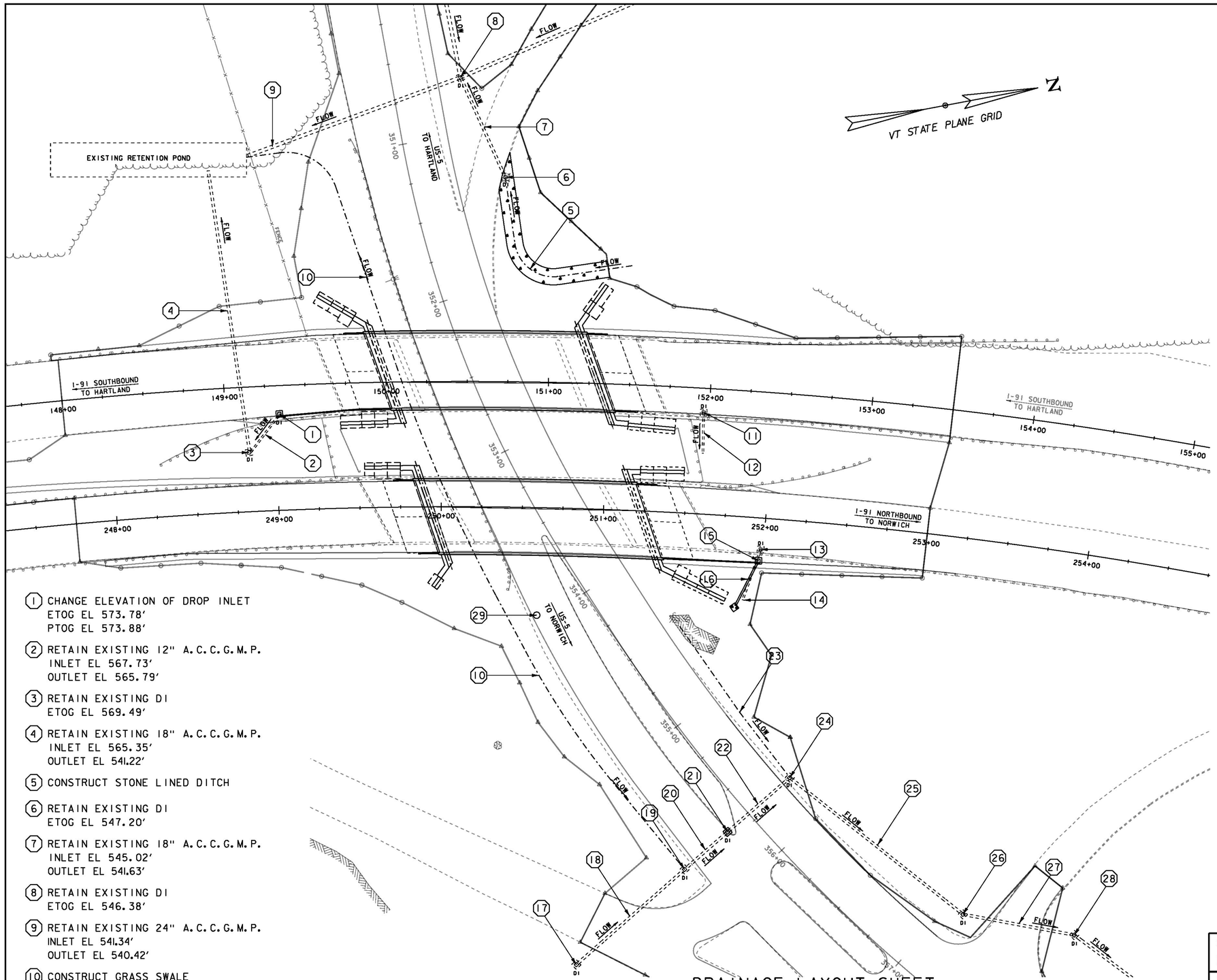

(1) CHANGE ELEVATION OF DROP INLET
ETOG EL 573.78'
PTOG EL 573.88'

(2) RETAIN EXISTING 12" A.C.C.G.M.P.
INLET EL 567.73'
OUTLET EL 565.79'

(3) RETAIN EXISTING DI
ETOG EL 569.49'

(4) RETAIN EXISTING 18" A.C.C.G.M.P.
INLET EL 565.35'
OUTLET EL 541.22'

(5) CONSTRUCT STONE LINED DITCH

(6) RETAIN EXISTING DI
ETOG EL 547.20'

(7) RETAIN EXISTING 18" A.C.C.G.M.P.
INLET EL 545.02'
OUTLET EL 541.63'

(8) RETAIN EXISTING DI
ETOG EL 546.38'

(9) RETAIN EXISTING 24" A.C.C.G.M.P.
INLET EL 541.34'
OUTLET EL 540.42'

(10) CONSTRUCT GRASS SWALE

(11) REMOVE EXISTING DI
ETOG EL 569.68'

(12) REMOVE EXISTING BURIED PIPE
INLET EL UNKNOWN
OUTLET EL UNKOWN

(13) REMOVE EXISTING DI
ETOG EL 569.68'

(14) REMOVE EXISTING 12" C.G.M.P.
INLET EL 564.70'
OUTLET EL 562.81'

(15) NEW PRECAST REINFORCED CONCRETE DROP INLET
WITH CAST IRON GRATE
PTOG EL 569.50'
SUMP EL 563.50'

(16) NEW 18" x 30' OPTION PIPE WITH
4' WIDE x 4' LONG STONE PAD
INLET EL 564.50'
OUTLET EL 562.00'

(17) RETAIN EXISTING DI
ETOG EL 552.50'

(18) RETAIN EXISTING 18" RCP
INLET EL 548.51'
OUTLET EL 544.72'

(19) RETAIN EXISTING DI
ETOG EL 549.06'

(20) RETAIN EXISTING 18" RCP
INLET EL 548.51'
OUTLET EL 544.72'

(21) NEW CAST IRON COVER WITH FRAME
ON EXISTING DI
ETOG EL 549.01'
PTOG EL 548.75'

(22) RETAIN EXISTING 18" RCP
INLET EL 540.15'
OUTLET EL 536.65'

(23) CONSTRUCT GRASS SWALE

(24) RETAIN EXISTING DI
ETOG EL 544.28'

(25) RETAIN EXISTING 18" RCP
INLET EL 536.37'
OUTLET EL 535.32'

(26) RETAIN EXISTING DI
ETOG EL 540.72'

(27) RETAIN EXISTING 18" RCP
INLET EL 535.21'
OUTLET EL 539.93'

(28) RETAIN EXISTING DI
ETOG EL 540.26'

(29) CHANGE ELEVATION OF MANHOLE
ETOG EL 551.84'
PTOG EL 551.54'

ETOG = EXISTING TOP OF GRATE
PTOG = PROPOSED TOP OF GRATE

DRAINAGE LAYOUT SHEET

SCALE 1" = 30'-0"
30 0 30

PROJECT NAME:	HARTFORD
PROJECT NUMBER:	IM 091-2(79)
FILE NAME: sl2al32drain.dgn	PLOT DATE: 15-DEC-2014
PROJECT LEADER: K. HIGGINS	DRAWN BY: J. GRIGAS
DESIGNED BY: J. GRIGAS	CHECKED BY: W. LAMMER
DRAINAGE LAYOUT SHEET	SHEET 54 OF 166

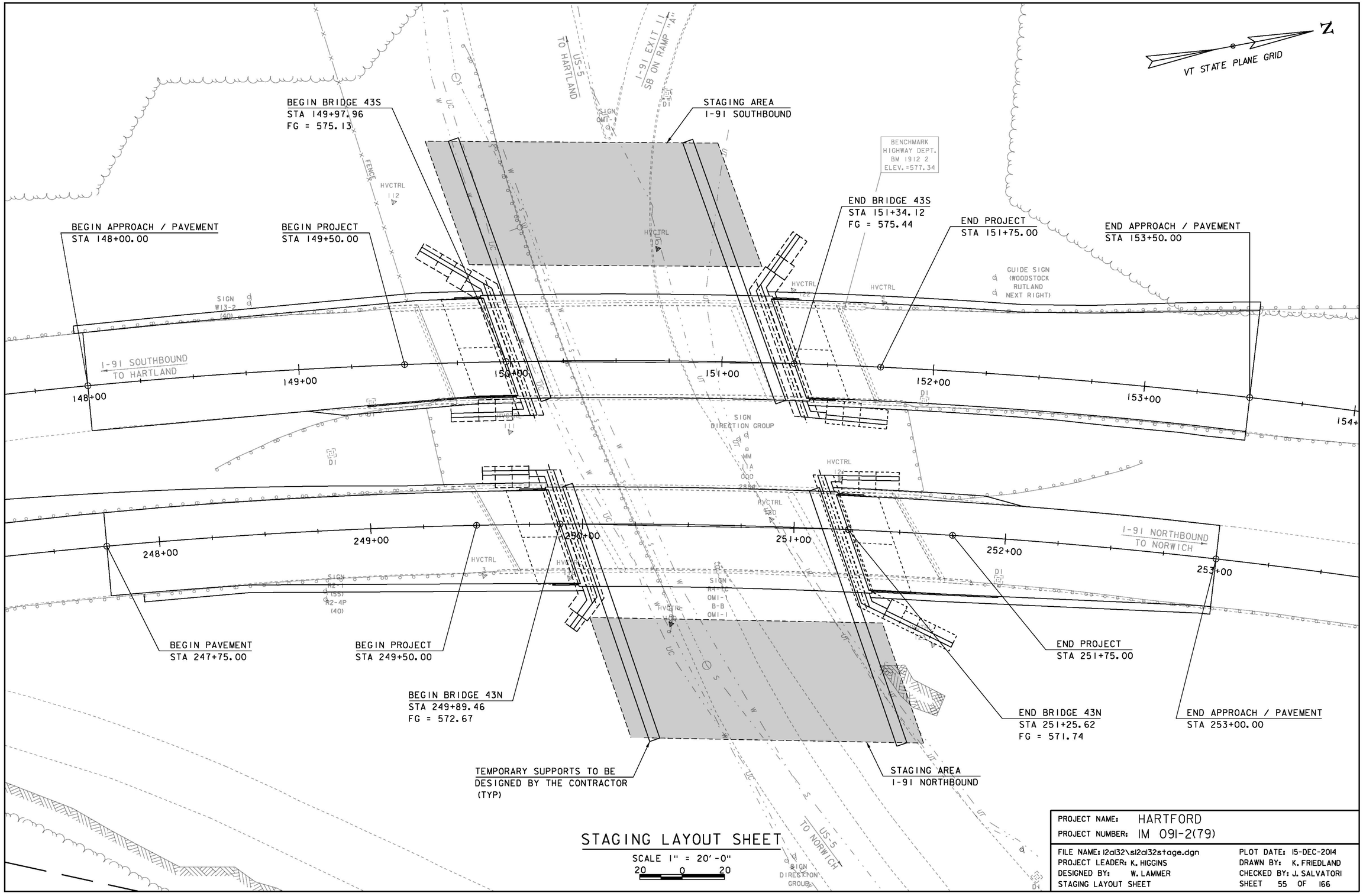

STAGING LAYOUT SHEET

SCALE 1" = 20'-0"
20 0 20

PROJECT NAME:	HARTFORD
PROJECT NUMBER:	IM 091-2(79)
FILE NAME: I2al32\sl2al32stage.dgn	PLOT DATE: 15-DEC-2014
PROJECT LEADER: K. HIGGINS	DRAWN BY: K. FRIEDLAND
DESIGNED BY: W. LAMMER	CHECKED BY: J. SALVATORI
STAGING LAYOUT SHEET	SHEET 55 OF 166

INSTALL SHUT OFF VALVE
STA 351+25.00, OFFSET 46.6' RT

EXISTING 10" V.C.
SEWER LINE

PROPOSED 12" D.I.
WATER LINE

EXISTING FIBER OPTIC
(TO BE ABANDONED)

EXISTING 8" D.I.
WATER LINE

EXISTING 12" D.I. WATER LINE
(TO BE ABANDONED)

INSTALL SHUT OFF VALVE
STA 354+75.00, OFFSET 50.0' RT

EXISTING FIBER OPTIC
(CAPPED WITH CONCRETE)

I-91 SOUTHBOUND
TO HARTLAND

I-91 NORTHBOUND
TO NORWICH

US-5
TO HARTLAND

US-5
TO NORWICH

I-91 EXIT 11
SB ON RAMP "A"

VT STATE PLANE GRID

NOTES:

1) LOCATIONS OF EXISTING UTILITIES ARE APPROXIMATE.

2) ALL UTILITY WORK TO BE COMPLETED BY OTHERS.

3) THE EXISTING FIBER OPTIC ON THE SOUTHERN SIDE OF US5 WILL BE ABANDONED. IT WILL BE RE-ROUTED OUTSIDE THE PROJECTS LIMITS VIA OVERHEAD LINE BY FALL 2014.

4) VALVES SHALL BE INSTALLED ON THE EXISTING 12" WATER LINE AS SHOWN ON THE PLANS BY FALL 2014. PRIOR TO CONSTRUCTION, THE VALVES WILL BE CLOSED AND THE LINE BETWEEN THE LINES SHALL BE ABANDONED.

5) THE NEW 12" WATER LINE SHALL NOT BE INSTALLED UNTIL AFTER THE PIER #1 IS REMOVED.

6) NO DRILLING OR BLASTING SHALL OCCUR WITHIN 10 FEET OF ANY UTILITY WITHOUT THE WRITTEN PERMISSION OF THE UTILITY OWNER. SEE SPECIAL PROVISIONS FOR FURTHER DETAILS.

UTILITY LAYOUT SHEET

SCALE 1" = 20'-0"
20 0 20

PROJECT NAME: HARTFORD
PROJECT NUMBER: IM 091-2(79)

FILE NAME: sl2al32bdr_utl.dgn
PROJECT LEADER: K. HIGGINS
DESIGNED BY: W. LAMMER
UTILITY LAYOUT SHEET

PLOT DATE: 15-DEC-2014
DRAWN BY: K. FRIEDLAND
CHECKED BY: J. SALVATORI
SHEET 56 OF 166

DURABLE 12" WHITE LINE, RECESSED POLYUREA (DOTTED)
STA 148+00.00 - 153+00.00 LT

DURABLE 12" WHITE LINE, RECESSED POLYUREA (SOLID)
STA 153+00.00 - 153+50.00 LT

REMOVAL OF EXISTING DELINEATOR
STA 148+86.25 RT
STA 151+50.25 RT
STA 248+96.50 LT
STA 251+79.00 LT

DELINEATOR, TYPE I (YELLOW)
STA 148+86.25 RT
STA 151+50.25 RT
STA 248+96.50 LT
STA 251+79.00 LT

DURABLE 6" WHITE LINE, RECESSED POLYUREA (SOLID)
STA 148+00.00 - 153+50.00 LT
STA 247+75.00 - 253+00.00 LT

DURABLE 6" YELLOW LINE, RECESSED POLYUREA (SOLID)
STA 148+00.00 - 153+50.00 RT
STA 247+75.00 - 253+00.00 RT

DURABLE 6" WHITE LINE, RECESSED POLYUREA (DASHED)
STA 148+00.00 - 153+50.00 ℄
STA 247+75.00 - 253+00.00 ℄

N
VT STATE PLANE GRID

STA 148+79.00 LT
EXIT 40 M.P.H. RET
RET

STA 148+86.25 LT
70 15 R
R
70 15 N
N

STA 151+50.25 LT
STA 151+35.00 LT
BRIDGE 10-S I-91 N
N
MILE 70 2 N
N
STA 151+64.00 LT
BRIDGE 10-S I-91 R
R

STA 152+26.00 LT
WOODSTOCK RUTLAND NEXT RIGHT RET
RET

GUIDE SIGN (WOODSTOCK RUTLAND NEXT RIGHT)

SIGN W13-2 (40)

I-91 SOUTHBOUND TO HARTLAND

I-91 EXIT 11 SB ON RAMP "A"

US-5 TO HARTLAND

STREET LIGHT

SIGN DIRECTION GROUP

I-91 NORTHBOUND TO NORWICH

SIGN R2-1 (55)
SIGN R2-4P (40)

SIGN R4-8 OM1-B-B OM1-1

SPEED LIMIT 55 RET
MINIMUM SPEED 40 RET
RET

STA 248+77.00 RT

70 15 R
R
70 15 N
N

STA 248+96.50 RT

BRIDGE 10-N I-91 R
R

STA 249+60.00 RT

BRIDGE 10-N I-91 N
N

STA 249+85.00 RT

70 20 R
R
MILE 70 2 N
N

STA 251+79.00 RT

I-91 EXIT 11 NB OFF RAMP "C"

MILLED RUMBLE STRIP
STA 148+00.00 - 149+87.00 LT
STA 247+75.00 - 249+85.00 RT
STA 247+75.00 - 249+63.00 LT
STA 247+75.00 - 249+72.00 RT
STA 251+42.00 - 253+00.00 LT
STA 251+53.00 - 253+00.00 RT

NOTE:
ADJUST NEW CENTERLINE AND EDGE LINES TO MATCH EXISTING LINES AT BEGIN/END APPROACH

SIGN LEGEND
N = NEW
R = REMOVE
S = SALVAGE
R&S = REMOVE & SALVAGE
RET = RETAIN

SIGN & PAVEMENT MARKINGS SHEET

SCALE 1" = 20'-0"
20 0 20

PROJECT NAME: HARTFORD
PROJECT NUMBER: IM 091-2(79)

FILE NAME: sl2al32bdr_signs.dgn
PROJECT LEADER: K. HIGGINS
DESIGNED BY: W. LAMMER
SIGN & PAVEMENT MARKINGS SHEET

PLOT DATE: 15-DEC-2014
DRAWN BY: K. FRIEDLAND
CHECKED BY: J. SALVATORI
SHEET 57 OF 166

STATE OF VERMONT
AGENCY OF TRANSPORTATION

TRAFFIC SIGN SUMMARY SHEET

MILEMARKER, STATION, OR SIGN NUMBER	SIGN LEGEND	SIGN DIMENSIONS			NEW & SALVAGED SIGNS				EXIST POST		NEW SIGN POSTS																						REMARKS	SIGN DETAIL		
		EA	WIDTH (in)	HEIGHT (in)	"A"	"B"	SALV SIGN	SALV TIS	RETAIN	SALVAGE	NO. OF POSTS	FLANGED CHANNEL lb/ft			SQUARE STEEL (in) lb/ft			ANCHOR	SLEEVE	TUBULAR ALUMINUM Ø (in) lb/ft			FOUND-ATION	TUBULAR STEEL Ø (in) lb/ft				W-SHAPE STEEL FTG. SIZE		WEIGHT	POST SIZE	SIGN FRAME REQUIRED		DETAIL IN SHSM	DETAIL ON SHEET NUMBER	STD. SHEET NUMBER
															1.75	2.0	2.5			3.0	4.0	4.0 MOD		3.0	3.5	4.0	5.0	24"	30"						
												1.12	2.0	3.0	1.88	2.42	3.35			1.3	1.7	1.7		7.6	9.0	10.8	14.6								
											OPTION ITEMS																									
148+86.25 LT	70 15	1	6	8	0.33						1				8			X																T-40
151+50.25 LT	M3 7 0 2	1	12	48	4						1				8			X														D10-2a	X		
151+35.00 LT	BRIDGE 10-S I-91	1	6	8	0.33						1				8			X																T-42
248+96.50 RT	70 15	1	6	8	0.33						1				8			X																T-40
249+85.00 RT	BRIDGE 10-N I-91	1	6	8	0.33						1				8			X																T-42
251+79.00 RT	M3 7 0 2	1	12	48	4						1				8			X														D10-2a	X		
TOTALS					SF 9.32	SF	EA.	SF				FT	FT	FT	FT 48	FT	FT	EA	LB	LB	LB	EA.	LB	LB	LB	LB	EA.	EA.	LB						

FINAL POST LENGTHS ARE TO BE DETERMINED IN THE FIELD. POST SIZES ARE COMPUTED BASED ON INFORMATION FURNISHED ON THE STANDARD SHEETS AND VTRANS "SIGN POST DESIGN GUIDELINE."
SHS = STANDARD HIGHWAY SIGNS

PROJECT NAME: HARTFORD
PROJECT NUMBER: IM 091-2(79)

FILE NAME: sl2al32tss.dgn
PROJECT LEADER: K. HIGGINS
DESIGNED BY: W. LAMMER
TRAFFIC SIGN SUMMARY SHEET

PLOT DATE: 15-DEC-2014
DRAWN BY: K. FRIEDLAND
CHECKED BY: J. SALVATORI

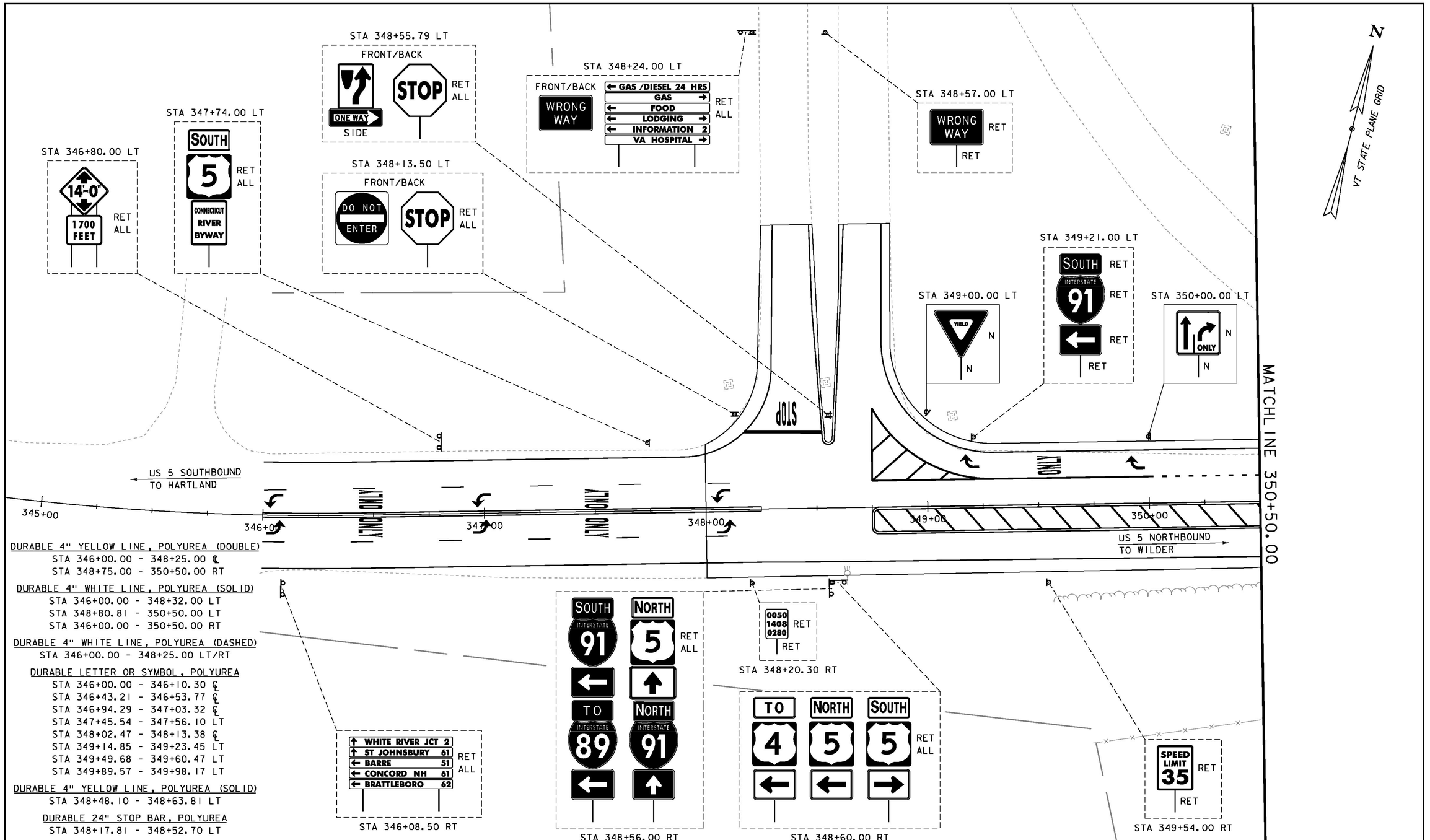

DURABLE 4" YELLOW LINE, POLYUREA (DOUBLE)
STA 346+00.00 - 348+25.00 ℄
STA 348+75.00 - 350+50.00 RT

DURABLE 4" WHITE LINE, POLYUREA (SOLID)
STA 346+00.00 - 348+32.00 LT
STA 348+80.81 - 350+50.00 LT
STA 346+00.00 - 350+50.00 RT

DURABLE 4" WHITE LINE, POLYUREA (DASHED)
STA 346+00.00 - 348+25.00 LT/RT

DURABLE LETTER OR SYMBOL, POLYUREA
STA 346+00.00 - 346+10.30 ℄
STA 346+43.21 - 346+53.77 ℄
STA 346+94.29 - 347+03.32 ℄
STA 347+45.54 - 347+56.10 LT
STA 348+02.47 - 348+13.38 ℄
STA 349+14.85 - 349+23.45 LT
STA 349+49.68 - 349+60.47 LT
STA 349+89.57 - 349+98.17 LT

DURABLE 4" YELLOW LINE, POLYUREA (SOLID)
STA 348+48.10 - 348+63.81 LT

DURABLE 24" STOP BAR, POLYUREA
STA 348+17.81 - 348+52.70 LT

DURABLE 8" YELLOW LINE, POLYUREA (SOLID)
STA 348+75.00 - 350+50.00 RT

DURABLE 8" WHITE LINE, POLYUREA (SOLID)
STA 348+75.00 - 350+00.00 LT

DURABLE 8" WHITE LINE, POLYUREA (DOTTED)
STA 350+00.00 - 350+50.00 LT

NOTE:
ADJUST NEW CENTERLINE AND EDGE LINES TO MATCH EXISTING LINES AT BEGIN/END APPROACH

US 5 SIGNS & PAVEMENT MARKINGS SHEET 1

SCALE 1" = 20'-0"
20 0 20

SIGN LEGEND
N = NEW
R = REMOVE
S = SALVAGE
R&S = REMOVE & SALVAGE
RET = RETAIN

PROJECT NAME: HARTFORD
PROJECT NUMBER: IM 091-2(79)

FILE NAME: sl2al32bdr_rte5_signs.dgn
PROJECT LEADER: K. HIGGINS
DESIGNED BY: W. LAMMER
US 5 SIGNS & PAVEMENT MARKINGS SHEET 1
PLOT DATE: 15-DEC-2014
DRAWN BY: K. FRIEDLAND
CHECKED BY: J. SALVATORI

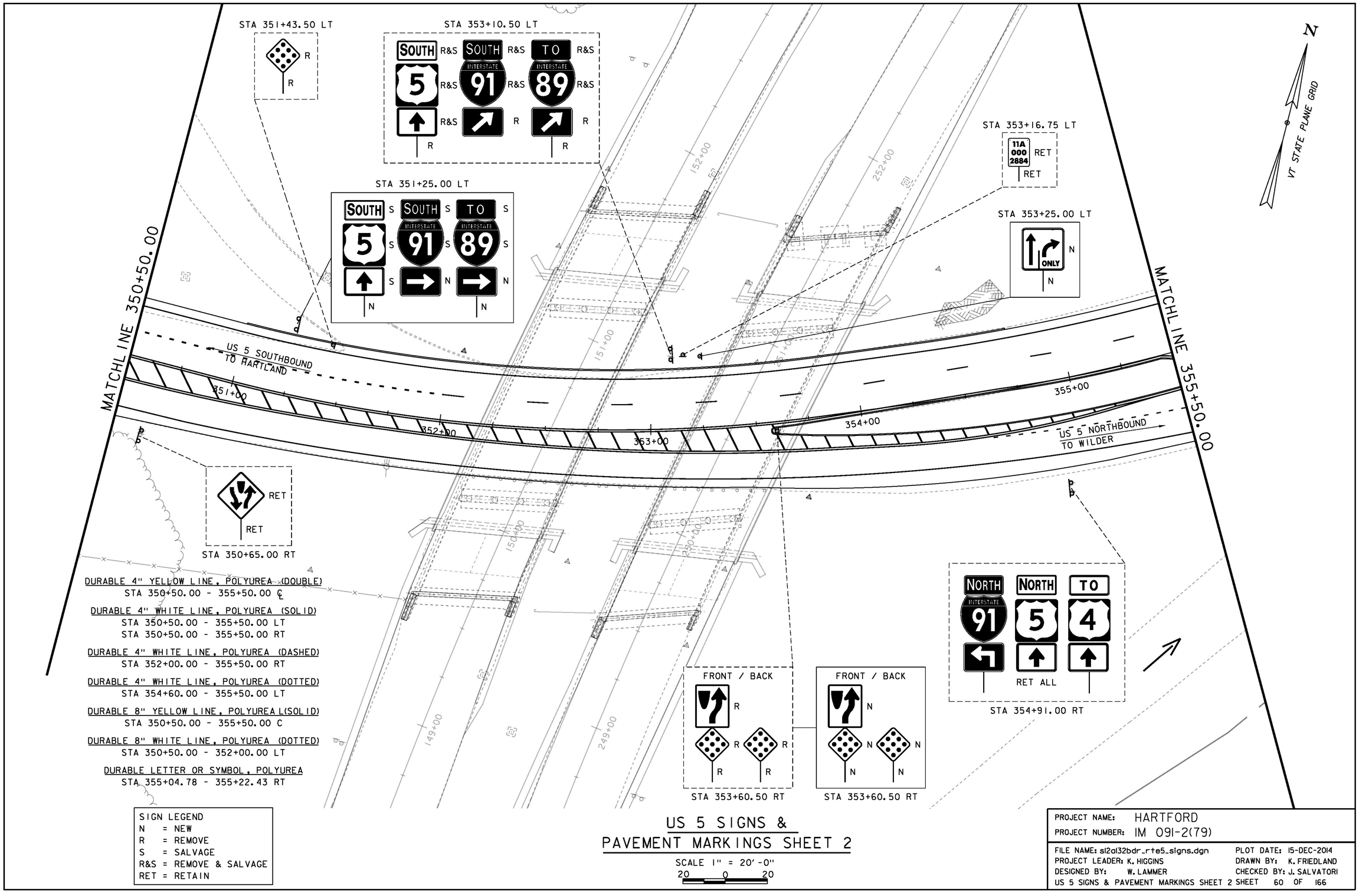

US 5 SIGNS & PAVEMENT MARKINGS SHEET 2

SCALE 1" = 20'-0"

20 0 20

PROJECT NAME:	HARTFORD
PROJECT NUMBER:	IM 091-2(79)
FILE NAME: sl2al32bdr_rte5_signs.dgn	PLOT DATE: 15-DEC-2014
PROJECT LEADER: K. HIGGINS	DRAWN BY: K. FRIEDLAND
DESIGNED BY: W. LAMMER	CHECKED BY: J. SALVATORI
US 5 SIGNS & PAVEMENT MARKINGS SHEET 2	SHEET 60 OF 166

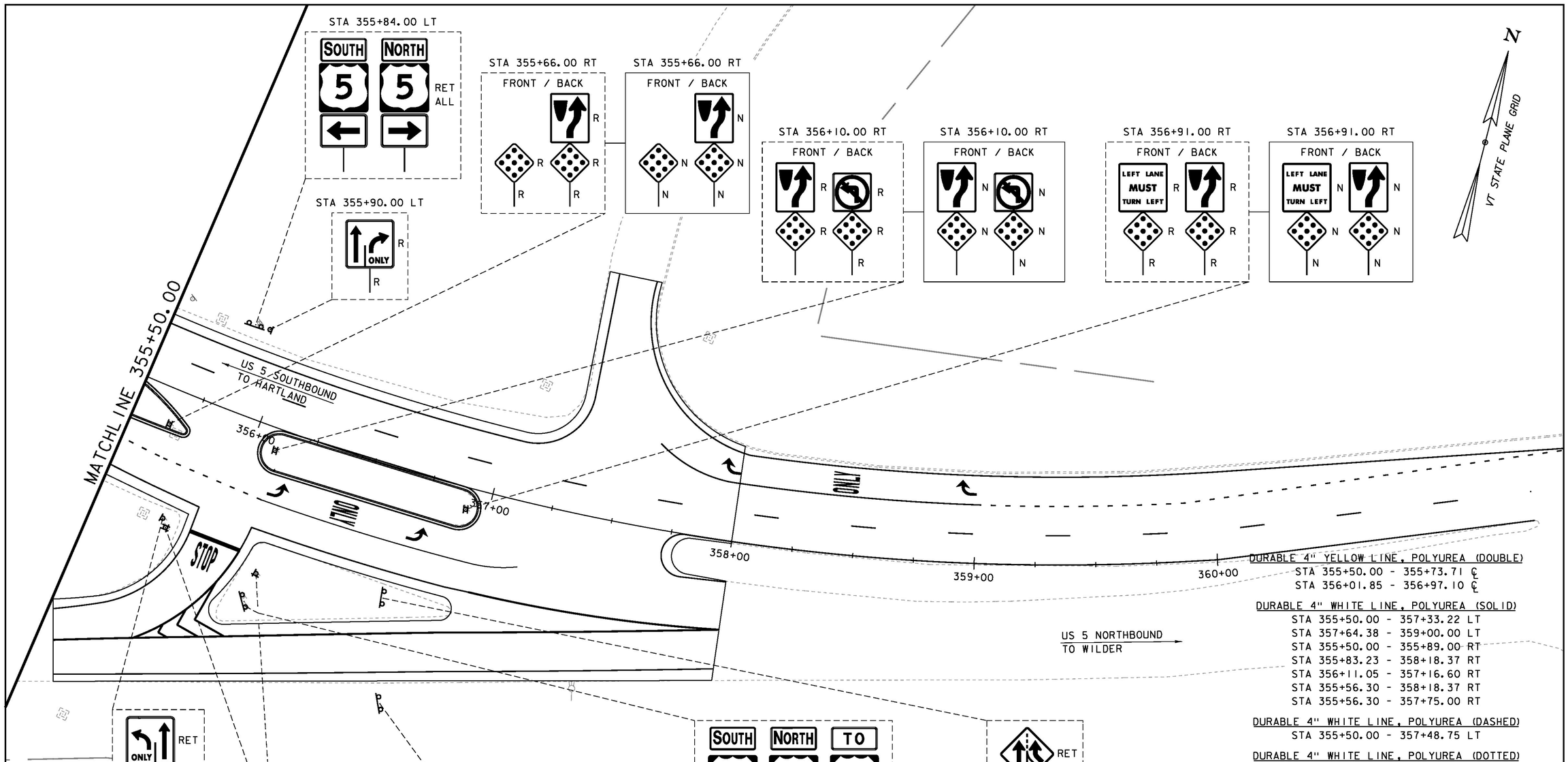

SIGN LEGEND
N = NEW
R = REMOVE
S = SALVAGE
R&S = REMOVE & SALVAGE
RET = RETAIN

NOTE:
ADJUST NEW CENTERLINE AND EDGE LINES TO MATCH EXISTING LINES AT BEGIN/END APPROACH

US 5 SIGNS & PAVEMENT MARKINGS SHEET 3

SCALE 1" = 20'-0"
20 0 20

DURABLE 4" YELLOW LINE, POLYUREA (DOUBLE)
STA 355+50.00 - 355+73.71 ℄
STA 356+01.85 - 356+97.10 ℄

DURABLE 4" WHITE LINE, POLYUREA (SOLID)
STA 355+50.00 - 357+33.22 LT
STA 357+64.38 - 359+00.00 LT
STA 355+50.00 - 355+89.00 RT
STA 355+83.23 - 358+18.37 RT
STA 356+11.05 - 357+16.60 RT
STA 355+56.30 - 358+18.37 RT
STA 355+56.30 - 357+75.00 RT

DURABLE 4" WHITE LINE, POLYUREA (DASHED)
STA 355+50.00 - 357+48.75 LT

DURABLE 4" WHITE LINE, POLYUREA (DOTTED)
STA 355+50.00 - 356+10.00 RT
STA 359+00.00 - 361+43.32 LT

DURABLE LETTER OR SYMBOL, POLYUREA
STA 356+12.33 - 356+20.47 RT
STA 356+39.10 - 356+49.40 RT
STA 356+70.60 - 356+78.90 RT
STA 357+91.18 - 358+01.00 LT
STA 358+39.20 - 358+50.15 LT
STA 358+91.23 - 359+00.00 LT

DURABLE 24" STOP BAR, POLYUREA
STA 355+89.00 - 356+09.65 LT

DURABLE 8" YELLOW LINE, POLYUREA (SOLID)
STA 355+50.00 - 355+74.51 ℄
STA 356+02.76 - 356+96.85 ℄

DURABLE 8" WHITE LINE, POLYUREA (SOLID)
STA 355+56.29 - 358+00.00 FRT

DURABLE 4" YELLOW LINE, POLYUREA (SOLID)
STA 357+31.61 - 357+33.22 LT

PROJECT NAME: HARTFORD
PROJECT NUMBER: IM 091-2(79)

FILE NAME: sl2al32bdr_rte5_signs.dgn
PROJECT LEADER: K. HIGGINS
DESIGNED BY: W. LAMMER
US 5 SIGNS & PAVEMENT MARKINGS SHEET 3

PLOT DATE: 15-DEC-2014
DRAWN BY: K. FRIEDLAND
CHECKED BY: J. SALVATORI
SHEET 61 OF 166

STATE OF VERMONT
AGENCY OF TRANSPORTATION

TRAFFIC SIGN SUMMARY SHEET

MILEMARKER, STATION, OR SIGN NUMBER	SIGN LEGEND	SIGN DIMENSIONS			NEW & SALVAGED SIGNS				EXIST POST		NEW SIGN POSTS																							REMARKS	SIGN DETAIL		
		EA	WIDTH (in)	HEIGHT (in)	"A"	"B"	SALV SIGN	SALV TIS	RETAIN	SALVAGE	NO. OF POSTS	FLANGED CHANNEL lb/ft			SQUARE STEEL (in) lb/ft			ANCHOR	SLEEVE	TUBULAR ALUMINUM Ø (in) lb/ft			FOUNDATION	TUBULAR STEEL Ø (in) lb/ft				W-SHAPE STEEL FTG. SIZE		WEIGHT	POST SIZE	SIGN REFLECTORIZED		DETAIL IN SHSM	DETAIL ON SHEET NUMBER	STD. SHEET NUMBER
												1.12	2.0	3.0	1.88	2.42	3.35			1.3	1.7	1.7		7.6	9.0	10.8	14.6	24"	30"						
												OPTION ITEMS																									
349+00.00 LT	YIELD	1	36	36	9.00						1					15		X																R1-2	X		
350+00.00 LT	ONLY	1	30	36	7.50						1					15		X																VR-921			E-145A
351+25.00 LT	SOUTH	1					X				2					30		X																M3-3	X		
351+25.00 LT	5	1					X																											M1-4	X		
351+25.00 LT		1					X																											M6-3	X		
351+25.00 LT	SOUTH	1					X																											M3-3	X		
351+25.00 LT	91	1					X																											M1-1	X		
351+25.00 LT		1	21	15	2.19																													M6-1	X		
351+25.00 LT	TO	1					X																											M4-5	X		
351+25.00 LT	89	1					X																											M1-1	X		
351+25.00 LT		1	21	15	2.19		X																											M6-1	X		
353+25.00 LT	ONLY	1	30	36	7.50						1					15		X																VR-921			E-145A
SUB TOTALS					SF 28.38	SF	EA. 8.00	SF	EA. 5.00		FT	FT	FT	FT	FT 75	FT		EA	LB	LB	LB	EA.	LB	LB	LB	LB	EA.	EA.	LB							
					SF	SF	EA.	SF			FT			FT					LB			EA.	LB				EA.	EA.	LB							

FINAL POST LENGTHS ARE TO BE DETERMINED IN THE FIELD. POST SIZES ARE COMPUTED BASED ON INFORMATION FURNISHED ON THE STANDARD SHEETS AND VTRANS "SIGN POST DESIGN GUIDELINE."
SHS = STANDARD HIGHWAY SIGNS

PROJECT NAME: HARTFORD
PROJECT NUMBER: IM 091-2(79)

FILE NAME: sl2al32tss_rte5.dgn
PROJECT LEADER: K. HIGGINS
DESIGNED BY: W. LAMMER
US-5 TRAFFIC SIGN SUMMARY SHEET 1

PLOT DATE: 15-DEC-2014
DRAWN BY: K. FRIEDLAND
CHECKED BY: J. SALVATORI
SHEET 62 OF 166

STATE OF VERMONT
AGENCY OF TRANSPORTATION

TRAFFIC SIGN SUMMARY SHEET

MILEMARKER, STATION, OR SIGN NUMBER	SIGN LEGEND	SIGN DIMENSIONS			NEW & SALVAGED SIGNS				EXIST POST		NEW SIGN POSTS																					REMARKS	SIGN DETAIL		
		EA	WIDTH (in)	HEIGHT (in)	"A"	"B"	SALV SIGN	SALV TIS	RETAIN	SALVAGE	NO. OF POSTS	FLANGED CHANNEL lb/ft			SQUARE STEEL (in) lb/ft			ANCHOR	SLEEVE	TUBULAR ALUMINUM Ø (in) lb/ft			FOUNDATION	TUBULAR STEEL Ø (in) lb/ft				W-SHAPE STEEL FTG. SIZE		WEIGHT	POST SIZE	SIGN REMOVED		DETAIL IN SHSM	DETAIL ON SHEET NUMBER	STD. SHEET NUMBER
												1.12	2.0	3.0	1.88	2.42	3.35			1.3	1.7	1.7		7.6	9.0	10.8	14.6	24"	30"						
												OPTION ITEMS																								
353+60.50 RT		1	18	24	3.00						1					15		X														ONE POST FOR THREE SIGNS STA 353+60.50 RT (R4-7c)	X		
353+60.50 RT		2	18	18	4.50																											OMI-1	X		
355+66.00 RT		1	18	24	3.00						1					15		X														ONE POST FOR THREE SIGNS STA 355+66.00 RT (R4-7c)	X		
355+66.00 RT		2	18	18	4.50																											OMI-1	X		
356+10.00 RT		1	18	24	3.00						1					15		X														ONE POST FOR FOUR SIGNS STA 356+10.00 RT (R4-7c)	X		
356+10.00 RT		2	18	18	4.50																											OMI-1	X		
356+10.00 RT		1	24	24	4.00																											R3-2	X		
356+91.00 RT	LEFT LANE MUST TURN LEFT	1	30	30	6.25						1					15		X														ONE POST FOR FOUR SIGNS STA 356+91.00 RT (R3-7L)	X		
356+91.00 RT		2	18	18	4.50																											OMI-1	X		
356+91.00 RT		1	18	24	3.00																											R4-7c	X		
SUB TOTALS		SF	SF	EA.	SF	EA.	FT	FT	FT	FT	FT	FT	EA	LB	LB	LB		LB	LB	LB	LB													
		40.25				4.00					60																								
GRAND TOTALS		SF	SF	EA.	SF	EA.	FT			FT				LB			EA.	LB				EA.	EA.	LB										
		68.63		8.00		9.00				135																								

FINAL POST LENGTHS ARE TO BE DETERMINED IN THE FIELD. POST SIZES ARE COMPUTED BASED ON INFORMATION FURNISHED ON THE STANDARD SHEETS AND VTRANS "SIGN POST DESIGN GUIDELINE."
SHS = STANDARD HIGHWAY SIGNS

PROJECT NAME: HARTFORD
PROJECT NUMBER: IM 091-2(79)

FILE NAME: sl2al32tss_rte5.dgn
PROJECT LEADER: K. HIGGINS
DESIGNED BY: W. LAMMER
US-5 TRAFFIC SIGN SUMMARY SHEET 2

PLOT DATE: 15-DEC-2014
DRAWN BY: K. FRIEDLAND
CHECKED BY: J. SALVATORI
SHEET 63 OF 166

OFFSETS FOR GUARDRAIL FLARE

STATION	OFFSET
STA 246+92.50	27.17' LT
STA 247+29.25	23.17' LT
STA 247+41.75	22.75' LT
STA 247+66.50	21.83' LT
STA 247+91.25	20.92' LT
STA 248+16.00	20.00' LT
STA 248+40.75	19.08' LT
STA 248+65.75	18.08' LT
STA 248+90.50	17.08' LT
STA 249+15.25	16.00' LT

DELINEATOR W/STEEL POST (BLUE)
STA 246+90.00 LT
STA 247+04.00 RT

DELINEATOR W/STEEL POST (GREEN)
STA 149+17.00 RT
STA 251+92.00 LT

ANCHOR FOR STEEL BEAM RAIL
STA 149+34.00 RT
STA 249+42.00 FLT
STA 249+47.00 LT
STA 251+44.00 FLT
STA 251+49.00 LT
STA 251+75.00 LT

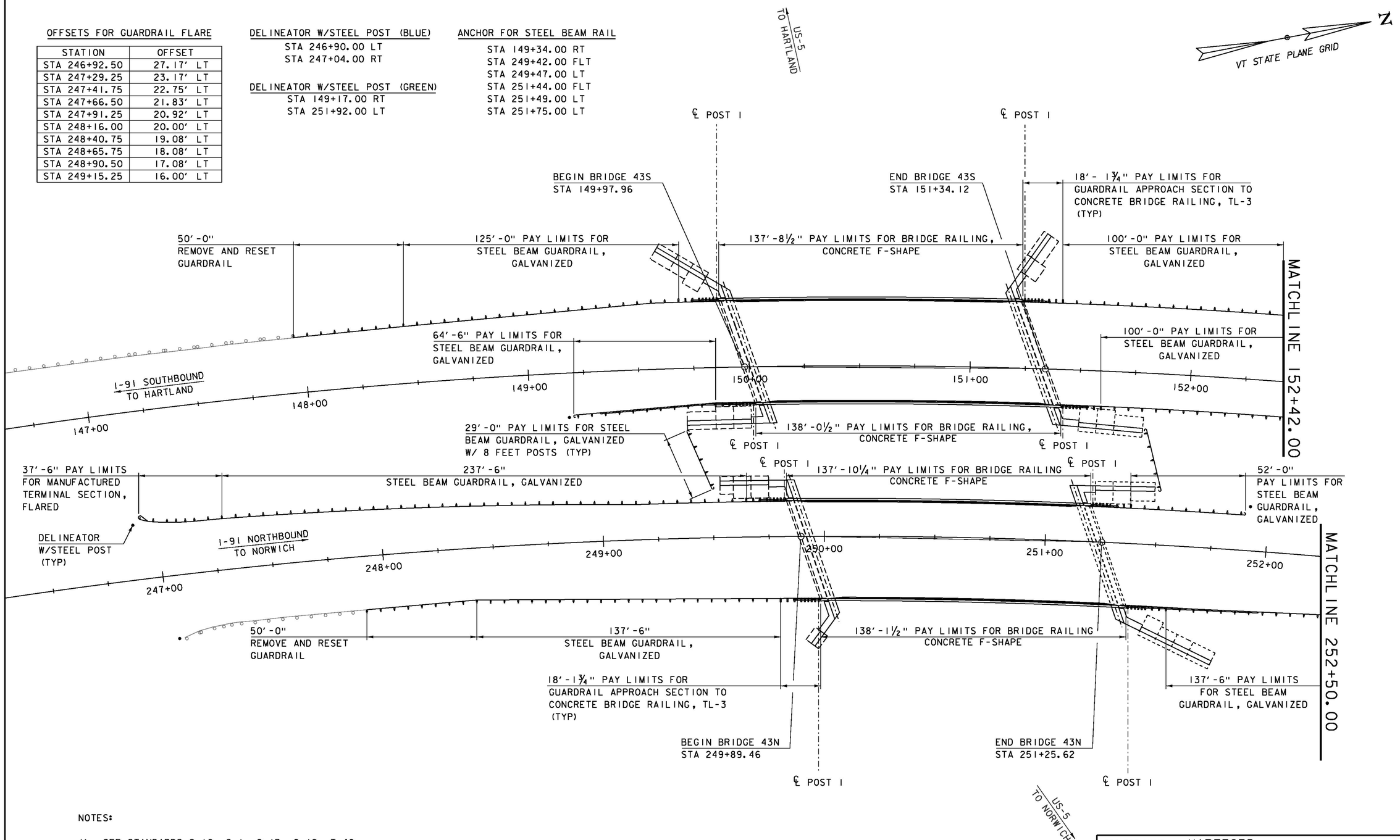

NOTES:

1) SEE STANDARDS C-10, G-1, G-1D, G-19, T-40, T-45, S-363 FOR FURTHER DETAILS.

2) OFFSETS GIVEN FOR GUARDRAIL FLARE ARE TO FACE OF RAIL.

RAIL LAYOUT SHEET 1

SCALE 1" = 20'-0"
20 0 20

PROJECT NAME: HARTFORD
PROJECT NUMBER: IM 091-2(79)

FILE NAME: sl2al32bdr_rail.dgn
PROJECT LEADER: K. HIGGINS
DESIGNED BY: J. GRIGAS
RAIL LAYOUT SHEET 1

PLOT DATE: 15-DEC-2014
DRAWN BY: K. FRIEDLAND
CHECKED BY: J. SALVATORI
SHEET 64 OF 166

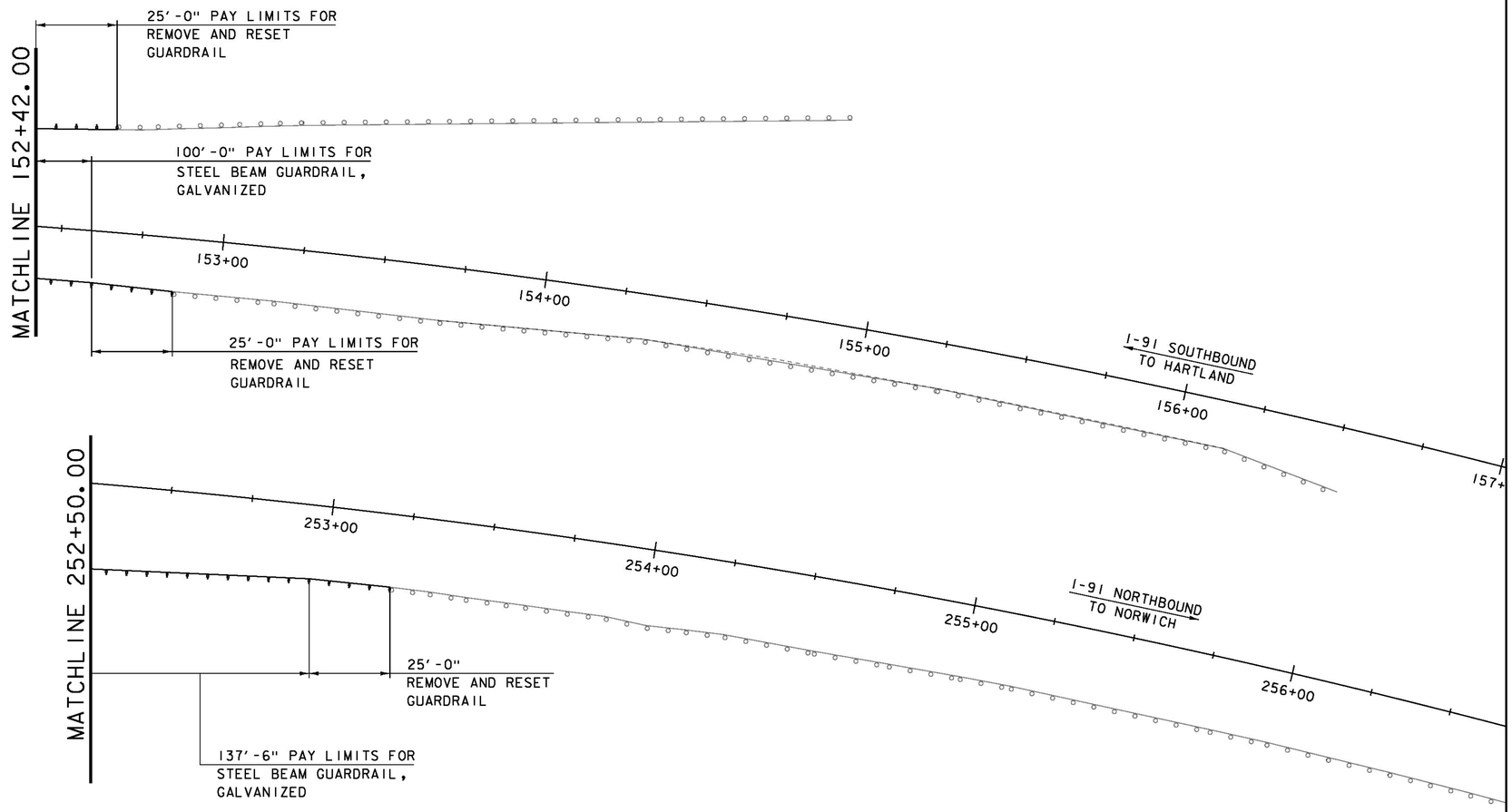

NOTES:

1) SEE STANDARDS C-10, G-1, G-1D, G-19, T-40, T-45, S-363 FOR FURTHER DETAILS.

RAIL LAYOUT SHEET 2

SCALE 1" = 20'-0"
20 0 20

PROJECT NAME: HARTFORD	
PROJECT NUMBER: IM 091-2(79)	
FILE NAME: si2al32bdr_rail.dgn	PLOT DATE: 15-DEC-2014
PROJECT LEADER: K. HIGGINS	DRAWN BY: K. FRIEDLAND
DESIGNED BY: J. GRIGAS	CHECKED BY: J. SALVATORI
RAIL LAYOUT SHEET 2	SHEET 65 OF 166

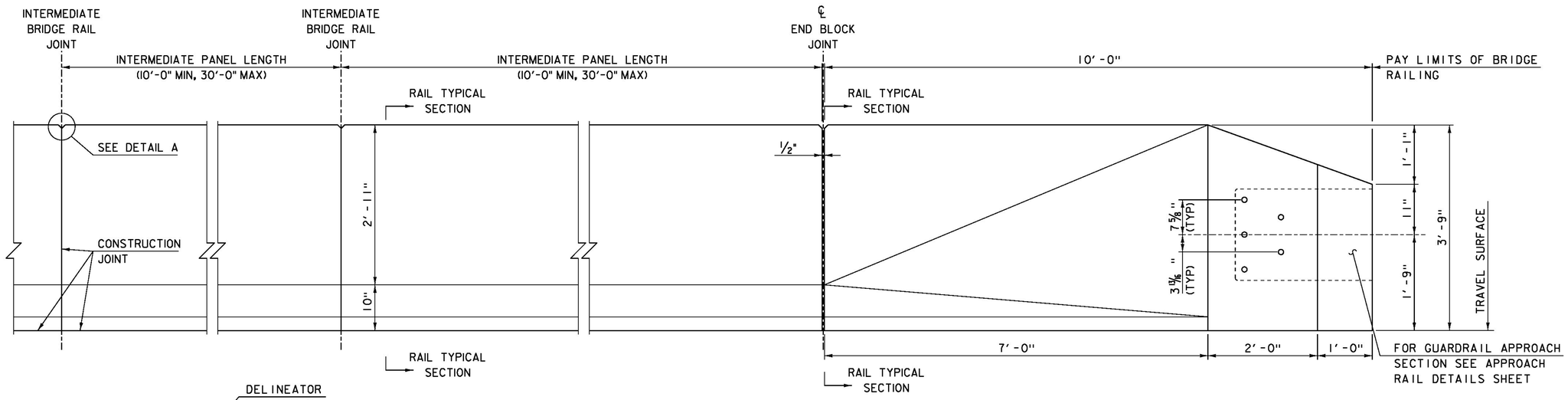

RAILING ELEVATION
NOT TO SCALE

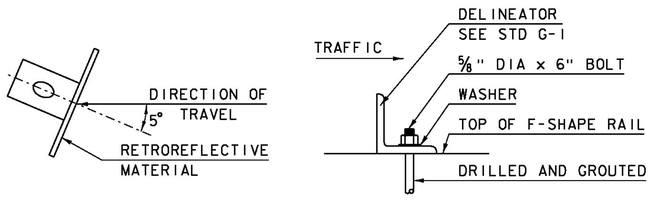

DELINEATOR MOUNTING DETAILS
(NOT TO SCALE)

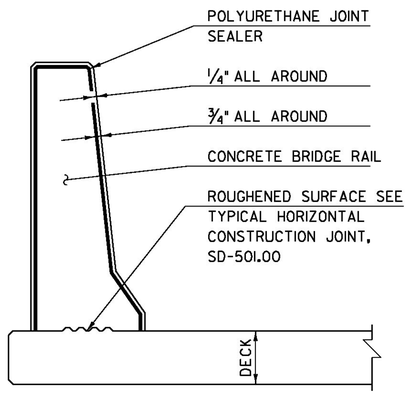

BRIDGE RAIL JOINT SECTION
SCALE 1"=1'-0"

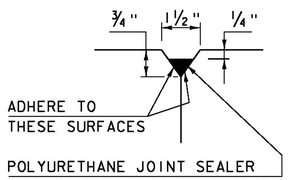

POLYURETHANE JOINT SEALER MEETING THE REQUIREMENTS OF SECTION 524. COLOR TO MATCH CONCRETE. PAYMENT TO BE INCIDENTAL TO THE BRIDGE RAIL ITEM

DETAIL "A"
(NOT TO SCALE)

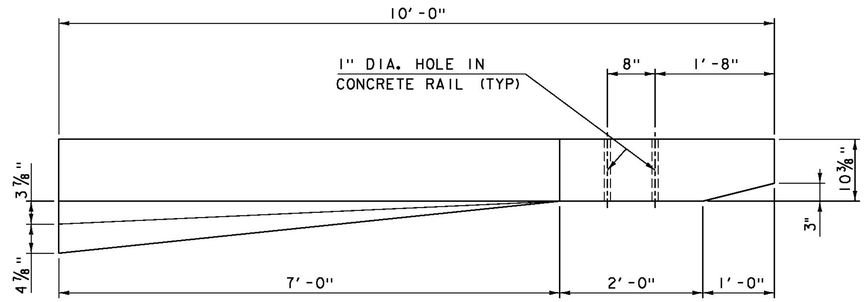

END BLOCK PLAN
SCALE 1"=1'-0"

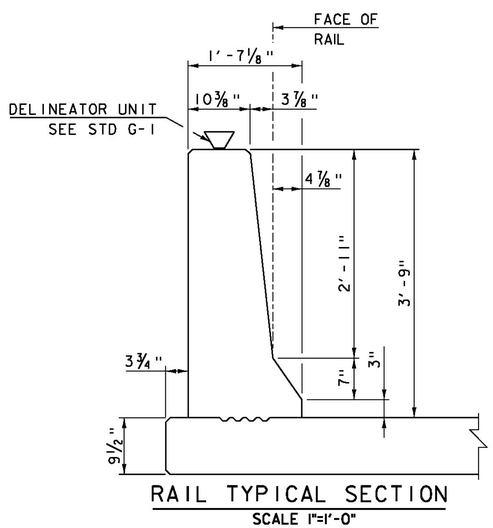

RAIL TYPICAL SECTION
SCALE 1"=1'-0"

CONCRETE RAIL JOINT NOTES

1. CONCRETE RAIL MAY BE PLACED IN ONE CONTINUOUS OPERATION IF AN APPROVED SHRINKAGE REDUCING ADMIXTURE LISTED IN THE SPECIAL PROVISIONS IS USED WITH THE CONCRETE MIX DESIGN. PAYMENT FOR THE SHRINKAGE REDUCING ADMIXTURE WILL BE INCIDENTAL TO THE BRIDGE RAIL CONCRETE ITEM.
2. WHEN BRIDGE RAIL JOINTS ARE USED THE PANELS SHALL BE PLACED IN ALTERNATE SECTIONS WITH A MINIMUM OF 48 HOUR DELAY BETWEEN ADJACENT PLACEMENTS.
3. REINFORCING STEEL SHALL EXTEND THROUGH THE RAIL JOINT.

NOTE:
EF = EACH FACE
3" CLEAR, UNLESS OTHERWISE SPECIFIED ON THE PLANS.
2'-2" BAR LAP UNLESS OTHERWISE SPECIFIED ON THE PLANS.
*** MATCH SLOPE OF NEAREST TRANSVERSE STEEL

NOTES:
1. ALL WORK AND MATERIALS SHALL CONFORM TO SECTION 525.
2. BRIDGE RAILING SHALL HAVE A RUBBED FINISH IN ACCORDANCE WITH SECTION 501.
3. SEE STANDARD DRAWING G-1 FOR DETAILS OF DELINEATORS. A DELINEATOR SHALL BE INSTALLED AT 30 FOOT SPACING. WHITE IS TO BE INSTALLED ON THE DRIVER'S RIGHT. FOR ONE WAY BRIDGES, YELLOW IS TO BE INSTALLED ON THE DRIVER'S LEFT. PAYMENT FOR DELINEATORS SHALL BE INCIDENTAL TO THE BRIDGE RAIL, CONCRETE F-SHAPE TL-5 ITEM.
4. PAYMENT FOR ALL MATERIALS INCLUDING REINFORCING STEEL SHALL INCLUDED IN THE BID PRICE FOR BRIDGE RAIL, CONCRETE F-SHAPE TL-5.

PROJECT NAME: HARTFORD
PROJECT NUMBER: IM 091-2(79)

FILE NAME: sl2al32rail_details.dgn
PROJECT LEADER: K. HIGGINS
DESIGNED BY: C. MOONEY
BRIDGE RAIL DETAILS

PLOT DATE: 15-DEC-2014
DRAWN BY: C. MOONEY
CHECKED BY: W. LAMMER
SHEET 66 OF 166

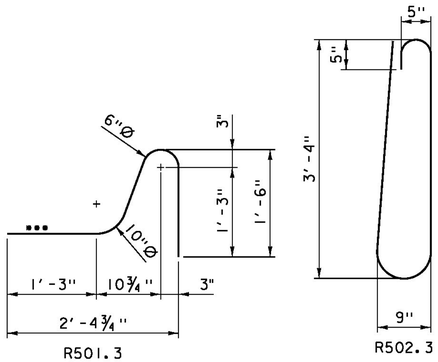

R501.3

R502.3

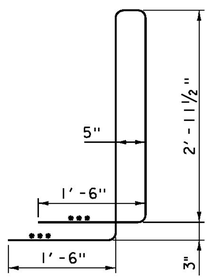

R503.3

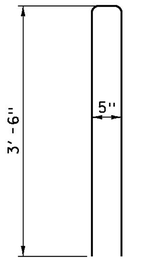

R504.3

REINFORCING BAR BEND DETAILS
NOT TO SCALE

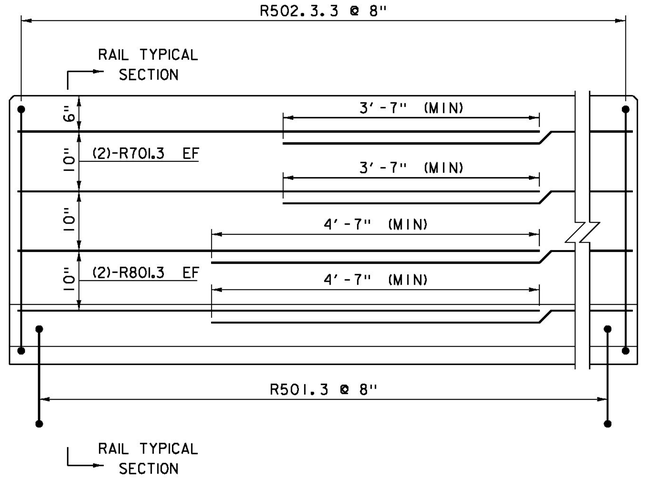

INTERMEDIATE PANEL REINFORCING ELEVATION
NOT TO SCALE

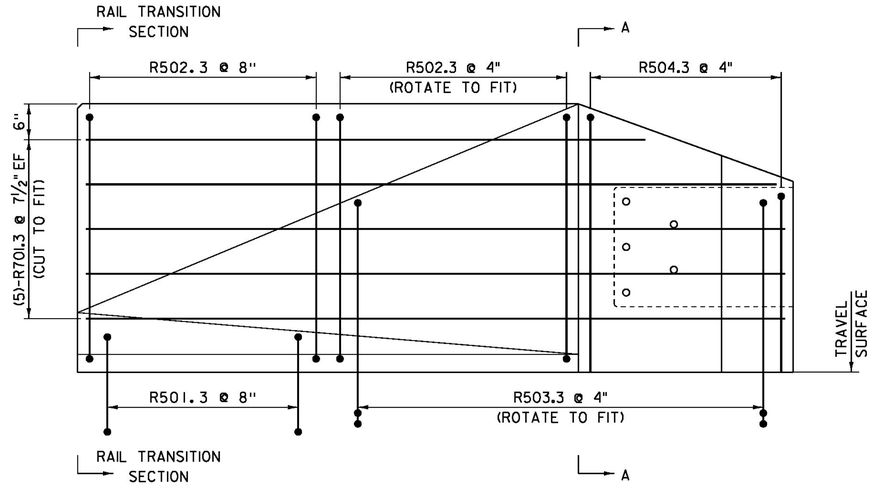

END BLOCK REINFORCING ELEVATION
NOT TO SCALE

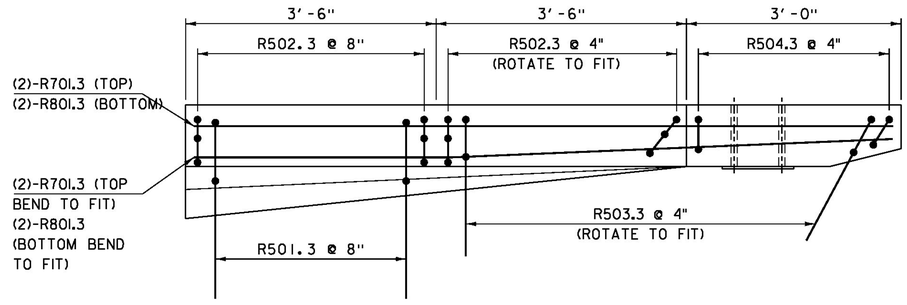

END BLOCK REINFORCING PLAN
NOT TO SCALE

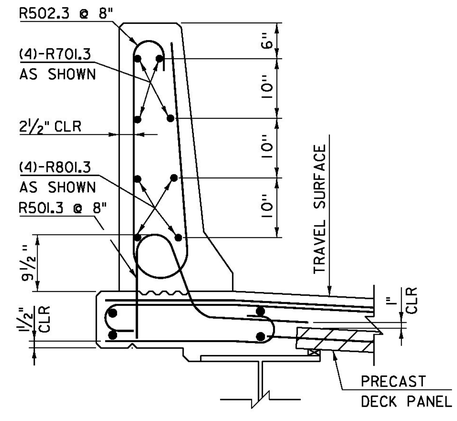

RAIL TYPICAL REINFORCING SECTION
NOT TO SCALE

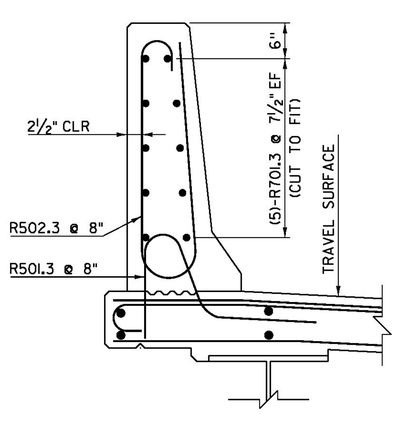

RAIL TRANSITION SECTION
NOT TO SCALE

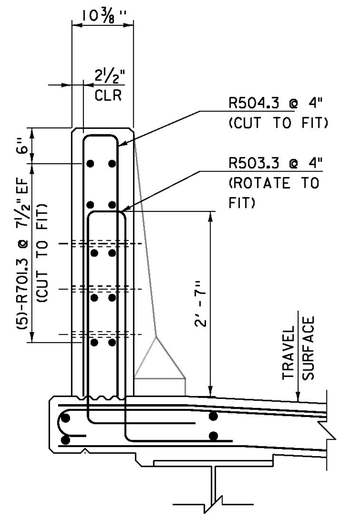

SECTION A-A
NOT TO SCALE

NOTE:
EF = EACH FACE
3" CLEAR, UNLESS OTHERWISE SPECIFIED ON THE PLANS.
2'-2" BAR LAP UNLESS OTHERWISE SPECIFIED ON THE PLANS.
*** MATCH SLOPE OF NEAREST TRANSVERSE STEEL

NOTES
1. ALL REINFORCING STEEL USED IN THE BRIDGE RAIL SHALL BE LEVEL III.

PROJECT NAME:	HARTFORD
PROJECT NUMBER:	IM 091-2(79)
FILE NAME: sl2al32rail_details.dgn	PLOT DATE: 15-DEC-2014
PROJECT LEADER: K. HIGGINS	DRAWN BY: C. MOONEY
DESIGNED BY: C. MOONEY	CHECKED BY: W. LAMMER
BRIDGE RAIL REINFORCING DETAILS	SHEET 67 OF 166

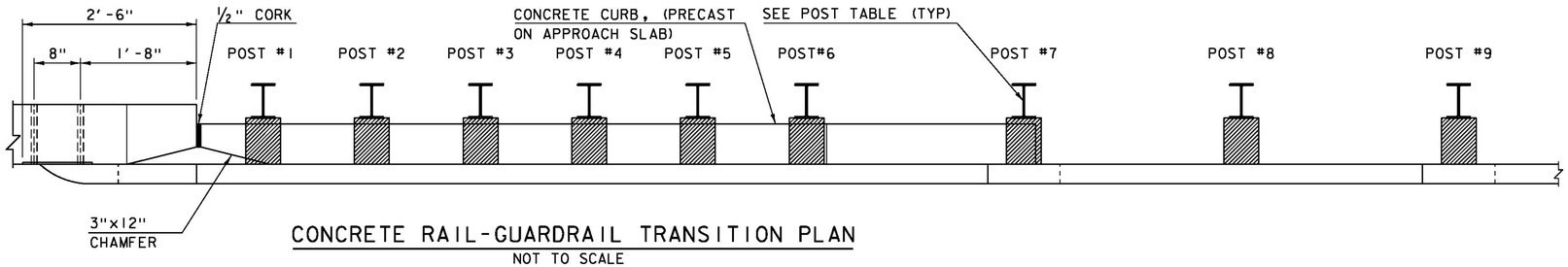

CONCRETE RAIL-GUARDRAIL TRANSITION PLAN

NOT TO SCALE

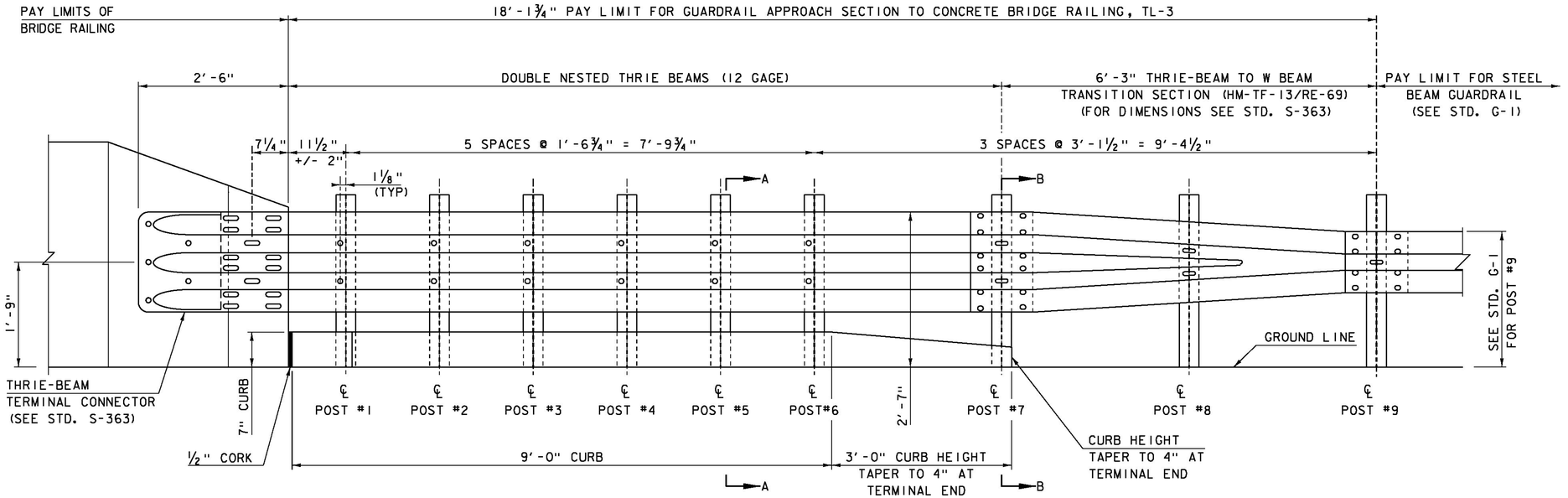

CONCRETE RAIL-GUARDRAIL TRANSITION ELEVATION

NOT TO SCALE

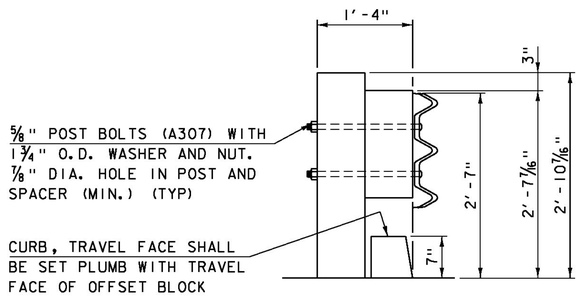

SECTION A-A

NOT TO SCALE

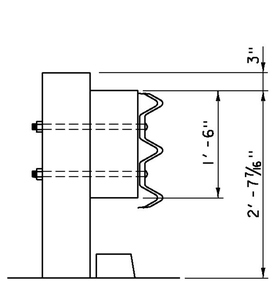

SECTION B-B

NOT TO SCALE

		STEEL	WOOD
SECTION		W6x9	6"X8"
OFFSET BLOCK		6"X8" WOOD	6"X8" RECESSED WOOD
EMBEDMENT DEPTH	POST# 1-6	7'-0"	7'-0"
	POST# 7&8	6'-0"	6'-0"
	POST# 9	SEE STD. G-1	SEE STD. G-1

POST TABLE

NOTES:

1. THRIE-BEAM TERMINAL CONNECTOR SHALL BE INCLUDED IN THE UNIT BID PRICE FOR GUARDRAIL APPROACH SECTION TO CONCRETE BRIDGE RAILING, TL-3.
2. UNLESS OTHERWISE DIRECTED BY THE ENGINEER, A COMPOSITE MATERIAL OFFSET BLOCK FROM THE APPROVED PRODUCTS LIST MAY BE SUBSTITUTED FOR A OFFSET BLOCK OF SIMILAR DIMENSIONS.
3. THIS APPROACH RAILING MEETS THE REQUIREMENTS FOR A NCHRP REPORT 350 TL-3 SERVICE LEVEL.
4. SEE STANDARDS C-10, G-1 AND S-363.

PROJECT NAME: HARTFORD
PROJECT NUMBER: IM 091-2(79)

FILE NAME: sl2al32rail_details.dgn
PROJECT LEADER: K. HIGGINS
DESIGNED BY: C. MOONEY
APPROACH RAIL DETAILS

PLOT DATE: 15-DEC-2014
DRAWN BY: C. MOONEY
CHECKED BY: W. LAMMER
SHEET 68 OF 166

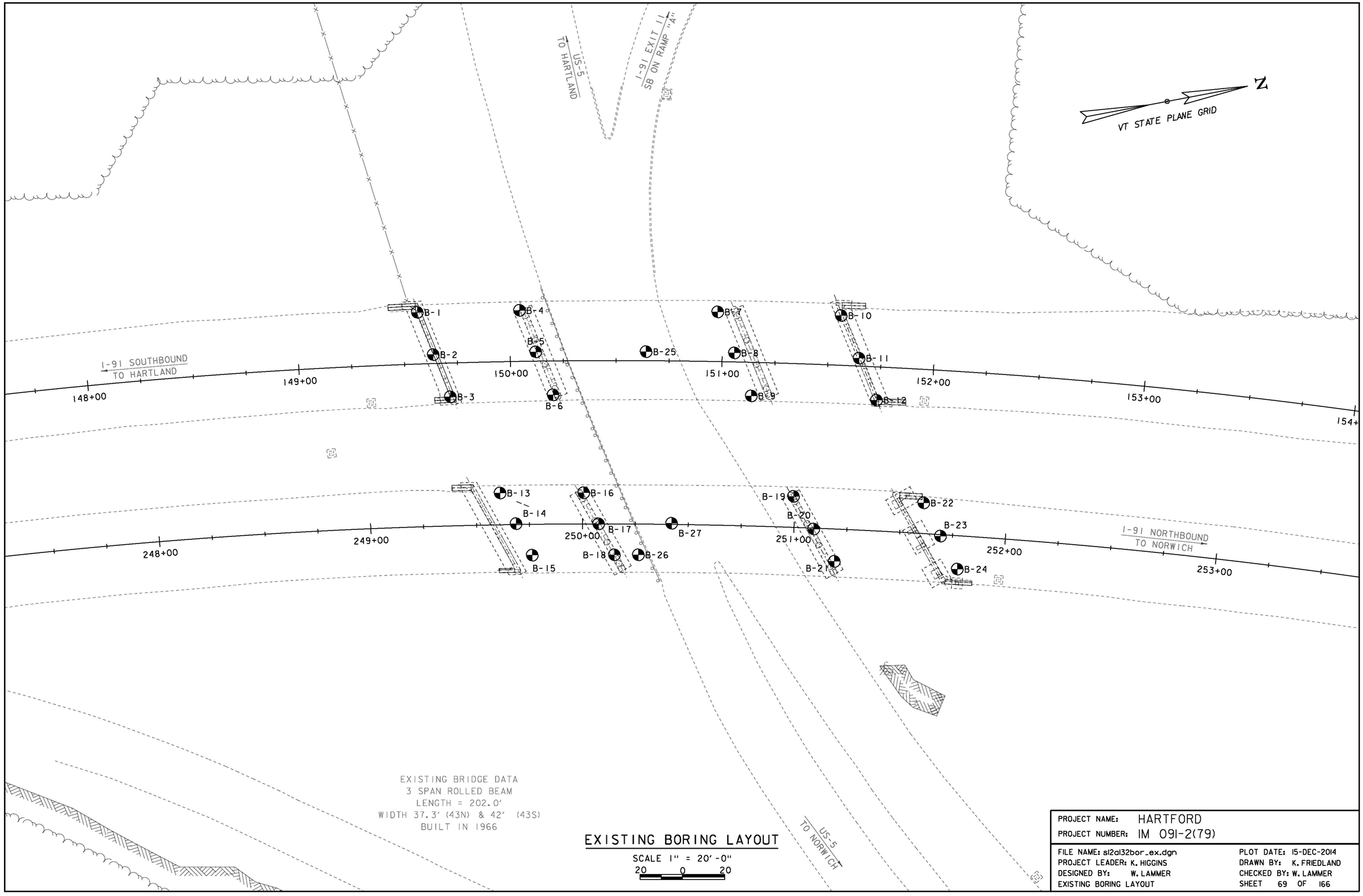

EXISTING BORING LAYOUT

SCALE 1" = 20'-0"

20 0 20

PROJECT NAME:	HARTFORD
PROJECT NUMBER:	IM 091-2(79)
FILE NAME: sl2al32bor_ex.dgn	PLOT DATE: 15-DEC-2014
PROJECT LEADER: K. HIGGINS	DRAWN BY: K. FRIEDLAND
DESIGNED BY: W. LAMMER	CHECKED BY: W. LAMMER
EXISTING BORING LAYOUT	SHEET 69 OF 166

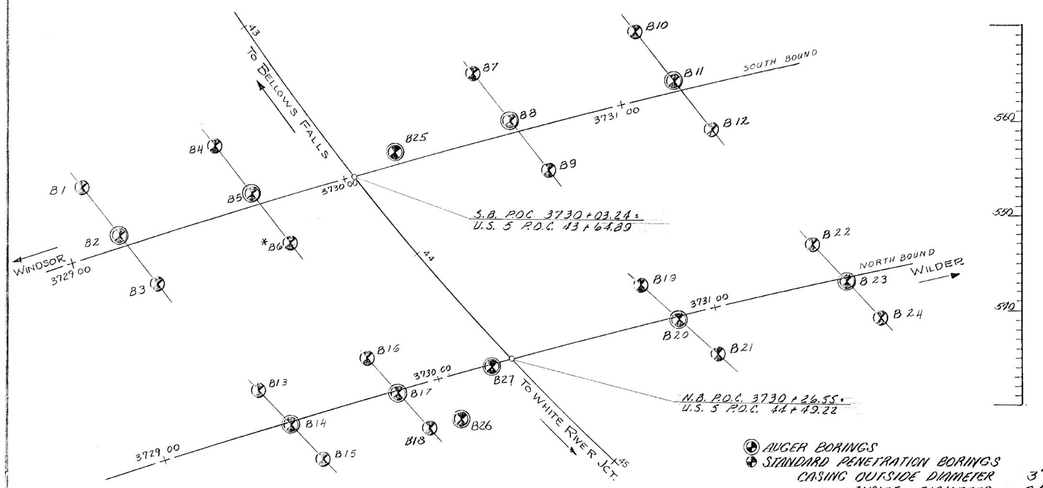

BORING PLAN LAYOUT

SCALE 1"=20'-0

- AUGER BORINGS
- STANDARD PENETRATION BORINGS

CASING OUTSIDE DIAMETER	3"
INSIDE DIAMETER	2½"
WEIGHT OF HAMMER	350 #
HAMMER FALL	24"
SAMPLER OUTSIDE DIAMETER	2"
INSIDE DIAMETER	1⅜"
WEIGHT OF HAMMER	140 #
HAMMER FALL	30"

Additional Auger Borings (not plotted)

Station	Offset	Ground Elevation	Depth to Bedrock or Refusal
3731+30 NB	16' Lt.	561.8	14.0'
3731+13 NB	9' Rt.	562.3	10.0'
3731+51 NB	33' Rt.	563.4	10.0'

BORING NO	STATION	OFFSET FROM ℄
	SOUTH BOUND	
B1	3729+12	24 Lt
B2	3729+19	4 Lt
B3	3729+26	16 Rt
B4	3729+60	24 Lt
B5	3729+67	4 Lt
*B6	3729+75	16 Rt
B7	3730+53	24 Lt
B8	3730+62	4 Lt
B9	3730+70	16 Rt
B10	3731+11	24 Lt
B11	3731+20	4 Lt
B12	3731+29	16 Rt
	NORTH BOUND	
B13	3729+39	14 Lt
B14	3729+46	1 Rt
B15	3729+53	16 Rt
B16	3729+78	14 Lt
B17	3729+85	1 Rt
B18	3729+92	16 Rt
B19	3730+77	14 Lt
B20	3730+87	1 Rt
B21	3730+97	16 Rt
B22	3731+38	14 Lt
B23	3731+47	1 Rt
B24	3731+56	16 Rt

* BORINGS NOT TAKEN

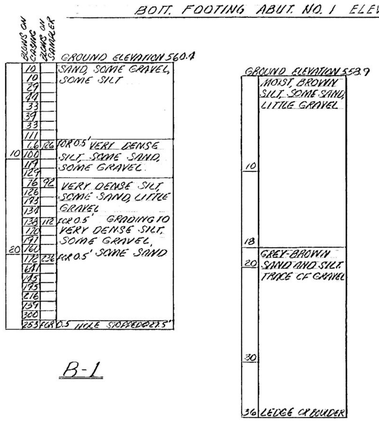

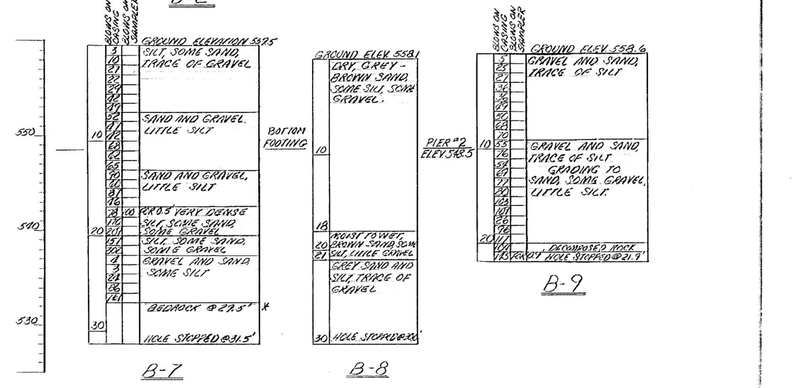

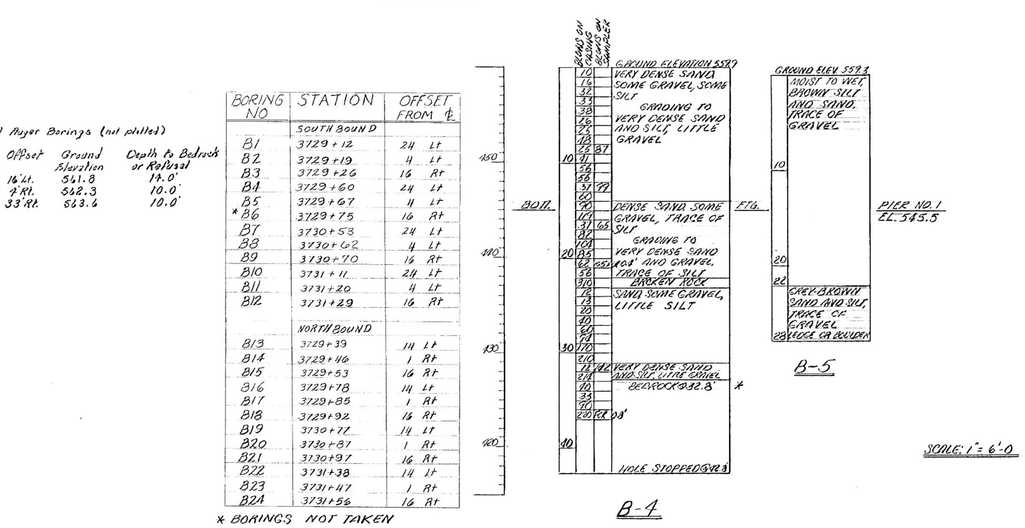

ITEM NO.	ITEM	UNIT	NET	OVERRUN	TOTAL	FINAL
106-A	CHAN. EXCAV. OF EARTH	C.Y.				
106-B	CHAN. EXCAV. OF ROCK	C.Y.				
106-C	UNCLASS. CHAN. EXCAV.	C.Y.				
107	STRUCT. EXCAV.	C.Y.				
601-B	CONC. CLASS B (MOD.)	C.Y.				
602	REINF. STEEL	LBS.				
607	ASPHALTIC-ASB. COATING	S.Y.				
607-B	TREATED TIMBER PILING	L.F.				
608	SPLICES FOR STEEL PILING	EA.				
501	STEEL PILING	L.F.				
502-A	UNTREATED TIMBER PILING	L.F.				

STATE OF VERMONT
DEPARTMENT OF HIGHWAYS

TOWN OF HARTFORD
ROUTE NO. I-91 LOC. STA.
INTERSTATE OVER US 5
BORING PLAN
SCALE AS SHOWN
SURVEYED BY:
DRAWN BY Tessie, ASW CHECKED BY R.B.H. & R.L.O.
PROJECT NO. I 91-2 (2)
SHEET 92 OF 719

BR 104 of 124

EXISTING BORING LOGS SHEET 1

NOT TO SCALE

PROJECT NAME:	HARTFORD
PROJECT NUMBER:	IM 091-2(79)
FILE NAME: sl2al32bor_logs_ex.dgn	PLOT DATE: 15-DEC-2014
PROJECT LEADER: K. HIGGINS	DRAWN BY: K. FRIEDLAND
DESIGNED BY: W. LAMMER	CHECKED BY: J. SALVATORI
EXISTING BORING LOGS SHEET 1	SHEET 70 OF 166

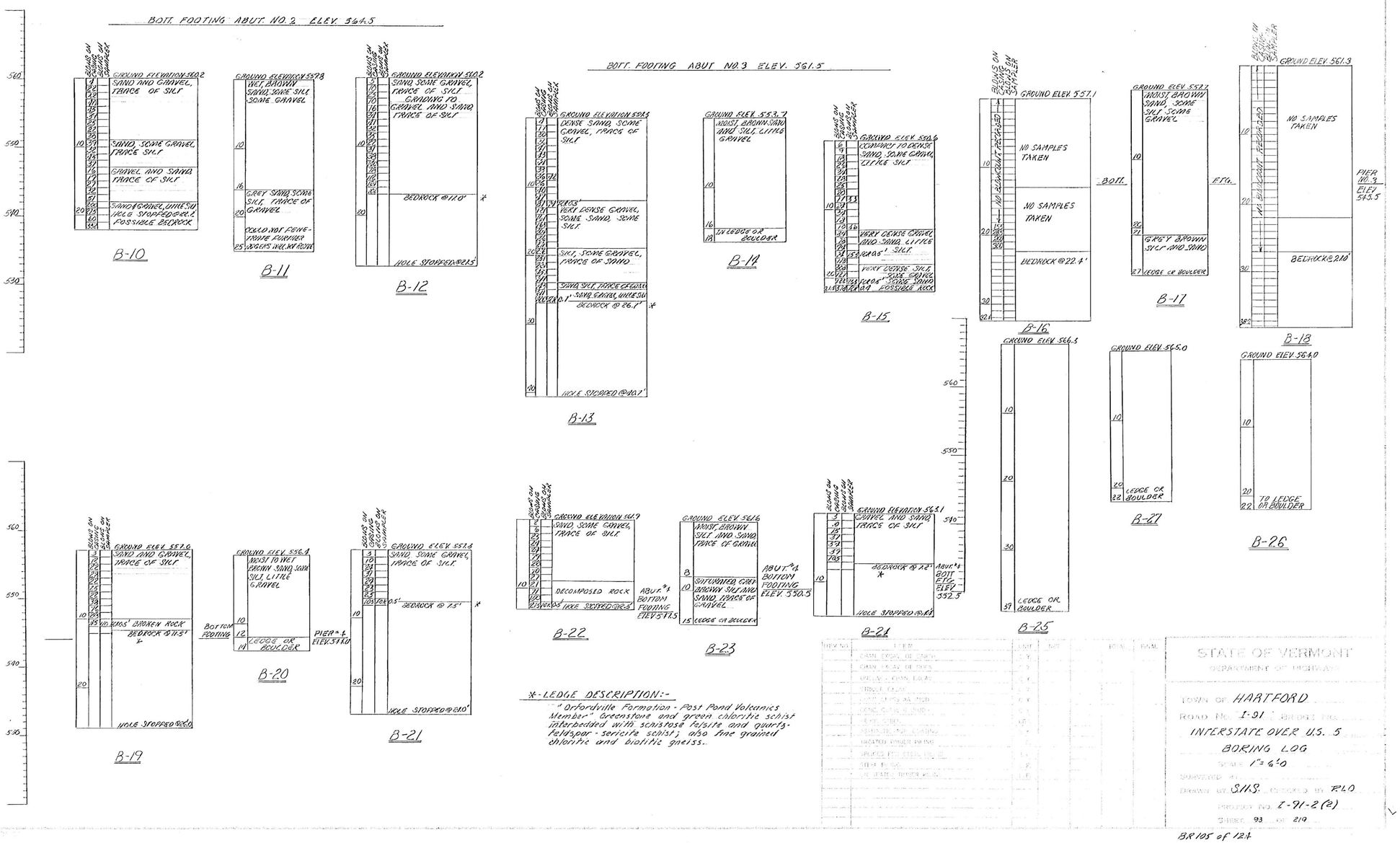

BR 105 of 124

EXISTING BORING LOGS SHEET 2

NOT TO SCALE

PROJECT NAME:	HARTFORD
PROJECT NUMBER:	IM 091-2(79)
FILE NAME: sl2al32bor_logs_ex.dgn	PLOT DATE: 15-DEC-2014
PROJECT LEADER: K. HIGGINS	DRAWN BY: K. FRIEDLAND
DESIGNED BY: W. LAMMER	CHECKED BY: J. SALVATORI
EXISTING BORING LOGS SHEET 2	SHEET 71 OF 166

SOIL CLASSIFICATION

AASHTO	
A1	Gravel and Sand
A3	Fine Sand
A2	Silty or Clayey Gravel and Sand
A4	Silty Soil - Low Compressibility
A5	Silty Soil - Highly Compressible
A6	Clayey Soil - Low Compressibility
A7	Clayey Soil - Highly Compressible

ROCK QUALITY DESIGNATION

R.Q.D. (%)	ROCK DESCRIPTION
<25	Very Poor
25 to 50	Poor
51 to 75	Fair
76 to 90	Good
>90	Excellent

SHEAR STRENGTH

UNDRAINED SHEAR STRENGTH IN P.S.F.	CONSISTENCY
<250	Very Soft
250-500	Soft
500-1000	Med. Stiff
1000-2000	Stiff
2000-4000	Very Stiff
>4000	Hard

CORRELATION GUIDE OF "N" TO DENSITY/CONSISTENCY

DENSITY (GRANULAR SOILS)		CONSISTENCY (COHESIVE SOILS)	
N	DESCRIPTIVE TERM	N	DESCRIPTIVE TERM
<5	Very Loose	<2	Very Soft
5-10	Loose	2-4	Soft
11-24	Med. Dense	5-8	Med. Stiff
25-50	Dense	9-15	Stiff
>50	Very Dense	16-30	Very Stiff
		31-60	Hard
		>60	Very Hard

COMMONLY USED SYMBOLS

▼	Water Elevation
⊛	Standard Penetration Boring
⊕	Auger Boring
⊙	Rod Sounding
S	Sample
N	Standard Penetration Test Blow Count Per Foot For: 2" O.D. Sampler 1 3/8" I.D. Sampler Hammer Weight Of 140 Lbs. Hammer Fall Of 30"
VS	Field Vane Shear Test
US	Undisturbed Soil Sample
B	Blast
DC	Diamond Core
MD	Mud Drill
WA	Wash Ahead
HSA	Hollow Stem Auger
AX	Core Size 1 1/8"
BX	Core Size 1 5/8"
NX	Core Size 2 1/8"
M	Double Tube Core Barrel Used
LL	Liquid Limit
PL	Plastic Limit
PI	Plasticity Index
NP	Non Plastic
w	Moisture Content (Dry Wgt. Basis)
D	Dry
M	Moist
MTW	Moist To Wet
W	Wet
Sat	Saturated
Bo	Boulder
Gr	Gravel
Sa	Sand
Si	Silt
Cl	Clay
HP	Hardpan
Le	Ledge
NLTD	No Ledge To Depth
CNPF	Can Not Penetrate Further
TLOB	Top of Ledge Or Boulder
NR	No Recovery
Rec.	Recovery
%Rec.	Percent Recovery
RQD	Rock Quality Designation
CBR	California Bearing Ratio
<	Less Than
>	Greater Than
R	Refusal (N > 100)
VTSPG	NAD83 - See Note 7

COLOR

blk	Black	pnk	Pink
bl	Blue	pu	Purple
brn	Brown	rd	Red
dk	Dark	tn	Tan
gry	Gray	wh	White
gn	Green	yel	Yellow
lt	Light	mltc	Multicolored
or	Orange		

DEFINITIONS (AASHTO)

BEDROCK (LEDGE) - Rock in its native location of indefinite thickness.

BOULDER - A rock fragment with an average dimension > 12 inches.

COBBLE - Rock fragments with an average dimension between 3 and 12 inches.

GRAVEL - Rounded particles of rock < 3" and > 0.0787" (#10 sieve).

SAND - Particles of rock < 0.0787" (#10 sieve) and > 0.0029" (#200 sieve).

SILT - Soil < 0.0029" (#200 sieve), non or slightly plastic and exhibits no strength when air-dried.

CLAY - Fine grained soil, exhibits plasticity when moist and considerable strength when air-dried.

VARVED - Alternate layers of silt and clay.

HARDPAN - Extremely dense soil, cemented layer, not softened when wet.

MUCK - Soft organic soil (containing > 10% organic material.

MOISTURE CONTENT - Weight of water divided by dry weight of soil.

FLOWING SAND - Granular soil so saturated (loose) that it flows into drill casing during extraction of wash rod.

STRIKE - Angle from magnetic north to line of intersection of bed with a horizontal plane.

DIP - Inclination of bed with a horizontal plane.

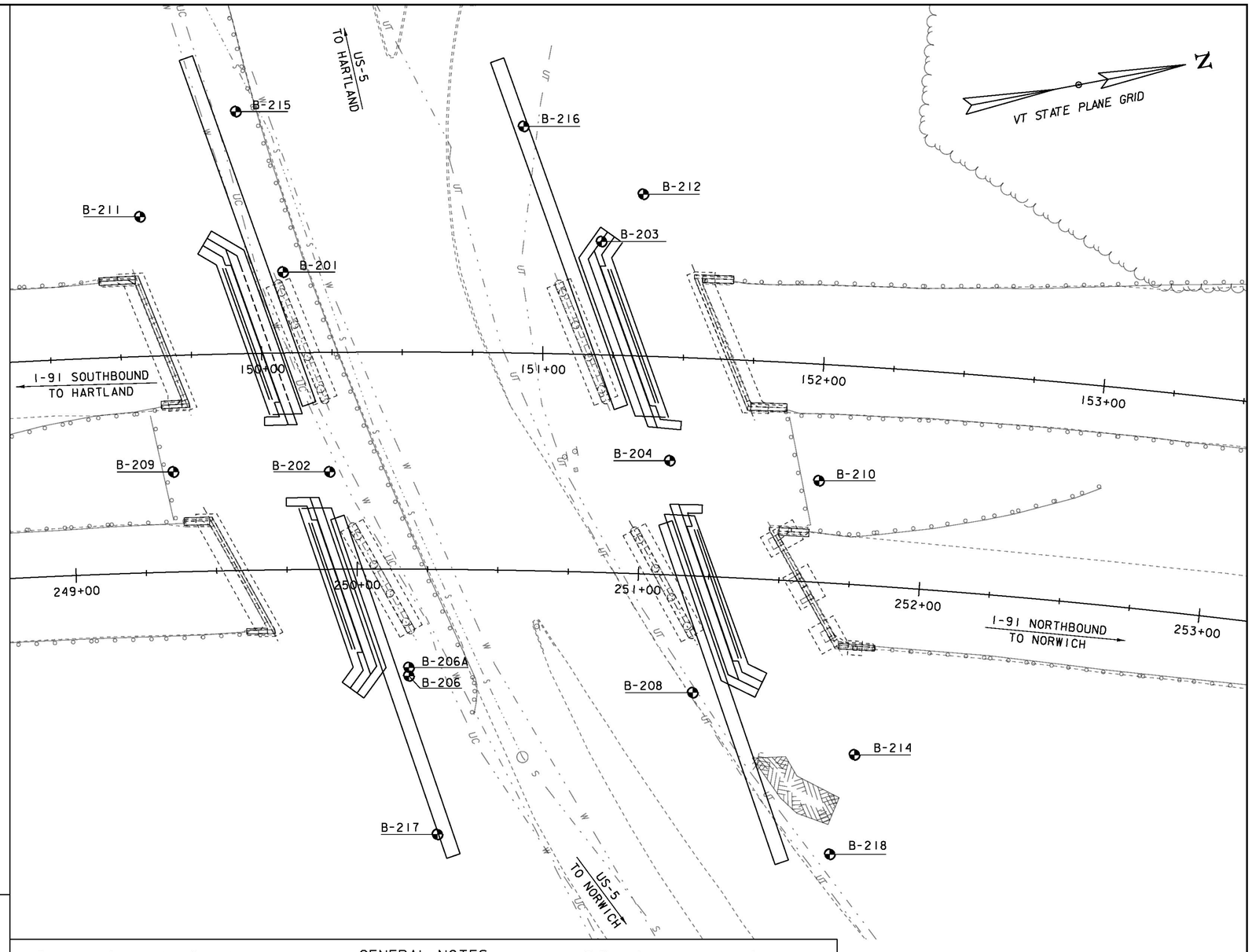

The subsurface explorations shown herein were made between 3/25/14 and 5/5 by the Agency.

Soil and rock classifications, properties and descriptions are based on engineering interpretation from available subsurface information by the Agency and may not necessarily reflect actual variations in subsurface conditions that may be encountered between individual boring or sample locations.

Observed water levels and/or conditions indicated are as recorded at the time of exploration and may vary according to the prevailing rainfall, methods of exploration and other factors.

GENERAL NOTES

4. Engineering judgment was exercised in preparing the subsurface information presented herein. Analysis and interpretation of subsurface data was performed and interpreted for Agency design and estimating purposes. Presentation of the information in the Contract is intended to provide the Contractor access to the same data available to the Agency. The subsurface information is presented in good faith and is not intended as a substitute for personal investigation, independent interpretation, independent analysis or judgment by the Contractor.

5. Pictorial structure details shown on the boring plan layout or soils profile are for illustrative purposes only and may not accurately portray final contract details.

6. Terminology used on boring logs to describe the hardness, degree of weathering, and spacing of fractures, joints and other discontinuities in the bedrock is defined in the AASHTO Manual on Subsurface Investigations, 1988.

7. Northing and Easting coordinates are shown in Vermont State Plane Grid North American Datum 1983 in meters and survey feet.

BORING LAYOUT SHEET

SCALE 1" = 20'-0"

20 0 20

PROJECT NAME: HARTFORD

PROJECT NUMBER: IM 091-2(79)

FILE NAME: sl2al32bor_new.dgn
PROJECT LEADER: K. HIGGINS
DESIGNED BY: W. LAMMER
BORING LAYOUT SHEET

PLOT DATE: 15-DEC-2014
DRAWN BY: W. LAMMER
CHECKED BY: J. SALVATORI
SHEET 72 OF 166

STATE OF VERMONT
AGENCY OF TRANSPORTATION
MATERIALS & RESEARCH SECTION
SUBSURFACE INFORMATION

BORING LOG

Hartford, VT

I91 Bridge 43 N/S

Boring No.: B-201
Page No.: 1 of 2
Pin No.: s12a132
Checked By: ASP

Boring Crew: Drilex/Jason, MJR
Date Started: 3/31/14 Date Finished: 4/01/14
VTSPG NAD83: N 417499.15 ft E 1683209.44 ft
Station: 150+08.07 Offset: -28.75
Ground Elevation: 552.05 ft

	Casing	Sampler
Type:	Auger/WB	SS
I.D.:	4.5 in	2 in
Hammer Wt:	300 lb.	140 lb.
Hammer Fall:	N.A.	30 in.
Hammer/Rod Type:		Auto
Rig:	CME 50	CE = 1.33

Groundwater Observations		
Date	Depth (ft)	Notes
04/01/14	0.0	Due to water used
		during drilling

Depth (ft)	Strata (1)	CLASSIFICATION OF MATERIALS (Description)	Run (Dip deg.)	Core Rec. % (RQD %)	Drill Rate minutes/ft	Blows/6" (N Value)	Moisture Content %	Gravel %	Sand %	Fines %
0.0		A-2-4, SaSiGr, Auger sample (FILL)					19.1	19.6	54.2	26.2
2.5										
5.0		A-2-4, SaSiGr, Rec. = 1.83 ft				8-17-19-20 (36)	13.5	14.4	51.6	34.0
7.5										
10.0		A-2-4, SaSiGr, Rec. = 1.5 ft				8-10-13-19 (23)	14.4	19.7	48.8	31.5
12.5										
15.0		A-2-4, GrSaSi, Rec. = 0.33 ft				17-30/2" (30+)	12.1	35.3	33.9	30.8
17.5										
20.0		A-4, SiSaGr, Rec. = 1.42 ft				10-24-32-46 (56)	11.8	26.9	35.2	37.9
22.5										

Notes:
1. Stratification lines represent approximate boundary between material types. Transition may be gradual.
2. N Values have not been corrected for hammer energy. CE is the hammer energy correction factor. CE is an estimated value.
3. Water level readings have been made at times and under conditions stated. Fluctuations of groundwater may occur due to other factors than those present at the time measurements were made.
4. Ground surface elevations indicated on the boring logs were estimated based on the grading plan provided by VAOT.

Terracon

STATE OF VERMONT
AGENCY OF TRANSPORTATION
MATERIALS & RESEARCH SECTION
SUBSURFACE INFORMATION

BORING LOG

Hartford, VT

I91 Bridge 43 N/S

Boring No.: B-201
Page No.: 2 of 2
Pin No.: s12a132
Checked By: ASP

Boring Crew: Drilex/Jason, MJR
Date Started: 3/31/14 Date Finished: 4/01/14
VTSPG NAD83: N 417499.15 ft E 1683209.44 ft
Station: 150+08.07 Offset: -28.75
Ground Elevation: 552.05 ft

	Casing	Sampler
Type:	Auger/WB	SS
I.D.:	4.5 in	2 in
Hammer Wt:	300 lb.	140 lb.
Hammer Fall:	N.A.	30 in.
Hammer/Rod Type:		Auto
Rig:	CME 50	CE = 1.33

Groundwater Observations		
Date	Depth (ft)	Notes
04/01/14	0.0	Due to water used
		during drilling

Depth (ft)	Strata (1)	CLASSIFICATION OF MATERIALS (Description)	Run (Dip deg.)	Core Rec. % (RQD %)	Drill Rate minutes/ft	Blows/6" (N Value)	Moisture Content %	Gravel %	Sand %	Fines %
25.0		A-2-4, SaSiGr, Rec. = 1.33 ft				27-32-55/5" (55+)	11.3	28.5	36.7	34.8
27.5		Split spoon refusal, Weathered bedrock								
30.0		29.5 ft – 35.5 ft, Gray-green ANDESITE, hard, fresh 45° and 30° joint sets, smooth, open, moderately close. Upper 7 inches and lower 6 inches highly fractured and weathered	1	28 (11)	2 1 0.75 0.75 0.5					
32.5										
35.0		35.5 ft – 39.5 ft, Gray-green ANDESITE, hard,slight weathering in top 9 inches, 45° and 75° joint sets, very close. Bottom 31 inches, fresh weathering, 80° and 45° joint sets, moderately close, tight. Thinly foliated. Open hole coring changed to spin 4-inch casing to 39 feet.	3	67 (56)	3 2.5 3.5 2.5					
37.5										
40.0		39.0 ft – 44.0 ft, Gray-green ANDESITE, very hard, slight to moderate weathering, 85°, 0°, 45° joint sets, very close to moderately close, quartz infilling.	5	87 (70)	2 2 2 2.75 2.5					
42.5										
		Hole stopped @ 44.0 ft			3.5					
45.0										
47.5										

Notes:
1. Stratification lines represent approximate boundary between material types. Transition may be gradual.
2. N Values have not been corrected for hammer energy. CE is the hammer energy correction factor. CE is an estimated value.
3. Water level readings have been made at times and under conditions stated. Fluctuations of groundwater may occur due to other factors than those present at the time measurements were made.
4. Ground surface elevations indicated on the boring logs were estimated based on the grading plan provided by VAOT.

Terracon

2010 COPY J1145115.GPJ VERMONT AOT.GDT 5/30/14

PROJECT NAME:	HARTFORD
PROJECT NUMBER:	IM 091-2(79)
FILE NAME: s12a132bor_new.dgn	PLOT DATE: 15-DEC-2014
PROJECT LEADER: K. HIGGINS	DRAWN BY: W. LAMMER
DESIGNED BY: W. LAMMER	CHECKED BY: J. SALVATORI
BORING LOGS I	SHEET 73 OF 166

STATE OF VERMONT
AGENCY OF TRANSPORTATION
MATERIALS & RESEARCH SECTION
SUBSURFACE INFORMATION

BORING LOG

HARTFORD
IM 91-2(79)
I-91 BR-43

Boring No.: **B-202**
Page No.: 1 of 1
Pin No.: 12A132
Checked By: BLS

Boring Crew: DAIGNEAULT, NIETO, HOOK
Date Started: 5/06/14 Date Finished: 5/07/14
VTSPG NAD83: N 417502.25 ft E 1683282.33 ft
Station: 150+23.81 Offset: 42.49
Ground Elevation: 551.6 ft

	Casing	Sampler
Type:	WB	SS
I.D.:	4 in	1.5 in
Hammer Wt:	N.A.	140 lb.
Hammer Fall:	N.A.	30 in.
Hammer/Rod Type:	Auto/AWJ	
Rig:	CME 55 TRACK	C_e = 1.46

Groundwater Observations

Date	Depth (ft)	Notes
05/07/14	5.1	AM

Depth (ft)	Strata (1)	CLASSIFICATION OF MATERIALS (Description)	Run (Dip deg.)	Core Rec. % (ROD %)	Drill Rate minutes/ft	Blows/6" (N Value)	Moisture Content %	Gravel %	Sand %	Fines %
		A-2-4, GrSiSa, brn, Moist, Rec. = 1.1 ft, Lab Note: Roots, grass, and Broken Rock were within sample.				WH-2-4-11 (6)	13.2	27.2	42.1	30.7
		Field Note:, Roller Coned ahead and cleaned out casing.								
5		A-2-4, SiGrSa, brn, MTW, Rec. = 1.0 ft, Lab Note: Broken Rock was within sample.				11-14-18-28 (32)	13.2	33.0	37.5	29.5
		Field Note:, Roller Coned ahead and cleaned out casing.								
10		A-4, SaSi, gry, MTW, Rec. = 1.5 ft				19-31-39-R@1.0" (70)	12.5	16.9	33.9	49.2
		Field Note:, Roller Coned ahead and cleaned out casing.								
15		A-4, GrSaSl, gry, MTW, Rec. = 1.0 ft, Lab Note: Broken Rock was within sample.				12-30-48-R@1.0" (78)	11.5	25.0	28.2	46.8
		Field Note:, Roller Coned ahead and cleaned out casing.								
20		Visual Description:, Broken Rock with silty sand, gry, Moist, Rec. = 0.2 ft, Insufficient sample for testing.				R@2.5" (R)				
		Field Note:, NXDC								
25		25.0 ft - 30.0 ft, Dark-greenish-gray to medium-bluish-gray metamorphosed andesitic and basaltic Tuff, Moderately hard, Moderately weathered, Poor rock, NXMDC, Staining along fractures. RMR = 36	1 (85)	36 (0)	3 5 7 5 10	Top of Bedrock @ 25.0 ft				
30		30.0 ft - 35.0 ft, Dark-greenish-gray to medium-bluish-gray metamorphosed andesitic and basaltic Tuff, Moderately hard, Moderately weathered, Poor rock, NXMDC, Staining along fractures near end of run. RMR = 41	2 (85)	100 (48)	5 5 4 5 3					
35		Hole stopped @ 35.0 ft								
40		Remarks: Hole collapsed at 7.0 ft.								
45										

Notes:
1. Stratification lines represent approximate boundary between material types. Transition may be gradual.
2. N Values have not been corrected for hammer energy. C_e is the hammer energy correction factor.
3. Water level readings have been made at times and under conditions stated. Fluctuations may occur due to other factors than those present at the time measurements were made.

BORING LOG 2 HARTFORD IM 91-2(79).GPJ VERMONT AOT.GDT 5/30/14

PROJECT NAME: HARTFORD
PROJECT NUMBER: IM 091-2(79)

FILE NAME: sl2al32bor_new.dgn
PROJECT LEADER: K. HIGGINS
DESIGNED BY: W. LAMMER
BORING LOGS 2

PLOT DATE: 15-DEC-2014
DRAWN BY: W. LAMMER
CHECKED BY: J. SALVATORI
SHEET 74 OF 166

STATE OF VERMONT
AGENCY OF TRANSPORTATION
MATERIALS & RESEARCH SECTION
SUBSURFACE INFORMATION

BORING LOG

Hartford, VT

I91 Bridge 43 N/S

Boring No.: B-203
Page No.: 1 of 2
Pin No.: s12a132
Checked By: ASP

Boring Crew: Drilex/Jason, MJR
Date Started: 4/02/14 Date Finished: 4/02/14
VTSPG NAD83: N 417612.48 ft E 1683219.83 ft
Station: 151+19.83 Offset: -40.28
Ground Elevation: 559.25 ft

	Casing	Sampler
Type:	Auger/WB	SS
I.D.:	4.5 in	2 in
Hammer Wt:	300 lb.	140 lb.
Hammer Fall:	N.A.	30 in.
Hammer/Rod Type:		Auto
Rig:	CME 50	CE = 1.33

Groundwater Observations

Date	Depth (ft)	Notes
04/02/14	0.0	Due to water used during drilling

Depth (ft)	Strata (1)	CLASSIFICATION OF MATERIALS (Description)	Run (Dip deg.)	Core Rec. % (RQD %)	Drill Rate minutes/ft	Blows/6" (N Value)	Moisture Content %	Gravel %	Sand %	Fines %
2.5										
5.0		A-1-b, SaGrSi, Rec. = 1.17 ft, (FILL)				47-21-19-27 (40)	8.0	37.0	39.8	23.2
7.5										
10.0		No recovery, Rec. = 0.0 ft, (FILL)				18-32-32-32 (64)				
12.5										
15.0		A-1-b, GrSaSi, Rec. = 0.33 ft				7-8-8-9 (16)	10.3	58.3	29.6	12.1
17.5										
20.0		A-4, SiSaGr, Rec. = 1.08 ft				10-19-24-36 (43)	10.9	25.0	35.7	39.3
22.5		Weathered bedrock								
		23.0 ft – 28.0 ft, Gray/brown ANDESITE, hard, very slight weathering, 0°, 45°, 80° joint sets, smooth, close, extensive quartz filling of joints/foliation.	1	75 (67)	3 3					

Notes:
1. Stratification lines represent approximate boundary between material types. Transition may be gradual.
2. N Values have not been corrected for hammer energy. CE is the hammer energy correction factor. CE is an estimated value.
3. Water level readings have been made at times and under conditions stated. Fluctuations of groundwater may occur due to other factors than those present at the time measurements were made.
4. Ground surface elevations indicated on the boring logs were estimated based on the grading plan provided by VAOT.

Terracon

STATE OF VERMONT
AGENCY OF TRANSPORTATION
MATERIALS & RESEARCH SECTION
SUBSURFACE INFORMATION

BORING LOG

Hartford, VT

I91 Bridge 43 N/S

Boring No.: B-203
Page No.: 2 of 2
Pin No.: s12a132
Checked By: ASP

Boring Crew: Drilex/Jason, MJR
Date Started: 4/02/14 Date Finished: 4/02/14
VTSPG NAD83: N 417612.48 ft E 1683219.83 ft
Station: 151+19.83 Offset: -40.28
Ground Elevation: 559.25 ft

	Casing	Sampler
Type:	Auger/WB	SS
I.D.:	4.5 in	2 in
Hammer Wt:	300 lb.	140 lb.
Hammer Fall:	N.A.	30 in.
Hammer/Rod Type:		Auto
Rig:	CME 50	CE = 1.33

Groundwater Observations

Date	Depth (ft)	Notes
04/02/14	0.0	Due to water used during drilling

Depth (ft)	Strata (1)	CLASSIFICATION OF MATERIALS (Description)	Run (Dip deg.)	Core Rec. % (RQD %)	Drill Rate minutes/ft	Blows/6" (N Value)	Moisture Content %	Gravel %	Sand %	Fines %
27.5					3.5 2 3.5					
30.0		28.0 ft – 33.0 ft, Gray/brown ANDESITE, hard, very slight weathering, 0°, 45°, 80° joint sets, smooth, close, extensive quartz filling of joints/foliation.	2	90 (67)	2 2 2.75 2.5 5					
32.5		Hole stopped @ 33.0 ft								
35.0										
37.5										
40.0										
42.5										
45.0										
47.5										

Notes:
1. Stratification lines represent approximate boundary between material types. Transition may be gradual.
2. N Values have not been corrected for hammer energy. CE is the hammer energy correction factor. CE is an estimated value.
3. Water level readings have been made at times and under conditions stated. Fluctuations of groundwater may occur due to other factors than those present at the time measurements were made.
4. Ground surface elevations indicated on the boring logs were estimated based on the grading plan provided by VAOT.

Terracon

2010 COPY J1145115.GPJ VERMONT AOT.GDT 5/30/14

PROJECT NAME: HARTFORD
PROJECT NUMBER: IM 091-2(79)

FILE NAME: s12a132bor_new.dgn
PROJECT LEADER: K. HIGGINS
DESIGNED BY: W. LAMMER
BORING LOGS 3

PLOT DATE: 15-DEC-2014
DRAWN BY: W. LAMMER
CHECKED BY: J. SALVATORI
SHEET 75 OF 166

STATE OF VERMONT
AGENCY OF TRANSPORTATION
MATERIALS & RESEARCH SECTION
SUBSURFACE INFORMATION

BORING LOG

HARTFORD
IM 91-2(79)
I-91 BR-43

Boring No.: **B-204**
Page No.: 1 of 1
Pin No.: 12A132
Checked By: BLS

Boring Crew: JUDKINS, HOOK
Date Started: 5/13/14 Date Finished: 5/15/14
VTSPG NAD83: N 417621.84 ft E 1683300.91 ft
Station: 151+46.59 Offset: 36.82
Ground Elevation: 556.94 ft

	Casing	Sampler
Type:	WB	SS
I.D.:	4 in	1.5 in
Hammer Wt:	N.A.	140 lb.
Hammer Fall:	N.A.	30 in.
Hammer/Rod Type:	Auto/AWJ	
Rig:	CME 55 TRACK	C_e = 1.46

Groundwater Observations

Date	Depth (ft)	Notes
05/14/14	4.9	While drilling.

Depth (ft)	Strata (1)	CLASSIFICATION OF MATERIALS (Description)	Run (Dip deg.)	Core Rec. % (ROD %)	Drill Rate minutes/ft	Blows/6" (N Value)	Moisture Content %	Gravel %	Sand %	Fines %
		A-1-a, SaGr with roots & grass, brn, Moist, Rec. = 0.6 ft, Lab Note: Broken Rock was within sample.					4.6	53.4	33.0	13.6
5		Field Note:, Roller coned and cleaned out casing.								
		A-2-4, GrSa, brn, Moist, Rec. = 0.3 ft, Lab Note: Broken Rock was within sample.				12-20-16-17 (36)	15.8	27.5	54.0	18.5
10		Field Note:, Roller coned and cleaned out casing.								
		A-4, SaGrSi, gry, Moist, Rec. = 0.8 ft, Lab Note: Broken Rock was within sample.				21-28-R@2.5" (R)	10.5	30.0	26.4	43.6
		11.8 ft - 14.0 ft, Dark-greenish-gray to medium-bluish-gray metamorphosed andesitic and basaltic Tuff, Moderately hard, Unweathered, Poor rock, NXDC, RMR = 36	1 (70)	68 (0)		Top of Bedrock @ 11.8 ft				
15		14.0 ft - 19.0 ft, Dark-greenish-gray to medium-bluish-gray metamorphosed andesitic and basaltic Tuff, Moderately hard, Unweathered, Fair rock, NXMDC, RMR = 49	2 (70)	88 (72)	7 8 8 12 13					
		Hole stopped @ 19.0 ft								
20		Remarks: Hole collapsed at 5.0 ft.								
25										
30										
35										

Notes:
1. Stratification lines represent approximate boundary between material types. Transition may be gradual.
2. N Values have not been corrected for hammer energy. C_e is the hammer energy correction factor.
3. Water level readings have been made at times and under conditions stated. Fluctuations may occur due to other factors than those present at the time measurements were made.

BORING LOG 2 HARTFORD IM 91-2(79).GPJ VERMONT AOT.GDT 5/30/14

PROJECT NAME: HARTFORD
PROJECT NUMBER: IM 091-2(79)

FILE NAME: sl2al32bor_new.dgn
PROJECT LEADER: K. HIGGINS
DESIGNED BY: W. LAMMER
BORING LOGS 4

PLOT DATE: 15-DEC-2014
DRAWN BY: W. LAMMER
CHECKED BY: J. SALVATORI
SHEET 76 OF 166

STATE OF VERMONT
AGENCY OF TRANSPORTATION
MATERIALS & RESEARCH SECTION
SUBSURFACE INFORMATION

BORING LOG

Hartford, VT

I91 Bridge 43 N/S

Boring No.: B-206
Page No.: 1 of 2
Pin No.: s12a132
Checked By: ASP

Boring Crew: NTB/Mike Nadeau, MJR
Date Started: 3/25/14 Date Finished: 3/26/14
VTSPG NAD83: N 417516.45 ft E 1683358.85 ft
Station: 250+18.53 Offset: 37.94
Ground Elevation: 551.24 ft

	Casing	Sampler
Type:	Auger/WB	SS
I.D.:	4.5 in	2 in
Hammer Wt:	300 lb.	140 lb.
Hammer Fall:	N.A.	30 in.
Hammer/Rod Type:		Auto
Rig:	CME 50	CE = 1.33

Groundwater Observations

Date	Depth (ft)	Notes
03/26/14	11.4	After casing removal

Depth (ft)	Strata (1)	CLASSIFICATION OF MATERIALS (Description)	Run (Dip deg.)	Core Rec. % (RQD %)	Drill Rate minutes/ft	Blows/6" (N Value)	Moisture Content %	Gravel %	Sand %	Fines %
2.5		A-1-b, SaGrSi, Rec. = 1.17 ft, (FILL)				1-4-8-7 (12)	15.6	32.0	48.7	19.3
5.0		A-2-4, SaGrSi, Rec. = 11.0 ft, (FILL)				8-8-6-8 (14)	10.4	28.7	46.6	24.7
10.0		A-1-b, GrSaSi, Rec. = 0.5 ft				19-12-9-8 (21)		59.4	23.3	17.3
15.0		A-1-b, GrSaSi, Rec. = 10.8 ft				10-12-27-50/2" (39)	11.6	39.8	39.6	20.6
17.5										
20.0										
22.5										

Notes:
1. Stratification lines represent approximate boundary between material types. Transition may be gradual.
2. N Values have not been corrected for hammer energy. CE is the hammer energy correction factor. CE is an estimated value.
3. Water level readings have been made at times and under conditions stated.
Fluctuations of groundwater may occur due to other factors than those present at the time measurements were made.
4. Ground surface elevations indicated on the boring logs were estimated based on the grading plan provided by VAOT.

Terracon

2010 COPY J1145115.GPJ VERMONT AOT.GDT 5/30/14

STATE OF VERMONT
AGENCY OF TRANSPORTATION
MATERIALS & RESEARCH SECTION
SUBSURFACE INFORMATION

BORING LOG

Hartford, VT

I91 Bridge 43 N/S

Boring No.: B-206
Page No.: 2 of 2
Pin No.: s12a132
Checked By: ASP

Boring Crew: NTB/Mike Nadeau, MJR
Date Started: 3/25/14 Date Finished: 3/26/14
VTSPG NAD83: N 417516.45 ft E 1683358.85 ft
Station: 250+18.53 Offset: 37.94
Ground Elevation: 551.24 ft

	Casing	Sampler
Type:	Auger/WB	SS
I.D.:	4.5 in	2 in
Hammer Wt:	300 lb.	140 lb.
Hammer Fall:	N.A.	30 in.
Hammer/Rod Type:		Auto
Rig:	CME 50	CE = 1.33

Groundwater Observations

Date	Depth (ft)	Notes
03/26/14	11.4	After casing removal

Depth (ft)	Strata (1)	CLASSIFICATION OF MATERIALS (Description)	Run (Dip deg.)	Core Rec. % (RQD %)	Drill Rate minutes/ft	Blows/6" (N Value)	Moisture Content %	Gravel %	Sand %	Fines %
27.5		A-4, SlSaGr					21.4	12.1	13.7	74.2
		Weathered bedrock								
		26.5 ft – 28.5 ft, Gray-green ANDESITE, fresh, very hard, 45°, 75°, 20° joint sets, rough, open, moderately close, foliated.	1	83 (83)	3.75 4					
		Hole stopped @ 28.5 ft								
30.0										
32.5										
35.0										
37.5										
40.0										
42.5										
45.0										
47.5										

Notes:
1. Stratification lines represent approximate boundary between material types. Transition may be gradual.
2. N Values have not been corrected for hammer energy. CE is the hammer energy correction factor. CE is an estimated value.
3. Water level readings have been made at times and under conditions stated.
Fluctuations of groundwater may occur due to other factors than those present at the time measurements were made.
4. Ground surface elevations indicated on the boring logs were estimated based on the grading plan provided by VAOT.

Terracon

2010 COPY J1145115.GPJ VERMONT AOT.GDT 5/30/14

PROJECT NAME: HARTFORD
PROJECT NUMBER: IM 091-2(79)

FILE NAME: s12a132bor_new.dgn
PROJECT LEADER: K. HIGGINS
DESIGNED BY: W. LAMMER
BORING LOGS 5

PLOT DATE: 15-DEC-2014
DRAWN BY: W. LAMMER
CHECKED BY: J. SALVATORI
SHEET 77 OF 166

STATE OF VERMONT
AGENCY OF TRANSPORTATION
MATERIALS & RESEARCH SECTION
SUBSURFACE INFORMATION

BORING LOG

Hartford, VT

191 Bridge 43 N/S

Boring No.: B-206A
Page No.: 1 of 2
Pin No.: s12a132
Checked By: ASP

Boring Crew: Drilex/Jason, MJR
Date Started: 3/31/14 Date Finished: 3/31/14
VTSPG NAD83: N 417516.45 ft E 1683355.85 ft
Station: 250+18.53 Offset: 34.94
Ground Elevation: 551.24 ft

	Casing	Sampler
Type:	Auger/WB	SS
I.D.:	4.5 in	2 in
Hammer Wt:	300 lb.	140 lb.
Hammer Fall:	N.A.	30 in.
Hammer/Rod Type:		Auto
Rig:	CME 50	CE = 1.33

Groundwater Observations		
Date	Depth (ft)	Notes
03/26/14	11.4	See B-206

Depth (ft)	Strata (1)	CLASSIFICATION OF MATERIALS (Description)	Run (Dip deg.)	Core Rec. % (RQD %)	Drill Rate minutes/ft	Blows/6" (N Value)	Moisture Content %	Gravel %	Sand %	Fines %
0.0		Augered to 22.5', 3 feet west of B-206, and began rock core at 22.5 feet.								
22.5		22.5 ft – 27.5 ft, Gray-green ANDESITE, very hard, with phenocrysts, no foliation/bedding, 45° and 25° joint sets, smooth, fresh, moderately close.	1	46 (17)						

Notes:
1. Stratification lines represent approximate boundary between material types. Transition may be gradual.
2. N Values have not been corrected for hammer energy. CE is the hammer energy correction factor. CE is an estimated value.
3. Water level readings have been made at times and under conditions stated. Fluctuations of groundwater may occur due to other factors than those present at the time measurements were made.
4. Ground surface elevations indicated on the boring logs were estimated based on the grading plan provided by VAOT.

Terracon

2010 COPY J114511S.GPJ VERMONT AOT.GDT 5/30/14

STATE OF VERMONT
AGENCY OF TRANSPORTATION
MATERIALS & RESEARCH SECTION
SUBSURFACE INFORMATION

BORING LOG

Hartford, VT

191 Bridge 43 N/S

Boring No.: B-206A
Page No.: 2 of 2
Pin No.: s12a132
Checked By: ASP

Boring Crew: Drilex/Jason, MJR
Date Started: 3/31/14 Date Finished: 3/31/14
VTSPG NAD83: N 417516.45 ft E 1683355.85 ft
Station: 250+18.53 Offset: 34.94
Ground Elevation: 551.24 ft

	Casing	Sampler
Type:	Auger/WB	SS
I.D.:	4.5 in	2 in
Hammer Wt:	300 lb.	140 lb.
Hammer Fall:	N.A.	30 in.
Hammer/Rod Type:		Auto
Rig:	CME 50	CE = 1.33

Groundwater Observations		
Date	Depth (ft)	Notes
03/26/14	11.4	See B-206

Depth (ft)	Strata (1)	CLASSIFICATION OF MATERIALS (Description)	Run (Dip deg.)	Core Rec. % (RQD %)	Drill Rate minutes/ft	Blows/6" (N Value)	Moisture Content %	Gravel %	Sand %	Fines %
27.5		27.5 ft – 29.5 ft, Similar as above.	2	25 (0)						
30.0		29.5 ft – 32.5 ft, Similar as above. Lots of stops and starts due to poor circulation return/stoppages.	3	77 (64)	2.25 2.5 1.5					
32.5		Hole stopped @ 32.5 ft								

Notes:
1. Stratification lines represent approximate boundary between material types. Transition may be gradual.
2. N Values have not been corrected for hammer energy. CE is the hammer energy correction factor. CE is an estimated value.
3. Water level readings have been made at times and under conditions stated. Fluctuations of groundwater may occur due to other factors than those present at the time measurements were made.
4. Ground surface elevations indicated on the boring logs were estimated based on the grading plan provided by VAOT.

Terracon

2010 COPY J114511S.GPJ VERMONT AOT.GDT 6/2/14

PROJECT NAME: HARTFORD
PROJECT NUMBER: IM 091-2(79)

FILE NAME: s12a132bor_new.dgn
PROJECT LEADER: K. HIGGINS
DESIGNED BY: W. LAMMER
BORING LOGS 6

PLOT DATE: 15-DEC-2014
DRAWN BY: W. LAMMER
CHECKED BY: J. SALVATORI
SHEET 78 OF 166

STATE OF VERMONT
AGENCY OF TRANSPORTATION
MATERIALS & RESEARCH SECTION
SUBSURFACE INFORMATION

BORING LOG

Hartford, VT

I91 Bridge 43 N/S

Boring No.: B-208
Page No.: 1 of 1
Pin No.: s12a132
Checked By: ASP

Boring Crew: Drilex/Jason, MJR
Date Started: 4/02/14 Date Finished: 4/03/14
VTSPG NAD83: N 417615.23 ft E 1683383.96 ft
Station: 251+21.16 Offset: 41.48
Ground Elevation: 546.61 ft

	Casing	Sampler
Type:	Auger/WB	SS
I.D.:	4.5 in	2 in
Hammer Wt:	300 lb.	140 lb.
Hammer Fall:	N.A.	30 in.
Hammer/Rod Type:		Auto
Rig:	CME 50	CE = 1.33

Groundwater Observations		
Date	Depth (ft)	Notes
04/03/14	0.0	Due to water used during drilling

Depth (ft)	Strata (1)	CLASSIFICATION OF MATERIALS (Description)	Run (Dip deg.)	Core Rec. % (RQD %)	Drill Rate minutes/ft	Blows/6" (N Value)	Moisture Content %	Gravel %	Sand %	Fines %
		Spin 4" casing to 12", start coring at 14"								
2.5		1.0 ft – 5.0 ft, Gray-green ANDESITE, hard, fresh, joints moderately close, rough, some smooth surfaces; foliation near vertical .	1	91 (89)	2.75 2.5 2.5 2					
5.0		5.0 ft – 9.0 ft, Similar as above, very slight weathering, near vertical foliation, joint set at 45°, hard, close, smooth.	2	93 (85)	2.5 2.75 2.5 2.75					
7.5										
10.0		9.0 ft – 10.0 ft, Similar as above, 45° joint set.	3	100 (68)	3					
12.5		10.0 ft – 15.0 ft, Similar as above, severe vertical fracturing in upper 2 feet, moderately weathered, open to closed, vertical foliation with quartz filling.	4	100 (65)	2.3 3 3 3.3 5.2					
15.0										
17.5		15.0 ft – 20.0 ft, Similar as above, hard, 45° joint set, open to closed, moderate to fresh weathering, vertical to near vertical foliation with quartz filling.	5	100 (66)	2.7 2.7 2.2 2.3 2.6					
20.0		Hole stopped @ 20.0 ft								
22.5										

Notes:
1. Stratification lines represent approximate boundary between material types. Transition may be gradual.
2. N Values have not been corrected for hammer energy. CE is the hammer energy correction factor. CE is an estimated value.
3. Water level readings have been made at times and under conditions stated. Fluctuations of groundwater may occur due to other factors than those present at the time measurements were made.
4. Ground surface elevations indicated on the boring logs were estimated based on the grading plan provided by VAOT.

Terracon

2010 COPY J114515.GPJ VERMONT AOT.GDT 5/30/14

STATE OF VERMONT
AGENCY OF TRANSPORTATION
MATERIALS & RESEARCH SECTION
SUBSURFACE INFORMATION

BORING LOG

HARTFORD
IM 91-2(79)
I-91 BR-43

Boring No.: **B-209**
Page No.: 1 of 1
Pin No.: 12A132
Checked By: BLS

Boring Crew: DAIGNEAULT, NIETO, JUDKINS
Date Started: 5/07/14 Date Finished: 5/08/14
VTSPG NAD83: N 417447.61 ft E 1683272.04 ft
Station: 149+67.32 Offset: 41.40
Ground Elevation: 573.65 ft

	Casing	Sampler
Type:	WB	SS
I.D.:	4 in	1.5 in
Hammer Wt:	N.A.	140 lb.
Hammer Fall:	N.A.	30 in.
Hammer/Rod Type:		Auto/AWJ
Rig:	CME 55 TRACK	C_e = 1.46

Groundwater Observations		
Date	Depth (ft)	Notes
05/08/14	26.7	AM

Depth (ft)	Strata (1)	CLASSIFICATION OF MATERIALS (Description)	Run (Dip deg.)	Core Rec. % (RQD %)	Drill Rate minutes/ft	Blows/6" (N Value)	Moisture Content %	Gravel %	Sand %	Fines %
		A-1-b, GrSa, brn, Moist, Rec. = 1.1 ft				1-2-4-6 (6)	5.1	43.1	47.9	9.0
5		Field Note:, Roller Coned ahead and cleaned out casing. A-1-b, GrSa, brn, Moist, Rec. = 0.7 ft, Lab Note: Broken Rock was within sample.				8-6-7-9 (13)	11.1	42.1	44.1	13.8
10		Field Note:, Roller Coned ahead and cleaned out casing. Visual Description:, GrSa with some Broken Rock, brn, Moist, Rec. = 0.3 ft, Rock stuck in sampler. Insufficient sample for testing.				8-12-16-19 (28)	7.9			
15		A-2-4, Sa, Lt/brn, Moist, Rec. = 1.5 ft				13-14-17-15 (31)	11.9	2.2	80.7	17.1
20		Field Note:, Roller Coned ahead and cleaned out casing. A-2-4, GrSiSa, brn, Moist, Rec. = 1.3 ft, Lab Note: Broken Rock was within sample.				13-13-15-16 (28)	13.2	24.1	47.8	28.1
25		Field Note:, Roller Coned ahead and cleaned out casing. A-2-4, SiSa, brn, Moist, Rec. = 1.3 ft, Lab Note: Broken Rock was within sample.				8-9-15-14 (24)	13.6	19.2	51.1	29.7
30		Field Note:, Roller Coned ahead and cleaned out casing. A-2-4, SiGrSa, brn, Moist, Rec. = 0.9 ft, Lab Note: Broken Rock was within sample.				24-22-22-14 (44)	12.4	37.1	39.5	23.4
35		35.0 ft - 40.0 ft, Dark-greenish-gray to medium-bluish-gray metamorphosed andesitic and basaltic Tuff, Moderately hard, Unweathered, Poor rock, NXMDC, Near vertical fracture from 36.25' to 39.2'. RMR = 36	1 (85)	84 (18)	6 7 6 5 6	Top of Bedrock @ 35.0 ft				
40		Hole stopped @ 40.0 ft								
45		Remarks: Hole collapsed at 27.1 ft.								

Notes:
1. Stratification lines represent approximate boundary between material types. Transition may be gradual.
2. N Values have not been corrected for hammer energy. C is the hammer energy correction factor.
3. Water level readings have been made at times and under conditions stated. Fluctuations may occur due to other factors than those present at the time measurements were made.

BORING LOG 2 HARTFORD IM 91-2(79).GPJ VERMONT AOT.GDT 5/30/14

PROJECT NAME: HARTFORD
PROJECT NUMBER: IM 091-2(79)

FILE NAME: s12a132bor_new.dgn
PROJECT LEADER: K. HIGGINS
DESIGNED BY: W. LAMMER
BORING LOGS 7

PLOT DATE: 15-DEC-2014
DRAWN BY: W. LAMMER
CHECKED BY: J. SALVATORI
SHEET 79 OF 166

STATE OF VERMONT
AGENCY OF TRANSPORTATION
MATERIALS & RESEARCH SECTION
SUBSURFACE INFORMATION

BORING LOG

HARTFORD
IM 91-2(79)
I-91 BR-43

Boring No.: **B-210**
Page No.: 1 of 1
Pin No.: 12A132
Checked By: BLS

Boring Crew: DAIGNEAULT, NIETO, JUDKINS
Date Started: 5/08/14 Date Finished: 5/12/14
VTSPG NAD83: N 417672.63 ft E 1683317.78 ft
Station: 152+00.73 Offset: 41.39
Ground Elevation: 572.42 ft

	Casing	Sampler
Type:	WB	SS
I.D.:	4 in	1.5 in
Hammer Wt:	N.A.	140 lb.
Hammer Fall:	N.A.	30 in.
Hammer/Rod Type:	Auto/AWJ	
Rig:	CME 55 TRACK	C_e = 1.46

Groundwater Observations

Date	Depth (ft)	Notes
05/09/14	19.7	AM
05/12/14	19.3	While drilling.

Depth (ft)	Strata (1)	CLASSIFICATION OF MATERIALS (Description)	Run (Dip deg.)	Core Rec. % (ROD %)	Drill Rate minutes/ft	Blows/6" (N Value)	Moisture Content %	Gravel %	Sand %	Fines %
		A-1-b, SaGr, brn, Moist, Rec. = 1.1 ft, Lab Note: Wood & Roots were within sample.				3-2-4-4 (6)	5.3	47.9	44.4	7.7
		Field Note:, NXDC, Cobbles								
5		Field Note:, No Recovery				R@0.0" (R)				
		Field Note:, NXDC, Boulder								
10		A-2-4, GrSiSa, gry, Moist, Rec. = 0.9 ft				5-4-3-4 (7)	14.5	22.3	44.5	33.2
		Field Note:, NXDC								
15		A-2-4, SiSa, gry, Moist, Rec. = 1.2 ft				10-13-11-15 (24)	12.7	17.8	48.1	34.1
		Field Note:, Roller Coned ahead and cleaned out casing.								
20		A-2-4, GrSiSa, gry, Moist, Rec. = 1.1 ft				10-9-10-10 (19)	12.1	21.8	51.5	26.7
		Field Note:, Roller Coned ahead and cleaned out casing.								
25		A-4, SaGrSi, gry, Moist, Rec. = 0.5 ft, Lab Note: Broken Rock was within sample.				R@6.0" (R)	10.3	32.0	29.4	38.6
		Field Note:, Roller Coned ahead and cleaned out casing.								
30		Field Note:, No Recovery Field Note:, Mostly Broken Rock with a small layer of Weathered Rock				R@0.0" (R)				
		32.6 ft - 36.6 ft, Dark-greenish-gray to medium-bluish-gray metamorphosed andesitic and basaltic Tuff, Moderately hard to soft, Unweathered, Poor rock, NXMDC, RMR = 41	1 (75)	100 (28)	2 3 7 13	Top of Bedrock @ 32.6 ft				
35		36.6 ft - 41.6 ft, Dark-greenish-gray to medium-bluish-gray metamorphosed andesitic and basaltic Tuff, Moderately hard to soft, Unweathered, Poor rock, NXMDC, RMR = 36	2 (75)	42 (0)	3 26 16 9 3					
40		Hole stopped @ 41.6 ft								
45		Remarks: Hole collapsed at 7.7 ft.								

Notes:
1. Stratification lines represent approximate boundary between material types. Transition may be gradual.
2. N Values have not been corrected for hammer energy. C_e is the hammer energy correction factor.
3. Water level readings have been made at times and under conditions stated. Fluctuations may occur due to other factors than those present at the time measurements were made.

BORING LOG 2 HARTFORD IM 91-2(79).GPJ VERMONT AOT.GDT 5/30/14

STATE OF VERMONT
AGENCY OF TRANSPORTATION
MATERIALS & RESEARCH SECTION
SUBSURFACE INFORMATION

BORING LOG

HARTFORD
IM 91-2(79)
I-91 BR-43

Boring No.: **B-211**
Page No.: 1 of 1
Pin No.: 12A132
Checked By: BLS

Boring Crew: DAIGNEAULT, NIETO, HOOK
Date Started: 5/05/14 Date Finished: 5/05/14
VTSPG NAD83: N 417452.80 ft E 1683180.69 ft
Station: 149+58.45 Offset: -49.66
Ground Elevation: 567.04 ft

	Casing	Sampler
Type:	WB	SS
I.D.:	4 in	1.5 in
Hammer Wt:	N.A.	140 lb.
Hammer Fall:	N.A.	30 in.
Hammer/Rod Type:	Auto/AWJ	
Rig:	CME 55 TRACK	C_e = 1.46

Groundwater Observations

Date	Depth (ft)	Notes
05/05/14	8.1	While drilling.

Depth (ft)	Strata (1)	CLASSIFICATION OF MATERIALS (Description)	Run (Dip deg.)	Core Rec. % (ROD %)	Drill Rate minutes/ft	Blows/6" (N Value)	Moisture Content %	Gravel %	Sand %	Fines %
		A-2-4, SiSa, brn, Moist, Rec. = 0.7 ft, Lab Note: Grass & Roots were within sample.				1-1-1-1 (2)	18.0	15.5	53.9	30.6
5		A-2-4, SiSa, brn, Moist, Rec. = 1.0 ft, Lab Note: Roots were within sample. Roller Coned, Cleaned out casing.				1-1-6-10 (7)	20.1	7.8	70.4	21.8
10		A-2-4, SiSa, brn, Moist, Rec. = 1.1 ft, Lab Note: Broken Rock was within sample.				10-9-9-14 (18)	14.5	15.4	58.8	25.8
		Field Note:, Roller Coned ahead and cleaned out casing.								
15		A-4, SiSa, brn, Moist, Rec. = 0.7 ft, Lab Note: Broken Rock was within sample.				5-12-R@6.0" (R)	13.8	18.1	41.1	40.8
		SaGr, blu-grn, Dry, Rec. = 0.2 ft, 16.3 ft - 16.5 ft, Lab Note: Mostly Broken Rock with sandy silt.					3.8	52.2	32.2	15.6
		Field Note:, Roller Coned ahead and cleaned out casing.								
20		A-4, GrSaSi, gry, MTW, Rec. = 0.9 ft, Lab Note: Broken Rock was within sample.				25-42-R@3.5" (R)	11.3	25.3	26.8	47.9
		Field Note:, Roller Coned ahead and cleaned out casing.								
25		A-4, GrSaSi, gry, MTW, Rec. = 1.2 ft, Lab Note: Broken Rock was within sample.				17-36-31-R@3.5" (67)	12.9	20.5	35.2	44.3
		Field Note:, Roller Coned ahead and cleaned out casing.								
30		A-4, SaSi, gry, Moist, Rec. = 1.3 ft, Lab Note: Broken Rock was within sample.				26-44-R@3.5" (R)	11.5	18.3	32.5	49.2
		Field Note:, Roller Coned ahead and cleaned out casing.								
35		A-4, SaSi, gry, Moist, Rec. = 0.8 ft, Lab Note: Broken Rock was within sample.				30-R@6.0" (R)	12.4	16.1	36.9	47.0
		Field Note:, Roller Coned, Weathered Rock								
40		40.0 ft - 45.0 ft, Dark-greenish-gray to medium-bluish-gray metamorphosed andesitic and basaltic Tuff, Moderately hard, Unweathered, Poor rock, NXMDC, Vertical fractures in upper core run. RMR = 36	1 (85)	90 (7)	6 7 7 13 15	Top of Bedrock @ 40.0 ft				
45		Hole stopped @ 45.0 ft								
		Remarks: Hole collapsed at 38.2 ft.								

Notes:
1. Stratification lines represent approximate boundary between material types. Transition may be gradual.
2. N Values have not been corrected for hammer energy. C_e is the hammer energy correction factor.
3. Water level readings have been made at times and under conditions stated. Fluctuations may occur due to other factors than those present at the time measurements were made.

BORING LOG 2 HARTFORD IM 91-2(79).GPJ VERMONT AOT.GDT 5/30/14

PROJECT NAME: HARTFORD
PROJECT NUMBER: IM 091-2(79)

FILE NAME: sl2al32bor_new.dgn
PROJECT LEADER: K. HIGGINS
DESIGNED BY: W. LAMMER
BORING LOGS 8

PLOT DATE: 15-DEC-2014
DRAWN BY: W. LAMMER
CHECKED BY: J. SALVATORI
SHEET 80 OF 166

STATE OF VERMONT
AGENCY OF TRANSPORTATION
MATERIALS & RESEARCH SECTION
SUBSURFACE INFORMATION

BORING LOG

HARTFORD
IM 91-2(79)
I-91 BR-43

Boring No.: **B-212**
Page No.: 1 of 1
Pin No.: 12A132
Checked By: BLS

Boring Crew: DAIGNEAULT, NIETO, HOOK
Date Started: 4/30/14 Date Finished: 5/02/14
VTSPG NAD83: N 417630.22 ft E 1683206.05 ft
Station: 151+33.92 Offset: -57.55
Ground Elevation: 564.13 ft

	Casing	Sampler
Type:	WB	SS
I.D.:	4 in	1.5 in
Hammer Wt:	N.A.	140 lb.
Hammer Fall:	N.A.	30 in.
Hammer/Rod Type:	Auto/AWJ	
Rig:	CME 55 TRACK	C_e = 1.46

Groundwater Observations		
Date	Depth (ft)	Notes
05/02/14	12.7	AM
05/02/14	1.6	Casing removed.

Depth (ft)	Strata (1)	CLASSIFICATION OF MATERIALS (Description)	Run (Dip deg.)	Core Rec. % (ROD %)	Drill Rate minutes/ft	Blows/6" (N Value)	Moisture Content %	Gravel %	Sand %	Fines %
		A-4, SiSa, brn, Moist, Rec. = 1.1 ft, Lab Note: Grass & Roots were within sample.				1-2-3-4 (5)	16.1	12.1	49.3	38.6
		A-4, SiSa, brn, Moist, Rec. = 1.4 ft					10.8	13.9	48.6	37.5
5		A-4, SiSa, brn, Moist, Rec. = 1.3 ft				8-10-16-19 (26)	9.8	15.6	43.1	41.3
		A-2-4, SiSa, brn, Moist, Rec. = 1.7 ft				15-20-15-17 (35)	8.6	16.3	53.7	30.0
		A-2-4, SiGrSa, gry, Moist, Rec. = 1.2 ft, NXDC, Cleaned out casing.				11-14-45-17 (59)	11.0	26.0	49.2	24.8
10		A-2-4, SiGrSa, gry, Moist, Rec. = 1.2 ft, NXDC, Cleaned out casing. Lab Note: Broken Rock was within sample.				13-11-13-14 (24)	11.5	24.0	55.7	20.3
		A-2-4, SiGrSa, gry, Moist, Rec. = 0.8 ft, Lab Note: Broken Rock was within sample.				23-16-11-16 (27)	11.7	32.2	47.2	20.6
15		A-1-b, SaGr, gry, Moist, Rec. = 1.1 ft, NXDC, Cleaned out casing. Lab Note: Broken Rock was within sample.				20-16-15-16 (31)	10.9	43.0	39.5	17.5
		A-2-4, GrSa, gry, Moist, Rec. = 1.2 ft, Lab Note: Broken Rock was within sample.				13-13-14-15 (27)	11.8	29.0	53.1	17.9
		A-1-b, SaGr, gry, Moist, Rec. = 1.1 ft, Lab Note: Broken Rock was within sample.				22-26-28-22 (54)	10.6	51.4	32.0	16.6
20		A-4, SiSa, gry, Moist, Rec. = 1.5 ft, Lab Note: Broken Rock was within sample.				12-12-16-13 (28)	15.6	17.0	45.9	37.1
		A-2-4, SaGrSi, gry, Moist, Rec. = 1.0 ft, Lab Note: Broken Rock was within sample.				18-39-33-R@1.0" (72)	10.3	33.9	31.0	35.1
		A-4, SaSi, gry, Moist, Rec. = 0.3 ft				R@3.5" (R)	11.7	8.7	44.0	47.3
25		Field Note:, Cobbles								
		Field Note:, Weathered Rock				Top of Bedrock @ 27.4 ft				
		27.4 ft - 32.4 ft, Dark-greenish-gray to medium-bluish-gray metamorphosed andesitic and basaltic Tuff, Moderately hard, Unweathered, Poor rock, NXMDC, Near vertical fracture from 29.4' to 32.4'. RMR = 36	1 (85)	86 (10)	2 3 4 3 4					
30		Hole stopped @ 32.4 ft								
35		Remarks: Hole collapsed at 16.3 ft.								

Notes:
1. Stratification lines represent approximate boundary between material types. Transition may be gradual.
2. N Values have not been corrected for hammer energy. C_e is the hammer energy correction factor.
3. Water level readings have been made at times and under conditions stated. Fluctuations may occur due to other factors than those present at the time measurements were made.

BORING LOG 2 HARTFORD IM 91-2(79).GPJ VERMONT AOT.GDT 5/30/14

STATE OF VERMONT
AGENCY OF TRANSPORTATION
MATERIALS & RESEARCH SECTION
SUBSURFACE INFORMATION

BORING LOG

HARTFORD
IM 91-2(79)
I-91 BR-43

Boring No.: **B-214**
Page No.: 1 of 1
Pin No.: 12A132
Checked By: BLS

Boring Crew: JUDKINS, HOOK
Date Started: 5/12/14 Date Finished: 5/13/14
VTSPG NAD83: N 417666.95 ft E 1683415.96 ft
Station: 251+81.01 Offset: 60.34
Ground Elevation: 560.87 ft

	Casing	Sampler
Type:	WB	SS
I.D.:	4 in	1.5 in
Hammer Wt:	N.A.	140 lb.
Hammer Fall:	N.A.	30 in.
Hammer/Rod Type:	Auto/AWJ	
Rig:	CME 55 TRACK	C_e = 1.46

Groundwater Observations		
Date	Depth (ft)	Notes
		No water to depth.

Depth (ft)	Strata (1)	CLASSIFICATION OF MATERIALS (Description)	Run (Dip deg.)	Core Rec. % (ROD %)	Drill Rate minutes/ft	Blows/6" (N Value)	Moisture Content %	Gravel %	Sand %	Fines %
		A-2-4, SiGrSa, brn, Moist, Rec. = 0.7 ft, Lab Note: Wood, roots, grass were within sample.				1-4-10-9 (14)	24.2	24.8	53.9	21.3
		Field Note:, Cobbles & Boulders								
5		Field Note:, No Recovery				R@1.0" (R)				
		Field Note:, Lost water return at 6.0 feet								
		Field Note:, NXDC, Cleaned out casing								
10		Lab Note, Mostly Broken Rock with sandy silt, grn, Moist, Rec. = 0.5 ft				26-24-17-13 (41)	7.5	65.7	20.7	13.6
		Field Note:, NXDC, Cobbles								
15		15.0 ft - 16.0 ft, Dark-greenish-gray to medium-bluish-gray metamorphosed andesitic and basaltic Tuff, with plagioclase phenocrysts. Moderately hard, Unweathered, Poor rock, NXDC, RMR = 39	1 (?) 2 (?)	70 (0) 98 (58)	3 5 4 4 5 5	Top of Bedrock @ 15.0 ft				
20		16.0 ft - 21.0 ft, Dark-greenish-gray to medium-bluish-gray metamorphosed andesitic and basaltic Tuff, with plagioclase phenocrysts. Moderately hard, Unweathered, Fair rock, NXMDC, RMR = 49								
		Hole stopped @ 21.0 ft								
25		Remarks: Hole collapsed at 10.3 ft.								
30										
35										
40										
45										

Notes:
1. Stratification lines represent approximate boundary between material types. Transition may be gradual.
2. N Values have not been corrected for hammer energy. C_e is the hammer energy correction factor.
3. Water level readings have been made at times and under conditions stated. Fluctuations may occur due to other factors than those present at the time measurements were made.

BORING LOG 2 HARTFORD IM 91-2(79).GPJ VERMONT AOT.GDT 5/30/14

PROJECT NAME: HARTFORD
PROJECT NUMBER: IM 091-2(79)

FILE NAME: sl2al32bor_new.dgn
PROJECT LEADER: K. HIGGINS
DESIGNED BY: W. LAMMER
BORING LOGS 9

PLOT DATE: 15-DEC-2014
DRAWN BY: W. LAMMER
CHECKED BY: J. SALVATORI
SHEET 81 OF 166

STATE OF VERMONT
AGENCY OF TRANSPORTATION
MATERIALS & RESEARCH SECTION
SUBSURFACE INFORMATION

BORING LOG

Hartford, VT

I91 Bridge 43 N/S

Boring No.: B-215
Page No.: 1 of 1
Pin No.: s12a132
Checked By: ASP

Boring Crew: Drilex/Jason, MJR
Date Started: 4/03/14 Date Finished: 4/03/14
VTSPG NAD83: N 417493.25 ft E 1683150.25 ft
Station: 149+92.68 Offset: -86.12
Ground Elevation: 552.71 ft

	Casing	Sampler
Type:	Auger/WB	SS
I.D.:	4.5 in	2 in
Hammer Wt:	300 lb.	140 lb.
Hammer Fall:	N.A.	30 in.
Hammer/Rod Type:		Auto
Rig:	CME 50	CE = 1.33

Groundwater Observations

Date	Depth (ft)	Notes
04/03/14	0.0	Due to water used
		during drilling

Depth (ft)	Strata (1)	CLASSIFICATION OF MATERIALS (Description)	Run (Dip deg.)	Core Rec. % (RQD %)	Drill Rate minutes/ft	Blows/6" (N Value)	Moisture Content %	Gravel %	Sand %	Fines %
		A-1-b, SaGrSi, Rec. = 1.0 ft, (FILL)				4-3-2-2 (5)	20.4	31.6	46.0	22.4
2.5		A-2-4, SaSiGr, (FILL)				5-7-10-10 (17)	13.5	22.8	45.6	31.6
		A-4, SiSaGr, Rec. = 1.17 ft				12-27-39-25/1" (66)	11.2	20.2	33.9	45.9
5.0										
7.5		A-4, SiSaGr, Rec. = 15.0 ft				19-27-42-30/2" (69)	11.4	12.5	37.4	50.1
10.0		Weathered bedrock								
12.5		12.0 ft – 17.0 ft, Grey-green ANDESITE, hard, 5° to 70° and 45° joint sets, smooth, fresh. Bottom 8" 45° fractures, mod. weathered, open-clay-silt filled at very bottom of last 45° joint. Foliation nearly vertical, mod. close, tight.	1	100 (85)	1.3 2.3 2.5 3 1.6					
15.0										
		Hole stopped @ 17.0 ft								
17.5										
20.0										
22.5										

Notes:
1. Stratification lines represent approximate boundary between material types. Transition may be gradual.
2. N Values have not been corrected for hammer energy. CE is the hammer energy correction factor. CE is an estimated value.
3. Water level readings have been made at times and under conditions stated. Fluctuations of groundwater may occur due to other factors than those present at the time measurements were made.
4. Ground surface elevations indicated on the boring logs were estimated based on the grading plan provided by VAOT.

Terracon

2010 COPY J114S115.GPJ VERMONT AOT.GDT 5/30/14

STATE OF VERMONT
AGENCY OF TRANSPORTATION
MATERIALS & RESEARCH SECTION
SUBSURFACE INFORMATION

BORING LOG

Hartford, VT

I91 Bridge 43 N/S

Boring No.: B-216
Page No.: 1 of 1
Pin No.: s12a132
Checked By: ASP

Boring Crew: Drilex/Jason, MJR
Date Started: 4/03/14 Date Finished: 4/03/14
VTSPG NAD83: N 417592.86 ft E 1683174.45 ft
Station: 150+91.87 Offset: 80.60
Ground Elevation: 549.35 ft

	Casing	Sampler
Type:	Auger/WB	SS
I.D.:	4.5 in	2 in
Hammer Wt:	300 lb.	140 lb.
Hammer Fall:	N.A.	30 in.
Hammer/Rod Type:		Auto
Rig:	CME 50	CE = 1.33

Groundwater Observations

Date	Depth (ft)	Notes
04/03/14	0.0	Due to water used
		during drilling

Depth (ft)	Strata (1)	CLASSIFICATION OF MATERIALS (Description)	Run (Dip deg.)	Core Rec. % (RQD %)	Drill Rate minutes/ft	Blows/6" (N Value)	Moisture Content %	Gravel %	Sand %	Fines %
2.5										
5.0		A-4, SaSiGr, Rec. = 0.83 ft				9-11-14-14 (25)	12.3	25.0	39.1	35.9
7.5		Weathered bedrock								
10.0		11.0 ft – 16.0 ft, Gray-green ANDESITE, hard, 0° and 80° joint sets, slightly weathered, smooth, moderately close, slighty open joints in 9" piece near bottom, smooth; thin foliation.	1	90 (85)	2.5 2.3 2.5 2.3 2.8					
12.5										
15.0										
		Hole stopped @ 16.0 ft								
17.5										
20.0										
22.5										

Notes:
1. Stratification lines represent approximate boundary between material types. Transition may be gradual.
2. N Values have not been corrected for hammer energy. CE is the hammer energy correction factor. CE is an estimated value.
3. Water level readings have been made at times and under conditions stated. Fluctuations of groundwater may occur due to other factors than those present at the time measurements were made.
4. Ground surface elevations indicated on the boring logs were estimated based on the grading plan provided by VAOT.

Terracon

2010 COPY J114S115.GPJ VERMONT AOT.GDT 5/30/14

PROJECT NAME: HARTFORD
PROJECT NUMBER: IM 091-2(79)

FILE NAME: s12a132bor_new.dgn
PROJECT LEADER: K. HIGGINS
DESIGNED BY: W. LAMMER
BORING LOGS 10

PLOT DATE: 15-DEC-2014
DRAWN BY: W. LAMMER
CHECKED BY: J. SALVATORI
SHEET 82 OF 166

STATE OF VERMONT
AGENCY OF TRANSPORTATION
MATERIALS & RESEARCH SECTION
SUBSURFACE INFORMATION

BORING LOG

Hartford, VT

I91 Bridge 43 N/S

Boring No.: B-217
Page No.: 1 of 2
Pin No.: s12a132
Checked By: ASP

Boring Crew: NTB/Mike Nadeau, MJR
Date Started: 3/25/14 Date Finished: 3/25/14
VTSPG NAD83: N 417515.93 ft E 1683416.13 ft
Station: 250+29.29 Offset: 94.25
Ground Elevation: 555.78 ft

	Casing	Sampler
Type:	Auger/WB	SS
I.D.:	4.5 in	2 in
Hammer Wt:	300 lb.	140 lb.
Hammer Fall:	N.A.	30 in.
Hammer/Rod Type:		Auto
Rig:	CME 50	CE = 1.33

Groundwater Observations

Date	Depth (ft)	Notes
03/25/14	10.2	After drilling

Depth (ft)	Strata (1)	CLASSIFICATION OF MATERIALS (Description)	Run (Dip deg.)	Core Rec. % (RQD %)	Blows/6" (N Value)	Moisture Content %	Gravel %	Sand %	Fines %
2.5		A-2-4, SaSiGr, Rec. = 1.17 ft, (FILL)			3-7-7-7 (14)	16.8	23.4	47.4	29.2
5.0		A-2-4, SaSiGr, Rec. = 1.83 ft, (FILL)			9-17-17-12 (34)	14.6	17.8	51.3	30.9
7.5		A-1-b, GrSaSi, (FILL)				7.4	48.0	29.5	22.5
10.0		A-2-4, SaSiGr, Rec. = 1.92 ft			15-14-16-8 (30)	10.8	26.8	41.6	31.6
12.5									
15.0		A-2-4, GrSaSi, Rec. = 1.08 ft			9-15-18-19 (33)	10.7	37.0	34.5	28.5
17.5									
20.0									
22.5									

Notes:
1. Stratification lines represent approximate boundary between material types. Transition may be gradual.
2. N Values have not been corrected for hammer energy. CE is the hammer energy correction factor. CE is an estimated value.
3. Water level readings have been made at times and under conditions stated.
Fluctuations of groundwater may occur due to other factors than those present at the time measurements were made.
4. Ground surface elevations indicated on the boring logs were estimated based on the grading plan provided by VAOT.

Terracon

2010 COPY J1145115.GPJ VERMONT AOT.GDT 5/30/14

STATE OF VERMONT
AGENCY OF TRANSPORTATION
MATERIALS & RESEARCH SECTION
SUBSURFACE INFORMATION

BORING LOG

Hartford, VT

I91 Bridge 43 N/S

Boring No.: B-217
Page No.: 2 of 2
Pin No.: s12a132
Checked By: ASP

Boring Crew: NTB/Mike Nadeau, MJR
Date Started: 3/25/14 Date Finished: 3/25/14
VTSPG NAD83: N 417515.93 ft E 1683416.13 ft
Station: 250+29.29 Offset: 94.25
Ground Elevation: 555.78 ft

	Casing	Sampler
Type:	Auger/WB	SS
I.D.:	4.5 in	2 in
Hammer Wt:	300 lb.	140 lb.
Hammer Fall:	N.A.	30 in.
Hammer/Rod Type:		Auto
Rig:	CME 50	CE = 1.33

Groundwater Observations

Date	Depth (ft)	Notes
03/25/14	10.2	After drilling

Depth (ft)	Strata (1)	CLASSIFICATION OF MATERIALS (Description)	Run (Dip deg.)	Core Rec. % (RQD %)	Blows/6" (N Value)	Moisture Content %	Gravel %	Sand %	Fines %
		Rec. = 0.17 ft, 25.0 ft – 27.0 ft			9-11-12-14 (23)				
27.5		Weathered bedrock							
30.0		30.0 ft – 33.0 ft, Gray-green ANDESITE, hard, 70° and 45° joint sets, closely spaced, slight to severe weathering, with quartz boudins.	1	58 (12.5)					
32.5		33.0 ft – 34.5 ft, Green-gray ANDESITE, hard, 45° to 0°, 90° joint sets, closely spaced, rough to smooth, moderately weathered.	2	66 (44)					
35.0		34.5 ft – 36.0 ft, Similar as above, vertical fracture in last 8" piece, very slight weathering.	3	100 (69)					
		Hole stopped @ 36.0 ft							
37.5									
40.0									
42.5									
45.0									
47.5									

Notes:
1. Stratification lines represent approximate boundary between material types. Transition may be gradual.
2. N Values have not been corrected for hammer energy. CE is the hammer energy correction factor. CE is an estimated value.
3. Water level readings have been made at times and under conditions stated.
Fluctuations of groundwater may occur due to other factors than those present at the time measurements were made.
4. Ground surface elevations indicated on the boring logs were estimated based on the grading plan provided by VAOT.

Terracon

2010 COPY J1145115.GPJ VERMONT AOT.GDT 5/30/14

PROJECT NAME: HARTFORD
PROJECT NUMBER: IM 091-2(79)

FILE NAME: s12a132bor_new.dgn
PROJECT LEADER: K. HIGGINS
DESIGNED BY: W. LAMMER
BORING LOGS II

PLOT DATE: 15-DEC-2014
DRAWN BY: W. LAMMER
CHECKED BY: J. SALVATORI
SHEET 83 OF 166

STATE OF VERMONT
AGENCY OF TRANSPORTATION
MATERIALS & RESEARCH SECTION
SUBSURFACE INFORMATION

BORING LOG

Hartford, VT

I91 Bridge 43 N/S

Boring No.: B-218
Page No.: 1 of 1
Pin No.: s12a132
Checked By: ASP

Boring Crew: Drilex/Jason, MJR
Date Started: 4/03/14 Date Finished: 4/03/14
VTSPG NAD83: N 417651.73 ft E 1683448.99 ft
Station: 251+74.37 Offset: 96.21
Ground Elevation: 547.65 ft

	Casing	Sampler
Type:	Auger/WB	SS
I.D.:	4.5 in	2 in
Hammer Wt:	300 lb.	140 lb.
Hammer Fall:	N.A.	30 in.
Hammer/Rod Type:		Auto
Rig:	CME 50	CE = 1.33

Groundwater Observations

Date	Depth (ft)	Notes
04/02/14	0.0	Due to water used
		during drilling

Depth (ft)	Strata (1)	CLASSIFICATION OF MATERIALS (Description)	Run (Dip deg.)	Core Rec. % (RQD %)	Drill Rate minutes/ft	Blows/6" (N Value)	Moisture Content %	Gravel %	Sand %	Fines %
		Spin 4" casing to 12", start coring at 12"								
2.5		1.0 ft – 5.0 ft, Gray-green ANDESITE, hard, 75° and 10° joint sets, fresh weathering, moderately close. Minor 75° foliation with quartz filling, thin, rough, slightly open to tight.	1	92 (92)	2.3 2.2 2 2.75					
5.0		5.0 ft – 6.0 ft, Similar as above.	2	100 (50)	2					
		Hole stopped @ 6.0 ft								
7.5										
10.0										
12.5										
15.0										
17.5										
20.0										
22.5										

Notes:
1. Stratification lines represent approximate boundary between material types. Transition may be gradual.
2. N Values have not been corrected for hammer energy. CE is the hammer energy correction factor. CE is an estimated value.
3. Water level readings have been made at times and under conditions stated. Fluctuations of groundwater may occur due to other factors than those present at the time measurements were made.
4. Ground surface elevations indicated on the boring logs were estimated based on the grading plan provided by VAOT.

Terracon

2010 COPY J114S115.GPJ VERMONT AOT.GDT 5/30/14

PROJECT NAME: HARTFORD
PROJECT NUMBER: IM 091-2(79)

FILE NAME: s12a132bor_new.dgn
PROJECT LEADER: K. HIGGINS
DESIGNED BY: W. LAMMER
BORING LOGS 8

PLOT DATE: 15-DEC-2014
DRAWN BY: W. LAMMER
CHECKED BY: J. SALVATORI
SHEET 84 OF 166

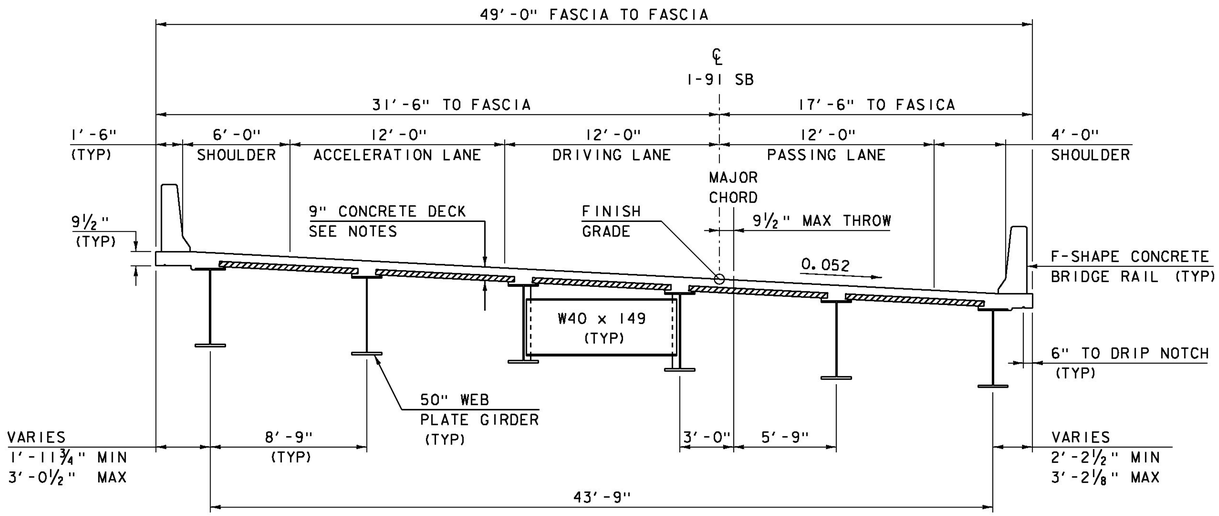

BRIDGE 43S TYPICAL SECTION

SCALE: ¼" = 1'-0"

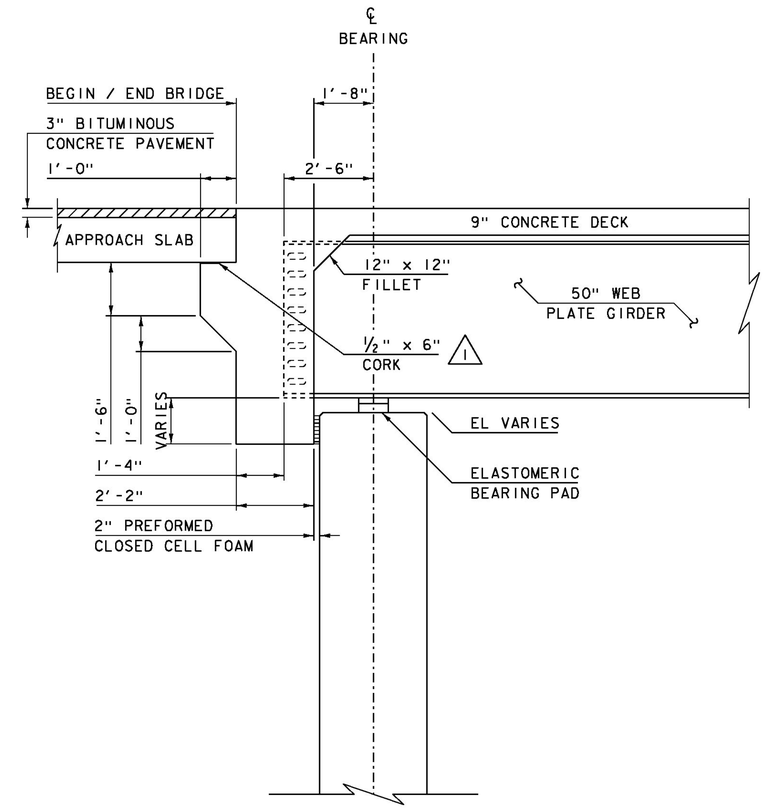

BRIDGE 43S END DETAIL

SCALE ½" = 1'-0"

REVISION	DATE	DESCRIPTION	BY
1	01-06-2015	CORK DIMENSION	RK

PROJECT NAME: HARTFORD
PROJECT NUMBER: IM 091-2(79)

FILE NAME: sl2al32bridge_end_detail.dgn
PROJECT LEADER: K. HIGGINS
DESIGNED BY: R. KLINEFELTER
SUPERSTRUCTURE TYPICALS 43S

PLOT DATE: 06-JAN-2015
DRAWN BY: K. FRIEDLAND
CHECKED BY: J. SALVATORI
SHEET 85 OF 166

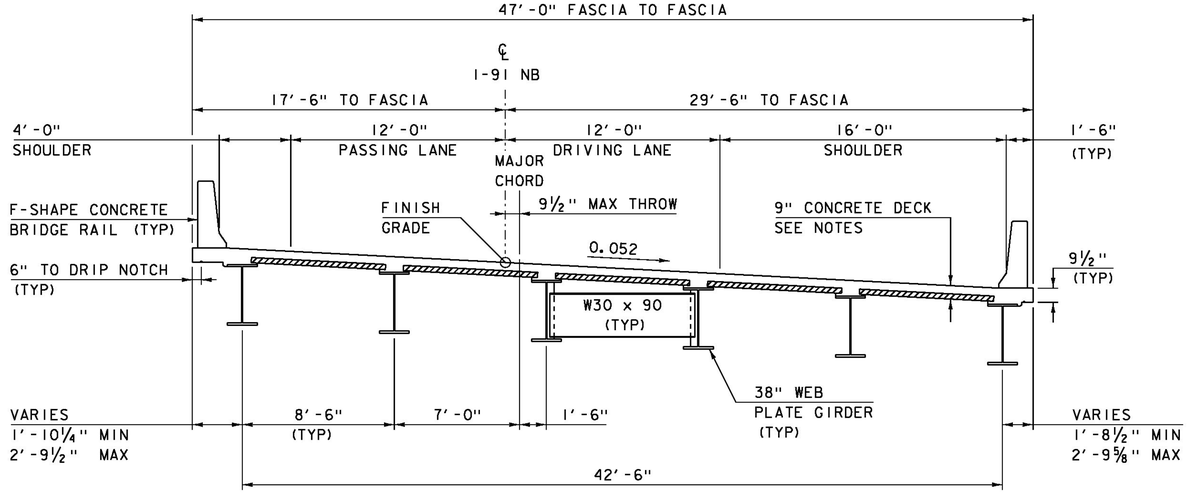

BRIDGE 43N TYPICAL SECTION

SCALE: ¼" = 1'-0"

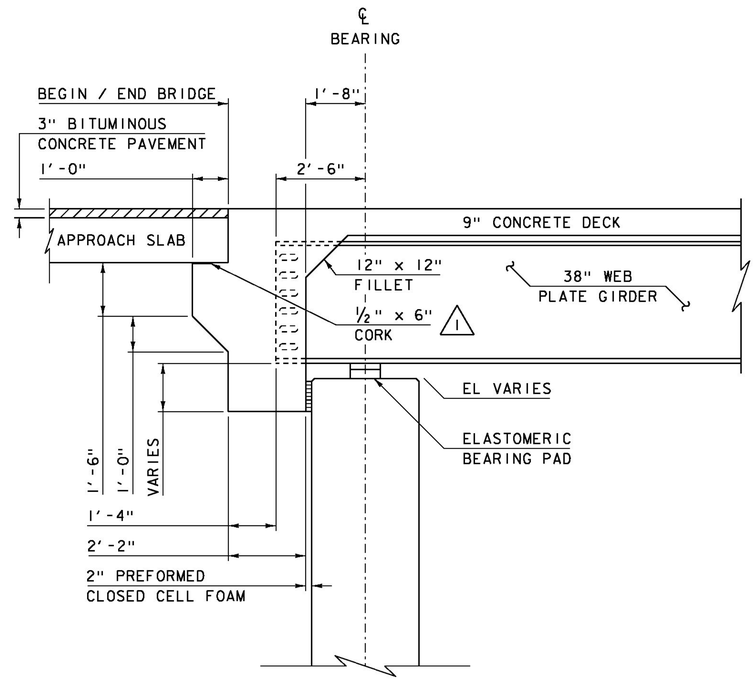

BRIDGE 43N END DETAIL

SCALE ½"=1'-0"

REVISION	DATE	DESCRIPTION	BY
1	01-06-2015	CORK DIMENSION	RK

PROJECT NAME: HARTFORD
PROJECT NUMBER: IM 091-2(79)

FILE NAME: sl2al32bridge_end_detail.dgn
PROJECT LEADER: K. HIGGINS
DESIGNED BY: R. KLINEFELTER
SUPERSTRUCTURE TYPICALS 43N

PLOT DATE: 06-JAN-2015
DRAWN BY: K. FRIEDLAND
CHECKED BY: J. SALVATORI
SHEET 86 OF 166

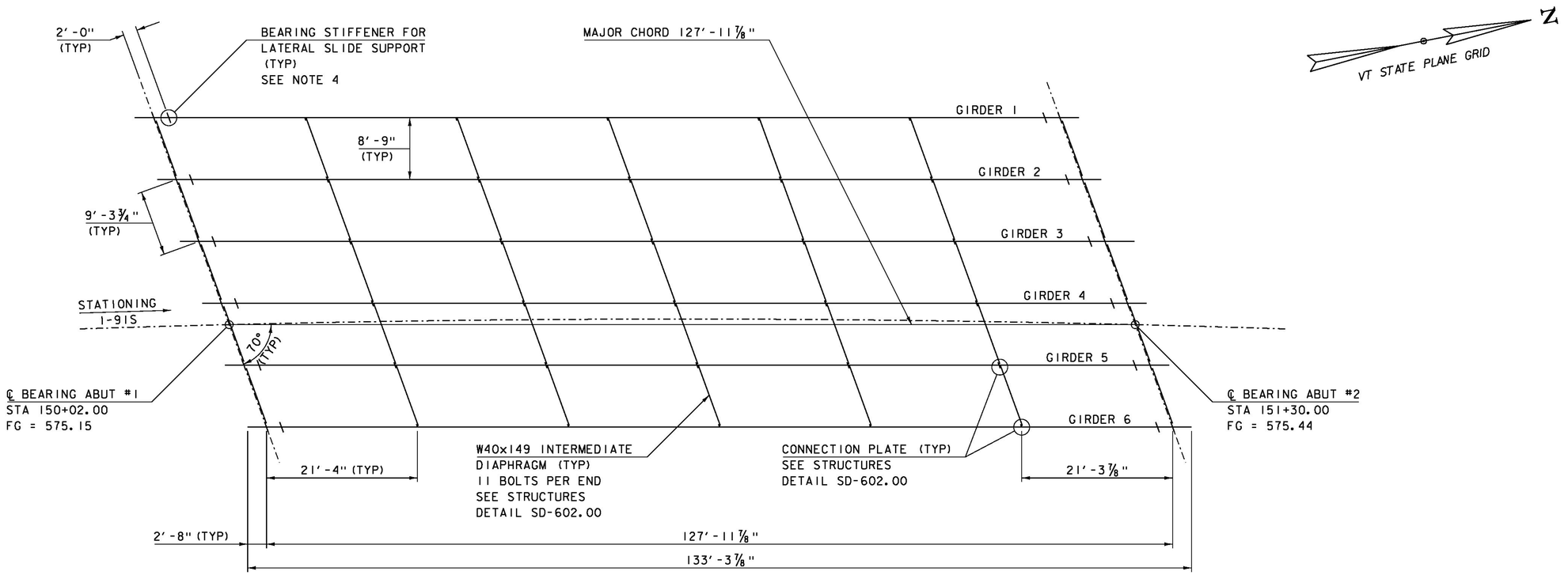

BRIDGE 43S FRAMING PLAN

SCALE 1/8" = 1'-0"

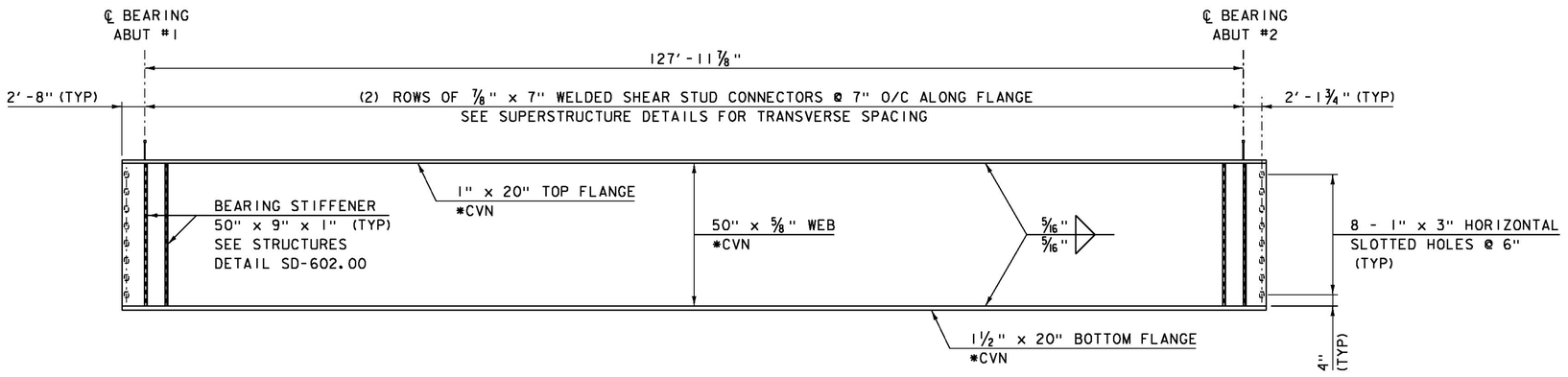

BRIDGE 43S TYPICAL GIRDER ELEVATION

HORIZONTAL SCALE 1/8" = 1'-0"
VERTICAL SCALE 1/2" = 1'-0"

NOTES:

1. *CVN DENOTES THAT CHARPY V-NOTCH TEST IS REQUIRED.
2. ALL STEEL SHALL BE GRADE 50W.
3. PLACE DRIP PLATE ON LOW END OF EXTERIOR GIRDERS. SEE STRUCTURES DETAIL SD-601.00.
4. THE CONTRACTOR IS RESPONSIBLE FOR VERIFYING THE LOCATION OF THE BEARING STIFFENERS FOR THE LATERAL SLIDE SUPPORT.

PROJECT NAME: HARTFORD	
PROJECT NUMBER: IM 091-2(79)	
FILE NAME: sl2al32fra43S.dgn	PLOT DATE: 15-DEC-2014
PROJECT LEADER: K. HIGGINS	DRAWN BY: R. KLINEFELTER
DESIGNED BY: R. KLINEFELTER	CHECKED BY: W. LAMMER
BR 43S FRAMING PLAN & GIRDER ELEVATION	SHEET 87 OF 166

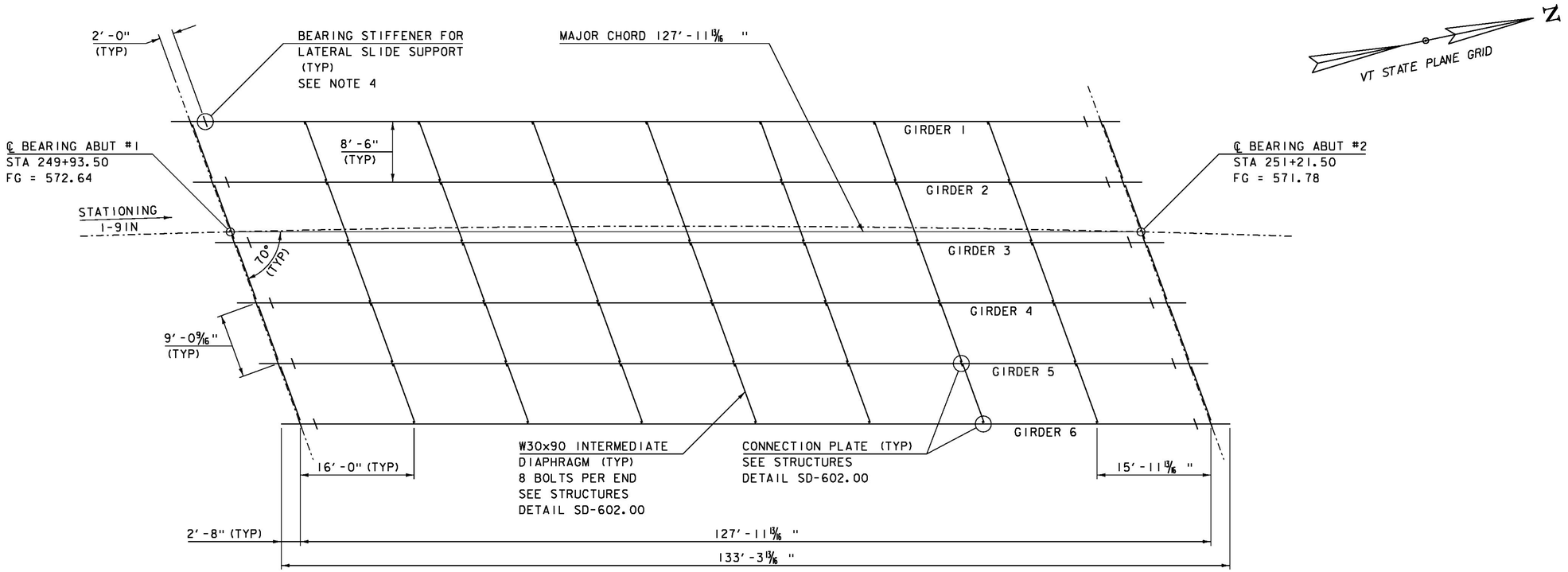

BRIDGE 43N FRAMING PLAN

SCALE 1/8"=1'-0"

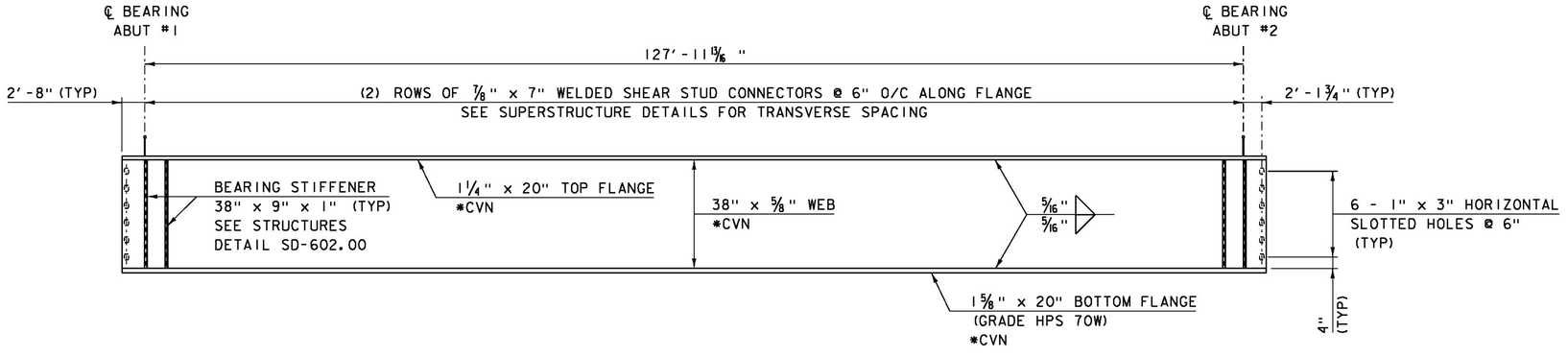

BRIDGE 43N TYPICAL GIRDER ELEVATION

HORIZONTAL SCALE 1/8"=1'-0"
VERTICAL SCALE 1/2"=1'-0"

NOTES:

1. *CVN DENOTES THAT CHARPY V-NOTCH TEST IS REQUIRED.
2. THE GIRDER BOTTOM FLANGE SHALL BE GRADE HPS 70W. ALL OTHER STEEL SHALL BE GRADE 50W.
3. PLACE DRIP PLATE ON LOW END OF EXTERIOR GIRDERS. SEE STRUCTURES DETAIL SD-601.00.
4. THE CONTRACTOR IS RESPONSIBLE FOR VERIFYING THE LOCATION OF THE BEARING STIFFENERS FOR THE LATERAL SLIDE SUPPORT.

PROJECT NAME:	HARTFORD
PROJECT NUMBER:	IM 091-2(79)
FILE NAME: sl2al32fra43N.dgn	PLOT DATE: 15-DEC-2014
PROJECT LEADER: K. HIGGINS	DRAWN BY: R. KLINEFELTER
DESIGNED BY: R. KLINEFELTER	CHECKED BY: W. LAMMER
BR 43N FRAMING PLAN & GIRDER ELEVATION	SHEET 88 OF 166

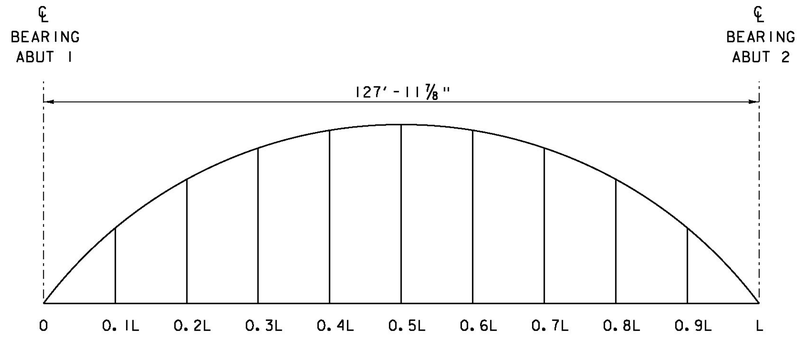

BRIDGE 43S CAMBER DIAGRAM

NOT TO SCALE

	0	0.1L	0.2L	0.3L	0.4L	0.5L	0.6L	0.7L	0.8L	0.9L	L
Steel Deflection	0	9/16	1 1/8	1 1/2	1 13/16	1 7/8	1 13/16	1 1/2	1 1/8	9/16	0
Precast Deck Panel Deflection	0	9/16	1 1/16	1 1/2	1 3/4	1 13/16	1 3/4	1 1/2	1 1/16	9/16	0
Cast-in-Place Slab Deflection	0	1 1/8	2 1/8	2 15/16	3 3/8	3 9/16	3 3/8	2 15/16	2 1/8	1 1/8	0
Superimposed Deflection	0	3/16	3/8	1/2	5/8	5/8	5/8	1/2	3/8	3/16	0
Total Slab & Super Deflection	0	1 5/16	2 1/2	3 7/16	4	4 3/16	4	3 7/16	2 1/2	1 5/16	0
Total Panel, Slab & Super Deflection	0	1 7/8	3 9/16	4 15/16	5 3/4	6	5 3/4	4 15/16	3 9/16	1 7/8	0
Total Deflection	0	2 7/16	4 11/16	6 7/16	7 9/16	7 7/8	7 9/16	6 7/16	4 11/16	2 7/16	0
Residual Camber	0	9/16	1	1 5/16	1 9/16	1 5/8	1 9/16	1 5/16	1	9/16	0
Total Camber	0	3	5 11/16	7 3/4	9 1/8	9 1/2	9 1/8	7 3/4	5 11/16	3	0

BRIDGE 43S

⚠1 CAMBER AND DEFLECTION

(INCHES)

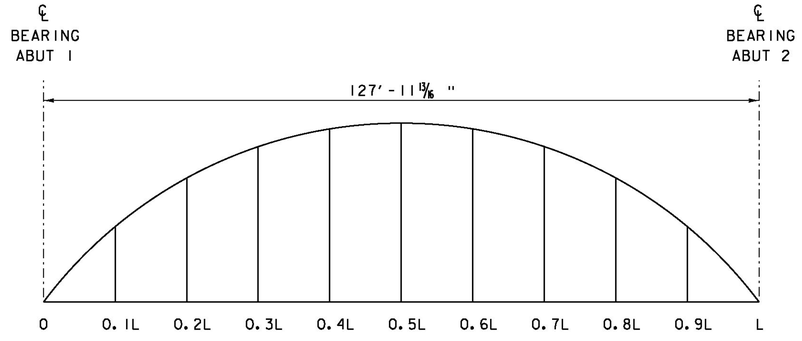

BRIDGE 43N CAMBER DIAGRAM

NOT TO SCALE

	0	0.1L	0.2L	0.3L	0.4L	0.5L	0.6L	0.7L	0.8L	0.9L	L
Steel Deflection	0	7/8	1 5/8	2 1/4	2 5/8	2 3/4	2 5/8	2 1/4	1 5/8	7/8	0
Precast Deck Panel Deflection	0	7/8	1 5/8	2 1/4	2 5/8	2 3/4	2 5/8	2 1/4	1 5/8	7/8	0
Cast-in-Place Slab Deflection	0	1 11/16	3 3/16	4 3/8	5 1/8	5 3/8	5 1/8	4 3/8	3 3/16	1 11/16	0
Superimposed Deflection	0	5/16	9/16	13/16	15/16	1	15/16	13/16	9/16	5/16	0
Total Slab & Super Deflection	0	2	3 3/4	5 3/16	6 1/16	6 3/8	6 1/16	5 3/16	3 3/4	2	0
Total Panel, Slab & Super Deflection	0	2 7/8	5 3/8	7 7/16	8 11/16	9 1/8	8 11/16	7 7/16	5 3/8	2 7/8	0
Total Deflection	0	3 3/4	7	9 11/16	11 5/16	11 7/8	11 5/16	9 11/16	7	3 3/4	0
Residual Camber	0	9/16	1	1 5/16	1 9/16	1 5/8	1 9/16	1 5/16	1	9/16	0
Total Camber	0	4 5/16	8	11	12 7/8	13 1/2	12 7/8	11	8	4 5/16	0

BRIDGE 43N

⚠1 CAMBER AND DEFLECTION

(INCHES)

REVISION	DATE	DESCRIPTION	BY
⚠1	12-16-2014	ADDITIONAL INFORMATION ADDED	RK

PROJECT NAME: HARTFORD
PROJECT NUMBER: IM 091-2(79)

FILE NAME: s12a132cam.dgn
PROJECT LEADER: K. HIGGINS
DESIGNED BY: R. KLINEFELTER
CAMBER & DEFLECTION

PLOT DATE: 16-DEC-2014
DRAWN BY: K. FRIEDLAND
CHECKED BY: W. LAMMER
SHEET 89 OF 166

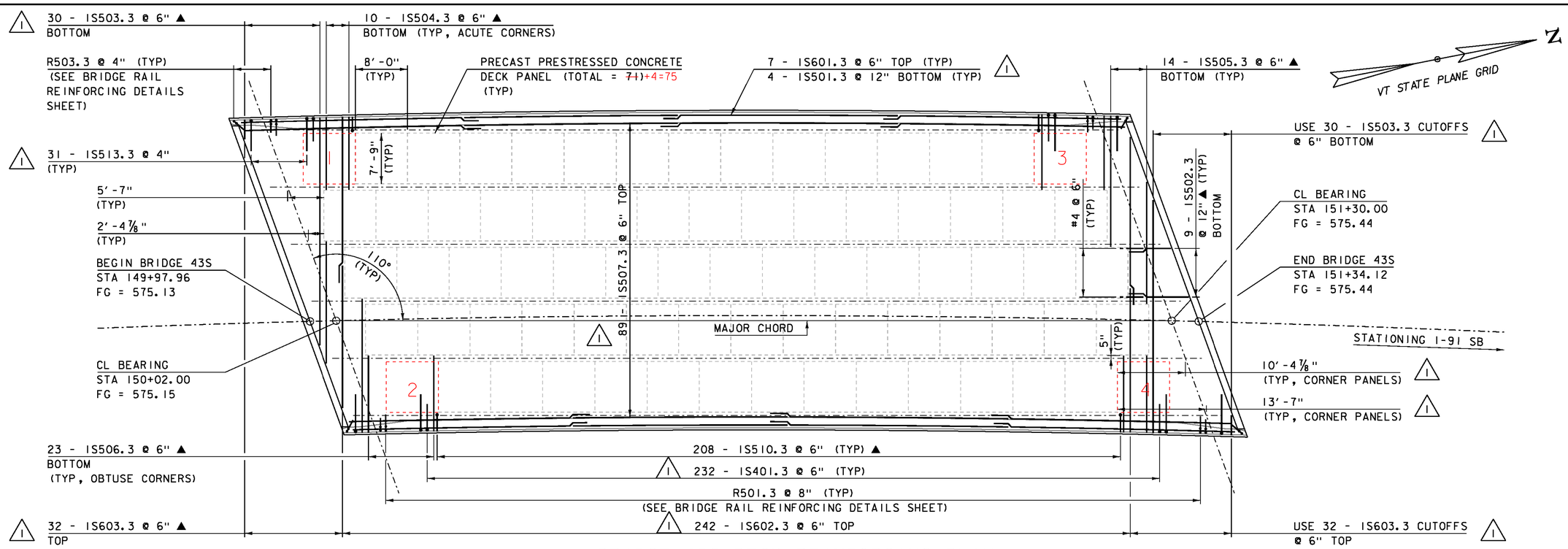

BRIDGE 43S DECK REINFORCING PLAN

SCALE 1/8"=1'-0"

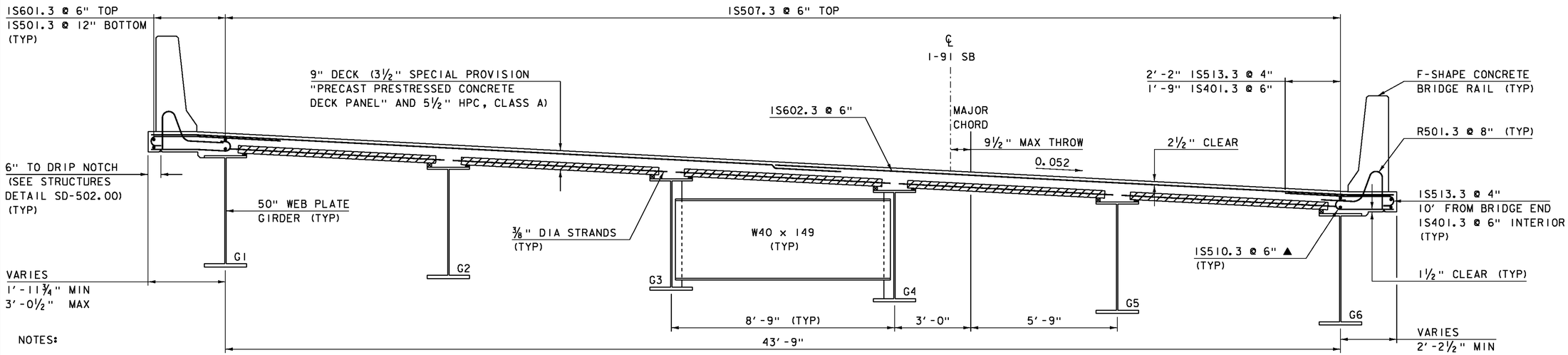

BRIDGE 43S TYPICAL DECK REINFORCEMENT

SCALE 1/2"=1'-0"

NOTES:

1) SPLICES FOR TOP TRANSVERSE AND LONGITUDINAL DECK REINFORCING STEEL SHALL NOT BE LOCATED OVER PANEL JOINTS.

2) PRIOR TO PLACING THE DECK CONCRETE, LAITANCE OR OTHER CONTAMINATES THAT WOULD INTERFERE WITH FULL BOND TO THE PANELS SHALL BE REMOVED BY AN APPROVED METHOD PER SECTION 510.12(b)(4).

3) PRIOR TO PLACING THE DECK CONCRETE, THE PRECAST PRESTRESSED CONCRETE DECK PANELS SHALL BE WETTED IN ACCORDANCE WITH SECTION 501.10(d).

REVISION	DATE	DESCRIPTION	BY
1	01-06-2015	REINFORCING STEEL BAR COUNTS AND DIMENSIONS TO DECK PANELS	RK

NOTE:
NF = NEAR FACE
FF = FAR FACE
EF = EACH FACE
▲ = CUT TO FIT IN FIELD
3" CLEAR, UNLESS OTHERWISE SPECIFIED ON THE PLANS.
2'-2" BAR LAP FOR #5 REINFORCING
2'-7" BAR LAP FOR #6 REINFORCING

PROJECT NAME: HARTFORD
PROJECT NUMBER: IM 091-2(79)

FILE NAME: sl2al32sup43S.dgn
PROJECT LEADER: K. HIGGINS
DESIGNED BY: R. KLINEFELTER
43S DECK REINFORCING PLAN
PLOT DATE: 06-JAN-2015
DRAWN BY: K. FRIEDLAND
CHECKED BY: R. KLINEFELTER
SHEET 90 OF 166

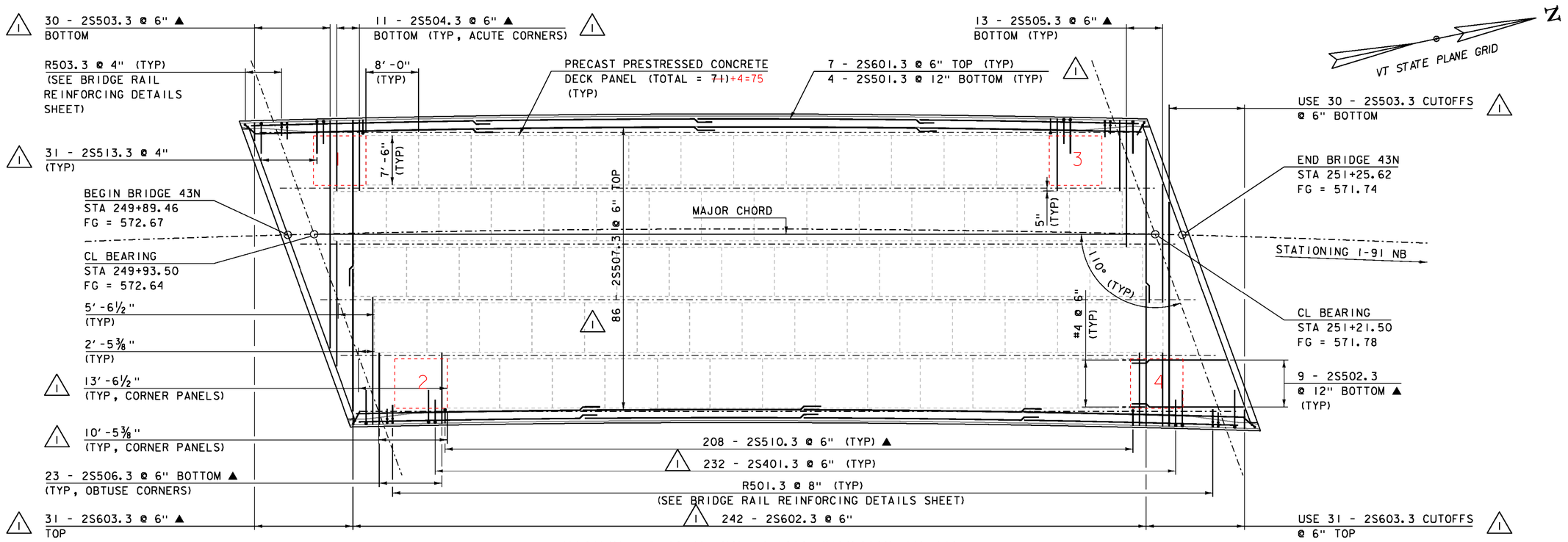

BRIDGE 43N DECK REINFORCING PLAN

SCALE ⅛"=1'-0"

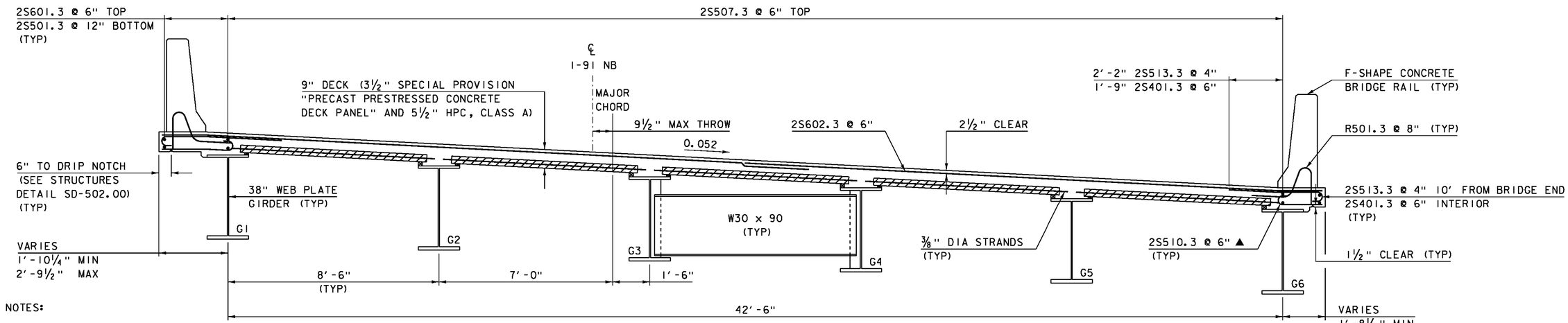

BRIDGE 43N TYPICAL DECK REINFORCEMENT

SCALE ½"=1'-0"

NOTES:

1) SPLICES FOR TOP TRANSVERSE AND LONGITUDINAL DECK REINFORCING STEEL SHALL NOT BE LOCATED OVER PANEL JOINTS.

2) PRIOR TO PLACING THE DECK CONCRETE, LAITANCE OR OTHER CONTAMINATES THAT WOULD INTERFERE WITH FULL BOND TO THE PANELS SHALL BE REMOVED BY AN APPROVED METHOD PER SECTION 510.12(b)(4).

3) PRIOR TO PLACING THE DECK CONCRETE, THE PRECAST PRESTRESSED CONCRETE DECK PANELS SHALL BE WETTED IN ACCORDANCE WITH SECTION 501.10(d).

REVISION	DATE	DESCRIPTION	BY
1	01-05-2015	REINFORCING STEEL BAR COUNTS AND DIMENSIONS TO DECK PANELS	RK

NOTE:
NF = NEAR FACE
FF = FAR FACE
EF = EACH FACE
▲ = CUT TO FIT IN FIELD
3" CLEAR, UNLESS OTHERWISE SPECIFIED ON THE PLANS.
2'-2" BAR LAP FOR #5 REINFORCING
2'-7" BAR LAP FOR #6 REINFORCING

PROJECT NAME: HARTFORD
PROJECT NUMBER: IM 091-2(79)

FILE NAME: sl2al32sup43N.dgn
PROJECT LEADER: K. HIGGINS
DESIGNED BY: R. KLINEFELTER
43N DECK REINFORCING PLAN

PLOT DATE: 05-JAN-2015
DRAWN BY: K. FRIEDLAND
CHECKED BY: R. KLINEFELTER
SHEET 91 OF 166

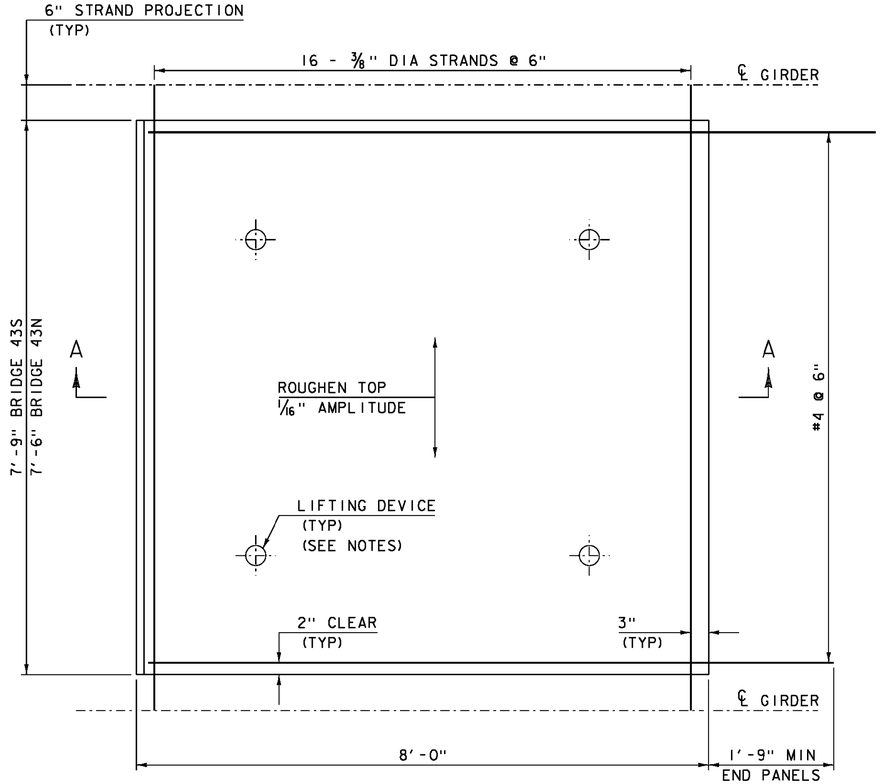

PRECAST PRESTRESSED CONCRETE DECK PANEL PLAN

SCALE 1"=1'-0"

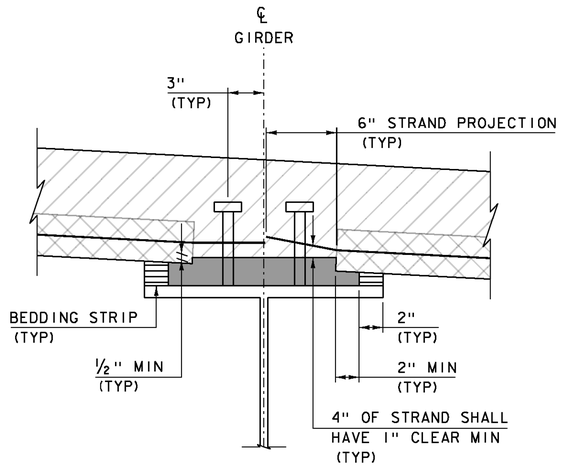

HAUNCH DETAIL

SCALE 2"=1'-0"

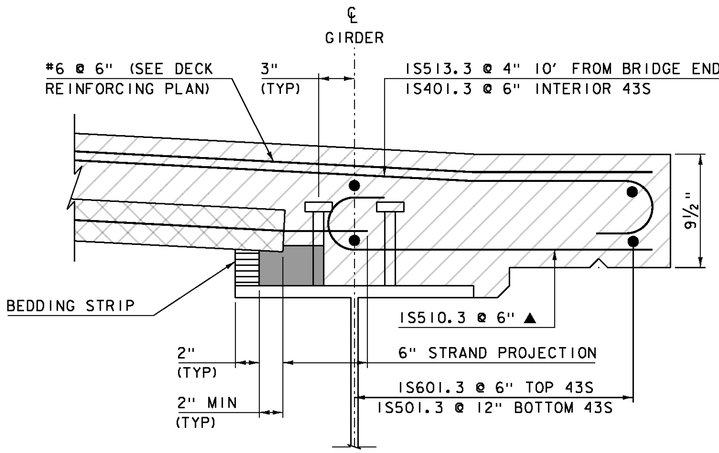

BRIDGE 43S SHOWN, BRIDGE 43N SIMILAR.

TYPICAL OVERHANG

SCALE 2"=1'-0"

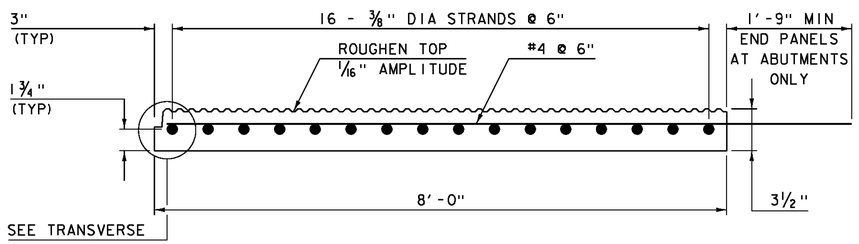

SECTION A-A

HOR. SCALE 1"=1'-0"
VER. SCALE 2"=1'-0"

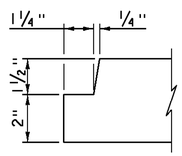

TRANSVERSE NOTCH DETAIL

SCALE 4"=1'-0"

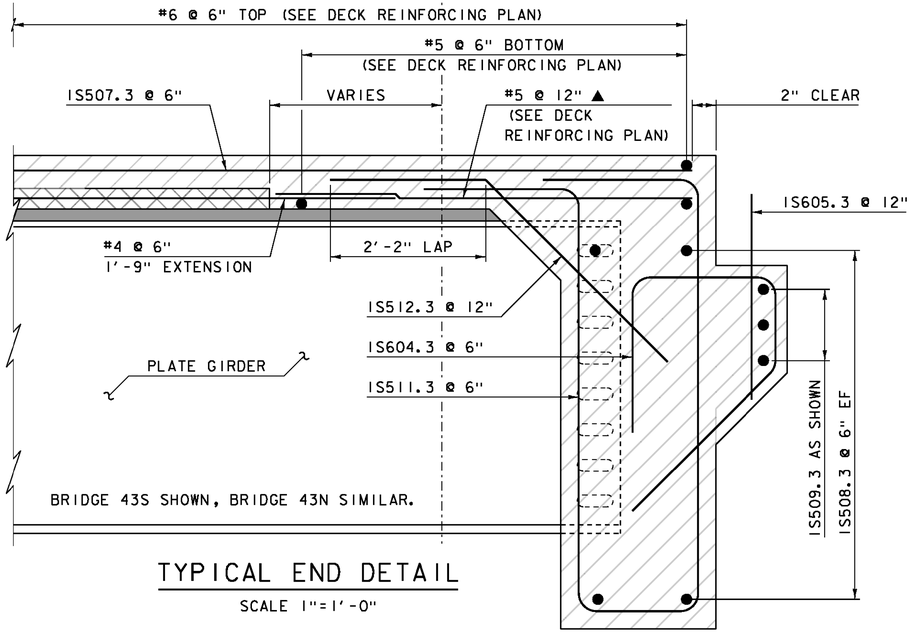

BRIDGE 43S SHOWN, BRIDGE 43N SIMILAR.

TYPICAL END DETAIL

SCALE 1"=1'-0"

NOTES:

1) LIFTING DEVICE SHALL BE DESIGNED BY THE FABRICATOR.

2) SHEAR CONNECTORS AND STRANDS PROJECTING FROM PANELS SHALL BE CLEANED OF ANY EXCESS MORTAR AFTER GROUT BED PLACEMENT.

3) STRANDS PROJECTING FROM PANELS SHALL BE SECURED IN PLACE DURING DECK CONCRETE PLACEMENT.

4) OMIT TRANSVERSE NOTCH ON END PANELS AT ABUTMENTS.

NOTE:

NF = NEAR FACE
FF = FAR FACE
EF = EACH FACE
▲ = CUT TO FIT IN FIELD
3" CLEAR, UNLESS OTHERWISE SPECIFIED ON THE PLANS.
2'-2" BAR LAP UNLESS OTHERWISE SPECIFIED ON THE PLANS.

LEGEND

- CONCRETE, HPC CLASS A
- PRECAST PRESTESSED CONCRETE DECK PANEL
- HPC CLASS AA ~~MORTAR, TYPE IV~~

PROJECT NAME:	HARTFORD
PROJECT NUMBER:	IM 091-2(79)
FILE NAME: sl2al32sup43S.dgn	PLOT DATE: 15-DEC-2014
PROJECT LEADER: K. HIGGINS	DRAWN BY: K. FRIEDLAND
DESIGNED BY: R. KLINEFELTER	CHECKED BY: W. LAMMER
SUPERSTRUCTURE DETAILS	SHEET 92 OF 166

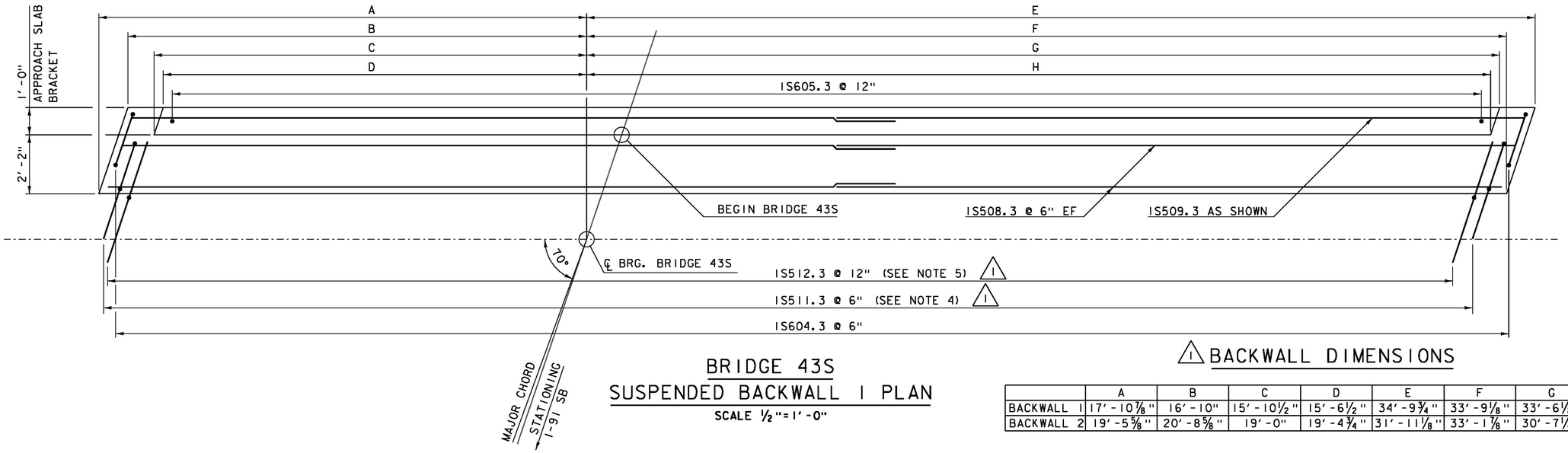

BRIDGE 43S
SUSPENDED BACKWALL 1 PLAN

SCALE ½"=1'-0"

1 BACKWALL DIMENSIONS

	A	B	C	D	E	F	G	H
BACKWALL 1	17'-10⅞"	16'-10"	15'-10½"	15'-6½"	34'-9¾"	33'-9⅛"	33'-6⅛"	33'-2⅛"
BACKWALL 2	19'-5⅝"	20'-8⅝"	19'-0"	19'-4¾"	31'-11⅛"	33'-1⅞"	30'-7¼"	30'-11⅞"

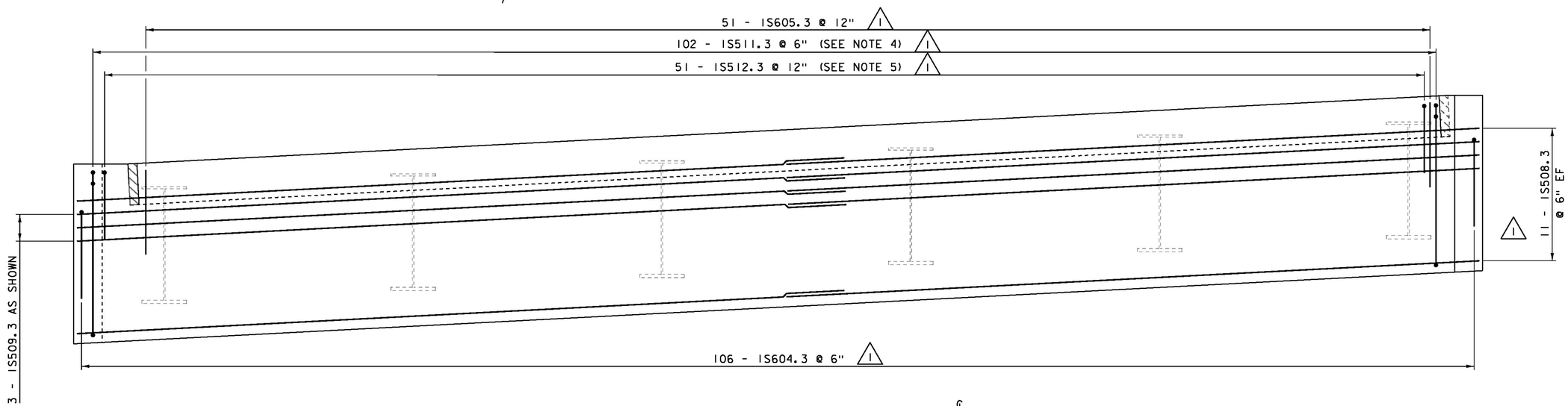

BRIDGE 43S
SUSPENDED BACKWALL 1 ELEVATION

SCALE ½"=1'-0"

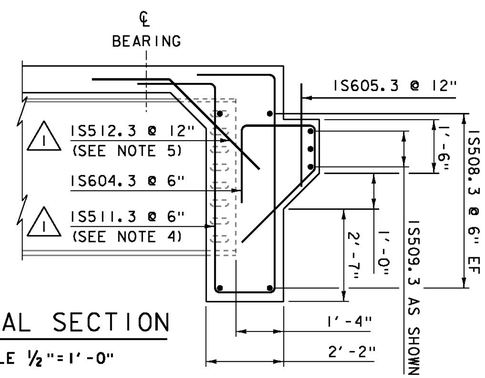

TYPICAL SECTION

SCALE ½"=1'-0"

NOTES:

1) BACKWALL 1 SHOWN. BACKWALL 2 SIMILAR.

2) BRIDGE DECK REINFORCING NOT SHOWN FOR CLARITY.

3) A TEMPLATE SHALL BE USED TO LAYOUT IS605.3 BARS TO ENSURE PROPER ALIGNMENT WITH DUCTS IN APPROACH SLABS.

1 4) AT EACH GIRDER LOCATION, BUNDLE (2) IS511.3 BARS ON EACH SIDE OF THE GIRDER FLANGE AND OMIT THE (3) IS511.3 BARS THAT FALL WITHIN THE WIDTH OF THE FLANGE.

1 5) AT EACH GIRDER LOCATION, OMIT (1) IS512.3 BAR THAT FALLS WITHIN THE WIDTH OF THE FLANGE.

REVISION	DATE	DESCRIPTION	BY
1	01-06-2015	REINFORCING STEEL BAR COUNTS, NOTES, AND BACKWALL 2 DIMENSIONS	RK

NOTE:

NF = NEAR FACE
FF = FAR FACE
EF = EACH FACE
▲ = CUT TO FIT IN FIELD
3" CLEAR, UNLESS OTHERWISE SPECIFIED ON THE PLANS.
2'-2" BAR LAP FOR #5 REINFORCING

PROJECT NAME: HARTFORD
PROJECT NUMBER: IM 091-2(79)

FILE NAME: sl2al32Backwall43S.dgn
PROJECT LEADER: K. HIGGINS
DESIGNED BY: R. KLINEFELTER
43S SUSPENDED BACKWALL DETAILS

PLOT DATE: 06-JAN-2015
DRAWN BY: K. FRIEDLAND
CHECKED BY: R. KLINEFELTER
SHEET 93 OF 166

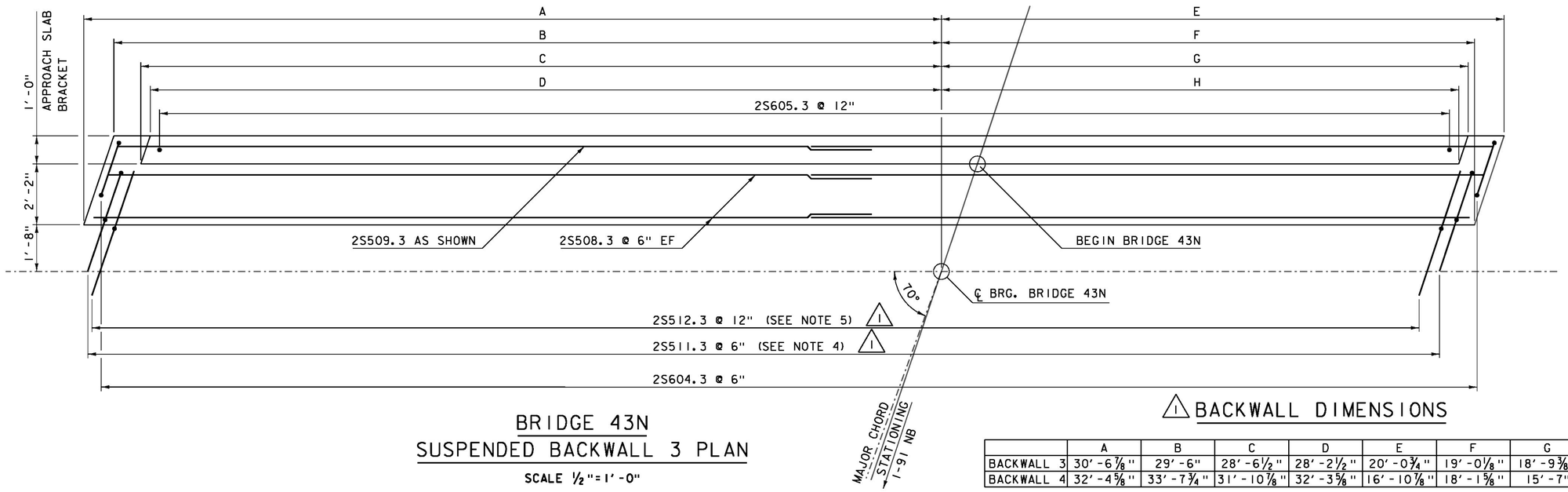

BRIDGE 43N
SUSPENDED BACKWALL 3 PLAN

SCALE ½"=1'-0"

⚠1 BACKWALL DIMENSIONS

	A	B	C	D	E	F	G	H
BACKWALL 3	30'-6⅞"	29'-6"	28'-6½"	28'-2½"	20'-0¾"	19'-0⅛"	18'-9⅜"	18'-5⅜"
BACKWALL 4	32'-4⅝"	33'-7¾"	31'-10⅞"	32'-3⅝"	16'-10⅞"	18'-1⅝"	15'-7"	15'-11¾"

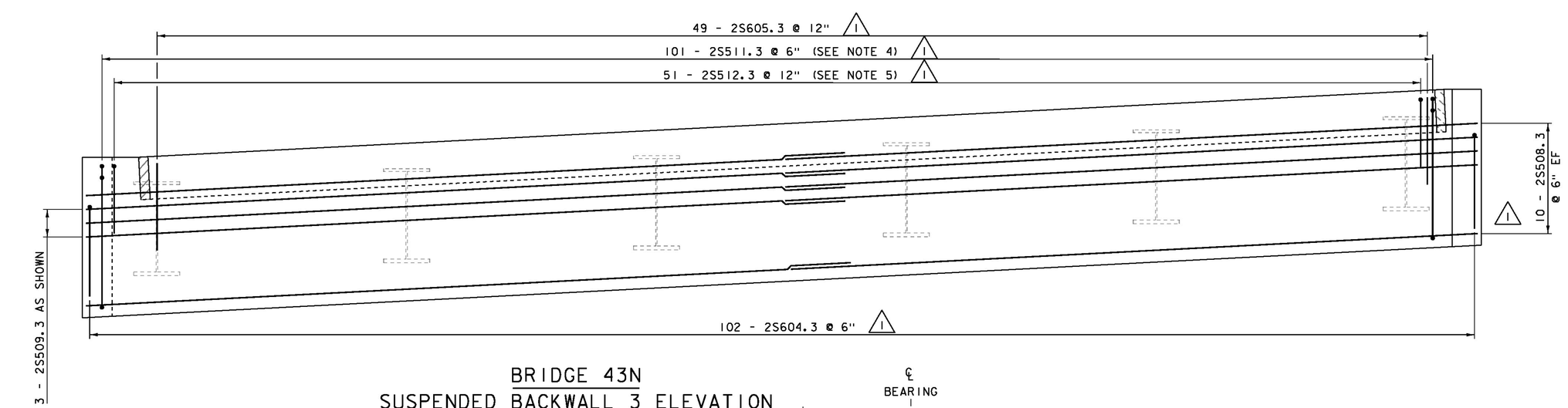

BRIDGE 43N
SUSPENDED BACKWALL 3 ELEVATION

SCALE ½"=1'-0"

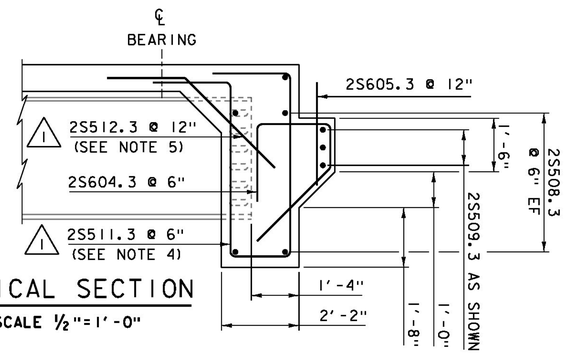

TYPICAL SECTION

SCALE ½"=1'-0"

NOTES:

1) BACKWALL 3 SHOWN. BACKWALL 4 SIMILAR.

2) BRIDGE DECK REINFORCING NOT SHOWN FOR CLARITY.

3) A TEMPLATE SHALL BE USED TO LAYOUT 2S605.3 BARS TO ENSURE PROPER ALIGNMENT WITH DUCTS IN APPROACH SLABS.

⚠1 4) AT EACH GIRDER LOCATION, BUNDLE (2) 2S511.3 BARS ON EACH SIDE OF THE GIRDER FLANGE AND OMIT THE (3) 2S511.3 BARS THAT FALL WITHIN THE WIDTH OF THE FLANGE.

⚠1 5) AT EACH GIRDER LOCATION, OMIT (1) 2S512.3 BAR THAT FALLS WITHIN THE WIDTH OF THE FLANGE.

REVISION	DATE	DESCRIPTION	BY
⚠1	01-06-2015	REINFORCING STEEL BAR COUNTS, NOTES, AND BACKWALL 4 DIMENSIONS	RK

NOTE:
NF = NEAR FACE
FF = FAR FACE
EF = EACH FACE
▲ = CUT TO FIT IN FIELD
3" CLEAR, UNLESS OTHERWISE SPECIFIED ON THE PLANS.
2'-2" BAR LAP FOR #5 REINFORCING

PROJECT NAME: HARTFORD
PROJECT NUMBER: IM 091-2(79)

FILE NAME: sl2al32Backwall43N.dgn
PROJECT LEADER: K. HIGGINS
DESIGNED BY: R. KLINEFELTER
43N SUSPENDED BACKWALL DETAILS

PLOT DATE: 06-JAN-2015
DRAWN BY: K. FRIEDLAND
CHECKED BY: R. KLINEFELTER
SHEET 94 OF 166

BEARING NOTES

1) BEARINGS SHALL BE PAID FOR UNDER ITEM 531.18 “BEARING DEVICE ASSEMBLY, ELASTOMERIC PAD WITH EXTERNAL LOAD PLATES”. BEARING DEVICES SHALL CONFORM TO APPLICABLE SUBSECTIONS OF SECTIONS 531 AND 731.

2) ALL MATERIALS SHALL CONFORM TO SECTION 14 OF THE AASHTO LRFD BRIDGE DESIGN SPECIFICATIONS AND SECTION 18 OF AASHTO LRFD BRIDGE CONSTRUCTION SPECIFICATIONS AND ALL AASHTO OR ASTM SPECIFICATIONS REFERENCED IN THE CONTRACT DOCUMENTS.

3) THE ELASTOMERIC COMPOUND SHALL BE VIRGIN CRYSTALLIZATION RESISTANT POLYCHLOROPRENE (NEOPRENE) OR VIRGIN NATURAL POLYISOPRENE (NATURAL RUBBER) AS THE RAW POLYMER. THE RESULTING PRODUCT SHALL BE FREE OF POROUS AREAS, WEAK SECTIONS, BUBBLES, FOREIGN MATTER, OR OTHER DEFECTS AFFECTING SERVICEABILITY. IT SHALL CONFORM TO THE REQUIREMENTS OF AASHTO M 251.

4) BEARING WAS DESIGNED USING METHOD A, WITH A DESIGN HARDNESS OF 50 POINTS AND A DESIGN SHEAR MODULUS OF 110 PSI.

5) ALTERNATE CONFIGURATIONS FOR BEARINGS MAY BE SUBMITTED FOR APPROVAL. ANY ALTERNATE SUBMITTED SHALL BE DESIGNED AND STAMPED IN ACCORDANCE WITH SUBSECTION 105.03 AND SHALL MEET THE DESIGN LOADS AND CRITERIA SHOWN ON THIS SHEET. ANY ALTERNATE SHALL BE DESIGNED PER THE LATEST AASHTO LRFD BRIDGE DESIGN SPECIFICATIONS. BRIDGE SEAT ELEVATIONS MAY BE REVISED TO ACCOMMODATE AN ALTERNATE CONFIGURATION.

6) STEEL REINFORCED ELASTOMERIC PADS SHALL BE WITHIN THE TOLERANCES LISTED IN TABLE 2 IN AASHTO M251. EXTERNAL LOAD PLATES SHALL BE WITHIN THE TOLERANCES GIVEN IN SECTION 18 OF THE AASHTO LRFD BRIDGE CONSTRUCTION SPECIFICATIONS.

7) BEARING SHALL BE SET LEVEL AND PARALLEL. THE CONCRETE UNDER THE BEARING DEVICE SHALL BE LEVEL.

8) DURING ANY WELDING, SURFACES IN CONTACT WITH THE ELASTOMER SHALL BE RESTRICTED TO 200 DEGREES FAHRENHEIT. TEMPERATURE SHALL BE DETERMINED BY TEMPERATURE INDICATING WAX PENCILS OR OTHER SUITABLE MEANS.

9) PRIOR TO ORDERING MATERIALS AND STARTING THE WORK, THE CONTRACTOR SHALL SUBMIT A DRILLING AND MORTARING PROPOSAL TO THE ENGINEER FOR APPROVAL, INCLUDING A PREMIXED MORTAR MATERIAL BRAND NAME.

10) THE DRILLED HOLES TO BE MORTARED SHALL BE THOROUGHLY CLEANED, WETTED, AND FREE OF STANDING WATER.

11) THE MORTAR SHALL BE MIXED IN A MECHANICAL MIXER ACCORDING TO THE MANUFACTURER'S RECOMMENDATIONS AND SHALL BE READILY POURABLE SO THAT WHEN POURED IT COMPLETELY FILLS THE REMAINING HOLE CAVITIES. THE PLACEMENT OF MORTAR FOR EACH BEARING SHALL BE CONTINUOUS AND COMPLETE AT ALL HOLE LOCATIONS.

12) ALL EXPOSED MORTAR SHALL BE CURED FOR A PERIOD OF NOT LESS THAN THREE (3) DAYS BY THE WETTED BURLAP METHOD IN ACCORDANCE WITH SECTION 501. CURING SHALL COMMENCE AS SOON AS PRACTICAL AFTER MORTAR PLACEMENT. THE CONTRACTOR SHALL NOT APPLY ANY FORCES TO THE BEARING RETAINERS DURING THE CURING PERIOD.

13) THE BEARING MANUFACTURER SHALL INCLUDE A TEMPERATURE SETTING TABLE ON THE FABRICATION DRAWINGS.

14) BRIDGE SEAT ELEVATIONS ARE BASED ON THE BEARING HEIGHTS SHOWN. PRIOR TO CASTING SUBSTRUCTURE UNITS, THE CONTRACTOR SHALL SUBMIT TO THE ENGINEER THE PROPOSED BEARING HEIGHT AS PROVIDED BY THE MANUFACTURER AND ANY ELEVATION MODIFICATIONS REQUIRED BEFORE CONSTRUCTING SUBSTRUCTURE UNITS.

15) ANCHOR BOLTS FURNISHED FOR BEARING SIDE RETAINERS SHALL CONFORM TO SUBSECTION 714.08. THE BOLTS, NUTS, AND WASHERS FURNISHED SHALL BE TESTED AND CERTIFIED AS MEETING THE REQUIREMENTS OF THE ZINC THICKNESS TEST AS SPECIFIED IN SUBSECTION 714.05, IN ADDITION TO ANY OTHER TEST AND CERTIFICATION REQUIREMENTS.

16) THE WELDS FOR THE SOLE PLATE CONNECTION SHOULD ONLY BE ALONG THE LONGITUDINAL GIRDER AXIS. TRANSVERSE JOINTS SHOULD BE SEALED WITH AN ACCEPTABLE CAULKING MATERIAL.

17) BEARING RETAINER ASSEMBLIES SHALL BE GALVANIZED IN ACCORDANCE WITH SUBSECTION 726.08 OR METALIZED IN ACCORDANCE WITH SUBSECTION 726.09.

18) METALIZING OR GALVANIZING THAT HAS BEEN DAMAGED SHALL BE REPAIRED USING THE METHODS DESCRIBED IN SUBSECTION 726.08.

19) ELASTOMERIC BEARINGS SHALL BE VULCANIZED TO SOLE PLATES.

20) ALL LOADS PROVIDED ARE UNFACTORED.

LOCATION		BRIDGE 43S ABUTMENT 1	BRIDGE 43S ABUTMENT 2	BRIDGE 43N ABUTMENT 3	BRIDGE 43N ABUTMENT 4
FIXED (F) or EXPANSION (EXP)		EXP	EXP	EXP	EXP
QUANTITY REQUIRED		6	6	6	6
DL+SDL (kips)		167.3	167.3	158.9	158.9
LL+IM (kips)		120.3	120.3	119.0	119.0
TOTAL DESIGN REACTION (kips)		287.6	287.6	277.9	277.9
ASKEW ANGLE (degrees)	A	70	70	70	70
ELASTOMERIC PAD (in)	L	13	13	13	13
	W	20	20	20	20
	Ns	7	7	7	7
	Ts	0.075	0.075	0.075	0.075
	Ne	6	6	6	6
	Te	3/8	3/8	3/8	3/8
	Tc	1/8	1/8	1/8	1/8
	Hp	3.025	3.025	3.025	3.025
ANCHOR BOLTS (in)	PER BRG.	4	4	4	4
	DIA.a	1 1/2	1 1/2	1 1/2	1 1/2
	Ha	21	21	21	21
ANCHOR BOLT HOLES (in)	DIA.h	1 5/8	1 5/8	1 5/8	1 5/8
	Ez	3	3	3	3
	Ex	3 1/4	3 1/4	3 1/4	3 1/4
WELD SIZE (in)	F	5/16	5/16	5/16	5/16
SOLE PLATE (in)	Ws	22	22	22	22
	Ls	15	15	15	15
	T1	1 1/2	1 1/2	1 1/2	1 5/8
	T2	1 11/16	1 11/16	1 1/2	1 1/2
RETAINER (in)	Lr	15	15	15	15
	Or	5/8	5/8	5/8	5/8
GIRDER EXTENSION (in)	EXT	32	32	32	32
BEARING HEIGHT (in)	Ht	4.619	4.619	4.525	4.588

PROJECT NAME: HARTFORD
PROJECT NUMBER: IM 091-2(79)

FILE NAME: sl2al32bearings.dgn
PROJECT LEADER: K. HIGGINS
DESIGNED BY: R. KLINEFELTER
BEARING NOTES

PLOT DATE: 15-DEC-2014
DRAWN BY: R. KLINEFELTER
CHECKED BY: W. LAMMER

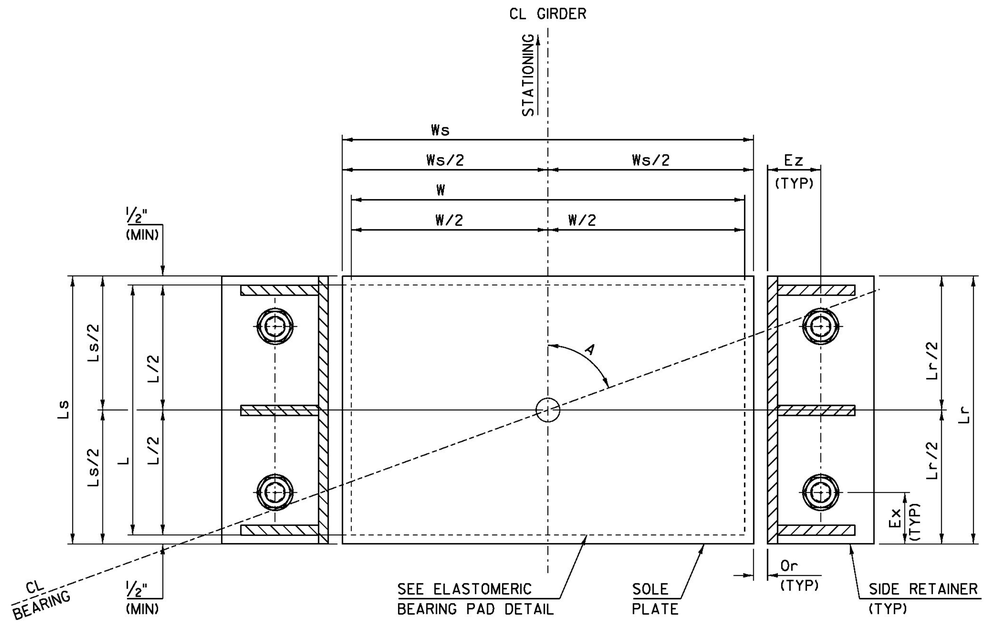

EXPANSION BEARING TYPICAL PLAN
(NTS)

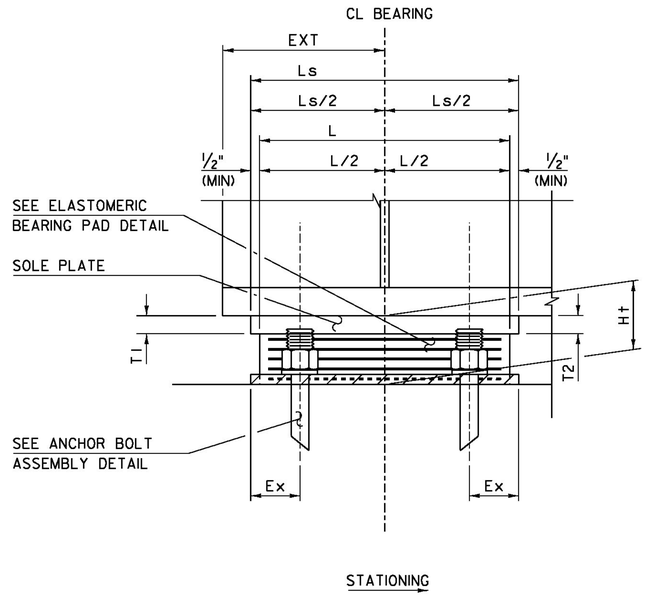

EXPANSION BEARING TYPICAL SECTION
(NTS)

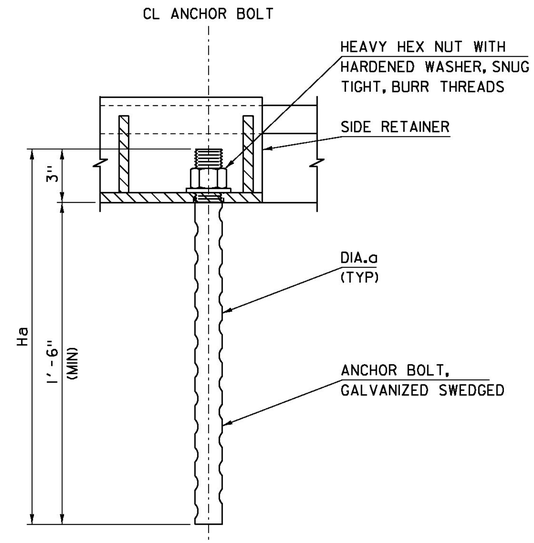

ANCHOR BOLT ASSEMBLY DETAIL
(NTS)

NOTES:
1. SECTION SHOWN AT BEGIN BRIDGE. ACTUAL LOCATION MAY VARY.
2. T2 IS ALWAYS UP STATION OF T1.
3. VERTICAL LEG AND PLATES REMOVED FOR CLARITY.

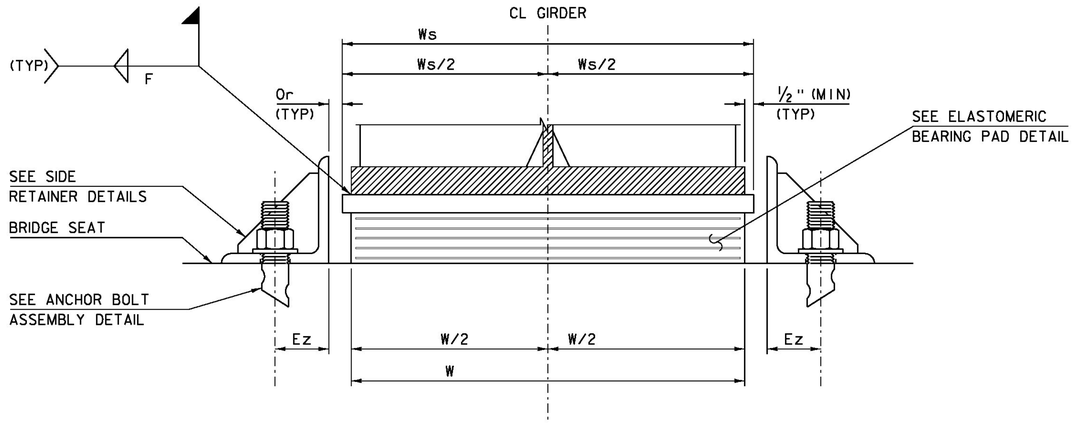

EXPANSION BEARING TYPICAL ELEVATION
(NTS)

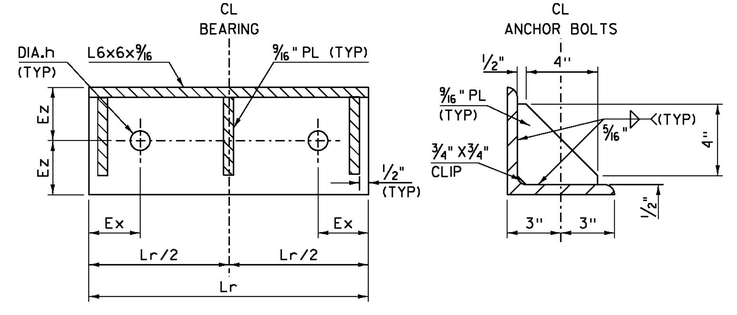

SIDE RETAINER DETAILS
(NTS)

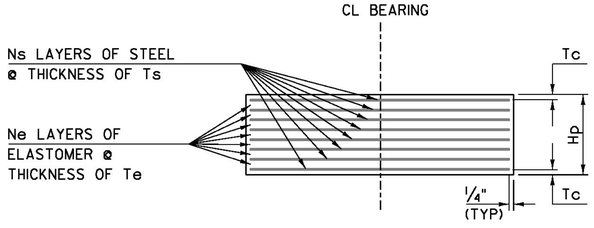

ELASTOMERIC BEARING PAD DETAIL
(NTS)

NOTE:
1. SEE BEARING TABLE ON BEARING NOTES SHEET FOR DIMENSIONS.

PROJECT NAME: HARTFORD	
PROJECT NUMBER: IM 091-2(79)	
FILE NAME: sl2al32bearings.dgn	PLOT DATE: 15-DEC-2014
PROJECT LEADER: K. HIGGINS	DRAWN BY: R. KLINEFELTER
DESIGNED BY: R. KLINEFELTER	CHECKED BY: W. LAMMER
BEARING DETAILS	SHEET 96 OF 166

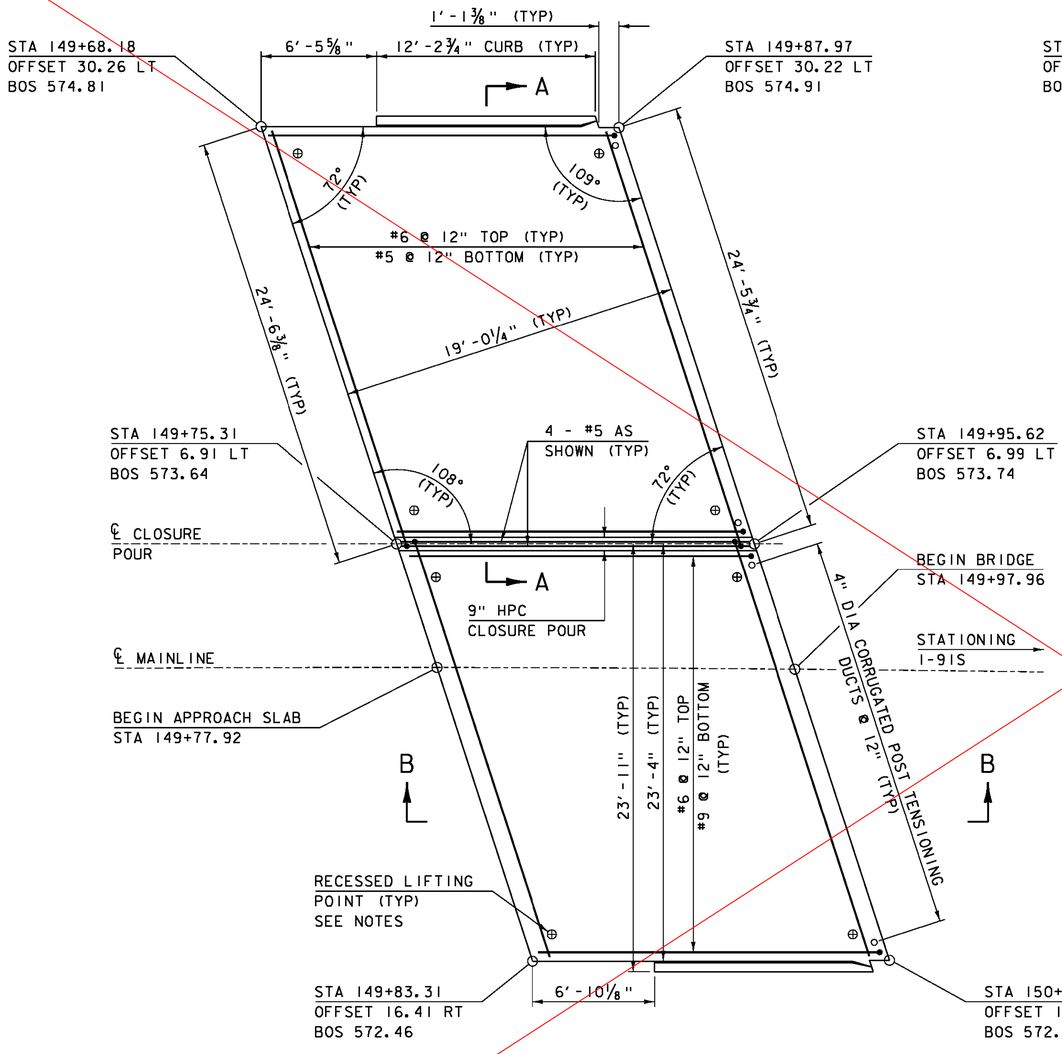

APPROACH SLAB 1 PLAN

SCALE 1/4" = 1'-0"

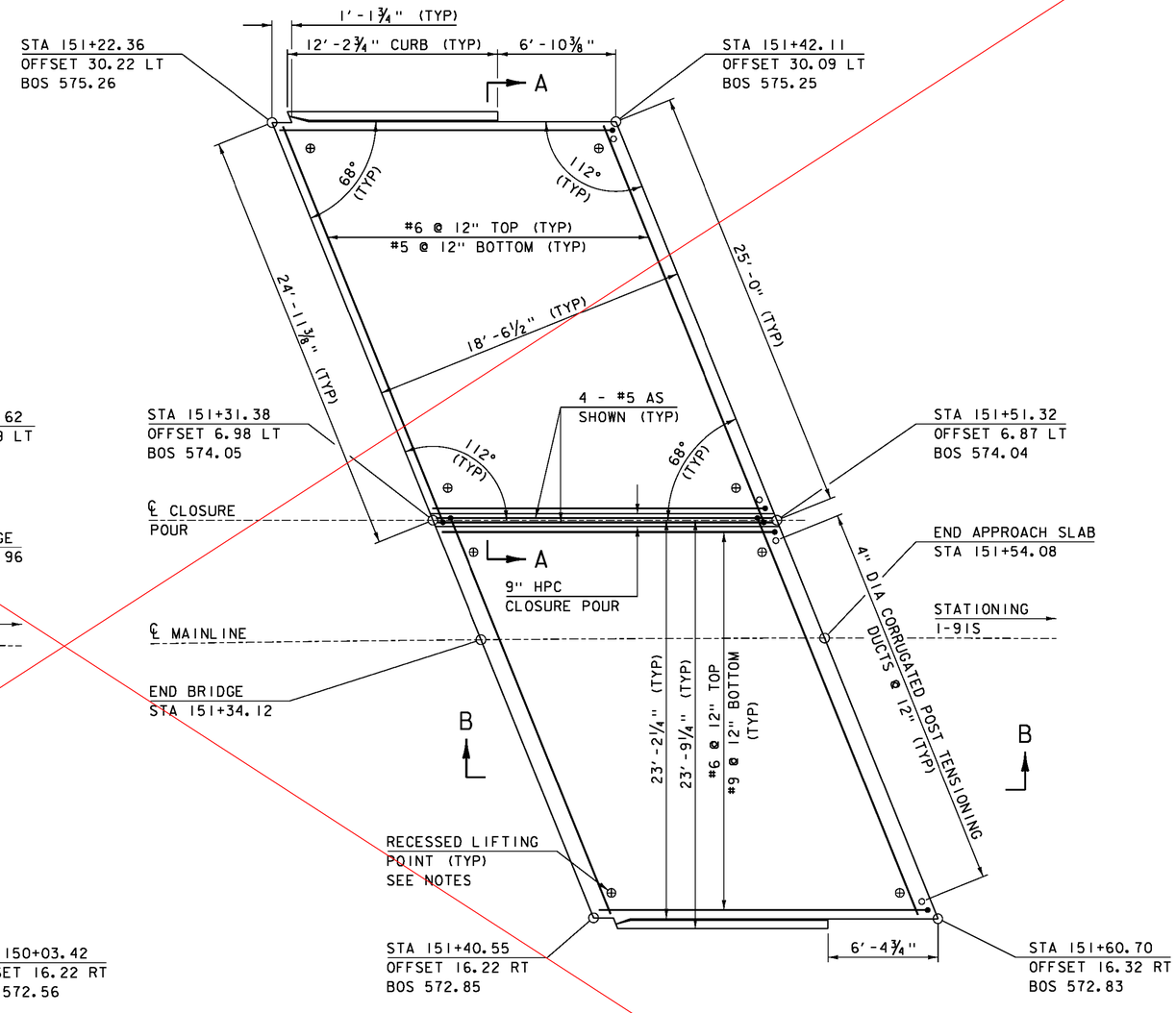

APPROACH SLAB 2 PLAN

SCALE 1/4" = 1'-0"

NOTES:

1) ALL APPROACH SLAB REINFORCING STEEL SHALL BE LEVEL II OR HIGHER.
2) BOS = BOTTOM OF SLAB
3) LIFTING POINTS SAHLL BE DESIGNED BY OTHERS AND CALCULATIONS INCLUDED WITH SUBMITTAL.

SEE SHEET 97-R

NOTE:

NF = NEAR FACE
FF = FAR FACE
EF = EACH FACE
3" CLEAR, UNLESS OTHERWISE SPECIFIED ON THE PLANS.
2'-2" BAR LAP UNLESS OTHERWISE SPECIFIED ON THE PLANS.

PROJECT NAME:	HARTFORD
PROJECT NUMBER:	IM 091-2(79)
FILE NAME: sl2al32apslabs_43S.dgn	PLOT DATE: 15-DEC-2014
PROJECT LEADER: K. HIGGINS	DRAWN BY: K. FRIEDLAND
DESIGNED BY: G. LAROCHE	CHECKED BY: W. LAMMER
APPROACH SLAB DETAILS 43S	SHEET 97 OF 166

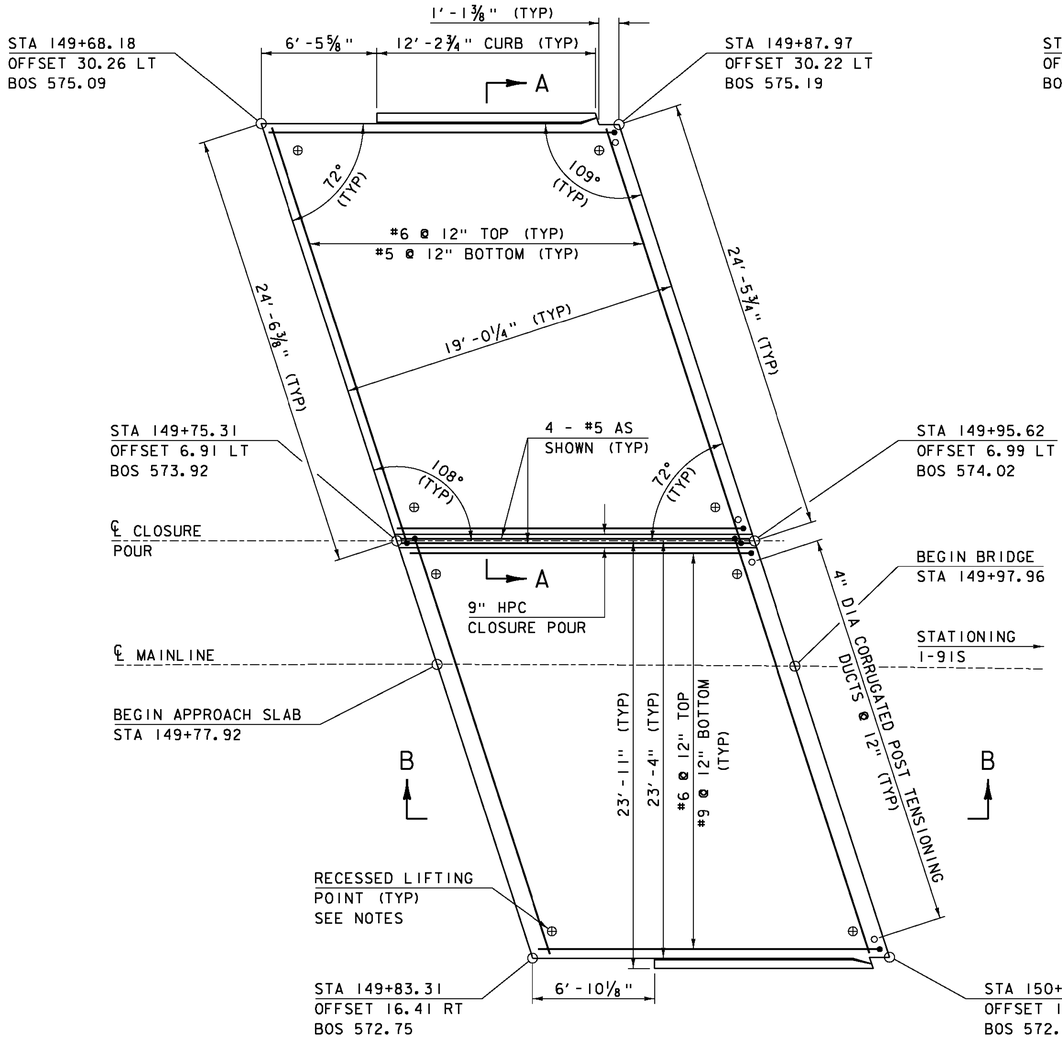

APPROACH SLAB 1 PLAN

SCALE ¼" = 1'-0"

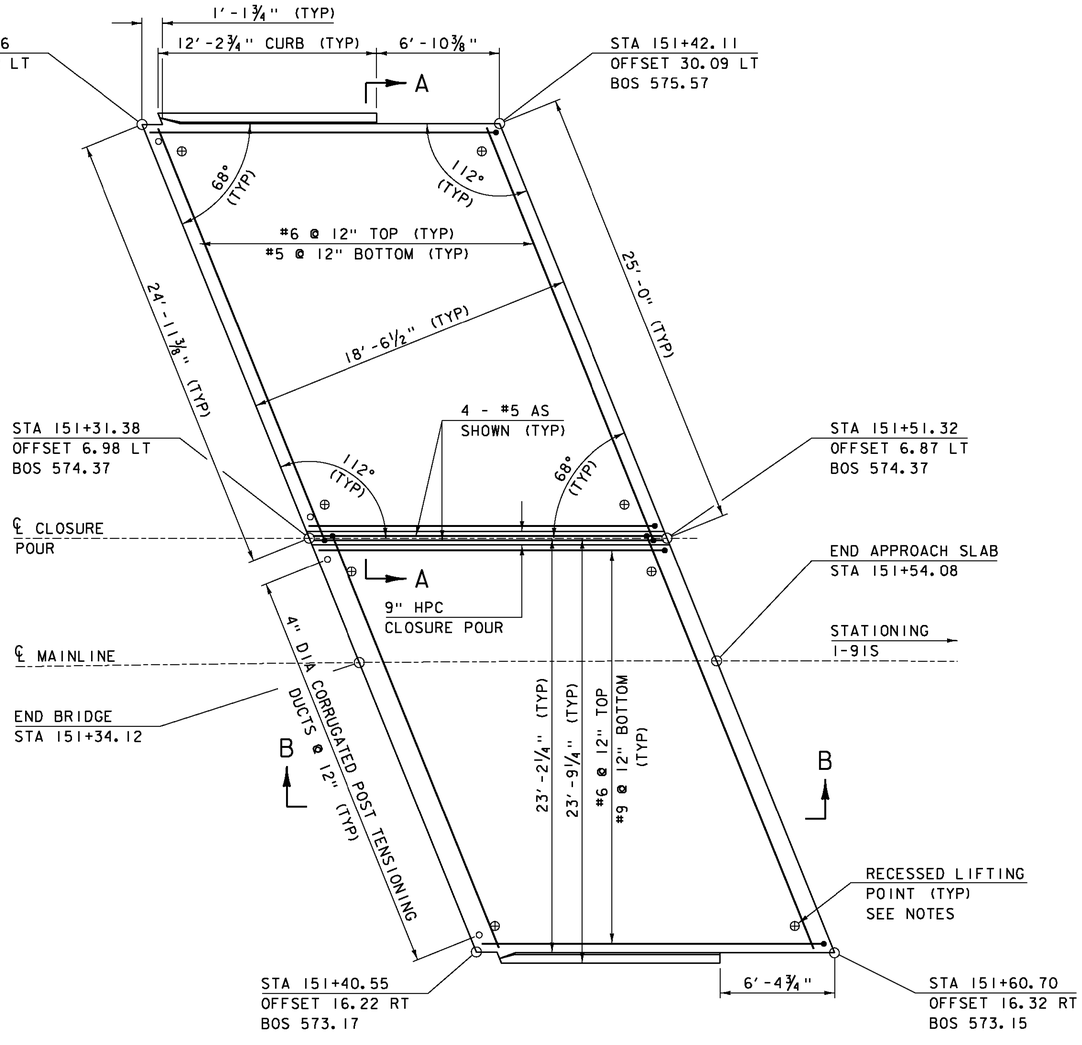

APPROACH SLAB 2 PLAN

SCALE ¼" = 1'-0"

NOTES:

1) ALL APPROACH SLAB REINFORCING STEEL SHALL BE LEVEL II OR HIGHER.

2) BOS = BOTTOM OF SLAB

3) LIFTING POINTS SAHLL BE DESIGNED BY OTHERS AND CALCULATIONS INCLUDED WITH SUBMITTAL.

NOTE:

NF = NEAR FACE
FF = FAR FACE
EF = EACH FACE
3" CLEAR, UNLESS OTHERWISE SPECIFIED ON THE PLANS.
2'-2" BAR LAP UNLESS OTHERWISE SPECIFIED ON THE PLANS.

REVISION	DATE	DESCRIPTION	BY
1	09-09-2015	REVISED DUCT LOCATIONS AND LONGITUDINAL REINFORCING	JTS
2	09-09-2015	REVISED BOS ELEVATIONS	JTS

PROJECT NAME: HARTFORD
PROJECT NUMBER: IM 091-2(79)

FILE NAME: sl2al32apslabs_43S.dgn
PROJECT LEADER: K. HIGGINS
DESIGNED BY: G. LAROCHE
APPROACH SLAB DETAILS 43S

PLOT DATE: 09-SEP-2015
DRAWN BY: K. FRIEDLAND
CHECKED BY: W. LAMMER
SHEET 97R OF 166

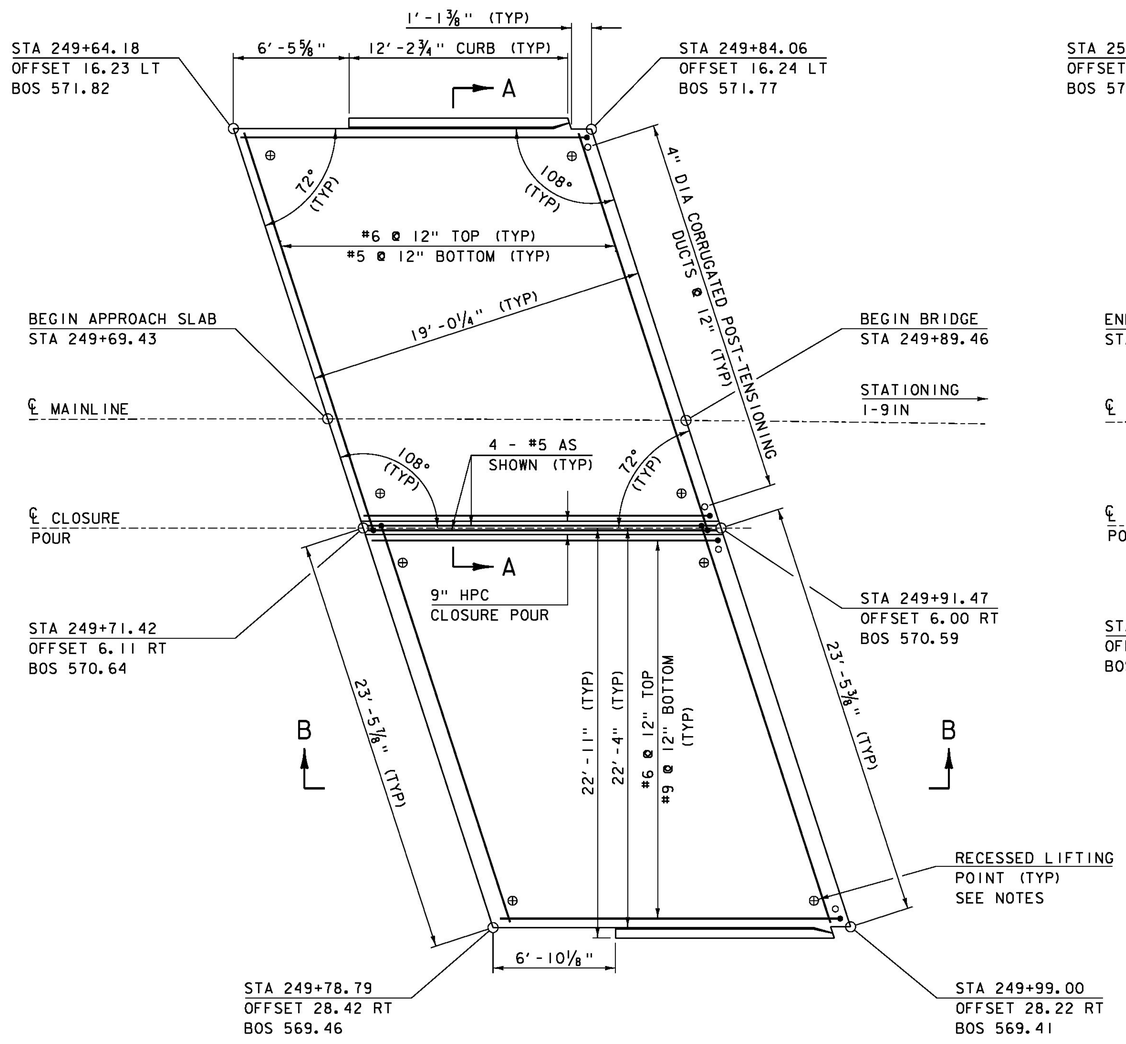

APPROACH SLAB 3 PLAN

SCALE 1/4" = 1'-0"

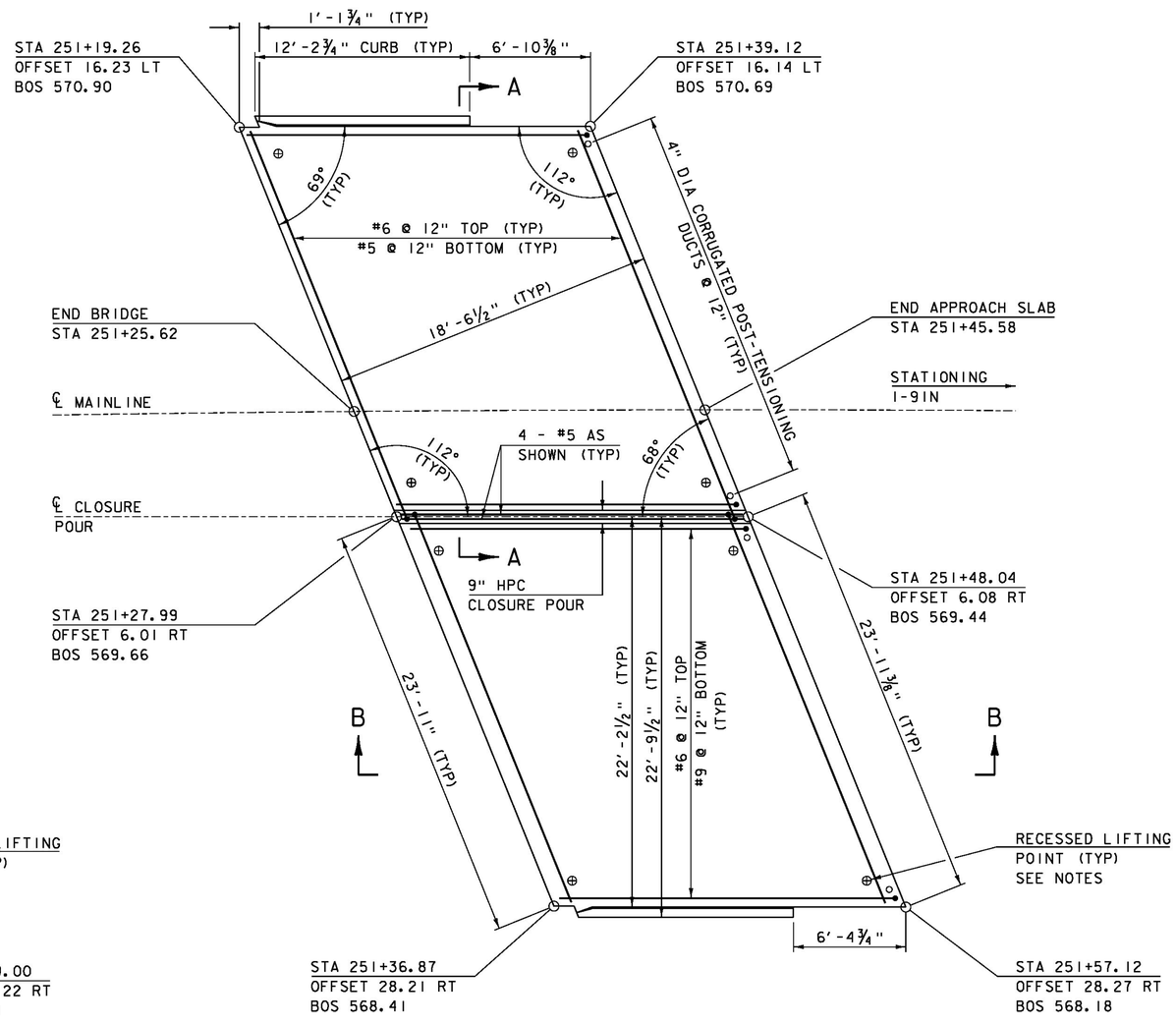

APPROACH SLAB 4 PLAN

SCALE 1/4" = 1'-0"

NOTES:

1) ALL APPROACH SLAB REINFORCING STEEL SHALL BE LEVEL II OR HIGHER.

2) BOS = BOTTOM OF SLAB

3) LIFTING POINTS SAHLL BE DESIGNED BY OTHERS AND CALCULATIONS INCLUDED WITH SUBMITTAL.

NOTE:

NF = NEAR FACE
FF = FAR FACE
EF = EACH FACE
3" CLEAR, UNLESS OTHERWISE SPECIFIED ON THE PLANS.
2'-2" BAR LAP UNLESS OTHERWISE SPECIFIED ON THE PLANS.

PROJECT NAME: HARTFORD
PROJECT NUMBER: IM 091-2(79)

FILE NAME: sl2al32apslabs_43N.dgn
PROJECT LEADER: K. HIGGINS
DESIGNED BY: G. LAROCHE
APPROACH SLAB DETAILS 43N

PLOT DATE: 15-DEC-2014
DRAWN BY: K. FRIEDLAND
CHECKED BY: W. LAMMER
SHEET 98 OF 166

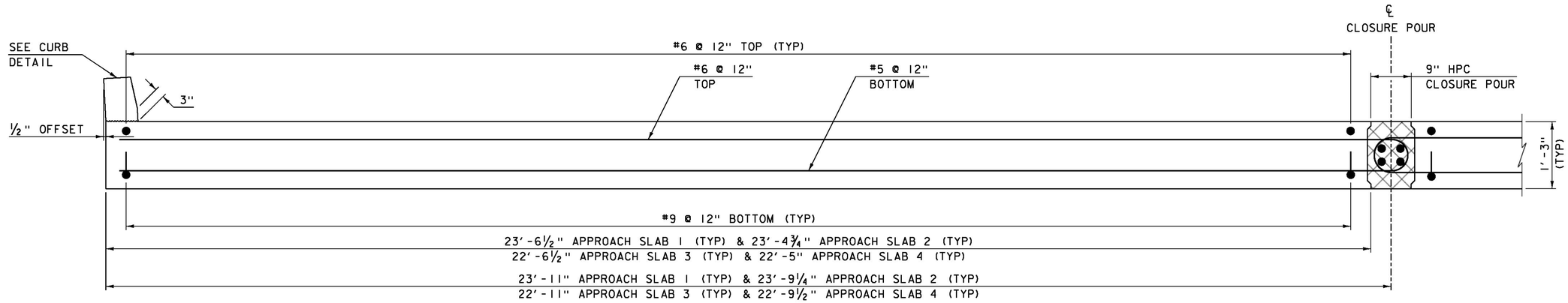

SECTION A-A

SCALE 1" = 1'-0"

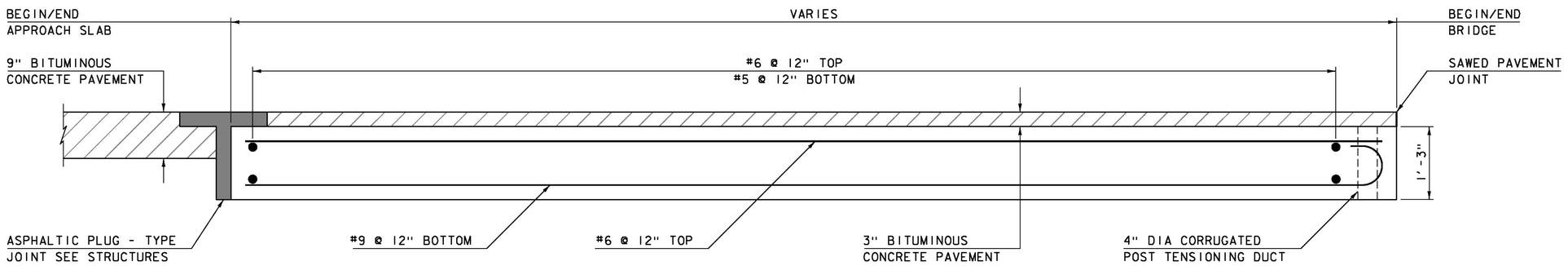

SECTION B-B

SCALE 1" = 1'-0"

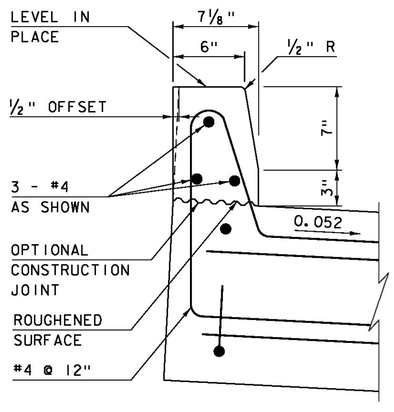

CURB DETAIL

SCALE 2" = 1'-0"

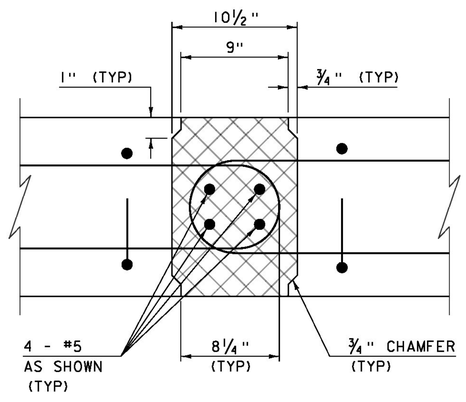

JOINT DETAIL SECTION

SCALE 2" = 1'-0"

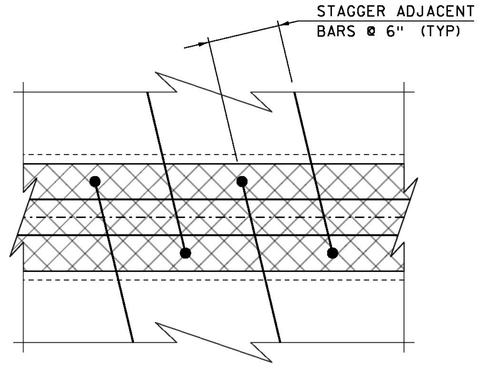

JOINT DETAIL PLAN

SCALE 2" = 1'-0"

NOTE:

NF = NEAR FACE
FF = FAR FACE
EF = EACH FACE
▲ = CUT TO FIT IN FIELD
3" CLEAR, UNLESS OTHERWISE SPECIFIED ON THE PLANS.
2'-2" BAR LAP UNLESS OTHERWISE SPECIFIED ON THE PLANS.

NOTES:

1) ALL APPROACH SLAB REINFORCING STEEL SHALL BE LEVEL II OR HIGHER.

PROJECT NAME: HARTFORD
PROJECT NUMBER: IM 091-2(79)

FILE NAME: sl2al32apslabs_43S.dgn
PROJECT LEADER: K. HIGGINS
DESIGNED BY: G. LAROCHE
APPROACH SLAB DETAILS

PLOT DATE: 15-DEC-2014
DRAWN BY: K. FRIEDLAND
CHECKED BY: W. LAMMER
SHEET 99 OF 166

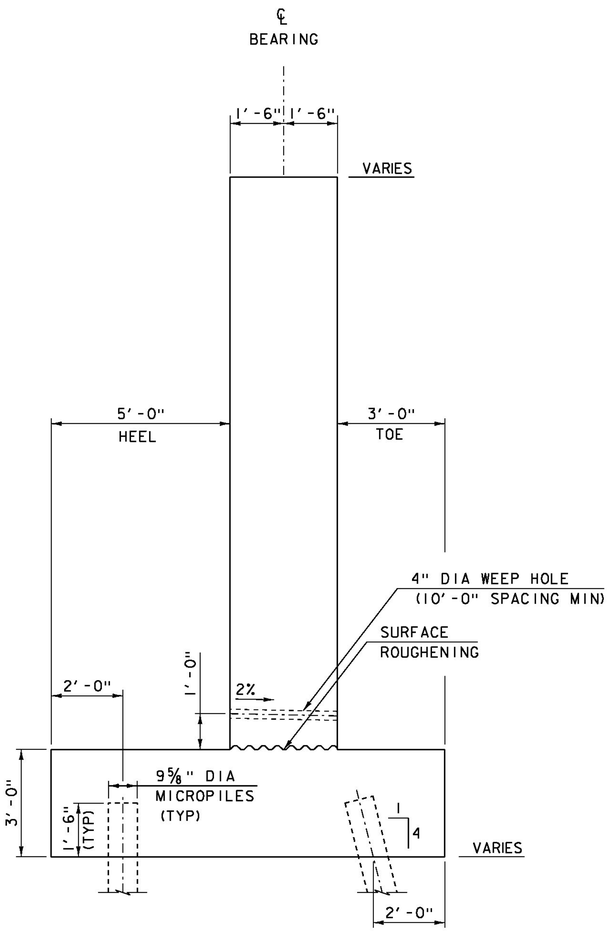

ABUTMENT 1-3 TYPICAL

SCALE ½"=1'-0"

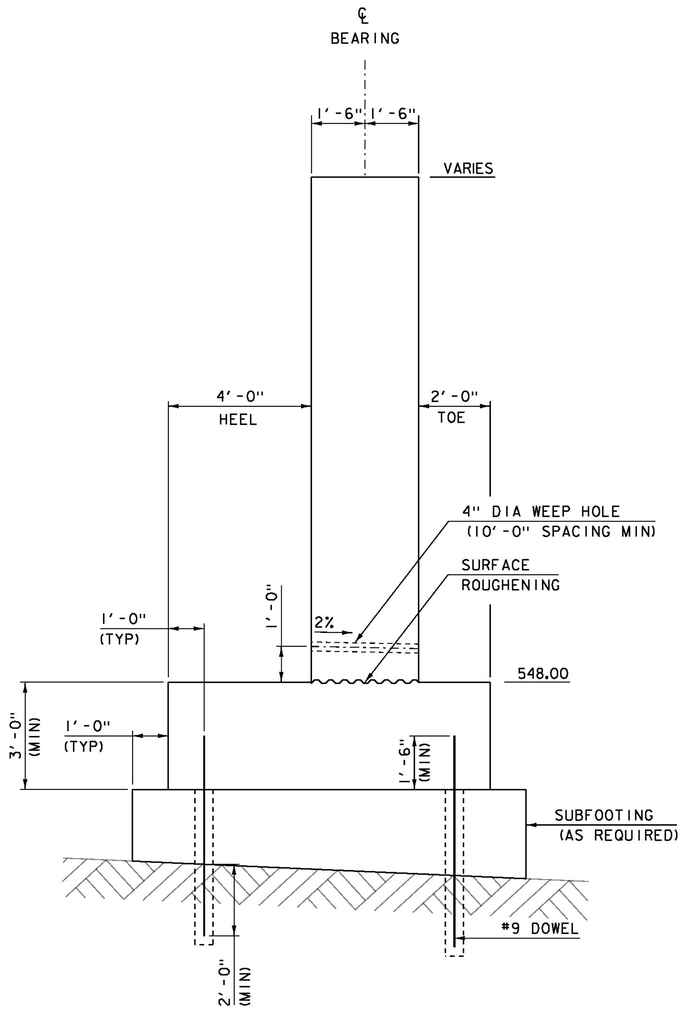

ABUTMENT 4 TYPICAL

SCALE ½"=1'-0"

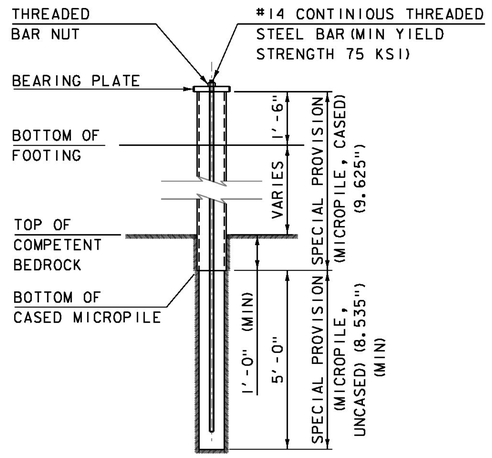

PLUMB MICROPILE ELEVATION

SCALE: ½" = 1'-0"

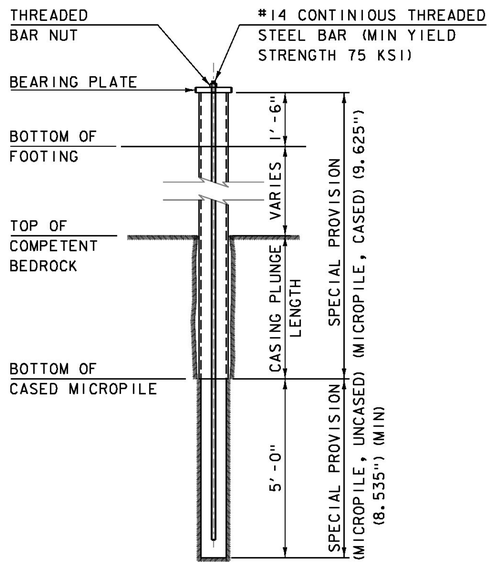

BATTERED MICROPILE ELEVATION

SCALE: ½" = 1'-0"

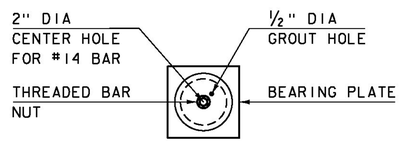

MICROPILE PLAN

SCALE: 1" = 1'-0"

	PILE TYPE	CASING PLUNGE LENGTH IN COMPETENT ROCK	CASING SEATED INTO COMPETENT ROCK	BEARING PLATE SIZE
ABUT 1	FRONT ROW (BATTERED)	3.0 FT	N/A	1¾" X 1' X 1'
	BACK ROW (PLUMB)	N/A	1 FT	
ABUT 2	FRONT ROW (BATTERED)	4.5 FT	N/A	1¾" X 1'1" X 1'1"
	BACK ROW (PLUMB)	N/A	1 FT	
ABUT 3	FRONT ROW (BATTERED)	4.0 FT	N/A	1¾" X 1' X 1'
	BACK ROW (PLUMB)	N/A	1 FT	

PROJECT NAME: HARTFORD
PROJECT NUMBER: IM 091-2(79)

FILE NAME: s12a132sub_abl.dgn
PROJECT LEADER: K. HIGGINS
DESIGNED BY: G. LAROCHE
ABUTMENT TYPICALS

PLOT DATE: 15-DEC-2014
DRAWN BY: J. SALVATORI
CHECKED BY: W. LAMMER
SHEET 100 OF 166

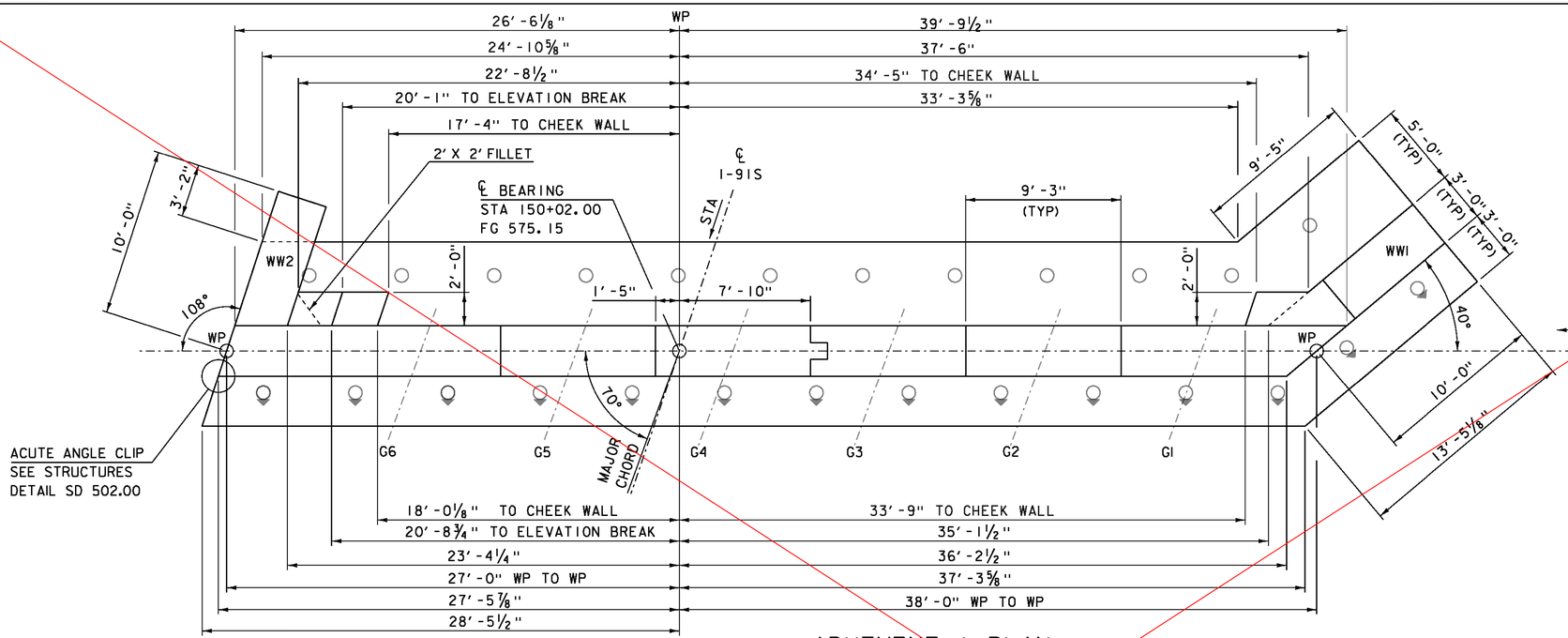

ABUTMENT 1 PLAN

SCALE: 1/4" = 1'-0"

BRIDGE SEAT ELEVATIONS

GIRDER	ELEVATION
G1	570.81
G2	570.37
G3	569.92
G4	569.47
G5	569.03
G6	568.58

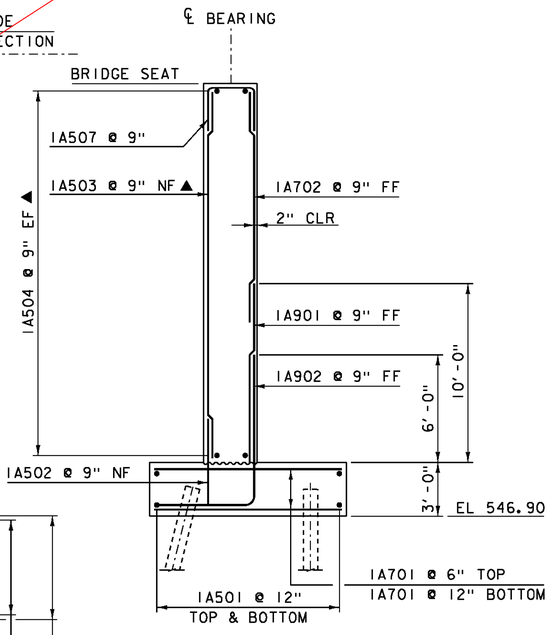

ABUTMENT 1 REINFORCING AT BRIDGE SEAT

SCALE: 1/4" = 1'-0"

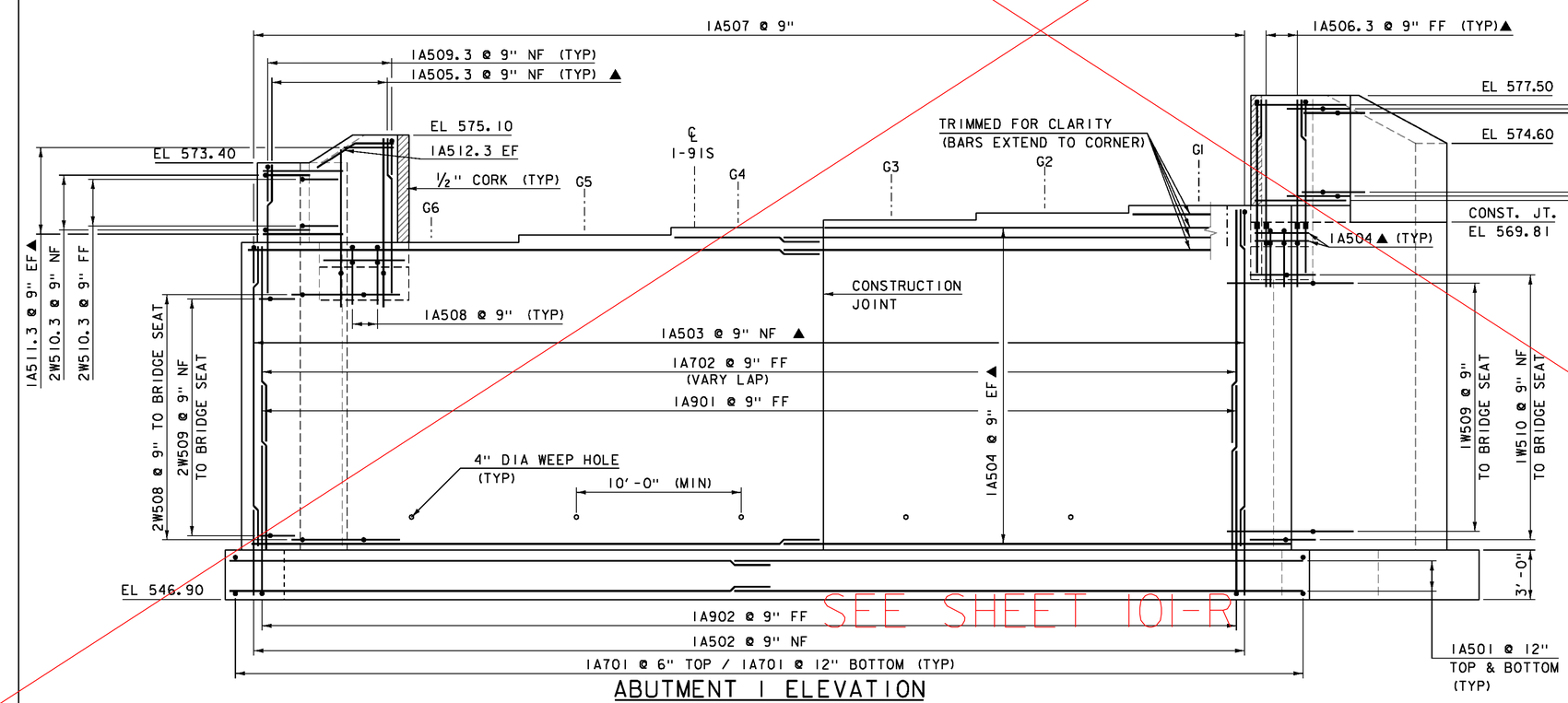

SEE SHEET 101-R

ABUTMENT 1 ELEVATION

SCALE: 1/4" = 1'-0"

NOTE:

NF = NEAR FACE
FF = FAR FACE
EF = EACH FACE
▲ = CUT TO FIT IN FIELD
▬ = MECHANICAL CONNECTOR
3" CLEAR, UNLESS OTHERWISE SPECIFIED ON THE PLANS.
2'-2" LAP FOR #5 BAR
2'-7" LAP FOR #6 BAR
3'-5" LAP FOR #7 BAR
4'-6" LAP FOR #8 BAR

PROJECT NAME: HARFORD
PROJECT NUMBER: IM 091-2(79)

FILE NAME: sl2al32sub_abl.dgn
PROJECT LEADER: K. HIGGINS
DESIGNED BY: G. LAROCHE
ABUTMENT 1

PLOT DATE: 15-DEC-2014
DRAWN BY: J. SALVATORI
CHECKED BY: G. LAROCHE
SHEET 101 OF 166

BRIDGE SEAT ELEVATIONS

GIRDER	ELEVATION
GI	570.81
G2	570.37
G3	569.92
G4	569.47
G5	569.03
G6	568.58

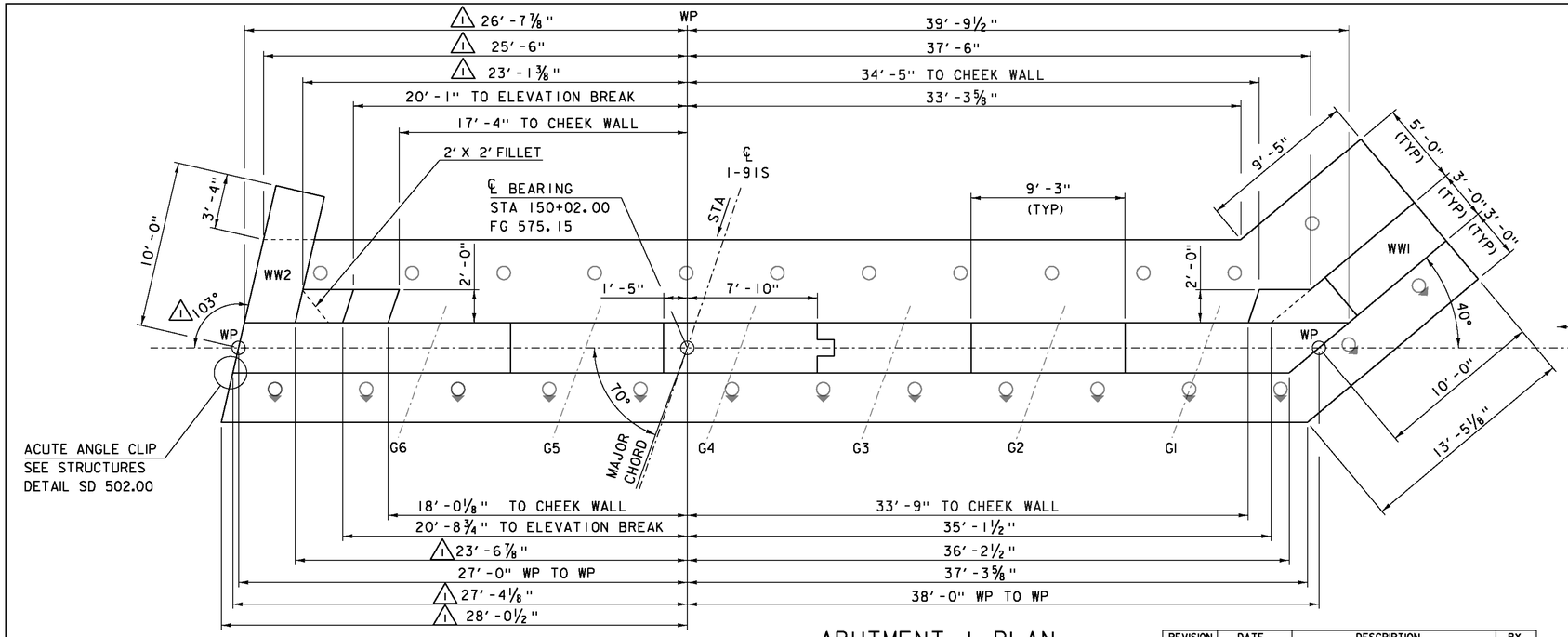

ABUTMENT I PLAN

SCALE: 1/4" = 1'-0"

REVISION	DATE	DESCRIPTION	BY
1	04-23-2015	WINGWALL 2 ROTATED 5 DEGREES	JS

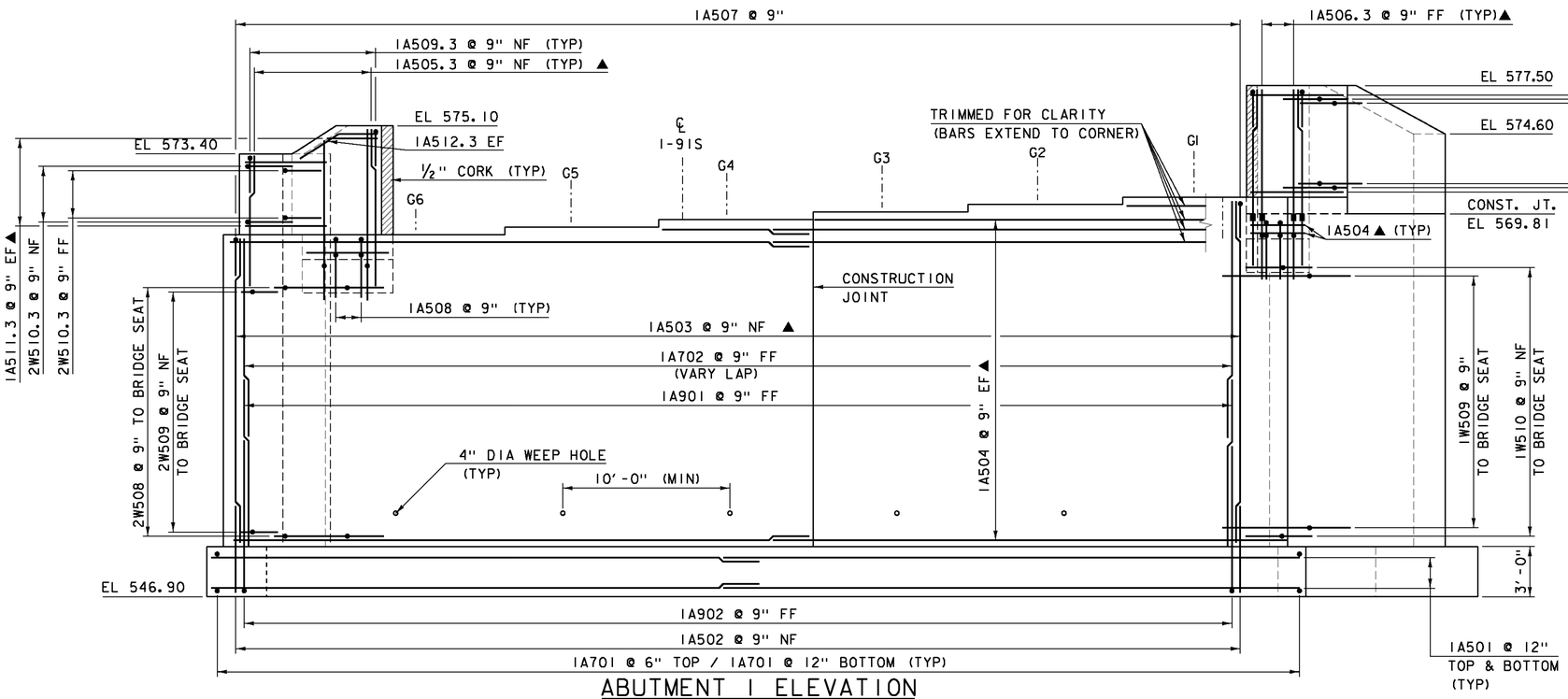

ABUTMENT I ELEVATION

SCALE: 1/4" = 1'-0"

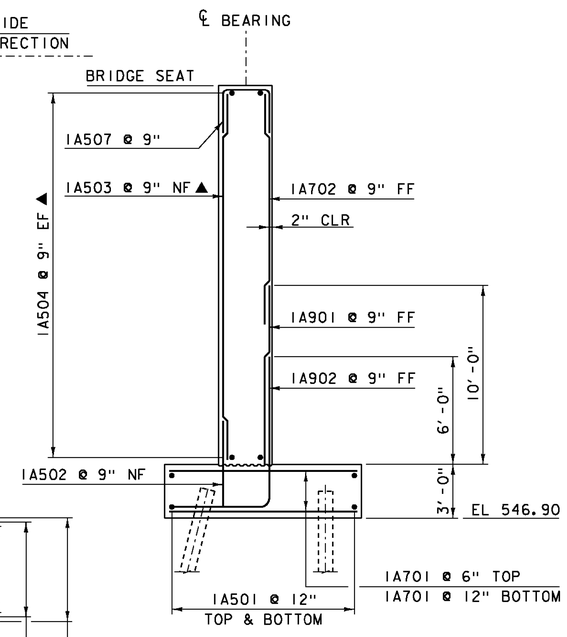

ABUTMENT I REINFORCING AT BRIDGE SEAT

SCALE: 1/4" = 1'-0"

NOTE:

NF = NEAR FACE
FF = FAR FACE
EF = EACH FACE
▲ = CUT TO FIT IN FIELD
▬ = MECHANICAL CONNECTOR
3" CLEAR, UNLESS OTHERWISE SPECIFIED ON THE PLANS.
2'-2" LAP FOR #5 BAR
2'-7" LAP FOR #6 BAR
3'-5" LAP FOR #7 BAR
4'-6" LAP FOR #8 BAR

PROJECT NAME: HARFORD
PROJECT NUMBER: IM 091-2(79)

FILE NAME: sl2al32sub_abl.dgn
PROJECT LEADER: K. HIGGINS
DESIGNED BY: G. LAROCHE
ABUTMENT I

PLOT DATE: 23-APR-2015
DRAWN BY: J. SALVATORI
CHECKED BY: G. LAROCHE
SHEET 101R OF 166

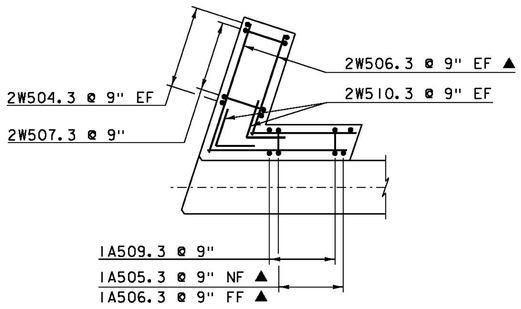

WINGWALL 2 CORNER DETAIL ABOVE BRIDGE SEAT

SCALE: 1/4" = 1'-0"

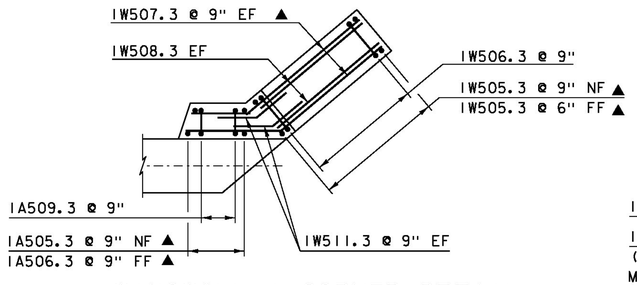

WINGWALL 1 CORNER DETAIL ABOVE BRIDGE SEAT

SCALE: 1/4" = 1'-0"

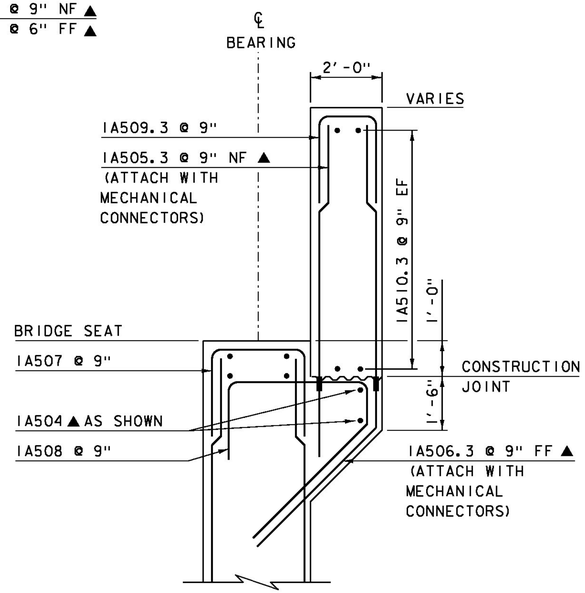

ABUTMENT 1 CHEEK WALL REINFORCING @ WW 2

SCALE: 1/4" = 1'-0"

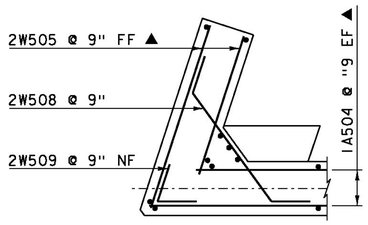

WINGWALL 2 CORNER DETAIL BELOW BRIDGE SEAT

SCALE: 1/4" = 1'-0"

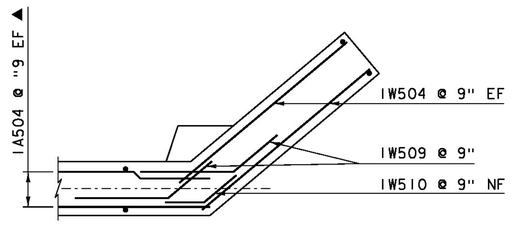

WINGWALL 1 CORNER DETAIL BELOW BRIDGE SEAT

SCALE: 1/4" = 1'-0"

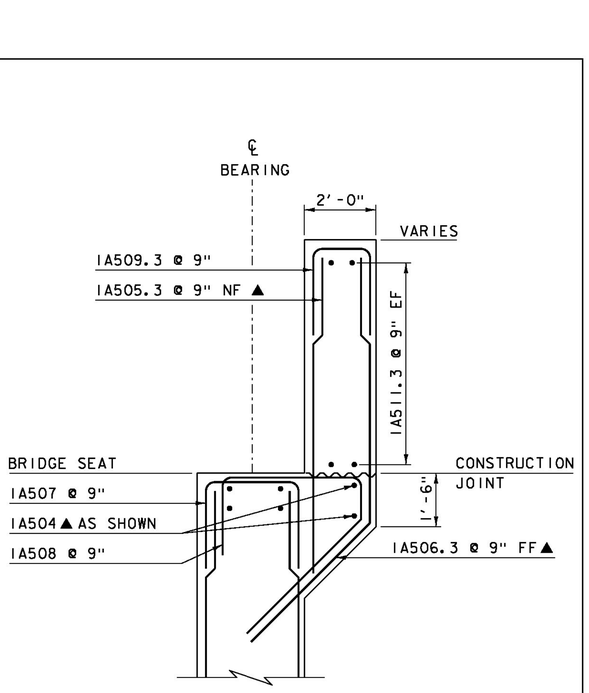

ABUTMENT 1 CHEEK WALL REINFORCING @ WW 1

SCALE: 1/2" = 1'-0"

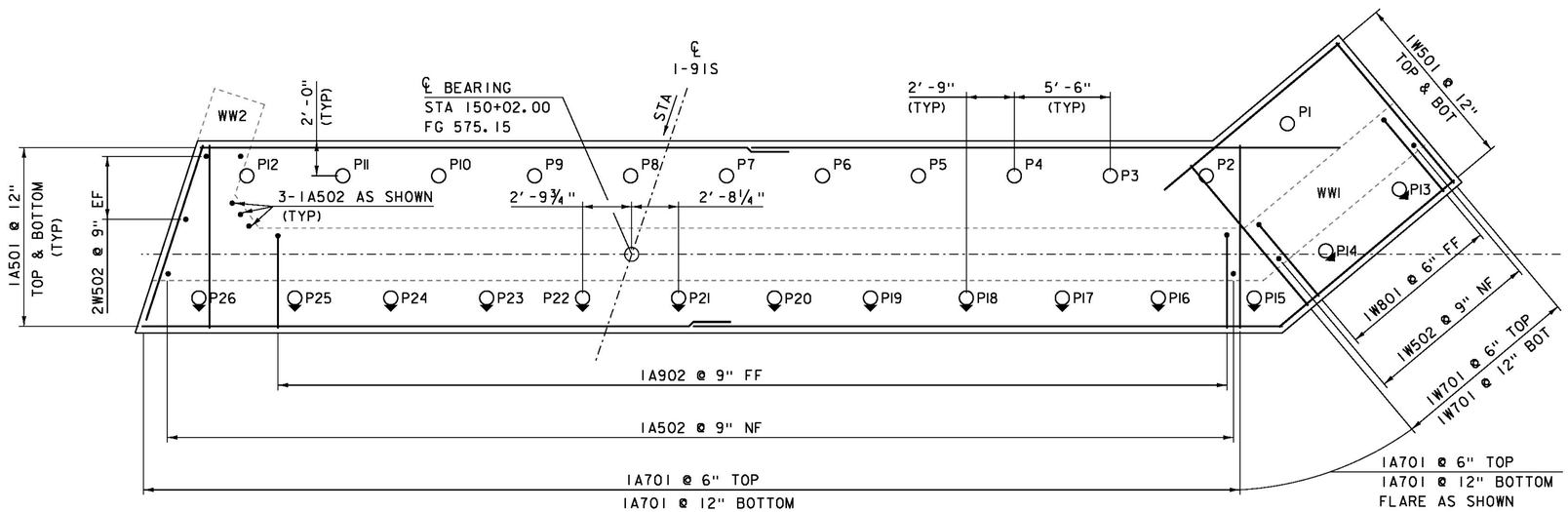

ABUTMENT 1 FOOTING PLAN

SCALE: 1/4" = 1'-0"

NOTE:

NF = NEAR FACE
FF = FAR FACE
EF = EACH FACE
▲ = CUT TO FIT IN FIELD
▬ = MECHANICAL CONNECTOR
3" CLEAR, UNLESS OTHERWISE SPECIFIED ON THE PLANS.
2'-2" LAP FOR #5 BAR
2'-7" LAP FOR #6 BAR
3'-5" LAP FOR #7 BAR
4'-6" LAP FOR #8 BAR

PROJECT NAME: HARFORD
PROJECT NUMBER: IM 091-2(79)

FILE NAME: s12a132sub_ab1.dgn
PROJECT LEADER: K. HIGGINS
DESIGNED BY: G. LAROCHE
ABUTMENT 1 FOOTING

PLOT DATE: 15-DEC-2014
DRAWN BY: J. SALVATORI
CHECKED BY: G. LAROCHE
SHEET 102 OF 166

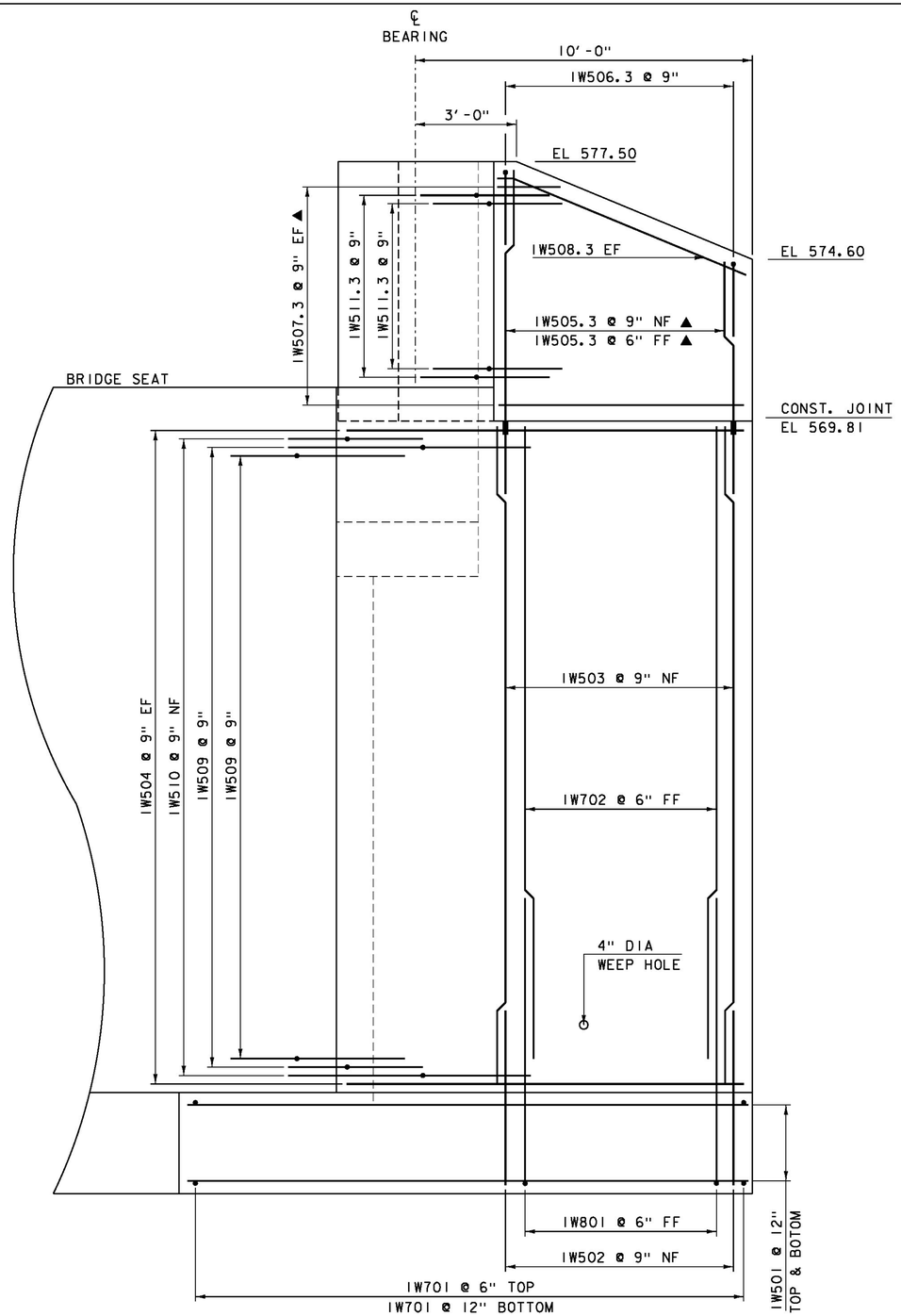

WINGWALL 1 ELEVATION

SCALE: ½" = 1'-0"

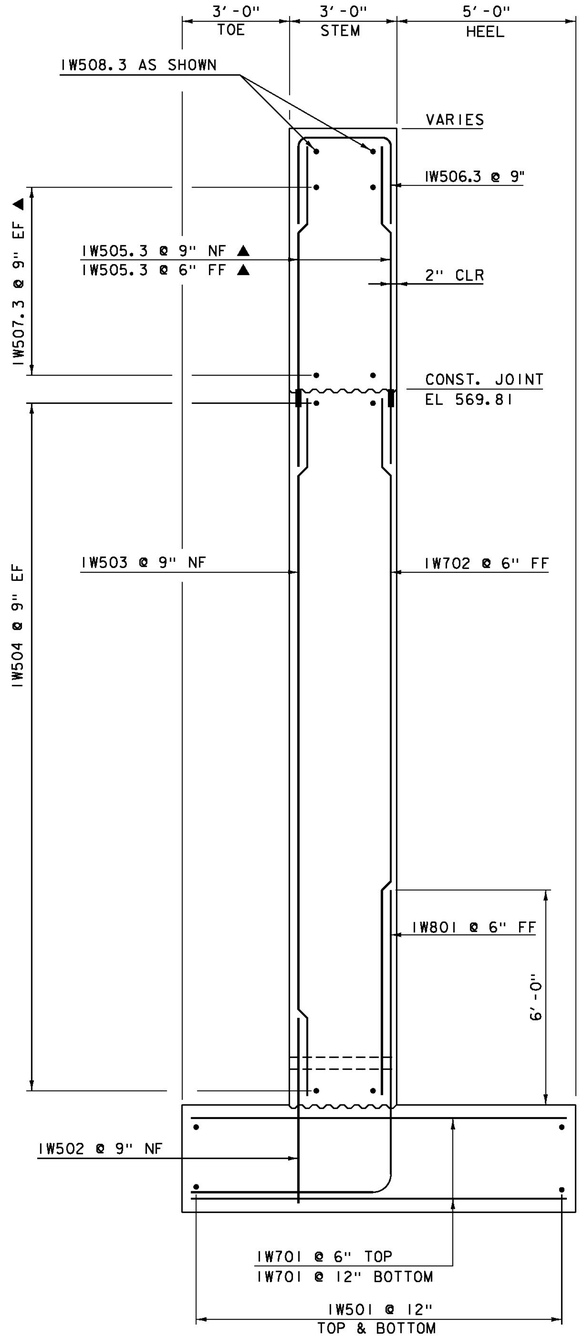

WINGWALL 1 TYPICAL

SCALE: ½" = 1'-0"

NOTE:

NF = NEAR FACE
FF = FAR FACE
EF = EACH FACE
▲ = CUT TO FIT IN FIELD
▬ = MECHANICAL CONNECTOR
3" CLEAR, UNLESS OTHERWISE SPECIFIED ON THE PLANS.
2'-2" LAP FOR #5 BAR
2'-7" LAP FOR #6 BAR
3'-5" LAP FOR #7 BAR
4'-6" LAP FOR #8 BAR

PROJECT NAME:	HARTFORD
PROJECT NUMBER:	IM 091-2(79)
FILE NAME: s12a132sub_abl.dgn	PLOT DATE: 15-DEC-2014
PROJECT LEADER: K. HIGGINS	DRAWN BY: J. SALVATORI
DESIGNED BY: G. LAROCHE	CHECKED BY: G. LAROCHE
WINGWALL 1 DETAILS	SHEET 103 OF 166

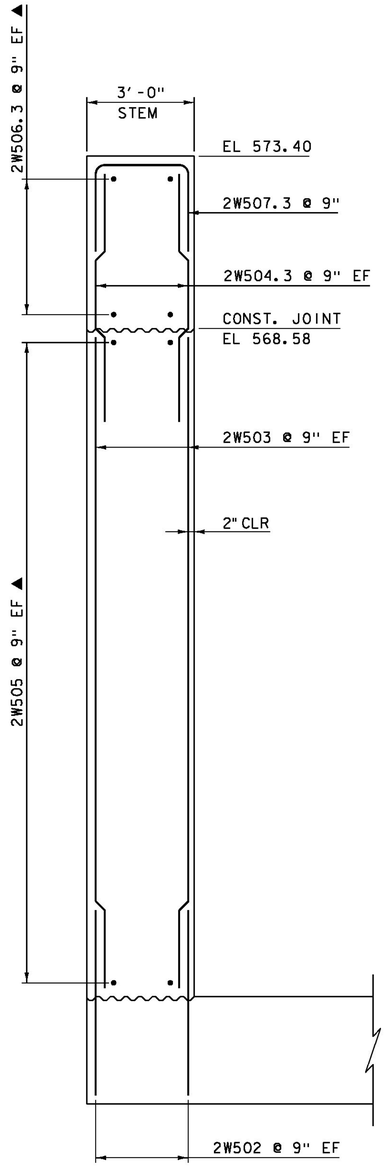

WINGWALL 2 TYPICAL

SCALE: ½" = 1'-0"

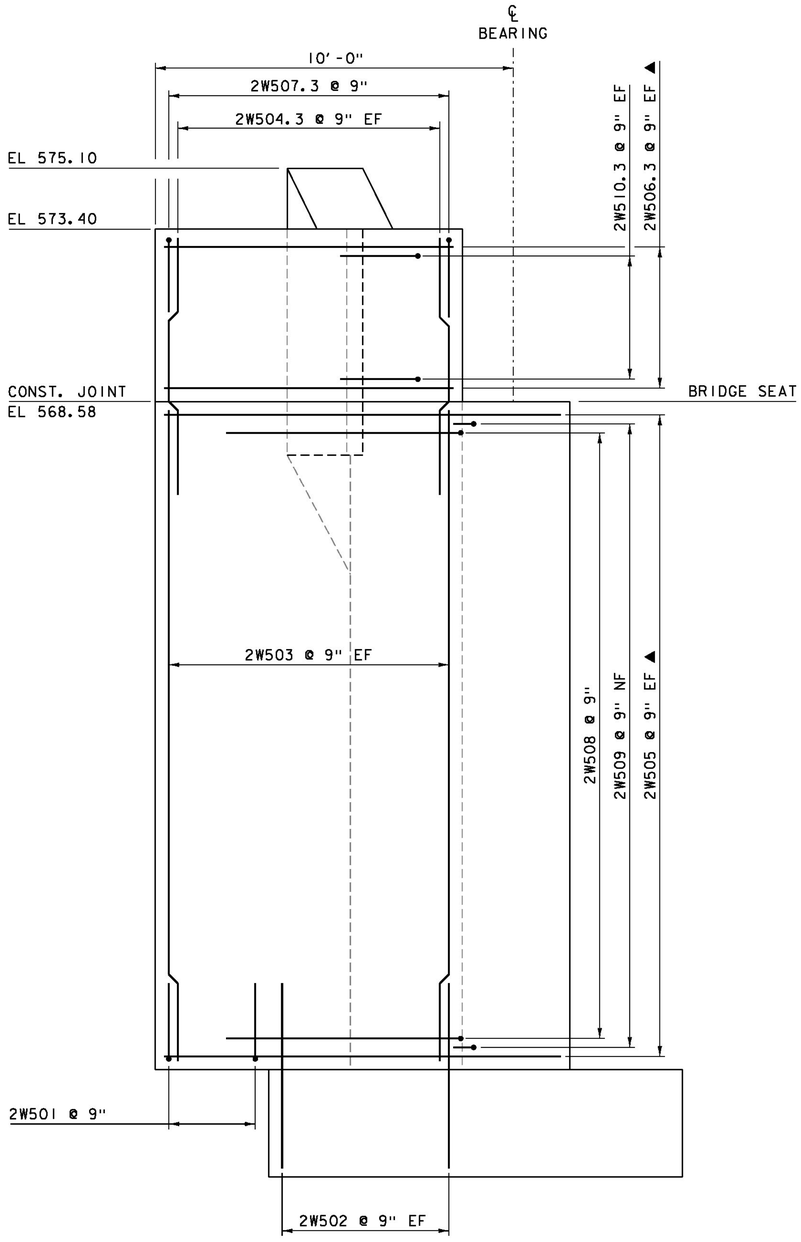

WINGWALL 2 ELEVATION

SCALE: ½" = 1'-0"

NOTE:

NF = NEAR FACE
FF = FAR FACE
EF = EACH FACE
▲ = CUT TO FIT IN FIELD
▬ = MECHANICAL CONNECTOR
3" CLEAR, UNLESS OTHERWISE SPECIFIED ON THE PLANS.
2'-2" LAP FOR #5 BAR
2'-7" LAP FOR #6 BAR
3'-5" LAP FOR #7 BAR
4'-6" LAP FOR #8 BAR

PROJECT NAME:	HARTFORD
PROJECT NUMBER:	IM 091-2(79)
FILE NAME: sl2al32sub_abl.dgn	PLOT DATE: 15-DEC-2014
PROJECT LEADER: K. HIGGINS	DRAWN BY: J. SALVATORI
DESIGNED BY: G. LAROCHE	CHECKED BY: G. LAROCHE
WINGWALL 2 DETAILS	SHEET 104 OF 166

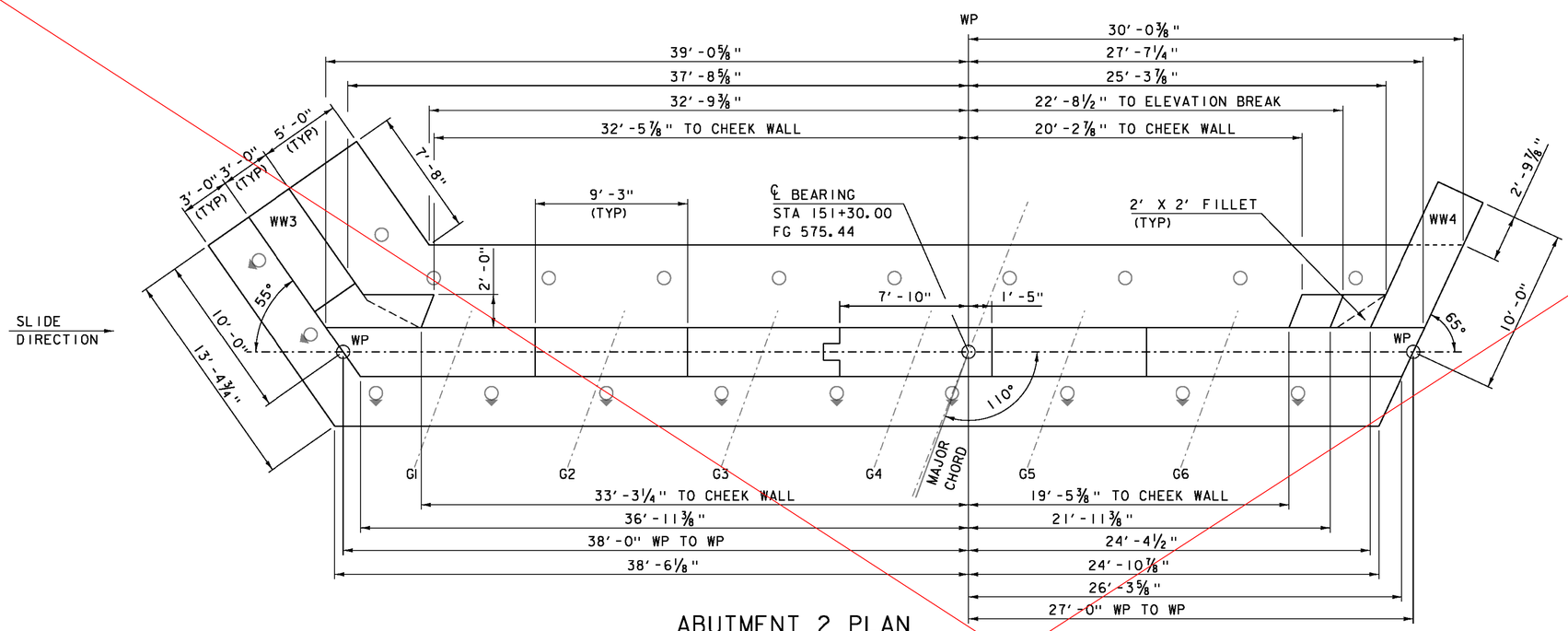

ABUTMENT 2 PLAN

SCALE: 1/4″ = 1′-0″

BRIDGE SEAT ELEVATIONS

GIRDER	ELEVATION
G1	571.11
G2	570.66
G3	570.22
G4	569.77
G5	569.32
G6	568.87

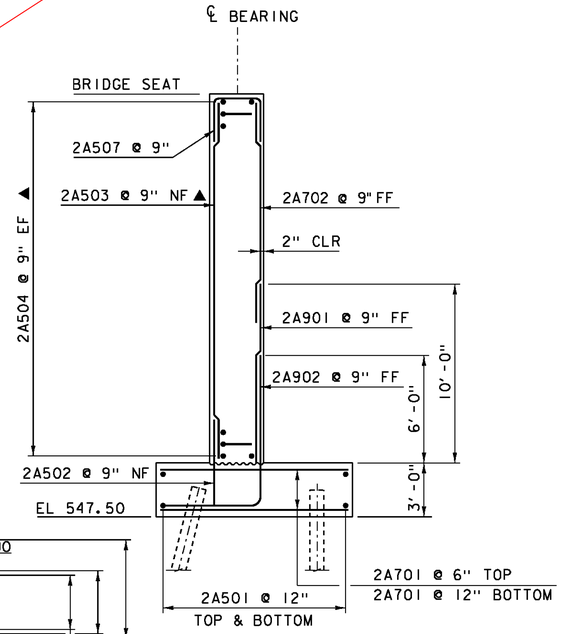

ABUTMENT 2 REINFORCING AT BRIDGE SEAT

SCALE: 1/4″ = 1′-0″

NOTE:

NF = NEAR FACE
FF = FAR FACE
EF = EACH FACE
▲ = CUT TO FIT IN FIELD
▬ = MECHANICAL CONNECTOR
3″ CLEAR, UNLESS OTHERWISE SPECIFIED ON THE PLANS.
2′-2″ LAP FOR #5 BAR
2′-7″ LAP FOR #6 BAR
3′-5″ LAP FOR #7 BAR
4′-6″ LAP FOR #8 BAR

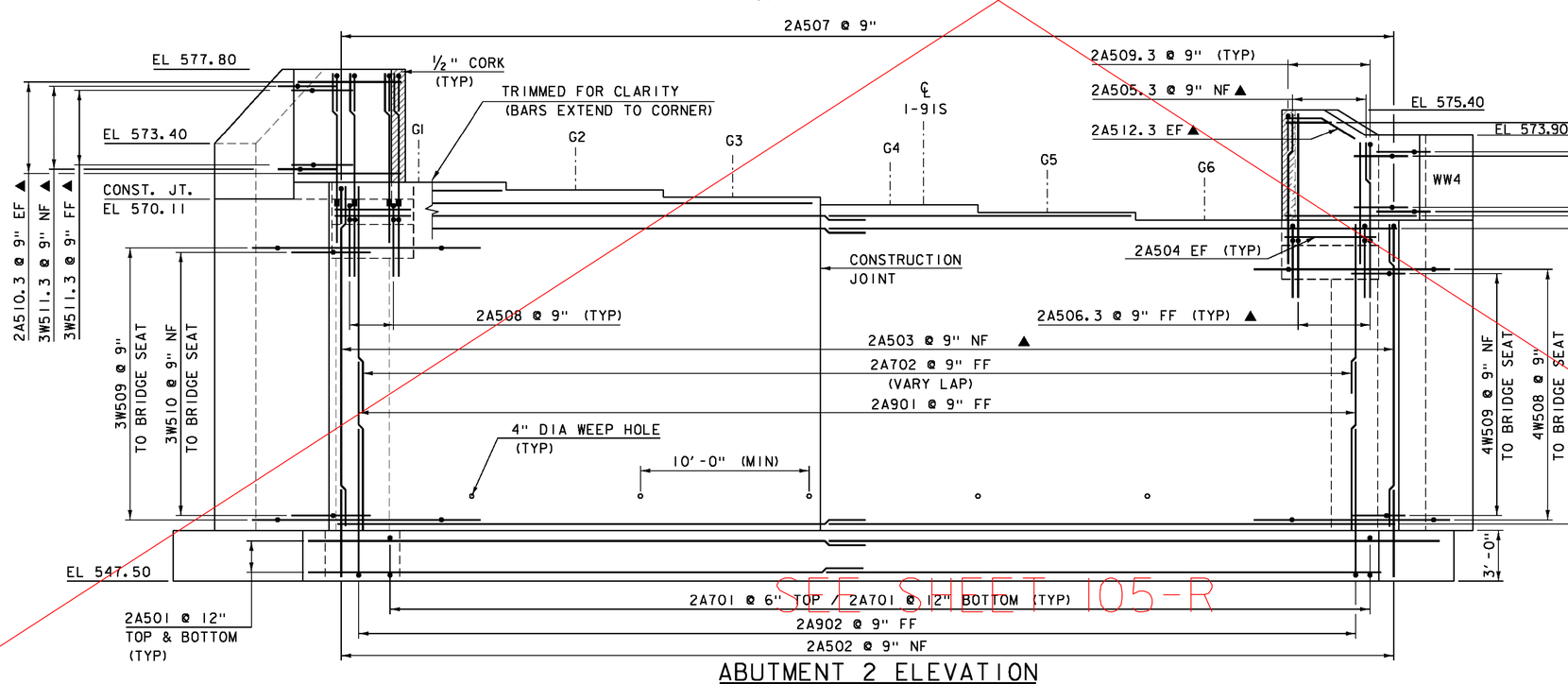

SEE SHEET 105-R

ABUTMENT 2 ELEVATION

SCALE: 1/4″ = 1′-0″

PROJECT NAME:	HARTFORD
PROJECT NUMBER:	IM 091-2(79)
FILE NAME: sl2al32sub_ab2	PLOT DATE: 15-DEC-2014
PROJECT LEADER: K. HIGGINS	DRAWN BY: J. SALVATORI
DESIGNED BY: G. LAROCHE	CHECKED BY: G. LAROCHE
ABUTMENT 2	SHEET 105 OF 166

REVISION	DATE	DESCRIPTION	BY
1	04-23-2015	WINGWALL 4 ROTATED 5 DEGREES	JS

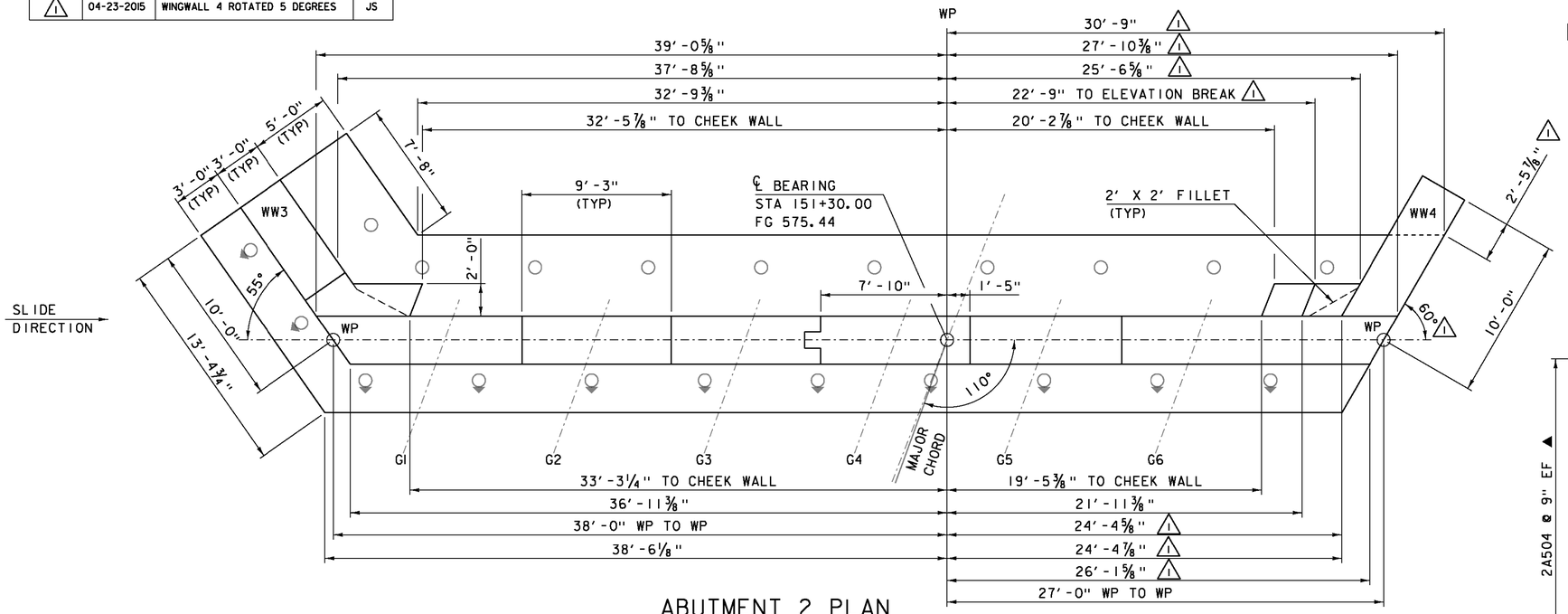

ABUTMENT 2 PLAN

SCALE: 1/4" = 1'-0"

BRIDGE SEAT ELEVATIONS

GIRDER	ELEVATION
G1	571.11
G2	570.66
G3	570.22
G4	569.77
G5	569.32
G6	568.87

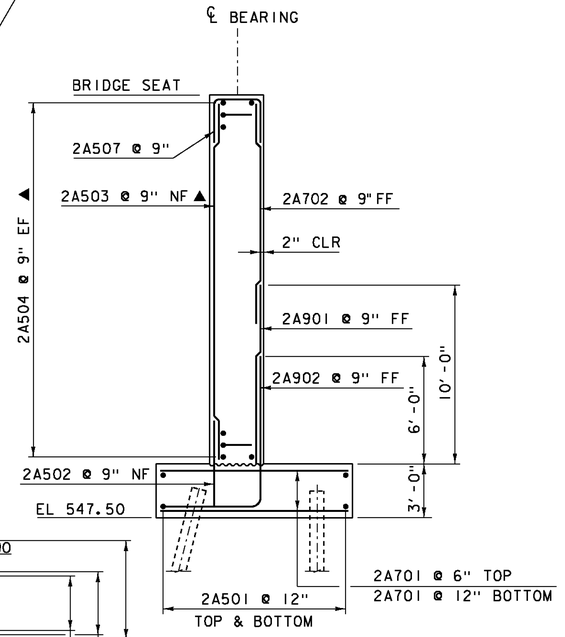

ABUTMENT 2 REINFORCING AT BRIDGE SEAT

SCALE: 1/4" = 1'-0"

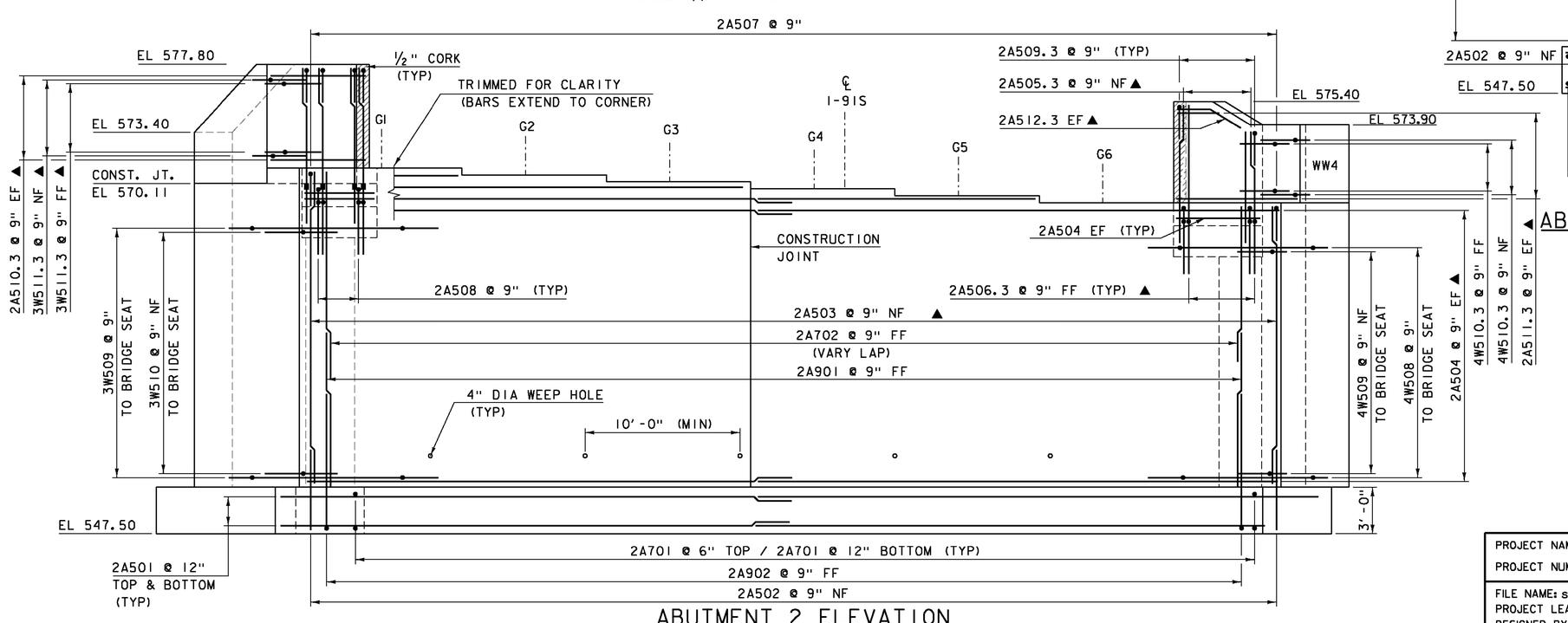

ABUTMENT 2 ELEVATION

SCALE: 1/4" = 1'-0"

NOTE:

NF = NEAR FACE
FF = FAR FACE
EF = EACH FACE
▲ = CUT TO FIT IN FIELD
▬ = MECHANICAL CONNECTOR
3" CLEAR, UNLESS OTHERWISE SPECIFIED ON THE PLANS.
2'-2" LAP FOR #5 BAR
2'-7" LAP FOR #6 BAR
3'-5" LAP FOR #7 BAR
4'-6" LAP FOR #8 BAR

PROJECT NAME: HARTFORD
PROJECT NUMBER: IM 091-2(79)

FILE NAME: sl2al32sub_ab2
PROJECT LEADER: K. HIGGINS
DESIGNED BY: G. LAROCHE
ABUTMENT 2

PLOT DATE: 23-APR-2015
DRAWN BY: J. SALVATORI
CHECKED BY: G. LAROCHE
SHEET 105R OF 166

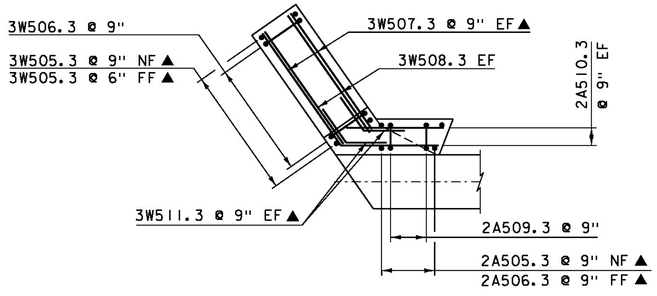

WINGWALL 3 CORNER DETAIL ABOVE BRIDGE SEAT

SCALE: 1/4" = 1'-0"

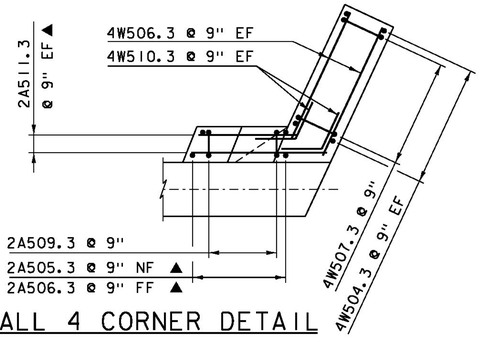

WINGWALL 4 CORNER DETAIL ABOVE BRIDGE SEAT

SCALE: 1/4" = 1'-0"

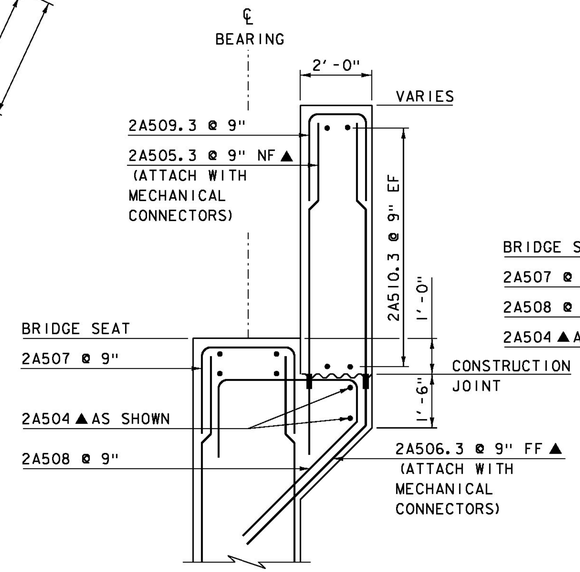

ABUTMENT 2 CHEEK WALL REINFORCING @ WW3

SCALE: 1/4" = 1'-0"

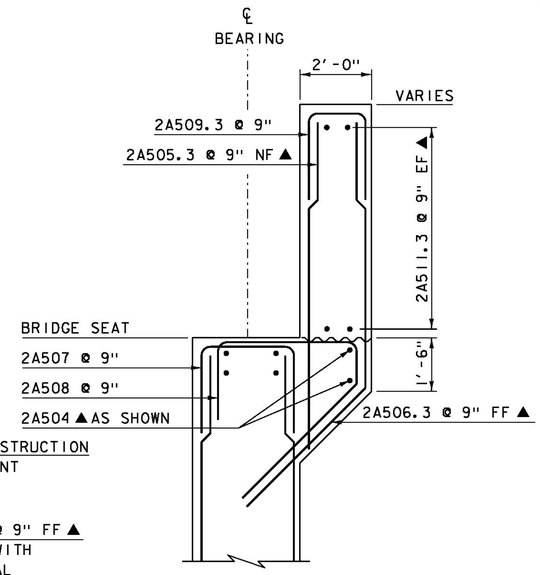

ABUTMENT 2 CHEEK WALL REINFORCING @ WW4

SCALE: 1/4" = 1'-0"

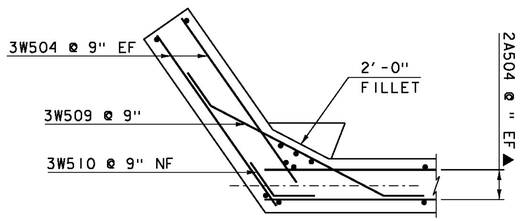

WINGWALL 3 CORNER DETAIL BELOW BRIDGE SEAT

SCALE: 1/4" = 1'-0"

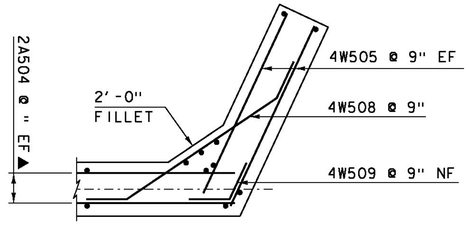

WINGWALL 4 CORNER DETAIL BELOW BRIDGE SEAT

SCALE: 1/4" = 1'-0"

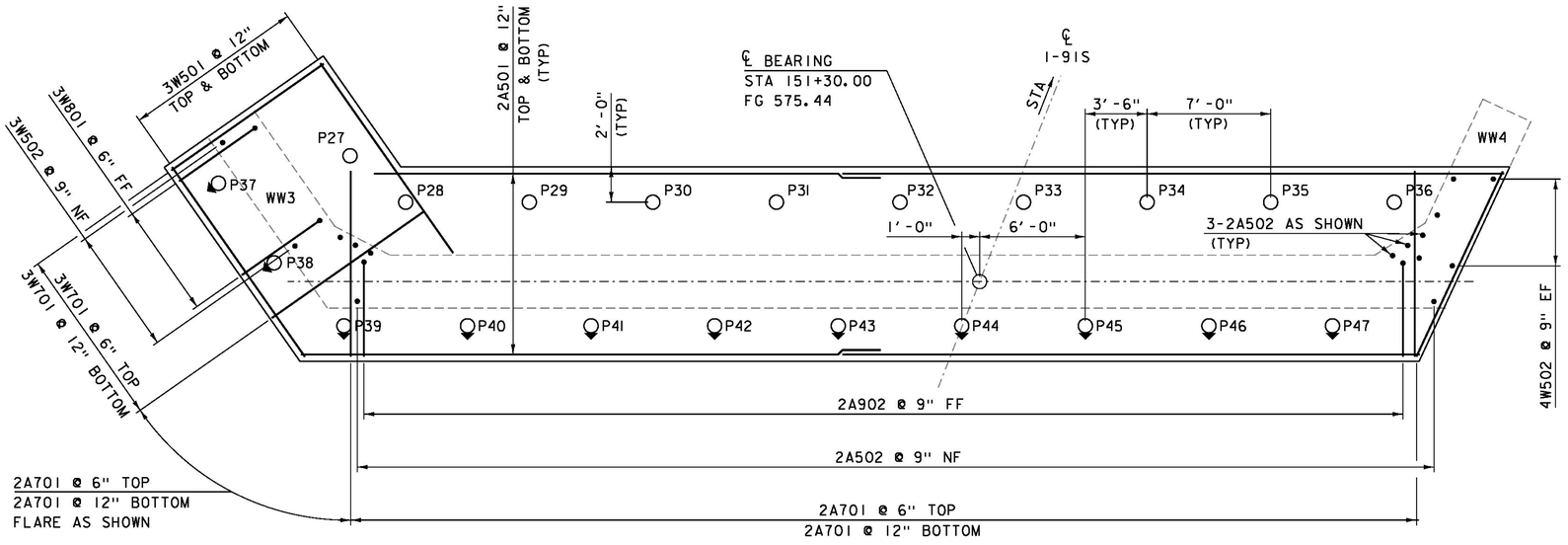

ABUTMENT 2 FOOTING PLAN

SCALE: 1/4" = 1'-0"

NOTE:

NF = NEAR FACE
FF = FAR FACE
EF = EACH FACE
▲ = CUT TO FIT IN FIELD
▬ = MECHANICAL CONNECTOR
3" CLEAR, UNLESS OTHERWISE SPECIFIED ON THE PLANS.
2'-2" LAP FOR #5 BAR
2'-7" LAP FOR #6 BAR
3'-5" LAP FOR #7 BAR
4'-6" LAP FOR #8 BAR

PROJECT NAME:	HARTFORD
PROJECT NUMBER:	IM 091-2(79)
FILE NAME: sl2al32sub_ab2	PLOT DATE: 15-DEC-2014
PROJECT LEADER: K. HIGGINS	DRAWN BY: J. SALVATORI
DESIGNED BY: G. LAROCHE	CHECKED BY: G. LAROCHE
ABUTMENT 2 FOOTING	SHEET 106 OF 166

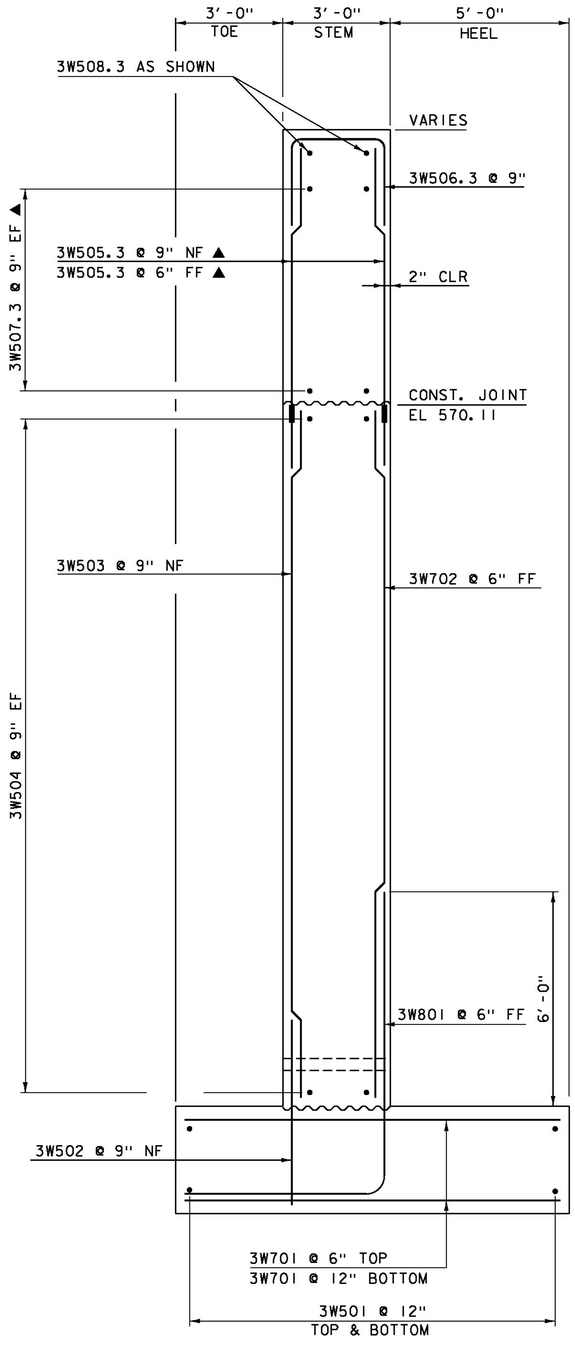

WINGWALL 3 TYPICAL

SCALE: ½" = 1'-0"

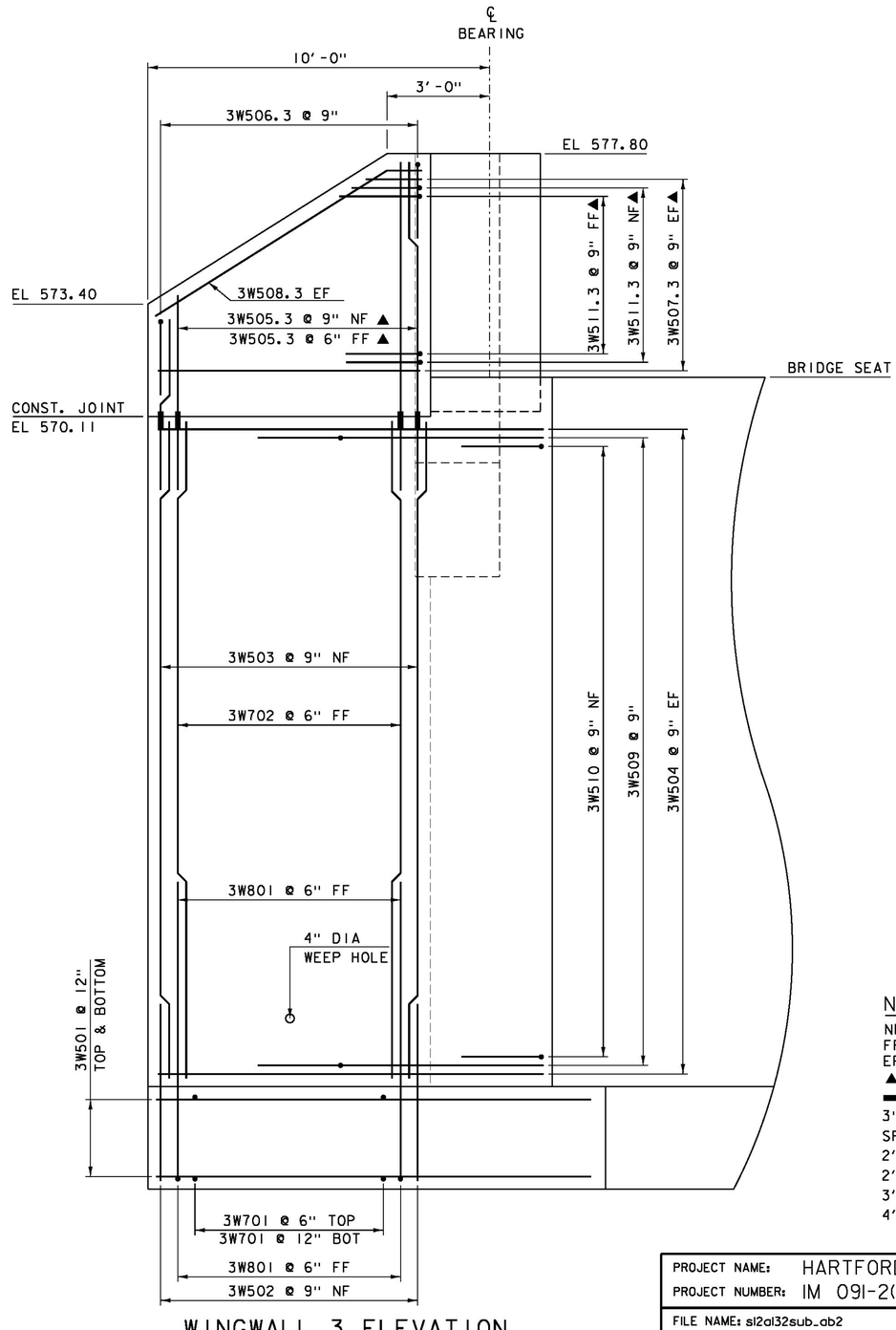

WINGWALL 3 ELEVATION

SCALE: ½" = 1'-0"

NOTE:

NF = NEAR FACE
FF = FAR FACE
EF = EACH FACE
▲ = CUT TO FIT IN FIELD
▬ = MECHANICAL CONNECTOR
3" CLEAR, UNLESS OTHERWISE SPECIFIED ON THE PLANS.
2'-2" LAP FOR #5 BAR
2'-7" LAP FOR #6 BAR
3'-5" LAP FOR #7 BAR
4'-6" LAP FOR #8 BAR

PROJECT NAME: HARTFORD
PROJECT NUMBER: IM 091-2(79)

FILE NAME: sl2al32sub_ab2
PROJECT LEADER: K. HIGGINS
DESIGNED BY: G. LAROCHE
WINGWALL 3 DETAILS

PLOT DATE: 15-DEC-2014
DRAWN BY: J. SALVATORI
CHECKED BY: G. LAROCHE
SHEET 107 OF 166

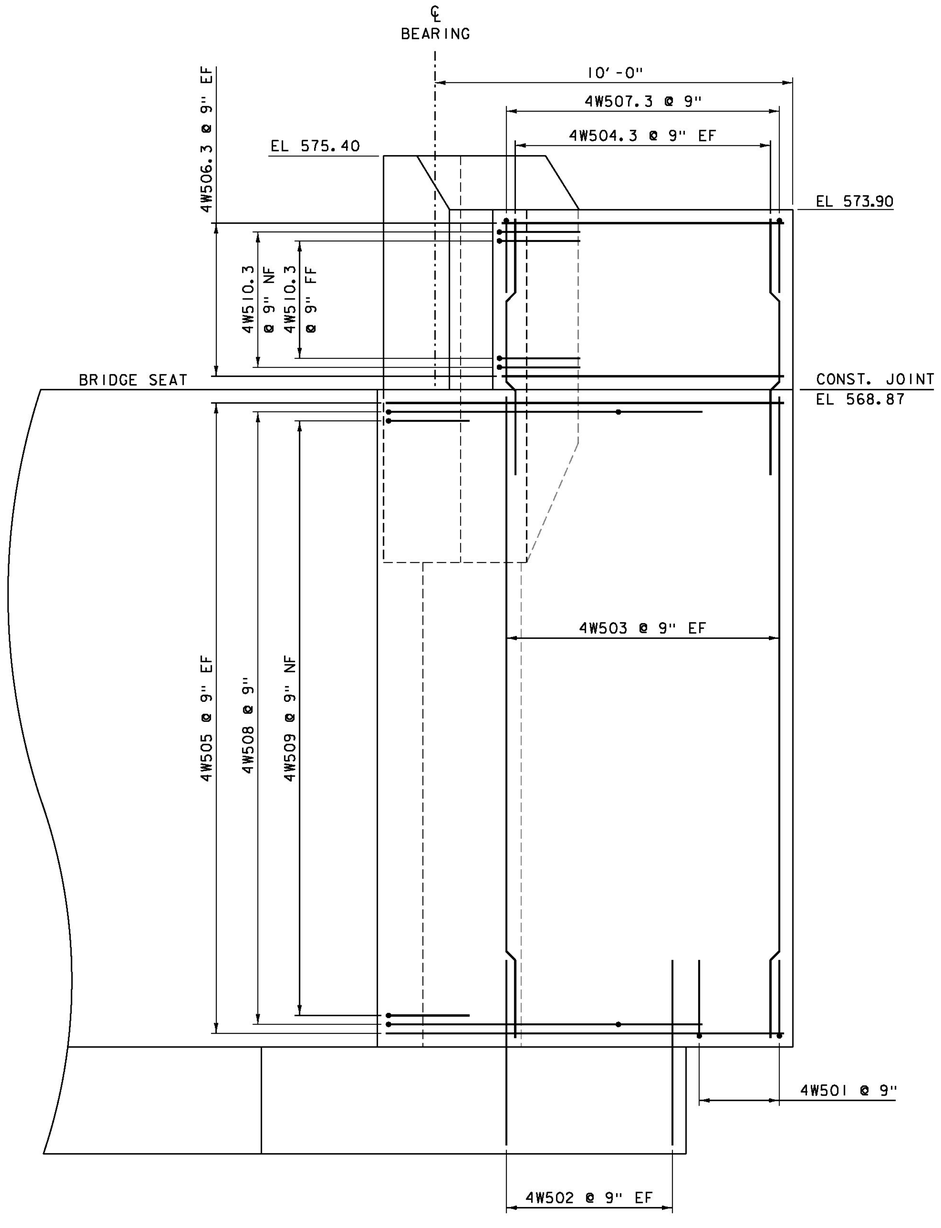

WINGWALL 4 ELEVATION

SCALE: ½" = 1'-0"

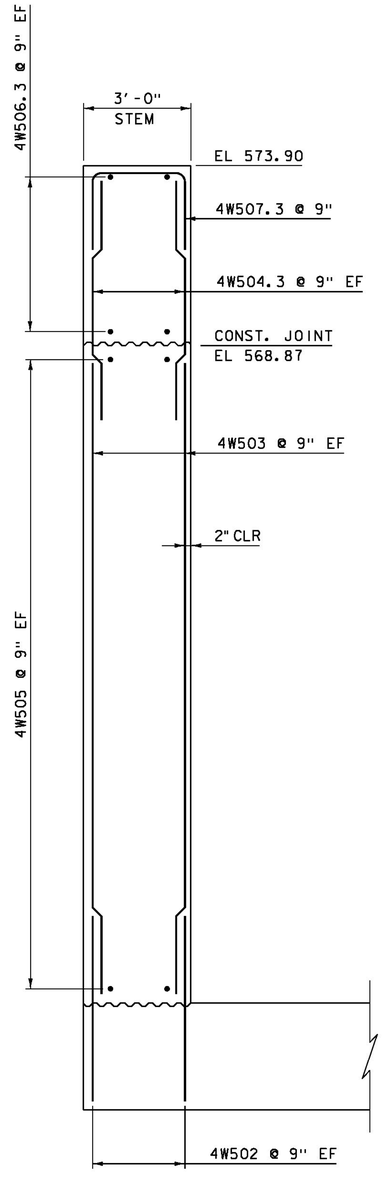

WINGWALL 4 TYPICAL OVER FOOTING

SCALE: ½" = 1'-0"

NOTE:

NF = NEAR FACE
FF = FAR FACE
EF = EACH FACE
▲ = CUT TO FIT IN FIELD
▬ = MECHANICAL CONNECTOR
3" CLEAR, UNLESS OTHERWISE SPECIFIED ON THE PLANS.
2'-2" LAP FOR #5 BAR
2'-7" LAP FOR #6 BAR
3'-5" LAP FOR #7 BAR
4'-6" LAP FOR #8 BAR

PROJECT NAME:	HARTFORD
PROJECT NUMBER:	IM 091-2(79)
FILE NAME: sl2al32sub_ab2	PLOT DATE: 15-DEC-2014
PROJECT LEADER: K. HIGGINS	DRAWN BY: J. SALVATORI
DESIGNED BY: G. LAROCHE	CHECKED BY: G. LAROCHE
WINGWALL 4 DETAILS	SHEET 108 OF 166

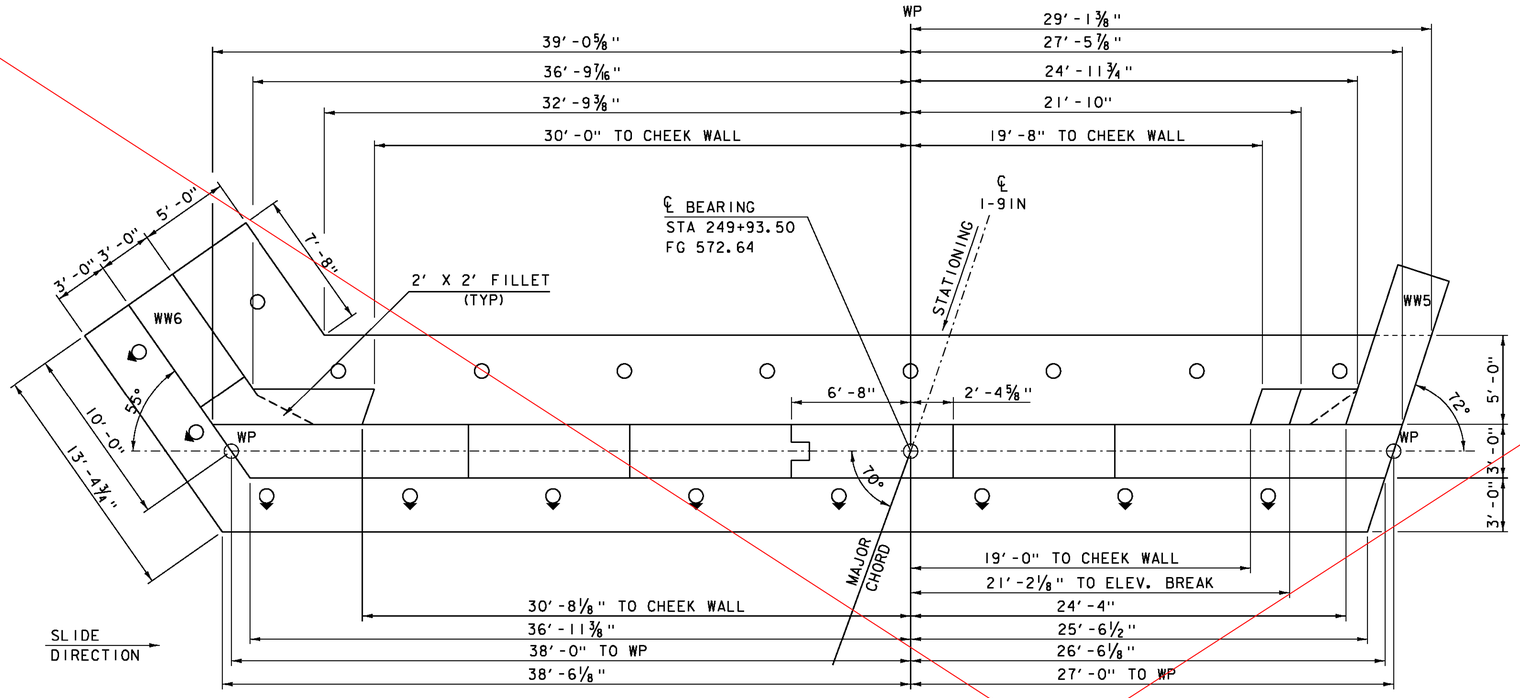

ABUTMENT 3 PLAN

SCALE: 1/4″ = 1′-0″

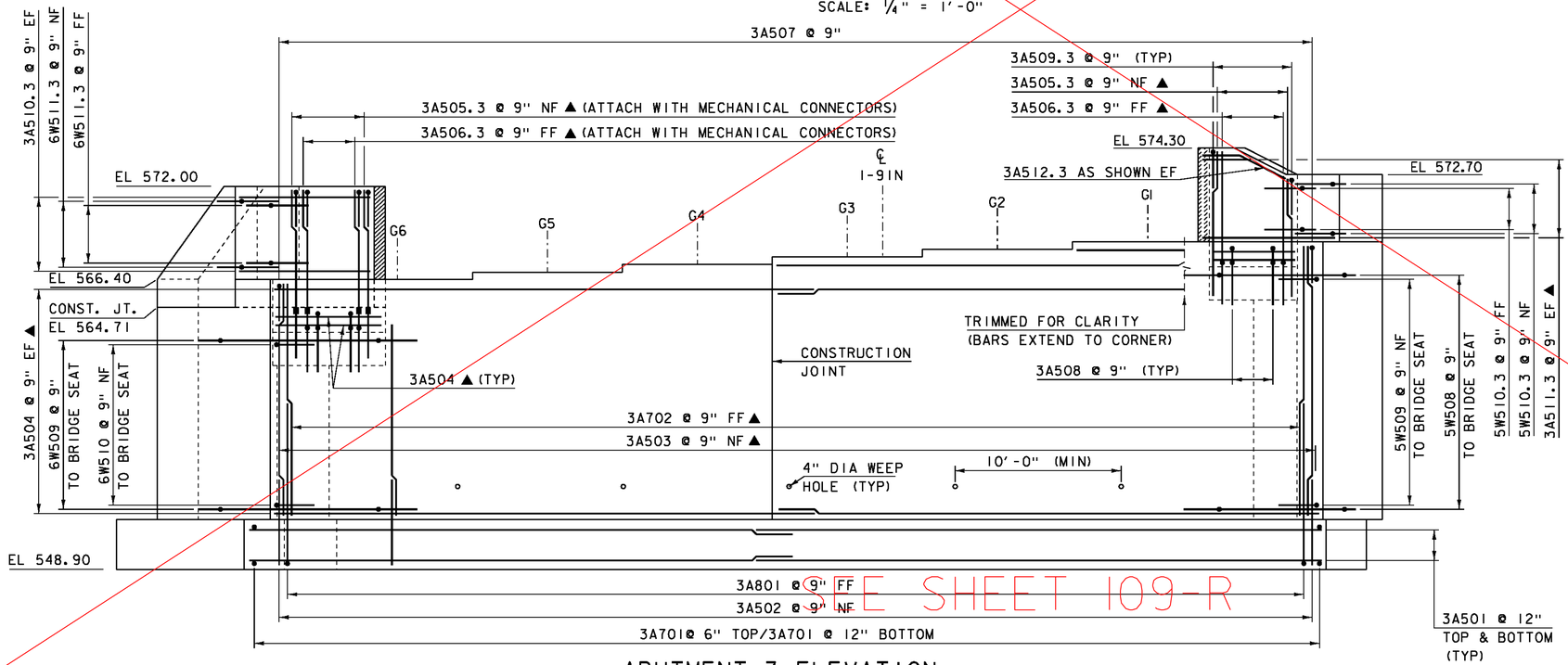

ABUTMENT 3 ELEVATION

SCALE: 1/4″ = 1′-0″

SEE SHEET 109-R

BRIDGE SEAT ELEVATIONS

GIRDER	ELEVATION
G1	568.65
G2	568.20
G3	567.74
G4	567.29
G5	566.83
G6	566.38

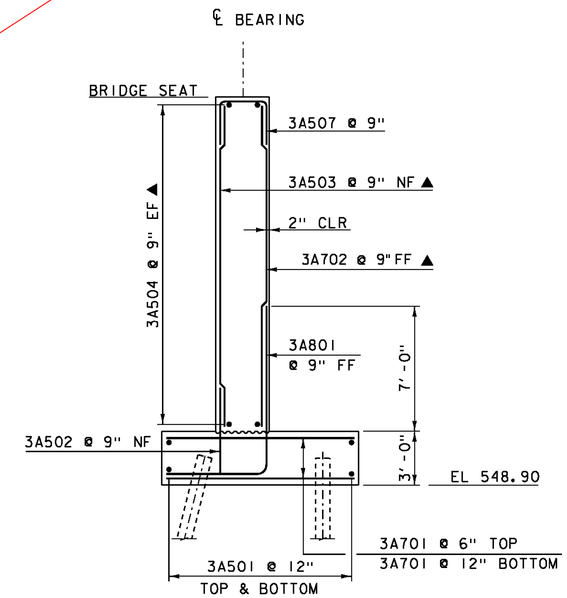

ABUTMENT 3 TYPICAL

SCALE: 1/4″ = 1′-0″

NOTE:

NF = NEAR FACE
FF = FAR FACE
EF = EACH FACE
▲ = CUT TO FIT IN FIELD
▬ = MECHANICAL CONNECTOR
3″ CLEAR, UNLESS OTHERWISE SPECIFIED ON THE PLANS.
2′-2″ LAP FOR #5 BAR
2′-7″ LAP FOR #6 BAR
3′-5″ LAP FOR #7 BAR
4′-6″ LAP FOR #8 BAR

PROJECT NAME: HARTFORD
PROJECT NUMBER: IM 091-2(79)

FILE NAME: s12a132sub_ab3
PROJECT LEADER: K. HIGGINS
DESIGNED BY: G. LAROCHE
ABUTMENT 3

PLOT DATE: 15-DEC-2014
DRAWN BY: J. SALVATORI
CHECKED BY: G. LAROCHE
SHEET 109 OF 166

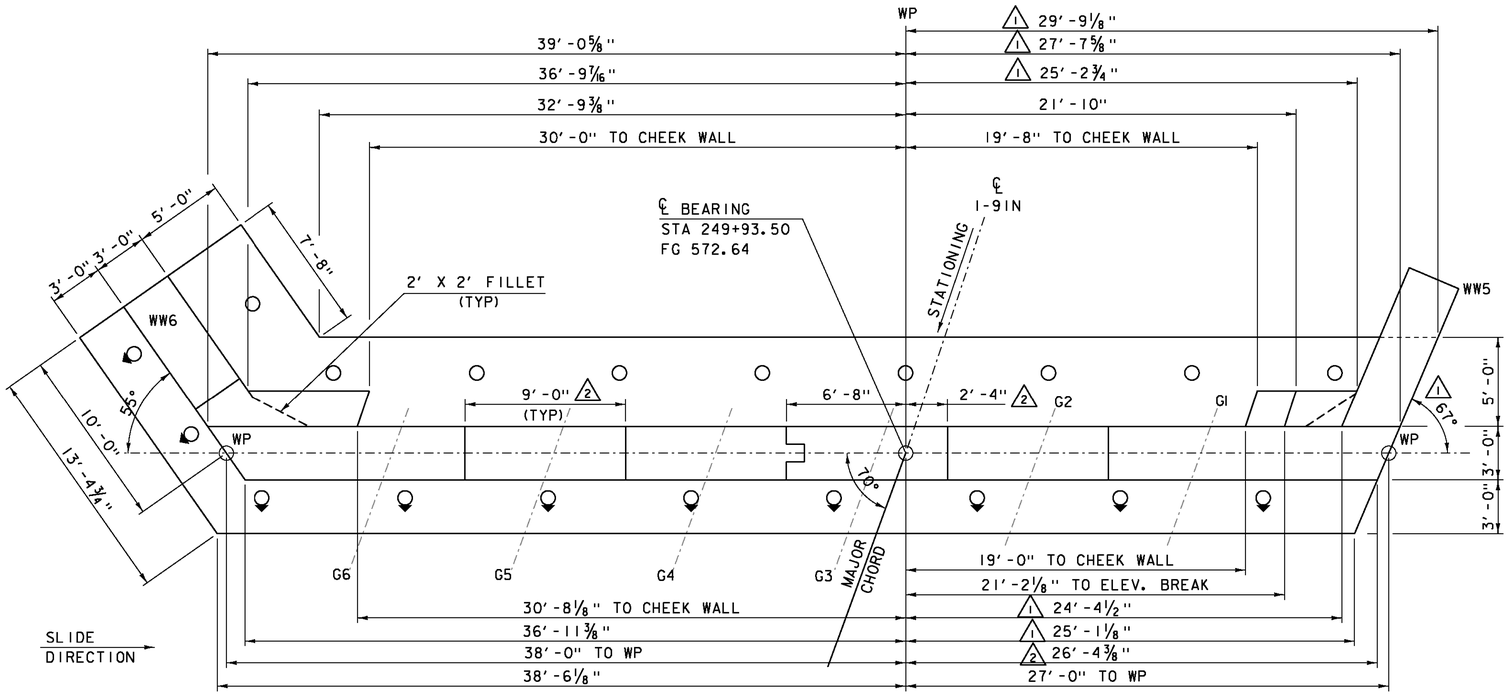

ABUTMENT 3 PLAN

SCALE: 1/4" = 1'-0"

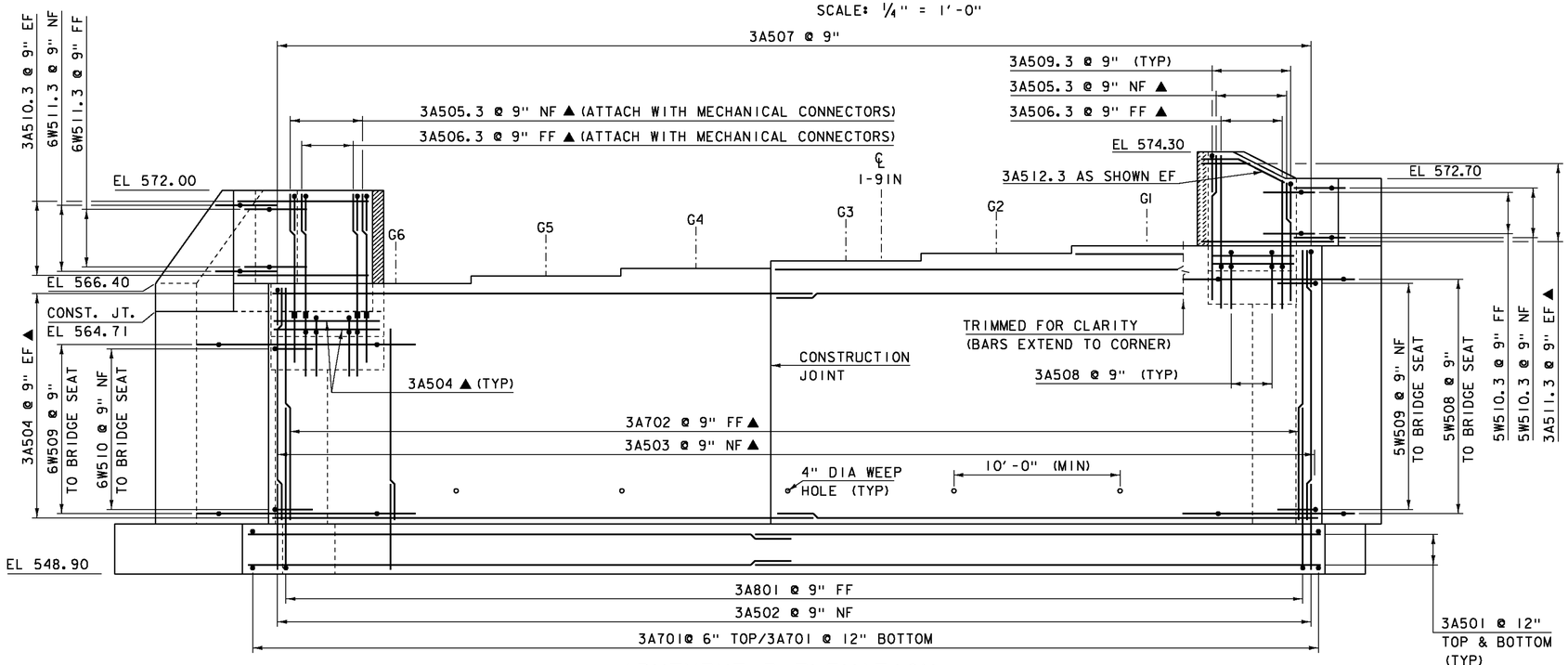

ABUTMENT 3 ELEVATION

SCALE: 1/4" = 1'-0"

BRIDGE SEAT ELEVATIONS

GIRDER	ELEVATION
G1	568.65
G2	568.20
G3	567.74
G4	567.29
G5	566.83
G6	566.38

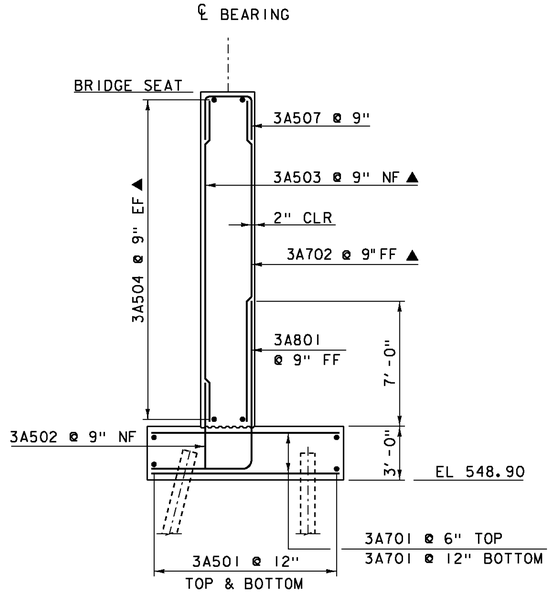

ABUTMENT 3 TYPICAL

SCALE: 1/4" = 1'-0"

REVISION	DATE	DESCRIPTION	BY
1	04-23-2015	WINGWALL 5 ROTATED 5 DEGREES	JS
2	05-04-2015	ADDED OR REIVSED DIMENSIONS	JS

NOTE:

NF = NEAR FACE
FF = FAR FACE
EF = EACH FACE
▲ = CUT TO FIT IN FIELD
▬ = MECHANICAL CONNECTOR
3" CLEAR, UNLESS OTHERWISE SPECIFIED ON THE PLANS.
2'-2" LAP FOR #5 BAR
2'-7" LAP FOR #6 BAR
3'-5" LAP FOR #7 BAR
4'-6" LAP FOR #8 BAR

PROJECT NAME: HARTFORD
PROJECT NUMBER: IM 091-2(79)

FILE NAME: s12a132sub_ab3
PROJECT LEADER: K. HIGGINS
DESIGNED BY: G. LAROCHE
ABUTMENT 3

PLOT DATE: 04-MAY-2015
DRAWN BY: J. SALVATORI
CHECKED BY: G. LAROCHE
SHEET 109R OF 166

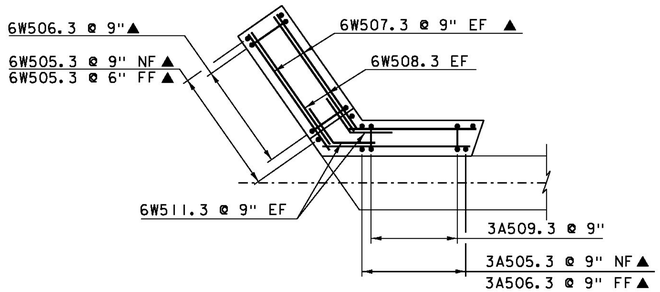

WINGWALL 6 CORNER DETAIL ABOVE BRIDGE SEAT

SCALE: 1/4" = 1'-0"

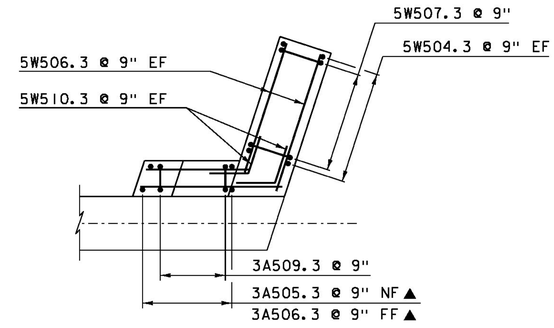

WINGWALL 5 CORNER DETAIL ABOVE BRIDGE SEAT

SCALE: 1/4" = 1'-0"

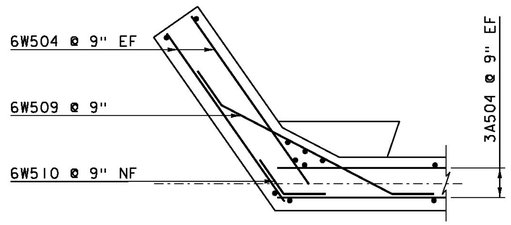

WINGWALL 6 CORNER DETAIL BELOW BRIDGE SEAT

SCALE: 1/4" = 1'-0"

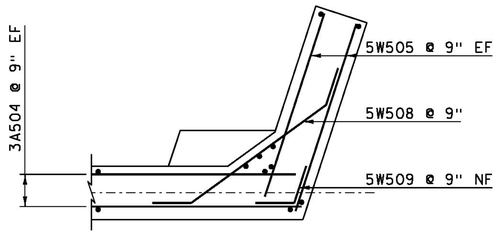

WINGWALL 5 CORNER DETAIL BELOW BRIDGE SEAT

SCALE: 1/4" = 1'-0"

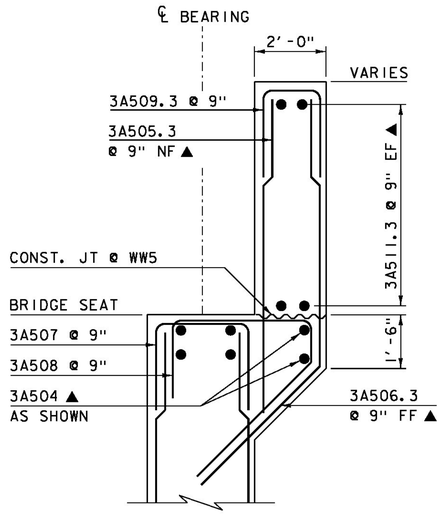

ABUTMENT 3 CHEEK WALL REINFORCING @ WW 5

SCALE: 1/2" = 1'-0"

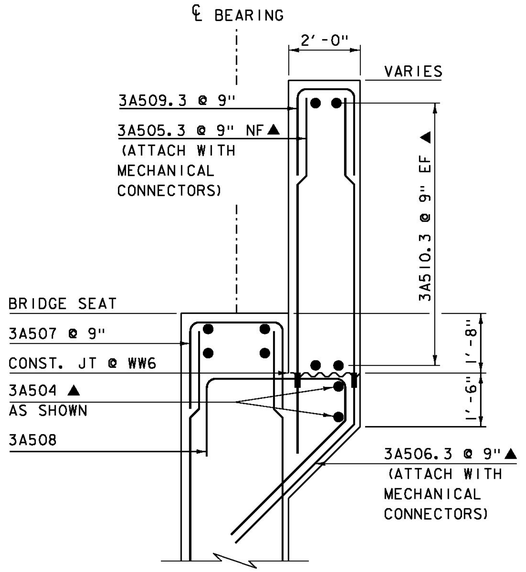

ABUTMENT 3 CHEEK WALL REINFORCING @ WW 6

SCALE: 1/2" = 1'-0"

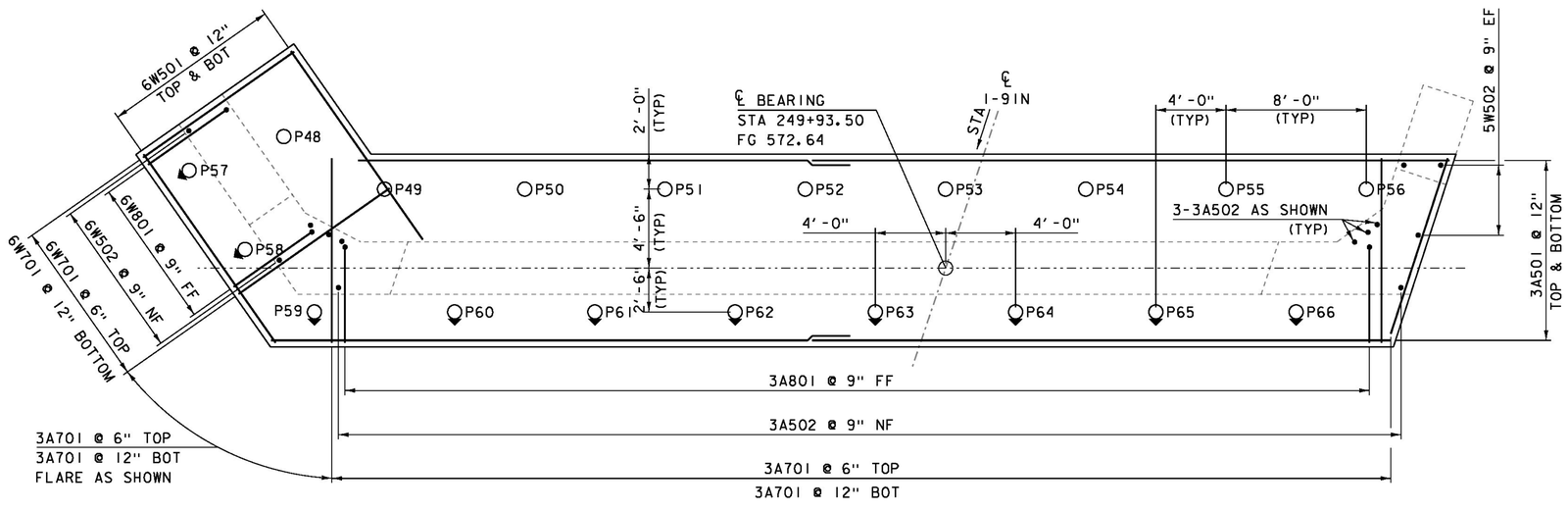

ABUTMENT 3 FOOTING PLAN

SCALE: 1/4" = 1'-0"

NOTE:

NF = NEAR FACE
FF = FAR FACE
EF = EACH FACE
▲ = CUT TO FIT IN FIELD
▬ = MECHANICAL CONNECTOR
3" CLEAR, UNLESS OTHERWISE SPECIFIED ON THE PLANS.
2'-2" LAP FOR #5 BAR
2'-7" LAP FOR #6 BAR
3'-5" LAP FOR #7 BAR
4'-6" LAP FOR #8 BAR
5'-9" LAP FOR #9 BAR

PROJECT NAME: HARTFORD
PROJECT NUMBER: IM 091-2(79)

FILE NAME: sl2al32sub_ab3
PROJECT LEADER: K. HIGGINS
DESIGNED BY: G. LAROCHE
ABUTMENT 3 FOOTING

PLOT DATE: 15-DEC-2014
DRAWN BY: J. SALVATORI
CHECKED BY: G. LAROCHE
SHEET 110 OF 166

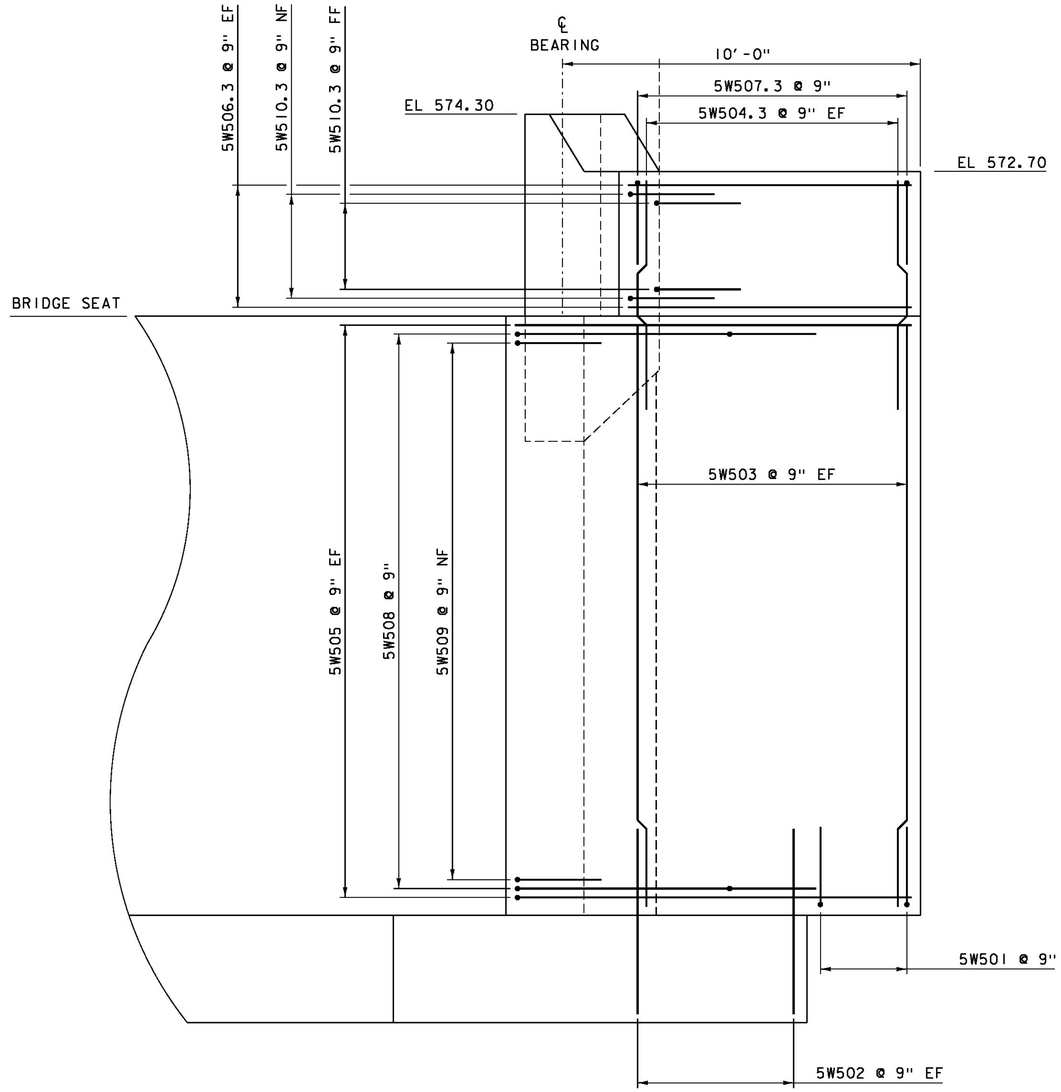

WINGWALL 5 ELEVATION

SCALE: 1/4" = 1'-0"

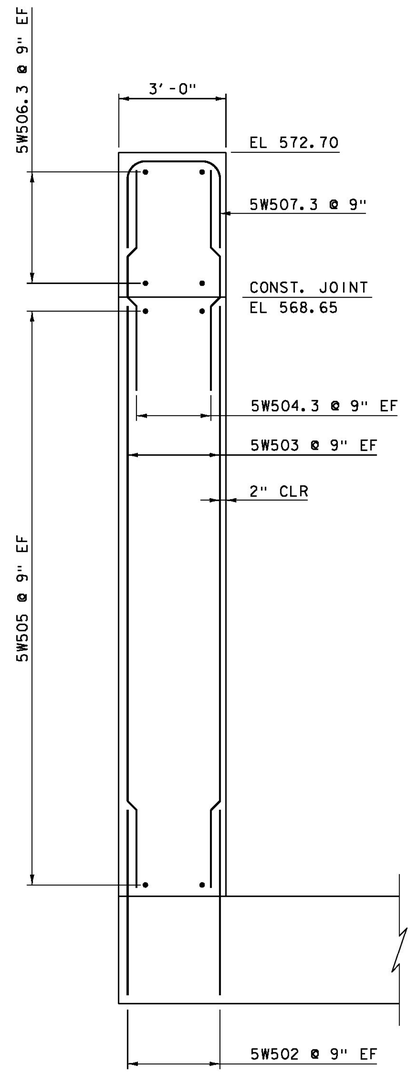

WINGWALL 5 TYPICAL

SCALE: 1/4" = 1'-0"

NOTE:

NF = NEAR FACE
FF = FAR FACE
EF = EACH FACE
▲ = CUT TO FIT IN FIELD
▬ = MECHANICAL CONNECTOR
3" CLEAR, UNLESS OTHERWISE SPECIFIED ON THE PLANS.
2'-2" LAP FOR #5 BAR
2'-7" LAP FOR #6 BAR
3'-5" LAP FOR #7 BAR
4'-6" LAP FOR #8 BAR

PROJECT NAME:	HARFORD
PROJECT NUMBER:	IM 091-2(79)
FILE NAME: s12a132sub_ab3.dgn	PLOT DATE: 15-DEC-2014
PROJECT LEADER: K. HIGGINS	DRAWN BY: J. SALVATORI
DESIGNED BY: G. LAROCHE	CHECKED BY: G. LAROCHE
WINGWALL 5 DETAILS	SHEET 111 OF 166

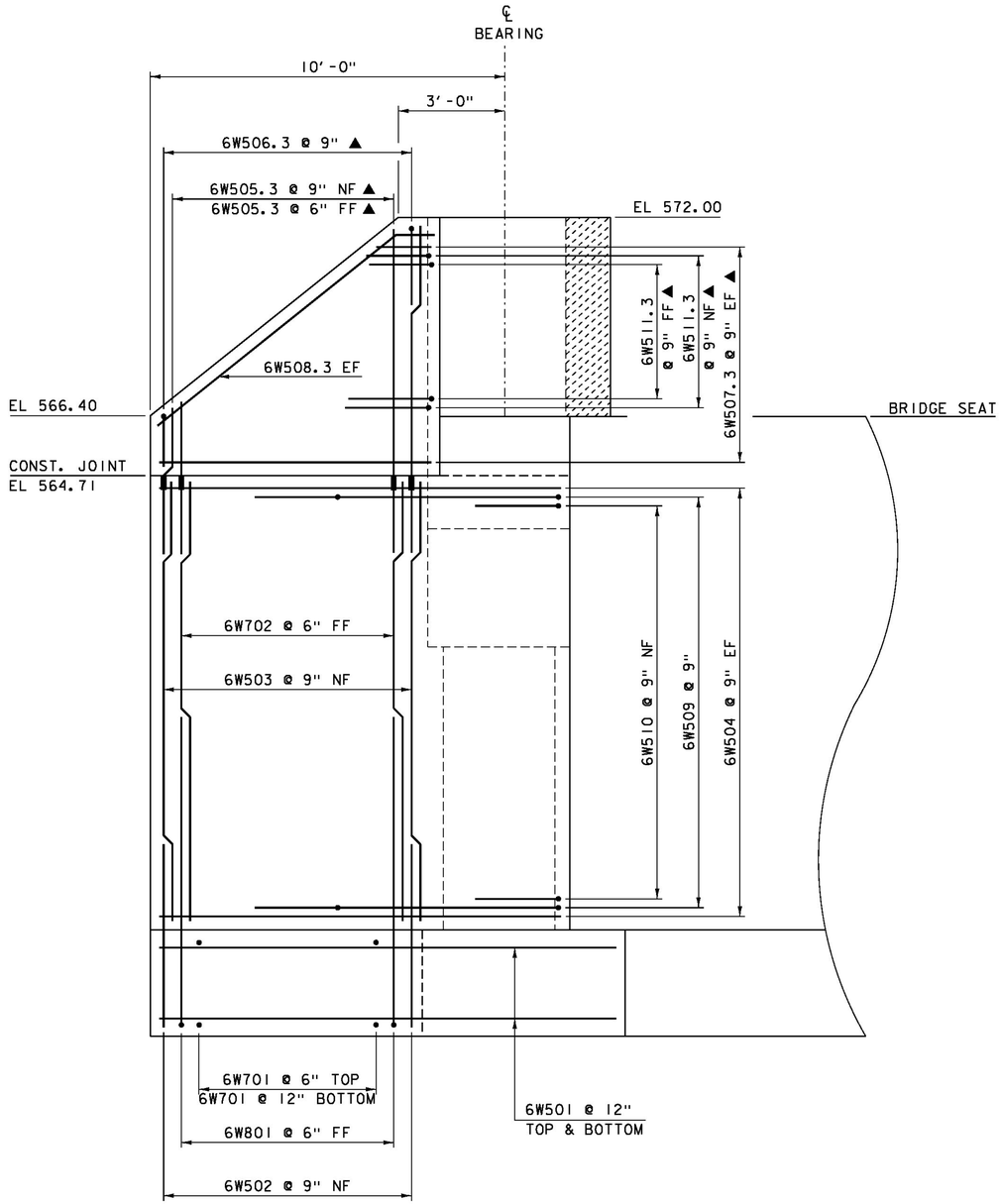

WINGWALL 6 ELEVATION

SCALE: 1/4" = 1'-0"

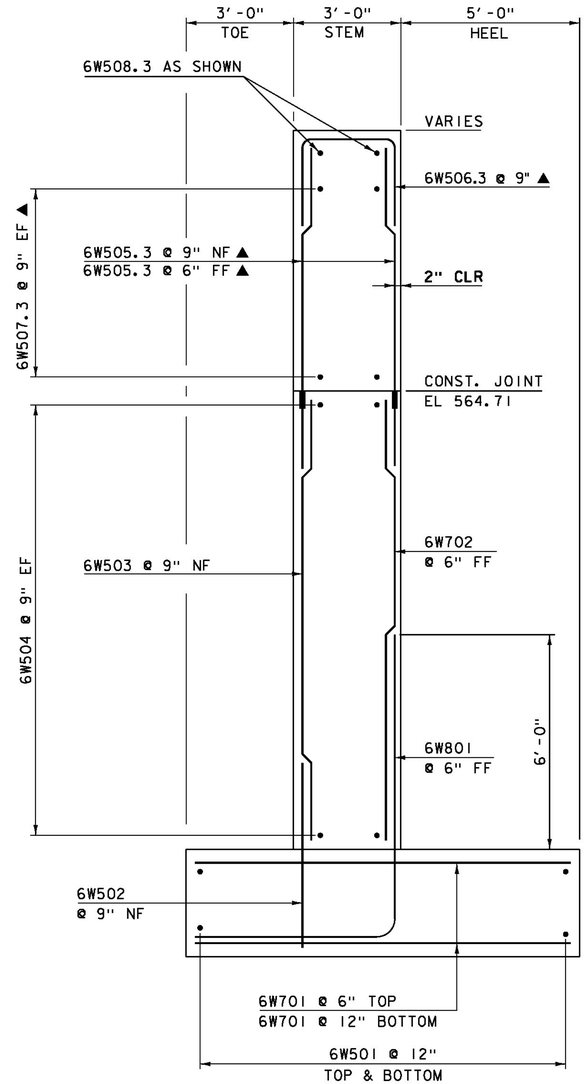

WINGWALL 6 TYPICAL

SCALE: 1/4" = 1'-0"

NOTE:

NF = NEAR FACE
FF = FAR FACE
EF = EACH FACE
▲ = CUT TO FIT IN FIELD
▬ = MECHANICAL CONNECTOR
3" CLEAR, UNLESS OTHERWISE SPECIFIED ON THE PLANS.
2'-2" LAP FOR #5 BAR
2'-7" LAP FOR #6 BAR
3'-5" LAP FOR #7 BAR
4'-6" LAP FOR #8 BAR

PROJECT NAME: HARFORD	
PROJECT NUMBER: IM 091-2(79)	
FILE NAME: sl2al32sub_ab3.dgn	PLOT DATE: 15-DEC-2014
PROJECT LEADER: K. HIGGINS	DRAWN BY: J. SALVATORI
DESIGNED BY: G. LAROCHE	CHECKED BY: G. LAROCHE
WINGWALL 6 DETAILS	SHEET 112 OF 166

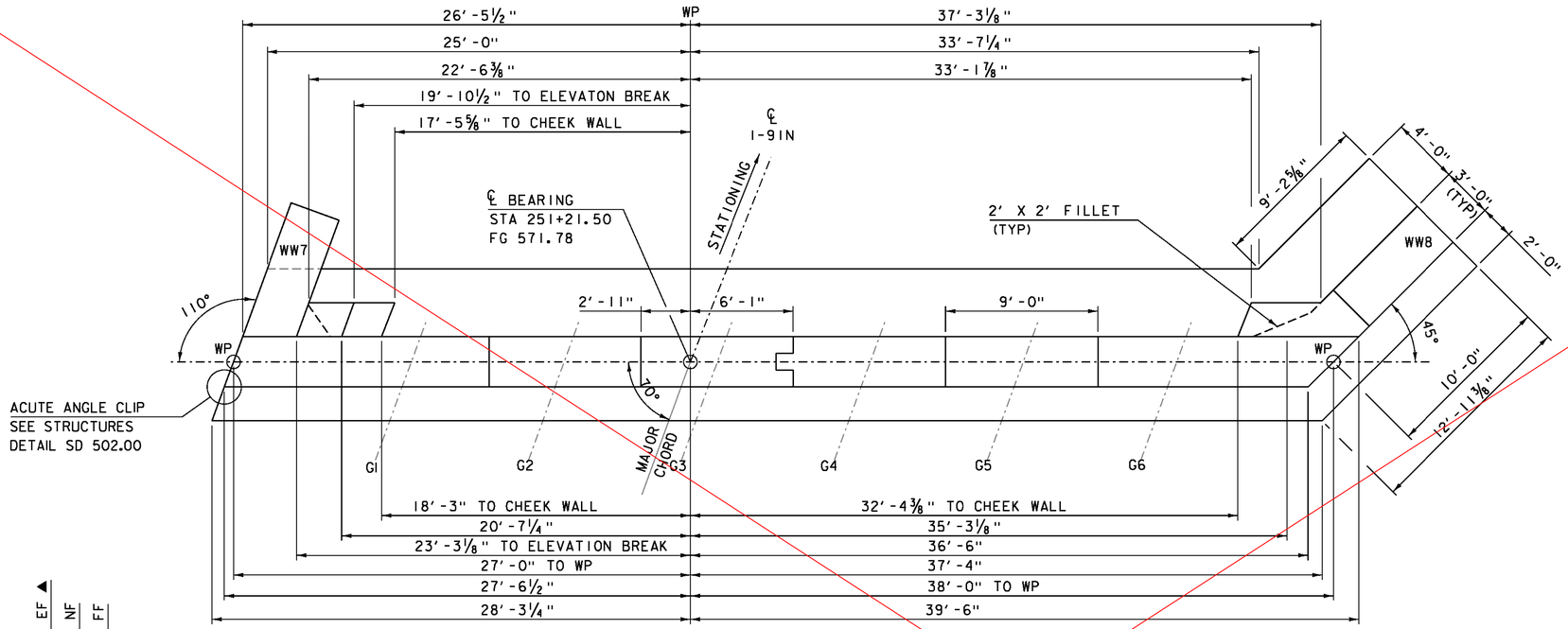

ABUTMENT 4 PLAN

SCALE: ¼" = 1'-0"

BRIDGE SEAT ELEVATIONS

GIRDER	ELEVATION
G1	567.81
G2	567.35
G3	566.88
G4	566.40
G5	565.93
G6	565.47

SLIDE DIRECTION

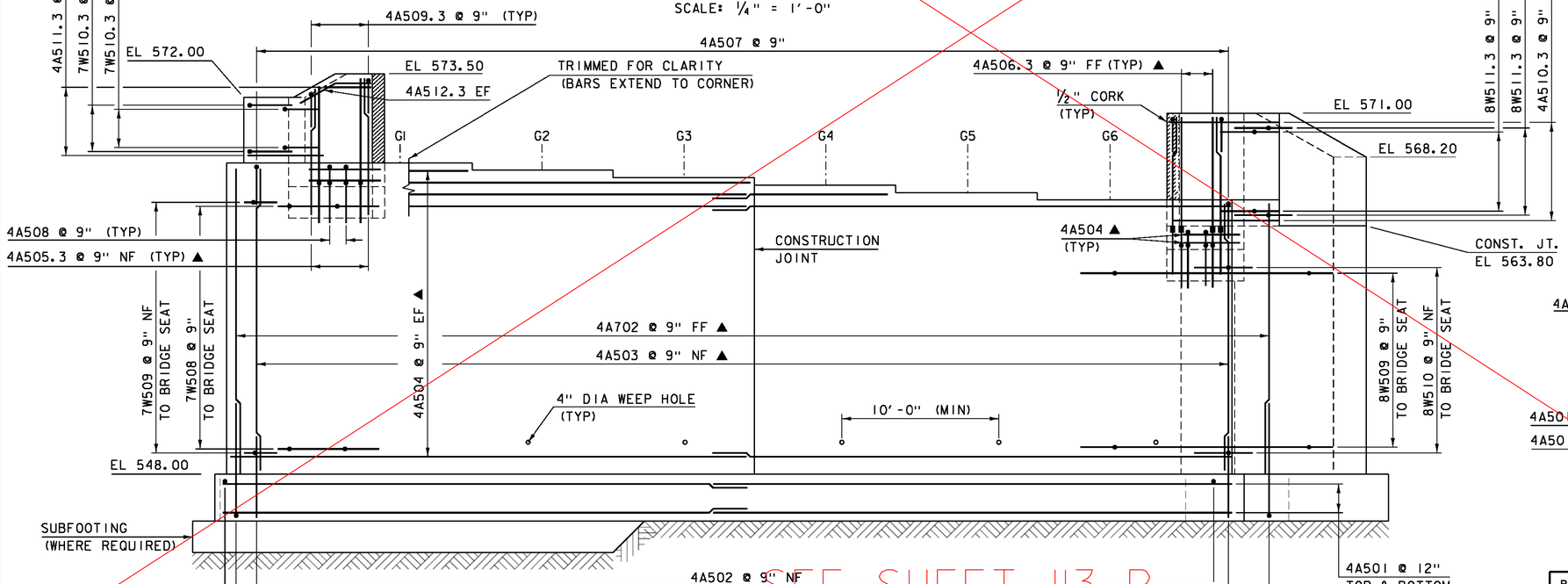

SEE SHEET 113-R

ABUTMENT 4 ELEVATION

SCALE: ¼" = 1'-0"

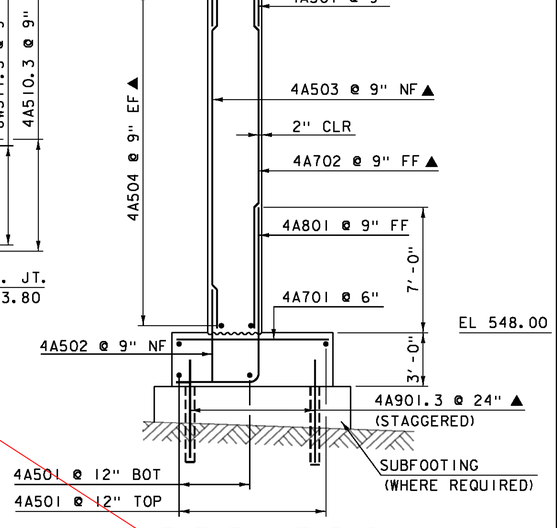

ABUTMENT 4 TYPICAL AT BRIDGE SEAT

SCALE: ¼" = 1'-0"

PROJECT NAME:	HARTFORD
PROJECT NUMBER:	IM 091-2(79)
FILE NAME: sl2al32sub_ab4	PLOT DATE: 15-DEC-2014
PROJECT LEADER: K. HIGGINS	DRAWN BY: J. SALVATORI
DESIGNED BY: G. LAROCHE	CHECKED BY: G. LAROCHE
ABUTMENT 4	SHEET 113 OF 166

REVISION	DATE	DESCRIPTION	BY
1	04-23-2015	WINGWALL 7 ROTATED 5 DEGREES	JS
2	05-04-2015	ADDED OR REIVSED DIMENSIONS	JS

BRIDGE SEAT ELEVATIONS

GIRDER	ELEVATION
G1	567.81
G2	567.35
G3	566.88
G4	566.40
G5	565.93
G6	565.47

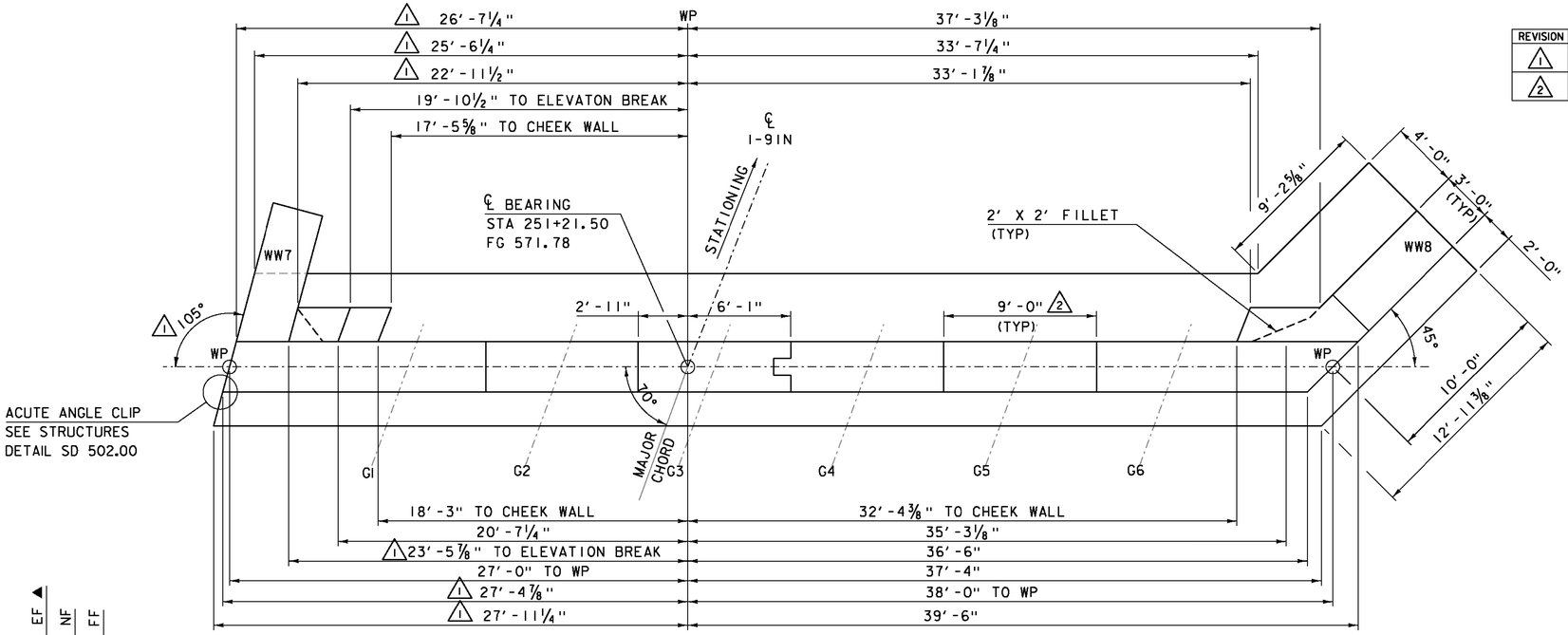

SLIDE DIRECTION

ABUTMENT 4 PLAN

SCALE: ¼" = 1'-0"

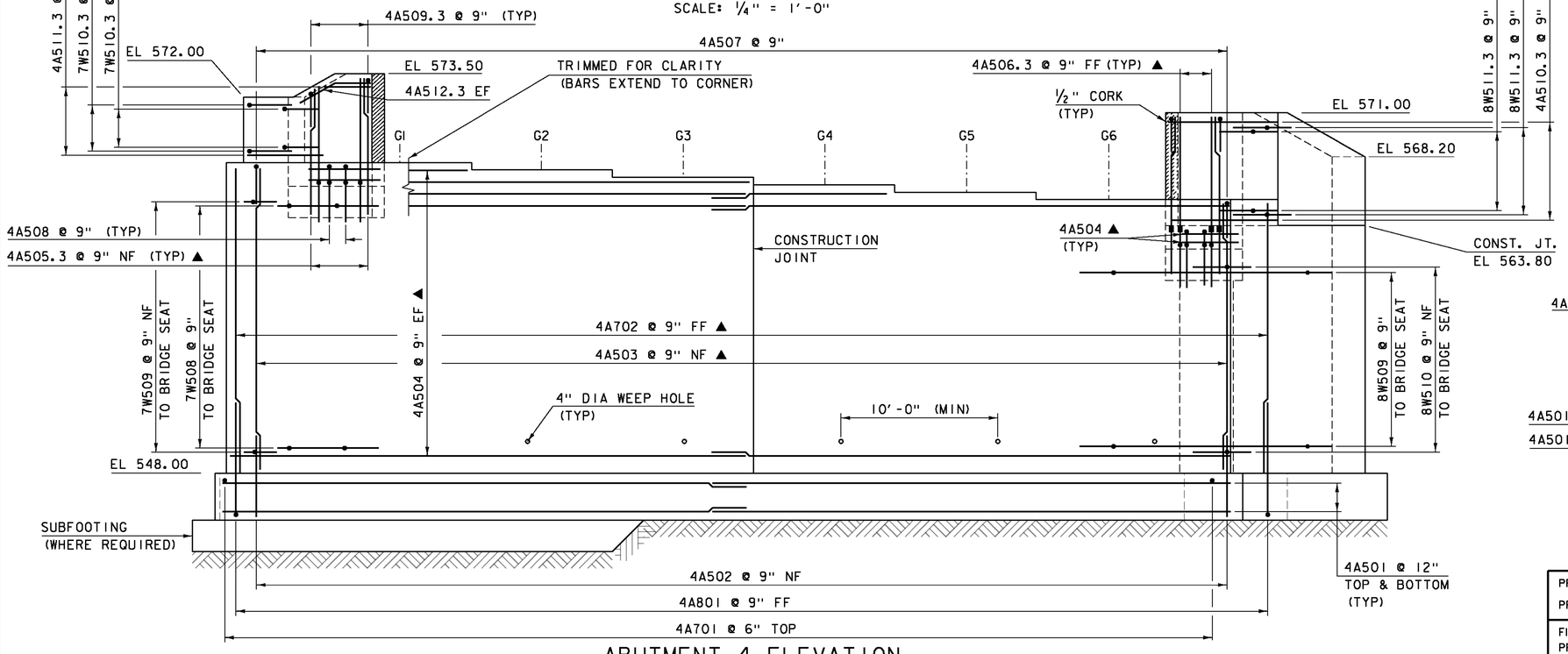

ABUTMENT 4 ELEVATION

SCALE: ¼" = 1'-0"

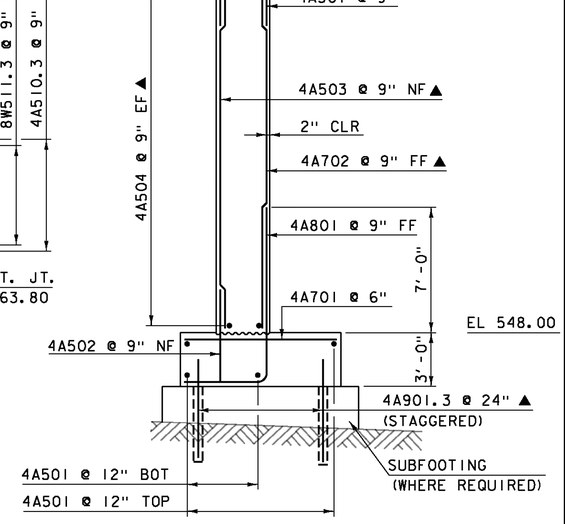

ABUTMENT 4 TYPICAL AT BRIDGE SEAT

SCALE: ¼" = 1'-0"

PROJECT NAME:	HARTFORD
PROJECT NUMBER:	IM 091-2(79)
FILE NAME: sl2al32sub_ab4	PLOT DATE: 04-MAY-2015
PROJECT LEADER: K. HIGGINS	DRAWN BY: J. SALVATORI
DESIGNED BY: G. LAROCHE	CHECKED BY: G. LAROCHE
ABUTMENT 4	SHEET 113R OF 166

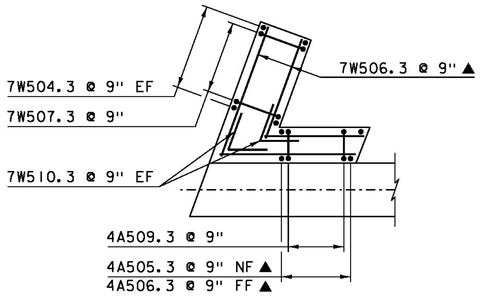

WINGWALL 7 CORNER DETAIL ABOVE BRIDGE SEAT

SCALE: 1/4" = 1'-0"

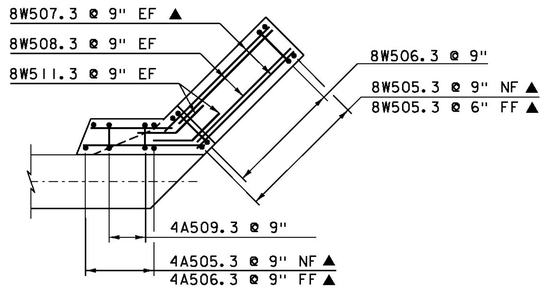

WINGWALL 8 CORNER DETAIL ABOVE BRIDGE SEAT

SCALE: 1/4" = 1'-0"

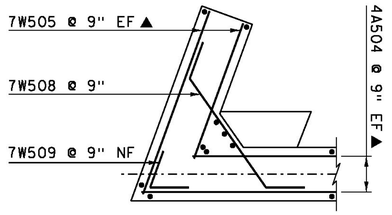

WINGWALL 7 CORNER DETAIL BELOW BRIDGE SEAT

SCALE: 1/4" = 1'-0"

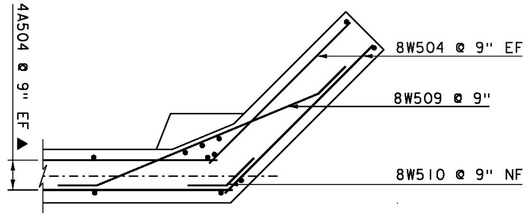

WINGWALL 8 CORNER DETAIL BELOW BRIDGE SEAT

SCALE: 1/4" = 1'-0"

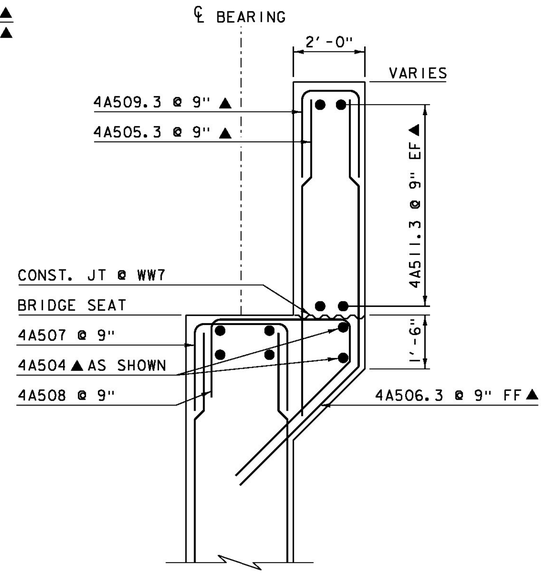

ABUTMENT 4 CHEEK WALL REINFORCING @ WW 7

SCALE: 1/4" = 1'-0"

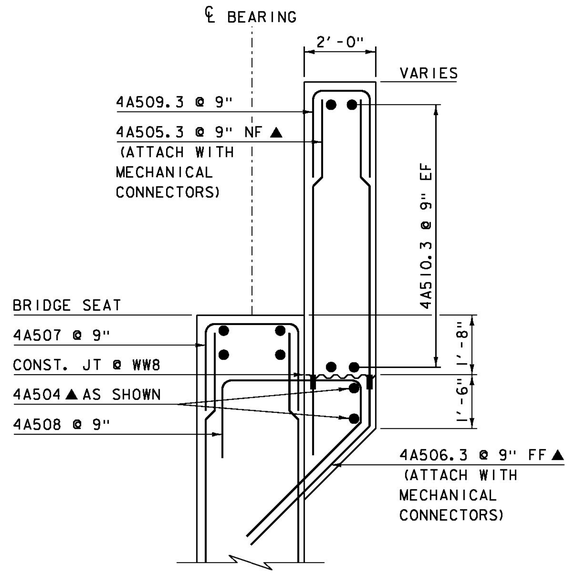

ABUTMENT 4 CHEEK WALL REINFORCING @ WW 8

SCALE: 1/4" = 1'-0"

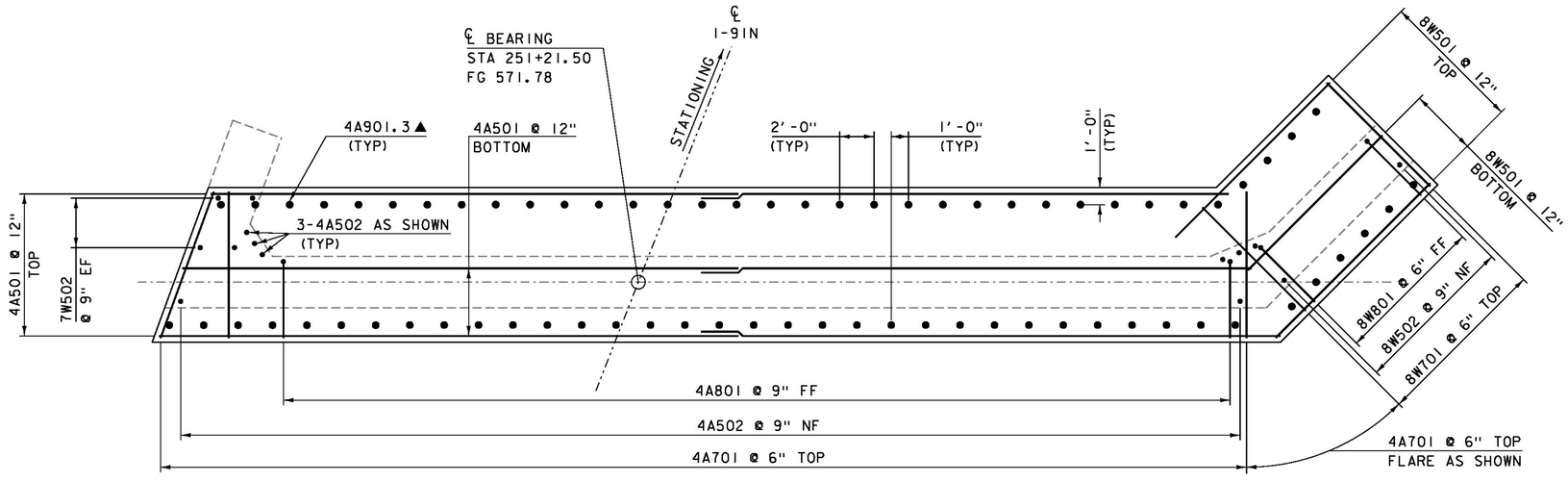

ABUTMENT 4 FOOTING PLAN

SCALE: 1/4" = 1'-0"

NOTE:

NF = NEAR FACE
FF = FAR FACE
EF = EACH FACE
▲ = CUT TO FIT IN FIELD
▬ = MECHANICAL CONNECTOR
3" CLEAR, UNLESS OTHERWISE SPECIFIED ON THE PLANS.
2'-2" LAP FOR #5 BAR
2'-7" LAP FOR #6 BAR
3'-5" LAP FOR #7 BAR
4'-6" LAP FOR #8 BAR

PROJECT NAME:	HARTFORD
PROJECT NUMBER:	IM 091-2(79)
FILE NAME: s12a132sub_ab4	PLOT DATE: 15-DEC-2014
PROJECT LEADER: K. HIGGINS	DRAWN BY: J. SALVATORI
DESIGNED BY: G. LAROCHE	CHECKED BY: G. LAROCHE
ABUTMENT 4 FOOTING	SHEET 114 OF 166

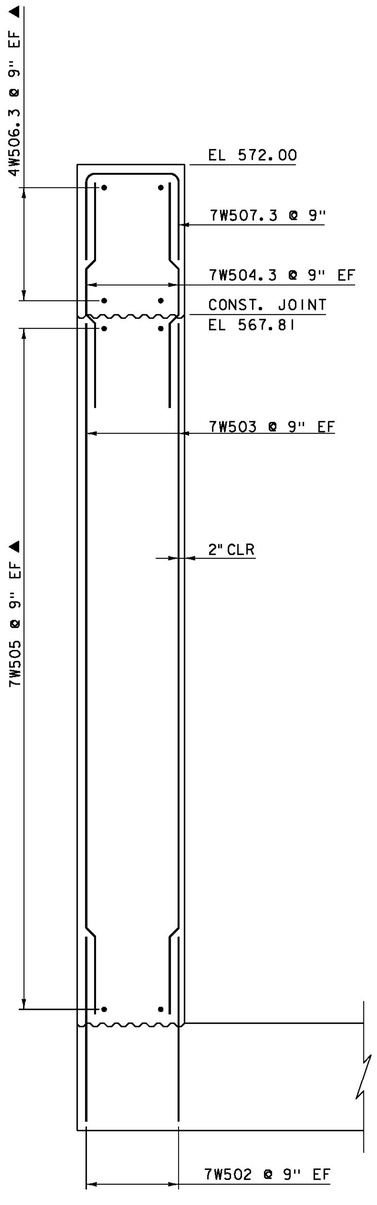

WINGWALL 7 TYPICAL

SCALE: ½" = 1'-0"

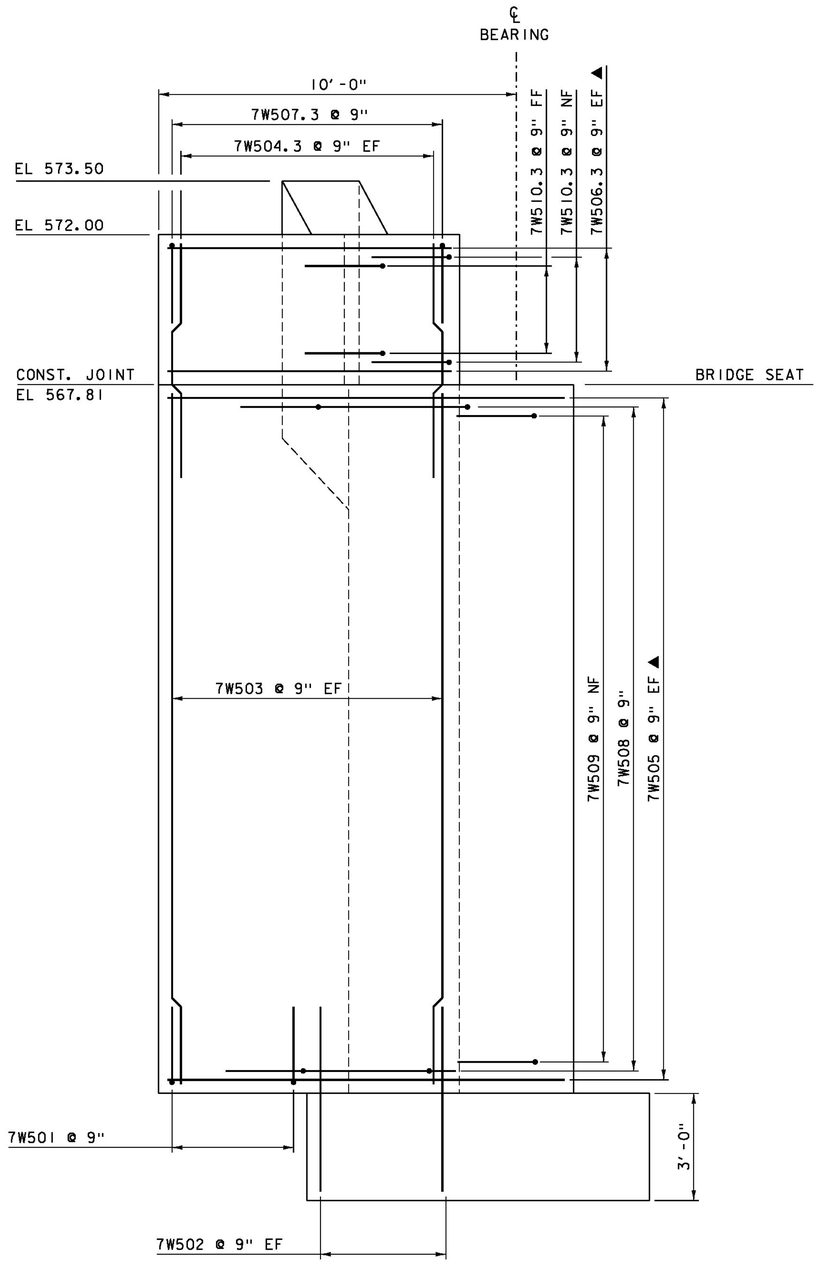

WINGWALL 7 ELEVATION

SCALE: ½" = 1'-0"

NOTE:

NF = NEAR FACE
FF = FAR FACE
EF = EACH FACE
▲ = CUT TO FIT IN FIELD
▬ = MECHANICAL CONNECTOR
3" CLEAR, UNLESS OTHERWISE SPECIFIED ON THE PLANS.
2'-2" LAP FOR #5 BAR
2'-7" LAP FOR #6 BAR
3'-5" LAP FOR #7 BAR
4'-6" LAP FOR #8 BAR

PROJECT NAME: HARTFORD
PROJECT NUMBER: IM 091-2(79)

FILE NAME: s12a132sub_ab4
PROJECT LEADER: K. HIGGINS
DESIGNED BY: G. LAROCHE
WINGWALL 7 DETAILS

PLOT DATE: 15-DEC-2014
DRAWN BY: J. SALVATORI
CHECKED BY: G. LAROCHE
SHEET 115 OF 166

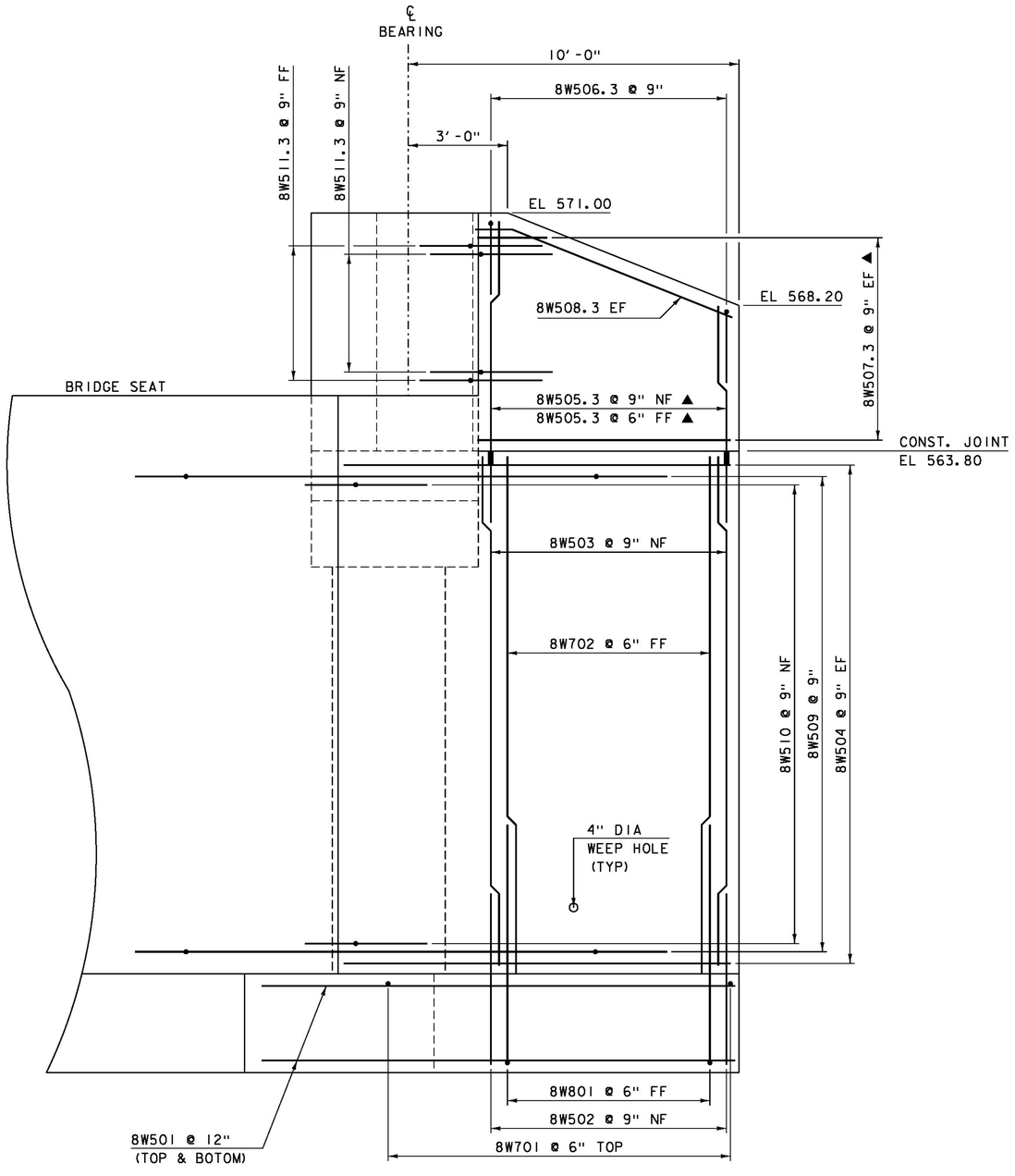

WINGWALL 8 ELEVATION

SCALE: ½" = 1'-0"

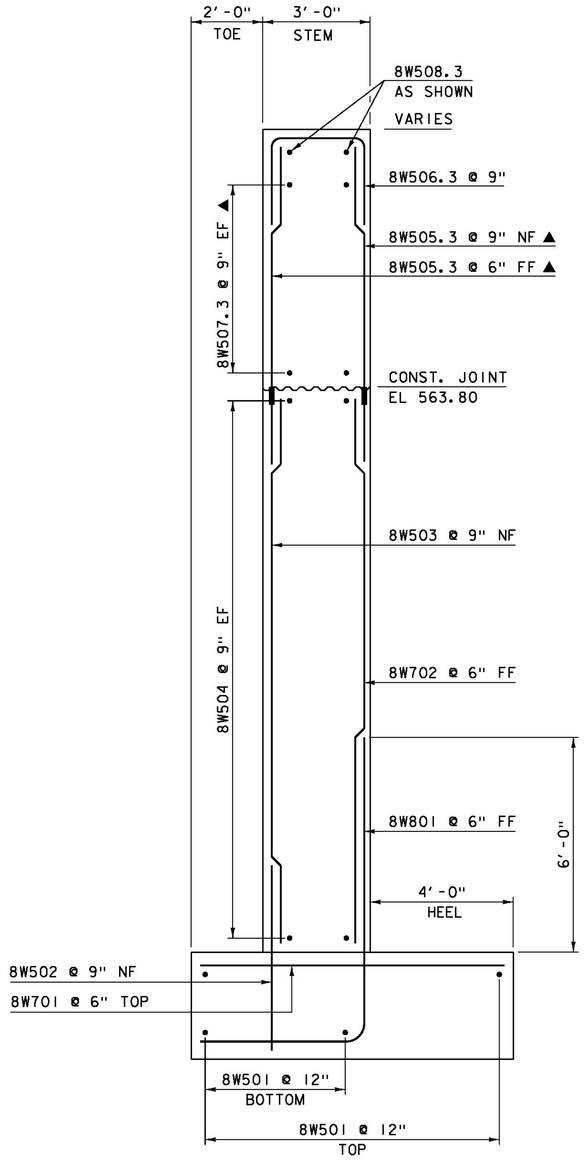

WINGWALL 8 TYPICAL

SCALE: ½" = 1'-0"

NOTE:

NF = NEAR FACE
FF = FAR FACE
EF = EACH FACE
▲ = CUT TO FIT IN FIELD
▬ = MECHANICAL CONNECTOR
3" CLEAR, UNLESS OTHERWISE SPECIFIED ON THE PLANS.
2'-2" LAP FOR #5 BAR
2'-7" LAP FOR #6 BAR
3'-5" LAP FOR #7 BAR
4'-6" LAP FOR #8 BAR

PROJECT NAME: HARTFORD
PROJECT NUMBER: IM 091-2(79)

FILE NAME: sl2al32sub_ab4
PROJECT LEADER: K. HIGGINS
DESIGNED BY: G. LAROCHE
WINGWALL 8 DETAILS

PLOT DATE: 15-DEC-2014
DRAWN BY: J. SALVATORI
CHECKED BY: G. LAROCHE
SHEET 116 OF 166

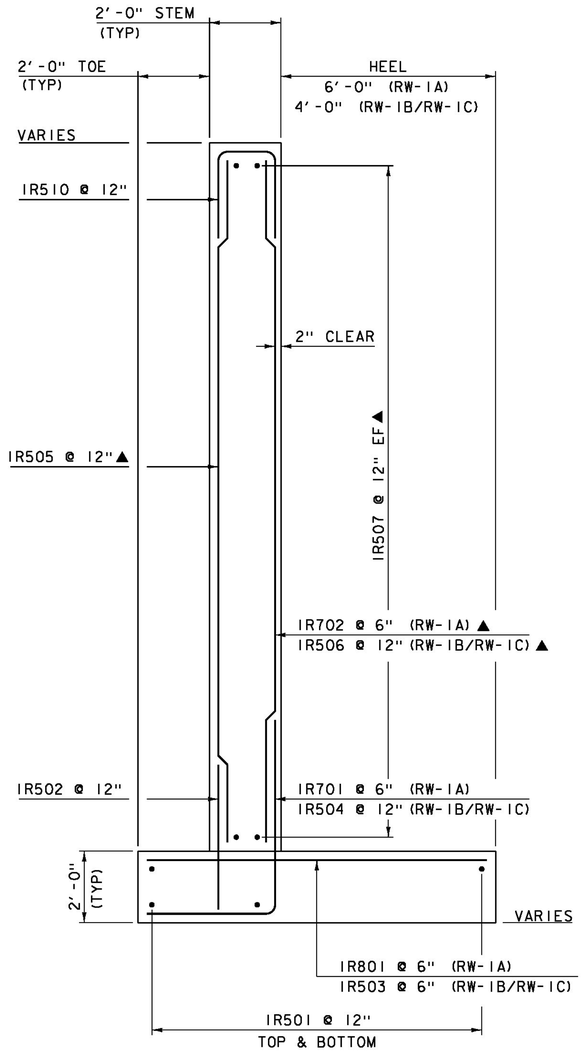

RETAINING WALL #1 TYPICAL

SCALE ½ = 1'-0"

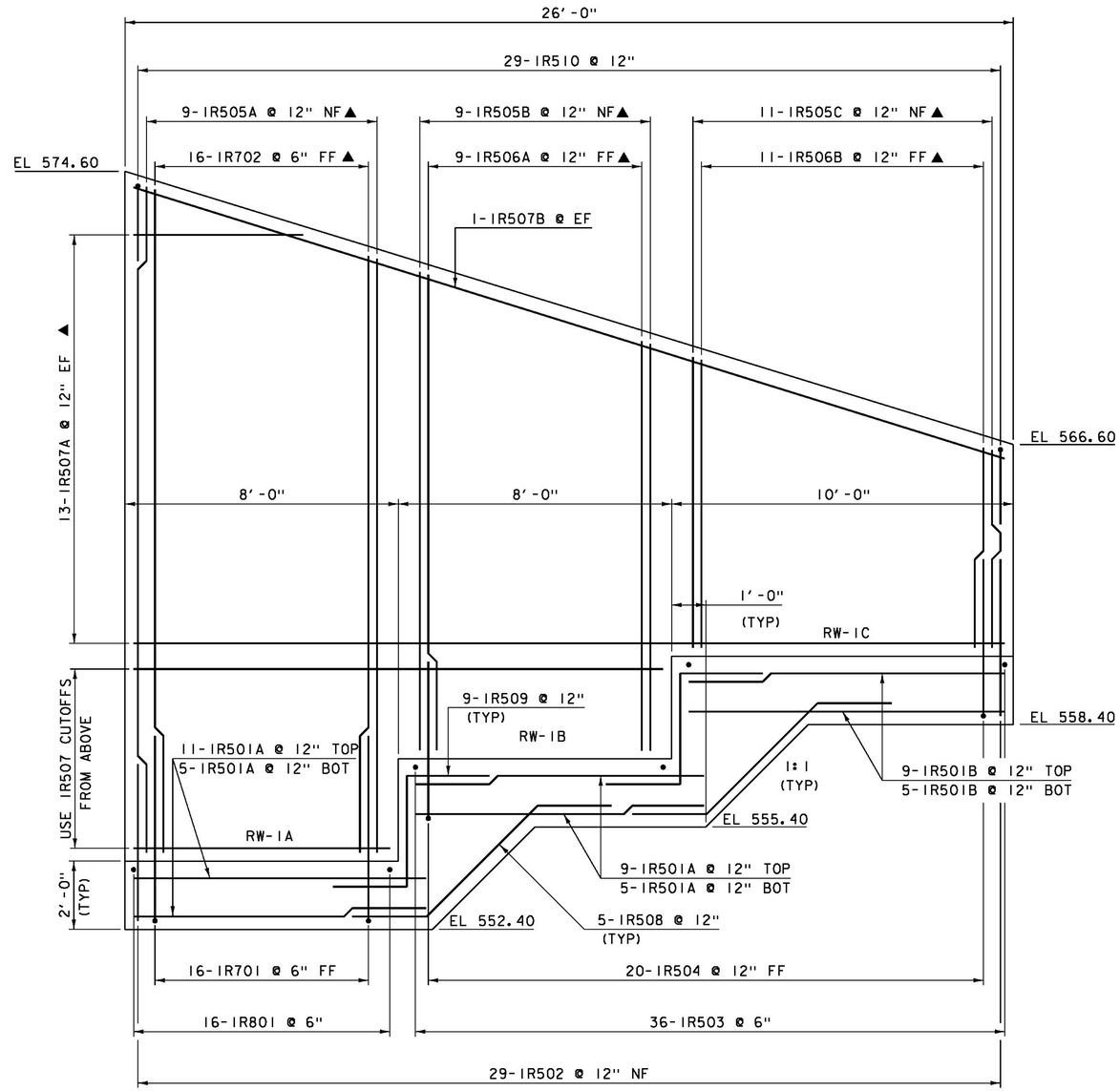

RETAINING WALL #1 ELEVATION

SCALE ½"= 1'-0"

NOTE:

NF = NEAR FACE
FF = FAR FACE
EF = EACH FACE
▲ = CUT TO FIT IN FIELD
3" CLEAR, UNLESS OTHERWISE SPECIFIED ON THE PLANS.
2'-2" LAP FOR #5 BAR
2'-7" LAP FOR #6 BAR
3'-5" LAP FOR #7 BAR
4'-6" LAP FOR #8 BAR

PROJECT NAME: HARTFORD
PROJECT NUMBER: IM 091-2(79)

FILE NAME: sl2al32retwall.dgn
PROJECT LEADER: K. HIGGINS
DESIGNED BY: G. LAROCHE
RETAINING WALL #1

PLOT DATE: 15-DEC-2014
DRAWN BY: J. SALVATORI
CHECKED BY: J. GRIGAS
SHEET 117 OF 166

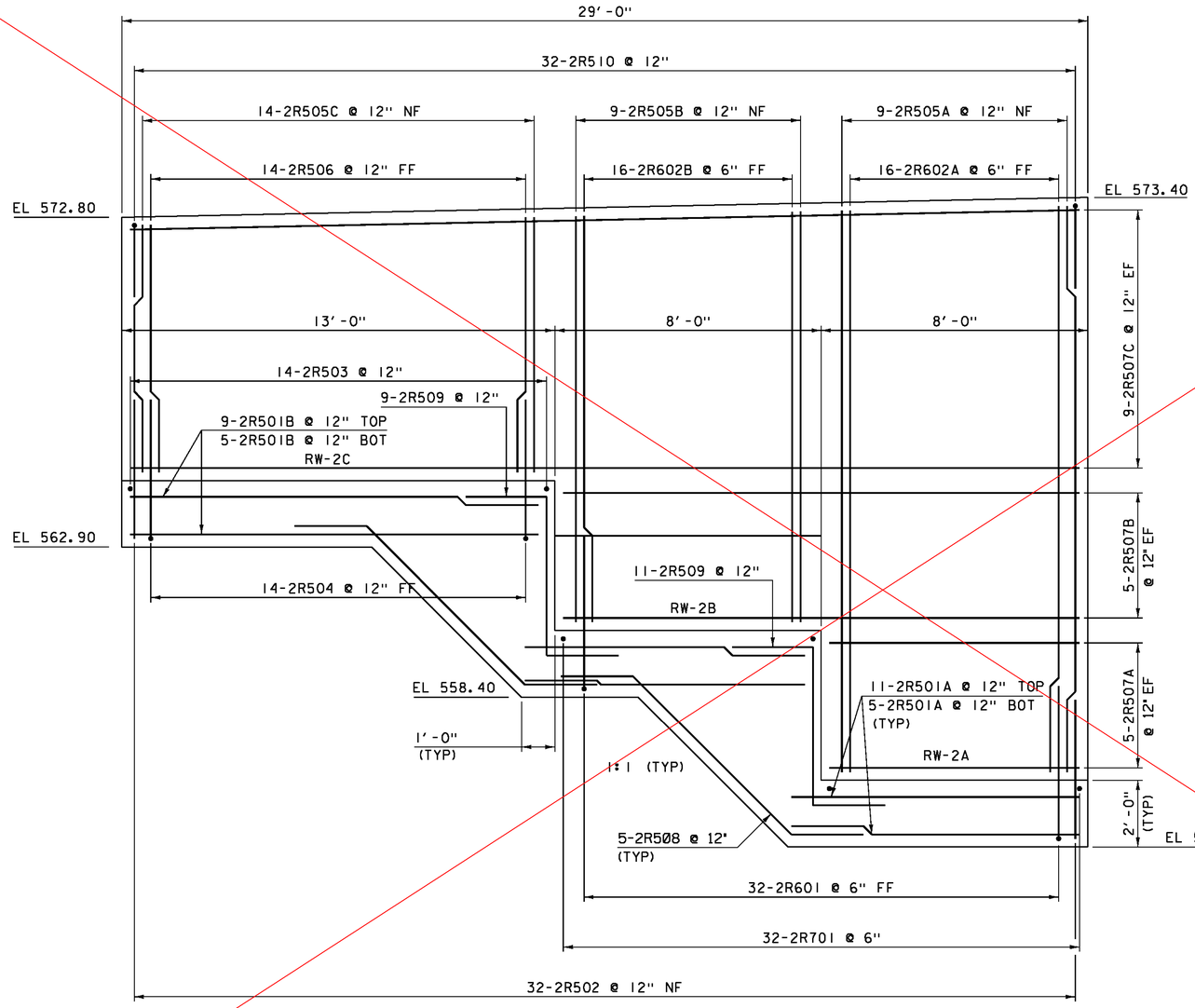

RETAINING WALL #2 ELEVATION

SCALE 1/2 =1'-0"

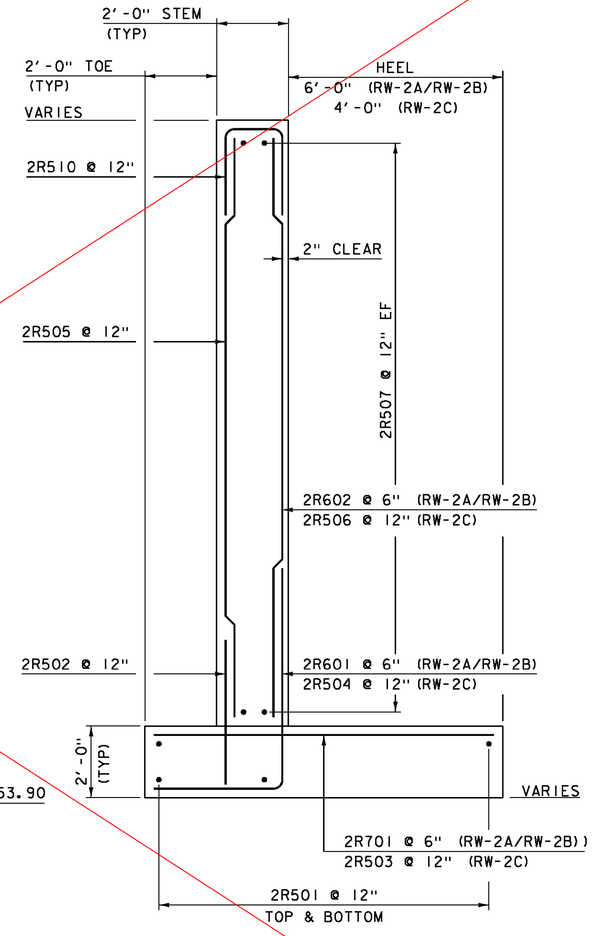

RETAINING WALL #2 TYPICAL

SCALE 1/2 =1'-0"

SEE SHEET 118-R

NOTE:

NF = NEAR FACE
FF = FAR FACE
EF = EACH FACE
▲ = CUT TO FIT IN FIELD
3" CLEAR, UNLESS OTHERWISE SPECIFIED ON THE PLANS.
2'-2" LAP FOR #5 BAR
2'-7" LAP FOR #6 BAR
3'-5" LAP FOR #7 BAR
4'-6" LAP FOR #8 BAR

PROJECT NAME: HARTFORD
PROJECT NUMBER: IM 091-2(79)

FILE NAME: sl2al32retwall.dgn
PROJECT LEADER: K. HIGGINS
DESIGNED BY: G. LAROCHE
RETAINING WALL #2

PLOT DATE: 15-DEC-2014
DRAWN BY: J. SALVATORI
CHECKED BY: J. GRIGAS
SHEET 118 OF 166

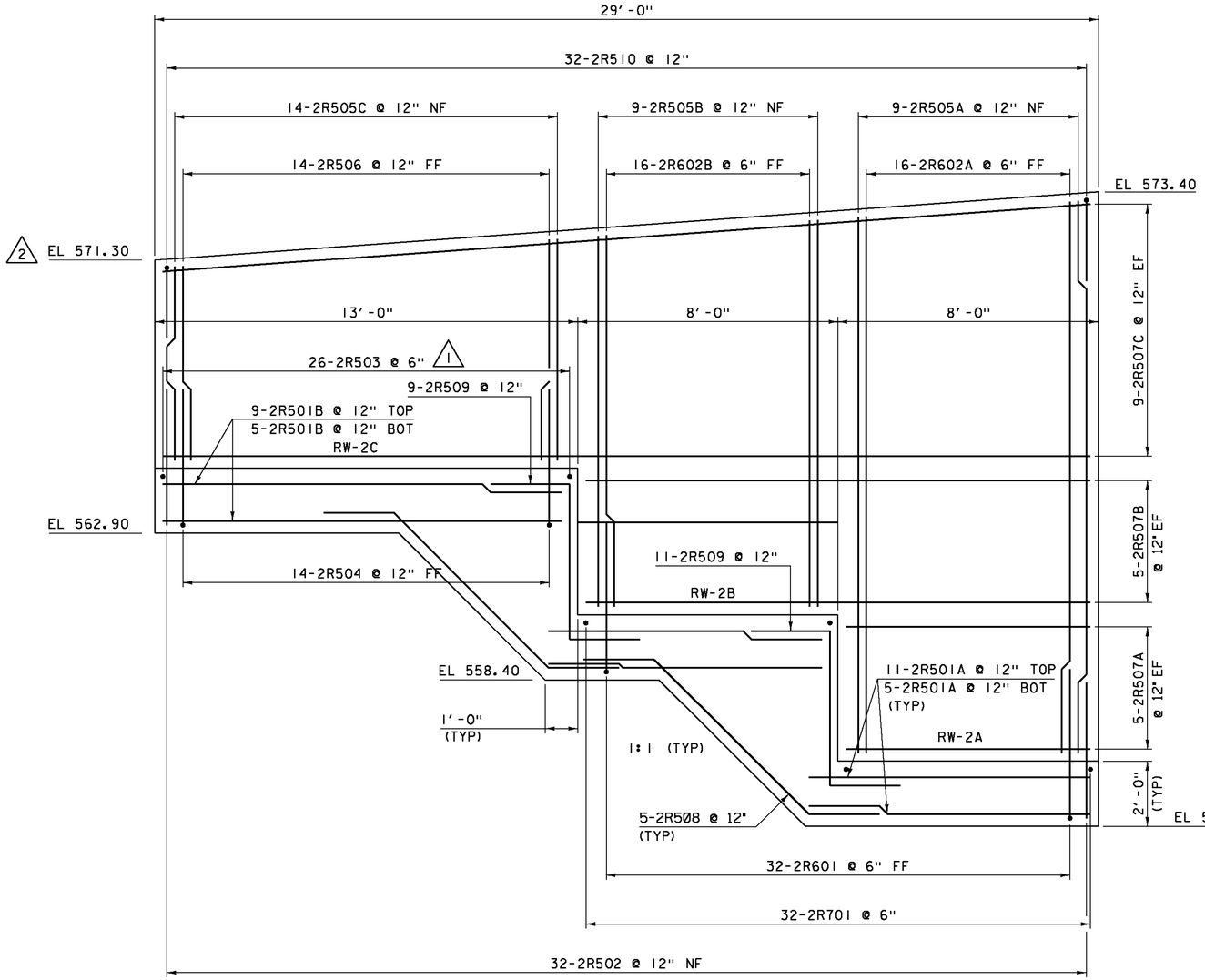

RETAINING WALL #2 ELEVATION

SCALE 1/2 = 1'-0"

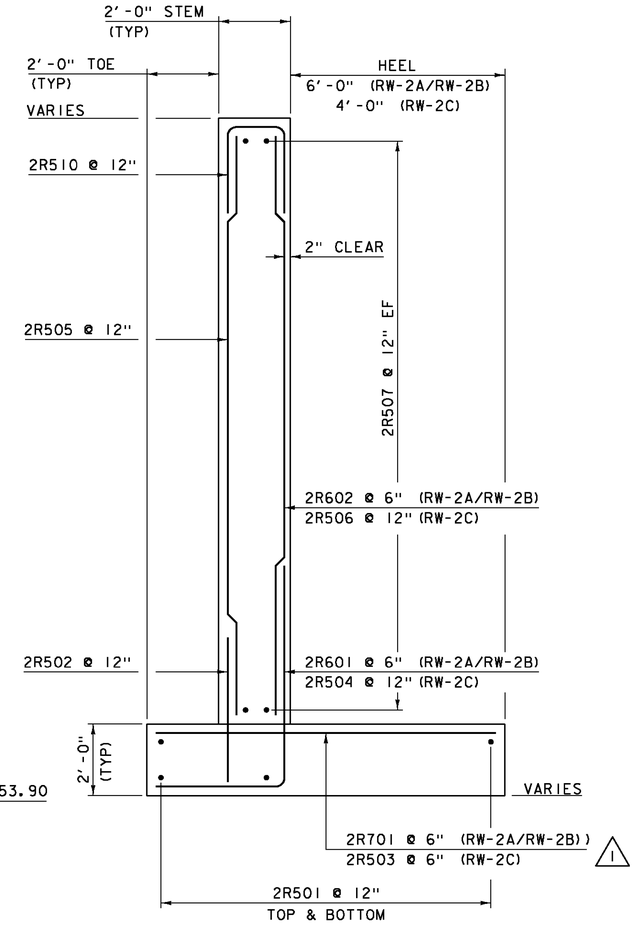

RETAINING WALL #2 TYPICAL

SCALE 1/2 = 1'-0"

REVISION	DATE	DESCRIPTION	BY
1	03-02-2015	UPDATED SPACING AND NUMBER OF 2R503 BARS	JS
2	04-28-2015	REVISED END ELEVATION	JS

NOTE:

NF = NEAR FACE
FF = FAR FACE
EF = EACH FACE
▲ = CUT TO FIT IN FIELD
3" CLEAR, UNLESS OTHERWISE SPECIFIED ON THE PLANS.
2'-2" LAP FOR #5 BAR
2'-7" LAP FOR #6 BAR
3'-5" LAP FOR #7 BAR
4'-6" LAP FOR #8 BAR

PROJECT NAME: HARTFORD
PROJECT NUMBER: IM 091-2(79)

FILE NAME: si2al32retwall.dgn
PROJECT LEADER: K. HIGGINS
DESIGNED BY: G. LAROCHE
RETAINING WALL #2

PLOT DATE: 28-APR-2015
DRAWN BY: J. SALVATORI
CHECKED BY: J. GRIGAS
SHEET 118R OF 166

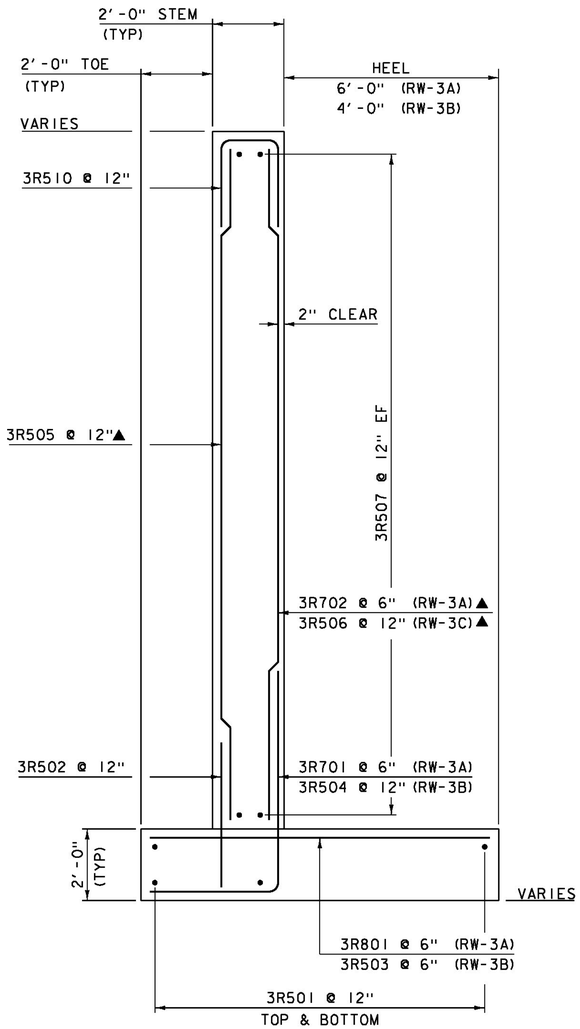

RETAINING WALL #3 TYPICAL

SCALE ½ = 1'-0"

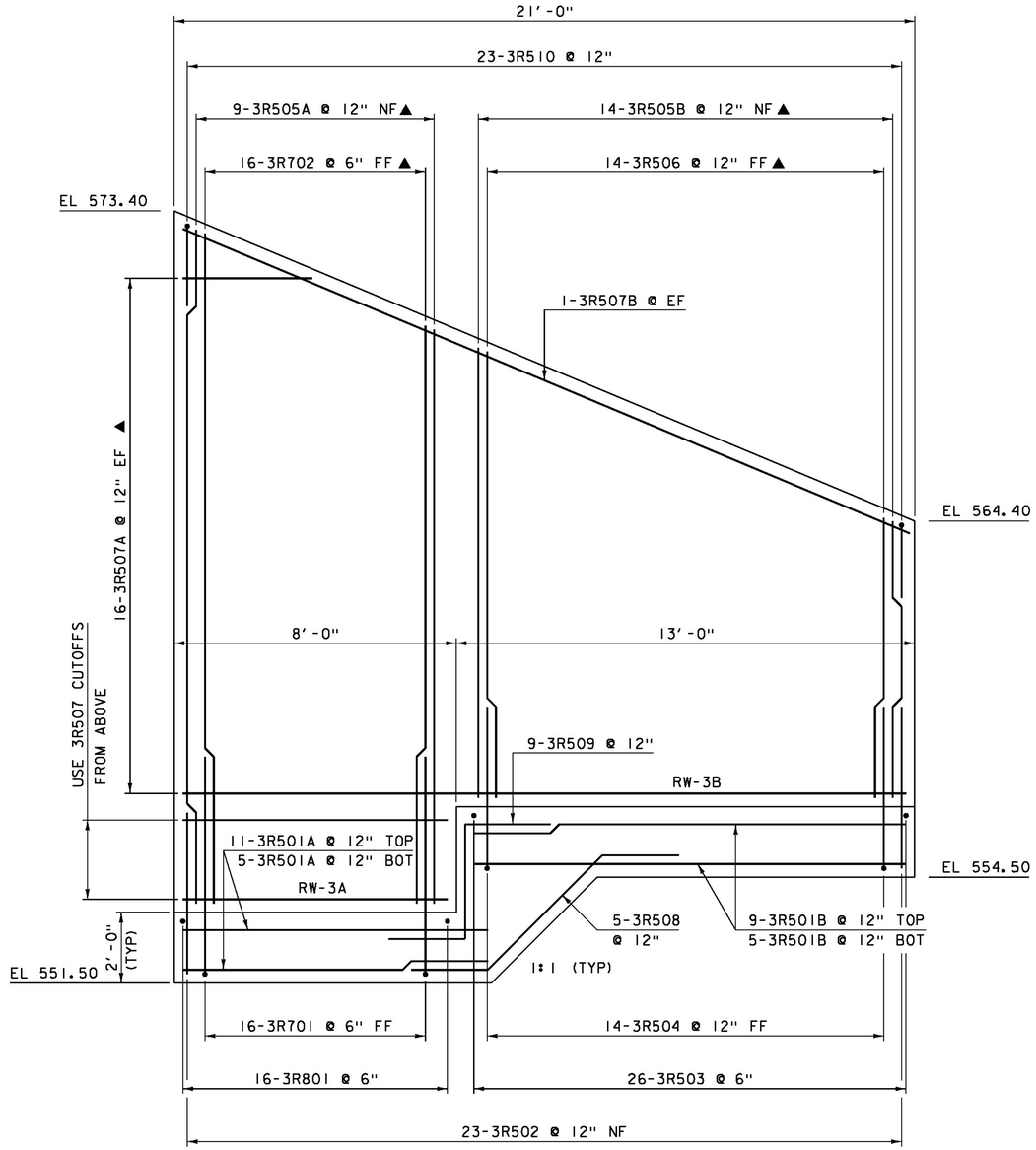

RETAINING WALL #3 ELEVATION

SCALE ½ = 1'-0"

NOTE:

NF = NEAR FACE
FF = FAR FACE
EF = EACH FACE
▲ = CUT TO FIT IN FIELD
3" CLEAR, UNLESS OTHERWISE SPECIFIED ON THE PLANS.
2'-2" LAP FOR #5 BAR
2'-7" LAP FOR #6 BAR
3'-5" LAP FOR #7 BAR
4'-6" LAP FOR #8 BAR

PROJECT NAME:	HARTFORD
PROJECT NUMBER:	IM 091-2(79)
FILE NAME: sl2al32retwall.dgn	PLOT DATE: 15-DEC-2014
PROJECT LEADER: K. HIGGINS	DRAWN BY: J. SALVATORI
DESIGNED BY: G. LAROCHE	CHECKED BY: J. GRIGAS
RETAINING WALL #3	SHEET 119 OF 166

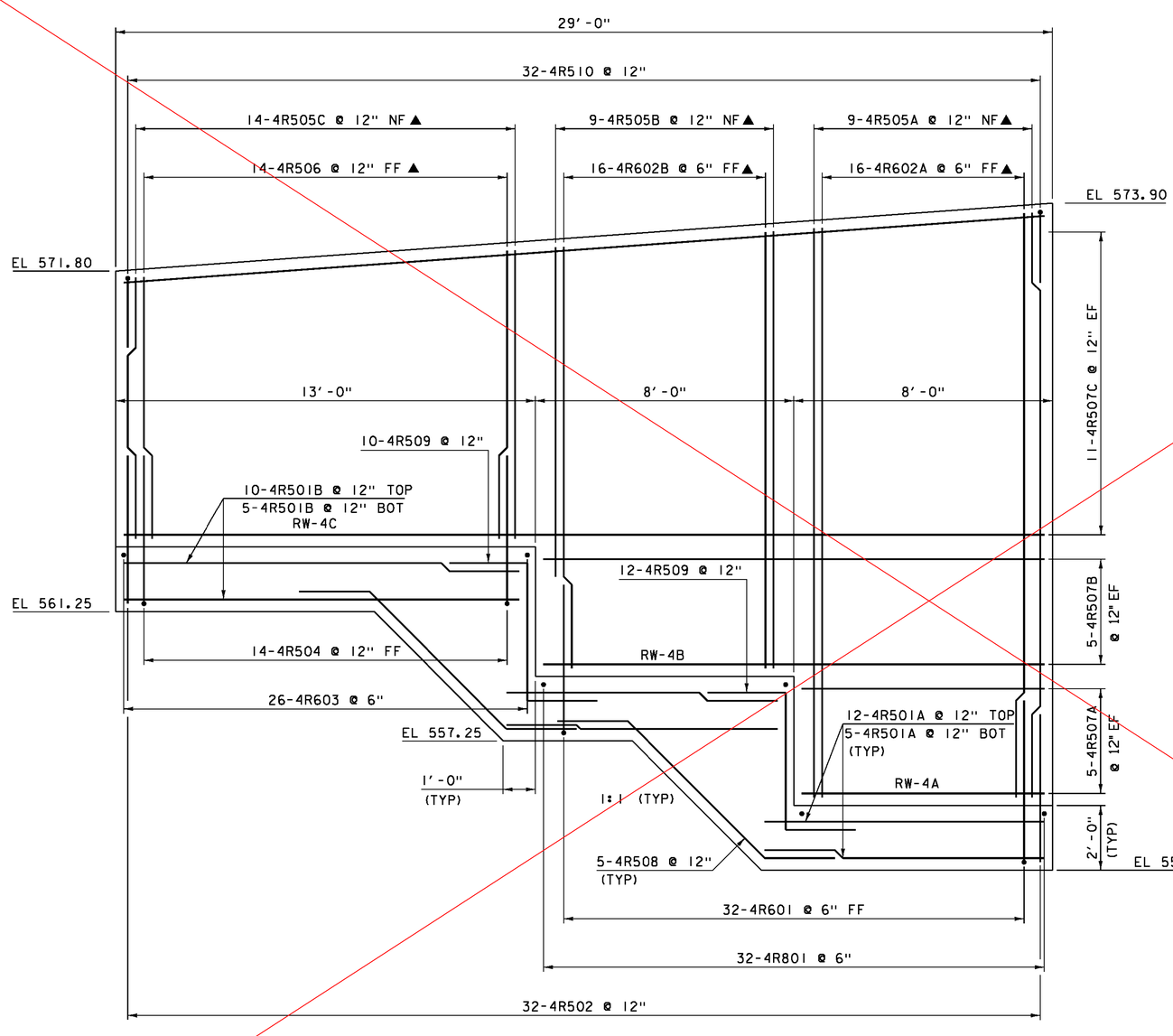

RETAINING WALL #4 ELEVATION

SCALE ½ = 1'-0"

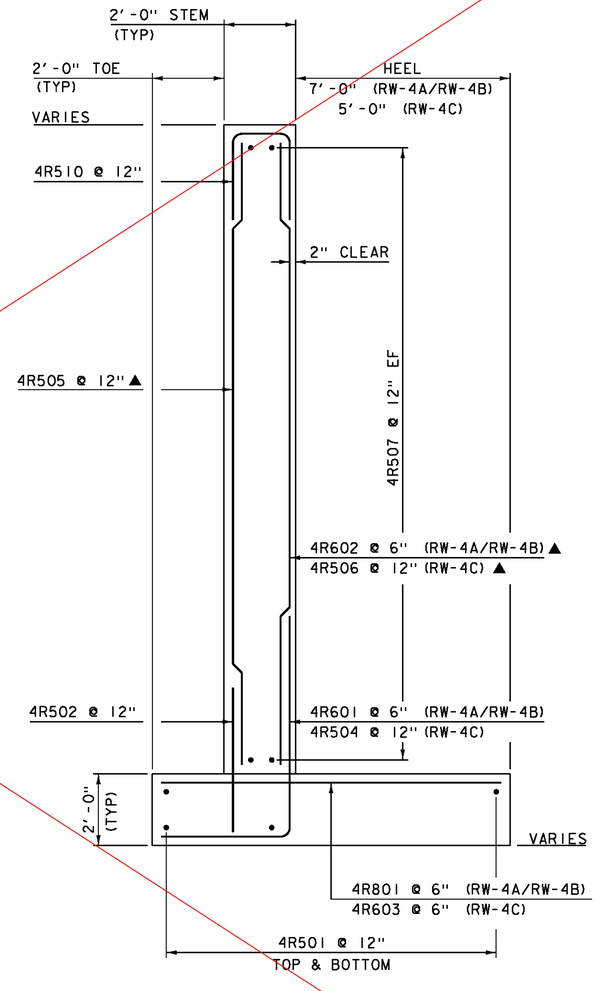

RETAINING WALL #4 TYPICAL

SCALE ½ = 1'-0"

NOTE:

NF = NEAR FACE
FF = FAR FACE
EF = EACH FACE
▲ = CUT TO FIT IN FIELD
3" CLEAR, UNLESS OTHERWISE SPECIFIED ON THE PLANS.
2'-2" LAP FOR #5 BAR
2'-7" LAP FOR #6 BAR
3'-5" LAP FOR #7 BAR
4'-6" LAP FOR #8 BAR

SEE SHEET 120-R

PROJECT NAME:	HARTFORD
PROJECT NUMBER:	IM 091-2(79)
FILE NAME: sl2al32retwall.dgn	PLOT DATE: 15-DEC-2014
PROJECT LEADER: K. HIGGINS	DRAWN BY: J. SALVATORI
DESIGNED BY: G. LAROCHE	CHECKED BY: J. GRIGAS
RETAINING WALL #4	SHEET 120 OF 166

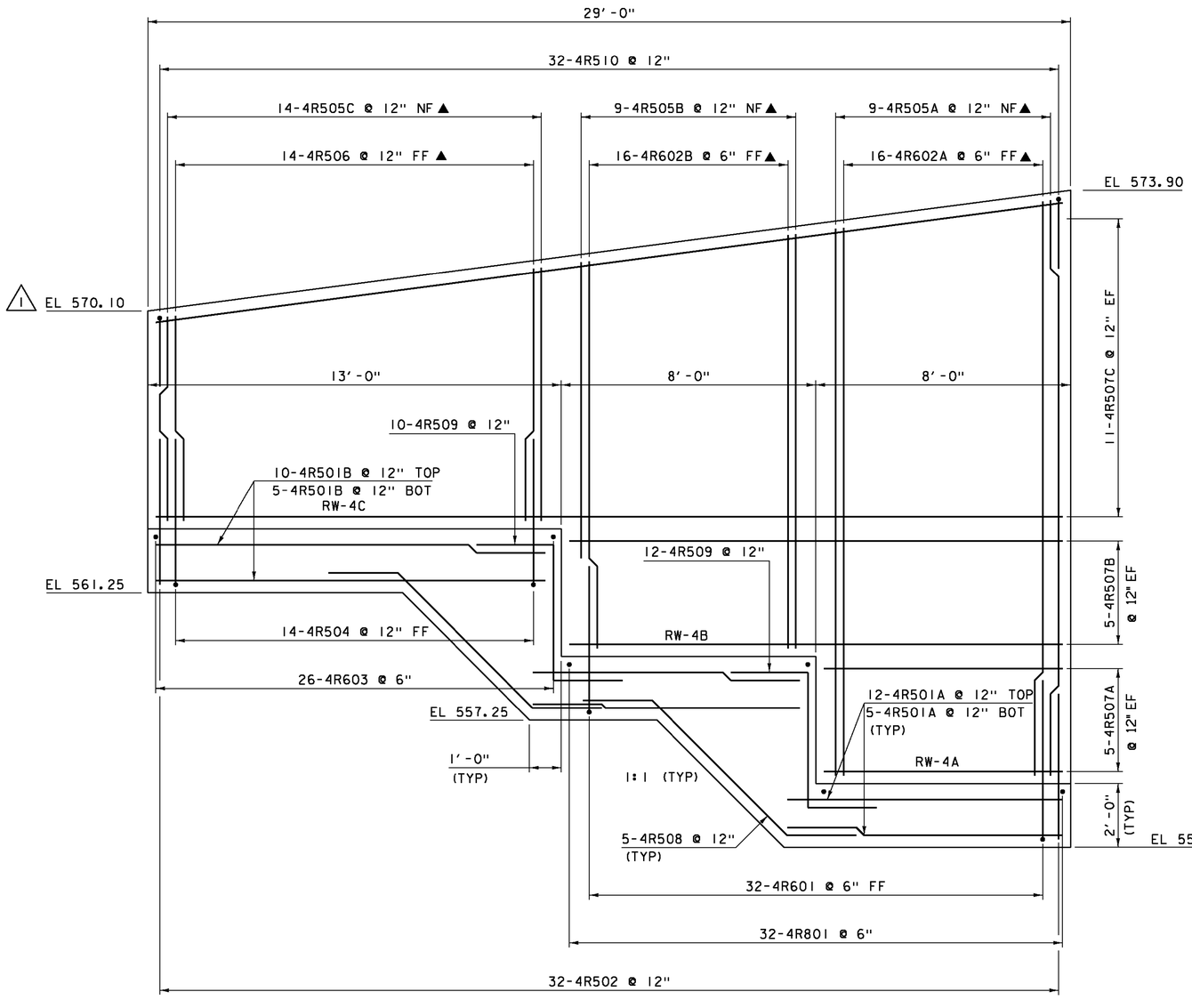

RETAINING WALL #4 ELEVATION

SCALE ½ = 1'-0"

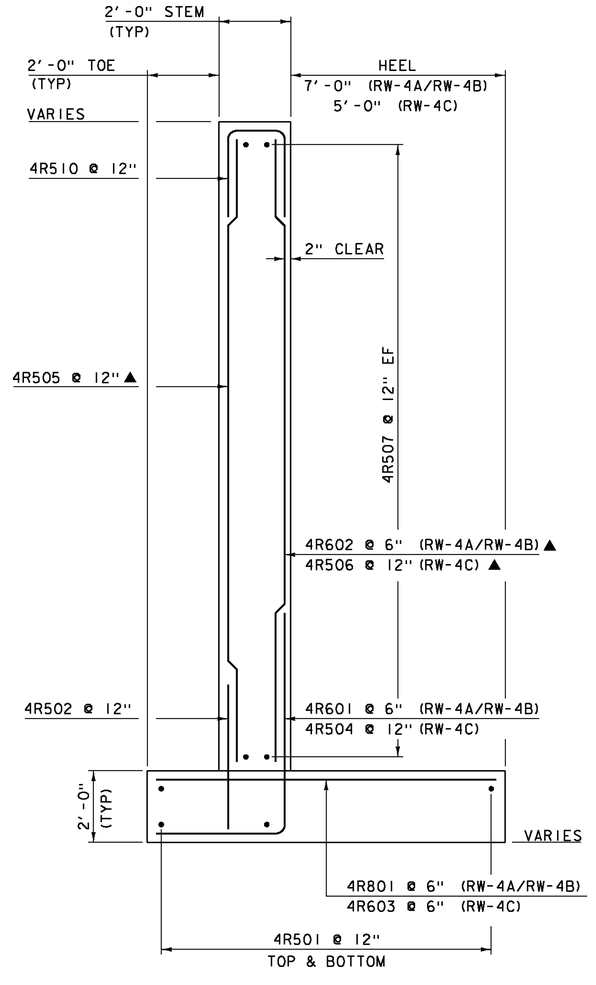

RETAINING WALL #4 TYPICAL

SCALE ½ = 1'-0"

REVISION	DATE	DESCRIPTION	BY
1	04-23-2015	REVISED END ELEVATION	JS

NOTE:

NF = NEAR FACE
FF = FAR FACE
EF = EACH FACE
▲ = CUT TO FIT IN FIELD
3" CLEAR, UNLESS OTHERWISE SPECIFIED ON THE PLANS.
2'-2" LAP FOR #5 BAR
2'-7" LAP FOR #6 BAR
3'-5" LAP FOR #7 BAR
4'-6" LAP FOR #8 BAR

PROJECT NAME: HARTFORD
PROJECT NUMBER: IM 091-2(79)

FILE NAME: sl2al32retwall.dgn
PROJECT LEADER: K. HIGGINS
DESIGNED BY: G. LAROCHE
RETAINING WALL #4

PLOT DATE: 23-APR-2015
DRAWN BY: J. SALVATORI
CHECKED BY: J. GRIGAS
SHEET 120R OF 166

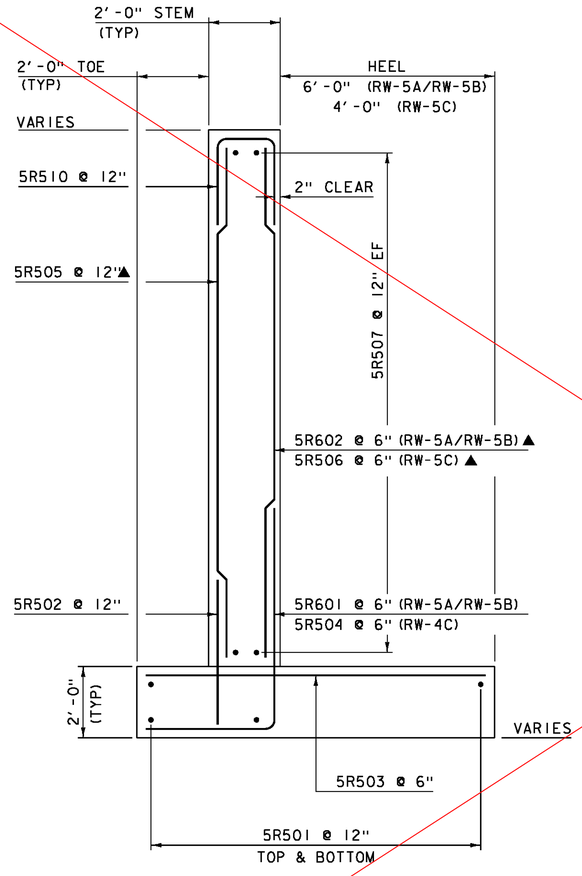

RETAINING WALL #5 TYPICAL

SCALE ½ = 1'-0"

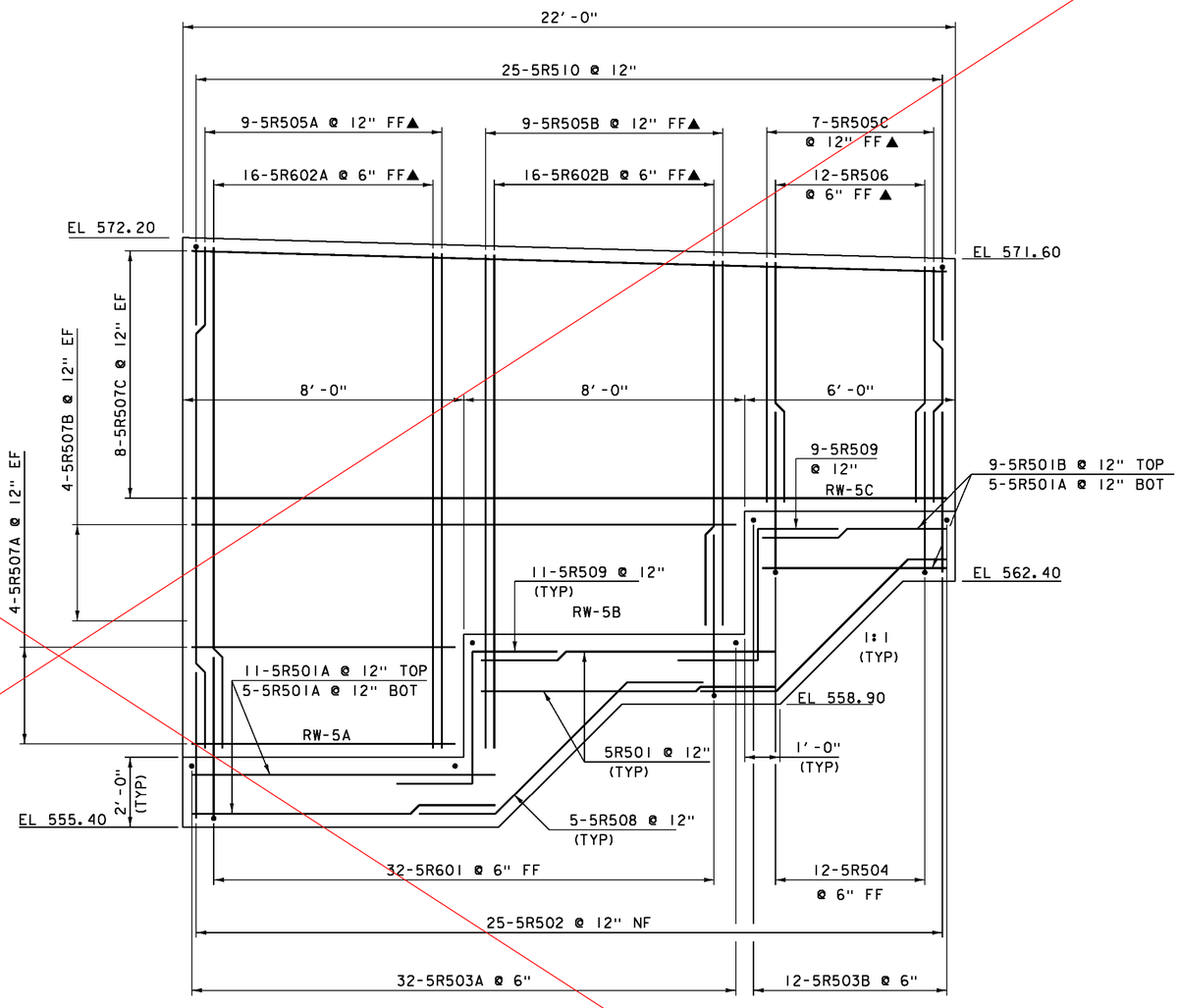

RETAINING WALL #5 ELEVATION

SCALE ½ = 1'-0"

SEE SHEET 121-R

NOTE:

NF = NEAR FACE
FF = FAR FACE
EF = EACH FACE
▲ = CUT TO FIT IN FIELD
3" CLEAR, UNLESS OTHERWISE SPECIFIED ON THE PLANS.
2'-2" LAP FOR #5 BAR
2'-7" LAP FOR #6 BAR
3'-5" LAP FOR #7 BAR
4'-6" LAP FOR #8 BAR

PROJECT NAME: HARTFORD
PROJECT NUMBER: IM 091-2(79)

FILE NAME: sl2al32retwall.dgn
PROJECT LEADER: K. HIGGINS
DESIGNED BY: G. LAROCHE
RETAINING WALL #5

PLOT DATE: 15-DEC-2014
DRAWN BY: J. SALVATORI
CHECKED BY: J. GRIGAS
SHEET 121 OF 166

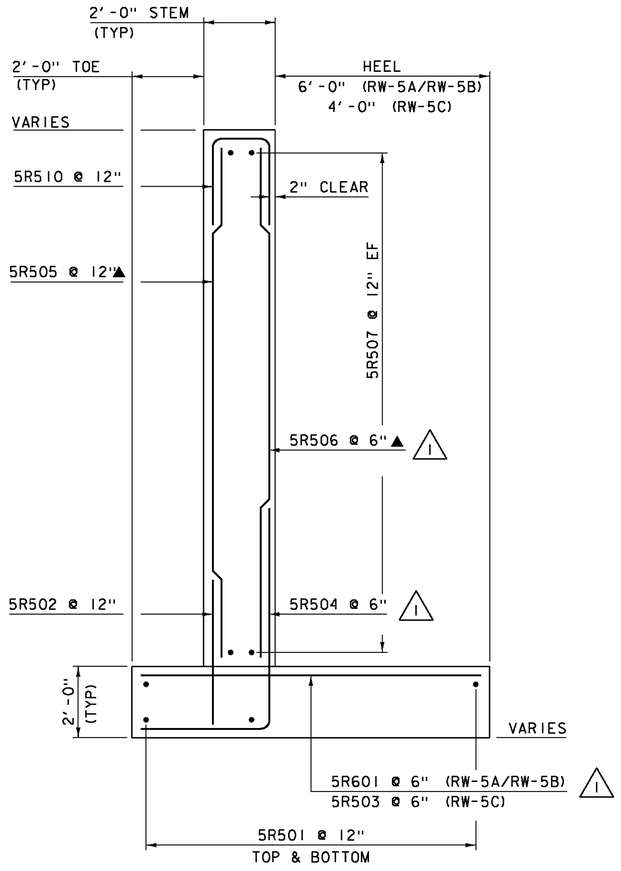

RETAINING WALL #5 TYPICAL

SCALE ½ = 1'-0"

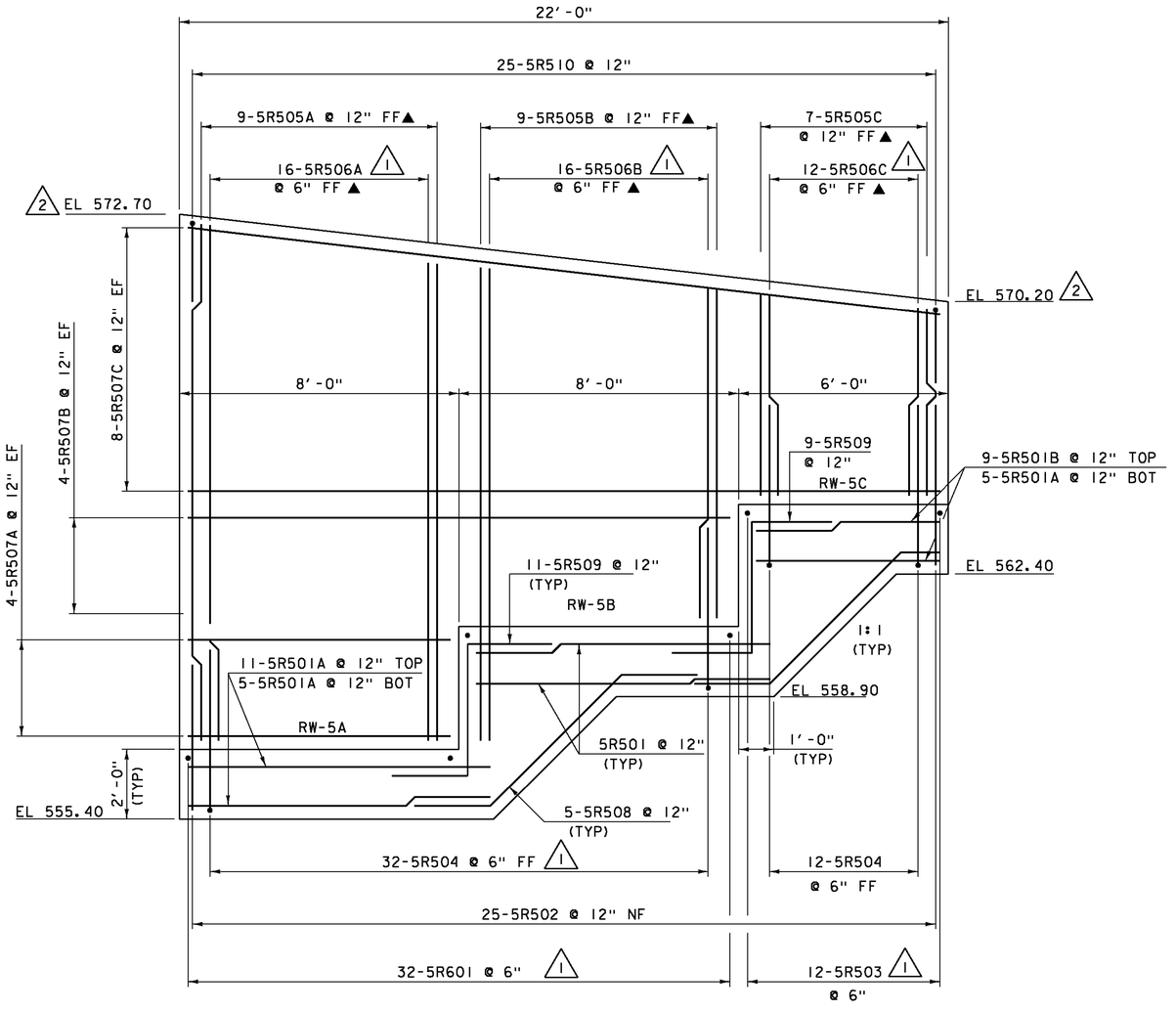

RETAINING WALL #5 ELEVATION

SCALE ½ = 1'-0"

REVISION	DATE	DESCRIPTION	BY
1	03-05-2015	BAR CHANGES PER DESIGN	JS
2	04-28-2015	REVISED END ELEVATION	JS

NOTE:

NF = NEAR FACE
FF = FAR FACE
EF = EACH FACE
▲ = CUT TO FIT IN FIELD
3" CLEAR, UNLESS OTHERWISE SPECIFIED ON THE PLANS.
2'-2" LAP FOR #5 BAR
2'-7" LAP FOR #6 BAR
3'-5" LAP FOR #7 BAR
4'-6" LAP FOR #8 BAR

PROJECT NAME: HARTFORD
PROJECT NUMBER: IM 091-2(79)

FILE NAME: sl2al32retwall.dgn
PROJECT LEADER: K. HIGGINS
DESIGNED BY: G. LAROCHE
RETAINING WALL #5

PLOT DATE: 28-APR-2015
DRAWN BY: J. SALVATORI
CHECKED BY: J. GRIGAS
SHEET 121R OF 166

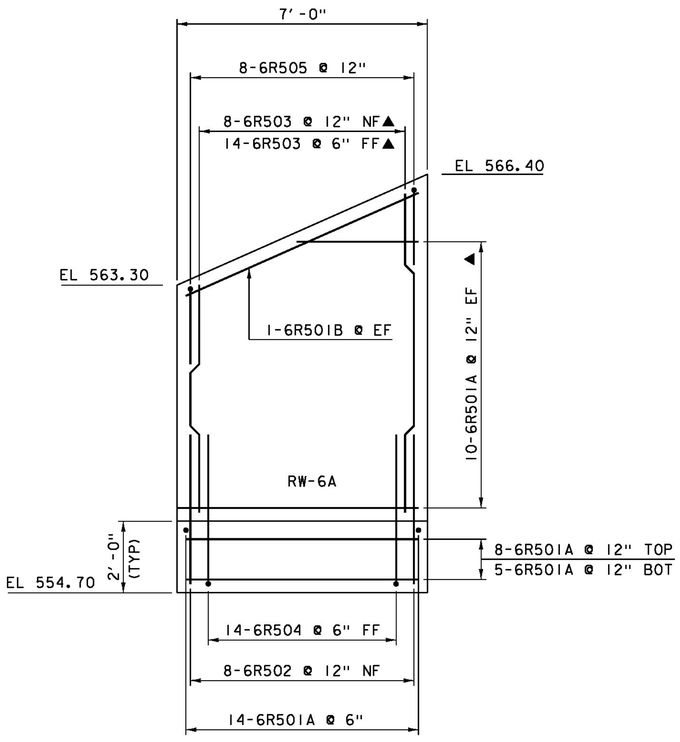

RETAINING WALL #6 TYPICAL

SCALE ½ =1'-0"

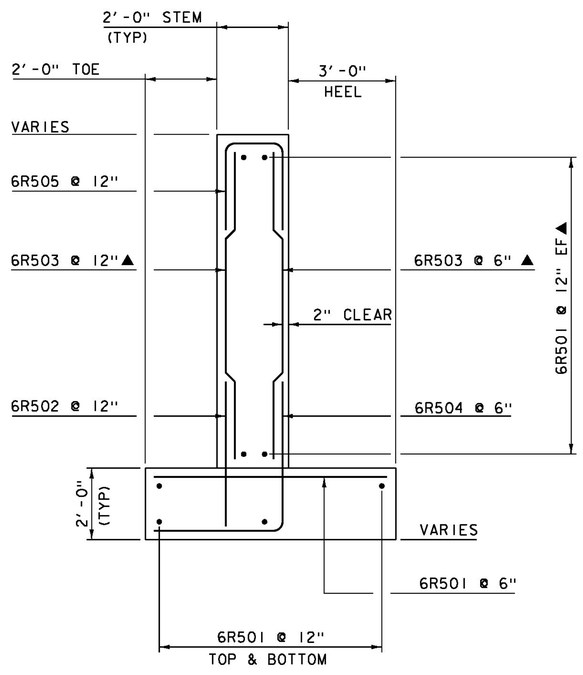

RETAINING WALL #6 TYPICAL

SCALE ½ =1'-0"

NOTE:

NF = NEAR FACE
FF = FAR FACE
EF = EACH FACE
▲ = CUT TO FIT IN FIELD
3" CLEAR, UNLESS OTHERWISE SPECIFIED ON THE PLANS.
2'-2" LAP FOR #5 BAR
2'-7" LAP FOR #6 BAR
3'-5" LAP FOR #7 BAR
4'-6" LAP FOR #8 BAR

PROJECT NAME: HARTFORD	
PROJECT NUMBER: IM 091-2(79)	
FILE NAME: sl2al32retwall.dgn	PLOT DATE: 15-DEC-2014
PROJECT LEADER: K. HIGGINS	DRAWN BY: J. SALVATORI
DESIGNED BY: G. LAROCHE	CHECKED BY: J. GRIGAS
RETAINING WALL #6	SHEET 122 OF 166

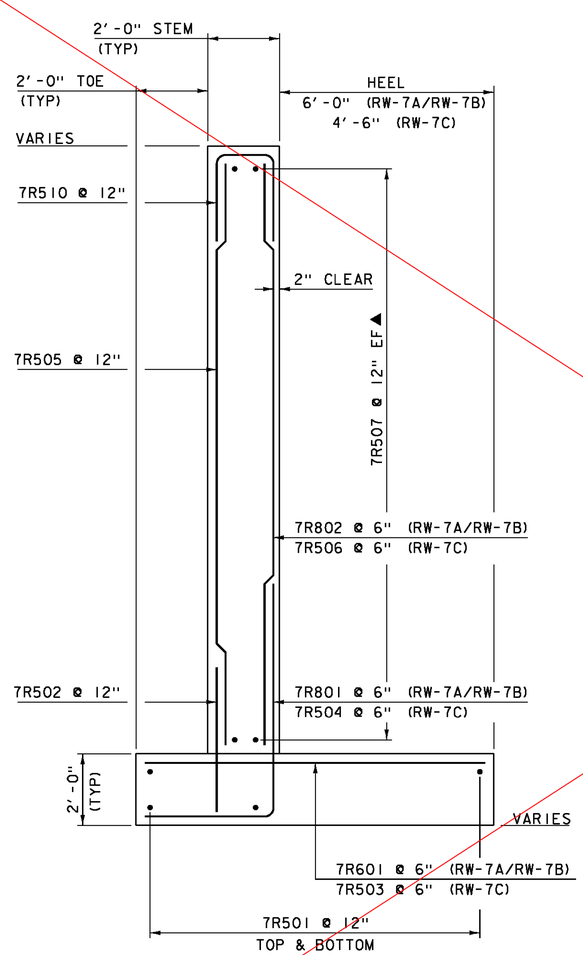

RETAINING WALL #7 TYPICAL

SCALE ½ =1'-0"

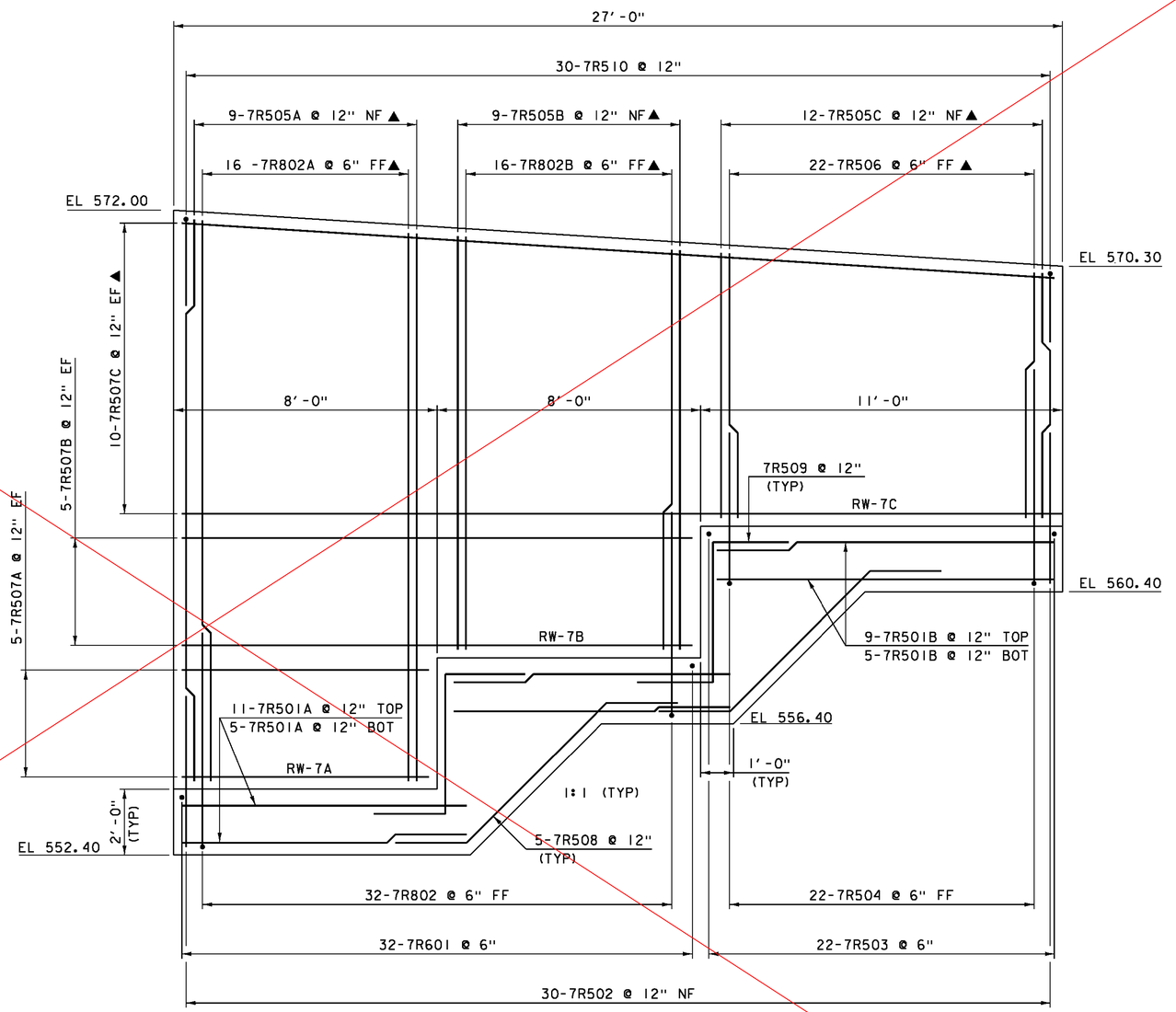

RETAINING WALL #7 ELEVATION

SCALE ½ =1'-0"

SEE SHEET 123-R

NOTE:

NF = NEAR FACE
FF = FAR FACE
EF = EACH FACE
▲ = CUT TO FIT IN FIELD
3" CLEAR, UNLESS OTHERWISE SPECIFIED ON THE PLANS.
2'-2" LAP FOR #5 BAR
2'-7" LAP FOR #6 BAR
3'-5" LAP FOR #7 BAR
4'-6" LAP FOR #8 BAR

PROJECT NAME:	HARTFORD
PROJECT NUMBER:	IM 091-2(79)
FILE NAME: sl2al32retwall.dgn	PLOT DATE: 15-DEC-2014
PROJECT LEADER: K. HIGGINS	DRAWN BY: J. SALVATORI
DESIGNED BY: G. LAROCHE	CHECKED BY: J. GRIGAS
RETAINING WALL #7	SHEET 123 OF 166

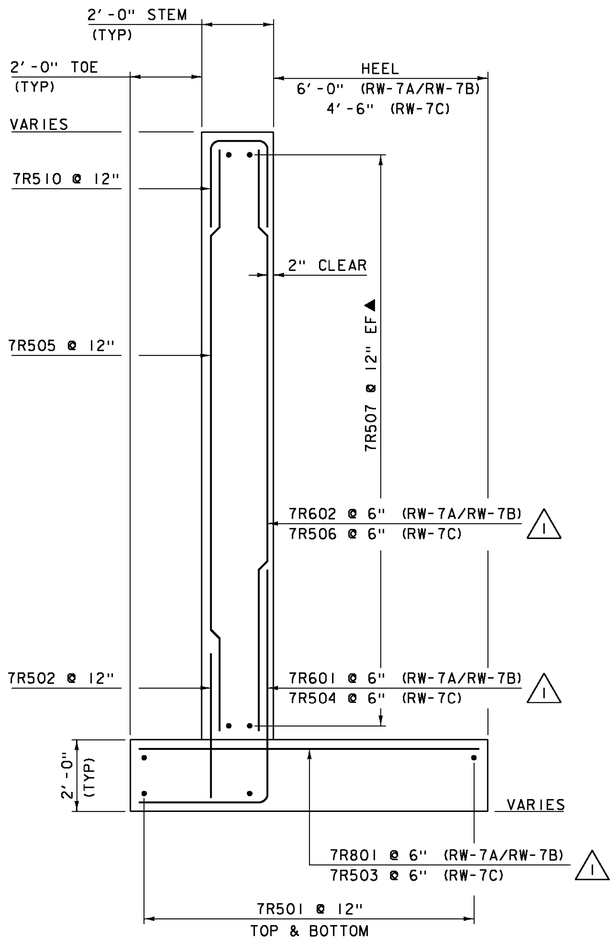

RETAINING WALL #7 TYPICAL

SCALE ½ =1'-0"

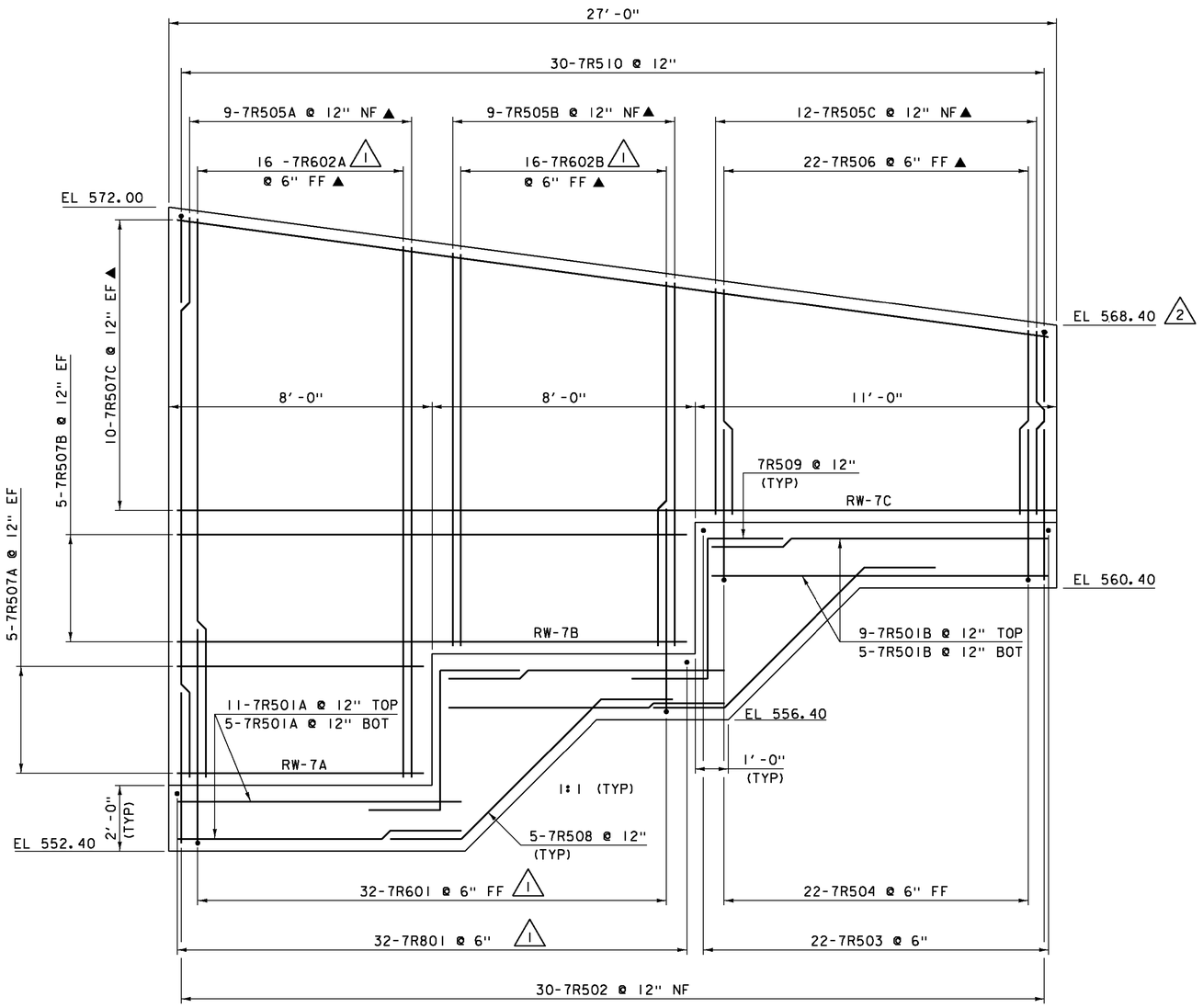

RETAINING WALL #7 ELEVATION

SCALE ½ =1'-0"

NOTE:

NF = NEAR FACE
FF = FAR FACE
EF = EACH FACE
▲ = CUT TO FIT IN FIELD
3" CLEAR, UNLESS OTHERWISE SPECIFIED ON THE PLANS.
2'-2" LAP FOR #5 BAR
2'-7" LAP FOR #6 BAR
3'-5" LAP FOR #7 BAR
4'-6" LAP FOR #8 BAR

REVISION	DATE	DESCRIPTION	BY
1	03-05-2015	BAR CHANGES PER DESIGN	JS
2	04-23-2015	REVISED END ELEVATION	JS

PROJECT NAME: HARTFORD
PROJECT NUMBER: IM 091-2(79)

FILE NAME: sl2al32retwall.dgn
PROJECT LEADER: K. HIGGINS
DESIGNED BY: G. LAROCHE
RETAINING WALL #7

PLOT DATE: 23-APR-2015
DRAWN BY: J. SALVATORI
CHECKED BY: J. GRIGAS
SHEET 123R OF 166

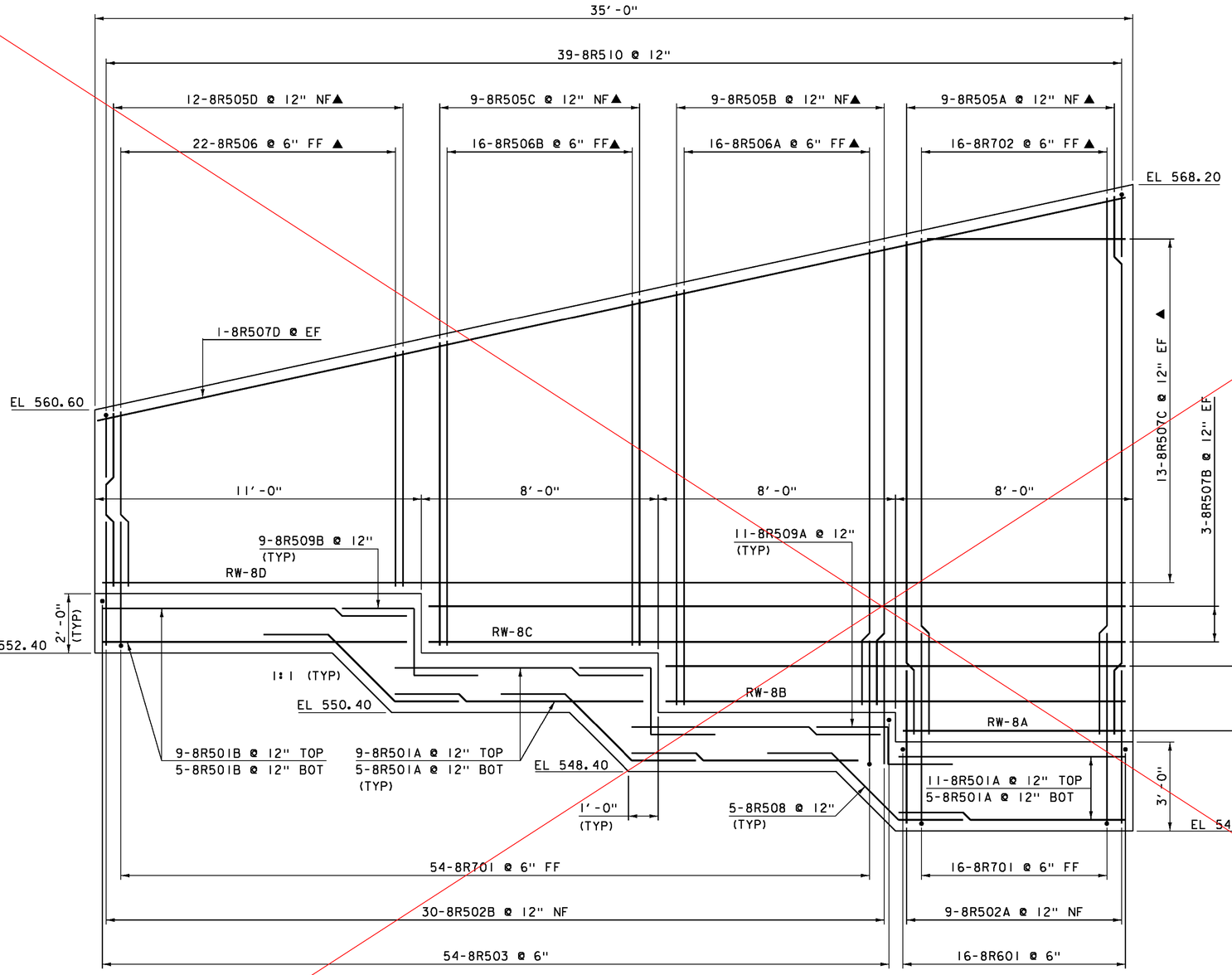

RETAINING WALL #8 ELEVATION

SCALE ½ = 1'-0"

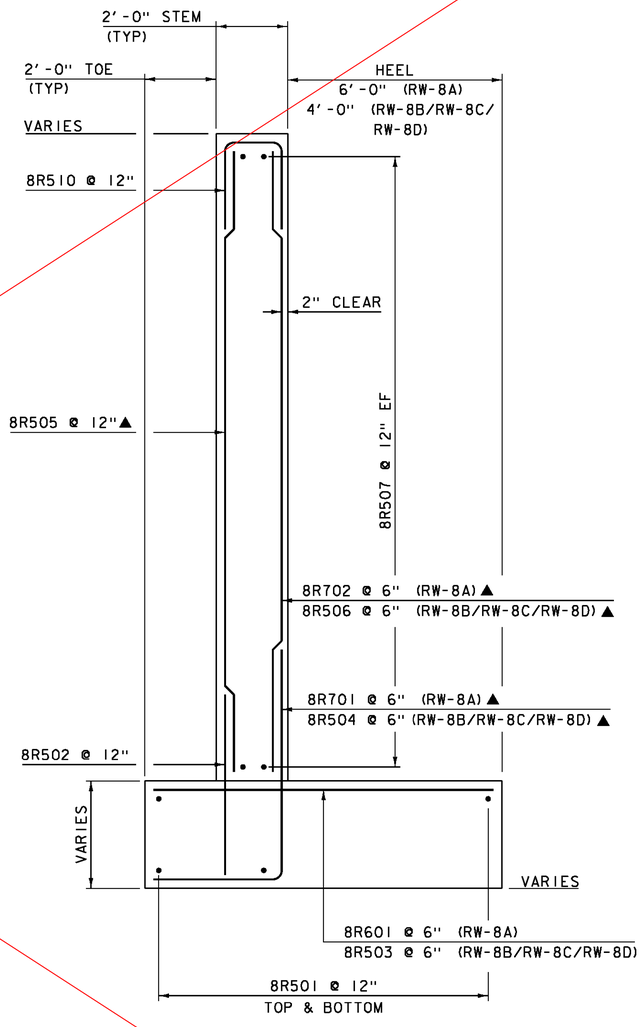

RETAINING WALL #8 TYPICAL

SCALE ½ = 1'-0"

SEE SHEET 124-R

NOTE:

NF = NEAR FACE
FF = FAR FACE
EF = EACH FACE
▲ = CUT TO FIT IN FIELD
3" CLEAR, UNLESS OTHERWISE SPECIFIED ON THE PLANS.
2'-2" LAP FOR #5 BAR
2'-7" LAP FOR #6 BAR
3'-5" LAP FOR #7 BAR
4'-6" LAP FOR #8 BAR

PROJECT NAME:	HARTFORD
PROJECT NUMBER:	IM 091-2(79)
FILE NAME: sl2al32retwall.dgn	PLOT DATE: 15-DEC-2014
PROJECT LEADER: K. HIGGINS	DRAWN BY: J. SALVATORI
DESIGNED BY: G. LAROCHE	CHECKED BY: J. GRIGAS
RETAINING WALL #8	SHEET 124 OF 166

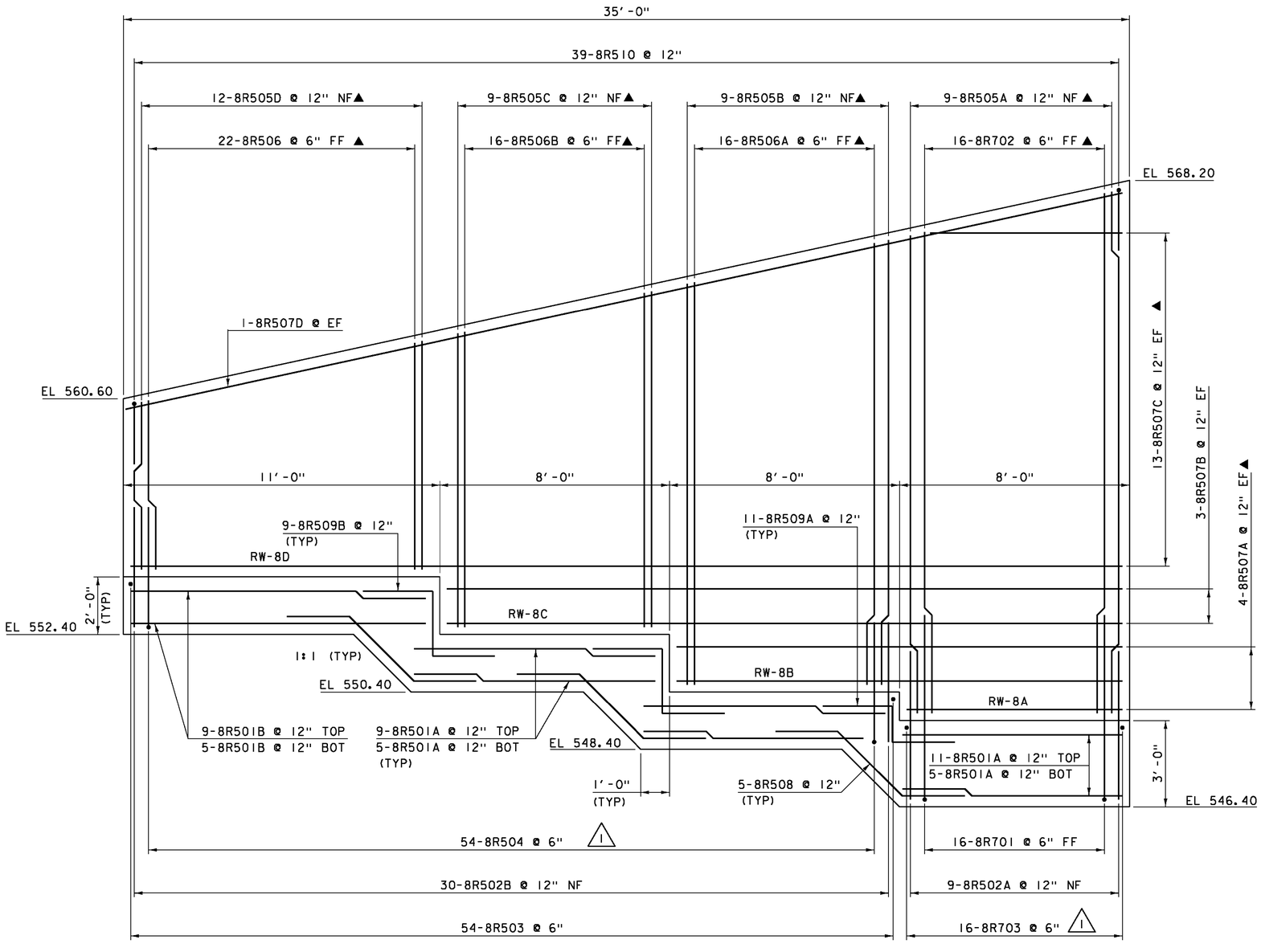

RETAINING WALL #8 ELEVATION

SCALE ½ =1'-0"

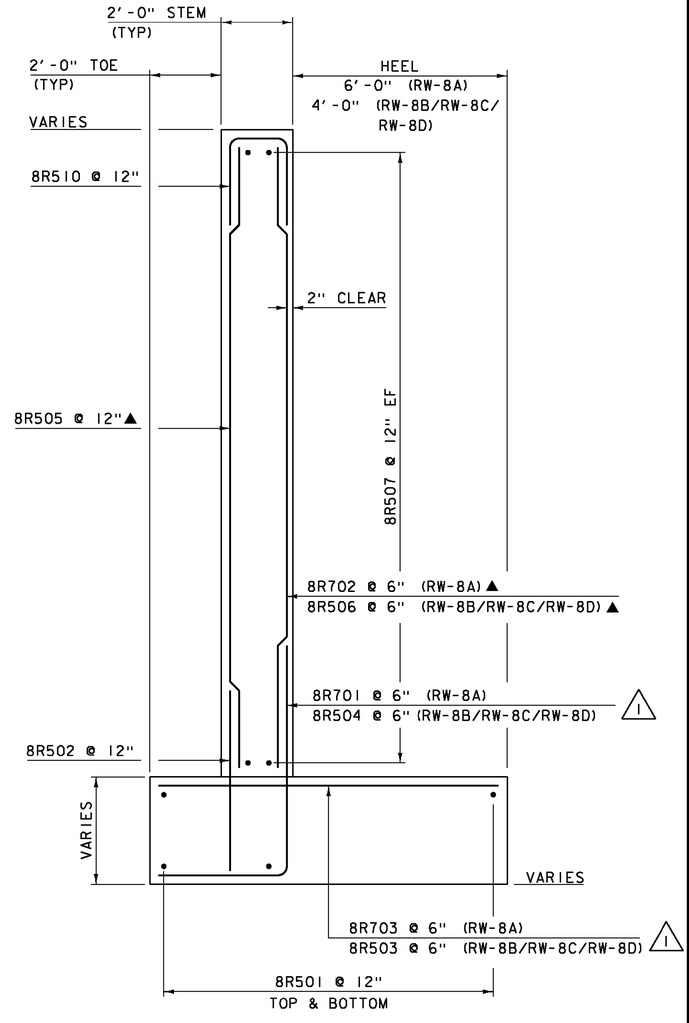

RETAINING WALL #8 TYPICAL

SCALE ½ =1'-0"

REVISION	DATE	DESCRIPTION	BY
1	03-05-2015	BAR CHANGES PER DESIGN	JS

NOTE:

NF = NEAR FACE
FF = FAR FACE
EF = EACH FACE
▲ = CUT TO FIT IN FIELD
3" CLEAR, UNLESS OTHERWISE SPECIFIED ON THE PLANS.
2'-2" LAP FOR #5 BAR
2'-7" LAP FOR #6 BAR
3'-5" LAP FOR #7 BAR
4'-6" LAP FOR #8 BAR

PROJECT NAME: HARTFORD
PROJECT NUMBER: IM 091-2(79)

FILE NAME: sl2al32retwall.dgn
PROJECT LEADER: K. HIGGINS
DESIGNED BY: G. LAROCHE
RETAINING WALL #8

PLOT DATE: 05-MAR-2015
DRAWN BY: J. SALVATORI
CHECKED BY: J. GRIGAS
SHEET 124R OF 166

STATE OF VERMONT
AGENCY OF TRANSPORTATION

⚠1 REINFORCING STEEL SCHEDULE

ITEM	EACH	SIZE	LENGTH	MARK	TYPE	A	B	C	D	E	F	G	H	J	K	R	O
	32	5	36'- 2"	1S501.3	STR												
▲	90	5	17'- 1"	1S502.3	STR												
▲	30	5	37'- 2"	1S503.3	STR												
✳ ▲	21	5	11'- 9"	1S504.3	STR												
▲	28	5	26'- 2"	1S505.3	STR												
▲	46	5	11'- 10"	1S506.3	STR												
	356	5	35'- 7"	1S507.3	STR												
	88	5	27'- 2"	1S508.3	STR												
	12	5	27'- 2"	1S509.3	STR												
	56	6	36'- 6"	1S601.3	STR												
	484	6	25'- 7"	1S602.3	STR												
✳	65	6	23'- 11"	1S603.3	STR												
	102	6	2'- 10"	1S605.3	STR												
△	466	4	5'- 0"	1S401.3	1	0'- 6"	4'- 6"					---		0'- 4"			
▲	416	5	3'- 9"	1S510.3	1	0'- 7"	3'- 2"					---		0'- 5"			
	204	5	18'- 7"	1S511.3	S5	2'- 5"	6'- 1"	1'- 10"	5'- 10"			2'- 5"					
	102	5	5'- 6"	1S512.3	22		2'- 5"	3'- 1"	---				1'- 9"	---	1'- 9"	---	
	124	5	5'- 8"	1S513.3	1	0'- 7"	5'- 1"					---		0'- 5"			
	212	6	7'- 3"	1S604.3	16	1'- 0"	2'- 1"	1'- 2"	3'- 0"				2'- 1"		2'- 1"		

~ NOTES ~

1. UNLESS OTHERWISE DESIGNATED, ALL BAR REINFORCEMENT FOR CONCRETE IN SIZES UP TO AND INCLUDING NO. 18 SHALL CONFORM TO THE REQUIREMENTS OF THE "SPECIFICATIONS FOR DEFORMED BILLET-STEEL BARS FOR CONCRETE REINFORCEMENT", AASHTO M 31 (ASTM A 615-SI). ALL BARS SHALL BE GRADE 60, UNLESS OTHERWISE DESIGNATED.
2. FOR TYPICAL BENDING DETAILS, RECOMMENDED PIN DIAMETER "D" OF BENDS AND HOOKS, AND OTHER STANDARD PRACTICE, SEE CURRENT CONCRETE REINFORCING STEEL INSTITUTE "MANUAL OF STANDARD PRACTICE".
3. BARS WHICH REQUIRE MORE ACCURATE BENDING THAN STANDARD PRACTICES SHOULD HAVE LIMITS INDICATED.
4. ALL DIMENSIONS ARE OUT TO OUT OF BAR EXCEPT "A" AND "G" ON STANDARD 180 DEGREE AND 135 DEGREE HOOKS.
5. "J" DIMENSION ON 180 DEGREE HOOKS TO BE SHOWN ONLY WHERE NECESSARY TO RESTRICT HOOK SIZE. OTHERWISE, STANDARD HOOKS ARE TO BE USED.
6. "H" DIMENSION ON STIRRUPS TO BE SHOWN ONLY WHEN NECESSARY TO MAINTAIN CLEARANCES.
7. WHERE SLOPE DIFFERS FROM 45 DEGREES, DIMENSIONS "H" AND "K" MUST BE SHOWN.
8. ▲ DENOTES BARS TO BE CUT IN FIELD.
9. ✳ DENOTES ONE EXTRA BAR ADDED FOR TESTING PURPOSES.
10. △ DENOTES TWO EXTRA BARS ADDED FOR TESTING PURPOSES.
11. E IN BAR MARK PREFIX DENOTES EPOXY COATED REINFORCING STEEL.

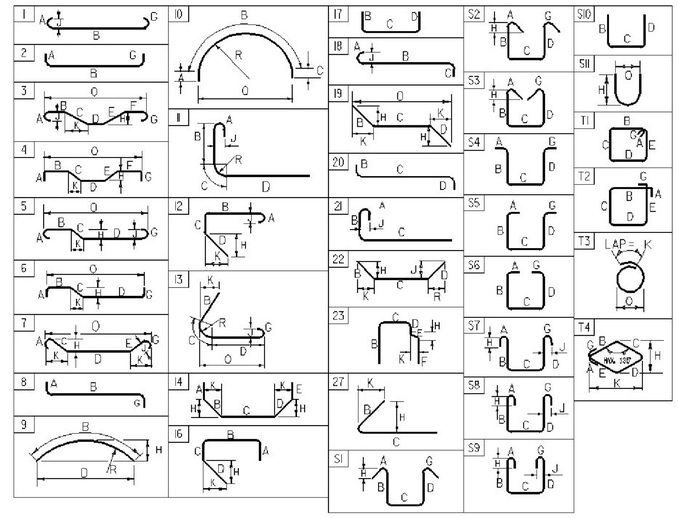

ASTM STANDARD REINFORCING BARS

#3	0.376	0.375	0.11	1.178
#4	0.668	0.500	0.20	1.571
#5	1.043	0.625	0.31	1.963
#6	1.502	0.750	0.44	2.356
#7	2.04	0.875	0.60	2.749
#8	2.670	1.000	0.79	3.14
#9	3.400	1.13	1.00	3.54
#10	4.3	1.270	1.27	3.990
#11	5.31	1.410	1.56	4.430
#14	7.65	1.69	2.25	5.32
#18	13.60	2.26	4.00	7.09

~ REINFORCING STEEL CORROSION RESISTANCE LEVEL ~

THE REINFORCING STEEL MARKS IN THIS SCHEDULE INDICATE THE REQUIRED BAR CORROSION RESISTANCE LEVEL. CORROSION RESISTANCE LEVEL IS DENOTED WITH A .2 FOR LEVEL TWO SUFFIX OR .3 FOR LEVEL THREE SUFFIX. .1 FOR LEVEL ONE IS TO BE OMITTED. THE BAR MATERIAL TYPE AND BAR STEEL GRADE PROVIDED FOR EACH CORROSION LEVEL WILL BE RECORDED ON THE PLAN SET PI SHEET FOR AS-BUILT RECORD PLAN ARCHIVES.

REVISION	DATE	DESCRIPTION	BY
⚠1	01-05-2015	REINFORCING STEEL SCHEDULE UPDATE, ADDED TEST BARS	RK

PROJECT NAME: **HARTFORD**
PROJECT NUMBER: **IM 091-2 (79)**

FILE NAME: **s12a132RSS_43S.dgn**
PROJECT MANAGER: **K. HIGGINS**
DESIGNED BY: **R. KLINEFELTER**
RSS SUPERSTRUCTURE 43S

PLOT DATE: **1/5/2015**
DRAWN BY: **K. FRIEDLAND**
CHECKED BY: **J. GRIGAS**
SHEET **125** OF **166**

STATE OF VERMONT
AGENCY OF TRANSPORTATION

△1 REINFORCING STEEL SCHEDULE

ITEM	EACH	SIZE	LENGTH	MARK	TYPE	A	B	C	D	E	F	G	H	J	K	R	O
	32	5	36'- 2"	2S501.3	STR												
▲	90	5	17'- 1"	2S502.3	STR												
▲	30	5	36'- 5"	2S503.3	STR												
✳ ▲	23	5	11'- 1"	2S504.3	STR												
▲	26	5	26'- 0"	2S505.3	STR												
▲	46	5	10'- 11"	2S506.3	STR												
	344	5	35'- 7"	2S507.3	STR												
	80	5	26'- 2"	2S508.3	STR												
	12	5	26'- 2"	2S509.3	STR												
	56	6	36'- 6"	2S601.3	STR												
	484	6	24'- 7"	2S602.3	STR												
✳	63	6	23'- 6"	2S603.3	STR												
	98	6	2'- 10"	2S605.3	STR												
△	466	4	4'- 10"	2S401.3	1	0'- 6"	4'- 4"					---		0'- 4"			
▲	416	5	3'- 4"	2S510.3	1	0'- 7"	2'- 9"					---		0'- 5"			
	202	5	16'- 9"	2S511.3	S5	2'- 5"	5'- 2"	1'- 10"	4'- 11"			2'- 5"					
	102	5	5'- 6"	2S512.3	22		2'- 5"	3'- 1"	---				1'- 9"	---	1'- 9"	---	
	124	5	5'- 4"	2S513.3	1	0'- 7"	4'- 9"					---		0'- 5"			
	204	6	7'- 3"	2S604.3	16	1'- 0"	2'- 1"	1'- 2"	3'- 0"				2'- 1"		2'- 1"		

ITEM	EACH	SIZE	LENGTH	MARK	TYPE	A	B	C	D	E	F	G	H	J	K	R	O

~ NOTES ~

1. UNLESS OTHERWISE DESIGNATED, ALL BAR REINFORCEMENT FOR CONCRETE IN SIZES UP TO AND INCLUDING NO. 18 SHALL CONFORM TO THE REQUIREMENTS OF THE "SPECIFICATIONS FOR DEFORMED BILLET-STEEL BARS FOR CONCRETE REINFORCEMENT", AASHTO M 31 (ASTM A 615-SI). ALL BARS SHALL BE GRADE 60, UNLESS OTHERWISE DESIGNATED.
2. FOR TYPICAL BENDING DETAILS, RECOMMENDED PIN DIAMETER "D" OF BENDS AND HOOKS, AND OTHER STANDARD PRACTICE, SEE CURRENT CONCRETE REINFORCING STEEL INSTITUTE "MANUAL OF STANDARD PRACTICE".
3. BARS WHICH REQUIRE MORE ACCURATE BENDING THAN STANDARD PRACTICES SHOULD HAVE LIMITS INDICATED.
4. ALL DIMENSIONS ARE OUT TO OUT OF BAR EXCEPT "A" AND "G" ON STANDARD 180 DEGREE AND 135 DEGREE HOOKS.
5. "J" DIMENSION ON 180 DEGREE HOOKS TO BE SHOWN ONLY WHERE NECESSARY TO RESTRICT HOOK SIZE. OTHERWISE, STANDARD HOOKS ARE TO BE USED.
6. "H" DIMENSION ON STIRRUPS TO BE SHOWN ONLY WHEN NECESSARY TO MAINTAIN CLEARANCES.
7. WHERE SLOPE DIFFERS FROM 45 DEGREES, DIMENSIONS "H" AND "K" MUST BE SHOWN.
8. ▲ DENOTES BARS TO BE CUT IN FIELD.
9. ✳ DENOTES ONE EXTRA BAR ADDED FOR TESTING PURPOSES.
10. △ DENOTES TWO EXTRA BARS ADDED FOR TESTING PURPOSES.
11. E IN BAR MARK PREFIX DENOTES EPOXY COATED REINFORCING STEEL.

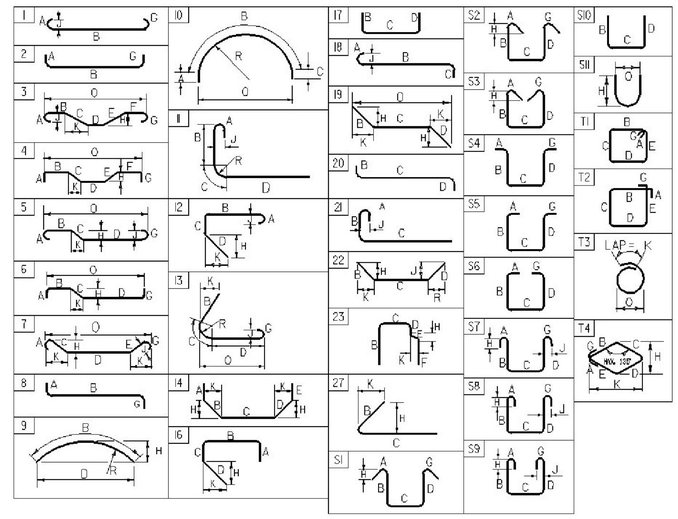

ASTM STANDARD REINFORCING BARS

#3	0.376	0.375	0.11	1.178
#4	0.668	0.500	0.20	1.571
#5	1.043	0.625	0.31	1.963
#6	1.502	0.750	0.44	2.356
#7	2.04	0.875	0.60	2.749
#8	2.670	1.000	0.79	3.14
#9	3.400	1.13	1.00	3.54
#10	4.3	1.270	1.27	3.990
#11	5.31	1.410	1.56	4.430
#14	7.65	1.69	2.25	5.32
#18	13.60	2.26	4.00	7.09

~ REINFORCING STEEL CORROSION RESISTANCE LEVEL ~

THE REINFORCING STEEL MARKS IN THIS SCHEDULE INDICATE THE REQUIRED BAR CORROSION RESISTANCE LEVEL. CORROSION RESISTANCE LEVEL IS DENOTED WITH A .2 FOR LEVEL TWO SUFFIX OR .3 FOR LEVEL THREE SUFFIX. .1 FOR LEVEL ONE IS TO BE OMITTED. THE BAR MATERIAL TYPE AND BAR STEEL GRADE PROVIDED FOR EACH CORROSION LEVEL WILL BE RECORDED ON THE PLAN SET PI SHEET FOR AS-BUILT RECORD PLAN ARCHIVES.

REVISION	DATE	DESCRIPTION	BY
△1	01-05-2015	REINFORCING STEEL SCHEDULE UPDATE, ADDED TEST BARS	RK

PROJECT NAME: **HARTFORD**
PROJECT NUMBER: **IM 091-2 (79)**

FILE NAME: **s12a132RSS_43N.dgn**
PROJECT MANAGER: **K. HIGGINS**
DESIGNED BY: **R. KLINEFELTER**
RSS SUPERSTRUCTURE 43N

PLOT DATE: **1/5/2015**
DRAWN BY: **K. FRIEDLAND**
CHECKED BY: **J. GRIGAS**
SHEET **126** OF **166**

STATE OF VERMONT
AGENCY OF TRANSPORTATION

⚠1 REINFORCING STEEL SCHEDULE

ITEM	EACH	SIZE	LENGTH	MARK	TYPE	A	B	C	D	E	F	G	H	J	K	R	O
	ABUTMENT 1:																
	48	5	33'- 9"	1A501	STR												
✳	90	5	5'- 2"	1A502	STR												
▲	89	5	20'- 5"	1A503	STR												
	116	5	32'- 9"	1A504	STR												
	92	5	7'- 5"	1A507	17		2'- 5"	2'- 7"	2'- 5"								
	17	5	12'- 11"	1A508	16	2'- 5"	4'- 7"	1'- 2"	4'- 9"				2'- 7"		2'- 7"		
✳	201	7	10'- 6"	1A701	STR												
	83	7	14'- 1"	1A702	STR												
✳	84	9	10'- 0"	1A901	STR												
	83	9	14'- 3"	1A902	17		5'- 7"	8'- 9"									
✳ ▲	26	5	10'- 6"	1A505.3	STR												
▲	17	5	13'- 7"	1A506.3	19		4'- 9"	8'- 10"					2'- 7"		2'- 7"		
	25	5	6'- 5"	1A509.3	17		2'- 5"	1'- 7"	2'- 5"								
	24	5	5'- 7"	1A510.3	STR												
▲	22	5	8'- 0"	1A511.3	STR												
	2	5	5'- 8"	1A512.3	19		2'- 5"	3'- 3"					1'- 4"		2'- 0"		
	WW1:																
	24	5	13'- 0"	1W501	STR												
	17	5	5'- 2"	1W502	STR												
	17	5	19'- 5"	1W503	STR												
	54	5	11'- 10"	1W504	STR												
	54	5	11'- 0"	1W509	19		5'- 6"	5'- 6"					3'- 6"		4'- 2"		
	27	5	4'- 10"	1W510	19		2'- 5"	2'- 5"					1'- 10"		1'- 7"		
	41	7	10'- 6"	1W701	STR												
	23	7	19'- 5"	1W702	STR												
	23	8	14'- 4"	1W801	17		5'- 7"	8'- 9"									
▲	27	5	9'- 11"	1W505.3	STR												
▲	13	5	7'- 5"	1W506.3	17		2'- 5"	2'- 7"	2'- 5"								
▲	22	5	8'- 0"	1W507.3	STR												
	2	5	7'- 10"	1W508.3	19		0'- 5"	7'- 5"					0'- 2"		0'- 4"		
	11	5	4'- 10"	1W511.3	19		2'- 5"	2'- 5"					1'- 10"	1'- 7"			
	WW2:																
	5	5	7'- 5"	2W501	17		2'- 5"	2'- 7"	2'- 5"								
	16	5	5'- 2"	2W502	STR												
	32	5	18'- 3"	2W503	STR												
▲	52	5	11'- 0"	2W505	STR												
	26	5	13'- 7"	2W508	22		2'- 5"	8'- 9"	2'- 5"				1'- 11"	1'- 11"	1'- 4"	1'- 4"	
	26	5	5'- 4"	2W509	27		2'- 8"	2'- 8"					2'- 6"		0'- 10"		
	24	5	7'- 0"	2W504.3	STR												
▲	14	5	7'- 10"	2W506.3	STR												
	12	5	7'- 5"	2W507.3	17		2'- 5"	2'- 7"	2'- 5"								
	14	5	5'- 4"	2W510.3	27		2'- 8"	2'- 8"					2'- 6"		0'- 10"		

ITEM	EACH	SIZE	LENGTH	MARK	TYPE	A	B	C	D	E	F	G	H	J	K	R	O

~ NOTES ~

1. UNLESS OTHERWISE DESIGNATED, ALL BAR REINFORCEMENT FOR CONCRETE IN SIZES UP TO AND INCLUDING NO. 18 SHALL CONFORM TO THE REQUIREMENTS OF THE "SPECIFICATIONS FOR DEFORMED BILLET-STEEL BARS FOR CONCRETE REINFORCEMENT", AASHTO M 31 (ASTM A 615-SI). ALL BARS SHALL BE GRADE 60, UNLESS OTHERWISE DESIGNATED.
2. FOR TYPICAL BENDING DETAILS, RECOMMENDED PIN DIAMETER "D" OF BENDS AND HOOKS, AND OTHER STANDARD PRACTICE, SEE CURRENT CONCRETE REINFORCING STEEL INSTITUTE "MANUAL OF STANDARD PRACTICE".
3. BARS WHICH REQUIRE MORE ACCURATE BENDING THAN STANDARD PRACTICES SHOULD HAVE LIMITS INDICATED.
4. ALL DIMENSIONS ARE OUT TO OUT OF BAR EXCEPT "A" AND "G" ON STANDARD 180 DEGREE AND 135 DEGREE HOOKS.
5. "J" DIMENSION ON 180 DEGREE HOOKS TO BE SHOWN ONLY WHERE NECESSARY TO RESTRICT HOOK SIZE. OTHERWISE, STANDARD HOOKS ARE TO BE USED.
6. "H" DIMENSION ON STIRRUPS TO BE SHOWN ONLY WHEN NECESSARY TO MAINTAIN CLEARANCES.
7. WHERE SLOPE DIFFERS FROM 45 DEGREES, DIMENSIONS "H" AND "K" MUST BE SHOWN.
8. ▲ DENOTES BARS TO BE CUT IN FIELD.
9. ✳ DENOTES ONE EXTRA BAR ADDED FOR TESTING PURPOSES.
10. △ DENOTES TWO EXTRA BARS ADDED FOR TESTING PURPOSES.
11. E IN BAR MARK PREFIX DENOTES EPOXY COATED REINFORCING STEEL.

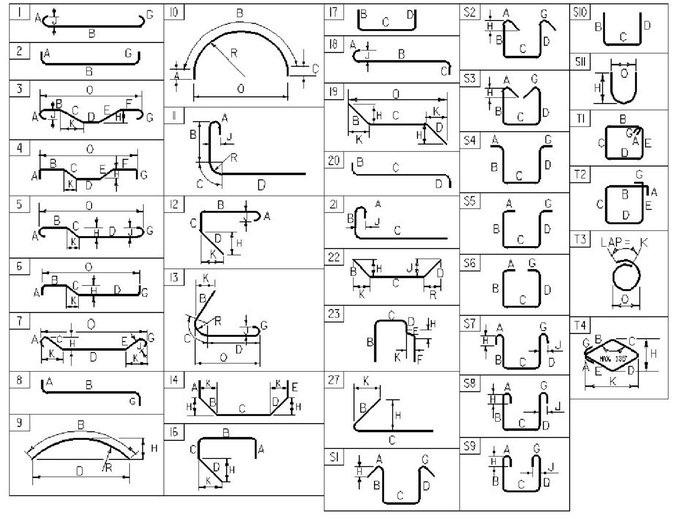

ASTM STANDARD REINFORCING BARS

BAR SIZE DESIGNATION	WEIGHT POUNDS PER FOOT	NOMINAL DIMENSIONS ROUND SECTION DIAMETER INCHES	AREA INCHES^2	PERIMETER INCHES
#3	0.376	0.375	0.11	1.178
#4	0.668	0.500	0.20	1.571
#5	1.043	0.625	0.31	1.963
#6	1.502	0.750	0.44	2.356
#7	2.044	0.875	0.60	2.749
#8	2.670	1.000	0.79	3.142
#9	3.400	1.128	1.00	3.544
#10	4.303	1.270	1.27	3.990
#11	5.313	1.410	1.56	4.430
#14	7.65	1.693	2.25	5.32
#18	13.60	2.257	4.00	7.09

REVISION	DATE	DESCRIPTION	BY
⚠1	01-07-2015	REINFORCING STEEL SCHEDULE UPDATE, ADDED TEST BARS	WDL

PROJECT NAME: **HARTFORD**
PROJECT NUMBER: **IM 091-2 (79)**

FILE NAME: **s12a132RSS_AB1.dgn** PLOT DATE: **1/7/2015**
PROJECT MANAGER: **K. HIGGINS** DRAWN BY: **J. SALVATORI**
DESIGNED BY: **G. LAROCHE** CHECKED BY: **J. GRIGAS**
REINFORCING STEEL SCHEDULE ABUTMENT 1 SHEET **127** OF **166**

STATE OF VERMONT
AGENCY OF TRANSPORTATION

⚠ REINFORCING STEEL SCHEDULE

ITEM	EACH	SIZE	LENGTH	MARK	TYPE	A	B	C	D	E	F	G	H	J	K	R	O
	ABUTMENT 2:																
	48	5	32'- 7"	2A501	STR												
✳	86	5	5'- 2"	2A502	STR												
▲	85	5	20'- 2"	2A503	STR												
	112	5	32'- 6"	2A504	STR												
	85	5	7'- 5"	2A507	17		2'- 5"	2'- 7"	2'- 5"								
	19	5	12'- 11"	2A508	16		2'- 5"	4'- 7"	1'- 2"	4'- 9"			3'- 4"		3'- 4"		
✳	211	7	10'- 6"	2A701	STR												
	81	7	13'- 10"	2A702	STR												
✳	82	9	10'- 0"	2A901	STR												
	81	9	14'- 3"	2A902	17		5'- 6"	8'- 9"									
▲	23	5	10'- 6"	2A505.3	STR												
▲	18	5	13'- 7"	2A506.3	19		4'- 9"	8'- 10"					3'- 4"		3'- 4"		
	17	5	6'- 5"	2A509.3	17		2'- 5"	1'- 7"	2'- 5"								
	24	5	5'- 4"	2A510.3	STR												
▲	20	5	7'- 9"	2A511.3	STR												
	2	5	5'- 0"	2A512.3	19		2'- 10"	2'- 2"					1'- 6"		2'- 5"		
	WW3:																
	24	5	12'- 11"	3W501	STR												
	17	5	5'- 2"	3W502	STR												
	17	5	19'- 2"	3W503	STR												
	54	5	11'- 4"	3W504	STR												
	28	5	18'- 11"	3W509	22		2'- 3"	14'- 5"	2'- 3"				1'- 1"	1'- 1"	2'- 0"	2'- 0"	
	28	5	4'- 8"	3W510	19		2'- 4"	2'- 4"					1'- 11"		1'- 4"		
	39	7	10'- 6"	3W701	STR												
	21	7	19'- 2"	3W702	STR												
✳	23	8	13'- 0"	3W801	17		5'- 6"	8'- 9"									
▲	28	5	9'- 11"	3W505.3	STR												
	12	5	7'- 5"	3W506.3	17		2'- 5"	2'- 7"	2'- 5"								
▲	24	5	7'- 8"	3W507.3	STR												
	2	5	8'- 11"	3W508.3	19		0'- 10"	8'- 1"					0'- 5"		0'- 8"		
	24	5	4'- 8"	3W511.3	19		2'- 4"	2'- 4"					1'- 11"		1'- 4"		
	WW4:																
	7	5	7'- 5"	4W501	17		2'- 5"	2'- 7"	2'- 5"								
	16	5	5'- 2"	4W502	STR												
	32	5	17'- 11"	4W503	STR												
	50	5	11'- 2"	4W505	STR												
	25	5	17'- 7"	4W508	22		2'- 3"	13'- 1"	2'- 3"				1'- 3"	1'- 2"	1'- 10"	1'- 11"	
	25	5	4'- 8"	4W509	19		2'- 4"	2'- 4"					2'- 1"		1'- 0"		
✳	26	5	7'- 0"	4W504.3	STR												
	16	5	7'- 10"	4W506.3	STR												
	15	5	7'- 5"	4W507.3	17		2'- 5"	2'- 7"	2'- 5"								
	20	5	4'- 8"	4W510.3	19		2'- 4"	2'- 4"					2'- 1"		1'- 0"		

ITEM	EACH	SIZE	LENGTH	MARK	TYPE	A	B	C	D	E	F	G	H	J	K	R	O

~ NOTES ~

1. UNLESS OTHERWISE DESIGNATED, ALL BAR REINFORCEMENT FOR CONCRETE IN SIZES UP TO AND INCLUDING NO. 18 SHALL CONFORM TO THE REQUIREMENTS OF THE "SPECIFICATIONS FOR DEFORMED BILLET-STEEL BARS FOR CONCRETE REINFORCEMENT", AASHTO M 31 (ASTM A 615-SI). ALL BARS SHALL BE GRADE 60, UNLESS OTHERWISE DESIGNATED.
2. FOR TYPICAL BENDING DETAILS, RECOMMENDED PIN DIAMETER "D" OF BENDS AND HOOKS, AND OTHER STANDARD PRACTICE, SEE CURRENT CONCRETE REINFORCING STEEL INSTITUTE "MANUAL OF STANDARD PRACTICE".
3. BARS WHICH REQUIRE MORE ACCURATE BENDING THAN STANDARD PRACTICES SHOULD HAVE LIMITS INDICATED.
4. ALL DIMENSIONS ARE OUT TO OUT OF BAR EXCEPT "A" AND "G" ON STANDARD 180 DEGREE AND 135 DEGREE HOOKS.
5. "J" DIMENSION ON 180 DEGREE HOOKS TO BE SHOWN ONLY WHERE NECESSARY TO RESTRICT HOOK SIZE. OTHERWISE, STANDARD HOOKS ARE TO BE USED.
6. "H" DIMENSION ON STIRRUPS TO BE SHOWN ONLY WHEN NECESSARY TO MAINTAIN CLEARANCES.
7. WHERE SLOPE DIFFERS FROM 45 DEGREES, DIMENSIONS "H" AND "K" MUST BE SHOWN.
8. ▲ DENOTES BARS TO BE CUT IN FIELD.
9. ✳ DENOTES ONE EXTRA BAR ADDED FOR TESTING PURPOSES.
10. △ DENOTES TWO EXTRA BARS ADDED FOR TESTING PURPOSES.
11. E IN BAR MARK PREFIX DENOTES EPOXY COATED REINFORCING STEEL.

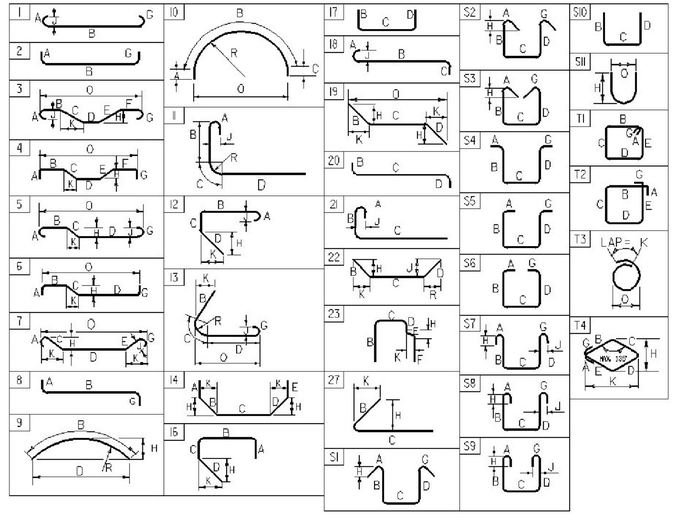

ASTM STANDARD REINFORCING BARS

BAR SIZE DESIGNATION	WEIGHT POUNDS PER FOOT	NOMINAL DIMENSIONS ROUND SECTION DIAMETER INCHES	AREA INCHES^2	PERIMETER INCHES
#3	0.376	0.375	0.11	1.178
#4	0.668	0.500	0.20	1.571
#5	1.043	0.625	0.31	1.963
#6	1.502	0.750	0.44	2.356
#7	2.044	0.875	0.60	2.749
#8	2.670	1.000	0.79	3.142
#9	3.400	1.128	1.00	3.544
#10	4.303	1.270	1.27	3.990
#11	5.313	1.410	1.56	4.430
#14	7.65	1.693	2.25	5.32
#18	13.60	2.257	4.00	7.09

REVISION	DATE	DESCRIPTION	BY
⚠	01-07-2015	REINFORCING STEEL SCHEDULE UPDATE, ADDED TEST BARS	WDL

PROJECT NAME: **HARTFORD**
PROJECT NUMBER: **IM 091-2 (79)**

FILE NAME: **s12a132RSS_AB2.dgn** PLOT DATE: **1/7/2015**
PROJECT MANAGER: **K.HIGGINS** DRAWN BY: **G. LAROCHE**
DESIGNED BY: **G. LAROCHE** CHECKED BY: **J.SALVATORI**
REINFORCING STEEL SCHEDULE ABUTMENT 2 SHEET **128** OF **166**

STATE OF VERMONT
AGENCY OF TRANSPORTATION

⚠ REINFORCING STEEL SCHEDULE

ITEM	EACH	SIZE	LENGTH	MARK	TYPE	A	B	C	D	E	F	G	H	J	K	R	O
	ABUTMENT 3:																
	48	5	32'- 11"	3A501	STR												
✳	92	5	5'- 2"	3A502	STR												
▲	91	5	16'- 3"	3A503	STR												
	92	5	32'- 7"	3A504	STR												
	87	5	7'- 5"	3A507	17		2'- 5"	2'- 7"	2'- 5"								
	24	5	12'- 11"	3A508	16	2'- 5"	4'- 7"	1'- 2"	4'- 9"				1'- 0"		1'- 0"		
✳	207	7	10'- 6"	3A701	STR												
▲	85	7	16'- 3"	3A702	STR												
	81	8	15'- 3"	3A801	17		5'- 6"	9'- 9"									
▲	28	5	10'- 0"	3A505.3	STR												
▲	28	5	13'- 3"	3A506.3	19		4'- 9"	8'- 6"					1'- 0"		1'- 0"		
	23	5	6'- 5"	3A509.3	17		2'- 5"	1'- 7"	2'- 5"								
	22	5	8'- 0"	3A510.3	STR												
	16	5	8'- 0"	3A511.3	STR												
	2	5	5'- 7"	3A512.3	19		3'- 8"	1'- 11"					1'- 8"		3'- 3"		
	WW5:																
	6	5	7'- 5"	5W501	17		2'- 5"	2'- 7"	2'- 5"								
	16	5	5'- 2"	5W502	STR												
	29	5	16'- 9"	5W503	STR												
	46	5	11'- 2"	5W505	STR												
	23	5	17'- 7"	5W508	22		2'- 4"	11'- 10"	2'- 4"				1'- 4"	1'- 4"	1'- 10"	1'- 10"	
	23	5	4'- 10"	5W509	19		2'- 5"	2'- 5"					2'- 4"		0'- 9"		
✳	27	5	6'- 3"	5W504.3	STR												
	12	5	8'- 0"	5W506.3	STR												
	13	5	7'- 5"	5W507.3	17		2'- 5"	2'- 7"	2'- 5"								
	12	5	4'- 10"	5W510.3	19		2'- 5"	2'- 5"					2'- 4"		0'- 9"		
	WW6:																
	24	5	12'- 11"	6W501	STR												
	17	5	5'- 2"	6W502	STR												
	17	5	12'- 10"	6W503	STR												
	38	5	11'- 4"	6W504	STR												
	19	5	18'- 11"	6W509	22		2'- 3"	14'- 5"	2'- 3"				1'- 0"	1'- 0"	2'- 0"	2'- 0"	
	19	5	4'- 10"	6W510	19		2'- 5"	2'- 5"					1'- 11"		1'- 4"		
	41	7	10'- 6"	6W701	STR												
	21	7	12'- 10"	6W702	STR												
✳	22	8	14'- 3"	6W801	17		5'- 6"	8'- 9"									
▲	29	5	9'- 6"	6W505.3	STR												
▲	12	5	7'- 5"	6W506.3	17		2'- 5"	2'- 7"	2'- 5"								
▲	22	5	7'- 8"	6W507.3	STR												
	2	5	9'- 7"	6W508.3	19		0'- 10"	8'- 9"					0'- 6"		0'- 8"		
	28	5	4'- 10"	6W511.3	19		2'- 5"	2'- 5"					1'- 11"		1'- 4"		

ITEM	EACH	SIZE	LENGTH	MARK	TYPE	A	B	C	D	E	F	G	H	J	K	R	O

~ NOTES ~

1. UNLESS OTHERWISE DESIGNATED, ALL BAR REINFORCEMENT FOR CONCRETE IN SIZES UP TO AND INCLUDING NO. 18 SHALL CONFORM TO THE REQUIREMENTS OF THE "SPECIFICATIONS FOR DEFORMED BILLET-STEEL BARS FOR CONCRETE REINFORCEMENT", AASHTO M 31 (ASTM A 615-SI). ALL BARS SHALL BE GRADE 60, UNLESS OTHERWISE DESIGNATED.
2. FOR TYPICAL BENDING DETAILS, RECOMMENDED PIN DIAMETER "D" OF BENDS AND HOOKS, AND OTHER STANDARD PRACTICE, SEE CURRENT CONCRETE REINFORCING STEEL INSTITUTE "MANUAL OF STANDARD PRACTICE".
3. BARS WHICH REQUIRE MORE ACCURATE BENDING THAN STANDARD PRACTICES SHOULD HAVE LIMITS INDICATED.
4. ALL DIMENSIONS ARE OUT TO OUT OF BAR EXCEPT "A" AND "G" ON STANDARD 180 DEGREE AND 135 DEGREE HOOKS.
5. "J" DIMENSION ON 180 DEGREE HOOKS TO BE SHOWN ONLY WHERE NECESSARY TO RESTRICT HOOK SIZE. OTHERWISE, STANDARD HOOKS ARE TO BE USED.
6. "H" DIMENSION ON STIRRUPS TO BE SHOWN ONLY WHEN NECESSARY TO MAINTAIN CLEARANCES.
7. WHERE SLOPE DIFFERS FROM 45 DEGREES, DIMENSIONS "H" AND "K" MUST BE SHOWN.
8. ▲ DENOTES BARS TO BE CUT IN FIELD.
9. ✳ DENOTES ONE EXTRA BAR ADDED FOR TESTING PURPOSES.
10. △ DENOTES TWO EXTRA BARS ADDED FOR TESTING PURPOSES.
11. E IN BAR MARK PREFIX DENOTES EPOXY COATED REINFORCING STEEL.

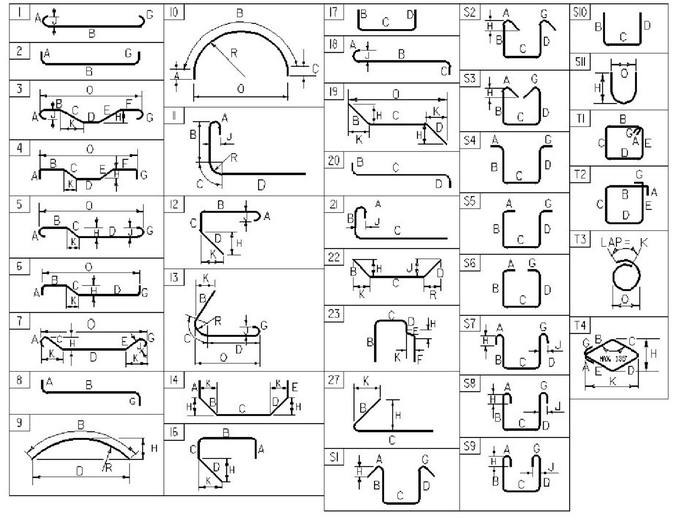

ASTM STANDARD REINFORCING BARS

BAR SIZE DESIGNATION	WEIGHT POUNDS PER FOOT	NOMINAL DIMENSIONS ROUND SECTION DIAMETER INCHES	AREA INCHES^2	PERIMETER INCHES
#3	0.376	0.375	0.11	1.178
#4	0.668	0.500	0.20	1.571
#5	1.043	0.625	0.31	1.963
#6	1.502	0.750	0.44	2.356
#7	2.044	0.875	0.60	2.749
#8	2.670	1.000	0.79	3.142
#9	3.400	1.128	1.00	3.544
#10	4.303	1.270	1.27	3.990
#11	5.313	1.410	1.56	4.430
#14	7.65	1.693	2.25	5.32
#18	13.60	2.257	4.00	7.09

REVISION	DATE	DESCRIPTION	BY
⚠1	01-07-2015	REINFORCING STEEL SCHEDULE UPDATE, ADDED TEST BARS	WDL

PROJECT NAME: **HARTFORD**
PROJECT NUMBER: **IM 091-2 (79)**

FILE NAME: **s12a132RSS_AB3.dgn** PLOT DATE: **1/7/2015**
PROJECT MANAGER: **K. HIGGINS** DRAWN BY: **G. LAROCHE**
DESIGNED BY: **G. LAROCHE** CHECKED BY: **W. LAMMER**
REINFORCING STEEL SCHEDULE ABUTMENT 3 SHEET **129** OF **166**

STATE OF VERMONT
AGENCY OF TRANSPORTATION

⚠1 REINFORCING STEEL SCHEDULE

ITEM	EACH	SIZE	LENGTH	MARK	TYPE	A	B	C	D	E	F	G	H	J	K	R	O
	ABUTMENT 4:																
	32	5	33'- 8"	4A501	STR												
✳	94	5	5'- 2"	4A502	STR												
▲	93	5	19'- 4"	4A503	STR												
	108	5	32'- 11"	4A504	STR												
	88	5	7'- 5"	4A507	17		2'- 5"	2'- 7"	2'- 5"								
	17	5	12'- 11"	4A508	16	2'- 5"	4'- 7"	1'- 2"	4'- 9"				1'- 0"		1'- 0"		
✳	133	7	8'- 6"	4A701	STR												
▲	83	7	19'- 4"	4A702	STR												
✳	84	8	14'- 4"	4A801	17		4'- 7"	9'- 9"									
✳ ▲	25	5	9'- 11"	4A505.3	STR												
▲	17	5	13'- 2"	4A506.3	19		4'- 9"	8'- 5"					1'- 0"		1'- 0"		
	24	5	6'- 5"	4A509.3	17		2'- 5"	1'- 7"	2'- 5"								
	22	5	6'- 8"	4A510.3	STR												
▲	18	5	7'- 9"	4A511.3	STR												
	2	5	5'- 3"	4A512.3	19		2'- 1"	3'- 2"					1'- 0"		1'- 9"		
✳ ▲	13	9	40'- 0"	4A901.3	STR												
	WW7:																
	6	5	7'- 5"	7W501	17		2'- 5"	2'- 7"	2'- 5"								
	14	5	5'- 2"	7W502	STR												
	32	5	19'- 4"	7W503	STR												
▲	54	5	11'- 1"	7W505	STR												
	27	5	13'- 5"	7W508	22		2'- 5"	8'- 7"	2'- 5"				1'- 11"	1'- 11"	1'- 4"	1'- 4"	
	27	5	5'- 6"	7W509	27		2'- 9"	2'- 9"					2'- 6"		0'- 11"		
	24	5	6'- 5"	7W504.3	STR												
▲	12	5	7'- 9"	7W506.3	STR												
	12	5	7'- 5"	7W507.3	17		2'- 5"	2'- 7"	2'- 5"								
	18	5	5'- 6"	7W510.3	27		2'- 9"	2'- 9"					2'- 6"		0'- 11"		
	WW8:																
	16	5	12'- 6"	8W501	STR												
	17	5	5'- 2"	8W502	STR												
	17	5	15'- 4"	8W503	STR												
	44	5	11'- 9"	8W504	STR												
	24	5	21'- 3"	8W509	22		2'- 3"	16'- 9"	2'- 3"				0'- 10"	0'- 10"	2'- 1"	2'- 1"	
	24	5	4'- 8"	8W510	19		2'- 4"	2'- 4"					1'- 0"		1'- 0"		
	27	7	8'- 6"	8W701	STR												
	22	7	15'- 4"	8W702	STR												
	22	8	13'- 4"	8W801	17		4'- 7"	8'- 9"									
▲	29	5	9'- 5"	8W505.3	STR												
	13	5	7'- 5"	8W506.3	17		2'- 5"	2'- 7"	2'- 5"								
▲	22	5	7'- 7"	8W507.3	STR												
	2	5	7'- 11"	8W508.3	19		0'- 7"	7'- 4"					0'- 2"		0'- 6"		
	16	5	4'- 8"	8W511.3	19		2'- 4"	2'- 4"					1'- 0"		1'- 0"		

ITEM	EACH	SIZE	LENGTH	MARK	TYPE	A	B	C	D	E	F	G	H	J	K	R	O

~ NOTES ~

1. UNLESS OTHERWISE DESIGNATED, ALL BAR REINFORCEMENT FOR CONCRETE IN SIZES UP TO AND INCLUDING NO. 18 SHALL CONFORM TO THE REQUIREMENTS OF THE "SPECIFICATIONS FOR DEFORMED BILLET-STEEL BARS FOR CONCRETE REINFORCEMENT", AASHTO M 31 (ASTM A 615-SI). ALL BARS SHALL BE GRADE 60, UNLESS OTHERWISE DESIGNATED.
2. FOR TYPICAL BENDING DETAILS, RECOMMENDED PIN DIAMETER "D" OF BENDS AND HOOKS, AND OTHER STANDARD PRACTICE, SEE CURRENT CONCRETE REINFORCING STEEL INSTITUTE "MANUAL OF STANDARD PRACTICE".
3. BARS WHICH REQUIRE MORE ACCURATE BENDING THAN STANDARD PRACTICES SHOULD HAVE LIMITS INDICATED.
4. ALL DIMENSIONS ARE OUT TO OUT OF BAR EXCEPT "A" AND "G" ON STANDARD 180 DEGREE AND 135 DEGREE HOOKS.
5. "J" DIMENSION ON 180 DEGREE HOOKS TO BE SHOWN ONLY WHERE NECESSARY TO RESTRICT HOOK SIZE. OTHERWISE, STANDARD HOOKS ARE TO BE USED.
6. "H" DIMENSION ON STIRRUPS TO BE SHOWN ONLY WHEN NECESSARY TO MAINTAIN CLEARANCES.
7. WHERE SLOPE DIFFERS FROM 45 DEGREES, DIMENSIONS "H" AND "K" MUST BE SHOWN.
8. ▲ DENOTES BARS TO BE CUT IN FIELD.
9. ✳ DENOTES ONE EXTRA BAR ADDED FOR TESTING PURPOSES.
10. △ DENOTES TWO EXTRA BARS ADDED FOR TESTING PURPOSES.
11. E IN BAR MARK PREFIX DENOTES EPOXY COATED REINFORCING STEEL.

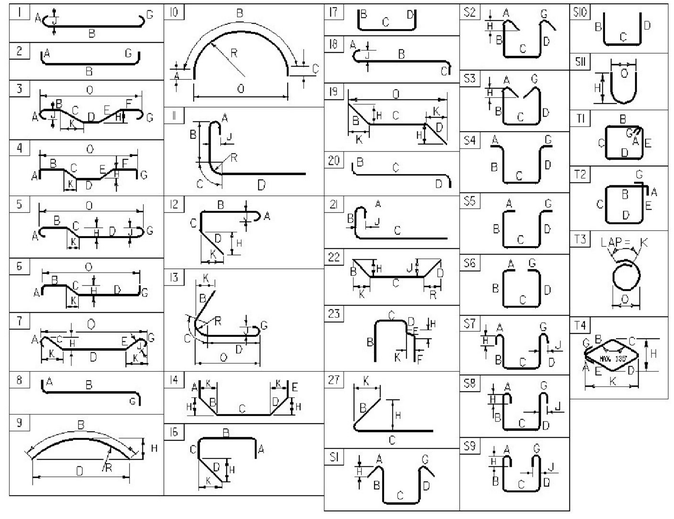

ASTM STANDARD REINFORCING BARS

BAR SIZE DESIGNATION	WEIGHT POUNDS PER FOOT	NOMINAL DIMENSIONS ROUND SECTION DIAMETER INCHES	AREA INCHES^2	PERIMETER INCHES
#3	0.376	0.375	0.11	1.178
#4	0.668	0.500	0.20	1.571
#5	1.043	0.625	0.31	1.963
#6	1.502	0.750	0.44	2.356
#7	2.044	0.875	0.60	2.749
#8	2.670	1.000	0.79	3.142
#9	3.400	1.128	1.00	3.544
#10	4.303	1.270	1.27	3.990
#11	5.313	1.410	1.56	4.430
#14	7.65	1.693	2.25	5.32
#18	13.60	2.257	4.00	7.09

REVISION	DATE	DESCRIPTION	BY
⚠1	01-07-2015	REINFORCING STEEL SCHEDULE UPDATE, ADDED TEST BARS	WDL

PROJECT NAME: **HARTFORD**
PROJECT NUMBER: **IM 091-2 (79)**

FILE NAME: **s12a132RSS_AB4.dgn** PLOT DATE: **1/7/2015**
PROJECT MANAGER: **K. HIGGINS** DRAWN BY: **G. LAROCHE**
DESIGNED BY: **G. LAROCHE** CHECKED BY: **J. GRIGAS**
REINFORCING STEEL SCHEDULE ABUTMENT 4 SHEET **130** OF **166**

STATE OF VERMONT
AGENCY OF TRANSPORTATION

⚠ REINFORCING STEEL SCHEDULE

ITEM	EACH	SIZE	LENGTH	MARK	TYPE	A	B	C	D	E	F	G	H	J	K	R	O
	30	5	8'- 6"	1R501A	STR												
	14	5	9'- 6"	1R501B	STR												
	29	5	4'- 2"	1R502	STR												
	36	5	7'- 6"	1R503	STR												
	20	5	7'- 9"	1R504	S10		3'- 7"	4'- 2"	---								
▲	9	5	19'- 4"	1R505A	STR												
▲	9	5	14'- 0"	1R505B	STR												
▲	11	5	8'- 7"	1R505C	STR												
▲	9	5	14'- 0"	1R506A	STR												
▲	11	5	8'- 7"	1R506B	STR												
▲	26	5	25'- 6"	1R507A	STR												
	2	5	26'- 6"	1R507B	STR												
	10	5	8'- 7"	1R508	19		2'- 2"	4'- 3"	2'- 2"				1'- 7"		1'- 7"		7'- 3"
	18	5	7'- 4"	1R509	20		2'- 2"	3'- 0"	2'- 2"								
	29	5	5'- 11"	1R510	S10		2'- 2"	1'- 7"	2'- 2"								
	16	7	8'- 0"	1R701	S10		3'- 7"	4'- 5"	---								
▲	16	7	19'- 4"	1R702	STR												
	16	8	9'- 6"	1R801	STR												
	32	5	8'- 6"	2R501A	STR												
	14	5	12'- 6"	2R501B	STR												
	32	5	4'- 2"	2R502	STR												
	14	5	7'- 6"	2R503	STR												
	14	5	7'- 9"	2R504	S10		3'- 7"	4'- 2"	---								
	9	5	16'- 7"	2R505A	STR												
	9	5	12'- 1"	2R505B	STR												
	14	5	7'- 7"	2R505C	STR												
	14	5	7'- 7"	2R506	STR												
	10	5	7'- 6"	2R507A	STR												
	10	5	15'- 6"	2R507B	STR												
	18	5	28'- 6"	2R507C	STR												
	10	5	10'- 9"	2R508	19		2'- 2"	6'- 5"	2'- 2"				1'- 7"		1'- 7"		9'- 5"
	20	5	8'- 10"	2R509	20		2'- 2"	4'- 6"	2'- 2"								
	32	5	5'- 11"	2R510	S10		2'- 2"	1'- 7"	2'- 2"								
✳	33	6	8'- 2"	2R601	S10		3'- 7"	4'- 7"	---								
	16	6	16'- 7"	2R602A	STR												
	16	6	12'- 1"	2R602B	STR												
	32	7	9'- 6"	2R701	STR												
	16	5	8'- 6"	3R501A	STR												
	14	5	12'- 6"	3R501B	STR												
	23	5	4'- 2"	3R502	STR												
	26	5	7'- 6"	3R503	STR												
	14	5	7'- 9"	3R504	S10		3'- 7"	4'- 2"	---								
▲	9	5	19'- 1"	3R505A	STR												
▲	14	5	12'- 11"	3R505B	STR												
▲	14	5	12'- 11"	3R506	STR												
▲	32	5	20'- 6"	3R507A	STR												
	2	5	22'- 2"	3R507B	STR												
	5	5	8'- 7"	3R508	19		2'- 2"	4'- 3"	2'- 2"				1'- 7"		1'- 7"		7'- 4"
	9	5	7'- 4"	3R509	20		2'- 2"	3'- 0"	2'- 2"								
	23	5	5'- 11"	3R510	S10		2'- 2"	1'- 7"	2'- 2"								
	16	7	9'- 0"	3R701	S10		3'- 7"	5'- 5"	---								
	16	7	19'- 1"	3R702	STR												
▲	16	8	9'- 6"	3R801	STR												
	34	5	8'- 6"	4R501A	STR												
	15	5	12'- 6"	4R501B	STR												
	32	5	4'- 2"	4R502	STR												
	14	5	7'- 9"	4R504	S10		3'- 7"	4'- 2"	---								
▲	9	5	17'- 8"	4R505A	STR												
▲	9	5	13'- 3"	4R505B	STR												
▲	14	5	8'- 9"	4R505C	STR												
▲	14	5	8'- 9"	4R506	STR												
	10	5	7'- 6"	4R507A	STR												
	10	5	15'- 6"	4R507B	STR												
	22	5	28'- 6"	4R507C	STR												
	10	5	10'- 0"	4R508	19		2'- 2"	5'- 8"	2'- 2"				1'- 7"		1'- 7"		8'- 9"
	22	5	8'- 4"	4R509	20		2'- 2"	4'- 0"	2'- 2"								
	32	5	5'- 11"	4R510	S10		2'- 2"	1'- 7"	2'- 2"								
	32	6	8'- 2"	4R601	S10		3'- 7"	4'- 7"	---								
▲	16	6	17'- 8"	4R602A	STR												
▲	16	6	13'- 3"	4R602B	STR												
	14	6	7'- 6"	4R603	STR												
	32	8	10'- 6"	4R801	STR												
	32	5	8'- 6"	5R501A	STR												
	14	5	5'- 6"	5R501B	STR												
	25	5	4'- 2"	5R502	STR												
	32	5	9'- 6"	5R503A	STR												
	12	5	7'- 6"	5R503B	STR												
	12	5	7'- 9"	5R504	S10		3'- 7"	4'- 2"	---								
▲	9	5	14'- 4"	5R505A	STR												
▲	9	5	10'- 7"	5R505B	STR												
▲	7	5	6'- 10"	5R505C	STR												
	12	5	6'- 10"	5R506	STR												

ITEM	EACH	SIZE	LENGTH	MARK	TYPE	A	B	C	D	E	F	G	H	J	K	R	O
	8	5	7'- 6"	5R507A	STR												
	8	5	15'- 6"	5R507B	STR												
	16	5	21'- 6"	5R507C	STR												
	10	5	9'- 3"	5R508	19		2'- 2"	4'- 11"	2'- 2"					1'- 7"		1'- 7"	8'- 0"
	20	5	7'- 10"	5R509	20		2'- 2"	3'- 6"	2'- 2"								
	25	5	5'- 11"	5R510	S10		2'- 2"	1'- 7"	2'- 2"								
✳	33	6	8'- 2"	5R601	S10		3'- 7"	4'- 7"									
▲	16	6	14'- 4"	5R602A	STR												
▲	16	6	10'- 7"	5R602B	STR												
▲	47	5	6'- 6"	6R501A	STR												
	2	5	7'- 0"	6R501B	STR												
	8	5	4'- 2"	6R502	STR												
▲	22	5	8'- 11"	6R503	STR												
	14	5	7'- 9"	6R504	S10		3'- 7"	4'- 2"	---								
	8	5	5'- 11"	6R505	S10		2'- 2"	1'- 7"	2'- 2"								
	32	5	8'- 6"	7R501A	STR												
	14	5	10'- 6"	7R501B	STR												
	30	5	4'- 2"	7R502	STR												
	22	5	8'- 0"	7R503	STR												
	22	5	7'- 9"	7R504	S10		3'- 7"	4'- 2"	---								
	9	5	16'- 8"	7R505A	STR												
	9	5	12'- 4"	7R505B	STR												
	12	5	7'- 11"	7R505C	STR												
	22	5	7'- 11"	7R506	STR												
	10	5	7'- 6"	7R507A	STR												
	10	5	15'- 6"	7R507B	STR												
	20	5	26'- 6"	7R507C	STR												
	10	5	10'- 0"	7R508	19		2'- 2"	5'- 8"	2'- 2"					1'- 7"		1'- 7"	8'- 9"
	20	5	8'- 4"	7R509	20		2'- 2"	4'- 0"	2'- 2"								
	30	5	5'- 11"	7R510	S10		2'- 2"	1'- 7"	2'- 2"								
	32	6	9'- 6"	7R601	STR												
	32	8	10'- 1"	7R801	S10		3'- 7"	6'- 6"	---								
	16	8	16'- 8"	7R802A	STR												
	16	8	12'- 4"	7R802B	STR												
	44	5	8'- 6"	8R501A	STR												
	14	5	10'- 6"	8R501B	STR												
	9	5	5'- 2"	8R502A	STR												
	30	5	4'- 2"	8R502B	STR												
	54	5	7'- 6"	8R503	STR												
	30	5	7'- 9"	8R504	S10		3'- 7"	4'- 2"	---								
▲	9	5	17'- 11"	8R505A	STR												
▲	9	5	15'- 3"	8R505B	STR												
▲	9	5	11'- 7"	8R505C	STR												
▲	12	5	8'- 0"	8R505D	STR												
▲	16	5	15'- 3"	8R506A	STR												
▲	16	5	11'- 7"	8R506B	STR												
▲	22	5	8'- 0"	8R506C	STR												
▲	8	5	15'- 6"	8R507A	STR												
	6	5	23'- 6"	8R507B	STR												
▲	26	5	34'- 6"	8R507C	STR												
	2	5	35'- 3"	8R507D	STR												
	15	5	7'- 2"	8R508	19		2'- 2"	2'- 10"	2'- 2"					1'- 7"		1'- 7"	5'- 8"
	11	5	5'- 4"	8R509A	20		2'- 2"	1'- 0"	2'- 2"								
	18	5	6'- 4"	8R509B	20		2'- 2"	2'- 0"	2'- 2"								
	39	5	5'- 11"	8R510	S10		2'- 2"	1'- 7"	2'- 2"								
	16	6	9'- 6"	8R601	STR												
	16	7	10'- 0"	8R701	S10		3'- 7"	6'- 5"	---								
▲	16	7	17'- 11"	8R702	STR												

~ NOTES ~

1. UNLESS OTHERWISE DESIGNATED, ALL BAR REINFORCEMENT FOR CONCRETE IN SIZES UP TO AND INCLUDING NO. 18 SHALL CONFORM TO THE REQUIREMENTS OF THE "SPECIFICATIONS FOR DEFORMED BILLET-STEEL BARS FOR CONCRETE REINFORCEMENT", AASHTO M 31 (ASTM A 615-SI). ALL BARS SHALL BE GRADE 60, UNLESS OTHERWISE DESIGNATED.
2. FOR TYPICAL BENDING DETAILS, RECOMMENDED PIN DIAMETER "D" OF BENDS AND HOOKS, AND OTHER STANDARD PRACTICE, SEE CURRENT CONCRETE REINFORCING STEEL INSTITUTE "MANUAL OF STANDARD PRACTICE".
3. BARS WHICH REQUIRE MORE ACCURATE BENDING THAN STANDARD PRACTICES SHOULD HAVE LIMITS INDICATED.
4. ALL DIMENSIONS ARE OUT TO OUT OF BAR EXCEPT "A" AND "G" ON STANDARD 180 DEGREE AND 135 DEGREE HOOKS.
5. "J" DIMENSION ON 180 DEGREE HOOKS TO BE SHOWN ONLY WHERE NECESSARY TO RESTRICT HOOK SIZE. OTHERWISE, STANDARD HOOKS ARE TO BE USED.
6. "H" DIMENSION ON STIRRUPS TO BE SHOWN ONLY WHEN NECESSARY TO MAINTAIN CLEARANCES.
7. WHERE SLOPE DIFFERS FROM 45 DEGREES, DIMENSIONS "H" AND "K" MUST BE SHOWN.
8. ▲ DENOTES BARS TO BE CUT IN FIELD.
9. ✳ DENOTES ONE EXTRA BAR ADDED FOR TESTING PURPOSES.
10. △ DENOTES TWO EXTRA BARS ADDED FOR TESTING PURPOSES.
11. E IN BAR MARK PREFIX DENOTES EPOXY COATED REINFORCING STEEL.

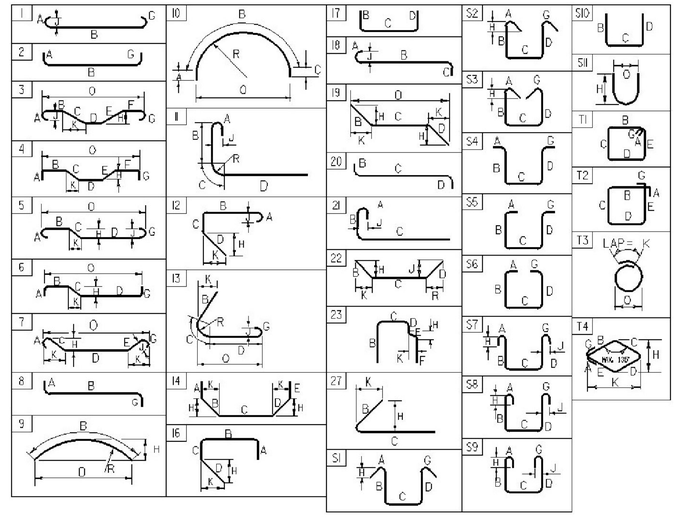

ASTM STANDARD REINFORCING BARS

#3	0.376	0.375	0.11	1.178
#4	0.668	0.500	0.20	1.571
#5	1.043	0.625	0.31	1.963
#6	1.502	0.750	0.44	2.356
#7	2.04	0.875	0.60	2.749
#8	2.670	1.000	0.79	3.14
#9	3.400	1.13	1.00	3.54
#10	4.3	1.270	1.27	3.990
#11	5.31	1.410	1.56	4.430
#14	7.65	1.69	2.25	5.32
#18	13.60	2.26	4.00	7.09

~ REINFORCING STEEL CORROSION RESISTANCE LEVEL ~

THE REINFORCING STEEL MARKS IN THIS SCHEDULE INDICATE THE REQUIRED BAR CORROSION RESISTANCE LEVEL. CORROSION RESISTANCE LEVEL IS DENOTED WITH A .2 FOR LEVEL TWO SUFFIX OR .3 FOR LEVEL THREE SUFFIX, .1 FOR LEVEL ONE IS TO BE OMITTED. THE BAR MATERIAL TYPE AND BAR STEEL GRADE PROVIDED FOR EACH CORROSION LEVEL WILL BE RECORDED ON THE PLAN SET PI SHEET FOR AS-BUILT RECORD PLAN ARCHIVES.

REVISION	DATE	DESCRIPTION	BY
⚠	01-07-2015	REINFORCING STEEL SCHEDULE UPDATE, ADDED TEST BARS	WDL

PROJECT NAME: **HARTFORD**
PROJECT NUMBER: **IM 091-2 (79)**

FILE NAME: **s12a132RSS_RetWalls.dgn**
PROJECT MANAGER: **K. HIGGINS**
DESIGNED BY: **W. LAMMER**
REINFORCING STEEL SCHEDULE RET WALLS

PLOT DATE: **1/7/2015**
DRAWN BY: **K. FRIEDLAND**
CHECKED BY: **W. LAMMER**
SHEET **131** OF **166**

EPSC PLAN NARRATIVE

1.1 PROJECT DESCRIPTION

THIS PROJECT INVOLVES THE REMOVAL OF BRIDGE 43N AND 43S ON INTERSTATE 91 OVER US-5 AND LOCATED IN THE TOWN OF HARTFORD, VT. BRIDGES 43N AND 43S WILL BE REPLACED WITH SINGLE SPAN BRIDGES. BOTH BRIDGES WILL BE BUILT ON THE EXISTING ALIGNMENT. BRIDGE 43N AND 43S WILL BOTH BE APPROXIMATELY 136 FEET IN LENGTH.

NOTE: AREA OF DISTURBANCE INCLUDES LIMITS OF EARTH DISTURBANCE WITHIN THE PROJECT AREA, AS WELL AS WASTE, BORROW AND STAGING AREAS, AND OTHER EARTH DISTURBING ACTIVITIES WITHIN OR DIRECTLY ADJACENT TO THE PROJECT LIMITS AS SHOWN ON THE ATTACHED EPSC PLAN.

TOTAL AREA OF DISTURBANCE AS SHOWN ON THE ATTACHED EPSC PLAN IS APPROXIMATELY 4.63 ACRES.

IT IS ANTICIPATED THAT THIS PROJECT WILL LAST ONE CONSTRUCTION SEASON.

1.2 SITE INVENTORY

1.2.1 TOPOGRAPHY

THE TOPOGRAPHY OF THE AREA IS SLOPING OPEN GROUND WITH SOME AREAS THAT ARE GENTLY SLOPING TO NEARLY FLAT. INTERSTATE 91 AND US-5 ARE RELATIVELY FLAT BUT WITH SLOPING AREAS BETWEEN THE TWO CORRIDORS.

1.2.2 DRAINAGE, WATERWAYS, BODIES OF WATER, AND PROXIMITY TO NATURAL OR MAN-MADE WATER FEATURES

THERE ARE NUMEROUS EXISTING AND PROPOSED DRAINAGE SYSTEMS WITHIN THE PROJECT LIMITS, INCLUDING CULVERTS, DROP INLETS, STONE LINED DITCHES AND GRASS SWALES. SOME CULVERTS AND DRAINAGE DITCHES WITHIN THE PROJECT LIMITS DRAIN TO AN EXISTING STORM WATER RETENTION POND OUTSIDE OF THE PROJECT LIMITS. FOR DETAILS SEE THE DRAINAGE LAYOUT SHEET.

1.2.3 VEGETATION

THE VEGETATION IN THE PROJECT AREA CONSISTS OF MOWED GRASSES.

1.2.4 SOILS

ALL SOIL DATA CAME FROM THE U.S. DEPARTMENT OF AGRICULTURE SOIL CONSERVATION SERVICE FOR THE COUNTY OF WINDSOR, VERMONT.

GLOVER VERSHIRE COMPLEX	15% - 35% SLOPES	"K" FACTOR = 0.32 - 0.28
URBAN LAND WINDSOR-AGAWAM COMPLEX	0% - 8% SLOPES	"K" FACTOR = 0.17 - 0.28

NOTE: K-VALUES GENERALLY INDICATE THE FOLLOWING:
0.0-0.23 = LOW EROSION POTENTIAL
0.24-0.36 = MODERATE EROSION POTENTIAL
0.37 AND HIGHER = HIGH EROSION POTENTIAL

1.2.5 SENSITIVE RESOURCE AREAS

CRITICAL HABITATS: NO
HISTORICAL OR ARCHEOLOGICAL AREAS: NO
PRIME AGRICULTURAL LAND: NO
THREATENED AND ENDANGERED SPECIES: NO
WATER RESOURCE: NO
WETLANDS: NO

1.3 RISK EVALUATION

THIS PROJECT FALLS UNDER THE JURISDICTION OF GENERAL PERMIT 3-9020 FOR STORMWATER RUNOFF FROM CONSTRUCTION SITES FOR LOW RISK PROJECTS. ANY MODIFICATIONS TO THE PROJECT THAT INCREASE THE RISK TO ENVIRONMENTAL RESOURCES SHALL BE EVALUATED IN ACCORDANCE WITH THE PERMIT REQUIREMENTS. THE CONTRACTOR WILL BE RESPONSIBLE FOR ANY ADDITIONAL PERMITTING.

1.4 EROSION PREVENTION AND SEDIMENT CONTROL

THE EROSION CONTROL PLANS ARE MEANT AS A GUIDELINE FOR PREVENTING EROSION AND CONTROLLING SEDIMENT TRANSPORT. THE PRINCIPLES OUTLINED IN THIS NARRATIVE CONSIST OF APPLYING MEASURES THROUGHOUT CONSTRUCTION OF THE PROJECT IN ORDER TO MINIMIZE SEDIMENT TRANSPORT TO THE RECEIVING WATERS. THE MEASURES INCLUDE STABILIZATION AND STRUCTURAL PRACTICES, STORM WATER CONTROLS AND OTHER POLLUTION PREVENTION PRACTICES. THEY HAVE BEEN PROPOSED BY THE DESIGNER AS A BASIS FOR PROTECTING RESOURCES AND WILL NEED TO BE BUILT UPON BASED ON THE SPECIFIC MEANS AND METHODS OF THE CONTRACTOR. REFER TO THE LOW RISK SITE HANDBOOK AND APPROPRIATE DETAIL SHEETS FOR SPECIFIC GUIDANCE AND CONSTRUCTION DETAILING.

ALL MEASURES SHALL BE REGULARLY MAINTAINED AND SHALL BE CHECKED FOR SEDIMENT BUILD-UP. SEDIMENT SHALL BE DISPOSED OF AT AN APPROVED SITE WHERE IT WILL NOT BE SUBJECT TO EROSION.

1.4.1 MARK SITE BOUNDARIES

SITE BOUNDARIES AND AREAS CONSTRUCTION EQUIPMENT CAN ACCESS SHALL BE DELINEATED.

BARRIER FENCE (BF) SHALL BE USED TO PHYSICALLY MARK SITE BOUNDARIES.

1.4.2 LIMIT DISTURBANCE AREA

PREVENTING INITIAL SOIL EROSION BY MINIMIZING THE EXPOSED AREA IS MUCH MORE EFFECTIVE THAN TREATING ERODED SEDIMENT. EARTH DISTURBANCE CAN BE MINIMIZED THROUGH CONSTRUCTION PHASING BY ONLY OPENING UP EARTH AS NECESSARY. THIS CAN LIMIT THE AREA THAT WILL BE DISTURBED AND EXPOSED TO EROSION. EMPLOY TEMPORARY CONSTRUCTION STABILIZATION PRACTICES IN INCREMENTAL STAGES AS PHASES CHANGE. FOR PROJECTS WHICH FALL UNDER THE CONSTRUCTION GENERAL PERMIT, ONLY THE ACREAGE LISTED ON THE PERMIT AUTHORIZATION MAY BE EXPOSED AT ANY GIVEN TIME.

MAINTAINING VEGETATED BUFFERS ALONG STREAM BANKS, WETLANDS OR OTHER SENSITIVE AREAS IS A CRUCIAL EROSION AND SEDIMENT CONTROL MEASURE THAT SHOULD BE ESTABLISHED WHEREVER POSSIBLE.

1.4.3 SITE ENTRANCE/EXIT STABILIZATION

TRACKING OF SEDIMENT ONTO PUBLIC HIGHWAYS SHALL BE MINIMIZED TO REDUCE THE POTENTIAL FOR RUNOFF ENTERING RECEIVING WATERS. INSTALLATION SHALL COINCIDE WITH THE CONTRACTORS PROGRESS SCHEDULE.

STABILIZED CONSTRUCTION ENTRANCES SHALL BE INSTALLED AS PROPOSED ON THE EPSC PLAN AND ANYWHERE EQUIPMENT WILL BE GOING FROM AREAS OF EXPOSED SOILS TO PAVED SURFACES.

1.4.4 INSTALL SEDIMENT BARRIERS

SEDIMENT BARRIERS SHALL BE UTILIZED TO INTERCEPT RUNOFF AND ALLOW SUSPENDED SEDIMENT TO SETTLE OUT. THEY SHALL BE INSTALLED PRIOR TO ANY UP SLOPE WORK.

FILTER FABRIC DROP INLET PROTECTION SHALL BE INSTALLED AS PROPOSED ON THE EPSC PLANS.

SILT FENCE WILL BE INSTALLED AS PROPOSED ON THE EPSC PLAN.

1.4.5 DIVERT UPLAND RUNOFF

DIVERSIONARY MEASURES SHALL BE USED TO INTERCEPT RUNOFF FROM ABOVE THE CONSTRUCTION AND DIRECT IT AROUND THE DISTURBED AREA SO THAT CLEAN WATER DOES NOT BECOME MUDDIED WHILE TRAVELING OVER EXPOSED SOILS ON THE CONSTRUCTION SITE.

THE PROJECT AREA IS RELATIVELY FLAT. THEREFORE IT IS NOT ANTICIPATED THAT DIVERSION MEASURES WILL BE NECESSARY.

1.4.6 SLOW DOWN CHANNELIZED RUNOFF

CHECK STRUCTURES SHALL BE UTILIZED TO REDUCE THE VELOCITY, AND THUS THE EROSIVE POTENTIAL, OF CONCENTRATED FLOW IN CHANNELS.

STONE CHECK DAMS WILL BE INSTALLED AS PROPOSED ON THE EPSC PLAN, AT A MINIMUM.

1.4.7 CONSTRUCT PERMANENT CONTROLS

PERMANENT STORMWATER TREATMENT DEVICES SHALL BE INSTALLED AS SHOWN ON THE PLANS AND IN ACCORDANCE WITH PERMIT CONDITIONS. CULVERTS, DROP INLETS, STONE LINED DITCHES AND GRASS SWALES SHALL BE INSTALLED AS SHOWN ON THE DRAINAGE LAYOUT SHEET.

1.4.8 STABILIZE EXPOSED SOILS DURING CONSTRUCTION

ALL AREAS OF DISTURBANCE MUST HAVE TEMPORARY STABILIZATION IN PLACE WITHIN 48 HOURS OF DISTURBANCE OR IN ACCORDANCE WITH THE CONSTRUCTION GENERAL PERMIT 3-9020 AUTHORIZATION.

SURFACE ROUGHENING OF ALL EXPOSED SLOPES, COMBINED WITH TEMPORARY MULCHING, SHALL BE UTILIZED ON A REGULAR BASIS. BIODEGRADABLE EROSION CONTROL MATTING OR AN EQUIVALENT SHALL BE USED TO STABILIZE ALL SLOPES STEEPER THAN 1:3.

THE FORECAST OF RAINFALL EVENTS SHALL TRIGGER IMMEDIATE PROTECTION OF EXPOSED SOILS.

1.4.9 WINTER STABILIZATION

VARIOUS MEASURES SPECIFIC TO WINTER MAY BE NECESSARY SHOULD THE PROJECT EXTEND INTO WINTER (OCTOBER 15 THROUGH APRIL 15). REFER TO THE LOW RISK SITE HANDBOOK FOR GUIDANCE.

1.4.10 STABILIZE SOIL AT FINAL GRADE

EXPOSED SOIL MUST BE STABILIZED WITHIN 48 HOURS OF REACHING FINAL GRADE.

SEED, MULCH, FERTILIZER AND LIME SHALL BE USED TO ESTABLISH PERMANENT VEGETATION. FOR SLOPES STEEPER THAN 1:3, BIODEGRADABLE EROSION CONTROL MATTING OR AN EQUIVALENT SHALL BE USED INSTEAD OF MULCH.

1.4.11 DE-WATERING ACTIVITIES

DISCHARGE FROM DEWATERING ACTIVITIES THAT FLOWS OFF OF THE CONSTRUCTION SITE MUST NOT CAUSE OR CONTRIBUTE TO A VIOLATION OF THE VERMONT WATER QUALITY STANDARDS.

DEWATERING IS NOT ANTICIPATED ON THIS PROJECT SITE.

1.4.12 INSPECT YOUR SITE

INSPECT THE PROJECT SITE BASED ON SPECIAL PROVISION REQUIREMENTS OR CONSTRUCTION GENERAL PERMIT AUTHORIZATION STIPULATIONS.

1.5 SEQUENCE AND STAGING

THIS SECTION WILL BE DEVELOPED BY THE CONTRACTOR USING THE GUIDANCE OUTLINED IN THE VTRANS EPSC PLAN CONTRACTOR CHECKLIST.

1.5.1 CONSTRUCTION SEQUENCE

1.5.2 OFF-SITE ACTIVITIES

IN ADDITION TO THE CONTRACTOR CHECKLIST ANY ACTIVITIES OUTSIDE THE CONSTRUCTION LIMITS SHALL FOLLOW SPECIFICATION 105.25- 105.29 OF THE STANDARD SPECIFICATIONS FOR CONSTRUCTION.

PROJECT NAME:	HARTFORD
PROJECT NUMBER:	IM 091-2(79)

FILE NAME: sl2al32ero_narrative.dgn	PLOT DATE: 15-DEC-2014
PROJECT LEADER: K. HIGGINS	DRAWN BY: K. FRIEDLAND
DESIGNED BY: W. LAMMER	CHECKED BY: J. SALVATORI
EPSC NARRATIVE	SHEET 132 OF 166

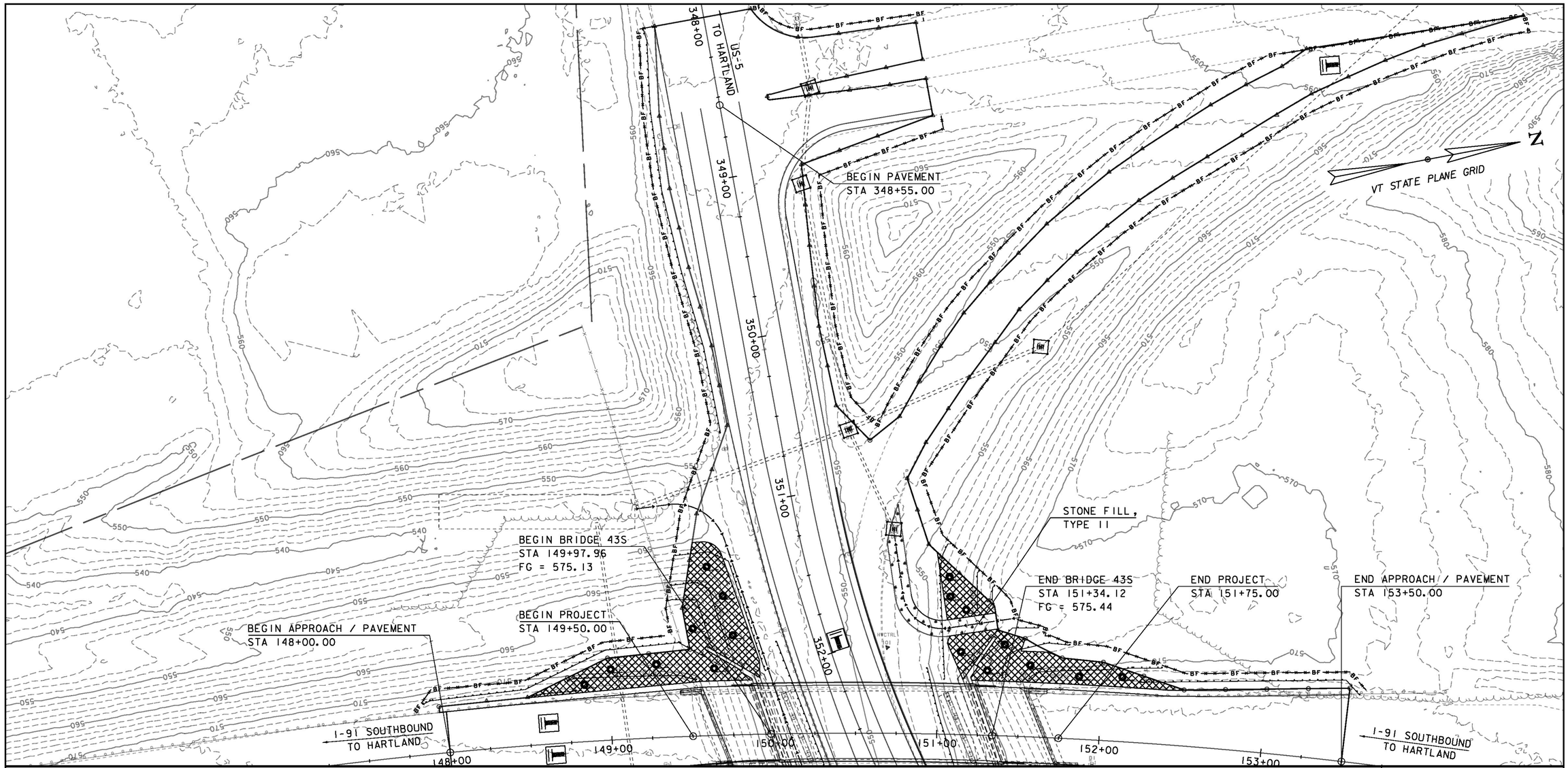

MATCHLINE STA 352+75.00

EPSC DURING CONSTRUCTION SHEET 1

SCALE 1" = 30'-0"
30 0 30

PROJECT NAME:	HARTFORD
PROJECT NUMBER:	IM 091-2(79)
FILE NAME: sl2al32bdr_ero_dur.dgn	PLOT DATE: 15-DEC-2014
PROJECT LEADER: K. HIGGINS	DRAWN BY: K. FRIEDLAND
DESIGNED BY: W. LAMMER	CHECKED BY: J. SALVATORI
EPSC DURING CONSTRUCTION SHEET 1	SHEET 133 OF 166

VT STATE PLANE GRID

N

MATCHLINE STA 352+75.00

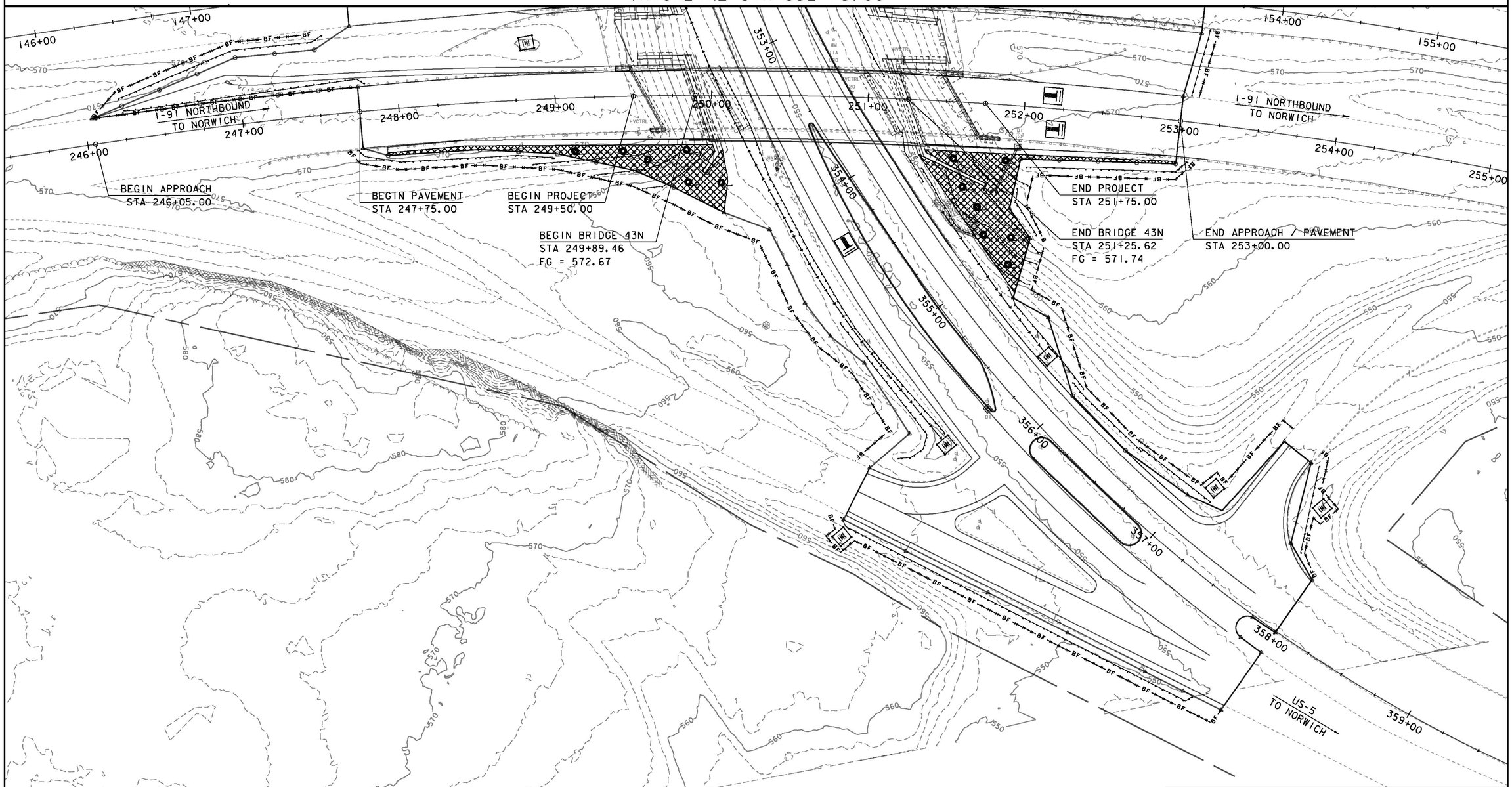

NOTES:

1. TEMPORARY CRANE PAD TO BE DESIGNED BY CONTRACTOR.

EPSC DURING CONSTRUCTION SHEET 2

SCALE 1" = 30'-0"
30 0 30

PROJECT NAME:	HARTFORD
PROJECT NUMBER:	IM 091-2(79)

FILE NAME: sl2al32bdr_ero_dur.dgn	PLOT DATE: 15-DEC-2014
PROJECT LEADER: K. HIGGINS	DRAWN BY: K. FRIEDLAND
DESIGNED BY: W. LAMMER	CHECKED BY: J. SALVATORI
EPSC DURING CONSTRUCTION SHEET 2	SHEET 134 OF 166

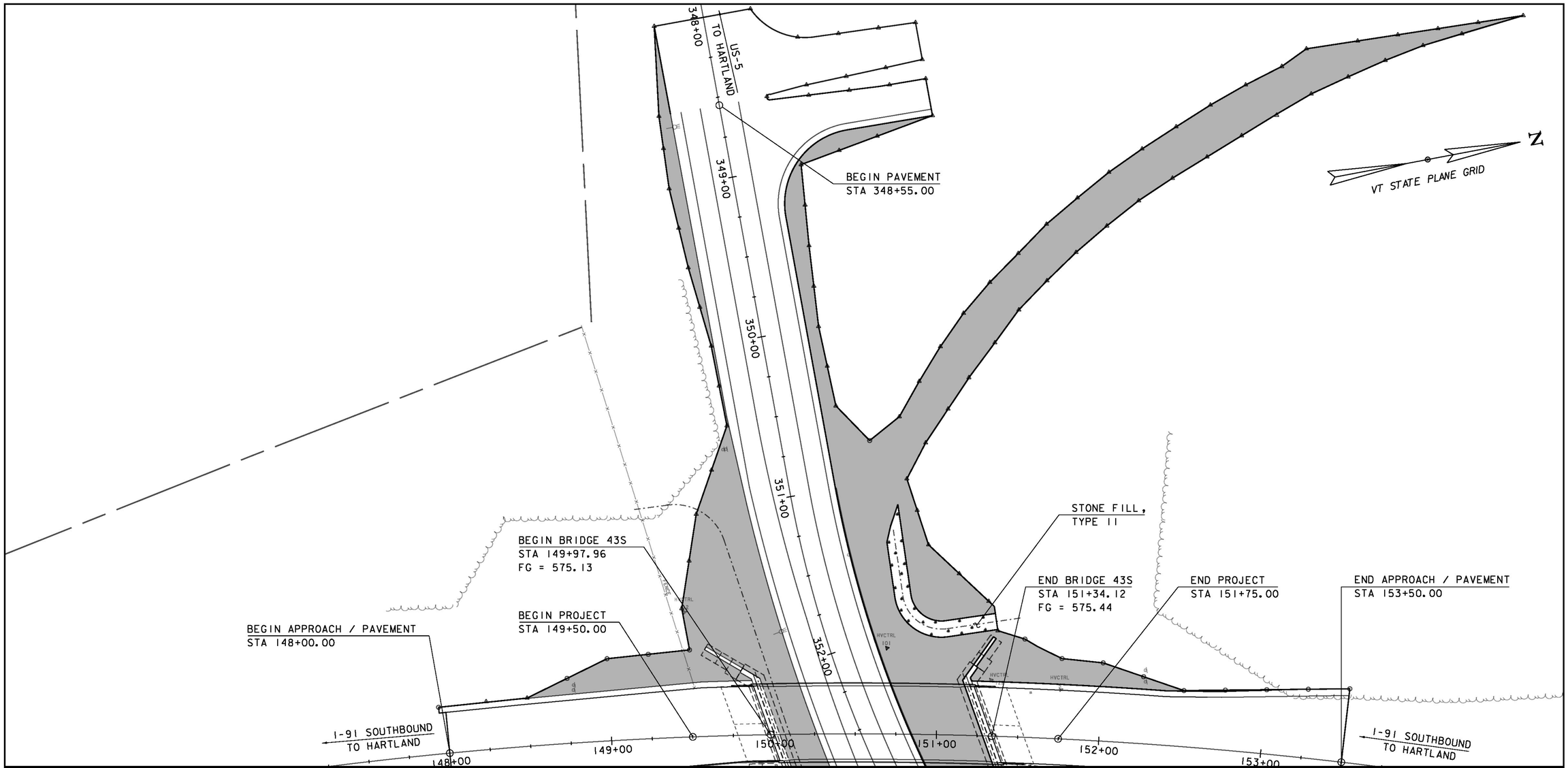

MATCHLINE STA 352+75.00

AREAS OF EARTH DISTURBANCE
THAT WILL REQUIRE REVEGETATION.

EPSC FINAL CONDITIONS SHEET 1

SCALE 1" = 30'-0"
30 0 30

PROJECT NAME:	HARTFORD
PROJECT NUMBER:	IM 091-2(79)
FILE NAME: sl2al32bdr_ero_final.dgn	PLOT DATE: 15-DEC-2014
PROJECT LEADER: K. HIGGINS	DRAWN BY: K. FRIEDLAND
DESIGNED BY: W. LAMMER	CHECKED BY: J. SALVATORI
EPSC FINAL CONDITIONS SHEET 1	SHEET 135 OF 166

MATCHLINE STA 352+75.00

VT STATE PLANE GRID

N

I-91 NORTHBOUND
TO NORWICH

US-5
TO NORWICH

146+00
147+00
246+00
247+00
248+00
249+00
250+00
251+00
252+00
253+00
254+00
255+00
353+00
354+00
355+00
356+00
357+00
358+00
359+00
154+00
155+00

BEGIN APPROACH
STA 246+05.00

BEGIN PAVEMENT
STA 247+75.00

BEGIN PROJECT
STA 249+50.00

BEGIN BRIDGE 43N
STA 249+89.46
FG = 572.67

END PROJECT
STA 251+75.00

END BRIDGE 43N
STA 251+25.62
FG = 571.74

END APPROACH / PAVEMENT
STA 253+00.00

AREAS OF EARTH DISTURBANCE
THAT WILL REQUIRE REVEGETATION.

EPSC FINAL CONDITIONS SHEET 2

SCALE 1" = 30'-0"
30 0 30

PROJECT NAME:	HARTFORD
PROJECT NUMBER:	IM 091-2(79)
FILE NAME: sl2al32bdr_ero_final.dgn	PLOT DATE: 15-DEC-2014
PROJECT LEADER: K. HIGGINS	DRAWN BY: K. FRIEDLAND
DESIGNED BY: W. LAMMER	CHECKED BY: J. SALVATORI
EPSC FINAL CONDITIONS SHEET 2	SHEET 136 OF 166

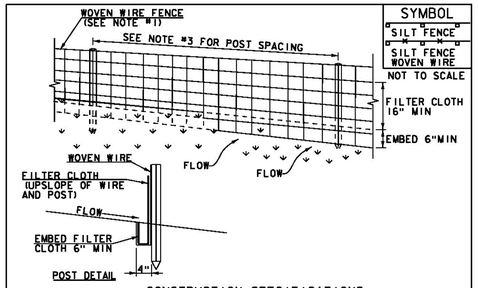

SYMBOL
SILT FENCE
SILT FENCE WOVEN WIRE
NOT TO SCALE

CONSTRUCTION SPECIFICATIONS

1. WOVEN WIRE REINFORCED FENCE IS REQUIRED WITHIN 100' UPSLOPE OF RECEIVING WATERS WHEN THE PROJECT FALLS UNDER A CONSTRUCTION STORMWATER PERMIT. WOVEN WIRE SHALL BE A MIN. 14 GAUGE WITH A 6" MAX. MESH OPENING.
2. FILTER CLOTH SHALL BE EITHER FILTER X, MIRAFI100X, STABILINKA T140N OR APPROVED EQUIVALENT.
3. POST SPACING FOR WIRE-BACKED FENCE SHALL BE 10' MAXIMUM. FOR FILTER-CLOTH FENCE, WHEN ELONGATION IS >50%, POST SPACING SHALL NOT EXCEED 4' AND WHEN ELONGATION IS <50%, POST SPACING SHALL NOT EXCEED 6'.
4. WOVEN WIRE FENCE IS TO BE FASTENED SECURELY TO FENCE POSTS WITH WIRE TIES. FILTER CLOTH IS TO BE FASTENED SECURELY TO WOVEN WIRE FENCE WITH TIES SPACED EVERY 24" AT TOP AND MID SECTION.
5. WHEN TWO SECTIONS OF FILTER CLOTH ADJOIN EACH OTHER THEY SHALL BE OVER-LAPPED BY 6" AND FOLDED.
6. MAINTENANCE SHALL BE PERFORMED AS NEEDED AND MATERIAL REMOVED WHEN SEDIMENT REACHES HALF OF FABRIC HEIGHT.

ADAPTED FROM DETAILS PROVIDED BY: NEW YORK STATE DEC ORIGINALLY DEVELOPED BY USDA-NRCS VERMONT DEPARTMENT OF ENVIRONMENTAL CONSERVATION

SILT FENCE

NOTES:
REFER TO "THE VERMONT STANDARDS & SPECIFICATIONS FOR EROSION PREVENTION & SEDIMENT CONTROL -2006- " FROM THE VT AGENCY OF NATURAL RESOURCES FOR ADDITIONAL GUIDANCE.

THIS WORK SHALL BE PERFORMED IN ACCORDANCE WITH SECTION 649 AND AS SHOWN IN THE PLANS FOR GEOTEXTILE FOR SILT FENCE (PAY ITEM 649.51) OR GEOTEXTILE FOR SILT FENCE, WOVEN WIRE REINFORCED (PAY ITEM 649.515).

REVISIONS	
MARCH 21, 2008	WHF
DECEMBER 11, 2008	WHF
JANUARY 13, 2009	WHF

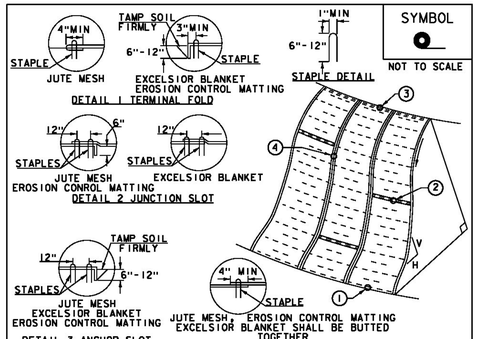

SYMBOL
NOT TO SCALE

CONSTRUCTION SPECIFICATIONS

1. APPLY TO SLOPES GREATER THAN 3H: 1V OR WHERE NECESSARY TO AID IN ESTABLISHING VEGETATION.
2. APPLY FERTILIZER, LIME SEED PRIOR TO PLACING MATTING.
3. STAPLES ARE TO BE PLACED ALTERNATELY, IN COLUMNS APPROXIMATELY 2' APART AND IN ROWS APPROXIMATELY 3' APART. APPROXIMATELY 175 STAPLES ARE REQUIRED PER 4'X225' ROLL OF MATERIAL AND 125 STAPLES ARE REQUIRED PER 4'X150' ROLL OF MATERIAL.
4. DISTURBED AREAS SHALL BE SMOOTHLY GRADED. EROSION CONTROL MATERIAL SHALL BE PLACED LOOSELY OVER GROUND SURFACE. DO NOT STRETCH.
5. ALL TERMINAL ENDS AND TRANSVERSE LAPS SHALL BE STAPLED AT APPROXIMATELY 12" INTERVALS.

ADAPTED FROM DETAILS PROVIDED BY: NEW YORK STATE DEC ORIGINALLY DEVELOPED BY USDA-NRCS VERMONT DEPARTMENT OF ENVIRONMENTAL CONSERVATION

ROLLED EROSION CONTROL PRODUCT (RECP) SIDE SLOPE

NOTES:
REFER TO "THE VERMONT STANDARDS & SPECIFICATIONS FOR EROSION PREVENTION & SEDIMENT CONTROL -2006- " FROM THE VT AGENCY OF NATURAL RESOURCES FOR ADDITIONAL GUIDANCE.
THIS WORK SHALL BE PERFORMED IN ACCORDANCE WITH SECTION 653 AND AS SHOWN IN THE PLANS FOR TEMPORARY EROSION MATTING (PAY ITEM 653.20) ~~OR PERMANENT EROSION MATTING (PAY ITEM 653.21).~~

REVISIONS	
APRIL 16, 2007	JMF
JANUARY 13, 2009	WHF

VAOT RURAL AREA MIX

LBS/AC					
% WEIGHT	BROADCAST	HYDROSEED	NAME	GERM %	PURITY %
37.5%	22.5	45	CREEPING RED FESCUE	85%	98%
37.5%	22.5	45	TALL FESCUE	90%	95%
5.0%	3	6	RED TOP	90%	95%
15.0%	9	18	BIRDSFOOT TREFOIL	85%	98%
5.0%	3	6	ANNUAL RYE GRASS	85%	95%
100%	60	120			

VAOT URBAN AREA MIX

LBS/AC					
% WEIGHT	BROADCAST	HYDROSEED	NAME	GERM %	PURITY %
42.5%	34	68	CREEPING RED FESCUE	85%	98%
10.0%	8	16	PERENNIAL RYE GRASS	90%	95%
42.5%	34	68	KENTUCKY BLUE GRASS	85%	85%
5.0%	4	8	ANNUAL RYE GRASS	85%	95%
100%	80	160			

SOIL AMENDMENT GUIDANCE

FERTILIZER		LIME	
BROADCAST	HYDROSEED	BROADCAST	HYDROSEED
10-20-10	*FOLLOW*	PELLETIZED	*FOLLOW*
500 LBS/AC	*MANUFACTURER*	2 TONS/AC	*MANUFACTURER*

CONSTRUCTION GUIDANCE

1. RURAL SEED MIX: USE AS INDICATED IN THE PLANS AND/OR FOR ALL ESTABLISHED UPLAND (NON WETLAND) AREAS DISTURBED BY THE CONTRACTOR.
2. URBAN SEED MIX: USE AS INDICATED IN THE PLANS AND/OR FOR ALL ESTABLISHED LAWN AREAS DISTURBED BY THE CONTRACTOR.
3. ALL SEED MIXTURES: SHALL NOT HAVE A WEED CONTENT EXCEEDING 0.40% BY WEIGHT AND SHALL BE FREE OF ALL NOXIOUS SEED.
4. FERTILIZER AND LIMESTONE: SHALL FOLLOW RATES SHOWN ON PLAN OR AS DIRECTED BY THE ENGINEER
5. HAY MULCH: TO BE PLACED ON EARTH SLOPES AT THE RATE OF 2 TONS/ACRE, ACHIEVE 90% GROUND COVER OR AS DIRECTED BY THE ENGINEER.
6. TOPSOIL: TO BE USED WITH SEED AS INDICATED ON THE PLANS, OR AS DIRECTED BY THE ENGINEER.
7. HYDROSEEDING: ALTHOUGH GUIDANCE IS GIVEN ABOVE THE SITE CONDITIONS AND THE TYPE OF HYDROSEED WILL ULTIMATELY DICTATE THE AMOUNTS AND TYPES OF SOIL AMENDMENTS TO BE APPLIED
8. TURF ESTABLISHMENT: PLACING SEED, FERTILIZER, LIME AND MULCH PRIOR TO SEPTEMBER 15 AND AFTER APRIL 15 CAN BETTER ENSURE A VIGOROUS GROWTH OF GRASS.

ADAPTED FROM VTRANS TECHNICAL LANDSCAPE MANUAL FOR ROADWAYS AND TRANSPORTATION FACILITIES

TURF ESTABLISHMENT

THIS WORK SHALL BE PERFORMED IN ACCORDANCE WITH SECTION 651 FOR SEED (PAY ITEM 651.15)

REVISIONS	
JUNE 23, 2009	WHF
JANUARY 15, 2010	WHF
FEBRUARY 16, 2011	WHF

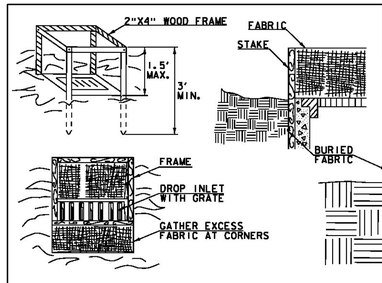

SYMBOL
NOT TO SCALE

CONSTRUCTION SPECIFICATIONS

1. FILTER FABRIC SHALL HAVE AN APPARENT OPENING SIZE OF 40-85. BURLAP MAY BE USED FOR SHORT TERM APPLICATIONS.
2. CUT FABRIC FROM A CONTINUOUS ROLL TO ELIMINATE JOINTS. IF JOINTS ARE NEEDED THEY WILL BE OVERLAPPED TO THE NEXT STAKE.
3. STAKE MATERIALS WILL BE STANDARD 2"x 4" WOOD OR EQUIVALENT METAL WITH A MINIMUM LENGTH OF 3'.
4. SPACE STAKES EVENLY AROUND INLET 3' APART AND DRIVE A MINIMUM 18" DEEP. SPANS GREATER THAN 3' MAY BE BRIDGED WITH THE USE OF WIRE MESH BEHIND THE FILTER FABRIC FOR SUPPORT.
5. FABRIC SHALL BE EMBEDDED 1' MINIMUM BELOW GROUND AND BACKFILLED. IT SHALL BE SECURELY FASTENED TO THE STAKES AND FRAME.
6. A 2" x 4" WOOD FRAME SHALL BE COMPLETED AROUND THE CREST OF THE FABRIC FOR OVER FLOW STABILITY.
7. MAXIMUM DRAINAGE AREA 1 ACRE

ADAPTED FROM DETAILS PROVIDED BY: NEW YORK STATE DEC ORIGINALLY DEVELOPED BY USDA-NRCS VERMONT DEPARTMENT OF ENVIRONMENTAL CONSERVATION

FILTER FABRIC DROP INLET PROTECTION

NOTES:
REFER TO "THE VERMONT STANDARDS & SPECIFICATIONS FOR EROSION PREVENTION & SEDIMENT CONTROL -2006- " FROM THE VT AGENCY OF NATURAL RESOURCES FOR ADDITIONAL GUIDANCE.

THIS WORK SHALL BE PERFORMED IN ACCORDANCE WITH SECTION 653 FOR INLET PROTECTION DEVICE, TYPE I (PAY ITEM 653.40).

REVISIONS	
MARCH 7, 2008	WHF
JANUARY 13, 2009	WHF

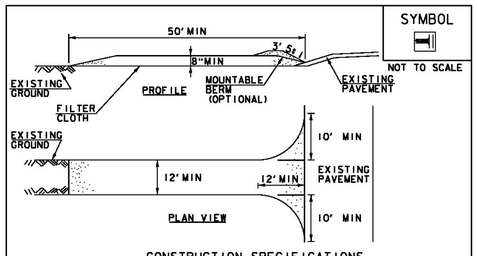

SYMBOL
NOT TO SCALE

CONSTRUCTION SPECIFICATIONS

1. STONE SIZE- USE 1-4" STONE, RECLAIMED OR RECYCLED CONCRETE EQUIVALENT.
2. LENGTH- NOT LESS THAN 50' (EXCEPT ON A SINGLE RESIDENCE LOT WHERE A 30' MINIMUM LENGTH APPLIES).
3. THICKNESS- NOT LESS THAN 8".
4. WIDTH- 12' MINIMUM, BUT NOT LESS THAN THE FULL WIDTH AT POINTS WHERE INGRESS OR EGRESS OCCURS. 24' IF SINGLE ENTRANCE TO SITE.
5. GEOTEXTILE MUST BE PLACED OVER THE ENTIRE AREA PRIOR TO PLACING STONE.
6. SURFACE WATER- ALL SURFACE WATER FLOWING OR DIVERTED TOWARD CONSTRUCTION ENTRANCES SHALL BE PIPED BENEATH THE ENTRANCE. IF PIPING IS IMPRACTICAL, A MOUNTABLE BERM WITH 5:1 SLOPES WILL BE PERMITTED.
7. MAINTENANCE- THE ENTRANCE SHALL BE MAINTAINED IN A CONDITION WHICH WILL PREVENT TRACKING OR FLOWING OF SEDIMENT ONTO PUBLIC RIGHTS-OF-WAY. ALL SEDIMENT SPILLED, DROPPED, WASHED OR TRACKED ONTO PUBLIC RIGHTS-OF-WAY MUST BE REMOVED IMMEDIATELY.
8. WHEN WASHING IS REQUIRED, IT SHALL BE DONE ON AN AREA STABILIZED WITH STONE AND WHICH DRAINS INTO AN APPROVED SEDIMENT TRAPPING DEVICE.
9. PERIODIC INSPECTION AND NEEDED MAINTENANCE SHALL BE PROVIDED ACCORDING TO PERMIT REQUIREMENTS.

ADAPTED FROM DETAILS PROVIDED BY: NEW YORK STATE DEC ORIGINALLY DEVELOPED BY USDA-NRCS VERMONT DEPARTMENT OF ENVIRONMENTAL CONSERVATION

STABILIZED CONSTRUCTION ENTRANCE

NOTES:
REFER TO "THE VERMONT STANDARDS & SPECIFICATIONS FOR EROSION PREVENTION & SEDIMENT CONTROL -2006- " FROM THE VT AGENCY OF NATURAL RESOURCES FOR ADDITIONAL GUIDANCE.

THIS WORK SHALL BE PERFORMED IN ACCORDANCE WITH SECTION 653 FOR VEHICLE TRACKING PAD (PAY ITEM 653.35) OR AS SPECIFIED IN THE CONTRACT.

REVISIONS	
MARCH 24, 2008	WHF
JANUARY 13, 2009	WHF

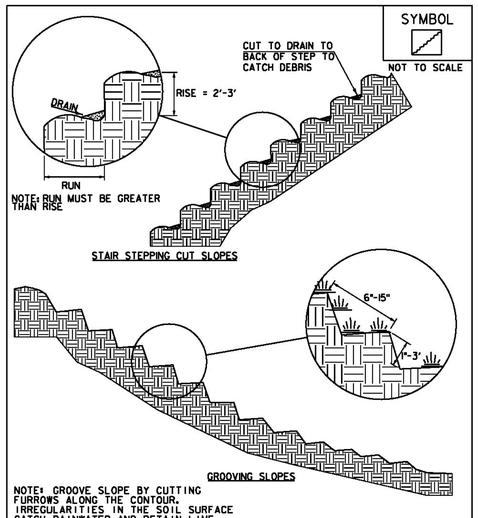

SYMBOL
NOT TO SCALE

NOTE: GROOVE SLOPE BY CUTTING FURROWS ALONG THE CONTOUR. IRREGULARITIES IN THE SOIL SURFACE CATCH RAINWATER AND RETAIN LIME, FERTILIZER AND SEED.

ADAPTED FROM DETAILS PROVIDED BY: NEW YORK STATE DEC ORIGINALLY DEVELOPED BY USDA-NRCS VERMONT DEPARTMENT OF ENVIRONMENTAL CONSERVATION

SURFACE ROUGHENING

NOTES:
REFER TO "THE VERMONT STANDARDS & SPECIFICATIONS FOR EROSION PREVENTION & SEDIMENT CONTROL -2006- " FROM THE VT AGENCY OF NATURAL RESOURCES FOR ADDITIONAL GUIDANCE.

THIS WORK SHALL BE CONSIDERED INCIDENTAL TO THE CONTRACT

REVISIONS	
APRIL 1, 2008	WHF
JANUARY 13, 2009	WHF

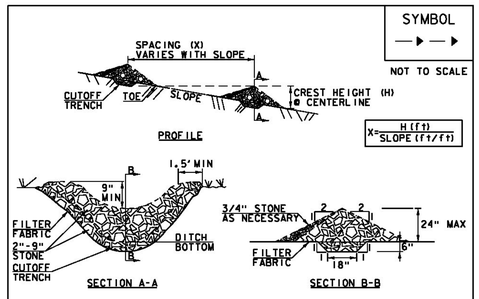

SYMBOL
NOT TO SCALE

CONSTRUCTION SPECIFICATIONS

1. STONE WILL BE PLACED ON A FILTER FABRIC FOUNDATION.
2. CHECK DAMS SHALL BE SPACED SO THAT THE ELEVATION OF THE CREST OF THE DOWNSTREAM DAM IS AT THE SAME ELEVATION AS THE TOE OF THE UPSTREAM DAM.
3. 3/4" FILTERING STONE MAY BE ADDED TO THE FACE OF THE CHECK DAM AS NECESSARY.
4. EXTEND THE STONE A MINIMUM OF 1.5' BEYOND THE DITCH BANKS TO PREVENT CUTTING AROUND THE DAM.
5. PROTECT CHANNEL DOWNSTREAM OF THE LOWEST CHECK DAM FROM SCOUR AND EROSION WITH STONE OR LINER AS APPROPRIATE.
6. ENSURE THAT CHANNEL APPURTENANCES SUCH AS CULVERT ENTRANCES BELOW CHECK DAMS ARE NOT SUBJECT TO DAMAGE OR BLOCKAGE FROM DISPLACED STONE.
7. MAXIMUM DRAINAGE AREA 2 ACRES.

ADAPTED FROM DETAILS PROVIDED BY: NEW YORK STATE DEC ORIGINALLY DEVELOPED BY USDA-NRCS VERMONT DEPARTMENT OF ENVIRONMENTAL CONSERVATION

CHECK DAM

NOTES:
REFER TO "THE VERMONT STANDARDS & SPECIFICATIONS FOR EROSION PREVENTION & SEDIMENT CONTROL -2006- " FROM THE VT AGENCY OF NATURAL RESOURCES FOR ADDITIONAL GUIDANCE.

THIS WORK SHALL BE PERFORMED IN ACCORDANCE WITH SECTION 653 FOR TEMPORARY STONE CHECK DAM, TYPE I (PAY ITEM 653.25)

REVISIONS	
MARCH 21, 2008	WHF
JANUARY 8, 2009	WHF

PROJECT NAME: HARTFORD
PROJECT NUMBER: IM 091-2(79)

FILE NAME: sl2al32ero_details.dgn
PROJECT LEADER: K. HIGGINS
DESIGNED BY: W. LAMMER
EPSC DETAILS

PLOT DATE: 15-DEC-2014
DRAWN BY: K. FRIEDLAND
CHECKED BY: J. SALVATORI

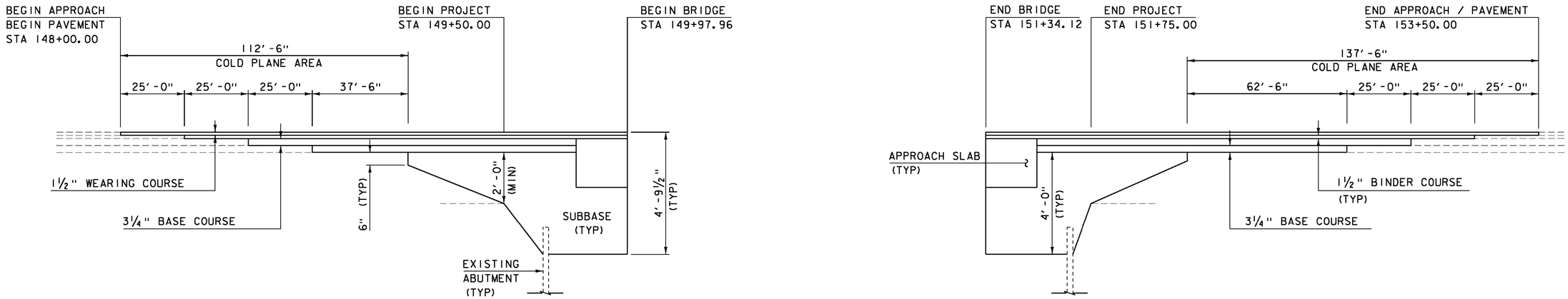

I-91 SB MATERIAL TRANSITION

HOR. SCALE 1" = 20'-0"
NO VERT. SCALE

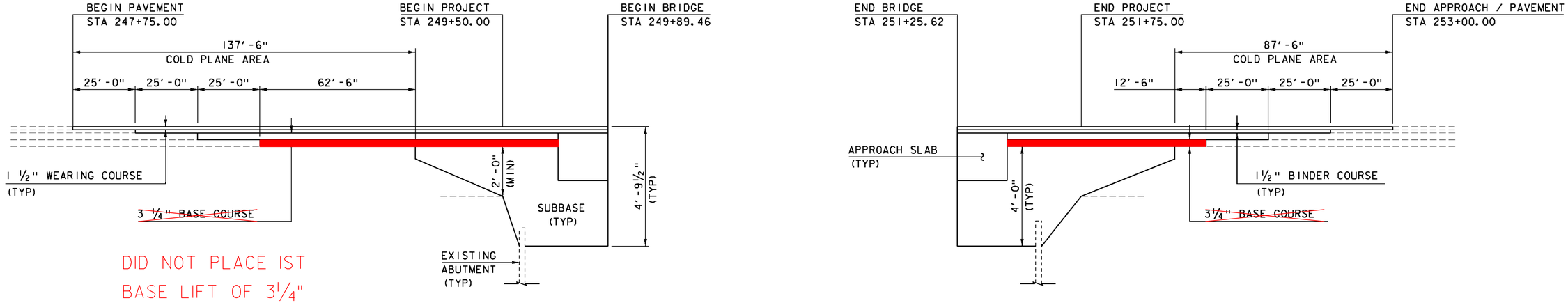

DID NOT PLACE IST BASE LIFT OF 3¼" ON NB ONLY

I-91 NB MATERIAL TRANSITION

HOR. SCALE 1" = 20'-0"
NO VERT. SCALE

PROJECT NAME:	HARTFORD
PROJECT NUMBER:	IM 091-2(79)

FILE NAME: sl2al32profile.dgn	PLOT DATE: 15-DEC-2014
PROJECT LEADER: K. HIGGINS	DRAWN BY: J. SALVATORI
DESIGNED BY: J. SALVATORI	CHECKED BY: G. LAROCHE
MATERIAL TRANSITION	SHEET 138 OF 166

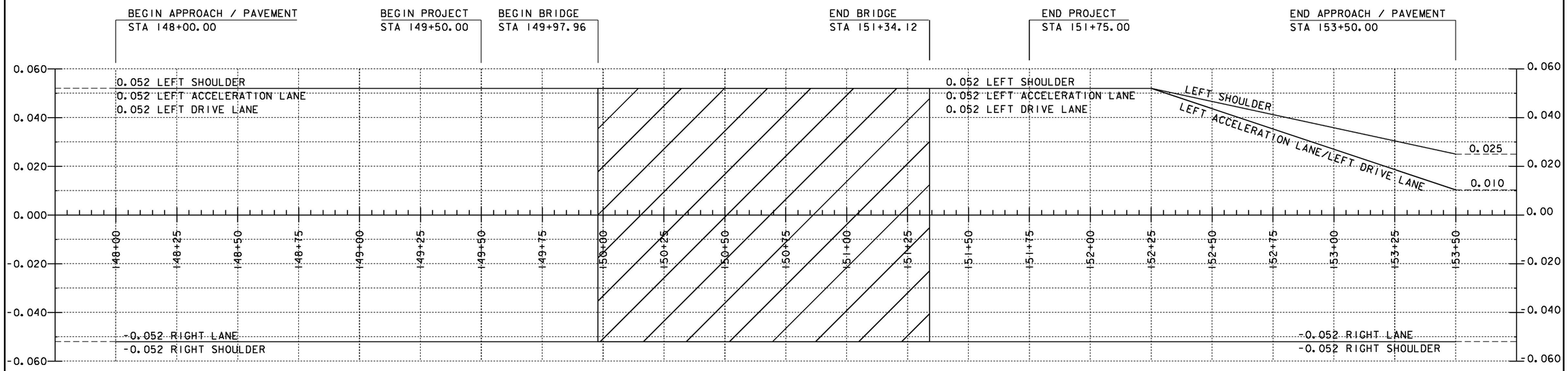

I-91 SB BANKING DIAGRAM

HOR. SCALE 1" = 20'-0"
NO VER. SCALE

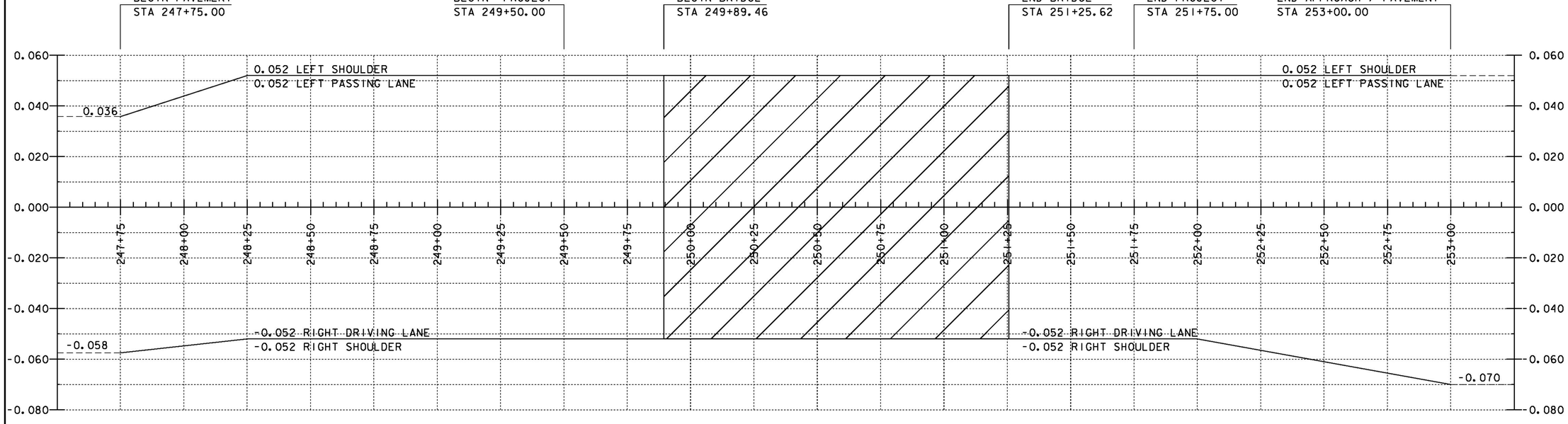

I-91 NB BANKING DIAGRAM

HOR. SCALE 1" = 20'-0"
NO VER. SCALE

PROJECT NAME:	HARTFORD
PROJECT NUMBER:	IM 091-2(79)
FILE NAME: sl2al32profile.dgn	PLOT DATE: 15-DEC-2014
PROJECT LEADER: K. HIGGINS	DRAWN BY: J. SALVATORI
DESIGNED BY: G. LAROCHE	CHECKED BY: W. LAMMER
BANKING DIAGRAM	SHEET 139 OF 166

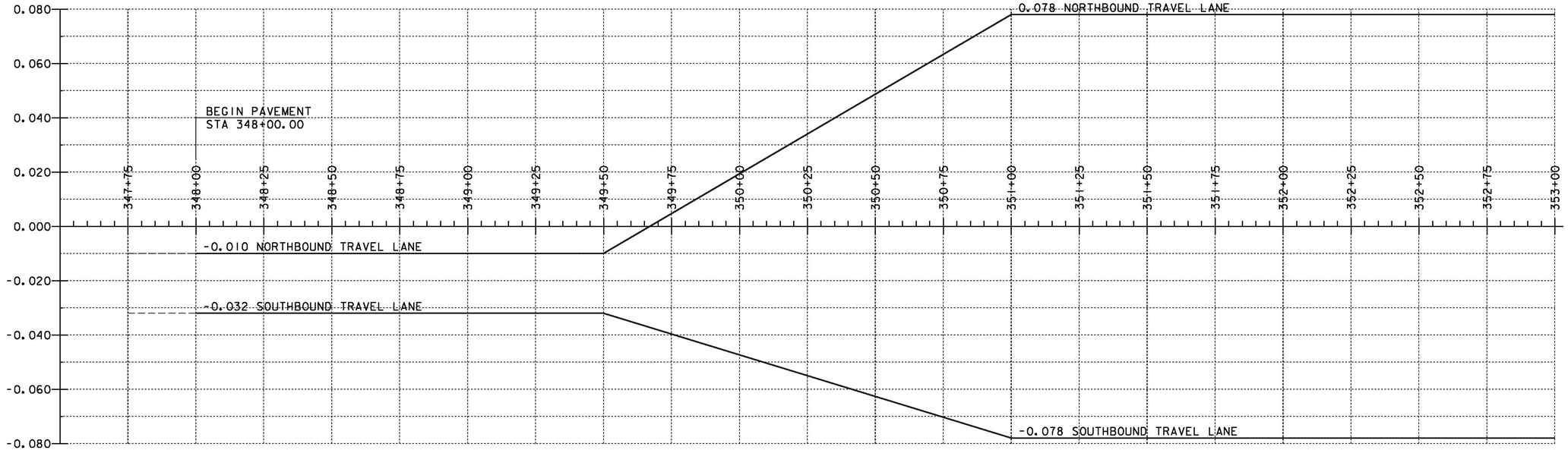

US 5 BANKING DIAGRAM
(STA 347+50 - 353+00)

HOR. SCALE 1" = 20'-0"
NO VER. SCALE

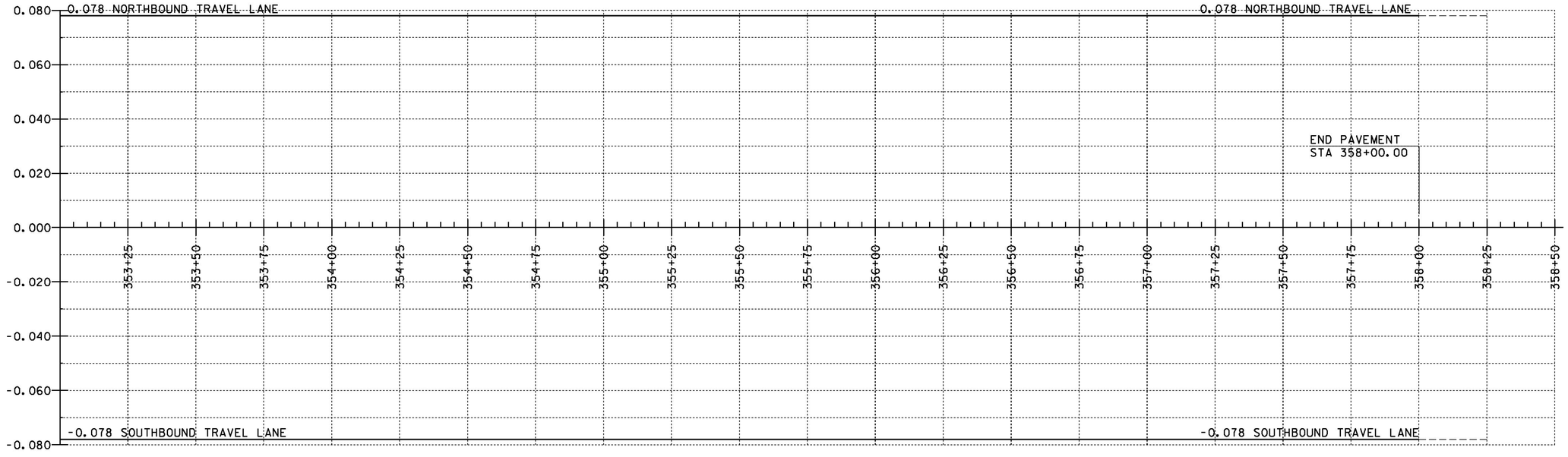

US 5 BANKING DIAGRAM
(STA 353+00 - 358+50)

HOR. SCALE 1" = 20'-0"
NO VER. SCALE

PROJECT NAME:	HARTFORD
PROJECT NUMBER:	IM 091-2(79)

FILE NAME: s12a132profile.dgn	PLOT DATE: 15-DEC-2014
PROJECT LEADER: K. HIGGINS	DRAWN BY: J. SALVATORI
DESIGNED BY: G. LAROCHE	CHECKED BY: W. LAMMER
US 5 BANKING DIAGRAM	SHEET 140 OF 166

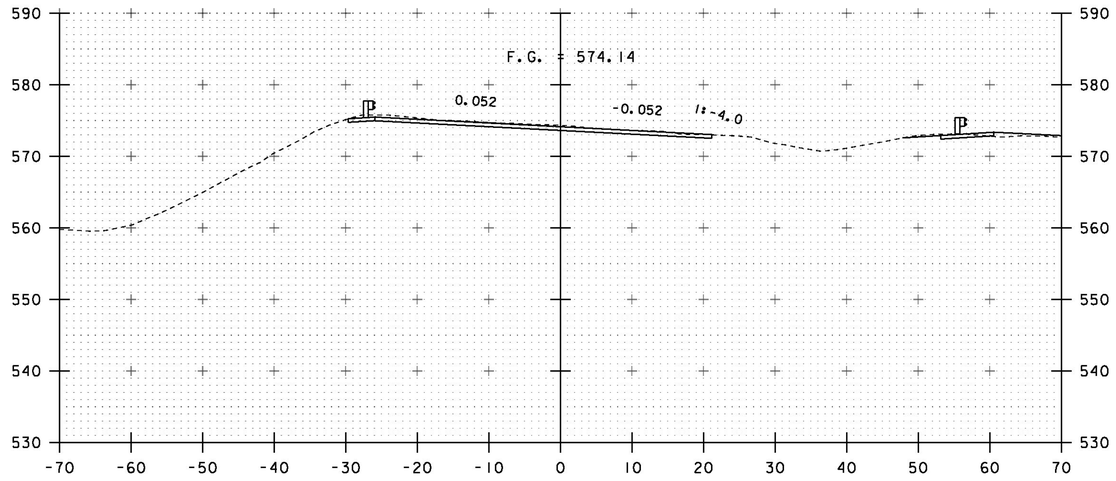

148+50

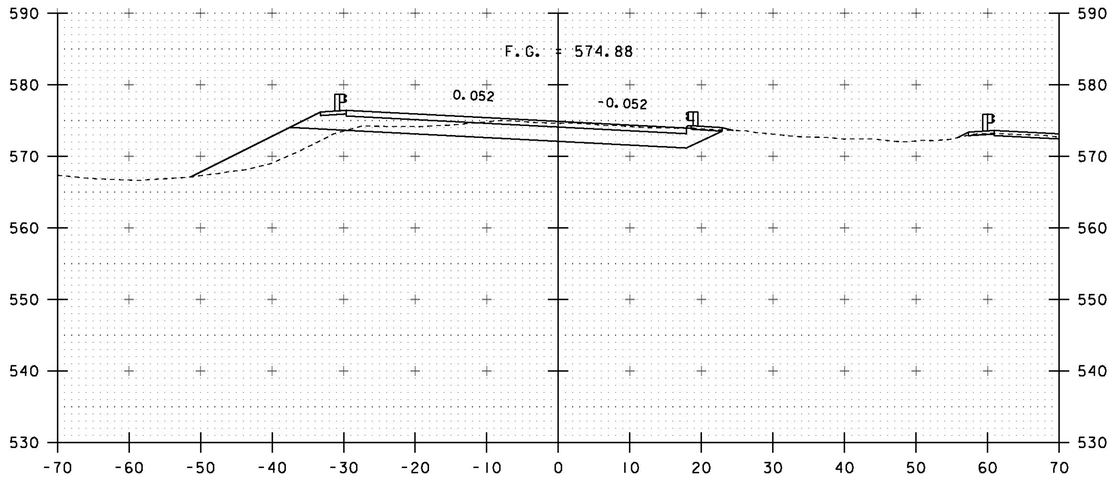

149+50
BEGIN PROJECT

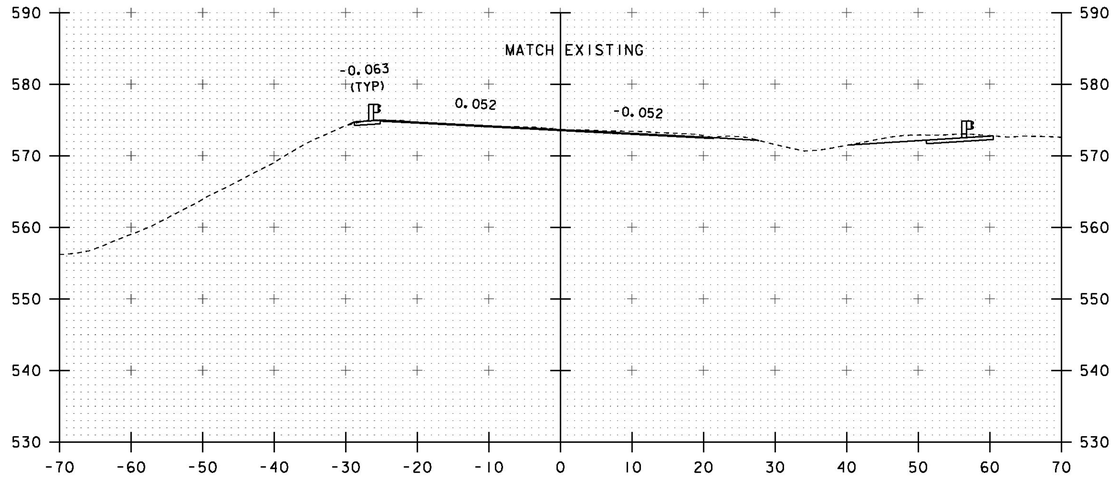

148+00
BEGIN APPROACH / PAVEMENT

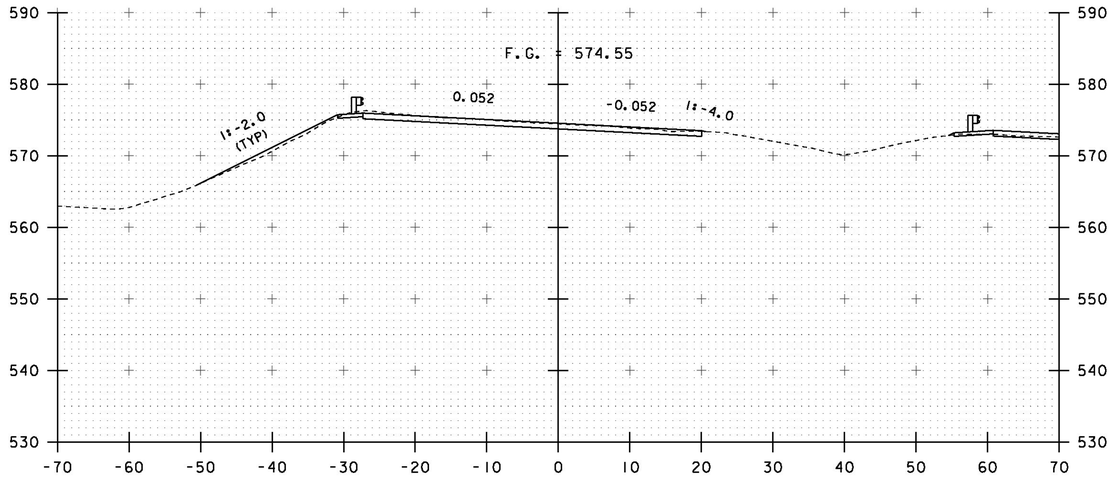

149+00

STA. 148+00 TO STA. 149+50

PROJECT NAME:	HARTFORD
PROJECT NUMBER:	IM 091-2(79)
FILE NAME: sl2al32xsec.dgn	PLOT DATE: 15-DEC-2014
PROJECT LEADER: K. HIGGINS	DRAWN BY: K. FRIEDLAND
DESIGNED BY: G. LAROCHE	CHECKED BY: W. LAMMER
I-91 SOUTHBOUND CROSS SECTIONS	SHEET 141 OF 166

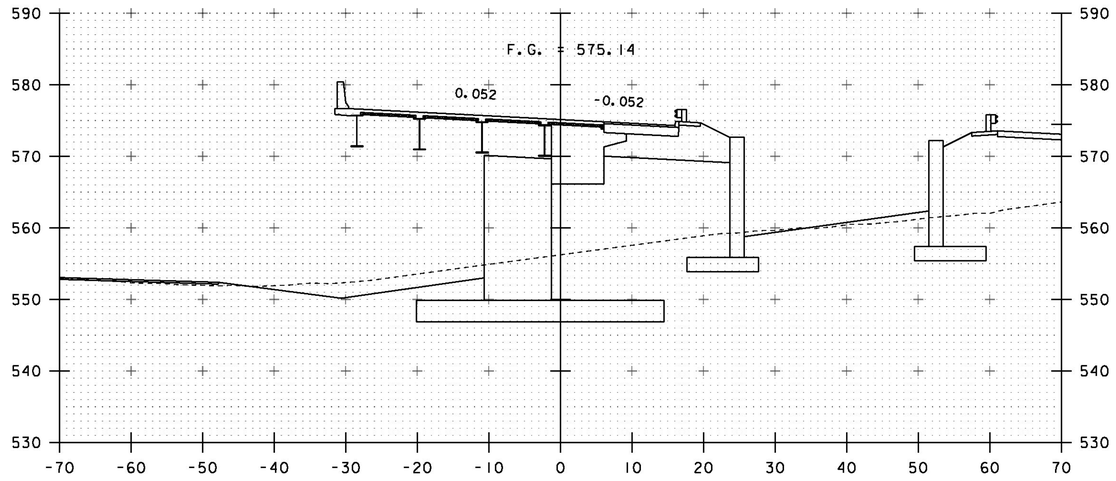

150+00
BEGIN BRIDGE 149+97.96

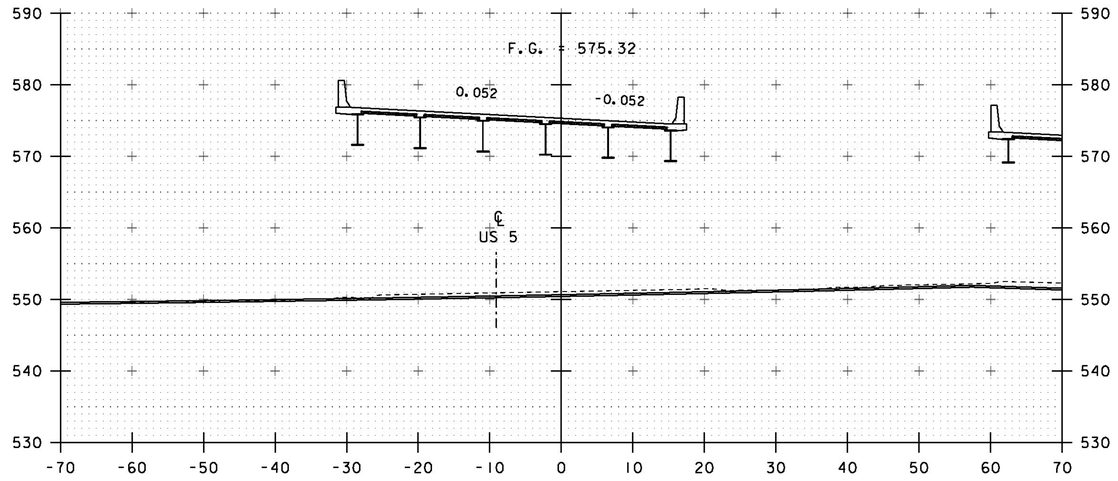

150+50

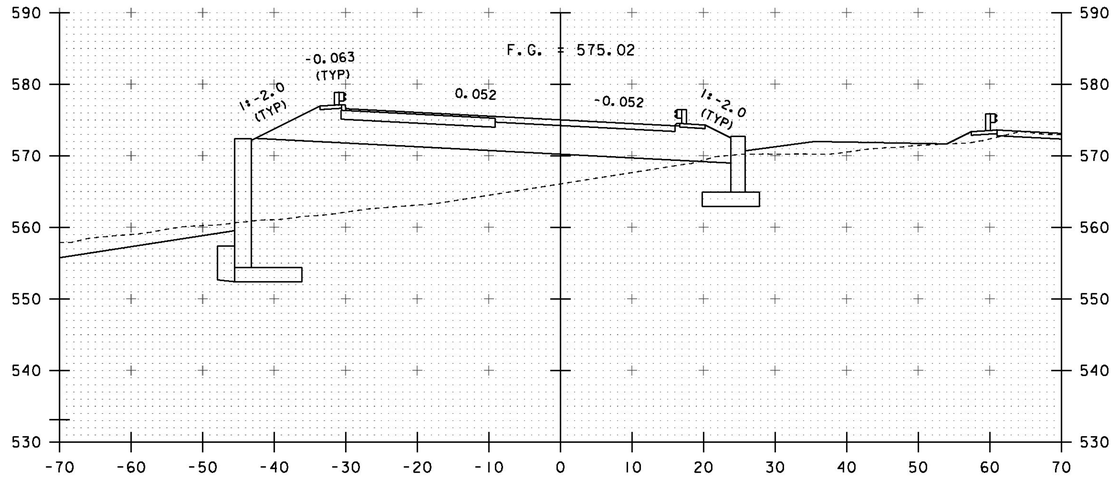

149+75

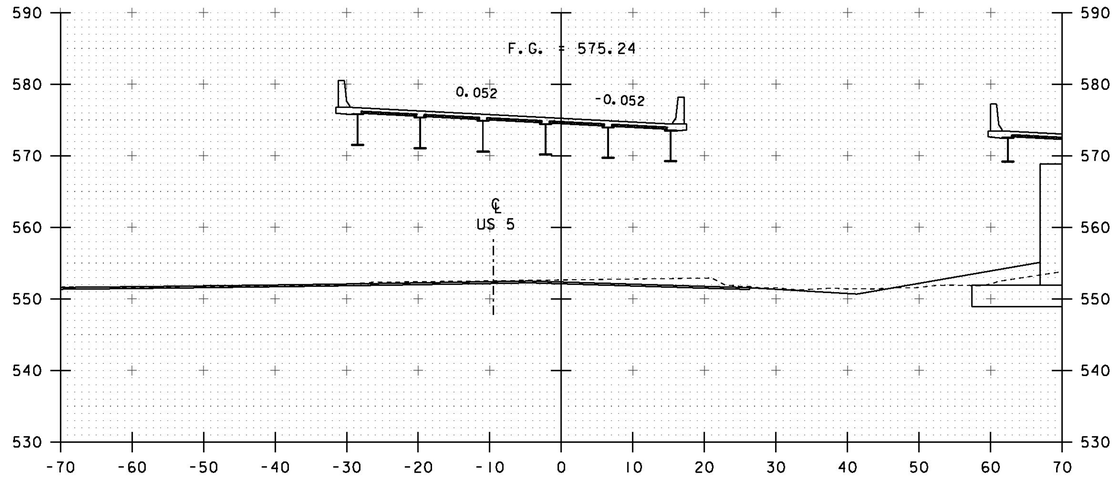

150+25

STA. 149+75 TO STA. 150+50

PROJECT NAME:	HARTFORD
PROJECT NUMBER:	IM 091-2(79)
FILE NAME: sl2al32xsec.dgn	PLOT DATE: 15-DEC-2014
PROJECT LEADER: K. HIGGINS	DRAWN BY: K. FRIEDLAND
DESIGNED BY: G. LAROCHE	CHECKED BY: W. LAMMER
I-91 SOUTHBOUND CROSS SECTIONS	SHEET 142 OF 166

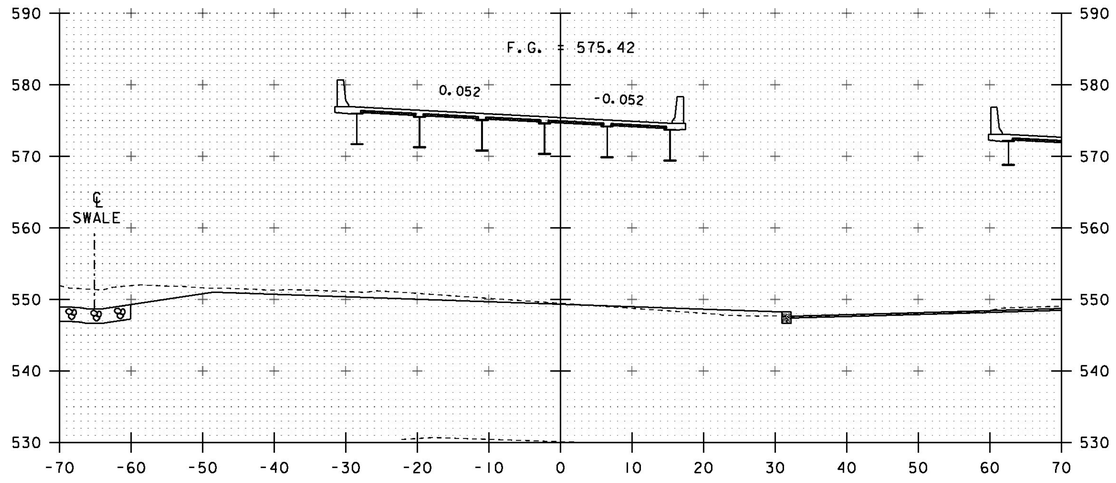

151+00

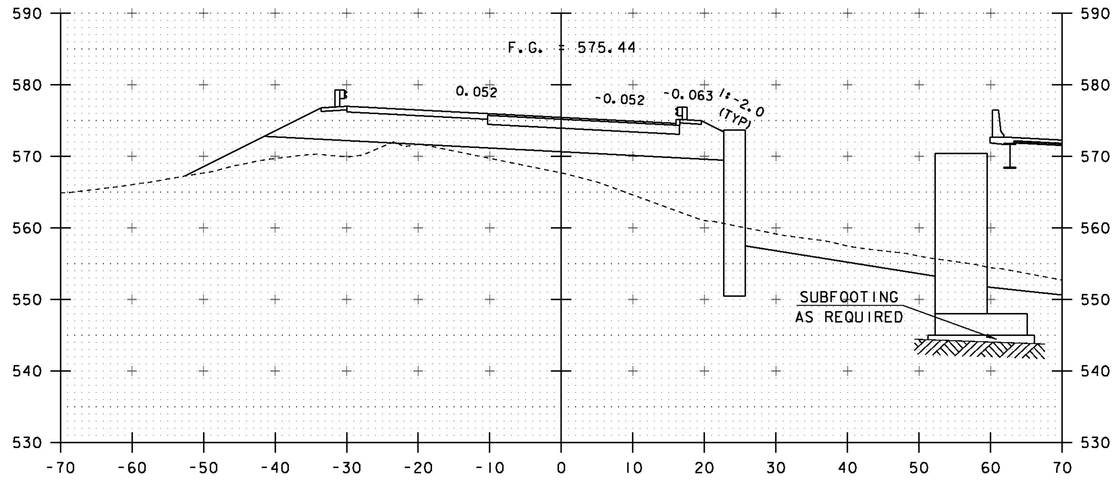

151+50

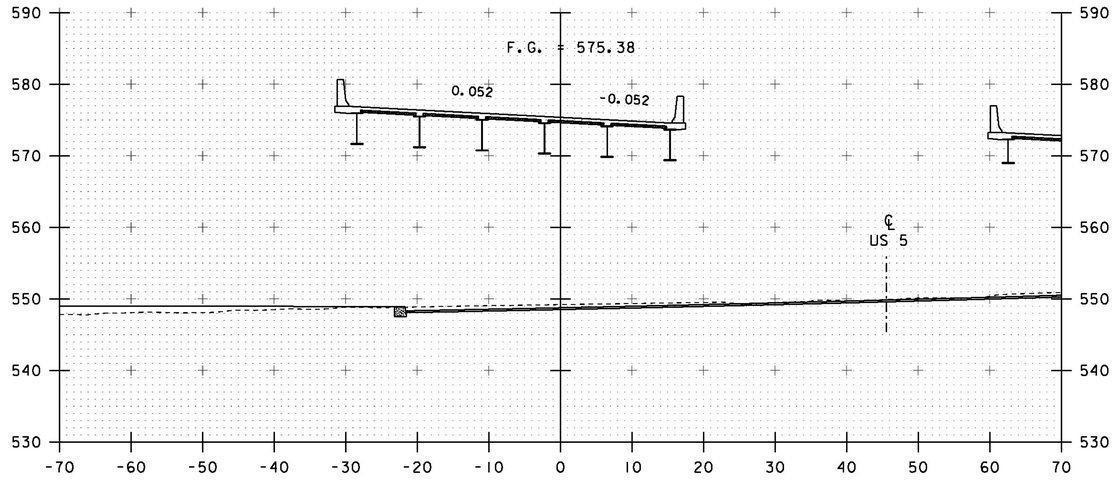

150+75

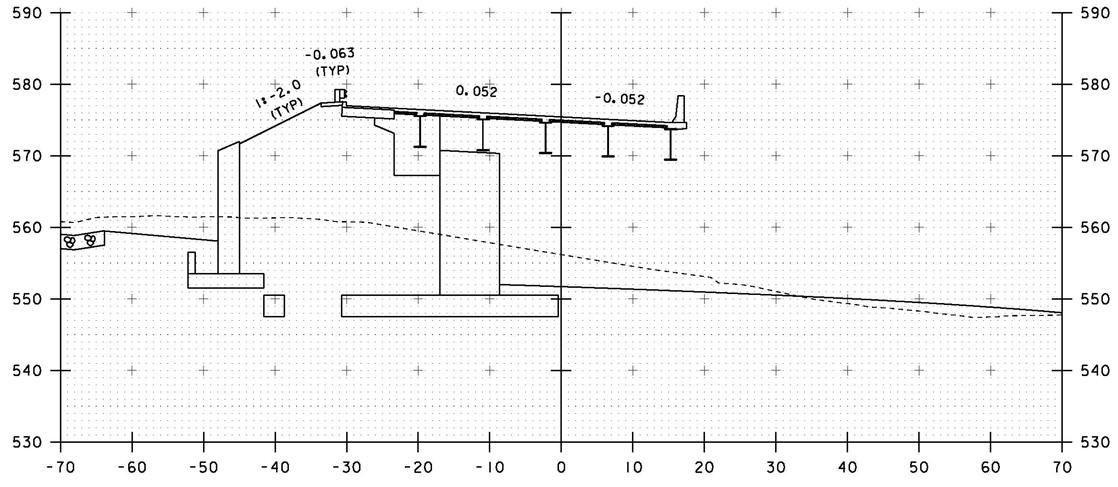

151+25

END BRIDGE 151+34.12

STA. 150+75 TO STA. 151+50

PROJECT NAME: HARTFORD
PROJECT NUMBER: IM 091-2(79)

FILE NAME: sl2al32xsec.dgn
PROJECT LEADER: K. HIGGINS
DESIGNED BY: G. LAROCHE
I-91 SOUTHBOUND CROSS SECTIONS

PLOT DATE: 15-DEC-2014
DRAWN BY: K. FRIEDLAND
CHECKED BY: W. LAMMER
SHEET 143 OF 166

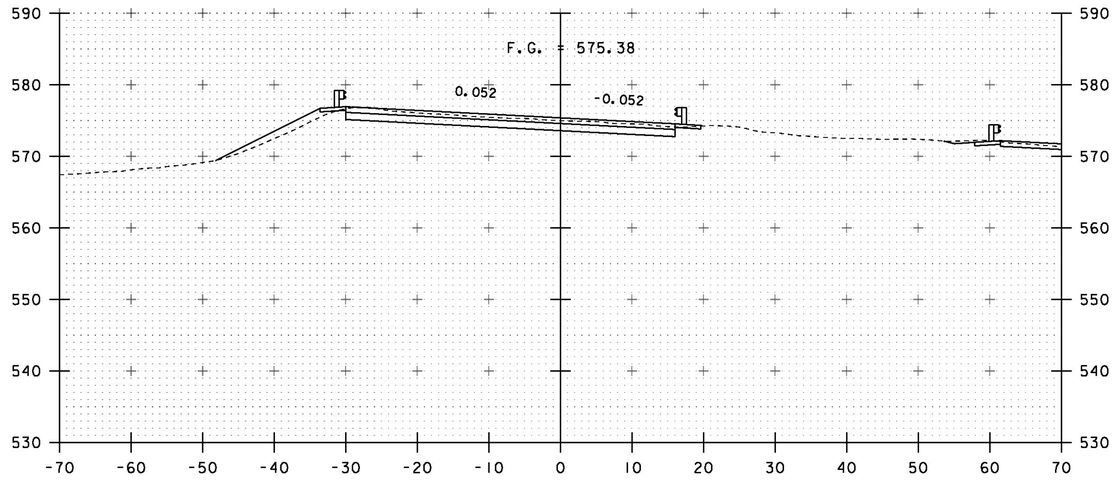

152+00

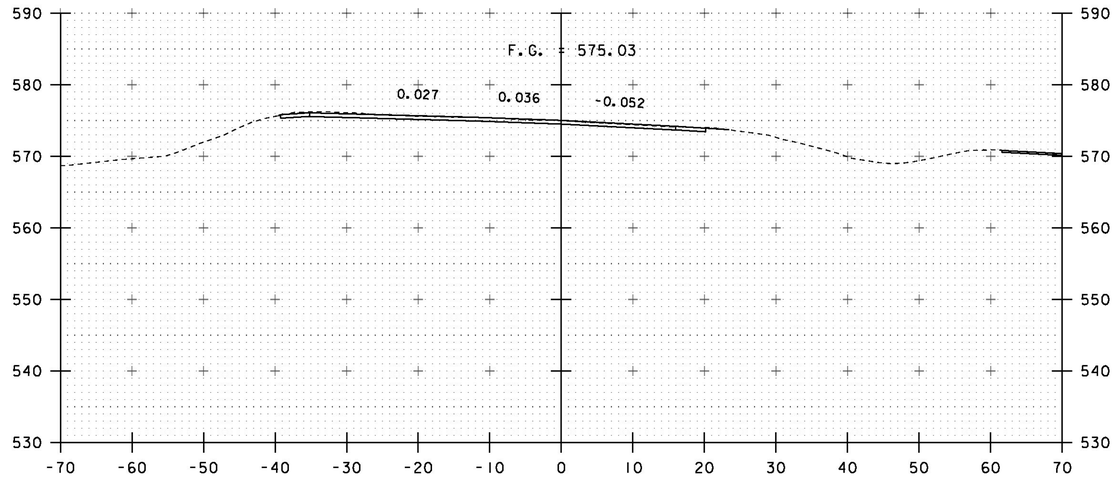

153+00

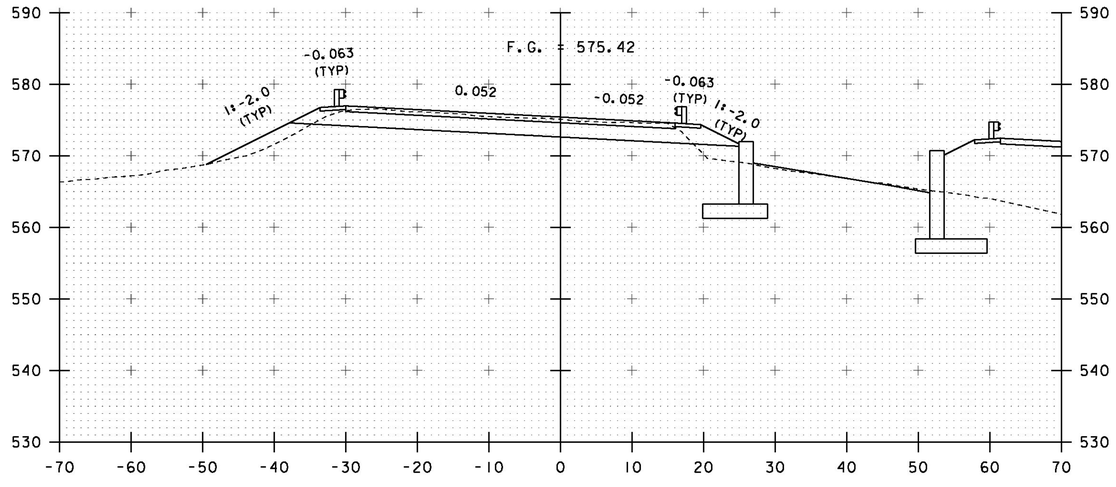

151+75
END PROJECT

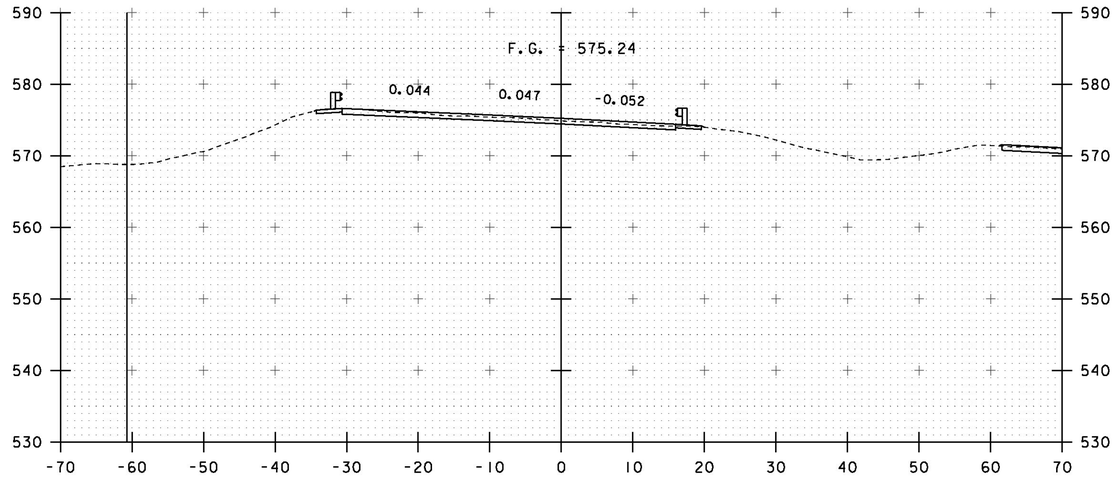

152+50

STA. 151+75 TO STA. 153+00

PROJECT NAME:	HARTFORD
PROJECT NUMBER:	IM 091-2(79)
FILE NAME: sl2al32xsec.dgn	PLOT DATE: 15-DEC-2014
PROJECT LEADER: K. HIGGINS	DRAWN BY: K. FRIEDLAND
DESIGNED BY: G. LAROCHE	CHECKED BY: W. LAMMER
I-91 SOUTHBOUND CROSS SECTIONS	SHEET 144 OF 166

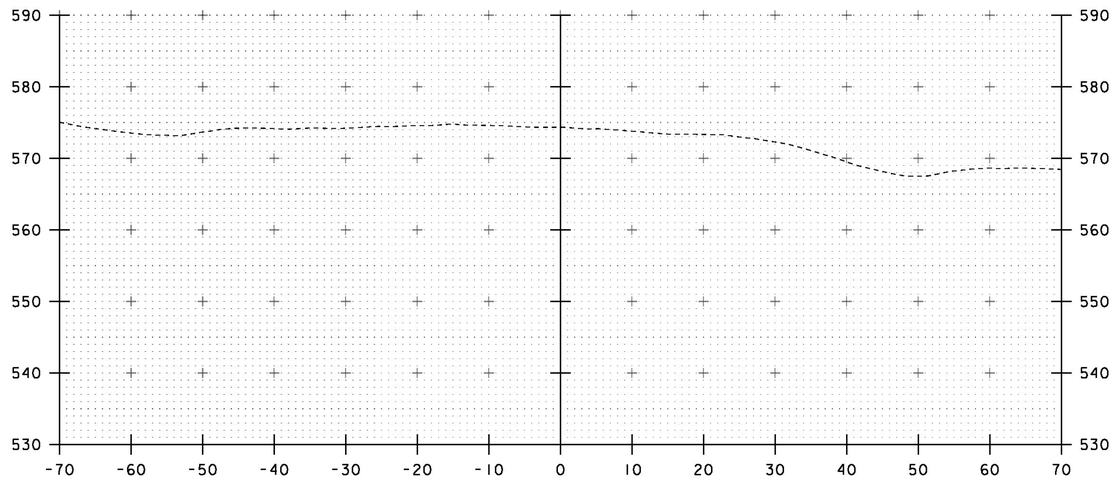

154+00

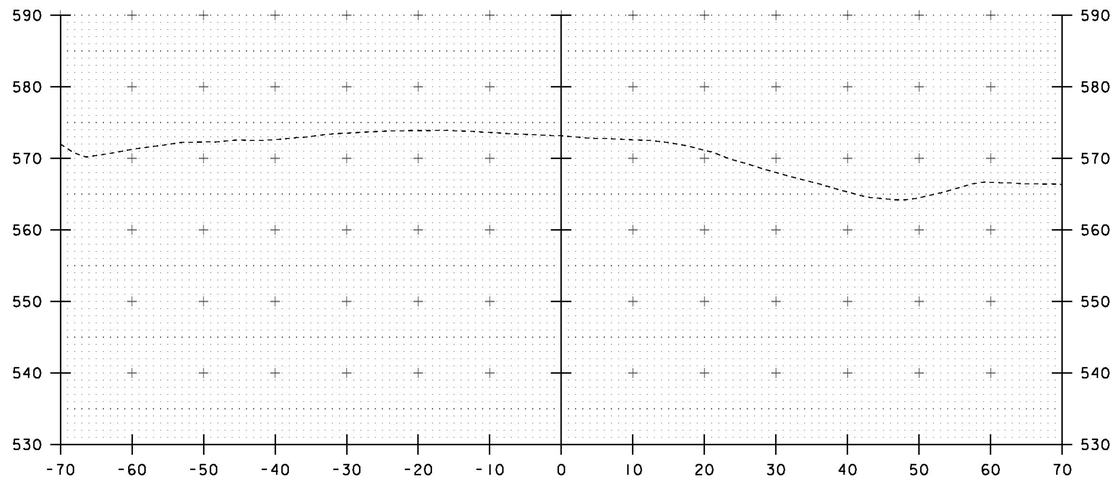

155+00

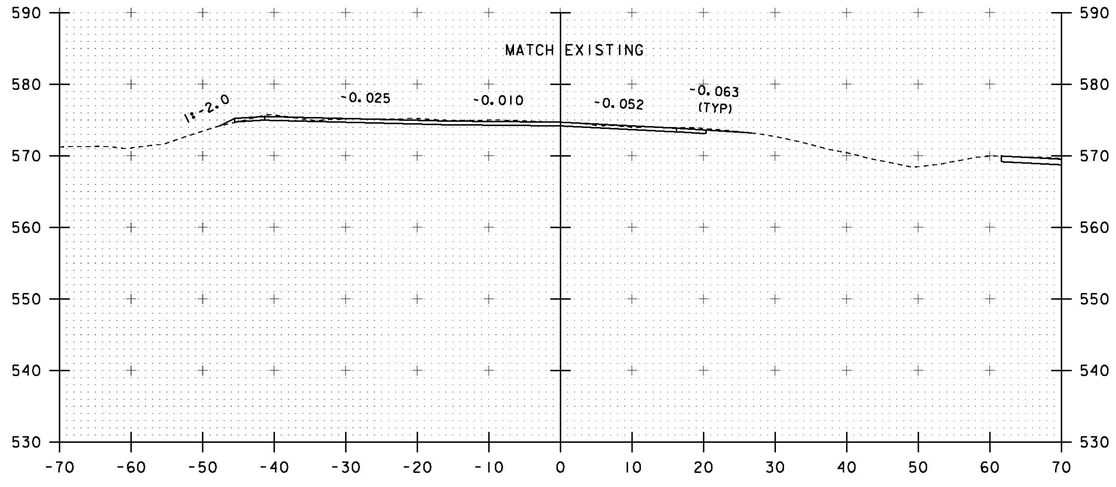

153+50
END APPROACH / PAVEMENT

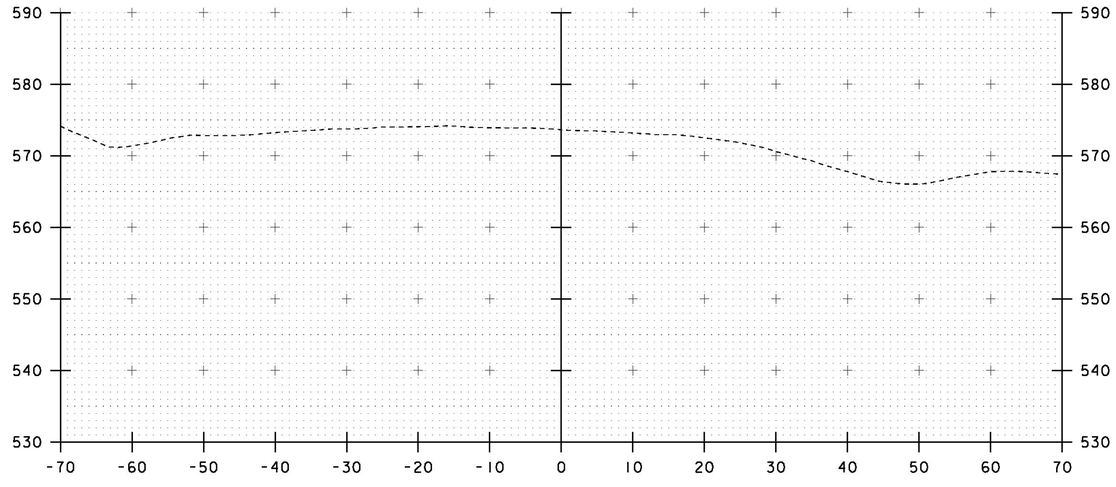

154+50

STA. 153+50 TO STA. 155+00

PROJECT NAME: HARTFORD
PROJECT NUMBER: IM 091-2(79)

FILE NAME: sl2al32xsec.dgn
PROJECT LEADER: K. HIGGINS
DESIGNED BY: G. LAROCHE
I-91 SOUTHBOUND CROSS SECTIONS

PLOT DATE: 15-DEC-2014
DRAWN BY: K. FRIEDLAND
CHECKED BY: W. LAMMER
SHEET 145 OF 166

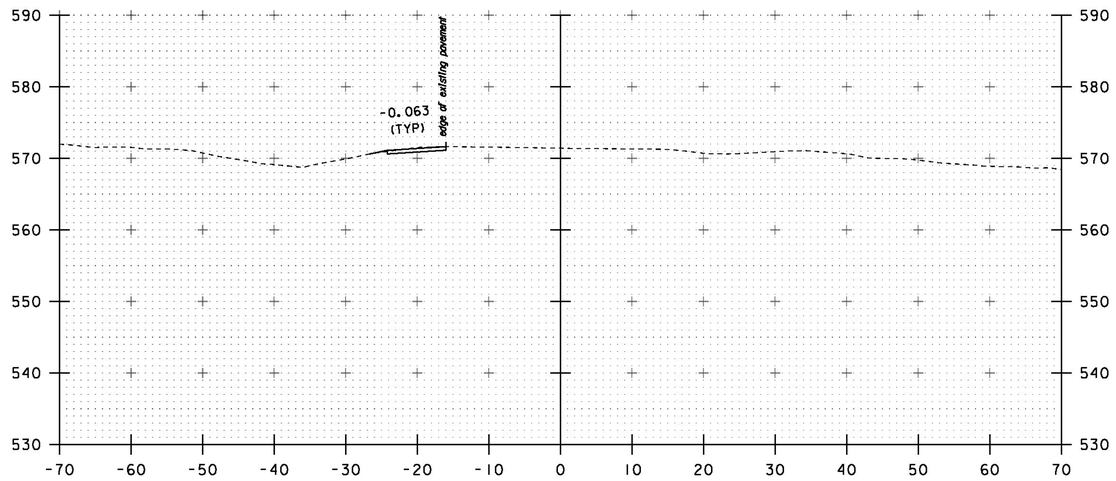

246+50

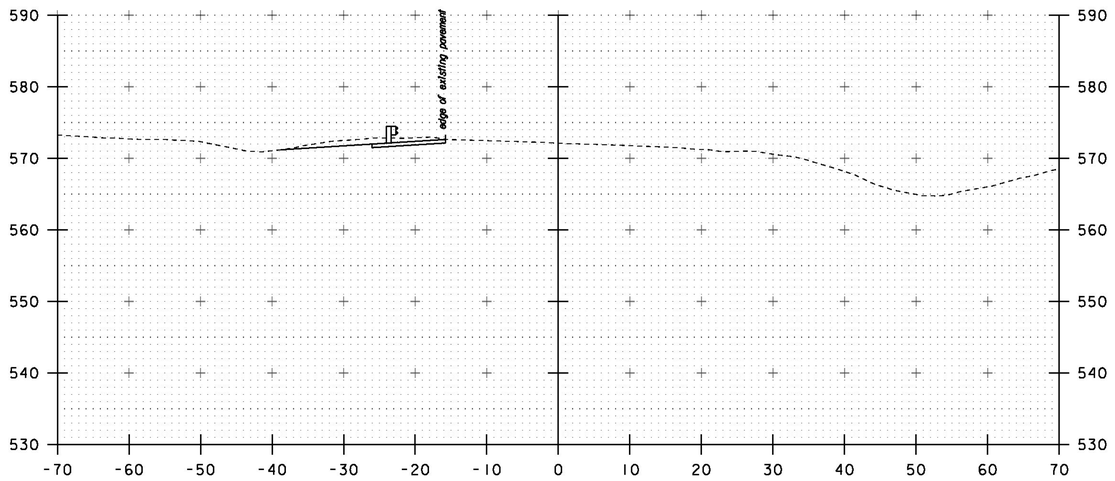

247+50

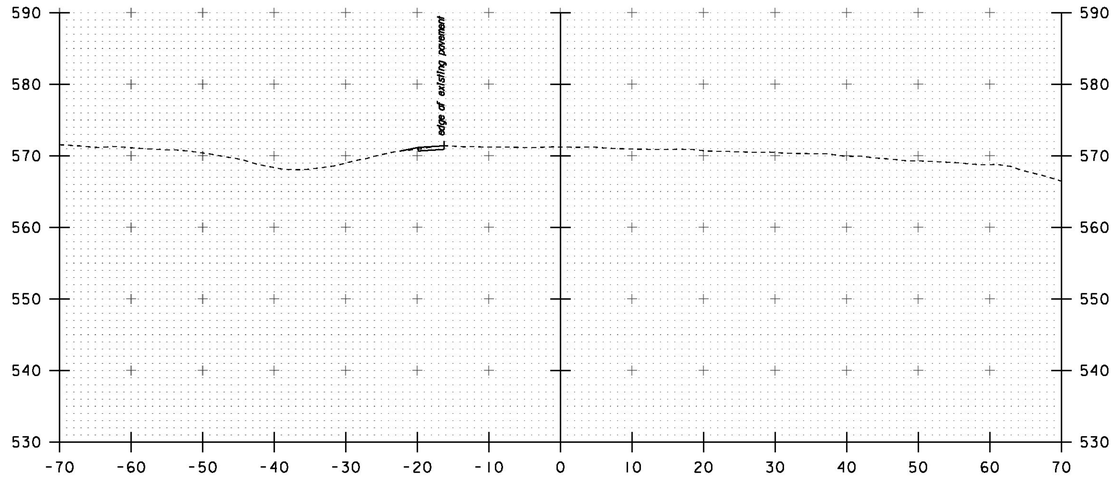

246+25
BEGIN APPROACH 246+05

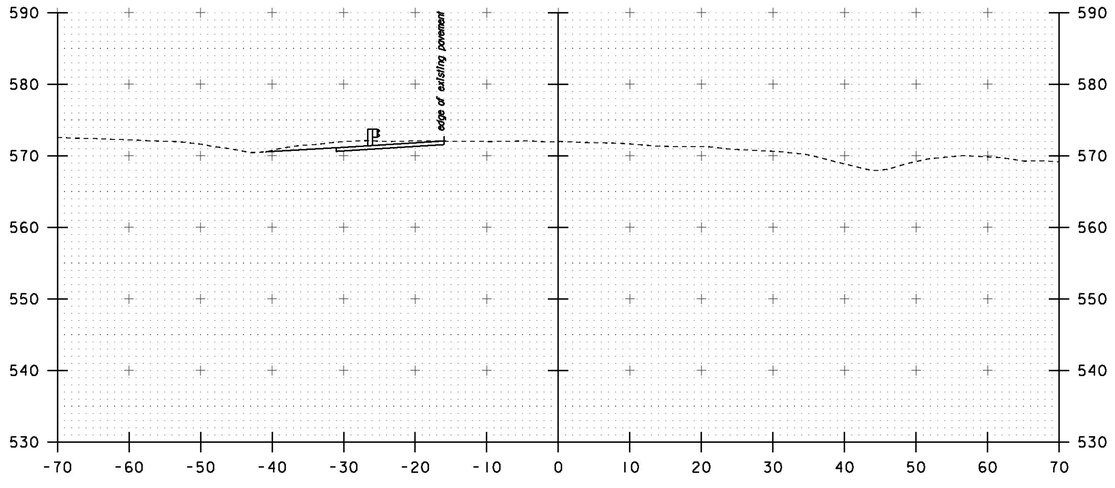

247+00

STA. 246+25 TO STA. 247+50

PROJECT NAME: HARTFORD
PROJECT NUMBER: IM 091-2(79)

FILE NAME: s12a132xsec.dgn
PROJECT LEADER: K. HIGGINS
DESIGNED BY: G. LAROCHE
I-91 NORTHBOUND CROSS SECTIONS

PLOT DATE: 15-DEC-2014
DRAWN BY: K. FRIEDLAND
CHECKED BY: W. LAMMER
SHEET 146 OF 166

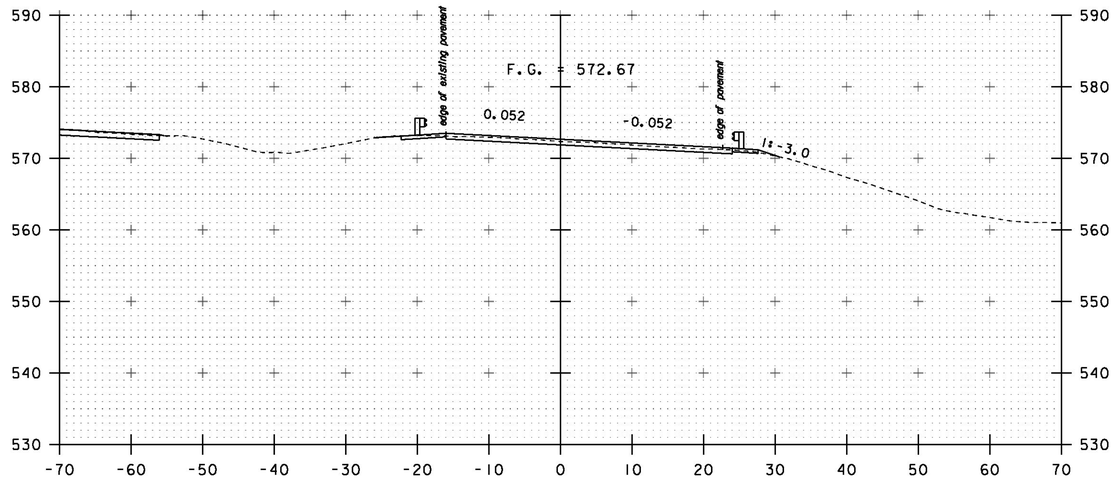

248+50

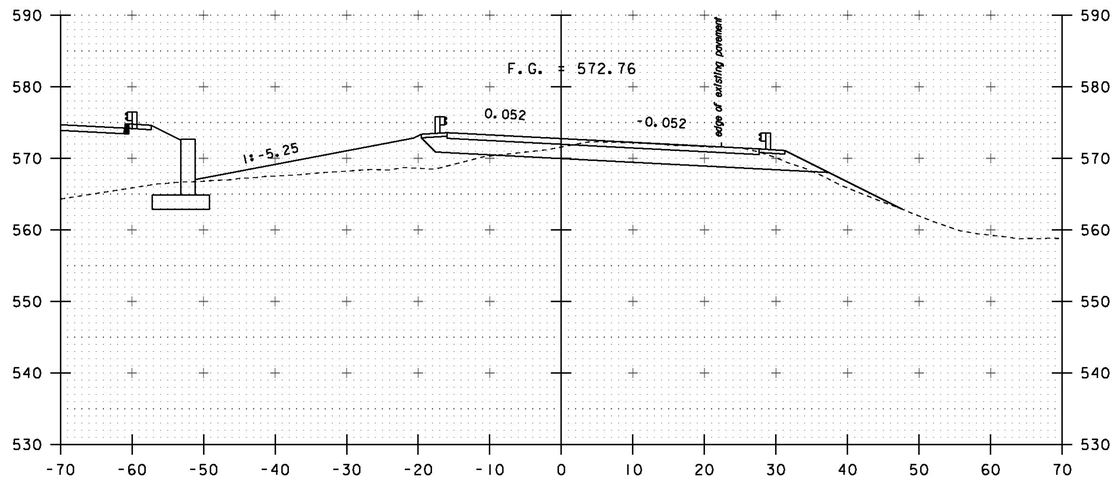

249+50
BEGIN PROJECT

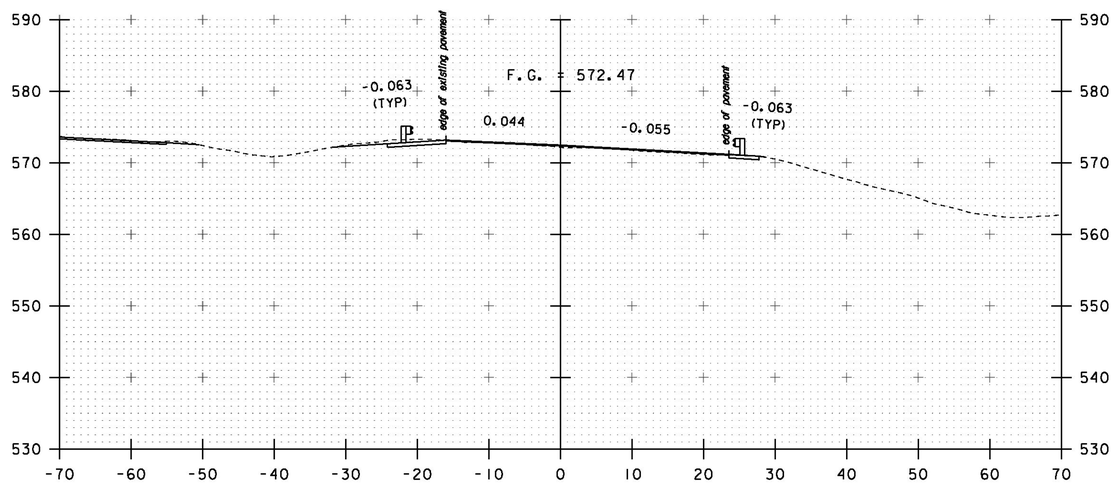

248+00
BEGIN PAVEMENT 247+75

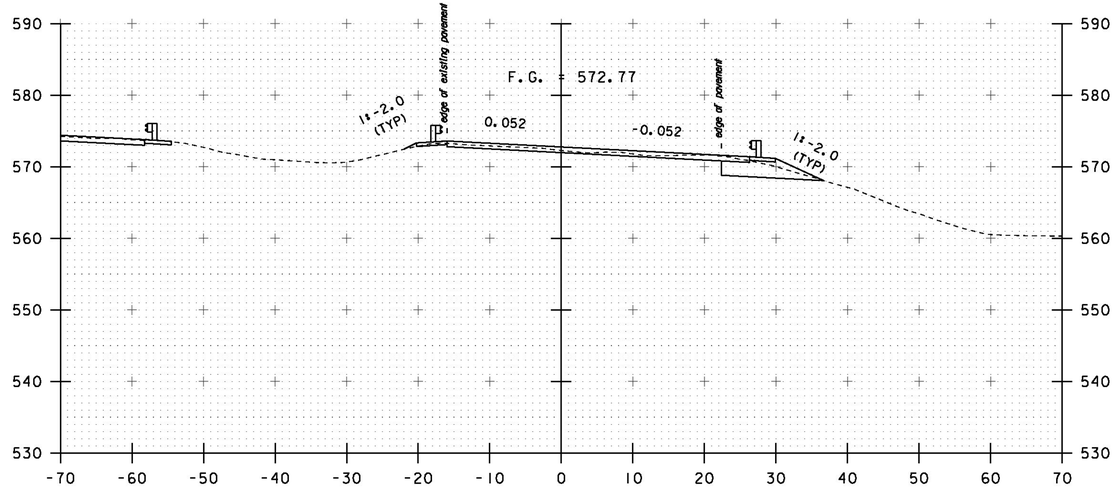

249+00

STA. 248+00 TO STA. 249+50

PROJECT NAME: HARTFORD
PROJECT NUMBER: IM 091-2(79)

FILE NAME: sl2al32xsec.dgn
PROJECT LEADER: K. HIGGINS
DESIGNED BY: G. LAROCHE
I-91 NORTHBOUND CROSS SECTIONS

PLOT DATE: 15-DEC-2014
DRAWN BY: K. FRIEDLAND
CHECKED BY: W. LAMMER
SHEET 147 OF 166

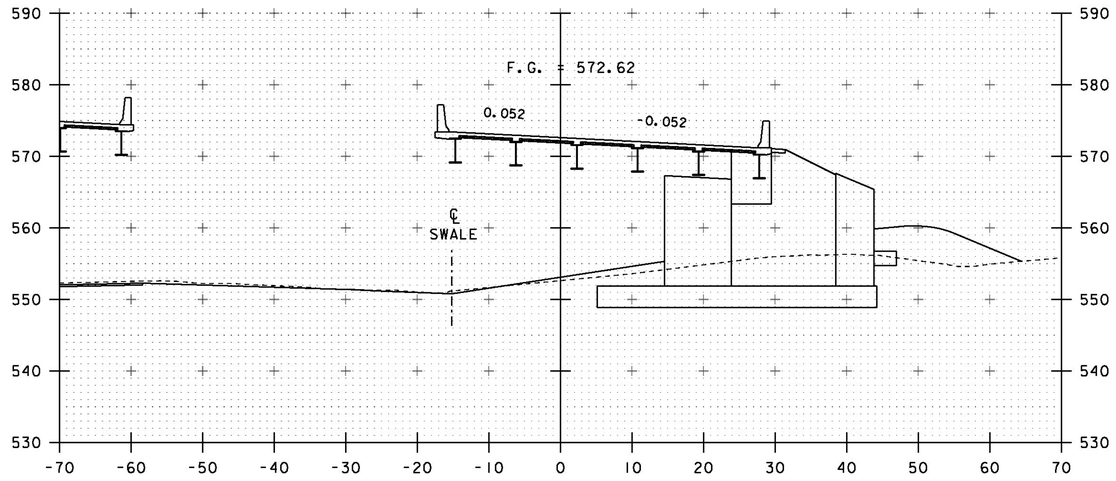

250+00
BEGIN BRIDGE 249+89.46

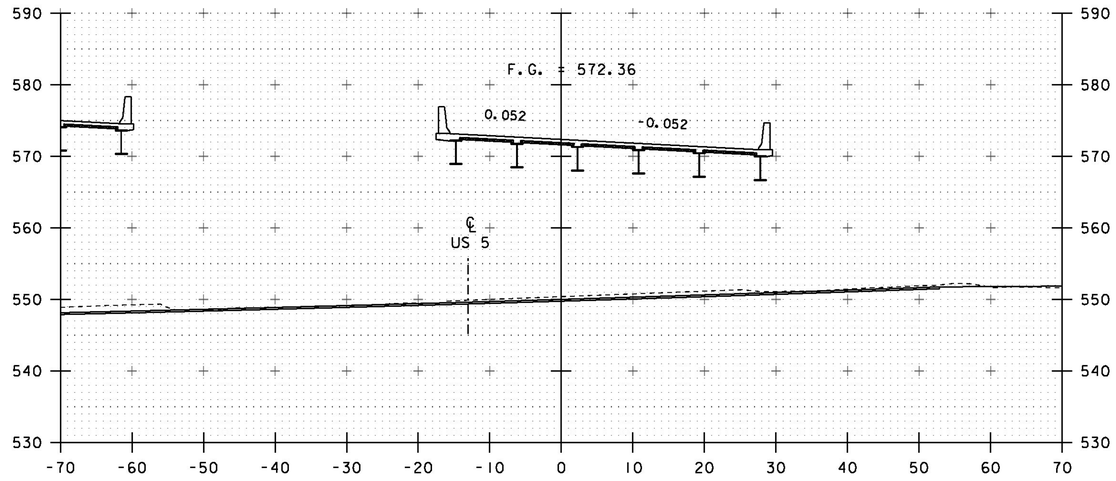

250+50

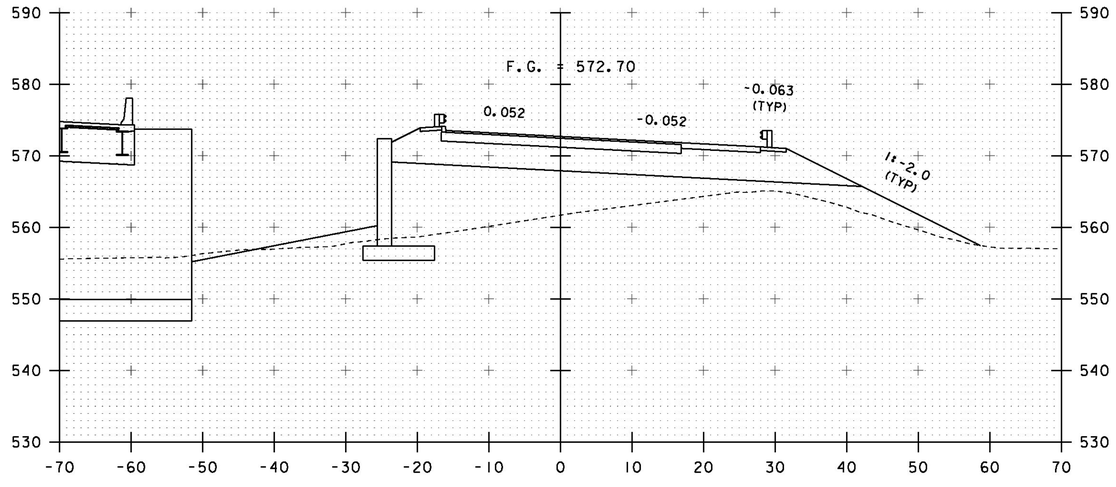

249+75

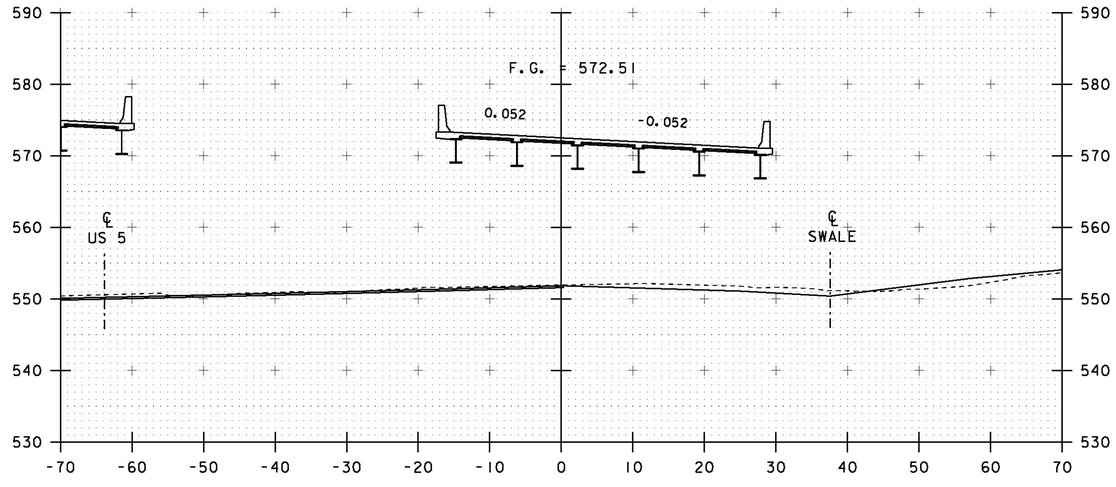

250+25

STA. 249+75 TO STA. 250+50

PROJECT NAME: HARTFORD
PROJECT NUMBER: IM 091-2(79)

FILE NAME: s12a132xsec.dgn
PROJECT LEADER: K. HIGGINS
DESIGNED BY: G. LAROCHE
I-91 NORTHBOUND CROSS SECTIONS

PLOT DATE: 15-DEC-2014
DRAWN BY: K. FRIEDLAND
CHECKED BY: W. LAMMER
SHEET 148 OF 166

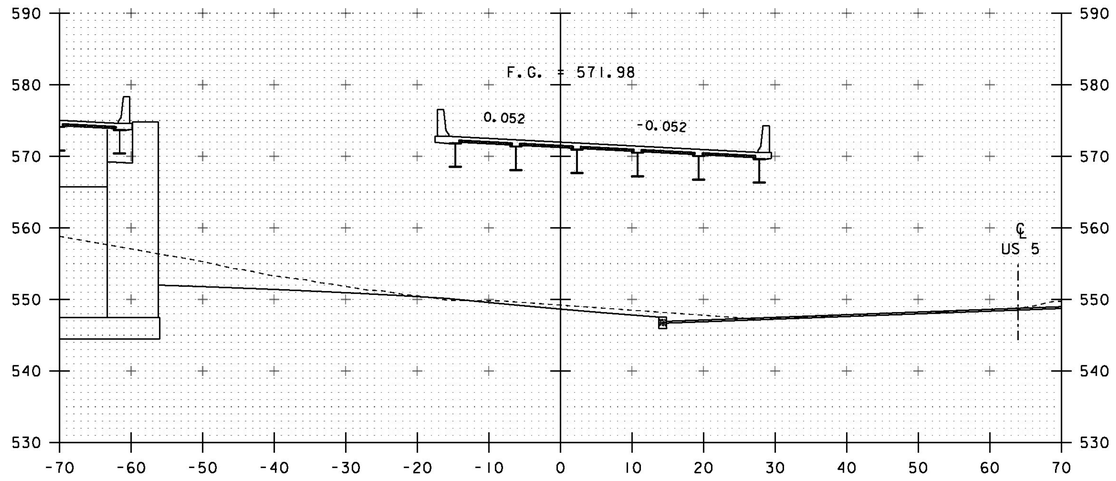

251+00

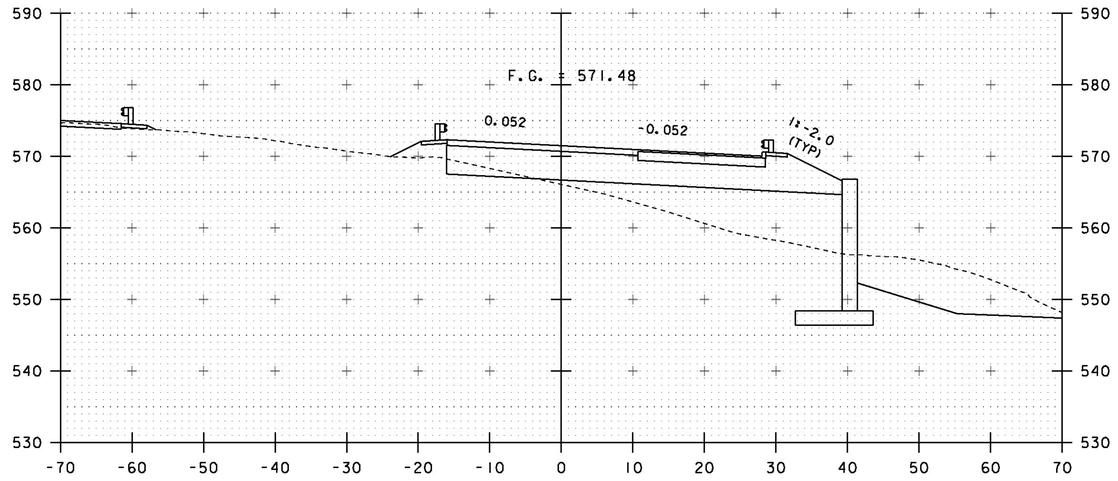

251+50

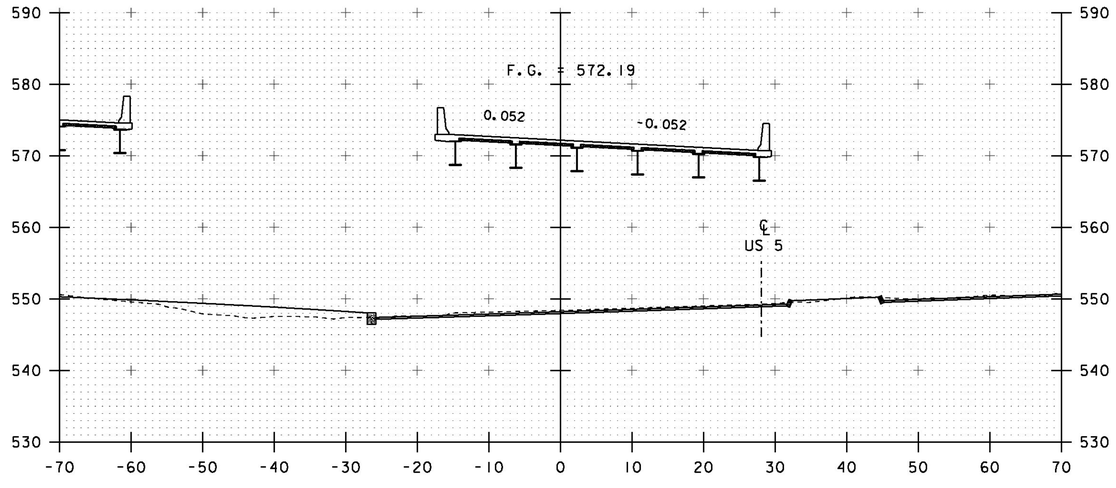

250+75

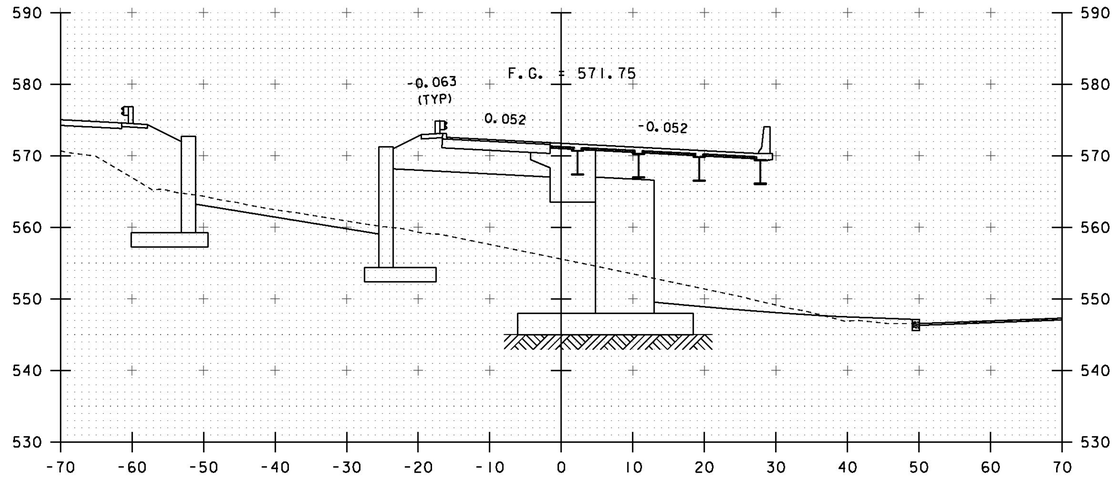

251+25

END BRIDGE 251+25.62

STA. 250+75 TO STA. 251+50

PROJECT NAME: HARTFORD	
PROJECT NUMBER: IM 091-2(79)	
FILE NAME: sl2al32xsec.dgn	PLOT DATE: 15-DEC-2014
PROJECT LEADER: K. HIGGINS	DRAWN BY: K. FRIEDLAND
DESIGNED BY: G. LAROCHE	CHECKED BY: W. LAMMER
I-91 NORTHBOUND CROSS SECTIONS	SHEET 149 OF 166

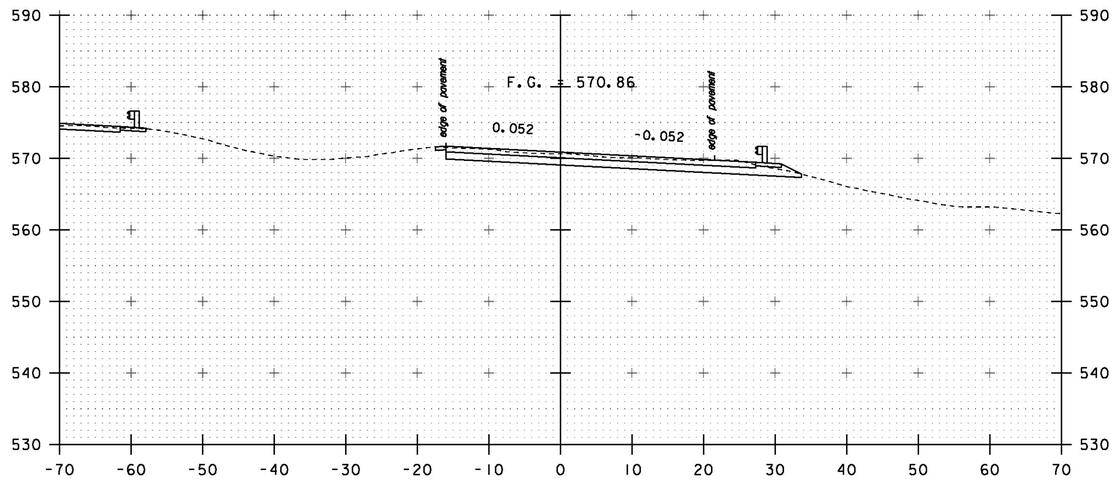

252+00

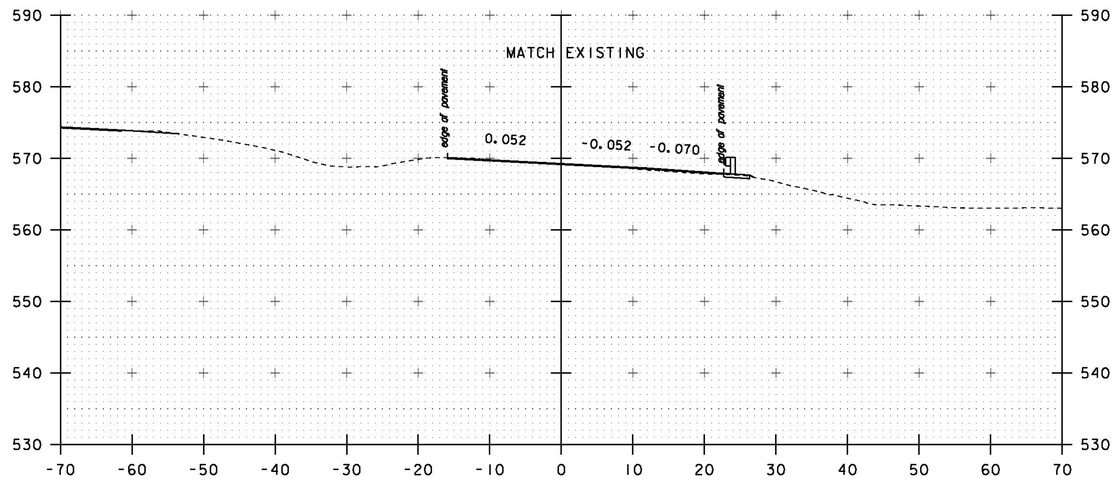

253+00
END APPROACH / PAVEMENT

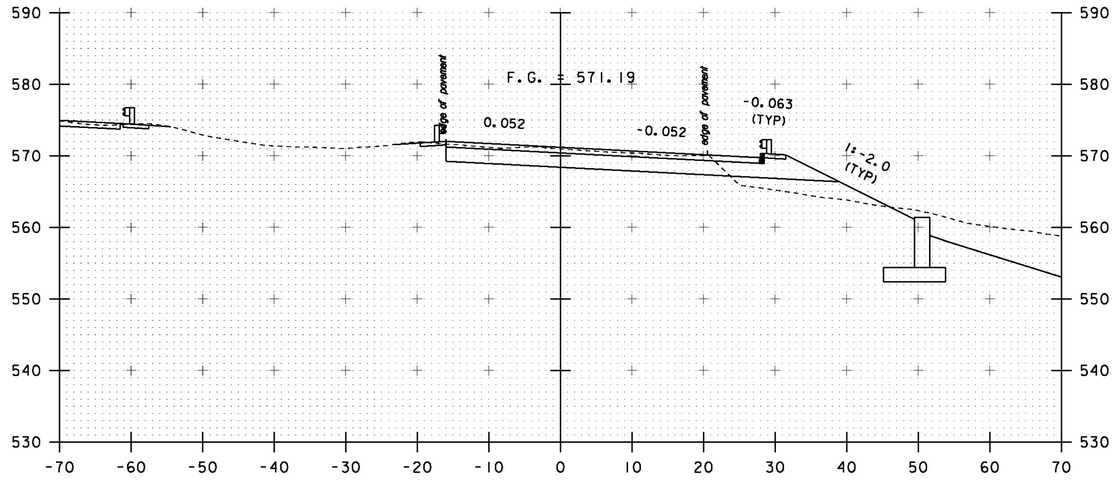

251+75
END PROJECT

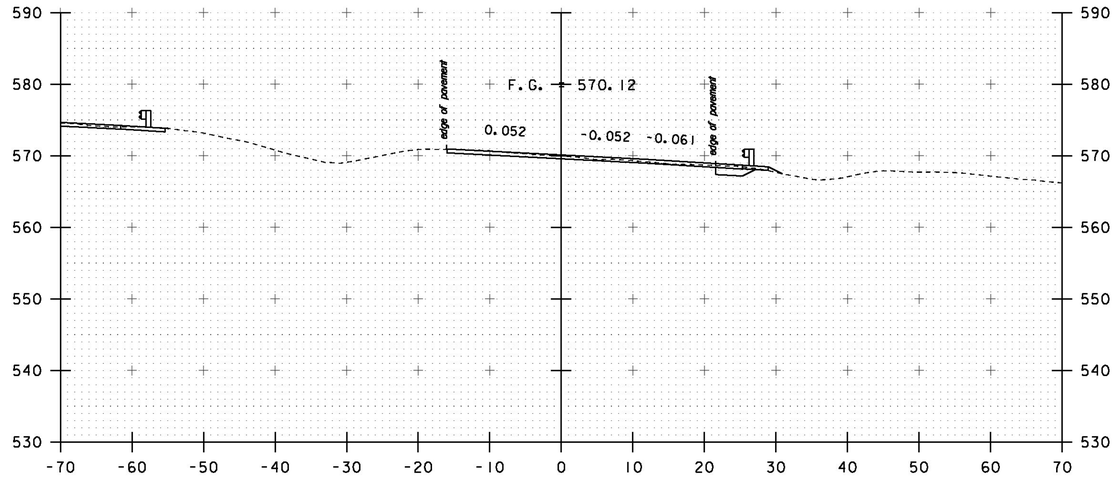

252+50

STA. 251+75 TO STA. 253+00

PROJECT NAME:	HARTFORD
PROJECT NUMBER:	IM 091-2(79)
FILE NAME: sl2al32xsec.dgn	PLOT DATE: 15-DEC-2014
PROJECT LEADER: K. HIGGINS	DRAWN BY: K. FRIEDLAND
DESIGNED BY: G. LAROCHE	CHECKED BY: W. LAMMER
I-91 NORTHBOUND CROSS SECTIONS	SHEET 150 OF 166

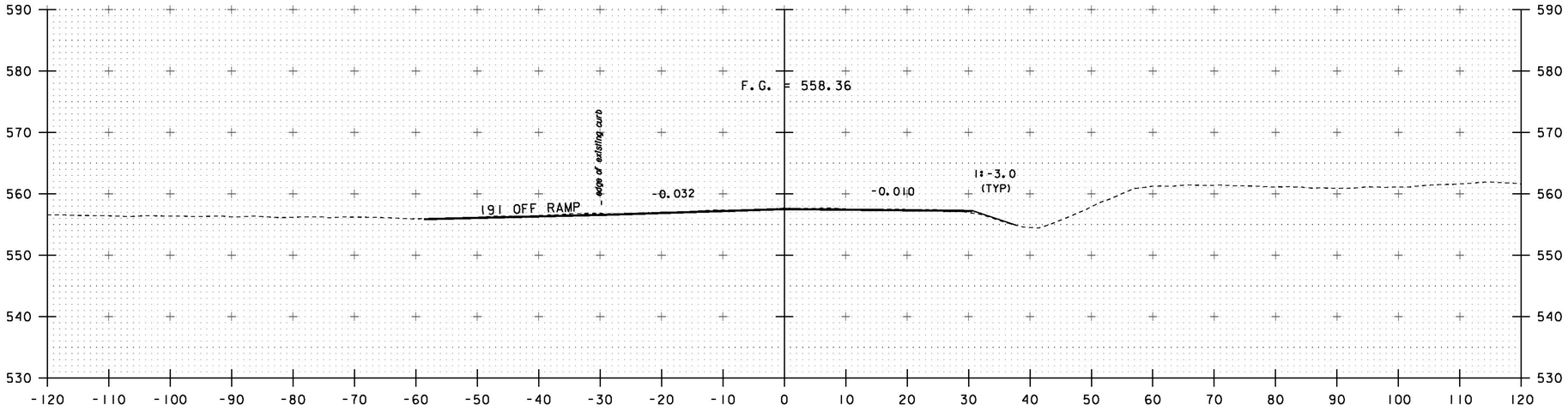

348+50

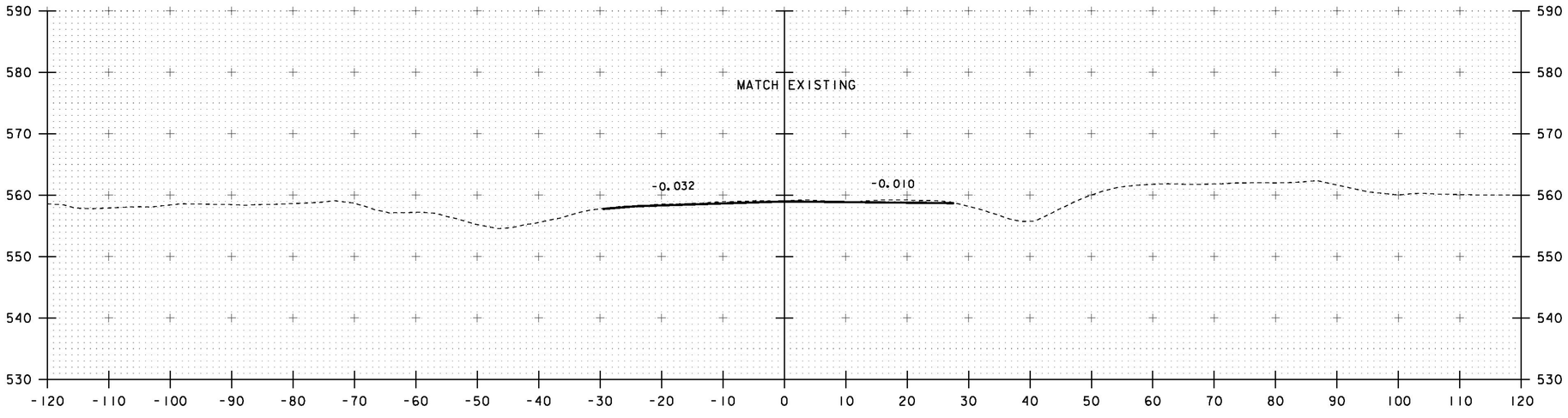

BEING PAVEMENT
348+00

STA. 348+00 TO STA. 348+50

PROJECT NAME: HARTFORD
PROJECT NUMBER: IM 091-2(79)

FILE NAME: sl2al32xsec.dgn
PROJECT LEADER: K. HIGGINS
DESIGNED BY: G. LAROCHE
US 5 CROSS SECTIONS

PLOT DATE: 15-DEC-2014
DRAWN BY: K. FRIEDLAND
CHECKED BY: W. LAMMER
SHEET 151 OF 166

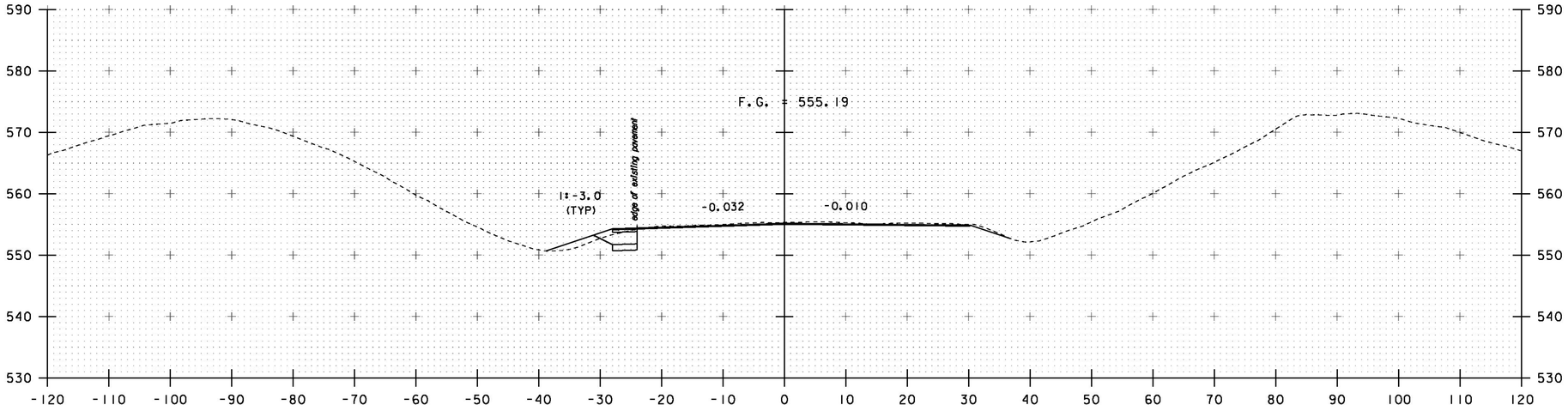

349+50

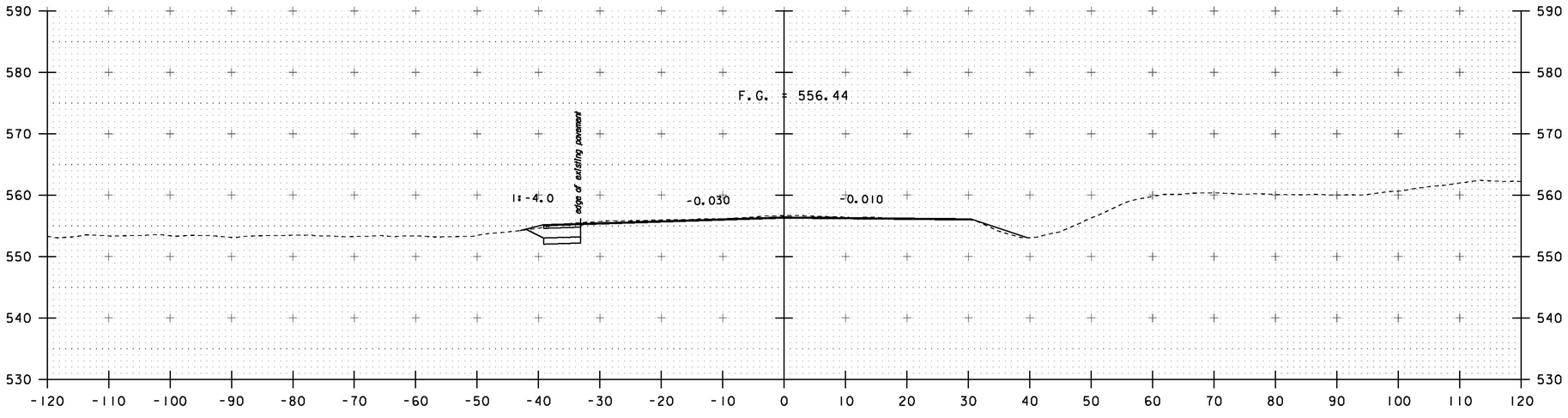

349+00

STA. 349+00 TO STA. 349+50

PROJECT NAME: HARTFORD
PROJECT NUMBER: IM 091-2(79)

FILE NAME: sl2al32xsec.dgn
PROJECT LEADER: K. HIGGINS
DESIGNED BY: G. LAROCHE
US 5 CROSS SECTIONS

PLOT DATE: 15-DEC-2014
DRAWN BY: K. FRIEDLAND
CHECKED BY: W. LAMMER
SHEET 152 OF 166

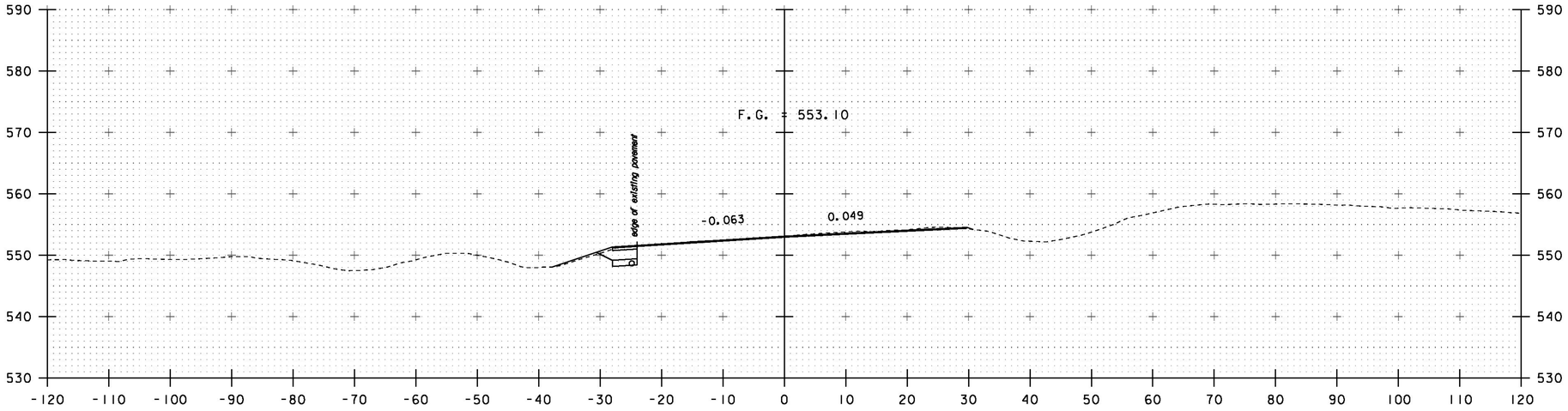

350+50

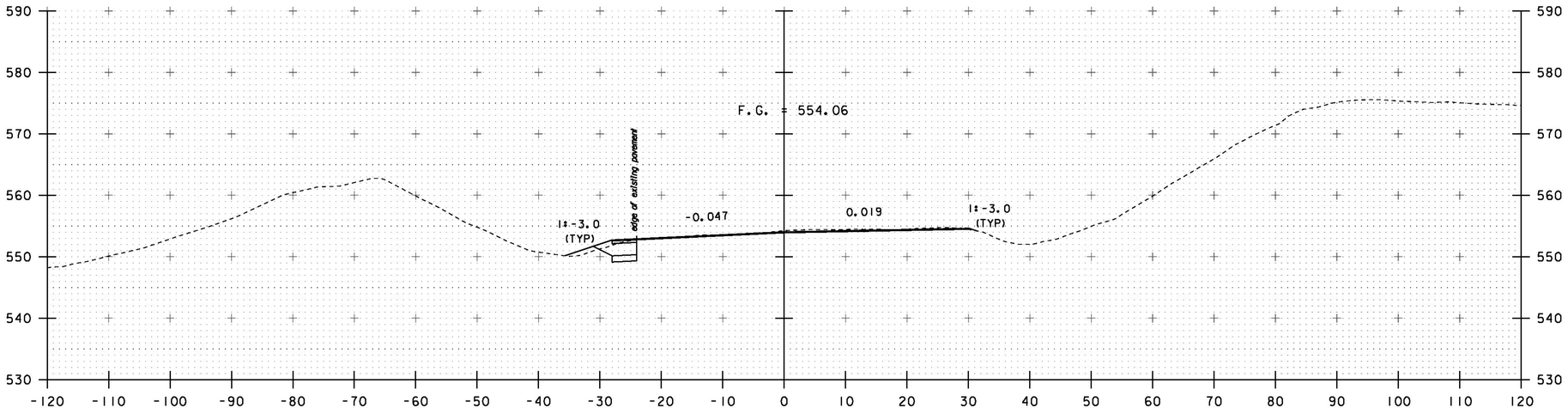

350+00

STA. 350+00 TO STA. 350+50

PROJECT NAME: HARTFORD
PROJECT NUMBER: IM 091-2(79)

FILE NAME: sl2al32xsec.dgn
PROJECT LEADER: K. HIGGINS
DESIGNED BY: G. LAROCHE
US 5 CROSS SECTIONS

PLOT DATE: 15-DEC-2014
DRAWN BY: K. FRIEDLAND
CHECKED BY: W. LAMMER
SHEET 153 OF 166

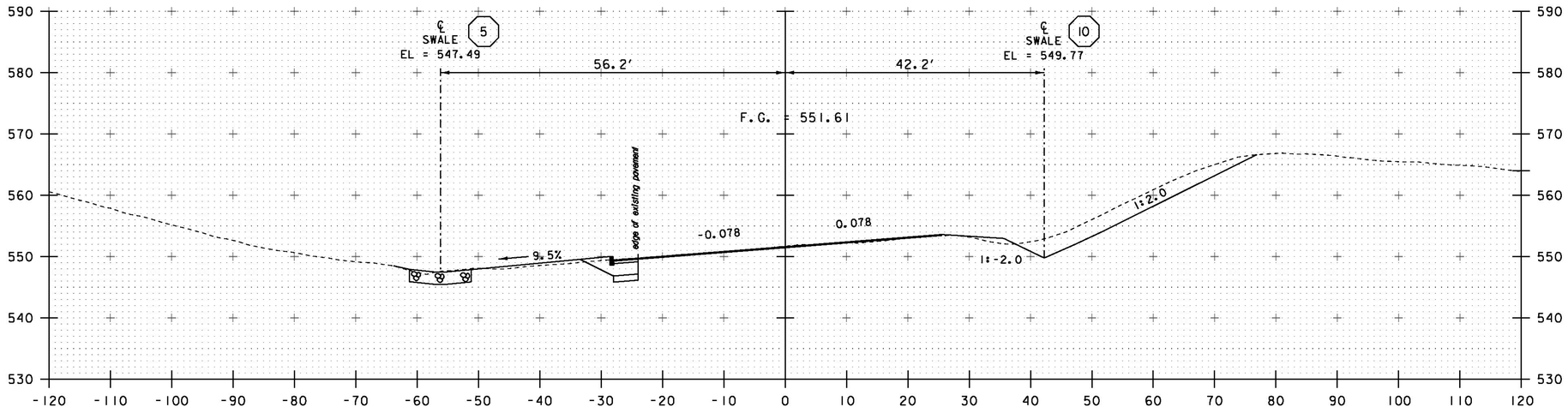

351+50

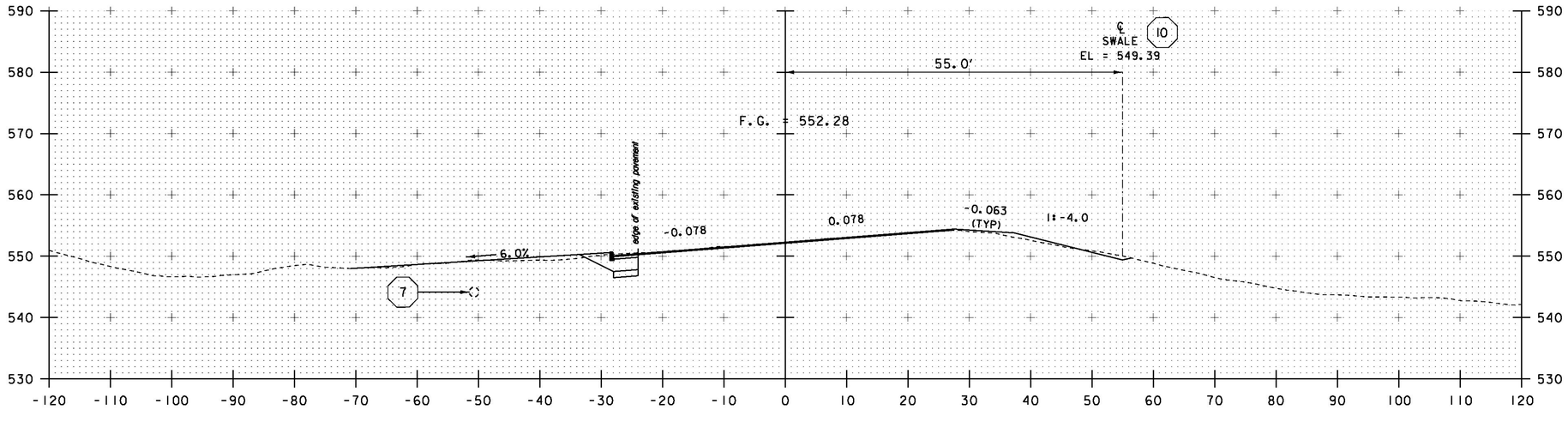

351+00

STA. 351+00 TO STA. 351+50

PROJECT NAME:	HARTFORD
PROJECT NUMBER:	IM 091-2(79)
FILE NAME: sl2al32xsec.dgn	PLOT DATE: 15-DEC-2014
PROJECT LEADER: K. HIGGINS	DRAWN BY: K. FRIEDLAND
DESIGNED BY: G. LAROCHE	CHECKED BY: W. LAMMER
US 5 CROSS SECTIONS	SHEET 154 OF 166

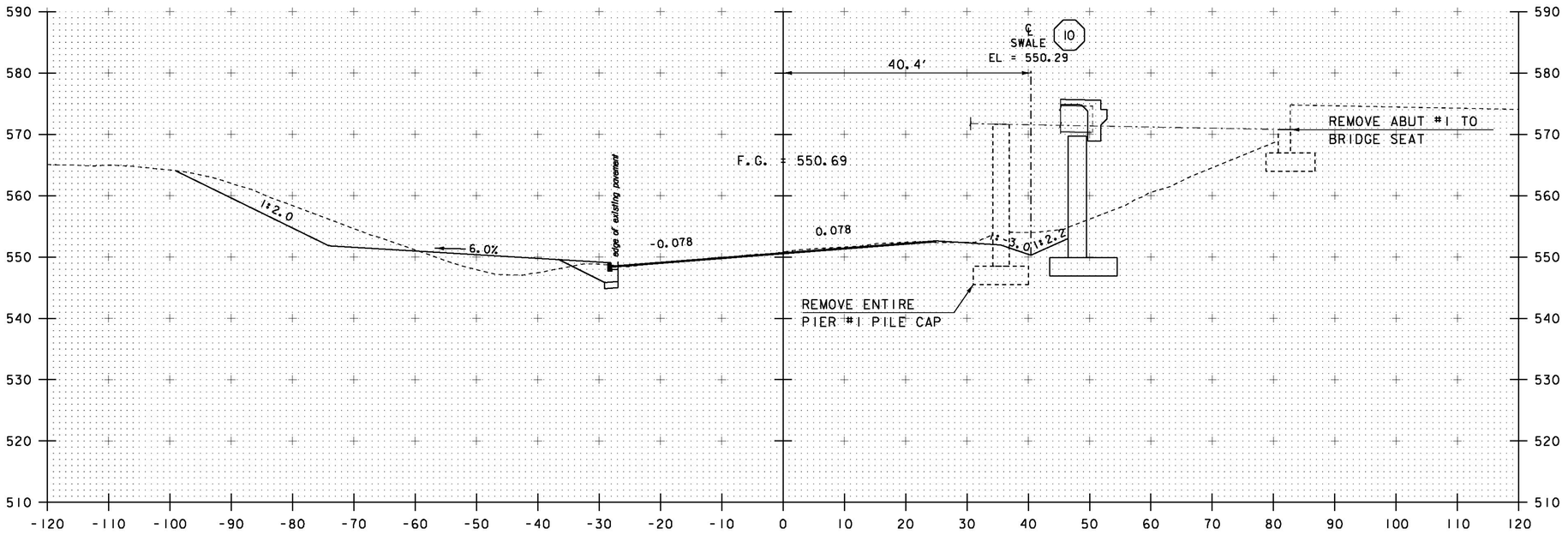

352+25

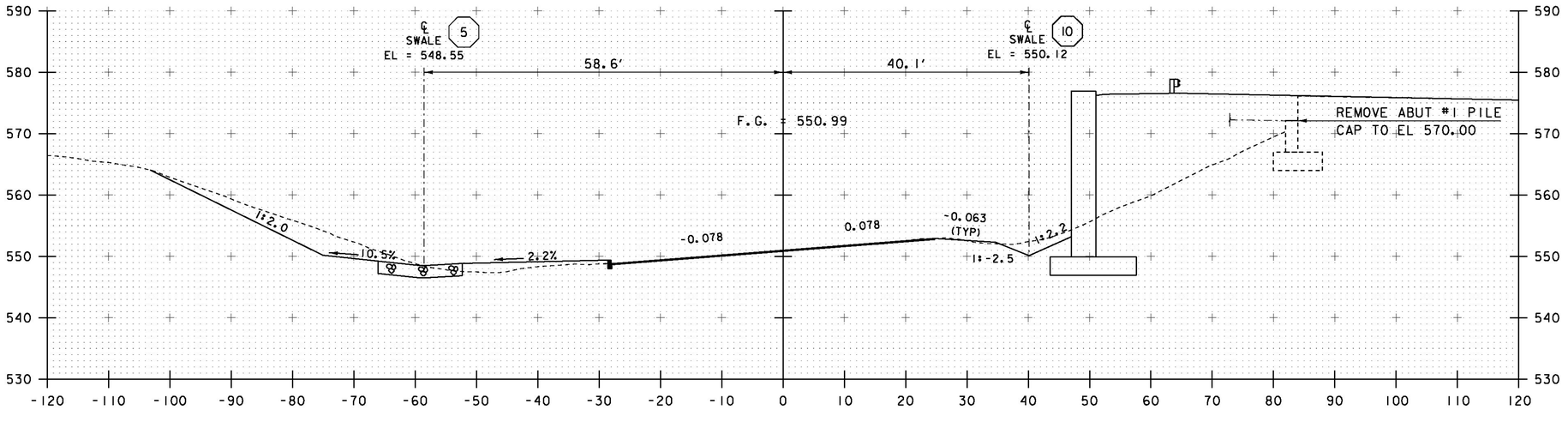

352+00

STA. 352+00 TO STA. 352+25

PROJECT NAME:	HARTFORD
PROJECT NUMBER:	IM 091-2(79)
FILE NAME: sl2al32xsec.dgn	PLOT DATE: 15-DEC-2014
PROJECT LEADER: K. HIGGINS	DRAWN BY: K. FRIEDLAND
DESIGNED BY: G. LAROCHE	CHECKED BY: W. LAMMER
US 5 CROSS SECTIONS	SHEET 155 OF 166

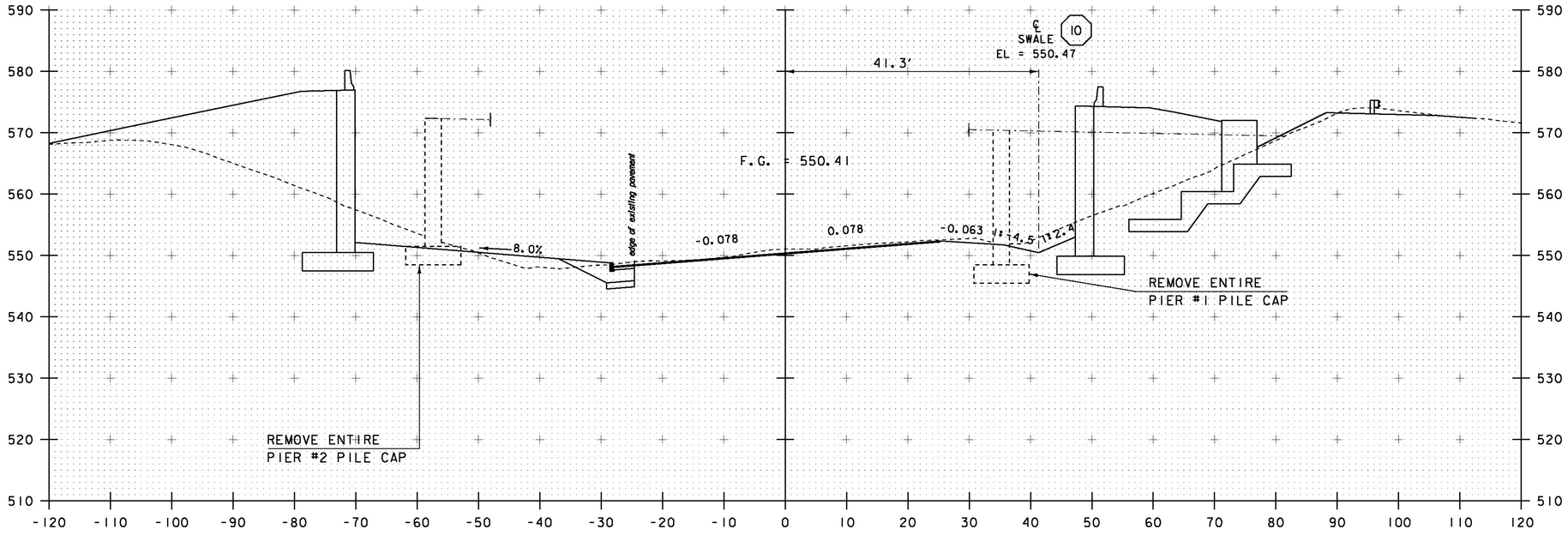

352+50

STA. 352+50 TO STA. 352+50

PROJECT NAME:	HARTFORD
PROJECT NUMBER:	IM 091-2(79)
FILE NAME: sl2al32xsec.dgn	PLOT DATE: 15-DEC-2014
PROJECT LEADER: K. HIGGINS	DRAWN BY: K. FRIEDLAND
DESIGNED BY: G. LAROCHE	CHECKED BY: W. LAMMER
US 5 CROSS SECTIONS	SHEET 156 OF 166

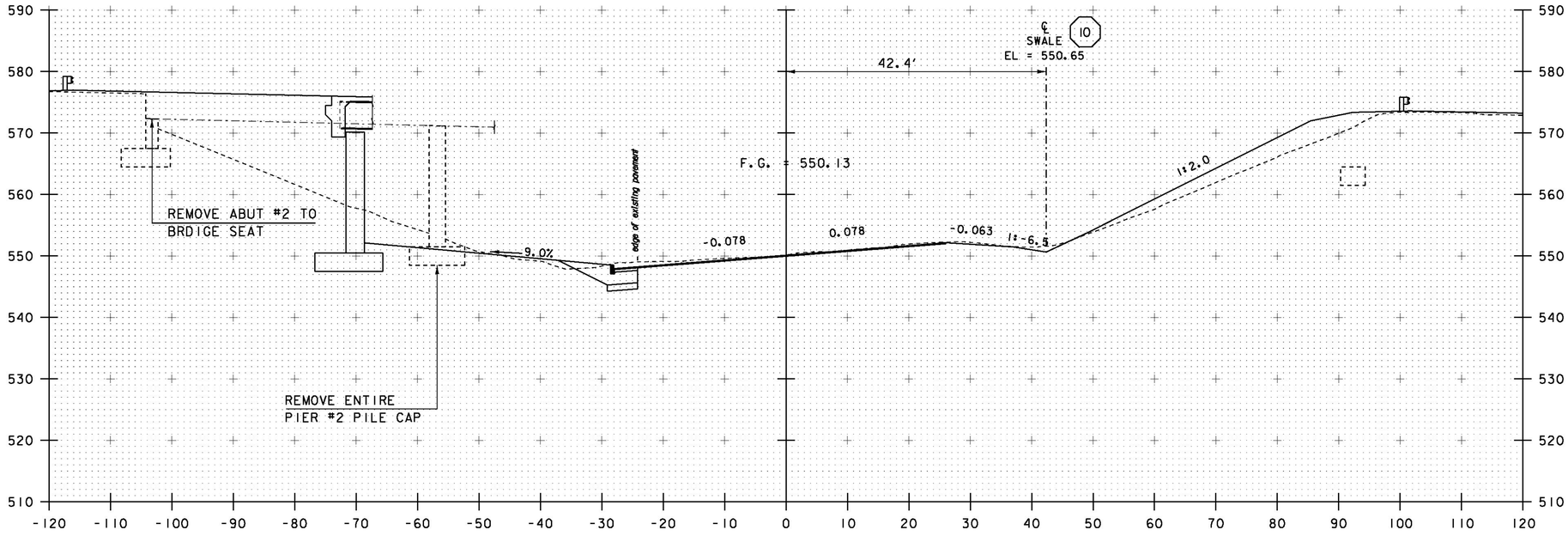

352+75

STA. 352+75 TO STA. 352+75

PROJECT NAME:	HARTFORD
PROJECT NUMBER:	IM 091-2(79)
FILE NAME: sl2al32xsec.dgn	PLOT DATE: 15-DEC-2014
PROJECT LEADER: K. HIGGINS	DRAWN BY: K. FRIEDLAND
DESIGNED BY: G. LAROCHE	CHECKED BY: W. LAMMER
US 5 CROSS SECTIONS	SHEET 157 OF 166

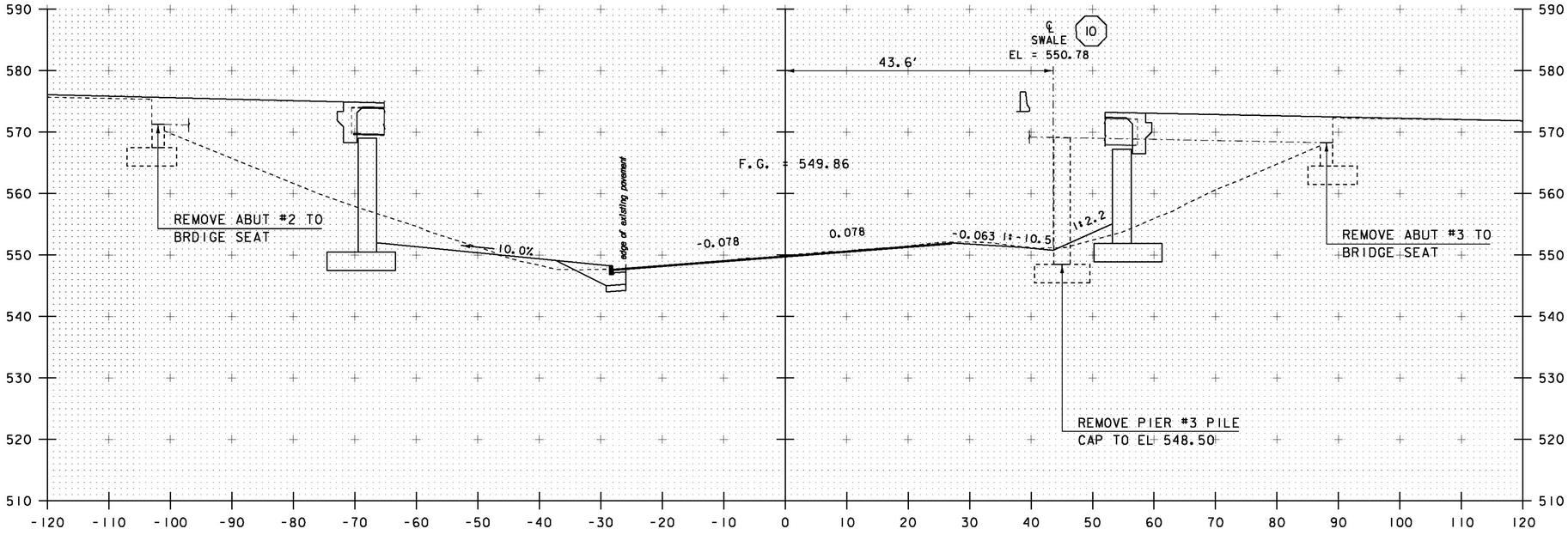

353+00

STA. 353+00 TO STA. 353+00

PROJECT NAME:	HARTFORD
PROJECT NUMBER:	IM 091-2(79)
FILE NAME: sl2al32xsec.dgn	PLOT DATE: 15-DEC-2014
PROJECT LEADER: K. HIGGINS	DRAWN BY: K. FRIEDLAND
DESIGNED BY: G. LAROCHE	CHECKED BY: W. LAMMER
US 5 CROSS SECTIONS	SHEET 158 OF 166

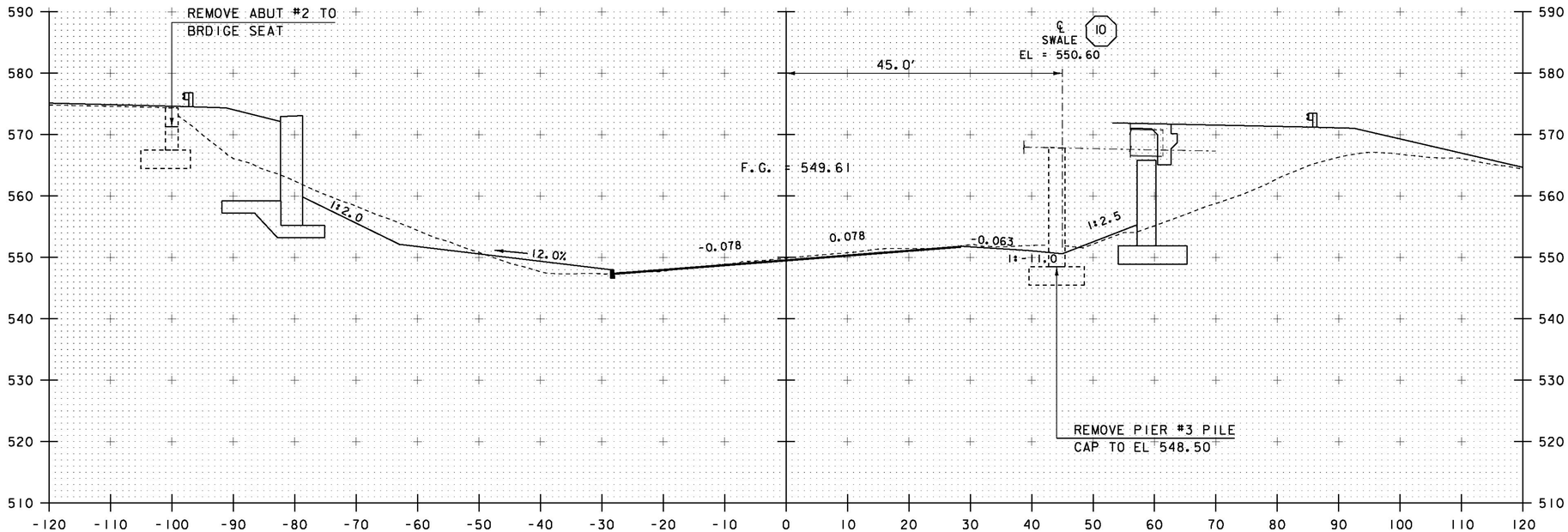

353+25

STA. 353+25 TO STA. 353+25

PROJECT NAME:	HARTFORD
PROJECT NUMBER:	IM 091-2(79)
FILE NAME: sl2al32xsec.dgn	PLOT DATE: 15-DEC-2014
PROJECT LEADER: K. HIGGINS	DRAWN BY: K. FRIEDLAND
DESIGNED BY: G. LAROCHE	CHECKED BY: W. LAMMER
US 5 CROSS SECTIONS	SHEET 159 OF 166

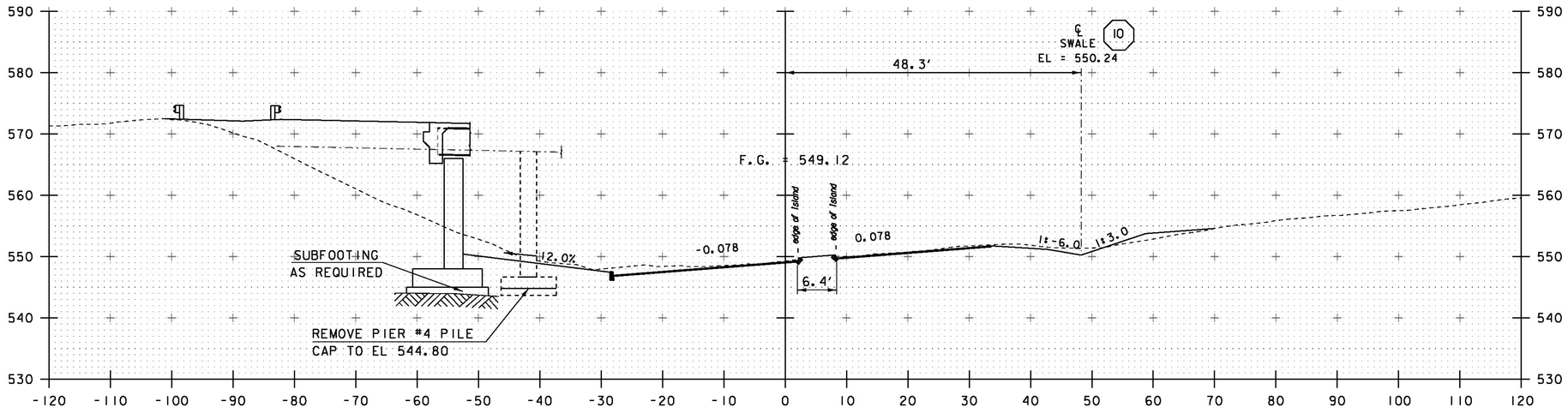

353+75

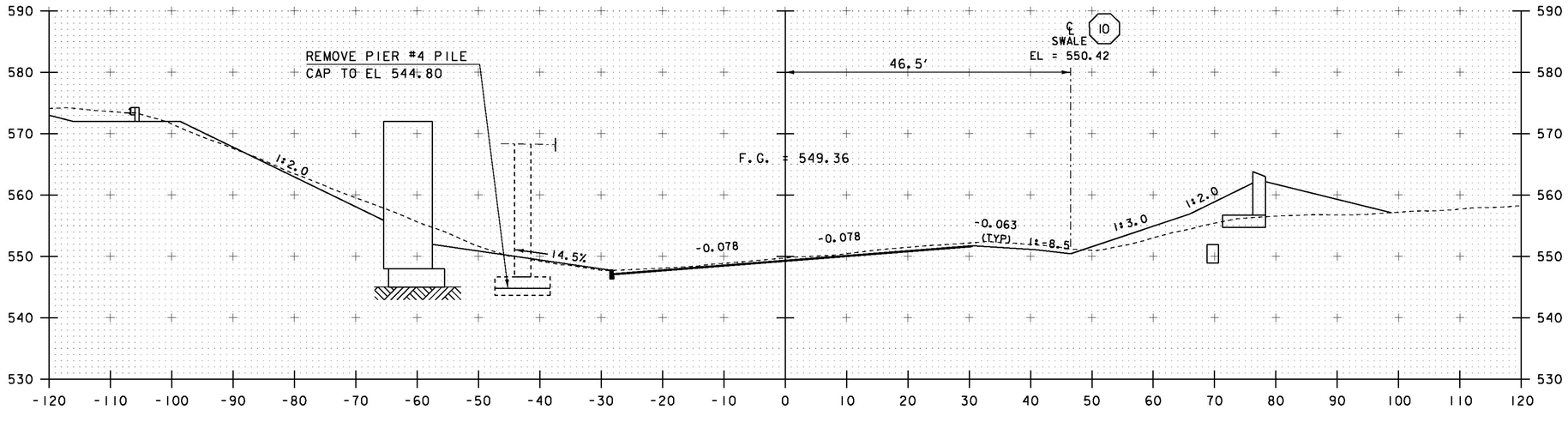

353+50

PROJECT NAME:	HARTFORD
PROJECT NUMBER:	IM 091-2(79)
FILE NAME: sl2al32xsec.dgn	PLOT DATE: 15-DEC-2014
PROJECT LEADER: K. HIGGINS	DRAWN BY: K. FRIEDLAND
DESIGNED BY: G. LAROCHE	CHECKED BY: W. LAMMER
US 5 CROSS SECTIONS	SHEET 160 OF 166

STA. 353+50 TO STA. 353+75

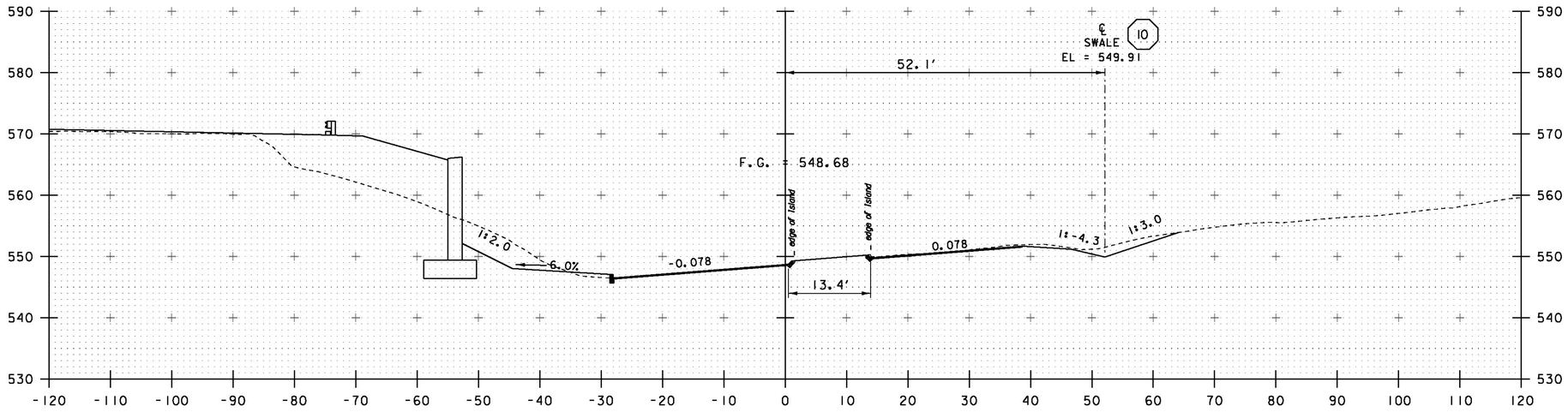

354+25

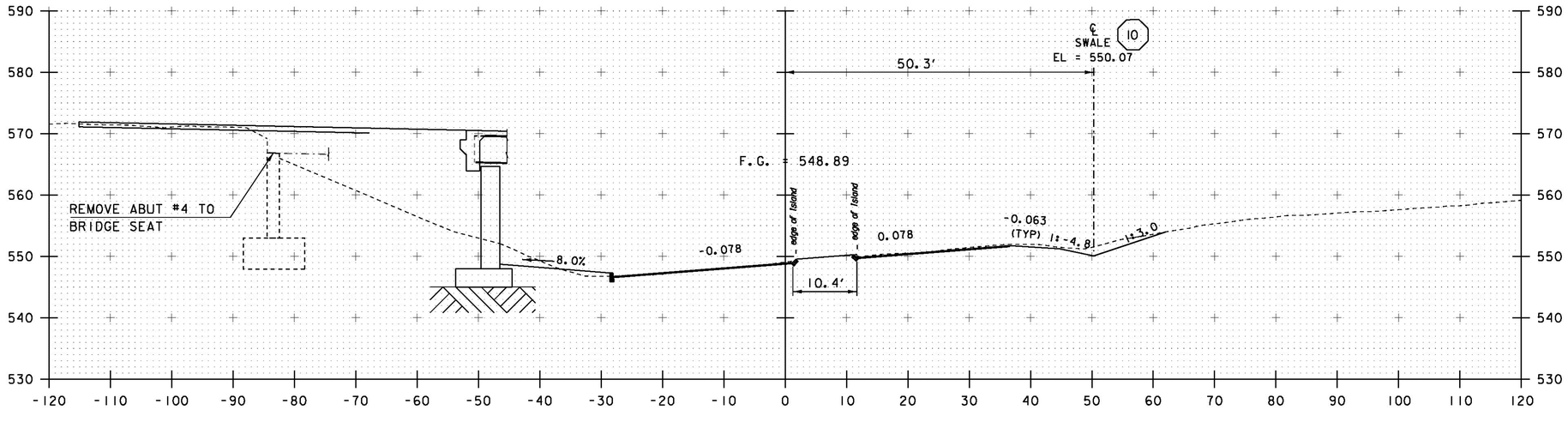

354+00

STA. 354+00 TO STA. 354+25

PROJECT NAME:	HARTFORD
PROJECT NUMBER:	IM 091-2(79)
FILE NAME: s12a132xsec.dgn	PLOT DATE: 15-DEC-2014
PROJECT LEADER: K. HIGGINS	DRAWN BY: K. FRIEDLAND
DESIGNED BY: G. LAROCHE	CHECKED BY: W. LAMMER
US 5 CROSS SECTIONS	SHEET 161 OF 166

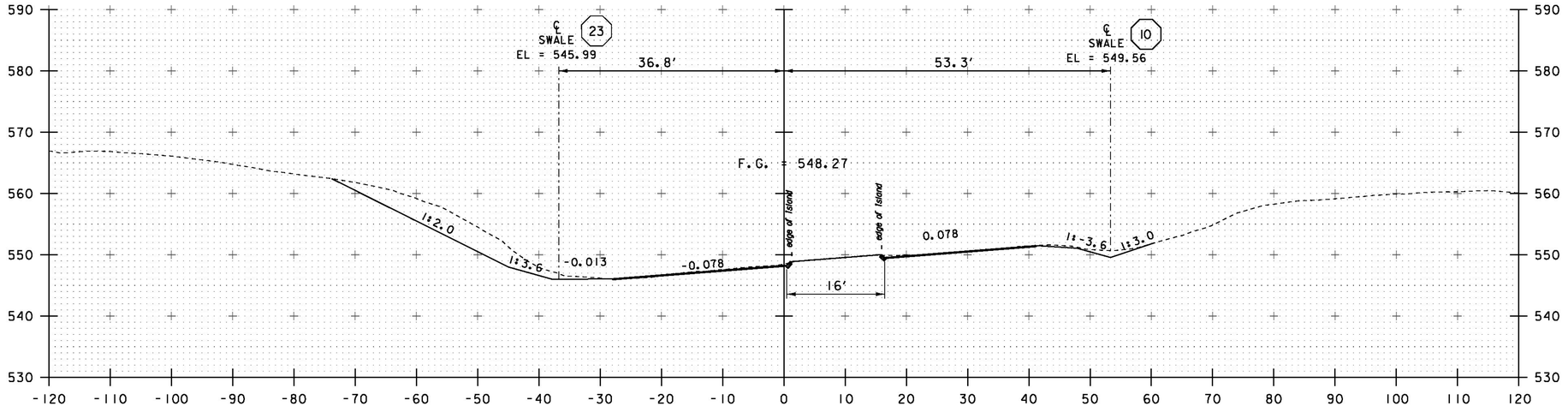

354+75

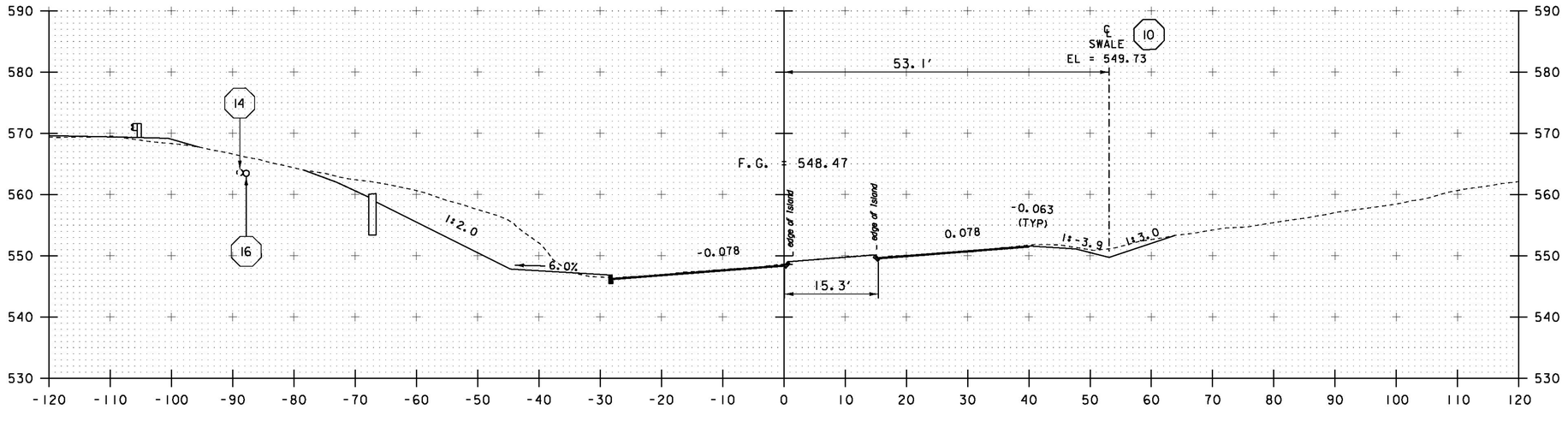

354+50

STA. 354+50 TO STA. 354+75

PROJECT NAME:	HARTFORD
PROJECT NUMBER:	IM 091-2(79)
FILE NAME: sl2al32xsec.dgn	PLOT DATE: 15-DEC-2014
PROJECT LEADER: K. HIGGINS	DRAWN BY: K. FRIEDLAND
DESIGNED BY: G. LAROCHE	CHECKED BY: W. LAMMER
US 5 CROSS SECTIONS	SHEET 162 OF 166

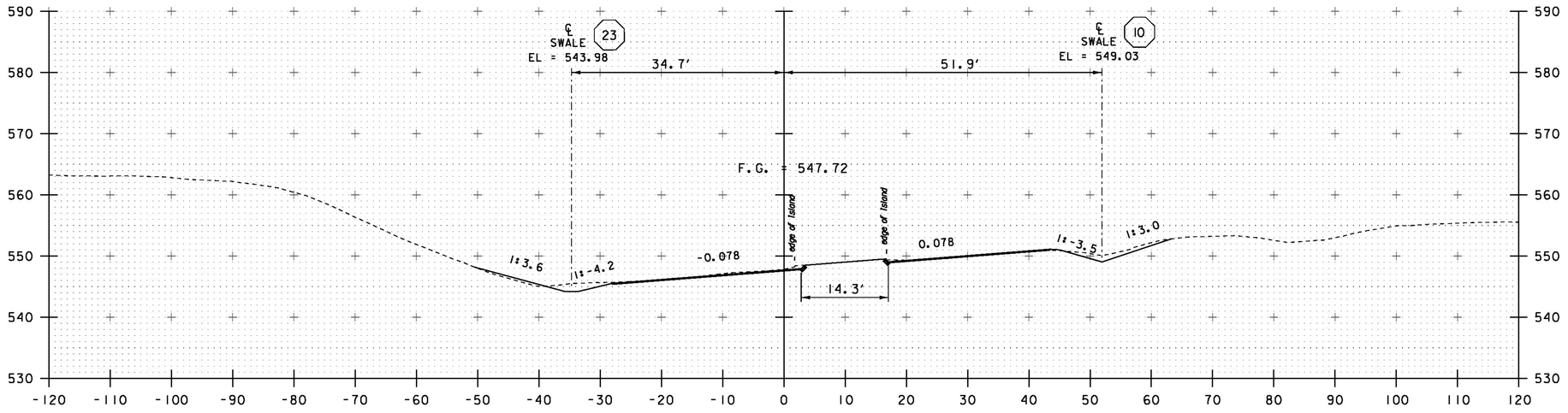

355+50

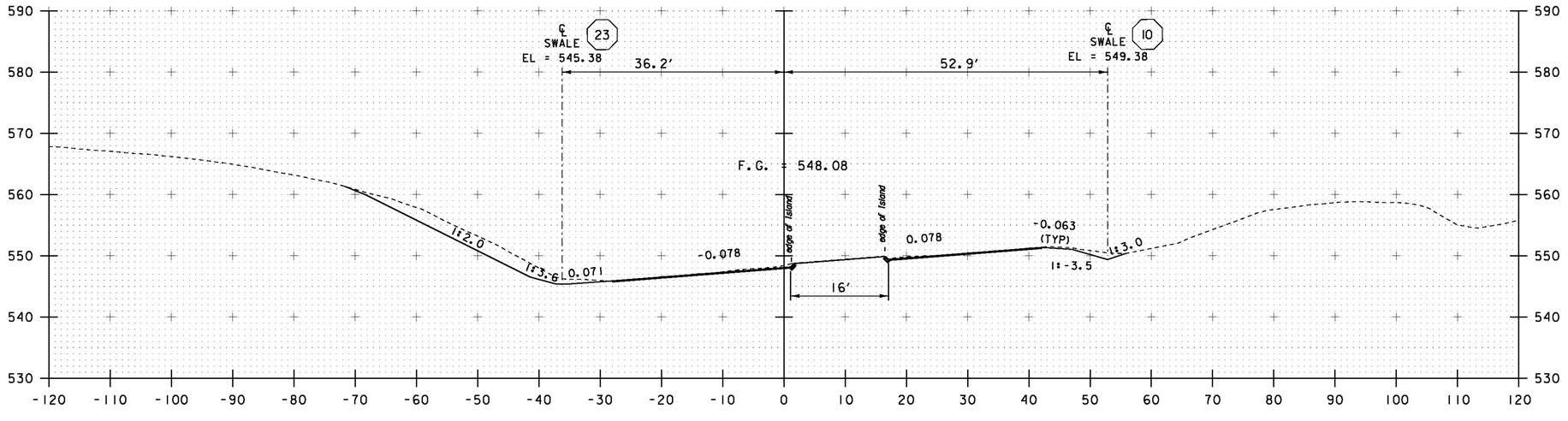

355+00

STA. 355+00 TO STA. 355+50

PROJECT NAME:	HARTFORD
PROJECT NUMBER:	IM 091-2(79)
FILE NAME: s12a132xsec.dgn	PLOT DATE: 15-DEC-2014
PROJECT LEADER: K. HIGGINS	DRAWN BY: K. FRIEDLAND
DESIGNED BY: G. LAROCHE	CHECKED BY: W. LAMMER
US 5 CROSS SECTIONS	SHEET 163 OF 166

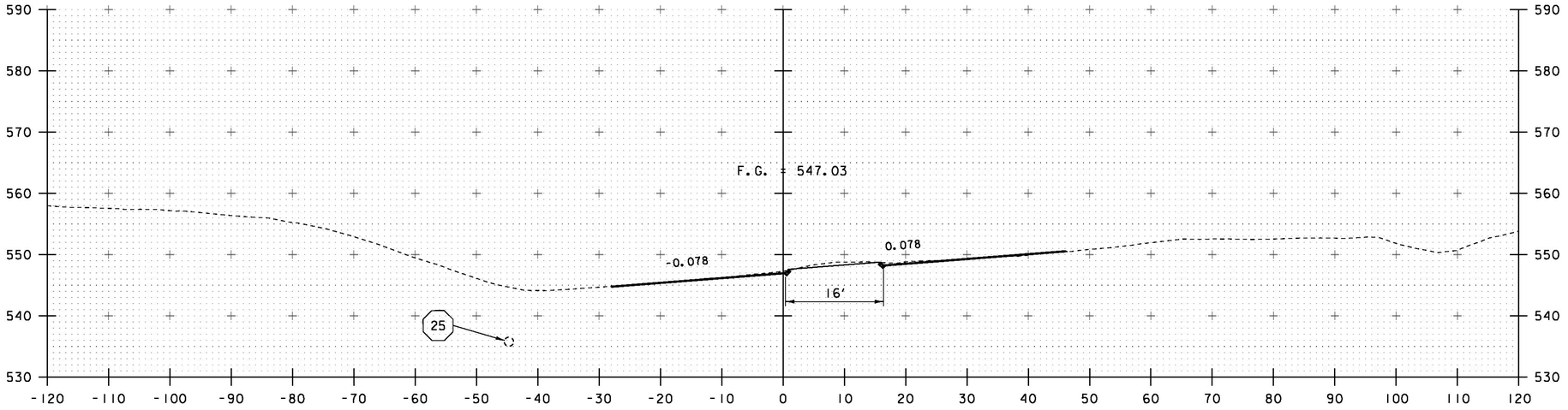

356+50

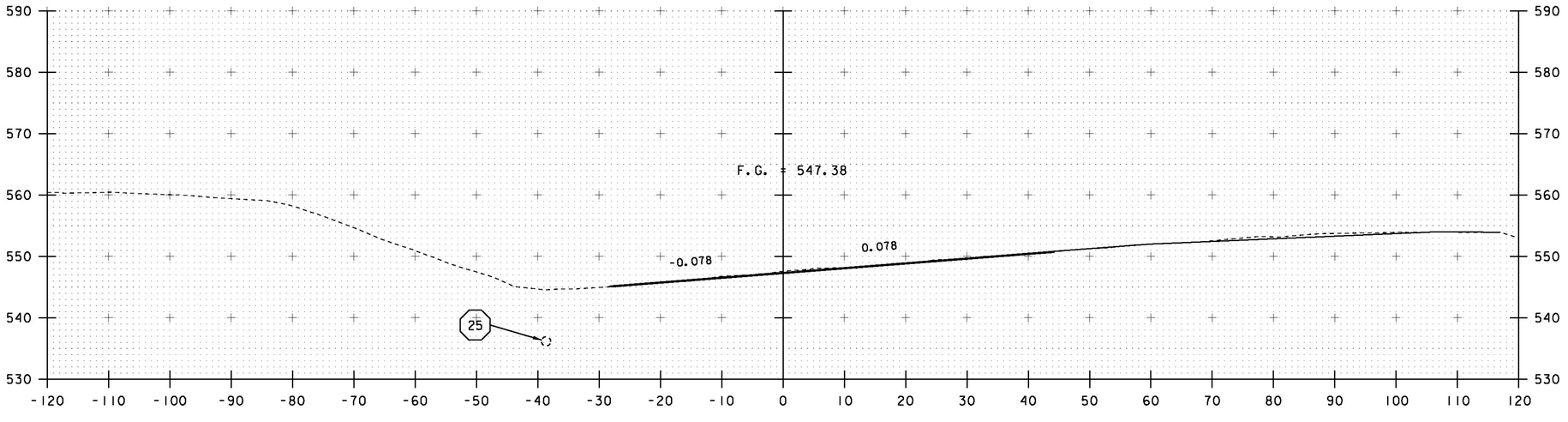

356+00

STA. 356+00 TO STA. 356+50

PROJECT NAME: HARTFORD
PROJECT NUMBER: IM 091-2(79)

FILE NAME: s12a132xsec.dgn
PROJECT LEADER: K. HIGGINS
DESIGNED BY: G. LAROCHE
US 5 CROSS SECTIONS

PLOT DATE: 15-DEC-2014
DRAWN BY: K. FRIEDLAND
CHECKED BY: W. LAMMER
SHEET 164 OF 166

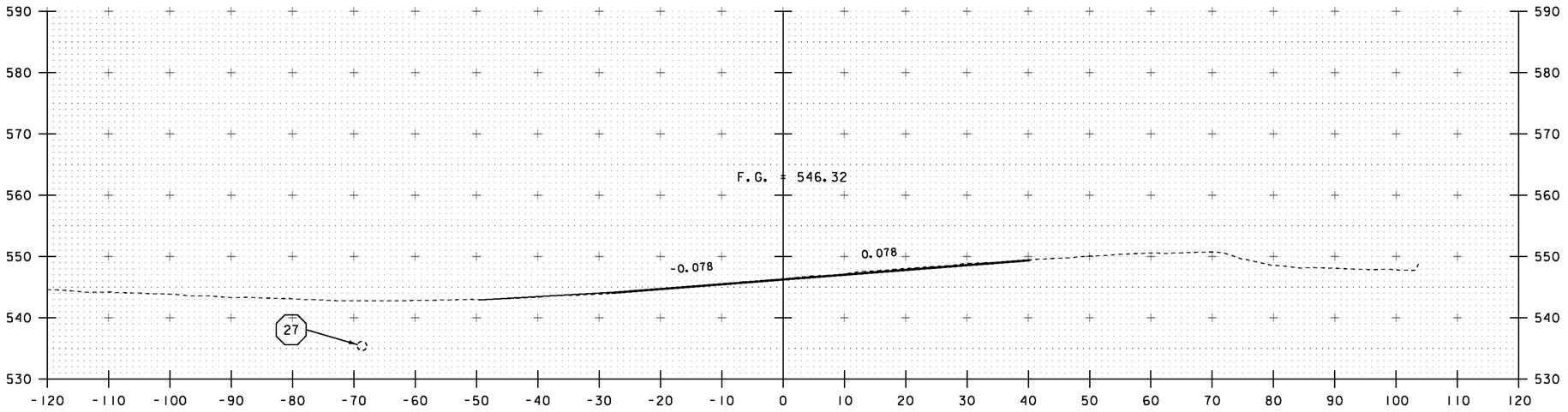

357+50

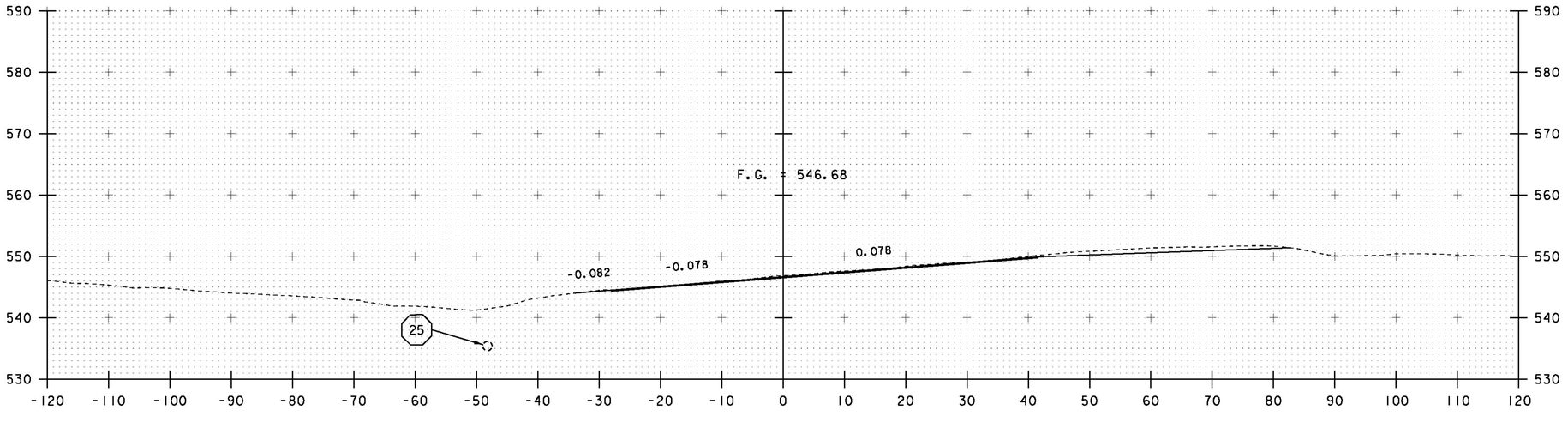

357+00

STA. 357+00 TO STA. 357+50

PROJECT NAME:	HARTFORD
PROJECT NUMBER:	IM 091-2(79)
FILE NAME: sl2al32xsec.dgn	PLOT DATE: 15-DEC-2014
PROJECT LEADER: K. HIGGINS	DRAWN BY: K. FRIEDLAND
DESIGNED BY: G. LAROCHE	CHECKED BY: W. LAMMER
US 5 CROSS SECTIONS	SHEET 165 OF 166

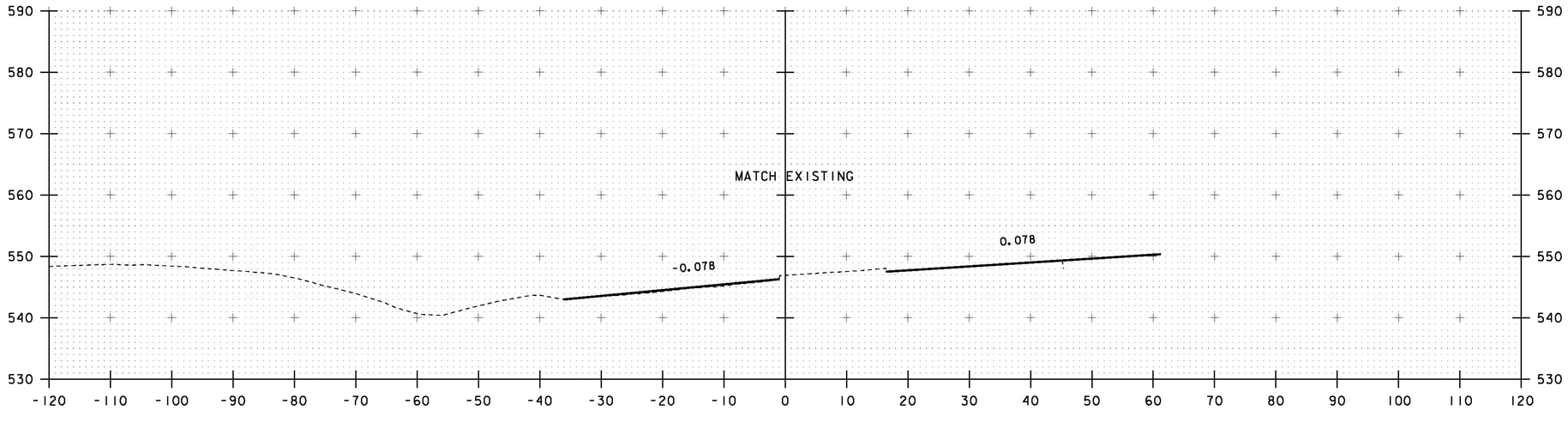

358+00

STA. 358+00 TO STA. 358+00

PROJECT NAME: HARTFORD
PROJECT NUMBER: IM 091-2(79)

FILE NAME: s12a132xsec.dgn
PROJECT LEADER: K. HIGGINS
DESIGNED BY: G. LAROCHE
US 5 CROSS SECTIONS

PLOT DATE: 15-DEC-2014
DRAWN BY: K. FRIEDLAND
CHECKED BY: W. LAMMER
SHEET 166 OF 166

CONCRETE GENERAL NOTES

1. ALL EXPOSED EDGES OF CONCRETE SHALL BE CHAMFERED 1" x 1"
2. REINFORCING STEEL SIZE AND SPACING SHOWN IN THE PLANS IS BASED ON 60 KSI STEEL, UNLESS NOTED OTHERWISE. WITH THE ENGINEER'S PERMISSION, BAR SIZE AND SPACING MAY BE MODIFIED ACCORDING TO THE LATEST AASHTO LRFD BRIDGE DESIGN SPECIFICATION AND STRUCTURES DESIGN MANUAL WHEN USING HIGHER STRENGTH STEEL.

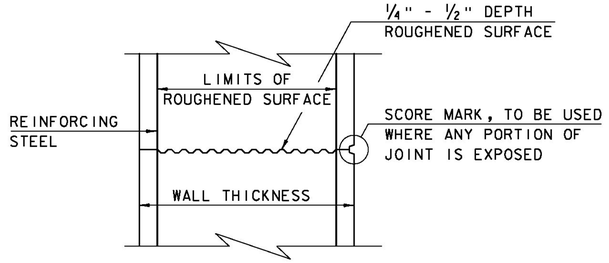

TYPICAL HORIZONTAL CONSTRUCTION JOINT
(NOT TO SCALE)

1. THE SURFACE OF THE CONCRETE CONSTRUCTION JOINTS SHALL BE CLEANED AND FREE OF LAITANCE.
2. IMMEDIATELY BEFORE NEW CONCRETE IS PLACED, ALL CONSTRUCTION JOINTS SHALL BE WETTED AND STANDING WATER REMOVED.

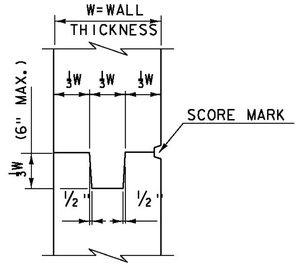

TYPICAL CONCRETE CONSTRUCTION JOINT
(NOT TO SCALE)

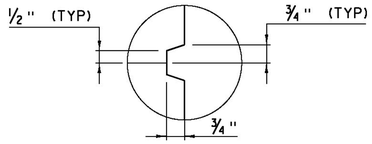

SCORE MARK DETAIL
(NOT TO SCALE)

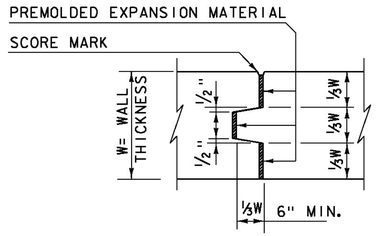

TYPICAL CONCRETE EXPANSION JOINT
(NOT TO SCALE)

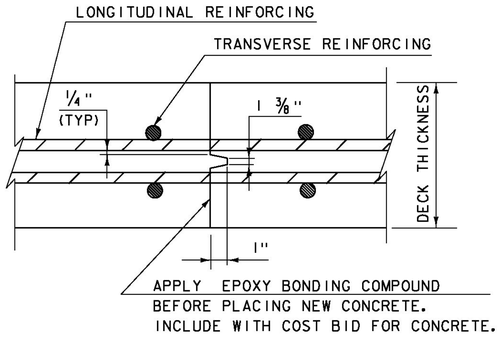

TRANSVERSE BRIDGE SLAB CONSTRUCTION JOINT DETAILS
(NOT TO SCALE)

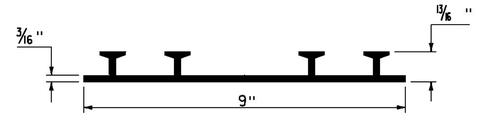

P.V.C. WATERSTOP FOR CONSTRUCTION JOINTS
(NOT TO SCALE)

PAYMENT FOR THE P.V.C. WATERSTOP SHALL BE INCIDENTAL TO THE UNIT BID PRICE FOR THE ADJACENT CONCRETE.

OTHER CONFIGURATIONS OF WATERSTOP MAY BE USED UPON APPROVAL OF THE ENGINEER.

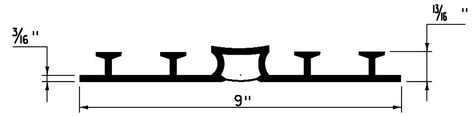

P.V.C. WATERSTOP FOR EXPANSION JOINTS
(NOT TO SCALE)

PAYMENT FOR THE P.V.C. WATERSTOP SHALL BE INCIDENTAL TO THE UNIT BID PRICE FOR THE ADJACENT CONCRETE.

OTHER CONFIGURATIONS OF WATERSTOP MAY BE USED UPON APPROVAL OF THE ENGINEER.

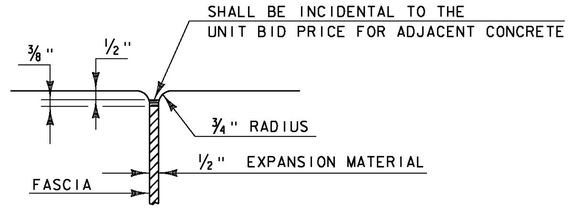

JOINT BETWEEN FASCIA AND WINGWALL
(NOT TO SCALE)

REVISIONS	
MAY 7, 2010	APPROVED FOR USE BY VAOT STRUCTURES SECTION
FEBRUARY 9, 2012	REBAR SUBSTITUTION ALLOWANCE ADDED TO CONCRETE GENERAL NOTES.

CONCRETE DETAILS AND NOTES

VERMONT AGENCY OF TRANSPORTATION
STRUCTURES - SECTION

STRUCTURES DETAIL
SD-501.00

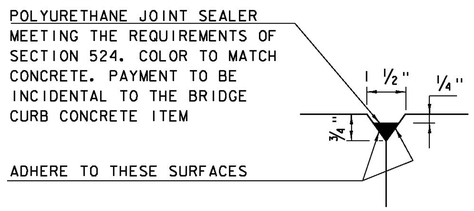

DETAIL "B"
(NOT TO SCALE)

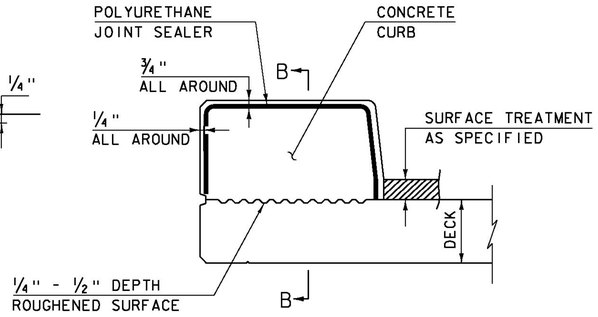

CONCRETE CURB JOINT SECTION
(NOT TO SCALE)

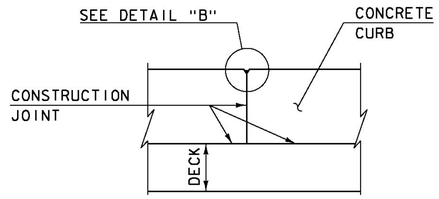

SECTION B - B
(NOT TO SCALE)

1. SEE TYPICAL HORIZONTAL CONSTRUCTION JOINT DETAIL FOR ADDITIONAL INFORMATION

CONCRETE CURB JOINT NOTES

1. CONCRETE CURBS MAY BE PLACED IN ONE CONTINUOUS OPERATION IF AN APPROVED SHRINKAGE REDUCING ADMIXTURE LISTED IN THE SPECIAL PROVISIONS IS USED WITH THE CONCRETE MIX DESIGN. PAYMENT FOR THE SHRINKAGE REDUCING ADMIXTURE WILL BE INCIDENTAL TO THE BRIDGE CURB CONCRETE ITEM.

2. IF THE CONTRACTOR CHOOSES NOT TO USE AN APPROVED SHRINKAGE REDUCING ADMIXTURE, THE CURBS SHALL BE CONSTRUCTED WITH CONSTRUCTION JOINTS SPACED AT A MAXIMUM OF 15'-0" CENTER TO CENTER AND 2'-0" MINIMUM FROM THE CENTER OF NEAREST BRIDGE RAILING POST.

3. ON MULTI-SPAN CONTINUOUS SUPERSTRUCTURES, REGARDLESS OF WHETHER APPROVED SHRINKAGE REDUCING ADMIXTURE IS USED, CURB JOINTS SHALL BE LOCATED OVER THE CENTERLINE OF PIERS AND 7'-0" EACH SIDE OF THE CENTERLINE OF EACH PIER.

4. WHEN CURB JOINTS ARE USED THE CURBS SHALL BE PLACED IN ALTERNATE SECTIONS WITH A MINIMUM OF 48 HOUR DELAY BETWEEN ADJACENT PLACEMENTS.

5. LONGITUDINAL REINFORCING SHALL BE CONTINUOUS THROUGH CURB CONSTRUCTION JOINTS. CURB STIRRUP BARS SHALL BE TURNED AS NECESSARY TO MAINTAIN COVER IN THE FLARED CURB ENDS.

6. THE JOINT SPACING AND DETAILS SHOWN SHALL APPLY TO SIDEWALKS WHEN SHOWN IN THE PLANS.

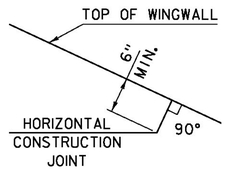

HORIZONTAL WINGWALL CONSTRUCTION JOINT
(NOT TO SCALE)

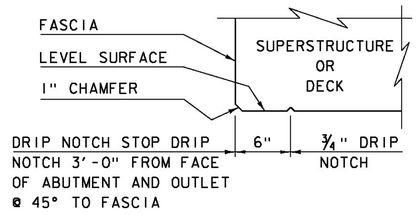

DRIP NOTCH DETAIL
(NOT TO SCALE)

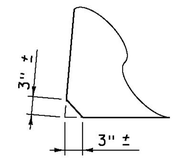

ACUTE ANGLE CLIP DETAIL
(NOT TO SCALE)

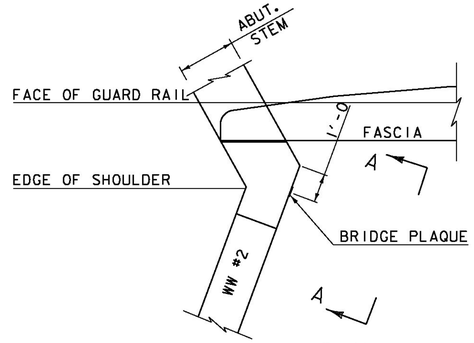

PLAN

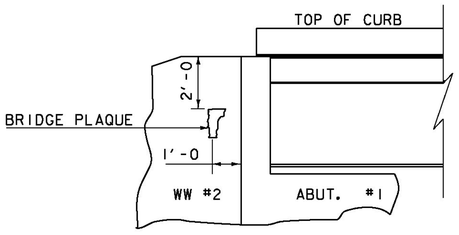

VIEW "A - A"

BRIDGE PLAQUE
(NOT TO SCALE)

THE BRIDGE PLAQUE WILL BE SUPPLIED BY THE AGENCY OF TRANSPORTATION AND SHALL BE INSTALLED BY THE CONTRACTOR AT ABUTMENT #1 ON THE RIGHT SIDE AS SHOWN OR AS DIRECTED BY THE ENGINEER.

PAYMENT FOR INSTALLATION OF THE BRIDGE PLAQUE SHALL BE INCIDENTAL TO THE ADJACENT CONCRETE.

REVISIONS	
MAY 7, 2010	APPROVED FOR USE BY VAOT STRUCTURES SECTION
JUNE 4, 2010	MODIFIED AND ADDED TWO DETAILS
OCTOBER 10, 2012	MODIFIED HORZ. JOINT WINGWALL ADD 6" MIN. DIMENSION

CONCRETE DETAILS AND NOTES

VERMONT AGENCY OF TRANSPORTATION
STRUCTURES - SECTION

STRUCTURES DETAIL
SD-502.00

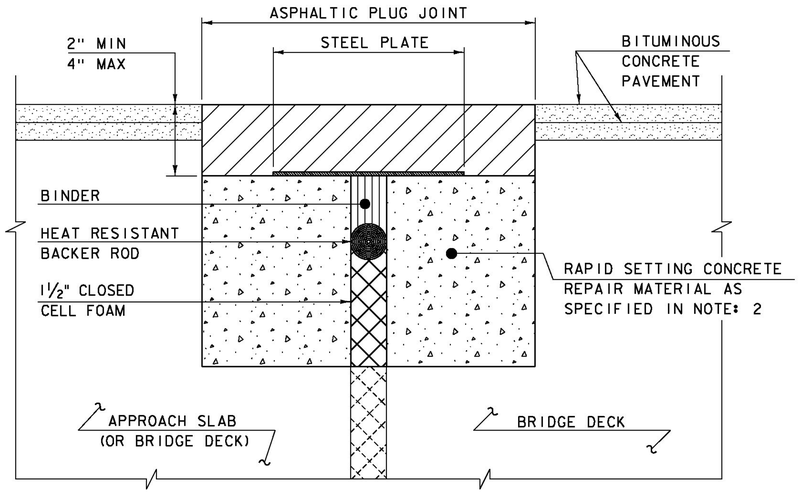

ASPHALTIC PLUG JOINT DETAIL - REHAB

NOTES:

1. THE CONTRACTOR SHALL REMOVE ALL ASPHALTIC PLUG JOINT MATERIAL AND DETERIORATED CONCRETE AS DIRECTED BY THE ENGINEER. REMOVAL OF THE FIRST 4 INCHES OF MATERIAL SHALL BE INCLUDED IN THE BID PRICE FOR ITEM 516.10 BRIDGE EXPANSION JOINT, ASPHALTIC PLUG. ANY REMOVAL OF MATERIAL GREATER THAN 4 INCHES SHALL BE INCLUDED IN THE BID PRICE OF ITEM 580.20 RAPID SETTING CONCRETE REPAIR MATERIAL WITH COARSE AGGREGATE.

2. THE CONTRACTOR SHALL REPLACE REMOVED MATERIAL THAT IS LESS THAN 4" FROM FINISHED GRADE WITH ASPHALTIC PLUG JOINT MATERIAL MEETING THE REQUIREMENTS OF SUBSECTION 707.15. ALL REMOVED MATERIAL THAT IS GREATER THAN 4 INCHES FROM FINISHED GRADE SHALL BE REPLACED WITH RAPID SETTING CONCRETE REPAIR MATERIAL WITH COARSE AGGREGATE MEETING THE REQUIREMENTS OF SUBSECTION 780.04.

3. REINFORCING STEEL NOT SHOWN FOR CLARITY.

4. PLACE 1/4" THICK BY 8" WIDE SECTIONS OF STEEL PLATE OVER THE CENTER OF THE MOVEMENT GAP. SECURE THE PLATES FROM MOVING BY INSERTING LOCATING PINS THROUGH THE PRE-STAMPED HOLES INTO BACKER ROD AND COVER WITH HOT BINDER. THE STEEL PLATES MAY BE OMITTED WHERE THE ENGINEER DETERMINES THAT THE APPROACH SLAB OR BRIDGE DECK WILL PROVIDE INADEQUATE SUPPORT AND WHERE VERTICAL MOVEMENT OF THE PLATES MIGHT OCCUR.

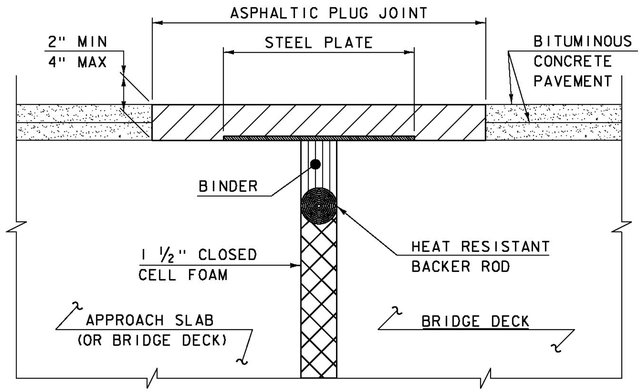

ASPHALTIC PLUG JOINT DETAIL "A" - NEW

NOTE:
PLACE 1/4" THICK BY 8" WIDE SECTIONS OF STEEL PLATE OVER THE CENTER OF THE MOVEMENT GAP. SECURE THE PLATES FROM MOVING BY INSERTING LOCATING PINS THROUGH THE PRE-STAMPED HOLES INTO BACKER ROD AND COVER WITH HOT BINDER.

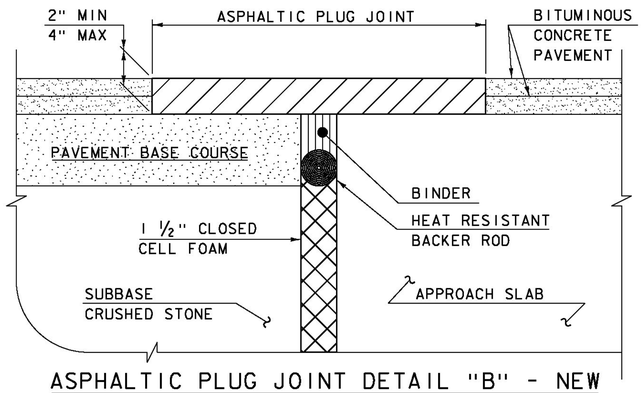

ASPHALTIC PLUG JOINT DETAIL "B" - NEW

ASPHALTIC PLUG JOINT NOTES

INSTALLATION:

1. LOCATE THE JOINT CENTRALLY OVER THE DECK OVERLAY EXPANSION GAP OR FIXED JOINT, MARKED OUT TO THE MANUFACTURER'S RECOMMENDED WIDTH.
2. REMOVE THE BITUMINOUS CONCRETE PAVEMENT FULL DEPTH AS SHOWN ON THE PLANS. THE PAVEMENT SHALL BE DRY AND SAW CUT TO THE LIMITS REQUIRED TO PLACE THE JOINT. A PNEUMATIC HAMMER AND CHISEL MAY BE USED ADJACENT TO THE CURB ONLY WHEN SAW CUTTING IS NOT POSSIBLE.
3. BLAST CLEAN THE JOINT AREA OF DEBRIS, ASPHALT AND SHEET MEMBRANE. THOROUGHLY DRY THE JOINT AREA WITH COMPRESSED AIR PRIOR TO APPLYING BINDER MATERIAL.
4. PLACE PROPERLY SIZED HEAT RESISTANT BACKER ROD IN THE MOVEMENT GAP ALLOWING FOR 1" +/- OF BINDER ABOVE THE ROD.
5. HEAT AND PLACE THE BINDER MATERIAL AS RECOMMENDED BY THE MANUFACTURER.
6. IMMEDIATELY AFTER TOP COATING, CAST AN ANTI-SKID MATERIAL OVER THE JOINT TO REDUCE THE RISK OF TRACKING.

WEATHER LIMITATIONS

APPLY BINDER MATERIAL ONLY WHEN THE FOLLOWING CONDITIONS PREVAIL OR AS RECOMMENDED BY THE MANUFACTURER:

1. THE AMBIENT AIR TEMPERATURE IS AT LEAST 10 DEG C (50 DEG F) AND RISING.
2. THE ROAD SURFACE IS DRY.
3. WEATHER CONDITIONS OR OTHER CONDITIONS ARE FAVORABLE AND ARE EXPECTED TO REMAIN SO FOR THE PERFORMANCE OF SATISFACTORY WORK.

DETAILS ON THIS SHEET ARE NOT TO SCALE.

REVISIONS	
MAY 7, 2010	APPROVED FOR USE BY VAOT STRUCTURES SECTION
AUGUST 29, 2011	ADD DETAIL "B" AND REV. NOTES

BRIDGE JOINT
ASPHALTIC PLUG

VERMONT AGENCY OF TRANSPORTATION
STRUCTURES - DIVISION

STRUCTURES DETAIL
SD-516.10

STRUCTURAL STEEL GENERAL NOTES:

1. ALL FIELD CONNECTIONS SHALL BE MADE WITH 7/8" DIAMETER HIGH-STRENGTH BOLTS IN 15/16" DIAMETER HOLES, PER SUBSECTION 506.19, UNLESS OTHERWISE SPECIFIED.
2. ALL HOLES IN THE WEBS OF THE FASCIA GIRDERS THAT ARE NOT OTHERWISE FILLED, SHALL BE FILLED WITH EITHER BUTTON HEAD OR HEX HEAD BOLTS. THESE BOLTS SHALL BE TIGHTENED IN ACCORDANCE WITH SUBSECTION 506.19.
3. ALL WELDING SHALL CONFORM TO THE PROVISIONS OF SUBSECTION 506.10.
4. ANY CONNECTIONS THAT ARE NOT DETAILED ON THE PLANS SHALL BE DETAILED BY THE FABRICATOR AND SUBMITTED TO THE STRUCTURES ENGINEER FOR APPROVAL.
5. STRUCTURAL STEEL MEMBERS DESIGNATED "CVN" IN THE PLANS SHALL BE CHARPY V-NOTCH TESTED IN ACCORDANCE WITH SUBSECTION 714.01 OF THE STANDARD SPECIFICATIONS.
6. ENDS OF GIRDERS ARE TO BE VERTICAL IN THEIR FINAL POSITION.
7. AFTER SUPERSTRUCTURE STEEL HAS BEEN ERECTED, ELEVATIONS ALONG THE TOP OF THE GIRDERS SHALL BE TAKEN AS DIRECTED BY THE RESIDENT ENGINEER FOR USE IN DETERMINING FINISHED GRADES.

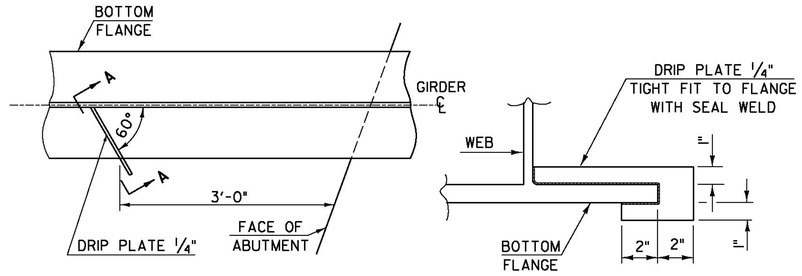

PLAN DRIP PLATE

SECTION A - A

NOTE: DRIP PLATES SHALL BE PLACED ON OUTSIDE EDGE OF FASCIA GIRDERS ON THE HIGH SIDE OF ALL PIERS AND ABUTMENTS OR AS INDICATED ON PROJECT PLANS.

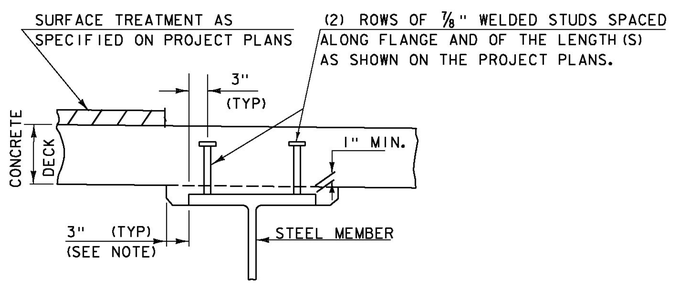

NOTE:
THE 3" HORIZONTAL SECTION MAY BE ELIMINATED FOR FORMING SYSTEMS DESIGNED FOR THE CONSTRUCTION OF VERTICAL HAUNCHES. ANY VOIDS RESULTING FROM FORMING SYSTEM ELEMENTS SHALL BE FILLED WITH JOINT SEALER, POLYURETHANE MEETING THE REQUIREMENTS OF SECTION 524. THE COST OF THE JOINT SEALER, POLYURETHANE SHALL BE INCIDENTAL TO THE ADJACENT CONCRETE.

HAUNCH AND SHEAR CONNECTOR DETAIL

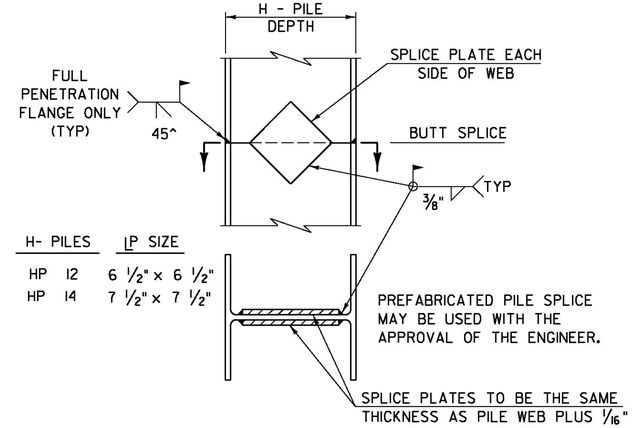

DETAIL OF PILE SPLICE

DETAILS ON THIS SHEET ARE "NOT TO SCALE" UNLESS NOTED OTHERWISE.

REVISIONS	
MAY 7, 2010	APPROVED FOR USE BY VAOT STRUCTURES SECTION
JUNE 4, 2010	MODIFIED NOTES

STRUCTURAL STEEL DETAILS & NOTES

VERMONT AGENCY OF TRANSPORTATION
STRUCTURES - SECTION

STRUCTURES DETAIL
SD-601.00

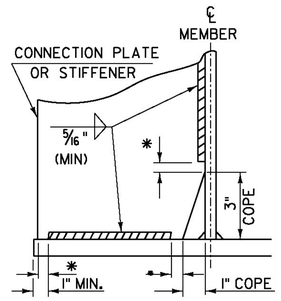

WELD TERMINATION AND COPING DETAILS FOR STEEL MEMBERS

*NO WELD FOR 3/8" MIN. 7/8" MAX. (EXCEPT MUST MAINTAIN 1" MINIMUM FROM EDGE OF FLANGE)

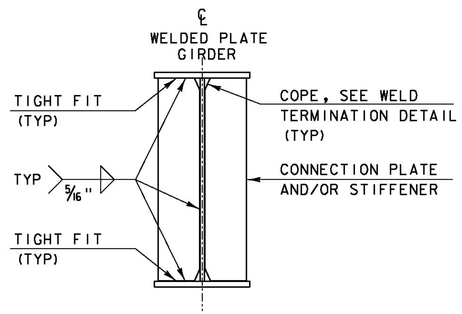

INTERMEDIATE CONNECTION PLATES AND/OR STIFFENERS FOR WELDED PLATE GIRDERS

INTERMEDIATE DETAIL IS ONLY USED WHEN PLATE DOES NOT OCCUR AT AN ABUTMENT OR PIER.

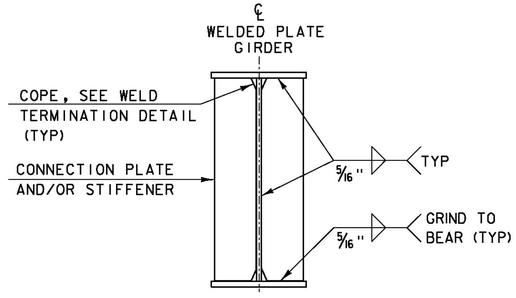

ABUTMENT BEARING STIFFENERS AND/OR CONNECTION PLATES FOR WELDED PLATE GIRDERS

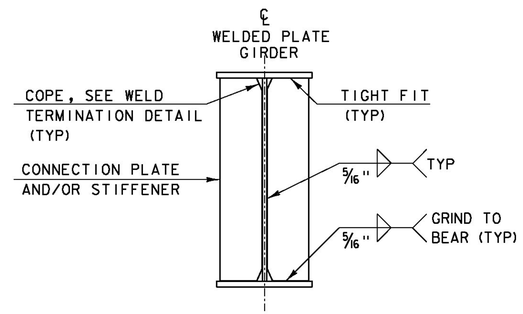

PIER BEARING STIFFENERS AND/OR CONNECTION PLATES FOR WELDED PLATE GIRDERS

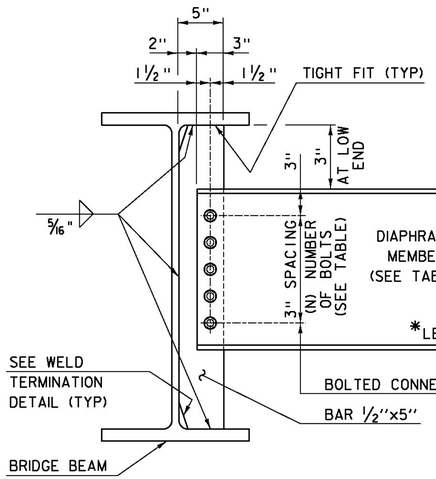

DEPTH		DIAPHRAGM MEMBER	(N) BOLTS
ROLLED BEAM	24" 30"	C15x33.9	4
	31" 36"	MC18x42.7	5
	37" 42"	W21x44	6
PLATE GIRDER WEB	31" 36"	W27x84	7
	37" 42"	W33x118	9
	43" 48"	W36x135	10

INTERMEDIATE DIAPHRAGMS FOR 24" TO 48" BRIDGE BEAMS

* IF CLEARANCE CANNOT BE MET, DIAPHRAGM MAY BE SLOPED.

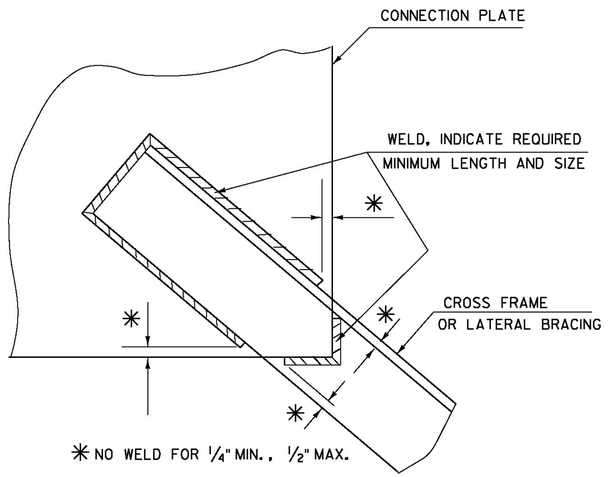

WELD LOCATION DETAIL AT CROSS FRAMES AND LATERAL BRACING

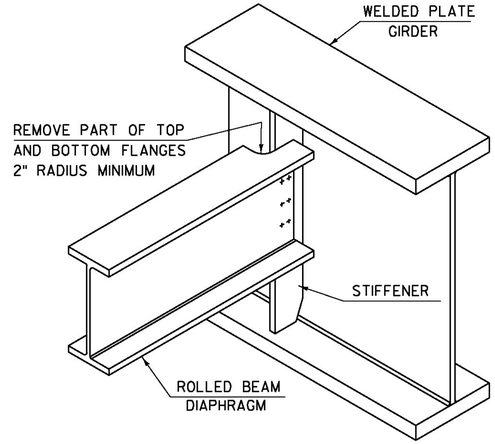

SEE CONTRACT DRAWINGS FOR SIZES OF MEMBERS AND CONNECTION DETAILS

ROLLED BEAM USED AS DIAPHRAGM

DETAILS ON THIS SHEET ARE "NOT TO SCALE" UNLESS NOTED OTHERWISE.

REVISIONS	
MAY 7, 2010	APPROVED FOR USE BY VAOT STRUCTURES SECTION
MAY 2, 2011	ADD INTERMEDIATE DIAPHRAGMS DETAIL & ADD NOT TO SCALE NOTE

STRUCTURAL STEEL PLATE GIRDER DETAILS AND NOTES

VERMONT AGENCY OF TRANSPORTATION
STRUCTURES - SECTION

STRUCTURES DETAIL
SD-602.00

Seismic Energy Products, L.P.
518 Progress Way
Athens, TX 75751
Phone: (903)675-8571
Fax: (903)675-8983

Welding Procedure Specification

Material Specification: *ASTM 709, Grade A36*

Welding Process: *FCAW*

Manual, Semiautomatic, or Automatic: *SEMI-AUTO*

Position of Welding: *1F*

Filler Metal Specification: *AWS A5.29*

Filler Metal Classification: *E81T1-Ni1CJ-H4*

Flux: *N/A*

Electrode and Manufacturer: *81 NiC-H LINCOLN*

Shielding Gas: *100% Co2* ***Dew Point:*** *-128°F* ***Flow Rate:*** *40cfm*

Single or Multiple Pass: *Single*

Single or Multiple Arc: *Single*

Welding Current: *DC*

Polarity: *DCEP*

Welding Progression: *Left to Right*

Root Treatment: *Wire Brush*

Preheat and Interpass Temperature: *70° and 450° MAX.*

Postheat Treatment: *None*

Vermont Agency of Transportation
RECEIVED
CK'D BY ____ OK'D BY JC
February 13, 2015
RESUBMIT NO Approved
BY KH DATE 3-5-2015

WELDING PROCEDURE

Pass No	Electrode Size	Welding Parameters		Travel Speed	Joint Detail
		Amperes	Volts		
All	*0.0625*	*300-325*	*27-30*	*12 IPM*	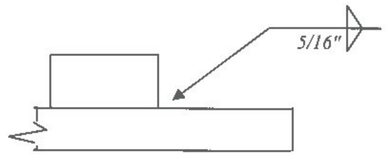

Procedure File#: TP4 **Contractor:** *Seismic Energy Products, L.P.*

Revision: WPS # NY-01 **Date:** 2/12/2015

SO. 61614

BD 1778(12/80)

NEW YORK STATE

DEPARTMENT OF TRANSPORTATION ~

WELDING PROCEDURE QUALIFICATION RECORD

Fabricator Seismic Energy Products Test Date 4/14/10

Process FCAW Filler Metal Classification E81T1-Ni1C

Electrode(s) Lincoln Ultracore 81Ni1C Flux N/A

(1) Diameter 1/16" Amps 310 Volts 33 Current & Polarity DC-Rev

(2) ____ ____ ____ ____

(3) ____ ____ ____ ____

Shielding Gas 100% CO_2 Flow Rate 40 CFH Dew Point -128°F

Travel Speed 12 I.P.M. Material Specification & Thickness A588 - 1"

Preheat Temp. 200°F Interpass Temp. 450°F max.

Heat Input 51,150 FCM ☐ Yes ☒ No

SPECIMEN	TEST RESULTS		
All Weld Metal Tension (AWMT)		(1)	(2)
	Tensile Strength (psi)	85,400	
	Yield Strength (psi)	77,500	
	Elongation in 2" (%)	28	
	Reduction in Area (%)		
Side Bends	1. Pass 2. Pass 3. Pass 4. Pass		
Reduction Section Tension	Tensile Strength 1. 85,000 2. 86,300	Location of Break 1. BM 2. BM	
Charpy Impact (Weld Metal)	(57, 48, 17, 26, 27)	Avg. Ft. Lbs. 33.7 @ -20 °F	
	(____, ____, ____, ____, ____)	Avg. Ft. Lbs. ____ @ ____ °F	
	ESW & EGW (____, ____, ____, ____, ____, ____, ____, ____)	Avg. Ft. Lbs. ____ @ ____ °F	
Chemistry	C. .06 Mn. 1.03 P. .01 S. .004 Si. .22		
	Ni .90 Cr. .08 Mo. .007 V. .02 Cu. .06		

REMARKS:

PQR# TP4

Position - 1G

NYSDOT
METALS ENGINEERING
REVIEW

X APPROVED Expires 4/14/15
___ APPROVED AS NOTED
___ DISAPPROVED
5/5/10
R. Cosgrove

Vermont Agency of Transportation
RECEIVED
CK'D BY ____ OK'D BY JC
February 13, 2015
RESUBMIT NO Approved
BY KH DATE 3-5-2015

Test Witness: John Martin Agency NDT

Results Reviewed: RMC DOT Acceptance R. Cosgrove Date 5/5/10

Seismic Energy Products
518 Progress Way
Athens, Texas 75751

Welder or Welding Operator Qualification Test Record (WPQR)

Welder's Name: **Whitley, Jeremy** Stamp: **7442**
Test WPS No.: **SEP.312, .375, .500** Rev.: **0** WPQ No.: **7442** Date: **6/20/2011** Page 1
Type of joint welded: Plate Fillet weld
Joint type(s) qualified: All applicable fillet welds (except T-, Y- & K-connection fillet welds)
Base metal(s) welded: ASTM 709 Grade 50W (A588) to ASTM 709 Grade 50W (A588)

Variables (Table 4.12)	Actual Values Used	Range Qualified
Welding process / type	FCAW / Semiautomatic	FCAW / Semiautomatic, Machine, and Automatic
Base metal thickness - groove (in.)	N/A	N/A
Base metal thickness - fillet (in.)	1/2"	1/8" to unlimited
Pipe diameter - groove (in.)	N/A	N/A
Pipe diameter - fillet (in.)	N/A	All diameters
Box tube size (in.)	N/A	All sizes
Dihedral angle - fillet	90	60° to 135°
Backing	Backing used	With backing only
Filler metal classification	E81T1-Ni1	
Filler metal specification	5.29	
Filler metal F-No.	6	N/A
Welding position - groove	N/A	N/A
Welding position - fillet	2F - Horizontal	Flat & Horizontal
Weld progression	N/A	N/A
Shielding gas	100% CO2	
Welding current / polarity	DCEP (reverse)	
Transfer mode (GMAW)	N/A	N/A
Single / multiple electrode	N/A	N/A

Notes:

Visual inspection acceptable: Yes Other test results:

Fillet Test Results

Appearance: Acceptable
Fracture test root penetration: Acceptable
Fillet size: 5/16"
Macroetch: Acceptable
Test No.: 7442-06-20-2011

Inspected by: Steven D. Downing 6/20/2011 CWI/CWE/CRI/ASNT Lv II
Date

We, the undersigned, certify that the statements in this record are correct and that the welds were prepared and tested in conformance with the requirements of AASHTO/AWS D1.5M/D1.5, 2010 Bridge Welding Code

Manufacturer or Contractor: Seismic Energy Products

Certified By: Date

Vermont Agency of Transportation
RECEIVED
CK'D BY ____ OK'D BY JC
February 13, 2015
RESUBMIT NO Approved
BY KH DATE 3-5-2015

REVISIONS			
REV.	DESCRIPTION	BY	DATE
A	SUBMITTAL	MS	2/10/2015
B	CHANGES PER MARK-UPS DATED 2/13/15	AL	3/2/2015

GENERAL NOTES

1. ALL BEARINGS SHALL CONFORM TO THE STATE OF VERMONT AGENCY OF TRANSPORTATION STANDARD SPECIFICATIONS, LATEST EDITION, SECTIONS 531 AND 731 AND THE CONTRACT PRINTS, UNLESS NOTED OTHERWISE.

2. MATERIALS:
   - ELASTOMER.....50 DURO NATURAL, GRADE 4 (110 ± 15 psi)
   - CARBON STEEL SHIMS.....ASTM A1011, GR. 40
   - SOLE PLATES.....ASTM A36 (AASHTO M270 GRADE 36)
   - SIDE RETAINERS.....ASTM A36 (AASHTO M270 GRADE 36) B

3. TOLERANCES:
   - LAMINATED ELASTOMERIC PADS:
     - DUROMETER.....± 5
     - OVERALL THICKNESS (VERTICAL) OVER 1 1/4".....-0, +1/4"
     - OVERALL LENGTH & WIDTH (HORIZONTAL) 36" OR LESS.....-0, +1/4"
     - THICKNESS OF INDIVIDUAL
       - LAYERS OF ELASTOMER.....±1/8"
       - PARALLELISM:
         - TOP.....0.005 rad
         - SIDES.....1/4"
     - EDGE COVER.....-0, +1/8"
     - HOLE/SLOT SIZE.....±1/8"
     - HOLE/SLOT POSITION.....±1/8"
   - PLATES:
     - OVERALL THICKNESS (VERTICAL).....0.001 X NOM.
     - OVERALL LENGTH & WIDTH (HORIZONTAL).....±1/4"
     - FLATNESS.....0.001 X NOM" B
     - BEVEL SLOPE.....±0.002 rad

4. MARKINGS:
   EACH BEARING SHALL BE PERMANENTLY MARKED IN A LOCATION THAT IS VISIBLE WHEN THE DEVICE IS INSTALLED IN THE COMPLETED STRUCTURE. MARKING SHALL BE SEP STANDARD:
   - CONTRACT/ORDER #
   - LOT#
   - BEARING ID # (MK. #)
   - LOCATION/BRIDGE #
   - ELASTOMER TYPE AND GRADE
   - ORIENTATION (WHERE APPLICABLE)

   SEE ISOMETRIC VIEW ON THIS SHEET FOR MARKING DETAILS

5. TESTING: PER SPECIFICATIONS CITED IN GENERAL NOTE #1.

6. PAINT/FINISH: EXTERNAL PLATES, RETAINER ANGLES AND HARDWARE HOT DIP GALVANIZED PER ASTM A123 OR ASTM A153 AS APPLICABLE.

7. SEP TO PROVIDE ONLY THE ITEMS SHOWN ON THIS DRAWING.

8. SHIPPING: BEARINGS SHALL BE PACKAGED IN SUCH A MANNER TO ENSURE THAT DURING SHIPMENT AND STORAGE THE BEARINGS WILL BE PROTECTED AGAINST DAMAGE FROM HANDLING, WEATHER OR ANY NORMAL HAZARD.

9. REPRESENTATIVE
   - CUSTOMER SERVICE: STEVE BOWMAN.....903-677-4318
   - TECHNICAL: MIKE SPELLMAN.....903-677-4342

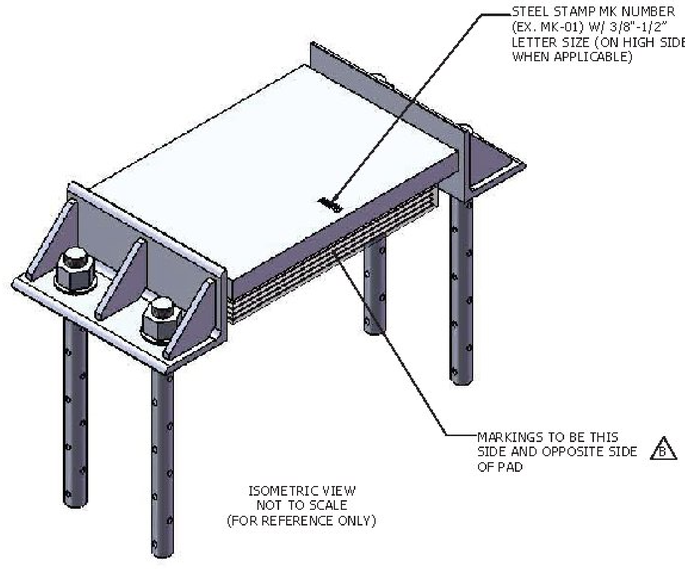

ISOMETRIC VIEW
NOT TO SCALE
(FOR REFERENCE ONLY)

Vermont Agency of Transportation
RECEIVED
CK'D BY JC/RK OK'D BY WL
March 2, 2015
RESUBMIT NO Approved
BY KH DATE 3-5-2015

ALL DIMENSIONS ARE IN INCHES UNLESS OTHERWISE SPECIFIED

NOTE

INFORMATION SET FORTH IN THIS DRAWING IS PROPRIETARY WITH Seismic Energy Products, Inc. THIS DRAWING SHALL NOT BE REPRODUCED, COPIED, LOANED OR SUBMITTED TO OUTSIDE PARTIES FOR EXAMINATION WITHOUT OUR CONSENT EXCEPT FOR THE PURPOSE FOR WHICH IT WAS INTENDED.

PROJECT NO.	IM 091-2(79)
BRIDGE NO	43 N/S
COUNTY	WINDSOR
TOWN	HARTFORD

Seismic Energy Products, Inc.
STRUCTURAL BEARINGS FOR BRIDGES & BUILDINGS
ATHENS, TX PHONE: 903-675-9571

BEARING ASSY FOR:
STATE OF VERMONT AGENCY OF TRANSPORTATION

INTERSTATE 91 EXIT 11

CONTRACTOR: PCL CIVIL CONSTRUCTORS

DRAWN ALUTTRELL	DATE 2/9/15	PO # EM
CHECKED .	DATE .	SO NO. & ST. 61614 VT
REVIEWED MSPELLMAN	DATE 2/10/15	SHEET 1 OF 5

REVISIONS			
REV.	DESCRIPTION	BY	DATE
A	SUBMITTAL	MS	2/10/2015
B	CHANGES PER MARK-UPS DATED 2/13/15	AL	3/2/2015

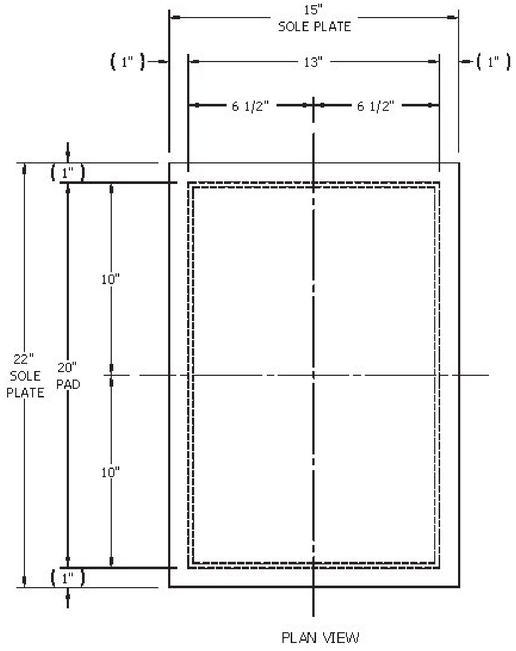

PLAN VIEW

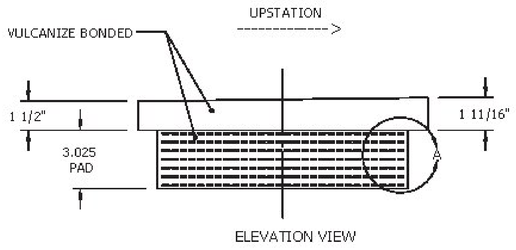

ELEVATION VIEW

MK.01
BEARING PADS
@ ABUTS 1 & 2
(12) REQ'D

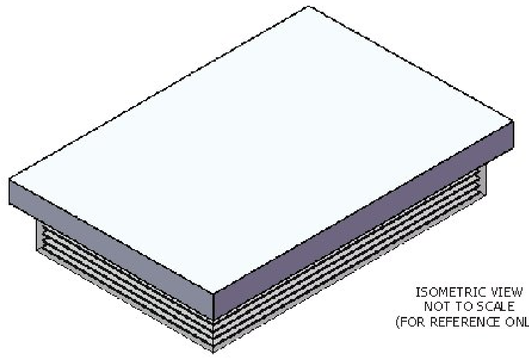

ISOMETRIC VIEW
NOT TO SCALE
(FOR REFERENCE ONLY)

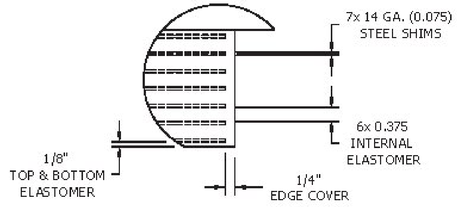

DETAIL A

Vermont Agency of Transportation
RECEIVED
CK'D BY JC/RK OK'D BY WL
March 2, 2015
RESUBMIT NO Approved
BY KH DATE 3-6-2015

ALL DIMENSIONS ARE IN INCHES
UNLESS OTHERWISE SPECIFIED

NOTE

INFORMATION SET FORTH IN THIS DRAWING IS PROPRIETARY WITH Seismic Energy Products, Inc. THIS DRAWING SHALL NOT BE REPRODUCED, COPIED, LOANED OR SUBMITTED TO OUTSIDE PARTIES FOR EXAMINATION WITHOUT OUR CONSENT EXCEPT FOR THE PURPOSE FOR WHICH IT WAS INTENDED.

PROJECT NO.	IM 091-2(79)
BRIDGE NO	43 N/S
COUNTY	WINDSOR
TOWN	HARTFORD

Seismic Energy Products, Inc.
STRUCTURAL BEARINGS FOR BRIDGES & BUILDINGS
ATHENS, TX PHONE: 903-675-8571

BEARING ASSY FOR:
STATE OF VERMONT AGENCY OF TRANSPORTATION

INTERSTATE 91 EXIT 11

CONTRACTOR:
PCL CIVIL CONSTRUCTORS

DRAWN ALUTTRELL	DATE 2/9/15	PO # EM
CHECKED .	DATE .	SO NO. & ST. **61614 VT**
REVIEWED MSPELLMAN	DATE 2/10/15	SHEET 2 OF 5

REVISIONS			
REV.	DESCRIPTION	BY	DATE
A	SUBMITTAL	MS	2/10/2015
B	CHANGES PER MARK-UPS DATED 2/13/15	AL	3/2/2015

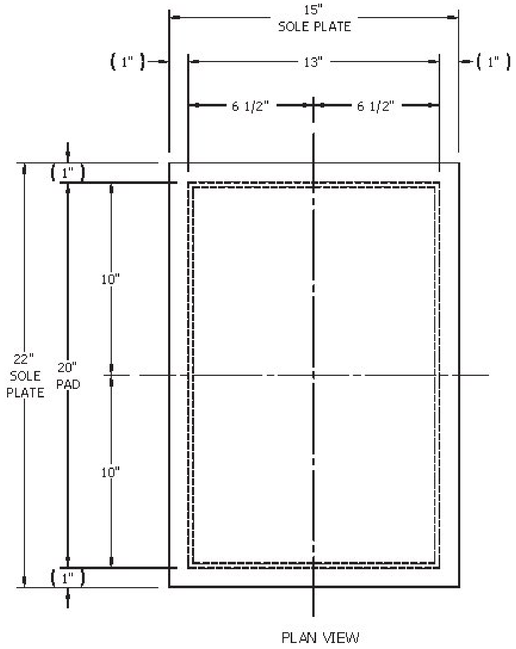

PLAN VIEW

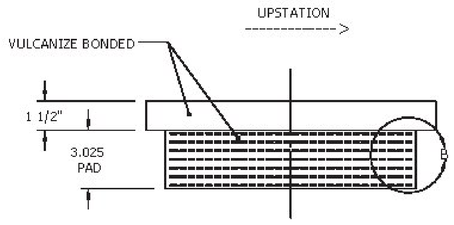

ELEVATION VIEW

MK.02
BEARING PADS
@ ABUT 3
(6) REQ'D

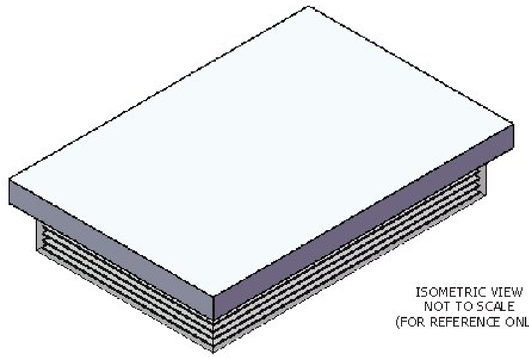

ISOMETRIC VIEW
NOT TO SCALE
(FOR REFERENCE ONLY)

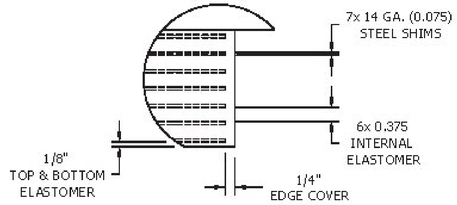

DETAIL B

Vermont Agency of Transportation
RECEIVED
CK'D BY JC/RK OK'D BY WL
March 2, 2015
RESUBMIT NO Approved
BY KH DATE 3-5-2015

ALL DIMENSIONS ARE IN INCHES
UNLESS OTHERWISE SPECIFIED

NOTE

INFORMATION SET FORTH IN THIS DRAWING IS PROPRIETARY WITH Seismic Energy Products, Inc. THIS DRAWING SHALL NOT BE REPRODUCED, COPIED, LOANED OR SUBMITTED TO OUTSIDE PARTIES FOR EXAMINATION WITHOUT OUR CONSENT EXCEPT FOR THE PURPOSE FOR WHICH IT WAS INTENDED.

PROJECT NO.	IM 091-2(79)
BRIDGE NO	43 N/S
COUNTY	WINDSOR
TOWN	HARTFORD

Seismic Energy Products, Inc.
STRUCTURAL BEARINGS FOR BRIDGES & BUILDINGS
ATHENS, TX PHONE: 903-675-8571

BEARING ASSY FOR:
STATE OF VERMONT AGENCY OF TRANSPORTATION

INTERSTATE 91 EXIT 11

CONTRACTOR:
PCL CIVIL CONSTRUCTORS

DRAWN ALUTTRELL	DATE 2/9/15	PO # EM
CHECKED .	DATE .	SO NO. & ST. **61614 VT**
REVIEWED MSPELLMAN	DATE 2/10/15	SHEET 3 OF 5

REVISIONS			
REV.	DESCRIPTION	BY	DATE
A	SUBMITTAL	MS	2/10/2015
B	CHANGES PER MARK-UPS DATED 2/13/15	AL	3/2/2015

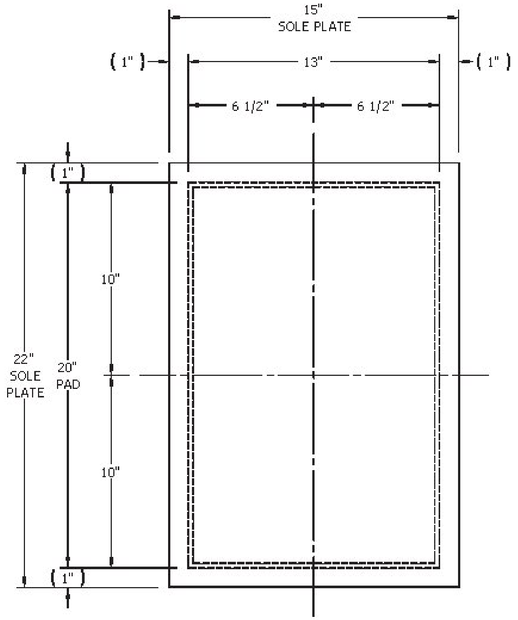

PLAN VIEW

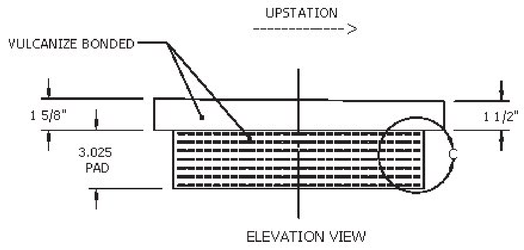

ELEVATION VIEW

MK.03
BEARING PADS
@ ABUT 4
(6) REQ'D

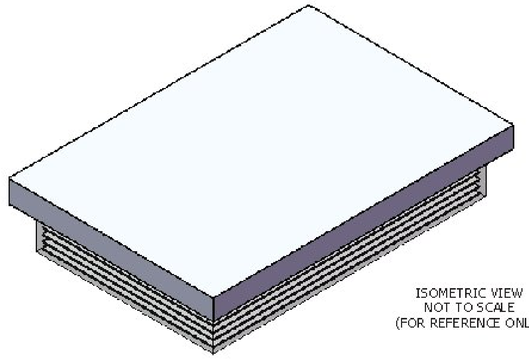

ISOMETRIC VIEW
NOT TO SCALE
(FOR REFERENCE ONLY)

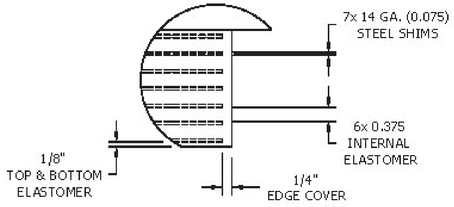

DETAIL C

Vermont Agency of Transportation
RECEIVED
CK'D BY JC/RK OK'D BY WL
March 2, 2015
RESUBMIT NO **Approved**
BY KH DATE 3-5-2015

ALL DIMENSIONS ARE IN INCHES
UNLESS OTHERWISE SPECIFIED

NOTE

INFORMATION SET FORTH IN THIS DRAWING IS PROPRIETARY WITH Seismic Energy Products, Inc. THIS DRAWING SHALL NOT BE REPRODUCED, COPIED, LOANED OR SUBMITTED TO OUTSIDE PARTIES FOR EXAMINATION WITHOUT OUR CONSENT EXCEPT FOR THE PURPOSE FOR WHICH IT WAS INTENDED.

PROJECT NO.	IM 091-2(79)
BRIDGE NO.	43 N/S
COUNTY	WINDSOR
TOWN	HARTFORD

Seismic Energy Products, Inc.
STRUCTURAL BEARINGS FOR BRIDGES & BUILDINGS
ATHENS, TX PHONE: 903-675-8571

BEARING ASSY FOR:
STATE OF VERMONT AGENCY OF TRANSPORTATION

INTERSTATE 91 EXIT 11

CONTRACTOR:
PCL CIVIL CONSTRUCTORS

DRAWN ALUTTRELL	DATE 2/9/15	PO # EM
CHECKED .	DATE .	SO NO. & ST. **61614 VT**
REVIEWED MSPELLMAN	DATE 2/10/15	SHEET 4 OF 5

REVISIONS			
REV.	DESCRIPTION	BY	DATE
A	SUBMITTAL	MS	2/10/2015
B	CHANGES PER MARK-UPS DATED 2/13/15	AL	3/2/2015

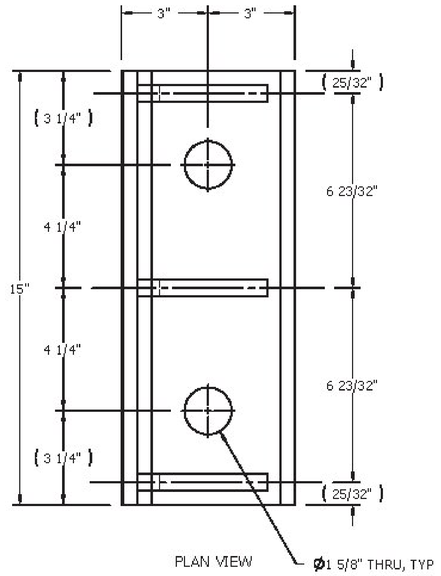

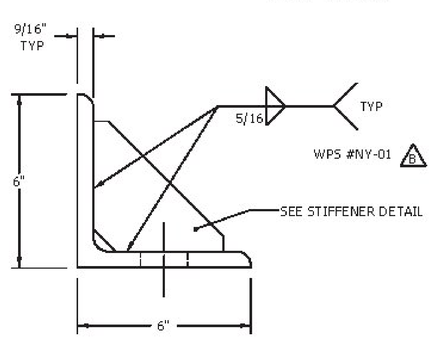

MK.04
RETAINERS
(48) REQ'D
(2 @ EACH BEARING)

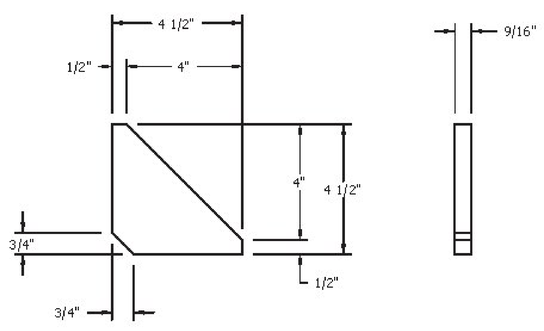

STIFFENER
(144) REQ'D
(3 @ EACH ANGLE ASSY)

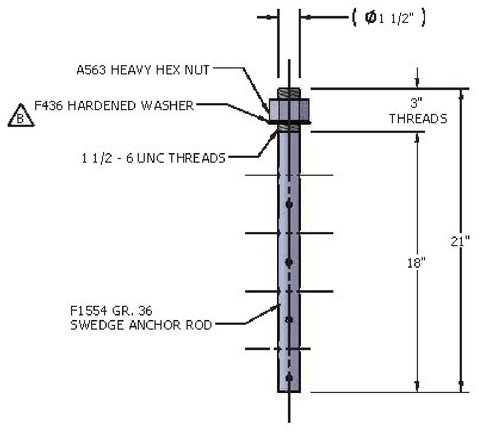

MK.05
ANCHOR ROD ASSEMBLY
(96) REQ'D
(4 @ EACH BEARING ASSY)

Vermont Agency of Transportation
RECEIVED
CK'D BY JC/RK OK'D BY WL
March 2, 2015
RESUBMIT NO Approved
BY KH DATE 3-6-2015

ALL DIMENSIONS ARE IN INCHES UNLESS OTHERWISE SPECIFIED

NOTE

INFORMATION SET FORTH IN THIS DRAWING IS PROPRIETARY WITH Seismic Energy Products, Inc. THIS DRAWING SHALL NOT BE REPRODUCED, COPIED, LOANED OR SUBMITTED TO OUTSIDE PARTIES FOR EXAMINATION WITHOUT OUR CONSENT EXCEPT FOR THE PURPOSE FOR WHICH IT WAS INTENDED.

PROJECT NO.	IM 091-2(79)
BRIDGE NO	43 N/S
COUNTY	WINDSOR
TOWN	HARTFORD

Seismic Energy Products, Inc.
STRUCTURAL BEARINGS FOR BRIDGES & BUILDINGS
ATHENS, TX PHONE: 903-675-8571

BEARING ASSY FOR:
STATE OF VERMONT AGENCY OF TRANSPORTATION

INTERSTATE 91 EXIT 11

CONTRACTOR: PCL CIVIL CONSTRUCTORS

DRAWN ALUTTRELL	DATE 2/9/15	PO # EM
CHECKED .	DATE .	SO NO. & ST. 61614 VT
REVIEWED MSPELLMAN	DATE 2/10/15	SHEET 5 OF 5

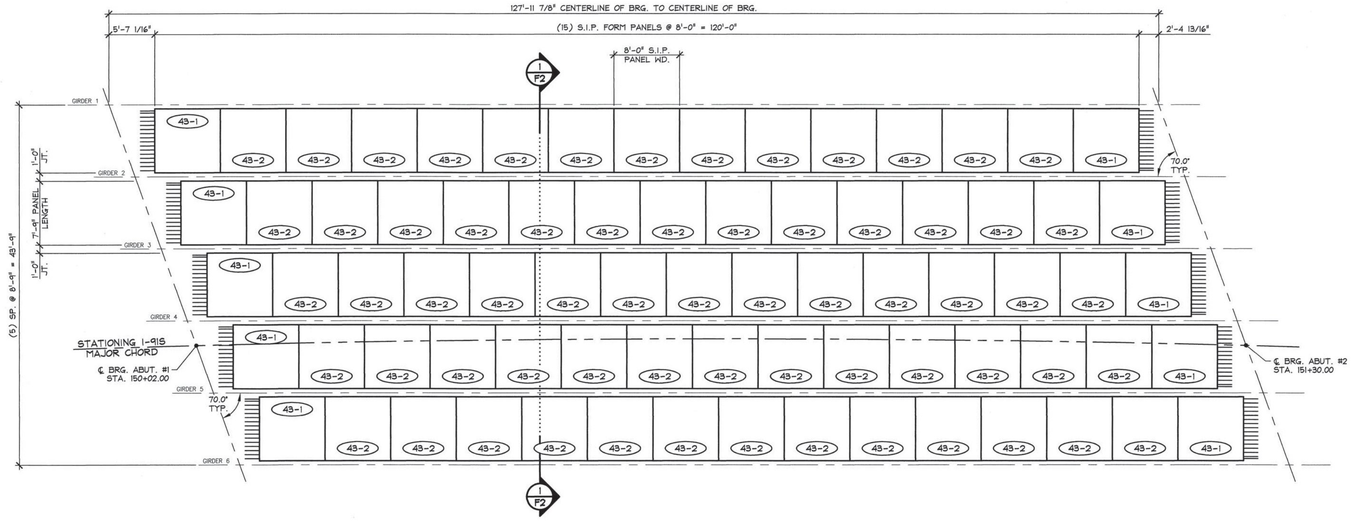

1 F1 PRESTRESSED STAY-IN-PLACE FORM PANEL LAYOUT (BRIDGE 43S)

1/8" = 1'-0"

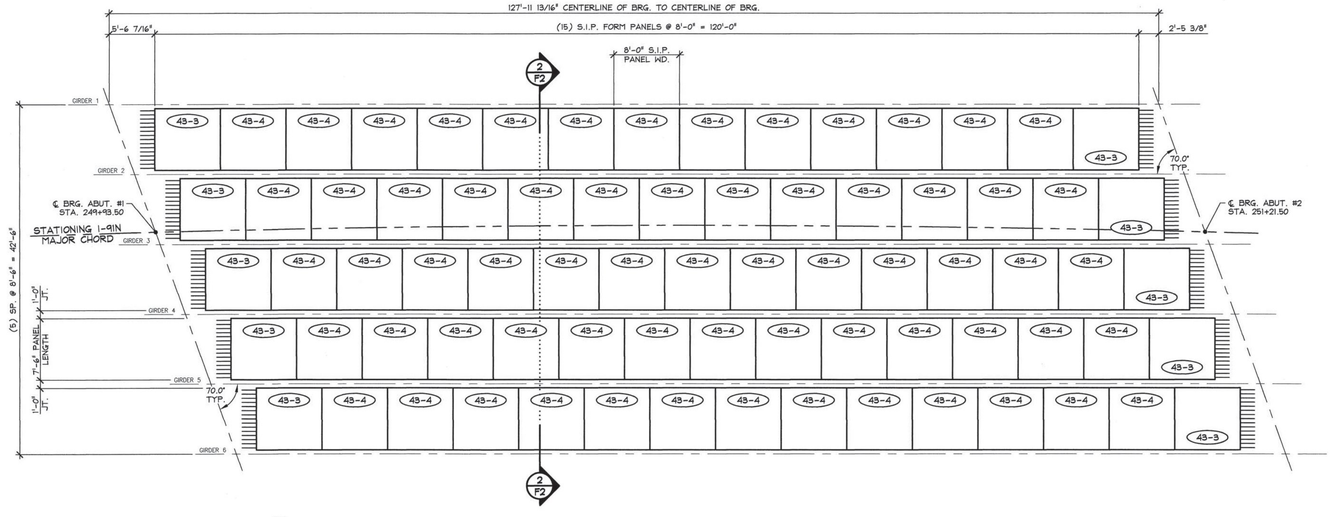

2 F1 PRESTRESSED STAY-IN-PLACE FORM PANEL LAYOUT (BRIDGE 43N)

1/8" = 1'-0"

GENERAL NOTES

1. MIN. CONCRETE STRENGTH AT 28 DAYS SHALL BE 5,000 PSI.
2. MIN. CONCRETE STRENGTH AT STRESS TRANSFER SHALL BE 4,000 PSI.
3. REINFORCING STEEL SHALL BE ~~GR-60, ASTM A-615 (AASHTO M31)~~, AND SHALL BE STAINLESS STEEL.
4. PRESTRESSING STRANDS SHALL CONFORM TO ASTM A-416 (AASHTO M203M), AND SHALL CONSIST OF 3/8"ø x 270 KSI 7 WIRE LOW RELAXATION STRANDS.
5. PRESTRESSING STRANDS SHALL EACH BE PULLED TO HAVE A NET TENSION OF 17.2 K (U.N.O.) AFTER ACCOUNTING FOR CHUCK SLIPPAGE. TENSION SHALL BE VERIFIED BY MEASURING STRAND ELONGATION, (SEE EXAMPLE ELONGATION CALCULATION AND TENSIONING PROCEDURE, THIS SHEET).
6. ENDS OF PRESTRESSING STRANDS SHALL PROJECT 6" MIN. FROM EACH END OF PANEL
7. THE TOPS OF THE PANELS SHALL BE BROOMED TO A SURFACE ROUGHNESS OF 1/16" (U.N.O.) (BROOM DIRECTION PARALLEL TO STRANDS).
8. PANELS SHALL BE HANDLED AND ERECTED USING THE LIFTING INSERTS ONLY. THE MINIMUM SLING ANGLE FROM THE HORIZONTAL SHALL BE 60°. PANELS SHALL BE STORED AND TRANSPORTED WITH TIMBER SUPPORTS WITHIN 2'-0" OF THE PANEL ENDS, UNLESS APPROVED BY J.P. CARRARA & SONS, INC.
9. DESIGN MIX: J.P.C. BRIDGE MIX #425M (NO DCI)
10. QUALITY CONTROL PROCEDURES ARE IN ACCORDANCE WITH PCI REQUIREMENTS, CONTRACT DOCUMENTS & SPECIFICATIONS. J.P. CARRARA & SONS, INC. IS A PCI CERTIFIED PLANT.
11. THE ENGINEER WILL BE NOTIFIED AT LEAST 14 DAYS PRIOR TO THE SCHEDULED START OF CASTING AND AT LEAST 2 DAYS BEFORE THE ACTUAL WORK BEGINS.
12. CURING METHOD: AS SOON AS THE TOP OF THE PANEL IS FINISHED A COVER OF POLY AND A LAYER OF HOMOSOTE, (OR BLUEBOARD) WILL BE PLACED OVER THE PANEL IN A MANNER THAT WILL NOT DISTURB THE BROOM FINISH. THE DESIRED CURING TEMPERATURE RANGE SHALL NOT DROP BELOW 70°F. THE TEMPERATURE SHALL BE RECORDED BY AUTOMATIC SENSOR INSTRUMENTS ON GRAPH CHARTS SPACED NOT MORE THAN 50 FEET APART & WILL CONTINUE UNTIL RELEASE STRENGTH IS ACHIEVED (NATURAL CURE WITH NO EXTERNAL HEAT APPLIED). EACH CHART SHALL BE MARKED AND GIVEN TO THE INSPECTOR (IF APPLICABLE).
13. THE DRILLING OF HOLES OR USE OF POWER ACTUATED TOOLS ON PANELS SHALL NOT BE PERMITTED.
14. THE PANELS SHALL BE ORIENTED AND ERECTED WITH THE MARK-END AS SHOWN ON PLANS.
15. THE GENERAL CONTRACTOR IS RESPONSIBLE FOR FORMING THE END OF THE DECK SLAB PRIOR TO CASTING DECK.

ASTM A 955 (See 2011 General Special Provisions Section 713.01(f) for allowable UNS Designations)

EXAMPLE PRESTRESSING STRAND ELONGATION CALC. AND TENSIONING

(NOT TO BE USED FOR CONSTRUCTION)

SIZE & GRADE: 3/8"ø x 270 KSI

AREA: 0.085 IN^2

TENSION: 17,200 LBS. EACH STRAND

GRIP TO GRIP: 120'-6" = 120.5'

Es = 28,600,000 PSI (ASSUMED FOR THESE CALCULATIONS; VALUE TO BE OBTAINED FOR STRAND SPOOL ACTUALLY USED)

EXAMPLE: $\Delta = \frac{PL}{AE} = \frac{(17{,}200 - 3{,}000) \times 120.5 \times 12}{0.085 \times 28{,}600{,}000} = 8.45"$

THEREFORE: TOLERANCES: ± 5%

Δ UPPER LIMIT = 1.05 x 8.45" = 8.87" = 8 7/8"

Δ LOWER LIMIT = 0.95 x 8.45" = 8.03" = 8"

EXTRA FORCE REQUIRED TO COMPENSATE FOR 1/2" CHUCK SLIPPAGE:

$\Delta P = \frac{0.5 \times 14{,}200}{8.45} = 840$ LBS.

TOTAL TENSIONING FORCE = 17,200 + 840 = 18,040 LBS.

18,040 LBS

STRAND TENSIONING PROCEDURE:

1. PULL EACH STRAND INITALLY TO 3,000 LBS.# AND MARK STRAND.
2. THEN PULL EACH STRAND TO A TOTAL TENSION OF ~~18,404 LBS.~~# AND MEASURE ELONGATION AFTER SEATING. IT MUST BE BETWEEN 8" AND 8 7/8".

NOTE: FORCES READ ON STRESSING JACK GAUGES MUST BE MADE TO CORRESPOND TO ABOVE VALUES BASED ON CALIBRATION DATA FOR SPECIFIC JACK USED.

APPROVAL STAMP:

Vermont Agency of Transportation

RECEIVED

CK'D BY RK OK'D BY WL

January 23, 2015

RESUBMIT NO Approved AsNoted

BY KH DATE 2-18-2015

J.P. CARRARA & SONS INC.
Precast & Prestress Manufacturer
2464 CASE STR., MIDDLEBURY, VERMONT 05753 Phone:(802)388-6361 Fax:(802)388-9010

PCL CONSTRUCTION
CONTRACTOR
TAMPA, FLORIDA

STATE OF VERMONT AGENCY OF TRANSPORTATION
COUNTY OF WINDSOR

TOWN OF HARTFORD
INTERSTATE 91 EXIT 11
BRIDGE NO.: 43 N/S PROJECT NO.: IM 091-2(79)

SUPERSTRUCTURE PLANS

DATE: JAN. 20, 2015
SCALE: NOTED
CHKD: - DFTM: B.L.
JOB NO: 23455-015
DWG. NO: F1

F:\VT-Bridges\23455-15 Hartford\23455-F1.dwg, 1/21/2015 9:27:39 AM

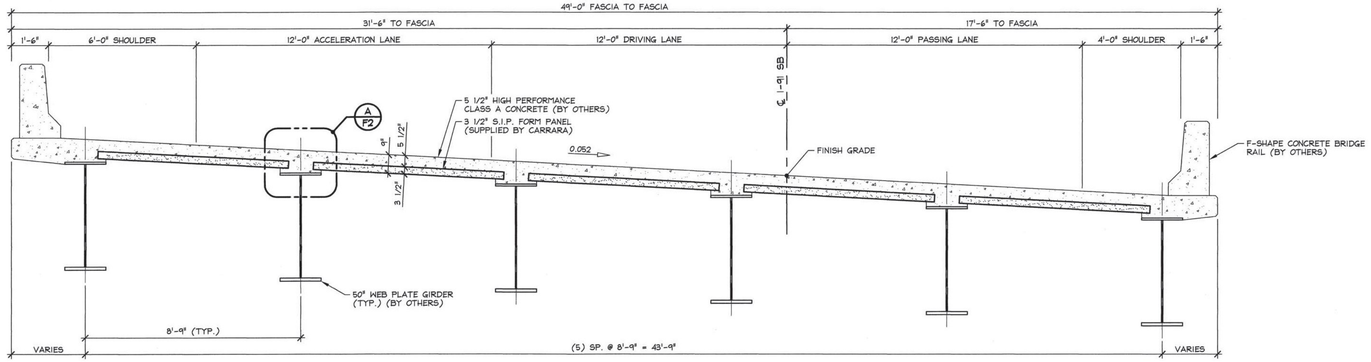

1 / F2 TRANSVERSE SECTION (BRIDGE 43S)

3/8" = 1'-0"

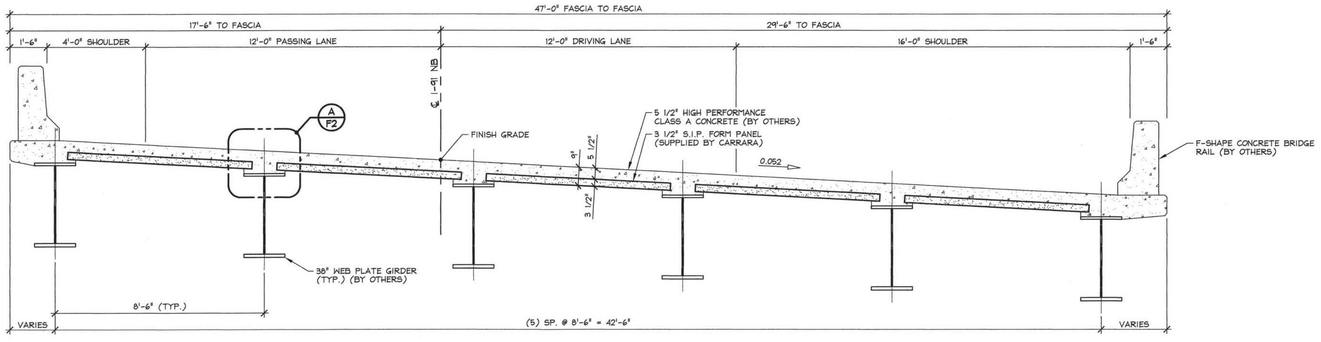

2 / F2 TRANSVERSE SECTION (BRIDGE 43N)

3/8" = 1'-0"

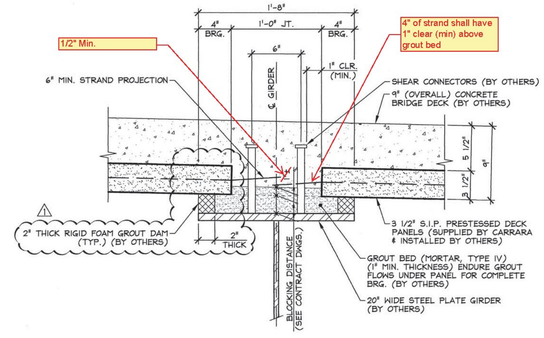

A / F2 SECTION

1 1/2" = 1'-0"

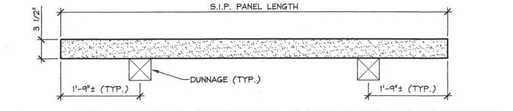

TYP. STORAGE & SHIPPING DUNNAGE LOCATIONS

N.T.S.

1 1-23-15 REVISED AS NOTED

APPROVAL STAMP:

Vermont Agency of Transportation
RECEIVED
CK'D BY RK OK'D BY WL
January 23, 2015
RESUBMIT NO Approved AsNoted
BY KH DATE 2-18-2015

J.P. CARRARA & SONS INC.
Precast & Prestress Manufacturer
2464 OSE STR., MIDDLEBURY, VERMONT 05753 Phone:(802)388-6361 Fax:(802)388-9010

PCL CONSTRUCTION
CONTRACTOR
TAMPA, FLORIDA

STATE OF VERMONT AGENCY OF TRANSPORTATION
COUNTY OF WINDSOR

DATE: JAN. 20, 2015
SCALE: NOTED
CHKD: - DFTM: B.L.
JOB NO: 23455-015

TOWN OF HARTFORD
INTERSTATE 91 EXIT 11
BRIDGE NO.: 43 N/S PROJECT NO.: IM 091-2(79)

SUPERSTRUCTURE SECTIONS & DETAILS

DWG. NO: F2

F:\VT-Bridges\23455-15 Hartford\2345S-F2.dwg, 1/22/2015 5:47:07 PM

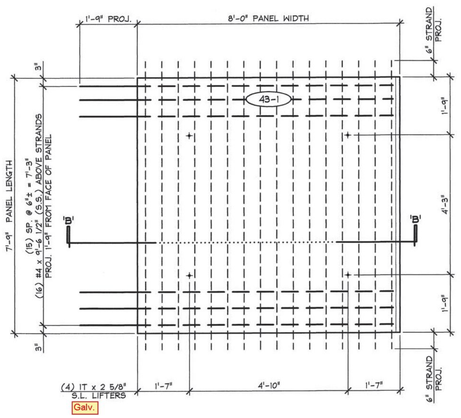

DECK PANEL - '43-1'

1/2" = 1'-0"

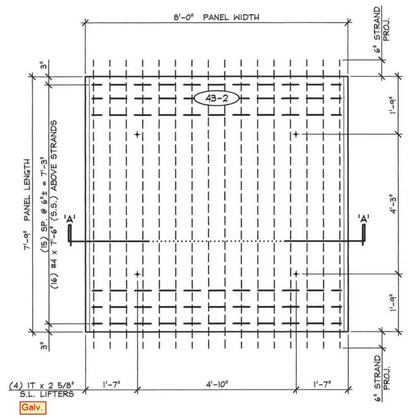

DECK PANEL - '43-2'

1/2" = 1'-0"

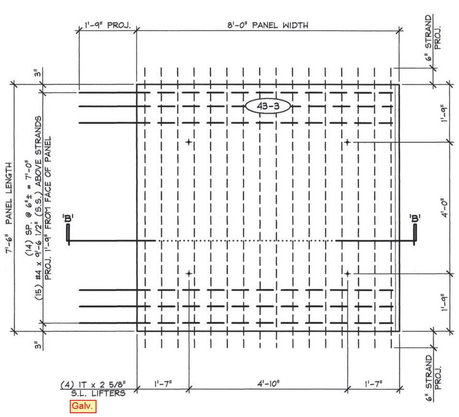

DECK PANEL - '43-3'

1/2" = 1'-0"

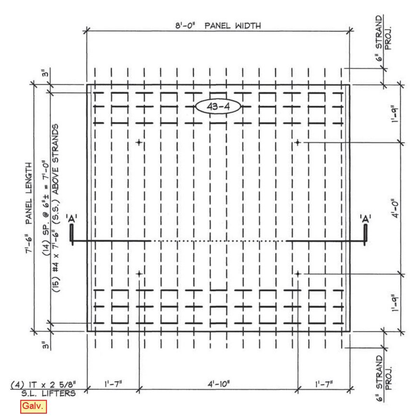

DECK PANEL - '43-4'

1/2" = 1'-0"

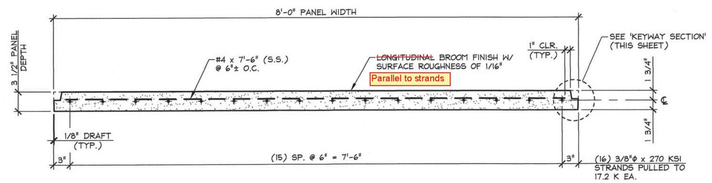

DECK PANEL SECTION - 'A-A'

1" = 1'-0"

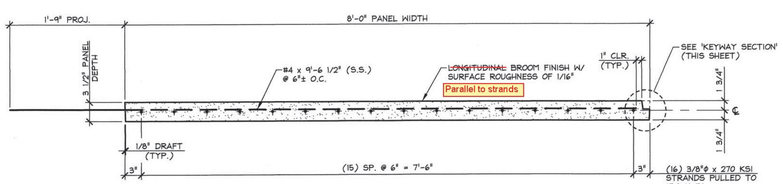

DECK PANEL SECTION - 'B-B'

1" = 1'-0"

① ③ ⑤ ⑦ ⑨ ⑪ ⑬ ⑮ ⑯ ⑭ ⑫ ⑩ ⑧ ⑥ ④ ②

DETENSIONING SCHEDULE

N.T.S.

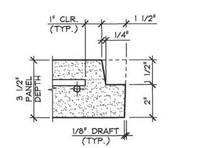

KEYWAY SECTION

3" = 1'-0"

MARK:	43-1	QTY.:	10	WT.:	1.35 T	VOL.:	0.66 cy
MARK:	43-2	QTY.:	65	WT.:	1.34 T	VOL.:	0.66 cy
MARK:	43-3	QTY.:	10	WT.:	1.30 T	VOL.:	0.64 cy
MARK:	43-4	QTY.:	65	WT.:	1.29 T	VOL.:	0.64 cy

MATERIAL LIST / PANEL

ITEM	DESCRIPTION	QTY./PANEL			
		43-1	43-2	43-3	43-4
1	#4 x 7'-6" (STAINLESS STEEL)		16		15
2	#4 x 9'-6 1/2" (STAINLESS STEEL)	16		15	
3					
4					
5					
6	1T x 2 5/8" SWIFT LIFT LIFTER (GALV.)	4	4	4	4
7					
8	~~LEVELING JACK EMBED INSERTS~~				
9					
10					
11					

⚠ 1-23-15 OMIT LEVELING JACKS

APPROVAL STAMP:

Vermont Agency of Transportation

RECEIVED

CK'D BY RK OK'D BY WL

January 23, 2015

RESUBMIT NO Approved AsNoted

BY KH DATE 2-18-2015

J.P. CARRARA & SONS INC.
Precast & Prestress Manufacturer
2464 OLDE STR., MIDDLEBURY, VERMONT 05753 Phone:(802)388-6361 Fax:(802)388-9010

PCL CONSTRUCTION
CONTRACTOR
TAMPA, FLORIDA

STATE OF VERMONT AGENCY OF TRANSPORTATION
COUNTY OF WINDSOR

TOWN OF HARTFORD
INTERSTATE 91 EXIT 11
BRIDGE NO.: 43 N/S PROJECT NO.: IM 091-2(79)

PRESTRESSED S.I.P. FORM PANEL DETAILS

DATE: JAN. 20, 2015
SCALE: NOTED
CHKD: - DFTM: B.L.
JOB NO: 23455-015
DWG. NO: P1

F:\VT-Bridges\23455-15 Hartford\23455-P1.dwg, 1/22/2015 5:44:49 PM

Structural Steel Repair Procedure

During inspection it was discovered that (2) small areas on I-91NB girder #6 were cut into with a torch. See pictures below for reference:







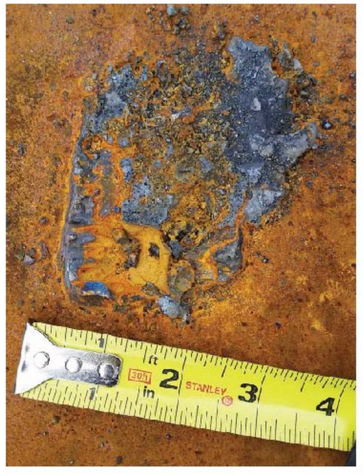

This happened when the welder cut and moved one of the legs for the fall protection. The welder has since been talked to as has the crew. If cutting of any temporary members is required grinders (not torches) are to be used. In no situation shall the permanent girders be damaged.

PCL proposes the following repair procedure:

1. **Grind off all latent materials**
2. **Fill divots with weld (E70XX)**
3. **Grind area to be flush with flange**

Vermont Agency of Transportation
RECEIVED
CK'D BY JC OK'D BY JS
June 24, 2015
RESUBMIT NO Approved
BY JS DATE 6-25-2015

WELDER, WELDING OPERATOR OR TACK WELDER QUALIFICATION TEST RECORD

Code: AASHTO/AWS D1.5M/D1.5:2010

Name: Chris Bodisher — **Identification No. 0314CB**

Welding Procedure Specification No. AWS B2.1-1-016-94R — **Date: 05/12/2015**

Variables		Record Actual Values Used in Qualification	Qualification Range
Process/Type		SMAW	SMAW
Electrode (single or multiple)		Single	Single
Current/Polarity		DCEP	DCEP
Position		2G	Flat/Horizontal
	Weld Progression	N/A	N/A
Backing (YES or NO)		Yes	With Steel Backing Only
Material/Spec.		M 270M/ M270 (A 709/A 709M) Gr. 250 [Gr. 36]	M 270M/ M270 (A 709/A 709M) Gr. 250 [Gr. 36]
Base Material			
	Thickness (Plate)		
	Groove	1"	1/8" to Unlimited
	Fillet	N/A	Flat, Horizontal
	Thickness: (Pipe/Tube)		
	Groove	N/A	1/8" to Unlimited
	Fillet	N/A	Unlimited Thickness
	Diameter: (Pipe)		
	Groove	N/A	N/A
	Fillet	N/A	N/A
Filler Metal			
	Spec. No.	AWS A5.1	AWS A5.1/A5.1M or AWS A5.5/A5.5M
	Class	E7018	E7018
F-No.		F4	F4 Only
Gas/Flux Type		N/A	N/A
Other		N/A	N/A

Vermont Agency of Transportation
RECEIVED
CK'D BY JC OK'D BY JS
June 24, 2015
RESUBMIT NO Approved
BY JS DATE 6-25-2015

Visual Inspection: Acceptable YES or NO

Guided Bend Test Results

Type	Results	Type	Results
Side	Accept	N/A	
Side	Accept	N/A	

Fillet Test Results

Appearance: N/A — Fillet Size: N/A

Fracture Test Root Penetration: N/A — Macro etch: N/A

(Describe the location, nature and size of any crack or tearing of specimen.)
N/A

Inspected by: Richard Irick — Test No: N/A

Organization: VT Nondestructive Testing — Date: N/A

Radiographic Results

Film Identification Number	Results	Remarks	Film Identification Number	Results	Remarks

Interpreted by: N/A — Test Number: N/A

Organization: N/A — Date: N/A

We, the undersigned, certify that the statements in this record are correct and that the test welds were prepared, welded and tested in accordance with the requirements of Section 5 of AASHTO/AWS D1.5M/D1.5:2010 Bridge Welding Code

Inspected by: *Richard Irick AWS/CWI* — Witnessed by: Richard Irick

Contractor: PCL Civil Constructors Inc. — Date: 5/12/2015

Richard F Irick
CWI 99060221
QC1 EXP. 6/1/2017

VT Nondestructive Testing

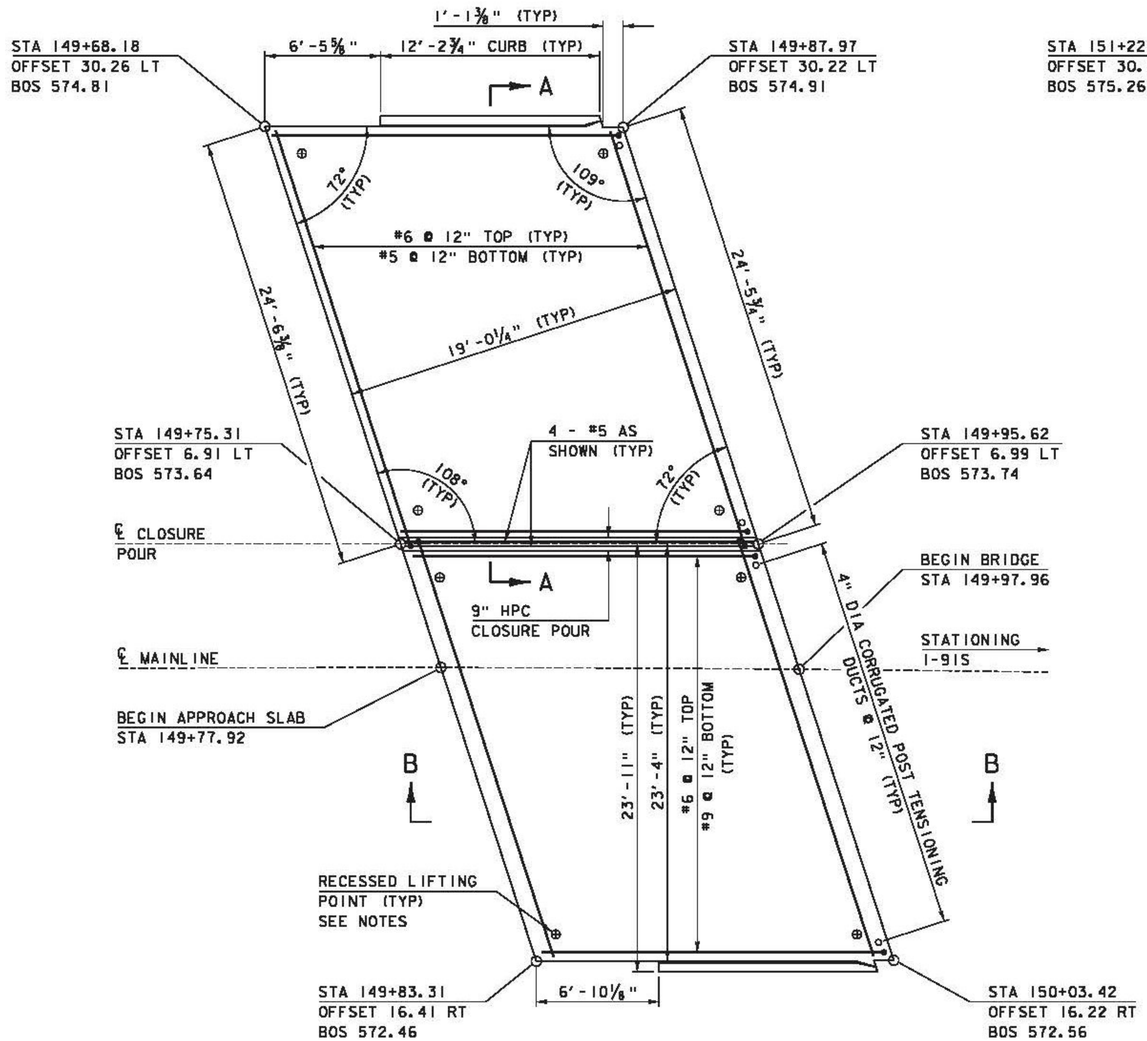

APPROACH SLAB 1 PLAN

SCALE ¼" = 1'-0"

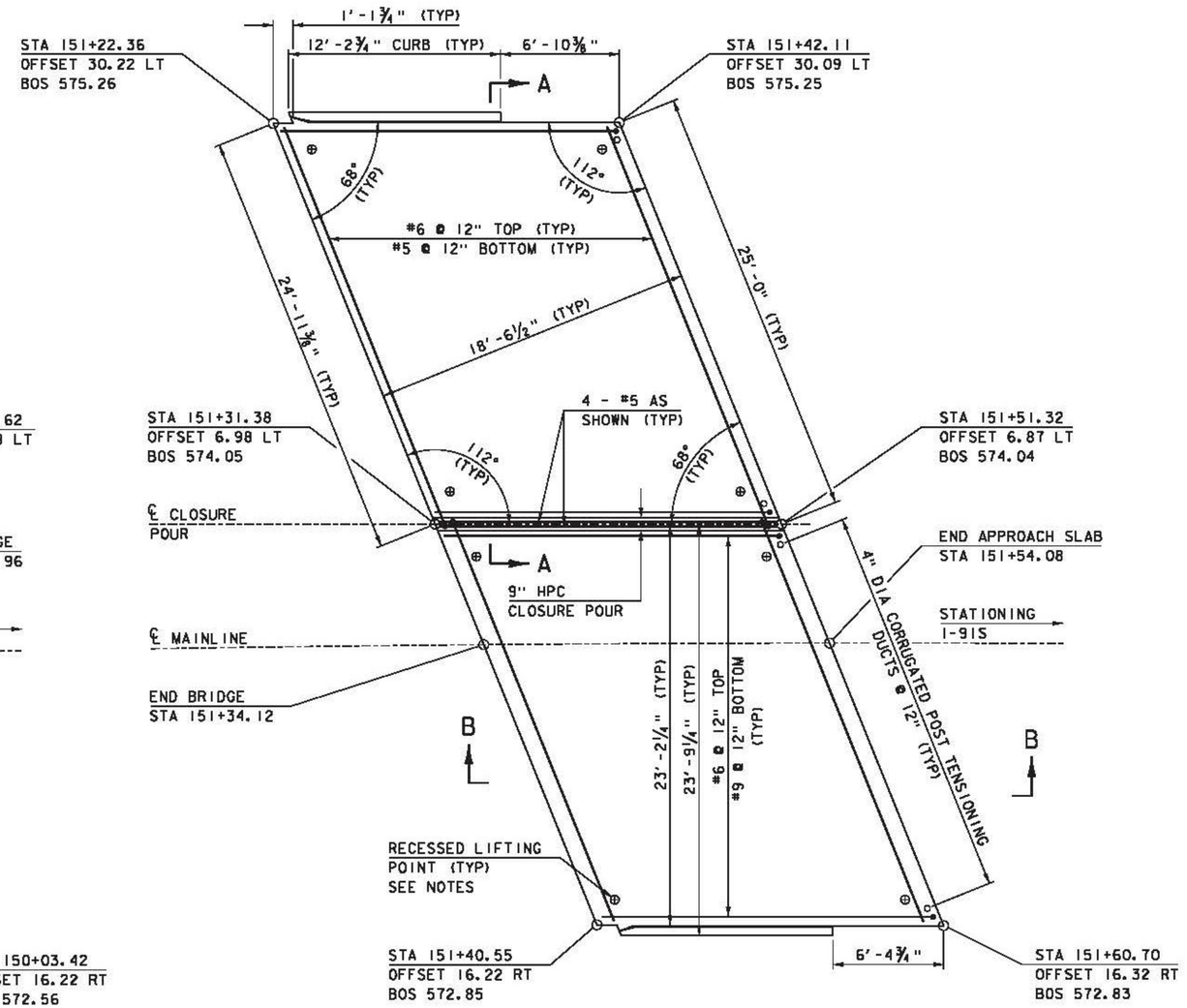

APPROACH SLAB 2 PLAN

SCALE ¼" = 1'-0"

NOTES:

1) ALL APPROACH SLAB REINFORCING STEEL SHALL BE LEVEL II OR HIGHER.

2) BOS = BOTTOM OF SLAB

3) LIFTING POINTS SAHLL BE DESIGNED BY OTHERS AND CALCULATIONS INCLUDED WITH SUBMITTAL.

NOTE:

NF = NEAR FACE
FF = FAR FACE
EF = EACH FACE
3" CLEAR, UNLESS OTHERWISE SPECIFIED ON THE PLANS.
2'-2" BAR LAP UNLESS OTHERWISE SPECIFIED ON THE PLANS.

PROJECT NAME: HARTFORD	
PROJECT NUMBER: IM 091-2(79)	
FILE NAME: sl2al32apslabs_43S.dgn	PLOT DATE: 15-DEC-2014
PROJECT LEADER: K. HIGGINS	DRAWN BY: K. FRIEDLAND
DESIGNED BY: G. LAROCHE	CHECKED BY: W. LAMMER
APPROACH SLAB DETAILS 43S	SHEET 97 OF 166

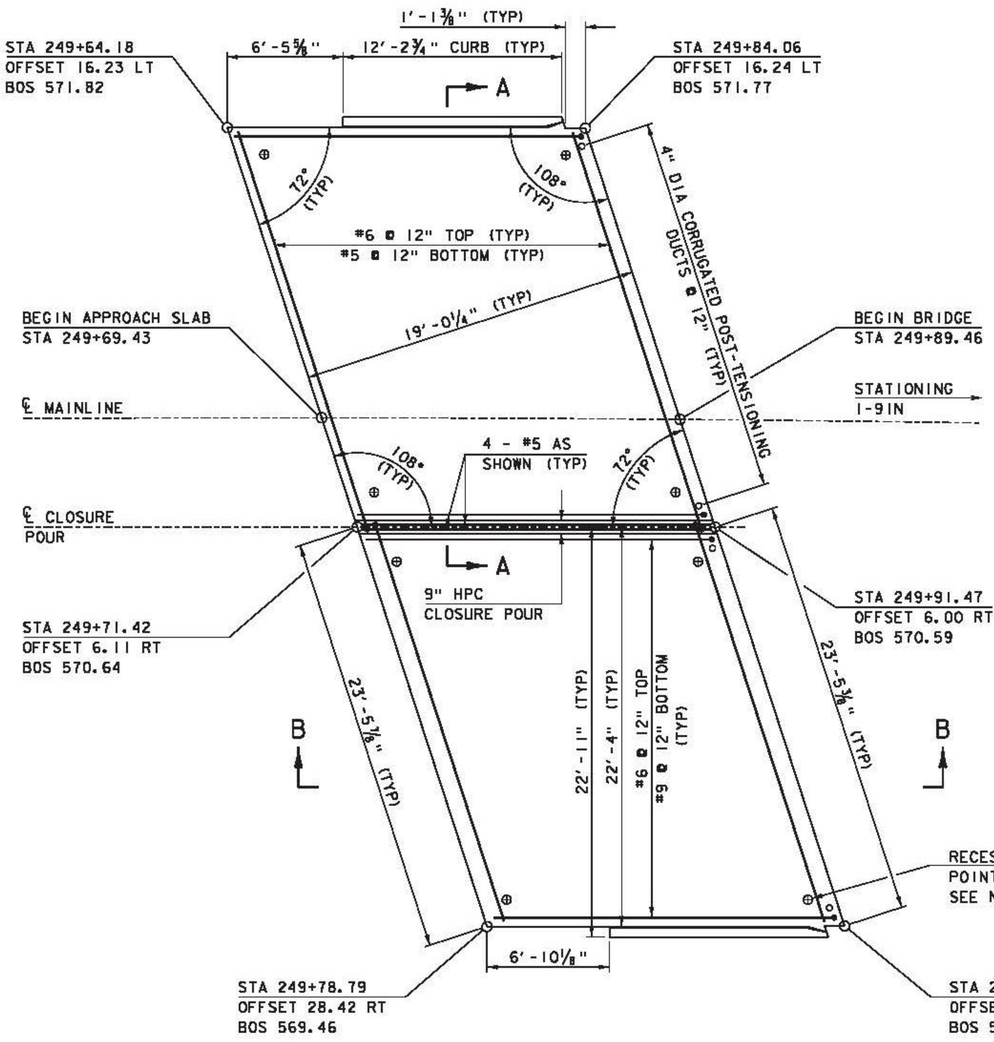

APPROACH SLAB 3 PLAN

SCALE ¼" = 1'-0"

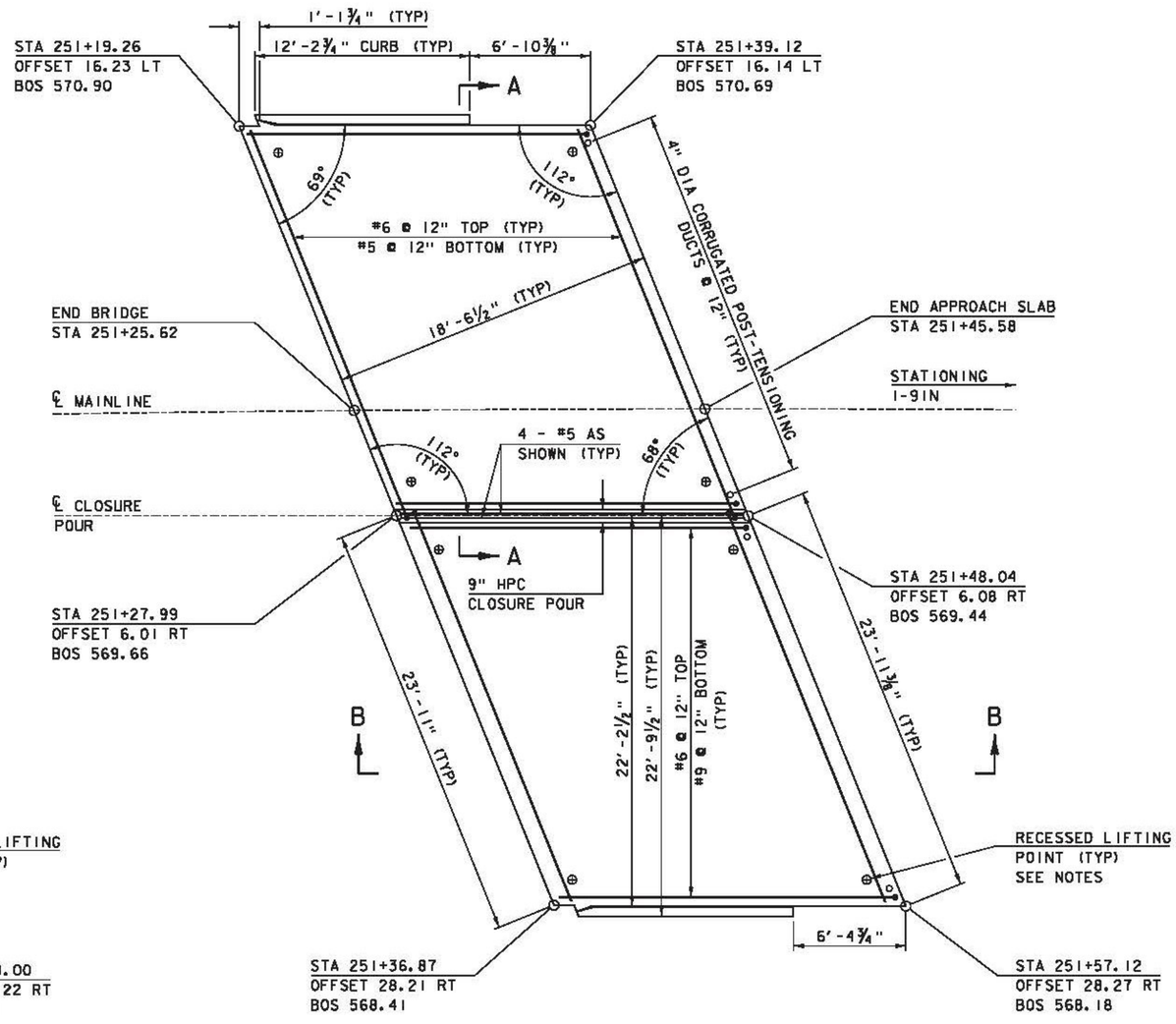

APPROACH SLAB 4 PLAN

SCALE ¼" = 1'-0"

NOTES:

1) ALL APPROACH SLAB REINFORCING STEEL SHALL BE LEVEL II OR HIGHER.

2) BOS = BOTTOM OF SLAB

3) LIFTING POINTS SAHLL BE DESIGNED BY OTHERS AND CALCULATIONS INCLUDED WITH SUBMITTAL.

NOTE:

NF = NEAR FACE
FF = FAR FACE
EF = EACH FACE
3" CLEAR, UNLESS OTHERWISE SPECIFIED ON THE PLANS.
2'-2" BAR LAP UNLESS OTHERWISE SPECIFIED ON THE PLANS.

PROJECT NAME: HARTFORD	
PROJECT NUMBER: IM 091-2(79)	
FILE NAME: s12a132apslabs_43N.dgn	PLOT DATE: 15-DEC-2014
PROJECT LEADER: K. HIGGINS	DRAWN BY: K. FRIEDLAND
DESIGNED BY: G. LAROCHE	CHECKED BY: W. LAMMER
APPROACH SLAB DETAILS 43N	SHEET 98 OF 166

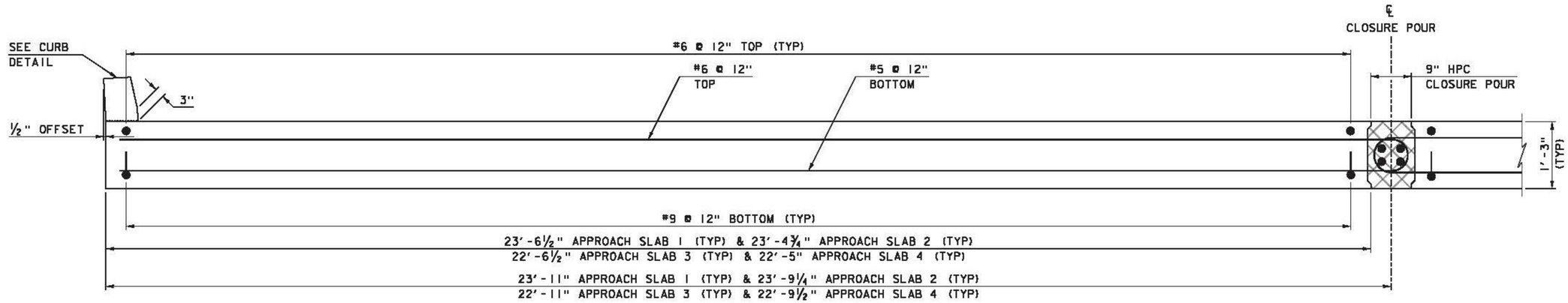

SECTION A-A

SCALE 1" = 1'-0"

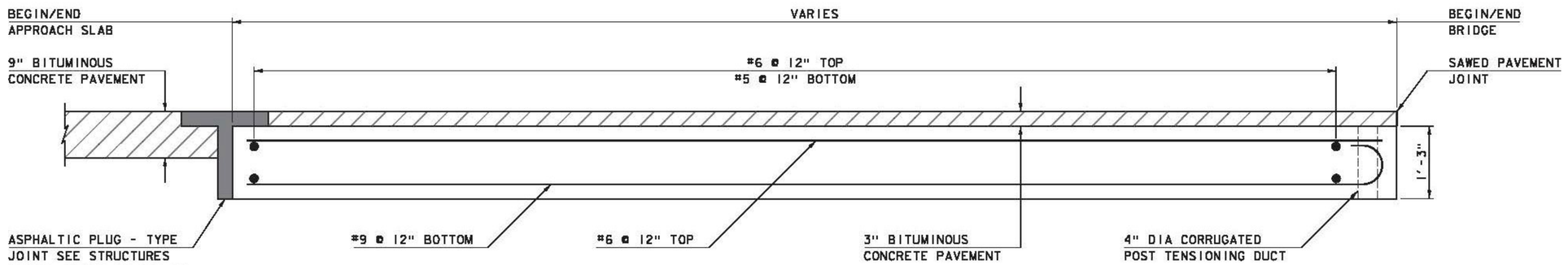

SECTION B-B

SCALE 1" = 1'-0"

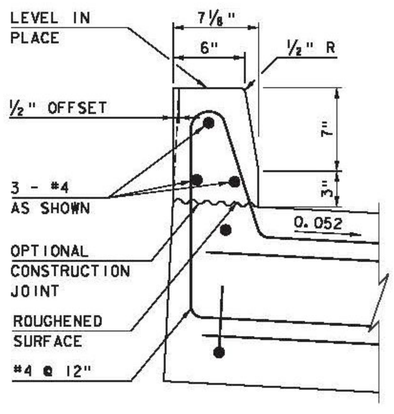

CURB DETAIL

SCALE 2" = 1'-0"

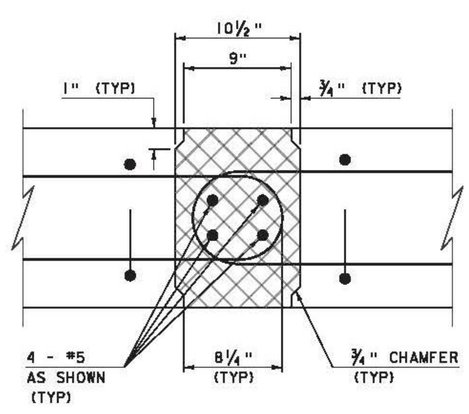

JOINT DETAIL SECTION

SCALE 2" = 1'-0"

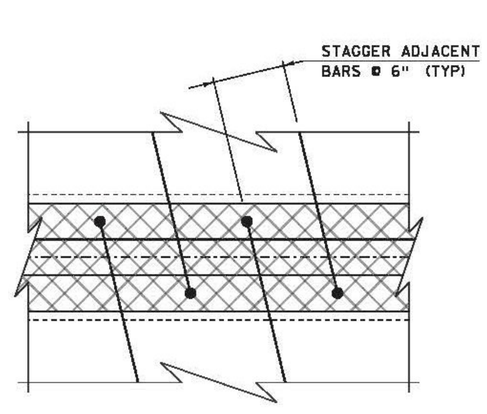

JOINT DETAIL PLAN

SCALE 2" = 1'-0"

NOTE:

NF = NEAR FACE
FF = FAR FACE
EF = EACH FACE
▲ = CUT TO FIT IN FIELD
3" CLEAR, UNLESS OTHERWISE SPECIFIED ON THE PLANS.
2'-2" BAR LAP UNLESS OTHERWISE SPECIFIED ON THE PLANS.

NOTES:

1) ALL APPROACH SLAB REINFORCING STEEL SHALL BE LEVEL II OR HIGHER.

PROJECT NAME:	HARTFORD
PROJECT NUMBER:	IM 091-2(79)
FILE NAME: sl2al32apslabs_43S.dgn	PLOT DATE: 15-DEC-2014
PROJECT LEADER: K. HIGGINS	DRAWN BY: K. FRIEDLAND
DESIGNED BY: G. LAROCHE	CHECKED BY: W. LAMMER
APPROACH SLAB DETAILS	SHEET 99 OF 166

B-12 Coil Rod

Dayton/Richmond B-12 Coil Rod is available in 1/2" to 1-1/2" diameters in 12' lengths. Field cutting can be accomplished with bolt cutters or carborundum blades.

B-12 threaded rod can be used with Coil Ties in many forming combinations to tie formwork, for adjustable ties, for concrete embedments and/or emergency ties.



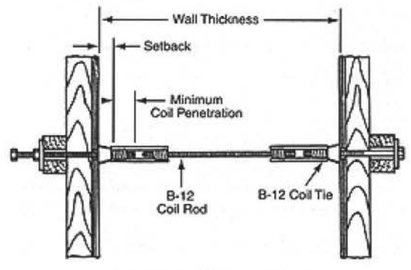

B-39
Wing Nut

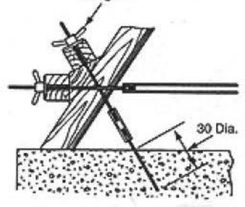

Vermont Agency of Transportation
RECEIVED
ON: May 28, 2015
and Checked for
CONFORMANCE
BY: CB DATE: 6-22-2015

B-12 Coil Rod Selection Chart						
Coil Rod Diameter	Safe Working Loads		Minimum Root Area (sq. in.)	Tensile Stress (psi.)	Yield Stress (psi.)	Minimum Coil Penetration
	Tension (lbs.)	Shear (lbs.)				
1/2"	9,000	6,000	.1385	130,000	110,000	2"
5/8"	12,000	8,000	.2124	113,000	96,000	2-1/4"
3/4"	18,000	12,000	.3079	117,000	100,000	2-1/4"
7/8"	31,000	20,600	.4477	117,000	100,000	2-1/2"
1"	38,000	25,300	.5410	140,000	120,000	2-1/2"
1-1/8"	45,000	30,000	.7163	126,600	105,000	2-1/2"
1-1/4"	56,000	37,500	.9161	123,000	105,000	2-1/2"
1-1/2"	68,000	45,300	1.3892	98,000	85,000	3"

SWL provides a factor of safety of approximately 2 to 1.

CONSTRUCTION LEADERS

Design of Lifting Beams Connections

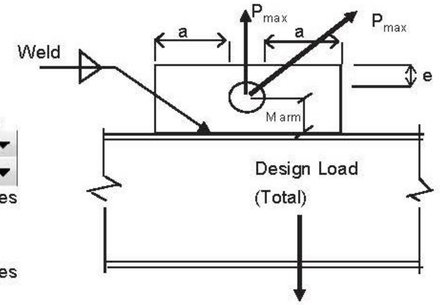

	Service Load =	22.3	
	Impact factor =	1.5	
Input:	Design Load =	33.45	Kips
	Design Angle =	90	
	# of Legs of Sling =	1	
	d =	1.5	inches
	t =	1	inch
	F_u =	58	ksi
	a =	2	inches
	F_y =	36	ksi
	e =	2	inches
	h =	5.5	inches
	l =	6	inches

px =	0.00	kips
py =	33.45	kips
Pmax =	33.45	kips

Ultimate Tensile Load

P_u =	$2*a*t*F_u$ =	232.0	kips		
P_{allow} =	$0.20*P_u$ =	**46.40**	kips	**Design Load is O.K.!**	
				46.40	> **33.45**

Lug Tearout (P_{max} Diagonal)

	Load Factor =	1			
P_{allow} =	$1.67*F_b*t*e^2/d$ =	**105.81**	kips	**Design Load is O.K.!**	
	e_{min} =	1.01	inches	**105.81**	> **33.45**

Allowable Crushing

P_p =	$0.9*F_y*t*d$ =	**48.60**	kips	**Design Load is O.K.!**
				48.60 > **33.45**

Shear

P_u =	$2*(0.4)*F_y*e*t$ =	**57.60**	kips	**Design Load is O.K.!**
				57.60 > **33.45**

Weld Design

	M_{arm} =	2.75	inches	f_m =	0.00 kips/inch
	$S_w = d^2/3$ =	10.08	in^2	f_v =	3.04 kips/inch
	A_w =	11	in	f_t =	0.00 kips/inch
				f_w =	3.04 kips/inch

use 1/4 fillet weld

Vermont Agency of Transportation
RECEIVED
ON: May 28, 2015
and Checked for
CONFORMANCE
BY: CB DATE: 6-22-2015

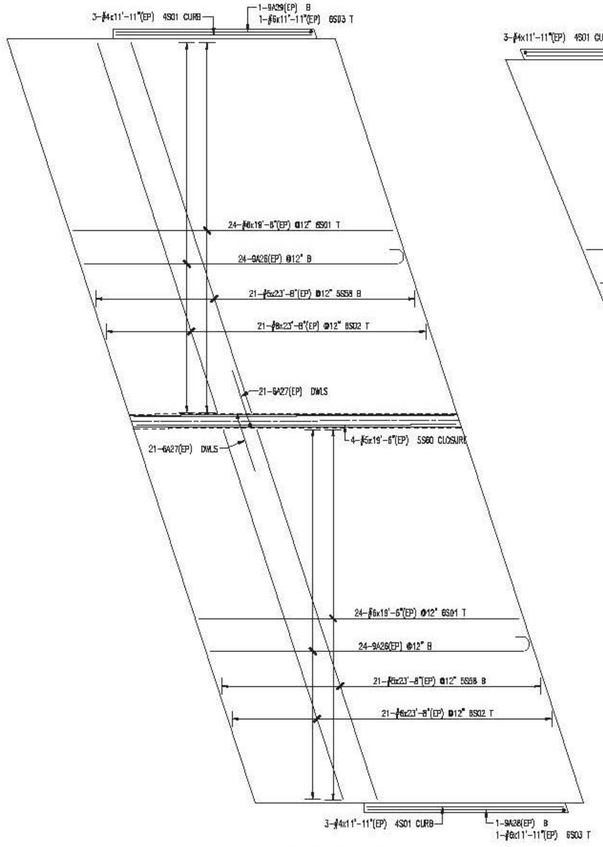

ABUTMENT 1 APPROACH SLAB

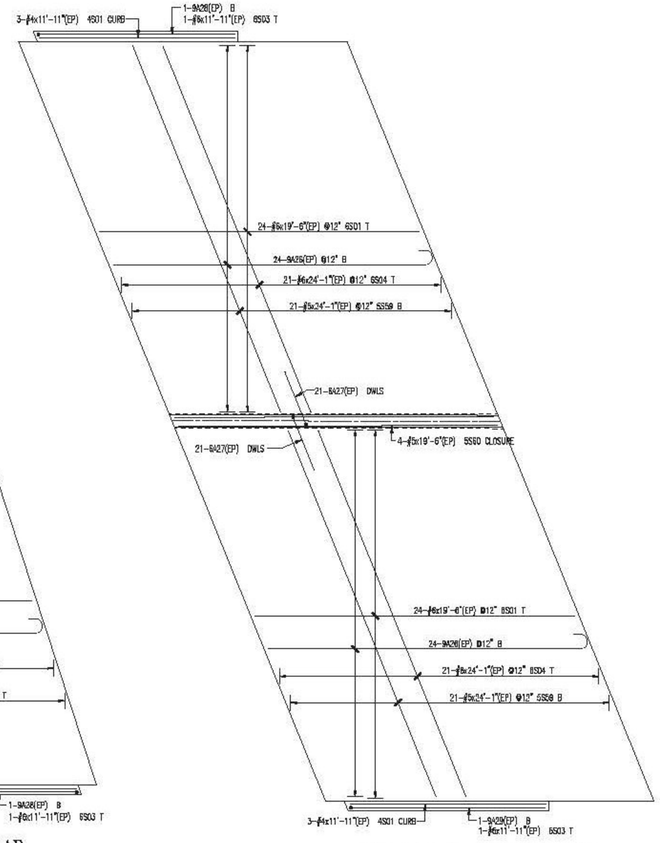

ABUTMENT 2 APPROACH SLAB

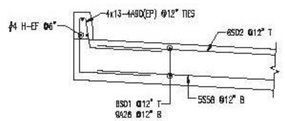

TYPICAL APPROACH SLAB @ CURB

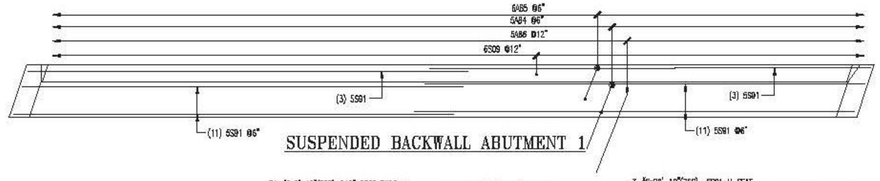

SUSPENDED BACKWALL ABUTMENT 1

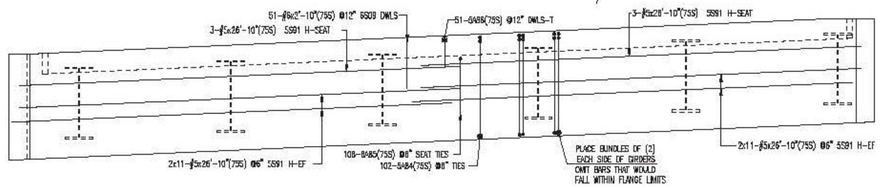

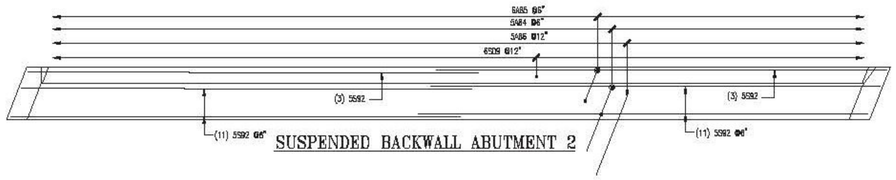

SUSPENDED BACKWALL ABUTMENT 2

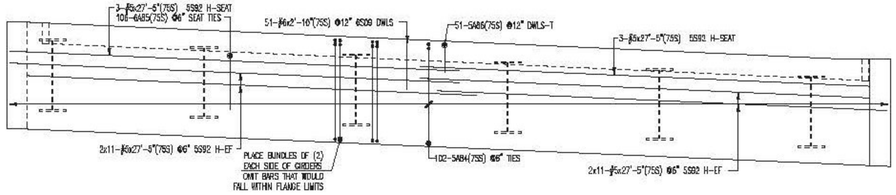

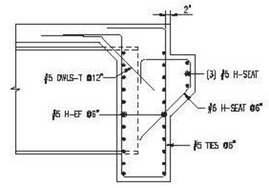

TYPICAL SUSPENDED BACKWALL SECTION

ALL MATERIAL NOTED AS (75S)
SHALL BE "ASTM A955"
STAINLESS STEEL

ALL MATERIAL NOTED AS "EP"
SHALL BE ASTM A1055 GRADE 60
"DUAL COATED"

SEE SHEET R06S FOR BAR LISTS
3" CLR COVER U.N.O.

LAP CHART-U.N.O.

SIZE	TOP BARS *	OTHER BARS
#11		
#10		
#9		
#8	24"	24"
#7	41"	41"
#6	31"	31"
#5	29"	29"
#4		
#3		

* Top bars are horiz. bars with more than 12" of concrete cast below the bars.

Vermont Agency of Transportation
RECEIVED
CK'D BY RK/GL OK'D BY WL
March 9, 2015
RESUBMIT NO Approved
BY KH DATE 3-12-2015

No.	Description	Date	By
2	FINAL APPROVAL PRINT	03/09/15	CPS
1	APPROVAL PRINT	02/13/15	CPS

Revisions and Issue Record

The full intent and purpose of this drawing is the placing of reinforcing steel bars ONLY. It is NOT to be used as a means of communication between the Architect, Engineer, Contractor or any other Sub-trades.

THIS DRAWING IS NOT TO BE SCALED.

HarrisRebar Surface Steel — National Strength. Local Service.

DETAILED AT:
CANAAN
NEW HAMPSHIRE

Project: BRIDGE 43 S REPLACEMENT
I-91 HARTFORD VT

Drawing: I-91 SOUTHBOUND APPROACH SLABS AND SUSPENDED BACKWALLS

Customer: PCL CIVIL CONSTRUCTORS
Engineer: G LAROCHE
Refer to Release:

Date	Drawn	Chkd.	JOB No.	Dwg. No.
02/09/15	CPS		33505535	R05S

W:\example\Projects\33505535\Placing Drawings\DWGs\R015.dwg

Drawing Sheet : R07S — BAR LIST

	Bar Mark	Qty	Size	Total Length	Type	'A'	'B'	'C'	'D'	'E'	'F'	'G'	'H'	'J'	'K'	'L'	'M'
	A14b	1	#5	4'-7"			4'-7"										
	Horizontal Bars																
7BR	A14c	1	#5	7'-0"			7'-0"										
7BR	A40B	33	#6	7'-0"	17		2'-0"	2'-7"	2'-6"								
7BR	A40D	14	#6	5'-4"	1891		2'-6 1/2"	2'-6"					2'-7 1/2"		8 1/2"		
7BR	A41D	10	#6	8'-4"	3		2'-0"	4'-0"					2'-7"		2'-10 1/2"	3'-3 1/2"	
7BR	A41C	6	#6	10'-0"	3		2'-6"	4'-0"					2'-7"		3'-3 1/2"	10'-11 1/2"	
7BR	A41J	14	#6	6'-0"	17		2'-0"	1'-7"	2'-6"				2'-4 1/2"		3'-4"		
7BR	A41G	1	#6	11'-0"	3		2'-0 1/2"	3'-7 1/2"					1'-0 1/2"		2'-4"	10'-0 1/2"	
7BR	A41H	1	#6	11'-0"	3		2'-0 1/2"	3 1/2"					2 1/2"		3"	7'-10 1/2"	
7BR	A40A	23	#6	4'-10"	3		2'-0"	2'-0"					1'-7"		1'-6 1/2"	4'-2 1/2"	
7BR	A31B	7	#6	5'-7"			5'-7"										
7BR	A31C	8	#6	3'-11"			3'-11"										
7BR	A32D	10	#6	3'-1"			3'-1"										
7BR	A32C	7	#6	7'-4"			7'-4"										
7BR	A32A	6	#6	5'-8"			5'-8"										
7BR	A32E	14	#6	8'-7"			8'-7"										
7BR	A24B	14	#6	7'-10"			7'-10"										
7BR	A22D	10	#6	5'-7"			5'-7"										
7BR	A22C	33	#6	7'-0"			7'-0"										
7BR	A22A	6	#6	4'-10"			4'-10"										
7BR	A22E	14	#6	8'-7"			8'-7"										
7BR	A21A	1	#6	11'-11"			11'-11"										
7BR	A21B	1	#6	11'-11"			11'-11"										
7BR	A21C	1	#6	11'-11"			11'-11"										
7BR	A21D	1	#6	11'-11"			11'-11"										
7BR	A21E	1	#6	11'-11"			11'-11"										
7BR	A21F	1	#6	11'-11"			11'-11"										
7BR	A21G	1	#6	11'-11"			11'-11"										
7BR	A21H	1	#6	11'-11"			11'-11"										
7BR	A21J	1	#6	11'-11"			11'-11"										
7BR	A21K	1	#6	11'-11"			11'-11"										
7BR	A21L	1	#6	11'-11"			11'-11"										
7BR	A21M	1	#6	11'-11"			11'-11"										
7BR	A21N	1	#6	11'-11"			11'-11"										
7BR	A21P	1	#6	11'-11"			11'-11"										
7BR	A21Q	1	#6	11'-11"			11'-11"										
7BR	A21R	1	#6	11'-11"			11'-11"										
7BR	A21S	1	#6	11'-11"			11'-11"										
7BR	A21T	1	#6	11'-11"			11'-11"										
7BR	A21U	1	#6	11'-11"			11'-11"										
7BR	A21V	1	#6	11'-11"			11'-11"										
7BR	A21W	1	#6	11'-11"			11'-11"										
7BR	A21X	1	#6	11'-11"			11'-11"										
7BR	A21Y	1	#6	11'-11"			11'-11"										
7BR	A21Z	1	#6	11'-11"			11'-11"										
7BR	A21AA	1	#6	11'-11"			11'-11"										
7BR	A21AB	1	#6	11'-11"			11'-11"										
7BR	A21AC	1	#6	11'-11"			11'-11"										
7BR	A21AD	1	#6	11'-11"			11'-11"										
7BR	A21AE	1	#6	11'-11"			11'-11"										
7BR	A21AF	1	#6	11'-11"			11'-11"										
7BR	A21AG	1	#6	11'-11"			11'-11"										
7BR	A21AH	1	#6	11'-11"			11'-11"										
7BR	A21AJ	1	#6	11'-11"			11'-11"										
7BR	A21AK	1	#6	11'-11"			11'-11"										
7BR	A21AL	1	#6	11'-11"			11'-11"										
7BR	A21AM	1	#6	11'-11"			11'-11"										
7BR	A21AN	1	#6	11'-11"			11'-11"										
7BR	A21AP	1	#6	11'-11"			11'-11"										
7BR	A21AQ	1	#6	11'-11"			11'-11"										
7BR	A21AR	1	#6	11'-11"			11'-11"										
7BR	A21AS	1	#6	11'-11"			11'-11"										
7BR	A21AT	1	#6	11'-11"			11'-11"										
7BR	A21AU	1	#6	11'-11"			11'-11"										
7BR	A21AV	1	#6	11'-11"			11'-11"										
7BR	A21AW	1	#6	11'-11"			11'-11"										
7BR	A21AX	1	#6	11'-11"			11'-11"										
7BR	A21AY	1	#6	11'-11"			11'-11"										
7BR	A21AZ	1	#6	11'-11"			11'-11"										
7BR	A21BA	1	#6	11'-11"			11'-11"										
7BR	A21BB	1	#6	11'-11"			11'-11"										
7BR	A21BC	1	#6	11'-11"			11'-11"										
7BR	A21BD	1	#6	11'-11"			11'-11"										
7BR	A21BE	1	#6	11'-11"			11'-11"										
7BR	A21BF	1	#6	11'-11"			11'-11"										
7BR	A21BG	1	#6	11'-11"			11'-11"										
7BR	A21BH	1	#6	11'-11"			11'-11"										
7BR	A21BJ	1	#6	11'-11"			11'-11"										
7BR	A21BK	1	#6	11'-11"			11'-11"										
7BR	A21BL	1	#6	11'-11"			11'-11"										
7BR	A21BM	1	#6	11'-11"			11'-11"										
7BR	A21BN	1	#6	11'-11"			11'-11"										
7BR	A21BP	1	#6	11'-11"			11'-11"										
7BR	A21BQ	1	#6	11'-11"			11'-11"										
7BR	A21BR	1	#6	11'-11"			11'-11"										
7BR	A21BS	1	#6	11'-11"			11'-11"										
7BR	A21BT	1	#6	11'-11"			11'-11"										
7BR	A21BU	1	#6	11'-11"			11'-11"										
7BR	A21BV	1	#6	11'-11"			11'-11"										
7BR	A21BW	1	#6	11'-11"			11'-11"										
7BR	A21BX	1	#6	11'-11"			11'-11"										
7BR	A21BY	1	#6	11'-11"			11'-11"										
7BR	A21BZ	1	#6	11'-11"			11'-11"										
7BR	A21CA	1	#6	11'-11"			11'-11"										
7BR	A21CB	1	#6	11'-11"			11'-11"										
7BR	A21CC	1	#6	11'-11"			11'-11"										
7BR	A21CD	1	#6	11'-11"			11'-11"										
7BR	A21CE	1	#6	11'-11"			11'-11"										
7BR	A21CF	1	#6	11'-11"			11'-11"										
7BR	A21CG	1	#6	11'-11"			11'-11"										
7BR	A21CH	1	#6	11'-11"			11'-11"										
7BR	A21CJ	1	#6	11'-11"			11'-11"										
7BR	A21CK	1	#6	11'-11"			11'-11"										
7BR	A21CL	1	#6	11'-11"			11'-11"										
7BR	A21CM	1	#6	11'-11"			11'-11"										
7BR	A21CN	1	#6	11'-11"			11'-11"										
7BR	A21CP	1	#6	11'-11"			11'-11"										
7BR	A21CQ	1	#6	11'-11"			11'-11"										
7BR	A21CR	1	#6	11'-11"			11'-11"										
7BR	A21CS	1	#6	11'-11"			11'-11"										
7BR	A21CT	1	#6	11'-11"			11'-11"										
7BR	A21CU	1	#6	11'-11"			11'-11"										
7BR	A21CV	1	#6	11'-11"			11'-11"										
7BR	A21CW	1	#6	11'-11"			11'-11"										
7BR	A21CX	1	#6	11'-11"			11'-11"										
7BR	A21CY	1	#6	11'-11"			11'-11"										
7BR	A21CZ	1	#6	11'-11"			11'-11"										
7BR	A21DA	1	#6	11'-11"			11'-11"										
7BR	A21DB	1	#6	11'-11"			11'-11"										
7BR	A21DC	1	#6	11'-11"			11'-11"										
7BR	A21DD	1	#6	11'-11"			11'-11"										
7BR	A21DE	1	#6	11'-11"			11'-11"										
7BR	A21DF	1	#6	11'-11"			11'-11"										
7BR	A21DG	1	#6	11'-11"			11'-11"										
7BR	A21DH	1	#6	11'-11"			11'-11"										
7BR	A21DJ	1	#6	11'-11"			11'-11"										
7BR	A21DK	1	#6	11'-11"			11'-11"										
7BR	A21DL	1	#6	11'-11"			11'-11"										
7BR	A21DM	1	#6	11'-11"			11'-11"										
7BR	A21DN	1	#6	11'-11"			11'-11"										
7BR	A21DP	1	#6	11'-11"			11'-11"										
7BR	A21DQ	1	#6	11'-11"			11'-11"										
7BR	A21DR	1	#6	11'-11"			11'-11"										
7BR	A21DS	1	#6	11'-11"			11'-11"										
7BR	A21DT	1	#6	11'-11"			11'-11"										
7BR	A21DU	1	#6	11'-11"			11'-11"										
7BR	A21DV	1	#6	11'-11"			11'-11"										
7BR	A21DW	1	#6	11'-11"			11'-11"										
7BR	A21DX	1	#6	11'-11"			11'-11"										
7BR	A21DY	1	#6	11'-11"			11'-11"										
7BR	A21DZ	1	#6	11'-11"			11'-11"										
7BR	A21EA	1	#6	11'-11"			11'-11"										
7BR	A21EB	1	#6	11'-11"			11'-11"										
7BR	A21EC	1	#6	11'-11"			11'-11"										
7BR	A21ED	1	#6	11'-11"			11'-11"										
7BR	A21EE	1	#6	11'-11"			11'-11"										
7BR	A21EF	1	#6	11'-11"			11'-11"										
7BR	A21EG	1	#6	11'-11"			11'-11"										
7BR	A21EH	1	#6	11'-11"			11'-11"										
7BR	A21EJ	1	#6	11'-11"			11'-11"										
7BR	A21EK	1	#6	11'-11"			11'-11"										
7BR	A21EL	1	#6	11'-11"			11'-11"										
7BR	A21EM	1	#6	11'-11"			11'-11"										
7BR	A21EN	1	#6	11'-11"			11'-11"										
7BR	A21EP	1	#6	11'-11"			11'-11"										
7BR	A21EQ	1	#6	11'-11"			11'-11"										
7BR	A21ER	1	#6	11'-11"			11'-11"										
7BR	A21ES	1	#6	11'-11"			11'-11"										
7BR	A21ET	1	#6	11'-11"			11'-11"										
7BR	A21EU	1	#6	11'-11"			11'-11"										
7BR	A21EV	1	#6	11'-11"			11'-11"										
7BR	A21EW	1	#6	11'-11"			11'-11"										
7BR	A21EX	1	#6	11'-11"			11'-11"										
7BR	A21EY	1	#6	11'-11"			11'-11"										
7BR	A21EZ	1	#6	11'-11"			11'-11"										
7BR	A21FA	1	#6	11'-11"			11'-11"										
7BR	A21FB	1	#6	11'-11"			11'-11"										
7BR	A21FC	1	#6	11'-11"			11'-11"										
7BR	A21FD	1	#6	11'-11"			11'-11"										
7BR	A21FE	1	#6	11'-11"			11'-11"										
7BR	A21FF	1	#6	11'-11"			11'-11"										
7BR	A21FG	1	#6	11'-11"			11'-11"										
7BR	A21FH	1	#6	11'-11"			11'-11"										
7BR	A21FJ	1	#6	11'-11"			11'-11"										
7BR	A21FK	1	#6	11'-11"			11'-11"										
7BR	A21FL	1	#6	11'-11"			11'-11"										
7BR	A21FM	1	#6	11'-11"			11'-11"										
7BR	A21FN	1	#6	11'-11"			11'-11"										
7BR	A21FP	1	#6	11'-11"			11'-11"										
7BR	A21FQ	1	#6	11'-11"			11'-11"										
7BR	A21FR	1	#6	11'-11"			11'-11"										
7BR	A21FS	1	#6	11'-11"			11'-11"										
7BR	A21FT	1	#6	11'-11"			11'-11"										
7BR	A21FU	1	#6	11'-11"			11'-11"										
7BR	A21FV	1	#6	11'-11"			11'-11"										
7BR	A21FW	1	#6	11'-11"			11'-11"										
7BR	A21FX	1	#6	11'-11"			11'-11"										
7BR	A21FY	1	#6	11'-11"			11'-11"										
7BR	A21FZ	1	#6	11'-11"			11'-11"										
7BR	A21GA	1	#6	11'-11"			11'-11"										
7BR	A21GB	1	#6	11'-11"			11'-11"										
7BR	A21GC	1	#6	11'-11"			11'-11"										
7BR	A21GD	1	#6	11'-11"			11'-11"										
7BR	A21GE	1	#6	11'-11"			11'-11"										
7BR	A21GF	1	#6	11'-11"			11'-11"										
7BR	A21GG	1	#6	11'-11"			11'-11"										
7BR	A21GH	1	#6	11'-11"			11'-11"										
7BR	A21GJ	1	#6	11'-11"			11'-11"										
7BR	A21GK	1	#6	11'-11"			11'-11"										
7BR	A21GL	1	#6	11'-11"			11'-11"										
7BR	A21GM	1	#6	11'-11"			11'-11"										
7BR	A21GN	1	#6	11'-11"			11'-11"										
7BR	A21GP	1	#6	11'-11"			11'-11"										
7BR	A21GQ	1	#6	11'-11"			11'-11"										
7BR	A21GR	1	#6	11'-11"			11'-11"										
7BR	A21GS	1	#6	11'-11"			11'-11"										
7BR	A21GT	1	#6	11'-11"			11'-11"										
7BR	A21GU	1	#6	11'-11"			11'-11"										
7BR	A21GV	1	#6	11'-11"			11'-11"										
7BR	A21GW	1	#6	11'-11"			11'-11"										
7BR	A21GX	1	#6	11'-11"			11'-11"										
7BR	A21GY	1	#6	11'-11"			11'-11"										
7BR	A21GZ	1	#6	11'-11"			11'-11"										
7BR	A21HA	1	#6	11'-11"			11'-11"										
7BR	A21HB	1	#6	11'-11"			11'-11"										
7BR	A21HC	1	#6	11'-11"			11'-11"										
7BR	A21HD	1	#6	11'-11"			11'-11"										
7BR	A21HE	1	#6	11'-11"			11'-11"										
7BR	A21HF	1	#6	11'-11"			11'-11"										
7BR	A21HG	1	#6	11'-11"			11'-11"										
7BR	A21HH	1	#6	11'-11"			11'-11"										
7BR	A21HJ	1	#6	11'-11"			11'-11"										
7BR	A21HK	1	#6	11'-11"			11'-11"										
7BR	A21HL	1	#6	11'-11"			11'-11"										
7BR	A21HM	1	#6	11'-11"			11'-11"										
7BR	A21HN	1	#6	11'-11"			11'-11"										
7BR	A21HP	1	#6	11'-11"			11'-11"										
7BR	A21HQ	1	#6	11'-11"			11'-11"										
7BR	A21HR	1	#6	11'-11"			11'-11"										
7BR	A21HS	1	#6	11'-11"			11'-11"										
7BR	A21HT	1	#6	11'-11"			11'-11"										
7BR	A21HU	1	#6	11'-11"			11'-11"										
7BR	A21HV	1	#6	11'-11"			11'-11"										
7BR	A21HW	1	#6	11'-11"			11'-11"										
7BR	A21HX	1	#6	11'-11"			11'-11"										
7BR	A21HY	1	#6	11'-11"			11'-11"										
7BR	A21HZ	1	#6	11'-11"			11'-11"										
7BR	A21JA	1	#6	11'-11"			11'-11"										
7BR	A21JB	1	#6	11'-11"			11'-11"										
7BR	A21JC	1	#6	11'-11"			11'-11"										
7BR	A21JD	1	#6	11'-11"			11'-11"										
7BR	A21JE	1	#6	11'-11"			11'-11"										
7BR	A21JF	1	#6	11'-11"			11'-11"										
7BR	A21JG	1	#6	11'-11"			11'-11"										
7BR	A21JH	1	#6	11'-11"			11'-11"										
7BR	A21JJ	1	#6	11'-11"			11'-11"										
7BR	A21JK	1	#6	11'-11"			11'-11"										
7BR	A21JL	1	#6	11'-11"			11'-11"										
7BR	A21JM	1	#6	11'-11"			11'-11"										
7BR	A21JN	1	#6	11'-11"			11'-11"										
7BR	A21JP	1	#6	11'-11"			11'-11"										
7BR	A21JQ	1	#6	11'-11"			11'-11"										
7BR	A21JR	1	#6	11'-11"			11'-11"										
7BR	A21JS	1	#6	11'-11"			11'-11"										
7BR	A21JT	1	#6	11'-11"			11'-11"										
7BR	A21JU	1	#6	11'-11"			11'-11"										
7BR	A21JV	1	#6	11'-11"			11'-11"										
7BR	A21JW	1	#6	11'-11"			11'-11"										
7BR	A21JX	1	#6	11'-11"			11'-11"										
7BR	A21JY	1	#6	11'-11"			11'-11"										
7BR	A21JZ	1	#6	11'-11"			11'-11"										
7BR	A21KA	1	#6	11'-11"			11'-11"										
7BR	A21KB	1	#6	11'-11"			11'-11"										
7BR	A21KC	1	#6	11'-11"			11'-11"										
7BR	A21KD	1	#6	11'-11"			11'-11"										
7BR	A21KE	1	#6	11'-11"			11'-11"										
7BR	A21KF	1	#6	11'-11"			11'-11"										
7BR	A21KG	1	#6	11'-11"			11'-11"										
7BR	A21KH	1	#6	11'-11"			11'-11"										
7BR	A21KJ	1	#6	11'-11"			11'-11"										
7BR	A21KK	1	#6	11'-11"			11'-11"										
7BR	A21KL	1	#6	11'-11"			11'-11"										
7BR	A21KM	1	#6	11'-11"			11'-11"										
7BR	A21KN	1	#6	11'-11"			11'-11"										
7BR	A21KP	1	#6	11'-11"			11'-11"										
7BR	A21KQ	1	#6	11'-11"			11'-11"										
7BR	A21KR	1	#6	11'-11"			11'-11"										
7BR	A21KS	1	#6	11'-11"			11'-11"										
7BR	A21KT	1	#6	11'-11"			11'-11"										
7BR	A21KU	1	#6	11'-11"			11'-11"										
7BR	A21KV	1	#6	11'-11"			11'-11"										
7BR	A21KW	1	#6	11'-11"			11'-11"										
7BR	A21KX	1	#6	11'-11"			11'-11"										
7BR	A21KY	1	#6	11'-11"			11'-11"										
7BR	A21KZ	1	#6	11'-11"			11'-11"										
7BR	A21LA	1	#6	11'-11"			11'-11"										
7BR	A21LB	1	#6	11'-11"			11'-11"										
7BR	A21LC	1	#6	11'-11"			11'-11"										
7BR	A21LD	1	#6	11'-11"			11'-11"										
7BR	A21LE	1	#6	11'-11"			11'-11"										
7BR	A21LF	1	#6	11'-11"			11'-11"										
7BR	A21LG	1	#6	11'-11"			11'-11"										
7BR	A21LH	1	#6	11'-11"			11'-11"										
7BR	A21LJ	1	#6	11'-11"			11'-11"										
7BR	A21LK	1	#6	11'-11"			11'-11"										
7BR	A21LL	1	#6	11'-11"			11'-11"										
7BR	A21LM	1	#6	11'-11"			11'-11"										
7BR	A21LN	1	#6	11'-11"			11'-11"										
7BR	A21LP	1	#6	11'-11"			11'-11"										
7BR	A21LQ	1	#6	11'-11"			11'-11"										
7BR	A21LR	1	#6	11'-11"			11'-11"										
7BR	A21LS	1	#6	11'-11"			11'-11"										
7BR	A21LT	1	#6	11'-11"			11'-11"										
7BR	A21LU	1	#6	11'-11"			11'-11"										
7BR	A21LV	1	#6	11'-11"			11'-11"										
7BR	A21LW	1	#6	11'-11"			11'-11"										
7BR	A21LX	1	#6	11'-11"			11'-11"										
7BR	A21LY	1	#6	11'-11"			11'-11"										
7BR	A21LZ	1	#6	11'-11"			11'-11"										
7BR	A21MA	1	#6	11'-11"			11'-11"										
7BR	A21MB	1	#6	11'-11"			11'-11"										
7BR	A21MC	1	#6	11'-11"			11'-11"										
7BR	A21MD	1	#6	11'-11"			11'-11"										
7BR	A21ME	1	#6	11'-11"			11'-11"										
7BR	A21MF	1	#6	11'-11"			11'-11"										
7BR	A21MG	1	#6	11'-11"			11'-11"										
7BR	A21MH	1	#6	11'-11"			11'-11"										
7BR	A21MJ	1	#6	11'-11"			11'-11"										
7BR	A21MK	1	#6	11'-11"			11'-11"										
7BR	A21ML	1	#6	11'-11"			11'-11"										
7BR	A21MM	1	#6	11'-11"			11'-11"										
7BR	A21MN	1	#6	11'-11"			11'-11"										
7BR	A21MP	1	#6	11'-11"			11'-11"										
7BR	A21MQ	1	#6	11'-11"			11'-11"										
7BR	A21MR	1	#6	11'-11"			11'-11"										
7BR	A21MS	1	#6	11'-11"			11'-11"										
7BR	A21MT	1	#6	11'-11"			11'-11"										
7BR	A21MU	1	#6	11'-11"			11'-11"										
7BR	A21MV	1	#6	11'-11"			11'-11"										
7BR	A21MW	1	#6	11'-11"			11'-11"										
7BR	A21MX	1	#6	11'-11"			11'-11"										
7BR	A21MY	1	#6	11'-11"			11'-11"										
7BR	A21MZ	1	#6	11'-11"			11'-11"										
7BR	A21NA	1	#6	11'-11"			11'-11"										
7BR	A21NB	1	#6	11'-11"			11'-11"										
7BR	A21NC	1	#6	11'-11"			11'-11"										
7BR	A21ND	1	#6	11'-11"			11'-11"										
7BR	A21NE	1	#6	11'-11"			11'-11"										
7BR	A21NF	1	#6	11'-11"			11'-

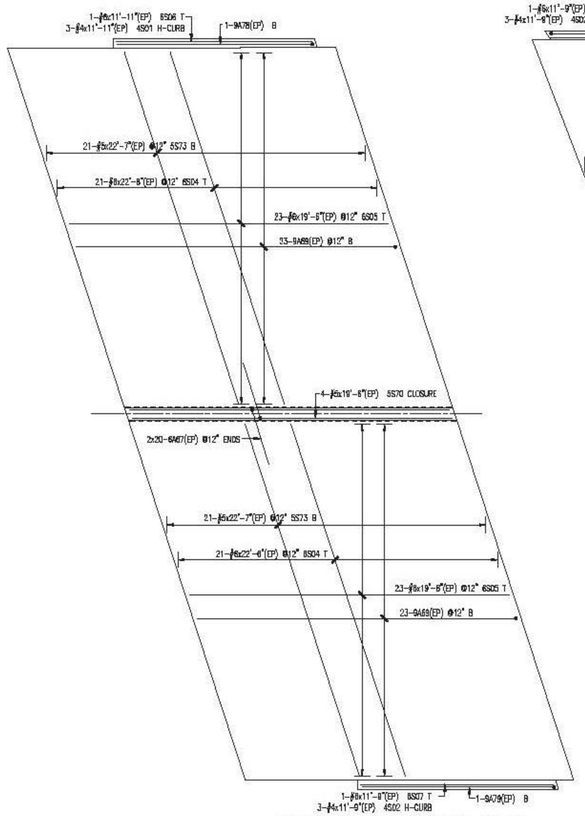

ABUTMENT 3 APPROACH SLAB

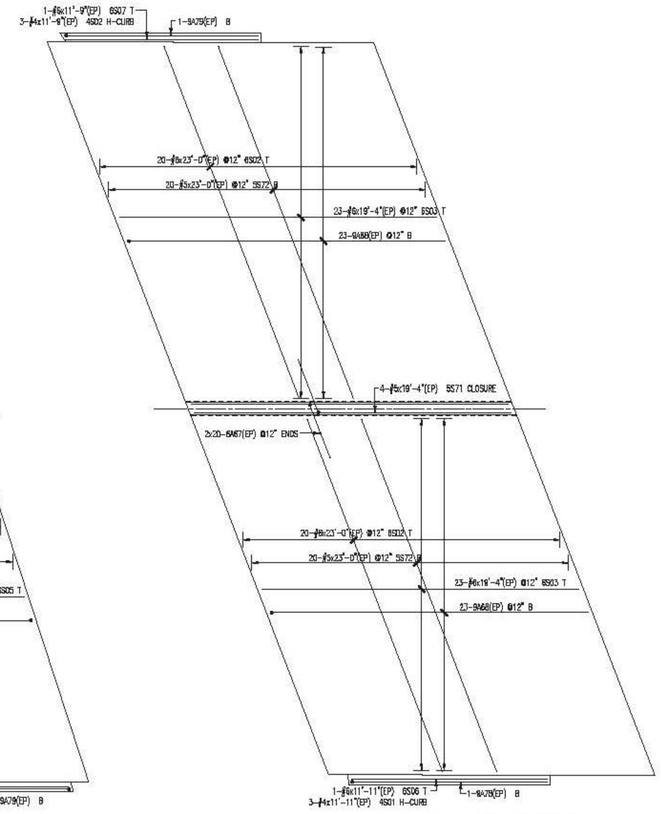

ABUTMENT 4 APPROACH SLAB

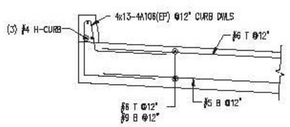

TYPICAL APPROACH SLAB @ CURB

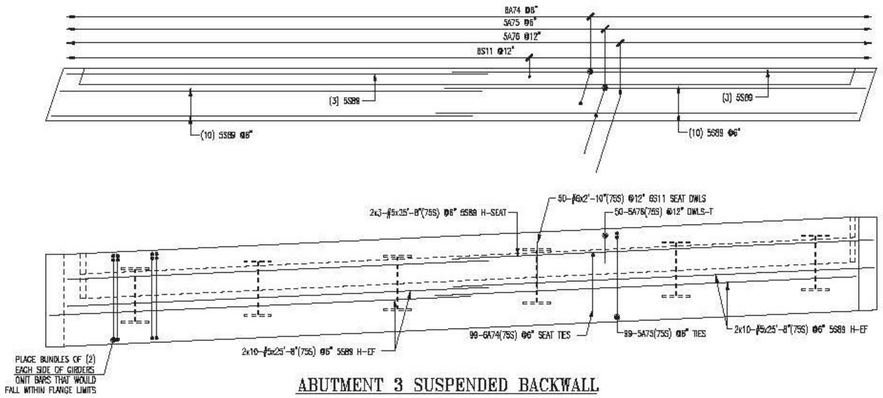

ABUTMENT 3 SUSPENDED BACKWALL

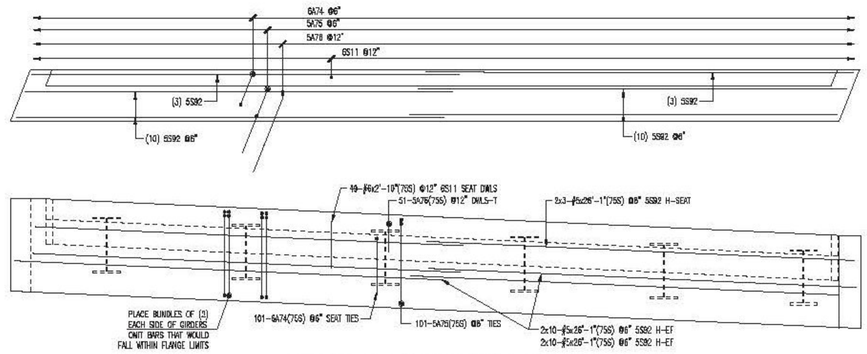

ABUTMENT 4 SUSPENDED BACKWALL

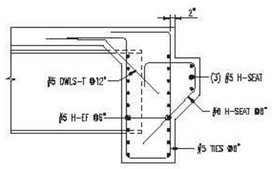

TYPICAL SUSPENDED BACKWALL SECTION

SEE SHEET R05S FOR BAR LISTS
3" CLR COVER U.N.O.

LAP CHART-U.N.O.

SIZE	TOP BARS ☆	OTHER BARS
#11		
#10		
#9		
#8	3'-	3'-
#7	4'-	4'-
#6	3'-	3'-
#5	2'-	2'-
#4		
#3		

☆ - Top bars are horiz. bars with more than 12" on concrete cast below the bars.

Vermont Agency of Transportation
RECEIVED
CK'D BY RK/GL OK'D BY WL
March 9, 2015
RESUBMIT NO Approved
BY KH DATE 3-12-2015

ALL MATERIAL ON THIS DRAWING NOTED AS (75S) SHALL BE ASTM A955 STAINLESS STEEL

ALL MATERIAL ON THIS DRAWING NOTED AS (EP) SHALL BE ASTM A1055 GR60 "DUAL COATED" REINF.

No.	Description	Date	By
2	FINAL APPROVAL PRINT	03/09/15	CPS
1	APPROVAL PRINT	02/18/15	CPS

Revisions and Issue Record

The full intent and purpose of this drawing is the placing of reinforcing steel bars ONLY. It is NOT to be used as a means of communication between the Architect, Engineer, Contractor or any other Sub-trades.

THIS DRAWING IS NOT TO BE SCALED.

HarrisRebar — National Strength. Local Service.

DETAILED AT: CANAAN NEW HAMPSHIRE

Project: HARTFORD LATERAL BRIDGE I-91 NORTHBOUND

Drawing: APPROACH SLABS AND BACKWALLS REINF.

Customer: PCL CIVIL CONSTRUCTORS

Engineer: G. LAROCHE

Refer to Release:

Date	Drawn	Chkd.	JOB No.	Dwg. No.
02/10/15	CPS		33505535	R05N

W:\cosimple\Projects\33505535\Placing Drawings\DWGs\R01N.dwg

Drawing Sheet : R01N — BAR LIST

	Bar Mark	Qty	Size	Total Length	Type	A	B	C	D	E	F	G	H	J	K	O	R
	5S23	24	#5	30'-0"			30'-0"										
	5S01	24	#5	31'-11"			31'-11"										
	5S02	24	#5	13'-0"			13'-0"										
	7S01	224	#7	10'-6"			10'-6"										
	5S03	19	#5	10'-6"			10'-6"										
	5A01	74	#5	8'-5 ½"	25		1'-6"	2'-3 ½"	10"	2'-3 ½"	1'-6"		1'-3"		1'-1 ½"		
	8A02	84	#8	13'-3"	17		9'-8"	6'-9"									
	5S88	128	#5	5'-2"			5'-2"										
	7S02	17	#7	14'-3"			14'-3"										
	7S03	12	#7	14'-8"			14'-8"										
	7S04	12	#7	15'-2"			15'-2"										
	7S07	12	#7	15'-7"			15'-7"										
	7S06	12	#7	16'-1"			16'-1"										
	7S05	21	#7	16'-6"			16'-6"										
	5S08	23	#5	14'-3"			14'-3"										
	5S07	14	#5	14'-8"			14'-8"										
	5S03	12	#5	15'-2"			15'-2"										
	5S04	12	#5	15'-7"			15'-7"										
	5S05	12	#5	16'-1"			16'-1"										
	5S18	92	#5	16'-6"			16'-6"										
	5S06	40	#5	32'-7"			32'-7"										
	5S24	42	#5	32'-4"			32'-4"										
	5S26	48	#5	11'-2"			11'-2"										
	5A03	90	#5	7'-5"	17		2'-5"	2'-7"	2'-5"								
	5S09	34	#5	11'-5"			11'-5"										
	8A04	20	#8	14'-3"	17		5'-6"	6'-9"									
	5S17	14	#5	12'-7"			12'-7"										
	7S08	14	#7	12'-7"			12'-7"										
7SS	5S10	4	#5	7'-4"			7'-4"										
7SS	5A05	24	#5	7'-5"	17		2'-5"	2'-7"	2'-4"								
7SS	5S11	10	#5	6'-1"			6'-1"										
7SS	5S12	10	#5	6'-7"			6'-7"										
7SS	5A07	18	#5	6'-5"	17		2'-5"	1'-7"	2'-5"								
7SS	A06a	2	#5	2'-10"			2'-10"										
	Varies To																
7SS	A04l	2	#5	7'-7"			7'-7"										
7SS	5S13	3	#5	7'-0"			7'-0"										
7SS	A09a	1	#5	2'-4"			2'-4"										
	Varies To																
7SS	A09h	1	#5	6'-11"			6'-11"										
7SS	5A11	2	#5	4'-7"	3		6'-9 ½"	10"					6 ½"		7 ½"	4'-4 ½"	
7SS	5A12	20	#5	4'-8 ½"	3		2'-5"	2'-4 ½"					2'-0"		1'-4"	3'-9"	
	5S83	2	#8	6'-6"			6'-6"										
	5A13	16	#5	12'-11"	16	2'-5"	4'-7"	1'-2"	4'-9"				3'-4 ½"		3'-4 ½"	4'-6 ½"	
7SS	5S14	24	#8	6'-3"			6'-3"										
7SS	5S15	12	#8	8'-0"			8'-0"										
7SS	5A15	12	#5	4'-10"	3		2'-5"	2'-5"					2'-3 ½"		8 ½"	3'-1 ½"	
	5S16	2	#8	5'-3"			5'-3"										
	5A16	23	#5	4'-10"	3		2'-5"	2'-5"					2'-3 ½"		8 ½"	3'-1 ½"	
7SS	5S22	7	#8	6'-3"			6'-3"										
7SS	5S21	2	#8	3'-7"			3'-7"										
7SS	5A17	2	#5	3'-7"	3		3'-6"	1'-11"					11"		1'-8 ½"	5'-4 ½"	
7SS	5S19	6	#5	6'-0"			6'-0"										
7SS	5S20	6	#5	5'-3"			5'-3"										
7SS	5A18	6	#5	11'-7"	3		6'-10"	4'-9"					3'-4 ½"		3'-3 ½"	10'-1 ½"	
	5A07	16	#5	4'-9 ½"	3		2'-5"	2'-4 ½"					2'-0"		1'-4"	3'-9"	
7SS	A10a	1	#5	2'-4"			2'-4"										
	Varies To																
7SS	A10l	1	#5	6'-4"			6'-4"										
	7S22	4	#7	16'-10"			16'-10"										
	5A108	23	#5	16'-3"	3			2'-2 ½"	11'-10"	2'-2 ½"			1'-4"		1'-4"	15'-4"	
	5A109	16	#5	16'-10 ½"	3			2'-3"	14'-4 ½"	2'-3"			1'-1"		1'-11 ½"	16'-4 ½"	

ABUTMENT 1 AND WING WALLS 1&2

Drawing Sheet : R02N — BAR LIST

	Bar Mark	Qty	Size	Total Length	Type	A	B	C	D	E	F	G	H	J	K	O	R
	5A03	92	#5	7'-5"	17		2'-5"	2'-7"	2'-5"								
7SS	5S35	19	#5	6'-5"			6'-5"										
7SS	5A05	22	#5	7'-5"	17		2'-5"	1'-7"	2'-5"								
7SS	5S39	10	#5	6'-6"			6'-6"										
7SS	5S38	4	#5	5'-6"			5'-6"										
7SS	5S37	6	#5	5'-0"			5'-0"										
7SS	5S36	6	#5	7'-6"			7'-6"										
7SS	5S40	10	#5	4'-0"			4'-0"										
7SS	5A07	18	#5	6'-5"	17		2'-5"	1'-7"	2'-5"								
	5S55	2	#5	4'-0"			4'-0"										
	5A13	16	#5	12'-11"	16	2'-5"	4'-7"	1'-2"	4'-9"				3'-4 ½"		3'-4 ½"	4'-4 ½"	
	5A20	27	#5	5'-4"	H91		2'-6"	2'-6"					2'-7"		10 ½"		
	5S42	2	#5	5'-0"			5'-0"										
7SS	5S22	4	#5	8'-3"			8'-3"										
7SS	5S41	2	#5	3'-5"			3'-5"										
7SS	5A22	2	#5	5'-3"	3		3'-2"	2'-1"					1'-3 ½"		1'-8 ½"	4'-11 ½"	
7SS	5A19	6	#5	11'-7"	3		6'-10"	4'-9"					3'-4 ½"		3'-3 ½"	10'-1 ½"	
	5S43	30	#5	18'-7"			18'-7"										
	5S88	124	#5	5'-2"			5'-2"										
	5S53	24	#5	17'-3"			17'-3"										
	5S48	22	#5	11'-8"			11'-8"										
	5S47	38	#5	19'-10"			19'-10"										
7SS	5S50	12	#5	7'-6"			7'-6"										
7SS	5S49	2	#5	4'-4"			4'-4"										
7SS	5S48	2	#5	6'-3"			6'-3"										
7SS	5A23	2	#5	7'-11"	3		7'-4"	7"					3 ½"		6 ½"	7'-10 ½"	
7SS	A24a	1	#5	4'-3"			4'-3"										
	Varies To																
7SS	A24l	1	#5	6'-6"			6'-6"										
7SS	5S51	5	#5	6'-11"			6'-11"										
	6A25	23	#6	13'-4"	17		4'-7"	6'-9"									
	5S52	11	#5	15'-7"			15'-7"										
	7S15	18	#7	15'-7"			15'-7"										
	7S16	24	#7	17'-3"			17'-3"										
7SS	5A27	14	#5	4'-6"	3		2'-4"	2'-4"					1'-8 ½"		1'-7 ½"	3'-11 ½"	
	5S54	2	#5	3'-11"			3'-11"										
	5S23	32	#5	30'-0"			30'-0"										
	5S84	14	#5	6'-6"			6'-6"										
	7S09	148	#7	6'-6"			6'-6"										
	5S24	48	#5	32'-4"			32'-4"										
	5S25	24	#5	33'-0"			33'-0"										
	5S26	2	#5	11'-2"			11'-2"										
	5S27	24	#5	32'-1"			32'-1"										
	5S28	1	#5	15'-0"			15'-0"										
	5S29	1	#5	14'-1"			14'-1"										
	5S30	12	#5	16'-2"			16'-2"										
	7S10	12	#7	16'-2"			16'-2"										
	7S11	12	#7	17'-6"			17'-6"										
	5S31	12	#5	17'-6"			17'-6"										
	5S32	12	#5	18'-6"			18'-6"										
	7S12	12	#7	18'-6"			18'-6"										
	5S44	12	#5	19'-1"			19'-1"										
	7S13	12	#7	19'-1"			19'-1"										
	5S45	12	#5	19'-10"			19'-10"										
	7S14	12	#7	19'-10"			19'-10"										
	5S33	27	#5	11'-0"			11'-0"										
	5S34	27	#5	7'-4"			7'-4"										
7SS	9S01	13	#9	40'-0"			40'-0"										
7SS	A29a	1	#5	4'-3"			4'-3"										
	Varies To																
7SS	A29m	1	#5	6'-6"			6'-6"										
7SS	5A98	12	#5	5'-4"	H91		2'-6"	2'-6"					2'-7"		10 ½"		
	8A99	85	#8	14'-4"	17		4'-7"	9'-9"									
	5A101	24	#5	4'-6"	3		2'-4"	2'-4"					1'-8 ½"		1'-7 ½"	3'-11 ½"	
	5A110	27	#5	12'-11 ½"	3			2'-2 ½"	8'-8"	2'-2 ½"			1'-10"		1'-3"	11'-0"	
	5A111	22	#5	21'-2"	3			2'-3"	16'-6 ½"	2'-3"			11"		2'-6"	20'-9 ½"	

ABUTMENT 2 AND WING WALLS 3&4

Drawing Sheet : R03N — BAR LIST

Bar Mark	Qty	Size	Total Length	Type	A	B	C	D	E	F	G	H	J	K	O	R
5S82	60	#5	8'-6"			8'-6"										
5S62	148	#5	7'-6"			7'-6"										
5S54	14	#5	5'-6"			5'-6"										
5A29	20	#5	7'-10 ½"	20		2'-2"	3'-6 ½"	2'-2"								
5A30	5	#5	9'-3 ½"	3		2'-2"	4'-11 ½"	2'-2"				3'-8"		3'-6"	7'-10"	
5A31	5	#5	9'-7 ½"	3		3'-3 ½"	4'-11 ½"	1'-4 ½"				3'-8"		3'-6"	8'-2"	
5S84	15	#5	9'-6"			9'-6"										
5S85	67	#5	4'-2"			4'-2"										
5A33	48	#5	7'-9"	17		3'-7"	4'-2"									
5S84	20	#5	15'-6"			15'-6"										
5S57	16	#5	21'-6"			21'-6"										
A35a	1	#5	10'-7"			10'-7"										
Varies To																
A36g	1	#5	10'-10"			10'-10"										
A36a	12	#5	8'-11"			8'-11"										
A37a	7	#5	8'-11"			8'-11"										
Varies To																
A38a	1	#5	10'-10"			10'-10"										
5A40	55	#5	5'-11"	17		2'-2"	1'-7"	2'-2"								
5S63	44	#5	6'-6"			6'-6"										
5S59	14	#5	4'-6"			4'-6"										
5S58	14	#5	2'-8"			2'-8"										
5S88	2	#5	7'-1"			7'-1"										
A41a	1	#5	6'-5"			6'-5"										
Varies To																
A41b	1	#5	9'-4"			9'-4"										
A42a	1	#5	6'-5"			6'-5"										
Varies To																
A42b	1	#5	9'-4"			9'-4"										
5A45	5	#5	11'-2"	3		3'-4"	5'-6"	2'-2"				4'-0"		4'-0"	9'-4"	
5S85	25	#5	6'-0"			6'-0"										
5S63	28	#5	10'-6"			10'-6"										
5A43	20	#5	8'-4 ½"	20		2'-2"	4'-4 ½"	2'-2"								
5A44	5	#5	10'-0"	3		2'-2"	5'-6"	2'-2"				4'-0"		4'-0"	8'-4"	
5S61	20	#5	26'-6"			26'-6"										
A47a	1	#5	16'-10"			16'-10"										
Varies To																
A47p	1	#6	17'-4"			17'-4"										
A50a	3	#5	7'-8"			7'-8"										
Varies To																
A50l	3	#5	8'-2"			8'-2"										
A51a	3	#5	12'-5"			12'-5"										
Varies To																
A51c	2	#5	12'-9"			12'-9"										
A52a	3	#5	16'-11"			16'-11"										
Varies To																
A52c	2	#5	17'-3"			17'-3"										
5A53	5	#5	6'-4"	3		3'-4"	2'-10"	2'-2"				2'-4"		2'-0"	7'-6"	
5A54	10	#5	7'-2"	3		1'-2"	2'-10"	1'-2"				2'-4"		1'-0"	6'-4"	
5A55	9	#5	5'-10 ½"	20		2'-6"	1'-6"	2'-2"								
5A58	18	#5	6'-4 ½"	20		2'-2"	2'-6"	2'-2"								
5S58	8	#5	5'-2"			5'-2"										
5S57	4	#5	23'-6"			23'-6"										
5S58	4	#5	34'-6"			34'-6"										
A58a	2	#5	5'-9"			5'-9"										
Varies To																
A58g	2	#5	33'-4"			33'-4"										
5S68	2	#5	35'-4"			35'-4"										
A59a	1	#7	18'-10"			18'-10"										
Varies To																
A59p	1	#7	18'-6"			18'-6"										
A60a	2	#5	14'-1"			14'-1"										
Varies To																
A60b	2	#5	15'-6"			15'-6"										
A61a	2	#5	10'-5"			10'-5"										
Varies To																
A61b	2	#5	11'-11"			11'-11"										
A62a	2	#5	6'-0"			6'-0"										
Varies To																
A62b	2	#5	8'-2"			8'-2"										
A63a	1	#5	8'-0"			8'-0"										
Varies To																
A63l	1	#5	8'-4"			8'-4"										
A64a	1	#5	10'-6"			10'-6"										
Varies To																
A64b	1	#5	12'-0"			12'-0"										
A65a	1	#5	14'-2"			14'-2"										
Varies To																
A65b	1	#5	15'-9"			15'-9"										
A66a	1	#5	17'-0"			17'-0"										
Varies To																
A66b	1	#5	18'-6"			18'-6"										
5A00	60	#5	8'-6"	25		1'-6"	1'-4"	10"	1'-4"	1'-6"		1'-3 ½"		7 ½"		
5A01	6	#5	8'-5 ½"	25		1'-6"	2'-3 ½"	10"	2'-3 ½"	1'-6"		2'-3"		1'-1 ½"		
A34a	1	#5	14'-4"			14'-4"										
Varies To																
A34g	1	#5	14'-7"			14'-7"										
Varies To																
A38b	1	#5	14'-7"			14'-7"										
A40a	8	#5	7'-6"			7'-6"										
Varies To																
A40d	4	#5	8'-3"			8'-3"										
6S12	34	#6	9'-6"			9'-6"										
5A102	32	#5	8'-2"	17		3'-7"	~~4'-7"~~ 4'-2"									
8S04	34	#8	9'-6"			9'-6"										
6A103	32	#8	10'-1"	17		3'-7"	~~5'-6"~~ 4'-7"									
A48a	1	#8	12'-4"			12'-4"										
Varies To																
A48g	1	#8	12'-10"			12'-10"										
5A104	54	#5	10'-1"	17		3'-7"	~~5'-6"~~ 4'-2									
7S21	18	#7	9'-6"			9'-6"										
7A105	18	#7	8'-8"	17		3'-7"	~~5'-6"~~ 6'-6"									

RETAINING WALLS 5,6,7,8

MATERIAL/COATING CODE TO THE LEFT OF BAR MARK ADDED BY PCL

Drawing Sheet : R04N — BAR LIST

	Bar Mark	Qty	Size	Total Length	Type	A	B	C	D	E	F	G	H	J	K	O	R
7SS	6S02	8	#6	16'-5"			16'-5"										
7SS	8S03	32	#8	30'-0"			30'-0"										
7SS	7S17	8	#7	12'-5"			12'-5"										
7SS	7S18	32	#7	30'-0"			30'-0"										
7SS	5A70	418	#5	7'-9"	H2		10 ½"	2'-9"	1'-2 ½"	2'-11"				2 ½"		5 ½"	4 ½"
7SS	5A71	378	#5	4'-10"	H1		1'-3"	8 ½"	1'-1"	6 ½"	1'-3"			5"		2'-4 ½"	3"
7SS	5A72	78	#5	9'-7"	H3		1'-6"	3'-2 ½"	5"	2'-11 ½"	1'-6"						
7SS	7S19	8	#7	12'-9"			12'-9"										
7SS	7S20	32	#7	14'-4"			14'-4"										
7SS	A73a	4	#5	5'-8"	17		2'-7"	6"	2'-7"								
	Varies To																
7SS	A73f	4	#5	7'-6"	17		3'-6"	6"	3'-6"								
7SS	5S74	376	#5	30'-0"			30'-0"										
7SS	5S74	84	#5	24'-5"			24'-5"										
7SS	8S06	507	#8	24'-7"			24'-7"										
7SS	A82a	1	#8	2'-2"			2'-2"										
	Varies To																
7SS	A82r	1	#8	25'-5"			25'-5"										
7SS	8S09	58	#8	30'-0"			30'-0"										
7SS	8S10	14	#5	25'-1"			25'-1"										
7SS	A83a	1	#5	4'-6"			4'-6"										
	Varies To																
7SS	A83a	1	#6	22'-4"			22'-4"										
7SS	5A84	124	#5	5'-4"	1	7"	4'-9"							5"			
7SS	4A85	460	#4	4'-10"	1	6"	4'-4"							4"			
7SS	5A86	461	#5	3'-4 ½"	1	7"	2'-9 ½"							5"			
7SS	A86a	1	#5	2'-7"			2'-7"										
	Varies To																
7SS	A86e	1	#5	27'-4"			27'-4"										
7SS	A84a	1	#5	18'-2"			18'-2"										
	Varies To																
7SS	A85f	1	#5	25'-0"			25'-0"										
7SS	A87a	1	#5	17'-10"			17'-10"										
	Varies To																
7SS	A87f	1	#5	24'-8"			24'-8"										
7SS	5S78	7	#5	18'-6"			18'-6"										
7SS	5S79	8	#5	10'-0"			10'-0"										
7SS	A81a	1	#5	2'-2"			2'-2"										
	Varies To																
7SS	A81a	1	#5	28'-10"			28'-10"										
7SS	A83a	1	#5	18'-2"			18'-2"										
	Varies To																
7SS	A90f	1	#5	25'-0"			25'-0"										
7SS	A93a	1	#5	17'-11"			17'-11"										
	Varies To																
7SS	A93f	1	#5	24'-6"			24'-6"										
7SS	5S80	6	#5	19'-11"			19'-11"										
7SS	5S81	6	#5	11'-5"			11'-5"										
7SS	A95a	1	#6	2'-7"			2'-7"										
	Varies To																
7SS	A95r	1	#6	35'-11"			35'-11"										
7SS	A94a	1	#6	5'-4"			5'-4"										
	Varies To																
7SS	A91m	1	#6	21'-10"			21'-10"										
7SS	A91a	5	#5	6'-3"			6'-3"										
	Varies To																
7SS	A97f	5	#5	6'-10"			6'-10"										
7SS	A94a	5	#5	6'-4"			6'-4"										
	Varies To																
7SS	A94f	5	#5	6'-11"			6'-11"										

DECK REINFORCEMENT

Drawing Sheet : R05N — BAR LIST

	Bar Mark	Qty	Size	Total Length	Type	A	B	C	D	E	F	G	H	J	K	O	R
7SS	6A74	200	#6	7'-3"	18	1'-0"	2'-1"	1'-2"	3'-0"				2'-1 ½"		2'-1 ½"	3'-3 ½"	
7SS	5A75	200	#5	16'-9"	H66		2'-5"	5'-2"	1'-10"	4'-11"	2'-5"				3 ½"		
7SS	5A76	101	#5	5'-8"	3		3'-1"	2'-8"					1'-8 ½"		1'-8 ½"	4'-9 ½"	
EP	9A78	2	#9	13'-2"	1	1'-3"	11'-11"							11 ½"			
EP	8S06	2	#8	11'-11"			11'-11"										
EP	4S01	6	#4	11'-11"			11'-11"										
EP	9A79	2	#9	13'-0"	1	1'-3"	11'-9"							11 ½"			
EP	8S07	2	#8	11'-9"			11'-9"										
EP	4S02	6	#4	11'-9"			11'-9"										
7SS	5S12	46	#5	26'-1"			26'-1"										
7SS	6S11	98	#6	2'-10"			2'-10"										
EP	9A80	48	#9	20'-4 ½"	1	1'-3"	19'-5 ½"							11 ½"			
EP	8S05	48	#8	19'-6"			19'-6"										
EP	9A88	48	#9	20'-7"	1	1'-3"	19'-4"							11 ½"			
EP	8S03	48	#8	19'-4"			19'-4"										
EP	8S02	40	#8	23'-0"			23'-0"										
EP	5S72	40	#5	23'-0"			23'-0"										
EP	5S73	42	#5	22'-7"			22'-7"										
EP	4S04	42	#4	22'-6"			22'-6"										
EP	5S70	4	#5	18'-6"			18'-6"										
EP	5S71	4	#5	18'-4"			18'-4"										
EP	6A67	80	#6	7'-2 ½"	S11		7'-2 ¾"						3'-6"			7"	
7SS	5S84	46	#5	15'-8"			25'-8"										
EP	4A106	52	#4	7'-0"	H4		2'-2"	1'-6 ½"	3 ½"	10"	2'-2"						1 ½"

APPROACH SLABS AND SUSPENDED BACKWALLS

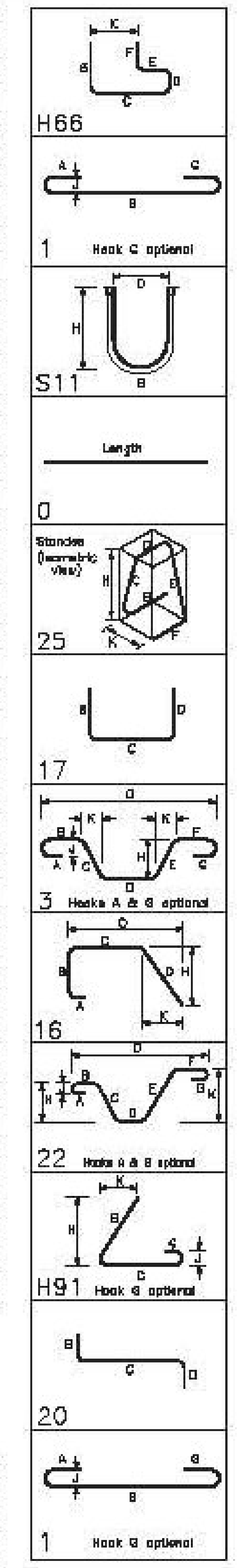

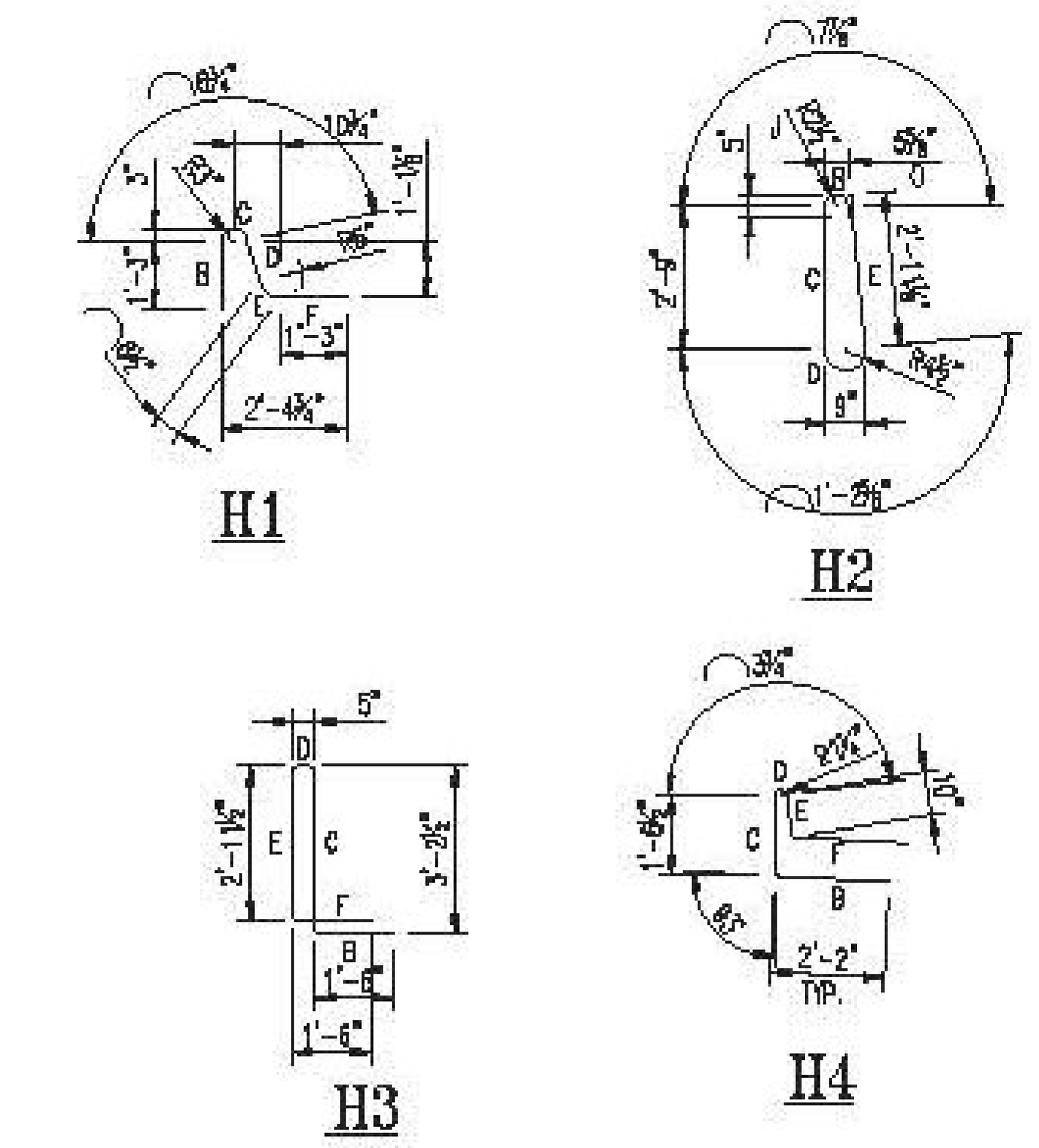

SPECIAL BEND DETAILS

No.	Description	Date	By
2	FINAL APPROVAL PRINT	03/09/15	CPS
1	APPROVAL PRINT	02/18/15	CPS

Revisions and Issue Record

The full intent and purpose of this drawing is the placing of reinforcing steel bars ONLY. It is NOT to be used as a means of communication between the Architect, Engineer, Contractor or any other Sub-trades.

THIS DRAWING IS NOT TO BE SCALED.

HarrisRebar — Harbor Steel — National Strength. Local Service.

DETAILED AT: CANAAN NEW HAMPSHIRE

Project: HARTFORD LATERAL BRIDGE I-91 NORTHBOUND

Drawing: BAR SCHEDULES

Customer: PCL CIVIL CONSTRUCTORS

Engineer: G. LAROCHE

Refer to Release:

Date	Drawn	Chkd.	JOB No.	Dwg. No.
02/10/15	CPS		33505535	R08N

Vermont Agency of Transportation
RECEIVED
CK'D BY RK/GL OK'D BY WL
March 9, 2015
RESUBMIT NO Approved AsNoted
BY KH DATE 3-12-2015

W:\csample\Projects\33505535\Placing Drawings\DWGs\R01N.dwg

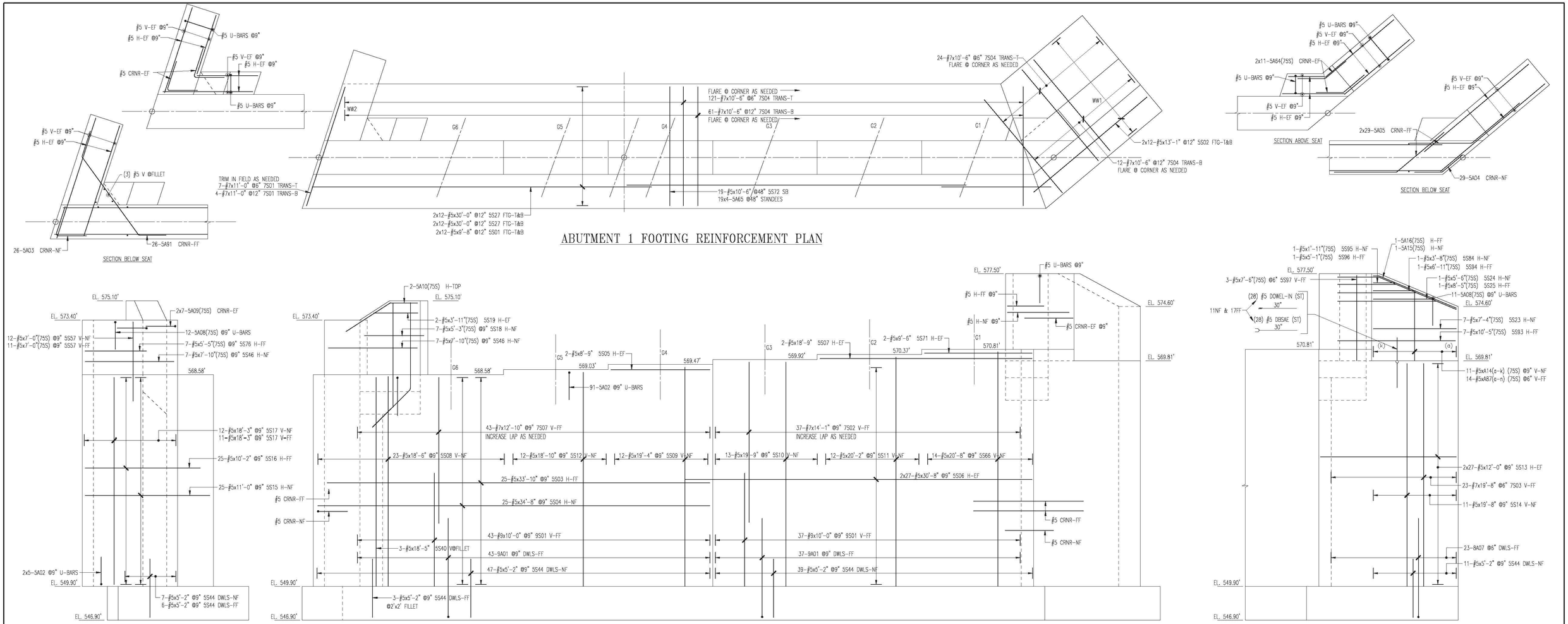

ABUTMENT 1 FOOTING REINFORCEMENT PLAN

WINGWALL 2 (WW2) ELEVATION

ABUTMENT 1 ELEVATION

WINGWALL 1 (WW1) ELEVATION

NOTE: ALL DOWEL BAR SUBS NOT INCLUDED IN THE BAR SCHEDULES DUE TO NOT BEING A "LIVE BAR" IN REBARCAD---THUS, THEY ARE CALLED OUT, QUANTITY, SIZES AND LENGTHS ON APPROPRIATE ELEVATIONS

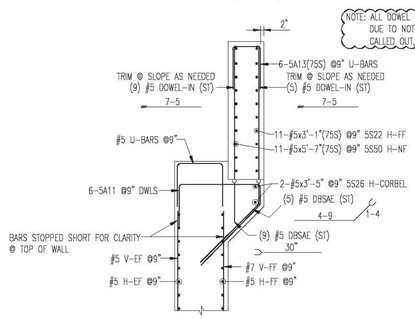

CHEEKWALL @ WW1 SECTION

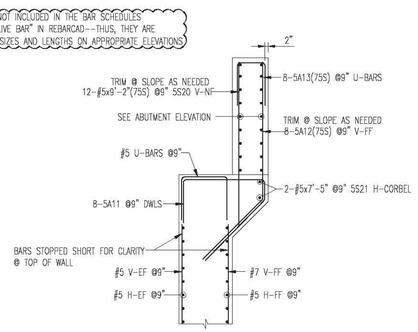

CHEEKWALL @ WW2 SECTION

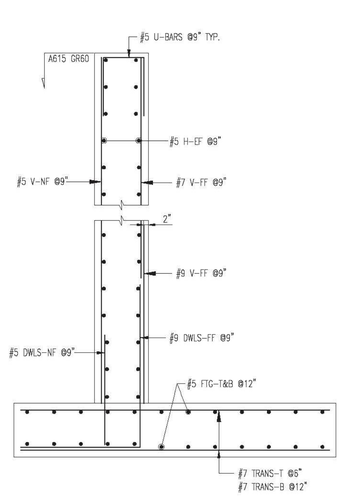

ABUTMENT WALL REINF. SECTION

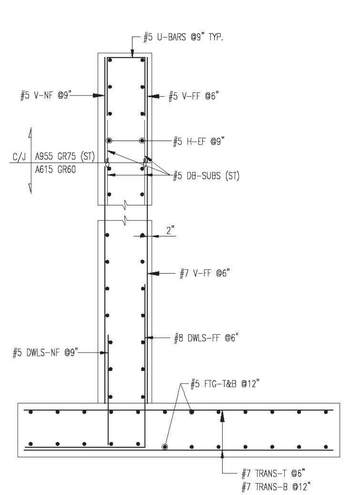

WINGWALL 1 REINF. SECTION

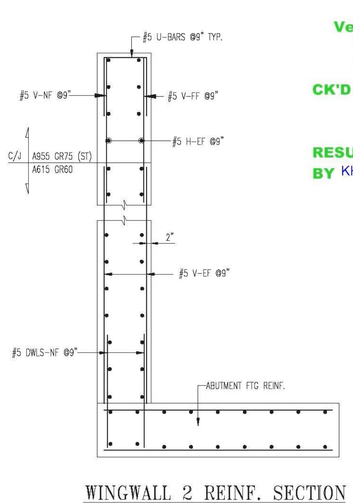

WINGWALL 2 REINF. SECTION

ALL MATERIAL ON THIS DRAWING SHALL BE AASHTO M31 U.N.O.

ALL MATERIAL ON THIS DRAWING NOTED AS (75S) SHALL BE ASTM "ASTM A955" STAINLESS STEEL

LAP CHART-U.N.O.

SIZE	TOP BARS ★	OTHER BARS
#11		
#10		
#9		
#8	54"	54"
#7	41"	41"
#6	31"	31"
#5	26"	26"
#4		
#3		

★ -Top bars are horiz. bars with more than 12" of concrete cast below the bars.

SEE SHEET R06S FOR BAR LISTS
3" CLR COVER U.N.O.

Vermont Agency of Transportation

RECEIVED

CK'D BY RK/GL OK'D BY WL

March 9, 2015

RESUBMIT NO Approved

BY KH DATE 3-12-2015

No.	Description	Date	By
2	FINAL APPROVAL PRINT	03/09/15	CPS
1	APPROVAL PRINT	02/13/15	CPS

Revisions and Issue Record

The full intent and purpose of this drawing is the placing of reinforcing steel bars ONLY. It is NOT to be used as a means of communication between the Architect, Engineer, Contractor or any other Sub-trades.

THIS DRAWING IS NOT TO BE SCALED.

HarrisRebar Barker Steel — National Strength. Local Service.

DETAILED AT: CANAAN NEW HAMPSHIRE

Project: BRIDGE 43 S REPLACEMENT I-91 HARTFORD VT

Drawing: I-91 SOUTHBOUND ABUTMENT 1 W/ WINGWALLS 1&2

Customer: PCL CIVIL CONSTRUCTORS

Engineer: G. LAROCHE

Refer to Release:

Date	Drawn	Chkd.	JOB No.	Dwg. No.
02/06/15	CPS		33505535	R01S

W:\csample\Projects\33505535\Placing Drawings\DWGs\R01S.dwg

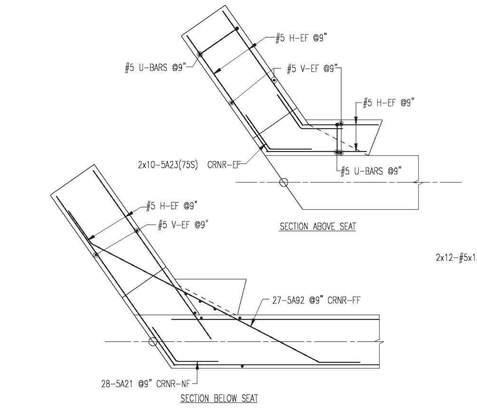

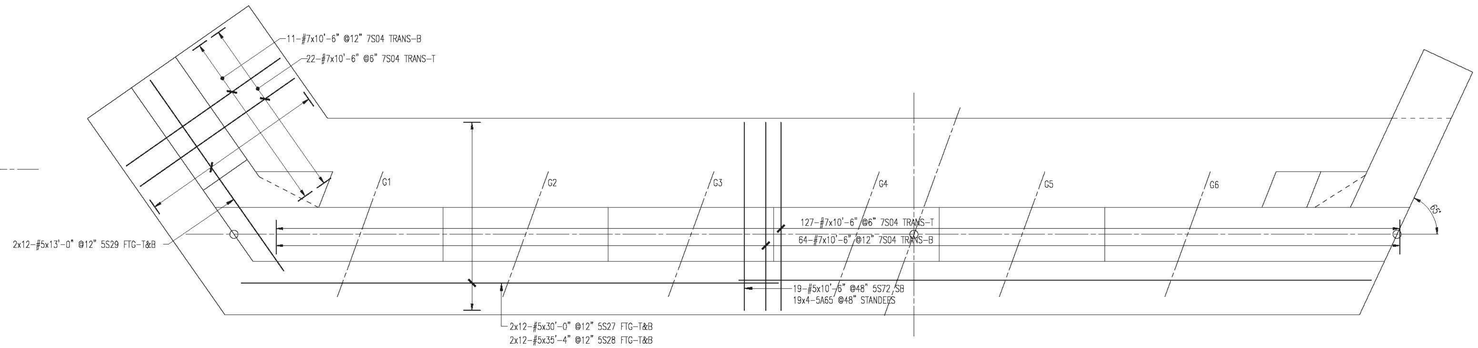

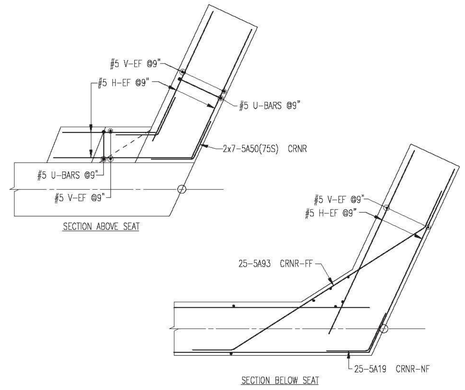

ABUTMENT 2 FOOTING REINFORCEMENT PLAN

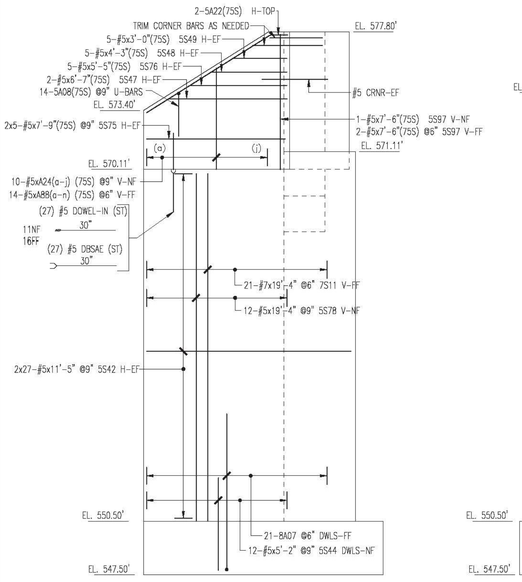

WINGWALL 3 (WW3) ELEVATION

NOTE: ALL DOWEL BAR SUBS NOT INCLUDED IN THE BAR SCHEDULES DUE TO NOT BEING A "LIVE BAR" IN REBARCAD---THUS, THEY ARE CALLED OUT, QUANTITY, SIZES AND LENGTHS ON APPROPRIATE ELEVATIONS

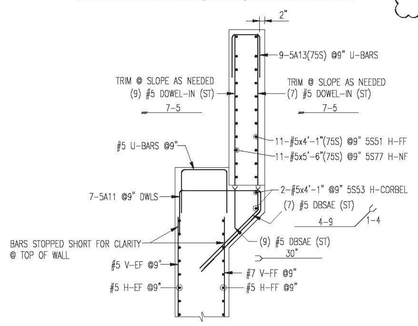

CHEEKWALL @ WW3 SECTION

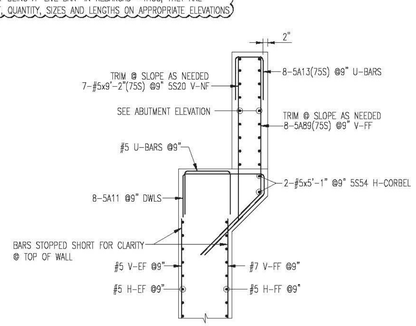

CHEEKWALL @ WW4 SECTION

ALL MATERIAL ON THIS DRAWING SHALL BE AASHTO M31 U.N.O.

ALL MATERIAL ON THIS DRAWING NOTED AS (75S) SHALL BE ASTM "ASTM A955" STAINLESS STEEL

LAP CHART-U.N.O.

SIZE	TOP BARS ★	OTHER BARS
#11		
#10		
#9		
#8	54"	54"
#7	41"	41"
#6	31"	31"
#5	26"	26"
#4		
#3		

★ -Top bars are horiz. bars with more than 12" of concrete cast below the bars.

SEE SHEET R06S FOR BAR LISTS
3" CLR COVER U.N.O.

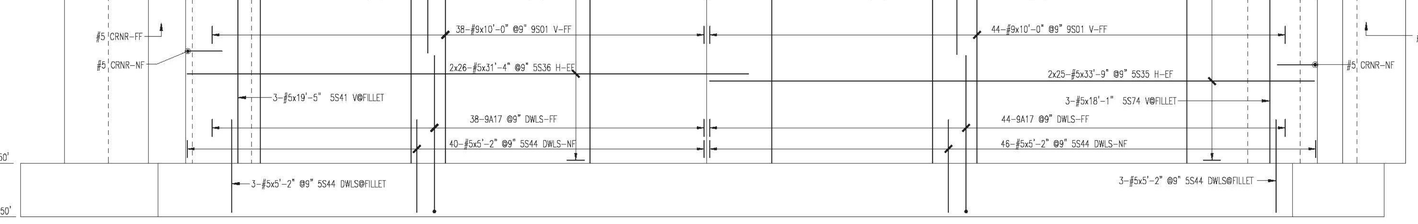

ABUTMENT 2 ELEVATION

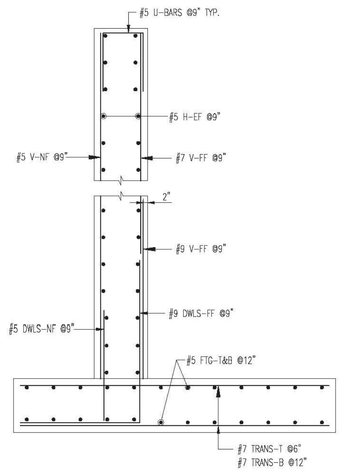

ABUTMENT WALL REINFORCEMENT SECTION

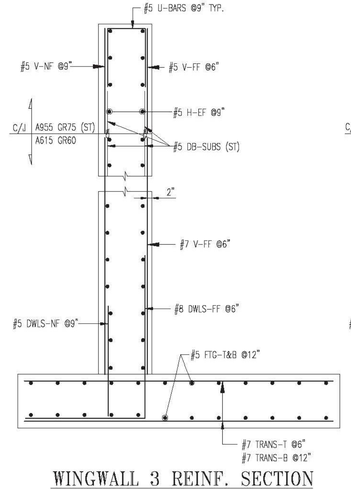

WINGWALL 3 REINF. SECTION

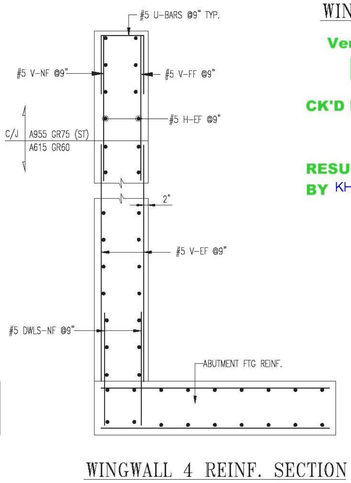

WINGWALL 4 REINF. SECTION

WINGWALL 4 (WW4) ELEVATION

Vermont Agency of Transportation

RECEIVED

CK'D BY RK/GL OK'D BY WL

March 9, 2015

RESUBMIT NO Approved

BY KH DATE 3-12-2015

No.	Description	Date	By
2	FINAL APPROVAL PRINT	03/09/15	CPS
1	APPROVAL PRINT	02/13/15	CPS

Revisions and Issue Record

The full intent and purpose of this drawing is the placing of reinforcing steel bars ONLY. It is NOT to be used as a means of communication between the Architect, Engineer, Contractor or any other Sub-trades.

THIS DRAWING IS NOT TO BE SCALED.

HarrisRebar Barker Steel — National Strength. Local Service.

DETAILED AT: CANAAN NEW HAMPSHIRE

Project: BRIDGE 43 S REPLACEMENT I-91 HARTFORD VT

Drawing: I-91 SOUTHBOUND ABUTMENT 2 W/ WINGWALLS 3&4

Customer: PCL CIVIL CONSTRUCTORS

Engineer: G LAROCHE

Refer to Release:

Date	Drawn	Chkd.	JOB No.	Dwg. No.
02/06/15	CPS		33505535	R02S

W:\csample\Projects\33505535\Placing Drawings\DWGs\R01S.dwg

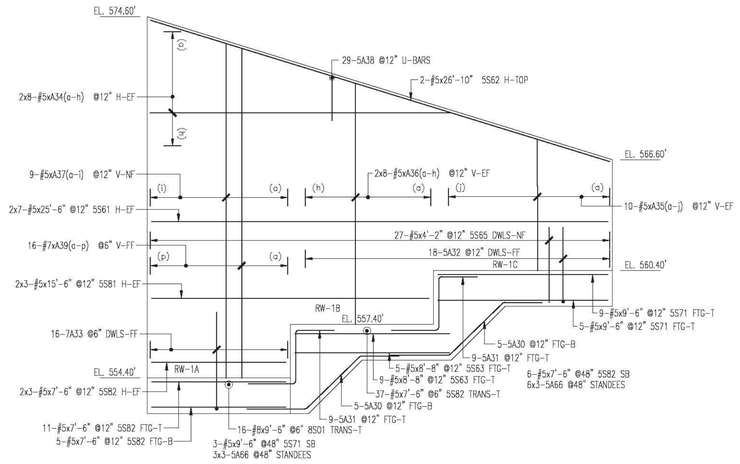

RETAINING WALL 1 (RW1) ELEVATION

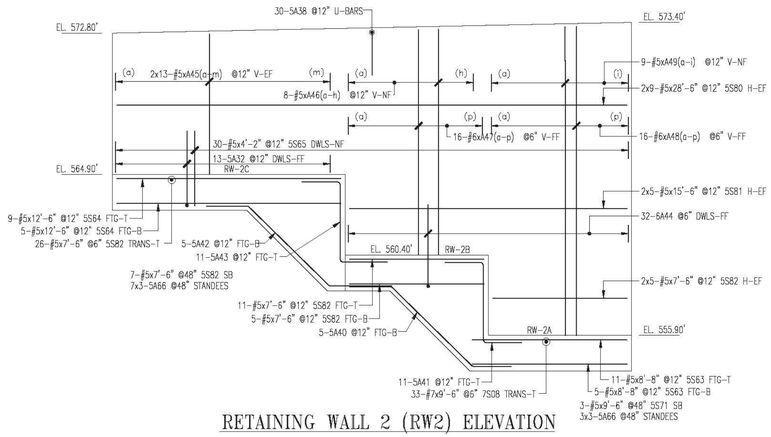

RETAINING WALL 2 (RW2) ELEVATION

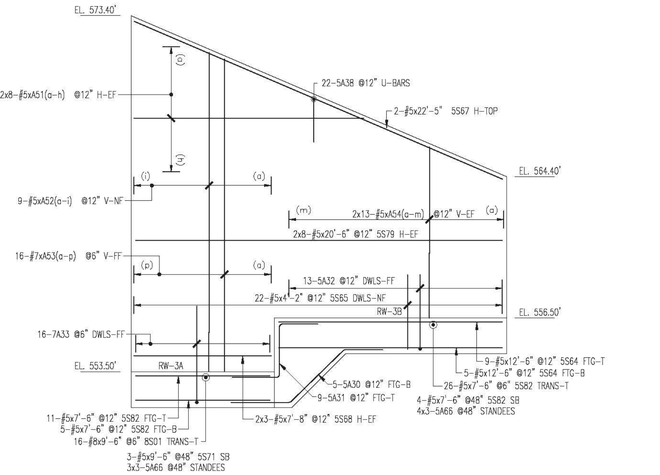

RETAINING WALL 3 (RW3) ELEVATION

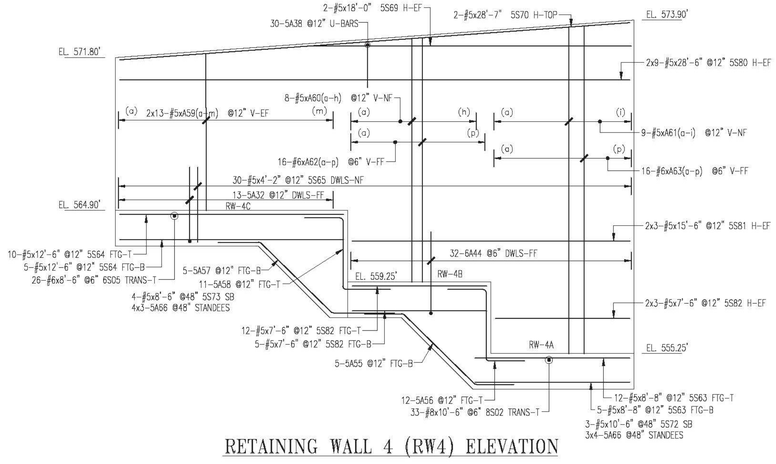

RETAINING WALL 4 (RW4) ELEVATION

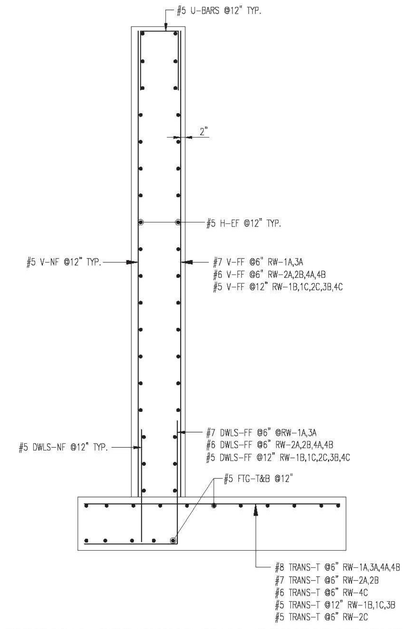

TYYPICAL RETAINING WALL REINFORCEMENT SECTION

LAP CHART-U.N.O.		
#11		
#10		
#9		
#8	54"	54"
#7	41"	41"
#6	31"	31"
#5	26"	26"
#4		
#3		
SIZE	TOP BARS ★	OTHER BARS

★ -Top bars are horiz. bars with more than 12" of concrete cast below the bars.

SEE SHEET R06S FOR BAR LISTS
3" CLR COVER U.N.O.

ALL MATERIAL ON THIS DRAWING SHALL BE AASHTO M31 U.N.O.

Vermont Agency of Transportation
RECEIVED
CK'D BY RK/GL OK'D BY WL
March 9, 2015
RESUBMIT NO Approved
BY KH DATE 3-12-2015

No.	Description	Date	By
2	FINAL APPROVAL PRINT	03/09/15	CPS
1	APPROVAL PRINT	02/13/15	CPS

Revisions and Issue Record

The full intent and purpose of this drawing is the placing of reinforcing steel bars ONLY. It is NOT to be used as a means of communication between the Architect, Engineer, Contractor or any other Sub-trades.

THIS DRAWING IS NOT TO BE SCALED.

HarrisRebar Barker Steel
National Strength. Local Service.

DETAILED AT:
CANAAN
NEW HAMPSHIRE

Project: BRIDGE 43 S REPLACEMENT
I-91 HARTFORD VT

Drawing: I-91 SOUTHBOUND
RETAINING WALLS 1-4

Customer: PCL CIVIL CONSTRUCTORS

Engineer: G LAROCHE

Refer to Release:

Date	Drawn	Chkd.	JOB No.	Dwg. No.
02/09/15	CPS		33505535	R03S

W:\csample\Projects\33505535\Placing Drawings\DWGs\R01S.dwg

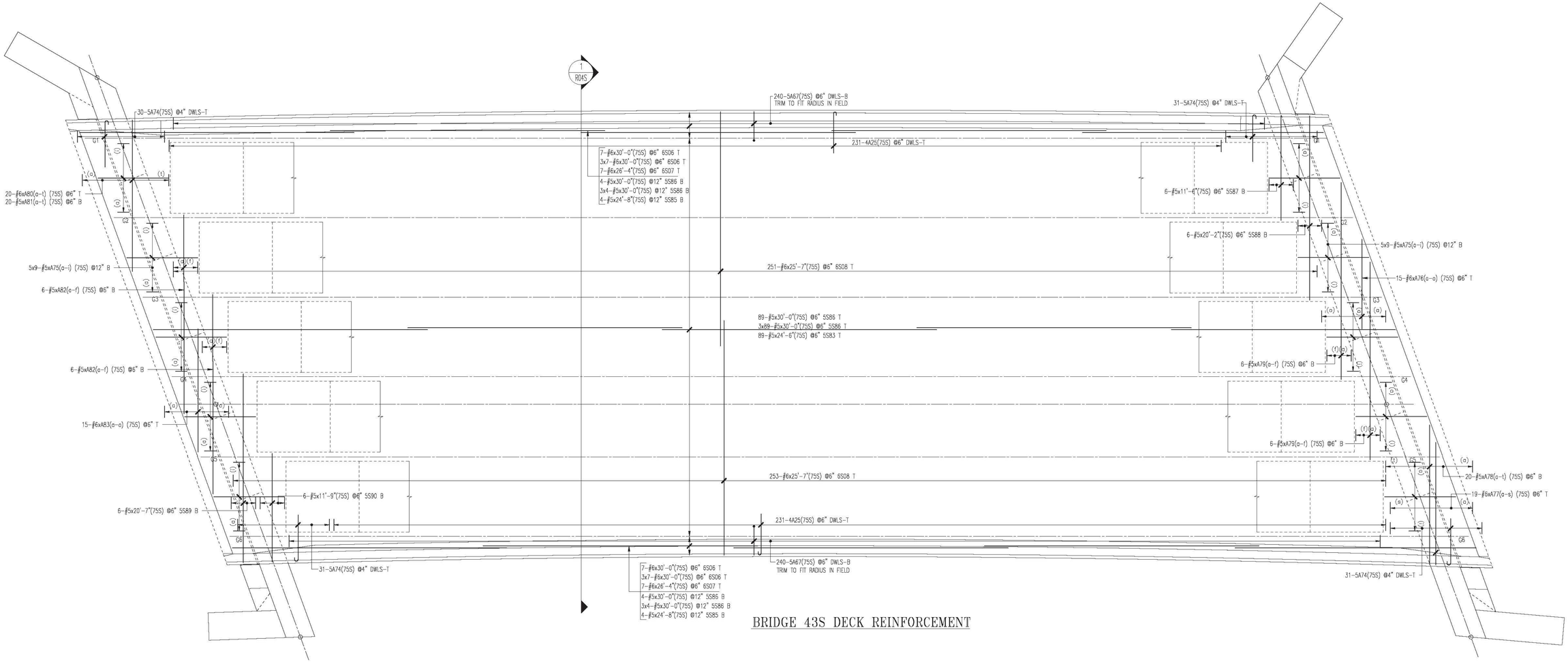

BRIDGE 43S DECK REINFORCEMENT

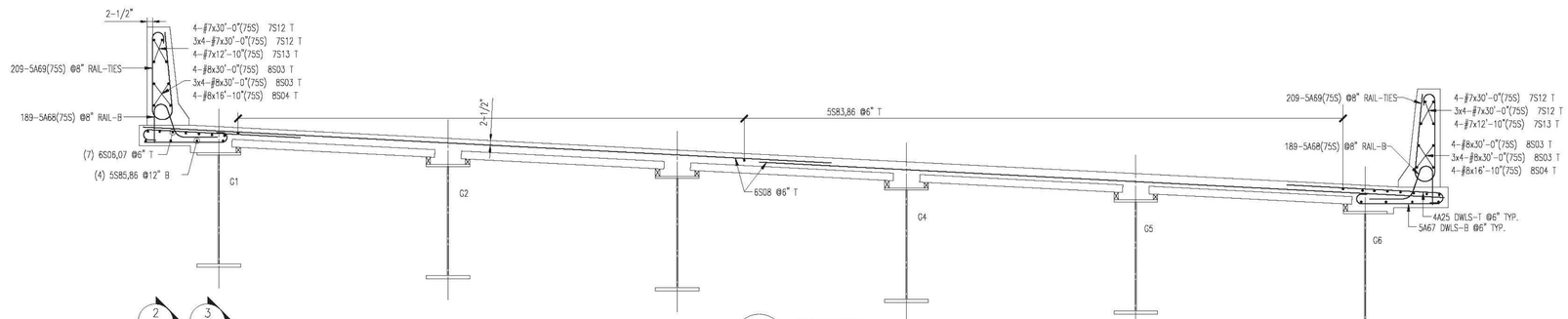

1 R04S SECTION
SCALE: N.T.S.

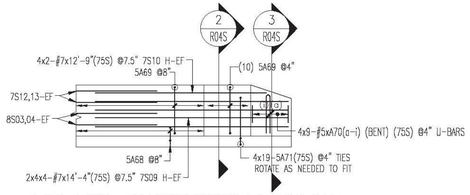

RAIL END TRANSITIONS ELEVATION

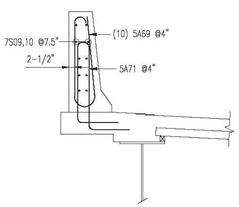

2 R04S SECTION
SCALE: N.T.S.

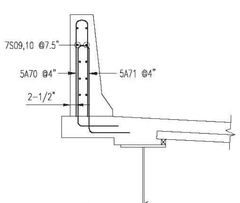

3 R04S SECTION
SCALE: N.T.S.

LAP CHART-U.N.O.

#11		
#10		
#9		
#8	54"	54"
#7	41"	41"
#6	31"	31"
#5	26"	26"
#4		
#3		
SIZE	TOP BARS ★	OTHER BARS

★ -Top bars are horiz. bars with more than 12" of concrete cast below the bars.

SEE SHEET R06S FOR BAR LISTS
3" CLR COVER U.N.O.

ALL MATERIAL ON THIS DRAWING NOTED AS (75S) SHALL BE ASTM "ASTM A955" STAINLESS STEEL

No.	Description	Date	By
2	FINAL APPROVAL PRINT	03/09/15	CPS
1	APPROVAL PRINT	02/13/15	CPS

Revisions and Issue Record

The full intent and purpose of this drawing is the placing of reinforcing steel bars ONLY. It is NOT to be used as a means of communication between the Architect, Engineer, Contractor or any other Sub-trades.

THIS DRAWING IS NOT TO BE SCALED.

HarrisRebar Barker Steel
National Strength. Local Service.

DETAILED AT:
CANAAN
NEW HAMPSHIRE

Project: BRIDGE 43 S REPLACEMENT
I-91 HARTFORD VT

Drawing: I-91 SOUTHBOUND
DECK REINFORCEMENT

Customer: PCL CIVIL CONSTRUCTORS

Engineer: G LAROCHE

Refer to Release:

Date	Drawn	Chkd.	JOB No.	Dwg. No.
02/09/15	CPS		33505535	R04S

Vermont Agency of Transportation
RECEIVED
CK'D BY RK/GL OK'D BY WL
March 9, 2015
RESUBMIT NO Approved
BY KH DATE 3-12-2015

W:\csample\Projects\33505535\Placing Drawings\DWGs\R01S.dwg

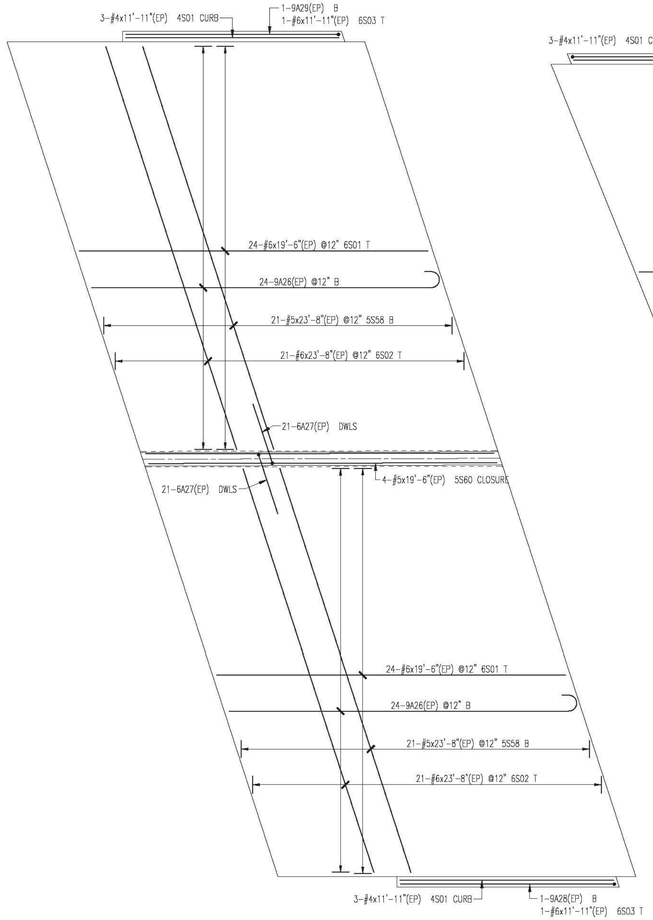

ABUTMENT 1 APPROACH SLAB

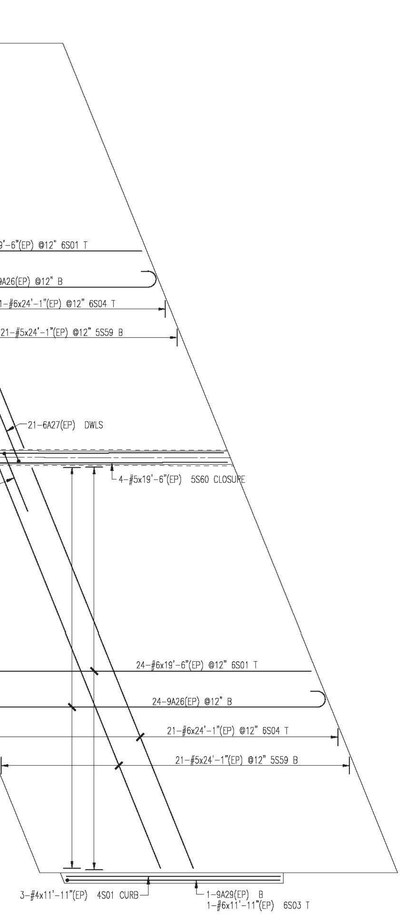

ABUTMENT 2 APPROACH SLAB

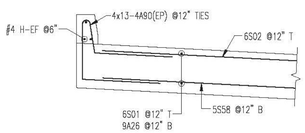

TYPICAL APPROACH SLAB @ CURB

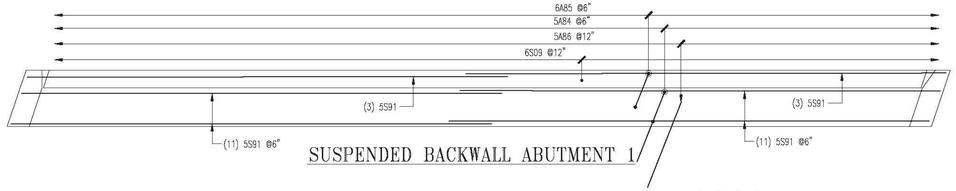

SUSPENDED BACKWALL ABUTMENT 1

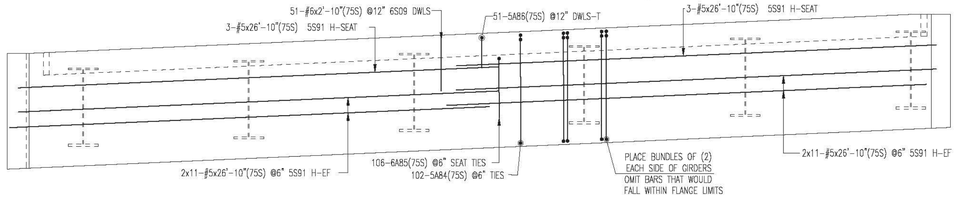

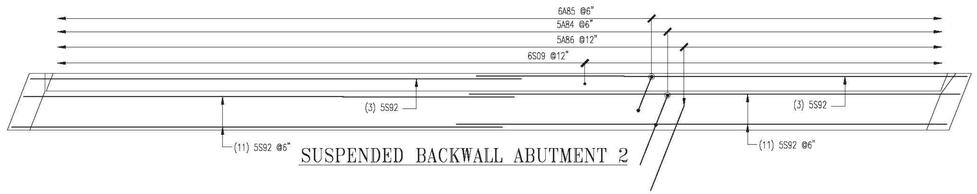

SUSPENDED BACKWALL ABUTMENT 2

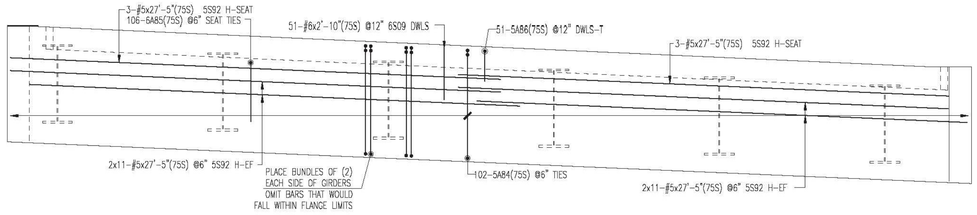

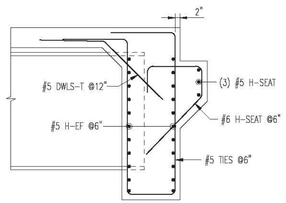

TYPICAL SUSPENDED BACKWALL SECTION

ALL MATERIAL NOTED AS (75S) SHALL BE "ASTM A955" STAINLESS STEEL

ALL MATERIAL NOTED AS "EP" SHALL BE ASTM A1055 GRADE 60 "DUAL COATED"

SEE SHEET R06S FOR BAR LISTS
3" CLR COVER U.N.O.

LAP CHART-U.N.O.

SIZE	TOP BARS ★	OTHER BARS
#11		
#10		
#9		
#8	54"	54"
#7	41"	41"
#6	31"	31"
#5	26"	26"
#4		
#3		

★ -Top bars are horiz. bars with more than 12" of concrete cast below the bars.

Vermont Agency of Transportation

RECEIVED

CK'D BY RK/GL OK'D BY WL

March 9, 2015

RESUBMIT NO Approved

BY KH DATE 3-12-2015

No.	Description	Date	By
2	FINAL APPROVAL PRINT	03/09/15	CPS
1	APPROVAL PRINT	02/13/15	CPS

Revisions and Issue Record

The full intent and purpose of this drawing is the placing of reinforcing steel bars ONLY. It is NOT to be used as a means of communication between the Architect, Engineer, Contractor or any other Sub-trades.

THIS DRAWING IS NOT TO BE SCALED.

HarrisRebar Barker Steel — National Strength. Local Service.

DETAILED AT: CANAAN NEW HAMPSHIRE

Project: BRIDGE 43 S REPLACEMENT I-91 HARTFORD VT

Drawing: I-91 SOUTHBOUND APPROACH SLABS AND SUSPENDED BACKWALLS

Customer: PCL CIVIL CONSTRUCTORS

Engineer: G LAROCHE

Refer to Release:

Date	Drawn	Chkd.	JOB No.	Dwg. No.
02/09/15	CPS		33505535	R05S

W:\csample\Projects\33505535\Placing Drawings\DWGs\R01S.dwg

Drawing Sheet : R01S

BAR LIST

	Bar Mark	Qty	Size	Total Length	Type	'A'	'B'	'C'	'D'	'E'	'F'	'G'	'H'	'J'	'K'	'O'	'R'
75S	A14a	1	#5	4'-7"			4'-7"										
	Varies To																
75S	A14k	1	#5	7'-5"			7'-5"										
75S	SA08	23	#5	7'-5"	17		2'-5"	2'-7"	2'-5"								
75S	SA09	14	#5	5'-4"	H91		2'-8 K"	2'-8"							2'-7 K"		9 K"
75S	SA10	2	#5	7'-1"	3		2'-5"	4'-8"							2'-7"		3'-10 K" 6'-3 K"
75S	SA12	8	#5	12'-5"	3		7'-8"	4'-9"							3'-4 K"		3'-3 K" 10'-11 K"
75S	SA13	14	#5	6'-5"	17		2'-5"	1'-7"	2'-5"								
75S	SA15	1	#5	11'-K"	3		7'-5 K"	3'-7 K"							1'-5 K"		3'-4" 10'-9 K"
75S	SA16	1	#5	7'-11"	3		7'-5 K"	5 K"							2 K"		5" 7'-10 K"
75S	SA64	22	#5	4'-10"	3		2'-5"	2'-5"							1'-7"		1'-9 K" 4'-2 K"
75S	SS18	7	#5	5'-3"			5'-3"										
75S	SS19	2	#5	3'-11"			3'-11"										
75S	SS20	12	#5	9'-2"			9'-2"										
75S	SS22	11	#5	3'-1"			3'-1"										
75S	SS23	7	#5	7'-4"			7'-4"										
75S	SS24	1	#5	5'-6"			5'-6"										
75S	SS25	1	#5	8'-5"			8'-5"										
75S	SS46	14	#5	7'-10"			7'-10"										
75S	SS50	11	#5	5'-7"			5'-7"										
75S	SS57	23	#5	7'-0"			7'-0"										
75S	SS76	7	#5	5'-5"			5'-5"										
75S	SS84	1	#5	3'-8"			3'-8"										
75S	SS83	7	#5	10'-5"			10'-5"										
75S	SS94	1	#5	6'-11"			6'-11"										
	SA02	101	#5	7'-5"	17		2'-5"	2'-7"	2'-5"								
	SA03	28	#5	5'-4"	H91		2'-8 K"	2'-8"							2'-7 K"		9 K"
	SA04	29	#5	4'-10"	3		2'-5"	2'-5"							1'-7"		1'-9 K" 4'-2 K"
	SA05	58	#5	11'-0"	3		5'-6"	5'-6 K"							3'-7"		4'-2 K" 9'-8 K"
	SA11	14	#5	12'-11"	16	2'-5"	4'-7"	1'-7"	4'-9"						3'-4 K"		3'-4 K" 4'-6 K"
	SA65	78	#5	8'-4 K"	25		1'-6"	2'-3 K"	10"	2'-3 K"	1'-6"				2'-2 K"		1'-1 K"
	SS01	24	#5	5'-8"			5'-8"										
	SS02	24	#5	13'-1"			13'-1"										
	SS03	25	#5	33'-10"			33'-10"										
	SS24	25	#5	34'-8"			34'-8"										
	SS25	2	#5	8'-8"			8'-8"										
	SS26	54	#5	30'-8"			30'-8"										
	SS27	2	#5	18'-9"			18'-9"										
	SS28	23	#5	18'-6"			18'-6"										
	SS29	12	#5	19'-4"			19'-4"										
	SS30	13	#5	19'-9"			19'-9"										
	SS31	12	#5	20'-2"			20'-2"										
	SS12	12	#5	18'-10"			18'-10"										
	SS13	54	#5	12'-0"			12'-0"										
	SS14	11	#5	19'-8"			19'-8"										
	SS15	25	#5	11'-0"			11'-0"										
	SS16	25	#5	10'-2"			10'-2"										
	SS17	23	#5	18'-3"			18'-3"										
	SS21	2	#5	7'-5"			7'-5"										
	SS28	2	#5	3'-5"			3'-5"										
	SS27	48	#5	30'-0"			30'-0"										
	SS40	3	#5	18'-5"			18'-5"										
	SS44	113	#5	5'-2"			5'-2"										
	SS85	14	#5	20'-8"			20'-8"										
	SS71	2	#5	9'-6"			9'-6"										
	SS72	19	#5	10'-6"			10'-6"										
	7S01	11	#7	11'-0"			11'-0"										
	7S02	37	#7	14'-1"			14'-1"										
	7S03	23	#7	19'-8"			19'-8"										
	7S04	218	#7	10'-6"			10'-6"										
	7S07	43	#7	12'-10"			12'-10"										
	BA07	23	#8	14'-3"	17		5'-6"	8'-9"									
	SA01	80	#3	14'-4"	17		5'-7"	8'-9"									
	SS21	80	#3	10'-0"			10'-0"										
75S	SS93	1	#5	1'-11"			1'-11"										
75S	SS96	1	#5	5'-1"			5'-1"										
75S	SS97	3	#5	7'-6"			7'-6"										
75S	A87a	1	#5	4'-8"			4'-8"										
	Varies To																
75S	A87n	1	#5	7'-4"			7'-4"										
	SA91	28	#5	13'-5"	3			2'-5"	8'-7"	2'-5"				1'-11 K"		1'-4 K"	11'-4"

ABUTMENT 1 AND WINGWALLS 1 & 2

Drawing Sheet : R02SS

BAR LIST

	Bar Mark	Qty	Size	Total Length	Type	'A'	'B'	'C'	'D'	'E'	'F'	'G'	'H'	'J'	'K'	'O'	'R'
EP	4S21	12	#4	11'-11"			11'-11"										
75S	SA84	204	#5	16'-7"	H66		7'-5"	8'-1"	1'-10"	5'-10"	2'-5"						
75S	SA86	102	#5	5'-8"	3		3'-1"	2'-5"							1'-8 K"		1'-8 K" 4'-9 K"
EP	SS58	42	#5	23'-8"			23'-8"										
EP	SS56	42	#5	24'-1"			24'-1"										
EP	SS60	8	#5	19'-6"			19'-6"										
75S	SS91	50	#5	26'-10"			26'-10"										
75S	SS92	50	#5	27'-5"			27'-5"										
EP	6A27	84	#6	7'-2 K"	S11		7'-2 K"										
75S	6A85	212	#6	7'-3"	16	1'-0"	2'-1"	1'-2"	3'-0"						2'-1 K"		2'-1 K" 3'-3 K"
EP	6S01	98	#6	19'-6"			19'-6"										
EP	6S02	42	#6	23'-8"			23'-8"										
EP	6S03	4	#6	11'-11"			11'-11"										
EP	6S04	42	#6	24'-1"			24'-1"										
75S	6S05	102	#6	2'-10"			2'-10"										
EP	9A26	98	#9	20'-8 K"	1	1'-3"	19'-5 K"										
EP	9A28	2	#9	13'-3"	1	1'-3"	12'-0"								11 K"		
EP	9A29	2	#9	13'-3"	1	1'-3"	11'-11"								11 K"		
EP	4A90	52	#4	7'-0"	H4		2'-2"	1'-6 K"	3 K"	10"	2'-2"						1 K"

APPROACH SLABS & SUSPENDED BACKWALLS

Drawing Sheet : R04S

BAR LIST

	Bar Mark	Qty	Size	Total Length	Type	'A'	'B'	'C'	'D'	'E'	'F'	'G'	'H'	'J'	'K'	'O'	'R'
75S	4A25	452	#4	5'-0"	1	5"	4'-8"							4"			
75S	A70a	4	#5	5'-8"	17		2'-7"	6"	2'-7"								
	Varies To																
75S	A70	4	#5	7'-6"	17		3'-8"	6"	3'-6"								
75S	A70n	10	#5	6'-5"			6'-5"										
	Varies To																
75S	A75l	10	#5	9'-1"			9'-1"										
75S	A78a	1	#5	2'-5"			2'-5"										
	Varies To																
75S	A78l	1	#5	28'-6"			28'-8"										
75S	A79a	2	#5	11'-9"			11'-9"										
	Varies To																
75S	A79f	2	#5	19'-1"			19'-1"										
75S	A81a	1	#5	1'-6"			1'-8"										
	Varies To																
75S	A81l	1	#5	27'-8"			27'-8"										
75S	A82a	2	#5	18'-7"			18'-7"										
	Varies To																
75S	A82f	2	#5	25'-11"			25'-11"										
75S	SA67	480	#5	3'-5"	1	7"	3'-2"										
75S	SA68	378	#5	4'-10"	H1		1'-3"	8 K"	1'-1"	6 K"	1'-3"				5"		
75S	SA69	418	#5	7'-9"	H2		10 K"	2'-9"	1'-2 K"	2'-11"					2 K"		5 K" 4 K"
75S	SA71	76	#5	9'-7"	H3		1'-8"	3'-2 K"	5"	2'-11 K"	1'-4"						
75S	SA74	123	#5	5'-8"	1	7"	5'-1"								5"		
75S	SS83	88	#5	24'-6"			24'-6"										
75S	SS85	8	#5	24'-8"			24'-8"										
75S	SS86	388	#5	30'-0"			30'-0"										
75S	SS87	6	#5	11'-6"			11'-6"										
75S	SS88	6	#5	20'-2"			20'-2"										
75S	SS89	6	#5	20'-7"			20'-7"										
75S	SS93	6	#5	11'-9"			11'-9"										
75S	SS95	1	#5	2'-5"			2'-8"										
	Varies To																
75S	A78o	1	#6	21'-11"			21'-11"										
75S	A77a	1	#6	2'-5"			2'-5"										
	Varies To																
75S	A77k	1	#6	26'-10"			26'-10"										
75S	A80a	1	#6	1'-6"			1'-8"										
	Varies To																
75S	A80l	1	#6	27'-8"			27'-8"										
75S	A83a	1	#6	3'-6"			3'-5"										
	Varies To																
75S	A83o	1	#6	22'-10"			22'-10"										
75S	6S05	56	#6	30'-0"			30'-0"										
75S	6S07	14	#6	26'-4"			26'-4"										
75S	6S08	504	#6	25'-7"			25'-7"										
75S	7S09	32	#7	14'-4"			14'-4"										
75S	7S10	8	#7	12'-5"			12'-9"										
75S	7S12	32	#7	30'-0"			30'-0"										
75S	7S13	8	#7	12'-10"			12'-10"										
75S	8S03	32	#8	30'-0"			30'-0"										
75S	8S04	8	#8	16'-10"			16'-10"										

DECK AND RAILS

Drawing Sheet : R02S

BAR LIST

	Bar Mark	Qty	Size	Total Length	Type	'A'	'B'	'C'	'D'	'E'	'F'	'G'	'H'	'J'	'K'	'O'	'R'
75S	A24a	1	#5	3'-1"			3'-1"										
	Varies To																
75S	A24j	1	#5	7'-4"			7'-4"										
75S	SA08	28	#5	7'-5"	17		2'-5"	2'-7"	2'-5"								
75S	SA13	17	#5	6'-5"	17		2'-5"	1'-7"	2'-5"								
75S	SA22	2	#5	9'-1 K"	3		8'-1 K"	1'-0"									
75S	SA23	20	#5	4'-8"	3		2'-4"	2'-4"							1'-11 K"		1'-3 K" 3'-7 K"
75S	SA50	14	#5	4'-8"	3		2'-4"	2'-4"							2'-1 K"		11 K" 3'-3 K"
75S	SA73	2	#5	6'-K"	3		3'-9 K"	2'-3"							1'-2 K"		1'-10 K" 5'-8 K"
75S	SA89	8	#5	12'-3 K"	3		7'-8"	4'-9 K"							3'-4 K"		3'-4 K" 11'-K"
75S	SS20	7	#5	9'-2"			9'-2"										
75S	SS47	2	#5	6'-7"			6'-7"										
75S	SS48	5	#5	4'-3"			4'-3"										
75S	SS49	5	#5	3'-0"			3'-0"										
75S	SS51	11	#5	4'-1"			4'-1"										
75S	SS52	14	#5	7'-11"			7'-11"										
75S	SS55	7	#5	7'-8"			7'-8"										
75S	SS26	7	#5	5'-0"			5'-0"										
75S	SS57	24	#5	7'-0"			7'-0"										
75S	SS75	10	#5	7'-9"			7'-9"										
75S	SS76	5	#5	5'-5"			5'-5"										
75S	SS77	11	#5	5'-6"			5'-6"										
75S	SS84	2	#5	3'-8"			3'-8"										
75S	SS97	3	#5	7'-6"			7'-6"										
	SA02	80	#5	7'-5"	17		2'-5"	2'-7"	2'-5"								
	SA11	15	#5	12'-11"	16	2'-5"	4'-7"	1'-7"	4'-9"						3'-4 K"		3'-4 K" 4'-6 K"
	SA19	25	#5	4'-8"	3		2'-4"	2'-4"							2'-1 K"		11 K" 3'-3 K"
	SA21	28	#5	4'-8"	3		2'-4"	2'-4"							1'-11 K"		1'-3 K" 3'-7 K"
	SA65	78	#5	8'-4 K"	25		1'-6"	2'-3 K"	10"	2'-3 K"	1'-6"				2'-2 K"		1'-1 K"
	SS27	24	#5	30'-0"			30'-0"										
	SS28	24	#5	30'-4"			30'-4"										
	SS29	24	#5	13'-0"			13'-0"										
	SS30	12	#5	18'-7"			18'-7"										
	SS31	13	#5	19'-0"			19'-0"										
	SS32	13	#5	19'-6"			19'-6"										
	SS33	13	#5	20'-5"			20'-5"										
	SS34	12	#5	19'-11"			19'-11"										
	SS35	50	#5	33'-9"			33'-9"										
	SS36	52	#5	31'-4"			31'-4"										
	SS37	2	#5	8'-10"			8'-10"										
	SS38	2	#5	28'-8"			28'-8"										
	SS39	2	#5	10'-2"			10'-2"										
	SS41	3	#5	19'-5"			19'-5"										
	SS42	54	#5	11'-5"			11'-5"										
	SS43	50	#5	11'-3"			11'-3"										
	SS44	125	#5	5'-2"			5'-2"										
	SS45	28	#5	18'-2"			18'-2"										
	SS53	2	#5	4'-1"			4'-1"										
	SS54	2	#5	5'-1"			5'-1"										
	SS72	19	#5	10'-6"			10'-6"										
	SS74	24	#5	18'-1"			18'-1"										
	SS78	12	#5	19'-4"			19'-4"										
	7S04	224	#7	10'-6"			10'-6"										
	7S05	38	#7	13'-9"			13'-9"										
	7S06	44	#7	12'-6"			12'-6"										
	7S11	21	#7	19'-4"			19'-4"										
	BA07	21	#8	14'-3"	17		5'-6"	8'-9"									
	BA17	82	#9	14'-3"	17		5'-6"	8'-9"									
	SS01	82	#9	10'-0"			10'-0"										
75S	A88a	1	#5	3'-2"			3'-2"										
	Varies To																
75S	A88n	1	#5	7'-6"			7'-6"										
75S	SA92	27	#5	18'-10 K"	3			2'-3"	14'-4 K"	2'-3"				1'-1"		1'-11 K"	18'-4 K"
	SA93	25	#5	17'-2 K"	3			2'-3"	12'-8 K"	2'-3"				1'-3"		1'-10 K"	16'-5 K"

ABUTMENT 2 AND WINGWALLS 3 & 4

MATERIAL/COATING CODE TO THE LEFT OF BAR MARK ADDED BY PCL

Drawing Sheet : R03S

BAR LIST

	Bar Mark	Qty	Size	Total Length	Type	'A'	'B'	'C'	'D'	'E'	'F'	'G'	'H'	'J'	'K'	'O'	'R'
	A34a	2	#5	2'-0"			2'-0"										
	Varies To																
	A34h	2	#5	22'-9"			22'-9"										
	A35a	1	#5	6'-0"			6'-0"										
	Varies To																
	A35l	1	#5	8'-9"			8'-9"										
	A37a	1	#5	17'-6"			17'-6"										
	Varies To																
	A37l	1	#5	19'-10"			19'-10"										
	A46a	1	#5	12'-5"			12'-5"										
	Varies To																
	A48h	1	#5	12'-7"			12'-7"										
	A49a	1	#5	17'-1"			17'-1"										
	Varies To																
	A49l	1	#5	17'-3"			17'-3"										
	A51a	2	#5	3'-2"			3'-2"										
	Varies To																
	A51h	2	#5	19'-8"			19'-8"										
	A52a	1	#5	15'-4"			16'-4"										
	Varies To																
	A52l	1	#5	19'-8"			19'-8"										
	A54a	2	#5	7'-8"			7'-8"										
	Varies To																
	A54m	2	#5	12'-10"			12'-10"										
	A60a	1	#5	13'-3"			13'-3"										
	Varies To																
	A60h	1	#5	13'-8"			13'-8"										
	A61a	1	#5	17'-10"			17'-10"										
	Varies To																
	A61l	1	#5	18'-4"			18'-4"										
	5A30	15	#5	9'-6 K"	3		3'-3 K"	4'-4"	2'-2"				3'-0"		3'-0"		8'-5 K"
	5A31	27	#5	7'-10 K"	20		2'-5"	3'-K"	2'-2"								
	5A32	57	#5	7'-9"	17		3'-7"	4'-2"									
	5A38	111	#5	6'-5"	17		2'-5"	1'-7"	2'-5"								
	5A40	5	#5	10'-10 K"	3		2'-2"	6'-4 K"	2'-4 K"				4'-6"		4'-6"		5'-4"
	5A41	11	#5	8'-10 K"	20		2'-2"	4'-6 K"	2'-2"								
	5A42	5	#5	12'-2 K"	3		3'-5"	5'-4 K"	2'-4 K"				4'-6"		4'-6"		10'-4 K"
	5A43	11	#5	8'-4 K"	20		2'-6"	4'-6 K"	2'-2"								
	5A55	5	#5	10'-0"	3		2'-2"	5'-8"	2'-2"				4'-0"		4'-0"		8'-4"
	5A56	12	#5	8'-4 K"	20		2'-2"	4'-K"	2'-2"								
	5A57	5	#5	11'-6"	3		3'-5"	5'-6"	2'-4 K"				4'-0"		4'-0"		9'-10 K"
	5A58	11	#5	8'-10 K"	20		2'-8"	4'-K"	2'-2"								
	5A65	102	#5	6'-8"	25		1'-6"	1'-4"	10"	1'-4"	1'-8"		1'-3 K"		7 K"		
	SS51	14	#5	25'-8"			25'-6"										
	SS52	2	#5	26'-10"			26'-10"										
	SS53	47	#5	8'-8"			8'-8"										
	SS54	43	#5	12'-6"			12'-8"										
	SS55	1098	#5	4'-2"			4'-2"										
	SS57	2	#5	22'-5"			22'-5"										
	SS58	6	#5	7'-8"			7'-8"										
	SS59	2	#5	18'-0"			18'-0"										
	SS70	2	#5	28'-7"			28'-7"										
	SS71	23	#5	9'-6"			9'-6"										
	SS72	3	#5	10'-6"			10'-6"										
	SS73	4	#5	8'-6"			8'-6"										
	SS79	16	#5	20'-6"			20'-6"										
	SS80	36	#5	28'-6"			28'-6"										
	SS81	22	#5	15'-8"			15'-8"										
	SS82	193	#5	7'-6"			7'-6"										
	A47a	1	#6	12'-5"			12'-5"										
	Varies To																
	A47p	1	#6	12'-7"			12'-7"										
	A52a	1	#6	13'-3"			13'-3"										
	Varies To																
	A52o	1	#6	13'-9"			13'-9"										
	A53a	1	#6	17'-10"			17'-10"										
	Varies To																
	A53p	1	#6	18'-4"			18'-4"										
	9A44	64	#6	8'-2"	17		3'-7"	4'-7"									
	6S00	28	#6	8'-8"			8'-8"										
	A39a	1	#7	17'-8"			17'-8"										
	Varies To																
	A39p	1	#7	19'-10"			19'-10"										
	A53a	1	#7	16'-4"			16'-4"										
	Varies To																
	A53o	1	#7	19'-8"			19'-8"										
	7A33	32	#7	9'-0"	17		3'-7"	5'-5"									
	7S08	33	#7	9'-8"			9'-6"										
	8S01	32	#8	9'-8"			9'-6"										
	8S02	33	#8	10'-8"			10'-6"										
	A36a	2	#5	12'-1"			12'-1"										
	Varies To																
	A36h	2	#5	14'-2"			14'-2"										
	A43a	2	#5	7'-8"			7'-8"										
	Varies To																
	A45m	2	#5	7'-11"			7'-11"										
	A48a	1	#6	17'-1"			17'-1"										
	Varies To																
	A48p	1	#6	17'-3"			17'-3"										
	A58a	2	#5	8'-2"			8'-2"										
	Varies To																
	A58m	2	#5	9'-2"			9'-2"										

RETAINING WALLS 1 THRU 4

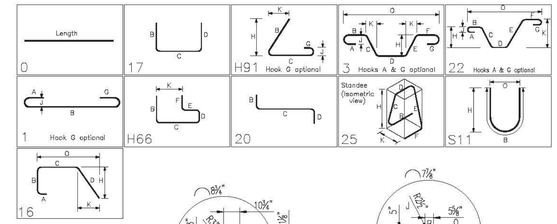

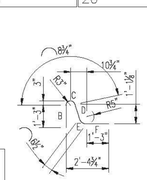

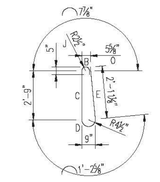

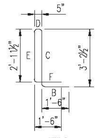

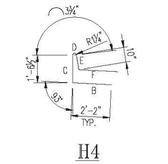

Legend:

IF	Inside Face
OF	Outside Face
NF	Near Face
FF	Far Face
EF	Each Face
V	Vertical
H	Horizontal
EW	Each Way
T	Top
SB	Support Bars
B/Bot	Bottom
BB	Bond Beam
MV	Masonry Vert.
MD	Masonry Dwls

SPECIAL BEND DETAILS

Vermont Agency of Transportation
RECEIVED
CK'D BY RK/GL OK'D BY WL
March 9, 2015
RESUBMIT NO Approved AsNoted
BY KH DATE 3-12-2015

No.	Description	Date	By
2	FINAL APPROVAL PRINT	03/09/15	CPS
1	APPROVAL PRINT	02/13/15	CPS

Revisions and Issue Record

The full intent and purpose of this drawing is the placing of reinforcing steel bars ONLY. It is NOT to be used as a means of communication between the Architect, Engineer, Contractor or any other Sub-trades.

THIS DRAWING IS NOT TO BE SCALED.

HarrisRebar Barker Steel
National Strength. Local Service.

DETAILED AT:
CANAAN
NEW HAMPSHIRE

Project: BRIDGE 43 S REPLACEMENT
I-91 HARTFORD VT

Drawing: I-91 SOUTHBOUND
BAR SCHEDULES

Customer: PCL CIVIL CONSTRUCTORS
Engineer: G LAROCHE
Refer to Release:

Date	Drawn	Chkd.	JOB No.	Dwg. No.
02/09/15	CPS		33505535	R06S

W:\csample\Projects\33505535\Placing Drawings\DWGs\R01S.dwg

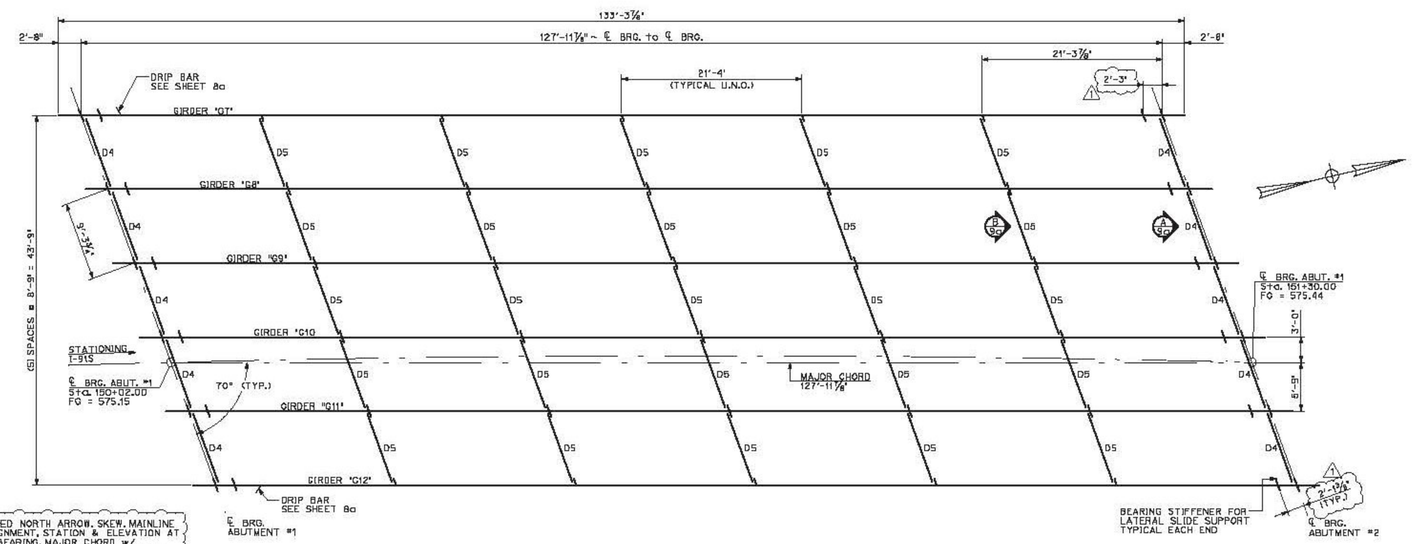

SOUTHBOUND FRAMING PLAN (BRIDGE 43S)
SCALE: ¼" = 1'-0"

2/ ADDED NORTH ARROW, SKEW, MAINLINE ALIGNMENT, STATION & ELEVATION AT ℄ BEARING, MAJOR CHORD w/ DIMENSIONS TO ADJACENT GIRDERS

2/ IT IS VERIFIED THAT THE ℄ DIAPHRAGMS ARE SHOWN ON THE CORRECT SIDE OF THE BEARING STIFFENERS. THE NOTE ON SHEET 9a HAS BEEN REMOVED.

2/ THE SHIP MARKS ON THE SOUTHBOUND BRIDGE HAVE BEEN CHANGED SO THAT THEY ARE DIFFERENT FROM THE NORTHBOUND BRIDGE.

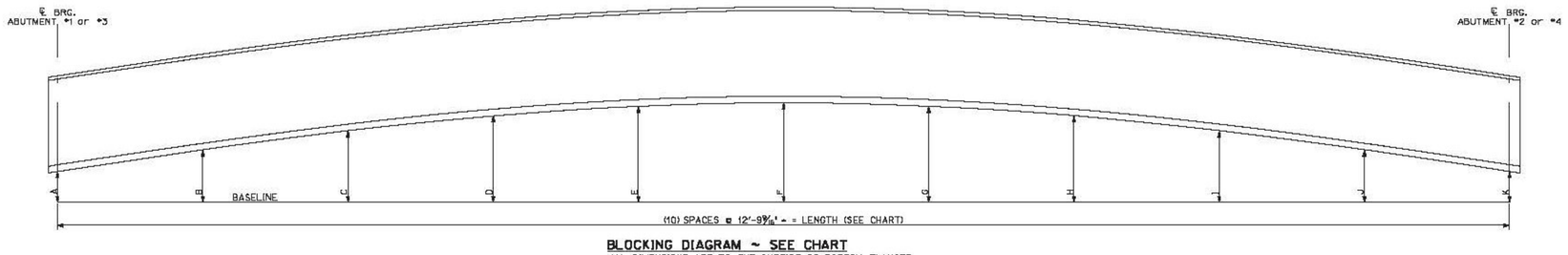

BLOCKING DIAGRAM ~ SEE CHART
ALL DIMENSIONS ARE TO THE OUTSIDE OF BOTTOM FLANGES
NOT TO SCALE

GIRDER LINE	LENGTH	ABUT. 1 ℄ BRG. 'A'	'B'	'C'	'D'	'E'	'F'	'G'	'H'	2/ 'I'	'J'	ABUT. 2 ℄ BRG. 'K'
SOUTHBOUND GIRDERS BRIDGE 43S	127'-11⅞"	6"	9"	11'-1⅛"	13¾"	15⅛"	15½"	15⅛"	13¾"	(11'-1⅛")	9"	6"
NORTHBOUND GIRDER BRIDGE 43N	127'-11¹³⁄₁₆"	6"	10⅝"	14"	17"	18⅞"	19½"	18⅞"	17"	14"	10⅝"	6"

GENERAL FABRICATION NOTES

MATERIAL SPECIFICATIONS

1.) ALL MATERIAL SHALL BE ASTM A709 GRADE 50W (UNO). THE BOTTOM FLANGES OF THE GIRDERS FOR BRIDGE 43N SHALL CONFORM TO ASTM A709 HPS 70W.

2/ 2.) ALL A709 GRADE 50W MATERIAL DENOTED "CVN" SHALL MEET THE CHARPY V-NOTCH TESTING REQUIREMENTS OF ZONE 2, H FREQUENCY: 15 FT-LB AT 40° (UP TO 2" WELDED)

ALL A709 GRADE HPS 70W MATERIAL DENOTED "CVN" SHALL MEET THE CHARPY V-NOTCH TESTING REQUIREMENTS OF ZONE 2, H FREQUENCY: 25 FT-LB AT -10° (UP TO 4" WELDED)

ITEMS SHALL CALL OUT "CVN" FOR EACH APPLICABLE ITEM IN THE BILL OF MATERIALS

3.) BOLTS SHALL BE HIGH STRENGTH BOLTS ASTM A325, TYPE 3
NUTS SHALL BE A563 GRADE DH OR DH3
WASHERS SHALL BE ASTM F436, TYPE 3

BOLTS AND NUTS SHALL BE ROTATIONAL CAPACITY TESTED. DO NOT MIX NUTS AND BOLTS FROM DIFFERENT CONTAINERS UNLESS ALL NUTS AND BOLTS HAVE THE SAME LOT NUMBER.

2/ 4.) DIRECT TENSION INDICATORS SHALL BE INSTALLED WITH ALL HIGH STRENGTH BOLTS

FABRICATION

1.) DIE STAMPING IS ALLOWED IN SPECIFIC LOCATIONS WITH THE APPROVAL OF THE ENGINEER.

2.) ALL EDGES OF FLAME CUT MATERIAL SUBJECTED TO CALCULATED STRESSES SHALL BE ROUNDED TO A MINIMUM RADIUS OF 1/16", OR AN EQUIVALENT FLAT SURFACE AT A SUITABLE ANGLE.

2/ 3.) ALL PLATES FLAME CUT FROM LARGER PLATES, SHALL BE CUT SO THAT THE PRIMARY DIRECTION OF ROLLING IS PARALLEL TO THE MAIN TENSILE OR COMPRESSIVE STRESS. STANDARD SPEC. 506.08

4.) FLANGE PLATE MATERIAL SHALL HAVE AN EDGE HARDNESS NOT GREATER THAN HRC 30, ALLOWED per STANDARD SPEC. 506.09.

WELDING

1.) ALL WELDING PROCEDURES SHALL BE IN ACCORDANCE WITH THE PROVISIONS OF SUBSECTION 506.10.

2.) NON DESTRUCTIVE TESTING OF WELDS SHALL BE IN ACCORDANCE WITH ANSI/AASHTO/AWS D1.5 – SECTION 6. FLANGE WELDS WILL BE CALLED OUT AS BEING IN EITHER COMPRESSION OR TENSION. WEB WELDS WILL LABEL EITHER TOP OR BOTTOM AS BEING IN COMPRESSION, OR BE LABELED AS BEING IN A STRESS REVERSAL AREA.

FLANGE SPLICES SHALL BE TESTED AS FOLLOWS:
FLANGE SPLICES IN TENSION ~ TESTED 100%
FLANGE SPLICES IN STRESS REVERSAL AREAS ~ TESTED 100%
FLANGE SPLICES IN COMPRESSION ~ TESTED 25%

WEB SPLICES SHALL BE TESTED AS FOLLOWS:
FOR 1/6 THE DEPTH OF THE WEB (TENSION AREA) ~ TESTED 100%
FOR THE REMAINING DEPTH OF WEB (COMPRESSION AREA) ~ TESTED 25 %

FOR 1/6 DEPTH OF THE WEB @ TOP & BTM. (STRESS REVERSAL) ~ TESTED 100%
THE REMAINING 2/3 OF THE WEB ~ TESTED 25%

2/ 3.) TERMINATE CONNECTION ℄ & STIFFENER WELDS AS SHOWN IN THE "WELD TERMINATION DETAIL" ON SHEET 8a.

FIELD CONNECTIONS

2/ 1.) FIELD BOLTS SHALL HAVE A HEAVY HEX NUT, HEX HEAD, ONE HARD WASHER, AND ONE DIRECT TENSION INDICATOR (DTI) EACH. DTI's SHALL BE INSTALLED ACCORDING TO SUBSECTION 506.19.

2.) PIECE MARKS WILL BE LOCATED AS SHOWN ON ERECTION DRAWINGS. ALL ERECTION MARKS, MATCH MARKS, AND WEIGHT MARKS MUST NOT BE EXPOSED IN THE FINISHED STRUCTURE.

CLEANING AND PAINTING

2/ 1.) UNPAINTED STEEL SHALL BE BLAST CLEANED TO SSPC SP-10 TO ACHIEVE A UNIFORM WEATHERED APPEARANCE.

Vermont Agency of Transportation
RECEIVED
CK'D BY RK/JC OK'D BY WL
February 17, 2015
RESUBMIT NO Approved
BY KH DATE 2-19-2015

PROJECT No. IM 091-2(79)
ITEM No. 506.55

FINISH	N/A				
MATERIAL	SEE DETAIL SHEETS				
HOLES					
ELECTRODES	PER WELD PROCEDURE				
WELDS	PER WELD PROCEDURE	2	2/17/14	As noted	JJH
SURFACE PREP		1	2/5/14	Lateral slide support	JJH
		NO	DATE	DESCRIPTION	BY
		REVISIONS			

ARC ENTERPRISES, INC.
ADVANCED RESOURCES & CONST. ENTERPRISES, INCORPORATED
P.O. BOX 120 KINGFIELD, ME. 04947
PHONE: (207) 265-2646 – FAX: (207) 265-4054

DRAFTER	JJH	SOUTHBOUND FRAMING PLAN	PROJECT NO. 14-180
DATE	JAN. 2015	HARTFORD, VT I-91 SB OVER US RTE 5 PROJECT NUMBER IM 091-2(79)	DWG. NO. 1a
CHECKED	GNM	SC: PCL CIVIL CONSTRUCTORS	
DATE	JAN. 2015		

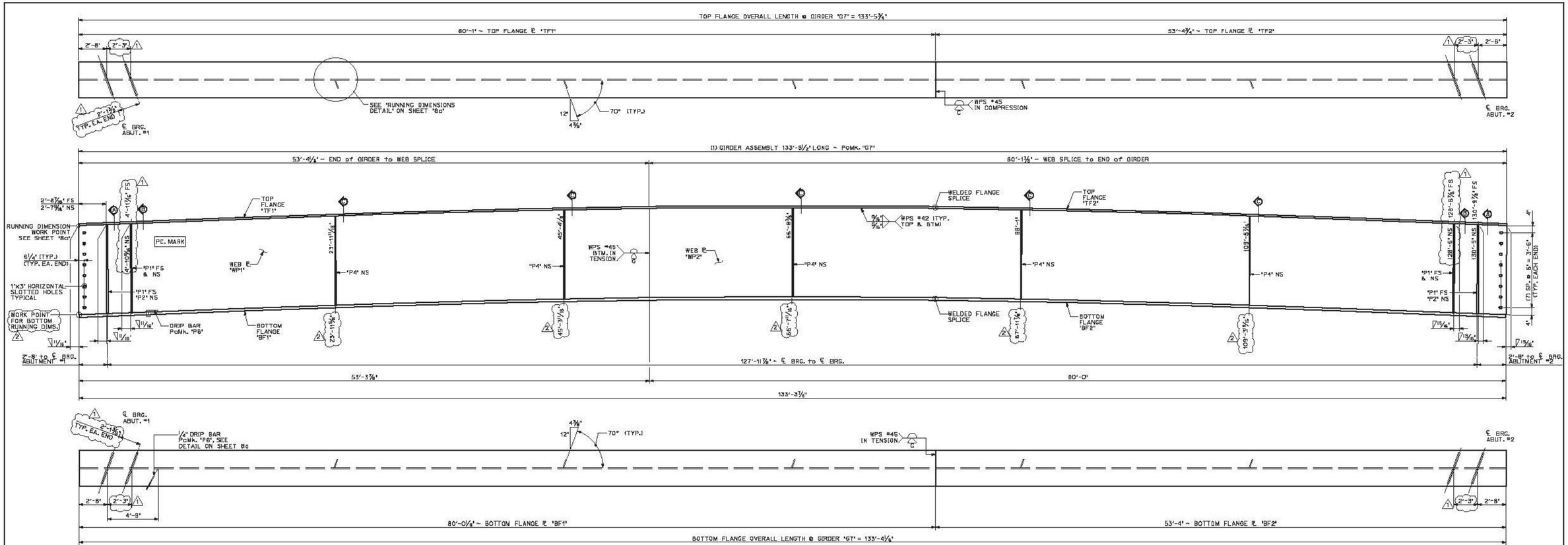

2 SHIP MARK CHANGED FROM "G1" TO "G7". (TYPICAL ALL APPLICABLE DETAILS

1 / 2g DIMENSIONAL PLANS & ELEVATIONS ~ GIRDER "G7"
HORIZONTAL SCALE: 1/4" = 1'-0"
VERTICAL SCALE EXAGGERATED 2:1

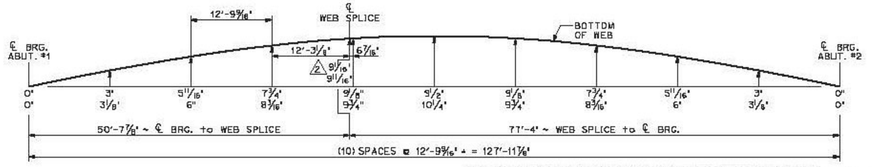

GIRDER "G1" CAMBER

THE TWO CAMBER DIMENSIONS SHOWN REPRESENT THE FOLLOWING:
TOP DIMENSION ~ TOTAL CAMBER IN FINISHED BEAM IN A NO-LOAD POSITION
BTM. DIMENSION ~ TOTAL CAMBER IN BEAM @ TIME OF FABRICATION

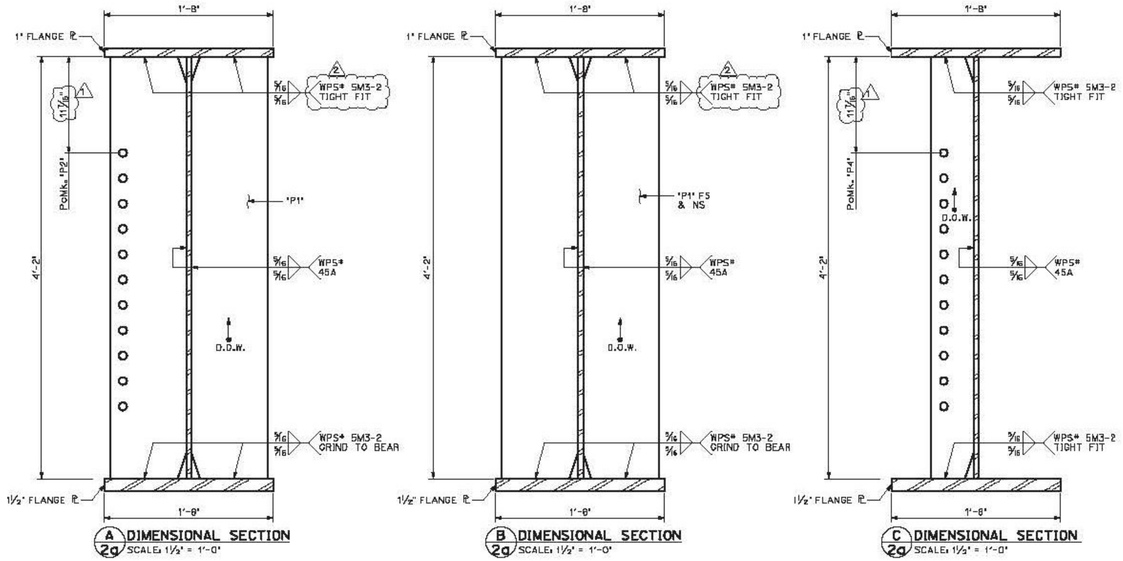

A / 2g DIMENSIONAL SECTION
SCALE: 1½" = 1'-0"

B / 2g DIMENSIONAL SECTION
SCALE: 1½" = 1'-0"

C / 2g DIMENSIONAL SECTION
SCALE: 1½" = 1'-0"

BILL OF MATERIALS

SHIP	SHIP MARK	NO. PCS.	PIECE MARK	DESCRIPTION	LENGTH	REMARKS	MAT'L	
1	G7			BRIDGE GIRDER ASSEMBLY	133'-5½"	38,100#		
		1	WP1	ℙ 5/8" x 50"	53'-4¼"	5700#	CVN	2 LENGTH VERIFIED
		1	WP2	ℙ 5/8" x 50"	80'-1⅜"	8550#	CVN	
		1	TF1	ℙ 1" x 20"	80'-1"	5475#	CVN	
		1	TF2	ℙ 1" x 20	53'-4¾"	3650#	CVN	
		1	BF1	ℙ 1½" x 20"	80'-0⅛"	8200#	CVN	
		1	BF2	ℙ 1½" x 20"	53'-4"	5450#	CVN	
		6	P1	SEE SHEET 8a 2				
		2	P2	SEE SHEET 8a				
		5	P4	SEE SHEET 8a				
		1	P6	ℙ 1/4" x 3½" DRIP BAR				

Vermont Agency of Transportation
RECEIVED
CK'D BY RKJC OK'D BY WL
February 17, 2015
RESUBMIT NO Approved
BY KH DATE 2-19-2015

PROJECT No. IM 091-2(79)
ITEM No. 506.55

FINISH	1 SSPC SP10			
MATERIAL	AASHTO M270 (ASTM A709) GRADE 50W			
HOLES	15/16 " Ø U.N.O.			
ELECTRODES	PER WELD PROCEDURE			
WELDS	PER WELD PROCEDURE	2	2/17/14	As noted JJH
SURFACE PREP	SSPC SP6	1	2/5/15	HOLE & PLATE LOCATION JJH
		NO	DATE	DESCRIPTION BY

REVISIONS

ARC BRIDGE, INC.
ADVANCED RESOURCES & CONST. ENTERPRISES, INCORPORATED
P.O. BOX 120 KINGFIELD, ME. 04947
PHONE: (207) 265-2646 – FAX: (207) 265-4034

DRAFTER	JJH	SOUTHBOUND GIRDER "G7" 2	PROJECT NO. 14-180
DATE	JAN. 2015	HARTFORD, VT I-91 SB OVER US RTE 5 PROJECT NUMBER IM 091-2(79)	
CHECKED	GNM	PCL CIVIL CONSTRUCTORS	DWG. NO. 2a
DATE	JAN. 2015		

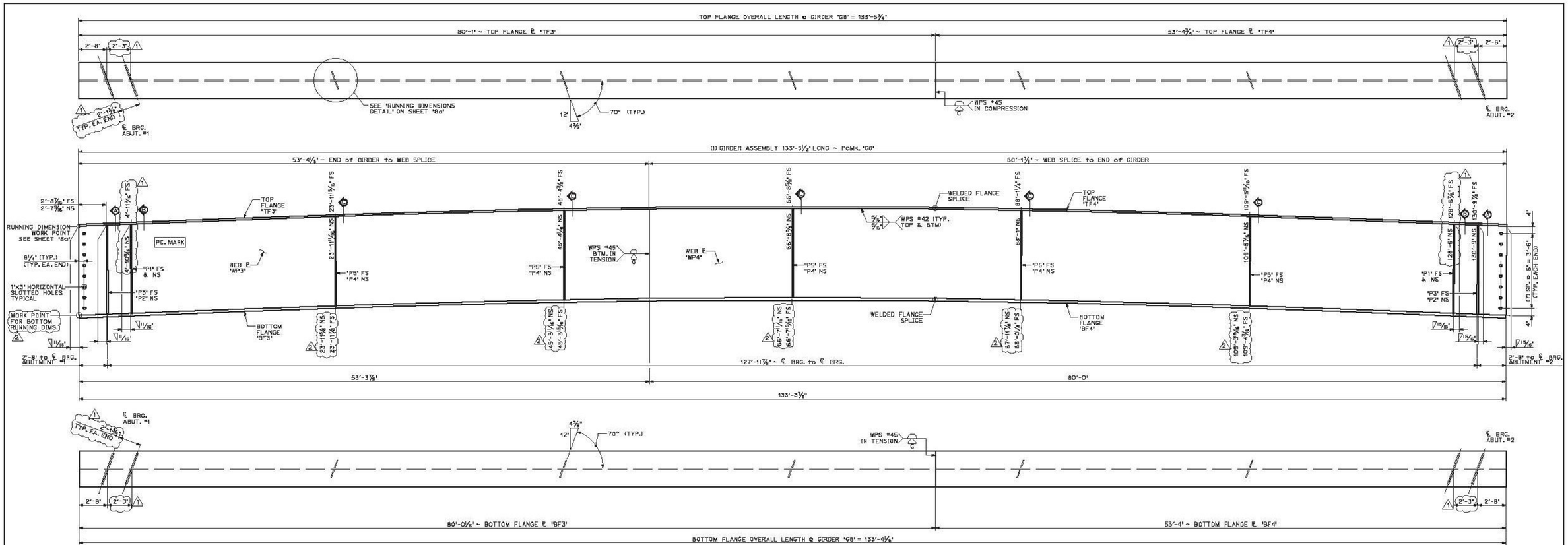

2 SHIP MARK CHANGED FROM "G2" TO "G8". TYPICAL ALL APPLICABLE DETAILS.

1 / 3a DIMENSIONAL PLANS & ELEVATIONS ~ GIRDER "G8"

HORIZONTAL SCALE: 1/4" = 1'-0"
VERTICAL SCALE EXAGGERATED 2:1

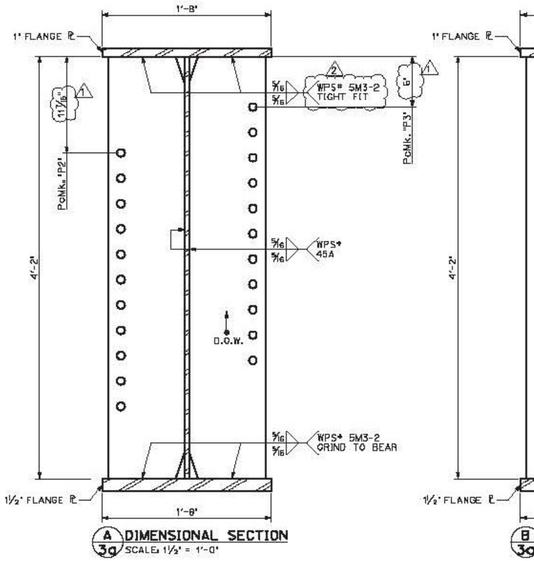

A 3a DIMENSIONAL SECTION

SCALE: 1½" = 1'-0"

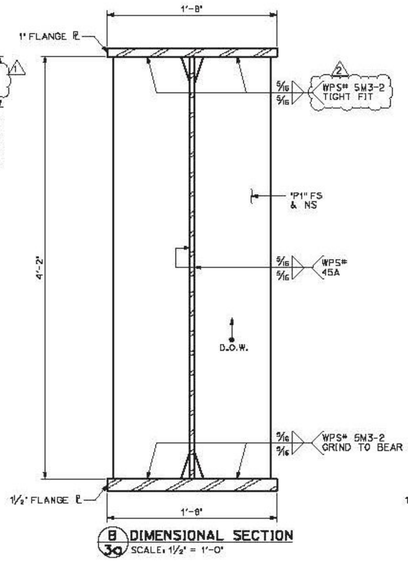

B 3a DIMENSIONAL SECTION

SCALE: 1½" = 1'-0"

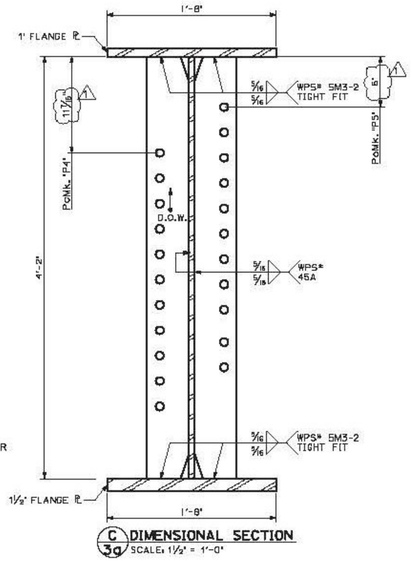

C 3a DIMENSIONAL SECTION

SCALE: 1½" = 1'-0"

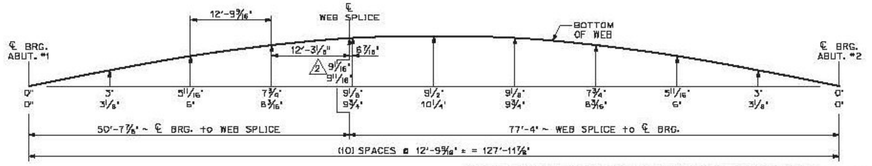

GIRDER "G8" CAMBER

THE TWO CAMBER DIMENSIONS SHOWN REPRESENT THE FOLLOWING:
TOP DIMENSION ~ TOTAL CAMBER IN FINISHED BEAM IN A NO-LOAD POSITION
BTM. DIMENSION ~ TOTAL CAMBER IN BEAM @ TIME OF FABRICATION

BILL OF MATERIALS

SHIP	SHIP MARK	NO. PCS.	PIECE MARK	DESCRIPTION	LENGTH	REMARKS	MAT'L	
1	G8			BRIDGE GIRDER ASSEMBLY	133'-5½"	38,225#		
		1	WP3	℄ 5/8" x 50"	53'-4¼"	5700#	CVN	2 LENGTH VERIFIED
		1	WP4	℄ 5/8" x 50"	80'-1⅜"	8550#	CVN	
		1	TF3	℄ 1" x 20"	80'-1"	5475#	CVN	
		1	TF4	℄ 1" x 20	53'-4¾"	3650#	CVN	
		1	BF3	℄ 1½" x 20"	80'-0⅛"	8200#	CVN	
		1	BF4	℄ 1½" x 20"	53'-4"	5450#	CVN	
		4	P1	SEE SHEET 8a 2				
		2	P2	SEE SHEET 8a				
		2	P3	SEE SHEET 8a				
		5	P4	SEE SHEET 8a				
		6	P5	SEE SHEET 8a				

Vermont Agency of Transportation
RECEIVED
CK'D BY RKJC OK'D BY WL
February 17, 2015
RESUBMIT NO Approved
BY KH DATE 2-19-2015

PROJECT No. IM 091-2(79)
ITEM No. 506.55

FINISH	1 SSPC SP10			
MATERIAL	AASHTO M270 (ASTM A709) GRADE 50W			
HOLES	15/16 " Ø U.N.O.			
ELECTRODES	PER WELD PROCEDURE			
WELDS	PER WELD PROCEDURE	2	2/17/14	As noted JJH
SURFACE PREP	SSPC SP6	1	2/5/15	HOLE & PLATE LOCATION JJH
		NO	DATE	DESCRIPTION BY

REVISIONS

ARC BRIDGE, PE
ADVANCED RESOURCES & CONST. ENTERPRISES, INCORPORATED
P.O. BOX 120 KINGFIELD, ME. 04947
PHONE: (207) 265-2646 – FAX: (207) 265-4054

DRAFTER	JJH	SOUTHBOUND GIRDER "G8" 2	PROJECT NO. 14-180
DATE	JAN. 2015	HARTFORD, VT I-91 SB OVER US RTE 5 PROJECT NUMBER IM 091-2(79)	
CHECKED	GNM	PC: PCL CIVIL CONSTRUCTORS	DWG. NO. 3a
DATE	JAN. 2015		

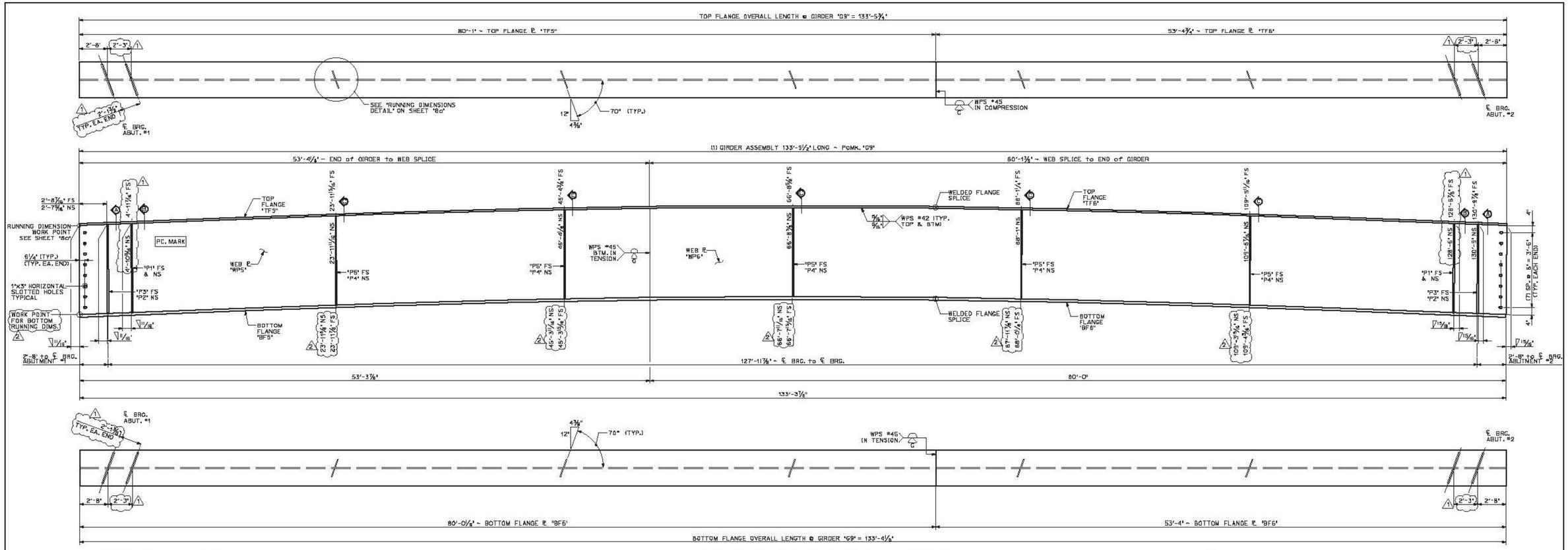

2 SHIP MARK CHANGED FROM 'G3' TO 'G9'. TYPICAL ALL APPLICABLE DETAILS

1 4a DIMENSIONAL PLANS & ELEVATIONS ~ GIRDER 'G9'

HORIZONTAL SCALE: 1/4" = 1'-0"
VERTICAL SCALE EXAGGERATED 2:1

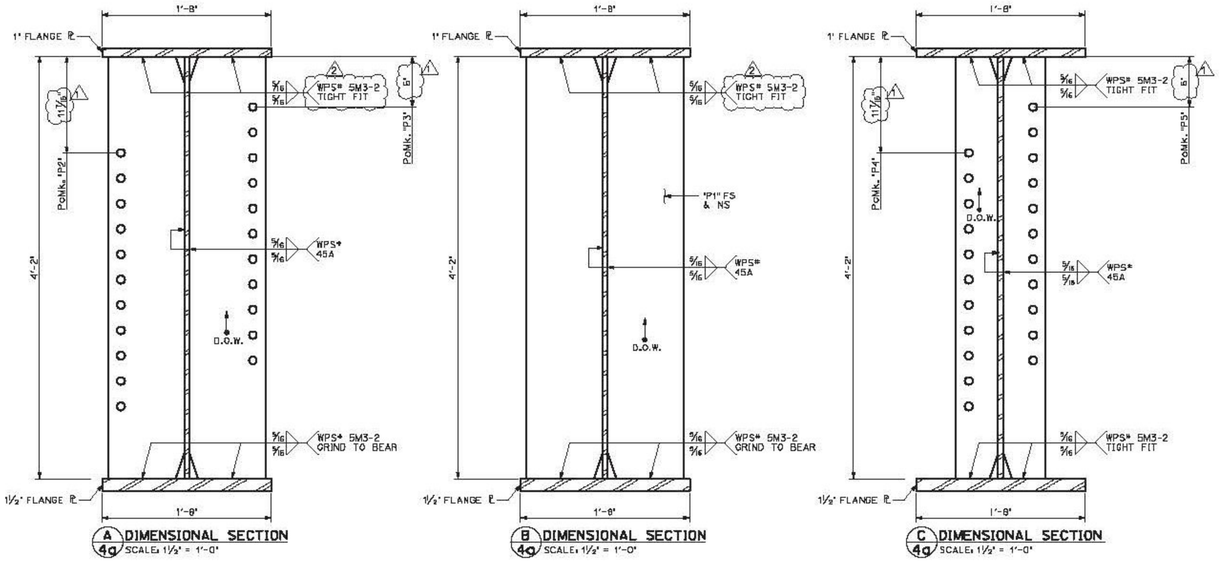

A 4a DIMENSIONAL SECTION
SCALE: 1½" = 1'-0"

B 4a DIMENSIONAL SECTION
SCALE: 1½" = 1'-0"

C 4a DIMENSIONAL SECTION
SCALE: 1½" = 1'-0"

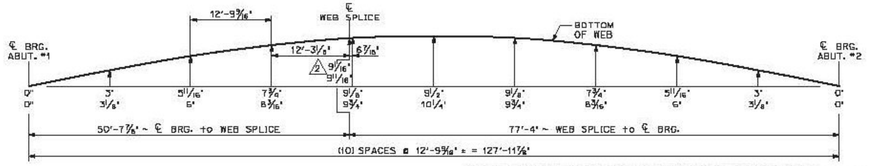

GIRDER 'G9' CAMBER

THE TWO CAMBER DIMENSIONS SHOWN REPRESENT THE FOLLOWING:
TOP DIMENSION ~ TOTAL CAMBER IN FINISHED BEAM IN A NO-LOAD POSITION
BTM. DIMENSION ~ TOTAL CAMBER IN BEAM @ TIME OF FABRICATION

BILL OF MATERIALS

SHIP	SHIP MARK	NO. PCS.	PIECE MARK	DESCRIPTION	LENGTH	REMARKS	MAT'L	
1	G9			BRIDGE GIRDER ASSEMBLY	133'-5½"	38,225#		
		1	WP5	℄ 5/8" x 50"	53'-4¼"	5700#	CVN	2 LENGTH VERIFIED
		1	WP6	℄ 5/8" x 50"	80'-1⅜"	8550#	CVN	
		1	TF5	℄ 1" x 20"	80'-1"	5475#	CVN	
		1	TF6	℄ 1" x 20	53'-4¾"	3650#	CVN	
		1	BF5	℄ 1½" x 20"	80'-0⅛"	8200#	CVN	
		1	BF6	℄ 1½" x 20"	53'-4"	5450#	CVN	
		4	P1	SEE SHEET 8a 2				
		2	P2	SEE SHEET 8a				
		2	P3	SEE SHEET 8a				
		5	P4	SEE SHEET 8a				
		5	P5	SEE SHEET 8a				

Vermont Agency of Transportation
RECEIVED
CK'D BY RKJC OK'D BY WL
February 17, 2015
RESUBMIT NO Approved
BY KH DATE 2-19-2015

PROJECT No. IM 091-2(79)
ITEM No. 506.55

FINISH	4 SSPC SP10			
MATERIAL	AASHTO M270 (ASTM A709) GRADE 50W			
HOLES	15/16 " Ø U.N.O.			
ELECTRODES	PER WELD PROCEDURE			
WELDS	PER WELD PROCEDURE	2	2/17/14	As noted JJH
SURFACE PREP	SSPC SP6	1	2/5/15	HOLE & PLATE LOCATION JJH
		NO	DATE	DESCRIPTION BY
		REVISIONS		

ARC BRIDGE, INC.
ADVANCED RESOURCES & CONST. ENTERPRISES, INCORPORATED
P.O. BOX 120 KINGFIELD, ME. 04947
PHONE: (207) 265-2646 – FAX: (207) 265-4054

DRAFTER	JJH	SOUTHBOUND GIRDER "G9" 1 2	PROJECT NO. 14-180
DATE	JAN. 2015	HARTFORD, VT I-91 SB OVER US RTE 5 PROJECT NUMBER IM 091-2(79)	
CHECKED	GNM	PCL CIVIL CONSTRUCTORS	DWG. NO. 4a
DATE	JAN. 2015		

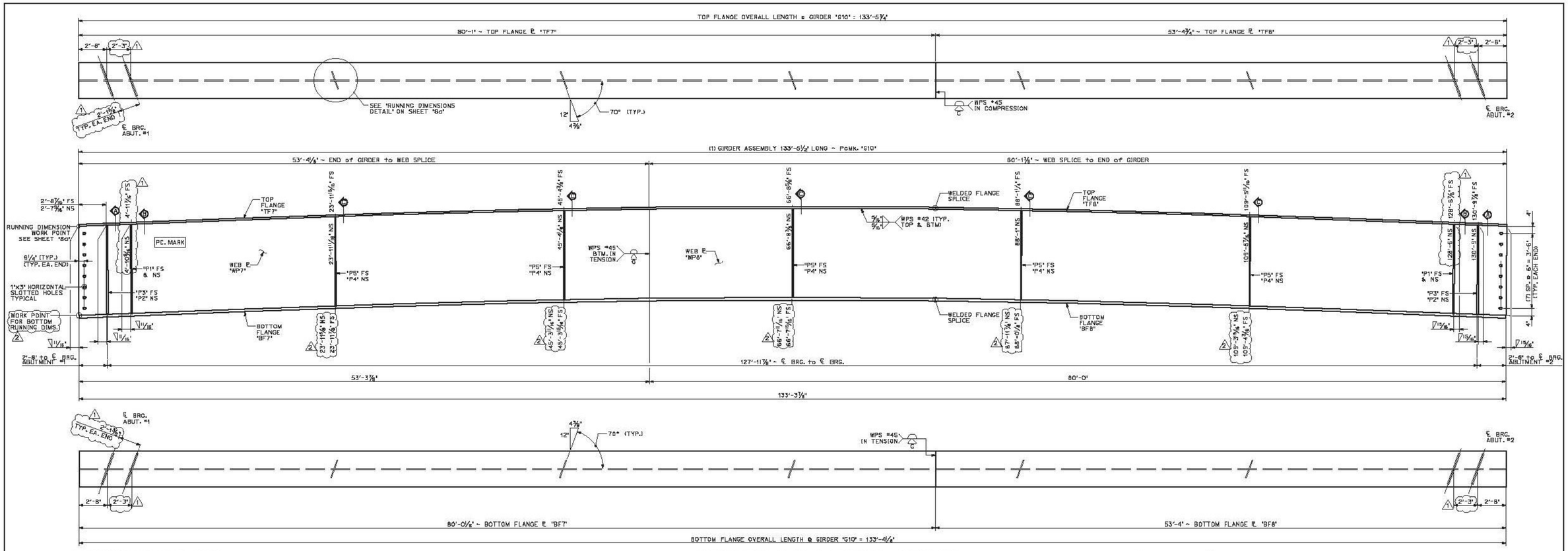

2 SHIP MARK CHANGED FROM "04" TO "G10". TYPICAL ALL APPLICABLE DETAILS

1 5a DIMENSIONAL PLANS & ELEVATIONS ~ GIRDER 'G10'
HORIZONTAL SCALE: 1/4" = 1'-0"
VERTICAL SCALE EXAGGERATED 2:1

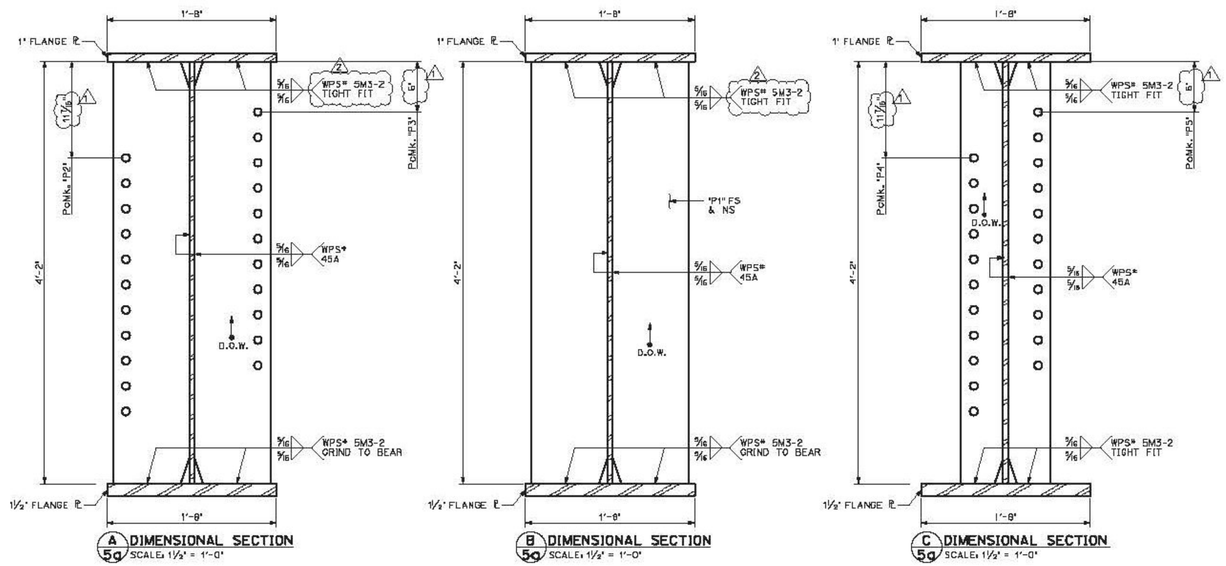

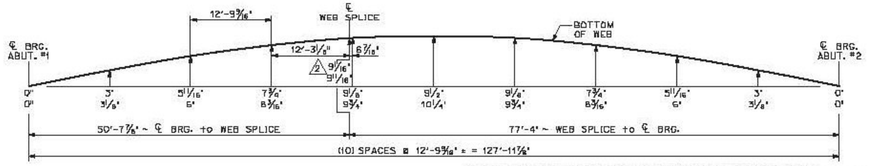

GIRDER 'G10' CAMBER

THE TWO CAMBER DIMENSIONS SHOWN REPRESENT THE FOLLOWING:
TOP DIMENSION ~ TOTAL CAMBER IN FINISHED BEAM IN A NO-LOAD POSITION
BTM. DIMENSION ~ TOTAL CAMBER IN BEAM @ TIME OF FABRICATION

BILL OF MATERIALS

SHIP	SHIP MARK	NO. PCS.	PIECE MARK	DESCRIPTION	LENGTH	REMARKS	MAT'L	
1	G10			BRIDGE GIRDER ASSEMBLY	133'-5½"	38,225#		
		1	WP7	℄ 5/8" x 50"	53'-4¼"	5700#	CVN	2 LENGTH VERIFIED
		1	WP8	℄ 5/8" x 50"	80'-1⅜"	8550#	CVN	
		1	TF7	℄ 1" x 20"	80'-1"	5475#	CVN	
		1	TF8	℄ 1" x 20	53'-4¾"	3650#	CVN	
		1	BF7	℄ 1½" x 20"	80'-0⅛"	8200#	CVN	
		1	BF8	℄ 1½" x 20"	53'-4"	5450#	CVN	
		4	P1	SEE SHEET 8a 2				
		2	P2	SEE SHEET 8a				
		2	P3	SEE SHEET 8a				
		5	P4	SEE SHEET 8a				
		5	P5	SEE SHEET 8a				

Vermont Agency of Transportation
RECEIVED
CK'D BY RKJC OK'D BY WL
February 17, 2015
RESUBMIT NO Approved
BY KH DATE 2-19-2015

PROJECT No. IM 091-2(79)
ITEM No. 506.55

FINISH	1 SSPC SP10			
MATERIAL	AASHTO M270 (ASTM A709) GRADE 50W			
HOLES	15/16 " Ø U.N.O.			
ELECTRODES	PER WELD PROCEDURE			
WELDS	PER WELD PROCEDURE	2 2/17/14	As noted	JJH
SURFACE PREP	SSPC SP6	1 2/5/15	HOLE & PLATE LOCATION	JJH
		NO DATE	DESCRIPTION	BY

REVISIONS

ARC STEEL, PE
ADVANCED RESOURCES & CONST. ENTERPRISES, INCORPORATED
P.O. BOX 120 KINGFIELD, ME. 04947
PHONE: (207) 265-2646 – FAX: (207) 265-4054

DRAFTER	JJH	SOUTHBOUND GIRDER 'G10' 1 2	PROJECT NO. 14-180
DATE	JAN. 2015	HARTFORD, VT I-91 SB OVER US RTE 5 PROJECT NUMBER IM 091-2(79)	
CHECKED	GNM	PCL CIVIL CONSTRUCTORS	DWG. NO. 5a
DATE	JAN. 2015		

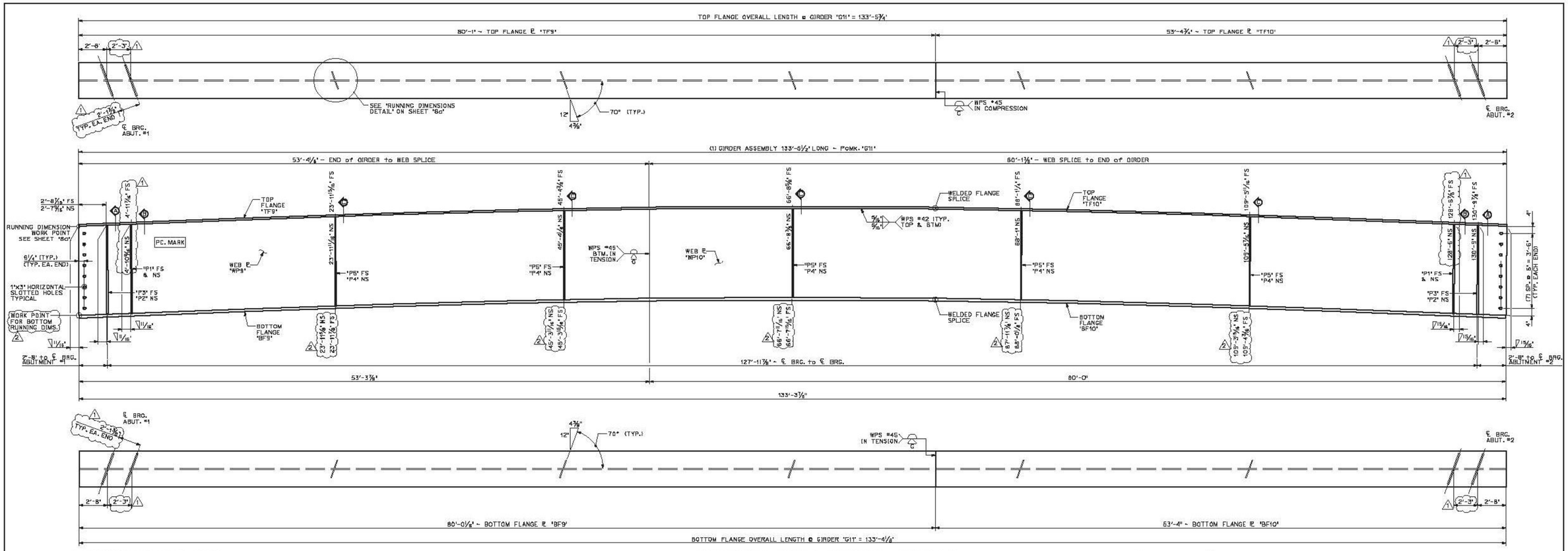

2 SHIP MARK CHANGED FROM "G5" TO "G11". TYPICAL ALL APPLICABLE DETAILS

1 / 6a DIMENSIONAL PLANS & ELEVATIONS ~ GIRDER "G11"

HORIZONTAL SCALE: ⅛" = 1'-0"
VERTICAL SCALE EXAGGERATED 2:1

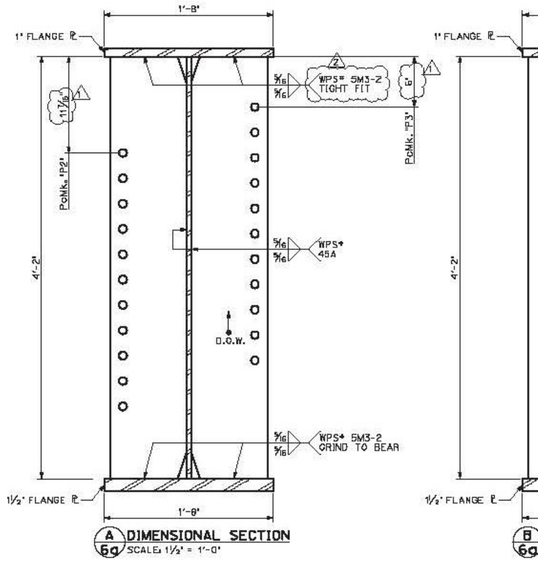

A / 6a DIMENSIONAL SECTION
SCALE: 1½" = 1'-0"

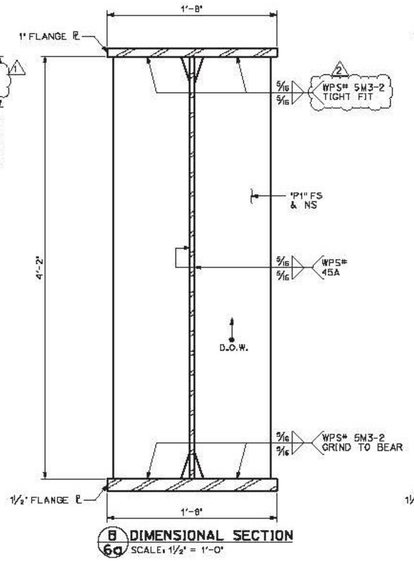

B / 6a DIMENSIONAL SECTION
SCALE: 1½" = 1'-0"

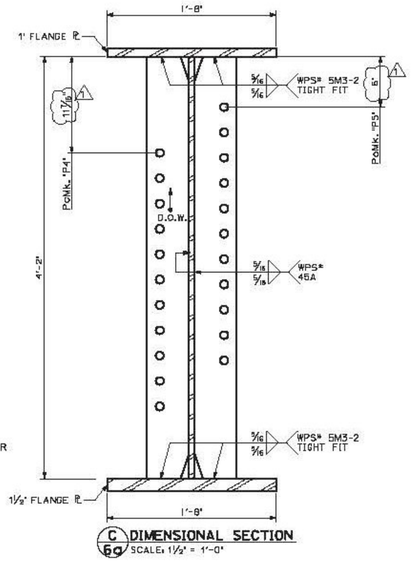

C / 6a DIMENSIONAL SECTION
SCALE: 1½" = 1'-0"

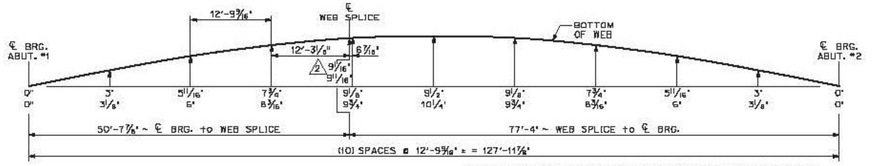

GIRDER "G11" CAMBER

THE TWO CAMBER DIMENSIONS SHOWN REPRESENT THE FOLLOWING:
TOP DIMENSION ~ TOTAL CAMBER IN FINISHED BEAM IN A NO-LOAD POSITION
BTM. DIMENSION ~ TOTAL CAMBER IN BEAM @ TIME OF FABRICATION

BILL OF MATERIALS

SHIP	SHIP MARK	NO. PCS.	PIECE MARK	DESCRIPTION	LENGTH	REMARKS	MAT'L	
1	G11			BRIDGE GIRDER ASSEMBLY	133'-5½"	38,225#		
		1	WP9	℄ ⅝" x 50"	53'-4¼"	5700#	CVN	2 LENGTH VERIFIED
		1	WP10	℄ ⅝" x 50"	80'-1⅜"	8550#	CVN	
		1	TF9	℄ 1" x 20"	80'-1"	5475#	CVN	
		1	TF10	℄ 1" x 20	53'-4¾"	3650#	CVN	
		1	BF9	℄ 1½" x 20"	80'-0⅛"	8200#	CVN	
		1	BF10	℄ 1½" x 20"	53'-4"	5450#	CVN	
		4	P1	SEE SHEET 8a 2				
		2	P2	SEE SHEET 8a				
		2	P3	SEE SHEET 8a				
		5	P4	SEE SHEET 8a				
		5	P5	SEE SHEET 8a				

Vermont Agency of Transportation
RECEIVED
CK'D BY RK/JC OK'D BY WL
February 17, 2015
RESUBMIT NO Approved
BY KH DATE 2-19-2015

PROJECT No. IM 091-2(79)
ITEM No. 506.55

FINISH	SSPC SP10			
MATERIAL	AASHTO M270 (ASTM A709) GRADE 50W			
HOLES	15/16 " Ø U.N.O.			
ELECTRODES	PER WELD PROCEDURE			
WELDS	PER WELD PROCEDURE	2	2/17/14	As noted JJH
SURFACE PREP	SSPC SP6	1	2/5/15	HOLE & PLATE LOCATION JJH
		NO	DATE	DESCRIPTION BY

REVISIONS

ARC
ADVANCED RESOURCES & CONST. ENTERPRISES, INCORPORATED
P.O. BOX 120 KINGFIELD, ME. 04947
PHONE: (207) 265-2646 – FAX: (207) 265-4054

DRAFTER	JJH	SOUTHBOUND GIRDER "G11" 2	PROJECT NO. 14-180
DATE	JAN. 2015	HARTFORD, VT I-91 SB OVER US RTE 5 PROJECT NUMBER IM 091-2(79)	
CHECKED	GNM		DWG. NO. 6a
DATE	JAN. 2015	PCL CIVIL CONSTRUCTORS	

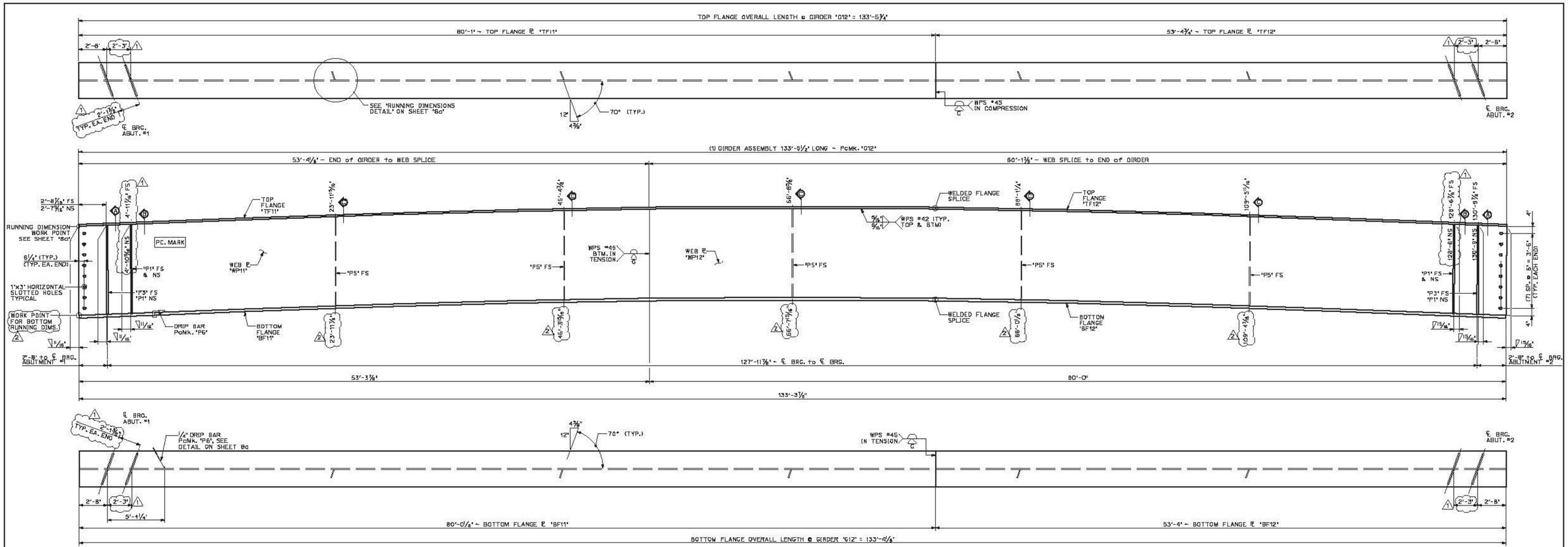

2 SHIP MARK CHANGED FROM 'G6' TO 'G12'. TYPICAL ALL APPLICABLE DETAILS

1 7a DIMENSIONAL PLANS & ELEVATIONS ~ GIRDER 'G12'

HORIZONTAL SCALE: 1/4" = 1'-0"
VERTICAL SCALE EXAGGERATED 2:1

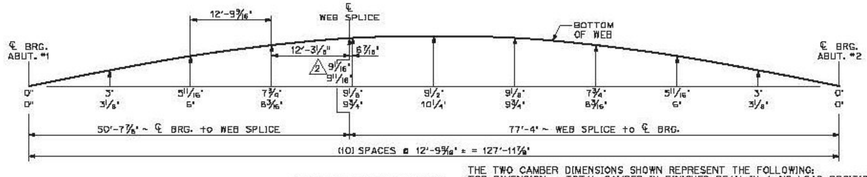

GIRDER 'G12' CAMBER

THE TWO CAMBER DIMENSIONS SHOWN REPRESENT THE FOLLOWING:
TOP DIMENSION ~ TOTAL CAMBER IN FINISHED BEAM IN A NO-LOAD POSITION
BTM. DIMENSION ~ TOTAL CAMBER IN BEAM @ TIME OF FABRICATION

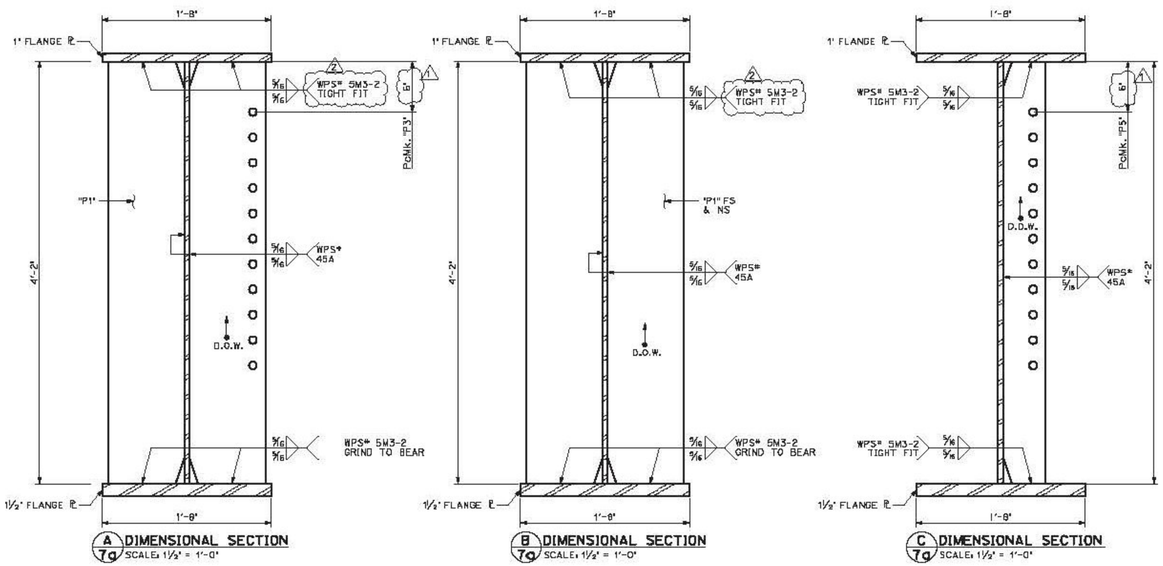

BILL OF MATERIALS

SHIP	SHIP MARK	NO. PCS.	PIECE MARK	DESCRIPTION	LENGTH	REMARKS	MAT'L	
1	G12			BRIDGE GIRDER ASSEMBLY	133'-5½"	38,100#		
		1	WP11	℄ 5/8" x 50"	53'-4¼"	5700#	CVN	2 LENGTH VERIFIED
		1	WP12	℄ 5/8" x 50"	80'-1⅜"	8550#	CVN	
		1	TF11	℄ 1" x 20"	80'-1"	5475#	CVN	
		1	TF12	℄ 1" x 20	53'-4¾"	3650#	CVN	
		1	BF11	℄ 1½" x 20"	80'-0⅛"	8200#	CVN	
		1	BF12	℄ 1½" x 20"	53'-4"	5450#	CVN	
		6	P1	SEE SHEET 8a 2				
		2	P3	SEE SHEET 8a				
		5	P5	SEE SHEET 8a				
		1	P6	℄ ¼" x 3½" DRIP BAR				

Vermont Agency of Transportation

RECEIVED

CK'D BY RKJC OK'D BY WL

February 17, 2015

RESUBMIT NO Approved

BY KH DATE 2-19-2015

PROJECT No. IM 091-2(79)
ITEM No. 506.55

FINISH	1 SSPC SP10			
MATERIAL	AASHTO M270 (ASTM A709) GRADE 50W			
HOLES	15/16 " Ø U.N.O.			
ELECTRODES	PER WELD PROCEDURE			
WELDS	PER WELD PROCEDURE	2 2/17/14	As noted	JJH
SURFACE PREP	SSPC SP6	1 2/5/15	HOLE & PLATE LOCATION	JJH
		NO DATE	DESCRIPTION	BY

REVISIONS

ARC BRIDGES, INC.
ADVANCED RESOURCES & CONST. ENTERPRISES, INCORPORATED
P.O. BOX 120 KINGFIELD, ME. 04947
PHONE: (207) 265-2646 – FAX: (207) 265-4054

DRAFTER JJH	SOUTHBOUND GIRDER 'G12' 2
DATE JAN. 2015	HARTFORD, VT I-91 SB OVER US RTE 5
CHECKED GNM	PROJECT NUMBER IM 091-2(79)
DATE JAN. 2015	PCL CIVIL CONSTRUCTORS

PROJECT NO. 14-180

DWG. NO. 7a

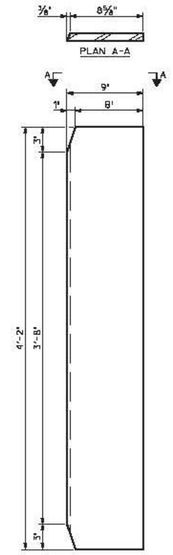

1" BEARING ℄, PcMk. "P1"
SCALE: 1½" = 1'-0"
FOR USE ON FASCIA GIRDERS @ ABUTMENTS & AS LATERAL SLIDE BEARING STIFFENER

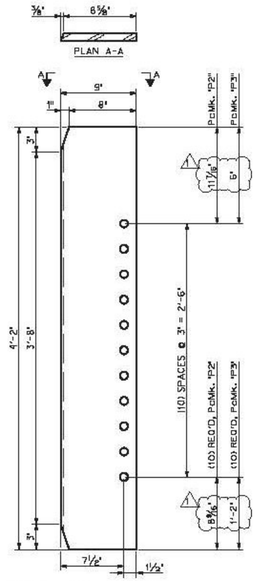

1" BEARING ℄, PcMk. VARIES
SCALE: 1½" = 1'-0"
FOR USE @ ABUTMENTS

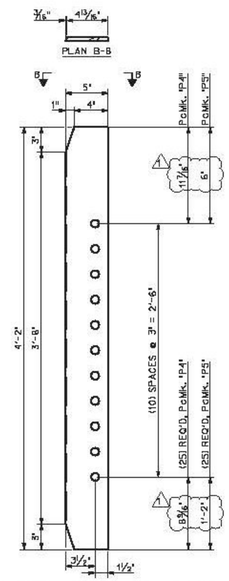

½" CONNECTION ℄, PcMk. VARIES
SCALE: 1½" = 1'-0"
FOR USE @ INTERMEDIATE DIAPHRAGM CONNECTIONS

SOUTHBOUND BOLT SCHEDULE

NO. BOLTS	PIECE MARK	LENGTH	DESCRIPTION	LOCATION
220	FB1	3"	⅞"ϕ BOLT w/N&W and DTI (WEATHERING) ASTM A325, TYPE 3	ABUTMENT DIAPHRAGMS
550	FB2	2½"	⅞"ϕ BOLT w/N&W and DTI (WEATHERING) ASTM A325, TYPE 3	INTERMEDIATE DIAPHRAGMS

2 FABRICATOR SHALL SUPPLY (3) TEST ASSEMBLIES OF EACH BOLT LENGTH per SPECIFICATIONS.

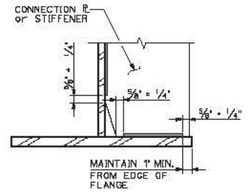

TYPICAL CONNECTION ℄ WELD TERMINATION DETAIL
N.T.S.

BILL OF MATERIALS

SHIP	SHIP MARK	NO. PCS.	PIECE MARK	DESCRIPTION	LENGTH	WEIGHT	MATERIAL
28	P1			℄ 1" x 9"	4'-2"	130# EACH	
10	P2			℄ 1" x 9"	4'-2"	130# EACH	
10	P3			℄ 1" x 9"	4'-2"	130# EACH	
25	P4			℄ ½" x 5"	4'-2"	40# EACH	
25	P5			℄ ½" x 5"	4'-2"	40# EACH	
2	P6			℄ ¼" x 3½" DRIP BARS	1'-1 3/16"	5# EACH	

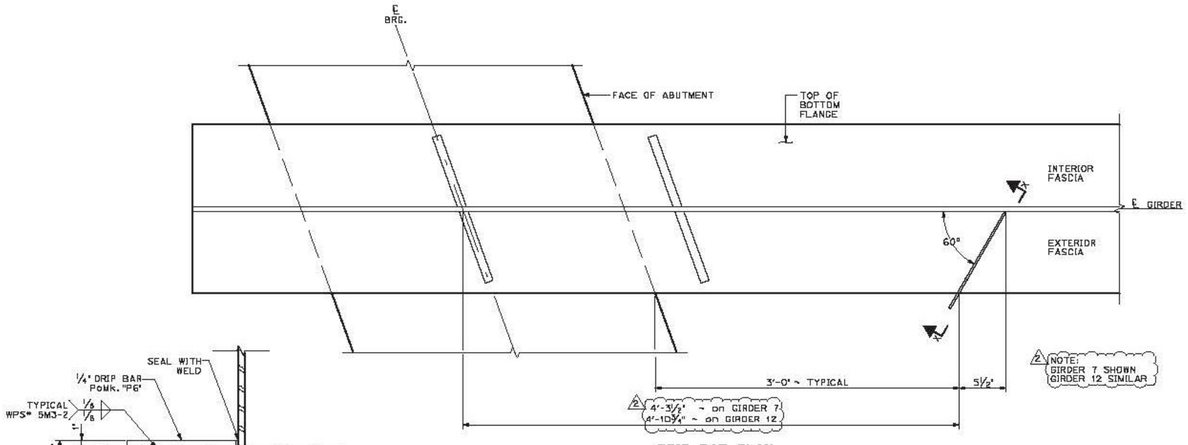

DRIP BAR PLAN

X 8a DRIP BAR SECTION
SCALE: 1½" = 1'-0"

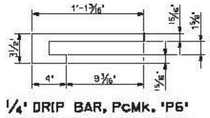

¼" DRIP BAR, PcMk. "P6"
SCALE: 1½" = 1'-0"

2 DIMENSIONS FOR PcMk. "P6" HAVE NOT BEEN REVISED. THE ℄ USED FOR THE DRIP BAR INCLUDE A 1/16" TOLERANCE ON THE TOP AND THE BOTTOM OF THE FLANGE TO FACILITATE INSTALLATION.

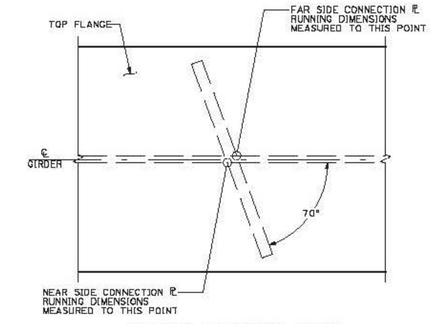

RUNNING DIMENSIONS DETAIL
SCALE: 2"= 1'-0"

Vermont Agency of Transportation
RECEIVED
CK'D BY RKJC OK'D BY WL
February 17, 2015
RESUBMIT NO Approved
BY KH DATE 2-19-2015

PROJECT No. IM 091-2(79)
ITEM No. 506.55

FINISH	1 SSPC SP10				
MATERIAL	AASHTO M270 (ASTM A709) GRADE 50W				
HOLES	15/16 " Ø U.N.O.				
ELECTRODES	PER WELD PROCEDURE				
WELDS	PER WELD PROCEDURE	2	2/17/14	As noted	JJH
SURFACE PREP	SSPC SP6	1	2/5/15	HOLE LOCATION	JJH
		NO	DATE	DESCRIPTION	BY
		REVISIONS			

ARC STAFFORD, PE
ADVANCED RESOURCES & CONST. ENTERPRISES, INCORPORATED
P.O. BOX 120 KINGFIELD, ME. 04947
PHONE: (207) 265-2646 – FAX: (207) 265-4034

DRAFTER	JJH
DATE	JAN. 2015
CHECKED	GNM
DATE	JAN. 2015

SOUTHBOUND MISCELLANEOUS DETAILS
HARTFORD, VT I-91 SB OVER US RTE 5
PROJECT NUMBER IM 091-2(79)
SC: **PCL CIVIL CONSTRUCTORS**

PROJECT NO. 14-180
DWG. NO. 8a

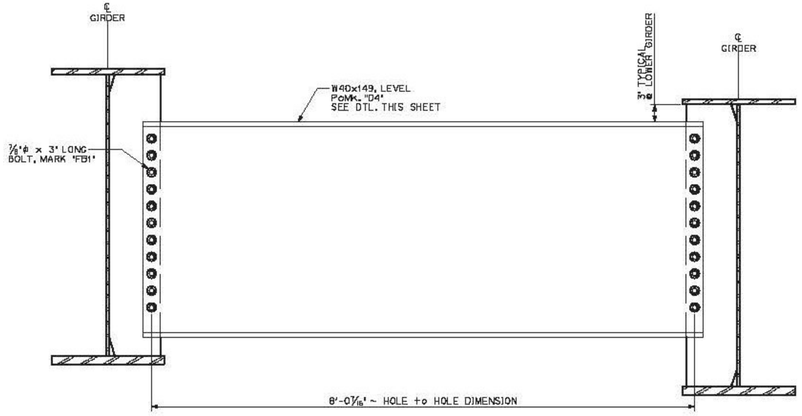

A 9a **'D4' TYPE DIAPHRAGMS**
SCALE: 1" = 1'-0"
FOR USE @ ABUTMENT LOCATIONS

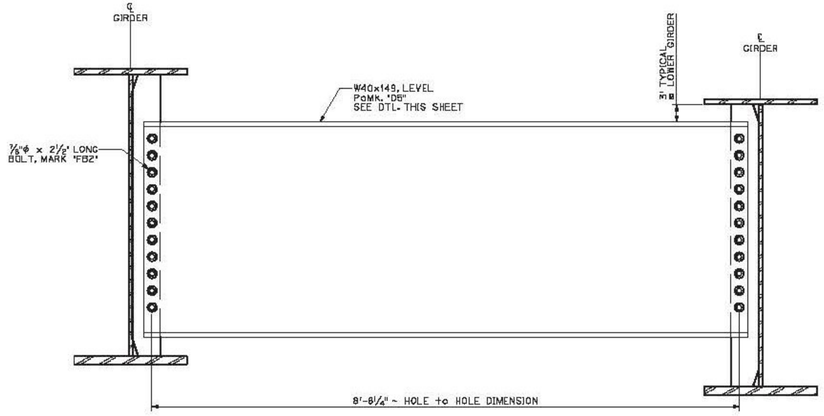

B 9a **'D5' TYPE DIAPHRAGMS**
SCALE: 1" = 1'-0"
FOR USE @ INTERMEDIATE LOCATIONS

BILL OF MATERIALS

SHIP	SHIP MARK	NO. PCS.	PIECE MARK	DESCRIPTION	LENGTH	WEIGHT	MATERIAL
10	D4			ABUTMENT DIAPHRAGM			
		10	--	W140x149	8'-3⁷⁄₁₆"	1240# EACH	
25	D5			INTERMEDIATE DIAPHRAGM			
		25	--	W140x149	8'-11¼"	1340# EACH	

2 PIECE MARK "D1" CHANGED TO "D4". TYPICAL ALL APPLICABLE DETAILS.

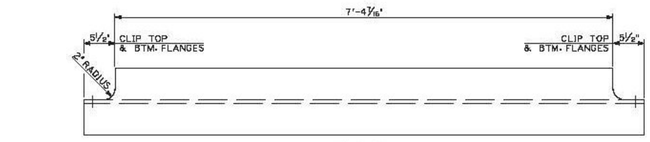

PLAN A-A

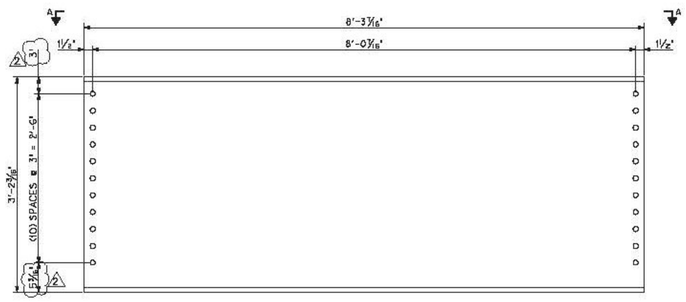

W40x149 DIAPHRAGM, PcMk. "D4"
SCALE: 1"=1'-0"

2 PIECE MARK "D2" CHANGED TO "D5". TYPICAL ALL APPLICABLE DETAILS.

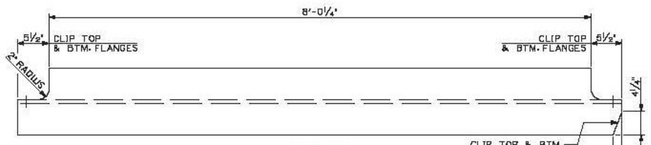

PLAN B-B

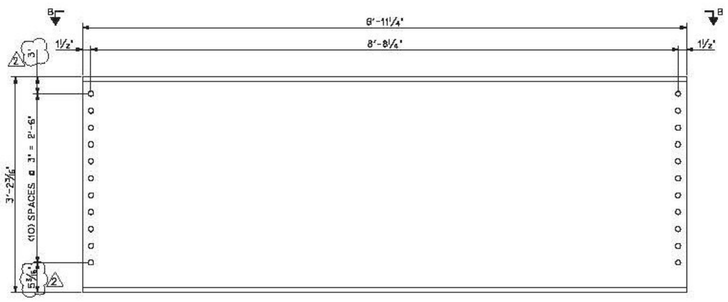

W40x149 DIAPHRAGM, PcMk. "D5"
SCALE: 1"=1'-0"

Vermont Agency of Transportation
RECEIVED
CK'D BY RK/JC OK'D BY WL
February 17, 2015
RESUBMIT NO Approved
BY KH DATE 2-19-2015

PROJECT No. IM 091-2(79)
ITEM No. 506.50

FINISH	1 SSPC SP10			
MATERIAL	AASHTO M270 (ASTM A709) GRADE 50W			
HOLES	15/16 " Ø U.N.O.			
ELECTRODES	PER WELD PROCEDURE			
WELDS	PER WELD PROCEDURE	2	2/17/14	As noted JJH
SURFACE PREP	SSPC SP6	1	2/5/15	HOLE LOCATION JJH
		NO	DATE	DESCRIPTION BY

REVISIONS

ARC ENGINEERS, INC.
ADVANCED RESOURCES & CONST. ENTERPRISES, INCORPORATED
P.O. BOX 120 KINGFIELD, ME. 04947
PHONE: (207) 265-2646 – FAX: (207) 265-4054

DRAFTER	JJH	SOUTHBOUND DIAPHRAGM DETAILS	PROJECT NO. 14-180
DATE	JAN. 2015	HARTFORD, VT I-91 SB OVER US RTE 5 PROJECT NUMBER IM 091-2(79)	DWG. NO. 9a
CHECKED	GNM	PCL CIVIL CONSTRUCTORS	
DATE	JAN. 2015		

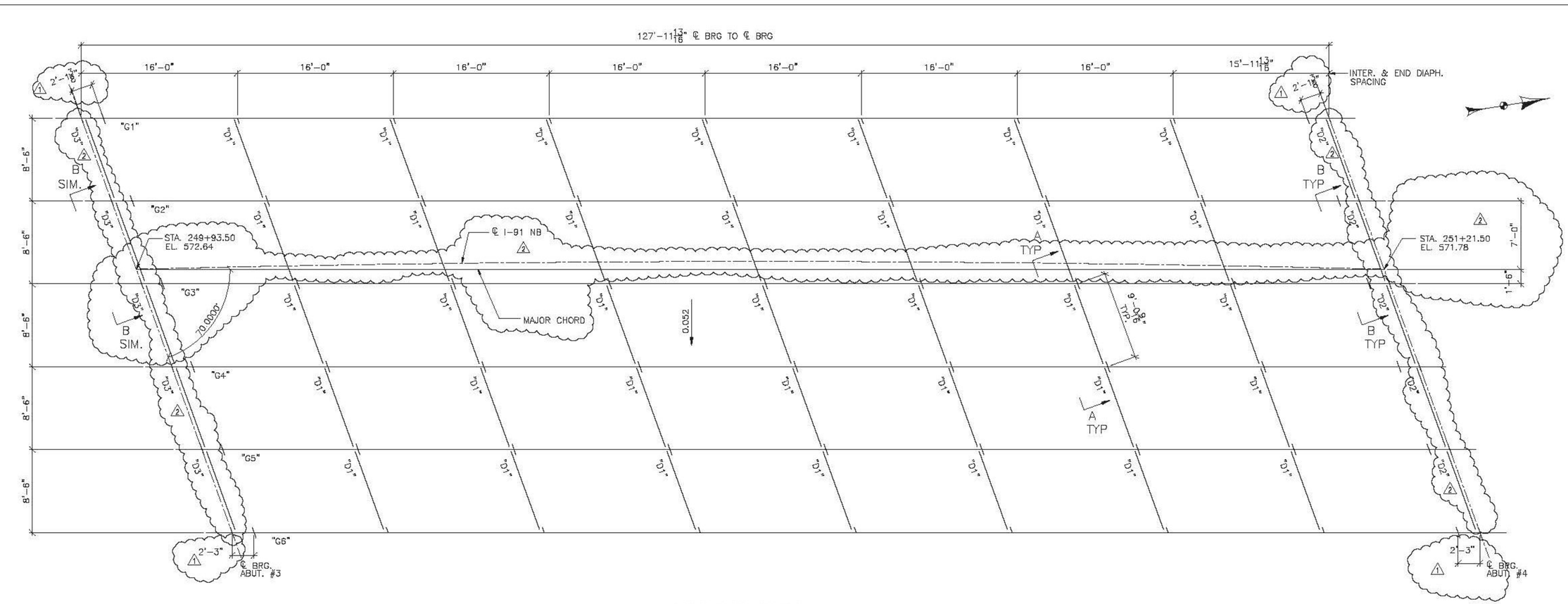

FRAMING PLAN

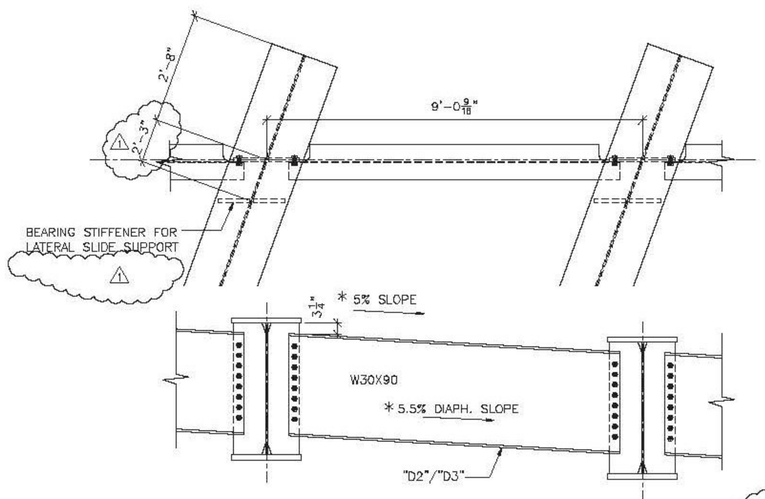

SECTION B–B

ABUT. #4 SHOWN, ABUT. #3 SIMILAR

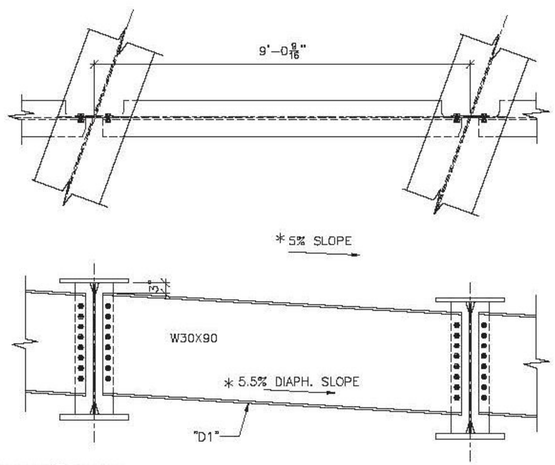

SECTION A–A

* NOTE:
DIAPHRAGM SLOPE IS CALCULATED BY USING CONNECTION HOLE LOCATIONS IN CONNECTION PLATE

FIELD BOLT LIST

MARK	QTY.	DESCRIPTION	LOCATION
FB6	160	7/8"øX3	END DIAPH. TO CONN./STIFF. PL
FB4	560	7/8"øX2 1/2	INTER. DIAPH. TO CONN. PL
	720	DIRECT TENSION INDICATORS + THREE (3) TEST ASSEMBLIES	

Vermont Agency of Transportation
RECEIVED
CK'D BY RKJC OK'D BY WL
February 17, 2015
RESUBMIT NO Approved
BY KH DATE 2-19-2015

FINISH				
MATERIAL	SEE DETAIL SHEETS			
HOLES				
ELECTRODES				
WELDS	PER WPS	2	2/13/15	AS NOTED JAC
SURFACE PREP		1	1/29/15	AS NOTED JAC
		NO	DATE	DESCRIPTION BY

REVISIONS

ARC ENTERPRISES, INC.

ADVANCED RESOURCES & CONST. ENTERPRISES, INCORPORATED
P.O. BOX 120 KINGFIELD, ME. 04947
PHONE: (207) 265-2646 – FAX: (207) 265-4054

DRAFTER JAC	FRAMING PLAN		PROJECT NO. 14-180
DATE 1/05/15	HARTFORD, VT I-91 NB OVER US RTE. 5 PROJECT NUMBER IM 091-2(79)		
CHECKED CNM	GC: PCL CIVIL CONSTRUCTORS		DWG. NO. 1
DATE 1/14/15			

J.A.C. DRAFTING/S45B14/1

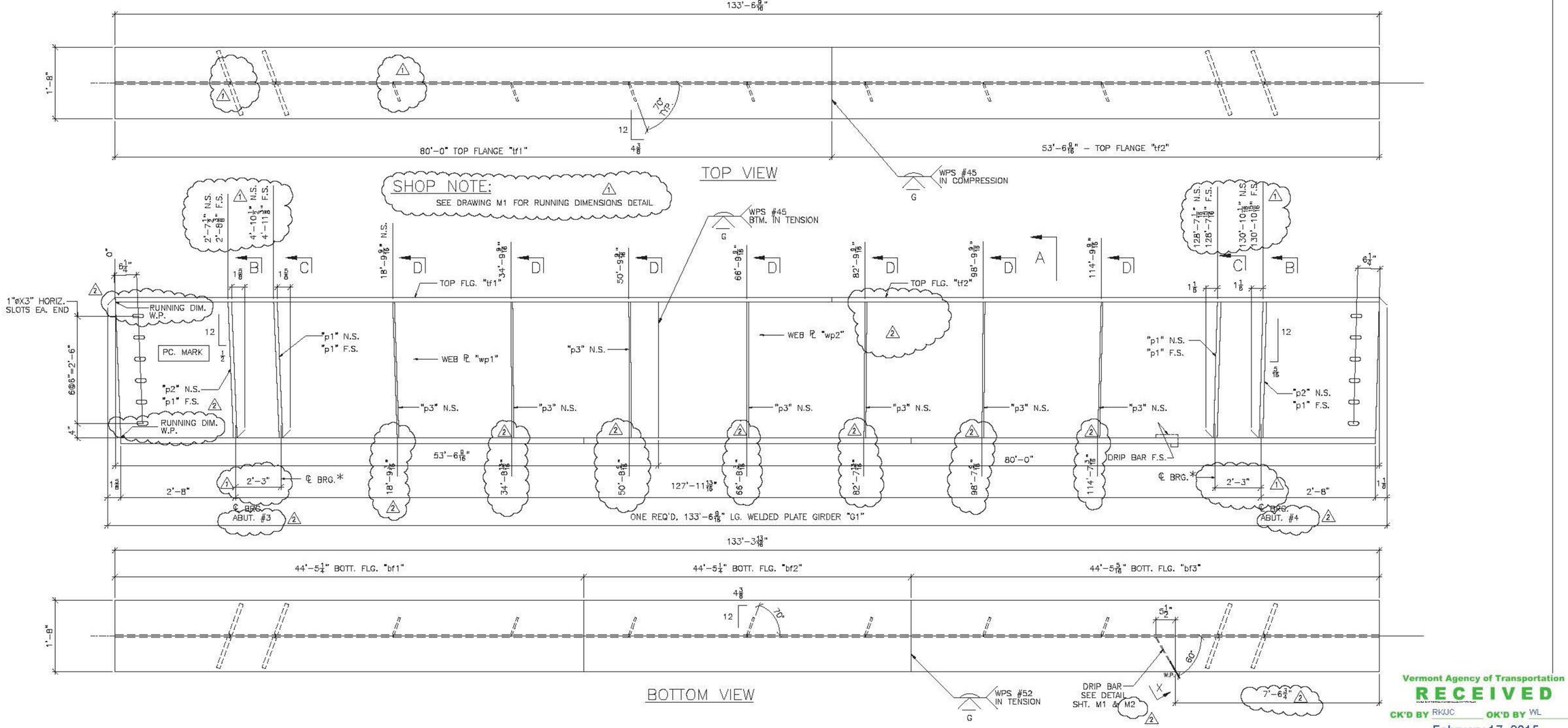

* STIFFENER FOR LATERAL SLIDE SUPPORT

BILL OF MATERIAL

SHIP	SHIP MARK	NO. PCS.	PIECE MARK	DESCRIPTION	LENGTH	REMARKS	WT.
1	G1			WELDED PLATE GIRDER			37866
		1	wp1	℄ 5/8X38	53'-6 9/16	CVN	4328
		1	wp2	℄ 5/8X38	80'-0	CVN	6466
		1	tf1	℄ 1 1/2X20	80'-0	CVN	6806
		1	tf2	℄ 1 1/2X20	53'-6 9/16	CVN	4556
		1	bf1	℄ 1 3/4X20	44'-5 1/4	CVN	4915
		1	bf2	℄ 1 3/4X20	44'-5 1/4	CVN	4915
		1	bf3	℄ 1 3/4X20	44'-5 5/16	CVN	4915
		2					
		6	p1	SEE SHT. M2			
		2	p2	SEE SHT. M2			
		7	p3	SEE SHT. M2			
		1	dp1	1/4" THK. DRIP BAR SEE SHT. M1 & M2			

BOTTOM FLANGE ℄ MATERIAL SHALL BE ASTM A709 GR. HPS 70W

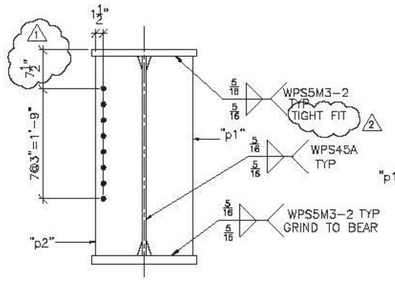

SECTION B

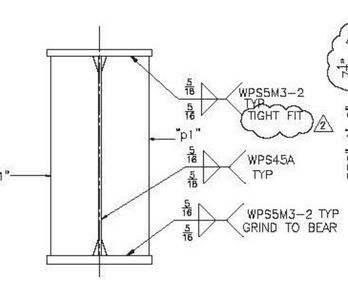

SECTION C

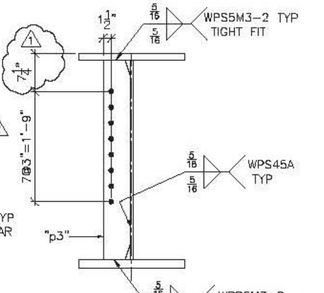

SECTION D

SEE SHEET M1 FOR CAMBER AND SECTIONS & DETAILS NOT SHOWN

Vermont Agency of Transportation
RECEIVED
CK'D BY RKJC OK'D BY WL
February 17, 2015
RESUBMIT NO Approved
BY KH DATE 2-19-2015

SHOP NOTE:
ENTIRE TOP FLANGE IS IN COMPRESSION
ENTIRE BOTT FLANGE IS IN TENSION

FINISH SSPC SP10 1				
MATERIAL AASHTO M270 (ASTM A709) GR. 50W U.O.N.				
HOLES 15/16"ø U.O.N.				
ELECTRODES				
WELDS PER WPS	2	2/13/15	AS NOTED	JAC
SURFACE PREP	1	1/29/15	AS NOTED	JAC
	NO	DATE	DESCRIPTION	BY
	REVISIONS			

ARC ENTERPRISES, INC.
ADVANCED RESOURCES & CONST. ENTERPRISES, INCORPORATED
P.O. BOX 120 KINGFIELD, ME. 04947
PHONE: (207) 265-2646 - FAX: (207) 265-4054

DRAFTER JAC	STRINGER DETAILS, G1
DATE 1/6/15	HARTFORD, VT I-91 NB OVER US RTE. 5
CHECKED JS	PROJECT NUMBER IM 091-2(79)
DATE 1/14/15	G.C. PCL CIVIL CONSTRUCTORS
	PROJECT NO. 14-180
	DWG. NO. 2

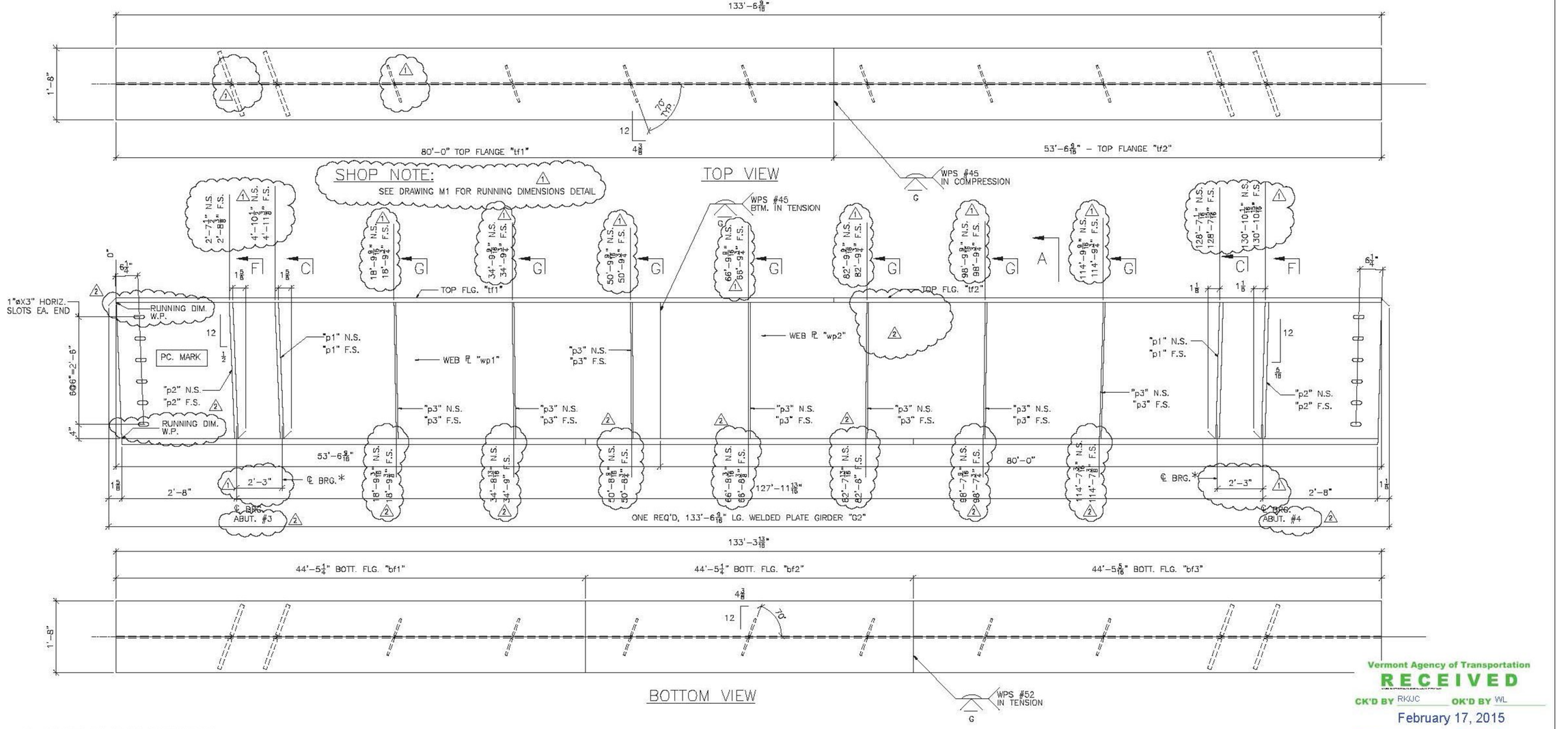

* STIFFENER FOR LATERAL SLIDE SUPPORT

BILL OF MATERIAL

SHIP	SHIP MARK	NO. PCS.	PIECE MARK	DESCRIPTION	LENGTH	REMARKS	WT.	
1	G2			WELDED PLATE GIRDER			38055	
		1	wp1	℄ 9/16X38	53'-6 9/16	CVN	4328	
		1	wp2	℄ 9/16X38	80'-0	CVN	6466	
		1	tf1	℄ 1 1/2X20	80'-0	CVN	6806	BOTTOM FLANGE ℄ MATERIAL SHALL BE ASTM A709 GR. HPS 70W
		1	tf2	℄ 1 1/2X20	53'-6 9/16	CVN	4556	
		1	bf1	℄ 1 5/8X20	44'-5 1/4	CVN	4915	
		1	bf2	℄ 1 5/8X20	44'-5 1/4	CVN	4915	
		1	bf3	℄ 1 5/8X20	44'-5 5/16	CVN	4915	
		2						
		4	p1	SEE SHT. M2				
		4	p2	SEE SHT. M2				
		14	p3	SEE SHT. M2				

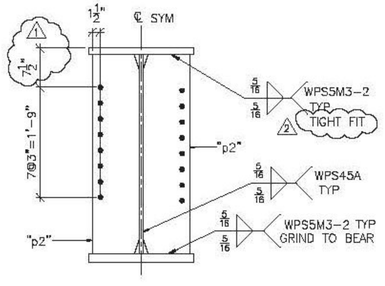

SECTION F

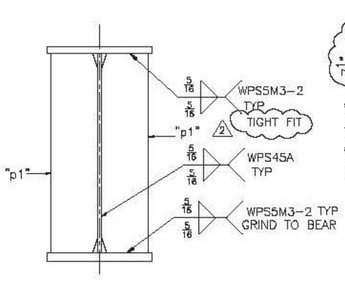

SECTION C

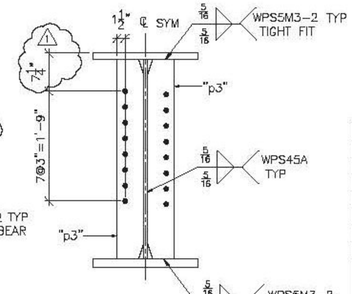

SECTION G

SEE SHEET M1 FOR CAMBER AND SECTIONS & DETAILS NOT SHOWN

Vermont Agency of Transportation
RECEIVED
CK'D BY RKJC OK'D BY WL
February 17, 2015
RESUBMIT NO Approved
BY KH DATE 2-19-2015

SHOP NOTE:
ENTIRE TOP FLANGE IS IN COMPRESSION
ENTIRE BOTT FLANGE IS IN TENSION

FINISH SSPC SP10	1			
MATERIAL AASHTO M270 (ASTM A709) GR. 50W U.O.N.				
HOLES 15/16"ø U.O.N.				
ELECTRODES				
WELDS PER WPS	2	2/13/15	AS NOTED	JAC
SURFACE PREP	1	1/29/15	AS NOTED	JAC
	NO	DATE	REVISIONS	BY

ARC ENTERPRISES, INC.
ADVANCED RESOURCES & CONST. ENTERPRISES, INCORPORATED
P.O. BOX 120 KINGFIELD, ME. 04947
PHONE: (207) 265-2646 - FAX: (207) 265-4054

DRAFTER JAC	STRINGER DETAILS, G2	PROJECT NO.	
DATE 1/6/15	HARTFORD, VT I-91 NB OVER US RTE. 5 PROJECT NUMBER IM 091-2(79)	14-180	
CHECKED JS	G.C. PCL CIVIL CONSTRUCTORS	DWG. NO.	
DATE 1/14/15		3	

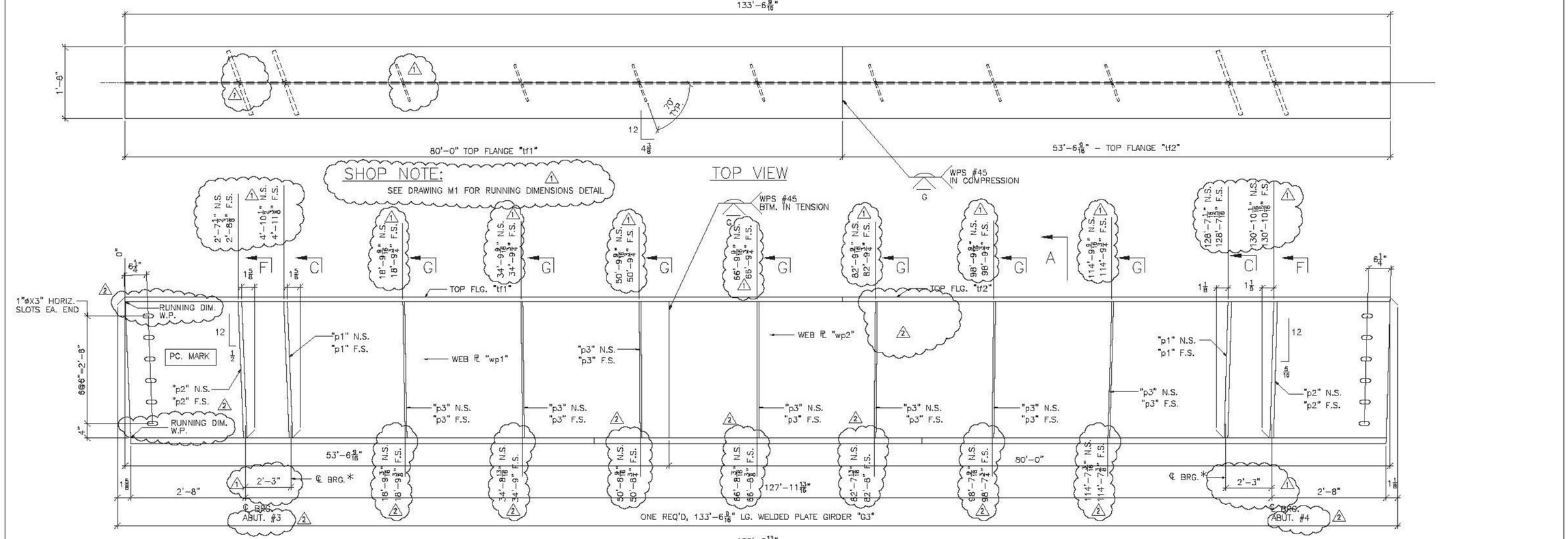

* STIFFENER FOR LATERAL SLIDE SUPPORT

BILL OF MATERIAL

SHIP	SHIP MARK	NO. PCS.	PIECE MARK	DESCRIPTION	LENGTH	REMARKS	WT.	
1	G3			WELDED PLATE GIRDER			38055	
		1	wp1	℄ 5/16X38	53'-6 9/16	CVN	4328	
		1	wp2	℄ 5/16X38	80'-0	CVN	6466	
		1	tf1	℄ 1 1/2X20	80'-0	CVN	6806	
		1	tf2	℄ 1 1/2X20	53'-6 9/16	CVN	4556	
		1	bf1	℄ 1 5/8X20	44'-5 1/4	CVN	4915	BOTTOM FLANGE ℄ MATERIAL SHALL BE ASTM A709 GR. HPS 70W
		1	bf2	℄ 1 5/8X20	44'-5 1/4	CVN	4915	
		1	bf3	℄ 1 5/8X20	44'-5 5/16	CVN	4915	
		2						
		4	p1	SEE SHT. M2				
		4	p2	SEE SHT. M2				
		14	p3	SEE SHT. M2				

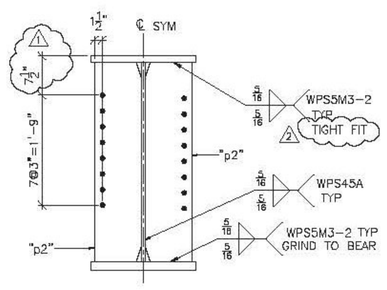

SECTION F

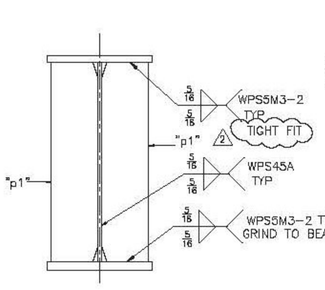

SECTION C

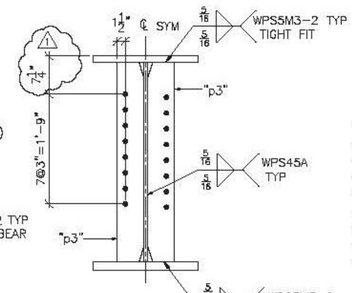

SECTION G

SEE SHEET M1 FOR CAMBER AND SECTIONS & DETAILS NOT SHOWN

Vermont Agency of Transportation
RECEIVED
CK'D BY RKJC OK'D BY WL
February 17, 2015
RESUBMIT NO Approved
BY KH DATE 2-19-2015

SHOP NOTE:
ENTIRE TOP FLANGE IS IN COMPRESSION
ENTIRE BOTT FLANGE IS IN TENSION

FINISH SSPC SP10 1				
MATERIAL AASHTO M270 (ASTM A709) GR. 50W U.O.N.				
HOLES 15/16"ø U.O.N.				
ELECTRODES				
WELDS PER WPS	2	2/13/15	AS NOTED	JAC
SURFACE PREP	1	1/29/15	AS NOTED	JAC
	NO	DATE	DESCRIPTION	BY
	REVISIONS			

ARC NORTHEASTERN, INC.
ADVANCED RESOURCES & CONST. ENTERPRISES, INCORPORATED
P.O. BOX 120 KINGFIELD, ME. 04947
PHONE: (207) 265-2646 – FAX: (207) 265-4054

DRAFTER JAC	STRINGER DETAILS, G3		PROJECT NO. 14-180
DATE 1/8/15	HARTFORD, VT I-91 NB OVER US RTE. 5 PROJECT NUMBER IM 091-2(79)		
CHECKED JS	G.C.	PCL CIVIL CONSTRUCTORS	DWG. NO. 4
DATE 1/14/15			

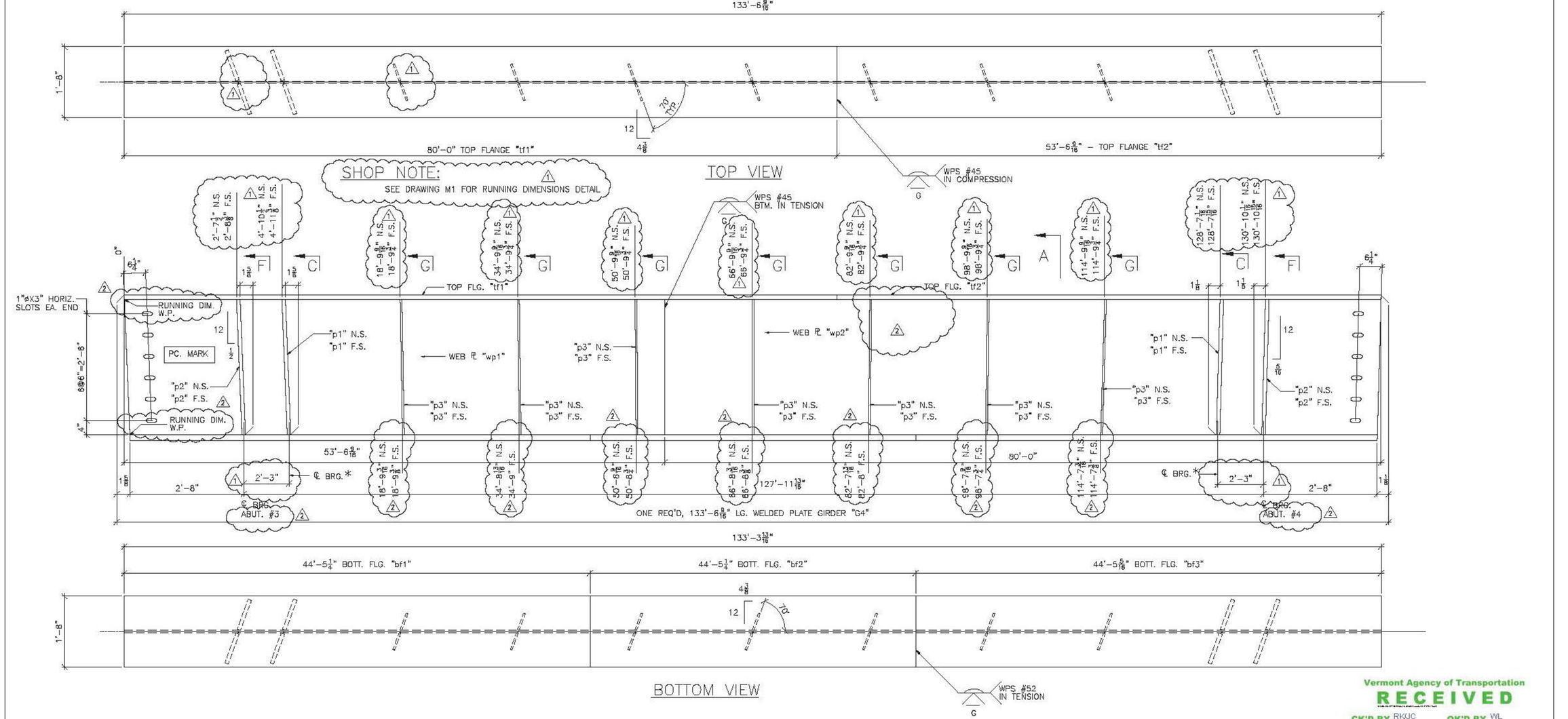

* STIFFENER FOR LATERAL SLIDE SUPPORT

BILL OF MATERIAL

SHIP	SHIP MARK	NO. PCS.	PIECE MARK	DESCRIPTION	LENGTH	REMARKS	WT.	
1	G4			WELDED PLATE GIRDER			38055	
		1	wp1	PL 5/16X38	53'-6 9/16	CVN	4328	BOTTOM FLANGE ℄ MATERIAL SHALL BE ASTM A709 GR. HPS 70W
		1	wp2	PL 5/16X38	80'-0	CVN	6466	
		1	tf1	PL 1 1/2X20	80'-0	CVN	6806	
		1	tf2	PL 1 1/2X20	53'-6 9/16	CVN	4556	
		1	bf1	PL 1 5/8X20	44'-5 1/4	CVN	4915	
		1	bf2	PL 1 5/8X20	44'-5 1/4	CVN	4915	
		1	bf3	PL 1 5/8X20	44'-5 5/16	CVN	4915	
		2						
		4	p1	SEE SHT. M2				
		4	p2	SEE SHT. M2				
		14	p3	SEE SHT. M2				

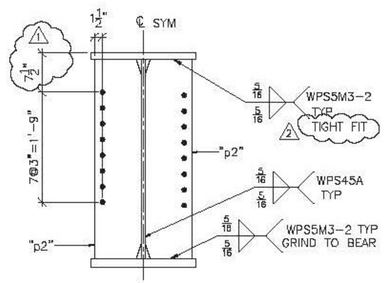

SECTION F

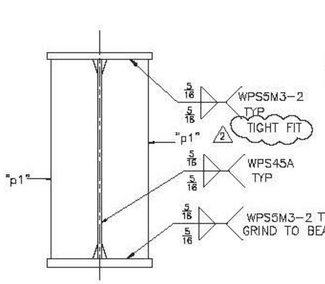

SECTION C

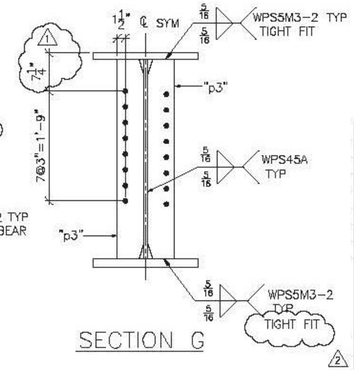

SECTION G

SEE SHEET M1 FOR CAMBER AND SECTIONS & DETAILS NOT SHOWN

Vermont Agency of Transportation
RECEIVED
CK'D BY RKJC OK'D BY WL
February 17, 2015
RESUBMIT NO Approved
BY KH DATE 2-19-2015

SHOP NOTE:
ENTIRE TOP FLANGE IS IN COMPRESSION
ENTIRE BOTT FLANGE IS IN TENSION

FINISH SSPC SP10 1				
MATERIAL AASHTO M270 (ASTM A709) GR. 50W U.O.N.				
HOLES 15/16"ø U.O.N.				
ELECTRODES				
WELDS PER WPS	2	2/13/15	AS NOTED	JAC
SURFACE PREP	1	1/29/15	AS NOTED	JAC
	NO	DATE	DESCRIPTION	BY
	REVISIONS			

ARC NORTHEASTERN, INC.
ADVANCED RESOURCES & CONST. ENTERPRISES, INCORPORATED
P.O. BOX 120 KINGFIELD, ME. 04947
PHONE: (207) 265-2646 – FAX: (207) 265-4054

DRAFTER JAC	STRINGER DETAILS, G4		PROJECT NO. 14-180
DATE 1/8/15	HARTFORD, VT I-91 NB OVER US RTE. 5 PROJECT NUMBER IM 091-2(79)		
CHECKED JS	G.C. PCL CIVIL CONSTRUCTORS		DWG. NO. 5
DATE 1/14/15			

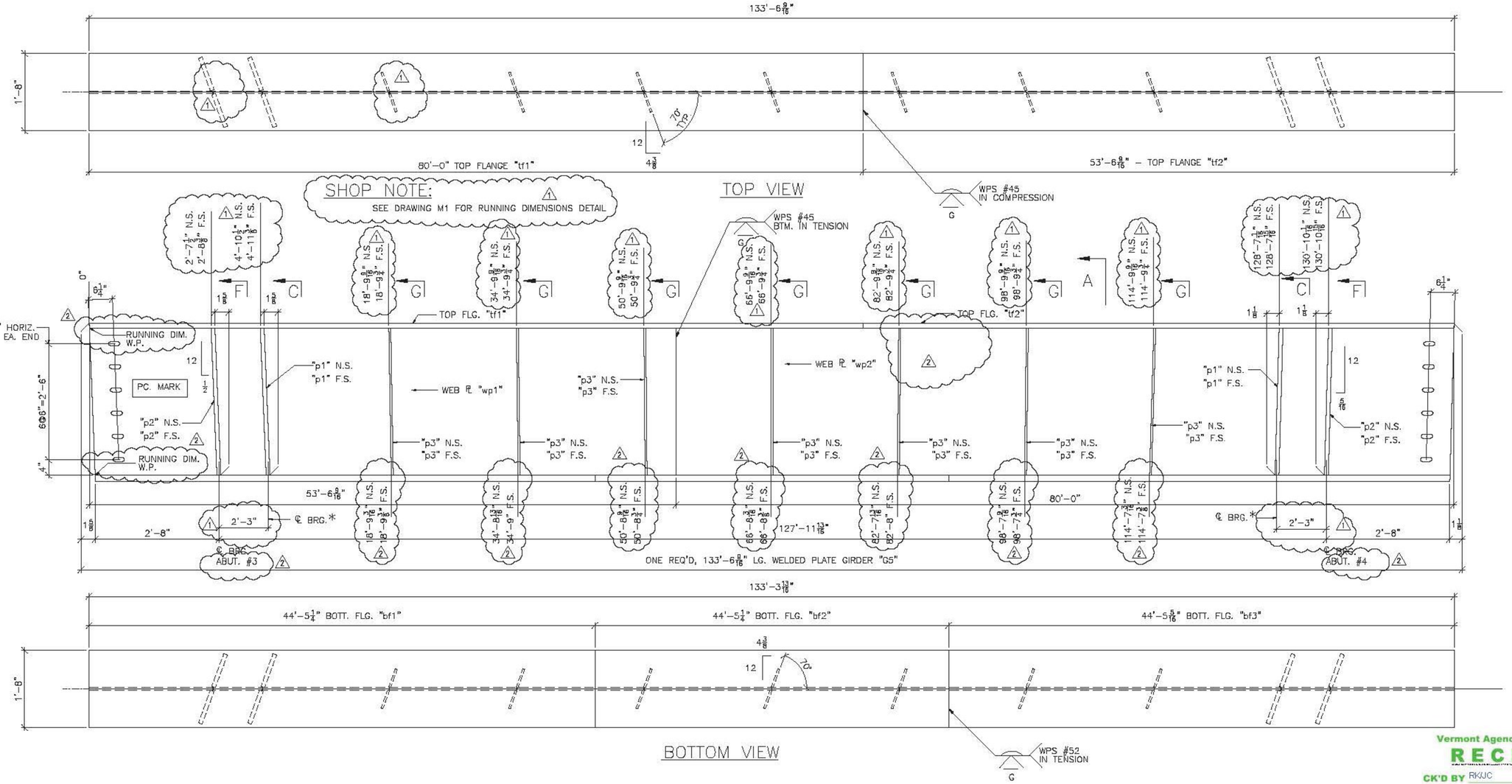

* STIFFENER FOR LATERAL SLIDE SUPPORT

BILL OF MATERIAL

SHIP	SHIP MARK	NO. PCS.	PIECE MARK	DESCRIPTION	LENGTH	REMARKS	WT.	
1	G5			WELDED PLATE GIRDER			38055	
		1	wp1	PL 5/8 X38	53'-6 9/16	CVN	4328	
		1	wp2	PL 5/8 X38	80'-0	CVN	6466	
		1	tf1	PL 1 1/2 X20	80'-0	CVN	6806	
		1	tf2	PL 1 1/2 X20	53'-6 9/16	CVN	4556	
		1	bf1	PL 1 3/4 X20	44'-5 1/4	CVN	4915	BOTTOM FLANGE PL MATERIAL SHALL BE ASTM A709 GR. HPS 70W
		1	bf2	PL 1 3/4 X20	44'-5 1/4	CVN	4915	
		1	bf3	PL 1 3/4 X20	44'-5 5/16	CVN	4915	
		2						
		4	p1	SEE SHT. M2				
		4	p2	SEE SHT. M2				
		14	p3	SEE SHT. M2				

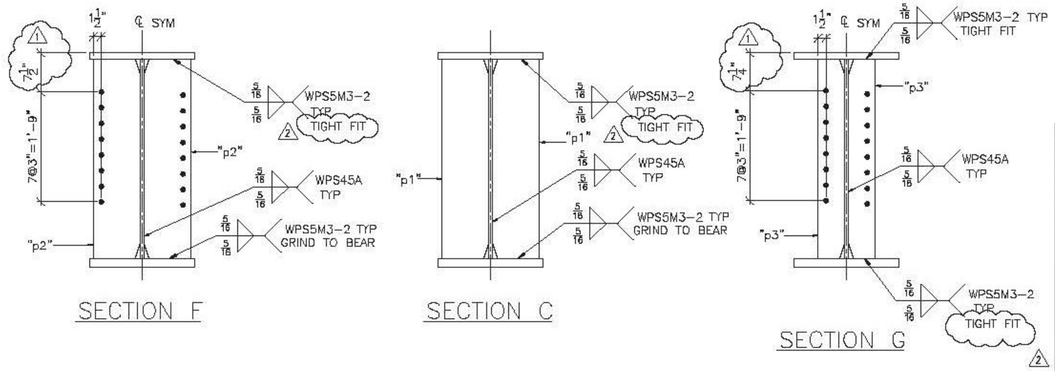

SEE SHEET M1 FOR CAMBER AND SECTIONS & DETAILS NOT SHOWN

Vermont Agency of Transportation
RECEIVED
CK'D BY RKJC OK'D BY WL
February 17, 2015
RESUBMIT NO Approved
BY KH DATE 2-19-2015

SHOP NOTE:
ENTIRE TOP FLANGE IS IN COMPRESSION
ENTIRE BOTT FLANGE IS IN TENSION

FINISH	SSPC SP10 1				
MATERIAL	AASHTO M270 (ASTM A709) GR. 50W U.O.N.				
HOLES	15/16"ø U.O.N.				
ELECTRODES					
WELDS	PER WPS	2	2/13/15	AS NOTED	JAC
SURFACE PREP		1	1/29/15	AS NOTED	JAC
		NO	DATE	DESCRIPTION	BY
		REVISIONS			

ARC ENTERPRISES, INC.

ADVANCED RESOURCES & CONST. ENTERPRISES, INCORPORATED
P.O. BOX 120 KINGFIELD, ME. 04947
PHONE: (207) 265-2546 - FAX: (207) 265-4054

DRAFTER	JAC	STRINGER DETAILS, G5	PROJECT NO. 14-180
DATE	1/6/15	HARTFORD, VT I-91 NB OVER US RTE. 5 PROJECT NUMBER IM 091-2(79)	
CHECKED	JS	G.C. PCL CIVIL CONSTRUCTORS	DWG. NO. 6
DATE	1/14/15		

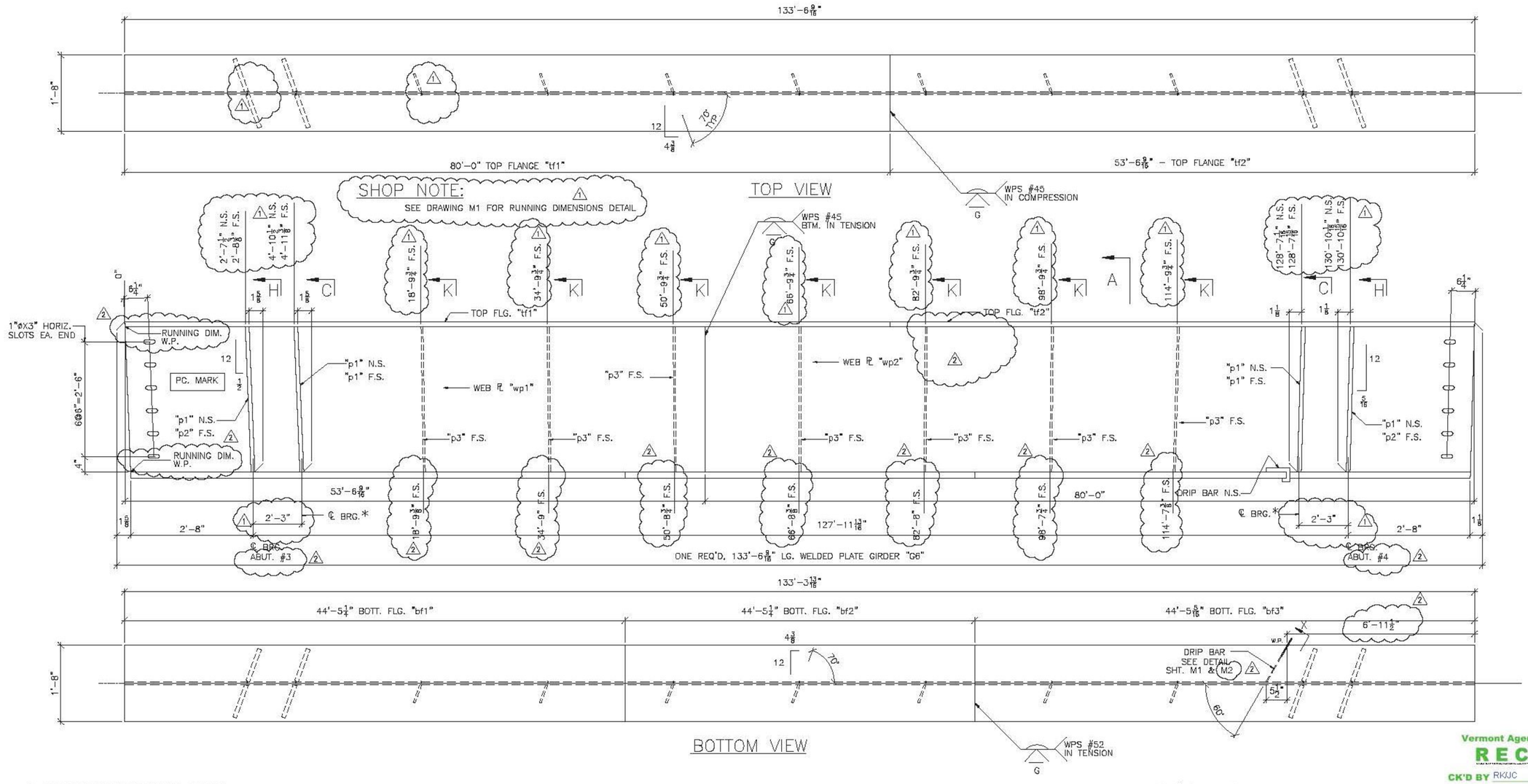

* STIFFENER FOR LATERAL SLIDE SUPPORT

BILL OF MATERIAL

SHIP	SHIP MARK	NO. PCS.	PIECE MARK	DESCRIPTION	LENGTH	REMARKS	WT.	
1	G6			WELDED PLATE GIRDER			37866	
		1	wp1	PL 5/8X38	53'-6 9/16	CVN	4328	
		1	wp2	PL 5/8X38	80'-0	CVN	6466	
		1	tf1	PL 1 1/4X20	80'-0	CVN	6806	
		1	tf2	PL 1 1/4X20	53'-6 9/16	CVN	4556	
		1	bf1	PL 1 1/8X20	44'-5 1/4	CVN	4915	BOTTOM FLANGE ℄ MATERIAL SHALL BE ASTM A709 GR. HPS 70W
		1	bf2	PL 1 1/8X20	44'-5 1/4	CVN	4915	
		1	bf3	PL 1 1/8X20	44'-5 5/16	CVN	4915	
		2						
		6	p1	SEE SHT. M2				
		2	p2	SEE SHT. M2				
		7	p3	SEE SHT. M2				
		2	dp1	1/4" THK. DRIP BAR SEE SHT. M1 & M2				

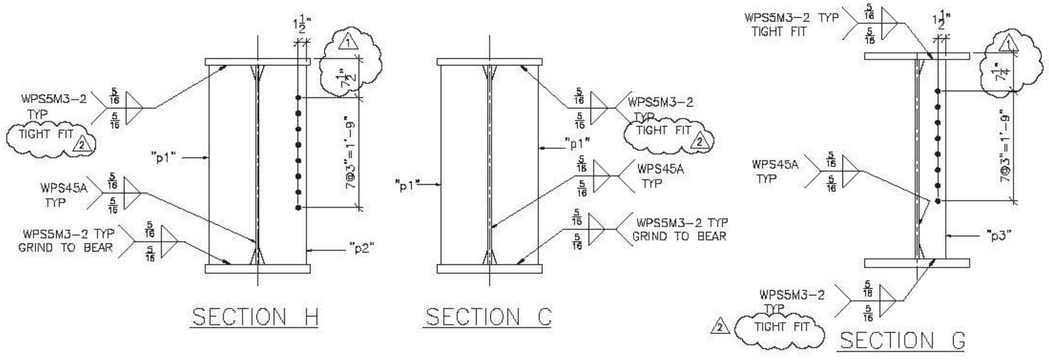

SEE SHEET M1 FOR CAMBER AND SECTIONS & DETAILS NOT SHOWN

Vermont Agency of Transportation
RECEIVED
CK'D BY RK/JC OK'D BY WL
February 17, 2015
RESUBMIT NO Approved
BY KH DATE 2-19-2015

SHOP NOTE:
ENTIRE TOP FLANGE IS IN COMPRESSION
ENTIRE BOTT FLANGE IS IN TENSION

FINISH SSPC SP10	1				
MATERIAL AASHTO M270 (ASTM A709) GR. 50W U.O.N.					
HOLES 15/16"ø U.O.N.					
ELECTRODES					
WELDS PER WPS	2	2/13/15	AS NOTED	JAC	
SURFACE PREP	1	1/29/15	AS NOTED	JAC	
	NO	DATE	DESCRIPTION	BY	
	REVISIONS				

ARC ADVANCED RESOURCES & CONSTRUCTION, INC.
ADVANCED RESOURCES & CONST. ENTERPRISES, INCORPORATED
P.O. BOX 120 KINGFIELD, ME. 04947
PHONE: (207) 265-2646 - FAX: (207) 265-4054

DRAFTER JAC	STRINGER DETAILS, G6	PROJECT NO.	
DATE 1/5/15	HARTFORD, VT I-91 NB OVER US RTE. 5	14-180	
CHECKED JS	PROJECT NUMBER IM 091-2(79)	DWG. NO.	
DATE 1/14/15	G.C. PCL CIVIL CONSTRUCTORS	7	

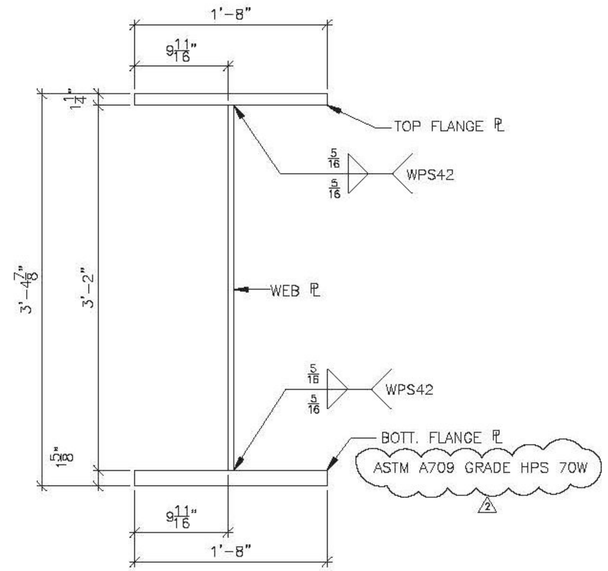

SECTION A
(GIRDER ASS'Y)

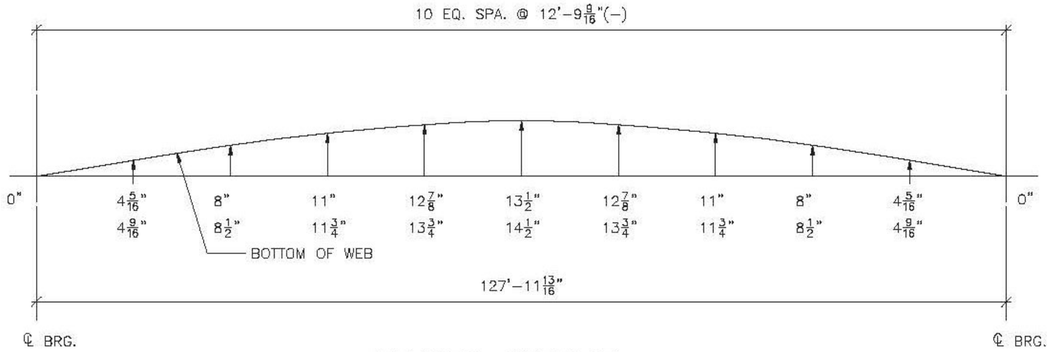

CAMBER DIAGRAM

THE TWO CAMBER DIMENSIONS SHOWN REPRESENT THE FOLLOWING:
TOP DIMENSION – TOTAL CAMBER IN FINISHED BEAM IN A NO-LOAD POSITION
BTM. DIMENSION – TOTAL CAMBER OF WEB ℄ @ TIME OF FABRICATION

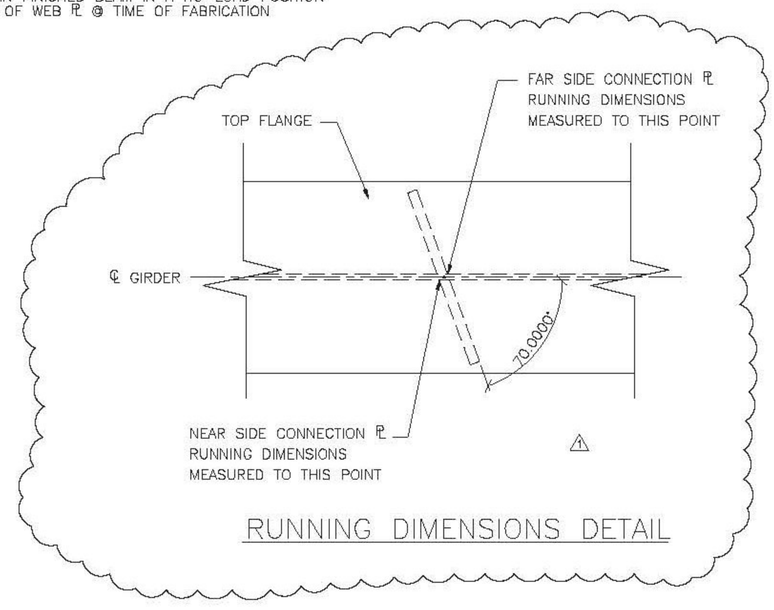

RUNNING DIMENSIONS DETAIL

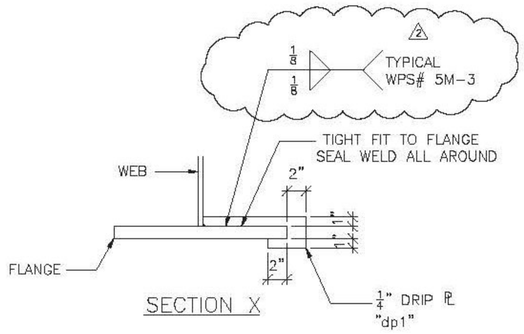

SECTION X

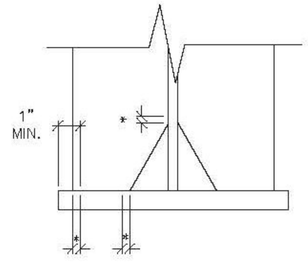

WELD TERMINATION DETAIL

* NO WELD FOR 3/8" MIN. 7/8" MAX.

Vermont Agency of Transportation
RECEIVED
CK'D BY RKJJC OK'D BY WL
February 17, 2015
RESUBMIT NO Approved
BY KH DATE 2-19-2015

FINISH					
MATERIAL	ASTM A709 GRADE 50W U.O.N.				
HOLES	15/16"ø U.O.N.				
ELECTRODES					
WELDS	PER WPS	2	2/13/15	AS NOTED	JAC
SURFACE PREP		1	1/29/15	AS NOTED	JAC
		NO.	DATE	DESCRIPTION	BY
		REVISIONS			

ARC ENTERPRISES, INC.
ADVANCED RESOURCES & CONST. ENTERPRISES, INCORPORATED
P.O. BOX 120 KINGFIELD, ME. 04947
PHONE: (207) 265-2646 – FAX: (207) 265-4054

DRAFTER JAC	MISC. DETAILS		PROJECT NO. 14-180
DATE 1/09/15	HARTFORD, VT I-95 NB OVER US RTE. 5		
CHECKED JS	PROJECT NUMBER IM 091-2(79)		DWG. NO. M1
DATE 1/14/15	CUSTOMER: PCL CIVIL CONSTRUCTORS		

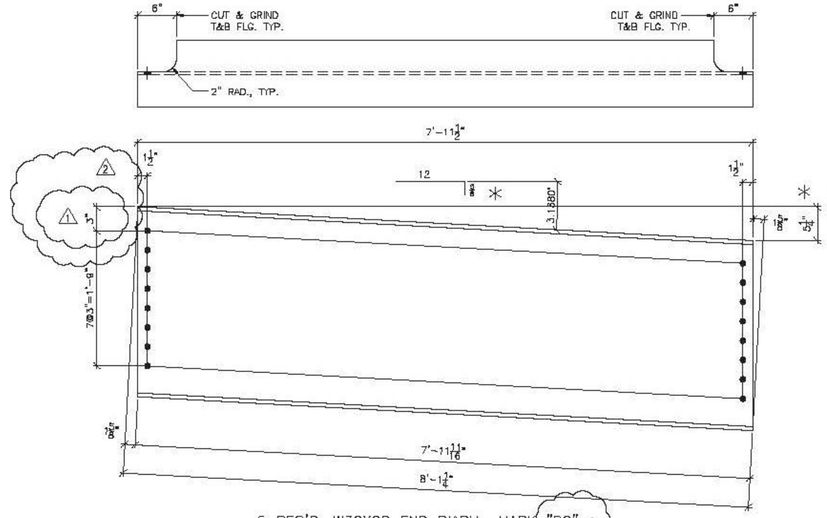

5 REQ'D, W30X90 END DIAPH., MARK "D2" ⚠1

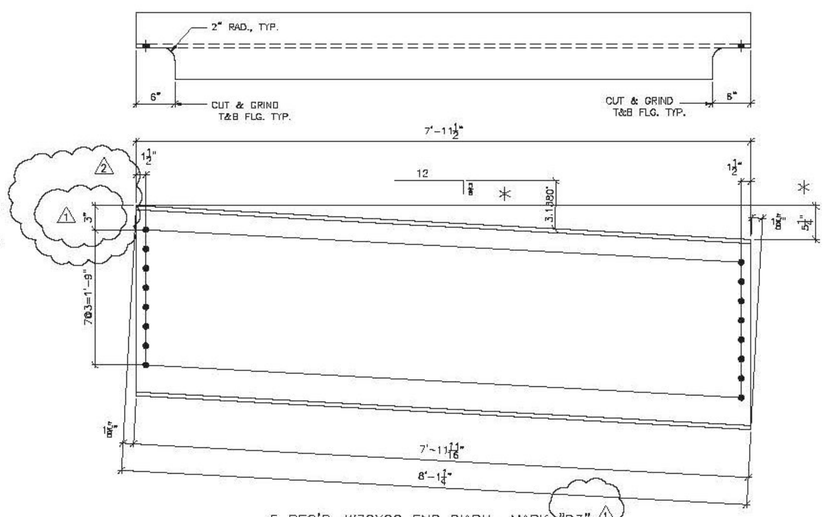

5 REQ'D, W30X90 END DIAPH., MARK "D3" ⚠1

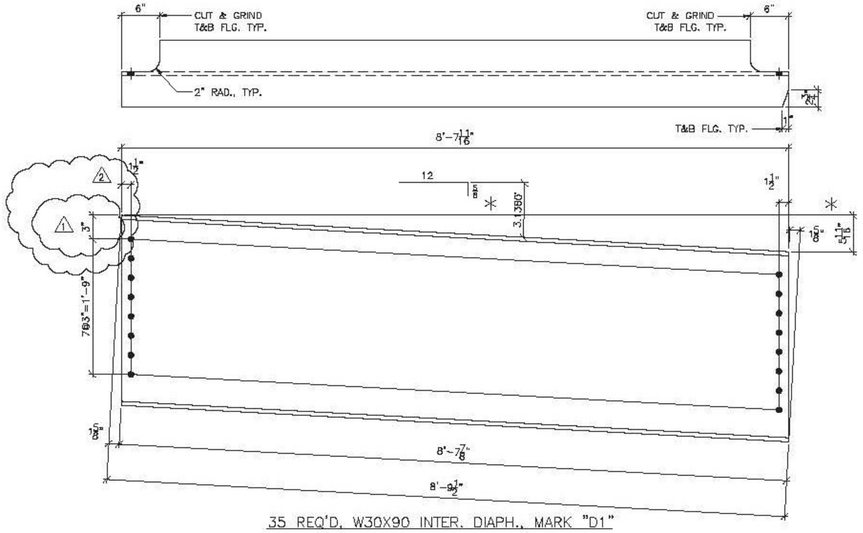

35 REQ'D, W30X90 INTER. DIAPH., MARK "D1"

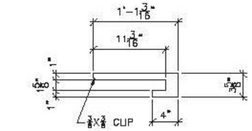

2 REQ'D, ¼" DRIP PL, MARK "dp1"

* NOTE: ⚠1
DIAPHRAGM SLOPE IS CALCULATED BY USING CONNECTION HOLE LOCATIONS IN CONNECTION PLATE

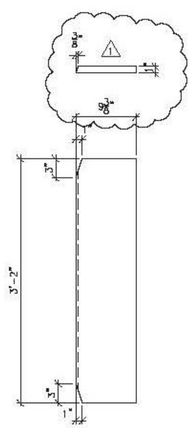

28 REQ'D, 1" STIFF. PL, MARK "p1"

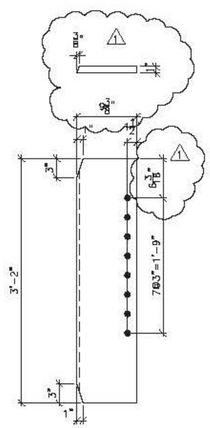

20 REQ'D, 1" STIFF./CONN. PL, MARK "p2"

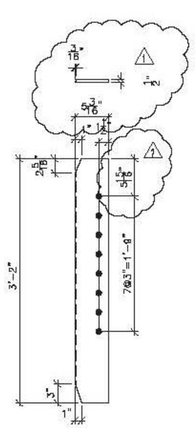

70 REQ'D, ½" CONN. PL, MARK "p3"

BILL OF MATERIAL

SHIP	SHIP MARK	NO. PCS.	PIECE MARK	DESCRIPTION	LENGTH	REMARKS	WT.
		28	p1	PL 1X9 3/8	3'-2		2716
		20	p2	PL 1X9 3/8	3'-2		1940
		70	p3	PL ½X5 5/16	3'-2		1890
		2	dp1	PL ¼X3 3/8	1'-1 5/16		3
	D1	35		W30X90	8'-9½		26775
	D2	5		W30X90	8'-1¼		3510
	D3	5		W30X90	8'-1¼		3510

Vermont Agency of Transportation
RECEIVED
CK'D BY RKJJC OK'D BY WL
February 17, 2015
RESUBMIT NO Approved
BY KH DATE 2-19-2015

FINISH	⚠1 SSPC SP10				
MATERIAL	ASTM A709 GRADE 50W U.O.N.				
HOLES	15/16"ø U.O.N.				
ELECTRODES					
WELDS	PER WPS	⚠2	2/15/15	AS NOTED	JAC
SURFACE PREP		⚠1	1/29/15	AS NOTED	JAC
		NO	DATE	DESCRIPTION	BY
		REVISIONS			

ARC ENTERPRISES, INC.
ADVANCED RESOURCES & CONST. ENTERPRISES, INCORPORATED
P.O. BOX 120 KINGFIELD, ME. 04947
PHONE: (207) 265-2646 – FAX: (207) 265-4054

DRAFTER	JAC	MISC. DETAILS	PROJECT NO. 14-180
DATE	1/09/15	HARTFORD, VT I-95 NB OVER US RTE. 5	
CHECKED	JS	PROJECT NUMBER IM 091-2(79)	DWG. NO. M2
DATE	1/14/15	CUSTOMER: PCL CIVIL CONSTRUCTORS	

WELDING PROCEDURE SPECIFICATION (WPS) YES (X)
PREQUALIFIED ____ QUALIFIED BY TESTING ____
or PROCEDURE QUALIFICATION RECORD (PQR) YES (x)

Company Name ARC Ent. Inc.
Welding Process(es) SAW
Supporting PQR No.(s) PQR # 52

Identification # ARC WPS # 52
Revision 2 **Date** 1/24/2013 **By** SVH
Authorized by STEVE HOWARD **Date** 1/24/2013
Type - Manual Semi - Automatic ( )
Machine ( ) Automatic (X)

JOINT DESIGN USED
Type B - L2c - S
Single (X) **Double Weld** ( )
Backing Yes ( ) NO
Backing Material
Root Opening 0 - 1/16" **Root Face Dimension**
Groove Angle 60 degrees **Radius (J-U)**
Back Gouging (YES) **Method**

Material Spec A 709
Type or Grade HPS 70W
Thickness **Groove** U **Fillet**
Diameter (Pipe)

Lincoln LA-85
FILLER METALS
AWS Specification A 5.23
AWS Classification EN5

SHIELDING
Flux MIL800-H **Gas**
Composition
Flow Rate
Electrode - Flux (Class) **Gas Cup Size**
F8A8-EN5-NI5-H2

Preheat 3/4"= 50 degrees F 3/4 to 1 1/2"= 125 degn rees F
1 1/2 to 2 1/2"= 175 degrees F over 2 1/2"= 225 degrees F

POSITION
Position of Groove 1G **Fillet**
Vertical Progression ( )

ELECTRICAL CHARACTERISTICS
Transfer Mode (FCAW) **Short Circuiting** ( )
Globular ( ) **Spray** (X)
Current : AC ( ) DCEP (X) DCEN ( )
Pulsed ( )
OTHER :

TECHNIQUE
Stringer or Weave Bead Stringer
Multi-pass or Single Pass (per side) Multi
Number of Electrodes ONE
Electrode Spacing **Longitudinal**
Lateral
Angle
Contact Tube to Work Distance 1" stickout +/- 1/4"
Peening
Interpass Cleaning : hand or power tools

POSTWELD HEAT TREATMENT
Temp
Time

WELDING PROCEDURE

Pass or Weld Layer(s)	S	Filler Metals		Current		Volts	Travel Speed	Joint Details
		Class	Diameter	Type & Polarity	Amps or Wire Feed Speed			
	SAW	EN5	3/32"	DCEN	360 - 440	28 - 32	12.4 - 16.6	

Joint Details

	Tolerance
Root = 0"	+ 1/16"
Face => 1/2" - 1" = 1/4"	+ 1/4"
> 1" - 1 1/2" = 3/8"	+ 1/4"
> 1 1/2" - 2" = 1/2"	+ 1/4"
Angle = 60 degrees	+ 10 - 5

VTrans
Received
OK'D _____ OK'd BY TWC

JAN 21 2015

Resubmit _____ APPROVED ✓
BY _____ DATE 1/30/15

WELDING PROCEDURE SPECIFICATION (WPS) YES (X)
PREQUALIFIED ____ QUALIFIED BY TESTING ___X___
or PROCEDURE QUALIFICATION RECORD (PQR) YES ( )

Company Name ARC Ent. Inc.
Welding Process(es) SAW
Supporting PQR No.(s) ARC PQR # 45

Identification # ARC WPS 45a
Revision 3 **Date** 9/12/2014 **By** SVH
Authorized by STEVE HOWARD **Date** 6/8/2012
Type - Manual Semi - Automatic ( )
Machine ( ) Automatic (X)

DART Welder

JOINT DESIGN USED
Type FILLET
Single (X) Double Weld ( )
Backing NO ( )
Backing Material
Root Opening 0 Root Face Dimension
Groove Angle NA Radius (J-U) _____
Back Gouging Method

BASE METALS
Material Spec A709
Type or Grade 50 50W HPS50W
Thickness Groove Fillet U
Diameter (Pipe)

FILLER METALS
AWS Specification A5.23 Lincoln LA-75
AWS Classification EN1K-N1-H5

SHIELDING
Flux 960 Gas
Composition
Electrode - Flux (Class) Flow Rate
F8A2-EN1K-N1 Gas Cup Size

Preheat up to 3/4" = 50 degrees 3/4" - 1 1/2" = 70 degrees
1 1/2" - 2 1/2" = 150 degrees Over 2 1/2" = 225 degrees F.

POSITION
Position of Groove Fillet 1F 2F
Vertical Progression ( )

ELECTRICAL CHARACTERISTICS
Transfer Mode (FCAW) Short Circuiting ( )
Globular ( ) Spray (X)
Current : AC ( ) DCEP DCEN (X)
Pulsed ( )
OTHER :

TECHNIQUE
Stringer or Weave Bead STRINGER
Multi-pass or Single Pass (per side) SINGLE
Number of Electrodes
Electrode Spacing Longitudinal
Lateral
Angle
Contact Tube to Work Distance 1 1/4" Stickout +/- 1/4"
Peening
Interpass Cleaning :

POSTWELD HEAT TREATMENT
Temp
Time

WELDING PROCEDURE

Pass or Weld Layer(s)	S	Filler Metals		Current		Volts	Travel Speed	Joint Details
		Class	Diameter	Type & Polarity	Amps or Wire Feed Speed			
	SAW	EN1K	3/32"	DCEN	360-440	28-32	12-16 2 ipm	
1	1/4"							
1	5/16"							
1	3/8"							

\Trans
Received
CK'D _____ OK'd BY JWK

JAN 2 1 2015

Resubmit _____ APPROVED ✓
BY _____ DATE 1/30/15

Welding Procedure Specification (wps) Yes (X)
PREQUALIFIED ___ QUALIFIED BY TESTING __X__
or PROCEDURE QUALIFICATION RECORD (PQR) YES ( )

Company Name A.R.C. Enterprises, Inc.
Welding Process(es) SAW
Supporting PQR No.(s) ARC PQR # 46

Identification # ARC WPS #46
Revision 7 Date 5/1/2013 By SVH
Authorized by STEVE HOWARD Date 5/1/2013
Type - Manual Semi - Automatic ( )
Machine ( ) Automatic x

JOINT DESIGN USED
Type B-L2c-S
Single Double Weld (X)
Backing ( ) NO (X)
Backing Material
Root Opening 0" Root Face Dimension 1/4" min
Groove Angle 60 degrees Radius (J-U)
Back Gouging (YES) Method open

BASE METALS
Material Spec A709
Type or Grade 50W HPS50W
Thickness Groove U Fillet
Diameter (Pipe)

FILLER METALS Lincoln LA-75
AWS Specification A5.23
AWS Classification EN1K-N1-H8

SHIELDING
Flux 960 Lincoln Gas
Composition
Electrode - Flux (Class) Flow Rate
FSAD-EN1K-N1-H8 Gas Cup Size

Preheat 3/4" = 60 degrees 3/4" - 1 1/2" = 70 degrees.
1 1/2" - 2 1/2" = 150 degrees. Over 2 1/2" = 225 degrees F.

POSITION
Position of Groove 1G Fillet
Vertical Progression ( )

ELECTRICAL CHARACTERISTICS
Transfer Mode (FCAW) Short Circuiting ( )
Globular ( ) Spray (X)
Current : AC ( ) DCEP (X) DCEN ( )
Pulsed ( )
OTHER :

TECHNIQUE
Stringer or Weave Bead STRINGER
Multi-pass or Single Pass (per side) MULTI
Number of Electrodes ONE
Electrode Spacing Longitudinal
Lateral
Angle

Contact Tube to Work Distance 1"1/4 stickout +/-1/4"
Peening none
Interpass Cleaning : Hand or Power tools

POSTWELD HEAT TREATMENT
Temp

WELDING PROCEDURE Min. heat input=37.3 Kj/in. Max heat input= 70.4 Kj/in.

Pass or Weld Layer(s)	S	Filler Metals		Current		Volts	Travel Speed	Joint Details
		Class	Diameter	Type & Polarity	Amps or Wire Feed Speed			B-L2c-S
	SAW	EN1K	3/32"	DCEP	360-440	28-32	14-16.2 ipm	Tolerance Root = 0" = 1/16" Face = > 1/2" - 1" = 1/4" = 1/4" > 1" - 1 1/2" = 3/8" = 1/4" > 1 1/2" - 2" = 1/2" = 1/4" Angle = 60 degrees = 10 - 6 BACKGOUGE

VTrans
Received
CK'D ___ OK'd BY JWC

JAN 21 2015

Resubmit ___ APPROVED ✓ AS NOTED
BY ___ DATE 1/30/15