STATE OF VERMONT
AGENCY OF TRANSPORTATION

RECORD PLANS	
CONTRACTOR:	J.P. SICARD, INC. – BARTON, VT
RESIDENT ENGINEER:	SETH HISMAN
CONSTRUCTION BEGAN:	MAY 5, 2016
CONSTRUCTION COMPLETE:	OCTOBER 31, 2016
RECORD PLANS BY:	SETH HISMAN & JESSE IVES

I HEREBY CERTIFY THAT ALL THE CONSTRUCTION REQUIRED BY THIS SET OF DRAWINGS HAS BEEN ACCOMPLISHED AS INDICATED HEREIN.

BY _____ RESIDENT ENGINEER

DATE 11/09/18

NOTE: Any further information concerning final quantities, amounts or other details relative to this project may be found by contacting Vtrans Records Management.

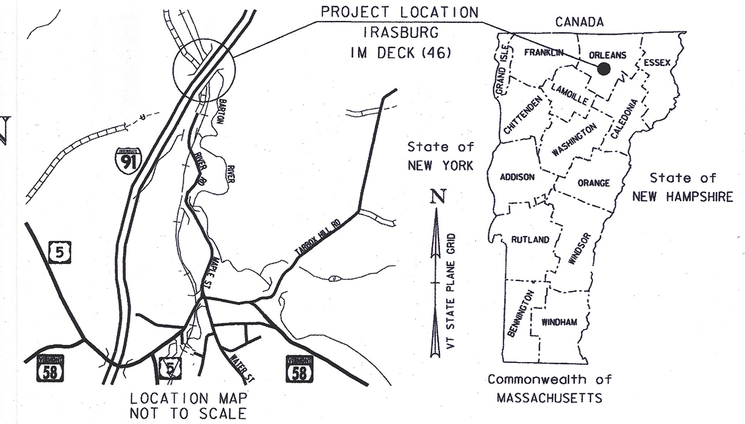

PROPOSED IMPROVEMENT
BRIDGE PROJECT
TOWN OF IRASBURG
COUNTY OF ORLEANS
INTERSTATE 91 (PRINCIPAL ARTERIAL) BRIDGE NO. 107N

PROJECT LOCATION: LOCATED IN THE TOWN OF IRASBURG, ON INTERSTATE 91, APPROXIMATELY 0.430 MILES SOUTHERLY OF THE IRASBURG/BROWNINGTON TOWN LINE.

PROJECT DESCRIPTION: WORK TO BE PERFORMED UNDER THIS PROJECT INCLUDES THE REPLACEMENT OF THE EXISTING BRIDGE DECK INCLUDING RELATED APPROACH WORK.

LENGTH OF STRUCTURE: 447.43 FEET
LENGTH OF ROADWAY: 152.57 FEET
LENGTH OF PROJECT: 600.00 FEET

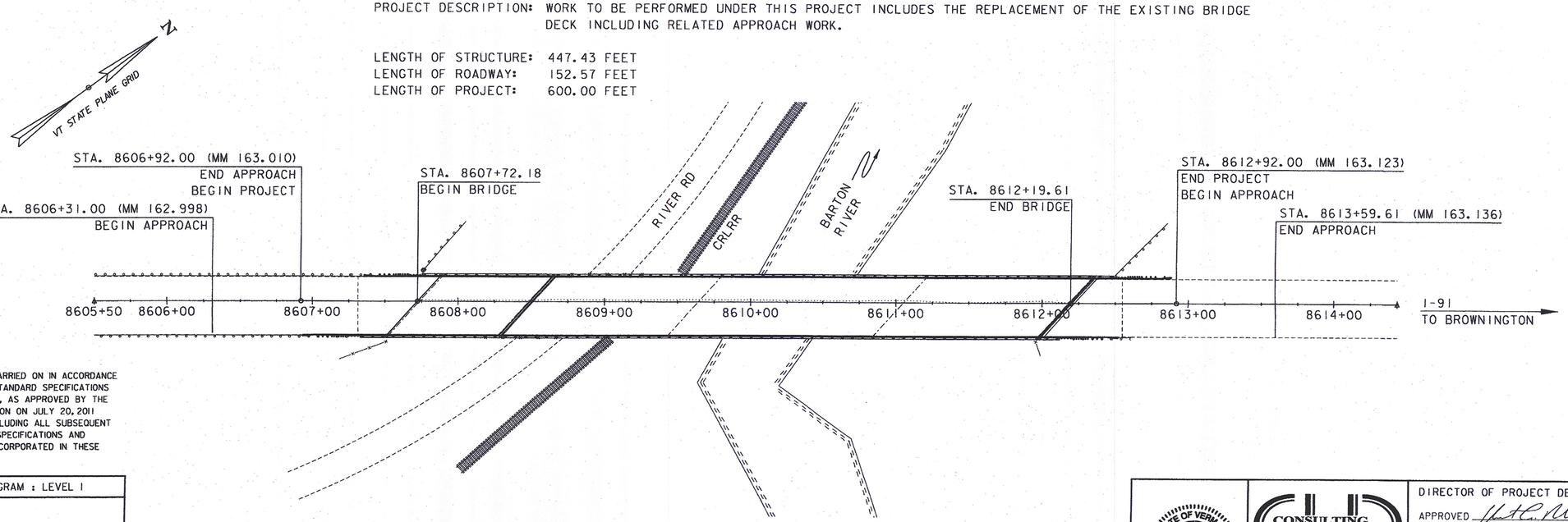

CONSTRUCTION IS TO BE CARRIED ON IN ACCORDANCE WITH THESE PLANS AND THE STANDARD SPECIFICATIONS FOR CONSTRUCTION DATED 2011, AS APPROVED BY THE FEDERAL HIGHWAY ADMINISTRATION ON JULY 20, 2011 FOR USE ON THIS PROJECT, INCLUDING ALL SUBSEQUENT REVISIONS AND SUCH REVISED SPECIFICATIONS AND SPECIAL PROVISIONS AS ARE INCORPORATED IN THESE PLANS.

QUALITY ASSURANCE PROGRAM : LEVEL 1

SURVEYED BY : CLD
SURVEYED DATE : 09/21/2015

DATUM
VERTICAL NAVD 88
HORIZONTAL NAD 83

SCALE 1" = 40'-0"
40 0 40

STATE OF VERMONT
JOHN P. BIATT
NO. 8478
Structural I
LICENSED
PROFESSIONAL ENGINEER

CLD CONSULTING ENGINEERS
540 Commercial Street
Manchester, NH 03101
(603) 668-8223
www.cldengineers.com

DIRECTOR OF PROJECT DELIVERY
APPROVED _____ DATE 2/4/2016
PROJECT MANAGER : JENNIFER FITCH, P.E.

PROJECT NAME : IRASBURG
PROJECT NUMBER : IM DECK (46)

SHEET 1 OF 49 SHEETS

INDEX OF SHEETS

1. TITLE SHEET
2.-3. INDEX OF SHEETS AND PROJECT NOTES SHEETS 1-2
4. TYPICAL BRIDGE SECTIONS SHEET
5. TYPICAL ROADWAY SECTIONS SHEET
6.-7. QUANTITY SHEETS 1-2
8. CONVENTIONAL SYMBOLOGY LEGEND SHEET
9. LAYOUT SHEET
10. PROFILE SHEET
11.-13. TRAFFIC CONTROL SHEETS 1-3
14. TRAFFIC CONTROL BARRIER SHEET
15.-16. PHASING SECTIONS SHEETS 1-2
17.-18. TEMPORARY TRAFFIC BARRIER - BRACED SHEETS 1-2
19.-20. DECK DETAILS SHEETS 1-2
21.-23. JOINT DETAILS SHEETS 1-3
24. CURB REPLACEMENT DETAILS SHEET
25. BITUMINOUS CONCRETE REMOVAL PLAN SHEET
26. RAIL LAYOUT SHEET
27.-49. REFERENCE PLAN SHEETS 1-23

STRUCTURE DETAIL SHEETS

SD-501.00	02/09/2012	CONCRETE DETAILS AND NOTES
SD-502.00	10/10/2012	CONCRETE DETAILS AND NOTES
SD-516.10	08/29/2011	BRIDGE JOINT ASPHALTIC PLUG
SD-601.00	06/04/2010	STRUCTURAL STEEL DETAILS & NOTES

HIGHWAY SAFETY AND DESIGN DETAIL SHEETS

HSD-621.06	11/03/2015	GUARDRAIL TERMINAL LABEL DETAIL

VAOT STANDARD SHEETS

E-193	08/18/1995	PAVEMENT MARKING DETAILS
G-1	11/10/2015	STEEL BEAM GUARDRAIL WITH STEEL POSTS, STEEL BEAM GUARDRAIL WITH WOOD POSTS
G-1d	02/10/2014	STEEL BEAM GUARDRAIL APPROACH END TERMINAL, STEEL BEAM GUARDRAIL TRAILING END TERMINAL
T-1	08/06/2012	TRAFFIC CONTROL GENERAL NOTES
T-11	08/06/2012	CONSTRUCTION APPROACH SIGNING DIVIDED HIGHWAY ONE LANE CLOSED
T-12	08/06/2012	TRAFFIC CONTROL DIVIDED HIGHWAY ONE LANE CLOSED
T-13	08/06/2012	TRAFFIC CONTROL DIVIDED HIGHWAY ONE LANE CLOSED
T-22	08/06/2012	TRAFFIC CONTROL FOR PAVEMENT MARKING ON DIVIDED HIGHWAY
T-31	08/06/2012	CONSTRUCTION SIGN DETAILS
T-42	04/09/2014	BRIDGE NUMBER PLAQUE
T-44	04/09/2014	MILEMARKER DETAILS STATE AND TOWN HIGHWAYS
T-55	10/26/2015	SIGN PLACEMENT EXPRESSWAY & FREEWAY
S-360A	04/23/2012	BRIDGE RAILING, GALVANIZED 2 RAIL BOX BEAM
S-360B	04/23/2012	GUARDRAIL APPROACH SECTION, GALVANIZED 2 RAIL BOX BEAM
S-391	01/16/2014	SNOW BARRIER

LRFR LOAD RATING FACTORS

LOADING LEVELS	TRUCK						
	H-20	HL-93	3S2	6 AXLE	3A. STR.	4A. STR.	5A. SEMI
TONNAGE	20	36	36	66	30	34.5	38
INVENTORY	1.17	0.86					
POSTING							
OPERATING	1.52	1.11	2.48	1.46	2.10	2.15	2.21
COMMENTS:	H-20 AND 3A. STR. TRUCKS CONTROLLED BY DECK RATING, OTHER TRUCKS CONTROLLED BY GIRDER RATING. HL-93 INVENTORY RATING IS LESS THAN 1.00 FOR MOMENT.						

PROJECT NOTES

GENERAL

1. ALL MATERIALS AND CONSTRUCTION SHALL CONFORM TO STATE OF VERMONT, AGENCY OF TRANSPORTATION, 2011 STANDARD SPECIFICATIONS FOR CONSTRUCTION, AND ITS LATEST REVISIONS, AND THE AASHTO LRFD BRIDGE DESIGN SPECIFICATIONS, DATED 2014, AND ITS LATEST REVISIONS.

2. THE DESIGN LIVE LOAD SHALL BE HL-93.

3. ALL WORK AND ANY ASSOCIATED ACTIVITY ON THIS PROJECT SHALL BE PERFORMED WITHIN THE EXISTING RIGHT-OF-WAY LIMITS.

4. THE CONTRACTOR IS MADE AWARE THAT EXISTING UTILITIES MAY EXIST WITHIN THE CONSTRUCTION LIMITS OF BRIDGE NO. 107N. THE LOCATION OF ANY UTILITY INFORMATION ON THE PLANS IS APPROXIMATE. NO CLAIMS ARE MADE TO THE ACCURACY OR COMPLETENESS OF THE UTILITIES SHOWN. THE CONTRACTOR IS SOLELY RESPONSIBLE FOR LOCATING AND PROTECTING FROM DAMAGE ALL UTILITIES ON SITE DURING ALL STAGES OF CONSTRUCTION. ANY DAMAGE TO UTILIES DUE DIRECTLY TO THE CONTRACTOR'S OPERATIONS SHALL BE REPAIRED AS DIRECTED BY THE ENGINEER AT NO ADDITIONAL COST TO THE STATE. SEE SPECIAL PROVISIONS FOR ADDITIONAL INFORMATION AND REQUIREMENTS.

5. FOLLOWING THE COMPLETION OF ALL OTHER CONSTRUCTION ACTIVITIES, ALL BEAM SEATS SHALL BE CLEANED OFF. THE COST FOR CLEANING BEAM SEATS WILL BE CONSIDERED INCIDENTAL TO ALL OTHER ITEMS IN THE CONTRACT.

6. ANY DAMAGE TO PRIVATE OR PUBLIC PROPERTY DUE DIRECTLY TO THE CONTRACTOR'S OPERATIONS SHALL BE REPAIRED AS DIRECTED BY THE ENGINEER AT NO ADDITIONAL COST TO THE STATE.

7. LIMITS OF GROUND SURVEY ARE BETWEEN STA 8607+24 AND STA 8612+61. OUTSIDE THESE LIMITS ARE APPROXIMATE LOCATIONS TAKEN FROM AERIAL MAPPING.

ENVIRONMENTAL

8. THE CONTRACTOR SHALL REVIEW AND UNDERSTAND ALL APPLICABLE ENVIRONMENTAL PERMITS AND ENSURE THAT ALL CONSTRUCTION CONDITIONS ARE MET.

9. EROSION CONTROL MEASURES SHALL BE UTILIZED AS REQUIRED AND SHALL CONFORM TO SECTION 105 OF THE STANDARD SPECIFICATIONS AND THE LOW RISK SITE HANDBOOK FOR EROSION PREVENTION AND SEDIMENT CONTROL FROM THE AGENCY OF NATURAL RESOURCES. PAYMENT FOR EROSION CONTROL MEASURES, IF APPLICABLE, WILL BE PAID FOR AS EXTRA WORK IN ACCORDANCE WITH 104.03.

10. THE CONTRACTOR SHALL PREVENT ANY MATERIAL FROM ENTERING THE WATERWAY, RAILROAD, OR ROADWAY DURING EXCAVATION, PARTIAL REMOVAL OF STRUCTURE, OR CONSTRUCTING THE NEW DECK.

11. THE DESIGN INTENT IS TO ALLOW THE CONTRACTOR TO STAGE IN THE LANE CLOSURES OF THE TRAVELED ROADWAY OF THE APPROACHES TO THE BRIDGE. ANY STAGING AREAS OUTSIDE OF THIS SHALL BE CLEARED FOR RESOURCES THROUGH THE VTRANS ENVIRONMENTAL UNIT.

TRAFFIC CONTROL

12. SEE TRAFFIC CONTROL SHEET 1 FOR TRAFFIC CONTROL NOTES.

DECK REMOVAL AND RELATED ITEMS

13. ITEM 529.20, "PARTIAL REMOVAL OF STRUCTURE" WILL INCLUDE REMOVAL OF ANY PORTIONS OF THE EXISTING STRUCTURE AS SHOWN ON THE PLANS, INCLUDING THE EXISTING BRIDGE DECK AND CURBS, SCUPPERS, BARRIER MEMBRANE, PAVEMENT, AND BRIDGE RAILING, EXCEPT AS NOTED ON SHEET 25. ITEM 529.25, "REMOVAL OF CONCRETE OR MASONRY" WILL INCLUDE REMOVAL OF THE EXISTING CONCRETE CURBS ALONG THE TOPS OF THE WINGWALLS. ITEM 525.10, "REMOVAL OF EXISTING BRIDGE RAILING" WILL INCLUDE REMOVAL OF THE EXISTING BRIDGE RAIL ALONG THE TOP OF THE WINGWALLS. SEE BITUMINOUS CONCRETE/ CONCRETE REMOVAL DETAIL ON SHEET 25.

14. THE TOPS OF THE EXISTING WINGWALLS SHALL BE REMOVED BY MECHANICAL MEANS AND THE REMAINING CONCRETE SHALL HAVE NEAT LINES AND BE SMOOTH. PROTECT ALL ELEMENTS INTENDED TO REMAIN.

15. AFTER REMOVAL OF THE EXISTING BRIDGE DECK, ANY AREAS ON THE CONCRETE BEAM SEAT THAT ARE FOUND TO BE UNSOUND SHALL BE BROUGHT TO THE ATTENTION OF THE ENGINEER. THE METHOD FOR DETERMINING AREAS OF UNSOUND CONCRETE SHALL BE APPROVED BY THE ENGINEER. THE ENGINEER SHALL MAKE A DETERMINATION AS TO HOW TO REPAIR THE DETERIORATED PORTION OF THE CONCRETE BEAM SEAT AND THE LIMITS OF THE REPAIR. THE REPAIRS WILL BE PAID FOR UNDER ITEM 580.13, "REPAIR OF CONCRETE SUBSTRUCTURE SURFACE, CLASS I" OR ITEM 580.14, "REPAIR OF CONCRETE SUBSTRUCTURE SURFACE, CLASS II, AS APPLICABLE. QUANTITIES FOR ITEMS 580.13 AND 580.14 AS SHOWN ON THE QUANTITY SUMMARY SHEETS ARE ESTIMATED.

16. THE EXISTING STEEL AND HARDWARE FOR THE FINGER JOINT AT PIER #4 AND THE COMPRESSION JOINT AT ABUTMENT #4 SHALL REMAIN IN-PLACE DURING DECK REMOVAL OPERATIONS AS SHOWN ON SHEET 20, AND THE EXISTING STEEL SHALL BE CLEANED OF REMAINING CONCRETE OR LATENT MATERIAL. PAYMENT FOR THIS WORK WILL BE CONSIDERED INCIDENTAL TO ITEM 529.20, "PARTIAL REMOVAL OF STRUCTURE". IF REMOVAL OF THE JOINT HARDWARE IS DETERMINED TO BE REQUIRED BY THE CONTRACTOR TO FACILITATE THE WORK, THE COST FOR THE REMOVAL OF THE HARDWARE WILL BE CONSIDERED INCIDENTAL TO ITEM 529.20, "PARTIAL REMOVAL OF STRUCTURE". RESETTING THE HARDWARE WILL BE CONSIDERED INCIDENTAL TO ITEM 501.33, "CONCRETE, HIGH PERFORMANCE CLASS A".

17. MINOR REPAIRS TO THE EXISTING COMPRESSION JOINT HARDWARE AT ABUTMENT #4, SPECIFICALLY TO THE STEEL ANGLES ALONG THE LENGTH OF THE JOINT AND ANY OTHER MINOR DAMAGE TO STEEL HARDWARE, MAY BE REQUIRED. ANY AREAS OF THE EXISTING JOINT HARDWARE THAT ARE FOUND TO BE MISSING OR DAMAGED SHALL BE BROUGHT TO THE ATTENTION OF THE ENGINEER. THE ENGINEER SHALL MAKE A DETERMINATION AS TO HOW TO REPAIR THE DAMAGED HARDWARE IN ACCORDANCE WITH THE PROVISIONS OF SECTION 506 AND THE LIMITS OF THE REPAIR. ANY REPAIRS SHALL BE MADE WITH GRADE A36 STEEL AND SHALL BE GALVANIZED. THE GALVANIZING OF THE NEW STEEL SHALL BE REPAIRED PER SUBSECTION 726.08, IF APPLICABLE. THE REPAIRS TO THE JOINT WILL BE PAID FOR UNDER ITEM 506.60, "STRUCTURAL STEEL". AN ESTIMATED QUANTITY FOR ITEM 506.60 IS SHOWN IN THE QUANTITY SUMMARY SHEETS.

18. THE COMPRESSION JOINT SEAL AT ABUTMENT #4 SHALL BE REMOVED AND REPLACED. THIS WORK WILL BE PAID FOR UNDER ITEM 900.640, "SPECIAL PROVISION (REMOVE AND REPLACE COMPRESSION JOINT SEAL)".

STEEL

19. AFTER ALL PAVEMENT AND MEMBRANE ARE REMOVED BUT PRIOR TO THE REMOVAL OF THE EXISTING CONCRETE DECK, THE CONTRACTOR SHALL TAKE TOP OF DECK ELEVATIONS ALONG THE CENTERLINE OF EACH BEAM AT TENTH POINTS FROM CENTERLINE TO CENTERLINE OF BEARING. AFTER THE EXISTING CONCRETE DECK HAS BEEN REMOVED, THE CONTRACTOR SHALL TAKE ELEVATIONS ALONG THE TOP OF EACH BEAM AT TENTH POINTS FROM CENTERLINE TO CENTERLINE OF BEARING. THE TOP OF DECK AND TOP OF BEAM ELEVATIONS SHALL THEN BE SENT TO THE ENGINEER FOR USE IN DETERMINING THE FINAL PROFILE AND HAUNCH DEPTHS. THE CONTRACTOR SHALL EXPECT 3 WORKING DAYS FOR VTRANS TO PREPARE THE REVISED PROFILE AND HAUNCH DEPTH CALCULATIONS.

20. THE EXISTING STRUCTURAL STEEL IS PAINTED WITH A MATERIAL THAT MAY CONTAIN LEAD. THE CONTRACTOR SHALL FOLLOW ALL APPLICABLE REGULATIONS WHEN HANDLING AND WORKING WITH THIS STEEL. ANY REMOVED STRUCTURAL STEEL, IF APPLICABLE, IS THE PROPERTY OF THE CONTRACTOR. THE CONTRACTOR SHALL INDEMNIFY AND HOLD THE STATE AND ITS OFFICERS AND EMPLOYEES HARMLESS CONCERNING THE CONTRACTOR'S USE OR DISPOSITION OF THE REMOVED EXISTING STRUCTURAL STEEL.

21. NEW BRIDGE SCUPPERS WILL BE PROVIDED AT THE SAME LOCATIONS AS THE REMOVED SCUPPERS. THE NEW SCUPPERS WILL BE PAID FOR UNDER ITEM 900.620, "SPECIAL PROVISION (BRIDGE SCUPPER)".

REINFORCED CONCRETE

22. ALL CONCRETE SHALL CONFORM TO THE SPECIFICATIONS FOR CONCRETE, HIGH PERFORMANCE CLASS A. THE CONTRACTOR SHALL PROVIDE TESTING EQUIPMENT FOR CONCRETE IN ACCORDANCE WITH SUBSECTION 631.05.

23. ALL REINFORCING STEEL SHALL BE LEVEL 1 - EPOXY COATED AND MEET THE REQUIREMENTS OF SECTION 507. A REINFORCING STEEL SCHEDULE AND SHOP DRAWINGS MEETING THE REQUIREMENTS OF SUBSECTION 105.03 SHALL BE SUBMITTED. PAYMENT FOR THIS WORK WILL BE CONSIDERED INCIDENTAL TO ITEM 507.11, "REINFORCING STEEL, LEVEL 1".

24. TEST BARS SHALL BE PROVIDED IN ACCORANCE WITH THE "VERMONT AGENCY OF TRANSPORTATION MATERIAL SAMPLING MANUAL" AVAILABLE ON THE AGENCY WEBSITE. A MINIMUM OF TWO TEST SECTIONS ARE REQUIRED FOR EACH SIZE, BRAND, AND GRADE OR TYPE OF REINFORCING. SEE THE MANUAL FOR ACCEPTABLE DIMENSIONS OF TEST SECTIONS. EXTRA BARS FOR TESTING PURPOSES SHALL BE SPECIFIED IN THE WORKING DRAWING SUBMITTAL.

25. EPOXY COATED REINFORCING STEEL PROJECTING FROM THE DECK DURING CONSTRUCTION SHALL BE COVERED WITH CANVAS OR OTHER SUITABLE MATERIAL THAT WILL EFFECTIVELY PROTECT IT AGAINST DAMAGE FROM SUNLIGHT AND WEATHER EXPOSURE UNTIL IT WILL BE ENCASED IN CONCRETE. PAYMENT FOR THIS WORK WILL BE CONSIDERED INCIDENTAL TO ITEM 507.11, "REINFORCING STEEL, LEVEL 1".

26. WATER REPELLENT, SILANE SHALL BE APPLIED TO ALL EXPOSED CONCRETE BRIDGE DECK SURFACES EXCEPT THE UNDERSIDE OF THE DECK BETWEEN THE DRIP NOTCHES. THIS WORK WILL BE PAID FOR UNDER ITEM 514.10, "WATER REPELLENT, SILANE".

27. ALL REINFORCING STEEL SHALL BE DETAILED AND FABRICATED USING PROCEDURES AND TOLERANCES IN ACCORDANCE WITH APPLICABLE PUBLICATIONS OF THE "CONCRETE REINFORCING INSTITUTE".

28. MINIMUM CLEAR COVER FOR REINFORCING STEEL SHALL BE AS FOLLOWS:

ALONG BACKFACES OF WALL AGAINST EARTH:	2.0 INCH
ALONG TOP SURFACE OF DECK SLAB:	2.5 INCH
ALONG BOTTOM SURFACE OF DECK SLAB:	1.5 INCH
ELSEWHERE UNLESS OTHERWISE INDICATED:	3.0 INCH

PAVEMENT REMOVAL AND DECK REPAIRS

29. PAVEMENT REMOVAL SHOULD BE LIMITED TO WHAT IS SHOWN ON THE PLANS. ALTHOUGH THE INTENT OF THE PLANS IS TO REMOVE AND REPLACE THE CONCRETE BRIDGE DECK FOR THE ENTIRE BRIDGE LENGTH, THE ENGINEER HAS THE OPTION TO MAINTAIN THE EXISTING SPAN 1 CONCRETE BRIDGE DECK IF THE CONCRETE APPEARS TO BE IN GOOD CONDITION WITH MINIMAL AREAS OF UNSOUND CONCRETE. THEREFORE, PAVEMENT AND MEMBRANE REMOVAL ON SPAN #1 SHALL BE REQUIRED PRIOR TO BRIDGE DECK REMOVAL OPERATIONS. THIS WORK SHALL BE IN ACCORDANCE WITH SECTION 529 OF THE STANDARD SPECIFICATIONS.

30. THE FINAL ONE HALF INCH OF PAVEMENT ON SPAN #1 OF THE CONCRETE BRIDGE DECK AND THE AT-GRADE APPROACH SLABS SHALL BE REMOVED BY LOADER, GRADER OR EQUIPMENT APPROVED BY THE ENGINEER. COLD PLANING TO REMOVE BRIDGE PAVEMENT WILL BE CONSIDERED INCIDENTAL TO ITEM 529.10, "REMOVAL OF BRIDGE PAVEMENT".

31. DURING BRIDGE AND AT-GRADE APPROACH SLAB PAVEMENT REMOVAL, THE CONTRACTOR SHALL EXERCISE CARE TO ENSURE THAT NO DAMAGE OCCURS TO SPAN #1 OF THE EXISTING CONCRETE BRIDGE DECK AND THE EXISTING AT-GRADE APPROACH SLABS. ANY DAMAGE TO SPAN #1 OF THE CONCRETE BRIDGE DECK OR AT-GRADE APPROACH SLABS SHALL BE REPAIRED AT THE CONTRACTOR'S EXPENSE. REPAIRS, IF APPLICABLE, SHALL BE MADE IN ACCORDANCE WITH SECTION 580.

32. THE AT-GRADE APPROACH SLABS AND SPAN 1 OF THE CONCRETE BRIDGE DECK (IF APPLICABLE) SHALL BE CLEANED IN ACCORDANCE WITH SUBSECTION 580.04 AND TO THE SATISFACTION OF THE ENGINEER. REMOVAL OF THE BARRIER MEMBRANE AND THE CLEANING OF THE AT-GRADE APPROACH SLABS AND SPAN #1 OF THE CONCRETE BRIDGE DECK WILL BE PAID FOR UNDER ITEM 580.16, "SURFACE PREPARATION FOR MEMBRANE".

33. ONCE THE EXISTING PAVEMENT AND MEMBRANE ARE REMOVED FROM THE SPAN #1 CONCRETE BRIDGE DECK, ANY AREAS THAT ARE FOUND TO BE UNSOUND SHALL BE BROUGHT TO THE ATTENTION OF THE ENGINEER. THE METHOD FOR DETERMINING AREAS OF UNSOUND CONCRETE SHALL BE APPROVED BY THE ENGINEER. THE ENGINEER SHALL MAKE A DETERMINATION AS TO WHETHER THE EXISTING SPAN #1 CONCRETE BRIDGE DECK SHOULD BE REPLACED OR REPAIRED. IF THE DECK IS TO BE REPLACED, BRIDGE DECK REMOVAL OPERATIONS SHALL COMMENCE. IF THE DECK IS TO BE MAINTAINED, THE ENGINEER SHALL MAKE A DETERMINATION AS TO HOW TO REPAIR THE DETERIORATED PORTION OF THE DECK AND THE LIMITS OF THE REPAIR. THE REPAIRS WILL BE PAID FOR UNDER ITEM 580.10, "REPAIR OF CONCRETE SUPERSTRUCTURE SURFACE, CLASS 1", ITEM 580.11, "REPAIR OF CONCRETE SUPERSTRUCTURE SURFACE, CLASS 11", OR ITEM 580.12, "REPAIR OF CONCRETE SUPERSTRUCTURE SURFACE, CLASS 111". QUANTITIES FOR ITEMS 580.10, 580.11, AND 580.12 AS SHOWN ON THE QUANTITY SUMMARY SHEETS ARE ESTIMATED AND INCLUDED IN THE CONTRACT IN THE EVENT THE SPAN IS MAINTAINED.

34. ONCE THE EXISTING PAVEMENT AND MEMBRANE ARE REMOVED FROM THE AT-GRADE APPROACH SLABS, ANY AREAS THAT ARE FOUND TO BE UNSOUND SHALL BE BROUGHT TO THE ATTENTION OF THE ENGINEER. THE METHOD FOR DETERMINING AREAS OF UNSOUND CONCRETE SHALL BE APPROVED BY THE ENGINEER. THE ENGINEER SHALL MAKE A DETERMINATION AS TO HOW TO REPAIR THE DETERIORATED PORTION OF THE AT-GRADE APPROACH SLABS AND THE LIMITS OF THE REPAIR. THE REPAIRS WILL BE PAID FOR UNDER ITEM 580.10, "REPAIR OF CONCRETE SUPERSTRUCTURE SURFACE, CLASS 1", ITEM 580.11, "REPAIR OF CONCRETE SUPERSTRUCTURE SURFACE, CLASS 11", OR ITEM 580.12, "REPAIR OF CONCRETE SUPERSTRUCTURE SURFACE, CLASS 111". QUANTITIES FOR ITEMS 580.10, 580.11, AND 580.12 AS SHOWN ON THE QUANTITY SUMMARY SHEETS ARE ESTIMATED.

PAVEMENT AND MEMBRANE

35. UPON THE ENGINEER'S APPROVAL OF THE CONCRETE BRIDGE DECK'S CONDITION, ITEM 519.20, "SHEET MEMBRANE WATERPROOFING, TORCH APPLIED" SHALL BE INSTALLED IN ACCORDANCE WITH SECTION 519. THE CONTRACTOR SHALL NOT INSTALL ITEM 519.20, "SHEET MEMBRANE WATERPROOFING, TORCH APPLIED" WHEN THE DECK CONCRETE AND/OR DECK PATCH AREAS' MOISTURE CONTENT IS ABOVE SECTION 519 SPECIFICATIONS OR MANUFACTURER'S SPECIFICATIONS, WHICHEVER IS LESS.

36. TRAFFIC WILL BE ALLOWED TO DRIVE ON THE BARE CONCRETE DECK PRIOR TO THE DECK BEING CLEANED AND PREPARED FOR THE NEW SHEET MEMBRANE. ONCE THE CONCRETE BRIDGE DECK IS PREPARED FOR THE NEW SHEET MEMBRANE, NO TRAFFIC WILL BE ALLOWED ON THE NEW MEMBRANE UNTIL THE SECOND LIFT OF BITUMINOUS CONCRETE PAVEMENT IS IN PLACE.

37. FOLLOWING THE INSTALLATION OF THE NEW SHEET MEMBRANE WATERPROOFING ON THE CONCRETE BRIDGE DECK, THE SOUTHERN ROADWAY APPROACH, CONCRETE BRIDGE DECK, AND AT-GRADE APPROACH SLAB #5 SHALL BE PAVED CURB TO CURB WITH ITEM 900.680, "SPECIAL PROVISION (BITUMINOUS CONCRETE PAVEMENT - BRIDGE MIX - TYPE IVB)" WITH ONE ¾" SHIM AND ONE 1¾" LIFT. THE TOP LIFT SHALL TAPER TO 1½" AT THE PIER #4 FINGER JOINT AND THE ABUTMENT #4 COMPRESSION JOINT TO ACCOMMODATE THE EXISTING STEEL PLATES AND HARDWARE. SEE JOINT DETAILS SHEET 1 ON SHEET 21 FOR TAPER LOCATIONS. AT-GRADE APPROACH SLAB #6 AND THE NORTHERN ROADWAY APPROACH SHALL BE PAVED CURB TO CURB WITH ITEM 900.680, "SPECIAL PROVISION (BITUMINOUS CONCRETE PAVEMENT - BRIDGE MIX - TYPE IVB)" WITH ONE ¾" SHIM AND ONE 1½" LIFT.

38. THE GRADE OF PG ASPHALT BINDER USED TO PRODUCE BITUMINOUS CONCRETE PAVEMENT SHALL BE 58-28. SUBSTITUTIONS WILL BE ACCEPTED BASED ON AVAILABILITY WHERE THE UPPER END TEMPERATURE VALUE IS GREATER THAN 58°C (136°F) AND/OR THE LOWER END TEMPERATURE VALUE IS LESS THAN -28°C (-18°F).

39. CARE SHALL BE EXERCISED TO SMOOTHLY TRANSITION THE NEW BRIDGE PAVEMENT INTO THE EXISTING PAVEMENT. ANY COLD PLANING NECESSARY FOR SHAPING BRIDGE APPROACHES WILL BE PAID FOR UNDER ITEM 210.10, "COLD PLANING, BITUMINOUS PAVEMENT".

40. ANY REQUIRED SAWCUT OF EXISTING PAVEMENT WILL BE CONSIDERED INCIDENTAL TO ITEM 900.680, "SPECIAL PROVISION (BITUMINOUS CONCRETE PAVEMENT - BRIDGE MIX - TYPE IVB)".

41. EMULSIFIED ASPHALT SHALL BE APPLIED AT A RATE OF 0.08 GAL/SY TO ALL COLD PLANED SURFACES AND AT A RATE OF 0.04 GAL/SY BETWEEN PAVEMENT LIFTS OR AS DIRECTED BY THE ENGINEER. EMULSIFIED ASPHALT WILL BE PAID FOR UNDER ITEM 404.65, "EMULSIFIED ASPHALT".

42. UPON COMPLETION OF ALL PAVING OPERATIONS, FINAL PAVEMENT MARKINGS SHALL BE INSTALLED TO REPLICATE THE EXISTING CONFIGURATION.

43. DURABLE PAVEMENT MARKINGS ARE OPTIONED AS SHOWN ON THE PLAN SHEETS FOR THIS PROJECT. THE CONTRACTOR SHALL BID THE SAME MARKING MATERIAL FOR ALL OPTION ITEMS. 1

REVISION	DATE	DESCRIPTION	BY
1	03-30-2016	ADDING AND CHANGING ITEMS	LG

PROJECT NAME: IRASBURG
PROJECT NUMBER: IM DECK(46)

FILE NAME: z15all6notes-107N.dgn
PROJECT LEADER: J. BYATT
DESIGNED BY: S. BEAUMONT
INDEX OF SHEETS & PROJECT NOTES SHEET 2
PLOT DATE: 3/28/2016
DRAWN BY: M. SMITH
CHECKED BY: J. BYATT
SHEET 3 OF 49

CLD CONSULTING ENGINEERS

CLD 15-0223 MODEL: Sheet02

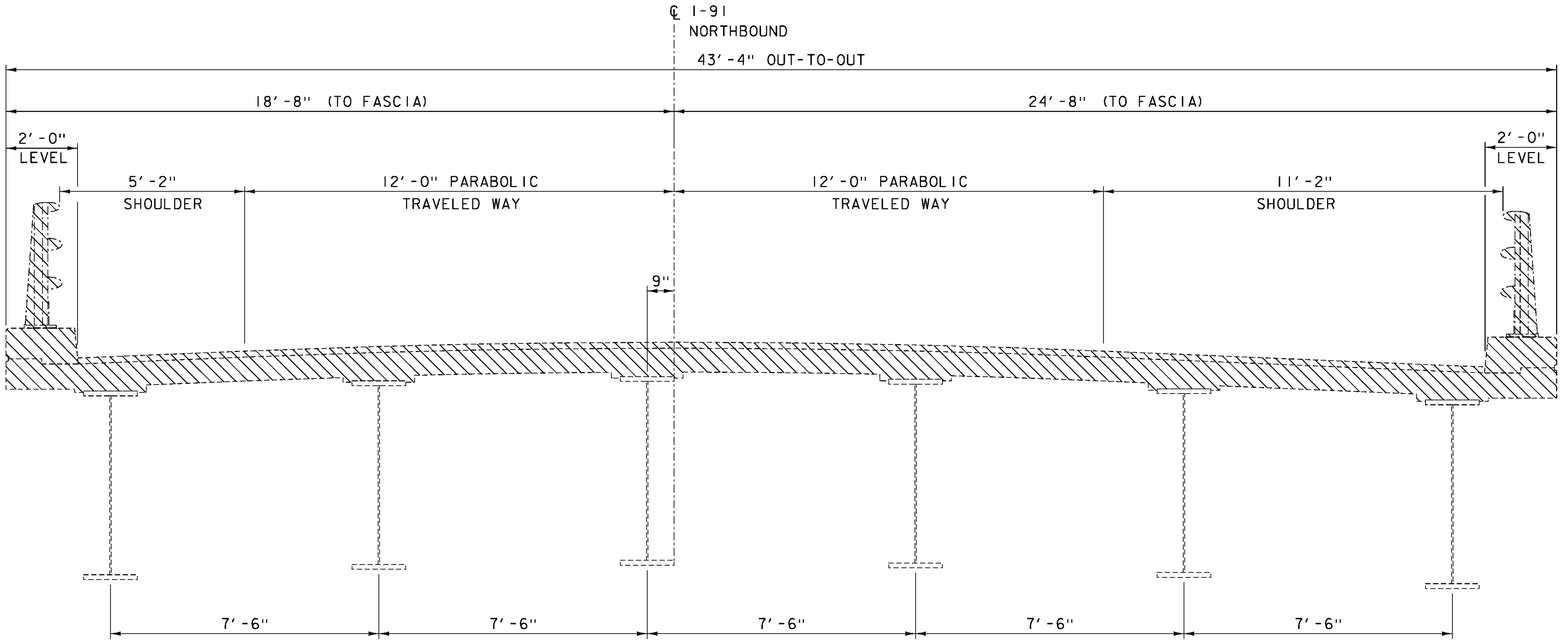

PARTIAL REMOVAL OF STRUCTURE

EXISTING BRIDGE TYPICAL

SCALE: 1/2" = 1'-0"

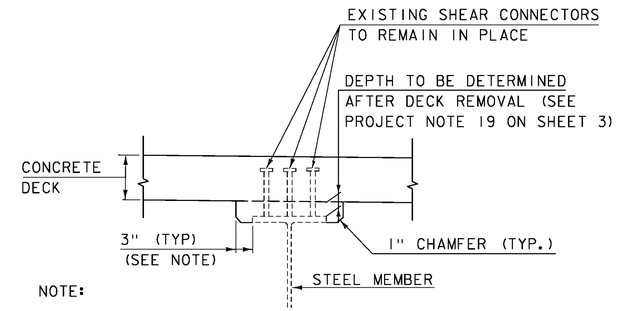

NOTE:

THE 3" HORIZONTAL SECTION MAY BE ELIMINATED FOR FORMING SYSTEMS DESIGNED FOR THE CONSTRUCTION OF VERTICAL HAUNCHES. ANY VOIDS RESULTING FROM FORMING SYSTEM ELEMENTS SHALL BE FILLED WITH JOINT SEALER, POLYURETHANE MEETING THE REQUIREMENTS OF SECTION 524. THE COST OF THE JOINT SEALER, POLYURETHANE WILL BE CONSIDERED INCIDENTAL TO THE ADJACENT CONCRETE ITEM.

HAUNCH AND SHEAR CONNECTOR DETAIL

SCALE: 3/4" = 1'-0"

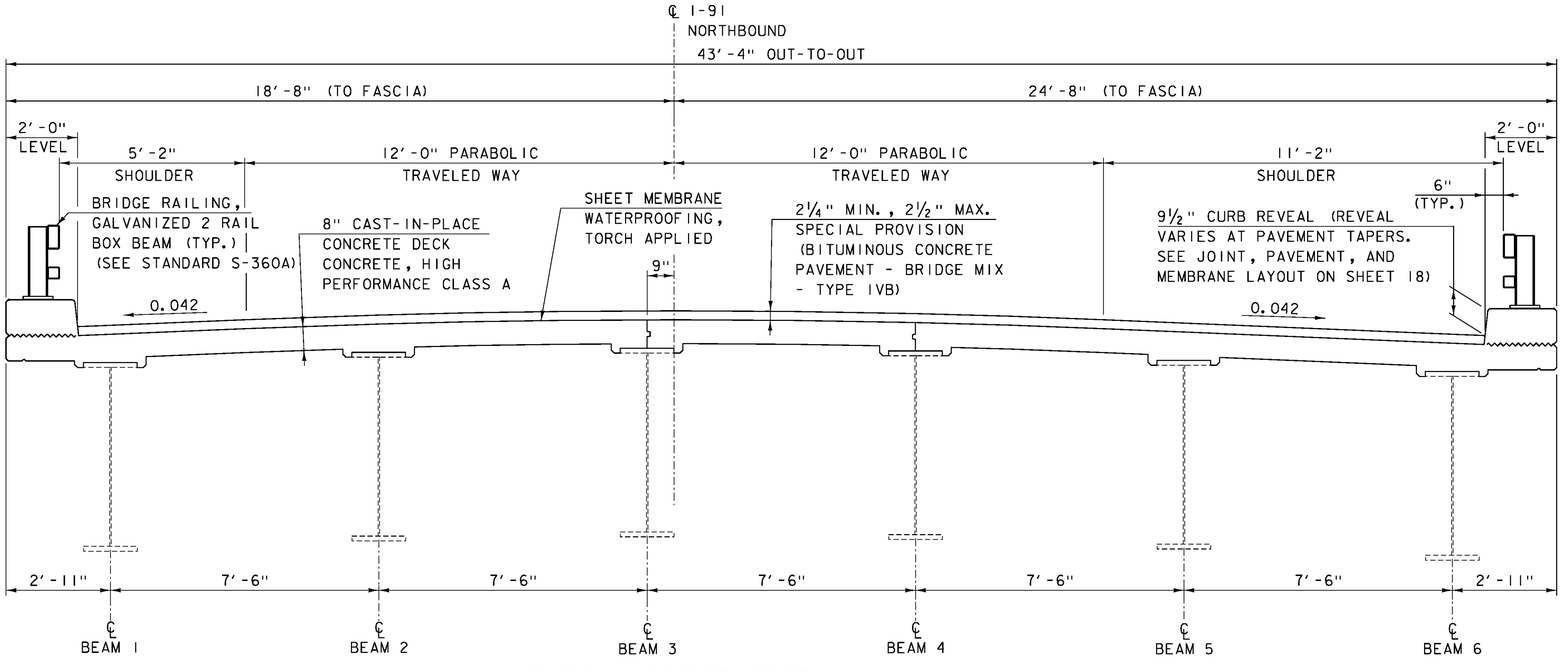

TYPICAL BRIDGE SECTION

(SPANS 2 THROUGH 4)
SCALE: 1/2" = 1'-0"

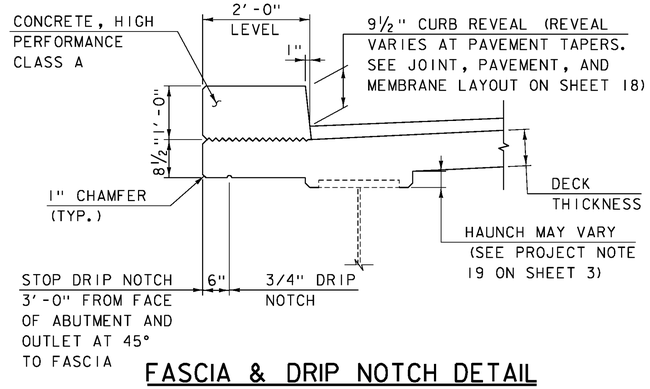

FASCIA & DRIP NOTCH DETAIL

SCALE: 3/4" = 1'-0"

PROJECT NAME: IRASBURG	
PROJECT NUMBER: IM DECK(46)	
FILE NAME: z15all6typ-107N.dgn	PLOT DATE: 2/5/2016
PROJECT LEADER: J. BYATT	DRAWN BY: M. SMITH
DESIGNED BY: N. CARON	CHECKED BY: S. BEAUMONT
TYPICAL BRIDGE SECTIONS SHEET	SHEET 4 OF 49

CONSULTING ENGINEERS

CLD 15-0223 MODEL: Sheet01

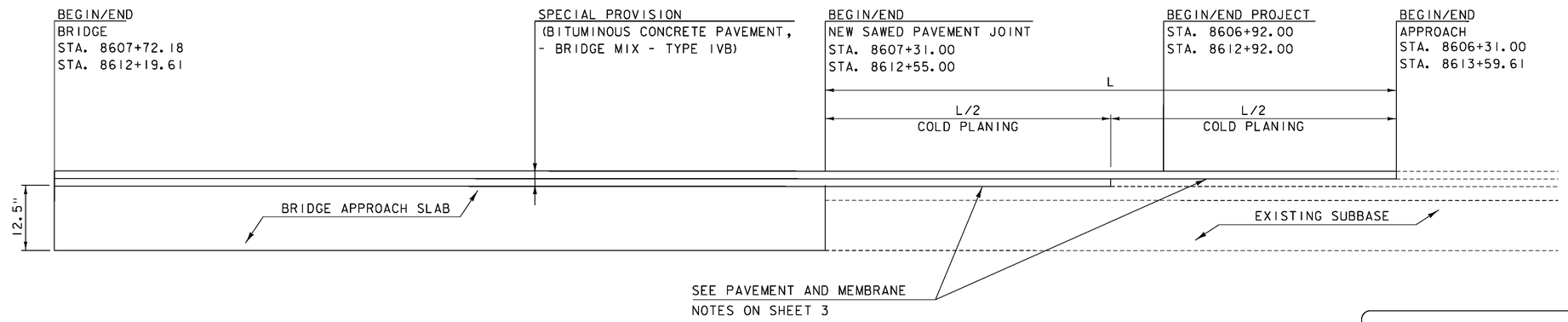

MATERIAL TRANSITION DIAGRAM

NOT TO SCALE

MATERIAL TOLERANCES	
SURFACE	
- PAVEMENT (TOTAL THICKNESS)	+/- 1/4"
- AGGREGATE SURFACE COURSE	+/- 1/2"

DESIGN NUMBER OF GYRATIONS - 65

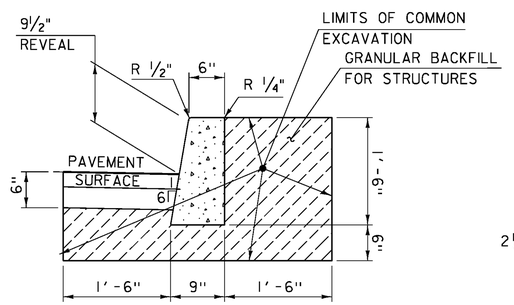

TYPICAL CAST-IN-PLACE CONCRETE CURB, TYPE B EARTHWORKS DETAIL

NORTHERN APPROACH

2 1/4" SPECIAL PROVISION (BITUMINOUS CONCRETE PAVEMENT - BRIDGE MIX - TYPE IVB) (1 - 1 1/2" LIFT AND 1 - 3/4" SHIM)

SOUTHERN APPROACH

2 1/2" SPECIAL PROVISION (BITUMINOUS CONCRETE PAVEMENT - BRIDGE MIX - TYPE IVB) (1 - 1 3/4" LIFT AND 1 - 3/4" SHIM)

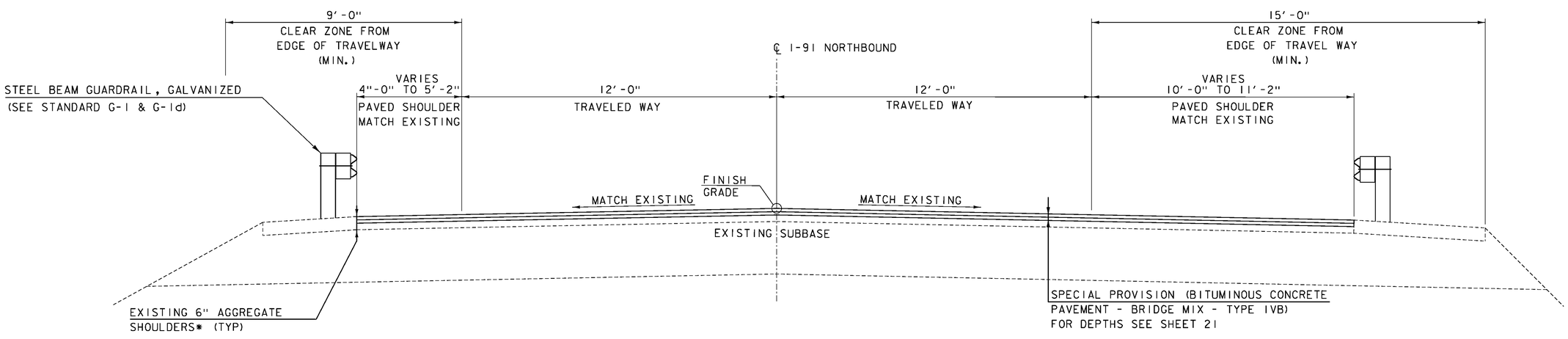

NOTE:
IN THE EVENT THAT COLD PLANING OF THE RIGHT ROADWAY SHOULDERS ALONG BRIDGE APPROACHES EXPOSES GRAVEL SUBBASE, THE CONTRACTOR SHALL REMOVE 2" OF GRAVEL SUBBASE, PREPARE THE AREA AS DIRECTED BY THE ENGINEER, AND PROVIDE 2" BASE PAVEMENT. IN ADDITION TO THE PAVEMENT DEPTH TO BE PLACED IN ALL OTHER LOCATIONS PER THE JOINT DETAILS SHEET 1 ON SHEET 21, ADDITIONAL QUANTITIES HAVE BEEN INCLUDED IN THE ESTIMATE UNDER ITEM 900.680, "SPECIAL PROVISION (BITUMINOUS CONCRETE PAVEMENT - BRIDGE MIX - TYPE IVB)" AND ITEM 402.12, "AGGREGATE SHOULDERS" TO ADDRESS THIS WORK. WHERE DETERMINED BY THE ENGINEER, PAYMENT FOR BASE PREPARATION WILL BE CONSIDERED INCIDENTAL TO EQUIPMENT RENTAL ITEMS.

I-91 TYPICAL SECTION

SCALE: 1/2" = 1'-0"

*REPLACE AGGREGATE SHOULDER AS NEEDED, AS DIRECTED BY THE ENGINEER

PROJECT NAME: IRASBURG	
PROJECT NUMBER: IM DECK(46)	
FILE NAME: z15a116typ-107N.dgn	PLOT DATE: 3/8/2016
PROJECT LEADER: J. BYATT	DRAWN BY: P. McKECHNIE
DESIGNED BY: L. GREER	CHECKED BY: S. FORTIER
TYPICAL ROADWAY SECTIONS SHEET	SHEET 5 OF 49

CLD 15-0223 MODEL: Sheet02

STATE OF VERMONT
AGENCY OF TRANSPORTATION

QUANTITY SHEET 1

SUMMARY OF ESTIMATED QUANTITIES				TOTALS		DESCRIPTIONS			
ROADWAY	EROSION CONTROL	BRIDGE NO. 107N	FULL C.E. ITEMS	GRAND TOTAL	FINAL	UNIT	ITEMS	ITEM NUMBER	ROUND
20				20		CY	COMMON EXCAVATION	203.15	4
1				1		CY	TRENCH EXCAVATION OF EARTH, EXPLORATORY (N.A.B.I.)	204.22	-
15				15		CY	GRANULAR BACKFILL FOR STRUCTURES	204.30	-
900				900		SY	COLD PLANING, BITUMINOUS PAVEMENT	210.10	9
6				6		TON	AGGREGATE SHOULDERS	402.12	0.8
15		23		38		CWT	EMULSIFIED ASPHALT	404.65	3.76
1				1		LU	PRICE ADJUSTMENT, ASPHALT CEMENT (N.A.B.I.)	406.50	-
		618		618		CY	CONCRETE, HIGH PERFORMANCE CLASS A	501.33	0.58
		500		500		LB	STRUCTURAL STEEL	506.60	EST.
		184463		184463		LB	REINFORCING STEEL, LEVEL I	507.11	0.52
		72		72		LF	DRILLING AND GROUTING DOWELS	507.16	-
		38		38		GAL	WATER REPELLENT, SILANE	514.10	0.65
		54		54		LF	BRIDGE EXPANSION JOINT, ASPHALTIC PLUG	516.10	0.65
		1941		1941		SY	SHEET MEMBRANE WATERPROOFING, TORCH APPLIED	519.20	0.28
		79		79		LF	JOINT SEALER, HOT POURED	524.11	0.33
		58		58		LF	REMOVAL OF EXISTING BRIDGE RAILING	525.10	0.67
		952.35		952.35		LF	BRIDGE RAILING, GALVANIZED 2 RAIL BOX BEAM	525.33	-
		670		670		SY	REMOVAL OF BRIDGE PAVEMENT	529.10	0.87
		1		1		EACH	PARTIAL REMOVAL OF STRUCTURE	529.20	-
		5		5		CY	REMOVAL OF CONCRETE OR MASONRY	529.25	1.37
		10		10		SY	REPAIR OF CONCRETE SUPERSTRUCTURE SURFACE, CLASS I	580.10	EST.
		25		25		SY	REPAIR OF CONCRETE SUPERSTRUCTURE SURFACE, CLASS II	580.11	EST.
		3		3		CY	REPAIR OF CONCRETE SUPERSTRUCTURE SURFACE, CLASS III	580.12	EST.
		15		15		SY	REPAIR OF CONCRETE SUBSTRUCTURE SURFACE, CLASS I	580.13	EST.
		15		15		SY	REPAIR OF CONCRETE SUBSTRUCTURE SURFACE, CLASS II	580.14	EST.
		6025		6025		SF	SURFACE PREPARATION FOR MEMBRANE	580.16	2.77
	5			5		HR	ALL PURPOSE EXCAVATOR RENTAL, TYPE I	608.25	EST.
	5			5		HR	TRUCK RENTAL	608.37	EST.
160				160		LF	CAST-IN-PLACE CONCRETE CURB, TYPE B	616.28	-
		238		238		LF	SNOW BARRIER	620.75	-
112.5				112.5		LF	STEEL BEAM GUARDRAIL, GALVANIZED	621.20	8.5
2				2		EACH	ANCHOR FOR STEEL BEAM RAIL	621.60	-
		4		4		EACH	GUARDRAIL APPROACH SECTION, GALVANIZED 2 RAIL BOX BEAM	621.72	-
50				50		LF	REMOVE AND RESET GUARDRAIL	621.75	-
190				190		LF	REMOVAL AND DISPOSAL OF GUARDRAIL	621.80	9
80				80		HR	UNIFORMED TRAFFIC OFFICERS	630.10	EST.
150				150		HR	FLAGGERS	630.15	EST.
			1	1		LS	FIELD OFFICE, ENGINEERS	631.10	-
			1	1		LS	TESTING EQUIPMENT, CONCRETE	631.16	-
			1	1		LS	TESTING EQUIPMENT, BITUMINOUS	631.17	-

DETAILED SUMMARY OF QUANTITIES

QUANTITIES	UNIT	ITEMS

PROJECT NAME: IRASBURG
PROJECT NUMBER: IM DECK(46)

FILE NAME: z15a116qss-107N.dgn
PROJECT LEADER: J. BYATT
DESIGNED BY: J. FRENCH
QUANTITY SHEET 1

PLOT DATE: 2/5/2016
DRAWN BY: M. SMITH
CHECKED BY: A. GIRALDI
SHEET 6 OF 49

STATE OF VERMONT
AGENCY OF TRANSPORTATION

QUANTITY SHEET 2

SUMMARY OF ESTIMATED QUANTITIES					TOTALS		DESCRIPTIONS			
ROADWAY	EROSION CONTROL	BRIDGE NO. 107N	FULL C.E. ITEMS		GRAND TOTAL	FINAL	UNIT	ITEMS	ITEM NUMBER	ROUND
			3000		3000		DL	FIELD OFFICE TELEPHONE (N.A.B.I.)	631.26	-
1					1		LS	MOBILIZATION/DEMOBILIZATION	635.11	-
2					2		EACH	PORTABLE CHANGEABLE MESSAGE SIGN	641.15	-
								BEGIN OPTION AA 1		
950					950		LF	DURABLE 6 INCH WHITE LINE, THERMOPLASTIC	646.422	
950					950		LF	DURABLE 6 INCH WHITE LINE, EPOXY PAINT	646.423	
950					950		LF	DURABLE 6 INCH WHITE LINE, POLYUREA	646.424	
								END OPTION AA		
								BEGIN OPTION BB 1		
750					750		LF	DURABLE 6 INCH YELLOW LINE, THERMOPLASTIC	646.432	
750					750		LF	DURABLE 6 INCH YELLOW LINE, EPOXY PAINT	646.433	
750					750		LF	DURABLE 6 INCH YELLOW LINE, POLYUREA	646.434	
								END OPTION BB		
5					5		EACH	REMOVING SIGNS	675.50	-
5					5		EACH	ERECTING SALVAGED SIGNS	675.60	-
2					2		EACH	DELINEATOR WITH STEEL POST	676.10	-
		16			16		EACH	SPECIAL PROVISION (BRIDGE SCUPPER)	900.620	-
6					6		EACH	SPECIAL PROVISION (CPM SCHEDULE)	900.620	-
825		2920			3745		LF	SPECIAL PROVISION (PAVEMENT JOINT ADHESIVE)	900.640	5.56
		58			58		LF	SPECIAL PROVISION (REMOVE AND REPLACE COMPRESSION JOINT SEAL)	900.640	0.65
1					1		LS	SPECIAL PROVISION (TRAFFIC CONTROL, ALL INCLUSIVE)	900.645	-
1					1		LU	SPECIAL PROVISION (MAINTENANCE OF RAILROAD TRAFFIC) (N.A.B.I.)	900.650	-
1					1		LU	SPECIAL PROVISION (MAT DENSITY PAY ADJUSTMENT - BRIDGE MIX - TYPE IVB) (N.A.B.I.)	900.650	-
105		320			425		TON	SPECIAL PROVISION (BITUMINOUS CONCRETE PAVEMENT - BRIDGE MIX - TYPE IVB)	900.680	2.3

DETAILED SUMMARY OF QUANTITIES		
QUANTITIES	UNIT	ITEMS
		SPECIAL PROVISION (BITUMINOUS CONCRETE PAVEMENT - BRIDGE MIX - TYPE IVB)
103.0	TON	TYPE IVB (ROADWAY)
319.7	TON	TYPE IVB (BRIDGE)
422.7	TON	SUBTOTAL
2.3	TON	ROUNDING
425.0	TON	TOTAL

REVISION	DATE	DESCRIPTION	BY
1	03-30-2016	ADDING AND CHANGING ITEMS	LG

PROJECT NAME: IRASBURG
PROJECT NUMBER: IM DECK(46)

FILE NAME: z15a116qss-107N.dgn
PROJECT LEADER: J. BYATT
DESIGNED BY: J. FRENCH
QUANTITY SHEET 2

PLOT DATE: 3/28/2016
DRAWN BY: M. SMITH
CHECKED BY: A. GIRALDI
SHEET 7 OF 49

GENERAL INFORMATION

SYMBOLOGY LEGEND NOTE

THE SYMBOLOGY ON THIS SHEET IS INTENDED TO COVER STANDARD CONVENTIONAL SYMBOLOGY. THE SYMBOLOGY IS USED FOR EXISTING & PROPOSED FEATURES WITH HEAVIER LINEWEIGHT, IN COMBINATION WITH PROJECT ANNOTATION, AS NOTED ON PROJECT PLAN SHEETS. THIS LEGEND SHEET COVERS THE BASICS. SYMBOLOGY ON PLANS MAY VARY, PLAN ANNOTATIONS AND NOTES SHOULD BE USED TO CLARIFY AS NEEDED.

R.O.W. ABBREVIATIONS (CODES) & SYMBOLS

POINT	CODE	DESCRIPTION
	CH	CHANNEL EASEMENT
	CONST	CONSTRUCTION EASEMENT
	CUL	CULVERT EASEMENT
	D&C	DISCONNECT & CONNECT
	DIT	DITCH EASEMENT
	DR	DRAINAGE EASEMENT
	DRIVE	DRIVEWAY EASEMENT
	EC	EROSION CONTROL
	HWY	HIGHWAY EASEMENT
	I&M	INSTALL & MAINTAIN EASEMENT
	LAND	LANDSCAPE EASEMENT
	R&RES	REMOVE & RESET
	R&REP	REMOVE & REPLACE
	SR	SLOPE RIGHT
	UE	UTILITY EASEMENT
	(P)	PERMANENT EASEMENT
	(T)	TEMPORARY EASEMENT
■	BNDNS	BOUND SET
⊡	BNDNS	BOUND TO BE SET
●	IPNS	IRON PIN SET
◎	IPNS	IRON PIN TO BE SET
⊠	CALC	EXISTING ROW POINT
○	PROW	PROPOSED ROW POINT
[LENGTH]		LENGTH CARRIED ON NEXT SHEET

COMMON TOPOGRAPHIC POINT SYMBOLS

POINT	CODE	DESCRIPTION
	APL	BOUND APPARENT LOCATION
	BM	BENCHMARK
	BND	BOUND
	CB	CATCH BASIN
	COMB	COMBINATION POLE
	DITHR	DROP INLET THROATED DNC
	EL	ELECTRIC POWER POLE
	FPOLE	FLAGPOLE
	GASFIL	GAS FILLER
	GP	GUIDE POST
	GSO	GAS SHUT OFF
	GUY	GUY POLE
	GUYW	GUY WIRE
	GV	GATE VALUE
	H	TREE HARDWOOD
	HCTRL	CONTROL HORIZONTAL
	HVCTRL	CONTROL HORIZ. & VERTICAL
	HYD	HYDRANT
	IP	IRON PIN
	IPIPE	IRON PIPE
	LI	LIGHT - STREET OR YARD
	MB	MAILBOX
	MH	MANHOLE (MH)
	MM	MILE MARKER
	PM	PARKING METER
	PMK	PROJECT MARKER
	POST	POST STONE/WOOD
	RRSIG	RAILROAD SIGNAL
	RRSL	RAILROAD SWITCH LEVER
	S	TREE SOFTWOOD
	SAT	SATELLITE DISH
	SHRUB	SHRUB
	SIGN	SIGN
	STUMP	STUMP
	TEL	TELEPHONE POLE
	TIE	TIE
	TSIGN	SIGN W/DOUBLE POST
	VCTRL	CONTROL VERTICAL
	WELL	WELL
	WSO	WATER SHUT OFF

THESE ARE COMMON VAOT SURVEY POINT SYMBOLS FOR EXISTING FEATURES, ALSO USED FOR PROPOSED FEATURES WITH HEAVIER LINEWEIGHT, IN COMBINATION WITH PROPOSED ANNOTATION.

PROPOSED GEOMETRY CODES

CODE	DESCRIPTION
PC	POINT OF CURVATURE
PI	POINT OF INTERSECTION
CC	CENTER OF CURVE
PT	POINT OF TANGENCY
PCC	POINT OF COMPOUND CURVE
PRC	POINT OF REVERSE CURVE
POB	POINT OF BEGINNING
POE	POINT OF ENDING
STA	STATION PREFIX
AH	AHEAD STATION SUFFIX
BK	BACK STATION SUFFIX
D	CURVE DEGREE OF (100FT)
R	CURVE RADIUS OF
T	CURVE TANGENT LENGTH
L	CURVE LENGTH OF
E	CURVE EXTERNAL DISTANCE

UTILITY SYMBOLOGY

UNDERGROUND UTILITIES

UGU	UTILITY (GENERIC-UNKNOWN)
	TELEPHONE
	ELECTRIC
	CABLE (TV)
UEC	ELECTRIC+CABLE
UET	ELECTRIC+TELEPHONE
UCT	CABLE+TELEPHONE
UECT	ELECTRIC+CABLE+TELEP.
	GAS LINE
	WATER LINE
	SANITARY SEWER (SEPTIC)

ABOVE GROUND UTILITIES (AERIAL)

AGU	UTILITY (GENERIC-UNKNOWN)
	TELEPHONE
	ELECTRIC
C	CABLE (TV)
EC	ELECTRIC+CABLE
ET	ELECTRIC+TELEPHONE
	ELECTRIC+TELEPHONE
CT	CABLE+TELEPHONE
ECT	ELECTRIC+CABLE+TELEP.
	UTILITY POLE GUY WIRE

PROJECT CONSTRUCTION SYMBOLOGY

PROJECT DESIGN & LAYOUT SYMBOLOGY

CZ	CLEAR ZONE
	PLAN LAYOUT MATCHLINE

PROJECT CONSTRUCTION FEATURES

	TOP OF CUT SLOPE
	TOE OF FILL SLOPE
	STONE FILL
	BOTTOM OF DITCH ℄
	CULVERT PROPOSED
	STRUCTURE SUBSURFACE
	PROJECT DEMARCATION FENCE
BF BF	BARRIER FENCE
	TREE PROTECTION ZONE (TPZ)
	STRIPING LINE REMOVAL
	SHEET PILES

CONVENTIONAL BOUNDARY SYMBOLOGY

BOUNDARY LINES

	TOWN BOUNDARY LINE
	COUNTY BOUNDARY LINE
	STATE BOUNDARY LINE
	PROPOSED STATE R.O.W. (LIMITED ACCESS)
	PROPOSED STATE R.O.W.
	STATE ROW (LIMITED ACCESS)
	STATE ROW
	TOWN ROW
	PERMANENT EASEMENT LINE (P)
	TEMPORARY EASEMENT LINE (T)
	SURVEY LINE
P L P L	PROPERTY LINE (P/L)
SR SR SR	SLOPE RIGHTS
	6F PROPERTY BOUNDARY
	4F PROPERTY BOUNDARY
	HAZARDOUS WASTE

EPSC LAYOUT PLAN SYMBOLOGY

EPSC MEASURES

	FILTER CURTAIN
	SILT FENCE
	SILT FENCE WOVEN WIRE
	CHECK DAM
	DISTURBED AREAS REQUIRING RE-VEGETATION
	EROSION MATTING

ENVIRONMENTAL RESOURCES

	WETLAND BOUNDARY
	RIPARIAN BUFFER ZONE
	WETLAND BUFFER ZONE
	SOIL TYPE BOUNDARY
T&E	THREATENED & ENDANGERED SPECIES
	HAZARDOUS WASTE AREA
AG	AGRICULTURAL LAND
HABITAT	FISH & WILDLIFE HABITAT
FLOOD PLAIN	FLOOD PLAIN
OHW	ORDINARY HIGH WATER (OHW)
	STORM WATER
	USDA FOREST SERVICE LANDS
	WILDLIFE HABITAT SUIT/CONN

ARCHEOLOGICAL & HISTORIC

ARCH	ARCHEOLOGICAL BOUNDARY
HISTORIC DIST	HISTORIC DISTRICT BOUNDARY
HISTORIC	HISTORIC AREA
H	HISTORIC STRUCTURE

CONVENTIONAL TOPOGRAPHIC SYMBOLOGY

EXISTING FEATURES

	ROAD EDGE PAVEMENT
	ROAD EDGE GRAVEL
	DRIVEWAY EDGE
	DITCH
	FOUNDATION
	FENCE (EXISTING)
	FENCE WOOD POST
	FENCE STEEL POST
	GARDEN
	ROAD GUARDRAIL
	RAILROAD TRACKS
	CULVERT (EXISTING)
	STONE WALL
	WALL
	WOOD LINE
	BRUSH LINE
	HEDGE
	BODY OF WATER EDGE
	LEDGE EXPOSED

CLD 15-0223 MODEL: Sheet

CONSULTING ENGINEERS

PROJECT NAME: IRASBURG	
PROJECT NUMBER: IM DECK(46)	
FILE NAME: z15all6legend-107N.dgn	PLOT DATE: 2/5/2016
PROJECT LEADER: J. BYATT	DRAWN BY: P. McKECHNIE
DESIGNED BY: L. GREER	CHECKED BY: S. FORTIER
CONVENTIONAL SYMBOLOGY LEGEND SHEET	SHEET 8 OF 49

EXISTING BRIDGE DATA:

ROLLED BEAM, CONCRETE DECK-SPAN 1
3-SPAN CONTINUOUS WELDED PLATE
GIRDER, CONCRETE DECK-SPAN 2-4.
LENGTH = 447'0"
WIDTH = 39'-4" RAIL-TO-RAIL
BUILT IN 1971

DURABLE 6 INCH WHITE LINE (OPTION ITEM)
8606+31 TO 8613+60 LT (SOLID)
8606+31 TO 8613+60 LT (DASHED) 1

DURABLE 6 INCH YELLOW LINE (OPTION ITEM)
8606+31 TO 8613+60 RT (SOLID) 1

REMOVAL AND DISPOSAL OF GUARDRAIL
8607+21 TO 8607+67 LT
8606+79 TO 8607+24 RT
8612+58 TO 8613+03 LT
8612+21 TO 8612+66 RT

STEEL BEAM GUARDRAIL, GALVANIZED
8606+79 TO 8607+04 RT
8607+21 TO 8607+46 LT
8612+41 TO 8612+66 RT
8612+78 TO 8613+03 LT

ANCHOR FOR STEEL BEAM RAIL
8612+66 RT
8613+03 LT

DELINEATOR WITH STEEL POST
8612+66 RT
8613+03 LT

CAST-IN-PLACE CONCRETE CURB, TYPE B
8606+93 TO 8607+33 RT
8607+35 TO 8607+75 LT
8612+12 TO 8612+52 RT
8612+49 TO 8612+89 LT

REMOVING SIGNS
8607+23 RT
8607+29 RT
8607+29 LT
8609+38 LT
8612+00 LT

ERECTING SALVAGED SIGNS
8607+23 RT
8607+29 RT
8607+29 LT
8609+38 LT
8612+00 LT

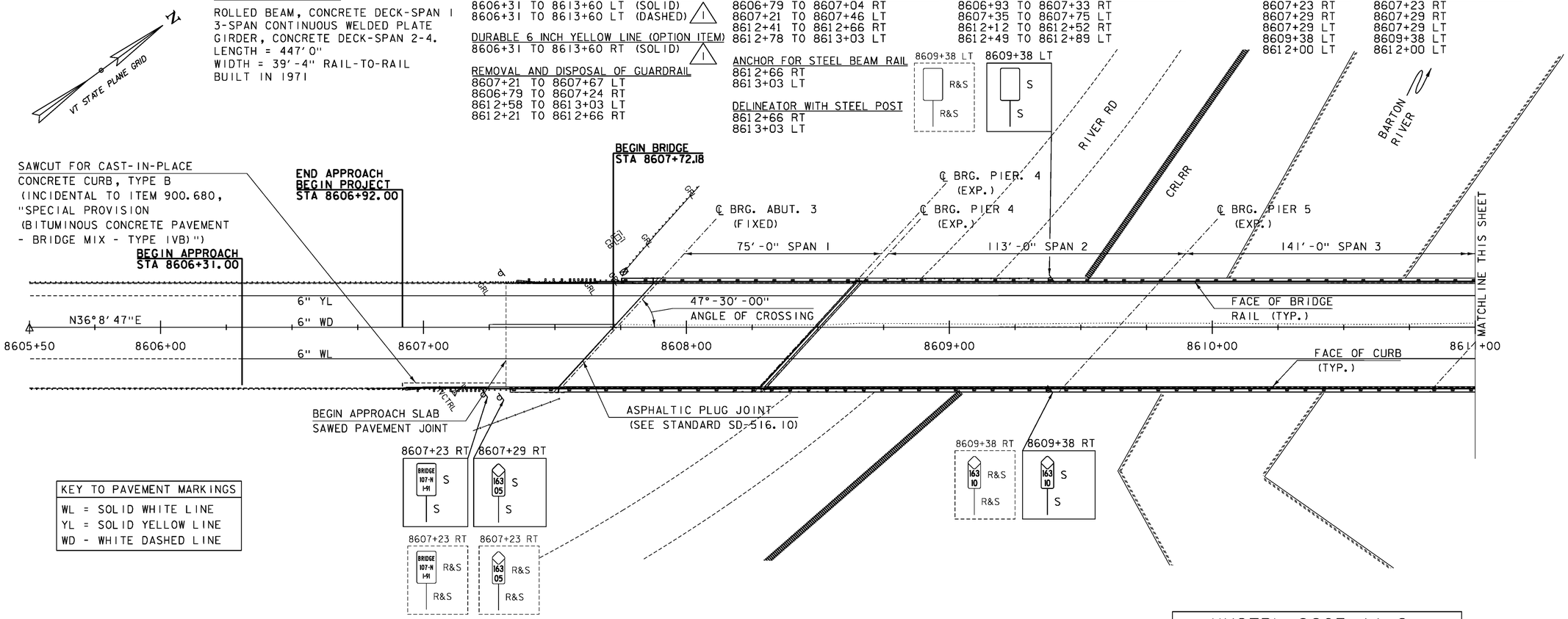

KEY TO PAVEMENT MARKINGS

WL	= SOLID WHITE LINE
YL	= SOLID YELLOW LINE
WD	- WHITE DASHED LINE

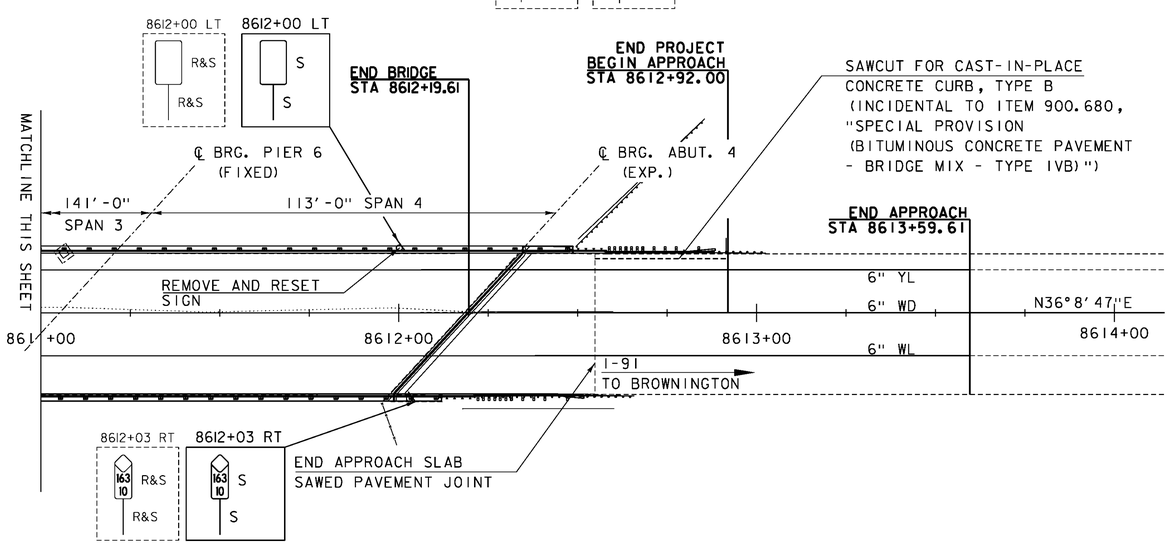

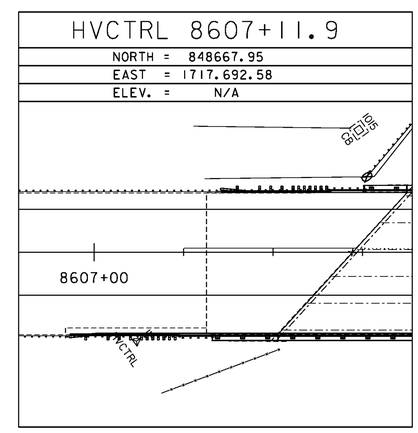

REVISION	DATE	DESCRIPTION	BY
1	03-30-2016	ADDING AND CHANGING ITEMS	LG

0 20 40
(SCALE 1" = 20')

CONSULTING ENGINEERS

PROJECT NAME: IRASBURG
PROJECT NUMBER: IM DECK(46)

FILE NAME: z15a116bdr-107N.dgn
PROJECT LEADER: J. BYATT
DESIGNED BY: L. GREER
LAYOUT SHEET

PLOT DATE: 3/28/2016
DRAWN BY: P. McKECHNIE
CHECKED BY: S. FORTIER
SHEET 9 OF 49

CLD 15-0223 MODEL: Sheet01

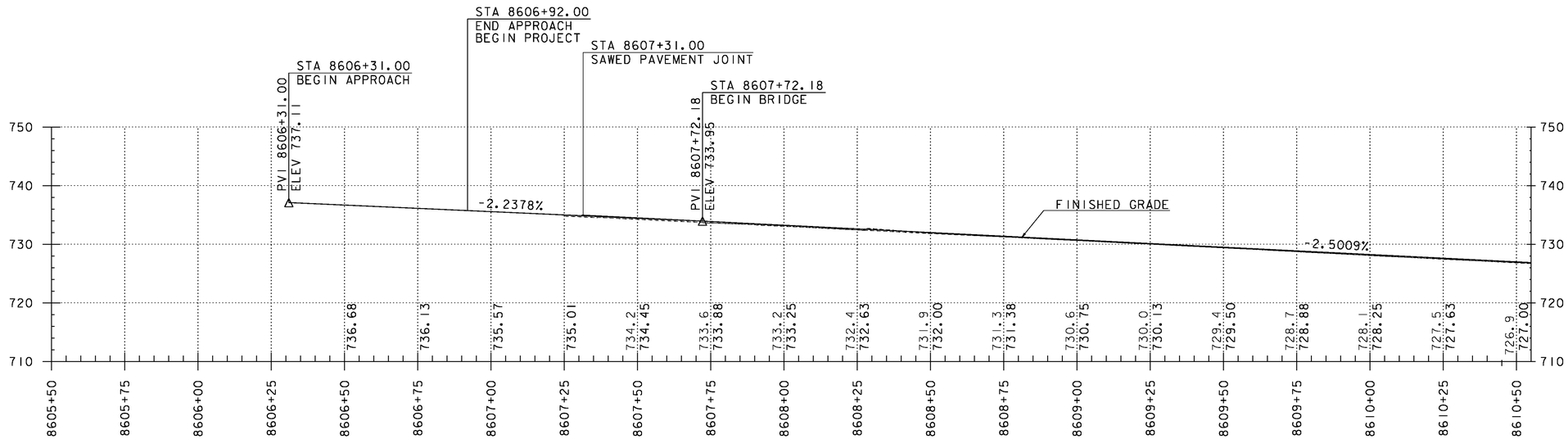

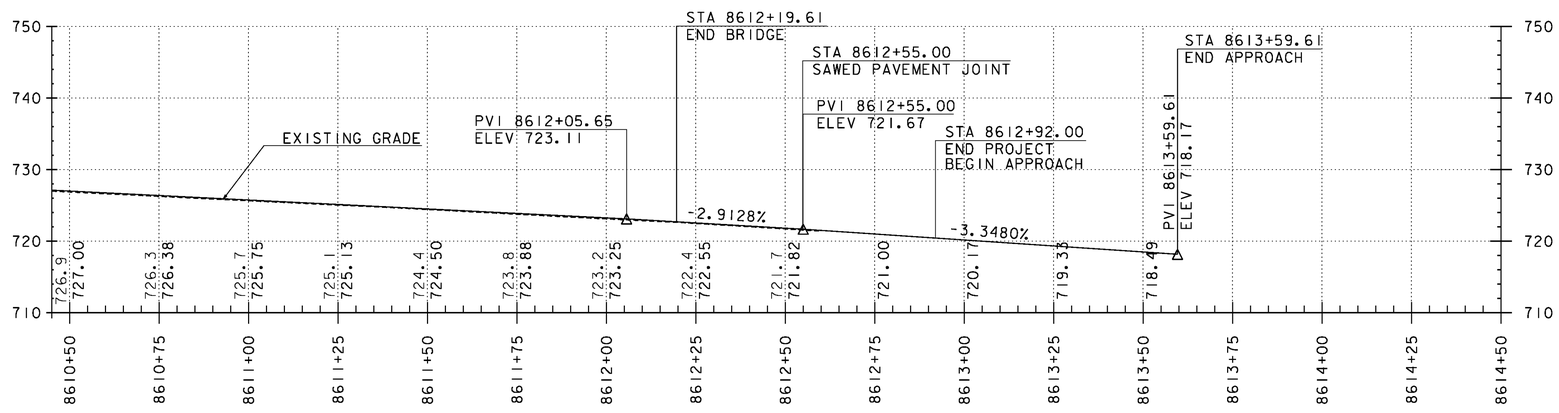

NOTES

1. STATIONS AND ELEVATIONS ARE IN FEET.

2. THE ELEVATIONS SHOWN TO THE NEAREST TENTH ARE THE EXISTING GROUND ALONG THE CENTERLINE.

3. THE ELEVATIONS SHOWN TO THE NEAREST HUNDRETH ARE THE FINISHED GRADE ALONG THE CENTERLINE.

4. PROPOSED PROFILE SHOWN IS FOR INFORMATIONAL PURPOSES ONLY. FINAL FINISHED GRADE SHALL BE DETERMINED BY THE PROJECT MANAGER AFTER EXISTING TOP OF DECK AND TOP OF BEAM ELEVATIONS ARE SURVEYED. SEE PROJECT NOTE 19 ON SHEET 3.

I-91 PROFILE

HOR. SCALE 1" = 40'-0"
VER. SCLAE 1" = 20'-0"

PROJECT NAME: IRASBURG	
PROJECT NUMBER: IM DECK(46)	
FILE NAME: z15all6pro-107N.dgn	PLOT DATE: 2/5/2016
PROJECT LEADER: J. BYATT	DRAWN BY: J. FOWLER
DESIGNED BY: L. GREER	CHECKED BY: S. FORTIER
PROFILE SHEET	SHEET 10 OF 49

CONSULTING ENGINEERS

CLD 15-0223 MODEL: Profile

TRAFFIC CONTROL

1. AS PART OF 900.645, "SPECIAL PROVISION (TRAFFIC CONTROL, ALL INCLUSIVE)", THE CONTRACTOR SHALL SUBMIT A SITE SPECIFIC TRAFFIC CONTROL PLAN TO THE PROJECT MANAGER DEPICTING EACH PHASE OF THE PLANNED WORK. PLANS SHALL BE SUBMITTED FOR APPROVAL IN ACCORDANCE WITH SUBSECTION 105.03. THE PLAN SHALL INCLUDE A LAYOUT SHOWING ALL ON- AND OFF-PROJECT SIGNS AND BARRICADES, DETAILS FOR LANE CLOSURES, AND ANY OTHER DETAILS ASSOCIATED WITH THE TRAFFIC CONTROL.

   THE TRAFFIC CONTROL PLANS SHOWN ON TRAFFIC CONTROL SHEETS 2 AND 3, THE TRAFFIC CONTROL BARRIER SHEET ON SHEET 14, AND THE PHASING SECTIONS ON SHEETS 15 AND 16 ARE SCHEMATICS ONLY AND SHOULD BE USED AS REFERENCES. DIMENSIONS SHOWN ARE MINIMUMS BASED ON VTRANS STANDARDS AND THE MUTCD. THESE DIMENSIONS MAY BE REDUCED DUE TO SITE CONSTRAINTS WITH THE ENGINEER'S APPROVAL. ITEMS THAT MAY BE REVISED IN THE SITE SPECIFIC TRAFFIC CONTROL PLAN SUBMITTED BY THE CONTRACTOR INCLUDE, BUT ARE NOT LIMITED TO, APPROACH SIGN SPACING, TAPER LENGTHS/RATES, LANE WIDTHS, BUFFER SPACES, TANGENT LENGTHS, AND LOCATIONS OF PORTABLE CHANGEABLE MESSAGE SIGNS.

2. ALL ITEMS REQUIRED TO PREPARE, SUBMIT, AND IMPLEMENT THE CONTRACTOR'S PLAN, INCLUDING ANY NECESSARY REVISIONS TO THE PLAN, WILL BE INCLUDED IN THE UNIT BID PRICE FOR ITEM 900.645, "SPECIAL PROVISION (TRAFFIC CONTROL, ALL-INCLUSIVE)". THE PAY ITEM INCLUDES, BUT IS NOT LIMITED TO, THE FOLLOWING:

   TRAFFIC CONTROL PLAN
   TEMPORARY TRAFFIC BARRIERS
   BARRICADES
   DRUMS/CONES
   ON PROJECT CONSTRUCTION SIGNING
   TEMPORARY TAPE OR RAISED PAVEMENT MARKERS, TYPE II
   PORTABLE ARROW BOARDS
   ENERGY ABSORPTION ATTENUATORS

   TRAFFIC CONTROL ITEMS NOT PAID FOR IN THE UNIT PRICE BID FOR ITEM 900.645, "SPECIAL PROVISION (TRAFFIC CONTROL, ALL-INCLUSIVE)", AND PAID FOR SEPARATELY INCLUDE THE FOLLOWING:

   ITEM 630.10, "UNIFORMED TRAFFIC OFFICERS"
   ITEM 630.15, " FLAGGERS"
   ITEM 641.15, "PORTABLE CHANGEABLE MESSAGE SIGN"

   THE CONTRACTOR SHALL ALLOW TWO WEEKS FOR REVIEW OF THE TRAFFIC CONTROL PLAN. NO WORK SHALL COMMENCE UNTIL THE CONTRACTOR HAS AN APPROVED TRAFFIC CONTROL PLAN.

3. THE EXISTING SPEED LIMIT IS 65 MPH. THE SPEED LIMIT WILL BE REDUCED TO 55 MPH IN THE WORK ZONE FOR THIS PROJECT. ANY EXISTING SPEED LIMIT SIGNS WITHIN THE SPEED REDUCTION AREA SHALL BE COMPLETELY COVERED.

4. CONSTRUCTION SIGNS SHALL BE INSTALLED SO AS NOT TO OBSTRUCT EXISTING SIGNS.

5. ALL SIGNS SHALL BE IN ACCORDANCE WITH THE CURRENT EDITIONS OF THE "MANUAL ON UNIFORM TRAFFIC CONTROL DEVICES" (MUTCD) AND THE "STANDARD HIGHWAY SIGNS AND MARKINGS" BOOK (SHSM) PUBLISHED BY THE FEDERAL HIGHWAY ADMINISTRATION (FHWA).

6. SOLID SUBSTRATE CONSTRUCTION SIGNS SHALL HAVE RETROREFLECTIVE SHEETING EQUAL TO OR EXCEEDING "AMERICAN SOCIETY FOR TESTING AND MATERIALS" (ASTM D 4956) TYPE VII, VIII OR IX REQUIREMENTS, UNLESS OTHERWISE NOTED. BLACK AND WHITE REGULATORY SIGNS SHALL BE A MINIMUM OF TYPE III, UNLESS OTHERWISE NOTED.

7. ROLL UP SIGNS SHALL HAVE RETROREFLECTIVE SHEETING EQUAL TO OR EXCEEDING ASTM D 4956 TYPE VI.

8. CONSTRUCTION SIGNS SHALL BE ERECTED BEFORE THE START OF ANY WORK AND SHALL BE COVERED UNTIL WORK COMMENCES, DURING PERIODS OF INACTIVITY OR UPON COMPLETION OF THE WORK. EACH SIGN SHALL BE ERECTED IN A NEAT AND WORKMANLIKE MANNER. SIGNS SHALL BE REMOVED UPON COMPLETION OF THE WORK AT THE DISCRETION OF THE ENGINEER.

TRAFFIC CONTROL (CONTINUED)

9. FIXED SIGNS SHALL BE SET SECURELY IN THE GROUND. THE BOTTOM OF A SIGN SHALL BE AT LEAST SEVEN FEET ABOVE THE EDGE OF PAVEMENT. THE NEAREST EDGE OF A SIGN SHALL BE AT LEAST SIX FEET OUTSIDE THE SHOULDER POINT OR FOUR FEET OUTSIDE GUARDRAIL.

10. PORTABLE SIGNS SHALL BE PLACED ON THE EDGE OF ROADWAY AND ONE FOOT MINIMUM ABOVE TRAVELED WAY. ALL VEGETATION THAT INTERFERES WITH VISIBILITY OF THE SIGNS SHALL BE REMOVED AT THE CONTRACTOR'S EXPENSE. WHEN PLACED BEHIND GUARDRAIL, THE BOTTOM OF THE SIGN FACE SHALL BE ABOVE THE TOP OF THE GUARDRAIL.

11. WHERE SIGN INSTALLATIONS ARE NOT PROTECTED BY GUARDRAIL OR OTHER APPROVED TRAFFIC BARRIERS, ALL SIGN STANDS AND POST INSTALLATIONS SHALL BE "NATIONAL COOPERATIVE HIGHWAY RESEARCH PROGRAM" (NCHRP) REPORT 350 COMPLIANT. NO SIGN POSTS SHALL EXTEND OVER THE TOP OF THE SIGN INSTALLED ON SAID POST(S). WHEN ANCHORS ARE INSTALLED, STUB SHALL NOT BE GREATER THAN FOUR INCHES ABOVE EXISTING GROUND.

12. THE CONTRACTOR SHALL HAVE SIGNS FOR CLOSURE OF RIGHT AND LEFT LANES ON PROJECT BEFORE WORK COMMENCES.

13. THE TRAFFIC CONTROL CONFIGURATIONS SHOWN ON TRAFFIC CONTROL SHEET 2 MAY BE UTILIZED FOR ALL WORK REQUIRING A LANE CLOSURE OF 3 DAYS OR LESS SUCH AS MEMBRANE AND PAVING OPERATIONS THAT DO NOT REQUIRE OPEN DECK WORK. ANY WORK REQUIRING A LANE CLOSURE LONGER THAN 3 DAYS OR INCLUDES OPEN DECK WORK SUCH AS DECK REMOVAL AND REPLACEMENT OPERATIONS SHALL UTILIZE THE TRAFFIC CONTROL CONFIGURATIONS SHOWN ON TRAFFIC CONTROL SHEET 3.

14. CHANNELIZING DEVICES OTHER THAN RETROREFLECTIVE PLASTIC DRUMS SHALL BE ALLOWED ALONG THE BUFFER SPACE AND WORK AREA FOR MEMBRANE AND PAVING OPERATIONS ONLY. THE TYPE OF DEVICE SHALL BE CONSISTENT THROUGHOUT THE BUFFER SPACE AND WORK AREA AND SHALL REMAIN STABLE WHILE UNATTENDED.

15. THE NUMBER OF CHANNELIZING DEVICES, TYPE III BARRICADE AND OTHER TRAFFIC CONTROL DEVICES SHOWN ARE FOR ILLUSTRATIVE PURPOSES ONLY. THE ACTUAL NUMBER REQUIRED ARE TO BE DETERMINED BASED ON INDIVIDUAL DETOUR CONDITIONS (TAPERS, SPEED LIMITS, LENGTH OF DETOUR, CURVE, ETC.). WARNING LIGHTS SHALL NOT BE USED ON CHANNELIZING DEVICES.

16. PLACE LAST CHANNELIZING DEVICE A MINIMUM 100 FEET BEYOND THE ANTICIPATED WORK ZONE TERMINAL POINT EACH DAY FOR MEMBRANE AND PAVING OPERATIONS ONLY.

17. THE ARROW PANEL SHALL BE PLACED ON THE SHOULDER OF THE ROADWAY AS CLOSE AS PRACTICAL TO THE BEGINNING OF THE MERGING TAPER.

18. THE PORTABLE CHANGEABLE MESSAGE SIGNS (PCMS) SHALL BE USED AT THE DISCRETION OF THE ENGINEER AND WILL BE PAID FOR UNDER ITEM 641.15, "PORTABLE CHANGEABLE MESSAGE SIGN)". THE PCMS SHALL BE PLACED AS SHOWN IN THE "CONSTRUCTION APPROACH SIGNING ON I-91" DETAIL ON TRAFFIC CONTROL SHEET 2. THE PCMS SHALL BE USED IN ACCORDANCE WITH SECTION 6F.60 OF THE MUTCD. THE PCMS SHALL READ "LEFT (OR RIGHT) LANE CLOSED AHEAD, PLEASE MERGE EARLY".

19. TRAVEL LANE SHALL BE A MINIMUM OF 12 FEET WIDE.

20. DURING MEMBRANE AND PAVING OPERATIONS, THE CONTRACTOR MAY REDUCE TRAFFIC TO ONE LANE DURING WORKING HOURS IN ACCORDANCE WITH THIS SHEET. ALL EQUIPMENT SHALL BE MOVED TO A LOCATION OFF PAVED SHOULDERS AND OUTSIDE THE CLEAR ZONE (MINIMUM 30 FEET) DURING NON-WORK PERIODS AND PROTECTED BY BARRELS OR CONES, UNLESS PROTECTED BY TRAFFIC BARRIER OR GUARDRAIL.

21. AT THE DISCRETION OF THE ENGINEER, MERGING TAPER, BUFFER SPACE, AND TANGENT LENGTHS MAY BE EXTENDED BEYOND MINIMUM VALUES, ESPECIALLY IN CLOSE PROXIMITY TO INTERCHANGE RAMPS, CURVES, OR OTHER INFLUENCING FACTORS.

22. EXTEND MERGING TAPER TO ACCOUNT FOR REQUIRED LANE SHIFT OFFSET.

23. PROVIDE MERGING TAPER LENGTH AS REQUIRED FOR LANE SHIFT.

TEMPORARY TRAFFIC BARRIER

24. TEMPORARY TRAFFIC BARRIER SHALL BE A CONCRETE MEDIAN BARRIER (CMB) TYPE. STEEL BEAM GUARDRAIL WILL NOT BE ALLOWED FOR USE AS A TEMPORARY TRAFFIC BARRIER. PLACEMENT OF CMBs AND REMOVING AND RESETTING CMBs WILL BE CONSIDERED INCIDENTAL TO ITEM 900.645, "SPECIAL PROVISION (TRAFFIC CONTROL, ALL-INCLUSIVE)".

25. THE END OF THE BARRIER FACING APPROACHING TRAFFIC SHALL MEET THE FOLLOWING REQUIREMENTS.

    A. WHEN NO GUARDRAIL IS PRESENT, A 30' OFFSET SHALL BE USED FROM THE EDGE OF TRAVELED WAY. IF A 30' OFFSET IS NOT ATTAINABLE, THEN AN ENERGY ABSORPTION ATTENUATOR SHALL BE LOCATED AT THE END OF THE BARRIER.

    B. IF GUARDRAIL IS PRESENT, THEN TEMPORARY CONCRETE TRAFFIC BARRIER SHALL BE CONNECTED TO EXISTING GUARDRAIL. PAYMENT WILL BE CONSIDERED INCIDENTAL TO ITEM 900.645, "SPECIAL PROVISION (TRAFFIC CONTROL, ALL-INCLUSIVE)". (COSTS FOR DISMANTLING BARRIER CONNECTION AND RESTORING EXISTING BARRIER TO ORIGINAL CONFIGURATION WILL BE CONSIDERED INCIDENTAL TO ITEM 900.645, "SPECIAL PROVISION (TRAFFIC CONTROL, ALL-INCLUSIVE)".) SEE BARRIER RAIL DETAILS ON SHEET 14. AN ENERGY ABSPORTION ATTENUATOR SHALL BE LOCATED AT THE END OF THE BARRIER.

26. THE CONTRACT INCLUDES AN ESTIMATED QUANTITY OF THREE ENERGY ABSORPTION ATTENUATORS, WHICH INCLUDES ONE BACKUP ATTENUATOR TO BE USED IN THE EVENT AN IN-SERVICE ATTENUATOR IS DAMAGED AND NEEDS TO BE REPLACED. PAYMENT FOR THE ATTENUATORS AND TO MOVE ATTENUATORS FOR SHIFTING LANE CLOSURES WILL BE CONSIDERED INCIDENTAL TO ITEM 900.645, "SPECIAL PROVISION (TRAFFIC CONTROL, ALL-INCLUSIVE)". PAYMENT FOR ENERGY ABSORPTION ATTENUATORS USED FOR ANY OTHER TRAFFIC CONTROL SETUP WILL BE CONSIDERED INCIDENTAL TO ITEM 900.645, "SPECIAL PROVISION (TRAFFIC CONTROL, ALL-INCLUSIVE)".

27. TEMPORARY TAPE EDGELINES SHALL BE APPLIED AND SHALL MAINTAIN A ONE FOOT MINIMUM DISTANCE FROM THE BARRIER WITH TWO FEET BEING DESIRABLE. ALL TEMPORARY TAPE EDGE LINES AND PAVEMENT MARKING MASKS WILL BE CONSIDERED INCIDENTAL TO ITEM 900.645, "SPECIAL PROVISION (TRAFFIC CONTROL, ALL-INCLUSIVE)".

28. THE RAISED PAVEMENT MARKERS (RPM'S), TYPE II SHALL BE PLACED TO THE OUTSIDE OF THE TEMPORARY TAPE PAVEMENT MARKINGS. THE RPM'S SHALL BE SPACED AT A MINIMUM OF 20 FEET AND WILL BE CONSIDERED INCIDENTAL TO ITEM 900.645, "SPECIAL PROVISION (TRAFFIC CONTROL, ALL-INCLUSIVE)".

29. DASHED LINE REMOVAL SHALL BEGIN A MINIMUM OF 750 FEET IN ADVANCE OF THE BEGINNING OF THE SHOULDER TAPER FOR TRAFFIC CONTROL WITH TEMPORARY BARRIER PROTECTION.

CLD 15-0223 MODEL: TCP1

CONSULTING ENGINEERS

PROJECT NAME: IRASBURG	
PROJECT NUMBER: IM DECK(46)	
FILE NAME: z15all6tcp-107N.dgn	PLOT DATE: 3/8/2016
PROJECT LEADER: J. BYATT	DRAWN BY: S. BEAUMONT
DESIGNED BY: S. BEAUMONT	CHECKED BY: L. GREER
TRAFFIC CONTROL SHEET 1	SHEET 11 OF 49

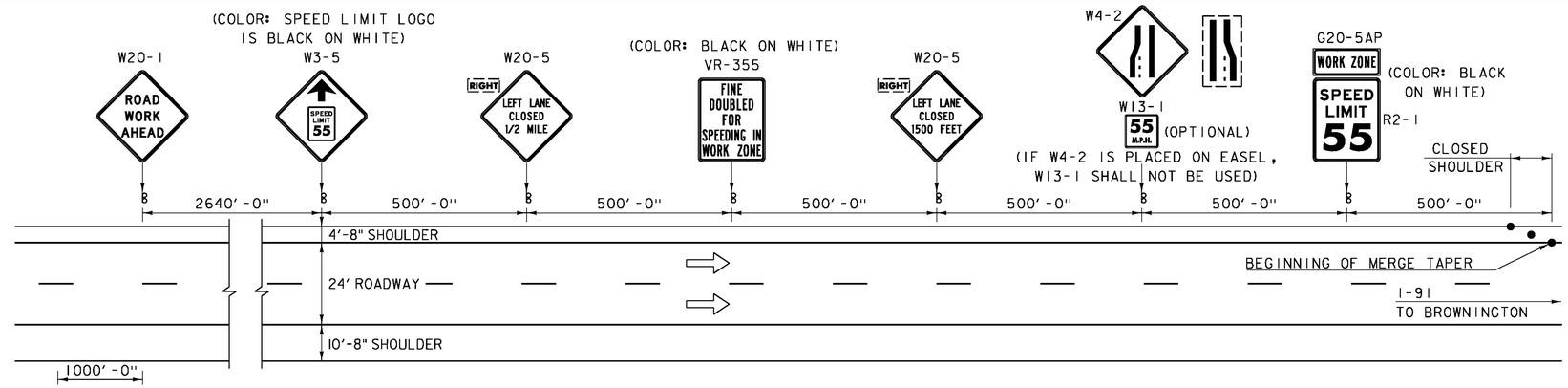

POSTED SPEED (MPH)	TAPER LENGTHS (FT) SHOULDER W=10 FT (L/3)	TAPER LENGTHS (FT) MERGING 12 FT LANE* (L)	TANGENT W=12 FT (L/2)	BARRIER FLARE RATE (MIN.)	MIN. BUFFER SPACE LENGTH (FT)	MAXIMUM CHANNELIZING DEVICE SPACING (FT) TAPER (S)	MAXIMUM CHANNELIZING DEVICE SPACING (FT) TANGENT (2S)
≤40	90	320	160	1:9	305	40	80
45	150	540	270	1:9	360	45	90
50	170	600	300	1:11	425	50	100
55	185	660	330	1:13	495	55	110
60	200	720	360	1:13	570	60	120
65	215	780	390	1:13	645	65	130

* SEE NOTE 22.

TAPER RATES ARE DETERMINED USING THE FOLLOWING EQUATION:

$L = WS$ FOR POSTED SPEEDS OF 45 MPH OR GREATER

$L = WS^2/60$ FOR POSTED SPEEDS OF 40 MPH OR LESS

L = MINIMUM LENGTH OF TAPER
W = WIDTH OF OFFSET IN FEET. (TYPICAL)
S = POSTED SPEED IN MPH

TRAFFIC DATA

LOCATION	AADT 2015	AADT 2035	DHV 2015	DHV 2035	%T 2015	%T 2035	%D 2015	%D 2035	ADTT 2015	ADTT 2035
I-91 NORTH	3600	4000	680	760	16.3	22.5	100	100	680	1000

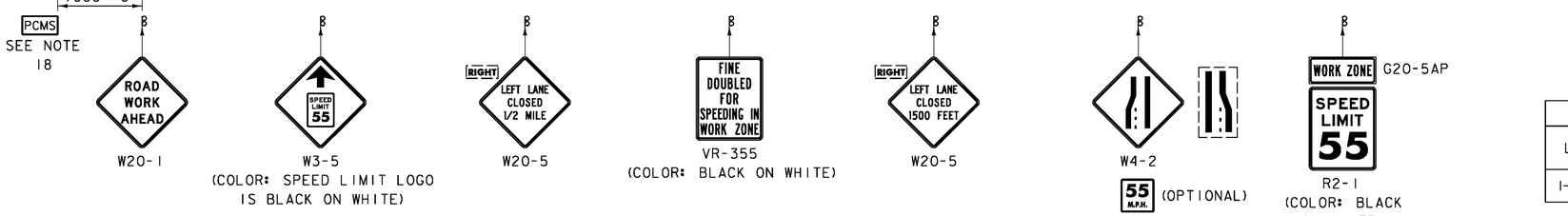

CONSTRUCTION APPROACH SIGNING ON I-91

(LEFT LANE CLOSED, RIGHT LANE SIMILAR)

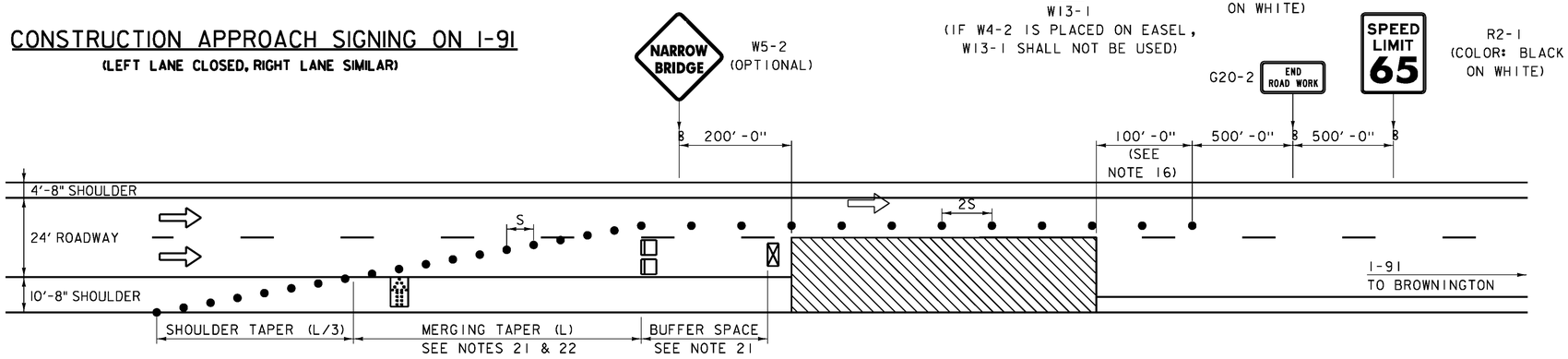

TRAFFIC CONTROL ON I-91 RIGHT LANE CLOSED

(SEE NOTE 13)

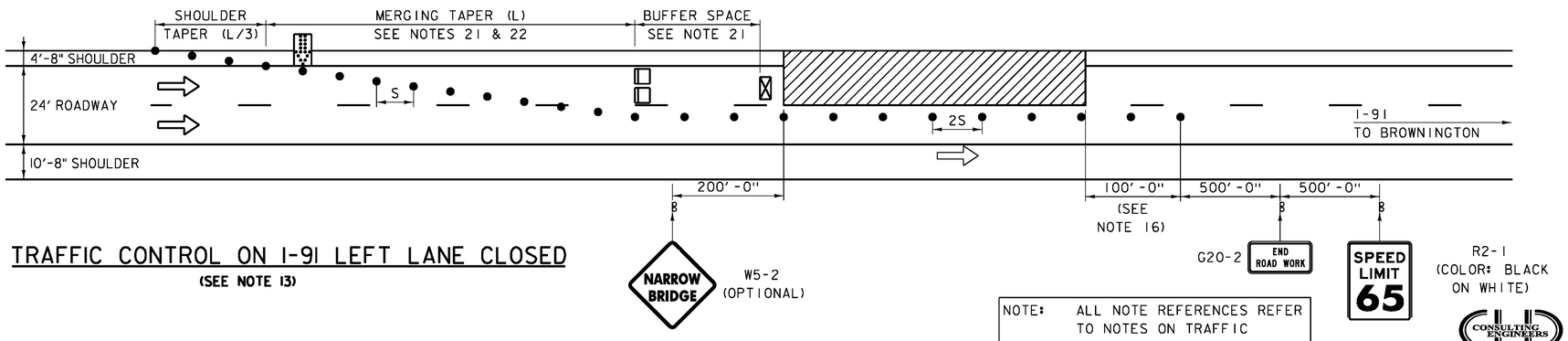

TRAFFIC CONTROL ON I-91 LEFT LANE CLOSED

(SEE NOTE 13)

NOTE: ALL NOTE REFERENCES REFER TO NOTES ON TRAFFIC CONTROL SHEET 1.

LEGEND

- FLOW OF TRAFFIC
- RETROREFLECTIVE PLASTIC DRUM
- PORTABLE ARROW BOARD
- TYPE III BARRICADE
- WORK AREA
- TRUCK-MOUNTED ATTENUATOR
- PCMS — PORTABLE CHANGEABLE MESSAGE SIGN (ITEM 641.15) (SEE NOTE 18)

CONSULTING ENGINEERS

PROJECT NAME: IRASBURG
PROJECT NUMBER: IM DECK(46)

FILE NAME: z15all6tcp-107N.dgn
PROJECT LEADER: J. BYATT
DESIGNED BY: S. BEAUMONT
TRAFFIC CONTROL SHEET 2

PLOT DATE: 2/5/2016
DRAWN BY: S. BEAUMONT
CHECKED BY: L. GREER
SHEET 12 OF 49

CLD 15-0223 MODEL: TCP2

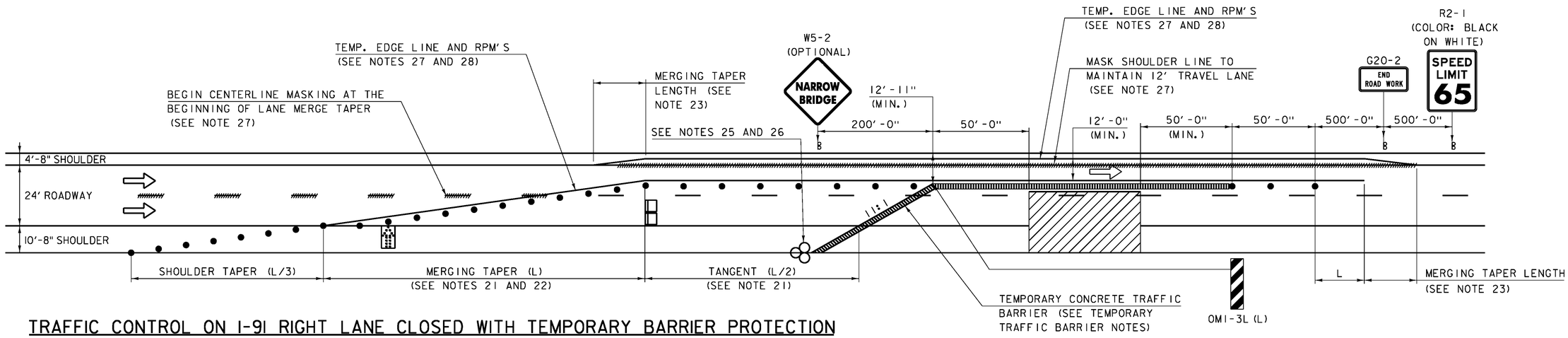

TRAFFIC CONTROL ON I-91 RIGHT LANE CLOSED WITH TEMPORARY BARRIER PROTECTION

(SEE NOTE 13)

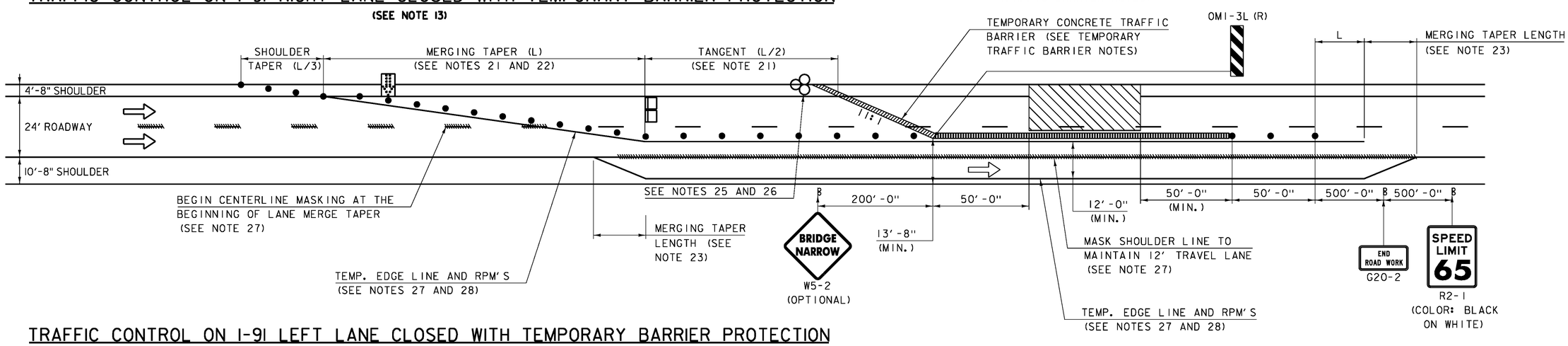

TRAFFIC CONTROL ON I-91 LEFT LANE CLOSED WITH TEMPORARY BARRIER PROTECTION

(SEE NOTE 13)

POSTED SPEED (MPH)	TAPER LENGTHS (FT) SHOULDER W=10 FT (L/3)	TAPER LENGTHS (FT) MERGING 12 FT LANE* (L)	TANGENT W=12 FT (L/2)	BARRIER FLARE RATE (MIN.)	MIN. BUFFER SPACE LENGTH (FT)	MAXIMUM CHANNELIZING DEVICE SPACING (FT) TAPER (S)	MAXIMUM CHANNELIZING DEVICE SPACING (FT) TANGENT (2S)
≤40	90	320	160	1:9	305	40	80
45	150	540	270	1:9	360	45	90
50	170	600	300	1:11	425	50	100
55	185	660	330	1:13	495	55	110
60	200	720	360	1:13	570	60	120
65	215	780	390	1:13	645	65	130

* SEE NOTE 22.

TAPER RATES ARE DETERMINED USING THE FOLLOWING EQUATION:

$L = WS$ FOR POSTED SPEEDS OF 45 MPH OR GREATER

$L = WS^2/60$ FOR POSTED SPEEDS OF 40 MPH OR LESS

L = MINIMUM LENGTH OF TAPER
W = WIDTH OF OFFSET IN FEET. (TYPICAL)
S = POSTED SPEED IN MPH

LEGEND

- FLOW OF TRAFFIC
- RETROREFLECTIVE PLASTIC DRUM
- PORTABLE ARROW BOARD
- TYPE III BARRICADE
- WORK AREA
- TRUCK-MOUNTED ATTENUATOR
- ENERGY ABSORPTION ATTENUATOR

NOTE: ALL NOTE REFERENCES REFER TO NOTES ON TRAFFIC CONTROL SHEET 1.

PROJECT NAME: IRASBURG
PROJECT NUMBER: IM DECK(46)

FILE NAME: z15all6tcp-107N.dgn
PROJECT LEADER: J. BYATT
DESIGNED BY: S. BEAUMONT
TRAFFIC CONTROL SHEET 3

PLOT DATE: 2/5/2016
DRAWN BY: S. BEAUMONT
CHECKED BY: L. GREER
SHEET 13 OF 49

CLD CONSULTING ENGINEERS

CLD 15-0223 MODEL: TCP3

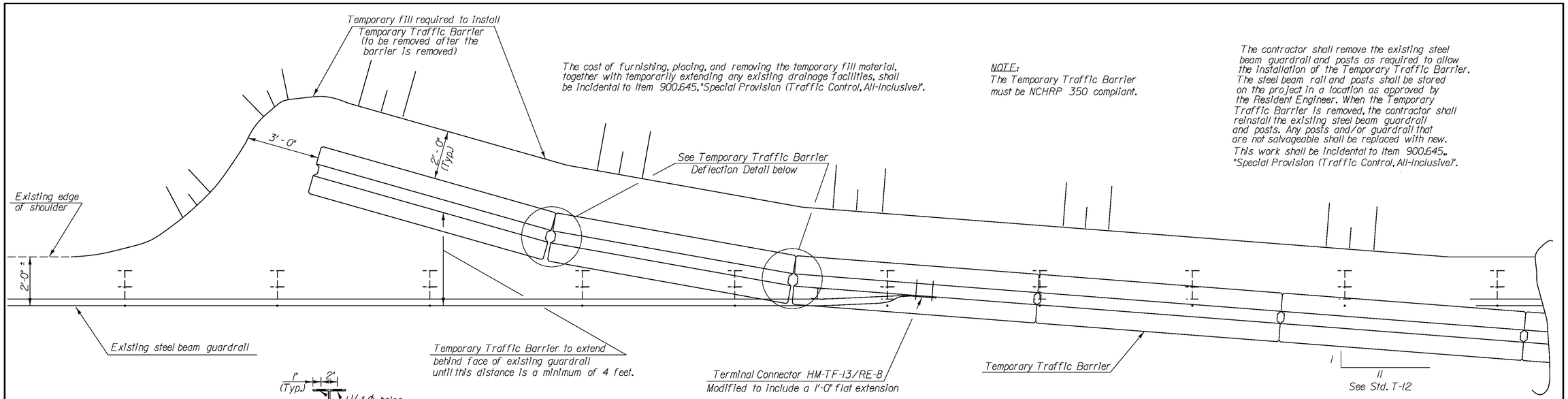

PLAN VIEW SHOWING POSITIVE CONNECTION BETWEEN TEMPORARY TRAFFIC BARRIER AND EXISTING GUARDRAIL

NTS

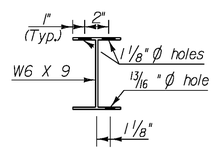

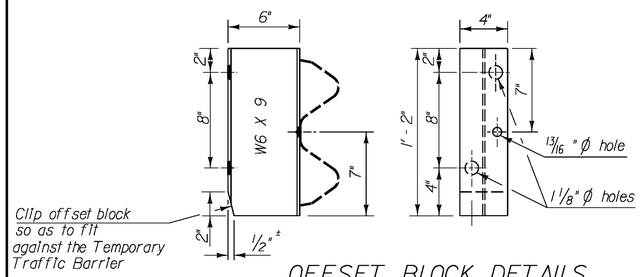

OFFSET BLOCK DETAILS

NTS

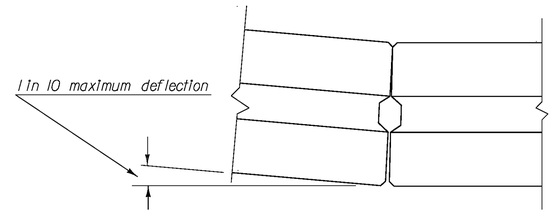

TEMPORARY TRAFFIC BARRIER DEFLECTION DETAIL

NTS

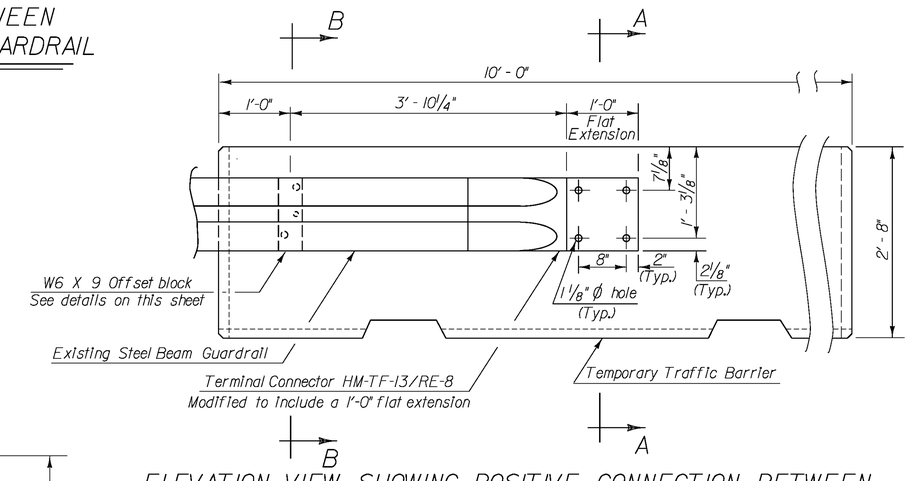

ELEVATION VIEW SHOWING POSITIVE CONNECTION BETWEEN TEMPORARY TRAFFIC BARRIER AND EXISTING GUARDRAIL

NTS

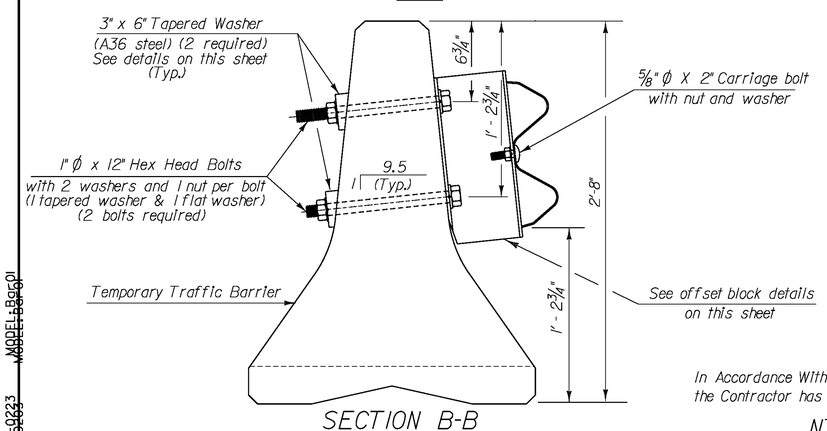

SECTION B-B

In Accordance With Section 621, the Contractor has options in barrier selection

NTS

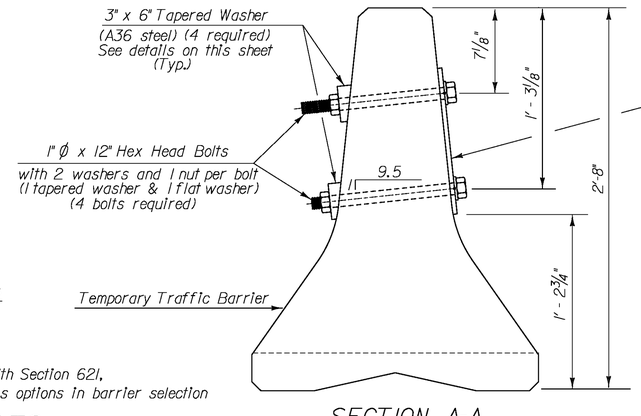

SECTION A-A

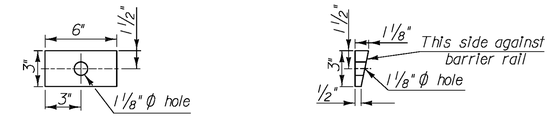

TAPERED WASHER DETAILS

NTS

PROJECT NAME: IRASBURG	
PROJECT NUMBER: IM DECK(46)	
FILE NAME: z15all6-barrier.dgn	PLOT DATE: 2/5/2016
PROJECT LEADER: J. BYATT	DRAWN BY: M. SMITH
DESIGNED BY: S. BEAUMONT	CHECKED BY: J. BYATT
TRAFFIC CONTROL BARRIER SHEET	SHEET 14 OF 49

CLD CONSULTING ENGINEERS

CLD J5:0223 MODEL:Barr01

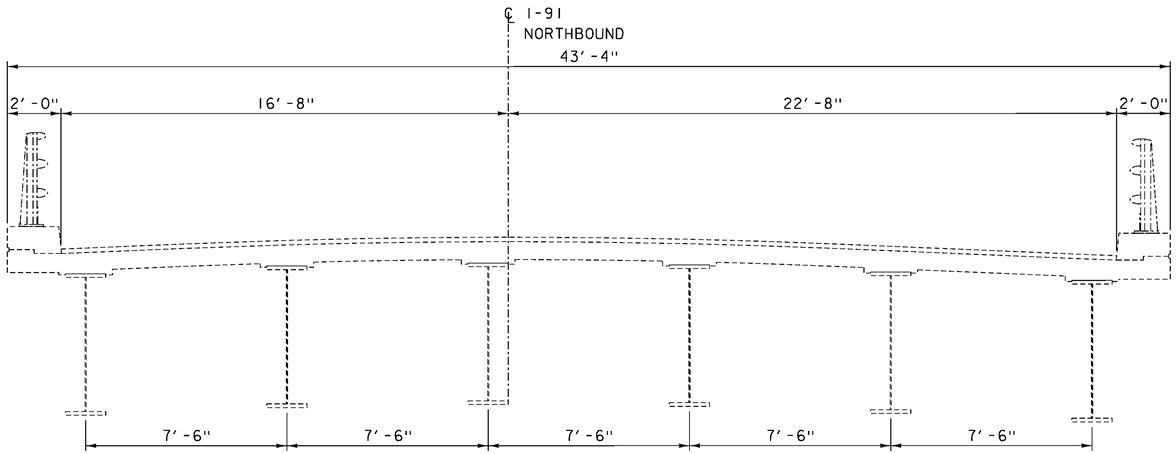

EXISTING TYPICAL BRIDGE SECTION

SCALE: 3/8" = 1'-0"

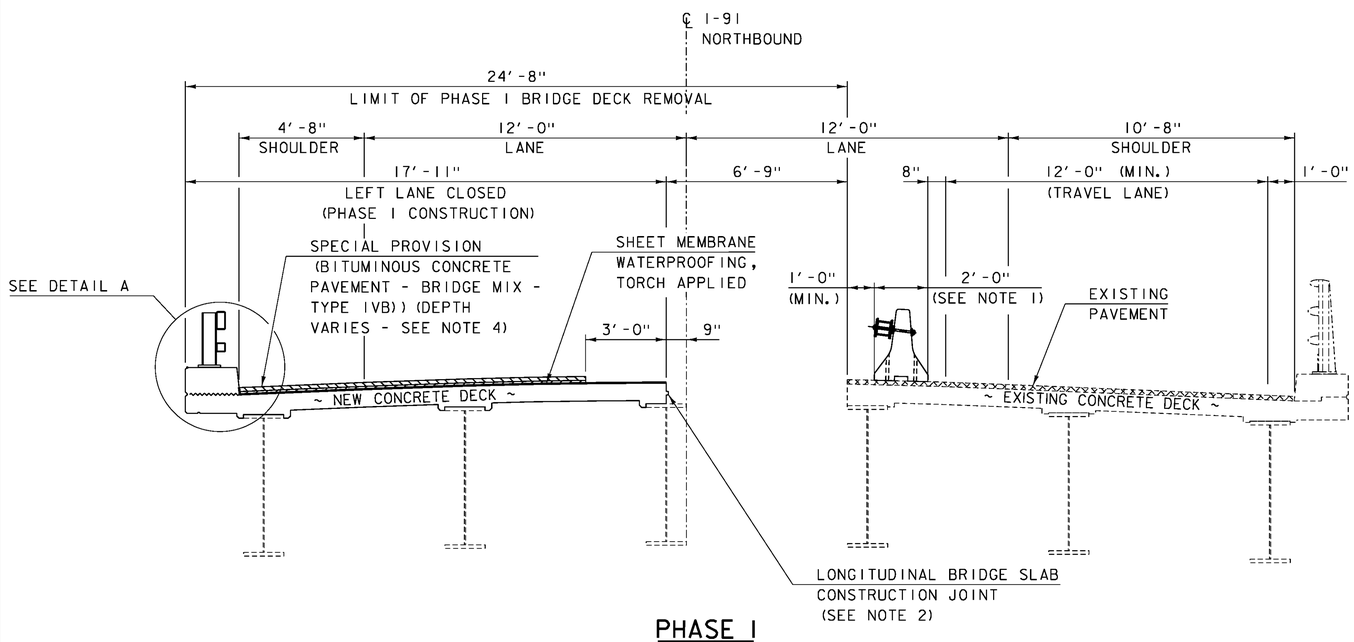

PHASE I

SCALE: 3/8" = 1'-0"

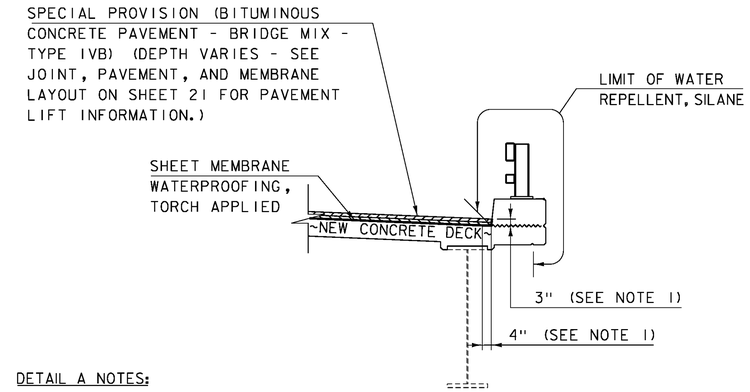

DETAIL A NOTES:

1. INDICATES AREA ALONG DECK AND UP FACE OF CURB FOR PLACEMENT OF TWO COATS OF POLYURETHANE MEMBRANE.
2. POLYURETHANE MEMBRANE AND BLAST CLEANING SHALL BE INCLUDED IN THE UNIT PRICE BID FOR SHEET MEMBRANE WATERPROOFING, TORCH APPLIED.
3. SHEET MEMBRANE WATERPROOFING SHALL EXTEND TO FACE OF CURB AS SHOWN.
4. IN ADDITION TO THE REQUIREMENTS OF SUBSECTION 519.04, BLAST CLEAN 3" UP THE FACE OF CURB PRIOR TO PLACING THE MEMBRANE.

DETAIL A

SCALE: 3/8" = 1'-0"

NOTES:

1. TEMPORARY CONCRETE TRAFFIC BARRIER AND TEMPORARY CONCRETE TRAFFIC BARRIER - BRACED SHALL BE REQUIRED DURING BRIDGE DECK CONSTRUCTION OPERATIONS. CHANNELIZING DEVICES SUCH AS RETROREFLECTIVE PLASTIC DRUMS MAY BE UTILIZED DURING PAVING AND MEMBRANE OPERATIONS. SEE TRAFFIC CONTROL NOTES ON TRAFFIC CONTROL SHEET 1.
2. SEE BRACED BARRIER, MEMBRANE OVERLAP, AND LONGITUDINAL BRIDGE SLAB CONSTRUCTION JOINT DETAILS ON SHEET 16 AND TEMPORARY CONCRETE TRAFFIC BARRIER - BRACED DETAILS ON SHEETS 17 AND 18 FOR ADDITIONAL INFORMATION.
3. PLACEMENT OF THE MEMBRANE SHALL START AT THE LOW SIDE OF THE BRIDGE. THE SPLICE SHALL BE AS SHOWN IN THE DETAILS ON THIS PAGE WITH THE HIGH SIDE OVERLAPPING THE LOW SIDE.
4. SEE JOINT, PAVEMENT, AND MEMBRANE LAYOUT ON SHEET 21 FOR PAVEMENT LIFT INFORMATION.

PROJECT NAME: IRASBURG	
PROJECT NUMBER: IM DECK(46)	
FILE NAME: z15all6tcp-107N.dgn	PLOT DATE: 2/5/2016
PROJECT LEADER: J. BYATT	DRAWN BY: M. SMITH
DESIGNED BY: J. FRENCH	CHECKED BY: S. BEAUMONT
PHASING SECTIONS SHEET 1	SHEET 15 OF 49

CLD 15-0223 MODEL: PHASING1

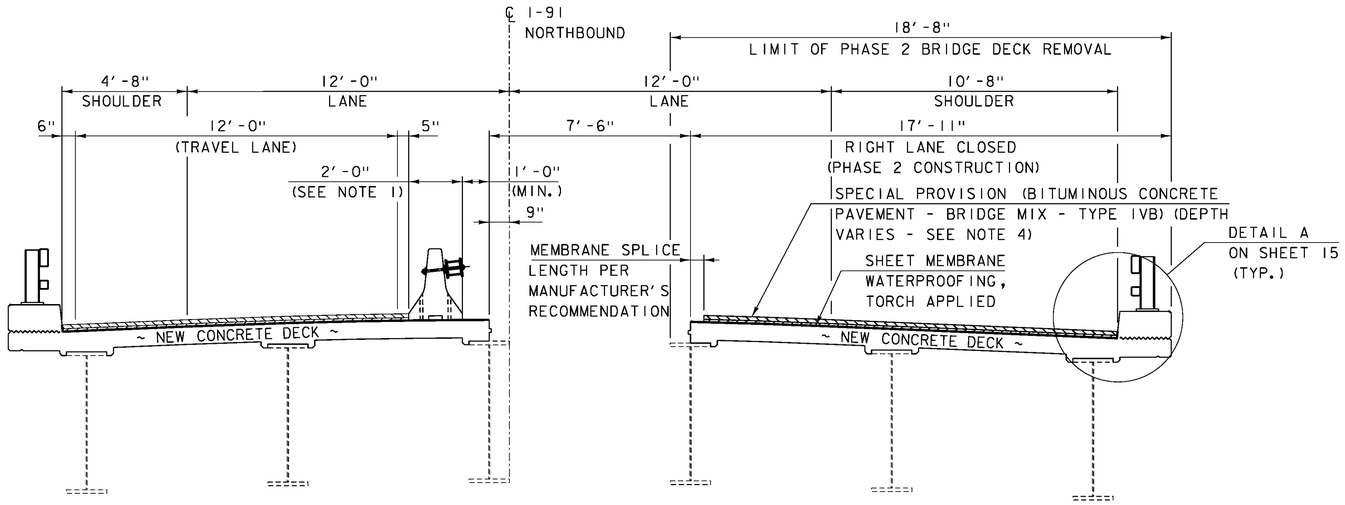

PHASE 2

SCALE: 3/8" = 1'-0"

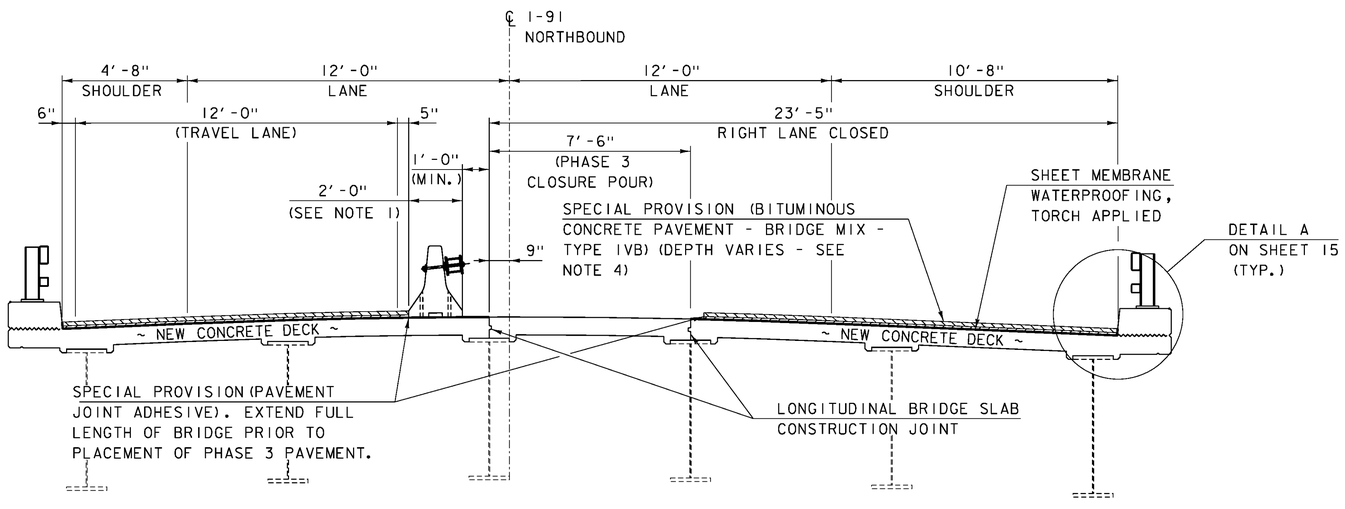

PHASE 3

SCALE: 3/8" = 1'-0"

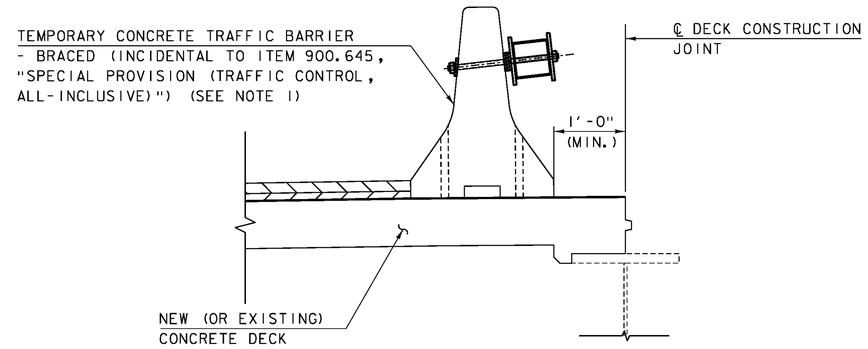

BRACED BARRIER DETAIL

SCALE: 1" = 1'-0"

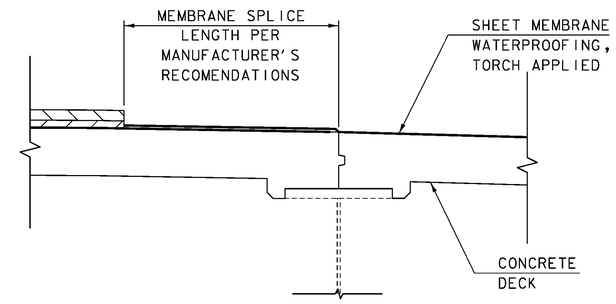

MEMBRANE OVERLAP DETAIL

SCALE: 1" = 1'-0"

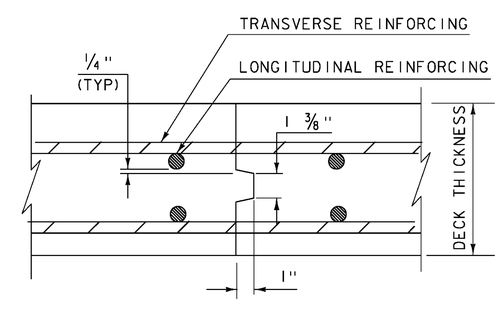

LONGITUDINAL BRIDGE SLAB CONSTRUCTION JOINT DETAILS

3" = 1'-0"

NOTES:

1. TEMPORARY CONCRETE TRAFFIC BARRIER AND TEMPORARY CONCRETE TRAFFIC BARRIER - BRACED SHALL BE REQUIRED DURING BRIDGE DECK CONSTRUCTION OPERATIONS. CHANNELIZING DEVICES SUCH AS RETROREFLECTIVE PLASTIC DRUMS MAY BE UTILIZED DURING PAVING AND MEMBRANE OPERATIONS. SEE TRAFFIC CONTROL NOTES ON TRAFFIC CONTROL SHEET 1.
2. SEE TEMPORARY CONCRETE TRAFFIC BARRIER - BRACED DETAILS ON SHEETS 17 AND 18 FOR ADDITIONAL INFORMATION.
3. PLACEMENT OF THE MEMBRANE SHALL START AT THE LOW SIDE OF THE BRIDGE. THE SPLICE SHALL BE AS SHOWN IN THE DETAILS ON THIS PAGE WITH THE HIGH SIDE OVERLAPPING THE LOW SIDE.
4. SEE JOINT, PAVEMENT, AND MEMBRANE LAYOUT ON SHEET 21 FOR PAVEMENT LIFT INFORMATION.
5. AFTER PHASE 3 IS COMPLETE, SHIFT TRAFFIC TO THE RIGHT LANE AND COMPLETE MEMBRANE AND PAVING OPERATIONS.

CONSULTING ENGINEERS

PROJECT NAME: IRASBURG	
PROJECT NUMBER: IM DECK(46)	
FILE NAME: z15a116tcp-107N.dgn	PLOT DATE: 2/5/2016
PROJECT LEADER: J. BYATT	DRAWN BY: M. SMITH
DESIGNED BY: J. FRENCH	CHECKED BY: S. BEAUMONT
PHASING SECTIONS SHEET 2	SHEET 16 OF 49

CLD 15-0223 MODEL: PHASING2

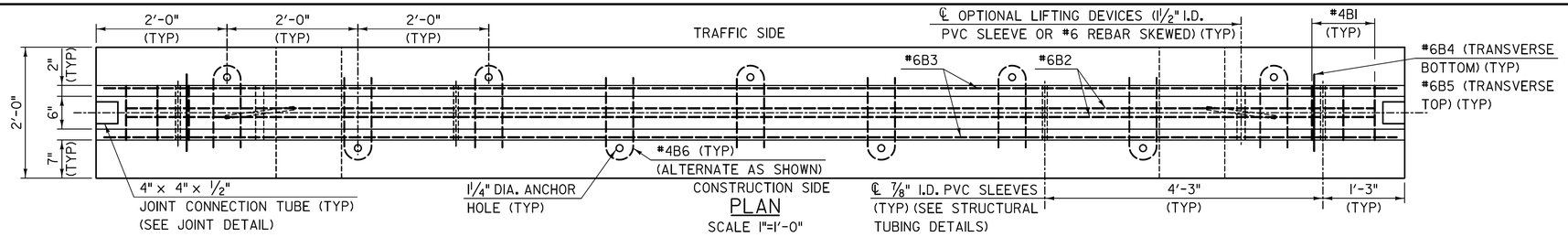

PLAN

SCALE 1"=1'-0"

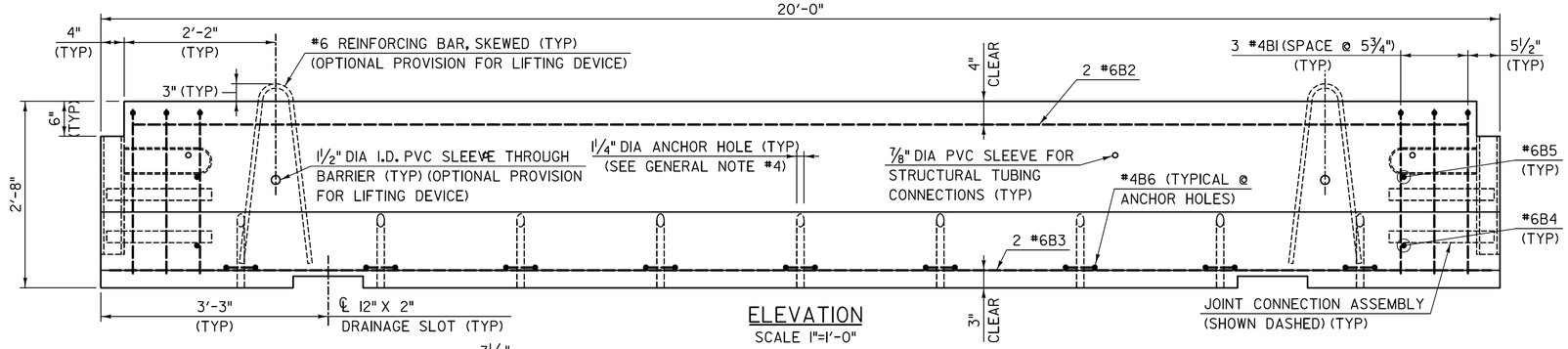

ELEVATION

SCALE 1"=1'-0"

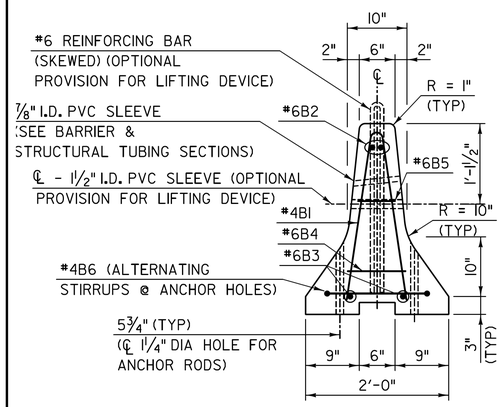

TYPICAL SECTION

SCALE 1"=1'-0"

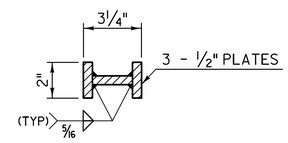

SECTION D-D

SCALE 3" = 1'-0"

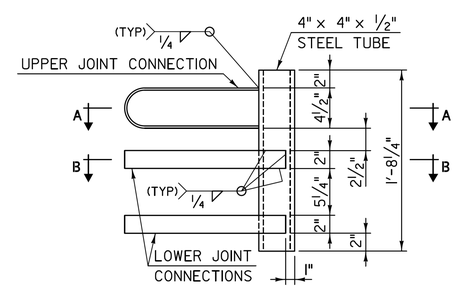

JOINT ASSEMBLY

SCALE 1½" = 1'-0"

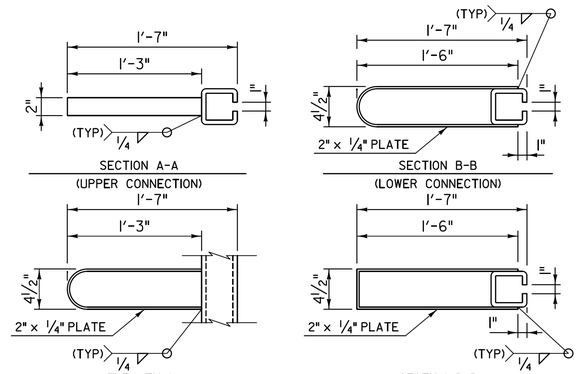

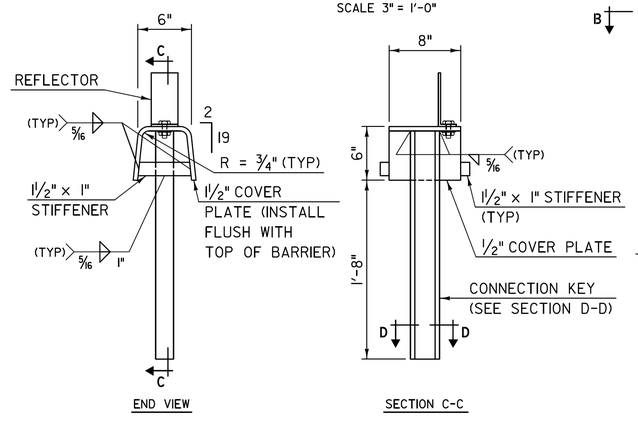

CONNECTION KEY ASSEMBLY DETAILS

SCALE 1½" = 1'-0"

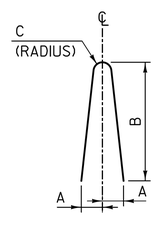

TYPE "I" REBAR

NOT TO SCALE

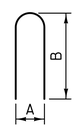

TYPE "II" REBAR

NOT TO SCALE

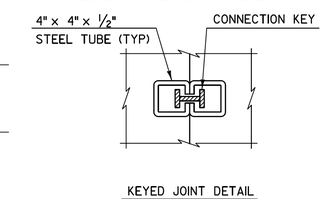

KEYED JOINT DETAIL

NOT TO SCALE

JOINT CONNECTION DETAILS

SCALE 1½" = 1'-0" (EXCEPT AS NOTED)

GENERAL NOTES

1. TEMPORARY TRAFFIC BARRIER-BRACED SHALL BE FURNISHED BY THE CONTRACTOR AND PAYMENT SHALL BE INCLUDED IN PAY ITEM 900.645 SPECIAL PROVISION (TRAFFIC CONTROL, ALL INCLUSIVE). CONCRETE BARRIER AND ALL ATTACHMENTS SHALL BE FABRICATED IN ACCORDANCE WITH SECTION 621. ALL BARRIER UNITS FOR BRACED SYSTEMS SHALL BE 20' LONG.
2. TEMPORARY TRAFFIC BARRIER-BRACED DETAILS, AS SHOWN IN THESE PLANS, ARE IN COMPLIANCE WITH REQUIREMENTS PER UPDATED NCHRP REPORT 350 FOR TEST NO. 3-11, TL-3 CRASH TESTED BY MIDWEST ROADSIDE SAFETY; NY BOX BEAM STIFFENING OF UNANCHORED TCB, MARCH 2008. THE BARRIER SYSTEM TESTED WITH A 27.6" DYNAMIC DEFLECTION AND ALLOWS FOR PLACEMENT AT A MINIMUM 12" DISTANCE BETWEEN BARRIERS AND EDGE OF BRIDGE DECK.
3. A MINIMUM OF TWO BARRIER UNITS WITH BRACED JOINTS ARE REQUIRED TO BE PLACED BEYOND BOTH ENDS OF THE BRIDGE WORK AREA FOR SPEEDS GREATER THAN 45 MPH. FOR SPEEDS ≤ 45 MPH, A MINIMUM OF ONE BRACED BARRIER IS REQUIRED TO BE FULLY SET BEYOND EACH END OF BRIDGE WORK AREA.
4. THE LAST CONCRETE BARRIER UNIT, AT EACH END OF BARRIER LAYOUT, SHALL BE ANCHORED A MINIMUM 18" BELOW THE ROADWAY SURFACE. REQUIRED 1" DIA. ANCHOR RODS (A36 STEEL) SHALL BE INSTALLED WITH 5 ANCHORS ON THE TRAFFIC SIDE OF BARRIER AND 4 ON THE CONSTRUCTION SIDE. IF THE END(S) OF THE BRACED CONCRETE BARRIER SYSTEM EXTENDS 50' OR MORE BEYOND LIMITS OF BRIDGE WORK THE LAST BARRIER UNIT DOES NOT REQUIRE ANCHORAGE.
5. TEMPORARY TRAFFIC BARRIER - BRACED MAY BE INSTALLED WITH A 230' MINIMUM RADIUS. GAPS CREATED BETWEEN STRUCTURAL TUBES AND CONCRETE BARRIER, DURING A RADIAL LAYOUT, SHALL BE SHIMMED WITH 8"x8"x½" PLATES & FENDER WASHERS TO FIRMLY ATTACH STRUCTURAL TUBING TO BARRIER.
6. THE CONTRACTOR SHALL FURNISH AND INSTALL APPROVED RETROREFLECTIVE DELINEATORS AT 25-FOOT INTERVALS ALONG TOP AND/OR ONE FOOT DOWN THE SIDE OF PORTABLE CONCRETE BARRIER. PAYMENT SHALL BE INCLUDED IN ITEM 900.645 "SPECIAL PROVISION (TRAFFIC CONTROL, ALL INCLUSIVE).". THE COLOR OF DELINEATORS SHALL, IN ALL INSTANCES, CONFORM TO THE COLOR OF EDGE LINE MARKINGS. DELINEATORS SUPPLEMENT, BUT DO NOT REPLACE, THE NEED FOR RETROREFLECTIVE SOLID EDGE LINE MARKINGS.

MATERIAL NOTES

1. BARRIERS SHALL BE LIGHT COLORED CLASS AA CONCRETE, WITH MINIMUM COMPRESSIVE STRENGTH OF 4000 psi, AND SHALL HAVE A SMOOTH UNIFORM SURFACE FREE OF DEFECTS AND IRREGULARITIES. CASTING DATE SHALL BE SHOWN ON BARRIER. ALL EXPOSED EDGES OF CONCRETE SHALL BE CHAMFERED ¾", UNLESS OTHERWISE NOTED.
2. ALL REINFORCING STEEL SHALL BE AASHTO M31 (ASTM A615) GRADE 60. ALL REINFORCEMENT SHALL HAVE 1½" MINIMUM CLEAR COVER, UNLESS OTHERWISE NOTED.
3. STRUCTURAL STEEL, EXCEPT THE STEEL TUBES, SHALL BE AASHTO M270 GRADE 50. ALL STEEL SHALL BE FABRICATED IN ACCORDANCE WITH SECTION 506.
4. STEEL TUBES, 6x6x3/16 & 4x4x½, SHALL BE ASTM A 500 GRADE B OR C. THE 6x6x3/16 TUBES SHALL BE 12' LONG AND GALVANIZED IN ACCORDANCE WITH SUBSECTION 726.08.
5. A MINIMUM OF 2 RECESSED LIFTING DEVICES, EACH WITH THE CAPACITY TO LIFT A MASS OF 6 TONS (MINIMUM), SHALL BE INSTALLED TO EACH BARRIER UNIT. TWENTY FOOT LONG CONCRETE BARRIER UNITS ARE APPROXIMATELY 400 LBS./FT.
6. DELINEATORS SHALL BE ATTACHED TO BARRIER USING AN APPROVED ADHESIVE MATERIAL OR AS SHOWN ON THIS SHEET.

REINFORCING SCHEDULE (PER 20' BARRIER UNIT)

MARK	SIZE	LENGTH	# PIECES	TYPE	A	B	C	LOCATION
B1	#4	4'-10"	6	I	5"	2'-4"	1"	STIRRUPS
B2	#6	19'-1"	2	—				LONGITUDINAL (TOP)
B3	#6	19'-9"	2	—				LONGITUDINAL (BOTTOM)
B4	#6	1'-2"	2	—				TRANSVERSE (BOTTOM)
B5	#6	6"	2	—				TRANSVERSE (TOP)
B6	#4	2'-9"	9	II	5"	1'-3"		STIRRUPS

CLD 15-0223 MODEL: Sheet01

CONSULTING ENGINEERS

PROJECT NAME: IRASBURG
PROJECT NUMBER: IM DECK(46)

FILE NAME: z15all6barrier-107N.dgn
PROJECT LEADER: J. BYATT
DESIGNED BY: S. BEAUMONT
TEMPORARY TRAFFIC BARRIER - BRACED SHEET 1
PLOT DATE: 2/5/2016
DRAWN BY: M. SMITH
CHECKED BY: J. BYATT
SHEET 17 OF 49

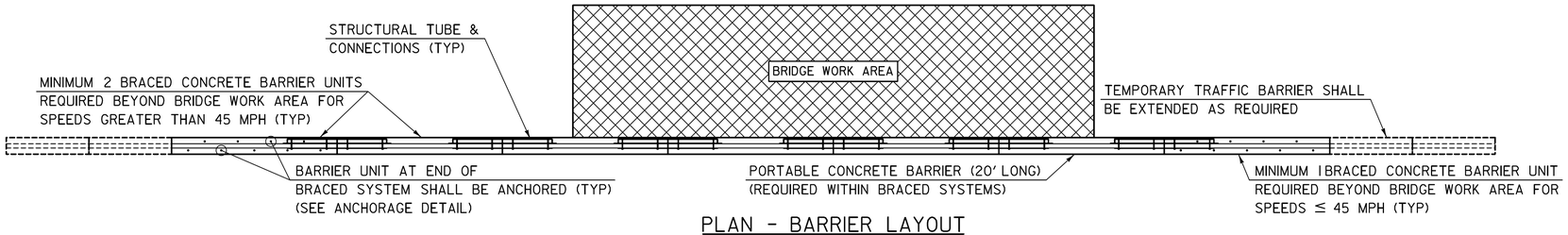

PLAN - BARRIER LAYOUT
NOT TO SCALE

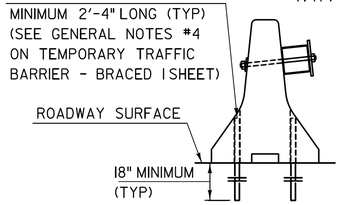

ANCHORAGE DETAIL
SCALE 3/4"=1'-0"

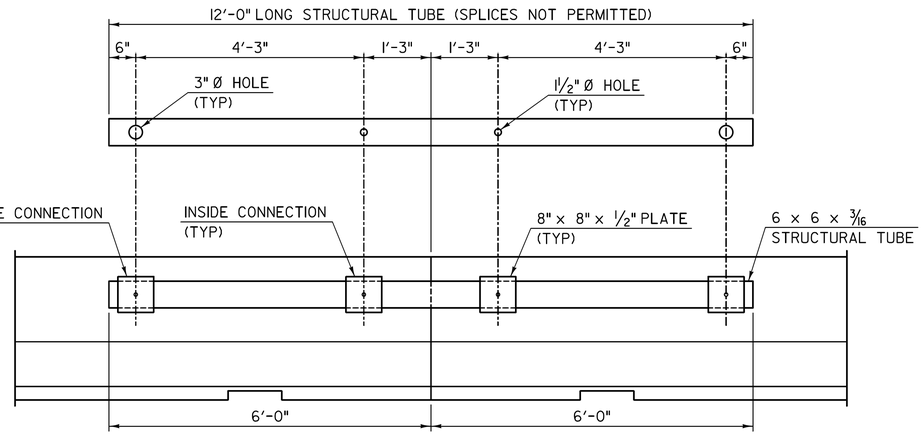

STRUCTURAL TUBING DETAILS
SCALE 3/4"=1'-0"

PVC SLEEVE OPENINGS SHALL BE MODIFIED/DRILLED AS REQUIRED TO PROPERLY ALIGN STRUCTURAL TUBE BRACING UNITS FOR CURVED ALIGNMENTS

THE PRESENCE OF NORMAL HOLES WHICH HAVE BEEN MODIFIED/DRILLED WILL NOT AFFECT THE REUSE OF CONCRETE BARRIER UNITS

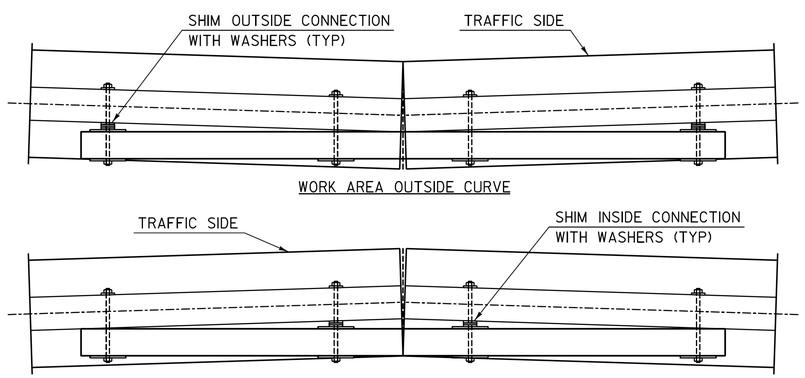

TUBE CONNECTIONS (CURVED ALIGNMENT)
SCALE 3/4"=1'-0"

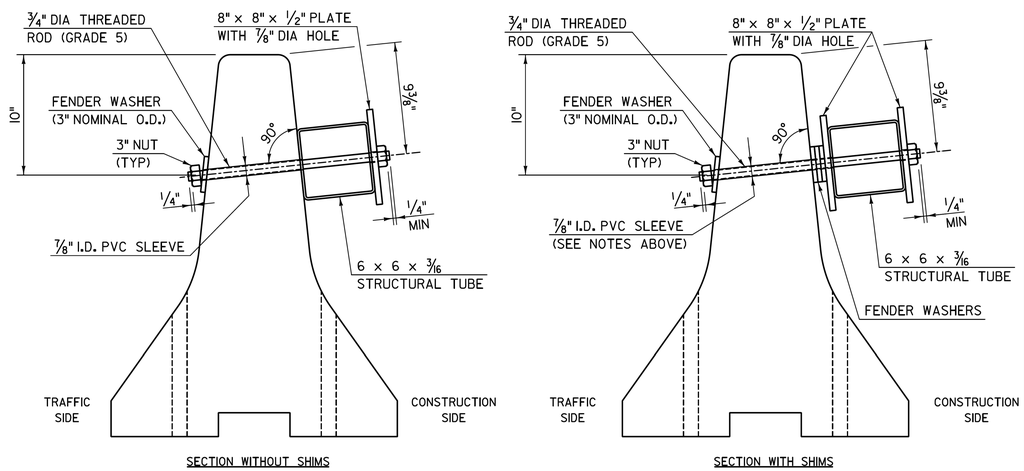

BARRIER & STRUCTURAL TUBING SECTIONS
SCALE 1"=1'-0"

PROJECT NAME: IRASBURG	
PROJECT NUMBER: IM DECK(46)	
FILE NAME: z15all6barrier-107N.dgn	PLOT DATE: 2/5/2016
PROJECT LEADER: J. BYATT	DRAWN BY: M. SMITH
DESIGNED BY: S. BEAUMONT	CHECKED BY: J. BYATT
TEMPORARY TRAFFIC BARRIER - BRACED SHEET 2	SHEET 18 OF 49

CLD CONSULTING ENGINEERS

CLD 15-0223 MODEL: Sheet02

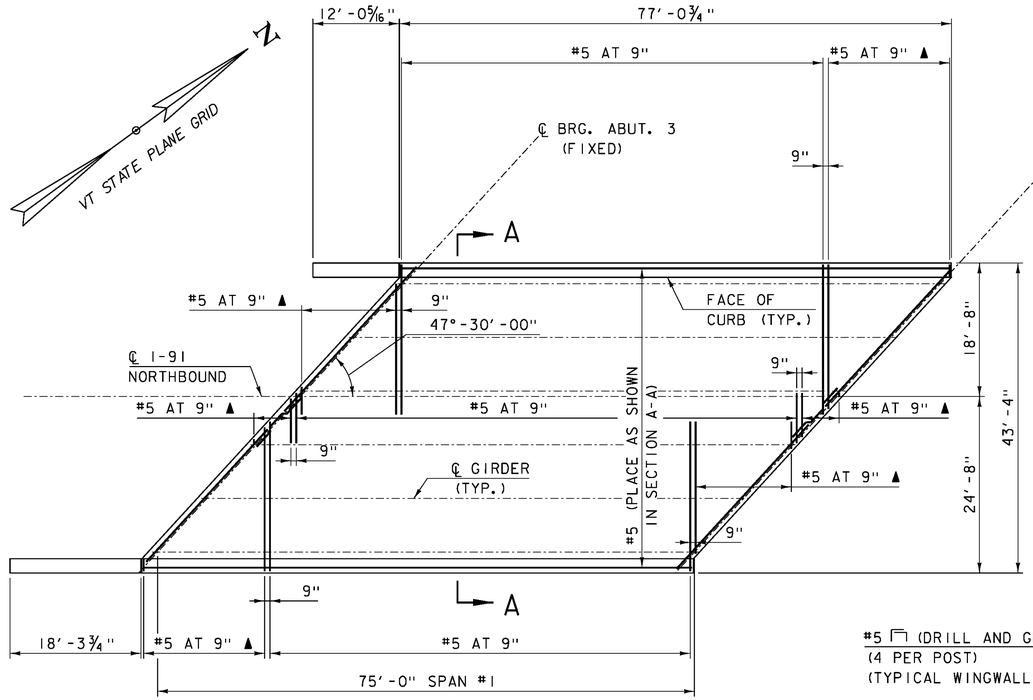

DECK REINFORCEMENT PLAN - BOTTOM BARS - SPAN #1

SCALE: 1" = 10'-0"

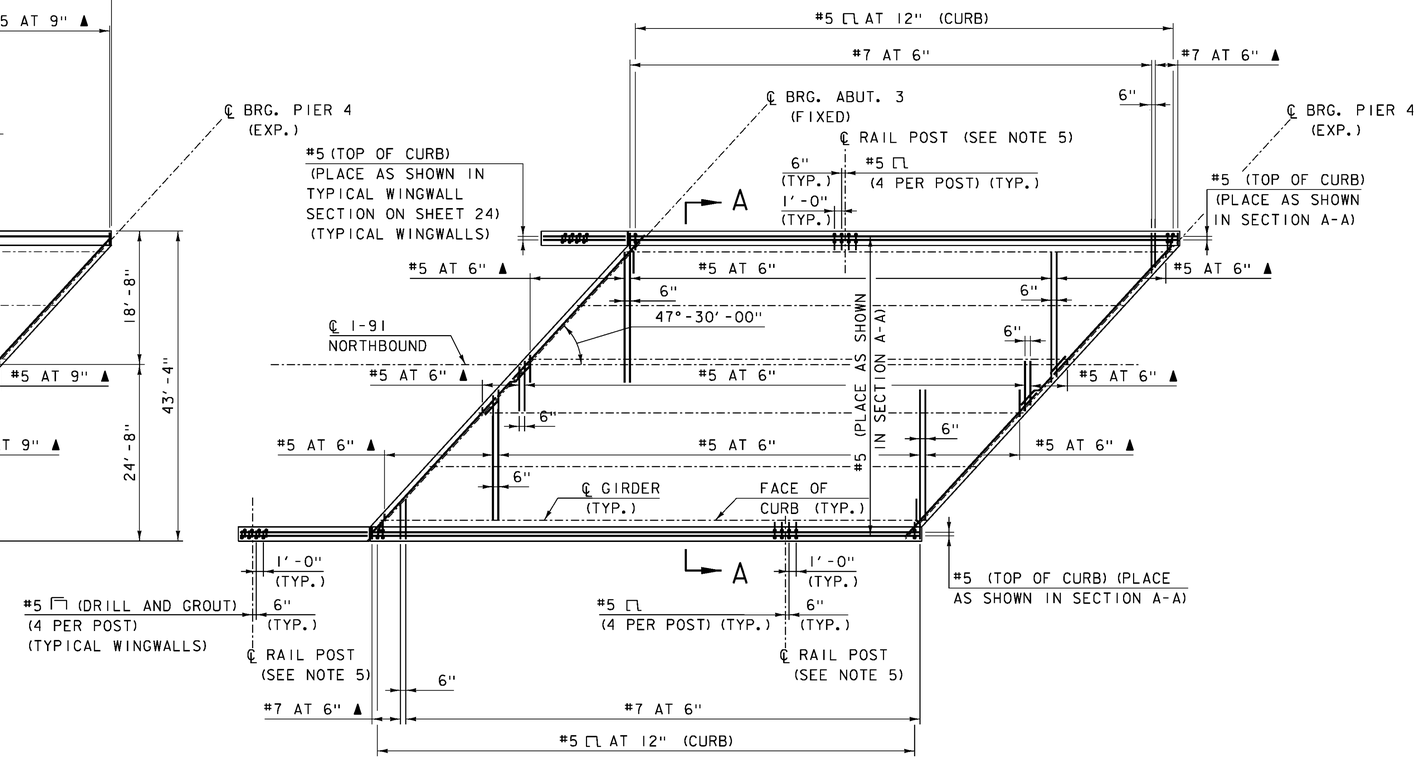

DECK REINFORCEMENT PLAN - TOP BARS - SPAN #1

SCALE: 1" = 10'-0"

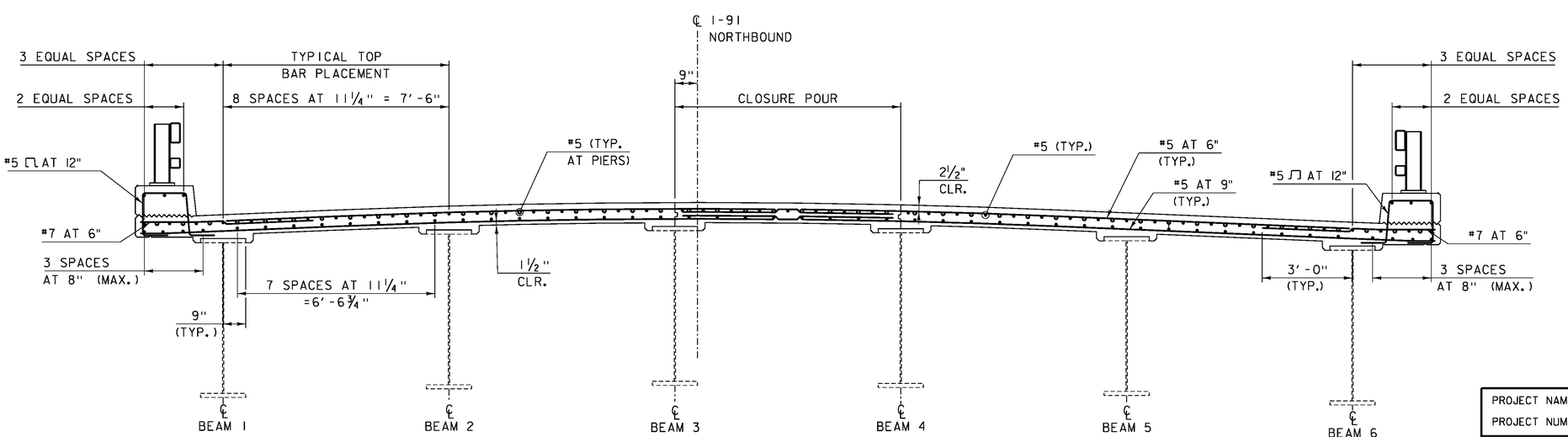

SECTION A-A

SCALE: 1/2" = 1'-0"

NOTES:

1. 3" CLEAR, UNLESS OTHERWISE SPECIFIED ON THE PLANS.
2. 3'-0" BAR LAP UNLESS OTHERWISE SPECIFIED ON THE PLANS.
3. 1'-0" HOOK UNLESS OTHERWISE SPECIFIED ON THE PLANS.
4. SEE SHEET 20 FOR SPAN #2 THROUGH SPAN #4 DECK REINFORCEMENT PLANS.
5. SEE SHEET 26 FOR RAIL LAYOUT PLAN.
6. DECK DIMENSIONS ARE APPROXIMATED FROM REFERENCE PLANS. CONTRACTOR SHALL FIELD VERIFY.

PROJECT NAME: IRASBURG	
PROJECT NUMBER: IM DECK(46)	
FILE NAME: z15a116typ-107N.dgn	PLOT DATE: 2/5/2016
PROJECT LEADER: J. BYATT	DRAWN BY: M. SMITH
DESIGNED BY: N. CARON	CHECKED BY: S. BEAUMONT
DECK DETAILS SHEET 1	SHEET 19 OF 49

CONSULTING ENGINEERS

CLD 15-0223 MODEL: Sheet03

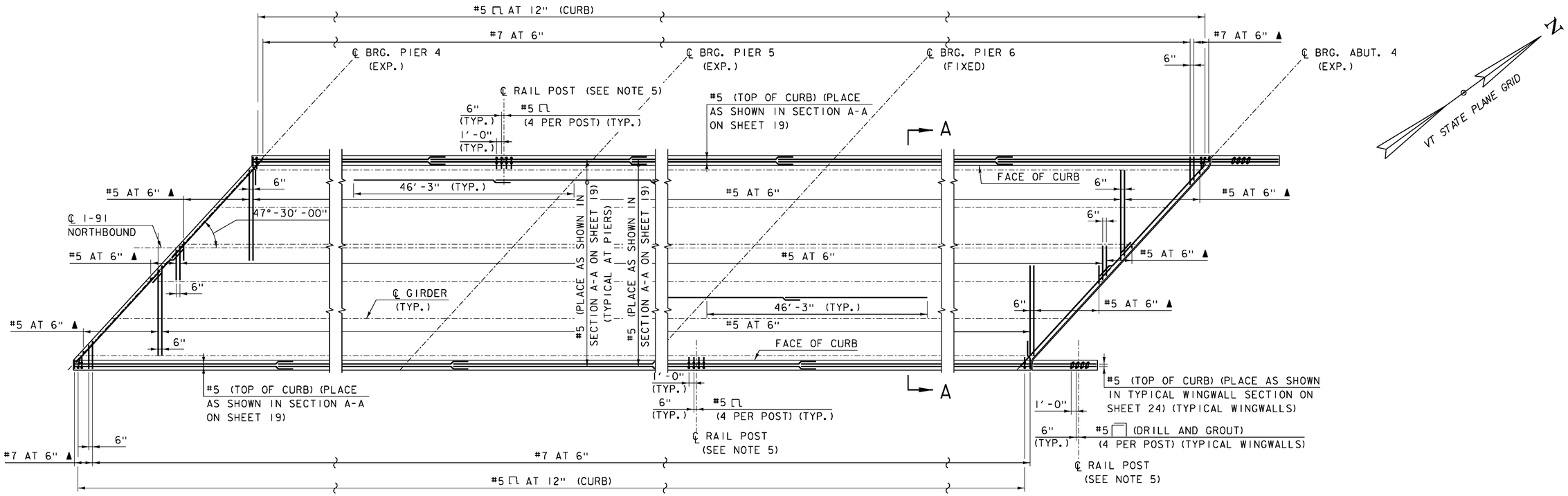

DECK REINFORCEMENT PLAN - TOP BARS - SPAN #2 THROUGH SPAN #4

SCALE: 1" = 10'-0"

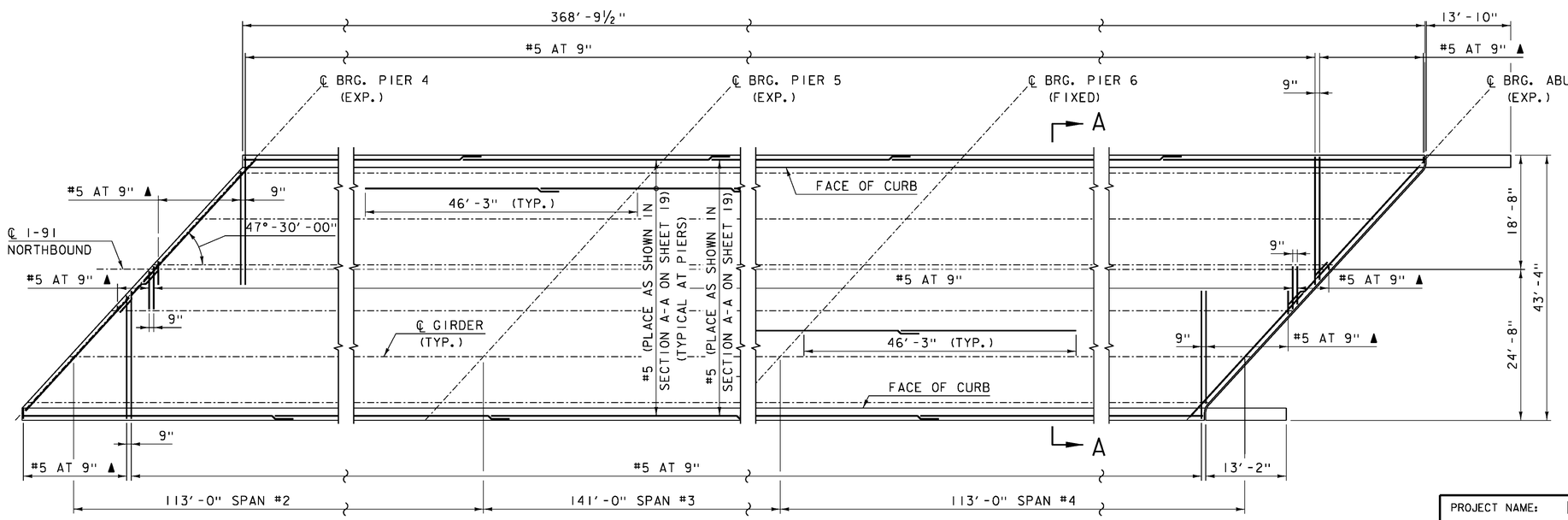

DECK REINFORCEMENT PLAN - BOTTOM BARS - SPAN #2 THROUGH SPAN #4

SCALE: 1" = 10'-0"

NOTES:

1. 3" CLEAR, UNLESS OTHERWISE SPECIFIED ON THE PLANS.
2. 3'-0" BAR LAP UNLESS OTHERWISE SPECIFIED ON THE PLANS.
3. 1'-0" HOOK UNLESS OTHERWISE SPECIFIED ON THE PLANS.
4. SEE SHEET 19 FOR SPAN #1 REINFORCEMENT PLANS AND SECTION A-A.
5. SEE SHEET 26 FOR RAIL LAYOUT PLAN.
6. DECK DIMENSIONS ARE APPROXIMATED FROM REFERENCE PLANS. CONTRACTOR SHALL FIELD VERIFY.

PROJECT NAME: IRASBURG	
PROJECT NUMBER: IM DECK(46)	
FILE NAME: z15a116typ-107N.dgn	PLOT DATE: 2/5/2016
PROJECT LEADER: J. BYATT	DRAWN BY: M. SMITH
DESIGNED BY: N. CARON	CHECKED BY: S. BEAUMONT
DECK DETAILS SHEET	SHEET 20 OF 49

CLD CONSULTING ENGINEERS

MODEL: Sheet04

CLD 15-0223

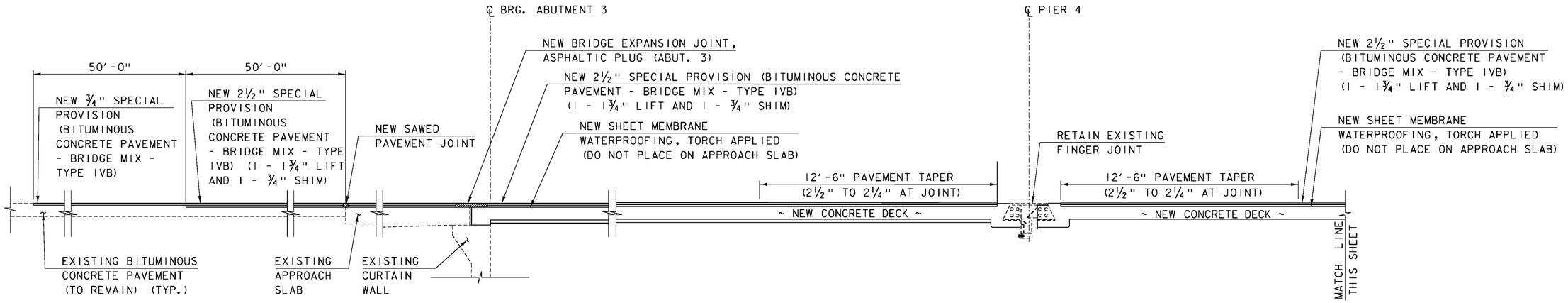

SAWED PAVEMENT JOINT REPLACEMENT SCHEDULE		
BRIDGE NO.	APPROACH SLAB 3	APPROACH SLAB 4
107N	40 LF	40 LF

JOINT SCHEDULE					
	ABUT. 3	PIER 4	PIER 5	PIER 6	ABUT. 4
JOINT TYPE	ASPHALTIC PLUG	FINGER JOINT	N/A	N/A	COMPRESSION SEAL
REQUIRED JOINT WORK	REPLACE	RETAIN (SEE NOTE)	N/A	N/A	REPLACE SEAL, RETAIN HARDWARE (SEE NOTE)
LENGTH	54 LF	58 LF	N/A	N/A	58 LF

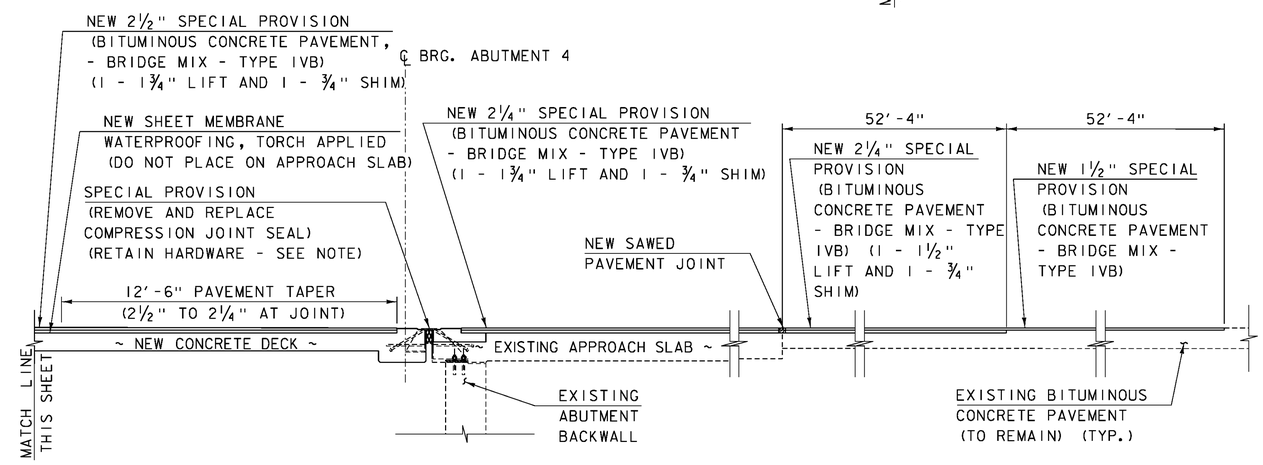

JOINT, PAVEMENT, AND MEMBRANE LAYOUT

SCALE: ⅜" = 1'-0"

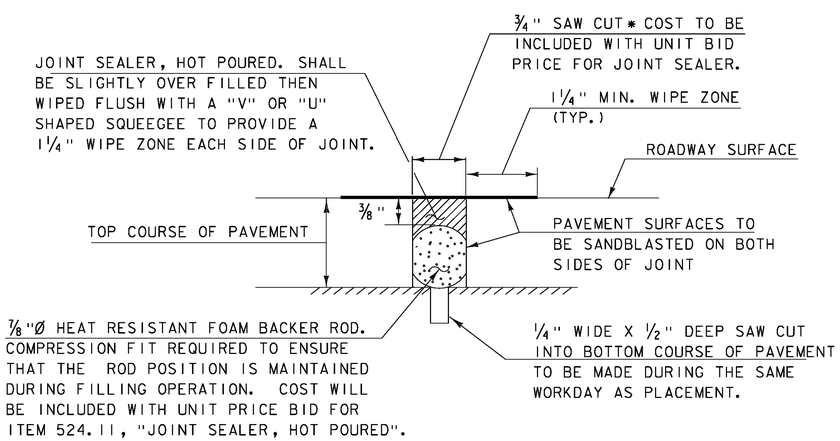

SAWED PAVEMENT JOINT DETAIL

(NOT TO SCALE)

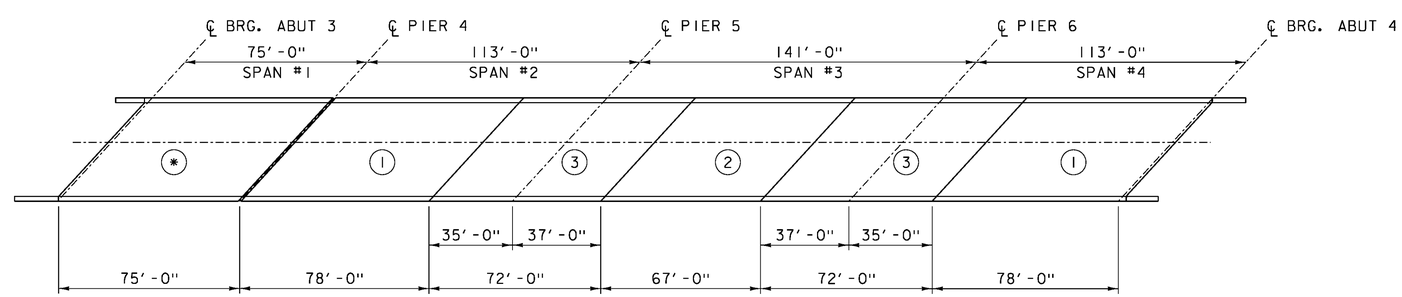

* SPAN #1 IS A SIMPLE SPAN AND CAN BE POURED AT ANY TIME.

DECK POUR SEQUENCE

SCALE: N.T.S.

NOTE: SEE NOTES 17 THROUGH 19 ON SHEET 2 FOR ADDITIONAL JOINT INFORMATION.

* JOINT IS TO BE LOCATED ACCURATELY BY STRING LINING, OR OTHER MEANS, PRIOR TO PAVING, SO THAT THE SAW CUT WILL BE MADE DIRECTLY OVER THE END OF CONCRETE DECK. JOINT SHALL BE CUT DRY IN A SINGLE PASS AND BE SEALED WITHIN 24 HOURS OR PRIOR TO EXPOSURE TO TRAFFIC. JOINT SHALL BE CLEANED PRIOR TO APPLYING THE JOINT SEALER. ALL WORK WILL BE PAID UNDER ITEM 524.11, "JOINT SEALER, HOT POURED".

CLD 15-0223 MODEL: Sheet05

PROJECT NAME: IRASBURG	
PROJECT NUMBER: IM DECK(46)	
FILE NAME: z15all6typ-107N.dgn	PLOT DATE: 2/5/2016
PROJECT LEADER: J. BYATT	DRAWN BY: M. SMITH
DESIGNED BY: J. FRENCH	CHECKED BY: S. BEAUMONT
JOINT DETAILS SHEET 1	SHEET 21 OF 49

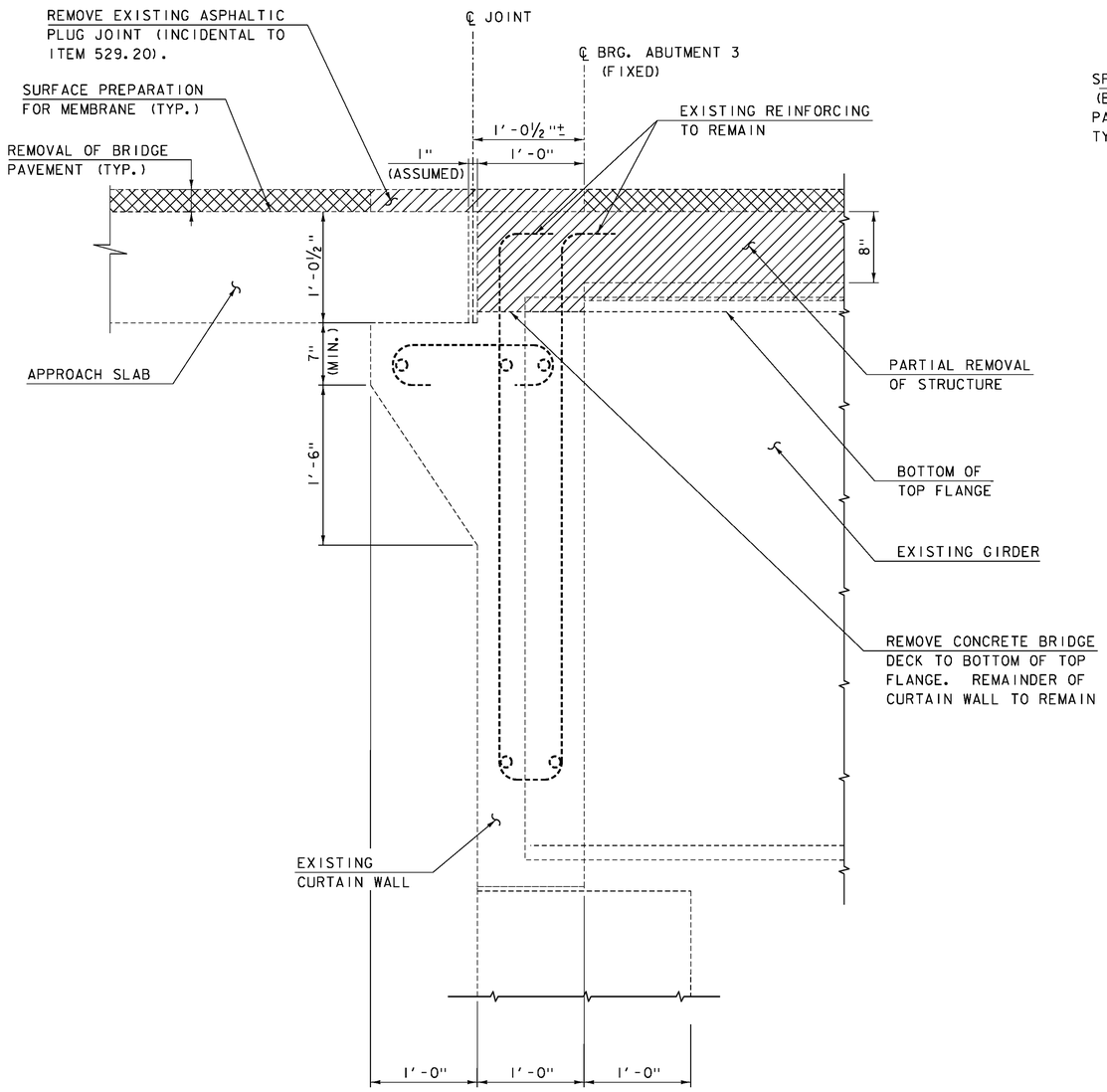

DECK REMOVAL DETAIL AT ABUTMENT 3

SCALE: 1½" = 1'-0"

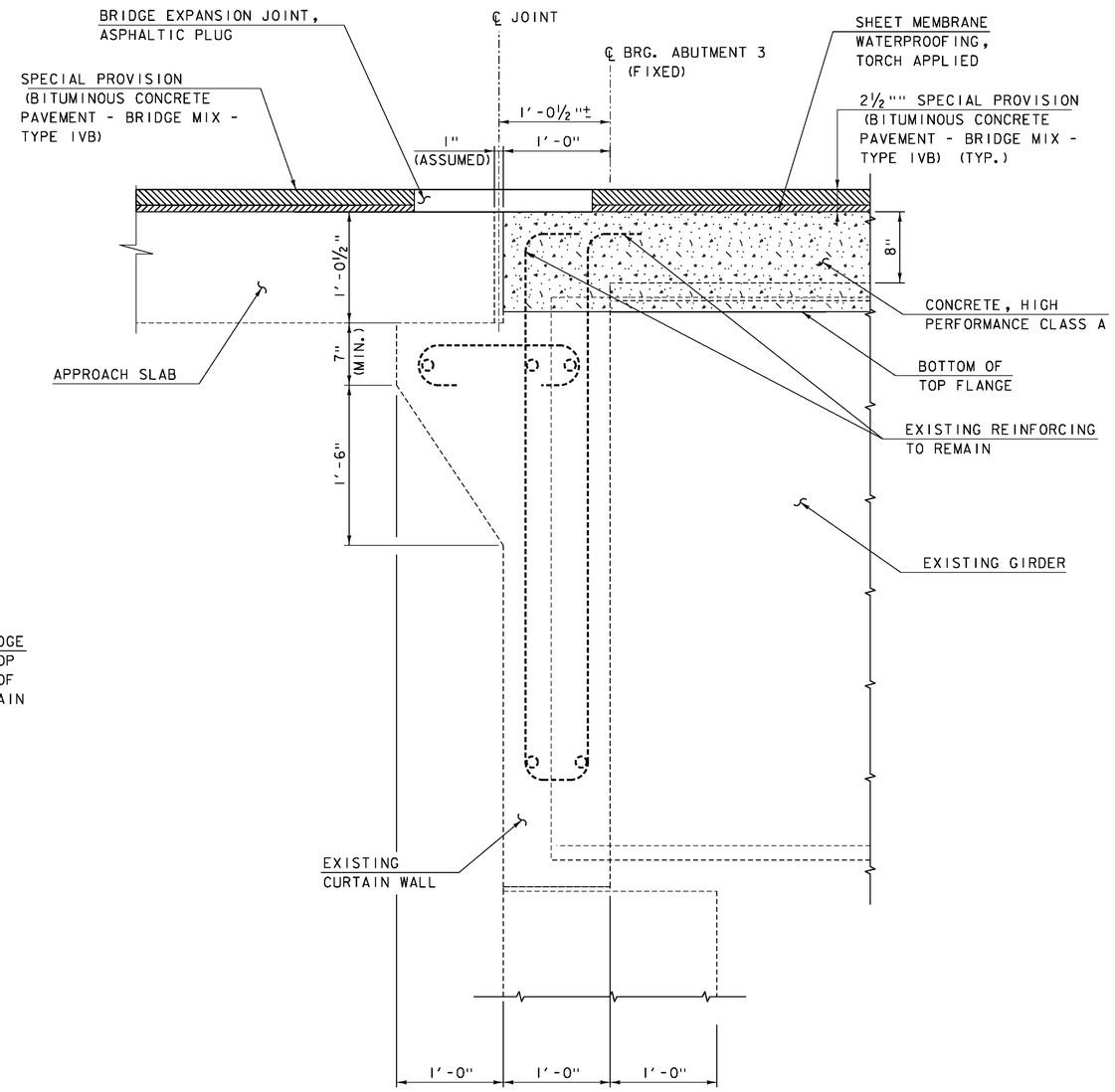

JOINT DETAIL AT ABUTMENT 3

SCALE: 1½" = 1'-0"

CLD 15-0223 MODEL: Sheet06

PROJECT NAME: IRASBURG	
PROJECT NUMBER: IM DECK(46)	
FILE NAME: z15all6typ-107N.dgn	PLOT DATE: 2/5/2016
PROJECT LEADER: J. BYATT	DRAWN BY: M. SMITH
DESIGNED BY: J. FRENCH	CHECKED BY: S. BEAUMONT
JOINT DETAILS SHEET 2	SHEET 22 OF 49

CONSULTING ENGINEERS

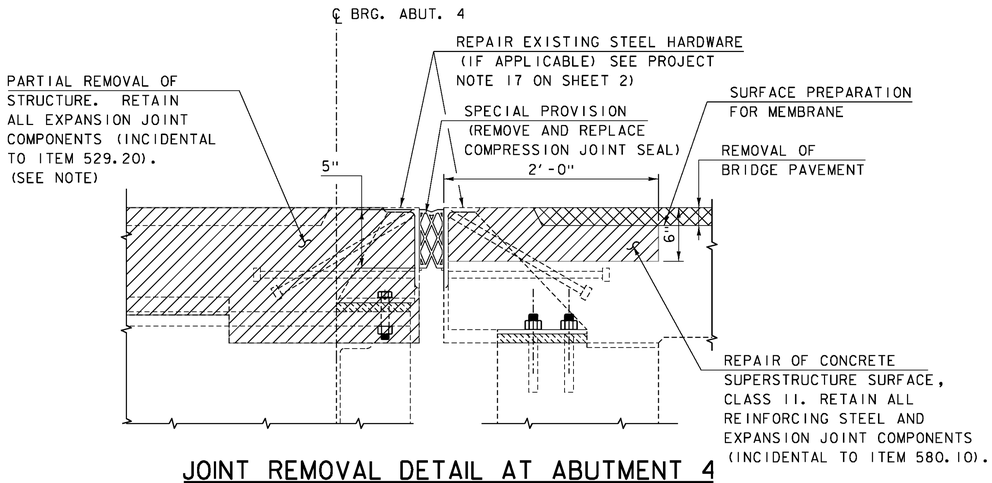

JOINT REMOVAL DETAIL AT ABUTMENT 4

SCALE: 1½" = 1'-0"

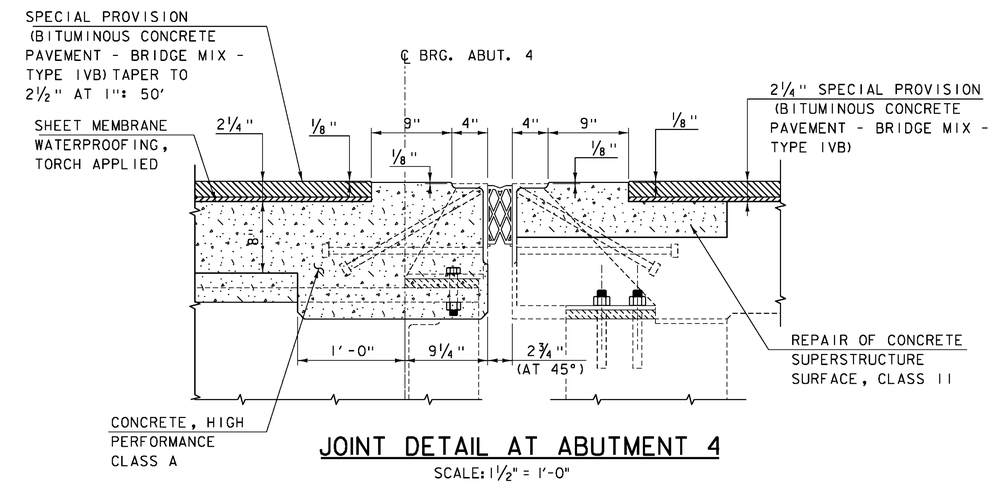

JOINT DETAIL AT ABUTMENT 4

SCALE: 1½" = 1'-0"

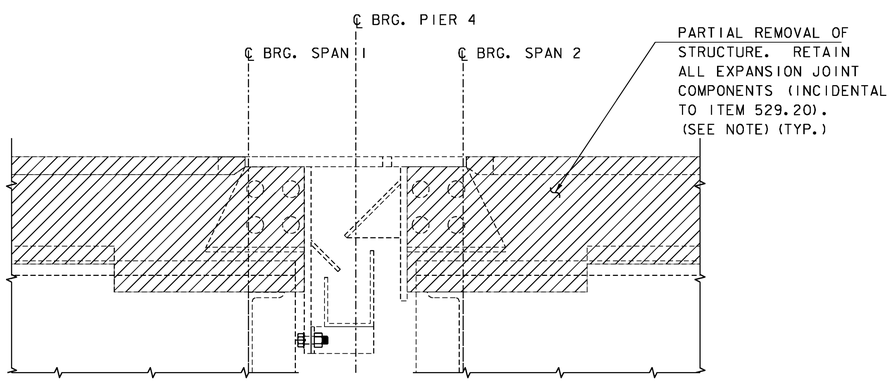

JOINT REMOVAL DETAIL AT PIER 4

SCALE: 1½" = 1'-0"

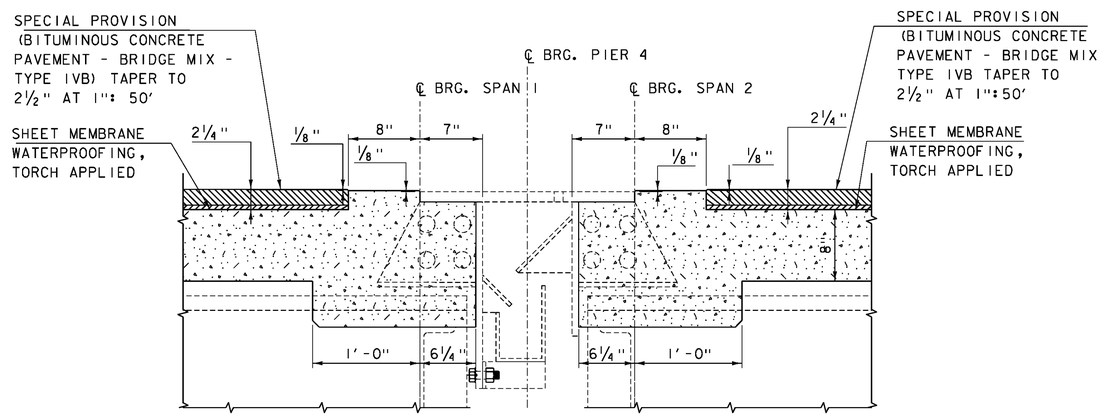

JOINT DETAIL AT PIER 4

SCALE: 1½" = 1'-0"

NOTE: SEE PROJECT NOTES 16 THROUGH 18 ON SHEET 2 FOR ADDITIONAL JOINT INFORMATION.

PROJECT NAME: IRASBURG	
PROJECT NUMBER: IM DECK(46)	
FILE NAME: z15all6typ-107N.dgn	PLOT DATE: 2/5/2016
PROJECT LEADER: J. BYATT	DRAWN BY: M. SMITH
DESIGNED BY: J. FRENCH	CHECKED BY: S. BEAUMONT
JOINT DETAILS SHEET 3	SHEET 23 OF 49

CLD CONSULTING ENGINEERS

CLD 15-0223 MODEL: Sheet107

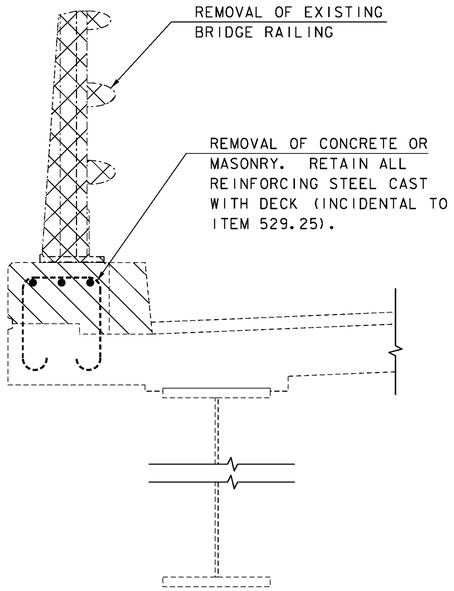

SPAN 1 REMOVAL LIMITS

SCALE: 1" = 1'-0"

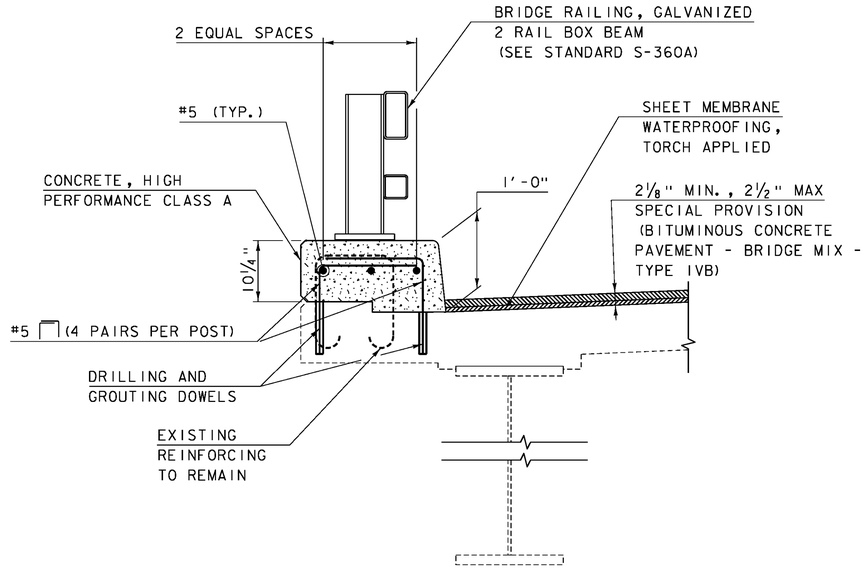

TYPICAL SPAN 1 SECTION

SCALE: 1" = 1'-0"

TO BE USED IF SPAN 1 REMAINS IN-PLACE

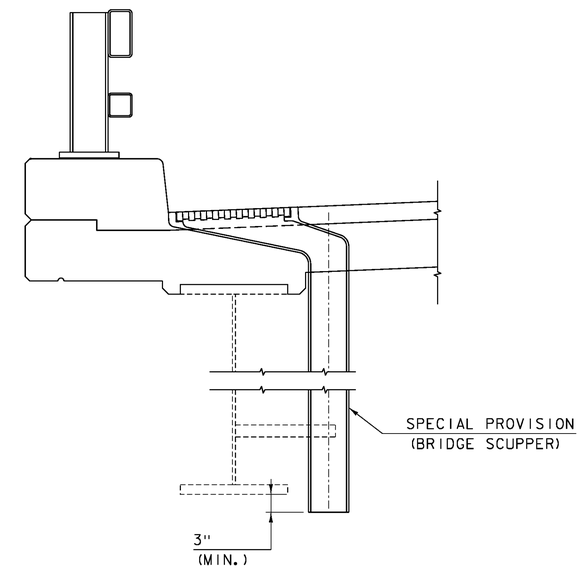

TYPICAL SCUPPER DETAIL

SCALE: 1" = 1'-0"

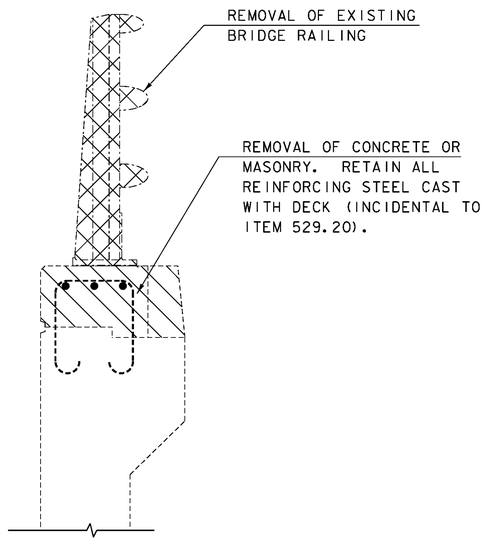

WINGWALL REMOVAL LIMITS

SCALE: 1" = 1'-0"

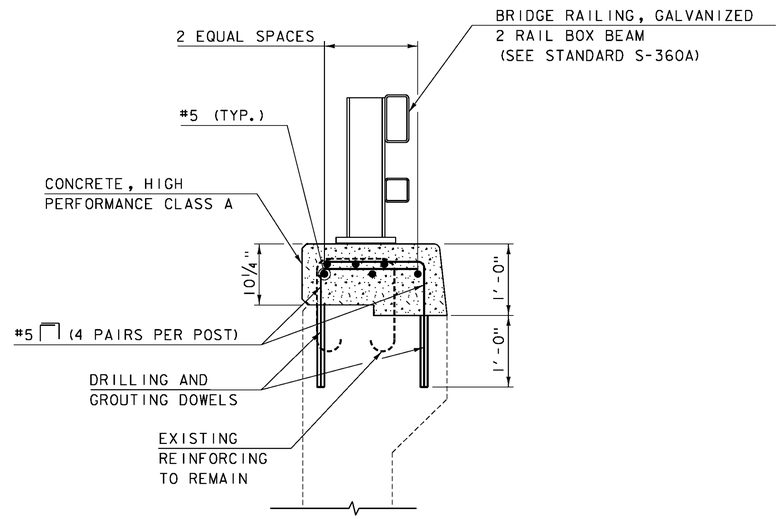

TYPICAL WINGWALL SECTION

SCALE: 1" = 1'-0"

REMOVAL OF EXISTING BRIDGE RAILING

REMOVAL OF CONCRETE OR MASONRY SEE PROJECT NOTES 13 AND 14 ON SHEET 2.

CONCRETE, HIGH PERFORMANCE CLASS A

PROJECT NAME: IRASBURG	
PROJECT NUMBER: IM DECK(46)	
FILE NAME: z15all6typ-107N.dgn	PLOT DATE: 2/5/2016
PROJECT LEADER: J. BYATT	DRAWN BY: M. SMITH
DESIGNED BY: J. FRENCH	CHECKED BY: S. BEAUMONT
CURB REPLACEMENT DETAILS SHEET	SHEET 24 OF 49

CLD CONSULTING ENGINEERS

CLD 15-0223 MODEL: Sheet08

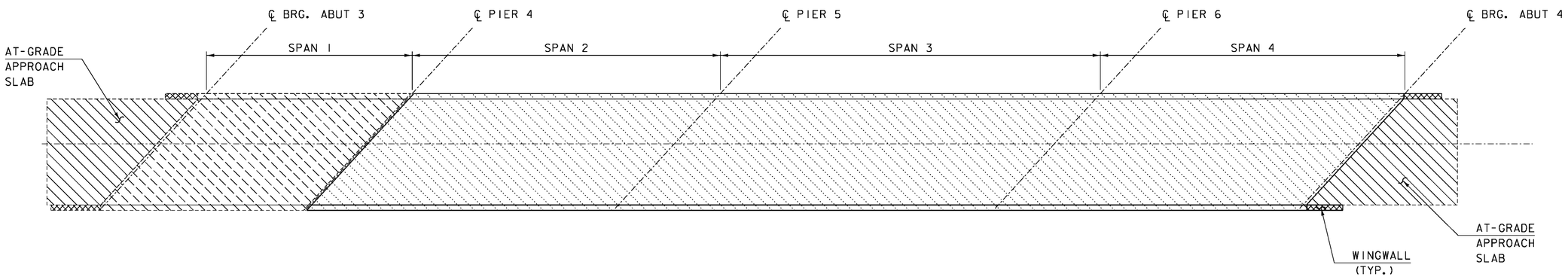

BITUMINOUS CONCRETE/ CONCRETE REMOVAL

SCALE: 1" = 20'-0"

REMOVE BIT. CONC. PAVEMENT TO TOP OF AT-GRADE APPROACH SLABS (PAID FOR UNDER ITEM 529.10). NO MORE THAN 4" OF PAVEMENT SHALL BE REMOVED. SEE PROJECT NOTE 30 ON SHEET 3. REMOVE BARRIER MEMBRANE (PAID UNDER ITEM 580.16), IF APPLICABLE. SEE PROJECT NOTE 32 ON SHEET 3.

REMOVE BIT. CONC. PAVEMENT TO TOP OF BRIDGE DECK (PAID FOR UNDER ITEM 529.10) AND REMOVE THE BARRIER MEMBRANE (PAID FOR UNDER ITEM 580.16). REMOVE BRIDGE DECK (PAID FOR UNDER ITEM 529.20), IF APPLICABLE. SEE PROJECT NOTE 30 ON SHEET 3 AND NOTE 1 THIS SHEET.

REMOVE BRIDGE RAIL (PAID FOR UNDER ITEM 525.10) AND CONCRETE CURB (PAID FOR UNDER ITEM 529.25).

REMOVE BRIDGE DECK (PAID FOR UNDER ITEM 529.20). SEE NOTE 2 THIS SHEET.

NOTES:

1. PAYMENT UNDER ITEM 529.20, "PARTIAL REMOVAL OF STRUCTURE" FOR THE REMOVAL OF THE BRIDGE DECK FOR SPAN #1 WILL INCLUDE THE CONCRETE DECK AND CURBS AND THE BRIDGE RAILING.

2. PAYMENT UNDER ITEM 529.20, "PARTIAL REMOVAL OF STRUCTURE" FOR THE REMOVAL OF THE BRIDGE DECK FOR SPANS #2 THROUGH #4 WILL INCLUDE THE REMOVAL OF THE CONCRETE DECK AND CURBS, BARRIER MEMBRANE, PAVEMENT, AND BRIDGE RAILING.

CONSULTING ENGINEERS

PROJECT NAME: IRASBURG	
PROJECT NUMBER: IM DECK(46)	
FILE NAME: z15all6typ-107N.dgn	PLOT DATE: 2/5/2016
PROJECT LEADER: J. BYATT	DRAWN BY: M. SMITH
DESIGNED BY: J. FRENCH	CHECKED BY: S. BEAUMONT
BITUMINOUS CONCRETE REMOVAL PLAN SHEET	SHEET 25 OF 49

CLD 15-0223 MODEL: Sheet109

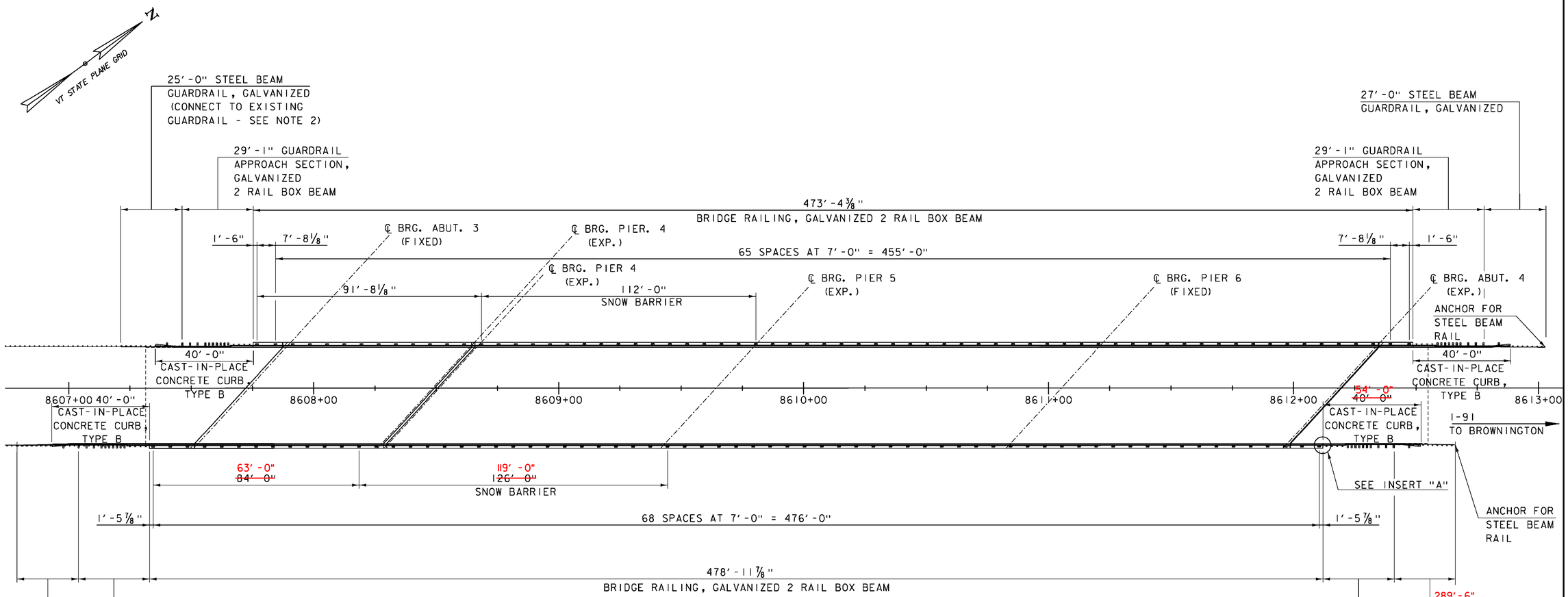

RAIL LAYOUT PLAN

SCALE 1" = 20'-0"

SCALE 1" = 20'-0"
20 0 20

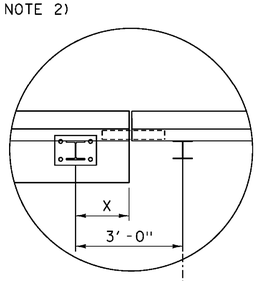

X = 1'-6" NW AND SW CORNERS
= 1'-5 7/8" NE AND SE CORNERS

INSERT "A"

(NE CORNER SHOWN, OTHERS SIMILAR)
SCALE: 1/2" = 1'-0"

NOTES:

1. REFER TO STANDARDS G-1, G-1d, S-360A, AND S360B.
2. PAYMENT FOR NEW STEEL BEAM GUARDRAIL CONNECTION TO EXISTING RAIL WILL BE CONSIDERED INCIDENTAL TO ITEM 621.20, "STEEL BEAM GUARDRAIL, GALVANIZED".

PROJECT NAME: IRASBURG	
PROJECT NUMBER: IM DECK(46)	
FILE NAME: z15all6rail_bdr-107N.dgn	PLOT DATE: 2/5/2016
PROJECT LEADER: J. BYATT	DRAWN BY: P. McKECHNIE
DESIGNED BY: L. GREER	CHECKED BY: S. FORTIER
RAIL LAYOUT SHEET	SHEET 26 OF 49

CLD CONSULTING ENGINEERS

CLD 15-0223 MODEL: Sheet01

750-A

STATE	PROJECT NO.	FISCAL YEAR	SHEET NO.	TOTAL NO. SHEETS
VT	I 91-3(8)	1969	1	605

STATE OF VERMONT
DEPARTMENT OF HIGHWAYS

PROPOSED IMPROVEMENT

INTERSTATE PROJECT

TOWNS OF IRASBURG-BROWNINGTON-COVENTRY-DERBY

COUNTY OF ORLEANS

INTERSTATE ROUTE 91

IRASBURG— DERBY

BEGINNING AT A POINT APPROXIMATELY 1.540 MILES SOUTHWESTERLY FROM THE IRASBURG— BROWNINGTON TOWN LINE U.S.5, AND EXTENDING NORTHERLY 7.749 MILES.

LENGTH OF ROADWAY - 40,465.29 FEET = 7.664 MILES
LENGTH OF BRIDGES - 447.43 FEET = 0.085 MILES
LENGTH OF PROJECT - 40,912.72 FEET = 7.749 MILES

INDEX OF SHEETS

1	TITLE S
2	ALIGNMENT SHEET
3-7	TYPICAL SECTIONS AND DETAIL SHEETS
8-9	QUANTITY SHEETS
10-21	DRAINAGE SHEETS
22-37	EARTHWORK AND GRADE SHEETS
38-40	ROW DETAIL SHEETS
41-99	PLAN AND PROFILE SHEETS - MAINLINE AND SA-3
100-101	ROUND PLATE PIPE AND PLATE PIPE ARCH DETAIL SHEETS
102-103	BLANK
104-115	ROUND PLATE PIPE AND PLATE PIPE ARCH DETAIL SHEETS
116-119	BLANK
120	A 60 SOLID ROCK EXCAVATION 1-17-69 R
121	BLANK
122	B 5 TYPICAL SLOPE GRADING 3-10-65
123	B 6 MUCK EXCAVATION 3-10-65
124	B 10 EMBANKMENT ON A SLOPE 3-10-65
125	B 11 UNDERDRAIN, SHATTERED ROCK SUBGRADE-SLOPE STABILIZATION 3-10-65
126	B 15 ENTRANCE AND EXIT TERMINALS 7-21-67 R
127	B 17 U-TURNS AND REST AREAS 9-10-69 R
128	C 1 CURBS 9-10-69 R
129	C 16 CURBS 3-10-65
130	D 2 UNDERDRAIN AND HEADWALLS 4-19-69 R
131	D 3 JUTE MATTING 7-19-67 R
132	D 4 ELBOWS AND FLUSHING BASINS 12-4-68 R
133	D 6 DROP INLET W/GRATE FOR USE IN DITCHES 12-23-66
134	D 8 DROP INLETS 3-10-65
135	D 9 REINFORCED CONCRETE THROAT ADAPTOR 3-10-65
136	D 10 DROP INLET TOPS 3-10-65
137	D 11 DETAIL OF GRATES AND COVERS 3-10-65
138	D 13 CONCRETE CATCH BASINS 5-15-69 R
139	D 16 PRECAST REINFORCED CONCRETE CURB DROP INLET 10-28-69
140	D 17 A.C.C.G.M.P. VERTICAL RISER 7-1-68 R
141	E 31 FEDERAL AID CONSTRUCTION IDENTIFICATION SIGNS 8-21-67 R
142	E 32 ROAD CONSTRUCTION APPROACH SIGNS 1-6-67
143	E 33 BRIDGE CONSTRUCTION APPROACH SIGNS 1-6-67
144	E 34 ON-PROJECT CONSTRUCTION SIGNS 5-3-67 R
145	F 1 PROPERTY LINE FENCE 11-29-67R
146	G 3 THREE CABLE GUARD RAIL W/STEEL POSTS AND ANCHORS 9-1-66 R
147	G 4 WOOD GUIDE POSTS, PLANK GUARD RAIL, 12-30-65 R
148	G 8 BRIDGE RAILING FOR BRIDGE APPROACHES 2-13-68 R
148-A	G 9 BRIDGE RAILING FOR BRIDGE APPROACHES 8-21-68 R
149	J 1 PROJECT AND BOUNDARY MARKERS 3-10-65
150	SCB D1 67 GENERAL NOTES & INFORMATION 1-24-68
151	SCB D2 67 DETAIL "A" & "B" & "C" 1-24-68
152	SCB D3 67 DRAIN TROUGH DETAILS 1-24-68
153	SCB D4 67 REINFORCING AT ABUTMENTS 12-17-68 R
154	SCB D6 67 DETAILS "A" & "B" 5-23-69 R
155	SCB D7 67 INTERMEDIATE DIAPHRAGM 1-24-68
156	SCB D8 67 BEARING DEVICES 1-24-67
157	SCB D9 67 DETAIL "A" 1-24-68
158-159	SB R1 64 ALUMINUM BRIDGE RAILING DETAILS SHT #1- 12-16-68 R, SHT #2- 11-8-66 R
160	SB R2 65 STEEL BRIDGE RAILING DETAILS 11-8-66 R
161-168	BLANK
169-198	BRIDGE SERIES 100 I-91 OVER SA-3, CP&RR & RIVER AT STA. 2538± IRASBURG
199-211	BRIDGE SERIES 200 SA-3 OVER I-91 AT STA. 2683± COVENTRY
212-231	SOUTHBOUND CROSS SECTIONS STA. 2480+00 - 2517+19.21
232-250	NORTHBOUND CROSS SECTIONS STA. 2480+00 - 2546+28.12
251-272	SOUTHBOUND & NORTHBOUND CROSS SECTIONS STA. 2517+32.17-2550+00
273-432	SOUTHBOUND CROSS SECTIONS STA. 2550+50 - 2895+00
433-584	NORTHBOUND CROSS SECTIONS STA. 2550+50 - 2895+00
585-588	SA-3 CROSS SECTIONS
589-605	CULVERT CROSS SECTIONS

TRAFFIC DATA

1962	ADT	1680
1987	ADT	4580
1987	DHV	715
	D	57%
	T	9%
	V	60 MPH

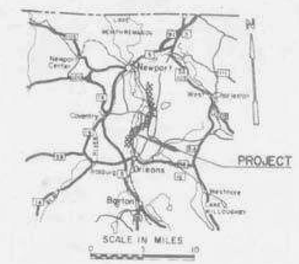

THESE PLANS HAVE BEEN REDUCED PHOTOGRAPHICALLY TO APPROXIMATELY ½ SCALE

Dated 28 April 70

PERINI CORPORATION

Louis L. Capone

Louis L. Capone, Vice President

Contractor

Commissioner

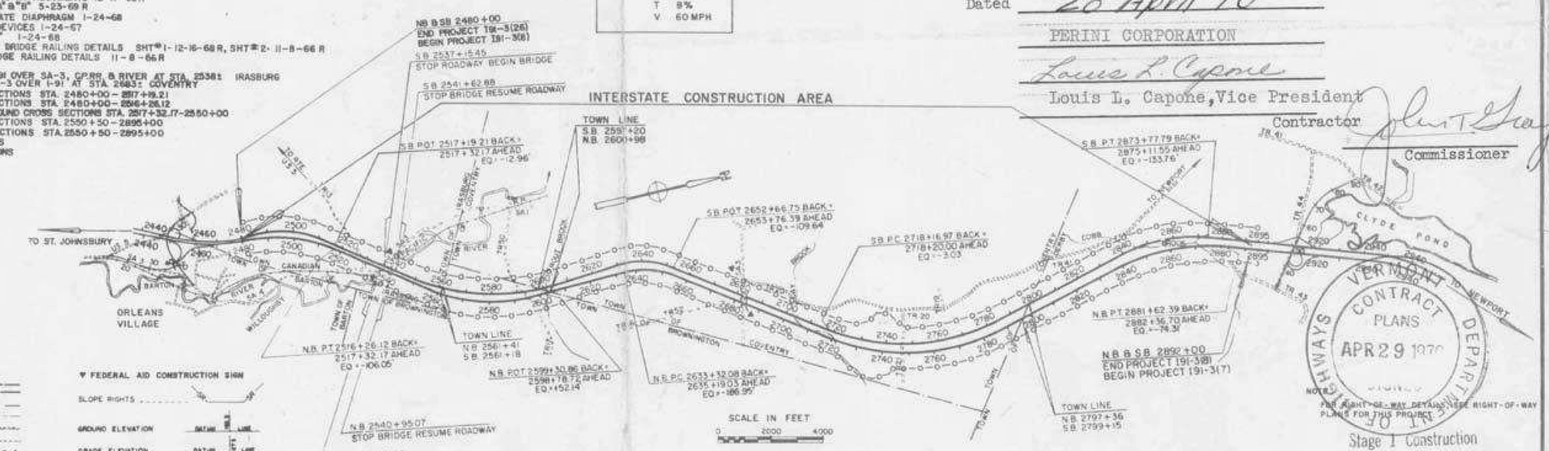

CONVENTIONAL SIGNS

ROW
COUNTY LINE
TOWN LINE
FENCE LINE
STONE WALL
UNFENCED PROPERTY
GUARD RAIL
TRAVELED WAY
RAILROAD
RETAINING WALL
CENTER LINE
SURVEY LINE
CULVERT
DROP INLET
TROLLEY POLE
POWER POLE
TELEPHONE POLE
TREES
HEDGE
LIMITED ACCESS

▼ FEDERAL AID CONSTRUCTION SIGN

SLOPE RIGHTS

GROUND ELEVATION — DATUM — LINE

GRADE ELEVATION — DATUM — LINE

CURVE DATA

DEFLECTION OF ANGLE	A
DEGREE OF CURVE	D
RADIUS OF CURVE	R
TANGENT DISTANCE	T
LENGTH OF CURVE	L
EXTERNAL DISTANCE	E
POINT OF INTERSECTION	PI
POINT OF CURVE	PC
POINT OF TANGENT	PT
POINT ON TANGENT	POT
POINT ON SUB-TANGENT	POST
SEISMIC POINT PROFILE	▽

PREPARED BY
EDWARDS AND KELCEY, INC.
BOSTON, MASSACHUSETTS

THESE PLANS ARE SUBJECT TO SUCH REVISIONS AS MAY BE REQUIRED BY THE BUREAU OF PUBLIC ROADS OR THE COMMISSIONER OF HIGHWAYS.

CONSTRUCTION IS TO BE CARRIED ON IN ACCORDANCE WITH THESE PLANS AND THE STANDARD SPECIFICATIONS FOR HIGHWAY AND BRIDGE CONSTRUCTION, DATED APRIL, 1964, AS APPROVED BY THE BUREAU OF PUBLIC ROADS ON OCTOBER 12, 1964, INCLUDING ALL SUBSEQUENT APPROVED REVISIONS AND SUCH REVISED SPECIFICATIONS AND SPECIAL PROVISIONS AS ARE INCORPORATED IN THESE PLANS.

APPROVED	DATE
ASST. CHIEF ENGINEER	16 May 67
CHIEF ENGINEER	19 May 67
BRIDGE ENGINEER	3/13/69
DISTRICT ENGINEER	9 May 1969
HIGHWAY ENGINEER	5/13/69
CHIEF ENGINEER (SUBMITTED BY ORDER OF THE STATE HIGHWAY BOARD)	5/16/69

VERMONT DEPARTMENT OF HIGHWAYS
CONTRACT PLANS
APR 29 1970

NOTE: FOR RIGHT-OF-WAY DETAILS SEE RIGHT-OF-WAY PLANS FOR THIS PROJECT.

Stage I Construction

DEPARTMENT OF TRANSPORTATION
BUREAU OF PUBLIC ROADS

APPROVED

DIVISION ENGINEER DATE

PROJECT I 91-3(8) NO

SHEET 1 OF 605 SHEETS

IRASBURG
IM DECK(46)
BRIDGE NO. 107N
SHEET 27 OF 49
FOR REFERENCE ONLY

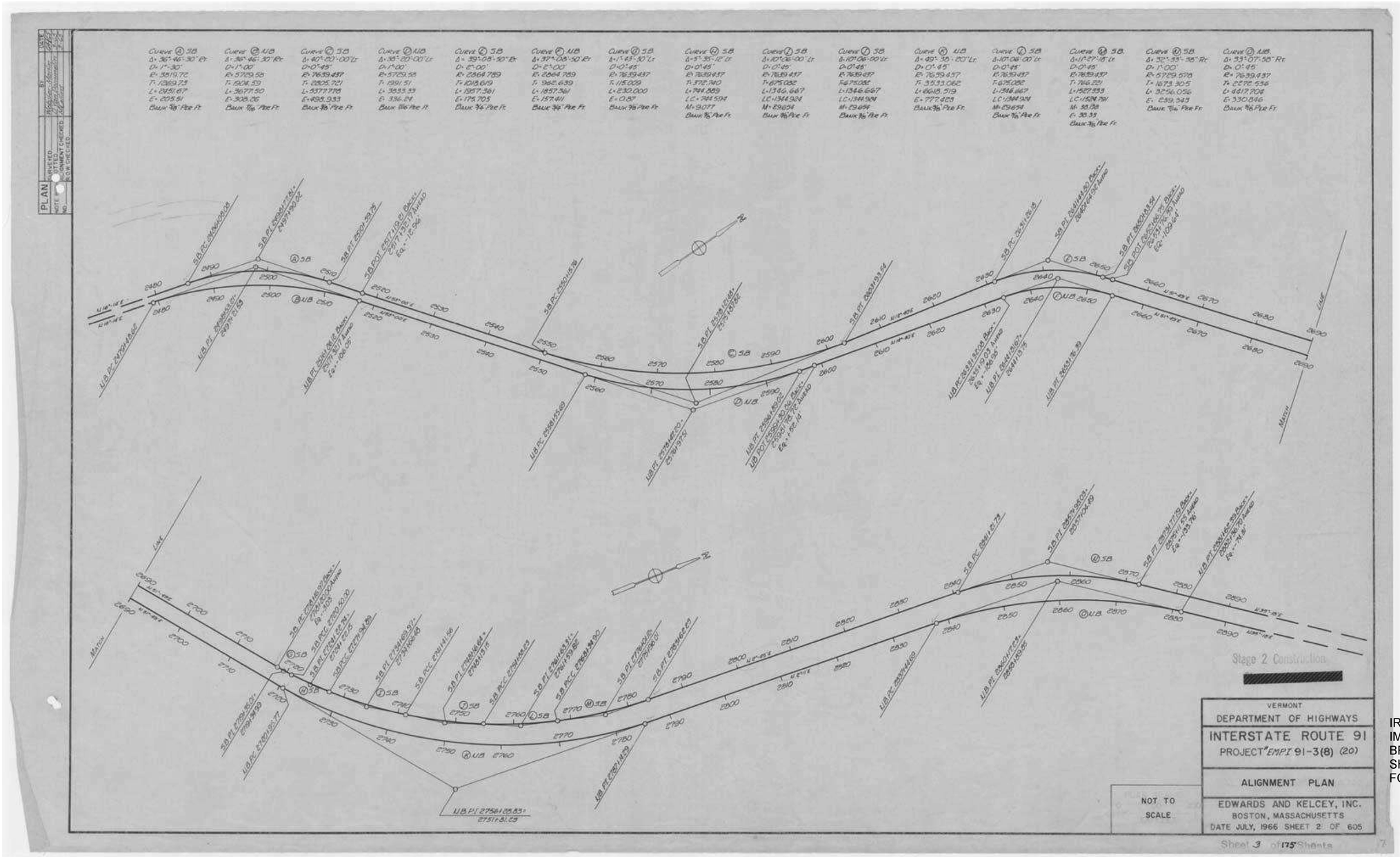

IRASBURG
IM DECK(46)
BRIDGE NO. 107N
SHEET 28 OF 49
FOR REFERENCE ONLY

SOUTHBOUND ROADWAY

STAGE 2
STAGE 1 SUBGRADE ELEVATION 2.67' (2'-8") BELOW

EARTHWORK SHEET

STATE OF VERMONT
DEPARTMENT OF HIGHWAYS

FED. ROAD DIVISION NO.	STATE	PROJECT NO.	FISCAL YEAR	SHEET NO.	TOTAL SHEETS
1	VT	191-3(8)	POST WAR		

type checked 12/4/68

V.C.: 700' V.C. — % Grade: -1.7759 %, +0.880 %

Station	Elev. on Tangent	Elev. on V Curves	Corr V.C.	Dist	Total Exc. Area	Total Exc. Cu Yds	Rock Area	Rock Cu Yds	Emb. Area	Emb. Cu Yds	Base Area	Base Cu Yds
2480+00	752.59								1055			
				50						1991		
+50	751.70								1095			
				50						2025		
2481	750.81								1070			
				50						2001		
+50	749.92								1091			
				50						2172		
2482	749.04								1212		C	-
				50						2109	R	-
+50	748.15								1066		F	19,901
				50						2007	FAC	3.25
2483	747.26								1156		EX F	39,955
				50						2015		
+50	746.37								1020			
				50						1900		
2484	745.48								1054			
				50						1883		
+50	744.60								980			
				50						1851		
2485	743.71								1019			
				50						1796		
+50	742.82								921			
				50						1706		
2486	741.93								922			
				50						1682		
+50	741.04								862			
				50						1525		
2487	740.16								892		C	72
				50						1507	R	
+50	739.27								790		F	12,836
				50						1382	FAC	1.25
2488	738.38								626		EX F	16,704
				50						1175		
+50	737.50								597			
				50						1046		
2489	736.60								522			
				50						917		
+50	735.72				0				458			
				50		19				545		
2490	734.83	734.88	+0.05		20				131			
				50		935				121		
+50	733.94	734.13	+0.19		990				0			
				50		1007						
2491	733.05	733.48	+0.43		98				0			
				50		91				269		
+50	732.16	732.92	+0.76		0				290			
				50						500	C	5,850
2492	731.28	732.47	+1.19						250		R	-
				50						458	F	2,126
+50	730.39	732.10	+1.71						245		FAC	1.25
				50						421	EX C	9,255
2493	729.500	731.83	+2.33		0				210			
				50		15				272		
+50	729.94	731.65	+1.71		14				85			
				50		656				81		
2494	730.38	731.57	+1.19		692				2			
				50		1872				2		
+50	730.82	731.58	+0.76		1330				0			
				50		2287						
2495	731.26	731.69	+0.43		1190							
				50		1556						
+50	731.70	731.89	+0.19		580				0			
				50		685				18		
2496	732.14	732.19	+0.05		200				19			
				50		251				38		
+50	732.58				82				22			
				50		75				167		
2497	733.02				0				137		C	3,020
				50						495	R	-
+50	733.46								400		F	4,936
				50						1076	FAC	1.25
2498	733.90								762		EX F	3,150
				50						1428		
+50	734.34								780			
				50						1153		
2499	734.78				0				465			
				50		96				506		
+50	735.22				50				61			
				50		306				75		
2500	735.66				570				0			
				50		696				14		
+50	736.10				220				15			
				50		324				21		
2501	736.54				30				19			
				50		155				18		
+50	736.98				137				0			
				50		17.3				13		
2502	737.42				50				14			
				50		45				115		
+50	737.86				0				110			
CARRIED FORWARD						1344				191		
COLUMN FOOTINGS						11292				40593		

V.C.: 1000' V.C. — % Grade: +0.880 %

Station	Elev. on Tangent	Elev. on V Curves	Corr V.C.	Dist	Total Exc. Area	Total Exc. Cu Yds	Rock Area	Rock Cu Yds	Emb. Area	Emb. Cu Yds	Base Area	Base Cu Yds
				50		41				107		
2503	738.30				55				6			
				50		546				6	C	6,792
+50	738.74				599				0		R	---
				50		1276					F	104
2504	739.18				842						FAC	1.75
				50		1750					EX C	6,962
+50	739.62				1076							
				50		1774						
2505	740.06				846							
				50		1263						
+50	740.50				500							
				50		1180						
2506	740.94				890							
				50		1663						
+50	741.38				1022							
				50		1230						
2507	741.82				306				0		C	(11)
				50		309				46	R	---
+50	742.26				60				50		F	771
				50		56				422	FAC	1.25
2508	742.70				0				406		EX F	3615
				50						1105		
+50	743.14								920			
				50						1710		
2509	743.58								1036			
				50						2029		
+50	744.02								1150			
				50						2435		
2510	744.46								1480			
				50						2693		
+50	744.90								1628			
				50						2629		
2511	745.34								1330			
				50						2750		
+50	745.78								1560			
				50						2722	C	---
2512	746.22								1330		R	---
				50						2611	F	28,201
+50	746.66								1490		FAC	1.25
				50						2909	EX F	35,258
2513	747.10								1750			
				50						2200		
+50	747.54								1700			
				50						2049		
2514	747.98								1505			
				50						2923		
+50	748.42								1650			
				50						2791		
2515	748.86								1363			
				50						2270		
+50	749.30								1091			
				50						1520		
2516	749.74				0				570			
				50		134				527		
+50	750.18				195				0			
				50		1222						
2517	750.62				1175							
				10.21		969						
BK 2517+19.21	750.79				1550						C	15,106
AHD 2517+32.17	750.79				1550						R	---
				17.83		1085					F	9,336
2517+50	750.95				1732							
				50		3156						
2518	751.39				1295						FAC	1.25
				50		1938					EX C	9,681
+50	751.83				740							
				50		1509						
2519	752.27				889							
				50		2160						
+50	752.71				1470							
				50		3617						
2520	753.15				2220							
				50		4833						
+50	753.59				3000							
				50		5014						
2521	754.03				2415							
				50		3706						
+50	754.47				1580							
				50		2279						
2522	754.91				870							
				50		1673						
+50	755.35				937							
				50		2284						
2523	755.79	755.75	-0.04		1530							
				50		2697						
+50	756.23	756.05	-0.18		1333							
				50		2204						
2524	756.67	756.27	-0.40		1095							
				50		1804						
+50	757.11	756.41	-0.70		853							
CARRIED FORWARD						26565						
COLUMN FOOTINGS						53198				40638		

V.C.: 1000' V.C., 1400' V.C. — % Grade: +0.880 %, -2.64383 %, BRIDGE, -2.64383 %

Station	Elev. on Tangent	Elev. on V Curves	Corr V.C.	Dist	Total Exc. Area	Total Exc. Cu Yds	Rock Area	Rock Cu Yds	Emb. Area	Emb. Cu Yds	Base Area	Base Cu Yds
				50		2061					C R	28,661
2525	757.55	756.45	-1.10		1880				EX C	28,551	F	---
				50		3009						
+50	757.99	756.40	-1.59		1170							
				50		3907						
2526	758.43	756.27	-2.16		2350							
				50		5091						
+50	758.87	756.05	-2.82		3112							
				50		6210						
2527	759.31	755.74	-3.57		3555						C	51,555
				50		6556					R	7,089
+50	759.750	755.35	-4.40		3621						F	---
				50		6813						
2528	758.43	754.86	-3.57		3842		0				EX C	56,642
				50		6204		197				
+50	757.11	754.29	-2.02		2960		200					
				50		4931		1107				
2529	755.78	753.62	-2.16		2425		1210					
				50		4742		2480				
+50	754.46	752.87	-1.59		2880		1470					
				50		4863		3065				
2530	753.14	752.04	-1.10		2790		1840					
				50		4670		3050				
+50	751.82	751.12	-0.70		2508		1463					
				50		4980		2711				
2531	750.50	750.10	-0.40		2750		1665					
				50		4085		2951				
+50	749.17	748.99	-0.18		2162		1515					
				50		4030		2726				
2532	747.85	747.81	-0.04		2002		1330				C	68,503
				50		4189		2430			R	25,966
+50	746.53				2421		1220				F	---
				50		4909		2448				
2533	745.21				2638		1350				EX C	62,696
				50		4502		2297				
+50	743.89				2425		1125					
				50		4421		2152				
2534	742.57				2350		1205					
				50		4421		2310				
+50	741.24				2425		1290					
				50		4125		2472				
2535	739.92				2090		1380					
				50		3336		2242				
+50	738.60				1405		1085					
				50		3139		1951				
2536	737.28				1750		325				C	11,952
				50		2952		1606			R	5,065
+50	735.96				1330		810				F	---
				50		1852		983			EX C	17,076
2537	734.63				670		267					
				15.45								
+15.45	END ROADWAY - BEGIN BRIDGE			34.55		620		231				
+50	733.31				0		0					
				50								
2538	731.99											
				50								
+50	730.67											
				16								
+66	730.24											
				44								
2539	729.35	NOTE: EMBANKMENT QUANTITY WITHIN BRIDGE AREA INCLUDED										
				50								
+50	728.02											
				50								
2540	726.70											
				50								
+50	725.38											
				50								
2541	724.06								0			
				50						550		
+50	722.74								594			
				12.88								
+62.88	END BRIDGE - RESUME ROADWAY			37.12						2663		
2542	721.41								2282			
				50						3968		
+50	720.09								2003		C	---
				50						3581	R	---
2543	718.77								1865		F	22,636
				50						3256	FAC	1.25
+50	717.45								1651		EX F	28,295
				50						3022		
2544	716.13								1613			
				50						2917		
+50	714.80	714.85	+0.05						1537			
				50						2679		
2545	713.48	713.66	+0.18						1356			
				50						2402		
+50	712.16	712.57	+0.41						1238			
				50						2131		
2546	710.84	711.57	+0.73						1063			
				50						2056		
+50	709.52	710.67	+1.15						1100			
CARRIED FORWARD										6591		
COLUMN FOOTINGS						109078		39469		29227		

Stage 2 Continuation

PROJECT IRASBURG - DERBY

PROJECT EMPI NO. 91-3(8)3 (20)
SHEET 22 OF 605 SHEETS

IRASBURG
IM DECK(46)
BRIDGE NO. 107N
SHEET 29 OF 49
FOR REFERENCE ONLY

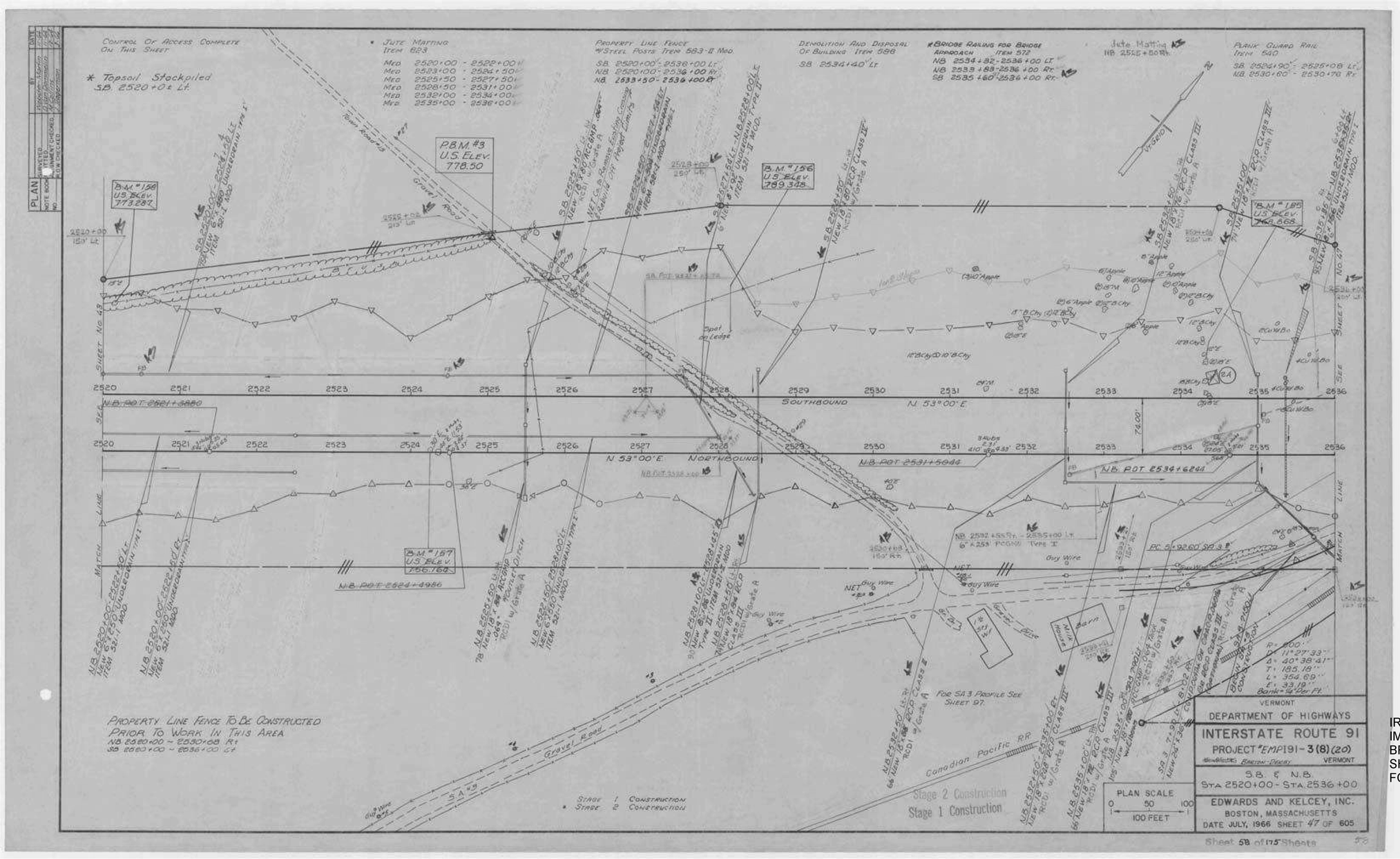

IRASBURG
IM DECK(46)
BRIDGE NO. 107N
SHEET 30 OF 49
FOR REFERENCE ONLY

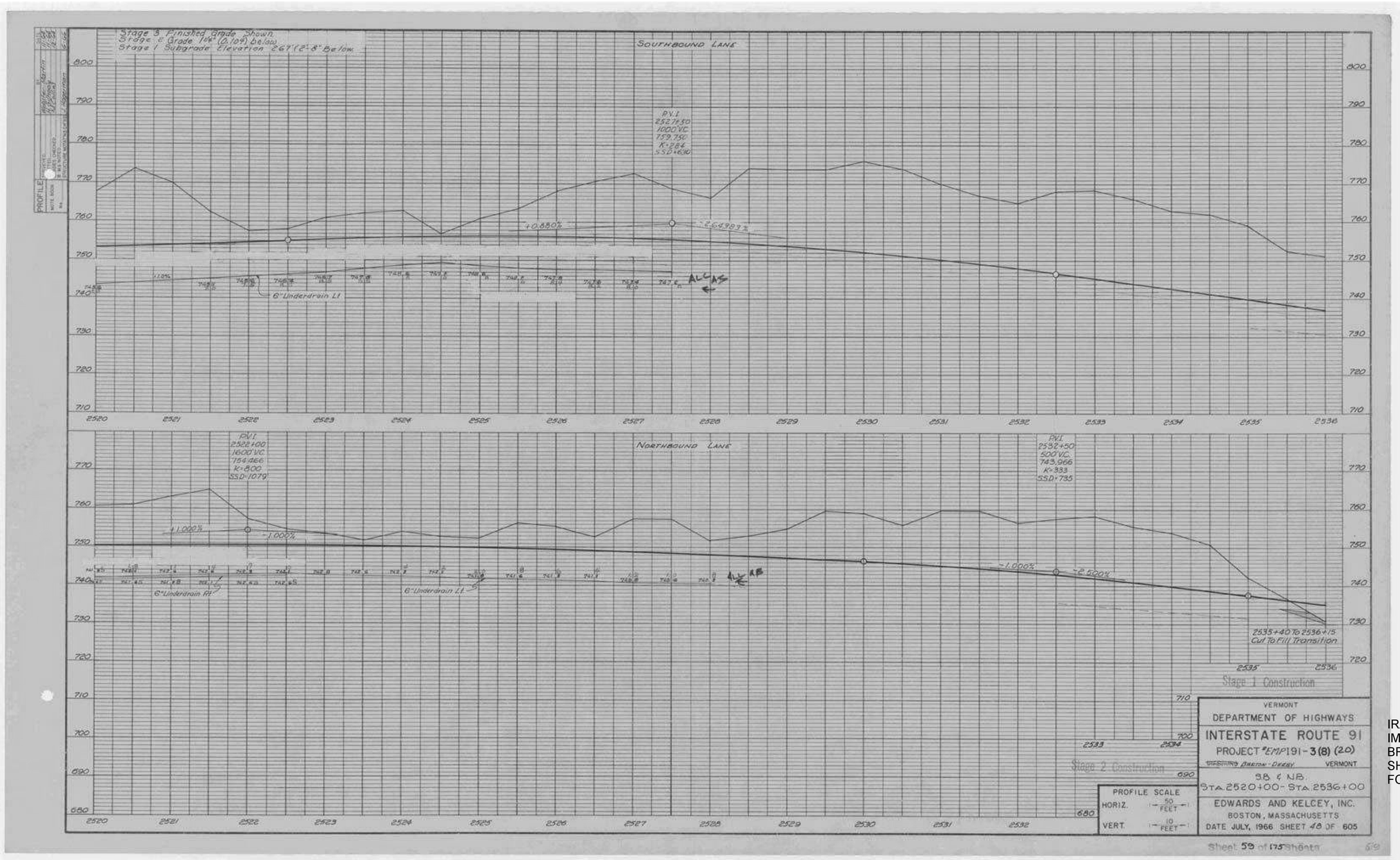

IRASBURG
IM DECK(46)
BRIDGE NO. 107N
SHEET 31 OF 49
FOR REFERENCE ONLY

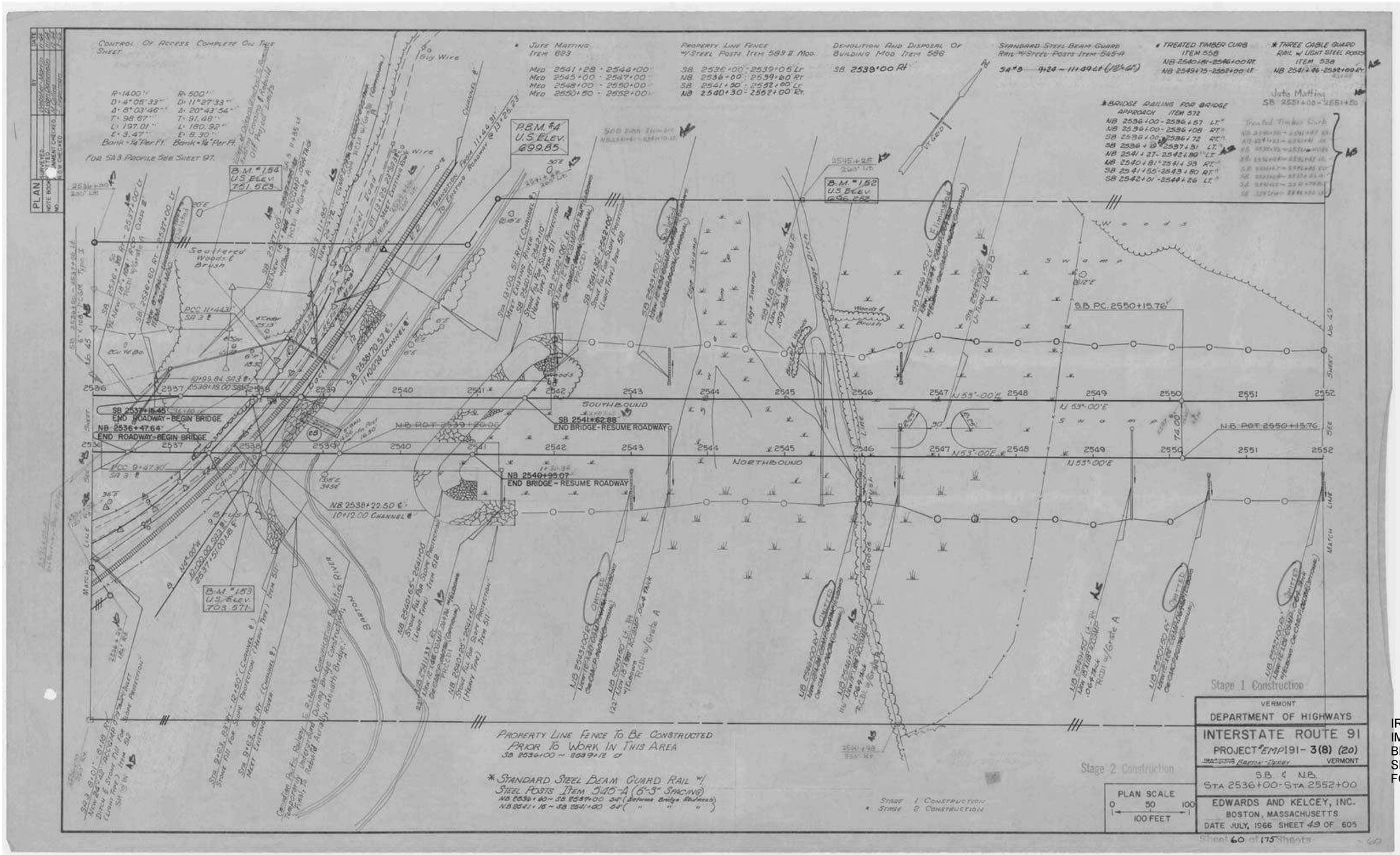

IRASBURG
IM DECK(46)
BRIDGE NO. 107N
SHEET 32 OF 49
FOR REFERENCE ONLY

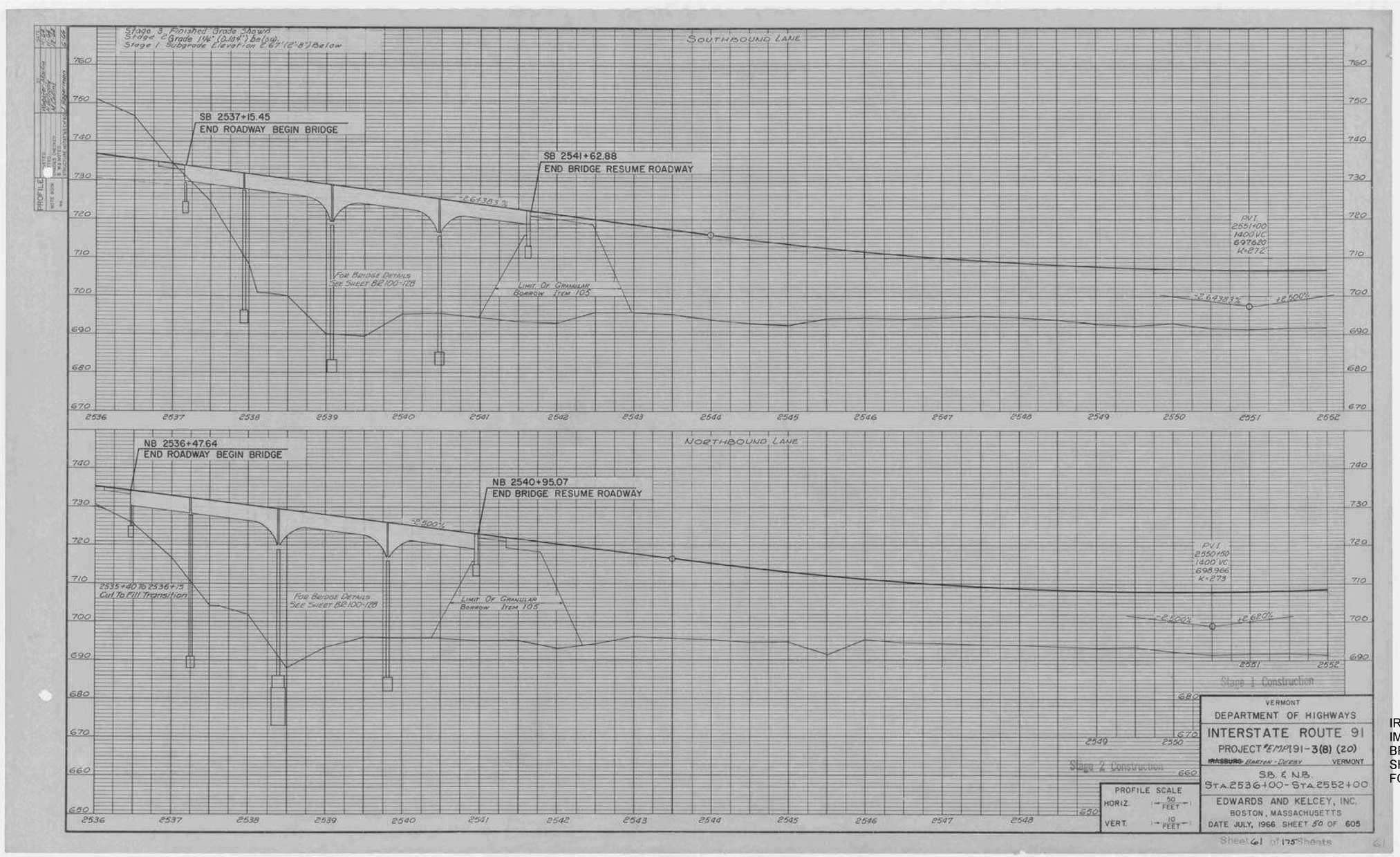

IRASBURG
IM DECK(46)
BRIDGE NO. 107N
SHEET 33 OF 49
FOR REFERENCE ONLY

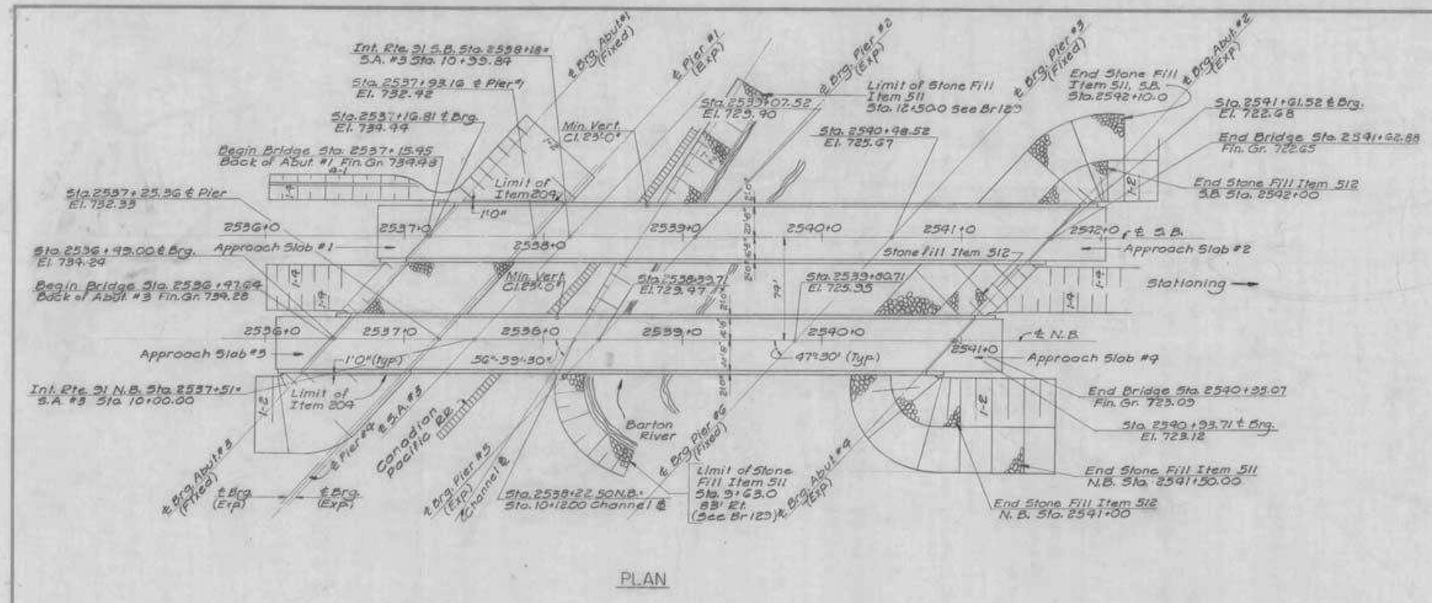

PLAN

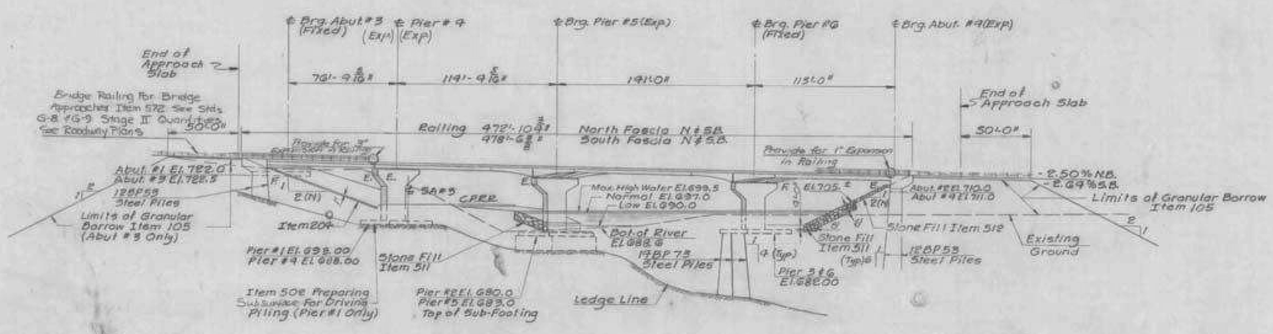

ELEVATION

LIST OF SHEETS

Br.100 Plan & Elevation
Br.101-102 Bridge Quantity Sheets
Br.103 Preliminary Information Sheet
Br.104-106 Boring Logs
Br.107 Framing Plan & Girder Details
Br.108 Girder Elevation & Conn. Details.
Br.109 Deck Section & Splice
Br.110 Expansion Dam & Scupper Details
Br.111 Rocker Bearings
Br.112 Abutment #1
Br.113 Abutment #2
Br.114 Abutment #3
Br.115 Abutment #4
Br.116 Abutment #2 & #4 Details
Br.117 Abutment #1 & #3 Approach Slab
Br.118 Abutment #2 & 4 Approach Slab
Br.119 Pier #1
Br.120 Pier #2
Br.121 Pier #3
Br.122 Pier #4
Br.123 Pier #5
Br.124 Pier #6
Br.125-128 Reinforcing Schedules
Br.129 Channel Sections

STANDARD SHEETS REQUIRED

SCB	D1 67	General Notes & Information	Jan 24, '68
SCB	D2 67	Detail A & B & C	Jan 24, '68
SCB	D3 67	Drain Trough Details	Jan 24, '68
SCB	D4 67	Reinforcing at Abutments	Dec 17, '68 R
SCB	D6 67	Detail A & B	May 23, 1969 R
SCB	D7 67	Intermediate Diaphragm	Jan 24, '68
SCB	D8 67	Bearing Devices	Jan 24, '68
SCB	D9 67	Detail A	Jan 24, '68
SB	R1 64	Aluminum Railing (2 Sheets)	Sheet 1 of 2 Dec 14, 1968 R · 2 of 2 Nov 8, 66 R
SB	R2 65	Steel Bridge Railing	Nov 8, 66 R

NOTE:

The channel excavation and stone fill shall be done between July 1 and October 1 so as not to interfere with the Rainbow Trout runs. Precautions shall be taken during construction to prevent siltation or pollution of the river.

1. Changed roadway width from 38'-0" to 39'-4", curb width from 2'-6" to 2'-0". Updated Sht. Sheets 21, Trace 3/62

STATE OF VERMONT
DEPARTMENT OF HIGHWAYS

PROJECT IRASBURG - LEREY
TOWN OF IRASBURG 82 of 87
ROUTE No. I-91 STA. 2539±
I-91 OVER BARTON RIVER AND S.A. #3
PLAN AND ELEVATION
SCALE 1" = 40'
IN CHARGE S. TERENZIO
DRAWN BY JMR CHECKED BY A. CENTORE
PROJECT No. I 91-3(8) 9-57
SHEET 152 OF 805 BR 100

IRASBURG
IM DECK(46)
BRIDGE NO. 107N
SHEET 34 OF 49
FOR REFERENCE ONLY

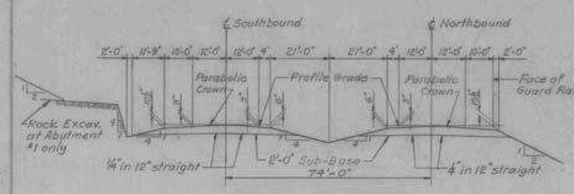

NEW HIGHWAY SECT. STA. 2520+00 TO STA. 2547+50

SCALE: 1" = 20'

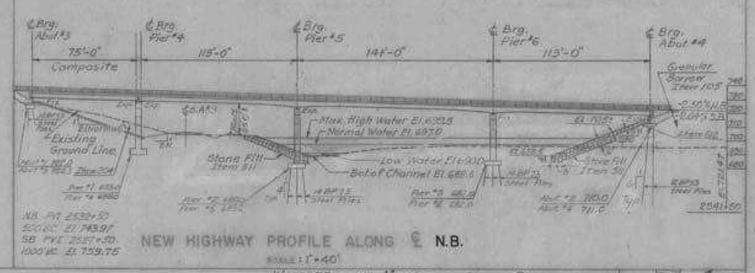

NEW HIGHWAY PROFILE ALONG ℄ N.B.

SCALE: 1" = 40'

Note: For Details of Deck Construction See BR 109
For Railing Details see SB-R1-64 and SB-R2-65
For Curb Details see SCB-DG-67

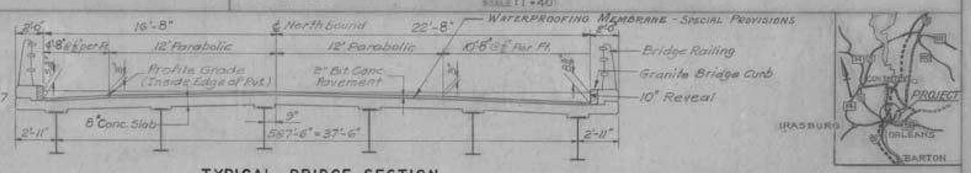

TYPICAL BRIDGE SECTION

SCALE: 1/4" = 1'-0"

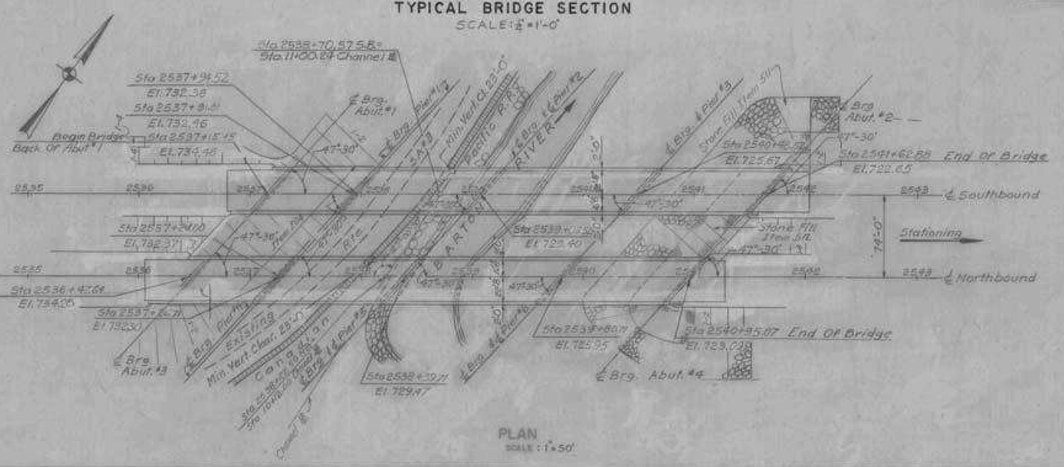

PLAN

SCALE: 1" = 50'

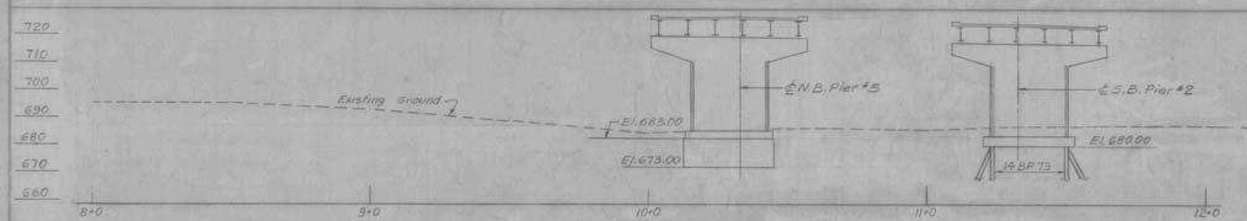

PROFILE OF PROPOSED STREAM CHANNEL 50' RT. OF CHANNEL ℄

SCALE: 1" = 20'

HIGHWAY NO. I-91 NAME OF HIGHWAY INTERSTATE

STRUCTURE NO. ____ COUNTY ORLEANS TOWN IRAS

PROJECT NO. I-91-3(8) LOCATION I91 over BARTON RIVER, C.P.R.R.

EXISTING STRUCTURE

1 RATED LOADING OF EXISTING STRUCTURE N.A.
2 TYPE OF EXISTING STRUCTURE N.A.
3 UNDERCLEARANCE ELEVATION OF EXISTING STRUCTURE N.A.
4 WHAT DISPOSITION SHOULD BE MADE OF EXISTING STRUCTURE? N.A. COST OF REM
5 SHOULD EXISTING STRUCTURE BE USED TO MAINTAIN TRAFFIC DURING CONSTRUCTION OF NEW
6 SHOULD NEW TEMPORARY STRUCTURE BE BUILT? N.A.
7 ORDINARY HIGH WATER SURFACE ELEV. AT EXISTING STRUCTURE N.A. WATERWAY T
8 EXTREME HIGH WATER AT EXISTING STRUCTURE N.A.
9 SPAN OF EXISTING BRIDGE UPSTREAM N.A. WATERWAY TO EXTREME H.W.
SPAN OF EXISTING BRIDGE DOWNSTREAM 2 Stone Fill Sled Bridge WATERWAY TO EXTREME H.W.
10 TYPE OF FOUNDATION UNDER EXISTING ABUTMENTS N.A.
11 DOES ALL WATER AT FLOOD ELEVATION PASS THROUGH EXISTING STRUCTURE? ____
12 IF NOT AT WHAT ELEVATION IS RELIEF APPROVED? N.A.
13 ADDITIONAL WATERWAY AREA PROVIDED N.A.

NEW STRUCTURE

1 RECOMMENDED TYPE OF STRUCTURE ONE SINGLE SPAN (COMPOSITE) STEEL WELDED
2 RECOMMENDED CLEAR SPAN OR SPANS 75.0 - 113.0 - 141.0 - 113.0
MEASURED PARALLEL TO ℄ NEW HIGHWAY 75.0 - 113.0 - 141.0 - 113
MEASURED AT RIGHT ANGLES TO ℄ STREAM 55.0 - 84.0 - 104.0 - 84.0
3 ARE THERE OBJECTIONS TO A PIER IN THE STREAM? ANSWER YES OR NO. NO
4 ORDINARY HIGH WATER ELEVATION AT NEW STRUCTURE 697.0
5 EXTREME HIGH WATER ELEVATION AT NEW STRUCTURE 692.5 SOURCE OF INFORM
6 IS ALL WATER INTENDED TO PASS THROUGH NEW STRUCTURE? Yes
7 DOES STREAM REACH ITS MAXIMUM HIGH WATER ELEVATION RAPIDLY? NO
8 LOW WATER ELEVATION AT NEW STRUCTURE 690.0
9 DRAINAGE AREA IN ACRES ABOVE STRUCTURE 99.3/2 CHARACTER OF TERRAIN
10 IS STREAM EVER DRY No
11 VELOCITY OF STREAM AT HIGH WATER STAGE 6.31 C.F.P.S. ESTIMATED DISCHARG
12 AREA FULL OPENING 1260 S.F. AREA BELOW ORDINARY H.W. 1000 S.F.
13 CHARACTER OF SCOUR NONE DRIFT NONE
14 ESTIMATED DRAINAGE AREA ABOVE NATURAL OR ARTIFICIAL STORAGE
15 VERTICAL CLEARANCE ABOVE FLOOD ELEVATION 18 Ft.
16 ARE SIDEWALKS REQUIRED? IF SO ON WHAT SIDE? No BOTH SIDES
17 RECOMMENDED TYPE OF PAVEMENT 2" BITUMINOUS CONCRETE, 8" C
18 TRAFFIC TO BE MAINTAINED UNDER ITEM NO. N.A. ONE OR TWO WAYS
19 PROBABLE COST OF CLEARING AND DRUDGING STREAM CHANNEL AT STRUCTURE SITE
20 SHOULD PROVISIONS BE MADE FOR PUBLIC UTILITIES? No
21 ESTIMATED ALLOWABLE LOAD ON FOUNDATIONS * SHOULD PILES BE USED
* See Below

FOUNDATION INFORMATION

OBTAINED FOR DESIGN PURPOSES ONLY, AND THE STATE ASSUMES NO RESPONSIBILITY FOR THE SUFFICIENCY OR ACCURACY OF THE INFORMATION SHOWN. BOULDERS ENCOUNTERED AT ANY PIER OR ABUTMENT LOCATION.

Pier No. 4 & 5 - 5 Tons/S.F.
Abutment No. 2 - 12 BP 53 110' Long
Abutment No. 1 & 3 - 12 BP 53 120' Long } 58 Tons/Pile
Abutment No. 4 - 12 BP 53 100' Long
Pier No. 1 - 14 BP 73 20' Long
Pier No. 2 - 14 BP 73 30' Long
Pier No. 3 - 14 BP 73 55' Long } 80 Tons/Pile Max.
Pier No. 6 - 14 BP 73 45' Long

Design Stresses:
Concrete f'_c = 3000 p.s.i. f_c = 1200 p.s.i.
Structural Steel f_s = 20,000 p.s.i. (A-36) others per
Reinforcing Steel f_s = 20,000 p.s.i. Tension
f_s = 16,000 p.s.i. Compression
Welding per A.W.S. Specs.

Design Loading: H.S 20-44

Sta

RECOMMENDED FOR APPROVAL — CONSTRUCTION ENGINEER — DATE 9-15-69
RECOMMENDED FOR APPROVAL — HIGHWAY ENGINEER — DATE 9-15-69
RECOMMENDED FOR APPROVAL — ASSIST. HIGHWAY ENGINEER — DATE 9-15-69
APPROVED BY — CHIEF ENGINEER — DATE 9/15/69

Changed Roadway width from 38'10" to 39'4"
Changed Curb width from 2'-8" to 2'-0"
E. Rocco 9/24/69

STATE OF
DEPARTMENT O
I-91
PROJECT BARTON
ROUTE NO. I-91
I91 OVER BARTON RIVER,
PRELIMINARY INFOR
PROJECT E-MPI 91-3(20)

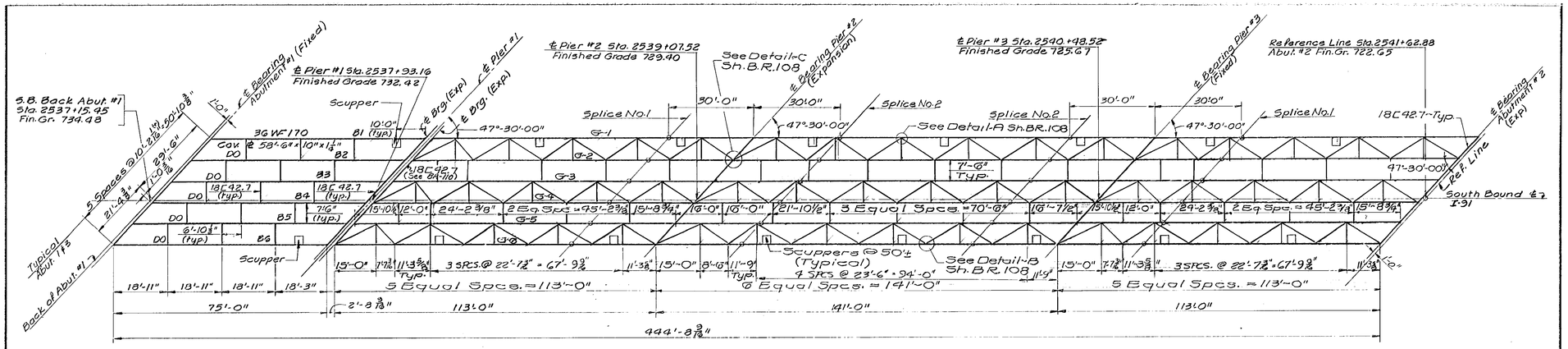

SOUTHBOUND FRAMING PLAN
SCALE: 1/16" = 1'-0"

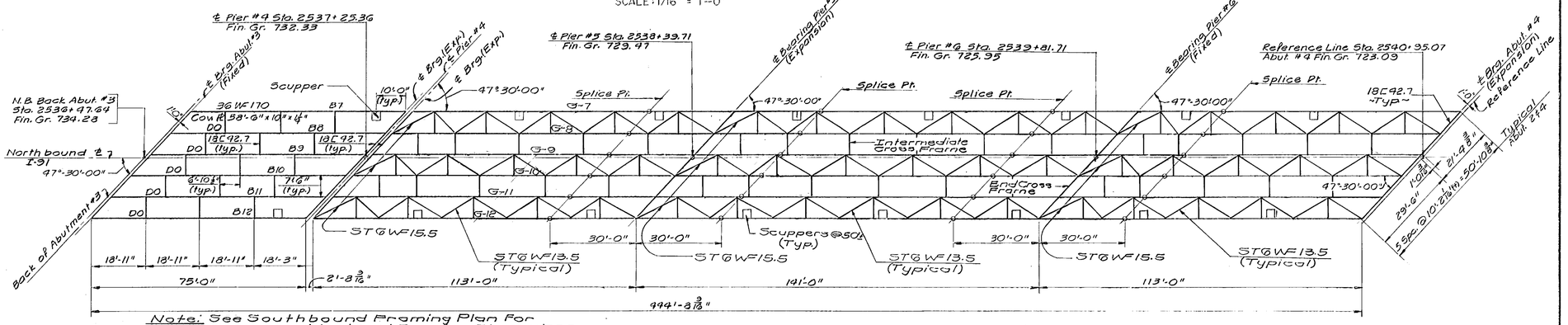

Note: See Southbound Framing Plan For Cross Frame and Lateral Bracing Dimensions.

NORTHBOUND FRAMING PLAN
SCALE: 1/16" = 1'-0"

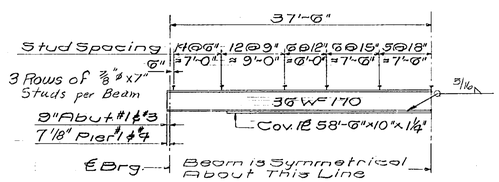

BEAM HALF ELEVATION B-1 THRU B-12
SCALE: 1/8" = 1'-0"

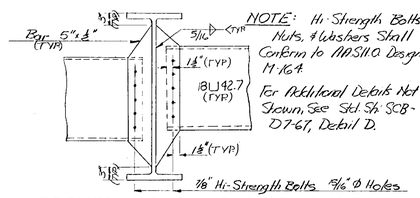

NOTE: Hi-Strength Bolts, Nuts, & Washers Shall Conform to AASHTO Designation M 164.
For Additional Details Not Shown, See Std. Sh. SCB-DT-67, Detail D.

INTERMEDIATE DIAPHRAGM CONNECTION FOR ROLLED BEAM SECTION
1" = 1'-0"

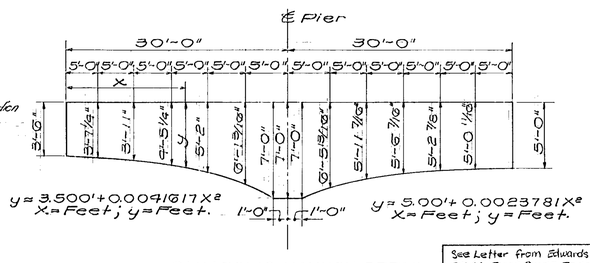

PARABOLIC HAUNCH DETAIL
N.T.S.

See Letter from Edwards & Kelsey 5-2-69. Cross Frame Spacing Added. Diaphragm Connection Detail Changed. 7-25-69

Br. 107 Of 129

STATE OF VERMONT
DEPARTMENT OF HIGHWAYS

PROJECT IRASBURG-DERBY
TOWN OF IRASBURG
ROUTE No. I-91 STA. 2539±
I-91 OVER BARTON RIVER AND SA #3
FRAMING PLAN AND GIRDER DETAILS
SCALE AS NOTED
IN CHARGE C. TERENZIO
DRAWN BY JMB CHECKED BY A. CENTORE
PROJECT No. 191-3(8) 9-67
SHEET 176 OF 605 BR. 107

IRASBURG
IM DECK(46)
BRIDGE NO. 107N
SHEET 36 OF 49
FOR REFERENCE ONLY

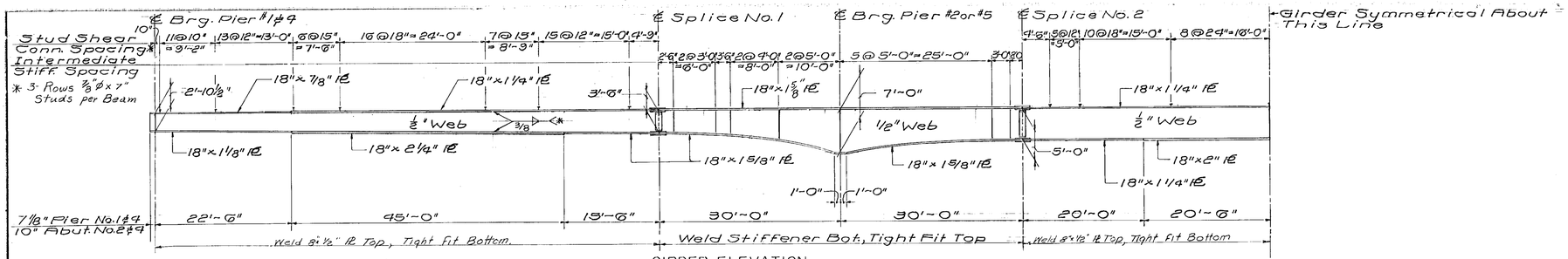

* For Flange Plates 1 1/2" or Less In Thickness 5/16" Fillet Welds Shall Be Used.

GIRDER ELEVATION
SCALE: 1/8"=1'-0"

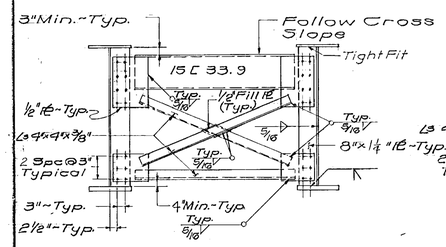

PIERS 2,3,5 & 6
END CROSS FRAME
SCALE: 1/2"=1'-0"

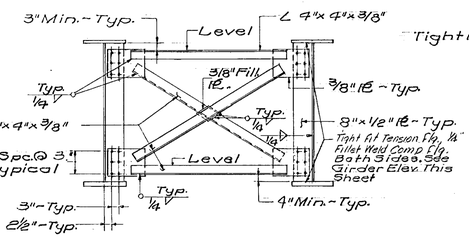

PLATE GIRDER
INTERMEDIATE CROSS FRAME
SCALE: 1/2"=1'-0"

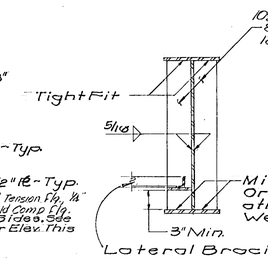

BEARING STIFFENER
DETAIL
N.T.S.

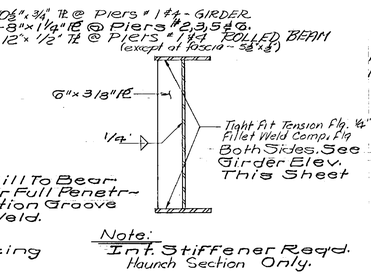

Note:
Int. Stiffener Req'd. Haunch Section Only.

INTERMEDIATE STIFFENER
DETAIL
N.T.S.

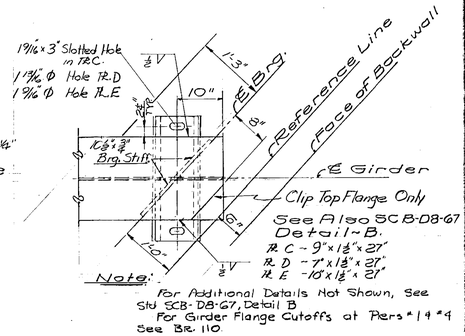

Note:
For Additional Details Not Shown, See Std SCB-DB-67, Detail B
For Girder Flange Cutoffs at Piers # 1 & 4 See Br. 110.

DETAIL OF GIRDER AT ABUT. 2 & 4
SCALE: 1"=1'-0"

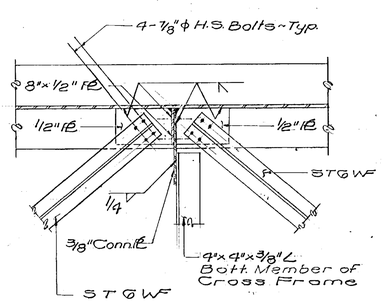

DETAIL-A
SCALE: 1"=1'-0"

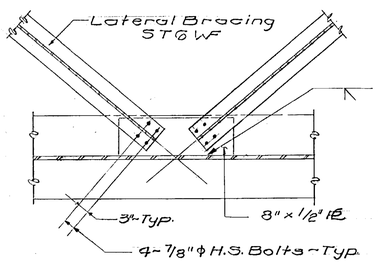

DETAIL-B
SCALE: 1"=1'-0"

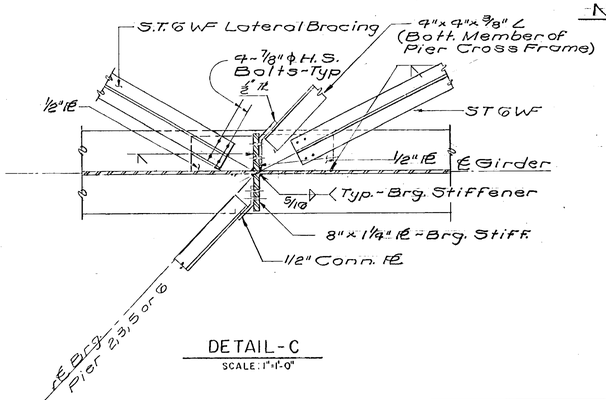

DETAIL-C
SCALE: 1"=1'-0"

NOTES:

1. Intermediate Stiffeners Shall Be Placed on Alternate Sides of Girder Web. Intermediate Stiffeners Shall Not Be Placed on The Outside Face of The Fascia Girder.
2. Bearing and Intermediate Stiff. and Ends of Girders Shall Be Vertical After Application of Full Dead Load.
3. For Detail of Beam at Abutments No. 1 & 3 See Std. SCB-D-9 67- Detail "A".
4. Omit Int. Stiffeners at Cross Frame Locations.

Δ Cross Frame Conn & Flg PL thickness Rev RLH 8-22-69
Changed 3/8" Web to 1/2" Web. Removed Int Stiff. Added Cutoff Detail to Flange at Abut 2 & 4. Changed Brg. Stiff Sizes. Revised Connection at Detail C. PL Rev. 5-7-69
Added Brg. Stiff. at Abut 2 & 4

STATE OF VERMONT
DEPARTMENT OF HIGHWAYS

PROJECT IRASBURG-DERBY
TOWN OF IRASBURG
ROUTE NO. I-91 LOG STA. 2539±
I-91 OVER BARTON RIVER AND S.A. #3
GIRDER ELEVATION & CONN. DETAILS
SCALE AS NOTED
IN CHARGE C. TERENZIO
DRAWN BY JMB CHECKED BY A. CENTORE
PROJECT NO. I-91 3(8) 9-67
SHEET 177 OF 605 BR.108

BR3

IRASBURG
IM DECK(46)
BRIDGE NO. 107N
SHEET 37 OF 49
FOR REFERENCE ONLY

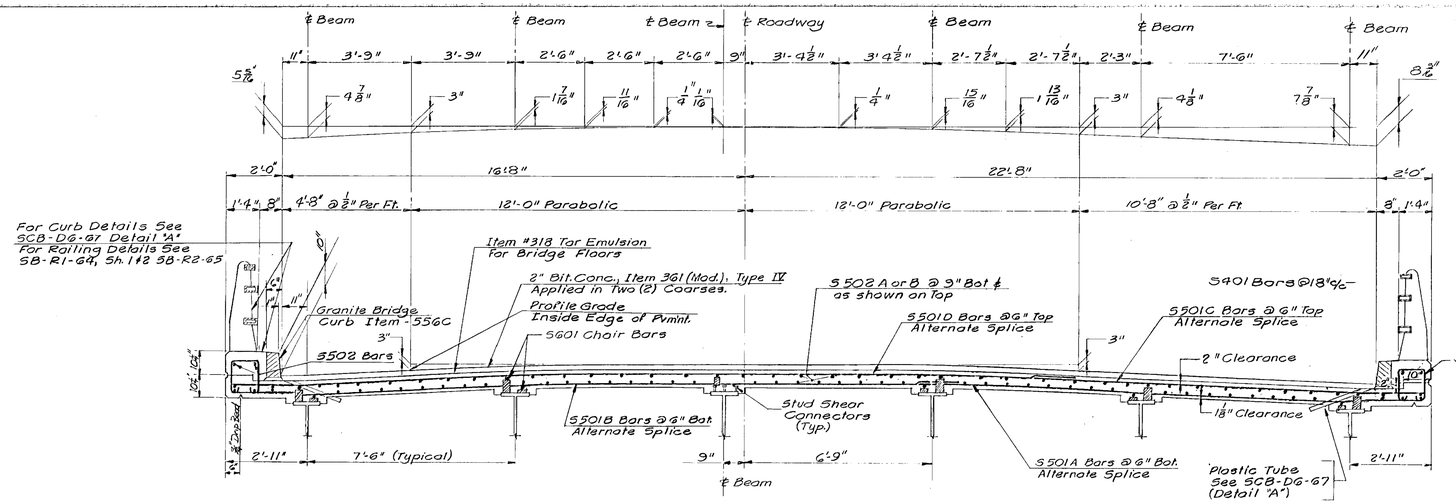

TYPICAL DECK SECTION
(NORTHBOUND SHOWN)
SCALE : 1/2" = 1'-0"

Floor Slab to be concrete, class AA 8" thick, dapped as shown at Beam Haunch, Surface to be finished with a self-propelled concrete finishing machine.
Partial parabolic crown, as per detail, to be obtained by stepping bridge seats.
Cut S501 Transverse Bars at skew end and use cut off on opposite end.

Note: Water Repellent, Item 440 Shall Be Used on Top of Safety-Walk And on The Fascia And Back To The Fascia Beam Under The Slab.

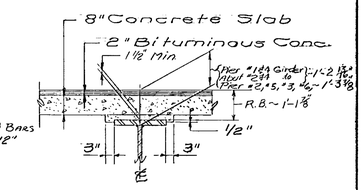

BEAM HAUNCH DETAIL
N. T. S.

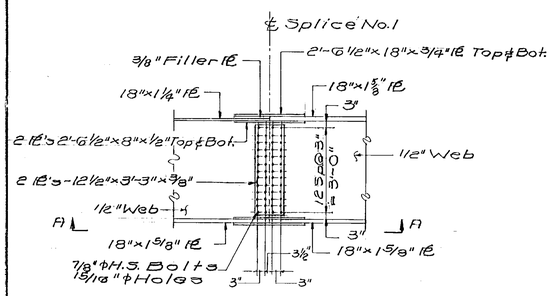

SPLICE NO. 1
SCALE: 1/2" = 1'-0"

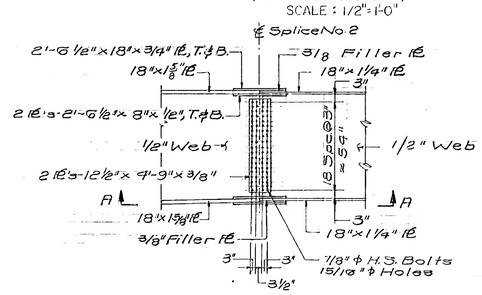

SPLICE NO. 2
SCALE : 3/8" = 1'-0"

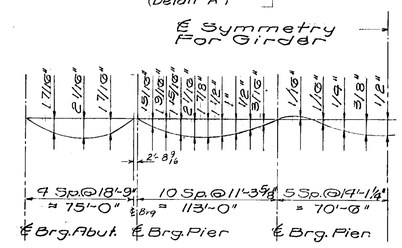

TOTAL DEAD LOAD DEFLECTIONS
N.T.S.

SUPERSTRUCTURE NOTES:

1. For general notes and design stresses see std. sh. SCB-D1-67
2. For details of shear connectors see std. sh. SCB-D2-67
3. For bearing details at abutments see std sh. SCB-D8-67 & Br 111 & Br 108.
4. All cover plate welds to be 5/16" Fillet continuous shop welds.
5. All field connections to be made with 7/8" ϕ High Strength Bolts with 15/16" ϕ Holes.
6. Structural Steel shall be ASTM A-36-62T unless otherwise noted.
7. Scuppers to be placed @ 50' (±) except as noted. Do not place above SA 3 or Railroad.
8. For curtain wall details, Approach Slab bracket details, See SCB-D2-67, Detail A.

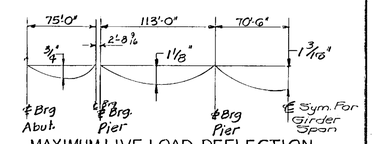

MAXIMUM LIVE LOAD DEFLECTION
NOT TO SCALE

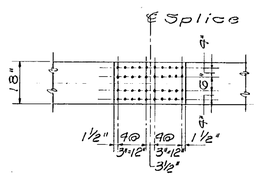

VIEW A-A
SCALE: 1/2" = 1'-0"

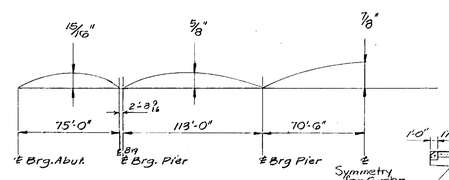

PERMANENT CAMBER AFTER DEAD LOAD IS APPLIED

CAMBER DIAGRAM
NOT TO SCALE

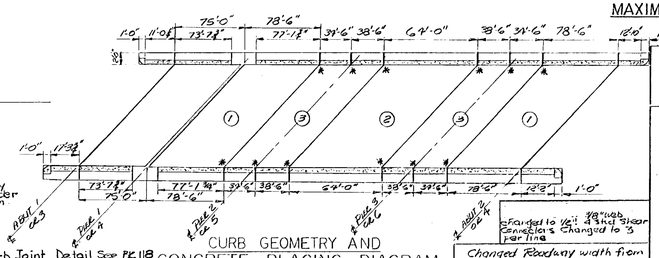

* - For Curb Joint Detail See BR 118
For Detail at Pier 1 & 4 See BR 110
For Detail at Abut 1 & 3 See BR 117
For Detail at Abut 2 & 4 See BR 116

CURB GEOMETRY AND CONCRETE PLACING DIAGRAM
NOT TO SCALE

Changed Roadway width from 38'-0" to 39'-6". Changed curb width from 2'-8" to 2'-10"
R. Scott 7/23/69

Changed to 1/2" 3/8" web Stiffeners Changed to 3 per line

BR 109 of 129

STATE OF VERMONT
DEPARTMENT OF HIGHWAYS

PROJECT IRASBURG-DERBY
TOWN OF IRASBURG
ROUTE No. I-91 STA. 2539±
I-91 OVER BARTON RIVER AND SA 3
DECK SECTION AND SPLICE
SCALE AS NOTED
IN CHARGE C. TERENZIO
DRAWN BY JMB CHECKED BY A. CENTORE
PROJECT No. 191-3(8) 9-67
SHEET 178 OF 605 BR. 109

IRASBURG
IM DECK(46)
BRIDGE NO. 107N
SHEET 38 OF 49
FOR REFERENCE ONLY

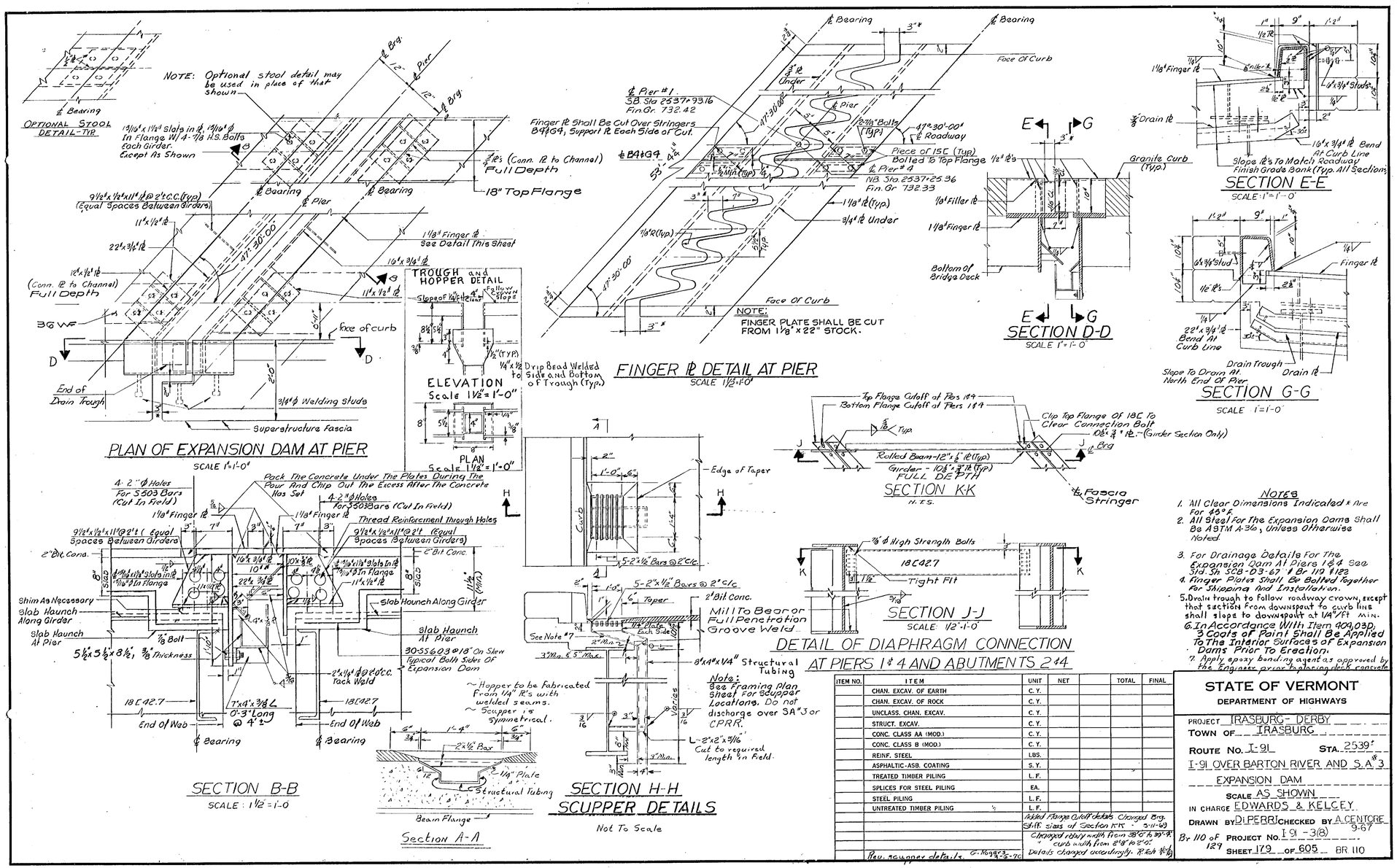

NOTES

1. All Clear Dimensions Indicated * Are For 45°F.
2. All Steel For The Expansion Dams Shall Be ASTM A-36, Unless Otherwise Noted.
3. For Drainage Details For The Expansion Dam At Piers 1 & 4 See Std. Sh SCB-D3-67 & Br 119 & 122
4. Finger Plates Shall Be Bolted Together For Shipping And Installation.
5. Drain trough to follow roadway crown, except that section from downspout to curb line shall slope to downspout at 1/4"/ft min.
6. In Accordance With Item 409.03D, 3 Coats of Paint Shall Be Applied To The Interior Surfaces of Expansion Dams Prior To Erection.
7. Apply epoxy bonding agent as approved by the Engineer prior to placing deck concrete.

ITEM NO.	ITEM	UNIT	NET		TOTAL	FINAL
	CHAN. EXCAV. OF EARTH	C.Y.				
	CHAN. EXCAV. OF ROCK	C.Y.				
	UNCLASS. CHAN. EXCAV.	C.Y.				
	STRUCT. EXCAV.	C.Y.				
	CONC. CLASS AA (MOD.)	C.Y.				
	CONC. CLASS B (MOD.)	C.Y.				
	REINF. STEEL	LBS.				
	ASPHALTIC-ASB. COATING	S.Y.				
	TREATED TIMBER PILING	L.F.				
	SPLICES FOR STEEL PILING	EA.				
	STEEL PILING	L.F.				
	UNTREATED TIMBER PILING	L.F.				

Added Flange Cutoff details Changed Brg. Stiff. sizes of Section K-K 5-11-69
Changed roadway width from 38'-0" to 39'-8" curb width from 2'-8" to 2'-0"
Details changed accordingly. R. Kirk 11-6-69
Rev. scupper details. G. Hoggard 3-5-70

STATE OF VERMONT
DEPARTMENT OF HIGHWAYS

PROJECT IRASBURG - DERBY
TOWN OF IRASBURG
ROUTE NO. I-91 STA. 2539+
I-91 OVER BARTON RIVER AND S.A.#3
EXPANSION DAM
SCALE AS SHOWN
IN CHARGE EDWARDS & KELCEY
DRAWN BY DI PERRI CHECKED BY A. CENTORE 9-67
BR 110 OF 129 PROJECT NO. I 91 - 3(8)
SHEET 179 OF 605 BR 110

IRASBURG
IM DECK(46)
BRIDGE NO. 107N
SHEET 39 OF 49
FOR REFERENCE ONLY

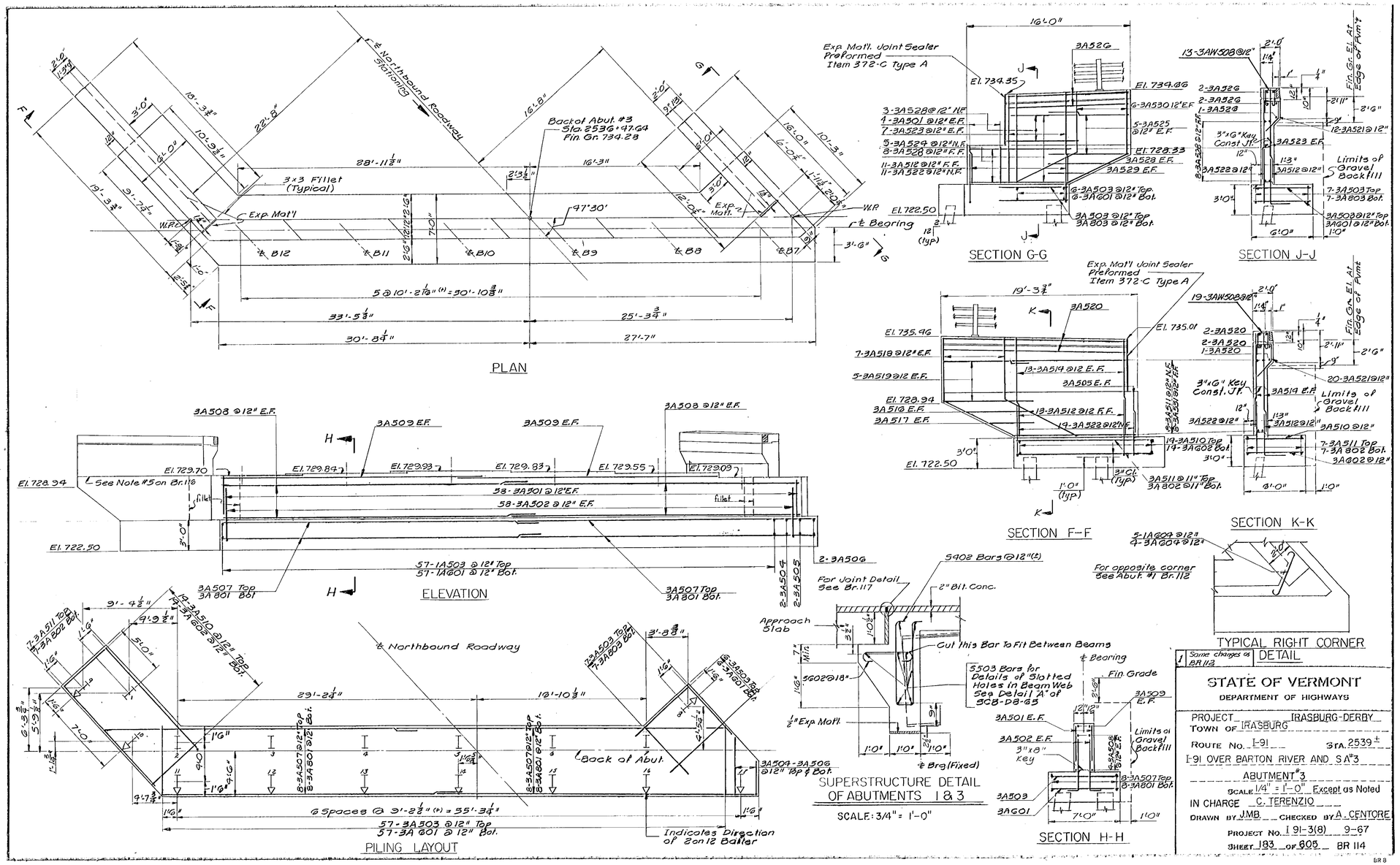

STATE OF VERMONT
DEPARTMENT OF HIGHWAYS

PROJECT IRASBURG-DERBY
TOWN OF IRASBURG
ROUTE No. I-91 STA. 2539 ±
I-91 OVER BARTON RIVER AND S.A. #3
ABUTMENT #3
SCALE 1/4" = 1'-0" Except as Noted
IN CHARGE C. TERENZIO
DRAWN BY J.M.B. CHECKED BY A. CENTORE
PROJECT No. I 91-3(8) 9-67
SHEET 183 OF 605 BR 114

IRASBURG
IM DECK(46)
BRIDGE NO. 107N
SHEET 40 OF 49
FOR REFERENCE ONLY

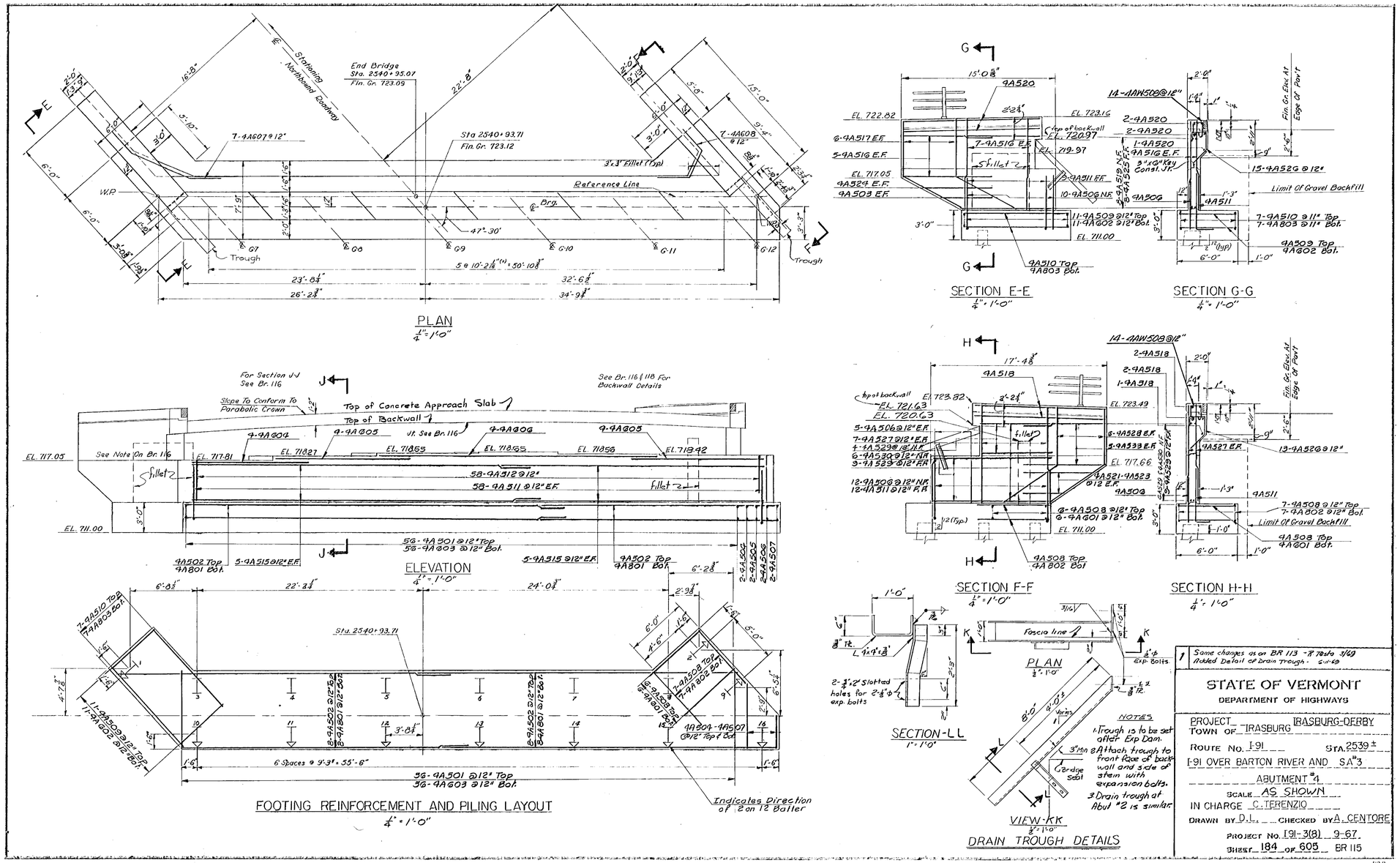

IRASBURG
IM DECK(46)
BRIDGE NO. 107N
SHEET 41 OF 49
FOR REFERENCE ONLY

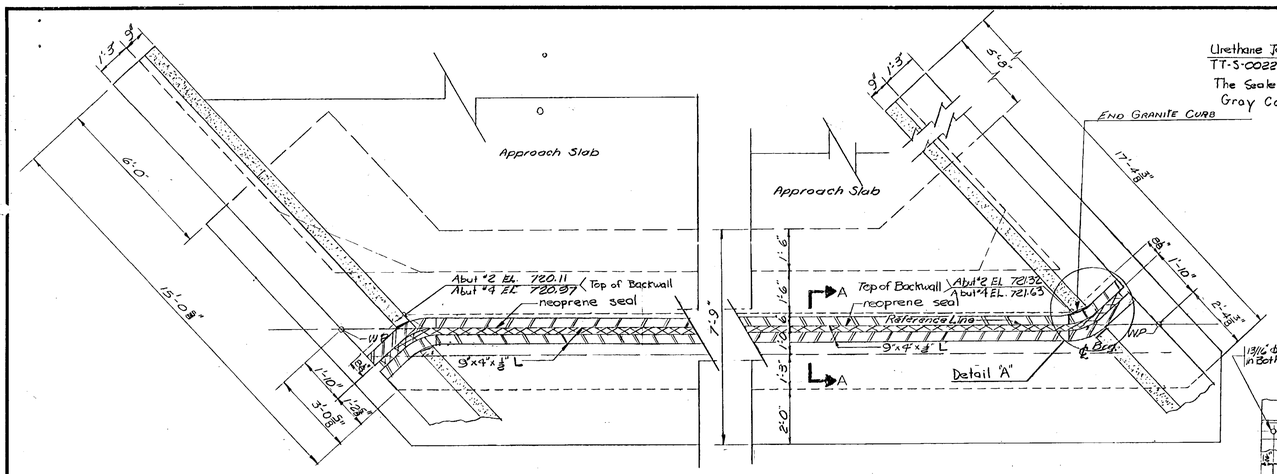

PLAN ABUTMENTS 2&4

SCALE: 1/2"=1'-0"

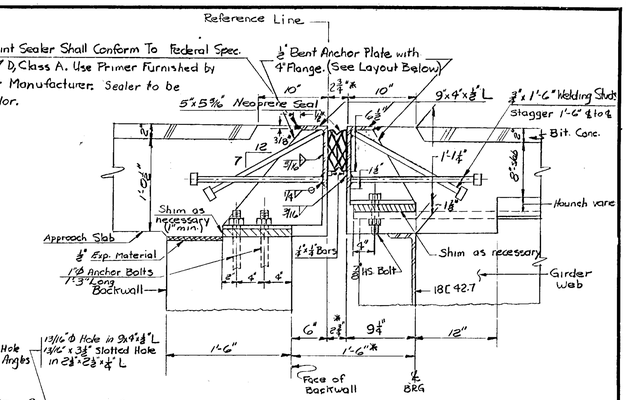

SECTION-A A

1 1/2" = 1'-0"

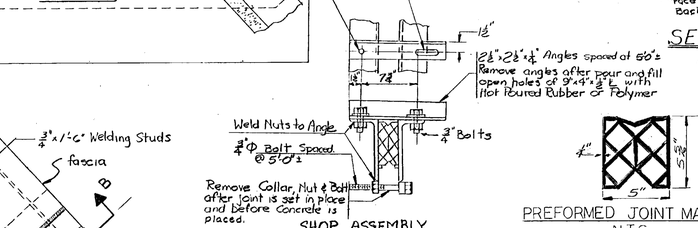

SHOP ASSEMBLY

NOTE: All dimensions indicated * are for 45°F

PREFORMED JOINT MATERIAL

N.T.S.

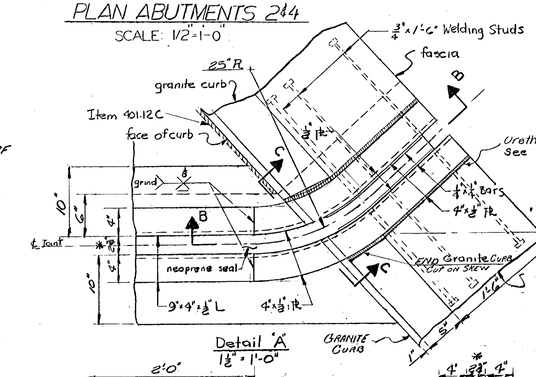

Detail "A"

1 1/2" = 1'-0"

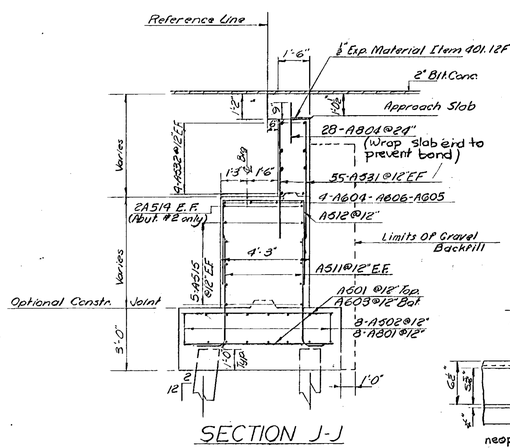

SECTION J-J

ABUTMENTS 2&4 TYPICAL SECTION

SCALE: 3/8"=1'-0"

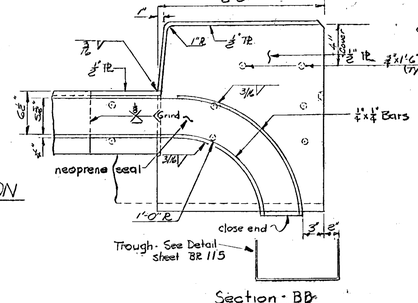

Section-BB

1 1/2" = 1'-0"

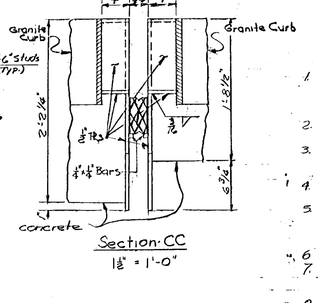

Section-CC

1 1/2" = 1'-0"

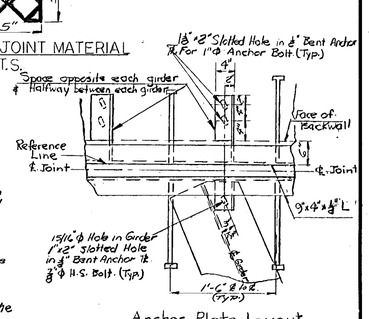

Anchor Plate Layout

N.T.S.

General Abutment Notes

1. For Estimated Length Of Piles And No. Of Splices See Br. 112.
2. Abutments Are Designed For A Maximum Pile Bearing Pressure Of 58 Tons.
3. All Reinforcing To Have Minimum Cover Of 2" Except 3" In Footing.
4. For Details Of Const. Jts. See Std. Sh. SCB-D6-67 Detail B.
5. No Concrete Shall Be Placed Above Adjacent Bridge Seat Elevation Until Girders Have Been Profiled And Final Finish Grade Established By The Engineer.
6. Four (4) Inch Diameter Weep Holes Shall Be Provided In All Abutments, Wings And Walls. Weep Holes Shall Be Spaced Not Over Ten (10) Feet Center To Center And So Placed To Provide Adequate Drainage For Backfill.

Notes For Abutments 2&4

1. The Front Face Of The Backwall From the Edge Of The Steel Angle For The Joint To the Bridge Seat Shall Be Coated With Paint Waterproofing, Item 410. All Exposed Surfaces Not Otherwise Coated Shall Be Covered With Water Repellant, Item 440.

Expansion Joint Notes

1. The Entire Expansion Joint And All Necessary Material And Labor To Install And Adequately Anchor the Expansion Joint Shall Be Included In Item 734A Elastomeric Bridge Deck Expansion Joint.
2. The Expansion Joint Shall Be Entirely Shop Fabricated and Assembled As Indicated On The Plans.
3. Prior To Fabrication, Shop Drawings Shall Be Submitted In Quadruplicate To the State of Vermont, Department of Highways, Bridge Engineer For Approval.
4. The Drain Trough And The Necessary Hanger Shall Be Paid For As Structural Steel Item 404-A See Sheet BR. 115
5. The Neoprene Seals Shall Be Bonded To The Steel Members With An Approved Adhesive. Prior to Bonding, All Steel Surfaces Must be Sandblasted.
6. Design Movement: Compress 5/8" Extend 5/8" From 45°F
7. A Qualified Representative Of The Joint Manufacturer Shall Be On The Project At The Time Of Installation To Ensure Proper Procedures Are Followed.
8. All Steel To Be ASTM A-36.

Changed Curb from 2'-8" to 2'-0". Installed Preformed Expansion Joint. RE Tests 6-10-12

STATE OF VERMONT

DEPARTMENT OF HIGHWAYS

PROJECT IRASBURG-DERBY

TOWN OF IRASBURG

ROUTE NO. I-91 STA. 2.539±

I-91 OVER BARTON RIVER AND SA #3

ABUTS 2&4 DETAILS

SCALE AS SHOWN

IN CHARGE C. TERENZIO

DRAWN BY S. CURRAN CHECKED BY A. CENTORE 9-67

PROJECT NO. 191-3(8)

SHEET 185 OF 606 BR. 116

IRASBURG
IM DECK(46)
BRIDGE NO. 107N
SHEET 42 OF 49
FOR REFERENCE ONLY

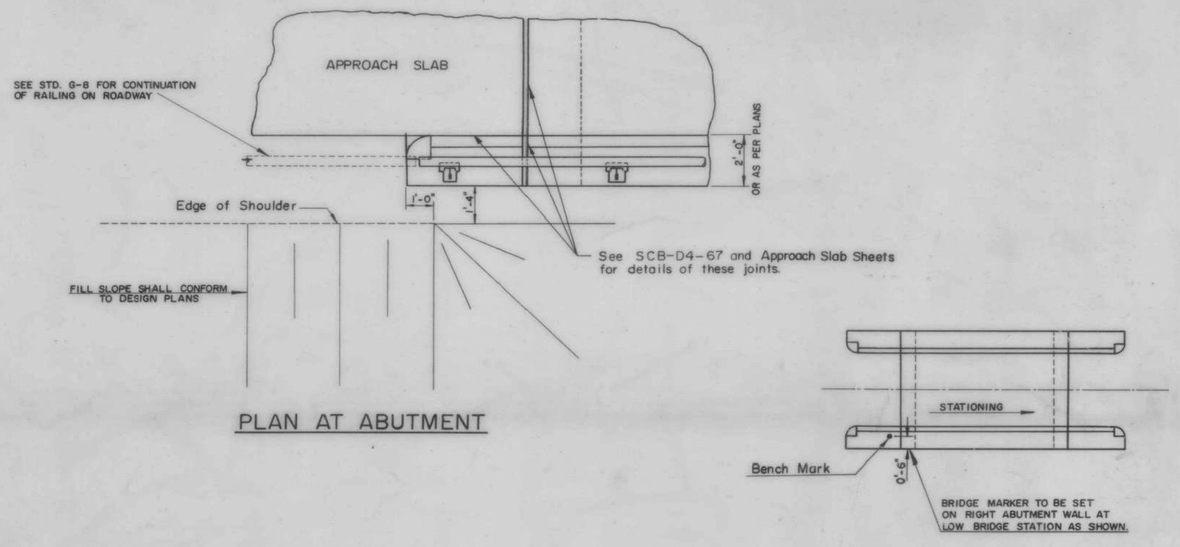

PLAN AT ABUTMENT

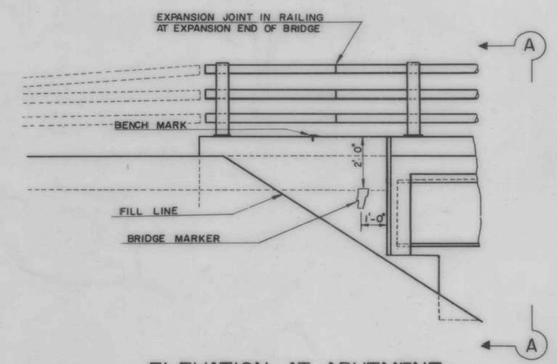

ELEVATION AT ABUTMENT

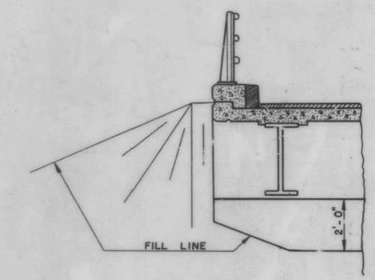

SECTION A-A

GENERAL NOTES

ALL MATERIALS AND CONSTRUCTION SHALL CONFORM TO STATE OF VERMONT, DEPARTMENT OF HIGHWAYS, STANDARD SPECIFICATIONS FOR HIGHWAY AND BRIDGE CONSTRUCTION, DATED APRIL 1964, AND T A.A.S.H.O. STANDARD SPECIFICATIONS FOR HIGHWAY BRIDGES, DATED 1965 AND ITS LATEST REVISIONS. DESIGN IS FOR HS20-44 LOADING MODIFIED FOR THE NATIONAL SYS OF INTERSTATE HIGHWAYS, APPLIED IN ACCORDANCE WITH THE PROVISIONS OF A.A.S.H.O. STANDARD SPECIFICATIONS.

THE FOLLOWING NOTES SHALL APPLY UNLESS OTHERWISE NOTED ON PROJECT PLANS.

1. ALL STRUCTURAL STEEL SHALL CONFORM TO A.S.T.M. DESIGNATION A-36 . ALL FIELD CONNECTIONS SHALL BE MADE WITH 7/8" Ø A.S.T.M. A325 BOLTS IN 15/16" Ø HOLES. WHERE CONNECTIONS ARE NOT DETAILED ON THE PLANS THEY SHALL BE DETAILED BY THE FABRICATOR AND SUBMITTED TO THE STATE FOR APPROVAL.
2. SIMPLE BEAMS SHALL BE CAMBERED FOR THE DEAD LOAD DEFLECTION PLUS ONE-EIGHTH (1/8) INCH FOR EACH TEN FEET OF SPAN OR FRACTION THEREOF. THE CAMBER SHALL APPROXIMATE A SIMPLE CIRCULAR CURVE FROM END TO END OF BEAM. TOLERANCES IN CAMBER SHALL BE AS INDICATED IN THE A.I.S.C. HANDBOOK FOR ROLLED BEAMS AND AS INDICATED IN THE A.W.S. SPECIFICATIONS FOR WELDED GIRDERS.
3. THE DIMENSIONS OF WELDED STRUCTURAL MEMBERS SHALL BE WITHIN THE LIMITS SET UP IN PARAGRAPH 407, DIMENSIONAL TOLERANCES AWS D2.0-66, "SPECIFICATIONS F WELDED HIGHWAY AND RAILWAY BRIDGES ".
4. AFTER SUPERSTRUCTURE STEEL HAS BEEN ERECTED, ELEVATIONS AT INTERVALS ALONG THE TOP OF THE ERECTED BEAMS SHALL BE TAKEN UNDER THE DIRECTION OF THE ENGINEER FOR USE IN DETERMINING THE FINAL GRADE.
5. SCUPPERS SHALL BE USED ONLY WHEN INDICATED ON THE PROJECT PLANS. THEY SHALL BE PLACED MIDWAY BETWEEN INTERMEDIATE DIAPHRAGMS. ON SUPERELEVATED BRID PLACE SCUPPERS ON LOW SIDE ONLY. PAYMENT FOR SCUPPERS SHALL BE AT THE UNIT PRICE BID FOR STRUCTURAL STEEL, ITEM 404-A.
6. CHANNEL SHEAR CONNECTORS MAY BE SUBSTITUTED FOR THE STUDS SHOWN ON THE STANDARDS. DETAILS OF SHEAR CONNECTORS SHALL BE SUBMITTED TO THE STATE FOR APPROVAL.
7. THE FINAL COAT OF FIELD PAINT SHALL BE GREEN.
8. ALL CONCRETE IN THE SUPERSTRUCTURE SHALL BE CLASS AA, MODIFIED. ALL EXPOSED EDGES OF CONCRETE IN THE SUBSTRUCTURE AND SUPERSTRUCTURE SHALL BE CHAMFE 1" X 1".
9. SLAB REINFORCING STEEL FOR SKEWED BRIDGES SHALL BE MODIFIED FROM THAT INDICATED ON THE STANDARDS FOR SQUARE SPANS AS FOLLOWS:
   - A. TRANSVERSE BARS SHALL BE FURNISHED AS FOR A SQUARE SPAN. THESE BARS SHALL BE CUT IN THE FIELD TO FIT ONE END, WITH CUT-OFF BARS USED AT THE OPPOSITE END OF THE SPAN.
   - B. THE S506 BARS SHALL BE LENGTHENED.
   - C. THE QUANTITY OF S402 AND S 602 BARS SHALL BE INCREASED.
   - D. S506 AND S507 BARS SHALL BE INCREASED.
10. SPIRAL COLUMN REINFORCEMENT SHALL CONFORM TO A.A.S.H.O. SPECIFICATION M-32 COLD DRAWN STEEL WIRE FOR CONCRETE REINFORCEMENT.
11. MINIMUM COVER FOR REINFORCING STEEL SHALL BE 2" MEASURED FROM THE CONCRETE SURFACE TO THE FACE OF THE REINFORCEMENT.
12. LAYOUT AND DETAIL DRAWINGS FOR GRANITE BRIDGE CURB, ITEM 556-C, SHALL BE SUBMITTED IN TRIPLICATE TO THE STATE OF VERMONT FOR APPROVAL PRIOR TO FABRI- CATION AND SHIPMENT. GRANITE CURB ENDS SHALL BE SAWED ON EACH SIDE OF ALL JOINTS WHERE JOINT SEALER - PREFORMED, ITEM 372-C IS USED OR WHERE THE CUR BUTTS A METAL EXPANSION JOINT. GRANITE CURB SHALL BE FURNISHED IN RANDOM LENGTHS RANGING FROM 4' MINIMUM TO 10' MAXIMUM.
13. WATER REPELLENT, ITEM 440, SHALL BE APPLIED TO ALL EXPOSED CONCRETE SURFACES NOT OTHERWISE TREATED IN BOTH SUPERSTRUCTURE AND SUBSTRUCTURE, EXCEPT FO THAT PORTION OF THE DECK SLAB AND CURTAIN OR BACKWALLS BETWEEN FASCIA BEAMS.
14. TOP SURFACES OF ALL PIERS AND ABUTMENTS SHALL BE SLOPED 1/2" PER FOOT EXCEPT UNDER BEARING PLATES WHERE THE SURFACES SHALL BE LEVEL. ABUTMENT BRIDGE SEATS SHALL BE SLOPED FROM THE FRONT EDGE OF THE CURTAIN WALL OR BACKWALL, AND PIER BRIDGE SEATS SHALL BE SLOPED FROM THE CENTERLINE OF PIER.
15. THE ENTIRE EXPOSED TOP SURFACE OF THE ABUTMENTS AND PIERS, EXCEPT THE TOP OF ABUTMENT WINGS SHALL BE COATED WITH ASPHALTIC-ASBESTOS COATING ITEM 407. THIS ITEM SHALL BE APPLIED AFTER ALL PAINTING AND INCIDENTAL ITEMS ARE COMPLETED.
16. ALL EXPANSION MATERIAL SHALL CONFORM TO A.A.S.H.O. DESIGNATION M153, AND SHALL NOT CONTAIN ASPHALT OR BITUMINOUS MATERIAL.
17. WHERE BITUMINOUS CONCRETE PAVEMENT IS CALLED FOR AS A WEARING SURFACE ON BRIDGE DECKS AND APPROACH SLABS, IT SHALL BE TYPE IV MIX APPLIED IN TWO COURSES.
18. BORINGS INDICATED ON THE DRAWINGS HAVE BEEN MADE FOR DESIGN PURPOSES ONLY AND ARE NOT WARRANTED TO SHOW ACTUAL SUB-SURFACE CONDITIONS.
19. ALL DIMENSIONS ARE HORIZONTAL OR VERTICAL.
20. ALLOWABLE DESIGN STRESSES:

    CONCRETE: $F'C$ = 3,000 P.S.I. FC = 1,200 P.S.I.

    STRUCTURAL STEEL: FS = 20,000 P.S.I. - A36 (ALL OTHER STEELS AS PER A.A.S.H.O. SPECIFICATIONS)

    REINFORCING STEEL: FS = 20,000 P.S.I. TENSION

    FS = 16,000 P.S.I. COMPRESSION
21. WHEN PILE SUPPORTED SUBSTRUCTURES ARE PLACED ON EMBANKMENTS, THE CONSTRUCTION PROCEDURE OUTLINED UNDER ITEM 503, ARTICLE 503.03A SHALL BE FOLLOWED. MATERIAL REMOVED WITHIN THE SIX (6) INCH DEPTH SHALL BE PAID FOR AS STRUCTURE EXCAVATION, ITEM 109.

Vt. Route 2
Revised date

IRASBURG
IM DECK(46)
BRIDGE NO. 107N
SHEET 43 OF 49
FOR REFERENCE ONLY

REVISIONS AND CORRECTIONS

DRAWN BY:	W. T.	JAN. 1965
RETRACED BY	AJA	MAY 1967
CHECKED BY:	W. M. Smith	DEC. 1967
RECOMMENDED FOR APPROVAL	BRIDGE ENGINEER	1/24/68
RECOMMENDED FOR APPROVAL	CONSTRUCTION ENGINEER	1/24/68
RECOMMENDED FOR APPROVAL	ASST. CHIEF ENGINEER	1/24/68
APPROVED BY:	CHIEF ENGINEER	DATE

DETAILS OF WF BEAM BRIDGES
GENERAL INFORMATION AND GENERAL NOTES

VERMONT
DEPARTMENT OF HIGHWAYS
STRUCTURE STANDARDS

SCB-DI-67

242A 242A

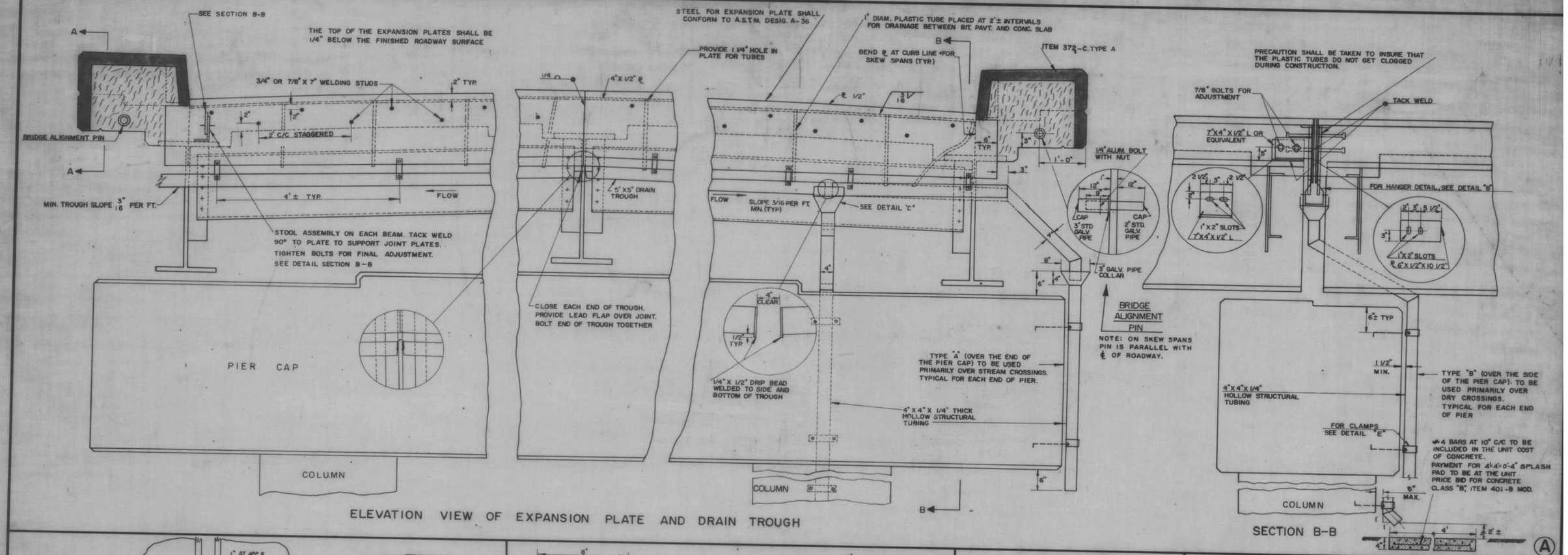

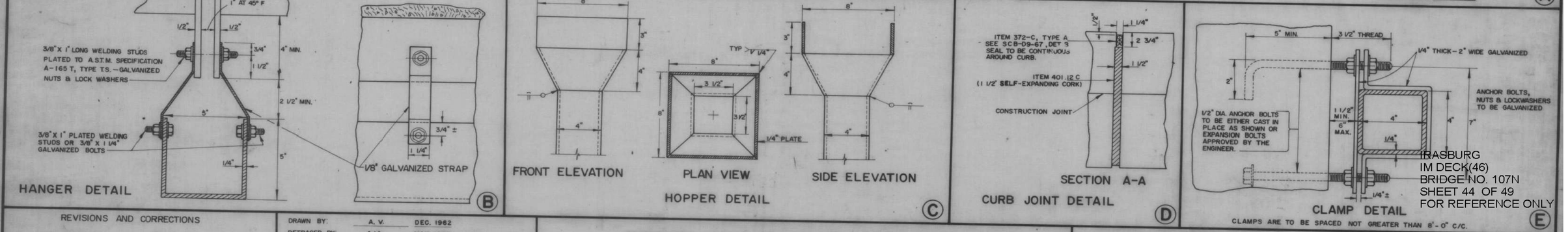

REVISIONS AND CORRECTIONS

DRAWN BY:	A. V.	DEC. 1962
RETRACED BY:	AJA	MAY 1967
CHECKED BY:	W. SMITH	DEC. 1967

RECOMMENDED FOR APPROVAL — BRIDGE ENGINEER — 1/24/68
RECOMMENDED FOR APPROVAL — CONSTRUCTION ENGINEER — 1/24/68
RECOMMENDED FOR APPROVAL — ASST. CHIEF ENGINEER — 1/24/68
APPROVED BY: — CHIEF ENGINEER — DATE 1/24/68

DETAIL OF WF BEAM BRIDGES
PIER EXPANSION PLATES AND DRAIN TROUGH DETAILS

VERMONT
DEPARTMENT OF HIGHWAYS
STANDARD STRUCTURES

SCB-D3-67

246A

IRASBURG
IM DECK(46)
BRIDGE NO. 107N
SHEET 44 OF 49
FOR REFERENCE ONLY

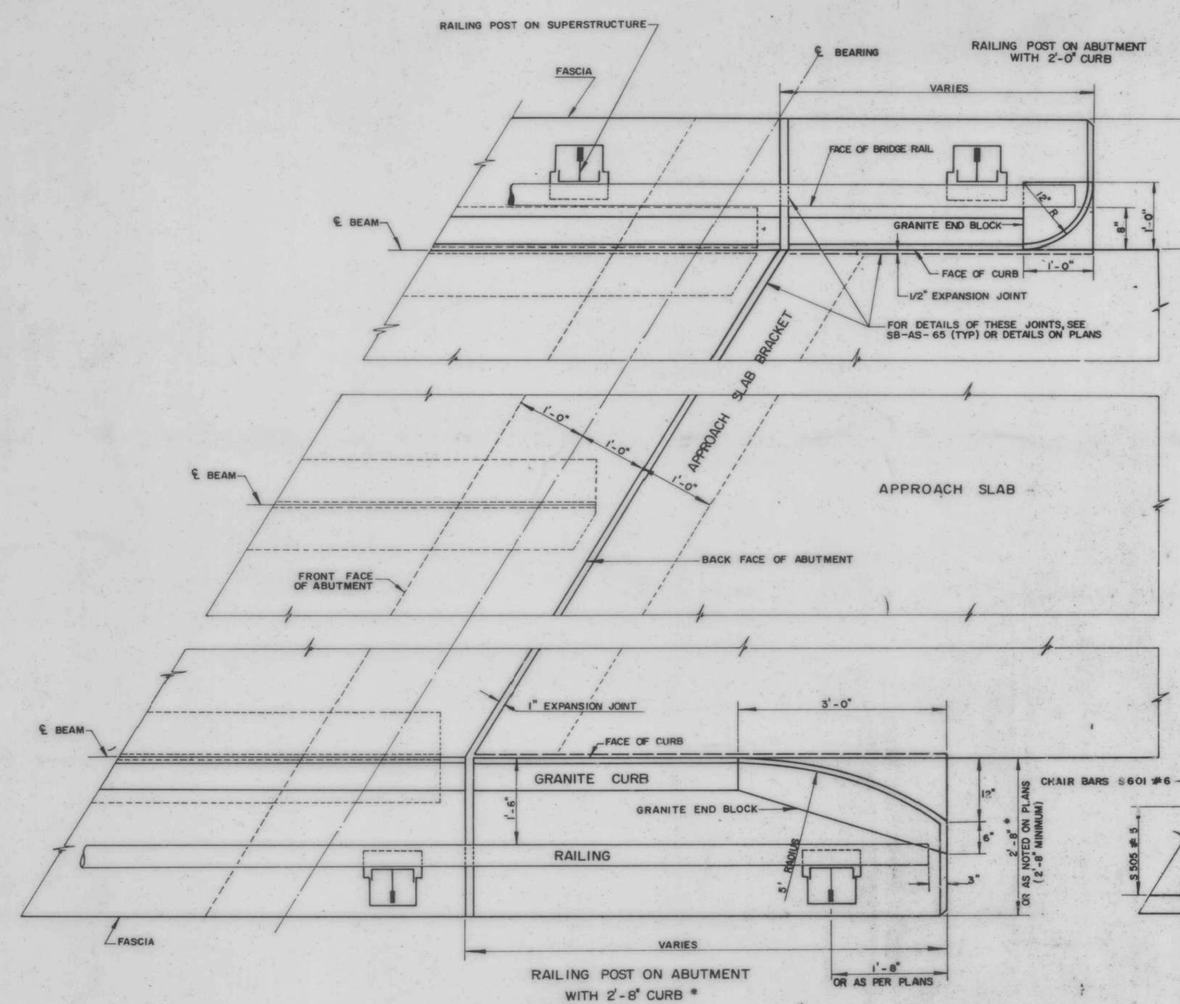

PLAN AT ABUTMENT

* NOTE: DETAILS FOR "RAILING POST ON ABUTMENT WITH 2'-8" CURB" SHALL NOT BE USED ON FEDERAL AID PROJECTS.

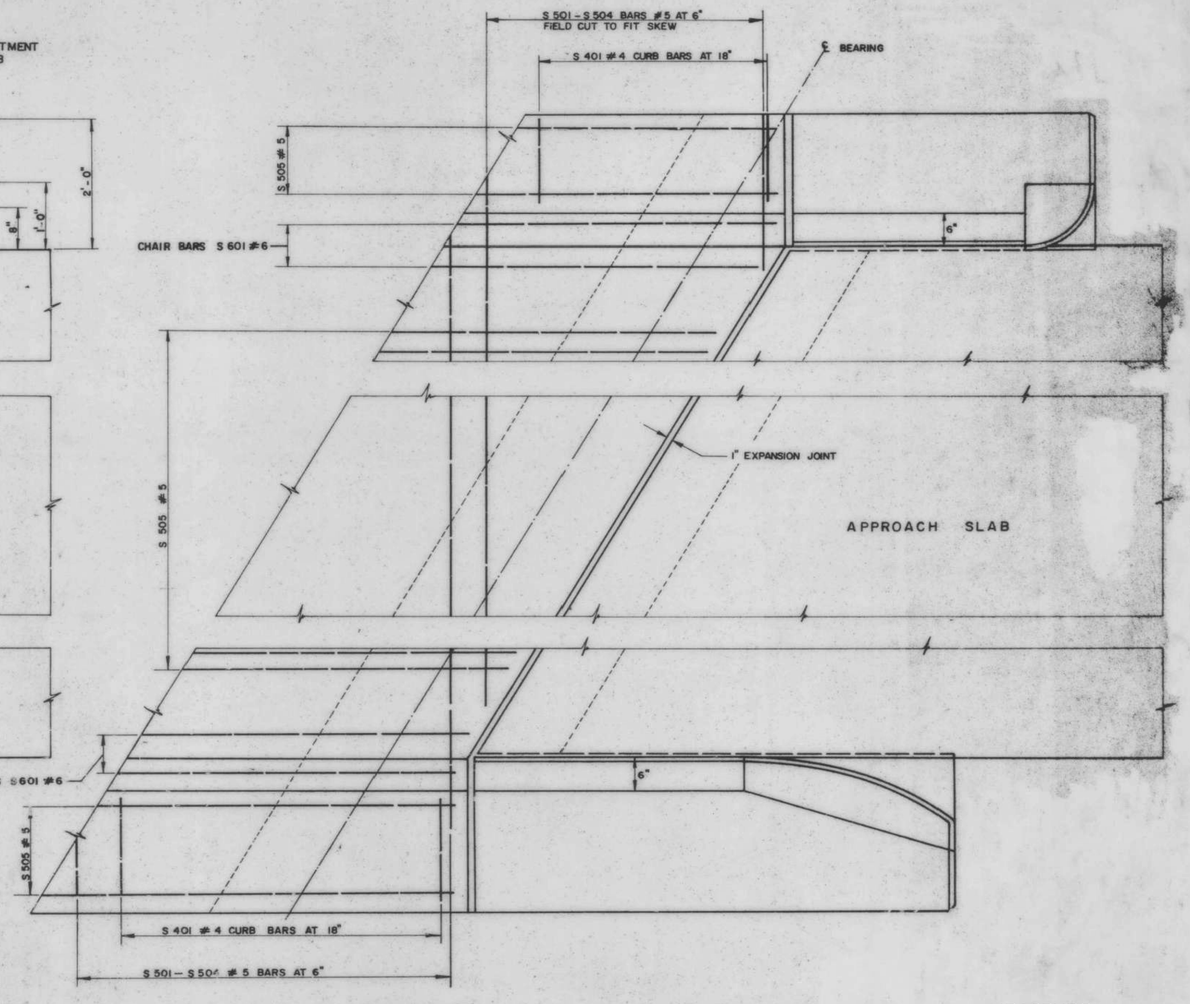

REINFORCEMENT LAYOUT AT ABUTMENT

IRASBURG
IM DECK(46)
BRIDGE NO. 107N
SHEET 45 OF 49
FOR REFERENCE ONLY

REVISIONS AND CORRECTIONS

1. NOTE CONCERNING 2'-8" CURB SECTION ADDED DEC. 17, 1968 R.S.H.

DRAWN BY:	A. V.	DEC. 1968
RETRACED BY:	AJA	MAY 1967
CHECKED BY:	W. SMITH	DEC. 1967
RECOMMENDED FOR APPROVAL	BRIDGE ENGINEER	1/24/68
RECOMMENDED FOR APPROVAL	CONSTRUCTION ENGINEER	1/24/68
RECOMMENDED FOR APPROVAL	ASST. CHIEF ENGINEER	1/24/68
APPROVED BY:	CHIEF ENGINEER	1/24/68 DATE

DETAILS OF WF BEAM BRIDGES
PLAN AND REINFORCEMENT LAYOUT AT ABUTMENT

VERMONT
DEPARTMENT OF HIGHWAYS
STRUCTURE STANDARDS

SCB-D4-67

248

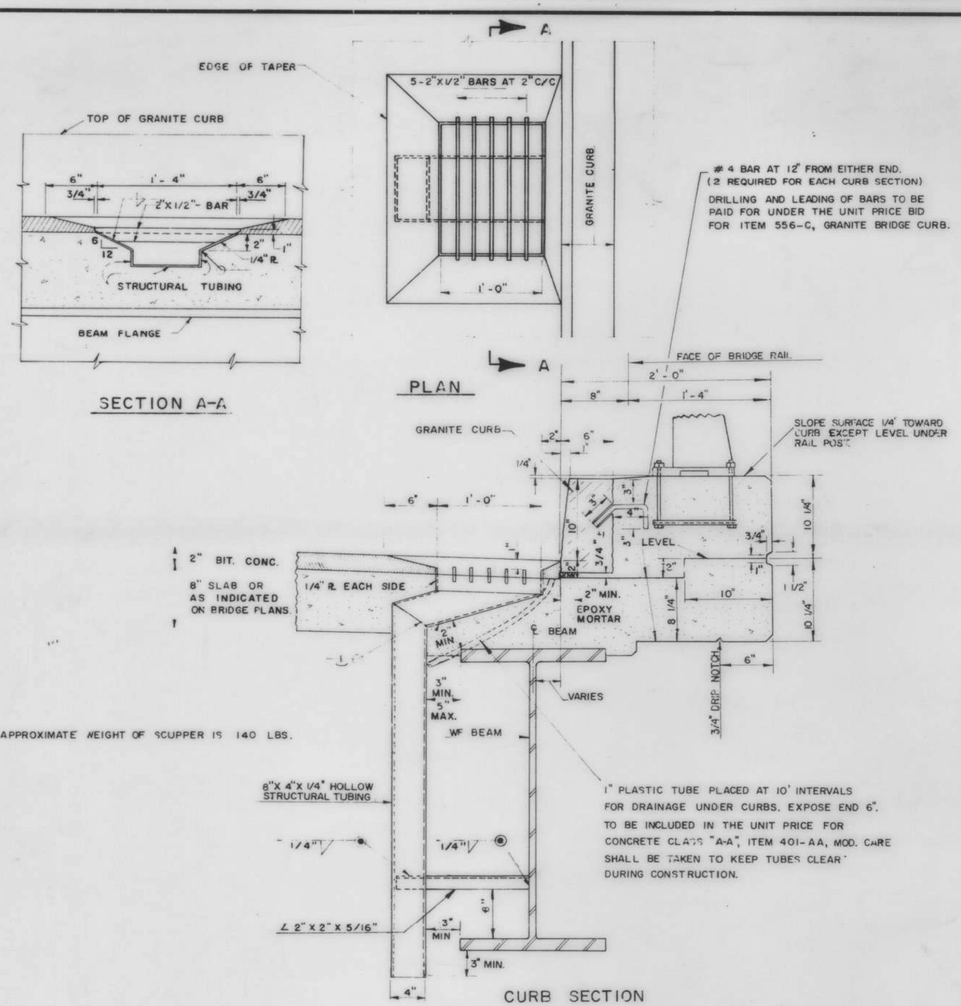

UNLESS OTHERWISE CALLED FOR ON THE PLANS:
1.- END SCUPPERS ARE TO BE PLACED MIDWAY BETWEEN ℄ BRG. AND FIRST DIAPHRAGM ASSEMBLY.
2.- INTERMEDIATE SCUPPERS ARE TO BE PLACED MIDWAY BETWEEN DIAPHRAGM ASSEMBLIES.

SCUPPER AND CURB DETAILS

Ⓐ

CONSTRUCTION JOINTS SHALL BE PLACED AS INDICATED ON THE PLANS.

HORIZONTAL SCORE MARKS SHALL BE PLACED AS INDICATED ON THE PLANS OR AS DIRECTED BY THE ENGINEER.

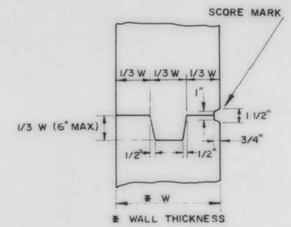

TYPICAL DETAIL OF CONSTRUCTION JOINT AND SCORE MARKS

Ⓑ

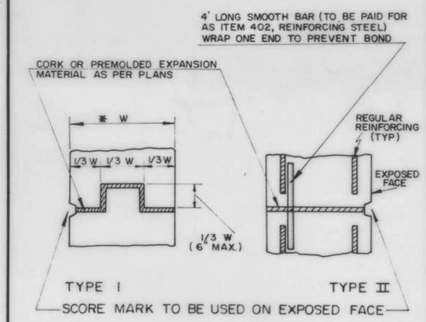

DETAILS OF VERTICAL EXPANSION JOINTS

Ⓒ

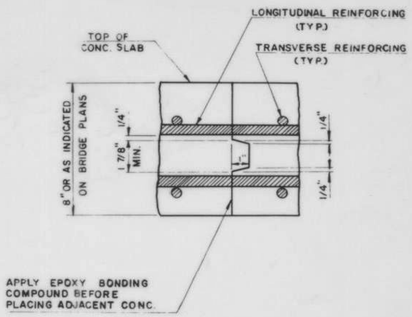

TRANSVERSE BRIDGE SLAB CONSTRUCTION JOINT DETAILS

Ⓓ

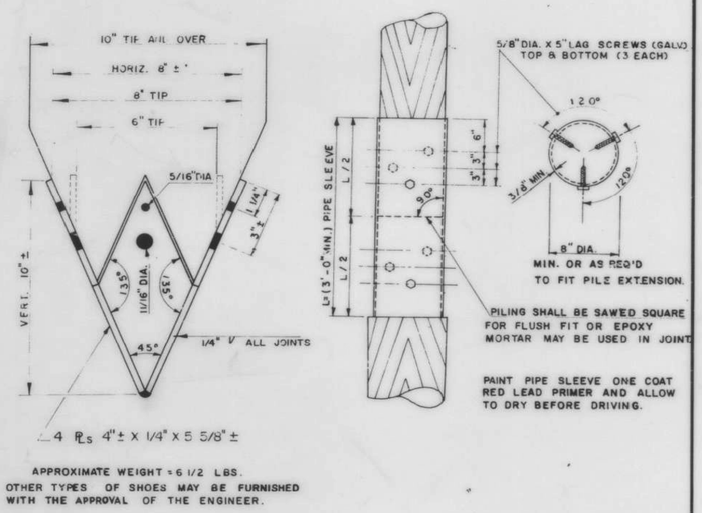

DETAILS FOR TIMBER PILES

Ⓔ

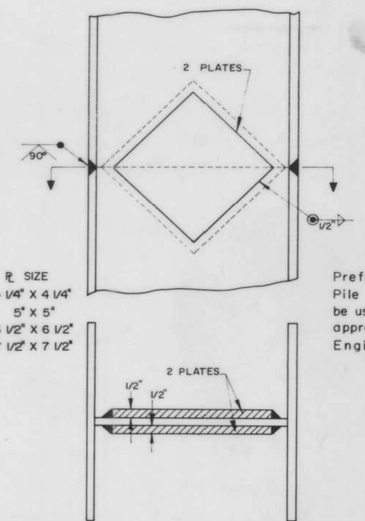

H-PILES	℞ SIZE
8 BP	4 1/4" X 4 1/4"
10 BP	5" X 5"
12 BP	6 1/2" X 6 1/2"
14 BP	7 1/2" X 7 1/2"

Prefabricated Pile Splice may be used with the approval of the Engineer.

DETAIL OF PILE SPLICE

Ⓕ

IRASBURG
IM DECK(46)
BRIDGE NO. 107N
SHEET 46 OF 49
FOR REFERENCE ONLY

REVISIONS AND CORRECTIONS
1 REVISION IN SCUPPER TO BEAM CONNECTION. MAY 23, 1969 R.S.H.
2. REVISED SCUPPER DETAILS AND WEIGHT. - Ⓓ ADDED "TRANSVERSE BRIDGE SLAB CONSTRUCTION JOINT DETAILS", DELETED "DETAIL OF COPPER SUPPORT FOR EXPANSION MATERIAL". - Ⓔ ADDED "PILE SPLICE" DETAIL. APRIL 28, 1970- C O BRYAN

DRAWN BY:	A. V.	DEC. 1962
RETRACED BY:	AJA	MAY 1967
CHECKED BY:	W. SMITH	DEC. 1967
RECOMMENDED FOR APPROVAL	BRIDGE ENGINEER	
RECOMMENDED FOR APPROVAL	CONSTRUCTION ENGINEER	
RECOMMENDED FOR APPROVAL	ASST. CHIEF ENGINEER	
APPROVED BY:	CHIEF ENGINEER	DATE

DETAILS OF WF BEAM BRIDGES

Ⓐ SCUPPER AND CURB DETAILS
ⒷⒸⒹ CONSTRUCTION DETAILS
ⒺⒻ PILE DETAILS

VERMONT
DEPARTMENT OF HIGHWAYS
STRUCTURE STANDARDS

SCB-D6-67

252C

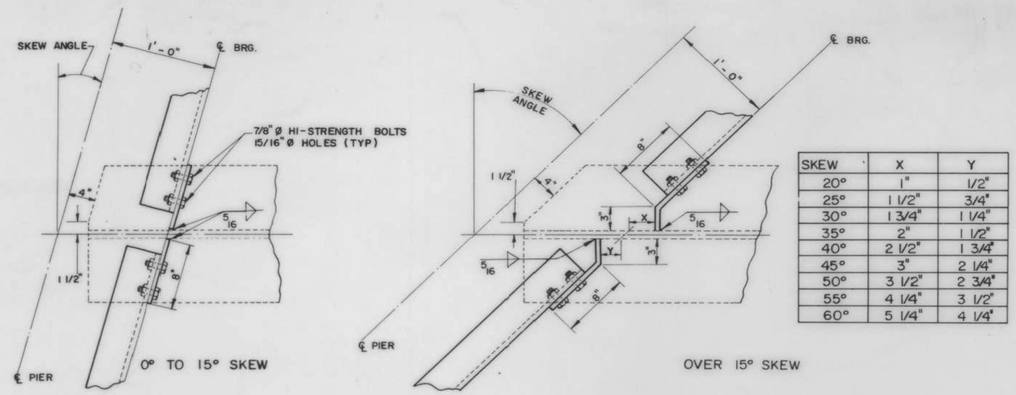

SKEW	X	Y
20°	1"	1/2"
25°	1 1/2"	3/4"
30°	1 3/4"	1 1/4"
35°	2"	1 1/2"
40°	2 1/2"	1 3/4"
45°	3"	2 1/4"
50°	3 1/2"	2 3/4"
55°	4 1/4"	3 1/2"
60°	5 1/4"	4 1/4"

DETAILS OF PIER DIAPHRAGM CONNECTIONS

A

7'-6" BEAM SPACING - S.C.B. - 24 - 67							
SPAN	COVER PL. LENGTH	WIDTH	THICK-NESS	TAPER	WELD "A"	WELD "B"	L I
99'-0"	64'-10"	15"	2 1/4"	1'-10"	3/8"	5/8"	2'-5"
94'-0"	62'-2"	15"	2"	1'-10"	3/8"	5/8"	2'-1"
89'-0"	56'-6"	15"	1 5/8"	1'-10"	3/8"	1/2"	2'-3"
84'-0"	57'-4"	11"	1 3/4"	1'-4"	3/8"	1/2"	1'-8
79'-0"	50'-9"	11"	1 3/8"	1'-4"	5/16"	1/2"	1'-4"
74'-0"	48'-9"	11"	1 1/4"	1'-4"	5/16"	1/2"	1'-4"
69'-0"	43'-0"	11"	1"	1'-4"	5/16"	3/8"	1'-6"
64'-0"	40'-9"	11"	3/4"	1'-4"	5/16"	5/16"	——
59'-0"	30'-9"	11"	1/2"	1'-4"	5/16"	5/16"	——
54'-0"	18'-9"	11"	1/2"	1'-4"	5/16"	5/16"	——

7'-4" BEAM SPACING S.C.B. - 30, 38, 44-67						
COVER PL. LENGTH	WIDTH	THICK-NESS	TAPER	WELD "A"	WELD "B"	L I
60'-0"	15"	2 1/4"	1'-10"	3/8"	5/8"	2'-5"
60'-2"	15"	2"	1'-10"	3/8"	5/8"	2'-1"
54'-6"	15"	1 1/2"	1'-10"	5/16"	1/2"	2'-3"
55'-4"	11"	1 5/8"	1'-4"	3/8"	1/2"	1'-8"
48'-9"	11"	1 1/8"	1'-4"	5/16"	1/2"	1'-4"
46'-9"	11"	1"	1'-4"	5/16"	1/2"	1'-4"
45'-0"	11"	1"	1'-4"	5/16"	3/8"	1'-6"
38'-9"	11"	3/4"	1'-4"	5/16"	5/16"	——
28'-9"	11"	1/2"	1'-4"	5/16"	5/16"	——
14'-9"	11"	1/2"	1'-4"	5/16"	5/16"	——

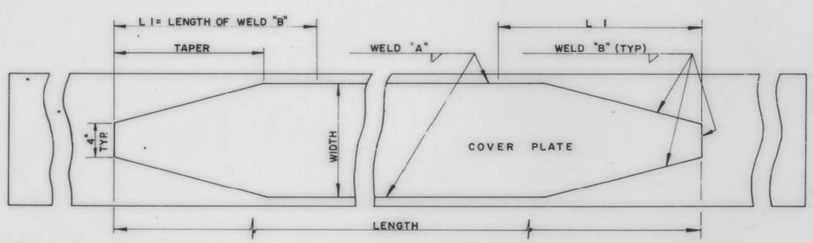

COVER PLATE DETAILS

C

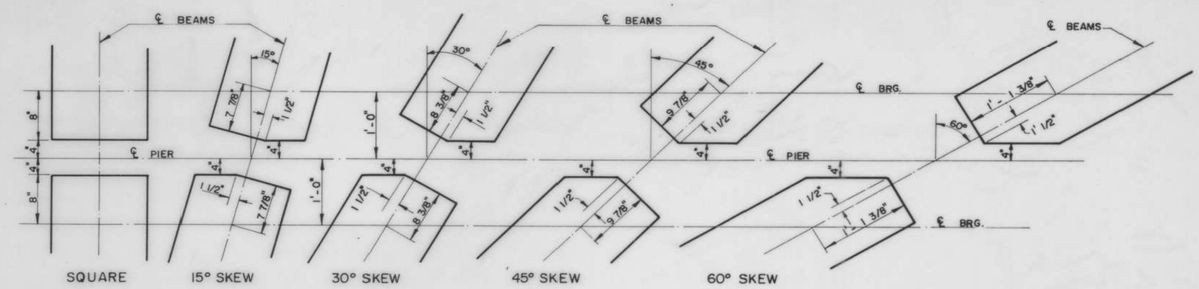

INTERIOR WF BEAM CUT-OFFS AT PIER

B

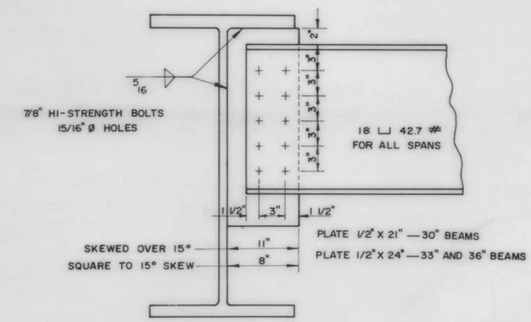

PIER DIAPHRAGMS

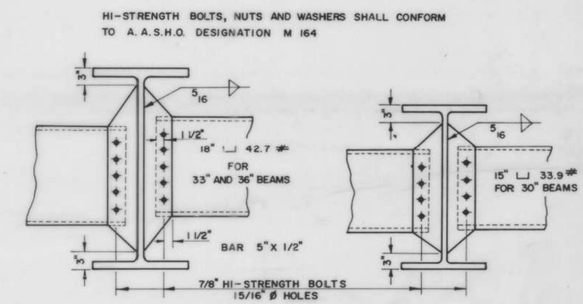

INTERMEDIATE DIAPHRAGMS

D

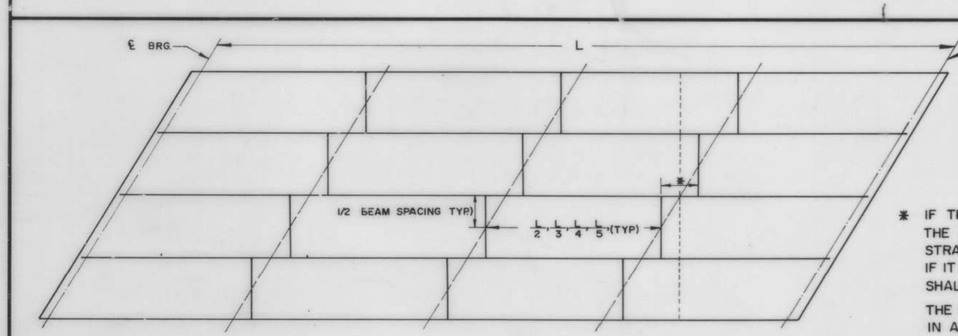

SPAN LENGTH		SETS OF DIAPH. REQUIRED
28'-0" THROUGH 43'-0"		1
44'-0"	69'-0"	2
70'-0"	84'-0"	3
85'-0"	99'-0"	4

* IF THIS DIMENSION IS LESS THAN 1'-0" THE DIAPHRAGMS MAY BE PLACED IN A STRAIGHT LINE AS INDICATED BY DASH LINE. IF IT IS GREATER THAN 1'-0" THE DIAPHAGMS SHALL BE STAGGERED AS SHOWN.

THE MAXIMUM UNBRACED LENGTH OF BEAM IN ALL CASES SHALL BE 25'-0".

DIAPHRAGM LOCATION PLAN

E

IRASBURG
IN DECK(46)
BRIDGE NO. 107N
SHEET 47 OF 49
FOR REFERENCE ONLY

REVISIONS AND CORRECTIONS

DRAWN BY:	A. V.	DEC. 1962
RETRACED BY:	AJA	MAY 1967
CHECKED BY:	W. SMITH	DEC. 1967
RECOMMENDED FOR APPROVAL	BRIDGE ENGINEER	1/24/68
RECOMMENDED FOR APPROVAL	CONSTRUCTION ENGINEER	1/24/68
RECOMMENDED FOR APPROVAL	ASST. CHIEF ENGINEER	1/24/68
APPROVED BY:	CHIEF ENGINEER	1/24/68 DATE

DETAILS OF WF BEAM BRIDGES

STRUCTURAL STEEL DETAILS

A D E DIAPHRAGM DETAILS
B WF BEAM CUT-OFFS
C COVER PLATE DETAILS

VERMONT
DEPARTMENT OF HIGHWAYS
STRUCTURE STANDARDS

SCB-D7-67

254A

254A

When bridge is on a grade exceeding 5%, plate "A" shall be beveled to fit with a mean thickness of 1".

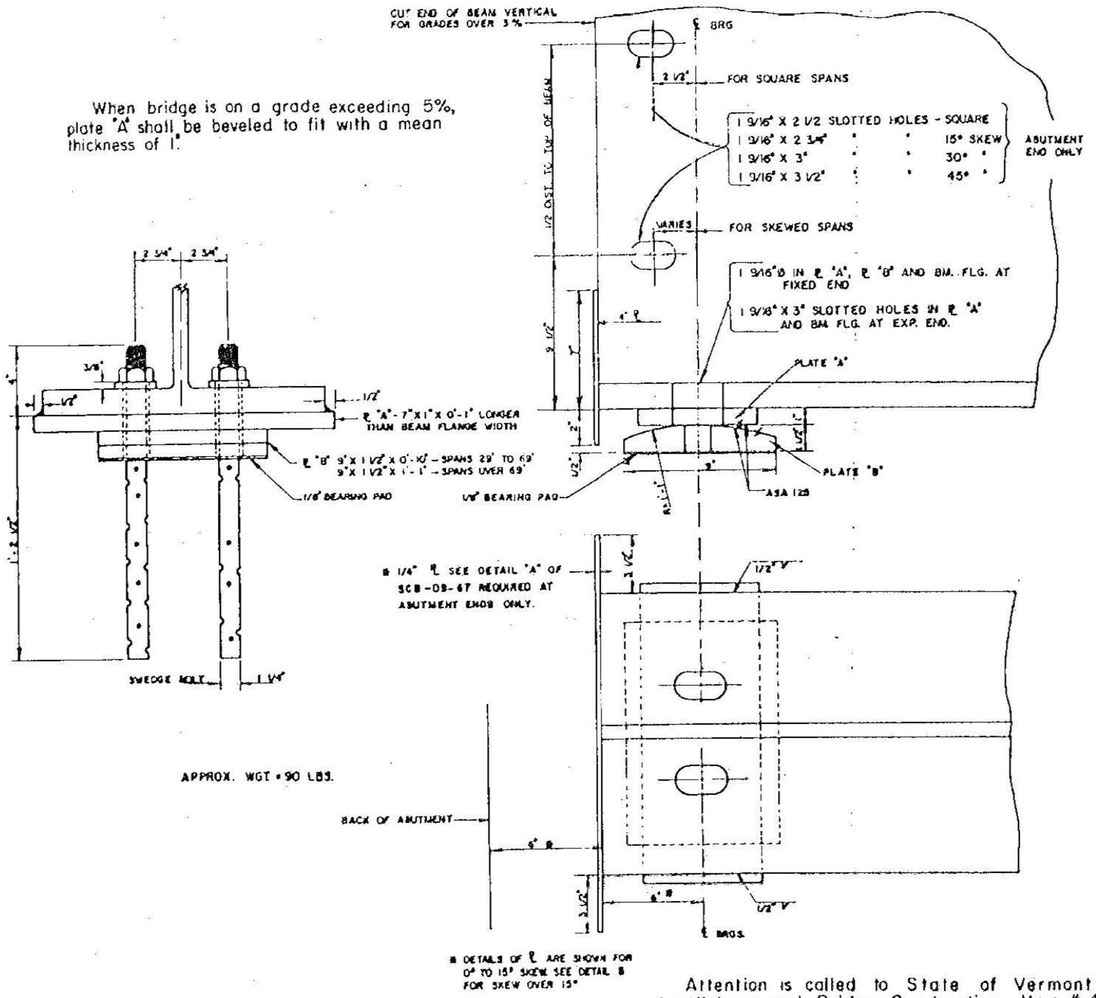

FIXED END BEARING DEVICE
USE FOR EXPANSION END ON SPANS UP TO AND INCLUDING 69'

Ⓐ

Plate "C" - 9" x 1 1/2" x 1' longer than the beam flange width. When the bridge is on a grade exceeding 5%, plate "C" shall be beveled to fit the grade with a mean thickness of 1 1/2".

Plate "D" - 7" x (outer edge thickness 1 1/2", center thickness 1") x 1'-1".

To be Cast Bronze - A.S.T.M. - B 22-40 T, Class "B" unless otherwise specified. This plate shall have trepanned recesses filled with a lubricating compound. The lubricating area shall comprise not less than 25% of the total bearing area. The manufacturer shall supply additional lubricant in liquid form with which the Contractor shall thoroughly coat the bearing surfaces that contact the lubricated portion of the bronze plate. The coefficient of friction shall not exceed 0.10.

Plate "E" - 10" x 1 1/2" x 1'-1".

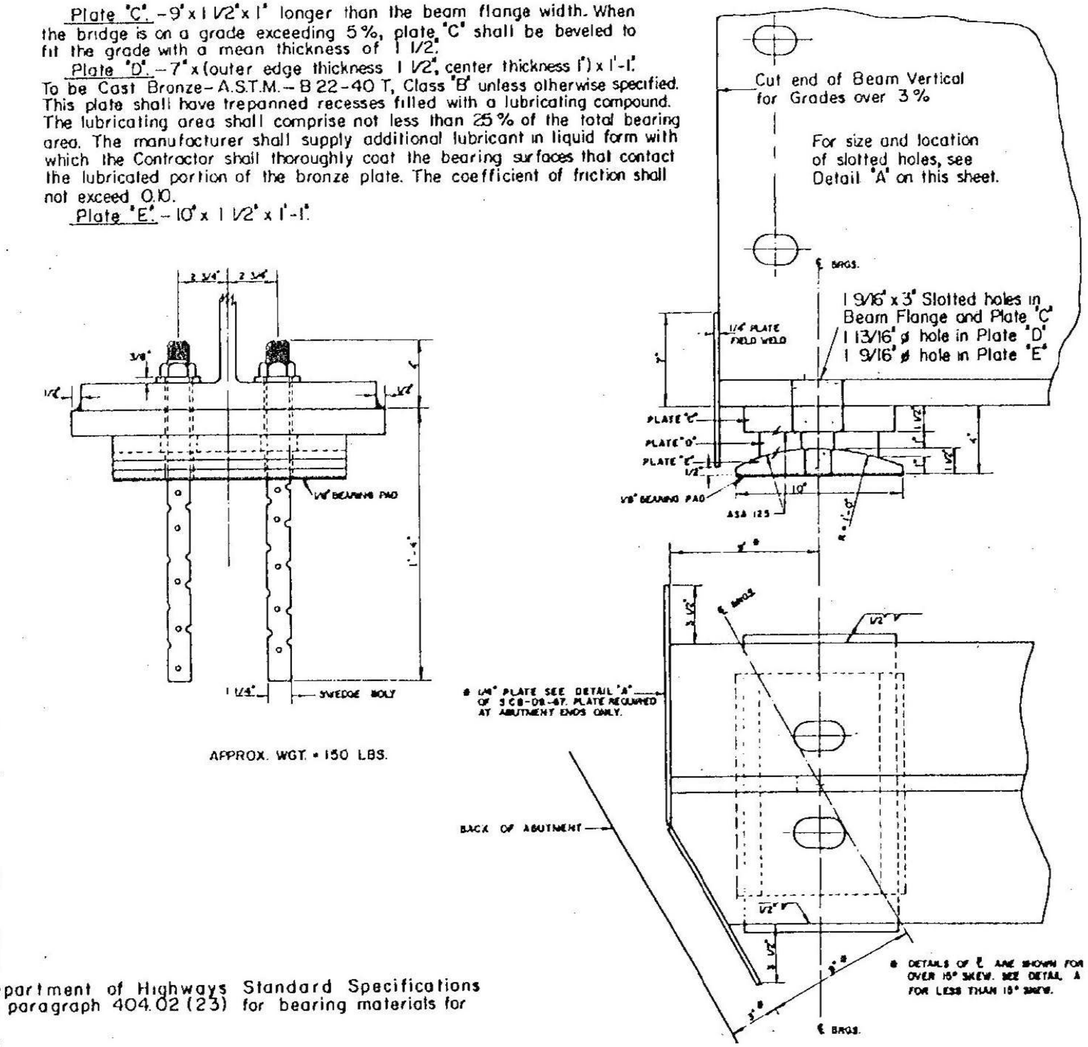

EXPANSION END BEARING DEVICE
FOR SPANS OVER 69'

Attention is called to State of Vermont Department of Highways Standard Specifications for Highway and Bridge Construction, Item # 404, paragraph 404.02 (23) for bearing materials for Shoes and Pedestals.

IRASBURG
IM DECK(46)
BRIDGE NO. 107N
SHEET 48 OF 48
FOR REFERENCE ONLY

REVISIONS AND CORRECTIONS			
	DRAWN BY: A.V. DEC. 1968	DETAILS OF WF BEAM BRIDGES	VERMONT DEPARTMENT OF HIGHWAYS STRUCTURE STANDARDS
	RETRACED BY: AJA MAY 1987	Ⓐ FIXED END BEARING DEVICE	SCB-D8-67
	CHECKED BY: W. SMITH DEC. 1987	Ⓑ EXPANSION END BEARING DEVICE	
	RECOMMENDED FOR APPROVAL: 1/23/69		
	RECOMMENDED FOR APPROVAL: 1/23/69		
	RECOMMENDED FOR APPROVAL: 1/23/69		
	APPROVED BY: 1/24/69 (CHIEF ENGINEER) (DATE)		

256 A

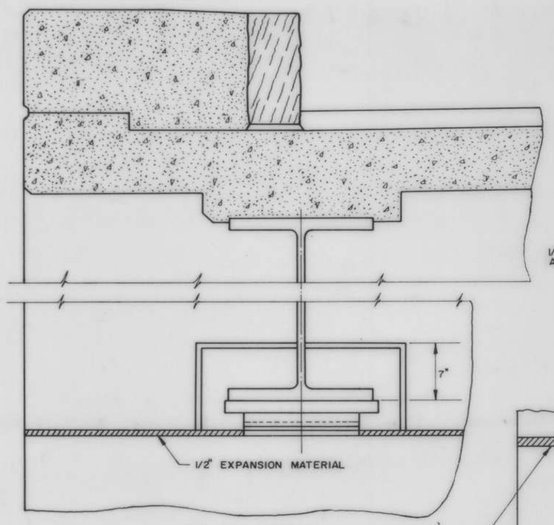

ELEVATION

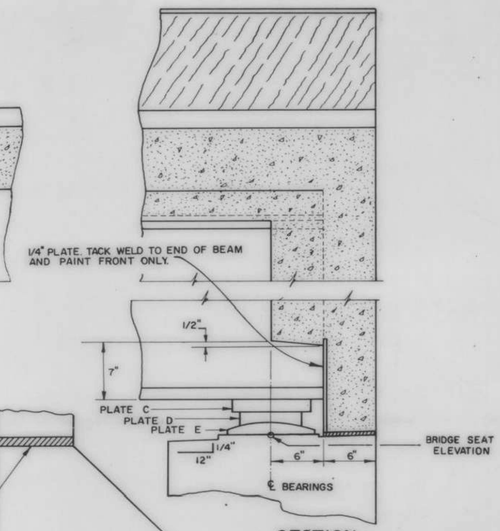

SECTION

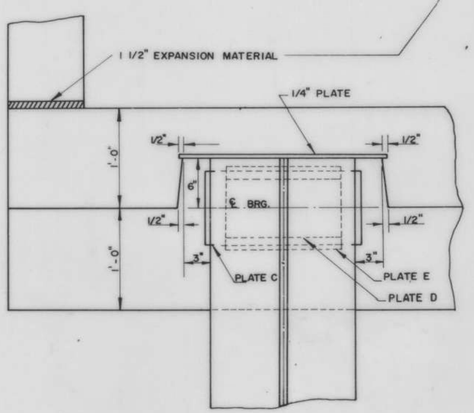

PLAN FOR SQUARE BRIDGES

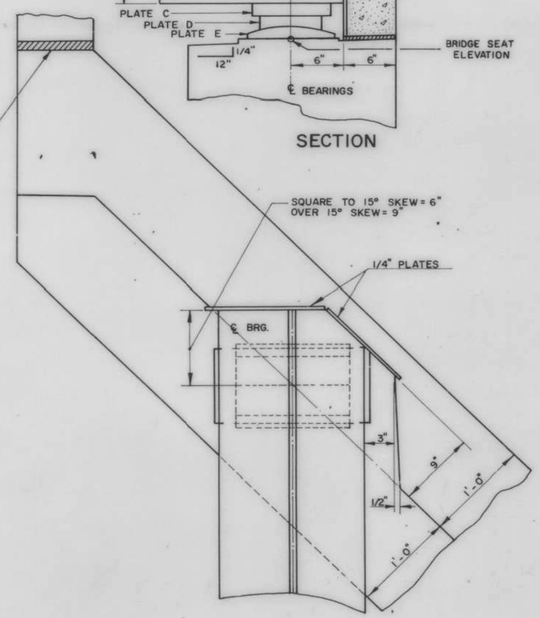

PLAN FOR SKEWED BRIDGES

(DETAILS SHOWN FOR EXP END; FIXED END SIMILAR EXCEPT ℄s A AND B IN LIEU OF ℄s C, D AND E; SEE SCB-D8-69) Ⓐ

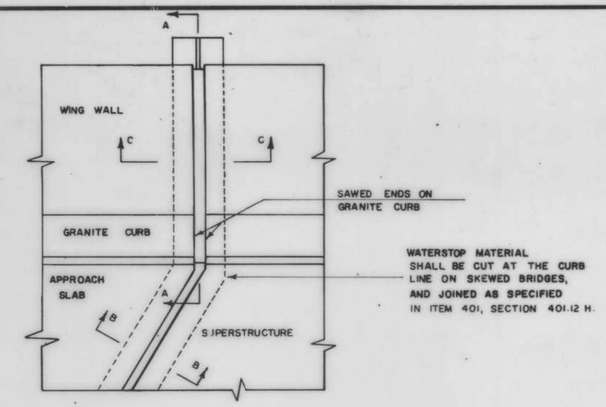

PLAN

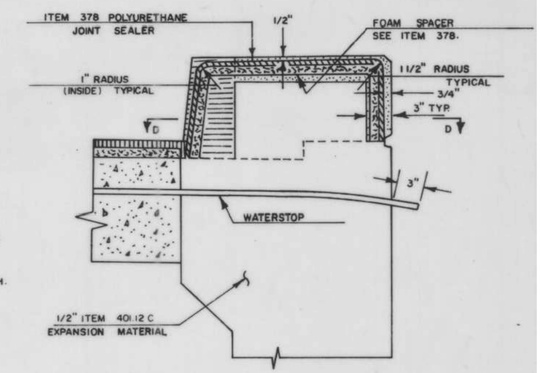

SECTION A-A

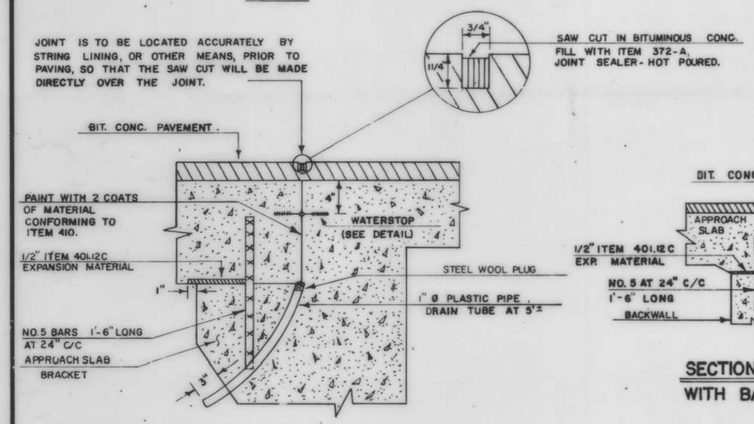

SECTION B-B

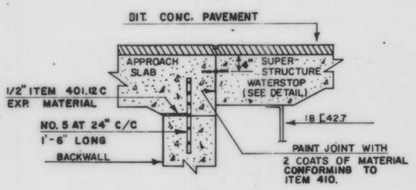

SECTION B-B
WITH BACKWALL

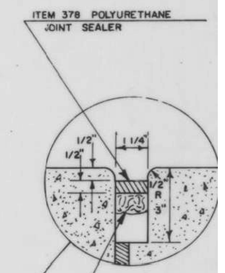

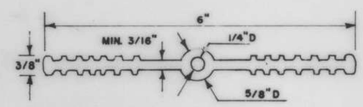

WATERSTOP DETAIL

MATERIAL TO BE POLYVINYLCHLORIDE, AS SPECIFIED IN ITEM 401.12 H. OTHER CONFIGURATIONS, WITH MINOR DIMENSION VARIATIONS, MAY BE USED WITH THE APPROVAL OF THE BRIDGE ENGINEER.

COST OF THE WATERSTOP SHALL BE INCLUDED IN THE UNIT PRICE BID FOR ITEM 401, CONCRETE.

THE CONTRACTOR SHALL PROVIDE ADEQUATE SUPPORT TO MAINTAIN PROPER ALIGNMENT OF WATERSTOP DURING CONSTRUCTION.

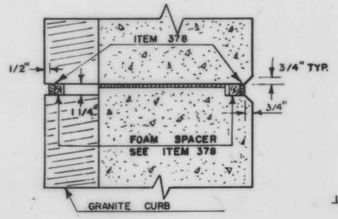

SECTION D-D

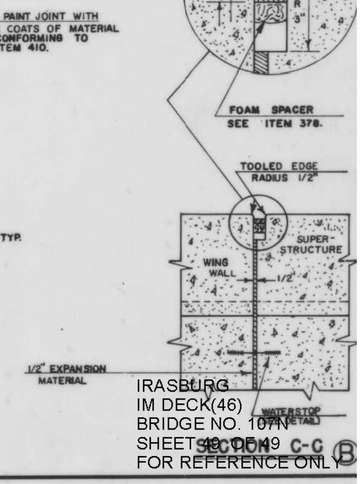

SECTION C-C Ⓑ

IRASBURG
IM DECK(46)
BRIDGE NO. 107N
SHEET 49 OF 49
FOR REFERENCE ONLY

REVISIONS AND CORRECTIONS

1 Ⓑ FIXED END JOINT DETAILS - ADDED 4-28-70 J. WOOD
2 ADDED " SEE SCB-D8-69 " TO NOTE ON DET. Ⓐ 12-11-70 J. WOOD

DRAWN BY:	AV.	DEC 1962
RETRACED BY:	AJA	MAY 1967
CHECKED BY:	W. SMITH	DEC. 1967
RECOMMENDED FOR APPROVAL	BRIDGE ENGINEER	1/24/68
RECOMMENDED FOR APPROVAL	CONSTRUCTION ENGINEER	1/24/68
RECOMMENDED FOR APPROVAL	ASST. CHIEF ENGINEER	1/24/68
APPROVED BY:	CHIEF ENGINEER	1/24/68 DATE

DETAILS OF WF BEAM BRIDGES

Ⓐ CURTAIN WALL AT BEARING DEVICES

Ⓑ FIXED END JOINT DETAILS

VERMONT
DEPARTMENT OF HIGHWAYS
STRUCTURE STANDARDS

SCB-D9-67

258B1

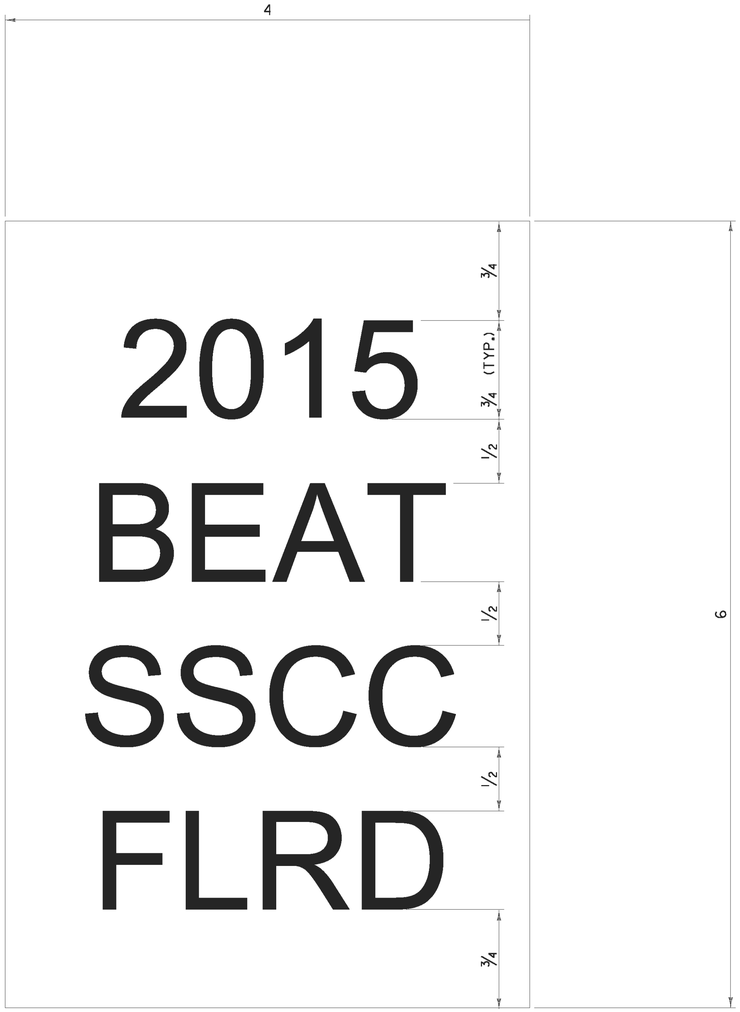

GENERAL NOTES:

1. LINE ONE SHALL INDICATE THE INSTALLATION YEAR (YYYY).
2. LINE TWO SHALL INDICATE THE MODEL AS IDENTIFIED ON THE APPROVED PRODUCTS LIST. FOR GENERIC INSTALLATIONS THE STANDARD DRAWING DESIGNATION OR NAME AS IDENTIFIED IN THE FHWA ELIGIBILITY LETTER SHALL BE USED.
3. LINE THREE SHALL SHALL INDICATE ADDITIONIAL MODEL INFORMATION IF NECESSARY.
4. LINE FOUR SHALL INDICATE FLARED (FLRD) OR TANGENT (TANG).
5. LEGEND SHALL BE ONE ARIEL FONT.
6. LEGEND SHALL BE BLACK ON A WHITE BACKGROUND, LENGEND AND BACKGROUND SHALL NOT BE REFLECTIVE.
7. SUITABLE MATERIAL SHALL BE USED SO AS TO NOT DETERIORATE DURING EXPOSURE TO WEATHER.
8. LABELS SHALL BE APPLIED IN SUCH A WAY THAT THEY REMAIN INTACT DURING THE LIFE OF THE TERMINAL.
9. FOR W-BEAM GUARDRAIL, LABEL SHALL BE PLACED ON THE TOP OF POST ONE FACING AWAY FROM TRAFFIC.
10. FOR BOX BEAM GUARDRAIL, LABEL SHALL BE PLACED ON THE BOX BEAM ADJACENT TO POST ONE FACING AWAY FROM TRAFFIC.
11. PAYMENT SHALL BE INCIDENTAL TO OTHER TRAFFIC BARRIER ITEMS.
12. ALL DIMENSIONS IN INCHES.

REV.	DATE	DESCRIPTION
0	NOV. 3, 2015	ORIGINAL APPROVAL

OTHER DETAILS REQUIRED: NONE

DETAILS APPROVED FOR USE BY HIGHWAY SAFETY & DESIGN

GUARDRAIL TERMINAL LABEL DETAIL

VTrans Working to Get You There VERMONT AGENCY OF TRANSPORTATION

HIGHWAY SAFETY & DESIGN DETAIL

HSD-621.06

CONCRETE GENERAL NOTES

1. ALL EXPOSED EDGES OF CONCRETE SHALL BE CHAMFERED 1" x 1"
2. REINFORCING STEEL SIZE AND SPACING SHOWN IN THE PLANS IS BASED ON 60 KSI STEEL, UNLESS NOTED OTHERWISE. WITH THE ENGINEER'S PERMISSION, BAR SIZE AND SPACING MAY BE MODIFIED ACCORDING TO THE LATEST AASHTO LRFD BRIDGE DESIGN SPECIFICATION AND STRUCTURES DESIGN MANUAL WHEN USING HIGHER STRENGTH STEEL.

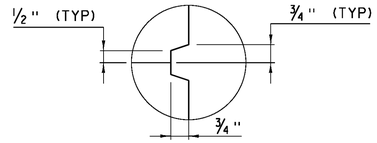

SCORE MARK DETAIL
(NOT TO SCALE)

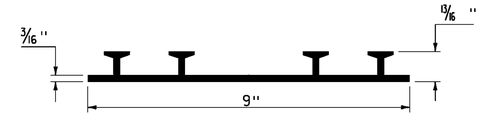

P.V.C. WATERSTOP FOR CONSTRUCTION JOINTS
(NOT TO SCALE)

PAYMENT FOR THE P.V.C. WATERSTOP SHALL BE INCIDENTAL TO THE UNIT BID PRICE FOR THE ADJACENT CONCRETE.

OTHER CONFIGURATIONS OF WATERSTOP MAY BE USED UPON APPROVAL OF THE ENGINEER.

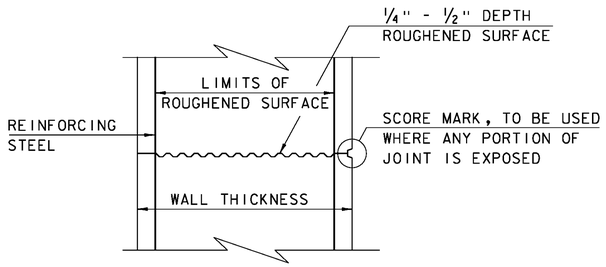

TYPICAL HORIZONTAL CONSTRUCTION JOINT
(NOT TO SCALE)

1. THE SURFACE OF THE CONCRETE CONSTRUCTION JOINTS SHALL BE CLEANED AND FREE OF LAITANCE.
2. IMMEDIATELY BEFORE NEW CONCRETE IS PLACED, ALL CONSTRUCTION JOINTS SHALL BE WETTED AND STANDING WATER REMOVED.

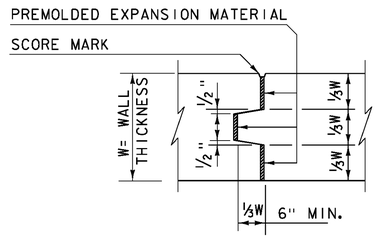

TYPICAL CONCRETE EXPANSION JOINT
(NOT TO SCALE)

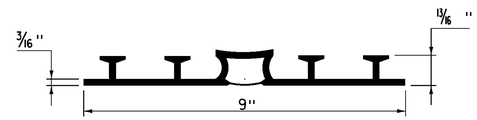

P.V.C. WATERSTOP FOR EXPANSION JOINTS
(NOT TO SCALE)

PAYMENT FOR THE P.V.C. WATERSTOP SHALL BE INCIDENTAL TO THE UNIT BID PRICE FOR THE ADJACENT CONCRETE.

OTHER CONFIGURATIONS OF WATERSTOP MAY BE USED UPON APPROVAL OF THE ENGINEER.

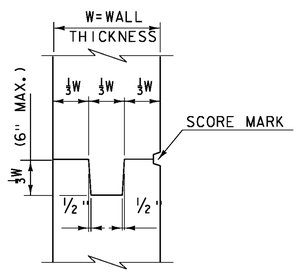

TYPICAL CONCRETE CONSTRUCTION JOINT
(NOT TO SCALE)

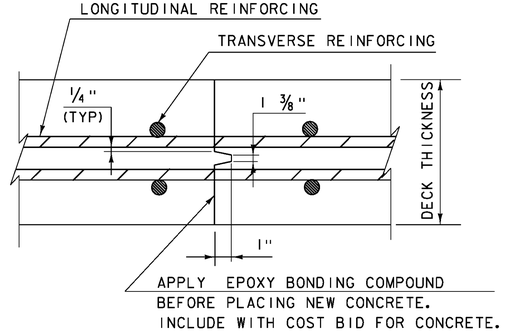

TRANSVERSE BRIDGE SLAB CONSTRUCTION JOINT DETAILS
(NOT TO SCALE)

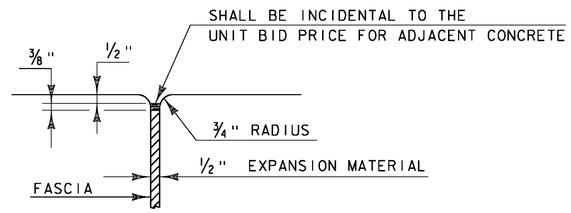

JOINT BETWEEN FASCIA AND WINGWALL
(NOT TO SCALE)

REVISIONS	
MAY 7, 2010	APPROVED FOR USE BY VAOT STRUCTURES SECTION
FEBRUARY 9, 2012	REBAR SUBSTITUTION ALLOWANCE ADDED TO CONCRETE GENERAL NOTES.

CONCRETE DETAILS AND NOTES

VERMONT AGENCY OF TRANSPORTATION
STRUCTURES - SECTION

STRUCTURES DETAIL

SD-501.00

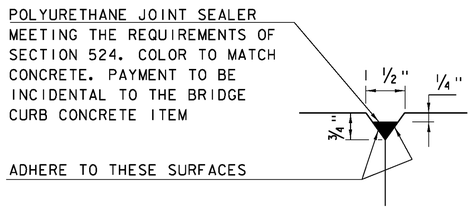

DETAIL "B"
(NOT TO SCALE)

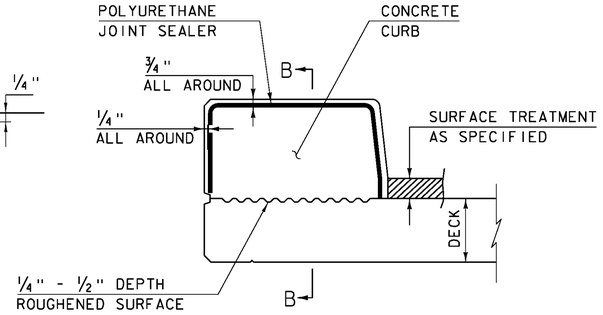

CONCRETE CURB JOINT SECTION
(NOT TO SCALE)

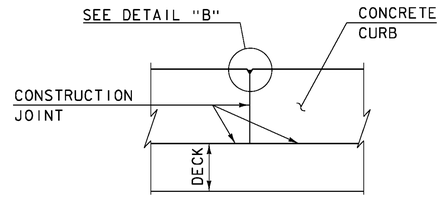

SECTION B - B
(NOT TO SCALE)

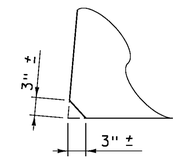

ACUTE ANGLE CLIP DETAIL
(NOT TO SCALE)

1. SEE TYPICAL HORIZONTAL CONSTRUCTION JOINT DETAIL FOR ADDITIONAL INFORMATION

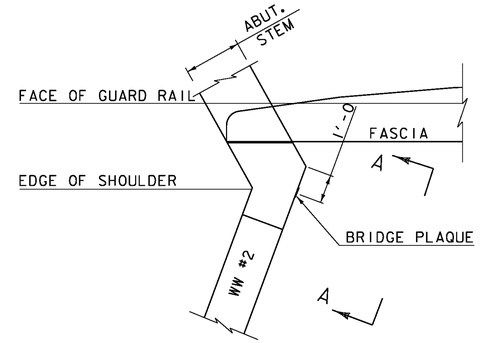

PLAN

CONCRETE CURB JOINT NOTES

1. CONCRETE CURBS MAY BE PLACED IN ONE CONTINUOUS OPERATION IF AN APPROVED SHRINKAGE REDUCING ADMIXTURE LISTED IN THE SPECIAL PROVISIONS IS USED WITH THE CONCRETE MIX DESIGN. PAYMENT FOR THE SHRINKAGE REDUCING ADMIXTURE WILL BE INCIDENTAL TO THE BRIDGE CURB CONCRETE ITEM.

2. IF THE CONTRACTOR CHOOSES NOT TO USE AN APPROVED SHRINKAGE REDUCING ADMIXTURE, THE CURBS SHALL BE CONSTRUCTED WITH CONSTRUCTION JOINTS SPACED AT A MAXIMUM OF 15'-0" CENTER TO CENTER AND 2'-0" MINIMUM FROM THE CENTER OF NEAREST BRIDGE RAILING POST.

3. ON MULTI-SPAN CONTINUOUS SUPERSTRUCTURES, REGARDLESS OF WHETHER APPROVED SHRINKAGE REDUCING ADMIXTURE IS USED, CURB JOINTS SHALL BE LOCATED OVER THE CENTERLINE OF PIERS AND 7'-0" EACH SIDE OF THE CENTERLINE OF EACH PIER.

4. WHEN CURB JOINTS ARE USED THE CURBS SHALL BE PLACED IN ALTERNATE SECTIONS WITH A MINIMUM OF 48 HOUR DELAY BETWEEN ADJACENT PLACEMENTS.

5. LONGITUDINAL REINFORCING SHALL BE CONTINUOUS THROUGH CURB CONSTRUCTION JOINTS. CURB STIRRUP BARS SHALL BE TURNED AS NECESSARY TO MAINTAIN COVER IN THE FLARED CURB ENDS.

6. THE JOINT SPACING AND DETAILS SHOWN SHALL APPLY TO SIDEWALKS WHEN SHOWN IN THE PLANS.

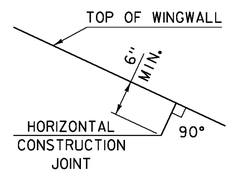

HORIZONTAL WINGWALL CONSTRUCTION JOINT
(NOT TO SCALE)

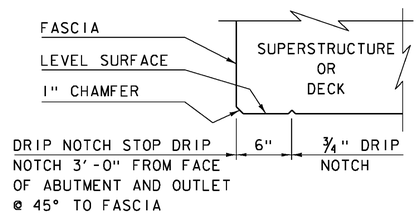

DRIP NOTCH DETAIL
(NOT TO SCALE)

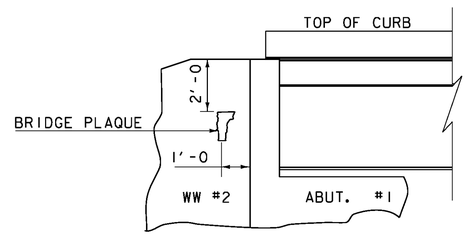

VIEW "A - A"

BRIDGE PLAQUE
(NOT TO SCALE)

THE BRIDGE PLAQUE WILL BE SUPPLIED BY THE AGENCY OF TRANSPORTATION AND SHALL BE INSTALLED BY THE CONTRACTOR AT ABUTMENT #1 ON THE RIGHT SIDE AS SHOWN OR AS DIRECTED BY THE ENGINEER.

PAYMENT FOR INSTALLATION OF THE BRIDGE PLAQUE SHALL BE INCIDENTAL TO THE ADJACENT CONCRETE.

REVISIONS

MAY 7, 2010	APPROVED FOR USE BY VAOT STRUCTURES SECTION
JUNE 4, 2010	MODIFIED AND ADDED TWO DETAILS
OCTOBER 10, 2012	MODIFIED HORZ. JOINT WINGWALL ADD 6" MIN. DIMENSION

CONCRETE DETAILS AND NOTES

VERMONT AGENCY OF TRANSPORTATION
STRUCTURES - SECTION

STRUCTURES DETAIL
SD-502.00

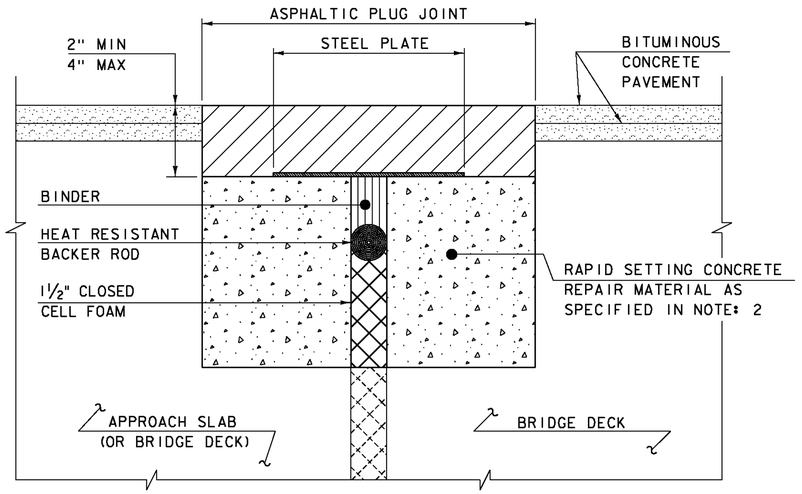

ASPHALTIC PLUG JOINT DETAIL - REHAB

NOTES:

1. THE CONTRACTOR SHALL REMOVE ALL ASPHALTIC PLUG JOINT MATERIAL AND DETERIORATED CONCRETE AS DIRECTED BY THE ENGINEER. REMOVAL OF THE FIRST 4 INCHES OF MATERIAL SHALL BE INCLUDED IN THE BID PRICE FOR ITEM 516.10 BRIDGE EXPANSION JOINT, ASPHALTIC PLUG. ANY REMOVAL OF MATERIAL GREATER THAN 4 INCHES SHALL BE INCLUDED IN THE BID PRICE OF ITEM 580.20 RAPID SETTING CONCRETE REPAIR MATERIAL WITH COARSE AGGREGATE.

2. THE CONTRACTOR SHALL REPLACE REMOVED MATERIAL THAT IS LESS THAN 4" FROM FINISHED GRADE WITH ASPHALTIC PLUG JOINT MATERIAL MEETING THE REQUIREMENTS OF SUBSECTION 707.15. ALL REMOVED MATERIAL THAT IS GREATER THAN 4 INCHES FROM FINISHED GRADE SHALL BE REPLACED WITH RAPID SETTING CONCRETE REPAIR MATERIAL WITH COARSE AGGREGATE MEETING THE REQUIREMENTS OF SUBSECTION 780.04.

3. REINFORCING STEEL NOT SHOWN FOR CLARITY.

4. PLACE 1/4" THICK BY 8" WIDE SECTIONS OF STEEL PLATE OVER THE CENTER OF THE MOVEMENT GAP. SECURE THE PLATES FROM MOVING BY INSERTING LOCATING PINS THROUGH THE PRE-STAMPED HOLES INTO BACKER ROD AND COVER WITH HOT BINDER. THE STEEL PLATES MAY BE OMITTED WHERE THE ENGINEER DETERMINES THAT THE APPROACH SLAB OR BRIDGE DECK WILL PROVIDE INADEQUATE SUPPORT AND WHERE VERTICAL MOVEMENT OF THE PLATES MIGHT OCCUR.

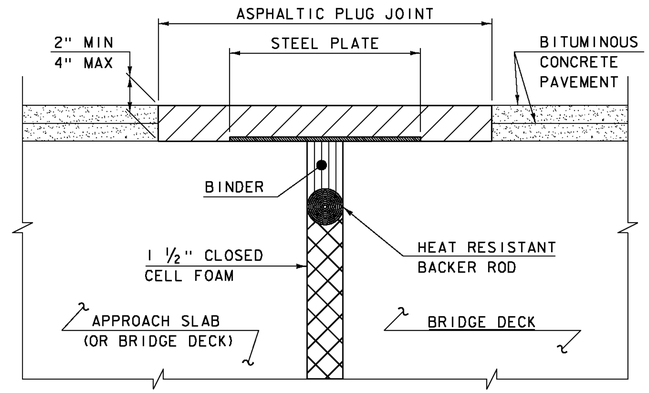

ASPHALTIC PLUG JOINT DETAIL "A" - NEW

NOTE:
PLACE 1/4" THICK BY 8" WIDE SECTIONS OF STEEL PLATE OVER THE CENTER OF THE MOVEMENT GAP. SECURE THE PLATES FROM MOVING BY INSERTING LOCATING PINS THROUGH THE PRE-STAMPED HOLES INTO BACKER ROD AND COVER WITH HOT BINDER.

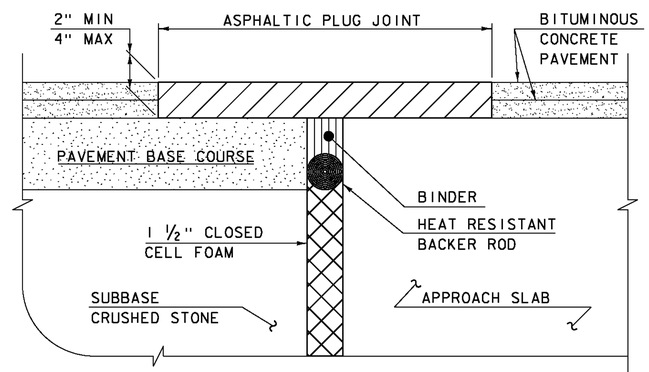

ASPHALTIC PLUG JOINT DETAIL "B" - NEW

ASPHALTIC PLUG JOINT NOTES

INSTALLATION:

1. LOCATE THE JOINT CENTRALLY OVER THE DECK OVERLAY EXPANSION GAP OR FIXED JOINT, MARKED OUT TO THE MANUFACTURER'S RECOMMENDED WIDTH.

2. REMOVE THE BITUMINOUS CONCRETE PAVEMENT FULL DEPTH AS SHOWN ON THE PLANS. THE PAVEMENT SHALL BE DRY AND SAW CUT TO THE LIMITS REQUIRED TO PLACE THE JOINT. A PNEUMATIC HAMMER AND CHISEL MAY BE USED ADJACENT TO THE CURB ONLY WHEN SAW CUTTING IS NOT POSSIBLE.

3. BLAST CLEAN THE JOINT AREA OF DEBRIS, ASPHALT AND SHEET MEMBRANE. THOROUGHLY DRY THE JOINT AREA WITH COMPRESSED AIR PRIOR TO APPLYING BINDER MATERIAL.

4. PLACE PROPERLY SIZED HEAT RESISTANT BACKER ROD IN THE MOVEMENT GAP ALLOWING FOR 1" +/- OF BINDER ABOVE THE ROD.

5. HEAT AND PLACE THE BINDER MATERIAL AS RECOMMENDED BY THE MANUFACTURER.

6. IMMEDIATELY AFTER TOP COATING, CAST AN ANTI-SKID MATERIAL OVER THE JOINT TO REDUCE THE RISK OF TRACKING.

WEATHER LIMITATIONS

APPLY BINDER MATERIAL ONLY WHEN THE FOLLOWING CONDITIONS PREVAIL OR AS RECOMMENDED BY THE MANUFACTURER:

1. THE AMBIENT AIR TEMPERATURE IS AT LEAST 10 DEG C (50 DEG F) AND RISING.

2. THE ROAD SURFACE IS DRY.

3. WEATHER CONDITIONS OR OTHER CONDITIONS ARE FAVORABLE AND ARE EXPECTED TO REMAIN SO FOR THE PERFORMANCE OF SATISFACTORY WORK.

DETAILS ON THIS SHEET ARE NOT TO SCALE.

REVISIONS	
MAY 7, 2010	APPROVED FOR USE BY VAOT STRUCTURES SECTION
AUGUST 29, 2011	ADD DETAIL "B" AND REV. NOTES

BRIDGE JOINT
ASPHALTIC PLUG

VERMONT AGENCY OF TRANSPORTATION
STRUCTURES - DIVISION

STRUCTURES DETAIL

SD-516.10

STRUCTURAL STEEL GENERAL NOTES:

1. ALL FIELD CONNECTIONS SHALL BE MADE WITH 7/8" DIAMETER HIGH-STRENGTH BOLTS IN 15/16" DIAMETER HOLES, PER SUBSECTION 506.19, UNLESS OTHERWISE SPECIFIED.
2. ALL HOLES IN THE WEBS OF THE FASCIA GIRDERS THAT ARE NOT OTHERWISE FILLED, SHALL BE FILLED WITH EITHER BUTTON HEAD OR HEX HEAD BOLTS. THESE BOLTS SHALL BE TIGHTENED IN ACCORDANCE WITH SUBSECTION 506.19.
3. ALL WELDING SHALL CONFORM TO THE PROVISIONS OF SUBSECTION 506.10.
4. ANY CONNECTIONS THAT ARE NOT DETAILED ON THE PLANS SHALL BE DETAILED BY THE FABRICATOR AND SUBMITTED TO THE STRUCTURES ENGINEER FOR APPROVAL.
5. STRUCTURAL STEEL MEMBERS DESIGNATED "CVN" IN THE PLANS SHALL BE CHARPY V-NOTCH TESTED IN ACCORDANCE WITH SUBSECTION 714.01 OF THE STANDARD SPECIFICATIONS.
6. ENDS OF GIRDERS ARE TO BE VERTICAL IN THEIR FINAL POSITION.
7. AFTER SUPERSTRUCTURE STEEL HAS BEEN ERECTED, ELEVATIONS ALONG THE TOP OF THE GIRDERS SHALL BE TAKEN AS DIRECTED BY THE RESIDENT ENGINEER FOR USE IN DETERMINING FINISHED GRADES.

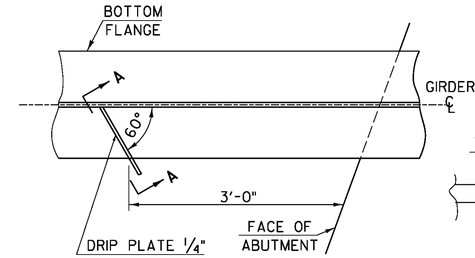

PLAN DRIP PLATE

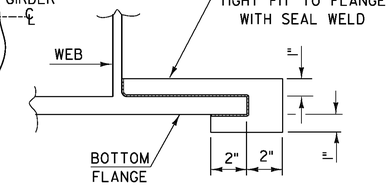

SECTION A - A

NOTE: DRIP PLATES SHALL BE PLACED ON OUTSIDE EDGE OF FASCIA GIRDERS ON THE HIGH SIDE OF ALL PIERS AND ABUTMENTS OR AS INDICATED ON PROJECT PLANS.

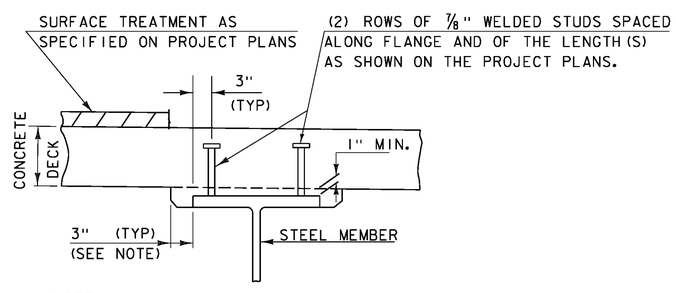

NOTE:
THE 3" HORIZONTAL SECTION MAY BE ELIMINATED FOR FORMING SYSTEMS DESIGNED FOR THE CONSTRUCTION OF VERTICAL HAUNCHES. ANY VOIDS RESULTING FROM FORMING SYSTEM ELEMENTS SHALL BE FILLED WITH JOINT SEALER, POLYURETHANE MEETING THE REQUIREMENTS OF SECTION 524. THE COST OF THE JOINT SEALER, POLYURETHANE SHALL BE INCIDENTAL TO THE ADJACENT CONCRETE.

HAUNCH AND SHEAR CONNECTOR DETAIL

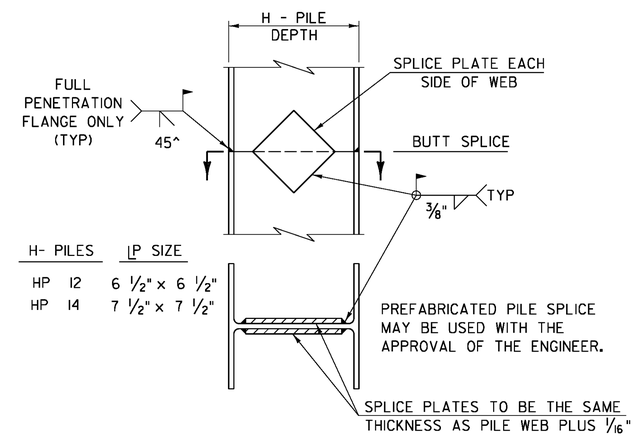

H- PILES	LP SIZE
HP 12	6 1/2" x 6 1/2"
HP 14	7 1/2" x 7 1/2"

DETAIL OF PILE SPLICE

DETAILS ON THIS SHEET ARE "NOT TO SCALE" UNLESS NOTED OTHERWISE.

REVISIONS	
MAY 7, 2010	APPROVED FOR USE BY VAOT STRUCTURES SECTION
JUNE 4, 2010	MODIFIED NOTES

STRUCTURAL STEEL DETAILS & NOTES

VERMONT AGENCY OF TRANSPORTATION
STRUCTURES - SECTION

STRUCTURES DETAIL

SD-601.00

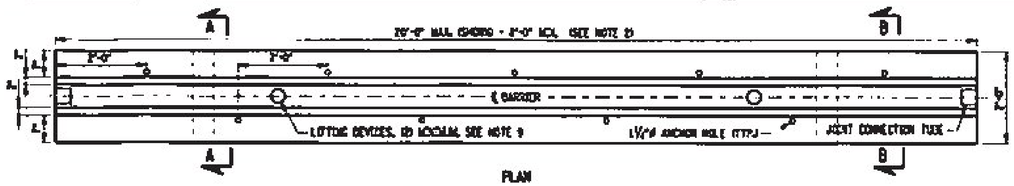

PLAN

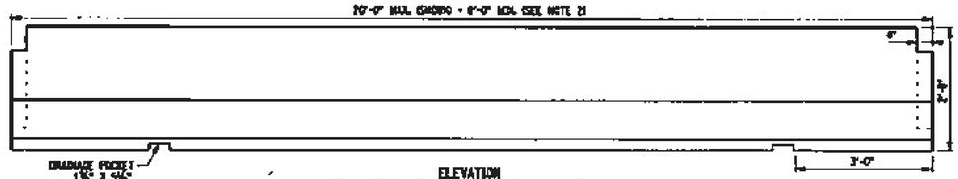

ELEVATION
TEMPORARY CONCRETE BARRIER FULL SECTION

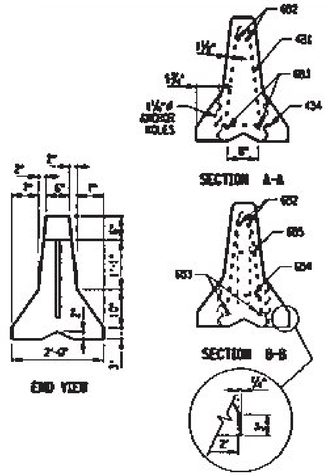

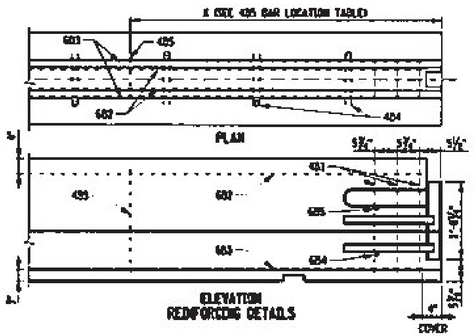

FULL SECTION BAR LIST								
MARK	SIZE	NUMBER PER SECTION	LENGTH	TYPE	A	B	C	LOCATION
491	4	6	4'-11"	I	5"	28"	1"	STIRRUPS
494	4	SEE TABLE	3'-1"	II	4"	18½"		ANCHOR RECESS HOOPS
495	4	1 PER RECESS	4'-11"	I	5"	28"	1"	STIRRUPS
602	6	2	SEE NOTE 7	STR.				LONGITUDINAL (TOP)
603	6	2	SEE NOTE 7	STR.				LONGITUDINAL (BOTTOM)
604	6	2	1'-2"	STR.				TRANSVERSE (BOTTOM)
605	6	2	6"	STR.				TRANSVERSE (TOP)

495 BAR LOCATION TABLE		
NOMINAL LENGTH OF BARRIER UNIT	X	NO. EACH SECTION
20'	9'-11"	2
18'	8'-5"	2
16'	5'-11"	2
14'	3'	1
12'	8'	1
10'	5'	1
8'	N/A	0

"X" DISTANCE FROM END OF BARRIER TO 495 BAR

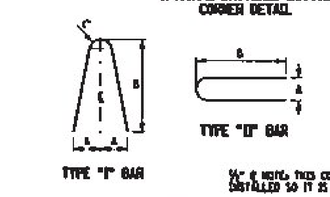

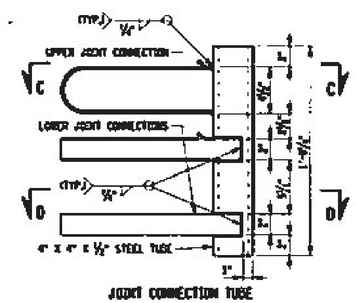

JOINT CONNECTION TUBE

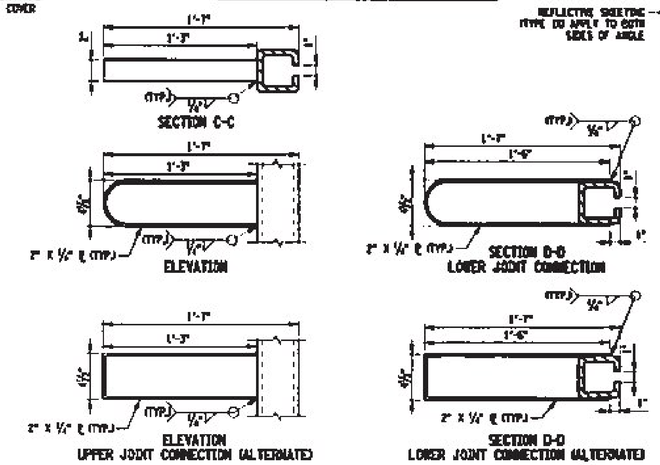

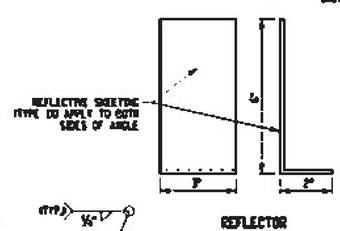

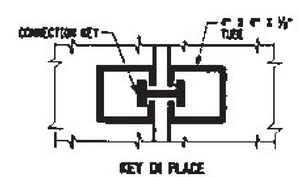

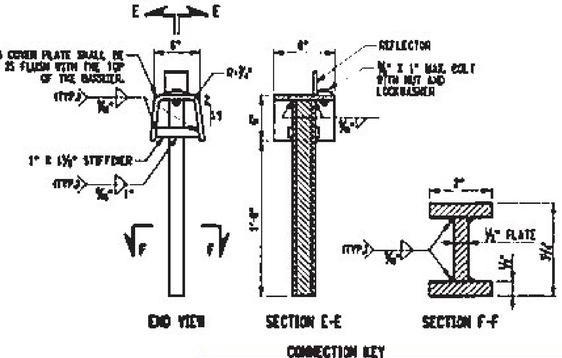

NOTES:

1. TEMPORARY CONCRETE BARRIER SHALL BE PRECAST IN ACCORDANCE WITH THE REQUIREMENTS OF ST704-005 PRECAST CONCRETE BARRIER.
2. TEMPORARY CONCRETE BARRIER SHALL BE PRECAST UNITS OF ONE OF THE FOLLOWING NOMINAL LENGTHS 8', 10', 12', 14', 16', 18', 20'.
3. STEEL PLATE REINFORCEMENT SHALL BE ASTM A36M, ASTM GRADE 345 STEEL. TUBE REINFORCEMENT SHALL BE ASTM A500, GRADE B OR C. AND REINFORCING BARS SHALL BE A615, GRADE 420. EPOXY BARS ARE NOT REQUIRED.
4. ALL WELDING SHALL BE PERFORMED BY A WELDER QUALIFIED IN ACCORDANCE WITH SECTION 8 OF THE NYS STEEL CONSTRUCTION MANUAL.
5. SURFACES TO BE WELDED SHALL BE FREE OF SLAG, RUST, MOISTURE, GREASE OR ANY OTHER MATERIAL THAT WILL PREVENT PROPER WELDING OR PRODUCE OBJECTIONABLE FUMES.
6. WELDING SHALL BE SHIELDED METAL ARC WELDING USING PROPERLY DRIED 5/32"ø E7018 ELECTRODES CONFORMING TO THE REQUIREMENTS OF SECTION 7 OF THE NYS STEEL CONSTRUCTION MANUAL.
7. THE NUMBER AND PLACEMENT OF THE 494 AND 495 BARS WILL VARY WITH THE LENGTH OF THE BARRIER SEGMENT.
8. CONCRETE CLEAR COVER FOR REINFORCING BARS SHALL BE 1½" MIN. UNLESS OTHERWISE SPECIFIED.
9. A MINIMUM OF (2) TWO RECESSED LIFTING DEVICES, EACH WITH THE CAPACITY TO LIFT A MASS OF 6 TONS MINIMUM, SHALL BE INSTALLED ON EACH SEGMENT. SEGMENT MASS IS APPROXIMATELY 450 LBS/FT.
10. ONE DRAINAGE POCKET SHALL BE INCLUDED IN THE CENTER OF 8'-0" AND 10'-0" SEGMENTS, TWO DRAINAGE POCKETS IN ALL OTHER SEGMENTS.
11. CONNECTION KEY COVER PLATE SHALL BE INSTALLED FLUSH WITH THE BARRIER TOP.
12. 1"ø ASTM A36M ANCHOR PINS SHALL BE PLACED IN FOUR ANCHOR HOLES OF EACH SEGMENT TO BE PINNED.
13. BASED ON SEGMENT LENGTH AND MAXIMUM JOINT ROTATION, TEMPORARY CONCRETE BARRIER CAN ONLY BE INSTALLED TO THE FOLLOWING MINIMUM RADII: 8' - 92', 10' - 115', 12' - 138', 14' - 161', 16' - 184', 18' - 207', 20' - 230'.

STATE OF NEW YORK
DEPARTMENT OF TRANSPORTATION

U.S. CUSTOMARY STANDARD SHEET

TEMPORARY CONCRETE BARRIER
(SHEET 1 OF 3)

APPROVED SEPTEMBER 30, 2009
/S/ J. F. TOWN, P.E.
DEPUTY CHIEF ENGINEER
(CONSTRUCTION)

ISSUED UNDER ED 09-03

619-01

EFFECTIVE DATE: 01/01/10

NOTES:

1. TEMPORARY CONCRETE BARRIER SHALL BE PRECAST IN ACCORDANCE WITH THE REQUIREMENTS OF §704-02, PRECAST CONCRETE BARRIER.
2. STEEL PLATE SHALL BE ASTM A36M, ASTM, GRADE 345, TUBE STEEL SHALL BE ASTM A500 GRADE B OR C, AND REINFORCING BARS SHALL BE A615 GRADE 420.
3. ALL WELDING SHALL BE PERFORMED BY A QUALIFIED WELDER IN ACCORDANCE WITH SECTION 6 OF THE NYS STEEL CONSTRUCTION MANUAL.
4. SURFACES TO BE WELDED SHALL BE FREE OF SLAG, DUST, MOISTURE, GREASE OR ANY OTHER MATERIAL THAT WILL PREVENT PROPER WELDING OR PRODUCE OBJECTIONABLE FUMES.
5. WELDING SHALL BE SHIELDED METAL ARC WELDING USING PROPERLY DRIED 5/32"Ø E7018 ELECTRODES CONFORMING TO THE REQUIREMENTS OF SECTION 7 OF THE NYS STEEL CONSTRUCTION MANUAL.
6. CONCRETE CLEAR COVER FOR REINFORCING BARS SHALL BE 1½" MIN EXCEPT WHERE OTHERWISE SPECIFIED.
7. A MINIMUM OF (2) TWO RECESSED LIFTING DEVICES, WITH THE CAPACITY TO LIFT A MASS OF 6 TONS MAXIMUM SHALL BE INSTALLED ON EACH SEGMENT.
8. 1"Ø ASTM A36M ANCHOR PINS SHALL BE PLACED IN FOUR RECESSES OF EACH SEGMENT TO BE PINNED.
9. CONNECTION KEY COVER PLATE SHALL BE INSTALLED FLUSH WITH THE BARRIER TOP.
10. THE DETAILS SHOWN FOR THE END SECTIONS ON THIS SHEET ARE FOR APPROACH ENDS WHICH ARE TO BE LOCATED TO THE LEFT OF THE TRAFFIC FLOW ON ONE-WAY OPERATIONS OR BETWEEN OPPOSING FLOWS OF TRAFFIC ON TWO-WAY OPERATIONS. WHEN AN APPROACH END IS TO BE LOCATED TO THE RIGHT OF THE TRAFFIC FLOW, THE END SEGMENT SHALL BE CONSTRUCTED SO THAT IT IS OPPOSITE-HAND REVERSED IN ALL CONFIGURATIONS, ANCHOR HOLE LOCATIONS AND REINFORCEMENTS.
11. ALL CORNERS ON THE TOP OF THE SEGMENT SHALL BE ROUNDED TO A 1" RADIUS. THE SEGMENT SHALL HAVE A SMOOTH TRANSITION TO A 6" END-OF-SECTION HEIGHT. ALL END SECTIONS SHALL BE PINNED UNLESS OTHERWISE NOTED.

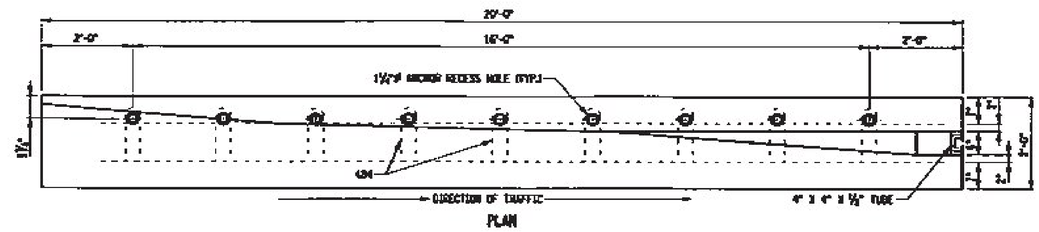

PLAN

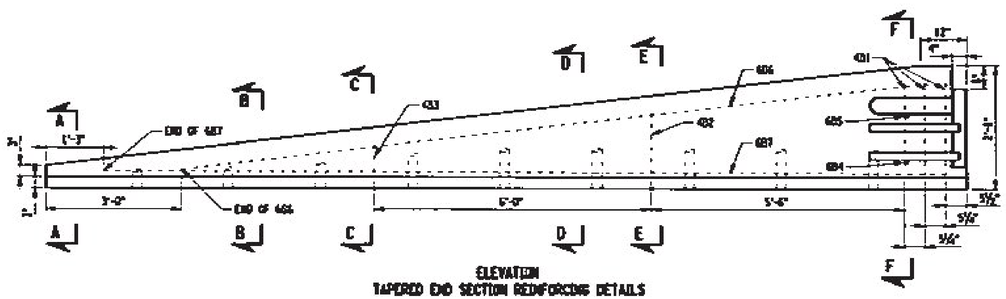

ELEVATION
TAPERED END SECTION REINFORCING DETAILS

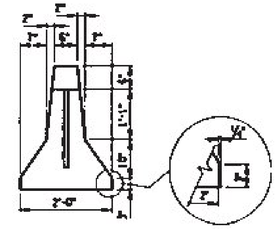

END VIEW

OPTIONAL BATTERED BOTTOM CORNER DETAIL

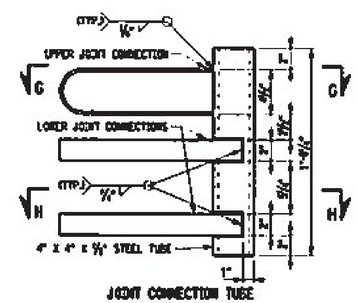

JOINT CONNECTION TUBE

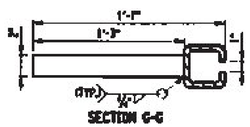

SECTION G-G

SECTION A-A

SECTION B-B

SECTION C-C

SECTION D-D

SECTION E-E

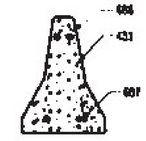

SECTION F-F

TRANSITION SECTIONS

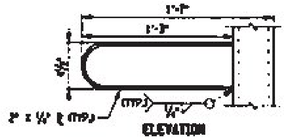

ELEVATION

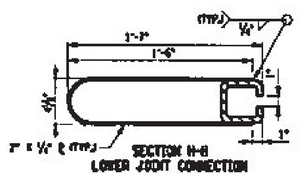

SECTION H-H
LOWER JOINT CONNECTION

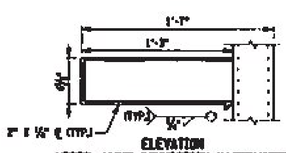

ELEVATION
UPPER JOINT CONNECTION (ALTERNATE)

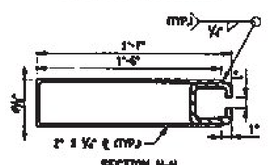

SECTION H-H
LOWER JOINT CONNECTION (ALTERNATE)

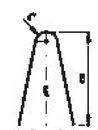
TYPE "I" BAR

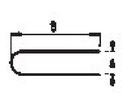
TYPE "U" BAR

TAPERED END SECTION BAR LIST

MARK	SIZE	NUMBER PER SECTION	LENGTH	TYPE	A	B	C	LOCATION
431	13	3	9'-11"	I	5"	78"	5"	STIRRUPS
432	13	1	5'-3"	I	5"	18"	5"	STIRRUPS
433	13	1	1'-4"	I	5"	8"	5"	STIRRUPS
434	13	4	3'-1"	U	4"	15¾"		HOOPS
484	13	1	1'-3"	STR.				
485	13	1	6"	STR.				
486	13	2	15'-7"	STR.				TRANSVERSE (TOP)
487	13	2	18'-2"	STR.				TRANSVERSE (BOTTOM)

EFFECTIVE DATE: 01/07/10

STATE OF NEW YORK
DEPARTMENT OF TRANSPORTATION

U.S. CUSTOMARY STANDARD SHEET

TEMPORARY CONCRETE BARRIER
(SHEET 2 OF 3)

APPROVED SEPTEMBER 30, 2009
/S/ J. F. RYAN, P.E.
DEPUTY DIR OF DESIGN CONSTRUCTION

ISSUED UNDER EO 09-01

619-01

FILE NAME = 619-01(2).DGN(TS-07)
DATE/TIME = 18-SEP-2009 14:07
USER = rdahm

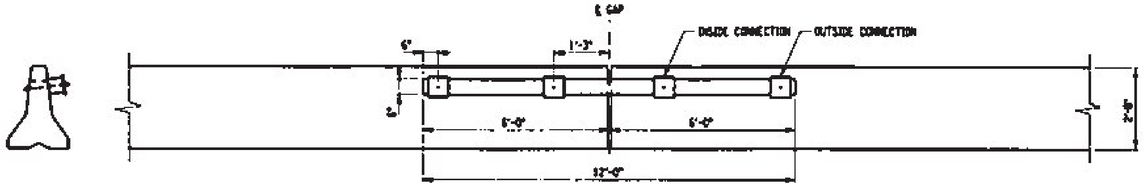

SIDE VIEW
(CONSTRUCTION SIDE)

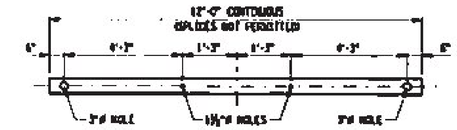

BOX BEAM GUIDE RAIL
HOLE LAYOUT DETAIL

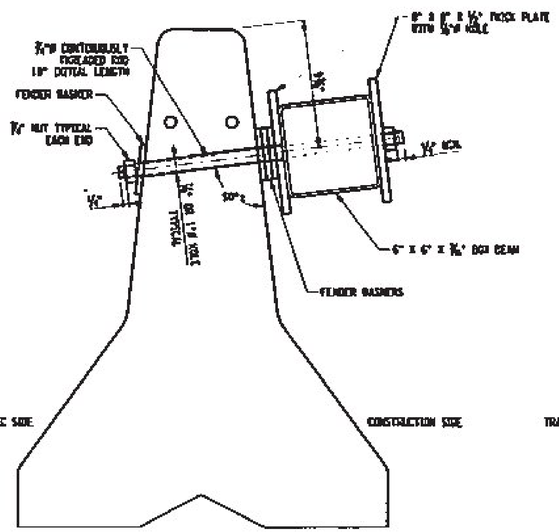

SECTION WITH SHIMMING

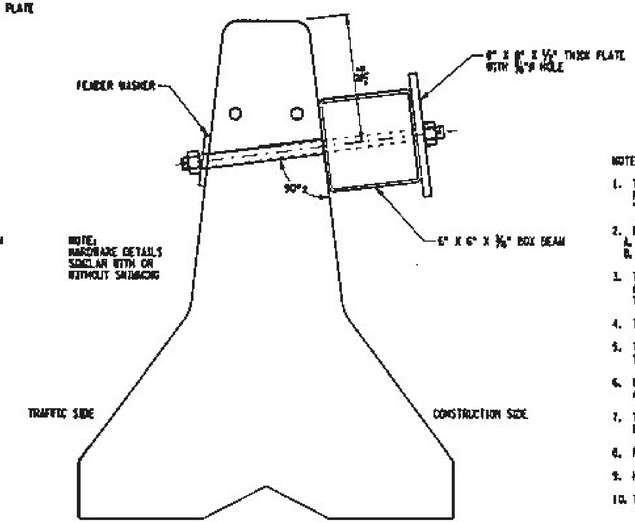

SECTION WITHOUT SHIMMING

BOX BEAM STIFFENING OF TEMPORARY CONCRETE BARRIER

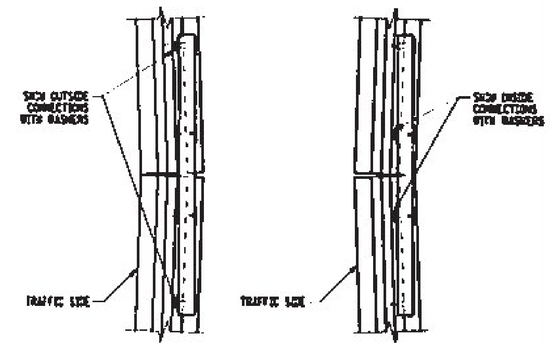

PLAN VIEW
TCB CURVING
TOWARD TRAFFIC

PLAN VIEW
TCB CURVING
AWAY FROM TRAFFIC

NOTES:

1. TEMPORARY CONCRETE BARRIER (TCB) SHALL BE PRECAST IN ACCORDANCE WITH THE REQUIREMENTS OF §704-05 PRECAST CONCRETE BARRIER AND STANDARD SHEET TITLED "TEMPORARY CONCRETE BARRIER - SHEET 1 OF 3" AND "TEMPORARY CONCRETE BARRIER - SHEET 2 OF 3".
2. BOX BEAM SHALL BE IN ACCORDANCE WITH THE REQUIREMENTS OF §710-20, BOX BEAM RAILING AND MEDIAN BARRIER RAILS.
   A. HOWEVER, THE BOX BEAM NEED NOT BE NEW.
   B. THE GALVANIZING REMAINING ON THE OLD PIECES SHALL BE SUFFICIENT TO ENSURE THE STEEL IS STRUCTURALLY INTACT.
3. TCB WITH BOX BEAM STIFFENER SHALL BEGIN AT LEAST 50'-0" FROM TO, BE CONTINUOUS THROUGH AND EXTEND AT LEAST 50'-0" BEYOND THE AREA REQUIRING LIMITED DEFLECTIONS. WHERE SPACE LIMITS SUCH EXTENSIONS, THE FIRST/LAST TCB SEGMENT SHOULD BE PINNED WITH 4 PINS ON THE CONSTRUCTION SIDE.
4. TEMPORARY CONCRETE BARRIER WITH BOX BEAM STIFFENER MAY ONLY BE USED WITH TCB SEGMENTS 14'-0" OR LONGER.
5. TEMPORARY CONCRETE BARRIER MAY ONLY BE INSTALLED TO THE FOLLOWING MINIMUM RADII: 14'-0" SEGMENT - 161'-0" RADIUS, 16'-0" SEGMENT - 114'-0" RADIUS, 18'-0" SEGMENT - 207'-0" RADIUS, AND 20'-0" SEGMENT - 230'-0" RADIUS.
6. WHERE TEMPORARY CONCRETE BARRIERS ARE PLACED ON A RADIUS, THE RESULTING GAPS BETWEEN THE BOX BEAM AND CONCRETE BARRIER SHALL BE SHIMMED.
7. THE SHIMMING SHALL CONSIST OF 6" x 6" x 1/2" SQUARE PLATE, AND FENDER WASHERS AS NEEDED TO SNUG THE BOX BEAM STIFFENER TO THE TCB.
8. FENDER WASHERS SHALL BE 3" NOMINAL O.D.
9. HARDWARE OTHER THAN THE BOX BEAM NEED NOT BE GALVANIZED.
10. THE PRESENCE OF NORMAL HOLES DRILLED PER THIS SHEET WILL NOT AFFECT THE REUSABILITY OF THE CONCRETE SEGMENTS.

STATE OF NEW YORK
DEPARTMENT OF TRANSPORTATION

U.S. CUSTOMARY STANDARD SHEET

TEMPORARY CONCRETE BARRIER
(SHEET 3 OF 3)

APPROVED SEPTEMBER 1, 2010
/S/ J.F. TIMAN, P.E.
DEPUTY CHIEF ENGINEER
(CONSTRUCTION)

ISSUED UNDER CD 10-034

619-01

EFFECTIVE DATE: 01/06/11

FILE NAME : 619-01S.DGN
DATE/TIME : 09/30/2010 10:44
USER : jcarlsg

To:	New York State Department of Transportation ENGINEERING BULLETIN	EB 10-034
		Expires one year after issue unless replaced sooner

Title: **BOX BEAM STIFFENING OF TEMPORARY CONCRETE BARRIER**

Distribution:
- ☒ Manufacturers (18)
- ☒ Local Govt. (31)
- ☒ Agencies (32)
- ☐ Surveyors (33)
- ☒ Consultants (34)
- ☒ Contractors (39)
- ☐ _____( )

Approved:

/s/J.F. Tynan — 8-31-10
James F. Tynan, P.E. — Date
Deputy Chief Engineer (Construction)

ADMINISTRATIVE INFORMATION:

- This Engineering Bulletin (EB) is effective beginning with projects submitted for the letting of 01/06/11.
- This EB does not supersede any previous issuances.
- This standard sheet will be incorporated into the next complete printing of the Standard Sheets.

PURPOSE:

The purpose of this EB is to issue Standard Sheets *619-01 Temporary Concrete Barrier (Sheet 3 of 3)* and *M619-72 Box Beam Stiffening of Temporary Concrete Barrier*.

TECHNICAL INFORMATION:

- Box Beam Stiffening of Temporary Concrete Barrier is an option to limit the deflection of temporary concrete barrier to 2.2 feet for standard impact conditions (5000# pickup impacting at 62 mph and a 25° angle). Without box beam stiffening, the deflection was 3.3 feet. With all segments pinned and no box beam stiffening, the deflection was 0.7 feet.
- Standard Specification Section 619 will subsequently be modified to include construction details and separate payment items for Box Beam Stiffened Temporary Concrete Barrier. In the interim, if a designer plans to use this detail, he/she must submit a special specification to the Design Quality Assurance Bureau, Specification and Standards Section for approval. Contact Terry Hale at terry.hale@dot.state.ny.us or (518) 485-7009 for assistance.
- Standard Sheets 619-01, 1 of 2 and 2 of 2 will be renumbered to 1 of 3 and 2 of 3 on the website, but will not be reissued.

TRANSMITTED MATERIALS:

Standard Sheets *619-01 Temporary Concrete Barrier (Sheet 3 of 3)* and *M619-72 Box Beam Stiffening of Temporary Concrete Barrier* are available on the IntraDOT and the Department's website at: https://www.nysdot.gov/main/business-center/engineering/cadd-info/drawings

BACKGROUND:

In 2007, research was conducted on a concept to reduce the deflection of TCB without the need to pin units into the pavement or a bridge deck. The concept involved bolting 12 foot lengths of 6" x 6" box beam on the back side of the TCB, spanning across the joints.

CONTACT:

For additional information contact Terry Hale of the Design Quality Assurance Bureau at (518) 485-7009, thale@dot.state.ny.us or Tom Melander of the Office of Construction at (518) 457-6472, tmelander@dot.state.ny.us.

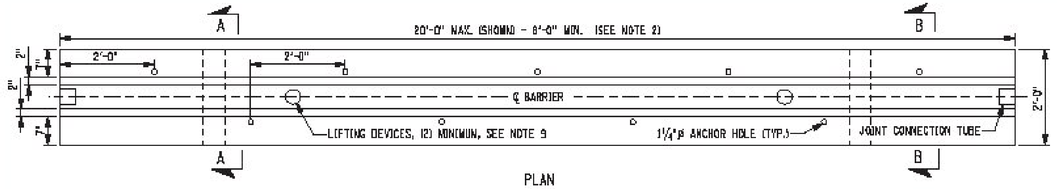

PLAN

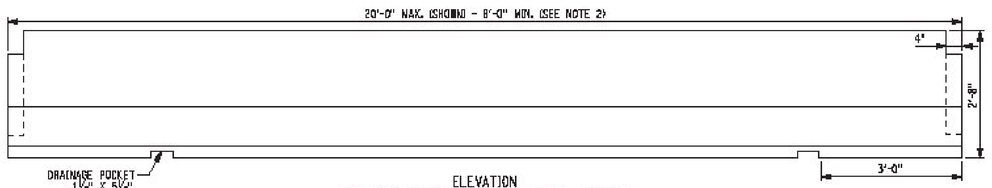

ELEVATION
TEMPORARY CONCRETE BARRIER FULL SECTION

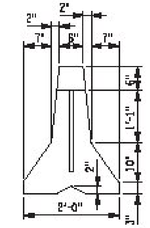

END VIEW

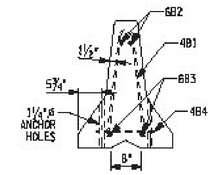

SECTION A-A

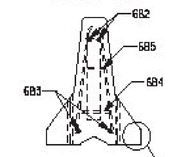

SECTION B-B

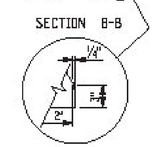

OPTIONAL BATTERED BOTTOM
CORNER DETAIL

NOTES:

1. TEMPORARY CONCRETE BARRIER SHALL BE PRECAST IN ACCORDANCE WITH THE REQUIREMENTS OF §704-05 PRECAST CONCRETE BARRIER.
2. TEMPORARY CONCRETE BARRIER SHALL BE PRECAST UNITS OF ONE OF THE FOLLOWING NOMINAL LENGTHS 8', 10', 12', 14', 16', 18', 20'.
3. STEEL PLATE REINFORCEMENT SHALL BE ASTM A36M, A572M, GRADE 345 STEEL, TUBE REINFORCEMENT SHALL BE ASTM A500, GRADE B OR C, AND REINFORCING BARS SHALL BE A615, GRADE 420. EPOXY BARS ARE NOT REQUIRED.
4. ALL WELDING SHALL BE PERFORMED BY A WELDER QUALIFIED IN ACCORDANCE WITH SECTION 8 OF THE NYS STEEL CONSTRUCTION MANUAL.
5. SURFACES TO BE WELDED SHALL BE FREE OF SLAG, RUST, MOISTURE, GREASE OR ANY OTHER MATERIAL THAT WILL PREVENT PROPER WELDING OR PRODUCE OBJECTIONABLE FUMES.
6. WELDING SHALL BE SHIELDED METAL ARC WELDING USING PROPERLY DRIED 5/32"ø E7018 ELECTRODES CONFORMING TO THE REQUIREMENTS OF SECTION 7 OF THE NYS STEEL CONSTRUCTION MANUAL.
7. THE NUMBER AND PLACEMENT OF THE 4B4 AND 4B5 BARS WILL VARY WITH THE LENGTH OF THE BARRIER SEGMENT.
8. CONCRETE CLEAR COVER FOR REINFORCING BARS SHALL BE 1½" (MIN.) UNLESS OTHERWISE SPECIFIED.
9. A MINIMUM OF (2) TWO RECESSED LIFTING DEVICES, EACH WITH THE CAPACITY TO LIFT A MASS OF 6 TONS (MINIMUM), SHALL BE INSTALLED ON EACH SEGMENT. SEGMENT MASS IS APPROXIMATELY 400 LBS/FT.
10. ONE DRAINAGE POCKET SHALL BE INCLUDED IN THE CENTER OF 8'-0" AND 10'-0" SEGMENTS, TWO DRAINAGE POCKETS IN ALL OTHER SEGMENTS.
11. CONNECTION KEY COVER PLATE SHALL BE INSTALLED FLUSH WITH THE BARRIER TOP.
12. 1"ø ASTM A36M ANCHOR PINS SHALL BE PLACED IN FOUR ANCHOR HOLES OF EACH SEGMENT TO BE PINNED. PINS SHALL BE PLACED ON THE WORKZONE SIDE OF THE BARRIER.
13. BASED ON SEGMENT LENGTH AND MAXIMUM JOINT ROTATION, TEMPORARY CONCRETE BARRIER CAN ONLY BE INSTALLED TO THE FOLLOWING MINIMUM RADII: 8' - 92', 10' - 115', 12' - 138', 14' - 161', 16' - 184', 18' - 207', 20' - 230'.

FULL SECTION BAR LIST								
MARK	SIZE	NUMBER PER SECTION	LENGTH	TYPE	A	B	C	LOCATION
4B1	4	6	4'-11"	I	5"	28"	1"	STIRRUPS
4B4	4	1 PER RECESS	3'-1"	II	4"	15½"		ANCHOR RECESS HOOPS
4B5	4	SEE TABLE	4'-11"	I	5"	28"	1"	STIRRUPS
6B2	6	2	SEE NOTE 7	STR.				LONGITUDINAL (TOP)
6B3	6	2	SEE NOTE 7	STR.				LONGITUDINAL (BOTTOM)
6B4	6	2	1'-2"	STR.				TRANSVERSE (BOTTOM)
6B5	6	2	8"	STR.				TRANSVERSE (TOP)

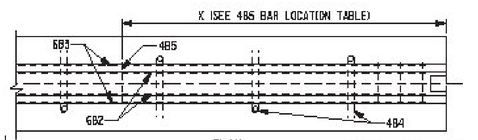

PLAN

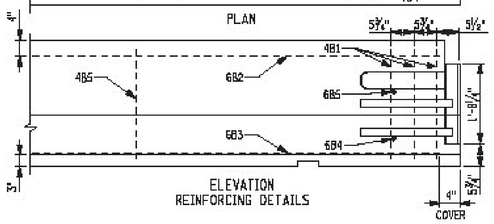

ELEVATION
REINFORCING DETAILS

4B5 BAR LOCATION TABLE		
NOMINAL LENGTH OF BARRIER UNIT	X	NO. EACH SECTION
20'	6'-11"	2
18'	6'-5"	2
16'	5'-11"	2
14'	7'	1
12'	6'	1
10'	5'	1
8'	N/A	0
"X" DISTANCE FROM END OF BARRIER TO 4B5 BAR		

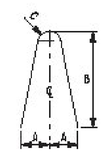

TYPE "J" BAR

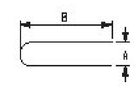

TYPE "U" BAR

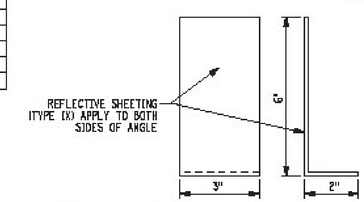

REFLECTOR

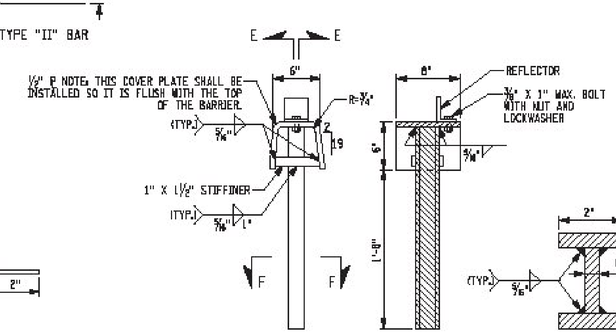

END VIEW SECTION E-E SECTION F-F
CONNECTION KEY

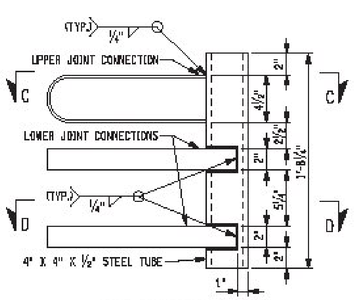

JOINT CONNECTION TUBE

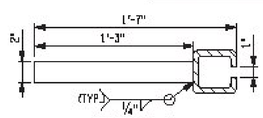

SECTION C-C

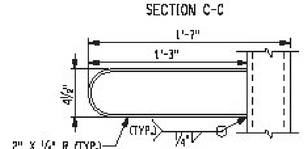

ELEVATION

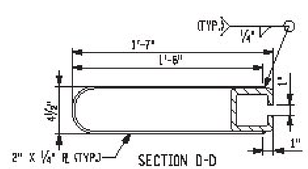

SECTION D-D
LOWER JOINT CONNECTION

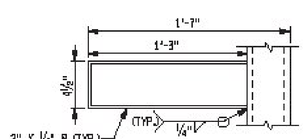

ELEVATION
UPPER JOINT CONNECTION (ALTERNATE)

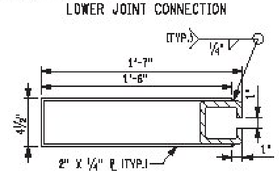

SECTION D-D
LOWER JOINT CONNECTION (ALTERNATE)

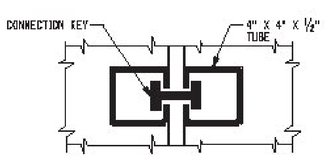

KEY IN PLACE

STATE OF NEW YORK
DEPARTMENT OF TRANSPORTATION

U.S. CUSTOMARY STANDARD SHEET

TEMPORARY CONCRETE BARRIER
(SHEET 1 OF 3)

ERRATA 2 EFF. 09/04/2014
ISSUED WITH EB 14-025

ERRATA 1 EFF. 01/09/2014
ISSUED WITH EB 13-042

EFFECTIVE DATE: 01/07/10

APPROVED JULY 10, 2014
/S/ J. F. TYNAN, P.E.
DEPUTY CHIEF ENGINEER
(CONSTRUCTION)

ISSUED UNDER EB 09-025

619-01

FILE NAME = 619-01D1_20071Dec2.dgn
DATE/TIME = 06-AUG-2014 14:06
USER = jburney

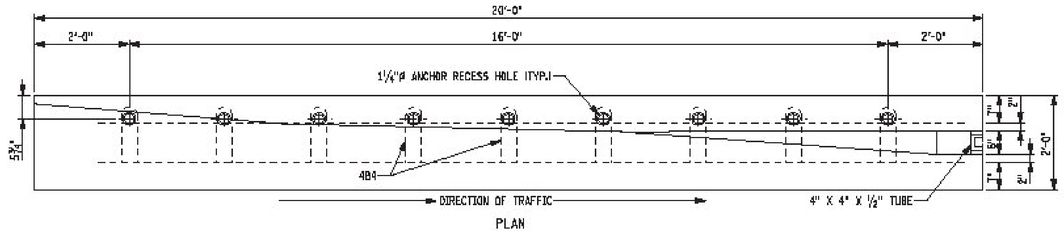

PLAN

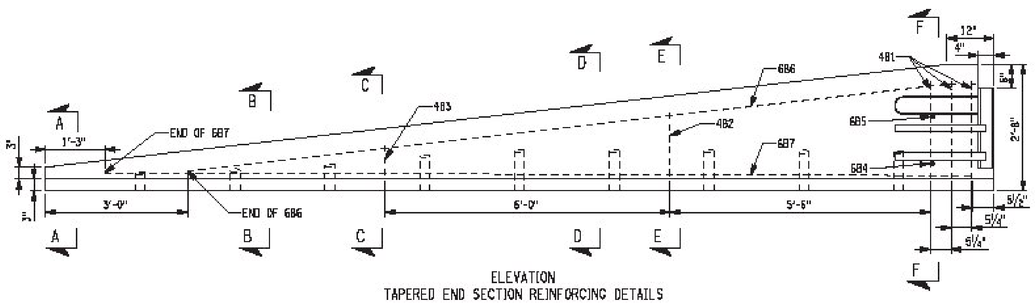

ELEVATION
TAPERED END SECTION REINFORCING DETAILS

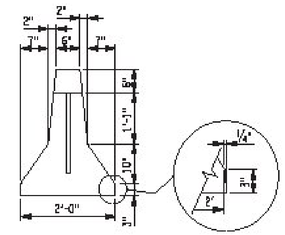

END VIEW

OPTIONAL BATTERED BOTTOM CORNER DETAIL

NOTES:

1. TEMPORARY CONCRETE BARRIER SHALL BE PRECAST IN ACCORDANCE WITH THE REQUIREMENTS OF §704-05, PRECAST CONCRETE BARRIER.
2. STEEL PLATE SHALL BE ASTM A36M, A572M, GRADE 345, TUBE STEEL SHALL BE ASTM A500 GRADE B OR C, AND REINFORCING BARS SHALL BE A615 GRADE 420.
3. ALL WELDING SHALL BE PERFORMED BY A QUALIFIED WELDER IN ACCORDANCE WITH SECTION 8 OF THE NYS STEEL CONSTRUCTION MANUAL.
4. SURFACES TO BE WELDED SHALL BE FREE OF SLAG, RUST, MOISTURE, GREASE OR ANY OTHER MATERIAL THAT WILL PREVENT PROPER WELDING OR PRODUCE OBJECTIONABLE FUMES.
5. WELDING SHALL BE SHIELDED METAL ARC WELDING USING PROPERLY DRIED 5/32"ø E7018 ELECTRODES CONFORMING TO THE REQUIREMENTS OF SECTION 7 OF THE NYS STEEL CONSTRUCTION MANUAL.
6. CONCRETE CLEAR COVER FOR REINFORCING BARS SHALL BE 1½" (MIN.) EXCEPT WHERE OTHERWISE SPECIFIED.
7. A MINIMUM OF (2) TWO RECESSED LIFTING DEVICES, WITH THE CAPACITY TO LIFT A MASS OF 6 TONS (MINIMUM) SHALL BE INSTALLED ON EACH SEGMENT.
8. 1"ø ASTM A36M ANCHOR PINS SHALL BE PLACED IN FOUR RECESSES OF EACH SEGMENT TO BE PINNED.
9. CONNECTION KEY COVER PLATE SHALL BE INSTALLED FLUSH WITH THE BARRIER TOP.
10. THE DETAILS SHOWN FOR THE END SECTIONS ON THIS SHEET ARE FOR APPROACH ENDS WHICH ARE TO BE LOCATED TO THE LEFT OF THE TRAFFIC FLOW ON ONE-WAY OPERATIONS OR BETWEEN OPPOSING FLOWS OF TRAFFIC ON TWO-WAY OPERATIONS. WHEN AN APPROACH END IS TO BE LOCATED TO THE RIGHT OF THE TRAFFIC FLOW, THE END SEGMENT SHALL BE CONSTRUCTED SO THAT IT IS OPPOSITE-HAND (REVERSED IN ALL CONFIGURATIONS, ANCHOR HOLE LOCATIONS AND REINFORCEMENT).
11. ALL CORNERS ON THE TOP OF THE SEGMENT SHALL BE ROUNDED TO A 1" RADIUS. THE SEGMENT SHALL HAVE A SMOOTH TRANSITION TO A 6" END-OF-SECTION HEIGHT. ALL END SECTIONS SHALL BE PINNED UNLESS OTHERWISE NOTED.

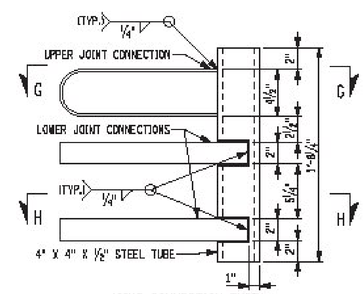

JOINT CONNECTION TUBE

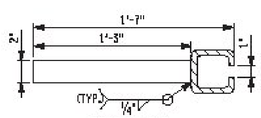

SECTION G-G

SECTION A-A SECTION B-B SECTION C-C SECTION D-D SECTION E-E SECTION F-F

TRANSITION SECTIONS

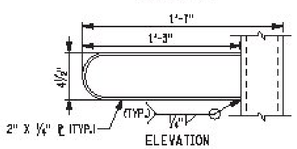

ELEVATION

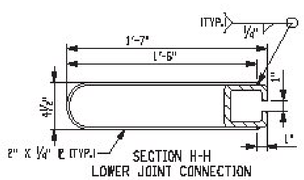

SECTION H-H
LOWER JOINT CONNECTION

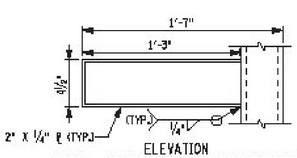

ELEVATION
UPPER JOINT CONNECTION (ALTERNATE)

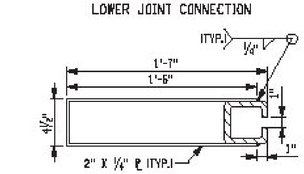

SECTION H-H
LOWER JOINT CONNECTION (ALTERNATE)

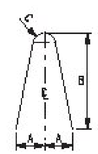

TYPE "I" BAR

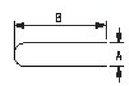

TYPE "II" BAR

TAPERED END SECTION BAR LIST

MARK	SIZE	NUMBER PER SECTION	LENGTH	TYPE	A	B	C	LOCATION
481	13	3	4'-11"	C	5"	28"	1"	STIRRUPS
482	13	1	3'-3"	C	5"	18"	1"	STIRRUPS
483	13	1	1'-8"	C	5"	8"	1"	STIRRUPS
484	13	9	3'-1"	D	4"	(5½"		HOOPS
684	19	1	1'-2"	STR.				
685	19	1	6"	STR.				
686	19	2	16'-7"	STR.				TRANSVERSE (TOP)
687	19	2	18'-2"	STR.				TRANSVERSE (BOTTOM)

STATE OF NEW YORK
DEPARTMENT OF TRANSPORTATION

U.S. CUSTOMARY STANDARD SHEET

TEMPORARY CONCRETE BARRIER
(SHEET 2 OF 3)

APPROVED SEPTEMBER 30, 2009
/S/ J. F. TYNAN, P.E.
DEPUTY CHIEF ENGINEER
(CONSTRUCTION)

ISSUED UNDER EB 09-025

619-01

EFFECTIVE DATE: 01/07/10

FILE NAME = 619-0102.010710A.dgn
DATE/TIME = 19-SEP-2010 14:59
USER = nlahse

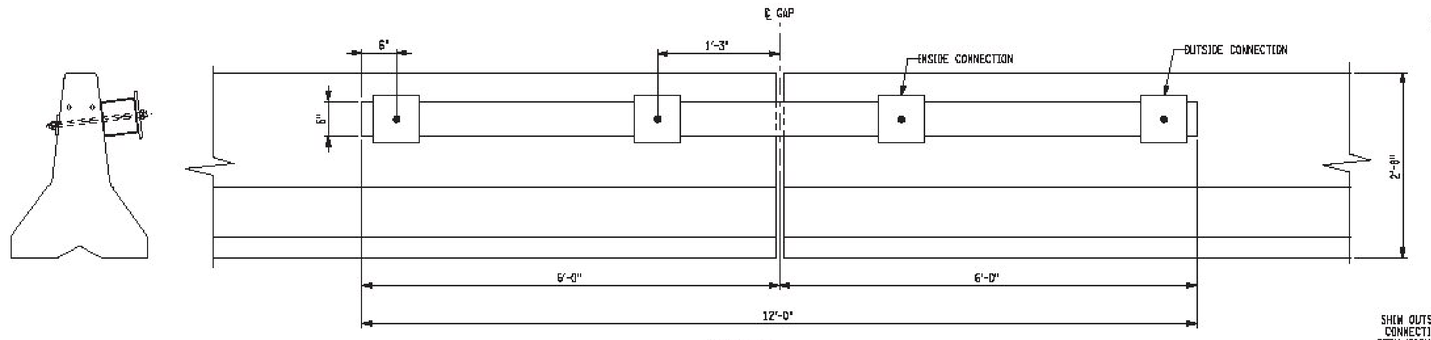

SIDE VIEW
(CONSTRUCTION SIDE)

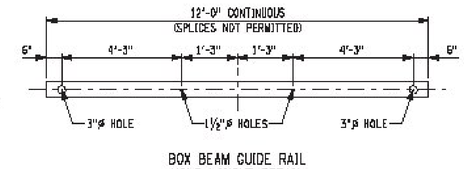

BOX BEAM GUIDE RAIL
HOLE LAYOUT DETAIL

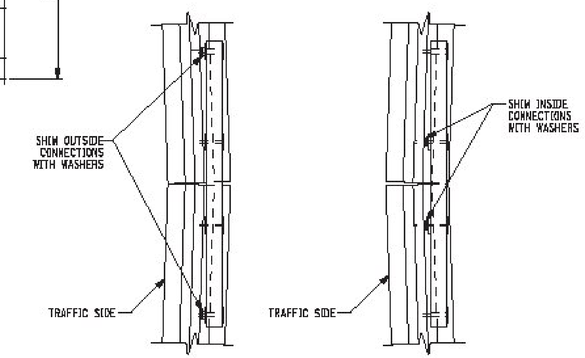

PLAN VIEW
TCB CURVING
TOWARD TRAFFIC

PLAN VIEW
TCB CURVING
AWAY FROM TRAFFIC

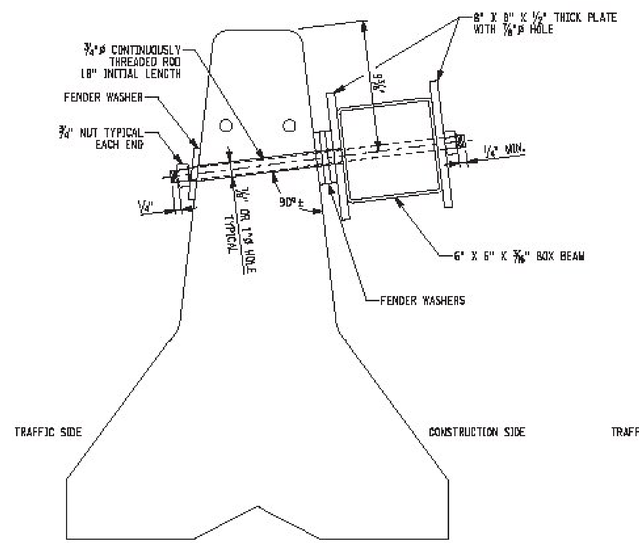

SECTION WITH SHIMMING

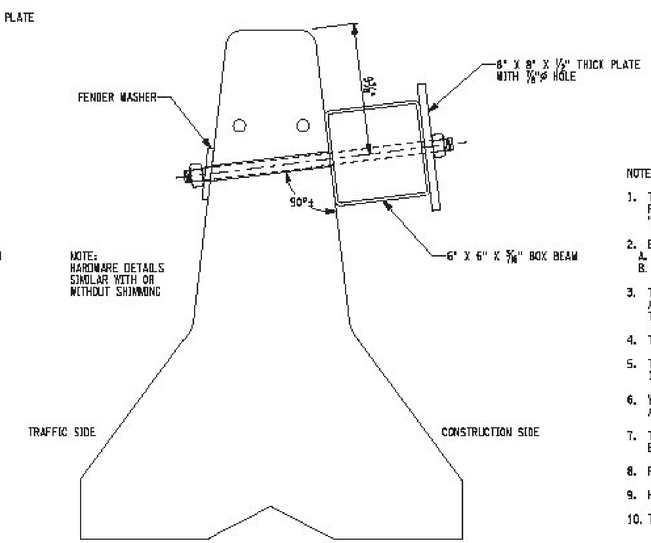

SECTION WITHOUT SHIMMING

BOX BEAM STIFFENING OF TEMPORARY CONCRETE BARRIER

NOTES:

1. TEMPORARY CONCRETE BARRIER (TCB) SHALL BE PRECAST IN ACCORDANCE WITH THE REQUIREMENTS OF §704-05 PRECAST CONCRETE BARRIER AND STANDARD SHEET TITLED "TEMPORARY CONCRETE BARRIER - SHEET 1 OF 3" AND "TEMPORARY CONCRETE BARRIER - SHEET 2 OF 3".
2. BOX BEAM SHALL BE IN ACCORDANCE WITH THE REQUIREMENTS OF §710-21, BOX BEAM RAILING AND MEDIAN BARRIER, RAILS.
   A. HOWEVER, THE BOX BEAM NEED NOT BE NEW.
   B. THE GALVANIZING REMAINING ON THE OLD PIECES SHALL BE SUFFICIENT TO ENSURE THE STEEL IS STRUCTURALLY INTACT.
3. TCB WITH BOX BEAM STIFFENER SHALL BEGIN AT LEAST 50'-0" PRIOR TO, BE CONTINUOUS THROUGH AND EXTEND AT LEAST 50'-0" BEYOND THE AREA REQUIRING LIMITED DEFLECTIONS. WHERE SPACE LIMITS SUCH EXTENSIONS, THE FIRST/LAST TCB SEGMENT SHOULD BE PINNED WITH 4 PINS ON THE CONSTRUCTION SIDE.
4. TEMPORARY CONCRETE BARRIER WITH BOX BEAM STIFFENER MAY ONLY BE USED WITH TCB SEGMENTS 14'-0" OR LONGER.
5. TEMPORARY CONCRETE BARRIER MAY ONLY BE INSTALLED TO THE FOLLOWING MINIMUM RADII: 14'-0" SEGMENT - 161'-0" RADIUS, 16'-0" SEGMENT - 184'-0" RADIUS, 18'-0" SEGMENT - 207'-0" RADIUS, AND 20'-0" SEGMENT - 230'-0" RADIUS.
6. WHERE TEMPORARY CONCRETE BARRIERS ARE PLACED ON A RADIUS, THE RESULTING GAPS BETWEEN THE BOX BEAM AND CONCRETE BARRIER SHALL BE SHIMMED.
7. THE SHIMMING SHALL CONSIST OF 8" X 8" X ½" SQUARE PLATE, AND FENDER WASHERS AS NEEDED TO SNUG THE BOX BEAM STIFFENER TO THE TCB.
8. FENDER WASHERS SHALL BE 3" NOMINAL O.D.
9. HARDWARE OTHER THAN THE BOX BEAM NEED NOT BE GALVANIZED.
10. THE PRESENCE OF NORMAL HOLES DRILLED PER THIS SHEET WILL NOT AFFECT THE REUSABILITY OF THE CONCRETE SEGMENTS.

STATE OF NEW YORK
DEPARTMENT OF TRANSPORTATION

U.S. CUSTOMARY STANDARD SHEET

TEMPORARY CONCRETE BARRIER
(SHEET 3 OF 3)

ERRATA 1 EFF. 01/09/2014 ISSUED WITH EB 13-042	APPROVED: NOVEMBER 4, 2013 /S/ J.F. TYNAN, P.E. DEPUTY CHIEF ENGINEER (CONSTRUCTION)	ISSUED UNDER EB 10-034
EFFECTIVE DATE: 01/06/11		619-01

FILE NAME = 619-0103.01D3ile1.dgn
DATE/TIME = 14-NOV-2013 09:01
USER = rlarse

300.36
ISSUED 1/10/12

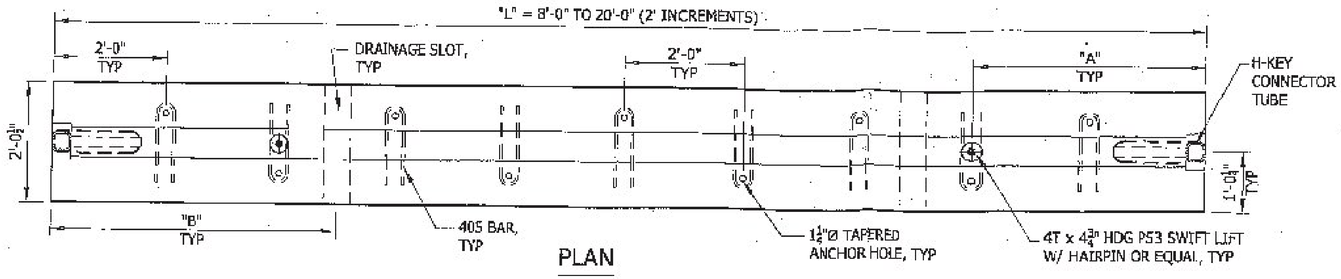

PLAN

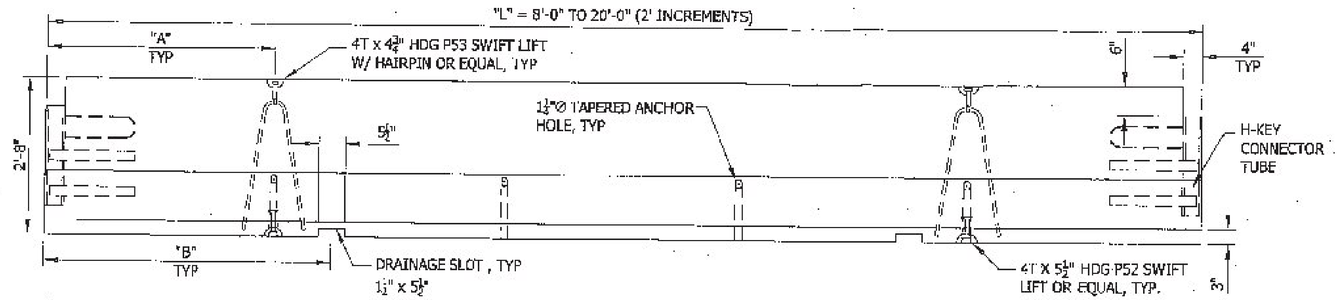

ELEVATION

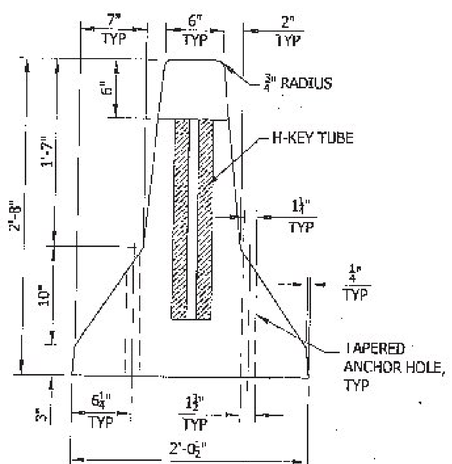

END ELEVATION

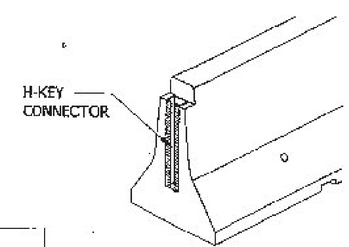

END ISOMETRIC

TABLE

MK#	LENGTH (FT)	VOLUME (C.Y.)	WEIGHT (TONS)	LIFTING "A"	SLOT "B"	HOLES (QTY)
H8	8'-0"	0.80	1.61	2'-0"	5'-0" *	3
H10	10'-0"	0.99	2.01	2'-0"	5'-0" *	4
H12	12'-0"	1.19	2.42	2'-0"	3'-0"	5
H14	14'-0"	1.39	2.82	4'-0"	5'-0"	6
H16	16'-0"	1.59	3.22	4'-0"	5'-0"	7
H18	18'-0"	1.79	3.62	4'-0"	5'-0"	8
H20	20'-0"	1.99	4.03	4'-0"	5'-0"	9

* 8'-0" & 10'-0" UNITS HAVE ONLY (1) DRAINAGE SLOT. SLOT IN 8'-0" UNIT IS 5'-0" IN FROM ONE END & 3'-0" IN FROM THE OTHER.

NOTES:

1. ALL MATERIAL SHALL CONFORM TO SECTION 704-05, PRECAST CONCRETE BARRIER, OF THE NYSDOT STANDARD SPECIFICATIONS AND THE FORT MILLER CO., INC. QUALITY CONTROL PLAN FOR MANUFACTURING PRECAST CONCRETE.
2. REINFORCING BARS SHALL BE ASTM A615, GRADE 60.
3. CONCRETE TO BE 3,000 PSI @ 28 DAYS.
4. AIR CONTENT SHALL BE 5.0 - 9.0%.
5. MINIMUM STRIPPING STRENGTH: 2,000 PSI.
6. POSITION OF REINFORCEMENT TO BE MAINTAINED WITH THERMOPLASTIC CHAIRS OR PLASTIC TIPPED SLAB BOLSTERS.
7. CURING WITH MEMBRANE CURING COMPOUND SHALL CONFORM TO NYSDOT SPECIFICATION 704-03.
8. ALL H-KEY & TUBE DETAILS, MATERIALS AND WELDING REQUIREMENTS SHALL CONFORM TO NYSDOT STANDARD SHEET 619-01.
9. CONCRETE CLEAR COVER FOR REINFORCING BARS SHALL BE 1½", UNLESS OTHERWISE SPECIFIED.

DIMENSIONAL TOLERANCES:

1. H-KEY CONNECTOR LOCATION: ±¼"
2. CROSS-SECTIONAL DIMENSIONS: ±¼"
3. PLUMBNESS: ±¼"
4. LONGITUDINAL DIMENSIONS (LAY LENGTH): ±¼" PER 10'-0"
5. WHEN CHECKED WITH A 10'-0" STRAIGHT EDGE, IRREGULARITIES SHALL NOT EXCEED ±¼"
6. REINFORCING COVER: 1½" (-¼", +⅜")
7. REINFORCING SPACING: ±2" NON-CUMULATIVE

TESTING/INSPECTION:

FMC QCP/NYSDOT

UNIT MARKING:

EACH UNIT SHALL BE PERMANENTLY MARKED WITH THE FOLLOWING:

FMC MM/YY

EACH UNIT SHALL ALSO BE LABELED OR PAINTED WITH THE FOLLOWING INFORMATION FOR FIELD INSPECTION PURPOSES:

FMC
D.O.M.
MK#/PIECE I.D.
NYSDOT

NYSDOT

☒ Approved

☐ Approved As Noted

ORIGINAL SIGNED BY:
J. P. REIDY JAN 0 8 '01

By Date

For: Director Materials Bureau

Drawing Verified In English Units Only

NO	DATE	BY	REVISIONS

THE FORT MILLER Co., Inc.
P.O. BOX 98
SCHUYLERVILLE, NY 12871
(518) 695-5000/(518) 695-4970 FAX
www.fortmiller.com

CONTRACT NO.:
PROJECT:
LOCATION:
SUBJECT: H-KEY TEMPORARY BARRIER 8' TO 20'
CONTRACTOR:
ENGINEER/ARCHITECT NYSDOT

F.M. JOB NO. NA
SHEET NO. 1 OF 2
DATE: 12-19-11
DRN. BY: TDS
CHK. BY: SDH
SCALE: NONE

DWG. NO.
TB5-1

PO Box 508
Barton, VT 05822
Phone: (802)525-9506
Fax: (802)525-4616
www.jpsicard.com

Submittal Data Sheet

Submittal #: 8

Submission #: 2

Date: 5/6/2016

Project Name: Irasburg IM Deck (46)

Owner: Vermont Agency of Transportation

Engineer: VTrans

Contractor: J.P. Sicard, Inc.

Item Number: 507.11

Supplier: Dimension Fabricators, Inc.

Description of Item: 507.11 Reinforcing Steel, Placement Drawings: Page 1: Span 1/Page 2: Span 2-4 REV1

Subsitution: NO

Engineers Review Comments:

Submitted By:	Brad Drake
Title:	Project Manager
Company:	JP Sicard, Inc.

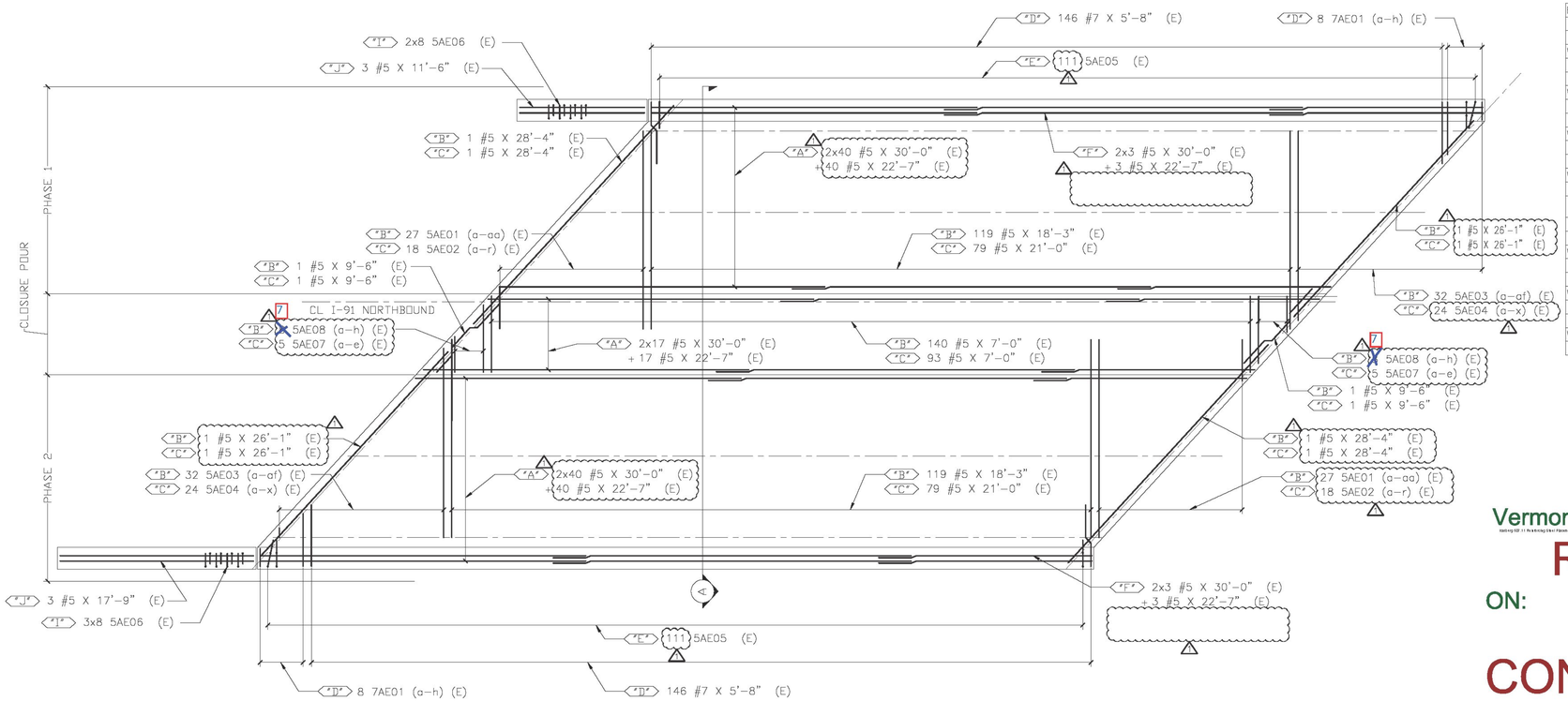

DECK REINFORCEMENT PLAN - SPAN #1

CONTRACT DWG. REF. 19 OF 49

Release Number:																	BAR LIST
Bar Mark	Qty	Size	Total Length	Type	'A'	'B'	'C'	'D'	'E'	'F'	'G'	'H'	'J'	'K'	'O'	'R'	
5AE01a	2	#5	3'-9"	0		3'-9"											
Varies To																	
5AE01aa	2	#5	17'-11"	0		17'-11"											
5AE02a	2	#5	4'-3"	0		4'-3"											
Varies To																	
5AE02r	2	#5	18'-3"	0		18'-3"											
5AE03a	2	#5	1'-2"	0		1'-2"											
Varies To																	
5AE03af	2	#5	18'-1"	0		18'-1"											
5AE04a	2	#5	1'-8"	0		1'-8"											
Varies To																	
5AE04x	2	#5	20'-5"	0		20'-5"											
5AE05	222	#5	5'-8 3/8"	CM14		0'-10"	1'-4"	1'-5"	1'-3 3/4"	0'-10"				1'-6 3/4"			
5AE06	40	#5	3'-1"	17		1'-4"	1'-9"										
5AE07a	2	#5	3'-4"	0		3'-4"											
Varies To																	
5AE07e	2	#5	6'-8"	0		6'-8"											
5AE08a	2	#5	3'-4"	0		3'-4"											
Varies To																	
5AE08h	2	#5	6'-8"	0		6'-8"											
7AE01a	2	#7	1'-8"	0		1'-8"											
Varies To																	
7AE01h	2	#7	5'-5"	0		5'-5"											

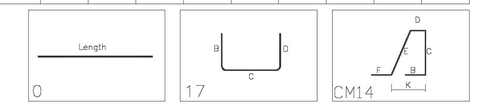

Vermont Agency of Transportation

Updated 02/2011 Rev Working Sheet Pavers+Slowedge REV1

RECEIVED

ON: May 6, 2016

and Checked for

CONFORMANCE

BY: Jennifer Fitch DATE: 05/10/16

FOR APPROVAL

LAP CHART	
#5	3'-0"

LEGEND:

CONT.-CONTINUOUS	E.E.-EACH END
TRANS.-TRANSVERSE	E.F.-EACH FACE
DWLS.-DOWELS	F.F.-FRONT FACE
VERTS.-VERTICAL	R.F.-REAR FACE
HORIZ.-HORIZONTAL	E.W.-EACH WAY
T&B -TOP & BOTTOM	O.C.-ON CENTER
I.F.-INNER FACE	L.W.-LONG WAY
O.F.-OUTER FACE	S.W.-SHORT WAY

ELEVATIONS & DIMENSIONS SHOWN ON THIS DWG. ARE FOR REINF. DETAILING PURPOSES ONLY AND ARE NOT INTENDED FOR DIMENSIONAL CONSTRUCTION.

EPOXY REINF. BARS ASTM A615 GRADE 60, MARKED (E)

VERIFICATION OF UNCLEAR INFORMATION MAY BE REQUESTED ON THIS DRAWING. SHOULD VERIFICATION BE LEFT UN-ADDRESSED IT WILL REMAIN AS SHOWN AND ASSUME TO BE CORRECT.

SHOP DRAWING REVIEW

☐ REVIEWED AS REQUIRED BY THE CONSTRUCTION CONTRACT DOCUMENTS AND APPROVED, BUT ONLY FOR CONFORMANCE TO THE DESIGN CONCEPT OF THE WORK, AND SUBJECT TO FURTHER LIMITATIONS AND REQUIREMENTS CONTAINED IN THE CONSTRUCTION CONTRACT DOCUMENTS.

☐ REJECTED ☐ REVISE AND RESUBMIT ☒ APPROVED AS NOTED

CORRECTIONS OR COMMENTS MADE ON THE SHOP DRAWINGS DURING THIS REVIEW DID NOT RELIEVE CONTRACTOR FROM COMPLIANCEWITH REQUIREMENTS OF THE DRAWINGS AND SPECIFICATIONS. THIS CHECK IS ONLY FOR REVIEW OF GENERAL CONFORMANCE WITH THE DESIGN CONCEPT OF THE PROJECT AND GENERAL COMPLIANCE WITH THE INFORMATION GIVEN IN THE CONTRACT DOCUMENTS. THE CONTRACTOR IS RESPONSIBLE FOR: CONFIRMING AND CORRELATING ALL QUANTITIES AND DIMENSIONS; SELECTING FABRICATION PROCESSES AND TECHNIQUES OF CONSTRUCTION; COORDINATING THEIR WORK WITH THAT OF ALL OTHER TRADES; AND PERFORMING THEIR WORK IN A SAFE AND SATISFACTORY MANNER.

CLD Consulting Engineers
540 Commercial Street
Manchester, NH 03101
603-669-8223

Job Number: 150223
Reviewed by: SRB
Date: 05/06/2016

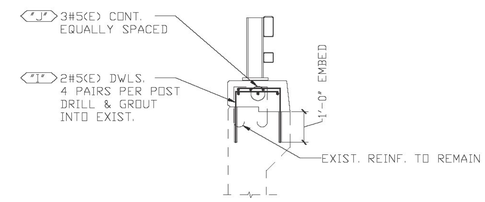

TYPICAL WINGWALL SECTION

CONTRACT DWG. REF. 24 OF 49

YES - DRAWN CORRECTLY. HOWEVER, THERE ARE 3 SPACES WITH 4 BARS, NOT 4 SPACES. PLEASE REVISE.

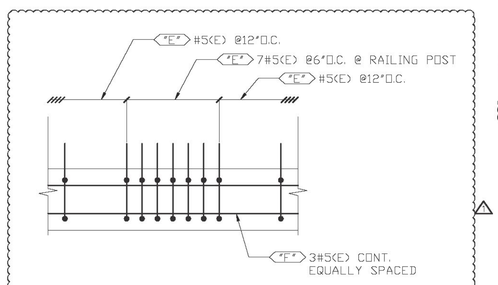

CURB REINF. PLAN

CONTRACT DWG. REF. 19

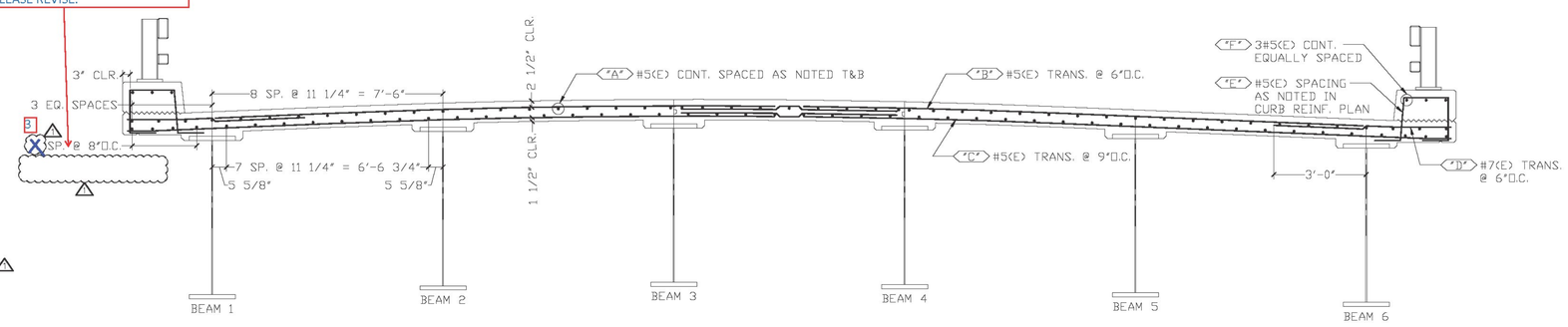

SECTION A

CONTRACT DWG. REF. A / 19 OF 49

ALL REINF. EPOXY

6			
5			
4			
3			
2	5/6/16	△	REVISED PER APPROVAL / FOR APPROVAL
1	5/3/16	–	FOR APPROVAL
	DATE	REV.#	SENT FOR

DIMENSION
DIMENSION FABRICATORS INC.
2000 7TH STREET
SCOTIA, N.Y. 12302
PH: (518) 374-1936
FAX (518) 374-4830
www.dimensionfabricators.com

STRUCTURE	VTAOT IRASBURG IM DECK (46)
	INTERSTATE 91 (PRINCIPLE ARTERIAL) BRIDGE NO. 107N
LOCATION	TOWN OF IRASBURG, COUNTY OF ORLEANS
ARCHITECT	
ENGINEER	CLD CONSULTING ENGINEERS
CUSTOMER	J.P. SICARD, INC.

DRAWN BY	DATE	DFI #
CMB	4/26/16	9737

DRAWING COVERS	DRAWING #
DECK SLAB – SPAN 1	A

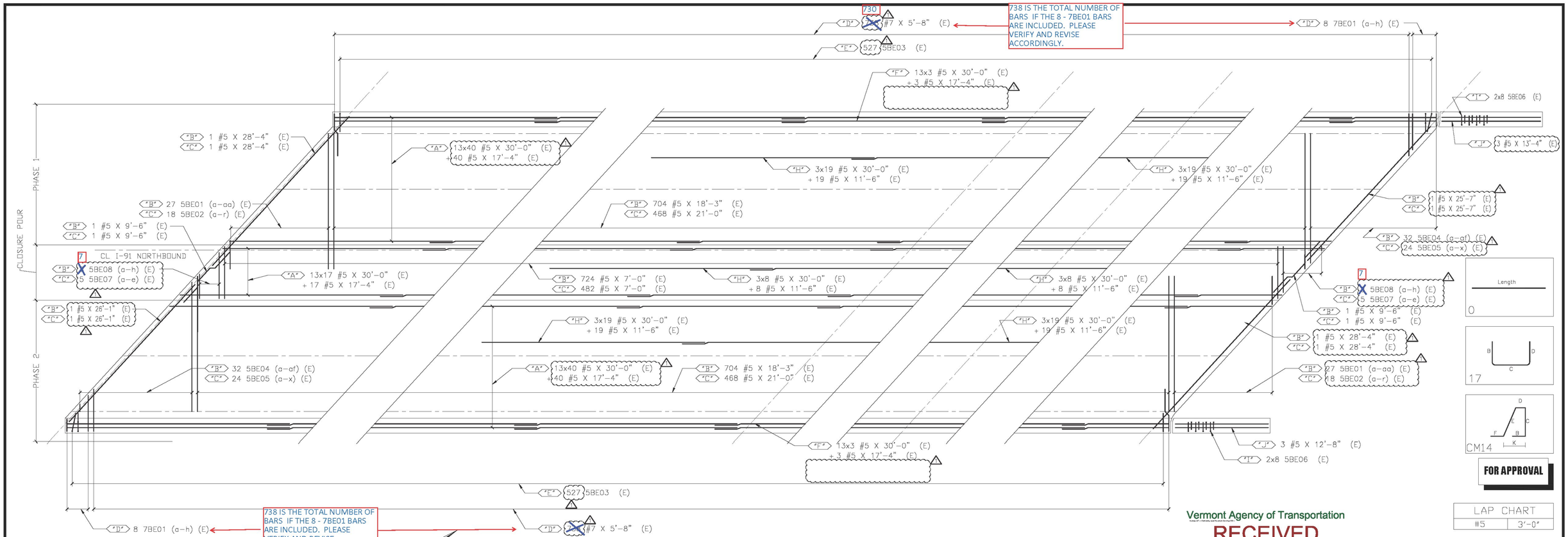

738 IS THE TOTAL NUMBER OF BARS IF THE 8 - 7BE01 BARS ARE INCLUDED. PLEASE VERIFY AND REVISE ACCORDINGLY.

738 IS THE TOTAL NUMBER OF BARS IF THE 8 - 7BE01 BARS ARE INCLUDED. PLEASE VERIFY AND REVISE ACCORDINGLY.

DECK REINFORCEMENT PLAN - SPANS 2 THRU 4

CONTRACT DWG. REF. 20 OF 49

FOR APPROVAL

LAP CHART	
#5	3'-0"

Vermont Agency of Transportation

RECEIVED

ON: May 6, 2016

and Checked for

CONFORMANCE

BY: Jennifer Fitch DATE: 05/10/16

LEGEND:

CONT.-CONTINUOUS	E.E.-EACH END
TRANS.-TRANSVERSE	E.F.-EACH FACE
DWLS.-DOWELS	F.F.-FRONT FACE
VERTS.-VERTICAL	R.F.-REAR FACE
HORIZ.-HORIZONTAL	E.W.-EACH WAY
T&B -TOP & BOTTOM	O.C.-ON CENTER
I.F.-INNER FACE	L.W.-LONG WAY
O.F.-OUTER FACE	S.W.-SHORT WAY

ELEVATIONS & DIMENSIONS SHOWN ON THIS DWG. ARE FOR REINF. DETAILING PURPOSES ONLY AND ARE NOT INTENDED FOR DIMENSIONAL CONSTRUCTION.

EPOXY REINF. BARS ASTM A615 GRADE 60, MARKED (E)

VERIFICATION OF UNCLEAR INFORMATION MAY BE REQUESTED ON THIS DRAWING. SHOULD VERIFICATION BE LEFT UN-ADDRESSED IT WILL REMAIN AS SHOWN AND ASSUME TO BE CORRECT.

Release Number: BAR LIST

Bar Mark	Qty	Size	Total Length	Type	'A'	'B'	'C'	'D'	'E'	'F'	'G'	'H'	'J'	'K'	'O'	'R'
5BE01a	2	#5	3'-9"	0		3'-9"										
Varies To																
5BE01aa	2	#5	17'-11"	0		17'-11"										
5BE02a	2	#5	4'-3"	0		4'-3"										
Varies To																
5BE02r	2	#5	18'-3"	0		18'-3"										
5BE03	1054	#5	5'-8 X̄"	CM14		0'-10"	1'-4"	1'-5"	1'-3 X̄"	0'-10"				1'-6 X̄"		
5BE04a	2	#5	1'-2"	0		1'-2"										
Varies To																
5BE04af	2	#5	18'-1"	0		18'-1"										
5BE05a	2	#5	1'-8"	0		1'-8"										
Varies To																
5BE05x	2	#5	20'-5"	0		20'-5"										
5BE06	32	#5	3'-1"	17		1'-4"	1'-9"									
5BE07a	2	#5	3'-4"	0		3'-4"										
Varies To																
5BE07e	2	#5	6'-8"	0		6'-8"										

Release Number: BAR LIST

Bar Mark	Qty	Size	Total Length	Type	'A'	'B'	'C'	'D'	'E'	'F'	'G'	'H'	'J'	'K'	'O'	'R'
5BE08a	2	#5	3'-4"	0		3'-4"										
Varies To																
5BE08h	2	#5	6'-8"	0		6'-8"										
7BE01a	2	#7	1'-8"	0		1'-8"										
Varies To																
7BE01h	2	#7	5'-5"	0		5'-5"										

SHOP DRAWING REVIEW

☐ REVIEWED AS REQUIRED BY THE CONSTRUCTION CONTRACT DOCUMENTS AND APPROVED, BUT ONLY FOR CONFORMANCE TO THE DESIGN CONCEPT OF THE WORK, AND SUBJECT TO FURTHER LIMITATIONS AND REQUIREMENTS CONTAINED IN THE CONSTRUCTION CONTRACT DOCUMENTS.

☐ REJECTED ☐ REVISE AND RESUBMIT ☒ APPROVED AS NOTED

CORRECTIONS OR COMMENTS MADE ON THE SHOP DRAWINGS DURING THIS REVIEW DID NOT RELIEVE CONTRACTOR FROM COMPLIANCE WITH REQUIREMENTS OF THE DRAWINGS AND SPECIFICATIONS. THIS CHECK IS ONLY FOR REVIEW OF GENERAL CONFORMANCE WITH THE DESIGN CONCEPT OF THE PROJECT AND GENERAL COMPLIANCE WITH THE INFORMATION GIVEN IN THE CONTRACT DOCUMENTS. THE CONTRACTOR IS RESPONSIBLE FOR: CONFIRMING AND CORRELATING ALL QUANTITIES AND DIMENSIONS; SELECTING FABRICATION PROCESSES AND TECHNIQUES OF CONSTRUCTION; COORDINATING THEIR WORK WITH THAT OF ALL OTHER TRADES; AND PERFORMING THEIR WORK IN A SAFE AND SATISFACTORY MANNER.

CLD Consulting Engineers
540 Commercial Street
Manchester, NH 03101
603-668-8223

Job Number: 150223
Reviewed by: SRB
Date: 05/06/2016

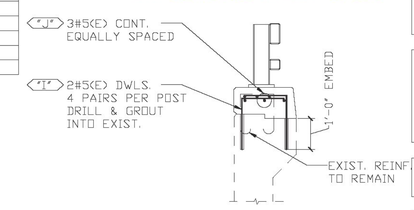

TYPICAL WINGWALL SECTION

CONTRACT DWG. REF. 24 OF 49

YES - DRAWN CORRECTLY. HOWEVER, THERE ARE 3 SPACES WITH 4 BARS, NOT 4 SPACES. PLEASE REVISE.

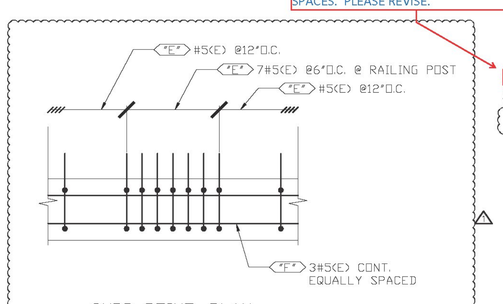

CURB REINF. PLAN

CONTRACT DWG. REF. 19

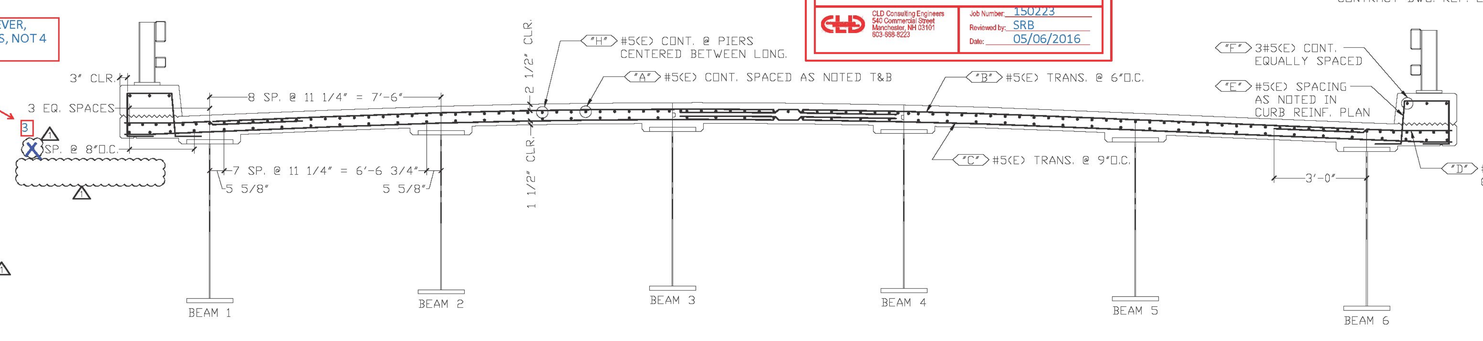

SECTION A

CONTRACT DWG. REF. A / 19 OF 49

ALL REINF. EPOXY

6			
5			
4			
3			
2	5/6/16	△	REVISED PER APPROVAL / FOR APPROVAL
1	5/3/16	–	FOR APPROVAL
	DATE	REV.#	SENT FOR

DIMENSION
DIMENSION FABRICATORS INC.
2000 7TH STREET
SCOTIA, N.Y. 12302
PH: (518) 374-1936
FAX (518) 374-4830
www.dimensionfabricators.com

STRUCTURE	VTAOT IRASBURG IM DECK (46) INTERSTATE 91 (PRINCIPLE ARTERIAL) BRIDGE NO. 107N
LOCATION	TOWN OF IRASBURG, COUNTY OF ORLEANS
ARCHITECT	
ENGINEER	CLD CONSULTING ENGINEERS
CUSTOMER	J.P. SICARD, INC.

DRAWN BY	DATE	DFI #
CMB	5/2/16	9737

DRAWING COVERS	DRAWING #
DECK SLAB – SPANS 2-4	B

PO Box 508
Barton, VT 05822
Phone: (802)525-9506
Fax: (802)525-4616
www.jpsicard.com

Submittal Data Sheet

Submittal #: 1

Submission #: 1

Date: 4/19/2016

Project Name: Irasburg IM Deck (46)

Owner: Vermont Agency of Transportation

Engineer: VTrans

Contractor: J.P. Sicard, Inc.

Item Number: Special Provision 900.620 (Bridge Scupper)

Supplier: NEENAH Foundry Company

Description of Item: Bridge Scupper

Subsitution: NO

Engineers Review Comments:

Submitted By:	Brad Drake
Title:	Project Manager
Company:	JP Sicard, Inc.

39360001— 4 B8

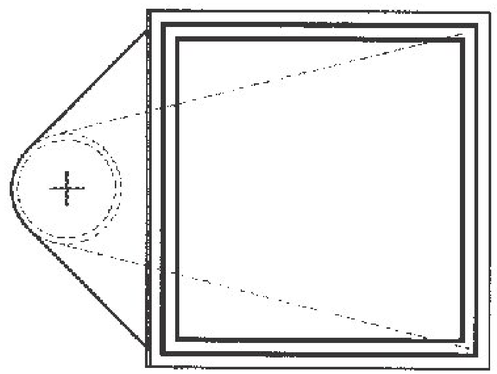

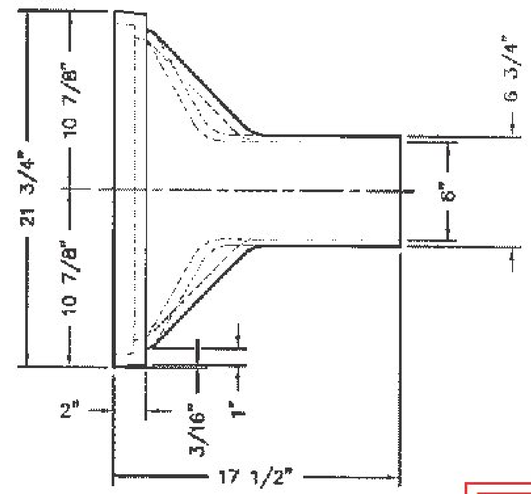

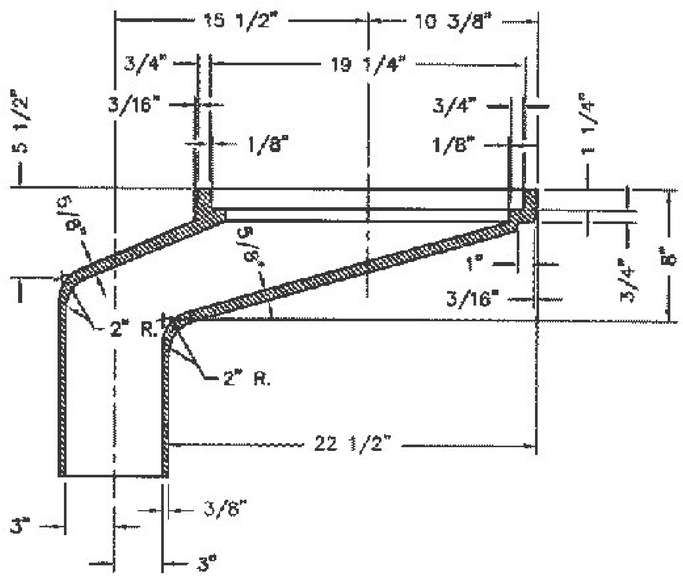

Vermont Agency of Transportation
RECEIVED
ON: April 20, 2016
and Checked for
CONFORMANCE
BY: Jennifer Fitch DATE: 04/26/16

SHOP DRAWING REVIEW

☒ REVIEWED AS REQUIRED BY THE CONSTRUCTION CONTRACT DOCUMENTS AND APPROVED, BUT ONLY FOR CONFORMANCE TO THE DESIGN CONCEPT OF THE WORK, AND SUBJECT TO FURTHER LIMITATIONS AND REQUIREMENTS CONTAINED IN THE CONSTRUCTION CONTRACT DOCUMENTS.

☐ REJECTED ☐ REVISE AND RESUBMIT ☐ APPROVED AS NOTED

CORRECTIONS OR COMMENTS MADE ON THE SHOP DRAWINGS DURING THIS REVIEW DID NOT RELIEVE CONTRACTOR FROM COMPLIANCE WITH REQUIREMENTS OF THE DRAWINGS AND SPECIFICATIONS. THIS CHECK IS ONLY FOR REVIEW OF GENERAL CONFORMANCE WITH THE DESIGN CONCEPT OF THE PROJECT AND GENERAL COMPLIANCE WITH THE INFORMATION GIVEN IN THE CONTRACT DOCUMENTS. THE CONTRACTOR IS RESPONSIBLE FOR: CONFIRMING AND CORRELATING ALL QUANTITIES AND DIMENSIONS; SELECTING FABRICATION PROCESSES AND TECHNIQUES OF CONSTRUCTION; COORDINATING THEIR WORK WITH THAT OF ALL OTHER TRADES; AND PERFORMING THEIR WORK IN A SAFE AND SATISFACTORY MANNER.

CLD Consulting Engineers
540 Commercial Street
Manchester, NH 03101
603-668-8223

Job Number: 150223
Reviewed by: SRB
Date: 04/26/2016

MATERIAL: CAST GRAY IRON ASTM A-48, CLASS 35B
FINISH: NO PAINT
WEIGHT: 250#

11-20-2008	REVISED TO MORE MATCH INDIANA SPEC-6 3/4"	DSM	
08-11-2008	REVISED SPIGOT O.D. FROM 6 1/2	ELR	
08-04-2008	REVISED SPIGOT O.D. FROM 6 3/4	ELR	
DATE	REVISION	INT	

DR. E. REMME	SCALE 1/8"=1"	TITLE: R-3936-A SCUPPER	
CH.			
APP.	DIM CHK.	NEENAH FOUNDRY COMPANY NEENAH WISCONSIN 54956	NF- 39360001 B
DATE 05/10/90			

CAD DWG. REF: 39360001.DWG- 4

3936 0004– 1 B4

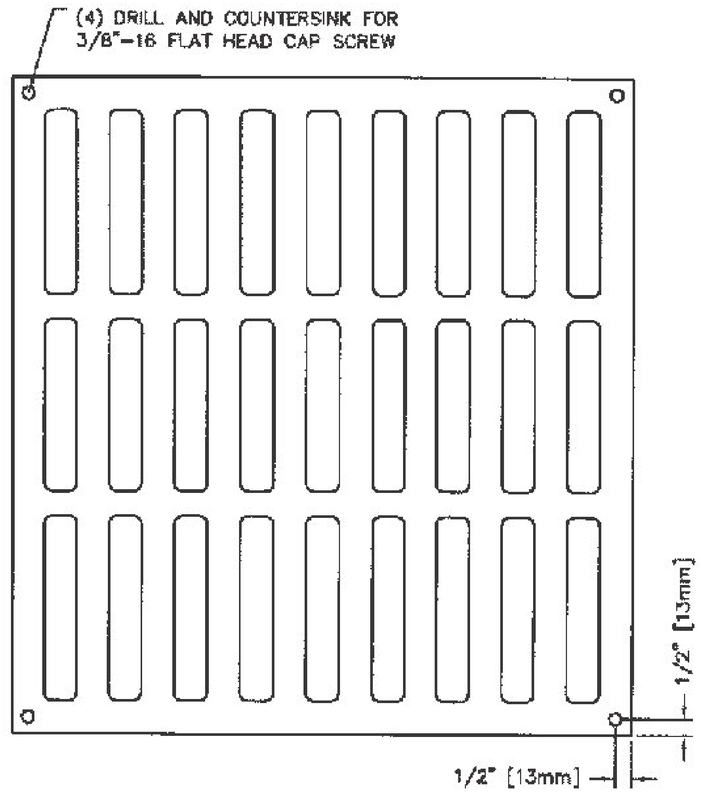

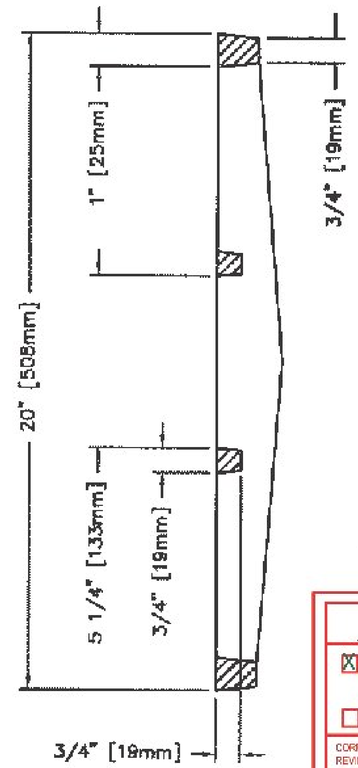

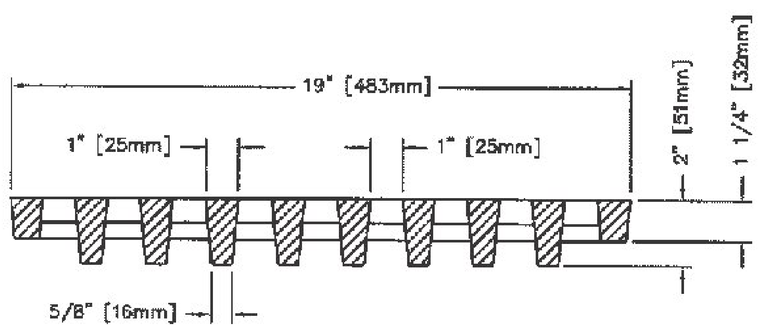

Vermont Agency of Transportation
RECEIVED
ON: April 20, 2016
and Checked for
CONFORMANCE
BY: Jennifer Fitch DATE: 04/26/16

SHOP DRAWING REVIEW

☒ REVIEWED AS REQUIRED BY THE CONSTRUCTION CONTRACT DOCUMENTS AND APPROVED, BUT ONLY FOR CONFORMANCE TO THE DESIGN CONCEPT OF THE WORK, AND SUBJECT TO FURTHER LIMITATIONS AND REQUIREMENTS CONTAINED IN THE CONSTRUCTION CONTRACT DOCUMENTS.

☐ REJECTED ☐ REVISE AND RESUBMIT ☐ APPROVED AS NOTED

CORRECTIONS OR COMMENTS MADE ON THE SHOP DRAWINGS DURING THIS REVIEW DID NOT RELIEVE CONTRACTOR FROM COMPLIANCEWITH REQUIREMENTS OF THE DRAWINGS AND SPECIFICATIONS. THIS CHECK IS ONLY FOR REVIEW OF GENERAL CONFORMANCE WITH THE DESIGN CONCEPT OF THE PROJECT AND GENERAL COMPLIANCE WITH THE INFORMATION GIVEN IN THE CONTRACT DOCUMENTS. THE CONTRACTOR IS RESPONSIBLE FOR: CONFIRMING AND CORRELATING ALL QUANTITIES AND DIMENSIONS: SELECTING FABRICATION PROCESSES AND TECHNIQUES OF CONSTRUCTION: COORDINATING THEIR WORK WITH THAT OF ALL OTHER TRADES: AND PERFORMING THEIR WORK IN A SAFE AND SATISFACTORY MANNER.

CLD Consulting Engineers
540 Commercial Street
Manchester, NH 03101
603-668-8223

Job Number: 150223
Reviewed by: SRB
Date: 04/26/2016

NOTE: ALL DIMENSIONS SHOWN ARE IN ENGLISH AND [METRIC]
MATERIAL: CAST GRAY IRON ASTM A–48, CLASS 35B
FINISH: NO PAINT
WEIGHT: 79# WAS NF–12105

DR. KMH	SCALE 1 : 4	TITLE: R–3936–A TYPE "C" GRATE	
CH.			
APP.	DIM CHK.	NEENAH FOUNDRY COMPANY	NF- 39360004 B
DATE 06–30–2000			

CAD DWG. REF: 39360004.DWG– 1

PO Box 508
Barton, VT 05822
Phone: (802)525-9506
Fax: (802)525-4616
www.jpsicard.com

Submittal Data Sheet

Submittal #: 7

Submission #: 1

Date: 4/28/2016

Project Name: Irasburg IM Deck (46)

Owner: Vermont Agency of Transportation

Engineer: VTrans

Contractor: J.P. Sicard, Inc.

Item Number: Bridge Railing 525.33 / Steel Beam Guardrail 621.20 / Guardrail Approach Section 621.72

Supplier: J.P. Sicard, Inc.

Description of Item: Bridge Rail, Approach Rail (Galvinized 2 Rail Box Beam) / Steel Beam Guardrail + Welding Procedure

Subsitution: NO

Engineers Review Comments:

Submitted By: Brad Drake
Title: Project Manager
Company: JP Sicard, Inc.

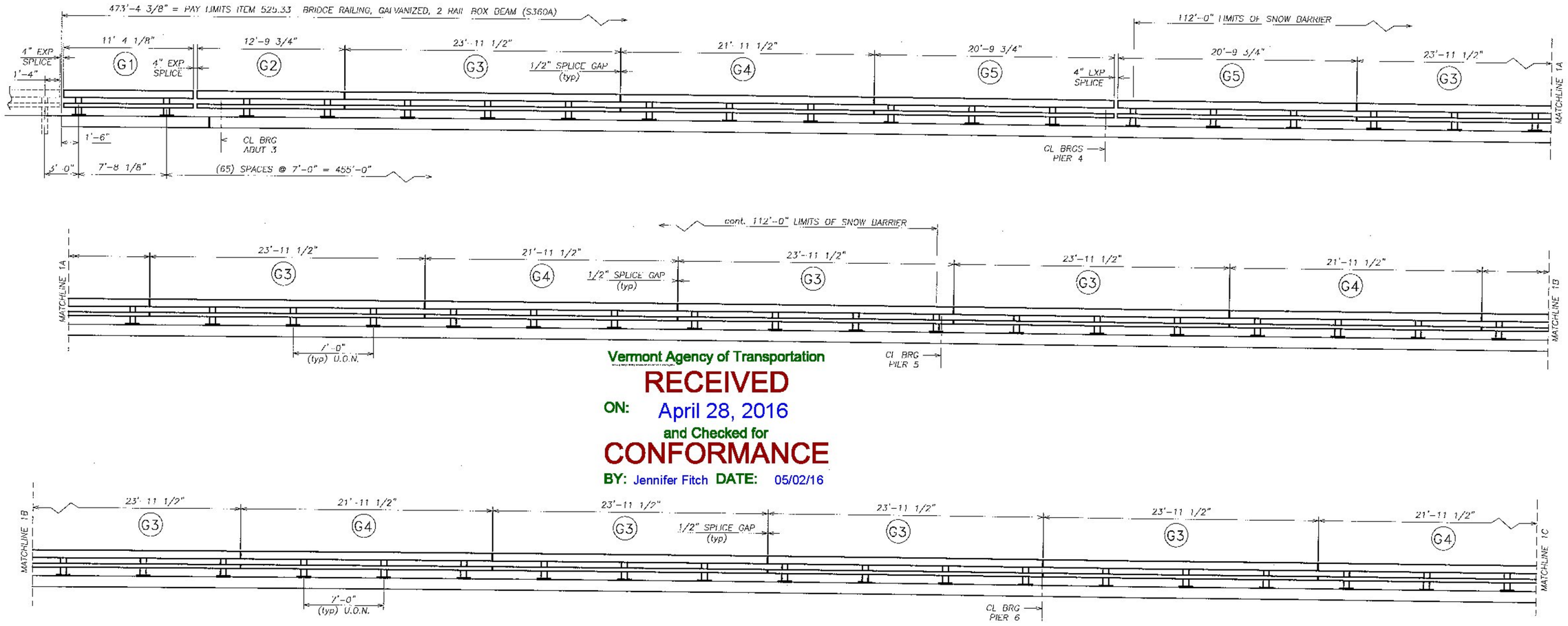

Vermont Agency of Transportation

RECEIVED

ON: April 28, 2016

and Checked for

CONFORMANCE

BY: Jennifer Fitch DATE: 05/02/16

NORTHWEST SIDE RAILING ELEVATION

LOOKING AT TRAFFIC FACE OF RAILING
FACING NORTHWEST FROM CENTERLINE OF ROAD

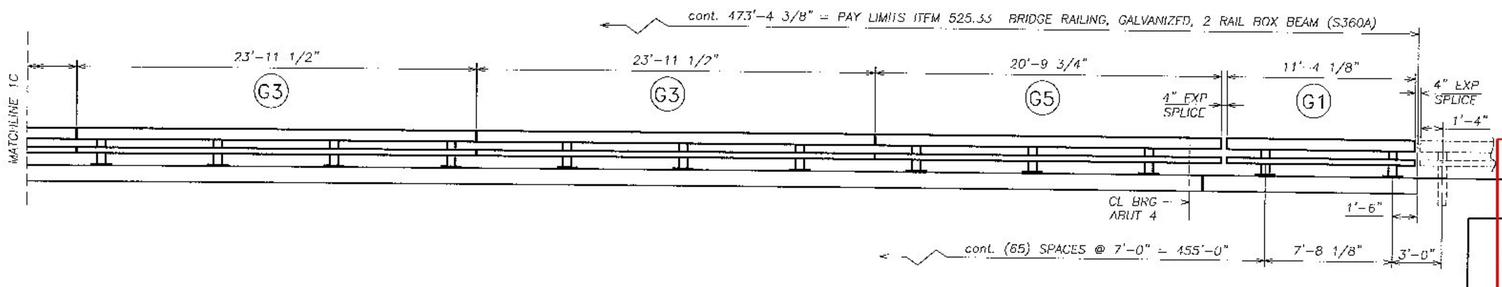

SHOP DRAWING REVIEW

☒ REVIEWED AS REQUIRED BY THE CONSTRUCTION CONTRACT DOCUMENTS AND APPROVED, BUT ONLY FOR CONFORMANCE TO THE DESIGN CONCEPT OF THE WORK, AND SUBJECT TO FURTHER LIMITATIONS AND REQUIREMENTS CONTAINED IN THE CONSTRUCTION CONTRACT DOCUMENTS.

☐ REJECTED ☐ REVISE AND RESUBMIT ☐ APPROVED AS NOTED

CORRECTIONS OR COMMENTS MADE ON THE SHOP DRAWINGS DURING THIS REVIEW DID NOT RELIEVE CONTRACTOR FROM COMPLIANCE WITH REQUIREMENTS OF THE DRAWINGS AND SPECIFICATIONS. THIS CHECK IS ONLY FOR REVIEW OF GENERAL CONFORMANCE WITH THE DESIGN CONCEPT OF THE PROJECT AND GENERAL COMPLIANCE WITH THE INFORMATION GIVEN IN THE CONTRACT DOCUMENTS. THE CONTRACTOR IS RESPONSIBLE FOR: CONFIRMING AND CORRELATING ALL QUANTITIES AND DIMENSIONS; SELECT NG FABRICATION PROCESSES AND TECHNIQUES OF CONSTRUCTION; COORDINATING THEIR WORK WITH THAT OF ALL OTHER TRADES; AND PERFORMING THEIR WORK IN A SAFE AND SATISFACTORY MANNER.

CLD Consulting Engineers
540 Commercial Street
Manchester, NH 03101
603-668-8223

Job Number: 150223
Reviewed by: SRB
Date: 04/29/2015

No.	Remarks	Date
0	Initial submittal	4/28/16

REVISIONS – APPLIES TO SET

HIGHWAY SAFETY CORP
GLASTONBURY, CT
860-633-9445

ITEM 525.33 BRIDGE RAILING, GALVANIZED 2 RAIL BOX BEAM (S-360A)
ITEM 621.72 GUARDRAIL APPROACH, GALV 2 RAIL BOX BEAM (S-360B)

TOWN OF IRASBURG, VERMONT
INTERSTATE 91 (PRINCIPAL ARTERIAL) BRIDGE NO. 107 N
ORLEANS COUNTY IM DECK (46)

AISC CERTIFIED FABRICATOR

GENERAL CONTRACTOR

SUB CONTRACTOR LAFAYETTE

HSC JOB NO. 2103

SHEET NO. 1 of 5

DRAWN PAR | CHECKED | DATE 04-27-16 | SCALE NONE | SIZE D

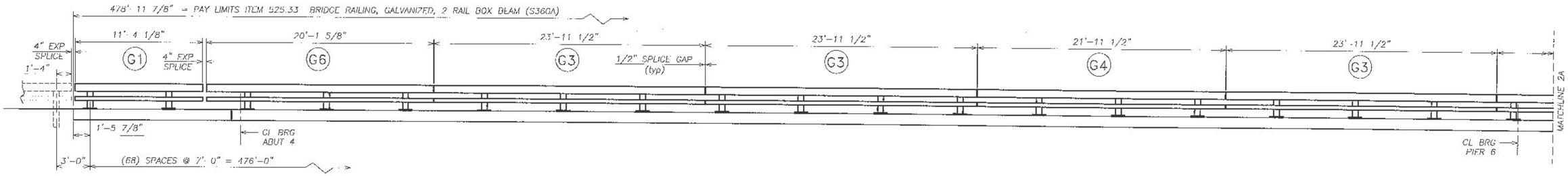

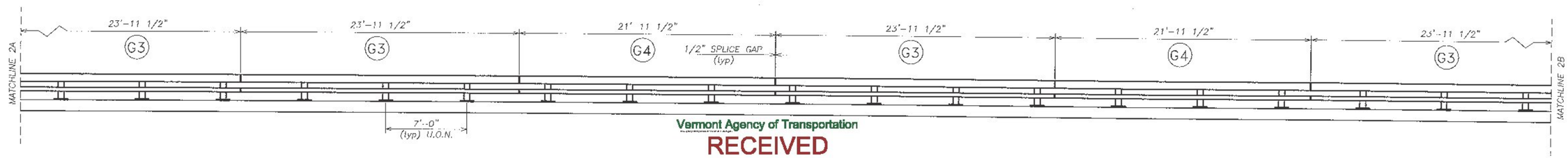

Vermont Agency of Transportation
RECEIVED
ON: April 28, 2016
and Checked for
CONFORMANCE
BY: Jennifer Fitch DATE: 05/02/16

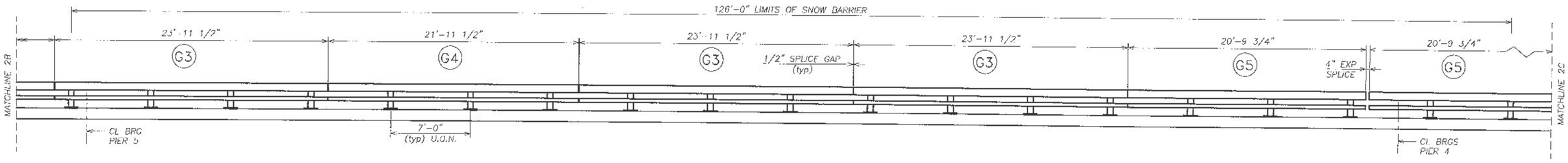

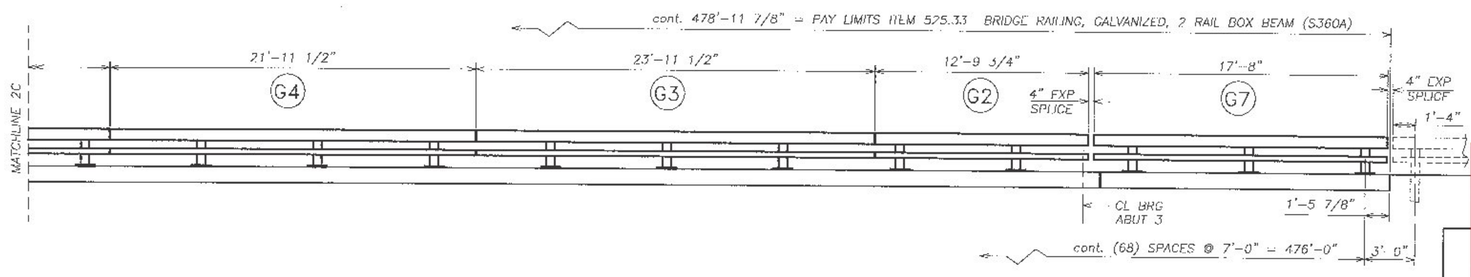

SOUTHEAST SIDE RAILING ELEVATION

LOOKING AT TRAFFIC FACE OF RAILING
FACING SOUTHEAST FROM CENTERLINE OF ROAD

SHOP DRAWING REVIEW

☒ REVIEWED AS REQUIRED BY THE CONSTRUCTION CONTRACT DOCUMENTS AND APPROVED, BUT ONLY FOR CONFORMANCE TO THE DESIGN CONCEPT OF THE WORK AND SUBJECT TO FURTHER LIMITATIONS AND REQUIREMENTS SET FORTH IN THE CONTRACT DOCUMENTS.

☐ REJECTED ☐ REVISE AND RESUBMIT ☐ APPROVED AS NOTED

CORRECTIONS OR COMMENTS MADE ON THE SHOP DRAWINGS DURING THIS REVIEW DO NOT RELIEVE CONTRACTOR FROM COMPLIANCE WITH REQUIREMENTS OF THE DRAWINGS AND SPECIFICATIONS. THIS CHECK IS ONLY FOR REVIEW OF GENERAL CONFORMANCE WITH THE DESIGN CONCEPT OF THE PROJECT AND GENERAL COMPLIANCE WITH THE INFORMATION GIVEN IN THE CONTRACT DOCUMENTS. THE CONTRACTOR IS RESPONSIBLE FOR: CONFIRMING AND CORRELATING ALL QUANTITIES AND DIMENSIONS; SELECTING FABRICATION PROCESSES AND TECHNIQUES OF CONSTRUCTION; COORDINATING THEIR WORK WITH THAT OF ALL OTHER TRADES; AND PERFORMING THEIR WORK IN A SAFE AND SATISFACTORY MANNER.

CLD Consulting Engineers
540 Commercial Street
Manchester, NH 03101
603-893-6223

Job Number: 150223
Reviewed by: SRB
Date: 04/29/2015

HIGHWAY SAFETY CORP
GLASTONBURY, CT
860-633-9445

ITEM 525.33 BRIDGE RAILING, GALVANIZED 2 RAIL BOX BEAM (S-360A)
ITEM 621.72 GUARDRAIL APPROACH, GALV 2 RAIL BOX BEAM (S-360B)

TOWN OF IRASBURG, VERMONT
INTERSTATE 91 (PRINCIPAL ARTERIAL) BRIDGE NO. 107 N
ORLEANS COUNTY IM DECK (46)

AISC CERTIFIED FABRICATOR

HSC JOB NO. 2103

SHEET NO. 2 of 5

GENERAL CONTRACTOR
SUB CONTRACTOR LAFAYETTE

DRAWN	CHECKED	DATE	SCALE	SIZE
PAR		04-27-16	NONE	D

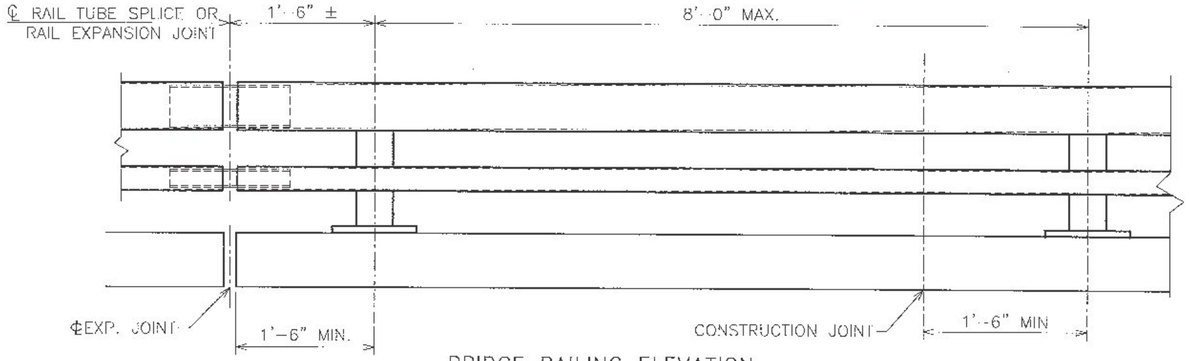

BRIDGE RAILING ELEVATION

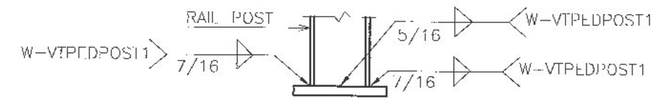

BASE WELD DETAIL

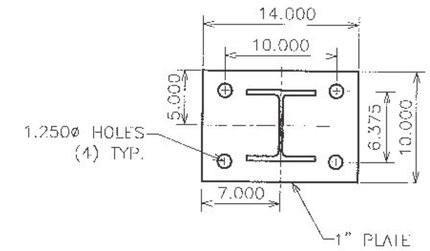

POST AND BASE PLATE

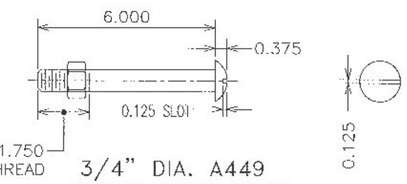

3/4" DIA. A449 ROUND HEAD BOLT

(WITH WASHER AND PREVAILING TORQUE TYPE LOCK NUT) (SEE NOTE #8)

ONLY FULL DIAMETER BODY BOLTS WILL BE ALLOWED.

Vermont Agency of Transportation

RECEIVED

ON: April 28, 2016

and Checked for

CONFORMANCE

BY: Jennifer Fitch DATE: 05/02/16

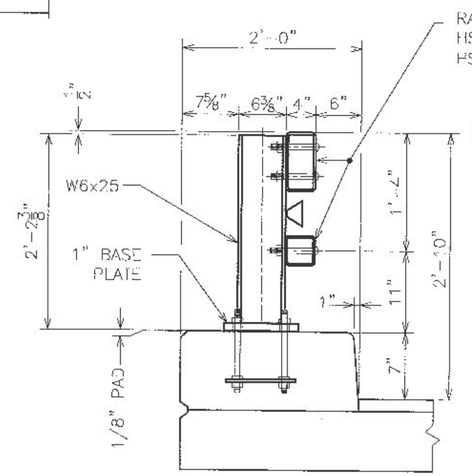

TYPICAL SECTION

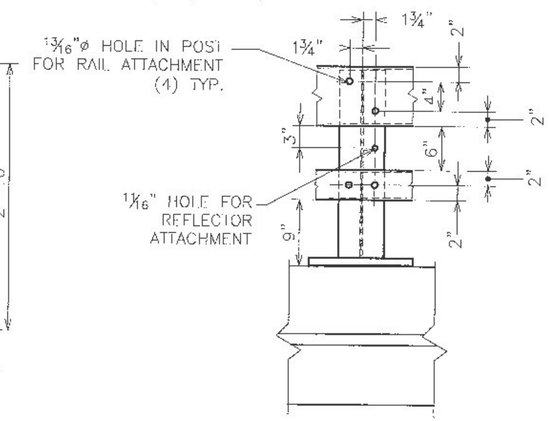

ELEVATION

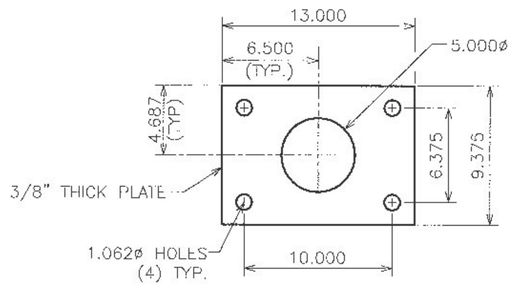

ANCHOR PLATE

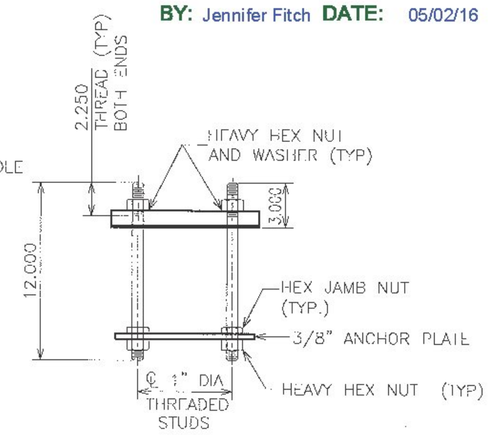

RAIL POST ANCHORAGE

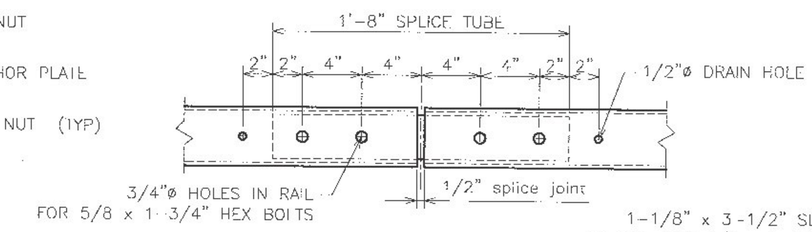

FIXED SPLICE JOINT DETAIL

BOTTOM VIEW

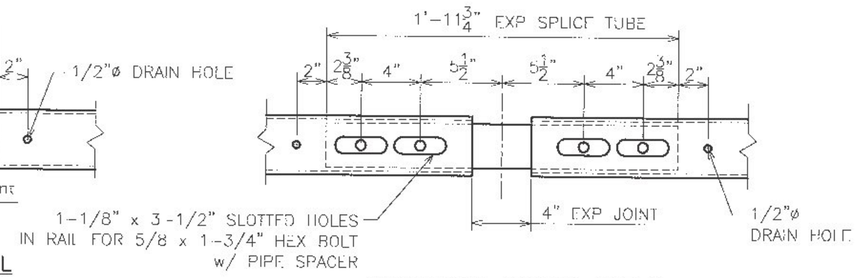

EXPANSION SPLICE DETAIL

BOTTOM VIEW

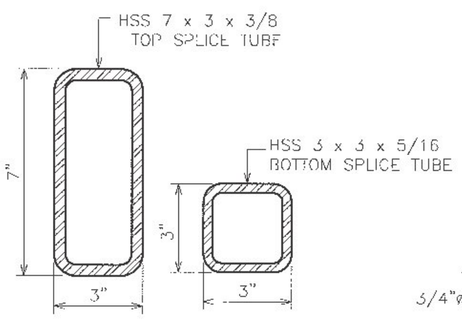

RAIL TUBE SPLICE SECTION

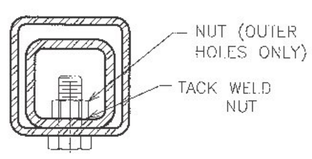

TAPPED HOLE IN SPLICE TUBE & 3/4"ø HOLE IN RAIL TUBE FOR 5/8ø BOLT & PLAIN HARDENED WASHER

FIXED SPLICE JOINT SECTION

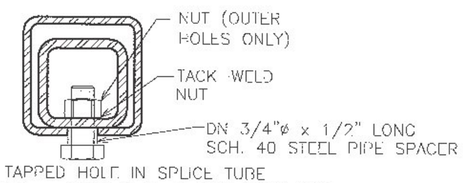

TAPPED HOLE IN SPLICE TUBE AND 1.125 x 3.500 SLOT IN RAIL TUBE FOR 5/8ø BOLT AND PLAIN HARDENED WASHER

EXPANSION JOINT SECTION

SHOP DRAWING REVIEW

☒ REVIEWED AS REQUIRED BY THE CONSTRUCTION CONTRACT DOCUMENTS AND APPROVED, BUT ONLY FOR CONFORMANCE TO THE DESIGN CONCEPT OF THE WORK, AND SUBJECT TO FURTHER LIMITATIONS AND REQUIREMENTS CONTAINED IN THE CONSTRUCTION CONTRACT DOCUMENTS.

☐ REJECTED ☐ REVISE AND RESUBMIT ☐ APPROVED AS NOTED

CORRECTIONS OR COMMENTS MADE ON THE SHOP DRAWINGS DURING THIS REVIEW DO NOT RELIEVE CONTRACTOR FROM COMPLIANCE WITH REQUIREMENTS OF THE DRAWINGS AND SPECIFICATIONS. THIS CHECK IS ONLY FOR REVIEW OF GENERAL CONFORMANCE WITH THE DESIGN CONCEPT OF THE PROJECT AND GENERAL COMPLIANCE WITH THE INFORMATION GIVEN IN THE CONTRACT DOCUMENTS. THE CONTRACTOR IS RESPONSIBLE FOR: CONFIRMING AND CORRELATING ALL QUANTITIES AND DIMENSIONS; SELECTING FABRICATION PROCESSES AND TECHNIQUES OF CONSTRUCTION; COORDINATING THEIR WORK WITH THAT OF ALL OTHER TRADES; AND PERFORMING THEIR WORK IN A SAFE AND SATISFACTORY MANNER.

CLD Consulting Engineers
543 Commercial Street
Manchester, NH 03101
603-668-6223

Job Number: 150223
Reviewed by: SRB
Date: 04/29/2015

HIGHWAY SAFETY CORP
GLASTONBURY, CT
860-633-9445

ITEM 525.33 BRIDGE RAILING, GALVANIZED 2 RAIL BOX BEAM (S-360A)

TOWN OF IRASBURG, VERMONT
INTERSTATE 91 (PRINCIPAL ARTERIAL) BRIDGE NO. 107 N
ORLEANS COUNTY IM DECK (46)

CERTIFIED FABRICATOR

GENERAL CONTRACTOR

SUB CONTRACTOR LAFAYETTE

HSC JOB NO. 2103

SHEET NO. 3 of 5

DRAWN PAR | CHECKED | DATE 04-27-16 | SCALE NONE | SIZE D

BILL OF MATERIAL

Qty	mk	Description	Spec.
952.35 LF		ITEM 525.33 BRIDGE RAILING, GALVANIZED, 2 RAIL BOX BEAM	
137		BRIDGE RAILING POST W6 x 25 x 2'-2.375" OAH WITH 1 x 10 x 14 BASE PLATE (GLV)	A709 gr 50
36		SPLICE TUBE (FOR 8X4 RAIL) HSS 7 x 3 x 3/8 x 1'-8.000" OAL w/ TAPPED HOLES & 2 WELDED NUTS (GLV)	A500 gr B
36		SPLICE TUBE (FOR 4X4 RAIL) HSS 3 x 3 x 5/16 x 1'-8.000" OAL w/ TAPPED HOLES & 2 WELDED NUTS (GLV)	A500 gr B
6		EXP SPLICE (FOR 8X4 RAIL) HSS 7 x 3 x 3/8 x 1'-11.750" OAL w/ TAPPED HOLES & 2 WELDED NUTS (GLV)	A500 gr B
6		EXP SPLICE (FOR 4X4 RAIL) HSS 3 x 3 x 5/16 x 1'-11.750" OAL w/ TAPPED HOLES & 2 WELDED NUTS (GLV)	A500 gr B
3	G1	RAIL TUBE HSS 8 x 4 x 5/16 x 11 ft - 4.125 in OAL - EXP splice both ends (GLV)	A500 gr B
2	G2	RAIL TUBE HSS 8 x 4 x 5/16 x 12 ft - 9.75 in OAL - FIX splice 1 end, EXP splice 1 end (GLV)	A500 gr B
22	G3	RAIL TUBE HSS 8 x 4 x 5/16 x 23 ft - 11.5 in OAL - FIX splice both ends (GLV)	A500 gr B
10	G4	RAIL TUBE HSS 8 x 4 x 5/16 x 21 ft - 11.5 in OAL - FIX splice both ends (GLV)	A500 gr B
5	G5	RAIL TUBE HSS 8 x 4 x 5/16 x 20 ft - 9.75 in OAL - FIX splice 1 end, EXP splice 1 end (GLV)	A500 gr B
1	G6	RAIL TUBE HSS 8 x 4 x 5/16 x 20 ft - 1.625 in OAL - FIX splice 1 end, EXP splice 1 end (GLV)	A500 gr B
1	G7	RAIL TUBE HSS 8 x 4 x 5/16 x 17 ft - 8 in OAL - EXP splice both ends (GLV)	A500 gr B
3	G1	RAIL TUBE HSS 4 x 4 x 1/4 x 11 ft - 4.125 in OAL - EXP splice both ends (GLV)	A500 gr B
2	G2	RAIL TUBE HSS 4 x 4 x 1/4 x 12 ft - 9.75 in OAL - FIX splice 1 end, EXP splice 1 end (GLV)	A500 gr B
22	G3	RAIL TUBE HSS 4 x 4 x 1/4 x 23 ft - 11.5 in OAL - FIX splice both ends (GLV)	A500 gr B
10	G4	RAIL TUBE HSS 4 x 4 x 1/4 x 21 ft - 11.5 in OAL - FIX splice both ends (GLV)	A500 gr B
5	G5	RAIL TUBE HSS 4 x 4 x 1/4 x 20 ft - 9.75 in OAL - FIX splice 1 end, EXP splice 1 end (GLV)	A500 gr B
1	G6	RAIL TUBE HSS 4 x 4 x 1/4 x 20 ft - 1.625 in OAL - FIX splice 1 end, EXP splice 1 end (GLV)	A500 gr B
1	G7	RAIL TUBE HSS 4 x 4 x 1/4 x 17 ft - 8 in OAL - EXP splice both ends (GLV)	A500 gr B
137		ANCHOR SPACER PLATE PL 0.375 x 13.000 x 9.375	A709 gr 36
548		ANCHOR STUD DBL END PART THREAD - 1" DIA x 12.000 w/ 2.250" THD EACH END (GLV)	A449
1096		HEAVY HEX NUT 1" (GLV)	A563 DH
548		ROUND WASHER (SAE) - 1" DIA SMALL (GLV)	F436
548		JAM NUT 1" (GALV)	A563 DH
548		ROUND HEAD POST BOLT slot or wrench head - no shoulder 3/4" DIA x 6" LG. FULL BODY (GLV)	A449 / A325
548		LOCK NUT 3/4" (GLV)	A563 DH
548		ROUND WASHER (SAE) 3/4" (GLV)	F436
336		HEX HEAD BOLT 5/8" DIA x 1.75" LG. (GLV)	A325
336		ROUND WASHER (SAE) 5/8" (GLV)	F436
48		SPACER PIPE - GALVANIZED 3/4" SCH. 40 x 1/2" LONG (GLV)	A53 gr B
137		BEARING PAD 0.125" THICK x 10.000 x 14.000 (NEOPRENE 80 duro +/-10)	aashto M251

Vermont Agency of Transportation
RECEIVED
ON: April 28, 2016
and Checked for
CONFORMANCE
BY: Jennifer Fitch DATE: 05/02/16

NOTES:

1. ALL WORK AND MATERIALS SHALL CONFORM TO SECTION 525.

2. PRIOR TO GALVANIZING, ALL EXPOSED CUT OR SHEARED EDGES SHALL BE ROUNDED TO A 1/16" RADIUS AND BE FREE OF BURRS.

3. ALL POSTS SHALL BE SET NORMAL TO GRADE.

4. SECTIONS OF RAIL TUBE SHALL BE ATTACHED TO A MINIMUM OF TWO (2) RAIL POSTS AND PREFERABLY TO AT LEAST FOUR (4) POSTS.

5. RAIL TUBE EXPANSION JOINT SHALL BE PROVIDED IN ANY RAIL BAY SPANNING THE END OF AN INTEGRAL ABUTMENT BRIDGE AND AT ALL SUPERSTRUCTURE EXPANSION JOINTS. EXPANSION JOINT WIDTH SHALL BE 4" AT 45°F AND WILL BE ADJUSTED IN THE FIELD BY THE ENGINEER FOR OTHER TEMPERATURES.

6. HOLES IN RAILS FOR RAIL TUBE ATTACHMENT SHALL BE FIELD-DRILLED. HOLES SHALL BE COATED WITH AN APPROVED ZINC-RICH PAINT PRIOR TO INSTALLATION.

7. RAIL POST ANCHORING NUTS SHALL BE TIGHTENED TO A SNUG FIT AND GIVEN AN ADDITIONAL ONE-EIGHTH TURN.

8. RAIL TUBES SHALL BE ATTACHED USING 3/4" FULL DIAMETER BODY ASTM A449 ROUND HEAD BOLTS INSERTED THROUGH THE FACE OF THE TUBE. HOLES IN POSTS SHALL BE 1/16" LARGER THAN THE BOLT SIZE.

9. ANY BENDING OR CURVING OF RAIL SHALL BE DONE IN A FABRICATION PLANT IN ACCORDANCE WITH SUBMITTED PROCEDURES.

10. THE MINIMUM DISTANCE FROM A POST TO AN EXPANSION JOINT SHALL BE SUCH TO MAINTAIN MINIMUM EDGE DISTANCE OF 5" FROM ANY ANCHOR STUD TO THE END OF THE SLAB, OR TO THE EXPANSION JOINT RECESS POUR, IF ONE IS USED.

11. A DELINEATOR (SEE VAOT STANDARD DRAWING G-1 FOR DETAILS) SHALL BE INSTALLED AT NEAREST POST TO 30 FT SPACING. WHITE IS TO BE INSTALLED ON THE DRIVER'S RIGHT. FOR ONE WAY BRIDGES, YELLOW IS TO BE INSTALLED ON THE DRIVER'S LEFT. PAYMENT SHALL BE INCIDENTAL TO OTHER ITEMS.

12. THIS RAILING MEETS THE REQUIREMENTS FOR A TL-4 SERVICE LEVEL.

MATERIALS
RAIL TUBES.....ASTM A500 GRADE B OR ASTM A501
RAIL POSTS AND BASE PLATES.....ASTM A709/A709M, GRADE 50
ALL OTHER SHAPES AND PLATES.....ASTM A709/A709M, GARDE 36
ANCHOR STUDS.....ASTM A449
ALL OTHER BOLTS (UNLESS NOTED).....AASHTO M164, TYPE1

NUTS FOR AASHTO M164 BOLTS AND FOR ANCHOR STUDS SHALL COMPLY WITH AASTHO M291 (ASTM A563).

WASHERS SHALL COMPLY WITH AASHTO M293 (ASTM F436) SPECIFCATIONS.

1/8" PAD SHALL COMPLY WITH STANDARD SPECIFICATION SUBSECTION 731.01 OR 731.02.

RAIL POSTS AND BASE PLATES SHALL BE TESTED FOR IMPACT PROPERTIES IN ACCORDANCE WITH ASTM A370 CHARPY IMPACT TESTING USING TYPE A SPECIMEN.

SHOP DRAWING REVIEW

[X] REVIEWED AS REQUIRED BY THE CONSTRUCTION CONTRACT DOCUMENTS AND APPROVED BUT ONLY FOR CONFORMANCE TO THE DESIGN CONCEPT OF THE WORK AND SUBJECT TO FURTHER LIMITATIONS AND REQUIREMENTS CONTAINED IN THE CONSTRUCTION CONTRACT DOCUMENTS.

[ ] REJECTED [ ] REVISE AND RESUBMIT [ ] APPROVED AS NOTED

CORRECTIONS OR COMMENTS MADE ON THE SHOP DRAWINGS DURING THIS REVIEW DID NOT RELIEVE CONTRACTOR FROM COMPLIANCE WITH REQUIREMENTS OF THE DRAWINGS AND SPECIFICATIONS. THIS CHECK IS ONLY FOR REVIEW OF GENERAL CONFORMANCE WITH THE DESIGN CONCEPT OF THE PROJECT AND GENERAL COMPLIANCE WITH THE INFORMATION GIVEN IN THE CONTRACT DOCUMENTS. THE CONTRACTOR IS RESPOINSIBLE FOR: CONFIRMING AND CORRELATING ALL QUANTITIES AND DIMENSIONS; SELECTING FABRICATION PROCESSES AND TECHNIQUES OF CONSTRUCTION; COORDINATING THEIR WORK WITH that OF ALL OTHER TRADES; AND PERFORMING THEIR WORK IN A SAFE AND SATISFACTORY MANNER.

CLD Consulting Engineers
540 Commercial Street
Manchester, NH 03101
603 668 8223

Job Number: 150223
Reviewed by: SRB
Date: 04/29/2015

HIGHWAY SAFETY CORP
GLASTONBURY, CT
860-633-9445

ITEM 525.33 BRIDGE RAILING, GALVANIZED 2 RAIL BOX BEAM (S-360A)

TOWN OF IRASBURG, VERMONT
INTERSTATE 91 (PRINCIPAL ARTERIAL) BRIDGE NO. 107 N
ORLEANS COUNTY IM DECK (46)

AISC CERTIFIED FABRICATOR

GENERAL CONTRACTOR
SUB CONTRACTOR LAFAYETTE
AISC JOB NO. 2103
SHEET NO. 4 of 5

DRAWN	CHECKED	DATE	SCALE	SIZE
PAR		04-27-16	NONE	D

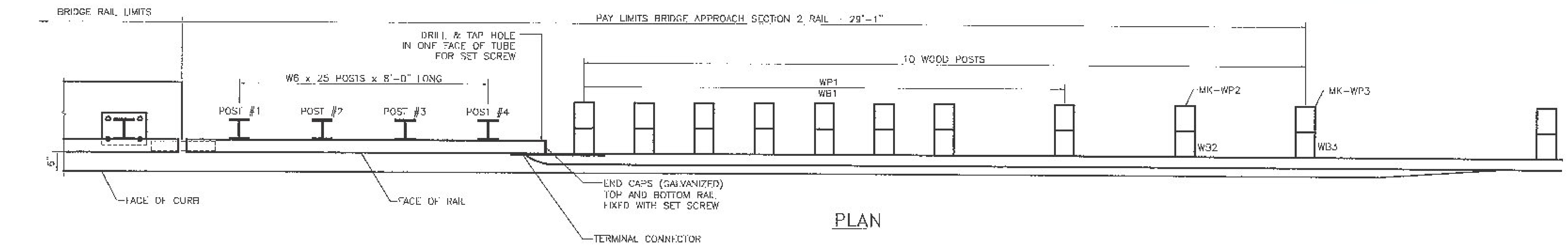

PLAN

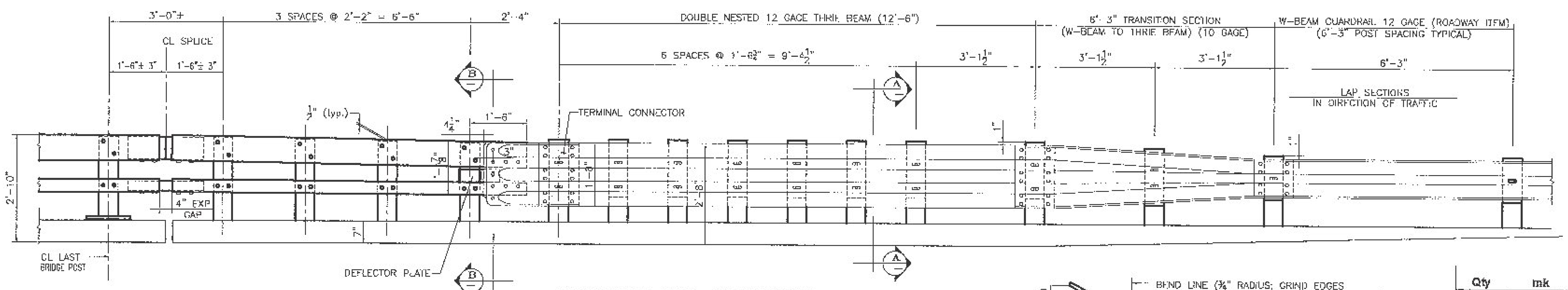

APPROACH RAIL ELEVATION

LEADING END (RIGHT) IS SHOWN
DEPARTURE END (LEFT) SIMILAR BUT OPPPOSITE HAND

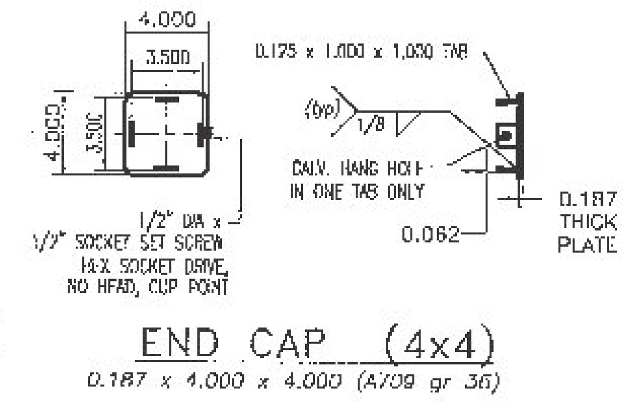

END CAP (4x4)
0.187 x 4.000 x 4.000 (A709 gr 36)

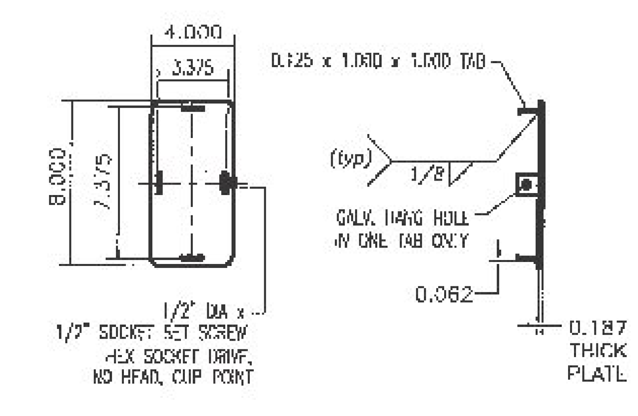

END CAP (8x4)
0.187 x 4.000 x 8.000 (A709 gr 36)

NOTES:
1. PAYMENT FOR GUARDRAIL APPROACH SECTION – GALVANIZED 2 RAIL, SHALL INCLUDE THE TERMINAL CONNECTOR, THE CONNECTION PLATE, THE DEFLECTOR PLATE, RAIL, POSTS, BLOCKS AND ATTACHMENT HARDWARE.

2. ALL APPROACH RAIL SPLICES SHALL BE LAPPED IN THE DIRECTION OF TRAFFIC FLOW.

3. TUBE AND STEEL POST MATERIALS, DIMENSION SIZES AND NOTES SHALL BE THE SAME AS THOSE OF THE BRIDGE RAIL UNLESS OTHERWISE NOTED.

4. APPROACH RAIL BOLTS SHALL BE ASTM A307 GRADE A AND NUTS SHALL BE AASHTO M291 (ASTM 563 GRADE A OR BETTER (GALVANIZED). WASHERS SHALL BE ASTM F844.

5. WELD TOP SPLICE BAR TO FIT BEND. USE COMPLETE PENETRATION WELD (B-U2).

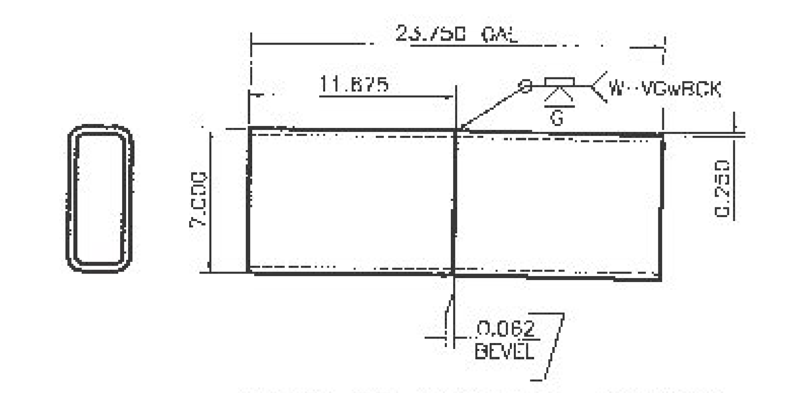

ANGLED SPLICE DETAIL
HSS 7 x 3 x 3/8 – FOR UPPER RAIL SPLICE
SEE BRIDGE RAIL SHEET FOR DETAIL ON LOWER RAIL SPLICE TUBE

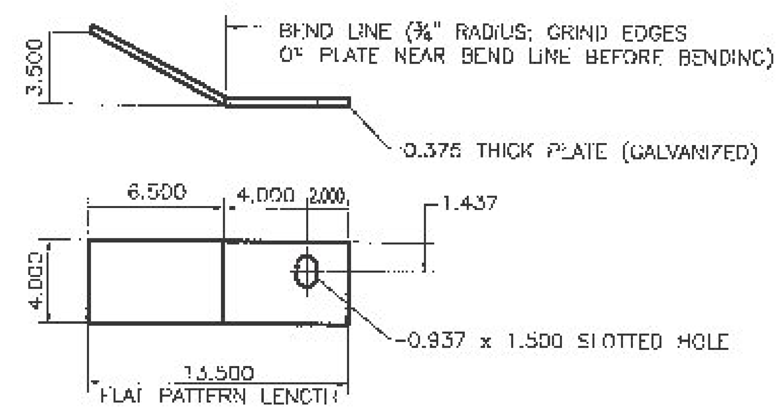

DEFLECTOR PLATE
0.375 x 4.000 x 13.500 (A709 gr 36)
RIGHT HAND APPROACH SHOWN – LEFT HAND BENT OPPOSITE

Vermont Agency of Transportation
RECEIVED
ON: April 28, 2016
and Checked for
CONFORMANCE
BY: Jennifer Fitch DATE: 05/02/16

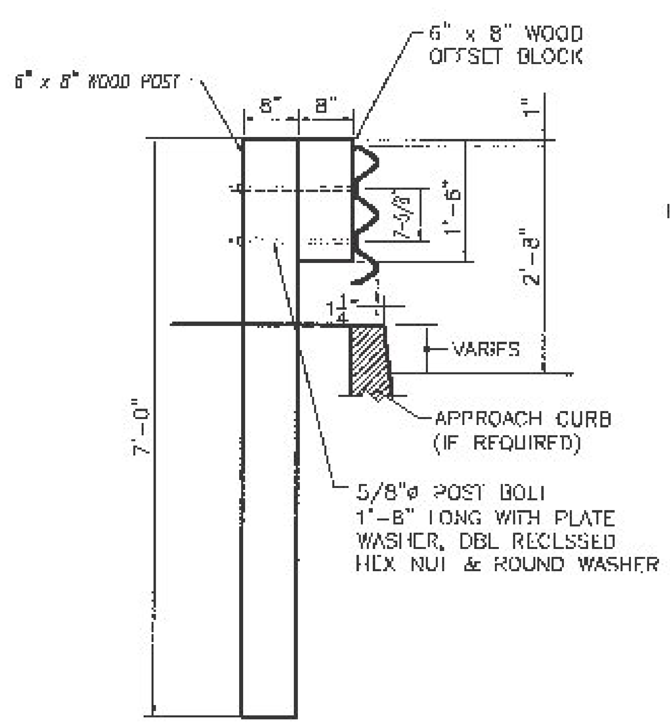

SECTION A-A

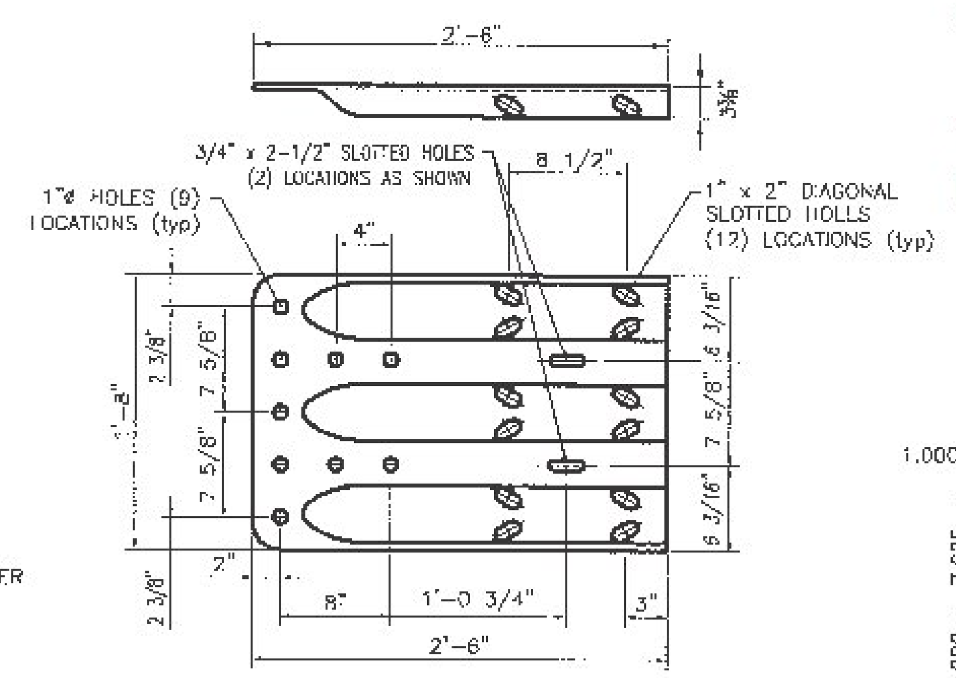

TERMINAL CONNECTOR
10 GAUGE (AASHTO M180 B2)

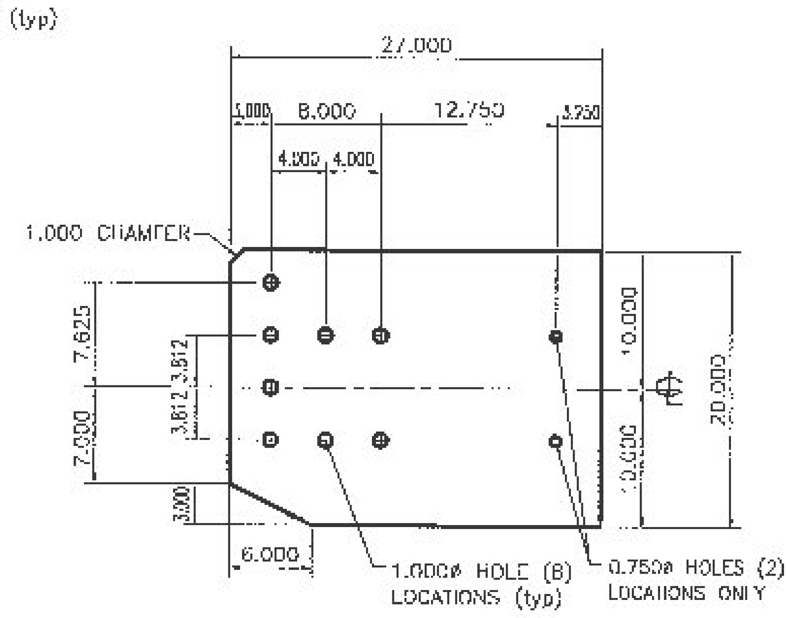

CONNECTION PLATE
0.375 x 20.000 x 27.000 (A709 gr 36)

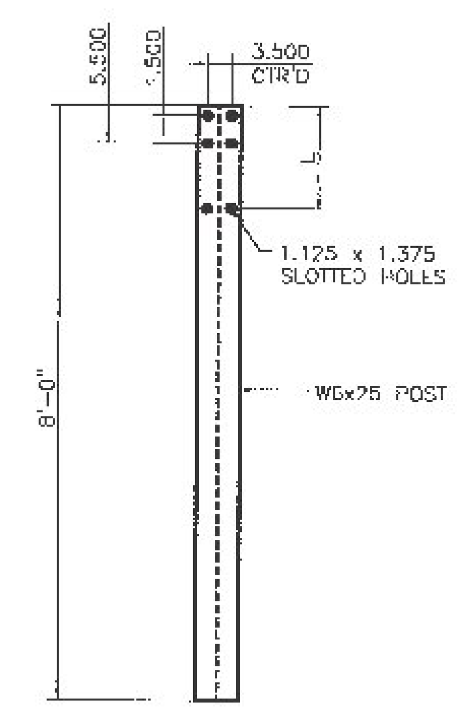

STEEL POST

STEEL POST CHART

No.	L
#1	1'-3.250"
#2	1'-3.000"
#3	1'-2.687"
#4	1'-2.375"

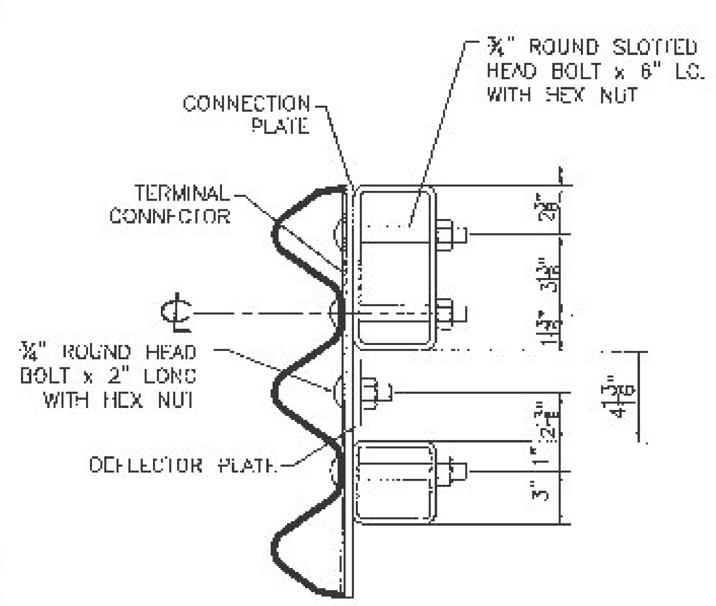

SECTION B-B

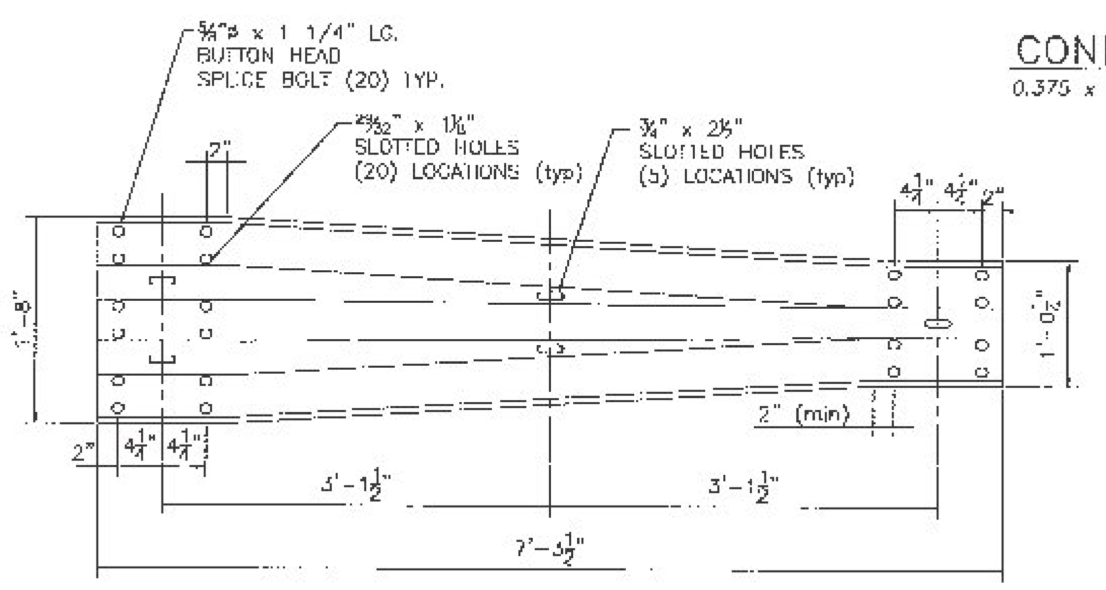

THRIE TRANSITION PANEL
10 GAUGE (AASHTO M180 B2)

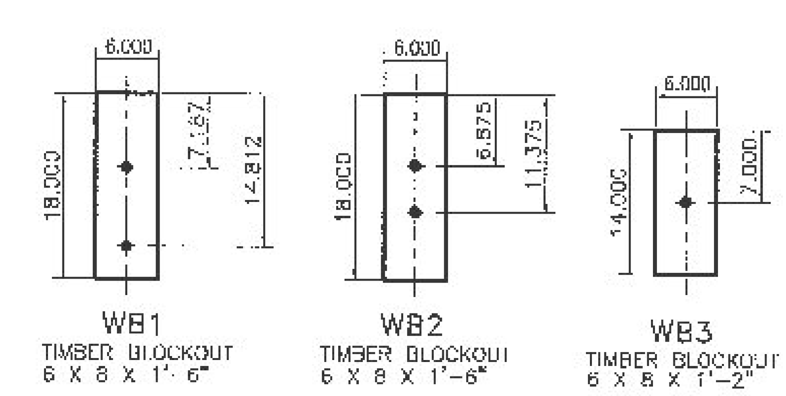

WOOD BLOCK DETAILS

BILL OF MATERIAL

Qty	mk	Description	Spec.
4 EA		ITEM 621.72 GUARDRAIL APPROACH SECTION, GALVANIZED, 2 RAIL BOX BEAM	
4	01	W6x25 APPROACH POST - #1 x 8'-0" OAL (GALV)	A709 gr 50
4	02	W6x25 APPROACH POST - #2 x 8'-0" OAL (GALV)	A709 gr 50
4	03	W6x25 APPROACH POST - #3 x 8'-0" OAL (GALV)	A709 gr 50
4	04	W6x25 APPROACH POST - #4 x 8'-0" OAL (GALV)	A709 gr 50
4		UPPER RAIL APPROACH TUBE HSS 8 x 4 x 5/16 x 9'-4.000" w/ 3.500 SLOTS FOR 4" EXP GAP (GALV)	A500 gr B
4		LOWER RAIL APPROACH TUBE HSS 4 x 4 x 5/16 x 9'-4.000" w/ 3.500 SLOTS FOR 4" EXP GAP (GALV)	A500 gr B
4		CONNECTION PLATE PL 0.375" x 20.000" x 27.000" (GALV)	A709 gr 36
2		DEFLECTOR PLATE (RIGHT) PL 0.375 x 4.000 x 13.375 (GALV)	A709 gr 36
2		DEFLECTOR PLATE (LEFT) PL 0.375 x 4.000 x 13.375 (GALV)	A709 gr 36
4		END CAP FOR 8x4 TUBE 0.187 THICK PLATE 8.000 x 4.000 w/ WELDED TABS (GALV)	A709 gr 36
4		END CAP FOR 4x4 TUBE 0.187 THICK PLATE 4.000 x 4.000 w/ WELDED TABS (GALV)	A709 gr 36
4		(ANGLED) SPLICE TUBE (EXPANSION) FOR 8x4 UPPER RAIL HSS 7 x 3 x 3/8 x 1'-11.750" OAL (GALV)	A500 gr B
4		SPLICE TUBE (EXPANSION) FOR 4x4 LOWER RAIL HSS 3 x 3 x 5/16 x 1'-11.750" OAL (GALV)	A500 gr B
32		WOOD POST (WP1) 6 x 8 x 7'-0"	TIMBER
32		WOOD BLOCKOUT (WB1) 6 x 8 x 1'-6"	TIMBER
4		WOOD POST (WP2) 6 x 8 x 7'-0"	TIMBER
4		WOOD BLOCKOUT (WB2) 6 x 8 x 1'-6"	TIMBER
4		WOOD POST(WP3) 6 x 8 x 7'-0"	TIMBER
4		WOOD BLOCKOUT (WB3) 6 x 8 x 1'-2"	TIMBER
4		THRIE FLAT LIP BRIDGE SHOE (MODIFIED) 10 GA. GALV	aashto M180 B2
4		THRIE TRANSITION PANEL 6'-3" / 3'-1 1/2" 10 GA. GALV.	aashto M180 B2
8		THRIE PANEL 12'-6" / 1'-6 3/4" 12 GA. GALV.	aashto M180 A2
92		ROUND HEAD POST BOLT slot or wrench head - no shoulder 3/4" DIA x 6" LG. (GLV) w/ LOCK NUT & FLAT WASHER	A449
4		ROUND HEAD POST BOLT slot or wrench head - no shoulder 3/4" DIA x 2" LG. (GLV) w/ HEX NUT	A449
8		ROUND HEAD POST BOLT - oval shoulder 5/8" DIA x 1'-8" LG. (GALV) w/ DBL RECESS NUT, FLAT WASHER	A307
68		ROUND HEAD POST BOLT - oval shoulder 5/8" DIA x 1'-8" LG. (GALV) w/ DBL RECESS NUT, FLAT WASHER	A307
32		HEX HEAD BOLT 5/8 x 1-3/4" (GALV) w/ FLAT WASHER	A325
128		PANEL SPLICE BOLT 5/8 x 1-1/4" (GALV) w/ DOUBLE RECESSED NUT	A307
76		RECTANGULAR PLATE WASHER 0.187 x 1.750 x 3.000 (GALV)	A709 gr 36
32		SPACER PIPE - GALVANIZED 3/4" SCH. 40 x 1/2" LONG (GLV)	A53 gr B

SHOP DRAWING REVIEW

[X] REVIEWED AS REQUIRED BY THE CONSTRUCTION CONTRACT DOCUMENTS AND APPROVED, BUT ONLY FOR CONFORMANCE TO THE DESIGN CONCEPT OF THE WORK, AND SUBJECT TO FURTHER LIMITATIONS AND REQUIREMENTS CONTAINED IN THE CONSTRUCTION CONTRACT DOCUMENTS.

[ ] REJECTED [ ] REVISE AND RESUBMIT [ ] APPROVED AS NOTED

CORRECTIONS OR COMMENTS MADE ON THE SHOP DRAWINGS DURING THIS REVIEW DID NOT RELIEVE CONTRACTOR FROM COMPLIANCE WITH REQUIREMENTS OF THE DRAWINGS AND SPECIFICATIONS. THIS CHECK IS ONLY FOR REVIEW OF GENERAL CONFORMANCE WITH THE DESIGN CONCEPT OF THE PROJECT AND GENERAL COMPLIANCE WITH THE INFORMATION GIVEN IN THE CONTRACT DOCUMENTS. THE CONTRACTOR IS RESPONSIBLE FOR: CONFIRMING AND CORRELATING ALL QUANTITIES AND DIMENSIONS; SELECTING FABRICATION PROCESSES AND TECHNIQUES OF CONSTRUCTION; COORDINATING THEIR WORK WITH THAT OF ALL OTHER TRADES; AND PERFORMING THEIR WORK IN A SAFE AND SATISFACTORY MANNER.

CLD Consulting Engineers
Job Number: 150223
Reviewed by: SRB
Date: 04/29/2015

HIGHWAY SAFETY CORP
GLASTONBURY, CT
860-633-9445

ITEM 621.72 GUARDRAIL APPROACH, GALV 2 RAIL BOX BEAM (S-3608)
TOWN OF IRASBURG, VERMONT
INTERSTATE 91 (PRINCIPAL ARTERIAL) BRIDGE NO. 107 N
ORLEANS COUNTY IM DECK (46)

AISC CERTIFIED FABRICATOR

GENERAL CONTRACTOR	
SUB CONTRACTOR	LAFAYETTE
HSC JOB NO.	2103
SHEET NO.	5 of 5
DRAWN	PAR
CHECKED	
DATE	04-27-16
SCALE	NONE
SIZE	D

Highway Safety Corporation

Glastonbury, CT

Welding Procedure Specification

SHOP DRAWING REVIEW

[X] REVIEWED AS REQUIRED BY THE CONSTRUCTION CONTRACT DOCUMENTS AND APPROVED - BUT ONLY FOR CONFORMANCE TO THE DESIGN CONCEPT OF THE WORK, AND SUBJECT TO FURTHER LIMITATIONS AND REQUIREMENTS CONTAINED IN THE CONSTRUCTION CONTRACT DOCUMENTS.

[ ] REJECTED [ ] REVISE AND RESUBMIT [ ] APPROVED AS NOTED

CORRECTIONS OR COMMENTS MADE ON THE SHOP DRAWINGS DURING THIS REVIEW DID NOT RELIEVE CONTRACTOR FROM COMPLIANCE WITH REQUIREMENTS OF THE DRAWINGS AND SPECIFICATIONS. THIS CHECK IS ONLY FOR REVIEW OF GENERAL CONFORMANCE WITH THE DESIGN CONCEPT OF THE PROJECT AND GENERAL COMPLIANCE WITH THE INFORMATION GIVEN IN THE CONTRACT DOCUMENTS. THE CONTRACTOR IS RESPONSIBLE FOR: CONFIRMING AND CORRELATING ALL QUANTITIES AND DIMENSIONS; SELECTING FABRICATION PROCESSES AND TECHNIQUES OF CONSTRUCTION; COORDINATING THEIR WORK WITH THAT OF ALL OTHER TRADES; AND PERFORMING THEIR WORK IN A SAFE AND SATISFACTORY MANNER.

CLD Consulting Engineers
540 Commercial Street
Manchester, NH 03101
603-668-8282

Job Number: 15D223
Reviewed by: SRB
Date: 04/29/2015

Material specification: A572 gr 50, A709 Gr 50

Welding process: Gas Metal Arc Welding (GMAW) Spray Transfer

Manual, semi-automatic, or automatic: Semi-Automatic

Position of welding: Flat (1F) or Horizontal (2F)

Filler metal specification: AWS A5.18

Filler metal classification: ER70S-6

Electrode and manufacturer: Lincoln Electric Lincoln Weld L-56

Flux and manufacturer: N/A

Shielding gas: 86% Argon / 14% CO2 Flow rate: 39 - 45 CFH

Single or multiple pass: Single or Multiple

Single or multiple arc: Single

Welding current: DCEP

Polarity: Reverse - electrode positive

Welding progression: Stringers

Root treatment: clean base metal

Preheat and interpass temperature: base metal up to 3/4" (50°F) ; over 3/4 thru 1-1/2" (150°F) : over 1-1/2" thru 2-1/2" (225°F)

Postweld heat treatment: None

Electrode extension: 3/4" ± 1/4"

Vermont Agency of Transportation
RECEIVED
ON: April 28, 2016
and Checked for
CONFORMANCE
BY: Jennifer Fitch DATE: 05/02/16

WELDING PROCEDURE

Weld size	Pass no.	Electrode size	Welding parameters Amperes	Welding parameters Volts	Travel speed	Joint detail
5/16"	1	0.062"	300 A ± 30	29 V ± 2	15 ipm ± 2	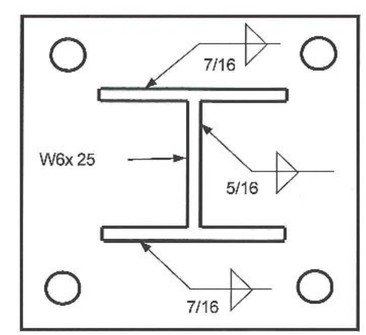
7/16"	1 & 2	0.062"	↓	↓	15 ipm ± 2	

This procedure may vary due to fabrication sequence, fit-up, pass size, etc. within the limitation of variables given in section 5 of latest edition AWS D1.5

Paul A Radice
CWI 98070221
QC1 EXP. 7/1/2016

WPS no. W-VTPEDPOST1

Revision no. 0

Supporting PQR no. W-AWSD1511 (06-22-11)

Project Name Irasburg, VT

Fabricator Highway Safety Corporation

Prepared By: Paul Radice

Date 04-28-16

Project Number IM DECK (46)

Highway Safety Corporation

Glastonbury, CT

Welding Procedure Specification

SHOP DRAWING REVIEW

[X] REVIEWED AS REQUIRED BY THE CONSTRUCTION CONTRACT DOCUMENTS AND APPROVED, BUT ONLY FOR CONFORMANCE TO THE DESIGN CONCEPT OF THE WORK AND SUBJECT TO FURTHER LIMITATIONS AND REQUIREMENTS CONTAINED IN THE CONSTRUCTION CONTRACT DOCUMENTS.

[ ] REJECTED [ ] REVISE AND RESUBMIT [ ] APPROVED AS NOTED

CORRECTIONS OR COMMENTS MADE ON THE SHOP DRAWINGS DURING THIS REVIEW DID NOT RELIEVE CONTRACTOR FROM COMPLIANCE WITH REQUIREMENTS OF THE DRAWINGS AND SPECIFICATIONS. THIS CHECK IS ONLY FOR REVIEW OF GENERAL CONFORMANCE WITH THE DESIGN CONCEPT OF THE PROJECT AND GENERAL COMPLIANCE WITH THE INFORMATION GIVEN IN THE CONTRACT DOCUMENTS. THE CONTRACTOR IS RESPONSIBLE FOR: CONFIRMING AND CORRELATING ALL QUANTITIES AND DIMENSIONS; SELECTING FABRICATION PROCESSES AND TECHNIQUES OF CONSTRUCTION; COORDINATING THEIR WORK WITH THAT OF ALL OTHER TRADES; AND PERFORMING THEIR WORK IN A SAFE AND SATISFACTORY MANNER.

CLD Consulting Engineers
540 Commercial Street
Manchester, NH 03101
603-669-8223

Job Number: 150223
Reviewed by: SRB
Date: 04/29/2015

Material specification: **ASTM A500 gr B**

Welding process: **Gas Metal Arc Welding (GMAW)**

Manual, semi-automatic, or automatic: **Semi-Automatic**

Position of welding: **Flat (1F)**

Filler metal specification: **AWS A5.18**

Filler metal classification: **ER70S-6**

Electrode and manufacturer: **Lincoln Electric Lincoln Weld L-56**

Flux and manufacturer: **N/A**

Shielding gas: **86% Argon / 14% CO2** Flow rate: **39 - 45 CFH**

Single or multiple pass: **Single**

Single or multiple arc: **Single**

Welding current: **DCEP**

Polarity: **Reverse - electrode positive**

Welding progression: **Stringers**

Root treatment: **clean base metal**

Preheat and interpass temperature: **base metal up to 3/4" (50°F)**

Postweld heat treatment: **None**

Electrode extension: **3/4" ± 1/4"**

WELDING PROCEDURE

Weld size	Pass no.	Electrode size	Welding parameters Amperes	Welding parameters Volts	Travel speed	Joint detail
	1	0.063"	300 A ± 30	29 V ± 2	15 ipm ± 2	B-U2a-GF 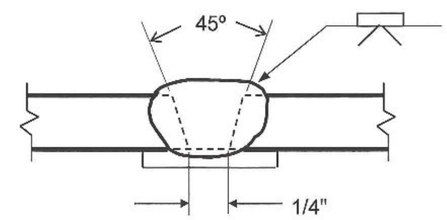

Vermont Agency of Transportation
RECEIVED
ON: April 28, 2016
and Checked for
CONFORMANCE
BY: Jennifer Fitch DATE: 05/02/16

This procedure may vary due to fabrication sequence, fit-up, pass size, etc. within the limitation of variables given in section 5 of latest edition AWS D1.5

Paul A Radice
CWI 98070221
DC1 EXP. 7/1/2016

WPS no.: **W-VGwBCK**

Revision no.: **0**

Supporting PQR no.: **W-AWSD1511 (06-22-11)**

Project Name: **Irasburg, VT**

Fabricator: **Highway Safety Corporation**

Prepared By: **Paul Radice**

Date: **04-28-16**

Project Number: **IM DECK (46)**