FOR INDEX OF SHEETS, SEE SHEET 2

STATE OF VERMONT
AGENCY OF TRANSPORTATION

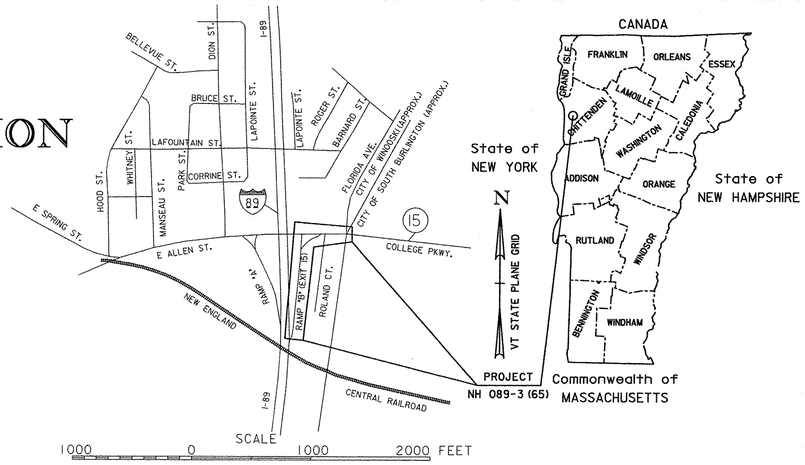

RECORD PLANS

CONTRACTOR: DON WESTON EXCAVATING,INC. – WILLISTON, VT

RESIDENT ENGINEER: DALE NORTON

CONSTRUCTION BEGAN: JUNE 21, 2010

CONSTRUCTION COMPLETE: OCTOBER 27, 2011

RECORD PLANS BY: DALE NORTON & JENNA HYDE

I HEREBY CERTIFY THAT ALL THE CONSTUCTION REQUIRED BY THIS SET OF DRAWINGS HAS BEEN ACCOMPLISHED AS INDICATED HEREIN.

BY Dale R. Norton RESIDENT ENGINEER

DATE 08/22/12

NOTE: Any further information concerning final quantities, amounts or other details relative to this project may be found at Central Files in the electronic archives.

PROPOSED IMPROVEMENT
CITY OF WINOOSKI
COUNTY OF CHITTENDEN
INTERSTATE 89 NB EXIT 15 OFF RAMP "B"
AT VT ROUTE 15 (PRINCIPAL ARTERIAL)

BEGINNING ON THE I-89 NORTHBOUND EXIT 15 OFF-RAMP, RAMP "B", APPROXIMATELY 595 FEET (0.113 MILE) SOUTH OF VERMONT ROUTE 15 AND EXTENDING NORTHERLY ALONG RAMP "B" FOR A DISTANCE OF 567.66 FT (0.108 MILE)
LENGTH OF ROADWAY: 1,432.87 FEET = 0.277 MILES
LENGTH OF PROJECT: 567.66 FEET = 0.108 MILES
THIS PROJECT CONSISTS OF FULL DEPTH RECONSTRUCTION AND WIDENING OF RAMP "B", INSTALLATION OF CURB, SIDEWALK, PAVEMENT MARKINGS, COLD PLANING AND OVERLAY, DRAINAGE, NEW SIGNAGE AND THE INSTALLATION OF NEW TRAFFIC SIGNALS AT THE INTERSECTION OF RAMP "B" AND VERMONT ROUTE 15 AND AT THE INTERSECTION OF ROLAND COURT AND VERMONT ROUTE 15.

I-89 NORTHBOUND OFF-RAMP TRAFFIC DATA

2010 AADT	8,500
2020 AADT	8,800
2030 AADT	9,200
2030 DHV	1,155
D	100%
T	4%
V	35 MPH
2010-2030 ESAL	2,240,000
2010-2050 ESAL	5,555,000

VT-15 FROM I-89 SB ON-RAMP TO NB OFF-RAMP TRAFFIC DATA

2010 AADT	24,000
2020 AADT	25,000
2030 AADT	26,200
2030 DHV	3,164
D	64%
T	3%
V	25MPH

VT-15 FROM I-89 NB OFF-RAMP TO ROLAND COURT TRAFFIC DATA

2010 AADT	27,000
2020 AADT	28,000
2030 AADT	29,400
2030 DHV	3,422
D	53%
T	3%
V	25MPH

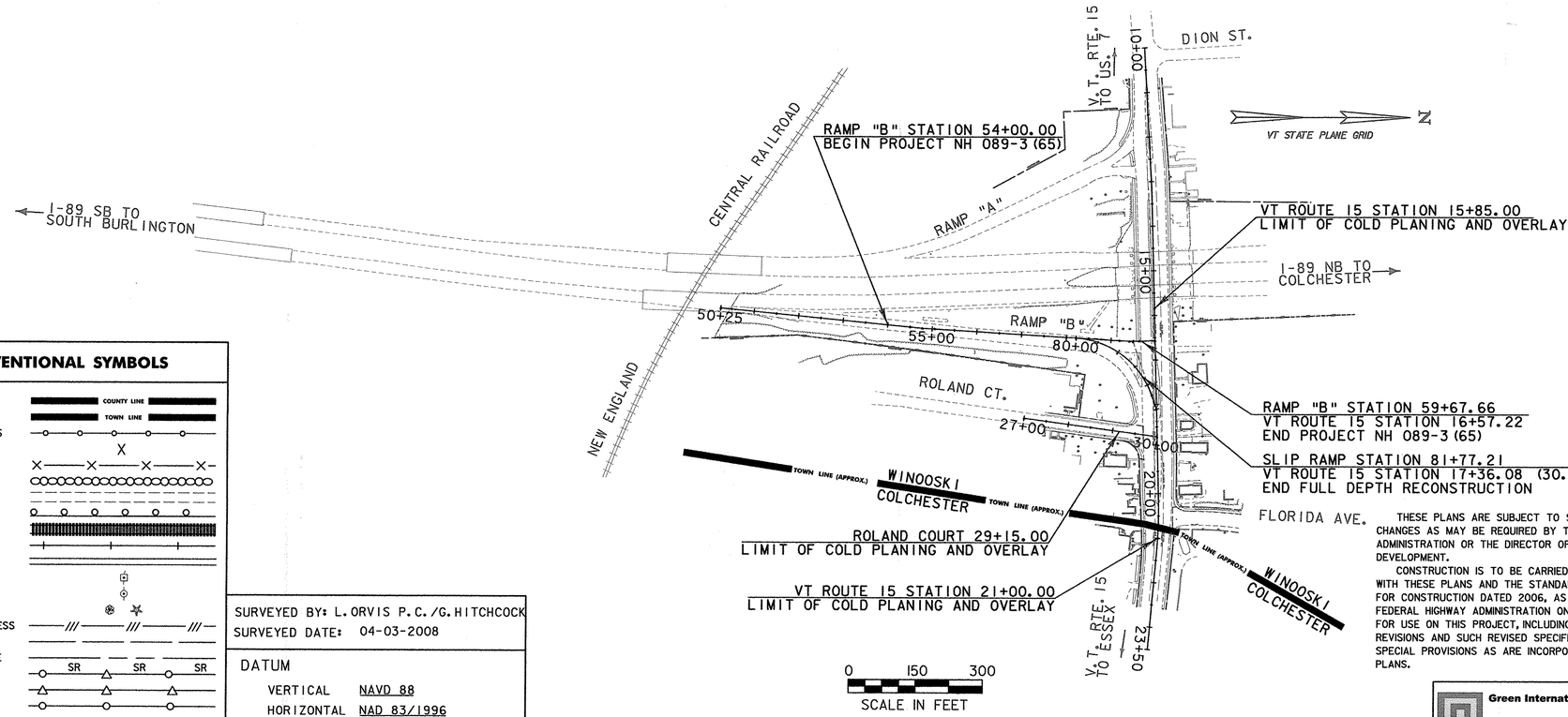

BITUMINOUS CONCRETE PAVEMENT SUPER PAVE MIXTURE DESIGN CRITERIA

DESIGN LIFE ESAL (DESIGN LANE)	2,240,000
DESIGN NUMBER OF GYRATIONS	75
PERFORMANCE GRADED ASPHALT BINDER	SEE SECTION 490 GENERAL SPECIAL PROVISIONS

CONVENTIONAL SYMBOLS

COUNTY LINE
TOWN LINE
LIMITS OF ACCESS
POINT OF ACCESS
FENCE LINE
STONE WALL
TRAVELED WAY
GUARD RAIL
RAILROAD
SURVEY LINE
CULVERT
POWER POLE
TELEPHONE POLE
TREES
CONTROL OF ACCESS
PROPERTY LINE
R.O.W. TAKING LINE
SLOPE RIGHTS
TOP OF CUT
TOE OF SLOPE

SURVEYED BY: L. ORVIS P.C./G. HITCHCOCK
SURVEYED DATE: 04-03-2008

DATUM
VERTICAL NAVD 88
HORIZONTAL NAD 83/1996

STATE OF VERMONT REGISTERED PROFESSIONAL ENGINEER NO. 7599 LICENSED

THESE PLANS ARE SUBJECT TO SUCH ENGINEERING CHANGES AS MAY BE REQUIRED BY THE FEDERAL HIGHWAY ADMINISTRATION OR THE DIRECTOR OF PROGRAM DEVELOPMENT.

CONSTRUCTION IS TO BE CARRIED ON IN ACCORDANCE WITH THESE PLANS AND THE STANDARD SPECIFICATIONS FOR CONSTRUCTION DATED 2006, AS APPROVED BY THE FEDERAL HIGHWAY ADMINISTRATION ON JUNE 15, 2006 FOR USE ON THIS PROJECT, INCLUDING ALL SUBSEQUENT REVISIONS AND SUCH REVISED SPECIFICATIONS AND SPECIAL PROVISIONS AS ARE INCORPORATED IN THESE PLANS.

Green International Affiliates, Inc.
Civil and Structural Engineers Westford, MA

DIRECTOR OF PROGRAM DEVELOPMENT
APPROVED DATE 3-9-10

PROJECT MANAGER : KEN UPMAL

PROJECT NAME : WINOOSKI
PROJECT NUMBER : NH 089-3(65)

SHEET 1 OF 67 SHEETS

INDEX OF SHEETS

1.	TITLE SHEET
2.	INDEX OF SHEETS
3.	RAMP "B" TYPICAL SECTIONS
4.	VT ROUTE 15 TYPICAL SECTIONS
5.	LANDSCAPE DETAIL SHEET
6-9.	QUANTITY SHEETS
10.	ITEM DETAIL AND DRAINAGE SHEET
11.	EARTHWORK SHEET
12-14.	R.O.W. SHEETS
15-16.	TIE SHEETS
17-18.	CURB TIE AND LAYOUT SHEETS
19-20.	ROADWAY LAYOUT SHEETS
21.	RAMP "B" PROFILE SHEET
22.	SLIP RAMP PROFILE SHEET
23.	PARTIAL GRADING PLAN
24.	DRAINAGE DETAILS
25-26.	DRAINAGE LAYOUT SHEETS
27.	EROSION CONTROL NARRATIVE
28.	EPSC EROSION CONTROL LEGEND
29-31.	EPSC EROSION CONTROL DETAILS SHEETS
32-33.	EPSC EXISTING CONDITIONS PLAN SHEETS
34-35.	EPSC CONSTRUCTION SITE PLAN SHEETS
36-37.	EPSC FINAL CONDITIONS PLAN SHEETS
38-39.	BORING LAYOUT SHEETS
40-41.	BORING LOGS
42-43.	PAVEMENT MARKING AND SIGNS LAYOUT SHEETS
44-47.	TRAFFIC SIGN SUMMARY SHEETS
48-50.	TRAFFIC SIGNAL PLANS SHEETS
51-53.	TRAFFIC SIGNAL DETAILS SHEETS
54.	SINGLE MAST ARM DETAIL SHEET
55.	OVERHEAD SIGN DETAIL SHEET
56-58.	TRAFFIC MANAGEMENT PLANS
59.	PEDESTRIAN DETOUR PLAN
60-64.	RAMP "B" CROSS SECTIONS SHEETS
65-66.	SLIP RAMP CROSS SECTIONS SHEETS
67.	CROSS SECTIONS AT MAST-ARMS

STANDARDS LISTS

A-76	STANDARDS FOR TOWN & DEVELOPMENT ROADS	03/03/2003
B-5	SLOPE GRADING, EMBANKMENTS, MUCK	06/01/1994
C-10	CURBING	02/11/2008
C-2A	PORTLAND CEMENT CONCRETE SIDEWALK DRIVE ENTRANCES WITH SIDEWALK ADJACENT TO CURB	10/14/2005
C-2B	PORTLAND CEMENT CONCRETE SIDEWALK DRIVE ENTRANCES WITH SIDEWALK AND GREEN STRIP	10/14/2005
C-3A	SIDEWALK RAMPS	03/10/2008
C-3B	SIDEWALK RAMPS AND MEDIAN ISLANDS	03/10/2008
D-3	TREATED GUTTERS	06/01/1994
D-4	FLUSHING BASINS, END SECTION, ELBOWS TYPICAL WATERFALL FOR CULVERTS UP TO AND INCLUDING 48" DIA EXTENSION SERVICE BOX AND CURB STOP CORRUGATED PIPE ELBOW GRANULAR BORROW AT CULVERT LOCATIONS CORRUGATED STEEL PIPE END SECTION CORRUGATED STEEL PIPE ARCH END SECTION	08/13/2007
D-15	PRECAST REINFORCED CONCRETE MH-GRATES (BICYCLE SAFE) CAST IRON GRATE WITH FRAME,TYPE D CAST IRON GRATE WITH FRAME,TYPE E	06/01/1994
D-16	PRECAST CURB DI, GRATE, RCP END SECTION, ETC. CAST IRON GRATE, TYPE B, CAST IRON GRATE TYPE C UNDERDRAIN RISER REINFORCED CONCRETE PIPE END SECTION ENERGY DISSIPATOR FOR CULVERT	06/01/1994
D-20	HIGHWAY CROSSING FOR UNDERGROUND UTILITIES	03/03/2003
D-30	UNDERDRAIN CONSTRUCTION DETAILS	08/13/2007
E-100	CONSTRUCTION APPROACH SIGNS	01/02/2004
E-100A	SIDE ROAD CONSTRUCTION - APPROACH SIGNS	01/02/2004
E-101	CONSTRUCTION SIGN DETAILS	05/30/2003
E-102	CONSTRUCTION SIGN DETAILS	06/30/2003
E-102A	CONSTRUCTION SIGN DETAILS	05/01/2004
E-103	MAINLINE TRAFFIC CONTROL DIVIDED HIGHWAY ONE LANE CLOSED	03/01/2004
E-106	TRAFFIC CONTROL - MISCELLANEOUS DETAILS	03/01/2004
E-107	DELINEATION, BARRICADES AND DETOURS FOR CONSTRUCTION AREAS	06/30/2003
E-108	CONSTRUCTION ZONE LONGITUDINAL DROP OFFS	06/08/2009
E-108A	CONSTRUCTION ZONE LONGITUDINAL DROP OFFS FOR PAVING	06/08/2009
E-110	MAJOR MAINTENANCE OPERATION LANE CLOSURE	08/08/1995
E-111	MINOR MAINTENANCE OPERATIONS	03/11/1997
E-119	UTILITY WORK ZONE	03/01/2004
E-120	STANDARD SIGN PLACEMENT - EXPRESSWAY & FREEWAY	08/08/1995
E-121	STANDARD SIGN PLACEMENT - CONVENTIONAL ROAD	08/08/1995
E-123	GUIDE SIGN PLACEMENT - MISCELLANEOUS DETAILS	03/16/2004
E-126	TYPICAL FREEWAY INTERCHANGE SIGNING	02/01/2000
E-130	TYPE ''B'' GUIDE SIGN, ATTACHMENT DETAILS	08/08/1995
E-133	SERVICE SIGN DETAILS	08/08/1995
E-136B	STATE ROUTE MARKER SIGN DETAILS	08/08/1995
E-140	REGULATORY SIGN DETAILS	08/30/1996
E-144	REGULATORY SIGN DETAILS	03/29/1999
E-145B	REGULATORY SIGN DETAILS - LANE USE CONTROL SIGNS THREE LANE APPROACHES	12/23/1994
E-164	SQUARE STEEL SIGN POST	06/08/2009
E-170	TRAFFIC CONTROL SIGNALS PEDESTAL POST MOUNTED	11/04/1999
E-171A	TRAFFIC CONTROL SIGNALS GENERAL NOTES AND DETAILS	08/09/1995
E-171B	TRAFFIC CONTROL SIGNALS MISC. DETAILS	08/09/1995
E-171C	TRAFFIC CONTROL SIGNALS CANTILEVER MOUNTING DETAILS PED. PUSH BUTTON ACCESSIBILITY DETAIL	08/09/1995
E-172	VEHICLE DETECTOR LOOP DETAILS	08/09/1995
E-173	PULL BOXES AND JUNCTION BOXES	08/09/1995
E-175	POWER DROP STANCHIONS	06/08/2009
E-191	PAVEMENT MARKING DETAILS	02/01/1999
E-192	PAVEMENT MARKING DETAILS	10/12/2000
E-193	PAVEMENT MARKING DETAILS	08/18/1995
E-197	DELINEATOR PLACEMENT TYPICAL	04/01/2005
E-198	DELINEATORS AND MILE POSTS	04/01/2005

LEGEND

	UNDERDRAIN WITH DIRECTION OF FLOW
●F.B.	FLUSHING BASIN
	STONE FILL (REFER TO ROADWAY LAYOUT SHEETS FOR TYPE)
▷ DELIN	DELINEATOR
	PROPOSED MAST ARM
	EXISTING MAST ARM
	PEDESTAL POST
	TREE PROTECTION ZONE (TPZ)
	DECIDUOUS TREE
	DECIDUOUS SHRUB
	BARRIER FENCE FOR TREE PROTECTION
	WHEELCHAIR RAMP
	PRECAST CONCRETE CATCH BASIN
(REC)	INFORMATION OF RECORD
(TYP)	TYPICAL

PROJECT NAME: WINOOSKI
PROJECT NUMBER: NH 089-3(65)

FILE NAME: z94a198frm.dgn
PROJECT LEADER: KEN UPMAL
DESIGNED BY: T.BIGELOW
INDEX OF SHEETS

PLOT DATE: 2/23/2010
DRAWN BY: T.BIGELOW
CHECKED BY: E.ATKINS
SHEET 2 OF 67

TYPICAL SECTIONS

1.75" SUPERPAVE BITUMINOUS CONCRETE PAVEMENT (TYPE IIIS)*
3.50" SUPERPAVE BITUMINOUS CONCRETE PAVEMENT (TYPE IIS)*
3.50" SUPERPAVE BITUMINOUS CONCRETE PAVEMENT (TYPE IIS)*
24" SUBBASE OF DENSE GRADED CRUSHED STONE
24" SAND BORROW

* FOR PG GRADE SEE SECTION 490 OF THE GENERAL SPECIAL PROVISIONS.
TACK COAT: EMULSIFIED ASPHALT IS TO BE APPLIED AT THE RATE OF 0.025 GAL/SY BETWEEN SUCCESSIVE COURSES OF PAVEMENT AS DIRECTED BY THE ENGINEER.

MATERIAL ITEM	THICKNESS TOLERANCE
PAVEMENT (TOTAL DEPTH ALL LAYERS)	+/- 1/4"
BASE COURSE	+/- 1/2"
SUBBASE	+/- 1"
SAND BORROW	+/- 1"

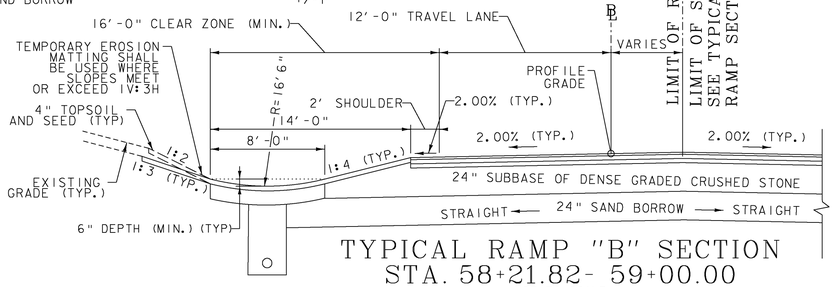

TYPICAL RAMP "B" SECTION
STA. 58+21.82- 59+00.00
NOT TO SCALE

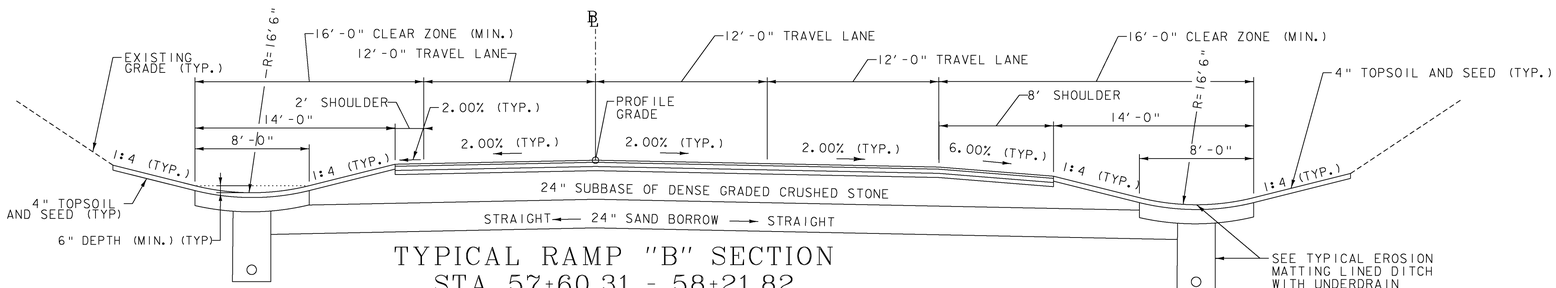

TYPICAL RAMP "B" SECTION
STA. 57+60.31 - 58+21.82
NOT TO SCALE

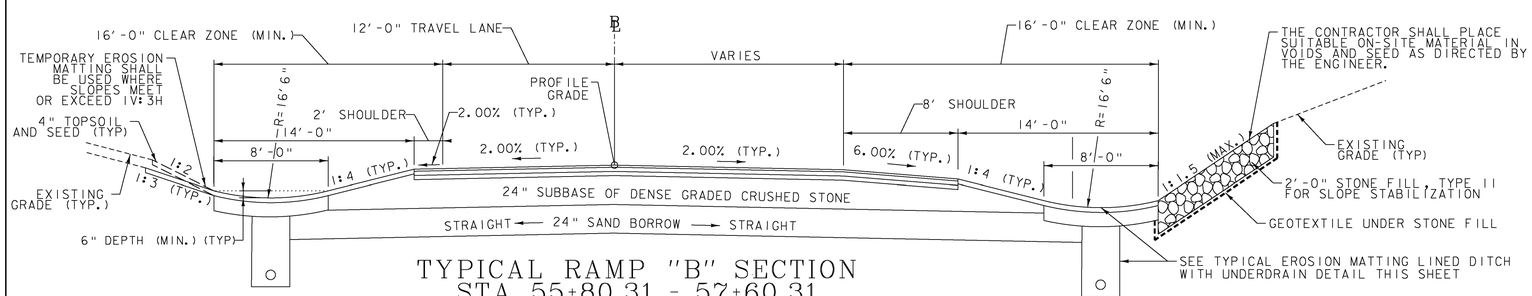

TYPICAL RAMP "B" SECTION
STA. 55+80.31 - 57+60.31
NOT TO SCALE

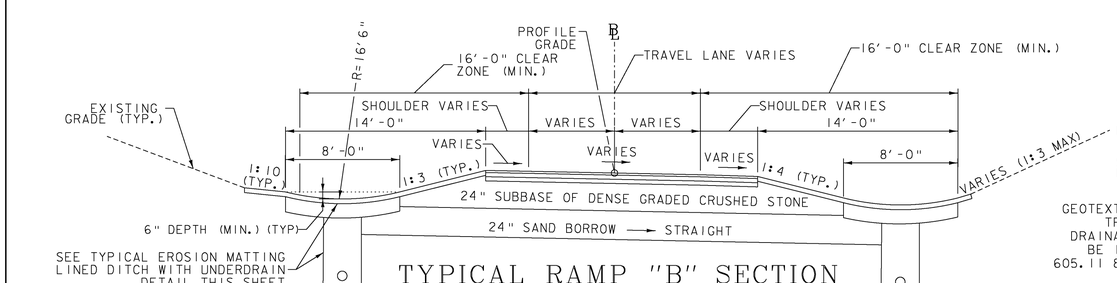

TYPICAL RAMP "B" SECTION
STA. 54+00.00 - 55+80.31
NOT TO SCALE

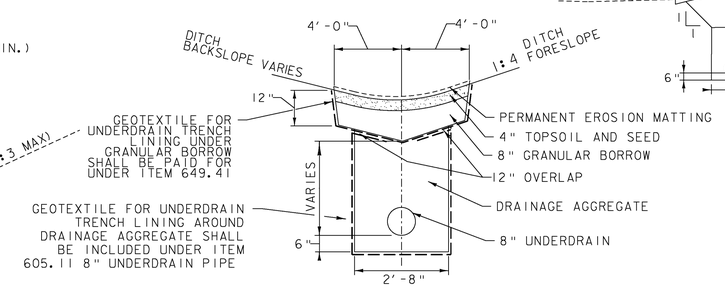

TYPICAL EROSION MATTING LINED DITCH WITH UNDERDRAIN
NOT TO SCALE

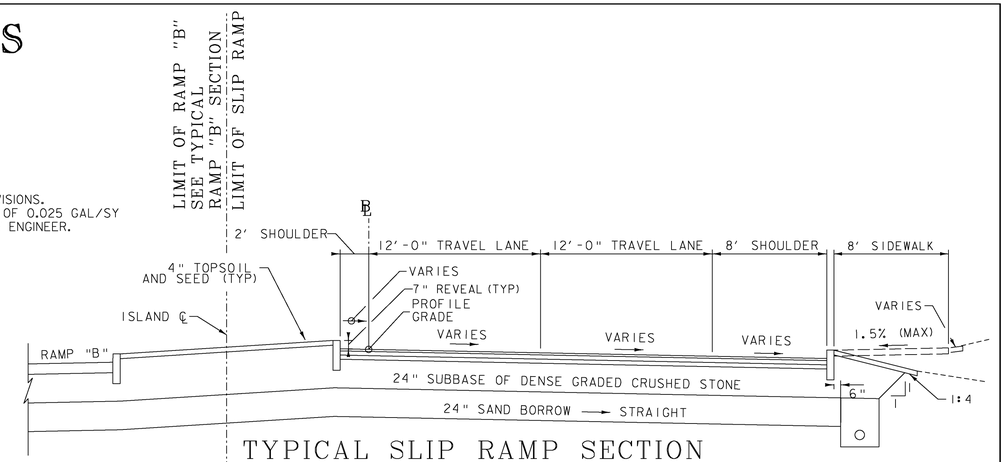

TYPICAL SLIP RAMP SECTION
STA. 80+73.48 - 81+77.21
NOT TO SCALE

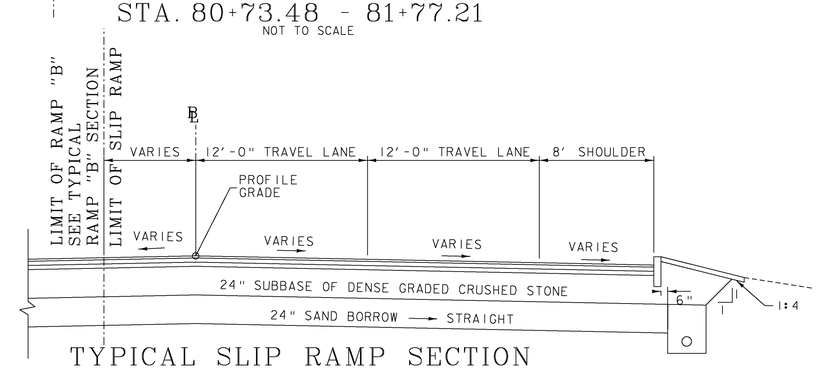

TYPICAL SLIP RAMP SECTION
STA. 80+00.00 - 80+73.48
NOT TO SCALE

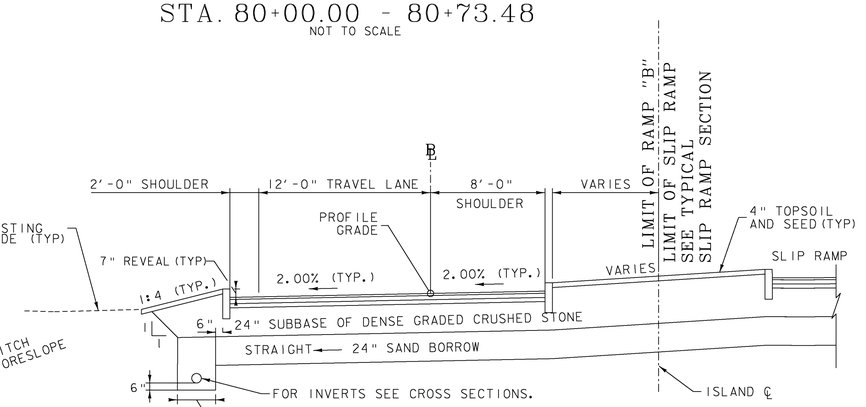

TYPICAL RAMP "B" SECTION
STA. 59+00.00 - 59+67.66
NOT TO SCALE

PROJECT NAME: WINOOSKI	
PROJECT NUMBER: NH 089-3(65)	
FILE NAME: z94a198typ.dgn	PLOT DATE: 2/23/2010
PROJECT LEADER: KEN UPMAL	DRAWN BY: A. ACHARYA
DESIGNED BY: A. ACHARYA	CHECKED BY: E.ATKINS
RAMP "B" TYPICAL SECTIONS	SHEET 3 OF 67

TYPICAL SECTIONS

MATERIAL ITEM	THICKNESS TOLERANCE
PAVEMENT (TOTAL DEPTH ALL LAYERS)	+/- 1/4"
BASE COURSE	+/- 1/2"
SUBBASE	+/- 1"
SAND BORROW	+/- 1"

VT RTE 15 FULL DEPTH:

2" SUPERPAVE BITUMINOUS CONCRETE PAVEMENT (TYPE IVS)*

4" SUPERPAVE BITUMINOUS CONCRETE PAVEMENT (TYPE IIS)*

18" SUBBASE OF DENSE GRADED CRUSHED STONE OR APPROVED IN-SITU MATERIAL MEETING THE MATERIAL REQUIREMENTS OF SUB SECTION 704.06.

VT RTE 15 COLD PLANE AND OVERLAY:

2" COLD PLANE AND 2" OVERLAY OF SUPERPAVE BITUMINOUS CONCRETE PAVEMENT (TYPE IVS)*

* FOR PG GRADE SEE SECTION 490 OF THE GENERAL SPECIAL PROVISIONS.
TACK COAT: EMULSIFIED ASPHALT IS TO BE APPLIED AT THE RATE OF 0.025 GAL/SY BETWEEN SUCCESSIVE COURSES OF PAVEMENT AS DIRECTED BY THE ENGINEER.

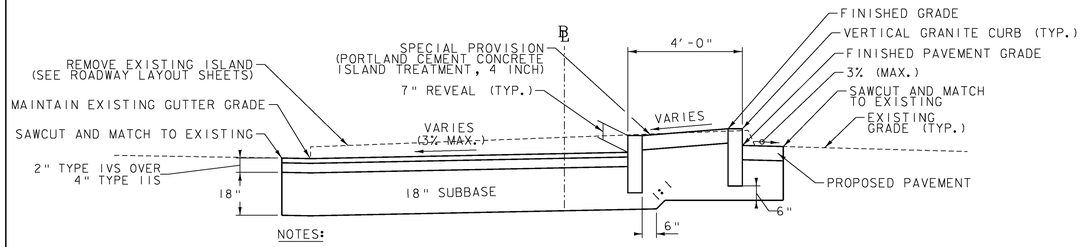

NOTES:

1. PAYMENT FOR GRADING AND PLACING THE CONCRETE FOR THE APPROACH ISLAND SHALL BE MADE UNDER ITEM 900.675 FOR SPECIAL PROVISION (PORTLAND CEMENT CONCRETE ISLAND TREATMENT, 4 INCH.)
2. PAYMENT FOR SAWCUTTING SHALL BE CONSIDERED INCIDENTAL TO ITEM 616.40 REMOVING AND RESETTING CURB AND ITEM 616.41 REMOVAL OF EXISTING CURB.

VT ROUTE 15 MEDIAN ISLAND SECTION
STA. 18+91.13 - 19+36.05

NOT TO SCALE

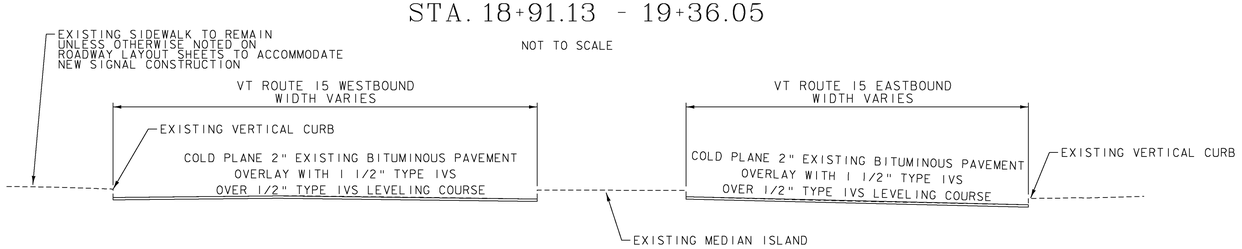

TYPICAL VT ROUTE 15 SECTION
STA. 15+85 - 21+00

NOT TO SCALE

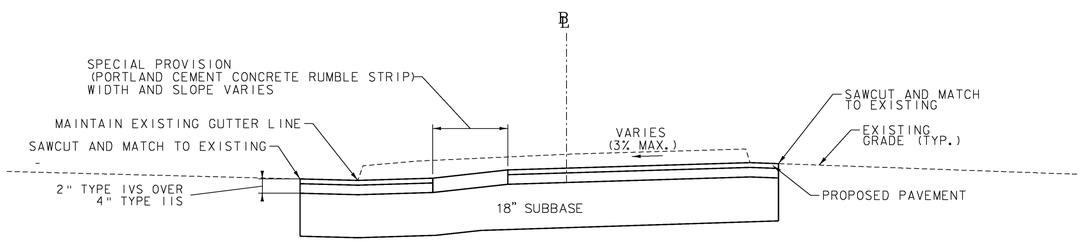

VT ROUTE 15 RUMBLE STRIP SECTION
STA. 19+36.05 - 20+36.81

NOT TO SCALE

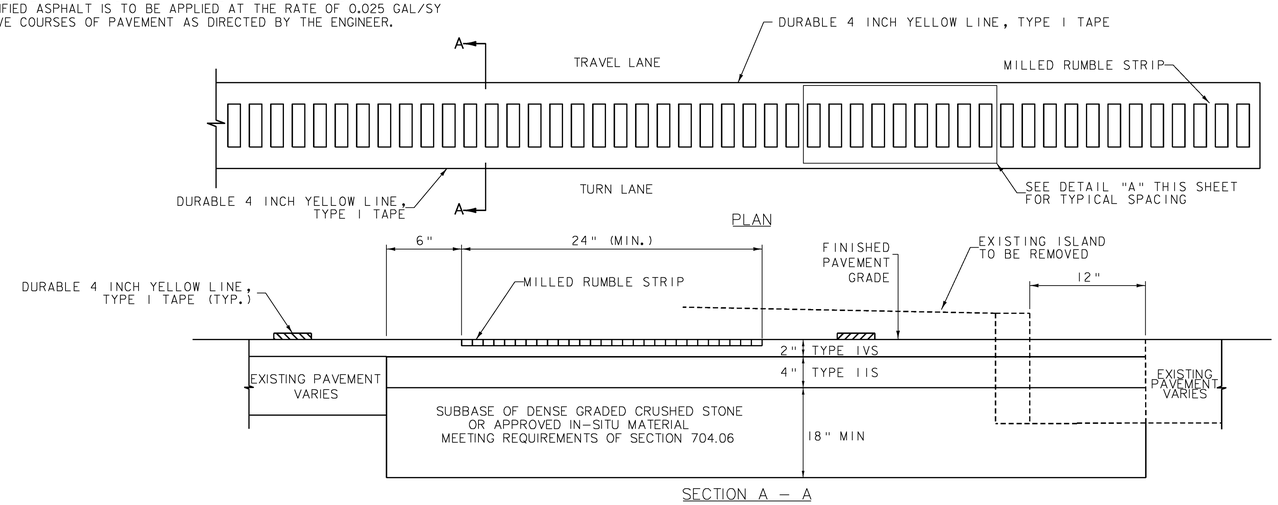

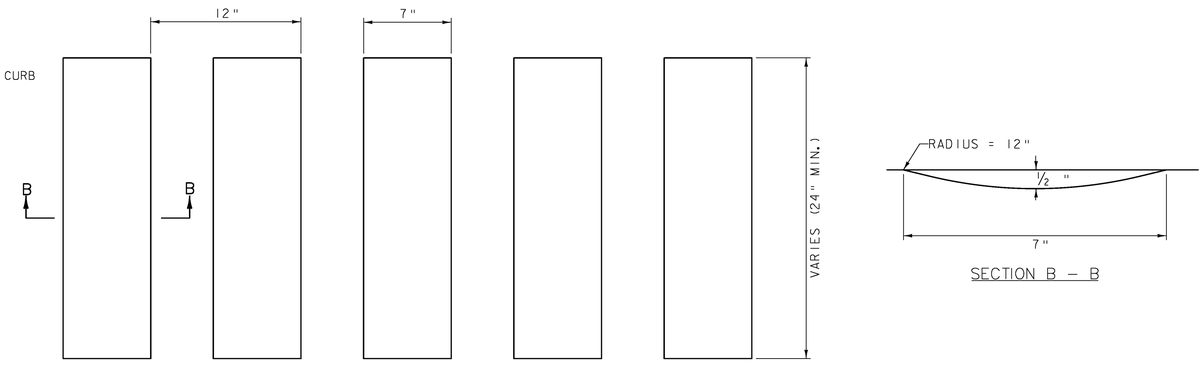

DETAIL A
TYPICAL SPACING PLAN

NOTES:

1. PAYMENT FOR THE TURNING LANE MILLED RUMBLE STRIP SHALL BE MADE UNDER ITEM 213.10 MILLED RUMBLE STRIPS. ALL PROVISIONS IN STANDARD SPECIFICATIONS SECTION 213 SHALL APPLY.

TURNING LANE
MILLED RUMBLE STRIP DETAIL

NOT TO SCALE

PROJECT NAME: WINOOSKI	
PROJECT NUMBER: NH 089-3(65)	
FILE NAME: z94a198typ.dgn	PLOT DATE: 2/24/2010
PROJECT LEADER: KEN UPMAL	DRAWN BY: A. ACHARYA
DESIGNED BY: A. ACHARYA	CHECKED BY: E.ATKINS
VT ROUTE 15 TYPICAL SECTIONS	SHEET 4 OF 67

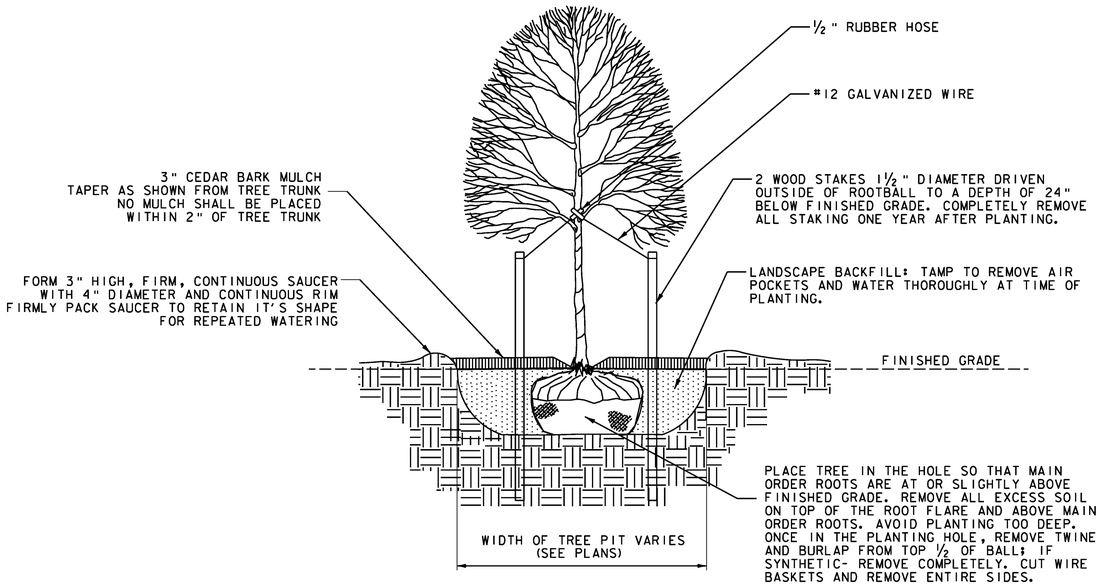

TYPICAL DECIDUOUS TREE PLANTING DETAIL

SCALE: NOT TO SCALE

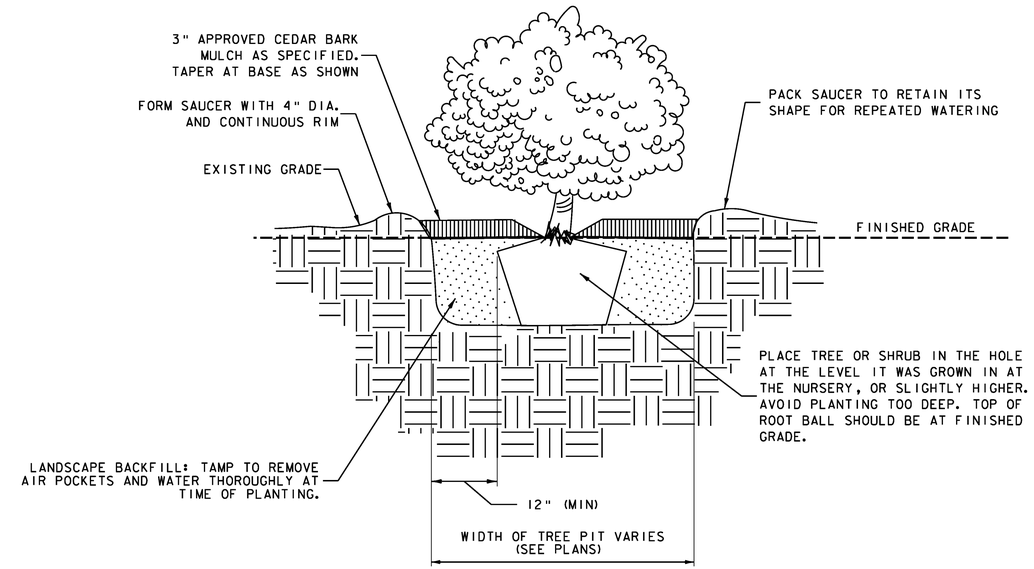

SHRUB PLANTING DETAIL

SCALE: NOT TO SCALE

PLANT LIST

QTY.	SIZE	COMMON NAME/ AREA	BOTANICAL NAME	SPACING/ COMMENTS
TREES				
2	2" - 2 1/2" CALIPER	AUTUMN BLAZE FREMAN MAPLE	ACER x FREMANII "AUTUMN BLAZE"	B&B, SEE PLAN FOR LOCATION
SHRUBS				
8	18" - 24" HEIGHT	DENSE SPREADING YEWS	TAXUS x MEDEA DENSIFORMIS	3' ON CENTER

NOTE:
FINAL LOCATION OF PLANTINGS TO BE APPROVED BY PROPERTY OWNERS.

GENERAL LANDSCAPE NOTES:

1. SEE EPSC EROSION CONTROL DETAIL SHEET 1 FOR SEEDING FORMULAS, FERTILIZER APPLICATION RATES, MULCH REQUIREMENTS ETC...

2. LANDSCAPE BACKFILL, TRUCK MEASUREMENT
BACKFILL WITH PLANTING MIX OF 1/2 SCREENED TOPSOIL, 1/4 COMPOST AND 1/4 NATIVE MATERIAL AS APPROVED BY THE ENGINEER. UNSUITABLE NATIVE MATERIAL SHALL BE REPLACED WITH IMPORTED APPROVED TOPSOIL AS DIRECTED BY ENGINEER.

3. WATERING
SHRUBS TO RECEIVE A MINIMUM OF 5 GALLONS AT EACH WATERING, TWICE WEEKLY DURING ESTABLISHMENT PERIOD. TREES TO RECEIVE A MINIMUM OF 10 GALLONS AT EACH WATERING, TWICE WEEKLY DURING ESTABLISHMENT PERIOD. CONTRACTORS SHALL MAINTAIN AND PROVIDE A LOG TO THE RESIDENT ENGINEER SHOWING AMOUNTS AND DATES OF WATERING AND NOTING NATURAL RAINFALL EVENTS. WATERING SCHEDULE MAY BE ADJUSTED AS APPROVED BY THE RESIDENT ENGINEER.

4. TREE PIT WIDTH
FOR ALL TREES TO BE PLANTED, THE PLANTING PIT SHALL BE THREE TIMES THE WIDTH OF THE ROOTBALL.

5. BARK MULCH SHALL BE CEDAR AND PROVIDED IN ACCORDANCE WITH SUBSECTION 755.10(C).

6. SAVE/TPZ TREE PROTECTION ZONE FOR EXISTING TREES SHALL BE USED TO ESTABLISH TREE PROTECTION ZONES TO PRESERVE AND PROTECT EXISTING TREES AND TREE ROOTS DURING CONSTRUCTION. REFER TO VTRANS STANDARD SPECIFICATION 656.10 TREE PROTECTION FOR THE PROCEDURES AND LOCATION AND DESCRIPTION OF BARRIER FENCE. ANY DAMAGE TO EXISTING TREES SHALL BE MITIGATED ACCORDING TO THIS SPECIFICATION.

PROJECT NAME: WINOOSKI
PROJECT NUMBER: NH 089-3(65)

FILE NAME: z94a198landdet.dgn
PROJECT LEADER: KEN UPMAL
DESIGNED BY: J. BROWN
LANDSCAPE DETAIL SHEET

PLOT DATE: 2/24/2010
DRAWN BY: A. ACHARYA
CHECKED BY: E. ATKINS
SHEET 5 OF 67

STATE OF VERMONT
AGENCY OF TRANSPORTATION

QUANTITY SHEET 1

SUMMARY OF ESTIMATED QUANTITIES					TOTALS		DESCRIPTIONS			
ROADWAY	TRAINING	LANDSCAPING	EROSION CONTROL	FULL C.E. ITEMS	GRAND TOTAL	FINAL	UNIT	ITEMS	ITEM NUMBER	ROUND
1					1		LS	CLEARING AND GRUBBING, INCLUDING INDIVIDUAL TREES AND STUMPS	201.10	-
7250					7250		CY	COMMON EXCAVATION	203.15	132
55					55		CY	SOLID ROCK EXCAVATION	203.16	4
300					300		CY	EARTH BORROW	203.30	25
2750					2750		CY	SAND BORROW	203.31	81
85					85		CY	GRANULAR BORROW	203.32	6
550					550		CY	TRENCH EXCAVATION OF EARTH	204.20	10
25					25		CY	TRENCH EXCAVATION OF ROCK	204.21	4
1					1		CY	TRENCH EXCAVATION OF EARTH, EXPLORATORY (N.A.B.I.)	204.22	-
60					60		CY	GRANULAR BACKFILL FOR STRUCTURES	204.30	8
3900					3900		SY	COLD PLANING, BITUMINOUS PAVEMENT	210.10	37
105					105		LF	MILLED RUMBLE STRIPS	213.10	3
3500					3500		CY	SUBBASE OF DENSE GRADED CRUSHED STONE	301.35	106
28					28		CWT	EMULSIFIED ASPHALT	404.65	1.4
200					200		TON	BITUMINOUS CONCRETE PAVEMENT	406.25	11
1					1		LU	PRICE ADJUSTMENT, ASPHALT CEMENT (N.A.B.I.)	406.50	-
2000					2000		TON	SUPERPAVE BITUMINOUS CONCRETE PAVEMENT	490.30	44
1					1		LU	AIR VOIDS PAY ADJUSTMENT (N.A.B.I.)	490.31	-
1					1		LU	MAT DENSITY PAY ADJUSTMENT (N.A.B.I.)	490.32	-
4					4		LF	18" PCCSP .064 (2-2/3 X 1/2)	601.0415	-
								BEGIN OPTION AA		
90					90		LF	18" RCP CLASS III	601.0815	-
90					90		LF	18" CPEP(SL)	601.2615	-
								END OPTION AA		
3					3		EACH	PRECAST REINFORCED CONCRETE CATCH BASIN WITH CAST IRON GRATE	604.20	-
3					3		EACH	CHANGING ELEVATION OF DROP INLETS, CATCH BASINS, OR MANHOLES	604.40	-
3					3		EACH	REHAB. DROP INLETS, CATCH BASINS, OR MANHOLES, CLASS I	604.412	-
1					1		EACH	REHAB. DROP INLETS, CATCH BASINS, OR MANHOLES, CLASS III	604.418	-
4					4		EACH	CHANGING ELEVATION OF SEWER MANHOLES	604.42	-
900					900		LF	8 INCH UNDERDRAIN PIPE	605.11	25
220					220		LF	8 INCH UNDERDRAIN CARRIER PIPE	605.21	8
8					8		EACH	UNDERDRAIN FLUSHING BASIN	605.95	-
			700		700		MGAL	DUST CONTROL WITH WATER	609.10	51
			7		7		TON	DUST AND ICE CONTROL WITH CALCIUM CHLORIDE	609.15	0.5
			20		20		CY	STONE FILL, TYPE I	613.10	0.4
			120		120		CY	STONE FILL, TYPE II	613.11	5
500					500		LF	VERTICAL GRANITE CURB	616.21	55
410					410		LF	REMOVING AND RESETTING CURB	616.40	14
700					700		LF	REMOVAL OF EXISTING CURB	616.41	29
360					360		SY	PORTLAND CEMENT CONCRETE SIDEWALK, 5 INCH	618.10	17

DETAILED SUMMARY OF QUANTITIES

QUANTITIES	UNIT	ITEMS
COMMON EXCAVATION		
3962	CY	RAMP "B"
1586	CY	SLIP RAMP
182	CY	VT ROUTE 15
1297	CY	CONSTRUCTION PHASING
1	CY	ISLAND
90	CY	SIDEWALK
132	CY	ROUNDING
7250	CY	TOTAL
SOLID ROCK EXCAVATION		
51	CY	VT ROUTE 15 CONCRETE SLAB
4	CY	ROUNDING
55	CY	TOTAL
EARTH BORROW		
15	CY	RAMP "B"
260	CY	CONSTRUCTION PHASING
25	CY	ROUNDING
300	CY	TOTAL
SAND BORROW		
1907	CY	RAMP "B"
594	CY	SLIP RAMP
168	CY	CONSTRUCTION PHASING
81	CY	ROUNDING
2750	CY	TOTAL
TRENCH EXCAVATION OF EARTH		
478	CY	UNDERDRAIN
62	CY	PROPOSED DRAINAGE
10	CY	ROUNDING
550	CY	TOTAL
TRENCH EXCAVATION OF ROCK		
16	CY	REMOVAL OF EXISTING DRAINAGE STRUCTURES
5	CY	REMOVAL OF EXISTING DRAINAGE PIPES
4	CY	ROUNDING
25	CY	TOTAL
SUBBASE OF DENSE GRADED CRUSHED STONE		
1800	CY	RAMP "B"
667	CY	SLIP RAMP
109	CY	VT ROUTE 15
57	CY	SIDEWALK
761	CY	CONSTRUCTION PHASING
106	CY	ROUNDING
3500	CY	TOTAL
BITUMINOUS CONCRETE PAVEMENT		
189	CY	TEMPORARY PAVEMENT FOR CONSTRUCTION PHASING
11	CY	ROUNDING
200	TON	TOTAL
SUPERPAVE BITUMINOUS CONCRETE PAVEMENT		
	RAMP "B"	
900	TON	TYPE IIS
235	TON	TYPE IIIS
	SLIP RAMP	
298	TON	TYPE IIS
74	TON	TYPE IIIS
	VT ROUTE 15	
37	TON	TYPE IIS
412	TON	TYPE IVS
44	TON	ROUNDING
2000	TON	TOTAL

PROJECT NAME: WINOOSKI
PROJECT NUMBER: NH 089-3(65)

FILE NAME: z94a198qty.xls
PROJECT LEADER: KEN UPMAL
DESIGNED BY:
QUANTITY SHEET #1

PLOT DATE: 03/09/2010
DRAWN BY: A.ACHARYA
CHECKED BY: E. ATKINS
SHEET 6 OF 67

STATE OF VERMONT
AGENCY OF TRANSPORTATION

QUANTITY SHEET 2

SUMMARY OF ESTIMATED QUANTITIES						TOTALS		DESCRIPTIONS			
ROADWAY	TRAINING	LANDSCAPING	EROSION CONTROL	FULL C.E. ITEMS		GRAND TOTAL	FINAL	UNIT	ITEMS	ITEM NUMBER	ROUND
150						150		SF	DETECTABLE WARNING SURFACE	618.30	10
11						11		EACH	YIELDING MARKER POSTS	619.17	-
30						30		LF	REMOVAL OF EXISTING FENCE	620.55	5
4						4		EACH	ENERGY ABSORPTION ATTENUATOR	621.56	-
1400						1400		LF	TEMPORARY TRAFFIC BARRIER	621.90	100
1850						1850		LF	REMOVE AND RESET TEMPORARY TRAFFIC BARRIER	621.95	100
2						2		EACH	ADJUST ELEVATION OF VALVE BOX	629.20	-
1000						1000		HR	UNIFORMED TRAFFIC OFFICERS	630.10	EST.
800						800		HR	FLAGGERS	630.15	EST.
				1		1		LS	FIELD OFFICE, ENGINEERS	631.10	-
				1		1		LS	TESTING EQUIPMENT, CONCRETE	631.16	-
				1		1		LS	TESTING EQUIPMENT, BITUMINOUS	631.17	-
				1		1		LU	FIELD OFFICE TELEPHONE (N.A.B.I.)	631.25	-
	520					520		HR	EMPLOYEE TRAINEESHIP	634.10	EST.
1						1		LS	MOBILIZATION/DEMOBILIZATION	635.11	-
1						1		LS	TRAFFIC CONTROL	641.10	-
1						1		LS	PUBLIC RELATIONS OFFICER	641.12	-
4						4		EACH	PORTABLE CHANGEABLE MESSAGE SIGN	641.15	-
1595						1595		LF	DURABLE 4 INCH WHITE LINE, TYPE I TAPE	646.401	-
718						718		LF	DURABLE 4 INCH YELLOW LINE, TYPE I TAPE	646.411	-
1205						1205		LF	DURABLE 6 INCH WHITE LINE, TYPE I TAPE	646.421	-
150						150		LF	~~DURABLE 6 INCH WHITE LINE, RECESSED TYPE I TAPE~~	646.427	-
799						799		LF	DURABLE 6 INCH YELLOW LINE, TYPE I TAPE	646.431	-
150						150		LF	~~DURABLE 6 INCH YELLOW LINE, RECESSED TYPE I TAPE~~	646.437	-
108						108		LF	DURABLE 8 INCH WHITE LINE, TYPE I TAPE	646.441	-
193						193		LF	DURABLE 8 INCH YELLOW LINE, TYPE I TAPE	646.451	-
281						281		LF	DURABLE 12 INCH WHITE LINE, TYPE I TAPE	646.461	-
211						211		LF	DURABLE 24 INCH STOP BAR, TYPE I TAPE	646.481	-
50						50		EACH	DURABLE LETTER OR SYMBOL, TYPE I TAPE	646.491	-
200						200		LF	DURABLE CROSSWALK MARKING, TYPE I TAPE	646.501	-
6815						6815		LF	TEMPORARY 4 INCH WHITE LINE	646.600	-
4786						4786		LF	TEMPORARY 4 INCH YELLOW LINE	646.610	-
2710						2710		LF	TEMPORARY 6 INCH WHITE LINE	646.620	-
1898						1898		LF	TEMPORARY 6 INCH YELLOW LINE	646.630	-
216						216		LF	TEMPORARY 8 INCH WHITE LINE	646.640	-
386						386		LF	TEMPORARY 8 INCH YELLOW LINE	646.650	-
562						562		LF	TEMPORARY 12 INCH WHITE LINE	646.660	-
422						422		LF	TEMPORARY 24 INCH STOP BAR	646.680	-
100						100		EACH	TEMPORARY LETTER OR SYMBOL	646.690	-
478						478		LF	TEMPORARY CROSSWALK MARKING	646.700	-

THESE TWO ITEMS NOT USED

DETAILED SUMMARY OF QUANTITIES

QUANTITIES	UNIT	ITEMS
EROSION CONTROL		
PERMANENT EROSION CONTROL		
20	CY	STONE FILL, TYPE I
120	CY	STONE FILL, TYPE II
330	SY	GEOTEXTILE UNDER STONE FILL
900	SY	GEOTEXTILE FOR UNDERDRAIN TRENCH LINING
850	SY	PERMANENT EROSION MATTING
TEMPORARY EROSION CONTROL		
15	SY	GEOTEXTILE FOR SILT FENCE
45	LB	SEED (WINTER RYE)
1.5	TON	HAY MULCH
200	SY	TEMPORARY EROSION MATTING
50	CY	VEHICLE TRACKING PAD

PROJECT NAME: WINOOSKI
PROJECT NUMBER: NH 089-3(65)

FILE NAME: z94a198qty.xls
PROJECT LEADER: KEN UPMAL
DESIGNED BY:
QUANTITY SHEET #2

PLOT DATE: 03/09/2010
DRAWN BY: A.ACHARYA
CHECKED BY: E. ATKINS
SHEET 7 OF 67

STATE OF VERMONT
AGENCY OF TRANSPORTATION

QUANTITY SHEET 3

SUMMARY OF ESTIMATED QUANTITIES					TOTALS		DESCRIPTIONS			
ROADWAY	TRAINING	LANDSCAPING	EROSION CONTROL	FULL C.E. ITEMS	GRAND TOTAL	FINAL	UNIT	ITEMS	ITEM NUMBER	ROUND
300					300		LF	PAINTED CURB	646.81	7
300					300		SF	REMOVAL OF EXISTING PAVEMENT MARKINGS	646.85	46
			330		330		SY	GEOTEXTILE UNDER STONE FILL	649.31	4
			900		900		SY	GEOTEXTILE FOR UNDERDRAIN TRENCH LINING NOTE PAGE 3	649.41	26
			15		15		SY	GEOTEXTILE FOR SILT FENCE	649.51	2
			45		45		LB	SEED	651.15	3
			45		45		LB	SEED, WINTER RYE	651.17	3
			275		275		LB	FERTILIZER	651.18	11
			1.5		1.5		TON	AGRICULTURAL LIMESTONE	651.20	0.4
			1.5		1.5		TON	HAY MULCH	651.25	0.4
300					300		CY	TOPSOIL	651.35	16
			1		1		LS	EPSC PLAN	652.10	-
			200		200		HR	MONITORING EPSC PLAN	652.20	EST.
			1		1		LU	MAINTENANCE OF EPSC PLAN (N.A.B.I.)	652.30	-
			200		200		SY	TEMPORARY EROSION MATTING	653.20	41
			850		850		SY	PERMANENT EROSION MATTING	653.21	47
			40		40		CY	TEMPORARY STONE CHECK DAM, TYPE I	653.25	11
			50		50		CY	VEHICLE TRACKING PAD	653.35	6
			12		12		EACH	INLET PROTECTION DEVICE, TYPE I (FILTER FABRIC)	653.40	-
			2		2		EACH	INLET PROTECTION DEVICE, TYPE I (STAKED FABRIC)	653.40	-
			230		230		LF	BARRIER FENCE	653.50	21
			1680		1680		LF	PROJECT DEMARCATION FENCE	653.55	153
		2			2		EACH	DECIDUOUS TREES (ACER X FREMANII " AUTUMN BLAZE") (2" - 2.5" CALIPER, B&B)	656.30	-
		8			8		EACH	DECIDUOUS SHRUBS (TAXUS X MEDEA DENSIFORMIS) (18" - 24" HT.)	656.35	-
		4			4		MGAL	LANDSCAPE WATERING	656.65	0.6
		3			3		CY	LANDSCAPE BACKFILL, TRUCK MEASUREMENT	656.80	0.1
		1			1		LS	TREE PROTECTION	656.85	-
143.82					143.82		SF	TRAFFIC SIGNS, TYPE A	675.20	-
297					297		SF	TRAFFIC SIGNS, TYPE B	675.21	-
432.75					432.75		LF	SQUARE TUBE SIGN POST AND ANCHOR	675.341	-
55					55		EACH	REMOVING SIGNS	675.50	-
23					23		EACH	ERECTING SALVAGED SIGNS	675.60	-
20					20		EACH	DELINEATOR WITH STEEL POST	676.10	3
17					17		EACH	REMOVAL OF EXISTING DELINEATOR	676.12	-
1					1		EACH	OVERHEAD TRAFFIC SIGN SUPPORT, MULTI-SUPPORT	677.13	-
1					1		EACH	TRAFFIC CONTROL SIGNAL SYSTEM, INTERSECTION	678.15	-
475					475		LF	INTERCONNECTING CABLE	678.20	25
545					545		LF	WIRED CONDUIT (1 1/2") (PVC)	678.23	29
265					265		LF	WIRED CONDUIT (2 ") (PVC)	678.23	15
125					125		LF	WIRED CONDUIT (2 1/2") (PVC)	678.23	6

DETAILED SUMMARY OF QUANTITIES		
QUANTITIES	UNIT	ITEMS

PROJECT NAME: WINOOSKI
PROJECT NUMBER: NH 089-3(65)

FILE NAME: z94a198qty.xls
PROJECT LEADER: KEN UPMAL
DESIGNED BY:
QUANTITY SHEET #3

PLOT DATE: 03/09/2010
DRAWN BY: A.ACHARYA
CHECKED BY: E. ATKINS
SHEET 8 OF 67

STATE OF VERMONT
AGENCY OF TRANSPORTATION

QUANTITY SHEET 4

SUMMARY OF ESTIMATED QUANTITIES									TOTALS		DESCRIPTIONS				DETAILED SUMMARY OF QUANTITIES		
					ROADWAY	TRAINING	LANDSCAPING	EROSION CONTROL	FULL C.E. ITEMS	GRAND TOTAL	FINAL	UNIT	ITEMS	ITEM NUMBER	ROUND	QUANTITIES	UNIT	ITEMS
					325					325		LF	ELECTRICAL WIRING	678.24	-			
					12					12		EACH	PULL BOX, STANDARD	678.25	-			
					1					1		EACH	JUNCTION BOX	678.26	-			
					1					1		EACH	PULL BOX, DOUBLE	678.27	-			
					200					200		LF	ELECTRICAL CONDUIT SLEEVE (8")(PVC)	678.30	12			
					1					1		LU	PRICE ADJUSTMENT, FUEL (N.A.B.I.)	690.50	-			
					20					20		CY	SPECIAL PROVISION (CONTROLLED DENSITY (FLOWABLE) FILL)	900.608	1.9			
					1					1		EACH	SPECIAL PROVISION (REMOVAL OF EXISTING TRAFFIC CONTROL SIGNAL SYSTEM)	900.620	-			
					22					22		SY	SPECIAL PROVISION (PORTLAND CEMENT CONCRETE ISLAND TREATMENT, 4 INCH)	900.675	5			
													SUPPLEMENTAL AGREEMENTS					
										2		EA.	9000 PORTABLE CHANGEABLE MESSAGE SIGN C.O. 001 DATED 06-10-2010	641.15				
										1		LS	MASTER CONTROLLER UPGRADES I-89 EXIT 15 ON RAMP C.O. 002 DATED 06-28-10	900.545				
										46.8		SY	9010 PC CONCRETE SIDEWALK 8" C.O. 003 DATED 8-24-2010	618.11				
										1		LS	9015 (TRAFFIC CONTROL SIGNAL SYSTEM INTERSECTION) REMOTE SIGNAL LAMP INDICATOR C.O. 004 DATES 01-26-2011	900.545 678.15				
										1		EA.	9020 TRAFFIC SIGNAL SYSTEM INTERSECTION (MOD) (ADDITIONAL LED SIGNAL HEAD PEDESTAL POLE MOUNTED) C.O. 005 DATED 05-17-2011	678.15				
										1		LS	9025 STRUCTURAL FOUNDATION DESIGN CLAIM C.O. 006 DATED 06-20-2011	900.545				
										1		LS	9030 (PEDESTAL HEAD STABILIZER BAR) C.O. 007 DATED 07-05-2011	900.545				
										1		LS	9035 MOBILIZATION/DEMOBILIZATION C.O. 008 DATED 08-18-2011	635.11				
										1		LS	9040 NIGHT WORK CONDUIT SLEEVE INSTALL C.O. 009 DATED 12-07-2011	900.545				

PROJECT NAME: WINOOSKI
PROJECT NUMBER: NH 089-3(65)

FILE NAME: z94a198qty.xls
PROJECT LEADER: KEN UPMAL
DESIGNED BY:
QUANTITY SHEET #4

PLOT DATE: 03/09/2010
DRAWN BY: A.ACHARYA
CHECKED BY: E. ATKINS
SHEET 9 OF 67

STATE OF VERMONT
AGENCY OF TRANSPORTATION

ITEM DETAIL AND DRAINAGE SHEET

STATION	STATION	POS.	ASKEW	INLET/OUTLET TYPE		PIPE		ALLOWABLE OPTIONS				PIPE ELBOW	ES	CB	MH	DEPTH DI	CONC CLASS B	REINF STEEL	DI GRATE	MANHOLE COVER	CRM	TRENCH EXCAVATION		GRAN BKFILL STRUCT	EROS MATT	STONE FILL		MARKER POSTS		REMARKS
			NO. DEG.	INLET	OUTLET	D IN	L FT	RCP CLASS	CAAP TH	CPEP SL	PCCSP TH	NO. DEG.	EA	EA	EA	FT	CY	LBS	TYPE	EA	CY	EARTH CY	ROCK CY	CY	SY	CY	TYPE	LT EA	RT EA	
EXISTING DRAINAGE																														* REFER TO DRAINAGE LAYOUT SHEETS FOR REMOVAL OR ABANDONMENT REQUIREMENT FOR EXISTING PIPES. QUANTITY OF PIPE REMOVAL IS INCLUDED IN TRENCH EXCAVATION OF ROCK WHERE APPLICABLE
RAMP "B"																														
1 55+06.6	55+06.6	LT		DI	DI																									REMOVE ENTIRE STRUCTURE AND REPLACE WITH NEW CB (SEE BELOW)
VT ROUTE 15																														
2 16+91.5	15+86.2	RT-RT		DI	DI																									RETAIN PIPE. RETAIN STRUCTURE AT 15+86.2 RT, ADJUST ELEVATION.
3 15+84.1		LT		DI	DI																									RETAIN STRUCTURE AT 15+84.1 LT, ADJUST ELEVATION.
4 16+91.6	16+91.5	LT-RT		DI	DI														E											RETAIN PIPE. REHAB STRUCTURE AT 16+91.6 LT.
5 19+21.4	16+91.5	RT-RT		DI	DI														D											RETAIN PIPE. REHAB STRUCTURE AT 16+91.5 RT.
6 19+21.2	19+21.4	LT-RT		DI	DI														E											RETAIN PIPE. REHAB STRUCTURE AT 19+21.2 LT.
7 20+42.7	19+21.4	RT-RT		DI	DI														D											RETAIN PIPE. REHAB STRUCTURE AT 19+21.4 RT.
8 20+67.2	20+42.7	LT-RT		DI	DI																									RETAIN PIPE. RETAIN STRUCTURES AT 20+42.7 RT, ADJUST ELEVATION.
SLIP RAMP																														
9 81+87.3	81+40.9	RT-RT		DI	DI																									REMOVE PIPE AND BOTH STRUCTURES. (PIPE REMOVAL LENGTH = 37 FT.)
10 81+40.9	VT 15 16+91.5	RT-RT		DI	DI																									REMOVE PIPE AND STRUCTURE @ 81+40.9 RT. (PIPE REMOVAL LENGTH = 53 FT.)
PROPOSED DRAINAGE																														
RAMP "B"																														
1 55+06.58	55+06.58	LT		CB	PIPE	18	4				0.064			1					B			15.7	5.6					1		4' DIA. PRECAST REINFORCED CONCRETE CATCHBASIN (1 GRATE). STONE FILL, TYPE I PAD @ DITCH. SHORT PIPE SEGMENT TO CONNECT TO EXISTING. SEE DRAINAGE DETAIL SHEET.
SLIP RAMP																														
2 81+87.3	81+40.9	RT-RT		CB	CB	18	36	III		X				1					D			15.4	7.7							4' DIAMETER PRECAST REINFORCED CONCRETE CATCHBASIN (1 GRATE). SEE DRAINAGE DETAIL SHEET
3 81+40.9	VT 15 16+91.5	RT-RT		CB	DI	18	54	III		X				1					D			31.1	7.8							4' DIAMETER PRECAST REINFORCED CONCRETE CATCHBASIN (1 GRATE). SEE DRAINAGE DETAIL SHEET
TOTALS						18 18 18	90 90 4	RCP CLASS III CPEP(SL) PCCSP (0.064)						3					D=4 B=1 E=2			62.2	21.1					1		

DONE BY OTHERS IN 2009

CURB

BEGIN STATION	END STATION	POSITION LEFT FT	POSITION RIGHT FT	END TREATMENT LEFT FT	END TREATMENT RIGHT FT
TOTAL OF EXISTING CURB WITHIN THE PROJECT = 1067 FT.					
TOTAL OF CURBING REQUIRED FOR THE PROJECT = 841 FT.					
TOTAL OF REMOVING AND RESETTING CURB = 396 FT.					
TOTAL OF NEW VERTICAL GRANITE CURB NEEDED = 445 FT.					
TOTAL OF REMOVAL OF EXISTING CURB = 671 FT.					
TOTALS					

UNDERDRAIN

BEGIN STATION	END STATION	POSITION	TYPE	DIA IN.	LENGTH FT	TRENCH EARTH CY.	TRENCH ROCK CY.	GRAN BKFILL CF	FB EA	MRK. POST EA
3 57+59.7	55+00.0	RT-RT	U	8	260	113.6			1	1
4 80+60.2	57+59.7	RT-RT	U	8	111	51.7			1	1
5 81+40.9	80+60.2	RT-RT	U	8	66	32.6				1
6 56+75.0	55+06.3	LT-LT	U	8	166	82.7			1	1
7 58+59.0	56+75.0	LT-LT	U	8	184	88.5			1	1
8 59+00.0	58+59.0	LT-LT	U	8	42	17.8			1	1
9 59+46.7	58+59.3	LT-LT	U	8	46	17.5			1	1
TOTAL 8 INCH UNDERDRAIN PIPE					875	404.4			6	7
56+83	LATERAL	LT-RT	U	8	22					
57+22	LATERAL	LT-RT	U	8	22					
57+95	LATERAL	LT-RT	U	8	22					
2 55+00.0	53+07.4	RT-RT	C	8	194	71			1	1
1 53+07.4	53+00.0	RT-RT	C	8	18	2.7			1	2
TOTAL 8 INCH UNDERDRAIN CARRIER PIPE					212	73.7			2	3
TOTALS						478.1			8	10

PROJECT NAME: **WINOOSKI**
PROJECT NUMBER: **NH 089-3(65)**

FILE NAME: **z94a198ITEMDET.XLS**
PROJECT LEADER: **KEN UPMAL**
DESIGNED BY: **A. ACHARYA**
ITEM DETAIL AND DRAINAGE SHEET

PLOT DATE: **2/19/2010**
DRAWN BY: **A. ACHARYA**
CHECKED BY: **E. ATKINS**
SHEET **10** OF **67**

STATE OF VERMONT
AGENCY OF TRANSPORTATION

EARTHWORKS

STATION	DIST FT.	TOTAL EXCAVATION EARTH AND ROCK AREA S.F.	TOTAL EXCAVATION EARTH AND ROCK VOLUME C.Y.	ROCK EXCAVATION AREA S.F.	ROCK EXCAVATION VOLUME C.Y.	EMBANKMENT AREA S.F.	EMBANKMENT VOLUME C.Y.	AREA S.F.	VOLUME C.Y.
RAMP "B"									
53+00		0				0			
	50		64						
53+50		70				0			
	50		189						
54+00		135				0			
	50		254						
54+50		140				0			
	50		290				3		
55+00		173				3			
	50		325				5		
55+50		178				2			
	50		328				3		
56+00		176				2			
	50		342				2	CUT	3962
56+50		193				0		ROCK	0
	50		397					R.FAC	.495
57+00		236				0		FILL	15
	50		446					F.FAC	1.15
57+50		246				0		EX. C	3945
	50		470						
58+00		262				0			
	50		333						
58+50		97				0			
	50		206				1		
59+00		125				1			
	50		234				1		
59+50		128				0			
	18		84				0		
59+68		128				0			
SLIP RAMP									
80+00		180							
	50		325						
80+50		171							
	50		379						
81+00		238						CUT	1586
	50		415					ROCK	0
81+50		210						R.FAC	.495
	27		196					FILL	0
81+77		181						F.FAC	1.15
	81		271					EX. C	1586
82+58		0							

VT ROUTE 15

VOLUME OF COMMON EXCAVATION WITHIN THE FOOTPRINT OF THE ISLAND WORK AREAS WERE CALCULATED BY THE DEPTH OF EXCAVATION REQUIRED MULTIPLIED BY THE AREA OF THE EXCAVATION.

AREA OF ISLAND WORK = 1963 SF
DEPTH OF CUT = 30 INCHES
COMMON EXCAVATION = 182 CY

AREA OF ISLAND WORK = 95 SF
DEPTH OF CUT = 5 INCHES
COMMON EXCAVATION = 1 CY

VOLUME OF SOLID ROCK EXCAVATION ACCOUNT FOR REMOVAL OF CONCRETE SLAB ON VT ROUTE 15.

SOLID ROCK EXCAVATION = 55 CY

SIDEWALK CONSTRUCTION

REMOVAL OF EXISTING SIDEWALK
COMMON EXCAVATION = 33 CY

COMMON EXCAVATION FOR SIDEWALK SUBBASE

DEPTH OF SUBBASE = 6 INCH (FROM STD. A-76)
AREA OF NEW SIDEWALK = 343 SY
SUBBASE EXCAVATION FOR SIDEWALK
COMMON EXCAVATION = 57

CONSTRUCTION PHASING

COMMON EXCAVATION = 1297 CY

EARTH BORROW = 260 CY

SUMMARY AND BALANCES

STATION TO STATION		TOT EXC. EARTH & ROCK C.Y.	ROCK EXCAV C.Y.	EMBANK C.Y.	EXCESSES CUT	EXCESSES FILL	ACUMULATIVE EXCESSES CUT	ACUMULATIVE EXCESSES FILL
53+00	59+68	3962		15	3945		3945	
80+00	82+58	1586		0	1586		5531	
VT ROUTE 15		238	55	0	238		5769	
SIDEWALK CONSTRUCTION		90		0	90		5859	
CONSTRUCTION PHASING		1297		260	998		6857	
TOTALS		7173	55	275	6857			

REMARKS

EARTH AND ROCK EXCAVATION	7173
SOLID ROCK EXCAVATION	55
EARTH EXCAVATION	7118
BACKFILL FOR TRENCH EXCAVATION (CB AND PIPES)	52
PLANIMETERED FILL	275
LESS FACTORED SOLID ROCK	
LESS DISPLACEMENT OF ANY LARGE STRUCTURES	
NET PLANIMETERED FILL	327
FACTOR	1.15
PLANIMETERED FILL INCLUDING FACTOR	376
MATERIALS AVAILABLE FOR FILLS	
EARTH EXCAVATION	7118
CHANNEL EXCAVATION	
UNDERDRAIN EXCAVATION	478
STRUCTURE EXCAVATION	
TRENCH EXCAVATION FOR DRAINAGE	62
TRENCH EXCAVATION OF ROCK	21
TOTAL MATERIAL AVAILABLE FOR FILL	7679
TOTAL FILL INCLUDING FACTOR	376
TOTAL MATERIAL FOR FILL	7679
BORROW	
EXCESS EXCAVATION	7303

PROJECT NAME: **WINOOSKI**
PROJECT NUMBER: **NH 089-3(65)**

FILE NAME: **Z94A198EWQTY.XLS**
PROJECT LEADER: **KEN UPMAL**
DESIGNED BY: **E.ATKINS**
EARTHWORK SHEET

PLOT DATE: **2/19/2010**
DRAWN BY: **A. ACHARYA**
CHECKED BY: **E.ATKINS**
SHEET **11** OF **67**

STATE OF VERMONT
AGENCY OF TRANSPORTATION

RIGHT - OF - WAY DETAIL SHEET

TABLE OF PROPERTY ACQUISITION

PARCEL NO.	PROPERTY OWNER	SHEET NO.	BEGINNING STATION	ENDING STATION	TAKE AREA±	REMAINDER AREA±	RIGHT TYPE	RIGHT (T)/(P)	RIGHT AREA ±	RECORDING DATA TITLE	RECORDING DATA DATE	RECORDING DATA TOWN / CITY	RECORDING DATA BOOK	RECORDING DATA PAGE	REMARKS
1	MOORE, CHARLES T. & JOANNE M.	5	16+26 LT	16+65 LT			INSTALL & MAINTAIN	(P)	460 SF			WINOOSKI			MAST ARM POLE, SIGNALS & CONDUIT;
															INCLUDES REMOVAL OF EXISTING POLE
			16+26 LT	16+60 LT			REMOVE	(T)							2 S. ASH TREES
			16+34 LT	16+63 LT			LANDSCAPE	(T)							INSTALL 2 TREES AND HEDGE
2	TIPSON, WAYNE P. & MICHELLE L.	5	18+17 LT	18+24			INSTALL & MAINTAIN	(P)	60 SF			WINOOSKI			MAST ARM POLE & CONDUIT
			18+23 LT				REMOVE	(T)							FENCE
			18+07 LT				UTILITY	(T)							ADJUST ELEVATION OF VALVE BOX
3	COTA, MICHELLE D.	5	18+23 LT	18+29 LT			INSTALL & MAINTAIN	(P)	43 SF			WINOOSKI			MAST ARM POLE & CONDUIT
			18+23 LT				REMOVE	(T)							FENCE
4A	CITY OF WINOOSKI	5	18+39 RT	18+85 RT			INSTALL	(T)							SIDEWALKS & CURB
			18+46 RT	18+87 RT			APPROACH	(T)							ROLAND COURT
4B		5	20+30 LT	20+40 LT			INSTALL	(T)							SIDEWALK & CURB
			20+30 LT	20+78 LT			APPROACH	(T)							FLORIDA AVE.
4C		5	15+85	21+00			ALL R. T. & I.								UTILITY EASEMENTS
5	CHAMPLAIN WATER DISTRICT	5	15+85	21+00			ALL R. T. & I.								UTILITY EASEMENTS
6	VERMONT GAS SYSTEMS, INC.	5	15+85	21+00			ALL R. T. & I.								UTILITY EASEMENTS
7	TELEPHONE OPERATING COMPANY OF VERMONT	5	15+85	21+00			ALL R. T. & I.								UTILITY EASEMENTS

TABLE OF REVISIONS

REVISION NO.	SHEET NO.	DESCRIPTION	DATE
1	3,5	PARCEL NO. 4. CREATE NEW PARCEL~ CITY OF WINOOSKI.	01/27/10
		PER C.O. 9598	
		MADE BY: MR APPROVED BY: HP	
2	3	PARCEL NO 4 CITY OF WINOOSKI. ADD PARCEL 4C.	02/05/10
		ADD PARCELS 5, 6 & 7. ALL UTILITIES. PER C.O. 9599	
		MADE BY: MR APPROVED BY: HP	

PLAN LEGEND

	EXISTING RIGHT-OF-WAY		TOE OF SLOPE
	TAKING WITH ACCESS		TOP OF CUT
	TAKING WITHOUT ACCESS	SR (P)	SLOPE RIGHT
CZ	CLEAR ZONE	CONST. (T)	CONSTRUCTION RIGHT
P L	PROPERTY LINE	PDF PDF	PROJECT DEMARCATION FENCE

EC -EROSION CONTROL
(P) -PERMANENT
(T) -TEMPORARY
DR. -DRAINAGE RIGHT
DIT. -DITCHING RIGHT
CH. -CHANNEL RIGHT
DRIVE -DRIVE RIGHT
CUL. -CULVERT RIGHT
C&T -CLEARING & TRIMMING RIGHT
SR -SLOPE RIGHT
UE -UTILITY EASEMENT

APPROVED: HARRY PETROVS DATE: 01-04-10
CHIEF, PLANS & TITLES

PLOT DATE 02/23/10

PROJECT NAME: **WINOOSKI**
PROJECT NUMBER: **NH 089-3(65)**

FILE NAME: **r94a198 DetailSheet.xls**
PROJECT LEADER: **K. UPMAL**
DESIGNED BY: **J.SOBEL**
R.O.W. SHEET 3 OF 5
PLOT DATE:
DRAWN BY: **MR**
CHECKED BY: **EP**
SHEET **12** OF **67**

COLD PLANING, BITUMINOUS PAVEMENT

RAMP "B" 52+50.0 ~ 53+00.0

CLEARING AND GRUBBING, INCLUDING INDIVIVUAL TREES AND STUMPS

RAMP "B" 52+25 RT ~ 58+00 RT
RAMP "B" 57+49.1LT (S. MOUNTAIN ASH)

REMOVE EXISTING PAVEMENT (COMMON EXCAVATION)

RAMP "B" 53+00.0 ~ 58+00.0
RAMP "B" 54+78 LT ~ 55+35 LT (PAVED WATERWAY)

STONE FILL, TYPE I

RAMP "B" 54+78 LT ~ 55+19 LT

STONE FILL, TYPE II

RAMP "B" 56+50 RT ~ 57+90 RT

DELINEATOR WITH STEEL POST

RAMP "B" 53+75 LT-RT ~ 58+00 LT-RT (11 EACH)
REMOVE, STACK AND REINSTALL EACH

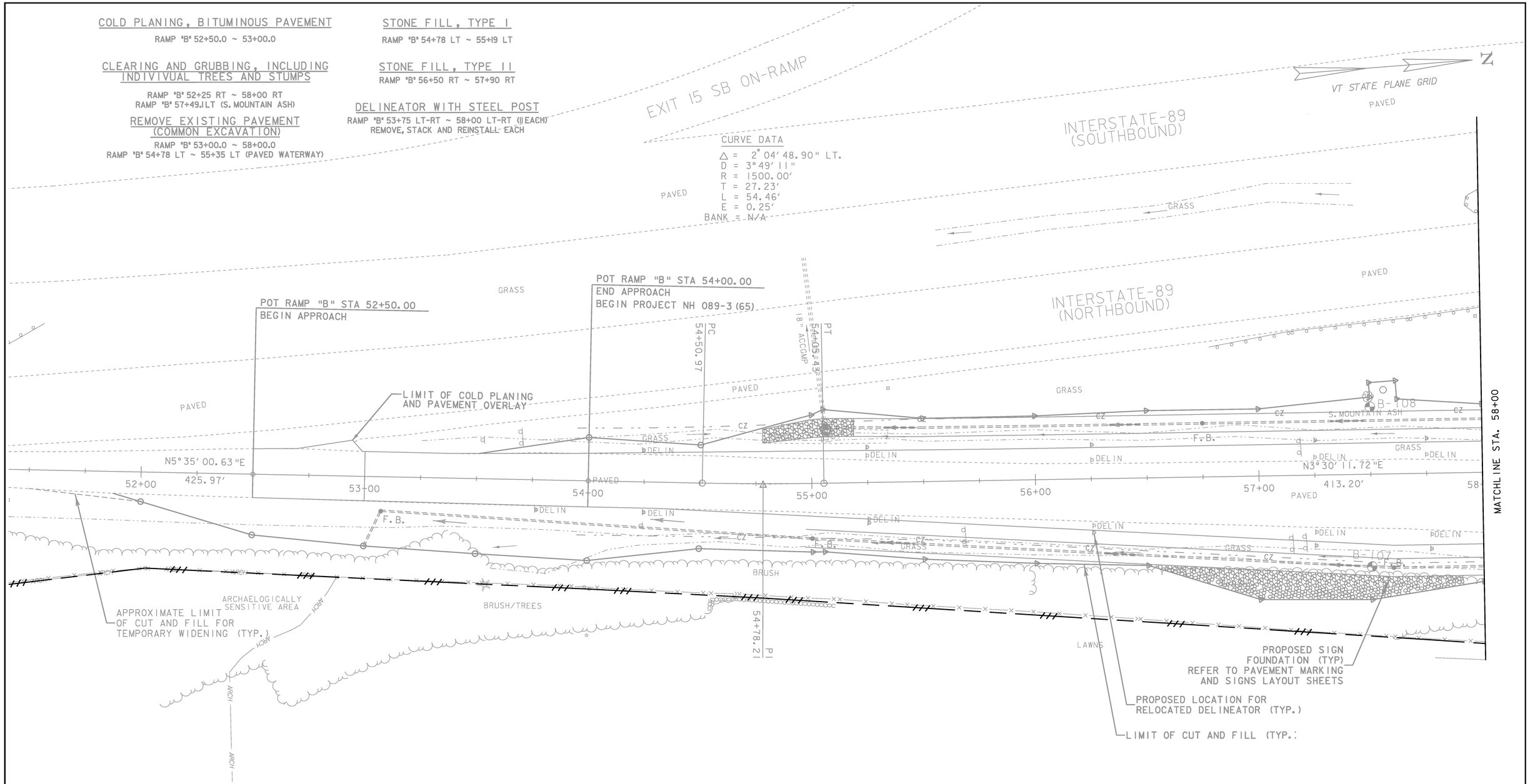

FOR R.O.W. USE ONLY

0 20 40
SCALE IN FEET

PROJECT NAME: WINOOSKI	
PROJECT NUMBER: NH 089-3(65)	
FILE NAME: r94al98zzz.bdr	PLOT DATE: 23-FEB-2010
PROJECT LEADER: KEN UPMAL	DRAWN BY: T. BIGELOW
DESIGNED BY: T. BIGELOW	CHECKED BY: E. ATKINS
ROW SHEET 4 OF 5	SHEET 13 OF 67

CLEARING AND GRUBBING, INCLUDING INDIVIDUAL TREES AND STUMPS

RAMP "B" 58+00.0 RT ~ 58+10.0 RT
RAMP "B" 58+31.5 LT (S. LOCUS)
RAMP "B" 58+71.2 LT (S. ASH)
VT RTE 15 16+26.4 LT (S. ASH)
VT RTE 15 16+59.4 LT (S. ASH)

REMOVE EXISTING PAVEMENT (COMMON EXCAVATION)

RAMP "B" 58+00.0 ~ 59+67.7
SLIP RAMP "B" 80+00.0 ~ 81+77.2

REMOVE EXISTING CONCRETE PAVEMENT (COMMON EXCAVATION)

VT RTE 15 16+15.0 ~ 16+36.7 RT (ISLAND)
VT RTE 15 16+24.6 ~ 16+56.5 RT
VT RTE 15 16+27.7 ~ 16+37.7 LT
VT RTE 15 16+82.6 ~ 17+42.1 RT
VT RTE 15 16+89.2 ~ 17+41.3 LT
VT RTE 15 17+92.2 ~ 18+37.1 RT
VT RTE 15 18+52.0 ~ 18+85.0 LT
VT RTE 15 20+26.1 ~ 20+33.2 LT
SLIP RAMP 81+70.7 RT ~ ROLAND CT. 29+15.0 LT
ROLAND CT. 29+15.0 RT ~ VT RTE 15 19+25.5 RT

STONE FILL, TYPE I

RAMP "B" 58+36 LT ~ 58+62 LT
8' WIDE IN DITCH

REMOVAL OF EXISTING FENCE

RAMP "B" 59+12.7 LT
19 LF ~ REMOVE TO CLEAR ZONE
VT RTE 15 18+23.1 LT
3 LF ~ REMOVE TO BACK OF EASEMENT

VERTICAL GRANITE CURB

RAMP "B" 58+95.27 RT ~ RAMP "B" 59+53.87 RT
RAMP "B" 59+61.74 RT ~ VT RTE 15 16+94.90 RT
VT RTE 15 16+99.90 RT ~ VT RTE 15 17+23.30 RT
SLIP RAMP 81+50.35 LT ~ SLIP RAMP 58+95.27 LT
VT RTE 15 16+38.18 RT ~ VT RTE 15 16+43.17 RT
VT RTE 15 16+82.91 LT ~ VT RTE 15 16+93.39 LT
VT RTE 15 16+92.42 LT ~ VT RTE 15 16+92.60 RT
VT RTE 15 17+00.40 LT ~ VT RTE 15 17+00.60 RT
VT RTE 15 20+29.63 LT ~ VT RTE 15 20+33.65 LT
VT RTE 15 20+36.19 LT ~ VT RTE 15 20+39.38 LT
VT RTE 15 18+91.13 RT ~ VT RTE 15 19+36.05 RT
ROLAND CT. 29+48.36 LT ~ ROLAND CT. 29+22.73 LT
ROLAND CT. 29+32.90 RT ~ VT RTE 15 19+25.48 RT

COLD PLANING, BITUMINOUS PAVEMENT

VT RTE 15 15+85.0 ~ VT RTE 15 21+00.0
ROLAND CT. 29+15.0 ~ ROLAND CT. 29+70.0

CHANGING ELEVATION OF SEWER MANHOLES

VT RTE 15 18+02.8 LT
VT RTE 15 18+29.5 RT
VT RTE 15 20+16.5 LT
VT RTE 15 20+57.1 LT
VT RTE 15 20+30.8 LT
VT RTE 15 20+36.5 LT
ROLAND CT. 29+15.5 LT
ROLAND CT. 29+51.4 LT

REMOVAL OF EXISTING CURB

VT RTE 15 16+38.18 RT ~ RAMP "B" 59+62.25 LT
VT RTE 15 16+82.37 RT ~ VT RTE 15 17+60.17 RT
SLIP RAMP 81+97.50 RT ~ SLIP RAMP 80+96.48 RT
RAMP "B" 59+13.11 RT ~ RAMP "B" 59+57.69 RT
VT RTE 15 16+20.78 RT ~ VT RTE 15 16+34.43 RT
VT RTE 15 16+20.82 RT ~ VT RTE 15 16+34.58 RT
VT RTE 15 16+92.37 LT ~ VT RTE 15 17+00.60 LT
VT RTE 15 16+92.60 RT ~ VT RTE 15 17+00.60 RT
VT RTE 15 16+83.00 LT ~ VT RTE 15 16+98.39 RT
VT RTE 15 18+92.43 LT ~ VT RTE 15 20+23.11 RT (ENTIRE ISLAND. RESET IF NEEDED)
VT RTE 15 20+29.63 LT ~ VT RTE 15 20+39.38 LT
ROLAND CT. 29+32.81 RT ~ VT RTE 15 19+25.48 RT
ROLAND CT. 29+30.90 LT ~ ROLAND CT. 29+22.61 LT

REMOVING AND RESETTING CURB

VT RTE 15 16+34.43 RT ~ VT RTE 15 16+34.43 RT - RESET NOSE TO
VT RTE 15 16+20.78 RT ~ VT RTE 15 16+20.82 RT

VT RTE 15 16+24.63 RT ~ VT RTE 15 16+38.18 RT
VT RTE 15 16+87.46 LT ~ VT RTE 15 16+92.47 LT
VT RTE 15 16+87.60 RT ~ VT RTE 15 16+92.60 RT
VT RTE 15 17+00.40 LT ~ VT RTE 15 16+17+05.60 LT
VT RTE 15 17+00.60 RT ~ VT RTE 15 17+05.60 RT
VT RTE 15 16+98.39 RT ~ VT RTE 15 17+10.00 RT

ROLAND CT. 29+22.61 LT ~ ROLAND CT. 29+15.00 LT
ROLAND CT. 29+15.00 RT ~ ROLAND CT. 29+32.81 RT

REMOVING AND RESETTING CURB (CONT'D)

VT RTE 15 16+34.43 RT ~ VT RTE 15 16+34.43 RT - RESET NOSE TO
VT RTE 15 16+20.78 RT ~ VT RTE 15 16+20.82 RT

VT RTE 15 16+24.63 RT ~ VT RTE 15 16+38.18 RT
VT RTE 15 16+87.46 LT ~ VT RTE 15 16+92.47 LT
VT RTE 15 16+87.60 RT ~ VT RTE 15 16+92.60 RT
VT RTE 15 17+00.40 LT ~ VT RTE 15 16+17+05.60 LT
VT RTE 15 17+00.60 RT ~ VT RTE 15 17+05.60 RT
VT RTE 15 16+98.39 RT ~ VT RTE 15 17+10.00 RT

ROLAND CT. 29+22.61 LT ~ ROLAND CT. 29+15.00 LT
ROLAND CT. 29+15.00 RT ~ ROLAND CT. 29+32.81 RT

CURVE DATA

Δ = 6° 36' 43.65" RT.
D = 5° 43' 46"
R = 1000.00'
T = 57.77'
L = 115.40'
E = 1.67'

CONCRETE SIDEWALK RAMPS W/ DETECTABLE WARNING SURFACE

RAMP "B" 59+57.8 LT (TYPE I)
RAMP "B" 59+58.0 RT (TYPE I)
RAMP "B" SLIPRAMP 81+54.9 LT (TYPE I)
RAMP "B" SLIPRAMP 81+59.1 RT (TYPE 2)
VT RTE 15 16+96.2 LT (MEDIAN ISLAND)
VT RTE 15 16+96.8 RT (MEDIAN ISLAND)
VT RTE 15 16+96.0 LT (TYPE 2)
VT RTE 15 16+97.4 RT (TYPE 2)
VT RTE 15 20+34.5 LT (TYPE 6)
ROLAND CT. 29+50.0 LT (TYPE 2)
ROLAND CT. 29+56.2 RT (TYPE 2)

PORTLAND CEMENT CONCRETE SIDEWALK, 5 INCH

VT RTE 15 16+27.7 ~ 16+37.7 LT (MATCH EXISTING WIDTH)
VT RTE 15 16+89.2 ~ 17+41.3 LT (MATCH EXISTING WIDTH)
VT RTE 15 17+92.2 ~ 18+37.1 LT (MATCH EXISTING WIDTH)
VT RTE 15 18+52.0 ~ 18+85.0 LT (MATCH EXISTING WIDTH)
VT RTE 15 20+26.1 ~ 20+33.2 LT (MATCH EXISTING BACK OF SIDEWALK)
VT RTE 15 16+24.6 ~ 16+29.6 RT (TRANSITION TO 8' WIDE)
VT RTE 15 16+29.6 ~ 16+43.1 RT (8' WIDE)
VT RTE 15 16+65.2 ~ 17+17.4 RT (8' WIDE)
SLIP RAMP 81+58.8 RT ~ ROLAND CT. 29+39.3 LT (8' WIDE)
ROLAND CT. 29+15.0 ~ 29+39.3 LT (MATCH EXISTING WIDTH)
ROLAND CT. 29+15.0 ~ 29+36.3 RT (MATCH EXISTING WIDTH)
ROLAND CT. 29+36.3 RT ~ VT RTE 15 19+25.5 RT (8' WIDE)

ADJUST ELEVATION OF VALVE BOX

VT RTE 15 18+07.0 LT
VT RTE 15 18+15.2 LT
VT RTE 15 18+80.7 LT
VT RTE 15 20+19.9 LT
VT RTE 15 20+26.1 LT
VT RTE 15 20+43.3 LT
VT RTE 15 20+49.8 LT
VT RTE 15 18+65.5 RT

PAINTED CURB

VT RTE 15 15+93.0 ~ 16+23.0 RT (BOTH SIDES OF MEDIAN)
VT RTE 15 16+77.1 ~ 17+07.1 LT & RT (BOTH SIDES OF MEDIAN)
VT RTE 15 18+09.8 ~ 18+39.8 LT & RT (BOTH SIDES OF MEDIAN)
VT RTE 15 18+91.1 ~ 19+36.1 RT (BOTH SIDES OF MEDIAN)

DELINEATOR WITH STEEL POST

RAMP "B" 58+00 LT ~ 59+25 LT (3 EACH)
RAMP "B" 58+00 RT ~ SLIP RAMP 81+25 RT (3 EACH)
REMOVE, STACK AND REINSTALL EACH

SPECIAL PROVISION (PORTLAND CEMENT CONCRETE ISLAND TREATMENT, 4 INCH)

VT RTE 15 16+15 ~ 16+22 RT
VT RTE 15 18+92 ~ 19+36 RT

SPECIAL PROVISION (PORTLAND CEMENT CONCRETE RUMBLE STRIP)

VT ROUTE 15 19+34 RT ~ 20+36 LT (MEDIAN)

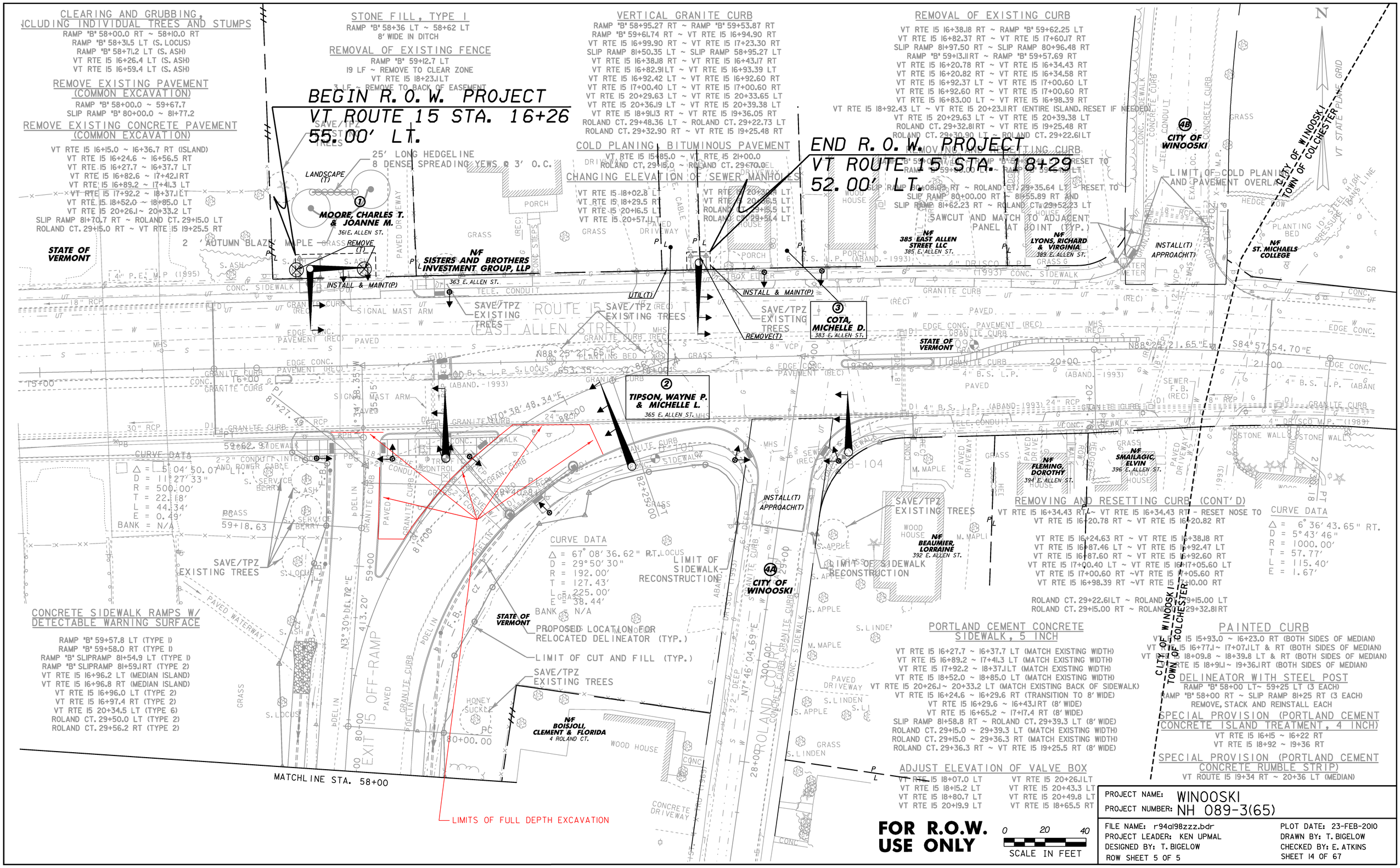

FOR R.O.W. USE ONLY

0 20 40
SCALE IN FEET

PROJECT NAME: WINOOSKI	
PROJECT NUMBER: NH 089-3(65)	
FILE NAME: r94d98zzz.bdr	PLOT DATE: 23-FEB-2010
PROJECT LEADER: KEN UPMAL	DRAWN BY: T. BIGELOW
DESIGNED BY: T. BIGELOW	CHECKED BY: E. ATKINS
ROW SHEET 5 OF 5	SHEET 14 OF 67

GPS CONTROL POINTS

HVCTRL #1
189 EXIT 15

NORTH = 727051.243
EAST = 1464741.437
ELEV. = 279.76

GENERAL LOCATION, SOUTH BURLINGTON, VT. TO REACH FROM THE I-89 SOUTHBOUND BRIDGE OVER VT ROUTE 15 (ETHAN ALLEN STREET) AT EXIT 15 IN WINOOSKI, GO SOUTHWEST ALONG I-89 SOUTHBOUND FOR 0.6 MI (0.97 KM) TO THE SITE OF THE MARK ON THE LEFT IN THE MEDIAN, JUST NORTHEAST OF A GRAVEL U-TURN. THE MARK IS SET FLUSH WITH GROUND SURFACE IN THE TOP OF A 30 CM (12 INCH) DIAMETER CONCRETE MONUMENT. IT IS 3.9 M (12.8 FT) SOUTHEAST OF AND ABOUT LEVEL WITH THE I-89 SOUTHBOUND SOUTHEAST EDGE OF PAVEMENT, 8.7 M (28.5 FT) NORTHWEST OF THE I-89 NORTHBOUND NORTHWEST EDGE OF PAVEMENT, 1.8 M (5.9 FT) WEST OF A STEEL BEAM GUARD RAIL, 7.0 M (23.0 FT) NORTH NORTHEAST OF A U-TURN SIGN, 16.5 M (54.1 FT) NORTHEAST OF THE CENTERLINE OF THE U-TURN, AND 0.4 M (1.3 FT) SOUTHWEST OF A FIBERGLASS WITNESS POST.

HVCTRL #2
189 EXIT 15 AZ MK

NORTH = 724183.456
EAST = 1464515.070
ELEV. = 204.39

GENERAL LOCATION, WINOOSKI, VT. TO REACH FROM THE I-89 SOUTHBOUND BRIDGE OVER VT ROUTE 15 (ETHAN ALLEN STREET) AT EXIT 15, GO SOUTH ALONG I-89 SOUTHBOUND FOR ABOUT 30 M (98.4 FT) TO THE SITE OF THE MARK ON THE LEFT IN THE MEDIAN. THE MARK IS SET FLUSH WITH GROUND SURFACE IN THE TOP OF A 30 CM (12 INCH) DIAMETER CONCRETE MONUMENT. IT IS 7.4 M (24.3 FT) EAST OF AND ABOUT 0.2 M (0.7 FT) HIGHER THAN THE I-89 SOUTHBOUND EAST EDGE OF PAVEMENT, 5.2 M (17.1 FT) WEST OF THE I-89 NORTHBOUND WEST EDGE OF PAVEMENT, 2.8 M (9.2 FT) WEST SOUTHWEST OF THE MOST SOUTHERLY WOODEN POST FOR A STEEL BEAM GUARD RAIL, AND 0.5 M (1.6 FT) SOUTH OF A FIBERGLASS WITNESS POST.

TRAVERSE TIES

HVCTRL #31

NORTH = 727212.90
EAST = 1464933.03
ELEV. = 276.84

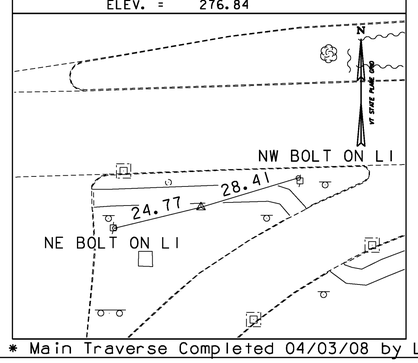

* Main Traverse Completed 04/03/08 by L.Orvis P.C. & G.Hitchcock

ALIGNMENT TIES

RAMP "B" POT STA. 52+50.00

NORTH = 726506.43
EAST = 1464827.43

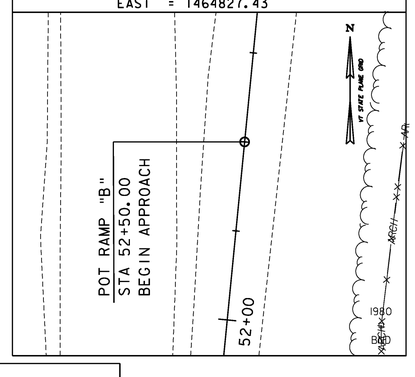

RAMP "B" POT STA. 54+00.00

NORTH = 726655.71
EAST = 1464842.02

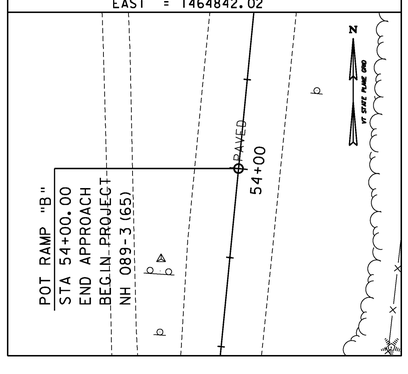

RAMP "B" PC STA. 54+50.97

NORTH = 726706.44
EAST = 1464846.98

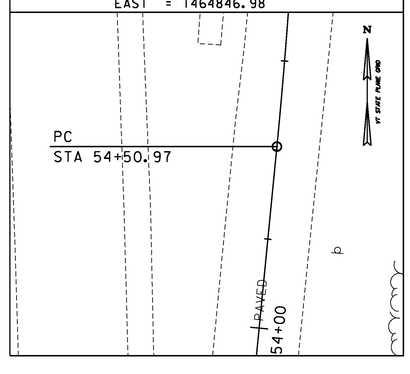

RAMP "B" PT STA. 55+05.43

NORTH = 726760.73
EAST = 1464851.30

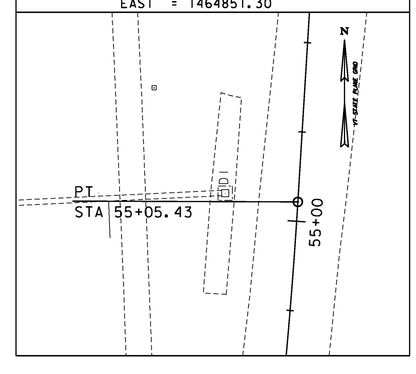

RAMP "B" POT STA. 58+21.82 = SLIP RAMP STA. 80+00.00

NORTH = 727076.52
EAST = 1464870.63

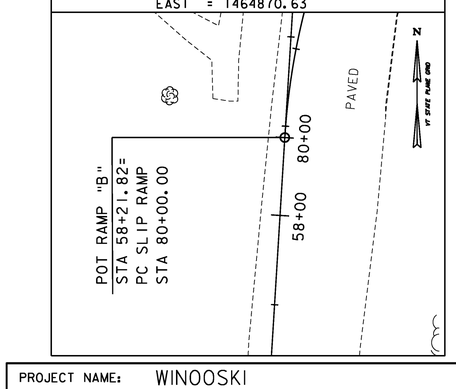

DATUM

VERTICAL	NAVD 88
HORIZONTAL	NAD 83(96)
ADJUSTMENT	Compass

0 20 40
SCALE IN FEET

PROJECT NAME: WINOOSKI
PROJECT NUMBER: NH 089-3(65)

FILE NAME: z94a198ti.dgn
PROJECT LEADER: KEN UPMAL
DESIGNED BY: A. ACHARYA
TIE SHEET 1

PLOT DATE: 2/22/2010
DRAWN BY: A. ACHARYA
CHECKED BY: E.ATKINS
SHEET 15 OF 67

ALIGNMENT TIES

RAMP "B" PC STA. 59+18.63

NORTH = 727173.15
EAST = 1464876.55

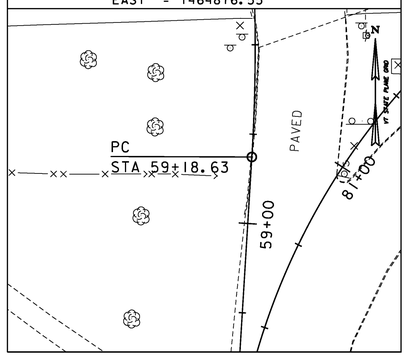

RAMP "B" PT STA. 59+62.97

NORTH = 727217.47
EAST = 1464877.29

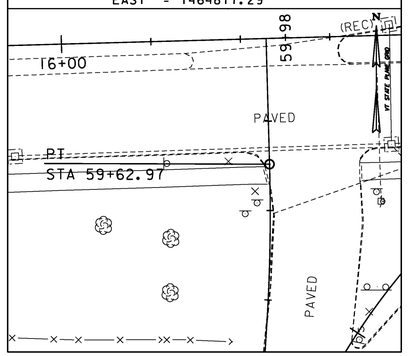

RAMP "B" POT STA. 59+67.66

NORTH = 727222.16
EAST = 1464877.16

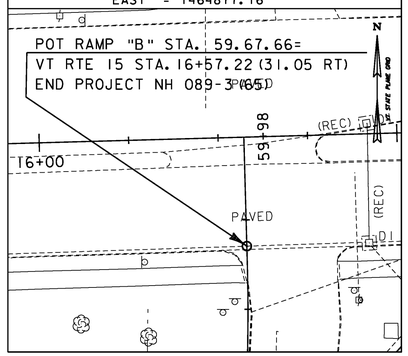

RAMP "B" POT STA. 59+98.12 = VT ROUTE 15 STA. 16+57.22

NORTH = 727252.60
EAST = 1464876.32

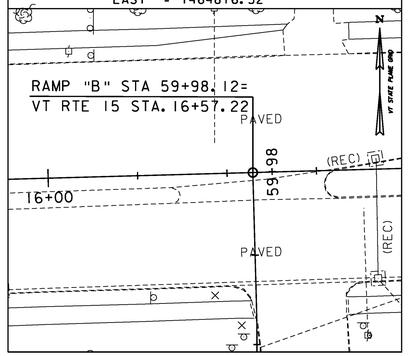

SLIP RAMP POC STA. 81+77.21

NORTH = 727224.69
EAST = 1464955.98

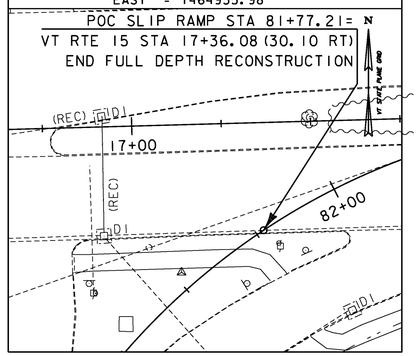

SLIP RAMP PT STA. 82+25.00

NORTH = 727245.94
EAST = 1464998.64

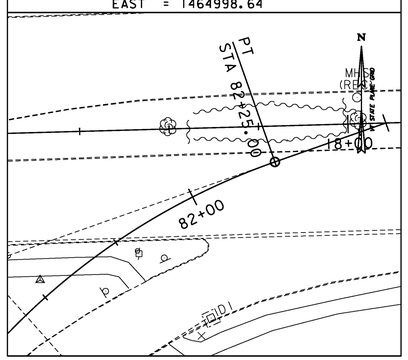

SLIP RAMP POT STA. 82+57.86 = VT RTE 15 STA 18+10.60

NORTH = 727256.83
EAST = 1465029.65

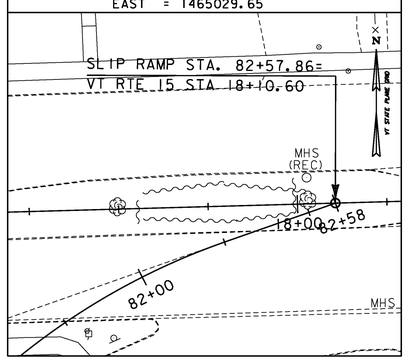

VT RTE 15 STA. 15+85.00

NORTH = 727250.62
EAST = 1464804.14

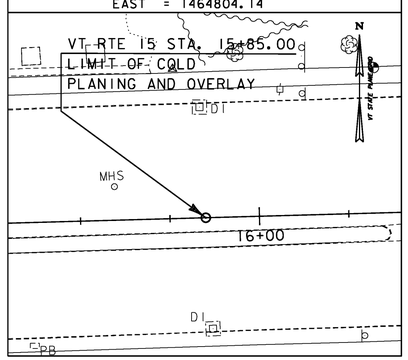

VT RTE 15 STA. 18+72.12 = ROLAND CT. STA. 30+00.00

NORTH = 727258.52
EAST = 1465091.14

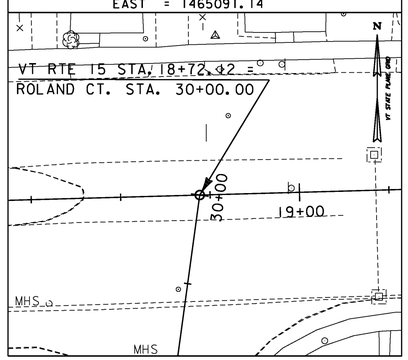

VT RTE 15 PC STA. 20+14.78

NORTH = 727262.45
EAST = 1465233.75

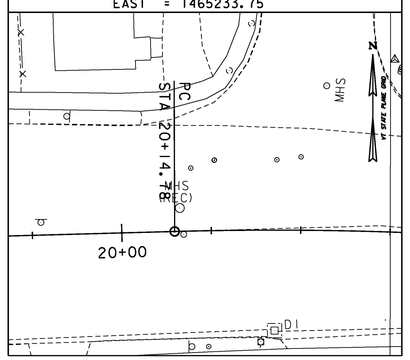

VT RTE 15 STA. 21+00.00

NORTH = 727261.16
EAST = 1465318.93

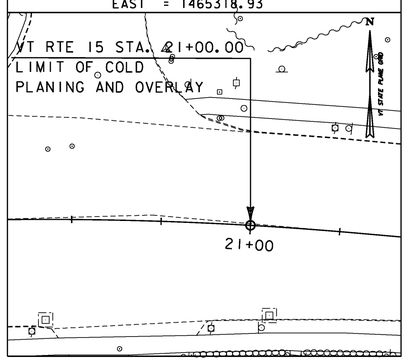

VT RTE 15 PT STA. 21+30.18

NORTH = 727258.97
EAST = 1465349.03

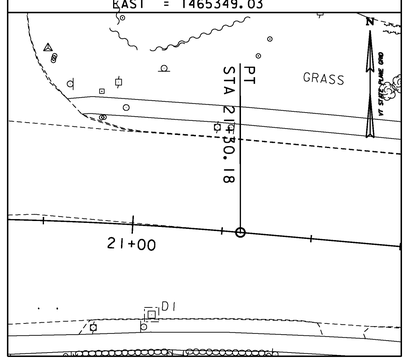

ROLAND CT. POT STA. 29+15.00

NORTH = 727174.30
EAST = 1465079.65

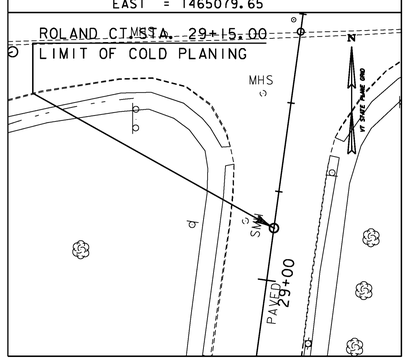

DATUM	
VERTICAL	NAVD 88
HORIZONTAL	NAD 83(96)
ADJUSTMENT	Compass

0 20 40
SCALE IN FEET

PROJECT NAME: WINOOSKI
PROJECT NUMBER: NH 089-3(65)

FILE NAME: z94a198t1.dgn
PROJECT LEADER: KEN UPMAL
DESIGNED BY: A. ACHARYA
TIE SHEET 2

PLOT DATE: 2/22/2010
DRAWN BY: A. ACHARYA
CHECKED BY: E.ATKINS
SHEET 16 OF 67

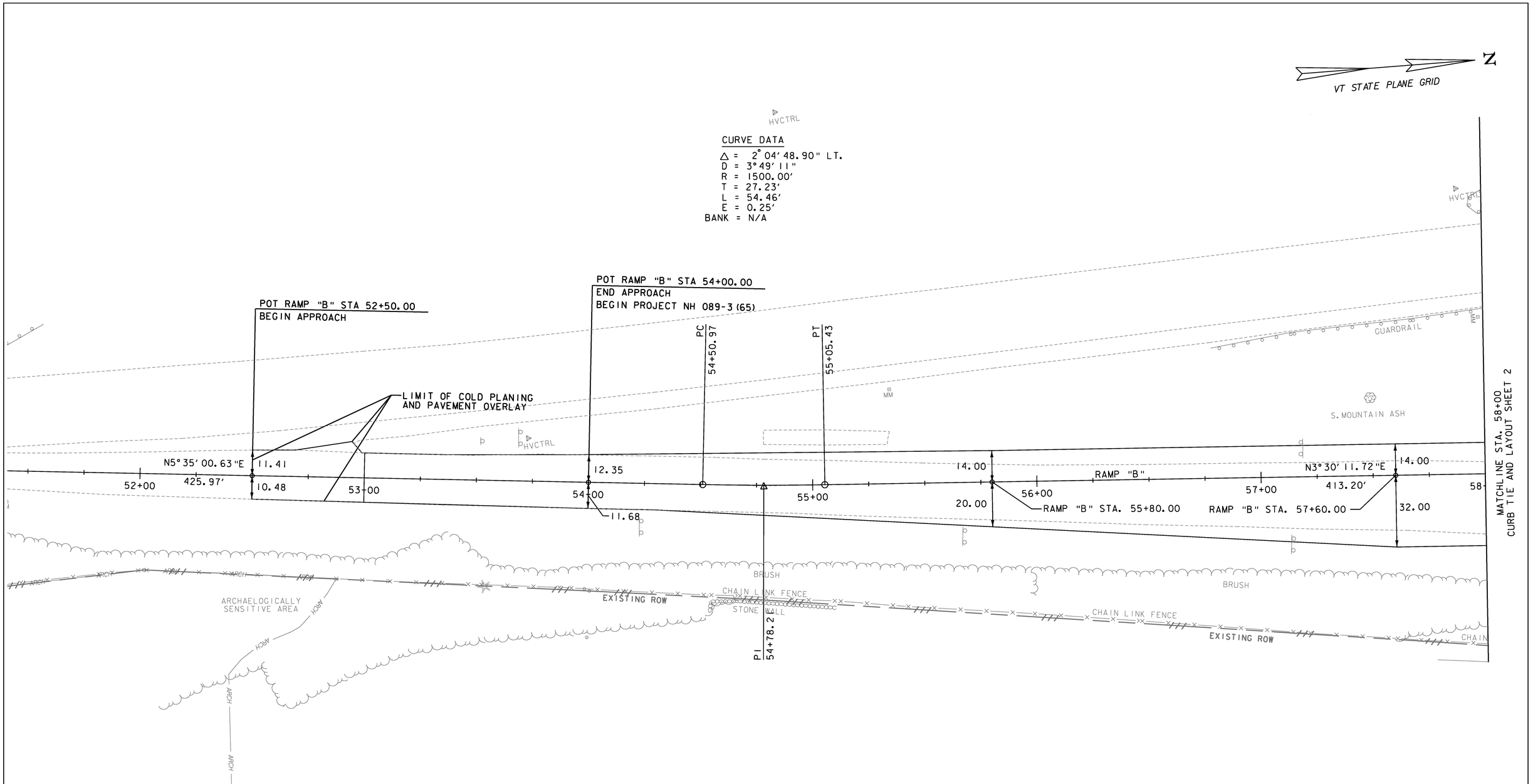

PROJECT NAME: WINOOSKI	
PROJECT NUMBER: NH 089-3(65)	
FILE NAME: z94a198curbbdr.dgn	PLOT DATE: 2/23/2010
PROJECT LEADER: KEN UPMAL	DRAWN BY: A. ACHARYA
DESIGNED BY: A. ACHARYA	CHECKED BY: E.ATKINS
CURB TIE AND LAYOUT SHEET 1	SHEET 17 OF 67

LABEL	BEGIN		END		RADIUS	LENGTH
	STA.	OFFSET (ft)	STA.	OFFSET (ft)	(ft)	(ft)
C1	VT ROUTE 15 16+82.91 LT	35.99	VT ROUTE 15 16+87.75 LT	32.32	5.00	6.52
L1	VT ROUTE 15 16+87.75 LT	32.32	VT ROUTE 15 16+93.36 LT	32.34	NA	5.61
L2	VT ROUTE 15 16+98.39 LT	32.36	VT ROUTE 15 17+10.00 LT	32.37	NA	11.60
C2	VT ROUTE 15 20+29.63 LT	38.93	VT ROUTE 15 20+33.65 LT	43.41	30.00	6.14
C3	VT ROUTE 15 20+36.19 LT	47.65	VT ROUTE 15 20+38.80 LT	55.44	30.00	8.29
L3	VT ROUTE 15 20+38.80 LT	55.44	VT ROUTE 15 20+39.38 LT	61.10	NA	5.69
L4	VT ROUTE 15 16+24.63 RT	31.64	VT ROUTE 15 16+38.18 RT	31.54	NA	13.55
C4	VT ROUTE 15 16+38.18 RT	31.54	VT ROUTE 15 16+43.17 RT	35.85	5.00	7.20
C5	RAMP "B" 59+18.63 LT	14.00	RAMP "B" 59+54.01 LT	14.00	486.00	34.39
L5	RAMP "B" 59+00.00 LT	14.00	RAMP "B" 59+18.63 LT	14.00	NA	18.63
C6	VT ROUTE 15 16+65.62 RT	36.40	VT ROUTE 15 16+70.21 LT	33.40	5.00	5.80
L6	VT ROUTE 15 16+70.21 RT	33.40	VT ROUTE 15 16+94.90 RT	33.38	NA	24.69
L7	VT ROUTE 15 16+99.90 RT	33.38	VT ROUTE 15 17+21.27 RT	33.36	NA	21.38
C7	VT ROUTE 15 17+21.27 RT	33.36	VT ROUTE 15 17+23.00 RT	36.36	2.00	4.19
C8	SLIP RAMP 80+97.00 LT	2.00	SLIP RAMP 81+50.35 LT	2.00	194.00	53.91
C9	SLIP RAMP 80+75.23 LT	2.00	SLIP RAMP 81+97.00 LT	2.00	1000.00	22.06
C10	RAMP "B" 58+96.29 RT	11.77	RAMP "B" 58+97.22 RT	8.00	2.00	5.32
L8	RAMP "B" 58+97.22 RT	8.00	RAMP "B" 59+18.63 RT	8.00	NA	21.42

LABEL	BEGIN		END		RADIUS	LENGTH
	STA.	OFFSET (ft)	STA.	OFFSET (ft)	(ft)	(ft)
C11	RAMP "B" 59+18.63 RT	8.00	RAMP "B" 59+53.87 RT	8.00	508.00	35.80
C12	SLIP RAMP 80+00.00 RT	32.00	SLIP RAMP 81+55.89 RT	32.00	160.00	129.91
C13	SLIP RAMP " 81+62.23 RT	32.00	VT ROUTE 15 18+22.22 RT	33.64	160.00	86.21
C14	VT ROUTE 15 18+22.22 RT	33.64	VT ROUTE 15 18+44.98 RT	43.94	25.00	26.17
C15	ROLAND CT 29+34.56 LT	12.32	ROLAND CT 29+48.36 LT	16.48	25.00	14.62
L9	ROLAND CT 29+15.00 LT	12.31	ROLAND CT 29+34.56 LT	12.32	NA	19.56
L10	ROLAND CT 29+15.00 RT	12.35	ROLAND CT 29+41.84 RT	12.55	NA	26.84
C16	ROLAND CT 29+41.84 LT	12.55	ROLAND CT 29+54.04 LT	14.83	35.00	12.48
C17	ROLAND CT 29+58.58 LT	16.94	VT ROUTE 15 19+09.37 RT	30.35	35.00	31.35
L11	VT ROUTE 15 19+09.37 RT	30.35	VT ROUTE 15 19+25.48 RT	30.27	NA	16.11
L12	VT ROUTE 15 16+92.42 LT	2.04	VT ROUTE 15 16+92.60 RT	7.82	NA	9.86
L13	VT ROUTE 15 17+00.40 LT	3.19	VT ROUTE 15 17+00.60 RT	7.79	NA	10.98
C18	VT ROUTE 15 19+93.12 RT	6.17	VT ROUTE 15 18+93.12 RT	2.17	2.00	6.28
L14	VT ROUTE 15 18+93.13 RT	2.17	VT ROUTE 15 19+34.06 RT	2.23	NA	40.93
C19	VT ROUTE 15 19+34.05 RT	6.23	VT ROUTE 15 19+34.06 RT	2.23	2.00	6.28
L15	VT ROUTE 15 18+93.12 RT	6.17	VT ROUTE 15 19+34.05 RT	6.23	NA	40.93
L16	VT ROUTE 15 19+03.03 LT	32.96	VT ROUTE 15 19+09.03 LT	32.04	NA	6.00
L17	VT ROUTE 15 19+77.10 LT	31.05	VT ROUTE 15 19+83.10 LT	30.76	NA	6.00

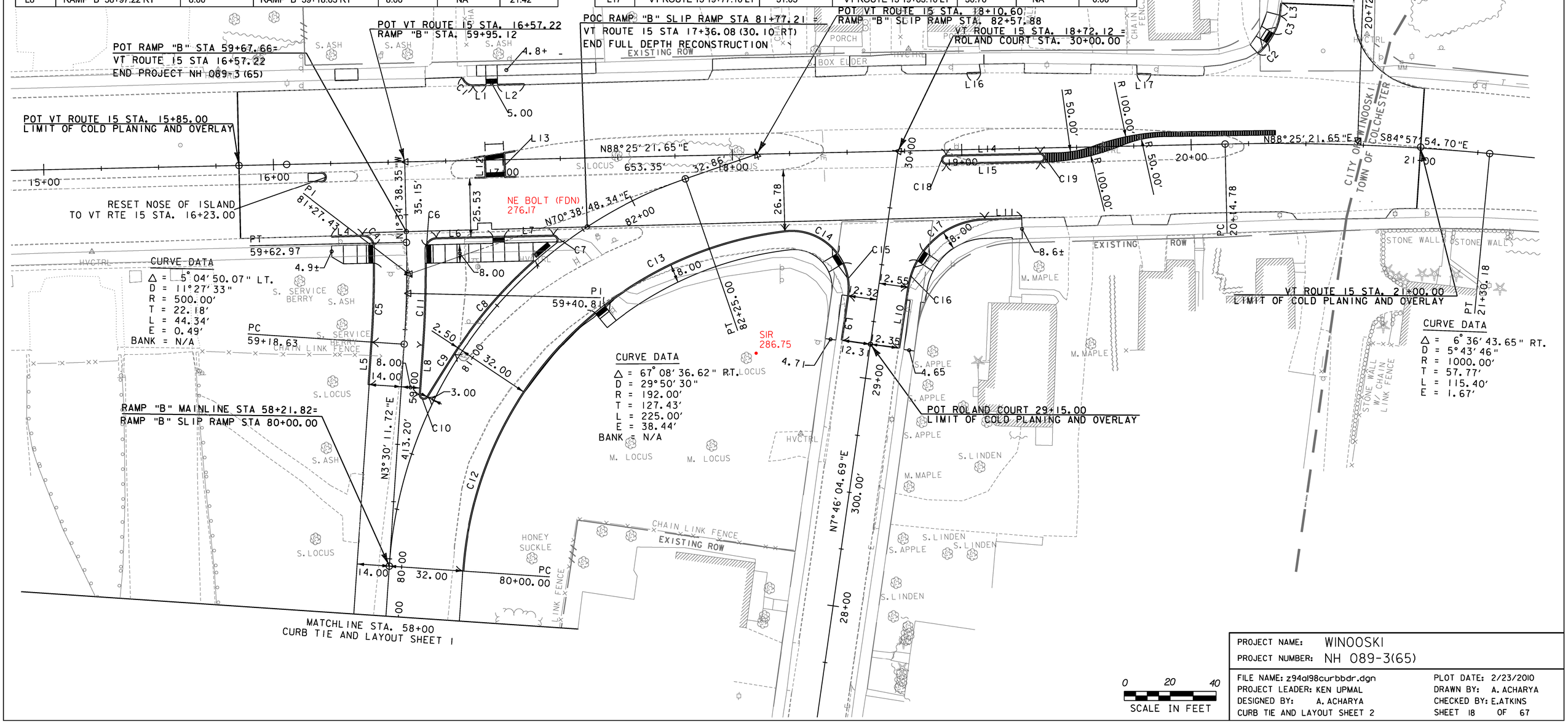

PROJECT NAME:	WINOOSKI
PROJECT NUMBER:	NH 089-3(65)

FILE NAME: z94a198curbbdr.dgn	PLOT DATE: 2/23/2010
PROJECT LEADER: KEN UPMAL	DRAWN BY: A. ACHARYA
DESIGNED BY: A. ACHARYA	CHECKED BY: E.ATKINS
CURB TIE AND LAYOUT SHEET 2	SHEET 18 OF 67

COLD PLANING, BITUMINOUS PAVEMENT

RAMP "B" 52+50.0 ~ 53+00.0

CLEARING AND GRUBBING, INCLUDING INDIVIDUAL TREES AND STUMPS

RAMP "B" 52+25 RT ~ 58+00 RT
RAMP "B" 57+49.1LT (S. MOUNTAIN ASH)

REMOVE EXISTING PAVEMENT (COMMON EXCAVATION)

RAMP "B" 53+00.0 ~ 58+00.0
RAMP "B" 54+78 LT ~ 55+35 LT (PAVED WATERWAY)

STONE FILL, TYPE I

RAMP "B" 54+78 LT ~ 55+19 LT

STONE FILL, TYPE II

RAMP "B" 56+50 RT ~ 57+90 RT

DELINEATOR WITH STEEL POST

RAMP "B" 53+75 LT-RT ~ 58+00 LT-RT (11 EACH)
REMOVE, STACK AND REINSTALL EACH

CURVE DATA

Δ = 2° 04' 48.90" LT.
D = 3° 49' 11"
R = 1500.00'
T = 27.23'
L = 54.46'
E = 0.25'
BANK = N/A

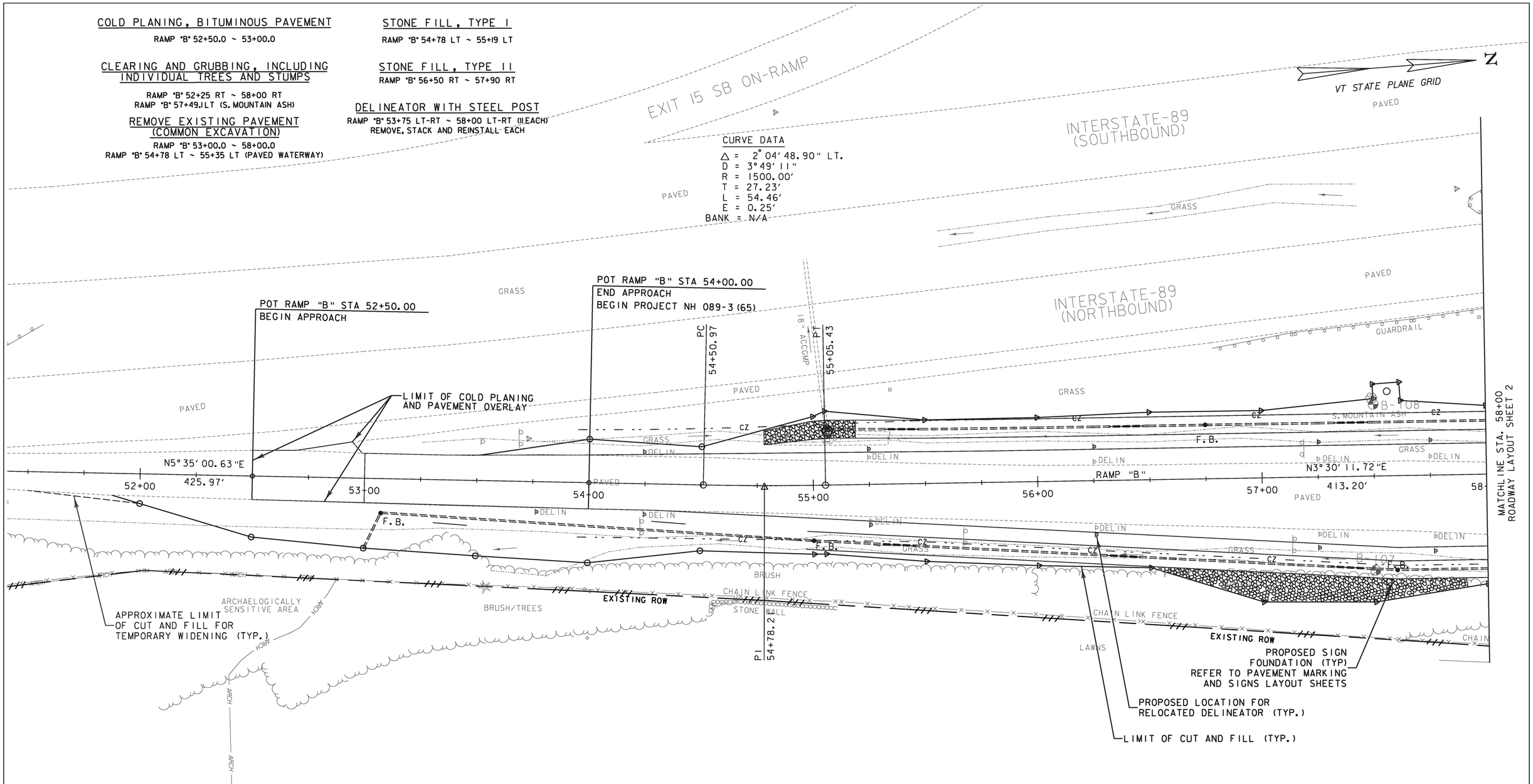

0 20 40
SCALE IN FEET

PROJECT NAME: WINOOSKI	
PROJECT NUMBER: NH 089-3(65)	
FILE NAME: z94a198bdr.dgn	PLOT DATE: 3/9/2010
PROJECT LEADER: KEN UPMAL	DRAWN BY: T.BIGELOW
DESIGNED BY: T.BIGELOW	CHECKED BY: E.ATKINS
ROADWAY LAYOUT SHEET 1	SHEET 19 OF 67

CLEARING AND GRUBBING, INCLUDING INDIVIDUAL TREES AND STUMPS

RAMP "B" 58+00.0 RT ~ 58+10.0 RT
RAMP "B" 58+31.5 LT (S. LOCUS)
RAMP "B" 58+71.2 LT (S. ASH)
VT RTE 15 16+26.4 LT (S. ASH)
VT RTE 15 16+59.4 LT (S. ASH)

REMOVE EXISTING PAVEMENT (COMMON EXCAVATION)

RAMP "B" 58+00.0 ~ 59+67.7
SLIP RAMP "B" 80+00.0 ~ 81+77.2
VT RTE 15 16+15.0 ~ 16+36.7 RT (ISLAND)
VT RTE 15 16+24.6 ~ 16+56.5 RT
VT RTE 15 16+27.7 ~ 16+37.7 LT
VT RTE 15 16+82.6 ~ 17+42.1 RT
VT RTE 15 16+89.2 ~ 17+41.3 LT
VT RTE 15 17+92.2 ~ 18+37.1 LT
VT RTE 15 18+52.0 ~ 18+85.0 LT
VT RTE 15 20+26.1 ~ 20+33.2 LT
SLIP RAMP 81+70.7 RT ~ ROLAND CT. 29+15.0 LT
ROLAND CT. 29+15.0 RT ~ VT RTE 15 19+25.5 RT

MILLED RUMBLE STRIPS

VT ROUTE 15 19+36 RT ~ 20+36 LT (MEDIAN)

STONE FILL, TYPE I

RAMP "B" 58+36 LT ~ 58+62 LT
8' WIDE IN DITCH

REMOVAL OF EXISTING FENCE

RAMP "B" 59+12.7 LT
REMOVE APPROXIMATELY 20LF OF FENCE, TERMINATE AT NEAREST POST
VT RTE 15 18+23.1 LT
5 LF ~ REMOVE TO BACK OF EASEMENT AND RESET EXISTING POST
(RESETTING OF POST SHALL BE INCIDENTAL TO ITEM 620.55 REMOVAL OF EXISTING FENCE)

VERTICAL GRANITE CURB

RAMP "B" 58+95.27 RT ~ RAMP "B" 59+53.87 RT
RAMP "B" 59+61.74 RT ~ VT RTE 15 16+94.90 RT
VT RTE 15 16+99.90 RT ~ VT RTE 15 17+23.30 RT
SLIP RAMP 81+50.35 LT ~ SLIP RAMP 58+95.27 LT
VT RTE 15 16+38.18 RT ~ VT RTE 15 16+43.17 RT
VT RTE 15 16+82.91 LT ~ VT RTE 15 16+93.39 LT
VT RTE 15 16+92.42 LT ~ VT RTE 15 16+92.60 RT
VT RTE 15 17+00.40 LT ~ VT RTE 15 17+00.60 RT
VT RTE 15 20+29.63 LT ~ VT RTE 15 20+33.65 LT
VT RTE 15 20+36.19 LT ~ VT RTE 15 20+39.38 LT
VT RTE 15 18+91.13 RT ~ VT RTE 15 19+36.05 RT
ROLAND CT. 29+48.36 LT ~ ROLAND CT. 29+22.73 LT
ROLAND CT. 29+32.90 RT ~ VT RTE 15 19+25.48 RT

COLD PLANING, BITUMINOUS PAVEMENT

VT RTE 15 15+85.0 ~ VT RTE 15 21+00.0
ROLAND CT. 29+15.0 ~ ROLAND CT. 29+70.0

CHANGING ELEVATION OF SEWER MANHOLES

VT RTE 15 18+29.5 RT
VT RTE 15 20+16.5 LT
VT RTE 15 20+57.1 LT
ROLAND CT. 29+51.4 LT

REMOVAL OF EXISTING CURB

VT RTE 15 16+38.18 RT ~ RAMP "B" 59+62.25 LT
VT RTE 15 16+82.37 RT ~ VT RTE 15 17+60.17 RT
SLIP RAMP 81+97.50 RT ~ SLIP RAMP 80+96.48 RT
RAMP "B" 59+13.11 RT ~ RAMP "B" 59+57.69 RT
VT RTE 15 16+20.78 RT ~ VT RTE 15 16+34.43 RT
VT RTE 15 16+20.82 RT ~ VT RTE 15 16+34.58 RT
VT RTE 15 16+92.37 LT ~ VT RTE 15 17+00.60 LT
VT RTE 15 16+92.60 RT ~ VT RTE 15 17+00.60 RT
VT RTE 15 16+83.00 LT ~ VT RTE 15 16+98.39 RT
VT RTE 15 18+92.43 LT ~ VT RTE 15 20+23.11 RT (ENTIRE ISLAND. RESET IF NEEDED)
VT RTE 15 19+09.03 LT ~ VT RTE 15 19+11.03 LT
VT RTE 15 19+75.10 LT ~ VT RTE 15 19+77.10 LT
VT RTE 15 20+29.63 LT ~ VT RTE 15 20+39.38 LT
ROLAND CT. 29+32.81 RT ~ VT RTE 15 19+25.48 RT
ROLAND CT. 29+30.90 LT ~ ROLAND CT. 29+22.61 LT

REMOVING AND RESETTING CURB

RAMP "B" 59+02.47 LT ~ RAMP "B" 59+57.48 LT - RESET TO
RAMP "B" 59+00.00 LT ~ RAMP "B" 59+54.01 LT
SLIP RAMP 80+08.03 RT ~ ROLAND CT. 29+35.64 LT - RESET TO
SLIP RAMP 80+00.00 RT ~ 81+55.89 RT AND
SLIP RAMP 81+62.23 RT ~ ROLAND CT. 29+52.23 LT

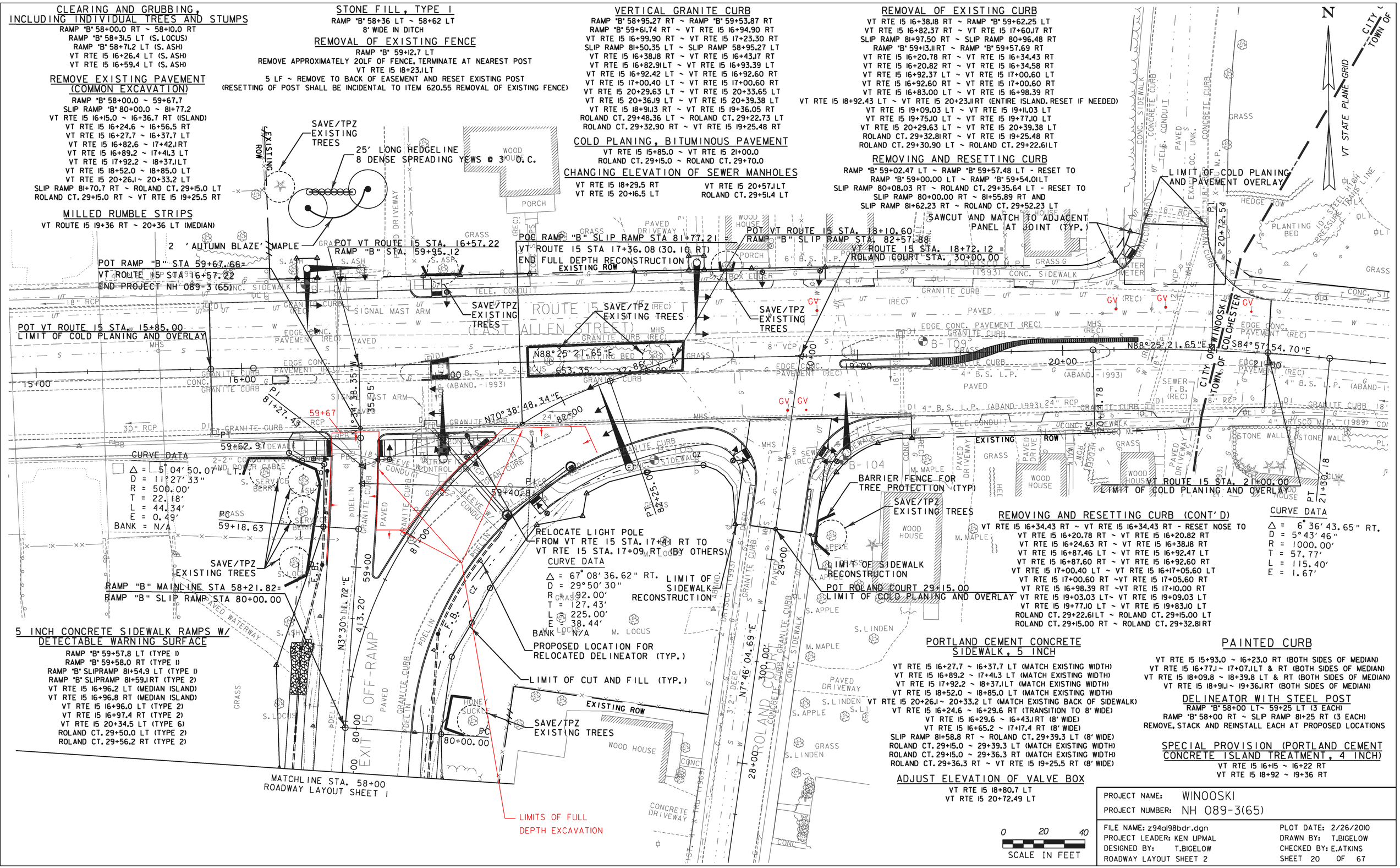

5 INCH CONCRETE SIDEWALK RAMPS W/ DETECTABLE WARNING SURFACE

RAMP "B" 59+57.8 LT (TYPE 1)
RAMP "B" 59+58.0 RT (TYPE 1)
RAMP "B" SLIPRAMP 81+54.9 LT (TYPE 1)
RAMP "B" SLIPRAMP 81+59.1 RT (TYPE 2)
VT RTE 15 16+96.2 LT (MEDIAN ISLAND)
VT RTE 15 16+96.8 RT (MEDIAN ISLAND)
VT RTE 15 16+96.0 LT (TYPE 2)
VT RTE 15 16+97.4 RT (TYPE 2)
VT RTE 15 20+34.5 LT (TYPE 6)
ROLAND CT. 29+50.0 LT (TYPE 2)
ROLAND CT. 29+56.2 RT (TYPE 2)

REMOVING AND RESETTING CURB (CONT'D)

VT RTE 15 16+34.43 RT ~ VT RTE 15 16+34.43 RT - RESET NOSE TO
VT RTE 15 16+20.78 RT ~ VT RTE 15 16+20.82 RT
VT RTE 15 16+24.63 RT ~ VT RTE 15 16+38.18 RT
VT RTE 15 16+87.46 LT ~ VT RTE 15 16+92.47 LT
VT RTE 15 16+87.60 RT ~ VT RTE 15 16+92.60 RT
VT RTE 15 17+00.40 LT ~ VT RTE 15 16+17+05.60 LT
VT RTE 15 17+00.60 RT ~ VT RTE 15 17+05.60 RT
VT RTE 15 16+98.39 RT ~ VT RTE 15 17+10.00 RT
VT RTE 15 19+03.03 LT ~ VT RTE 15 19+09.03 LT
VT RTE 15 19+77.10 LT ~ VT RTE 15 19+83.10 LT
ROLAND CT. 29+22.61 LT ~ ROLAND CT. 29+15.00 LT
ROLAND CT. 29+15.00 RT ~ ROLAND CT. 29+32.81 RT

CURVE DATA

Δ = 6°36'43.65" RT.
D = 5°43'46"
R = 1000.00'
T = 57.77'
L = 115.40'
E = 1.67'

PORTLAND CEMENT CONCRETE SIDEWALK, 5 INCH

VT RTE 15 16+27.7 ~ 16+37.7 LT (MATCH EXISTING WIDTH)
VT RTE 15 16+89.2 ~ 17+41.3 LT (MATCH EXISTING WIDTH)
VT RTE 15 17+92.2 ~ 18+37.1 LT (MATCH EXISTING WIDTH)
VT RTE 15 18+52.0 ~ 18+85.0 LT (MATCH EXISTING WIDTH)
VT RTE 15 20+26.1 ~ 20+33.2 LT (MATCH EXISTING BACK OF SIDEWALK)
VT RTE 15 16+24.6 ~ 16+29.6 RT (TRANSITION TO 8' WIDE)
VT RTE 15 16+29.6 ~ 16+43.1 RT (8' WIDE)
VT RTE 15 16+65.2 ~ 17+17.4 RT (8' WIDE)
SLIP RAMP 81+58.8 RT ~ ROLAND CT. 29+39.3 LT (8' WIDE)
ROLAND CT. 29+15.0 ~ 29+39.3 LT (MATCH EXISTING WIDTH)
ROLAND CT. 29+15.0 ~ 29+36.3 RT (MATCH EXISTING WIDTH)
ROLAND CT. 29+36.3 RT ~ VT RTE 15 19+25.5 RT (8' WIDE)

ADJUST ELEVATION OF VALVE BOX

VT RTE 15 18+80.7 LT
VT RTE 15 20+72.49 LT

PAINTED CURB

VT RTE 15 15+93.0 ~ 16+23.0 RT (BOTH SIDES OF MEDIAN)
VT RTE 15 16+77.1 ~ 17+07.1 LT & RT (BOTH SIDES OF MEDIAN)
VT RTE 15 18+09.8 ~ 18+39.8 LT & RT (BOTH SIDES OF MEDIAN)
VT RTE 15 18+91.1 ~ 19+36.1 RT (BOTH SIDES OF MEDIAN)

DELINEATOR WITH STEEL POST

RAMP "B" 58+00 LT ~ 59+25 LT (3 EACH)
RAMP "B" 58+00 RT ~ SLIP RAMP 81+25 RT (3 EACH)
REMOVE, STACK AND REINSTALL EACH AT PROPOSED LOCATIONS

SPECIAL PROVISION (PORTLAND CEMENT CONCRETE ISLAND TREATMENT, 4 INCH)

VT RTE 15 16+15 ~ 16+22 RT
VT RTE 15 18+92 ~ 19+36 RT

0 20 40
SCALE IN FEET

PROJECT NAME: WINOOSKI	
PROJECT NUMBER: NH 089-3(65)	
FILE NAME: z94a198bdr.dgn	PLOT DATE: 2/26/2010
PROJECT LEADER: KEN UPMAL	DRAWN BY: T.BIGELOW
DESIGNED BY: T.BIGELOW	CHECKED BY: E.ATKINS
ROADWAY LAYOUT SHEET 2	SHEET 20 OF 67

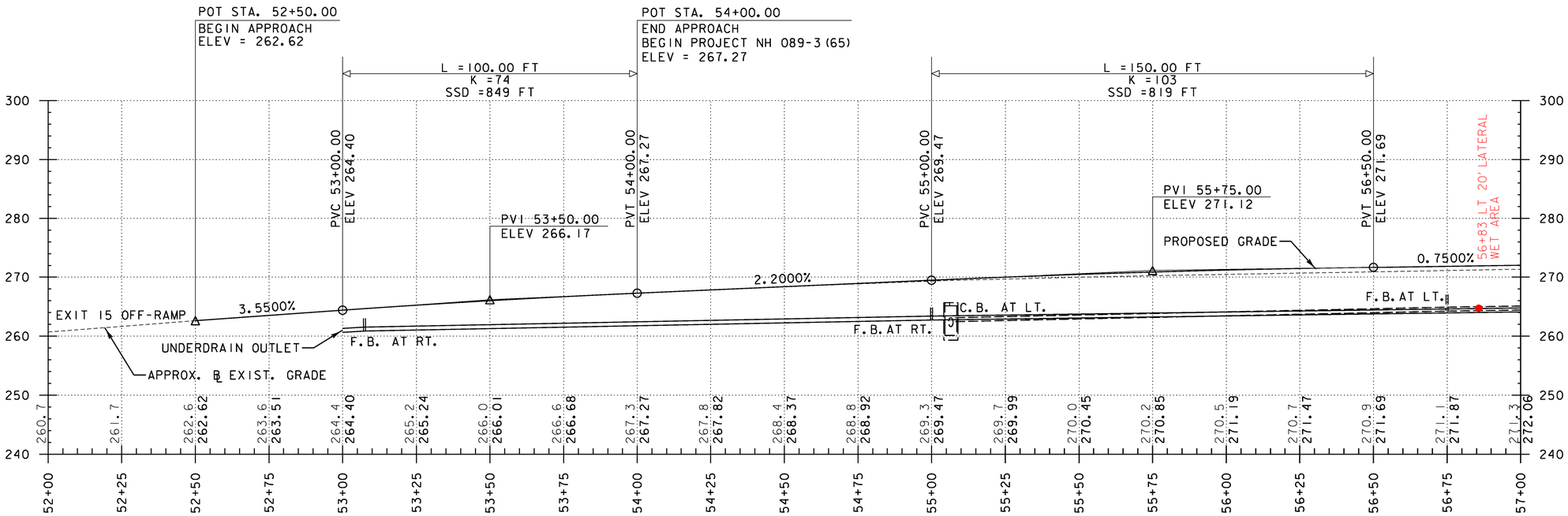

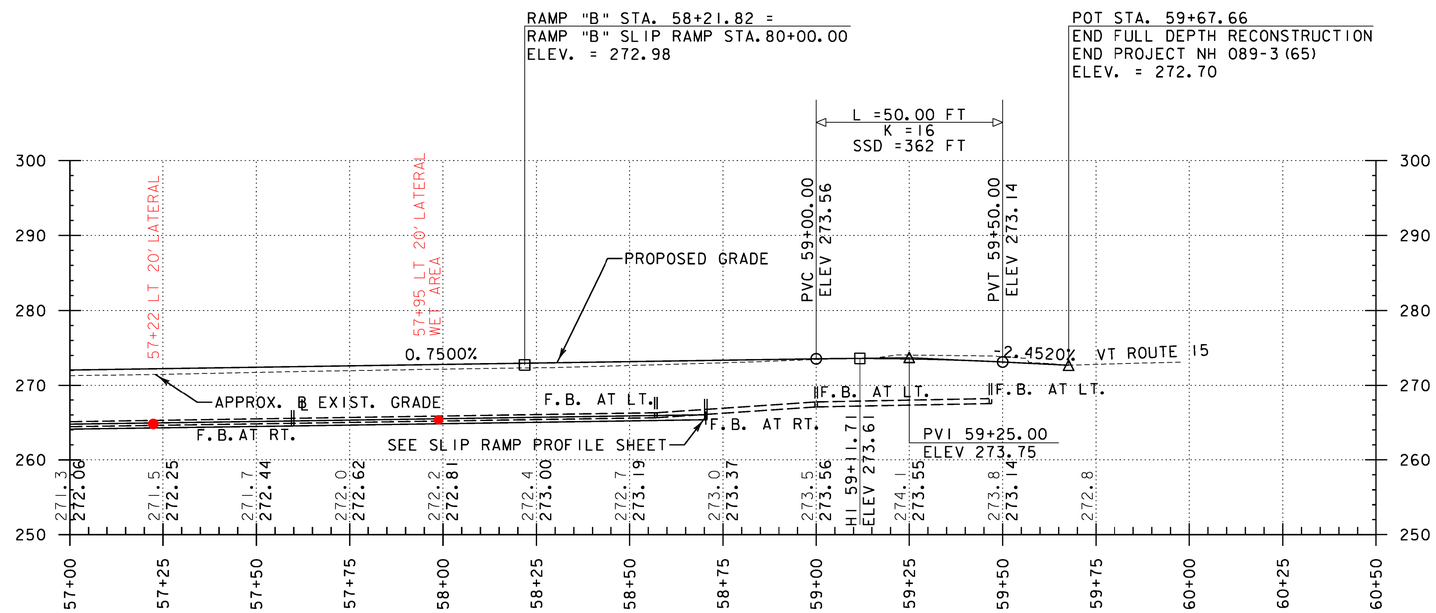

LEGEND

═══	UNDERDRAIN ON RIGHT
═══	UNDERDRAIN ON LEFT
‖F.B.	FLUSHING BASIN
C.B.	CATCH BASIN
LT.	LEFT
RT.	RIGHT

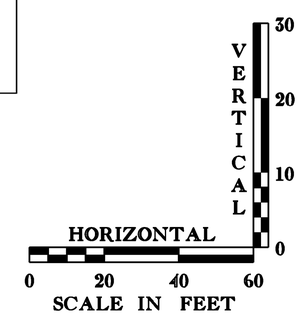

THE GRADES SHOWN TO THE NEAREST TENTH ARE THE ORIGINAL GROUND ELEVATIONS ALONG THE PROPOSED ALIGNMENT. THE GRADES SHOWN TO THE NEAREST HUNDREDTH ARE THE PROPOSED PROFILE GRADES FOR THE NEW ALIGNMENT.

PROJECT NAME: WINOOSKI
PROJECT NUMBER: NH 089-3(65)

FILE NAME: z94a198xsl.dgn
PROJECT LEADER: KEN UPMAL
DESIGNED BY: A. ACHARYA
RAMP "B" PROFILE SHEET

PLOT DATE: 2/22/2010
DRAWN BY: A. ACHARYA
CHECKED BY: E.ATKINS
SHEET 21 OF 67

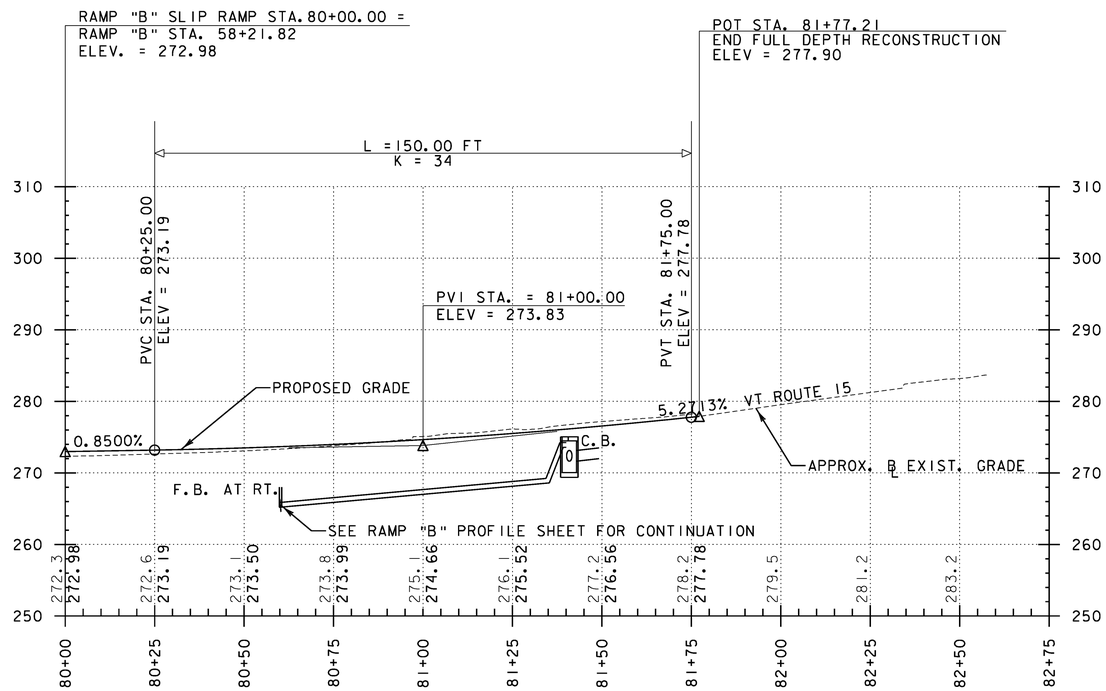

LEGEND

═══════	UNDERDRAIN ON RIGHT
=======	UNDERDRAIN ON LEFT
‖F.B.	FLUSHING BASIN
C.B.	CATCH BASIN
LT.	LEFT
RT.	RIGHT

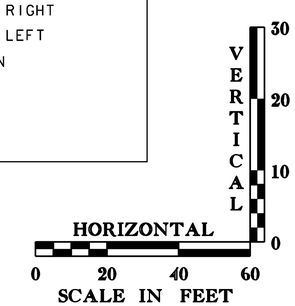

THE GRADES SHOWN TO THE NEAREST TENTH ARE THE ORIGINAL GROUND ELEVATIONS ALONG THE PROPOSED ALIGNMENT. THE GRADES SHOWN TO THE NEAREST HUNDREDTH ARE THE PROPOSED PROFILE GRADES FOR THE NEW ALIGNMENT.

PROJECT NAME: WINOOSKI
PROJECT NUMBER: NH 089-3(65)

FILE NAME: z94a198xsl.dgn
PROJECT LEADER: KEN UPMAL
DESIGNED BY: A. ACHARYA
SLIP RAMP PROFILE SHEET

PLOT DATE: 2/22/2010
DRAWN BY: A. ACHARYA
CHECKED BY: E.ATKINS
SHEET 22 OF 67

LEGEND

TC 290.58 / BC 290.0M.E.	PROPOSED TOP OF CURB ELEVATION / PROPOSED BOTTOM OF CURB ELEVATION
295.76	PROPOSED SPOT GRADE
289.4	EXISTING SPOT GRADE
M.E.	MATCH TO EXISTING ELEVATION
VIF	VERIFY IN FIELD

NOTES:

1) REFER TO TYPICAL SECTIONS, PROFILES AND CROSS SECTIONS FOR ADDITIONAL GRADING NOT SHOWN ON THE PARTIAL GRADING PLANS.
2) ALL PROPOSED GRADES SHALL BE FIELD VERIFIED WHERE MATCHING TO EXISTING SIDEWALK OR PAVEMENT CONDITIONS.
3) ALL PROPOSED GRADES SHOWN AT SIDEWALKS AND SIDEWALK RAMPS SHALL BE FIELD VERIFIED AND MODIFIED AS REQUIRED TO MAINTAIN AN ADA ACCESSIBLE ROUTE IN ACCORDANCE WITH STD. DETAILS C-3A, C-3B. ALL REQUIREMENTS OF C-3A AND C-3B SHALL APPLY.

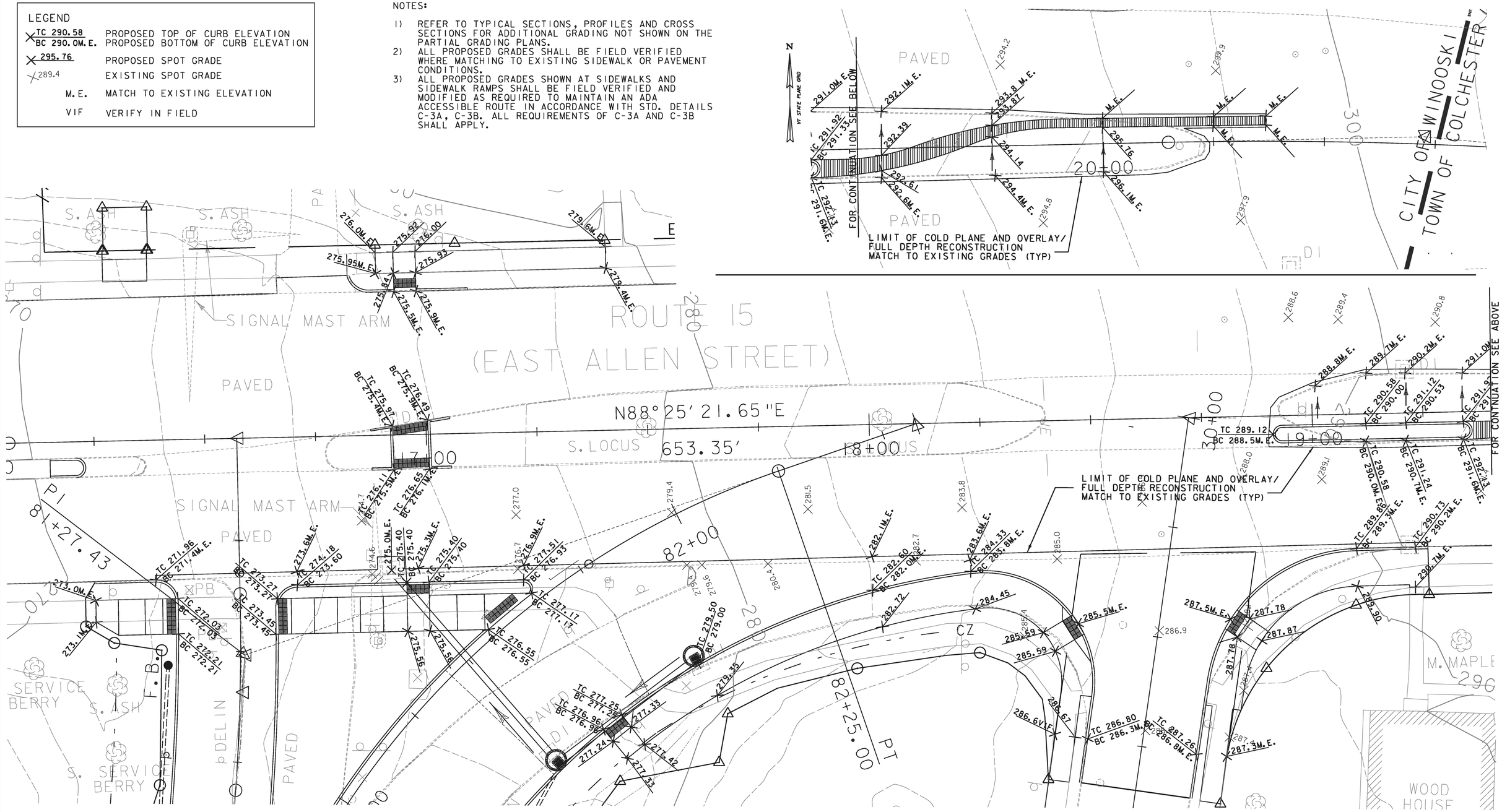

PARTIAL GRADING PLAN FOR RAMP "B" AND SLIP RAMP, VT RTE 15 AND ROLAND CT.

SCALE 1" = 10'-0"
10 0 10

PROJECT NAME: WINOOSKI	
PROJECT NUMBER: NH 089-3(65)	
FILE NAME: z94a198gradingbdr.dgn	PLOT DATE: 2/22/2010
PROJECT LEADER: KEN UPMAL	DRAWN BY: A. ACHARYA
DESIGNED BY: A. ACHARYA	CHECKED BY: E.ATKINS
PARTIAL GRADING PLAN	SHEET 23 OF 67

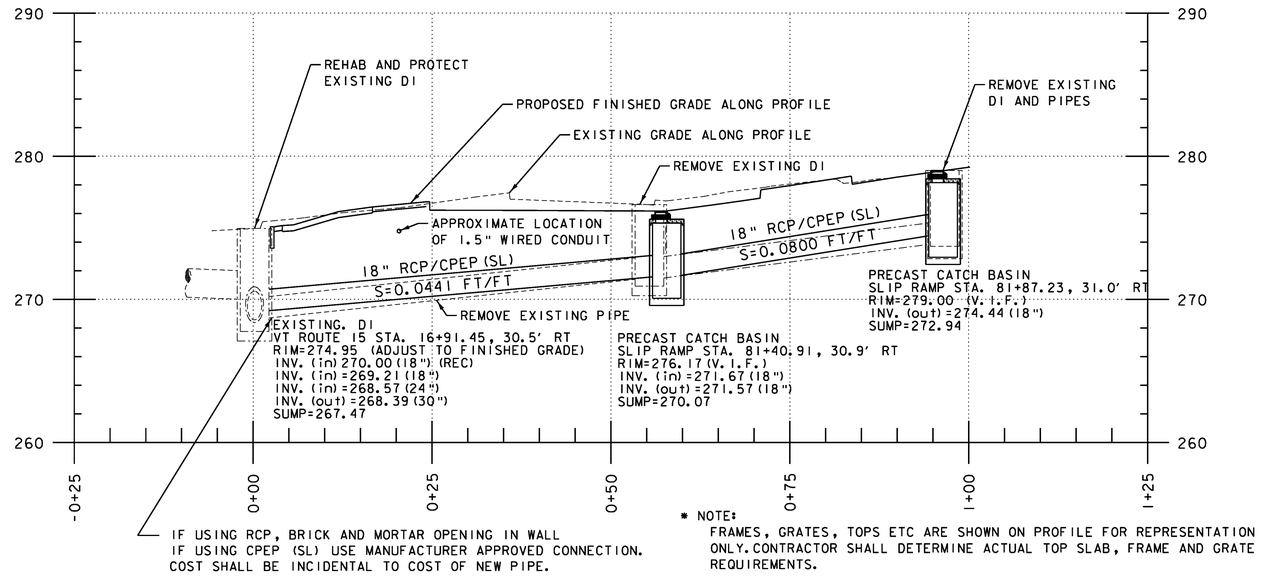

* NOTE:
FRAMES, GRATES, TOPS ETC ARE SHOWN ON PROFILE FOR REPRESENTATION ONLY. CONTRACTOR SHALL DETERMINE ACTUAL TOP SLAB, FRAME AND GRATE REQUIREMENTS.

DRAINAGE PROFILE
SLIP RAMP STA. 81+87.23
TO VT ROUTE 15 STA 16+91.45

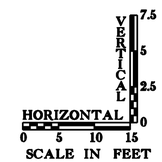

PRECAST CONCRETE CATCH BASIN NOTES:

1) AT A MINIMUM ALL PRECAST CONCRETE STRUCTURES, FRAME AND COVER/GRATE SHALL MEET AASTHO H-20 LOADING REQUIREMENTS. REFER TO SECTION 604 AND SUBSECTION 715.01 OF THE STANDARD SPECIFICATIONS.
2) FACE OF PIPE SHALL NOT PROJECT MORE THAN 2" OR LESS THAN 1" FROM INSIDE WALL OF STRUCTURE.
3) ALL STRUCTURES WITH MULTIPLE PIPES SHALL HAVE A MINIMUM OF 12" OF OUTSIDE SURFACE BETWEEN HOLES, NO MORE THAN 75% OF A HORIZONTAL CROSS-SECTION SHALL BE HOLES, AND THERE SHALL BE NO HOLES CLOSER THAN 3" TO JOINTS.
4) FITTING FRAME TO FINAL GRADE MAY BE DONE WITH BRICK OR PRECAST CONCRETE GRADE RINGS OF APPROPRIATE THICKNESS (3 COURSES MAX).
5) FLAT SLAB TOPS SHALL BE USED FOR ALL CATCH BASINS, UNLESS OTHERWISE PERMITTED BY THE ENGINEER.
6) ALL PIPE INVERTS AND PENETRATION ANGLES SHALL BE FIELD VERIFIED PRIOR TO PRECASTING.
7) PRECAST SECTIONS SHALL HAVE A TONGUE AND GROOVE JOINT AND BE ASSEMBLED USING A BUTYL RUBBER OR APPROVED EQUAL SEALANT.
8) PROVIDE FLEXIBLE RUBBER SLEEVES CONFORMING TO ASTM C-923, RESILIENT, OF SIZE REQUIRED, FOR EACH PIPE CONNECTING TO STRUCTURE. SLEEVES SHALL BE CAST INTO PRECAST STRUCTURE BY THE MANUFACTURER FOR ALL PIPE PENETRATIONS. FOR RCP PIPES, USE BRICK AND MORTAR.
9) CATCH BASIN GRATE ORIENTATION SHALL BE IN ACCORDANCE WITH STANDARD D-15 FOR TYPE E AND D-16 FOR TYPE B GRATES.
10) INSTALLATION OF DROP INLETS OVER EXISTING PIPES SHALL INCLUDE CLEAN CUTTING OF EXISTING PIPES, PROVIDING AN EXTENSION PIPE OF SIMILAR MATERIAL AND SIZE AS THE EXISTING PIPE, COUPLINGS REQUIRED FOR THE CONNECTION BETWEEN THE EXTENSION PIPE AND THE EXISTING PIPE, AND INSTALLING FLEXIBLE RUBBER SLEEVES AS SHOWN IN DETAILS PROVIDED ON THIS SHEET.
11) PAYMENT FOR INSTALLATION OF THE CATCH BASIN SHALL BE MADE UNDER THE PRECAST REINFORCED CONC. CATCH BASIN WITH CAST IRON GRATE ITEM (604.20).

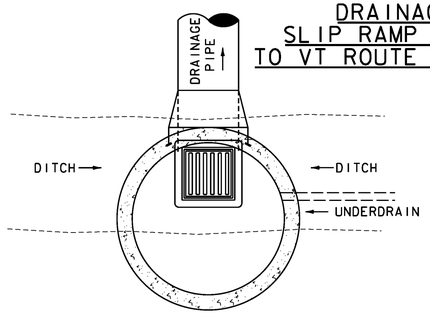

PLAN VIEW

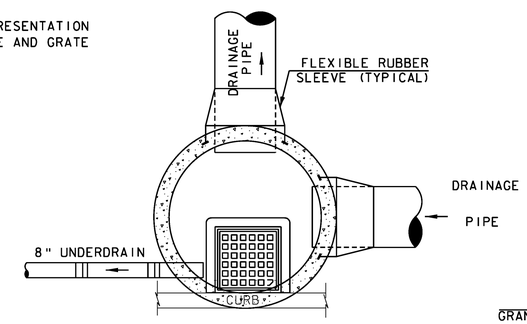

PLAN VIEW

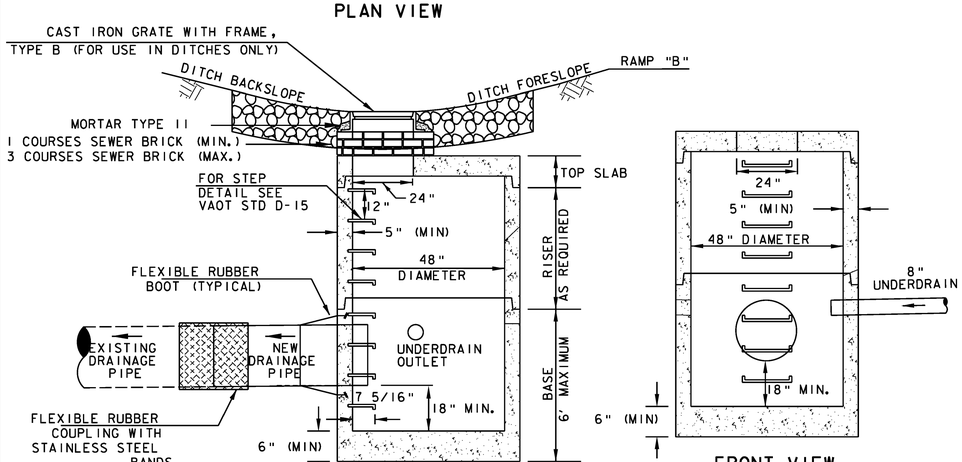

ELEVATION VIEW

FRONT VIEW

PRECAST CATCH BASIN INSTALLED IN DITCH
W/ UNDERDRAIN FLUSHING ACCESS
@ RAMP "B" STA. 55+06.58 LT

NOT TO SCALE

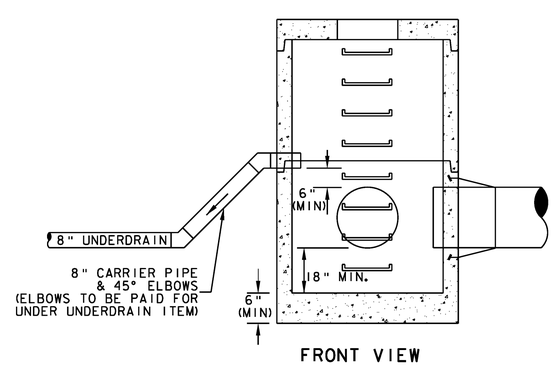

FRONT VIEW

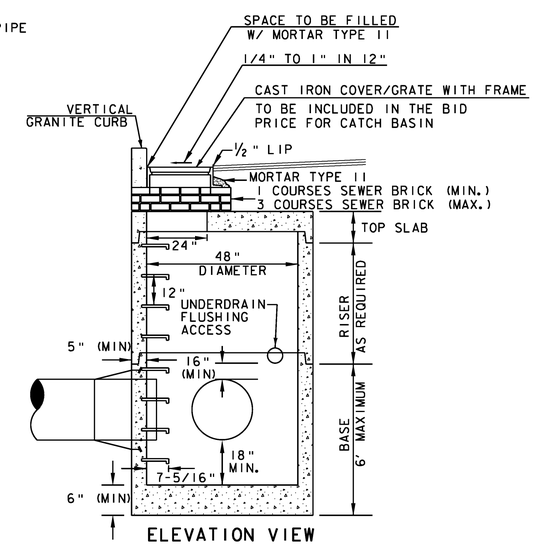

ELEVATION VIEW

TYPICAL PRECAST CATCH BASIN INSTALLED IN ROADWAY
WITH OPTIONAL UNDERDRAIN FLUSHING ACCESS

NOT TO SCALE

PROJECT NAME: WINOOSKI	
PROJECT NUMBER: NH 089-3(65)	
FILE NAME: z94a198drndet.dgn	PLOT DATE: 2/23/2010
PROJECT LEADER: KEN UPMAL	DRAWN BY: T.BIGELOW
DESIGNED BY: T.BIGELOW	CHECKED BY: E.ATKINS
DRAINAGE DETAILS	SHEET 24 OF 67

EXISTING DRAINAGE

1

RAMP "B" 55+06.6 LT
EXISTING DI AND GRATE ~ REMOVE
EXISTING PIPE ~ RETAIN AND PREP. FOR NEW CB

NEW DRAINAGE

1

RAMP "B" 55+06.6 LT
NEW CB AND NEW 18"x4' PCCSP

8 INCH UNDERDRAIN

3 RAMP "B" 57+59.7 RT ~ RAMP "B" 55+00.0 RT
NEW 8"X260' UNDERDRAIN W/FB @ RAMP "B" 57+59.7 RT

4 SLIP RAMP "B" 80+62.2 RT ~ RAMP "B" 57+59.7 RT
NEW 8"X111' UNDERDRAIN W/FB @ SLIP RAMP "B" 80+62.RT

6 RAMP "B" 56+75.0 LT ~ RAMP "B" 55+06.3 LT
NEW 8"X166' UNDERDRAIN W/FB @ RAMP "B" 56+75.1LT

7 RAMP "B" 58+59.0 LT ~ RAMP "B" 56+75.0 LT
NEW 8"X184' UNDERDRAIN W/FB @ RAMP "B" 58+59.0 LT

8 INCH UNDERDRAIN CARRIER PIPE

1 RAMP "B" 53+07.4 RT~RAMP "B" 53+00.0 RT
NEW 8"x18' UNDERDRAIN CARRIER PIPE W/FB
@ RAMP "B" 53+07.4 RT

2 RAMP "B" 55+00.0 RT~RAMP "B" 53+07.4 RT
NEW 8"x194' UNDERDRAIN CARRIER PIPE W/FB
@ RAMP "B" 55+00.0 RT

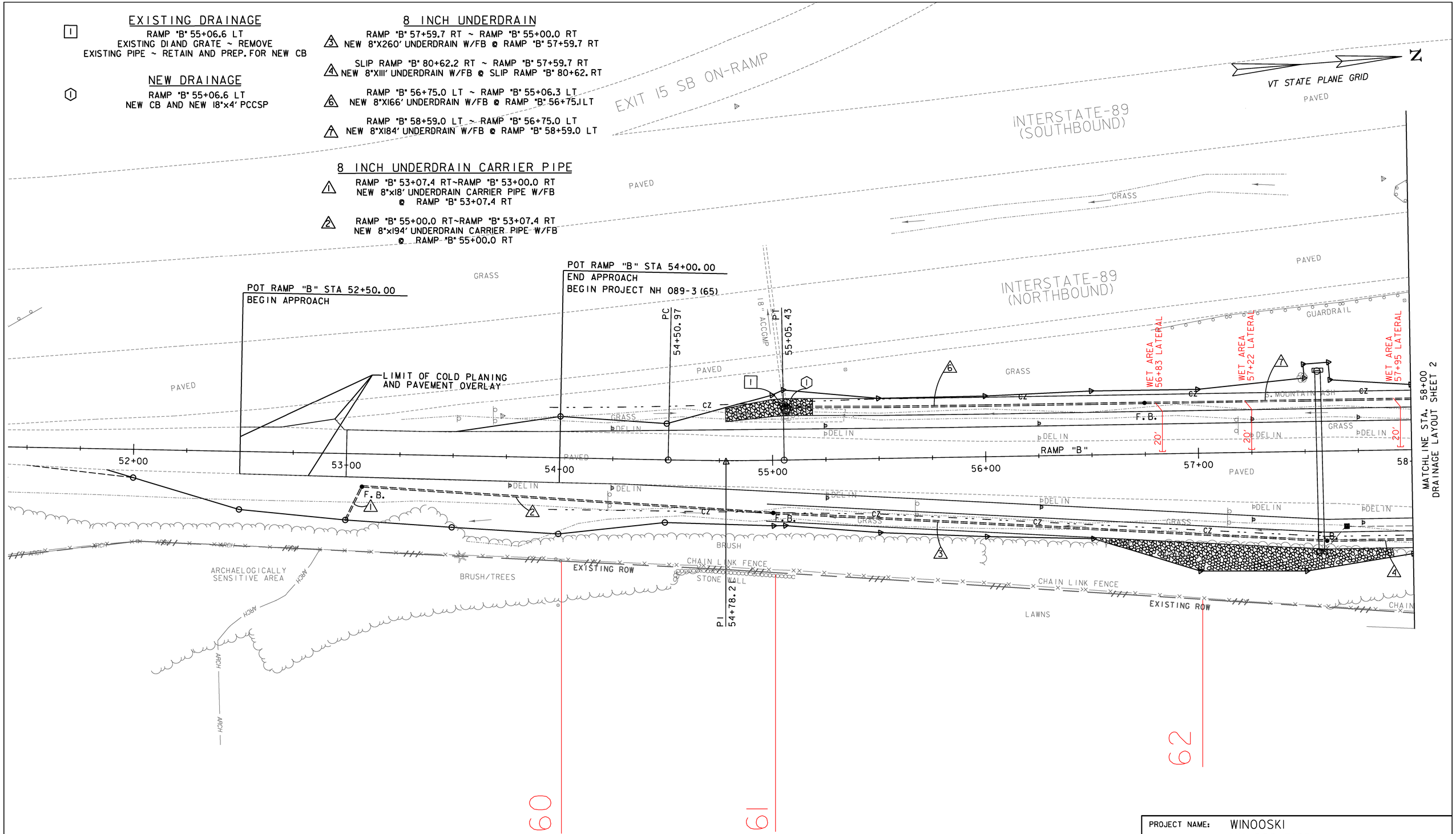

0 20 40
SCALE IN FEET

PROJECT NAME: WINOOSKI	
PROJECT NUMBER: NH 089-3(65)	
FILE NAME: z94a198drnbdr.dgn	PLOT DATE: 2/23/2010
PROJECT LEADER: KEN UPMAL	DRAWN BY: T.BIGELOW
DESIGNED BY: T.BIGELOW	CHECKED BY: E.ATKINS
DRAINAGE LAYOUT SHEET 1	SHEET 25 OF 67

EXISTING DRAINAGE

2 VT RTE 15 16+91.5 RT ~ VT RTE 15 15+86.2 RT
EXISTING PIPE ~ RETAIN
EXISTING DI @ VT RTE 15 15+86.2 RT ~ RETAIN

3 VT RTE 15 15+84.1LT
EXISTING DI ~ RETAIN

4 VT RTE 15 16+91.6 LT~VT RTE 15 16+91.5 RT
EXISTING PIPE ~ RETAIN
EXISTING DI @ VT RTE 15 16+91.6 LT ~ RETAIN

EXISTING DRAINAGE

5 VT RTE 15 19+21.4 RT ~ VT RTE 15 16+91.5 RT
EXISTING PIPE ~ RETAIN
EXISTING DI @ VT RTE 15 16+91.5 RT ~ REHAB

6 VT RTE 15 19+21.2 LT ~ VT RTE 15 19+21.4 RT
EXISTING PIPE ~ RETAIN
EXISTING DI @ VT RTE 15 19+21.2 LT ~ RETAIN

7 VT RTE 15 20+42.7 RT~VT RTE 15 19+21.4 RT
EXISTING PIPE ~ RETAIN
EXISTING DI @ VT RTE 15 19+21.4 RT ~ REHAB

EXISTING DRAINAGE

8 VT RTE 15 20+67.2 LT ~ VT RTE 15 20+42.7 RT
EXISTING PIPE AND DI ~ RETAIN

9 SLIP RAMP 81+87.2 RT ~ SLIP RAMP 81+40.9 RT
EXISTING PIPE AND DI @ 81+87.2 RT ~ REMOVE

10 SLIP RAMP 81+40.9 RT~VT RTE 15 16+91.5 RT
EXISTING PIPE ~ REMOVE
EXISTING DI @ 81+40.9 RT ~ REMOVE

NEW DRAINAGE

2 SLIP RAMP 81+87.3 RT ~ SLIP RAMP 81+40.9 RT
NEW 18" X 36' RCP/CPEP (SL) W/CB @ SLIP RAMP 81+87.3 RT

3 SLIP RAMP 81+40.9 RT ~ VT RTE 15 16+91.5 RT
NEW 18" X 54' RCP/CPEP (SL) W/CB @ SLIP RAMP 81+40.9 RT
NEW CONNECTION TO EXISTING DI @ VT RTE 15 16+91.5 RT

8 INCH UNDERDRAIN

4 SLIP RAMP 80+60.2 RT~RAMP "B" 57+59.7 RT
NEW 8"x111' UNDERDRAIN W/ FB
@ SLIP RAMP 80+60.2 RT

5 SLIP RAMP 81+40.9 RT~SLIP RAMP 80+60.2 RT
NEW 8"x66' UNDERDRAIN W/
UNDERDRAIN FLUSHING ACCESS @ CB SLIP RAMP 81+40.9 RT

7 RAMP "B" 58+59.0 LT ~ RAMP "B" 56+75.0 LT
NEW 8"X184' UNDERDRAIN W/FB
@ RAMP "B" 58+59.0 LT

8 RAMP "B" 58.98.3 LT~RAMP "B" 58+59.0 LT
NEW 8"x42' UNDERDRAIN W/ FB
@ RAMP "B" 59+00.0 LT

9 RAMP "B"59+46.7 LT ~RAMP "B" 59+00.0 LT
NEW 8"x46' UNDERDRAIN W/ FB
@ RAMP "B" 59+46.7 LT

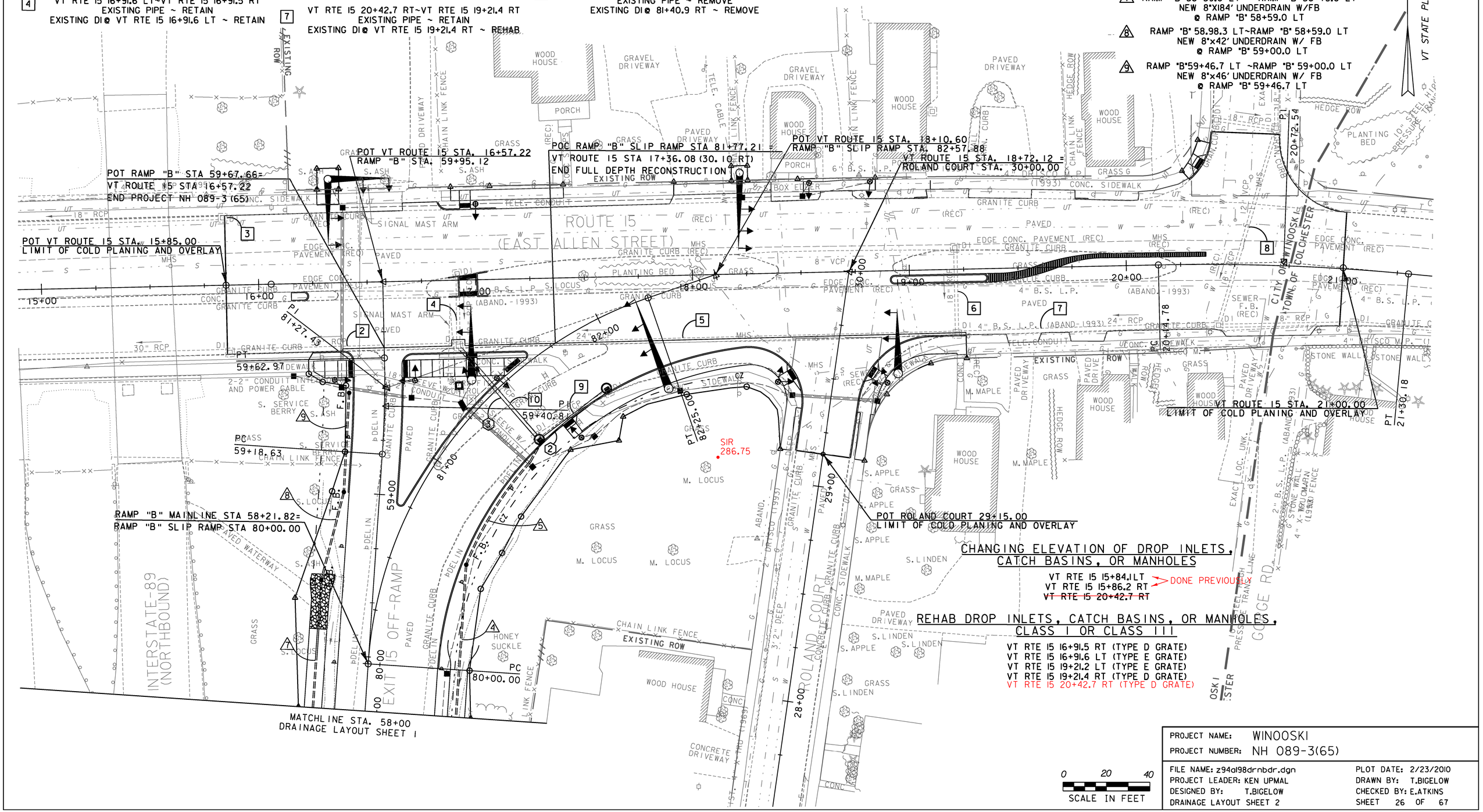

CHANGING ELEVATION OF DROP INLETS, CATCH BASINS, OR MANHOLES

VT RTE 15 15+84.1LT
VT RTE 15 15+86.2 RT
~~VT RTE 15 20+42.7 RT~~
DONE PREVIOUSLY

REHAB DROP INLETS, CATCH BASINS, OR MANHOLES, CLASS I OR CLASS III

VT RTE 15 16+91.5 RT (TYPE D GRATE)
VT RTE 15 16+91.6 LT (TYPE E GRATE)
VT RTE 15 19+21.2 LT (TYPE E GRATE)
VT RTE 15 19+21.4 RT (TYPE D GRATE)
VT RTE 15 20+42.7 RT (TYPE D GRATE)

0 20 40
SCALE IN FEET

PROJECT NAME: WINOOSKI	
PROJECT NUMBER: NH 089-3(65)	
FILE NAME: z94a198drnbdr.dgn	PLOT DATE: 2/23/2010
PROJECT LEADER: KEN UPMAL	DRAWN BY: T.BIGELOW
DESIGNED BY: T.BIGELOW	CHECKED BY: E.ATKINS
DRAINAGE LAYOUT SHEET 2	SHEET 26 OF 67

EPSC PLAN NARRATIVE

1.1 PROJECT DESCRIPTION

THIS PROJECT INVOLVES THE RECONSTRUCTION OF THE I-89 NORTHBOUND EXIT 15 OFF-RAMP. THE PROJECT INCLUDES THE WIDENING OF THE OFF-RAMP, NEW ROADSIDE DITCHES, INSTALLATION OF NEW TRAFFIC SIGNALS AND ASSOCIATED CURB WORK, SIDEWALK RECONSTRUCTION AND RESURFACING OF VT ROUTE 15. THE LENGTH OF THE PROJECT IS APPROXIMATELY 600 FEET AND ALSO INCLUDES MINOR GEOMETRIC IMPROVEMENTS TO ROLAND COURT.

THE TOTAL PROJECT AREA AS SHOWN ON THE ATTACHED EPSC PLAN IS 84,162 S.F. (1.93 ACRES) AND THE AREA OF EARTH DISTURBANCE UNDER THIS PROJECT IS 56,831 S.F. (1.30 ACRES). DISTURBED AREAS INCLUDE AREAS OF FULL DEPTH ROADWAY RECONSTRUCTION, EMBANKMENTS AND CUT SLOPES REQUIRED TO ACCOMMODATE GRADE CHANGES AND ROADSIDE DITCHES.

NOTE: AREA OF DISTURBANCE ALSO INCLUDES LIMITS OF EARTH DISTURBANCE WITHIN THE PROJECT AREA, AS WELL AS WASTE, BORROW AND STAGING AREAS, AND OTHER EARTH DISTURBING ACTIVITIES WITHIN OR DIRECTLY ADJACENT TO THE PROJECT LIMITS AS SHOWN ON THE ATTACHED EPSC PLAN. IT DOES NOT INCLUDE POTENTIAL OFF-SITE WASTE, BORROW AND STAGING AREAS.

IT IS ANTICIPATED THAT THIS PROJECT WILL LAST ONE CONSTRUCTION SEASON.

1.2 SITE INVENTORY

1.2.1 TOPOGRAPHY

WHEN ORIGINALLY CONSTRUCTED, THE EXISTING EXIT RAMP WAS CUT INTO AN EXISTING HILL FORMING 2H:1V CUT SLOPES TO THE EAST. THE RAMP IS ALSO BORDERED TO THE WEST BY THE EMBANKMENT OF I-89. THE OFF-RAMP PROFILE ASCENDS FROM THE I-89 GRADE TO THE ROUTE 15 GRADE AT AN APPROXIMATE 2% GRADE UNTIL IT FLATTENS OUT AS IT APPROACHES ROUTE 15. I-89 ASCENDS MORE RAPIDLY THAN THE OFF-RAMP AS IT APPROACHES ROUTE 15 AND PASSES OVER ROUTE 15.

ROADSIDE DITCHES PARALLEL THE OFF-RAMP FOR NEARLY THE ENTIRE LENGTH AND CARRY RUNOFF FROM THE OFF-RAMP, THE HILLSIDE TO THE EAST AND PORTIONS OF I-89 TO THE WEST. THE LONGITUDINAL DITCH SLOPES ARE RELATIVELY FLAT AND GENERALLY PARALLEL THE RAMP PROFILE. THE DITCHES APPEAR TO BE STABLE AND WELL VEGETATED.

1.2.2 DRAINAGE, WATERWAYS, BODIES OF WATER, AND PROXIMITY TO NATURAL OR MAN-MADE WATER FEATURES

THERE ARE NO WATER RESOURCE AREAS WHICH LIE WITHIN THE PROJECT AREA. HOWEVER, THE WINOOSKI RIVER IS LOCATED APPROXIMATELY 0.2 MILES TO THE SOUTH OF THE PROJECT. MOST RUNOFF FROM THE SITE IS COLLECTED IN THE ROADSIDE DITCHES. THE WESTERLY DITCH DISCHARGES TO AN EXISTING DROP INLET WHICH DISCHARGES TO AN 18" DRAIN PIPE UNDER I-89 WHERE IT ULTIMATELY DISCHARGES TO AN UNNAMED TRIBUTARY TO THE WINOOSKI RIVER. BASED ON RECORD PLANS FROM THE CONSTRUCTION OF I-89, IT APPEARS THAT THE EASTERLY DITCH DISCHARGES TO AN 18" CULVERT WHICH DISCHARGES TO AN OPEN CHANNEL LOCATED WITHIN THE RAILROAD PROPERTY.

THE TOTAL DRAINAGE AREA DRAINING TO THE WESTERLY DITCH IS APPROXIMATELY 1 ACRE AND CONSISTS OF PORTIONS OF I-89 PAVEMENT AND EMBANKMENTS AND PORTIONS OF THE OFF-RAMP. THE TOTAL DRAINAGE AREA DRAINING TO THE EASTERLY DITCH WITHIN THE PROJECT AREA IS APPROXIMATELY 1.9 ACRES AND IS PREDOMINANTLY GRASSED EMBANKMENTS AND RESIDENTIAL AREAS.

1.2.3 VEGETATION

THE VEGETATION IN THE PROJECT AREA CONSISTS PRIMARILY OF GRASSES AND A MIX OF SMALL TREES AND UNDERGROWTH. THE IMPACT TO VEGETATION WILL BE LIMITED TO THAT WHICH IS DIRECTLY AFFECTED BY THE RECONSTRUCTION OF THE EXISTING OFF-RAMP AND ROADSIDE DITCHES. UPON PROJECT COMPLETION, THE ROADSIDE DITCHES WILL BE ARMORED WITH PERMANENT EROSION MATTING WHILE THE EMBANKMENTS STEEPER THAN 3H:1V WILL BE ARMORED WITH TEMPORARY EROSION MATTING. TO LIMIT PROJECT IMPACTS AND AVOID POTENTIAL R.O.W. ACQUISITION, SOME CUT SLOPES ARE PROPOSED TO BE 1.5H:1V, IN THESE AREAS THE SLOPES WILL BE ARMORED WITH STONE FILL, TYPE II AS SPECIFIED ON THE PLANS. DISTURBED VEGETATION WILL BE REESTABLISHED WITH STANDARD SEED AND MULCH PRACTICES.

1.2.4 SOILS

ALL SOIL DATA CAME FROM THE VERMONT CENTER FOR GEOGRAPHIC INFORMATION WEBSITE. SOILS DATA WAS DOWNLOADED FOR THE PROJECT AREA AND OVERLAID ONTO THE DESIGN. THE PREDOMINANT SOILS ON THE PROJECT SITE IS ADAMS AND WINDSOR LOAMY SANDS, 0 TO 5 PERCENT SLOPES AND A SMALL PORTION OF THE SITE LIES WITHIN THE ADAMS AND WINDSOR LOAMY SANDS, 5 TO 12 PERCENT SLOPES. THE "K FACTOR" FOR BOTH SOILS IS REPORTED TO BE EQUAL TO 0.17. THE SOIL IS CONSIDERED ERODIBLE OR POTENTIALLY ERODIBLE DUE TO SIGNIFICANT SLOPES.

NOTE: K-VALUES GENERALLY INDICATE THE FOLLOWING:
0.0-0.23 = LOW EROSION POTENTIAL
0.24-0.36 = MODERATE EROSION POTENTIAL
0.37 AND HIGHER = HIGH EROSION POTENTIAL

1.2.5 SENSITIVE RESOURCE AREAS

CRITICAL HABITATS: NO
HISTORICAL OR ARCHEOLOGICAL AREAS: YES. LIES IN SOUTHEAST CORNER EAST OF FENCE LINE AND OUTSIDE OF PROJECT AREA.
PRIME AGRICULTURAL LAND: NO
THREATENED AND ENDANGERED SPECIES: NO
WATER RESOURCE: WINOOSKI RIVER NOT DIRECTLY IMPACTED BY PROJECT.
WETLANDS: NO

1.3 RISK EVALUATION

THIS PROJECT FALLS UNDER THE JURISDICTION OF GENERAL PERMIT 3-9020 FOR STORM WATER RUNOFF FROM CONSTRUCTION SITES FOR LOW RISK PROJECTS. ANY MODIFICATIONS TO THE PROJECT THAT INCREASE THE RISK TO ENVIRONMENTAL RESOURCES SHALL BE EVALUATED IN ACCORDANCE WITH THE PERMIT REQUIREMENTS. THE CONTRACTOR WILL BE RESPONSIBLE FOR ANY ADDITIONAL PERMITTING.

1.4 EROSION PREVENTION AND SEDIMENT CONTROL

THE EROSION CONTROL PLANS ARE MEANT AS A GUIDELINE FOR PREVENTING EROSION AND CONTROLLING SEDIMENT TRANSPORT. THE PRINCIPLES OUTLINED IN THIS NARRATIVE CONSIST OF APPLYING MEASURES THROUGHOUT CONSTRUCTION OF THE PROJECT IN ORDER TO MINIMIZE SEDIMENT TRANSPORT TO THE RECEIVING WATERS. THE MEASURES INCLUDE STABILIZATION AND STRUCTURAL PRACTICES, STORM WATER CONTROLS AND OTHER POLLUTION PREVENTION PRACTICES. THEY HAVE BEEN PROPOSED BY THE DESIGNER AS A BASIS FOR PROTECTING RESOURCES AND WILL NEED TO BE BUILT UPON BASED ON THE SPECIFIC MEANS AND METHODS OF THE CONTRACTOR. REFER TO THE LOW RISK SITE HANDBOOK AND APPROPRIATE DETAIL SHEETS FOR SPECIFIC GUIDANCE AND CONSTRUCTION DETAILING.

ALL MEASURES SHALL BE REGULARLY MAINTAINED AND SHALL BE CHECKED FOR SEDIMENT BUILD-UP. SEDIMENT SHALL BE DISPOSED OF AT AN APPROVED SITE WHERE IT WILL NOT BE SUBJECT TO EROSION.

1.4.1 MARK SITE BOUNDARIES

SITE BOUNDARIES AND AREAS CONSTRUCTION EQUIPMENT CAN ACCESS SHALL BE DELINEATED.

PROJECT DEMARCATION FENCING (PDF) SHALL BE USED TO PHYSICALLY MARK SITE BOUNDARIES AS SPECIFIED ON THE PLANS OR AS DIRECTED BY THE ENGINEER. BARRIER FENCE SHALL BE USED INSTEAD OF PROJECT DEMARCATION FENCE WITHIN 100 FEET OF A WATER RESOURCE (STREAM, BROOK, LAKE, POND, WETLAND, ETC).

1.4.2 LIMIT DISTURBANCE AREA

PREVENTING INITIAL SOIL EROSION BY MINIMIZING THE EXPOSED AREA IS MUCH MORE EFFECTIVE THAN TREATING ERODED SEDIMENT. EARTH DISTURBANCE CAN BE MINIMIZED THROUGH CONSTRUCTION PHASING BY ONLY OPENING UP EARTH AS NECESSARY. THIS CAN LIMIT THE AREA THAT WILL BE DISTURBED AND EXPOSED TO EROSION. EMPLOY TEMPORARY CONSTRUCTION STABILIZATION PRACTICES IN INCREMENTAL STAGES AS PHASES CHANGE. FOR PROJECTS WHICH FALL UNDER THE CONSTRUCTION GENERAL PERMIT, ONLY THE ACREAGE LISTED ON THE PERMIT AUTHORIZATION MAY BE EXPOSED AT ANY GIVEN TIME. THE LENGTH OF TIME THAT SOIL IS EXPOSED SHALL BE KEPT TO A MINIMUM AT ALL TIMES AND IN NO CASE EXCEED 21 DAYS WITHOUT TEMPORARY OR PERMANENT STABILIZATION. ONCE EACH CONSTRUCTION PHASE IS COMPLETED, THE SOILS SHALL BE STABILIZED TO THE SATISFACTION OF THE ENGINEER BEFORE PROCEEDING TO THE NEXT PHASE. REFER TO THE TRAFFIC MANAGEMENT PLANS FOR SUGGESTED CONSTRUCTION PHASING.

MAINTAINING VEGETATED BUFFERS ALONG STREAM BANKS, WETLANDS OR OTHER SENSITIVE AREAS IS A CRUCIAL EROSION AND SEDIMENT CONTROL MEASURE THAT SHOULD BE ESTABLISHED IN ACCORDANCE WITH THE REQUIREMENTS OF THE CGP.

1.4.3 SITE ENTRANCE/EXIT STABILIZATION
TRACKING OF SEDIMENT ONTO PUBLIC HIGHWAYS SHALL BE MINIMIZED TO REDUCE THE POTENTIAL FOR RUNOFF ENTERING RECEIVING WATERS. INSTALLATION SHALL COINCIDE WITH THE CONTRACTORS PROGRESS SCHEDULE.

ITEM 653.35 VEHICLE TRACKING PADS SHALL BE INSTALLED AS PROPOSED ON THE TRAFFIC MANAGEMENT PLANS, ANYWHERE EQUIPMENT WILL BE GOING FROM AREAS OF EXPOSED SOILS TO PAVED SURFACES OR AS DIRECTED BY THE ENGINEER.

1.4.4 INSTALL SEDIMENT BARRIERS
SEDIMENT BARRIERS SHALL BE UTILIZED TO INTERCEPT RUNOFF AND ALLOW SUSPENDED SEDIMENT TO SETTLE OUT. THEY SHALL BE INSTALLED PRIOR TO ANY UP SLOPE WORK.

SILT FENCE WILL BE INSTALLED AS PROPOSED ON THE EPSC PLAN. BECAUSE THIS PROJECT FALLS UNDER THE CGP 3-9020, WOVEN WIRE REINFORCED SILT FENCE SHALL BE USED INSTEAD OF SILT FENCE WITHIN 100 FEET UPSLOPE OF RECEIVING WATERS. HOWEVER, THIS IS NOT ANTICIPATED TO BE NEEDED UNDER THIS PROJECT.

INLET PROTECTION DEVICES SHALL BE EMPLOYED WHERE SHOWN ON THE PLANS AND MAINTAINED REGULARLY.

1.4.5 DIVERT UPLAND RUNOFF
DIVERSIONARY MEASURES SHALL BE USED TO INTERCEPT RUNOFF FROM ABOVE THE CONSTRUCTION AND DIRECT IT AROUND THE DISTURBED AREA SO THAT CLEAN WATER DOES NOT BECOME MUDDIED WHILE TRAVELING OVER EXPOSED SOILS ON THE CONSTRUCTION SITE.

OFFSITE RUNOFF IS ANTICIPATED TO BE MINIMAL UNDER THIS PROJECT, THEREFORE IT IS NOT ANTICIPATED THAT DIVERSION MEASURES WILL BE NECESSARY, HOWEVER AN APPROVED DIVERSION METHOD SHALL BE EMPLOYED WHEN DIRECTED BY THE ENGINEER.

1.4.6 SLOW DOWN CHANNELIZED RUNOFF
CHECK STRUCTURES SHALL BE UTILIZED TO REDUCE THE VELOCITY, AND THUS THE EROSIVE POTENTIAL, OF CONCENTRATED FLOW IN CHANNELS.

STONE CHECK DAMS WILL BE INSTALLED AS PROPOSED ON THE EPSC PLAN, AT A MINIMUM.

1.4.7 CONSTRUCT PERMANENT CONTROLS
PERMANENT STORM WATER TREATMENT DEVICES SHALL BE INSTALLED AS SHOWN ON THE PLANS AND IN ACCORDANCE WITH PERMIT CONDITIONS. PERMANENT EROSION MATTING SHALL BE INSTALLED IN ALL DITCHES AS SHOWN ON THE PLANS. STONE LINED DITCHES SHALL BE CONSTRUCTED WHERE SHOWN ON THE PLANS.

1.4.8 STABILIZE EXPOSED SOILS DURING CONSTRUCTION
ALL AREAS OF DISTURBANCE MUST HAVE TEMPORARY STABILIZATION IN PLACE IN ACCORDANCE WITH THE CONSTRUCTION GENERAL PERMIT 3-9020 AUTHORIZATION.

SURFACE ROUGHENING OF ALL EXPOSED SLOPES, COMBINED WITH TEMPORARY MULCHING, SHALL BE UTILIZED ON A REGULAR BASIS. BIODEGRADABLE EROSION CONTROL MATTING OR AN EQUIVALENT SHALL BE USED TO STABILIZE ALL SLOPES STEEPER THAN 1:3. WHERE SLOPES ARE PROPOSED AT 1.5H:1V, STONE FILL, TYPE II SHALL BE USED AS SHOWN ON THE PLANS.

THE FORECAST OF RAINFALL EVENTS SHALL TRIGGER IMMEDIATE PROTECTION OF EXPOSED SOILS.

1.4.9 WINTER STABILIZATION
VARIOUS MEASURES SPECIFIC TO WINTER MAY BE NECESSARY SHOULD THE PROJECT EXTEND INTO WINTER (OCTOBER 15 THROUGH APRIL 15). REFER TO THE LOW RISK SITE HANDBOOK FOR GUIDANCE.

1.4.10 STABILIZE SOIL AT FINAL GRADE
EXPOSED SOIL MUST BE STABILIZED IN ACCORDANCE WITH THE PLANS AND THE CONSTRUCTION GENERAL PERMIT 3-9020 AUTHORIZATION AFTER REACHING FINAL GRADES.

SEED, MULCH, FERTILIZER AND LIME SHALL BE USED TO ESTABLISH PERMANENT VEGETATION. FOR SLOPES STEEPER THAN 1:3, BIODEGRADABLE EROSION CONTROL MATTING OR AN EQUIVALENT SHALL BE USED INSTEAD OF MULCH.

1.4.11 DE-WATERING ACTIVITIES
DISCHARGE FROM DEWATERING ACTIVITIES THAT FLOWS OFF OF THE CONSTRUCTION SITE MUST NOT CAUSE OR CONTRIBUTE TO A VIOLATION OF THE VERMONT WATER QUALITY STANDARDS.

DEWATERING IS NOT ANTICIPATED ON THIS PROJECT. IF DEWATERING IS REQUIRED TO FACILITATE THE INSTALLATION OF THE DRAINAGE THEN THE CONTRACTOR SHALL DEVELOP SPECIFIC MEANS FOR TREATMENT OF DISCHARGE FOR APPROVAL BY THE ENGINEER PRIOR TO STARTING OF THAT WORK WHICH REQUIRES DEWATERING.

1.4.12 INSPECT YOUR SITE
INSPECT THE PROJECT SITE BASED ON SPECIAL PROVISION REQUIREMENTS OR CONSTRUCTION GENERAL PERMIT AUTHORIZATION STIPULATIONS.

1.5 SEQUENCE AND STAGING

THE CONTRACT DOCUMENTS INCLUDE A SUGGESTED CONSTRUCTION PHASING AND TRAFFIC MANAGEMENT PLAN. THIS SUGGESTED PHASING SHALL INCORPORATE THE PROPOSED EPSC MEASURES. IF THE CONTRACTOR WISHES TO PROPOSE AN ALTERNATE PHASING THEN THIS SECTION WILL BE DEVELOPED BY THE CONTRACTOR USING THE GUIDANCE OUTLINED IN THE VTRANS EPSC PLAN CONTRACTOR CHECKLIST.

1.5.1 CONSTRUCTION SEQUENCE

1.5.2 OFF-SITE ACTIVITIES
IN ADDITION TO THE CONTRACTOR CHECKLIST ANY ACTIVITIES OUTSIDE THE CONSTRUCTION LIMITS SHALL FOLLOW SUBSECTIONS 105.25- 105.29 OF THE STANDARD SPECIFICATIONS FOR CONSTRUCTION.

BARRIER FENCE (LINE STYLE) — B F — B F —
653.50

BRUSH LAYER (BL)
653.75, DETAIL

CHECK DAM (LINE STYLE)
653.25, DETAIL

COFFERDAM (LINE STYLE)
208.40

CURB DROP INLET PROTECTION
653.40, DETAIL

DUST CONTROL (DC)
609.10 & 609.15

PIPE INLET PROTECTION
653.40, DETAIL

EXCAVATED DROP INLET PROTECTION
653.40, DETAIL

FIBER ROLL (EROSION LOG) (FR)
653.60, DETAIL

FILTER BAG
653.45, DETAIL

FILTER FABRIC DROP INLET PROTECTION
653.40, DETAIL

LIVE CUTTINGS/LIVE STAKES PLANTING (LS)
653.70, DETAIL

LIVE FASCINE (LF)
653.65, DETAIL

PROJECT DEMARCATION FENCE (LINE STYLE) — PDF — PDF —
653.55

ROLLED EROSION CONTROL PRODUCT (RECP)
653.20 (TEMP. EROSION MATTING)
SEE PAGE 30

SEDIMENT BASIN
INCIDENTAL TO COFFERDAM 208.40

ADAPTED FROM DETAILS PROVIDED BY: NEW YORK STATE DEC
ORIGINALLY DEVELOPED BY USDA-NRCS
VERMONT DEPARTMENT OF ENVIRONMENTAL CONSERVATION

STANDARD SYMBOLS

SILT FENCE(LINE STYLE)
649.51, DETAIL

SILT FENCE WOVEN WIRE(LINE STYLE)
649.515, DETAIL

STABILIZED CONSTRUCTION ENTRANCE
653.35, DETAIL, VEHICLE TRACKING PAD

STONE & BLOCK DROP INLET PROTECTION
653.40, DETAIL

SURFACE ROUGHENING
INCIDENTAL TO CONTRACT
SEE PAGE 29

TURBIDITY CURTAIN
649.61, DETAIL, FILTER CURTAIN

ADAPTED FROM DETAILS PROVIDED BY: NEW YORK STATE DEC
ORIGINALLY DEVELOPED BY USDA-NRCS
VERMONT DEPARTMENT OF ENVIRONMENTAL CONSERVATION

STANDARD SYMBOLS

PROJECT NAME: WINOOSKI
PROJECT NUMBER: NH 089-3(65)

FILE NAME: z94a198ecdet.dgn
PROJECT LEADER: KEN UPMAL
DESIGNED BY: A.ACHARYA
EPSC EROSION CONTROL LEGEND

PLOT DATE: 2/22/2010
DRAWN BY: A.ACHARYA
CHECKED BY: E.ATKINS
SHEET 28 OF 67

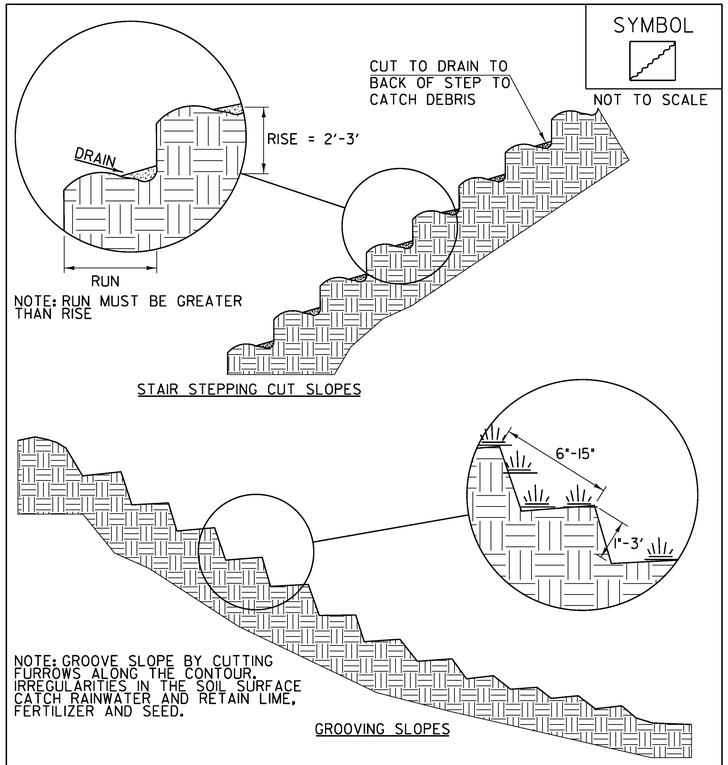

ADAPTED FROM DETAILS PROVIDED BY: NEW YORK STATE DEC
ORIGINALLY DEVELOPED BY USDA-NRCS
VERMONT DEPARTMENT OF ENVIRONMENTAL CONSERVATION

SURFACE ROUGHENING

NOTES:
REFER TO "THE VERMONT STANDARDS & SPECIFICATIONS FOR EROSION PREVENTION & SEDIMENT CONTROL -2006- " FROM THE VT AGENCY OF NATURAL RESOURCES FOR ADDITIONAL GUIDANCE.

THIS WORK SHALL BE CONSIDERED INCIDENTAL TO THE CONTRACT

REVISIONS	
APRIL 1, 2008	WHF
JANUARY 13, 2009	WHF

VAOT RURAL AREA MIX

	LBS/AC				
% WEIGHT	BROADCAST	HYDROSEED	NAME	GERM %	PURITY %
37.5%	22.5	45	CREEPING RED FESCUE	85%	98%
37.5%	22.5	45	TALL FESCUE	90%	95%
5.0%	3	6	RED TOP	90%	95%
15.0%	9	18	BIRDSFOOT TREFOIL	85%	98%
5.0%	3	6	ANNUAL RYE GRASS	85%	95%
100%	60	120			

VAOT URBAN AREA MIX

	LBS/AC				
% WEIGHT	BROADCAST	HYDROSEED	NAME	GERM %	PURITY %
42.5%	34	68	CREEPING RED FESCUE	85%	98%
10.0%	8	16	PERENNIAL RYE GRASS	90%	95%
42.5%	34	68	KENTUCKY BLUE GRASS	85%	85%
5.0%	4	8	ANNUAL RYE GRASS	85%	95%
100%	80	160			

GENERAL GUIDANCE

FERTILIZER		LIME	
BROADCAST	HYDROSEED	BROADCAST	HYDROSEED
10-20-10	19-19-19	PELLETIZED	LIQUID
500 LBS/AC		2 TONS/AC	4.4 GAL/AC

CONSTRUCTION GUIDANCE

1. RURAL SEED MIX: USE AS INDICATED IN THE PLANS AND/OR FOR ALL ESTABLISHED UPLAND (NON WETLAND) AREAS DISTURBED BY THE CONTRACTOR.
2. URBAN SEED MIX: USE AS INDICATED IN THE PLANS AND/OR FOR ALL ESTABLISHED LAWN AREAS DISTURBED BY THE CONTRACTOR.
3. ALL SEED MIXTURES: SHALL NOT HAVE A WEED CONTENT EXCEEDING 0.40% BY WEIGHT AND SHALL BE FREE OF ALL NOXIOUS SEED.
4. FERTILIZER AND LIMESTONE: SHALL FOLLOW RATES SHOWN ON PLAN OR AS DIRECTED BY THE ENGINEER
5. HAY MULCH: TO BE PLACED ON EARTH SLOPES AT THE RATE OF 2 TONS/ACRE, ACHIEVE 90% GROUND COVER OR AS DIRECTED BY THE ENGINEER.
6. TOPSOIL: TO BE USED WITH SEED AS INDICATED ON THE PLANS, OR AS DIRECTED BY THE ENGINEER.
7. HYDROSEEDING: ALTHOUGH GUIDANCE IS GIVEN ABOVE THE SITE CONDITIONS AND THE TYPE OF HYDROSEED WILL ULTIMATELY DICTATE THE AMOUNTS AND TYPES OF SOIL AMENDMENTS TO BE APPLIED
8. TURF ESTABLISHMENT: PLACING SEED, FERTILIZER, LIME AND MULCH PRIOR TO SEPTEMBER 15 AND AFTER APRIL 15 CAN BETTER ENSURE A VIGOROUS GROWTH OF GRASS.

ADAPTED FROM VTRANS TECHNICAL LANSCAPE MAUAL FOR ROADWAYS AND TRANSPORTATION FACILITIES

TURF ESTABLISHMENT

REVISIONS	
JUNE 23, 2009	WHF
JANUARY 15, 2010	WHF

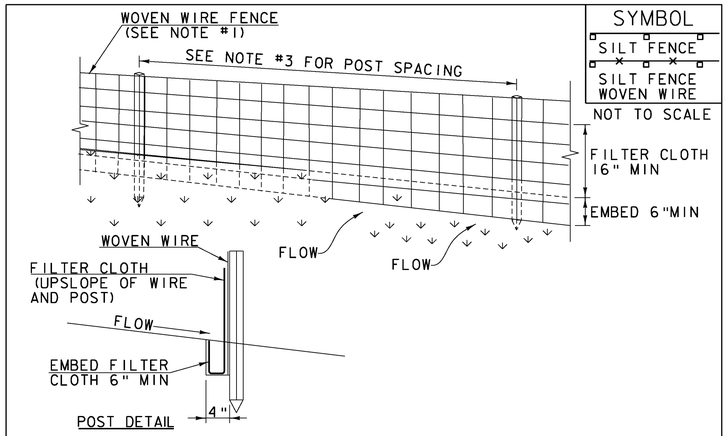

CONSTRUCTION SPECIFICATIONS

1. WOVEN WIRE REINFORCED FENCE IS REQUIRED WITHIN 100' UPSLOPE OF RECEIVING WATERS WHEN THE PROJECT FALLS UNDER A CONSTRUCTION STORMWATER PERMIT. WOVEN WIRE SHALL BE A MIN. 14 GAUGE WITH A 6" MAX. MESH OPENING.
2. FILTER CLOTH SHALL BE EITHER FILTER X, MIRAFI100X, STABILINKA T140N OR APPROVED EQUIVALENT.
3. POST SPACING FOR WIRE-BACKED FENCE SHALL BE 10' MAXIMUM. FOR FILTER-CLOTH FENCE, WHEN ELONGATION IS >50%, POST SPACING SHALL NOT EXCEED 4' AND WHEN ELONGATION IS <50%, POST SPACING SHALL NOT EXCEED 6'.
4. WOVEN WIRE FENCE IS TO BE FASTENED SECURELY TO FENCE POSTS WITH WIRE TIES. FILTER CLOTH IS TO BE FASTENED SECURELY TO WOVEN WIRE FENCE WITH TIES SPACED EVERY 24" AT TOP AND MID SECTION.
5. WHEN TWO SECTIONS OF FILTER CLOTH ADJOIN EACH OTHER THEY SHALL BE OVER-LAPPED BY 6" AND FOLDED.
6. PREFABRICATED UNITS SHALL BE GEOFAB, ENVIROFENCE, OR APPROVED EQUIVALENT.
7. MAINTENANCE SHALL BE PERFORMED AS NEEDED AND MATERIAL REMOVED WHEN SEDIMENT REACHES HALF OF FABRIC HEIGHT.

ADAPTED FROM DETAILS PROVIDED BY: NEW YORK STATE DEC
ORIGINALLY DEVELOPED BY USDA-NRCS
VERMONT DEPARTMENT OF ENVIRONMENTAL CONSERVATION

SILT FENCE

NOTES:
REFER TO "THE VERMONT STANDARDS & SPECIFICATIONS FOR EROSION PREVENTION & SEDIMENT CONTROL -2006- " FROM THE VT AGENCY OF NATURAL RESOURCES FOR ADDITIONAL GUIDANCE.

THIS WORK SHALL BE PERFORMED IN ACCORDANCE WITH SECTION 649 AND AS SHOWN IN THE PLANS FOR GEOTEXTILE FOR SILT FENCE (PAY ITEM 649.51) OR GEOTEXTILE FOR SILT FENCE, WOVEN WIRE REINFORCED (PAY ITEM 649.515).

REVISIONS	
MARCH 21, 2008	WHF
DECEMBER 11, 2008	WHF
JANUARY 13, 2009	WHF

PROJECT NAME: WINOOSKI
PROJECT NUMBER: NH 089-3(65)

FILE NAME: z94a198ecdet.dgn
PROJECT LEADER: KEN UPMAL
DESIGNED BY: A.ACHARYA
EPSC EROSION CONTROL DETAILS SHEET 1

PLOT DATE: 2/22/2010
DRAWN BY: A.ACHARYA
CHECKED BY: E.ATKINS
SHEET 29 OF 67

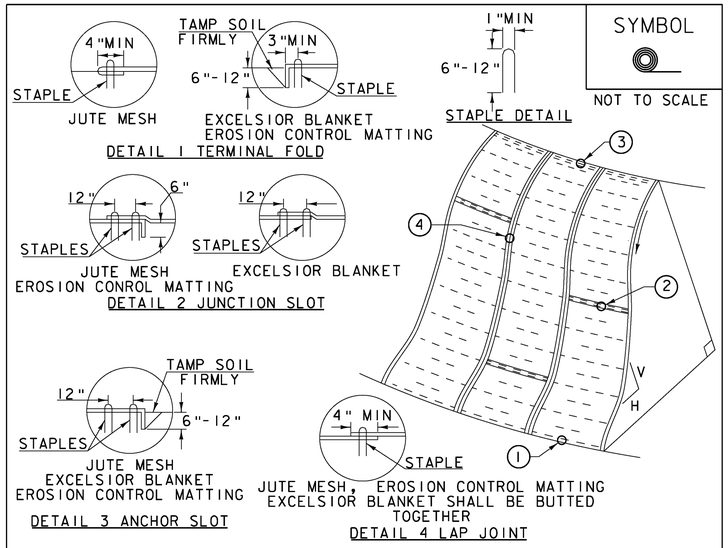

CONSTRUCTION SPECIFICATIONS

1. APPLY TO SLOPES GREATER THAN 3H: 1V OR WHERE NECESSARY TO AID IN ESTABLISHING VEGETATION.
2. APPLY FERTILIZER, LIME SEED PRIOR TO PLACING MATTING.
3. STAPLES ARE TO BE PLACED ALTERNATELY, IN COLUMNS APPROXIMATELY 2' APART AND IN ROWS APPROXIMATELY 3' APART. APPROXIMATELY 175 STAPLES ARE REQUIRED PER 4'X225' ROLL OF MATERIAL AND 125 STAPLES ARE REQUIRED PER 4'X150' ROLL OF MATERIAL.
4. DISTURBED AREAS SHALL BE SMOOTHLY GRADED. EROSION CONTROL MATERIAL SHALL BE PLACED LOOSELY OVER GROUND SURFACE. DO NOT STRETCH.
5. ALL TERMINAL ENDS AND TRANSVERSE LAPS SHALL BE STAPLED AT APPROXIMATELY 12" INTERVALS.

ADAPTED FROM DETAILS PROVIDED BY: NEW YORK STATE DEC
ORIGINALLY DEVELOPED BY USDA-NRCS
VERMONT DEPARTMENT OF ENVIRONMENTAL CONSERVATION

ROLLED EROSION CONTROL PRODUCT (RECP) SIDE SLOPE

NOTES:
REFER TO "THE VERMONT STANDARDS & SPECIFICATIONS FOR EROSION PREVENTION & SEDIMENT CONTROL -2006- " FROM THE VT AGENCY OF NATURAL RESOURCES FOR ADDITIONAL GUIDANCE.
THIS WORK SHALL BE PERFORMED IN ACCORDANCE WITH SECTION 653 AND AS SHOWN IN THE PLANS FOR TEMPORARY EROSION MATTING (PAY ITEM 653.20) OR PERMANENT EROSION MATTING (PAY ITEM 653.21).

REVISIONS	
APRIL 16, 2007	JMF
JANUARY 13, 2009	WHF

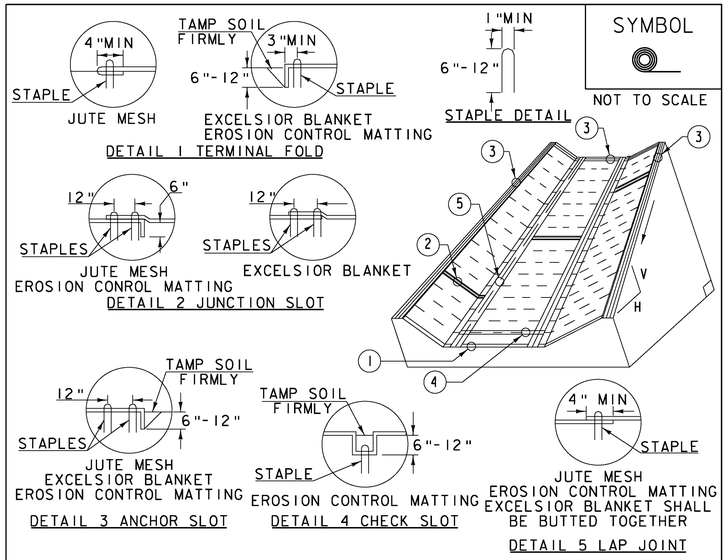

CONSTRUCTION SPECIFICATIONS

1. EROSION MATTING, CHECK SLOTS, SHALL BE SPACED IN DITCH CHANNEL SO THAT ONE OCCURS WITHIN EACH 50' ON SLOPES OF MORE THAN 4% AND LESS THAN 6%. ON SLOPES OF 6% OR MORE, THEY SHALL BE SPACED SO THAT ONE OCCURS WITHIN EACH 25'.
2. APPLY FERTILIZER, LIME SEED PRIOR TO PLACING MATTING.
3. STAPLES ARE TO BE PLACED ALTERNATELY, IN COLUMNS APPROXIMATELY 2' APART AND IN ROWS APPROXIMATELY 3' APART. APPROXIMATELY 175 STAPLES ARE REQUIRED PER 4'X225' ROLL OF MATERIAL AND 125 STAPLES ARE REQUIRED PER 4'X150' ROLL OF MATERIAL.
4. DISTURBED AREAS SHALL BE SMOOTHLY GRADED. EROSION CONTROL MATERIAL SHALL BE PLACED LOOSELY OVER GROUND SURFACE. DO NOT STRETCH.
5. ALL TERMINAL ENDS AND TRANSVERSE LAPS SHALL BE STAPLED AT APPROXIMATELY 12" INTERVALS.

ADAPTED FROM DETAILS PROVIDED BY: NEW YORK STATE DEC
ORIGINALLY DEVELOPED BY USDA-NRCS
VERMONT DEPARTMENT OF ENVIRONMENTAL CONSERVATION

ROLLED EROSION CONTROL PRODUCT (RECP) DITCH

NOTES:
REFER TO "THE VERMONT STANDARDS & SPECIFICATIONS FOR EROSION PREVENTION & SEDIMENT CONTROL -2006- " FROM THE VT AGENCY OF NATURAL RESOURCES FOR ADDITIONAL GUIDANCE.
THIS WORK SHALL BE PERFORMED IN ACCORDANCE WITH SECTION 653 AND AS SHOWN IN THE PLANS FOR TEMPORARY EROSION MATTING (PAY ITEM 653.20) OR PERMANENT EROSION MATTING (PAY ITEM 653.21).

REVISIONS	
MARCH 8, 2007	JMF
APRIL 16, 2007	WHF
JANUARY 13, 2009	WHF

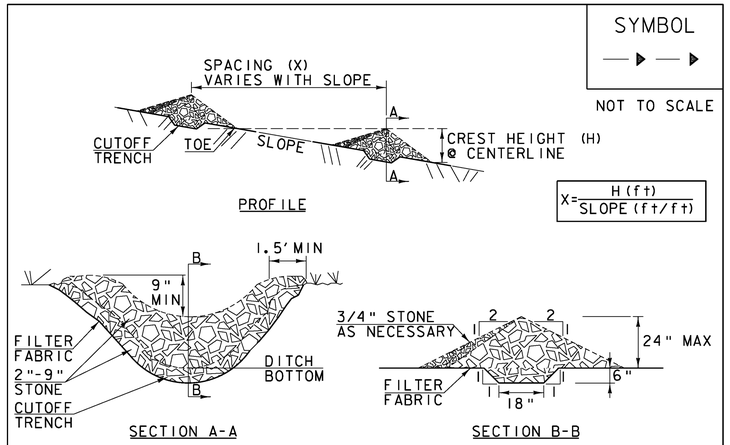

CONSTRUCTION SPECIFICATIONS

1. STONE WILL BE PLACED ON A FILTER FABRIC FOUNDATION.
2. CHECK DAMS SHALL BE SPACED SO THAT THE ELEVATION OF THE CREST OFTHE DOWNSTREAM DAM IS AT THE SAME ELEVATION AS THE TOE OF THE UPSTREAM DAM.
3. 3/4" FILTERING STONE MAY BE ADDED TO THE FACE OF THE CHECK DAM AS NECESSARY.
4. EXTEND THE STONE A MINIMUM OF 1.5 FEET BEYOND THE DITCH BANKS TO PREVENT CUTTING AROUND THE DAM.
5. PROTECT CHANNEL DOWNSTREAM OF THE LOWEST CHECK DAM FROM SCOUR AND EROSION WITH STONE OR LINER AS APPROPRIATE.
6. ENSURE THAT CHANNEL APPURTENANCES SUCH AS CULVERT ENTRANCES BELOW CHECK DAMS ARE NOT SUBJECT TO DAMAGE OR BLOCKAGE FROM DISPLACED STONE.
7. MAXIMUM DRAINAGE AREA 2 ACRES.

ADAPTED FROM DETAILS PROVIDED BY: NEW YORK STATE DEC
ORIGINALLY DEVELOPED BY USDA-NRCS
VERMONT DEPARTMENT OF ENVIRONMENTAL CONSERVATION

CHECK DAM

NOTES:
REFER TO "THE VERMONT STANDARDS & SPECIFICATIONS FOR EROSION PREVENTION & SEDIMENT CONTROL -2006- " FROM THE VT AGENCY OF NATURAL RESOURCES FOR ADDITIONAL GUIDANCE.

THIS WORK SHALL BE PERFORMED IN ACCORDANCE WITH SECTION 653 FOR TEMPORARY STONE CHECK DAM, TYPE I (PAY ITEM 653.25)

REVISIONS	
MARCH 21, 2008	WHF
JANUARY 8, 2009	WHF

PROJECT NAME: WINOOSKI
PROJECT NUMBER: NH 089-3(65)

FILE NAME: z94a198ecdet.dgn
PROJECT LEADER: KEN UPMAL
DESIGNED BY: A.ACHARYA
EPSC EROSION CONTROL DETAILS SHEET 2

PLOT DATE: 2/22/2010
DRAWN BY: A.ACHARYA
CHECKED BY: E.ATKINS
SHEET 30 OF 67

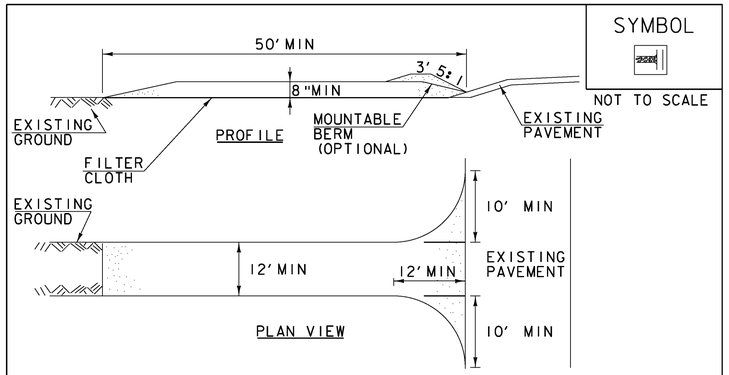

CONSTRUCTION SPECIFICATIONS

1. STONE SIZE- USE 1-4" STONE, RECLAIMED OR RECYCLED CONCRETE EQUIVALENT.
2. LENGTH- NOT LESS THAN 50' (EXCEPT ON A SINGLE RESIDENCE LOT WHERE A 30' MINIMUM LENGTH APPLIES).
3. THICKNESS- NOT LESS THAN 8".
4. WIDTH- 12' MINIMUM, BUT NOT LESS THAN THE FULL WIDTH AT POINTS WHERE INGRESS OR EGRESS OCCURS. 24' IF SINGLE ENTRANCE TO SITE.
5. GEOTEXTILE MUST BE PLACED OVER THE ENTIRE AREA PRIOR TO PLACING STONE.
6. SURFACE WATER- ALL SURFACE WATER FLOWING OR DIVERTED TOWARD CONSTRUCTION ENTRANCES SHALL BE PIPED BENEATH THE ENTRANCE. IF PIPING IS IMPRACTICAL, A MOUNTABLE BERM WITH 5:1 SLOPES WILL BE PERMITTED.
7. MAINTENANCE- THE ENTRANCE SHALL BE MAINTAINED IN A CONDITION WHICH WILL PREVENT TRACKING OR FLOWING OF SEDIMENT ONTO PUBLIC RIGHTS-OF-WAY, ALL SEDIMENT SPILLED, DROPPED, WASHED OR TRACKED ONTO PUBLIC RIGHTS-OF-WAY MUST BE REMOVED IMMEDIATELY.
8. WHEN WASHING IS REQUIRED, IT SHALL BE DONE ON AN AREA STABILIZED WITH STONE AND WHICH DRAINS INTO AN APPROVED SEDIMENT TRAPPING DEVICE.
9. PERIODIC INSPECTION AND NEEDED MAINTENANCE SHALL BE PROVIDED ACCORDING TO PERMIT REQUIREMENTS.

ADAPTED FROM DETAILS PROVIDED BY: NEW YORK STATE DEC
ORIGINALLY DEVELOPED BY USDA-NRCS
VERMONT DEPARTMENT OF ENVIRONMENTAL CONSERVATION

STABILIZED CONSTRUCTION ENTRANCE

NOTES:
REFER TO "THE VERMONT STANDARDS & SPECIFICATIONS FOR EROSION PREVENTION & SEDIMENT CONTROL -2006- " FROM THE VT AGENCY OF NATURAL RESOURCES FOR ADDITIONAL GUIDANCE.

THIS WORK SHALL BE PERFORMED IN ACCORDANCE WITH SECTION 653 FOR VEHICLE TRACKING PAD (PAY ITEM 653.35) OR AS SPECIFIED IN THE CONTRACT.

REVISIONS	
MARCH 24, 2008	WHF
JANUARY 13, 2009	WHF

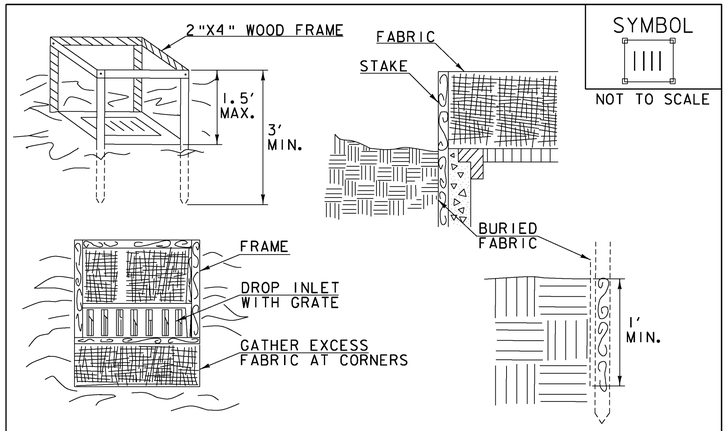

CONSTRUCTION SPECIFICATIONS

1. FILTER FABRIC SHALL HAVE AN APPARENT OPENING SIZE OF 40-85. BURLAP MAY BE USED FOR SHORT TERM APPLICATIONS.
2. CUT FABRIC FROM A CONTINUOUS ROLL TO ELIMINATE JOINTS. IF JOINTS ARE NEEDED THEY WILL BE OVERLAPPED TO THE NEXT STAKE.
3. STAKE MATERIALS WILL BE STANDARD 2"x 4" WOOD OR EQUIVALENT METAL WITH A MINIMUM LENGTH OF 3'.
4. SPACE STAKES EVENLY AROUND INLET 3' APART AND DRIVE A MINIMUM 18" DEEP. SPANS GREATER THAN 3' MAY BE BRIDGED WITH THE USE OF WIRE MESH BEHIND THE FILTER FABRIC FOR SUPPORT.
5. FABRIC SHALL BE EMBEDDED 1' MINIMUM BELOW GROUND AND BACKFILLED. IT SHALL BE SECURELY FASTENED TO THE STAKES AND FRAME.
6. A 2" x 4" WOOD FRAME SHALL BE COMPLETED AROUND THE CREST OF THE FABRIC FOR OVER FLOW STABILITY.
7. MAXIMUM DRAINAGE AREA 1ACRE

ADAPTED FROM DETAILS PROVIDED BY: NEW YORK STATE DEC
ORIGINALLY DEVELOPED BY USDA-NRCS
VERMONT DEPARTMENT OF ENVIRONMENTAL CONSERVATION

FILTER FABRIC DROP INLET PROTECTION

NOTES:
REFER TO "THE VERMONT STANDARDS & SPECIFICATIONS FOR EROSION PREVENTION & SEDIMENT CONTROL -2006- " FROM THE VT AGENCY OF NATURAL RESOURCES FOR ADDITIONAL GUIDANCE.

THIS WORK SHALL BE PERFORMED IN ACCORDANCE WITH SECTION 653 FOR INLET PROTECTION DEVICE, TYPE I (STAKED FABRIC) (PAY ITEM 653.40).

REVISIONS	
MARCH 7, 2008	WHF
JANUARY 13, 2009	WHF

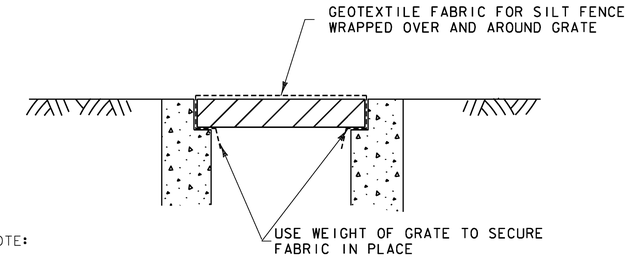

NOTE:

THE CONTRACTOR SHALL INSPECT ALL INSTALLATIONS DAILY AND REPAIR/REPLACE FABRIC AS REQUIRED OR REMOVE AND DISPOSE OF COLLECTED DEBRIS. NO DEBRIS SHALL BE DISPOSED OF INTO INLETS.

TYPICAL FILTER FABRIC INSTALLATION FOR INLET PROTECTION IN AREAS SUBJECT TO TRAFFIC

INLET PROTECTION

APPLICATION NOTES:

A. THE PRIMARY PURPOSE OF INLET PROTECTION IS TO PREVENT SEDIMENT FROM ENTERING A DRAINAGE STRUCTURE, WHILE STILL ALLOWING THE WATER TO DRAIN. THIS WORKS BY PONDING THE WATER, WHICH WILL ALLOW THE SEDIMENT TO FALL OUT OF SUSPENSION, BEFORE THE WATER ENTERS THE STRUCTURE.

B. THESE EXAMPLES OF INLET PROTECTION ARE NOT INTENDED TO CAUSE STORMWATER TO BYPASS THE STRUCTURE AND CREATE ADDITIONAL EROSION OR FLOODING. IN THE CASE WERE THE INLET PROTECTION STRUCTURE HAS CAUSED WATER TO BYPASS THE DRAINAGE STRUCTURE, ADDITIONAL PROTECTION DEVICES WILL BE REQUIRED. POSSIBLE MODIFICATIONS MAY INCLUDE ADDING CHECK DAMS UPSTREAM OF THE INLET TO CREATE MORE PONDING AND TO SLOW VELOCITIES. A BERM DOWNSTREAM OF THE INLET TO CREATE ADDITIONAL PONDING MAY ALSO BE UTILIZED.

C. DETAILS SHOWN SHALL BE USED FOR TEMPORARY INSTALLATION ONLY.

D. USE OF PREFABRICATED INLET PROTECTION SHALL BE AS APPROVED IN THE EPSCP.

GENERAL NOTES:

1. SILT FENCE GEOTEXTILE SHALL BE A SINGLE CONTINUOUS PIECE TO MINIMIZE UNNECESSARY JOINTS.
2. INLET PROTECTION SHALL BE INSPECTED EVERY SEVEN (7) CALENDAR DAYS AND WITHIN 24 HOURS OF A STORM EVENT GREAT ENOUGH TO CAUSE STORMWATER TO LEAVE THE CONSTRUCTION SITE, UNLESS OTHERWISE INDICATED ON THIS SHEET.
3. INLET PROTECTION SHALL BE CLEANED AND REPAIRED AS NEEDED. SEDIMENT SHALL BE REMOVED WHEN ACCUMULATION REACHES ONE-HALF OF THE HEIGHT OR AS RECOMMENDED BY THE MANUFACTURER. SEDIMENT SHALL BE DISPOSED OF AT AN APPROVED WASTE SITE.
4. PREFABRICATED INLET PROTECTION SHALL BE INSTALLED PER MANUFACTURER'S RECOMMENDATION.
5. PAYMENT SHALL BE MADE UNDER CONTRACT ITEM 653.40 INLET PROTECTION DEVICE, TYPE I (FILTER FABRIC).

INLET PROTECTION DEVICE, TYPE I (FILTER FABRIC)

NOT TO SCALE

PROJECT NAME: WINOOSKI	
PROJECT NUMBER: NH 089-3(65)	
FILE NAME: z94a198ecdet.dgn	PLOT DATE: 2/22/2010
PROJECT LEADER: KEN UPMAL	DRAWN BY: A.ACHARYA
DESIGNED BY: A.ACHARYA	CHECKED BY: E.ATKINS
EPSC EROSION CONTROL DETAILS SHEET 3	SHEET 31 OF 67

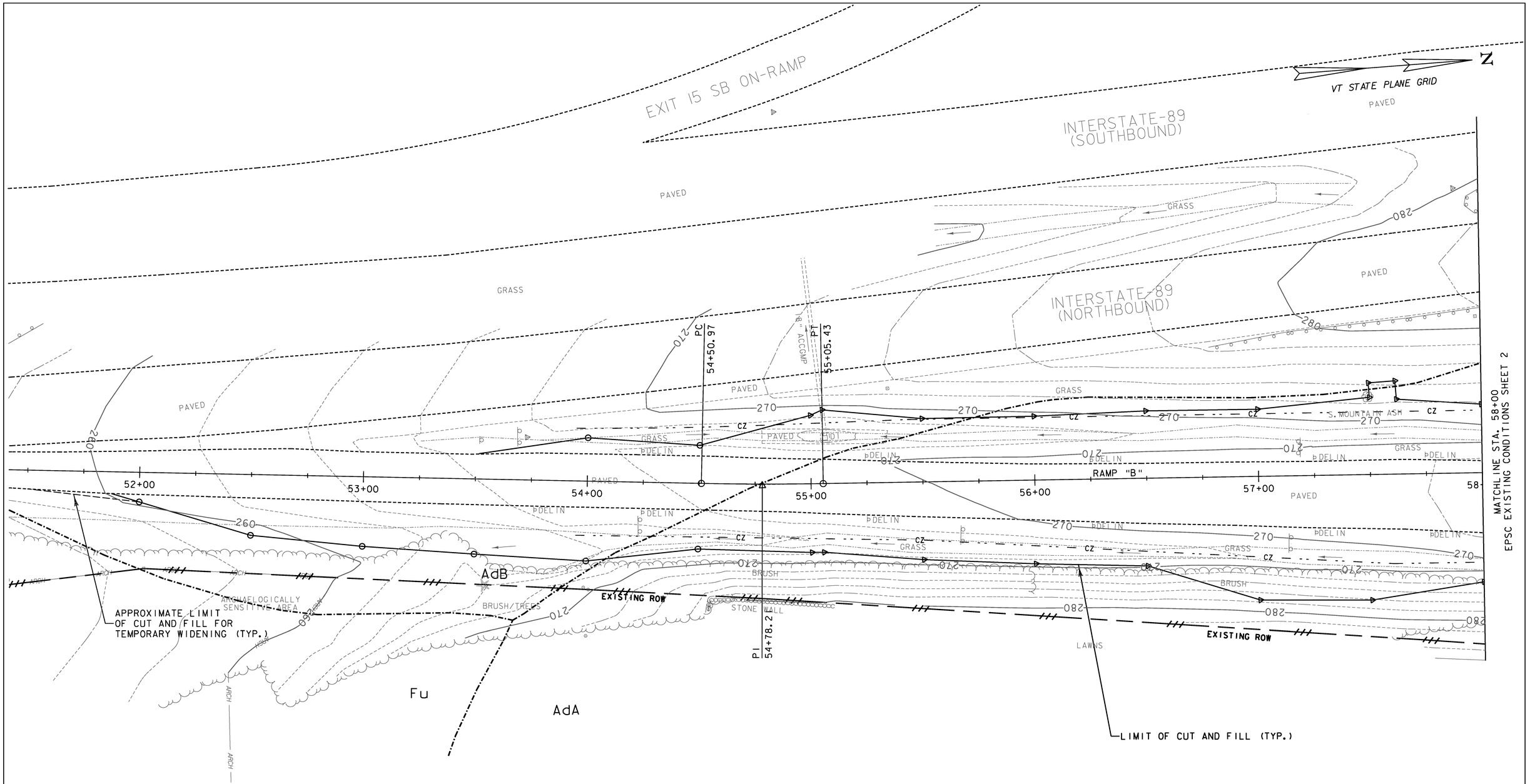

LEGEND

-·-·-·-·-	SOIL TYPE BOUNDARY
— 270 —	10' INTERVAL CONTOUR
— — — —	2' INTERVAL CONTOUR
—·—·—	EXIST. PROPERTY/ROW LINE
—○—△—	LIMIT OF WORK

SOIL LEGEND

SOIL DESIGNATION	HYDROLOGIC SOIL GROUP CLASSIFICATION	SOIL ERODIBILITY COEFFICIENTS (K)
AdA = ADAMS AND WINDSOR LOAMY SAND 0 TO 5 PERCENT SLOPES	A	0.17
AdB = ADAMS AND WINDSOR LOAMY SAND 5 TO 12 PERCENT SLOPES	A	0.17
Fu = FILL LAND	D	0.37 (ASSUMED)

0 20 40
SCALE IN FEET

PROJECT NAME: WINOOSKI
PROJECT NUMBER: NH 089-3(65)

FILE NAME: z94a198ecxcbdr.dgn
PROJECT LEADER: KEN UPMAL
DESIGNED BY: A. ACHARYA
EPSC EXISTING CONDITIONS PLAN SHEET 1

PLOT DATE: 2/24/2010
DRAWN BY: A. ACHARYA
CHECKED BY: E.ATKINS
SHEET 32 OF 67

LEGEND

- SOIL TYPE BOUNDARY
- 270 — 10' INTERVAL CONTOUR
- 2' INTERVAL CONTOUR
- EXIST. PROPERTY/ROW LINE
- LIMIT OF WORK

SOIL LEGEND

SOIL DESIGNATION	HYDROLOGIC SOIL GROUP CLASSIFICATION	SOIL ERODIBILITY COEFFICIENTS (K)
AdA = ADAMS AND WINDSOR LOAMY SAND 0 TO 5 PERCENT SLOPES	A	0.17
AdB = ADAMS AND WINDSOR LOAMY SAND 5 TO 12 PERCENT SLOPES	A	0.17
Fu = FILL LAND	D	0.37 (ASSUMED)

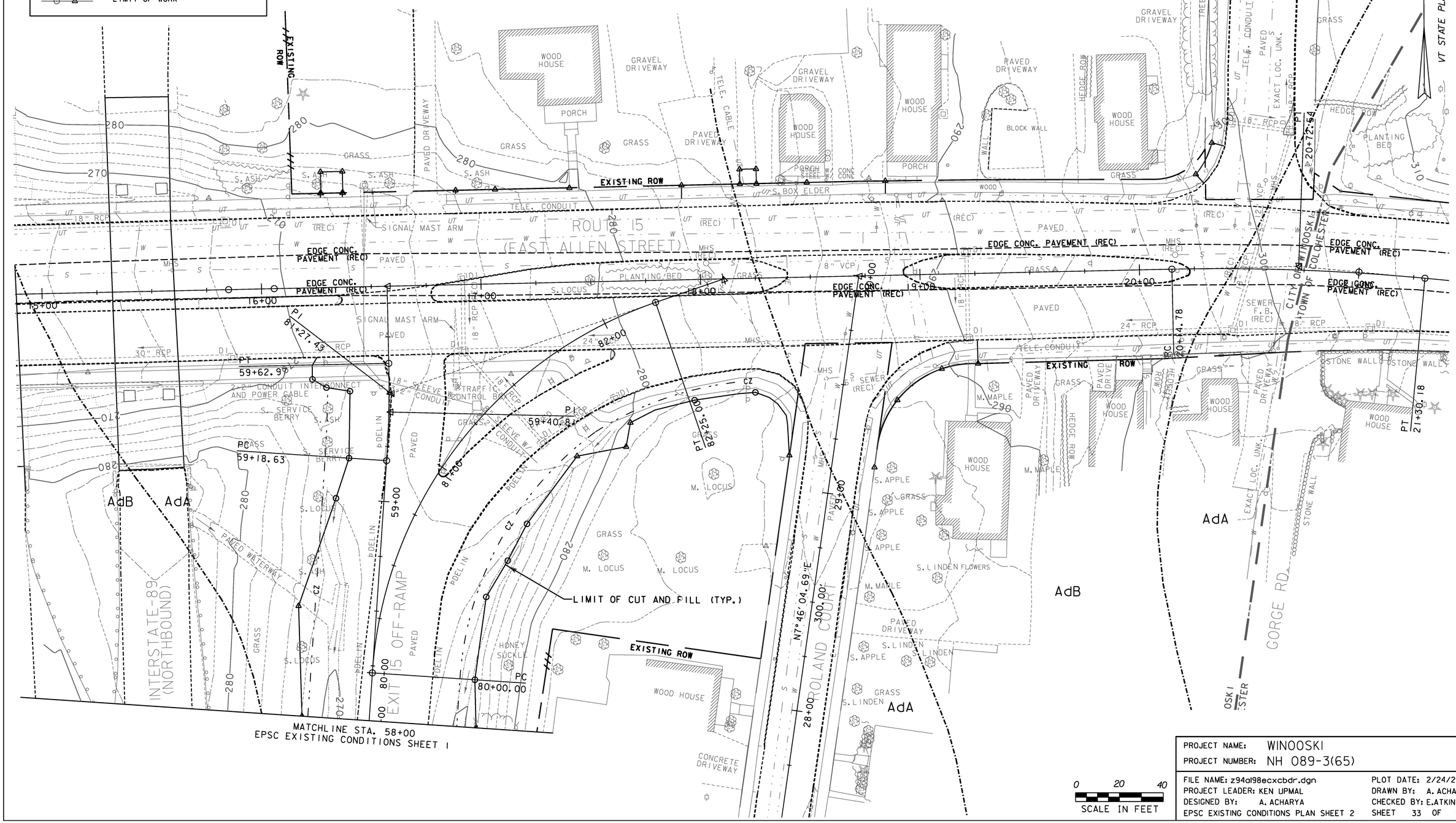

PROJECT NAME: WINOOSKI	
PROJECT NUMBER: NH 089-3(65)	
FILE NAME: z94a198ecxcbdr.dgn	PLOT DATE: 2/24/2010
PROJECT LEADER: KEN UPMAL	DRAWN BY: A. ACHARYA
DESIGNED BY: A. ACHARYA	CHECKED BY: E.ATKINS
EPSC EXISTING CONDITIONS PLAN SHEET 2	SHEET 33 OF 67

NOTES:

1. THESE PLANS SHOW A CONCEPTUAL EROSION CONTROL PLAN. THE CONTRACTOR MUST SUBMIT A TEMPORARY EROSION CONTROL PLAN FOR APPROVAL.
2. TEMPORARY EROSION CONTROL MEASURES ARE CONCEPTUALLY SHOWN. THE CONTRACTOR MAY RELOCATE TEMPORARY MEASURES TO IMPROVE EROSION CONTROL WITH APPROVAL OF THE RESIDENT ENGINEER AND ON SITE COORDINATOR. SILT FENCE SHALL NOT BE INSTALLED ACROSS CONTOURS.
3. THE CONTRACTOR SHALL USE OTHER TEMPORARY EROSION CONTROL MEASURES AS NECESSITATED BY THE SEQUENCE OF CONSTRUCTION OR AS DIRECTED BY THE RESIDENT ENGINEER AND ON SITE COORDINATOR.
4. REFER TO TEMPORARY EROSION CONTROL DETAIL SHEETS FOR ADDITIONAL DETAILS.

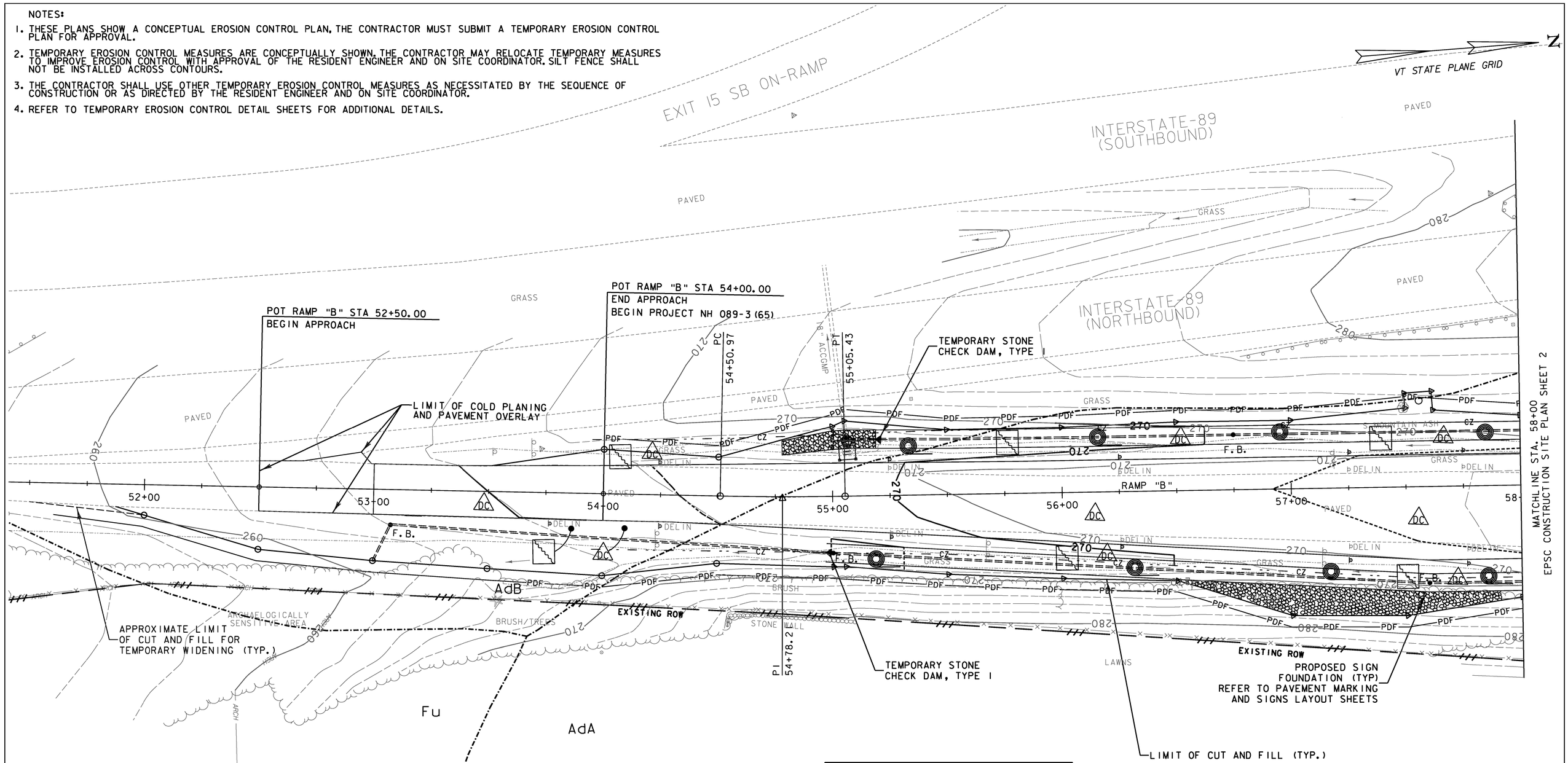

SEED

RAMP "B" 51+50 RT ~ RAMP "B" 58+00 RT
RAMP "B" 52+95 LT ~ RAMP "B" 58+00 LT

SEED, WINTER RYE

RAMP "B" 51+50 RT ~ RAMP "B" 58+00 RT
RAMP "B" 52+95 LT ~ RAMP "B" 58+00 LT

HAY MULCH

RAMP "B" 51+50 RT ~ RAMP "B" 58+00 RT
RAMP "B" 52+95 LT ~ RAMP "B" 58+00 LT

TOPSOIL

RAMP "B" 51+50 RT ~ RAMP "B" 58+00 RT
RAMP "B" 52+95 LT ~ RAMP "B"58+00 LT

TEMPORARY EROSION MATTING

RAMP "B" 54+75 LT ~ RAMP "B" 55+28 LT
RAMP "B" 56+25 LT ~ RAMP "B" 58+00 LT
RAMP "B" 57+90 RT ~ RAMP "B" 58+00 RT

PERMANANT EROSION MATTING

RAMP "B" 54+96 RT ~ RAMP "B" 58+00 RT
RAMP "B" 55+19 LT ~ RAMP "B" 58+00 LT

TEMPORARY STONE CHECK DAM, TYPE I

RAMP "B" 54+96 RT
RAMP "B" 55+19 LT (AT TRANSITION BETWEEN DITCHES)

INLET PROTECTION DEVICE, TYPE I (STAKED FABRIC)

RAMP "B" 55+06 LT-EXISTING DI
RAMP "B" 55+06 LT-NEW DI

VEHICLE TRACKING PAD

SEE TRAFFIC MANAGEMENT PLANS (SHEET 51, 52 AND 53)

BARRIER FENCE

RAMP "B" 51+60 RT~ RAMP "B" 53+67 RT

PROJECT DEMARCATION FENCE

RAMP "B" 53+67 RT~ RAMP "B" 58+00 RT
RAMP "B" 54+00 LT~ RAMP "B" 58+00 LT

LEGEND

ALSO SEE SHEET 28

-·-·-·-·-	SOIL TYPE BOUNDARY
—270—	10' INTERVAL PROPOSED CONTOUR
- - - - - -	2' INTERVAL PROPOSED CONTOUR
—270—	10' INTERVAL EXISTING CONTOUR
- - - - - -	2' INTERVAL EXISTING CONTOUR
-—-—-	EXIST. PROPERTY/ROW LINE
—○—△—	LIMIT OF WORK
PDF——PDF	PROJECT DEMARCATION FENCING (LIMIT OF DISTURBANCE)

SEE EROSION CONTROL NARRATIVE FOR ADDITIONAL REQUIREMENTS

0 20 40
SCALE IN FEET

PROJECT NAME: WINOOSKI	
PROJECT NUMBER: NH 089-3(65)	
FILE NAME: z94a198eccsbdr.dgn	PLOT DATE: 2/24/2010
PROJECT LEADER: KEN UPMAL	DRAWN BY: A. ACHARYA
DESIGNED BY: A. ACHARYA	CHECKED BY: E.ATKINS
EPSC CONSTRUCTION SITE PLAN SHEET 1	SHEET 34 OF 67

GEOTEXTILE FOR SILT FENCE
RAMP "B" 59+05LT ~ RAMP "B" 59+50 LT

SEED
RAMP "B" 58+95 RT ~ RAMP "B"59+68 RT (ISLAND)
RAMP "B" 58+00 LT ~ RAMP "B"59+68 LT
RAMP "B" 58+00 RT ~ ROLAND CT. 29+15 LT
ROLAND CT. 29+15 RT ~ VT RTE 15 19+26 RT
VT RTE 15 16+26 LT ~ VT RTE 15 16+40 LT
VT RTE 15 16+82 ~ VT RTE 15 17+11 (MEDIAN ISLAND)
VT RTE 15 16+81 LT ~ VT RTE 15 17+41 LT
VT RTE 15 18+50 LT ~ VT RTE 15 18+87 LT
VT RTE 15 20+24 LT ~ VT RTE 15 20+34 LT

SEED, WINTER RYE
RAMP "B" 58+95 RT ~ RAMP "B"59+68 RT (ISLAND)
RAMP "B" 58+00 LT ~ RAMP "B"59+68 LT
RAMP "B" 58+00 RT ~ ROLAND CT 29+15 LT
ROLAND CT 29+15 RT ~ VT RTE 15 19+26 RT
VT RTE 15 16+26 LT ~ VT RTE 15 16+40 LT
VT RTE 15 16+82 ~ VT RTE 15 17+11 (MEDIAN ISLAND)
VT RTE 15 16+81 LT ~ VT RTE 15 17+41 LT
VT RTE 15 18+50 LT ~ VT RTE 15 18+87 LT
VT RTE 15 20+24 LT ~ VT RTE 15 20+34 LT

HAY MULCH
RAMP "B" 58+95 RT ~ RAMP "B"59+68 RT (ISLAND)
RAMP "B" 58+00 LT ~ RAMP "B"59+68 LT
RAMP "B" 58+00 RT ~ ROLAND CT 29+15 LT
ROLAND CT 29+15 RT ~ VT RTE 15 19+26 RT
VT RTE 15 16+26 LT ~ VT RTE 15 16+40 LT
VT RTE 15 16+82 ~ VT RTE 15 17+11 (MEDIAN ISLAND)
VT RTE 15 16+81 LT ~ VT RTE 15 17+41 LT
VT RTE 15 18+50 LT ~ VT RTE 15 18+87 LT
VT RTE 15 20+24 LT ~ VT RTE 15 20+34 LT

TOPSOIL
RAMP "B" 58+95 RT ~ RAMP "B"59+68 RT (ISLAND)
RAMP "B" 58+00 LT ~ RAMP "B"59+68 LT
RAMP "B" 58+00 RT ~ ROLAND CT 29+15 LT
ROLAND CT 29+15 RT ~ VT RTE 15 19+26 RT
VT RTE 15 16+26 LT ~ VT RTE 15 16+40 LT
VT RTE 15 16+82 ~ VT RTE 15 17+11 (MEDIAN ISLAND)
VT RTE 15 16+81 LT ~ VT RTE 15 17+41 LT
VT RTE 15 18+50 LT ~ VT RTE 15 18+87 LT
VT RTE 15 20+24 LT ~ VT RTE 15 20+34 LT

TEMPORARY EROSION MATTING
RAMP "B" 58+00 RT ~ RAMP "B" 58+25 RT
RAMP "B" 58+00 LT ~ RAMP "B" 58+75 LT

PERMANENT EROSION MATTING
RAMP "B" 58+00 RT ~ RAMP "B" 58+35 RT
RAMP "B" 58+00 LT ~ RAMP "B" 58+36 LT

TEMPORARY STONE CHECK DAM, TYPE I
RAMP "B" 58+46 RT
RAMP "B" 58+44 LT

PROJECT DEMARCATION FENCE
RAMP "B" 58+00.0 RT ~ ROLAND CT. 29+15 LT
RAMP "B" 58+00 LT ~ 59+68 LT
ROLAND CT. 29+15.0 RT ~ VT RTE 15 19+26.5 RT
VT RTE 15 16+26.7 LT ~ 16+39.0 LT
VT RTE 15 16+86.4 LT ~ 17+41.3 LT
VT RTE 15 18+18.0 LT ~ 18+86.0 LT
VT RTE 15 20+24.9 LT ~ 20+32.5 LT

INLET PROTECTION DEVICE, TYPE I (FILTER FABRIC)
SLIP RAMP 81+41 RT (EXISTING AND PROPOSED DI)
SLIP RAMP 81+87 RT (EXISTING AND PROPOSED DI)
VT RTE 15 15+84 LT (EXISTING DI)
VT RTE 15 15+86 RT (EXISTING DI)
VT RTE 15 16+91 RT (EXISTING DI)
VT RTE 15 16+91 LT (EXISTING DI)
VT RTE 15 19+21 LT (EXISTING DI)
VT RTE 15 19+21 RT (EXISTING DI)
VT RTE 15 20+43 RT (EXISTING DI)

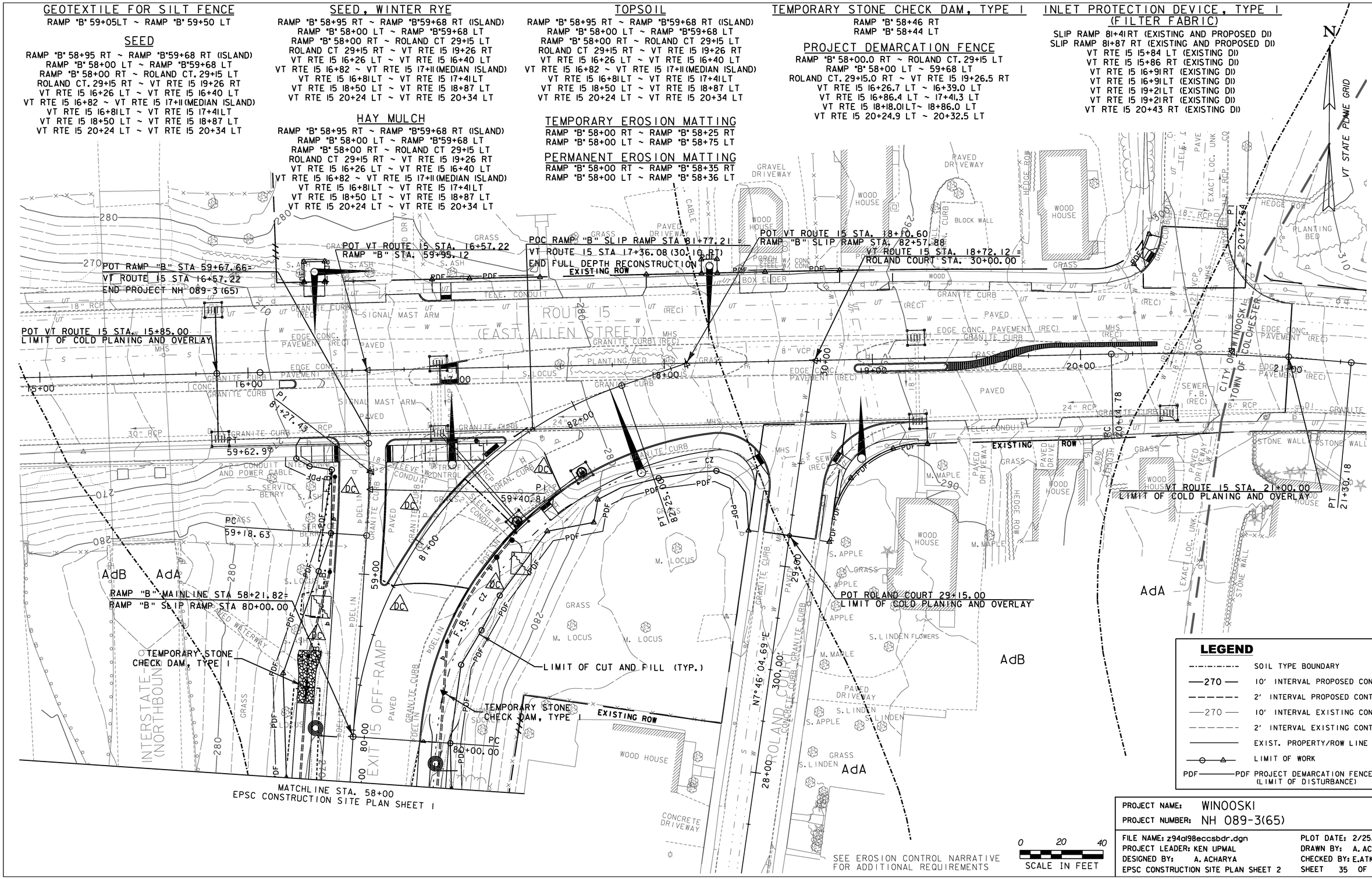

LEGEND
- SOIL TYPE BOUNDARY
- 270 — 10' INTERVAL PROPOSED CONTOUR
- 2' INTERVAL PROPOSED CONTOUR
- 270 — 10' INTERVAL EXISTING CONTOUR
- 2' INTERVAL EXISTING CONTOUR
- EXIST. PROPERTY/ROW LINE
- LIMIT OF WORK
- PDF——PDF PROJECT DEMARCATION FENCE (LIMIT OF DISTURBANCE)

PROJECT NAME: WINOOSKI	
PROJECT NUMBER: NH 089-3(65)	
FILE NAME: z94al98eccsbdr.dgn	PLOT DATE: 2/25/2010
PROJECT LEADER: KEN UPMAL	DRAWN BY: A. ACHARYA
DESIGNED BY: A. ACHARYA	CHECKED BY: E.ATKINS
EPSC CONSTRUCTION SITE PLAN SHEET 2	SHEET 35 OF 67

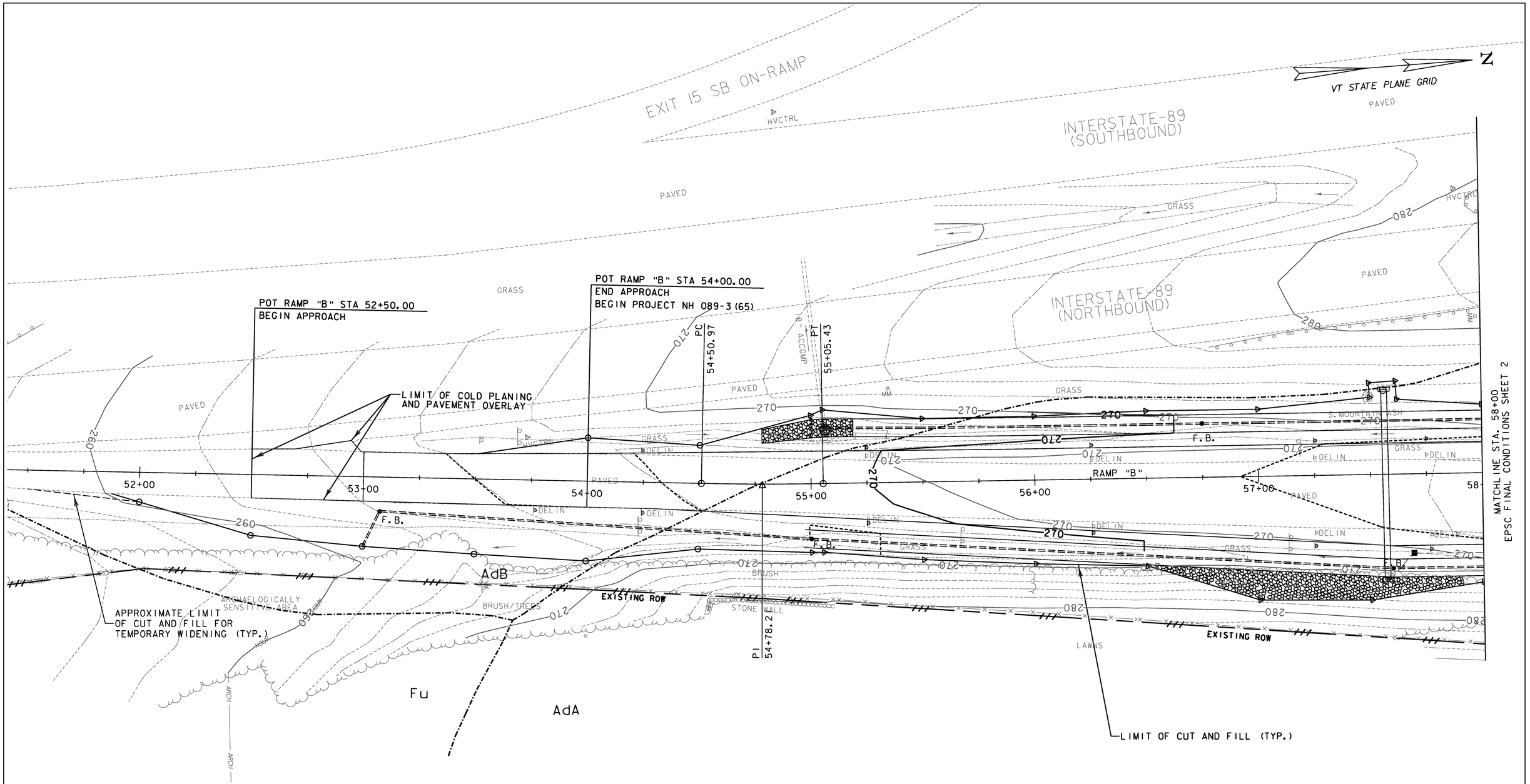

NOTE:
SEE CROSS SECTIONS FOR ADDITIONAL GRADING.

0 20 40
SCALE IN FEET

PROJECT NAME: WINOOSKI	
PROJECT NUMBER: NH 089-3(65)	
FILE NAME: z94a198ecfcbdr.dgn	PLOT DATE: 2/24/2010
PROJECT LEADER: KEN UPMAL	DRAWN BY: A. ACHARYA
DESIGNED BY: A. ACHARYA	CHECKED BY: E.ATKINS
ESPC FINAL CONDITIONS PLAN SHEET 1	SHEET 36 OF 67

POT RAMP "B" STA 59+67.66=
VT ROUTE 15 STA 16+57.22
END PROJECT NH 089-3 (65)

POT VT ROUTE 15 STA. 15+85.00
LIMIT OF COLD PLANING AND OVERLAY

POT VT ROUTE 15 STA. 16+57.22
RAMP "B" STA. 59+95.12

POC RAMP "B" SLIP RAMP STA 81+77.21 =
VT ROUTE 15 STA 17+36.08 (30.10 RT)
END FULL DEPTH RECONSTRUCTION
EXISTING ROW

POT VT ROUTE 15 STA. 18+50.60
RAMP "B" SLIP RAMP STA. 82+57.88
VT ROUTE 15 STA. 18+72.12 =
ROLAND COURT STA. 30+00.00

VT ROUTE 15 STA. 21+00.00
LIMIT OF COLD PLANING AND OVERLAY

POT ROLAND COURT 29+15.00
LIMIT OF COLD PLANING AND OVERLAY

RAMP "B" MAINLINE STA 58+21.82=
RAMP "B" SLIP RAMP STA 80+00.00

LIMIT OF CUT AND FILL (TYP.)

MATCHLINE STA. 58+00
EPSC FINAL CONDITIONS SHEET 1

NOTE:
SEE CROSS SECTIONS AND PARTIAL GRADING PLAN (SHEET 23) FOR ADDITIONAL GRADING

0 20 40
SCALE IN FEET

PROJECT NAME: WINOOSKI	
PROJECT NUMBER: NH 089-3(65)	
FILE NAME: z94a198ecfcbdr.dgn	PLOT DATE: 2/25/2010
PROJECT LEADER: KEN UPMAL	DRAWN BY: A. ACHARYA
DESIGNED BY: A. ACHARYA	CHECKED BY: E.ATKINS
ESPC FINAL CONDITIONS PLAN SHEET 2	SHEET 37 OF 67

SOIL CLASSIFICATION

AASHTO	
A1	Gravel and Sand
A3	Fine Sand
A2	Silty or Clayey Gravel and Sand
A4	Silty Soil - Low Compressibility
A5	Silty Soil - Highly Compressible
A6	Clayey Soil - Low Compressibility
A7	Clayey Soil - Highly Compressible

ROCK QUALITY DESIGNATION

R.Q.D. (%)	ROCK DESCRIPTION
<25	Very Poor
25 to 50	Poor
51 to 75	Fair
76 to 90	Good
>90	Excellent

SHEAR STRENGTH

UNDRAINED SHEAR STRENGTH IN kPa	CONSISTENCY
<12	Very Soft
12-24	Soft
24-48	Med. Stiff
48-96	Stiff
96-192	Very Stiff
>192	Hard

CORRELATION GUIDE OF "N" TO DENSITY/CONSISTENCY

DENSITY (GRANULAR SOILS)		CONSISTENCY (COHESIVE SOILS)	
N	DESCRIPTIVE TERM	N	DESCRIPTIVE TERM
<5	Very Loose	<2	Very Soft
5-10	Loose	2-4	Soft
11-24	Med. Dense	5-8	Med. Stiff
25-50	Dense	9-15	Stiff
>50	Very Dense	16-30	Very Stiff
		31-60	Hard
		>60	Very Hard

COMMONLY USED SYMBOLS

▼	Water Elevation
✪	Standard Penetration Boring
⊕	Auger Boring
⊙	Rod Sounding
S	Sample
N	Standard Penetration Test Blow Count Per 300 mm For: 50.8 mm O.D. Sampler 35.0 mm I.D. Sampler Hammer Weight Of 63.5 kg. Hammer Fall Of 762 mm
VS	Field Vane Shear Test
US	Undisturbed Soil Sample
B	Blast
DC	Diamond Core
MD	Mud Drill
WA	Wash Ahead
HSA	Hollow Stem Auger
AX	Core Size 30.1mm
BX	Core Size 42.0 mm
NX	Core Size 54.7 mm
M	Double Tube Core Barrel Used
LL	Liquid Limit
PL	Plastic Limit
PI	Plasticity Index
NP	Non Plastic
w	Moisture Content (Dry Wgt. Basis)
D	Dry
M	Moist
MTW	Moist To Wet
W	Wet
Sat	Saturated
Bo	Boulder
Gr	Gravel
Sa	Sand
Si	Silt
Cl	Clay
HP	Hardpan
Le	Ledge
NLTD	No Ledge To Depth
CNPF	Can Not Penetrate Further
TLOB	To Ledge Or Boulder
NR	No Recovery
Rec.	Recovery
%Rec.	Percent Recovery
RQD	Rock Quality Designation
CBR	California Bearing Ratio
<	Less Than
>	Greater Than
R	Refusal (N > 100)
OW	Indicates a temporary observation well installed

COLOR

blk	Black	pnk	Pink
bl	Blue	pu	Purple
brn	Brown	rd	Red
dk	Dark	tn	Tan
gry	Gray	wh	White
gn	Green	yel	Yellow
lt	Light	mltc	Multicolored
or	Orange		

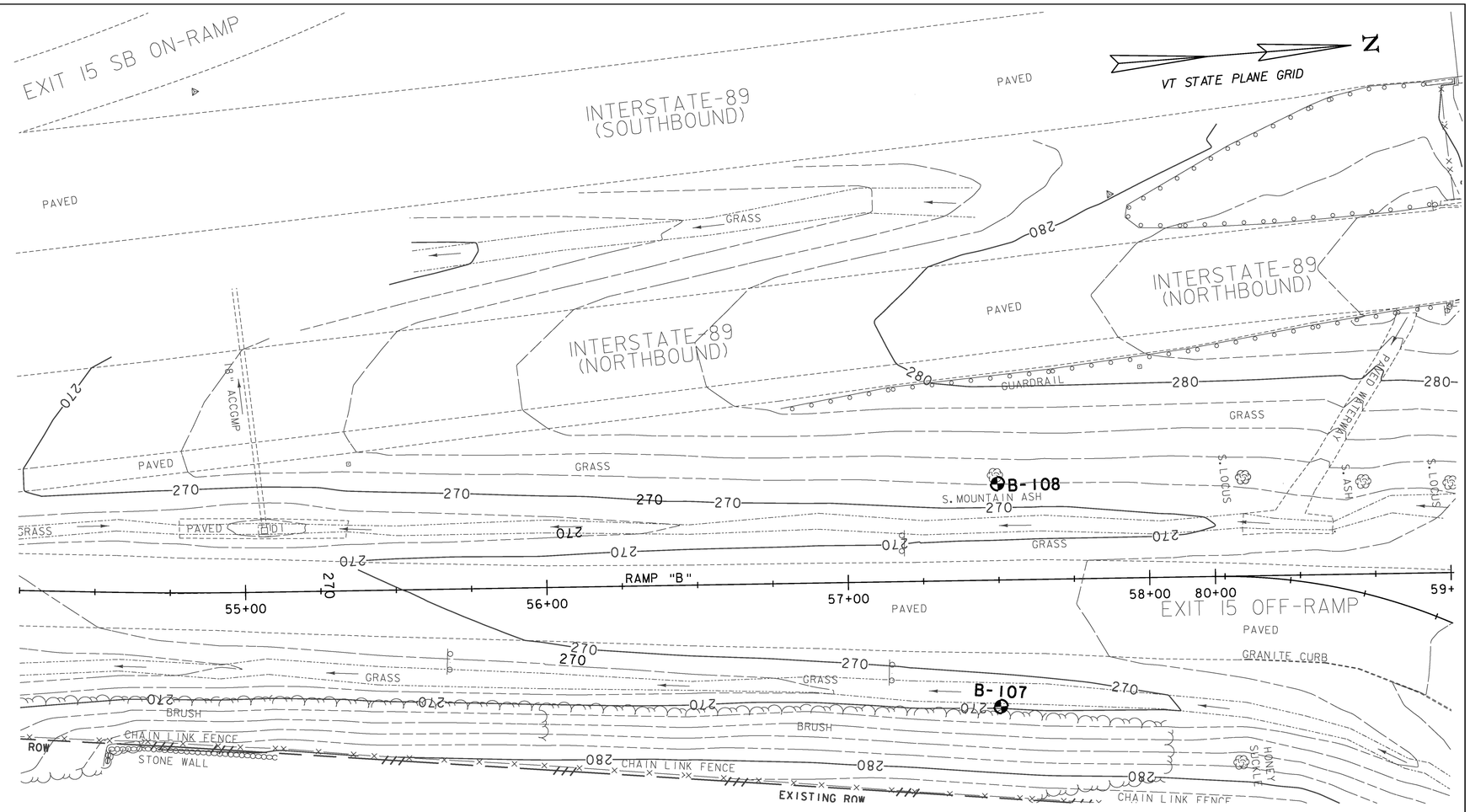

BORING LAYOUT

BORING CHART

HOLE NO.	STATION	OFFSET (ft)	GROUND ELEV.
B107	RAMP "B" 57+50	42.00 RT	269.31
B108	RAMP "B" 57+50	32.00 LT	271.57

0 20 40
SCALE IN FEET

DEFINITIONS (AASHTO)

BEDROCK (LEDGE) - Rock in its native location of indefinite thickness.

BOULDER - A rock fragment with an average dimension > 304.8 mm.

COBBLE - Rock fragments with an average dimension between 76.2 and 304.8 mm.

GRAVEL - Rounded particles of rock < 76.2 mm and > 2 mm (#10 sieve).

SAND - Particles of rock < 2 mm (#10 sieve) and > 75 μm (#200 sieve).

SILT - Soil < 75 μm (#200 sieve), non or slightly plastic and exhibits no strength when air-dried.

CLAY - Fine grained soil, exhibits plasticity when moist and considerable strength when air-dried.

VARVED - Alternate layers of silt and clay.

HARDPAN - Extremely dense soil, cemented layer, not softened when wet.

MUCK - Soft organic soil (containing > 10% organic material.

MOISTURE CONTENT - Weight of water divided by dry weight of soil.

FLOWING SAND - Granular soil so saturated (loose) that it flows into drill casing during extraction of wash rod.

STRIKE - Angle from magnetic north to line of intersection of bed with a horizontal plane.

DIP - Inclination of bed with a horizontal plane.

GENERAL NOTES

1. The test borings shown herein were drilled by the Agency between the period from 06/02/09 through 06/04/09.

2. Soil and rock classifications, properties and descriptions are based on engineering interpretation from available subsurface information by the Agency and may not necessarily reflect actual variations in subsurface conditions that may be encountered between individual boring or sample locations.

3. Observed water levels and/or conditions indicated are as recorded at the time of exploration and may vary according to the prevailing rainfall, methods of exploration and other factors.

4. Engineering judgement was exercised in preparing the subsurface information presented herein. Analysis and interpretation of subsurface data was performed and interpreted for Agency design and estimating purposes. Presentation of the information in the Contract is intended to provide the Contractor access to the same data available to the Agency. The subsurface information is presented in good faith and is not intended as a substitute for personal investigation, independent interpretation, independent analysis or judgement by the Contractor.

5. Pictorial structure details shown on the boring plan layout or soils profile are for illustrative purposes only and may not accurately portray final contract details.

6. Terminology used on boring logs to describe the hardness, degree of weathering, and spacing of fractures, joints and other discontinuities in the bedrock is defined in the AASHTO Manual on Subsurface Investigations, 1988.

PROJECT NAME: WINOOSKI
PROJECT NUMBER: NH 089-3(65)

FILE NAME: z94a198bor.dgn
PROJECT LEADER: KEN UPMAL
DESIGNED BY: A. ACHARYA
BORING LAYOUT SHEET 1

PLOT DATE: 2/22/2010
DRAWN BY: A. ACHARYA
CHECKED BY: E.ATKINS
SHEET 38 OF 67

SOIL CLASSIFICATION

AASHTO	
A1	Gravel and Sand
A3	Fine Sand
A2	Silty or Clayey Gravel and Sand
A4	Silty Soil - Low Compressibility
A5	Silty Soil - Highly Compressible
A6	Clayey Soil - Low Compressibility
A7	Clayey Soil - Highly Compressible

ROCK QUALITY DESIGNATION

R.Q.D. (%)	ROCK DESCRIPTION
<25	Very Poor
25 to 50	Poor
51 to 75	Fair
76 to 90	Good
>90	Excellent

SHEAR STRENGTH

UNDRAINED SHEAR STRENGTH IN kPa	CONSISTENCY
<12	Very Soft
12-24	Soft
24-48	Med. Stiff
48-96	Stiff
96-192	Very Stiff
>192	Hard

CORRELATION GUIDE OF "N" TO DENSITY/CONSISTENCY

DENSITY (GRANULAR SOILS)		CONSISTENCY (COHESIVE SOILS)	
N	DESCRIPTIVE TERM	N	DESCRIPTIVE TERM
<5	Very Loose	<2	Very Soft
5-10	Loose	2-4	Soft
11-24	Med. Dense	5-8	Med. Stiff
25-50	Dense	9-15	Stiff
>50	Very Dense	16-30	Very Stiff
		31-60	Hard
		>60	Very Hard

COMMONLY USED SYMBOLS

▼	Water Elevation
✪	Standard Penetration Boring
⊕	Auger Boring
⊙	Rod Sounding
S	Sample
N	Standard Penetration Test Blow Count Per 300 mm For: 50.8 mm O.D. Sampler 35.0 mm I.D. Sampler Hammer Weight Of 63.5 kg. Hammer Fall Of 762 mm
VS	Field Vane Shear Test
US	Undisturbed Soil Sample
B	Blast
DC	Diamond Core
MD	Mud Drill
WA	Wash Ahead
HSA	Hollow Stem Auger
AX	Core Size 30.1mm
BX	Core Size 42.0 mm
NX	Core Size 54.7 mm
M	Double Tube Core Barrel Used
LL	Liquid Limit
PL	Plastic Limit
PI	Plasticity Index
NP	Non Plastic
w	Moisture Content (Dry Wgt. Basis)
D	Dry
M	Moist
MTW	Moist To Wet
W	Wet
Sat	Saturated
Bo	Boulder
Gr	Gravel
Sa	Sand
Si	Silt
Cl	Clay
HP	Hardpan
Le	Ledge
NLTD	No Ledge To Depth
CNPF	Can Not Penetrate Further
TLOB	To Ledge Or Boulder
NR	No Recovery
Rec.	Recovery
%Rec.	Percent Recovery
RQD	Rock Quality Designation
CBR	California Bearing Ratio
<	Less Than
>	Greater Than
R	Refusal (N > 100)
OW	Indicates a temporary observation well installed

COLOR

blk	Black	pnk	Pink
bl	Blue	pu	Purple
brn	Brown	rd	Red
dk	Dark	tn	Tan
gry	Gray	wh	White
gn	Green	yel	Yellow
lt	Light	mltc	Multicolored
or	Orange		

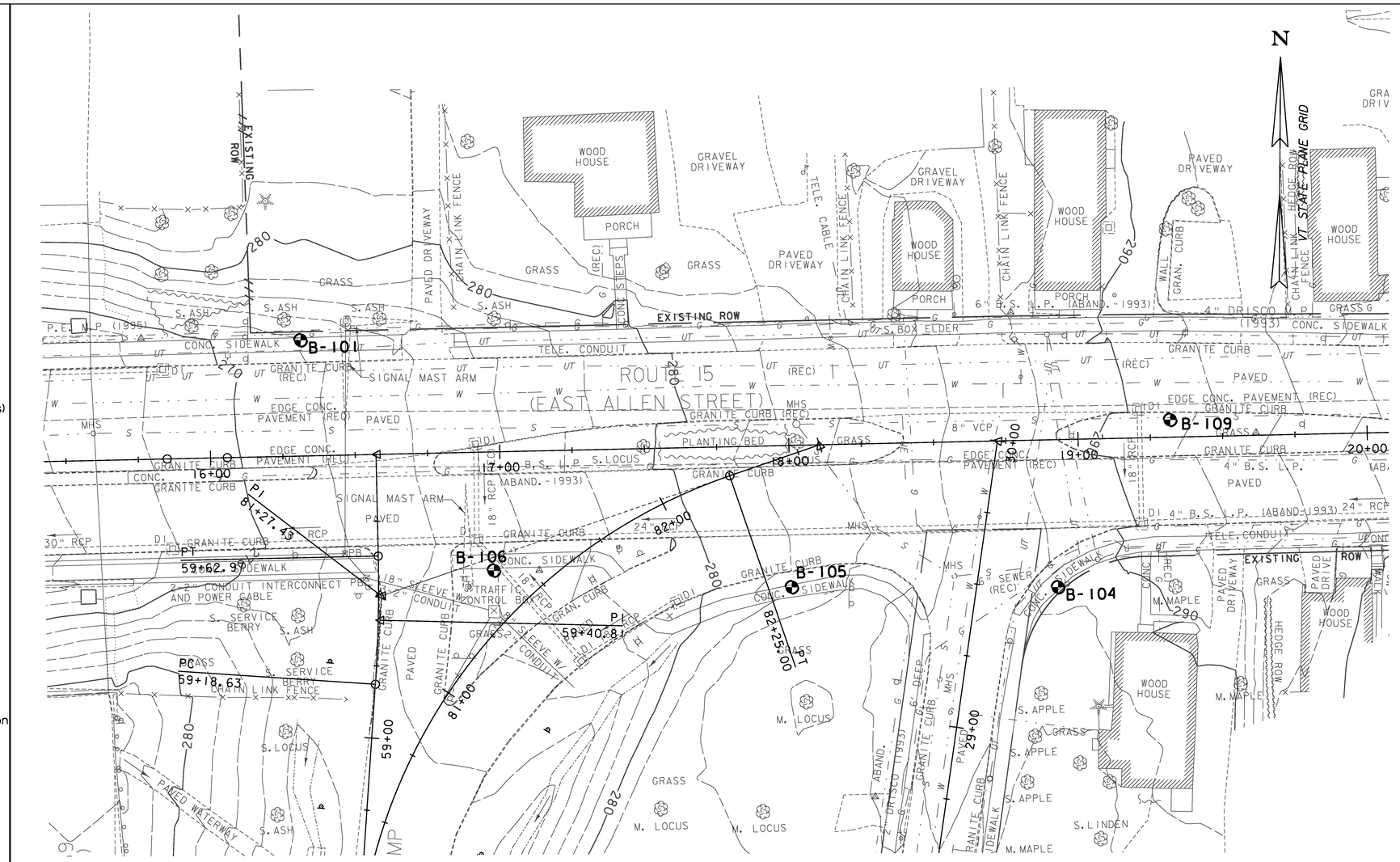

DEFINITIONS (AASHTO)

BEDROCK (LEDGE) - Rock in its native location of indefinite thickness.

BOULDER - A rock fragment with an average dimension > 304.8 mm.

COBBLE - Rock fragments with an average dimension between 76.2 and 304.8 mm.

GRAVEL - Rounded particles of rock < 76.2 mm and > 2 mm (#10 sieve).

SAND - Particles of rock < 2 mm (#10 sieve) and > 75 μm (#200 sieve).

SILT - Soil < 75 μm (#200 sieve), non or slightly plastic and exhibits no strength when air-dried.

CLAY - Fine grained soil, exhibits plasticity when moist and considerable strength when air-dried.

VARVED - Alternate layers of silt and clay.

HARDPAN - Extremely dense soil, cemented layer, not softened when wet.

MUCK - Soft organic soil (containing > 10% organic material.

MOISTURE CONTENT - Weight of water divided by dry weight of soil.

FLOWING SAND - Granular soil so saturated (loose) that it flows into drill casing during extraction of wash rod.

STRIKE - Angle from magnetic north to line of intersection of bed with a horizontal plane.

DIP - Inclination of bed with a horizontal plane.

GENERAL NOTES

1. The test borings shown herein were drilled by the Agency between the period from 06/02/09 through 06/04/09.

2. Soil and rock classifications, properties and descriptions are based on engineering interpretation from available subsurface information by the Agency and may not necessarily reflect actual variations in subsurface conditions that may be encountered between individual boring or sample locations.

3. Observed water levels and/or conditions indicated are as recorded at the time of exploration and may vary according to the prevailing rainfall, methods of exploration and other factors.

4. Engineering judgement was exercised in preparing the subsurface information presented herein. Analysis and interpretation of subsurface data was performed and interpreted for Agency design and estimating purposes. Presentation of the information in the Contract is intended to provide the Contractor access to the same data available to the Agency. The subsurface information is presented in good faith and is not intended as a substitute for personal investigation, independent interpretation, independent analysis or judgement by the Contractor.

5. Pictorial structure details shown on the boring plan layout or soils profile are for illustrative purposes only and may not accurately portray final contract details.

6. Terminology used on boring logs to describe the hardness, degree of weathering, and spacing of fractures, joints and other discontinuities in the bedrock is defined in the AASHTO Manual on Subsurface Investigations, 1988.

BORING CHART

HOLE NO.	STATION	OFFSET (ft)	GROUND ELEV.
B101	VT ROUTE 15 16+32	40.00 LT	272.14
B104	VT ROUTE 15 18+92	51.00 RT	288.55
B105	VT ROUTE 15 18+00	49.00 RT	283.21
B106	VT ROUTE 15 16+97	41.00 RT	275.95
B109	VT ROUTE 15 19+32	6.00 LT	293.18

0 20 40
SCALE IN FEET

PROJECT NAME: WINOOSKI
PROJECT NUMBER: NH 089-3(65)

FILE NAME: z94a198bor.dgn
PROJECT LEADER: KEN UPMAL
DESIGNED BY: A. ACHARYA
BORING LAYOUT SHEET 2

PLOT DATE: 2/22/2010
DRAWN BY: A. ACHARYA
CHECKED BY: E.ATKINS
SHEET 39 OF 67

STATE OF VERMONT
AGENCY OF TRANSPORTATION
MATERIALS & RESEARCH SECTION
SUBSURFACE INFORMATION

BORING NUMBER: B-101
SHEET 1 of 1
DATE STARTED: 6/04/09
DATE COMPLETED: 6/04/09

PROJECT NAME: WINOOSKI
SITE NAME: I-89 NB
STATION: 16+32
OFFSET: -40.00
VTSPG NAD83: N 727292.62 ft E 1464850.97 ft

PROJECT NUMBER: NH 089-3(65)
SITE NUMBER: EXIT#15 OFF RAMP
GROUND ELEVATION: 272.14 ft
GROUNDWATER DEPTH: NONE TAKEN
PROJECT PIN NUMBER: 94A198

BORING CREW
CREW CHIEF: PORTER
DRILLER: PORTER
LOGGER: WERNER

BORING RIG: LAG TRACK RIG #10 w/AUTO HAMMER
BORING TYPE: HOLLOW STEM AUGER
SAMPLE TYPE: SPLIT BARREL
CHECKED BY: CEE

DEPTH (ft)	SYMBOL	CLASSIFICATION OF MATERIALS (Description)	BLOWS PER FOOT	M.C. (%)	GRAVEL (%)	SAND (%)	FINES (%)	LL (%)	PI (%)
		A-4, SiSa, brn, Moist, Rec. = 1.4 ft	2	12.5	5.2	52.0	42.8		
5		A-4, SiSa, brn, Wet, Rec. = 0.7 ft, Sample had a slight odor of possible septic.	WH	26.6	12.4	47.6	40.0		
10		A-4, Si, gry, Wet, Rec. = 1.3 ft	3	25.9	0.0	8.0	92.0	26	3
15		A-4, Si, gry, Wet, Rec. = 2.0 ft	WH	29.3	0.0	3.5	96.5	27	4
20		A-4, Si, gry, Wet, Rec. = 1.2 ft	9	25.8	0.0	19.0	81.0		
		Hole stopped @ 22.0 ft							
25									
30									
35									

STATE OF VERMONT
AGENCY OF TRANSPORTATION
MATERIALS & RESEARCH SECTION
SUBSURFACE INFORMATION

BORING NUMBER: B-104
SHEET 1 of 1
DATE STARTED: 6/03/09
DATE COMPLETED: 6/03/09

PROJECT NAME: WINOOSKI
SITE NAME: I-89 NB
STATION: 18+92
OFFSET: 51.00
VTSPG NAD83: N 727208.24 ft E 1465110.85 ft

PROJECT NUMBER: NH 089-3(65)
SITE NUMBER: EXIT#15 OFF RAMP
GROUND ELEVATION: 288.55 ft
GROUNDWATER DEPTH: NONE TAKEN
PROJECT PIN NUMBER: 94A198

BORING CREW
CREW CHIEF: PORTER
DRILLER: PORTER
LOGGER: WERNER

BORING RIG: LAG TRACK RIG #10 w/AUTO HAMMER
BORING TYPE: HOLLOW STEM AUGER
SAMPLE TYPE: SPLIT BARREL
CHECKED BY: CEE

DEPTH (ft)	SYMBOL	CLASSIFICATION OF MATERIALS (Description)	BLOWS PER FOOT	M.C. (%)	GRAVEL (%)	SAND (%)	FINES (%)
		A-2-4, GrSa, brn, Moist, Rec. = 1.3 ft	5	8.6	23.9	61.1	15.0
5		A-2-4, SiSa, brn, Moist, Rec. = 1.7 ft	7	9.2	2.2	75.1	22.7
10		A-3, Sa, brn, Wet, Rec. = 1.5 ft	12	19.1	11.9	80.2	7.9
15		A-2-4, SiSa, brn, Wet, Rec. = 1.7 ft	5	25.4	0.0	76.2	23.8
20		A-4, Si, gry, Wet, Rec. = 1.5 ft	4	28.3	0.0	11.8	88.2
		Hole stopped @ 22.0 ft					
25							
30							
35							

STATE OF VERMONT
AGENCY OF TRANSPORTATION
MATERIALS & RESEARCH SECTION
SUBSURFACE INFORMATION

BORING NUMBER: B-105
SHEET 1 of 1
DATE STARTED: 6/03/09
DATE COMPLETED: 6/03/09

PROJECT NAME: WINOOSKI
SITE NAME: I-89 NB
STATION: 18+00
OFFSET: 49.00
VTSPG NAD83: N 727208.10 ft E 1465019.80 ft

PROJECT NUMBER: NH 089-3(65)
SITE NUMBER: EXIT#15 OFF RAMP
GROUND ELEVATION: 283.21 ft
GROUNDWATER DEPTH: NONE TAKEN
PROJECT PIN NUMBER: 94A198

BORING CREW
CREW CHIEF: PORTER
DRILLER: PORTER
LOGGER: WERNER

BORING RIG: LAG TRACK RIG #10 w/AUTO HAMMER
BORING TYPE: HOLLOW STEM AUGER
SAMPLE TYPE: SPLIT BARREL
CHECKED BY: CEE

DEPTH (ft)	SYMBOL	CLASSIFICATION OF MATERIALS (Description)	BLOWS PER FOOT	M.C. (%)	GRAVEL (%)	SAND (%)	FINES (%)
		A-2-4, GrSa, brn, Moist, Rec. = 1.2 ft	6	8.6	26.9	58.9	14.2
5		A-2-4, SiSa, brn, Moist, Rec. = 1.4 ft	10	25.7	0.0	73.5	26.5
10		A-4, SiSa, brn, Wet, Rec. = 1.5 ft	4	27.3	0.3	54.5	45.2
15		A-4, Si, gry, Wet, Rec. = 1.4 ft	3	27.0	0.0	13.7	86.3
20		A-4, SaSi, gry, Wet, Rec. = 2.0 ft	1	23.5	0.3	27.1	72.6
		Hole stopped @ 22.0 ft					
25							
30							
35							

STATE OF VERMONT
AGENCY OF TRANSPORTATION
MATERIALS & RESEARCH SECTION
SUBSURFACE INFORMATION

BORING NUMBER: B-106
SHEET 1 of 1
DATE STARTED: 6/03/09
DATE COMPLETED: 6/03/09

PROJECT NAME: WINOOSKI
SITE NAME: I-89 NB
STATION: 16+97
OFFSET: 41.00
VTSPG NAD83: N 727207.57 ft E 1464917.53 ft

PROJECT NUMBER: NH 089-3(65)
SITE NUMBER: EXIT#15 OFF RAMP
GROUND ELEVATION: 275.95 ft
GROUNDWATER DEPTH: NONE TAKEN
PROJECT PIN NUMBER: 94A198

BORING CREW
CREW CHIEF: PORTER
DRILLER: PORTER
LOGGER: WERNER

BORING RIG: LAG TRACK RIG #10 w/AUTO HAMMER
BORING TYPE: HOLLOW STEM AUGER
SAMPLE TYPE: SPLIT BARREL
CHECKED BY: CEE

DEPTH (ft)	SYMBOL	CLASSIFICATION OF MATERIALS (Description)	BLOWS PER FOOT	M.C. (%)	GRAVEL (%)	SAND (%)	FINES (%)
		Field Note:, No Recovery, Cobbles	6				
		Cobbles with Gravely Sand, brn, Moist, Rec. = 0.6 ft, 2.0 ft - 3.0 ft	R	10.3	21.3	62.0	16.7
5		A-4, SaSi, brn, Moist, Rec. = 1.8 ft	12	22.1	1.7	37.7	60.6
10		A-4, SaSi, gry, Wet, Rec. = 1.4 ft	4	23.3	0.0	23.3	76.7
15		A-4, Si, gry, Wet, Rec. = 1.3 ft	3	26.3	0.0	12.1	87.9
20		A-4, SaSi, gry, Wet, Rec. = 2.0 ft	WH	24.6	0.0	27.6	72.4
		Hole stopped @ 22.0 ft					
25							
30							
35							

PROJECT NAME: WINOOSKI
PROJECT NUMBER: NH 089-3(65)

FILE NAME: z94a198borlog.dgn
PROJECT LEADER: KEN UPMAL
DESIGNED BY: A. ACHARYA
BORING LOGS SHEET 1

PLOT DATE: 2/22/2010
DRAWN BY: A. ACHARYA
CHECKED BY: E. ATKINS
SHEET 40 OF 67

STATE OF VERMONT
AGENCY OF TRANSPORTATION
MATERIALS & RESEARCH SECTION
SUBSURFACE INFORMATION

BORING NUMBER: B-107
SHEET 1 of 1
DATE STARTED: 6/02/09
DATE COMPLETED: 6/02/09

PROJECT NAME: WINOOSKI
SITE NAME: I-89 NB
STATION: 57+50
OFFSET: 42.00
VTSPG NAD83: N 727002.30 ft E 1464907.52 ft

PROJECT NUMBER: NH 089-3(65)
SITE NUMBER: EXIT#15 OFF RAMP
GROUND ELEVATION: 269.31 ft
GROUNDWATER DEPTH: HOLE CAVED IN
PROJECT PIN NUMBER: 94A198

BORING CREW
CREW CHIEF: PORTER
DRILLER: PORTER
LOGGER: WERNER

BORING RIG: LAG TRACK RIG #10 w/AUTO HAMMER
BORING TYPE: HOLLOW STEM AUGER
SAMPLE TYPE: SPLIT BARREL
CHECKED BY: CEE

DEPTH (ft)	SYMBOL	CLASSIFICATION OF MATERIALS (Description)	BLOWS PER FOOT	M.C. (%)	GRAVEL (%)	SAND (%)	FINES (%)
		A-2-4, GrSa, brn, Wet, Rec. = 0.9 ft	6	17.4	23.3	64.8	11.9
		A-2-4, SiSa, brn, Wet, Rec. = 0.4 ft	6	28.5	17.3	53.3	29.4
		A-4, Si, gry, Wet, Rec. = 0.8 ft		24.2	0.0	13.3	86.7
5		A-4, Si, gry, Wet, Rec. = 1.1 ft	7	22.8	0.0	17.8	82.2
		A-4, SaSi, gry, Wet, Rec. = 1.2 ft	6	20.3	0.0	44.6	55.4
		A-4, Si, gry, Wet, Rec. = 1.2 ft	2	26.3	0.0	19.8	80.2
10		A-4, Si, gry, Wet, Rec. = 1.4 ft	1	24.4	0.0	16.1	83.9
		A-4, Si, gry, Wet, Rec. = 1.6 ft	1	27.7	0.0	6.8	93.2
		A-4, Si, gry, Wet, Rec. = 1.5 ft	1	29.1	0.0	3.8	96.2
15		A-4, Si, gry, Wet, Rec. = 2.0 ft	1	28.9	0.0	4.4	95.6
		A-4, Si, gry, Wet, Rec. = 2.0 ft	4	24.8	0.0	7.3	92.7
20		Hole stopped @ 20.0 ft					
25							
30							
35							

LOG OF BORING WINOOSKI NH 089-3(65) GPJ VT AOT.GDT 7/20/09

STATE OF VERMONT
AGENCY OF TRANSPORTATION
MATERIALS & RESEARCH SECTION
SUBSURFACE INFORMATION

BORING NUMBER: B-108
SHEET 1 of 1
DATE STARTED: 6/02/09
DATE COMPLETED: 6/02/09

PROJECT NAME: WINOOSKI
SITE NAME: I-89 NB
STATION: 57+50
OFFSET: -32.00
VTSPG NAD83: N 727006.74 ft E 1464836.18 ft

PROJECT NUMBER: NH 089-3(65)
SITE NUMBER: EXIT#15 OFF RAMP
GROUND ELEVATION: 271.57 ft
GROUNDWATER DEPTH: NONE TAKEN
PROJECT PIN NUMBER: 94A198

BORING CREW
CREW CHIEF: PORTER
DRILLER: PORTER
LOGGER: WERNER

BORING RIG: LAG TRACK RIG #10 w/AUTO HAMMER
BORING TYPE: HOLLOW STEM AUGER
SAMPLE TYPE: SPLIT BARREL
CHECKED BY: CEE

DEPTH (ft)	SYMBOL	CLASSIFICATION OF MATERIALS (Description)	BLOWS PER FOOT	M.C. (%)	GRAVEL (%)	SAND (%)	FINES (%)
		A-4, SaSi, brn, Moist, Rec. = 1.5 ft	2	19.2	0.4	32.1	67.5
5		A-4, SaSi, brn, Moist, Rec. = 1.4 ft	6	23.9	0.0	23.3	76.7
10		A-4, Si, gry, Wet, Rec. = 1.1 ft	6	23.8	0.0	18.2	81.8
15		A-4, Si, gry, Wet, Rec. = 1.5 ft	2	27.0	0.0	6.7	93.3
20		A-4, Si, gry, Wet, Rec. = 2.0 ft	WH	23.9	0.0	7.3	92.7
		Hole stopped @ 22.0 ft					
25							
30							
35							

DRILLER'S NOTES:
1. Water table was at ground level.

LOG OF BORING WINOOSKI NH 089-3(65) GPJ VT AOT.GDT 7/20/09

STATE OF VERMONT
AGENCY OF TRANSPORTATION
MATERIALS & RESEARCH SECTION
SUBSURFACE INFORMATION

BORING NUMBER: B-109
SHEET 1 of 1
DATE STARTED: 6/04/09
DATE COMPLETED: 6/04/09

PROJECT NAME: WINOOSKI
SITE NAME: I-89 NB
STATION: 19+32
OFFSET: -6.00
VTSPG NAD83: N 727264.52 ft E 1465175.09 ft

PROJECT NUMBER: NH 089-3(65)
SITE NUMBER: EXIT#15 OFF RAMP
GROUND ELEVATION: 293.18 ft
GROUNDWATER DEPTH: NONE TAKEN
PROJECT PIN NUMBER: 94A198

BORING CREW
CREW CHIEF: PORTER
DRILLER: PORTER
LOGGER: WERNER

BORING RIG: LAG TRACK RIG #10 w/AUTO HAMMER
BORING TYPE: HOLLOW STEM AUGER
SAMPLE TYPE: SPLIT BARREL
CHECKED BY: CEE

DEPTH (ft)	SYMBOL	CLASSIFICATION OF MATERIALS (Description)	BLOWS PER FOOT	M.C. (%)	GRAVEL (%)	SAND (%)	FINES (%)
		A-2-4, SiGrSa with Cobbles, brn, Moist, Rec. = 0.8 ft	8	9.2	24.3	55.0	20.7
		A-2-4, GrSa with Cobbles, brn, Moist, Rec. = 1.1 ft, Broken rock was within sample.	37	5.1	33.9	49.3	16.8
5		A-2-4, SiSa, brn, Moist, Rec. = 1.7 ft	6	11.3	3.7	63.1	33.2
		A-2-4, Sa, brn, Moist, Rec. = 1.5 ft	9	6.8	9.3	79.3	11.4
		A-2-4, SiSa, brn, Moist, Rec. = 2.0 ft	11	12.2	0.8	71.9	27.3
10							
15		A-4, SaSi, brn, Wet, Rec. = 1.4 ft	4	27.9	0.0	48.5	51.5
20		A-4, Si, gry, Wet, Rec. = 1.5 ft	5	26.8	0.0	20.0	80.0
		Hole stopped @ 22.0 ft					
25							
30							
35							

LOG OF BORING WINOOSKI NH 089-3(65) GPJ VT AOT.GDT 7/20/09

PROJECT NAME: WINOOSKI
PROJECT NUMBER: NH 089-3(65)

FILE NAME: z94a198borlog.dgn
PROJECT LEADER: KEN UPMAL
DESIGNED BY: A. ACHARYA
BORING LOGS SHEET 2

PLOT DATE: 2/22/2010
DRAWN BY: A. ACHARYA
CHECKED BY: E. ATKINS
SHEET 41 OF 67

DURABLE 6 INCH WHITE LINE, TYPE I TAPE
RAMP "B" 52+50 ~ 58+00 RT, 552 LF (EL)
RAMP "B" 57+60 ~ 58+00 RT, 40 LF (LL)
RAMP "B" 55+80 ~ 58+00 BL, 220 LF (LL)

DURABLE 6 INCH YELLOW LINE, TYPE I TAPE
RAMP "B" 52+50 ~ 58+00 LT, 551 LF (EL)

DURABLE LETTER OR SYMBOL, TYPE I TAPE
RAMP "B" 55+80 ~ 56+30 LT, 1 LEFT ARROW
RAMP "B" 57+60 ~ 57+69 LT & RT, 3 "ONLY" (3X4=12 EACH)

TEMPORARY 6 INCH WHITE LINE
RAMP "B" 52+50 ~ 58+00 RT, 552 LF (EL)
RAMP "B" 57+60 ~ 58+00 RT, 40 LF (LL)
RAMP "B" 55+80 ~ 58+00 BL, 220 LF (LL)

TEMPORARY 6 INCH YELLOW LINE
RAMP "B" 52+50 ~ 58+00 LT, 551 LF (EL)

TEMPORARY LETTER OR SYMBOL
RAMP "B" 55+80 ~ 56+30 LT, 1 LEFT ARROW
RAMP "B" 57+60 ~ 57+69 LT & RT, 3 "ONLY" (3X4=12 EACH)

REMOVING SIGNS
13 EACH

ERECTING SALVAGED SIGNS
5 EACH

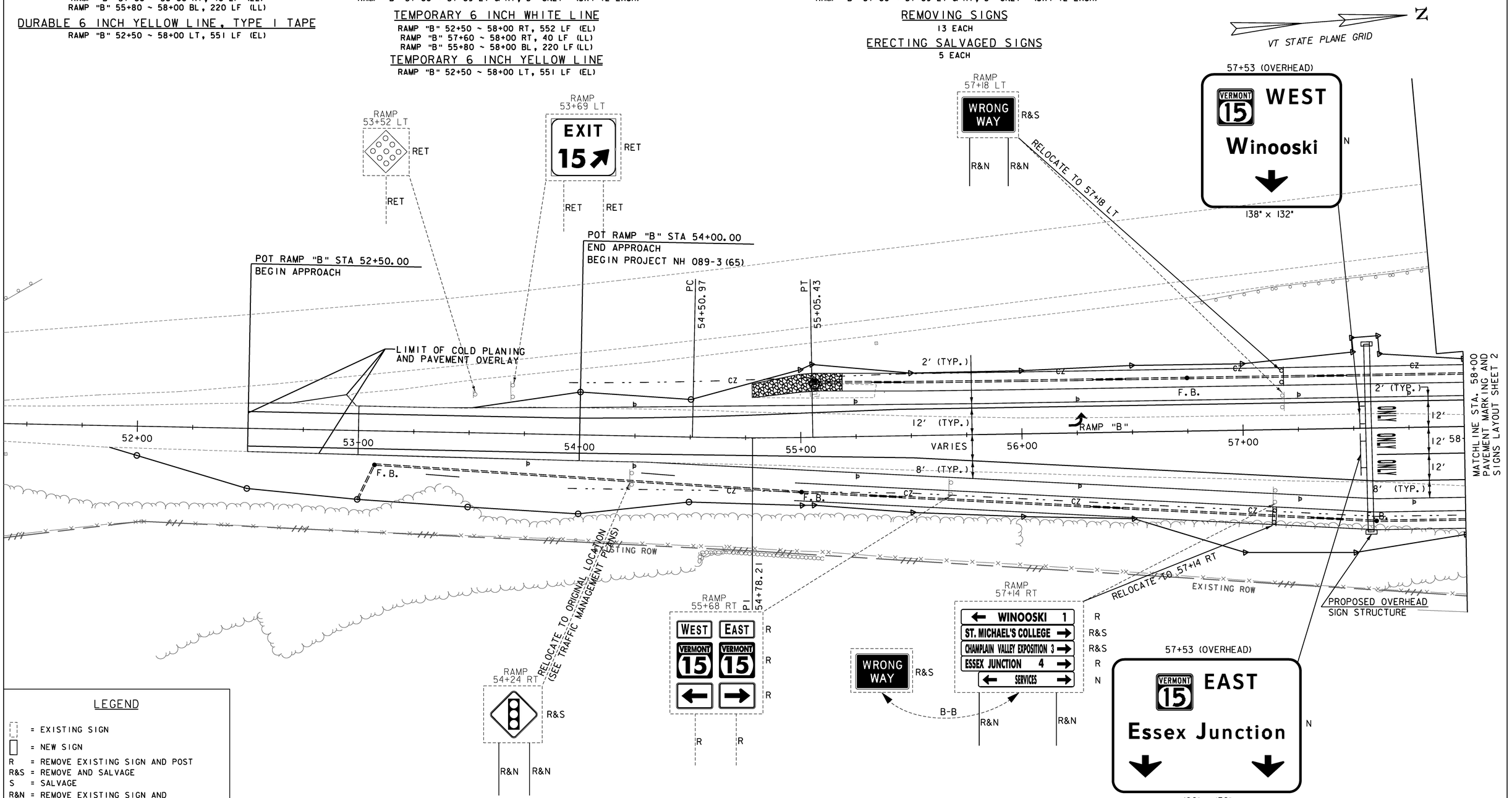

LEGEND

= EXISTING SIGN
= NEW SIGN
R = REMOVE EXISTING SIGN AND POST
R&S = REMOVE AND SALVAGE
S = SALVAGE
R&N = REMOVE EXISTING SIGN AND PROVIDE NEW SIGN
N = NEW
RET = RETAIN AT EXISTING LOCATION
B-B = BACK TO BACK
EL = EDGE LINE
LL = LANE LINE
CL = CENTERLINE
TL = TURN LANE
GORE = GORING

0 20 40
SCALE IN FEET

NOTE:

1. REFER TO THE TRAFFIC MANAGEMENT PLANS FOR ADDITIONAL PAVEMENT MARKING REQUIREMENTS BEYOND THE APPROACH LIMITS.
2. ALL DURABLE PAVEMENT MARKINGS SHALL BE TYPE I TAPE UNLESS OTHERWISE NOTED.

PROJECT NAME: WINOOSKI
PROJECT NUMBER: NH 089-3(65)

FILE NAME: z94a198pmbdr.dgn
PROJECT LEADER: KEN UPMAL
DESIGNED BY: J.SOBEL
PVMT. MARKING AND SIGNS LAYOUT SHEET 1
PLOT DATE: 2/23/2010
DRAWN BY: J.WILTSHIRE
CHECKED BY: D.FLYNN
SHEET 42 OF 67

DURABLE 4 INCH WHITE LINE, TYPE I TAPE

ROUTE 15 15+85 ~ 16+20 LT, 35 LF (TL)
ROUTE 15 15+85 ~ 16+21 RT, 36 LF (LL)
ROUTE 15 15+85 ~ 16+38 RT, 53 LF (EL)
ROUTE 15 15+85 ~ 16+92 LT, 107 LF (EL)
ROUTE 15 15+85 ~ 16+20 LT, 1 X 10 = 10 LF (LL)
ROUTE 15 16+68 ~ 16+92 RT, 24 LF (EL)
ROUTE 15 17+00 ~ 20+33 LT , 338 LF (EL)
ROUTE 15 17+00 ~ 17+78 RT 2 X 10 = 20 LF (LL)
ROUTE 15 17+02 ~ 17+35 RT, 33 LF (EL)
ROUTE 15 17+04 ~ 17+54 LT, 50 LF (LL)
ROUTE 15 17+42 ~ 18+45 RT, 112 LF (EL)
ROUTE 15 17+54 ~ 18+35 LT 2 X 10 = 20 LF (LL)
ROUTE 15 17+78 ~ 18+28 RT, 50 LF (LL)
ROUTE 15 18+83 ~ 21+00 RT, 218 LF (LL)
ROUTE 15 18+93 ~ 20+36 RT 4 X 10 = 40 LF (LL)
ROUTE 15 18+93 ~ 19+43 LT, 50 LF (LL)
ROUTE 15 18+93 ~ 19+43 LT, 50 LF (LL)
ROUTE 15 19+43 ~ 20+36 LT 2 X 10, 20 LF (LL)
ROUTE 15 19+87 ~ 20+37 RT, 50 LF (TL)
ROUTE 15 20+33 ~ 20+67 LT, 279 LF (CH)
SLIP RAMP 81+75 ~ 82+25 RT, 50 LF (DOTTED LL)

DURABLE 4 INCH YELLOW LINE, TYPE I TAPE

ROUTE 15 15+85 ~ 16+21 RT, 36 LF (EL)
ROUTE 15 15+85 ~ 16+21 RT, 36 LF (EL)
ROUTE 15 16+81 ~ 16+93 RT, 12 LF (EL)
ROUTE 15 16+81 ~ 16+92 LT, 12 LF (EL)
ROUTE 15 17+00 ~ 18+28 RT, 127 LF (EL)
ROUTE 15 17+00 ~ 18+21 LT, 121 LF (EL)
ROUTE 15 18+93 RT ~ 20+37 LT, 145 LF (EL)
ROUTE 15 18+93 RT ~ 20+37 LT, 145 LF (EL)
ROLAND COURT 29+15 ~ 29+45 LT&RT, 2 X 30 = 60 LF (EL)
ROUTE 15 20+53 ~ 20+54 LT, 2 X 12 = 24 LF (EL)
ROUTE 15 20+67 ~ 21+00, 143 LF (EL)

DURABLE 6 INCH WHITE LINE, TYPE I TAPE

RAMP "B" 58+00 ~ SLIP RAMP 81+50 RT, 163 LF (LL)
RAMP "B" 58+00 ~ SLIP RAMP 81+50 RT, 153 LF (LL)
RAMP "B" 58+00 ~ 58+22 BL, 22 LF (LL)
RAMP "B" 59+19 ~ 59+52 BL, 33 LF (EL)
ROUTE 15 17+31 ~ 17+90 RT II X 2 = 22 LF (LL)

DURABLE 8 INCH WHITE LINE, TYPE I TAPE

ROUTE 15 20+33 ~ 20+67, 108 LF (DNBBL)

DURABLE 6 INCH YELLOW LINE, TYPE I TAPE

RAMP 58+00 ~ 59+52 LT, 152 LF (EL)
SLIP RAMP 80+80 ~ 81+76 BL, 96 LF (EL)

DURABLE 8 INCH YELLOW LINE, TYPE I TAPE

ROUTE 15 20+67 ~ 21+00, 50 LF (GORE)

DURABLE 12 INCH WHITE LINE, TYPE I TAPE

RAMP 58+22 ~ 59+19 BL, 97 LF (EL)
SLIP RAMP 80+00 ~ 80+80 BL, 80 LF (EL)
RAMP GORE, 104 LF

DURABLE 24 INCH STOP BAR, TYPE I TAPE

ROUTE 15 16+21 RT, 24 LF
ROUTE 15 17+05 LT, 29 LF
ROUTE 15 18+28 RT, 27 LF
ROUTE 15 18+93 LT, 35 LF
ROUTE 15 20+38 ~ 20+54 LT, 17 LF
ROLAND COURT 29+45 ~ 29+48 RT, 13 LF
SLIP RAMP 81+50 RT, 34 LF
RAMP "B" 59+52 LT/RT, 22 LF

DURABLE LETTER OR SYMBOL, TYPE I TAPE

ROUTE 15 15+89 ~ 16+20 LT, 1 LEFT ARROW, 1 "ONLY" (1x4=4 EACH)
ROUTE 15 18+98 ~ 19+46 LT, 1 LEFT ARROW, 1 "ONLY" (1x4=4 EACH)
ROUTE 15 19+87 ~ 20+33 LT, 1 LEFT ARROW, 1 "ONLY" (1x4=4 EACH)
ROUTE 15 20+43 ~ 20+51 LT, 1 "STOP" (1x4=4 EACH)
RAMP "B" 58+02 ~ 58+10 LT & RT, 1 LEFT AND 2 RIGHT ARROWS
RAMP "B" 58+92 ~ 59+47 LT, 1 LEFT ARROW, 1 "ONLY" (1x4=4 EACH)
SLIP RAMP 80+81 ~ 81+43 RT, 1 RIGHT ARROW, 1 "ONLY" (1x4=4 EACH)
SLIP RAMP 80+79 ~ 81+45 RT, 1 RIGHT ARROW, 1 "ONLY" (1x4=4 EACH)

DURABLE CROSSWALK MARKING, TYPE I TAPE

ROUTE 15 16+96 LT, 30 LF
ROUTE 15 16+96 RT, 26 LF
ROUTE 15 20+35 ~ 20+84 LT, 53 LF
ROLAND COURT 29+54 LT/RT, 35 LF
SLIP RAMP 81+58 RT, 34 LF
RAMP "B" 59+58 LT/RT, 22 LF

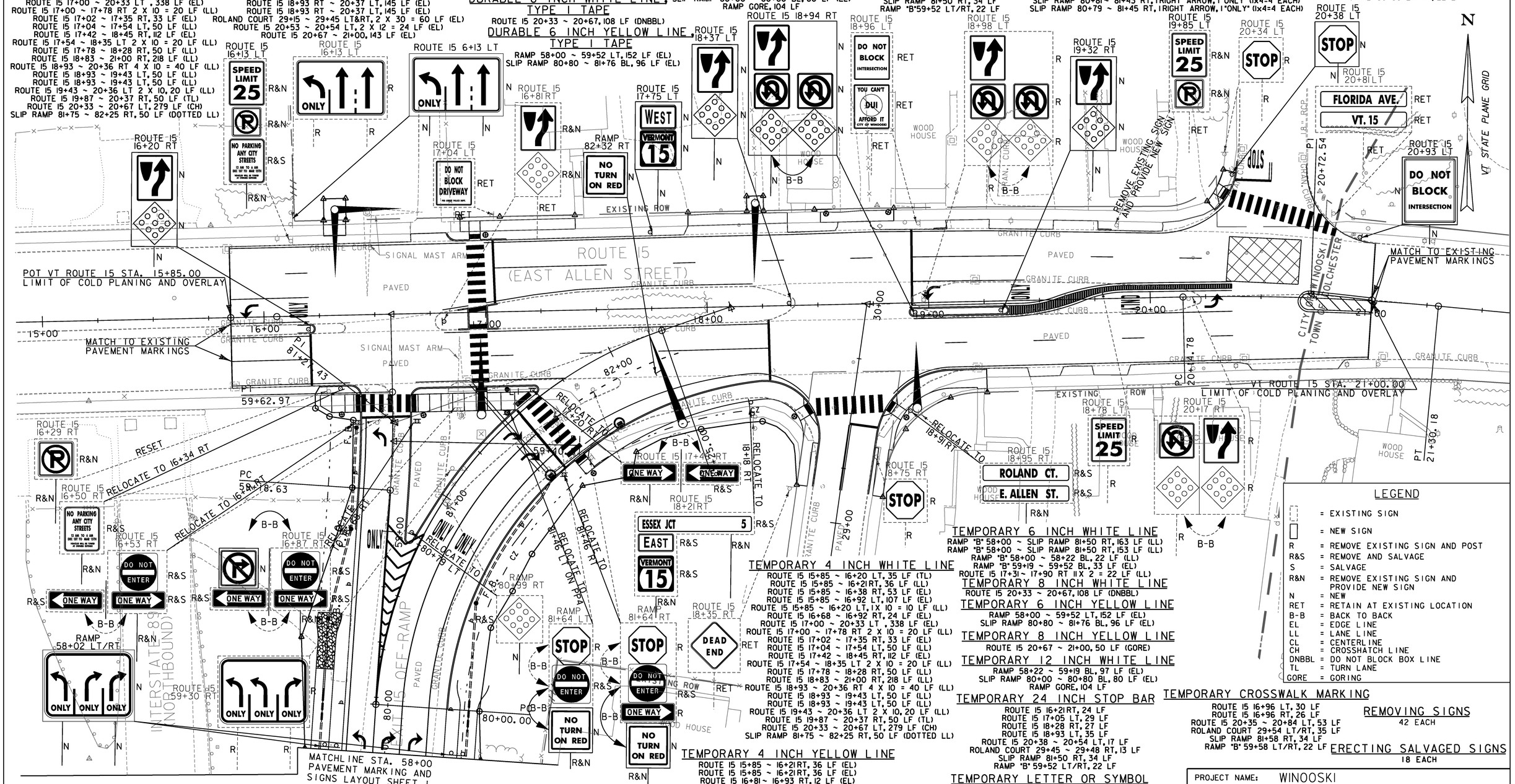

LEGEND

[ ]	=	EXISTING SIGN
[ ]	=	NEW SIGN
R	=	REMOVE EXISTING SIGN AND POST
R&S	=	REMOVE AND SALVAGE
S	=	SALVAGE
R&N	=	REMOVE EXISTING SIGN AND PROVIDE NEW SIGN
N	=	NEW
RET	=	RETAIN AT EXISTING LOCATION
B-B	=	BACK TO BACK
EL	=	EDGE LINE
LL	=	LANE LINE
CL	=	CENTERLINE
CH	=	CROSSHATCH LINE
DNBBL	=	DO NOT BLOCK BOX LINE
TL	=	TURN LANE
GORE	=	GORING

TEMPORARY 4 INCH WHITE LINE

ROUTE 15 15+85 ~ 16+20 LT, 35 LF (TL)
ROUTE 15 15+85 ~ 16+21 RT, 36 LF (LL)
ROUTE 15 15+85 ~ 16+38 RT, 53 LF (EL)
ROUTE 15 15+85 ~ 16+92 LT, 107 LF (EL)
ROUTE 15 15+85 ~ 16+20 LT, 1 X 10 = 10 LF (LL)
ROUTE 15 16+68 ~ 16+92 RT, 24 LF (EL)
ROUTE 15 17+00 ~ 20+33 LT , 338 LF (EL)
ROUTE 15 17+00 ~ 17+78 RT 2 X 10 = 20 LF (LL)
ROUTE 15 17+02 ~ 17+35 RT, 33 LF (EL)
ROUTE 15 17+04 ~ 17+54 LT, 50 LF (LL)
ROUTE 15 17+42 ~ 18+45 RT, 112 LF (EL)
ROUTE 15 17+54 ~ 18+35 LT 2 X 10 = 20 LF (LL)
ROUTE 15 17+78 ~ 18+28 RT, 50 LF (LL)
ROUTE 15 18+83 ~ 21+00 RT, 218 LF (LL)
ROUTE 15 18+93 ~ 20+36 RT 4 X 10 = 40 LF (LL)
ROUTE 15 18+93 ~ 19+43 LT, 50 LF (LL)
ROUTE 15 18+93 ~ 19+43 LT, 50 LF (LL)
ROUTE 15 19+43 ~ 20+36 LT 2 X 10, 20 LF (LL)
ROUTE 15 19+87 ~ 20+37 RT, 50 LF (TL)
ROUTE 15 20+33 ~ 20+67 LT, 279 LF (CH)
SLIP RAMP 81+75 ~ 82+25 RT, 50 LF (DOTTED LL)

TEMPORARY 4 INCH YELLOW LINE

ROUTE 15 15+85 ~ 16+21 RT, 36 LF (EL)
ROUTE 15 15+85 ~ 16+21 RT, 36 LF (EL)
ROUTE 15 16+81 ~ 16+93 RT, 12 LF (EL)
ROUTE 15 16+81 ~ 16+92 LT, 12 LF (EL)
ROUTE 15 17+00 ~ 18+28 RT, 127 LF (EL)
ROUTE 15 17+00 ~ 18+21 LT, 121 LF (EL)
ROUTE 15 18+93 RT ~ 20+37 LT, 145 LF (EL)
ROUTE 15 18+93 RT ~ 20+37 LT, 145 LF (EL)
ROLAND COURT 29+15 ~ 29+45 LT&RT, 2 X 30 = 60 LF (EL)
ROUTE 15 20+53 ~ 20+54 LT, 2 X 12 = 24 LF (EL)
ROUTE 15 20+67 ~ 21+00, 143 LF (EL)

TEMPORARY 6 INCH WHITE LINE

RAMP "B" 58+00 ~ SLIP RAMP 81+50 RT, 163 LF (LL)
RAMP "B" 58+00 ~ SLIP RAMP 81+50 RT, 153 LF (LL)
RAMP "B" 58+00 ~ 58+22 BL, 22 LF (LL)
RAMP "B" 59+19 ~ 59+52 BL, 33 LF (EL)
ROUTE 15 17+31 ~ 17+90 RT II X 2 = 22 LF (LL)

TEMPORARY 8 INCH WHITE LINE

ROUTE 15 20+33 ~ 20+67, 108 LF (DNBBL)

TEMPORARY 6 INCH YELLOW LINE

RAMP 58+00 ~ 59+52 LT, 152 LF (EL)
SLIP RAMP 80+80 ~ 81+76 BL, 96 LF (EL)

TEMPORARY 8 INCH YELLOW LINE

ROUTE 15 20+67 ~ 21+00, 50 LF (GORE)

TEMPORARY 12 INCH WHITE LINE

RAMP 58+22 ~ 59+19 BL, 97 LF (EL)
SLIP RAMP 80+00 ~ 80+80 BL, 80 LF (EL)
RAMP GORE, 104 LF

TEMPORARY 24 INCH STOP BAR

ROUTE 15 16+21 RT, 24 LF
ROUTE 15 17+05 LT, 29 LF
ROUTE 15 18+28 RT, 27 LF
ROUTE 15 18+93 LT, 35 LF
ROUTE 15 20+38 ~ 20+54 LT, 17 LF
ROLAND COURT 29+45 ~ 29+48 RT, 13 LF
SLIP RAMP 81+50 RT, 34 LF
RAMP "B" 59+52 LT/RT, 22 LF

TEMPORARY LETTER OR SYMBOL

ROUTE 15 15+89 ~ 16+20 LT, 1 LEFT ARROW, 1 "ONLY" (1x4=4 EACH)
ROUTE 15 18+98 ~ 19+46 LT, 1 LEFT ARROW, 1 "ONLY" (1x4=4 EACH)
ROUTE 15 19+87 ~ 20+33 LT, 1 LEFT ARROW, 1 "ONLY" (1x4=4 EACH)
ROUTE 15 20+43 ~ 20+51 LT, 1 "STOP" (1x4=4 EACH)
RAMP "B" 58+02 ~ 58+10 LT & RT, 1 LEFT AND 2 RIGHT ARROWS
RAMP "B" 58+92 ~ 59+47 LT, 1 LEFT ARROW, 1 "ONLY" (1x4=4 EACH)
SLIP RAMP 80+81 ~ 81+43 RT, 1 RIGHT ARROW, 1 "ONLY" (1x4=4 EACH)
SLIP RAMP 80+79 ~ 81+45 RT, 1 RIGHT ARROW, 1 "ONLY" (1x4=4 EACH)

TEMPORARY CROSSWALK MARKING

ROUTE 15 16+96 LT, 30 LF
ROUTE 15 16+96 RT, 26 LF
ROUTE 15 20+35 ~ 20+84 LT, 53 LF
ROLAND COURT 29+54 LT/RT, 35 LF
SLIP RAMP 81+58 RT, 34 LF
RAMP "B" 59+58 LT/RT, 22 LF

REMOVING SIGNS

42 EACH

ERECTING SALVAGED SIGNS

18 EACH

NOTE:

1. REFER TO THE TRAFFIC MANAGEMENT PLANS FOR ADDITIONAL PAVEMENT MARKING REQUIREMENTS BEYOND THE APPROACH LIMITS.
2. ALL DURABLE PAVEMENT MARKINGS SHALL BE TYPE I TAPE UNLESS OTHERWISE NOTED.
3. SEE SHEET 51 FOR CROSSWALK DETAIL.

0 20 40
SCALE IN FEET

PROJECT NAME: WINOOSKI	
PROJECT NUMBER: NH 089-3(65)	
FILE NAME: z94al98pmbdr.dgn	PLOT DATE: 2/25/2010
PROJECT LEADER: KEN UPMAL	DRAWN BY: J.WILTSHIRE
DESIGNED BY: J.SOBEL	CHECKED BY: D.FLYNN
PVMT. MARKING AND SIGNS LAYOUT SHEET 2	SHEET 43 OF 67

STATE OF VERMONT
AGENCY OF TRANSPORTATION

TRAFFIC SIGN SUMMARY SHEET 1

MILEMARKER, STATION, OR SIGN NUMBER	SIGN LEGEND	SIGN DIMENSIONS EA	SIGN DIMENSIONS WIDTH (in)	SIGN DIMENSIONS HEIGHT (in)	NEW & SALVAGED SIGNS "A"	NEW & SALVAGED SIGNS "B"	NEW & SALVAGED SIGNS SALV SIGN	NEW & SALVAGED SIGNS SALV TIS	EXIST POST RETAIN	EXIST POST SALVAGE	NEW SIGN POSTS NO. OF POSTS	FLANGED CHANNEL lb/ft 1.12	FLANGED CHANNEL lb/ft 2.0	FLANGED CHANNEL lb/ft 3.0	SQUARE STEEL (in) lb/ft 1.75	SQUARE STEEL (in) lb/ft 2.0	SQUARE STEEL (in) lb/ft 2.5	ANCHOR	SLEEVE	TUBULAR ALUMINUM Ø (in) lb/ft 3.0	TUBULAR ALUMINUM Ø (in) lb/ft 4.0	TUBULAR ALUMINUM Ø (in) lb/ft 4.0 MOD	TUBULAR STEEL Ø (in) FOUND-ATION	TUBULAR STEEL Ø (in) lb/ft 3.0	TUBULAR STEEL Ø (in) lb/ft 3.5	TUBULAR STEEL Ø (in) lb/ft 4.0	TUBULAR STEEL Ø (in) lb/ft 5.0	W-SHAPE STEEL FTG. SIZE 24"	W-SHAPE STEEL FTG. SIZE 30"	W-SHAPE STEEL WEIGHT	W-SHAPE STEEL POST SIZE	SIGN REQUIRED	REMARKS	SIGN DETAIL DETAIL ON SHEET NUMBER	SIGN DETAIL STD. SHEET NUMBER
												OPTION ITEMS																								
RAMP "B"																																				
STATION 54+24, RT RAMP	W3-3, SIGNAL AHEAD						1				2 +						X	2 +																RELOCATE EXISTING SIGN ON NEW POSTS		
STATION 57+14, RT RAMP "B"	ST. MICHAEL'S COLLEGE DI-1, GUIDE SIGN, ST. MICHAEL'S COLLEGE						1				2						X	2																RELOCATE EXISTING SIGN ON NEW POSTS		
	CHAMPLAIN VALLEY EXPOSITION 2 DI-1, GUIDE SIGN, CHAMPLAIN VALLEY EXPOSITION						1																											RELOCATE EXISTING SIGN ON NEW POSTS (SUB-MOUNT WITH PREVIOUS SIGN)		
	SERVICES SERVICE SIGN, SERVICES		54	7.5	2.82																													INSTALL NEW SIGN ON NEW POSTS (SUB-MOUNT WITH PREVIOUS SIGNS)		STD. E-133
	WRONG WAY R5-1A, WRONG WAY						1																											RELOCATE EXISTING SIGN ON NEW POSTS (MOUNT BACK TO BACK WITH PREVIOUS SIGNS)		
STATION 57+18, LT RAMP "B" 57+25	WRONG WAY R5-1A, WRONG WAY						1				2					X		2																RELOCATE EXISTING SIGN ON NEW POSTS		
STATION 57+53 RAMP "B" OVERHEAD	15 WEST Winooski GUIDE SIGN ROUTE 15 WEST WINOOSKI	1	138	132		126.5																												INSTALL NEW SIGN ON NEW OVERHEAD SIGN SUPPORT, CENTER ARROW OVER LEFT-MOST LANE	SHEET 53	
STATION 57+53 RAMP "B" OVERHEAD	15 EAST Essex Junction GUIDE SIGN ROUTE 15 EAST ESSEX JUNCTION	1	186	132		170.5																												INSTALL NEW SIGN ON NEW OVERHEAD SIGN SUPPORT, CENTER ARROWS OVER MIDDLE AND RIGHT-MOST LANES	SHEET 53	
STATION 58+02, LT RAMP "B"	ONLY ONLY ONLY VR-936, LEFT, RIGHT, RIGHT	1	54	30	11.25						2					X		2																INSTALL NEW SIGN ON NEW POSTS		STD. E-145B
STATION 58+02, RT RAMP "B"	ONLY ONLY ONLY VR-936, LEFT, RIGHT, RIGHT	1	54	30	11.25						2					X		2																INSTALL NEW SIGN ON NEW POSTS		STD. E-145B
SLIP RAMP																																				
STATION 80+79, RT SLIP RAMP	OMI-1, OBJECT MARKER						1				1					X		1																RELOCATE EXISTING SIGN ON NEW POST		
STATION 81+46, LT SLIP RAMP	DO NOT ENTER R5-1, DO NOT ENTER						1																											RELOCATE EXISTING SIGN ON NEW PEDESTAL POST 4		
	NO TURN ON RED R10-11B, NO TURN ON RED	1	30	30	6.25																													INSTALL NEW SIGN ON NEW PEDESTAL POST 4 (MOUNT BACK TO BACK WITH PREVIOUS SIGN)		SHS PAGE 1-141
STATION 81+46, RT SLIP RAMP	DO NOT ENTER R5-1, DO NOT ENTER						1				1					X		1																RELOCATE EXISTING SIGN ON NEW POST		
												FT	FT	FT	FT	FT 104.25	FT 44.5		EA	LB	LB	LB		LB	LB	LB	LB								
	TOTALS				SF 31.57	SF 297	EA. 8	SF				FT			FT 148.75					LB			EA.	LB				EA.	EA.	LB					

FINAL POST LENGTHS ARE TO BE DETERMINED IN THE FIELD. POST SIZES ARE COMPUTED BASED ON INFORMATION FURNISHED ON THE VTRANS STANDARD SHEETS AND THE "SIGN POST DESIGN GUIDELINE".

PROJECT NAME: WINOOSKI
PROJECT NUMBER: NH 089-3(65)

FILE NAME: z94a198tss.dgn
PROJECT LEADER: KEN UPMAL
DESIGNED BY: J.SOBEL
TRAFFIC SIGN SUMMARY SHEET 1

PLOT DATE: 2/22/2010
DRAWN BY: J.WILTSHIRE
CHECKED BY: D.FLYNN
SHEET 44 OF 67

STATE OF VERMONT
AGENCY OF TRANSPORTATION

TRAFFIC SIGN SUMMARY SHEET 2

MILEMARKER, STATION, OR SIGN NUMBER	SIGN LEGEND	SIGN DIMENSIONS EA	SIGN DIMENSIONS WIDTH (in)	SIGN DIMENSIONS HEIGHT (in)	NEW & SALVAGED SIGNS "A"	NEW & SALVAGED SIGNS "B"	NEW & SALVAGED SIGNS SALV SIGN	NEW & SALVAGED SIGNS SALV TIS	EXIST POST RETAIN	EXIST POST SALVAGE	NEW SIGN POSTS NO. OF POSTS	FLANGED CHANNEL lb/ft 1.12	FLANGED CHANNEL lb/ft 2.0	FLANGED CHANNEL lb/ft 3.0	SQUARE STEEL (in) lb/ft 1.75 (1.88)	SQUARE STEEL (in) lb/ft 2.0 (2.42)	SQUARE STEEL (in) lb/ft 2.5 (3.35)	ANCHOR	SLEEVE	TUBULAR ALUMINUM Ø (in) lb/ft 3.0 (1.3)	TUBULAR ALUMINUM Ø (in) lb/ft 4.0 (1.7)	TUBULAR ALUMINUM Ø (in) lb/ft 4.0 MOD (1.7)	TUBULAR STEEL Ø (in) FOUND-ATION	TUBULAR STEEL Ø (in) lb/ft 3.0 (7.6)	TUBULAR STEEL Ø (in) lb/ft 3.5 (9.0)	TUBULAR STEEL Ø (in) lb/ft 4.0 (10.8)	TUBULAR STEEL Ø (in) lb/ft 5.0 (14.6)	W-SHAPE STEEL FTG. SIZE 24"	W-SHAPE STEEL FTG. SIZE 30"	W-SHAPE STEEL WEIGHT	W-SHAPE STEEL POST SIZE	SIGN FRAME REQUIRED	REMARKS	SIGN DETAIL DETAIL ON SHEET NUMBER	SIGN DETAIL STD. SHEET NUMBER
												OPTION ITEMS																							
	NO TURN ON RED — R10-1B, NO TURN ON RED	1	30	30	6.25																												INSTALL NEW SIGN ON NEW POST (MOUNT BACK TO BACK WITH PREVIOUS SIGN)		SHS PAGE 1-141
STATION 82+32, RT SLIP RAMP	NO TURN ON RED — R10-1B, NO TURN ON RED	1	30	30	6.25																												INSTALL NEW SIGN ON NEW MAST ARM POLE 3 SEE TRAFFIC SIGNAL PLANS SHEET 1(SHEET 48)		STD. E-140
VT RTE 15																																			
STATION 16+13, LT ROUTE 15	SPEED LIMIT 25 — R2-1, SPEED LIMIT	1	24	30	5						1						X	1															INSTALL NEW SIGN ON NEW POST		SHS PAGE 1-10
	R8-3A, NO PARKING	1	24	24	4																												INSTALL NEW SIGN ON NEW POST (SUB-MOUNT WITH PREVIOUS SIGN)		SHS PAGE 1-104
	NO PARKING ANY CITY STREETS — NO PARKING ANY CITY STREET						1																										RELOCATE EXISTING SIGN ON NEW POST (SUB-MOUNT WITH PREVIOUS SIGN)		
STATION 16+13, LT ROUTE 15	ONLY — VR-935, LEFT, STRAIGHT, STRAIGHT	1	48	30	10						2					X		2															INSTALL NEW SIGN ON NEW POSTS		STD. E-144
STATION 16+20, RT ROUTE 15	R4-7, KEEP RIGHT	1	24	30	5						1	ISLAND				X		1	1														INSTALL NEW SIGN ON NEW POST		SHS PAGE 1-67
	OM1-1, OBJECT MARKER	1	18	18	2.25																												INSTALL NEW SIGN ON NEW POST (SUB-MOUNT WITH PREVIOUS SIGN)		SHS PAGE 11-1
STATION 16+29, RT ROUTE 15	R8-3A, NO PARKING	1	24	24	4						1					X		1															RESET EXISTING SIGN ON NEW POST		
STATION 16+34, RT ROUTE 15	NO PARKING ANY CITY STREETS — NO PARKING ANY CITY STREET						1				1					~~X~~		+		ON SAME POST													RELOCATE EXISTING SIGN ON NEW POST		
STATION 16+41, RT ROUTE 15	DO NOT ENTER — R5-1, DO NOT ENTER						1				1						X	1															RELOCATE EXISTING SIGN ON NEW POST		
	ONE WAY — R6-1, ONE WAY						2																										RELOCATE EXISTING SIGN ON NEW POST (SUB-MOUNT PERPENDICULAR TO PREVIOUS SIGN)		
STATION 16+68, RT ROUTE 15	DO NOT ENTER — R5-1, DO NOT ENTER						1				1						X	1															RELOCATE EXISTING SIGN ON NEW POST (FACING NORTH)		
	ONE WAY — R6-1, ONE WAY						2																										RELOCATE EXISTING SIGN ON NEW POST (SUB-MOUNT PERPENDICULAR TO PREVIOUS SIGN)		
	R3-1, RIGHT TURN PROHIBITED	1	24	24	4																												INSTALL NEW SIGN ON NEW POST (MOUNT BACK TO BACK WITH "DO NOT ENTER" SIGN)		SHS PAGE 1-21
												FT	FT	FT	FT	FT	FT		EA	LB	LB	LB		LB	LB	LB	LB								
																69	46.5		1																
TOTALS			SF 46.75	SF	EA. 8	SF						FT			FT 115.5					LB			EA.	LB				EA.	EA.	LB					

FINAL POST LENGTHS ARE TO BE DETERMINED IN THE FIELD. POST SIZES ARE COMPUTED BASED ON INFORMATION FURNISHED ON THE VTRANS STANDARD SHEETS AND THE "SIGN POST DESIGN GUIDELINE".

PROJECT NAME: WINOOSKI
PROJECT NUMBER: NH 089-3(65)

FILE NAME: z94a198tss.dgn
PROJECT LEADER: KEN UPMAL
DESIGNED BY: J.SOBEL
TRAFFIC SIGN SUMMARY SHEET 2

PLOT DATE: 2/22/2010
DRAWN BY: J.WILTSHIRE
CHECKED BY: D.FLYNN
SHEET 45 OF 67

STATE OF VERMONT
AGENCY OF TRANSPORTATION

TRAFFIC SIGN SUMMARY SHEET 3

MILEMARKER, STATION, OR SIGN NUMBER	SIGN LEGEND	SIGN DIMENSIONS EA	SIGN DIMENSIONS WIDTH (in)	SIGN DIMENSIONS HEIGHT (in)	NEW & SALVAGED SIGNS "A"	NEW & SALVAGED SIGNS "B"	NEW & SALVAGED SIGNS SALV SIGN	NEW & SALVAGED SIGNS SALV TIS	EXIST POST RETAIN	EXIST POST SALVAGE	NEW SIGN POSTS NO. OF POSTS	FLANGED CHANNEL lb/ft 1.12	FLANGED CHANNEL lb/ft 2.0	FLANGED CHANNEL lb/ft 3.0	SQUARE STEEL (in) lb/ft 1.75	SQUARE STEEL (in) lb/ft 2.0	SQUARE STEEL (in) lb/ft 2.5	ANCHOR	SLEEVE	TUBULAR ALUMINUM Ø (in) lb/ft 3.0	TUBULAR ALUMINUM Ø (in) lb/ft 4.0	TUBULAR ALUMINUM Ø (in) lb/ft 4.0 MOD	FOUND-ATION	TUBULAR STEEL Ø (in) lb/ft 3.0	TUBULAR STEEL Ø (in) lb/ft 3.5	TUBULAR STEEL Ø (in) lb/ft 4.0	TUBULAR STEEL Ø (in) lb/ft 5.0	W-SHAPE STEEL FTG. SIZE 24"	W-SHAPE STEEL FTG. SIZE 30"	W-SHAPE STEEL WEIGHT	W-SHAPE STEEL POST SIZE	SIGN REQUIRED	REMARKS	SIGN DETAIL DETAIL ON SHEET NUMBER	SIGN DETAIL STD. SHEET NUMBER
												OPTION ITEMS																								
STATION 16+81, RT ROUTE 15	R4-7, KEEP RIGHT	1	24	30	5						1					X		1															INSTALL NEW SIGN ON NEW POST		SHS PAGE 1-67
	OM1-1, OBJECT MARKER	1	18	18	2.25	ISLAND WEST END																											INSTALL NEW SIGN ON NEW POST (SUB-MOUNT WITH PREVIOUS SIGN)		SHS PAGE 11-1
STATION 17+20, RT ROUTE 15	R6-1, ONE WAY						2				1					X		1															INSTALL NEW SIGN ON NEW POST		
STATION 17+75, LT ROUTE 15	M3-4, WEST	1	24	12	2						1					X		1															INSTALL NEW SIGNS (BACK TO BACK) ON NEW POST		STD. E-136B
	M1-6A, STATE ROUTE 15	1	24	24	4																												INSTALL NEW SIGN ON NEW POST (SUB-MOUNT WITH PREVIOUS SIGN)		STD. E-136B
STATION 18+18, RT ROUTE 15	D1-1, GUIDE SIGN						1				2					X		2															RELOCATE EXISTING SIGN ON NEW POSTS		
	M3-2, EAST						1																										RELOCATE EXISTING SIGN ON NEW POST (SUB-MOUNT WITH PREVIOUS SIGN)		
	M1-6A, STATE ROUTE 15						1																										RELOCATE EXISTING SIGN ON NEW POST (SUB-MOUNT WITH PREVIOUS SIGN)		
STATION 18+37, LT ROUTE 15	R4-7, KEEP RIGHT	1	24	30	5	ISLAND WEST END					1					X		1															INSTALL NEW SIGN ON NEW POST		SHS PAGE 1-67
	OM1-1, OBJECT MARKER	1	18	18	2.25																												INSTALL NEW SIGN ON NEW POST (SUB-MOUNT WITH PREVIOUS SIGN)		SHS PAGE 11-1
STATION 18+91, RT ROUTE 15	D1-1, GUIDE SIGN ROLAND CT.						1				1					X		1															RELOCATE EXISTING SIGN ON NEW POST		
	D1-1, GUIDE SIGN E. ALLEN ST.						1																										RELOCATE EXISTING SIGN ON NEW POST (SUB-MOUNT WITH PREVIOUS SIGN)		
STATION 18+94, RT ROUTE 15	R4-7, KEEP RIGHT	1	24	30	5	CONCRETE ISLAND WEST END					1						X	1	1														INSTALL NEW SIGN ON NEW POST		SHS PAGE 1-67
	R3-4, NO U TURN	1	24	24	4																												INSTALL NEW SIGNS BACK TO BACK ON NEW POST (SUB-MOUNT WITH PREVIOUS SIGN)		SHS PAGE 1-26
	OM1-1, OBJECT MARKER	1	18	18	2.25																												INSTALL NEW SIGNS BACK TO BACK ON NEW POST (SUB-MOUNT WITH PREVIOUS SIGN)		SHS PAGE 11-1
	R3-4, NO U TURN	1	24	24	4																												INSTALL NEW SIGNS BACK TO BACK ON NEW POST (SUB-MOUNT WITH PREVIOUS SIGN)		SHS PAGE 1-26
												FT	FT	FT	FT	FT 96.5	FT 16		EA 1	LB	LB	LB		LB	LB	LB	LB								
				TOTALS	SF 35.75	SF	EA. 7	SF				FT			FT 112.5					LB			EA.	LB				EA.	EA.	LB					

FINAL POST LENGTHS ARE TO BE DETERMINED IN THE FIELD. POST SIZES ARE COMPUTED BASED ON INFORMATION FURNISHED ON THE VTRANS STANDARD SHEETS AND THE "SIGN POST DESIGN GUIDELINE".

PROJECT NAME: WINOOSKI
PROJECT NUMBER: NH 089-3(65)

FILE NAME: z94a198tss.dgn
PROJECT LEADER: KEN UPMAL
DESIGNED BY: J.SOBEL
TRAFFIC SIGN SUMMARY SHEET 3

PLOT DATE: 2/22/2010
DRAWN BY: J.WILTSHIRE
CHECKED BY: D.FLYNN
SHEET 46 OF 67

STATE OF VERMONT
AGENCY OF TRANSPORTATION

TRAFFIC SIGN SUMMARY SHEET 4

MILEMARKER, STATION, OR SIGN NUMBER	SIGN LEGEND	SIGN DIMENSIONS EA	WIDTH (in)	HEIGHT (in)	NEW & SALVAGED SIGNS "A"	"B"	SALV SIGN	SALV TIS	EXIST POST RETAIN	SALVAGE	NO. OF POSTS	FLANGED CHANNEL lb/ft 1.12	2.0	3.0	SQUARE STEEL (in) 1.75 lb/ft 1.88	2.0 lb/ft 2.42	2.5 lb/ft 3.35	ANCHOR	SLEEVE	TUBULAR ALUMINUM Ø (in) 3.0 lb/ft 1.3	4.0 lb/ft 1.7	4.0 MOD 1.7	TUBULAR STEEL Ø (in) FOUND-ATION	3.0 lb/ft 7.6	3.5 lb/ft 9.0	4.0 lb/ft 10.8	5.0 lb/ft 14.6	W-SHAPE STEEL FTG. SIZE 24"	30"	WEIGHT	POST SIZE	SIGN FRAMEMED REQUIRED	REMARKS	SIGN DETAIL DETAIL ON SHEET NUMBER	STD. SHEET NUMBER
												OPTION ITEMS																							
	OMI-1, OBJECT MARKER	1	18	18	2.25																												INSTALL NEW SIGNS BACK TO BACK ON NEW POST (SUB-MOUNT WITH PREVIOUS SIGN)		SHS PAGE 11-1
STATION 19+32, RT ROUTE 15	R4-7, KEEP RIGHT	1	24	30	5						1					X		1	1														INSTALL NEW SIGN ON NEW POST		SHS PAGE 1-67
	OMI-1, OBJECT MARKER	1	18	18	2.25																												INSTALL NEW SIGN ON NEW POST (SUB-MOUNT WITH PREVIOUS SIGN)		SHS PAGE 11-1
STATION 19+85, LT ROUTE 15	R2-1, SPEED LIMIT	1	24	30	5						1						X	1					LID INSTALLED NEW SIGNS ON OLD POST, AS DETAILED IM 40 ON SHEET 43										INSTALL NEW SIGN ON NEW POST		SHS PAGE 1-10
	R8-3A, NO PARKING	1	24	24	4																												INSTALL NEW SIGN ON NEW POST (SUB-MOUNT WITH PREVIOUS SIGN)		SHS PAGE 1-104
STATION 20+38, LT ROUTE 15	R1-1, STOP	1	30	30	6.25						1					X		1	1														INSTALL NEW SIGN ON NEW POST		SHS PAGE 1-1
STATION 20+93, LT ROUTE 15	R10-7, DO NOT BLOCK INTERSECTION	1	24	30	5						1					X		1	1														INSTALL NEW SIGN ON NEW POST		SHS PAGE 1-136
												FT	FT	FT	FT	FT 41	FT 15		EA 2	LB	LB	LB		LB	LB	LB	LB								

	SF	SF	EA.	SF		FT	FT	LB	EA.	LB	EA.	EA.	LB
TOTALS	29.75						56						

	SF	SF	EA.	SF		FT	FT	LB	EA.	LB	EA.	EA.	LB
SHEET 44 TOTALS	31.57	297	8				148.75						
SHEET 45 TOTALS	46.75		8				115.5						
SHEET 46 TOTALS	35.75		7				112.5						
SHEET 47 TOTALS	29.75						56.00						
GRAND TOTALS	143.82	297	23				432.75						

FINAL POST LENGTHS ARE TO BE DETERMINED IN THE FIELD. POST SIZES ARE COMPUTED BASED ON INFORMATION FURNISHED ON THE VTRANS STANDARD SHEETS AND THE "SIGN POST DESIGN GUIDELINE".

PROJECT NAME: WINOOSKI
PROJECT NUMBER: NH 089-3(65)

FILE NAME: z94a198tss.dgn
PROJECT LEADER: KEN UPMAL
DESIGNED BY: J.SOBEL
TRAFFIC SIGN SUMMARY SHEET 4

PLOT DATE: 2/23/2010
DRAWN BY: J.WILTSHIRE
CHECKED BY: D.FLYNN
SHEET 47 OF 67

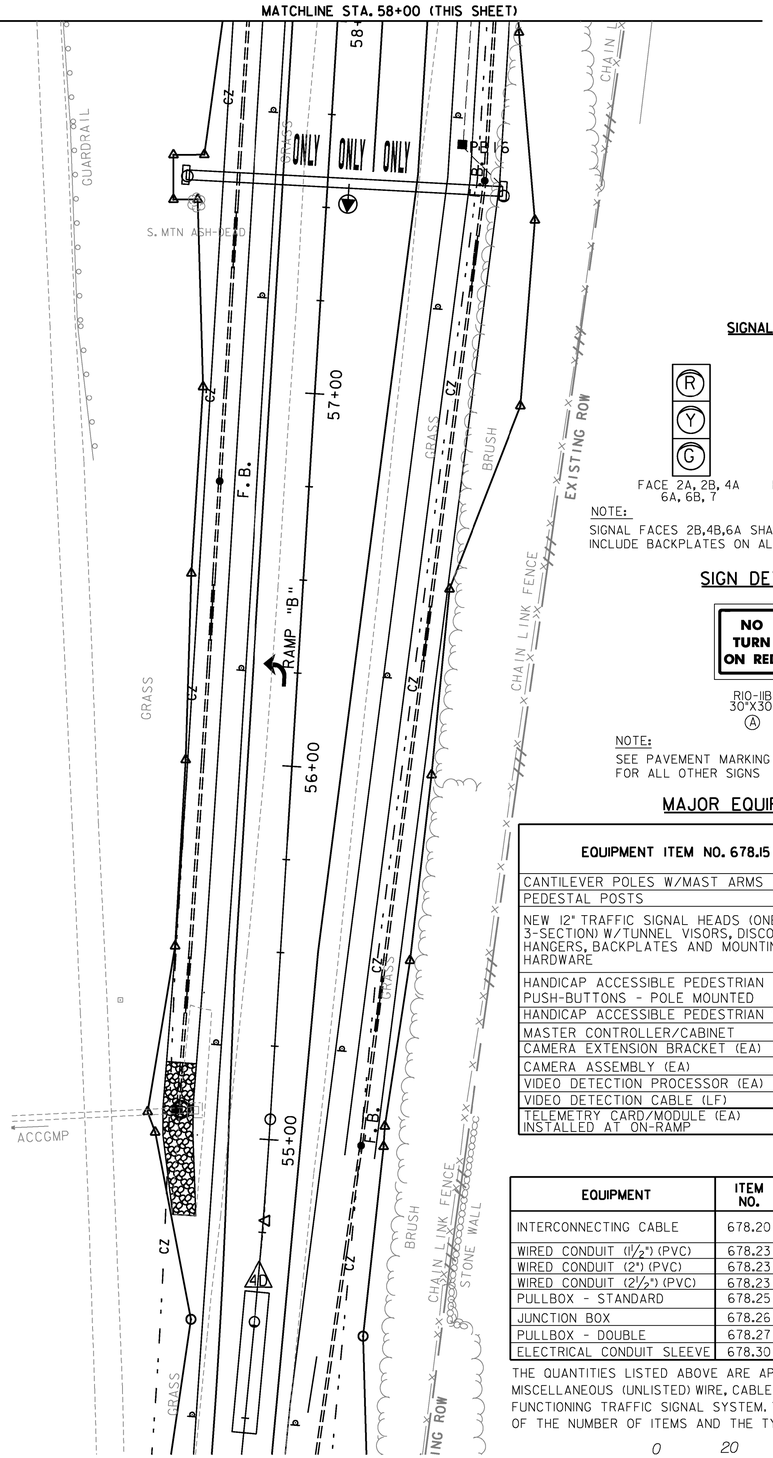

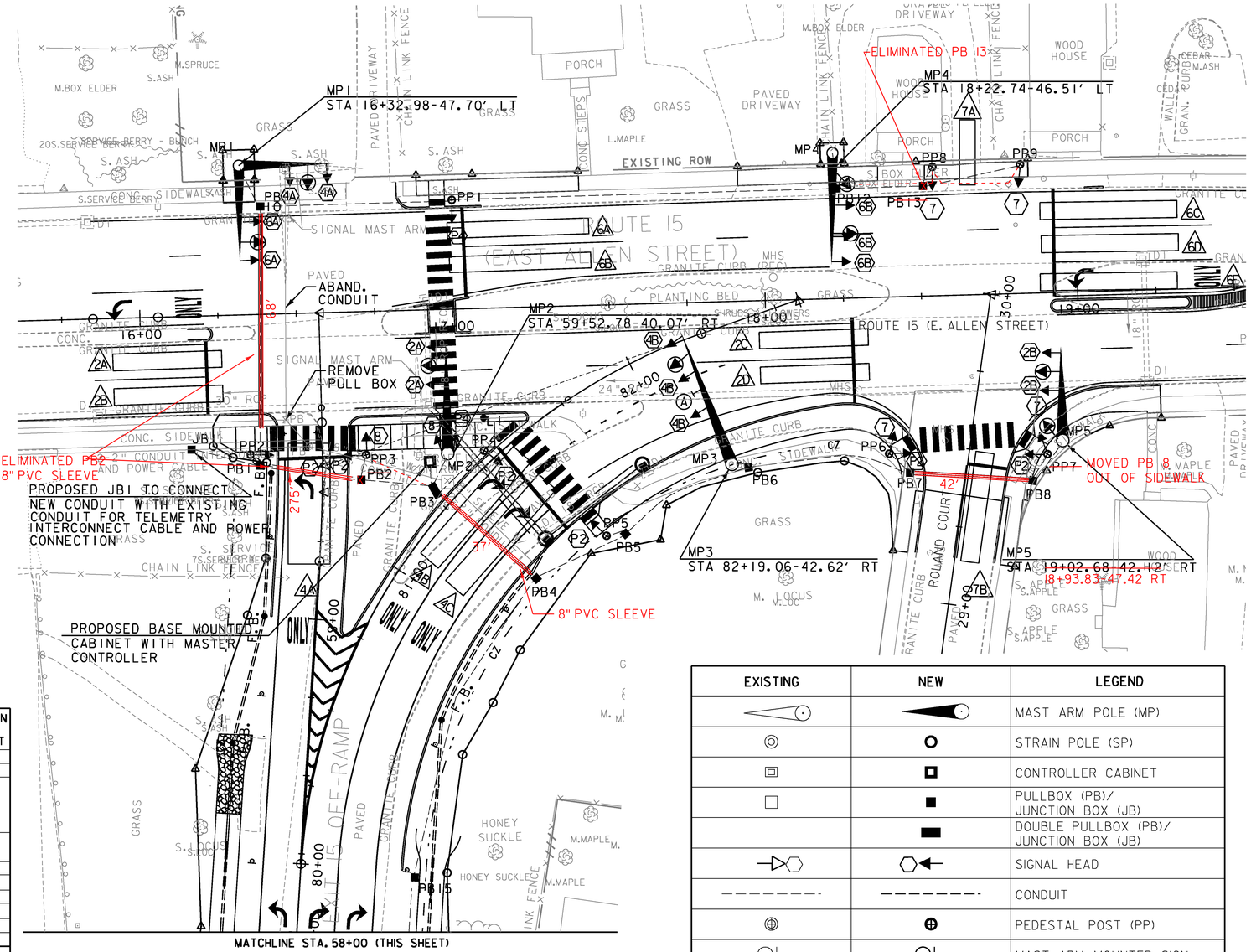

PROPOSED SIGNAL FACE ARRANGEMENT 12" LENSES

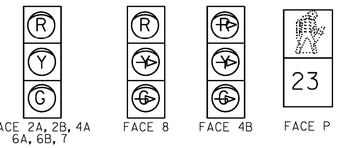

NOTE:
SIGNAL FACES 2B,4B,6A SHALL BE OPTICALLY PROGRAMMED.
INCLUDE BACKPLATES ON ALL SIGNAL FACES.

SIGN DETAIL

R10-11B
30"X30"
(A)

NOTE:
SEE PAVEMENT MARKING AND SIGNS SHEETS
FOR ALL OTHER SIGNS

MAJOR EQUIPMENT LIST

EQUIPMENT ITEM NO. 678.15	VT ROUTE 15 (EAST ALLEN STREET) @ I-89 EXIT 15 OFF RAMP/ROLAND COURT
CANTILEVER POLES W/MAST ARMS	5
PEDESTAL POSTS	9
NEW 12" TRAFFIC SIGNAL HEADS (ONE-WAY, 3-SECTION) W/TUNNEL VISORS, DISCONNECT HANGERS, BACKPLATES AND MOUNTING HARDWARE	20
HANDICAP ACCESSIBLE PEDESTRIAN PUSH-BUTTONS - POLE MOUNTED	8
HANDICAP ACCESSIBLE PEDESTRIAN SIGNALS	8
MASTER CONTROLLER/CABINET	1
CAMERA EXTENSION BRACKET (EA)	9
CAMERA ASSEMBLY (EA)	9
VIDEO DETECTION PROCESSOR (EA)	5
VIDEO DETECTION CABLE (LF)	305
TELEMETRY CARD/MODULE (EA) INSTALLED AT ON-RAMP	1

EQUIPMENT	ITEM NO.	UNIT	VT ROUTE 15 (EAST ALLEN STREET) @ I-89 EXIT 15 OFF RAMP/ROLAND COURT	NOTES
INTERCONNECTING CABLE	678.20	LF	450	ON-RAMP CONTROLLER TO JBI
WIRED CONDUIT (1½") (PVC)	678.23	LF	516	-
WIRED CONDUIT (2") (PVC)	678.23	LF	250	-
WIRED CONDUIT (2½") (PVC)	678.23	LF	119	-
PULLBOX - STANDARD	678.25	EA	12	-
JUNCTION BOX	678.26	EA	1	-
PULLBOX - DOUBLE	678.27	EA	1	-
ELECTRICAL CONDUIT SLEEVE	678.30	LF	188	8 INCHES

THE QUANTITIES LISTED ABOVE ARE APPROXIMATE AND ARE FURNISHED FOR INFORMATION ONLY. MISCELLANEOUS (UNLISTED) WIRE, CABLE, HARDWARE ETC., ARE REQUIRED TO PROVIDE FOR A FUNCTIONING TRAFFIC SIGNAL SYSTEM. THE CONTRACTOR IS RESPONSIBLE FOR VERIFICATION OF THE NUMBER OF ITEMS AND THE TYPES OF EQUIPMENT REQUIRED.

0 20 40
SCALE IN FEET

EXISTING	NEW	LEGEND
		MAST ARM POLE (MP)
		STRAIN POLE (SP)
		CONTROLLER CABINET
		PULLBOX (PB)/ JUNCTION BOX (JB)
		DOUBLE PULLBOX (PB)/ JUNCTION BOX (JB)
		SIGNAL HEAD
		CONDUIT
		PEDESTAL POST (PP)
		MAST ARM MOUNTED SIGN
		VIDEO DETECTOR
		VIDEO DETECTION AREA/LABEL

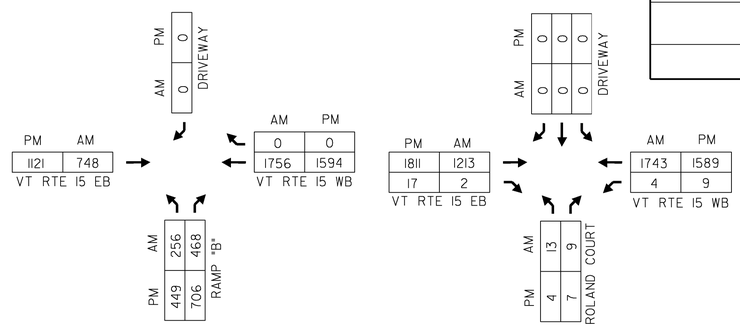

2030 HOURLY VOLUMES

PROJECT NAME: WINOOSKI
PROJECT NUMBER: NH 089-3(65)

FILE NAME: z94a198trfbdr.dgn
PROJECT LEADER: KEN UPMAL
DESIGNED BY: J.SOBEL
TRAFFIC SIGNAL PLANS SHEET 1

PLOT DATE: 3/9/2010
DRAWN BY: J.WILTSHIRE
CHECKED BY: D.FLYNN
SHEET 48 OF 67

CAMERA EXTENSION BRACKET FOR MAST ARM AND MONOTUBE SIGN BRIDGE

N.T.S.

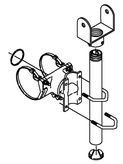

TWO PIECE CAMERA MOUNT
TUBE LENGTHS: 23", 37", 46", OR 74"
BAND LENGTHS: 29", 36", 42", 48", OR 56"

Notes:

All assemblies shall have steel fasteners and stainless steel clamp screw kits.

1 or 2 piece bracket mounts shall be specified for camera type.

SEE SHEET 67 FOR MAST ARM CROSS SECTIONS

SEE SHEETS 42-43 FOR PAVEMENT MARKINGS AND SIGNS LAYOUT

SEE SHEET 48 - TRAFFIC SIGNAL PLANS SHEET NO. 1 FOR INTERCONNECT TO EXIT 15 ON-RAMP

SEE SHEET 48 FOR VIDEO DETECTION ON RAMP "B"

PHASING DIAGRAM
ROUTE 15 (EAST ALLEN STREET)
@ I-89 EXIT 15 OFF RAMP/ROLAND COURT

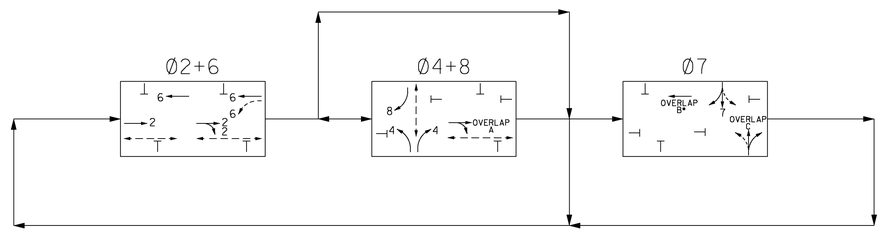

* Lead overlap B for 5 seconds to clear prior to Ø7

ROUTE 15 (EAST ALLEN STREET) @ I-89 EXIT 15 OFF RAMP/ROLAND COURT

CONTROLLER TIMING CHART								
LOCAL PROGRAMING	PHASE							
	1	2	3	4	5	6	7	8
MINIMUM GREEN		10		6		10	9	6
PASSAGE/VEHICLE EXT		3.0		3.0		3.0	-	3.0
YELLOW CLEARANCE		4.0		4.0		4.0	3.0	4.0
ALL RED CLEARANCE		2.0		2.0		2.0	1.0	2.0
MAX. 1 GREEN-75 SEC		33		17		33	9	17
MAX. 2 GREEN-60 SEC		17		18		17	9	18
SEC/AT		-		-		-	-	-
TIME BEFORE REDUCE		-		-		-	-	-
TIME TO REDUCE		-		-		-	-	-
WALK		11		5		-	-	-
FLASHING DON'T WALK		11		17		-	-	-
DON'T WALK		1		1		-	-	-
RECALL		SOFT		LOCK		SOFT	N.L.	N.L.

EXIT 15 OFF-RAMP QUEUE DETECTOR SETTING TABLE
(VIDEO DETECTION ZONE 4D)

	PREEMPT 1
PRIORITY	NO
DET. LOCK	YES
DELAY	0
ALT. MIN. GRN	10
ALT. YELLOW	PARENT
ALT. RED	PARENT
ALT. PED. CLR.	PARENT
HOLD GREEN	30
HOLD YELLOW	4.0
HOLD RED	1.0
HOLD PHASE	4,8
EXIT PHASE	2,6
EXIT CALL	NONE

ROUTE 15 (EAST ALLEN STREET) @ I-89 EXIT 15 OFF RAMP/ROLAND COURT

TABLE OF CHANGE SEQUENCE

FACE	Ø2 + Ø6 R/W	Ø2 + Ø6 CLEAR TO ALL OTHER PHASES		Ø4 + Ø8 R/W	Ø4 + Ø8 CLEAR TO ALL OTHER PHASES		Ø7 R/W	Ø7 CLEAR TO ALL OTHER PHASES		FLASHING OPERATION
2A	G	Y	R	R	R	R	R	R	R	FY
2B	G	G/Y	G/R	G	G/Y	G/R	R	R	R	FY
4A	R	R	R	G	Y	R	R	R	R	FR
4B	~~R~~	~~R~~	~~R~~	~~G~~	~~Y~~	~~R~~	~~R~~	~~R~~	~~R~~	FR
6A	G	Y	R	R	R	R	G	G	G	FY
6B	G	Y	R	R	R	R	R	R	R	FY
7	R	R	R	R	R	R	G	Y	R	FR
8	R	R	R	~~G~~	~~Y~~	R	R	R	R	FR
P2	W	FD	DW	DW	DW	DW	DW	DW	DW	
P4	DW	DW	DW	W/FD	DW	DW	DW	DW	DW	

SEQUENCE NOTES:

1. FACE 2B TO REMAIN ON G INDICATION IF Ø4+Ø8 IS FOLLOWED BY Ø2+Ø6, AND IF Ø2+Ø6 IS FOLLOWED BY Ø4+Ø8.

ROUTE 15 (EAST ALLEN STREET) @ I-89 EXIT 15 OFF RAMP/ROLAND COURT
COORDINATION TIMING (SECONDS)

DIAL SPLIT	CYCLE LENGTH	PHASES 1	2	3	4	5	6	7	8	OFFSETS SEC	%
1 - 1	75		39		23		39	13	23	31	41
2 - 1	60		23		24		23	13	24	22	37

1 - 1	WEEKDAYS - 0600 - 1100
2 - 1	WEEKDAYS - 1100 - 2000
2 - 1	SAT. & SUN. - 0600 - 2000

FOR ALL OTHER TIMES, THE INTERSECTION SHALL OPERATE IN FREE MODE.

ROUTE 15 (EAST ALLEN STREET) @ I-89 EXIT 15 OFF RAMP/ROLAND COURT

ELECTRICAL CONDUIT SLEEVE (8") (PVC)

PB1 TO PB2 - 30' 27.5
PB1 TO PB10 - 80' 68
PB3 TO PB4 - 38' 37
PB7 TO PB8 - 40' 42

WIRED CONDUIT (2½") (PVC)

PB3 TO PB4 - 39'
PB4 TO PB5 - 32'
PB5 TO PB6 - 43'
CONTROLLER TO PB3 - 5'

WIRED CONDUIT (2") (PVC)

JB1 TO PB1 - 21'
PB1 TO PB2 - 30'
PB1 TO PB10 - 80'
PB2 TO PB3 - 20'
PB6 TO PB7 - 50'
PB7 TO PB8 - 40'
PB3 TO MP2 - 9'

WIRED CONDUIT (1½") (PVC)

PB1 TO PP2 - 4'
PB2 TO PP3 - 8'
PB3 TO PP4 - 20'
PB5 TO PP5 - 6'
PB6 TO MP3 - 5'
PB7 TO PP6 - 9'
PB8 TO MP5 - 13'
PB8 TO PP7 - 11'
PB12 TO MP4 - 10'

WIRED CONDUIT (1½") (PVC) (CONT.)

PB12 TO PB13 - 28'
PB13 TO PP8 - 6'
PB13 TO PP9 - 32'
PB10 TO MP1 - 13'
PB10 TO PP1 - 60'
PP1 TO PB12 - 122'
PB4 TO PB15 - 105'
PB15 TO PB16 - 49'
PB16 TO OVERHEAD SIGN STRUCTURE - 15'

ELECTRICAL WIRING

I-89 ON RAMP TO OFF RAMP - 375'
(USE EXISTING CONDUIT)

NOTE:
THE CONDUIT BETWEEN PB1 AND PB10 ACROSS VT ROUTE 15 SHALL BE BACKFILLED WITH 900.608 SPECIAL PROVISION (CONTROLLED DENSITY (FLOWABLE) FILL).

NOTES:

1. OFFSET IS REFERENCED AT THE END OF PHASE 2.
2. SPLITS AND OFFSETS ARE SHOWN IN SECONDS.
3. VIDEO DETECTION AREAS ARE IN NON-LOCK PRESENCE MODE. VIDEO DETECTOR 7A IS IN DELAY MODE, 10 SECONDS, NON-LOCK. DETECTOR 4D TO FORCE TIMINGS AS SHOWN ON THE QUEUE DETECTOR SETTING TABLE UNTIL RAMP CLEARS.
4. ANY PULL BOX OR JUNCTION BOX WITHIN SIDEWALK SHALL HAVE A SKID RESISTANT COVER.
5. MASTER CONTROLLER WILL BE LOCATED AT EXIT 15 OFF-RAMP INTERSECTION.
6. PROPOSED TELEMETRY SYSTEM WILL BE USED TO COORDINATE SIGNAL WITH THE ROUTE 15/I-89 EXIT 15 ON-RAMP INTERSECTION.
7. VIDEO DETECTION CABLE SHALL RUN INSIDE OVERHEAD SIGN STRUCTURE AND CONTINUE IN 1 1/2" PVC CONDUIT TO PB16.

PROJECT NAME:	WINOOSKI
PROJECT NUMBER:	NH 089-3(65)
FILE NAME: z94a198trfbdr.dgn	PLOT DATE: 2/22/2010
PROJECT LEADER: KEN UPMAL	DRAWN BY: J.WILTSHIRE
DESIGNED BY: J.SOBEL	CHECKED BY: D.FLYNN
TRAFFIC SIGNAL PLANS SHEET 2	SHEET 49 OF 67

ROUTE 15 (EAST ALLEN STREET)
@ I-89 SB ON RAMP

TABLE OF CHANGE SEQUENCE							FLASHING OPERATION
FACE	Ø2 + Ø6			Ø1 + Ø6			
	R/W	CLEAR TO ALL OTHER PHASES		R/W	CLEAR TO ALL OTHER PHASES		
1	~~R~~	~~R~~	~~R~~	~~G~~	~~Y~~	~~R~~	F ~~R~~
2	G	Y	R	R	R	R	FY
3							
4							
5							
6	G	G	G	G	G	G	FY
7							
8							

ROUTE 15 (EAST ALLEN STREET) @ I-89 SB ON RAMP
TRAFFIC SIGNAL LAYOUT

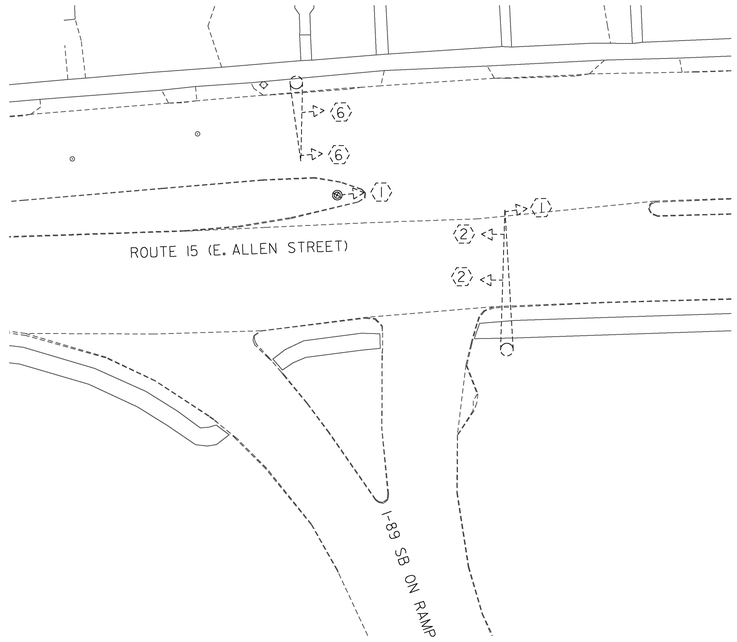

ROUTE 15 (EAST ALLEN STREET)
@ I-89 SB ON RAMP

CONTROLLER TIMING CHART								
LOCAL PROGRAMING	PHASE							
	1	2	3	4	5	6	7	8
MINIMUM GREEN	28.0	10.0				10.0		
PASSAGE/EXTENSION	3.0	3.0				3.0		
YELLOW CLEARANCE	4.0	4.0				4.0		
ALL RED CLEARANCE	2.0	2.0				2.0		
MAX. 1 GREEN-75 SEC	38	25				69		
MAX. 2 GREEN-60 SEC	20	28				54		
SEC/AT	-	-				-		
TIME BEFORE REDUCE	-	-				-		
TIME TO REDUCE	-	-				-		
WALK	-	-				-		
FLASHING DON'T WALK	-	-				-		
DON'T WALK	-	-				-		
RECALL	LOCK	SOFT				SOFT		

MAJOR EQUIPMENT LIST

SEE TRAFFIC SIGNAL PLANS SHEET 1(SHEET 48)

NOTES:

1. OFFSET IS REFERENCED AT THE END OF PHASE 2.
2. SPLITS AND OFFSETS ARE SHOWN IN SECONDS.
3. PROPOSED TELEMETRY SYSTEM WILL BE USED TO COORDINATE SIGNAL WITH THE MASTER CONTROLLER AT THE ROUTE 15/I-89 EXIT 15 OFF-RAMP INTERSECTION.

PHASING DIAGRAM
ROUTE 15 (EAST ALLEN STREET)
@ I-89 SB ON RAMP

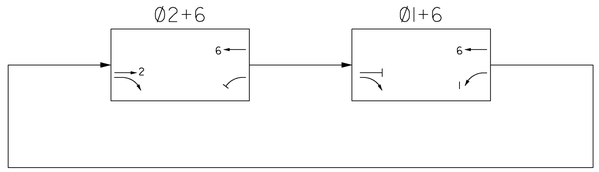

ROUTE 15 (EAST ALLEN STREET)
@ I-89 SB ON RAMP
COORDINATION TIMING (SECONDS)

DIAL SPLIT	CYCLE LENGTH	PHASES								OFFSETS	
		1	2	3	4	5	6	7	8	SEC	%
1 - 1	75	44	31				75			0	0
2 - 1	60	26	34				60			0	0
1 - 1		WEEKDAYS - 0600 - 1100									
2 - 1		WEEKDAYS - 1100 - 2000									
2 - 1		SAT. & SUN. - 0600 - 2000									

FOR ALL OTHER TIMES, THE INTERSECTION SHALL OPERATE IN FREE MODE.

PROJECT NAME: WINOOSKI
PROJECT NUMBER: NH 089-3(65)

FILE NAME: z94a198trfbdr.dgn
PROJECT LEADER: KEN UPMAL
DESIGNED BY: J.SOBEL
TRAFFIC SIGNAL PLANS SHEET 3

PLOT DATE: 3/9/2010
DRAWN BY: J.WILTSHIRE
CHECKED BY: D.FLYNN
SHEET 50 OF 67

TRAFFIC SIGNAL NOTES

A. NEW TRAFFIC SIGNAL EQUIPMENT

1. ALL SIGNAL HEADS SHALL BE RIGIDLY MOUNTED. ALL LENSES SHALL BE LED UNLESS SPECIFIED ON THE PLANS TO BE OPTICALLY PROGRAMMED. ALL SIGNAL HEADS SHALL INCLUDE DISCONNECT HANGERS (WHERE NEEDED), AND BACKPLATES SHALL BE INCLUDED FOR ALL NEW SIGNALS .

2. THE TRAFFIC SIGNAL CONTROLLER AND RELATED EQUIPMENT SHALL BE MANUFACTURED BY ECONOLITE CONTROL PRODUCTS, INC. THE SIGNAL SYSTEM CONTROLLER SHALL BE AN ASC/3-2100 (TS 2 - TYPE 2) AND AN ASC/2M MASTER CONTROLLER MOUNTED IN CABINET P44 WITH BASE EXTENSION INSTALLED AT THE LOCATION SHOWN ON SHEET 48.

3. A DISCONNECT BREAKER FOR EACH CIRCUIT SHALL BE INSTALLED IN A RAINPROOF (NEMA 3R), LOCKED CABINET ON A STANCHION OR ON THE SIDE OF THE STRAIN POLE NEXT TO OR BELOW THE METER SOCKET (SEE STD E-175). A SEPARATE CIRCUIT BREAKER SHALL BE INSTALLED FOR ROADWAY LIGHTING, IF APPLICABLE.

4. PUSH BUTTONS AND PEDESTRIAN SIGNS SHALL BE PROVIDED WITH ALL PROPOSED PEDESTRIAN SIGNALS.

5. PEDESTRIAN PEDESTAL POSTS SHALL BE LOCATED 1.0' BEHIND SIDEWALK UNLESS OTHERWISE SPECIFIED ON THE PLANS.

6. ALL PEDESTRIAN PUSH BUTTONS SHALL COMPLY WITH ADA STANDARDS AND THE SPECIFICATIONS.

7. ANY OTHER MISCELLANEOUS EQUIPMENT AND LABOR NECESSARY TO PROVIDE A FULLY FUNCTIONAL VIDEO DETECTION SYSTEM SHALL BE INCIDENTIAL TO ITEM # 678.15 TRAFFIC CONTROL SIGNAL SYSTEM, INTERSECTION.

8. VIDEO VEHICLE DETECTORS SHALL BE PLACED SO THAT OCCLUSION IS MINIMIZED AND PHASING IS NOT AFFECTED.

9. VIDEO VEHICLE DETECTION AREAS SHALL EXTEND 5 FT PAST THE STOP BAR.

10. VIDEO VEHICLE DETECTION SYSTEM SHALL BE ECONOLITE AUTOSCOPE SOLO TERRA OR ITERIS VERSICAM OR TRAFICON VIP SERIES OR APPROVED EQUAL.

11. ALL MAST ARMS, POLES, AND PEDESTAL POSTS SHALL BE PAINTED BLACK.

B. SIGNAL OPERATION

1. SWITCH-OVER FROM EXISTING TO REPLACEMENT SIGNALS SHALL NOT BE DONE DURING PEAK TRAFFIC PERIODS. UNIFORMED TRAFFIC OFFICERS SHALL CONTROL TRAFFIC DURING SWITCH-OVER.

C. PULLBOXES AND JUNCTION BOXES FOR TRAFFIC SIGNALS

1. PULLBOXES/JUNCTION BOXES ARE DETAILED ON STD E-173.

2. THE LOGO ON THE PULLBOXES/JUNCTION BOXES SHALL BE "SIGNAL".

D. TRAFFIC SIGNAL CONDUIT

1. ALL TRAFFIC SIGNAL CONDUITS SHALL BE PVC UNLESS OTHERWISE SPECIFIED.

2. MINIMUM CONDUIT SIZES SHALL BE:
   A) 1 1/2 " FOR INTERCONNECT CABLE.
   B) 2" FOR SHIELDED LEAD-IN CABLE, SIGNAL CABLE, POWER CABLE AND ALL OTHERS, UNLESS SPECIFIED OTHERWISE ON THE PLANS. SEE CHART ON STD E-172 FOR DESIGN VALUES.

3. WHEN CONDUIT IS PLACED BELOW THE ROADWAY OR ACROSS SIDE ROADS, IT SHALL BE PLACED IN AN ELECTRICAL CONDUIT SLEEVE (8") (PVC).

4. EXISTING CONDUIT MAY BE PRESENT AT THE INTERSECTION OF V.T. ROUTE 15 AND ROLAND COURT. INFORMATION ON SIZE AND LOCATION IS UNAVAILABLE AT THIS TIME. THE CONTRACTOR MAY UTILIZE EXISTING CONDUIT FOR WIRE RUNS IN LIEU OF INSTALLING NEW CONDUIT PROVIDED THE CONTRACTOR LOCATES THE EXISTING CONDUIT DURING CONSTRUCTION AND IT IS IN GOOD CONDITION AND OF ADEQUATE SIZE FOR THE REQUIRED WIRING. ALL EXISTING CONDUITS TO BE REUSED UNDER THIS PROJECT SHALL BE APPROVED BY THE ENGINEER PRIOR TO INSTALLATION. THE INSTALLATION OF SIGNAL WIRING IN EXISTING CONDUIT SHALL BE PAID FOR UNDER ITEM 678.24 - ELECTRICAL WIRING.

E. REMOVAL OF EXISTING OR REUSE OF SALVAGED TRAFFIC SIGNAL EQUIPMENT

1. AT THE DISCRETION OF THE CITY OF WINOOSKI, REMOVED AND NOT REUSED TRAFFIC SIGNAL EQUIPMENT SHALL BE DELIVERED TO THE CITY OF WINOOSKI GARAGE. UNWANTED TRAFFIC SIGNAL EQUIPMENT MUST BE DISPOSED OF BY THE CONTRACTOR. REMOVAL OF TRAFFIC SIGNAL EQUIPMENT SHALL INCLUDE REMOVAL OF CONCRETE BASES OR CUTTING BASES ONE FOOT BELOW GRADE, AND BACKFILLING OF THE HOLES. ANY TRAFFIC SIGNAL EQUIPMENT THAT IS DAMAGED OR LOST BY THE CONTRACTOR DURING REMOVAL SHALL BE REPAIRED OR REPLACED, TO THE SATISFACTION OF VTRANS AND THE CITY OF WINOOSKI AT THE CONTRACTOR'S EXPENSE. THE CONTACT PERSON FOR THE CITY OF WINOOSKI SHALL BE STEVE PALMER, CITY ENGINEER, (802) 655-6423. THE REMOVAL, TRANSPORTING, SALVAGING, AND DISPOSAL OF EXISTING SIGNAL EQUIPMENT SHALL BE PAID FOR UNDER ITEM 900.645 SPECIAL PROVISION (REMOVAL OF EXISTING TRAFFIC CONTROL SIGNAL SYSTEM).

2. ALL SALVAGED OR REUSED TRAFFIC SIGNAL EQUIPMENT SHALL BE THOROUGHLY CLEANED AND PAINTED AS REQUIRED, BEFORE REUSE.

F. GENERAL

1. THE CONTRACTOR SHALL ACQUIRE ALL NECESSARY LOCAL PERMITS AND MAKE ALL NECESSARY ARRANGEMENTS WITH THE UTILITY COMPANY TO PROVIDE A PERMANENT POWER SUPPLY TO THE SIGNAL AND STREET LIGHTING EQUIPMENT, IF APPLICABLE. THE ROUTING OF POWER TO THE INTERSECTION SHALL BE SUCH THAT VTRANS HAS FULL RESPONSIBILITY FROM THE TRANSFORMER THROUGH THE SIGNAL. NO INTERVENING OWNERSHIP/RESPONSIBILITY SHALL BE ALLOWED.

2. A METAL PLAQUE LISTING OWNERSHIP AND EMERGENCY PHONE NUMBERS SHALL BE ATTACHED TO THE OUTSIDE OF THE CONTROLLER CABINET. CONTACT THE CITY ENGINEER IN THE CITY OF WINOOSKI TO VERIFY APPROPRIATE PHONE NUMBERS.

G. COORDINATION, ETC.

1. A 14 GUAGE NO.7 WIRE SHALL BE USED AS THE TELEMETRY INTERCONNECT CABLE BETWEEN THE EXIT 15 ON-RAMP AND OFF-RAMP. FOR SIGNAL COORDINATION, THE TELEMETRY INTERCONNECT CABLE SHALL BE INSTALLED UNDERGROUND IN NEW CONDUIT BETWEEN JBI AND THE PROPOSED CONTROLLER AT THE ROUTE 15/OFF RAMP INTERSECTION AND IN EXISTING UNDERGROUND CONDUIT BETWEEN JBI AND THE SIGNAL CONTROLLER AT THE ROUTE 15/ON-RAMP INTERSECTION.

2. THE INTERCONNECT CABLE SHIELD SHALL BE GROUNDED AT EACH LOCATION OR WHERE EVER THE OUTSIDE INSULATION IS BROKEN.

TRAFFIC CONTROL NOTES FOR TRAFFIC SIGNAL WORK

1. THE FOLLOWING NOTES APPLY TO TRAFFIC CONTROL NECESSARY FOR THE INSTALLATION OR MODIFICATION OF THE TRAFFIC SIGNALS ONLY. FOR OVERALL PROJECT TRAFFIC CONTROL MANAGEMENT REQUIREMENTS REFER TO TRAFFIC MANAGEMENT PLANS AND SECTION 641.

2. DURING CONSTRUCTION, TWO-WAY TRAFFIC SHALL BE MAINTAINED AT ALL TIMES ON VT ROUTE 15. TWO-WAY TRAFFIC SHALL BE MAINTAINED AT NIGHT, ON WEEKENDS AND HOLIDAYS, DURING PEAK TRAFFIC AND DURING CONSTRUCTION. AT THE DISCRETION OF THE RESIDENT ENGINEER (OR OTHER DESIGNATED AGENCY REPRESENTATIVE), UNIFORMED TRAFFIC CONTROL OFFICERS OR TRAINED FLAG PERSONS SHALL DIRECT TRAFFIC, WHENEVER REQUIRED.

3. TRAFFIC CONTROL SIGNING AND CHANNELIZING DEVICES SHALL BE IN ACCORDANCE WITH THE APPROPRIATE STANDARD DRAWINGS (E-101, E-102, E-106, E-107, E-110, E-111) AND THE MANUAL ON UNIFORM TRAFFIC CONTROL DEVICES .

4. AFTER SIGNAL INSTALLATION, ALL HEADS MUST BE COVERED (TURNING SHALL NOT BE ALLOWED) UNTIL TURNED ON. THE METHOD OF COVERING SHALL BE AS FOLLOWS:

   ALL NEW TRAFFIC AND PEDESTRIAN SIGNAL HEADS WHICH HAVE BEEN INSTALLED BUT NOT PLACED IN EITHER FLASHING OR FULL OPERATION SHALL BE COVERED. EXISTING SIGNAL HEADS WHICH ARE PLACED OUT OF SERVICE IN ORDER TO PERFORM WORK ON THE SIGNAL SYSTEM SHALL ALSO BE COVERED, EXCEPT WHEN SUCH WORK CAN BE COMPLETED IN A RELATIVELY SHORT PERIOD OF TIME (SEVERAL HOURS) AND TRAFFIC CONTROL HAS BEEN PROVIDED FOR.

   THE SIGNAL COVERS SHALL CONSIST OF A ONE PIECE PLASTIC BAG HAVING A MINIMUM THICKNESS OF 4 MIL. THE BAG SHALL BE OPAQUE. THE COVER SHALL SLIP OVER THE ENTIRE SIGNAL HEAD AND SHALL BE SECURELY TIED AT THE OPENING WITH A ROPE OF SUFFICIENT SIZE AND STRENGTH TO SECURE THE COVER. AN INTERMEDIATE ROPE OF THE SAME MATERIAL SHALL BE DRAWN AROUND THE CENTER OF THE COVER TO PREVENT EXCESS FLAPPING IN THE WIND.

   A DRAIN HOLE SHALL BE MADE AT THE BOTTOM OF THE BAG TO ALLOW THE ESCAPE OF MOISTURE. NO TAPE OR ADHESIVE WILL BE ALLOWED TO BE ATTACHED TO ANY SURFACE OF THE SIGNAL HOUSING OR LENSES. ALL COVERS SHALL BE PLACED IN A NEAT WORKMANLIKE MANNER. ANY COVER WHICH IS TORN OR MISSING SHALL BE IMMEDIATELY REPLACED. PAYMENT FOR THE COVERS, THEIR PLACEMENT, AND REMOVAL AND ALL INCIDENTALS FOR COMPLETION OF THE WORK SHALL BE CONSIDERED INCIDENTAL TO THE INSTALLATION OF THE TRAFFIC SIGNAL.

5. WHERE TWO-WAY TRAFFIC IS MAINTAINED DURING CONSTRUCTION, THE SIGN PACKAGE SHOWN ON STD E-110 SHOULD BE USED. APPROACH CONSTRUCTION SIGNING SHALL REMAIN IN PLACE DURING THE ENTIRE CONSTRUCTION PERIOD. OTHER SIGNING SHALL BE REMOVED OR COVERED WHEN NOT APPLICABLE.

6. VARIATIONS IN THE SIGNING PACKAGES MAY BE DICTATED BY UNIQUE GEOMETRY AND/OR TRAFFIC CONDITIONS AND THE TRAFFIC MANAGEMENT PLANS.

7. THE CONTRACTOR SHALL NOT WORK WITHIN THE HIGHWAY ROW WITHOUT THE APPROPRIATE CONSTRUCTION SIGNING IN PLACE AS SHOWN ON STD E-100.

8. AT LOCATIONS WHERE SIGNALS CURRENTLY EXIST, A WORKING SIGNAL SYSTEM SHALL BE IN PLACE AT THE END OF EACH DAY. IF THE SIGNAL SYSTEM IS NOT WORKING AT THE END OF THE DAY, THE CONTRACTOR SHALL PROVIDE UNIFORMED TRAFFIC OFFICERS TO CONTROL TRAFFIC UNTIL SUCH TIME THAT THE EXISTING OR NEW SIGNAL IS IN OPERATION AT NO COST TO THE STATE.

9. "SIGNAL UNDER CONSTRUCTION" SIGN PANELS SHALL BE MOUNTED UNDER "ROAD CONSTRUCTION AHEAD" SIGNS ANYTIME SIGNAL SYSTEM WORK IS BEING PERFORMED (SEE SIGN DETAIL THIS SHEET).

10. THE TYPE OF TEMPORARY TRAFFIC BARRIER USED ON THIS PROJECT SHALL COMPLY WITH NCHRP REPORT 350 TEST LEVEL THREE (TL-3). TEMPORARY TRAFFIC BARRIER MEETING THIS REQUIREMENT CAN BE FOUND AT THE FOLLOWING FHWA WEBSITE: http://safety.fhwa.dot.gov/.

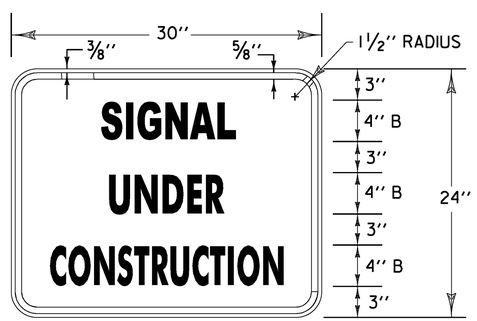

MATERIALS: SEE STD. E-144
COLORS: TEXT & BORDER - BLACK
BACKGROUND - ORANGE (RETROREFLECTIVE SHEETING)

CONSTRUCTION SIGN DETAIL

NOT TO SCALE

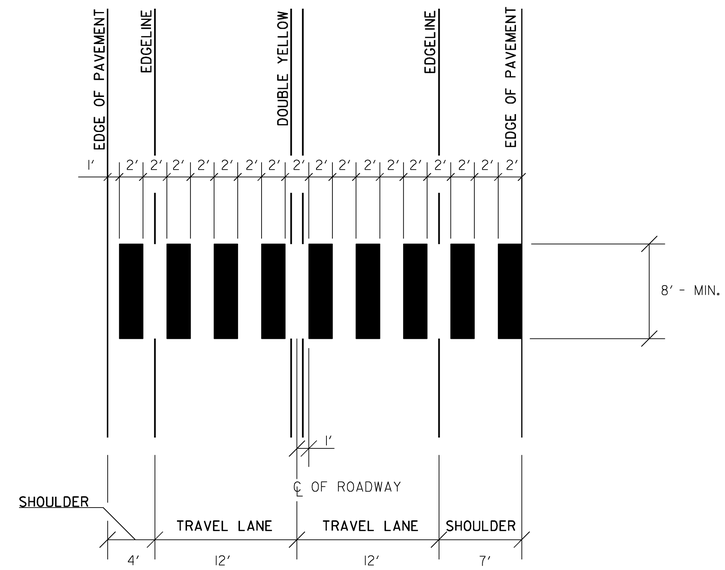

ADJUST SPACING (1 - 2 FT) TO AVOID WHEEL PATHS

BLOCK TYPE CROSSWALK DETAIL

PROJECT NAME: WINOOSKI	
PROJECT NUMBER: NH 089-3(65)	
FILE NAME: z94a198trfbdr.dgn	PLOT DATE: 2/23/2010
PROJECT LEADER: KEN UPMAL	DRAWN BY: J.WILTSHIRE
DESIGNED BY: J.SOBEL	CHECKED BY: D.FLYNN
TRAFFIC SIGNAL DETAILS SHEET 1	SHEET 51 OF 67

CANTILEVER SIGNAL AND SIGN SUPPORT NOTES

1. ALL MATERIALS AND CONSTRUCTION SHALL CONFORM TO THE STATE OF VERMONT AGENCY OF TRANSPORTATION'S "STANDARD SPECIFICATIONS FOR CONSTRUCTION", DATED 2006.
2. OVERHEAD SIGN/SIGNAL SUPPORTS SHALL CONFORM TO AASHTO'S PUBLICATION ENTITLED "STANDARD SPECIFICATIONS FOR STRUCTURAL SUPPORTS FOR HIGHWAY SIGNS, LUMINARIES, AND TRAFFIC SIGNALS", DATED 2009, OR ITS LATEST REVISIONS.
3. ADDITIONAL DESIGN CRITERIA ARE AS FOLLOWS:
   CONCRETE FC = 1400 PSI F'C = 3 500 PSI, CLASS B
   REINFORCING FS = 24 000 PSI (GRADE 60)
   FOOTING SOIL PRESSURE: REFER TO GEOTECHNICAL OFFICE MEMORANDUM (SEE SPECIAL PROVISIONS)
   WIND LOAD AND ICE LOAD PER AASHTO "STANDARD SPECIFICATIONS"
4. ANCHOR BOLTS
   FOUR STAINLESS STEEL ANCHOR BOLTS WITH TWO HEXAGON NUTS, ONE WASHER AND ONE LOCK WASHER PER BOLT SHALL BE FURNISHED WITH EACH POLE. SEE SUBSECTION 714.09.
5. FLANGE BOLTS
   ALL FLANGE BOLTS AND HEX NUTS SHALL BE HIGH STRENGTH STEEL AND SHALL CONFORM TO AASHTO M 164, TYPE 1 BOLTS, GALVANIZED PER AASHTO M 232 M/M 232 SPECIFICATION. THE FLANGE BOLTS SHALL BE CAPABLE OF RESISTING 133% OF THE FULL DESIGN STRESS OF THE TUBE AT ITS YIELD STRENGTH STRESS.
6. HORIZONTAL AND VERTICAL MEASURES
   STEEL TUBES SHALL BE FORMED AND WELDED WITH ONE CONTINUOUS LONGITUDINAL WELD ONLY. AFTER FORMING AND WELDING THEY SHALL BE COLD ROLLED TO ENSURE UNIFORMITY OF SIZE AND SMOOTHNESS OF WELD. THEY SHALL HAVE A MINIMUM YIELD STRENGTH OF AT LEAST 48 KSI. THERE SHALL BE NO TRANSVERSE WELDING EXCEPT AT THE FLANGE CONNECTIONS AND POLE BASE PLATES, WHERE THE TUBES SHALL TELESCOPE THE FLANGES AND PLATES AND BE CONTINUOUSLY WELDED BOTH SIDES INSIDE AND OUT TO WITHSTAND THE FULL TRANSFER OF THE BENDING STRENGTH TO THE BOLTS. OPTIONALLY, THE MEMBERS MAY BE A SERIES OF TWO OR THREE DIFFERENT DIAMETER PIPES WELDED TOGETHER.
7. GALVANIZING
   ALL STEEL COMPONENTS, EXCEPT CONCRETE REINFORCING AND STAINLESS STEEL HARDWARE AND FLANGE FASTENERS, ARE TO BE HOT DIPPED GALVANIZED IN ACCORDANCE WITH AASHTO M 111 M/M 111 AFTER FABRICATION. THE ASSEMBLIES SHALL BE DESIGNED AND FABRICATED TO PERMIT GALLON ALL INTERIOR AND EXTERIOR SURFACES AND SHALL BE FREE OF POCKETS AND OTHER STRUCTURAL OBSTRUCTIONS THAT WILL NOT PERMIT PROPER DEPOSITION OF ZINC COATING.
8. WELDING
   A. ALL DESIGN DETAILS, WORKMANSHIP, PROCEDURES AND INSPECTION SHALL CONFORM WITH SUBSECTION 506.10.
   B. ALL WELDS SHALL BE AT LEAST AS STRONG AS THE MATERIAL(S) BEING WELDED.
9. FOOTINGS
   A. FOOTINGS SHALL BE DESIGNED TO RESIST LOADS EQUAL TO OR GREATER THAN THE MAXIMUM LOADS THAT THE POLE IS DESIGNED FOR.
   B. FOUNDATIONS SHALL BE DESIGNED IN ACCORDANCE WITH THE RECOMMENDATIONS AND REQUIREMENTS SET FORTH IN THE GEOTECHNICAL REPORT.
   C. ANY BACKFILL PLACED ADJACENT TO THE FOOTING SHALL BE GRANULAR MATERIAL MEETING THE REQUIREMENTS FOR GRANULAR BACKFILL FOR STRUCTURES, SUBSECTION 704.08. CONCRETE FOR FOOTING SHALL CONFORM TO THE REQUIREMENTS OF CONCRETE, CLASS B, SECTION 541, STRUCTURAL CONCRETE. GROUT MATERIAL SHALL BE NON-SHRINKING MORTAR CONFORMING TO SUBSECTION 707.03 (MORTAR TYPE IV).
   D. SIGNALS/SIGNS SHALL BE MOUNTED AND LEVELED AND POLES SHALL BE PLUMB PRIOR TO PLACING GROUT UNDER POLE BASE.
10. FABRICATION DRAWINGS (6 COPIES OF EACH) SHALL BE SUBMITTED TO THE STATE OF VERMONT, AGENCY OF TRANSPORTATION, PROJECT MANAGER FOR APPROVAL, PRIOR TO FABRICATION. THE FABRICATION DRAWINGS SHALL INCLUDE THE FOLLOWING INFORMATION AND SHALL BE STAMPED BY A REGISTERED PROFESSIONAL ENGINEER IN THE STATE OF VERMONT:
    A. DETAILED DRAWING OF EACH COMPONENT OF THE STRUCTURE.
    B. MATERIAL SPECIFICATIONS FOR EACH COMPONENT OF THE STRUCTURE, EITHER BY COMPLETE SPECIFICATION OR REFERENCE TO APPLICABLE ASTM STANDARDS.
    C. NOTATION OF PROJECT NAME, PROJECT NUMBER, ROUTE NUMBER AND POLE NUMBER TO BE INCLUDED ON EACH SHEET.
    D. DETAILS FOR LOCATION OF SIGNS/SIGNALS AND ATTACHMENT HARDWARE FOR THE SUPPORT STRUCTURE.

10. (CONTINUED)
    E. ALL ELEVATIONS AND DIMENSIONS NECESSARY TO PROVIDE A COMPLETE SET OF RECORD PLANS.
    F. DEAD LOAD DEFLECTION AND CAMBER INFORMATION.
    G. WELDING DETAILS AND PROCEDURES ARE REQUIRED FOR ALL WELDS. PROCEDURES SHALL BE SUBMITTED FOR APPROVAL WITH REFERENCE TO EACH WELD IDENTIFIED ON THE FABRICATION DRAWINGS (SEE SUBSECTION 506.10).
11. EACH OVERHEAD TRAFFIC SIGNAL/SIGN SUPPORT SHALL BE GROUNDED. THE GROUND SHALL CONSIST OF:
    A. AN INTERNAL GROUND LUG OPPOSITE THE HAND HOLE.
    B. A 6 AWG (MIN.) SOFT DRAWN COPPER GROUNDING ELECTRODE CONDUCTOR.
    C. A 5/8 INCH X 8 FT (MIN.) COPPER CLAD GROUNDING ELECTRODE. THE RESISTANCE TO GROUND SHALL BE 25 OHMS OR LESS. ADDITIONAL GROUNDING ELECTRODES MAY BE REQUIRED (MINIMUM SPACING SHALL BE 6 FT).

    WHEN A POWER SERVICE, METER AND DISCONNECT ARE ATTACHED TO A POLE, THERE SHALL BE A CONTINUOUS GROUND WIRE FROM THE METER AND DISCONNECT WHICH MAY RUN INTERNAL TO THE UPRIGHT, THROUGH THE 1/2 INCH FLEXIBLE TUBING IN THE CONCRETE BASE TO THE REQUIRED GROUNDING ELECTRODE(S). THE GROUND WIRE FROM THE POLE GROUNDING LUG, CONTROLLER CABINET AND/OR LUMINAIRE MAY ATTACH TO THIS CONTINUOUS CABINET AND/OR LUMINAIRE MAY ATTACH TO THIS CONTINUOUS GROUNDING ELECTRODE CONDUCTOR FROM THE SERVICE METER AND DISCONNECT. THE CONTRACTOR SHALL PERFORM A RESISTANCE TO GROUND TEST ON THE CONTINUOUS GROUNDING ELECTRODE CONDUCTOR FROM THE SERVICE METER AND DISCONNECT AND PROVIDE A WRITTEN STATEMENT TO THE AREA ELECTRICAL INSPECTOR THAT THE GROUNDING ELECTRODE CONDUCTOR IS CONTINUOUS FROM THE SERVICE METER AND DISCONNECT AND THE RESISTANCE TO GROUND IS 25 OHMS OR LESS.
12. THE COST OF OVERHEAD TRAFFIC SIGN SUPPORTS, INCLUDING ALL HARDWARE, SIGN BRACKETS, AND FOOTING, SHALL BE INCLUDED IN THE UNIT BID PRICE FOR ITEM 677.13. THE COST OF TRAFFIC CONTROL SIGNAL SYSTEMS INCLUDING ALL HARDWARE, BRACKETS, FOOTINGS, LUMINAIRE AND LUMINAIRE ARMS SHALL BE INCLUDED IN ITEM 678.15. THE COMPONENTS SHALL CONFORM TO ALL APPLICABLE PROVISIONS OF SECTIONS 677, 678, AND 679.
13. HORIZONTAL MEMBERS SHALL BE CAMBERED AND THE VERTICAL POLES BACKRAKED (WHERE APPLICABLE) TO THE ANTICIPATED DEAD LOAD DEFLECTION PLUS THE CAMBER, IF ANY, SPECIFIED ON THE PLANS.
14. AN EQUIVALENT ALTERNATE DESIGN MAY BE SUBSTITUTED FOR THE DETAILS AND MATERIALS SHOWN.
15. THE DETAILS OF DESIGN FOR THE STRUCTURE AND FOOTINGS ARE TO BE SUPPLIED BY THE CONTRACTOR AND/OR BY THE MANUFACTURER. THE STRUCTURE SHALL BE DESIGNED TO RESIST THE MAXIMUM LOADING AS OUTLINED IN THE AASHTO STANDARD SPECIFICATIONS (SEE NOTE 2). ALL DETAILS OF THE STRUCTURE AND THE FOOTING SHALL BE CHECKED AND STAMPED BY A PROFESSIONAL ENGINEER REGISTERED IN THE STATE OF VERMONT PRIOR TO SUBMITTAL OF THE FABRICATION DRAWINGS TO THE VERMONT AGENCY OF TRANSPORTATION, PROJECT MANAGER.
16. IN ADDITION TO THE FABRICATION DRAWINGS OUTLINED IN NOTE 10, THE CONTRACTOR SHALL SUBMIT ALL DESIGN CALCULATIONS TO THE VERMONT AGENCY OF TRANSPORTATION, PROJECT MANAGER, SHOWING THE FOLLOWING INFORMATION FOR EACH OF THE VERTICAL AND HORIZONTAL COMPONENTS OF THE STRUCTURE AND FOOTING.
    A. THE DESIGN AXIAL AND SHEAR FORCES AND BENDING AND TORSIONAL MOMENTS.
    B. THE DESIGN AXIAL, BENDING AND SHEAR STRESSES AND THE COMBINED STRESS RATIO.
    C. VIBRATION AND FATIGUE CALCULATIONS AS SET FORTH IN SECTION 9 OF THE AASHTO PUBLICATION REFERENCED IN NOTE 2.
    D. THE ALLOWABLE AXIAL, BENDING, AND SHEAR STRESSES.
    E. ITEMS A, B, D - SHALL BE SHOWN FOR EACH OF THE GROUP LOADINGS (I, II, III) AND FOR THE BASIC WIND LOAD APPLIED TO THE TWO CASES OUTLINED IN THE AASHTO STANDARD SPECIFICATIONS (SEE NOTE 2) SECTION 1.2.5.
    F. FAILURE TO SUPPLY THE PROPER DESIGN INFORMATION SHALL BE CAUSE FOR REJECTION OF THE STRUCTURE.
    G. A MINIMUM OF FOUR (4) WEEKS SHALL BE REQUIRED FOR REVIEW BY THE VERMONT AGENCY OF TRANSPORTATION.
17. THE CONTRACTOR/MANUFACTURER SHALL BE RESPONSIBLE FOR COMPLETION OF THE STRUCTURE AND FOOTING DATA ON THE DETAIL SHEET(S).
18. FOR INSTALLATIONS WHERE BOTH "EXISTING" AND "FUTURE" CONDITIONS ARE SHOWN, THE SUPPORTS SHALL BE DESIGNED FOR THE MORE SEVERE OF THE TWO LOADING CONDITIONS. THE INFORMATION OUTLINED IN NOTE 16 ABOVE SHALL BE PROVIDED FOR BOTH THE LOADING CONDITIONS.
19. THE TRAFFIC SIGNALS SHALL BE MOUNTED TO THE ARM OR POLE USING A FIXED MOUNT SYSTEM AS SHOWN ON STANDARD E-171B, UNLESS OTHERWISE NOTED ON THE CROSS SECTION SHEET.
20. BASE PLATES SHALL BE STAMPED WITH THE VERTICAL POLE DIAMETER, HEIGHT, YIELD STRENGTH, GAUGE AND THE HORIZONTAL MEMBER DIAMETER, LENGTH, YIELD STRENGTH, GAUGE. ALTERNATELY, THE INFORMATION MAY BE STAMPED ON A METAL TAG RIVETED TO THE POLE NEAR THE HANDHOLE.
21. SEE STANDARD E-171A FOR ADDITIONAL NOTES.
22. CONTRACTOR SHALL VERIFY ALL GROUND ELEVATIONS.

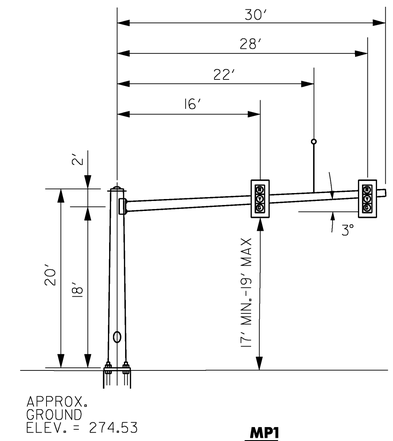

MP1

LOOKING NORTH

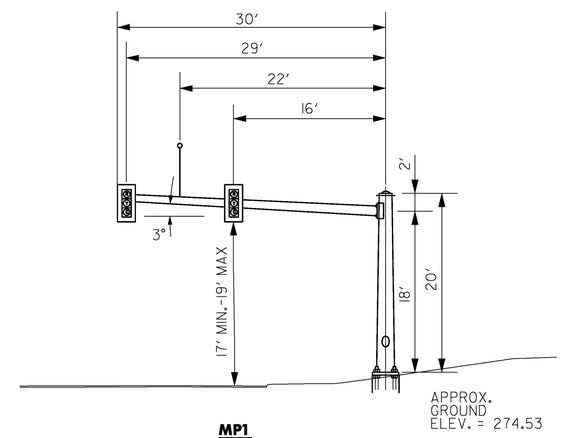

MP1

LOOKING WEST

NOTE : SEE SHEETS 54 AND 55 FOR ADDITIONAL INFORMATION AND SIGN SUPPORT CROSS-SECTIONS.

PROJECT NAME: WINOOSKI	
PROJECT NUMBER: NH 089-3(65)	
FILE NAME: z94a198trfbdr2.dgn	PLOT DATE: 2/22/2010
PROJECT LEADER: KEN UPMAL	DRAWN BY: J.WILTSHIRE
DESIGNED BY: J.SOBEL	CHECKED BY: D.FLYNN
TRAFFIC SIGNAL DETAILS SHEET 2	SHEET 52 OF 67

USE OVERHEAD RETROREFLECTIVE TYPE IX GREEN SHEETING AND ASTM TYPE IX BORDER AND TEXT (TYP.)

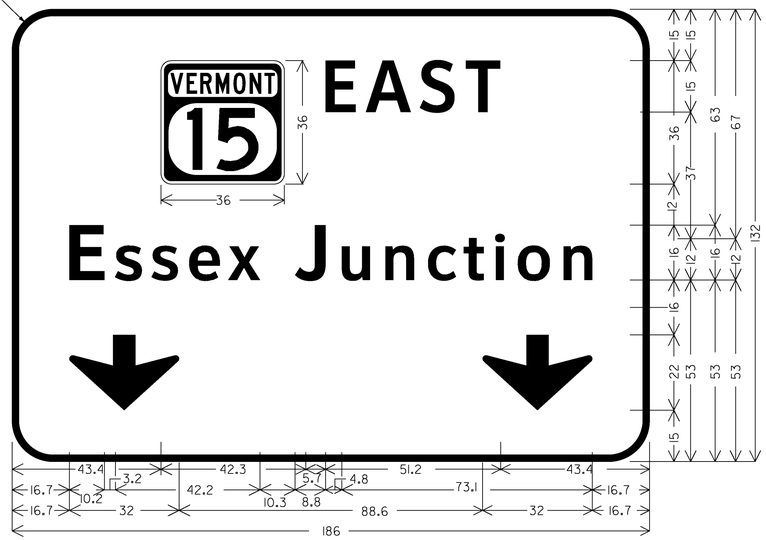

12.0" Radius, 2.0" Border, White on Green;
VT RT MRK;
"EAST" Clearview-Hwy-4-W; "E ssex J unction" Clearview-Hwy-5-W; Down Arrow 22.0" 270°; Down Arrow 22.0" 270°;

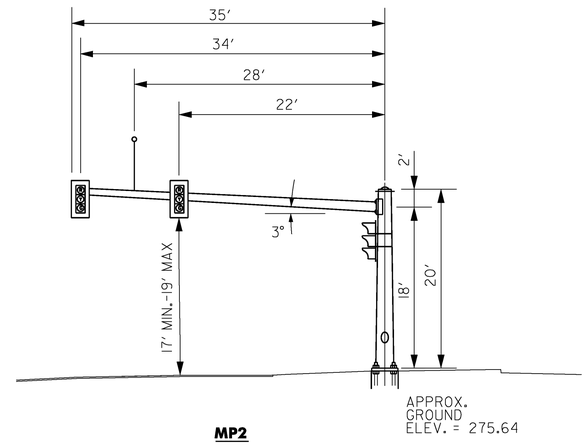

MP2

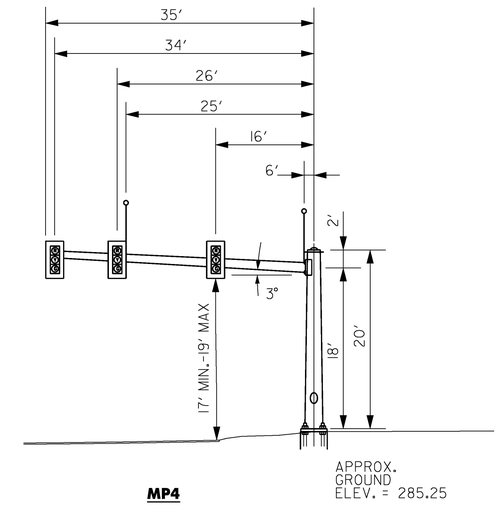

MP4

USE OVERHEAD RETROREFLECTIVE TYPE IX GREEN SHEETING AND ASTM TYPE IX BORDER AND TEXT (TYP.)

12.0" Radius, 2.0" Border, White on Green;
VT RT MRK;
"WEST" Clearview-Hwy-4-W; "W inooski" Clearview-Hwy-5-W specified length; Down Arrow 22.0" 270°;

SEE STATE STANDARD E-136B STATE ROUTE MARKER SIGN DETAILS FOR ACTUAL ROUTE MARKER SIGN DIMENSIONS

OVERHEAD TRAFFIC SIGN DETAIL

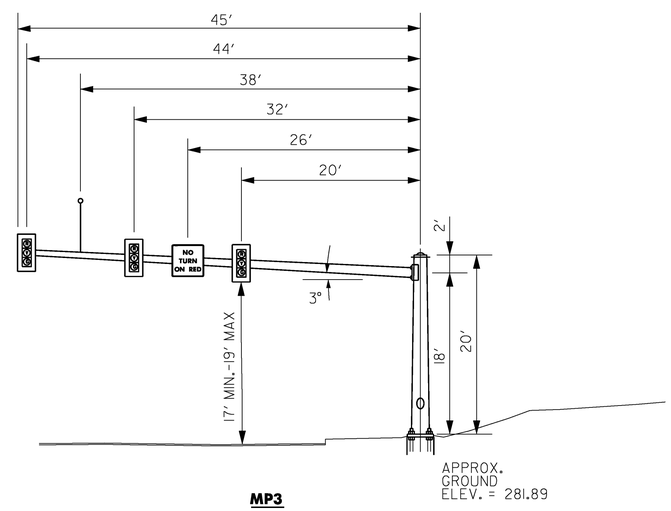

MP3

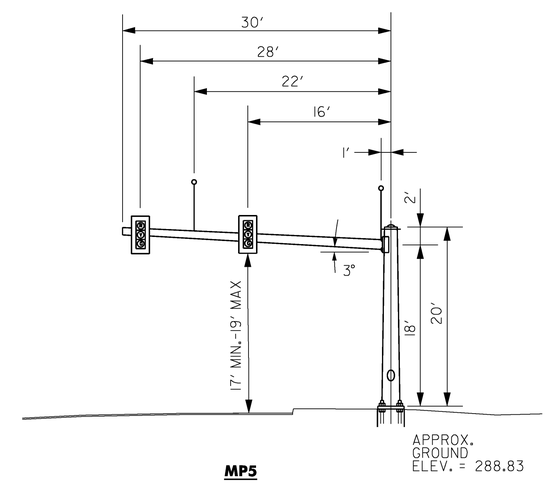

MP5

PROJECT NAME: WINOOSKI	
PROJECT NUMBER: NH 089-3(65)	
FILE NAME: z94a198trfbdr2.dgn	PLOT DATE: 2/22/2010
PROJECT LEADER: KEN UPMAL	DRAWN BY: J.WILTSHIRE
DESIGNED BY: J.SOBEL	CHECKED BY: D.FLYNN
TRAFFIC SIGNAL DETAILS SHEET 3	SHEET 53 OF 67

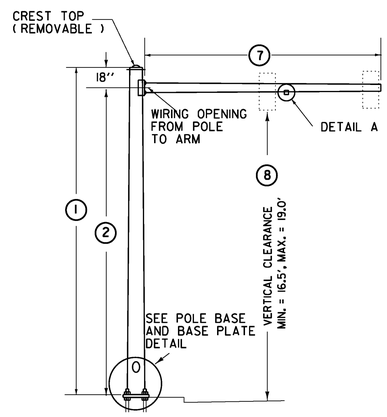

TYPE A

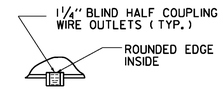

DETAIL A

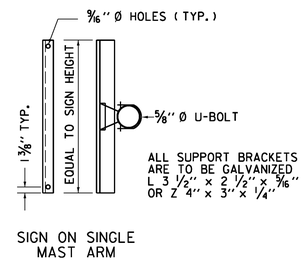

SIGN BRACKET DETAILS

ANCHOR BOLT DETAIL		
SIZE	L(IN)	T(IN)
1- 1/4'' X 48''	42	8
1- 1/2'' X 60''	54	9
1- 3/4'' X 90''	84	9
2'' X 96''	96	9

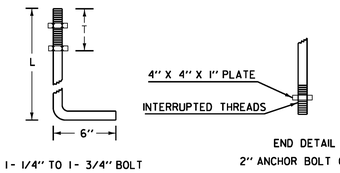

ANCHOR BOLT DETAIL

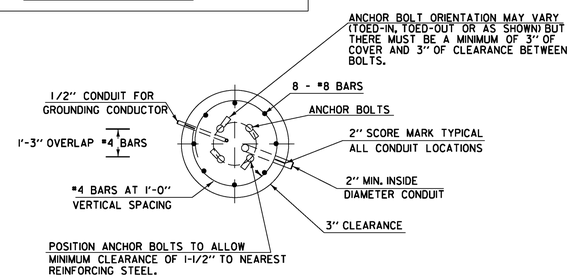

SECTION

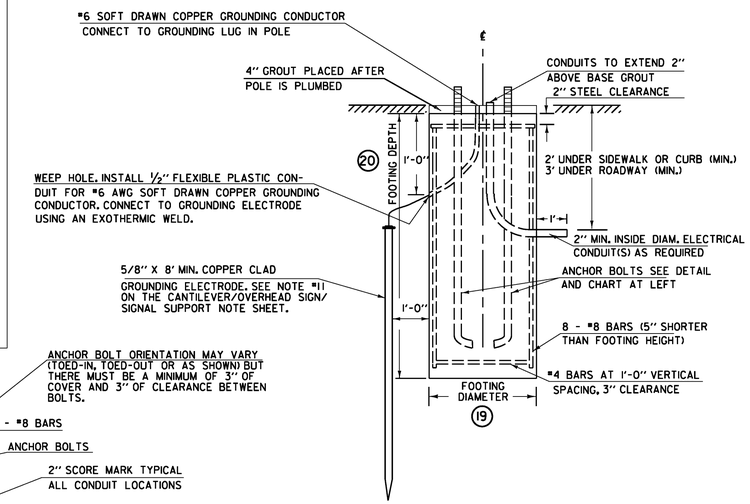

ELEVATION

CANTILEVER FOOTING DETAIL

(REFER TO GEOTECHNICAL REPORT FOR FOOTING REQUIREMENTS)

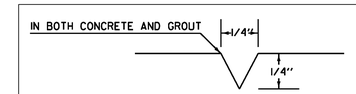

USED FOR CONDUIT LOCATION, SEE SECTION DETAIL AT LEFT

2'' SCORE MARK DETAIL

POLE BASE DIAMETER (4)
POLE GAUGE (5)
POLE TAPER RATE (6)
ARM DIAMETER (11)
ARM GAUGE (12)
ARM TAPER RATE (13)

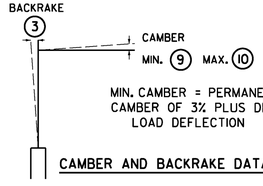

MIN. CAMBER = PERMANENT
CAMBER OF 3% PLUS DEAD
LOAD DEFLECTION

CAMBER AND BACKRAKE DATA

SEE SHEETS 51 AND 52 FOR ADDITIONAL INFORMATION

SEE TRAFFIC SIGNAL DETAIL SHEETS 2 AND 3 FOR CROSS SECTIONS

STRUCTURE DIMENSIONS																											
POLE DATA								ARM DATA							LIGHTING DATA					FOOTING DATA		BASE PLATE / BOLT DATA					
POLE	TYPE	1	2	3	4	5	6	7	8	9	10	11	12	13	14	15	16	17	18	19	20	BC	F	S	T	P	ANCHOR BOLT SIZE
MP1	A	20'	18'	TBBM	TBBM	TBBM	TBBM	30'	17'	3%	5%	TBBM	TBBM	TBBM	N/A	N/A	N/A	N/A	N/A	TBBM	TBBM	TBBM	TBBM	TBBM	TBBM	TBBM	TBBM
MP1	A	20'	18'	TBBM	TBBM	TBBM	TBBM	30'	17'	3%	5%	TBBM	TBBM	TBBM	N/A	N/A	N/A	N/A	N/A	TBBM	TBBM	TBBM	TBBM	TBBM	TBBM	TBBM	TBBM
MP2	A	20'	18'	TBBM	TBBM	TBBM	TBBM	35'	17'	3%	5%	TBBM	TBBM	TBBM	N/A	N/A	N/A	N/A	N/A	TBBM	TBBM	TBBM	TBBM	TBBM	TBBM	TBBM	TBBM
MP3	A	20'	18'	TBBM	TBBM	TBBM	TBBM	45'	17'	3%	5%	TBBM	TBBM	TBBM	N/A	N/A	N/A	N/A	N/A	TBBM	TBBM	TBBM	TBBM	TBBM	TBBM	TBBM	TBBM
MP4	A	20'	18'	TBBM	TBBM	TBBM	TBBM	30'	17'	3%	5%	TBBM	TBBM	TBBM	N/A	N/A	N/A	N/A	N/A	TBBM	TBBM	TBBM	TBBM	TBBM	TBBM	TBBM	TBBM
MP5	A	20'	18'	TBBM	TBBM	TBBM	TBBM	30'	17'	3%	5%	TBBM	TBBM	TBBM	N/A	N/A	N/A	N/A	N/A	TBBM	TBBM	TBBM	TBBM	TBBM	TBBM	TBBM	TBBM

TBBM = TO BE DETERMINED BY MANUFACTURER

NOTE: DETAILS NOT TO SCALE

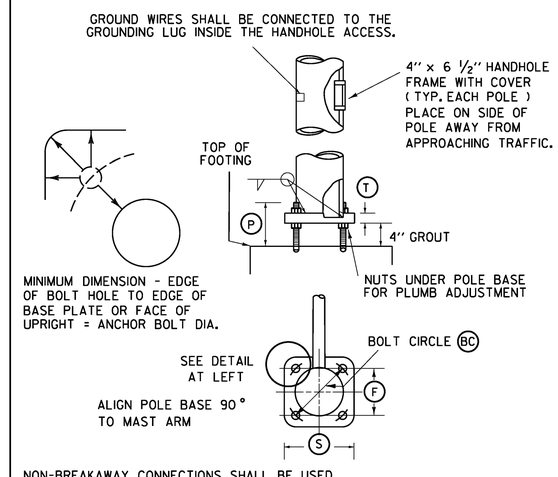

NON-BREAKAWAY CONNECTIONS SHALL BE USED.

POLE BASE AND BASE PLATE DETAIL

PROJECT NAME: WINOOSKI
PROJECT NUMBER: NH 089-3(65)

FILE NAME: z94a198trfbdr2.dgn
PROJECT LEADER: KEN UPMAL
DESIGNED BY: J.SOBEL
SINGLE MAST ARM DETAIL SHEET

PLOT DATE: 2/22/2010
DRAWN BY: J.WILTSHIRE
CHECKED BY: D.FLYNN
SHEET 54 OF 67

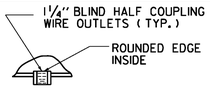

DETAIL A

ANCHOR BOLT DETAIL		
SIZE	L (IN)	T (IN)
1- 1/4" X 48"	42	8
1- 1/2" X 60"	54	9
1- 3/4" X 90"	84	9
2" X 96"	96	9

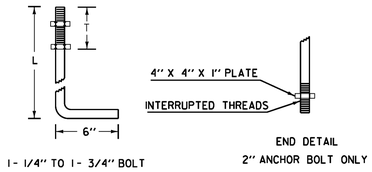

ANCHOR BOLT DETAIL

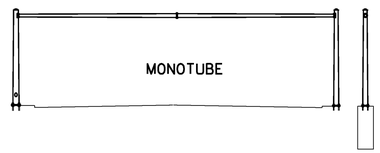

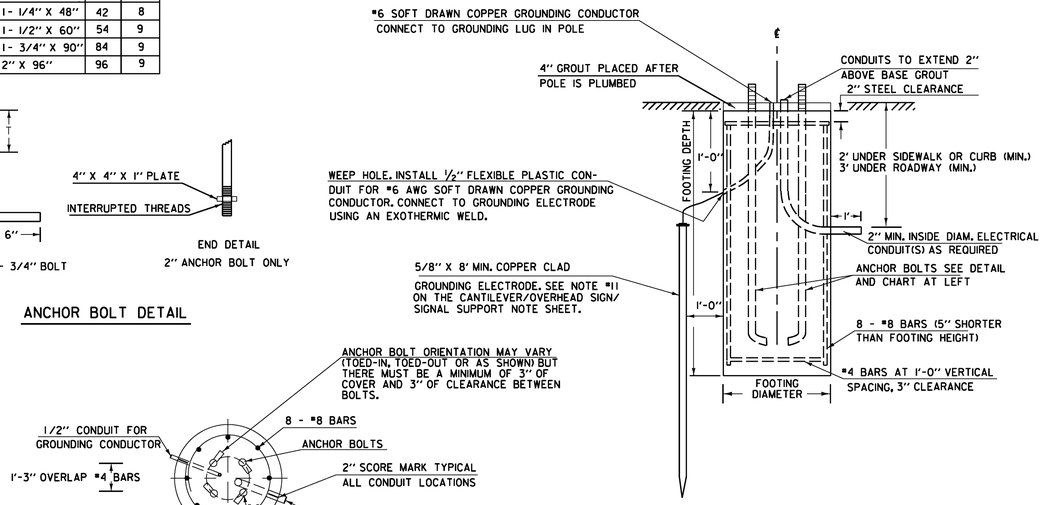

ELEVATION

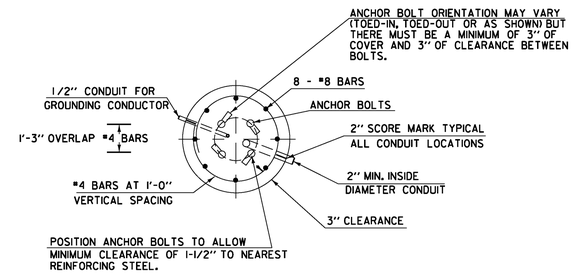

SECTION

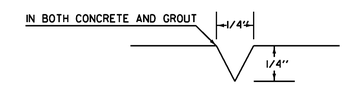

USED FOR CONDUIT LOCATION, SEE SECTION DETAIL AT LEFT

2" SCORE MARK DETAIL

OVERHEAD TRAFFIC SIGN BRIDGE FOOTING DETAIL

(SPREAD FOOTINGS OR PILES ARE OPTIONAL)

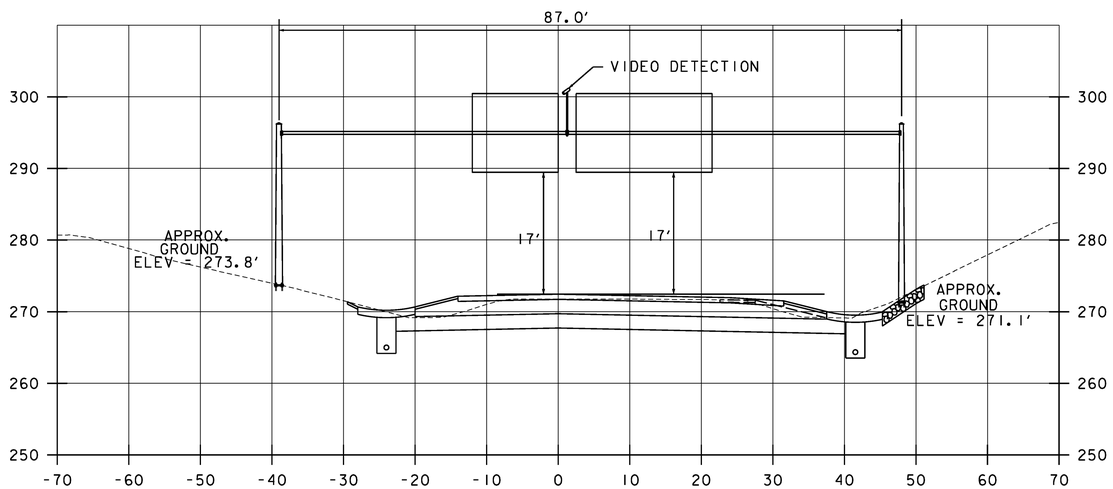

SEE SHEET 48 FOR LOCATION PLAN

OVERHEAD TRAFFIC SIGN SUPPORT STA. 57+53

CROSS-SECTION FOR ILLUSTRATION ONLY - SEE NOTES PROVIDED ON THIS SHEET

SCALE 1" = 10'

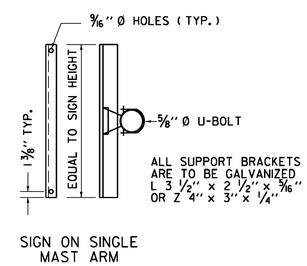

SIGN BRACKET DETAILS

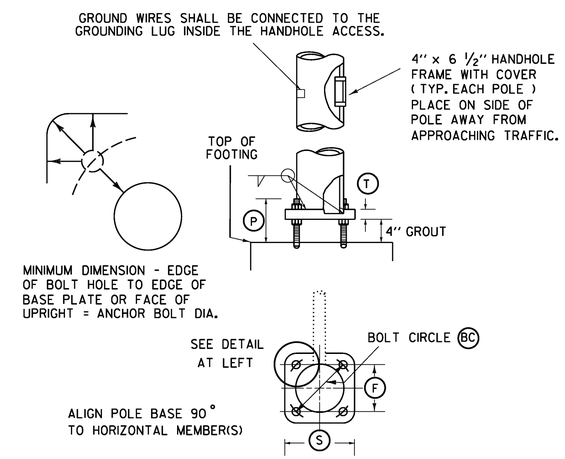

NOTES:

1. SEE SHEET 52 FOR ADDITIONAL INFORMATION.
2. MINIMUM CLEARANCE FROM SIGNS TO ANY TRAVEL LANE SHALL BE 17'.
3. CONTRACTOR SHALL VERIFY ALL GROUND ELEVATIONS.
4. A MONOTUBE STRUCTURE SHALL BE PROVIDED.

PROJECT NAME: WINOOSKI	
PROJECT NUMBER: NH 089-3(65)	
FILE NAME: z94al98trfbdr2.dgn	PLOT DATE: 2/22/2010
PROJECT LEADER: KEN UPMAL	DRAWN BY: J.WILTSHIRE
DESIGNED BY: J.SOBEL	CHECKED BY: D.FLYNN
OVERHEAD SIGN DETAIL SHEET	SHEET 55 OF 67

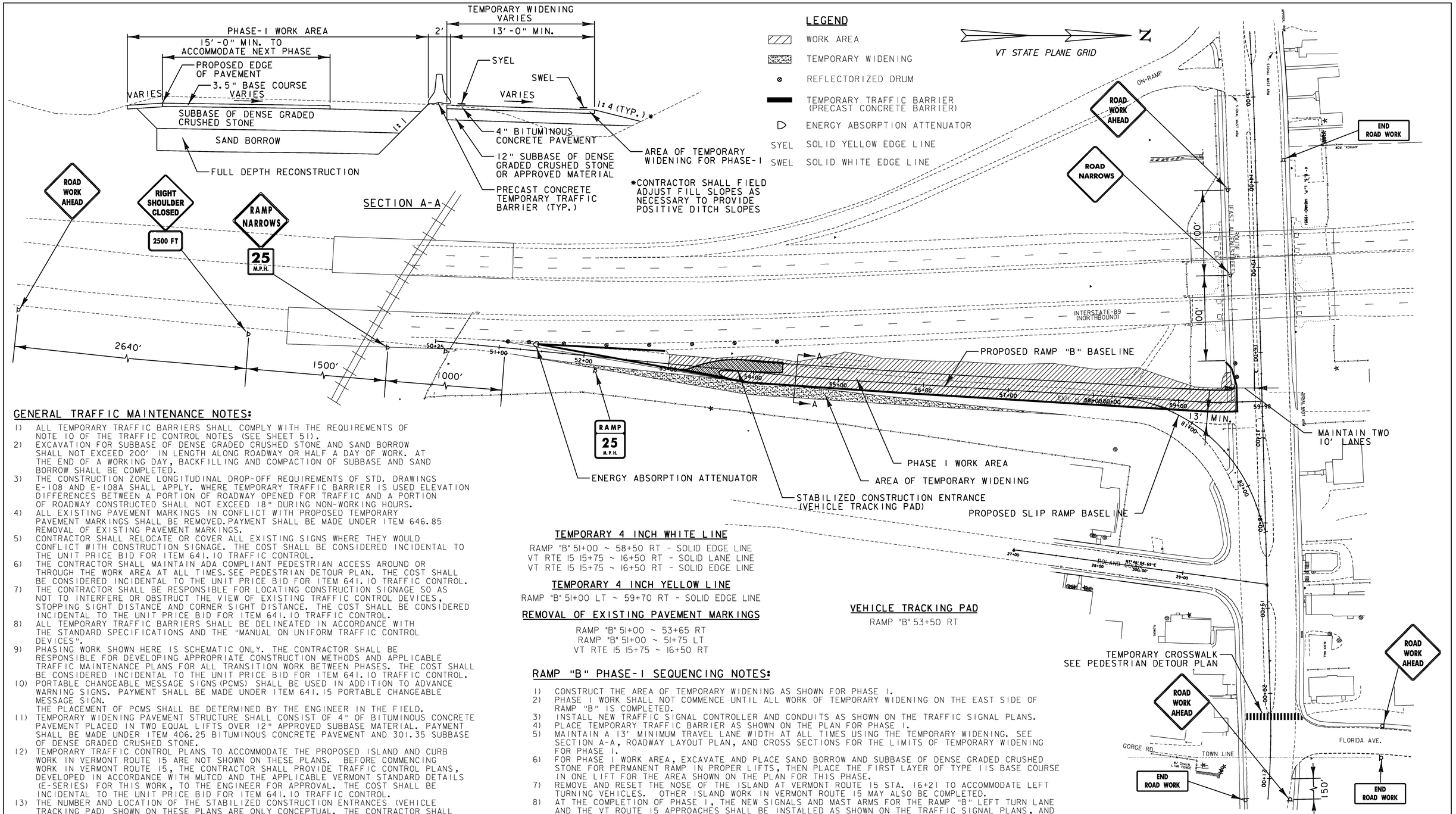

GENERAL TRAFFIC MAINTENANCE NOTES:

1) ALL TEMPORARY TRAFFIC BARRIERS SHALL COMPLY WITH THE REQUIREMENTS OF NOTE 10 OF THE TRAFFIC CONTROL NOTES (SEE SHEET 51).
2) EXCAVATION FOR SUBBASE OF DENSE GRADED CRUSHED STONE AND SAND BORROW SHALL NOT EXCEED 200' IN LENGTH ALONG ROADWAY OR HALF A DAY OF WORK. AT THE END OF A WORKING DAY, BACKFILLING AND COMPACTION OF SUBBASE AND SAND BORROW SHALL BE COMPLETED.
3) THE CONSTRUCTION ZONE LONGITUDINAL DROP-OFF REQUIREMENTS OF STD. DRAWINGS E-108 AND E-108A SHALL APPLY. WHERE TEMPORARY TRAFFIC BARRIER IS USED ELEVATION DIFFERENCES BETWEEN A PORTION OF ROADWAY OPENED FOR TRAFFIC AND A PORTION OF ROADWAY CONSTRUCTED SHALL NOT EXCEED 18" DURING NON-WORKING HOURS.
4) ALL EXISTING PAVEMENT MARKINGS IN CONFLICT WITH PROPOSED TEMPORARY PAVEMENT MARKINGS SHALL BE REMOVED. PAYMENT SHALL BE MADE UNDER ITEM 646.85 REMOVAL OF EXISTING PAVEMENT MARKINGS.
5) CONTRACTOR SHALL RELOCATE OR COVER ALL EXISTING SIGNS WHERE THEY WOULD CONFLICT WITH CONSTRUCTION SIGNAGE. THE COST SHALL BE CONSIDERED INCIDENTAL TO THE UNIT PRICE BID FOR ITEM 641.10 TRAFFIC CONTROL.
6) THE CONTRACTOR SHALL MAINTAIN ADA COMPLIANT PEDESTRIAN ACCESS AROUND OR THROUGH THE WORK AREA AT ALL TIMES. SEE PEDESTRIAN DETOUR PLAN. THE COST SHALL BE CONSIDERED INCIDENTAL TO THE UNIT PRICE BID FOR ITEM 641.10 TRAFFIC CONTROL.
7) THE CONTRACTOR SHALL BE RESPONSIBLE FOR LOCATING CONSTRUCTION SIGNAGE SO AS NOT TO INTERFERE OR OBSTRUCT THE VIEW OF EXISTING TRAFFIC CONTROL DEVICES, STOPPING SIGHT DISTANCE AND CORNER SIGHT DISTANCE. THE COST SHALL BE CONSIDERED INCIDENTAL TO THE UNIT PRICE BID FOR ITEM 641.10 TRAFFIC CONTROL.
8) ALL TEMPORARY TRAFFIC BARRIERS SHALL BE DELINEATED IN ACCORDANCE WITH THE STANDARD SPECIFICATIONS AND THE "MANUAL ON UNIFORM TRAFFIC CONTROL DEVICES".
9) PHASING WORK SHOWN HERE IS SCHEMATIC ONLY. THE CONTRACTOR SHALL BE RESPONSIBLE FOR DEVELOPING APPROPRIATE CONSTRUCTION METHODS AND APPLICABLE TRAFFIC MAINTENANCE PLANS FOR ALL TRANSITION WORK BETWEEN PHASES. THE COST SHALL BE CONSIDERED INCIDENTAL TO THE UNIT PRICE BID FOR ITEM 641.10 TRAFFIC CONTROL.
10) PORTABLE CHANGEABLE MESSAGE SIGNS (PCMS) SHALL BE USED IN ADDITION TO ADVANCE WARNING SIGNS. PAYMENT SHALL BE MADE UNDER ITEM 641.15 PORTABLE CHANGEABLE MESSAGE SIGN.
THE PLACEMENT OF PCMS SHALL BE DETERMINED BY THE ENGINEER IN THE FIELD.
11) TEMPORARY WIDENING PAVEMENT STRUCTURE SHALL CONSIST OF 4" OF BITUMINOUS CONCRETE PAVEMENT PLACED IN TWO EQUAL LIFTS OVER 12" APPROVED SUBBASE MATERIAL. PAYMENT SHALL BE MADE UNDER ITEM 406.25 BITUMINOUS CONCRETE PAVEMENT AND 301.35 SUBBASE OF DENSE GRADED CRUSHED STONE.
12) TEMPORARY TRAFFIC CONTROL PLANS TO ACCOMMODATE THE PROPOSED ISLAND AND CURB WORK IN VERMONT ROUTE 15 ARE NOT SHOWN ON THESE PLANS. BEFORE COMMENCING WORK IN VERMONT ROUTE 15, THE CONTRACTOR SHALL PROVIDE TRAFFIC CONTROL PLANS, DEVELOPED IN ACCORDANCE WITH MUTCD AND THE APPLICABLE VERMONT STANDARD DETAILS (E-SERIES) FOR THIS WORK, TO THE ENGINEER FOR APPROVAL. THE COST SHALL BE INCIDENTAL TO THE UNIT PRICE BID FOR ITEM 641.10 TRAFFIC CONTROL.
13) THE NUMBER AND LOCATION OF THE STABILIZED CONSTRUCTION ENTRANCES (VEHICLE TRACKING PAD) SHOWN ON THESE PLANS ARE ONLY CONCEPTUAL. THE CONTRACTOR SHALL PROVIDE EXACT LOCATION IN THE FIELD IN ACCORDANCE WITH THE APPLICABLE VTRANS EROSION CONTROL REQUIREMENTS AND SUBMIT TO ENGINEER FOR APPROVAL. PAYMENT SHALL BE MADE UNDER ITEM 653.35 VEHICLE TRACKING PAD.
14) ALL WORK AREA AND CONSTRUCTION ENTRANCES SHALL BE SECURED DURING OVERNIGHT AND NON ACTIVE PERIODS. THE COST SHALL BE CONSIDERED INCIDENTAL TO THE UNIT PRICE BID FOR ITEM 641.10 TRAFFIC CONTROL.
15) PAYMENT FOR FURNISHING AND PLACING TEMPORARY TRAFFIC SIGNS AND REMOVING AND RELOCATING TEMPORARY TRAFFIC SIGNS FOR THE DIFFERENT PHASES SHALL BE CONSIDERD INCIDENTAL TO THE UNIT PRICE BID FOR ITEM 641.10 TRAFFIC CONTROL.

TEMPORARY 4 INCH WHITE LINE

RAMP "B" 51+00 ~ 58+50 RT - SOLID EDGE LINE
VT RTE 15 15+75 ~ 16+50 RT - SOLID LANE LINE
VT RTE 15 15+75 ~ 16+50 RT - SOLID EDGE LINE

TEMPORARY 4 INCH YELLOW LINE

RAMP "B" 51+00 LT ~ 59+70 RT - SOLID EDGE LINE

REMOVAL OF EXISTING PAVEMENT MARKINGS

RAMP "B" 51+00 ~ 53+65 RT
RAMP "B" 51+00 ~ 51+75 LT
VT RTE 15 15+75 ~ 16+50 RT

VEHICLE TRACKING PAD

RAMP "B" 53+50 RT

RAMP "B" PHASE-1 SEQUENCING NOTES:

1) CONSTRUCT THE AREA OF TEMPORARY WIDENING AS SHOWN FOR PHASE 1.
2) PHASE 1 WORK SHALL NOT COMMENCE UNTIL ALL WORK OF TEMPORARY WIDENING ON THE EAST SIDE OF RAMP "B" IS COMPLETED.
3) INSTALL NEW TRAFFIC SIGNAL CONTROLLER AND CONDUITS AS SHOWN ON THE TRAFFIC SIGNAL PLANS.
4) PLACE TEMPORARY TRAFFIC BARRIER AS SHOWN ON THE PLAN FOR PHASE 1.
5) MAINTAIN A 13' MINIMUM TRAVEL LANE WIDTH AT ALL TIMES USING THE TEMPORARY WIDENING. SEE SECTION A-A, ROADWAY LAYOUT PLAN, AND CROSS SECTIONS FOR THE LIMITS OF TEMPORARY WIDENING FOR PHASE 1.
6) FOR PHASE 1 WORK AREA, EXCAVATE AND PLACE SAND BORROW AND SUBBASE OF DENSE GRADED CRUSHED STONE FOR PERMANENT RAMP IN PROPER LIFTS, THEN PLACE THE FIRST LAYER OF TYPE IIS BASE COURSE IN ONE LIFT FOR THE AREA SHOWN ON THE PLAN FOR THIS PHASE.
7) REMOVE AND RESET THE NOSE OF THE ISLAND AT VERMONT ROUTE 15 STA. 16+21 TO ACCOMMODATE LEFT TURNING VEHICLES. OTHER ISLAND WORK IN VERMONT ROUTE 15 MAY ALSO BE COMPLETED.
8) AT THE COMPLETION OF PHASE 1, THE NEW SIGNALS AND MAST ARMS FOR THE RAMP "B" LEFT TURN LANE AND THE VT ROUTE 15 APPROACHES SHALL BE INSTALLED AS SHOWN ON THE TRAFFIC SIGNAL PLANS, AND BE FULLY OPERATIONAL. PEDESTRIAN SIGNALS FOR VERMONT ROUTE 15 CROSSING SHALL BE COVERED AND APPROVED.
9) REMOVE EXISTING SIGNAL SYSTEM ONCE THE NEW SIGNAL SYSTEM IS ACTIVATED. THE COST OF REMOVAL SHALL BE MADE UNDER ITEM 900.645 SPECIAL PROVISION (REMOVAL OF EXISTING TRAFFIC CONTROL SIGNAL SYSTEM).

PROJECT NAME: WINOOSKI	
PROJECT NUMBER: NH 089-3(65)	
FILE NAME: z94a198tmp.dgn	PLOT DATE: 2/23/2010
PROJECT LEADER: KEN UPMAL	DRAWN BY: W.WONG
DESIGNED BY: W.WONG	CHECKED BY: E.ATKINS
TRAFFIC MANAGEMENT PLAN PHASE 1	SHEET 56 OF 67

RAMP "B" PHASE-2 SEQUENCING NOTES:

1) SEE TRAFFIC MANAGEMENT PLAN PHASE 1 SHEET FOR GENERAL TRAFFIC MAINTENANCE NOTES.
2) RELOCATE PHASE 1 SIGNS AS REQUIRED FOR PHASE 2.
3) REMOVE TEMPORARY PAVEMENT AND WIDENING. PAYMENT FOR REMOVAL OF TEMPORARY PAVEMENT AND WIDENING SHALL BE MADE UNDER ITEM 203.15 COMMON EXCAVATION.
4) REMOVE EXISTING RAMP ISLAND, CURBING, PAVEMENT, AND PROVIDE BITUMINOUS CONCRETE PAVEMENT AS NEEDED TO FACILITATE THE LAYOUT OF THE SLIP RAMP FOR PHASE 2.
5) REMOVE AND RESET TEMPORARY TRAFFIC BARRIER FROM PHASE 1 CONDITION TO PHASE 2 CONDITION AS SHOWN ON THE PLAN FOR PHASE 2.
6) MAINTAIN THE SPECIFIED MINIMUM TRAVEL LANE WIDTHS FOR ALL APPROACHES AT ALL TIMES.
7) FOR PHASE 2 WORK AREA, EXCAVATE AND PLACE SAND BORROW AND SUBBASE OF DENSE GRADED CRUSHED STONE IN PROPER LIFTS, THEN PLACE FIRST LAYER OF TYPE IIS BASE COURSE IN ONE LIFT FOR THE AREA SHOWN ON THE PLAN FOR THIS PHASE.
8) CONSTRUCT THE AREA OF TEMPORARY WIDENING FOR PHASE 3. SEE SECTION A-A, ROADWAY LAYOUT PLAN, AND CROSS SECTIONS FOR THE LIMITS OF TEMPORARY WIDENING FOR PHASE 3.

TEMPORARY 4 INCH WHITE LINE

RAMP "B" 58+50 ~ 59+70 RT - SOLID EDGE LINE
RAMP "B" 51+00 RT - RAMP "B" SLIP RAMP 82+25 RT - SOLID EDGE LINE
VT RTE 15 16+60 ~ 17+20 RT - SOLID EDGE LINE
VT RTE 15 17+90 ~ 18+25 RT - SOLID EDGE LINE
VT RTE 15 16+60 ~ 18+25 RT - SOLID LANE LINE

TEMPORARY 4 INCH YELLOW LINE

RAMP "B" 51+00 ~ 59+70 LT - SOLID EDGE LINE
RAMP "B" SLIP RAMP 80+50 LT ~ 81+60 LT - SOLID EDGE LINE

REMOVAL OF EXISTING PAVEMENT MARKINGS

VT RTE 15 16+85 ~ 18+25 RT

VEHICLE TRACKING PAD

RAMP "B" 54+50 RT

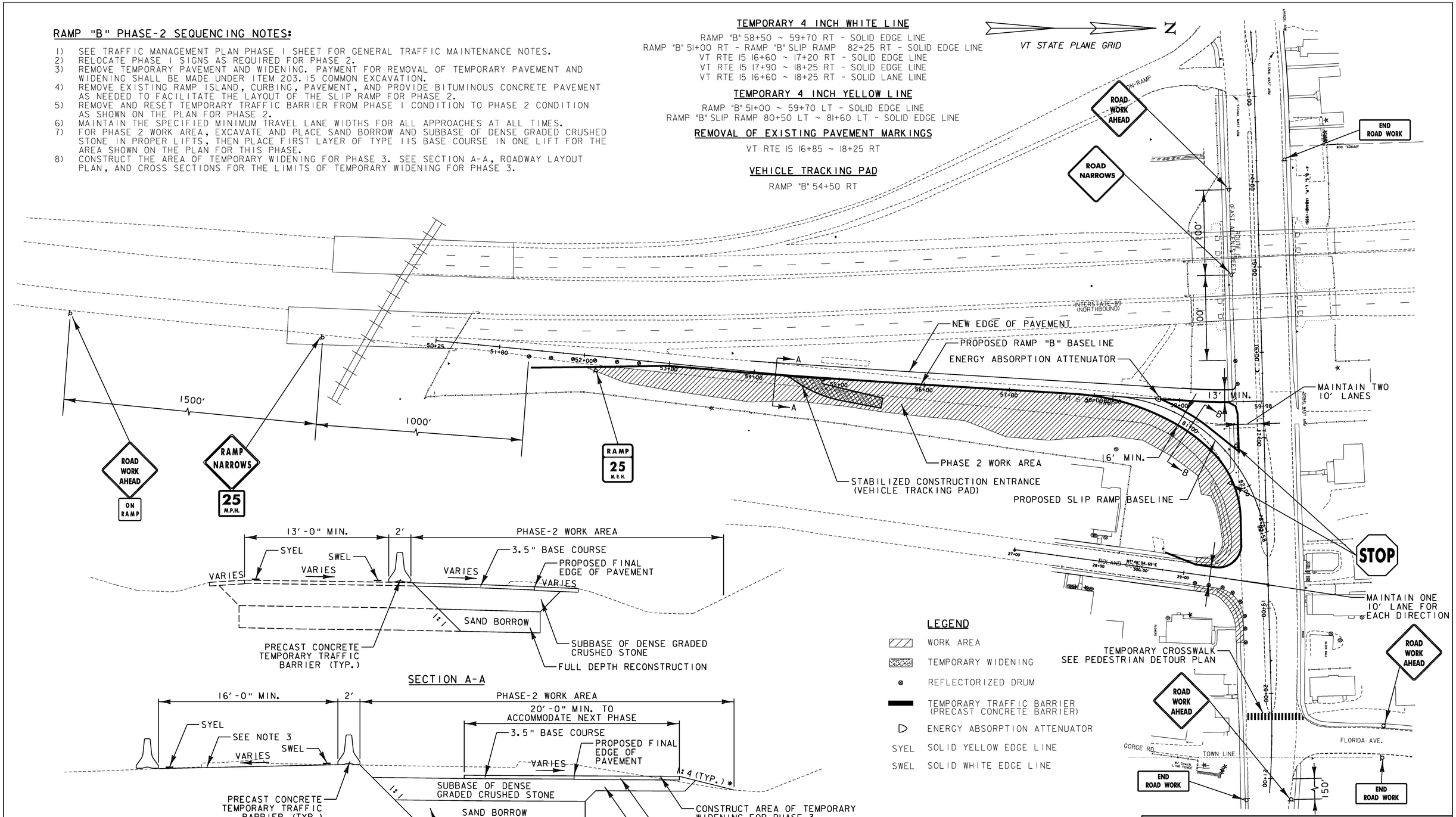

PROJECT NAME: WINOOSKI	
PROJECT NUMBER: NH 089-3(65)	
FILE NAME: z94a198tmp.dgn	PLOT DATE: 2/23/2010
PROJECT LEADER: KEN UPMAL	DRAWN BY: W.WONG
DESIGNED BY: W.WONG	CHECKED BY: E.ATKINS
TRAFFIC MANAGEMENT PLAN PHASE 2	SHEET 57 OF 67

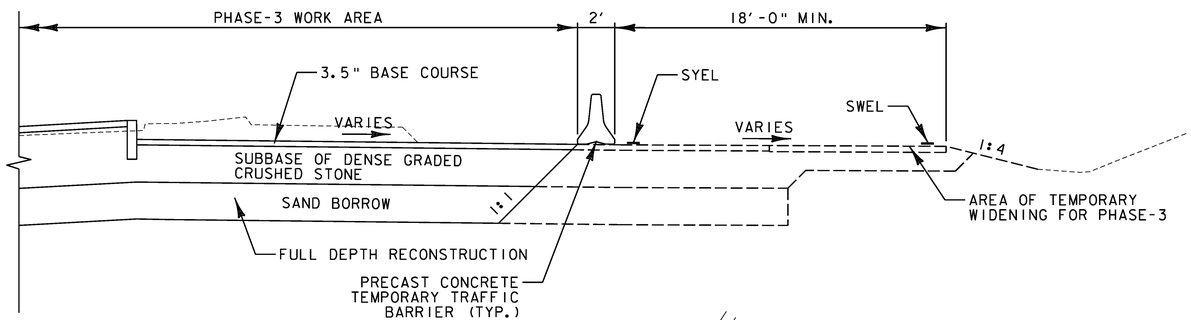

SECTION A-A

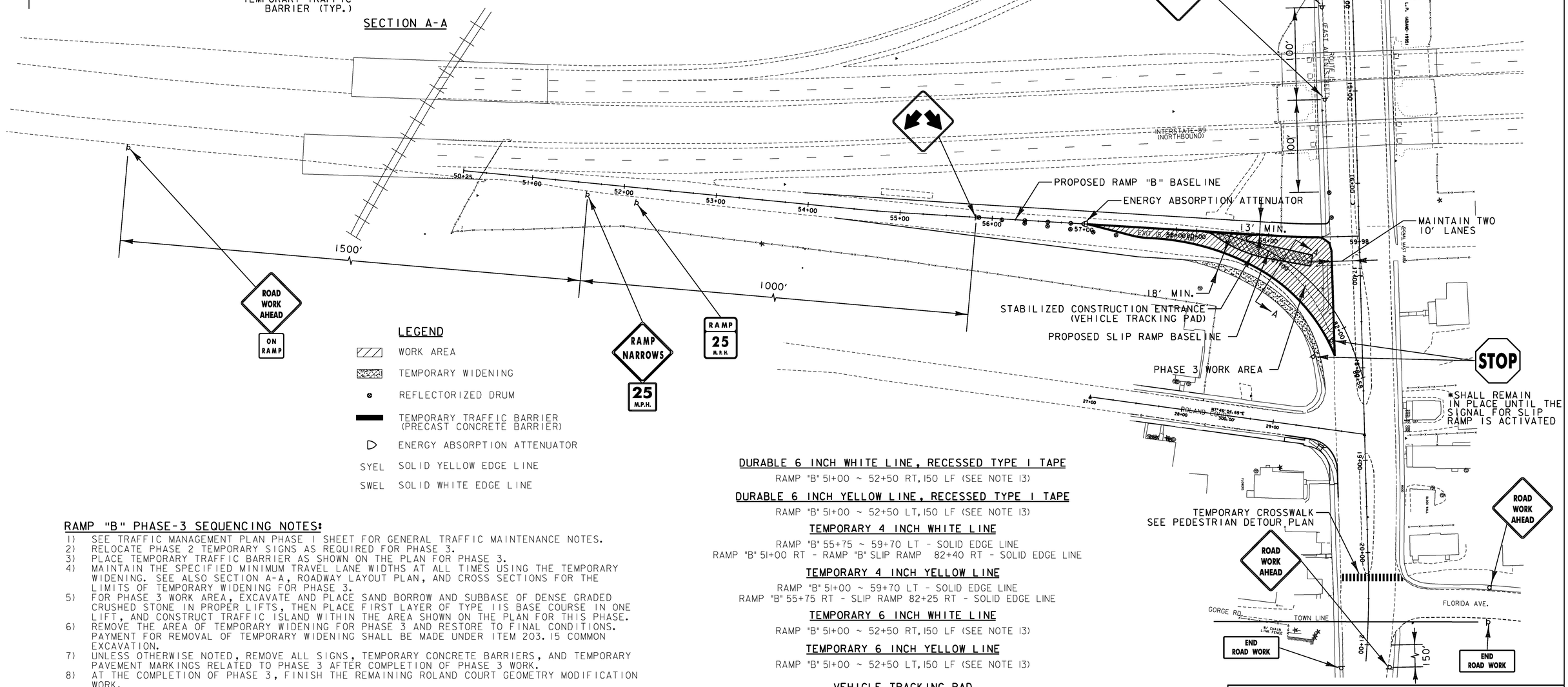

LEGEND

- WORK AREA
- TEMPORARY WIDENING
- REFLECTORIZED DRUM
- TEMPORARY TRAFFIC BARRIER (PRECAST CONCRETE BARRIER)
- ENERGY ABSORPTION ATTENUATOR
- SYEL SOLID YELLOW EDGE LINE
- SWEL SOLID WHITE EDGE LINE

RAMP "B" PHASE-3 SEQUENCING NOTES:

1) SEE TRAFFIC MANAGEMENT PLAN PHASE 1 SHEET FOR GENERAL TRAFFIC MAINTENANCE NOTES.
2) RELOCATE PHASE 2 TEMPORARY SIGNS AS REQUIRED FOR PHASE 3.
3) PLACE TEMPORARY TRAFFIC BARRIER AS SHOWN ON THE PLAN FOR PHASE 3.
4) MAINTAIN THE SPECIFIED MINIMUM TRAVEL LANE WIDTHS AT ALL TIMES USING THE TEMPORARY WIDENING. SEE ALSO SECTION A-A, ROADWAY LAYOUT PLAN, AND CROSS SECTIONS FOR THE LIMITS OF TEMPORARY WIDENING FOR PHASE 3.
5) FOR PHASE 3 WORK AREA, EXCAVATE AND PLACE SAND BORROW AND SUBBASE OF DENSE GRADED CRUSHED STONE IN PROPER LIFTS, THEN PLACE FIRST LAYER OF TYPE IIS BASE COURSE IN ONE LIFT, AND CONSTRUCT TRAFFIC ISLAND WITHIN THE AREA SHOWN ON THE PLAN FOR THIS PHASE.
6) REMOVE THE AREA OF TEMPORARY WIDENING FOR PHASE 3 AND RESTORE TO FINAL CONDITIONS. PAYMENT FOR REMOVAL OF TEMPORARY WIDENING SHALL BE MADE UNDER ITEM 203.15 COMMON EXCAVATION.
7) UNLESS OTHERWISE NOTED, REMOVE ALL SIGNS, TEMPORARY CONCRETE BARRIERS, AND TEMPORARY PAVEMENT MARKINGS RELATED TO PHASE 3 AFTER COMPLETION OF PHASE 3 WORK.
8) AT THE COMPLETION OF PHASE 3, FINISH THE REMAINING ROLAND COURT GEOMETRY MODIFICATION WORK.
9) COLD PLANE VERMONT ROUTE 15, ROLAND COURT AND FLORIDA AVENUE WITHIN THE PROJECT LIMITS.
10) FINAL SURFACE COURSE SHALL BE PAVED IN ONE OPERATION.
11) FINISH THE REMAINING SIGNAL WORK AS SHOWN ON THE TRAFFIC SIGNAL PLANS AND COMPLETE INSTALLATION OF PERMANENT SIGNAGE.
12) COMPLETE ISLAND MODIFICATIONS AS INDICATED ON THE ROADWAY LAYOUT SHEETS.
13) PLACE FINAL CONDITIONS TEMPORARY STRIPING. PLACE PERMANENT MARKINGS WHEN DIRECTED BY THE ENGINEER AND IN ACCORDANCE WITH THE SPECIFICATIONS.
14) SEE PAVEMENT MARKING AND SIGNING SHEETS FOR ADDITIONAL PAVEMENT MARKING REQUIREMENTS.

DURABLE 6 INCH WHITE LINE, RECESSED TYPE 1 TAPE
RAMP "B" 51+00 ~ 52+50 RT, 150 LF (SEE NOTE 13)

DURABLE 6 INCH YELLOW LINE, RECESSED TYPE 1 TAPE
RAMP "B" 51+00 ~ 52+50 LT, 150 LF (SEE NOTE 13)

TEMPORARY 4 INCH WHITE LINE
RAMP "B" 55+75 ~ 59+70 LT - SOLID EDGE LINE
RAMP "B" 51+00 RT - RAMP "B" SLIP RAMP 82+40 RT - SOLID EDGE LINE

TEMPORARY 4 INCH YELLOW LINE
RAMP "B" 51+00 ~ 59+70 LT - SOLID EDGE LINE
RAMP "B" 55+75 RT - SLIP RAMP 82+25 RT - SOLID EDGE LINE

TEMPORARY 6 INCH WHITE LINE
RAMP "B" 51+00 ~ 52+50 RT, 150 LF (SEE NOTE 13)

TEMPORARY 6 INCH YELLOW LINE
RAMP "B" 51+00 ~ 52+50 LT, 150 LF (SEE NOTE 13)

VEHICLE TRACKING PAD
RAMP "B" 58+50 RT

0 50 100
SCALE IN FEET

PROJECT NAME: WINOOSKI	
PROJECT NUMBER: NH 089-3(65)	
FILE NAME: z94a198tmp.dgn	PLOT DATE: 2/23/2010
PROJECT LEADER: KEN UPMAL	DRAWN BY: W.WONG
DESIGNED BY: W.WONG	CHECKED BY: E.ATKINS
TRAFFIC MANAGEMENT PLAN PHASE 3	SHEET 58 OF 67

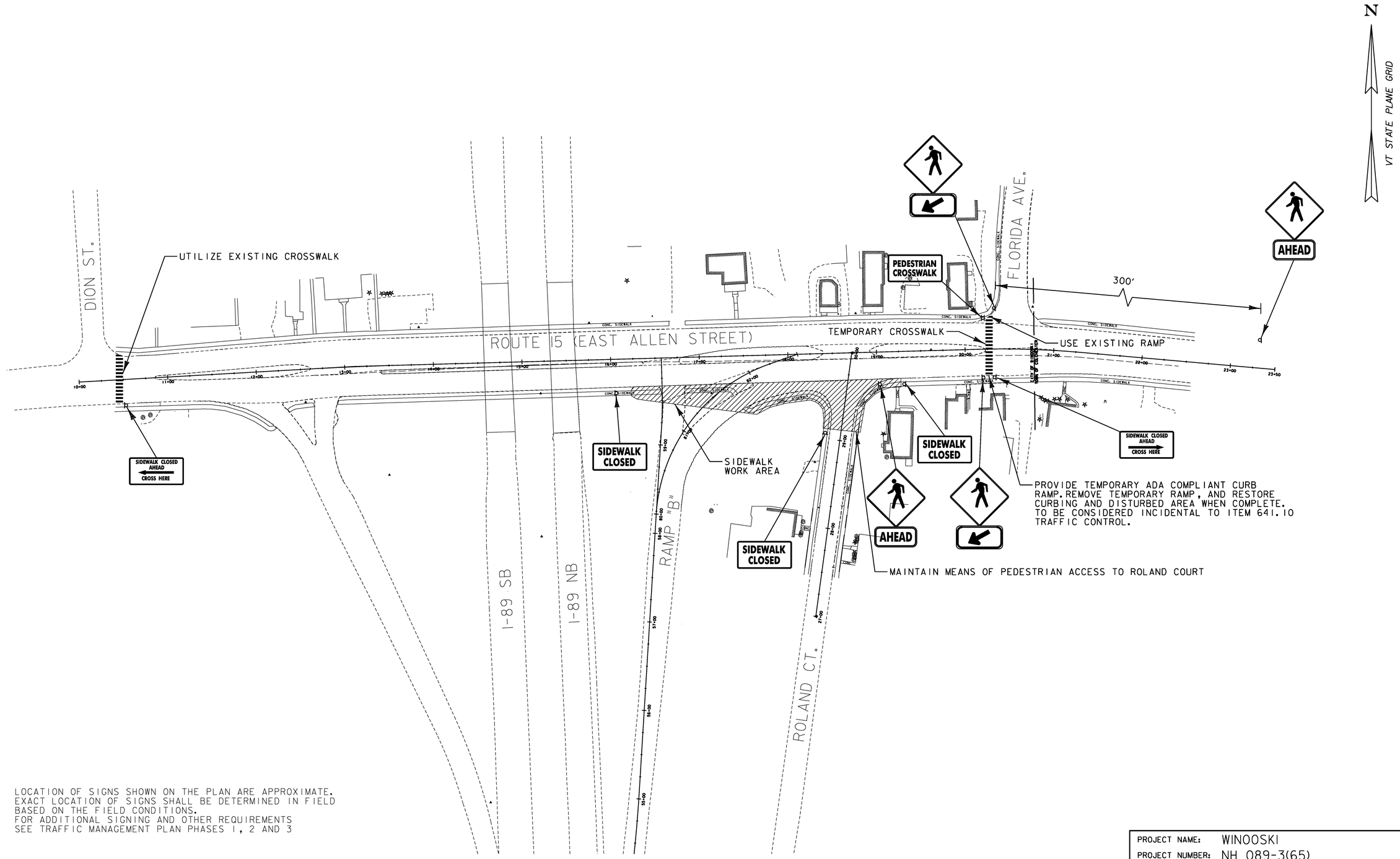

1) LOCATION OF SIGNS SHOWN ON THE PLAN ARE APPROXIMATE. EXACT LOCATION OF SIGNS SHALL BE DETERMINED IN FIELD BASED ON THE FIELD CONDITIONS.
2) FOR ADDITIONAL SIGNING AND OTHER REQUIREMENTS SEE TRAFFIC MANAGEMENT PLAN PHASES 1, 2 AND 3

PROJECT NAME: WINOOSKI	
PROJECT NUMBER: NH 089-3(65)	
FILE NAME: z94a198tmp.dgn	PLOT DATE: 2/22/2010
PROJECT LEADER: KEN UPMAL	DRAWN BY: A.ACHARYA
DESIGNED BY: A.ACHARYA	CHECKED BY: E.ATKINS
PEDESTRIAN DETOUR PLAN	SHEET 59 OF 67

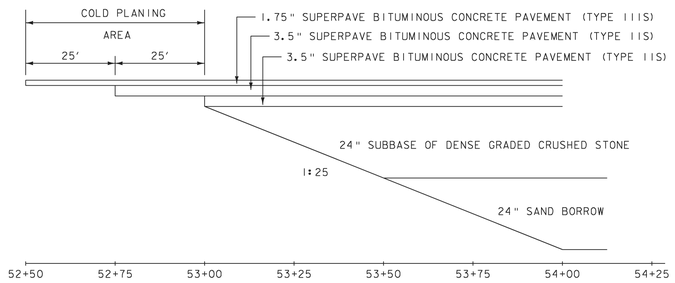

MATERIAL TRANSITION DETAIL

NOT TO SCALE

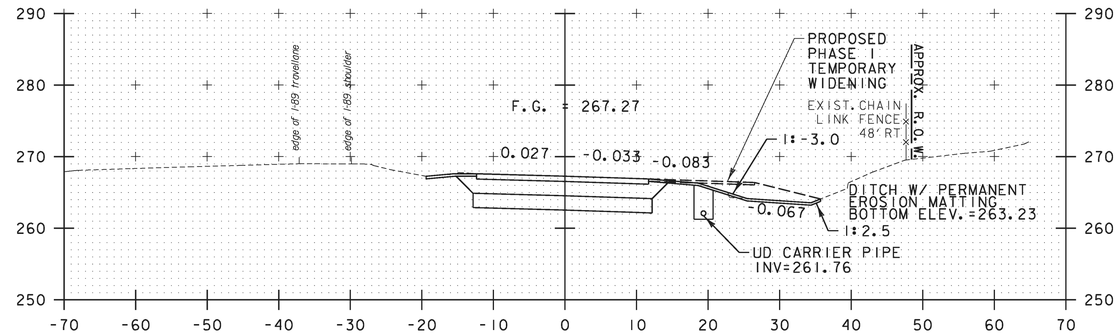

54+00
BEGIN PROJECT
END APPROACH

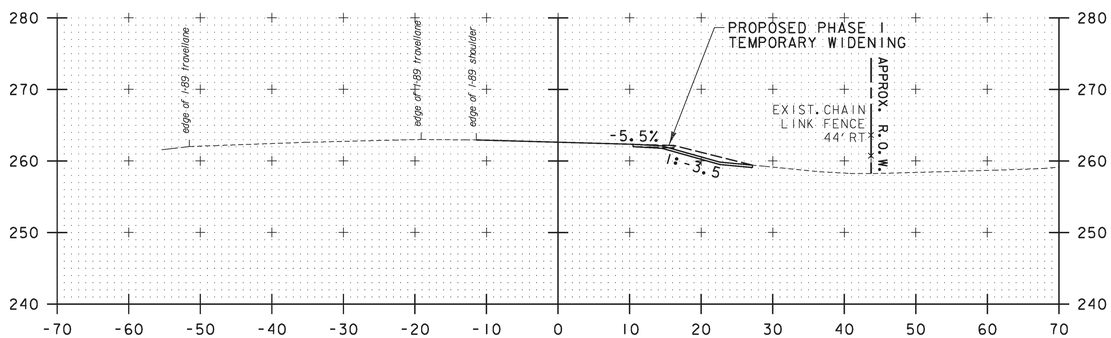

52+50
BEGIN APPROACH
MATCH EXISTING BCP

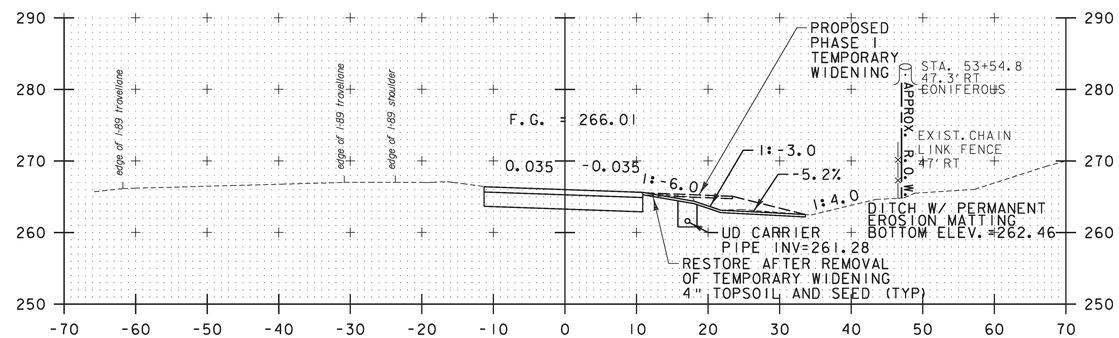

53+50

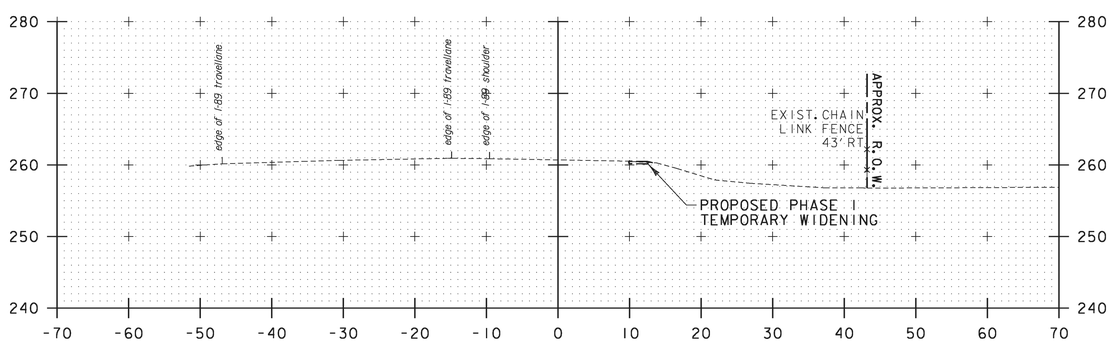

52+00

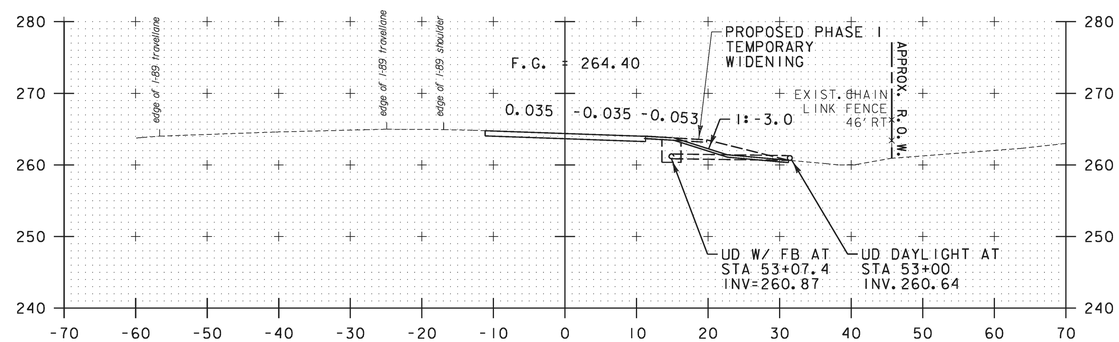

53+00

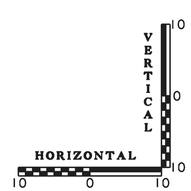

PROJECT NAME: WINOOSKI	
PROJECT NUMBER: NH 089-3(65)	
FILE NAME: z94a198xsl.dgn	PLOT DATE: 2/22/2010
PROJECT LEADER: KEN UPMAL	DRAWN BY: T.BIGELOW
DESIGNED BY: T.BIGELOW	CHECKED BY: E.ATKINS
RAMP "B" CROSS SECTIONS SHEET 1	SHEET 60 OF 67

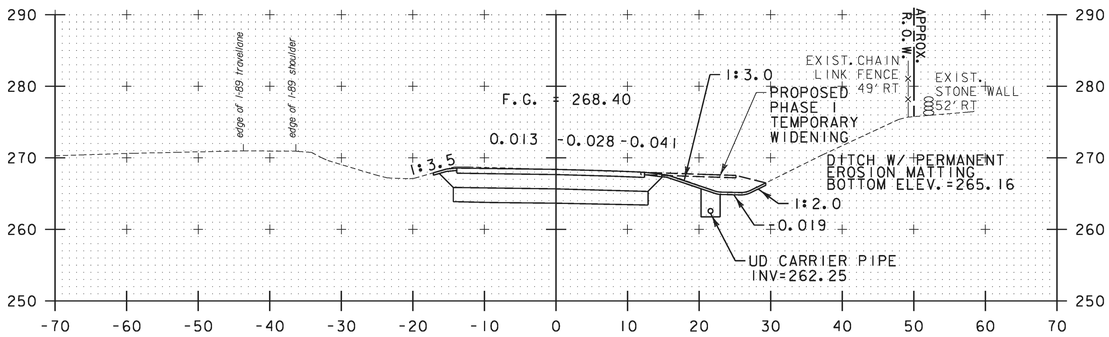

54+50.97 PC

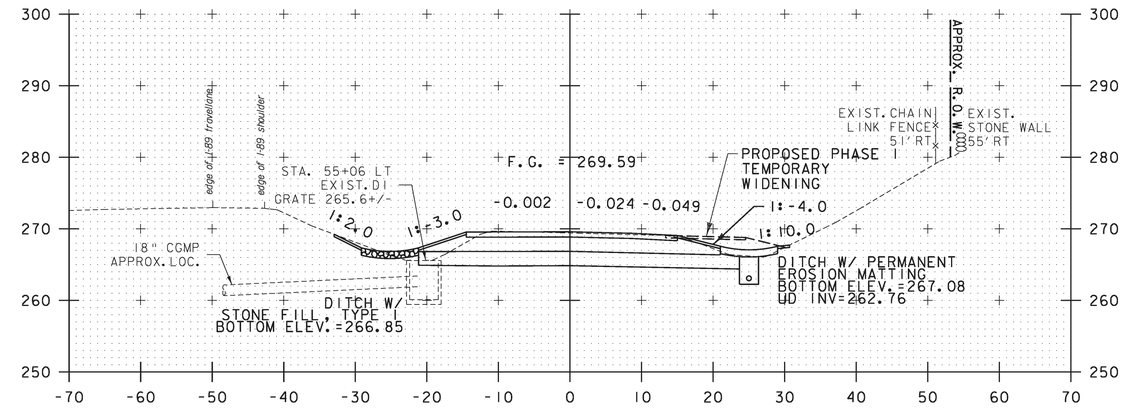

55+05.43 PT

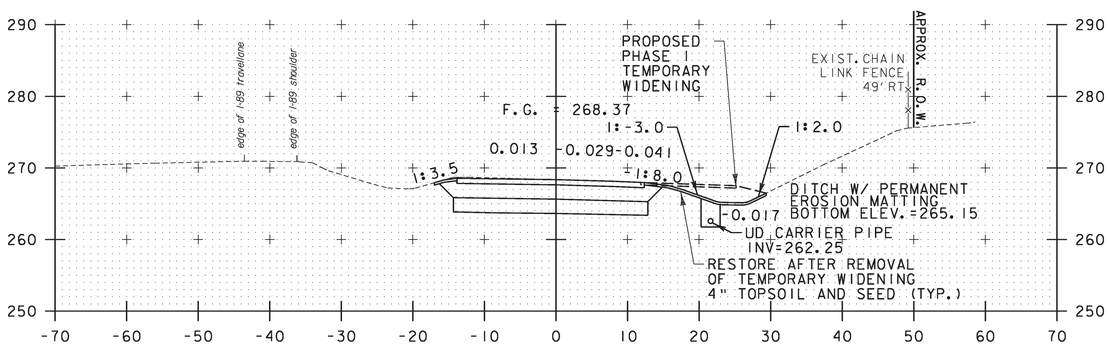

54+50

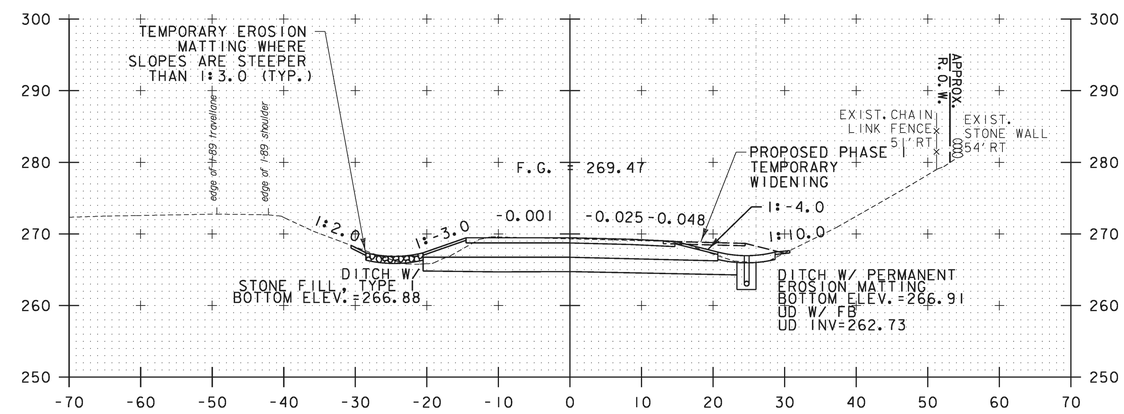

55+00

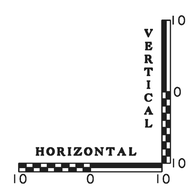

PROJECT NAME: WINOOSKI	
PROJECT NUMBER: NH 089-3(65)	
FILE NAME: z94a198xsl.dgn	PLOT DATE: 2/23/2010
PROJECT LEADER: KEN UPMAL	DRAWN BY: T.BIGELOW
DESIGNED BY: T.BIGELOW	CHECKED BY: E.ATKINS
RAMP "B" CROSS SECTIONS SHEET 2	SHEET 61 OF 67

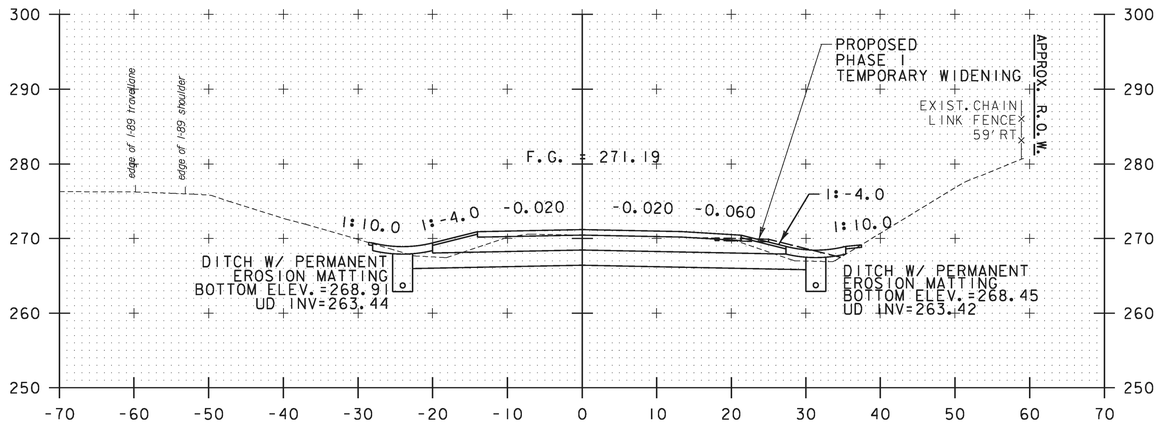

56+00

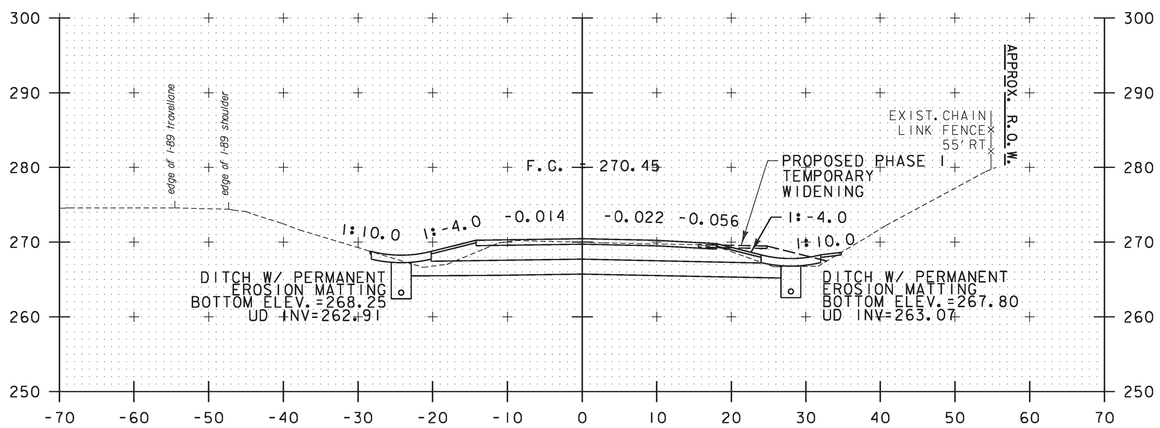

55+50

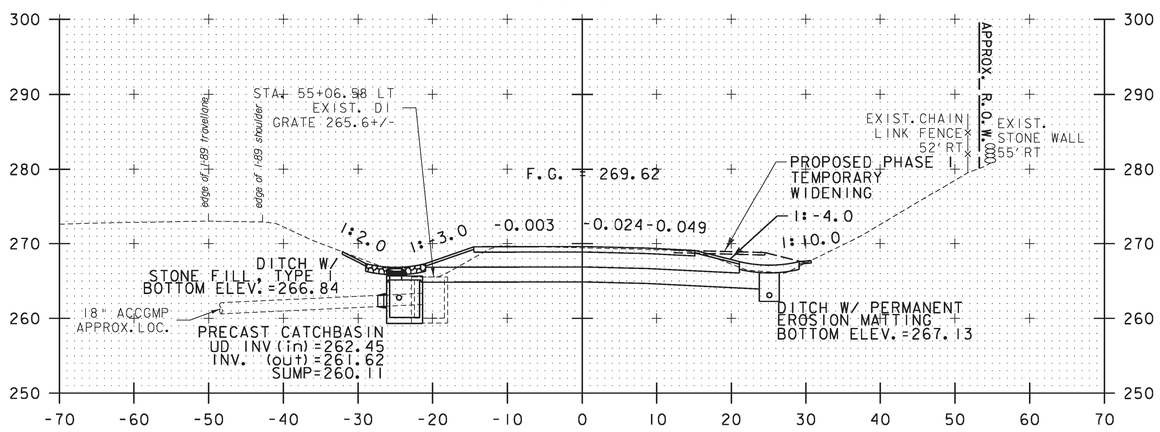

55+06.58 CB

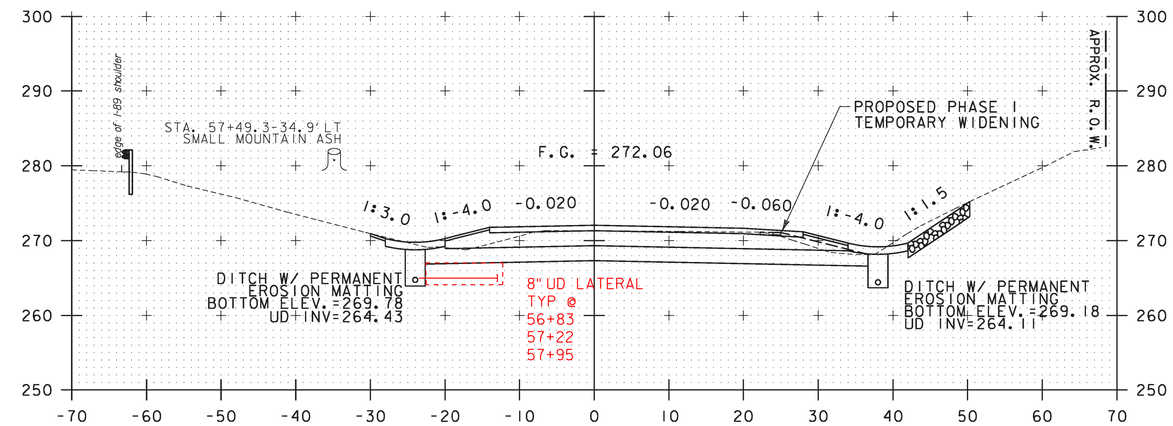

57+00

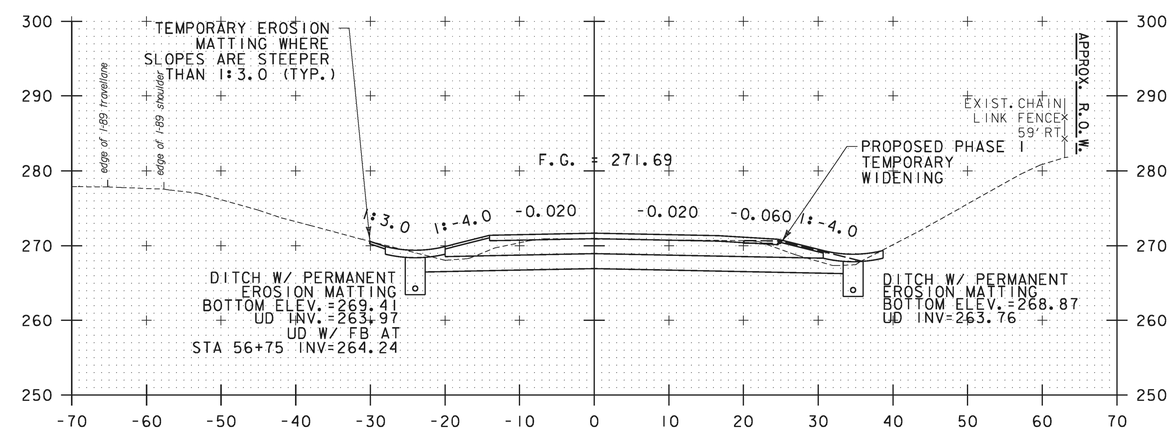

56+50

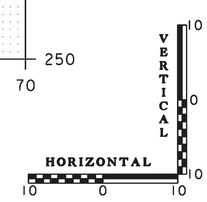

PROJECT NAME: WINOOSKI	
PROJECT NUMBER: NH 089-3(65)	
FILE NAME: z94a198xsl.dgn	PLOT DATE: 2/23/2010
PROJECT LEADER: KEN UPMAL	DRAWN BY: T.BIGELOW
DESIGNED BY: T.BIGELOW	CHECKED BY: E.ATKINS
RAMP "B" CROSS SECTIONS SHEET 3	SHEET 62 OF 67

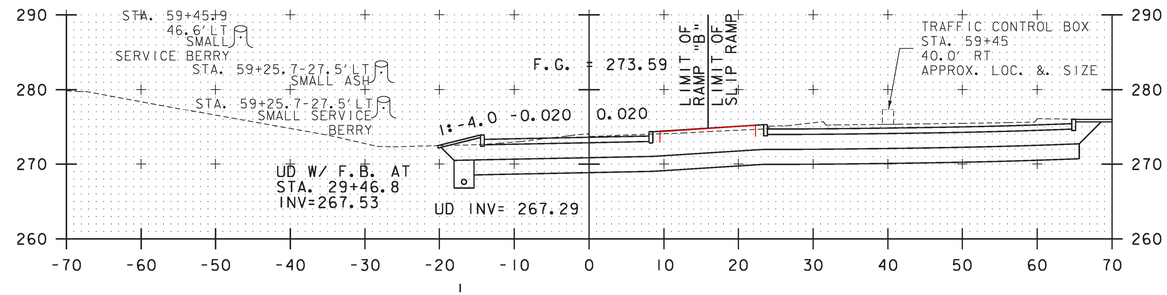

59+18.63 PC

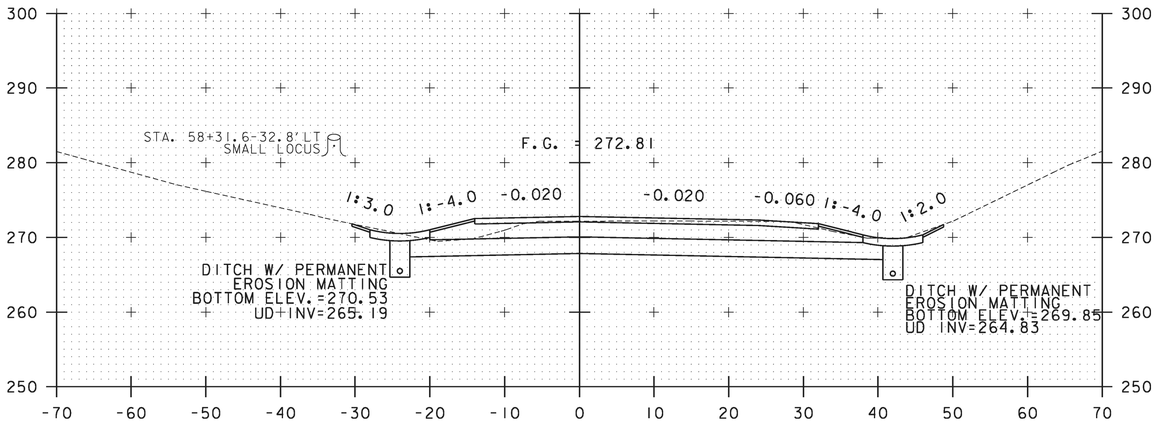

58+00

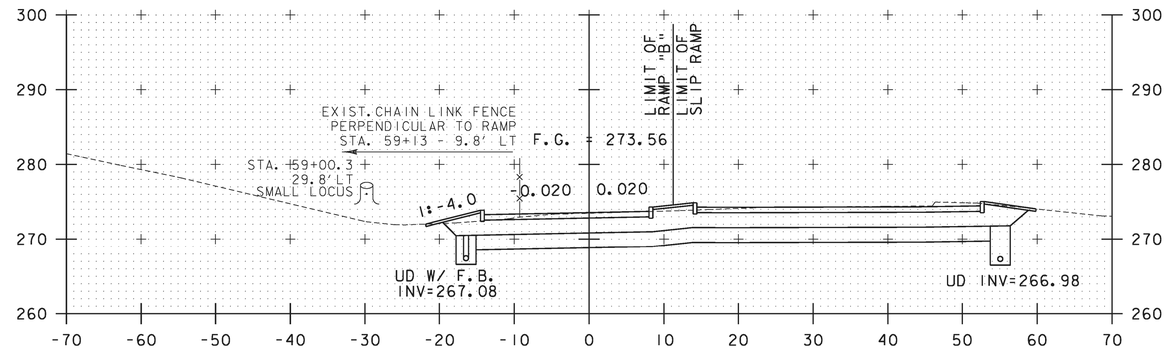

59+00

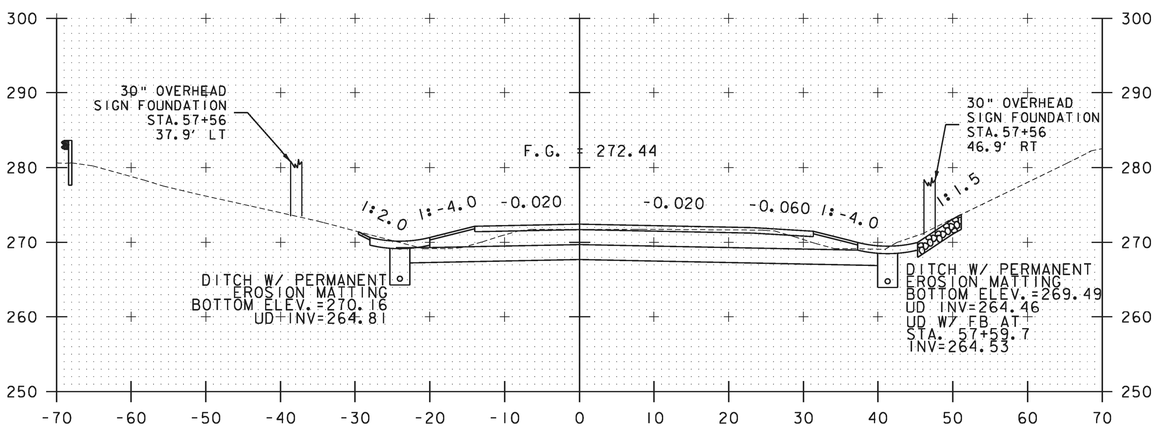

57+50

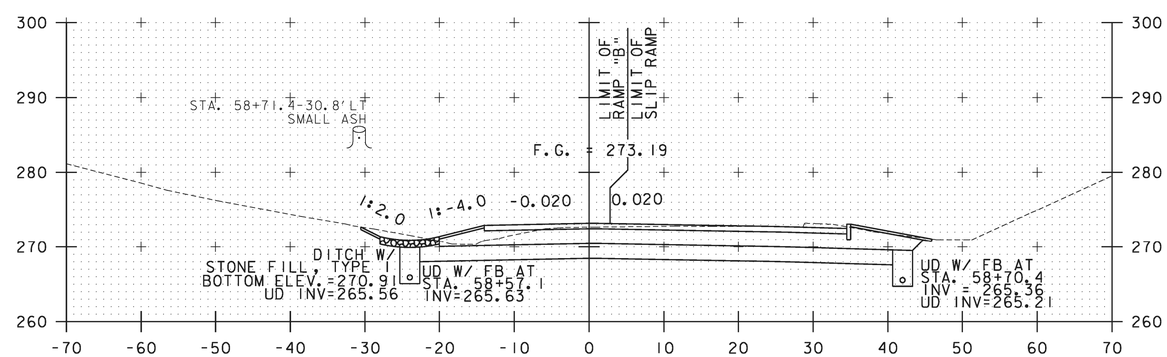

58+50

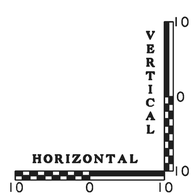

PROJECT NAME: WINOOSKI	
PROJECT NUMBER: NH 089-3(65)	
FILE NAME: z94a198xsl.dgn	PLOT DATE: 2/22/2010
PROJECT LEADER: KEN UPMAL	DRAWN BY: T.BIGELOW
DESIGNED BY: T.BIGELOW	CHECKED BY: E.ATKINS
RAMP "B" CROSS SECTIONS SHEET 4	SHEET 63 OF 67

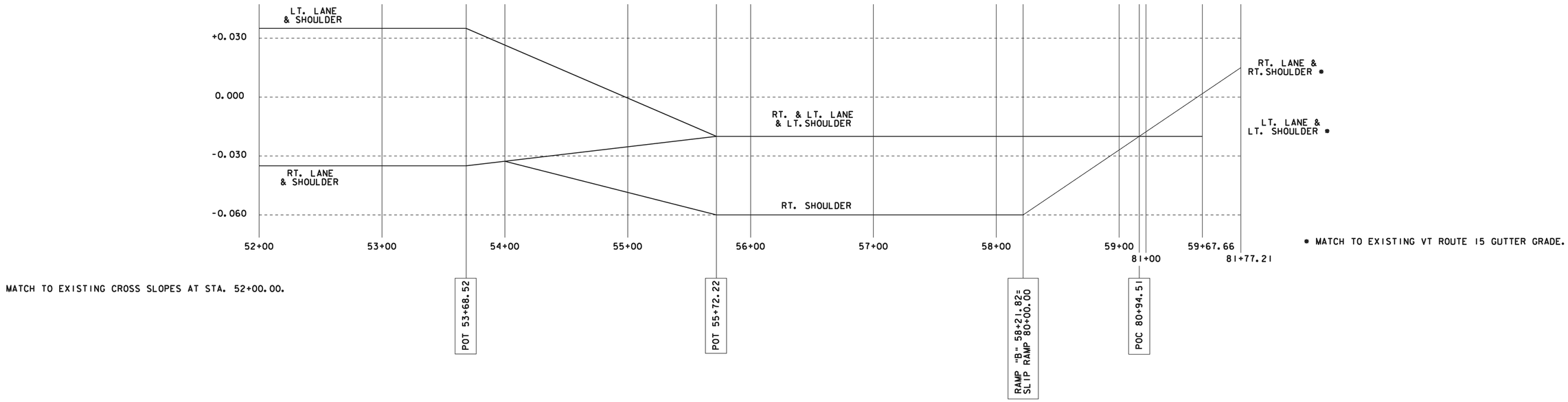

RAMP "B" AND SLIP RAMP
BANKING DIAGRAM

HZ. SCALE 1" = 40'
VT. SCALE 1" =0.025'

END FULL DEPTH
RECONSTRUCTION
END PROJECT
STA. 59+67.66
ELEV.= 272.70

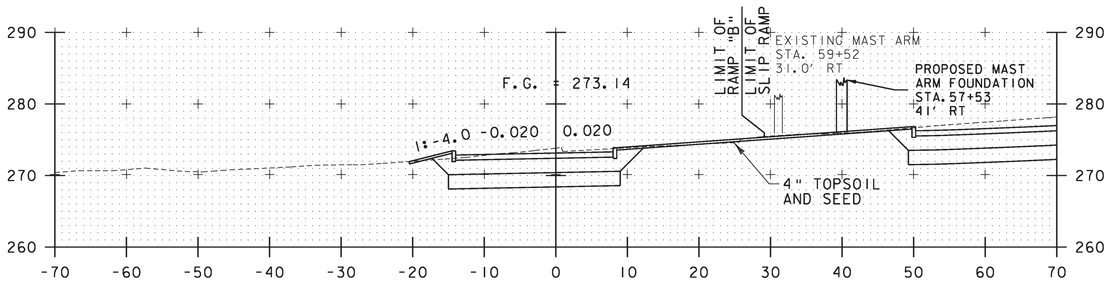

59+50

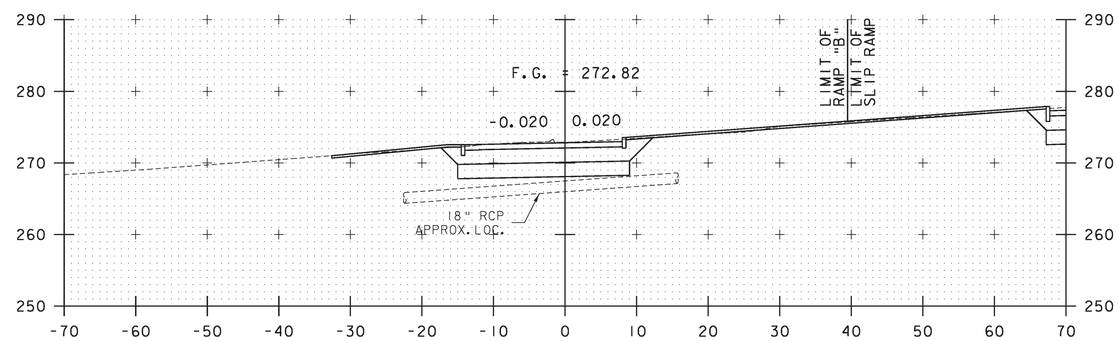

59+62.97 PT

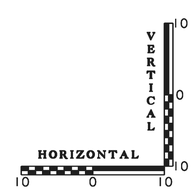

PROJECT NAME: WINOOSKI	
PROJECT NUMBER: NH 089-3(65)	
FILE NAME: z94a198xsl.dgn	PLOT DATE: 2/22/2010
PROJECT LEADER: KEN UPMAL	DRAWN BY: T.BIGELOW
DESIGNED BY: T.BIGELOW	CHECKED BY: E.ATKINS
RAMP "B" CROSS SECTIONS SHEET 5	SHEET 64 OF 67

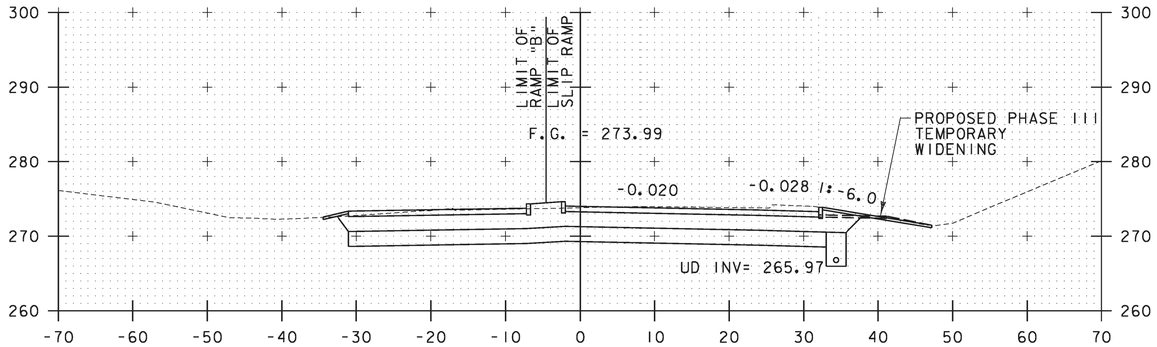

80+75

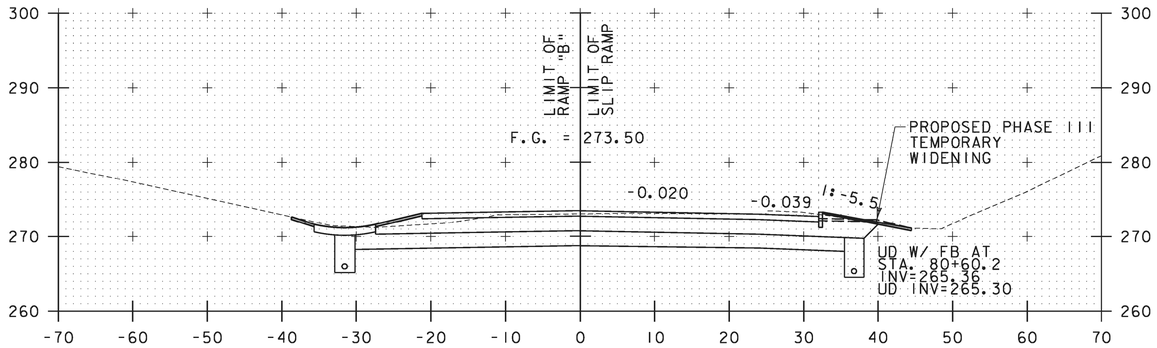

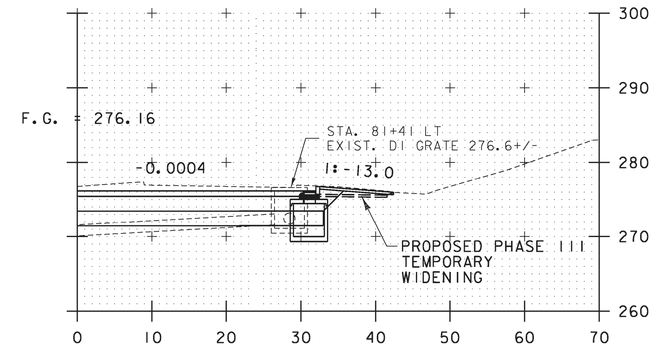

80+50

81+40.90 CB

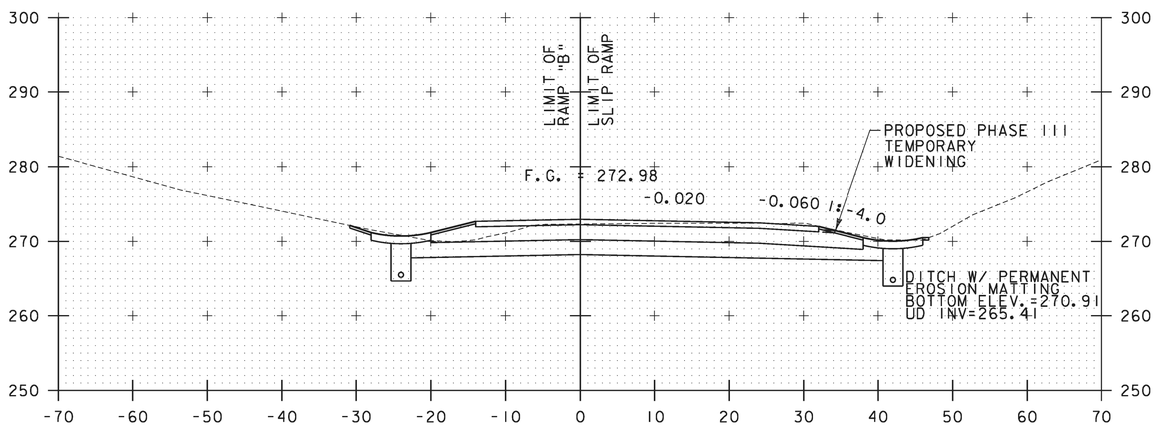

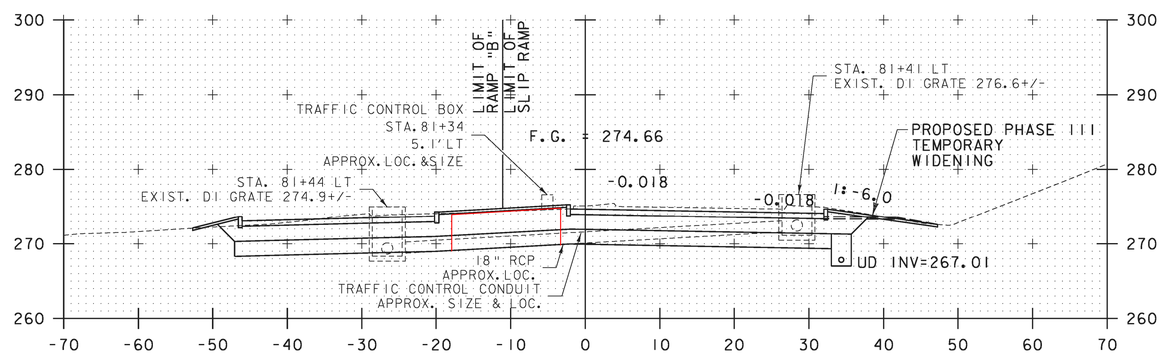

SLIP RAMP POT STA. 80+00.00=
RAMP "B" POT STA. 58+21.82

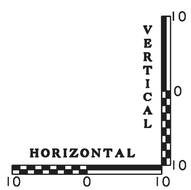

81+00

PROJECT NAME: WINOOSKI	
PROJECT NUMBER: NH 089-3(65)	
FILE NAME: z94a198xsl.dgn	PLOT DATE: 2/22/2010
PROJECT LEADER: KEN UPMAL	DRAWN BY: T.BIGELOW
DESIGNED BY: T.BIGELOW	CHECKED BY: E.ATKINS
SLIP RAMP CROSS SECTIONS SHEET 1	SHEET 65 OF 67

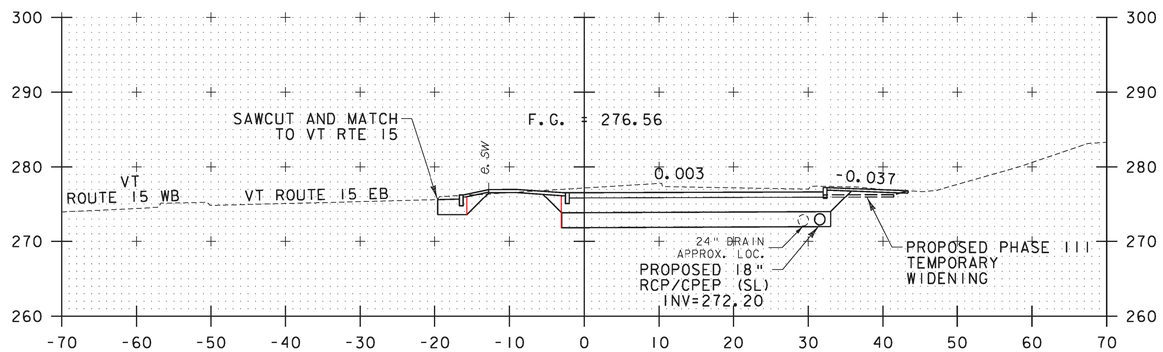

81+50

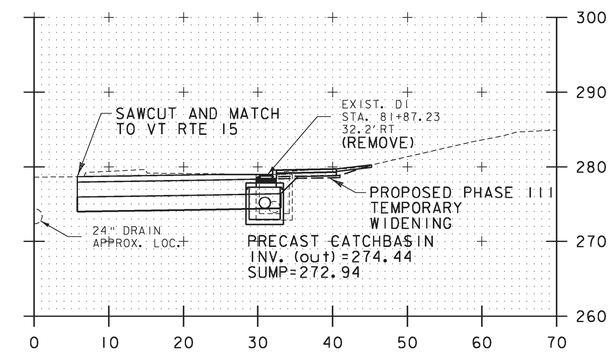

81+87.23 CB

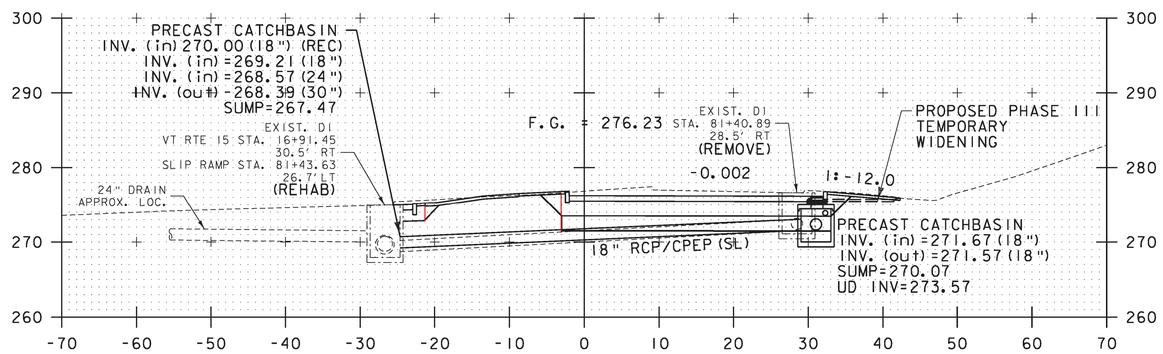

81+42.52 CB
SKEWED 2°41'03.5"

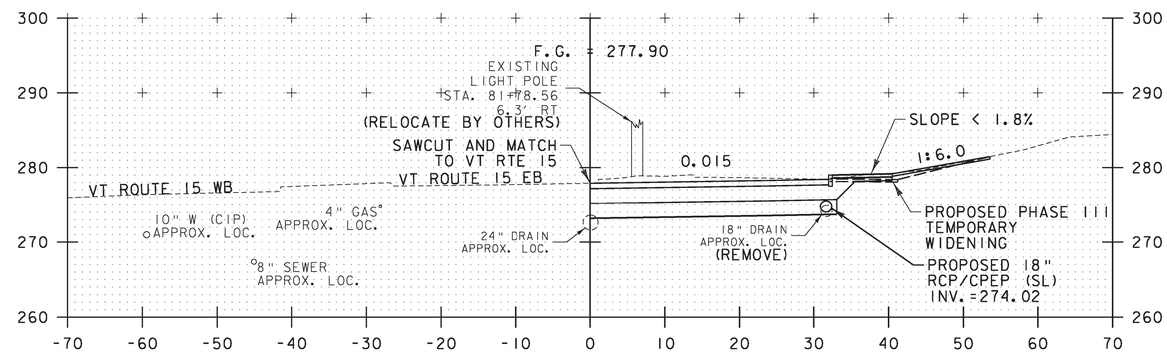

81+77.21
END FULL DEPTH RECONSTRUCTION

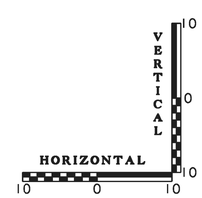

PROJECT NAME: WINOOSKI	
PROJECT NUMBER: NH 089-3(65)	
FILE NAME: z94a198xsl.dgn	PLOT DATE: 2/26/2010
PROJECT LEADER: KEN UPMAL	DRAWN BY: T.BIGELOW
DESIGNED BY: T.BIGELOW	CHECKED BY: E.ATKINS
SLIP RAMP CROSS SECTIONS SHEET 2	SHEET 66 OF 67

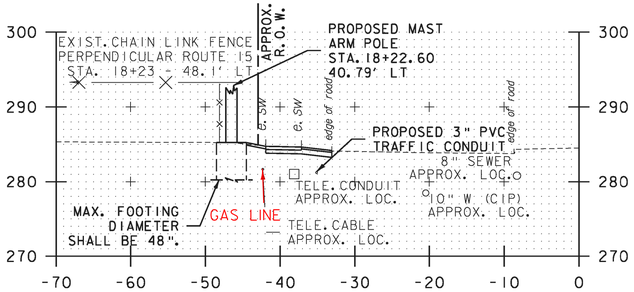

VT ROUTE 15 18+22.74-46.50' LT
MAST ARM POLE #4

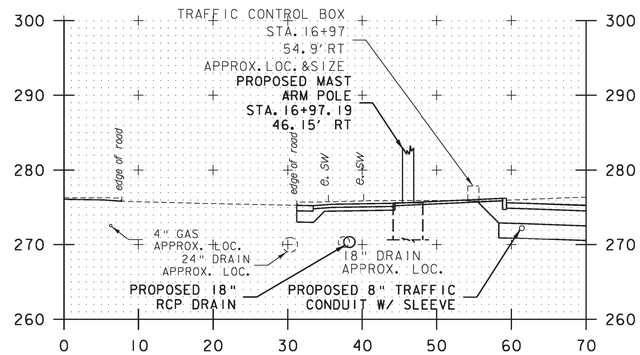

VT ROUTE 15 16+97.17-46.15' RT
MAST ARM POLE #2

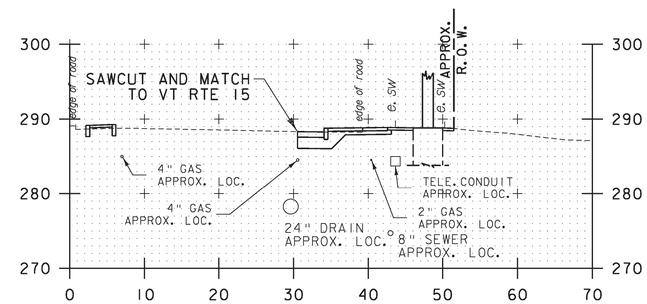

VT ROUTE 15 18+93.83-47.42' RT
MAST ARM POLE #5

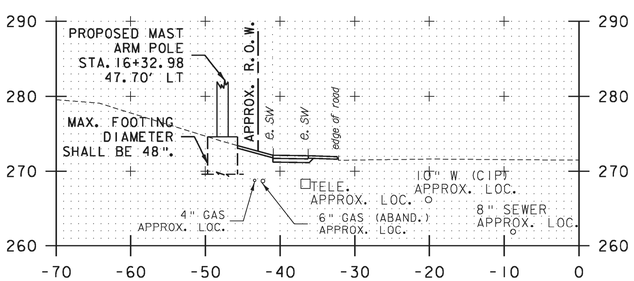

VT ROUTE 15 16+32.98-47.70' LT
MAST ARM POLE #1

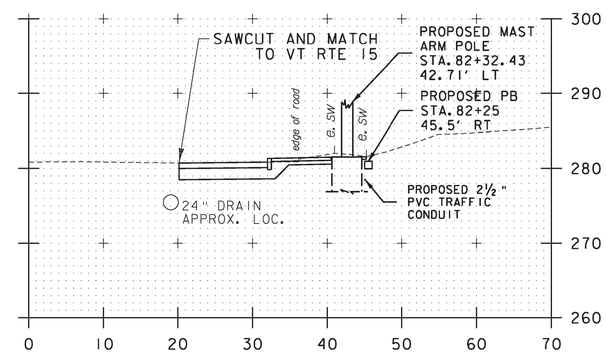

RAMP "B" SLIP RAMP 82+19.06-42.62' RT
MAST ARM POLE #3

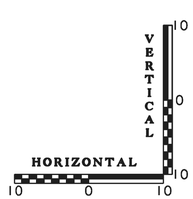

GENERAL NOTES:

1) EXCEPT FOR MP#1 AND MP#4, THE DIAMETER OF MAST ARM FOUNDATIONS ARE SHOWN FOR GRAPHICAL REPRESENTATION ONLY. REFER TO THE GEOTECHNICAL REPORT FOR FOUNDATION REQUIREMENTS.

2) STATION AND OFFSETS INDICATED ARE TO THE CENTER OF THE MAST ARM FOUNDATION.

3) THE LOCATIONS AND DEPTHS OF EXISTING GAS, SEWER, TELEPHONE AND WATER LINES SHOWN IN THE SECTIONS ARE APPROXIMATE. THE CONTRACTOR SHALL FIELD VERIFY ALL UTILITY LOCATIONS.

PROJECT NAME: WINOOSKI	
PROJECT NUMBER: NH 089-3(65)	
FILE NAME: z94a198xsl.dgn	PLOT DATE: 2/26/2010
PROJECT LEADER: KEN UPMAL	DRAWN BY: T.BIGELOW
DESIGNED BY: T.BIGELOW	CHECKED BY: E.ATKINS
CROSS SECTIONS AT MAST-ARMS	SHEET 67 OF 67