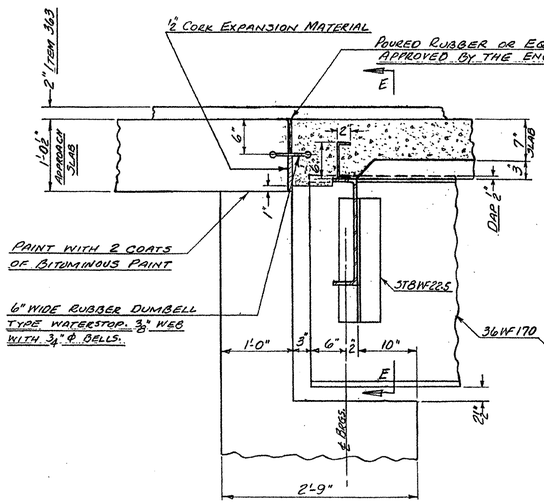

SECTION D-D. (SEE STEEL PLAN SHEET)
SCALE-1"=1'-0"

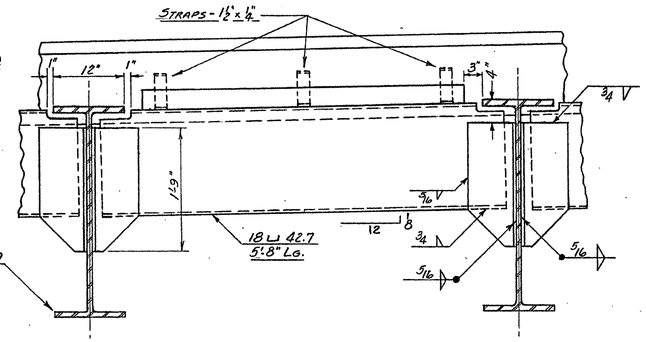

SECTION E-E
SCALE-1"=1'-0"

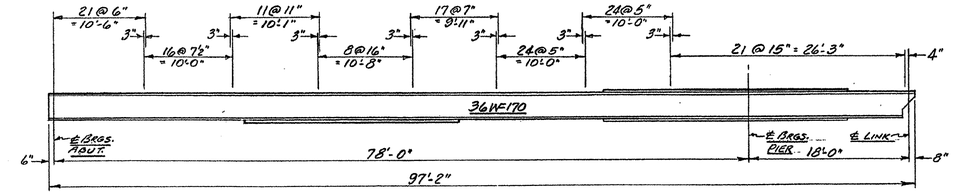

TYPICAL SPIRAL DETAIL
SCALE- 1/8" = 1'-0"

ALTERNATES:
(1) 3/4" x 7" WELDING STUDS (2 STUDS PER PITCH OF SPIRAL) (3/4" x 6" WELDING STUDS ON COVER ℞)
(2) SEE DETAIL BELOW FOR CHANNEL SHEAR CONNECTORS

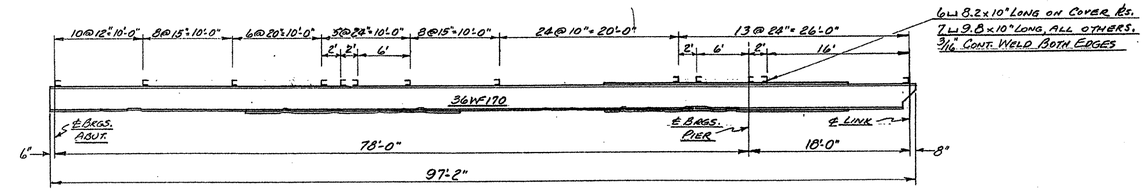

TYPICAL CHANNEL SHEAR CONNECTOR DETAIL
SCALE- 1/8" = 1'-0"

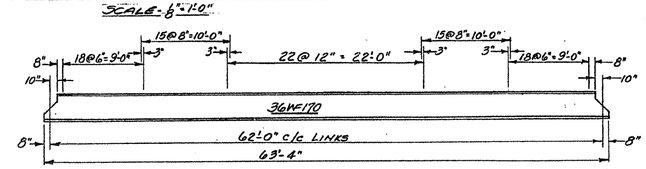

TYPICAL SPIRAL DETAIL
SCALE- 1/8" = 1'-0"

ALTERNATES:
(1) 3/4" x 7" WELDING STUDS (2 STUDS PER PITCH OF SPIRAL
(2) SEE DETAIL BELOW FOR CHANNEL SHEAR CONNECTORS

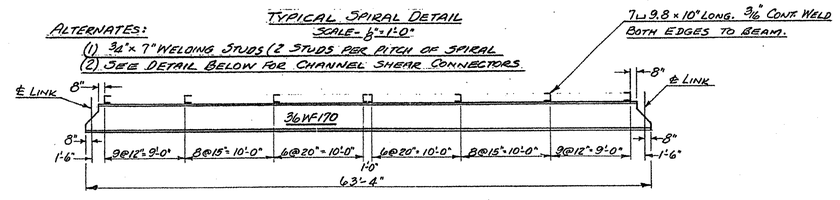

TYPICAL CHANNEL SHEAR CONNECTOR DETAIL
SCALE- 1/8" = 1'-0"

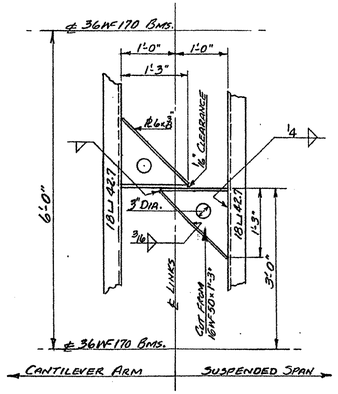

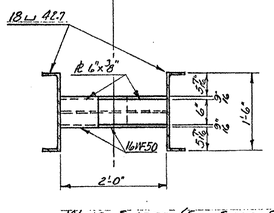

WIND SHOES (SEE STEEL PLAN SHEET)
SECTION F-F
SCALE- 3/4" = 1'-0"

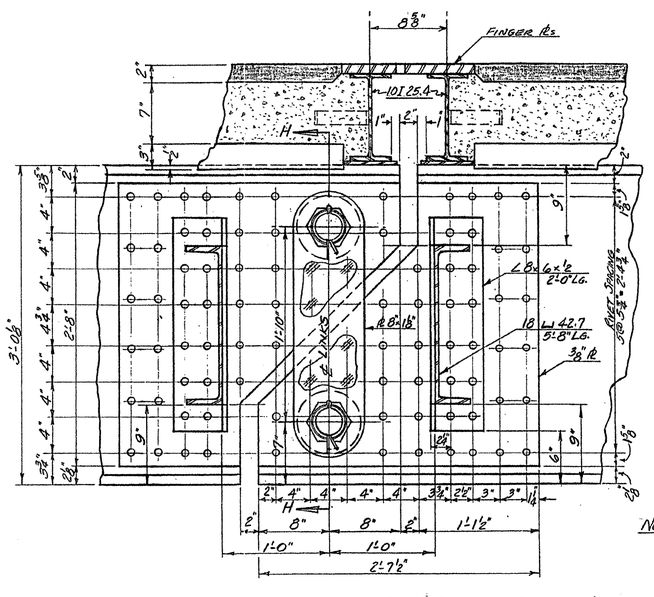

SECTIONAL VIEW G-G (SEE STEEL PLAN SHEET)
SCALE- 1½" = 1'-0"

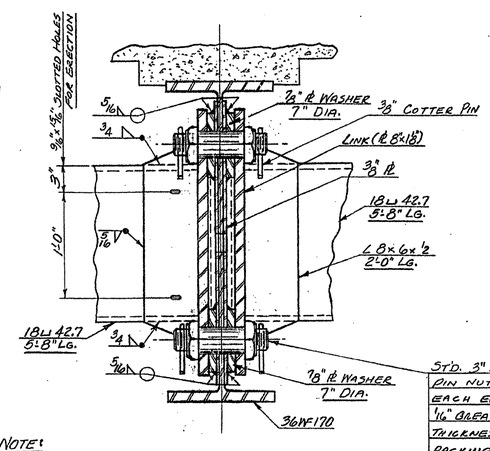

NOTE:
ALL RIVETS - 7/8"

SECTION H-H
SCALE- 1½" = 1'-0"

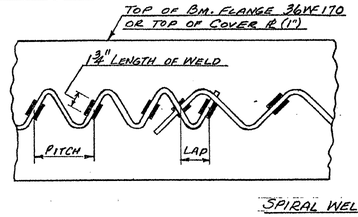

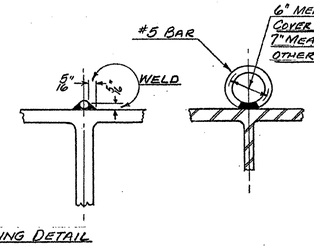

SPIRAL WELDING DETAIL
NO SCALE

CAUTION: REPRODUCTION IS NOT TO SCALE

IM 091-1(33)
This sheet for information only.
BR 3 N&S
Sheet 103 of 114

STATE OF VERMONT
DEPARTMENT OF HIGHWAYS

TOWN OF GUILFORD
ROUTE NO. INTERSTATE LOC. STA.

STEEL DETAILS
SCALE AS NOTED
SURVEYED BY POGAR
DRAWN BY RTB 7/56 CHECKED BY WES 7/56
PROJECT NO. I-001-1(6)
SHEET 103 OF 114