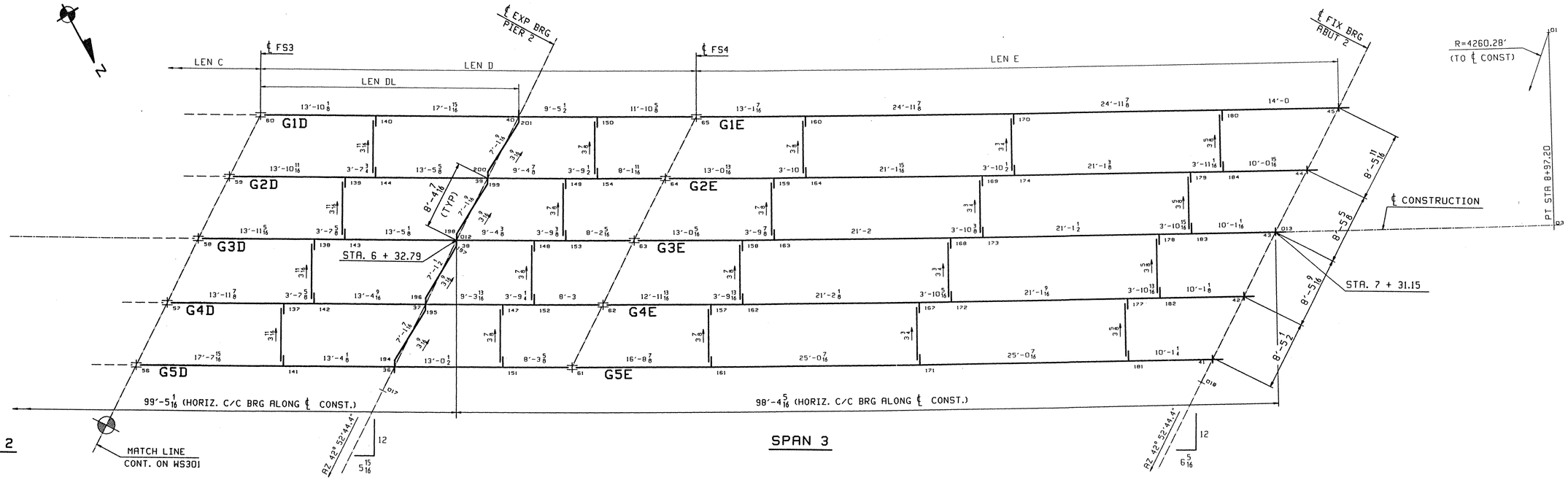

CALCULATION PLAN

Line	DEVELOPED LENGTHS ALONG BTM OF WEB			GRADE	
	LEN DL	LEN D	LEN E	Pier 2	ABUT 2
1	31'-0 1/16	52'-4 3/16	77'-1 3/16	.0053	.0001
2	31'-0 1/16	52'-4 1/8	77'-0 5/8	.0052	-.0001
3	31'-0 1/16	52'-4 1/8	77'-0 1/16	.0052	-.0001
4	31'-0 1/16	52'-4 1/8	76'-11 9/16	.0052	-.0001
5	31'-0 1/16	52'-4 3/16	76'-11	.0053	.0000

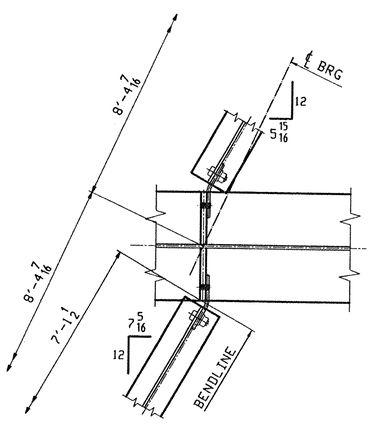

DIAPHRAGM WORKPOINTS @ PIER 2

TVGA
Engineering, Surveying, P.C.

X NO EXCEPTIONS TAKEN ☐ REJECTED
☐ FURNISH AS CORRECTED
☐ REVISE AND RESUBMIT

ENGINEER has reviewed Shop Drawings and Samples and other data which Contractor is required to submit, only for conformance with the information given in the Contract Documents and compatibility with the design concept of the completed Project as a functioning whole as indicated in the Contract Documents. Such review does not extend to means, methods, techniques, sequences or procedures of construction or to safety precautions and programs incident thereto. Contractor is responsible for dimensions to be confirmed and correlated at the job site; for information that pertains only to the fabrication processes or to techniques of construction; and for coordination of the work of all trades.

BY: Pat W. Gatti
DATE: 4/9/01

**** NOTE ****
THE PURPOSE OF THIS DRAWING IS TO COORDINATE GEOMETRIC CONTROL INFORMATION. THIS DWG IS SUBMITTED FOR INFORMATION ONLY AND IS NOT INTENDED FOR SHOP FABRICATION.

NOTES
1. LONGITUDINAL DIMENSIONS ARE SLOPING ALONG BOTT OF WEB WITH CORRECTIONS MADE FOR VERTICAL CURVE, GRADE & DL CAMBER (UN).
2. TRANSVERSE DIMENSIONS ARE IN A HORIZ. PLANE (UN).
3. ARROW POINTS TOWARDS LOW END OF MEMBER.
4. ENDS OF STRINGERS AND BRG. STIFF'S ARE VERTICAL AFTER DL ROTATION.
5. DIAPH STIFF & FIELD SPLICES ARE NORMAL TO GRADE.
6. BOTT PT NUMBERS =TOP PT NUMBERS + 200.
7. FOR LAYOUTS SEE DWG TD301.
8. COMBINE CROSSFRAMES FOR DIFF IN DROPS OF +/- 1/8.
9. CROSSFRAMES DROPS ARE CALCULATED IN THEIR FINAL POSITION.
10. WP's AT ℄ OF BENT PLATE.

REV.	REMARKS	DATE	DWN	CHK	APP	Q.A.	NO.	DIA.	LGT	TYPE	WASHER
	OUT FOR APPROVAL 3-13-01										
	OUT FOR APPROVAL										
	ISSUED TO SHOP										
	FIELD & OFFICE										

MATERIAL:	ELECTRODES:	HOLES:	SHOP BOLTS:
M270 GR 50W		15/16 ∅ (UN)	7/8 ∅ (UN)

SURFACE PREP. & PAINT:
-STEEL WITHIN 10'-0 OF ABUT 1 SHALL BE PAINTED (SEE GN301)
-ALL OTHER STEEL SHALL BE BLAST CLEANED AND LEFT UNPAINTED.

DESCRIPTION: CALCULATION PLAN	DRAWN BY	DATE
JOB: BRIDGE NO. 48S	WL	02/20
I-89 SB OVER LITTLE RIVER	CHKD BY	
I-89 IMPROVEMENTS	JAK	02/22
TOWN OF MIDDLESEX-BOLTON, VERMONT	APPROV BY	
TENSOR 2107-S	SUPERVISOR	W. J. GATTI
PROJ NO. IM-089-2(26)	Q.A.	
CUSTOMER: VERMONT AGENCY OF TRANSPORTATION		

CASCO BAY STEEL STRUCTURES, INC.
75 SPRING HILL ROAD SACO, MAINE 04072
PHONE (207) 282-7360 FAX. (207) 282-1179

JOB NO.	DRG. NO.
118-48S	WS302
	REV. △

WL Thu Feb 22 16:38:18 EST 2001 /users/jobs/2107-S/WS302 1 Rev0