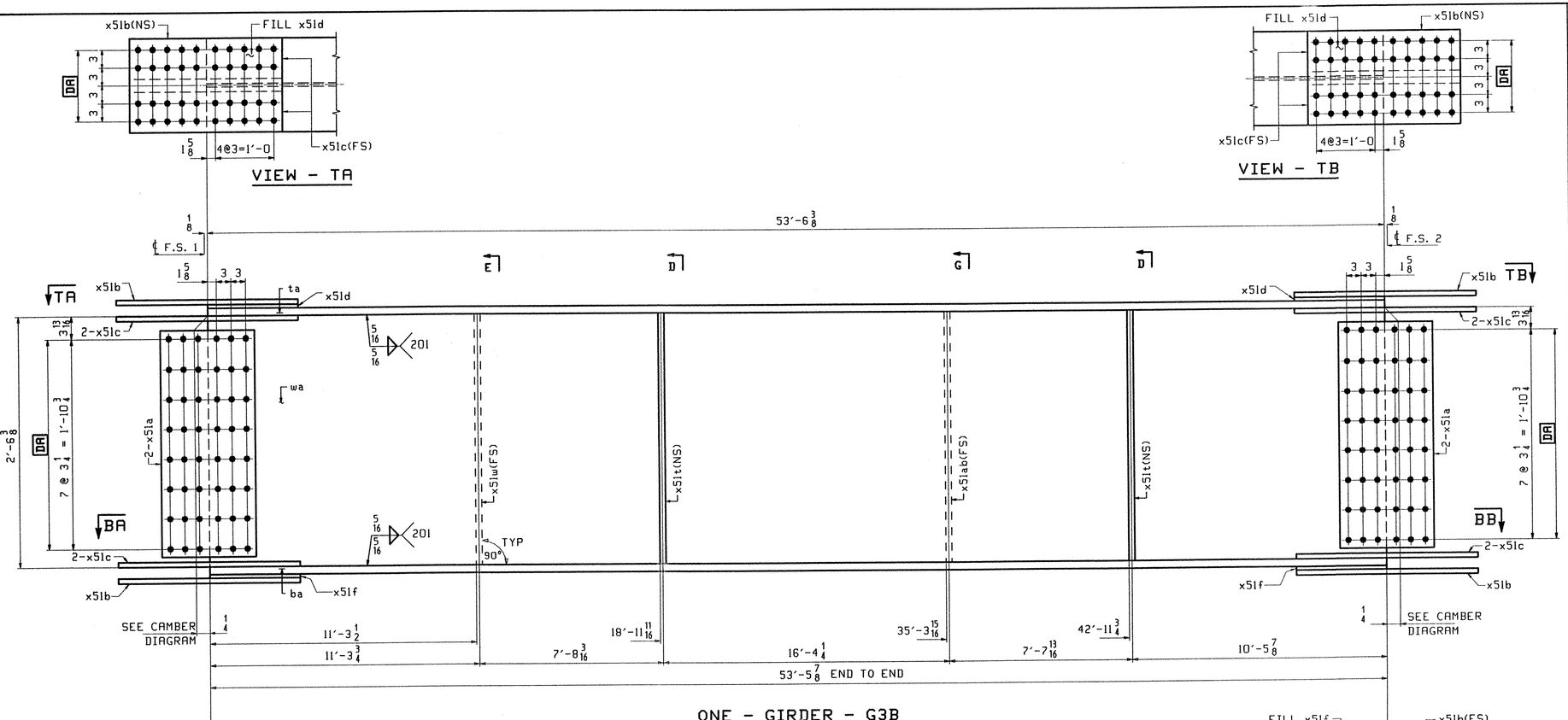

ONE - GIRDER - G3B

1. FOR GIRDER STANDARD DETAILS SEE DRAWING X51.
2. FOR CAMBER AND FLANGE DIAGRAMS SEE DRAWING C502.
2. FOR HORIZONTAL CURVING DIAGRAM SEE DRAWING HC501.
3. FOR GENERAL NOTES SEE DRAWING GN501.

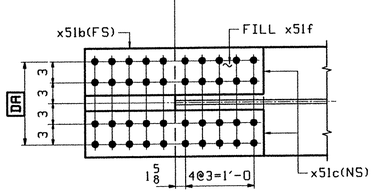

SECTION - BA

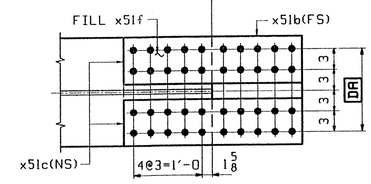

SECTION - BB

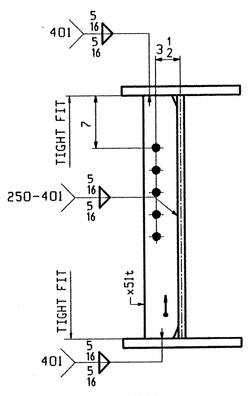

SECTION-D

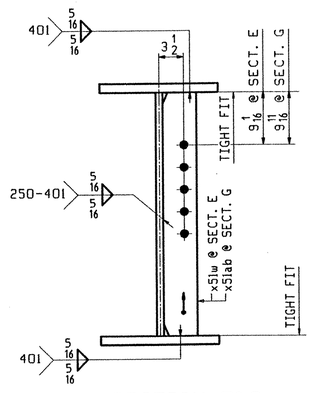

SECTION-E&G

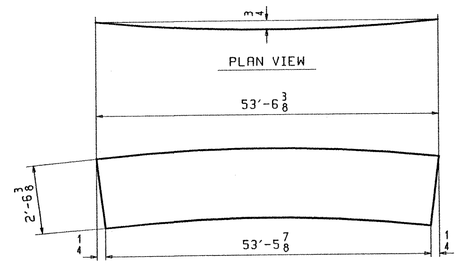

DEV. CAMBER DIAGRAM
SEE DWG C502

ABM INFO PAGE	ABM INFO LINE	SHIP MARK	QTY	MARK	MATERIAL	LENGTH FT	LENGTH INCHES	REMARKS	WT	PROCUREMENT NOTES
		G3B	1		GIRDER				8972	
502	A		1	wa	PL 1/2x30 3/8	53	6 3/8	(M270-50WT2) (H2-3)		
501	M		1	ta	PL 7/8x16	53	6 3/8	(M270-50WT2) (H2-3)		
501	M		1	ba	PL 7/8x16	53	5 7/8	(M270-50WT2) (H2-3)		
503	B		4	x51a	PL 1/2x26 1/4	1	7	(M270-50WT2) (H2-3)		
503	C		4	x51b	PL 5/8x16	2	7	(M270-50WT2) (H2-3)		
503	D		8	x51c	PL 5/8x7	2	7	(M270-50WT2) (H2-3)		
503	F		2	x51d	PL 1/4x16	1	3 3/8	(M270-50W) FILL		
503	G		2	x51f	PL 5/16x16	1	3 3/8	(M270-50W) FILL		
503	M		1	x51w	PL 1/2x5	2	6 3/8	(M270-50W)		
503	M		2	x51t	PL 1/2x5	2	6 3/8	(M270-50W)		
503	M		1	x51ab	PL 1/2x5	2	6 3/8	(M270-50W)		

JOB NO. | DRAWING NO. 508 | REV.

TVGA
Engineering, Surveying, P.C.

☒ NO EXCEPTIONS TAKEN ☐ REJECTED
☐ FURNISH AS CORRECTED
☐ REVISE AND RESUBMIT

ENGINEER has reviewed Shop Drawings and Samples and other data which Contractor is required to submit, only for conformance with the information given in the Contract Documents and compatibility with the design concept of the completed Project as a functioning whole as indicated in the Contract Documents. Review does not extend to means, methods, techniques, sequences or procedures of construction or to safety precautions and programs incident thereto. Contractor is responsible for dimensions to be confirmed and correlated at the job site; for information that pertains solely to the fabrication processes or to techniques of construction; and for coordination of the work of all trades.

BY: Pete W. Sitz
DATE: 5/3/01

OUT FOR APPROVAL	4-5-01									
OUT FOR APPROVAL										
ISSUED TO SHOP										
FIELD & OFFICE										
REV.	REMARKS	DATE	DWN	CHK	APP	Q.A.	NO.	DIA.	LGT	TYPE	WASHER

MATERIAL: M270 GR 50W
ELECTRODES:
HOLES: 15/16 ø (UN)
SHOP BOLTS: 7/8 ø (UN)

SURFACE PREP. & PAINT:
-STEEL WITHIN 10'-0 OF ABUT 1 SHALL BE PAINTED (SEE GN501)
-ALL OTHER STEEL SHALL BE BLAST CLEANED AND LEFT UNPAINTED.

DESCRIPTION: GIRDER - G3B

JOB: BRIDGE NO. 505
I-89 SB OVER U.S. ROUTE 2
I-89 IMPROVEMENTS
TOWN OF MIDDLESEX-BOLTON, VERMONT

TENSOR 2108-S

PROJ NO. IM-089-2(26)

CUSTOMER: VERMONT AGENCY OF TRANSPORTATION

DRAWN BY	PHG
DATE	03/09/01
CHKD BY	
TRM	04/03/01
APPROV BY	
SUPERVISOR	W. J. GATTI
Q.A.	
JOB NO.	122-505
DRG. NO.	508
REV.	△

CASCO BAY STEEL STRUCTURES, INC.
75 SPRING HILL ROAD SACO, MAINE 04072
PHONE (207) 282-7360 FAX. (207) 282-1179

PHG Tue Apr 3 08:48:08 EDT 2001 /users/jake/2108-S/508 : Rev0