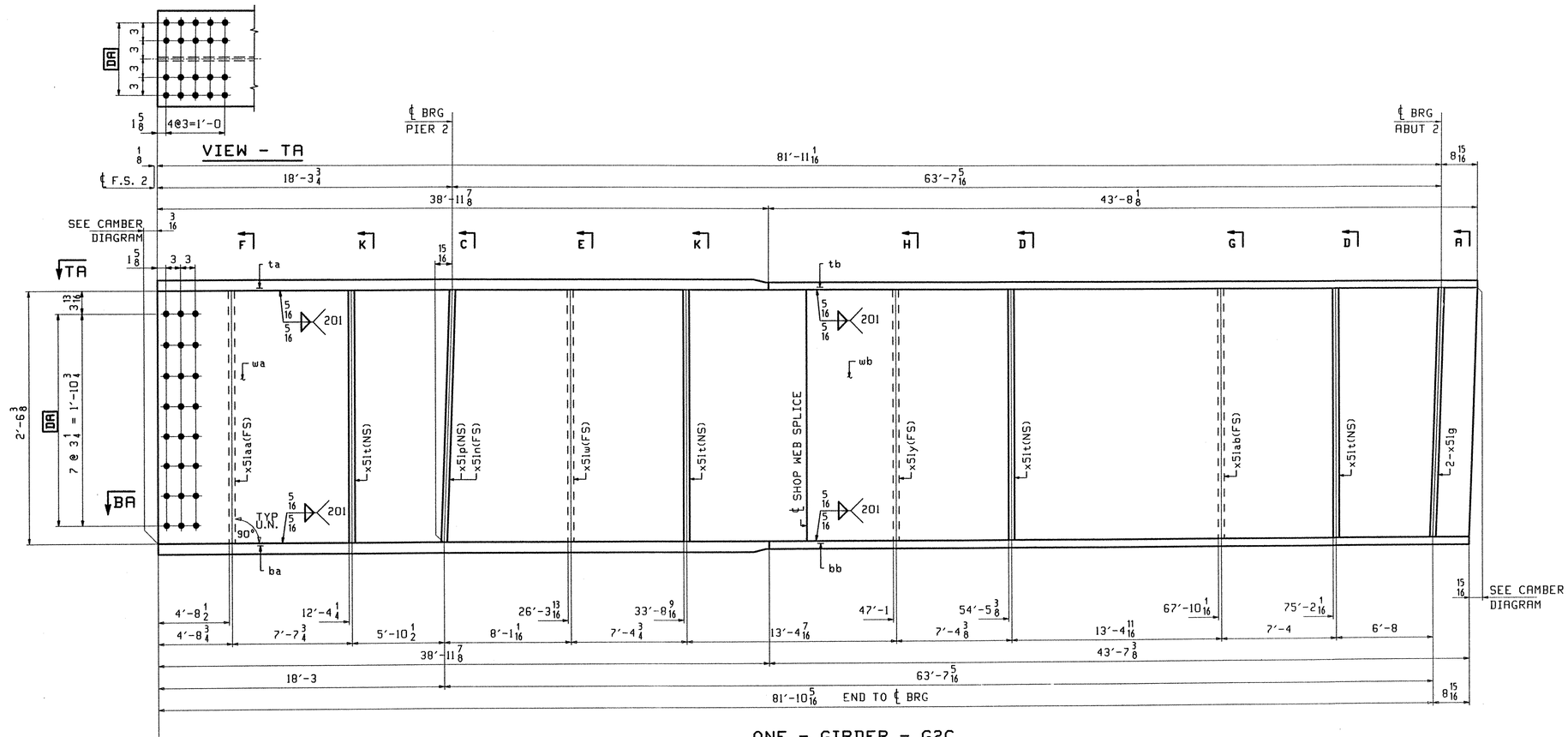

ONE - GIRDER - G2C

1. FOR GIRDER STANDARD DETAILS SEE DRAWING X51.
2. FOR CAMBER AND FLANGE DIAGRAMS SEE DRAWING C503.
2. FOR HORIZONTAL CURVING DIAGRAM SEE DRAWING HC501.
3. FOR GENERAL NOTES SEE DRAWING GN501.

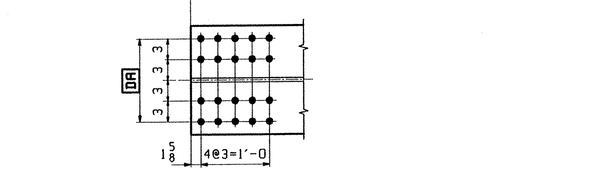

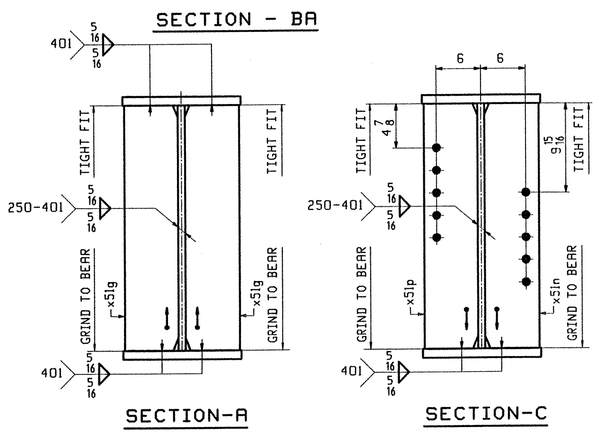

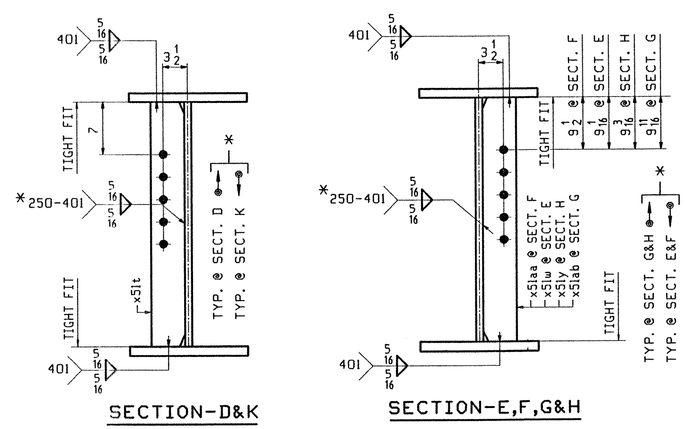

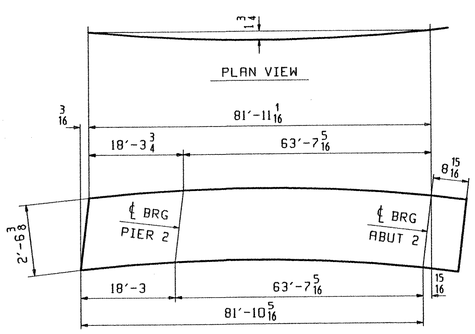

ABM INFO PAGE	LINE	SHIP MARK	QTY	MARK	MATERIAL	LENGTH FT	LENGTH INCHES	REMARKS	WT	PROCUREMENT NOTES
					BILL OF MATERIAL			JOB NO. / DRAWING NO. 512		REV.
		G2C	1		GIRDER				13746	
502	N		1	wa	PL $\frac{1}{2}$×30$\frac{3}{8}$	41	4$\frac{7}{8}$	(M270-50WT2) (H2-3)		
502	J		1	wb	PL $\frac{1}{2}$×30$\frac{3}{8}$	41	3$\frac{5}{16}$	(M270-50WT2) (H2-3)		
501	H		1	ta	PL 1$\frac{1}{8}$×16	38	11$\frac{7}{8}$	(M270-50WT2) (H2-3)		
501	V		1	tb	PL $\frac{7}{8}$×16	43	8$\frac{1}{8}$	(M270-50WT2) (H2-3)		
501	D		1	ba	PL 1$\frac{3}{16}$×16	38	11$\frac{7}{8}$	(M270-50WT2) (H2-3)		
501	V		1	bb	PL $\frac{7}{8}$×16	43	7$\frac{3}{8}$	(M270-50WT2) (H2-3)		
503	M		1	x51aa	PL $\frac{1}{2}$×5	2	6$\frac{3}{8}$	(M270-50W)		
503	M		4	x51t	PL $\frac{1}{2}$×5	2	6$\frac{3}{8}$	(M270-50W)		
503	K		1	x51p	PL $\frac{7}{8}$×7$\frac{3}{4}$	2	6$\frac{3}{8}$	(M270-50W)		
503	K		1	x51n	PL $\frac{7}{8}$×7$\frac{3}{4}$	2	6$\frac{3}{8}$	(M270-50W)		
503	M		1	x51w	PL $\frac{1}{2}$×5	2	6$\frac{3}{8}$	(M270-50W)		
503	M		1	x51y	PL $\frac{1}{2}$×5	2	6$\frac{3}{8}$	(M270-50W)		
503	M		1	x51ab	PL $\frac{1}{2}$×5	2	6$\frac{3}{8}$	(M270-50W)		
503	K		2	x51g	PL $\frac{7}{8}$×7$\frac{3}{4}$	2	6$\frac{3}{8}$	(M270-50W)		

TVGA
Engineering, Surveying, P.C.

☒ NO EXCEPTIONS TAKEN ☐ REJECTED
☐ FURNISH AS CORRECTED
☐ REVISE AND RESUBMIT

BY: Pat W. Scott
DATE: 5/3/01

REV.	REMARKS	DATE	DWN	CHK	APP	Q.A.	NO.	DIA.	LGT	TYPE	WASHER
	OUT FOR APPROVAL	4-5-01									
	OUT FOR APPROVAL										
	ISSUED TO SHOP										
	FIELD & OFFICE										

MATERIAL:	ELECTRODES:	HOLES:	SHOP BOLTS:
M270 GR 50W		15/16 ø (UN)	7/8 ø (UN)

SURFACE PREP. & PAINT:
-STEEL WITHIN 10'-0 OF ABUT 1 SHALL BE PAINTED (SEE GN501)
-ALL OTHER STEEL SHALL BE BLAST CLEANED AND LEFT UNPAINTED.

DESCRIPTION: GIRDER - G2C

JOB: BRIDGE NO. 505
I-89 SB OVER U.S. ROUTE 2
I-89 IMPROVEMENTS
TOWN OF MIDDLESEX-BOLTON, VERMONT

TENSOR 2108-S

PROJ NO. IM-089-2(26)

CUSTOMER: VERMONT AGENCY OF TRANSPORTATION

	DRAWN BY	DATE
	PHG	03/09/01
	CHKD BY	
	TRM	04/03/01
	APPROV BY	
	SUPERVISOR	W. J. GATTI
	Q.A.	

CASCO BAY STEEL STRUCTURES, INC.
75 SPRING HILL ROAD SACO, MAINE 04072
PHONE (207) 282-7360 FAX. (207) 282-1179

JOB NO.	DRG. NO.
122-505	512
	REV. △