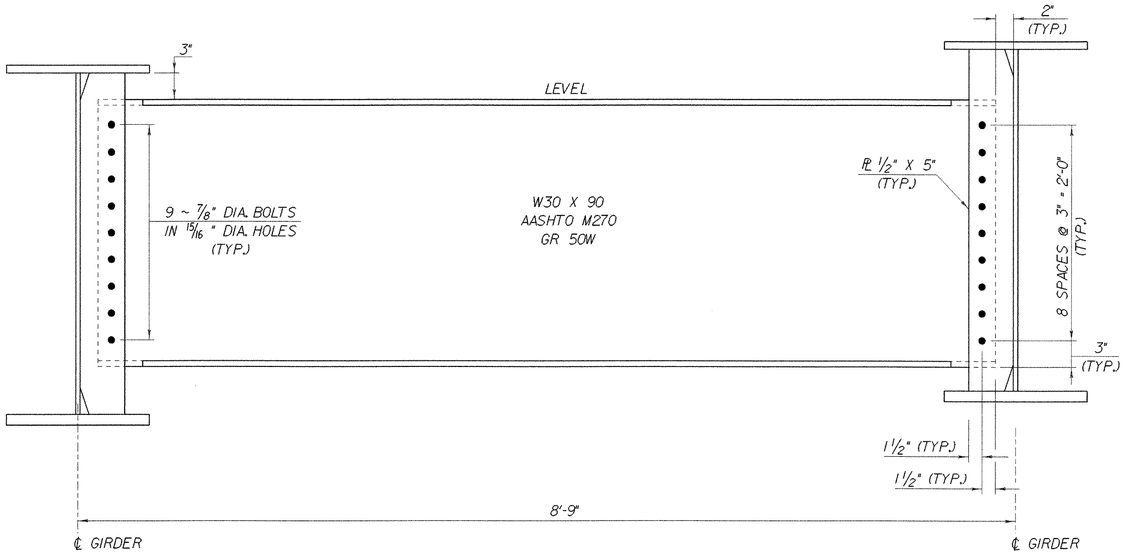

INTERMEDIATE DIAPHRAGM

SCALE: 1 1/2" = 1'-0"

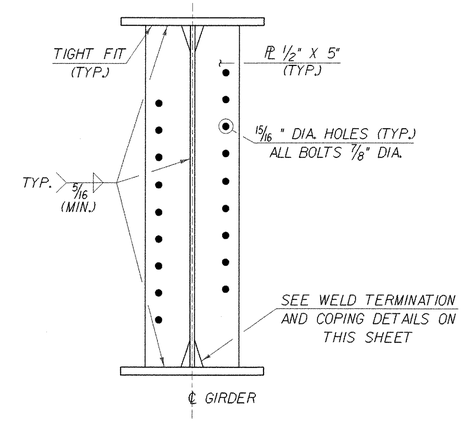

INTERMEDIATE DIAPHRAGM CONNECTION PLATE

SCALE: 1 1/2" = 1'-0"

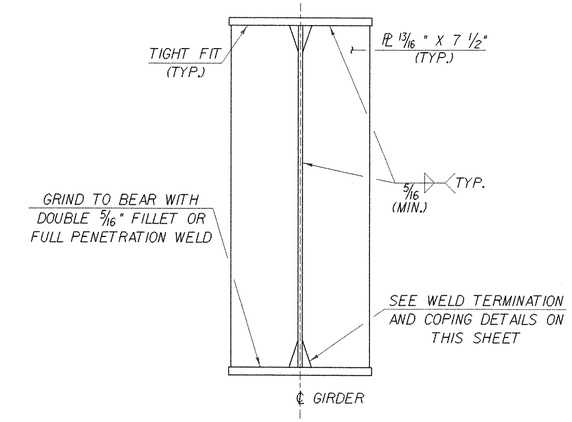

ABUTMENT BEARING STIFFENER

SCALE: 1 1/2" = 1'-0"

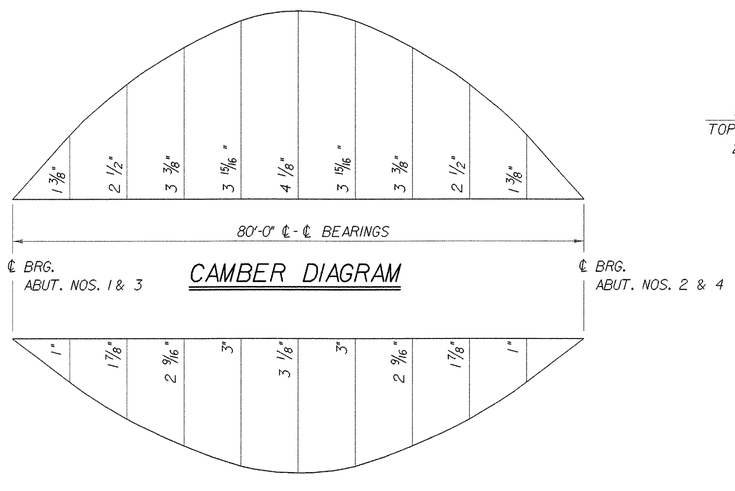

CAMBER DIAGRAM

DEFLECTION DIAGRAM

NOTE: CAMBER AND DEFLECTION MEASUREMENTS ARE GIVEN IN INCHES @ TENTH POINTS. MEASUREMENTS INCLUDE GIRDER SELF-WEIGHT.

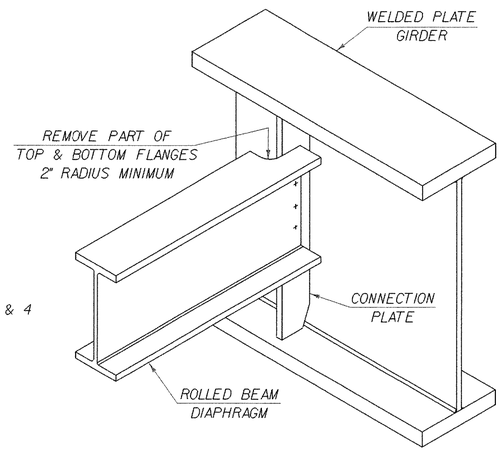

ROLLED BEAM USED AS DIAPHRAGM

SEE CONTRACT DRAWINGS FOR SIZES OF MEMBERS AND CONNECTION DETAILS

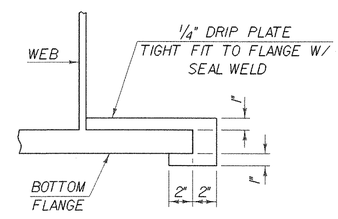

SECTION A - A

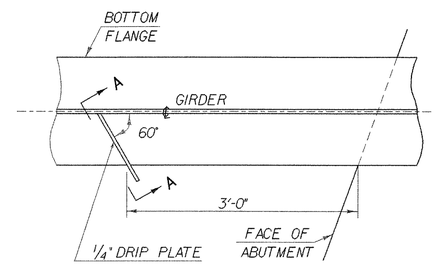

DRIP PLATE PLAN

NOTE:
DRIP PLATES SHALL BE PLACED ON OUTSIDE EDGE OF FASCIA GIRDERS ON THE HIGH SIDE OF ABUTMENTS OR AS INDICATED ON PROJECT PLANS.

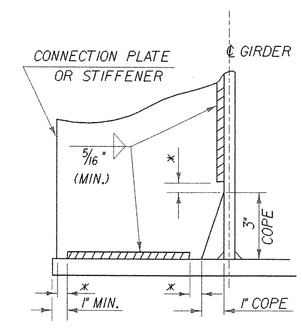

WELD TERMINATION AND COPING DETAILS FOR WELDED PLATE GIRDERS

* NO WELD FOR 1/4" MIN. 1/2" MAX. (EXCEPT MUST MAINTAIN 1" MIN. FROM EDGE OF FLANGE)

STATE OF VERMONT
AGENCY OF TRANSPORTATION

Town Of FAIRFAX-FAIRFIELD-ST. ALBANS	Bridge No. 87 N & S
Highway No. 1-89	Log Sta. / Surv. Sta.
1-89 OVER VT 104	
STRUCTURAL STEEL CONNECTION DETAILS	
Designed By M.LOZIER	Drawn By K.CHISHOLM
Checked By G.ROY Date 10 / 99	Bridge Design Supervisor R.R.WHITCOMB Date 11 / 99
PROJECT FAIRFAX-FAIRFIELD-ST. ALBANS	PROJECT NO. IM 089 - 3 (27)
I.G.C. Info. 94J106\Structures\sj106fr.dgn	sa056fr5J
Bridge Sheet No. BR210	Sheet 88 of 370

PLOTTED 21-SEP-2000