INDEX OF SHEETS
SEE SHEET 2

STATE OF VERMONT
AGENCY OF TRANSPORTATION

PROPOSED IMPROVEMENT
TOWNS OF FAIRFAX, FAIRFIELD, AND ST. ALBANS
COUNTY OF FRANKLIN
INTERSTATE ROUTE 89

BEGINNING IN THE TOWN OF FAIRFAX AT NORTHBOUND AND SOUTHBOUND MM 111.00, CONTINUING NORTHERLY 3.10 MILES, ENDING IN THE TOWN OF ST. ALBANS AT NORTHBOUND AND SOUTHBOUND MM 114.10

LENGTH OF ROADWAY	16,101.22 FEET	=	3.049 MILES
LENGTH OF BRIDGE	266.78 FEET	=	0.051 MILES
LENGTH OF PROJECT	16,368.00 FEET	=	3.100 MILES

THIS PROJECT CONSISTS OF REHABILITATING THE BRIDGE STRUCTURES AND THE ENTIRE PAVEMENT STRUCTURE, SOUTHBOUND AND NORTHBOUND.

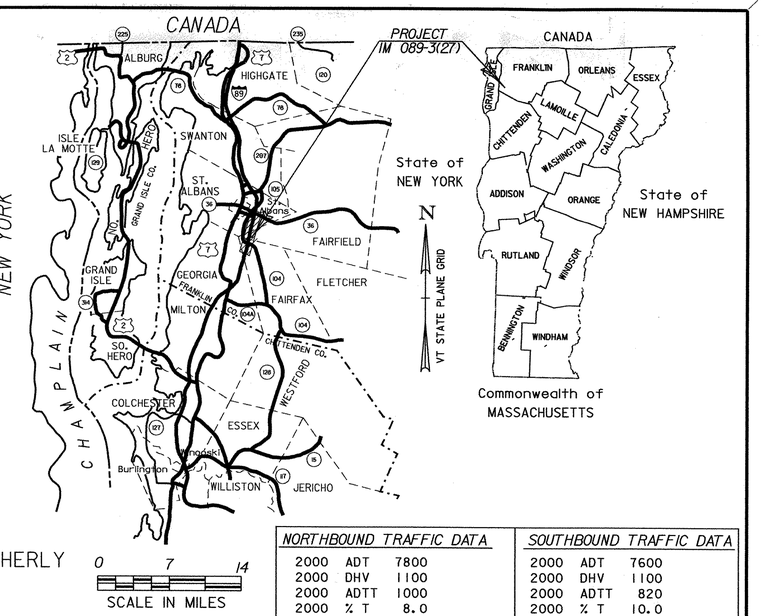

NORTHBOUND TRAFFIC DATA		SOUTHBOUND TRAFFIC DATA	
2000 ADT	7800	2000 ADT	7600
2000 DHV	1100	2000 DHV	1100
2000 ADTT	1000	2000 ADTT	820
2000 % T	8.0	2000 % T	10.0
2020 ADT	11500	2020 ADT	11200
2020 DHV	1500	2020 DHV	1500
2020 ADTT	1400	2020 ADTT	1000
2020 % T	8.0	2020 % T	9.0
D	67%	D	67%
V	70 MPH	V	70 MPH
18 KIP ESAL'S (FLEXIBLE)		18 KIP ESAL'S (FLEXIBLE)	
2000 - 2020	9,548,000	2000 - 2020	10,687,000
2000 - 2040	25,042,000	2000 - 2040	28,161,000

BITUMINOUS CONCRETE PAVEMENT SUPERPAVE MIXTURE DESIGN CRITERIA	
DESIGN LIFE ESALS (NORTH & SOUTHBOUND)	10,954,000
DESIGN NUMBER OF GYRATIONS	100
PERFORMANCE GRADED ASPHALT BINDER	PG 64-34

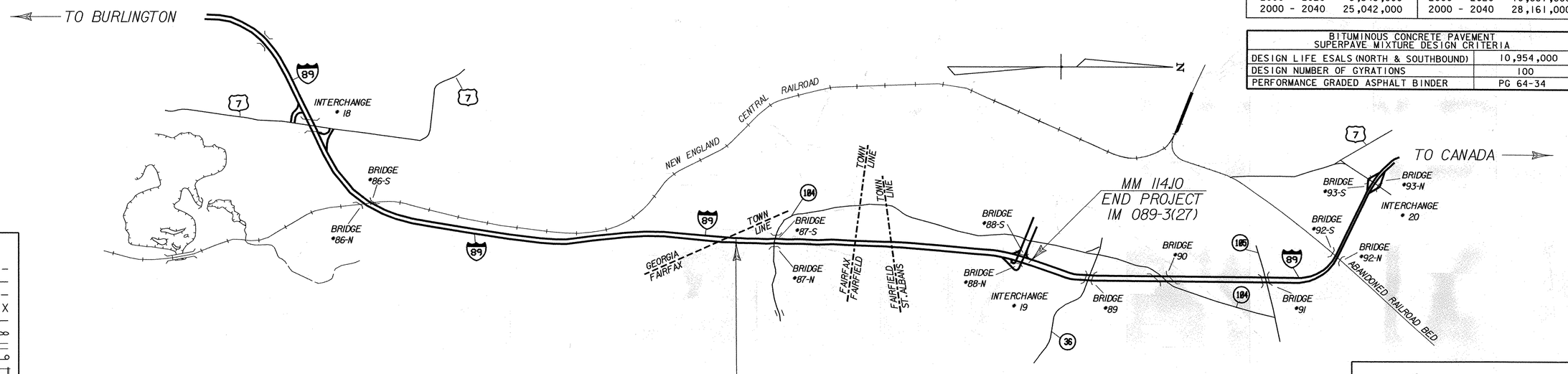

CONVENTIONAL SIGNS

COUNTY LINE
TOWN LINE
LIMITS OF ACCESS
POINT OF ACCESS
FENCE LINE
STONE WALL
TRAVELED WAY
GUARD RAIL
RAILROAD
SURVEY LINE
CULVERT
POWER POLE
TELEPHONE POLE
TREES
CONTROL OF ACCESS
PROPERTY LINE
R.O.W. TAKING LINE
SLOPE RIGHTS
TOP OF CUT
TOE OF SLOPE

DATUM	
VERTICAL	NAVD88
HORIZONTAL	NAD83(92)

da007tle.t

THESE PLANS ARE SUBJECT TO SUCH ENGINEERING CHANGES AS MAY BE REQUIRED BY THE FEDERAL HIGHWAY ADMINISTRATION OR THE CHIEF ENGINEER.

CONSTRUCTION IS TO BE CARRIED ON IN ACCORDANCE WITH THESE PLANS AND THE STANDARD SPECIFICATIONS FOR CONSTRUCTION DATED 1990, AS APPROVED BY THE FEDERAL HIGHWAY ADMINISTRATION ON MARCH 15, 1990 FOR USE ON THIS PROJECT, INCLUDING ALL SUBSEQUENT REVISIONS AND SUCH REVISED SPECIFICATIONS AND SPECIAL PROVISIONS AS ARE INCORPORATED IN THESE PLANS.

DATED PLOTTED: 05-OCT-2000

APPROVED _____ DATE 10/5/00
DIRECTOR OF PROJECT DEVELOPMENT

DEPARTMENT OF TRANSPORTATION
FEDERAL HIGHWAY ADMINISTRATION

APPROVED for Mark D. Richter DATE 11-22-00
DIVISION ADMINISTRATOR

PROJECT FAIRFAX-FAIRFIELD-ST. ALBANS
AC IM 089-3(27)

SHEET 1 OF 370 SHEETS

INDEX OF SHEETS

1	TITLE SHEET
2	INDEX OF SHEETS
3	EXISTING TYPICAL AND NORTHBOUND NORMAL TYPICAL
4	NORTHBOUND MAXIMUM BANKED TYPICALS
5	NORTHBOUND DECELERATION/ACCELERATION LANE TYPICAL CROSSOVER TYPICAL AND U-TURN TYPICAL
6	NORTHBOUND AND SOUTHBOUND PERMEABLE BASE TYPICAL
7	APPROACH TRANSITIONS
8	SOUTHBOUND NORMAL TYPICAL AND DECELERATION/ACCELERATION LANE TYPICAL
9	SOUTHBOUND MAXIMUM BANKED TYPICALS
10	RAMP C TYPICAL
11-14	QUANTITY SHEETS
15-16	EARTHWORK SUMMARY SHEETS
17-18	DRAINAGE SUMMARY SHEETS
19	SOUTHBOUND UNDERDRAIN SUMMARY SHEETS
20	NORTHBOUND UNDERDRAIN SUMMARY SHEETS
21	SB AND NB UNDERDRAIN CARRIER PIPE SUMMARY SHEETS
22	GUARD RAIL ITEM DETAIL SUMMARY SHEET
23	FENCE SUMMARY SHEET
24	GUARD RAIL DETAILS
25	EROSION CONTROL SHEET
26	MISCELLANEOUS DETAILS
27	NOTES
28	RUMBLE STRIP DETAILS
29-39	TRAFFIC SIGN AND PAVEMENT MARKING SHEETS
40	VT 104 & VT 105 INTERSECTION ROADWAY & TRAFFIC DESIGN SHEET
40A-40B	VT 104 CROSS SECTIONS
41-47	RAMP A DETOUR TRAFFIC DESIGN SHEETS
48	SPLINE SHEET FOR RAMP C MERGING WITH SOUTHBOUND
49-72	PLAN/PROFILE SHEETS, SOUTHBOUND AND NORTHBOUND
73	RAMP C PROFILE
74-75	BRIDGE SHEETS - BR 100-101
76-125	BRIDGE SHEETS - BR 200-247
126-151	BRIDGE SHEETS - BR 300-325
152-243	BRIDGE SHEETS - BR 400-491
244-252	BRIDGE SHEETS - BR 500-508
253-262	BLANK
263	SOUTHBOUND WORK ZONE SIGNING
264-268	CROSSOVER TO BEGIN SB DETOUR
269-271	SOUTHBOUND CROSSOVER TO RAMP D
272	RAMP C DETOUR PLAN/PROFILE SHEET
273-275	SOUTHBOUND CROSSOVER FROM RAMP C
276-281	CROSSOVER TO END SB DETOUR
282	NORTHBOUND WORK ZONE SIGNING
283-287	CROSSOVER TO BEGIN NB DETOUR
288-290	NB CROSSOVER TO RAMP B
291-295	CROSSOVER TO END NB DETOUR
296	SOUTHBOUND BANKING TRANSITION DIAGRAMS
297	NORTHBOUND BANKING TRANSITION DIAGRAMS
298-316	SOUTHBOUND CROSS SECTIONS
317-327	RAMP C CROSS SECTIONS (INCLUDES RAMP C DETOUR)
328-338	SOUTHBOUND DRAINAGE CROSS SECTIONS
339	RAMP C DRAINAGE CROSS SECTIONS
340-359	NORTHBOUND CROSS SECTIONS
360-370	NORTHBOUND DRAINAGE CROSS SECTIONS

THE FOLLOWING SHEETS ARE FOR REFERENCE PURPOSES ONLY:

1968 "AS BUILT" RECORD PLANS (13 SHEETS)

STANDARDS

B-1	BANKING TABLES	06-01-94
B-5	EMBANKMENT ON EARTH SLOPE, EMBANKMENT ON ROCK SLOPE, MUCK EXCAVATION, TYPICAL SLOPE ROUNDING	06-01-94
B-11	USE OF UNDERDRAIN WITH SHATTERED ROCK SUBGRADE METHODS OF SLOPE STABILIZATION	06-01-94
B-17	DETAIL OF REST AREA, DETAIL OF U-TURN TURNOUTS	02-23-95
BR1-97	N.E.T.C. BRIDGE RAIL	06-05-98
BR2-97	N.E.T.C. BRIDGE RAIL	08-06-98
BR3-97	SNOW FENCE FOR N.E.T.C. BRIDGE RAIL	06-23-98
C-1	GRANITE SLOPE EDGING VERTICAL GRANITE CURB PRECAST REINFORCED CONCRETE CURB CAST IN PLACE CONCRETE CURB TREATED TIMBER CURB	06-01-94
D-1	PRECAST REINFORCED CONCRETE PIPE DROP INLET WITH CAST IRON GRATE PRECAST REINFORCED CONCRETE PIPE DROP INLET WITH CONCRETE COVER	06-01-94
D-2	CEMENT RUBBLE MASONRY HEADWALLS & RETAINING WALL RIPRAP LIGHT TYPE SLOPE HEADWALL REINFORCED CONCRETE HEADWALL UNDERDRAIN & CARRIER PIPE CONSTRUCTION DETAILS	06-01-94
D-4	TYPICAL WATERFALL FOR CULVERTS UP TO AND INCLUDING 48'' DIAMETER EXTENSION SERVICE BOX AND CURB STOP CORRUGATED PIPE ELBOW GRANULAR BORROW AT CULVERT LOCATIONS UNDERDRAIN FLUSHING BASIN CORRUGATED STEEL PIPE END SECTION CORRUGATED STEEL PIPE ARCH END SECTION	06-01-94
D-6	REINFORCED CONCRETE DROP INLET WITH GRATE FOR USE IN DITCHES	06-01-94
D-16	PRECAST REINFORCED CONCRETE CURB DROP INLET WITH CAST IRON GRATE CAST IRON GRATE, TYPE B OPERATION APPROACH SIGNS CAST IRON GRATE, TYPE C UNDERDRAIN RISER REINFORCED CONCRETE PIPE END SECTION ENERGY DISSIPATOR FOR CULVERT	06-01-94
D-17	REDUCER, VERTICAL RISER	06-01-94
E-100	CONSTRUCTION APPROACH SIGNS	01-06-97
E-101	CONSTRUCTION SIGN DETAILS	03-10-97
E-102	CONSTRUCTION SIGN DETAILS	08-08-95
E-102A	CONSTRUCTION SIGN DETAILS	08-08-95
E-104	MAINLINE TRAFFIC CONTROL DIVIDED HIGHWAY ONE ROADWAY CLOSED	02-03-99
E-104A	PAVEMENT MARKING DETAILS-DIVIDED HIGHWAY-ONE ROADWAY CLOSED	12-27-96
E-106	TRAFFIC CONTROL - MISCELLANEOUS DETAILS	08-08-95
E-107	DELINEATION, BARRICADES AND DETOURS FOR CONSTRUCTION AREAS	08-08-95
E-107A	BREAKAWAY BARRICADE DETAILS	08-08-95
E-111	MINOR MAINTENANCE OPERATION	03-11-97
E-112	TRAFFIC CONTROL FOR TYPICAL MOVING MAINTENANCE OPERATIONS	01-23-97
E-120	STANDARD SIGN PLACEMENT - EXPRESSWAY AND FREEWAY	08-08-95
E-130	TYPE ''B'' GUIDE SIGN ATTACHMENT DETAILS	08-08-95
E-131	GUIDE SIGN DETAILS	08-08-95
E-132	GENERAL MOTORIST SERVICE SIGN DETAILS	08-18-95
E-134	BRIDGE NUMBER PLAQUE	08-08-95
E-135	INTERSTATE ROUTE MARKER SIGN DETAILS	08-08-95
E-139	MILEMARKER DETAILS INTERSTATE	04-01-98
E-140	REGULATORY SIGN DETAILS	08-30-96
E-142	REGULATORY SIGN DETAILS	09-20-95
E-143	REGULATORY SIGN DETAILS	09-20-95
E-144	REGULATORY SIGN DETAILS	03-29-99
E-150	WARNING SIGN DETAILS	01-15-97
E-152	WARNING SIGN DETAILS	08-08-95
E-154	WARNING SIGN DETAILS	08-08-95
E-160	FLANGED CHANNEL STEEL SIGN POST	05-20-99
E-161	W-SHAPED STEEL SIGN POST	08-18-95
E-162	TUBULAR ALUMINUM SIGN POST	05-20-99
E-163	TUBULAR STEEL SIGN POST	05-20-99
E-164	SQUARE STEEL SIGN POST	05-20-99
E-170	TRAFFIC CONTROL SIGNALS PEDESTAL POST MOUNTED	11-04-99
E-171A	TRAFFIC CONTROL SIGNALS GENERAL NOTES & DETAILS	08-09-95
E-171B	TRAFFIC CONTROL SIGNALS MISC. DETAILS	08-09-95
E-171C	TRAFFIC CONTROL CANTILEVER MOUNTING DETAILS	08-09-95
E-172	VEHICLE DETECTOR LOOP DETAILS	08-09-95
E-173	PULL BOXES AND JUNCTION BOXES	08-09-95
E-175	POWER DROP STANCHIONS	11-17-93
E-191	PAVEMENT MARKING DETAILS	02-01-99
E-193	PAVEMENT MARKING DETAILS	08-18-95
E-197	DELINEATOR PLACEMENT TYPICAL	08-18-95
E-198	FREEWAY-EXPRESSWAY DELINEATORS AND MILEPOSTS	04-14-97
E-199	FREEWAY-EXPRESSWAY DELINEATOR AND MILEPOST-MOUNTING ON BRIDGE RAIL	08-18-95
F-1	WOVEN WIRE FENCE WITH WOOD POSTS WOVEN WIRE FENCE WITH STEEL POSTS WOOD BRACE FOR WOVEN WIRE FENCE STEEL BRACE FOR WOVEN WIRE FENCE DRIVE GATE FOR WOVEN WIRE FENCE WALK GATE FOR WOVEN WIRE FENCE	06-01-94
F-2	CHAIN LINK FENCE (TYPE I) DRIVE GATE FOR CHAIN LINK FENCE (TYPE I) WALK GATE FOR CHAIN LINK FENCE (TYPE I)	06-01-94
F-3	CHAIN LINK FENCE, TYPE III DRIVE GATE FOR CHAIN-LINK FENCE, TYPE III WALK GATE FOR CHAIN-LINK FENCE, TYPE III	06-01-94
F-4	CHAIN LINK FENCE, TYPE II DRIVE GATE FOR CHAIN-LINK FENCE, TYPE II WALK GATE FOR CHAIN-LINK FENCE, TYPE II	06-01-94
G-1	STEEL BEAM GUARD RAIL HEAVY DUTY STEEL BEAM GUARD RAIL TWISTED END TERMINAL ANCHOR FOR STEEL BEAM RAIL	06-01-94
G-18	PRECAST CONCRETE TEMPORARY TRAFFIC BARRIER	06-01-94
G-19	GENERIC GRADING PLANS FOR GUARDRAIL END TERMINALS	10-21-98
T-1	TEMPORARY EROSION CONTROL DETAILS	06-01-94
T-2	TEMPORARY EROSION CONTROL DETAILS	06-01-94

DA007IND

PROJECT NAME: FAIRFAX-FAIRFIELD-ST.ALBANS

PROJECT NUMBER: IM 089-3(27)

FILE NAME: /87A007B/DESIGN/DA007FRM.DGN PLOT DATE: 22-SEP-2000

PROJECT LEADER: DELLA SANTA DRAWN BY:

DESIGNED BY: SQUAD B CHECKED BY:

SHEET 2 OF 370

EXISTING TYPICAL SECTION
(FOR REFERENCE ONLY)

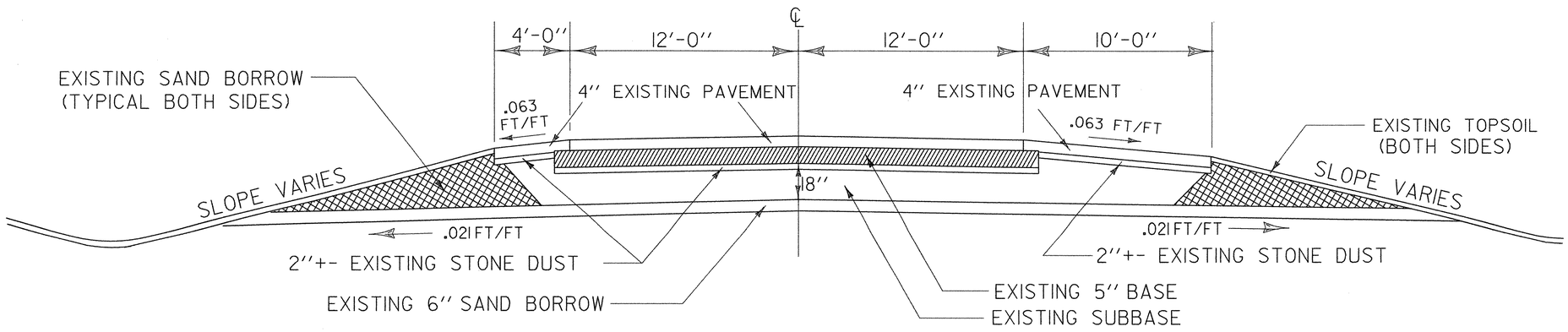

SEEDING FORMULA
RURAL AREAS

% WT.	LBS./A.	NAME	PUR %	GERM %
37.5	22.5	CREEPING RED FESCUE	98	85
37.5	22.5	TALL FESCUE	95	90
5.0	3.0	RED TOP	95	90
15.0	9.0	BIRDSFOOT TREFOIL	98	85
5.0	3.0	ANNUAL RYEGRASS	95	85
100.0	60.0			

GENERAL NOTES

SEED MIXTURE: SHALL NOT HAVE A WEED CONTENT EXCEEDING 0.40% BY WEIGHT AND SHALL BE FREE OF ALL NOXIOUS SEED.

SEED: TO BE APPLIED PER SEEDING FORMULAS OR AS DIRECTED BY THE ENGINEER.

FERTILIZER: FORMULA 10-20-10, TO BE USED WITH SEED, APPLIED AT THE RATE OF 500 LBS./ACRE. (HYDRO SEEDERS MAY USE 19-19-19 FORMULA).

AGRICULTURAL LIMESTONE: TO BE APPLIED AT THE RATE OF 2 TONS/ACRE, OR AS DIRECTED BY THE ENGINEER.

HAY MULCH: TO BE PLACED ON EARTH SLOPES AT THE RATE OF 2 TONS/ACRE, OR AS DIRECTED BY THE ENGINEER.

TOPSOIL: TO BE USED WITH SEED AS INDICATED ON THE PLANS, OR AS DIRECTED BY THE ENGINEER.

MARKER POSTS: TO BE PLACED AS INDICATED OR AS DIRECTED BY THE ENGINEER.

SLOPE ROUNDING: ALL CUT SLOPES TO BE ROUNDED IN ACCORDANCE WITH STANDARD SHEET B-5.

PAY LIMITS OF SAND BORROW: WHEN USED IN CONJUNCTION WITH UNDERDRAIN - SEE STANDARD SHEET D - 2.

TACK COAT: EMULSIFIED ASPHALT IS TO BE APPLIED AT THE RATE OF 0.015 GAL/SY BETWEEN SUCCESSIVE COURSES OF PAVEMENT AS DIRECTED BY THE ENGINEER.

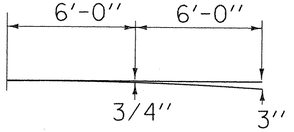

PARABOLIC DETAILS

NORTHBOUND NORMAL TYPICAL SECTION (EXCEPT IN AREA OF PERMEABLE BASE)

REMOVE ENTIRE DEPTH OF EXISTING BITUMINOUS PAVEMENT (9" +-).
REMOVE 6" OF SUBBASE TO ALLOW FOR NEW SUBBASE MATERIAL.

NEW PAVEMENT - 6" BITUMINOUS CONCRETE PAVEMENT (TWO 1¾" TYPE III S LIFTS OVER 2½" TYPE II S) (PG 64-34)
3½" BASE COURSE OF BITUMINOUS CONCRETE PAVEMENT, TYPE I S (PG 64-34)
12" SUBBASE OF DENSE GRADED CRUSHED STONE
(ADJUST NEW SUBBASE MATERIAL TO ESTABLISH NEW GRADE.)

MATERIAL ITEM	THICKNESS TOLERANCE
PAVEMENT (TOTAL DEPTH)	± 1/4"
SUBBASE	± 1"

SHOULDERS: 6" BITUMINOUS CONCRETE PAVEMENT (TWO 1¾" TYPE III S LIFTS OVER 2½" TYPE II S) (PG 64-34)

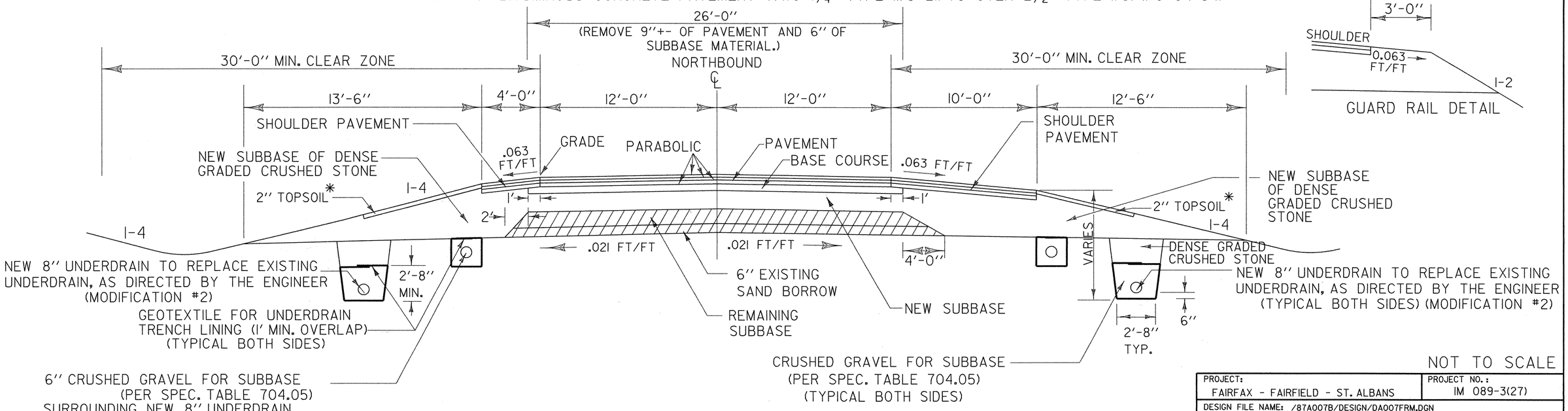

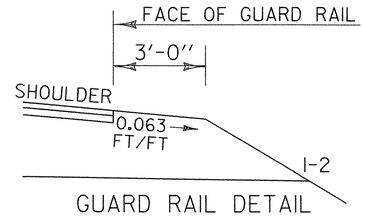

GUARD RAIL DETAIL

NOT TO SCALE

* THE TOPSOIL LAYER SHALL EXTEND MIDWAY DOWN THE SIDESLOPE FROM THE SHOULDER TO THE SUBGRADE POINT.

PROJECT: FAIRFAX - FAIRFIELD - ST. ALBANS	PROJECT NO.: IM 089-3(27)
DESIGN FILE NAME: /87A007B/DESIGN/DA007FRM.DGN	
IPARM FILE NAME: DA007TYI	PLOT DATE: 24-AUG-2000
SURVEYED BY: ORVIS	SURVEY DATE:
SQUAD LEADER: DELLA SANTA	DRAWN BY: SQUAD B
	SHEET: 3 OF 370

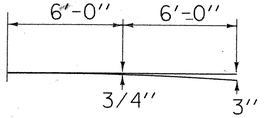

PARABOLIC DETAILS

NORTHBOUND MAXIMUM BANKED TYPICAL SECTION (EXCEPT IN AREA OF PERMEABLE BASE)

REMOVE ENTIRE DEPTH OF EXISTING BITUMINOUS PAVEMENT (9" +-).
REMOVE 6" OF SUBBASE TO ALLOW FOR NEW SUBBASE MATERIAL.

NEW PAVEMENT - 6" BITUMINOUS CONCRETE PAVEMENT (TWO 1¾" TYPE III S LIFTS OVER 2½" TYPE II S) (PG 64-34)
3½" BASE COURSE OF BITUMINOUS CONCRETE PAVEMENT, TYPE I S (PG 64-34)
12" SUBBASE OF DENSE GRADED CRUSHED STONE
(ADJUST NEW SUBBASE MATERIAL TO ESTABLISH NEW GRADE.)
SHOULDERS: 6" BITUMINOUS CONCRETE PAVEMENT (TWO 1¾" TYPE III S LIFTS OVER 2½" TYPE II S) (PG 64-34)

MATERIAL ITEM	THICKNESS TOLERANCE
PAVEMENT (TOTAL DEPTH)	± 1/4"
SUBBASE	± 1"

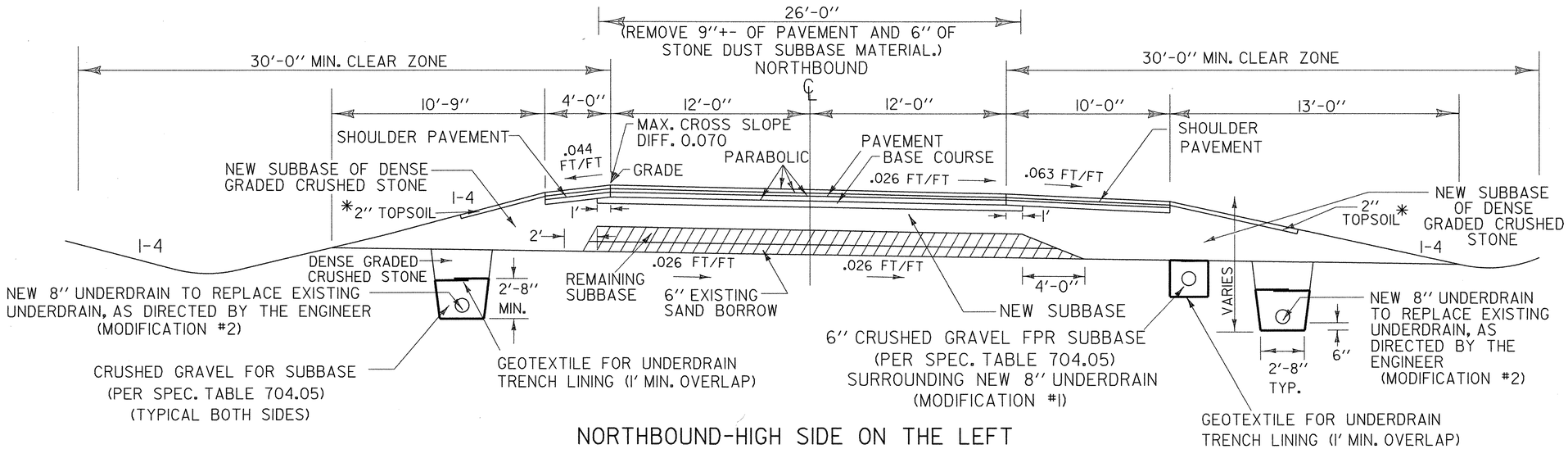

NORTHBOUND-HIGH SIDE ON THE LEFT

MAXIMUM BANK 0.026 FT/FT

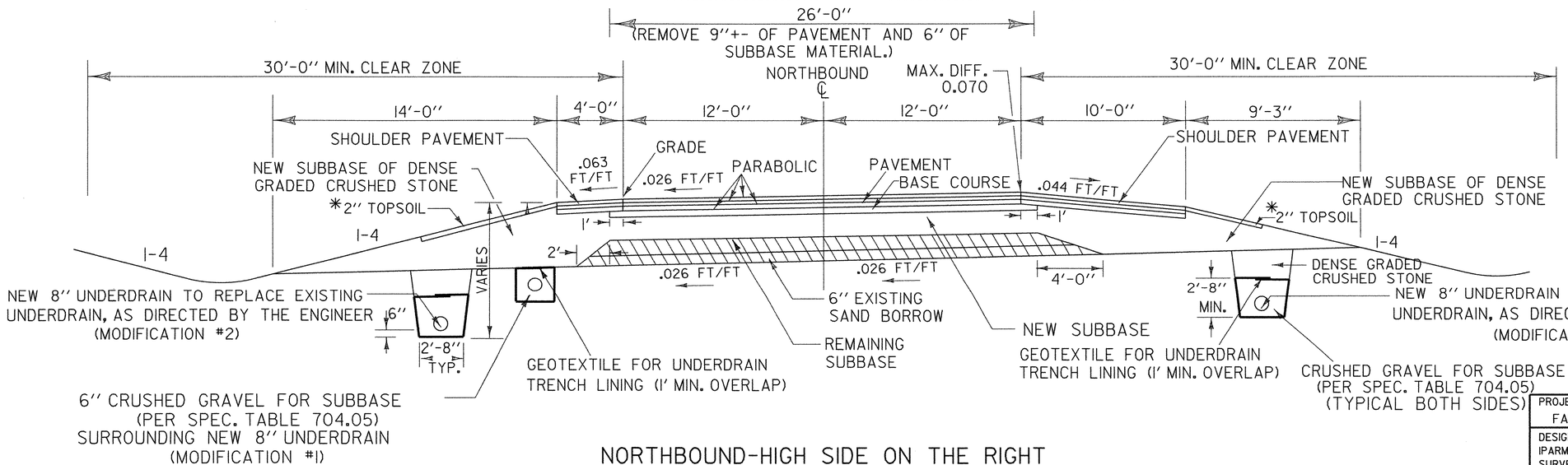

NORTHBOUND-HIGH SIDE ON THE RIGHT

MAXIMUM BANK 0.026 FT/FT

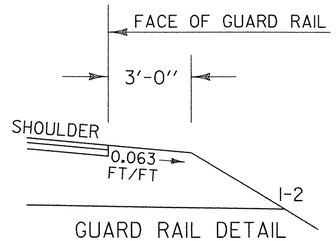

GUARD RAIL DETAIL

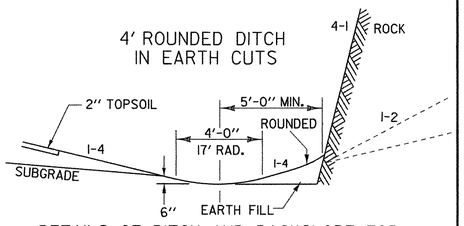

DETAILS OF DITCH AND BACKSLOPE FOR LOW SIDE OF BANK LESS THAN .042 FT/FT

*THE TOPSOIL LAYER SHALL EXTEND MIDWAY DOWN THE SIDESLOPE FROM THE SHOULDER TO THE SUBGRADE POINT.

NOT TO SCALE

PROJECT: FAIRFAX - FAIRFIELD - ST. ALBANS	PROJECT NO.: IM 089-3(27)
DESIGN FILE NAME: /87A007B/DESIGN/DA007FRM.DGN	
IPARM FILE NAME: DA007TY2	PLOT DATE: 24-AUG-2000
SURVEYED BY: ORVIS	SURVEY DATE:
SQUAD LEADER: DELLA SANTA	DRAWN BY: SQUAD B
	SHEET: 4 OF 370

NORTHBOUND DECELERATION/ACCELERATION LANE TYPICAL SECTION

REMOVE ENTIRE DEPTH OF EXISTING BITUMINOUS PAVEMENT (9'' +-).
REMOVE 6'' OF EXISTING SUBBASE TO ALLOW FOR NEW SUBBASE MATERIAL.

NEW PAVEMENT - 6'' BITUMINOUS CONCRETE PAVEMENT (TWO 1¾'' TYPE III S LIFTS OVER 2½'' TYPE II S) (PG 64-34)
3½'' BASE COURSE OF BITUMINOUS CONCRETE PAVEMENT, TYPE I S (PG 64-34)
12'' SUBBASE OF DENSE GRADED CRUSHED STONE
(ADJUST NEW SUBBASE MATERIAL TO ESTABLISH NEW GRADE.)

SHOULDERS: 6'' BITUMINOUS CONCRETE PAVEMENT (TWO 1¾'' TYPE III S LIFTS OVER 2½'' TYPE II S) (PG 64-34)

MATERIAL ITEM	THICKNESS TOLERANCE
PAVEMENT (TOTAL DEPTH)	± 1/4''
SUBBASE	± 1''

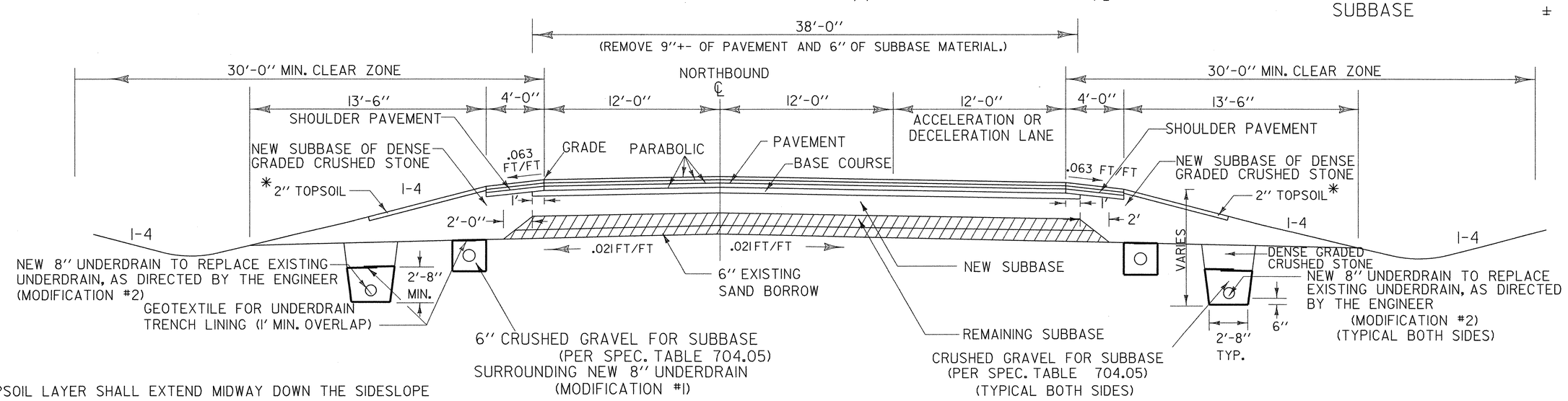

* THE TOPSOIL LAYER SHALL EXTEND MIDWAY DOWN THE SIDESLOPE FROM THE SHOULDER TO THE SUBGRADE POINT.

CROSSOVER TYPICAL SECTION

3½'' BITUMINOUS CONCRETE PAVEMENT (1½'' TYPE III OVER 2'' TYPE II) (PG 64-34)
15'' SUBBASE OF GRAVEL
SHOULDERS: 3½'' BITUMINOUS CONCRETE PAVEMENT (1½'' TYPE III OVER 2'' TYPE II) (PG 64-34)

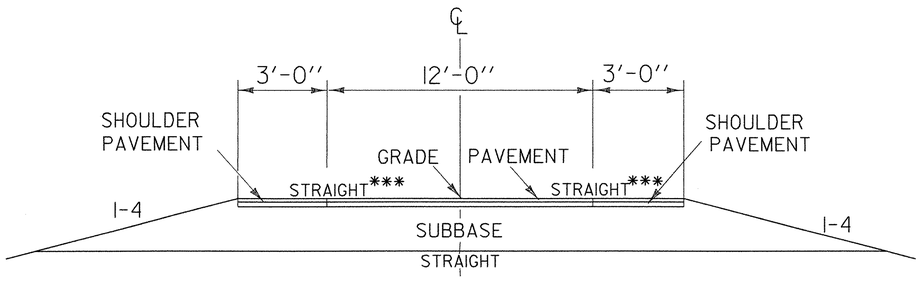

*** CROSS SLOPE VARIES ACCORDING TO BANKING.

U-TURN TYPICAL SECTION

6'' BITUMINOUS CONCRETE PAVEMENT (TWO 1¾'' TYPE III S LIFTS OVER 2½'' TYPE II S) (PG 64-34)
12'' SUBBASE OF DENSE GRADED CRUSHED STONE

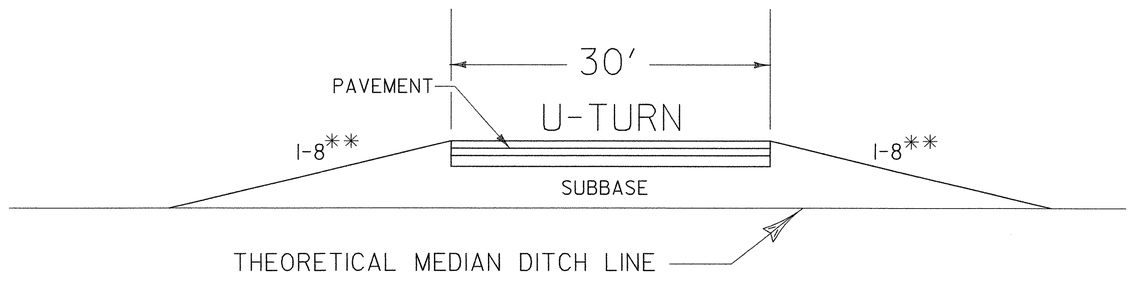

** SIDE SLOPE STEEPER THAN I-8 PERMITTED WHEN NOT FACING APPROACHING TRAFFIC.

NOT TO SCALE

PROJECT: FAIRFAX - FAIRFIELD - ST. ALBANS	PROJECT NO.: IM 089-3(27)
DESIGN FILE NAME: /87A007B/DESIGN/DA007FRM.DGN	
IPARM FILE NAME: DA007TY3	PLOT DATE: 24-AUG-2000
SURVEYED BY: ORVIS	SURVEY DATE:
SQUAD LEADER: DELLA SANTA	DRAWN BY: SQUAD B
	SHEET: 5 OF 370

MATERIAL ITEM	THICKNESS TOLERANCE
PAVEMENT (TOTAL DEPTH)	± 1/4"
SUBBASE	± 1"

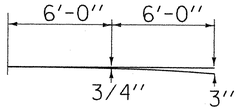

PARABOLIC DETAILS

NORMAL TYPICAL SECTION USING PERMEABLE BASE

THE FOLLOWING PROCEDURE WILL BE DONE FIRST:
REMOVE ENTIRE DEPTH OF EXISTING BITUMINOUS PAVEMENT (9" +-).
REMOVE 6" OF EXISTING SUBBASE TO ALLOW FOR NEW SUBBASE MATERIAL.

NEW PAVEMENT - 6" BITUMINOUS CONCRETE PAVEMENT (TWO 1¾" TYPE III S LIFTS OVER 2½" TYPE II S) (PG 64-34)
3½" BASE COURSE OF BITUMINOUS CONCRETE PAVEMENT, TYPE I S (PG 64-34)
4" PLANT MIXED BASE COURSE (MODIFIED, PERMEABLE BASE)
8" SUBBASE OF DENSE GRADED CRUSHED STONE
(ADJUST NEW SUBBASE MATERIAL TO ESTABLISH NEW GRADE.)

SHOULDERS: 6" BITUMINOUS CONCRETE PAVEMENT (TWO 1¾" TYPE III S LIFTS OVER 2½" TYPE II S) (PG 64-34)
3½" BASE COURSE OF BITUMINOUS CONCRETE PAVEMENT, TYPE I S (PG 64-34)
4" PLANT MIXED BASE COURSE (MODIFIED, PERMEABLE BASE)

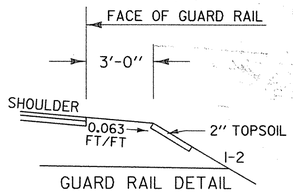

GUARD RAIL DETAIL

NORTHBOUND MM 112.85 TO MM 113.35 (NB STA. 3376+00 ~ 3402+00)

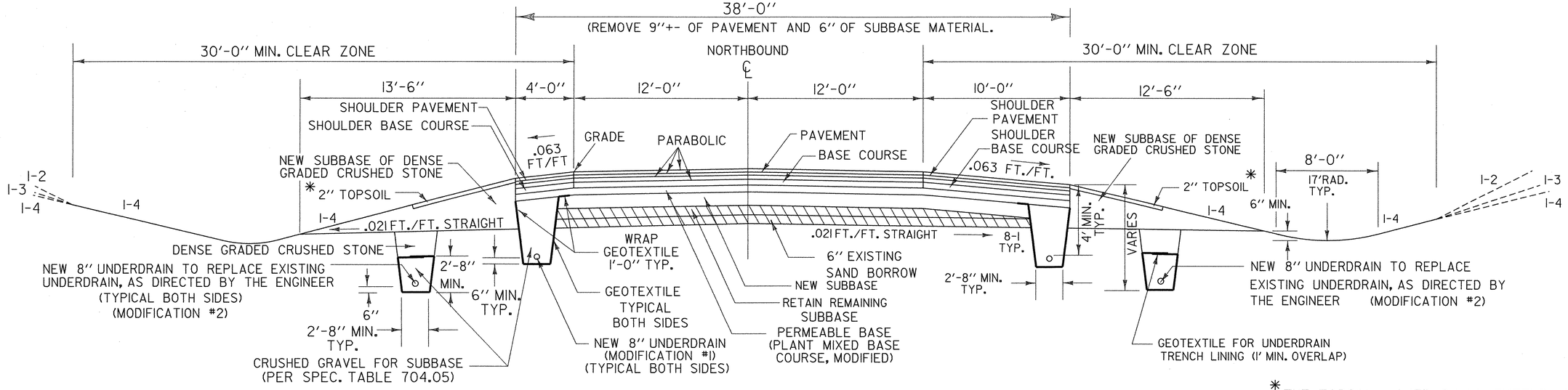

SOUTHBOUND MM 112.35 TO MM 112.85 (SB STA. 3350+11 ~ 3376+39)

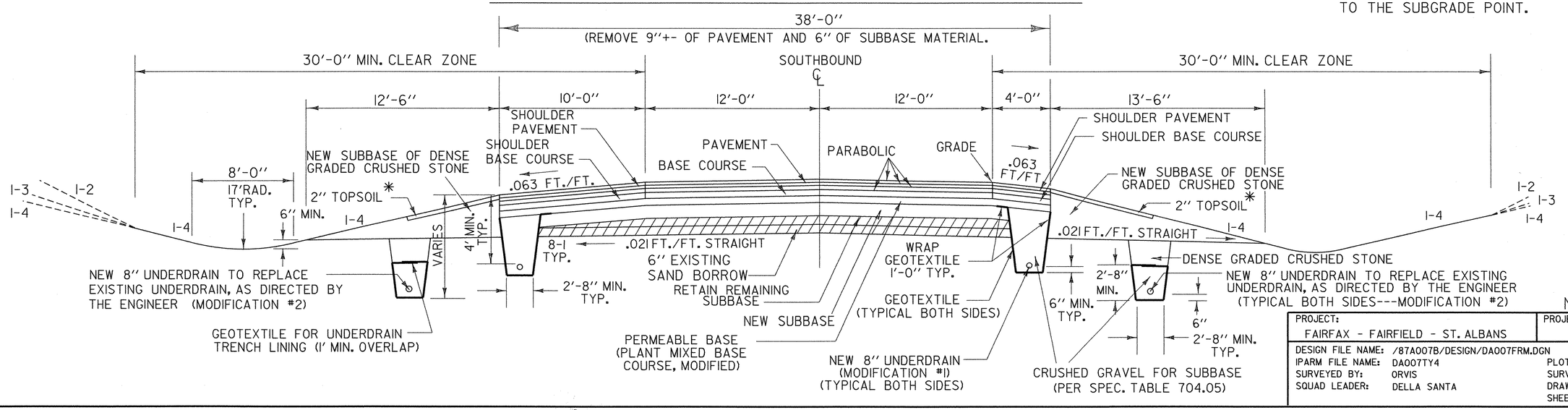

* THE TOPSOIL LAYER SHALL EXTEND MIDWAY DOWN THE SIDESLOPE FROM THE SHOULDER TO THE SUBGRADE POINT.

NOT TO SCALE

PROJECT:	PROJECT NO.:
FAIRFAX - FAIRFIELD - ST. ALBANS	IM 089-3(27)

DESIGN FILE NAME: /87A007B/DESIGN/DA007FRM.DGN
IPARM FILE NAME: DA007TY4 — PLOT DATE: 24-AUG-2000
SURVEYED BY: ORVIS — SURVEY DATE:
SQUAD LEADER: DELLA SANTA — DRAWN BY: SQUAD B
SHEET: 6 OF 370

NORTHBOUND AND SOUTHBOUND APPROACH TRANSITIONS

NO APPROACH TRANSITION AT BEGINNING OF PROJECT

THE MATERIALS SHALL BE BUTTED TO MATCH THE MATERIALS OF THE GEORGIA-FAIRFAX PROJECT IM 089-3(26)

APPROACH TRANSITION AT END OF PROJECT

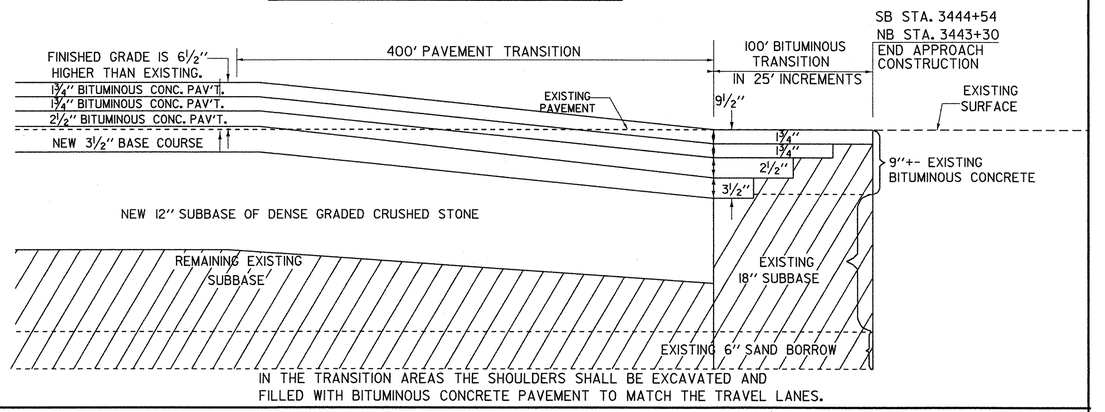

IN THE TRANSITION AREAS THE SHOULDERS SHALL BE EXCAVATED AND FILLED WITH BITUMINOUS CONCRETE PAVEMENT TO MATCH THE TRAVEL LANES.

NORTHBOUND AND SOUTHBOUND APPROACH TRANSITIONS FOR BRIDGES 88-S & 88-N

INTO THE BRIDGE

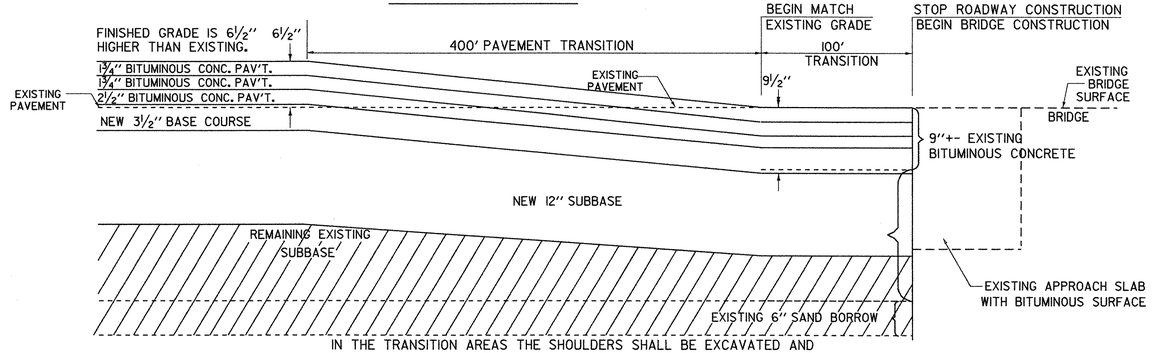

IN THE TRANSITION AREAS THE SHOULDERS SHALL BE EXCAVATED AND FILLED WITH BITUMINOUS CONCRETE PAVEMENT TO MATCH THE TRAVEL LANES.

OUT OF BRIDGE

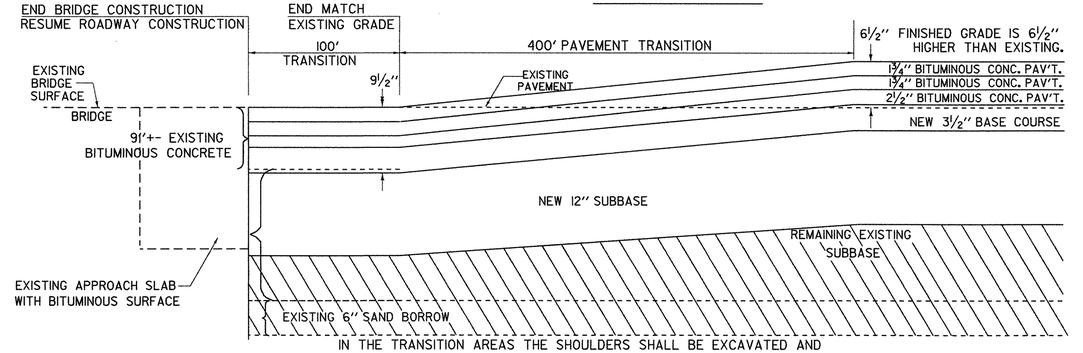

IN THE TRANSITION AREAS THE SHOULDERS SHALL BE EXCAVATED AND FILLED WITH BITUMINOUS CONCRETE PAVEMENT TO MATCH THE TRAVEL LANES.

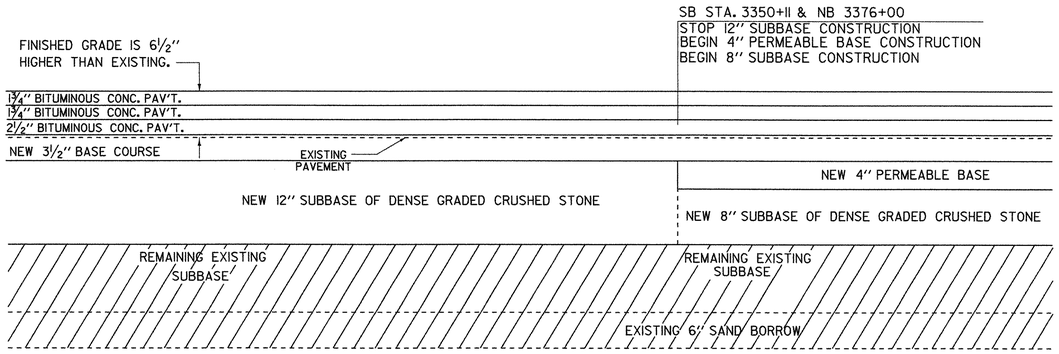

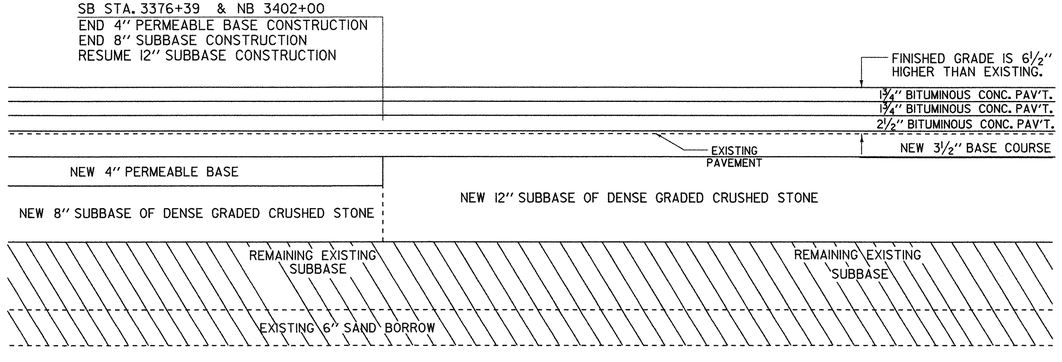

BUTT BETWEEN PERMEABLE BASE AND NON-PERMEABLE BASE TYPICALS

NOT TO SCALE

PROJECT: FAIRFAX - FAIRFIELD - ST. ALBANS	PROJECT NO.: IM 089-3(27)
DESIGN FILE NAME: /87A007B/DESIGN/DA007FRM.DGN	
IPARM FILE NAME: DA007TY5	PLOT DATE: 19-AUG-2000
SURVEYED BY: ORVIS	SURVEY DATE:
SQUAD LEADER: DELLA SANTA	DRAWN BY: SQUAD B
	SHEET: 7 OF 370

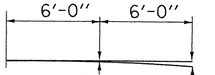

PARABOLIC DETAILS

MATERIAL ITEM	THICKNESS TOLERANCE
PAVEMENT (TOTAL DEPTH)	± 1/4"
SUBBASE	± 1"

REMOVE ENTIRE DEPTH OF EXISTING BITUMINOUS PAVEMENT (9" +-).
REMOVE 6" OF EXISTING SUBBASE TO ALLOW FOR NEW SUBBASE MATERIAL.

NEW PAVEMENT - 6" BITUMINOUS CONCRETE PAVEMENT (TWO 1¾" TYPE III S LIFTS OVER 2½" TYPE II S) (PG 64-34)
3½" BASE COURSE OF BITUMINOUS CONCRETE PAVEMENT, TYPE I S (PG 64-34)
12" SUBBASE OF DENSE GRADED CRUSHED STONE
(ADJUST NEW SUBBASE MATERIAL TO ESTABLISH NEW GRADE.)

SHOULDERS: 6" BITUMINOUS CONCRETE PAVEMENT (TWO 1¾" TYPE III S LIFTS OVER 2½" TYPE II S) (PG 64-34)

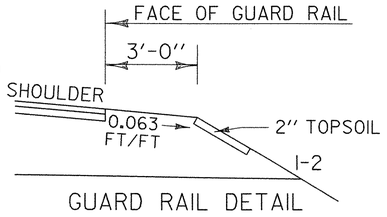

GUARD RAIL DETAIL

SOUTHBOUND NORMAL TYPICAL SECTION (EXCEPT IN AREA OF PERMEABLE BASE)

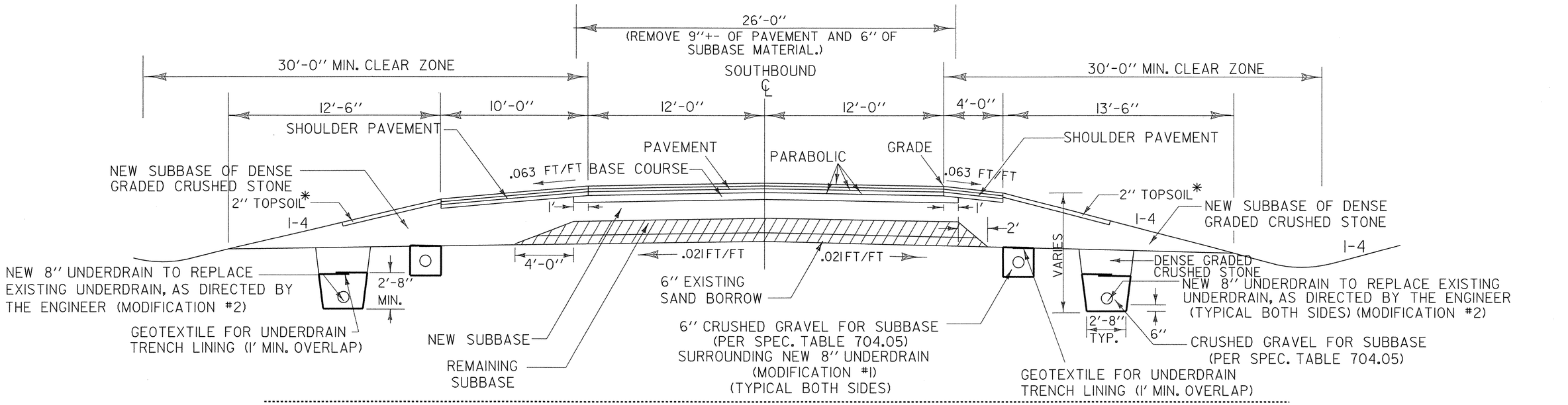

SOUTHBOUND DECELERATION/ACCELERATION LANE TYPICAL SECTION

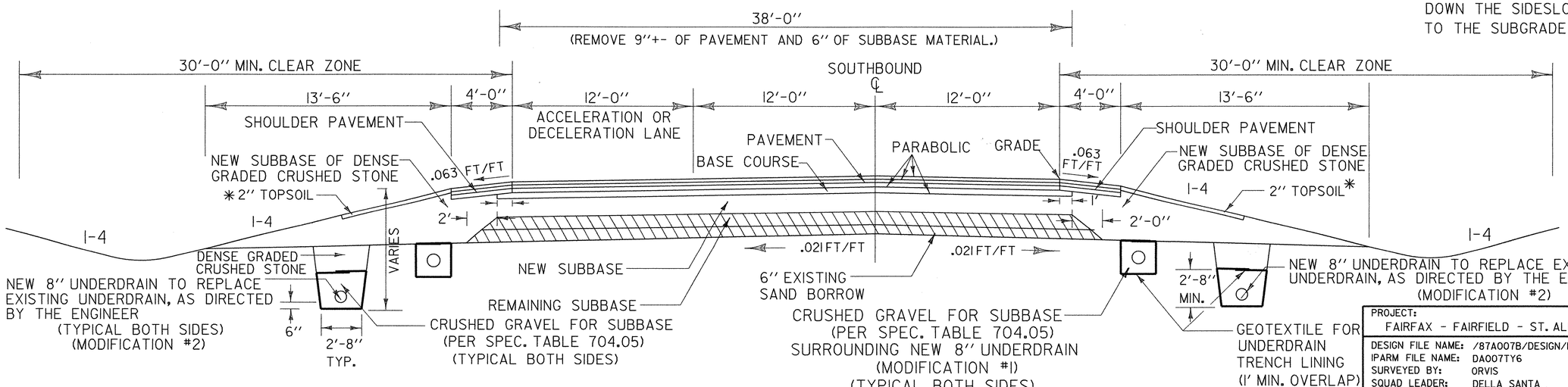

*THE TOPSOIL LAYER SHALL EXTEND MIDWAY DOWN THE SIDESLOPE FROM THE SHOULDER TO THE SUBGRADE POINT.

NOT TO SCALE

PROJECT: FAIRFAX - FAIRFIELD - ST. ALBANS	PROJECT NO.: IM 089-3(27)
DESIGN FILE NAME: /87A007B/DESIGN/DA007FRM.DGN	
IPARM FILE NAME: DA007TY6	PLOT DATE: 24-AUG-2000
SURVEYED BY: ORVIS	SURVEY DATE:
SQUAD LEADER: DELLA SANTA	DRAWN BY: SQUAD B
	SHEET: 8 OF 370

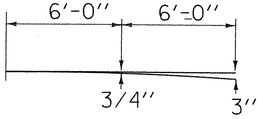

PARABOLIC DETAILS

SOUTHBOUND MAXIMUM BANKED TYPICAL SECTION (EXCEPT IN AREA OF PERMEABLE BASE)

REMOVE ENTIRE DEPTH OF EXISTING BITUMINOUS PAVEMENT (9'' +-).
REMOVE 6'' OF SUBBASE TO ALLOW FOR NEW SUBBASE MATERIAL.

NEW PAVEMENT - 6'' BITUMINOUS CONCRETE PAVEMENT (TWO 1¾'' TYPE III S LIFTS OVER 2½'' TYPE II S) (PG 64-34)
3½'' BASE COURSE OF BITUMINOUS CONCRETE PAVEMENT, TYPE I S (PG 64-34)
12'' SUBBASE OF DENSE GRADED CRUSHED STONE
(ADJUST NEW SUBBASE MATERIAL TO ESTABLISH NEW GRADE.)

SHOULDERS: 6'' BITUMINOUS CONCRETE PAVEMENT (TWO 1¾'' TYPE III S LIFTS OVER 2½'' TYPE II S) (PG 64-34)

MATERIAL ITEM	THICKNESS TOLERANCE
PAVEMENT (TOTAL DEPTH)	± 1/4''
SUBBASE	± 1''

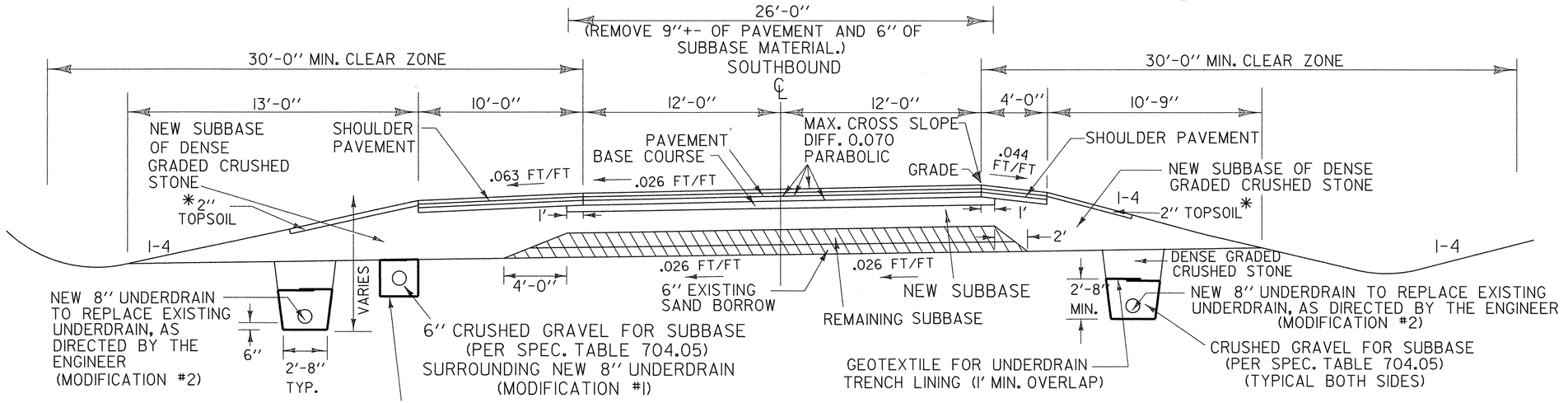

SOUTHBOUND-HIGH SIDE ON THE RIGHT

MAXIMUM BANK 0.026 FT/FT

* THE TOPSOIL LAYER SHALL EXTEND MIDWAY DOWN THE SIDESLOPE FROM THE SHOULDER TO THE SUBGRADE POINT.

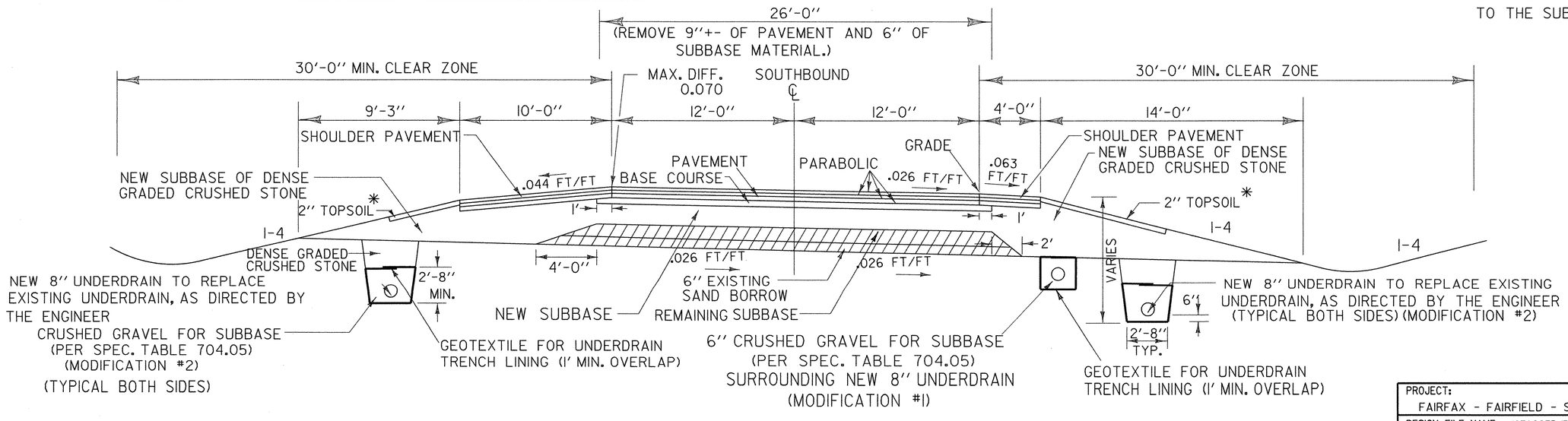

SOUTHBOUND-HIGH SIDE ON THE LEFT

MAXIMUM BANK 0.026 FT/FT

NOT TO SCALE

PROJECT: FAIRFAX - FAIRFIELD - ST. ALBANS	PROJECT NO.: IM 089-3(27)
DESIGN FILE NAME: /87A007B/DESIGN/DA007FRM.DGN	
IPARM FILE NAME: DA007TY7	PLOT DATE: 24-AUG-2000
SURVEYED BY: ORVIS	SURVEY DATE:
SQUAD LEADER: DELLA SANTA	DRAWN BY: SQUAD B
	SHEET: 9 OF 370

RAMP C TYPICAL

NEW PAVEMENT - 6'' BITUMINOUS CONCRETE PAVEMENT (TWO 1¾'' TYPE III S LIFTS OVER 2½'' TYPE II S) (PG 64-34)
3½'' BASE COURSE OF BITUMINOUS CONCRETE PAVEMENT, TYPE I S (PG 64-34)
24'' SUBBASE OF DENSE GRADED CRUSHED STONE
6'' SAND BORROW

SHOULDERS: 6'' BITUMINOUS CONCRETE PAVEMENT (TWO 1¾'' TYPE III S LIFTS OVER 2½'' TYPE II S) (PG 64-34)

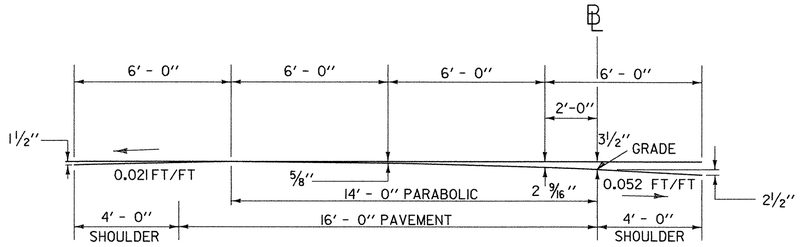

CROSS-SLOPE & PARABOLIC DETAIL

BREAK POINTS FOR TOP COURSES

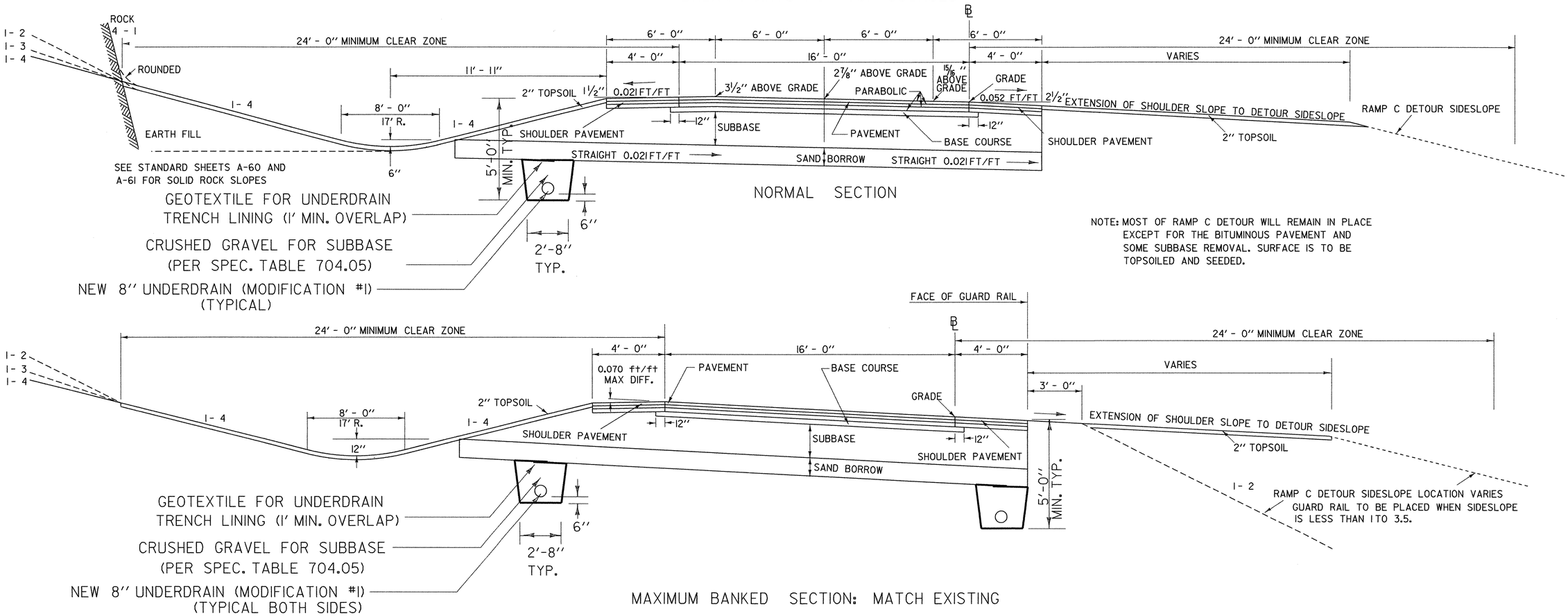

NORMAL SECTION

NOTE: MOST OF RAMP C DETOUR WILL REMAIN IN PLACE EXCEPT FOR THE BITUMINOUS PAVEMENT AND SOME SUBBASE REMOVAL. SURFACE IS TO BE TOPSOILED AND SEEDED.

MAXIMUM BANKED SECTION: MATCH EXISTING

RAMPS A, B, & D AND ST. ALBANS SOUTH STATE HIGHWAY TYPICAL

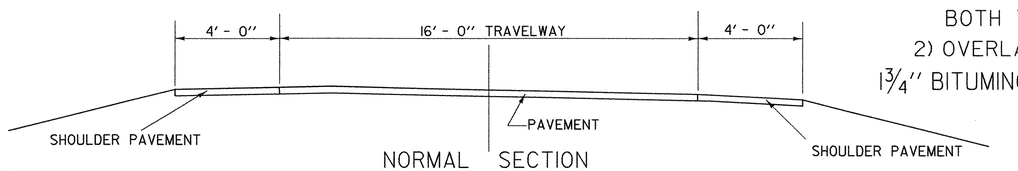

NORMAL SECTION

1) COLD PLANE RAMPS A, B AND D AND ST. ALBANS SOUTH STATE HIGHWAY, BOTH THE TRAVELWAY AND THE SHOULDERS (24' WIDTH). (MINIMUM 1¾'' DEPTH)
2) OVERLAY RAMPS A, B, AND D AND ST. ALBANS SOUTH STATE HIGHWAY WITH 1¾'' BITUMINOUS CONCRETE PAVEMENT, TYPE III S. (24' WIDTH) (PG 64-34)

NOT TO SCALE

PROJECT: FAIRFAX - FAIRFIELD - ST. ALBANS	PROJECT NO.: IM 089-3(27)
DESIGN FILE NAME: /87A007B/DESIGN/DA007FRM.DGN	
IPARM FILE NAME: DA007TY8	PLOT DATE: 24-AUG-2000
SURVEYED BY: ORVIS	SURVEY DATE:
SQUAD LEADER: DELLA SANTA	DRAWN BY: SQUAD B
	SHEET: 10 OF 370

QUANTITY SHEET

STATE OF VERMONT
AGENCY OF TRANSPORTATION

SOUTHBOUND

FULL E&C	TRAINING	EROSION CONTROL	BR 86-5 OUTLET 100 SERIES	BR 87S 200 SERIES	BR 87-3S 300 SERIES	BR 88S 400 SERIES		BR 88-3 OUTLET 500 SERIES	ROADWAY
									0.5
									3
									76150
									100
									150
			75		1525				
									100
				3355					1350
									117000
		310							8175
									50
			20	285	610	98		270	
			10	250	320	98		80	
									10500
									30200
					70				3450
									57700
									2200
					60				
									31
									268
									1290
									0.5
									36100
				116		213			
			10	186		153		46	13
			1						
				16		31			
				86580					
						23800			
						0.5			
									1100
			32			280			
			580	51185		82240		6060	
				1					
						1			
						0.5			
						0.5			
						0.5			
						0.5			
						0.5			
			1	35	15	37		2.5	
				38		42			
				510	205	942		120	

NORTHBOUND

FULL E&C	TRAINING	EROSION CONTROL	BR 86-5 INLET 100 SERIES	BR 87N 200 SERIES	BR 87-3N 300 SERIES	BR 88N 400 SERIES		BR 88-3 INLET 500 SERIES	ROADWAY
									0.5
									3
									70400
									100
									150
			75		1525				
									25
									100
				3355					75
									107700
		310							9770
									71
				285	570	184		260	
				260	190	184		70	20
									12400
									26200
									1840
									55550
									2212
									25
									263
									650
									0.5
									35720
				116		221			
				213		210		39	13
				16		30			
				86580					
						26640			
						0.5			
									1200
						460			
				51425		92510		5170	
				1					
						1			
						0.5			
						0.5			
						0.5			
						0.5			
						0.5			
			1	21	10	37		2.5	
				38		48			
				510	135	1005		120	

SUMMARY OF ESTIMATED QUANTITIES

QUANTITIES GRAND TOTAL	UNIT	ITEMS	ITEM NO.	ROUNDING
1	LS	CLEARING AND GRUBBING (PLUS INDIVIDUAL TREES AND STUMPS)	201.10	EST.
6	ACRE	CLEARING AND GRUBBING (MODIFIED)	201.11	EST.
146550	CY	COMMON EXCAVATION	203.15	
200	CY	SOLID ROCK EXCAVATION	203.16	EST.
300	LF	UNCLASSIFIED DITCHING	203.18	20
3200	CY	UNCLASSIFIED CHANNEL EXCAVATION	203.27	
25	CY	EXCAVATION OF SURFACES AND PAVEMENTS	203.28	
200	CY	EARTH BORROW	203.30	EST.
1500	CY	SAND BORROW	203.31	63
6785	CY	GRANULAR BORROW	203.32	
224700	SY	FINE GRADING - SUBGRADE	203.40	
18565	CY	TRENCH EXCAVATION OF EARTH	204.20	
121	CY	TRENCH EXCAVATION OF ROCK	204.21	
2582	CY	STRUCTURE EXCAVATION	204.25	
1482	CY	GRANULAR BACKFILL FOR STRUCTURES (EST.)	204.30	
22900	SY	COLD PLANING - BITUMINOUS PAVEMENT	210.10	
56400	LF	MILLED RUMBLE STRIPS	213.10	168
5360	CY	SUBBASE OF GRAVEL	301.15	
113250	CY	SUBBASE OF DENSE GRADED CRUSHED STONE	301.35	
4412	TON	PLANT MIXED BASE COURSE (MODIFIED)	303.25	4
60	CY	AGGREGATE SURFACE COURSE	401.10	
56	TON	AGGREGATE SHOULDERS	402.12	EST.
531	CWT	EMULSIFIED ASPHALT	404.65	4.5
1940	TON	BITUMINOUS CONCRETE PAVEMENT (PG 64-34)	406.25	
1	LU	PRICE ADJUSTMENT ASPHALT CEMENT (NOT A BID ITEM)	406.50	
71820	TON	SUPERPAVE BITUMINOUS CONCRETE PAVEMENT (PG 64-34)	490.30	
666	CY	CONCRETE, CLASS A	501.22	
883	CY	CONCRETE, CLASS B	501.25	0.6
1	CY	MORTAR, TYPE IV (MOD.)	501.58	
93	CY	SILICA-FUME CONCRETE	501.60	
173160	LB	STRUCTURAL STEEL (PLATE GIRDER)	506.55	
50440	LB	STRUCTURAL STEEL	506.60	
1	LS	STRUCTURAL STEEL (MODIFIED)	506.75	
2300	LB	REINFORCING STEEL	507.15	87
772	LF	DRILLING AND GROUTING DOWELS	507.16	
289170	LB	EPOXY COATED REINFORCING STEEL	507.17	
1	LS	SHEAR CONNECTORS(1210---7/8'' DIA. X 7'' STUDS)	508.15	
1	LS	SHEAR CONNECTORS(1210---7/8'' DIA. X 7'' STUDS)	508.15	
1	LS	SHEAR CONNECTORS(2436---7/8'' DIA. X 7'' STUDS)	508.15	
1	LS	SHEAR CONNECTORS(2478---7/8'' DIA. X 7'' STUDS)	508.15	
1	LS	STRUCTURAL PAINTING, SHOP APPLIED	513.25	
1	LS	STRUCTURAL PAINTING, FIELD APPLIED	513.30	
1	LS	CONTAINMENT & ENVIRONMENTAL PROTECTION, FIELD	513.36	
1	LS	SURFACE PREPARATION, SHOP	513.40	
1	LS	SURFACE PREPARATION, FIELD	513.41	
162	GAL	WATER REPELLENT	514.10	
166	LF	BRIDGE EXPANSION JOINT	516.10	
3547	SY	SHEET MEMBRANE WATERPROOFING	519.20	

DETAILED SUMMARY OF QUANTITIES

QUANTITIES	UNIT	ITEMS
		SUPERPAVE BITUMINOUS CONCRETE PAVEMENT SOUTHBOUND (PG 64-34)
13313	TON	MAINLINE, TYPE IIIS
9510	TON	MAINLINE, TYPE IIS
10024	TON	MAINLINE, TYPE IS
154	TON	MAINLINE END APPROACH, TYPE IIIS
88	TON	MAINLINE END APPROACH, TYPE IIS
70	TON	MAINLINE END APPROACH, TYPE IS
970	TON	RAMP C, TYPE IIIS
693	TON	RAMP C, TYPE IIS
723	TON	RAMP C, TYPE IS
288	TON	RAMP D, TYPE IIIS
88	TON	BRIDGE 87 S
164	TON	BRIDGE 88 S
15	TON	ROUNDING
36100	TON	TOTAL
		SUPERPAVE BITUMINOUS CONCRETE PAVEMENT NORTHBOUND (PG 64-34)
13381	TON	MAINLINE, TYPE IIIS
9558	TON	MAINLINE, TYPE IIS
9991	TON	MAINLINE, TYPE IS
72	TON	MAINLINE END APPROACH, TYPE IIIS
29	TON	MAINLINE END APPROACH, TYPE IIS
14	TON	MAINLINE END APPROACH, TYPE IS
229	TON	RAMP A, TYPE IIIS
348	TON	RAMP B, TYPE IIIS
553	TON	ST. ALBANS SO. STATE HIGHWAY, TYPE IIIS
88	TON	BRIDGE 87 N
175	TON	BRIDGE 88 N
181	TON	U-TURNS, TYPE III S
129	TON	U-TURNS, TYPE II S
961	TON	RAMP A DETOUR
11	TON	ROUNDING
35720	TON	TOTAL
		BITUMINOUS CONCRETE PAVEMENT (PG 64-34) SOUTHBOUND
48	TON	CROSSOVER TO BEGIN SB DETOUR, TYPE III
63	TON	CROSSOVER TO BEGIN SB DETOUR, TYPE II
49	TON	SB CROSSOVER TO RAMP D, TYPE III
66	TON	SB CROSSOVER TO RAMP D, TYPE II
98	TON	SB CROSSOVER FROM RAMP C, TYPE III
130	TON	SB CROSSOVER FROM RAMP C , TYPE II
78	TON	CROSSOVER TO END SB DETOUR, TYPE III
104	TON	CROSSOVER TO END SB DETOUR, TYPE II
278	TON	RAMP C DETOUR, TYPE III
371	TON	RAMP C DETOUR, TYPE II
5	TON	ROUNDING
1290	TON	TOTAL
		BITUMINOUS CONCRETE PAVEMENT (PG 64-34) NORTHBOUND
77	TON	CROSSOVER TO BEGIN NB DETOUR, TYPE III
103	TON	CROSSOVER TO BEGIN NB DETOUR, TYPE II
153	TON	NB CROSSOVER TO RAMP B, TYPE III
204	TON	NB CROSSOVER TO RAMP B, TYPE II
46	TON	CROSSOVER TO END NB DETOUR, TYPE III
61	TON	CROSSOVER TO END NB DETOUR, TYPE II
6	TON	ROUNDING
650	TON	TOTAL

SURVEYED BY _____ DATE _____
DRAWN BY SQUAD B DATE _____
SQUAD LEADER DELLA SANTA
DESIGN FILE NO. /87A007B/DESIGN/DA007FRM.DGN
IPARM FILE DA007QS1 DATE PLOTTED 05-OCT-2000
PROJ. NAME FAIRFAX-FAIRFIELD-ST. ALBANS
PROJ. NO. IM 089-3(27)
SHEET 11 OF 370 SHEETS

QUANTITY SHEET

STATE OF VERMONT
AGENCY OF TRANSPORTATION

SOUTHBOUND

FULL E&C	TRAINING	EROSION CONTROL	BR 86-5 OUTLET 100 SERIES	BR 87S 200 SERIES	BR 87-3S 300 SERIES	BR 88S 400 SERIES		BR 88-3 OUTLET 500 SERIES	ROADWAY
				220		399			
				3305					
				734		945			
				1					
					1				
					1				
						1			
			10					37	
				10		24			
					1				
					1				
						20		5	
									236
									236
									236
									236
									4
									24
									2
									82
									54
									36
									60
									1
									1
									150
									220
									5
									13
									3
									1
									1
									7
									3
									1
									1000
									11975
									8675
									200
									625
									3
									79
									25
									25
									25
									25
									25

NORTHBOUND

FULL E&C	TRAINING	EROSION CONTROL	BR 86-5 INLET 100 SERIES	BR 87N 200 SERIES	BR 87-3N 300 SERIES	BR 88N 400 SERIES		BR 88-3 INLET 500 SERIES	ROADWAY
				224		388			
				3305					
				733		1008			
				1					
					1				
						1			
				10		28			
									124
									124
									124
									124
									20
									80
									20
									1
									50
									100
									2100
									5
									18
									9
									2
									11
									2000
									13325
									10930
									300
									520
									7
									85
									25
									25
									25
									25
									25

SUMMARY OF ESTIMATED QUANTITIES

QUANTITIES GRAND TOTAL	UNIT	ITEMS	ITEM NO.	ROUNDING
1231	LF	BRIDGE RAILING-NETC 2 RAIL	525.33	
6610	SF	REINFORCED SLOPE (MSE WALLS)	526.40	
3420	SY	REMOVAL OF BRIDGE PAVEMENT	529.10	
2	EA	REMOVAL OF STRUCTURE	529.15	
1	EA	REMOVAL OF STRUCTURE (STA. 51+42.43)	529.15	
1	EA	REMOVAL OF STRUCTURE (SB STA. 3395+93.1)	529.15	
1	EA	REMOVAL OF STRUCTURE (NB STA. 3395+77.05)	529.15	
2	EA	PARTIAL REMOVAL OF STRUCTURE	529.20	
80	CY	REMOVAL OF CONCRETE OR MASONRY	529.25	
72	EA	BEARING DEVICE ASSEMBLY	531.10	
1	LS	PRECAST CONCRETE BOX (7' X 5' @ STA. 51+42.43)	540.10	
1	LS	PRECAST CONCRETE BOX (6' X 6' @ SB STA. 3395+93.10)	540.10	
1	LS	PRECAST CONCRETE BOX (6' X 6' @ NB STA. 3395+77.05)	540.10	
50	SY	REPAIR OF CONCRETE SUBSTRUCTURE SURFACE CLASS I	580.13	
		BEGIN OPTION PIPES		
360	LF	18'' CAAP .060 (2-2/3 X 1/2)	601.0215	
360	LF	18'' PCCSP .064 (2-2/3 X 1/2)	601.0415	
360	LF	18'' RCP CLASS III	601.0815	
360	LF	18'' CPEP (SL) (2-2/3 X 1/2)	601.2615	
		END OPTION PIPES		
20	LF	18'' PCCSP .064 (2-2/3 X 1/2)	601.0415	
4	LF	18'' PCCSP .079 (2-2/3 X 1/2)	601.0416	
24	LF	24'' PCCSP .064 (2-2/3 X 1/2)	601.0425	
2	LF	24'' PCCSP .079 (2-2/3 X 1/2)	601.0426	
162	LF	30'' PCCSP .079 (2-2/3 X 1/2)	601.0436	
74	LF	36'' PCCSP .079 (2-2/3 X 1/2)	601.0446	
36	LF	48'' PCCSP .109 (2-2/3 X 1/2)	601.0457	
60	LF	30'' RCP CLASS III	601.0835	
36	LF	36'' RCP CLASS III	601.0845	
1	EA	30'' CSPES .079 (2-2/3 X 1/2)	601.6036	
1	EA	24'' RCPES CLASS III	601.6825	
1	LF	CONCENTRIC REDUCER SECTION	601.98	
200	LF	RELAYING PIPE CULVERTS	601.99	16
320	LF	CLEANING CULVERT PIPE IN PLACE (0-24'' DIA. INCLUSIVE)	601.995	14
2100	LF	CLEANING CULVERT PIPE IN PLACE (0-24'' DIA. INCLUSIVE) (MODIFIED)	601.995	EST.
10	EA	CHANGING ELEVATION OF DI, CB, OR MH	604.40	EST.
31	EA	REHABILITATION OF DI, CB, OR MH CLASS I (MODIFIED)	604.412	
12	EA	REHABILITATION OF DI, CB, OR MH CLASS I	604.412	
3	EA	REHABILITATION OF DI, CB, OR MH CLASS II	604.415	
1	EA	REHABILITATION OF DI, CB, OR MH CLASS III	604.418	
7	EA	CAST IRON GRATE W/FRAME TYPE A	604.45	
14	EA	CAST IRON GRATE W/FRAME TYPE B	604.46	
1	EA	CAST IRON GRATE W/FRAME TYPE C	604.47	
3000	LF	6'' UNDERDRAIN	605.10	EST.
25300	LF	8'' UNDERDRAIN (MODIFICATION # 1)	605.11	59
19605	LF	8'' UNDERDRAIN (MODIFICATION # 2)	605.11	56
500	LF	6'' UNDERDRAIN CARRIER PIPE	605.20	EST.
1145	LF	8'' UNDERDRAIN CARRIER PIPE	605.21	23
10	EA	UNDERDRAIN FLUSHING BASINS	605.95	EST.
164	EA	UNDERDRAIN FLUSHING BASINS (MODIFIED)	605.95	
50	HR	BULLDOZER RENTAL, TYPE I	608.10	
50	HR	BULLDOZER RENTAL, TYPE II	608.11	
50	HR	POWER GRADER RENTAL	608.15	
50	HR	ALL PURP. EXCAVATOR RENTAL, TYPE I	608.25	
50	HR	ALL PURP. EXCAVATOR RENTAL, TYPE II	608.26	

DETAILED SUMMARY OF QUANTITIES

QUANTITIES	UNIT	ITEMS
		TRENCH EXCAVATION OF EARTH--SOUTHBOUND
159	CY	DRAINAGE
3364	CY	UNDERDRAIN--MODIFICATION #1
4079	CY	UNDERDRAIN--MODIFICATION #2
55	CY	UNDERDRAIN CARRIER PIPE
85	CY	BRIDGE 87S
380	CY	BRIDGE 87-3S OUTLET
20	CY	DRIVE
33	CY	ROUNDING
8175	CY	TOTAL
		TRENCH EXCAVATION OF ROCK--SOUTHBOUND
20	CY	DRAINAGE
26	CY	UNDERDRAIN CARRIER PIPE
4	CY	ROUNDING
50	CY	TOTAL
		TRENCH EXCAVATION OF EARTH--NORTHBOUND
159	CY	DRAINAGE
3436	CY	UNDERDRAIN--MODIFICATION #1
5215	CY	UNDERDRAIN--MODIFICATION #2
53	CY	UNDERDRAIN CARRIER PIPE
85	CY	BRIDGE 87N
240	CY	BRIDGE 87-3N INLET
30	CY	BRIDGE 88-3 INLET
500	CY	RAMP A DETOUR
52	CY	ROUNDING
9770	CY	TOTAL
		TRENCH EXCAVATION OF ROCK NORTHBOUND
27	CY	DRAINAGE
4	CY	UNDERDRAIN--MODIFICATION #1
36	CY	UNDERDRAIN CARRIER PIPE
4	CY	ROUNDING
71	CY	TOTAL
		SUBBASE OF DENSE GRADED CRUSHED STONE SOUTHBOUND
53321	CY	MAINLINE
4250	CY	RAMP C
65	CY	BRIDGE 88-3 OUTLET
64	CY	ROUNDING
57700	CY	TOTAL
		SUBBASE OF DENSE GRADED CRUSHED STONE NORTHBOUND
53885	CY	MAINLINE
375	CY	U-TURNS
85	CY	BRIDGE 88-3 INLET
1152	CY	RAMP A DETOUR
53	CY	ROUNDING
55550	CY	TOTAL
		SUBBASE OF GRAVEL--- SOUTHBOUND
1708	CY	RAMP C DETOUR
373	CY	CROSSOVER TO BEGIN SB DETOUR
342	CY	SOUTHBOUND CROSSOVER TO RAMP D
608	CY	SOUTHBOUND CROSSOVER FROM RAMP C
397	CY	CROSSOVER TO END SB DETOUR
22	CY	ROUNDING
3450	CY	TOTAL
		SUBBASE OF GRAVEL---NORTHBOUND
533	CY	CROSSOVER TO BEGIN NB DETOUR
935	CY	NORTHBOUND CROSSOVER TO RAMP B
349	CY	CROSSOVER TO END NB DETOUR
9	CY	RAMP A DETOUR (DRIVE TURN AROUND)
14	CY	ROUNDING
1840	CY	TOTAL

SURVEYED BY _____ DATE _____
DRAWN BY SQUAD B DATE _____
SQUAD LEADER DELLA SANTA

DESIGN FILE NO. /87A007B/DESIGN/DA007FRM.DGN
IPARM FILE DA007QS2 DATE PLOTTED 03-OCT-2000

PROJ. NAME FAIRFAX-FAIRFIELD-ST. ALBANS
PROJ. NO. IM 089-3(27)

QUANTITY SHEET

STATE OF VERMONT
AGENCY OF TRANSPORTATION

SOUTHBOUND

FULL E&C	TRAINING	EROSION CONTROL	BR 86-5 OUTLET 100 SERIES	BR 87S 200 SERIES	BR 87-3S 300 SERIES	BR 88S 400 SERIES		BR 88-3 OUTLET 500 SERIES	ROADWAY
									25
									25
									25
									25
									850
									10
		155							60
									2830
			85		260				
					655				
					1				
				160		160			
									2340
									115
									7470
									1420
									8890
				120		160			
									10687
									22
									6
				4		4			
									14500
									18600
									1750
					82				
									3400
									9000
0.5									
0.5									
0.5									
0.5									
0.5									
	1300								
									0.5
									0.5
									1
									2
									43800
									34400
									23500
									19300
									380

NORTHBOUND

FULL E&C	TRAINING	EROSION CONTROL	BR 86-5 INLET 100 SERIES	BR 87N 200 SERIES	BR 87-3N 300 SERIES	BR 88N 400 SERIES		BR 88-3 INLET 500 SERIES	ROADWAY
									25
									25
									25
									25
									850
									10
		155							15
									55
			75		260				
					655				
			1						
									150
				160		160			
									1420
									2880
									2
									2860
				120		160			
									10547
									11
									11
				4		4			
									12500
									15600
									1750
									5500
									8500
0.5									
0.5									
0.5									
0.5									
0.5									
	1300								
									0.5
									0.5
									1
									2
									43800
									34400
									1500
									1160
									24600
									20800
									320
									425
									36
									33

SUMMARY OF ESTIMATED QUANTITIES

QUANTITIES GRAND TOTAL	UNIT	ITEMS	ITEM NO.	ROUNDING
50	HR	POWER BROOM RENTAL	608.30	
50	HR	TRUCK RENTAL	608.37	
50	HR	LOADER RENTAL TYPE I	608.40	
50	HR	LOADER RENTAL TYPE II	608.41	
1700	MGAL	DUST CONTROL W/WATER	609.10	EST.
20	TON	DUST AND ICE CONTROL W/CALC. CHLORIDE	609.15	EST.
385	CY	STONE FILL, TYPE I	613.10	6
2885	CY	STONE FILL, TYPE II	613.11	3
680	CY	STONE FILL, TYPE III	613.12	
1310	CY	STONE FILL, TYPE IV	613.13	
1	LS	TEMPORARY RELOCATION OF STREAM (CHANNEL STA. 13+90.5)	614.10	
1	LS	TEMPORARY RELOCATION OF STREAM (CHANNEL STA. 31+04.1)	614.10	
150	LF	VERTICAL GRANITE CURB	616.21	
640	LF	CAST-IN PLACE CEMENT CONCRETE CURB, TYPE B (MOD. SILICA-FUME CONCRETE)	616.28	
3760	LF	TREATED TIMBER CURB	616.35	23
225	EA	YIELDING MARKER POSTS	619.17	10
7470	LF	CHAIN-LINK FENCE, 6 FEET	620.12	18
4300	LF	WOVEN WIRE FENCE W/ STEEL POSTS	620.25	50
2	EA	STEEL BRACE FOR WOVEN WIRE FENCE(10 EST)	620.40	
11750	LF	REMOVAL OF EXISTING FENCE (MODIFIED)	620.55	48
560	LF	SNOW BARRIER - GALVANIZED	620.75	
21234	LF	STEEL BEAM GUARD RAIL	621.20	
33	EA	MANUFACTURED TERMINAL SECTION (FLARED)	621.505	
17	EA	ANCHOR FOR STEEL BEAM RAIL	621.60	
16	EA	GUARD RAIL APPROACH SECTION, NETC 2 RAIL	621.72	
27000	LF	REMOVAL AND DISPOSAL OF GUARD RAIL	621.80	91
34200	LF	TEMPORARY TRAFFIC BARRIER	621.90	230
3500	LF	TEMPORARY TRAFFIC BARRIER - MODIFIED	621.90	60
82	LF	PVC SEWER PIPE (MOD. 4'' PERFORATED)	628.35	
8900	HR	UNIFORMED TRAFFIC OFFICERS	630.10	
17500	HR	FLAGGERS	630.15	
1	LS	FIELD OFFICE-ENGINEERS	631.10	
1	LS	FIELD OFFICE-SOILS & MATERIALS	631.11	
1	LS	TESTING EQUIPMENT - CONCRETE	631.16	
1	LS	TESTING EQUIPMENT - BITUMINOUS	631.17	
1	LU	FIELD OFFICE - TELEPHONE(NOT A BID ITEM)	631.25	
2600	HR	EMPLOYEE TRAINEESHIP	634.10	
1	LS	MOBILIZATION	635.10	EST.
1	LS	TRAFFIC CONTROL	641.10	EST.
2	EA	PORTABLE CHANGEABLE MESSAGE SIGN	641.15	
4	EA	PORTABLE ARROW BOARDS	641.16	
43800	LF	6'' WHITE LINE	646.214	117
34400	LF	6'' YELLOW LINE	646.215	109
1500	LF	DURABLE 4'' WHITE LINE	646.40	
1160	LF	DURABLE 4'' YELLOW LINE	646.41	
48100	LF	DURABLE 6'' WHITE LINE	646.414	189
40100	LF	DURABLE 6'' YELLOW LINE	646.415	219
320	LF	DURABLE 8'' YELLOW LINE	646.42	
805	LF	DURABLE ''12'' WHITE LINE	646.44	
36	LF	DURABLE 24'' STOP BAR	646.46	
33	EA	DURABLE LETTER OR SYMBOL	646.50	

DETAILED SUMMARY OF QUANTITIES

QUANTITIES	UNIT	ITEMS
		COLD PLANING - BITUMINOUS PAVEMENT
		SOUTHBOUND
7440	SY	DETOUR ON NORTHBOUND, RIGHT SHOULDER
2967	SY	RAMP D
133	SY	ROUNDING
10,500	SY	TOTAL
		COLD PLANING - BITUMINOUS PAVEMENT
		NORTHBOUND
2464	SY	RAMP A
3586	SY	RAMP B
5685	SY	ST. ALBANS SOUTH STATE HIGHWAY
520	SY	U-TURNS
145	SY	ROUNDING
12,400	SY	TOTAL
		COMMON EXCAVATION
		SOUTHBOUND
76033	CY	FROM EARTHWORKS SUMMARY SHEET
50	CY	BRIDGE 88-3 OUTLET
67	CY	ROUNDING
76150	CY	TOTAL
		COMMON EXCAVATION
		NORTHBOUND
68700	CY	FROM EARTHWORKS SUMMARY SHEET
50	CY	BRIDGE 88-3 INLET
1599	CY	RAMP A DETOUR
51	CY	ROUNDING
70400	CY	TOTAL
		STONE FILL, TYPE II
		SOUTHBOUND
2745	CY	RAMP C SLOPE PROTECTION
59	CY	FROM DRAINAGE SUMMARY SHEET
26	CY	ROUNDING
2830	CY	TOTAL
		FINE GRADING - SUBGRADE
		SOUTHBOUND
101909	SY	MAINLINE
6785	SY	RAMP C
4213	SY	RAMP C DETOUR
3736	SY	SB CROSSOVERS
357	SY	ROUNDING
117000	SY	TOTAL
		FINE GRADING - SUBGRADE
		NORTHBOUND
100805	SY	MAINLINE
980	SY	U-TURNS
3886	SY	SB CROSSOVERS
1773	SY	RAMP A DETOUR
256	SY	ROUNDING
107700	SY	TOTAL

SURVEYED BY _____ DATE _____
DRAWN BY SQUAD B DATE _____
SQUAD LEADER DELLA SANTA
DESIGN FILE NO. /87A007B/DESIGN/DA007FRM.DGN
IPARM FILE DA007QS3 DATE PLOTTED 17-NOV-2000
PROJ. NAME FAIRFAX-FAIRFIELD-ST. ALBANS
PROJ. NO. IM 089-3(27)
SHEET 13 OF 370 SHEETS

QUANTITY SHEET

STATE OF VERMONT
AGENCY OF TRANSPORTATION

SOUTHBOUND

FULL E&C	TRAINING	EROSION CONTROL	BR 86-5 OUTLET 100 SERIES	BR 87S 200 SERIES	BR 87-3S 300 SERIES	BR 88S 400 SERIES		BR 88-3 OUTLET 500 SERIES	ROADWAY
									38500
									750
									38300
									750
									410
									3400
									1500
									1000
									1150
									25000
		7500							
		1000							
		60							
		8000							
		31							
		43							
		2000							
									1200
			45		140				
		620							
					8				
									114
									207
									183
									59
									183
									10
									27
									130
									130
					332				
					2				

NORTHBOUND

FULL E&C	TRAINING	EROSION CONTROL	BR 86-5 INLET 100 SERIES	BR 87N 200 SERIES	BR 87-3N 300 SERIES	BR 88N 400 SERIES		BR 88-3 INLET 500 SERIES	ROADWAY
									1500
									1160
									35800
									750
									35100
									750
									320
									36
									425
									2900
									1500
									1000
									1150
									29400
		7100							
		1000							
		60							
		8500							
		33							
		45							
		2000							
			45		140				1050
		620							
									181
									770
									284
									3378
									59
									931
									4
									6
									2
									33
									130
									130
									1
									75
									2

SUMMARY OF ESTIMATED QUANTITIES

QUANTITIES GRAND TOTAL	UNIT	ITEMS	ITEM NO.	ROUNDING
1500	LF	TEMPORARY 4'' WHITE LINE	646.60	
1160	LF	TEMPORARY 4'' YELLOW LINE	646.61	
74300	LF	TEMPORARY 6'' WHITE LINE	646.614	203
1500	LF	TEMPORARY 6'' WHITE LINE (TAPE TYPE II)	646.614	
73400	LF	TEMPORARY 6'' YELLOW LINE	646.615	223
1500	LF	TEMPORARY 6'' YELLOW LINE (TAPE TYPE II)	646.615	
320	LF	TEMPORARY 8'' WHITE LINE	646.62	
36	LF	TEMPORARY 24'' STOP BAR	646.66	
835	EA	LINE STRIPING TARGETS	646.73	EST.
6300	EA	RAISED PAVEMENT MARKERS, TYPE II	646.81	65
3000	SF	REMOVAL OF EXISTING PAVEMENT MARKINGS	646.82	
2000	SF	BLACK PAVEMENT MARKING MASKING TAPE	646.86	EST.
2300	SY	GEOTEXTILE UNDER STONE FILL	649.31	44
54400	SY	GEOTEXTILE FOR UNDERDRAIN TRENCH LINING	649.41	391
14600	SY	GEOTEXTILE FOR SILT FENCE	649.51	147
2000	LB	SEED	651.15	
120	LB	SEED-WINTER RYE	651.17	
16500	LB	FERTILIZER	651.18	
64	TON	AGRICULTURAL LIMESTONE	651.20	
88	TON	HAY MULCH	651.25	
4000	EA	HAY BALES FOR EROSION CONTROL	651.26	EST.
2250	CY	TOPSOIL	651.35	79
370	SY	GRUBBING MATERIAL	651.40	
1240	SY	EROSION MATTING	654.10	
8	EA	TRANSPLANTING TREES	656.45	
295	SF	TRAFFIC SIGNS, TYPE A	675.20	
977	SF	TRAFFIC SIGNS, TYPE B	675.21	
467	LF	FLANGED CHANNEL SIGN POSTS	675.301	
3378	LB	W-SHAPE STEEL SIGN POSTS	675.31	
118	LB	TUBULAR ALUMINUM SIGN POSTS	675.32	
1114	LB	TUBULAR STEEL SIGN POSTS	675.33	
4	EA	FOUNDATION FOR W-SHAPE STEEL POSTS, 24'' DIAMETER	675.41	
6	EA	FOUNDATION FOR W-SHAPE STEEL POSTS, 30'' DIAMETER	675.42	
12	EA	FOUNDATION FOR TUBULAR STEEL POSTS	675.43	
60	EA	REMOVING SIGNS	675.50	
260	EA	DELINEATORS W/STEEL POSTS	676.10	
260	EA	REMOVAL OF EXISTING DELINEATORS	676.12	
1	LS	TRAFFIC CONTROL SIGNAL SYSTEM-INTERSECT, AT VT 104 AND VT 105	678.15	
332	EA	WIRED CONDUIT	678.23	
75	LF	ELECTRICAL CONDUIT SLEEVE	678.30	
2	EA	REMOVE AND RESETTING LIGHT POLE	679.25	

DETAILED SUMMARY OF QUANTITIES

QUANTITIES	UNIT	ITEMS
		TEMPORARY EROSION CONTROL SOUTHBOUND
310	CY	TRENCH EXCAVATION OF EARTH
155	CY	STONE FILL, TYPE I
60	CY	SEED-WINTER RYE
12	TON	HAY MULCH
620	SY	EROSION MATTING
2000	EA	HAY BALES FOR EROSION CONTROL
7400	SY	GEOTEXTILE FOR SILT FENCE
		TEMPORARY EROSION CONTROL NORTHBOUND
310	CY	TRENCH EXCAVATION OF EARTH
155	CY	STONE FILL, TYPE I
60	CY	SEED-WINTER RYE
12	TON	HAY MULCH
620	SY	EROSION MATTING
2000	EA	HAY BALES FOR EROSION CONTROL
7100	SY	GEOTEXTILE FOR SILT FENCE
		RAMP A DETOUR ITEMS
1599	CY	COMMON EXCAVATION
500	CY	TRENCH EXCAVATION OF EARTH (ESTIMATED)
25	CY	EXCAVATION OF SURFACES AND PAVEMENTS
1773	SY	FINE GRADING - SUBGRADE
5	CWT	EMULSIFIED ASPHALT
75	CY	GRANULAR BORROW
20	CY	GRANULAR BACKFILL FOR STRUCTURES (EST.)
1152	CY	SUBBASE OF DENSE GRADED CRUSHED STONE
9	CY	SUBBASE OF GRAVEL
961	TON	SUPERPAVE BITUMINOUS CONCRETE PAVEMENT
1000	LF	6'' UNDERDRAIN (ESTIMATED)
100	LF	6'' UNDERDRAIN CARRIER PIPE (ESTIMATED)
4	EA	UNDERDRAIN FLUSHING BASIN (ESTIMATED)
40	CY	TOPSOIL
150	LF	VERTICAL GRANITE CURB
1500	LF	DURABLE 4'' WHITE LINE
1160	LF	DURABLE 4'' YELLOW LINE
320	LF	DURABLE 8'' WHITE LINE
36	LF	DURABLE 24'' STOP BAR
33	EA	DURABLE LETTER OR SYMBOL
1500	LF	TEMPORARY 4'' WHITE LINE
1160	LF	TEMPORARY 4'' YELLOW LINE
320	LF	TEMPORARY 8'' WHITE LINE
36	LF	TEMPORARY 24'' STOP BAR
15	EA	LINE STRIPPING TARGETS
38	SF	TRAFFIC SIGNS, TYPE A
62	LF	FLANGED CHANNEL SIGN POST OR SQUARE TUBE STEEL POSTS AND ANCHORS
1	EA	REMOVING SIGNS
1	LS	TRAFFIC CONTROL SIGNAL SYSTEM-INTERSECT.
75	LF	ELECTRICAL CONDUIT SLEEVE
2200	HR	UNIFORMED TRAFFIC OFFICERS

SURVEYED BY _____ DATE _____
DRAWN BY SQUAD B DATE _____
SQUAD LEADER DELLA SANTA
DESIGN FILE NO. /87A007B/DESIGN/DA007FRM.DGN
IPARM FILE DA007QS4 DATE PLOTTED 17-NOV-2000
PROJ. NAME FAIRFAX-FAIRFIELD-ST. ALBANS
PROJ. NO. IM 089-3(27)
SHEET 14 OF 370 SHEETS

SOUTHBOUND

EARTHWORKS

STATE OF VERMONT
AGENCY OF TRANSPORTATION

STATION	DIST	TOTAL EXCAVATION EARTH AND ROCK AREA	TOTAL EXCAVATION EARTH AND ROCK CU. YDS.	ROCK EXCAVATION AREA	ROCK EXCAVATION CU. YDS.	EMBANKMENT AREA	EMBANKMENT CU. YDS.		
		BUTT				BUTT			
3282+50		110				13			
	150		581				36		
3284+00		99				0			
	200		781				4		
3286+00		112				1			
	200		822				22		
3288+00		110				5			
	200		770				56		
3290+00		98				10			
	200		685				70	CUT	5945
3292+00		87				9		FILL	357
	200		674				78	F FAC.	1.15
3294+00		95				12		EX. C	5534
	200		867				70		
3296+00		139				7			
	30		122				18		
3296+30		81				26			
BRIDGE CONSTRUCTION			BUTT				BUTT		
3298+20		76				0			
	180		643				3		
3300+00		117				1			
	200		804				11		
3302+00		100				2			
	200		711				52		
3304+00		92				12			
	200		689				148		
3306+00		94				28			
	200		704				174		
3308+00		96				19			
	200		737				107		
3310+00		103				10			
	200		730				70		
3312+00		94				9			
	200		707				41	CUT	7515
3314+00		97				2		FILL	644
	200		804				15	F FAC.	1.15
3316+00		120				2		EX. C	6774
	200		844				11		
3318+00		108				1			
	200		785				15		
3320+00		104				3			
	200		748				52		
3322+00		98				11			
	200		733				67		
3324+00		100				7			
	200		748				41		
3326+00		102				4			
	200		744				26		
3328+00		99				3			
	200		730				22		
3330+00		98				3			
	200		722				15		
3332+00		97				1			
	200		711				4		
3334+00		95				0		CUT	7351
	200		737				0	FILL	260
3336+00		104				0		F FAC.	1.15
	200		752				11	EX. C	7052
3338+00		99				3			
	200		726				22		
3340+00		97				3			
	200		707				11		
3342+00		94				0			
	200		700				744		
3344+00		95				201			
	200		681				1919		
3346+00		89				317			
	200		678				2219		
3348+00		94				282			

STATION	DIST	TOTAL EXCAVATION EARTH AND ROCK AREA	TOTAL EXCAVATION EARTH AND ROCK CU. YDS.	ROCK EXCAVATION AREA	ROCK EXCAVATION CU. YDS.	EMBANKMENT AREA	EMBANKMENT CU. YDS.		
3348+00		94				282			
	200		719				1778		
3350+00		100				198			
	11		41				81		
3350+11		100				198			
BEGIN PERMEABLE BASE			BUTT				BUTT		
3350+11		86				198		CUT	7997
	189		630				1610	FILL	10947
3 370+00		94				262		F FAC.	1.15
	200		615				1752	EX. F	4592
3354+00		72				211			
	200		793				785		
3356+00		142				1			
	200		1126				11		
3358+00		162				2			
	200		1307				37		
3360+00		191				8			
	200		1307				33		
3362+00		162				1			
	200		1167				4		
3364+00		153				0			
	200		1111				219		
3366+00		147				59			
	200		885				574		
3368+00		92				96			
	200		711				696		
3370+00		100				92		CUT	9230
	200		689				641	FILL	5907
3372+00		86				81		F FAC.	1.15
	200		774				322	EX. C	2437
3374+00		123				6			
	200		844				870		
3376+00		105				229			
	39		118				326		
3376+39		58				222			
END PERMEABLE BASE			BUTT				BUTT		
3376+39		90				222			
	161		617				1085		
3378+00		117				142			
	200		1007				1137		
3380+00		155				165			
	200		1126				837		
3382+00		149				61			
	200		1226				230		
3384+00		182				1			
	200		1215				4		
3386+00		146				0			
	200		1063				4	CUT	9574
3388+00		141				1		FILL	1175
	200		870				11	F FAC.	1.15
3390+00		94				2		EX. C	8223
	200		874				7		
3392+00		142				0			
	200		956				4		
3394+00		116				1			
	200		778				11		
3396+00		94				2			
	200		733				30		
3398+00		104				6			
	200		733				37		
3400+00		94				4			
	200		752				19		
3402+00		109				1			
	200		744				19		
3404+00		92				4			
	200		741				30	CUT	7415
3406+00		108				4		FILL	606
	200		815				26	F FAC.	1.15
3408+00		112				3		EX. C	6718
	200		711				15		
3410+00		89				1			
	200		678				111		
3412+00		103				29			
	200		789				156		
3414+00		110				13			

STATION	DIST	TOTAL EXCAVATION EARTH AND ROCK AREA	TOTAL EXCAVATION EARTH AND ROCK CU. YDS.	ROCK EXCAVATION AREA	ROCK EXCAVATION CU. YDS.	EMBANKMENT AREA	EMBANKMENT CU. YDS.		
3414+00		110				13			
	200		748				137		
3416+00		92				24			
	200		689				89		
3418+00		94				0			
	200		748				4		
3420+00		108				1			
	200		819				48		
3422+00		113				12			
	110		403				73		
3423+10		85				24			
BRIDGE CONSTRUCTION			BUTT				BUTT		
3425+00		89				0			
	100		406				6		
3426+00		130				3			
	200		919				37		
3428+00		118				7		CUT	7936
	200		856				41	FILL	380
3430+00		113				4		F FAC.	1.15
	200		870				78	EX. C	7499
3432+00		122				17			
	200		919				63		
3434+00		126				0			
	111		567				0		
3435+11		150				0			
	89		473				0		
3436+00		137				0			
	200		911				15		
3438+00		109				4			
	200		793				19		
3440+00		105				1			
	18		68				1		
3440+18		99				0			
	182		708				3		
3442+00		111				1		CUT	1694
	54		650				6	FILL	13
3443+54		117				1		F FAC.	1.15
	46		177				2	EX. C	1679
3444+00		91				1			
	54		91				1		
3444+54		0				0			
				RAMP	C				
		BUTT				BUTT			
11+75		77				0			
	25		71				0		
12+00		77				0			
	50		175				1	CUT	1229
12+50		112				1		FILL	2
	50		202				1	F FAC.	1.15
13+00		106				0		EX. C	1227
	50		194				0		
13+50		103				0			
	50		194				0		
14+00		107				0			
	50		194				0		
14+50		103				0			
	50		199				0		
15+00		112				0			
	50		209				0		
15+50		116				0			
	50		213				0		
16+00		114				0			
	50		211				0		
16+50		114				0			
	50		199				0		
17+00		101				0			
	50		188				0	CUT	1922
17+50		103				0		FILL	0
	50		188				0	F FAC.	1.15
18+00		100				0		EX. C	1922
	50		177				0		
18+50		91				0			

STATION	DIST	TOTAL EXCAVATION EARTH AND ROCK AREA	TOTAL EXCAVATION EARTH AND ROCK CU. YDS.	ROCK EXCAVATION AREA	ROCK EXCAVATION CU. YDS.	EMBANKMENT AREA	EMBANKMENT CU. YDS.		
18+50		91				0			
	50		175				0		
19+00		98				0			
	50		181				0		
19+50		98				0			
	50		181				0		
20+00		98				0			
	50		181				0		
20+50		98				0			
	50		178				0		
21+00		94				0			
	50		177				0		
21+50		97				0			
	50		182				0	CUT	1,831
22+00		100				0		FILL	0
	50		185				0	F FAC.	1.15
22+50		100				0		EX. C	1,831
	50		184				0		
23+00		99				0			
	50		185				0		
23+50		101				0			
	50		187				0		
24+00		101				0			
	50		187				0		
24+50		101				0			
	50		185				0		
25+00		99				0			
	50		188				0		
25+50		104				0			
	50		191				0		
26+00		102				0			
	50		184				16		
26+50		97				17			
	50		171				55		
27+00		88				42			
	50		162				68	CUT	1,555
27+50		87				31		FILL	1085
	50		179				169	F FAC.	1.15
28+00		106				151		EX. C	307
	50		191				245		
28+50		100				130			
	50		143				206		
29+00		54				92			
	50		84				162		
29+50		37				83			
	50		62				164		
30+00		30				94			
	50		47				175		
30+50		21				95			
	50		33				165		
31+00		15				83		CUT	162
	50		46				180	FILL	904
31+50		9				111		F FAC.	1.15
	50		16				158	EX. F	878
32+00		8				60			
	50		11				106		
32+50		4				54			
	50		7				85		
33+00		4				38			
	25		2				35		
33+25		0				0			

PROJECT NAME: FAIRFAX-FAIRFIELD-ST. ALBANS

PROJECT NUMBER: IM 089-3(27)

FILE NAME: /87A007B/DESIGN/DA007EWS. PLOT DATE: 19-AUG-2000
PROJECT LEADER: DELLA SANTA DRAWN BY: N/A
DESIGNED BY: SQUAD B CHECKED BY: N/A
SHEET 15 OF 370

NORTHBOUND

EARTHWORKS

STATE OF VERMONT
AGENCY OF TRANSPORTATION

STATION	DIST	TOTAL EXCAVATION EARTH AND ROCK AREA	TOTAL EXCAVATION EARTH AND ROCK CU. YDS.	ROCK EXCAVATION AREA	ROCK EXCAVATION CU. YDS.	EMBANKMENT AREA	EMBANKMENT CU. YDS.		
		BUTT				BUTT			
3282+15		84				0			
	185		973				72		
3284+00		200				21			
	200		1263				78		
3286+00		141				0			
	200		1041				4		
3288+00		140				1			
	200		867				26		
3290+00		94				6		CUT	7213
	200		670				56	FILL	331
3292+00		87				9		F FAC.	1.15
	200		756				44	EX. C	6832
3294+00		117				3			
	200		919				11		
3296+00		131				0			
	30		117				0		
3296+30		80				0			
BRIDGE CONSTRUCTION		BUTT					BUTT		
3298+20		85				0			
	180		607				40		
3300+00		97				12			
	200		748				52		
3302+00		105				2			
	200		770				33		
3304+00		103				7			
	200		744				33		
3306+00		98				2			
	200		774				15		
3308+00		111				2		CUT	7413
	200		763				33	FILL	532
3310+00		95				7		F FAC.	1.15
	200		733				44	EX. C	6801
3312+00		103				5			
	200		744				52		
3314+00		98				9			
	200		700				63		
3316+00		91				8			
	200		707				74		
3318+00		100				12			
	200		730				133		
3320+00		97				24			
	200		670				263		
3322+00		84				47			
	200		622				219		
3324+00		84				12			
	200		644				326		
3326+00		90				76			
	200		652				370		
3328+00		86				24			
	200		681				437	CUT	6924
3330+00		98				94		FILL	3633
	200		689				670	F FAC.	1.15
3332+00		88				87		EX. C	2746
	200		689				326		
3334+00		98				1			
	200		707				281		
3336+00		93				75			
	200		696				500		
3338+00		95				60			
	200		874				241		
3340+00		141				5			
	200		1081				81		
3342+00		151				17			
	200		993				63		
3344+00		117				0			
	200		1107				0		
3346+00		182				0			

STATION	DIST	TOTAL EXCAVATION EARTH AND ROCK AREA	TOTAL EXCAVATION EARTH AND ROCK CU. YDS.	ROCK EXCAVATION AREA	ROCK EXCAVATION CU. YDS.	EMBANKMENT AREA	EMBANKMENT CU. YDS.		
3346+00		182				0			
	200		1113				167		
3348+00		124				45			
	200		793				474		
3350+00		90				83			
	200		659				667	CUT	8824
3370+00		88				97		FILL	3706
	200		681				652	F FAC.	1.15
3354+00		96				79		EX. C	4769
	200		730				611		
3356+00		101				86			
	200		800				474		
3358+00		115				42			
	200		867				337		
3360+00		119				49			
	200		1022				296		
3362+00		157				31			
	200		1022				222		
3364+00		119				29			
	200		1011				359		
3366+00		154				68			
	200		1263				363		
3368+00		187				30		CUT	10010
	200		1181				263	FILL	3584
3370+00		132				41		F FAC.	1.15
	200		837				470	EX. C	5888
3372+00		94				86			
	200		837				604		
3374+00		132				77			
	200		978				570		
3376+00		132				77			
BEGIN PERMEABLE BASE		BUTT					BUTT		
3376+00		137				62			
	200		896				300		
3378+00		105				19			
	200		963				137		
3380+00		155				18			
	200		1007				104		
3382+00		117				10			
	200		856				233		
3384+00		114				53			
	200		856				307		
3386+00		117				30			
	200		1004				170		
3388+00		154				16			
	200		878				74		
3390+00		83				4		CUT	8586
	200		848				300	FILL	5772
3392+00		146				77		F FAC.	1.15
	200		1011				481	EX. C	1948
3394+00		127				53			
	200		804				870		
3396+00		90				182			
	200		670				1648		
3398+00		91				263			
	200		652				1585		
3400+00		85				165			
	200		715				619		
3402+00		108				2			
END PERMEABLE BASE		BUTT					BUTT		
3402+00		92				39			
	200		681				270		
3404+00		92				34			
	200		685				900		
3406+00		93				209			
	200		692				1193		
3408+00		94				113			
	50		180				231		
3408+50		100				137			
	150		514				875		
3410+00		85				178			
	200		707				1722		
3412+00		106				287			
	26		106				264		
3412+26		115				262			

STATION	DIST	TOTAL EXCAVATION EARTH AND ROCK AREA	TOTAL EXCAVATION EARTH AND ROCK CU. YDS.	ROCK EXCAVATION AREA	ROCK EXCAVATION CU. YDS.	EMBANKMENT AREA	EMBANKMENT CU. YDS.		
3412+26		115				262			
	174		654				844		
3414+00		88				0			
	200		681				15	CUT	7204
3416+00		96				4		FILL	7074
	200		719				78	F FAC.	1.15
3418+00		98				17		EX. F	931
	200		870				63		
3420+00		137				0			
	142		734				0		
3421+42		142				0			
	31		149				0		
3421+73		117				0			
	27		115				0		
3422+00		112				0			
	80		330				6		
3422+80		111				4			
BRIDGE CONSTRUCTION		BUTT					BUTT		
3424+70		86				6			
	130		436				29		
3426+00		95				6			
	200		707				26		
3428+00		96				1		CUT	6935
	200		733				59	FILL	304
3430+00		102				15		F FAC.	1.15
	50		183				24	EX. C	6585
3430+50		96				11			
	150		525				106		
3432+00		93				27			
	50		178				2		
3432+50		99				1			
	150		556				8		
3434+00		101				2			
	200		741				7		
3436+00		99				0			
	200		763				11		
3438+00		107				3			
	200		785				26		
3440+00		105				4			
	200		756				52		
3442+00		99				10		CUT	1059
	30		112				9	FILL	74
3442+30		103				7		F FAC.	1.15
	100		191				13	EX. C	974
3443+30		0				0			

SUMMARY AND BALANCES

STATION TO STATION		TOTAL EXCAV EARTH & ROCK	ROCK EXCAV CUBIC YARDS	EMBANKMENT CUBIC YARDS	EXCESSES CUT	EXCESSES FILL	ACCUMULATIVE EXCESSES CUT	ACCUMULATIVE EXCESSES FILL
SOUTHBOUND								
3282+50	3300+00	5945		357	5534		5534	
3300+00	3320+00	7515		644	6774		12,308	
3320+00	3340+00	7351		260	7052		19,360	
3340+00	3360+00	7997		10,947		4592	14,768	
3360+00	3380+00	9230		5907	2437		17,205	
3380+00	3400+00	9574		1175	8223		25,428	
3400+00	3420+00	7415		606	6718		32,146	
3420+00	3440+00	7936		380	7499		39,645	
3440+00	3444+54	1694		13	1679		41,324	
RAMP C								
11+75	15+00	1229		2	1227		42,551	
15+00	20+00	1922		0	1922		44,473	
20+00	25+00	1831		0	1831		46,304	
25+00	30+00	1555		1085	307		46,611	
30+00	33+25	162		904		878	45,733	
RAMP C DETOUR		1069		10,888		11,452	34,281	
SOUTHBOUND CROSSOVERS		410		5998		6488	27,793	
SB CROSSOVER REMOVAL*		3215		0	3215		31,008	
SUB TOTAL		76,050		39,166				
NORTHBOUND								
3282+15	3300+00	7213		331	6832		37,840	
3300+00	3320+00	7413		532	6801		44,641	
3320+00	3340+00	6924		3633	2746		47,387	
3340+00	3360+00	8824		3706	4562		51,949	
3360+00	3380+00	10,010		3584	5888		57,837	
3380+00	3400+00	8586		5772	1948		59,785	
3400+00	3420+00	7204		7074		931	58,854	
3420+00	3440+00	6935		304	6585		65,439	
3440+00	3443+30	1059		74	974		66,413	
NORTHBOUND CROSSOVERS		382		7680		8450	57,963	
NB CROSSOVER REMOVAL*		4050			4050		62,013	
U-TURNS				41		47	61,966	
RAMP A TEMP. DETOUR		1599		62	1528		63,494	
TOTAL		146,249		71,959				

*ESTIMATED

REMARKS

EARTH AND ROCK EXCAVATION		146,249
SOLID ROCK EXCAVATION		0
EARTH EXCAVATION		146,249
PLANIMETERED FILL		71,959
LESS FACTORED SOLID ROCK		0
LESS DISPLACEMENT OF ANY LARGE STRUCTURES		0
NET PLANIMETERED FILL		71,959
FACTOR (0.15)		10,794
PLANIMETERED FILL INCLUDING FACTOR		82,753
MATERIALS AVAILABLE FOR FILLS		0
EARTH EXCAVATION		146,249
CHANNEL EXCAVATION	(40% OF 3200)	1280
UNDERDRAIN EXCAVATION	(60% OF 16,200)	9720
STRUCTURE EXCAVATION	(60% OF 2500)	1500
TOTAL MATERIAL AVAILABLE FOR FILL		158,749
TOTAL FILL INCLUDING FACTOR		82,753
TOTAL MATERIAL FOR FILL		158,749
BORROW		0
EXCESS EXCAVATION		75,996

PROJECT NAME: FAIRFAX-FAIRFIELD-ST. ALBANS
PROJECT NUMBER: IM 089-3(27)

FILE NAME: /87A007B/DESIGN/DA007EWN. PLOT DATE: 22-SEP-2000
PROJECT LEADER: DELLA SANTA DRAWN BY: N/A
DESIGNED BY: SQUAD B CHECKED BY: N/A
SHEET 16 OF 370

DRAINAGE SUMMARY SHEET FOR FAIRFAX - FAIRFIELD - ST. ALBANS IM 089-3(27)

STATION	STATION	POS.	SOLID ROCK EXCAV. CY	COMM. EXCAV. CY	TRENCH EXCAV. EARTH CY	TRENCH EXCAV. ROCK CY	EARTH BORROW CY	PIPE ARCH S IN	PIPE ARCH R IN	PIPE ARCH L FT	PIPE D IN	PIPE L FT	OPTIONS (X = EXISTING PIPE) PCCSP TH	CAAP TH	RCP CL	CSP TH	CPEP	ACCGMP TH	ES EA	GRAN. BKFL. STRUC CY	CONC. CL B CY	CONC. CL C CY	REIN STEEL LBS	REHAB DI EA	GRATE TYPE EA	STEEL MRKR. POST EA	CRM CY	RELAY PIPE LF	STONE FILL TYPE	STONE FILL CY	REDUCER SECTION FOR VERTICAL RISER EA	CLEANING CULVERT < = 24" *SOL995 LF	UNCLASSIFIED DITCHING LF	CLEANING CULVERT >24" *SOL996 LF	REMARKS	STATION	STATION	POS.
SOUTHBOUND																																				SOUTHBOUND		
3282+02		CL									18				X																			OKAY	3282+02		CL
3291+00		LT									12					X																			REPLACE W/NEW 18" PIPE AND D.I.	3291+00		LT
3291+00		LT			23	3					18	96	.064	.060	III		SL				3.2		278		B	1		I	I			100		TO REPLACE EXISTING 12'' CULVERT	3291+00		LT
3292+00		CL									24							X						1										CLEAN MEDIAN DITCH, NORTH & SOUTH. REHAB D.I (CLASS I)	3292+00		CL
3294+99		CL									18				X									1	B									REHAB D.I (CLASS I)	3294+99		CL
3307+99		CL									18							X																OKAY	3307+99		CL
3312+99		CL									18							X																OKAY	3312+99		CL
3323+97		CL									36							X																OKAY	3323+97		CL
3329+54		CL			8						36	20	.079					X																REPLACE 20' OF PIPE @ OUTLET	3329+54		CL
3334+18		CL									48							X																OKAY	3334+18		CL
3339+09		CL			7						36	4	.079					X											II	6				OKAY	3339+09		CL
3344+01		CL			4						30	34	.079					X								1			II	4				EXTEND EXISTING ACCGMP @ OUTLET.	3344+01		CL
3349+70		CL			7						48	36	.109					X											II	10				EXTEND EXISTING ACCGMP @ OUTLET.	3449+10		CL
3353+01		CL			4						30	28	.079					X								1			II	4				EXTEND EXISTING PIPE 28' AT OUTLET.	3353+01		CL
3363+51		CL									36				X																			OKAY	3363+51		CL
3367+76		CL									30	20			III									1	2-A	1			I	2				REHAB D.I. (CLASS II) EXTEND RCP @ OUTLET.	3367+76		CL
3372+00		CL			2						30	16			III											2		32	II	4				RELAY 22' OF PIPE @ INLET & 8' OUTLET EXTEND RCP 16' @ OUTLET.	3372+00		CL
3377+50		CL									30	24			III									1	2-A	2			II	4				REHAB D.I. (CLASS III) EXTEND RCP 24' @ OUTLET.	3377+50		CL
3377+50		RT									24							X																OKAY	3377+50		RT
3381+00		CL			2						24	24	.064					X											II	2				EXTEND PIPE 24' @ OUTLET.	3381+00		CL
3381+00		RT									24							X																OKAY	3381+00		RT
3385+50		CL									36							X						1										REHAB D.I. (CLASS I)	3385+50		CL
3385+50		RT									24							X																OKAY	3385+00		RT
3389+99		CL									36							X															30		CLEAN OUTLET DITCH	3389+99		CL
3389+99		RT									24							X																OKAY	3389+99		RT
3395+93.1		CL									60							X																SEE BRIDGE SERIES 300	3395+93.1		CL
3401+49		CL			5						36							X									20	II	5					RELAY LAST 20' OF PIPE & ADD STONE FILL	3401+49		CL
3406+00		CL			4						36	12	.079					X										II	5					EXTEND PIPE 12' & ADD STONE FILL @ OUTLET.	3406+00		CL
3412+09		CL									30							X																OKAY	3412+09		CL
3412+09		CL			5	3					30	20	.079													2			II	4	I			REMOVE INLET HEADWALL. CONNECT BOTH CULVERTS. INSTALL VERT. RISER. ADD STONE FILL AT OUTLET.	3412+09		CL
3412+09		58' RT			5						18	4	.079																					FOR VERT. RISER FOR PIPE AT 3412+09 CL	3412+09		58' RT
3412+09		58' RT									24	2	.079												C									FOR VERT. RISER FOR PIPE AT 3412+09 CL	3412+09		58' RT
3416+62		CL									36							X																OKAY	3316+62		CL
3430+24		LT									12							X														50			CLEAN CULVERT			
3432+56		LT									12							X														66			CLEAN CULVERT	3432+56		LT
3432+56		CL			11						60							X									40	II	11					RELAY LAST 2 SECTIONS @ OUTLET	3432+56		CL
3435+00		LT									12							X																REPLACE W/NEW D.I. & 18'' PIPE	3435+00		LT
3435+00		LT			28	3					18	20	.064	.060	III		SL				3.2		278		B	1		I	I					TO REPLACE EXISTING 12'' CULVERT	3435+00		LT
3435+62		CL									72							X									20							RELAY LAST SECTION @ OUTLET	3435+62		CL
3439+65		CL									18							X								1	20							RELAY 20' OUTLET	3439+65		CL
3440+64.03		CL									18							X													100			CLEAN CULVERT	3440+64.03		CL
3442+07		CL									24							X																OKAY	3443+07		CL
RAMP C																																			RAMP C		
14+49		CL			1	2					24				X				1							1		12	I	1				REPLACE HEADWALL W/RCPES RELAY 12' OF PIPE @ INLET.	14+49		CL
16+99		RT									12							X																REPLACE W/NEW D.I. AND 18'' PCCSP	16+99		RT
16+99		RT			9	3					18	40	.064	.060	III		SL				2.3		200		A	1			I	I				TO REPLACE EXISTING 12'' CGMP	16+99		RT
20+80		CL									36	18	.079					X																EXTEND PIPE 18' @ OUTLET			
20+99		RT									12							X																REPLACE W/NEW D.I. AND 18'' PIPE.			
20+99		RT			15	3					18	40	.064	.060	III		SL				2.1		193		A	1								TO REPLACE EXISTING 12'' CGMP			
24+23		RT									12							X																REPLACE W/NEW D.I. AND 18'' PIPE.			
24+23		RT			19	3					18	40	.064	.060	III		SL				2.1		193		A	1								TO REPLACE EXISTING 12'' CGMP			
SOUTHBOUND TOTALS					159	20					18	236	.064	.060	III		SL		1		12.9		1142	5	7-A	16		144	I	6	1	216	130					
											18	4	.079												3-B				II	59								
											24	2	.079												I-C													
											24	24	.064																									
											30	82	.079																									
											30	60			III																						
											36	54	.079																									
											48	36	.109																									

DRAWN BY SQUAD B DATE 4/97
SQUAD LEADER DELLA SANTA
DESIGN FILE NO. /87A007B/DESIGN/DA007FRM.DGN
IPARM FILE DA007DRI DATE PLOTTED 03-OCT-2000
PROJ. NAME FAIRFAX-FAIRFIELD-ST. ALBANS
PROJ. NO. IM 089-3(27)
SHEET 17 OF 370 SHEETS

DRAINAGE SUMMARY SHEET FOR FAIRFAX - FAIRFIELD - ST. ALBANS IM 089-3(27)

STATION	STATION	POS.	SOLID ROCK EXCAV. CY	COMM. EXCAV. CY	TRENCH EXCAV. EARTH CY	TRENCH EXCAV. ROCK CY	EARTH BORROW CY	PIPE ARCH S IN	PIPE ARCH R IN	PIPE ARCH L FT	PIPE D IN	PIPE L FT	OPTIONS (X = EXISTING PIPE) PCCSP TH	CAAP TH	RCP CL	CSP TH	CPEP	ACCGMP TH	E S EA	GRAN. BKFILL STRUC CY	CONC. CL B CY	CONC. CL C CY	REIN STEEL LBS	REHAB DI EA	GRATE TYPE EA	STEEL MRKR. POST EA	CRM CY	RELAY PIPE LF	STONE FILL TYPE	STONE FILL CY	REDUCER SECTION FOR VERTICAL RISER EA	CLEANING CULVERT < = 24" *60L995 LF	UNCLASSIFIED DITCHING LF	CLEANING CULVERT >24" *60L996 LF	REMARKS	STATION	STATION	POS.
NORTHBOUND																																			NORTHBOUND		
3282+07		CL									18				X																			REHAB D. I. (CLASS I)	3282+07		CL
3288+13	3288+73	LT									8						X																	REPLACE W/NEW 18'' PIPE (U-TURN CULVERT)	3288+13	3288+73	LT
3288+13	3288+73	LT			24						18	60	.064	.060	III		SL																	TO REPLACE 8'' CULVERT	3288+13	3288+73	LT
3292+03		CL			2						24							X								1			II	2					REMOVE 6' @ OUTLET. ADD STONE FILL.	3292+03		CL
3295+03		CL									24							X						1		1		20					30		REHAB D. I. (CLASS I) RELAY 20' @ OUTLET & AND CLEAN OUTLET DITCH.	3295+03		CL
3298+59		CL			1						18							X						1					I	1			30		REHAB D. I. (CLASS I) CLEAN OUTLET DITCH. ADD STONE FILL	3298+59		CL
3302+87		CL			12	1					18	20	.064					X						1		1				I	1					REHAB D. I. (CLASS I) REMOVE HEADWALL. REPLACE LAST 20' OF PIPE. ADD STONE FILL	3302+87		CL
3324+06		CL			12	1					30	40	.079					X	1							2									REPLACE 20' OF PIPE @ INLET & OUTLET REPLACE HEADWALL W/ M.E.S.	3324+06		CL
3329+59		CL									36							X																	OKAY	3329+59		CL
3334+92		CL									48							X																	OKAY	3334+92		CL
3339+01		CL									30							X																	OKAY	3339+01		CL
3344+01		CL									24							X						1											REHAB D. I. (CLASS II)	3344+01		CL
3349+72		CL									48							X																	OKAY	3349+72		CL
3353+01		CL									30							X															50		CLEAN MEDIAN DITCH	3353+01		CL
3363+50		CL			13	3					30	20	.079					X						1		1			II	4					REHAB D. I. (CLASS I) REMOVE HEADWALL REPLACE 20' OF PIPE @ OUTLET. CLEAN MEDIAN DITCH. ADD STONE FILL.	3363+50		CL
3367+75		CL									30							X						1											REHAB D. I. (CLASS I)	3367+75		CL
3372+01		CL			3	3					24							X						1	B										REHAB D. I. (CLASS I)	3372+01		CL
3372+05		LT									12							X																	REPLACE PIPE W/NEW D. I. & 18" CULVERT	3372+05		LT
3372+05		LT			12	3					18	24	.064	.060	III		SL				3.2		278		B	1			I	1					TO REPLACE EXISTING 12'' CGMP	3372+05		LT
3377+50		CL									30	20	.079					X						1	2-B	1									REHAB D. I. (CLASS I) REPLACE 20' OF PIPE @ OUTLET	3377+50		CL
3377+56		LT									12							X																	REPLACE PIPE W/NEW D. I. & 18" CULVERT	3377+56		LT
3377+56		LT			11	3					18	20	.064	.060	III		SL				3.2		278		B	1			I	1					TO REPLACE EXISTING 12'' CGMP	3377+56		LT
3381+00		CL									30							X						1	2-B										REHAB D. I. (CLASS I)	3381+00		CL
3381+08		LT									12							X																	REPLACE PIPE W/NEW D. I. & 18" CULVERT	3381+08		LT
3381+08		LT			9	3					18	20	.064	.060	III		SL				3.2		278		B	1			I	1					TO REPLACE EXISTING 12'' CGMP	3381+08		LT
3385+50		CL			10	4					36							X			2.9		237		B			20	II	5					REPLACE D. I. REMOVE HEADWALL. REMOVE 6' OF PIPE @ OUTLET. REDO OUTLET DITCH. RELAY 20' OF PIPE @ INLET.	3385+50		CL
3389+99		CL			13	3					36	20	.079					X						1	2-B				II	5					REHAB D. I. (CLASS II) REMOVE HEADWALL. REPLACE 20' OF PIPE @ OUTLET.	3389+99		CL
3395+77.05		CL									60							X																	SEE BRIDGE SERIES 300	3395+77.05		CL
3405+99		CL			20						36	36			III														II	20					EXTEND PIPE 36' AT OUTLET TO FLATTEN SLOPE STONE LINE DITCH BETWEEN CULVERTS	3405+99		CL
3411+99		CL				3					30							X																	REMOVE OUTLET HEADWALL	3411+99		CL
3416+38		RT									24							X																	OKAY			
3416+40		CL									36							X																	OKAY	3416+40		CL
3432+39		CL									60							X																	OKAY	3432+39		CL
3435+53		CL			16						72							X											II	16			20		REDO DITCH @ INLET FOR 20'			
3439+36		CL			1						18							X								1			I	1			20		CLEAN INLET DITCH. ADD STONE FILL			
3440+28.33		CL									18							X														90			CLEAN CULVERT			
3441+83		CL									24							X																	OKAY			
NORTHBOUND TOTALS					159	27					18	124	.064	.060	III		SL		1		12.5		1071	11	11-B	13		40	I	6		90	150						
											18	20	.064																	II	52								
											30	80	.079																										
											36	20	.079																										
											36	36			III																							

DRAWN BY SQUAD B DATE 4/97
SQUAD LEADER DELLA SANTA
DESIGN FILE NO. /87A007B/DESIGN/DA007FRM.DGN
IPARM FILE DA007DR2 DATE PLOTTED 03-OCT-2000
PROJ. NAME FAIRFAX-FAIRFIELD-ST. ALBANS
PROJ. NO. IM 089-3(27)
SHEET 18 OF 370 SHEETS

NEW 8" UNDERDRAIN SUMMARY SHEET FOR FAIRFAX - FAIRFIELD - ST. ALBANS IM 089-3(27)

MODIFICATION # 1

*2 CY OF TRENCH ROCK USED TO PAY FOR CONNECTING UNDERDRAIN TO EXISTING D.I. OR EXISTING HEADWALL

STATION	STATION	POSITION	TYPE	LENGTH (FT)	TRENCH EARTH	TRENCH* ROCK	FB	OUTLET TYPE	MP	REMARKS
MODIFICATION # 1										
SOUTHBOUND										
3282+50	3288+00	LT	U	550	58		1		1	FB @ 3282+50 LT
3286+00	3291+93	RT	U	593	59		1		1	FB @ 3286+00 RT
3308+00	3312+94	RT	U	494	49		1		1	FB @ 3312+94 RT
3313+00	3318+00	LT	U	500	50		1		1	FB @ 3318+00 LT
3318+02	3321+02	LT	U	300	30		1		1	FB @ 3318+02 LT
3349+73	3 370+97	LT	U	324	145		1		1	FB @ 3 370+97 LT
3349+73	3 370+97	RT	U	324	148		1		1	FB @ 3 370+97 RT
3353+02	3355+96	LT	U	194	96		1		1	FB @ 3355+96 LT
3353+02	3355+96	RT	U	194	97		1		1	FB @ 3355+96 RT
3356+00	3363+47	LT	U	747	364		2		2	FB @ 3356+00 & 3359+75 LT
3356+00	3363+47	RT	U	747	368		2		2	FB @ 3356+00 & 3359+75 RT
3363+53	3367+73	LT	U	420	202		1		1	FB @ 3363+53 RT
3363+53	3367+73	RT	U	420	213		1		1	FB @ 3363+53 RT
3367+78	3371+97	LT	U	419	203		1		1	FB @ 3367+78 LT
3367+78	3371+97	RT	U	419	214		1		1	FB @ 3367+78 RT
3372+02	3377+47	LT	U	545	267		1		1	FB @ 3372+02 LT
3372+02	3377+47	RT	U	545	278		1		1	FB @ 3372+02 RT
3377+52	3380+95	RT	U	343	35		1		1	FB @ 3377+52 RT
3381+02	3385+46	RT	U	444	45		1		1	FB @ 3381+02 RT
3385+51	3389+96	RT	U	445	45		1		1	FB @ 3385+51 RT
3390+02	3395+00	RT	U	498	50		1		1	FB @ 3390+02 RT
3416+66	3422+50	RT	U	584	87		1		1	FB @ 3422+50 RT
3425+06	3432+54	RT	U	748	88		2		2	FB @ 3428+75 & 3432+54 RT
3432+65	3439+66	RT	U	701	71		2		2	FB @ 3436+25 & 3439+66 RT TEE CONNECTION TO CARRIER PIPE
3439+70	3440+70	RT	U	100	10		1		1	FB @ 3440+70 RT
RAMP C										
24+24	27+75	LT	U	351	92		1		1	FB @ 27+75 LT
SOUTHBOUND & RAMP C MODIFICATION #1 TOTALS				11949	3364		30		30	

MODIFICATION # 2

STATION	STATION	POSITION	TYPE	LENGTH (FT)	TRENCH EARTH	TRENCH* ROCK	FB	OUTLET TYPE	MP	REMARKS
MODIFICATION # 2										
SOUTHBOUND										
3282+50	3288+00	LT	U	550	278		1		1	FB @ 3282+53 LT TEE CONNECTION TO CARRIER PIPE
3286+00	3291+93	RT	U	593	263		1		1	FB @ 3286+00 RT TEE CONNECTION TO CARRIER PIPE
3295+00	3296+20	RT	U	120	60		1		1	FB @ 3296+20 RT
3308+00	3312+94	RT	U	494	222		1		1	FB @ 3312+94 RT TEE CONNECTION TO CARRIER PIPE
3313+00	3318+00	LT	U	500	228		1		1	FB @ 3318+00 LT TEE CONNECTION TO CARRIER PIPE
3318+02	3321+02	LT	U	300	141		1		1	FB @ 3318+02 LT TEE CONNECTION TO CARRIER PIPE
3355+50	3363+47	RT	U	797	386		2		2	FB @ 3355+50 & 3359+50 RT TEE CONNECTION TO CARRIER PIPE
3363+53	3367+73	RT	U	420	204		1		1	FB @ 3363+53 RT TEE CONNECTION TO CARRIER PIPE
3367+78	3371+97	RT	U	419	208		1		1	FB @ 3367+78 RT TEE CONNECTION TO CARRIER PIPE
3373+08	3377+47	RT	U	447	219		1		1	FB @ 3373+00 RT TEE CONNECTION TO CARRIER PIPE
3377+52	3380+95	RT	U	343	162		1		1	FB @ 3377+52 RT TEE CONNECTION TO CARRIER PIPE
3381+02	3385+46	RT	U	444	209		1		1	FB @ 3381+02 RT TEE CONNECTION TO CARRIER PIPE
3385+51	3389+96	RT	U	445	202		1		1	FB @ 3385+51 RT TEE CONNECTION TO CARRIER PIPE
3390+02	3395+00	RT	U	498	224		1		1	FB @ 3390+02 RT TEE CONNECTION TO CARRIER PIPE
3401+52	3403+00	RT	U	140	67		1		1	FB @ 3403+00 RT
3416+66	3422+50	RT	U	584	275		1		1	FB @ 3422+50 RT TEE CONNECTION TO CARRIER PIPE
3425+06	3432+58	RT	U	752	371		2		2	FB @ 3428+75 & 3432+58 RT
3432+65	3439+66	RT	U	701	313		2		2	FB @ 3436+25 & 3439+66 RT
3439+70	3440+70	RT	U	100	47		1		1	FB @ 3440+70 RT TEE CONNECTION TO CARRIER PIPE
SOUTHBOUND MODIFICATION #2 TOTALS				8647	4079		22		22	

DRAWN BY SQUAD B DATE 4/97
SQUAD LEADER DELLA SANTA
DESIGN FILE NO. /87A007B/DESIGN/DA007FRM.DGN
IPARM FILE DA007UDI DATE PLOTTED 19-AUG-2000
PROJ. NAME FAIRFAX-FAIRFIELD-ST. ALBANS
PROJ. NO. IM 089-3(27)
SHEET 19 OF 370 SHEETS

NEW 8" UNDERDRAIN SUMMARY SHEET FOR FAIRFAX - FAIRFIELD - ST. ALBANS IM 089-3(27)

MODIFICATION # 1

*2 CY OF TRENCH ROCK USED TO PAY FOR CONNECTING UNDERDRAIN TO EXISTING D.I. OR EXISTING HEADWALL

STATION	STATION	POSITION	TYPE	LENGTH (FT)	TRENCH EARTH	TRENCH ROCK*	FB	OUTLET TYPE	MP	REMARKS
MODIFICATION # 1										
NORTHBOUND										
3282+15	3289+00	RT	U	685	63		2		2	FB @ 3282+15 & 3285+50 RT
3285+00	3292+00	LT	U	700	70		2		2	FB @ 3285+00 & 3288+50 LT
3292+07	3295+03	LT	U	296	29		1		1	FB @ 3295+03 LT
3295+06	3296+25	LT	U	119	12		1		1	FB @ 3296+25 LT
3302+90	3308+08	LT	U	518	52		1		1	FB @ 3308+08 LT
3309+00	3320+00	RT	U	1100	110		2		2	FB @ 3314+50 & 3320+00 RT
3335+15	3338+99	RT	U	384	39		1		1	FB @ 3338+99 RT
3339+04	3343+99	RT	U	495	50		1		1	FB @ 3343+99 RT
3344+03	3349+68	RT	U	565	57		1		1	FB @ 3349+68 RT
3349+76	3 370+99	RT	U	323	32		1		1	FB @ 3 370+99 RT
3353+03	3355+97	RT	U	294	30		1		1	FB @ 3355+97 RT
3356+02	3363+47	RT	U	745	75		2		2	FB @ 3356+02 & 3359+75 RT
3363+53	3367+73	RT	U	420	42		1		1	FB @ 3363+53 RT
3367+78	3371+99	RT	U	421	42		1		1	FB @ 3371+99 RT
3372+03	3377+48	RT	U	545	161		1		1	FB @ 3372+03 RT
3376+00	3377+54	LT	U	154	74	2	1	DI	1	FB @ 3376+00 LT
3377+52	3381+05	LT	U	353	167	2	1	DI	1	FB @ 3381+05 LT
3377+52	3381+00	RT	U	348	173		1		1	FB @ 3377+52 RT
3381+13	3385+47	LT	U	434	209		1		1	FB @ 3381+13 LT
3381+03	3385+47	RT	U	444	217		1		1	FB @ 3381+03 RT
3385+52	3389+96	LT	U	444	218		1		1	FB @ 3385+52 LT
3385+52	3389+96	RT	U	444	220		1		1	FB @ 3385+52 RT
3390+02	3395+74	LT	U	572	281		1		1	FB @ 3390+02 LT
3390+02	3395+71	RT	U	569	282		1		1	FB @ 3395+71 RT
3395+82	3402+10	LT	U	628	312		1		1	FB @ 3395+82 LT
3395+79	3405+96	RT	U	1017	391		2		2	FB @ 3395+79 & 3400+00 RT
3419+00	3321+75	RT	U	275	28		1		1	FB @ 3319+00 RT
NORTHBOUND MODIFICATION #1 TOTALS				13292	3436	4	32		32	

MODIFICATION # 2

STATION	STATION	POSITION	TYPE	LENGTH (FT)	TRENCH EARTH	TRENCH ROCK*	FB	OUTLET TYPE	MP	REMARKS
MODIFICATION # 2										
NORTHBOUND										
3282+15	3289+00	RT	U	685	327		2		2	FB @ 3282+15 & 3285+50 RT
										TEE CONNECTION TO CARRIER PIPE
3286+00	3292+00	LT	U	700	317		2		2	FB @ 3285+00 & 3288+50 LT
										TEE COONECTION TO CARRIER PIPE
3292+07	3295+03	LT	U	296	144		1		1	FB @ 3295+03 LT TEE CONNECTION TO CARRIER PIPE
3295+06	3296+25	LT	U	119	57		1		1	FB @ 3296+25 LT TEE CONNECTION TO CARRIER PIPE
3302+90	3308+08	LT	U	518	242		1		1	FB @ 3308+08 LT TEE CONNECTION TO CARRIER PIPE
3309+00	3320+00	RT	U	1100	520		2		2	FB @ 3314+50 & 3320+00 RT
										TEE CONNECTION TO CARRIER PIPE
3335+18	3338+99	RT	U	381	180		1		1	FB @ 3338+99 RT TEE CONNECTION TO CARRIER PIPE
3339+05	3343+99	RT	U	494	235		1		1	FB @ 3343+99 RT TEE CONNECTION TO CARRIER PIPE
3344+04	3349+68	RT	U	564	265		1		1	FB @ 3349+68 RT TEE CONNECTION TO CARRIER PIPE
3349+74	3 370+99	RT	U	325	153		1		1	FB @ 3 370+99 RT TEE CONNECTION TO CARRIER PIPE
3353+05	3355+97	RT	U	292	138		1		1	FB @ 3355+97 RT TEE CONNECTION TO CARRIER PIPE
3356+02	3363+47	RT	U	745	370		2		2	FB @ 3356+02 & 3359+75 RT
										TEE CONNECTION TO CARRIER PIPE
3363+53	3367+73	RT	U	420	194		1		1	FB @ 3363+53 RT TEE CONNECTION TO CARRIER PIPE
3367+78	3371+99	RT	U	421	192		1		1	FB @ 3367+78 RT TEE CONNECTION TO CARRIER PIPE
3372+03	3377+48	RT	U	545	261		1		1	FB @ 3372+03 RT TEE CONNECTION TO CARRIER PIPE
3377+52	3381+00	RT	U	348	176		1		1	FB @ 3377+52 RT TEE CONNECTION TO CARRIER PIPE
3381+03	3385+47	RT	U	444	226		1		1	FB @ 3381+03 RT TEE CONNECTION TO CARRIER PIPE
3385+52	3389+96	RT	U	444	226		1		1	FB @ 3385+52 RT TEE CONNECTION TO CARRIER PIPE
3390+02	3395+71	RT	U	569	289		1		1	FB @ 3390+02 RT TEE CONNECTION TO CARRIER PIPE
3395+79	3405+96	RT	U	1017	497		2		2	FB @ 3395+79 & 3400+00 RT
										TEE CONNECTION TO CARRIER PIPE
3413+50	3415+50	RT	U	200	95		1		1	FB @ 3413+50 RT
3419+00	3421+75	RT	U	275	129		1		1	FB @ 3419+00 RT TEE CONNECTION TO CARRIER PIPE
NORTHBOUND MODIFICATION #2 TOTALS				10902	5215		27		27	

DRAWN BY SQUAD B DATE 4/97
SQUAD LEADER DELLA SANTA
DESIGN FILE NO. /87A007B/DESIGN/DA007FRM.DGN
IPARM FILE DA007UD2 DATE PLOTTED 19-AUG-2000
PROJ. NAME FAIRFAX-FAIRFIELD-ST. ALBANS
PROJ. NO. IM 089-3(27)
SHEET 20 OF 370 SHEETS

NEW 8" UNDERDRAIN SUMMARY SHEET FOR FAIRFAX - FAIRFIELD - ST. ALBANS IM 089-3(27)

CARRIER PIPE

*2 CY OF TRENCH ROCK USED TO PAY FOR CONNECTING UNDERDRAIN TO EXISTING D.I. OR EXISTING HEADWALL

STATION	STATION	POSITION	TYPE	LENGTH (FT)	TRENCH EARTH	TRENCH* ROCK	FB	OUTLET TYPE	MP	REMARKS
CARRIER PIPE										
SOUTHBOUND										
3288+00		LT	C	23	2		1		2	FB @ 3288+00 LT
3291+93		RT	C	31	2	2	1	DI	1	FB @ 3291+93 RT
3295+00		RT	C	22	2	2	1	DI	1	FB @ 3295+00 RT
3308+00		RT	C	20	2	2	1	DI	1	FB @ 3308+00 RT
3313+00		LT	C	23	2		1		2	FB @ 3313+00 LT
3321+02		LT	C	25	2		1		2	FB @ 3321+02 LT
3349+73		LT	C	14	1		1		2	FB @ 3349+73 LT
3349+73		RT	C	27	2		1		2	FB @ 3349+73 RT
3353+02		LT	C	24	1		1		2	FB @ 3353+02 LT
3353+02		RT	C	22	2		1		2	FB @ 3353+02 RT
3363+47		LT	C	16	1		1		2	FB @ 3363+47 LT
3363+47		RT	C	13	1	2	1	DI	1	FB @ 3363+47 RT
3367+73		LT	C	21	1		1		2	FB @ 3367+73 LT
3367+73		RT	C	16	1	2	1	DI	1	FB @ 3367+73 RT
3371+97		LT	C	22	1		1		2	FB @ 3371+97 LT
3371+97		RT	C	21	1		1		2	FB @ 3371+97 LT
3377+47		LT	C	16	1		1		2	FB @ 3377+47 LT
3377+47		RT	C	15	1	2	1	DI	1	FB @ 3377+47 RT
3380+95		RT	C	16	1	2	1	DI	1	FB @ 3380+95 RT
3385+46		RT	C	14	1	2	1	DI	1	FB @ 3385+46 RT
3389+96		RT	C	14	1	2	1	DI	1	FB @ 3389+96 RT
3395+00		RT	C	24	1		1		2	FB @ 3395+00 RT
3401+52		RT	C	11	1		1		2	FB @ 3401+52 RT
3416+66		RT	C	27	1	2	1	DI	1	FB @ 3416+66 RT
3432+53	3432+65	RT	C	100	21	2	1	DI	1	FB @ 3432+65 RT
3439+70		RT	C	13	1	2	1	DI	1	FB @ 3439+70 RT
RAMP C										
24+24		LT-RT	C	25	1	2	1	DI	1	FB @ 24+24 LT
SOUTHBOUND & RAMP C CARRIER PIPE TOTALS				615	55	26	27		41	

STATION	STATION	POSITION	TYPE	LENGTH (FT)	TRENCH EARTH	TRENCH* ROCK	FB	OUTLET TYPE	MP	REMARKS
NORTHBOUND										
3289+00		RT	C	12	1		1		2	FB @ 3289+00 RT
3292+00		LT	C	18	2	2	1	DI	1	FB @ 3292+00 LT
3292+07		LT	C	19	2	2	1	DI	1	FB @ 3292+07 LT
3295+06		LT	C	19	2	2	1	DI	1	FB @ 3295+06 LT
3302+90		LT	C	19	2	2	1	DI	1	FB @ 3302+90 LT
3309+00		RT	C	19	2		1		2	FB @ 3309+00 RT
3335+15		RT	C	34	4	2	1	HW	1	FB @ 3335+15 RT
3339+04		RT	C	38	4		1		2	FB @ 3339+04 RT
3344+03		RT	C	11	1	2	1	DI	1	FB @ 3344+03 RT
3349+76		RT	C	13	1	2	1	HW	1	FB @ 3349+76 RT
3353+03		RT	C	19	2		1		2	FB @ 3353+03 RT
3363+47		RT	C	12	1	2	1	DI	1	FB @ 3363+47 RT
3367+73		RT	C	12	1	2	1	DI	1	FB @ 3367+73 RT
3371+99		RT	C	10	1	2	1	DI	1	FB A 3311+99 RT
3377+48		RT	C	12	1	2	1	DI	1	FB @ 3377+48 RT
3381+00		RT	C	14	1	2	1	DI	1	FB @ 3381+00 RT
3385+47		LT	C	33	3		1		2	FB @ 3385+47 LT
3385+47		RT	C	13	1	2	1	DI	1	FB A 3385+47 RT
3389+96		LT	C	29	3	2	1	HW	1	FB @ 3389+96 LT
3389+96		RT	C	14	1	2	1	DI	1	FB @ 3389+96 LT
3395+74		LT	C	31	6	2	1	HW	1	FB @ 3395+74 LT
3395+71		RT	C	11	2	2	1	HW	1	FB @ 3395+71 RT
3402+10		LT	C	30	3		1		2	FB @ 3402+10 LT
3405+96		RT	C	21	2	2	1	HW	1	FB @ 3405+96 LT
3415+50		RT	C	25	2		1		2	FB @ 3415+50 RT
3421+75		RT	C	19	2		1		2	FB @ 3421+75 RT
NORTHBOUND CARRIER PIPE TOTALS				507	53	36	26		34	

DRAWN BY SQUAD B DATE 4/97
SQUAD LEADER DELLA SANTA
DESIGN FILE NO. /87A007B/DESIGN/DA007FRM.DGN
IPARM FILE DA007UD3 DATE PLOTTED 25-AUG-2000
PROJ. NAME FAIRFAX-FAIRFIELD-ST. ALBANS
PROJ. NO. IM 089-3(27)
SHEET 21 OF 370 SHEETS

NEW GUARD RAIL SUMMARY SHEET FOR FAIRFAX - FAIRFIELD - ST. ALBANS IM 089-3(27)

SOUTHBOUND

STATION	STATION	POS.	STEEL BEAM GUARD RAIL LENGTH (FT) 621.20	APPROACH SECTION (EACH) 621.72	MANUFACTURED TERMINAL SECTION (EACH) 621.505	ANCHOR FOR STEEL BEAM RAIL (EACH) 621.60*		REMARKS
SOUTHBOUND								
3287+58.8	3296+33.8	LT	877			1		
3296+33.8	3296+63.2	LT		1				
3297+72.3	3298+01.8	LT		1				
3298+01.8	3311+01.8	LT	1300		1			
3295+01.9	3296+26.9	RT	125		1			
3296+26.9	3296+56.3	RT		1				
3297+67.2	3297+96.6	RT		1				
3297+96.6	3299+46.6	RT	150		1			
3327+00	3343+00	LT	1602		1	1		
3333+50	3336+50	RT	300		2			
3362+50	3366+00	LT	370		1	1		
3349+50	3370+00	RT	250		2			
3371+50	3375+00	LT	370		1	1		
3385+10	3404+35	LT	1927			1		
3395+50	3398+00	RT	250		2			
3415+04.6	3422+79.6	LT	777			1		
3422+79.6	3423+09.0	LT		1				
3425+11.1	3425+40.5	LT		1				
3425+40.5	3429+90.5	LT	450		1			
3422+06.5	3422+81.5	RT	75		1			
3422+81.5	3423+10.9	RT		1				
3425+07.0	3425+36.4	RT		1				
3425+36.4	3427+61.4	RT	225		1			
3434+00	3442+50	LT	850		1			
RAMP C								
25+00	33+25	RT	825		1			
								*EXTRA 2' FOR CURLED END.
								GUARD RAIL APPROACH SECTION IS A BRIDGE ITEM.
SOUTHBOUND & RAMP C TOTALS			10687	8	17	6		

NORTHBOUND

STATION	STATION	POS.	STEEL BEAM GUARD RAIL LENGTH (FT) 621.20	APPROACH SECTION (EACH) 621.72	MANUFACTURED TERMINAL SECTION (EACH) 621.505	ANCHOR FOR STEEL BEAM RAIL (EACH) 621.60*	TEMPORARY MANUFACTURED TERMINAL SECTION (EACH) 621.505**	REMARKS
NORTHBOUND								
3294+04.1	3296+29.1	LT	225		1			
3296+29.1	3296+58.5	LT		1				
3297+70.6	3298+00.0	LT		1				
3298+00.0	3299+50.0	LT	152			1	1	
3288+98.2	3296+23.2	RT	725		1			
3296+23.2	3296+52.6	RT		1				
3297+64.5	3297+93.9	RT		1				
3297+93.9	3307+18.9	RT	927			1		
3321+00	3355+50	LT	3452		1	1	1	
3333+00	3336+00	RT	302		1	1		
3347+50	3350+50	RT	302		1	1		
3367+00	3383+00	LT	1602		1	1	1	
3394+50	3396+50	LT	202		1	1	1	
3394+50	3396+50	RT	202		1	1		
3404+00	3407+00	RT	302		1	1		
3420+42.4	3422+42.4	LT	200		1			
3422+42.4	3422+71.8	LT		1				
3424+73.1	3425+02.5	LT		1				
3425+02.5	3425+77.5	LT	77			1	1	
3420+22.8	3422+47.8	RT	225		1			
3422+47.8	3422+77.3	RT		1				
3424+63.9	3424+93.3	RT		1				
3424+93.3	3441+43.3	RT	1652			1		
								**THE TEMPORARY MANUFACTURED TERMINAL SECTIONS HAVE BEEN ADDED TO THE SOUTHBOUND ROADWAY QUANTITY BECAUSE THEY ARE FOR THE SOUTHBOUND DETOUR. THEY SHALL BE REPLACED WITH THE ANCHOR FOR STEEL BEAM GUARD RAIL WHEN THE NORTHBOUND IS RECONSTRUCTED.
								*EXTRA 2' FOR CURLED END.
								GUARD RAIL APPROACH SECTION IS A BRIDGE ITEM.
NORTHBOUND TOTALS			10547	8	11	11	5	

DRAWN BY SQUAD B DATE 4/97
SQUAD LEADER DELLA SANTA
DESIGN FILE NO. /87A007B/DESIGN/DA007FRM.DGN
IPARM FILE DA007GRI DATE PLOTTED 23-AUG-2000
PROJ. NAME FAIRFAX-FAIRFIELD-ST. ALBANS
PROJ. NO. IM 089-3(27)
SHEET 22 OF 370 SHEETS

FENCE SUMMARY SHEET FOR FAIRFAX - FAIRFIELD - ST. ALBANS IM 089-3(27)

SOUTHBOUND LEFT

STATION	STATION	NEW WOVEN WIRE FENCE (FT.)	NEW CHAIN LINK FENCE (FT.)	NEW WOVEN WIRE FENCE (MODIFIED, PASTURE) (FT.)	STEEL BRACE FOR FENCE CHAIN LINK (EA.)	STEEL BRACE FOR FENCE WOVEN WIRE (EA.)	REMOVAL OF EXISTING FENCE (MODIFIED)	REMARKS
SOUTHBOUND LEFT								
3288+50	3297+00	850					850	STREAM DETAIL @ 3292+00 LT
3298+00	3303+00	500					500	
3336+12		26					26	
3336+40		14					14	
3351+16	3366+75		1600				1600	
3377+00		14					14	
3385+00	3413+00		2800				2800	CONTINUES ALONG RAMP ''C''
RAMP ''C''								
8+28 RT	24+50 RT		1622				1622	CONTINUES ALONG SOUTHBOUND
RAMP ''D''			1430				1430	THE FULL LENGTH OF RAMP ''D'', WESTERLY SIDE
SOUTHBOUND TOTALS		1404	7452				8856	

NORTHBOUND RIGHT

STATION	STATION	NEW WOVEN WIRE FENCE (FT.)	NEW CHAIN LINK FENCE (FT.)	NEW WOVEN WIRE FENCE (MODIFIED, PASTURE) (FT.)	STEEL BRACE FOR FENCE CHAIN LINK (EA.)	STEEL BRACE FOR FENCE WOVEN WIRE (EA.)	REMOVAL OF EXISTING FENCE (MODIFIED)	REMARKS
NORTHBOUND RIGHT								
3284+60		14					14	
3284+90		26					26	
3288+86		26					26	
3289+65	3290+85	122					122	
3292+00						1		1 BRACE AND 1 CONCRETE BASE
3292+40		38					38	
3292+45	3293+45	110					110	
3294+00	3294+60	62					62	
3295+00		160					160	STREAM DETAIL
3296+50	RT-LT	380					380	REPLACE FENCE NB RT TO SB LT
3298+00	RT-LT	380					380	REPLACE FENCE NB RT TO SB LT
3312+10	3314+00	218					218	
3319+00		14					14	
3324+20		38					38	
3325+47		74					74	
3328+00		26					26	
3328+50		38					38	
3332+70		38					38	
3337+40		38					38	
3343+00		14					14	
3343+50		26					26	
3350+00		38					38	
3372+00		14					14	
3385+50								REPLACE CONCRETE BASE
3395+50		26					26	
3395+60		26					26	
3395+77		120				1	120	STREAM DETAIL
3403+50		26					26	
3406+10		14					14	
3408+70	3410+10	146					146	
3416+60		26					26	
3421+90		50					50	
3427+20		26					26	
3432+50		62					62	
3438+00	3442+30	430					430	
NORTHBOUND TOTALS		2846				2	2846	

DRAWN BY SQUAD B DATE 4/97
SQUAD LEADER DELLA SANTA
DESIGN FILE NO. /87A007B/DESIGN/DA007FRM.DGN
PRF FILE DA007FNI DATE PLOTTED 13-SEP-2000
PROJ. NAME FAIRFAX-FAIRFIELD-ST. ALBANS
PROJ. NO. IM 089-3(27)
SHEET 23 OF 370 SHEETS

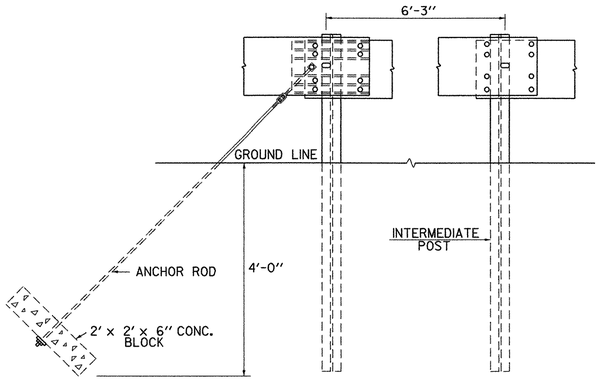

ANCHOR FOR STEEL BEAM RAIL

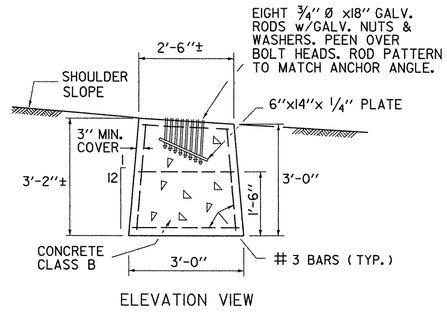

ELEVATION VIEW

ANCHOR FOR CABLE GUARD RAIL

DETAIL OF HEAVY DUTY ANCHORS TO BE REMOVED

NOT TO SCALE

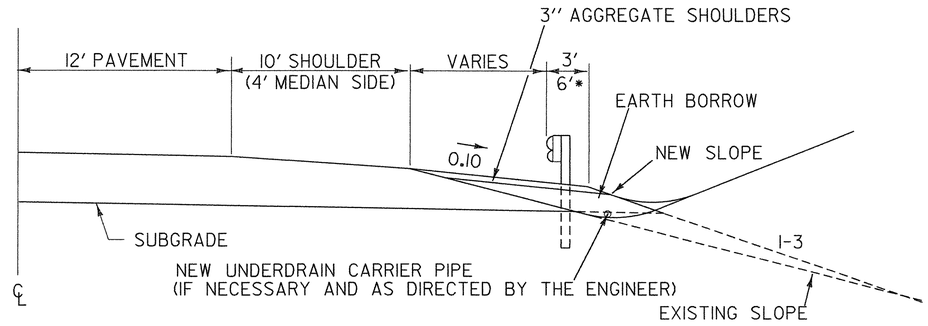

DETAIL OF SHOULDER TREATMENT AT GUARD RAIL WIDENING AREA

*OFFSET SHALL BE 6' BEHIND END OF MANUFACTURED TERMINAL SECTION.

STANDARD STEEL BEAM GUARD RAIL WITH STEEL POSTS FOR INTERSTATE SHALL BE FLARED AT THE RATE OF 1' IN 14' WITH THE MANUFACTURED TERMINAL SECTION END TREATMENT AS SHOWN ON STD. G-19.

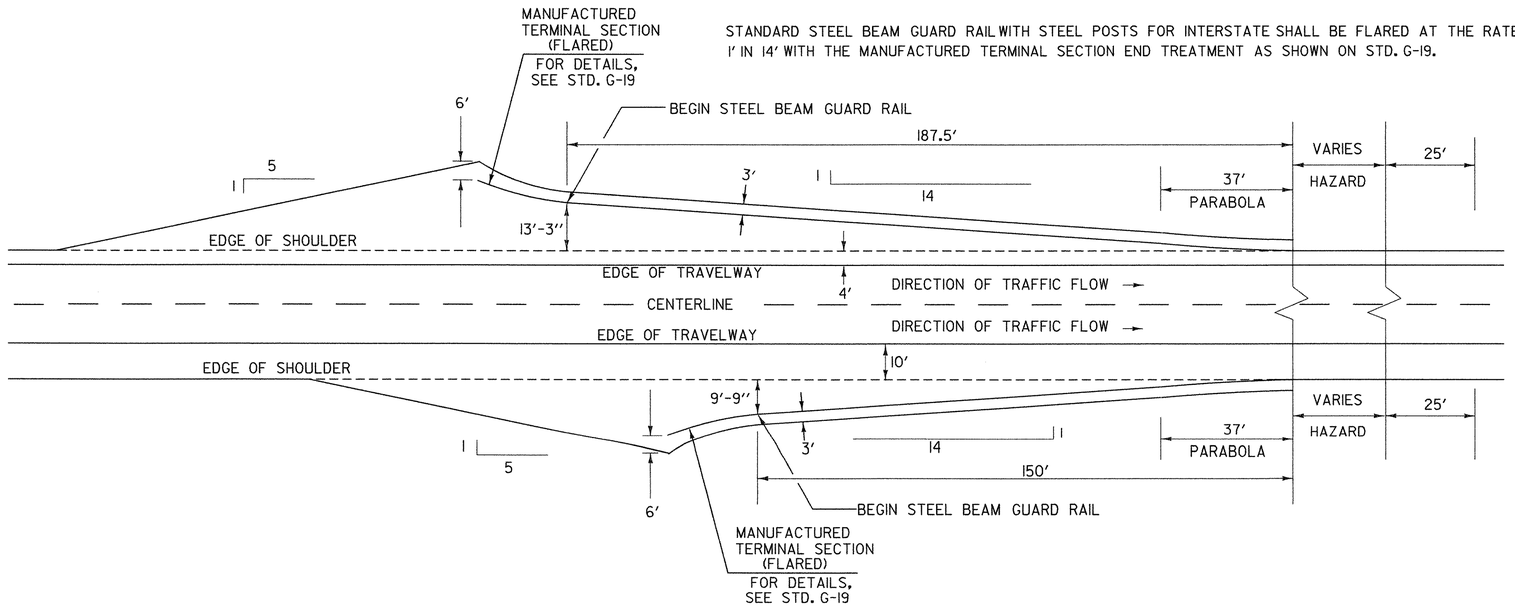

TYPICAL FLARE WITH MANUFACTURED TERMINAL SECTION---TO BE USED AS DIRECTED BY THE RESIDENT ENGINEER

NOT TO SCALE

DRAWN BY	SQUAD B
DATE	4/97
SQUAD LEADER	DELLA SANTA
DESIGN FILE NO.	/87A007B/DESIGN/DA007FRM.DGN
IPARM FILE	DA007MTS
DATE PLOTTED	19-AUG-2000
PROJ. NAME	FAIRFAX-FAIRFIELD-ST. ALBANS
PROJ. NO.	IM 089-3(27)

EROSION CONTROL - HAY BALE PLACEMENT

THIS DETAIL ILLUSTRATES THE HAY BALE CONFIGURATION THAT SHOULD BE USED TO PROTECT DROP INLETS THAT OCCUR ON NON-PAVED SURFACES.

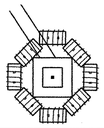

THIS DETAIL ILLUSTRATES THE HAY BALE CONFIGURATION THAT SHOULD BE USED TO PROTECT THE DRAINAGE DITCH IN A CUT SITUATION.

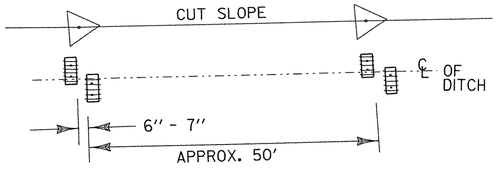

THIS DETAIL ILLUSTRATES THE HAY BALE CONFIGURATION THAT SHOULD BE USED TO COLLECT SEDIMENT FROM THE OUTLET OF A CULVERT WHICH DOES NOT OCCUR IN THE DRAINAGE DITCH.

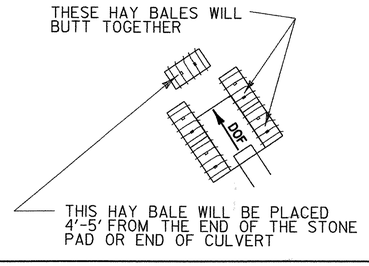

THIS DETAIL ILLUSTRATES THE HAY BALE AND EROSION MATTING CONFIGURATION THAT SHOULD BE USED TO PROTECT A SPECIAL DITCH WITH A GRADE OF LESS THAN 2%. IF THE SPECIAL DITCH IS GREATER THAN 2%, THEN USE STONE FILL INSTEAD OF EROSION MATTING.

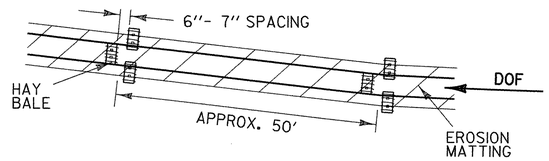

THIS DETAIL ILLUSTRATES THE HAY BALE CONFIGURATION THAT SHOULD BE USED TO PROTECT A DRAINAGE DITCH WHICH IS FORMED WHEN A FILL SLOPE TOUCHES DOWN ON AN EXISTING SIDESLOPE.

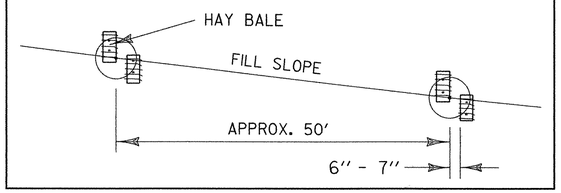

THIS DETAIL ILLUSTRATES THE HAY BALE CONFIGURATION THAT SHOULD BE USED ABOUT HALF WAY DOWN A FILL SLOPE TO COLLECT SEDIMENT FROM RUNOFF FROM THE FILL SLOPE.

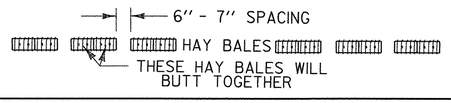

DOF
DOF
DIRECTION OF FLOW

THIS DETAIL ILLUSTRATES THE HAY BALE CONFIGURATION THAT SHOULD BE USED TO PROTECT THE INLET OR OUTLET OF A CULVERT IN THE DRAINAGE DITCH.

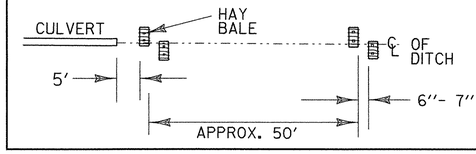

THIS DETAIL ILLUSTRATES THE HAY BALE AND SILT FENCE CONFIGURATION THAT SHOULD BE USED AT THE BOTTOM OF A FILL SLOPE TO PREVENT SEDIMENT FROM LEECHING BEYOND THE PROJECT AREA.

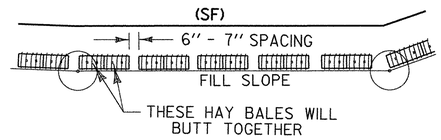

THIS DETAIL ILLUSTRATES THE HAY BALE AND SILT FENCE CONFIGURATION THAT SHOULD BE USED TO PROTECT AN INLET DITCH AT A CULVERT.

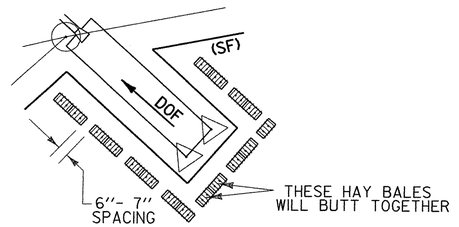

(SF) DENOTES GEOTEXTILE FOR SILT FENCE

GEOTEXTILE FOR SILT FENCE

REFER TO THE LAYOUTS AND STANDARD T-1 FOR PLACEMENT LOCATIONS.

SOUTHBOUND

3287+00 LT - 3296+30 LT
3297+80 LT - 3315+00 LT
3319+00 LT - 3325+00 LT
3329+00 LT - 3333+00 LT
3343+00 LT - 3363+00 LT
3330+00 RT - 3334+00 RT
3337+00 RT - 3341+00 RT
3343+00 RT - 3349+00 RT
3365+00 LT - 3385+00 LT
3387+00 LT - 3404+35 LT
3397+00 RT - 3401+00 RT
3402+75 RT - 3418+00 RT
3416+00 LT - 3421+00 LT
3424+50 LT - 3432+00 LT
3435+00 LT - 3440+00 LT
RAMP C 10+00 RT - 33+25 RT

NORTHBOUND

3287+00 RT - 3289+00 RT
3291+00 RT - 3295+00 RT
3297+50 RT - 3317+00 RT
3321+00 RT - 3337+00 RT
3330+00 LT - 3345+00 LT
3347+00 LT - 3402+00 LT
3350+00 RT - 3357+00 RT
3401+00 RT - 3406+00 RT
3402+50 LT - 3413+00 LT
3409+00 RT - 3412+50 RT
3415+00 RT - 3419+50 RT
3424+75 RT - 3439+00 RT

NOT TO SCALE

GENERAL NOTES

1. EROSION CONTROL MATERIALS WILL BE PLACED AS ILLUSTRATED ON NEWLY CONSTRUCTED OR DISTURBED AREAS AS SOON AS POSSIBLE.
2. DURING CONSTRUCTION EVERY EFFORT WILL BE MADE TO KEEP DEBRIS AND SEDIMENT OUT OF THE DITCH. HAY BALES WILL BE USED AS ILLUSTRATED TO INSURE BANK STABILITY.
3. THE HAY BALES SHALL BE INSPECTED AND CLEANED AS NEEDED.

SURVEYED BY		DATE	
DRAWN BY	SQUAD B	DATE	4/97
SQUAD LEADER	DELLA SANTA		
DESIGN FILE NO.	/87A007B/DESIGN/DA007FRM.DGN		
IPARM FILE	DA007ERI	DATE PLOTTED	19-AUG-2000
PROJ. NAME	FAIRFAX-FAIRFAX-ST. ALBANS		
PROJ. NO.	IM 089-3(27)		
SHEET	25 OF 370 SHEETS		

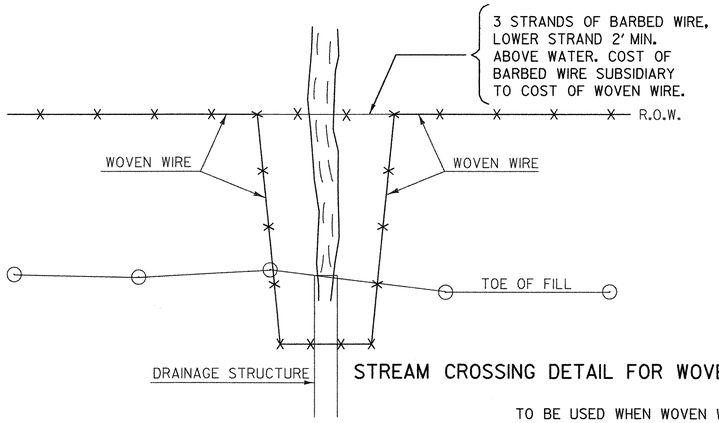

STREAM CROSSING DETAIL FOR WOVEN WIRE FENCE

TO BE USED WHEN WOVEN WIRE NOT DIRECTLY TIED INTO WINGWALL OR HEADWALL.

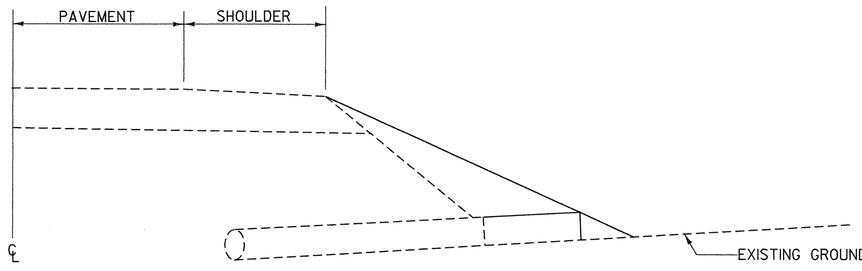

TYPICAL PROPOSED TREATMENT

INSTALL NEW PIPE, AND NEW END SECTION (IF APPLICABLE) AS REQUIRED. BACKFILL AND REGRADE SLOPE AND DITCH AS NECESSARY.

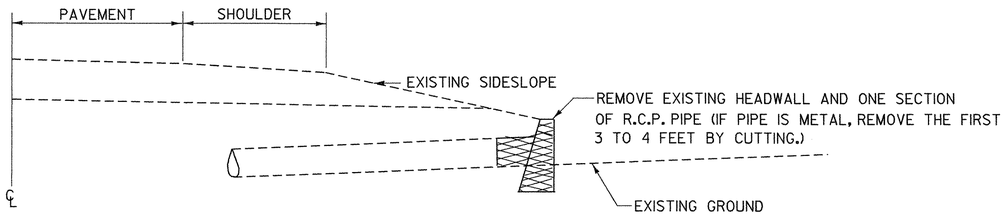

TYPICAL EXISTING CONDITION

HEADWALL TREATMENT DETAILS

FOR LOCATIONS AND QUANTITIES, SEE THE DRAINAGE SUMMARY SHEETS.

TEMPORARY TRAFFIC BARRIER---MODIFIED TUNNEL PASSAGEWAY FOR SMALL ANIMALS

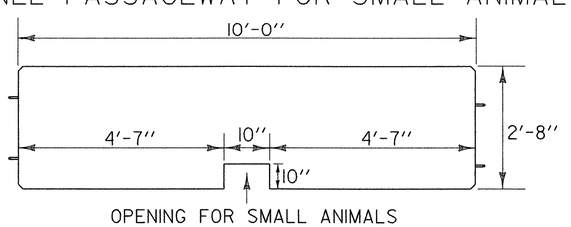

OPENING FOR SMALL ANIMALS

ELEVATION VIEW

NOT TO SCALE

WHERE TEMPORARY TRAFFIC BARRIER IS REQUIRED FOR THE SOUTHBOUND AND NORTHBOUND DETOURS EVERY 10TH SECTION WILL BE THIS MODIFIED BARRIER TO ALLOW SMALL ANIMALS TO CROSS UNDERNEATH.

ONE LINE OF BARBED WIRE SHALL BE PLACED 7" MIN. BELOW THE TOP STRAND OF THE WOVEN WIRE FENCE AND FASTENED TO EACH POST

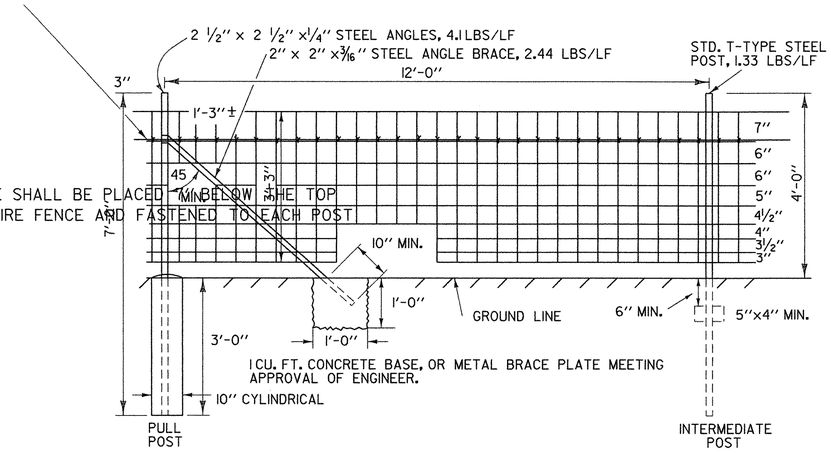

WOVEN WIRE FENCE WITH STEEL POSTS, MODIFIED FOR PASTURE USE

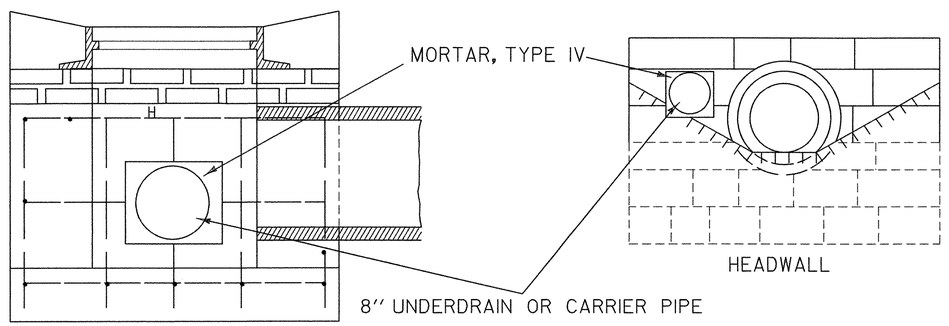

NOT TO SCALE

UNDERDRAIN OUTLET INSTALLATION AT DROP INLET OR HEADWALL

DRAWN BY	SQUAD B
SQUAD LEADER	DELLA SANTA
DATE	
DESIGN FILE NO.	/87A007B/DESIGN/DA007FRM.DGN
PRF FILE	DA007DTI
DATE PLOTTED	19-AUG-2000
PROJ. NAME	FAIRFAX-FAIRFIELD-ST. ALBANS
PROJ. NO.	IM 089-3(27)
SHEET	26 OF 370 SHEETS

NOTES

SLOPES

IF EXCAVATED MATERIAL IS TO BE USED TO REGRADE DESIGNATED AREAS OR TO FLATTEN SLOPES AND ELIMINATE GUARDRAIL, AS DIRECTED BY THE ENGINEER, THE FOLLOWING PROCEDURE WILL BE FOLLOWED:

1) AT THE DECISION OF THE ENGINEER TOPSOIL MAY BE STRIPPED FROM AREAS THAT ARE TO HAVE SLOPES FLATTENED OR FILLED. EXCAVATION AND PLACEMENT OF THIS MATERIAL WILL BE PAID UNDER ITEM 651.35 TOPSOIL.

2) THE STATE WILL PAY, AT CONTRACT UNIT PRICES, ANY WORK PERFORMED ON DRAINAGE STRUCTURES WHICH MUST BE EXTENDED OR RAISED.

3) AREA WILL BE SEEDED PER FORMULA SHOWN. PAID UNDER APPROPRIATE SEEDING ITEMS.

4) EXISTING GUARDRAIL WILL BE REMOVED, REMOVAL TO BE PAID AS ITEM 621.80, REMOVAL OF EXISTING GUARDRAIL. GUARDRAIL WILL NOT BE REMOVED UNTIL AREA IS COMPLETELY FILLED.

NOTE: WHEN THE FLATTENING OF SLOPES IN ONE AREA HAS BEEN STARTED IT SHALL BE COMPLETED BEFORE ANOTHER AREA IS STARTED EXCEPT IN THE FOLLOWING SITUATION:

EXTREME CAUTION WILL BE TAKEN WHEN WORKING NEAR THE DETOURED TRAFFIC LANE WHEN FILLING IN AN AREA. A MINIMUM DISTANCE OF 30' WILL BE MAINTAINED BETWEEN THE WORK AREA AND THE DETOURED TRAFFIC. THIS MAY RESULT IN THE COMPLETION OF THE FILL AREA AFTER THE TRAFFIC HAS BEEN TRANSFERRED TO THE COMPLETED LANES.

THE RESIDENT ENGINEER WILL AT HIS DISCRETION, DESIGNATE SLOPE AREAS TO BE FLATTENED. TO AVOID POSSIBLE ROW LIMITATIONS SLOPE FLATTENING FOR ELIMINATION OF GUARDRAIL WILL TAKE PLACE IN MEDIAN AREAS ONLY. THE EXACT STATIONS AND QUANTITIES WILL BE DETERMINED IN THE FIELD. REVIEW BY THE AGENCY'S ARCHAEOLOGIST AND/OR WETLANDS EXPERTS MAY BE NEEDED BEFORE A LOCATION CAN BE FOUND ACCEPTABLE FOR WASTE DISPOSAL ON OR OFF THE RIGHT-OF-WAY.

FENCE

1) IF ADDITIONAL AREAS OF DOWN OR DAMAGED FENCE ARE ENCOUNTERED, THEY SHALL BE REPLACED UNDER THIS CONTRACT.

2) IN AREAS WHERE FENCE IS TO BE CLEARED, AN AREA APPROXIMATELY 5' WIDE SHALL BE CLEARED ON THE STATE'S SIDE OF RIGHT OF WAY. THE COST OF THIS CLEARING SHALL BE PAID UNDER ITEM NO. 201.11 CLEARING & GRUBBING (MOD.). THIS ALSO INCLUDES INDIVIDUAL TREES WITHIN THIS 5' RANGE.

3) THE EXISTING FENCE, WHICH INCLUDES POSTS AND FABRIC, THAT IS TO BE REMOVED WILL BECOME THE PROPERTY OF THE CONTRACTOR AND WILL BE REMOVED FROM THE PROJECT LIMITS. NO OLD POSTS WILL BE USED WITH NEW FABRIC.

DRAINAGE

1) WHEN CONCRETE PIPE IS RELAYED OR EXTENDED, THE FINAL THREE SECTIONS SHALL BE RESTRAINED WITH CONNECTING DEVICES AS DESCRIBED IN SECTION 601.07 OF THE VERMONT STANDARD SPECIFICATIONS FOR CONSTRUCTION.

2) WHEN IT IS NOTED ON THE PLANS THAT 2-3-4 SECTIONS OF CONCRETE PIPE ARE TO BE RELAYED THIS IS ONLY AN ESTIMATE. AS EXCAVATION IS PERFORMED, THE RESIDENT ENGINEER WILL DETERMINE HOW MUCH MUST BE RELAYED.

3) AN ESTIMATED QUANTITY OF CONCRETE PIPE HAS BEEN ADDED TO THE PLANS SO THAT DAMAGED CONCRETE PIPE MAY BE REPLACED INSTEAD OF RELAYED.

4) ANY PIPE WHICH IS REMOVED AND NOT RELAYED SHALL BECOME THE PROPERTY OF THE CONTRACTOR AND SHALL BE REMOVED FROM THE STATE'S RIGHT-OF-WAY.

5) TRENCH EARTH AND STONE FILL QUANTITIES SHOWN ON THESE PLANS ARE ESTIMATES ONLY.

6) A QUANTITY OF GRANULAR BACKFILL FOR STRUCTURES HAS BEEN ADDED TO THE PROJECT FOR POSSIBLE USE IN RELAYING OR REPLACING PIPES.

7) IF END SECTIONS ARE TO BE USED ON R.C.P. PIPES, METAL END SECTIONS OF A LARGER SIZE SHALL BE USED AND PAID AS METAL END SECTIONS. A QUANTITY OF VARIOUS SIZED END SECTIONS HAVE BEEN ESTIMATED FOR USE BY THE RESIDENT ENGINEER.

8) SOME OF THE DRAINAGE WORK WILL REQUIRE THE CONTRACTOR TO REMOVE TREES AND BRUSH. THE COST OF THIS WORK WILL BE PAID UNDER THE ITEM 201.10, CLEARING AND GRUBBING.

9) AN ESTIMATED QUANTITY OF CLEANING PIPE CULVERTS IN PLACE HAS BEEN ADDED TO THE PROJECT.

10) MODIFICATIONS TO EXISTING DROP INLETS OR HEADWALLS TO ACCOMMODATE NEW UNDERDRAIN WILL BE DONE BY MECHANICAL MEANS. MORTAR, TYPE IV, WILL BE USED TO SEAL AROUND THE PIPE. THIS WILL BE PAID UNDER ITEM 204.21, TRENCH EXCAVATION OF ROCK. (SEE SHEET 26 FOR DETAIL.)

11) YIELDING MARKER POSTS, ITEM 619.16, SHALL BE USED THROUGHOUT PROJECT.

12) ITEM 601.995, CLEANING CULVERT PIPE IN PLACE (MODIFIED) (0-24'' DIA. INCLUSIVE): THE MODIFICATION IS TO FLUSH EXISTING UNDERDRAIN AS DIRECTED BY THE ENGINEER.

GENERAL

1) IF A MINOR PROBLEM, NOT CAUSED BY THE CONTRACTOR'S NEGLIGENCE, WITH DRAINAGE, FENCE OR OTHER ITEMS IS DISCOVERED BY THE ENGINEER, DISTRICT TRANSPORTATION ADMNISTRATOR OR THE CONTRACTOR DURING CONSTRUCTION, WHICH IS NOT NOTED IN THE PLANS, THE PROBLEM SHALL BE CORRECTED UNDER THIS CONTRACT, AS DIRECTED BY THE ENGINEER.

2) CLEARING AND GRUBBING, ITEM 201.10, SHALL INCLUDE ALL CLEAR ZONE AND DRAINAGE AREAS.

PLOTTED BY	SQUAD B	DATE	4/97
NOTES BY	SQUAD B	DATE	4/97
SQUAD LEADER	DELLA SANTA		
DESIGN FILE NO.	/87A007B/DESIGN/DA007FRM.DGN		
IPARM FILE	DA007NOT	DATE PLOTTED	19-AUG-2000
PROJ. NAME	FAIRFAX-FAIRFIELD-ST. ALBANS		
PROJ. NO.	IM 089-3(27)		
SHEET 27 OF 370 SHEETS			

TYPICAL RUMBLE STRIP MILLING DETAIL

SECTION A-A

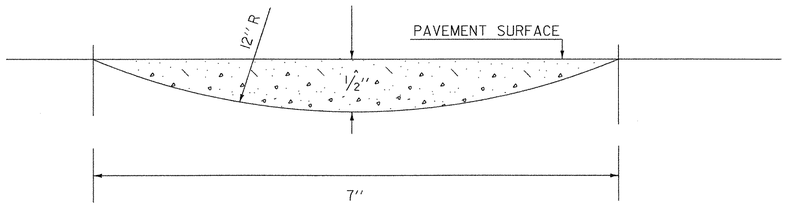

30'' FROM EDGE LINE (WHITE OR YELLOW) FOR ALL SHOULDERS 6' OR WIDER
6'' FROM EDGE LINES (WHITE OR YELLOW) FOR ALL SHOULDERS LESS THAN 6' WIDE WITH NO GUARDRAIL.

NOTE: STOP MILLED RUMBLE STRIPS WITH GUARDRAIL WITHIN 4' OF TRAVEL WAY

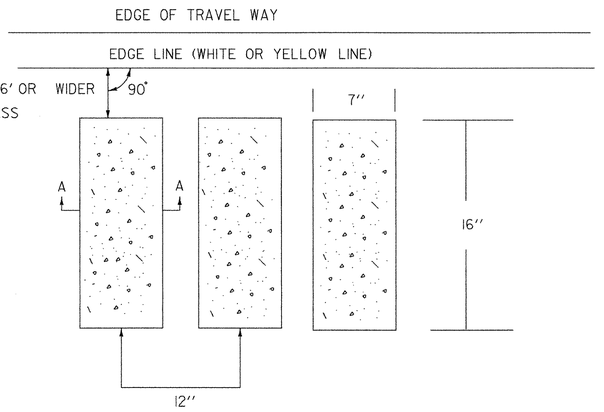

TYPICAL RUMBLE STRIP MILLING AT INTERCHANGES

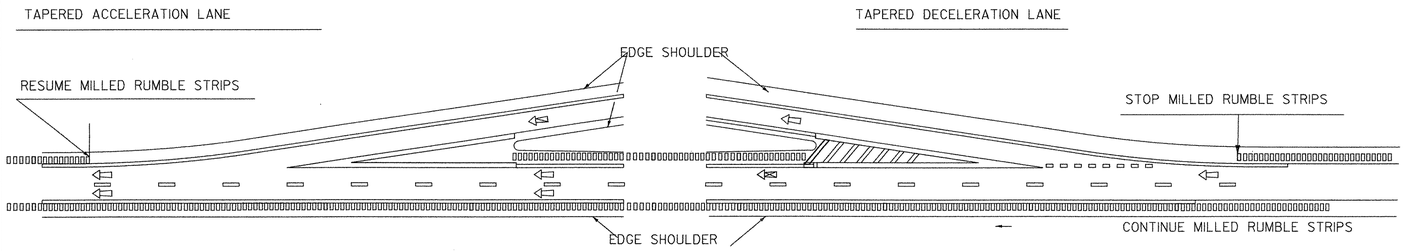

THIS TYPICAL MAYBE MODIFIED AT THE RESIDENT ENGINEER DISCRETION IF ACTUAL FIELD CONDITIONS NECESSITATE SUCH ACTIONS.

LOCATION OF STRIPS WILL VARY DEPENDING ON GUARDRAIL AND BRIDGE PRESENCE.

RUMBLE STRIP BRIDGE & DRAINAGE DETAIL

30'' FROM EDGE LINE (WHITE OR YELLOW) FOR ALL SHOULDERS 6' OR WIDER
6'' FROM EDGE LINE (WHITE OR YELLOW) FOR ALL SHOULDERS LESS THAN 6' WIDE WITH NO GUARDRAIL

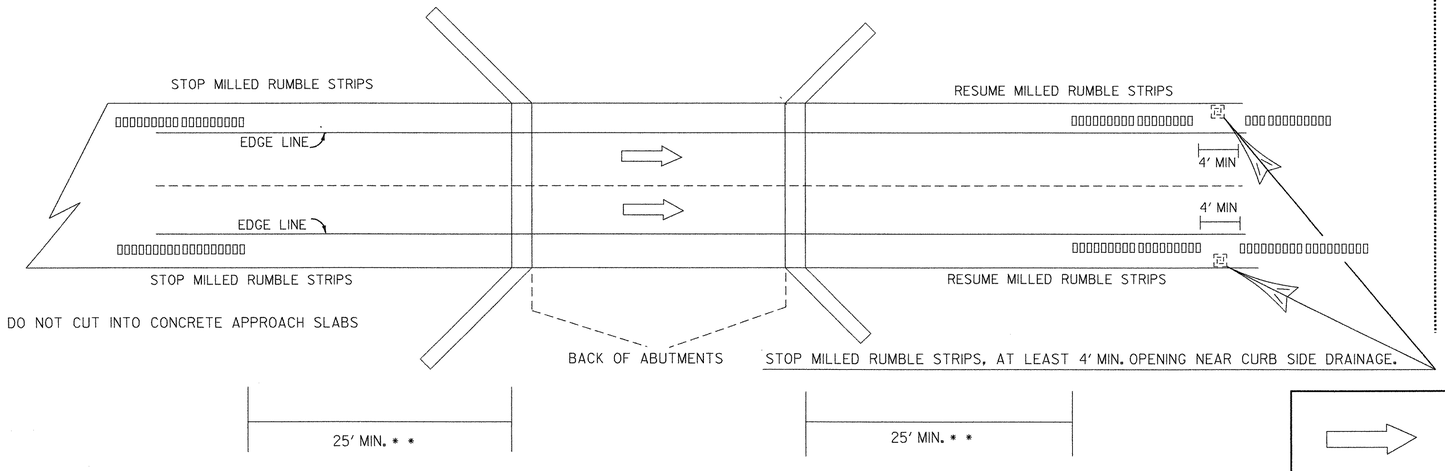

* * NOTE: APPROACH RAIL WILL DETERMINE MINIMUM DISTANCE IN SOME CASES.

MILLED RUMBLE STRIPS U TURN DETAIL

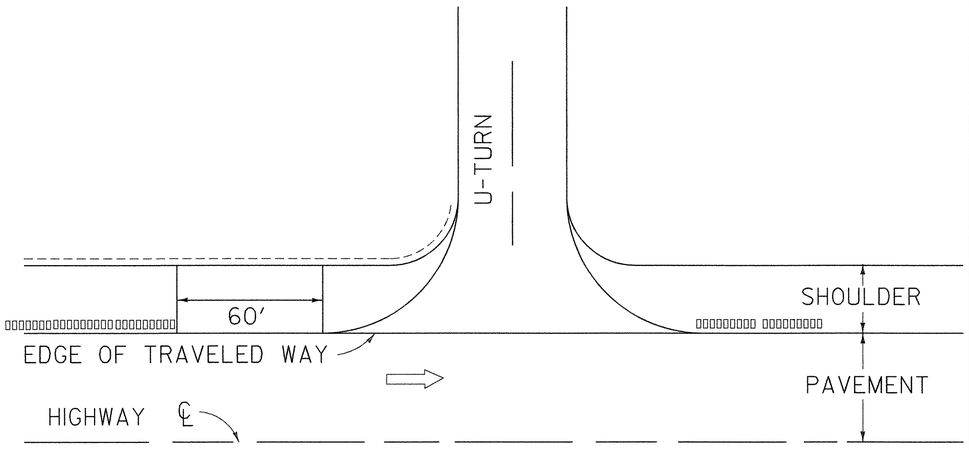

THIS DETAIL MAYBE MODIFIED AT THE RESIDENT ENGINEER DISCRETION IF ACTUAL FIELD CONDITIONS NECESSITATE SUCH ACTIONS.

NOT TO SCALE

LEGEND

DIRECTION OF TRAFFIC FLOW

MILLED RUMBLE STRIPS

PROJECT: FAIRFAX - FAIRFIELD - ST. ALBANS	PROJECT NO.: IM 089-3(27)
DESIGN FILE NAME: /87A007B/DESIGN/DA007FRM.DGN	
IPARM FILE NAME: DA007RUM	PLOT DATE: 19-AUG-2000
SURVEYED BY: ORVIS	SURVEY DATE:
SQUAD LEADER: DELLA SANTA	DRAWN BY: SQUAD B
	SHEET: 28 OF 370

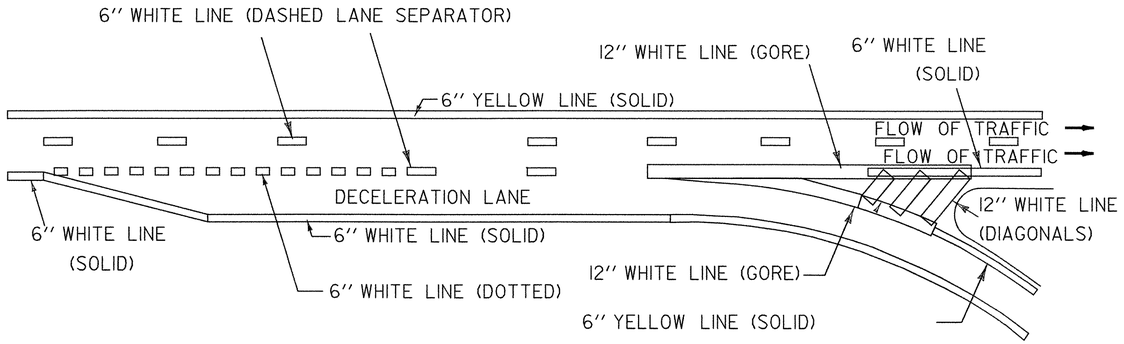

INTERCHANGE 19 EXIT RAMP D SOUTHBOUND

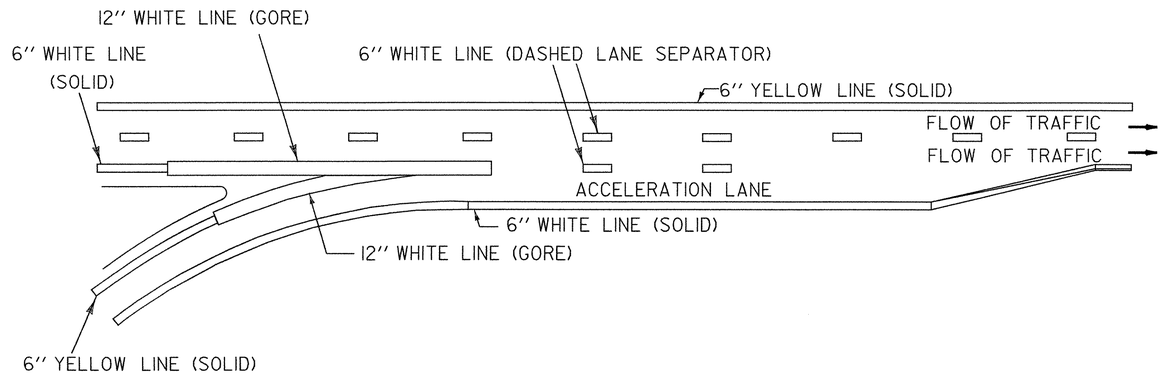

INTERCHANGE 19 ON RAMP C SOUTHBOUND

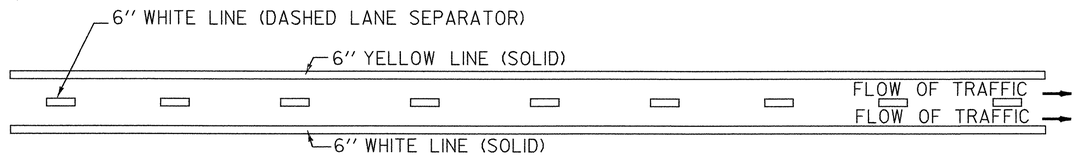

TYPICAL SOUTHBOUND MARKINGS

DURABLE 6'' WHITE LINE

STA. 3282+50 CL - STA. 3444+54 CL (DASHED)
STA. 3282+50 LT - STA. 3401+85 LT END TAPER RAMP C (SOLID)
STA. 3401+85 LT END TAPER RAMP C - STA. 10+66 RT RAMP C (SOLID)
STA. 3409+50 LT GORE RAMP C - STA. 3434+68 LT GORE RAMP D (SOLID)
STA. 3435+68 LT ALONG RAMP D- STA. 3439+00 LT (DOTTED)
STA. 3439+00 LT ALONG RAMP D- STA. 3443+54 LT (SOLID)
RAMP D, RIGHT, TO VT 104 INTERSECTION (SOLID)

DURABLE 12'' WHITE LINE

STA. 3408+60 LT - STA. 3409+50 LT (GORE EXIT FROM RAMP C)(SOLID)
STA. 3434+68 LT - STA. 3435+68 LT GORE ENTRANCE TO RAMP D) (SOLID)

DURABLE 6'' YELLOW LINE

STA. 3280+00 RT - STA. 3443+54 RT (SOLID)
RAMP C 10+66 LT - 28+00 LT (SOLID)
RAMP D, LEFT, TO ST. ALBANS SOUTH STATE HIGHWAY INTERSECTION (SOLID)

TYPICAL SOUTHBOUND PAVEMENT MARKINGS

NOT TO SCALE

PROJECT: FAIRFAX-FAIRFIELD-ST. ALBANS	PROJECT NO.: IM 089-3(27)
DESIGN FILE NAME: /87A007B/DESIGN/DA007FRM.DGN	
IPARM FILE NAME: DA007SPM.I	PLOT DATE: 19-AUG-2000
SURVEYED BY:	SURVEY DATE:
SQUAD LEADER: DELLA SANTA	DRAWN BY: SQUAD B
	SHEET: 29 OF 370

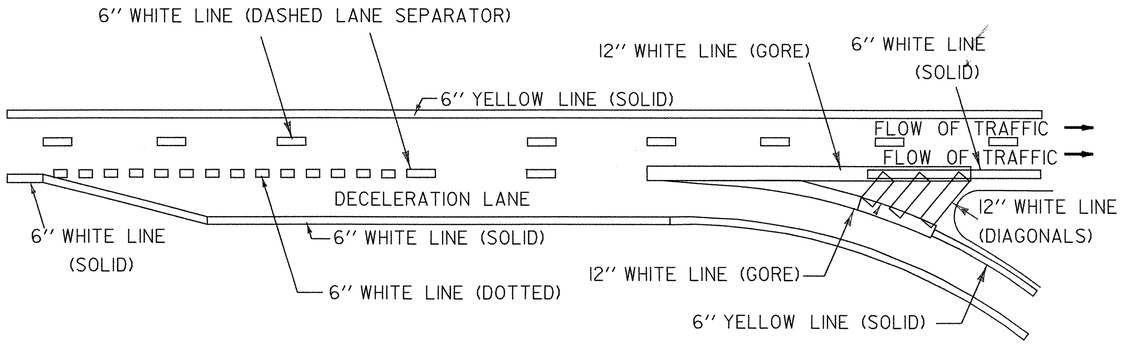

INTERCHANGE 19 EXIT RAMP B NORTHBOUND

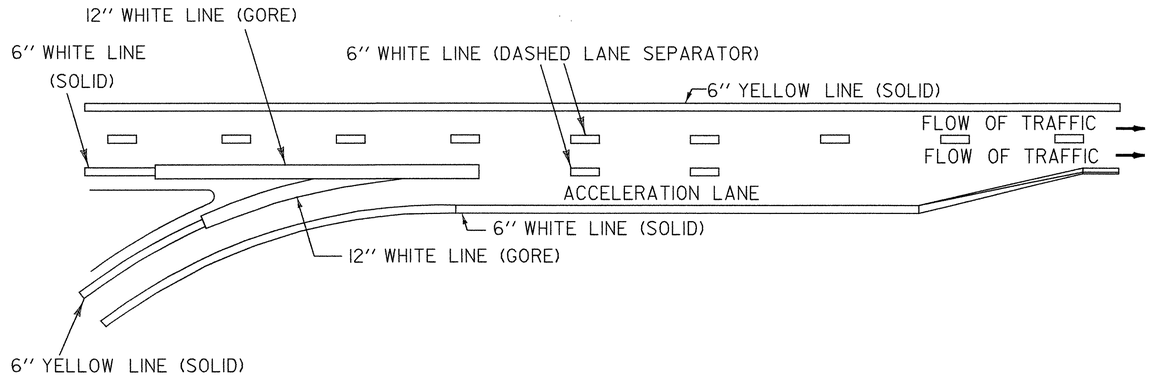

INTERCHANGE 19 ON RAMP A NORTHBOUND

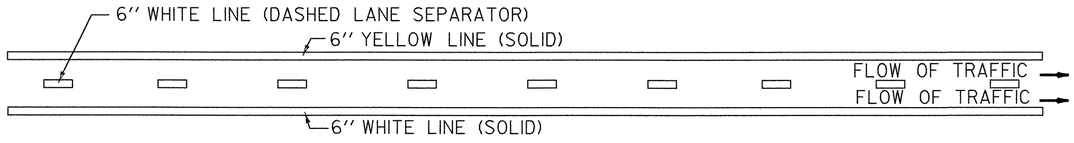

DURABLE 6'' WHITE LINE

STA. 3282+15 CL - STA. 3443+30 CL (DASHED)
STA. 3282+15 RT - STA. 3408+86 RT (BEGIN TAPER RAMP B)(SOLID)
STA. 3408+86 RT (BEGIN TAPER RAMP B) - STA. 3413+50 RT (ALONG RAMP B) (SOLID)
STA. 3414+50 RT (GORE RAMP B) - STA. 3420+50 RT (GORE RAMP A) (SOLID)
STA. 3420+50 RT (ALONG RAMP A) - STA. 3443+30 RT (SOLID)
RAMP A MM 0.00 RT - 0.20 RT (SOLID)
RAMP B MM 0.017 RT - 0.308 RT (SOLID)
ST. ALBANS SOUTH STATE HIGHWAY:
RAMP B MM 0.308 RT - VT 104 INTERSECTION RT (SOLID)
RAMP B INTERSECTION RT - RAMP A MM 0.00 RT (SOLID)

DURABLE 6'' YELLOW LINE

STA. 3282+15 LT - STA. 3443+30 LT (SOLID)
RAMP A MM 0.00 LT - 0.20 LT (SOLID)
RAMP B MM 0.017 LT - 0.308 LT (SOLID)
ST. ALBANS SOUTH STATE HIGHWAY:
RAMP B MM 0.308 LT - VT 104 INTERSECTION LT (SOLID)
RAMP B INTERSECTION LT- RAMP A MM 0.00 LT (SOLID)

DURABLE 12'' WHITE LINE

GORE @ RAMP B
GORE @ RAMP A

TYPICAL NORTHBOUND PAVEMENT MARKINGS

NOT TO SCALE

PROJECT: FAIRFAX-FAIRFIELD-ST. ALBANS	PROJECT NO.: IM 089-3(27)
DESIGN FILE NAME: /87A007B/DESIGN/DA007FRM.DGN	
IPARM FILE NAME: DA007NPM.I	PLOT DATE: 19-AUG-2000
SURVEYED BY:	SURVEY DATE:
SQUAD LEADER: DELLA SANTA	DRAWN BY: SQUAD B
	SHEET: 30 OF 370

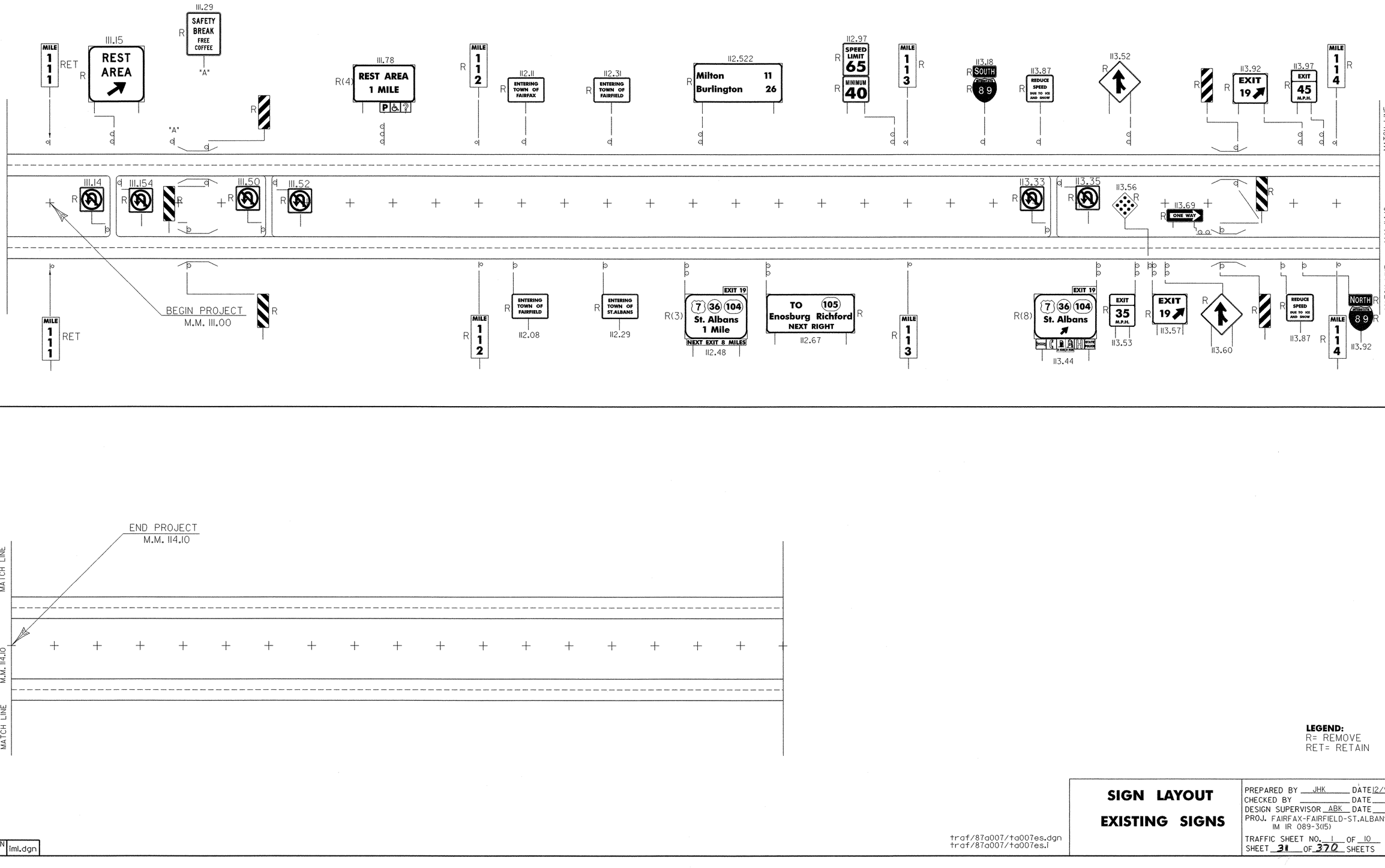

LEGEND:
R= REMOVE
RET= RETAIN

traf/87a007/ta007es.dgn
traf/87a007/ta007es.i

SIGN LAYOUT
EXISTING SIGNS

PREPARED BY JHK DATE 12/98
CHECKED BY _____ DATE ____
DESIGN SUPERVISOR ABK DATE ____
PROJ. FAIRFAX-FAIRFIELD-ST.ALBANS
IM IR 089-3(15)
TRAFFIC SHEET NO. 1 OF 10
SHEET 31 OF 370 SHEETS

M/L LOCATION SHEET | iml.dgn

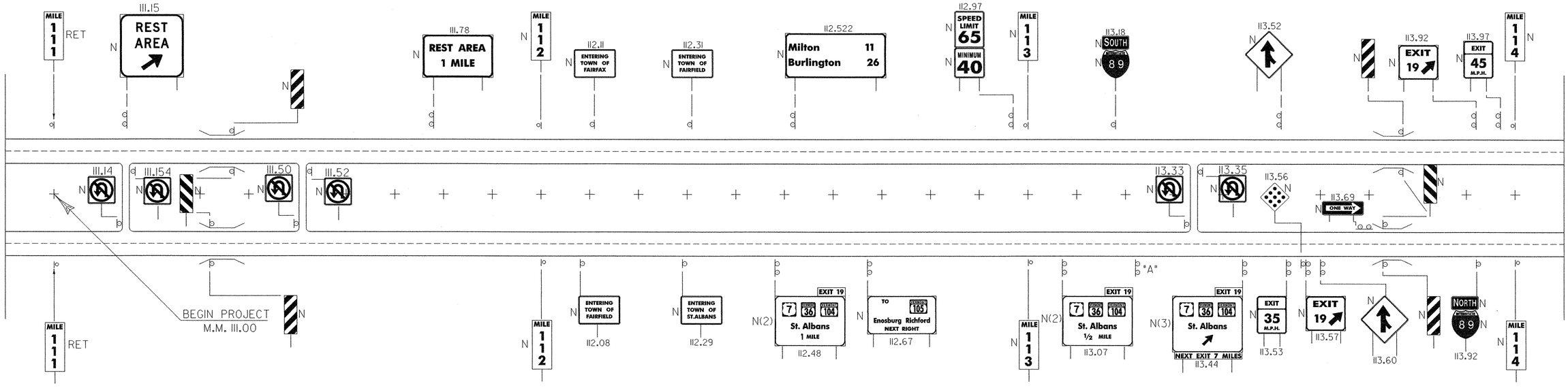

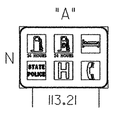

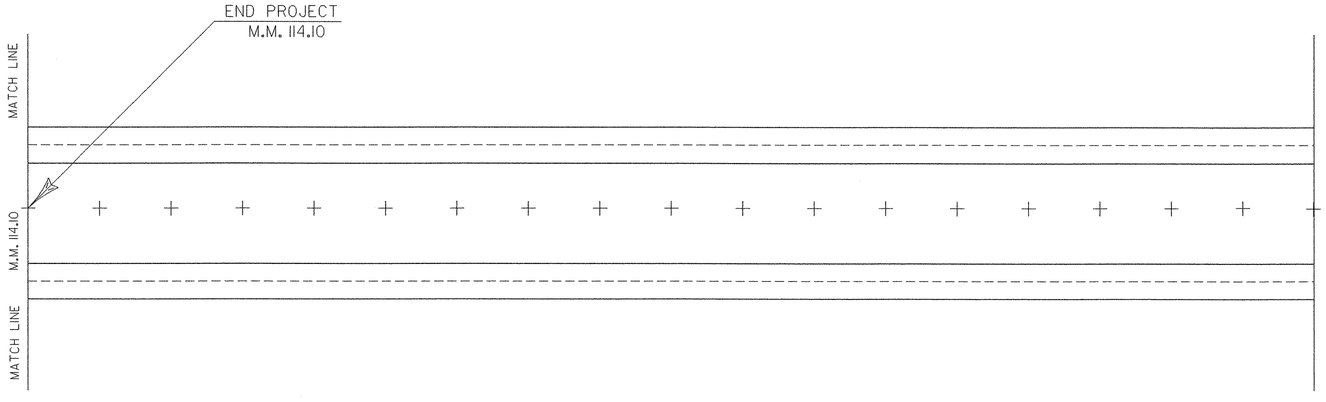

LEGEND:
N= NEW
RET= RETAIN

SIGN LAYOUT
NEW SIGNS

PREPARED BY JHK DATE 12/98
CHECKED BY _____ DATE ____
DESIGN SUPERVISOR ABK DATE ____
PROJ. FAIRFAX-FAIRFIELD-ST.ALBANS
IM IR 089-3( )
SHEET 32 OF 370 SHEETS

traf/87a007/ta007ns.dgn
traf/87a007/ta007ns.i

M/L LOCATION SHEET | iml.dgn

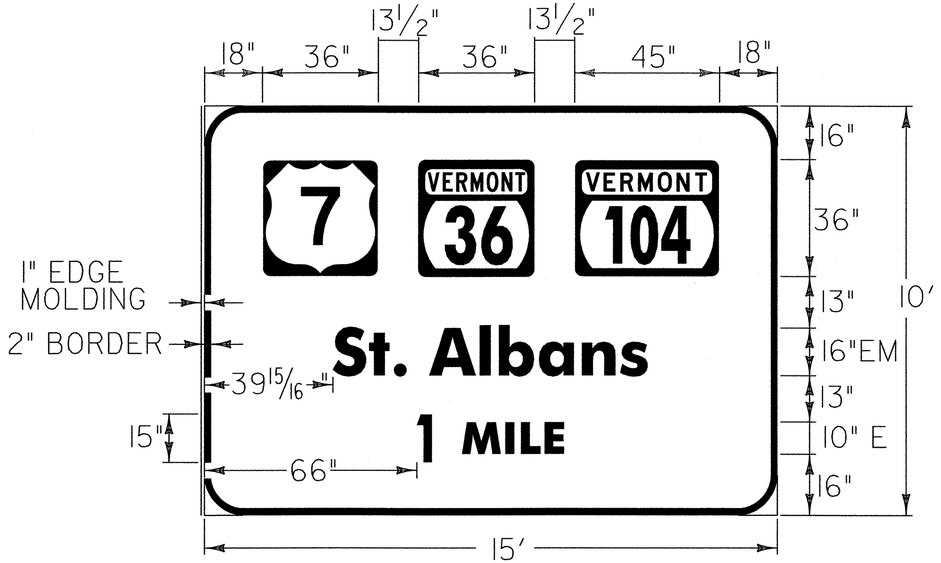

MM 112.48 NB.

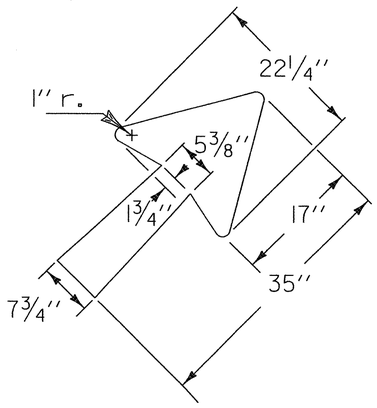

STANDARD ARROW AT 45° DETAIL

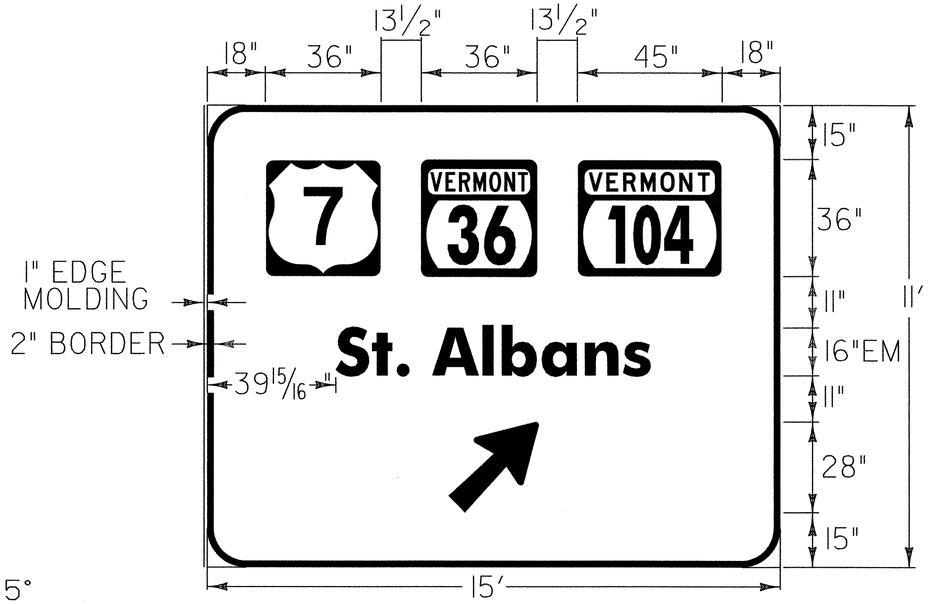

MM 113.44 NB.
CENTER ARROW

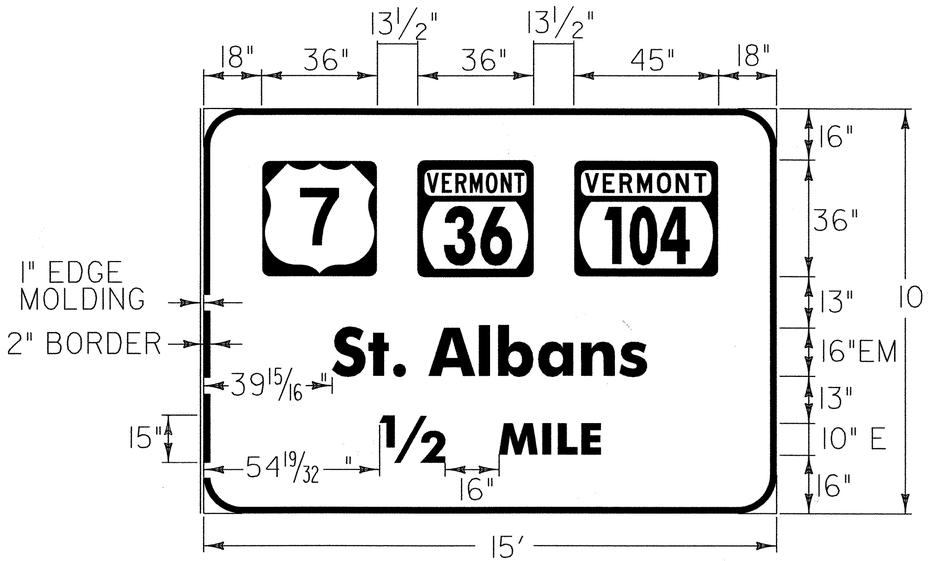

MM 113.07 NB.

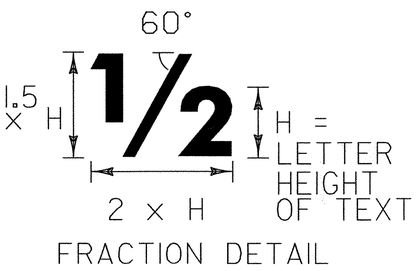

FRACTION DETAIL

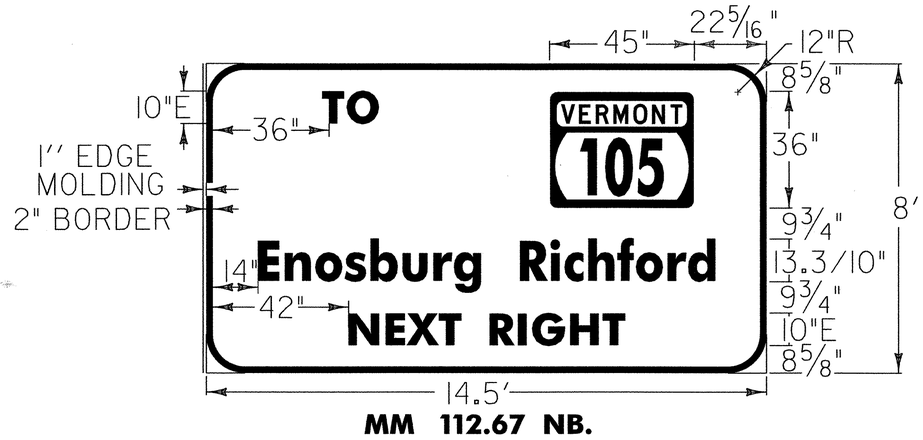

MM 112.67 NB.

COLORS: THE SIGNS SHALL HAVE A REFLECTORIZED WHITE TEXT AND BORDER ON A REFLECTORIZED GREEN BACKGROUND.

SIGN DETAILS

/87A007B/DESIGN/DA007FRM.DGN
/87A007B/DESIGN/DA007SD.I

PREPARED BY JHK DATE 12/98
CHECKED BY DATE
DESIGN SUPERVISOR ABK DATE 12/98
PROJ. FAIRFAX-FAIRFIELD-ST.ALBANS
IM 089-3 (27)

PLOTTED: 17-NOV-2000
SHEET 33 OF 370 SHEETS

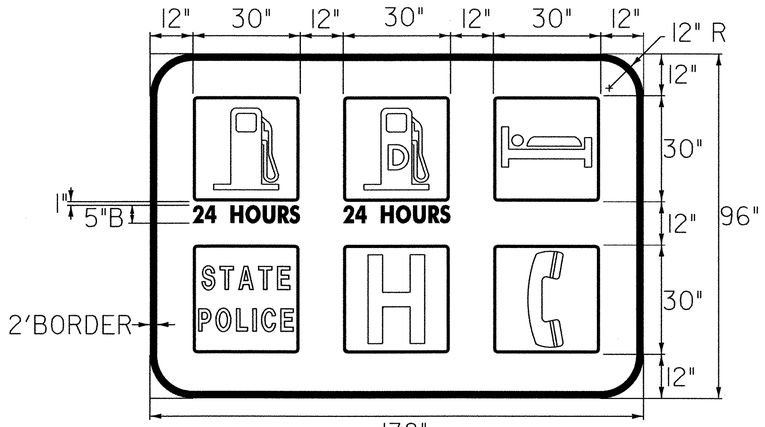

VD 367

WHITE SYMBOLS, BORDER & TEXT
WITH BLUE BACKGROUND

MM 113.21 NB.

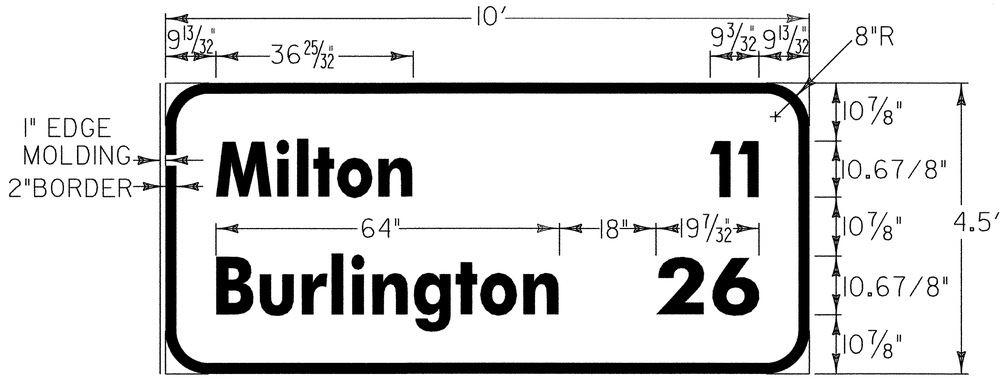

MM 112.522 SB.

REFLECTORIZED WHITE TEXT, BORDER
WITH REFLECTORIZED GREEN BACKGROUND

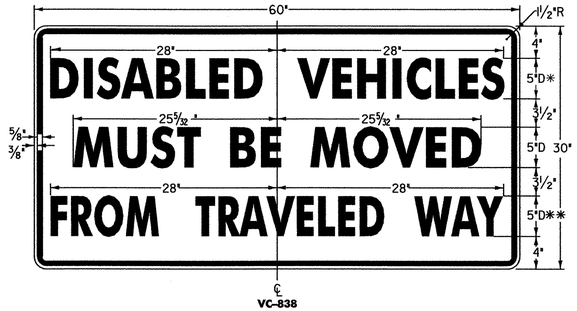

VC-838

* REDUCE SPACING BY 5%
** REDUCE SPACING BY 13%

COLORS: BLACK TEXT AND BORDER
WITH REFLECTORIZED ORANGE BACKROUND

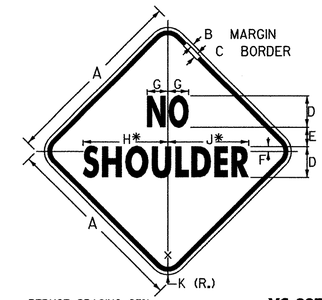

* REDUCE SPACING 25%

VC-827

	DIMENSIONS(INCHES)									
SIGN	A	B	C	D	E	F	G	H	J	K
STD.	30	1/2	3/4	5C	3	3/4	3 11/32	13 11/16	13 1/16	1 1/8
EXPWY.	36	5/8	7/8	6C	3 1/2	1	4	16 1/2	15 3/4	2 1/4
FWY.	48	3/4	1 1/4	8C	5	1 1/4	5 11/32	21 1/8	20 7/8	3

COLORS
LEGEND & BORDER- BLACK (NON-REFL)
BACKROUND - ORANGE (REFL)

SIGN DETAILS

/87A007B/DESIGN/DA007FRM.DGN
/87A007B/DESIGN/DA007SDI.I

PREPARED BY JHK DATE 12/98
CHECKED BY _____ DATE _____
DESIGN SUPERVISOR ABK DATE 12/98
PROJ. FAIRFAX-FAIRFIELD-ST.ALBANS
IM 089-3 (27)

PLOTTED: 17-NOV-2000
SHEET 34 OF 370 SHEETS

STATE OF VERMONT
AGENCY OF TRANSPORTATION

TRAFFIC SIGN SUMMARY SHEET

MILEMARKER, STATION, OR SIGN NUMBER	SIGN LEGEND	SIGN DIMENSIONS			NEW & SALVAGED SIGNS				EXIST POST		NEW SIGN POSTS																			REMARKS	SIGN DETAIL	
		EA	WIDTH (In)	HEIGHT (In)	"A"	"B"	SALV SIGN	SALV TIS	RETAIN	SALVAGE	NO. OF POSTS	FLANGED CHANNEL lb/ft 1.12	FLANGED CHANNEL lb/ft 2.0	FLANGED CHANNEL lb/ft 3.0	SQUARE STEEL (In) 1.75 lb/ft 1.88	SQUARE STEEL (In) 2.0 lb/ft 2.16	SQUARE STEEL (In) 2.5 lb/ft 3.35	ANCHOR	SLEEVE	TUBULAR ALUMINUM Ø (In) 3.0 lb/ft 1.3	TUBULAR ALUMINUM Ø (In) 4.0 lb/ft 1.7	TUBULAR ALUMINUM Ø (In) 4.0 MOD lb/ft 1.7	TUBULAR STEEL Ø (In) FOUNDATION	TUBULAR STEEL Ø (In) 3.0 lb/ft 7.6	TUBULAR STEEL Ø (In) 3.5 lb/ft 9.0	TUBULAR STEEL Ø (In) 4.0 lb/ft 10.8	TUBULAR STEEL Ø (In) 5.0 lb/ft 14.6	W-SHAPE STEEL FTG. SIZE 24"	W-SHAPE STEEL FTG. SIZE 30"	W-SHAPE STEEL WEIGHT	W-SHAPE STEEL POST SIZE	SIGN FRAMEMENT REQUIRED		DETAIL ON SHEET NUMBER	STD. SHEET NUMBER
												OPTION ITEMS																							
	NORTHBOUND																																
111.14LT.		1	36	36	9						1			X																	R3-4		E-143
111.30LT.		1	12	36	3						1			X																	OM-1		E-107
111.30RT.		1	12	36	3						1			X																	OM-1		E-107
111.50LT.		1	36	36	9						1			X																	R3-4		E-143
112.00RT.		1	12	48	4						1			X																	DIO-3		E-139
112.08RT.		1	36	24	6						1			X																			E-131
112.29RT.		1	36	24	6						1			X																			E-131
112.48RT.		1	96	24.5	16.33																											E-131
		1	180	120		150					2																	2	771	W8X21		SET BOLT TENSION TO 25 KIPS	33	
112.67RT.	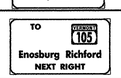	1	174	96		116					2																	2		524	W6X15		SET BOLT TENSION TO 24 KIPS	33	
113.00RT.		1	12	48	4						1			X																	DIO-3		E-139
113.07RT.	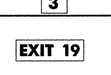	1	96	24.5	16.33																												
	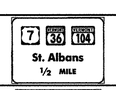	1	180	120		150					2																	2	780	W8X21		SET BOLT TENSION TO 25 KIPS	33	
113.21RT.		1	138	96		92					2																	2		500	W6X15		VD-367 SET BOLT TENSION TO 19 KIPS	34	
113.33LT.		1	36	36	9						1			X																	R3-4		E-143
												FT	FT	FT 118	FT	FT	FT		EA	LB	LB	LB		LB	LB	LB	LB							
	TOTALS		SF 86	SF 508	EA.	SF						FT 118			FT					LB			EA.	LB				EA. 4	EA. 4	LB 2575				

FINAL POST LENGTHS ARE TO BE DETERMINED IN THE FIELD. POST SIZES ARE COMPUTED BASED ON INFORMATION FURNISHED ON THE STANDARD SHEETS AND THE TRAFFIC & SAFETY DIVISION'S "SIGN POST DESIGN GUIDELINE."

PROJECT: FAIRFAX-FAIRFIELD-ST. ALBANS	PROJECT NO.: IM 089-3(27)
DESIGN FILE NAME: 87A007B/DESIGN/DA007FRM.DGN	
IPARM FILE NAME: DA007SSI.I	PLOT DATE: 19-AUG-2000
SURVEYED BY:	SURVEY DATE:
SQUAD LEADER: ANN KREIS	DRAWN BY: JHK
	SHEET: 35 OF 370

STATE OF VERMONT
AGENCY OF TRANSPORTATION

TRAFFIC SIGN SUMMARY SHEET

MILEMARKER, STATION, OR SIGN NUMBER	SIGN LEGEND	SIGN DIMENSIONS EA	WIDTH (In)	HEIGHT (In)	NEW & SALVAGED SIGNS "A"	"B"	SALV SIGN	SALV TIS	EXIST POST RETAIN	EXIST POST SALVAGE	NEW SIGN POSTS NO. OF POSTS	FLANGED CHANNEL lb/ft 1.12	2.0	3.0	SQUARE STEEL (In) 1.75 lb/ft 1.88	2.0 lb/ft 2.16	2.5 lb/ft 3.35	ANCHOR	SLEEVE	TUBULAR ALUMINUM Ø (In) 3.0 lb/ft 1.3	4.0 lb/ft 1.7	4.0 MOD lb/ft 1.7	TUBULAR STEEL Ø (In) FOUND-ATION	3.0 lb/ft 7.6	3.5 lb/ft 9.0	4.0 lb/ft 10.8	5.0 lb/ft 14.6	W-SHAPE STEEL FTG. SIZE 24"	30"	WEIGHT	POST SIZE	SIGN FRAME REQUIRED	REMARKS	SIGN DETAIL DETAIL ON SHEET NUMBER	STD. SHEET NUMBER
												OPTION ITEMS																									
	NORTHOUND CONT.																																			
113.44RT.	EXIT 19	1	96	24.5	16.33																														E-131
	7 36 104 St. Albans	1	180	132		165																												33	
	NEXT EXIT 7 MILES	1	162	24		27					2																		2	803	W8X21		SET BOLT TENSION TO 30 KIPS		E-131
113.53RT.	EXIT 35 M.P.H.	1	48	60		20					2									X													W13-2		E-150
113.56RT.		1	18	18	2.25						1			X																			OM-1		E-150
113.57RT.	EXIT 19	1	72	60		30					2												2	X											E-131
113.60RT.		1	48	48	16						2			X																			W4-1		E-150
113.69LT.	ONE WAY	1	48	60		20					2			X																			R6-1R		E-142
113.72LT.		1	12	36	3						1			X																			OM-1		E-107
113.72RT.		1	12	36	3						1			X																			OM-1		E-107
114.00RT.	NORTH	1	30	15	3.125																													M3-1		E-135
	INTERSTATE 89	1	36	36	9						1										X													M1-1		E-135
113.92RT.	MILE 114	1	12	48	4						1			X																			DI0-3		E-139

FINAL POST LENGTHS ARE TO BE DETERMINED IN THE FIELD. POST SIZES ARE COMPUTED BASED ON INFORMATION FURNISHED ON THE STANDARD SHEETS AND THE TRAFFIC & SAFETY DIVISION'S "SIGN POST DESIGN GUIDELINE."

	SF	SF	EA.	SF	FT	FT	LB	EA.	LB	EA.	EA.	LB
					FT FT FT 104	FT FT FT EA	LB 30 LB 29 LB		LB 183 LB LB LB			
TOTALS	57	262			104		59	2	183		2	803
N.B. TOTALS	143	770			222		59	2	183	4	6	3378

PROJECT: FAIRFAX-FAIRFIELD-ST. ALBANS	PROJECT NO.: IM 089-3(27)
DESIGN FILE NAME: 87A007B/DESIGN/DA007FRM.DGN	
IPARM FILE NAME: DA007SS2.I	PLOT DATE: 19-AUG-2000
SURVEYED BY:	SURVEY DATE:
SQUAD LEADER: ANN KREIS	DRAWN BY: JHK
	SHEET: 36 OF 370

STATE OF VERMONT
AGENCY OF TRANSPORTATION

TRAFFIC SIGN SUMMARY SHEET

MILEMARKER, STATION, OR SIGN NUMBER	SIGN LEGEND	SIGN DIMENSIONS EA	SIGN DIMENSIONS WIDTH (in)	SIGN DIMENSIONS HEIGHT (in)	NEW & SALVAGED SIGNS "A"	NEW & SALVAGED SIGNS "B"	NEW & SALVAGED SIGNS SALV SIGN	NEW & SALVAGED SIGNS SALV TIS	EXIST POST RETAIN	EXIST POST SALVAGE	NO. OF POSTS	FLANGED CHANNEL lb/ft 1.12	FLANGED CHANNEL lb/ft 2.0	FLANGED CHANNEL lb/ft 3.0	SQUARE STEEL (in) 1.75 lb/ft 1.88	SQUARE STEEL (in) 2.0 lb/ft 2.16	SQUARE STEEL (in) 2.5 lb/ft 3.35	ANCHOR	SLEEVE	TUBULAR ALUMINUM Ø (in) 3.0 lb/ft 1.3	TUBULAR ALUMINUM Ø (in) 4.0 lb/ft 1.7	TUBULAR ALUMINUM Ø (in) 4.0 MOD lb/ft 1.7	FOUNDATION	TUBULAR STEEL Ø (in) 3.0 lb/ft 7.6	TUBULAR STEEL Ø (in) 3.5 lb/ft 9.0	TUBULAR STEEL Ø (in) 4.0 lb/ft 10.8	TUBULAR STEEL Ø (in) 5.0 lb/ft 14.6	W-SHAPE STEEL FTG. SIZE 24"	W-SHAPE STEEL FTG. SIZE 30"	W-SHAPE STEEL WEIGHT	W-SHAPE STEEL POST SIZE	SIGN FRAME REQUIRED	REMARKS	SIGN DETAIL DETAIL ON SHEET NUMBER	SIGN DETAIL STD. SHEET NUMBER
												OPTION ITEMS																							
	SOUTHBOUND																																		
114.00RT.	MILE 114	1	12	48	4						1			X																			D10-3		E-139
113.97RT.	EXIT 45 M.P.H.	1	48	60		20					2									X													W13-2		E-150
113.92RT.	EXIT 19	1	72	60		30					2												2	X											E-131
113.77RT.		1	12	36	3						1			X																			OM-1		E-107
113.77LT.		1	12	36	3						1			X																			OM-1		E-107
113.52LT.		1	36	36	9						1			X																			R3-4		E-143
113.52RT.		1	48	48	16						2			X																			W4-1		E-150
113.35LT.		1	36	36	9						1			X																			R3-4		E-143
113.18RT.	SOUTH	1	30	15	3.125																												M3-3		E-135
	INTERSTATE 89	1	36	36	9						1										X												M1-1		E-135
113.00RT.	MILE 113	1	12	48	4						1			X																			D10-3		E-139
112.97RT.	SPEED LIMIT 65	1	48	60		20																											R2-1		E-142
	MINIMUM 40	1	48	48	16						2												2	X									VR-141		E-142
112.522RT.	Milton 11 Burlington 26	1	120	54		45					2												~~2~~	~~X~~									RETAINED EXISTING FDNS	34	
112.31RT.	ENTERING TOWN OF FAIRFIELD	1	36	24	6						1			X																					E-131
												FT	FT	FT 119	FT	FT	FT		EA	LB 30	LB 29	LB		LB 607	LB	LB	LB								
					SF	SF	EA.	SF				FT			FT					LB			EA.	LB				EA.	EA.	LB					
	TOTALS				82	115						119								59			6	607											

FINAL POST LENGTHS ARE TO BE DETERMINED IN THE FIELD. POST SIZES ARE COMPUTED BASED ON INFORMATION FURNISHED ON THE STANDARD SHEETS AND THE TRAFFIC & SAFETY DIVISION'S "SIGN POST DESIGN GUIDELINE."

PROJECT: FAIRFAX-FAIRFIELD-ST. ALBANS
PROJECT NO.: IM 089-3(27)
DESIGN FILE NAME: 87A007B/DESIGN/DA007FRM.DGN
IPARM FILE NAME: DA007SS3.1
SURVEYED BY:
SQUAD LEADER: ANN KREIS
PLOT DATE: 17-NOV-2000
SURVEY DATE:
DRAWN BY: JHK
SHEET: 37 OF 370

STATE OF VERMONT
AGENCY OF TRANSPORTATION

TRAFFIC SIGN SUMMARY SHEET

MILEMARKER, STATION, OR SIGN NUMBER	SIGN LEGEND	SIGN DIMENSIONS EA	WIDTH (in)	HEIGHT (in)	NEW & SALVAGED SIGNS "A"	"B"	SALV SIGN	SALV TIS	EXIST POST RETAIN	EXIST POST SALVAGE	NEW SIGN POSTS NO. OF POSTS	FLANGED CHANNEL lb/ft 1.12	2.0	3.0	SQUARE STEEL (in) lb/ft 1.75 1.88	2.0 2.16	2.5 3.35	ANCHOR	SLEEVE	TUBULAR ALUMINUM Ø (in) lb/ft 3.0 1.3	4.0 1.7	4.0 MOD 1.7	TUBULAR STEEL Ø (in) FOUNDATION	lb/ft 3.0 7.6	3.5 9.0	4.0 10.8	5.0 14.6	W-SHAPE STEEL FTG. SIZE 24"	30"	WEIGHT	POST SIZE	SIGN FRAME REQUIRED	REMARKS	SIGN DETAIL DETAIL ON SHEET NUMBER	STD. SHEET NUMBER
												OPTION ITEMS																									
	SOUTHBOUND CONT.																																			
112.11RT.	ENTERING TOWN OF FAIRFAX	1	36	24	6						1			X																				E-131
112.00RT.	MILE 1 1 2	1	12	48	4						1			X																			DI0-3		E-139
111.78RT.	REST AREA 1 MILE	1	120	60		50					2												2		X									E-131
111.37RT.		1	12	36	3						1			X																			OM-1		E-107
111.37LT.		1	12	36	3						1			X																			OM-1		E-107
111.154LT.		1	~~48~~ 36	~~48~~ 36	~~16~~ 12.5						1			X																			R3-4		E-143
111.15RT.	REST AREA	1	78	78		42.25					2												~~2~~		~~X~~								RETAINED EXISTING FDNS		E-131

FINAL POST LENGTHS ARE TO BE DETERMINED IN THE FIELD. POST SIZES ARE COMPUTED BASED ON INFORMATION FURNISHED ON THE STANDARD SHEETS AND THE TRAFFIC & SAFETY DIVISION'S "SIGN POST DESIGN GUIDELINE."

	SF	SF	EA.	SF		FT	FT	FT	FT	FT	FT		EA	LB	LB	LB		LB	LB	LB	LB	EA.	EA.	LB
								64										92	232					
TOTALS	32	92				64										4		324						
S.B. TOTALS	114	207				183								59		10		931						

PROJECT: FAIRFAX-FAIRFIELD-ST. ALBANS	PROJECT NO.: IM 089-3(27)
DESIGN FILE NAME: 87A007B/DESIGN/DA007FRM.DGN	
IPARM FILE NAME: DA007SS4.I	PLOT DATE: 19-AUG-2000
SURVEYED BY:	SURVEY DATE:
SQUAD LEADER: ANN KREIS	DRAWN BY: JHK
	SHEET: 38 OF 370

M.M.112.48 NB.
18.7' LT. POST
18.0' RT. POST

EDGE OF SHOULDER

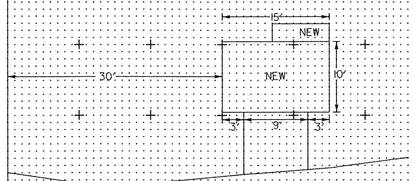

M.M.113.44 NB.
19.2' LT. POST
19.0 RT. POST

EDGE OF SHOULDER

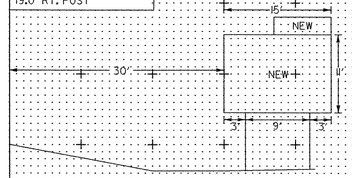

M.M.

EDGELINE

M.M.

EDGELINE

M.M.112.67 NB.
18.9' LT. POST
16.0' RT. POST

EDGE OF SHOULDER

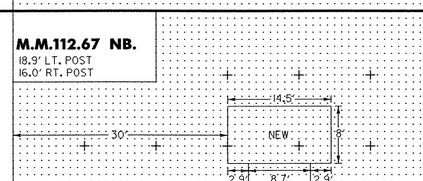

M.M.112.522 SB.
12.5' LT. POST
13.3' RT. POST

EDGE OF SHOULDER

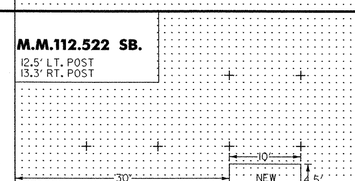

M.M.

EDGELINE

M.M.

EDGELINE

M.M.113.07 NB.
19.1' LT. POST
18' RT. POST

EDGE OF SHOULDER

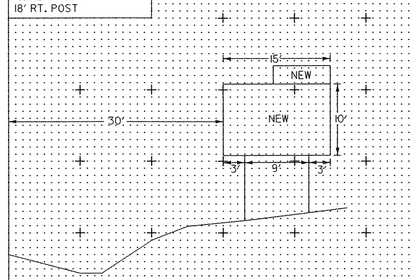

M.M. 111.78 S.B.
13.71' LT.POST
13.00' RT.POST

EDGE OF SHOULDER

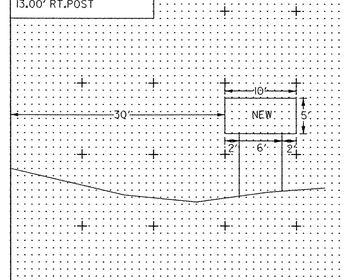

M.M.

EDGELINE

M.M.

EDGELINE

M.M.113.21 NB.
17.3' LT. POST
16.0' RT. POST

EDGE OF SHOULDER

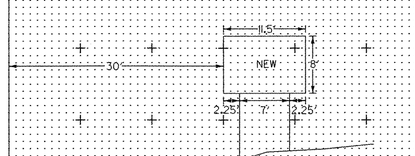

M.M.

EDGELINE

M.M.

EDGELINE

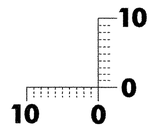

SCALE 1" = 10'

X-Section Sheet

PREPARED BY JHK DATE
CHECKED BY DATE
DESIGN SUPERVISOR ABK DATE
PROJ. FAIRFAX-FAIRFIELD-ST.ALBANS
IM IR 089-3( )

traf/87a007/ta007xs.dgn
traf/87a007/ta007xs.i

SHEET 39 OF 370 SHEETS

TEMPORARY TRAFFIC SIGNAL SHEET

RT 105 TO ST ALBANS

RT 104 TO ST ALBANS

RT 105 TO SWANTON

NEW SIGNS PLACED AT MILEMARKER

REDUCED SPEED AHEAD — 0.92

SPEED LIMIT 35 — 1.01

1.26

CURVE #1 DATA
△ = 6°05′16.64″ Rt
D = 28°38′52.40″
R = 200.00′
T = 10.64′
L = 21.25′
E = 0.28′
BANK = EXISTING

CURVE #2 DATA
△ = 34°50′38.36″ Lt
D = 114°35′29.61″
R = 50.00′
T = 15.69′
L = 30.41′
E = 2.40′
BANK = EXISTING

CURVE #3 DATA
△ = 1°20′02.11″ Lt
D = 5°43′46.48″
R = 1000.00′
T = 11.64′
L = 23.28′
E = 0.07′
BANK = EXISTING

CURVE #4 DATA
△ = 20°47′19.27″ Rt
D = 24°09′29.44″
R = 237.17′
T = 43.50′
L = 86.05′
E = 3.96′
BANK = EXISTING

VERTICAL GRANITE CURB
107+30 LT - 205+63 RT

EXCAVATION OF SURFACES AND PAVEMENTS
107+30 LT - 205+63 RT BEGIN EXCAVATION FULL DEPTH @207+00

ELECTRICAL CONDUIT SLEEVE (6″)
105+66 LT - 105+87 RT

CONSTRUCT DRIVE TURN AROUND
105+67, 64′ RT (12″ SUBBASE OF GRAVEL)

CONSTRUCT DRIVE
105+67 RT (PAVED)
(MAKE SMALL SWALE IN PAVEMENT ALONG DITCH LINE.)

TEMPORARY 4″ WHITE LINE
104+00 RT - 109+00 RT
104+00 LT - 105+58 LT
106+46 LT - 109+00 LT
205+11 LT - 207+87 LT
205+11 RT - 207+87 RT

TEMPORARY 4″ YELLOW LINE
104+00 - 104+96 (CENTERLINES)
106+67 - 109+00 (CENTERLINES)
205+41 - 207+87 (CENTERLINES)

TEMPORARY 8″ WHITE LINE (GORE)
105+42 LT - 206+04 LT
205+75 RT - 106+58 LT

TEMPORARY 24″ STOP BAR
104+97 RT
106+65 LT
205+40 LT

DURABLE 4″ WHITE LINE
104+00 RT - 109+00 RT
104+00 LT - 105+58 LT
106+46 LT - 109+00 LT
205+11 LT - 207+87 LT
205+11 RT - 207+87 RT

DURABLE 4″ YELLOW LINE
104+00 - 104+96 (CENTERLINES)
106+67 - 109+00 (CENTERLINES)
205+41 - 207+87 (CENTERLINES)

DURABLE 8″ WHITE LINE (GORE)
105+42 LT - 206+04 LT
205+75 RT - 106+58 LT

DURABLE 24″ STOP BAR
104+97 RT
106+65 LT
205+40 LT

DURABLE LETTER OR SYMBOL
MM 1.26
MM 1.54
MM 3.91
} AHEAD SIGNAL

PB=Pullbox MA=Mast arm	WIRED CONDUIT		ELECTRICAL			
LOCATION	1½″	2″	2½″	2″	2½″	DESCRIPTION
edge of road to PB 1		2				loop 8a,8b,8c,8d
PB 1 to PB 3		70				loops 8a,8b,8c,8d
edge of road to PB 2	3					loops 6
PB 2 to PB 3	86					loops 6
PB 3 to Controller		11				loops 8a,8b,8c,8d,6
edge of road to PB 4	4					loop 2
PB 4 to Controller	61					loop 2
power pole to stanchion		25				power: light MA 1
power pole to stanchion		25				power: signal MA 1
stanchion to controller		30				power: signal MA 1
stanchion to MA 1		30				power: luminaire MA 1
controller to MA 1		10				power: signal
subtotal	154	203				
rounding	21	22				
total	175	225				

NEW SIGNS PLACED AT MILEMARKER

1.54 — SPEED LIMIT 35 — 1.83 — REDUCED SPEED AHEAD — 1.93

CURVE #1
6″ UNDERDRAIN TO BE PLACED AS NEEDED AS DETERMINED AND DIRECTED BY THE RESIDENT ENGINEER

STA. 207+87
END NEW PAVEMENT MARKINGS
END VT 105 APPROACH CONSTRUCTION

VT 105 STA. 205+56
END VT 105 INTERSECTION CONSTRUCTION
CONTINUE NEW PAVEMENT MARKINGS

VT 104 STA 106+00=
VT 105 STA 205+00

VT 104 STA. 104+00
BEGIN DETOUR CONSTRUCTION
(NEW SUBBASE AND PAVEMENT)

VT 104 STA. 109+00
END DETOUR CONSTRUCTION
(NEW SUBBASE AND PAVEMENT)

APPROXIMATE AERIAL RELOCATION ROUTE
BY CENTRAL VERMONT PUBLIC SERVICE CORP.
NEW ENGLAND TELEPHONE & TELEGRAPH CO.
& ADELPHIA CABLE

APPROXIMATE AERIAL RELOCATION ROUTE
TELEPHONE ONLY

PI 205+58.50= 205+57.53
PI 106+87.19= 106+86.24
PI 206+33.37= 206+33.34
PI 104+59.64= 104+59.64

PC=205+42.81
PT=205+73.22

PC 104+48.00
PT 104+71.28

PC 106+43.69
PT 107+29.74

RETIRE POLE & CATV
RETIRE SPAN
6″ SLEEVE
REMOVE PAVEMENT
MM 1.40
MICROWAVE DECTECTOR AND SIGNAL TO BE MOUNTED ON WOODEN POLE
CONTROLLER
POWER SOURCE
NEW GRAVEL TURN AROUND
NEW STOP HERE ON RED
TO BEGIN PAVE MW
EXIST. R.O.W.
AER E&T
DR DITCH
POWER LINES (3)
STN WALL
GUY
SIGN
PB1
PB2
PB3
PB4
FN BW
GR DR
2 ST WFH
15 ACGMP
48″ ACCGMP
4/69-B 153/22X
4/72/153/17
153/16
69-A/2
BARN

EXISTING	NEW	LEGEND
		UTILITY POLE
		LUMINAIRE
		WOOD POLE
		STRAIN POLE
		CONTROLLER CABINET
		PULLBOX/JUNCTION BOX
		SIGNAL HEAD
		CONDUIT
		VEHICLE LOOPS
		SIGNS

REMOVE NEW
mm 3.91

0 20 40
SCALE

PROJECT NAME: FAIRFAX-FAIRFIELD-ST. ALBANS
PROJECT NUMBER: IM 089-3(27)

FILE NAME: 87a007b/design/da007nul.dgn
PROJECT LEADER: DELLA SANTA
DESIGNED BY: jfg
IPARM FILE NAME: da007dtr.i
PLOT DATE: 15-NOV-2000
DRAWN BY: jfg
UPDATED BY: SQUAD B
SHEET 40 OF 370

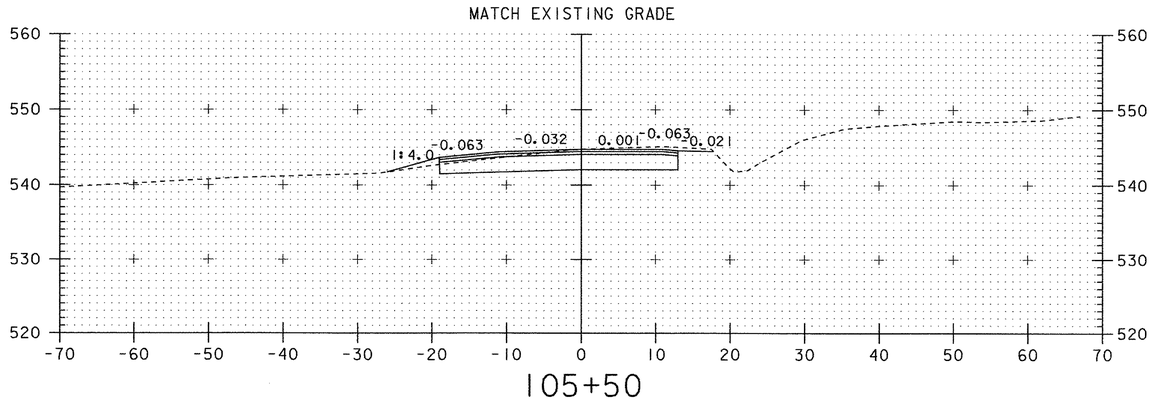

105+50

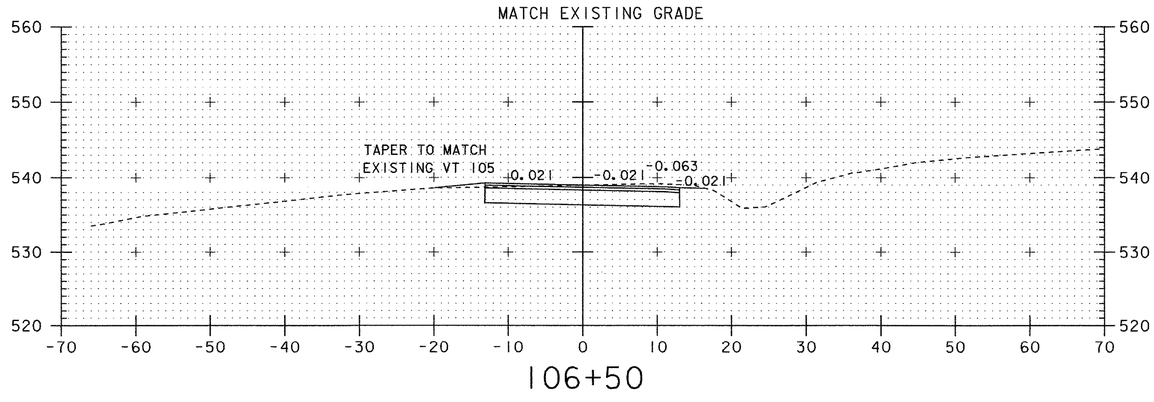

106+50

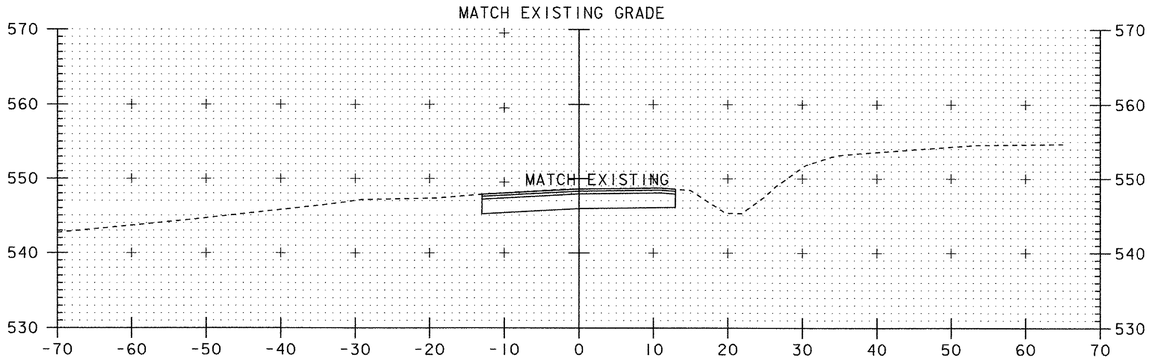

105+00

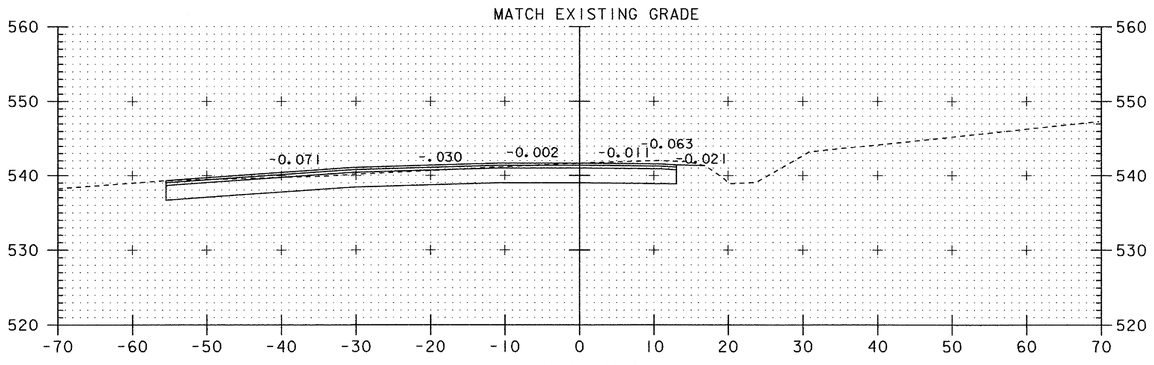

106+00

VT 104 POT 106+00 =
VT 105 POT 205+00

VT 104 TYPICAL

FOR TRAVELWAY AND SHOULDERS:
3½'' BITUMINOUS CONCRETE PAVEMENT
(1½'' TYPE III S OVER 2'' TYPE II S)(PG 64-34)
4½'' BITUMINOUS CONCRETE PAVEMENT (TYPE I S)(PG 64-34)
24'' SUBBASE ~~OF DENSE GRADED CRUSHED STONE~~ GRAVEL

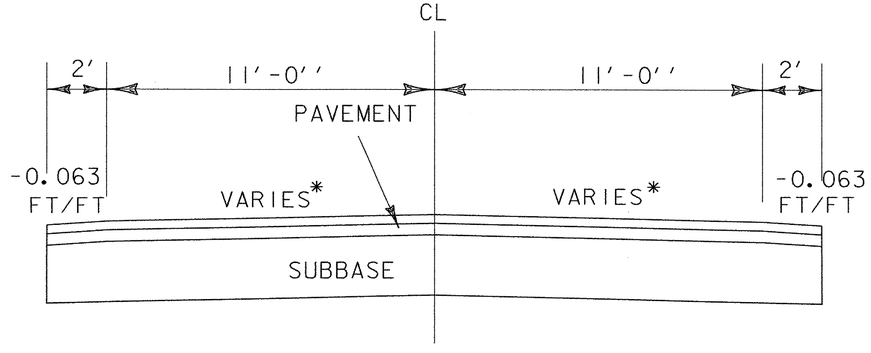

* REFER TO THE CROSS SECTIONS

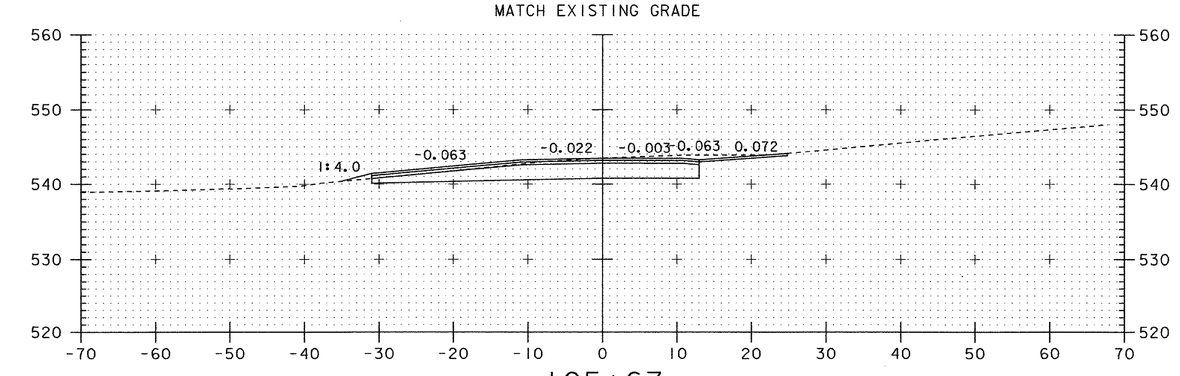

105+67
DR RT

0 10 20
SCALE IN FEET

PROJECT: FAIRFAX-FAIRFIELD-ST. ALBANS	PROJECT NO.: IM 089-3(27)
DESIGN FILE NAME: /87A007B/DESIGN/DA007XS2.DGN	
IPARM FILE NAME: DA007TXI.I	PLOT DATE: 22-SEP-2000
SURVEYED BY: R. MOREAU	SURVEY DATE: 9/90
SQUAD LEADER: DELLA SANTA	DRAWN BY: SQUAD B
	SHEET: 40A OF 370

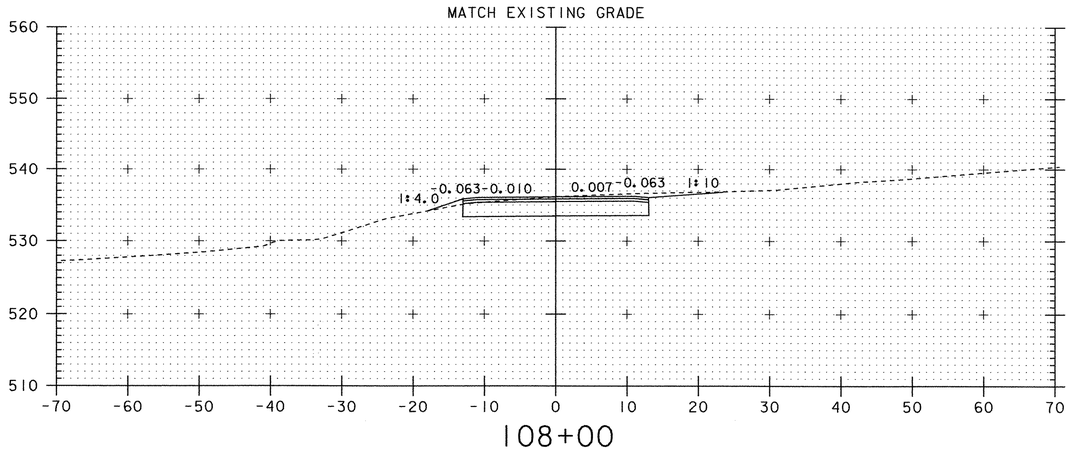

108+00

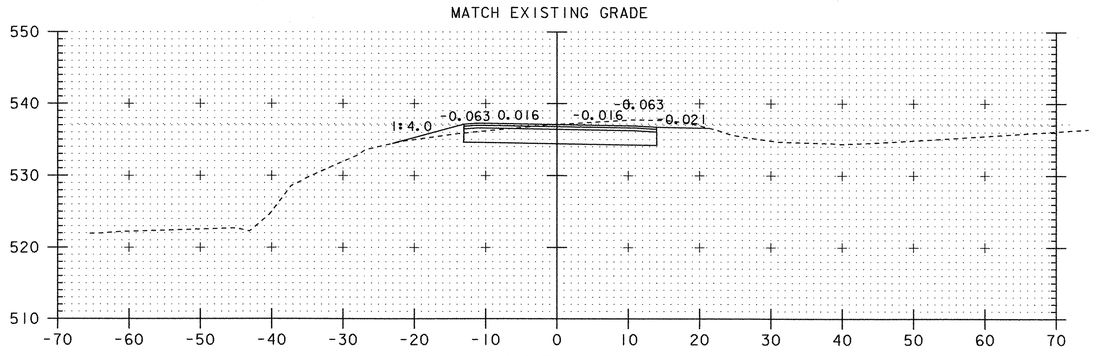

107+50

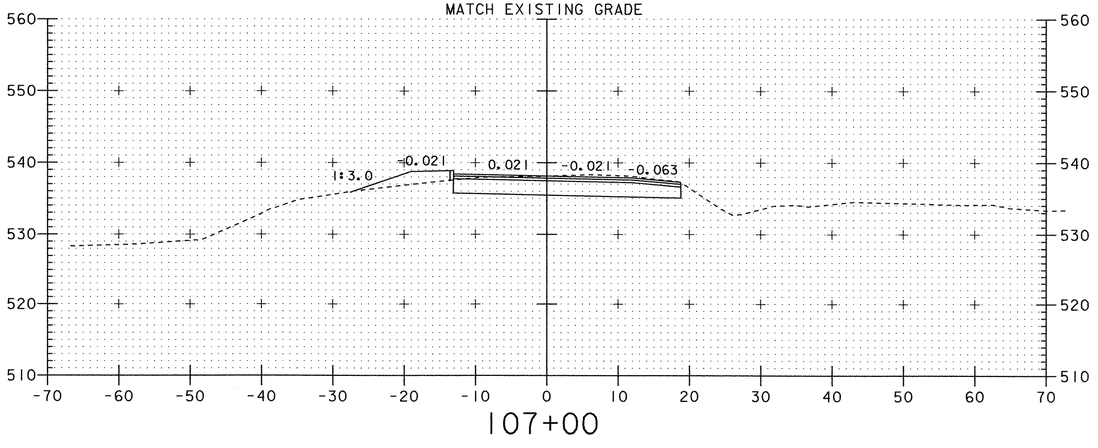

107+00

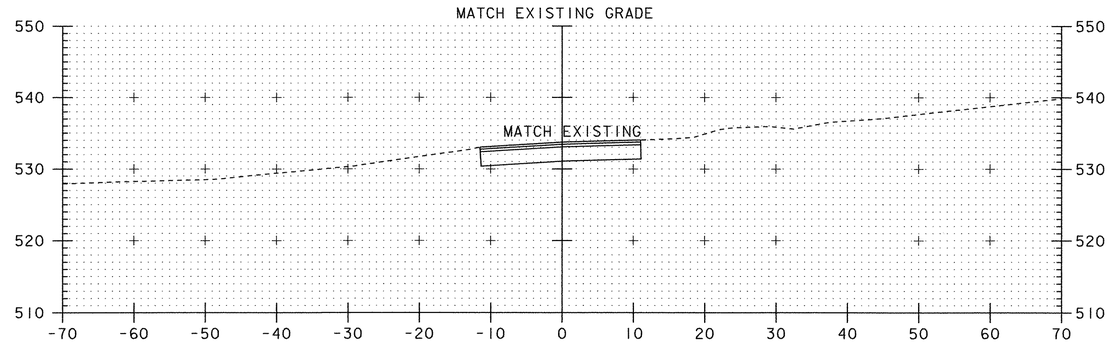

109+00

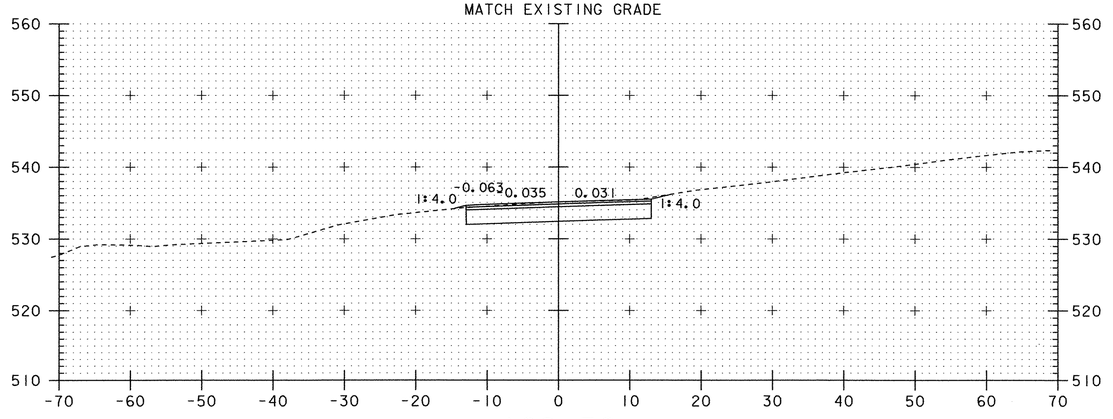

108+50

0 10 20
SCALE IN FEET

PROJECT: **FAIRFAX-FAIRFIELD-ST. ALBANS**	PROJECT NO.: **IM 089-3(27)**
DESIGN FILE NAME: /87A007B/DESIGN/DA007XS2.DGN	
IPARM FILE NAME: DA007TX2.I	PLOT DATE: 20-SEP-2000
SURVEYED BY: R. MOREAU	SURVEY DATE: 9/90
SQUAD LEADER: DELLA SANTA	DRAWN BY: SQUAD B
	SHEET: 40B OF 370

CONSTRUCTION ITEMS

COMMON EXCAVATION
GRANULAR BORROW
BITUMINOUS CONCRETE PAVEMENT

N
ASSUMED

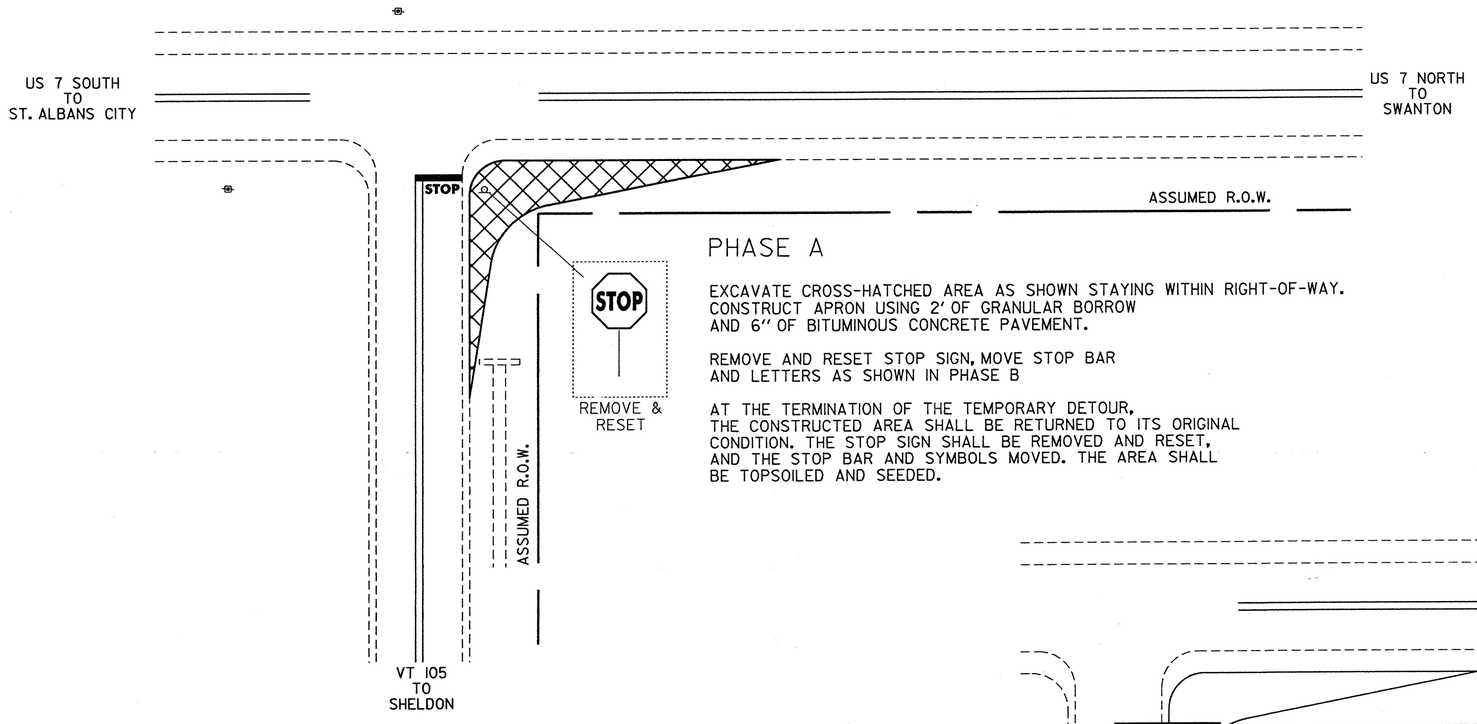

PHASE A

EXCAVATE CROSS-HATCHED AREA AS SHOWN STAYING WITHIN RIGHT-OF-WAY.
CONSTRUCT APRON USING 2' OF GRANULAR BORROW
AND 6'' OF BITUMINOUS CONCRETE PAVEMENT.

REMOVE AND RESET STOP SIGN, MOVE STOP BAR
AND LETTERS AS SHOWN IN PHASE B

AT THE TERMINATION OF THE TEMPORARY DETOUR,
THE CONSTRUCTED AREA SHALL BE RETURNED TO ITS ORIGINAL
CONDITION. THE STOP SIGN SHALL BE REMOVED AND RESET,
AND THE STOP BAR AND SYMBOLS MOVED. THE AREA SHALL
BE TOPSOILED AND SEEDED.

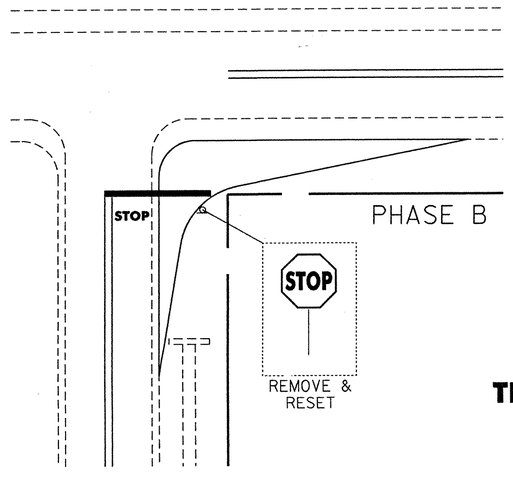

PHASE B

TEMPORARY SHOULDER CONSTRUCTION FOR DETOUR AT VT 105 AND US 7

0 20 40
SCALE IN FEET

PROJECT NAME:	FAIRFAX-FAIRFIELD-ST.ALBA
PROJECT NUMBER:	IM 089-3(27)
FILE NAME: J:/sqda/2d1057.dgn	PLOT DATE: 13-MAR-2000
PROJECT LEADER: blondin	DRAWN BY: J gruchacz
DESIGNED BY: J gruchacz	CHECKED BY:
te076shl.i	SHEET 41 OF 370

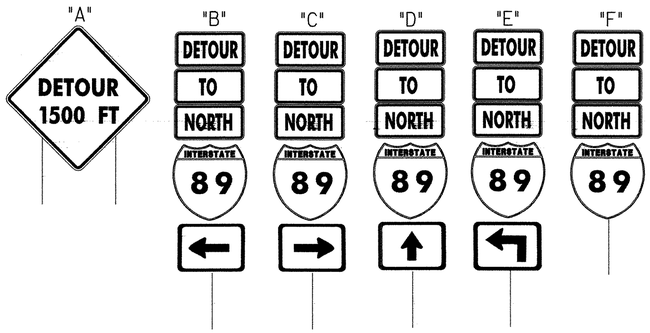

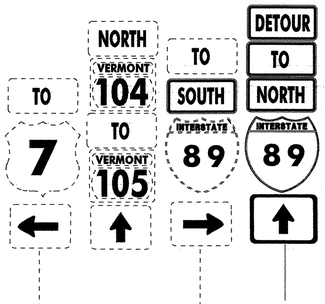

PLACE NEW ASSEMBLY
BESIDE EXISTING ON
SEPERATE POST. ADD
SOUTH CARDINAL DIRECTION
PLAQUE TO EXISTING ASSEMBLY

EXISTING ASSEMBLY "H"

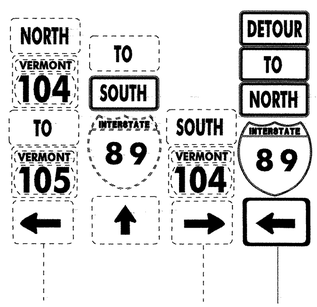

PLACE NEW ASSEMBLY
BESIDE EXISTING ON
SEPERATE POST. ADD
SOUTH CARDINAL DIRECTION
PLAQUE TO EXISTING ASSEMBLY

EXISTING ASSEMBLY "G"

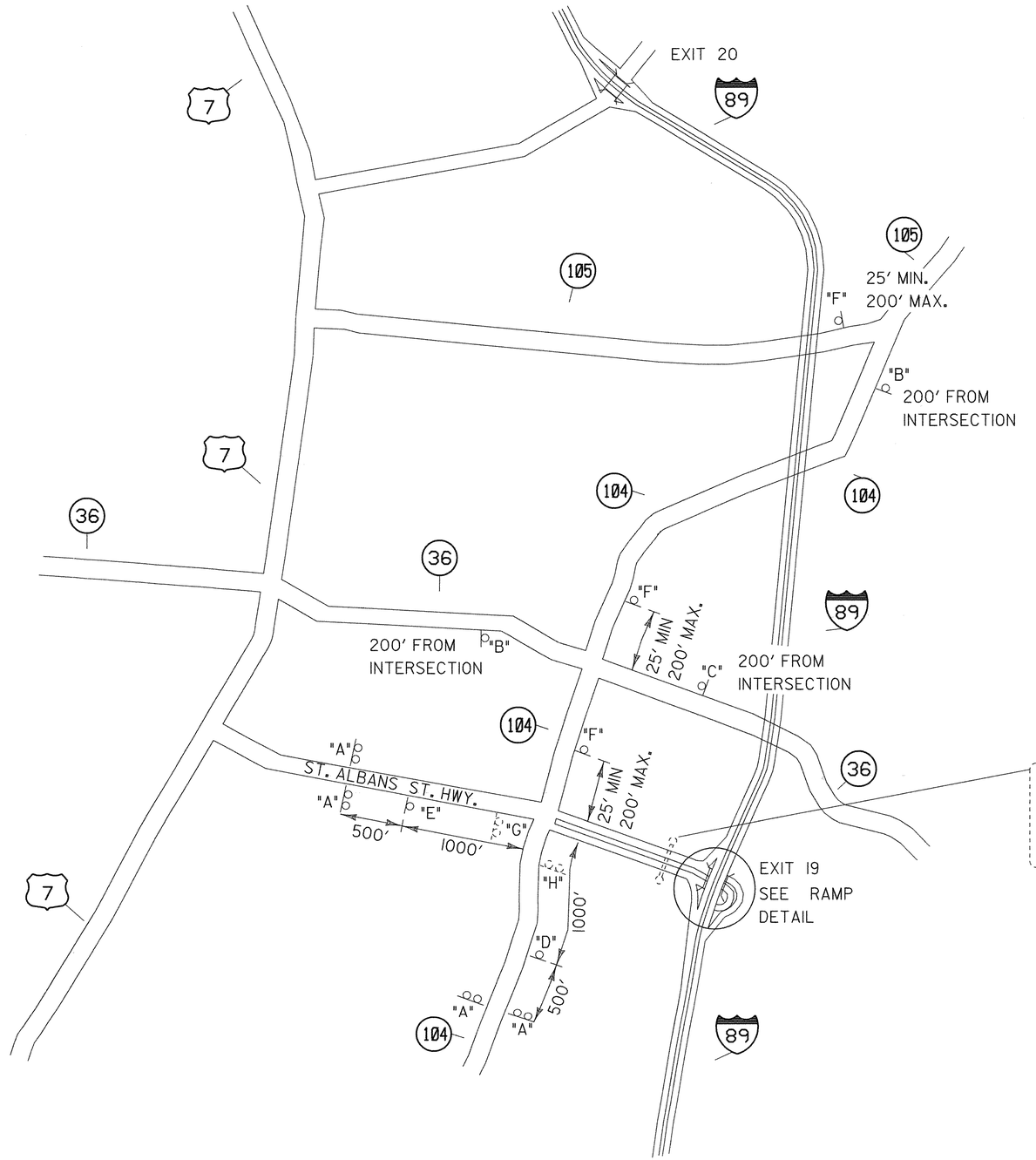

LEGEND:

- EXISTING
- NEW
- TYPE III BARRICADE
- TYPE III BARRICADE (MOD.)

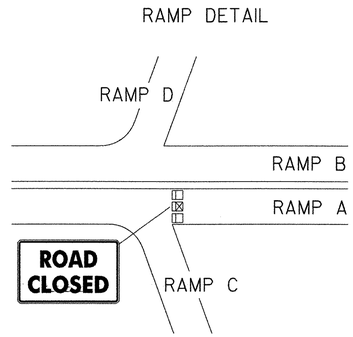

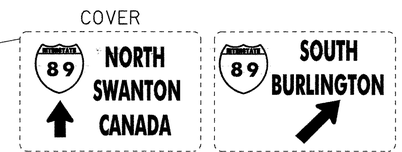

EXISITNG OVERHEAD ASSEMBLY

TRAFFIC CONTROL PLAN
NOT TO SCALE

/87a007b/design/ta007tc.i
/87a007b/design/ta007tc.dgn

PREPARED BY JHK DATE 9/99
CHECKED BY _____ DATE _____
DESIGN SUPERVISOR ABK DATE 9/99
PROJ. FAIRFAX-FAIRFIELD-ST. ALBANS
IM 089-3 (27)

PLOTTED: 05-JAN-2001
SHEET 41A OF 370 SHEETS

TIMING AND PHASING

		PHASE 2+6 DWELL								PHASE 4+8							
		R/W	CLEAR TO 4+8							R/W	CLEAR TO 2+6						
AM PEAK	VEH EXT	2								2							
	MINIMUM	8	4	2						8	4	2					
	MAX I	25	4	2						23	4	2					
OFF PEAK	VEH EXT	2								2							
	MINIMUM	8	4	2						8	4	2					
	MAX I	25	4	2						23	4	2					
PM PEAK	VEH EXT	2								2							
	MINIMUM	8	4	2						8	4	2					
	MAX I	25	4	2						23	4	2					
FACE 2		G	Y	R						R	R	R					
FACE 4		R	R	R						G	Y	R					
FACE 6		G	Y	R						R	R	R					
FACE 8		R	R	R						G	Y	R					

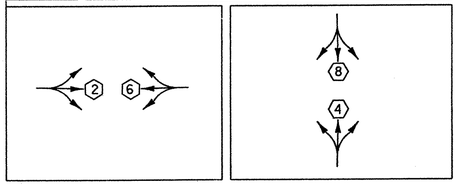

VEHICLE DETECTOR LOOPS

LOOP NO.	LANE	CALL Ø	SIZE	TYPE & NO. TURNS	MODE	MEMORY	Vehicle Ext.	INDUCTANCE CALC.	INDUCTANCE ACT.	RESISTANCE CALC.	RESISTANCE ACT.	LEAKAGE TO GROUND
2	105 SB	2+6	6X40	QUA-2TURNS	PRESENCE	NON LOCK	2	359.00		0.718		
6	104 NB	2+6	6X40	QUA-2TURNS	PRESENCE	LOCK	2	392.00		0.737		
8A	105 NB	8	6X46	REC-3TURNS	PRESENCE	NON LOCK	2	107.00		0.298		
8B	105 NB	8	6X46	REC-3TURNS	PRESENCE	NON LOCK	2	109.25		0.327		
8C	105 NB	8	6X46	REC-3TURNS	PRESENCE	NON LOCK	2	109.00		0.324		
8D	105 NB	8	6X46	REC-3TURNS	DELAY 5SEC	NON LOCK	2	106.50		0.291		
4	DRIVE	4	MICROWAVE		PRESENCE	NON LOCK						

SIGNAL FACE ARRANGEMENT

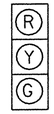

2+6
4+8

LIST OF MAJOR EQUIPMENT

EQUIPMENT ITEM – 678.15	QUANTITY
MAST ARM POLES	1
POWER DROP STANCHION	1
NEW 12" TRAFFIC SIGNAL HEADS W/ TUNNEL VISORS, DISCONNECT HANGERS & MOUNTING HARDWARE	
A. TWO-WAY 3-SEC.	
B. ONE-WAY 3-SEC.	8
LED HEADS	24
INTERSECTION CONTROLLER/CABINET	1
LUMINAIRES	2
BRACKET ARMS FOR LUMINAIRES	2

NOTE: Back plates to be installed on east-west heads

SIGNAL TIMING SEQUENCES & MISC. DETAILS

PROJECT: Fairfax-Fairfield-St. Albans

PROJECT NO.: IM 089-3(27)

DESIGN FILE NAME: J:/104detour/te076a5.dgn
IPARM FILE NAME: /traf/te076tim.i
SURVEYED BY:
SQUAD LEADER: Dubray

PLOT DATE: 13-MAR-2000
SURVEY DATE:
DRAWN BY: JFG
SHEET: 42 OF 370

TRAFFIC NOTES

A. NEW EQUIPMENT

1. ALL SIGNAL HEADS MOUNTED ON THE MAST ARM SHALL BE POLYCARBONATE.
2. ALL TRAFFIC SIGNAL INDICATIONS SHALL BE LEDS.
3. CONTROLLER SHALL BE TS2 AND BE ECONOLITE.
4. THE CONTROLLER SHALL BE EQUIPPED WITH A PULL-OUT SHELF CAPABLE OF SUPPORTING A LAPTOP.
5. A DISCONNECT BREAKER FOR EACH CIRCUIT SHALL BE INSTALLED ON A STANTION NEXT TO OR BELOW THE METER SOCKET. CONSIDER USING OPTION *2 ON STD E-175.
6. A LAPTOP COMPUTER SHALL BE PROVIDED AS PER THE SPECIAL PROVISIONS

B. SIGNAL OPERATION

1. THE SIGNAL SHALL DWELL ON THE MAIN STREET MOVEMENT (PHASE 2 & 6).
2. THE MAIN STREET PHASE (2 & 6) SHALL BE USED FOR THE START-UP PHASE FOLLOWING FLASHING OPERATION.

C. JUNCTION/PULL BOXES

1. JUNCTION/PULL BOXES ARE DETAILED ON STD E-173. MINIMUM JUNCTION BOX SIZE SHALL BE 18" X 12", OR LARGER AS REQUIRED BY THE ELECTRICAL CODE.
2. THE LOGO ON BOXES SHALL BE 'SIGNAL'.

D. TRAFFIC SIGNAL CONDUIT

1. ALL TRAFFIC SIGNAL CONDUIT SHALL BE PVC.
2. MINIMUM CONDUIT SIZE SHALL BE:
   1 1/2" FOR LOOP LEAD-INS;
   2" FOR ALL OTHERS OR AS SHOWN ON PLANS
   SEE CHART ON STD E-172 FOR DESIGN VALUES
3. THE OPEN CUT FOR BITUMINOUS CONCRETE PAVEMENT REQUIRED TO PLACE THE 6'' PVC ELECTRICAL CONDUIT SLEEVE SHALL BE PERFORMED USING THE VERMONT STANDARD SHEET D-20. A SAWCUT SHALL BE PERFORMED IN THE EXISTING PAVEMENT SURFACE PRIOR TO EXCAVATION. PAYMENT WILL BE CONSIDERED SUBSIDIARY TO ITEM 405.25. THE BITUMINOUS CONCRETE PAVEMENT SHALL BE PLACED SUBSEQUENT TO THE INSTALLATION OF THE 6'' PVC ELECTRICAL SLEEVE AND BACKFILL WILL BE UNDER ITEM 406.25.
   1-1/2 '' WEARING COURSE, TYPE III; LEVELING COURSE, TYPE III OR IV (AS DIRECTED BY RESIDENT ENGINEER)
   4'' BINDER COURSE, TYPE III OR IV (AS DIRECTED BY RESIDENT ENGINEER)
   3'' BASE COURSE TYPE I

E. STREET LIGHTING

1. THE MAST ARM POLE SHALL HAVE A 250 WATT HIGH PRESSURE SODIUM LUMINAIRE AS SHOWN ON THE PLANS, INSTALLED WITH A 34' + - MOUNTING HEIGHT ABOVE THE EDGE OF PAVEMENT WITH 15' ARM .THE LUMINAIRE SHALL HAVE THE MEDIUM CUTOFF DISTRIBUTION SHOWN ON THIS SHEET.
2. PAYMENT IS SUBSIDIARY TO ITEM *678.15

F. GENERAL

1. THE CONTRACTORS SHALL ACQUIRE ALL NECESSARY PERMITS AND MAKE ALL NECESSARY ARRANGEMENTS WITH THE UTILITY COMPANY TO PROVIDE A PERMANENT POWER SUPPLY TO THE SIGNAL AND STREET LIGHTING EQUIPMENT, IF APPLICABLE. THE ROUTING OF POWER TO THE INTERSECTION SHALL BE SUCH THAT THE STATE HAS FULL RESPONSIBILITY FROM THE TRANSFORMER THROUGH THE SIGNAL. NO INTERVENING OWNERSHIP/RESPONSIBILITY SHALL BE ALLOWED.
2. AN ID PLAQUE AS DETAILED ON THIS SHEET SHALL BE AFFIXED TO THE CONTROLLER.

PHOTOMETRIC DATA TO BE INCLUDED IN CONTRACT PLANS

CONTROLLER IDENTIFICATION PLAQUE

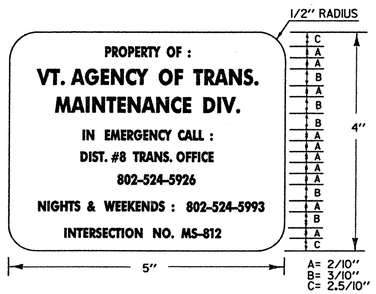

LEGEND: - BLACK (NON-REFL.) - STAMPED PRIOR TO PAINTING
BACKGROUND: NATURAL ALUMINUM OR BRASS SURFACE

NOTES:

1.) THE PLAQUE SHALL BE MOUNTED ON ALL TRAFFIC SIGNAL CONTROLLER CABINETS. IT SHALL BE FASTENED TO THE CONTROLLER CABINET IN SUCH A MANNER AS TO BE NOT EASILY REMOVED, SUCH AS WELDED, RIVETED OR BOLTED WITH VANDAL PROOF BOLTS.
2.) THE LETTERS SHALL BE PUNCHED OR STAMPED, SUCH STAMPING SHALL PENETRATE AT LEAST ½ THE BASE MATERIAL THICKNESS.
3.) THE BASE MATERIAL FOR THE PLAQUE SHALL BE BRASS OR ALUMINUM WITH A MINIMUM THICKNESS OF 0.100 INCHES.

PHOTOMETRIC DATA

NEW LUMINAIRES ON THE MAST ARM POLES NEED TO BE OF THE TYPE SHOWN OF PHOTOMETRIC CURVE * 7356.

PROJECT: Fairfax-Fairfield-St.Albans	PROJECT NO.: IM 089-3(27)
DESIGN FILE NAME: J:/ 104detour/te076a5.dgn	
IPARM FILE NAME: /traf/te076not.i	PLOT DATE: 16-MAR-2000
SURVEYED BY:	SURVEY DATE:
SQUAD LEADER: dubray	DRAWN BY: JFG
	SHEET: 43 OF 370

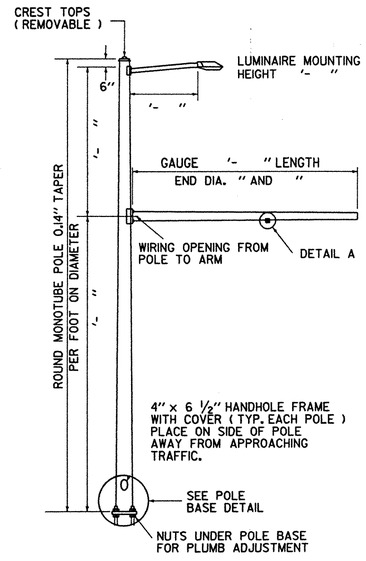

TYPE C

SINGLE MASTARM WITH LUMINAIRE

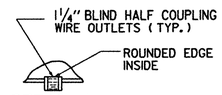

DETAIL A

POLE DATA		POLE BASE DATA					
TYPE	GAGE AND POLE SIZE	BC	F	S	T	P	ANCHOR BOLT SIZE

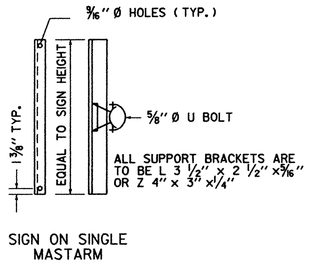

SIGN ON SINGLE
MASTARM

SIGN BRACKET DETAILS

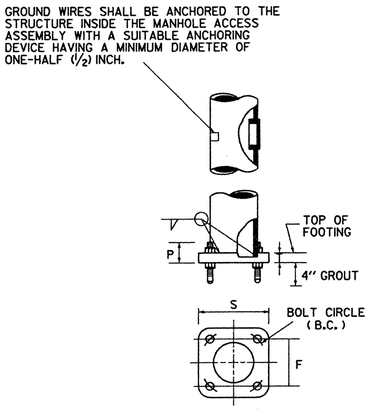

POLE BASE DETAIL

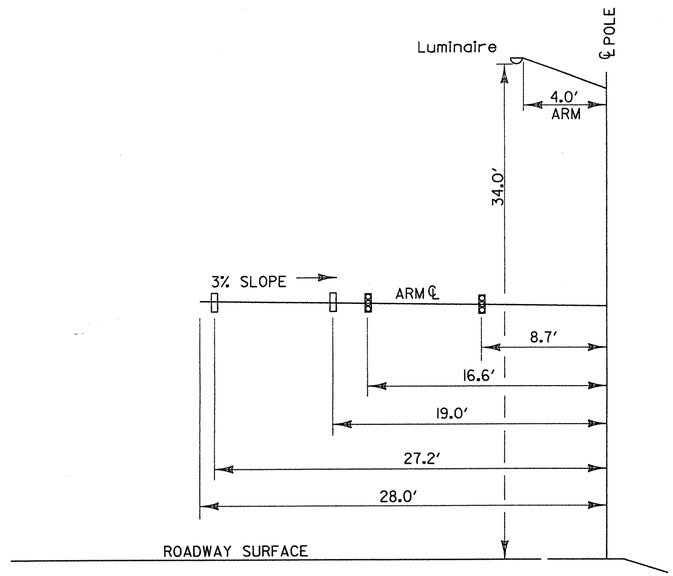

ELEVATION VIEW
(LOOKING NORTH)
NOT TO SCALE

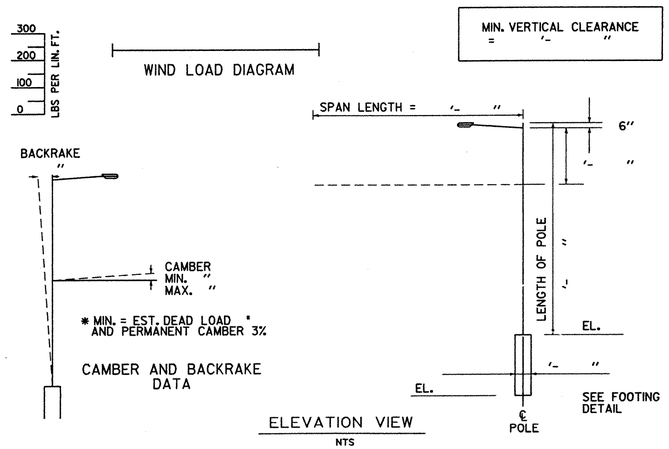

ELEVATION VIEW
NTS

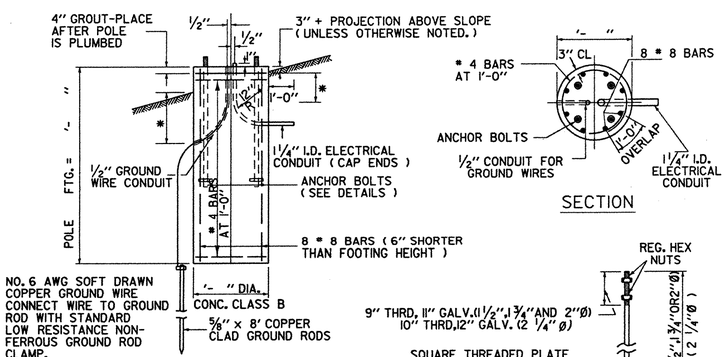

ELEVATION

SECTION

CONCRETE FOOTING DETAILS

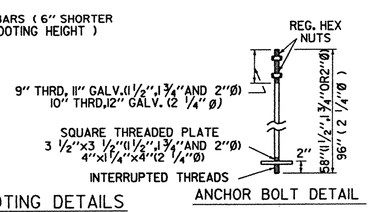

ANCHOR BOLT DETAIL

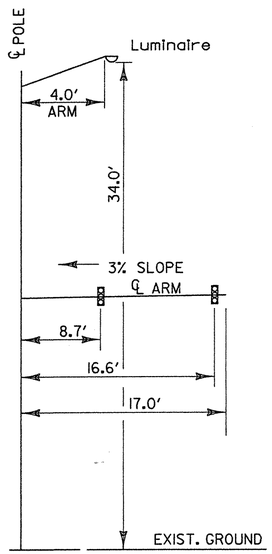

ELEVATION VIEW
(LOOKING WEST)
NOT TO SCALE

MAST ARM DETAILS

PROJECT NAME: Fairfax-Fairfield-St.Albans	
PROJECT NUMBER: IM 089-3(27)	
FILE NAME: J:/104detour/te076a5.dgn	PLOT DATE: 04-MAR-2000
PROJECT LEADER: dubray	DRAWN BY: jf gruchacz
DESIGNED BY:	CHECKED BY:
tb002mad.i	SHEET 44 OF 370

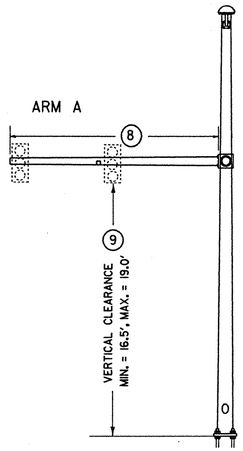

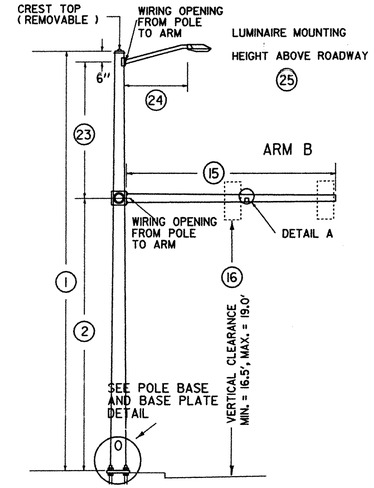

POLE BASE DIAMETER (3)
POLE GAUGE (4)
POLE TAPER RATE (5)

ARM A DIAMETER (10)
ARM A GAUGE (11)
ARM A TAPER RATE (12)

ARM B DIAMETER (17)
ARM B GAUGE (18)
ARM B TAPER RATE (19)

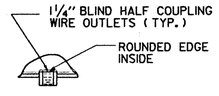

DETAIL A

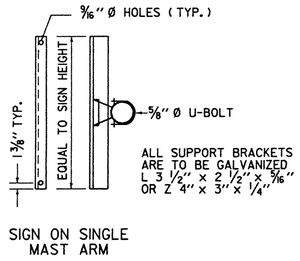

SIGN ON SINGLE
MAST ARM

SIGN BRACKET DETAILS

ANCHOR BOLT DETAIL		
SIZE	L (IN)	T (IN)
1- 1/4" X 48"	42	8
1- 1/2" X 60"	54	9
1- 3/4" X 90"	84	9
2" X 96"	96	9

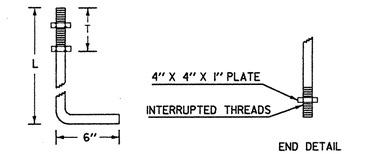

ANCHOR BOLT DETAIL

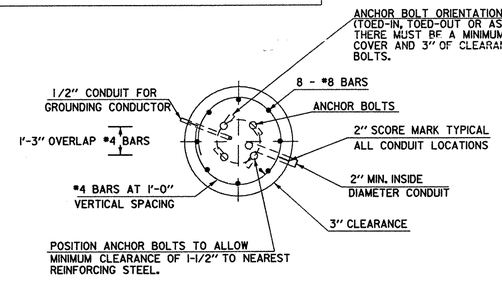

SECTION

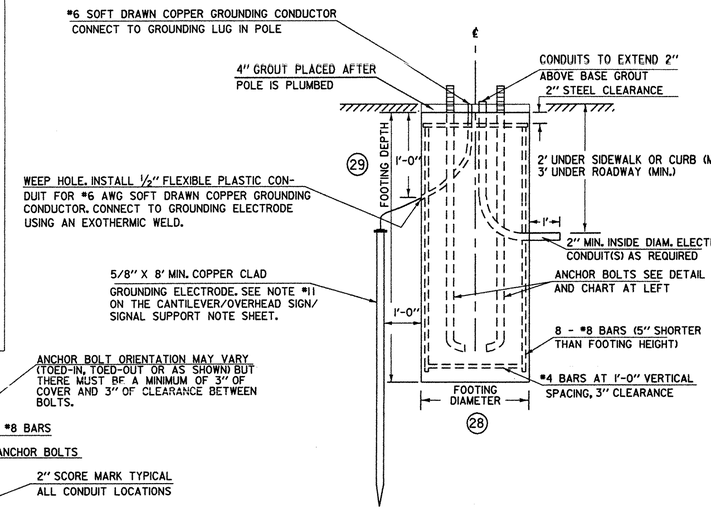

ELEVATION

CANTILEVER FOOTING DETAIL

(SPREAD FOOTINGS OR PILES ARE OPTIONAL)

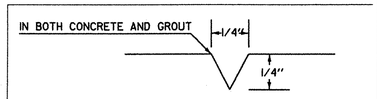

USED FOR CONDUIT LOCATION, SEE SECTION
DETAIL AT LEFT

2" SCORE MARK DETAIL

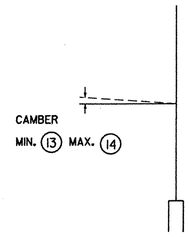

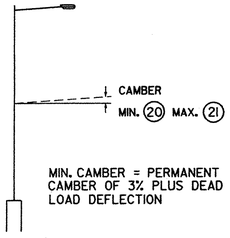

MIN. CAMBER = PERMANENT
CAMBER OF 3X PLUS DEAD
LOAD DEFLECTION

CAMBER DATA

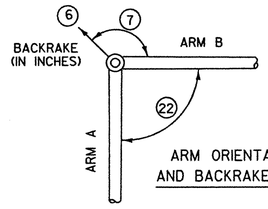

ARM ORIENTATION
AND BACKRAKE DATA

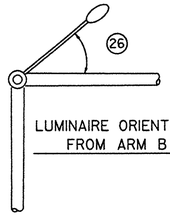

LUMINAIRE ORIENTATION
FROM ARM B

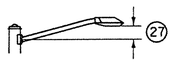

LUMINAIRE ARM RISE

SEE CANTILEVER / OVERHEAD SIGN / SIGNAL SUPPORTS
NOTE SHEET FOR ADDITIONAL INFORMATION

SEE SHEET(S) FOR CROSS SECTIONS

STRUCTURE DIMENSIONS

	POLE DATA							ARM DATA															LIGHTING DATA					FOOTING DATA		BASE PLATE / BOLT DATA					
POLE	(1)	(2)	(3)	(4)	(5)	(6)	(7)	(8)	(9)	(10)	(11)	(12)	(13)	(14)	(15)	(16)	(17)	(18)	(19)	(20)	(21)	(22)	(23)	(24)	(25)	(26)	(27)	(28)	(29)	(BC)	(F)	(S)	(T)	(P)	ANCHOR BOLT SIZE

NOTE:
DETAILS
NTS

DOUBLE MAST ARM CANTILEVER WITH LIGHTING / FOOTING DETAIL SHEET

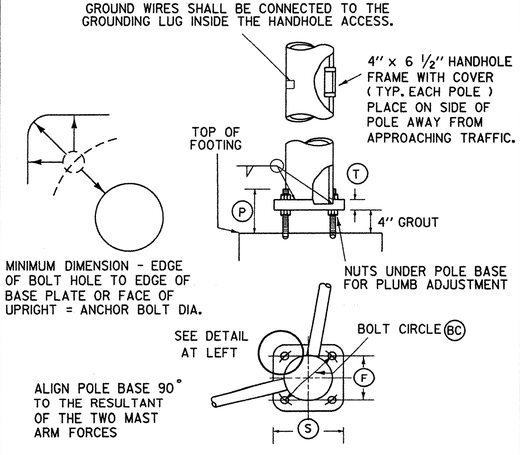

POLE BASE AND BASE PLATE DETAIL

PLOTTED: 04-MAR-2000
ref=/traf/forms/cantilvr.dgn

PREPARED BY Jgruchacz DATE 2/2000
CHECKED BY _____ DATE ____
DESIGN SUPERVISOR dubray
PROJ.
FAIRFAX-FAIRFIELD-ST.ALBANS
IM 089-3(27)

SHEET 45 OF 370 SHEETS

GENERAL NOTES

1. ALL MATERIALS AND CONSTRUCTION SHALL CONFORM TO THE STATE OF VERMONT AGENCY OF TRANSPORTATION'S ''STANDARD SPECIFICATIONS FOR CONSTRUCTION'', DATED 1990, WITH CURRENT MODIFICATIONS.

2. OVERHEAD SIGN/SIGNAL SUPPORTS SHALL CONFORM TO AASHTO'S PUBLICATION ENTITLED ''STANDARD SPECIFICATIONS FOR STRUCTURAL SUPPORTS FOR HIGHWAY SIGNS, LUMINAIRES, AND TRAFFIC SIGNALS'', DATED 1985 OR ITS LATEST REVISION.

3. ADDITIONAL DESIGN CRITERIA ARE AS FOLLOWS:

   CONCRETE f_c = 1400 PSI f'_c = 3500 PSI
   REINFORCING f_s = 24000 PSI (GRADE 60)
   FOOTING SOIL PRESSURE : 3000 PSF (MAXIMUM)

   WIND LOAD AND ICE LOAD PER AASHTO ''STANDARD SPECIFICATIONS''

4. ANCHOR BOLTS

   FOUR STAINLESS STEEL ANCHOR BOLTS WITH TWO HEXAGON NUTS, ONE WASHER AND ONE LOCK WASHER PER BOLT SHALL BE FURNISHED WITH EACH POLE. ANCHOR BOLT PLATES, WHEN USED, SHALL ALSO BE STAINLESS STEEL. SEE SUB-SECTION 714.09.

5. FLANGE BOLTS

   ALL FLANGE BOLTS AND HEX NUTS SHALL BE HIGH STRENGTH STEEL AND SHALL CONFORM TO ASTM A325. THE FLANGE BOLTS SHALL BE CAPABLE OF RESISTING 133% OF THE FULL DESIGN STRESS OF THE TUBE AT ITS YIELD STRENGTH STRESS.

6. HORIZONTAL AND VERTICAL MEMBERS

   STEEL TUBES SHALL BE FORMED AND WELDED WITH ONE CONTINUOUS LONGITUDINAL WELD ONLY. AFTER FORMING AND WELDING THEY SHALL BE COLD ROLLED TO ENSURE UNIFORMITY OF SIZE AND SMOOTHNESS OF WELD. THEY SHALL HAVE A MINIMUM YIELD STRENGTH OF 48,000 PSI. THERE SHALL BE NO TRANSVERSE WELDING EXCEPT AT THE FLANGE CONNECTIONS AND POLE BASE PLATES, WHERE THE TUBES SHALL TELESCOPE THE FLANGES AND PLATES AND BE CONTINUOUSLY WELDED BOTH SIDES INSIDE AND OUT TO WITHSTAND THE FULL TRANSFER OF THE BENDING STRENGTH TO THE BOLTS. OPTIONALLY, THE MEMBERS MAY BE A SERIES OF TWO OR THREE DIFFERENT DIAMETER PIPES WELDED TOGETHER.

7. GALVANIZING

   ALL STEEL COMPONENTS, EXCEPT CONCRETE REINFORCING AND STAINLESS STEEL HARDWARE, ARE TO BE HOT DIPPED GALVANIZED AFTER FABRICATION. THE ASSEMBLIES SHALL BE DESIGNED AND FABRICATED TO PERMIT GALVANIZING ON ALL INTERIOR AND EXTERIOR SURFACES AND SHALL BE FREE OF POCKETS AND OTHER STRUCTURAL OBSTRUCTIONS THAT WILL NOT PERMIT PROPER DEPOSITION OF ZINC COATING. GALVANIZING SHALL BE IN ACCORDANCE WITH ASTM A123 AND A153.

8. WELDING

   A. ALL DESIGN DETAILS, WORKMANSHIP, PROCEDURES AND INSPECTION SHALL CONFORM WITH SUB-SECTION 506.10.

   B. ALL WELDS SHALL BE AT LEAST AS STRONG AS THE MATERIAL(S) BEING WELDED.

9. FOOTINGS

   A. FOOTINGS SHALL BE DESIGNED TO RESIST LOADS EQUAL TO, OR GREATER THAN, THE MAXIMUM LOADS THAT THE POLE IS DESIGNED FOR.

   B. THREE TYPES OF FOUNDATIONS, AS OUTLINED IN AASHTO STANDARD SPECIFICATIONS (SEE NOTE 2) SECTION 1.8.2 (C) SHALL BE ALLOWED.

      1. DRILLED SHAFTS
      2. SPREAD FOOTINGS
      3. PILES.

   C. DRILLED SHAFT FOOTINGS SHALL BE POURED IN DRILLED SHAFTS AGAINST UNDISTURBED MATERIAL. THE TOP TWO FEET OF SOIL SHALL BE NEGLECTED FOR DESIGN PURPOSES. THE MAXIMUM FOOTING DIAMETER SHALL BE THREE FEET AND THE MAXIMUM DEPTH SHALL BE TWELVE FEET. IF THESE LIMITS ARE EXCEEDED OR IF THE SOIL IS NOT CAPABLE OF A BEARING PRESSURE OF 3000 PSF, A SPREAD FOOTING SHALL BE USED.

   D. AS AN ALTERNATIVE TO THE DRILLED HOLES, FOOTINGS MAY BE POURED IN EXCAVATED HOLES USING THE PROPER FORMS, WHICH MUST BE REMOVED. THE EXCAVATED HOLES SHALL BE AT LEAST TWO FEET CLEAR OF THE FOOTING SIDES AND ONE FOOT DEEPER THAN THE FOOTING. CARE SHALL BE TAKEN TO AVOID EXCAVATING AROUND THE TOP OF THE FOOTING. THE BACKFILL MATERIAL SHALL BE COMPACTED AS DESCRIBED IN SUB-SECTION 204.12. DESIGN LIMITS AS FOR AUGERED FOOTING APPLY.

   E. WHEN THE DESIGN DEPTH OF A FOOTING CANNOT BE OBTAINED DUE TO UNFORSEEN FIELD CONDITIONS, THE CONTRACTOR SHALL NOTIFY THE ENGINEER AND OBTAIN A REVISED FOOTING DETAIL FROM THE ENGINEER.

   F. ANY BACKFILL PLACED ADJACENT TO THE FOOTING SHALL BE GRANULAR MATERIAL MEETING THE REQUIREMENTS FOR GRANULAR BACKFILL FOR STRUCTURES, SUB-SECTION 704.08. CONCRETE FOR FOOTING SHALL CONFORM TO THE REQUIREMENTS OF CONCRETE, CLASS B, SECTION 501, STRUCTURAL CONCRETE. GROUT MATERIAL SHALL BE NON-SHRINKING MORTAR CONFORMING TO SUB-SECTION 707.03 (MORTAR TYPE IV).

   G. SIGNALS/SIGNS SHALL BE INSTALLED AND LEVELED AND POLES SHALL BE PLUMB PRIOR TO PLACING GROUT UNDER POLE BASE.

10. SHOP DRAWINGS (6 COPIES OF EACH) SHALL BE SUBMITTED TO THE STATE OF VERMONT, AGENCY OF TRANSPORTATION, STRUCTURES DIVISION FOR APPROVAL PRIOR TO FABRICATION. THE SHOP DRAWINGS SHALL INCLUDE THE FOLLOWING INFORMATION:

    A. DETAILED DRAWING OF EACH COMPONENT OF THE STRUCTURE.

    B. MATERIAL SPECIFICATION FOR EACH COMPONENT OF THE STRUCTURE, EITHER BY COMPLETE SPECIFICATION OR REFERENCE TO APPLICABLE ASTM STANDARDS.

    C. NOTATION OF PROJECT NAME, PROJECT NUMBER, ROUTE NUMBER, AND STRUCTURE STATIONING (TO BE INCLUDED ON EACH SHEET).

    D. DETAILS FOR LOCATION OF SIGNS/SIGNALS AND ATTACHMENT HARDWARE FOR THE SUPPORT STRUCTURE.

    E. ALL ELEVATIONS AND DIMENSIONS NECESSARY TO PROVIDE A COMPLETE SET OF RECORD PLANS.

    F. DEAD LOAD DEFLECTION AND CAMBER INFORMATION.

    G. WELDING DETAILS AND PROCEDURES ARE REQUIRED FOR ALL WELDS. PROCEDURES SHALL BE SUBMITTED FOR APPROVAL WITH REFERENCE TO EACH WELD IDENTIFIED ON THE SHOP DRAWINGS. (SEE SUB-SECTION 506.10)

11. EACH OVERHEAD TRAFFIC SIGNAL/SIGN SUPPORT SHALL BE GROUNDED. THE GROUND SHALL CONSIST OF:
    A) AN INTERNAL GROUND LUG OPPOSITE THE HAND HOLE.
    B) A #6 (MIN.) SOFT DRAWN COPPER GROUNDING ELECTRODE CONDUCTOR.
    C) A 5/8'' X 8' (MIN.) COPPER CLAD GROUNDING ELECTRODE. THE RESISTANCE TO GROUND SHALL BE 25 OHMS OR LESS. ADDITIONAL GROUNDING ELECTRODES MAY BE REQUIRED (MINIMUM SPACING SHALL BE 6').
    WHEN A POWER SERVICE, METER AND DISCONNECT ARE ATTACHED TO A POLE, THERE SHALL BE A CONTINUOUS GROUNDING ELECTRODE CONDUCTOR FROM THE METER AND DISCONNECT WHICH MAY RUN INTERNAL TO THE UPRIGHT, THROUGH THE 1/2'' FLEXIBLE TUBING IN THE CONCRETE BASE TO THE REQUIRED GROUNDING ELECTRODE(S). THE GROUNDING ELECTRODE CONDUCTOR FROM THE POLE GROUNDING LUG, CONTROLLER CABINET AND/OR LUMINAIRE MAY ATTACH TO THIS CONTINUOUS GROUNDING ELECTRODE CONDUCTOR FROM THE SERVICE METER AND DISCONNECT. THE CONTRACTOR SHALL PERFORM A RESISTANCE TO GROUND TEST ON THE CONTINUOUS GROUNDING ELECTRODE CONDUCTOR FROM THE SERVICE METER AND DISCONNECT AND PROVIDE A WRITTEN STATEMENT TO THE AREA ELECTRICAL INSPECTOR THAT THE GROUNDING ELECTRODE CONDUCTOR IS CONTINUOUS FROM THE SERVICE METER AND DISCONNECT AND THE RESISTANCE TO GROUND IS 25 OHMS OR LESS.

12. THE COST OF SIGNAL/SIGN SUPPORTS, INCLUDING ALL HARDWARE, SIGN BRACKETS, FOOTINGS AND LUMINAIRE ARMS SHALL BE INCLUDED IN THE UNIT BID PRICE FOR ITEM 677.12, 677.13 OR 678.15, WHICHEVER IS APPLICABLE. THESE COMPONENTS SHALL CONFORM TO ALL APPLICABLE PROVISIONS OF SECTIONS 677, 678, AND 679.

13. HORIZONTAL MEMBERS SHALL BE CAMBERED AND THE VERTICAL POLES BACK-RAKED (WHERE APPLICABLE) TO THE ANTICIPATED DEAD LOAD DEFLECTION PLUS THE CAMBER, IF ANY, SPECIFIED ON THE PLANS.

14. AN EQUIVALENT ALTERNATE DESIGN MAY BE SUBSTITUTED FOR THE DETAILS AND MATERIALS SHOWN.

15. THE DETAILS OF DESIGN FOR THE STRUCTURE AND FOOTINGS ARE TO BE SUPPLIED BY THE CONTRACTOR AND/OR BY THE MANUFACTURER. THE STRUCTURE SHALL BE DESIGNED TO RESIST THE MAXIMUM LOADING AS OUTLINED IN THE AASHTO STANDARD SPECIFICATIONS (SEE NOTE 2). ALL DETAILS OF THE STRUCTURE AND THE FOOTING SHALL BE CHECKED AND STAMPED BY A STRUCTURAL ENGINEER REGISTERED IN THE STATE OF VERMONT PRIOR TO SUBMITTAL OF THE SHOP DRAWINGS TO THE VERMONT AGENCY OF TRANSPORTATION.

16. IN ADDITION TO THE SHOP DRAWINGS OUTLINED IN NOTE 10 THE CONTRACTOR SHALL SUBMIT ALL DESIGN CALCULATIONS TO THE VERMONT AGENCY OF TRANSPORTATION, STRUCTURES DIVISION, SHOWING THE FOLLOWING INFORMATION FOR EACH OF THE VERTICAL AND HORIZONTAL COMPONENTS OF THE STRUCTURE AND FOOTING:

    A. THE DESIGN AXIAL AND SHEAR FORCES AND BENDING AND TORSIONAL MOMENTS.

    B. THE DESIGN AXIAL, BENDING AND SHEAR STRESSES AND THE COMBINED STRESS RATIO.

    C. VIBRATION AND FATIGUE CALCULATIONS AS SET FORTH IN SECTION 9 OF THE AASHTO PUBLICATION REFERENCED IN NOTE 2.

    D. THE ALLOWABLE AXIAL, BENDING, AND SHEAR STRESSES.

    E. ITEMS A, B, D - SHALL BE SHOWN FOR EACH OF THE GROUP LOADINGS (I, II, III) AND FOR THE BASIC WIND LOAD APPLIED TO THE TWO CASES OUTLINED IN THE AASHTO STANDARD SPECIFICATIONS (SEE NOTE 2) SECTION 1.2.5 (D)(4).

    F. FAILURE TO SUPPLY THE PROPER DESIGN INFORMATION SHALL BE CAUSE FOR REJECTION OF THE STRUCTURE.

    G. A MINIMUM OF FOUR (4) WEEKS SHALL BE REQUIRED FOR REVIEW BY THE VERMONT AGENCY OF TRANSPORTATION, STRUCTURES DIVISION.

17. THE CONTRACTOR/MANUFACTURER SHALL BE RESPONSIBLE FOR COMPLETION OF THE STRUCTURE AND FOOTING DATA ON THE DETAIL SHEET(S).

18. FOR INSTALLATIONS WHERE BOTH ''EXISTING'' AND ''FUTURE'' CONDITIONS ARE SHOWN, THE SUPPORTS SHALL BE DESIGNED FOR THE MORE SEVERE OF THE TWO LOADING CONDITIONS. THE INFORMATION OUTLINED IN NOTE 16 ABOVE SHALL BE PROVIDED FOR BOTH THE LOADING CONDITIONS.

19. THE TRAFFIC SIGNALS SHALL BE MOUNTED TO THE ARM OR POLE USING A FIXED MOUNT SYSTEM AS SHOWN ON STANDARD E-171C, UNLESS OTHERWISE NOTED ON THE CROSS SECTION SHEET.

20. BASE PLATES SHALL BE STAMPED WITH THE VERTICAL POLE DIAMETER, HEIGHT, YIELD STRENGTH, GAUGE AND THE HORZONTAL MEMBER DIAMETER, LENGTH, YIELD STRENGTH, GAUGE. ALTERNATELY, THE INFORMATION MAY BE STAMPED ON A METAL TAG RIVETED TO THE POLE NEAR THE HANDHOLE.

21. SEE STANDARD E-171A FOR ADDITIONAL NOTES.

22. SEE SHEET(S) 40 & 41 FOR INTERSECTION LAYOUT(S).

/traf/forms/cantilvr.dgn
/cantnote.txt
cantnote.i
PLOTTED: 14-FEB-2000

LAST REVISED 8/23/94

CANTILEVER / OVERHEAD SIGN / SIGNAL SUPPORT NOTES

PREPARED BY Jgruchacz DATE 2/2000
CHECKED BY _____ DATE _____
DESIGN SUPERVISOR blondin
PROJ.
FAIRFAX-FAIRFIELD-ST.ALBANS
IM 089-3(27)
TRAFFIC SHEET NO. ____ OF ____
SHEET 46 OF 370 SHEETS

STATE OF VERMONT
AGENCY OF TRANSPORTATION

TRAFFIC SIGN SUMMARY SHEET

MILEMARKER, STATION, OR SIGN NUMBER	SIGN LEGEND	SIGN DIMENSIONS EA	WIDTH (In)	HEIGHT (In)	NEW & SALVAGED SIGNS "A"	"B"	SALV SIGN	SALV TIS	EXIST POST RETAIN	SALVAGE	NEW SIGN POSTS NO. OF POSTS	FLANGED CHANNEL lb/ft 1.12	2.0	3.0	SQUARE STEEL (In) lb/ft 1.75 1.88	2.0 2.16	2.5 3.35	ANCHOR	SLEEVE	TUBULAR ALUMINUM Ø (In) lb/ft 3.0 1.3	4.0 1.7	4.0 MOD 1.7	TUBULAR STEEL Ø (In) FOUNDATION	lb/ft 3.0 7.6	3.5 9.0	4.0 10.8	5.0 14.6	W-SHAPE STEEL FTG. SIZE 24"	30"	WEIGHT	POST SIZE	SIGN REQUIRED	REMARKS	SIGN DETAIL DETAIL ON SHEET NUMBER	STD. SHEET NUMBER
												OPTION ITEMS																									
MM 3.91 VT 104		1	36	36	9.0																												REMOVE EXISTING STOP AHEAD SIGN, INSTALL NEW SIGN ON EXISTING POST RETAIN FLASHING BEACON	W3-3	E-152
MM 0.92 VT 105	REDUCED SPEED AHEAD	1	24	30	5.0								12																					R2-5A	E-142
MM 1.01 VT 105	SPEED LIMIT 35	1	24	30	5.0								12																					R2-4	E-142
MM 1.54 VT 105		1	36	36	9.0								14																					W3-3	E-152
MM 1.83 VT 105	REDUCED SPEED AHEAD	1	24	30	5.0								12																					R2-5A	E-142
MM 1.93 VT 105	SPEED LIMIT 35	1	24	30	5.0								12																					R2-4	E-142
104+95 RT	STOP HERE ON RED	1	24	36	6.0								13																					R10-6	E-140
TOTALS		SF 44.0	SF	EA.	SF							FT 75	FT	FT	FT	FT	FT		EA	LB	LB	LB		LB	LB	LB	LB	EA.	EA.	LB					

FINAL POST LENGTHS ARE TO BE DETERMINED IN THE FIELD. POST SIZES ARE COMPUTED BASED ON INFORMATION FURNISHED ON THE STANDARD SHEETS AND THE TRAFFIC & SAFETY DIVISION'S "SIGN POST DESIGN GUIDELINE."

PROJECT NAME: FAIRFAX-FAIRFIELD-ST.ALBANS
PROJECT NUMBER: IM 089-3(27)

FILE NAME: te076a5.dgn
PROJECT LEADER: dubray
DESIGNED BY:
te076tsi.1

PLOT DATE: 13-MAR-2000
DRAWN BY: J gruchacz
CHECKED BY:
SHEET 47 OF 370.

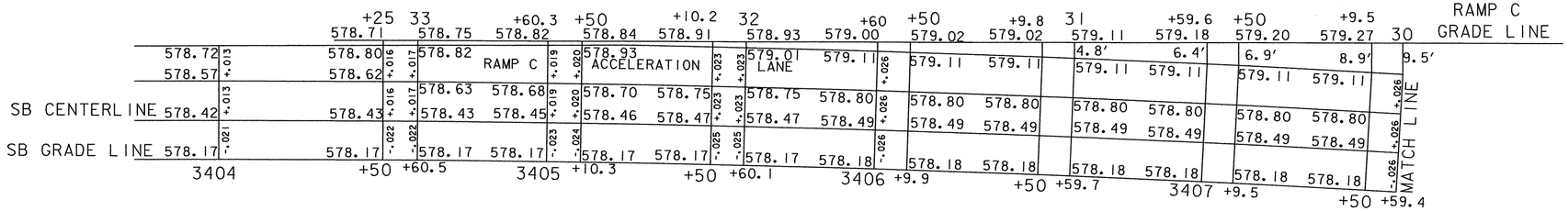

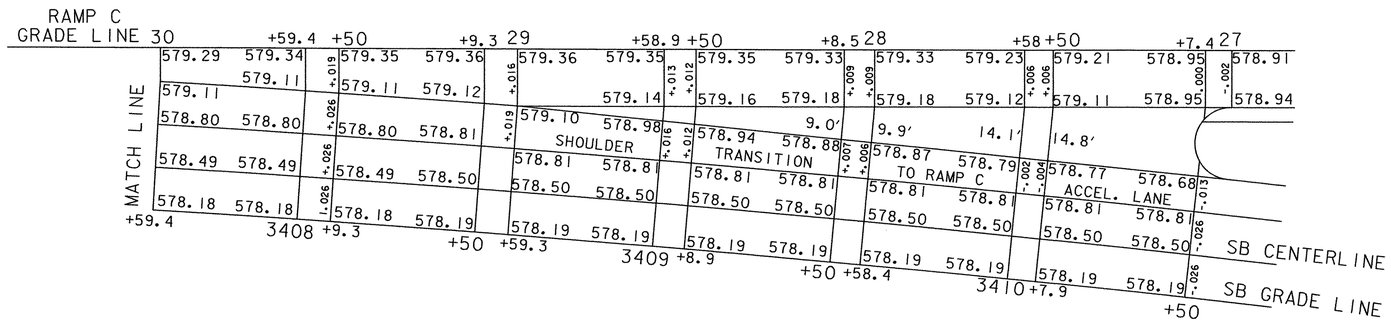

NOTE: THE PLUS OR MINUS INDICATION ON THE CROSS SLOPES IS IN REFERENCE TO THE SOUTHBOUND CENTERLINE.

SPLINE SHEET FOR RAMP C MERGING WITH SOUTHBOUND

0 20 40
SCALE IN FEET

PROJECT: FAIRFAX - FAIRFIELD - ST. ALBANS	PROJECT NO.: IM 089-3(27)
DESIGN FILE NAME: /87A007B/DESIGN/DA007NUI.DGN	
IPARM FILE NAME: DA007SPL	PLOT DATE: 22-AUG-2000
SURVEYED BY: ORVIS	SURVEY DATE: 6/98
SQUAD LEADER: DELLA SANTA	DRAWN BY: SQUAD B
	SHEET: 48 OF 370

SB CURVE#1 DATA
△ = 3°18'-43.38" LT.
D = 0°15'
R = 22918.32'
T = 662.59'
L = 1324.82'
E = 9.58'
BANK = 0.021FT / FT

SOUTHBOUND: 8'' UNDERDRAIN (MODIFICATION #1)
② 3282+50 LT - 3285+00 LT W/FB @ 3282+50 LT

SOUTHBOUND: 8'' UNDERDRAIN (MODIFICATION #2)
① 3282+50 LT - 3285+00 LT W/FB @ 3282+50 LT

N
VT STATE PLANE GRID

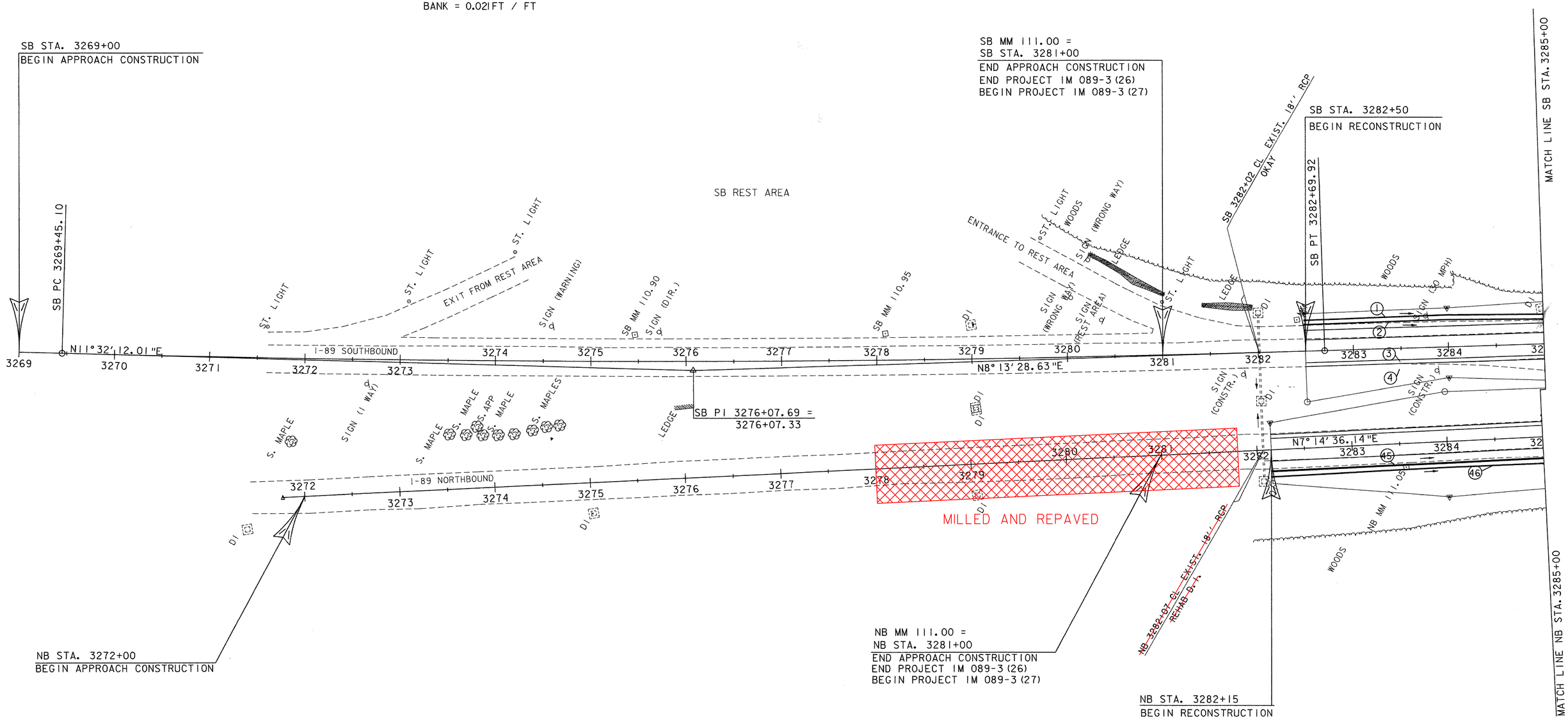

REMOVAL OF EXISTING FENCE (MOD.)
STA. 3284+60 NB RT
STA. 3284+90 NB RT

WOVEN WIRE FENCE W/STEEL POSTS
STA. 3284+60 NB RT
STA. 3284+90 NB RT

NORTHBOUND: 8'' UNDERDRAIN (MODIFICATION #1)
(45) 3282+~~15~~ RT -~~3285+00~~ RT W/FB @ 3282+~~15~~ RT
3289 21

NORTHBOUND: 8'' UNDERDRAIN (MODIFICATION #2)
(46) 3282+~~15~~ RT -~~3285+00~~ RT ~~W/FB @ 3282+15 RT~~
20 3284+95

SCALE IN FEET
0 50 100

SB 3269+00 - 3285+00
NB 3272+00 - 3285+00

PROJECT: FAIRFAX - FAIRFIELD - ST. ALBANS	PROJECT NO.: IM 089-3(27)
DESIGN FILE NAME: /87A007B/DESIGN/DA007NU1.DGN	
IPARM FILE NAME: DA007L01	PLOT DATE: 18-AUG-2000
SURVEYED BY: ORVIS	SURVEY DATE: 6/98
SQUAD LEADER: DELLA SANTA	DRAWN BY: SQUAD B
	SHEET: 49 OF 370

DATUM
VERTICAL NAVD88
HORIZONTAL NAD83(92)

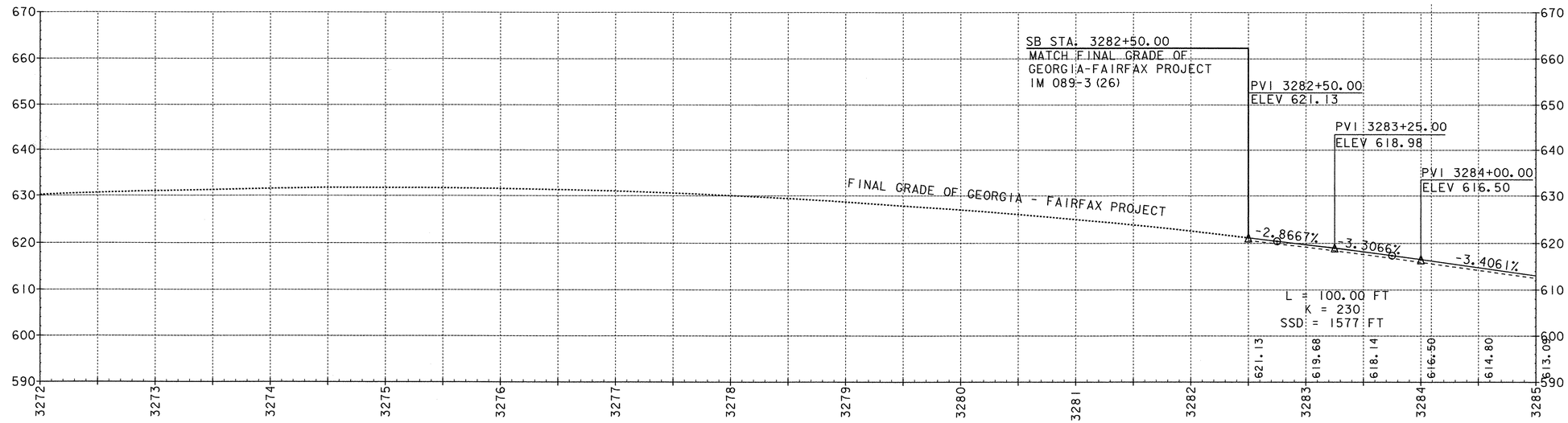

SOUTHBOUND GRADE PROFILE ALONG MEDIAN SIDE (REFER TO TYPICAL SHEET)

STA. 3272+00 – 3285+00

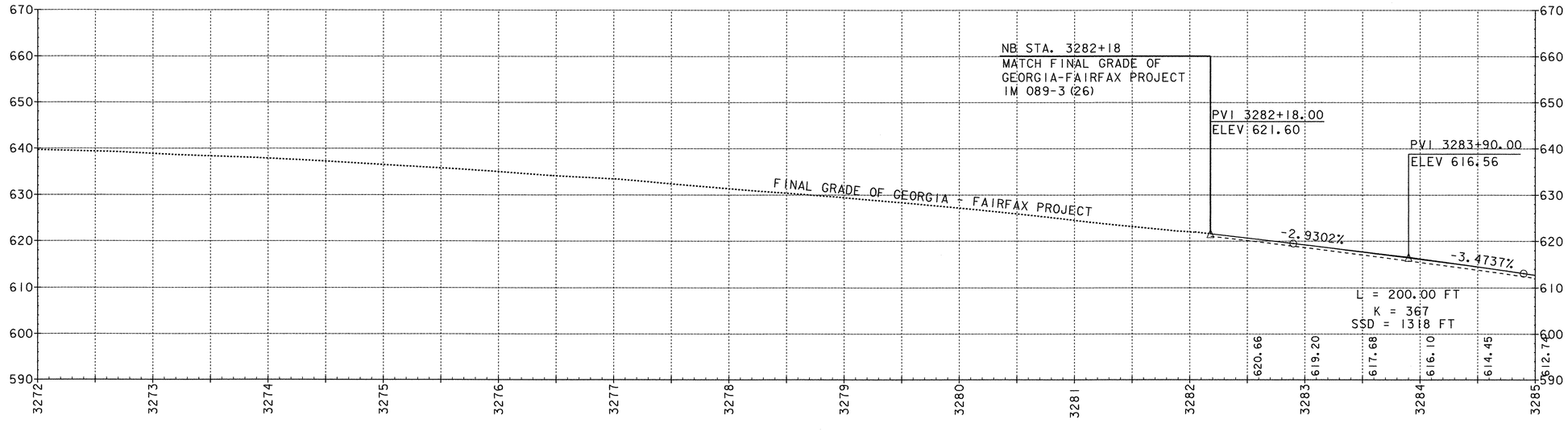

NORTHBOUND GRADE PROFILE ALONG MEDIAN SIDE (REFER TO TYPICAL SHEET)

STA. 3272+00 – 3285+00

SCALES IN FEET

0 50 100

20 10 0

DATUM

VERTICAL NAVD88

HORIZONTAL NAD83(92)

PROJECT: FAIRFAX - FAIRFIELD - ST. ALBANS	PROJECT NO.: IM 089-3(27)
DESIGN FILE NAME: /87A007B/DESIGN/DA007XSI.DGN	
IPARM FILE NAME: DA007P01	PLOT DATE: 04-OCT-2000
SURVEYED BY: ORVIS	SURVEY DATE: 6/98
SQUAD LEADER: DELLA SANTA	DRAWN BY: SQUAD B
	SHEET: 50 OF 370

SOUTHBOUND: 8'' UNDERDRAIN (MODIFICATION #1)

(2) 3285+00 LT - 3288+00 LT

(3) 3286+00 RT - 3291+93 RT W/FB @ 3286+00 RT

SOUTHBOUND: 8'' UNDERDRAIN CARRIER PIPE

(2A) 3288+00 LT W/FB @ 3288+00 LT

(3A) 3291+93 RT W/FB @ 3291+93 RT

(5A) 3295+00 RT W/FB @ 3295+00 RT

WOVEN WIRE FENCE W/STEEL POSTS

STA. 3288+50 SB LT - STA. 3297+00 SB LT

STA. 3298+00 SB LT - STA. 3301+00 SB LT

REMOVAL OF EXISTING FENCE (MOD.)

STA. 3288+50 SB LT - STA. 3297+00 SB LT

STA. 3298+00 SB LT - STA. 3301+00 SB LT

SOUTHBOUND: 8'' UNDERDRAIN (MODIFICATION #2)

(1) 3285+00 LT - 3288+00 LT

(4) 3286+00 RT - 3291+93 RT W/FB @ 3286+00 RT.

(5) 3295+00 RT - 3296+20 RT W/FB @ 3296+20 RT

REMOVAL AND DISPOSAL OF GUARD RAIL

(SOUTHBOUND)

3287+68 LT - 3296+30 LT

3298+33 LT - 3301+00 LT

3295+12 RT - 3296+22 RT

3298+25 RT - 3300+59 RT

STEEL BEAM GUARD RAIL

(SOUTHBOUND)

3287+58.8 LT - 3296+33.8 LT

3298+01.8 LT - 3301+00 LT

3295+01.9 RT - 3296+26.9 RT

3297+96.6 RT - 3299+46.6 RT

BRIDGE RAILING - NETC 2 RAIL

(SOUTHBOUND)

3296+63.2 LT - 3297+72.3 LT

3296+56.3 RT - 3297+67.2 RT

GUARD RAIL APPROACH SECTION, NETC 2 RAIL

(SOUTHBOUND)

3296+33.8 LT - 3296+63.2 LT

3296+26.9 RT - 3296+56.3 RT

3297+72.3 LT - 3298+01.8 LT

3297+67.2 RT - 3297+96.6 RT

TREATED TIMBER CURB

(SOUTHBOUND)

3285+00 LT - 3296+25 LT

SB CURVE #2 DATA

Δ = 5°-28'-06.84'' LT.
D = 0°-15'
R = 22918.32'
T = 1094.54'
L = 2187.43'
E = 26.12'
BANK = 0.021FT / FT

NB CURVE #1 DATA

Δ = 4°-25'-35.96'' LT.
D = 0°-15'
R = 22918.32'
T = 885.77'
L = 1770.66'
E = 17.11
BANK = 0.021FT / FT

VT STATE PLANE GRID

N

MATCH LINE SB STA. 3285+00

MATCH LINE SB STA. 3301+00

MATCH LINE NB STA. 3285+00

MATCH LINE NB STA. 3301+00

SB STA. 3296+72.11
STOP ROADWAY
BEGIN BRIDGE
(REFER TO BRIDGE SERIES 200)

SB STA. 3297+54.63
END BRIDGE
RESUME ROADWAY

NB STA 3299+85 CL EXISTING 36" ACCGMP REMOVED & REPLACED 20' @OUTLET

SB 3291+00 LT EXIST. 12'' X 96' SLOPE PIPE REPLACE W/NEW 16' X 18'' PCCSP (.064) OR CPEP CMAP (.060) RCP CL III, AT OUTLET

REFER TO BRIDGE SERIES 100

SB 3292+00 CL EXIST. 24'' ACCGMP CLEAN MEDIAN DITCH, NORTH AND SOUTH REHAB D.I. LEFT

SB 3292+79.06 CL= CHAN. 11+31.67 EXIST. 120'' CGMPP

SB 3294+99 CL EXIST. 18'' X 68' RCP REHAB DI W/B GRATE

NB 3288+13 LT EXIST. 8'' CPEP REPLACE W/NEW 18'' 60° PCCSP (.064) OR CPEP CMAP (.060) RCP CL III

NB 3292+03 CL EXIST. 24'' X 142' ACCGMP REMOVE 6' OF PIPE @ OUTLET. ADD STONE FILL, TYPE II

NB 3293+37.93 CL= CHAN. 12+32.75 EXIST. 120'' CGMPP

NB 3295+03 CL EXIST. 24'' X 106' ACCGMP REHAB D.I. RELAY 20' OF PIPE @ OUTLET. CLEAN OUTLET DITCH.

NB 3298+59 CL EXIST. 18'' X 102' ACCGMP REHAB D.I. CLEAN OUTLET DITCH. ADD STONE FILL, TYPE I

NB STA. 3296+70.13
STOP ROADWAY
BEGIN BRIDGE
(REFER TO BRIDGE SERIES 200)

NB STA. 3297+52.65
END BRIDGE
RESUME ROADWAY

SB PI 3299+04.82 = 3299+03.16

NB PI 3299+19.61 = 3299+18.73

N8°13'28.63"E

N7°14'36.14"E

CHANGE ELEVATION

WETLAND #30

WETLAND #21

WETLAND #22

REMOVAL AND DISPOSAL OF GUARD RAIL

(NORTHBOUND)

3293+80 LT - 3296+29 LT

3298+24 LT - 3299+36 LT

3288+13 RT - 3296+26 RT

3298+19 RT - 3301+00 RT

CONSTRUCT U-TURN

(NORTHBOUND)

3288+40 LT

REMOVAL OF EXISTING FENCE (MOD.)

STA. 3288+86 NB RT

STA. 3289+65 NB RT - STA. 3290+85 NB RT

STA. 3292+40 NB RT

STA. 3292+45 NB RT - STA. 3293+45 NB RT

STA. 3294+00 NB RT - STA. 3294+60 NB RT

STA. 3295+00 NB RT

STA. 3296+50 NB RT-LT

STA. 3298+00 NB RT-LT

WOVEN WIRE FENCE W/STEEL POSTS

STA. 3288+86 NB RT

STA. 3289+65 NB RT - STA. 3290+85 NB RT

STA. 3292+40 NB RT

STA. 3292+45 NB RT - STA. 3293+45 NB RT

STA. 3294+00 NB RT - STA. 3294+60 NB RT

STA. 3295+00 NB RT

STA. 3296+50 NB RT-LT

STA. 3298+00 NB RT-LT

STEEL BRACE FOR WOVEN WIRE FENCE

STA. 3292+00 NB RT

NORTHBOUND: 8'' UNDERDRAIN (MODIFICATION #1)

(45) 3285+00 RT -3289+00 RT ~~W/FB @ 3285+50 RT~~

(47) 3285+00 LT -~~3292+00~~ 3296+25 LT W/FB @ ~~3285+00 LT & 3288+50 LT~~ 3296+25 LT

~~(49) 3292+07 LT - 3295+03 LT W/FB @ 3295+03 LT~~

~~(51) 3295+06 LT - 3296+25 LT W/FB @ 3296+25 LT~~

NORTHBOUND: 8'' UNDERDRAIN (MODIFICATION #2)

(46) 3285+00 RT -3289+00 RT W/FB @ 3285+~~50~~ 05 RT

(48) ~~3285+00~~ 3286+00 LT -3292+00 LT W/FB @ ~~3285+00~~ 3286+00 LT & 3288+50 LT

(50) 3292+07 LT - 3295+~~03~~ 73 LT W/FB @ 3295+~~03~~ 73 LT

~~(52) 3295+06 LT - 3296+25 LT W/FB @ 3296+25 LT~~

NORTHBOUND: 8'' UNDERDRAIN CARRIER PIPE

(45A) 3289+00 RT W/FB @ 3289+00 RT

(47A) 3292+00 LT W/FB @ 3292+00 LT

(49A) 3292+07 LT W/FB @ 3292+07 LT

(51A) 3295+06 LT W/FB @ 3295+06 LT

BRIDGE RAILING - NETC 2 RAIL

(NORTHBOUND)

3296+58.5 LT - 3297+70.6 LT

3296+52.6 RT - 3297+64.5 RT

STEEL BEAM GUARD RAIL

(NORTHBOUND)

3294+04.1 LT - 3296+29.1 LT

3298+00.0 LT - 3299+50.0 LT

3288+98.2 RT - 3296+23.2 RT

3297+93.9 RT - 3301+00 RT

GUARD RAIL APPROACH SECTION, NETC 2 RAIL

(NORTHBOUND)

3296+29.1 LT - 3296+58.5 LT

3296+23.2 RT - 3296+52.6 RT

3297+70.6 LT - 3298+00.0 LT

3297+64.5 RT - 3297+93.9 RT

0 50 100

SCALE IN FEET

SB & NB 3285+00 - 3301+00

DATUM

VERTICAL NAVD88

HORIZONTAL NAD83(92)

PROJECT: FAIRFAX - FAIRFIELD - ST. ALBANS

PROJECT NO.: IM 089-3(27)

DESIGN FILE NAME: /87A007B/DESIGN/DA007NUI.DGN

IPARM FILE NAME: DA007L02

PLOT DATE: 23-AUG-2000

SURVEYED BY: ORVIS

SURVEY DATE: 6/98

SQUAD LEADER: DELLA SANTA

DRAWN BY: SQUAD B

SHEET: 51 OF 370

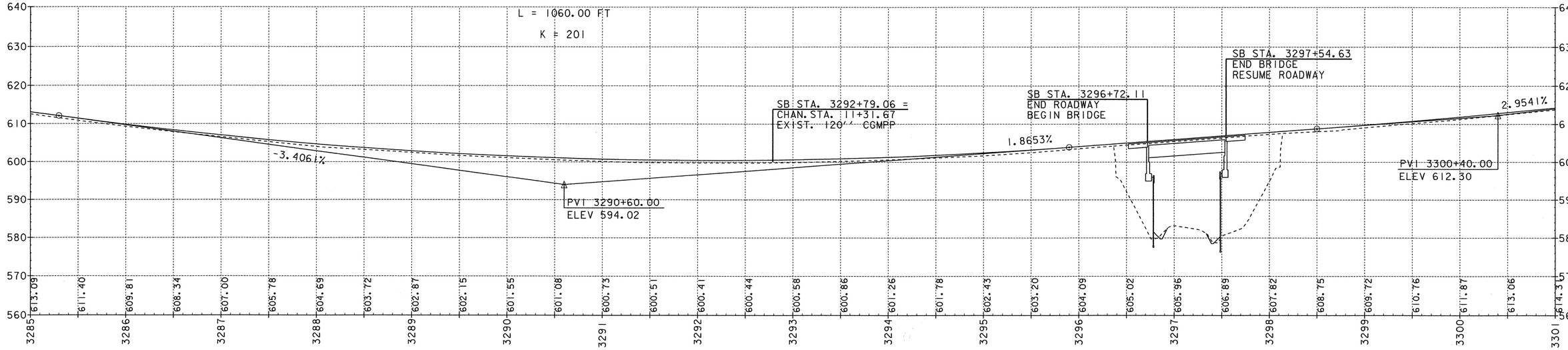

SOUTHBOUND GRADE PROFILE ALONG MEDIAN SIDE (REFER TO TYPICAL SHEET)
STA. 3285+00 – 3301+00

IMPORTANT NOTE: BRIDGE FINISHED GRADES ARE CENTERLINE GRADES.

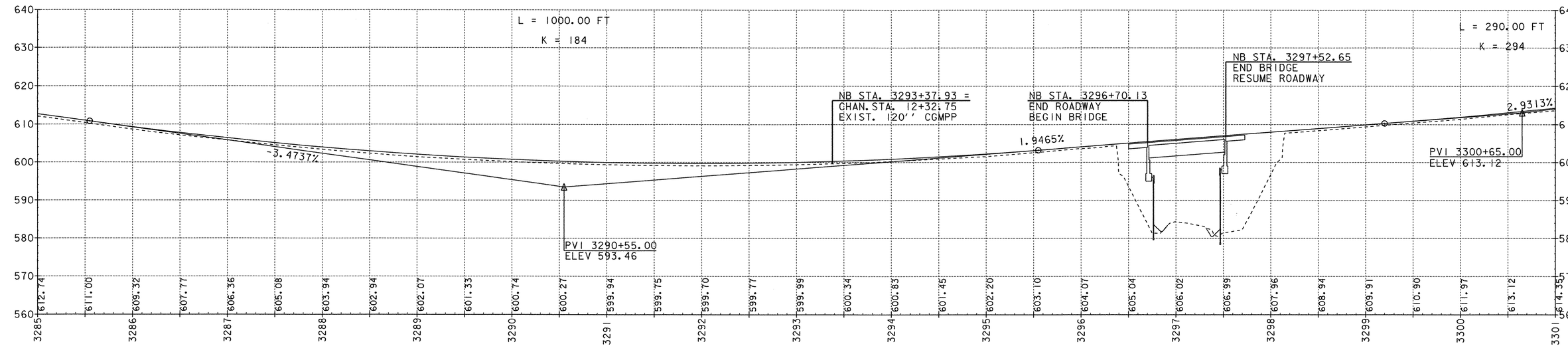

NORTHBOUND GRADE PROFILE ALONG MEDIAN SIDE (REFER TO TYPICAL SHEET)
STA. 3285+00 – 3301+00

IMPORTANT NOTE: BRIDGE FINISHED GRADES ARE CENTERLINE GRADES.

SCALES IN FEET
0 50 100
20 10 0

DATUM
VERTICAL NAVD88
HORIZONTAL NAD83(92)

PROJECT: FAIRFAX - FAIRFIELD - ST. ALBANS	PROJECT NO.: IM 089-3(27)
DESIGN FILE NAME: /87A007B/DESIGN/DA007XSI.DGN	
IPARM FILE NAME: DA007P02	PLOT DATE: 04-OCT-2000
SURVEYED BY: ORVIS	SURVEY DATE: 6/98
SQUAD LEADER: DELLA SANTA	DRAWN BY: SQUAD B
	SHEET: 52 OF 370

SOUTHBOUND: 8'' UNDERDRAIN (MODIFICATION #1)
(6) 3308+00 RT - 3312+94 RT W/FB @ 3312+94 RT
(8) 3313+00 LT - 3317+00 LT

SOUTHBOUND: 8'' UNDERDRAIN (MODIFICATION #2)
(7) 3308+00 RT - 3312+94 RT W/FB @ 3312+94 RT
(9) 3313+00 LT - 3317+00 LT

SOUTHBOUND: 8'' UNDERDRAIN CARRIER PIPE
(6A) 3308+00 RT W/FB @ 3308+00 RT
(8A) 3313+00 LT W/FB @ 3313+00 LT

REMOVAL AND DISPOSAL
OF GUARD RAIL
(SOUTHBOUND)
3301+00 LT - 3311+33 LT

REMOVAL OF EXISTING FENCE (MOD.)
STA. 3301+00 SB LT - STA. 3303+00 SB LT

WOVEN WIRE FENCE W/STEEL POSTS
STA. 3301+00 SB LT - STA. 3303+00 SB LT

STEEL BEAM GUARD RAIL
(SOUTHBOUND)
3301+00 LT - 3311+01.8 LT

VT STATE PLANE GRID
N

MATCH LINE SB STA. 3301+00

MATCH LINE SB STA. 3317+00

WOODS
FENCE
GUARDRAIL
SILT FENCE
WETLAND #21
SB MM 111.50
SB PT 3308+04.50
HEADWALL
SB MM 111.55
SB 3307+99 CL EXIST. 18'' X 88' ACCGMP OKAY
SB PT 3309+97.70
SB MM 111.60
SB 3312+99 CL EXIST. 18'' X 80' ACCGMP OKAY
SB MM 111.65
SB MM 111.70

3301 3302 3303 3304 3305 3306 3307 3308 3309 3310 3311 3312 3313 3314 3315 3316 3317

N2°45'21.79"E

N2°49'00.18"E

NB MM 111.40
NB MM 111.45
NB MM 111.50
NB MM 111.55
NB MM 111.60
NB MM 111.65
SILT FENCE
WETLAND #22
HEADWALL
NB 3302+87 CL EXIST. 18'' ACCGMP REHAB D: LAST 20' REMOVE HEADWALL; REPLACE: LAST 20' W/NEW PCCSP. ADD STONE FILL, TYPE I
S. ELM
BM RR SIR 631.53
IRON PIPE
NB PC 3312+76.00
BOUND

REMOVAL OF EXISTING FENCE (MOD.)
STA. 3312+10 NB RT - STA. 3314+00 NB RT

WOVEN WIRE FENCE W/STEEL POSTS
STA. 3312+10 NB RT - STA. 3314+00 NB RT

REMOVAL AND DISPOSAL
OF GUARD RAIL
(NORTHBOUND)
3301+00 RT - 3307+29 RT

STEEL BEAM GUARD RAIL
(NORTHBOUND)
3301+00 RT - 3307+18.9 RT

CONSTRUCT U-TURN
(NORTHBOUND)
3307+71 LT

NORTHBOUND: 8'' UNDERDRAIN (MODIFICATION #1)
(53) 3302+90 LT - ~~3308+08~~ 3308+16 LT W/FB @ ~~3308+08~~ 3308+18 LT
(55) ~~3309+00~~ 3308+85 RT - 3317+00 W/FB @ 3314+50 RT

NORTHBOUND: 8'' UNDERDRAIN (MODIFICATION #2)
(54) 3302+90 LT - 3308+~~08~~ 16 LT W/FB @ 3308+~~08~~ 16 LT
(56) ~~3309+00~~ 3308+50 RT - 3317+00 W/FB @ 3314+50 RT

NORTHBOUND: 8'' UNDERDRAIN CARRIER PIPE
(54A) 3302+92 LT W/FB @ 3302+92 LT
(55A) 3309+92 RT W/FB @ 3309+00 RT

DATUM
VERTICAL NAVD88
HORIZONTAL NAD83(92)

0 50 100
SCALE IN FEET

SB & NB 3301+00 - 3317+00

PROJECT: FAIRFAX - FAIRFIELD - ST. ALBANS	PROJECT NO.: IM 089-3(27)
DESIGN FILE NAME: /87A007B/DESIGN/DA007NUI.DGN	
IPARM FILE NAME: DA007L03	PLOT DATE: 23-AUG-2000
SURVEYED BY: ORVIS	SURVEY DATE: 6/98
SQUAD LEADER: DELLA SANTA	DRAWN BY: SQUAD B
	SHEET: 53 OF 370

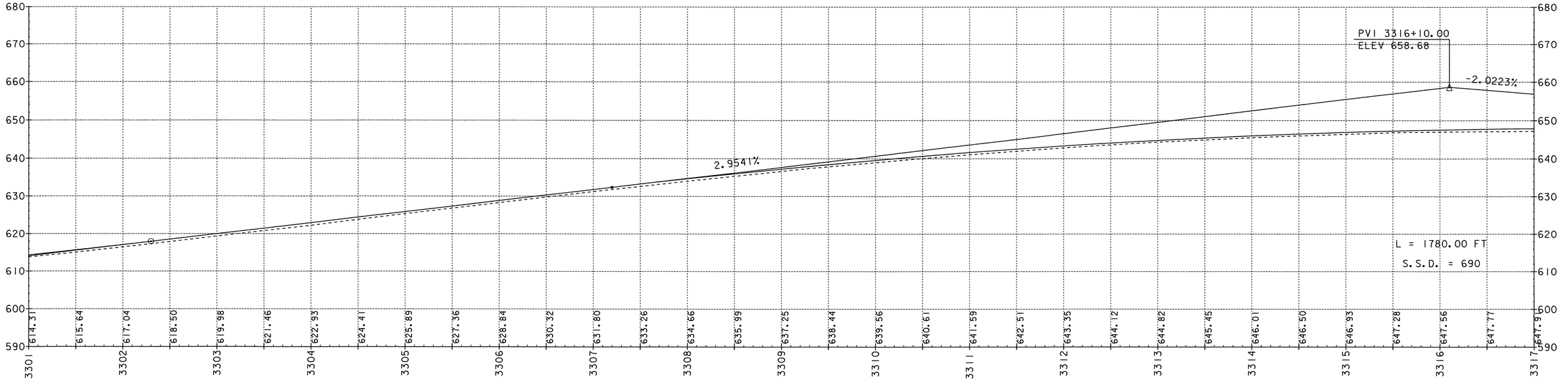

SOUTHBOUND GRADE PROFILE ALONG MEDIAN SIDE (REFER TO TYPICAL SHEET)
STA. 3301+00 – 3317+00

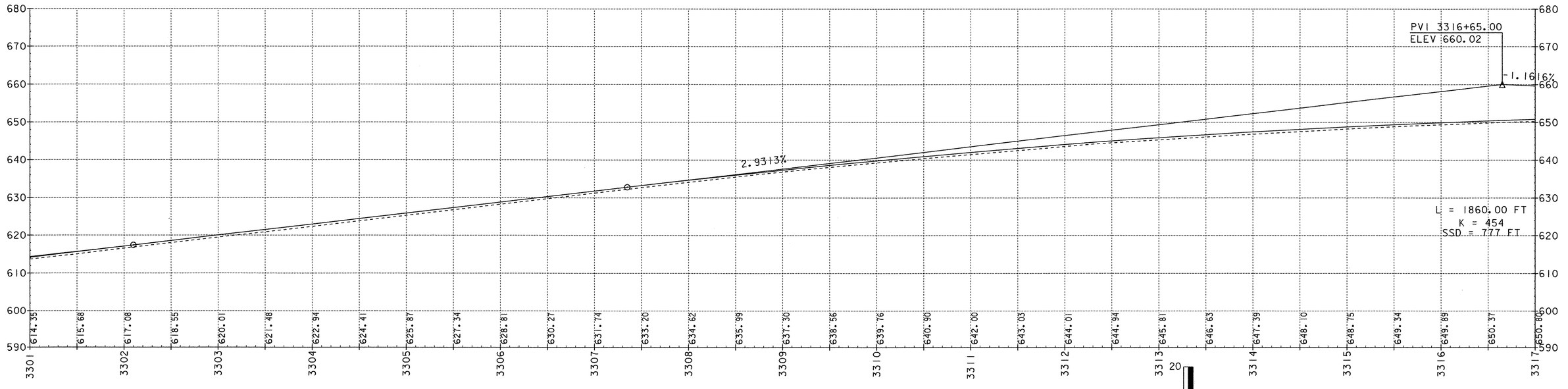

NORTHBOUND GRADE PROFILE ALONG MEDIAN SIDE (REFER TO TYPICAL SHEET)
STA. 3301+00 – 3317+00

SCALES IN FEET

0 50 100

20 10 0

DATUM
VERTICAL NAVD88
HORIZONTAL NAD83(92)

PROJECT: FAIRFAX - FAIRFIELD - ST. ALBANS	PROJECT NO.: IM 089-3(27)
DESIGN FILE NAME: /87A007B/DESIGN/DA007XSI.DGN	
IPARM FILE NAME: DA007P03	PLOT DATE: 04-OCT-2000
SURVEYED BY: ORVIS	SURVEY DATE: 6/98
SQUAD LEADER: DELLA SANTA	DRAWN BY: SQUAD B
	SHEET: 54 OF 370

SOUTHBOUND: 8'' UNDERDRAIN (MODIFICATION #1)
(8) 3317+00 LT - 3318+00 LT W/FB @ 3318+00 LT
(10) 3318+02 LT - 3321+02 LT W/FB @ 3318+02 LT

SOUTHBOUND: 8'' UNDERDRAIN (MODIFICATION #2)
(9) 3317+00 LT - 3318+00 LT W/FB @ 3318+00 LT
(11) 3318+02 LT - 3321+02 LT W/FB @ 3318+02 LT

SOUTHBOUND: 8'' UNDERDRAIN CARRIER PIPE
(25A) 3321+02 LT W/FB @ 3321+02 LT

REMOVAL AND DISPOSAL OF GUARD RAIL (SOUTHBOUND)
3324+66 LT - 3333+00 LT

STEEL BEAM GUARD RAIL (SOUTHBOUND)
3327+00 LT - 3333+00 LT

VT STATE PLANE GRID N

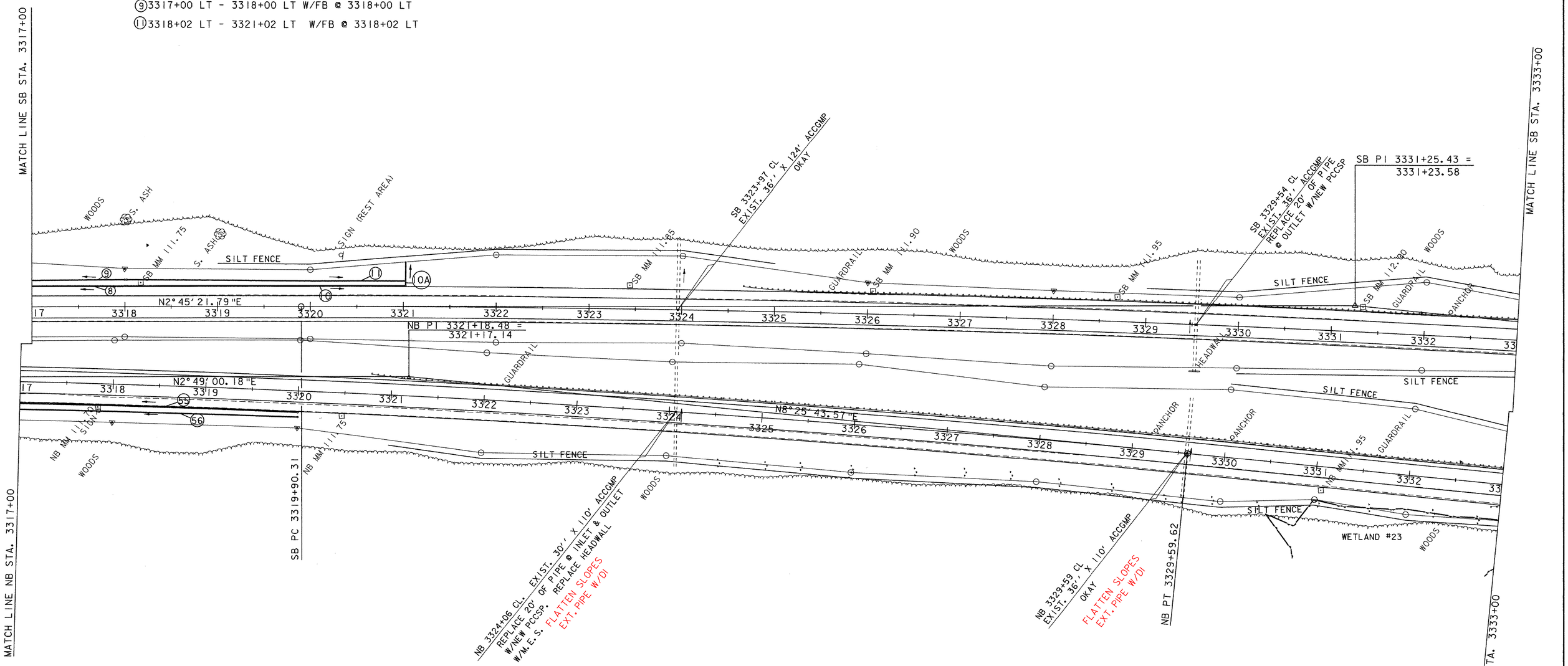

NB CURVE #2 DATA
△ = 5°36'-43.39'' RT.
D = 0°20'
R = 17188.74'
T = 842.48'
L = 1683.62'
E = 20.63'
BANK = 0.021FT / FT

NORTHBOUND: 8'' UNDERDRAIN (MODIFICATION #1)
(55) 3317+00 RT - 3320+00 RT W/FB @ 3320+~~00~~ 95 RT

NORTHBOUND: 8'' UNDERDRAIN (MODIFICATION #2)
(56) 3317+00 RT - 3320+00 RT W/FB @ 3320+~~00~~ 95 RT

REMOVAL OF EXISTING FENCE (MOD.)
STA. 3319+00 NB RT
STA. 3324+20 NB RT
STA. 3325+47 NB RT
STA. 3328+00 NB RT
STA. 3328+50 NB RT
STA. 3332+70 NB RT

WOVEN WIRE FENCE W/STEEL POSTS
STA. 3319+00 NB RT
STA. 3324+20 NB RT
STA. 3325+47 NB RT
STA. 3328+00 NB RT
STA. 3328+50 NB RT
STA. 3332+70 NB RT

REMOVAL AND DISPOSAL OF GUARD RAIL (NORTHBOUND)
3320+78 LT - 3333+00 LT

STEEL BEAM GUARD RAIL (NORTHBOUND)
3321+00 LT - 3333+00 LT

SB CURVE #3 DATA
△ = 5°40'-15.51'' RT.
D = 0°15'
R = 22918.32'
T = 1135.12'
L = 2268.39'
E = 28.09'
BANK = 0.021FT / FT

SB & NB 3317+00 - 3333+00

0 50 100
SCALE IN FEET

DATUM
VERTICAL NAVD88
HORIZONTAL NAD83(92)

PROJECT: FAIRFAX - FAIRFIELD - ST. ALBANS	PROJECT NO.: IM 089-3(27)
DESIGN FILE NAME: /87A007B/DESIGN/DA007NUI.DGN	
IPARM FILE NAME: DA007L04	PLOT DATE: 18-AUG-2000
SURVEYED BY: ORVIS	SURVEY DATE: 6/98
SQUAD LEADER: DELLA SANTA	DRAWN BY: SQUAD B
	SHEET: 55 OF 370

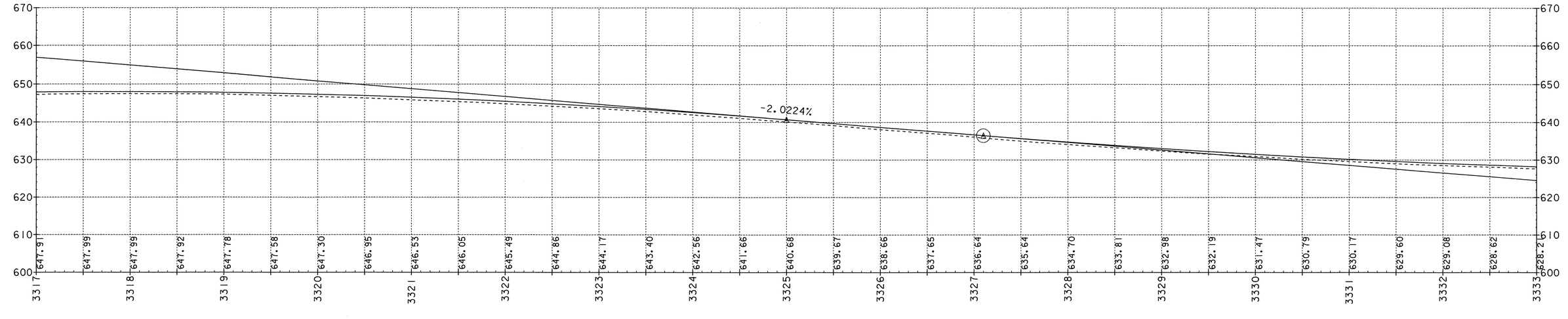

SOUTHBOUND GRADE PROFILE ALONG MEDIAN SIDE (REFER TO TYPICAL SHEET)
STA. 3317+00 – 3333+00

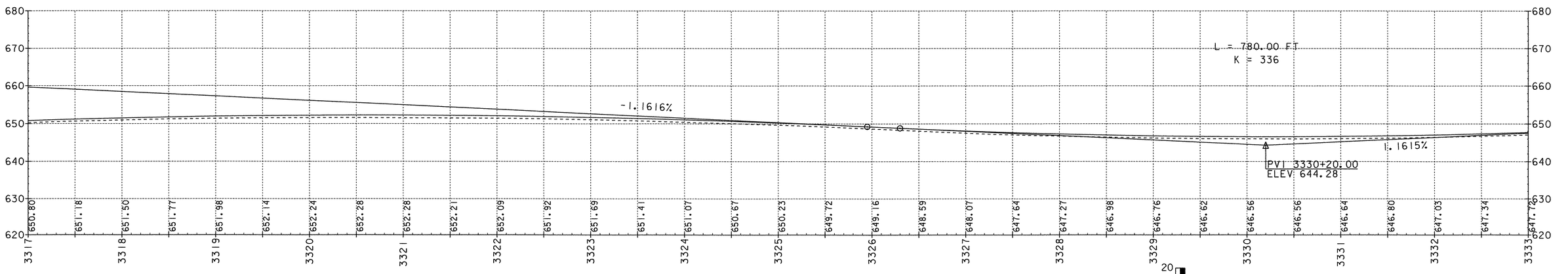

NORTHBOUND GRADE PROFILE ALONG MEDIAN SIDE (REFER TO TYPICAL SHEET)
STA. 3317+00 – 3333+00

SCALES IN FEET
0 50 100
20 10 0

DATUM
VERTICAL NAVD88
HORIZONTAL NAD83(92)

PROJECT: FAIRFAX - FAIRFIELD - ST. ALBANS	PROJECT NO.: IM 089-3(27)
DESIGN FILE NAME: /87A007B/DESIGN/DA007XSI.DGN	
IPARM FILE NAME: DA007P04	PLOT DATE: 04-OCT-2000
SURVEYED BY: ORVIS	SURVEY DATE: 6/98
SQUAD LEADER: DELLA SANTA	DRAWN BY: SQUAD B
	SHEET: 56 OF 370

STEEL BEAM GUARD RAIL
(SOUTHBOUND)
3333+00 LT - 3343+00 LT
3333+50 RT - 3336+50 RT

REMOVAL AND DISPOSAL
OF GUARD RAIL
(SOUTHBOUND)
3333+00 LT - 3349+00 LT
3334+12 RT - 3336+88 RT

REMOVAL OF EXISTING FENCE (MOD.)
STA. 3336+12 SB LT
STA. 3336+40 SB LT

WOVEN WIRE FENCE W/STEEL POSTS
STA. 3336+12 SB LT
STA. 3336+40 SB LT

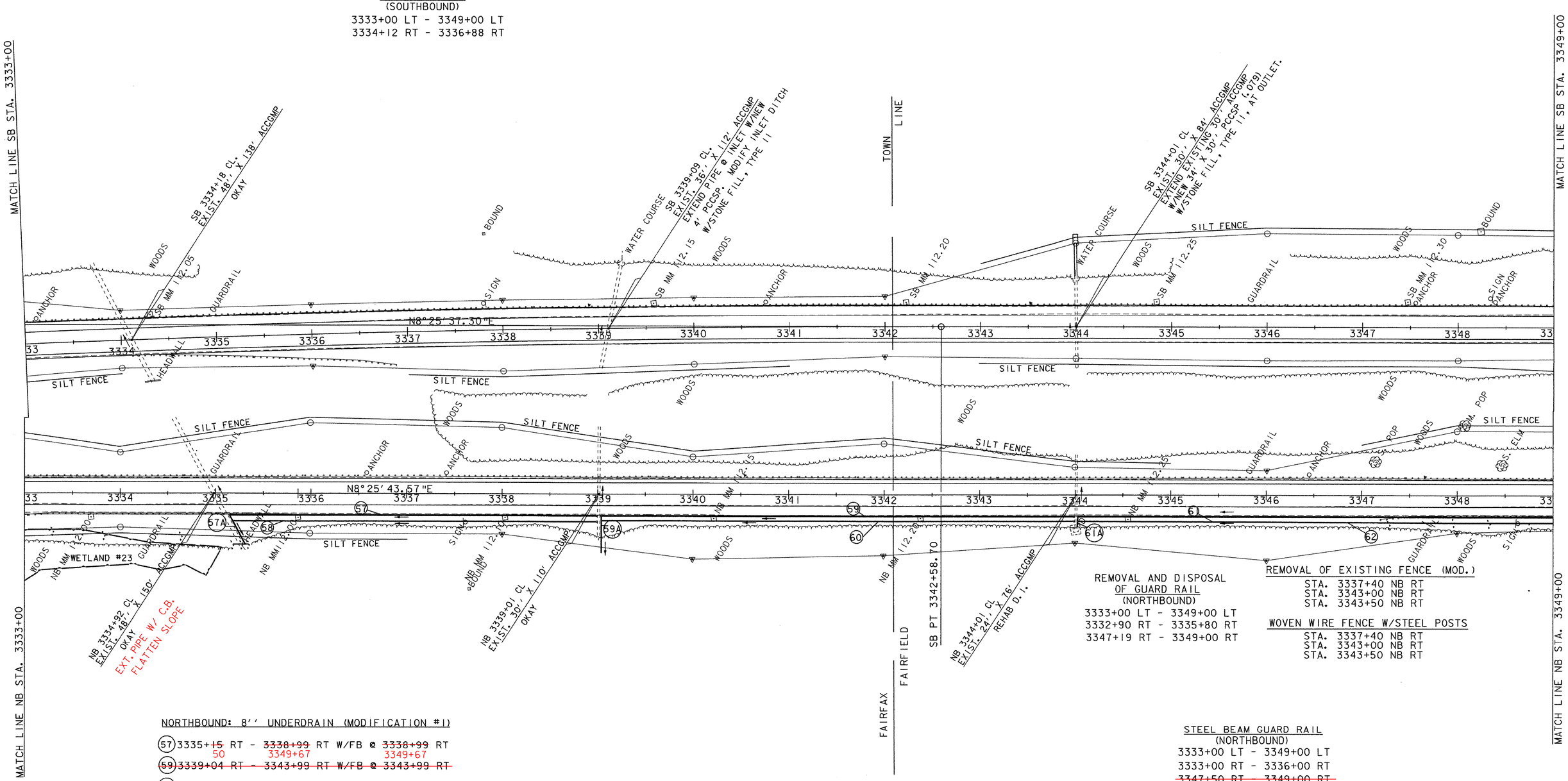

REMOVAL AND DISPOSAL
OF GUARD RAIL
(NORTHBOUND)
3333+00 LT - 3349+00 LT
3332+90 RT - 3335+80 RT
3347+19 RT - 3349+00 RT

REMOVAL OF EXISTING FENCE (MOD.)
STA. 3337+40 NB RT
STA. 3343+00 NB RT
STA. 3343+50 NB RT

WOVEN WIRE FENCE W/STEEL POSTS
STA. 3337+40 NB RT
STA. 3343+00 NB RT
STA. 3343+50 NB RT

STEEL BEAM GUARD RAIL
(NORTHBOUND)
3333+00 LT - 3349+00 LT
3333+00 RT - 3336+00 RT
~~3347+50 RT - 3349+00 RT~~

NORTHBOUND: 8'' UNDERDRAIN (MODIFICATION #1)

57 3335+~~15~~ 50 RT - ~~3338+99~~ 3349+67 RT W/FB @ ~~3338+99~~ 3349+67 RT
~~59 3339+04 RT - 3343+99 RT W/FB @ 3343+99 RT~~
~~61 3344+03 RT - 3349+68 RT W/FB @ 3349+68 RT~~

NORTHBOUND: 8'' UNDERDRAIN (MODIFICATION #2)

58 3335+~~18~~ 40 RT - ~~3338+99~~ 3349+63 RT W/FB @ ~~3338+99~~ 3349+63 RT
~~60 3339+05 RT - 3343+99 RT W/FB @ 3343+99 RT~~
~~62 3344+03 RT - 3349+68 RT W/FB @ 3349+68 RT~~

NORTHBOUND: 8'' UNDERDRAIN CARRIER PIPE

57A 3335+15 RT W/FB @ 3335+15 RT
59A 3339+04 RT W/FB @ 3339+04 RT
61A 3344+03 RT W/FB @ 3344+03 RT

DATUM
VERTICAL NAVD88
HORIZONTAL NAD83(92)

0 50 100
SCALE IN FEET

SB & NB 3333+00 - 3349+00

PROJECT: FAIRFAX - FAIRFIELD - ST. ALBANS	PROJECT NO.: IM 089-3(27)
DESIGN FILE NAME: /87A007B/DESIGN/DA007NU1.DGN	
IPARM FILE NAME: DA007L05	PLOT DATE: 18-AUG-2000
SURVEYED BY: ORVIS	SURVEY DATE: 6/98
SQUAD LEADER: DELLA SANTA	DRAWN BY: SQUAD B
	SHEET: 57 OF 370

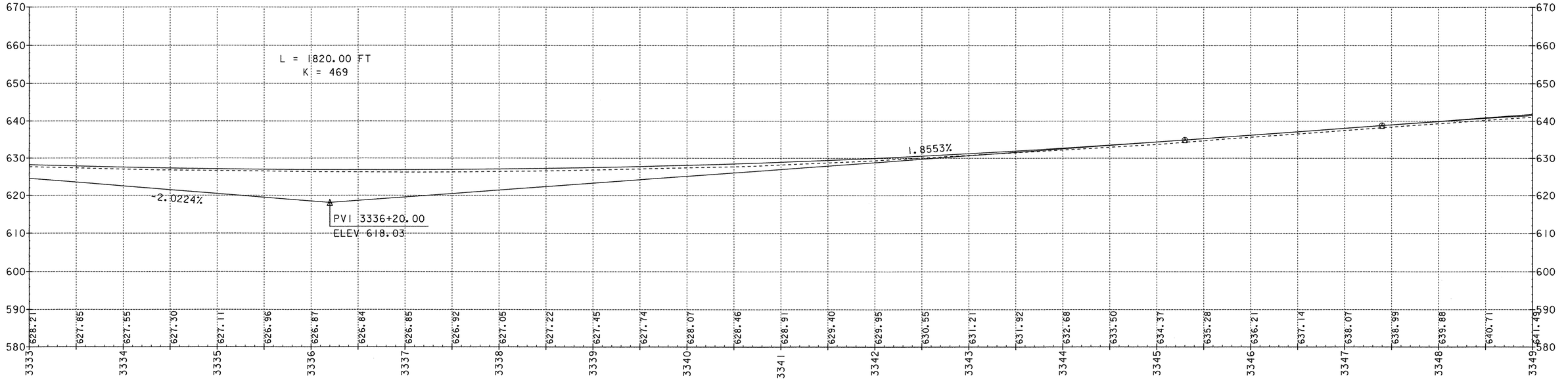

SOUTHBOUND GRADE PROFILE ALONG MEDIAN SIDE (REFER TO TYPICAL SHEET)
STA. 3333+00 – 3349+00

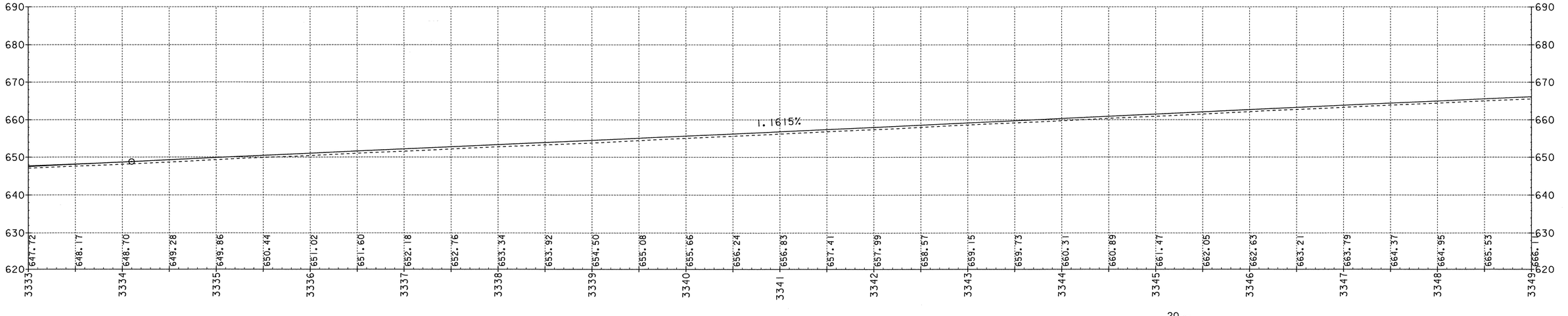

NORTHBOUND GRADE PROFILE ALONG MEDIAN SIDE (REFER TO TYPICAL SHEET)
STA. 3333+00 – 3349+00

SCALES IN FEET
0 50 100
20 10 0

DATUM	
VERTICAL	NAVD88
HORIZONTAL	NAD83(92)

PROJECT:	PROJECT NO.:
FAIRFAX - FAIRFIELD - ST. ALBANS	IM 089-3(27)
DESIGN FILE NAME: /87A007B/DESIGN/DA007XSI.DGN	
IPARM FILE NAME: DA007P05	PLOT DATE: 04-OCT-2000
SURVEYED BY: ORVIS	SURVEY DATE: 6/98
SQUAD LEADER: DELLA SANTA	DRAWN BY: SQUAD B
	SHEET: 58 OF 370

REMOVAL OF EXISTING FENCE (MOD.)
STA. 3351+16 SB LT - STA. 3365+00 SB LT

CHAIN LINK FENCE, 6 FEET
STA. 3351+16 SB LT - STA. 3365+00 SB LT

REMOVAL AND DISPOSAL
OF GUARD RAIL
(SOUTHBOUND)
3349+00 LT - 3356+10 LT
3362+26 LT - 3365+00 LT
3349+42 RT - 3 370+10 RT

STEEL BEAM GUARD RAIL
(SOUTHBOUND)
3362+50 LT - 3365+00 LT
3349+50 RT - 3 370+00 RT

SOUTHBOUND: 8'' UNDERDRAIN (MODIFICATION #1)
(12) 3349+73 LT - 3 370+97 LT W/FB @ 3 370+97 LT
(13) 3349+73 RT - 3 370+97 RT W/FB @ 3 370+97 RT
(14) 3353+02 LT - 3355+96 LT W/FB @ 3355+96 LT
(15) 3353+02 RT - 3355+96 RT W/FB @ 3355+96 RT
(16) 3356+00 LT - 3363+47 LT W/FB @ 3356+00 LT & 3359+75 LT
(17) 3356+00 RT - 3363+47 RT W/FB @ 3356+00 RT & 3359+75 RT
(19) 3363+53 LT - 3365+00 LT W/FB @ 3363+53 LT
(20) 3363+53 RT - 3365+00 RT W/FB @ 3363+53 RT

SOUTHBOUND: 8'' UNDERDRAIN (MODIFICATION #2)
(18) 3355+50 RT - 3363+47 RT W/FB @ 3355+50 RT & 3359+50 RT
(21) 3363+53 RT - 3365+00 RT W/FB @ 3363+53 RT

SOUTHBOUND: 8'' UNDERDRAIN CARRIER PIPE
(12A) 3349+73 LT W/FB @ 3349+73 LT
(13A) 3349+73 RT W/FB @ 3349+73 RT
(14A) 3353+02 LT W/FB @ 3353+02 LT
(15A) 3353+02 RT W/FB @ 3353+02 RT
(16A) 3363+47 LT W/FB @ 3363+47 LT
(17A) 3363+47 RT W/FB @ 3363+47 RT

N
VT STATE PLANE GRID

MATCH LINE SB STA. 3349+00

MATCH LINE SB STA. 3365+00

SB 3349+70 CL EXIST. 48'' X 106' ACCGMP EXTEND EXISTING 30'' ACCGMP W/NEW 34' X 30', PCCSP (.079) W/STONE FILL, TYPE 11, AT OUTLET.

SB 3353+01 CL EXIST. 30'' X 80' ACCGMP EXTEND EXISTING 30'' ACCGMP W/NEW 28' X 30', PCCSP (.079) W/STONE FILL, TYPE 11, AT OUTLET.

SB 3363+51 CL EXIST. 36'' X 88' RCP OKAY

TOWN LINE

SILT FENCE

WOODS

GUARDRAIL

SB MM 12.35

SB MM 12.40

SB MM 12.45

SB MM 12.50

SB MM 12.55

SB MM 12.60

SIGN

N8°25'37.30"E

3349 3350 3351 3 370 3353 3354 3355 3356 3357 3358 3359 3360 3361 3362 3363 3364 3365

D.I.

HEADWALL

N8°25'43.57"E

GUARDRAIL ANCHORAGE HEADWALL NB MM 12.35

3349+81 RT
OUTLET 8" UD

NB MM 12.40

NB MM 12.45

NB MM 12.50

NB MM 12.55

M. POPLAR

S. ELM

S. POPLAR

NB 3349+72 CL EXIST. 48'' ACCGMP OKAY

NB 3353+01 CL EXIST. 30'' X 98' ACCGMP CLEAN MEDIAN DITCH

NB 3363+50 CL EXIST. 30'' X 112' ACCGMP REMOVE HEADWALL, REHAB D.I., REPLACE 20' OF PIPE @ OUTLET W/NEW PCCSP, ADD STONE FILL, TYPE 11, CLEAN MEDIAN DITCH.

REMOVAL OF EXISTING FENCE (MOD.)
STA. 3350+00 NB RT

WOVEN WIRE FENCE W/STEEL POSTS
STA. 3350+00 NB RT

REMOVAL AND DISPOSAL
OF GUARD RAIL
(NORTHBOUND)
3349+00 LT - 3356+81 LT
3349+00 RT - 3350+34 RT

STEEL BEAM GUARD RAIL
(NORTHBOUND)
3349+00 LT - 3355+50 LT
~~3349+00 RT - 3350+50 RT~~
ADDED 24"X12' PCCSP W/C.B.

ST. ALBANS

FAIRFIELD

NORTHBOUND: 8'' UNDERDRAIN (MODIFICATION #1)
(63) 3349+~~76~~ 94 RT - ~~3 370+99~~ 3353+40 RT W/FB @ ~~3 370+99~~ 3353+40 RT
(65) 3353+~~03~~ 43 RT - 3355+~~97~~ 8 RT W/FB @ 3355+~~97~~ 8 RT
(67) 3356+~~02~~ 07 RT - 3363+47 RT W/FB @ 3356+~~02~~ 07 RT & 3359+75 RT
(69) 3363+~~53~~ 56 RT - 3365+00 RT W/FB @ 3363+~~53~~ 56 RT

NORTHBOUND: 8'' UNDERDRAIN (MODIFICATION #2)
(64) 3349+~~76~~ 81 RT - ~~3 370+99~~ 3352+95 RT W/FB @ ~~3 370+99~~ 3352+95 RT
(66) 3353+~~05~~ 10 RT - ~~3355+97~~ 3356+00 RT W/FB @ 3355+97 RT
(68) 3356+~~02~~ 03 RT - ~~3363+47~~ 50 RT W/FB @ 3356+~~02~~ 03 RT & ~~3359+75 RT~~
(70) 3363+~~53~~ 56 RT - 3365+00 RT W/FB @ 3363+~~53~~ 56 RT

NORTHBOUND: 8'' UNDERDRAIN CARRIER PIPE
~~(63A) 3349+76 RT W/FB @ 3349+76 RT~~
~~(65A) 3353+03 RT W/FB @ 3353+03 RT~~
(67A) 3363+47 RT W/FB @ 3363+47 RT

DATUM
VERTICAL NAVD88
HORIZONTAL NAD83(92)

0 50 100
SCALE IN FEET

SB & NB 3349+00 - 3365+00

PROJECT: FAIRFAX - FAIRFIELD - ST. ALBANS	PROJECT NO.: IM 089-3(27)
DESIGN FILE NAME: /87A007B/DESIGN/DA007NU1.DGN	
IPARM FILE NAME: DA007L06	PLOT DATE: 15-NOV-2000
SURVEYED BY: ORVIS	SURVEY DATE: 6/98
SQUAD LEADER: DELLA SANTA	DRAWN BY: SQUAD B
	SHEET: 59 OF 370

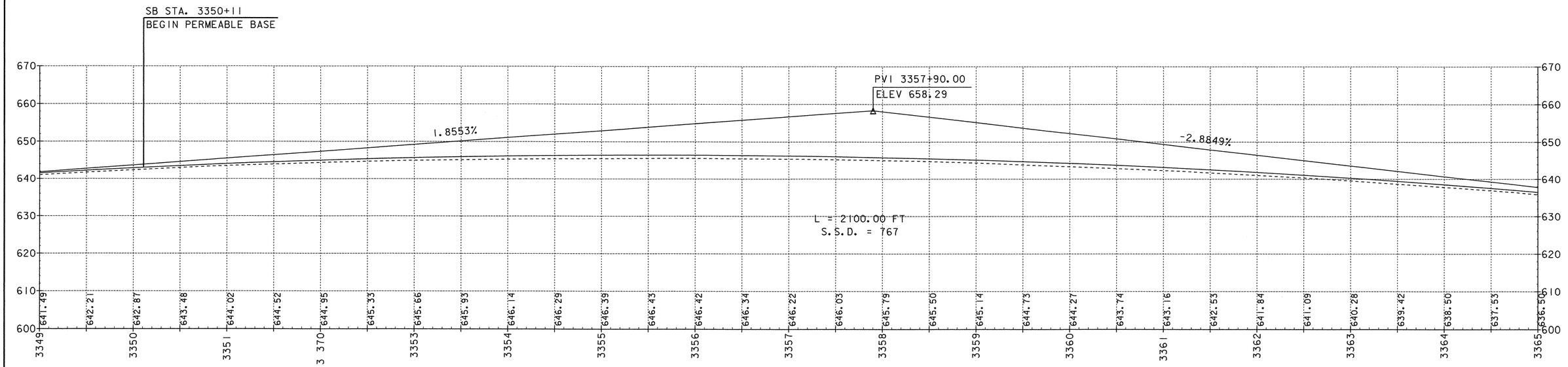

SOUTHBOUND GRADE PROFILE ALONG MEDIAN SIDE (REFER TO TYPICAL SHEET)

STA. 3349+00 – 3365+00

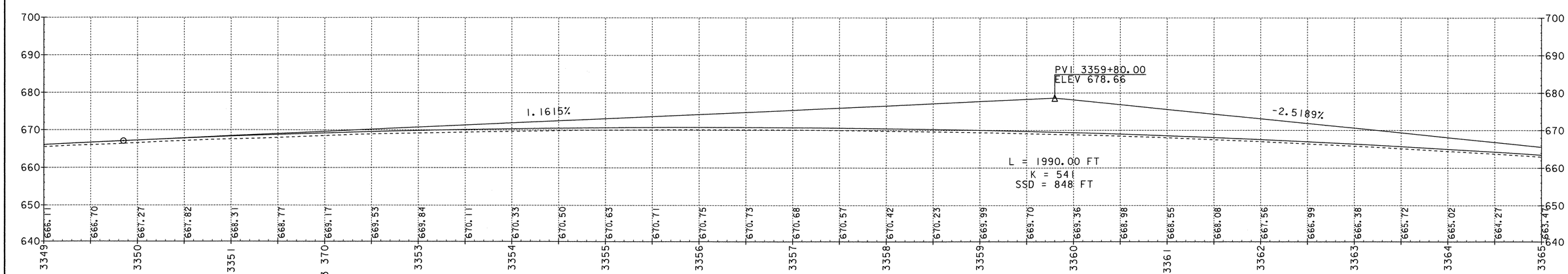

NORTHBOUND GRADE PROFILE ALONG MEDIAN SIDE (REFER TO TYPICAL SHEET)

STA. 3349+00 – 3365+00

SCALES IN FEET

0 50 100

20 10 0

DATUM

VERTICAL NAVD88

HORIZONTAL NAD83(92)

PROJECT: FAIRFAX - FAIRFIELD - ST. ALBANS	PROJECT NO.: IM 089-3(27)
DESIGN FILE NAME: /87A007B/DESIGN/DA007XSI.DGN	
IPARM FILE NAME: DA007P06	PLOT DATE: 04-OCT-2000
SURVEYED BY: ORVIS	SURVEY DATE: 6/98
SQUAD LEADER: DELLA SANTA	DRAWN BY: SQUAD B
	SHEET: 60 OF 370

REMOVAL AND DISPOSAL
OF GUARD RAIL
(SOUTHBOUND)
3365+00 LT - 3381+00 LT

STEEL BEAM GUARD RAIL
(SOUTHBOUND)
3365+00 LT - 3366+00 LT
3371+50 LT - 3375+00 LT

SOUTHBOUND: 8'' UNDERDRAIN (MODIFICATION #1)
(19) 3365+00 LT - 3367+73 LT
(20) 3365+00 RT - 3367+73 RT
(22) 3367+78 LT - 3371+97 LT W/FB @ 3367+78 LT
(23) 3367+78 RT - 3371+97 RT W/FB @ 3367+78 RT
(25) 3372+02 LT - 3377+47 LT W/FB @ 3372+02 LT
(26) 3372+02 RT - 3377+47 RT W/FB @ 3372+02 RT
(28) 3377+52 RT - 3380+95 RT W/FB @ 3377+52 RT

SOUTHBOUND: 8'' UNDERDRAIN CARRIER PIPE
(19A) 3367+73 LT W/FB @ 3367+73 LT
(20A) 3367+73 RT W/FB @ 3367+73 RT
(22A) 3371+97 LT W/FB @ 3371+97 LT
(23A) 3371+97 RT W/FB @ 3371+97 RT
(25A) 3377+47 LT W/FB @ 3377+47 RT
(26A) 3377+47 RT W/FB @ 3377+47 RT
(28A) 3380+95 RT W/FB @ 3380+95 RT

SOUTHBOUND: 8'' UNDERDRAIN (MODIFICATION #2)
(21) 3365+00 RT - 3367+73 RT
(24) 3367+78 RT - 3371+97 RT W/FB @ 3367+78 RT
(27) 3373+00 RT - 3377+47 RT W/FB @ 3373+00 RT
(29) 3377+52 RT - 3380+95 RT W/FB @ 3377+52 RT

N
VT STATE PLANE GRID

MATCH LINE SB STA. 3365+00

REMOVAL OF EXISTING FENCE (MOD.)
STA. 3365+00 SB LT - STA. 3366+75 SB LT
STA. 3377+00 SB LT

CHAIN LINK FENCE, 6 FEET
STA. 3365+00 SB LT - STA. 3366+75 SB LT

WOVEN WIRE FENCE W/STEEL POSTS
STA. 3377+00 SB LT

SB 3367+76 CL. EXIST. 30'' X 76' RCP EXTEND EXISTING 30'' RCP W/NEW 20' X 30'' RCP CL III W/STONE FILL, TYPE I, AT OUTLET. REHAB DI W/2 A GRATES

SB 3372+00 CL. EXIST. 30'' X 72' RCP EXTEND EXISTING 30'' RCP W/NEW 16' X 30'' RCP CL III W/STONE FILL, TYPE II, AT OUTLET. RELAY 24' OF PIPE @ INLET & 8° @ OUTLET.

SB 3377+50 CL EXIST. 30'' X 80' RCP EXTEND EXISTING 30'' RCP W/NEW 24'' X 30' RCP CL III W/STONE FILL, TYPE I, AT OUTLET. REHAB DI W/2 A GRATES.

SB 3377+50 RT. EXIST. 24'' ACCGMP OKAY

WOODS · SILT FENCE · GUARDRAIL · SB MM 12.65 · SB MM 12.70 · SB MM 12.85 · SB MM 12.90 · ANCHOR · HEADWALL

N8° 25' 37.30"E

65 · 20 · 3366 · 3367 · 3368 · 3369 · 23 · 3370 · 3371 · 3372 · 3373 · 3374 · 26 · 3375 · 3376 · 3377 · 3378 · 3379 · 28 · 3380 · 33

(21) (20A) (24) (23A) (27) (26A) (29) (28A)

WOODS · SILT FENCE · GUARDRAIL · MAPLE · SM · NB MM 12.60 · NB MM 12.75 · NB MM 12.80 · NB MM 12.85 · NB MM 12.90 · ANCHOR · HEADWALL

N8° 25' 43.57"E

65 · 3366 · 3367 · 3368 · 3369 · 3370 · 3371 · 3372 · 3373 · 3374 · 3375 · 3376 · 3377 · 3378 · 3379 · 3380 · 33

(69) (70) (69A) (72) (71A) (74) (73A) (76) (77) (77A) (78)

SIGN · NB MM 13.55 · NB MM 12.70 · NB MM 12.75 · NB MM 12.80 · NB MM 12.85 · NB MM 12.90

MATCH LINE NB STA. 3365+00

REMOVAL OF EXISTING FENCE (MOD.)
STA. 3372+00 NB RT

WOVEN WIRE FENCE W/STEEL POSTS
STA. 3372+00 NB RT

REMOVAL AND DISPOSAL
OF GUARD RAIL
(NORTHBOUND)
3365+68 LT - 3381+00 LT

STEEL BEAM GUARD RAIL
(NORTHBOUND)
3367+00 LT - 3381+00 LT

TREATED TIMBER CURB
(NORTHBOUND)
3367+00 LT - 3381+10 LT

NB 3367+75 CL. EXIST. 30'' X 86' ACCGMP REHAB D.I.

NB 3372+01 CL. EXIST. 24'' X 86' ACCGMP REHAB D.I. W/B GRATE

NB 3372+05 LT. EXIST. 12'' X 38' CGMP REPLACE PIPE W/NEW D.I. AND 24'' X 18'' PCCSP (.064") CAAP (.060") OR CPEP (SL) RCP CL III, W/STONE FILL, TYPE I, AT OUTLET.

NB 3377+50 CL EXIST. 30'' X 94' ACCGMP REPLACE 20' OF PIPE OUTLET W/NEW ACCGMP REHAB D.I. W/2 B GRATES.

NB 3377+56 LT. EXIST. 12'' X 30' CGMP REPLACE PIPE W/NEW D.I. AND 20' X 18'' PCCSP (.064") CAAP (.060") OR CPEP (SL) RCP CL III, W/STONE FILL, TYPE I, AT OUTLET.

NORTHBOUND: 8'' UNDERDRAIN (MODIFICATION #1)
(69) 3365+00 RT - 3367+73 RT W/FB @ 3363+53 RT
(71) 3367+~~78~~ 84 RT - 3371+~~99~~ 83 RT W/FB @ ~~3371+99~~ 3367+84 RT
(73) 3372+~~03~~ 07 RT - 3377+~~48~~ 25 RT W/FB @ 3372+~~03~~ 07 RT
(75) 3376+00 LT - 3377+54 LT W/FB @ 3376+00 LT
(76) 3377+52 LT - 3381+05 LT W/FB @ 3377+52 LT
(77) 3377+52 RT - 3381+00 RT W/FB @ 3377+52 RT

NORTHBOUND: 8'' UNDERDRAIN (MODIFICATION #2)
(70) 3365+00 RT - 3367+~~73~~ 75 RT W/FB @ 3363+~~53~~ 56 RT
(72) 3367+~~78~~ 85 RT - ~~3371+99~~ 3372+00 RT W/FB @ ~~3371+99~~ 3367+85 RT
(74) 3372+~~03~~ 07 RT - 3377+~~48~~ 50 RT W/FB @ 3372+~~03~~ 07 RT
(78) 3377+52 RT - 3381+00 RT W/FB @ 3377+52 RT

NORTHBOUND: 8'' UNDERDRAIN CARRIER PIPE
(69A) 3367+73 RT W/FB @ 3367+73 RT
(71A) 3371+99 RT W/FB @ 3371+99 RT
(73A) 3377+48 RT W/FB @ 3377+48 RT
(77A) 3381+00 RT W/FB @ 3381+00 RT

0 50 100
SCALE IN FEET

DATUM
VERTICAL NAVD88
HORIZONTAL NAD83(92)

SB & NB 3365+00 - 3381+00

PROJECT: FAIRFAX - FAIRFIELD - ST. ALBANS	PROJECT NO.: IM 089-3(27)
DESIGN FILE NAME: /87A007B/DESIGN/DA007NUI.DGN	
IPARM FILE NAME: DA007L07	PLOT DATE: 18-AUG-2000
SURVEYED BY: ORVIS	SURVEY DATE: 6/98
SQUAD LEADER: DELLA SANTA	DRAWN BY: SQUAD B
	SHEET: 61 OF 370

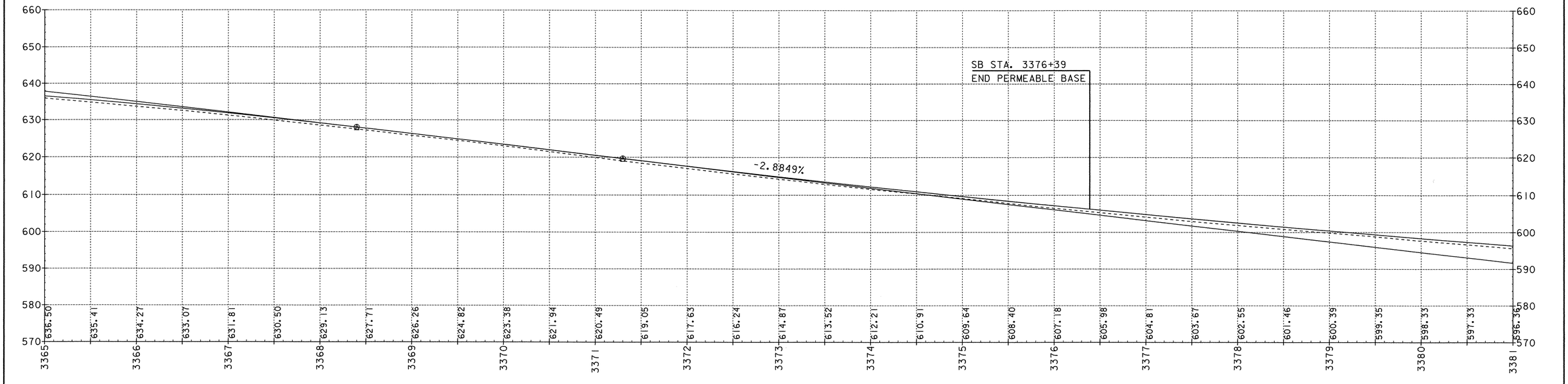

SOUTHBOUND GRADE PROFILE ALONG MEDIAN SIDE (REFER TO TYPICAL SHEET)
STA. 3365+00 – 3381+00

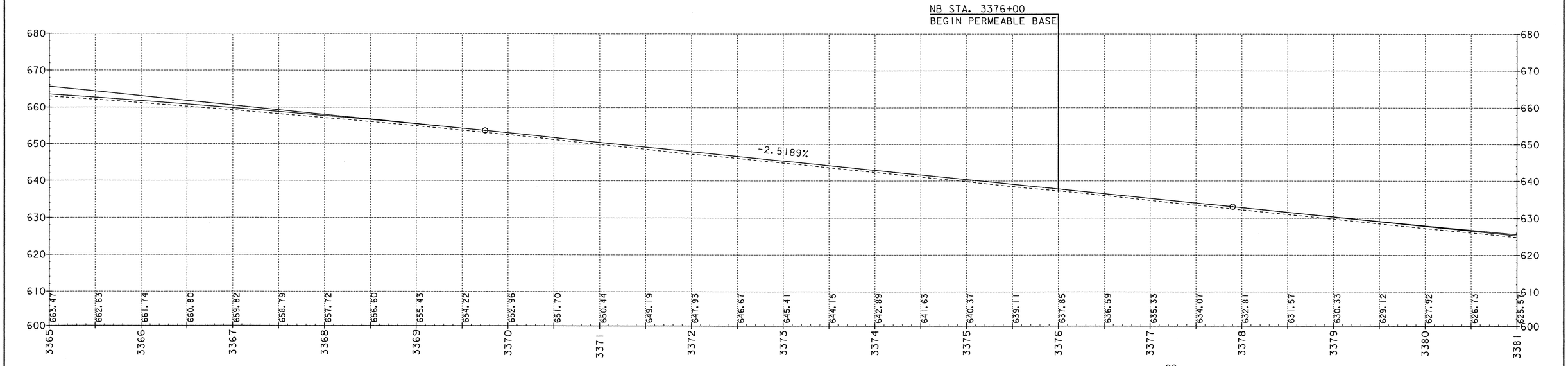

NORTHBOUND GRADE PROFILE ALONG MEDIAN SIDE (REFER TO TYPICAL SHEET)
STA. 3365+00 – 3381+00

SCALES IN FEET

0 50 100

20 10 0

DATUM

VERTICAL NAVD88

HORIZONTAL NAD83(92)

PROJECT: FAIRFAX - FAIRFIELD - ST. ALBANS	PROJECT NO.: IM 089-3(27)
DESIGN FILE NAME: /87A007B/DESIGN/DA007XSI.DGN	
IPARM FILE NAME: DA007P07	PLOT DATE: 04-OCT-2000
SURVEYED BY: ORVIS	SURVEY DATE: 6/98
SQUAD LEADER: DELLA SANTA	DRAWN BY: SQUAD B
	SHEET: 62 OF 370

REMOVAL AND DISPOSAL OF GUARD RAIL
(SOUTHBOUND)
3381+00 LT - 3382+81 LT
3394+12 LT - 3397+00 LT
3395+66 RT - 3397+00 RT

STEEL BEAM GUARD RAIL
(SOUTHBOUND)
3385+10 LT - 3397+00 LT
3395+50 RT - 3397+00 RT

REMOVAL OF EXISTING FENCE (MOD.)
STA. 3385+00 SB LT - 3397+00 SB LT
CHAIN LINK FENCE,6 FEET
STA. 3385+00 SB LT - 3397+00 SB LT

SOUTHBOUND: 8'' UNDERDRAIN (MODIFICATION #1)
(30) 3381+02 RT - 3385+46 RT W/FB @ 3381+02 RT
(32) 3385+51 RT - 3389+96 RT W/FB @ 3389+96 RT
(34) 3390+02 RT - 3395+00 RT W/FB @ 3390+02 RT

SOUTHBOUND: 8'' UNDERDRAIN (MODIFICATION #2)
(31) 3381+02 RT - 3385+46 RT W/FB @ 3381+02 RT
(33) 3385+51 RT - 3389+96 RT W/FB @ 3389+96 RT
(35) 3390+02 RT - 3395+00 RT W/FB @ 3390+02 RT

SOUTHBOUND: 8'' UNDERDRAIN CARRIER PIPE
(30A) 3385+46 LT W/FB @ 3385+46 LT
(32A) 3389+96 RT W/FB @ 3389+96 RT
(34A) 3395+00 RT W/FB @ 3395+00 RT

VT STATE PLANE GRID
N

MATCH LINE SB STA. 3381+00
MATCH LINE SB STA. 3397+00
MATCH LINE NB STA. 3381+00
MATCH LINE NB STA. 3397+00

SB 3381+00 CL EXIST. 24'' ACCGMP EXTEND EXISTING 24'' ACCGMP W/NEW 24'' X 24'' PCCSP (.064") W/STONE FILL, TYPE II, AT OUTLET.
SB 3381+00 RT EXIST. 24'' ACCGMP OKAY
SB 3385+50 CL EXIST. 36'' X 96'' ACCGMP REHAB D.I. SB 3385+50 RT EXIST. 24'' ACCGMP OKAY
SB 3389+99 CL EXIST. 36'' X 76'' ACCGMP CLEAN OUTLET DITCH SB 3389+99 RT EXIST. 24'' ACCGMP OKAY
SB 3396+30 LT EXIST. 36'' X 20'' CGMP REPLACE W/ 7' X 5' X 32' 75' PRECAST CONC. BOX CULVERT (REFER TO BRIDGE SERIES 300)
SB 3395+93.10 CL EXIST. 60'' X 120'' ACCGMP REPLACE W/ 6' X 6' X 110.85' PRECAST CONC. BOX CULVERT (REFER TO BRIDGE SERIES 300)

N8°25'37.30"E
N8°25'43.57"E

NB 3381+00 CL EXIST. 30'' X 86'' ACCGMP REHAB DI W/2 B GRATES.
NB 3381+08 LT. EXIST. 12'' X 28'' CGMP REPLACE PIPE W/NEW D.I. AND 20' X 18'' PCCSP (.064") RCP CL III, CAAP (.060") OR CMEP (SL) W/STONE FILL, TYPE I, AT OUTLET.
NB 3385+50 CL EXIST. 36'' X 112'' ACCGMP REPLACE DI. REMOVE HEADWALL & 6' OF PIPE @ OUTLET. REDO OUTLET DITCH & ADD STONE FILL, TYPE II, RELAY 20' @ INLET.
NB 3389+99 CL EXIST. 36'' X 84'' ACCGMP REHAB DI W/2 B GRATES. REMOVE HEADWALL. REPLACE 20' OF PIPE W/NEW PCCSP. ADD STONE FILL, TYPE II, @ OUTLET.
NB 3395+77.05 CL EXIST. 60'' X 120'' ACCGMP REPLACE W/ 6' X 6' X 91.70' PRECAST CONC. BOX CULVERT (REFER TO BRIDGE SERIES 300)

NORTHBOUND: 8'' UNDERDRAIN (MODIFICATION #1)
(79) 3381+13 LT - 3385+47 LT W/FB @ 3381+13 LT
(80) 3381+~~03~~ 06 RT - 3385+~~47~~ 50 RT W/FB @ 3381+~~03~~ 06 RT
(82) 3385+52 LT - 3389+96 LT W/FB @ 3385+52 LT
(83) 3385+52 RT - 3389+96 RT W/FB @ 3385+52 RT
(85) 3390+02 LT - 3395+74 LT W/FB @ 3390+02 LT
(86) ~~3390+02~~ RT - ~~3395+71~~ RT W/FB @ 3390+02 RT
(88) 3395+82 LT - 3397+00 LT W/FB @ 3395+82 LT
(89) ~~3395+79~~ RT - 3397+00 RT W/FB @ ~~3395+79~~ RT

NORTHBOUND: 8'' UNDERDRAIN (MODIFICATION #2)
(81) 3381+~~03~~ 06 RT - 3385+~~47~~ 50 RT W/FB @ 3381+~~03~~ 06 RT
(84) 3385+~~52~~ 56 RT - ~~3389+96 RT~~ W/FB @ 3385+~~52~~ 56 RT
(87) ~~3390+02 RT~~ - 3395+~~71~~ 65 RT ~~W/FB @ 3390+02 RT~~
(90) ~~3395+79~~ 3396+00 RT - 3397+00 RT W/FB @ 3395+79 RT
COMBINED

NORTHBOUND: 8'' UNDERDRAIN CARRIER PIPE
(79A) 3385+47 LT W/FB @ 3385+47 LT
(80A) 3385+47 RT W/FB @ 3385+47 RT
(82A) 3389+96 LT W/FB @ 3389+96 RT
(82A) 3389+96 RT W/FB @ 3389+96 RT
(85A) 3395+74 LT W/FB @ 3395+74 LT
(86A) 3395+71 RT W/FB @ 3395+71 RT

NB REMOVAL OF EXISTING FENCE (MOD.)
STA. 3395+50 NB RT
STA. 3395+60 NB RT
STA. 3395+77 NB RT

WOVEN WIRE FENCE W/STEEL POSTS
STA. 3395+50 NB RT
STA. 3395+60 NB RT
STA. 3395+77 NB RT

STEEL BRACE FOR WOVEN WIRE FENCE
STA. 3395+77 NB RT

STEEL BEAM GUARD RAIL
(NORTHBOUND)
3381+00 LT - 3383+00 LT
3394+50 LT - 3396+50 LT
3394+50 RT - 3396+50 RT

REMOVAL AND DISPOSAL OF GUARD RAIL
(NORTHBOUND)
3381+00 LT - 3383+95 LT
3394+68 LT - 3397+00 LT
3393+00 RT - 3396+25 RT

SB & NB 3381+00 - 3397+00

DATUM
VERTICAL NAVD88
HORIZONTAL NAD83(92)

0 50 100
SCALE IN FEET

PROJECT: FAIRFAX - FAIRFIELD - ST. ALBANS	PROJECT NO.: IM 089-3(27)
DESIGN FILE NAME: /87A007B/DESIGN/DA007NU.DGN	
IPARM FILE NAME: DA007L08	PLOT DATE: 07-SEP-2000
SURVEYED BY: ORVIS	SURVEY DATE: 6/98
SQUAD LEADER: DELLA SANTA	DRAWN BY: SQUAD B
	SHEET: 63 OF 370

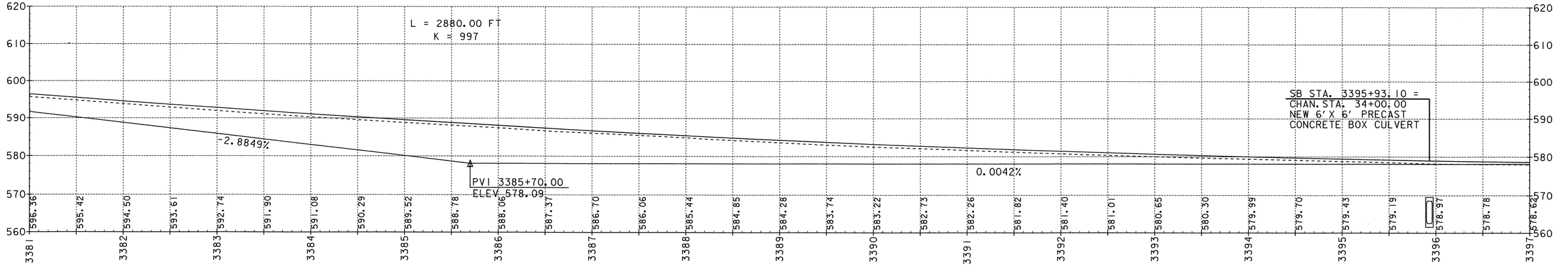

SOUTHBOUND GRADE PROFILE ALONG MEDIAN SIDE (REFER TO TYPICAL SHEET)
STA. 3381+00 – 3397+00

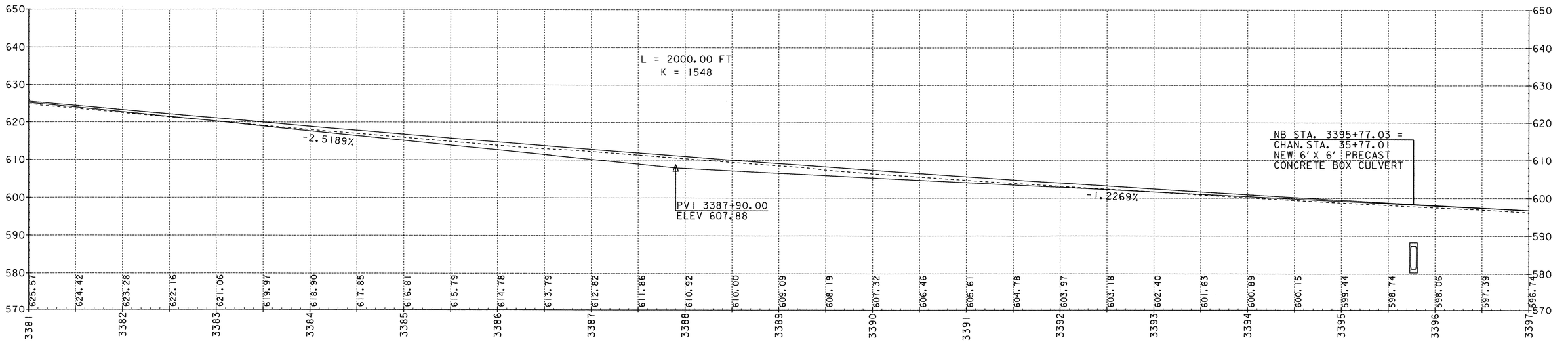

NORTHBOUND GRADE PROFILE ALONG MEDIAN SIDE (REFER TO TYPICAL SHEET)
STA. 3381+00 – 3397+00

SCALES IN FEET
0 50 100
20 10 0

DATUM
VERTICAL NAVD88
HORIZONTAL NAD83(92)

PROJECT: FAIRFAX - FAIRFIELD - ST. ALBANS	PROJECT NO.: IM 089-3(27)
DESIGN FILE NAME: /87A007B/DESIGN/DA007XSI.DGN	
IPARM FILE NAME: DA007P08	PLOT DATE: 04-OCT-2000
SURVEYED BY: ORVIS	SURVEY DATE: 6/98
SQUAD LEADER: DELLA SANTA	DRAWN BY: SQUAD B
	SHEET: 64 OF 370

SOUTHBOUND: 8'' UNDERDRAIN (MODIFICATION #2)
(88) 3401+52 RT - 3403+00 RT W/FB @ 3403+00 RT

RAMP C: 8'' UNDERDRAIN (MODIFICATION #1)
(94) 24+24 LT-28+52 LT W/FB @ 27+75 LT

SOUTHBOUND: 8'' UNDERDRAIN CARRIER PIPE
(86A) 3401+52 RT W/FB @ 3401+52 RT

REMOVAL OF EXISTING FENCE (MOD.)
(SOUTHBOUND)
STA. 3397+00 SB LT - 3413+00 SB LT
(CONTINUES ALONG RAMP C, NEXT SHEET)

STONE FILL, TYPE II
(FOR SLOPE PROTECTION)
RAMP C 24+50 RT-26+25 RT

TREATED TIMBER CURB
RAMP C 24+50 RT - 28+00 RT

CHAIN LINK FENCE,6 FEET
(SOUTHBOUND)
STA. 3397+00 SB LT - 3413+00 SB LT
(CONTINUES ALONG RAMP C, NEXT SHEET)

VT STATE PLANE GRID

SB PI 3412+74.80 =
3412+62.93

STEEL BEAM GUARD RAIL
(SOUTHBOUND)
3397+00 LT - 3404+35 LT
(CONTINUES ALONG RAMP C)
RAMP C 25+00 RT - 33+25 RT
3397+00 RT - 3398+00 RT

REMOVAL AND DISPOSAL
OF GUARD RAIL
(SOUTHBOUND)
3397+00 LT - 3404+35 LT
(CONTINUES ALONG RAMP C)
RAMP C 24+50 RT - 33+25 RT
3412+22 LT - 3413+00 LT
3397+00 RT - 3398+48 RT

MATCH LINE SB STA. 3397+00

SB 3401+49 CL EXIST. 36'' X 100' ACCGMP RELAY LAST 20' OF PIPE AND ADD STONE FILL, TYPE II, @ OUTLET

SB 3406+00 CL EXIST. 36'' X 120' ACCGMP EXTEND PIPE W/NEW 12' X 36'' PCCSP (.079) AND STONE FILL, TYPE II, @ OUTLET.

SB 3412+09 CL EXIST. 30'' X 206' ACCGMP REMOVE INLET HEADWALL. CONNECT BOTH CULVERTS W/NEW 10' X 30'' PCCSP (.079) INSTALL NEW VERTICAL RISER TO EXISTING PIPE, 58' RT. 30'' PCCSP (.079). EXTEND OUTLET W/NEW 10' X 30'' PCCSP (.079). ADD STONE FILL, TYPE II, AT OUTLET.

RAMP C
POT 33+25.50
END RAMP C
CONSTRUCTION

RAMP C ACCELERATION LANE

N8°25'37.30"E

N8°25'43.57"E

EXISTING 30" ACCGMP PIPE

BROKE RUN DUE TO X-PIPE LEFT OFF PLANS

3404+35.14 SB PC

SB PC 3407+61.63

NB PC 3407+61.63

MATCH LINE NB STA. 3397+00

MATCH LINE SB STA. 3413+00

MATCH LINE NB STA. 3413+00

NORTHBOUND: 8'' UNDERDRAIN (MODIFICATION #1)
(88) 3397+00 LT - 3402+10 LT
(89) 3397+00 RT - 3405+~~96~~ 65 RT ~~W/FB @ 3400+00 RT~~

NORTHBOUND: 8'' UNDERDRAIN (MODIFICATION #2)
(90) 3397+00 RT - ~~3405+96~~ 3401+50 RT W/FB @ ~~3400+00~~ 3396+00 RT

NORTHBOUND: 8'' UNDERDRAIN CARRIER PIPE
(88A) 3402+10 LT W/FB @ 3402+10 LT
(89A) 3405+96 RT W/FB @ 3405+96 RT

NORTHBOUND: 8" UNDERDRAIN (MOD. #2)
(90A) 3401+55 RT - 3405+90 RT W/FB @ 3401+55
(91A) 3407+00 RT - 3409+80 RT W/FB @ 3407+00 RT

REMOVAL OF EXISTING FENCE (MOD.)
STA. 3403+50 NB RT
STA. 3406+10 NB RT
STA. 3408+70 NB RT - STA. 3410+10 NB RT

WOVEN WIRE FENCE W/STEEL POSTS
STA. 3403+50 NB RT
STA. 3406+10 NB RT
STA. 3408+70 NB RT - STA. 3410+10 NB RT

NB 3405+99 CL EXIST. 36'' X 88' RCP EXTEND PIPE @ OUTLET WITH 36'' X 36' RCP. CL III TO FLATTEN SLOPE. LINE DITCH W/ STONE FILL, TYPE II, BETWEEN CULVERTS.

CONSTRUCT U-TURN
(NORTHBOUND)
3402+28 RT
(COLD PLANE. OVERLAY WITH SAME 6'' BITUMINOUS CONCRETE PAVEMENT AS SHOWN ON U-TURN TYPICAL.)

SB CURVE #4 DATA
△ = 16°40'-27.98'' RT.
D = 1°
R = 5729.58'
T = 839.66'
L = 1667.44'
E = 61.20'
BANK = 0.026 FT / FT

NB 3411+99 CL EXIST. 30'' ACCGMP @BOUND REMOVE HEADWALL AT OUTLET

NB 3412+08.50, 30.33 RT. =
RAMP B MM 0.000

STEEL BEAM GUARD RAIL
(NORTHBOUND)
~~3404+00 RT - 3407+00 RT~~
ADDED END SECTION ON INLET

REMOVAL AND DISPOSAL
OF GUARD RAIL
(NORTHBOUND)
3397+00 LT - 3401+80 LT
3402+80 LT - 3413+10 LT

SB & NB 3397+00 - 3413+00
RAMP "C" 24+50 - 33+25.50

PROJECT: FAIRFAX - FAIRFIELD - ST. ALBANS	PROJECT NO.: IM 089-3(27)
DESIGN FILE NAME: /87A007B/DESIGN/DA007NUL.DGN	
IPARM FILE NAME: DA007L09	PLOT DATE: 07-SEP-2000
SURVEYED BY: ORVIS	SURVEY DATE: 6/98
SQUAD LEADER: DELLA SANTA	DRAWN BY: SQUAD B
	SHEET: 65 OF 370

DATUM
VERTICAL NAVD88
HORIZONTAL NAD83(92)

0 50 100
SCALE IN FEET

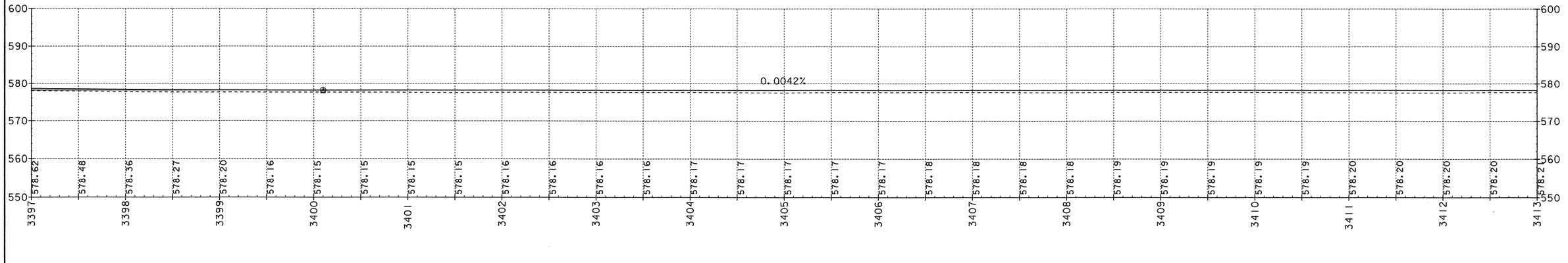

SOUTHBOUND GRADE PROFILE ALONG MEDIAN SIDE (REFER TO TYPICAL SHEET)
STA. 3397+00 – 3413+00

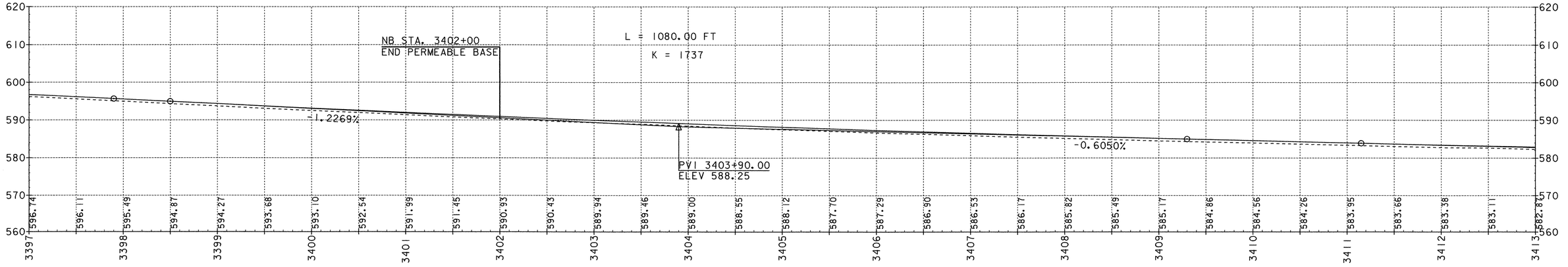

NORTHBOUND GRADE PROFILE ALONG MEDIAN SIDE (REFER TO TYPICAL SHEET)
STA. 3397+00 – 3413+00

SCALES IN FEET

0 50 100

20 10 0

DATUM

VERTICAL NAVD88

HORIZONTAL NAD83(92)

PROJECT: FAIRFAX - FAIRFIELD - ST. ALBANS	PROJECT NO.: IM 089-3(27)
DESIGN FILE NAME: /87A007B/DESIGN/DA007XSI.DGN	
IPARM FILE NAME: DA007P09	PLOT DATE: 04-OCT-2000
SURVEYED BY: ORVIS	SURVEY DATE: 6/98
SQUAD LEADER: DELLA SANTA	DRAWN BY: SQUAD B
	SHEET: 66 OF 370

SOUTHBOUND: 8'' UNDERDRAIN (MODIFICATION #1)
(37) 3416+66 RT - 3422+50 RT W/FB @ 3422+50 RT
(39) 3425+06 RT - 3429+00 RT W/FB @ 3428+75 RT

SOUTHBOUND: 8'' UNDERDRAIN (MODIFICATION #2)
(38) 3416+66 RT - 3422+50 RT W/FB @ 3422+50 RT
(40) 3425+06 RT - 3429+00 RT W/FB @ 3428+75 RT

SOUTHBOUND: 8'' UNDERDRAIN CARRIER PIPE
(37A) 3416+66 RT W/FB @ 3416+66 RT
(94A) RAMP C 24+24 LT-RT W/FB @ 24+24 LT

STONE FILL, TYPE II
(FOR SLOPE PROTECTION)
RAMP C 17+25 RT - 24+50 RT

STEEL BEAM GUARD RAIL
(SOUTHBOUND)
3415+04.6 LT - 3422+79.6 LT
3425+40.5 LT - 3429+00 LT
3422+06.5 RT - 3422+81.5 RT
3425+36.4 RT - 3427+61.4 RT

REMOVAL OF EXISTING FENCE (MOD.)
RAMP C 16+00 RT - 24+50 RT

CHAIN LINK FENCE, 6 FEET
RAMP C 16+00 RT - 24+50 RT

BRIDGE RAILING - NETC 2 RAIL
(SOUTHBOUND)
3423+09.0 LT - 3425+11.1 LT
3423+10.9 RT - 3425+07.0 RT

GUARD RAIL APPROACH SECTION, NETC 2 RAIL
(SOUTHBOUND)
3422+79.6 LT - 3423+09.0 LT
3422+81.5 RT - 3423+10.9 RT
3425+11.1 LT - 3425+40.5 LT
3425+07.0 RT - 3425+36.4 RT

REMOVAL AND DISPOSAL OF GUARD RAIL
(SOUTHBOUND)
3413+00 LT - 3423+09 LT
3425+12 LT - 3429+00 LT
3421+98 RT - 3423+09 RT
3425+08 RT - 3427+70 RT
RAMP C 16+00 RT - 24+50 RT

TREATED TIMBER CURB
RAMP C 16+98 RT - 24+50 RT

SB STA. 3423+17.42
STOP ROADWAY
BEGIN BRIDGE
(REFER TO BRIDGE SERIES 400)

SB STA. 3425+01.68
END BRIDGE
RESUME ROADWAY

RAMP C 24+23 RT. EXIST. 12'' X 52'' CGMP REPLACE EXIST. DI & PIPE W/NEW 18'' X 38' PCCSP (.064) CAAP (.060), RCP CL III OR CPEP (SL)

RAMP C 20+99 RT. EXIST. 12'' X 36'' CGMP PLUGGED REPLACE EXIST. DI & PIPE W/NEW 18'' X 40' PCCSP (.064) CAAP (.060), RCP CL III OR CPEP (SL)

RAMP C 20+80 CL. EXTEND W/NEW 36'' ACCGMP (.079) @ OUTLET.

RAMP C 16+99 RT. EXIST. 12'' CGMP PLUGGED REPLACE EXIST. DI & PIPE W/NEW 18'' X 32' PCCSP (.064) CAAP (.060) RCP CL III OR CPEP (SL) TO STONE FILL, TYPE I AT OUTLET.

SB 3416+62 CL. EXIST. 36'' ACCGMP OKAY

NB 3416+38 RT EXIST. 24'' ACCGMP OKAY

NB 3416+40 CL EXIST. 36'' ACCGMP OKAY

RAMP A MM 0.000 =
RAMP B MM 0.308 =
ST. ALBANS SOUTH STATE HIGHWAY
END RAMP B COLD PLANING AND OVERLAY
BEGIN COLD PLANING ST. ALBANS SOUTH STATE HIGHWAY (1¾'' MINIMUM)
BEGIN 1¾'' BITUMINOUS CONCRETE PAVEMENT OVERLAY (BOTH DIRECTIONS)
BEGIN RAMP A COLD PLANING (1¾'' MINIMUM)
BEGIN RAMP A 1¾'' BITUMINOUS CONCRETE PAVEMENT OVERLAY

RAMP B MM 0.017
BEGIN RAMP B COLD PLANING (1¾'' MINIMUM)
BEGIN RAMP B 1¾'' BITUMINOUS CONCRETE PAVEMENT OVERLAY

RAMP A MM 0.200
END RAMP A COLD PLANING AND OVERLAY

NB STA. 3422+86.75
STOP ROADWAY
BEGIN BRIDGE
(REFER TO BRIDGE SERIES 400)

NB STA. 3424+55.79
END BRIDGE
RESUME ROADWAY

REMOVAL OF EXISTING FENCE (MOD.)
STA. 3416+60 NB RT
STA. 3421+90 NB RT
STA. 3427+20 NB RT

WOVEN WIRE FENCE W/STEEL POSTS
STA. 3416+60 NB RT
STA. 3421+90 NB RT
STA. 3427+20 NB RT

NORTHBOUND: 8'' UNDERDRAIN (MODIFICATION #1)
(92) 3419+00 RT - 3421+75 RT W/FB @ 3419+00 RT

NORTHBOUND: 8'' UNDERDRAIN (MODIFICATION #2)
(91) 3413+50 RT - 3415+~~50~~ 80 RT W/FB @ 3413+~~50~~ 03 RT
(93) 3419+00 RT - 3421+75 RT W/FB @ 3419+00 RT

NORTHBOUND: 8'' UNDERDRAIN CARRIER PIPE
(91A) 3415+50 RT W/FB @ 3415+50 RT
(92A) 3421+75 RT W/FB @ 3421+75 RT

REMOVAL AND DISPOSAL OF GUARD RAIL
(NORTHBOUND)
3420+47 LT - 3422+78 LT
3424+64 LT - 3425+86 LT
3420+12 RT (ALONG RAMP ''A'') - 3422+78 RT
3424+74 RT - 3429+00 RT

CLEANING CULVERT PIPE IN PLACE (MODIFIED)
RAMP A AND RAMP B
(TO FLUSH EXISTING UNDERDRAIN)

STEEL BEAM GUARD RAIL
(NORTHBOUND)
3420+42.4 LT - 3422+42.4 LT
3425+02.5 LT - 3425+77.5 LT
3420+22.8 RT (FROM RAMP A) - 3422+47.8 RT
3424+93.3 RT - 3429+00 RT

GUARD RAIL APPROACH SECTION, NETC 2 RAIL
(NORTHBOUND)
3422+42.4 LT - 3422+71.8 LT
3422+47.8 RT - 3422+77.3 RT
3424+73.1 LT - 3425+02.5 LT
3424+63.9 RT - 3424+93.3 RT

BRIDGE RAILING - NETC 2 RAIL
(NORTHBOUND)
3422+71.8 LT - 3424+73.1 LT
3422+77.3 RT - 3424+63.9 RT

NB CURVE #3 DATA
△ = 16°-36'-58.24'' RT.
D = 1°
R = 5729.58'
T = 836.68'
L = 1661.62'
E = 60.77'
BANK = 0.026 FT / FT

NB PI 3415+98.32 = 3415+86.57
N25°06'05.28"E
N25°02'41.82"E
SB PT 3421+02.50
NB PT 3424+23.25

MATCH LINE SB STA. 3413+00
MATCH LINE NB STA. 3413+00
MATCH LINE
MATCH LINE NB STA. 3429+00

VT STATE PLANE GRID

SB & NB 3413+00 - 3429+00
RAMP ''C'' 16+00 - 24+50

DATUM
VERTICAL NAVD88
HORIZONTAL NAD83(92)

SCALE IN FEET 0 50 100

PROJECT: FAIRFAX - FAIRFIELD - ST. ALBANS
PROJECT NO.: IM 089-3(27)
DESIGN FILE NAME: /87A007B/DESIGN/DA007NUI.DGN
IPARM FILE NAME: DA007LI0
PLOT DATE: 23-AUG-2000
SURVEYED BY: ORVIS
SURVEY DATE: 6/98
SQUAD LEADER: DELLA SANTA
DRAWN BY: SQUAD B
SHEET: 67 OF 370

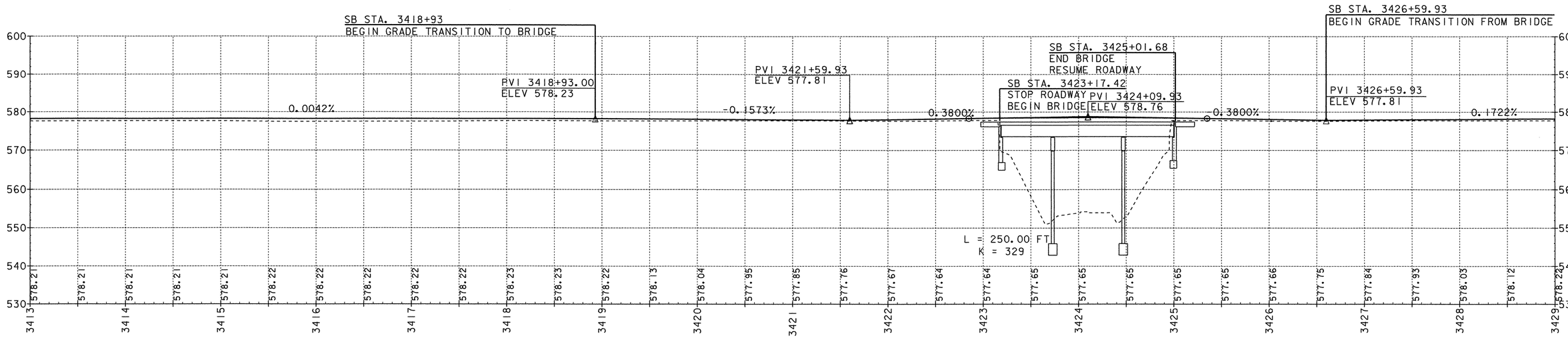

SOUTHBOUND GRADE PROFILE ALONG MEDIAN SIDE (REFER TO TYPICAL SHEET)

STA. 3413+00 – 3429+00

IMPORTANT NOTE: BRIDGE FINISHED GRADES ARE CENTERLINE GRADES.

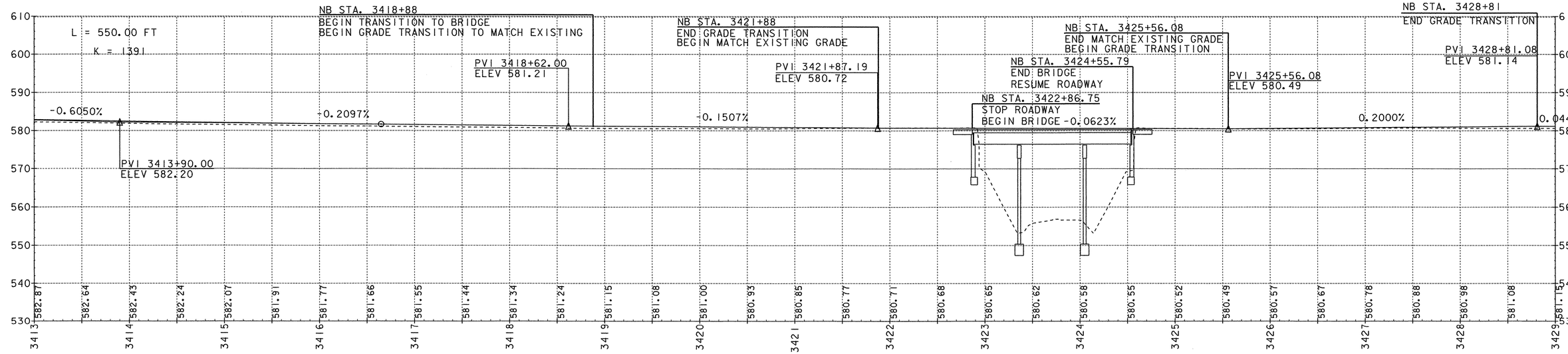

NORTHBOUND GRADE PROFILE ALONG MEDIAN SIDE (REFER TO TYPICAL SHEET)

STA. 3413+00 – 3429+00

IMPORTANT NOTE: BRIDGE FINISHED GRADES ARE CENTERLINE GRADES.

SCALES IN FEET

0 50 100

20 10 0

DATUM

VERTICAL NAVD88

HORIZONTAL NAD83(92)

PROJECT: FAIRFAX - FAIRFIELD - ST. ALBANS	PROJECT NO.: IM 089-3(27)
DESIGN FILE NAME: /87A007B/DESIGN/DA007XSI.DGN	
IPARM FILE NAME: DA007PIO	PLOT DATE: 04-OCT-2000
SURVEYED BY: ORVIS	SURVEY DATE: 6/98
SQUAD LEADER: DELLA SANTA	DRAWN BY: SQUAD B
	SHEET: 68 OF 370

SOUTHBOUND: 8'' UNDERDRAIN (MODIFICATION # 1)

(39) 3429+00 RT - 3432+54 RT W/FB @ 3432+54 RT

(41) 3432+65 RT - 3439+66 RT W/FB @ 3436+25 RT & 3439+66 RT

(43) 3439+70 RT - 3440+70 RT W/FB @ 3440+70 RT

SOUTHBOUND: 8'' UNDERDRAIN (MODIFICATION # 2)

(40) 3429+00 RT - 3432+58 RT W/FB @ 3432+58 RT

(42) 3432+65 RT - 3439+66 RT W/FB @ 3436+25 RT & 3439+66 RT

(44) 3439+70 RT - 3440+70 RT W/FB @ 3440+70 RT

SOUTHBOUND: 8'' UNDERDRAIN CARRIER PIPE

(42A) 3432+53 LT - 3432+65 RT W/FB @ 3432+65 RT

(43A) 3439+70 RT W/FB @ 3439+70 RT

N

VT STATE PLANE GRID

REMOVAL OF EXISTING FENCE (MOD.)
THE FULL LENGTH OF RAMP D, WESTERLY SIDE

WOVEN WIRE FENCE W/STEEL POSTS
THE FULL LENGTH OF RAMP D, WESTERLY SIDE

TREATED TIMBER CURB
(SOUTHBOUND)
3434+00 LT - 3435+00 LT

REMOVAL AND DISPOSAL OF GUARD RAIL
(SOUTHBOUND)
3429+00 LT - 3431+88 LT
3434+00 LT - 3442+70 LT
(CONTINUES FROM RAMP D)

STEEL BEAM GUARD RAIL
(SOUTHBOUND)
3429+00 LT - 3429+90.5 LT
3434+00 LT - 3442+50 LT
(CONTINUES FROM RAMP ''D'')

MATCH LINE SB STA. 3429+00

RAMP D 0.075 RT. EXIST. 12'' COMP PLUGGED CLEAN CULVERT

RAMP D MM 0.092
BEGIN RAMP D COLD PLANING (1 3/4'' MINIMUM)
BEGIN RAMP D 1 3/4'' BITUMINOUS CONCRETE PAVEMENT OVERLAY

RAMP D MM 0.028 RT. EXIST. 12'' COMP PLUGGED CLEAN CULVERT

SB 3432+56 CL EXIST. 60'' ACCGMP RELAY LAST 2 SECTIONS @ OUTLET. ADD STONE FILL, TYPE II.

SB 3435+00 LT EXIST. 12'' COMP REPLACE W/NEW 18' X 18' PCCSP (.064), CAAP (.060), RCP CL III, OR CPEP (SL), W/STONE FILL, TYPE I, AT OUTLET.

SB 3435+62 CL EXIST. 72'' ACCGMP RELAY LAST SECTION @ OUTLET.

SB 3438+85, 24.8' RT. = RAMP D MM 0.000

SB 3439+65 CL EXIST. 18'' X 84'' ACCGMP RELAY 20' @ OUTLET.

SB 3440+64.03 CL. EXIST. 78'' ACCGMP CLEAN CULVERT

SB 3440+78.78 CL. = RCB 20'+13.00 EXIST. 12' X 12.5' RCB REFER TO BRIDGE SERIES 500

SB MM 114.10 = SB STA. 3442+54
END PROJECT IM 089-3(27)
BEGIN APPROACH CONSTRUCTION

SB 3442+07 CL EXIST. 24'' ACCGMP OKAY

SB STA. 3444+54
END APPROACH CONSTRUCTION

MATCH LINE SB STA. 3445+00

SB MM 113.85

SB MM 114.00

SB MM 114.10

RAMP D

RAMP D DECELERATION LANE

SILT FENCE

GUARDRAIL

FENCE

DITCH

WOODS

FIELD DRIVE

WALL

SIGN

N25° 06' 05.28"E

N25° 02' 41.82"E

29 3430 3431 3432 3433 3434 3435 3436 3437 3438 3439 3440 3441 3442 3443 3444 3445

(39) (40) (41) (42) (43) (43A) (44) (42A) (31)

NB MM 113.95

NB MM 114.00

NB MM 114.10

NB MM 114.15

NB 3432+39 CL EXIST. 60'' ACCGMP OKAY

NB 3435+53 CL EXIST. 72'' ACCGMP REDD DITCH @ INLET FOR 20'. ADD STONE FILL, TYPE I

NB 3439+36 CL EXIST. 18'' X 84' ACCGMP CLEAN INLET DITCH. ADD STONE FILL, TYPE I

NB 3440+28.33 CL. EXIST. 18'' ACCGMP (PLUGGED)

NB 3440+43.08 CL. = RCB 20'+88.00 EXIST. 12' X 12.5' RCB REFER TO BRIDGE SERIES 500

NB 3441+83 CL EXIST. 24'' ACCGMP OKAY

NB 3443+64 LT EXIST. 15'' ACCGMP POOR RETAIN

NB STA. 3443+30
END APPROACH CONSTRUCTION

NB MM 114.10 = NB STA. 3442+30
END PROJECT IM 089-3(27)
BEGIN APPROACH CONSTRUCTION

MATCH LINE NB STA. 3429+00

MATCH LINE NB STA. 3445+00

REMOVAL AND DISPOSAL OF GUARD RAIL
(NORTHBOUND)
3429+00 RT - 3441+39 RT

STEEL BEAM GUARD RAIL
(NORTHBOUND)
3429+00 RT - 3441+43.3 RT

REMOVAL OF EXISTING FENCE (MOD.)
STA. 3432+50 NB RT
STA. 3438+00 NB RT - STA. 3442+30 NB RT

WOVEN WIRE FENCE W/STEEL POSTS
STA. 3432+50 NB RT
STA. 3438+00 NB RT - STA. 3442+30 NB RT

DATUM
VERTICAL NAVD88
HORIZONTAL NAD83(92)

0 50 100
SCALE IN FEET

SB & NB 3429+00 - 3445+00

PROJECT: FAIRFAX - FAIRFIELD - ST. ALBANS

PROJECT NO.: IM 089-3(27)

DESIGN FILE NAME: /87A007B/DESIGN/DA007NUI.DGN
IPARM FILE NAME: DA007LII
PLOT DATE: 03-OCT-2000
SURVEYED BY: ORVIS
SURVEY DATE: 6/98
SQUAD LEADER: DELLA SANTA
DRAWN BY: SQUAD B
SHEET: 69 OF 370

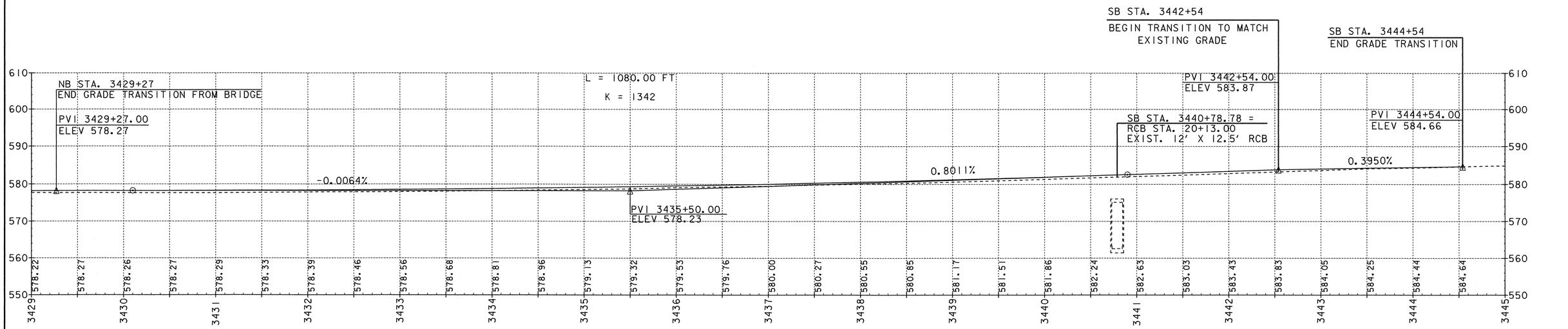

SOUTHBOUND GRADE PROFILE ALONG MEDIAN SIDE (REFER TO TYPICAL SHEET)

STA. 3429+00 – 3445+00

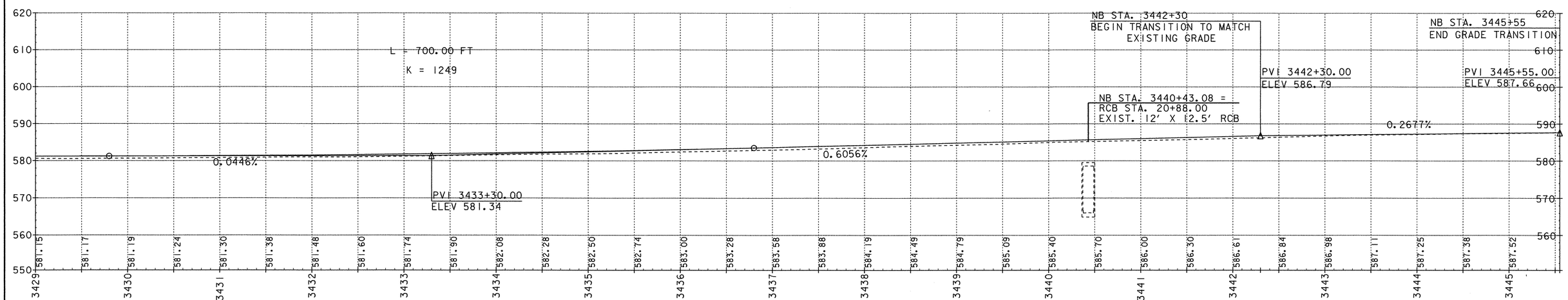

NORTHBOUND GRADE PROFILE ALONG MEDIAN SIDE (REFER TO TYPICAL SHEET)

STA. 3429+00 – 3445+55

SCALES IN FEET

0 50 100

20 10 0

DATUM

VERTICAL NAVD88

HORIZONTAL NAD83(92)

PROJECT: FAIRFAX - FAIRFIELD - ST. ALBANS	PROJECT NO.: IM 089-3(27)
DESIGN FILE NAME: /87A007B/DESIGN/DA007XSI.DGN	
IPARM FILE NAME: DA007PII	PLOT DATE: 04-OCT-2000
SURVEYED BY: ORVIS	SURVEY DATE: 6/98
SQUAD LEADER: DELLA SANTA	DRAWN BY: SQUAD B
	SHEET: 70 OF 370

RAMP C CURVE DATA
△ = 71°52'-28.05" RT.
D = 10°
R = 572.96'
T = 415.32'
L = 718.74'
E = 134.69'
MATCH EXISTING CROSS SLOPE

REMOVAL AND DISPOSAL OF GUARD RAIL
RAMP C 10+97 RT-11+73 RT
RAMP C 15+22 RT-16+00 RT

STONE FILL, TYPE II (FOR SLOPE PROTECTION)
RAMP C 14+25 RT-14+75 RT

REMOVAL OF EXISTING FENCE (MOD.)
RAMP C 8+28 RT-16+00 RT

CHAIN LINK FENCE, 6 FEET
RAMP C 8+28 RT-16+00 RT

VT STATE PLANE GRID N

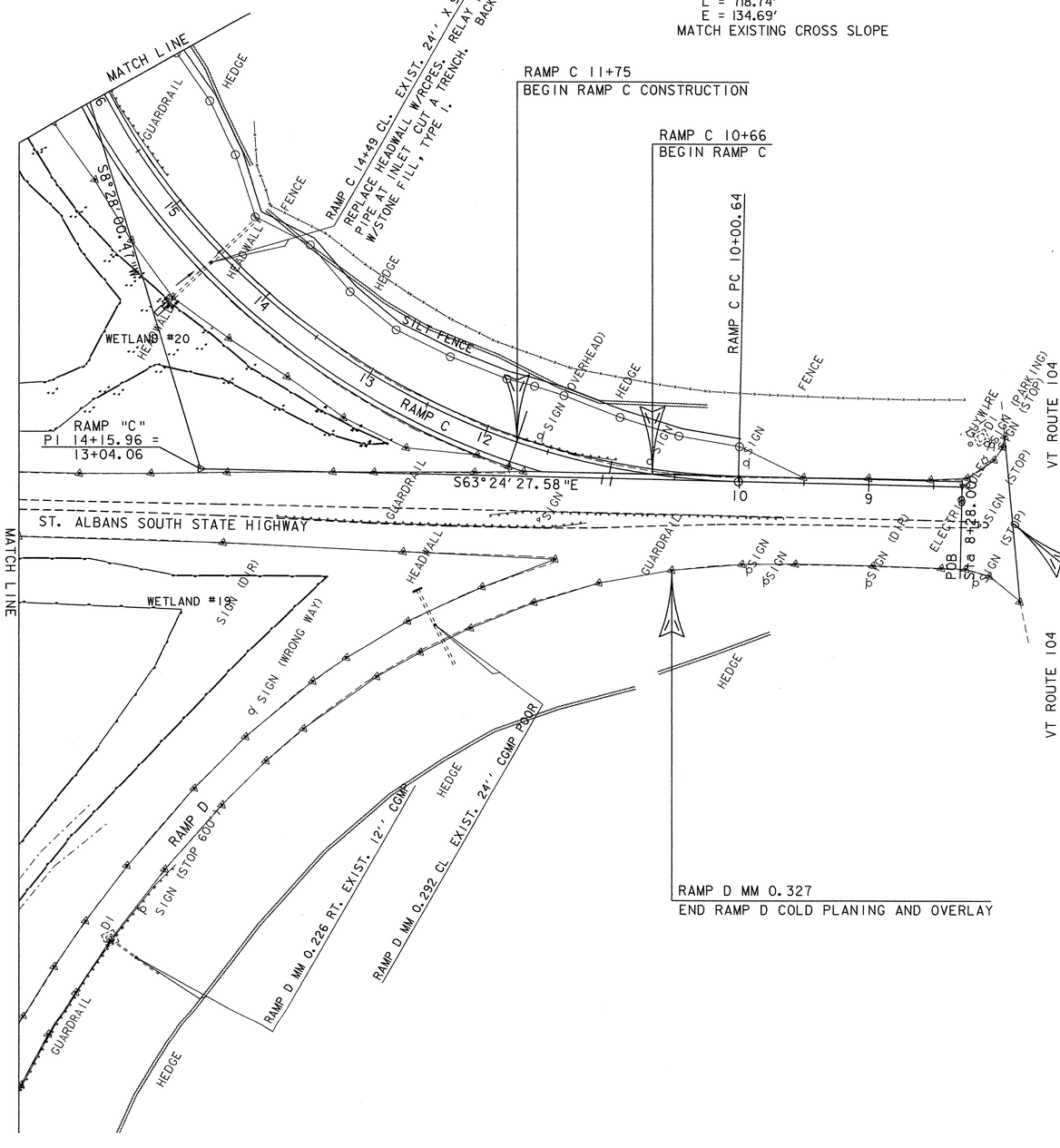

DATUM
VERTICAL NAVD88
HORIZONTAL NAD83(92)

0 50 100
SCALE IN FEET

RAMP C 8+28 - 16+00

PROJECT: FAIRFAX - FAIRFIELD - ST. ALBANS	PROJECT NO.: IM 089-3(27)
DESIGN FILE NAME: /87A007B/DESIGN/DA007NUI.DGN	
IPARM FILE NAME: DA007LI3	PLOT DATE: 18-AUG-2000
SURVEYED BY: ORVIS	SURVEY DATE: 6/98
SQUAD LEADER: DELLA SANTA	DRAWN BY: SQUAD B
	SHEET: 72 OF 370

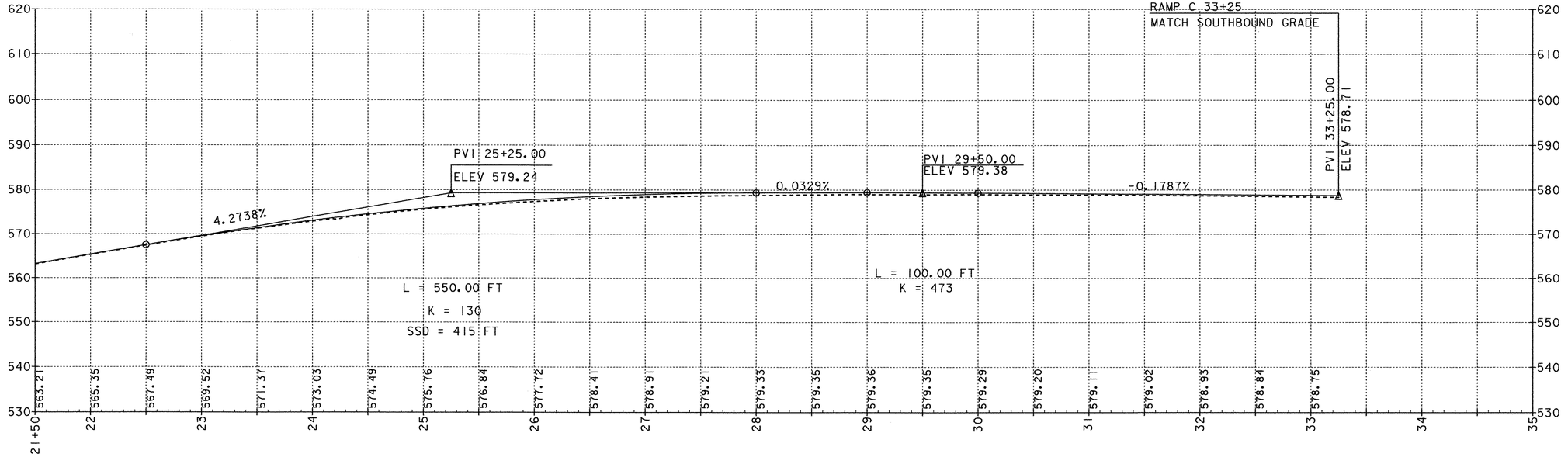

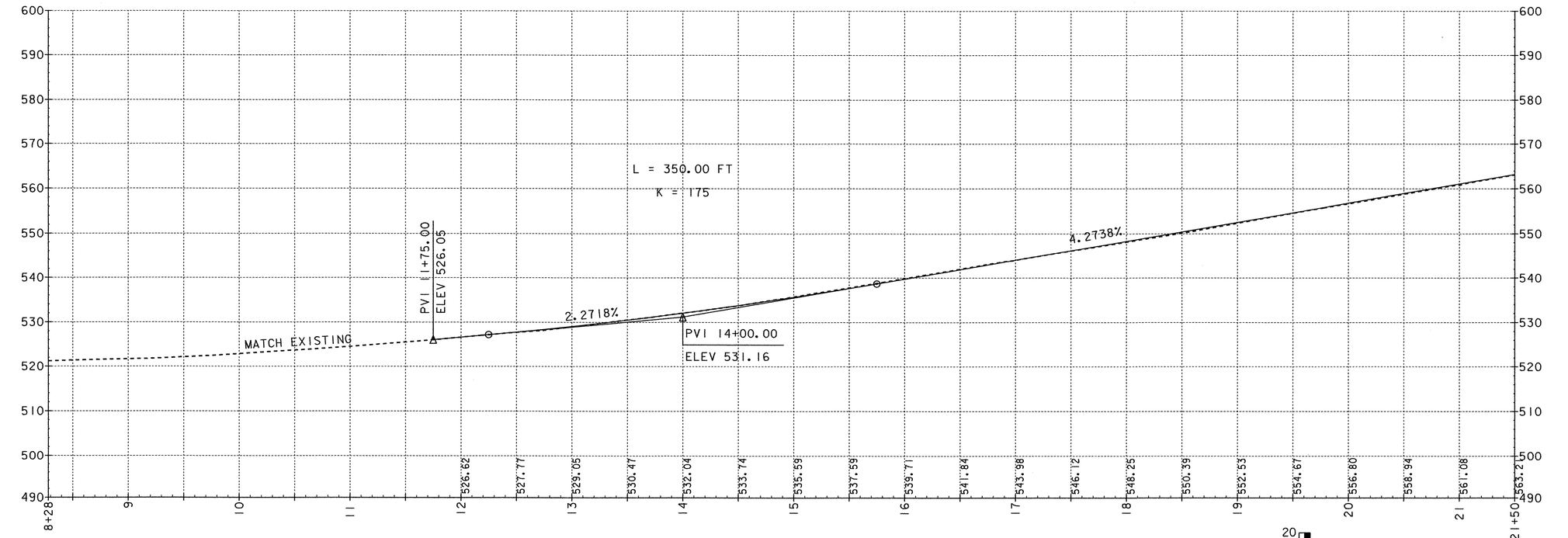

SCALES IN FEET

0 50 100

20 10 0

RAMP C PROFILE

DATUM	
VERTICAL	NAVD88
HORIZONTAL	NAD83(92)

PROJECT: FAIRFAX - FAIRFIELD - ST. ALBANS		PROJECT NO.: IM 089-3(27)	
DESIGN FILE NAME:	/87A007B/DESIGN/DA007RMC.DGN		
IPARM FILE NAME:	DA007RCP	PLOT DATE:	22-AUG-2000
SURVEYED BY:	ORVIS	SURVEY DATE:	6/98
SQUAD LEADER:	DELLA SANTA	DRAWN BY:	SQUAD B
		SHEET: 73 OF	370

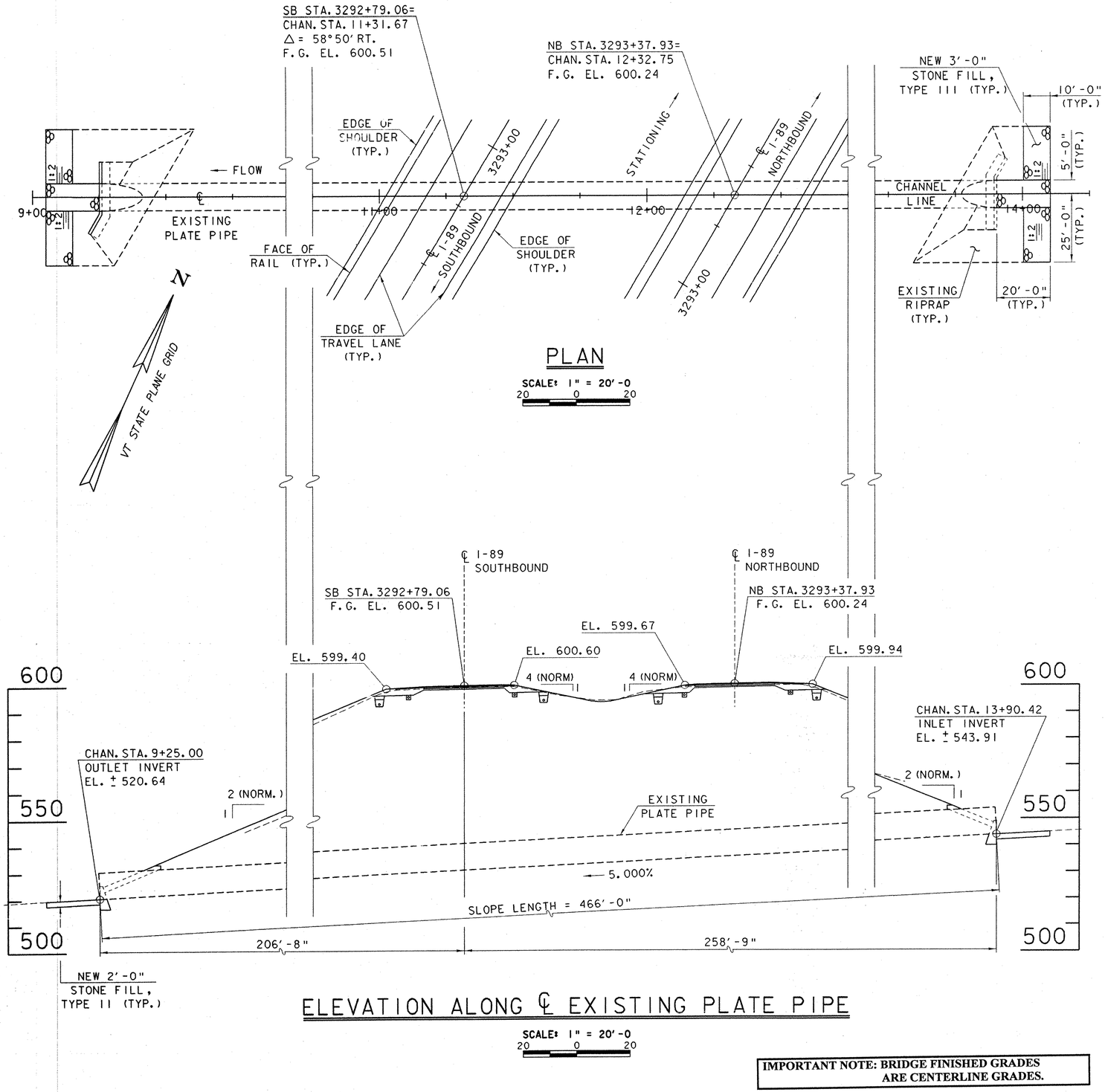

PLAN

SCALE: 1" = 20'-0
20 0 20

ELEVATION ALONG ℄ EXISTING PLATE PIPE

SCALE: 1" = 20'-0
20 0 20

IMPORTANT NOTE: BRIDGE FINISHED GRADES ARE CENTERLINE GRADES.

NOTES

1. **SCOPE OF WORK:** REPAIR INLET AND OUTLET OF EXISTING PIPE CULVERT AND PROVIDE ADDITIONAL STONE FILL AT BOTH INLET AND OUTLET ENDS AS SHOWN IN THE PLANS AND AS DIRECTED BY THE RESIDENT ENGINEER.
2. AT INLET END, RE-ANCHOR PIPE TO HEADWALL AND GROUT VOID BETWEEN PIPE AND WALL. SEE SHEET BRI01 FOR ADDITIONAL DETAILS.
3. AT OUTLET END, REMOVE HEADWALL TO 1'-0" BELOW FLOW LINE. DRILL AND GROUT VERTICAL REINFORCING STEEL INTO REMAINING CONCRETE. REPOUR HEADWALL WITH ANCHORS INTO EXISTING PIPE AT EXISTING HOLE LOCATIONS. SEE SHEET BRI01 FOR ADDITIONAL DETAILS.
4. ALL MATERIALS AND CONSTRUCTION SHALL CONFORM TO VERMONT AGENCY OF TRANSPORTATION STANDARD SPECIFICATIONS FOR CONSTRUCTION, DATED 1990, AND ITS LATEST REVISIONS AND THE AASHTO STANDARD SPECIFICATIONS FOR HIGHWAY BRIDGES, DATED 1996, AND ITS LATEST REVISIONS.

REINFORCING STEEL SCHEDULE

	NO. PIECES	SIZE	LENGTH	MARK	TYPE	B	C	D	H	J	K	R
				OUTLET HEADWALL								
*	29	5	7-6	H501	STR	▲						
*	9	5	5-4	H503	STR							
	8	5	5-11	H502	19	3-6	0-5	2-0	2-6	1-5	2-6	1-5
	2	5	15-6	H504	19	2-0	13-6	/	1-0		1-9	
	4	5	7-11	H505	22	2-0	3-11	2-0	1-5	1-5	1-5	1-5
	8	8	4-0	H801	STR							
	8	8	4-9	H802	19	2-0	2-9	/	0-8		1-11	

BRIDGE 86-5 PIPE QUANTITIES

ITEM NO.	ITEM	UNIT	INLET HEADWALL	OUTLET HEADWALL	TOTAL	FINAL
203.27	UNCLASSIFIED CHANNEL EXCAVATION	CY	75	75	150	
204.25	STRUCTURE EXCAVATION	CY		20	20	
204.30	GRANULAR BACKFILL FOR STRUCTURES	CY		10	10	
501.25	CONCRETE, CLASS B	CY		10	10	
501.58	MORTAR, TYPE IV (MOD.)	LS		1	1	
507.16	DRILLING AND GROUTING DOWELS	LF		32	32	
507.17	EPOXY COATED REINFORCING STEEL	LB		580	580	
514.10	WATER REPELLENT	GAL	1	1	2	
529.25	REMOVAL OF CONCRETE OR MASONRY	CY		10	10	
613.12	STONE FILL, TYPE III	CY	75	85	160	
614.10	TEMPORARY RELOCATION OF STREAM (CHANNEL STA. 13+90.5)	LS	1		1	
® 649.31	GEOTEXTILE UNDER STONE FILL	SY	70	70	140	
651.40	GRUBBING MATERIAL	SY	45	45	90	

® DENOTES ROADWAY QUANTITY

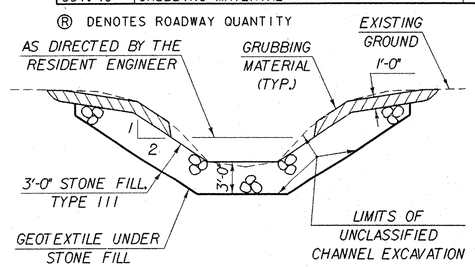

TYPICAL CHANNEL SECTION AT HEADWALLS

STATE OF VERMONT
AGENCY OF TRANSPORTATION

Town Of FAIRFAX-FAIRFIELD-ST. ALBANS	Bridge No. 86-5
Highway No. I-89	Log Sta. MM 111.28
	Surv. Sta.

I-89 OVER THE MILL RIVER

86-5 PRELIMINARY INFORMATION SHEET

Designed By M. LOZIER	Drawn By G. ROY
Checked By M. LOZIER Date 10/99	Bridge Design Supervisor R.R. WHITCOMB Date 10/99
PROJECT FAIRFAX-FAIRFIELD-ST. ALBANS	PROJECT NO. IM 089-3 (27)
I.G.C. Info. 96a056\Structures\sa056pl1.dgn	sa056pl1
Bridge Sheet No. BRI00	Sheet 74 of 370

PLOTTED 21-SEP-2000

INLET HEADWALL NOTES

1. NO HEADWALL CONCRETE REPAIRS ARE ANTICIPATED AT THE INLET END. ANY REPAIRS NECESSITATED DUE TO CONTRACTOR NEGLIGENCE SHALL BE PERFORMED AT NO EXPENSE TO THE STATE. ANY REPAIRS DIRECTED BY THE RESIDENT ENGINEER SHALL BE PAID FOR AS EXTRA WORK.
2. ANCHOR BOLTS SHALL BE INSTALLED TO THE SPECIFICATIONS OF THE MANUFACTURER.
3. INSTALL ANCHOR BOLTS IN ALTERNATE CIRCUMFERENTIAL SEAM HOLES TO THE ORIGINAL INSTALLATION. GROUT REMAINING VOID WITH NON-SHRINK GROUT.
4. MATERIAL FOR GROUTING SHALL MEET THE REQUIREMENTS OF SUBSECTION 707.03 OF THE STANDARD SPECIFICATIONS FOR CONSTRUCTION.
5. PAYMENT FOR THE BOLTS AND GROUT MATERIAL, AND ALL MATERIALS, LABOR, AND INCIDENTALS ASSOCIATED WITH THEIR INSTALLATION AND APPLICATION, RESPECTIVELY, SHALL BE MADE SUBSIDARY TO ITEM 501.58, "MORTAR, TYPE IV (MOD.)".
6. WATER REPELLENT SHALL BE APPLIED TO ALL EXPOSED CONCRETE SURFACES.

OUTLET HEADWALL NOTES

1. REMOVE EXISTING HEADWALL CONCRETE TO CUT LINE AS SHOWN IN THE PLANS. PAYMENT SHALL BE MADE UNDER ITEM 529.25, "REMOVAL OF CONCRETE AND MASONARY".
2. NEW HEADWALL CONCRETE SHALL BE CONCRETE, CLASS B AND SHALL BE PAID FOR UNDER ITEM 501.25, "CONCRETE, CLASS B".
3. DRILLING AND GROUTING OF DOWEL BARS SHALL BE PERFORMED IN ACCORDANCE WITH SECTION 507 OF THE STANDARD SPECIFICATIONS FOR CONSTRUCTION. MATERIAL FOR GROUTING SHALL MEET THE REQUIREMENTS OF SUBSECTION 707.03. PAYMENT SHALL BE MADE UNDER ITEM 507.16, "DRILLING AND GROUTING DOWELS".
4. WATER REPELLENT SHALL BE APPLIED TO ALL EXPOSED CONCRETE SURFACES.
5. ALL EXPOSED EDGES OF NEW CONCRETE SHALL BE CHAMFERED 1" X 1".
6. ALL REINFORCING STEEL, INCLUDING DOWEL BARS, SHALL BE EPOXY COATED AND PAID FOR UNDER ITEM 507.17, "EPOXY COATED REINFORCING STEEL". WHEN EPOXY COATED REINFORCING STEEL IS CUT, THE UNCOATED ENDS SHALL BE REPAIRED WITH MATERIALS AND PROCEDURES APPROVED BY THE COATING MANUFACTURER. FLAME CUTTING OF EPOXY COATED REINFORCING STEEL WILL NOT BE PERMITTED.
7. MINIMUM COVER FOR REINFORCING STEEL SHALL BE AS SHOWN IN THE PLANS.
8. REINFORCING PLACEMENT TOLERANCES SHALL BE:
   SPACING: ±1"
   CLEARANCE: ±1/4"

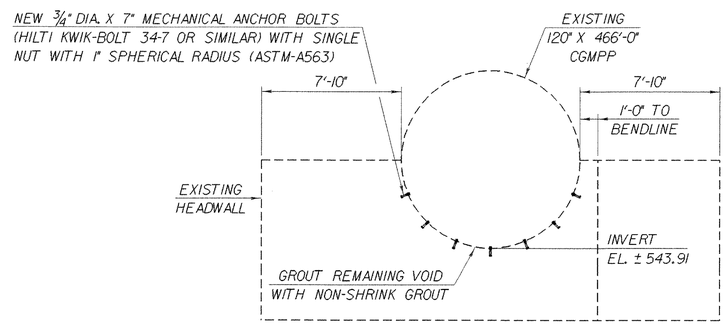

INLET HEADWALL ELEVATION

SCALE 1/4" = 1'-0

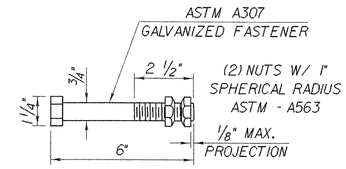

ANCHOR BOLT DETAIL FOR OUTLET HEADWALL

NTS

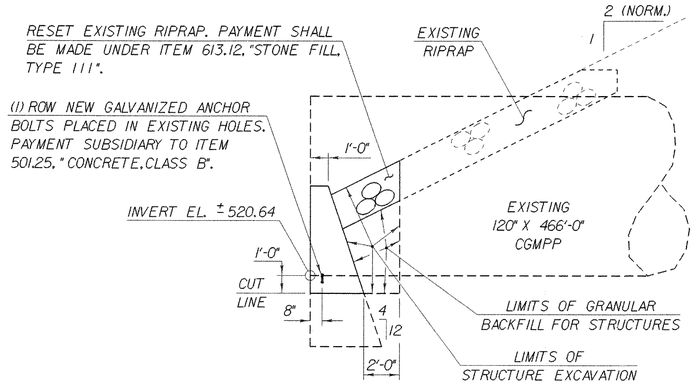

OUTLET SECTION AT PIPE CENTERLINE

SCALE 1/4" = 1'-0

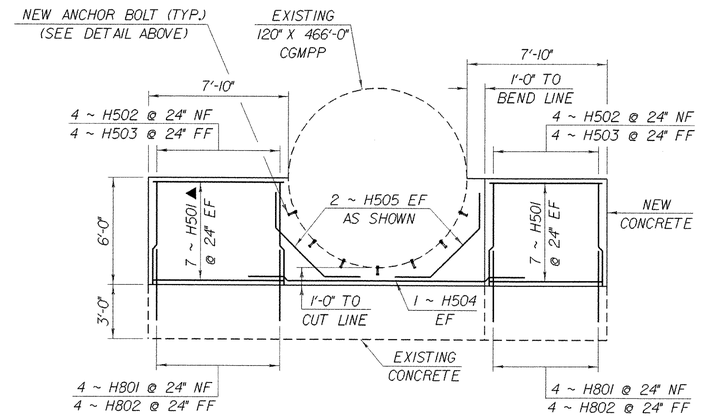

OUTLET HEADWALL ELEVATION

SCALE 1/4" = 1'-0

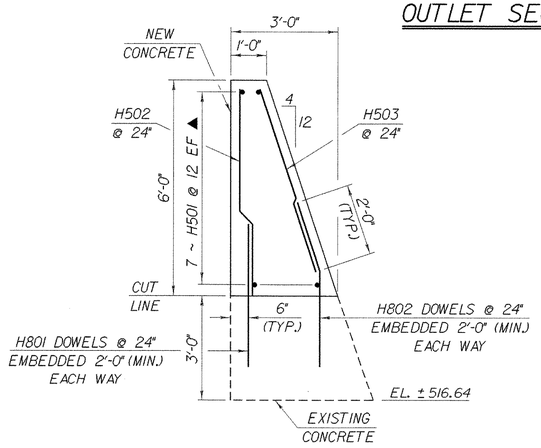

OUTLET HEADWALL TYPICAL SECTION

SCALE 1/2" = 1'-0

NOTE:

NF = NEAR FACE
FF = FAR FACE
EF = EACH FACE
▲ = CUT TO FIT IN FIELD
3" CLR. UNLESS OTHERWISE SPECIFIED ON THE PLANS.

STATE OF VERMONT
AGENCY OF TRANSPORTATION

Town Of FAIRFAX-FAIRFIELD-ST. ALBANS	Bridge No. 86-5
Highway No. I-89	Log Sta. MM 111.28
	Surv. Sta.

I-89 OVER THE MILL RIVER

86-5 HEADWALL DETAILS

Designed By M.LOZIER	Drawn By K.CHISHOLM
Checked By G. ROY Date 10/99	Bridge Design Supervisor R.R. WHITCOMB Date 10/99
PROJECT FAIRFAX-FAIRFIELD-ST. ALBANS	PROJECT NO. IM 089 - 3 (27)
I.G.C. Info. 96d056\Structures\sa056pll.dgn	sa056hw1
Bridge Sheet No. BRI01	Sheet 75 of 370

PLOTTED 21-SEP-2000

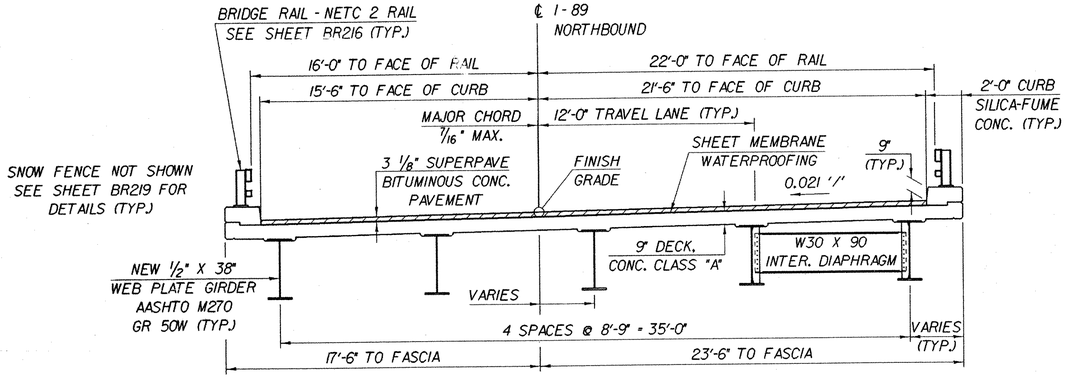

BRIDGE 87N TYPICAL SECTION

SCALE 1/4" = 1'-0

1 0 2 4 6

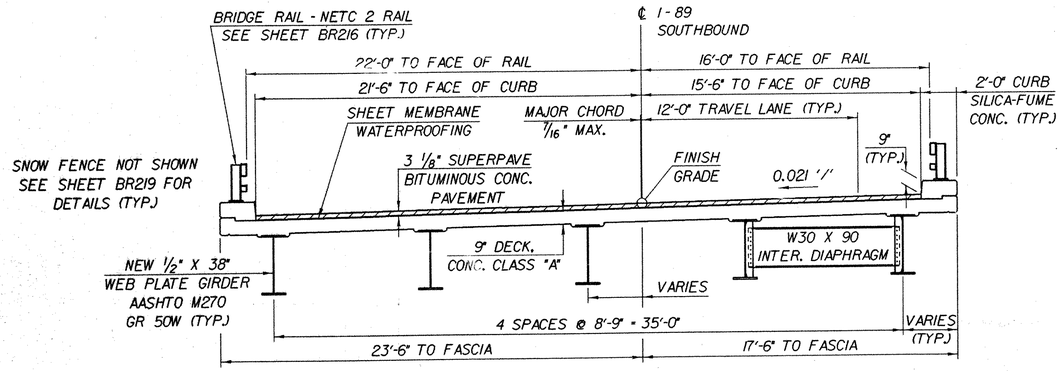

BRIDGE 87S TYPICAL SECTION

SCALE 1/4" = 1'-0

1 0 2 4 6

87 N & S INDEX OF SHEETS

BR200	87 N & S PRELIMINARY INFORMATION SHEET
BR201	87 N & S BRIDGE QUANTITY SHEET
BR202	87 N & S PLAN AND ELEVATION SHEET
BR202A	87 N & S BORING INFORMATION SHEET (1)
BR202B	87 N & S BORING INFORMATION SHEET (2)
BR203	87 N & S PROJECT NOTES
BR204	87 S BRIDGE DECK DETAILS
BR205	87 S DECK REINFORCING PLAN
BR206	87 S FRAMING PLAN DETAILS
BR207	87 N BRIDGE DECK DETAILS
BR208	87 N DECK REINFORCING PLAN
BR209	87 N FRAMING PLAN DETAILS
BR210	STRUCTURAL STEEL CONNFCTION DETAILS
BR211	FIXED BEARING DETAILS ABUT. NOS. 1 & 3
BR212	EXPANSION BEARING DETAILS ABUT. NOS. 2 & 4
BR213	87 S APPROACH SLAB DETAILS
BR214	87 N APPROACH SLAB DETAILS
BR215	CURB AND RAIL DETAILS
BR216-219	NETC RAIL DETAILS

INDEX OF SHEETS (CONT.)

BR220	ABUTMENT NO. 1 DETAILS
BR221	ABUTMENT NO. 2 DETAILS
BR222	ABUT. NOS. 1 & 2 FOOTING REINFORCING
BR223	WINGWALL NOS. 1 - 4 ELEVATIONS
BR224	ABUTMENT NO. 3 DETAILS
BR225	ABUTMENT NO. 4 DETAILS
BR226	ABUT. NOS. 3 & 4 FOOTING REINFORCING
BR227	WINGWALL NOS. 5 - 8 ELEVATIONS
BR228-229	87 N & S REINFORCING STEEL SCHEDULES
BR230	MSE WALL NOTES
BR231	MSE WALL NO. 1 PLAN AND ELEVATION
BR232	MSE WALL NO. 2 PLAN AND ELEVATION
BR233-234	MSE WALL DETAILS
BR235	MSE WALL REINFORCING STEEL SCHEDULE
BR236-238	VT 104 CROSS SECTIONS
BR239-247	87 N & S REFERENCE SHEETS 1 - 9

NOTES

1. **SCOPE OF WORK:** FOR BOTH BRIDGES 87N AND 87S, PERFORM A FULL SUPERSTRUCTURE AND SUBSTRUCTURE REPLACEMENT. REPLACE EXISTING 3-SPAN STRUCTURE WITH A SIMPLE SPAN STEEL GIRDER BRIDGE SUPPORTED ON MECHANICALLY STABILIZED EARTH WALL SUBSTRUCTURES. PERFORM ADDITIONAL APPROACH AND SITE WORK AS SHOWN IN THE PLANS AND AS DIRECTED BY THE RESIDENT ENGINEER.

2. ALL MATERIALS AND CONSTRUCTION SHALL CONFORM TO VERMONT AGENCY OF TRANSPORTATION STANDARD SPECIFICATIONS FOR CONSTRUCTION, DATED 1990, AND ITS LATEST REVISIONS AND THE AASHTO STANDARD SPECIFICATIONS FOR HIGHWAY BRIDGES, DATED 1996, AND ITS LATEST REVISIONS.

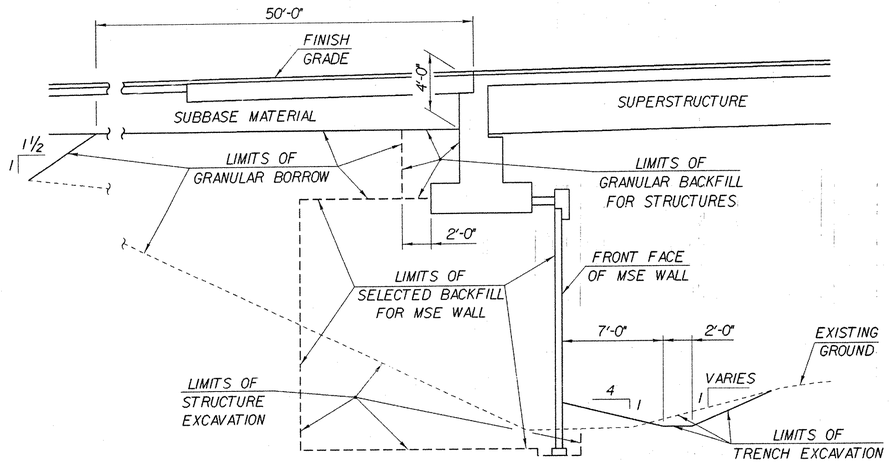

TYPICAL ABUTMENT SECTION

(NOT TO SCALE)

* SEE TRAFFIC CONTROL SHEETS

DESIGN CRITERIA:
1. DESIGN LIVE LOAD AASHTO HS25-44
2. DESIGN SPAN 80'
3. ALLOWABLE LOAD FOR SPREAD FOOTINGS ON SOIL 4 KSF ON LEDGE N/A
4. ALLOWABLE LOAD FOR PILING N/A TYPE N/A ESTIMATED LENGTH N/A
5. STRUCTURAL STEEL AASHTO M270 GRADE 50 W
6. REINFORCING STEEL GRADE 60
7. CONCRETE CLASS A f'_c = 4000 PSI
   CONCRETE CLASS B f'_c = 3500 PSI
   SILICA-FUME CONCRETE f'_c = 5000 PSI
8. ASSUMED UNIT WEIGHT OF SOIL: 140 PCF

* TRAFFIC MAINTENANCE:
1. IS TRAFFIC TO BE MAINTAINED? _____ IF YES, ON EXISTING STRUCTURE _____ OR ON TEMPORARY BRIDGE _____
2. TEMPORARY BRIDGE REQUIREMENTS: ONE OR TWO WAY _____ TRAFFIC CONTROL SIGNALS REQUIRED _____
   MINIMUM _____ _____
   ARE SIDEWALKS REQUIRED? _____ IF SO, ON WHAT SIDE? _____

LOAD FACTOR LOAD RATING (TONS)

LOADING LEVELS (LOAD FACTOR)	TRUCK						
	H	HS	3S2	6 AXLE	3A. STR.	4A. STR.	5A. SEMI
INVENTORY A=2.17: B=1.00	37	50					
POSTED A=1.55: B=1.40	52	71	84		65	66	77
OPERATING A=1.30: B=1.67		85	101	120	77	79	

STRENGTH RF = $\frac{\phi M_N - 1.3\,M_{DL}}{A \times M_{LL+I}}$ SERVICEABILITY RF = $B\left[\frac{.95\,F_y S_{LL+I} - M_{DL}\frac{S_{LL+I}}{S_{DL}} - M_{SDL}\frac{S_{LL+I}}{S_{SDL}}}{1.67\,M_{LL+I}}\right]$

IMPORTANT NOTE: BRIDGE FINISHED GRADES ARE CENTERLINE GRADES.

STATE OF VERMONT
AGENCY OF TRANSPORTATION

Town Of FAIRFAX-FAIRFIELD-ST. ALBANS	Bridge No. 87 N&S
Highway No. I-89	Log Sta.
	Surv. Sta.

I-89 OVER VT 104

87 N & S PRELIMINARY INFORMATION SHEET

Designed By M. LOZIER	Drawn By G. ROY
Checked By M. LOZIER Date 11/99	Bridge Design Supervisor R.R. WHITCOMB Date 11/99
PROJECT FAIRFAX-FAIRFIELD-ST. ALBANS	PROJECT NO. IM 089-3 (27)
I.G.C. Info. 96a056\Structures\sa056pl2.dgn	sa056pl2J
Bridge Sheet No. BR200	Sheet 76 of 370

PLOTTED 21-SEP-2000

STATE OF VERMONT
AGENCY OF TRANSPORTATION

QUANTITY SHEET

SUMMARY OF ESTIMATED QUANTITIES

MSE WALL NO. 2	MSE WALL NO. 1	ROADWAY I-89 NB	ABUTMENT NO. 4	ABUTMENT NO. 3	APPROACH SLAB NO. 4	APPROACH SLAB NO. 3	87N DECK	ROADWAY I-89 SB	ABUTMENT NO. 2	ABUTMENT NO. 1	APPROACH SLAB NO. 2	APPROACH SLAB NO. 1	87S DECK
4890	1820												
90	80												
330	240												
			140	120					130	120			
					0.1	0.1	0.6				0.1	0.1	0.6
					15	15	58				15	15	58
							~~116~~ 116						116
13	13		~~59~~ 59	~~58~~ 58	~~35~~ 35	~~35~~ 35			62	54	35	35	
			2	2			12		2	2			12
							86580						86580
1060	1010		5020	4890	4120	4120	32240		5110	4560	4120	4120	32240
													1
							1						
7	7	2	5	5			9	2	5	5			9
							38						38
					85	85	340				85	85	340
							224						220
3620	2990												
							733						734
							1						1
							10						10
		6						6					
		160						160					
							120						120
		4						4					
					30	30	103				30	30	103
					20	20	83				20	20	83

TOTALS

BRIDGE QUANTITY	ROUND	GRAND TOTAL	FINAL
6710		6710	
		170	
570		570	
510		510	
		1.6	
		176	
232		232	
399		399	
32		32	
173160		173160	
102610		102610	
1		1	
1		1	
56		56	
76		76	
1020		1020	
444		444	
6610		6610	
1467		1467	
2		2	
20		20	
		12	
320		320	
240		240	
8		8	
		326	
		246	

DESCRIPTIONS

UNIT	ITEMS	ITEM NUMBER	
CY	GRANULAR BORROW	203.32	
CY	TRENCH EXCAVATION OF EARTH	204.20	®
CY	STRUCTURE EXCAVATION	204.25	
CY	GRANULAR BACKFILL FOR STRUCTURES	204.30	
CWT	EMULSIFIED ASPHALT	404.65	®
TON	SUPERPAVE BITUMINOUS CONCRETE PAVEMENT (PG 64-34)	490.30	®
CY	CONCRETE, CLASS A	501.22	
CY	CONCRETE, CLASS B HIGH PERFORMANCE CL A	501.25	
CY	SILICA-FUME CONCRETE HIGH PERFORMANCE CL B	501.60	
LB	STRUCTURAL STEEL (PLATE GIRDER)	506.55	
LB	EPOXY COATED REINFORCING STEEL	507.17	
LS	SHEAR CONNECTORS (1210 ~ 7/8" DIA. X 7" STUDS)	508.15	
LS	SHEAR CONNECTORS (1210 ~ 7/8" DIA. X 7" STUDS)	508.15	
GAL	WATER REPELLENT	514.10	
LF	BRIDGE EXPANSION JOINT	516.10	
SY	SHEET MEMBRANE WATERPROOFING	519.20	
LF	BRIDGE RAILING-NETC 2 RAIL	525.33	
SF	REINFORCED SLOPE (MSE WALL SYSTEM)	526.40	
SY	REMOVAL OF BRIDGE PAVEMENT	529.10	
EACH	REMOVAL OF STRUCTURE	529.15	
EACH	BEARING DEVICE ASSEMBLY	531.10	
CY	STONE FILL, TYPE I	613.10	®
LF	CAST-IN-PLACE CONCRETE CURB, TYPE B (MOD. SILICA-FUME CONCRETE)	616.28	
LF	SNOW BARRIER - GALVANIZED	620.75	
EACH	GUARD RAIL APPROACH SECTION, NETC 2 RAIL	621.72	
LF	DURABLE 6" WHITE LINE	646.414	®
LF	DURABLE 6" YELLOW LINE	646.415	®

® DENOTES ROADWAY QUANTITY

DETAILED SUMMARY OF QUANTITIES

QUANTITIES	UNIT	ITEMS

PROJECT NAME: **FAIRFAX-FAIRFIELD-ST. ALBANS**
PROJECT NUMBER: **IM 089 - 3 (27)**

FILE NAME: **\96a056\structures\sa056q1.xls** PLOT DATE: **9/20/00**
PROJECT LEADER: **R. R. WHITCOMB** DRAWN BY: **G. ROY**
DESIGNED BY: **M. LOZIER** CHECKED BY: **P. PERRY**
87 N & S BRIDGE QUANTITY SHEET **BR201** SHEET 77 OF 370

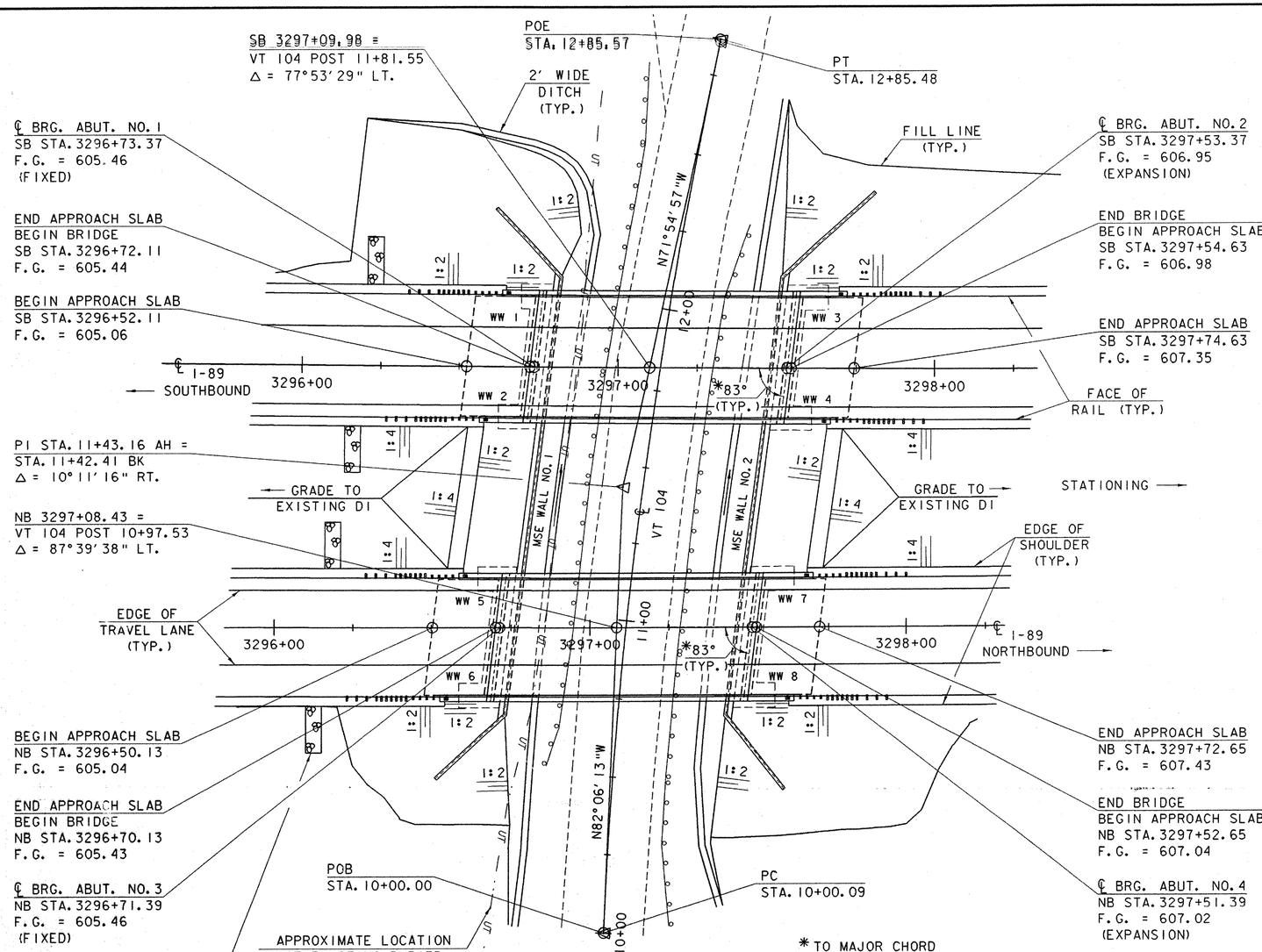

PLAN

SCALE: 1" = 20'-0

20 0 20

N

VT STATE PLANE GRID

VT 104 CURVE DATA

Δ = 10°11'16" RT.
D = 3°34'12"
R = 1605.00'
T = 143.07'
L = 285.39'
E = 6.36'
2T-L = 0.75'
BANKING = VARIES

BRIDGE RAILING TABLE

BRIDGE	RIGHT	LEFT
87 N	111'-11 7/8"	112'-0"
87 S	110'-11 15/16"	109'-0 1/16"

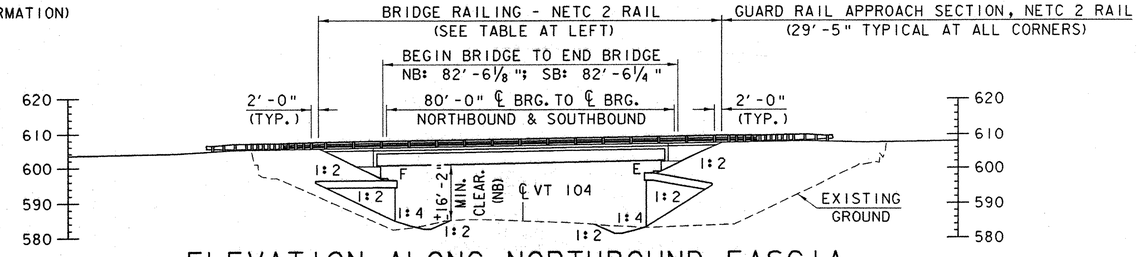

ELEVATION ALONG NORTHBOUND FASCIA

SCALE: 1" = 20'-0

20 0 20

IMPORTANT NOTE: BRIDGE FINISHED GRADES ARE CENTERLINE GRADES.

STATE OF VERMONT
AGENCY OF TRANSPORTATION

Town Of FAIRFAX-FAIRFIELD-ST. ALBANS	Bridge No. 87 N&S
Highway No. I-89	Log Sta. MM 111.35
	Surv. Sta.

I-89 OVER VT 104

87 N & S PLAN AND ELEVATION SHEET

Designed By G. ROY	Drawn By G. ROY
Checked By M. LOZIER Date 10/99	Bridge Design Supervisor R. R. WHITCOMB Date 11/99
PROJECT FAIRFAX-FAIRFIELD-ST. ALBANS	PROJECT NO. IM 089-3 (27)
I.G.C. Info. 96a056\Structures\sa056pe2.dgn	sa056pe21
Bridge Sheet No. BR202	Sheet 78 of 370

PLOTTED 21-SEP-2000

SOIL CLASSIFICATION

AASHTO

A1	Gravel and Sand
A3	Fine Sand
A2	Silty or Clayey Gravel and Sand
A4	Silty Soil - Low Compressibility
A5	Silty Soil - Highly Compressible
A6	Clayey Soil - Low Compressibility
A7	Clayey Soil - Highly Compressible

ROCK QUALITY DESIGNATION

R.Q.D. (%)	ROCK DESCRIPTION
<25	Very Poor
25 to 50	Poor
51 to 75	Fair
76 to 90	Good
>90	Excellent

SHEAR STRENGTH

UNDRAINED SHEAR STRENGTH IN P.S.F.	CONSISTENCY
<250	Very Soft
250-500	Soft
500-1000	Med. Stiff
1000-2000	Stiff
2000-4000	Very Stiff
>4000	Hard

CORRELATION GUIDE OF "N" TO DENSITY/CONSISTENCY

DENSITY (GRANULAR SOILS) N	DESCRIPTIVE TERM	CONSISTENCY (COHESIVE SOILS) N	DESCRIPTIVE TERM
<5	Very Loose	<2	Very Soft
5-10	Loose	2-4	Soft
11-24	Med. Dense	5-8	Med. Stiff
25-50	Dense	9-15	Stiff
>50	Very Dense	16-30	Very Stiff
		31-60	Hard
		>60	Very Hard

COMMONLY USED SYMBOLS

▼	Water Elevation
⊕	Standard Penetration Boring
⊕	Auger Boring
⊙	Rod Sounding
S	Sample
N	Standard Penetration Test Blow Count Per Foot For: 2" O.D. Sampler 1⅜" I.D. Sampler Hammer Weight Of 140 Lbs. Hammer Fall Of 30"
VS	Field Vane Shear Test
US	Undisturbed Soil Sample
B	Blast
DC	Diamond Core
MD	Mud Drill
WA	Wash Ahead
HSA	Hollow Stem Auger
AX	Core Size 1⅛"
BX	Core Size 1⅝"
NX	Core Size 2⅛"
M	Double Tube Core Barrel Used
LL	Liquid Limit
PL	Plastic Limit
PI	Plasticity Index
NP	Non Plastic
w	Moisture Content (Dry Wgt. Basis)
D	Dry
M	Moist
MTW	Moist To Wet
W	Wet
Sat	Saturated
Bo	Boulder
Gr	Gravel
Sa	Sand
Si	Silt
Cl	Clay
HP	Hardpan
Le	Ledge
NLTD	No Ledge To Depth
CNPF	Can Not Penetrate Further
TLOB	To Ledge Or Boulder
NR	No Recovery
Rec.	Recovery
%Rec.	Percent Recovery
ROD	Rock Quality Designation
CBR	California Bearing Ratio
<	Less Than
>	Greater Than
R	Refusal (N > 100)

COLOR

blk	Black	pnk	Pink
bl	Blue	pu	Purple
brn	Brown	rd	Red
dk	Dark	tn	Tan
gry	Gray	wh	White
gn	Green	yel	Yellow
lt	Light	mltc	Multicolored
or	Orange		

DEFINITIONS (AASHTO)

BEDROCK (LEDGE) - Rock in its native location of indefinite thickness.

BOULDER - A rock fragment with an average dimension > 12 inches.

COBBLE - Rock fragments with an average dimension between 3 and 12 inches.

GRAVEL - Rounded particles of rock < 3" and > 0.0787" (#10 sieve).

SAND - Particles of rock < 0.0787" (#10 sieve) and > 0.0029" (#200 sieve).

SILT - Soil < 0.0029" (#200 sieve), non or slightly plastic and exhibits no strength when air-dried.

CLAY - Fine grained soil, exhibits plasticity when moist and considerable strength when air-dried.

VARVED - Alternate layers of silt and clay.

HARDPAN - Extremely dense soil, cemented layer, not softened when wet.

MUCK - Soft organic soil (containing > 10% organic material.

MOISTURE CONTENT - Weight of water divided by dry weight of soil.

FLOWING SAND - Granular soil so saturated (loose) that it flows into drill casing during extraction of wash rod.

STRIKE - Angle from magnetic north to line of intersection of bed with a horizontal plane.

DIP - Inclination of bed with a horizontal plane.

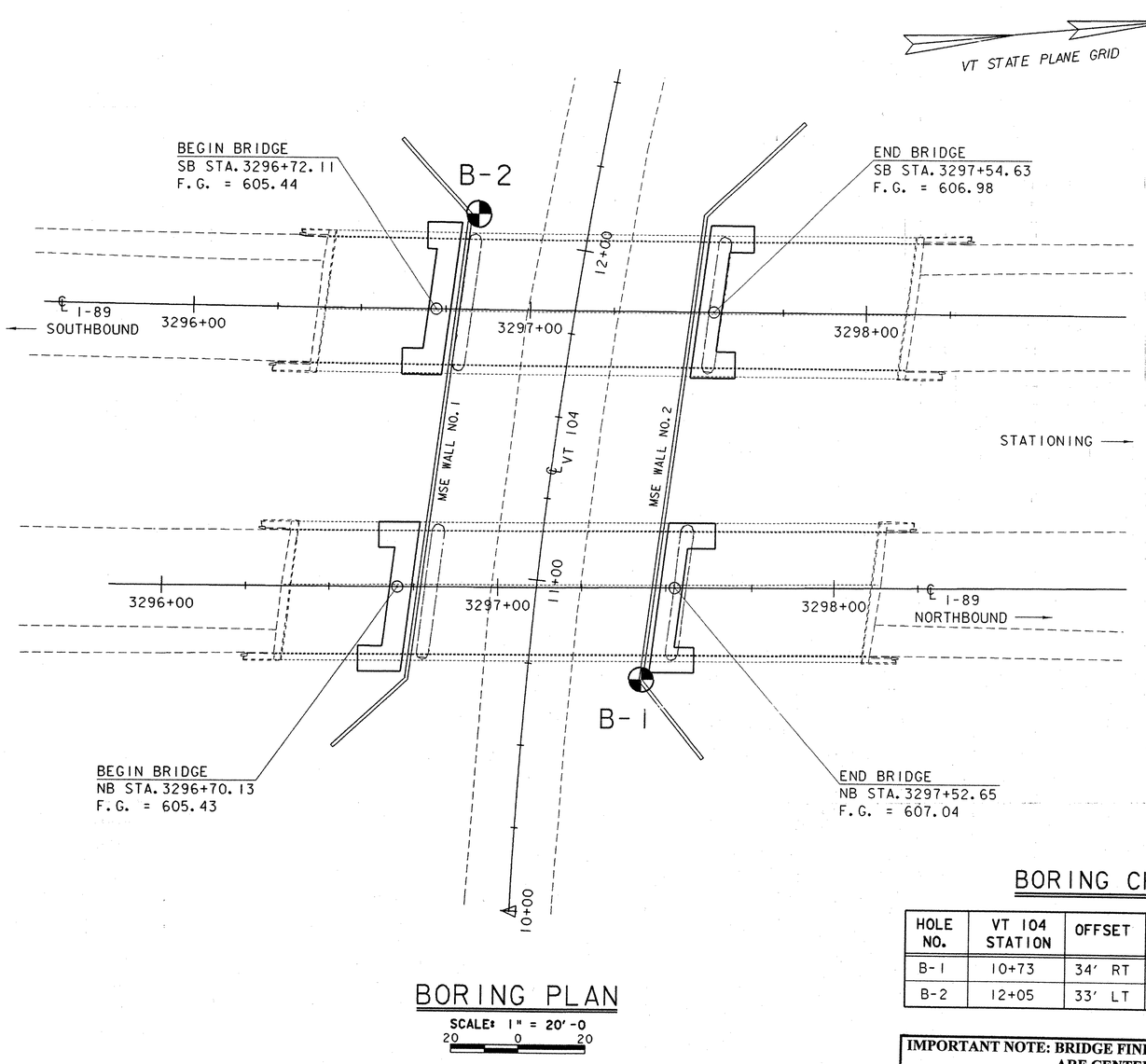

BORING PLAN

SCALE: 1" = 20'-0

20 0 20

BORING CHART

HOLE NO.	VT 104 STATION	OFFSET	GROUND ELEV.	ELEV. TLOB
B-1	10+73	34' RT	583.00	NLTD
B-2	12+05	33' LT	579.80	NLTD

IMPORTANT NOTE: BRIDGE FINISHED GRADES ARE CENTERLINE GRADES.

GENERAL NOTES

1. The subsurface explorations shown herein were made between 07/05/00 and 07/10/00 by the Agency.
2. Soil and rock classifications, properties and descriptions are based on engineering interpretation from available subsurface information by the Agency and may not necessarily reflect actual variations in subsurface conditions that may be encountered between individual boring or sample locations.
3. Observed water levels and/or conditions indicated are as recorded at the time of exploration and may vary according to the prevailing rainfall, methods of exploration and other factors.
4. Engineering judgement was exercised in preparing the subsurface information presented herein. Analysis and interpretation of subsurface data was performed and interpreted for Agency design and estimating purposes. Presentation of the information in the Contract is intended to provide the Contractor access to the same data available to the Agency. The subsurface information is presented in good faith and is not intended as a substitute for personal investigation, independent interpretation, independent analysis or judgement by the Contractor.
5. Pictorial structure details shown on the boring plan layout or soils profile are for illustrative purposes only and may not accurately portray final contract details.
6. Terminology used on boring logs to describe the hardness, degree of weathering, and spacing of fractures, joints and other discontinuities in the bedrock is defined in the AASHTO Manual on Subsurface Investigations, 1988.

STATE OF VERMONT
AGENCY OF TRANSPORTATION

Town Of FAIRFAX-FAIRFIELD-ST. ALBANS	Bridge No. 87 N&S
Highway No. I-89	Log Sta.
	Surv. Sta.
I-89 OVER VT 104	
87 N & S BORING INFORMATION SHEET (1)	
Designed By M.LOZIER	Drawn By G. ROY
Checked By G.ROY Date 7/00	Bridge Design Supervisor R.R.WHITCOMB Date 8/00
PROJECT FAIRFAX-FAIRFIELD-ST. ALBANS	PROJECT NO. IM 089-3 (27)
I.G.C. Info. 94J106\Structures\sJ106bor.dgn	so056b01J
Bridge Sheet No. BR202A	Sheet 79 of 370

PLOTTED 21-SEP-2000

TOP OF LEVELING PAD
MSE WALL NO. 2
EL. 578.96

STATE OF VERMONT
AGENCY OF TRANSPORTATION
MATERIALS & RESEARCH DIVISION
SUBSURFACE INFORMATION

HOLE NO.: B-1
SHEET 1 OF 1
DATE STARTED: 7/5/00
DATE COMPLETED: 7/10/00

PROJECT NAME: FAIRFAX - ST. ALBANS
SITE NAME: BR-87
STATION: 10+73.00
GROUND EL.: 583.0

PROJECT NUMBER: IM 089-3 (27)
SITE NO.: I-89
OFFSET: 34.00
G.W. DEPTH:

BORING CREW
CREW CHIEF: YOUNG
DRILLER: CHABOT
LOGGER: HOLT

BORING RIG: TRUCK
BORING TYPE: WASH BORE
SAMPLE TYPE: SPLIT BARREL

DEPTH	SYMBOL	CLASSIFICATION OF MATERIALS (Description)	BLOWS PER FOOT	M.C. %	GRAVEL %	SAND %	FINES %	LL	PI
5		A-2-4, SaSiGr, brn, Moist, Rec. = 0.40'	18	10	39.8	27.4	32.8		
		Visual Classification: Broken Rock	48	8.8					
		Visual Classification: Broken Rock	37	3.3					
10		A-4, SaSi, gry, Moist, Rec. = 0.6' Rock in end of sampler.	R	14	9.5	27.5	63		
		A-4, GrSaSi HP, gry, Dry, Rec. = 1.4'	63	8.6	25.5	30.7	43.8		
15		A-4, GrSaSi HP, gry, Dry, Rec. = 1.2'	54	8.4	29.5	31.7	38.8		
		No Rec.	R						
20		A-4, GrSaSi HP, gry, Dry, Rec. = 0.6'	R	6.5	29.4	33.6	37		
25		BXDC, 24.8'-26.1', Boulder							
		BXDC, 26.1'-29.2', Lots of stones in hardpan							
30		A-4, GrSaSi HP, gry, Dry, Rec. = 0.5'	R	6.5	30.6	31.7	37.7		
35		BXDC, Boulder	R						
40		Visual Classification: Broken Rock	R						
45		No Rec., Boulders	R						
		BXDC, 45.2'-50.0', Boulders							
50		Visual Class: Broken Rock	R						

Hole stopped @ 51.0'

TOP OF LEVELING PAD
MSE WALL NO. 1
EL. 578.00

STATE OF VERMONT
AGENCY OF TRANSPORTATION
MATERIALS & RESEARCH DIVISION
SUBSURFACE INFORMATION

HOLE NO.: B-2
SHEET 1 OF 1
DATE STARTED: 7/10/00
DATE COMPLETED: 7/10/00

PROJECT NAME: FAIRFAX - ST. ALBANS
SITE NAME: BR-87
STATION: 12+05.00
GROUND EL.: 579.8

PROJECT NUMBER: IM 089-3 (27)
SITE NO.: I-89
OFFSET: -33.00
G.W. DEPTH:

BORING CREW
CREW CHIEF: YOUNG
DRILLER: CHABOT
LOGGER: HOLT

BORING RIG: TRUCK
BORING TYPE: WASH BORE
SAMPLE TYPE: SPLIT BARREL

DEPTH	SYMBOL	CLASSIFICATION OF MATERIALS (Description)	BLOWS PER FOOT	M.C. %	GRAVEL %	SAND %	FINES %	LL	PI
5		Visual Classification: Crushed stone chips, Possible Fill	33	18.2					
10		A-2-4, SiSaGr HP, gry, Dry, Rec. = 1.0'	95	7.4	34.1	33.6	32.3		
15		A-2-4, GrSiSa HP, gry, Dry, Rec. = 0.4'	R	7.5	28.3	39	32.7		
20		A-1-a, SaGr HP, gry, Dry, Rec. = 0.2', Sample had some Broken Rock.	R	8	60.9	30.5	8.6		
25									
30									
35									
40									
45									

Hole stopped @ 20.2'

STATE OF VERMONT
AGENCY OF TRANSPORTATION

Town Of FAIRFAX-FAIRFIELD-ST. ALBANS	Bridge No. 87 N&S
Highway No. I-89	Log Sta.
	Surv. Sta.

I-89 OVER VT 104

87 N & S BORING INFORMATION SHEET (2)

Designed By M.LOZIER	Drawn By G. ROY
Checked By G.ROY Date 7/00	Bridge Design Supervisor R.R.WHITCOMB Date 8/00
PROJECT FAIRFAX-FAIRFIELD-ST. ALBANS	PROJECT NO. IM 089 - 3 (27)
I.G.C. Info. 94J106\Structures\sJ106bor.dgn	sa056b02J
Bridge Sheet No. BR202B	Sheet 80 of 370

PLOTTED 21-SEP-2000

BRIDGES 87 N & S PROJECT NOTES

GENERAL

1. ALL MATERIALS AND CONSTRUCTION SHALL CONFORM TO STATE OF VERMONT AGENCY OF TRANSPORTATION STANDARD SPECIFICATIONS FOR CONSTRUCTION DATED 1990, AND ITS LATEST REVISIONS, AND THE AASHTO STANDARD SPECIFICATIONS FOR HIGHWAY BRIDGES, DATED 1996, AND ITS LATEST REVISIONS.

2. REFERENCE SHEETS FROM THE RECORD PLANS FOR THESE BRIDGES ARE INCLUDED IN THE PLANS FOR THE CONTRACTOR'S USE. THESE SHEETS ARE LOCATED AT THE END OF THIS (BR200) SERIES OF BRIDGE SHEETS. THE CONTRACTOR IS RESPONSIBLE FOR VERIFYING IN THE FIELD ANY DIMENSIONS OF THE EXISTING MATERIAL INCLUDED IN THESE REFERENCE SHEETS.

3. DURING CONSTRUCTION, TRAFFIC SHALL BE MAINTAINED AS INDICATED IN THE TRAFFIC CONTROL SHEETS INCLUDED IN THE PLANS.

4. ALL DIMENSIONS SHOWN IN THE PLANS ARE HORIZONTAL OR VERTICAL AND ARE GIVEN AT 68°F.

EARTHWORK AND RELATED ITEMS

5. SEE SHEET BR230 AND SECTION 526 OF THE SPECIAL PROVISIONS FOR NOTES REGARDING THE MATERIALS AND CONSTRUCTION SPECIFICATIONS FOR THE CONSTRUCTION OF THE TWO (2) MSE WALLS ON THIS PROJECT.

6. THE EXISTING SUPERSTRUCTURE AND SUBSTRUCTURE SHALL BE COMPLETELY REMOVED INCLUDING STEEL PILING. THIS WORK SHALL BE PAID FOR UNDER ITEM 529.15, "REMOVAL OF STRUCTURE".

7. THE EXISTING SUPERSTRUCTURE STEEL, WHICH IS PAINTED WITH A MATERIAL THAT MAY CONTAIN LEAD, SHALL REMAIN THE PROPERTY OF THE STATE. THE CONTRACTOR SHALL STOCKPILE IT ON THE PROJECT SITE FOR REMOVAL, AND THEN BE PREPARED TO TRANSPORT IT TO A LOCATION DESIGNATED BY THE STATE. NOTIFICATION IS TO BE GIVEN ONE WEEK IN ADVANCE TO DISTRICT TRANSPORTATION ADMINISTRATOR GIL NEWBURY (TELEPHONE NO. (802) 524-5926) INDICATING WHEN THE EXISTING STEEL WILL BE AVAILABLE FOR REMOVAL FROM THE PROJECT SITE. SEE THE SPECIAL PROVISIONS FOR ADDITIONAL INFORMATION.

8. PAYMENT FOR CONSTRUCTING THE STONE PADS IN THE ROADWAY FILL SLOPES AT THE END OF APPROACH CURBING, AT THE LOCATIONS INDICATED ON SHEET BR202 OF THE PLANS, SHALL BE MADE UNDER ITEM 613.10, "STONE FILL, TYPE I". PAYMENT FOR ANY EXCAVATION REQUIRED TO CONSTRUCT THE PADS NOT PAID FOR ELSEWHERE SHALL BE CONSIDERED SUBSIDIARY TO THIS ITEM.

STRUCTURAL STEEL

9. AFTER SUPERSTRUCTURE STEEL HAS BEEN ERECTED, ELEVATIONS ALONG THE TOP OF THE GIRDERS SHALL BE TAKEN AS DIRECTED BY THE RESIDENT ENGINEER FOR USE IN DETERMINING FINAL GRADES. CONCRETE PORTIONS OF THE ABUTMENTS AND WINGWALLS ABOVE ADJACENT BRIDGE SEAT ELEVATIONS SHALL NOT BE PLACED UNTIL FINISHED GRADES HAVE BEEN DETERMINED BY THE RESIDENT ENGINEER.

10. FLEMING BRACKETS OR SIMILAR FALSEWORK SHALL BE SPACED AS REQUIRED BY DESIGN, BUT SHALL BE LIMITED TO A MAXIMUM OF 4 FEET. THE DESIGN OF FALSEWORK SHALL BE THE RESPONSIBILITY OF THE CONTRACTOR.

11. ALL STEEL PAID FOR UNDER ITEM 506.55, "STRUCTURAL STEEL (PLATE GIRDER)" SHALL CONFORM TO AASHTO M270 GRADE 50W UNLESS OTHERWISE NOTED ON THE PLANS.

12. THE CHARPY V-NOTCH TEST IS REQUIRED ONLY FOR THOSE MEMBERS DESIGNATED AS SUCH IN THE PLANS AS SPECIFIED IN SUBSECTION 714.01 OF THE STANDARD SPECIFICATIONS FOR CONSTRUCTION.

13. ANY BOLT HOLES IN THE WEBS OF THE FASCIA GIRDERS NOT OTHERWISE FILLED SHALL BE FILLED WITH BUTTON HEAD OR HEX HEAD BOLTS MEETING AASHTO M164, TYPE 3. THE BOLTS SHALL BE TIGHTENED IN ACCORDANCE WITH SUBSECTION 506.19 OF THE STANDARD SPECIFICATIONS FOR CONSTRUCTION.

14. ALL FIELD CONNECTIONS SHALL BE MADE USING 7/8 INCH DIAMETER BOLTS MEETING AASHTO M164, TYPE 3. HOLES SHALL BE 15/16 INCH DIAMETER, UNLESS OTHERWISE NOTED. ANY CONNECTIONS NOT DESIGNATED SHALL BE DETAILED BY THE FABRICATOR AND SUBMITTED TO THE STRUCTURES ENGINEER FOR APPROVAL.

CONCRETE AND REINFORCING STEEL

15. DECK CONCRETE SHALL BE CONCRETE, CLASS A AND SHALL BE PAID FOR UNDER ITEM 501.22, "CONCRETE, CLASS A". ALL OTHER CONCRETE SHALL BE CONCRETE CLASS B AND SHALL BE PAID FOR UNDER ITEM 501.25, "CONCRETE, CLASS B", UNLESS OTHERWISE NOTED.

16. CONCRETE FOR CURBS SHALL BE SILICA FUME AND SHALL BE PAID FOR UNDER ITEM 501.60, "SILICA-FUME CONCRETE".

17. THE DECKS ARE TO BE POURED IN ONE CONTINOUS POUR WITH A MAXIMUM DURATION OF EIGHT HOURS. IF CIRCUMSTANCES BEYOND THE CONTRACTOR'S CONTROL PREVENT THIS FROM BEING ACCOMPLISHED, A CONSTRUCTION JOINT SHALL BE USED AS SHOWN ON SHEET BR215 OF THE PLANS. A NINETY-SIX HOUR DELAY BETWEEN THE COMPLETION OF ONE DAY'S POUR AND THE BEGINNING OF ANY OTHER ADJACENT POUR SHALL BE OBSERVED.

18. WHEN CONSTRUCTING THE DECKS, THE CONCRETE SHALL BE POURED PARALLEL TO THE CENTERLINE OF BEARING SO AS TO LOAD THE GIRDERS EQUALLY.

19. WATER REPELLENT SHALL BE APPLIED TO ALL EXPOSED CONCRETE SURFACES EXCEPT THE UNDERSIDE OF DECKS BETWEEN DRIP NOTCHES.

20. ALL EXPOSED EDGES OF CONCRETE SHALL BE CHAMFERED 1" X 1".

21. JOINTS AND SCORE MARKS IN CONCRETE SHALL BE CONSTRUCTED AS SHOWN ON SHEET BR215 OF THE PLANS OR AS DIRECTED BY THE RESIDENT ENGINEER.

22. THE KEY IN CONCRETE CONSTRUCTION JOINTS SHALL BE MONOLITHIC AND CONTINUOUS FOR THE FULL LENGTH OF THE JOINT. ANY UPWARD KEY SHALL BE PLACED INTEGRALLY WITH THE CONCRETE BELOW THE JOINT.

23. SURFACES OF BRIDGE SEATS UNDER BEARING DEVICES SHALL BE LEVEL. OTHER BRIDGE SEAT AREAS SHALL BE SLOPED 1/4 INCH PER FOOT. ABUTMENT SEATS SHALL BE SLOPED FULL WIDTH TOWARD MIDSPAN. THE ENTIRE BRIDGE SEAT SURFACE SHALL BE SMOOTH STEEL TROWEL FINISHED.

24. ALL SUPERSTRUCTURE, SUBSTRUCTURE, AND APPROACH SLAB REINFORCING STEEL SHALL BE EPOXY COATED AND PAID FOR UNDER ITEM 507.17, "EPOXY COATED REINFORCING STEEL". WHEN EPOXY COATED REINFORCING STEEL IS TO BE CUT, THE UNCOATED ENDS SHALL BE REPAIRED WITH MATERIALS AND PROCEDURES APPROVED BY THE COATING MANUFACTURER. FLAME CUTTING OF EPOXY COATED REINFORCING STEEL WILL NOT BE PERMITTED.

25. MINIMUM COVER FOR REINFORCING STEEL SHALL BE AS INDICATED IN THE PLANS.

26. REINFORCING STEEL PLACEMENT TOLERANCES SHALL BE:
    SPACING: +/- 1"
    CLEARANCE: +/- 1/4"

STATE OF VERMONT
AGENCY OF TRANSPORTATION

Town Of FAIRFAX-FAIRFIELD-ST. ALBANS	Bridge No. 87 N&S
Highway No. I-89	Log Sta.
	Surv. Sta.
I-89 OVER VT 104	
87 N & S PROJECT NOTES	
Designed By M. LOZIER	Drawn By G. ROY
Checked By M. LOZIER Date 11/99	Bridge Design Supervisor R.R. WHITCOMB Date 11/99
PROJECT FAIRFAX-FAIRFIELD-ST. ALBANS	PROJECT NO. IM 089-3 (27)
I.G.C. Info. 96a056\Structures\sa056pnl.dgn	sa056pnl
Bridge Sheet No. BR203	Sheet 81 of 370

PLOTTED 15-NOV-2000

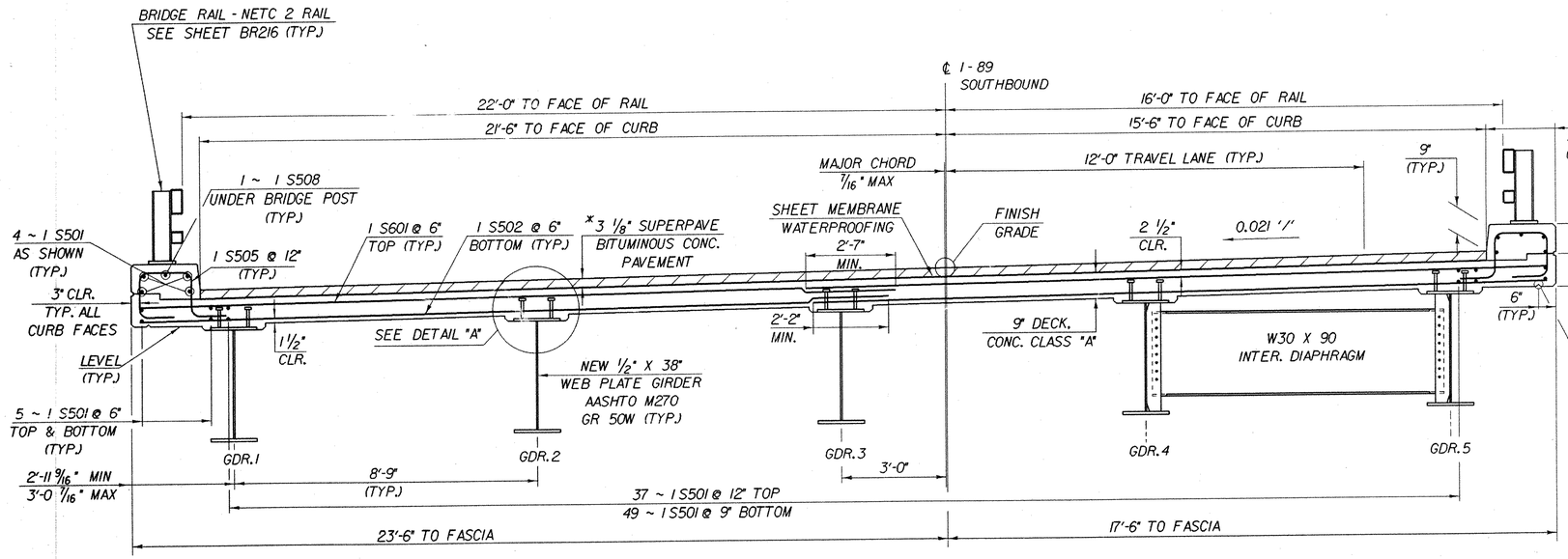

* IST LIFT: 1 3/8" TYPE IVS
2ND LIFT: 1 3/4" TYPE IIIS

BRIDGE 87S TYPICAL SECTION

SCALE: 1/2" = 1'-0"

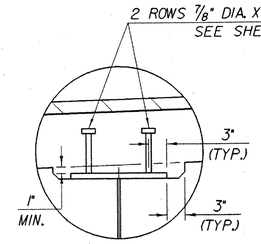

DETAIL "A"

SCALE: 1" = 1'-0"

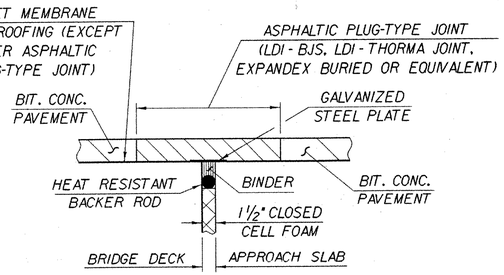

ASPHALTIC PLUG-TYPE JOINT DETAIL

NTS

ALL MATERIALS, LABOR, AND INCIDENTALS NECESSARY FOR THE INSTALLATION OF THE PAVEMENT JOINT DETAILED ABOVE SHALL BE PAID FOR UNDER ITEM 516.10, "BRIDGE EXPANSION JOINT".

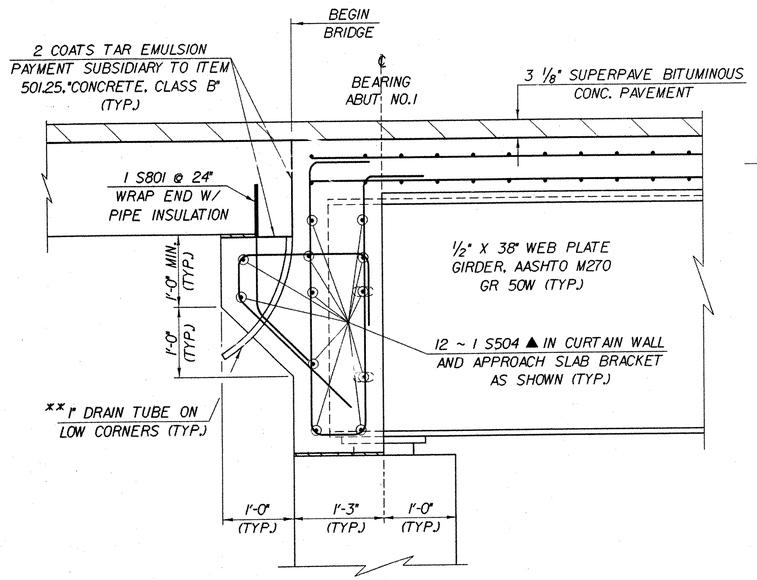

ABUT. NO.1
(FIXED)

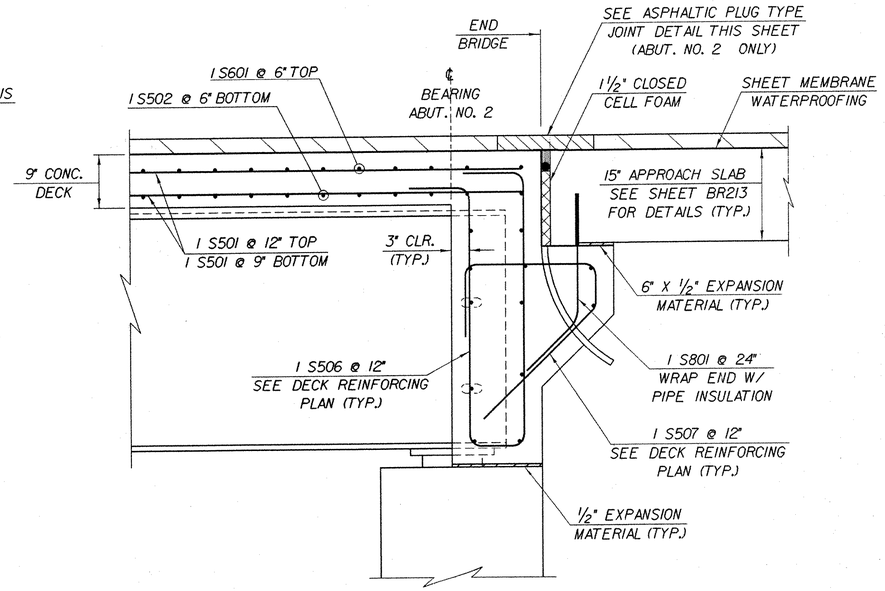

ABUT. NO.2
(EXPANSION)

BRIDGE 87S ABUTMENT END DETAIL

(NORMAL TO ℄ BEARING)
SCALE: 1" = 1'-0"

** MATERIAL FOR TUBE SHALL MEET THE REQUIREMENTS OF SUBSECTION 740.01 OF THE VAOT STANDARD SPECIFICATIONS FOR CONSTRUCTION. PAYMENT SHALL BE MADE SUBSIDIARY TO ITEM 501.25, "CONCRETE, CLASS A".

IMPORTANT NOTE: BRIDGE FINISHED GRADES ARE CENTERLINE GRADES.

STATE OF VERMONT
AGENCY OF TRANSPORTATION

Town Of FAIRFAX-FAIRFIELD-ST. ALBANS	Bridge No. 87 S
Highway No. I - 89	Log Sta.
	Surv. Sta.
I-89 SB OVER VT 104	
87S BRIDGE DECK DETAILS	
Designed By M.LOZIER	Drawn By K.CHISHOLM
Checked By G.ROY Date 10/99	Bridge Design Supervisor R.R.WHITCOMB Date 11/99
PROJECT FAIRFAX-FAIRFIELD-ST. ALBANS	PROJECT NO. IM 089 - 3 (27)
I.G.C. Info. 96a056\Structures\sa056sp2.dgn	sa056sp4J
Bridge Sheet No. BR204	Sheet 82 of 370

PLOTTED 21-SEP-2000

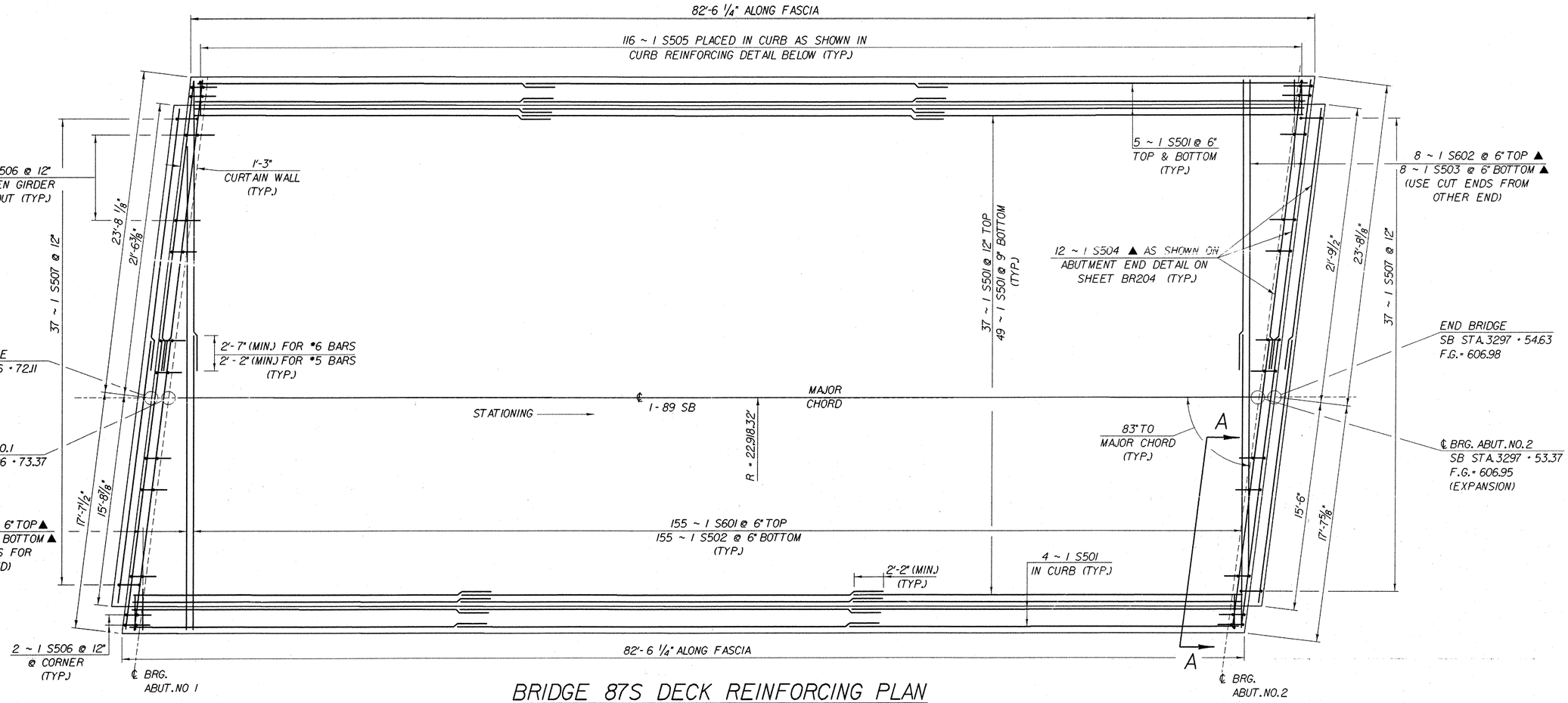

BRIDGE 87S DECK REINFORCING PLAN

SCALE: 1/4" = 1'-0"

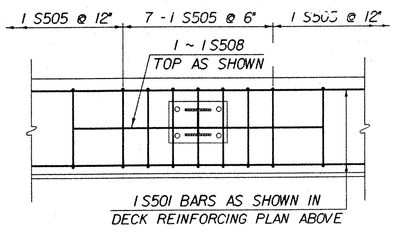

CURB REINFORCING DETAIL

NTS

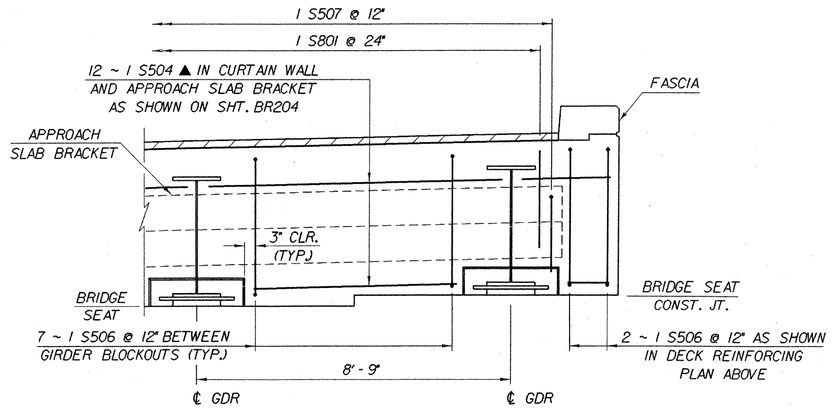

SECTION A - A

SCALE: 1/2" = 1'-0"

IMPORTANT NOTE: BRIDGE FINISHED GRADES ARE CENTERLINE GRADES.

STATE OF VERMONT
AGENCY OF TRANSPORTATION

Town Of FAIRFAX- FAIRFIELD-ST. ALBANS	Bridge No. 87 S
Highway No. I-89	Log Sta. / Surv. Sta.
I-89 OVER VT 104	
87S DECK REINFORCING PLAN	
Designed By M.LOZIER	Drawn By K.CHISHOLM
Checked By G.ROY Date 10/99	Bridge Design Supervisor R.R.WHITCOMB Date 11/99
PROJECT FAIRFAX- FAIRFIELD-ST. ALBANS	PROJECT NO. I M 089 - 3 (27)
I.G.C. Info. 96a056\Structures\sa056sp2.dgn	sa056sp5J
Bridge Sheet No. BR205	Sheet 83 of 370

PLOTTED 21-SEP-2000

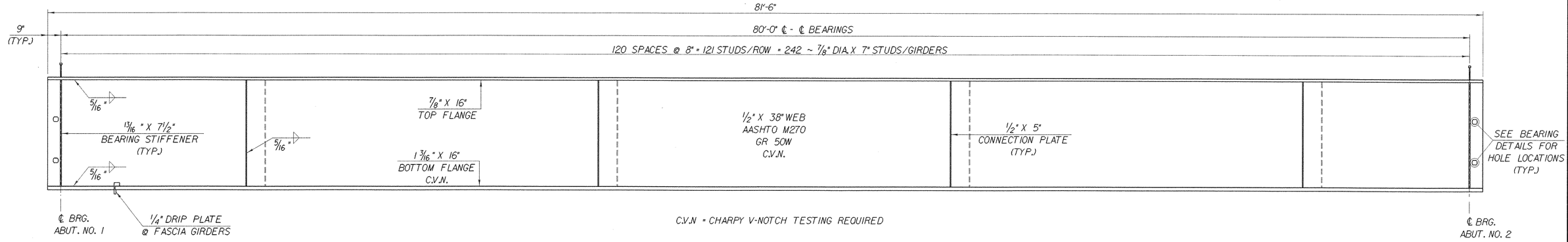

BRIDGE 87S GIRDER ELEVATION

SCALE: HORIZ.= 3/8" = 1'-0"
VERT.= 3/4" = 1'-0"

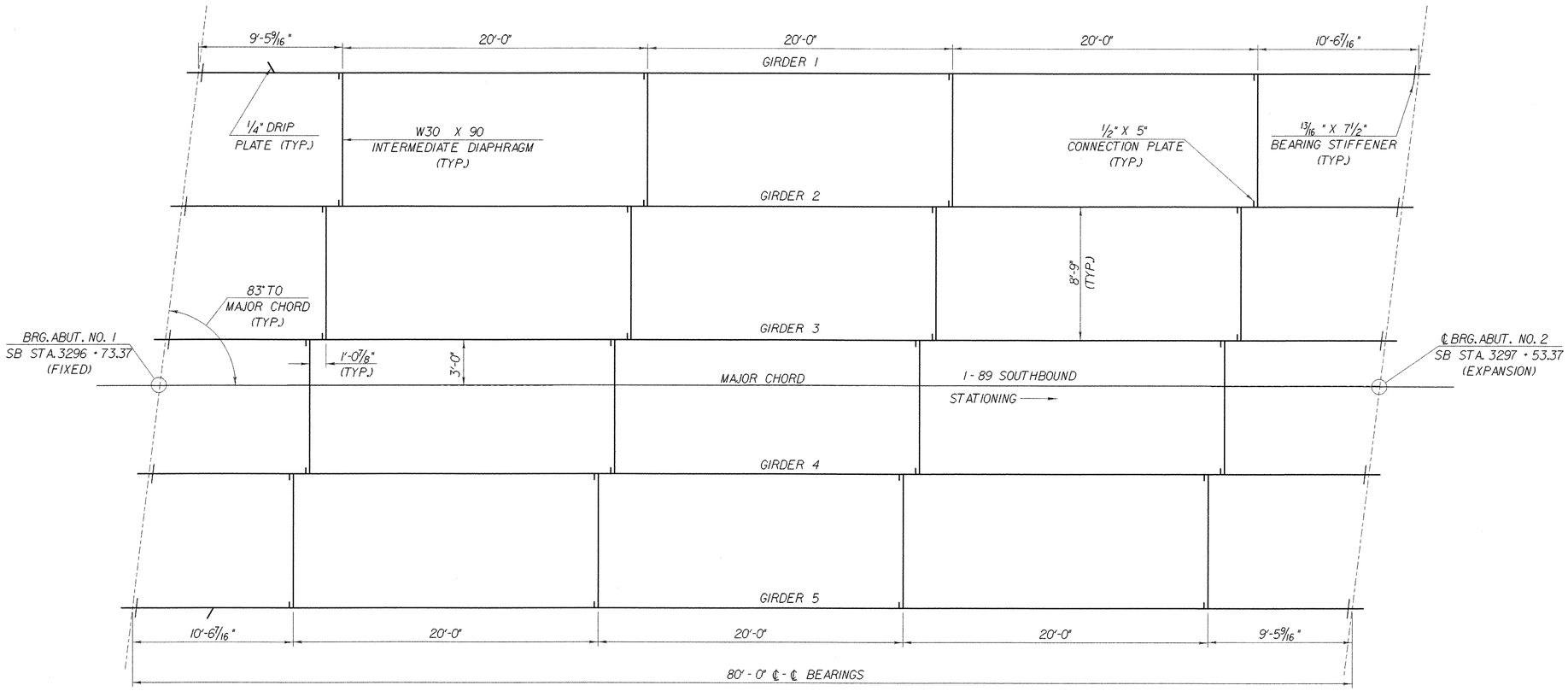

BRIDGE 87S FRAMING PLAN

SCALE: 1/4" = 1'-0"

STATE OF VERMONT
AGENCY OF TRANSPORTATION

Town Of FAIRFAX-FAIRFIELD-ST. ALBANS	Bridge No. 87 S
Highway No. I-89	Log Sta. / Surv. Sta.
I-89 SB OVER VT 104	
87S FRAMING PLAN DETAILS	
Designed By M.LOZIER	Drawn By K.CHISHOLM
Checked By G.ROY Date 10/99	Bridge Design Supervisor R.R.WHITCOMB Date 11/99
PROJECT FAIRFAX-FAIRFIELD-ST. ALBANS	PROJECT NO. I M 089 - 3 (27)
I.C.C. Info. 94\1106\Structures\s1106fr.dgn	sa056f141
Bridge Sheet No. BR206	Sheet 84 of 370

PLOTTED 21-SEP-2000

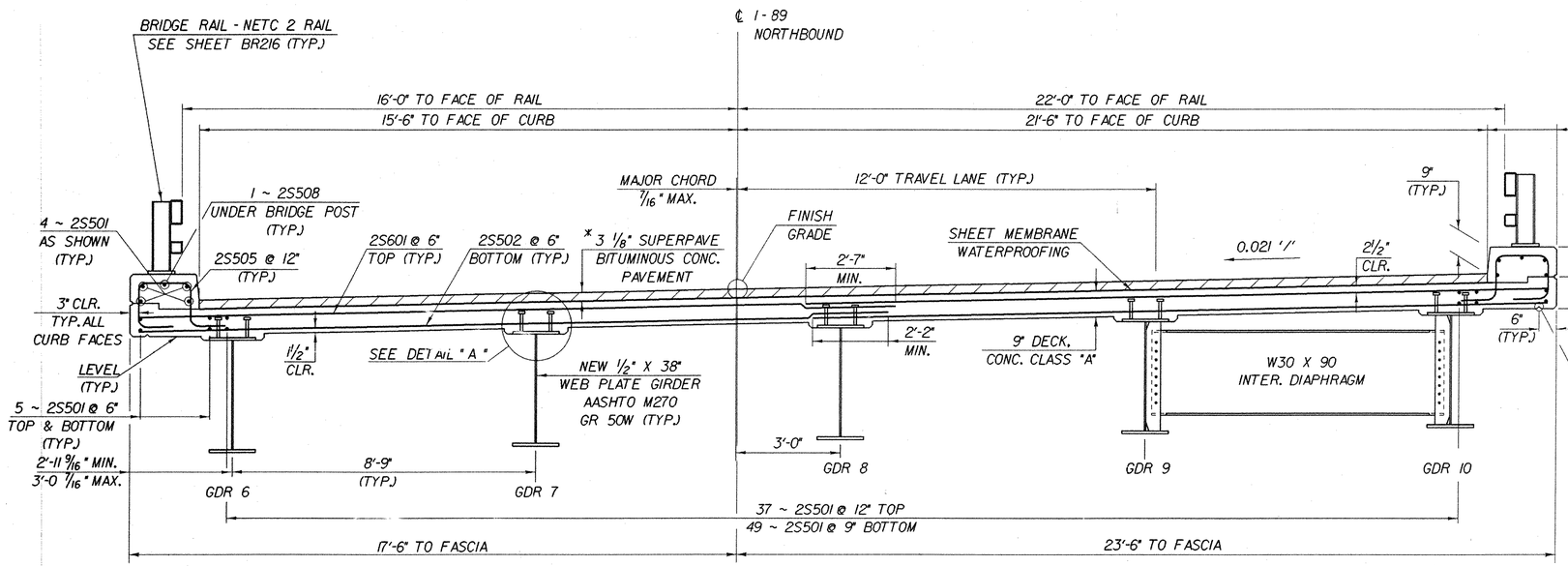

* 1ST LIFT: 1 3/8" TYPE IVS
2ND LIFT: 1 3/4" TYPE IIIS

BRIDGE 87N TYPICAL SECTION

SCALE: 1/2" = 1'-0"

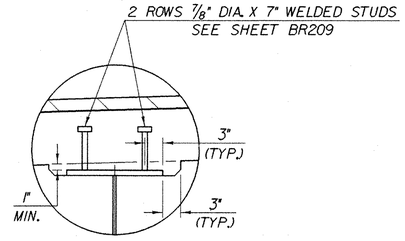

DETAIL "A"

SCALE: 1" = 1'-0"

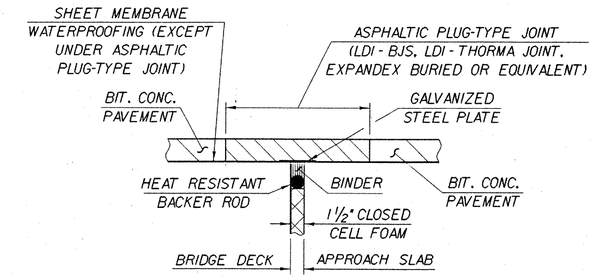

ASPHALTIC PLUG-TYPE JOINT DETAIL

NTS

ALL MATERIALS, LABOR, AND INCIDENTALS NECESSARY FOR THE INSTALLATION OF THE PAVEMENT JOINT DETAILED ABOVE SHALL BE PAID FOR UNDER ITEM 516.10, "BRIDGE EXPANSION JOINT".

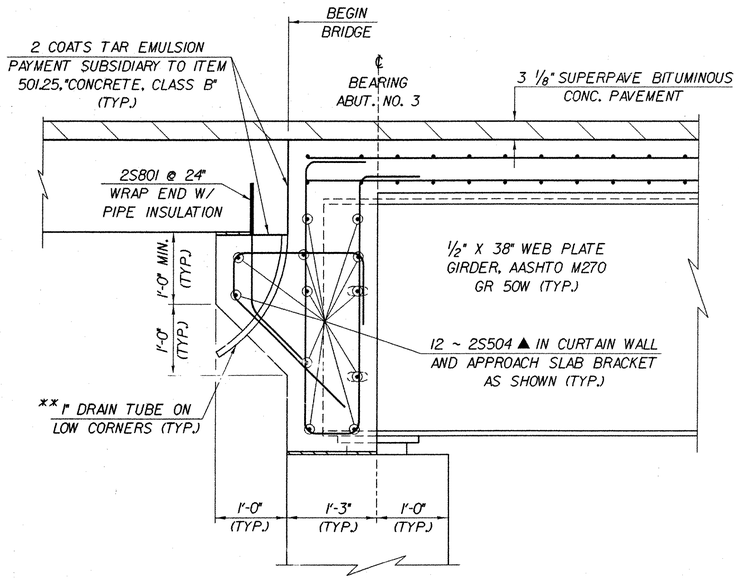

ABUT. NO. 3
(FIXED)

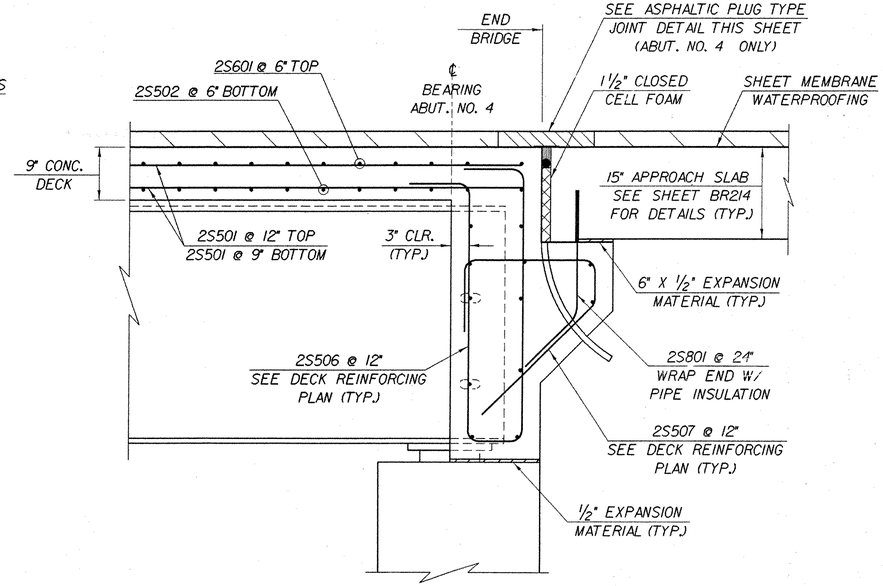

ABUT. NO. 4
(EXPANSION)

BRIDGE 87N ABUTMENT END DETAIL

(NORMAL TO ℄ BEARING)
SCALE: 1" = 1'-0"

** MATERIAL FOR TUBE SHALL MEET THE REQUIREMENTS OF SUBSECTION 740.01 OF THE VAOT STANDARD SPECIFICATIONS FOR CONSTRUCTION. PAYMENT SHALL BE MADE SUBSIDIARY TO ITEM 501.25, "CONCRETE, CLASS A".

IMPORTANT NOTE: BRIDGE FINISHED GRADES ARE CENTERLINE GRADES.

STATE OF VERMONT
AGENCY OF TRANSPORTATION

Town Of FAIRFAX-FAIRFIELD-ST. ALBANS	Bridge No. 87 N
Highway No. I - 89	Log Sta. / Surv. Sta.
I-89 NB OVER VT 104	
87N BRIDGE DECK DETAILS	
Designed By M.LOZIER	Drawn By K.CHISHOLM
Checked By G.ROY Date 10/99	Bridge Design Supervisor R.R.WHITCOMB Date 11/99
PROJECT FAIRFAX-FAIRFIELD-ST. ALBANS	PROJECT NO. IM 089 - 3 (27)
I.G.C. Info. 94J106\Structures\s_j106spl.dgn	s0056spl.i
Bridge Sheet No. BR207	Sheet 85 of 370

PLOTTED 21-SEP-2000

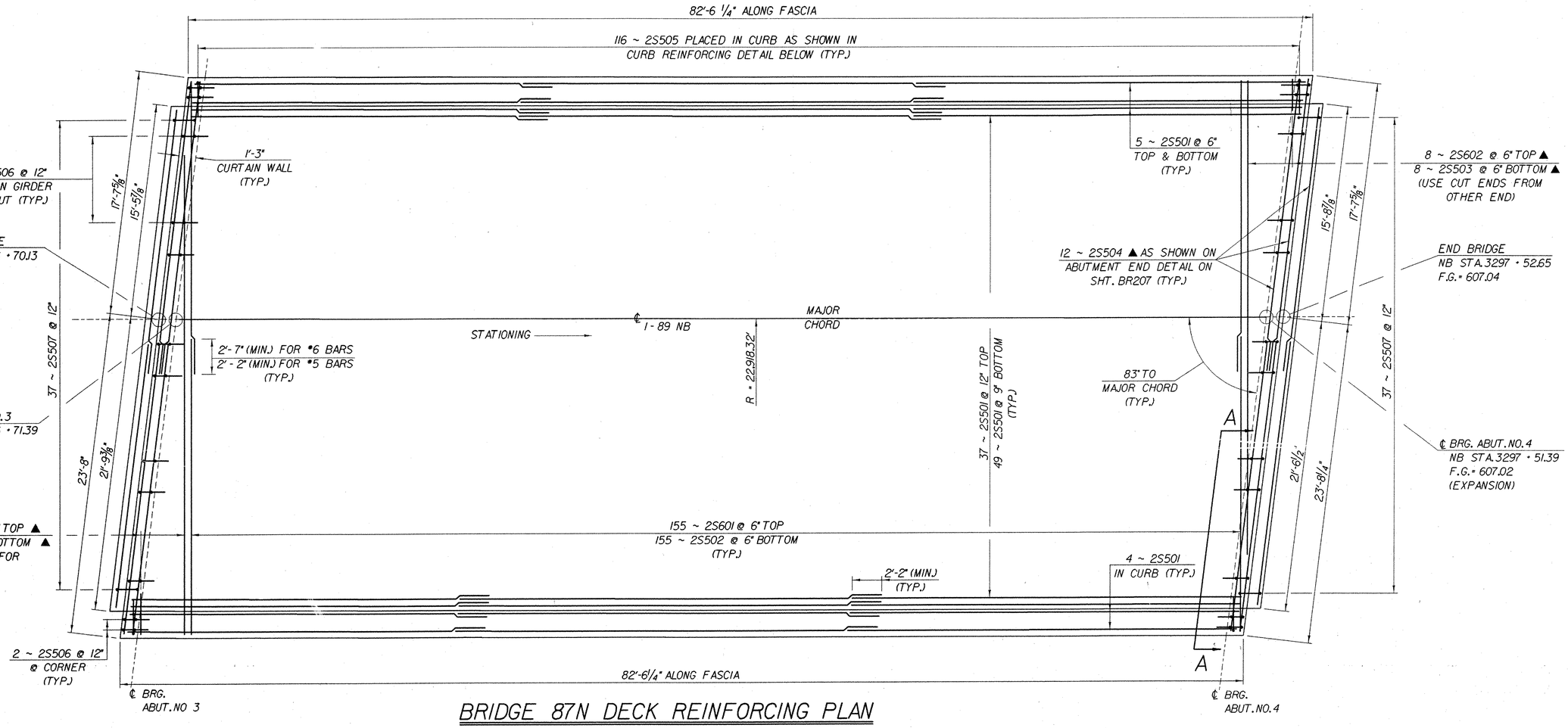

BRIDGE 87N DECK REINFORCING PLAN

SCALE: 1/4" = 1'-0"

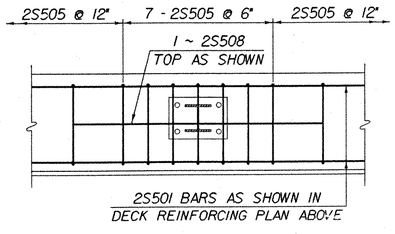

CURB REINFORCING DETAIL

NTS

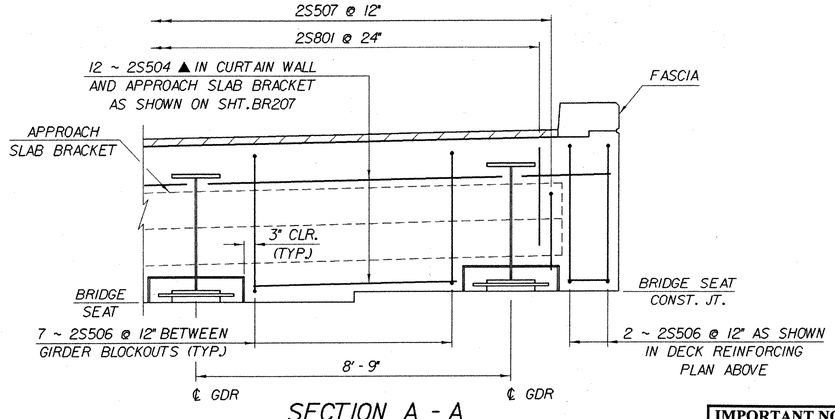

SECTION A - A

SCALE: 1/2" = 1'-0"

IMPORTANT NOTE: BRIDGE FINISHED GRADES ARE CENTERLINE GRADES.

STATE OF VERMONT
AGENCY OF TRANSPORTATION

Town Of FAIRFAX-FAIRFIELD-ST. ALBANS	Bridge No. 87 N
Highway No. I-89	Log Sta. / Surv. Sta.
I-89 NB OVER VT 104	
87N DECK REINFORCING PLAN	
Designed By M.LOZIER	Drawn By K.CHISHOLM
Checked By G.ROY Date 10/99	Bridge Design Supervisor R.R.WHITCOMB Date 11/99
PROJECT FAIRFAX-FAIRFIELD-ST. ALBANS	PROJECT NO. IM 089 - 3 (27)
I.G.C. Info. 96a056\Structures\sa056sp1.dgn	sa056sp2.1
Bridge Sheet No. BR208	Sheet 86 of 370

PLOTTED 21-SEP-2000

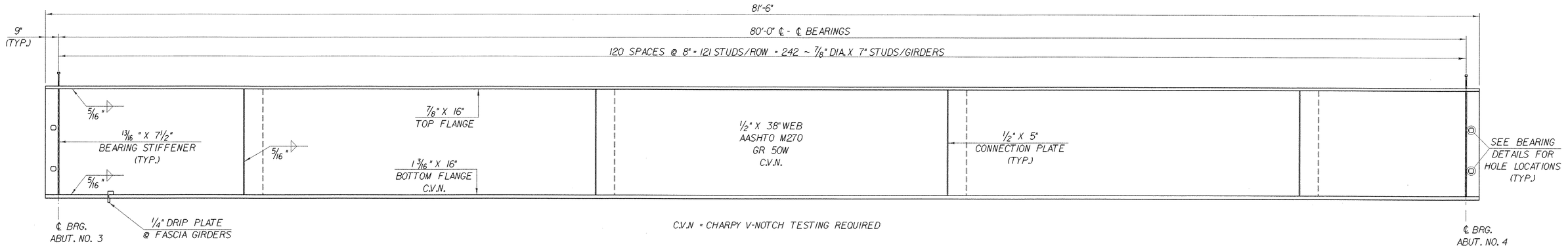

BRIDGE 87N GIRDER ELEVATION

SCALE: HORIZ.: 3/8" = 1'-0"
VERT.: 3/4" = 1'-0"

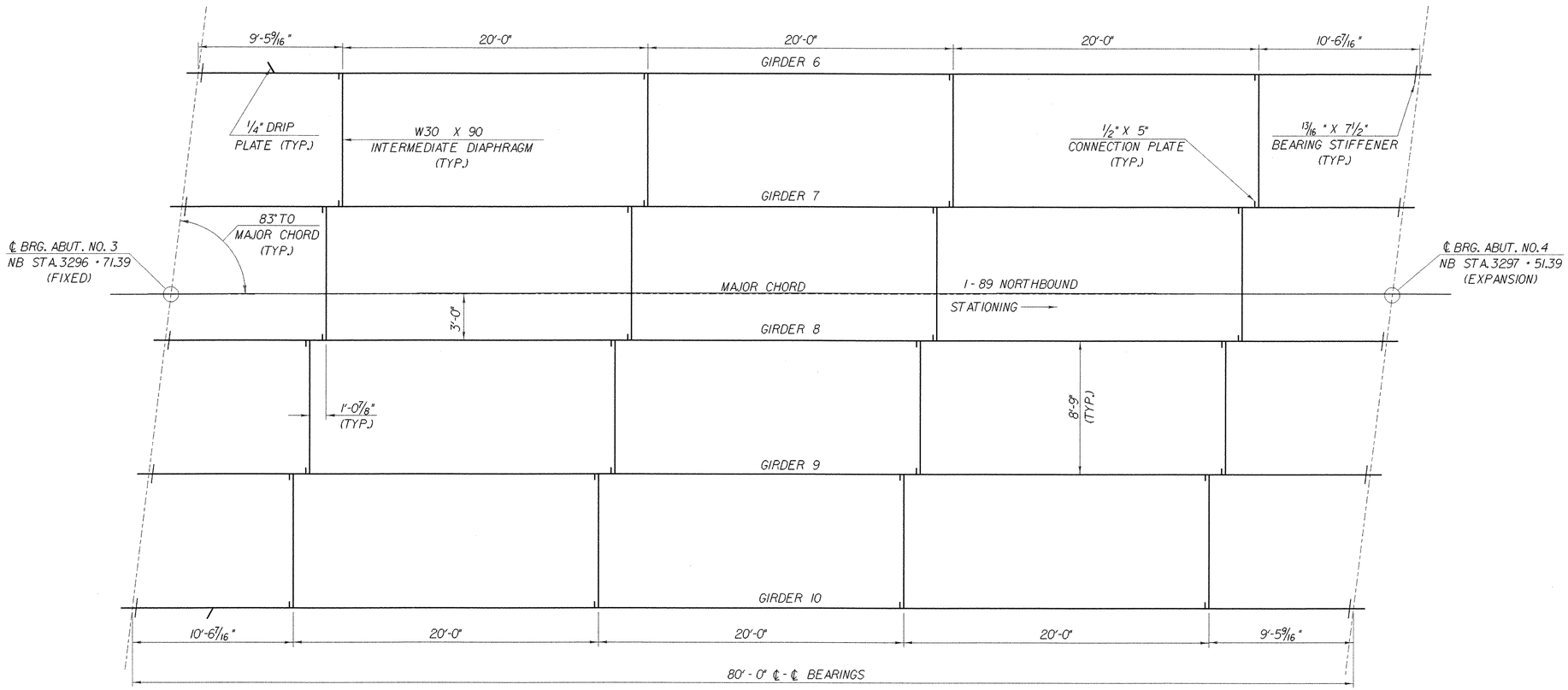

BRIDGE 87N FRAMING PLAN

SCALE: 1/4" = 1'-0"

STATE OF VERMONT
AGENCY OF TRANSPORTATION

Town Of FAIRFAX-FAIRFIELD-ST. ALBANS	Bridge No. 87 N
Highway No. I-89	Log Sta. / Surv. Sta.
I-89 NB OVER VT.104	
87N FRAMING PLAN DETAILS	
Designed By M.LOZIER	Drawn By K.CHISHOLM
Checked By G.ROY Date 10 / 99	Bridge Design Supervisor R.R.WHITCOMB Date 11 / 99
PROJECT FAIRFAX-FAIRFIELD-ST. ALBANS	PROJECT NO. I M 089 - 3 (27)
I.G.C. Info. 94J106\Structures\sj106fr.dgn	sa056fr.31
Bridge Sheet No. BR209	Sheet 87 of 370

PLOTTED 21-SEP-2000

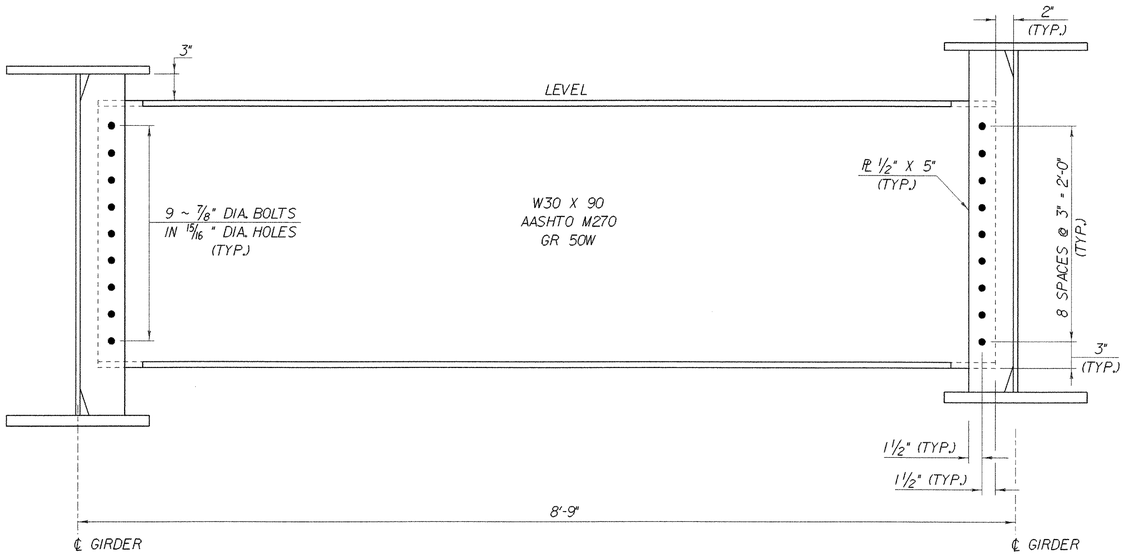

INTERMEDIATE DIAPHRAGM

SCALE: 1 1/2" = 1'-0"

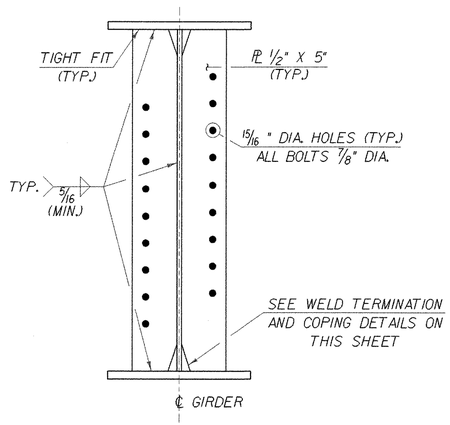

INTERMEDIATE DIAPHRAGM CONNECTION PLATE

SCALE: 1 1/2" = 1'-0"

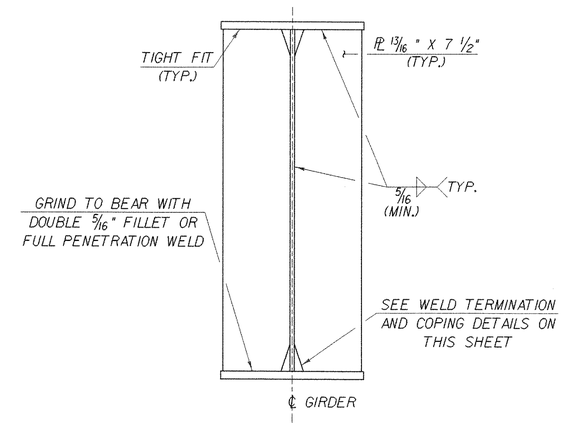

ABUTMENT BEARING STIFFENER

SCALE: 1 1/2" = 1'-0"

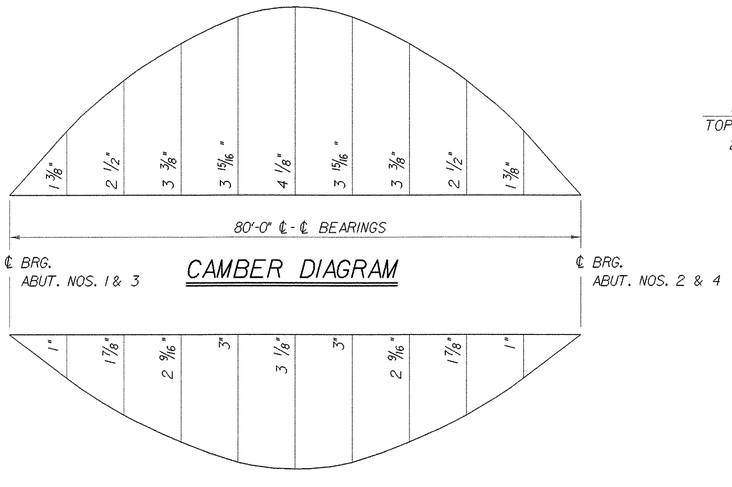

CAMBER DIAGRAM

DEFLECTION DIAGRAM

NOTE: CAMBER AND DEFLECTION MEASUREMENTS ARE GIVEN IN INCHES @ TENTH POINTS. MEASUREMENTS INCLUDE GIRDER SELF-WEIGHT.

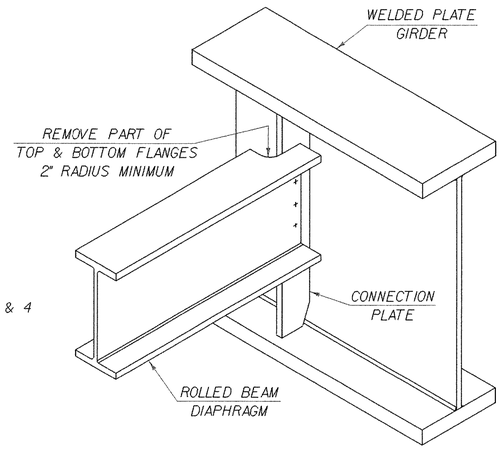

ROLLED BEAM USED AS DIAPHRAGM

SEE CONTRACT DRAWINGS FOR SIZES OF MEMBERS AND CONNECTION DETAILS

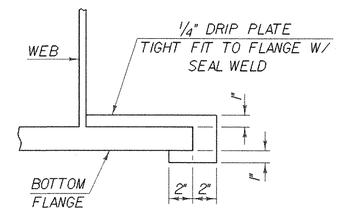

SECTION A - A

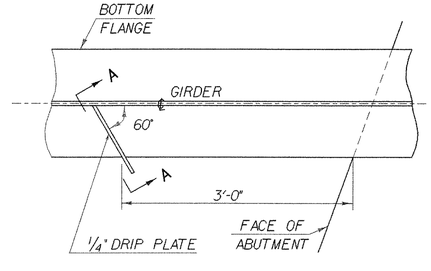

DRIP PLATE PLAN

NOTE:
DRIP PLATES SHALL BE PLACED ON OUTSIDE EDGE OF FASCIA GIRDERS ON THE HIGH SIDE OF ABUTMENTS OR AS INDICATED ON PROJECT PLANS.

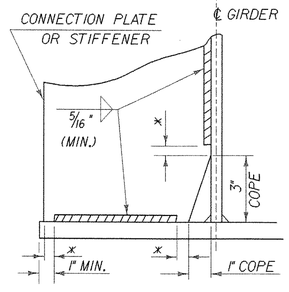

WELD TERMINATION AND COPING DETAILS FOR WELDED PLATE GIRDERS

* NO WELD FOR 1/4" MIN. 1/2" MAX. (EXCEPT MUST MAINTAIN 1" MIN. FROM EDGE OF FLANGE)

STATE OF VERMONT
AGENCY OF TRANSPORTATION

Town Of FAIRFAX-FAIRFIELD-ST. ALBANS	Bridge No. 87 N & S
Highway No. I-89	Log Sta. / Surv. Sta.
I-89 OVER VT 104	
STRUCTURAL STEEL CONNECTION DETAILS	
Designed By M.LOZIER	Drawn By K.CHISHOLM
Checked By G.ROY Date 10 / 99	Bridge Design Supervisor R.R.WHITCOMB Date 11 / 99
PROJECT FAIRFAX-FAIRFIELD-ST. ALBANS	PROJECT NO. IM 089 - 3 (27)
I.G.C. Info. 94J106\Structures\sj106fr.dgn	sa056fr5.1
Bridge Sheet No. BR210	Sheet 88 of 370

PLOTTED 21-SEP-2000

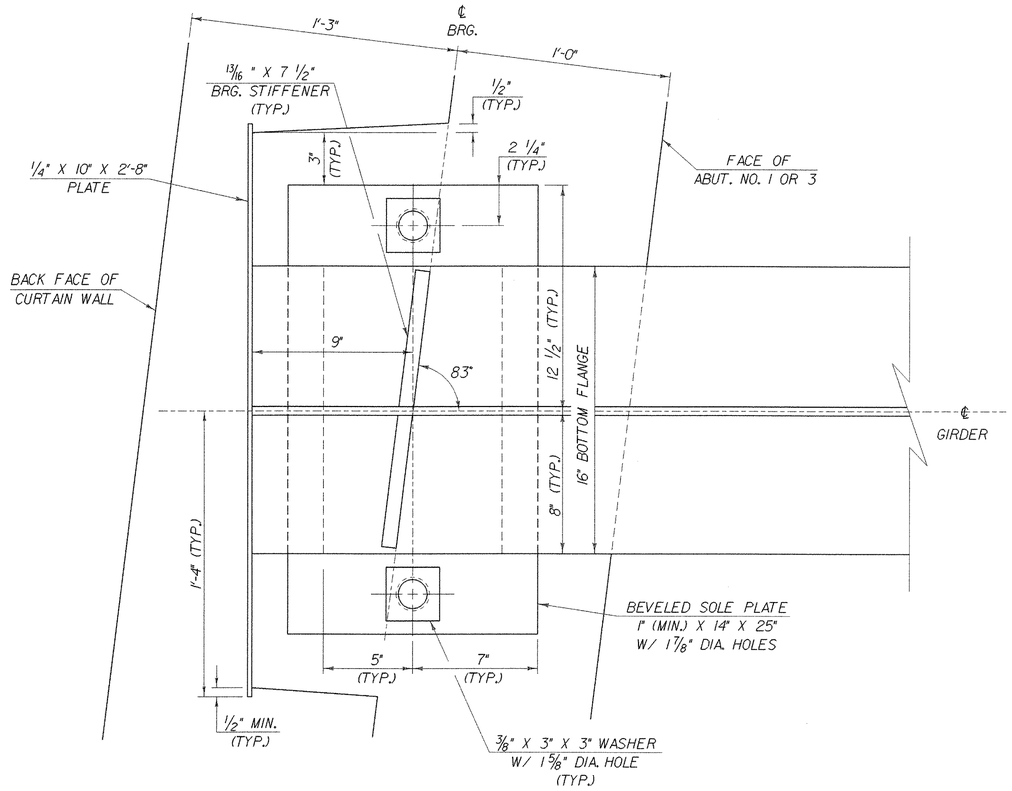

PLAN VIEW
SCALE: 3" = 1'-0"

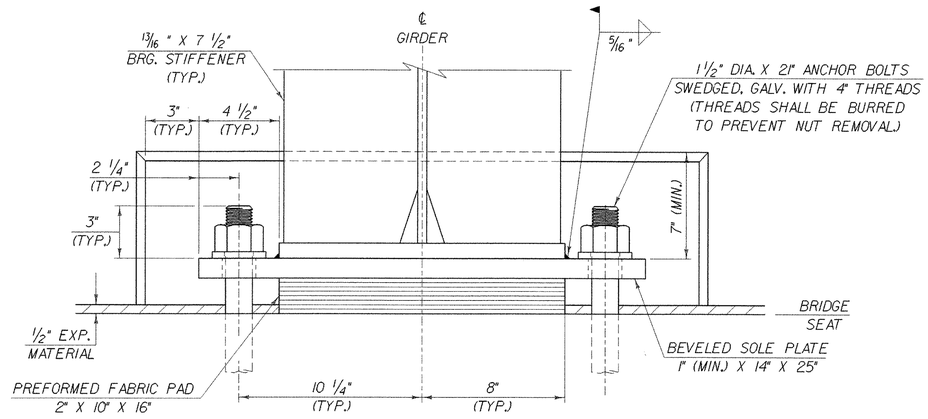

FRONT VIEW
SCALE: 3" = 1'-0"

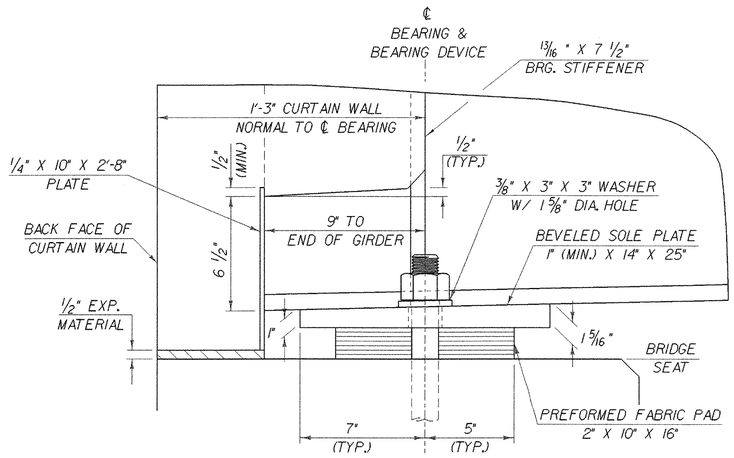

SIDE ELEVATION
SCALE: 3" = 1'-0"

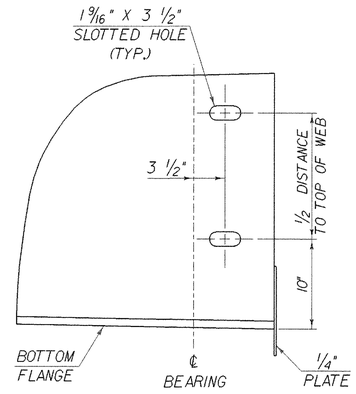

ELEVATION VIEW END OF STEEL MEMBER AT ABUTMENT
SCALE: 1 1/2" = 1'-0"

SLOTTED HOLES ARE FOR HORIZONTAL REINFORCING BARS IN FRONT FACE OF CURTAIN WALL.

NOTE:
SEE SHEET BR212 FOR ADDITIONAL BEARING NOTES.

STATE OF VERMONT
AGENCY OF TRANSPORTATION

Town Of FAIRFAX-FAIRFIELD-ST. ALBANS	Bridge No. 87 N & S
Highway No. I-89	Log Sta. / Surv. Sta.
I-89 OVER VT 104	
FIXED BEARING DETAILS ABUT. NOS. 1 & 3	
Designed By M.LOZIER	Drawn By K.CHISHOLM
Checked By G.ROY Date 10/99	Bridge Design Supervisor R.R.WHITCOMB Date 11/99
PROJECT FAIRFAX-FAIRFIELD-ST. ALBANS	PROJECT NO. IM 089-3 (27)
I.G.C. Info. 94J106\Structures\sJ106fr.dgn	so056fr1J
Bridge Sheet No. BR211	Sheet 89 of 370

PLOTTED 21-SEP-2000

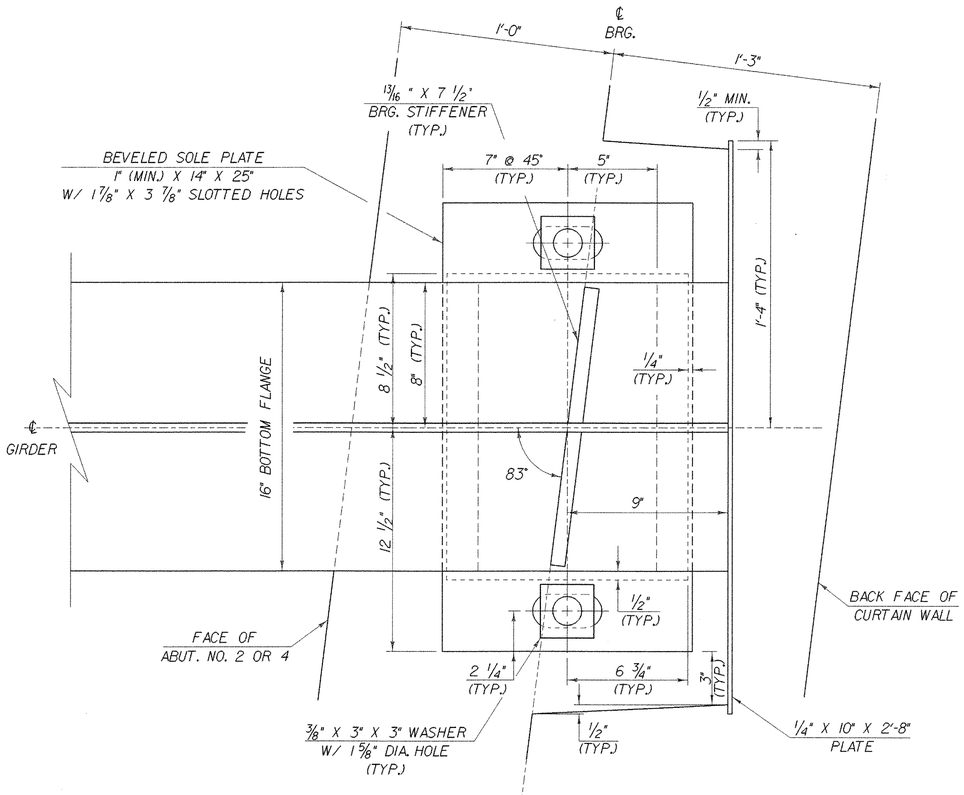

PLAN VIEW
SCALE: 3" = 1'-0"

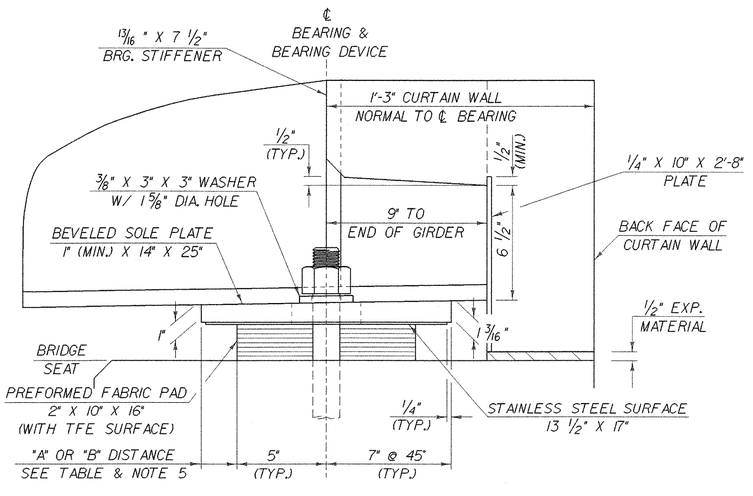

SIDE ELEVATION
SCALE: 3" = 1'-0"

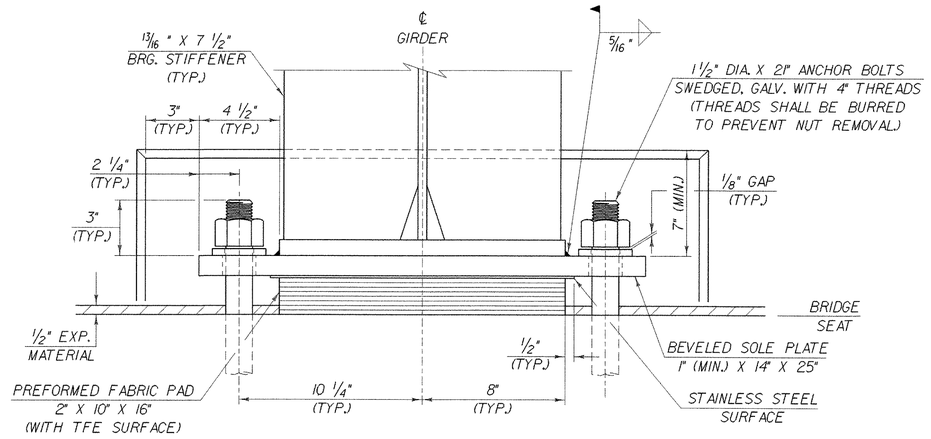

FRONT VIEW
SCALE: 3" = 1'-0"

BEARING NOTES

1. BEARINGS SHALL CONFORM TO APPLICABLE SUBSECTIONS OF SECTIONS 531 & 731.
2. BEARINGS SHALL BE PAID FOR UNDER ITEM 531.10 "BEARING DEVICE ASSEMBLY".
3. SHOP DRAWINGS CONFORMING TO SUBSECTION 531.03 SHALL BE SUBMITTED AND ARE TO INCLUDE WELDING AND BONDING PROCEDURES.
4. THE CONCRETE SURFACE UNDER THE BEARING DEVICE SHALL BE LEVEL.
5. "B" DISTANCE IS THE FINAL SETTING FOR THE BEARING PAD AFTER THE CONCRETE SLAB, CURB, PAVEMENT, AND BRIDGE RAIL ARE PLACED. "A" DISTANCE IS LISTED FOR SETTING THE BEARING AFTER THE STRUCTURAL STEEL IS ERECTED AND BEFORE THE CONCRETE DECK IS POURED. THE DIFFERENCE IS THE THEORETICAL ELONGATION OF THE BOTTOM FLANGE DUE TO DEAD LOAD DEFLECTION. THE FINAL "B" DISTANCE, AS SHOWN IN THE TABLE, MUST BE ATTAINED WITHIN 1/8 INCH.
6. DESIGN CRITERIA:
   A. BASE PLATE TO CONCRETE DESIGN PRESSURE = 1000 PSI MAXIMUM.
   B. MINIMUM ALLOWABLE DESIGN ROTATION = 0.015 RADIANS.
   C. HORIZONTAL CAPACITY SHALL BE A MINIMUM OF 10% OF THE VERTICAL LOAD.
   D. DESIGN LOAD PER BEARING = 153 KIPS.
7. ALL STEEL IN BEARING DEVICES (EXCEPT STAINLESS STEEL) SHALL BE AASHTO M270, GRADE 36.
8. ANCHOR BOLTS SHALL HAVE A MINIMUM OF 15" EMBEDMENT INTO THE CONCRETE AND SHALL CONFORM TO SUBSECTION 714.08.
9. ALL BEARING DEVICES SHALL BE GALVANIZED OR METALIZED AS PER SUBSECTIONS 531.04 (b) AND 506.15 (b) & (c), AS MODIFIED BY THE GENERAL SPECIAL PROVISIONS. IF THE BEARINGS ARE METALIZED, THEY SHALL BE SEALED WITH AN APPROVED SEALER AS SPECIFIED IN SUBSECTION 506.15 (b) OF THE GENERAL SPECIAL PROVISIONS. AREAS OF GALVANIZING OR METALIZING DAMAGED BY FIELD WELDING OR HANDLING SHALL BE REPAIRED IN CONFORMANCE WITH ASTM SPECIFICATION A760/A760M.
10. ALL ANCHOR BOLTS, NUTS, AND WASHERS SHALL BE GALVANIZED. ALL WASHERS SHALL BE 3/8" PLATE MINIMUM. PAYMENT FOR ANCHOR BOLTS, NUTS, AND WASHERS SHALL BE INCLUDED IN THE UNIT BID PRICE FOR ITEM 531.10, "BEARING DEVICE ASSEMBLY".

TEMPERATURE SETTING TABLE

TEMP	"A" DIST	"B" DIST
0°F	2 3/4"	2 3/8"
15°F	2 5/8"	2 1/4"
30°F	2 1/2"	2 1/8"
45°F	2 3/8"	2"
60°F	2 1/4"	1 7/8"
75°F	2 1/8"	1 3/4"
90°F	2"	1 5/8"
105°F	1 7/8"	1 1/2"

STATE OF VERMONT
AGENCY OF TRANSPORTATION

Town Of FAIRFAX-FAIRFIELD-ST. ALBANS	Bridge No. 87 N & S
Highway No. I-89	Log Sta. / Surv. Sta.
I-89 OVER VT 104	
EXPANSION BEARING DETAILS ABUT. NOS. 2&4	
Designed By M.LOZIER	Drawn By K.CHISHOLM
Checked By G.ROY Date 10/99	Bridge Design Supervisor R.R.WHITCOMB Date 11/99
PROJECT FAIRFAX-FAIRFIELD-ST. ALBANS	PROJECT NO. IM 089-3 (27)
I.G.C. Info. 94J106\Structures\sJ106fr.dgn sa056fr2J	
Bridge Sheet No. BR212	Sheet 90 of 370

PLOTTED 21-SEP-2000

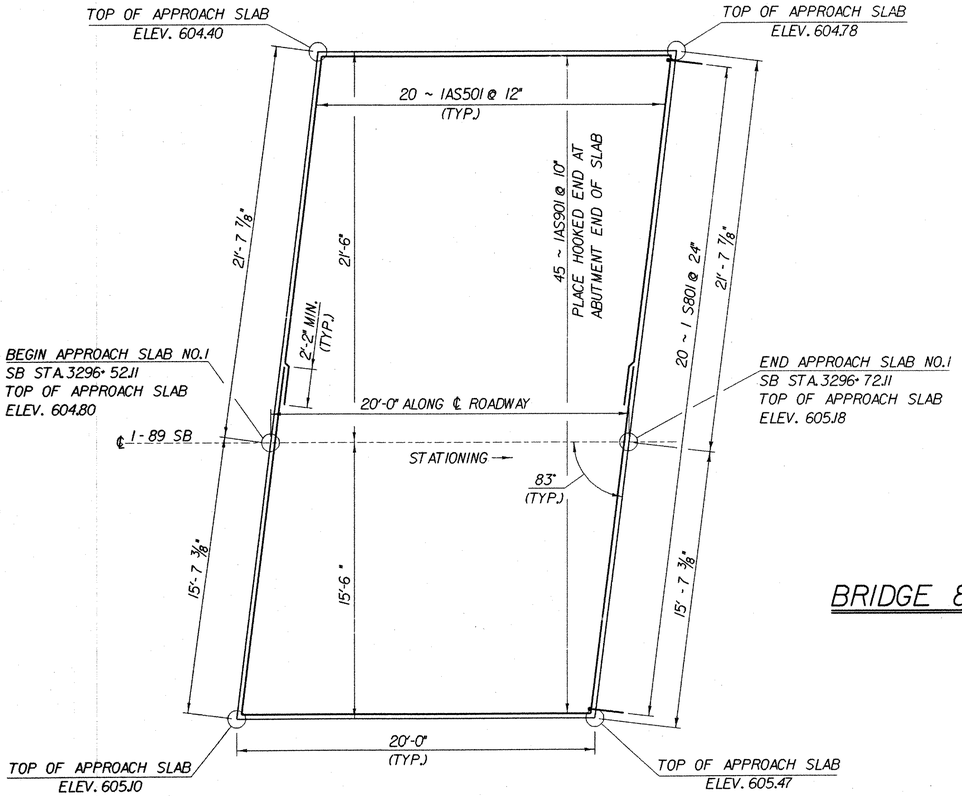

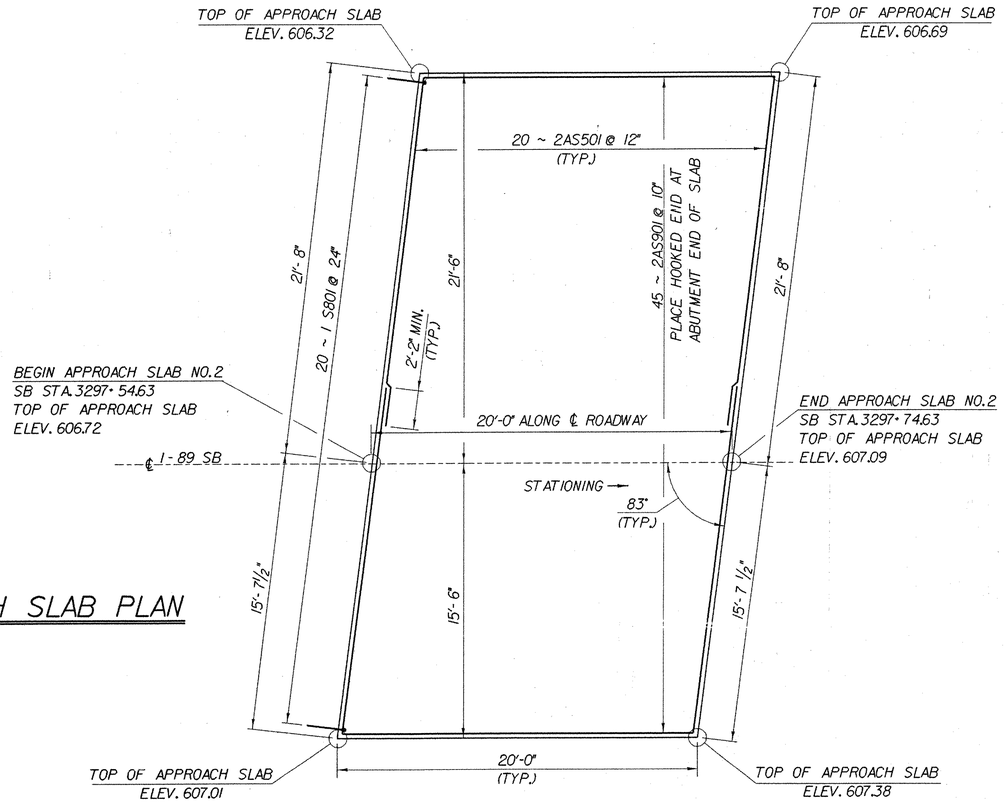

BRIDGE 87S APPROACH SLAB PLAN

SCALE: 1/4" = 1'-0

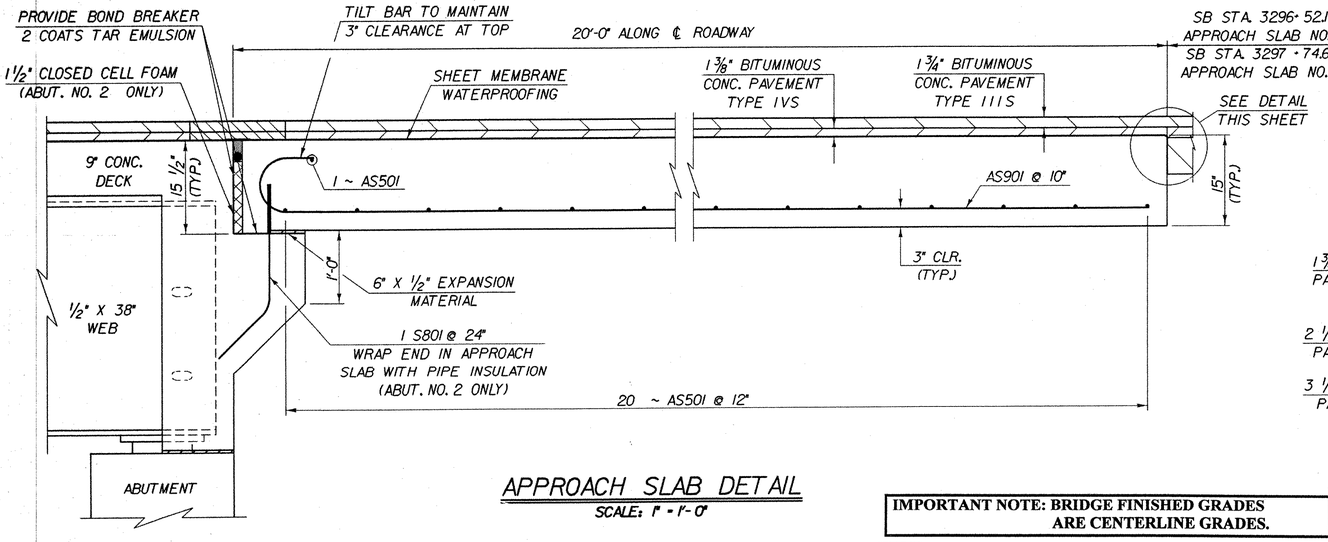

APPROACH SLAB DETAIL

SCALE: 1" = 1'-0"

IMPORTANT NOTE: BRIDGE FINISHED GRADES ARE CENTERLINE GRADES.

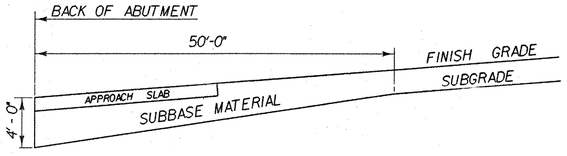

SUBBASE DETAIL AT ABUTMENTS

(ELEVATION IN CUT AND FILL)
NOT TO SCALE

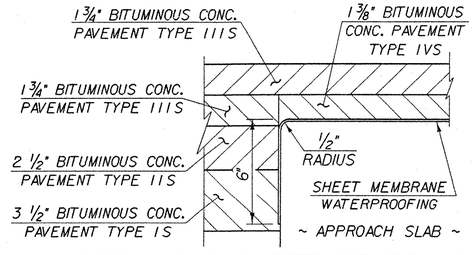

DETAIL FOR SHEET MEMBRANE AT APPROACH SLAB END

SCALE: 3" = 1'-0"

STATE OF VERMONT
AGENCY OF TRANSPORTATION

Town Of FAIRFAX-FAIRFIELD-ST. ALBANS	Bridge No. 87 S
Highway No. I-89	Log Sta. / Surv. Sta.
I-89 OVER VT 104	
87S APPROACH SLAB DETAILS	
Designed By M.LOZIER	Drawn By K.CHISHOLM
Checked By G.ROY Date 10/99	Bridge Design Supervisor R.R.WHITCOMB Date 11/99
PROJECT FAIRFAX-FAIRFIELD-ST. ALBANS	PROJECT NO. IM 089-3 (27)
I.G.C. Info. 96a056\Structures\sa056sp2.dgn	sa056sp6J
Bridge Sheet No. BR213	Sheet 91 of 370

PLOTTED 21-SEP-2000

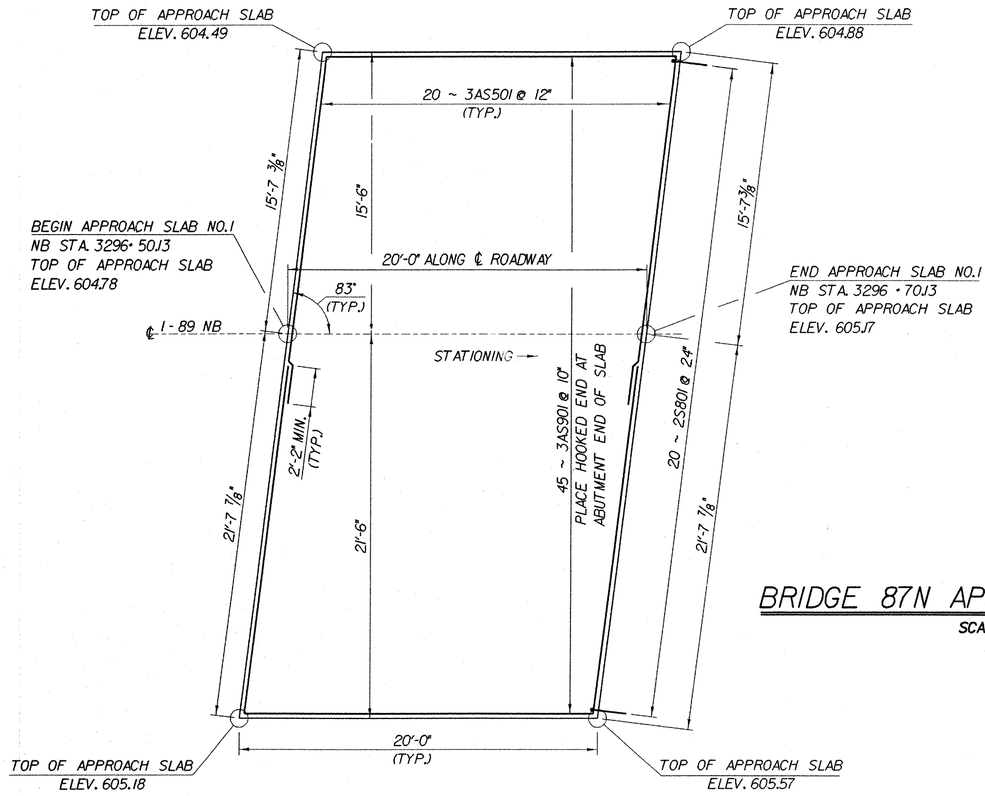

BRIDGE 87N APPROACH SLAB PLAN

SCALE: 1/4" = 1'-0

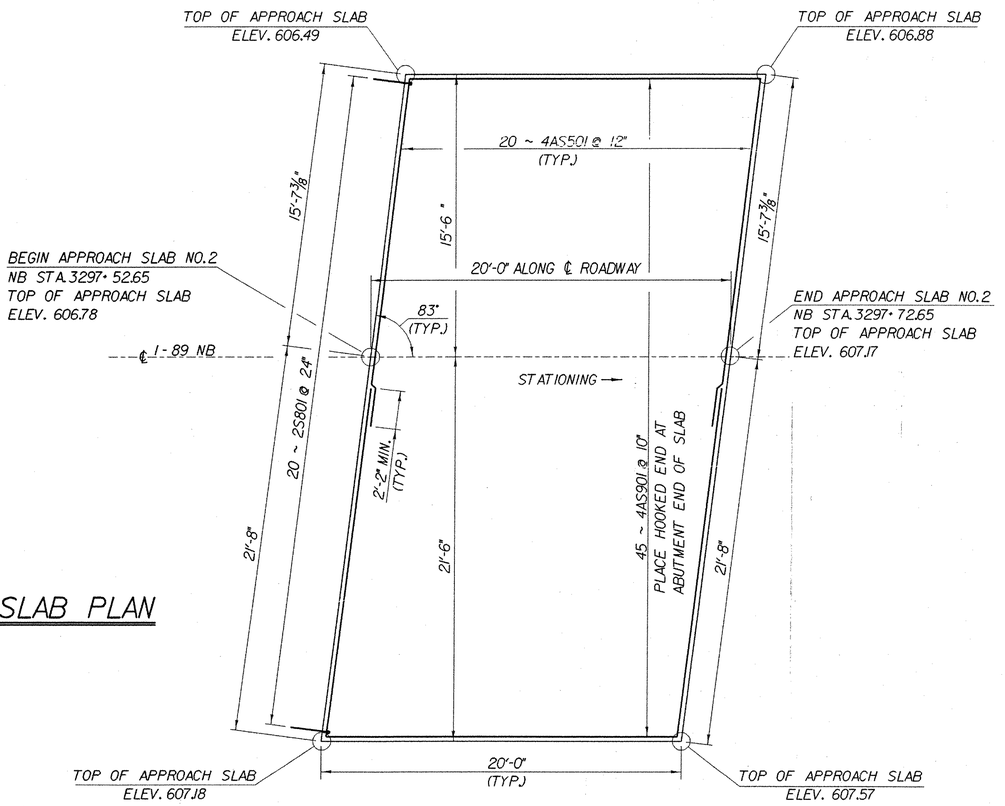

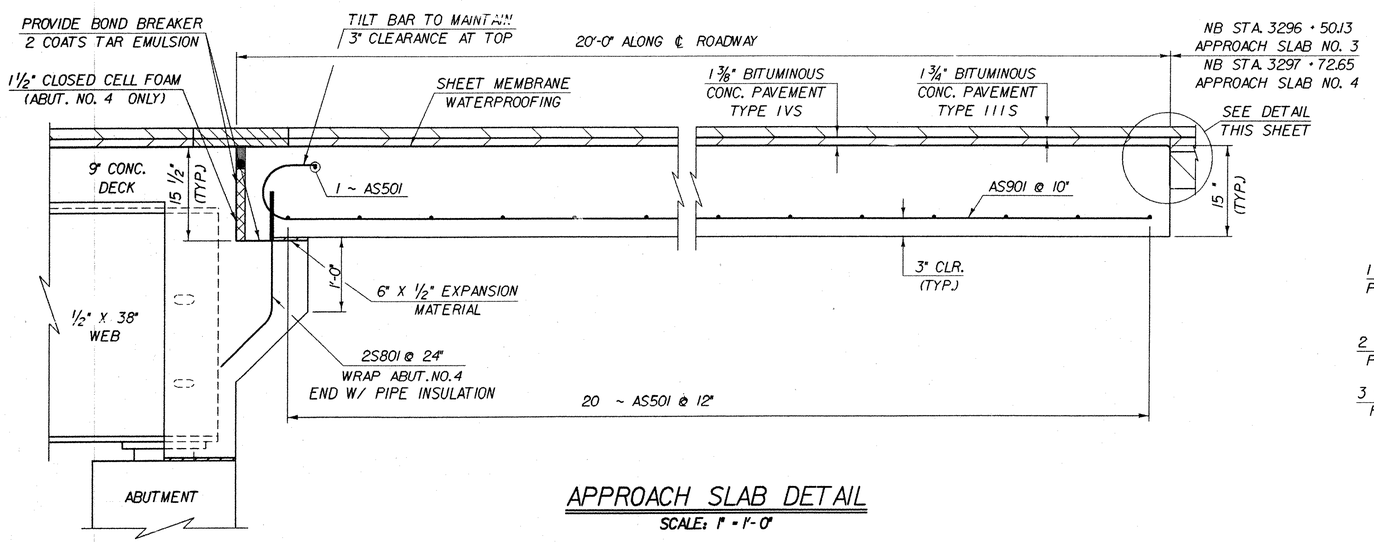

APPROACH SLAB DETAIL

SCALE: 1" = 1'-0"

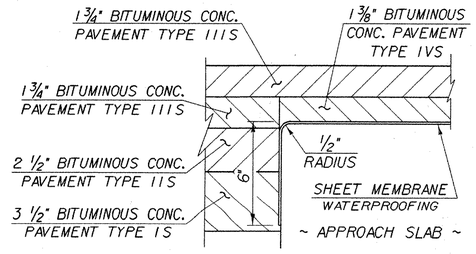

DETAIL FOR SHEET MEMBRANE AT APPROACH SLAB END

SCALE: 3" = 1'-0"

IMPORTANT NOTE: BRIDGE FINISHED GRADES ARE CENTERLINE GRADES.

STATE OF VERMONT
AGENCY OF TRANSPORTATION

Town Of FAIRFAX-FAIRFIELD-ST. ALBANS	Bridge No. 87 N
Highway No. I-89	Log Sta. / Surv. Sta.
I-89 NB OVER VT 104	
87N APPROACH SLAB DETAILS	
Designed By M.LOZIER	Drawn By K.CHISHOLM
Checked By G.ROY Date 10/99	Bridge Design Supervisor R.R.WHITCOMB Date 11/99
PROJECT FAIRFAX-FAIRFIELD-ST. ALBANS	PROJECT NO. IM 089-3 (27)
I.G.C. Info. 94J106\Structures\sJ106spl.dgn	sa056sp3.1
Bridge Sheet No. BR214	Sheet 92 of 370

PLOTTED 21-SEP-2000

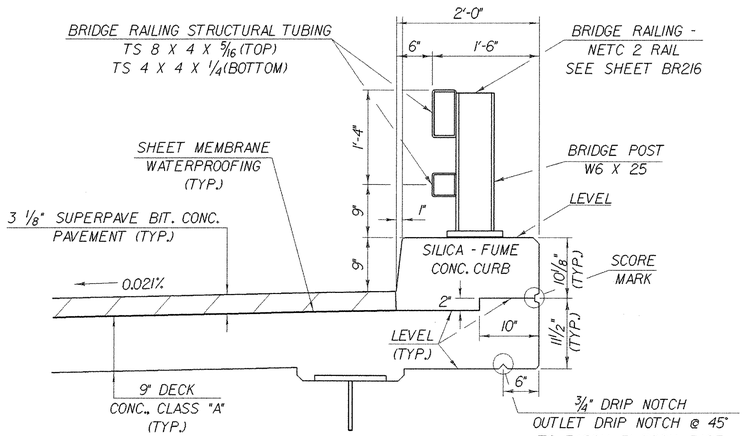

CURB AND RAIL DETAIL

SCALE: 1" = 1'-0"

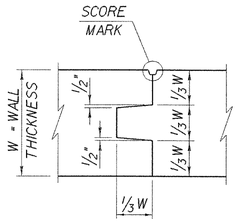

TYPICAL CONCRETE CONSTRUCTION JOINT

NTS

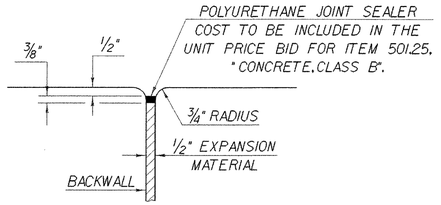

JOINT BETWEEN BACKWALL AND WINGWALL

NTS

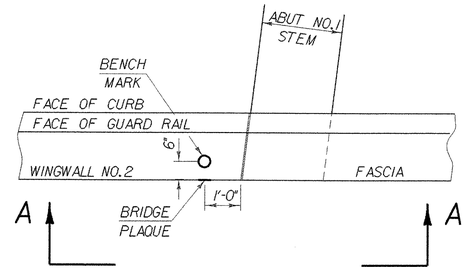

PLAN

NTS

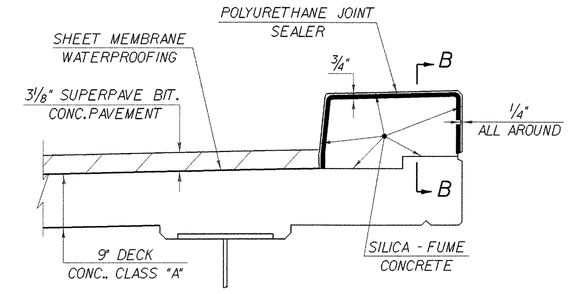

TYPICAL SECTION THROUGH CONCRETE CURB CONSTRUCTION JOINT

NTS

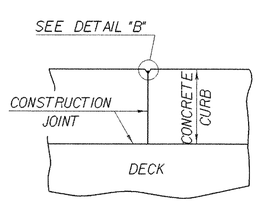

SECTION B - B

NTS

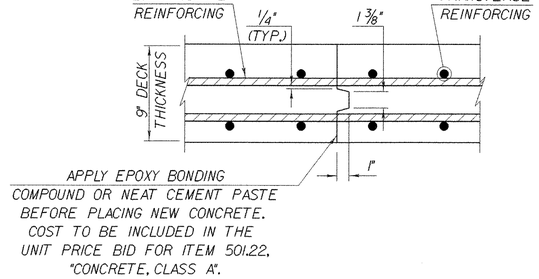

TRANSVERSE BRIDGE DECK CONSTRUCTION JOINT DETAILS

NTS

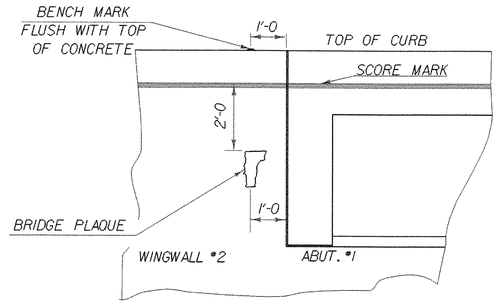

VIEW "A - A"

LOCATE BENCH MARK AND BRIDGE PLAQUE

NTS

THE BENCH MARK AND BRIDGE PLAQUE WILL BE SUPPLIED BY THE AGENCY OF TRANSPORTATION AND SHALL BE INSTALLED BY THE CONTRACTOR AT ABUTMENT NO. 1 ON THE RIGHT SIDE AS SHOWN OR AS DIRECTED BY THE ENGINEER.

NOTES

1. SHEET MEMBRANE WATERPROOFING SHALL EXTEND TO FACE OF CURB AS SHOWN ABOVE IN TYPICAL SECTION THROUGH CONCRETE CURB CONSTRUCTION JOINT.
2. CONSTRUCTION JOINTS THROUGH CONCRETE CURBS SHALL BE SPACED A MAXIMUM OF 15'-0" CENTER TO CENTER AND SHALL BE 1'-6" MINIMUM FROM THE CENTER OF THE NEAREST BRIDGE RAIL POST. CONCRETE SHALL BE PLACED IN ALTERNATE SECTIONS WITH A MINIMUM OF 48 HOURS DELAY BETWEEN ADJACENT POURS.
3. LONGITUDINAL REINFORCING SHALL PASS THROUGH CONCRETE CONSTRUCTION JOINTS. CURB REINFORCING STIRRUP BARS SHALL BE TURNED AS REQUIRED TO FIT FLARED ENDS.

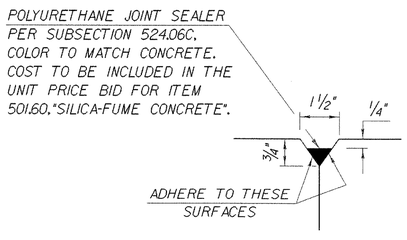

DETAIL "B"

NTS

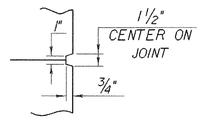

SCORE MARK DETAIL

NTS

STATE OF VERMONT
AGENCY OF TRANSPORTATION

Town Of FAIRFAX-FAIRFIELD-ST. ALBANS	Bridge No. 87 N&S
Highway No. I-89	Log Sta. / Surv. Sta.
I-89 OVER VT 104	
CURB AND RAIL DETAILS	
Designed By M.LOZIER	Drawn By K.CHISHOLM
Checked By G.ROY Date 10/99	Bridge Design Supervisor R.R.WHITCOMB Date 11/99
PROJECT FAIRFAX-FAIRFIELD-ST. ALBANS	PROJECT NO. I M 089 - 3 (27)
I.G.C. Info. 96a056\Structures\sa056sp2.dgn	sa056cb1.i
Bridge Sheet No. BR215	Sheet 93 of 370

PLOTTED 21-SEP-2000

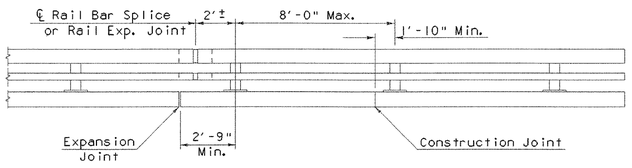

BRIDGE RAILING ELEVATION

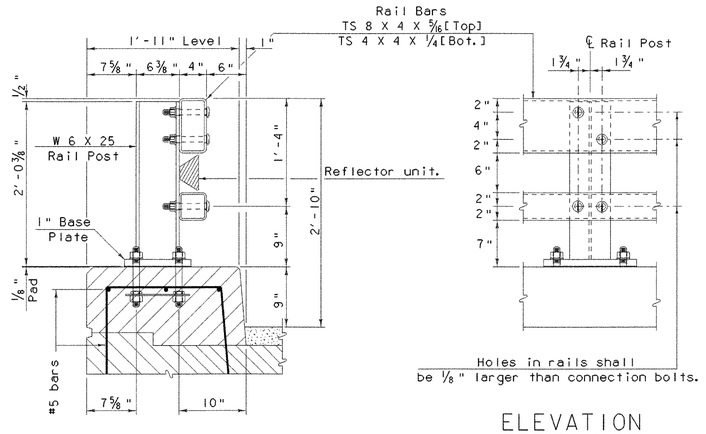

TYPICAL SECTION

ELEVATION

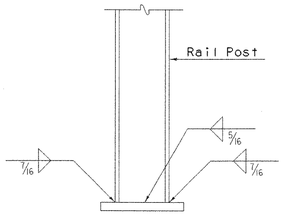

BASE WELD DETAIL

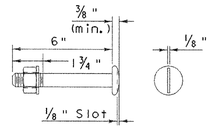

¾" Ø M164 (TYPE 1) ROUND HEAD BOLT

[with washer & prevailing torque type lock nut]
[See note No. 9]
Only full diameter body bolts will be allowed

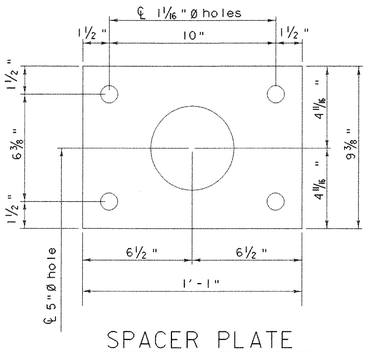

SPACER PLATE

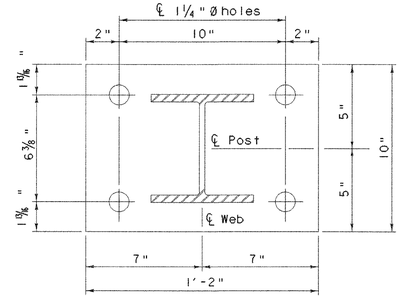

POST & BASE PLATE

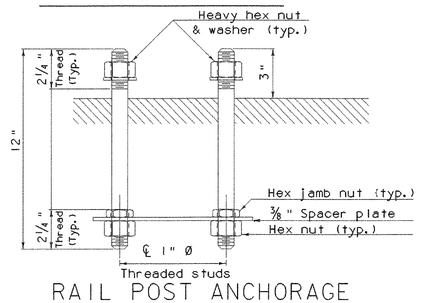

RAIL POST ANCHORAGE

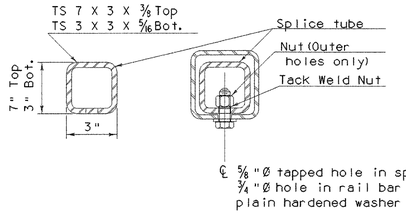

RAIL BAR SPLICE SECTION

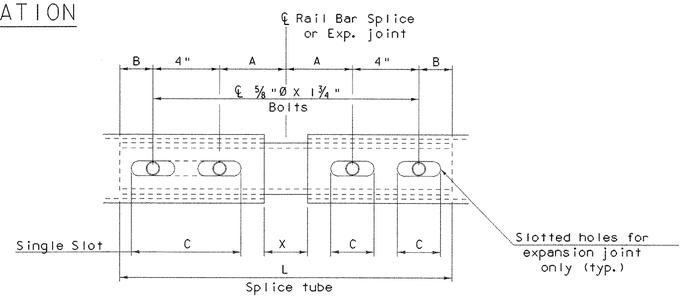

RAIL BAR SPLICE & RAIL EXP. JOINT DETAIL

[Bottom View]

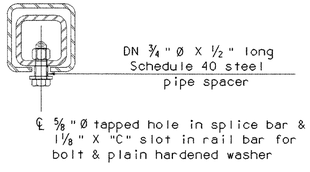

EXPANSION JOINT SECTION

For details not shown, see
"Rail Bar Splice Section"

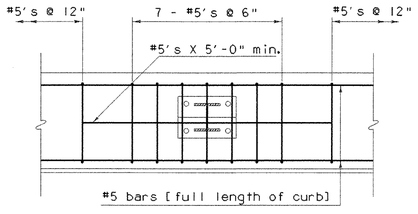

CURB REINFORCING PLAN

SPLICE & EXPANSION JOINT TABLE					
T	A	B	C	L	X
Splice	4"	2"	--	20"	¾"
≤4"	4"	2"	2½"	20"	2½"
>4" ≤ 6½"	5½"	2⅜"	3½"	23¾"	4"
>6½" ≤ 9"	6½"	3⅜"	9"*	27¾"	5"
>9" ≤ 13"	8½"	4⅜"	11"*	33¾"	7"

T = Total Movement * = Single Slot

NOTES

1. All work and materials shall conform to the provisions of Section 525 - Railings of the Standard Specifications for Construction.

2. Tubing and posts shall meet the requirements of Section 732 - Railing materials of the Standard Specifications for Construction.

3. All exposed cut or sheared edges shall be rounded to a 1/16" radius and be free of burrs.

4. Rail posts shall be set normal to grade.

5. Sections of rail bar shall be attached to a minimum of two [2] rail posts and preferably to at least four [4] posts.

6. Rail bar expansion joints shall be provided in any rail bay spanning a superstructure expansion joint. Expansion joint width shall be "X" at 45 °F and will be adjusted in the field by the Engineer.

7. All parts shall be galvanized after fabrication in accordance with AASHTO M111, except that hardware shall meet the requirements of AASHTO M232.

8. Rail posts anchoring nuts shall be tightened to a snug fit and given an additional ⅛ turn.

9. Rail bars shall be attached using ¾" full diameter body AASHTO M164 (Type 1) round head bolts inserted through the face of the bar. Holes in posts shall be 1/16" larger than the bolt size.

10. Holes in rails for rail bar attachment may be field - drilled. Holes shall be coated with an approved zinc - rich paint prior to erection.

11. If there is a conflict between these Standard Details and the Design Drawings, the requirements of the Design drawings shall be followed.

12. Any bending of rail shall be by shop procedure only.

13. The fabricator shall submit shop drawings including welding procedures to the Structures Section for approval in accordance with the provision of 506.04, shop drawings. All welding shall conform with section 506.10.

14. The drop-weight tear test in section 732 shall not apply to the structural tubing on this sheet.

MATERIALS

Rail bars.....ASTM A500, Grade B or ASTM A501
Rail posts.....ASTM A709/A709M, Grade 50
All other shapes & plates.....ASTM A709/A709M, Grade 36
Anchor studs.....ASTM A449
All other bolts [unless noted].....AASHTO M164, TYPE 1

Nuts for AASHTO M164 bolts shall comply with AASHTO M291. Nuts for anchor studs shall comply with ASTM A563.

Washers shall comply with AASHTO M293 (ASTM F436) specification.

⅛" pad shall comply with standard specification subsection 731.01 or 731.02.

Set screws for delineation devices shall conform to ASTM Specification F880, condition CW, Alloy Type 304.

STATE OF VERMONT
AGENCY OF TRANSPORTATION

Town Of FAIRFAX-FAIRFIELD-ST. ALBANS	Bridge No. 87 N & S
Highway No. I-89	Log Sta. / Surv. Sta.
I-89 OVER VT 104	
NETC RAIL DETAILS (1)	
Designed By VAOT	Drawn By VAOT
Checked By VAOT Date	Bridge Design Supervisor R. R. WHITCOMB Date 2/00
PROJECT FAIRFAX-FAIRFIELD-ST. ALBANS	PROJECT NO. IM 089-3 (27)
I.C.C. Info. 96a056\Structures\sa056bridgn	sa056rail
Bridge Sheet No. BR216	Sheet 94 of 370

PLOTTED 21-SEP-2000

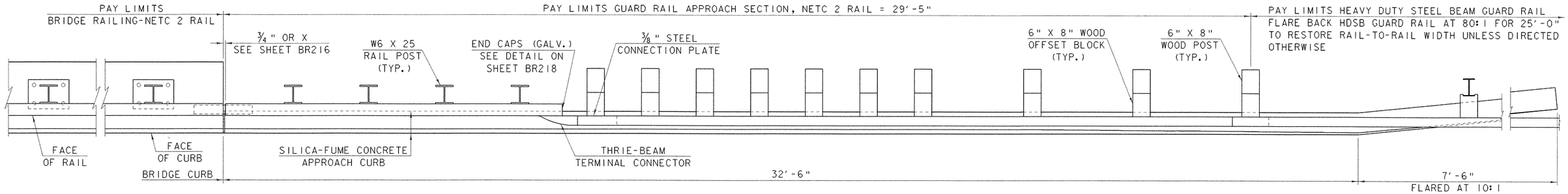

PLAN VIEW - APPROACH RAIL

SCALE: 3/4" = 1'-0"

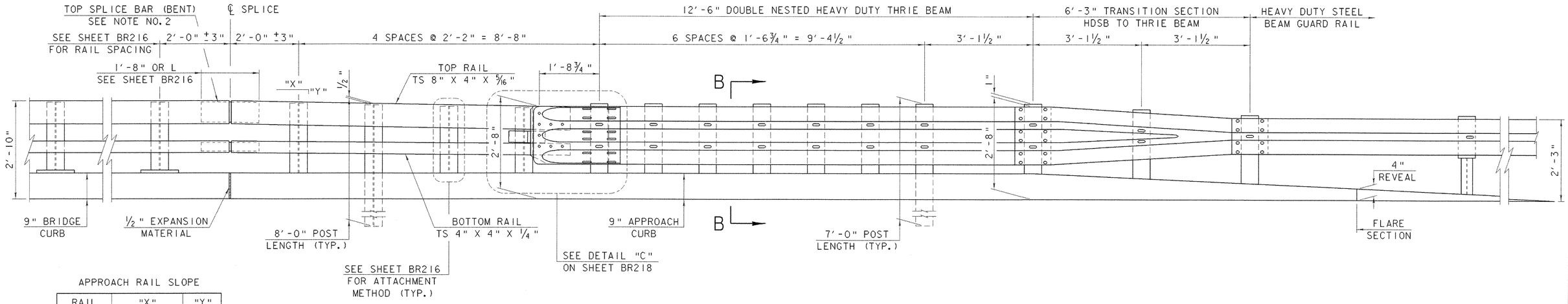

APPROACH RAIL SLOPE

RAIL	"X"	"Y"
TOP	8'-10 1/2"	2"
BOTTOM	8'-10 1/2"	13/16"

ELEVATION VIEW - APPROACH RAIL

SCALE: 3/4" = 1'-0"

NOTES

1. ALL GUARD RAIL APPROACH SECTION MATERIALS, DIMENSION SIZES, AND NOTES SHALL BE THE SAME AS THOSE OF THE BRIDGE RAILING UNLESS OTHERWISE NOTED.
2. WELD TOP SPLICE BAR TO FIT BEND. USE COMPLETE PENETRATION WELD (B-U2).
3. REFER TO SHEET BR216 FOR ADDITIONAL DETAILS, NOTES, AND MATERIAL SPECIFICATIONS.
4. THE REFLECTORIZED ALUMINUM DELINEATOR IS TO BE ERECTED EVERY 30'-0" (OR THE CLOSEST POST) WITH 2 - NO.8 X 3/4" SELF TAPPING SCREWS. DELINEATORS SHALL MEET SPECIFICATION REQUIREMENTS FOR ASTM B209 ALLOY 5052-H32.
5. REFLECTIVE MATERIAL SHALL MEET REQUIREMENTS OF SUBSECTION 750.08 AND SHALL BE ENCAPSULATED LENS SILVER OR AMBER. AMBER IS TO BE INSTALLED ON THE DRIVERS LEFT AND SILVER ON THEIR RIGHT.
6. ON BRIDGES WITH A SIDEWALK, DELINEATORS ARE NOT TO BE INSTALLED ON THE SIDEWALK SIDE OF THE BRIDGE (I.E. DELINEATORS INSTALLED ONLY ON THE CURB SIDE AND ON THE APPROACH ON THE CURB SIDE). PAYMENT SHALL BE SUBSIDIARY TO ALL OTHER ITEMS.
7. ALL APPROACH RAIL SPLICES SHALL BE LAPPED IN THE DIRECTION OF TRAFFIC FLOW.

STATE OF VERMONT
AGENCY OF TRANSPORTATION

Town Of FAIRFAX-FAIRFIELD-ST. ALBANS	Bridge No. 87 N & S
Highway No. I-89	Log Sta. / Surv. Sta.
I-89 OVER VT 104	
NETC RAIL DETAILS (2)	
Designed By G. ROY	Drawn By G. ROY
Checked By M. LOZIER Date 2/00	Bridge Design Supervisor R. R. WHITCOMB Date 2/00
PROJECT FAIRFAX-FAIRFIELD-ST. ALBANS	PROJECT NO. IM 089-3 (27)
I.G.C. Info. 96a056\Structures\sa056brl.dgn	sa056ra21
Bridge Sheet No. BR217	Sheet 95 of 370

PLOTTED 21-SEP-2000

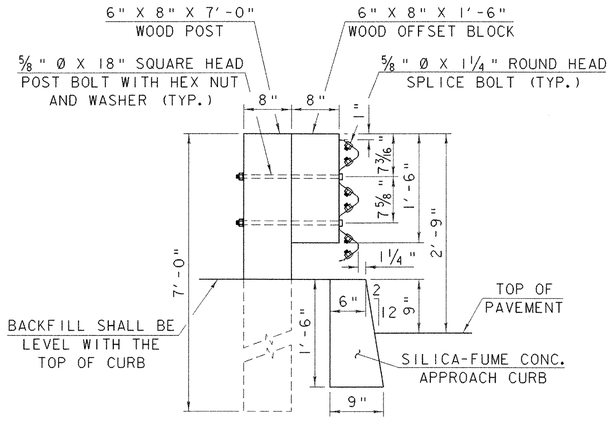

SECTION B-B

SCALE: 1" = 1'-0"

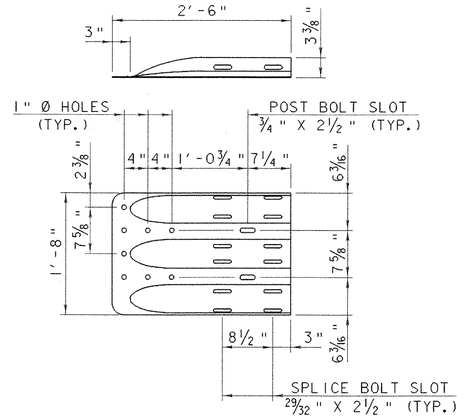

THRIE-BEAM TERMINAL CONNECTOR

SCALE: 1" = 1'-0"

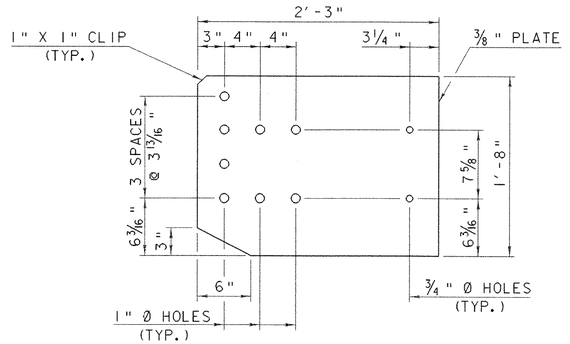

CONNECTION PLATE

SCALE: 1 1/2" = 1'-0"

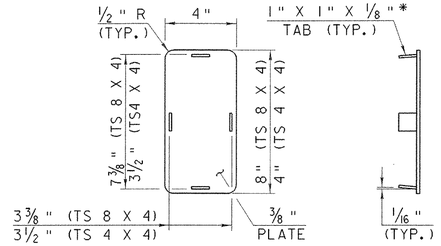

END CAP DETAIL

SCALE: 3" = 1'-0"

* WELD TABS TO END CAP PLATE IN TAPERED POSITION SO CAP CAN BE JAMMED INTO END OF RAIL TUBE.

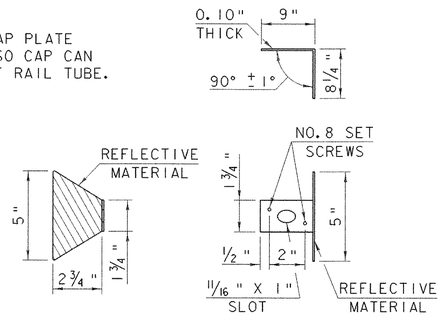

DELINEATION DEVICE DETAIL

SCALE: 3" = 1'-0"

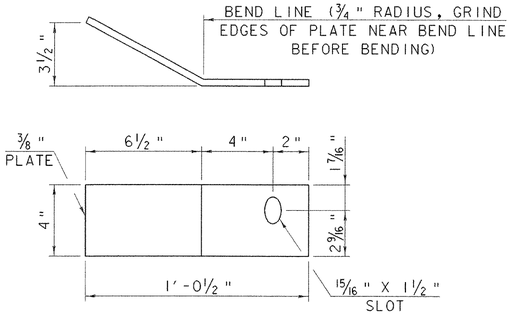

DEFLECTOR PLATE DETAIL

SCALE: 3" = 1'-0"

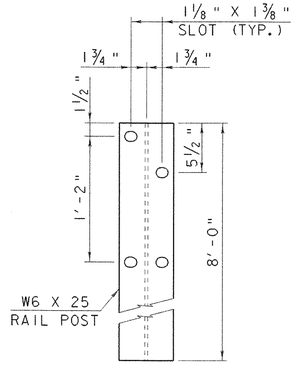

RAIL POST

SCALE: 1 1/2" = 1'-0"

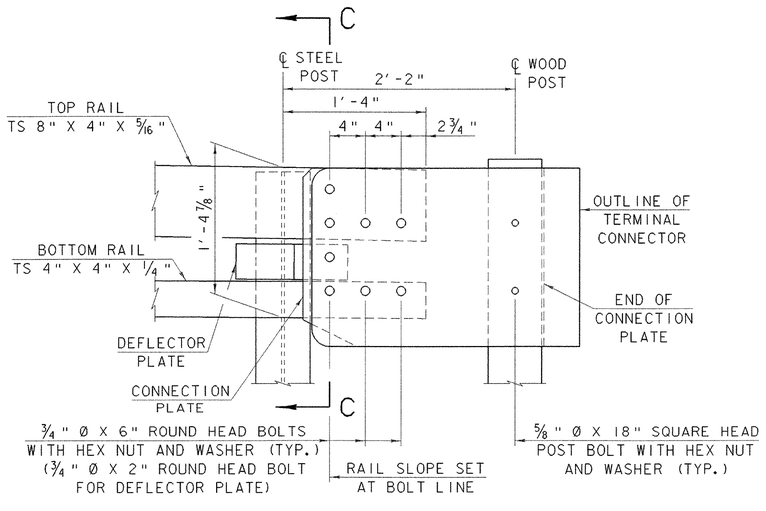

DETAIL "C"

SCALE: 1 1/2" = 1'-0"

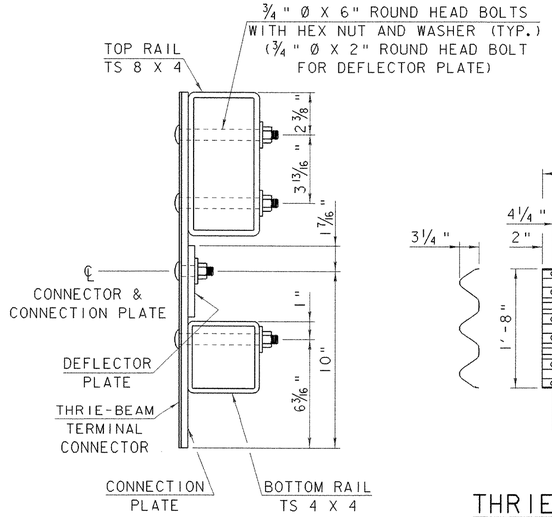

SECTION C-C

SCALE: 3" = 1'-0"

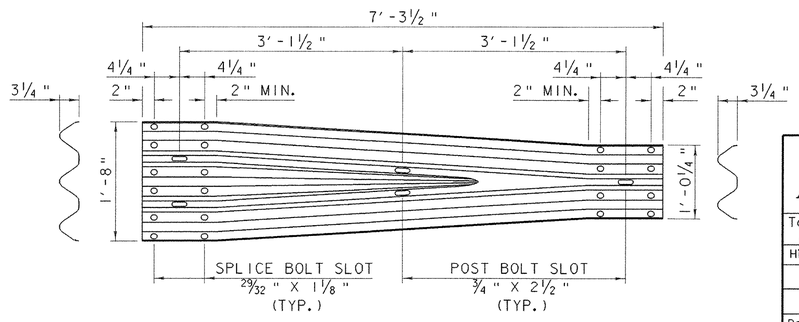

THRIE-BEAM TO W-BEAM TRANSITION SECTION

SCALE: 1" = 1'-0"

STATE OF VERMONT
AGENCY OF TRANSPORTATION

Town Of FAIRFAX-FAIRFIELD-ST. ALBANS	Bridge No. 87 N & S
Highway No. I-89	Log Sta. / Surv. Sta.
I-89 OVER VT 104	
NETC RAIL DETAILS (3)	
Designed By G. ROY	Drawn By G. ROY
Checked By M. LOZIER Date 2/00	Bridge Design Supervisor R. R. WHITCOMB Date 2/00
PROJECT FAIRFAX-FAIRFIELD-ST. ALBANS	PROJECT NO. IM 089-3 (27)
I.G.C. Info. 96a056\Structures\sa056br1dgn	sa056ra3J
Bridge Sheet No. BR218	Sheet 96 of 370

PLOTTED 21-SEP-2000

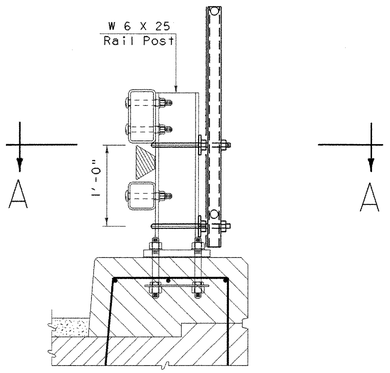

TYPICAL SECTION

NOTE: FOR DIMENSIONS SEE SHEETS BR216 & BR217.

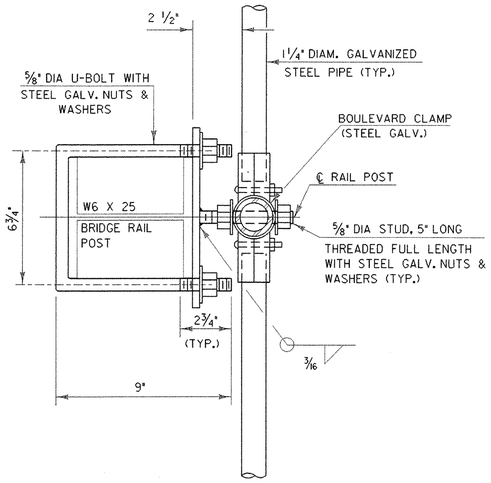

SECTION A-A

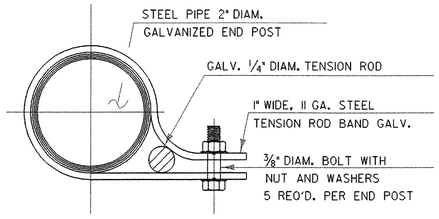

TENSION ROD BAND

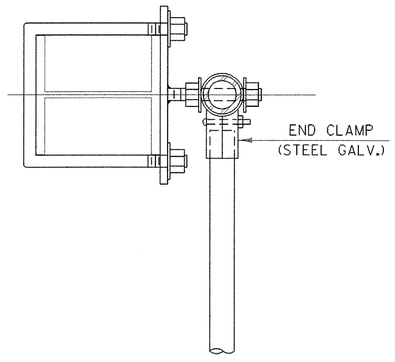

PLAN VIEW AT END POST

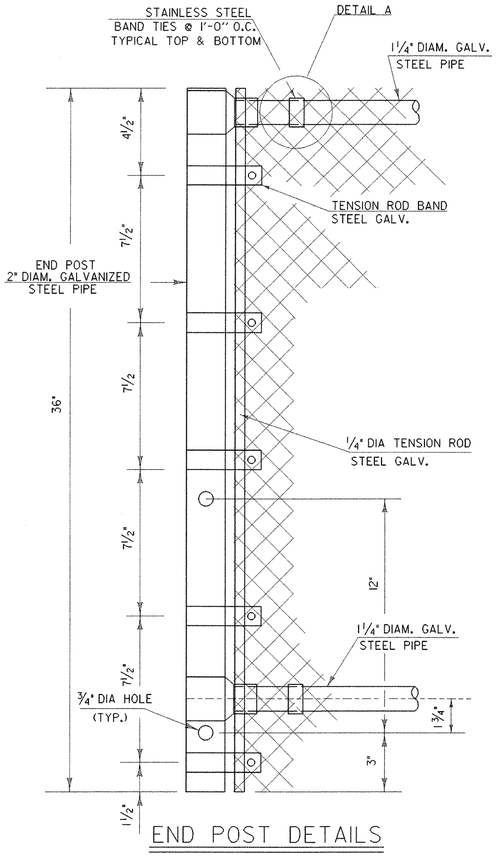

END POST DETAILS

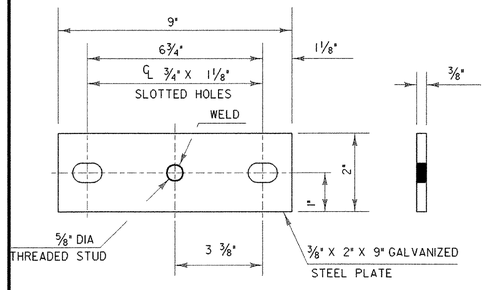

PLATE DETAILS

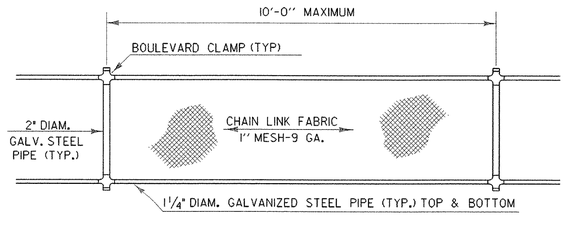

ELEVATION SNOW BARRIER

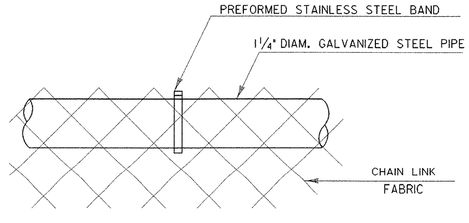

DETAIL A

NOTES

1. THREADS OF STUDS AND U-BOLTS TO BE 5/8-11 UNC.
2. ALL CONNECTION PLATES TO BE GALVANIZED AFTER FABRICATION.
3. 1¼" PIPE LENGTH SHALL BE FIELD CUT TO FIT POST SPACING.
4. CHAIN LINK FABRIC TO BE KNUCKLED TOP AND BOTTOM.
5. ALL BOLTS, NUTS AND WASHERS SHALL CONFORM TO THE SPECIFICATIONS FOR ASTM A307.
6. ALL STEEL PLATES SHALL CONFORM TO THE SPECIFICATION FOR AASHTO M270 GRADE 36.
7. ALL GALVANIZING SHALL CONFORM TO THE REQUIREMENTS OF AASHTO M-181 WITH HARDWARE AND FITTINGS CONFORMING TO THE REQUIREMENTS OF AASHTO M-111 OR AASHTO M-232 WHICHEVER IS APPLICABLE. ALL BOLTS, NUTS AND WASHERS SHALL BE EITHER HOT-DIP GALVANIZED IN ACCORDANCE WITH THE ABOVE AASHTO REQUIREMENTS OR MECHANICALLY GALVANIZED USING A MECHANICALLY DEPOSITED PROCESS CONFORMING TO THE REQUIREMENTS OF AASHTO M-298, CLASS 110.
8. GALVANIZED CHAIN-LINK FABRIC SHALL BE TYPE I (ZINC) CLASS D AS SPECIFIED IN AASHTO M-181.
9. SNOW BARRIER SHALL BEGIN AT THE BRIDGE RAIL POST WHICH WILL PROVIDE A MIN. DISTANCE OF 20' (AS SHOWN) OR AS DIRECTED BY THE ENGINEER.
10. ALL REFERENCES TO THE DIAMETERS OF GALVANIZED STEEL PIPE SHALL REFER TO THE OUTSIDE DIAMETER (O. D.).

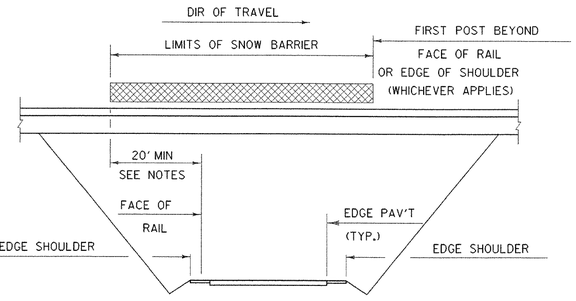

SCHEMATIC SNOW BARRIER LIMITS

STATE OF VERMONT
AGENCY OF TRANSPORTATION

Town Of FAIRFAX-FAIRFIELD-ST. ALBANS	Bridge No. 87 N & S
Highway No. I-89	Log Sta. / Surv. Sta.
I-89 OVER VT 104	
NETC RAIL DETAILS (4)	
Designed By VAOT	Drawn By VAOT
Checked By VAOT Date	Bridge Design Supervisor R. R. WHITCOMB Date 2/00
PROJECT FAIRFAX-FAIRFIELD-ST. ALBANS	PROJECT NO. IM 089 -3 (27)
I.C.C. Info. 96a056\Structures\sa056br1.dgn	sa056rd41
Bridge Sheet No. BR219	Sheet 97 of 370

PLOTTED 21-SEP-2000

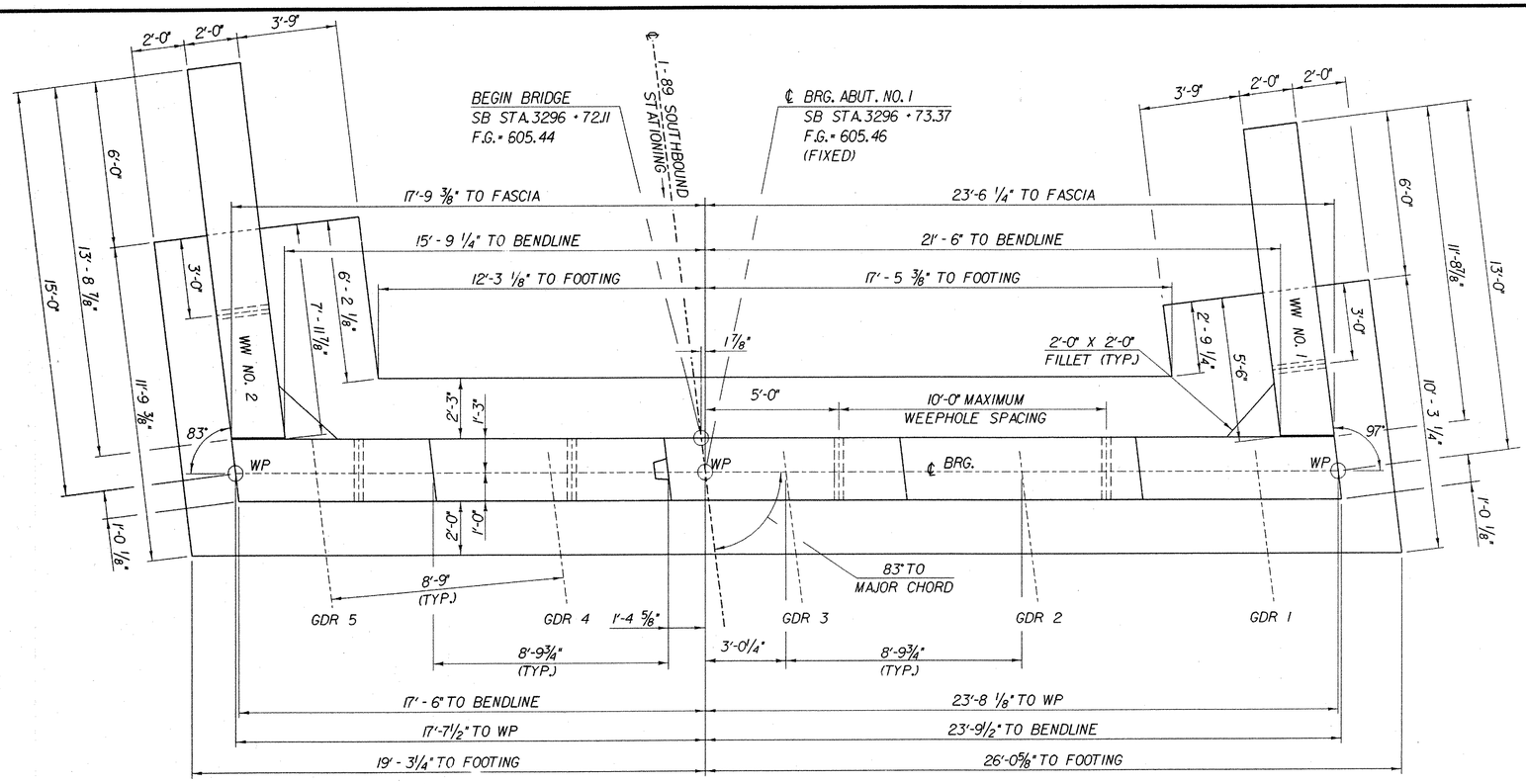

ABUTMENT NO. 1 PLAN

SCALE: 3/8" = 1'-0"

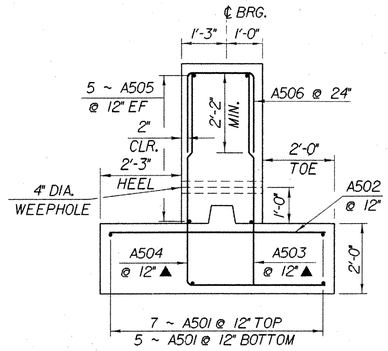

ABUTMENT TYPICAL

SCALE: 1/2" = 1'-0"

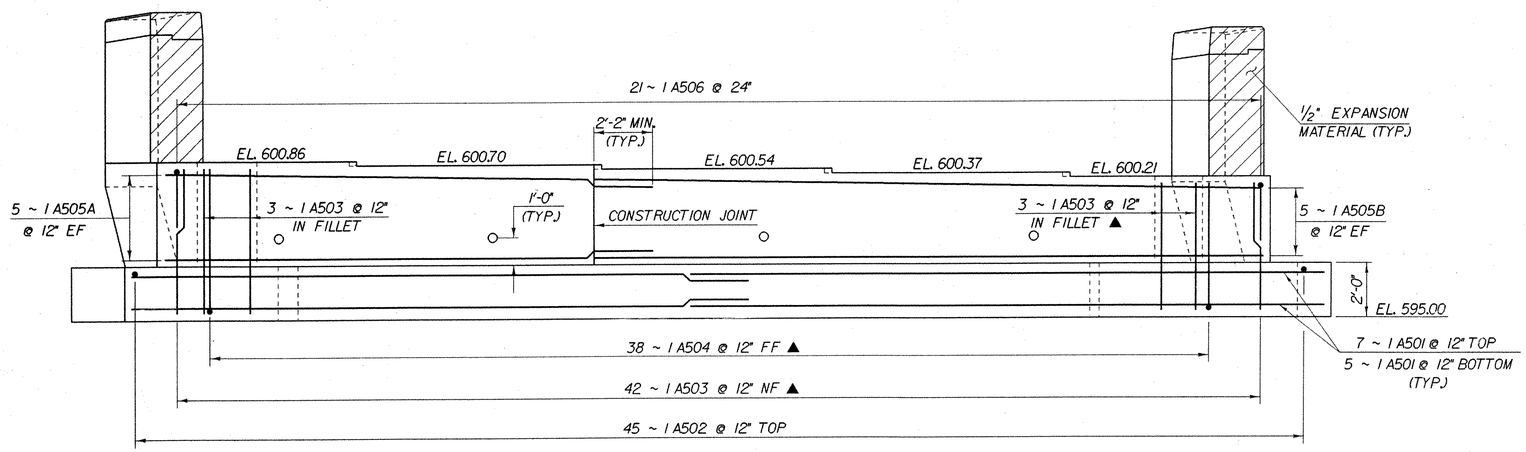

ABUTMENT NO. 1 ELEVATION

SCALE: 3/8" = 1'-0"

IMPORTANT NOTE: BRIDGE FINISHED GRADES ARE CENTERLINE GRADES.

NOTE:

NF = NEAR FACE
FF = FAR FACE
EF = EACH FACE
▲ = CUT TO FIT IN FIELD
3" CLR. UNLESS OTHERWISE SPECIFIED ON THE PLANS.

STATE OF VERMONT
AGENCY OF TRANSPORTATION

Town Of FAIRFAX-FAIRFIELD-ST. ALBANS	Bridge No. 87S
Highway No. I-89	Log Sta.
	Surv. Sta.

I-89 OVER VT 104

ABUTMENT NO. 1 DETAILS

Designed By M. LOZIER	Drawn By K. CHISHOLM
Checked By G. ROY Date 10/99	Bridge Design Supervisor R.R. WHITCOMB Date 11/99
PROJECT FAIRFAX-FAIRFIELD-ST. ALBANS	PROJECT NO. I M 089 - 3 (27)
I.G.C. Info. 94J106\Structures\sJ106ab.dgn	sa056abIJ
Bridge Sheet No. BR220	Sheet 98 of 370

PLOTTED 21-SEP-2000

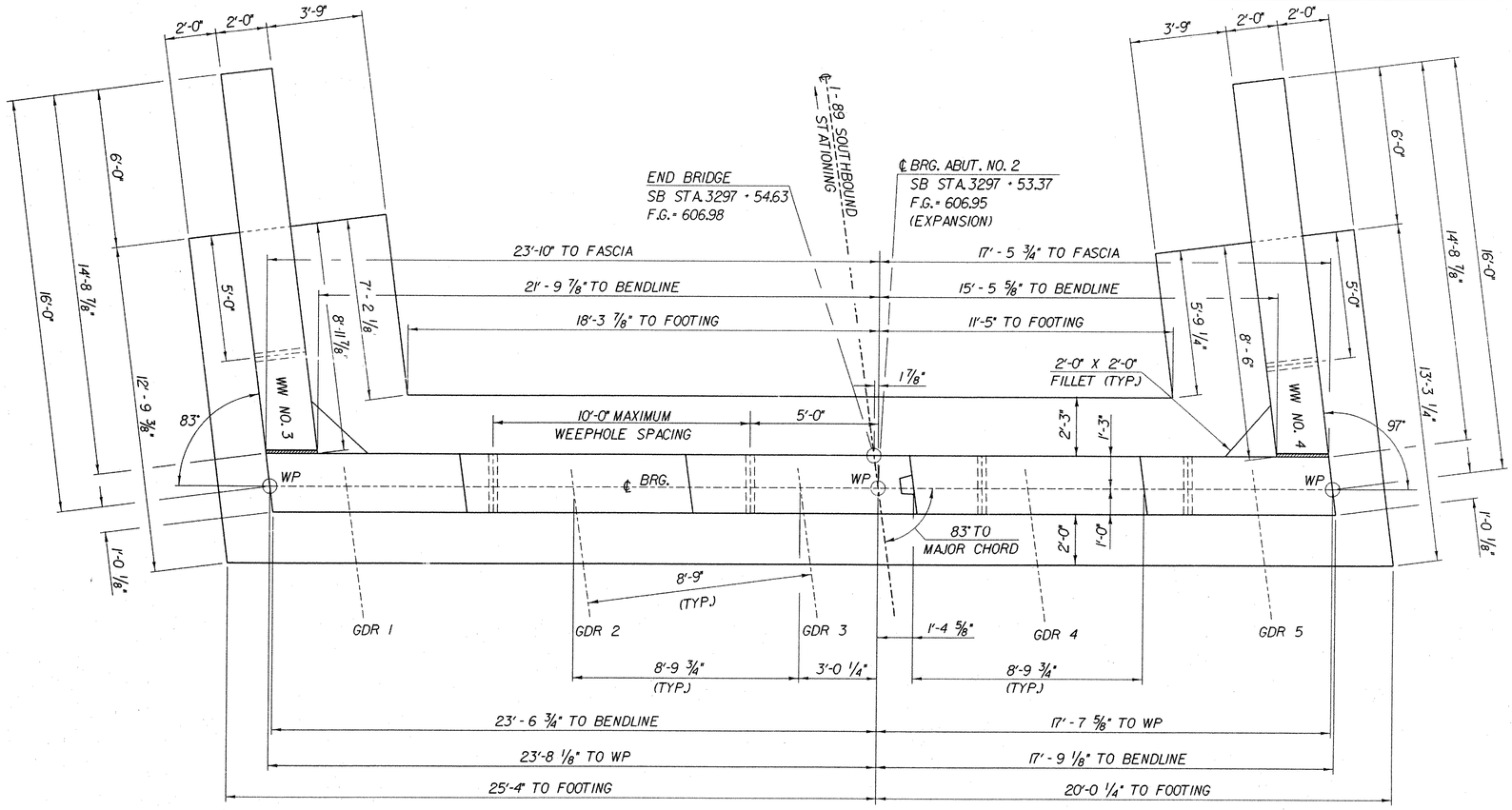

ABUTMENT NO. 2 PLAN

SCALE: 3/8" = 1'-0"

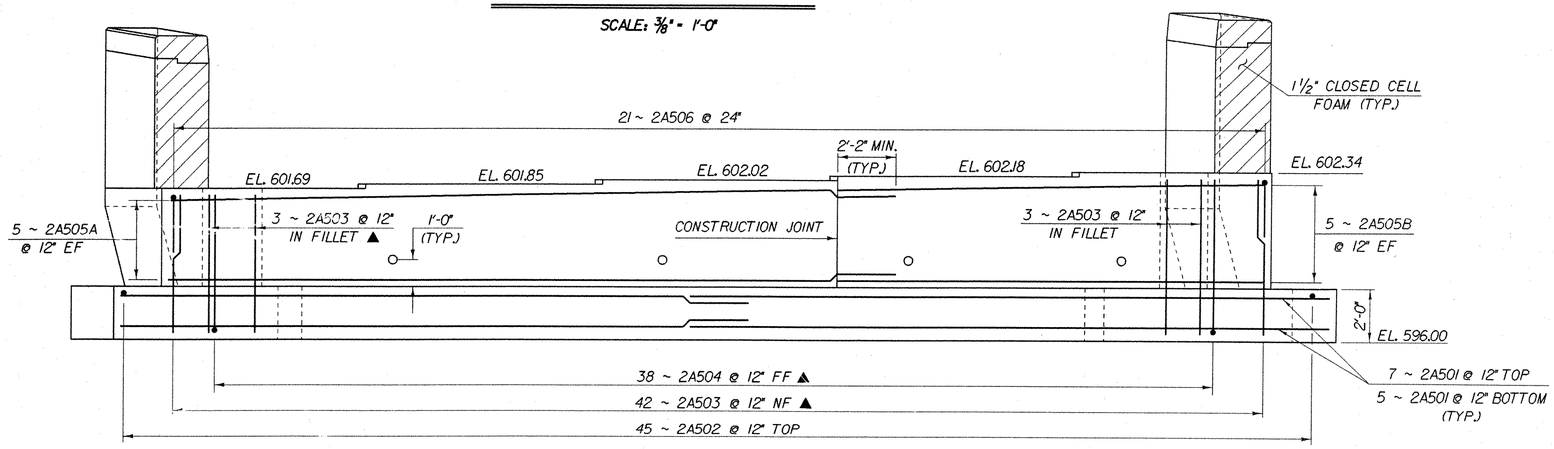

ABUTMENT NO. 2 ELEVATION

SCALE: 3/8" = 1'-0"

IMPORTANT NOTE: BRIDGE FINISHED GRADES ARE CENTERLINE GRADES.

NOTE:

NF = NEAR FACE
FF = FAR FACE
EF = EACH FACE
▲ = CUT TO FIT IN FIELD
3" CLR. UNLESS OTHERWISE SPECIFIED ON THE PLANS.

STATE OF VERMONT
AGENCY OF TRANSPORTATION

Town Of FAIRFAX-FAIRFIELD-ST. ALBANS	Bridge No. 87S
Highway No. I-89	Log Sta.
	Surv. Sta.

I-89 OVER VT 104

ABUTMENT NO. 2 DETAILS

Designed By M. LOZIER	Drawn By K. CHISHOLM
Checked By G. ROY Date 10/99	Bridge Design Supervisor R.R. WHITCOMB Date 11/99
PROJECT FAIRFAX-FAIRFIELD-ST. ALBANS	PROJECT NO. I M 089 - 3 (27)
I.G.C. Info. 94J106\Structures\sj106ab.dgn	sa056ab2.1
Bridge Sheet No. BR221	Sheet 99 of 370

PLOTTED 21-SEP-2000

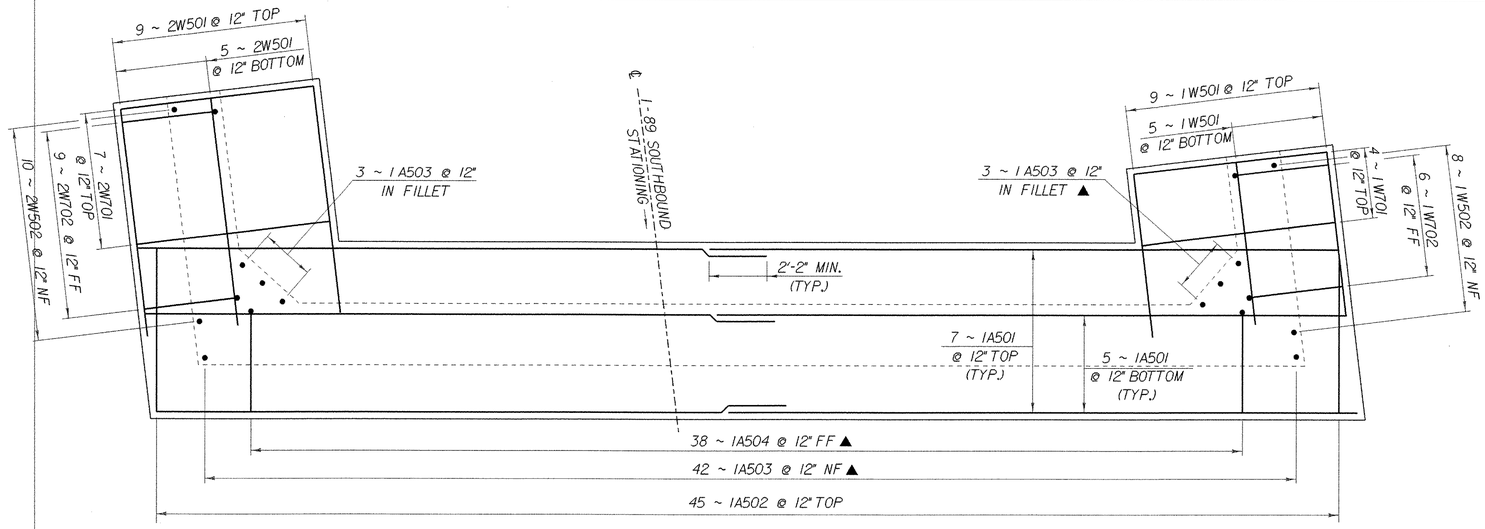

ABUTMENT NO. 1 FOOTING REINFORCING PLAN

SCALE: 3/8" = 1'-0"

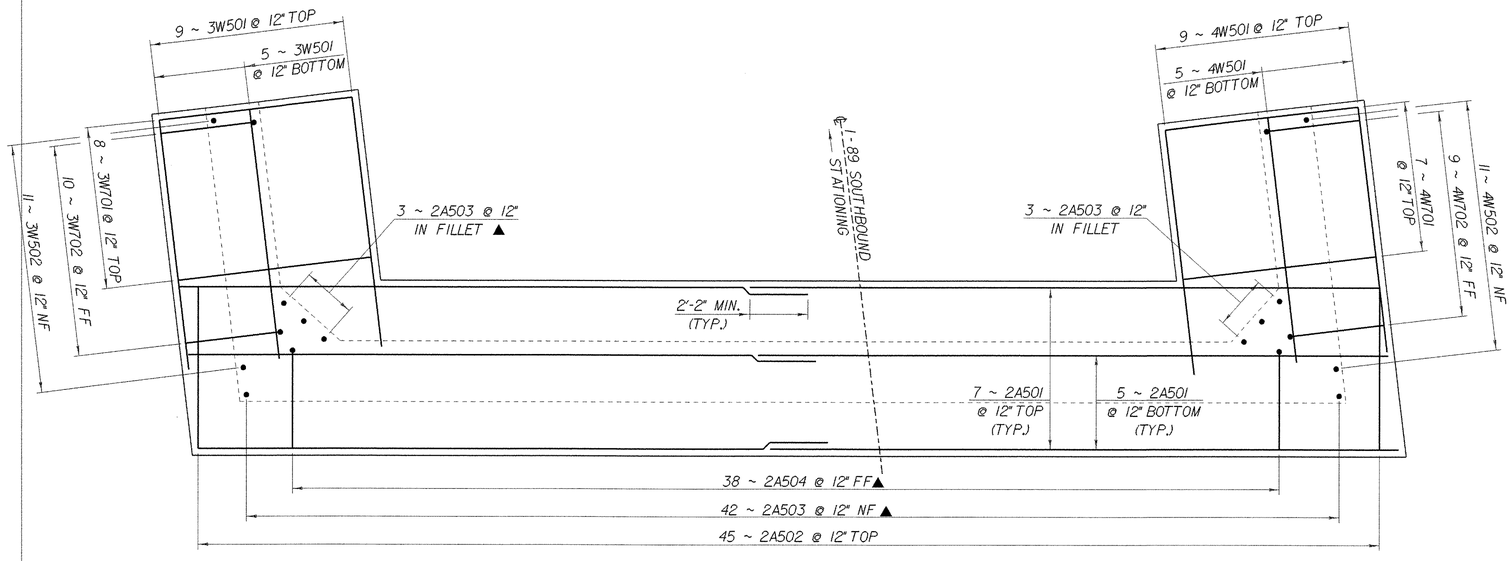

ABUTMENT NO.2 FOOTING REINFORCING PLAN

SCALE: 3/8" = 1'-0"

NOTE:

NF = NEAR FACE
FF = FAR FACE
EF = EACH FACE
▲ = CUT TO FIT IN FIELD
3" CLR. UNLESS OTHERWISE SPECIFIED ON THE PLANS.

STATE OF VERMONT
AGENCY OF TRANSPORTATION

Town Of FAIRFAX-FAIRFIELD-ST. ALBANS	Bridge No. 87S
Highway No. I-89	Log Sta. / Surv. Sta.
I-89 OVER VT 104	
ABUT. NOS. 1 & 2 FOOTING REINFORCING	
Designed By M.LOZIER	Drawn By K.CHISHOLM
Checked By G.ROY Date 10/99	Bridge Design Supervisor R.R.WHITCOMB Date 11/99
PROJECT FAIRFAX-FAIRFIELD-ST. ALBANS	PROJECT NO. IM 089 - 3 (27)
I.G.C. Info. 94J106\Structures\sJ106ab.dgn	sa056fgIJ
Bridge Sheet No. BR222	Sheet 100 of 370

PLOTTED 21-SEP-2000

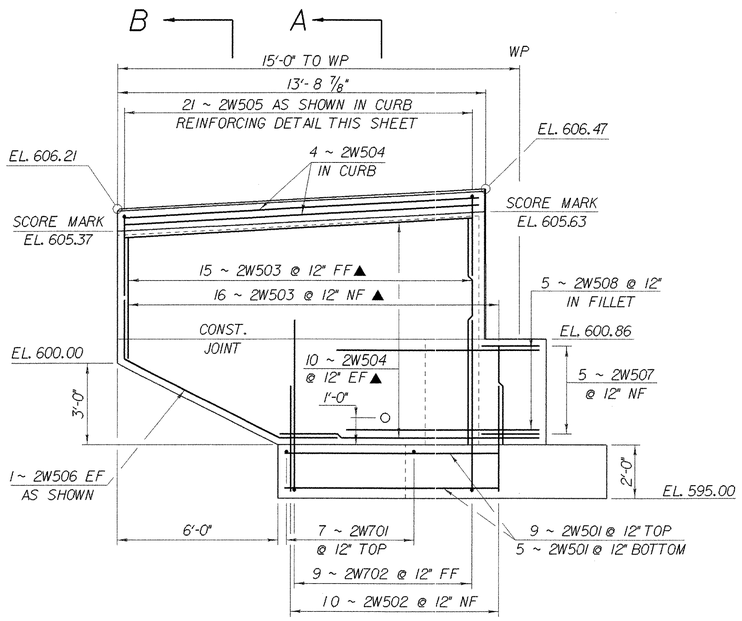

WINGWALL NO. 2

SCALE: 3/8" = 1'-0"

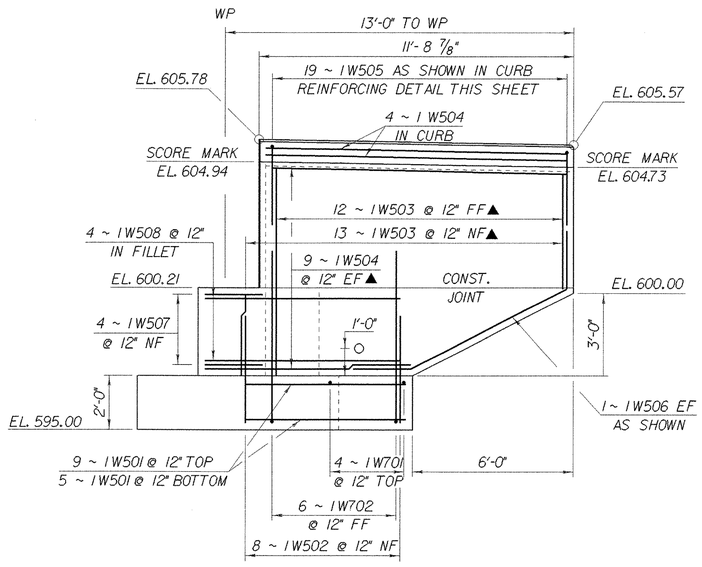

WINGWALL NO. 1

SCALE: 3/8" = 1'-0"

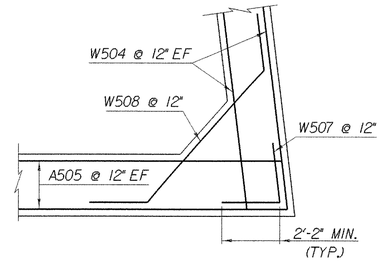

WINGWALL CORNER DETAIL BELOW BRIDGE SEAT

SCALE: 3/8" = 1'-0"

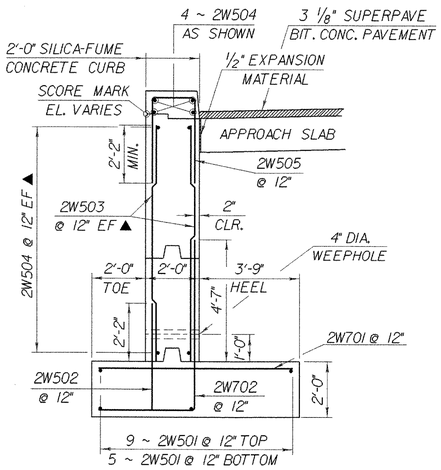

WINGWALL NO. 2 TYPICAL SECTION A-A

SCALE: 3/8" = 1'-0"

(WINGWALLS 1, 3 & 4 SIMILAR)

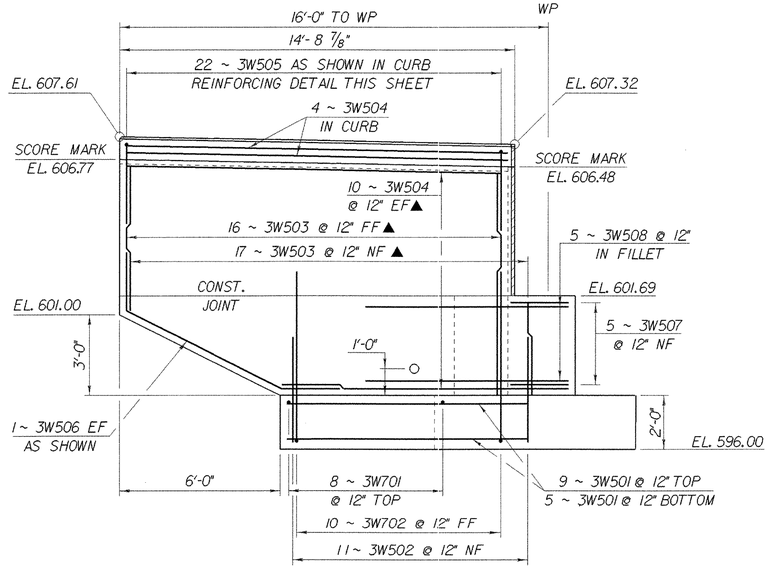

WINGWALL NO. 3

SCALE: 3/8" = 1'-0"

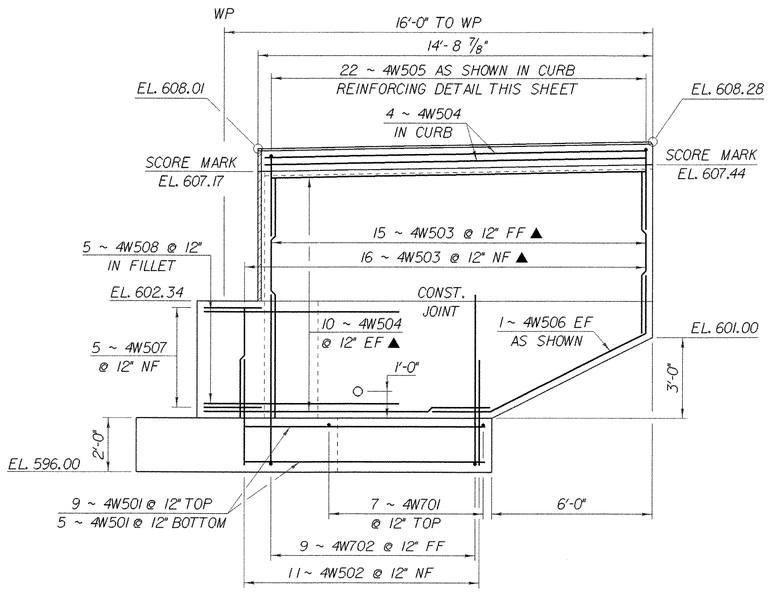

WINGWALL NO. 4

SCALE: 3/8" = 1'-0

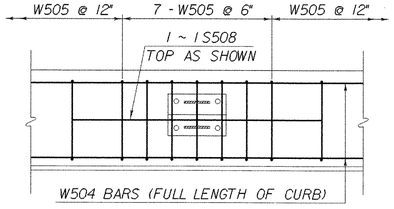

CURB REINFORCING DETAIL

NTS

WINGWALL NO. 2 TYPICAL SECTION B-B

SCALE: 3/8" = 1'-0"

(WINGWALLS 1, 3 & 4 SIMILAR)

NOTE:

NF = NEAR FACE
FF = FAR FACE
EF = EACH FACE
▲ = CUT TO FIT IN FIELD
3" CLR. UNLESS OTHERWISE SPECIFIED ON THE PLANS.

STATE OF VERMONT
AGENCY OF TRANSPORTATION

Town Of FAIRFAX-FAIRFIELD-ST. ALBANS	Bridge No. 87S
Highway No. I-89	Log Sta.
	Surv. Sta.

I-89 OVER VT 104

WINGWALL NOS. 1 - 4 ELEVATIONS

Designed By M.LOZIER	Drawn By K.CHISHOLM
Checked By G.ROY Date 10/99	Bridge Design Supervisor R.R.WHITCOMB Date 11/99
PROJECT FAIRFAX-FAIRFIELD-ST. ALBANS	PROJECT NO. IM 089 - 3 (27)
I.G.C. Info. 94J106\Structures\sJ106ab.dgn	sa056wwl.i
Bridge Sheet No. BR223	Sheet 101 of 370

PLOTTED 21-SEP-2000

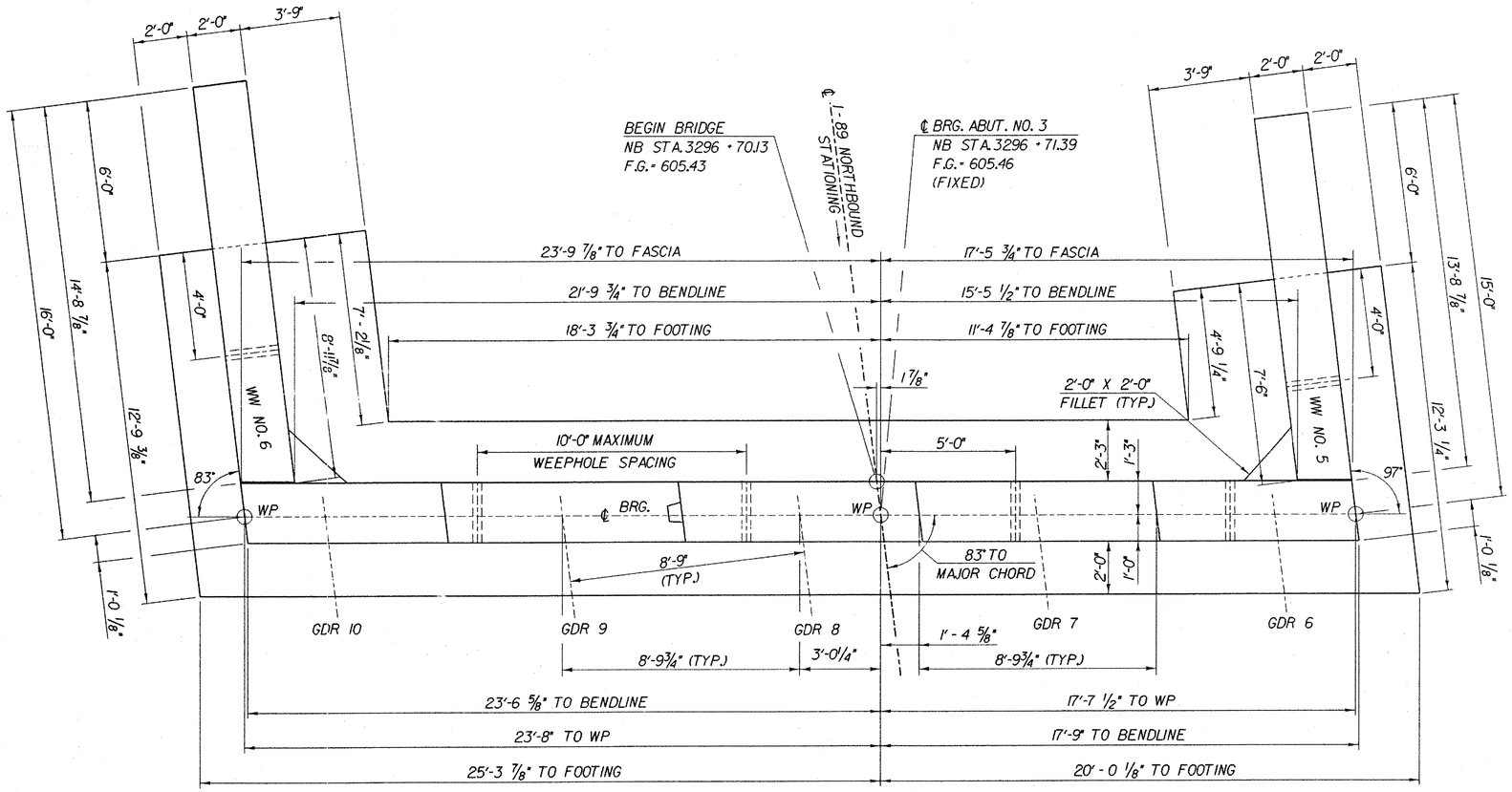

ABUTMENT NO. 3 PLAN

SCALE: 3/8" = 1'-0"

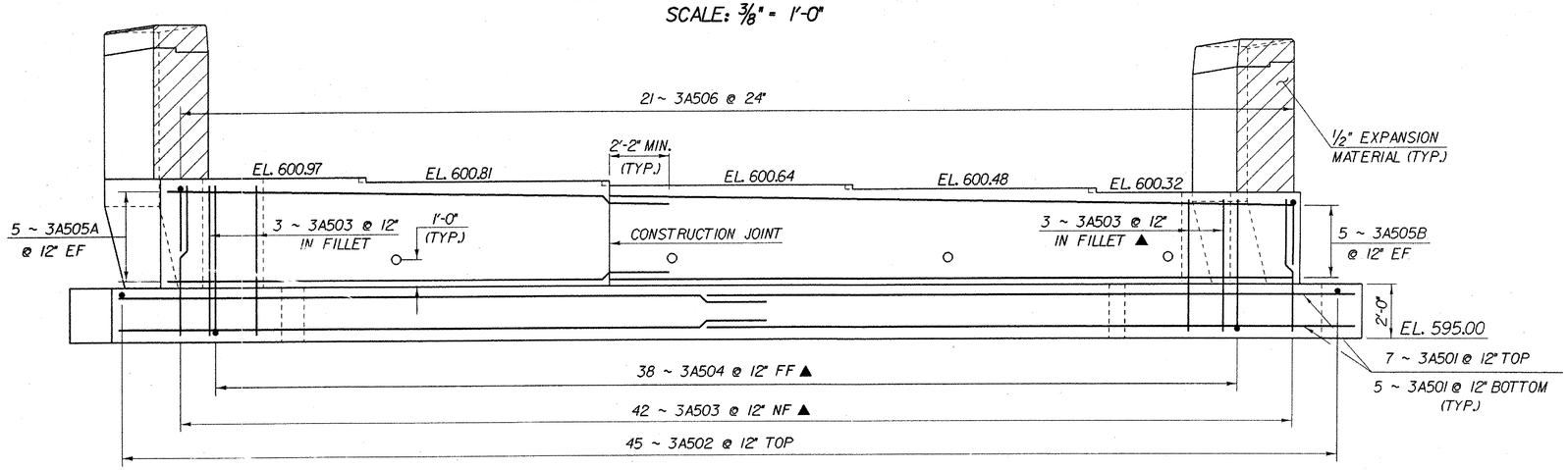

ABUTMENT NO.3 ELEVATION

SCALE: 3/8" = 1'-0"

HIGH PERFORMANCE CONCRETE WAS USED EXCLUSIVELY ON BR 87N

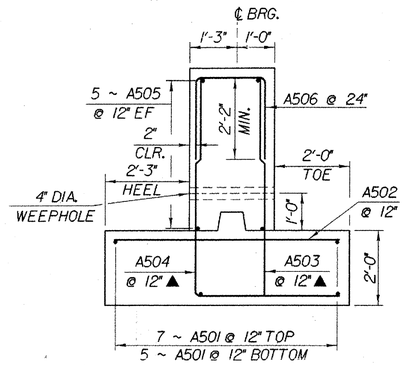

ABUTMENT TYPICAL

SCALE: 1/2" = 1'-0"

NOTE:

NF = NEAR FACE
FF = FAR FACE
EF = EACH FACE
▲ = CUT TO FIT IN FIELD
3" CLR. UNLESS OTHERWISE SPECIFIED ON THE PLANS.

IMPORTANT NOTE: BRIDGE FINISHED GRADES ARE CENTERLINE GRADES.

STATE OF VERMONT
AGENCY OF TRANSPORTATION

Town Of FAIRFAX-FAIRFIELD-ST. ALBANS	Bridge No. 87N
Highway No. I-89	Log Sta. / Surv. Sta.
I-89 OVER VT 104	
ABUTMENT NO. 3 DETAILS	
Designed By M.LOZIER	Drawn By K.CHISHOLM
Checked By G.ROY Date 10/99	Bridge Design Supervisor R.R.WHITCOMB Date 11/99
PROJECT FAIRFAX-FAIRFIELD-ST. ALBANS	PROJECT NO. IM 089 - 3 (27)
I.G.C. Info. 94J106\Structures\s1106ab.dgn	sa056ab31
Bridge Sheet No. BR224	Sheet 102 of 370

PLOTTED 21-SEP-2000

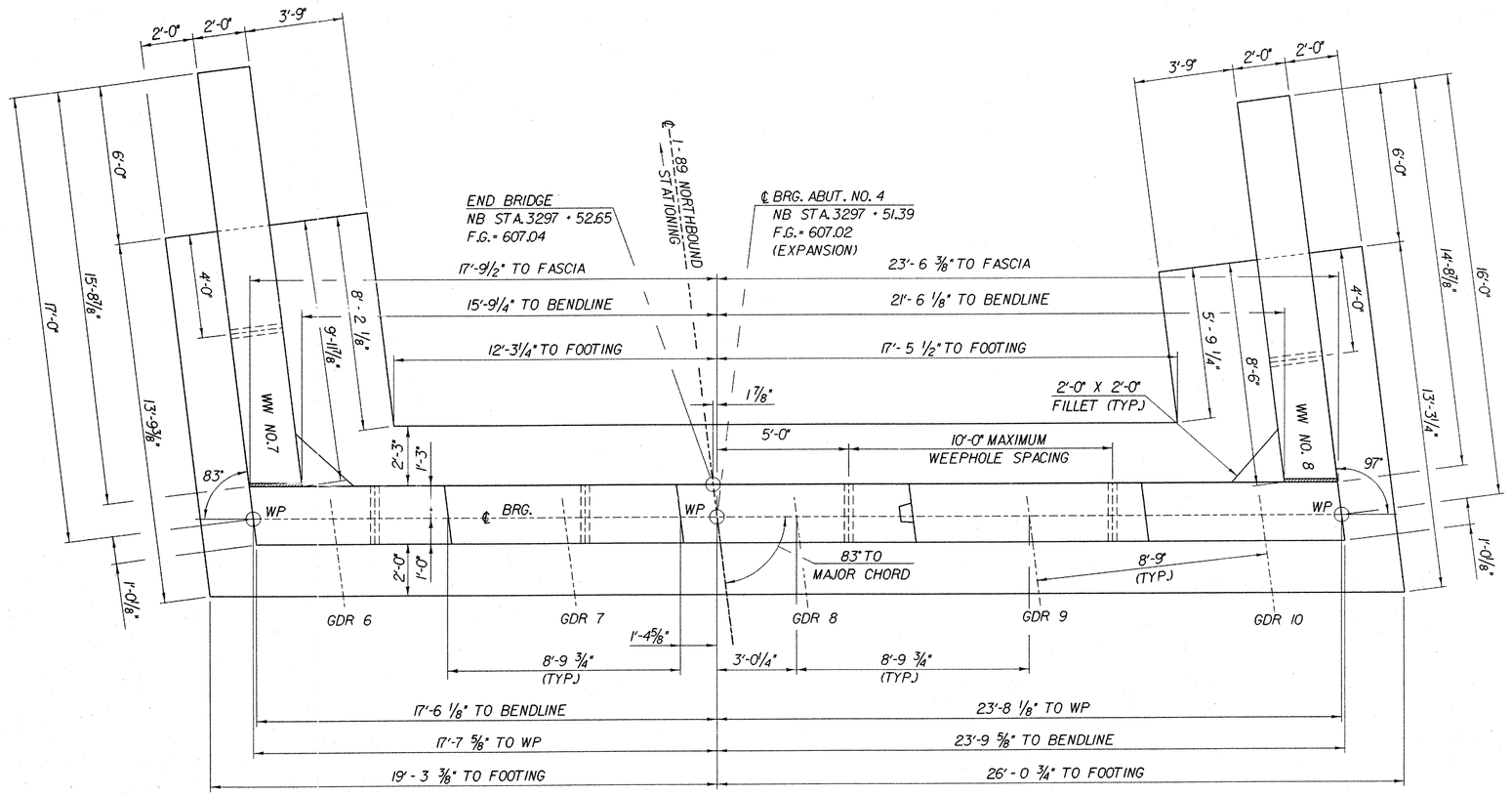

ABUTMENT NO. 4 PLAN

SCALE: ⅜" = 1'-0"

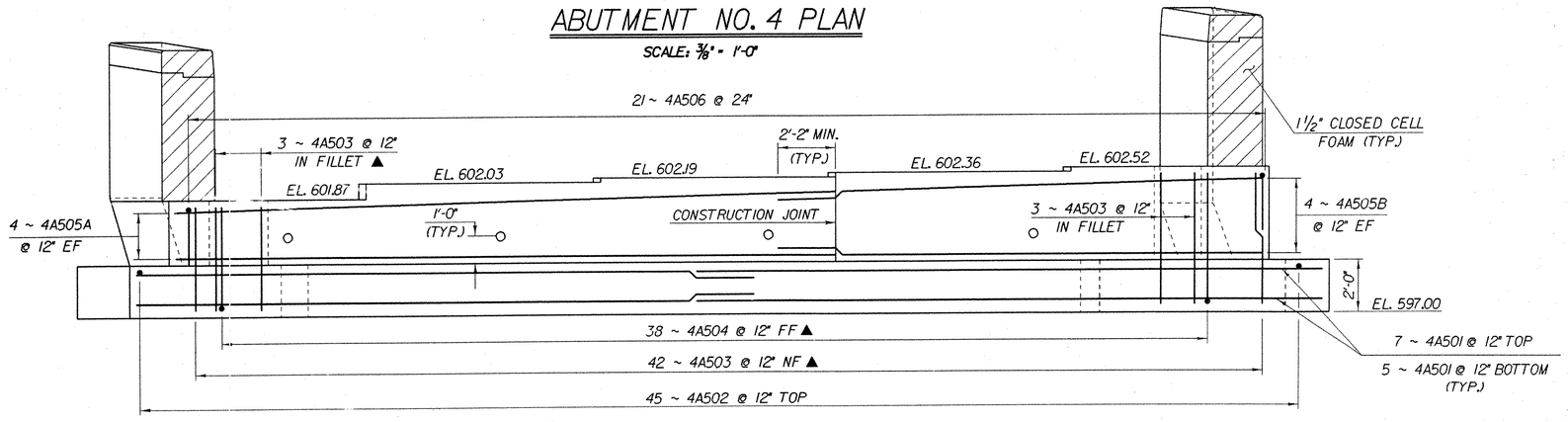

ABUTMENT NO. 4 ELEVATION

SCALE: ⅜" = 1'-0"

IMPORTANT NOTE: BRIDGE FINISHED GRADES ARE CENTERLINE GRADES.

NOTE:

NF = NEAR FACE
FF = FAR FACE
EF = EACH FACE
▲ = CUT TO FIT IN FIELD
3" CLR. UNLESS OTHERWISE SPECIFIED ON THE PLANS.

STATE OF VERMONT
AGENCY OF TRANSPORTATION

Town Of FAIRFAX-FAIRFIELD-ST. ALBANS	Bridge No. 87N
Highway No. I-89	Log Sta.
	Surv. Sta.

I-89 OVER VT 104

ABUTMENT NO. 4 DETAILS

Designed By M.LOZIER	Drawn By K.CHISHOLM
Checked By G.ROY Date 10/99	Bridge Design Supervisor R.R.WHITCOMB Date 11/99
PROJECT FAIRFAX-FAIRFIELD-ST. ALBANS	PROJECT NO. IM 089 - 3 (27)
I.G.C. Info. 94J106\Structures\sj106abd.dgn	sa056ab41
Bridge Sheet No. BR225	Sheet 103 of 370

PLOTTED 21-SEP-2000

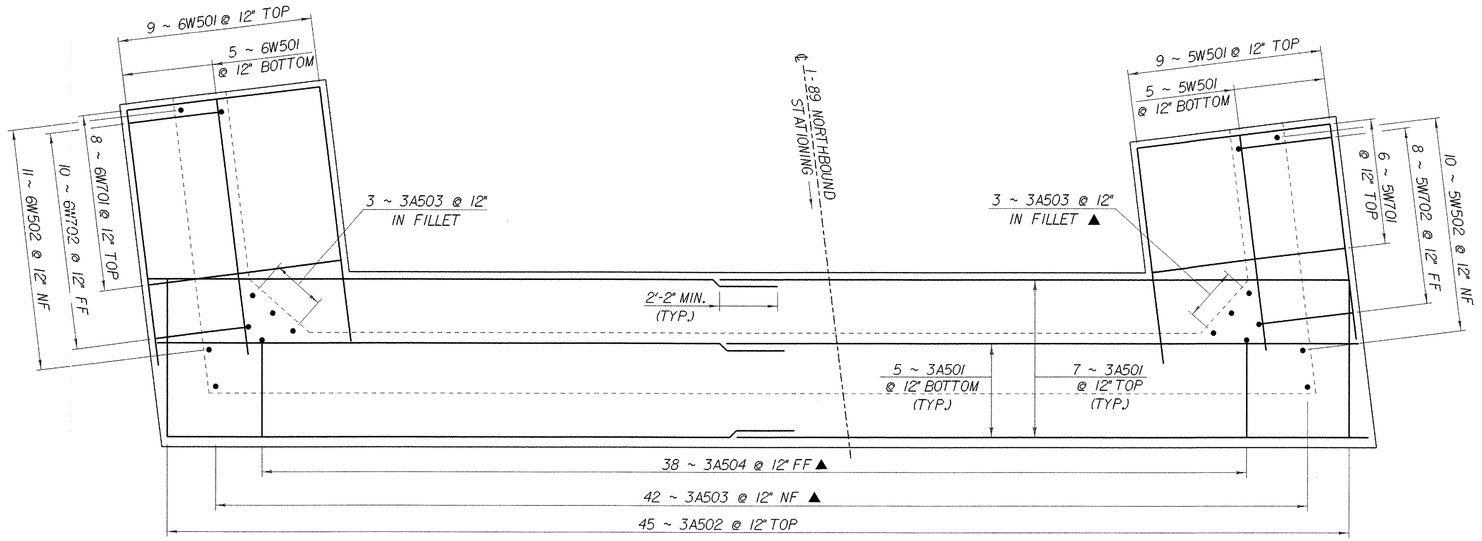

ABUTMENT NO.3 FOOTING REINFORCING PLAN

SCALE: 3/8" = 1'-0"

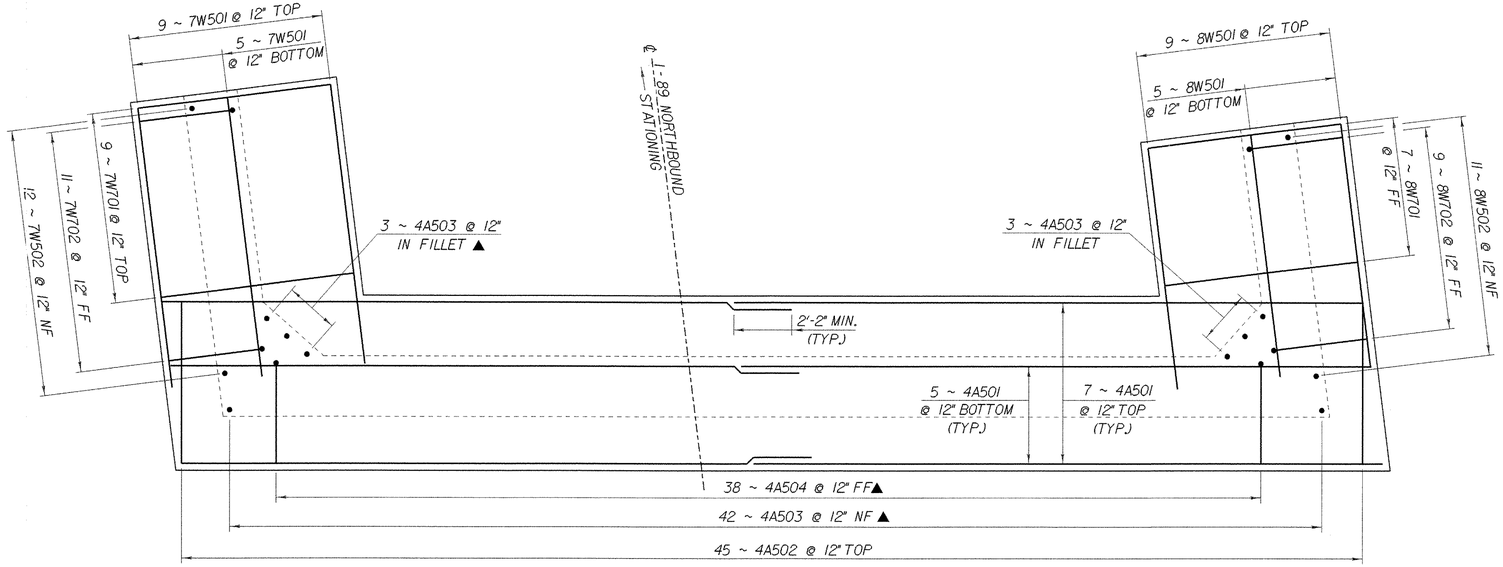

ABUTMENT NO.4 FOOTING REINFORCING PLAN

SCALE: 3/8" = 1'-0"

NOTE:

NF = NEAR FACE
FF = FAR FACE
EF = EACH FACE
▲ = CUT TO FIT IN FIELD
3" CLR. UNLESS OTHERWISE SPECIFIED ON THE PLANS.

STATE OF VERMONT
AGENCY OF TRANSPORTATION

Town Of FAIRFAX-FAIRFIELD-ST. ALBANS	Bridge No. 87N
Highway No. I-89	Log Sta. / Surv. Sta.
I-89 OVER VT 104	
ABUT. NOS. 3 & 4 FOOTING REINFORCING	
Designed By M.LOZIER	Drawn By K. CHISHOLM
Checked By G.ROY Date 10/99	Bridge Design Supervisor R.R.WHITCOMB Date 11/99
PROJECT FAIRFAX-FAIRFIELD-ST. ALBANS	PROJECT NO. I M 089 - 3 (27)
I.C.C. Info. 94J106\Structures\sJ106abdgn	so056fg2j
Bridge Sheet No. BR226	Sheet 104 of 370

PLOTTED 21-SEP-2000

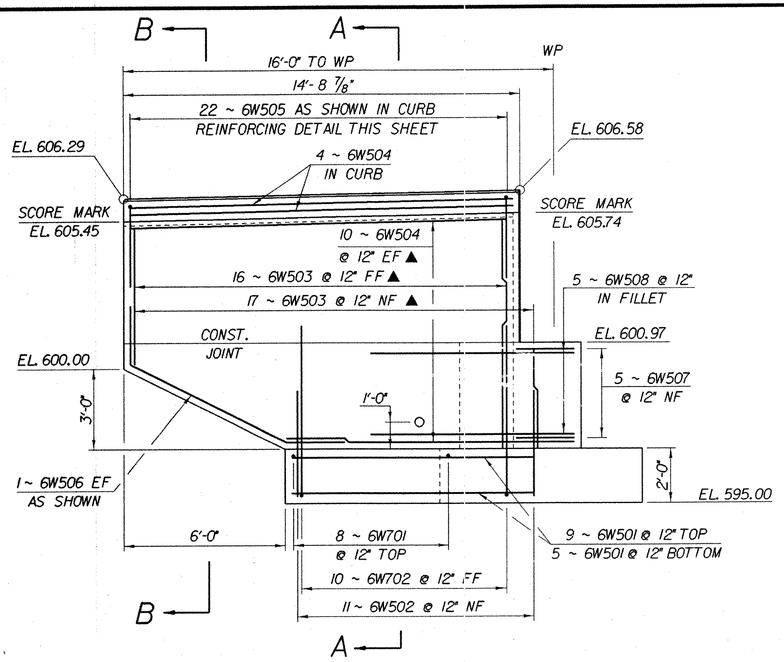

WINGWALL NO. 6

SCALE 3/8" = 1'-0"

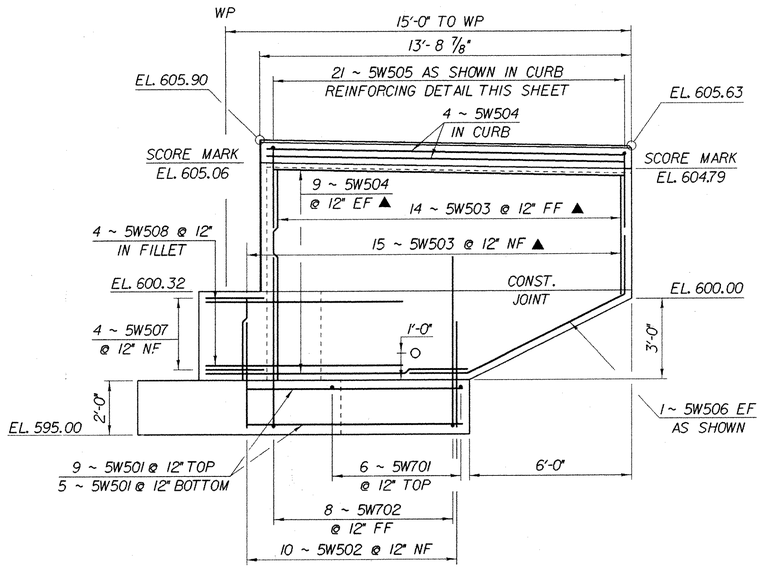

WINGWALL NO. 5

SCALE: 3/8" = 1'-0"

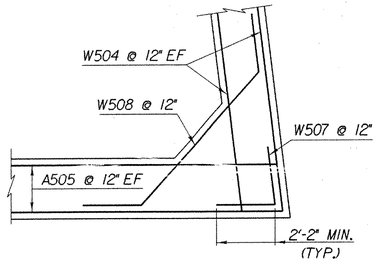

WINGWALL CORNER DETAIL BELOW BRIDGE SEAT

SCALE: 3/8" = 1'-0"

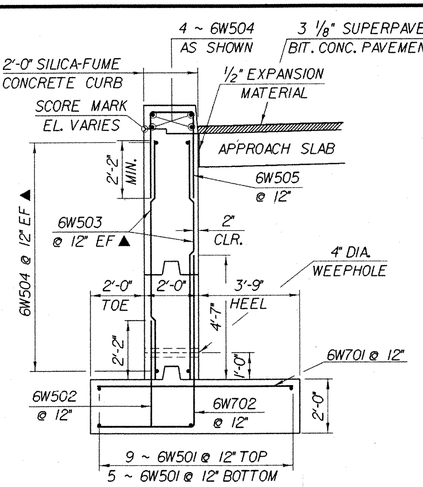

WINGWALL NO.6 TYPICAL SECTION A-A

SCALE: 3/8" = 1'-0"

(WINGWALLS 5, 7 & 8 SIMILAR)

WINGWALL NO.6 TYPICAL SECTION B-B

SCALE: 3/8" = 1'-0"

(WINGWALLS 5, 7 & 8 SIMILAR)

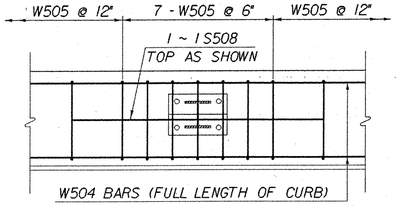

CURB REINFORCING DETAIL

NTS

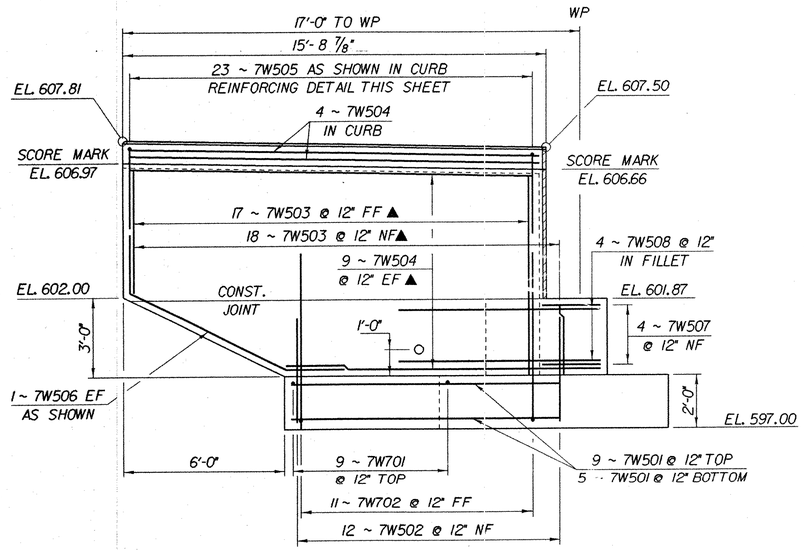

WINGWALL NO. 7

SCALE: 3/8" = 1'-0"

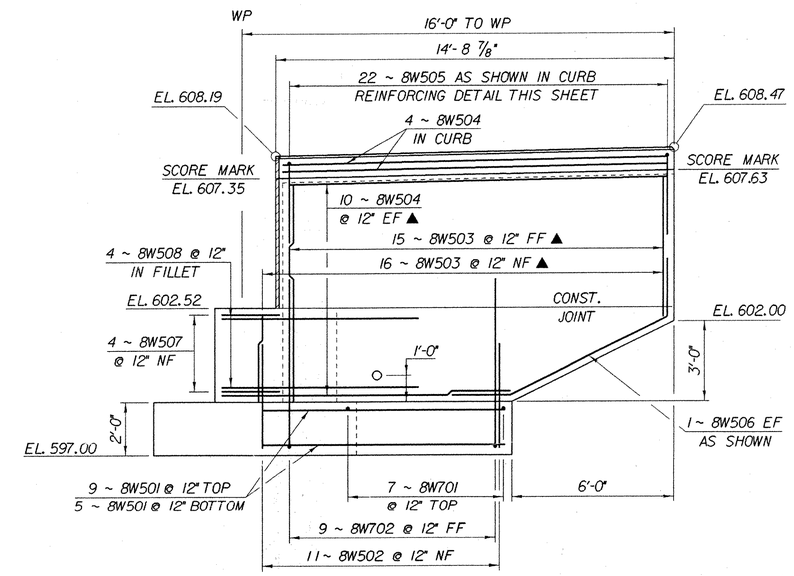

WINGWALL NO. 8

SCALE: 3/8" = 1'-0"

IMPORTANT NOTE: BRIDGE FINISHED GRADES ARE CENTERLINE GRADES.

NOTE:

NF = NEAR FACE
FF = FAR FACE
EF = EACH FACE
▲ = CUT TO FIT IN FIELD
3" CLR. UNLESS OTHERWISE SPECIFIED ON THE PLANS.

STATE OF VERMONT
AGENCY OF TRANSPORTATION

Town Of FAIRFAX-FAIRFIELD-ST. ALBANS	Bridge No. 87N
Highway No. I-89	Log Sta.
	Surv. Sta.

I-89 OVER VT 104

WINGWALL NOS. 5 - 8 ELEVATIONS

Designed By M.LOZIER	Drawn By K.CHISHOLM
Checked By G.ROY Date 10/99	Bridge Design Supervisor R.R.WHITCOMB Date 11/99
PROJECT FAIRFAX-FAIRFIELD-ST. ALBANS	PROJECT NO. I M 089 - 3 (27)
I.G.C. Info. 94J106\Structures\sJ106ab.dgn	sa056ww2J
Bridge Sheet No. BR227	Sheet 105 of 370

PLOTTED 21-SEP-2000

STATE OF VERMONT
AGENCY OF TRANSPORTATION

REINFORCING STEEL SCHEDULE

	EACH	SIZE	LENGTH	MARK	TYPE	A	B	C	D	E	F	G	H	J	K	R	O
87 S DECK																	
	342	5	28'- 10"	1S501	STR												
✳	311	5	21'- 4"	1S502	STR												
▲	8	5	36'- 5"	1S503	STR												
✳ ▲	49	5	21'- 6"	1S504	STR												
	30	5	5'- 0"	1S508	STR	(USE 8 PIECES FOR WINGWALLS @ 2 EACH PER WINGWALL)											
	232	5	6'- 3"	1S505	S5	1'- 0"	1'- 5"	1'- 5"	1'- 5"			1'- 0"					
	64	5	9'- 10"	1S506	S5	0'- 10"	3'- 10"	0'- 9"	3'- 7"			0'- 10"					
	74	5	5'- 7"	1S507	16	1'- 0"	1'- 9"	0'- 7"	2'- 3"								
✳	311	6	21'- 7"	1S601	STR												
✳ ▲	9	6	36'- 5"	1S602	STR												
	40	8	2'- 9"	1S801	19		1'- 0"	1'- 9"	----								
APPROACH SLAB NO.1																	
✳	43	5	19'- 6"	1AS501	STR												
✳	46	9	20'- 9"	1AS901	1	1'- 3"	19'- 6"										
APPROACH SLAB NO.2																	
✳	43	5	19'- 6"	2AS501	STR												
✳	46	9	20'- 9"	2AS901	1	1'- 3"	19'- 6"										
ABUTMENT NO. 1																	
	24	5	23'- 6"	1A501	STR												
	45	5	6'- 0"	1A502	STR												
✳ ▲	49	5	5'- 4"	1A503	STR												
	10	5	18'- 2"	1A505A	STR												
	10	5	24'- 10"	1A505B	STR												
▲	38	5	9'- 2"	1A504	17		5'- 4"	3'- 10"	----								
	21	5	6'- 2"	1A506	17		2'- 2"	1'- 10"	2'- 2"								
WINGWALL NO. 1																	
✳	15	5	6'- 0"	1W501	STR												
	8	5	3'- 11"	1W502	STR												
▲	25	5	7'- 8"	1W503	STR												
▲	22	5	13'- 6"	1W504	STR												
	19	5	7'- 5"	1W505	17		3'- 0"	1'- 5"	3'- 0"								
	2	5	10'- 10"	1W506	22		2'- 2"	6'- 6"	2'- 2"				1'- 11"	1'- 11"	1'- 0"	1'- 0"	
	4	5	4'- 4"	1W507	27		2'- 2"	2'- 2"					2'- 2"		0'- 3"		
	4	5	11'- 4"	1W508	22		2'- 2"	7'- 0"	2'- 2"				1'- 8"	1'- 8"	1'- 5"	1'- 5"	
✳	5	7	7'- 3"	1W701	STR												
	6	7	9'- 11"	1W702	17		6'- 4"	3'- 7"	----								
WINGWALL NO. 2																	
	14	5	8'- 6"	2W501	STR												
	10	5	3'- 11"	2W502	STR												
▲	31	5	8'- 5"	2W503	STR												
▲	24	5	15'- 6"	2W504	STR												
	21	5	7'- 5"	2W505	17		3'- 0"	1'- 5"	3'- 0"								
	2	5	10'- 10"	2W506	22		2'- 2"	6'- 6"	2'- 2"				1'- 11"	1'- 11"	1'- 0"	1'- 0"	
	5	5	4'- 4"	2W507	19		2'- 2"	2'- 2"	----				2'- 2"		0'- 3"		
	5	5	12'- 2"	2W508	22		2'- 2"	7'- 10"	2'- 2"				1'- 5"	1'- 5"	1'- 8"	1'- 8"	
✳	8	7	7'- 3"	2W701	STR												
	9	7	9'- 11"	2W702	17		6'- 4"	3'- 7"	----								

ITEM	EACH	SIZE	LENGTH	MARK	TYPE	A	B	C	D	E	F	G	H	J	K	R	O
ABUTMENT NO. 2																	
	24	5	23'- 7"	2A501	STR												
	45	5	6'- 0"	2A502	STR												
✳ ▲	49	5	5'- 10"	2A503	STR												
	10	5	27'- 0"	2A505A	STR												
	10	5	16'- 0"	2A505B	STR												
▲	38	5	9'- 8"	2A504	17		5'- 10"	3'- 10"	----								
	21	5	6'- 2"	2A506	17		2'- 2"	1'- 10"	2'- 2"								
WINGWALL NO. 3																	
	14	5	9'- 6"	3W501	STR												
	11	5	3'- 11"	3W502	STR												
✳ ▲	34	5	8'- 4"	3W503	STR												
▲	24	5	16'- 6"	3W504	STR												
	22	5	7'- 5"	3W505	17		3'- 0"	1'- 5"	3'- 0"								
	2	5	10'- 10"	3W506	22		2'- 2"	6'- 6"	2'- 2"				1'- 11"	1'- 11"	1'- 0"	1'- 0"	
	5	5	4'- 4"	3W507	19		2'- 2"	2'- 2"	----				2'- 2"		0'- 3"		
	5	5	12'- 2"	3W508	22		2'- 2"	7'- 10"	2'- 2"				1'- 5"	1'- 5"	1'- 8"	1'- 8"	
✳	9	7	7'- 3"	3W701	STR												
	10	7	9'- 11"	3W702	17		6'- 4"	3'- 7"	----								
WINGWALL NO. 4																	
	14	5	9'- 3"	4W501	STR												
	11	5	3'- 11"	4W502	STR												
▲	31	5	8'- 11"	4W503	STR												
▲	24	5	16'- 6"	4W504	STR												
	22	5	7'- 5"	4W505	17		3'- 0"	1'- 5"	3'- 0"								
	2	5	10'- 10"	4W506	22		2'- 2"	6'- 6"	2'- 2"				1'- 11"	1'- 11"	1'- 0"	1'- 0"	
	5	5	4'- 4"	4W507	27		2'- 2"	2'- 2"					2'- 2"		0'- 3"		
	5	5	11'- 4"	4W508	22		2'- 2"	7'- 0"	2'- 2"				1'- 8"	1'- 8"	1'- 5"	1'- 5"	
✳	8	7	7'- 3"	4W701	STR												
	9	7	9'- 11"	4W702	17		6'- 4"	3'- 7"	----								

~ NOTES ~

1. UNLESS OTHERWISE DESIGNATED, ALL BAR REINFORCEMENT FOR CONCRETE IN SIZES UP TO AND INCLUDING NO. 18 SHALL CONFORM TO THE REQUIREMENTS OF THE "SPECIFICATIONS FOR DEFORMED BILLET-STEEL BARS FOR CONCRETE REINFORCEMENT", AASHTO M 31 (ASTM A 615-SI). ALL BARS SHALL BE GRADE 60, UNLESS OTHERWISE DESIGNATED.
2. FOR TYPICAL BENDING DETAILS, RECOMMENDED PIN DIAMETER "D" OF BENDS AND HOOKS, AND OTHER STANDARD PRACTICE, SEE CURRENT CONCRETE REINFORCING STEEL INSTITUTE "MANUAL OF STANDARD PRACTICE".
3. BARS WHICH REQUIRE MORE ACCURATE BENDING THAN STANDARD PRACTICES SHOULD HAVE LIMITS INDICATED.
4. ALL DIMENSIONS ARE OUT TO OUT OF BAR EXCEPT "A" AND "G" ON STANDARD 180 DEGREE AND 135 DEGREE HOOKS.
5. "J" DIMENSION ON 180 DEGREE HOOKS TO BE SHOWN ONLY WHERE NECESSARY TO RESTRICT HOOK SIZE. OTHERWISE, STANDARD HOOKS ARE TO BE USED.
6. "H" DIMENSION ON STIRRUPS TO BE SHOWN ONLY WHEN NECESSARY TO MAINTAIN CLEARANCES.
7. WHERE SLOPE DIFFERS FROM 45 DEGREES, DIMENSIONS "H" AND "K" MUST BE SHOWN.
8. ▲ DENOTES BARS TO BE CUT IN FIELD.
9. ✳ DENOTES ONE EXTRA BAR ADDED FOR TESTING PURPOSES.
10. ■ DENOTES TWO EXTRA BARS ADDED FOR TESTING PURPOSES.
11. ~~"E" IN PREFIX DENOTES EPOXY COATED REINFORCING STEEL.~~

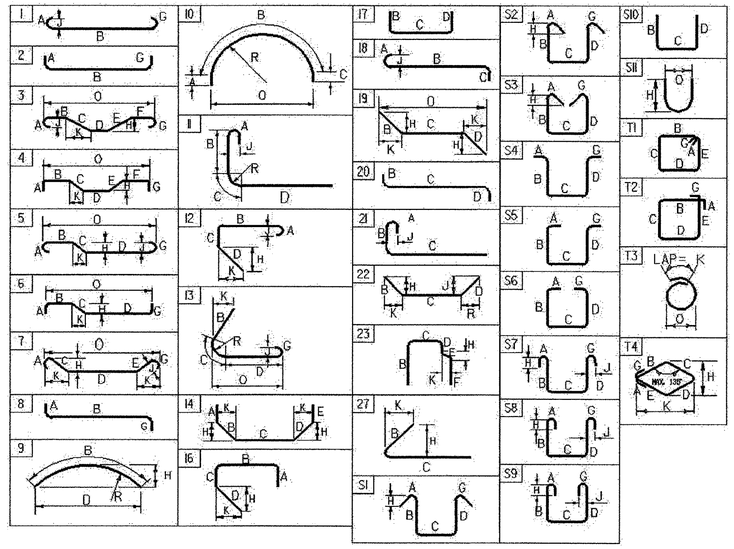

ASTM STANDARD REINFORCING BARS

BAR SIZE DESIGNATION	WEIGHT POUNDS PER FOOT	NOMINAL DIMENSIONS ROUND SECTION		
		DIAMETER INCHES	AREA INCHES^2	PERIMETER INCHES
#3	0.376	0.375	0.11	1.178
#4	0.668	0.500	0.20	1.571
#5	1.043	0.625	0.31	1.963
#6	1.502	0.750	0.44	2.356
#7	2.044	0.875	0.60	2.749
#8	2.670	1.000	0.79	3.142
#9	3.400	1.128	1.00	3.544
#10	4.303	1.270	1.27	3.990
#11	5.313	1.410	1.56	4.430
#14	7.65	1.693	2.25	5.32
#18	13.60	2.257	4.00	7.09

ALL STEEL DETAILED ON THIS SHEET TO BE EPOXY COATED

BR228

PROJECT NAME: **FAIRFAX-FAIRFIELD-ST. ALBANS**
PROJECT NUMBER: **IM 089 - 3 (27)**

FILE NAME: **\96a056\structures**
PROJECT LEADER: **R. R. WHITCOMB**
DESIGNED BY: **M. LOZIER**
BRIDGE 87S REINFORCING STEEL SCHEDULE

PLOT DATE: **9/20/00**
DRAWN BY: **G. ROY**
CHECKED BY: **P. PERRY**
SHEET 106 OF 370

STATE OF VERMONT
AGENCY OF TRANSPORTATION

REINFORCING STEEL SCHEDULE

	EACH	SIZE	LENGTH	MARK	TYPE	A	B	C	D	E	F	G	H	J	K	R	O
87 N DECK																	
	342	5	28'- 10"	2S501	STR												
✳	311	5	21'- 4"	2S502	STR												
▲	8	5	36'- 5"	2S503	STR												
✳ ▲	49	5	21'- 6"	2S504	STR												
	30	5	5'- 0"	2S508	STR	(USE 8 PIECES FOR WINGWALLS @ 2 EACH PER WINGWALL)											
	232	5	6'- 3"	2S505	S5	1'- 0"	1'- 5"	1'- 5"	1'- 5"			1'- 0"					
	64	5	9'- 10"	2S506	S5	0'- 10"	3'- 10"	0'- 9"	3'- 7"			0'- 10"					
	74	5	5'- 7"	2S507	16	1'- 0"	1'- 9"	0'- 7"	2'- 3"								
✳	311	6	21'- 7"	2S601	STR												
✳ ▲	9	6	36'- 5"	2S602	STR												
	40	8	2'- 9"	2S801	19		1'- 0"	1'- 9"	---								
APPROACH SLAB NO. 3																	
✳	43	5	19'- 6"	3AS501	STR												
✳	46	9	20'- 9"	3AS901	1	1'- 3"	19'- 6"										
APPROACH SLAB NO. 4																	
✳	43	5	19'- 6"	4AS501	STR												
✳	46	9	20'- 9"	4AS901	1	1'- 3"	19'- 6"										
ABUTMENT NO. 3																	
	24	5	23'- 6"	3A501	STR												
	45	5	6'- 0"	3A502	STR												
✳ ▲	49	5	5'- 6"	3A503	STR												
	10	5	18'- 2"	3A505A	STR												
	10	5	24'- 10"	3A505B	STR												
▲	38	5	9'- 4"	3A504	17		5'- 6"	3'- 10"	---								
	21	5	6'- 2"	3A506	17		2'- 2"	1'- 10"	2'- 2"								
WINGWALL NO. 5																	
✳	15	5	8'- 0"	5W501	STR												
	10	5	3'- 11"	5W502	STR												
▲	29	5	7'- 10"	5W503	STR												
▲	22	5	15'- 6"	5W504	STR												
	21	5	7'- 5"	5W505	17		3'- 0"	1'- 5"	3'- 0"								
	2	5	10'- 10"	5W506	22		2'- 2"	6'- 6"	2'- 2"				1'- 11"	1'- 11"	1'- 0"	1'- 0"	
	4	5	4'- 4"	5W507	27		2'- 2"	2'- 2"					2'- 2"		0'- 3"		
	4	5	11'- 2"	5W508	22		2'- 2"	7'- 0"	2'- 0"				1'- 8"	1'- 8"	1'- 5"	1'- 5"	
✳	7	7	7'- 3"	5W701	STR												
	8	7	9'- 11"	5W702	17		6'- 4"	3'- 7"	---								
WINGWALL NO. 6																	
	14	5	9'- 6"	6W501	STR												
	11	5	3'- 11"	6W502	STR												
▲	33	5	8'- 6"	6W503	STR												
▲	24	5	16'- 6"	6W504	STR												
	22	5	7'- 5"	6W505	17		3'- 0"	1'- 5"	3'- 0"								
	2	5	10'- 10"	6W506	22		2'- 2"	6'- 6"	2'- 2"				1'- 11"	1'- 11"	1'- 0"	1'- 0"	
	5	5	4'- 4"	6W507	19		2'- 2"	2'- 2"	---				2'- 2"		0'- 3"		
	5	5	12'- 2"	6W508	22		2'- 2"	7'- 10"	2'- 2"				1'- 5"	1'- 5"	1'- 8"	1'- 8"	
✳	9	7	7'- 3"	6W701	STR												
	10	7	9'- 11"	6W702	17		6'- 4"	3'- 7"	---								

ITEM	EACH	SIZE	LENGTH	MARK	TYPE	A	B	C	D	E	F	G	H	J	K	R	O
ABUTMENT NO. 4																	
	24	5	23'- 7"	4A501	STR												
	45	5	6'- 0"	4A502	STR												
✳ ▲	49	5	5'- 0"	4A503	STR												
	10	5	27'- 0"	4A505A	STR												
	10	5	16'- 0"	4A505B	STR												
▲	38	5	8'- 10"	4A504	17		5'- 0"	3'- 10"	---								
	21	5	6'- 2"	4A506	17		2'- 2"	1'- 10"	2'- 2"								
WINGWALL NO. 7																	
	14	5	10'- 6"	7W501	STR												
	12	5	3'- 11"	7W502	STR												
✳ ▲	36	5	7'- 9"	7W503	STR												
▲	22	5	17'- 6"	7W504	STR												
	23	5	7'- 5"	7W505	17		3'- 0"	1'- 5"	3'- 0"								
	2	5	10'- 10"	7W506	22		2'- 2"	6'- 6"	2'- 2"				1'- 11"	1'- 11"	1'- 0"	1'- 0"	
	4	5	4'- 4"	7W507	19		2'- 2"	2'- 2"	---				2'- 2"		0'- 3"		
	4	5	12'- 2"	7W508	22		2'- 2"	7'- 10"	2'- 2"				1'- 5"	1'- 5"	1'- 8"	1'- 8"	
✳	10	7	7'- 3"	7W701	STR												
	11	7	9'- 11"	7W702	17		6'- 4"	3'- 7"	---								
WINGWALL NO. 8																	
	14	5	9'- 3"	8W501	STR												
	11	5	3'- 11"	8W502	STR												
▲	31	5	8'- 4"	8W503	STR												
▲	24	5	16'- 6"	8W504	STR												
	22	5	7'- 5"	8W505	17		3'- 0"	1'- 5"	3'- 0"								
	2	5	10'- 10"	8W506	22		2'- 2"	6'- 6"	2'- 2"				1'- 11"	1'- 11"	1'- 0"	1'- 0"	
	4	5	4'- 4"	8W507	27		2'- 2"	2'- 2"					2'- 2"		0'- 3"		
	4	5	11'- 4"	8W508	22		2'- 2"	7'- 0"	2'- 2"				1'- 8"	1'- 8"	1'- 5"	1'- 5"	
✳	8	7	7'- 3"	8W701	STR												
	9	7	9'- 11"	8W702	17		6'- 4"	3'- 7"	---								

~ NOTES ~

1. UNLESS OTHERWISE DESIGNATED, ALL BAR REINFORCEMENT FOR CONCRETE IN SIZES UP TO AND INCLUDING NO. 18 SHALL CONFORM TO THE REQUIREMENTS OF THE "SPECIFICATIONS FOR DEFORMED BILLET-STEEL BARS FOR CONCRETE REINFORCEMENT", AASHTO M 31 (ASTM A 615-SI). ALL BARS SHALL BE GRADE 60, UNLESS OTHERWISE DESIGNATED.
2. FOR TYPICAL BENDING DETAILS, RECOMMENDED PIN DIAMETER "D" OF BENDS AND HOOKS, AND OTHER STANDARD PRACTICE, SEE CURRENT CONCRETE REINFORCING STEEL INSTITUTE "MANUAL OF STANDARD PRACTICE".
3. BARS WHICH REQUIRE MORE ACCURATE BENDING THAN STANDARD PRACTICES SHOULD HAVE LIMITS INDICATED.
4. ALL DIMENSIONS ARE OUT TO OUT OF BAR EXCEPT "A" AND "G" ON STANDARD 180 DEGREE AND 135 DEGREE HOOKS.
5. "J" DIMENSION ON 180 DEGREE HOOKS TO BE SHOWN ONLY WHERE NECESSARY TO RESTRICT HOOK SIZE. OTHERWISE, STANDARD HOOKS ARE TO BE USED.
6. "H" DIMENSION ON STIRRUPS TO BE SHOWN ONLY WHEN NECESSARY TO MAINTAIN CLEARANCES.
7. WHERE SLOPE DIFFERS FROM 45 DEGREES, DIMENSIONS "H" AND "K" MUST BE SHOWN.
8. ▲ DENOTES BARS TO BE CUT IN FIELD.
9. ✳ DENOTES ONE EXTRA BAR ADDED FOR TESTING PURPOSES.
10. ■ DENOTES TWO EXTRA BARS ADDED FOR TESTING PURPOSES.
11. ~~"E" IN PREFIX DENOTES EPOXY COATED REINFORCING STEEL.~~

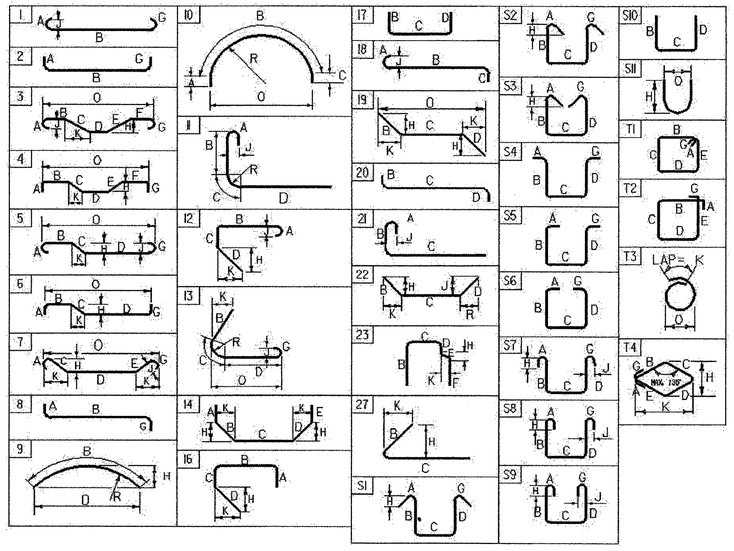

ASTM STANDARD REINFORCING BARS

BAR SIZE DESIGNATION	WEIGHT POUNDS PER FOOT	NOMINAL DIMENSIONS ROUND SECTION		
		DIAMETER INCHES	AREA INCHES^2	PERIMETER INCHES
#3	0.376	0.375	0.11	1.178
#4	0.668	0.500	0.20	1.571
#5	1.043	0.625	0.31	1.963
#6	1.502	0.750	0.44	2.356
#7	2.044	0.875	0.60	2.749
#8	2.670	1.000	0.79	3.142
#9	3.400	1.128	1.00	3.544
#10	4.303	1.270	1.27	3.990
#11	5.313	1.410	1.56	4.430
#14	7.65	1.693	2.25	5.32
#18	13.60	2.257	4.00	7.09

BR229

ALL STEEL DETAILED ON THIS SHEET TO BE EPOXY COATED

PROJECT NAME: FAIRFAX-FAIRFIELD-ST. ALBANS
PROJECT NUMBER: IM 089 - 3 (27)

FILE NAME: \96a056\structures
PROJECT LEADER: R. R. WHITCOMB
DESIGNED BY: M. LOZIER
BRIDGE 87N REINFORCING STEEL SCHEDULE

PLOT DATE: 9/20/00
DRAWN BY: G. ROY
CHECKED BY: P. PERRY
SHEET 107 OF 370

MECHANICALLY STABLIZIED EARTH WALL NOTES

WALL DESIGN

1. FINAL DESIGN DRAWINGS SHOWING PROPOSED PANEL SIZE, THE REQUIRED NUMBER OF REINFORCEMENT STRIPS PER PANEL, THE REINFORCEMENT STRIP LENGTHS, REINFORCEMENT STRIP LAYOUT, CONCRETE PANEL REINFORCEMENT DETAILS, NB/SB CONSTRUCTION SEQUENCING METHOD AND PANEL TIE-IN DETAILS WITH COPING AND LEVELING PAD SHALL BE PREPARED BY THE CONTRACTOR AND SUBMITTED TO THE ENGINEER FOR APPROVAL. THE FINAL DESIGN SHALL BE BASED ON THE ASSUMPTION THAT THE MATERIAL WITHIN THE MECHANICALLY STABILIZED EARTH (MSE) VOLUME, METHODS OF CONSTRUCTION AND THE QUALITY OF PREFABRICATED MATERIALS SHALL MEET THE VERMONT AGENCY OF TRANSPORTATION TECHNICAL SPECIFICATIONS FOR MSE WALLS.

2. DESIGN CRITERIA:

   SOILS CHARACTERISTICS FOR USE IN DESIGN:

   SELECT GRANULAR BACKFILL
   ϕ = 34°, c = 0 PSF, γ = 140 PCF

   EARTH BORROW
   ϕ = 30°, c = 0 PSF, γ = 140 PCF

   EXISTING SUBGRADE SOIL
   ϕ = 33°, c = 0 PSF, γ = 127 PCF

   ABUTMENT DESIGN LOADS:

   VERTICAL DEAD LOAD FROM SUPERSTRUCTURE = 10.64 KIPS/FT.
   VERTICAL LIVE LOAD FROM SUPERSTRUCTURE = 7.83 KIPS/FT.
   HORIZONTAL LOAD FROM SUPERSTRUCTURE = 0.84 KIPS/FT.
   LIVE LOAD SURCHARGE = 0.28 KSF

3. THE MAXIMUM ALLOWABLE BEARING PRESSURE FOR THE MSE WALLS IS 6500 PSF.

4. ANY UNSUITABLE FOUNDATION MATERIAL BELOW THE MSE VOLUME, AS DETERMINED BY THE ENGINEER, SHALL BE EXCAVATED AND REPLACED WITH SELECT GRANULAR BACKFILL OR OTHERWISE STABILIZED AS DIRECTED BY THE ENGINEER.

WALL CONSTRUCTION

5. BACKFILL MATERIAL SHALL BE COMPACTED IN ACCORDANCE WITH THE SPECIFICATIONS FOR MSE WALLS TO A LEVEL OF +/- 2" ABOVE THE TIE STRIPS EMBEDDED IN THE PANELS. INSTALLATION OF REINFORCING STRIPS SHALL BE PERMITTED ONLY AFTER PLACEMENT AND COMPACTION OF THE BACKFILL MATERIAL HAS REACHED THE REQUIRED LEVEL.

6. COMPACTION AND OPERATION EQUIPMENT SHALL BE KEPT A MINIMUM DISTANCE OF 3 FEET FROM THE BACK FACE OF THE MSE PANELS. COMPACTION WITHIN 3 FEET OF THE PANELS SHALL BE ACHIEVED WITH AT LEAST THREE (3) PASSES OF A LIGHTWEIGHT MECHANICAL TAMPER, ROLLER OR VIBRATORY SYSTEM.

7. AT A HEIGHT OF 20 FEET, THE FINISHED GRADE IN FRONT OF THE WALL SHALL BE PLACED AND COMPACTED BEFORE WALL CONSTRUCTION EXCEEDS A HEIGHT OF 20 FEET. FINISHED GRADE BACKFILL SHALL BE COMPACTED TO 95% OF AASHTO T-99, UNLESS OTHERWISE DIRECTED BY THE ENGINEER.

8. IT IS THE CONTRACTOR'S RESPONSIBILITY TO DETERMINE THE LOCATION OF ANY GUARDRAIL POSTS BEHIND THE MSE PANELS. PRIOR TO PLACEMENT OF THE TOP LAYERS OF REINFORCING STRIPS, INDIVIDUAL STRIPS MAY BE SKEWED TO AVOID THE POST LOCATIONS. THE CONTRACTOR SHALL REPAIR ANY DAMAGE DONE TO THE REINFORCING STRIPS DUE TO THE INSTALLATION OF GUARDRAIL AT NO ADDITIONAL EXPENSE TO THE STATE OF VERMONT.

9. THE CONTRACTOR SHALL ACCOMMODATE ANY PIPES, GEOMEMBRANE LINER, DRAINAGE STRUCTURES, FOUNDATIONS, GUARDRAIL POSTS AND OTHER SUCH ITEMS AND APPURTENANCES THAT ARE WITHIN THE DESIGNED MSE VOLUME.

10. TOP PANELS BENEATH COPING SHALL HAVE A MINIMUM OF 3 DOWELS PROTRUDING FROM THEIR TOP EDGE.

11. THE CONTRACTOR IS RESPONSIBLE FOR GRADUALLY DEFLECTING UPPER REINFORCING STRIPS DOWNWARD TO AVOID CONFLICTS WITH PAVING AND SUBGRADE PREPARATION. THE CONTRACTOR'S ATTENTION IS DIRECTED ESPECIALLY TO SITUATIONS WHERE ROADWAY SUPERELEVATION AND/OR SOIL MIXING ARE ANTICIPATED.

12. THE CONTRACTOR IS RESPONSIBLE FOR CONTROLLING THE STORM WATER DRAINAGE IN THE VICINITY OF THE WALL DURING CONSTRUCTION. STORM WATER RUNOFF IS TO BE COLLECTED AND DISCHARGED AWAY FROM THE WALL AND REINFORCED BACKFILL.

13. THE REQUIRED HORIZONTAL LIMIT OF GRANULAR BACKFILL SHALL EXCEED THE NOMINAL STRIP LENGTH.

MATERIAL NOTES

14. THE SELECT GRANULAR BACKFILL QUANTITY SHALL BE ESTIMATED BY MULTIPLYING THE NOMINAL STRIP LENGTHS (PLUS 1 FOOT) BY THEIR TRIBUTARY WALL SURFACE AREA AND CONVERTING THE RESULT TO A NEATLINE CUBIC YARD QUANTITY.

15. THE PRECAST PANELS FOR THIS PROJECT SHALL HAVE AN ASHLAR STONE FINISH APPROVED BY THE ENGINEER, UNLESS OTHERWISE SPECIFIED. THE CONCRETE SHALL BE COLORED IN ACCORDANCE WITH AN APPROVED SUBMITTAL FOR CONCRETE COLORING.

16. CONCRETE FOR BOTH THE CAST-IN-PLACE COPING AND LEVELING PAD SHALL BE CONCRETE, CLASS B. CONCRETE FOR THE COPING SHALL BE PAID FOR UNDER ITEM 501.25 "CONCRETE, CLASS B". REINFORCEMENT IN THE COPING SHALL BE PAID FOR UNDER ITEM 507.17, "EPOXY COATED REINFORCING STEEL". LEVELING PAD CONCRETE AND REINFORCING, AND ITS PLACEMENT, SHALL BE PAID FOR UNDER ITEM 526.40, "REINFORCED SLOPE (MSE WALL SYSTEM)".

NOTE TO CONTRACTORS

17. THE FOLLOWING MATERIALS SHALL BE SUPPLIED BY THE MSE WALL SYSTEM MANUFACTURER UNDER ITEM 526.40, "REINFORCED SLOPE (MSE WALL SYSTEM)":

    - PRECAST CONCRETE FACING PANELS
    - REINFORCING STRIPS
    - BOLT SETS (FOR ATTACHING PANELS TO THE REINFORCING STRIPS)
    - BEARING BLOCKS
    - RUBBER SHIMS
    - FILTER CLOTH AND ADHESIVE (FOR PANEL JOINTS ONLY)

18. OTHER MSE WALL MATERIALS CALLED FOR IN THE CONTRACT PLANS OR SPECIFICATIONS SHALL BE SUPPLIED BY THE CONTRACTOR. THIS MAY INCLUDE, BUT IS NOT LIMITED TO, ANY JOINT MATERIAL SHOWN AT THE INTERFACE OF PRECAST PANELS AND CAST-IN-PLACE CONCRETE STRUCTURES, SANDBLASTING, PAINTING, SEALERS OR OTHER SPECIAL APPLIED COATINGS.

STATE OF VERMONT
AGENCY OF TRANSPORTATION

Town Of FAIRFAX-FAIRFIELD-ST. ALBANS	Bridge No. 87 N&S
Highway No. I-89	Log Sta. / Surv. Sta.
I-89 OVER VT 104	
MSE WALL NOTES	
Designed By G. ROY	Drawn By G. ROY
Checked By M. LOZIER Date 11/99	Bridge Design Supervisor R. R. WHITCOMB Date 11/99
PROJECT FAIRFAX-FAIRFIELD-ST. ALBANS	PROJECT NO. IM 089-3 (27)
I.G.C. Info. \96a056\Structures\sa056mse.dgn	sa056mwnJ
Bridge Sheet No. BR230	Sheet 108 of 370

PLOTTED 15-NOV-2000

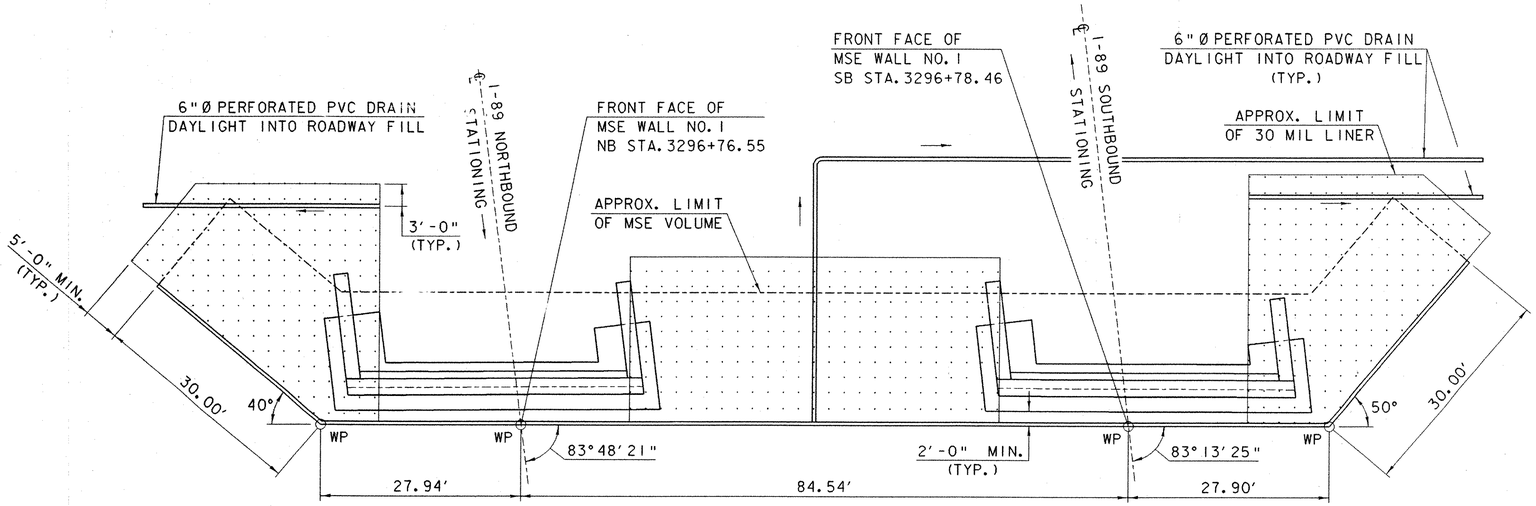

MSE WALL NO. 1 PLAN

SCALE: 1" = 10'-0"

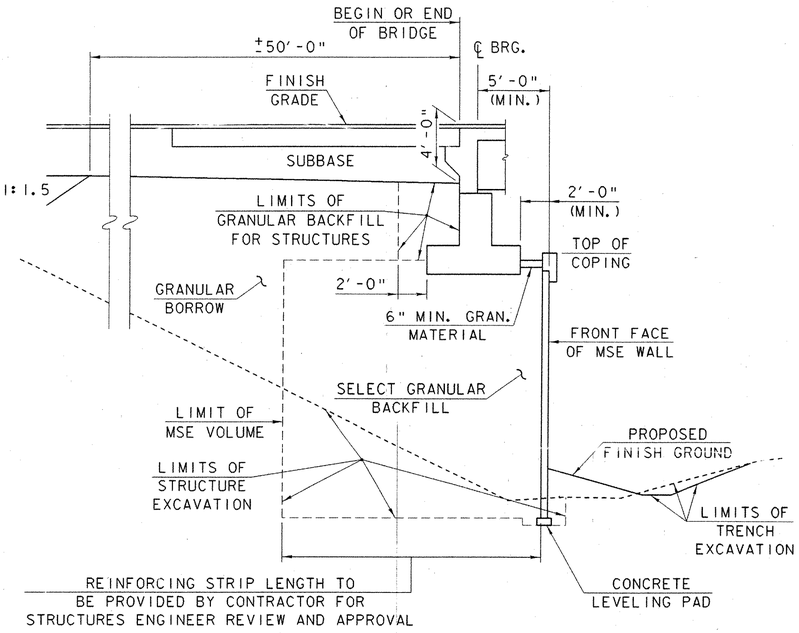

TYPICAL SECTION THRU ABUTMENT

SCALE: 1" = 5'-0"

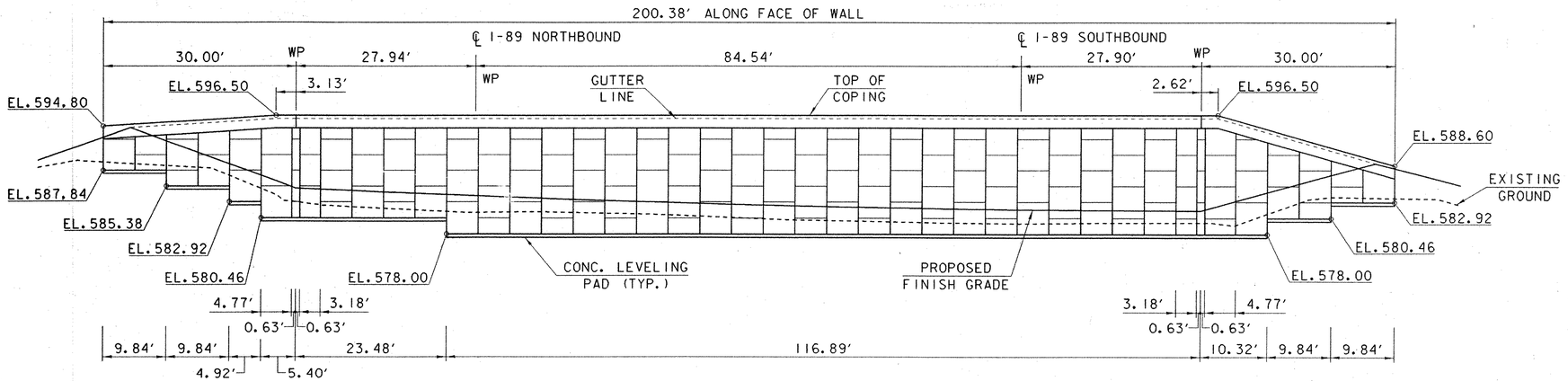

MSE WALL NO. 1 ELEVATION

SCALE: 1" = 10'-0"

NOTES

1. LENGTH OF LEVELING PAD IS BASED ON INDIVIDUAL PANEL WIDTHS, ℄ OF PIN TO ℄ OF PIN. USE STEP DETAIL ON SHEET BR233 TO DETERMINE THE ACTUAL LEVELING PAD STEP LOCATION.
2. SEE SHEET BR234 FOR COPING DETAILS APPLIED ON TOP OF MSE WALL PANELS.
3. GRANULAR MATERIAL PLACED ON TOP OF 30 MIL LINER SHALL CONFORM TO STANDARD ¾" STONE IN STANDARD SPECIFICATIONS TABLE 704.02B.
4. COST FOR LINER, FILTER FABRIC, GRANULAR MATERIAL PLACED ON LINER, 6"Ø PERFORATED PVC DRAIN, SELECT GRANULAR BACKFILL AND CONCRETE LEVELING PAD SHALL BE INCLUDED IN THE SQUARE FOOT COST FOR ITEM 526.40, "REINFORCED SLOPE (MSE WALL SYSTEM)".

IMPORTANT NOTE: BRIDGE FINISHED GRADES ARE CENTERLINE GRADES.

STATE OF VERMONT
AGENCY OF TRANSPORTATION

Town Of FAIRFAX-FAIRFIELD-ST. ALBANS	Bridge No. 87 N&S
Highway No. I-89	Log Sta. / Surv. Sta.
I-89 OVER VT 104	
MSE WALL NO. 1 PLAN AND ELEVATION	
Designed By G. ROY	Drawn By G. ROY
Checked By M. LOZIER Date 11/99	Bridge Design Supervisor R. R. WHITCOMB Date 11/99
PROJECT FAIRFAX-FAIRFIELD-ST. ALBANS	PROJECT NO. IM 089-3 (27)
I.G.C. Info. \96a056\Structures\sa056mse.dgn	sa056mw1J
Bridge Sheet No. BR231	Sheet 109 of 370

PLOTTED 21-SEP-2000

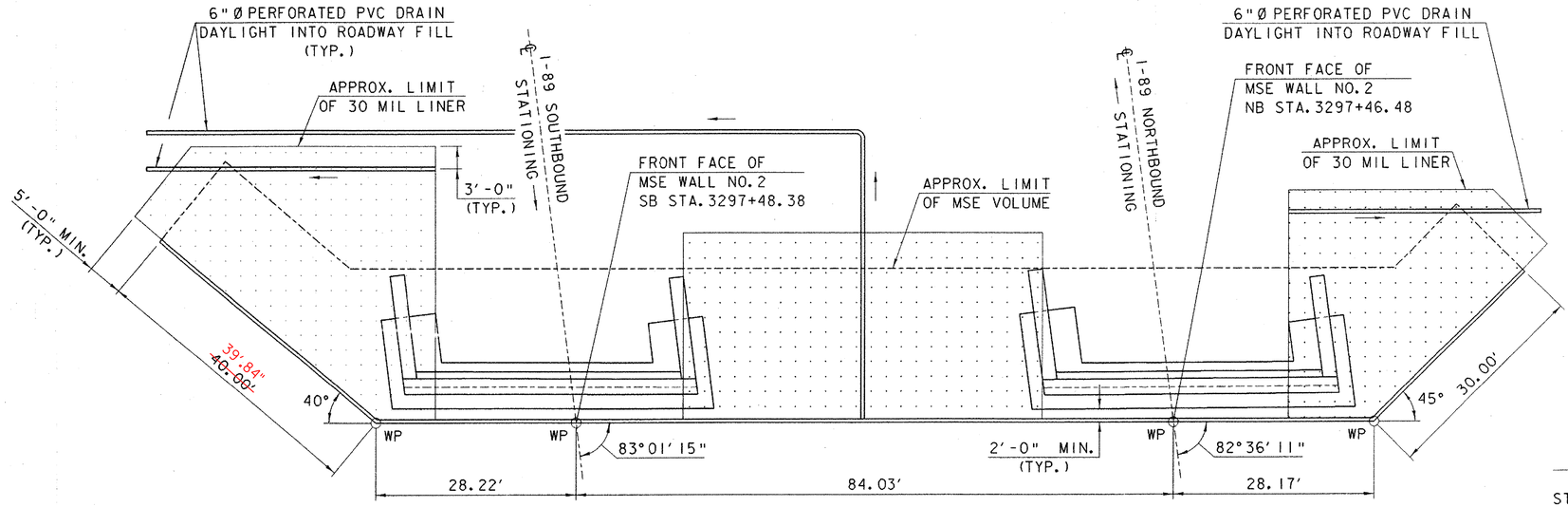

MSE WALL NO. 2 PLAN

SCALE: 1" = 10'-0"

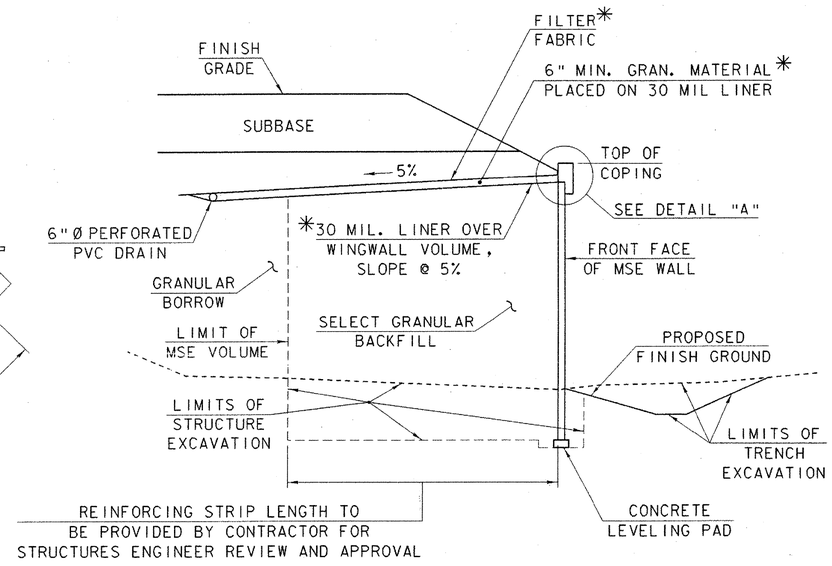

TYPICAL SECTION THRU WINGWALL

SCALE: 1" = 5'-0"

*SEE NOTE NO. 4 ON SHEET BR231.

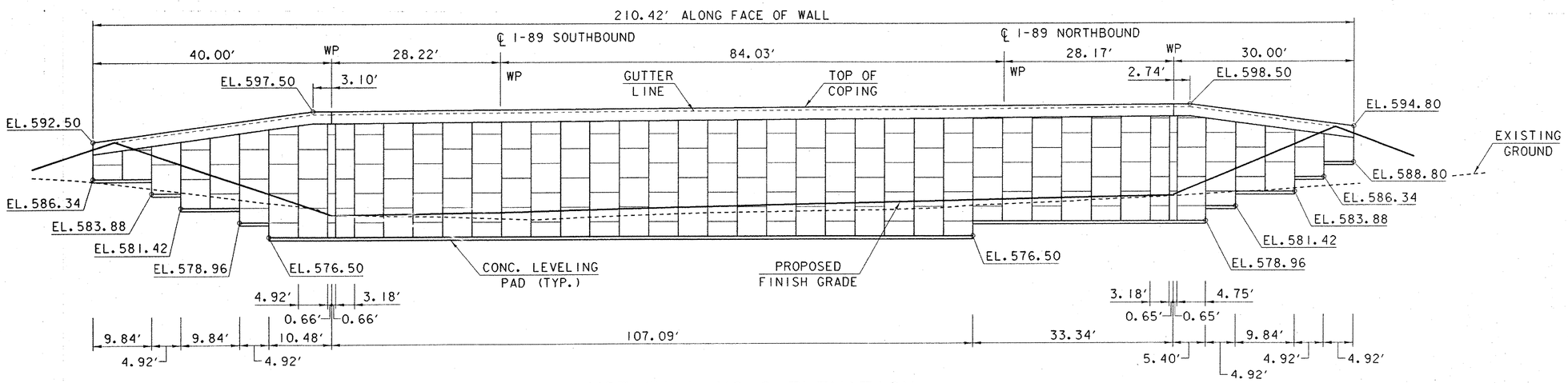

MSE WALL NO. 2 ELEVATION

SCALE: 1" = 10'-0"

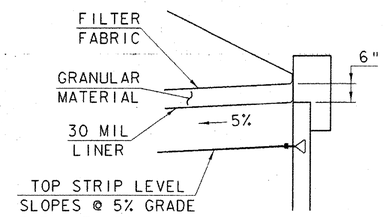

DETAIL "A"

SCALE: ½" = 1'-0"

IMPORTANT NOTE: BRIDGE FINISHED GRADES ARE CENTERLINE GRADES.

STATE OF VERMONT
AGENCY OF TRANSPORTATION

Town Of FAIRFAX-FAIRFIELD-ST. ALBANS	Bridge No. 87 N&S
Highway No. I-89	Log Sta. / Surv. Sta.
I-89 OVER VT 104	
MSE WALL NO. 2 PLAN AND ELEVATION	
Designed By G. ROY	Drawn By G. ROY
Checked By M. LOZIER Date 11/99	Bridge Design Supervisor R. R. WHITCOMB Date 11/99
PROJECT FAIRFAX-FAIRFIELD-ST. ALBANS	PROJECT NO. IM 089-3 (27)
I.G.C. Info. \96a056\Structures\sa056msedgn	sa056mw21
Bridge Sheet No. BR232	Sheet 110 of 370

PLOTTED 21-SEP-2000

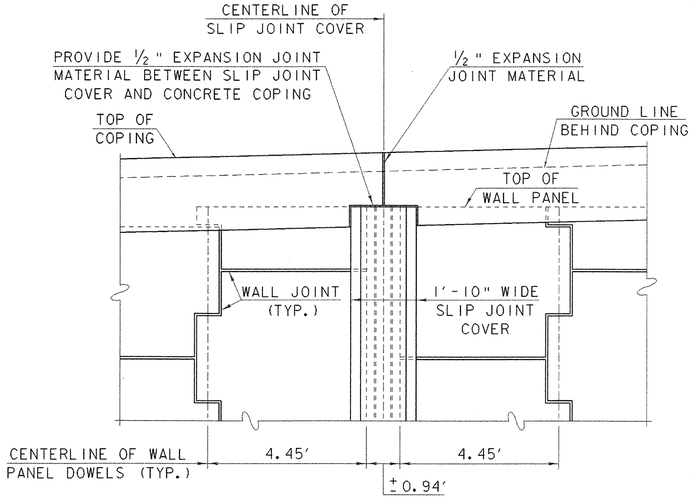

COPING OVER SLIP JOINT COVER
PARTIAL ELEVATION - FRONT FACE

SCALE: ½" = 1'-0"

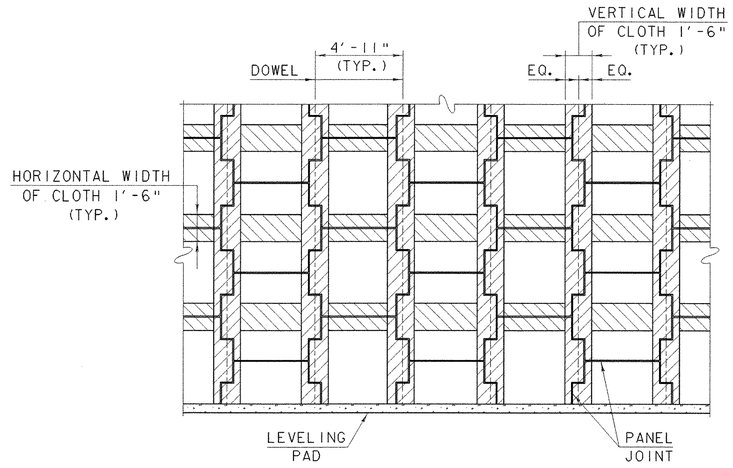

FILTER CLOTH DETAIL
PARTIAL ELEVATION - BACK FACE

SCALE: ¼" = 1'-0"

NOTE:

STRIPS OF FILTER CLOTH SHALL BE PLACED ON BACK FACE OF PANEL OVER PANEL JOINTS. FILTER CLOTH SHALL BE ADHERED TO BACK FACE OF PANELS USING AN ADHESIVE COMPOUND SUPPLIED BY THE MANUFACTURER.

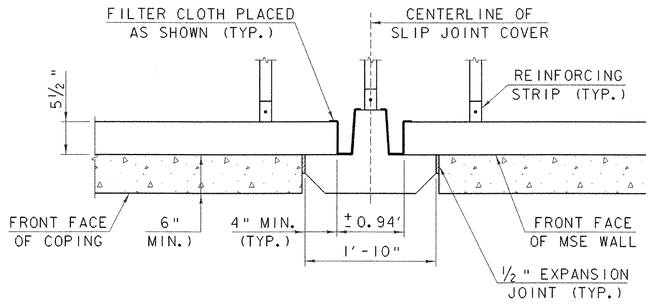

SLIP JOINT COVER PLAN DETAIL

SCALE: 1" = 1'-0"

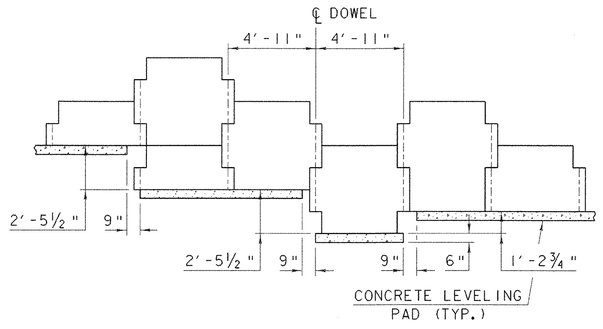

TYPICAL LEVELING PAD STEP DETAIL

SCALE: ¼" = 1'-0"

STATE OF VERMONT
AGENCY OF TRANSPORTATION

Town Of FAIRFAX-FAIRFIELD-ST. ALBANS	Bridge No. 87 N&S
Highway No. I-89	Log Sta. / Surv. Sta.
I-89 OVER VT 104	
MSE WALL DETAILS (1)	
Designed By G. ROY	Drawn By G. ROY
Checked By M. LOZIER Date 11/99	Bridge Design Supervisor R. R. WHITCOMB Date 11/99
PROJECT FAIRFAX-FAIRFIELD-ST. ALBANS	PROJECT NO. IM 089-3 (27)
I.G.C. Info. \96a056\Structures\sa056mse.dgn	sa056mw3J
Bridge Sheet No. BR233	Sheet 111 of 370

PLOTTED 21-SEP-2000

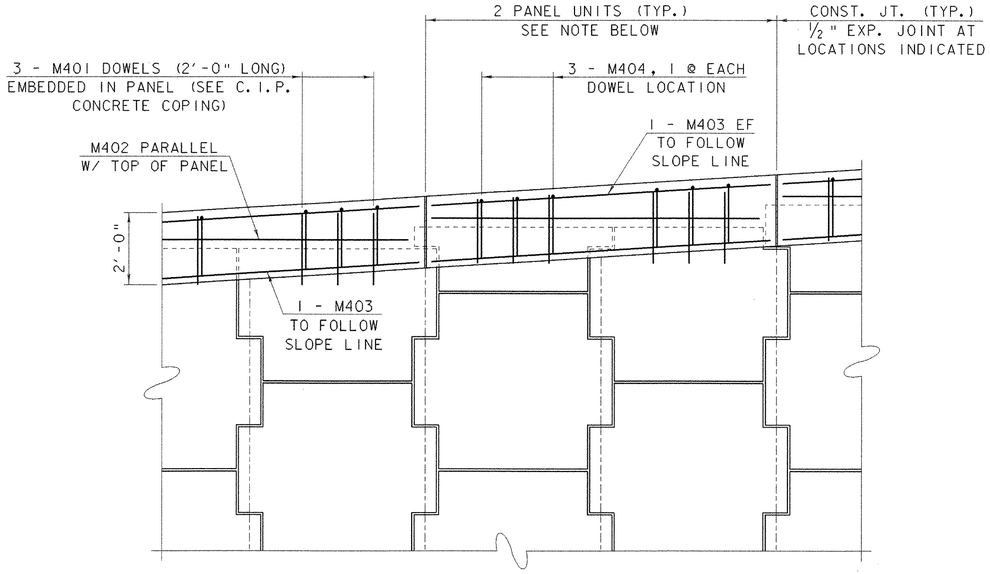

C.I.P. COPING
PARTIAL ELEVATION - FRONT FACE

SCALE: 1/2" = 1'-0"

NOTE:

JOINTS IN COPING SHALL BE AT 2 PANEL INTERVALS AND COINCIDE APPROXIMATELY WITH PANEL JOINTS. REINFORCING STEEL SHALL BE STOPPED 2" SHORT OF EITHER SIDE OF THE CONSTRUCTION AND EXPANSION JOINTS. COMPRESSIBLE CORK BOND BREAKER MATERIAL SHALL BE PLACED BETWEEN THE PANELS AND THE COPING TO PREVENT CRACKING.

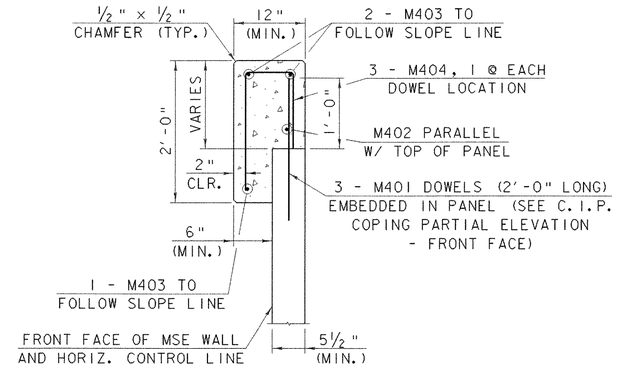

C.I.P. CONCRETE COPING

SCALE: 1" = 1'-0"

NOTES:

1. CONCRETE FOR COPING SHALL BE CONCRETE, CLASS "B".
2. REINFORCING STEEL SHALL BE GRADE 60 EPOXY COATED.
3. THE CONTRACTOR SHALL EXERCISE CARE NOT TO STAIN THE MSE WALL PANELS WHEN PLACING CAST-IN-PLACE CONCRETE. ANY STAINING AS A RESULT OF CONCRETE PLACEMENT SHALL BE REMOVED AT THE CONTRACTOR'S EXPENSE.

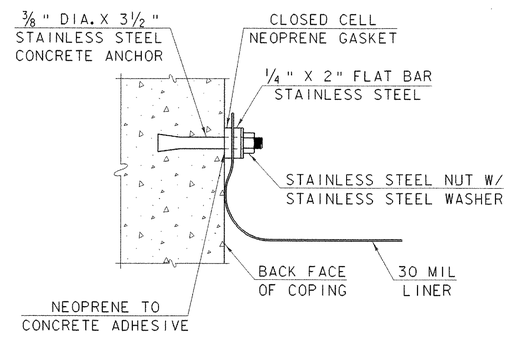

LINER CONNECTION TO COPING

NOT TO SCALE

COST OF HARDWARE AND LABOR TO CONNECT LINER TO COPING SHALL BE SUBSIDIARY TO ITEM 526.40, "REINFORCED SLOPE (MSE WALL SYSTEM)".

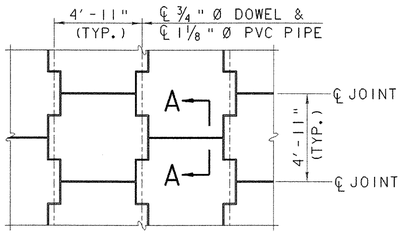

TYPICAL PANEL LAYOUT
PARTIAL ELEVATION - FRONT FACE

SCALE: 1/4" = 1'-0"

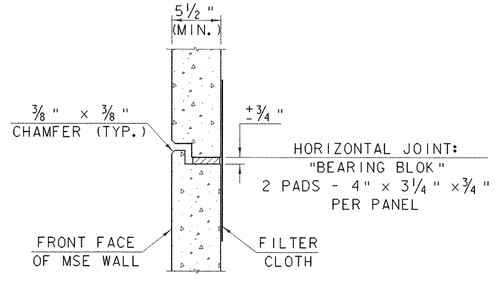

SECTION A - A

SCALE: 1 1/2" = 1'-0"

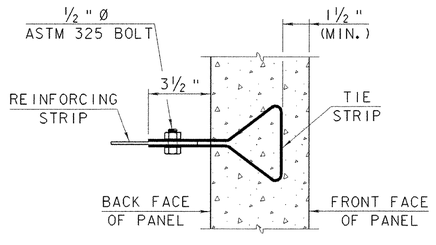

CONNECTION DETAIL

SCALE: 3" = 1'-0"

STATE OF VERMONT
AGENCY OF TRANSPORTATION

Town Of FAIRFAX-FAIRFIELD-ST. ALBANS	Bridge No. 87 N&S
Highway No. I-89	Log Sta. / Surv. Sta.
I-89 OVER VT 104	
MSE WALL DETAILS (2)	
Designed By G. ROY	Drawn By G. ROY
Checked By M. LOZIER Date 11/99	Bridge Design Supervisor R. R. WHITCOMB Date 11/99
PROJECT FAIRFAX-FAIRFIELD-ST. ALBANS	PROJECT NO. IM 089-3 (27)
I.G.C. Info. \96a056\Structures\sa056mse.dgn	sa056mw41
Bridge Sheet No. BR234	Sheet 112 of 370

PLOTTED 21-SEP-2000

STATE OF VERMONT
AGENCY OF TRANSPORTATION

REINFORCING STEEL SCHEDULE

	EACH	SIZE	LENGTH	MARK	TYPE	A	B	C	D	E	F	G	H	J	K	R	O
	MSE WALL NO. 1																
	123	4	2'- 0"	1M401	STR												
✳	23	4	9'- 6"	1M402	STR												
✳	67	4	9'- 6"	1M403	STR												
	123	4	3'- 4"	1M404	S10		1'- 8"	0'- 8"	1'- 0"								
	MSE WALL NO. 2																
	129	4	2'- 0"	2M401	STR												
✳	24	4	9'- 6"	2M402	STR												
✳	70	4	9'- 6"	2M403	STR												
	129	4	3'- 4"	2M404	S10		1'- 8"	0'- 8"	1'- 0"								

ITEM	EACH	SIZE	LENGTH	MARK	TYPE	A	B	C	D	E	F	G	H	J	K	R	O

~ NOTES ~

1. UNLESS OTHERWISE DESIGNATED, ALL BAR REINFORCEMENT FOR CONCRETE IN SIZES UP TO AND INCLUDING NO. 18 SHALL CONFORM TO THE REQUIREMENTS OF THE "SPECIFICATIONS FOR DEFORMED BILLET-STEEL BARS FOR CONCRETE REINFORCEMENT", AASHTO M 31 (ASTM A 615-SI). ALL BARS SHALL BE GRADE 60, UNLESS OTHERWISE DESIGNATED.
2. FOR TYPICAL BENDING DETAILS, RECOMMENDED PIN DIAMETER "D" OF BENDS AND HOOKS, AND OTHER STANDARD PRACTICE, SEE CURRENT CONCRETE REINFORCING STEEL INSTITUTE "MANUAL OF STANDARD PRACTICE".
3. BARS WHICH REQUIRE MORE ACCURATE BENDING THAN STANDARD PRACTICES SHOULD HAVE LIMITS INDICATED.
4. ALL DIMENSIONS ARE OUT TO OUT OF BAR EXCEPT "A" AND "G" ON STANDARD 180 DEGREE AND 135 DEGREE HOOKS.
5. "J" DIMENSION ON 180 DEGREE HOOKS TO BE SHOWN ONLY WHERE NECESSARY TO RESTRICT HOOK SIZE. OTHERWISE, STANDARD HOOKS ARE TO BE USED.
6. "H" DIMENSION ON STIRRUPS TO BE SHOWN ONLY WHEN NECESSARY TO MAINTAIN CLEARANCES.
7. WHERE SLOPE DIFFERS FROM 45 DEGREES, DIMENSIONS "H" AND "K" MUST BE SHOWN.
8. ▲ DENOTES BARS TO BE CUT IN FIELD.
9. ✳ DENOTES ONE EXTRA BAR ADDED FOR TESTING PURPOSES.
10. ■ DENOTES TWO EXTRA BARS ADDED FOR TESTING PURPOSES.
11. ~~"E" IN PREFIX DENOTES EPOXY COATED REINFORCING STEEL.~~

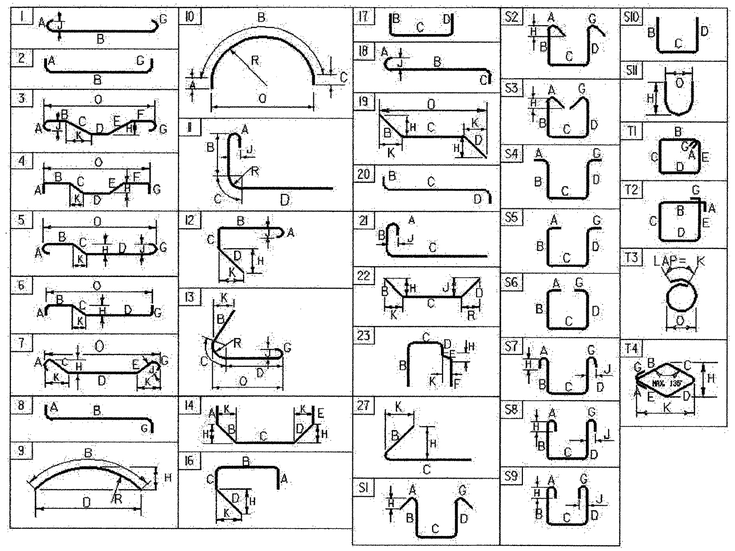

ASTM STANDARD REINFORCING BARS

BAR SIZE DESIGNATION	WEIGHT POUNDS PER FOOT	NOMINAL DIMENSIONS ROUND SECTION		
		DIAMETER INCHES	AREA INCHES^2	PERIMETER INCHES
#3	0.376	0.375	0.11	1.178
#4	0.668	0.500	0.20	1.571
#5	1.043	0.625	0.31	1.963
#6	1.502	0.750	0.44	2.356
#7	2.044	0.875	0.60	2.749
#8	2.670	1.000	0.79	3.142
#9	3.400	1.128	1.00	3.544
#10	4.303	1.270	1.27	3.990
#11	5.313	1.410	1.56	4.430
#14	7.65	1.693	2.25	5.32
#18	13.60	2.257	4.00	7.09

BR235

ALL STEEL DETAILED ON THIS SHEET TO BE EPOXY COATED

PROJECT NAME: FAIRFAX-FAIRFIELD-ST. ALBANS
PROJECT NUMBER: IM 089 - 3 (27)

FILE NAME: \96a056\structures
PROJECT LEADER: R. R. WHITCOMB
DESIGNED BY: M. LOZIER
MSE WALL REINFORCING STEEL SCHEDULE

PLOT DATE: 9/20/00
DRAWN BY: G. ROY
CHECKED BY: P. PERRY
SHEET 113 OF 370

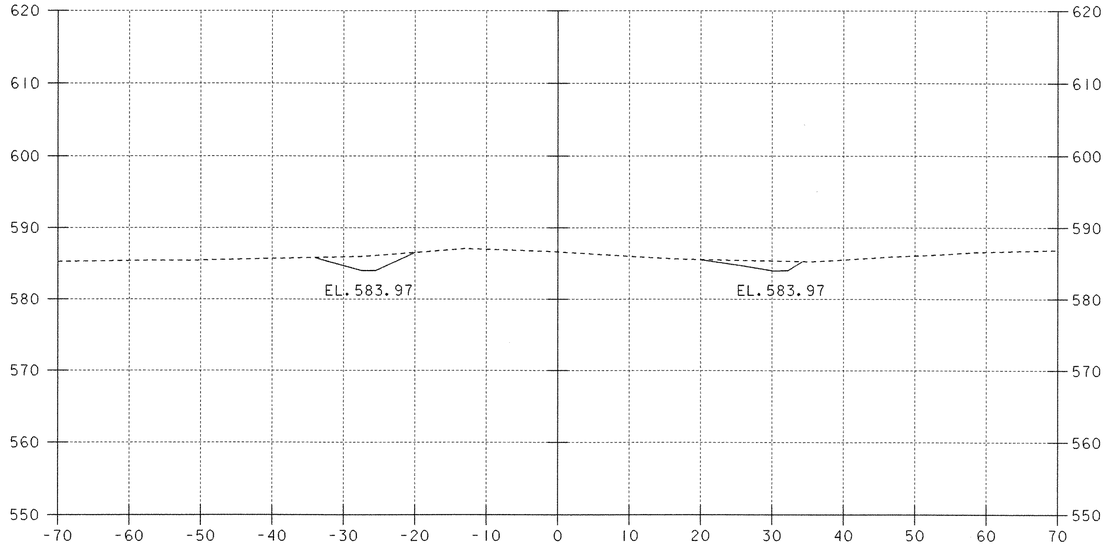

10+25

VT 104 STA. 10+10 RT.
BEGIN TRENCH EXCAVATION

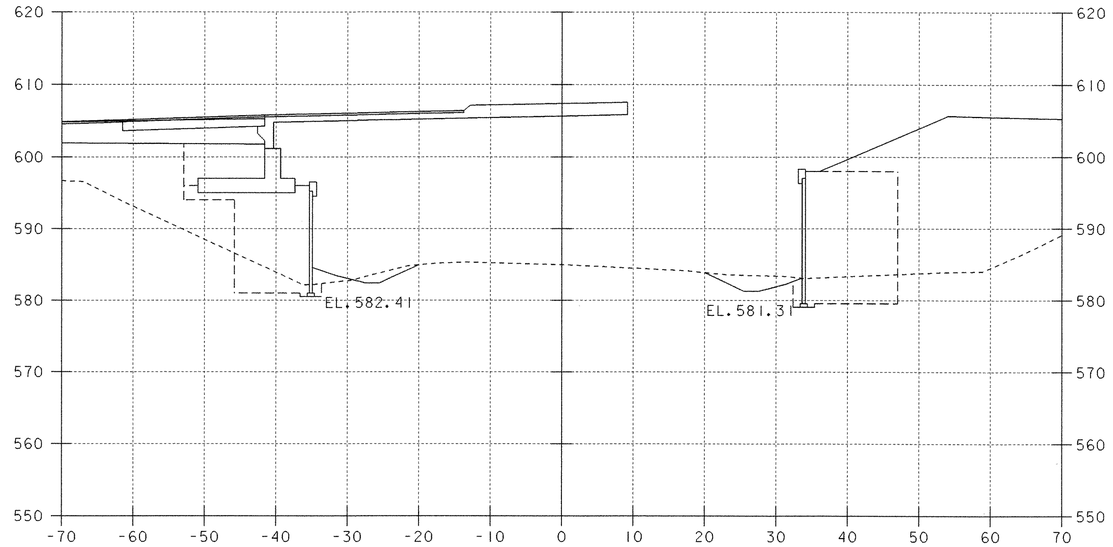

10+75

VT 104 STA. 10+66 LT.
BEGIN GRAN. BACKFILL FOR STRUCT.

VT 104 STA. 10+75 RT.
BEGIN GRAN. BACKFILL FOR STRUCT.

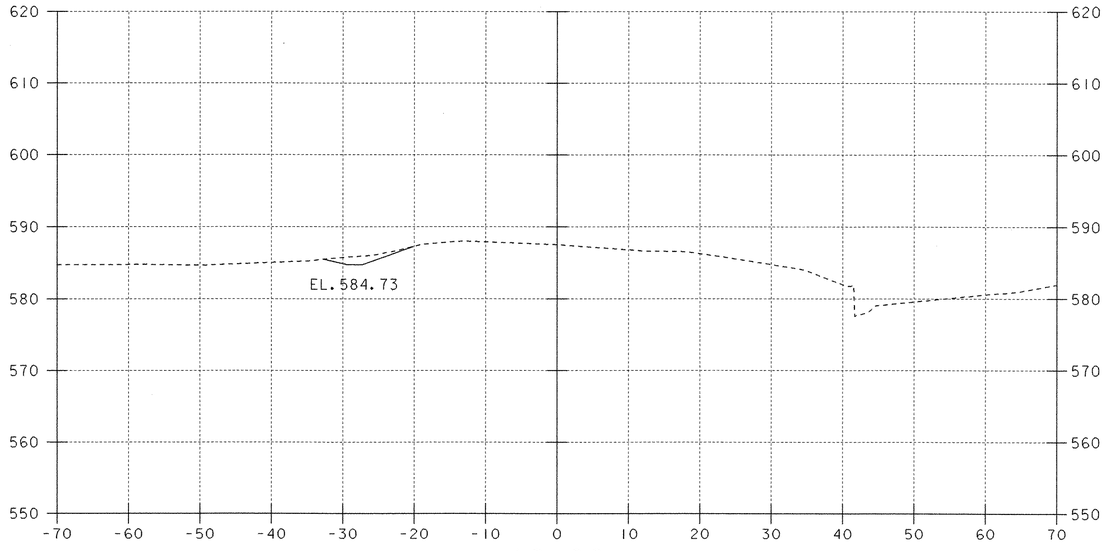

10+00

VT 104 STA. 10+00 LT.
BEGIN TRENCH EXCAVATION

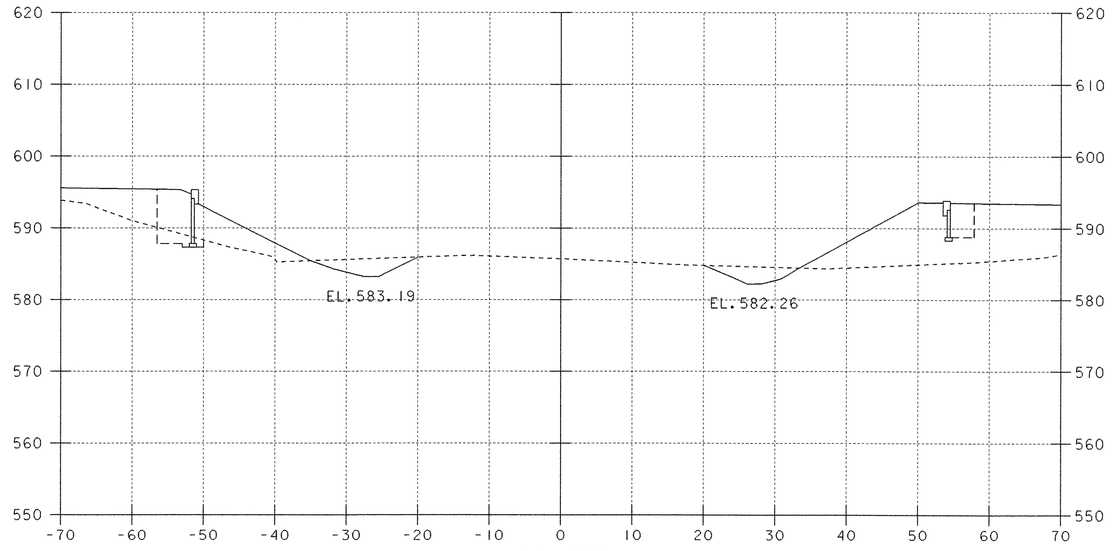

10+50

VT 104 STA. 10+45 LT.
BEGIN STRUCTURE EXCAVATION
SELECTED BACKFILL FOR MSE WALL

VT 104 STA. 10+49 RT.
BEGIN STRUCTURE EXCAVATION
SELECTED BACKFILL FOR MSE WALL

SCALE 1" = 10'-0
10 0 10

DATUM
VERTICAL _____
HORIZONTAL _____

PROJECT: FAIRFAX-FAIRFIELD-ST. ALBANS	PROJECT NO.: IM 089-3 (27)
DESIGN FILE NAME: \96a056\Structures\sa056xsl.dgn IPARM FILE NAME: sa056c01.i	PLOT DATE: 21-SEP-2000
VT 104 CROSS SECTIONS	BRIDGE SHEET BR236
STA. 10+00 TO STA. 10+75	SHEET: 114 OF 370

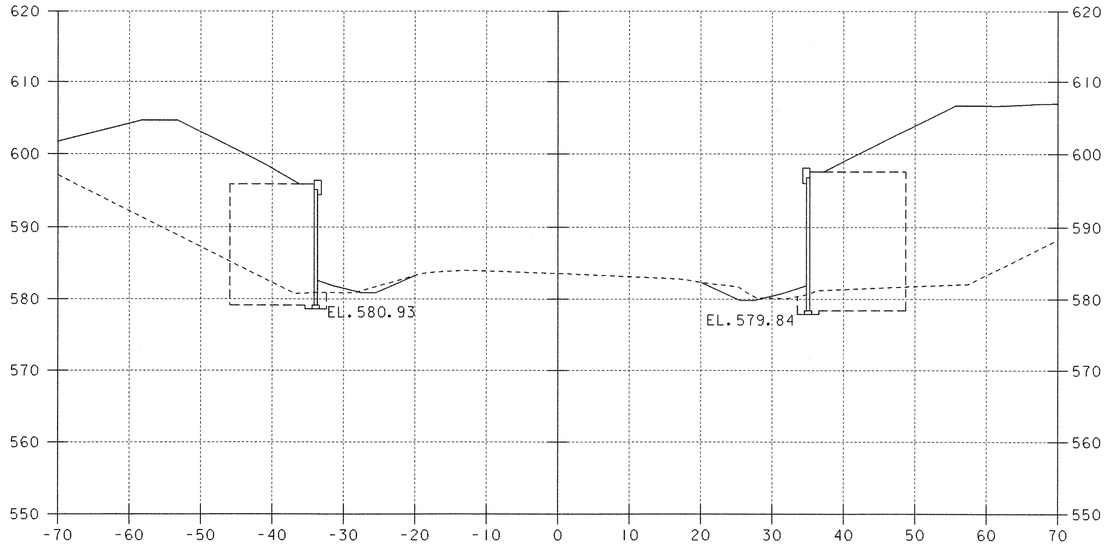

11+25

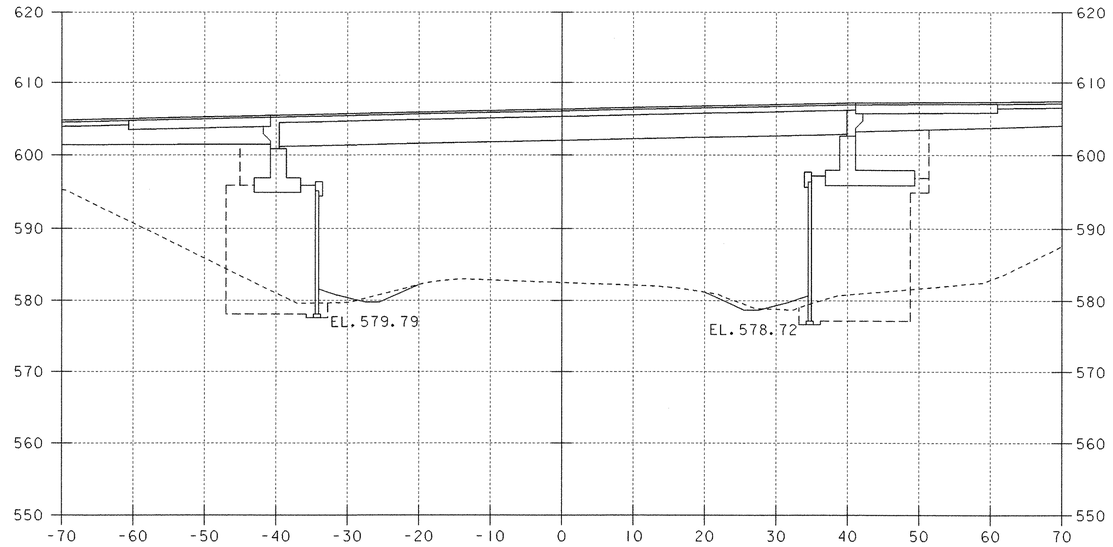

11+75

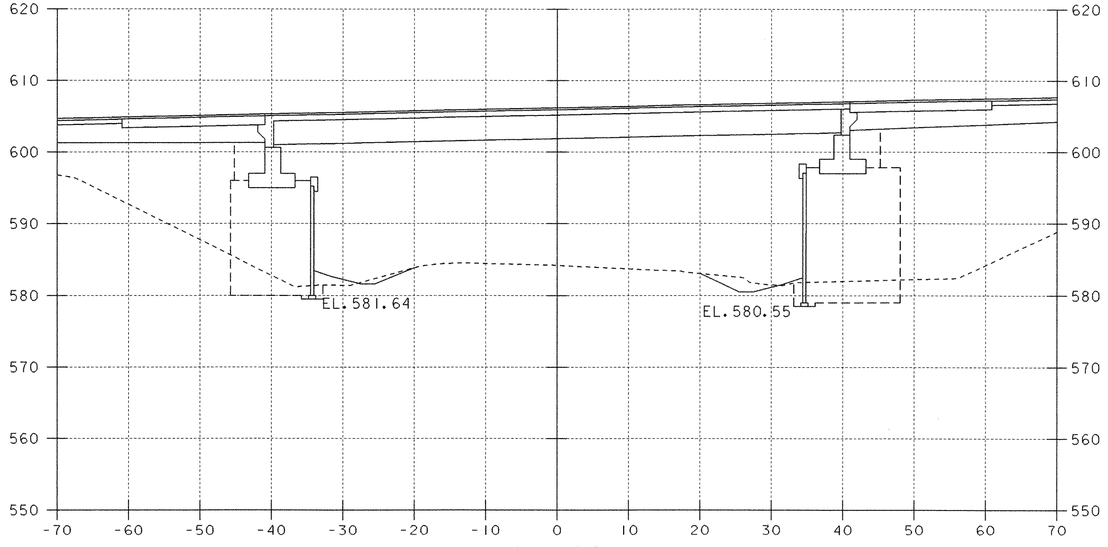

11+00

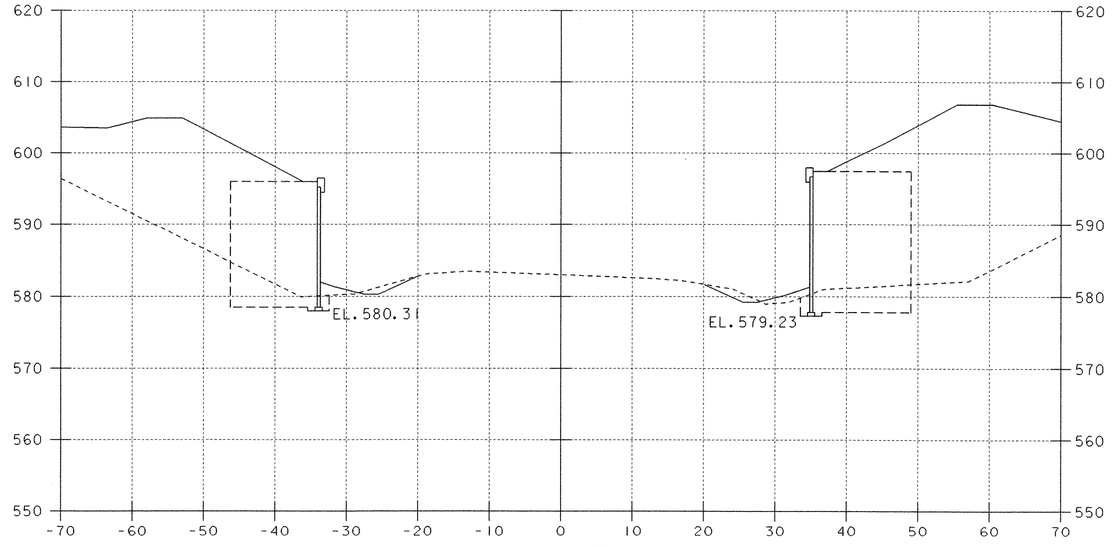

11+50

SCALE 1" = 10'-0
10 0 10

DATUM
VERTICAL _____
HORIZONTAL _____

PROJECT: FAIRFAX-FAIRFIELD-ST. ALBANS	PROJECT NO.: IM 089-3 (27)
DESIGN FILE NAME: \96a056\Structures\sa056xsl.dgn IPARM FILE NAME: sa056c02.i	PLOT DATE: 21-SEP-2000
VT 104 CROSS SECTIONS	BRIDGE SHEET BR237
STA. 11+00 TO STA. 11+75	SHEET: 115 OF 370

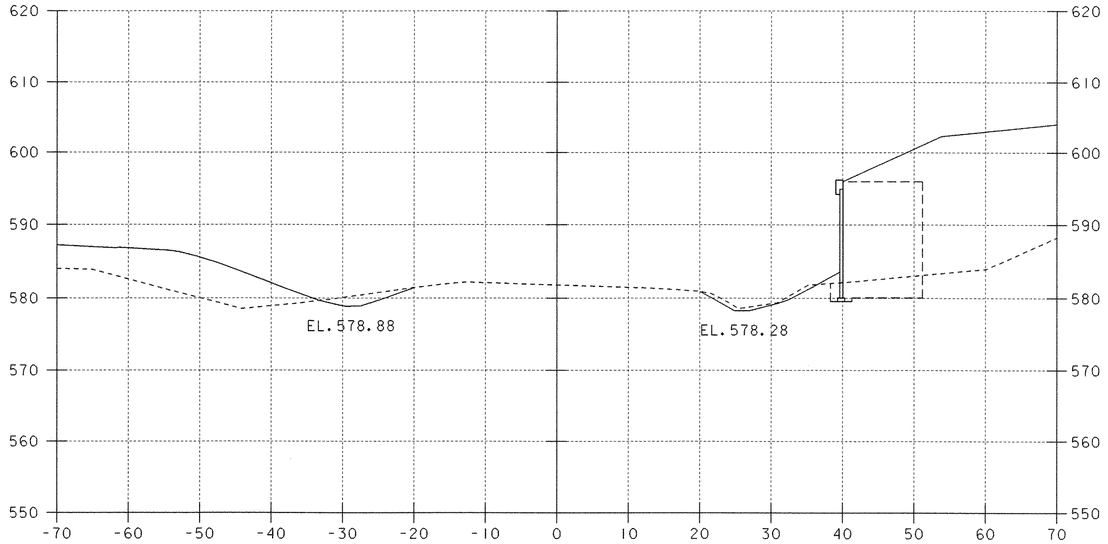

VT 104 STA. 12+23 LT.
END STRUCTURE EXCAVATION
SELECTED BACKFILL FOR MSE WALL

12+25

VT 104 STA. 12+18 RT.
END GRAN. BACKFILL FOR STRUCT.

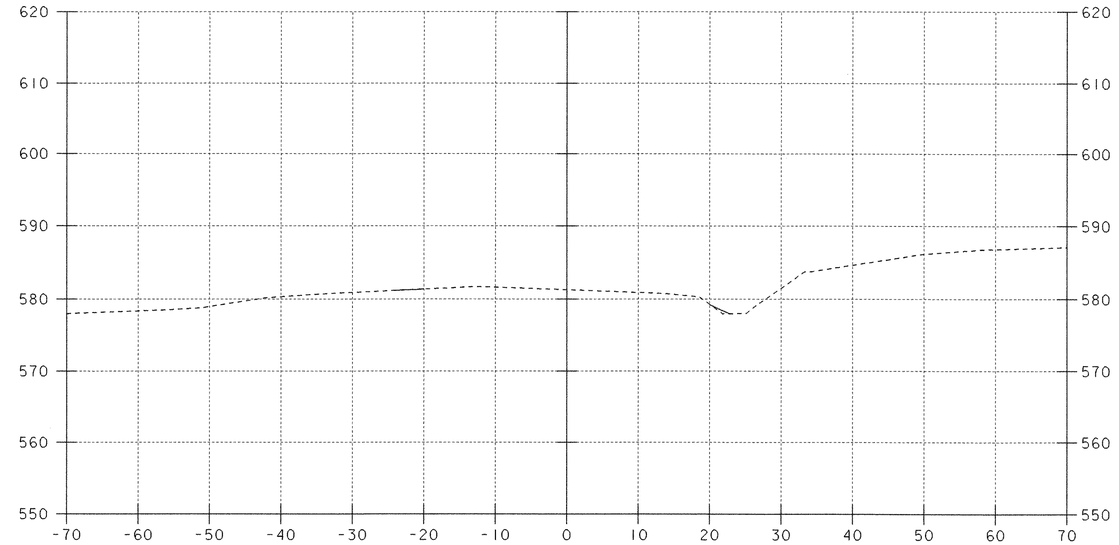

VT 104 STA. 12+75 LT.
END TRENCH EXCAVATION

12+75

VT 104 STA. 12+75 RT.
END TRENCH EXCAVATION

VT 104 STA. 12+04 LT.
END GRAN. BACKFILL FOR STRUCT.

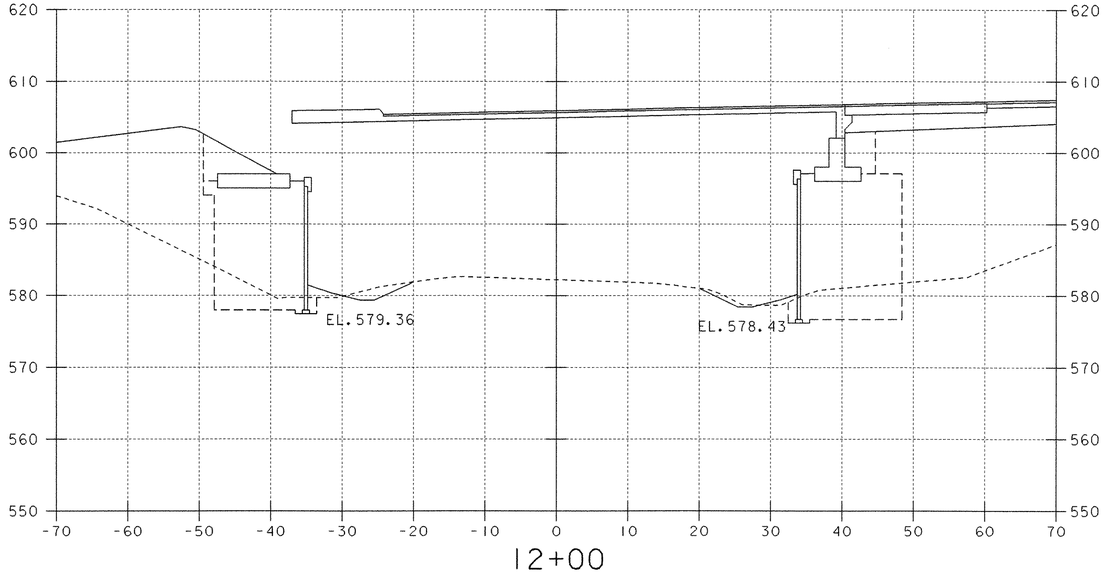

12+00

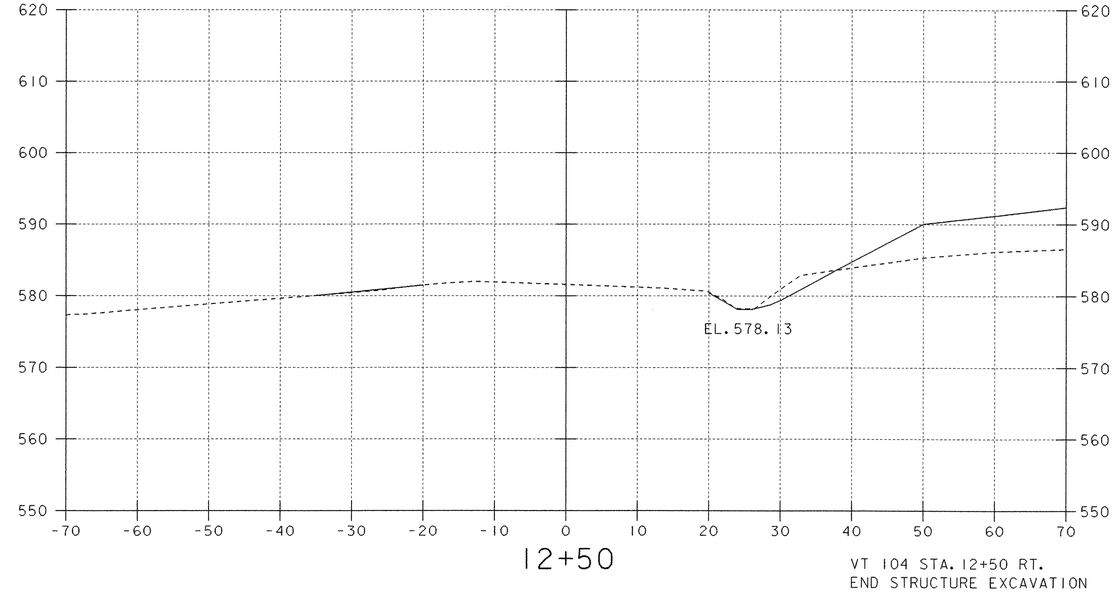

12+50

VT 104 STA. 12+50 RT.
END STRUCTURE EXCAVATION
SELECTED BACKFILL FOR MSE WALL

SCALE 1" = 10'-0
10 0 10

DATUM
VERTICAL _____
HORIZONTAL _____

PROJECT: FAIRFAX-FAIRFIELD-ST. ALBANS	PROJECT NO.: IM 089-3 (27)
DESIGN FILE NAME: \96a056\Structures\sa056xsl.dgn IPARM FILE NAME: sa056c03.i	PLOT DATE: 21-SEP-2000
VT 104 CROSS SECTIONS	BRIDGE SHEET BR238
STA. 12+00 TO STA. 12+75	SHEET: 116 OF 370

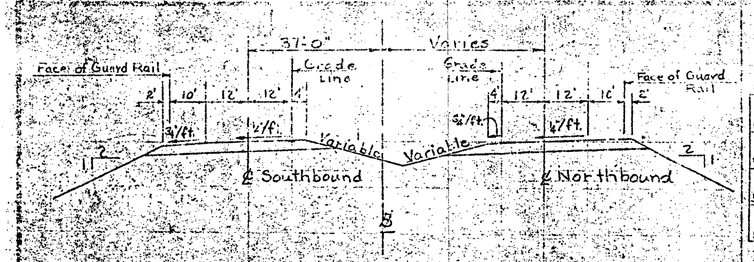

NEW HIGHWAY SECT. I 89

SCALE 1" = 20'

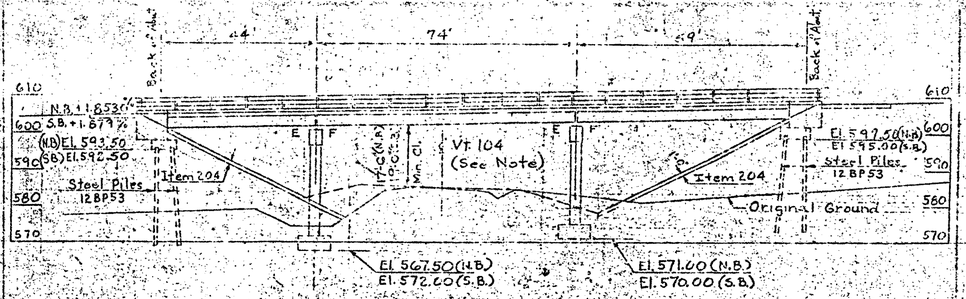

NEW HIGHWAY PROFILE ALONG NORTHBOUND FASCIA

SCALE 1" = 20'

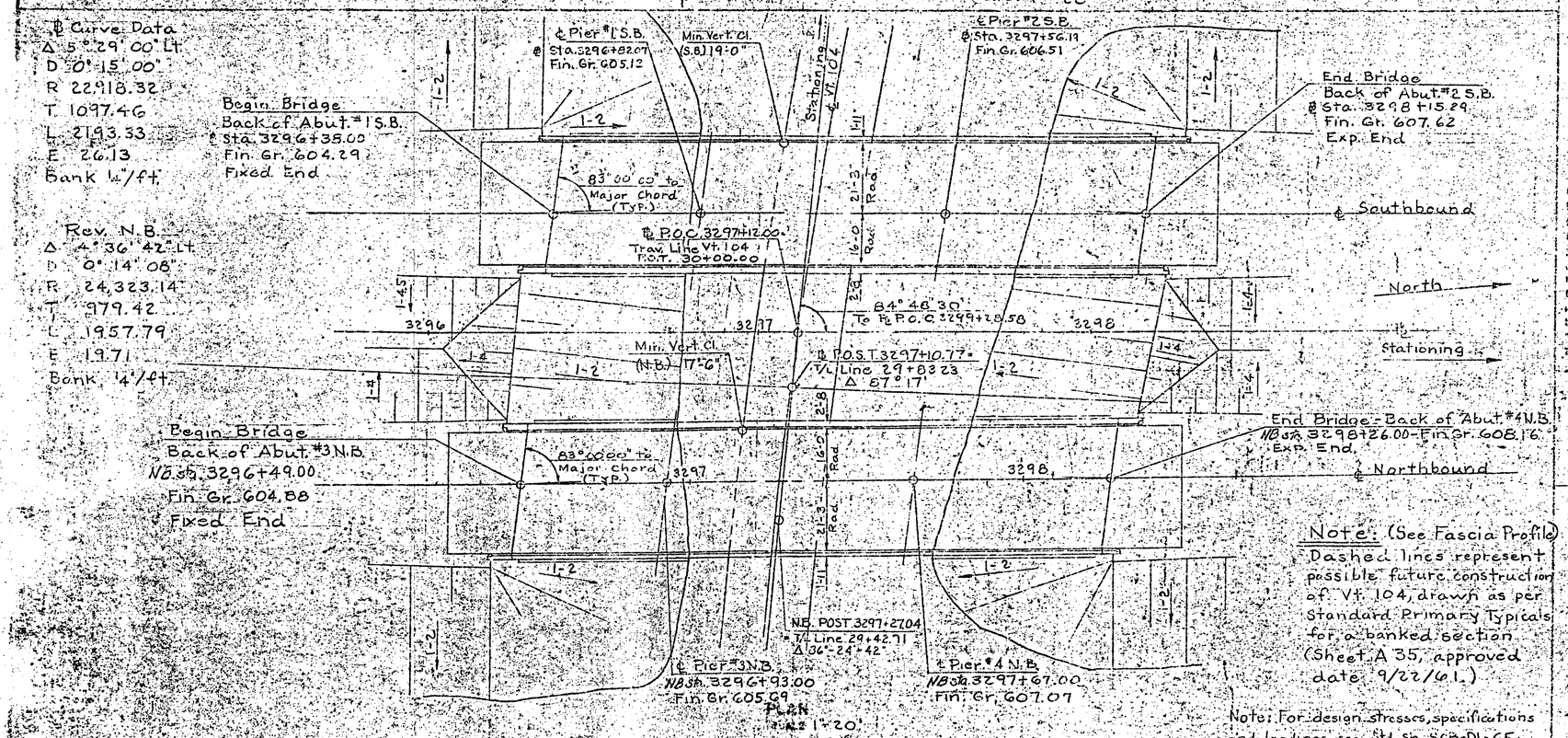

Note: (See Fascia Profile) Dashed lines represent possible future construction of Vt. 104, drawn as per Standard Primary Typicals for a banked section. (Sheet A 35, approved date 9/22/61.)

Note: For design stresses, specifications and loadings see Std. Sh. SCB-D1-65.

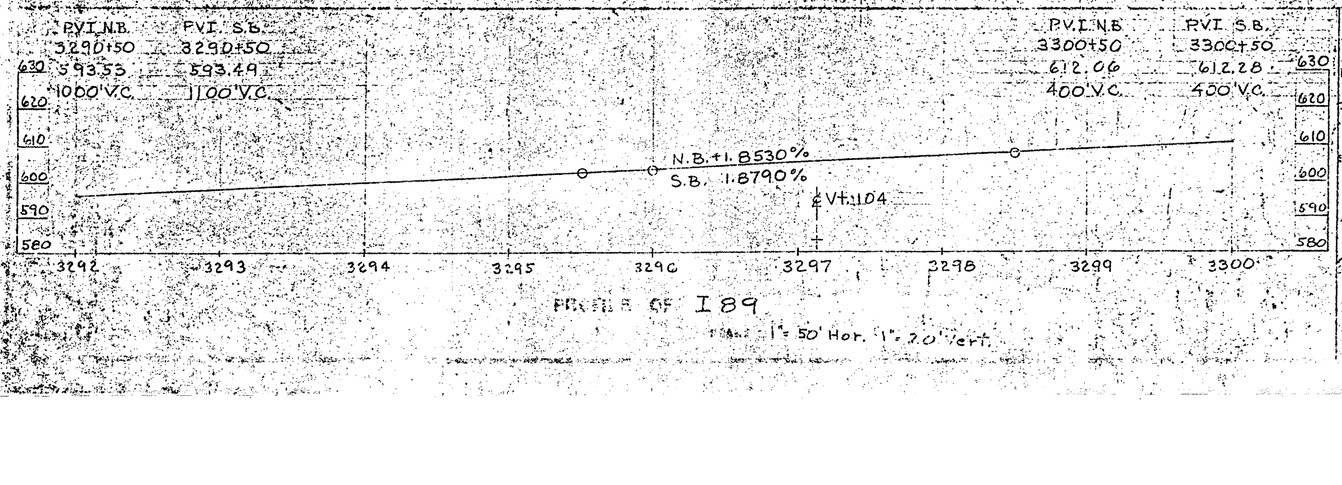

PROFILE OF I 89

Hor. 1" = 50' Hor. 1" = 20' Vert.

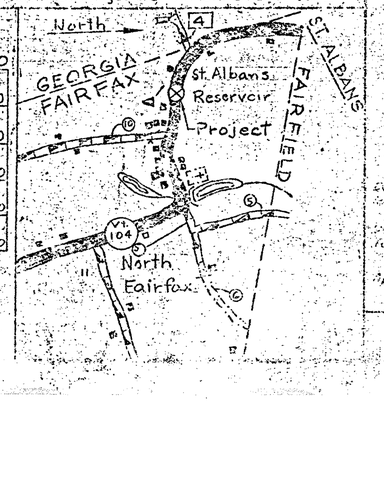

I 89 Interstate

Structure S4-B4 Franklin Fairfax

Project I 89-3(35) Counties Georgia, Fairfax, Fairfield-St. Albans Cont. #2.

EXISTING STRUCTURE

1 TYPE EXISTING STRUCTURE
2 TYPE EXISTING FOUNDATIONS
3 UNDERCLEAR TRAVEL DURATION OF EXISTING STRUCTURE
4 HIGH DISCHARGE SHOULD EXISTING STRUCTURE BE REMOVED COST OF
5 SHOULD EXISTING STRUCTURE BE REMOVED TRAFFIC SHALL BE MAINTAINED
6 SHOULD NEW STRUCTURE BE BUILT
7 IF NEW HIGH WATER SURFACE EXCEEDS EXISTING STRUCTURE
8 ESTIMATE FOR RAISE OF EXISTING STRUCTURE
9 DEPTH OF EXISTING BRIDGE SEAT
10 TYPE OF FOUNDATION OF EXISTING ABUTMENTS
11 FOOD FREQUENCY OF FLOOD ELEVATION PASS THROUGH EXISTING STRUCTURE
12 IS NOT WHERE ELEVATION IS BELIEF APPROVED
13 ADDITIONAL WATERWAY AREA PROVIDED

NEW STRUCTURE

1 RECOMMENDED TYPE OF STRUCTURE 3 Span WF Beam Composite Bridges NB & SB
2 RECOMMENDED CLEAR SPAN OR OPENING 44'-74'-59' Simple Spans
3 SKEW TO ℄ NEW HIGHWAY
4 ALIGNMENT AT RIGHT ANGLES TO ℄ STREAM
5 ARE THERE OBJECTIONS TO A FIXED BRIDGE, IF NOT, WHY NOT
6 ESTIMATED HIGH WATER ELEVATION AT NEW STRUCTURE
7 ESTIMATED HIGH WATER ELEVATION OF NEW STRUCTURE
8 IS ALL WATER INTENDED TO PASS THROUGH NEW STRUCTURE
9 DOES STREAM REACH ITS MAXIMUM HIGH WATER ELEVATION EARLIER
10 LOW WATER ELEVATION AT HEAD OF BRIDGE
11 WATERWAY AREA OF BRIDGE ABOVE PERMITTED
12 IS STREAM FLOOD LEVEL
13 VELOCITY OF STREAM AT HIGH WATER STAGE
14 DEBRIS FLOW EXPECTED
15 INCLINATION OF SLOPE
16 ESTIMATED DESIRABLE AREA ABOVE NATURAL OR ARTIFICIAL STORAGE
17 VERTICAL CLEARANCE ABOVE FLOOD ELEVATION
18 ARE SIDEWALKS REQUIRED, IF SO, ON WHAT SIDE NB
19 COMMENTS TYPE OF PAVEMENT
20 TRAFFIC TO BE MAINTAINED ON EXISTING BRIDGE OR ON NEW
21 PROBABLE COST OF CLEARING AND PAVING ENTIRE CHANNEL IN FEET
22 SPECIAL PROVISIONS OR DETAILS FOR ENDING BRIDGE
23 ESTIMATED MAXIMUM TONS PER SQUARE INCH 45 Tons Yes
For P/C Abut #S N.B. 35' Abut #1 S.B. 30'
2'2 Tons/Sq. Ft. Abut #4 N.B. 30' Abut #2 S.B. 30'

FOUNDATION INFORMATION

[illegible] DESIGN PURPOSES ONLY, AND THE STATE IS NOT RESPONSIBLE FOR ANY INTERPRETATIONS OR DEDUCTIONS MADE THEREFROM.

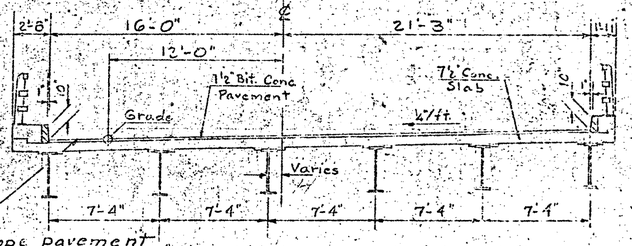

Slope pavement ½" per foot for 4' adjacent to curb Typical Northbound Bridge Section

scale 1" = 5'

(Southbound Section Similar)

BRIDGE SHEET BR239
REFERENCE SHEET 1 OF 9
SHEET 117 OF 370

Recommended for Approval [illegible] 11/9/64

Recommended for Approval Asst. Chief Engineer 11/20/64

Approved by [illegible] 11/20/64

Interstate
Georgia - Fairfax - Fairfield - St. Albans
I 89 over Vt. 104

SHEET 163 OF 254
A.S.C. (41) REV. 6-1-64
I 89-3(35) SHEET (121) 215

BR-102
Stage Construction
2

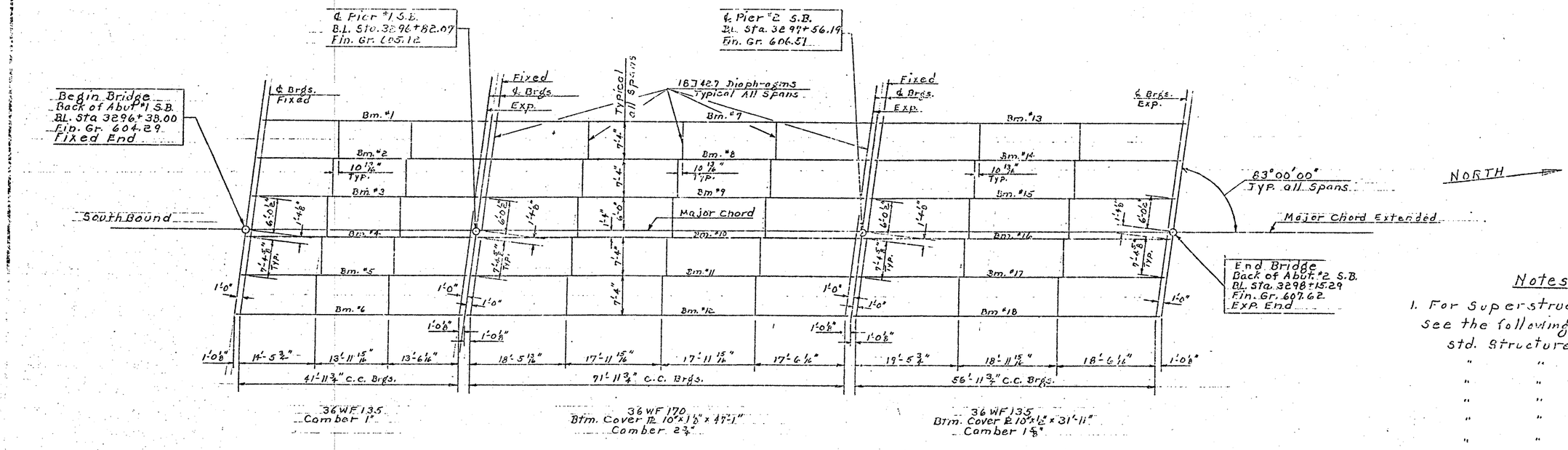

FRAMING PLAN

Scale 1" = 10'

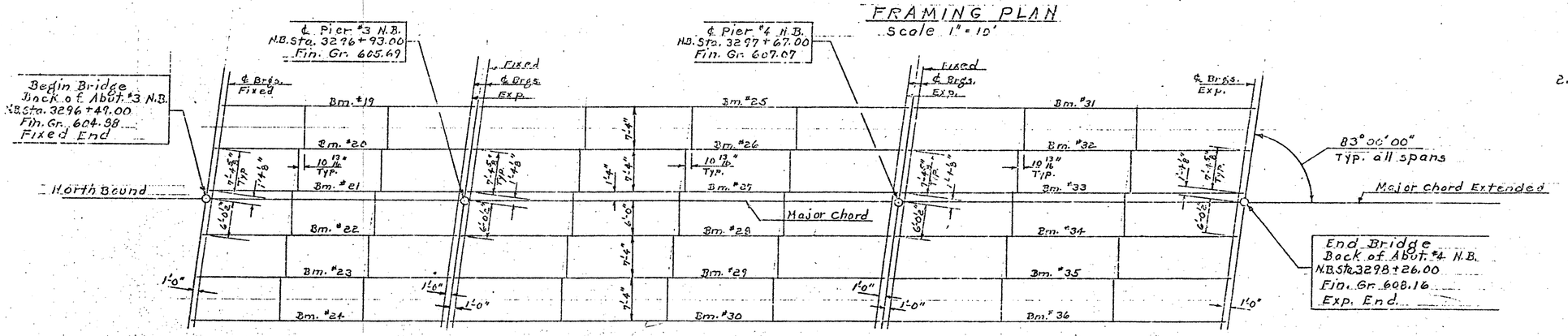

Note: Both Bridges Identically framed. For framing information not shown in Northbound Bridge, see Southbound Bridge. All beams are to be parallel to the Major Chord.

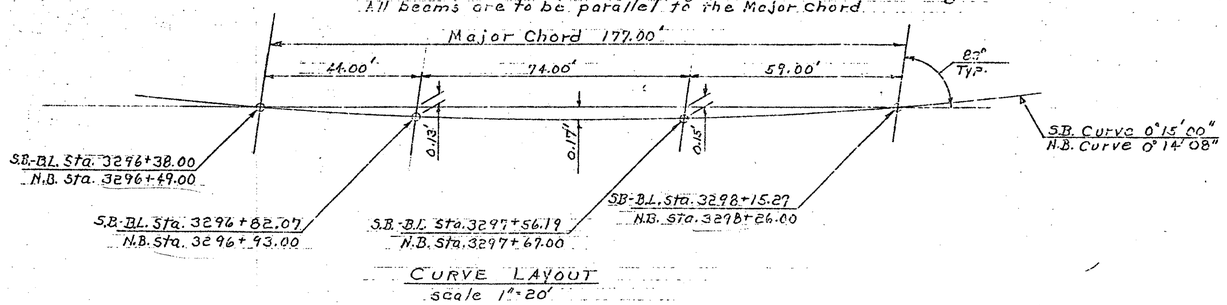

CURVE LAYOUT

scale 1"=20'

Notes

1. For superstructure framing details see the following list of standards.

Std. Structures	SCB-37.25-65	
"	"	SCB-D1-65
"	"	SCB-D2-65
"	"	SCB-D3-65
"	"	SCB-D5-65
"	"	SCB-D7-65
"	"	SCB-D8-65
"	"	SCB-D9-65 Detail "A"

2. All structural steel shall be A.S.T.M. Designation A-36-62T except Expansion plates at piers which shall be A.S.T.M. Designation A-242 as noted on Std. Structures SCB-D3-65, Detail "A"

ITEM NO.	ITEM	UNIT	NET		TOTAL	FINAL
	CHAN. EXCAV. OF EARTH	C.Y.				
	CHAN. EXCAV. OF ROCK	C.Y.				
	UNCLASS. CHAN. EXCAV.	C.Y.				
	STRUCT. EXCAV.	C.Y.				
	CONC. CLASS AA (MOD.)	C.Y.				
	CONC. CLASS B (MOD.)	C.Y.				
	REBAR STEEL	LBS.				
	ASPHALTIC ASB. COATING	S.Y.				
	TREATED TIMBER PILING	L.F.				
	SPLICES FOR STEEL PILING	EA.				
	STEEL PILING	L.F.				
	UNTREATED TIMBER PILING	L.F.				

BRIDGE SHEET BR240
REFERENCE SHEET 2 OF 9
SHEET 118 OF 370

Stage 1 Construction

CONTRACT 2

STATE OF VERMONT
DEPARTMENT OF HIGHWAYS

Georgia - Fairfax -
Town of Fairfield - St. Albans

Route No. I 89 Log Sta.

Framing Plan

I 89 over VT 104

Scale As Noted

Surveyed by

Drawn by WMS Checked by RBO

Project No. I 89-3(35) Cont 2

Sheet 168 of 467

BR-107

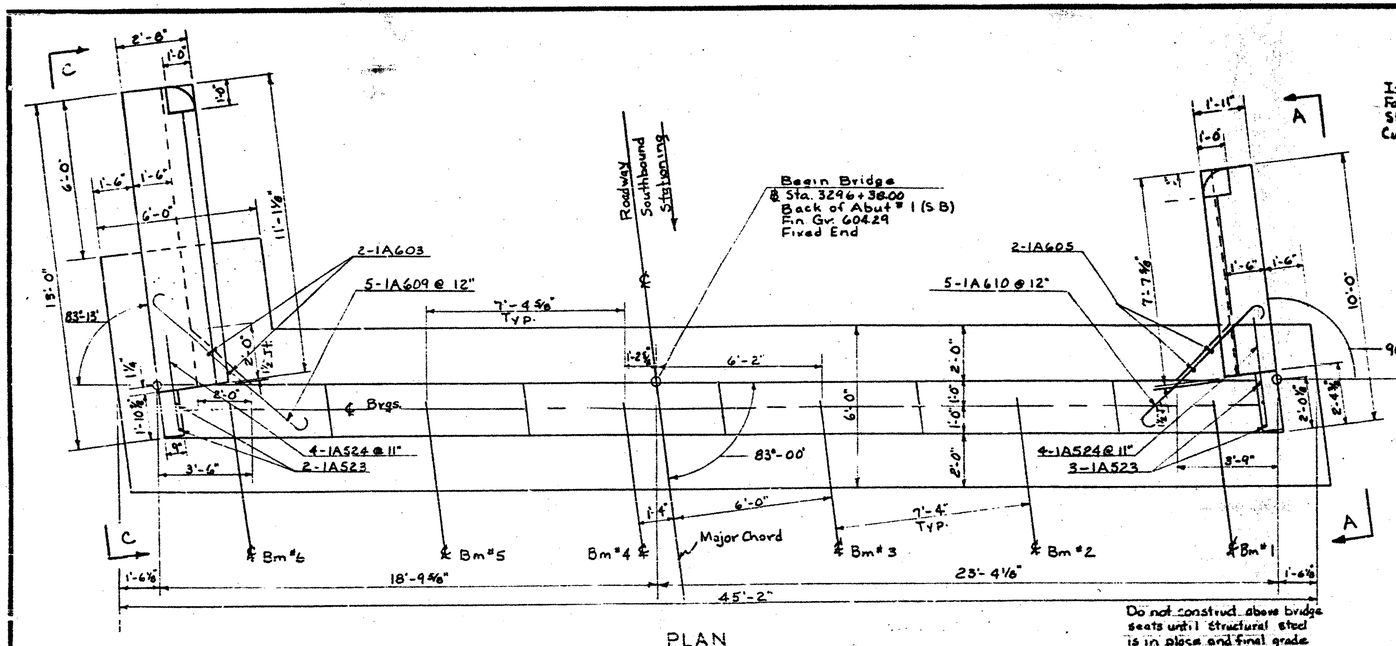

PLAN

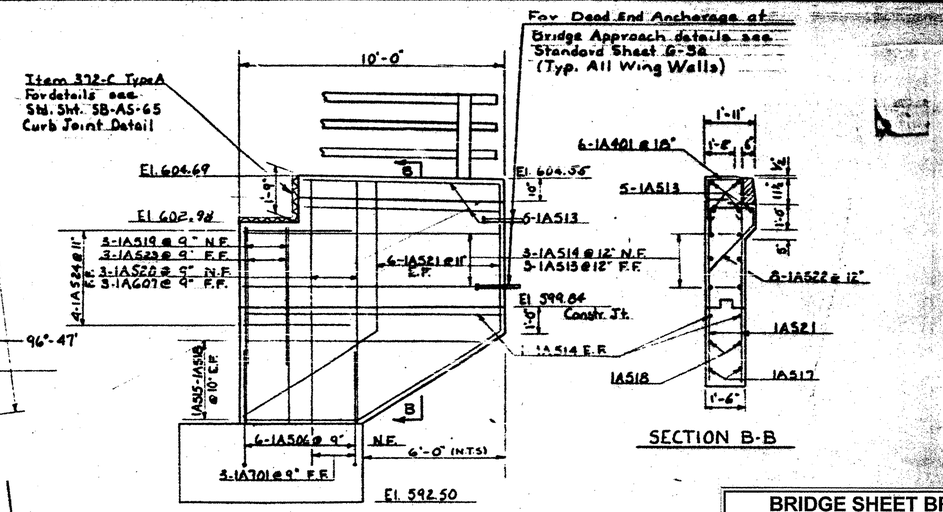

VIEW A-A

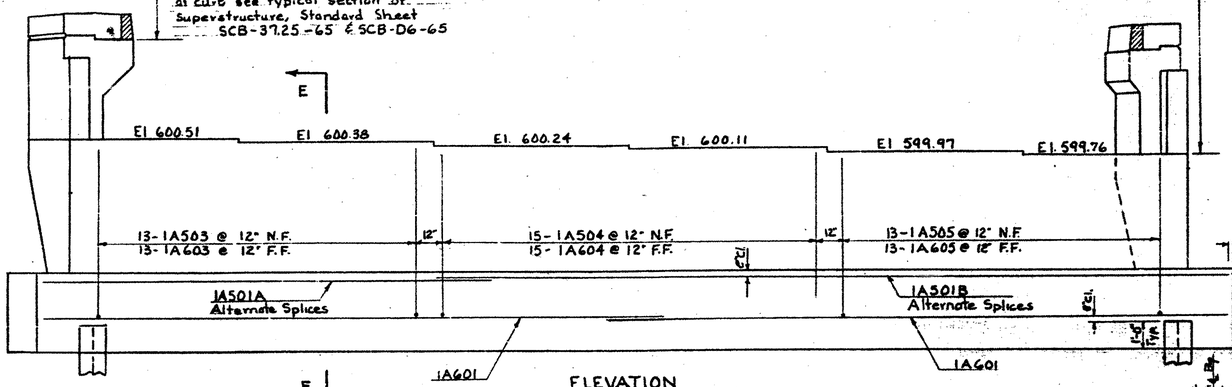

ELEVATION

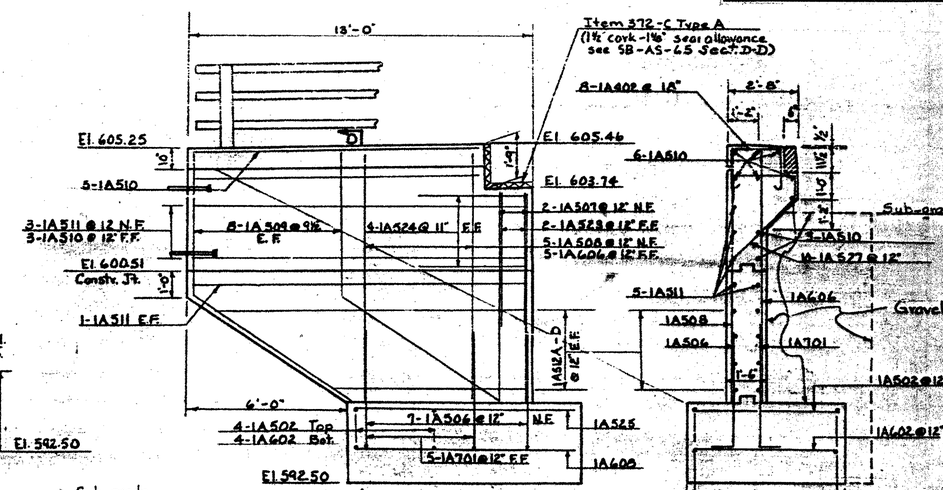

VIEW C-C

SECTION D-D

Stage 1 Construction

CONTRACT 2

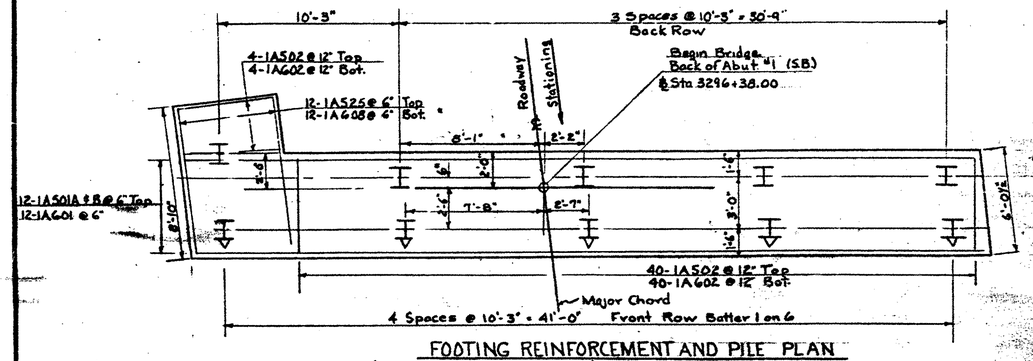

FOOTING REINFORCEMENT AND PILE PLAN
Scale: 1/4" = 1'-0"

Do not construct above bridge seats until structural steel is in place and final grade is determined. (Typ. both sides)

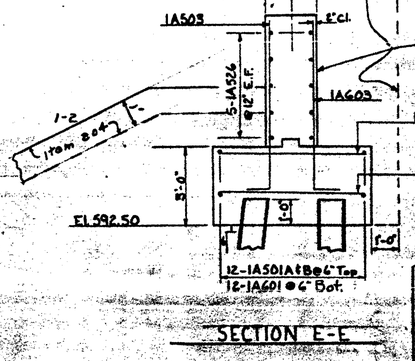

SECTION E-E

NOTES

1. For general notes see Sheet BR-100.
2. Fill to be made 6" above bottom of footing elevation before piles are driven.
3. All piles shall be driven to a minimum bearing capacity of 45 tons and to a minimum penetration of 10' into original ground.

No. Piles	Size	Est. Length of Piles	Splices Allowed for Piles not exceeding Plan Length (To be paid for only if used)	Splices Estimated for Piles exceeding Plan Length (to be paid for only if used)
10	12BP53	35	—	2

STATE OF VERMONT
DEPARTMENT OF HIGHWAYS

TOWN OF Georgia - Fairfax - Fairfield - St. Albans
ROUTE NO. I-89 LOG STA.
Abutment # 1 S.B.
I-89 Over VT 104
SCALE 3/8"=1'-0" or as Noted
SURVEYED BY
DRAWN BY R.A.C. CHECKED BY W.A.S. J.F.
PROJECT NO. I-89-3(65) Comt. 2
SHEET 120 OF 467

BRIDGE SHEET BR241
REFERENCE SHEET 3 OF 9
SHEET 119 OF 370

BR 109

BR875

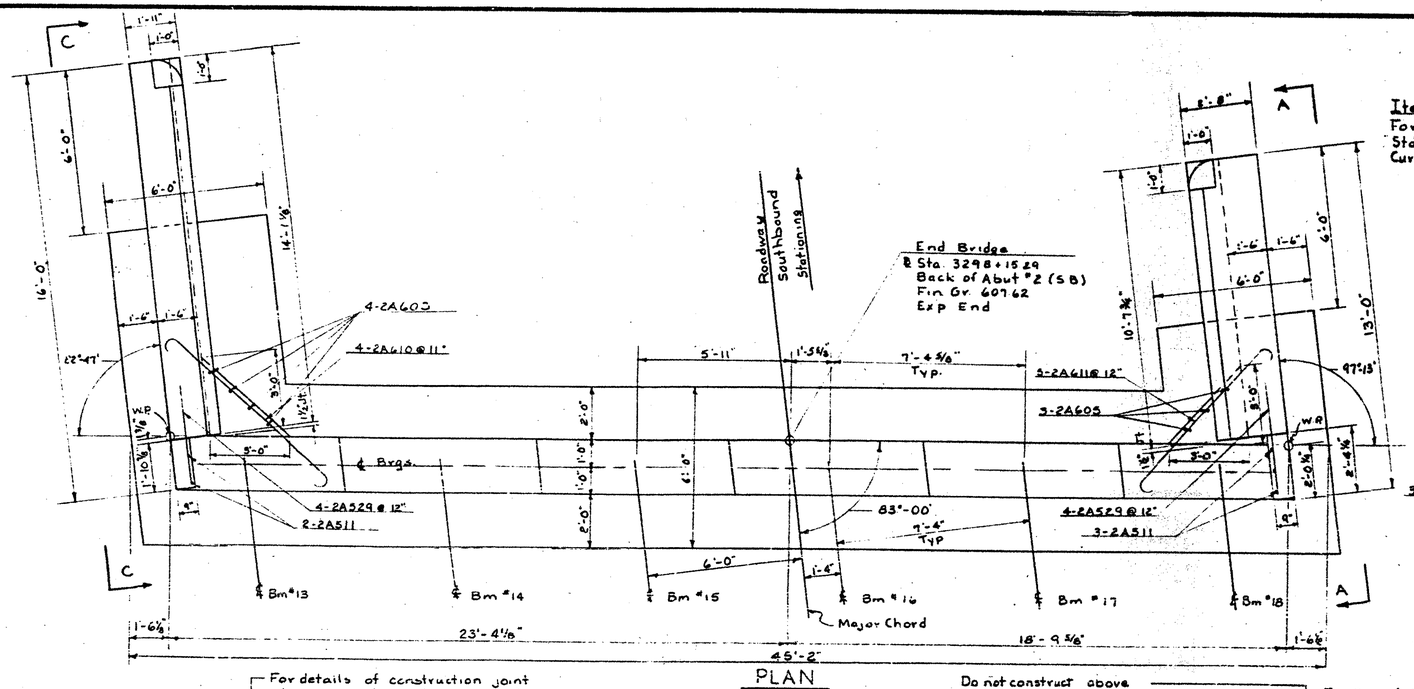

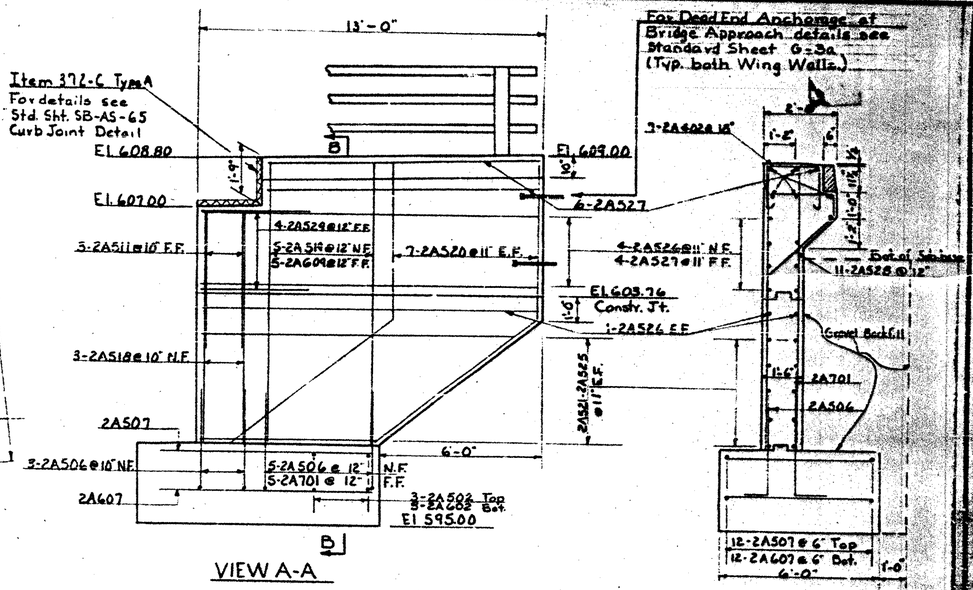

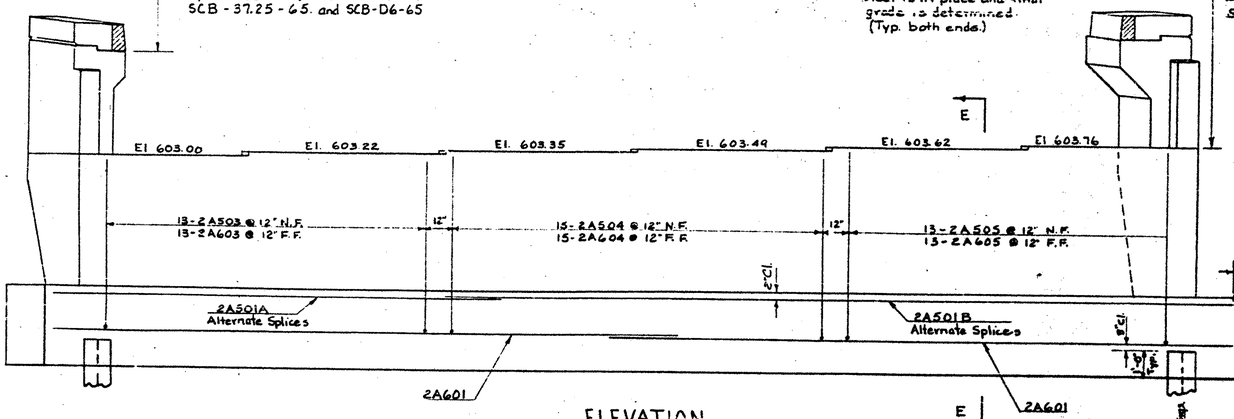

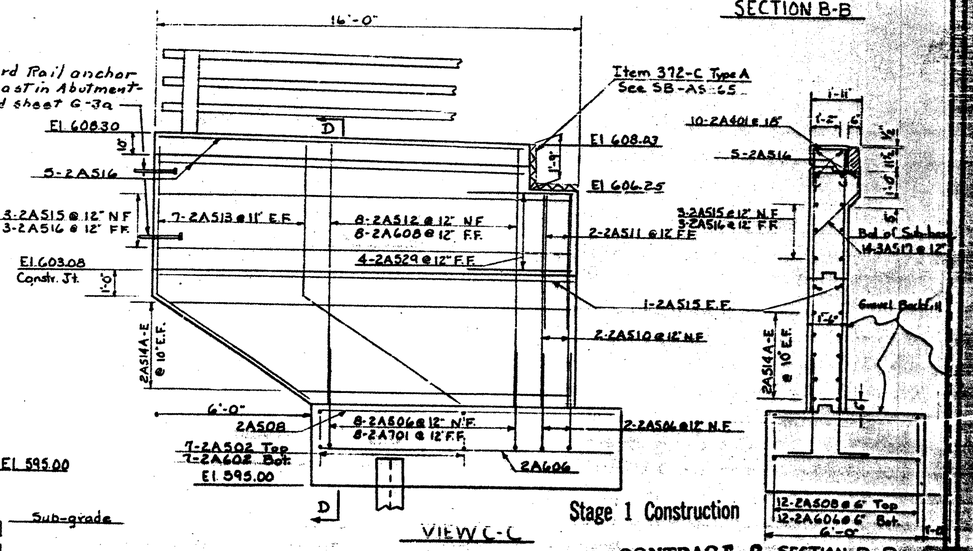

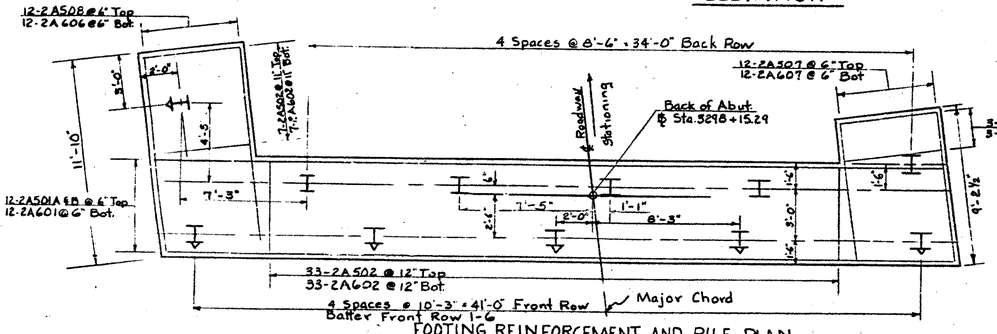

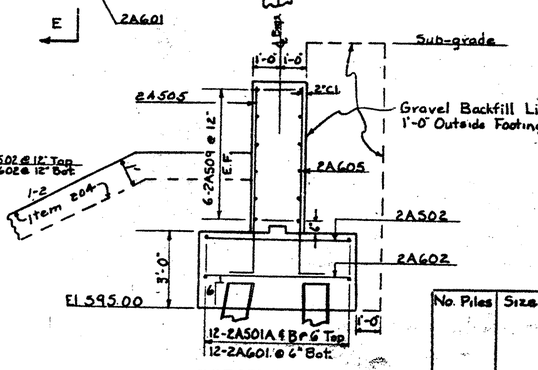

NOTES

1. For general notes see Sheet BR-100.
2. Fill to be made 6" above bottom of footing elevation before piles are driven.
3. All piles shall be driven to a minimum bearing capacity of 45 tons and to a minimum penetration of 10' into original ground.

No. Piles	Size	Est. Length of Piles	Splices Allowed for Piles not exceeding Plan Length (To be paid for only if used)	Splices Estimated for Piles exceeding Plan Length (To be paid for only if used)
*11	12BP53	25'		2

Stage 1 Construction

CONTRACT 2 SECTION D-D

BRIDGE SHEET BR242
REFERENCE SHEET 4 OF 9
SHEET 120 OF 370

TOWN OF Georgia-Fairfax-Fairfield-St. Albans
ROUTE NO. I 89 LOG STA
Abutment #2 S.B.
I 89 Over Vt 104
SCALE 3/8" = 1'-0" ORIG. NATL.
SURVEYED BY
DRAWN BY E.A.O. CHECKED BY W.M.S.-E.T.
PROJECT NO. I 89-3(35) Cont. #2
SHEET 121 OF 442

BR 87.5

BR-110

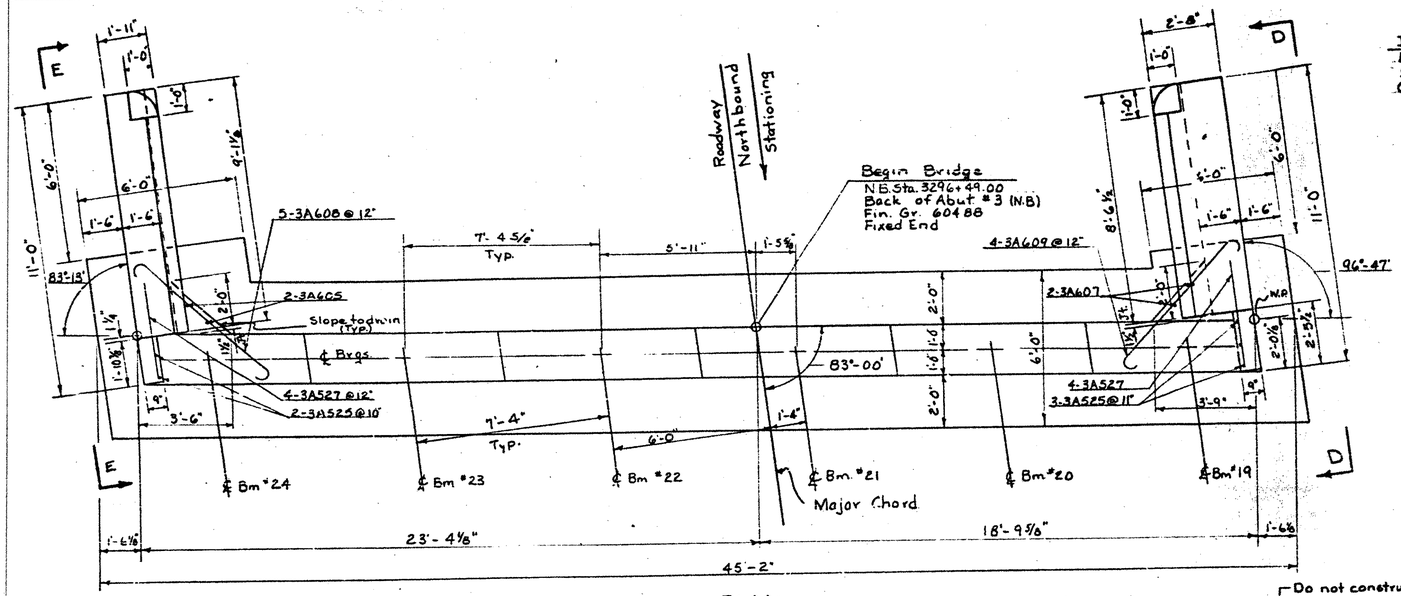

PLAN

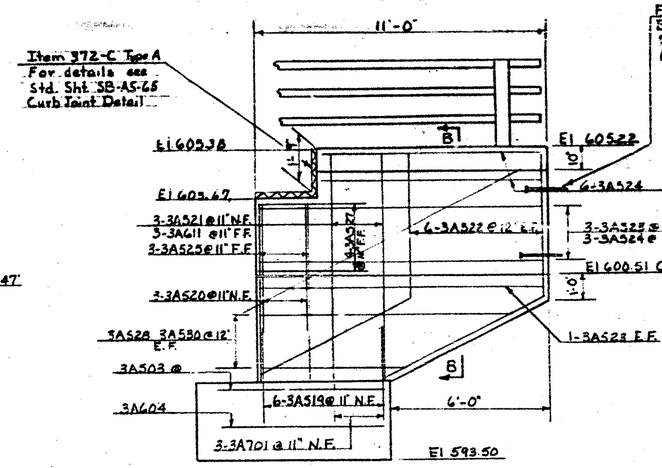

VIEW D-D

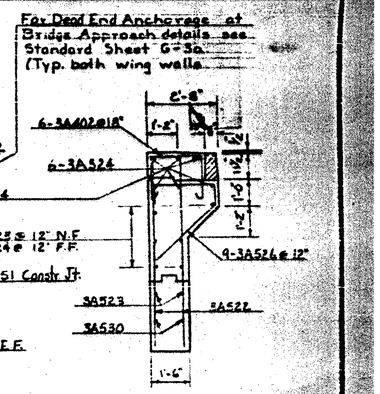

SECTION B-B

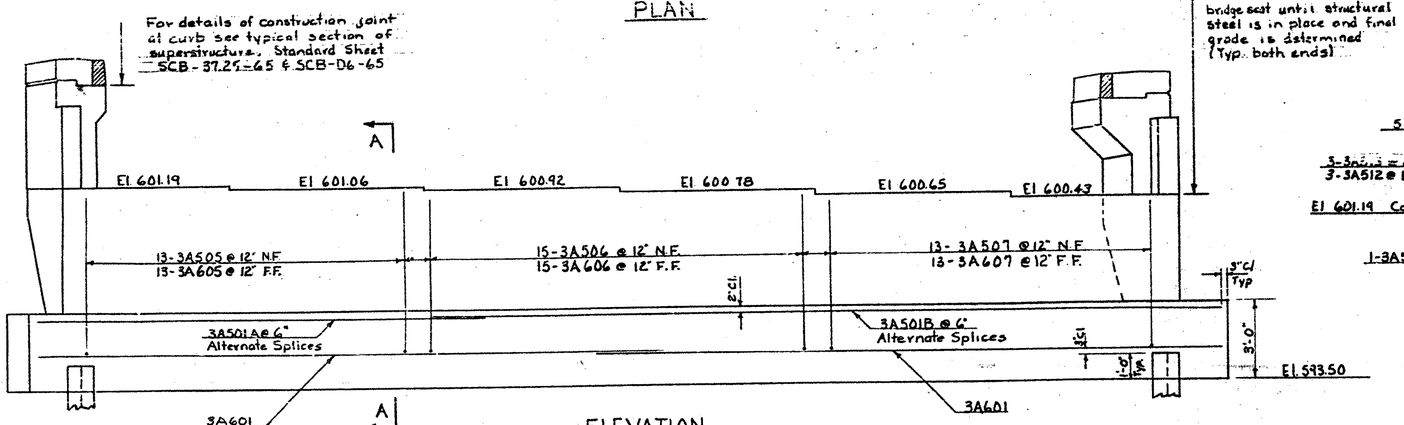

ELEVATION

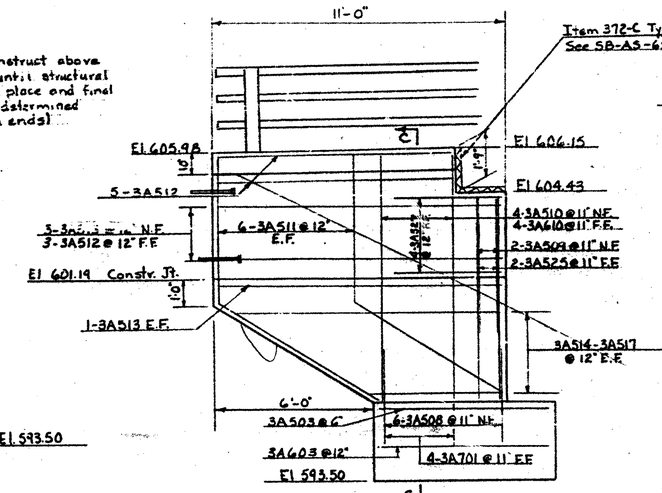

VIEW E-E

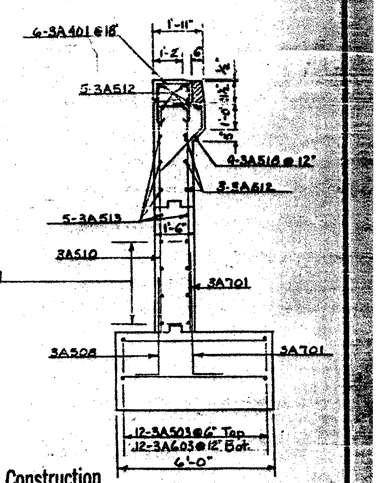

SECTION C-C

Stage 1 Construction

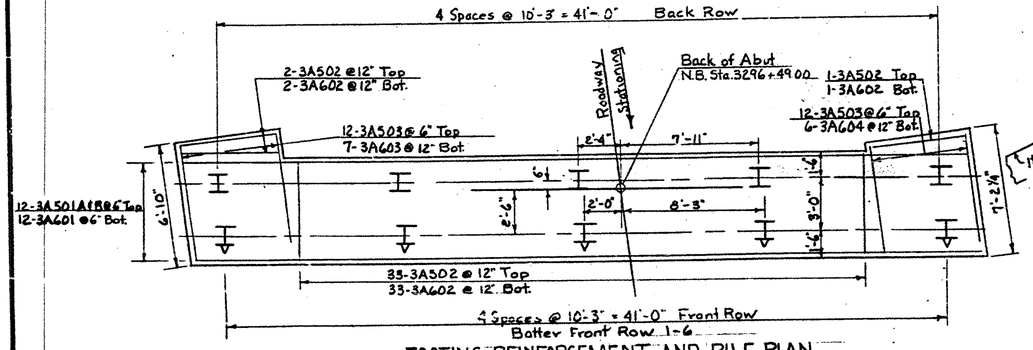

FOOTING REINFORCEMENT AND PILE PLAN

Scale: 1/4" = 1'-0"

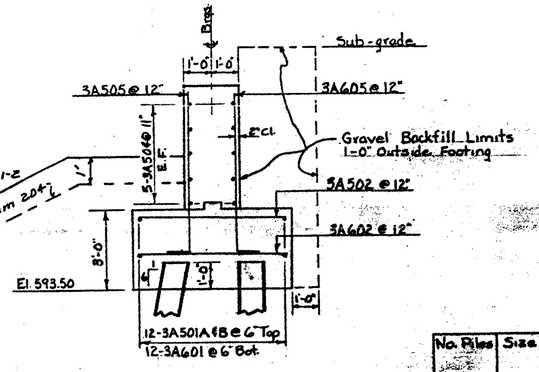

SECTION A-A

NOTES

1. For general notes see Sheet BR-100.
2. Fill to be made 6" above bottom of footing elevation before piles are driven.
3. All piles shall be driven to a minimum bearing capacity of 45 tons and to a minimum penetration of 10' into original ground.

No. Piles	Size	Est. Length of Piles	Splices Allowed for Piles not exceeding Plan Length (to be paid for only if used)	Splices Estimated for Piles exceeding Plan Length (to be paid for only if used)
10	12BP53	35'		2

CONTRACT 2

BRIDGE SHEET BR243
REFERENCE SHEET 5 OF 9
SHEET 121 OF 370

TOWN OF Georgia-Fairfax-Fairfield - St. Albans
ROUTE No. I 89 LOG STA.
Abutment #3 N.B.
I 89 Over Vt 104
SCALE 3/8" = 1'-0" or as Noted
SURVEYED BY
DRAWN BY R.A.O. CHECKED BY WMS-EJ
PROJECT No. I 89-3(35) Cont. #2
SHEET 172 OF 462

BR 111

BR 89 N

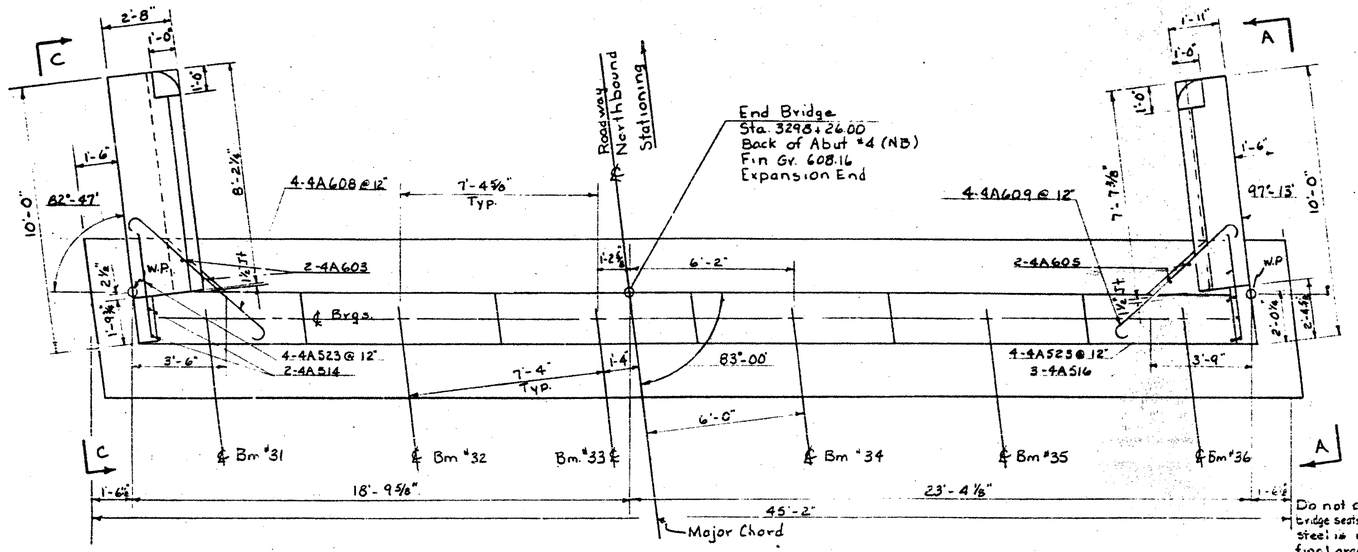

PLAN

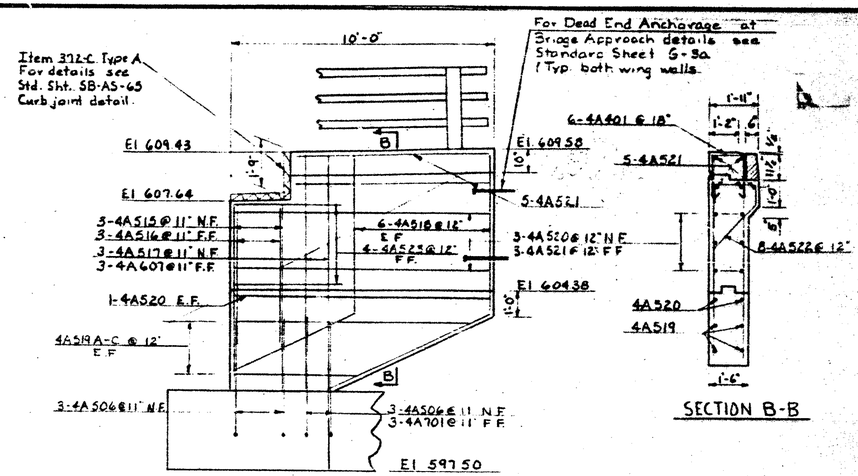

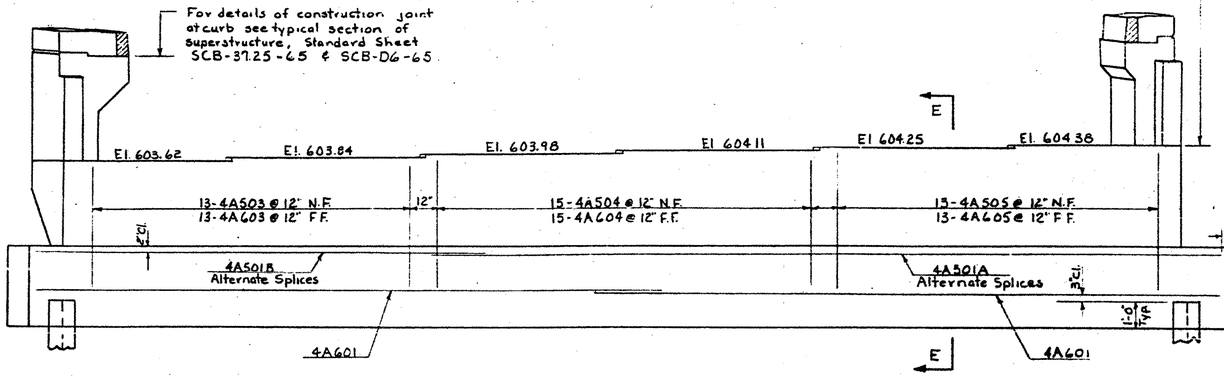

ELEVATION

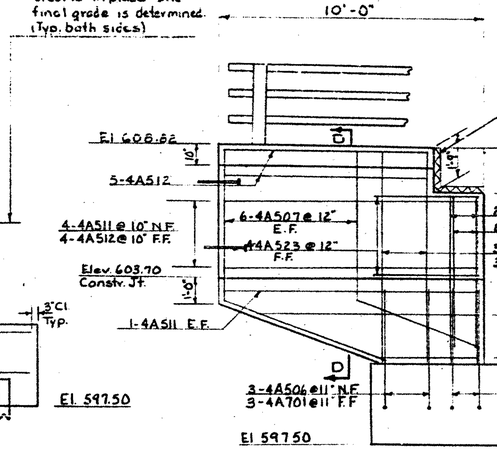

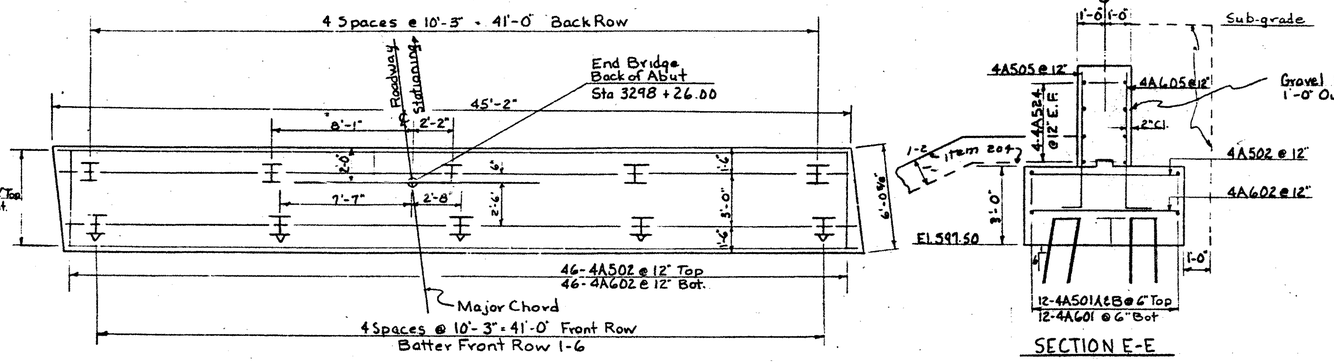

FOOTING REINFORCEMENT AND PILE PLAN

Scale: ¼" = 1'-0"

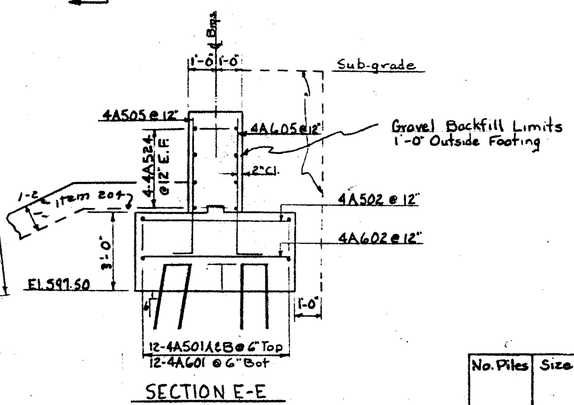

SECTION E-E

NOTES

1 For general notes see Sheet BR-100.

2 Fill to be made 6' above bottom of footing elevation before piles are driven.

3. All piles shall be driven to a minimum bearing capacity of 45 tons and to a minimum penetration of 10' into original ground.

No. Piles	Size	Est Length of Piles	Splices Allowed for Piles not exceeding Plan Length (to be paid for only if used)	Splices Estimated for Piles exceeding Plan Length (to be paid for only if used)
10	12BP53	30'	———	2

Stage 1 Construction

CONTRACT 2

BRIDGE SHEET BR244
REFERENCE SHEET 6 OF 9
SHEET 122 OF 370

TOWN OF Georgia-Fairfax-Fairfield-St Albans
ROUTE No. I89 LOG STA
Abutment #4 N.B.
I89 Over Vt 104
SCALE 3/8" = 1'-0" or as noted
SURVEYED BY
DRAWN BY R.A.D. CHECKED BY W.M.S-E.I.
PROJECT NO I89-3(35), Cont #2
SHEET 173 OF 407

BR-112 BR87N

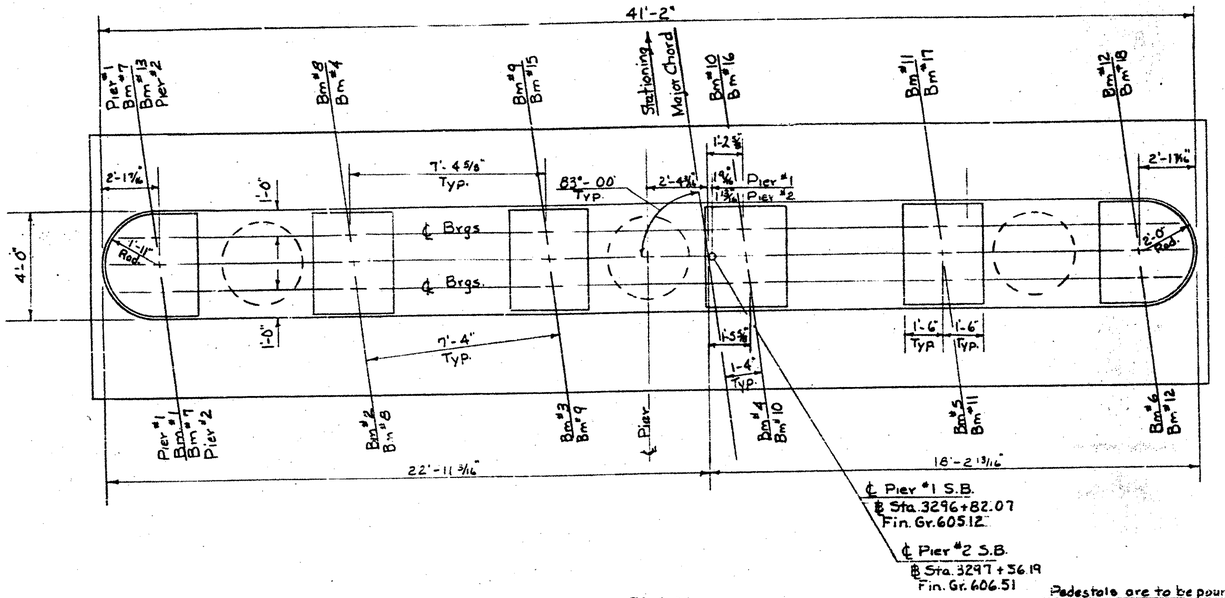

PLAN

Pedestals are to be poured integral with pier cap (Typ.)

El. 600.18 Pier #1
El. 601.41 Pier #2

El. A | El. B | El. C | El. D | El. E | El. F

El. 600.93 Pier #1
El. 602.16 Pier #2

El. 596.29 Pier #1
El. 597.52 Pier #2

El. 596.54 Pier #1
El. 597.79 Pier #2

El. 596.82 Pier #1
El. 598.05 Pier #2

4'-0"

2'-0"

2'-0" Dia.

3'-0" Dia.

3'-0" Dia.

2'-0"
¾" Drip bead (Typical)

Downspout Located on Abut. Side of Pier. #1 & #2

21'-9 1/4" Pier #1 S.B.
25'-0 1/4" Pier #2 S.B.

22'-0 3/4" Pier #1 S.B.
25'-3 1/2" Pier #2 S.B.

22'-3 3/4" Pier #1 S.B.
25'-6 5/8" Pier #2 S.B.

14'-6"

14'-6"

5'-0"

5'-0"

2'-6"

El. 572.00 Pier #1
El. 570.00 Pier #2

21'-0"

21'-0"

A

A

ELEVATION

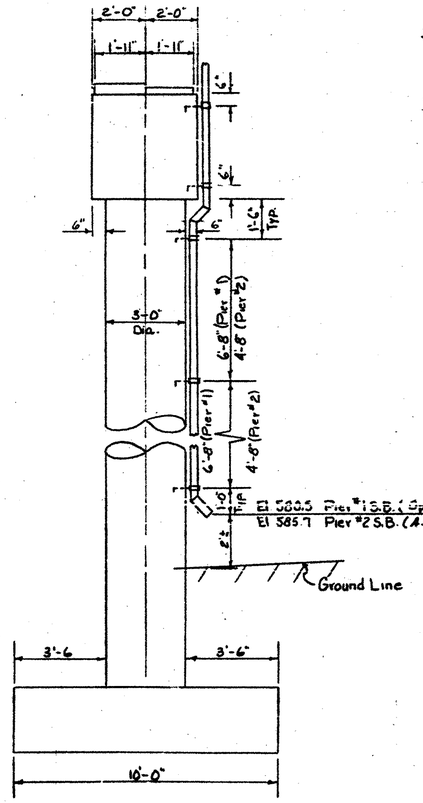

SECTION A-A

Pier	Elev. A	Elev. B	Elev. C	Elev. D	Elev. E	Elev. F
#1 Span1	600.55	600.76	600.90	601.03	601.17	601.30
#1 Span2	600.42	600.64	600.77	600.91	601.05	601.18
#2 Span2	601.65	601.86	602.00	602.14	602.27	602.41
#2 Span3	601.93	602.14	602.28	602.41	602.55	602.68

BRIDGE SEAT ELEVATIONS

NOTES

1. Spiral reinforcement for all columns on all piers shall conform to A.A.S.H.O. Desig. M 32-60, Cold Drawn Steel Wire. Where spiral splicing is necessary lap is to be 1½ turns. The furnishing and installation of col. spiral reinforcement shall be paid for under Item No. 402.

2. For details of drain trough and down-spouts at piers see Std. Sheet SCB-03-65.

3. All concrete in Pier Caps and Pier Columns shall be Class A-A and Pier Footings shall be Class B.

4. The furnishing and installation of drainage system with downspout shall be paid for under Item No. 404-A.

5. Pier Footings are designed for allowable earth bearing pressure of 2.5 tons per sq ft.

Stage 1 Construction

CONTRACT 2

BRIDGE SHEET BR245
REFERENCE SHEET 7 OF 9
SHEET 123 OF 370

TOWN OF Georgia-Fairfax-Fairfield-St-Albans
ROUTE NO. I89 LOG STA.
Pier #1 & #2 S.B. Layout Details
I89 over Vt. 104
SCALE 3/16" = 1'-0"
SURVEYED BY
DRAWN BY R.A.O. CHECKED BY WMS-EI.
PROJECT NO. I89-3(35) Cont. #2
SHEET 178 OF 467

BR-113 BR875

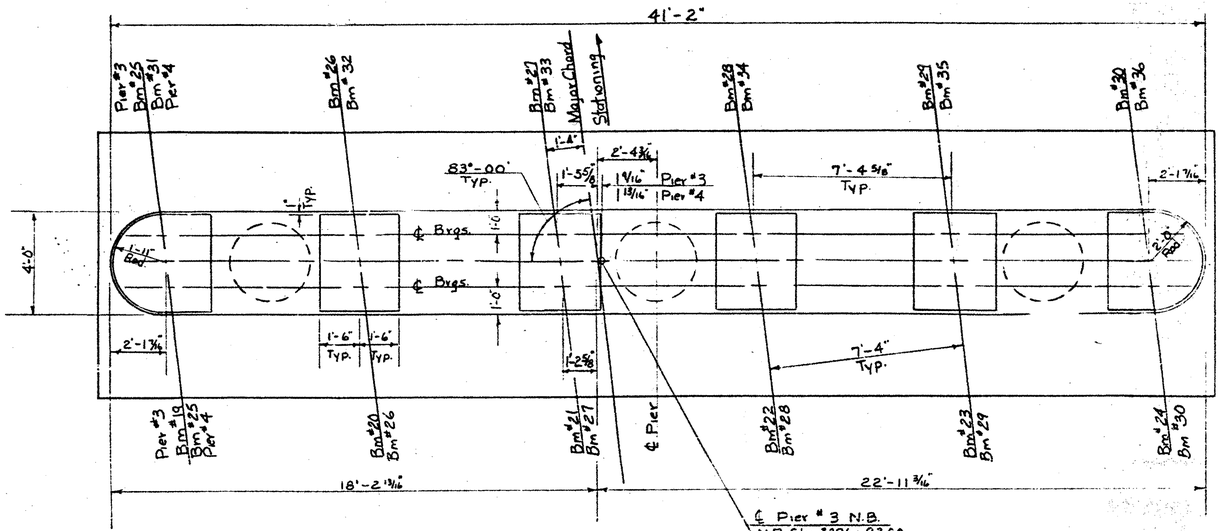

PLAN

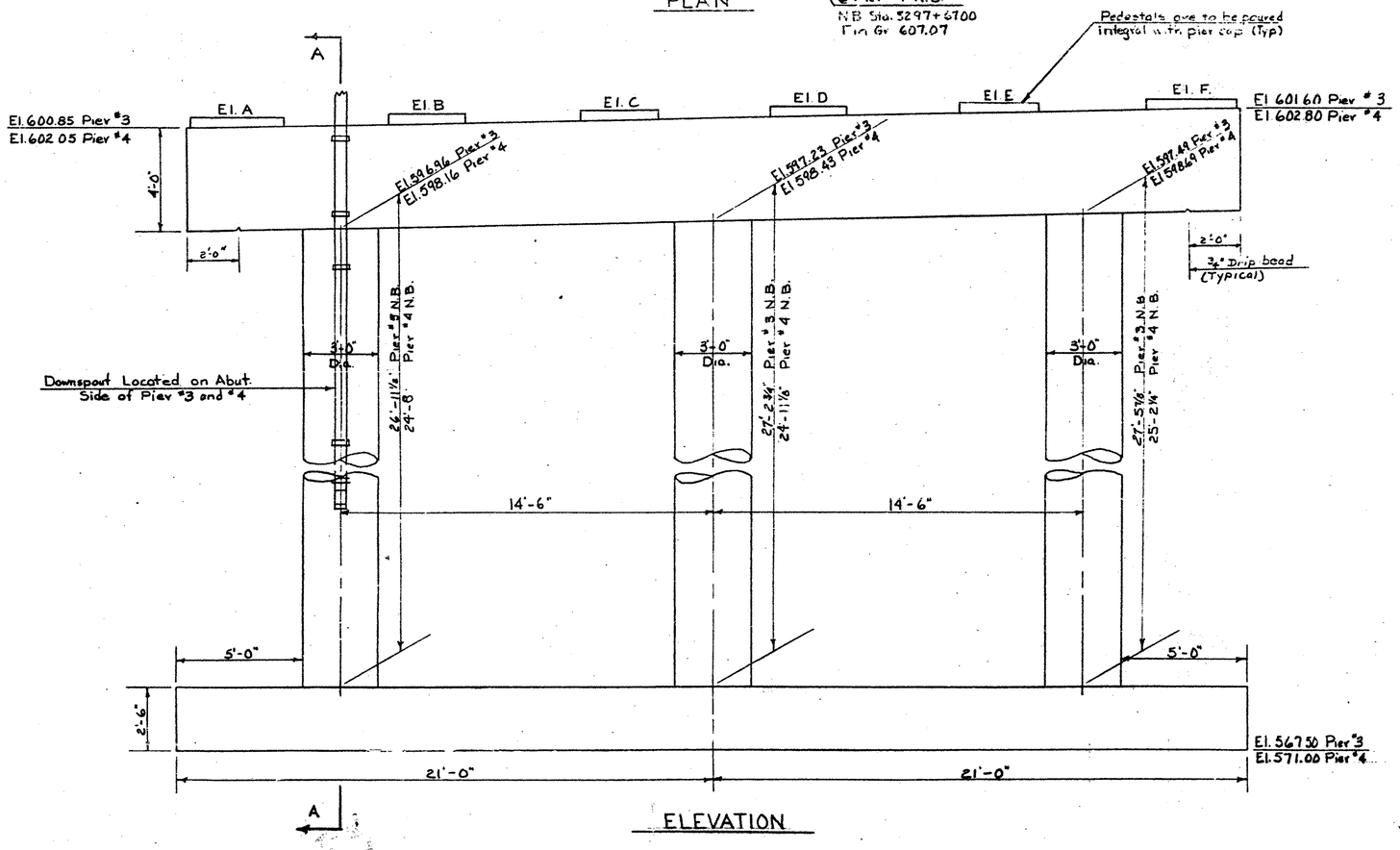

ELEVATION

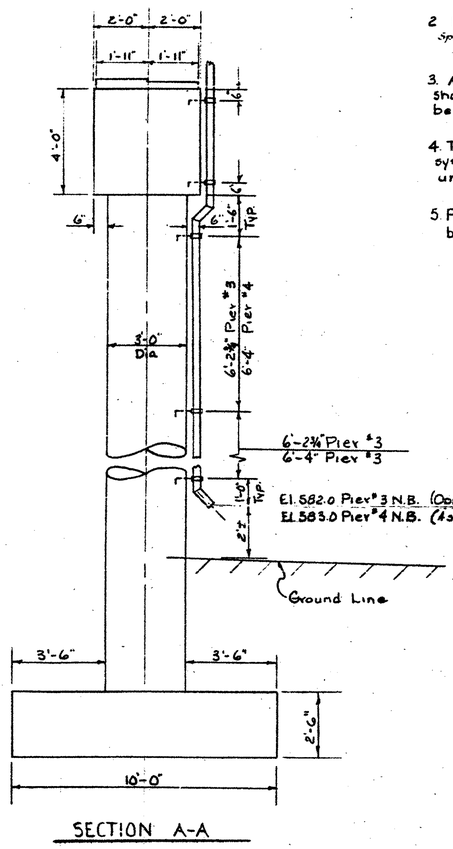

SECTION A-A

Pier	Elev. A	Elev. B	Elev. C	Elev. D	Elev. E	Elev. F
#3 Span 1	601.21	601.43	601.56	601.70	601.83	601.97
#3 Span 2	601.09	601.30	601.44	601.57	601.71	601.85
#4 Span 2	602.29	602.51	602.64	602.78	602.91	603.05
#4 Span 3	602.57	602.78	602.92	603.06	603.19	603.33

BRIDGE SEAT ELEVATIONS

NOTES

1. Spiral reinforcement for all columns on all piers shall conform to A.A.S.H.O. Desig. M 32-60, Cold Drawn Steel Wire. Wherever splicing is necessary lap to be 1½ turns. The furnishing and installation of col. spiral reinforcement shall be paid for under Item No. 402.
2. For details of drain trough and downspouts at piers see Std. Sheet SCB-D3-65.
3. All concrete in Pier Caps and Pier Columns shall be Class A-A and Pier Footings shall be Class B.
4. The furnishing and installation of drainage system with downspout shall be paid for under Item No. 404-A.
5. Pier Footings are designed for allowable earth bearing pressure of 2.5 tons per sq. ft.

Stage 1 Construction

CONTRACT 2

BRIDGE SHEET BR246
REFERENCE SHEET 8 OF 9
SHEET 124 OF 370

TOWN OF Georgia - Fairfax - Fairfield - St. Albans
ROUTE NO. I89 LOG STA.
Pier #3 & #4 N.B. Layout Details
I89 over Vt. 104
SCALE 3/8" = 1'-0"
SURVEYED BY
DRAWN BY R.A.O. CHECKED BY WMS-EHI
PROJECT NO. I89-3(35) Cont. 2
SHEET 175 OF 467

BR-114 BK87N

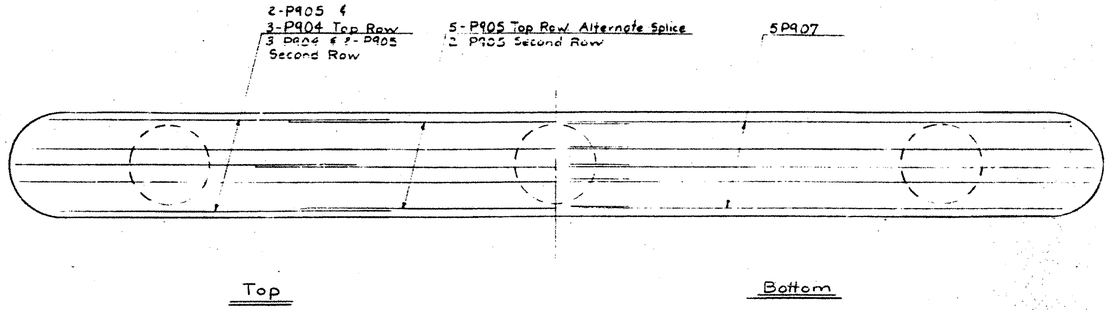

CAP REINFORCING PLAN
Scale: 3/8"=1'-0"

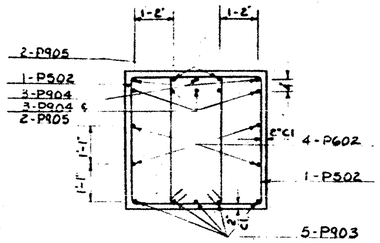

SECTION B-B
Scale: ½"=1'-0"

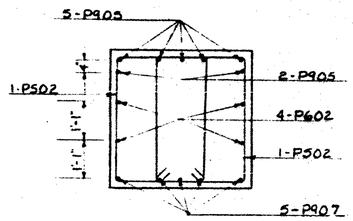

SECTION C-C
Scale: ½"=1'-0"

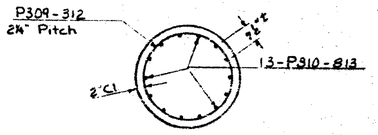

SECTION D-D
Scale ½"=1'-0"

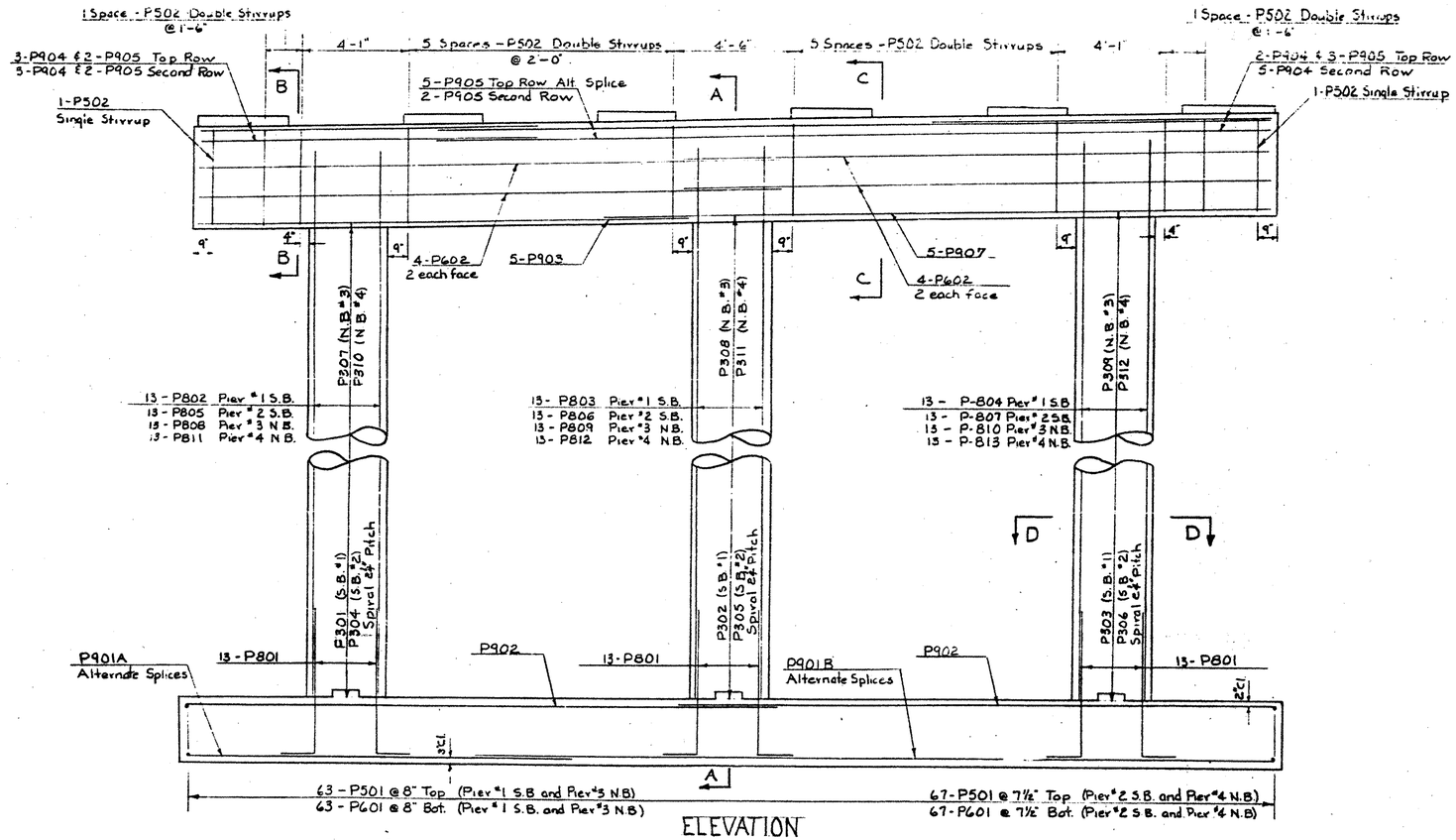

ELEVATION
Scale: 3/8"=1'-0"

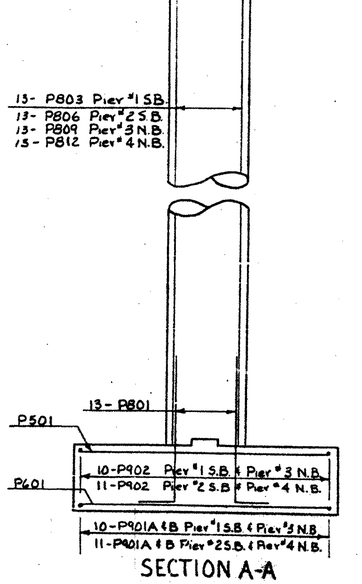

SECTION A-A
Scale: 3/8"=1'-0"

Stage 1 Construction

CONTRACT 2

BRIDGE SHEET BR247
REFERENCE SHEET 9 OF 9
SHEET 125 OF 370

TOWN OF Georgia-Fairfax-Fairfield - St-Albans
ROUTE NO. I89
Pier Reinforcing Details
I89 over Vt 104 54-B4
SCALE: As noted
SURVEYED BY
DRAWN BY R.A.O. CHECKED BY W.M.S.
PROJECT NO I89-3(35) Cont. #2
SHEET 176 OF 462

BR-115 BR247NF S

FINAL HYDRAULICS REPORT (Dated 7-20-2000)

TOWN: ST Albans COUNTY: Franklin

PROJECT NO.: IM 089-3(27) STREAM: Rugg Brook Tributary

HIGHWAY NO.: I89 North Bound STRUCTURE NO.: 87-3 NB

DRAINAGE AREA= 156 acres

Q2.33=	75 cfs	HEADWATER ELEVATION=	589.1
Q10=	110 cfs	" " =	589.8
Q25=	130 cfs	" " =	590.2
Q50=	160 cfs	" " =	590.8
Q100=	200 cfs	" " =	591.5

TAILWATER ELEVATION @ Q100 = no tailwater, outlet depth = 2.0'
OUTLET VELOCITY @ Q100 = 16.7 fps
AT WHAT FREQUENCY IS THE ROADWAY OVERTOPPED? Above Q100
DISCHARGE OVER ROAD @ Q100: None

REQUIRED CHANNEL PROTECTION: Stone Fill, Type IV, dissipater @ outlet

PERMIT INFORMATION

AVERAGE DAILY FLOW: 1.0 cfs
ORDINARY LOW WATER: 0.5 cfs DEPTH: less than 0.5'
ORDINARY HIGH WATER: 30.0 cfs DEPTH: 1.0'

TEMPORARY BRIDGE REQUIREMENTS

STRUCTURE TYPE: No temporary bridge required.

CLEAR SPAN (NORMAL TO STREAM):
VERTICAL CLEARANCE ABOVE STREAMBED:

WATERWAY OF FULL OPENING:

The new structure is a 6' X 6' box with 1' high baffles, resulting in a 6' X 5' waterway opening. Length is 77.7'. Inlet invert elevation = 586.74 and outlet invert elevation = 577.29, resulting in a 12.27% slope.

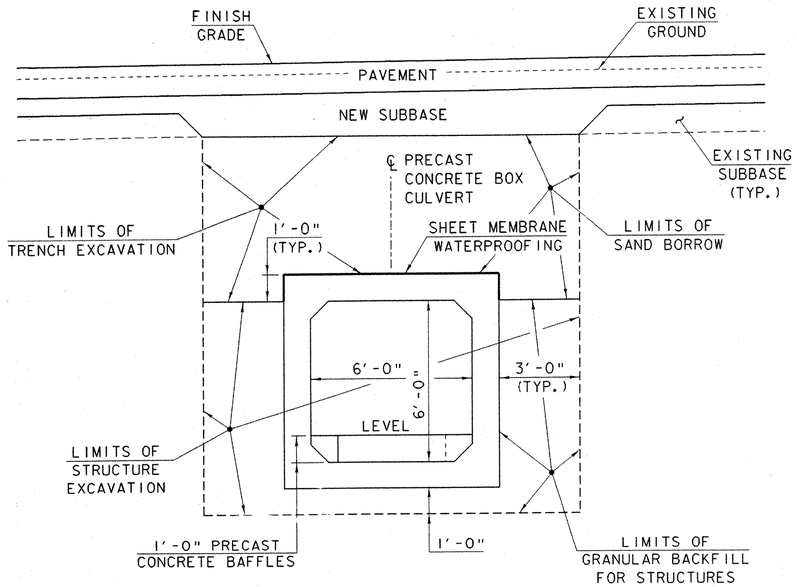

BRIDGES 87-3 N&S EARTHWORK TYPICAL

SCALE: 3/8" = 1'-0"

FINAL HYDRAULICS REPORT (Dated 7-20-2000)

TOWN: ST Albans COUNTY: Franklin

PROJECT NO.: IM 089-3(27) STREAM: Rugg Brook Tributary

HIGHWAY NO.: I89 South Bound STRUCTURE NO.: 87-3 SB

DRAINAGE AREA= 162 acres

Q2.33=	75 cfs	HEADWATER ELEVATION=	567.2
Q10=	110 cfs	" " =	568.0
Q25=	130 cfs	" " =	568.4
Q50=	160 cfs	" " =	568.9
Q100=	200 cfs	" " =	569.7

TAILWATER ELEVATION @ Q100 = no tailwater, outlet depth = 2.0'
OUTLET VELOCITY @ Q100 = 16.8 fps
AT WHAT FREQUENCY IS THE ROADWAY OVERTOPPED? Above Q100
DISCHARGE OVER ROAD @ Q100: None

REQUIRED CHANNEL PROTECTION: Stone Fill, Type IV, dissipater @ outlet

PERMIT INFORMATION

AVERAGE DAILY FLOW: 1.0 cfs
ORDINARY LOW WATER: 0.5 cfs DEPTH: less than 0.5'
ORDINARY HIGH WATER: 30.0 cfs DEPTH: 1.0'

TEMPORARY BRIDGE REQUIREMENTS

STRUCTURE TYPE: No temporary bridge required.

CLEAR SPAN (NORMAL TO STREAM):
VERTICAL CLEARANCE ABOVE STREAMBED:

WATERWAY OF FULL OPENING:

The new structure is a 6' X 6' box with 1' high baffles, resulting in a 6' X 5' waterway opening. Length is 107.8'. Inlet invert elevation = 564.89 and outlet invert elevation = 552.25, resulting in a 12.27% slope.

INDEX OF SHEETS

BR300	87-3 N&S PRELIMINARY INFORMATION SHEET
BR301	87-3 N&S EARTHWORK TYPICALS
BR302	87-3 N&S ENERGY DISSIPATER AND BAFFLE DETAILS
BR303-305	87-3 N&S R.O.W. SHEETS
BR306	DRIVE BOX CULVERT PLAN
BR307	87-3 N&S PLAN
BR308	DRIVE PROFILE AND CHANNEL PROFILE
BR309	87-3 N&S ELEVATION ALONG ℄ CULVERTS
BR310	87-3 N&S PROJECT NOTES & QUANTITIES
BR311	DRIVE BOX CULVERT LAYOUT
BR312	DRIVE WINGWALL ELEVATIONS
BR313	87-3 SOUTHBOUND BOX CULVERT LAYOUT
BR314	87-3 SOUTHBOUND WINGWALL ELEVATIONS
BR315	87-3 NORTHBOUND BOX CULVERT LAYOUT
BR316	87-3 NORTHBOUND WINGWALL ELEVATIONS
BR317-323	CHANNEL CORSS SECTIONS
BR324-325	DRIVE CROSS SECTIONS

FINAL HYDRAULICS REPORT (Dated 7-20-2000)

TOWN: ST Albans COUNTY: Franklin

PROJECT NO.: IM 089-3(27) STREAM: Rugg Brook Tributary

HIGHWAY NO.: Private Drive STRUCTURE NO.: Dnstr. Of 87-3

DRAINAGE AREA= 162 acres

Q2.33=	75 cfs	HEADWATER ELEVATION=	532.9
Q10=	110 cfs	" " =	533.6
Q25=	130 cfs	" " =	534.0
Q50=	160 cfs	" " =	534.5
Q100=	200 cfs	" " =	535.1

TAILWATER ELEVATION @ Q25 = 531.2
OUTLET VELOCITY @ Q25 = 11.6 fps
AT WHAT FREQUENCY IS THE ROADWAY OVERTOPPED? Q80
DISCHARGE OVER ROAD @ Q100: 6 cfs

REQUIRED CHANNEL PROTECTION: Stone Fill, Type III

PERMIT INFORMATION

AVERAGE DAILY FLOW: 1.0 cfs
ORDINARY LOW WATER: 0.5 cfs DEPTH: less than 0.5'
ORDINARY HIGH WATER: 30.0 cfs DEPTH: 1.0'

TEMPORARY BRIDGE REQUIREMENTS

STRUCTURE TYPE: No temporary bridge required.

CLEAR SPAN (NORMAL TO STREAM):
VERTICAL CLEARANCE ABOVE STREAMBED:

WATERWAY OF FULL OPENING:

The new structure is a 7' X 5' box with 1' high baffles, resulting in a 7' X 4' waterway opening. Length is 14.0'. Inlet invert elevation = 530.69 and outlet invert elevation = 529.75, resulting in a 6.71% slope.

NOTES

1. **SCOPE OF WORK FOR BRIDGES 87-3 N & S:** REPLACE THE EXISTING 60" DIA. CORRUGATED METAL PIPES WITH PRECAST 6' X 6' REINFORCED CONCRETE BOX CULVERTS WITH BAFFLES, ONE UNDER EACH LEG OF INTERSTATE I-89. PLACE PRECAST WINGWALLS AND APRONS WITH CUTOFF WALLS AT THE INLET AND OUTLET TO EACH STRUCTURE. CONSTRUCT ENERGY DISSIPATION STRUCTURES AT THE OUTLET OF BOTH BOX CULVERTS AS SHOWN IN THE PLANS. CONSTRUCT CHANNEL AND STREAM BANK REINFORCEMENT AS SHOWN IN THE PLANS AND AS DIRECTED BY THE RESIDENT ENGINEER.

2. **SCOPE OF WORK FOR DOWNSTREAM DRIVE CULVERT:** REPLACE THE EXISTING 36" DIA. CORRUGATED METAL PIPE WITH A PRECAST 7' X 5' REINFORCED CONCRETE BOX CULVERT. PLACE PRECAST WINGWALLS AND APRONS WITH CUTOFF WALLS AT THE INLET AND OUTLET. CONSTRUCT CHANNEL AND STREAM BANK REINFORCEMENT AS SHOWN IN THE PLANS AND AS DIRECTED BY THE RESIDENT ENGINEER.

3. ALL MATERIALS AND CONSTRUCTION SHALL CONFORM TO VERMONT AGENCY OF TRANSPORTATION STANDARD SPECIFICATIONS FOR CONSTRUCTION DATED 1990, AND ITS LATEST REVISIONS AND THE AASHTO STANDARD SPECIFICATIONS FOR HIGHWAY BRIDGES, DATED 1996, AND ITS LATEST REVISIONS.

IMPORTANT NOTE: BRIDGE FINISHED GRADES ARE CENTERLINE GRADES.

STATE OF VERMONT
AGENCY OF TRANSPORTATION

Town Of FAIRFAX-FAIRFIELD-ST. ALBANS	Bridge No. 87-3 N&S
Highway No. I-89	Log Sta.
	Surv. Sta.
I-89 OVER THE RUGG BROOK	
87-3 N&S PRELIMINARY INFORMATION SHEET	
Designed By G. ROY	Drawn By G. ROY
Checked By M. LOZIER Date 06/00	Bridge Design Supervisor R.R. WHITCOMB Date 06/00
PROJECT FAIRFAX-FAIRFIELD-ST. ALBANS	PROJECT NO. IM 089-3(27)
I.G.C. Info. 96a056\structures\sa056pl5.dgn	sa056pl5J
Bridge Sheet No. BR300	Sheet 126 of 370

PLOTTED 21-SEP-2000

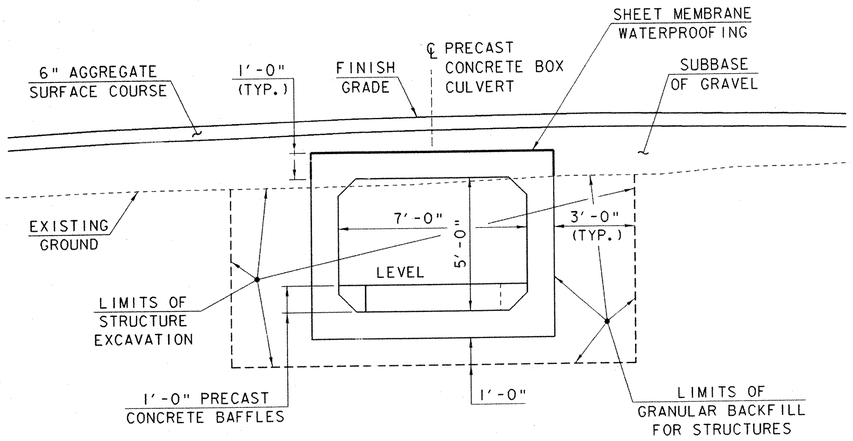

DRIVE REINFORCED CONCRETE BOX EARTHWORK TYPICAL

SCALE: 3/8" = 1'-0"

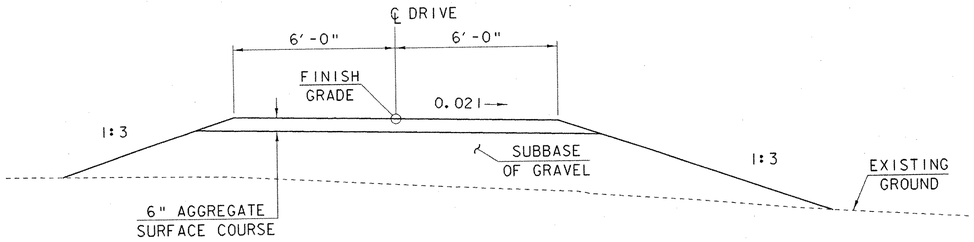

DRIVE TYPICAL SECTION

SCALE: 3/8" = 1'-0"

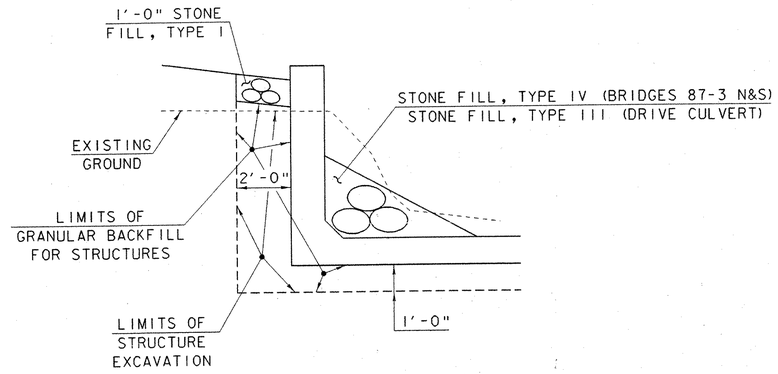

WINGWALL TYPICAL SECTION

SCALE: 3/8" = 1'-0"

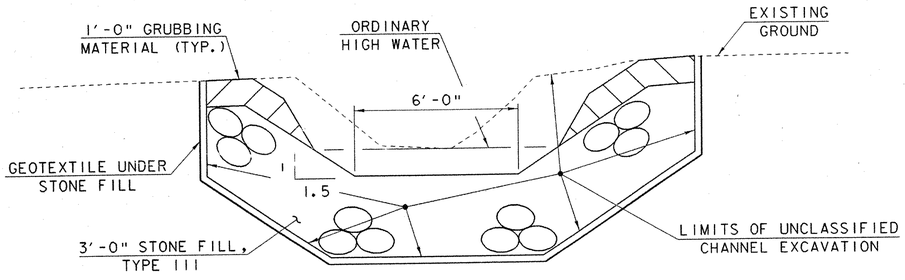

CHANNEL TYPICAL SECTION FOR DRIVE BOX CULVERT AND INLET TO BR 87-3 NORTHBOUND BOX CULVERT

SCALE: 3/8" = 1'-0"

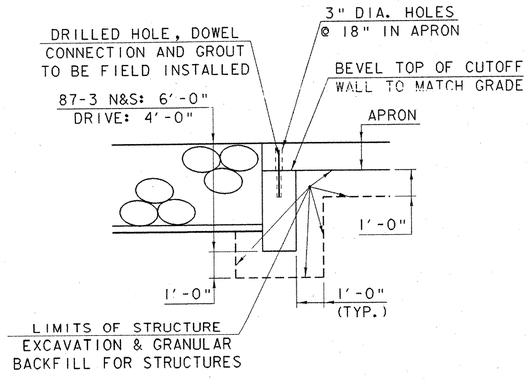

CUTOFF WALL DETAIL

NOT TO SCALE

IMPORTANT NOTE: BRIDGE FINISHED GRADES ARE CENTERLINE GRADES.

STATE OF VERMONT
AGENCY OF TRANSPORTATION

Town Of FAIRFAX-FAIRFIELD-ST. ALBANS	Bridge No. 87-3 N&S
Highway No. I-89	Log Sta. / Surv. Sta.

I-89 OVER THE RUGG BROOK

87-3 N&S EARTHWORK TYPICALS

Designed By G.ROY	Drawn By G.ROY
Checked By M.LOZIER Date 06/00	Bridge Design Supervisor R.R.WHITCOMB Date 06/00
PROJECT FAIRFAX-FAIRFIELD-ST. ALBANS	PROJECT NO. IM 089-3 (27)
I.G.C. Info. 96a056\structures\sa056pl5.dgn	sa056bx6J
Bridge Sheet No. BR301	Sheet 127 of 370

PLOTTED 21-SEP-2000

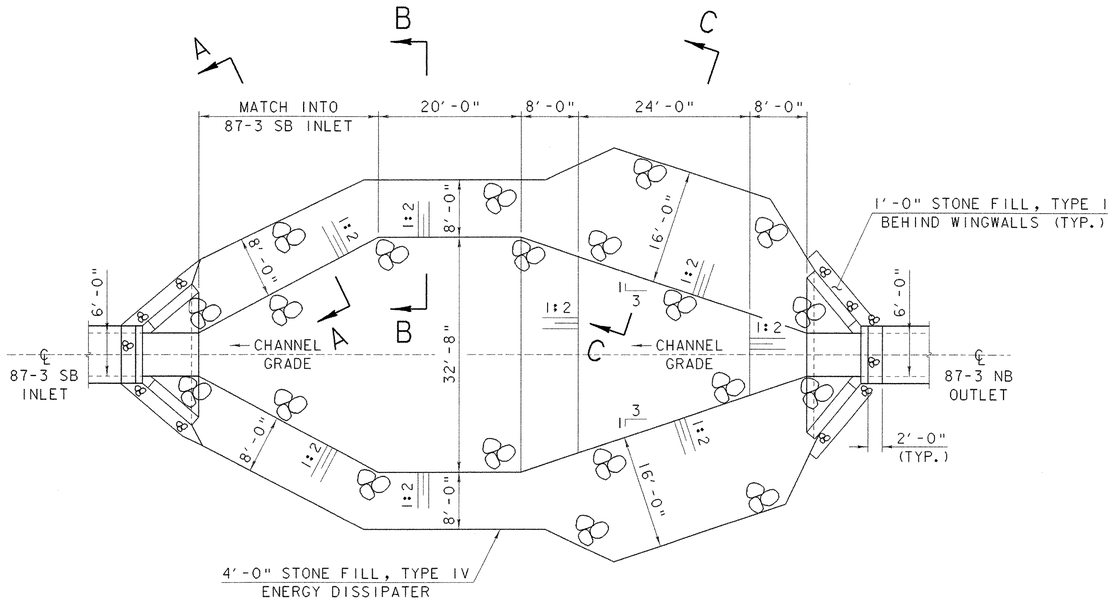

ENERGY DISSIPATER PLAN

SCALE: 1" = 10'-0"

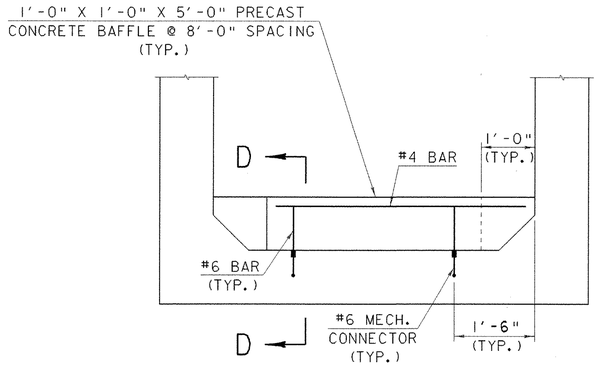

BAFFLE PLACEMENT & ANCHORAGE DETAIL

SCALE: 3/4" = 1'-0"

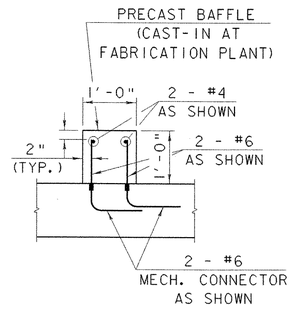

SECTION D-D

SCALE: 3/4" = 1'-0"

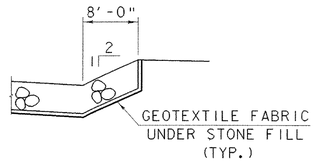

SECTION A-A

SCALE: 1" = 10'-0"

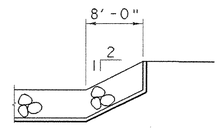

SECTION B-B

SCALE: 1" = 10'-0"

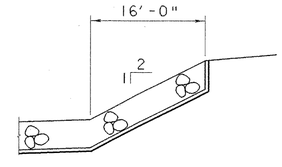

SECTION C-C

SCALE: 1" = 10'-0"

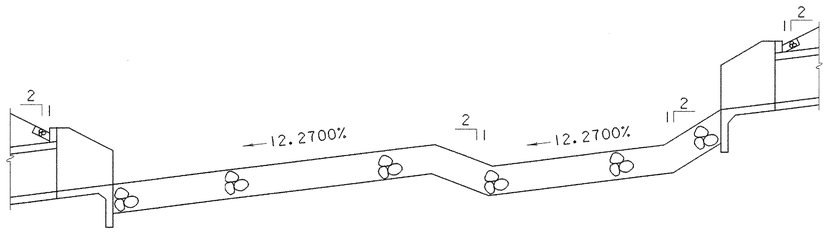

ENERGY DISSIPATER SECTION ALONG CENTERLINE

SCALE: 1" = 10'-0"

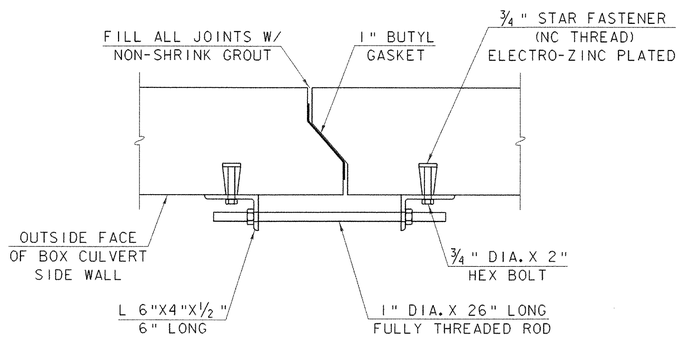

PREMANENT CLOSURE DETAIL

SCALE: 1 1/2" = 1'-0"

NOTES:

1. CONSTRUCT ENERGY DISSIPATER AT OUTLET OF BR 87-3S SIMILAR TO DETAILS SHOWN ON THIS SHEET.
2. ALTERNATE BAFFLE PLACEMENT & ANCHORAGE AND PREMANENT CLOSURE DETAILS MAY BE SUBMITTED TO THE STRUCTURES ENGINEER FOR APPROVAL.
3. ALL BOLTS AND RELATED HARDWARE SHALL BE ASTM A-307 AND SHALL BE GALVANIZED IN ACCORDANCE WITH ASTM A-153 (AASHTO M232).

STATE OF VERMONT
AGENCY OF TRANSPORTATION

Town Of FAIRFAX-FAIRFIELD-ST. ALBANS	Bridge No. 87-3 N&S
Highway No. I-89	Log Sta. / Surv. Sta.
I-89 OVER THE RUGG BROOK	
87-3 N&S ENERGY DISSIPATER & BAFFLE DETAILS	
Designed By G. ROY	Drawn By G. ROY
Checked By M. LOZIER Date 06/00	Bridge Design Supervisor R. R. WHITCOMB Date 06/00
PROJECT FAIRFAX-FAIRFIELD-ST. ALBANS	PROJECT NO. IM 089-3 (27)
I.G.C. Info. 96a056\structures\sa056pl5.dgn	sa056dlsj
Bridge Sheet No. BR302	Sheet 128 of 370

PLOTTED 21-SEP-2000

STATE OF VERMONT
AGENCY OF TRANSPORTATION
RIGHT OF WAY PLANS
DETAIL SHEET

TABLE OF PROJECT PROPERTY ACQUISITION

PARCEL NO.	GRANTOR	SHEET NO.	BEGINNING STATION	ENDING STATION	TAKING	REM.	RIGHTS	TITLE TAKEN	DATE	TOWN OR CITY RECORDED	BK.	PG.	REMARKS
1A	TROMBLY, LEO A. & JOYCE F.	3	SB 3395+63 RT.	SB 3396+46 LT.	4170 S.F.±					ST. ALBANS			
			SB 3395+63 LT.	SB 3396+46 LT.			EXCEPT & RESERVE						30' WIDE UTILITY EASEMENT
1B		2,3	CH 30+06 LT.	CH 31+16 RT.			DRIVE (T)						12' GRAVEL
			CH 30+43 RT.	CH 30+92 LT.			EASEMENT (T)						PRIVATE UNDER GROUND
													UTILITY RELOCATION
			CH 30+52 RT.	CH 32+27 LT.			CULVERT & CHANNEL (T)						INCLUDES HEADWALLS
			CH 30+76 RT.	CH 30+86 RT.			TRANSPLANT (T)						TREES
			CH 31+11 LT.	CH 32+08 LT.			TRANSPLANT (T)						TREES
2A	SANBORN, CRAIG R. & DEBORAH A.	2,3	SB 3396+42 LT.	SB 3396+58 LT.	910 S.F.±					ST. ALBANS			
			SB 3396+42 LT.	SB 3396+58 LT.			EXCEPT & RESERVE						30' WIDE UTILITY EASEMENT
2B			CH 30+43 RT.	CH 31+28 LT.			EASEMENT (T)						PRIVATE UNDER GROUND
													UTILITY RELOCATION
			CH 31+35 LT.	CH 31+75 LT.			INSTALL (T)						UNDERDRAIN PIPE
			CH 31+38 LT.	CH 32+26 LT.			CHANNEL (T)						

REVISION NO.	SHEET	DESCRIPTION OF REVISION	DATE	MADE BY	APPROVED BY
1	2,3	PARCEL NO. 2 SANBORN. ADD SB 3396+42 LT.-SB 3396+58, EXCEPT + RESERVE, 30' WIDE UTILITY EASE. CHANGE DITCH + DRIVE TO CHANNEL (T). PER C.O. 9174.	11-27-00	S.L.D.	R.P.D.
2	2,3	PARCEL NO. 1 TROMBLY. CHANGE CUL., DIT.+ DR. (T) TO CULVERT + CHANNEL (T). ADD SB 3395+63 LT.-SB 3396+46 LT., EXCEPT + RESERVE, 30' WIDE UTILITY EASE. PER C.O. 9175.	11-27-00	S.L.D.	R.P.D.
3	1,3	PARCEL NO. 3. DELETE THIS PARCEL. PER C.O. 9176.	11-27-00	S.L.D.	R.P.D.

PROJECT LOCATION MAP

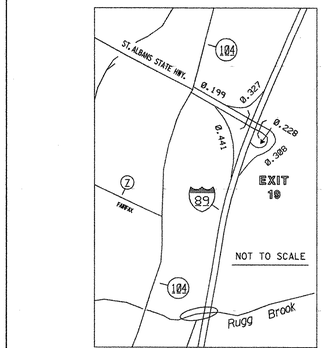

FAIRFAX-FAIRFIELD-ST. ALBANS
IM 089-3(27); BR 87-3 N&S

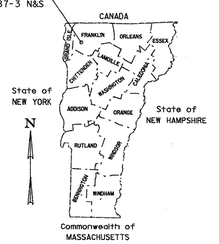

RIGHT-OF-WAY
NOV 27 2000
PRELIMINARY PLANS
COMPLETED PLANS ☒
FINAL PLANS ☒

ACCT. SDesrochers
\\vaot_cadd\filingcabinet$\96a056\RightOfWay\ra056d.dgn
DATE PLOTTED 27-NOV-2000

DR. (P)- DRAINAGE RIGHT
DIT. (P)- DITCHING RIGHT
CH. (P)- CHANNEL RT.
DRIVE (T)- DRIVE RIGHT
CUL. (P)- CULVERT RIGHT
[W]- WATER SOURCES

PRESENT R.O.W.
TAKING WITHOUT ACCESS
TAKING WITHOUT ACCESS ALONG PROPERTY LINE
TAKING WITH ACCESS
(P) PERMANENT EASEMENT
(T) TEMPORARY EASEMENT

LEGEND
C&T (P) CLEARING & TRIMMING
CZ (P) CLEAR ZONE
CONST. (T) CONSTRUCTION EASEMENT
SR SLOPE RIGHTS
PROPERTY LINE
TOP OF CUT
TOE OF SLOPE
UE (P) PERMANENT UTILITY EASEMENT

APPROVED: ROGER P. DUMAS DATE: 8-22-00
CHIEF, PLANS & TITLES

R. O. W. PLANS

FAIRFAX-FAIRFIELD-ST. ALBANS
IM 089-3(27)
SHEET 1 OF 3

CONSTRUCT DRIVEWAY ENTRANCE
STA. 50+93.3 LT

TRANSPLANT EVERGREEN TREES
CHAN. STA. 30+76 RT
CHAN. STA. 30+86 RT
CHAN. STA. 31+11 LT
CHAN. STA. 31+22 LT
CHAN. STA. 31+55 LT
CHAN. STA. 31+67 LT
CHAN. STA. 31+94 LT
CHAN. STA. 32+08 LT

✳ **REMOVE AND RESETTING LIGHT POLE**
STA. 51+41.2 RT
STA. 51+44.4 LT

✳ LIGHT POLES TO BE RESET ACCORDING TO RESIDENT ENGINEER AND PROPERTY OWNER.

SANBORN

ROBTOY, KEVIN L. & LISE G.

APPROXIMATE LOCATION OF NEW 4" DIA. PVC UNDERDRAIN CONNECT TO EXISTING 4" DIA. PVC DRAINAGE PIPE

SANBORN, CRAIG R. & DEBORAH A.

BM 61
SW CNR GARAGE FLOOR
ELEV. 536.51

DRIVE PI
STA. 51+20.11 BK=
STA. 50+99.60 AH
△ = 77° 17' 52" RT

DRIVE PC
STA. 50+54.54

BEGIN DRIVE CONSTRUCTION
STA. 50+45.00

DRIVE POB
STA. 50+00.00

S80° 54' 54"E

TO VT 104

50+00

51+00

R 30'

R 20'

DRIVE (T)

GRAVEL DRIVEWAY

1 STY WF HOUSE

GARAGE

EASEMENT (T)

S. WBIRCH

S. APPLES

EXISTING 4" DIA. PVC PIPE

INSTALL (T)

2B

HEDGE

CHANNEL (T)

TRANSPLANT (T)

S. SPRUCE (TYP.)

CHANNEL POB
STA. 30+00.00

APPROX. RELOCATION FOR UNDERGROUND UTILITIES

30+00

31+00

32

TROMBLY, LEO A. & JOYCE F.

GARDEN

CULVERT & CHANNEL (T)

EASEMENT (T)

TRANSPLANT (T)

WOOD WALL

6-2 / 7-2 GUYW

3'-0" STONE FILL, TYPE III (TYP.)

1'-0" STONE FILL, TYPE I (TYP.)

DRIVE PT
STA. 51+65.17

S3° 37' 02"E

52+00

CONSTRUCTION LIMITS (TYP.)

END DRIVE CONSTRUCTION
STA. 52+00.00

1B

DRIVE POE
STA. 52+25.00

TROMBLY, LEO A. & JOYCE F.

DRIVE POST
STA. 51+42.42
℄ 7'-0" X 5'-0" PRECAST CONCRETE BOX CULVERT
△ = 95° 25' 15" LT

A-A

MATCHL INE

RUGG BROOK

HEDGE

S. SPRUCE

SHED

HEDGE

M. WILLOW

DRIVE CURVE DATA
△ = 77° 17' 52"
D = 69° 52' 22"
R = 82.00'
T = 65.57'
L = 110.63
E = 23.00'
2T-L = 20.51'
BANKING = 0.021'/'

EXISTING STRUCTURE DATA
36" DIA. X 20' CGMP

TROMBLY

LINES SHOWN ON THIS PLAN AS EXISTING PROPERTY LINES P/L ARE BELIEVED TO BE ACCURATE BUT SHOULD NOT BE RELIED UPON FOR PURPOSES UNRELATED TO THE TOWN OF ST. ALBANS' ACQUISITION OF LAND AND RIGHTS FOR THIS PROJECT.

N

VT STATE PLANE GRID

RIGHT-OF-WAY
NOV 27 2000
PRELIMINARY PLANS
COMPLETED PLANS
FINAL PLANS

SCALE 1" = 20'-0
20 0 20

STATE OF VERMONT
AGENCY OF TRANSPORTATION

Town Of FAIRFAX-FAIRFIELD-ST. ALBANS	Bridge No. 87-3 N & S
Highway No. I-89	Log Sta. / Surv. Sta.
I-89 OVER THE RUGG BROOK	
DRIVE BOX CULVERT PLAN	
Designed By G. ROY	Drawn By G. ROY
Checked By M. LOZIER Date 6/00	Bridge Design Supervisor R.R. WHITCOMB Date 6/00
PROJECT FAIRFAX-FAIRFIELD-ST. ALBANS	PROJECT NO. IM 089 - 3 (27)
I.G.C. Info. 96a056\Structures\sa056bdr.dgn	sa056101J
R. O. W. SHEET 2 OF 3 SHEETS	

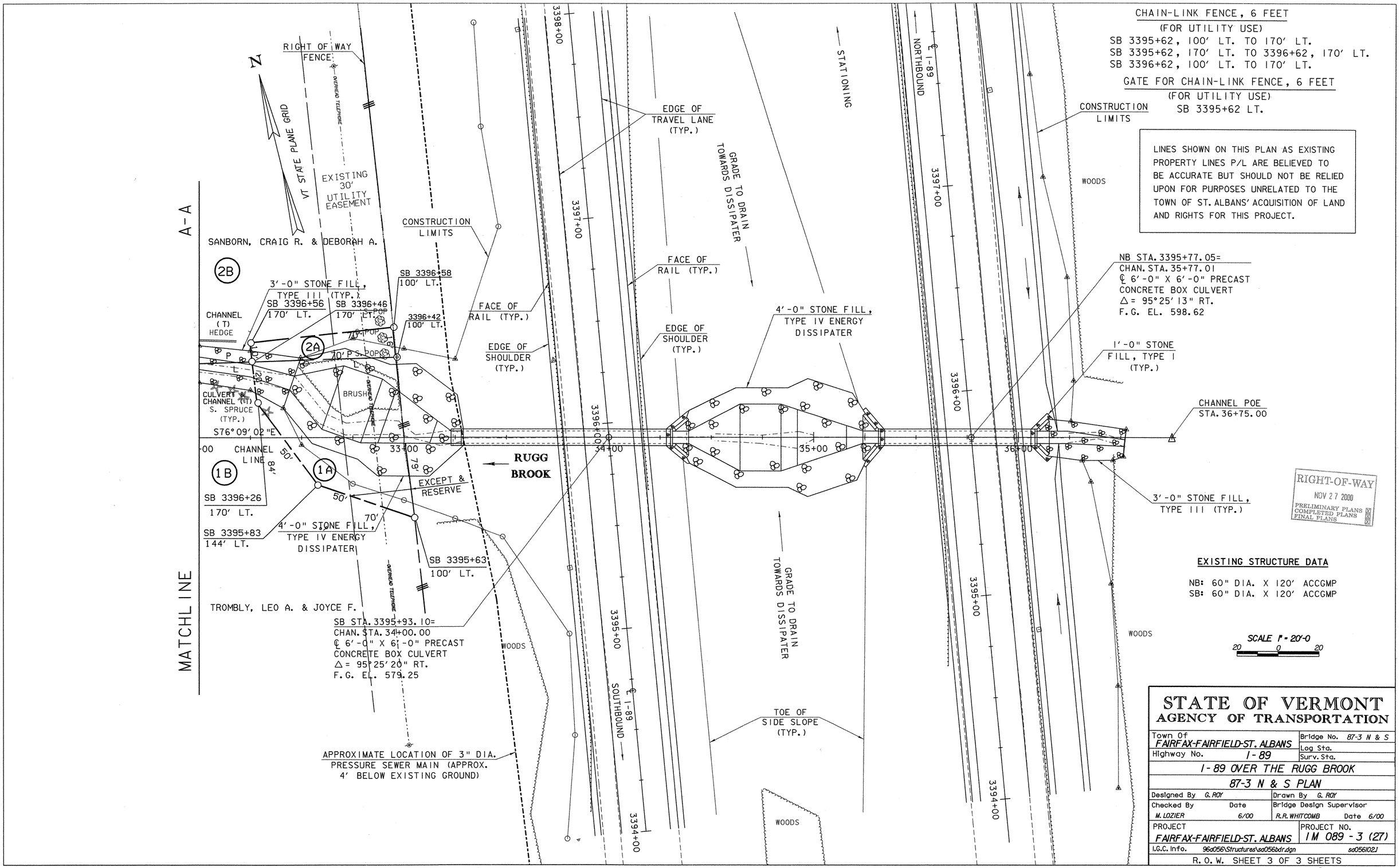

STATE OF VERMONT
AGENCY OF TRANSPORTATION

Town Of FAIRFAX-FAIRFIELD-ST. ALBANS	Bridge No. 87-3 N & S
Highway No. I-89	Log Sta.
	Surv. Sta.
I-89 OVER THE RUGG BROOK	
87-3 N & S PLAN	
Designed By G. ROY	Drawn By G. ROY
Checked By M. LOZIER Date 6/00	Bridge Design Supervisor R.R. WHITCOMB Date 6/00
PROJECT FAIRFAX-FAIRFIELD-ST. ALBANS	PROJECT NO. IM 089 - 3 (27)
I.G.C. Info. 96a056\Structures\sa056bdr.dgn	sa056102J
R. O. W. SHEET 3 OF 3 SHEETS	

CONSTRUCT DRIVEWAY ENTRANCE
STA. 50+93.3 LT

TRANSPLANT EVERGREEN TREES
CHAN. STA. 30+76 RT
CHAN. STA. 30+86 RT
CHAN. STA. 31+11 LT
CHAN. STA. 31+22 LT
CHAN. STA. 31+55 LT
CHAN. STA. 31+67 LT
CHAN. STA. 31+94 LT
CHAN. STA. 32+08 LT

✳ **REMOVE AND RESETTING LIGHT POLE**
STA. 51+41.2 RT
STA. 51+44.4 LT

✳ LIGHT POLES TO BE RESET ACCORDING TO RESIDENT ENGINEER AND PROPERTY OWNER.

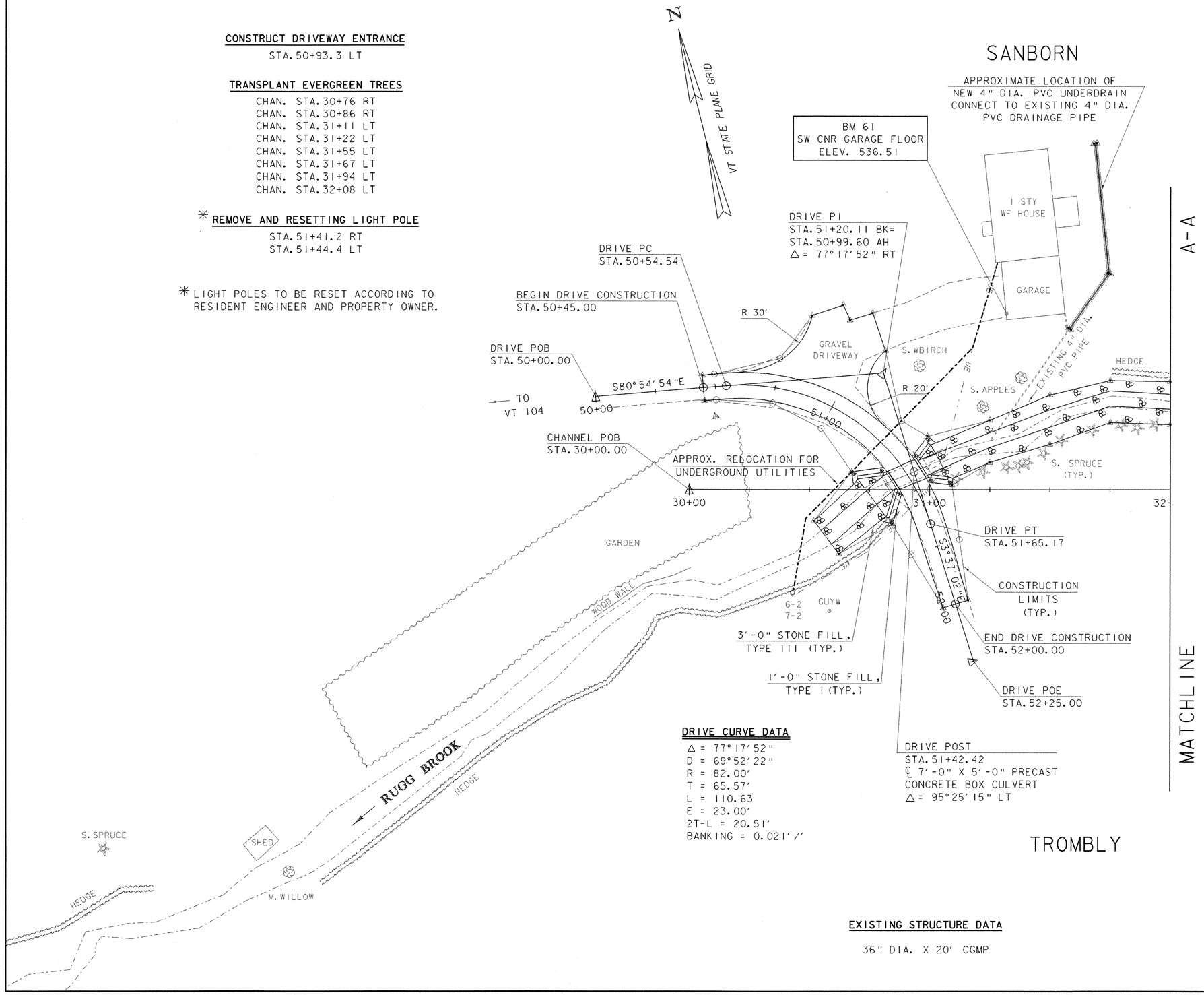

DRIVE CURVE DATA
Δ = 77°17'52"
D = 69°52'22"
R = 82.00'
T = 65.57'
L = 110.63
E = 23.00'
2T-L = 20.51'
BANKING = 0.021'/'

EXISTING STRUCTURE DATA
36" DIA. X 20' CGMP

NOT TO SCALE

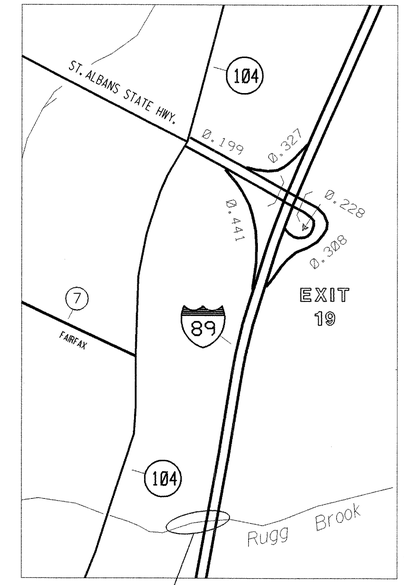

FAIRFAX-FAIRFIELD-ST. ALBANS
IM 089-3(27); BR 87-3 N&S

SCALE 1" = 20'-0
20 0 20

STATE OF VERMONT
AGENCY OF TRANSPORTATION

Town Of FAIRFAX-FAIRFIELD-ST. ALBANS	Bridge No. 87-3 N & S
Highway No. I-89	Log Sta. / Surv. Sta.
I-89 OVER THE RUGG BROOK	
DRIVE BOX CULVERT PLAN	
Designed By G. ROY	Drawn By G. ROY
Checked By M. LOZIER Date 6/00	Bridge Design Supervisor R.R. WHITCOMB Date 6/00
PROJECT FAIRFAX-FAIRFIELD-ST. ALBANS	PROJECT NO. IM 089-3(27)
I.G.C. Info. 96a056\Structures\sa056bdr.dgn	sa056l01J
Bridge Sheet No. BR306	Sheet 132 of 370

PLOTTED 21-SEP-2000

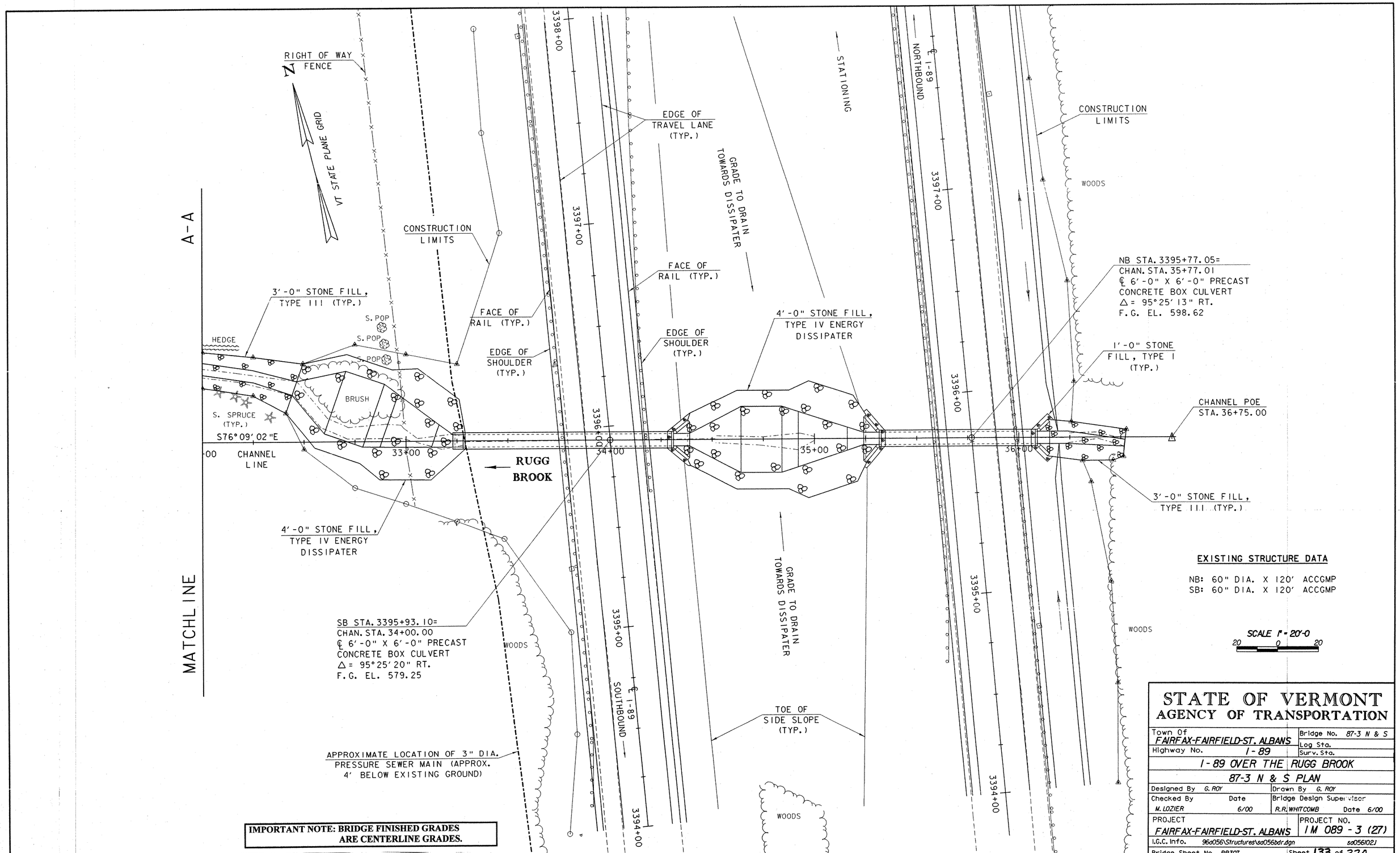

EXISTING STRUCTURE DATA

NB: 60" DIA. X 120' ACCGMP
SB: 60" DIA. X 120' ACCGMP

SCALE 1" = 20'-0
20 0 20

STATE OF VERMONT
AGENCY OF TRANSPORTATION

Town Of FAIRFAX-FAIRFIELD-ST. ALBANS	Bridge No. 87-3 N & S
Highway No. I-89	Log Sta.
	Surv. Sta.
I-89 OVER THE RUGG BROOK	
87-3 N & S PLAN	
Designed By G. ROY	Drawn By G. ROY
Checked By M. LOZIER Date 6/00	Bridge Design Supervisor R.R. WHITCOMB Date 6/00
PROJECT FAIRFAX-FAIRFIELD-ST. ALBANS	PROJECT NO. IM 089 - 3 (27)
I.G.C. Info. 96a056\Structures\sa056bdr.dgn	sa056102J
Bridge Sheet No. BR307	Sheet 133 of 370

PLOTTED 21-SEP-2000

DRIVE PROFILE

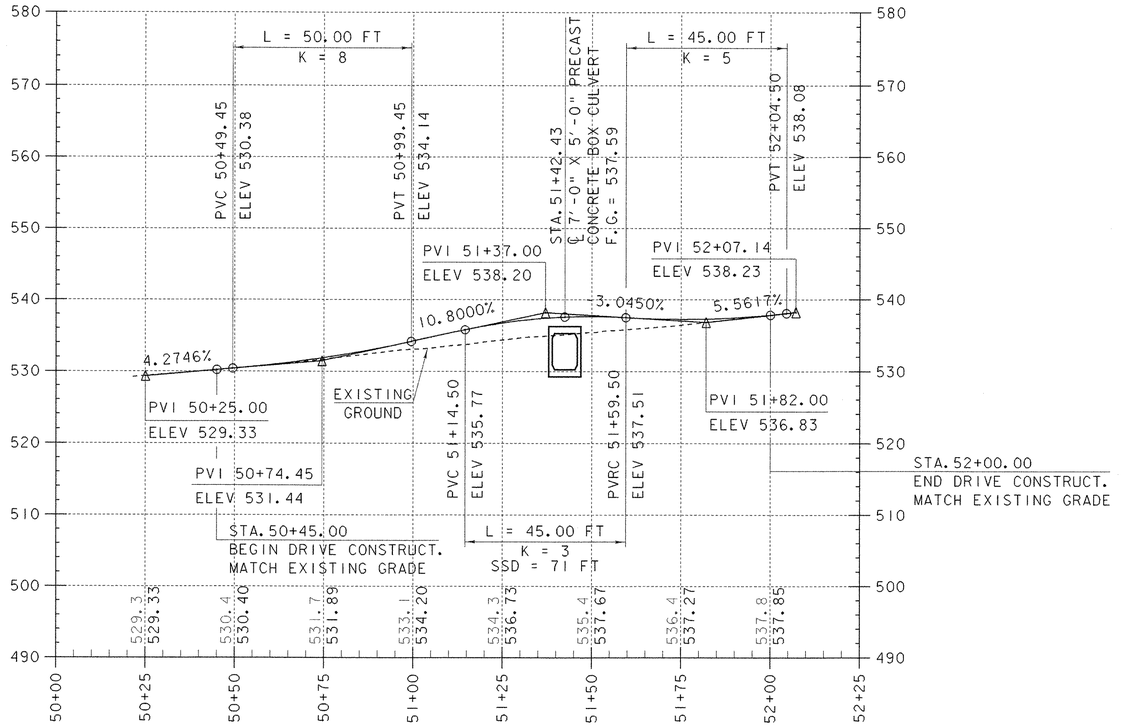

NOTE:
GRADES TO THE NEAREST TENTH ARE EXISTING GROUND ALONG CENTERLINE.
GRADES TO THE NEAREST HUNDREDTH ARE FINISH GRADES ALONG CENTERLINE.

CHANNEL PROFILE

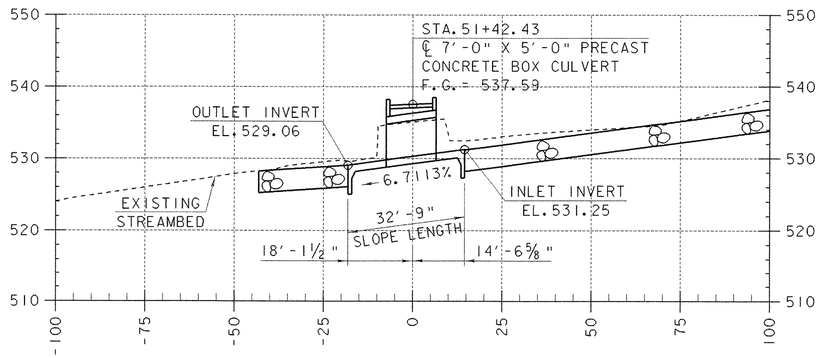

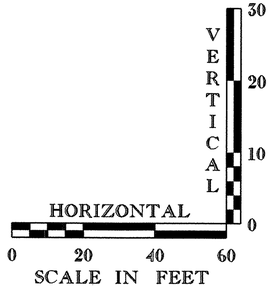

STATE OF VERMONT
AGENCY OF TRANSPORTATION

Town Of FAIRFAX-FAIRFIELD-ST. ALBANS	Bridge No. 87-3 N&S
Highway No. I-89	Log Sta. / Surv. Sta.
I-89 OVER THE RUGG BROOK	
DRIVE PROFILE AND CHANNEL PROFILE	
Designed By G. ROY	Drawn By G. ROY
Checked By M. LOZIER Date 06/00	Bridge Design Supervisor R. R. WHITCOMB Date 06/00
PROJECT FAIRFAX-FAIRFIELD-ST. ALBANS	PROJECT NO. I M 089 - 3 (27)
I.G.C. Info. 96a056\structures\sa056xs4.dgn	sa056p02.1
Bridge Sheet No. BR308	Sheet 134 of 370

PLOTTED 21-SEP-2000

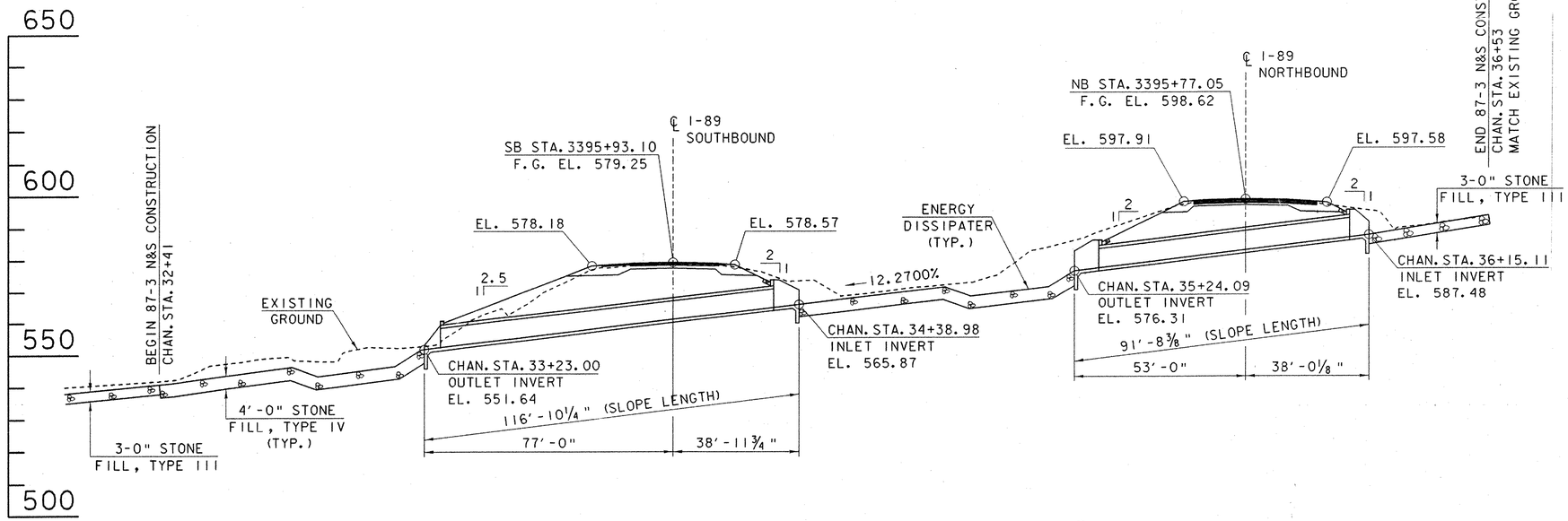

BRIDGES 87-3 N&S ELEVATION ALONG ℄ CULVERTS

SCALE: 1" = 20'-0
20 0 20

IMPORTANT NOTE: BRIDGE FINISHED GRADES ARE CENTERLINE GRADES.

STATE OF VERMONT
AGENCY OF TRANSPORTATION

Town Of FAIRFAX-FAIRFIELD-ST. ALBANS	Bridge No. 87-3 N&S
Highway No. I-89	Log Sta. / Surv. Sta.
I-89 OVER THE RUGG BROOK	
87-3 N&S ELEVATION ALONG ℄ CULVERTS	
Designed By G. ROY	Drawn By G. ROY
Checked By M. LOZIER Date 06/00	Bridge Design Supervisor R.R. WHITCOMB Date 06/00
PROJECT FAIRFAX-FAIRFIELD-ST. ALBANS	PROJECT NO. IM 089-3 (27)
I.G.C. Info. 96a056\structures\sa056xs4.dgn	sa056p03.1
Bridge Sheet No. BR309	Sheet 135 of 370

PLOTTED 21-SEP-2000

BRIDGES 87-3 N & S PROJECT NOTES

GENERAL

1. ALL MATERIALS AND CONSTRUCTION SHALL CONFORM TO STATE OF VERMONT AGENCY OF TRANSPORTATION STANDARD SPECIFICATIONS FOR CONSTRUCTION DATED 1990, AND ITS LATEST REVISIONS, AND THE AASHTO STANDARD SPECIFICATIONS FOR CONSTRUCTION, DATED 1996, AND ITS LATEST REVISIONS.

2. DURING CONSTRUCTION OF THE DRIVE CULVERT DOWNSTREAM OF BRIDGES 87-3 N&S, THE CONTRACTOR SHALL ENSURE ACCESS TO ALL DRIVES ON THE NORTH SIDE OF RUGG BROOK AT ALL TIMES. SHOULD CLOSURE OF VEHICULAR ACCESS TO THE TROMBLY PROPERTY ON THE SOUTH SIDE OF RUGG BROOK BE REQUIRED, A PEDESTRIAN ACCESS SHALL BE MAINTAINED TO THIS PROPERTY AS A MINIMUM. DURING CONSTRUCTION OF BRIDGES 87-3 N&S, TRAFFIC SHALL BE MAINTAINED AS INDICATED IN THE TRAFFIC CONTROL SHEETS INCLUDED IN THE PLANS.

3. THERE IS NO CONTROL FOR THE DRIVE HORIZONTAL ALIGNMENT. LINES SHOWN ARE FOR DESIGN PURPOSES ONLY. THE RESIDENT ENGINEER SHALL RUN LINE TO APPROXIMATE CENTERLINE OF EXISTING DRIVE.

4. ALL DIMENSIONS SHOWN IN THE PLANS ARE HORIZONTAL OR VERTICAL AND ARE GIVEN AT 68°F.

EARTHWORK AND RELATED ITEMS

5. THE CONTRACTOR IS ADVISED TO EXERCISE CAUTION WHILE WORKING IN AREAS OF EXISTING UNDERGROUND UTILITIES. AS SHOWN IN THE PLANS, THESE UTILITIES CONSIST OF AN UNDERGROUND ELECTRIC LINE BELOW INLET CONSTRUCTION FOR THE DRIVE CULVERT AND A 3 INCH DIA. PRESSURE SEWER MAIN BELOW OUTLET CONSTRUCTION FOR BRIDGE 87-3S. RELOCATION OF THE PRESSURE SEWER MAIN TO ACCOMMODATE CONSTRUCTION IS NOT ANTICIPATED FOR THIS PROJECT.

6. ALL CONSTRUCTION FOR THE RELOCATED UNDERGROUND ELECTRIC LINE AS SHOWN IN THE PLANS MUST COMPLY WITH THE NATIONAL ELECTRICAL CODE AND UTILITY COMPANY REQUIREMENTS. A SEPARATE WIRED CONDUIT SHALL BE INSTALLED FOR EACH SERVICE PROVIDED (I.E. ELECTRICAL, TELEPHONE, CABLE). PAYMENT FOR THIS RELOCATION SHALL BE PAID FOR UNDER ITEM 678.23, "WIRED CONDUIT".

7. EXCAVATION FOR THE PLACEMENT OF THE NEW 4 INCH DIA. PVC DRAINAGE PIPE ON THE SANBORN PROPERTY SHALL BE PAID FOR UNDER ITEM 204.20, "TRENCH EXCAVATION OF EARTH".

8. PAYMENT FOR STRUCTURE EXCAVATION SHALL BE AS SHOWN IN THE PLANS.

9. TO MIMIMIZE THE AMOUNT OF WATER FLOWING THROUGH THE STONE FILL, TYPE IV USED TO CONSTRUCT THE ENERGY DISSIPATION STRUCTURES AT THE OUTLETS TO BRIDGES 87-3 N&S, THE VOIDS BETWEEN THE LARGE STONES SHALL BE CHINKED WITH SMALLER STONE AS DIRECTED BY THE RESIDENT ENGINEER. PAYMENT SHALL BE MADE SUBSIDIARY TO ITEM 613.13, "STONE FILL, TYPE IV".

PRECAST CONCRETE BOX CULVERTS

10. ALL COMPONENTS OF THE THREE BOX CULVERTS INCLUDED IN THIS SERIES SHALL BE PRECAST, INCLUDING CULVERT SECTIONS, BAFFLES, HEADERS, WINGWALLS, APRONS AND CUT-OFF WALLS. THE DESIGN OF THESE CULVERTS SHALL BE THE RESPONSIBILITY OF THE FABRICATOR. CULVERT DESIGN SHALL CONFORM TO ALL APPLICABLE SECTIONS OF THE AASHTO STANDARD SPECIFICATIONS FOR CONSTRUCTION, DATED 1996, AND ITS LATEST REVISIONS. PAYMENT FOR THE DESIGN, FABRICATION, TRANSPORT, AND INSTALLATION OF THE BOX CULVERTS SHALL BE PAID FOR UNDER THE LUMP SUM PRICE BID FOR ITEM 540.10, "PRECAST CONCRETE BOX".

11. DESIGN CRITERIA:

    1. SOIL UNIT WEIGHT = 140 PCF

    2. DESIGN LIVE LOAD = AASHTO HS-25-44

    3. MINIMUM CLEAR INSIDE DIMENSIONS (INCLUDING BAFFLES):

        DRIVE CULVERT = 7'-0" SPAN AND 5'-0" RISE

        BRIDGES 87-3 N&S = 6'-0" SPAN AND 6'-0" RISE

12. THE CONTRACTOR SHALL SUBMIT FABRICATION DRAWINGS FOR THE BOX CULVERTS AND ALL ASSOCIATED DETAILS FOR THE APPROVAL OF THE STRUCTURES ENGINEER IN ACCORDANCE WITH SUBSECTION 105.03 OF THE STANDARD SPECIFICATIONS FOR CONSTRUCTION.

13. THE BOX CULVERT TYPICAL SECTIONS SHOWN IN THE DRAWINGS ARE FOR SCHEMATIC PURPOSES ONLY. THE ACTUAL SHAPE OF THE BOX CULVERT AND ITS COMPONENTS WILL BE DEPENDENT ON THE FABRICATOR. WHERE MULTIPLE CULVERT SECTIONS ARE USED, EACH SECTION SHALL BE THE SAME LENGTH AND THE SAME SHAPE.

14. ALL BOX CULVERT JOINTS SHALL BE STRENGTHENED WITH PERMANENT CLOSURE HARDWARE. ALL HARDWARE COMPONENTS SHALL BE GALVANIZED IN ACCORDANCE WITH SUBSECTION 506.15 OF THE STANDARD SPECIFICATIONS.

15. AFTER BOX CULVERT SECTIONS HAVE BEEN SET IN THEIR FINAL POSITION, THE EXTERIOR (TOP AND SIDES) AND INTERIOR (SIDES AND BOTTOM) OF ALL BOX CULVERT JOINTS, AND ALL LIFTING HOLES, SHALL BE FILLED WITH MORTAR, TYPE IV. ALL MORTAR SHALL BE WET CURED A MINIMUM OF 24 HOURS PRIOR TO THE APPLICATION OF ANY WATERPROOFING. PAYMENT FOR THE MORTAR AND ITS APPLICATION SHALL BE MADE SUBSIDIARY TO ITEM 540.10, "PRECAST CONCRETE BOX".

16. A 2 FOOT WIDE STRIP OF MEMBRANE WATERPROOFING SHALL BE APPLIED AT EACH SIDE JOINT. THE MEMBRANE SHALL BE CENTERED ON THE JOINT AND SHALL RUN THE ENTIRE HEIGHT OF THE JOINT. THE ENTIRE TOP OF THE BOX CULVERT SHALL THEN BE COVERED WITH MEMBRANE. THE MEMBRANE SHEETS SHALL OVERLAP THE EDGES OF THE CULVERT BY 1 FOOT ON EACH SIDE AS SHOWN IN THE PLANS. PAYMENT FOR THE MEMBRANE AND ITS INSTALLATION SHALL BE MADE UNDER ITEM 519.20, "SHEET MEMBRANE WATERPROOFING".

BRIDGE 87-3 QUANTITIES

	ITEM NO.	ITEM	UNIT	87-3 NB	87-3 SB	DRIVE	CHANNEL	TOTAL	FINAL
	203.27	UNCLASSIFIED CHANNEL EXCAVATION	CY				3050	3050	
Ⓡ	204.20	TRENCH EXCAVATION OF EARTH	CY	240	380	20		640	
	204.25	STRUCTURE EXCAVATION	CY	570	460	150		1180	
	204.30	GRANULAR BACKFILL FOR STRUCTURES	CY	190	250	70		510	
	301.15	SUBBASE OF GRAVEL	CY			70		70	
	401.10	AGGREGATE SURFACE COURSE	CY			60		60	
	514.10	WATER REPELLENT	GAL	10	10	5		25	
	519.20	SHEET MEMBRANE WATERPROOFING	SY	135	180	25		340	
	529.15	REMOVAL OF STRUCTURE (NB STA. 3395+77.05)	EA	1				1	
	529.15	REMOVAL OF STRUCTURE (SB STA. 3395+93.10)	EA		1			1	
	529.15	REMOVAL OF STRUCTURE (DRIVE STA. 51+42.43)	EA			1		1	
	540.10	PRECAST CONCRETE BOX (NB STA. 3395+77.05)	LS	1				1	
	540.10	PRECAST CONCRETE BOX (SB STA. 3395+93.10)	LS		1			1	
	540.10	PRECAST CONCRETE BOX (DRIVE STA. 51+42.43)	LS			1		1	
Ⓡ	613.10	STONE FILL, TYPE I	CY				15	15	
	613.12	STONE FILL, TYPE III	CY				520	520	
	613.13	STONE FILL, TYPE IV	CY				1310	1310	
	614.10	TEMPORARY RELOCATION OF STREAM	LS				1	1	
	628.35	PVC SEWER PIPE (MOD. 4" PERFORATED)	LF			82		82	
Ⓡ	649.31	GEOTEXTILE UNDER STONE FILL	SY				1870	1870	
	651.40	GRUBBING MATERIAL	SY				280	280	
	656.45	TRANSPLATING TREES	EA			8		8	
	678.23	WIRED CONDUIT	LF			332		332	
	679.25	REMOVE AND RESETTING LIGHT POLE	EA			2		2	

Ⓡ DENOTES ROADWAY QUANTITY

STATE OF VERMONT
AGENCY OF TRANSPORTATION

Town Of FAIRFAX-FAIRFIELD-ST. ALBANS	Bridge No. 87-3 N&S
Highway No. I-89	Log Sta. / Surv. Sta.
I-89 OVER THE RUGG BROOK	
87-3 N&S PROJECT NOTES & QUANTITIES	
Designed By G. ROY	Drawn By G. ROY
Checked By M. LOZIER Date 06/00	Bridge Design Supervisor R. R. WHITCOMB Date 06/00
PROJECT FAIRFAX-FAIRFIELD-ST. ALBANS	PROJECT NO. I M 089 - 3 (27)
I.G.C. Info. 96a056\structures\sa056pl5.dgn sa056pn31	
Bridge Sheet No. BR310	Sheet 136 of 370

PLOTTED 21-SEP-2000

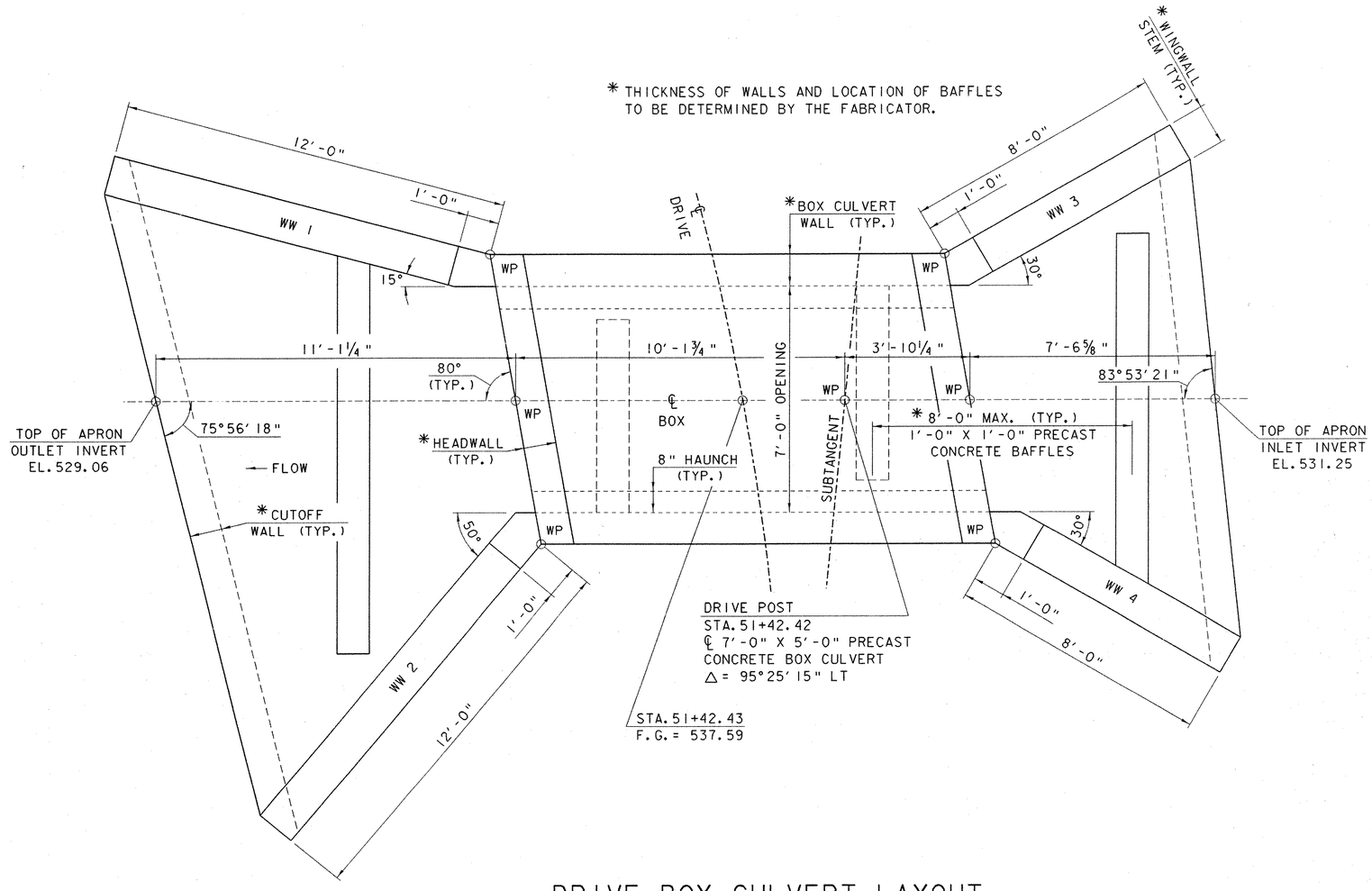

DRIVE BOX CULVERT LAYOUT

SCALE: ½" = 1'-0"

IMPORTANT NOTE: BRIDGE FINISHED GRADES ARE CENTERLINE GRADES.

STATE OF VERMONT
AGENCY OF TRANSPORTATION

Town Of FAIRFAX-FAIRFIELD-ST. ALBANS	Bridge No. 87-3 N&S
Highway No. I-89	Log Sta. / Surv. Sta.
I-89 OVER THE RUGG BROOK	
DRIVE BOX CULVERT LAYOUT	
Designed By G. ROY	Drawn By G. ROY
Checked By M. LOZIER Date 07/00	Bridge Design Supervisor R. P. WHITCOMB Date 07/00
PROJECT FAIRFAX-FAIRFIELD-ST. ALBANS	PROJECT NO. IM 089-3 (27)
I.C.C. Info. 96a056\structures\sa056ab5.dgn	sa056pb1J
Bridge Sheet No. BR311	Sheet 137 of 370

PLOTTED 21-SEP-2000

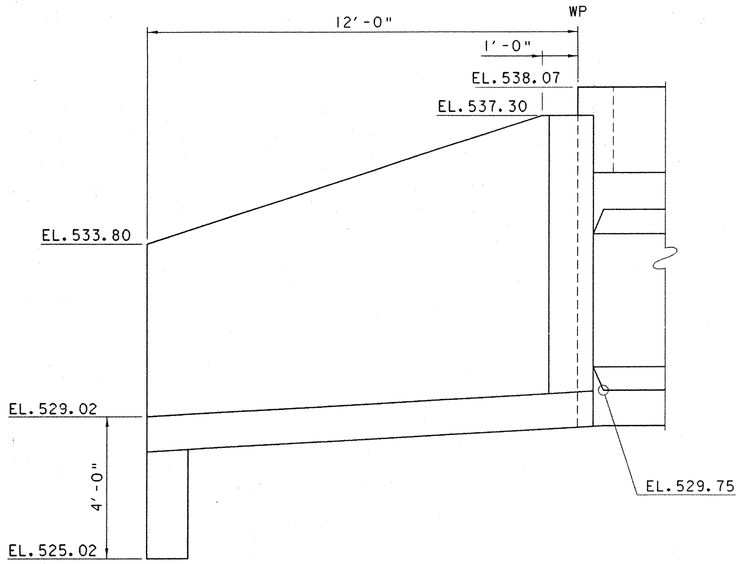

WINGWALL NO. 1 ELEVATION

SCALE: ½" = 1'-0"

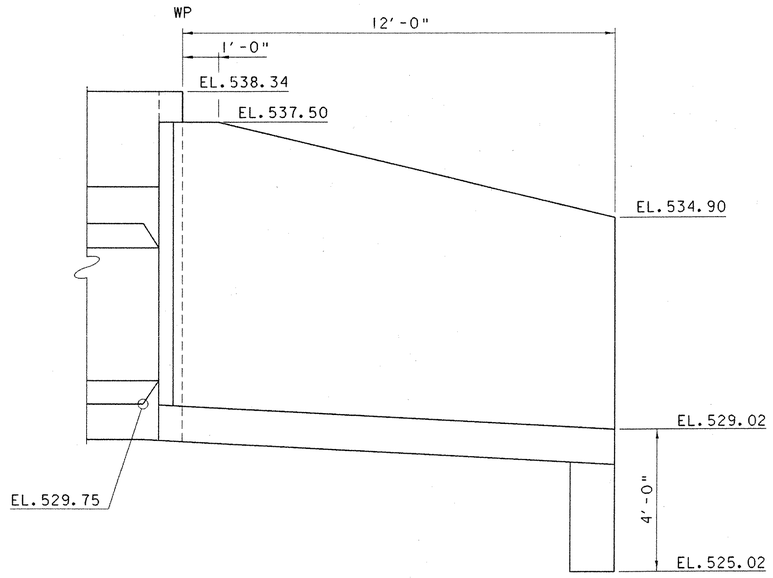

WINGWALL NO. 2 ELEVATION

SCALE: ½" = 1'-0"

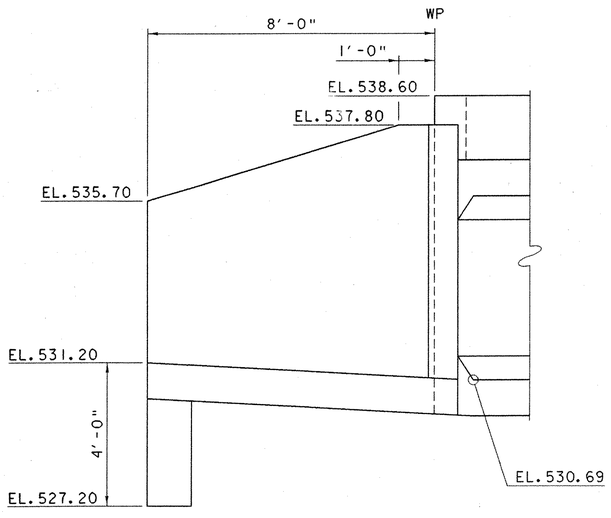

WINGWALL NO. 4 ELEVATION

SCALE: ½" = 1'-0"

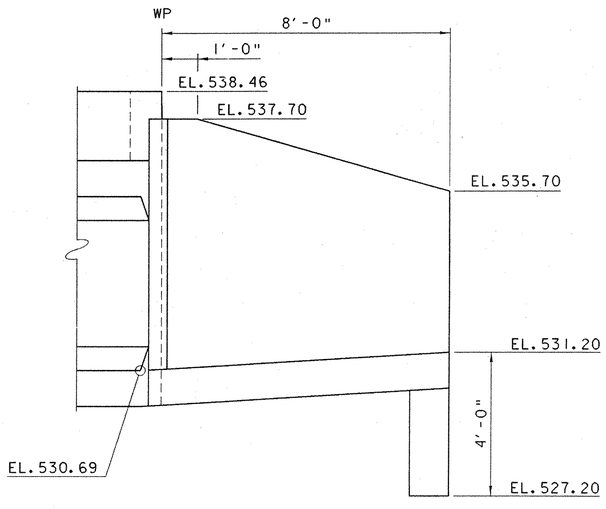

WINGWALL NO. 3 ELEVATION

SCALE: ½" = 1'-0"

IMPORTANT NOTE: BRIDGE FINISHED GRADES ARE CENTERLINE GRADES.

STATE OF VERMONT
AGENCY OF TRANSPORTATION

Town Of FAIRFAX-FAIRFIELD-ST. ALBANS	Bridge No. 87-3 N&S
Highway No. I-89	Log Sta. / Surv. Sta.
I-89 OVER THE RUGG BROOK DRIVE WINGWALL ELEVATIONS	
Designed By G. ROY	Drawn By G. ROY
Checked By M. LOZIER Date 07/00	Bridge Design Supervisor R. R. WHITCOMB Date 07/00
PROJECT FAIRFAX-FAIRFIELD-ST. ALBANS	PROJECT NO. IM 089-3 (27)
I.G.C. Info. 96a056\structures\sa056ab5.dgn	sa056pb21
Bridge Sheet No. BR312	Sheet 138 of 370

PLOTTED 21-SEP-2000

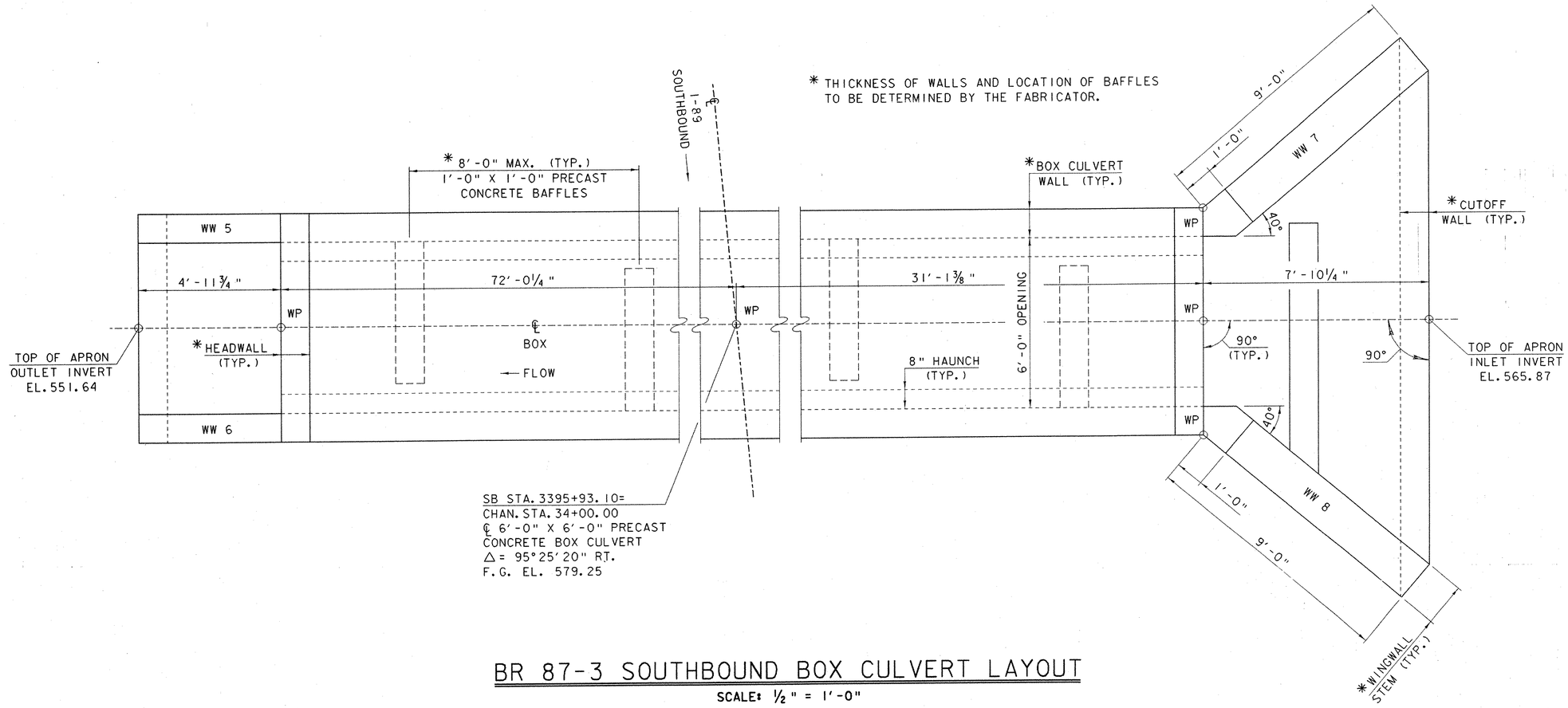

BR 87-3 SOUTHBOUND BOX CULVERT LAYOUT

SCALE: ½" = 1'-0"

IMPORTANT NOTE: BRIDGE FINISHED GRADES ARE CENTERLINE GRADES.

STATE OF VERMONT
AGENCY OF TRANSPORTATION

Town Of FAIRFAX-FAIRFIELD-ST. ALBANS	Bridge No. 87-3 N&S
Highway No. I-89	Log Sta. / Surv. Sta.
I-89 OVER THE RUGG BROOK	
87-3 SOUTHBOUND BOX CULVERT LAYOUT	
Designed By G. ROY	Drawn By G. ROY
Checked By M. LOZIER Date 07/00	Bridge Design Supervisor R.R. WHITCOMB Date 07/00
PROJECT FAIRFAX-FAIRFIELD-ST. ALBANS	PROJECT NO. IM 089-3 (27)
I.G.C. Info. 96a056\structures\sa056ab5.dgn	sa056pb31
Bridge Sheet No. BR313	Sheet 139 of 370

PLOTTED 21-SEP-2000

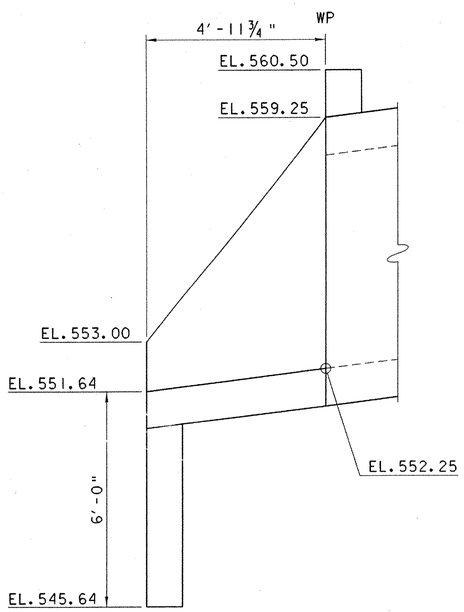

WINGWALL NO. 5 ELEVATION

SCALE: ½" = 1'-0"

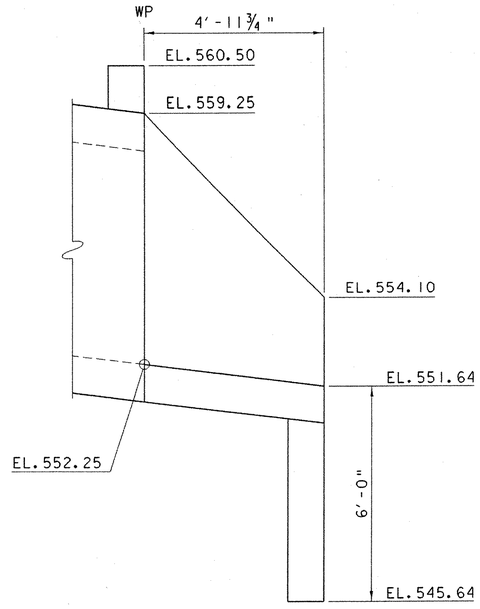

WINGWALL NO. 6 ELEVATION

SCALE: ½" = 1'-0"

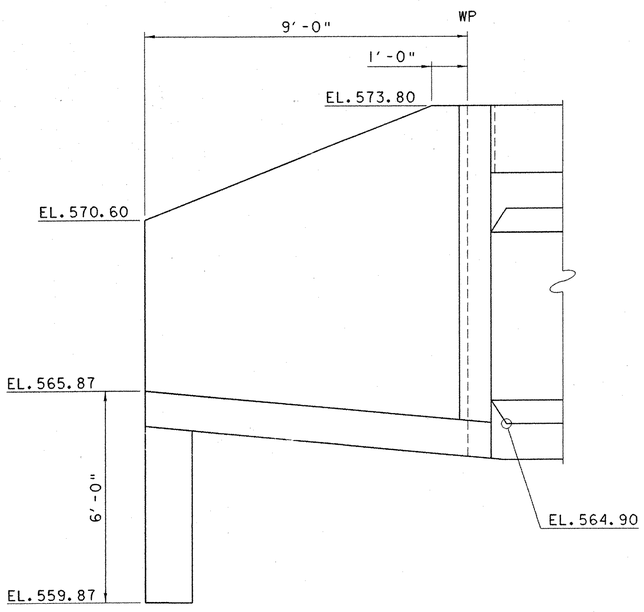

WINGWALL NO. 8 ELEVATION

SCALE: ½" = 1'-0"

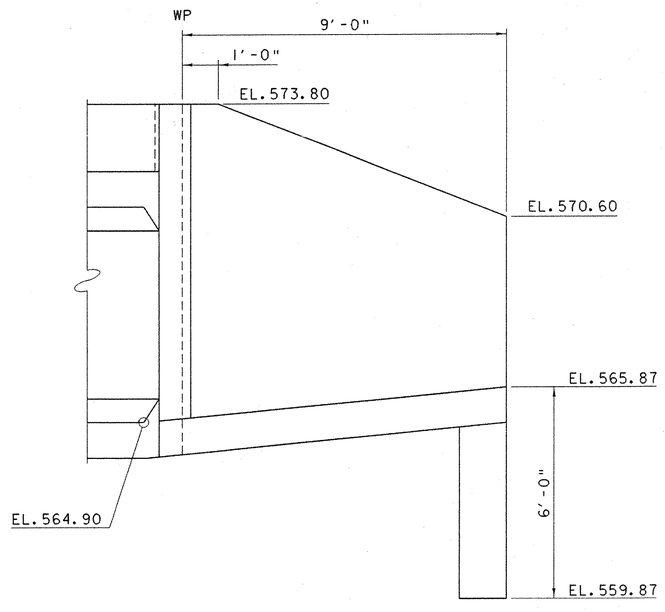

WINGWALL NO. 7 ELEVATION

SCALE: ½" = 1'-0"

IMPORTANT NOTE: BRIDGE FINISHED GRADES ARE CENTERLINE GRADES.

STATE OF VERMONT
AGENCY OF TRANSPORTATION

Town Of FAIRFAX-FAIRFIELD-ST. ALBANS	Bridge No. 87-3 N&S
Highway No. I-89	Log Sta. / Surv. Sta.
I-89 OVER THE RUGG BROOK	
87-3 SOUTHBOUND WINGWALL ELEVATIONS	
Designed By G. ROY	Drawn By G.ROY
Checked By M.LOZIER Date 07/00	Bridge Design Supervisor R.R.WHITCOMB Date 07/00
PROJECT FAIRFAX-FAIRFIELD-ST. ALBANS	PROJECT NO. IM 089-3 (27)
I.G.C. Info. 96a056\structures\sa056ab5.dgn	sa056pb4J
Bridge Sheet No. BR3I4	Sheet 140 of 370

PLOTTED 21-SEP-2000

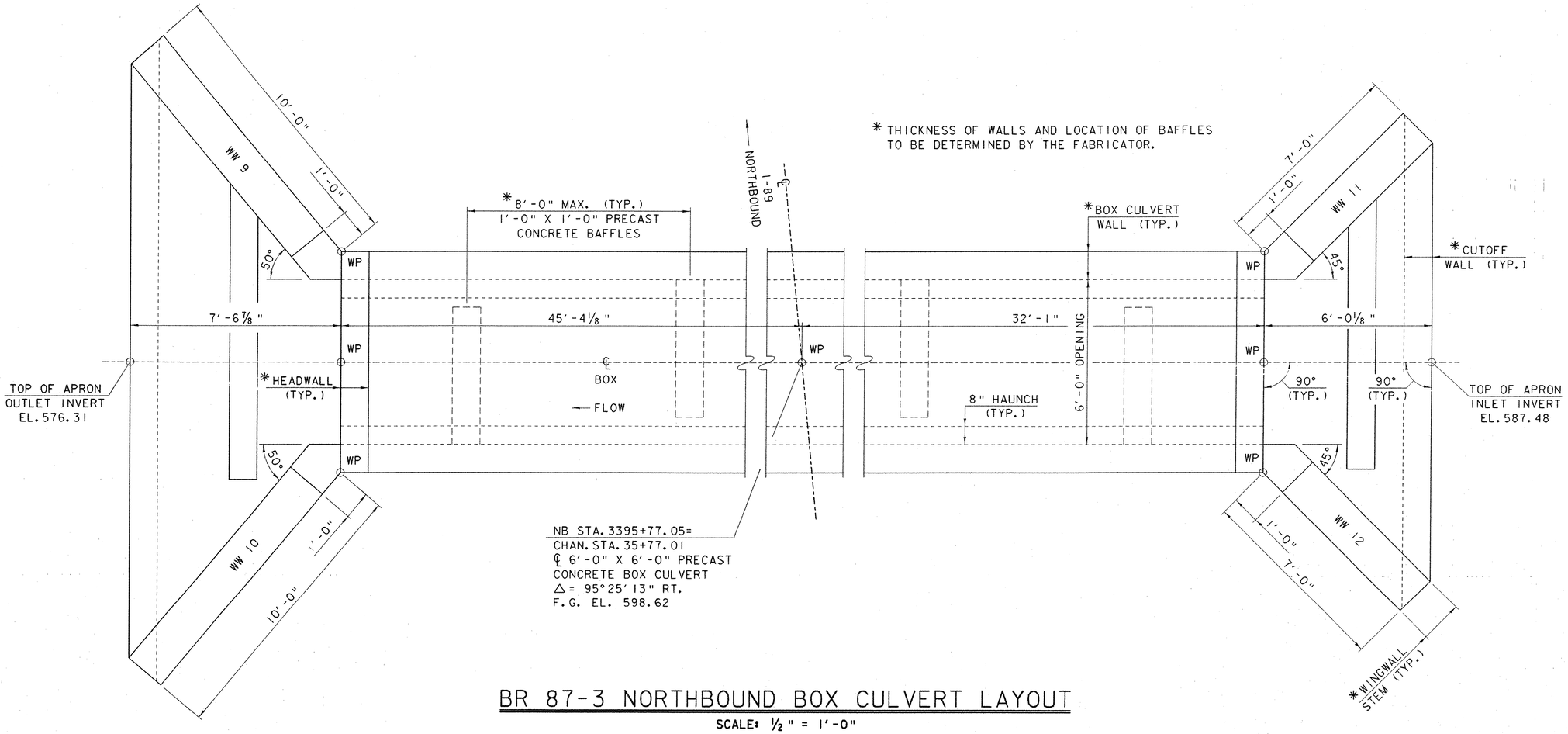

BR 87-3 NORTHBOUND BOX CULVERT LAYOUT

SCALE: 1/2" = 1'-0"

IMPORTANT NOTE: BRIDGE FINISHED GRADES ARE CENTERLINE GRADES.

STATE OF VERMONT
AGENCY OF TRANSPORTATION

Town Of FAIRFAX-FAIRFIELD-ST. ALBANS	Bridge No. 87-3 N&S
Highway No. I-89	Log Sta. / Surv. Sta.
I-89 OVER THE RUGG BROOK	
87-3 NORTHBOUND BOX CULVERT LAYOUT	
Designed By G. ROY	Drawn By G. ROY
Checked By M. LOZIER Date 07/00	Bridge Design Supervisor R. R. WHITCOMB Date 07/00
PROJECT FAIRFAX-FAIRFIELD-ST. ALBANS	PROJECT NO. IM 089-3 (27)
I.G.C. Info. 96a056\structures\sa056ab5.dgn	sa056pb5J
Bridge Sheet No. BR315	Sheet 141 of 370

PLOTTED 21-SEP-2000

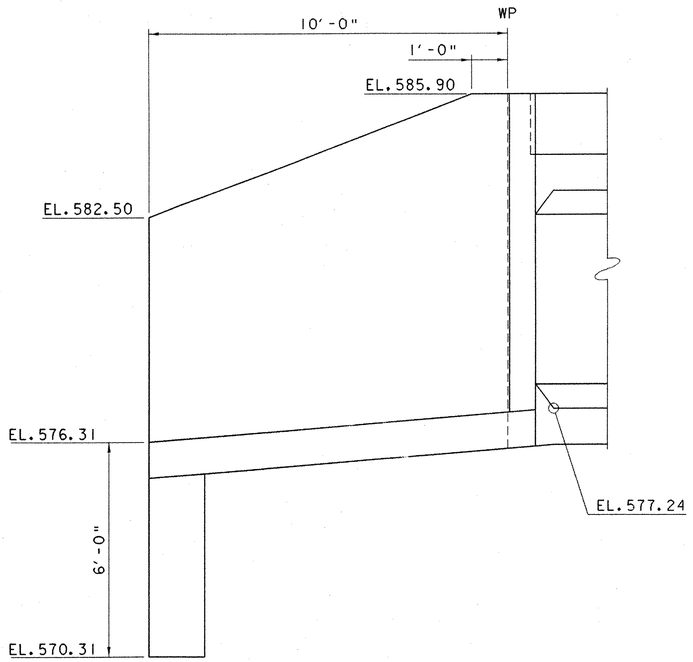

WINGWALL NO. 9 ELEVATION

SCALE: ½" = 1'-0"

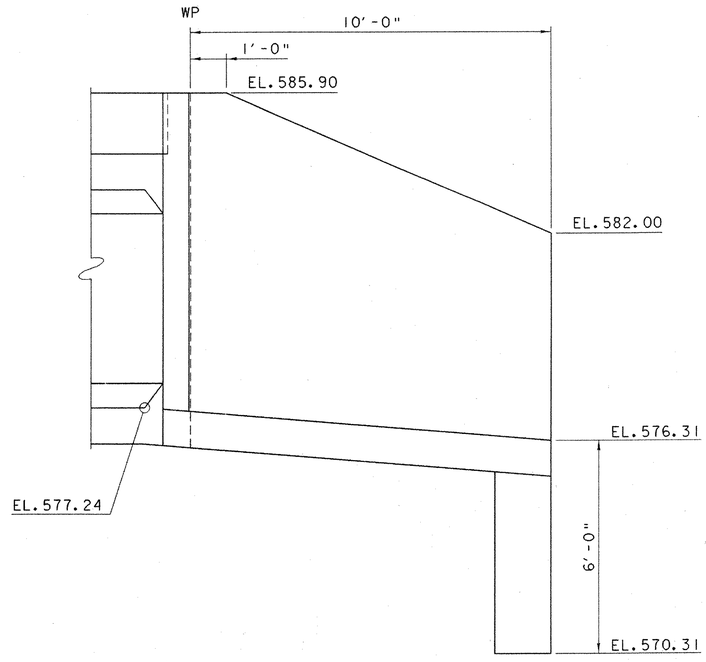

WINGWALL NO. 10 ELEVATION

SCALE: ½" = 1'-0"

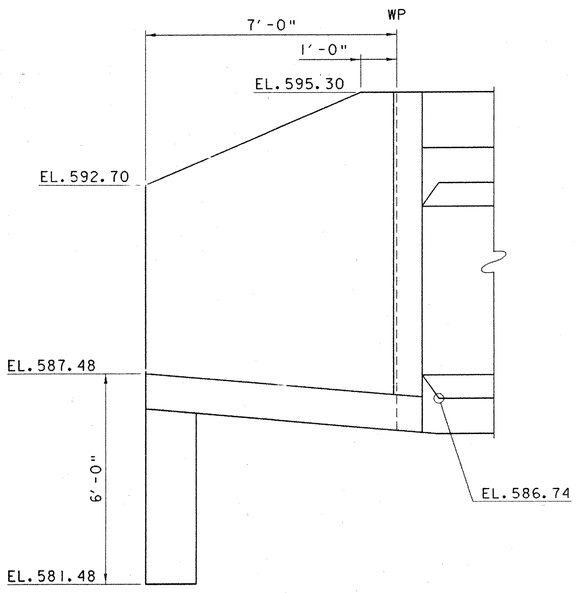

WINGWALL NO. 12 ELEVATION

SCALE: ½" = 1'-0"

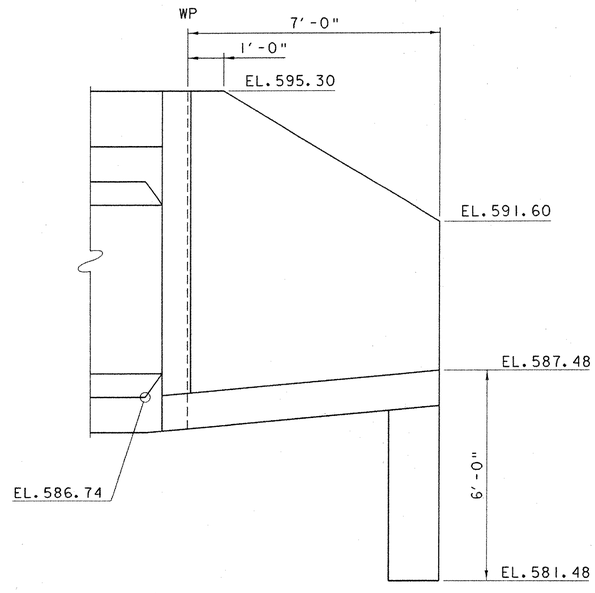

WINGWALL NO. 11 ELEVATION

SCALE: ½" = 1'-0"

IMPORTANT NOTE: BRIDGE FINISHED GRADES ARE CENTERLINE GRADES.

STATE OF VERMONT
AGENCY OF TRANSPORTATION

Town Of FAIRFAX-FAIRFIELD-ST. ALBANS	Bridge No. 87-3 N&S
Highway No. I-89	Log Sta. / Surv. Sta.
I-89 OVER THE RUGG BROOK	
87-3 NORTHBOUND WINGWALL ELEVATIONS	
Designed By G. ROY	Drawn By G. ROY
Checked By M. LOZIER Date 07/00	Bridge Design Supervisor R.R. WHITCOMB Date 07/00
PROJECT FAIRFAX-FAIRFIELD-ST. ALBANS	PROJECT NO. IM 089-3 (27)
I.G.C. Info. 96a056\structures\sa056ab5.dgn	sa056pb6J
Bridge Sheet No. BR316	Sheet 142 of 370

PLOTTED 21-SEP-2000

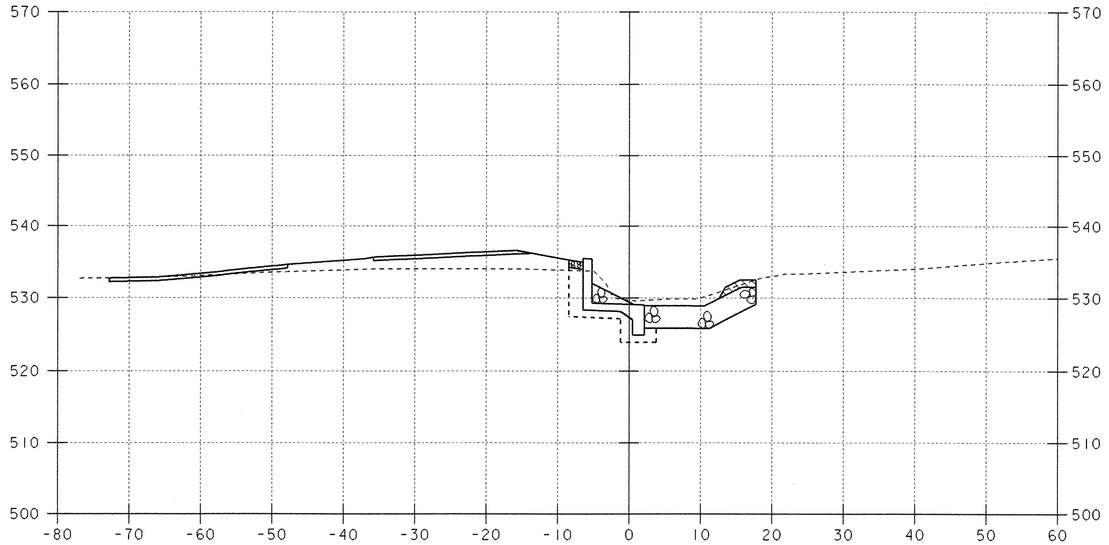

30+75

CHANNEL STA. 30+67
BEGIN STRUCTURE EXCAVATION
GRANULAR BACKFILL FOR STRUCTURES

CHANNEL STA. 30+52
BEGIN UNCLASSIFIED CHANNEL EXCAVATION
GEOTEXTILE UNDER STONE FILL
STONE FILL, TYPE III
GRUBBING MATERIAL

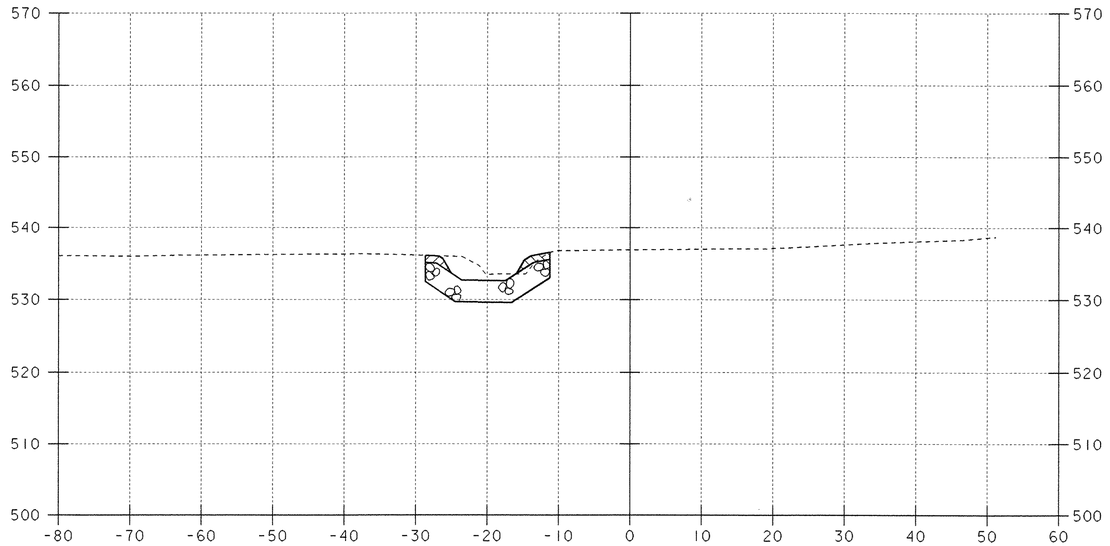

31+25

CHANNEL STA. 31+10
END STRUCTURE EXCAVATION
GRANULAR BACKFILL FOR STRUCTURES

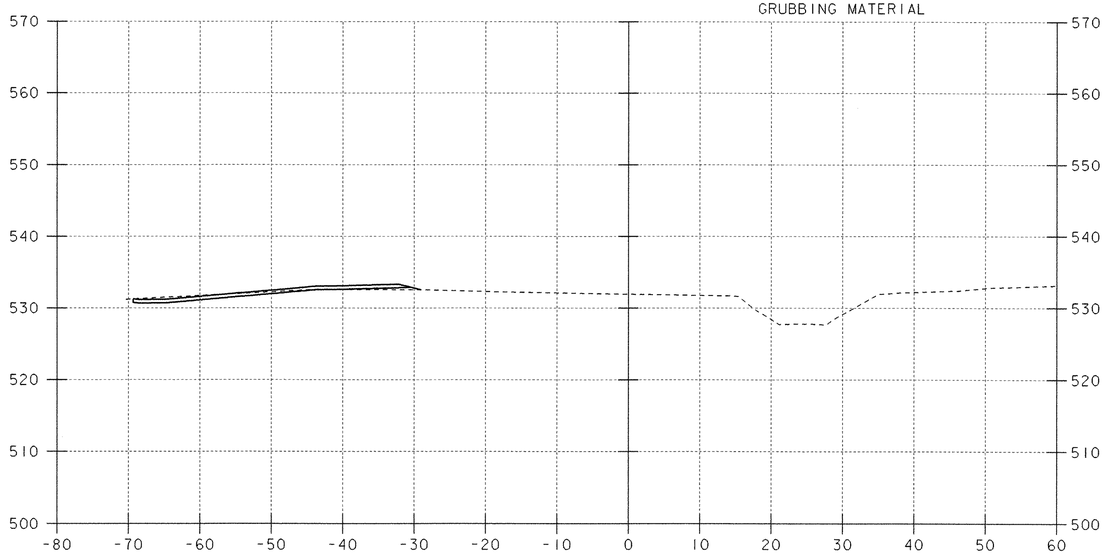

30+50

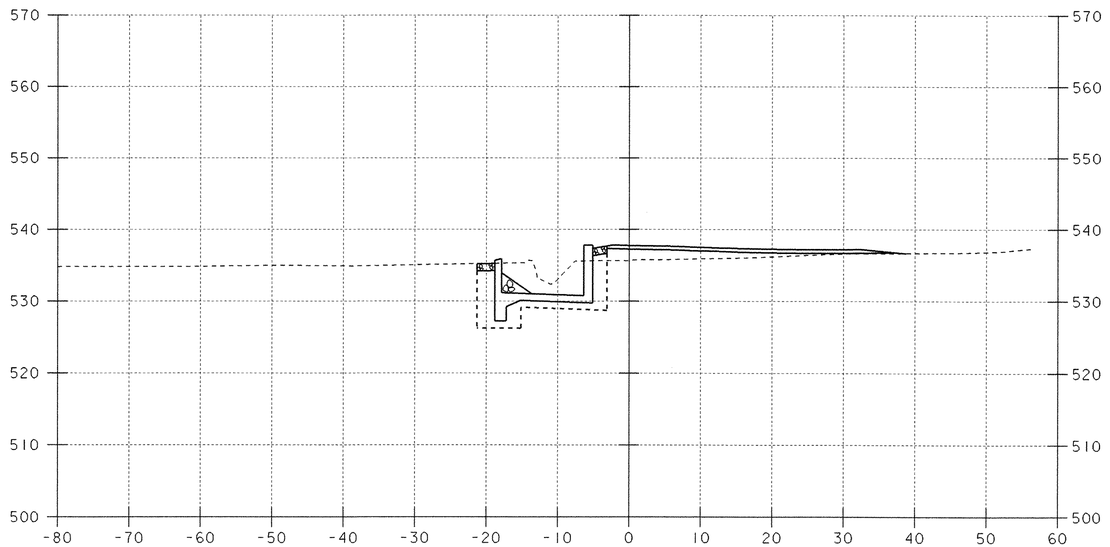

31+00

SCALE 1" = 10'-0
10 0 10

DATUM
VERTICAL _____
HORIZONTAL _____

PROJECT: FAIRFAX-FAIRFIELD-ST. ALBANS	PROJECT NO.: IM 089-3 (27)
DESIGN FILE NAME: \96a056\Structures\sa056xs4.dgn IPARM FILE NAME: sa056d03.i	PLOT DATE: 21-SEP-2000
CHANNEL CROSS SECTIONS (1)	BRIDGE SHEET BR317
STA. 30+50 TO STA. 31+25	SHEET: 143 OF 370

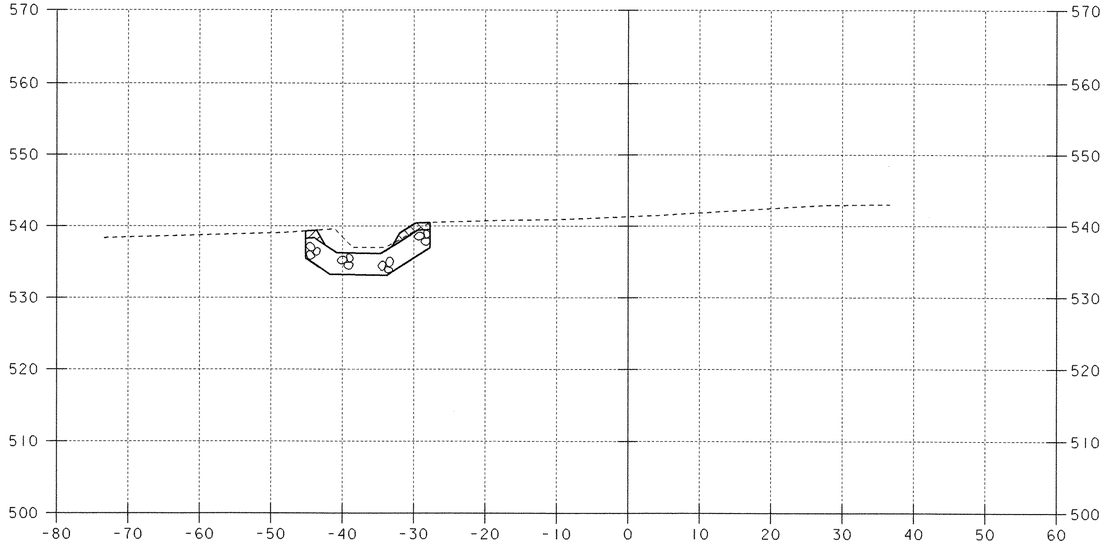

31+75

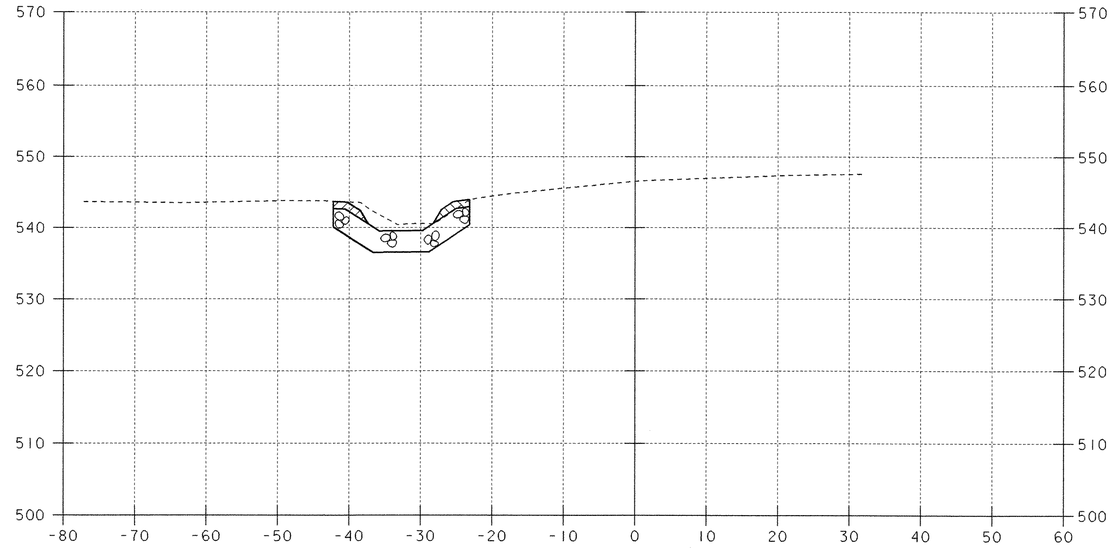

32+25

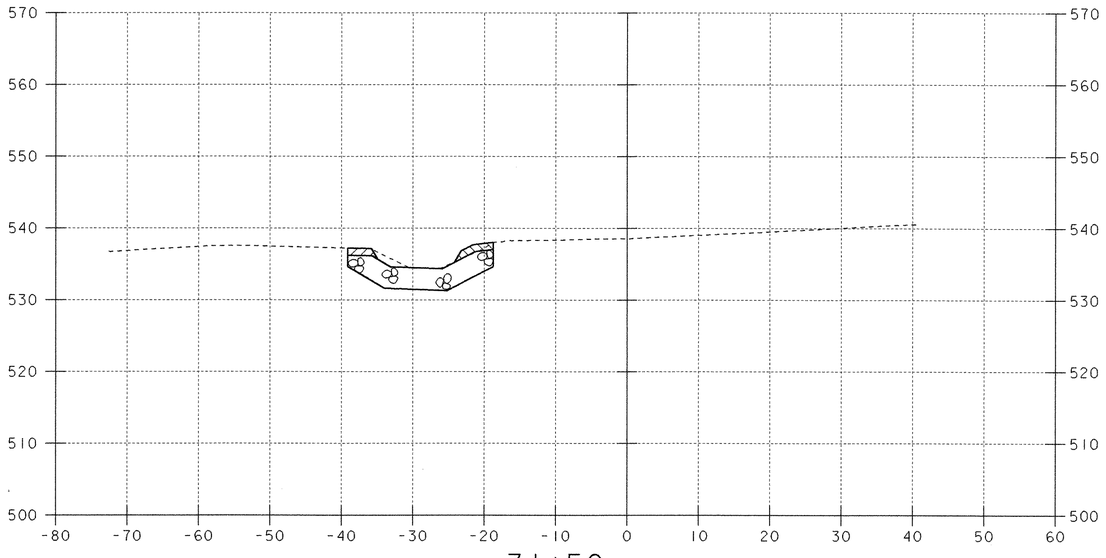

31+50

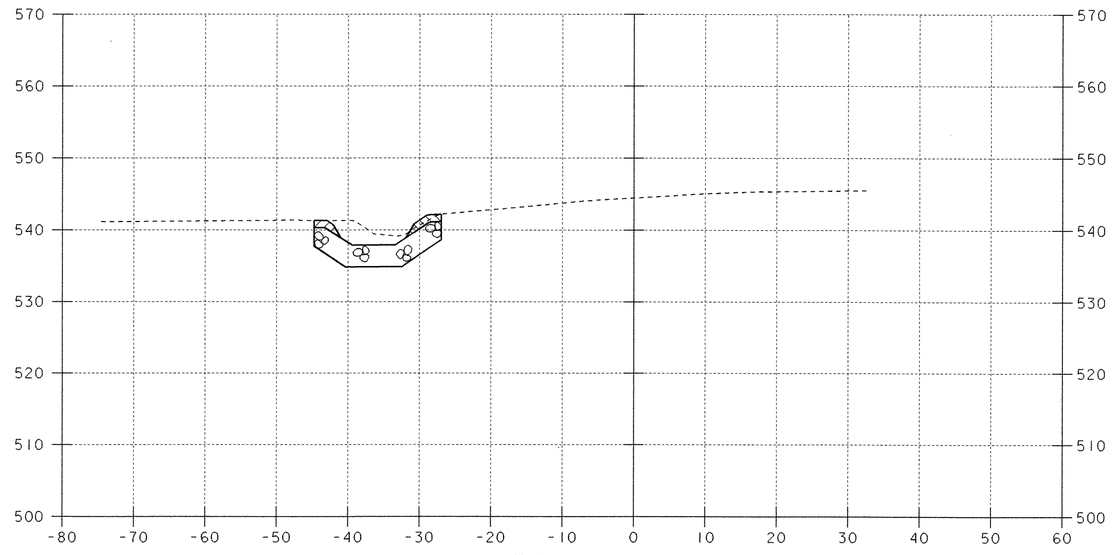

32+00

SCALE 1" = 10'-0
10 0 10

DATUM
VERTICAL _____
HORIZONTAL _____

PROJECT: FAIRFAX-FAIRFIELD-ST. ALBANS	PROJECT NO.: IM 089-3 (27)
DESIGN FILE NAME: \96a056\Structures\sa056xs4.dgn IPARM FILE NAME: sa056d04.i	PLOT DATE: 21-SEP-2000
CHANNEL CROSS SECTIONS (2)	BRIDGE SHEET BR318
STA. 31+50 TO STA. 32+25	SHEET: 144 OF 370

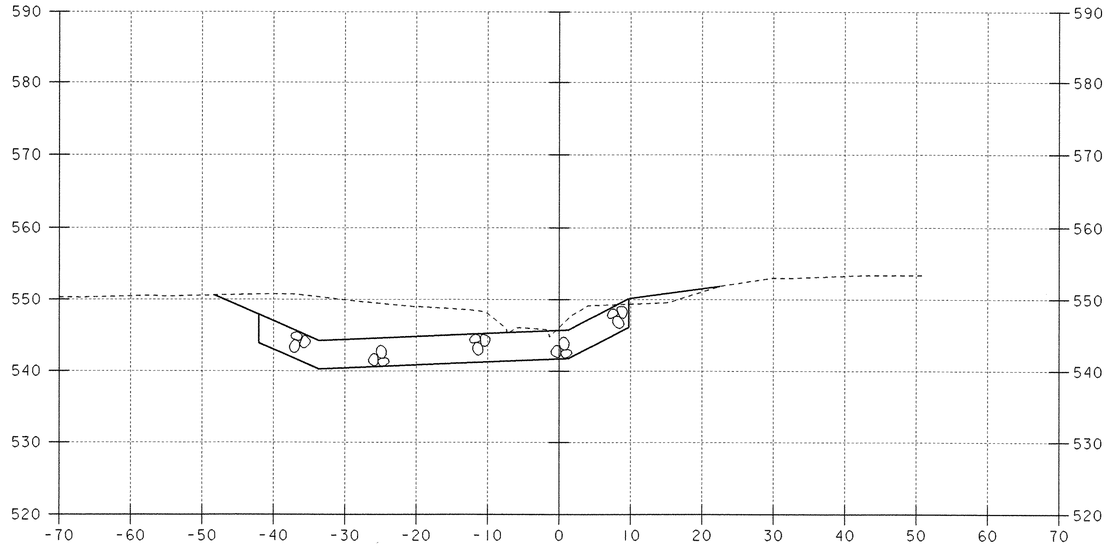

32+75

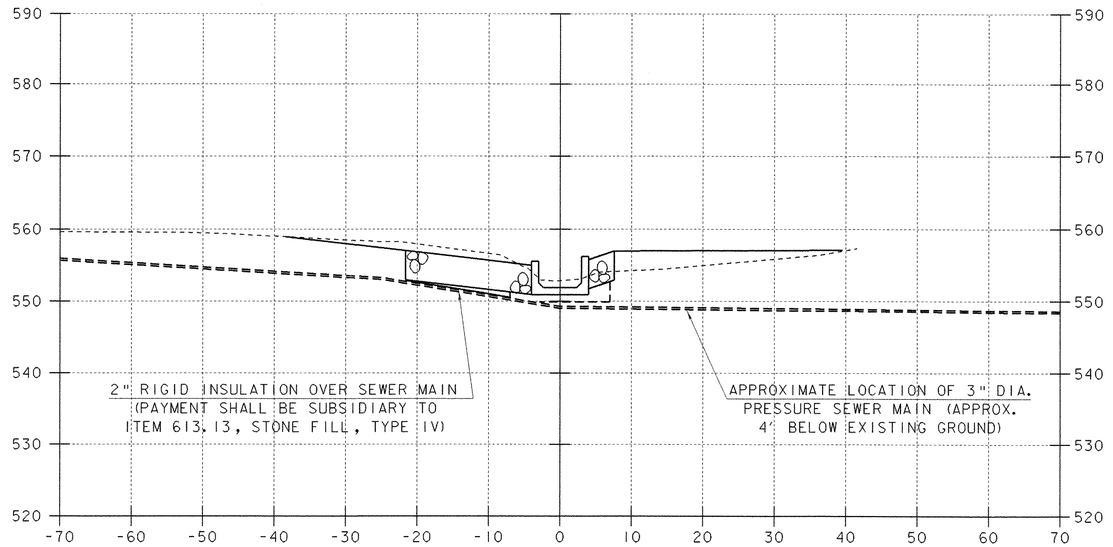

33+25

CHANNEL STA. 33+22
BEGIN STRUCTURE EXCAVATION
GRANULAR BACKFILL FOR STRUCTURES

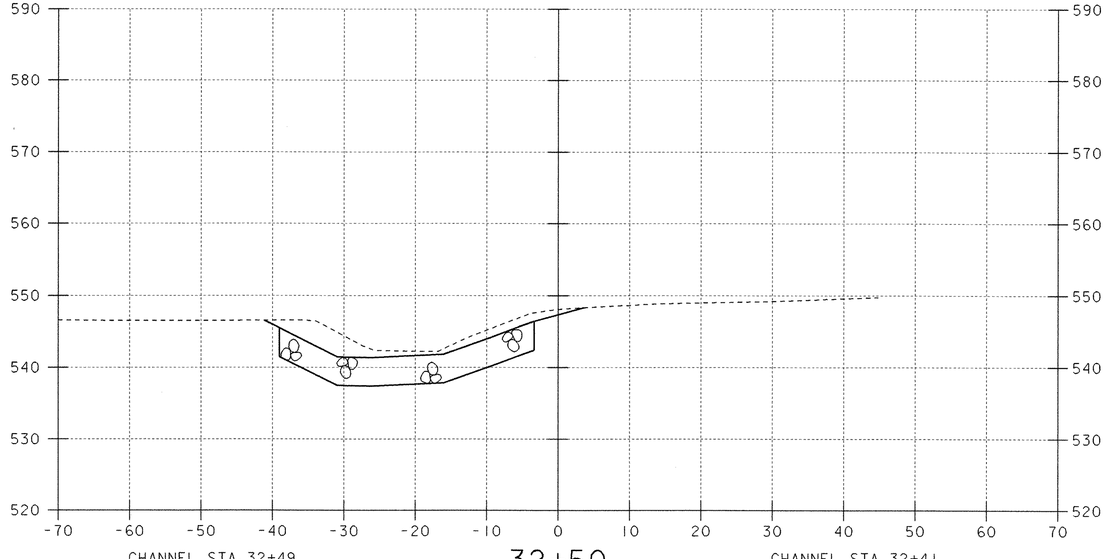

CHANNEL STA. 32+49
END STONE FILL, TYPE III
GRUBBING MATERIAL

32+50

CHANNEL STA. 32+41
BEGIN STONE FILL, TYPE IV

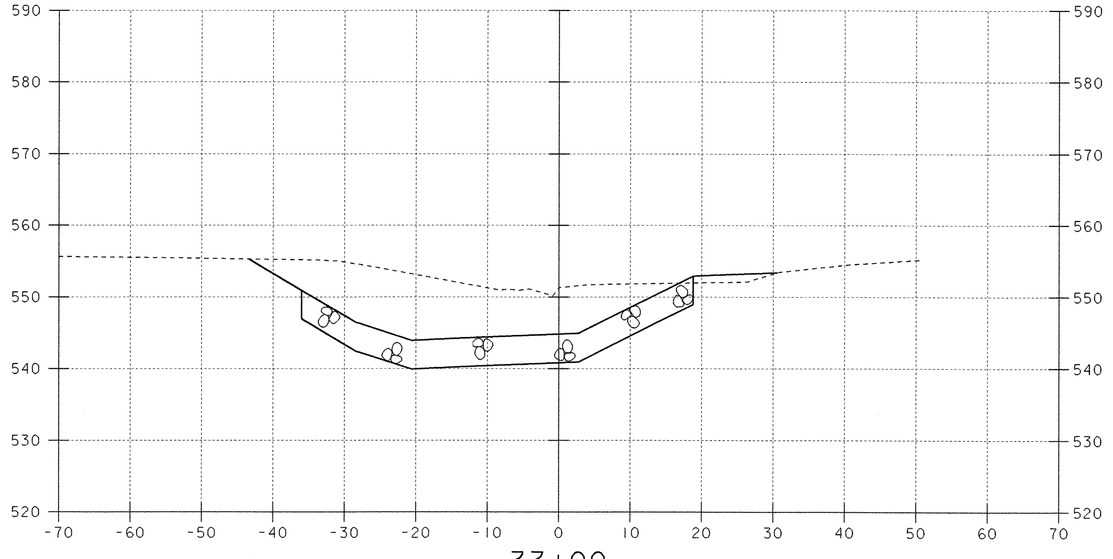

33+00

DATUM
VERTICAL _____
HORIZONTAL _____

SCALE 1" = 10'-0
10 0 10

PROJECT: FAIRFAX-FAIRFIELD-ST. ALBANS	PROJECT NO.: IM 089-3 (27)
DESIGN FILE NAME: \96a056\Structures\sa056xs4.dgn IPARM FILE NAME: sa056c04.i	PLOT DATE: 21-SEP-2000
CHANNEL CROSS SECTIONS (3)	BRIDGE SHEET BR319
STA. 32+50 TO STA. 33+25	SHEET: 145 OF 370

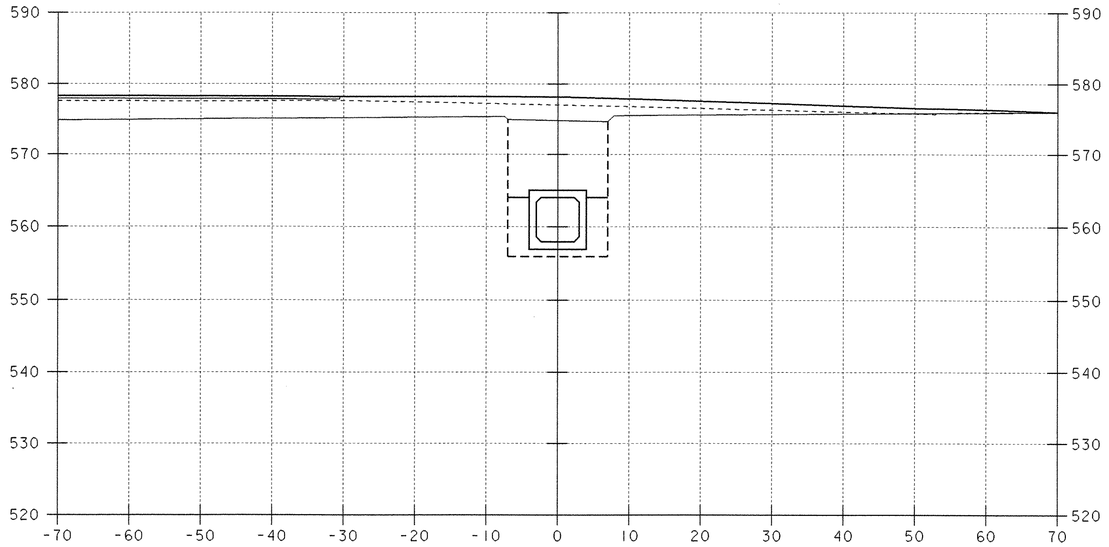

33+75

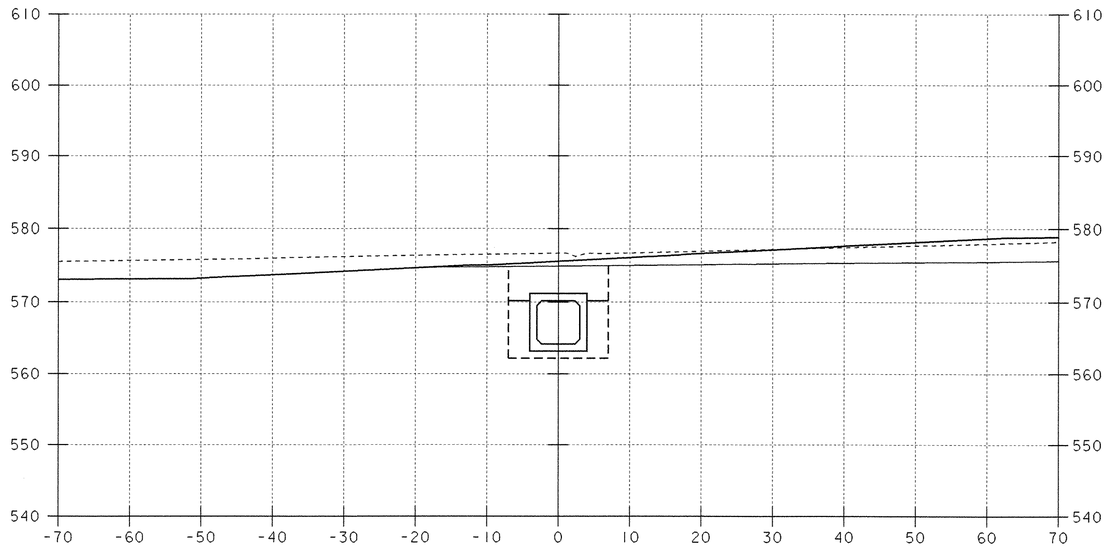

34+25

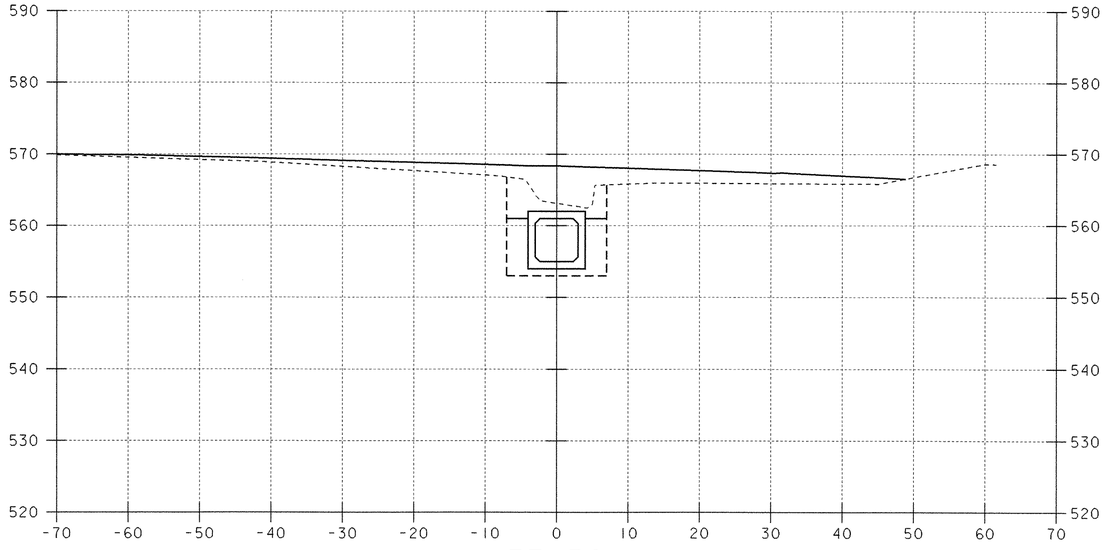

33+50

CHANNEL STA. 33+29
END UNCLASSIFIED CHANNEL EXCAVATION
GEOTEXTILE UNDER STONE FILL
STONE FILL, TYPE IV

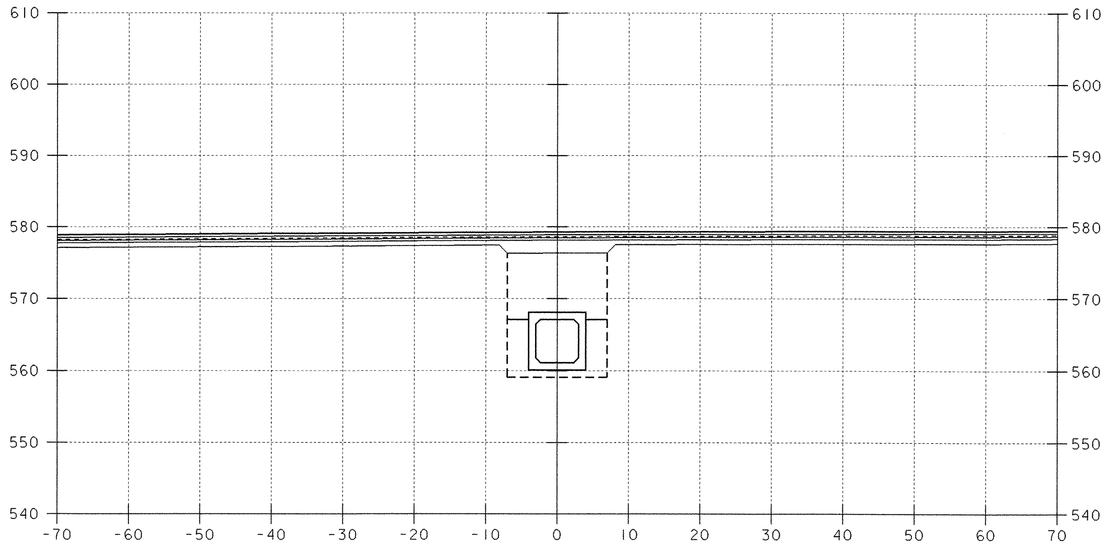

34+00

SCALE 1" = 10'-0
10 0 10

DATUM
VERTICAL _____
HORIZONTAL _____

PROJECT: FAIRFAX-FAIRFIELD-ST. ALBANS	PROJECT NO.: IM 089-3 (27)
DESIGN FILE NAME: \96a056\Structures\sa056xs4.dgn IPARM FILE NAME: sa056c05.i	PLOT DATE: 21-SEP-2000
CHANNEL CROSS SECTIONS (4)	BRIDGE SHEET BR320
STA. 33+50 TO STA. 34+25	SHEET: 146 OF 370

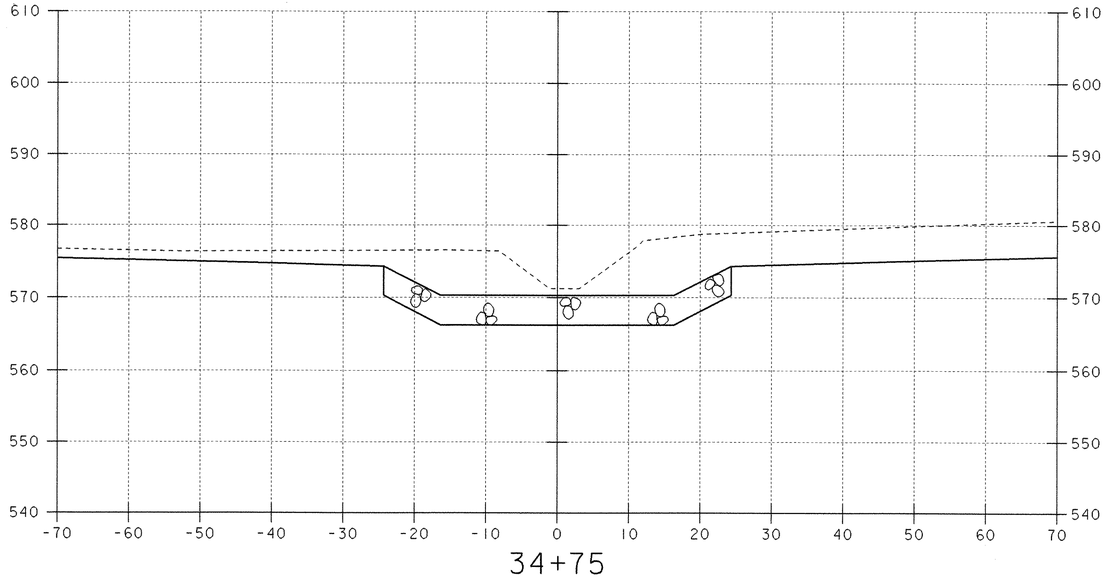

34+75

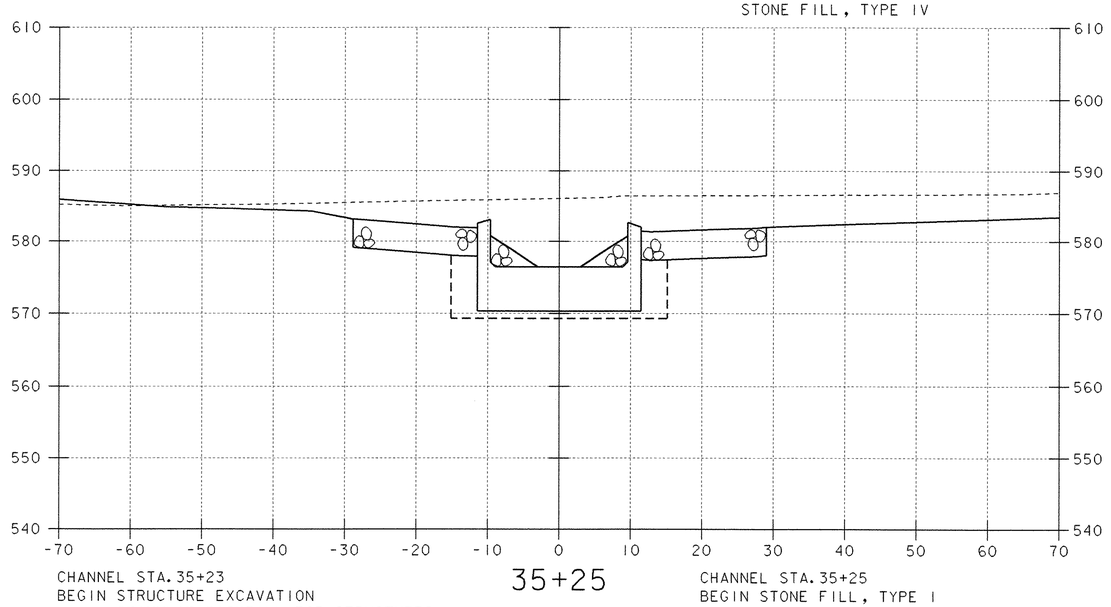

CHANNEL STA. 35+25
END UNCLASSIFIED CHANNEL EXCAVATION
GEOTEXTILE UNDER STONE FILL
STONE FILL, TYPE IV

CHANNEL STA. 35+23
BEGIN STRUCTURE EXCAVATION
GRANULAR BACKFILL FOR STRUCTURES

35+25

CHANNEL STA. 35+25
BEGIN STONE FILL, TYPE I

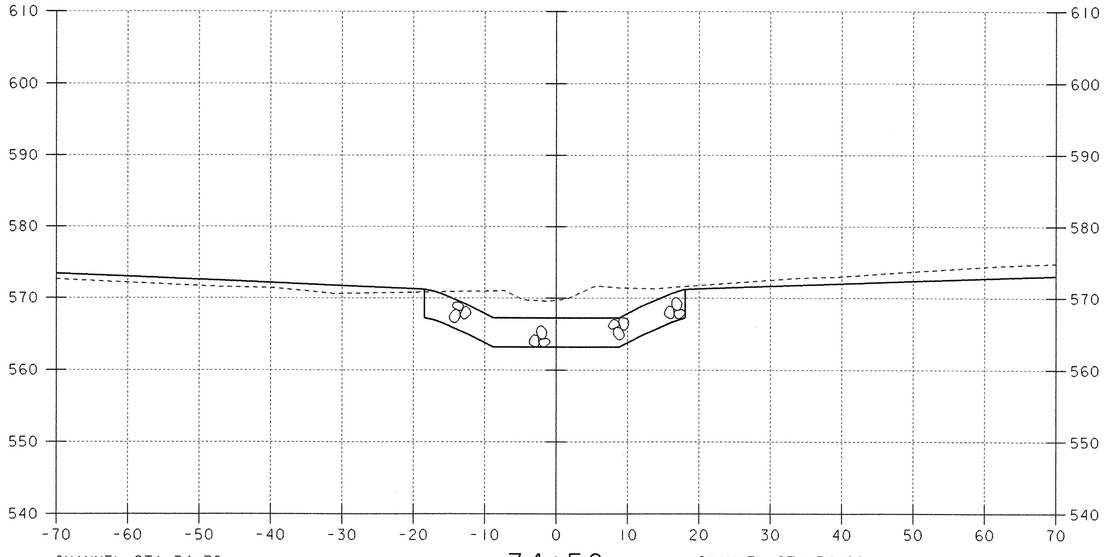

34+50

CHANNEL STA. 34+38
BEGIN UNCLASSIFIED CHANNEL EXCAVATION
GEOTEXTILE UNDER STONE FILL
STONE FILL, TYPE IV

CHANNEL STA. 34+28
BEGIN STONE FILL, TYPE I

CHANNEL STA. 34+39
END STONE FILL, TYPE I

CHANNEL STA. 34+40
END STRUCTURE EXCAVATION
GRANULAR BACKFILL FOR STRUCTURES

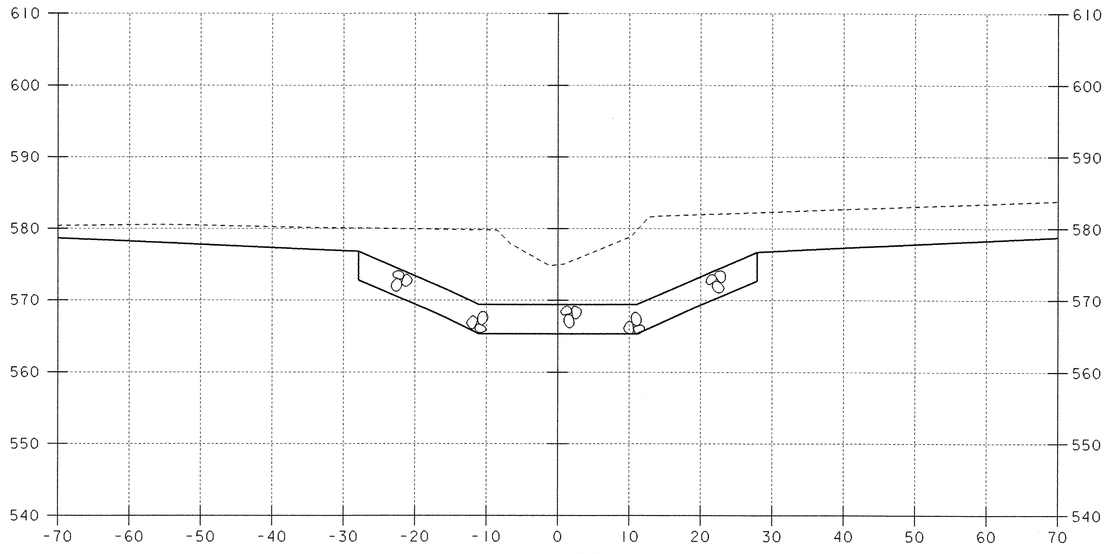

35+00

SCALE 1" = 10'-0
10 0 10

DATUM
VERTICAL _____
HORIZONTAL _____

PROJECT: FAIRFAX-FAIRFIELD-ST. ALBANS	PROJECT NO.: IM 089-3 (27)
DESIGN FILE NAME: \96a056\Structures\sa056xs4.dgn IPARM FILE NAME: sa056c06.i	PLOT DATE: 21-SEP-2000
CHANNEL CROSS SECTIONS (5)	BRIDGE SHEET BR321
STA. 34+50 TO STA. 35+25	SHEET: 147 OF 370

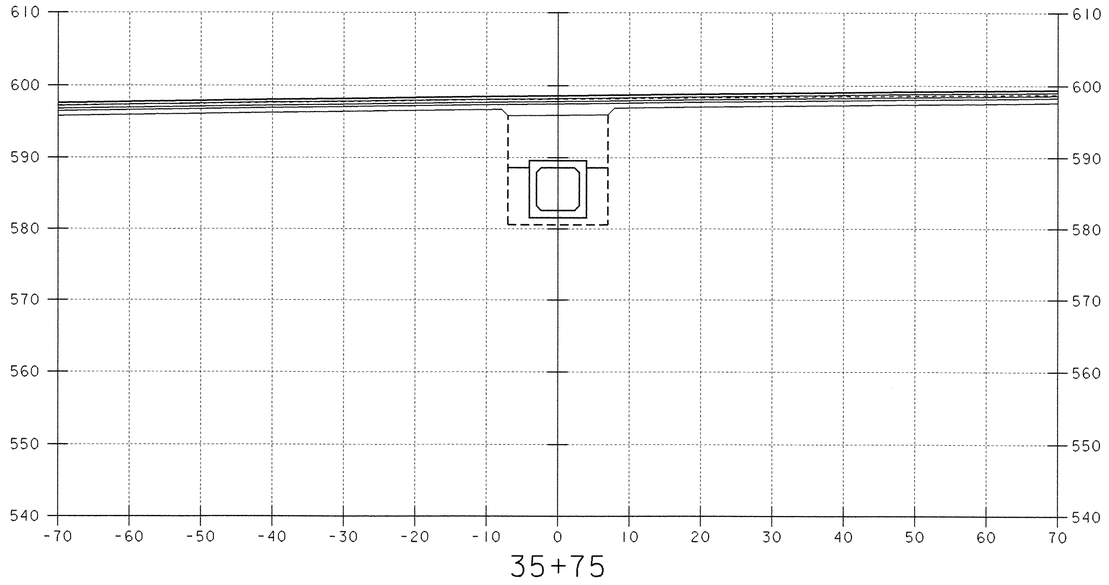

35+75

CHANNEL STA. 36+17
END STONE FILL, TYPE I

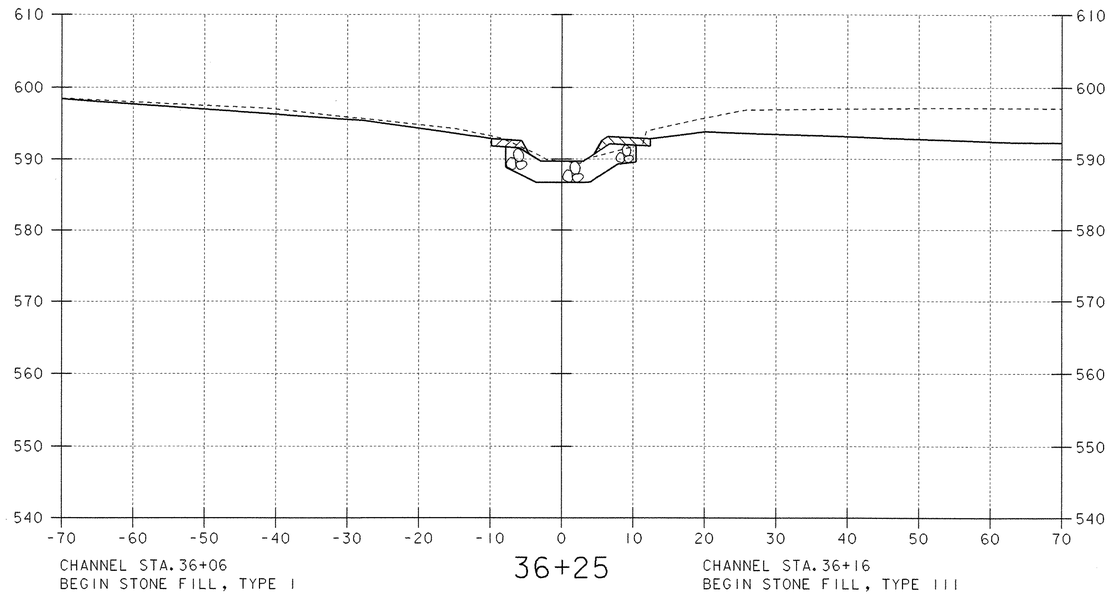

36+25

CHANNEL STA. 36+06
BEGIN STONE FILL, TYPE I

CHANNEL STA. 36+16
END STRUCTURE EXCAVATION
GRANULAR BACKFILL FOR STRUCTURES

CHANNEL STA. 36+16
BEGIN STONE FILL, TYPE III

CHANNEL STA. 36+14
BEGIN UNCLASSIFIED CHANNEL EXCAVATION
GEOTEXTILE UNDER STONE FILL
GRUBBING MATERIAL

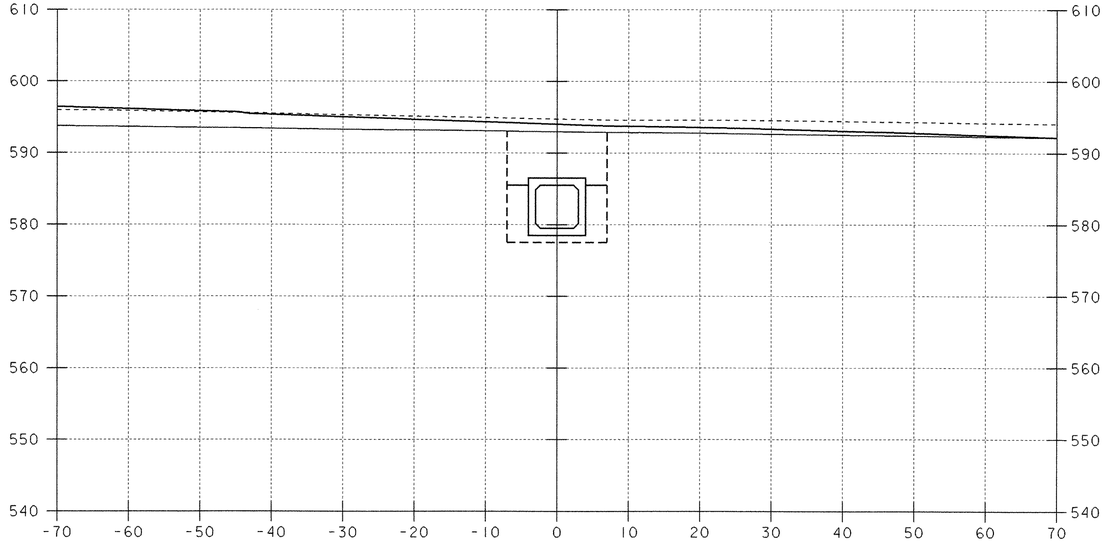

35+50

CHANNEL STA. 35+35
END STONE FILL, TYPE I

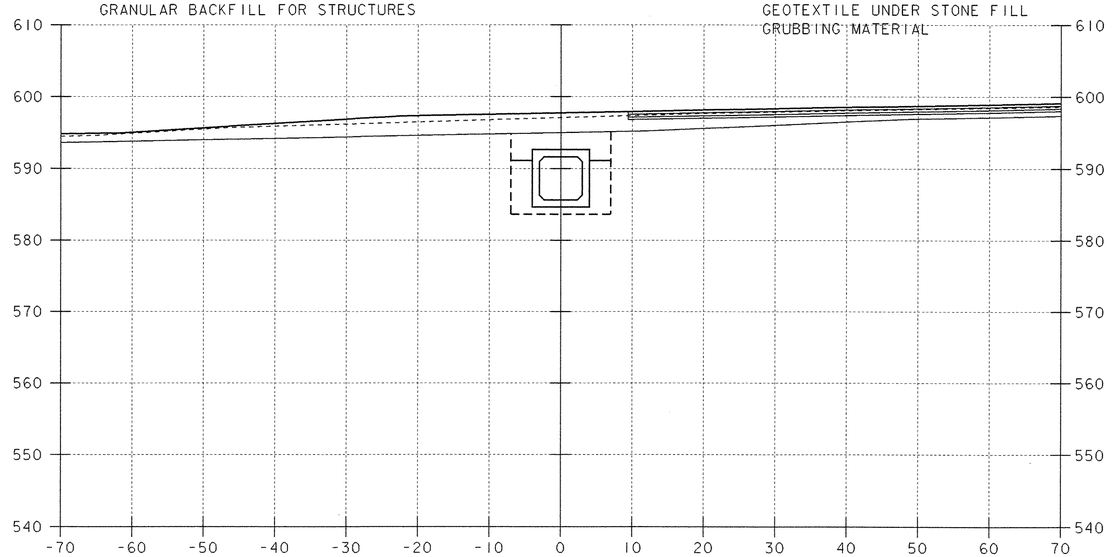

36+00

DATUM
VERTICAL _____
HORIZONTAL _____

SCALE 1" = 10'-0
10 0 10

PROJECT: FAIRFAX-FAIRFIELD-ST. ALBANS	PROJECT NO.: IM 089-3 (27)
DESIGN FILE NAME: \96a056\Structures\sa056xs4.dgn IPARM FILE NAME: sa056c07.i	PLOT DATE: 21-SEP-2000
CHANNEL CROSS SECTIONS (6)	BRIDGE SHEET BR322
STA. 35+50 TO STA. 36+25	SHEET: 148 OF 370

CHANNEL STA. 36+53
END UNCLASSIFIED CHANNEL EXCAVATION
GEOTEXTILE UNDER STONE FILL
STONE FILL, TYPE III
GRUBBING MATERIAL

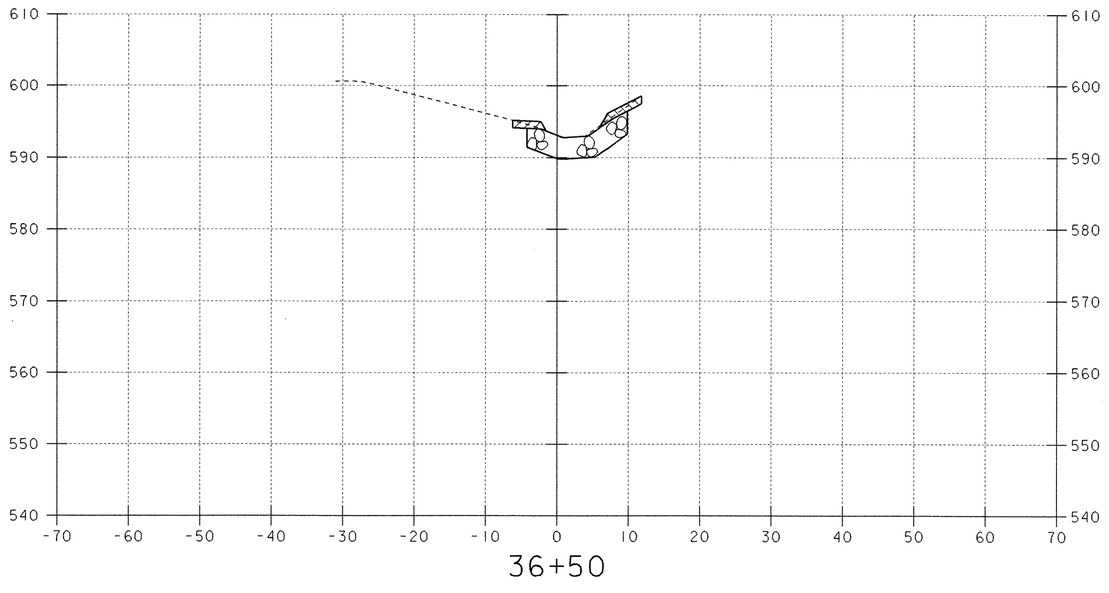

SCALE 1" = 10'-0
10 0 10

DATUM
VERTICAL _____
HORIZONTAL _____

PROJECT: FAIRFAX-FAIRFIELD-ST. ALBANS	PROJECT NO.: IM 089-3 (27)
DESIGN FILE NAME: \96a056\Structures\sa056xs4.dgn IPARM FILE NAME: sa056c08.i	PLOT DATE: 21-SEP-2000
CHANNEL CROSS SECTIONS (7)	BRIDGE SHEET BR323
STA. 36+50	SHEET: 149 OF 370

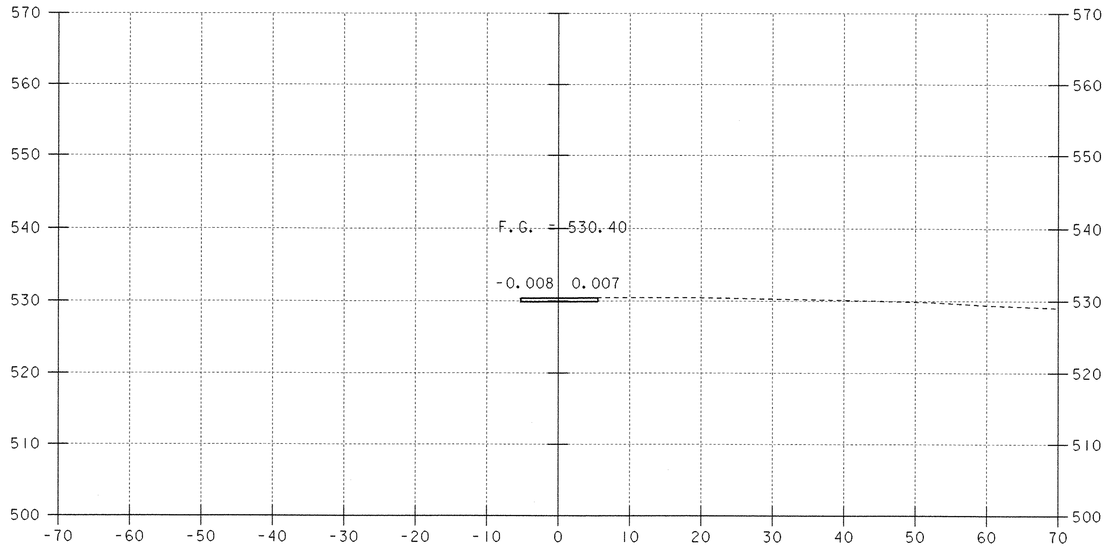

50+50

STA. 50+45
BEGIN DRIVE CONSTRUCTION
MATCH EXISTING GRADE

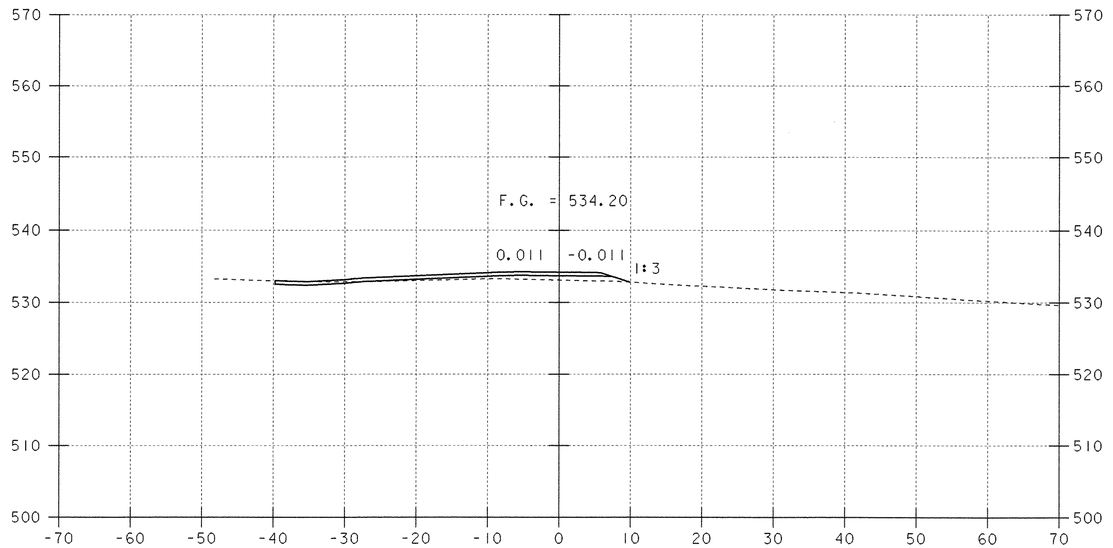

51+00

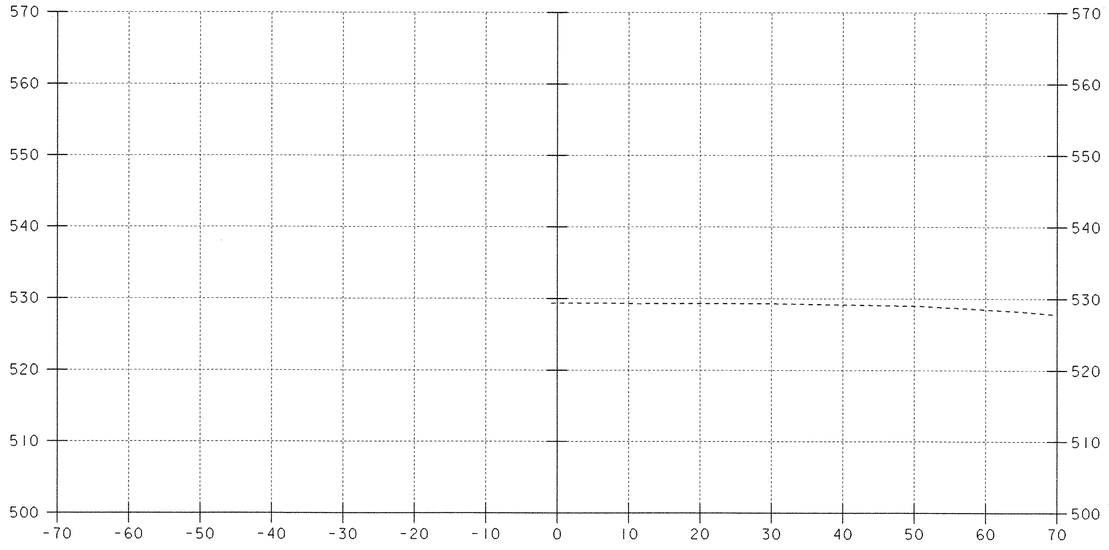

50+25

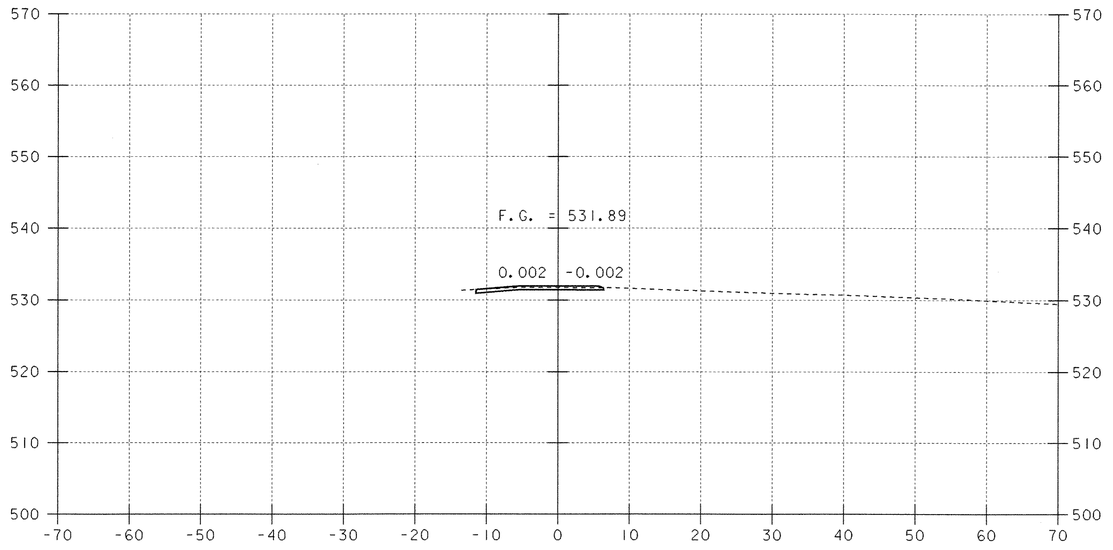

50+75

SCALE 1" = 10'-0
10 0 10

DATUM
VERTICAL _____
HORIZONTAL _____

PROJECT: FAIRFAX-FAIRFIELD-ST. ALBANS	PROJECT NO.: IM 089-3 (27)
DESIGN FILE NAME: \96a056\Structures\sa056xs4.dgn IPARM FILE NAME: sa056d01.i	PLOT DATE: 21-SEP-2000
DRIVE CROSS SECTIONS (1)	BRIDGE SHEET BR324
STA. 50+25 TO STA. 51+00	SHEET: 150 OF 370

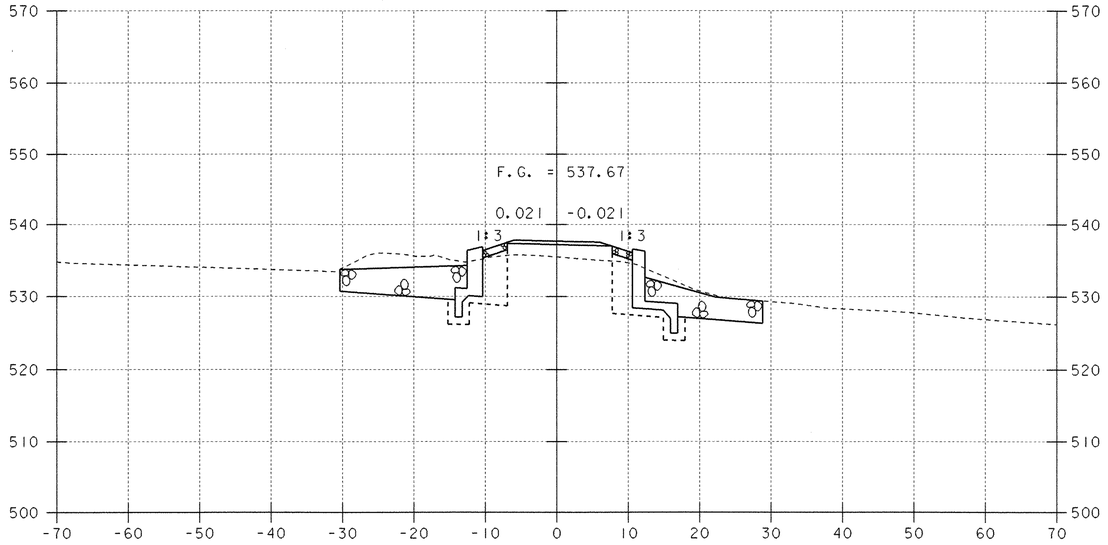

51+50

STA. 51+42.43
℄ 7'-0" X 5'-0" PRECAST
CONCRETE BOX CULVERT

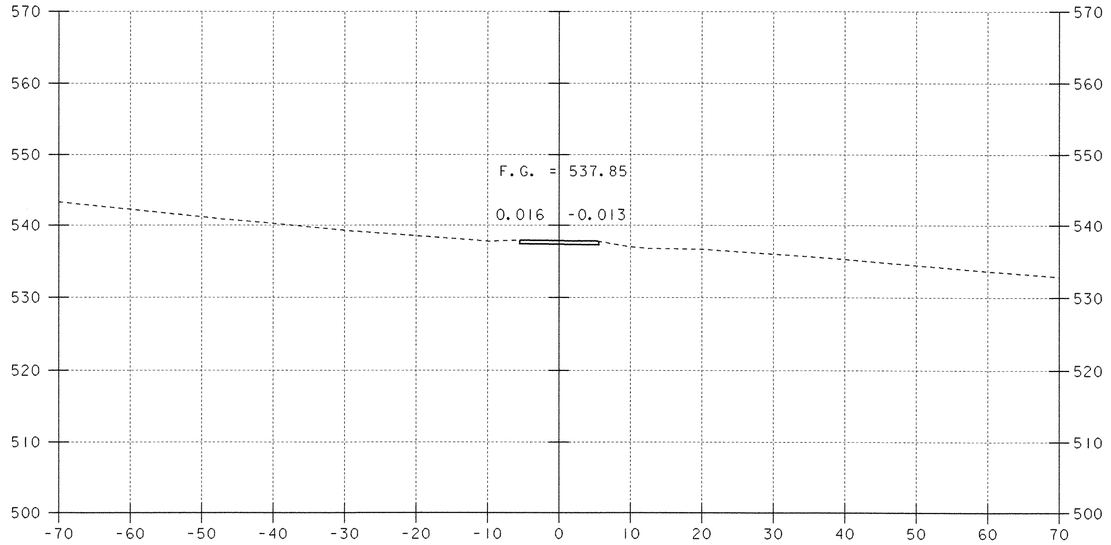

52+00

STA. 52+00
END DRIVE CONSTRUCTION
MATCH EXISTING GRADE

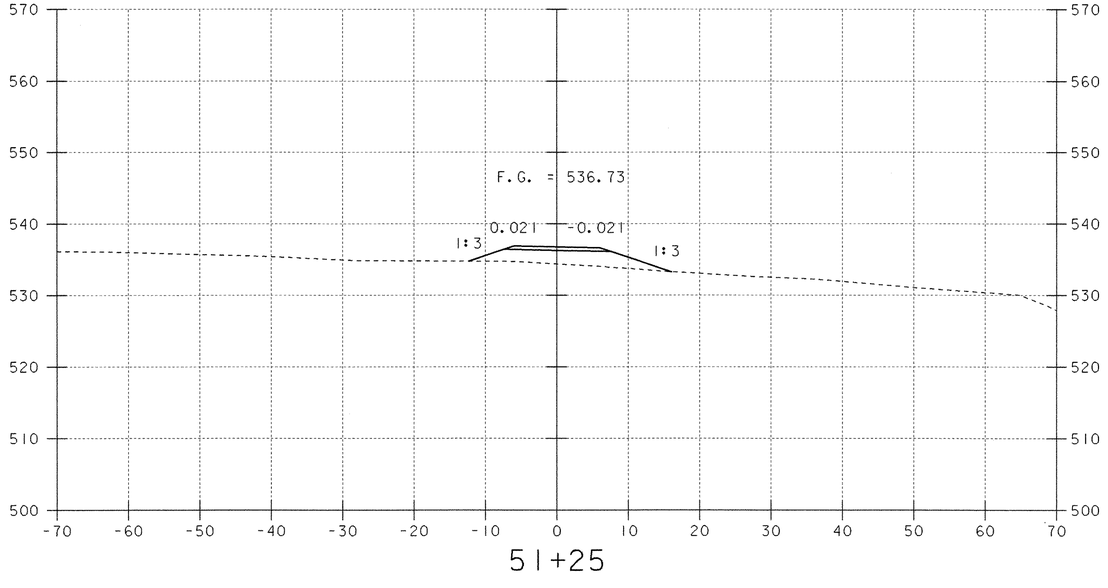

51+25

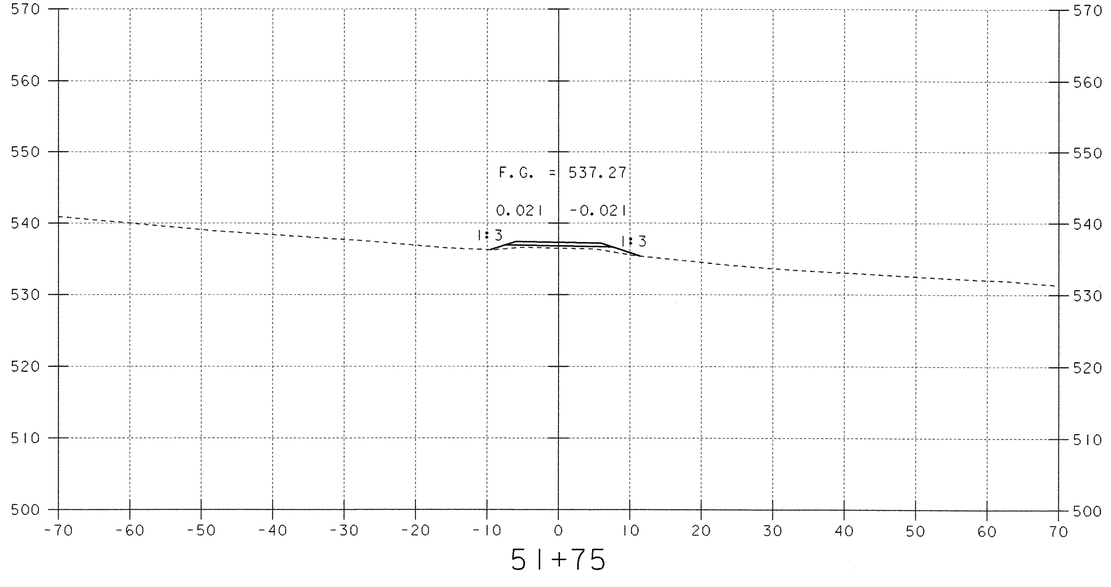

51+75

SCALE 1" = 10'-0
10 0 10

DATUM
VERTICAL _____
HORIZONTAL _____

PROJECT: FAIRFAX-FAIRFIELD-ST. ALBANS	PROJECT NO.: IM 089-3 (27)
DESIGN FILE NAME: \96a056\Structures\sa056xs4.dgn IPARM FILE NAME: sa056d02.i	PLOT DATE: 21-SEP-2000
DRIVE CROSS SECTIONS (2)	BRIDGE SHEET BR325
STA. 51+25 TO STA. 52+00	SHEET: 151 OF 370

** SEE PROJECT NOTE 5 ON SHEET BR403.

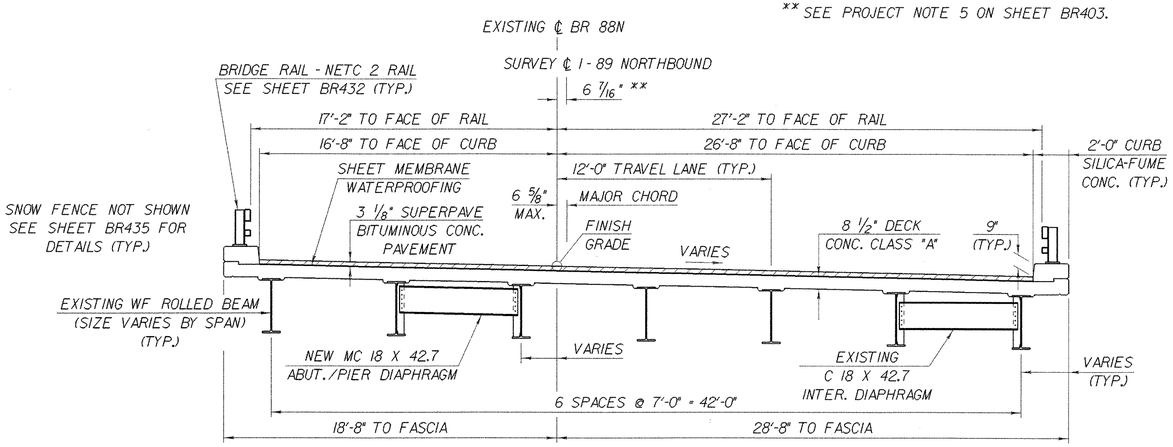

BRIDGE 88N TYPICAL SECTION

SCALE 1/4" = 1'-0

1 0 2 4 6

** SEE PROJECT NOTE 5 ON SHEET BR403.

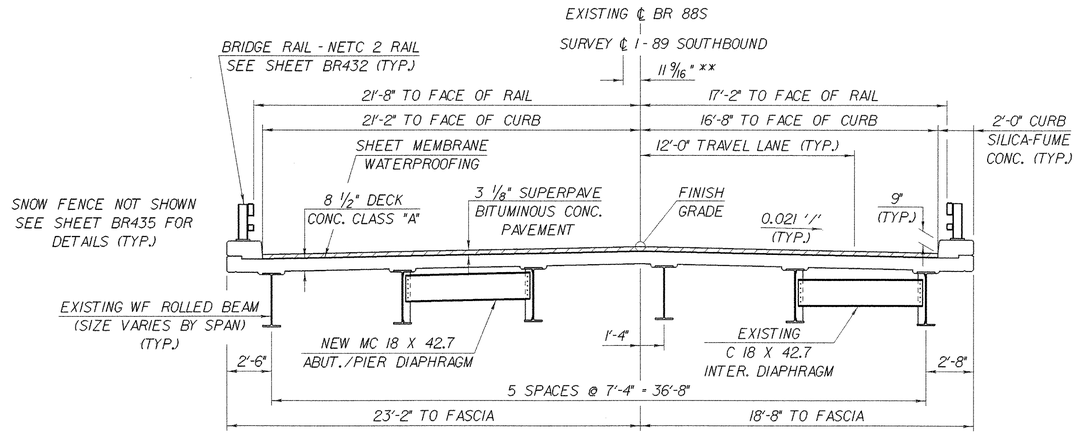

BRIDGE 88S TYPICAL SECTION

SCALE 1/4" = 1'-0

1 0 2 4 6

NOTES

1. **SCOPE OF WORK:** FOR BOTH BRIDGES 88N AND 88S: REMOVE EXISTING CONCRETE DECK AND STEEL BEAM SUPERSTRUCTURE. PERFORM SUBSTRUCTURE CONCRETE REMOVAL AND REPAIR WORK, INCLUDING BRIDGE SEATS AND WINGWALLS, AS SHOWN IN THE DRAWINGS AND AS DIRECTED BY THE RESIDENT ENGINEER. PLACE NEW BEARINGS AT EACH SUBSTRUCTURE UNIT. SPLICE EXISTING STEEL BEAMS TO MAKE CONTINUOUS AT THE PIERS. CONSTRUCT NEW CONCRETE DECK.

2. ALL MATERIALS AND CONSTRUCTION SHALL CONFORM TO VERMONT AGENCY OF TRANSPORTATION STANDARD SPECIFICATIONS FOR CONSTRUCTION, DATED 1990, AND ITS LATEST REVISIONS AND THE AASHTO STANDARD SPECIFICATIONS FOR HIGHWAY BRIDGES, DATED 1996, AND ITS LATEST REVISIONS.

88 N & S INDEX OF SHEETS

BR400	88 N & S PRELIMINARY INFORMATION SHEET
BR401	88 N & S BRIDGE QUANTITY SHEET
BR402	88 N & S PLAN AND ELEVATION SHEET
BR403	88 N & S PROJECT NOTES
BR404	88 S BRIDGE DECK DETAILS
BR405-407	88 S DECK REINFORCING PLAN
BR408	88 S FRAMING PLAN DETAILS
BR409	88 S STRUCTURAL STEEL CONNECTION DETAILS
BR410	88 S STRUCTURAL STEEL SPLICE DETAILS
BR411	88 N BRIDGE DECK DETAILS
BR412-414	88 N DECK REINFORCING PLAN
BR415	88 N FRAMING PLAN DETAILS
BR416	88 N STRUCTURAL STEEL CONNECTION DETAILS
BR417	88 N STRUCTURAL STEEL SPLICE DETAILS
BR418-420	88 S BEARING DETAILS
BR421-423	88 N BEARING DETAILS
BR424	88 N & S EXPANSION JOINT DETAILS
BR425	88 S EXPANSION JOINT PLAN
BR426	88 N EXPANSION JOINT PLAN
BR427	88 N & S CURB PLATE DETAILS
BR428	88 N & S DOWNSPOUT DETAILS
BR429	88 S APPROACH SLAB DETAILS
BR430	88 N APPROACH SLAB DETAILS

INDEX OF SHEETS (CONT.)

BR431	88 N & S CURB AND RAIL DETAILS
BR432-435	NETC RAIL DETAILS
BR436	88 S ABUTMENT REMOVAL DETAILS
BR437	88 S WINGWALL REMOVAL DETAILS
BR438	88 S PIER REMOVAL DETAILS
BR439	ABUTMENT NO. 5 DETAILS
BR440	ABUTMENT NO. 6 DETAILS
BR441	WINGWALL NOS. 9 - 12 ELEVATIONS
BR442	PIER NO. 1 DETAILS
BR443	PIER NO. 2 DETAILS
BR444	88 N ABUTMENT REMOVAL DETAILS
BR445	88 N WINGWALL REMOVAL DETAILS
BR446	88 N PIER REMOVAL DETAILS
BR447	ABUTMENT NO. 7 DETAILS
BR448	ABUTMENT NO. 8 DETAILS
BR449	WINGWALL NOS. 13 - 16 ELEVATIONS
BR450	PIER NO. 3 DETAILS
BR451	PIER NO. 4 DETAILS
BR452	PIER NOS. 3 & 4 CAP REINFORCING DETAILS
BR453-454	88 N & S REINFORCING STEEL SCHEDULE
BR455-491	88 N & S REFERENCE SHEETS 1-37

* SEE TRAFFIC CONTROL SHEETS

DESIGN CRITERIA:
1. DESIGN LIVE LOAD AASHTO HS25-44
2. DESIGN SPAN NB 48 - 69 - 48 SB 53 - 74 - 53
3. ALLOWABLE LOAD FOR SPREAD FOOTINGS ON SOIL N/A ON LEDGE N/A
4. ALLOWABLE LOAD FOR PILING N/A TYPE N/A ESTIMATED LENGTH N/A
5. STRUCTURAL STEEL AASHTO GRADE SEE PROJECT NOTES
6. REINFORCING STEEL GRADE 60
7. CONCRETE CLASS A f'_c : 4000 PSI
   CONCRETE CLASS B f'_c : 3500 PSI
   SILICA-FUME CONCRETE f'_c : 5000 PSI

* TRAFFIC MAINTENANCE:
1. IS TRAFFIC TO BE MAINTAINED? _____ IF YES, ON EXISTING STRUCTURE _____ OR ON TEMPORARY BRIDGE _____
2. TEMPORARY BRIDGE REQUIREMENTS: ONE OR TWO WAY _____ TRAFFIC CONTROL SIGNALS REQUIRED _____
   MINIMUM _____
   ARE SIDEWALKS REQUIRED? _____ IF SO, ON WHAT SIDE? _____

BR 88S LOAD FACTOR LOAD RATING (TONS)

LOADING LEVELS (LOAD FACTOR)	TRUCK						
	H	HS	3S2	6 AXLE	3A. STR.	4A. STR.	5A. SEMI
INVENTORY A=2.17; B=1.00	22	40					
POSTED A=1.55; B=1.40	31	56	75		68	69	81
OPERATING A=1.30; B=1.67		67	89	85	82	82	

BR 88N LOAD FACTOR LOAD RATING (TONS)

LOADING LEVELS (LOAD FACTOR)	TRUCK						
	H	HS	3S2	6 AXLE	3A. STR.	4A. STR.	5A. SEMI
INVENTORY A=2.17; B=1.00	29	53					
POSTED A=1.55; B=1.40	41	74	93		92	92	100
OPERATING A=1.30; B=1.67		89	111	107	110	110	

STRENGTH RF = $\frac{\phi M_N - 1.3\, M_{DL}}{A \times M_{LL+I}}$ SERVICEABILITY RF = B $\frac{.95\, F_y S_{LL+I} - M_{DL}\frac{S_{LL+I}}{S_{DL}} - M_{SDL}\frac{S_{LL+I}}{S_{SDL}}}{1.67\, M_{LL+I}}$

NOTE: SERVICEABILITY AT PIERS GOVERNS

STATE OF VERMONT
AGENCY OF TRANSPORTATION

Town Of FAIRFAX-FAIRFIELD-ST. ALBANS	Bridge No. 88 N&S
Highway No. I - 89	Log Sta.
	Surv. Sta.

I-89 OVER ST. ALBANS SOUTH STATE HIGHWAY (EXIT 19)

88 N & S PRELIMINARY INFORMATION SHEET

Designed By M. LOZIER	Drawn By G. ROY
Checked By M. LOZIER Date 2/00	Bridge Design Supervisor R.R. WHITCOMB Date 2/00
PROJECT FAIRFAX-FAIRFIELD-ST. ALBANS	PROJECT NO. IM 089 - 3 (27)
I.G.C. Info. 96a056\Structures\sa056pl3.dgn	sa056pl3.1
Bridge Sheet No. BR400	Sheet 152 of 370

PLOTTED 21-SEP-2000

STATE OF VERMONT
AGENCY OF TRANSPORTATION

QUANTITY SHEET

SUMMARY OF ESTIMATED QUANTITIES

ROADWAY I-89 NB	PIER NO. 4	PIER NO. 3	ABUTMENT NO. 8	ABUTMENT NO. 7	APPROACH SLAB NO. 8	APPROACH SLAB NO. 7	88N DECK	ROADWAY I-89 SB	PIER NO. 2	PIER NO. 1	ABUTMENT NO. 6	ABUTMENT NO. 5	APPROACH SLAB NO. 6	APPROACH SLAB NO. 5	88S DECK	BRIDGE QUANTITY
			92	92							49	49				282
			92	92							49	49				282
					0.2	0.2	1.5						0.2	0.2	1.4	
					17	17	141						15	15	134	
							~~221~~ 221								213	434
	~~12~~ 12	~~12~~ 12	~~54~~ 54	~~50~~ 50	~~41~~ 41	~~41~~ 41			4	4	37	36	36	36		363
			4	2			24				3	2			26	61
							26640								23800	50440
							0.5								0.5	1
			230	230							140	140				740
	2580	2750	5590	5130	4800	4760	66900		540	540	4010	3750	4190	4140	65070	174750
															1	1
							1									1
							0.5								0.5	1
							0.5								0.5	1
							0.5								0.5	1
							0.5								0.5	1
							0.5								0.5	1
2	5	5	5	5			15	2	5	5	5	5			15	74
							48								42	90
					99	99	807						87	87	768	1947
							388								399	787
					97	97	814						85	85	775	1953
							1								1	2
							28								24	52
	5	5	5	5					5	5	5	5				40
160								160								320
							160								160	320
4								4								8
					30	30	212						30	30	230	
					20	20	170						20	20	185	

TOTALS

ROUND	GRAND TOTAL	FINAL
	282	
	282	
	3.7	
	339	
	434	
	363	
	61	
	50440	
	1	
	740	
	174750	
	1	
	1	
	1	
	1	
	1	
	1	
	74	
	90	
	1947	
	787	
	1953	
	2	
	52	
	40	
	320	
	320	
	8	
	562	
	435	

DESCRIPTIONS

UNIT	ITEM	ITEM NUMBER	
CY	STRUCTURE EXCAVATION	204.25	
CY	GRANULAR BACKFILL FOR STRUCTURES	204.30	
CWT	EMULSIFIED ASPHALT	404.65	Ⓡ
TON	SUPERPAVE BITUMINOUS CONCRETE PAVEMENT (PG 64-34)	490.30	Ⓡ
CY	CONCRETE, CLASS A	501.22	
	HIGH PERFORMANCE CL A		
CY	CONCRETE, CLASS B	501.25	
	HIGH PERFORMANCE CL B		
CY	SILICA-FUME CONCRETE	501.60	
LB	STRUCTURAL STEEL	506.60	
LS	STRUCTURAL STEEL (MOD.)	506.75	
LF	DRILLING AND GROUTING DOWELS	507.16	
LB	EPOXY COATED REINFORCING STEEL	507.17	
LS	SHEAR CONNECTORS (2436 ~ 7/8" DIA. X 7" STUDS)	508.15	
LS	SHEAR CONNECTORS (2478 ~ 7/8" DIA. X 7" STUDS)	508.15	
LS	STRUCTURAL PAINTING,SHOP APPLIED	513.25	
LS	STRUCTURAL PAINTING,FIELD APPLIED	513.30	
LS	CONTAINMENT & ENVIRON. PROTECTION,FIELD	513.36	
LS	SURFACE PREPARATION,SHOP	513.40	
LS	SURFACE PREPARATION, FIELD	513.41	
GAL	WATER REPELLENT	514.10	
LF	BRIDGE EXPANSION JOINT	516.10	
SY	SHEET MEMBRANE WATERPROOFING	519.20	
LF	BRIDGE RAILING-NETC 2 RAIL	525.33	
SY	REMOVAL OF BRIDGE PAVEMENT	529.10	
EACH	PARTIAL REMOVAL OF STRUCTURE	529.20	
EACH	BEARING DEVICE ASSEMBLY	531.10	
SY	REPAIR OF CONCRETE SUBSTRUCTURE SURFACE, CLASS I	580.13	
LF	CAST-IN-PLACE CONCRETE CURB, TYPE B (MOD. SILICA-FUME CONCRETE)	616.28	
LF	SNOW BARRIER - GALVANIZED	620.75	
EACH	GUARD RAIL APPR. SECTION,NETC 2 RAIL	621.72	
LF	DURABLE 6" WHITE LINE	646.414	Ⓡ
LF	DURABLE 6" YELLOW LINE	646.415	Ⓡ

Ⓡ DENOTES ROADWAY QUANTITY

DETAILED SUMMARY OF QUANTITIES

QUANTITIES	UNIT	ITEMS
		NOTE: BR. #88N USED EXCLUSIVELY HIGH PERFORMANCE CONCRETE

PROJECT NAME: **FAIRFAX-FAIRFIELD-ST. ALBANS**
PROJECT NUMBER: **IM 089 - 3 (27)**

FILE NAME: \98a056\structures
PROJECT LEADER: R. R. WHITCOMB
DESIGNED BY: M. LOZIER
88 N & S BRIDGE QUANTITY SHEET BR401

PLOT DATE: 9/20/00
DRAWN BY: K. CHISHOLM
CHECKED BY: G. ROY
SHEET 153 OF 370

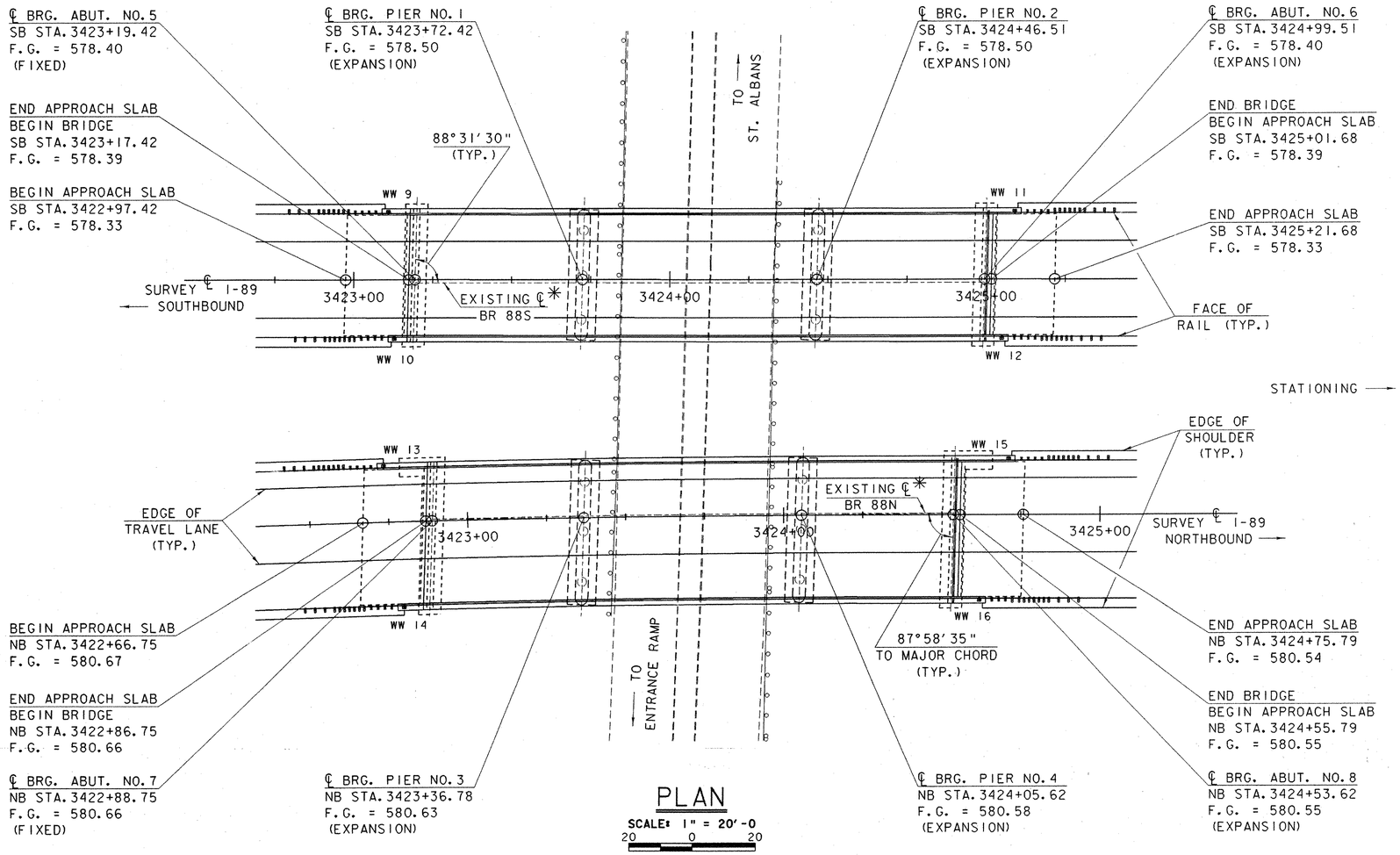

PLAN

SCALE: 1" = 20'-0

20 0 20

✳ SEE PROJECT NOTE 5 ON SHEET BR403

BRIDGE RAILING TABLE

BRIDGE	RIGHT	LEFT
88 N	185'-10 15/16"	201'-10"
88 S	196'-1 1/8"	202'-1 1/8"

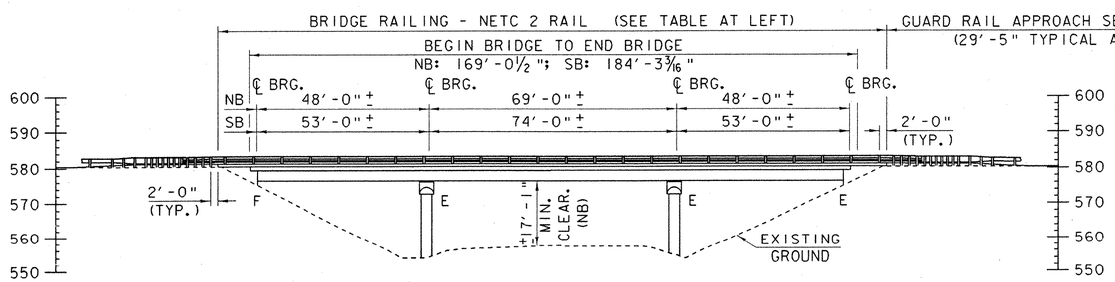

ELEVATION ALONG NORTHBOUND FASCIA

SCALE: 1" = 20'-0

20 0 20

IMPORTANT NOTE: BRIDGE FINISHED GRADES ARE CENTERLINE GRADES.

STATE OF VERMONT
AGENCY OF TRANSPORTATION

Town Of FAIRFAX-FAIRFIELD-ST. ALBANS	Bridge No. 88 N&S
Highway No. I-89	Log Sta. / Surv. Sta.
I-89 OVER ST. ALBANS SOUTH STATE HIGHWAY (EXIT 19)	
88 N & S PLAN AND ELEVATION SHEET	
Designed By G. ROY	Drawn By G. ROY
Checked By M. LOZIER Date 2/00	Bridge Design Supervisor R.R. WHITCOMB Date 2/00
PROJECT FAIRFAX-FAIRFIELD-ST. ALBANS	PROJECT NO. IM 089-3 (27)
I.G.C. Info. 96a056\Structures\sa056pe3.dgn	sa056pe3.1
Bridge Sheet No. BR402	Sheet 154 of 370

PLOTTED 21-SEP-2000

BRIDGES 88 N & S PROJECT NOTES

GENERAL

1. ALL MATERIALS AND CONSTRUCTION SHALL CONFORM TO STATE OF VERMONT AGENCY OF TRANSPORTATION STANDARD SPECIFICATIONS FOR CONSTRUCTION DATED 1990, AND ITS LATEST REVISIONS, AND THE AASHTO STANDARD SPECIFICATIONS FOR HIGHWAY BRIDGES, DATED 1996, AND ITS LATEST REVISIONS.

2. DURING CONSTRUCTION, TRAFFIC SHALL BE MAINTAINED AS INDICATED IN THE TRAFFIC CONTROL SHEETS INCLUDED IN THE PLANS.

3. THESE PLANS WERE PREPARED USING INFORMATION FROM THE VAOT RECORD PLANS AND ASSOCIATED FABRICATION DRAWINGS FOR BRIDGES 88N AND 88S, AND ANY FIELD MEASUREMENTS THAT HAVE BEEN PERFORMED SINCE ORIGINAL CONSTRUCTION. REFERENCE SHEETS FROM THE RECORD PLANS AND FABRICATION DRAWINGS ARE INCLUDED IN THE PLANS FOR THE CONTRACTOR'S USE. THESE SHEETS ARE LOCATED AT THE END OF THIS (BR 400) SERIES OF BRIDGE SHEETS. THE CONTRACTOR IS RESPONSIBLE FOR VERIFYING IN THE FIELD ANY DIMENSIONS OF EXISTING MATERIAL INCLUDED IN THESE REFERENCE SHEETS OR IN THE PLANS. MINOR MODIFICATIONS MAY BE REQUIRED TO THE DIMENSIONS SHOWN ON THE PLANS IN ORDER TO FIT ACTUAL FIELD CONDITIONS.

4. EXISTING ELEVATIONS SHOWN IN THE PLANS ARE BASED ON A CORRELATION BETWEEN THE RECORD PLANS ELEVATIONS AND THE VAOT SURVEY OF THE PROJECT AREA AND BRIDGE COMPONENTS. THE ADJUSTMENT FACTOR FOR EXISTING ELEVATIONS USED IN DESIGN, RELATIVE TO ELEVATIONS INDICATED ON THE RECORD PLANS, WAS -0.22 FT.

5. HORIZONTAL DIMENSIONS SHOWN IN THE PLANS ARE RELATIVE TO THE EXISTING BRIDGE CENTERLINES. THE RESIDENT ENGINEER SHALL ESTABLISH THESE CENTERLINES PRIOR TO REMOVAL OF ANY PARTS OF THE BRIDGES. THESE BRIDGE CENTERLINES ARE OFFSET FROM THE ROADWAY SURVEY CENTERLINES BY THE DIMENSIONS INDICATED. A FIELD ADJUSTMENT IS REQUIRED TO TAPER THE ROADWAY CENTERLINES TO THE BRIDGE CENTERLINES IN THE AREAS OF NEW APPROACH SLAB AND BRIDGE CONSTRUCTION. THE LENGTH OF FIELD ADJUSTMENT SHALL BE DETERMINED BY THE RESIDENT ENGINEER.

6. ALL DIMENSIONS SHOWN IN THE PLANS ARE HORIZONTAL OR VERTICAL AND ARE GIVEN AT 68°F.

EARTHWORK AND RELATED ITEMS

7. REMOVAL AND DISPOSAL OF PAVEMENT ON THE EXISTING BRIDGE DECKS AND APPROACH SLABS SHALL BE PAID FOR UNDER ITEM 529.10, "REMOVAL OF BRIDGE PAVEMENT".

8. REMOVAL AND DISPOSAL OF THE FOLLOWING SHALL BE INCLUDED FOR PAYMENT UNDER ITEM 529.20, "PARTIAL REMOVAL OF STRUCTURE":

   - EXISTING APPROACH SLABS;
   - EXISTING BRIDGE RAIL;
   - EXISTING CURBS;
   - EXISTING DECK CONCRETE, INCLUDING CURTAIN WALL CONCRETE AT THE ABUTMENTS;
   - EXISTING SHEAR STUDS;
   - EXISTING BEARINGS;
   - EXISTING SUBSTRUCTURE CONCRETE TO BE REMOVED AS SHOWN IN THE PLANS;
   - ALL EXISTING REINFORCING STEEL INCLUDED IN THE ABOVE AND
   - ALL OTHER BRIDGE COMPONENTS NOT RE-USED, INCLUDING BUT NOT LIMITED TO EXISTING DECK EXPANSION JOINTS AND DRAIN TROUGHS, SCUPPERS, AND OTHER EXISTING DRAINAGE APPURTENANCES ATTACHED TO THE EXISTING ABUTMENTS AND PIERS.

9. THE EXISTING ABUTMENTS ARE FOUNDED ON STEEL PILE (12BP53) FOUNDATIONS. WHEN EXCAVATING FOR THE PLACEMENT OF NEW BACKWALLS AT THE ABUTMENTS, THE CONTRACTOR SHALL NOT EXCAVATE BELOW THE EXISTING BOTTOM OF FOOTING CONCRETE ELEVATION. PAYMENT FOR STRUCTURE EXCAVATION SHALL BE AS SHOWN IN THE PLANS.

STRUCTURAL STEEL

10. UNLESS OTHERWISE NOTED IN THE PLANS, THE EXISTING SUPERSTRUCTURE STEEL WILL BE RE-USED AND THE EXISTING PAINT SYSTEM WILL BE RETAINED. THIS EXISTING PAINT SYSTEM MAY CONTAIN LEAD, SO THE CONTRACTOR IS ADVISED TO EXERCISE CAUTION WHEN HANDLING AND WORKING WITH THE EXISTING STEEL.

11. THE FINAL 3 FEET OF EXISTING BEAM ENDS IN THE AREAS OF NEW BEAM SPLICES AT THE PIERS, AND ANY OTHER AREAS OF TOUCH-UP ALONG THE SPANS AS DIRECTED BY THE RESIDENT ENGINEER, SHALL BE BLAST CLEANED AND REPAINTED. BEAM SPLICES SHALL BE CONSTRUCTED AFTER THE BEAMS HAVE BEEN BLAST CLEANED AND PRIOR TO THE FIRST COAT OF PAINT. THE CONTRACTOR SHALL ENSURE COMPATIBILITY BETWEEN THE EXISTING AND NEW PAINT SYSTEMS. THIS WORK SHALL BE PERFORMED IN ACCORDANCE WITH SUPPLEMENTAL SPECIFICATION 513, AND SHALL BE PAID FOR UNDER ITEM 513.20, "STRUCTURE PAINTING". SEE THE SPECIAL PROVISIONS FOR ADDITIONAL INFORMATION.

12. SURFACE AREAS OF BRIDGE COMPONENTS WITHIN THE FINAL 3 FEET OF EXISTING BEAM ENDS AT ABUTMENT NOS. 6 AND 8 SHALL BE GREASE RUSTPROOFED AS PER SUBSECTION 513.06(D) OF THE STANDARD SPECIFICATIONS FOR CONSTRUCTION.

13. ANY DAMAGE DONE TO EXISTING STEEL TO BE RE-USED DUE TO REMOVAL OPERATIONS SHALL BE REPAIRED AT THE EXPENSE OF THE CONTRACTOR.

14. ALL WELDING SHALL BE PERFORMED IN ACCORDANCE WITH THE 1995 ANSI/AASHTO/AWS D1.5-95 BRIDGE WELDING CODE. REPAIRS TO EXISTING STEEL BEAMS REQUIRED DUE TO THE REMOVAL OF EXISTING SHEAR STUDS SHALL BE PERFORMED IN ACCORDANCE WITH SUBSECTION 7.7.5.1 OF THE CODE. MAGNETIC PARTICLE TESTING SHALL BE PERFORMED ON ALL REPAIRS PERFORMED IN TENSION AREAS.

15. THERE ARE EXISTING HOLES IN THE STEEL BEAMS THAT ARE NOT RE-USED IN THE REHABILITATION DESIGN. THESE INCLUDE HOLES IN THE BOTTOM FLANGES AT BEAM ENDS FOR BEARING ANCHORAGE AT BOTH THE ABUTMENTS AND PIERS, AND HOLES IN THE WEB AT BEAM ENDS FOR TRANSVERSE REINFORCING STEEL AT BOTH ABUTMENTS. THESE HOLES SHALL BE PLUG WELDED. THE WELD METAL SHALL CONFORM TO AASHTO M270, GRADE 36. THE CONTRACTOR SHALL SUBMIT DETAILS FOR THIS WORK TO THE STRUCTURES ENGINEER FOR APPROVAL. PAYMENT SHALL BE MADE SUBSIDIARY TO ITEM 506.75, "STRUCTURAL STEEL (MOD.)" AS INDICATED IN NOTE 17 BELOW.

16. THE FOLLOWING SHALL BE INCLUDED FOR PAYMENT UNDER ITEM 506.60, "STRUCTURAL STEEL":

    - NEW STEEL FOR SPLICES AT THE PIERS;
    - NEW STEEL AND WELDING FOR BEAM END REPAIRS AT THE PIERS;
    - NEW STEEL FOR ABUTMENT AND PIER DIAPHRAGMS AND
    - NEW DOWNSPOUTS AND ATTACHMENT HARDWARE.

17. THE FOLLOWING SHALL BE INCLUDED FOR PAYMENT UNDER ITEM 506.75, "STRUCTURAL STEEL (MOD.)":

    - FOR EXISTING STEEL TO BE RE-USED, ANY REMOVAL, LOADING, TRANSPORTING AND ERECTION COSTS ASSOCIATED WITH ITS RE-USE AS DETAILED IN THE PLANS AND AS DIRECTED BY THE RESIDENT ENGINEER

    - REPAIRS TO EXISTING STEEL BEAMS REQUIRED DUE TO THE REMOVAL OF EXISTING SHEAR STUDS AND MAGNETIC PARTICLE TESTING AS INDICATED IN NOTE 14 ABOVE.

    - THE PLUG WELDING OF EXISTING HOLES NOT RE-USED AS INDICATED IN NOTE 15 ABOVE.

18. STEEL FOR NEW DIAPHRAGMS AND CONNECTION PLATES AT THE ABUTMENTS AND PIERS, AND FOR BEAM END REPAIRS AT THE PIERS AS SHOWN IN THE PLANS, SHALL BE PAINTED AND SHALL CONFORM TO AASHTO M270 GRADE 36. ALL NEW STEEL FOR SPLICE ASSEMBLIES AT THE PIERS SHALL BE PAINTED AND SHALL CONFORM TO AASHTO M270 GRADE 50.

19. AFTER SUPERSTRUCTURE STEEL HAS BEEN ERECTED, ELEVATIONS ALONG THE TOP OF THE GIRDERS SHALL BE TAKEN AS DIRECTED BY THE RESIDENT ENGINEER FOR USE IN DETERMINING FINISHED GRADES. NEW CONCRETE PORTIONS OF THE ABUTMENTS AND WINGWALLS ABOVE ADJACENT BRIDGE SEAT ELEVATIONS SHALL NOT BE PLACED UNTIL FINISHED GRADES HAVE BEEN DETERMINED BY THE RESIDENT ENGINEER.

20. FLEMING BRACKETS OR SIMILAR FALSEWORK SHALL BE SPACED AS REQUIRED BY DESIGN, BUT SHALL BE LIMITED TO A MAXIMUM OF 4 FEET. THE DESIGN OF FALSEWORK SHALL BE THE RESPONSIBILITY OF THE CONTRACTOR.

21. THE CHARPY V-NOTCH TEST IS REQUIRED ONLY FOR THOSE MEMBERS DESIGNATED AS SUCH IN THE PLANS AS SPECIFIED IN SUBSECTION 714.01 OF THE STANDARD SPECIFICATIONS FOR CONSTRUCTION.

22. ANY BOLT HOLES IN THE WEBS OF THE FASCIA BEAMS NOT OTHERWISE FILLED SHALL BE FILLED WITH GALVANIZED BUTTON HEAD OR HEX HEAD BOLTS MEETING AASHTO M164, TYPE 1. THE BOLTS SHALL BE TIGHTENED IN ACCORDANCE WITH SUBSECTION 506.19 OF THE STANDARD SPECIFICATIONS FOR CONSTRUCTION.

23. ALL FIELD CONNECTIONS SHALL BE MADE USING 7 /8 INCH DIAMETER GALVANIZED BOLTS MEETING AASHTO M164, TYPE 1. HOLES SHALL BE 15 /16 INCH DIAMETER, UNLESS OTHERWISE NOTED. ANY CONNECTIONS NOT DESIGNATED SHALL BE DETAILED BY THE FABRICATOR AND SUBMITTED TO THE STRUCTURES ENGINEER FOR APPROVAL.

CONCRETE AND REINFORCING STEEL

24. DECK CONCRETE SHALL BE CONCRETE, CLASS A AND SHALL BE PAID FOR UNDER ITEM 501.22, "CONCRETE, CLASS A". NEW SUBSTRUCTURE AND APPROACH SLAB CONCRETE SHALL BE CONCRETE, CLASS B AND SHALL BE PAID FOR UNDER ITEM 501.25, "CONCRETE, CLASS B" UNLESS OTHERWISE NOTED. NOTE: HIGH PERFORMANCE CONCRETE WAS USED FOR ALL OF BR. #88 N.

25. CONCRETE FOR CURBS AND THOSE PORTIONS OF BACKWALLS INDICATED IN THE PLANS SHALL BE SILICA-FUME AND SHALL BE PAID FOR UNDER ITEM 501.60, "SILICA-FUME CONCRETE".

26. THE DECKS ARE TO BE POURED IN ACCORDANCE WITH THE PROPOSED DECK POUR SEQUENCE SHOWN IN THE PLANS.

27. WHEN CONSTRUCTING THE DECKS, THE CONCRETE SHALL BE POURED PARALLEL TO THE CENTERLINE OF BEARING SO AS TO LOAD THE GIRDERS EQUALLY.

28. A QUANTITY FOR ITEM 580.13, "REPAIR OF CONCRETE SUBSTRUCTURE SURFACE, CLASS 1" HAS BEEN INCLUDED IN THE PLANS. THIS ITEM SHALL BE USED AT THE DISCRETION OF THE RESIDENT ENGINEER AS PAYMENT FOR THE REPAIR OF ANY EXISTING SUBSTRUCTURE CONCRETE NOT OTHERWISE REPAIRED OR REPLACED AS SHOWN IN THE PLANS. DAMAGE BEYOND THE LIMITS DEFINED IN THE PLANS OR BY THE RESIDENT ENGINEER PRIOR TO THE BEGINNING OF WORK FOR EXISTING CONCRETE REMOVAL SHALL BE REPAIRED AT THE EXPENSE OF THE CONTRACTOR. SEE SUPPLEMENTAL SPECIFICATION 580 FOR ADDITIONAL INFORMATION.

29. EXISTING BEARING ANCHOR BOLTS SHALL BE CUT A MINIMUM OF 2" BELOW FINAL CONCRETE ELEVATION.

30. IN AREAS WHERE NEW CONCRETE WILL BE MATED TO EXISTING CONCRETE, THE EXISTING SURFACE SHALL BE PREPARED ACCORDING TO SUBSECTION 501.13(B) OF THE STANDARD SPECIFICATIONS FOR CONSTRUCTION.

31. WATER REPELLENT SHALL BE APPLIED TO ALL EXPOSED CONCRETE SURFACES EXCEPT THE UNDERSIDE OF DECKS BETWEEN DRIP NOTCHES.

32. ALL EXPOSED EDGES OF NEW CONCRETE SHALL BE CHAMFERED 1" X 1". JOINTS AND SCORE MARKS IN CONCRETE SHALL BE CONSTRUCTED AS SHOWN IN THE PLANS OR AS DIRECTED BY THE RESIDENT ENGINEER.

33. THE KEY IN CONCRETE CONSTRUCTION JOINTS SHALL BE MONOLITHIC AND CONTINUOUS FOR THE FULL LENGTH OF THE JOINT. ANY UPWARD KEY SHALL BE PLACED INTEGRALLY WITH THE CONCRETE BELOW THE JOINT.

34. SURFACES OF BRIDGE SEATS UNDER BEARING DEVICES SHALL BE LEVEL. OTHER BRIDGE SEAT AREAS SHALL BE SLOPED 1/4 INCH PER FOOT. ABUTMENT SEATS SHALL BE SLOPED FULL WIDTH TOWARD MIDSPAN. THE ENTIRE BRIDGE SEAT SURFACE SHALL BE SMOOTH STEEL TROWEL FINISHED.

35. DRILLING AND GROUTING OF REINFORCING STEEL SHALL BE IN ACCORDANCE WITH SECTION 507 OF THE STANDARD SPECIFICATIONS FOR CONSTRUCTION. ANY HOLES DRILLED IN CONCRETE FOR GROUTING REINFORCING STEEL SHALL BE A MINIMUM OF 6 INCHES FROM THE EDGE OF EXISTING CONCRETE. PAYMENT FOR DRILLING AND GROUTING SHALL BE MADE UNDER ITEM 507.16, "DRILLING AND GROUTING DOWELS".

36. ALL NEW SUPERSTRUCTURE, SUBSTRUCTURE, AND APPROACH SLAB REINFORCING STEEL SHALL BE EPOXY COATED AND PAID FOR UNDER ITEM 507.17, "EPOXY COATED REINFORCING STEEL". WHEN EPOXY COATED REINFORCING STEEL IS TO BE CUT, THE UNCOATED ENDS SHALL BE REPAIRED WITH MATERIALS AND PROCEDURES APPROVED BY THE COATING MANUFACTURER. FLAME CUTTING OF EPOXY COATED REINFORCING STEEL WILL NOT BE PERMITTED.

37. MINIMUM COVER FOR REINFORCING STEEL SHALL BE AS INDICATED IN THE PLANS.

38. REINFORCING STEEL PLACEMENT TOLERANCES SHALL BE:
    SPACING: +/- 1"
    CLEARANCE: +/- 1/4"

STATE OF VERMONT
AGENCY OF TRANSPORTATION

Town Of FAIRFAX-FAIRFIELD-ST. ALBANS	Bridge No. 88 N&S
Highway No. I-89	Log Sta.
	Surv. Sta.

I-89 OVER ST. ALBANS SOUTH STATE HIGHWAY (EXIT 19)

88 N & S PROJECT NOTES

Designed By M. LOZIER	Drawn By G. ROY
Checked By M. LOZIER Date 2/00	Bridge Design Supervisor R. R. WHITCOMB Date 2/00
PROJECT FAIRFAX-FAIRFIELD-ST. ALBANS	PROJECT NO. IM 089-3(27)
I.G.C. Info. 96a056\Structures\sa056pn2.dgn	sa056pn2J
Bridge Sheet No. BR403	Sheet 155 of 370

PLOTTED 21-SEP-2000

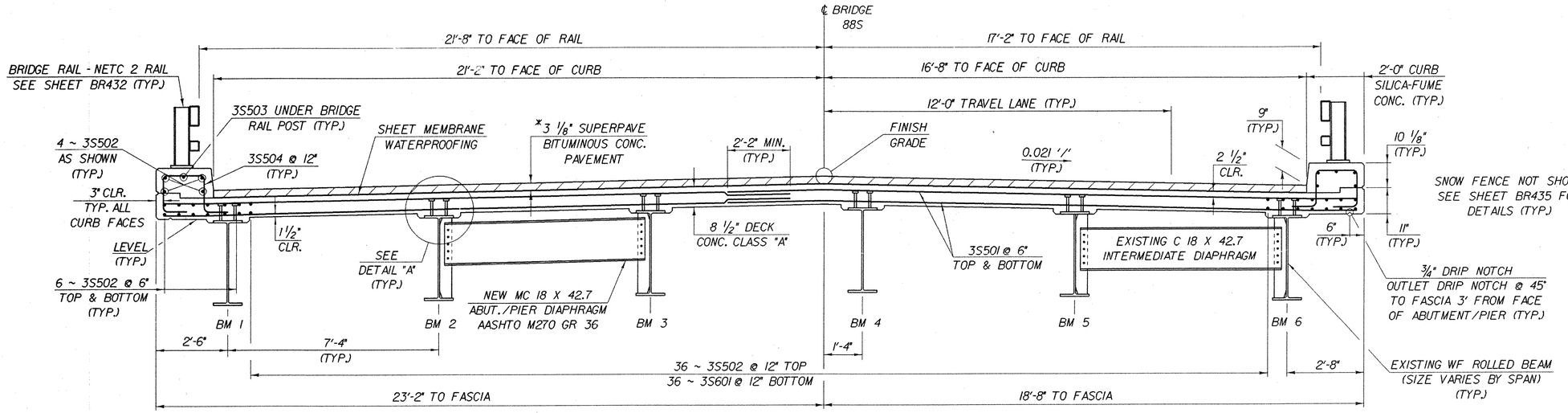

* 1ST LIFT: 1 3/8" TYPE IVS
2ND LIFT: 1 3/4" TYPE IIIS

BRIDGE 88S TYPICAL SECTION

SCALE: 1/2" = 1'-0"

NOTE: SEE DECK REINFORCING PLAN SHEETS FOR ADDITIONAL REINFORCING OVER PIERS

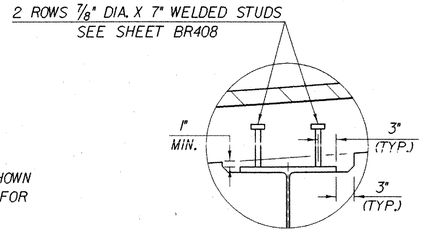

DETAIL "A"

SCALE: 1" = 1'-0"

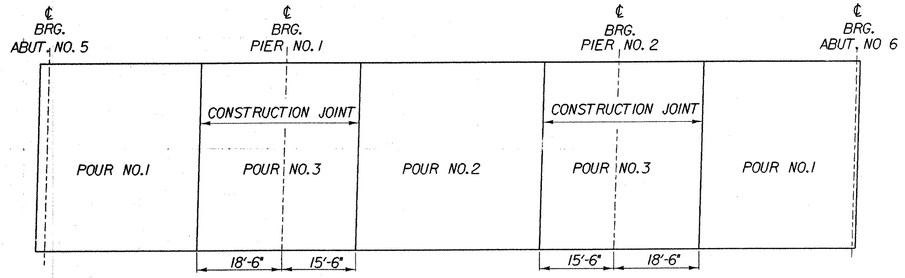

DECK POUR SEQUENCE

NTS

NOTES

1. SUBJECT TO APPROVAL BY THE ENGINEER, POURS NO.1 AND NO.2 MAY BE PERFORMED THE SAME DAY PROVIDED THAT THE MAXIMUM TIME SPAN OF THE POUR IS EIGHT HOURS. THE INDICATED POURING SEQUENCE SHALL BE FOLLOWED AND A RETARDING ADMIXTURE USED SO THAT THE DECK CONCRETE WILL NOT SET UP UNTIL ALL OF THE POUR HAS BEEN MADE. PAYMENT FOR THE RETARDING ADMIXTURE SHALL BE SUBSIDIARY TO ITEM 501.22, "CONCRETE, CLASS A".
2. ALL INDIVIDUAL DECK POURS SHALL START FROM THE LOW END (RELATIVE TO GRADE).
3. THERE SHALL BE A MINIMUM DELAY PERIOD OF 96 HOURS BETWEEN ADJACENT DECK POURS. TRANSVERSE BRIDGE SLAB CONSTRUCTION JOINTS AS SHOWN ON SHEET BR431 SHALL BE USED BETWEEN ADJACENT POURS.
4. ANY POURING SEQUENCE OTHER THAN THAT INDICATED ON THIS SHEET SHALL BE SUBMITTED IN WRITING TO THE STRUCTURES ENGINEER FOR APPROVAL.

IMPORTANT NOTE: BRIDGE FINISHED GRADES ARE CENTERLINE GRADES.

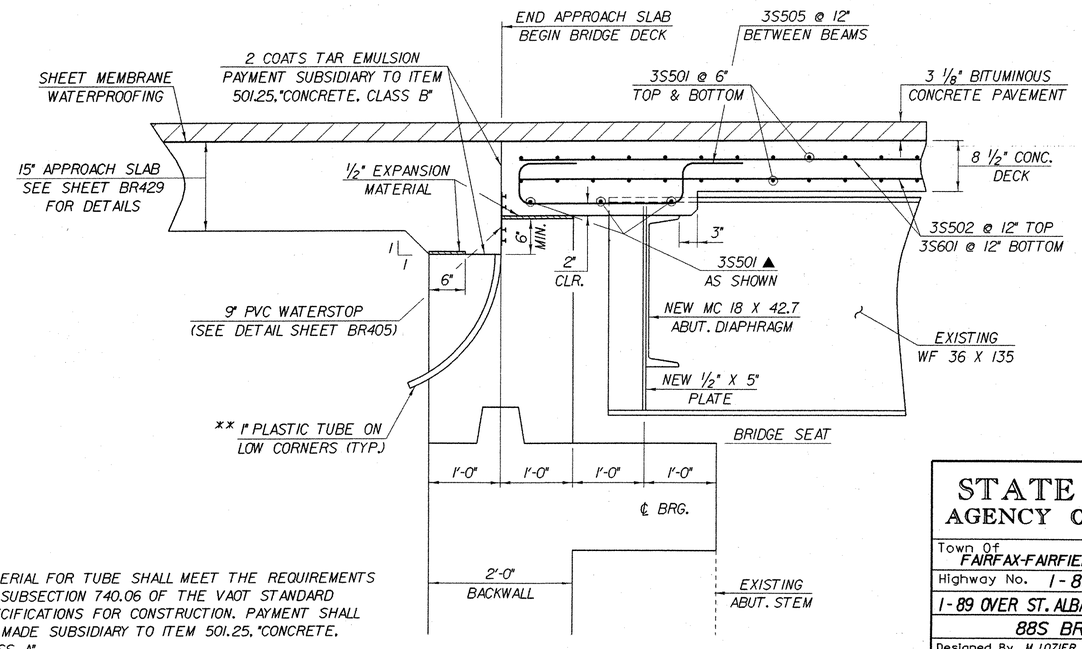

** MATERIAL FOR TUBE SHALL MEET THE REQUIREMENTS OF SUBSECTION 740.06 OF THE VAOT STANDARD SPECIFICATIONS FOR CONSTRUCTION. PAYMENT SHALL BE MADE SUBSIDIARY TO ITEM 501.25, "CONCRETE, CLASS A".

END DETAIL @ ABUTMENT NO. 5

(NORMAL TO ℄ BEARING)
SCALE: 1" = 1'-0"

STATE OF VERMONT
AGENCY OF TRANSPORTATION

Town Of FAIRFAX-FAIRFIELD-ST. ALBANS	Bridge No. 88S
Highway No. I-89	Log Sta.
	Surv. Sta.

I-89 OVER ST. ALBANS SOUTH STATE HIGHWAY (EXIT 19)

88S BRIDGE DECK DETAILS

Designed By M. LOZIER	Drawn By K. CHISHOLM
Checked By M. LOZIER Date 2/00	Bridge Design Supervisor R. R. WHITCOMB Date 2/00
PROJECT FAIRFAX-FAIRFIELD-ST. ALBANS	PROJECT NO. I M 089 - 3 (27)
I.G.C. Info. 96a056\Structures\sa056sp3.dgn	sa056bt1J
Bridge Sheet No. BR404	Sheet 156 of 370

PLOTTED 21-SEP-2000

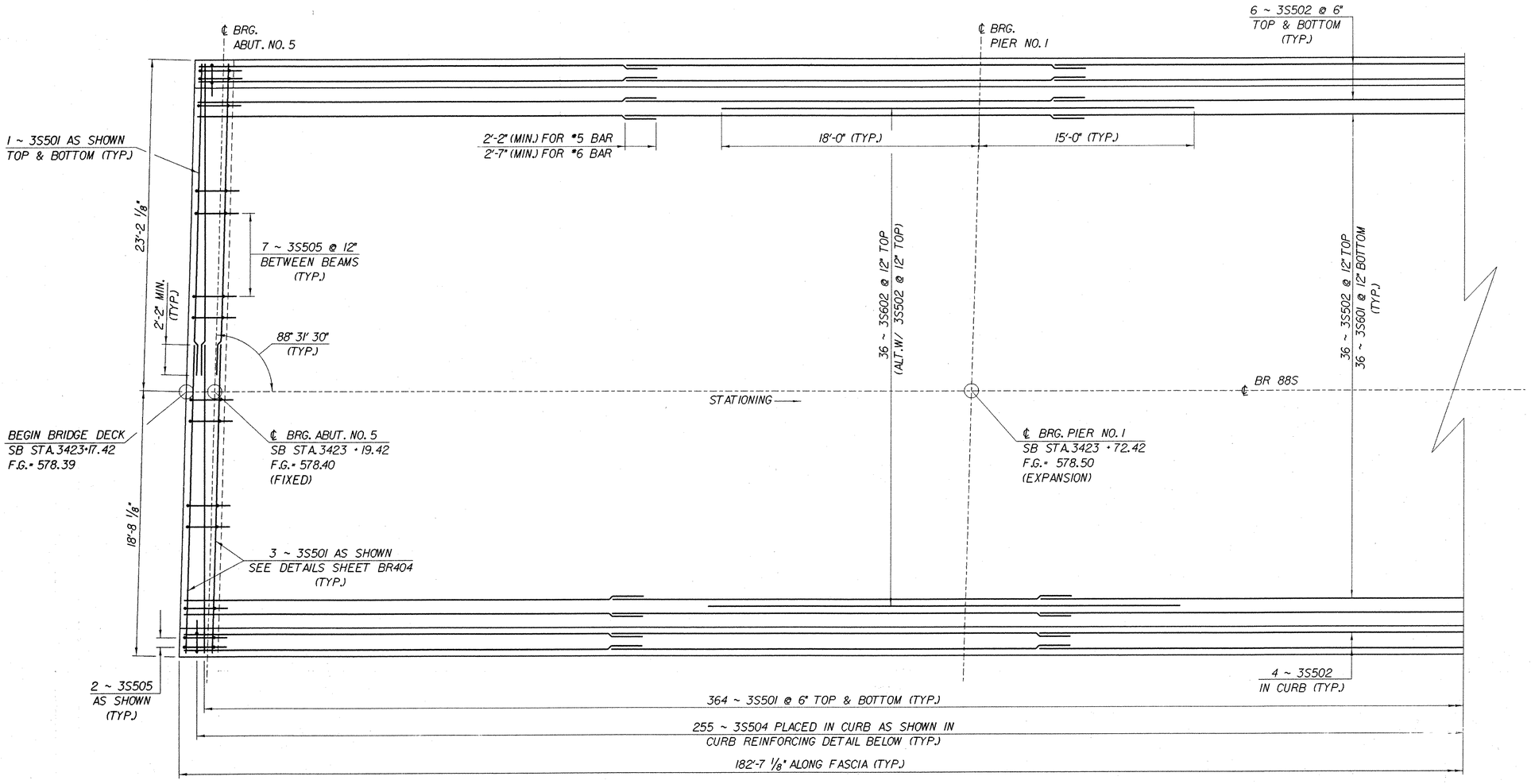

BRIDGE 88S DECK REINFORCING PLAN
SPAN ONE

SCALE: 1/4" = 1'-0"

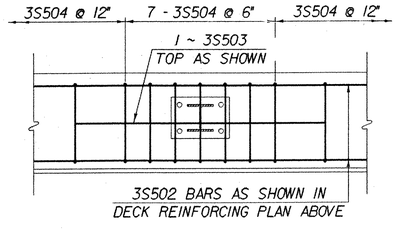

CURB REINFORCING DETAIL

NTS

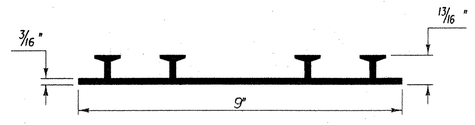

P.V.C. WATERSTOP FOR CONSTRUCTION JOINTS

THE COST FOR P.V.C. WATERSTOP SHALL BE INCLUDED IN THE UNIT PRICE BID FOR ITEM 501.25, "CONCRETE, CLASS B". OTHER CONFIGURATIONS MAY BE USED UPON APPROVAL OF THE STRUCTURES ENGINEER.

IMPORTANT NOTE: BRIDGE FINISHED GRADES ARE CENTERLINE GRADES.

STATE OF VERMONT
AGENCY OF TRANSPORTATION

Town Of FAIRFAX-FAIRFIELD-ST. ALBANS	Bridge No. 88S
Highway No. I-89	Log Sta. / Surv. Sta.
I-89 OVER ST. ALBANS SOUTH STATE HIGHWAY (EXIT 19)	
88S DECK REINFORCING PLAN SPAN NO. 1	
Designed By M. LOZIER	Drawn By K. CHISHOLM
Checked By M. LOZIER Date 2/00	Bridge Design Supervisor R. R. WHITCOMB Date 2/00
PROJECT FAIRFAX-FAIRFIELD-ST. ALBANS	PROJECT NO. IM 089 - 3 (27)
I.G.C. Info. 96a056\Structures\sa056sp3.dgn	sa056rp1J
Bridge Sheet No. BR405	Sheet 157 of 370

PLOTTED 21-SEP-2000

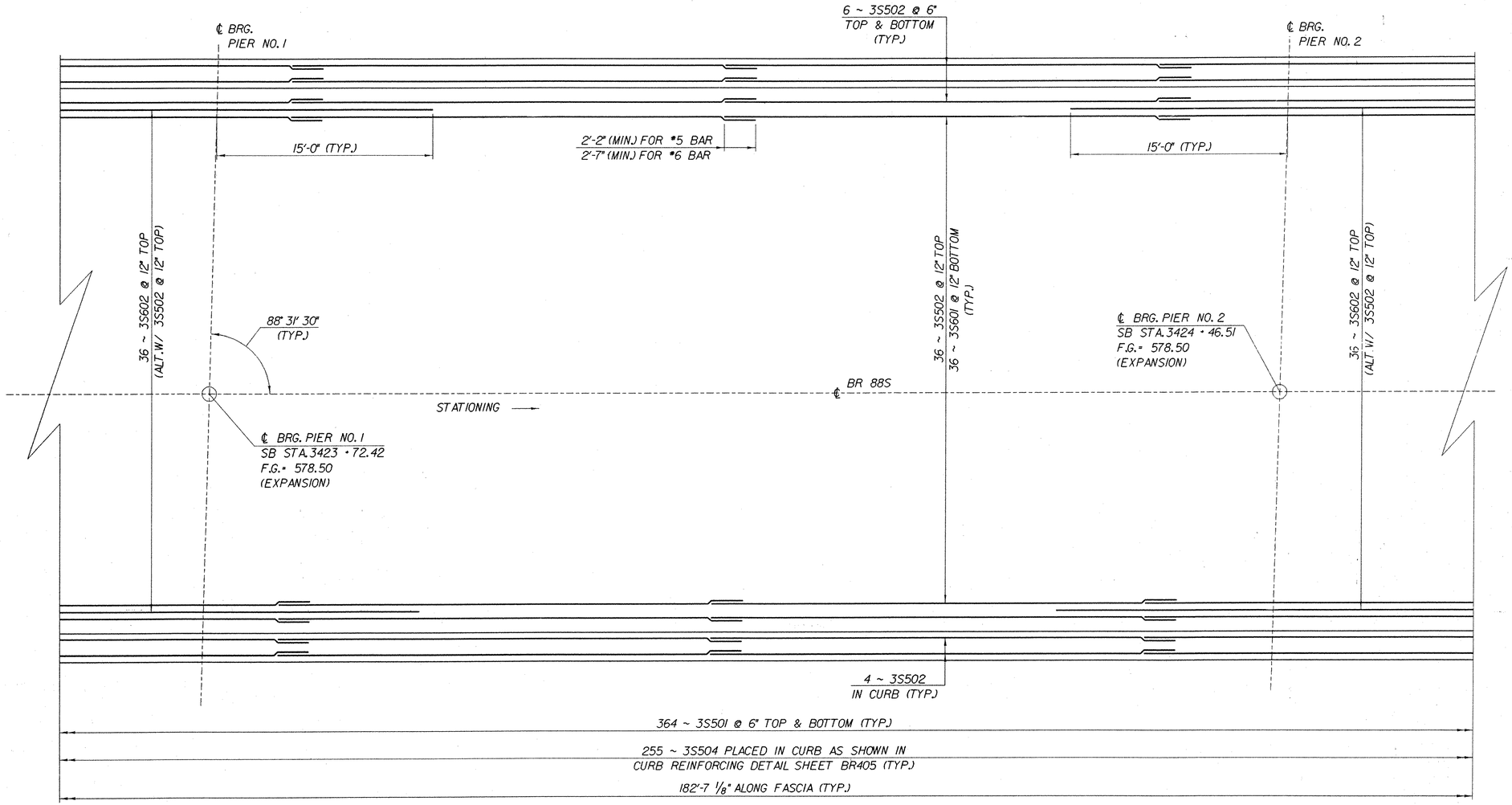

BRIDGE 88S DECK REINFORCING PLAN
SPAN TWO

SCALE: 1/4" = 1'-0"

IMPORTANT NOTE: BRIDGE FINISHED GRADES ARE CENTERLINE GRADES.

STATE OF VERMONT
AGENCY OF TRANSPORTATION

Town Of FAIRFAX-FAIRFIELD-ST. ALBANS	Bridge No. 88S
Highway No. I-89	Log Sta. / Surv. Sta.
I-89 OVER ST. ALBANS SOUTH STATE HIGHWAY (EXIT 19)	
88S DECK REINFORCING PLAN SPAN NO. 2	
Designed By M. LOZIER	Drawn By K. CHISHOLM
Checked By M. LOZIER Date 2/00	Bridge Design Supervisor R. R. WHITCOMB Date 2/00
PROJECT FAIRFAX-FAIRFIELD-ST. ALBANS	PROJECT NO. IM 089-3 (27)
I.G.C. info. 96a056\Structures\sa056sp3.dgn	sa056rp2J
Bridge Sheet No. BR406	Sheet 158 of 370

PLOTTED 21-SEP-2000

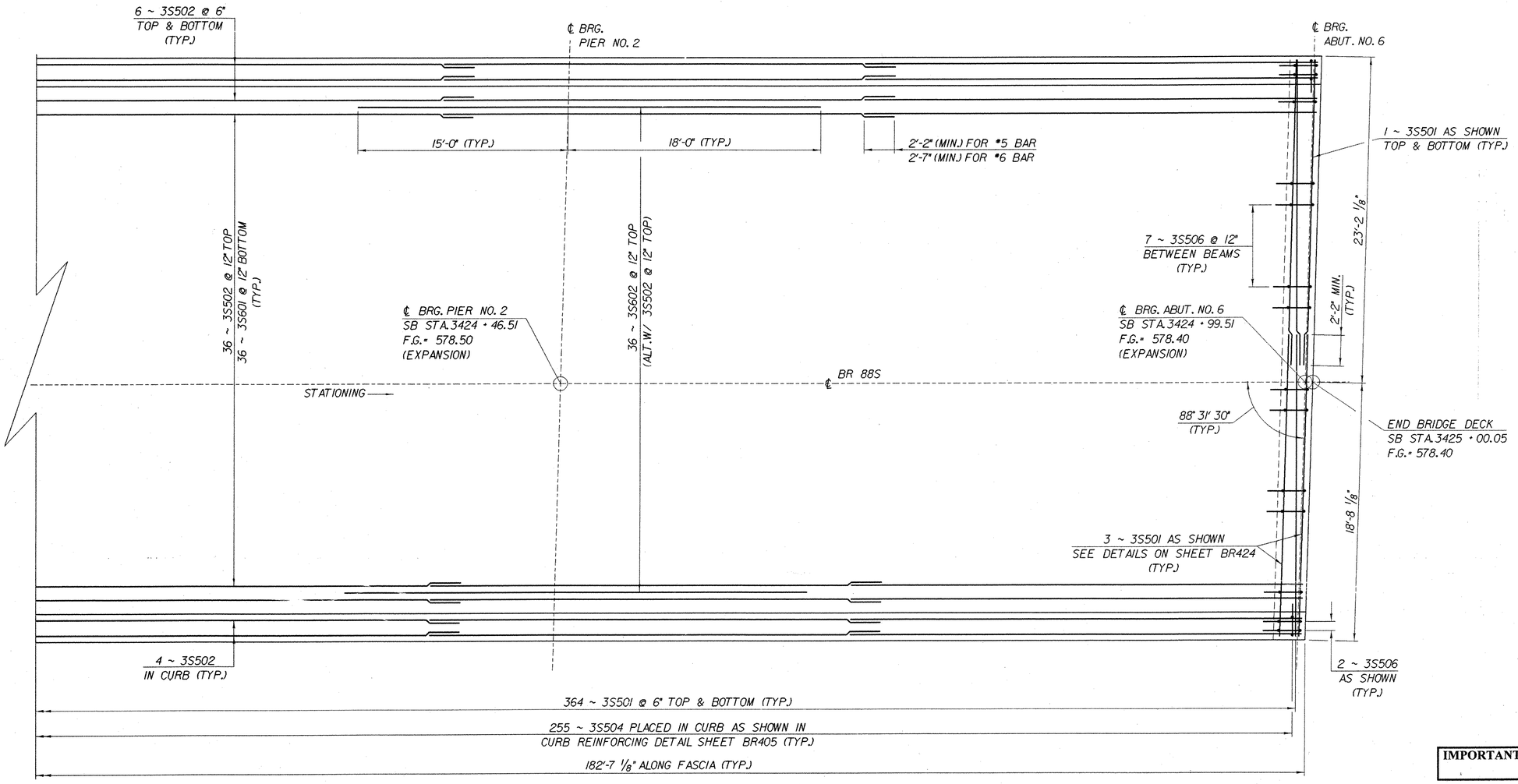

BRIDGE 88S DECK REINFORCING PLAN
SPAN THREE

SCALE: 1/4" = 1'-0"

IMPORTANT NOTE: BRIDGE FINISHED GRADES ARE CENTERLINE GRADES.

STATE OF VERMONT
AGENCY OF TRANSPORTATION

Town Of FAIRFAX-FAIRFIELD- ST. ALBANS	Bridge No. 88S
Highway No. I-89	Log Sta. / Surv. Sta.
I-89 OVER ST. ALBANS SOUTH STATE HIGHWAY (EXIT 19)	
88S DECK REINFORCING PLAN SPAN NO. 3	
Designed By M. LOZIER	Drawn By K. CHISHOLM
Checked By M. LOZIER Date 2/00	Bridge Design Supervisor R. R. WHITCOMB Date 2/00
PROJECT FAIRFAX-FAIRFIELD-ST. ALBANS	PROJECT NO. IM 089 - 3 (27)
I.G.C. Info. 96a056\Structures\sa056sp3.dgn	sa056rp3J
Bridge Sheet No. BR407	Sheet 159 of 370

PLOTTED 21-SEP-2000

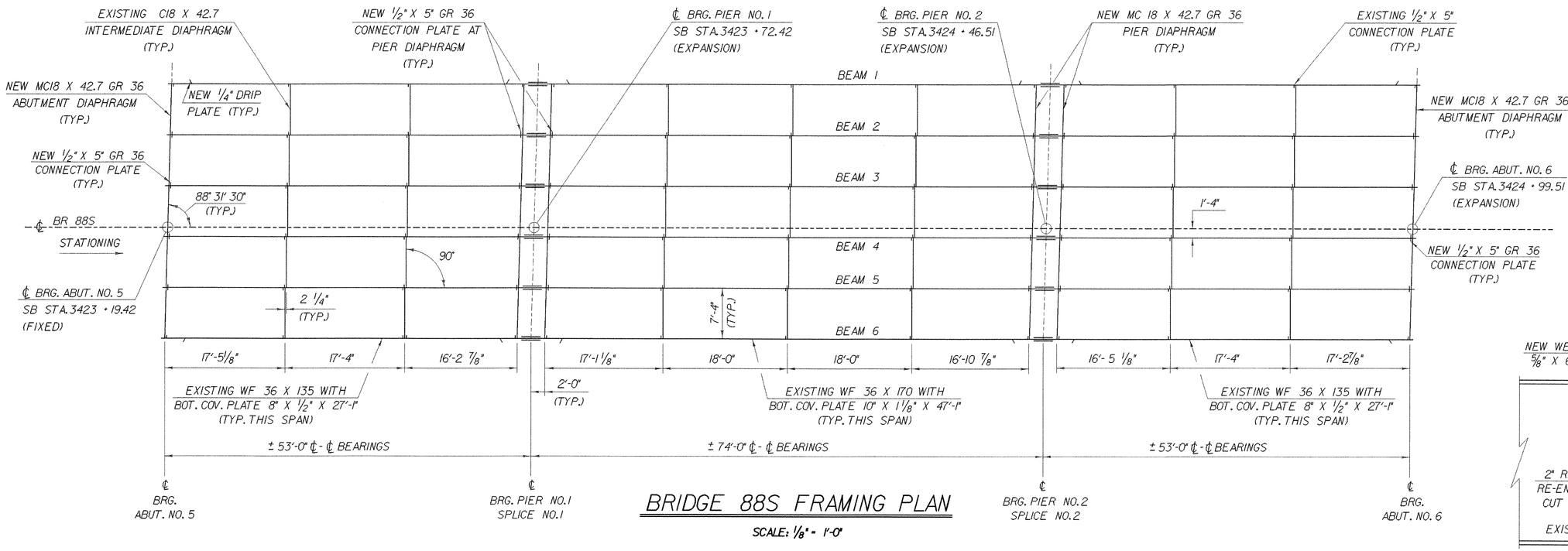

BRIDGE 88S FRAMING PLAN

SCALE: 1/8" = 1'-0"

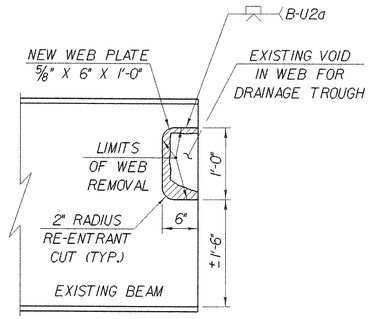

BEAM END @ PIERS REPAIR DETAIL

SCALE: 1" = 1'-0"

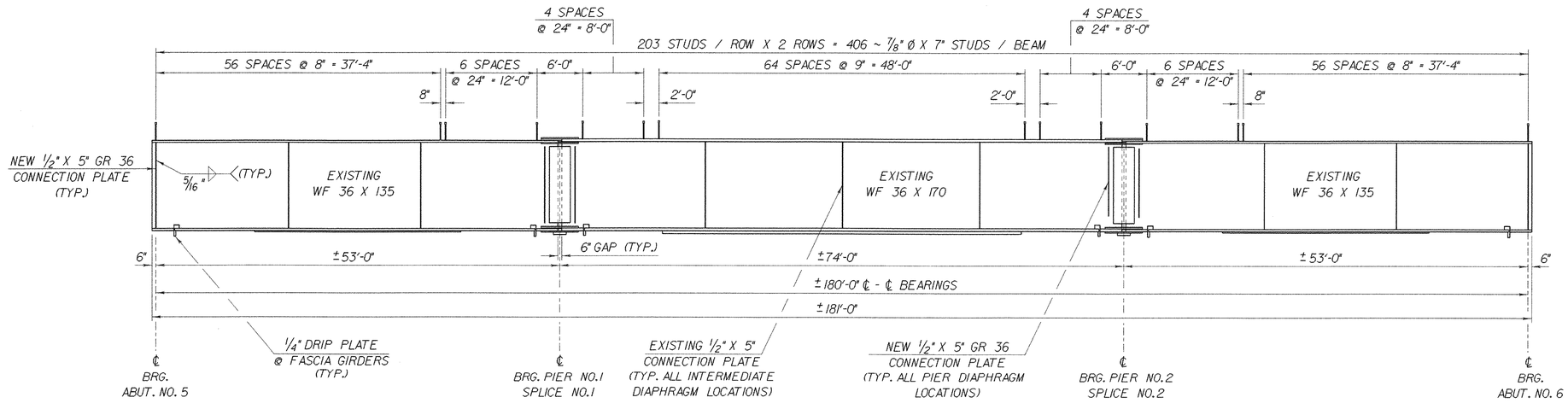

BRIDGE 88S TYPICAL BEAM ELEVATION

HORZ: SCALE: 1/8" = 1'-0"
VERT: SCALE: 1/2" = 1'-0"

SEE PROJECT NOTE 15 ON SHEET BR403 FOR PLUG WELDING OF EXISTING HOLES (NOT SHOWN).

NOTES:

1. THE CUTTING AND WELDING OF THE EXISTING BEAMS SHALL BE IN ACCORDANCE WITH THE APPLICABLE PROVISIONS OF SECTION 506 OF THE VAOT STANDARD SPECIFICATIONS FOR CONSTRUCTION. WELDING PROCEDURES SHALL BE SUBMITTED TO THE STRUCTURES ENGINEER FOR APPROVAL
2. NEW WEB STEEL SHALL BE AASHTO M270, GRADE 36.
3. PAYMENT FOR ALL MATERIAL, LABOR, AND INCIDENTALS NECESSARY FOR PERFORMING THESE REPAIRS SHALL BE MADE SUBSIDIARY TO ITEM 506.60, "STRUCTURAL STEEL".

STATE OF VERMONT
AGENCY OF TRANSPORTATION

Town Of FAIRFAX-FAIRFIELD- ST. ALBANS	Bridge No. 88S
Highway No. I - 89	Log Sta. / Surv. Sta.

I-89 OVER ST. ALBANS SOUTH STATE HIGHWAY (EXIT 19)

88S FRAMING PLAN DETAILS

Designed By M. LOZIER	Drawn By K. CHISHOLM
Checked By M. LOZIER Date 2/00	Bridge Design Supervisor R. R. WHITCOMB Date 2/00
PROJECT FAIRFAX-FAIRFIELD-ST. ALBANS	PROJECT NO. IM 089 - 3 (27)
I.G.C. Info. 96a056\Structures\sa056fr2.dgn	sa056gd31
Bridge Sheet No. BR408	Sheet 160 of 370

PLOTTED 21-SEP-2000

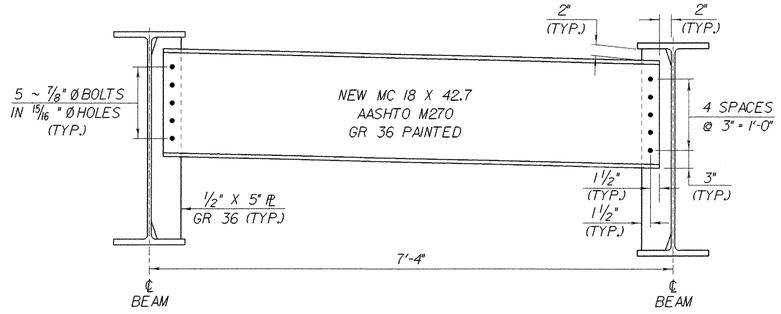

ABUTMENT DIAPHRAGM

SCALE: 1" = 1'-0"

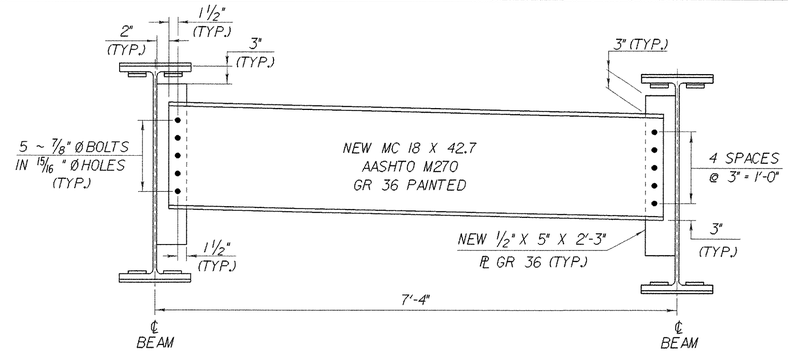

PIER DIAPHRAGM

SCALE: 1" = 1'-0"

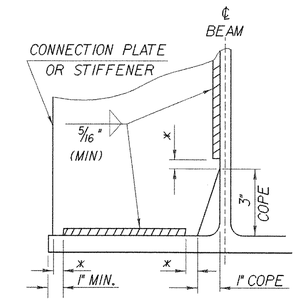

* NO WELD FOR 1/4" MIN. 1/2" MAX.
(EXCEPT MUST MAINTAIN 1" MINIMUM FROM EDGE OF FLANGE)

WELD TERMINATION AND COPING DETAILS FOR STEEL MEMBERS

NTS

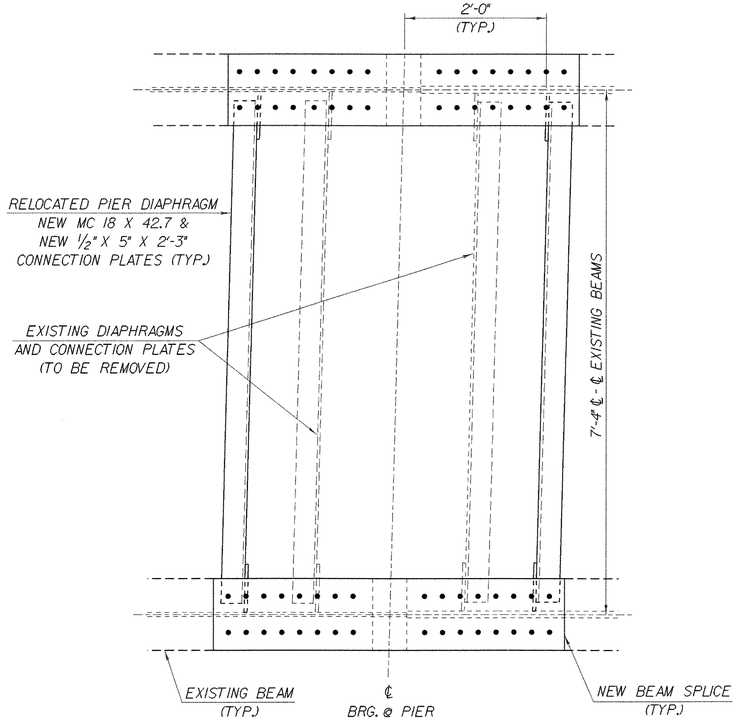

PIER DIAPHRAGM PLAN

SCALE: 1" = 1'-0"

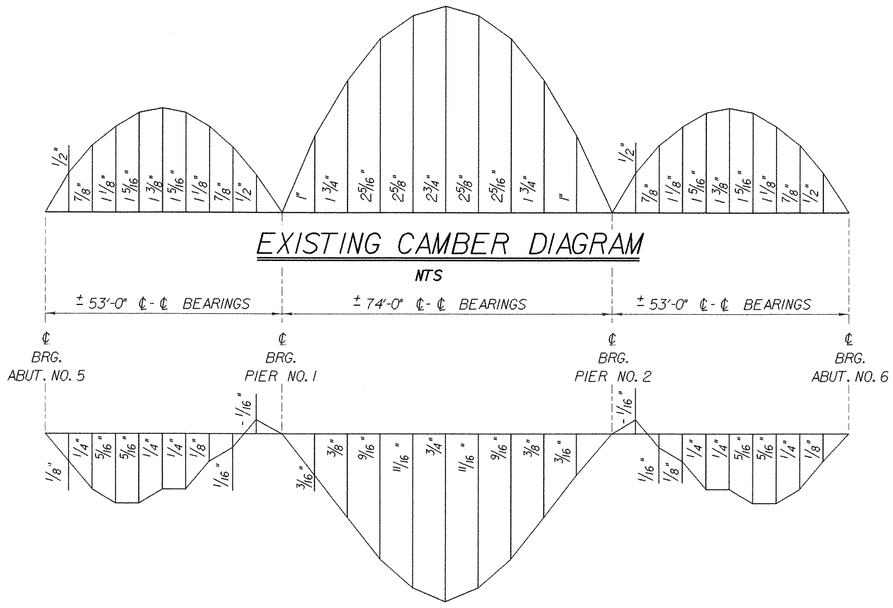

DEAD LOAD DEFLECTION DIAGRAM

NTS

NOTE:
EXISTING CAMBER AND DEFLECTION MEASUREMENTS ARE GIVEN IN INCHES @ TENTH POINTS.

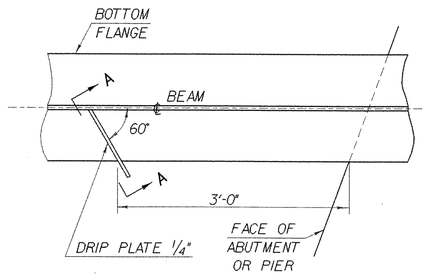

PLAN DRIP PLATE

NTS

NOTE: DRIP PLATES SHALL BE PLACED ON OUTSIDE EDGE OF FASCIA BEAMS ON THE HIGH SIDE OF ALL PIERS AND ABUTMENTS OR AS INDICATED ON PROJECT PLANS.

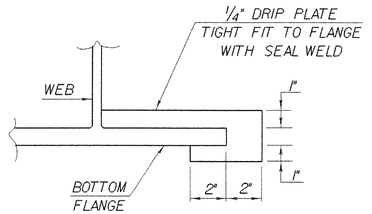

SECTION A - A

NTS

STATE OF VERMONT
AGENCY OF TRANSPORTATION

Town Of FAIRFAX-FAIRFIELD- ST. ALBANS	Bridge No. 88S
Highway No. I - 89	Log Sta. / Surv. Sta.
I-89 OVER ST. ALBANS SOUTH STATE HIGHWAY (EXIT 19)	
88S STRUCTURAL STEEL CONNECTION DETAILS	
Designed By M. LOZIER	Drawn By K. CHISHOLM
Checked By M. LOZIER Date 2/00	Bridge Design Supervisor R. R. WHITCOMB Date 2/00
PROJECT FAIRFAX-FAIRFIELD-ST. ALBANS	PROJECT NO. I M 089 - 3 (27)
I.G.C. Info. 96a056\Structures\sa056fr2.dgn	sa056gd11
Bridge Sheet No. BR409	Sheet 161 of 370

PLOTTED 21-SEP-2000

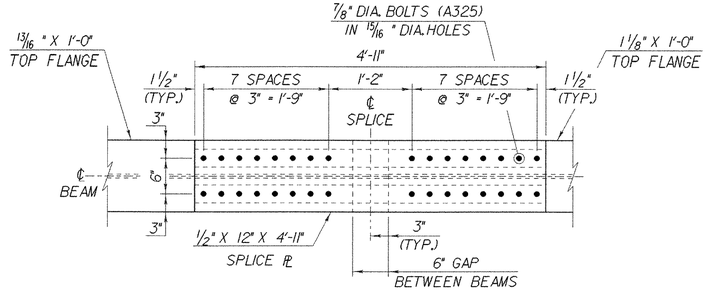

PLAN TOP FLANGE @ PIER NO. 1

(PIER NO. 2 REVERSE IMAGE)
SCALE: 1" = 1'-0"

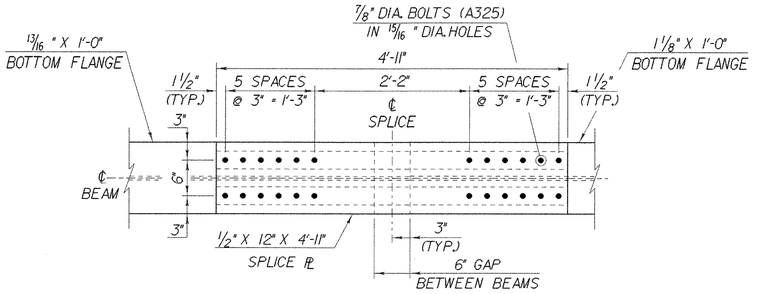

PLAN BOTTOM FLANGE @ PIER NO. 1

(PIER NO. 2 REVERSE IMAGE)
SCALE: 1" = 1'-0"

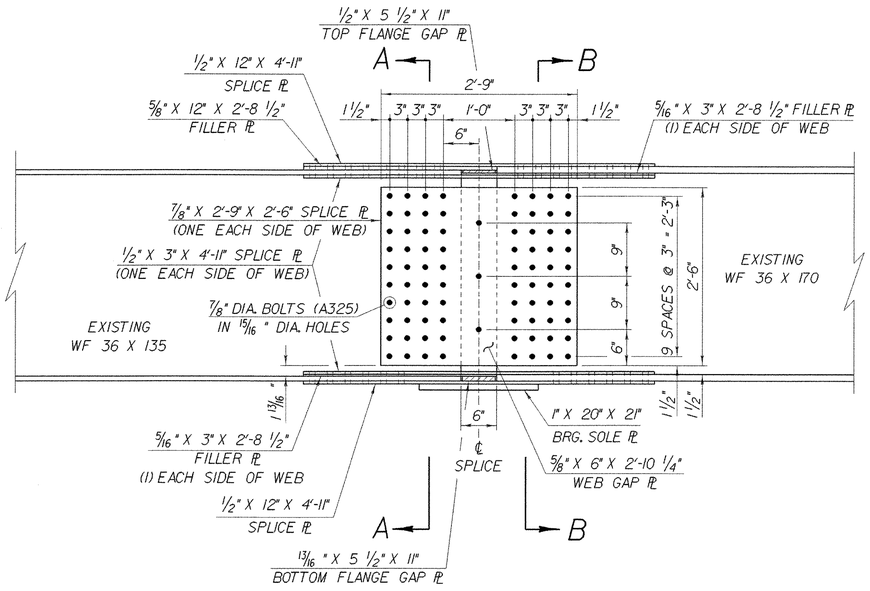

BEAM ELEVATION @ PIER NO. 1

SCALE: 1" = 1'-0"

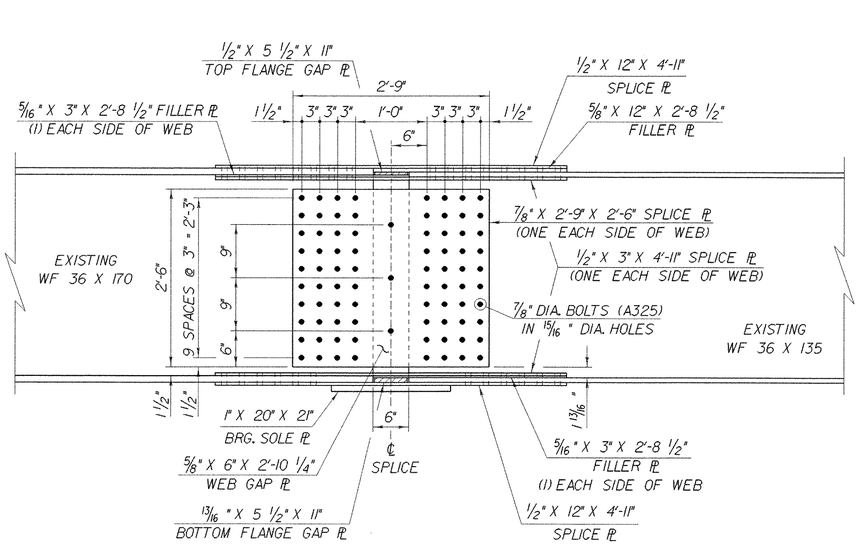

BEAM ELEVATION @ PIER NO. 2

SCALE: 1" = 1'-0"

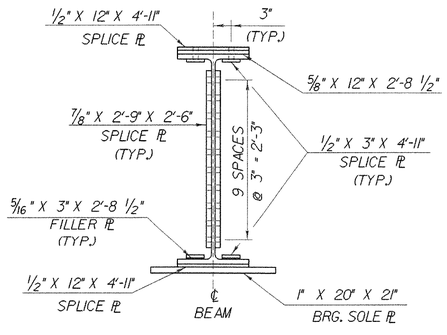

SECTION A-A

SCALE: 1" = 1'-0"

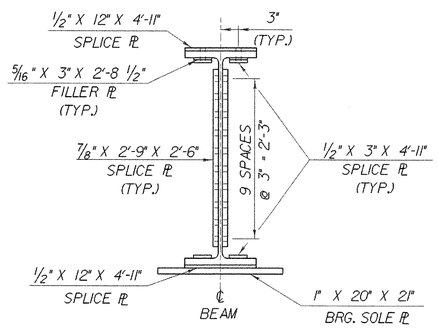

SECTION B-B

SCALE: 1" = 1'-0"

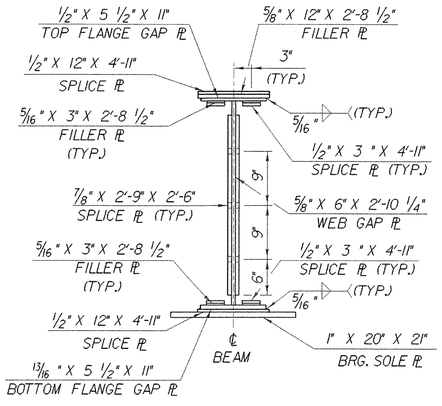

SECTION @ ℄ SPLICE

SCALE: 1" = 1'-0"

NOTES:

1. ALL NEW STEEL FOR SPLICE ASSEMBLY SHALL CONFORM TO AASHTO M270 GR 50 PAINTED.
2. ALL NEW STEEL FOR SPLICE PLATES, EXCLUDING FILLER PLATES, SHALL BE CHARPY V-NOTCH TESTED.

STATE OF VERMONT
AGENCY OF TRANSPORTATION

Town Of FAIRFAX-FAIRFIELD- ST. ALBANS	Bridge No. 88S
Highway No. I - 89	Log Sta. / Surv. Sta.
I-89 OVER ST. ALBANS SOUTH STATE HIGHWAY (EXIT 19)	
88S STRUCTURAL STEEL SPLICE DETAILS	
Designed By M. LOZIER	Drawn By K. CHISHOLM
Checked By M. LOZIER Date 2/00	Bridge Design Supervisor R. R. WHITCOMB Date 2/00
PROJECT FAIRFAX-FAIRFIELD-ST. ALBANS	PROJECT NO. I M 089 - 3 (27)
I.G.C. Info. 96a056\Structures\sa056fr2.dgn	sa056gd2J
Bridge Sheet No. BR410	Sheet 162 of 370

PLOTTED 21-SEP-2000

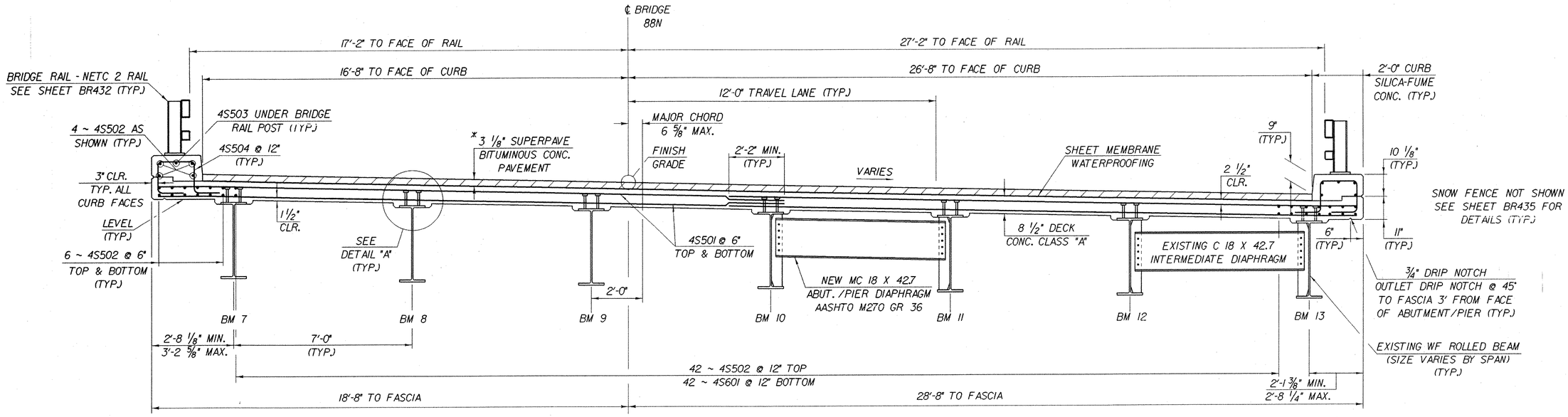

* 1ST LIFT: 1 3/8" TYPE IVS
2ND LIFT: 1 3/4" TYPE IIIS

BRIDGE 88N TYPICAL SECTION

SCALE: 1/2" = 1'-0

NOTE: SEE DECK REINFORCING PLAN SHEETS FOR ADDITIONAL REINFORCING OVER PIERS

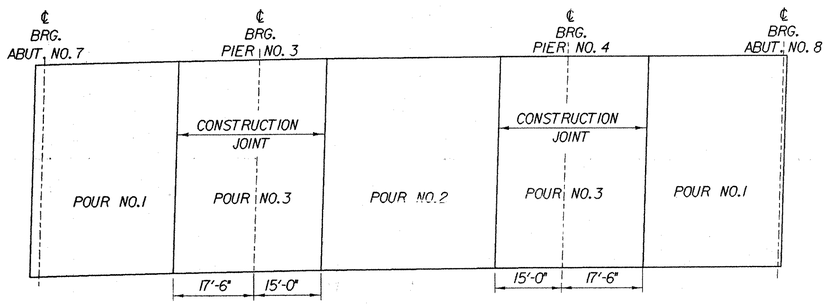

DECK POUR SEQUENCE

NTS

NOTES

1. SUBJECT TO APPROVAL BY THE ENGINEER, POURS NO.1 AND NO.2 MAY BE PERFORMED THE SAME DAY PROVIDED THAT THE MAXIMUM TIME SPAN OF THE POUR IS EIGHT HOURS. THE INDICATED POURING SEQUENCE SHALL BE FOLLOWED AND A RETARDING ADMIXTURE USED SO THAT THE DECK CONCRETE WILL NOT SET UP UNTIL ALL OF THE POUR HAS BEEN MADE. PAYMENT FOR THE RETARDING ADMIXTURE SHALL BE SUBSIDIARY TO ITEM 501.22, "CONCRETE, CLASS A".
2. ALL INDIVIDUAL DECK POURS SHALL START FROM THE LOW END (RELATIVE TO GRADE).
3. THERE SHALL BE A MINIMUM DELAY PERIOD OF 96 HOURS BETWEEN ADJACENT DECK POURS. TRANSVERSE BRIDGE SLAB CONSTRUCTION JOINTS AS SHOWN ON SHEET BR431 SHALL BE USED BETWEEN ADJACENT POURS.
4. ANY POURING SEQUENCE OTHER THAN THAT INDICATED ON THIS SHEET SHALL BE SUBMITTED IN WRITING TO THE STRUCTURES ENGINEER FOR APPROVAL.

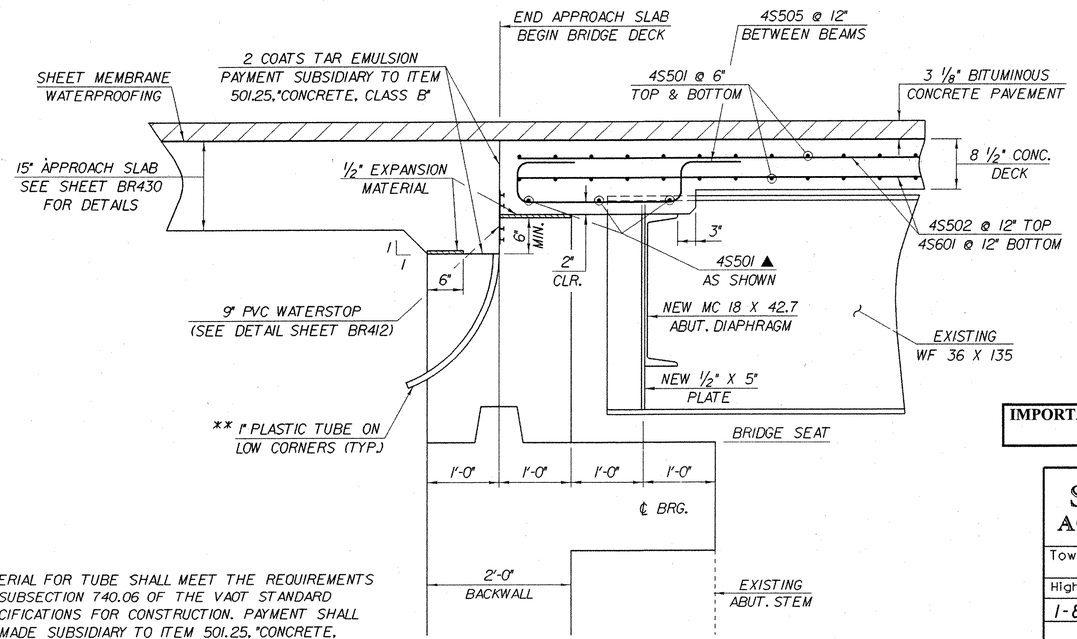

** MATERIAL FOR TUBE SHALL MEET THE REQUIREMENTS OF SUBSECTION 740.06 OF THE VAOT STANDARD SPECIFICATIONS FOR CONSTRUCTION. PAYMENT SHALL BE MADE SUBSIDIARY TO ITEM 501.25, "CONCRETE, CLASS A".

END DETAIL @ ABUTMENT NO. 7

(NORMAL TO ℄ BEARING)
SCALE: 1" = 1'-0"

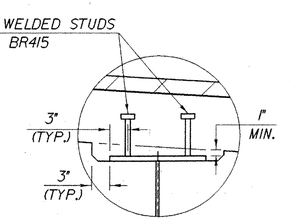

DETAIL "A"

SCALE: 1" = 1'-0"

IMPORTANT NOTE: BRIDGE FINISHED GRADES ARE CENTERLINE GRADES.

STATE OF VERMONT
AGENCY OF TRANSPORTATION

Town Of FAIRFAX-FAIRFIELD-ST. ALBANS	Bridge No. 88N
Highway No. I-89	Log Sta. / Surv. Sta.

I-89 OVER ST. ALBANS SOUTH STATE HIGHWAY (EXIT 19)

88N BRIDGE DECK DETAILS

Designed By J. ARMSTRONG	Drawn By K. CHISHOLM
Checked By M. LOZIER Date 2/00	Bridge Design Supervisor R.R. WHITCOMB Date 2/00
PROJECT FAIRFAX-FAIRFIELD-ST. ALBANS	PROJECT NO. I M 089 - 3 (27)
I.G.C. Info. 96a056\Structures\sa056sp4.dgn	sa056b21
Bridge Sheet No. BR411	Sheet 163 of 370

PLOTTED 21-SEP-2000

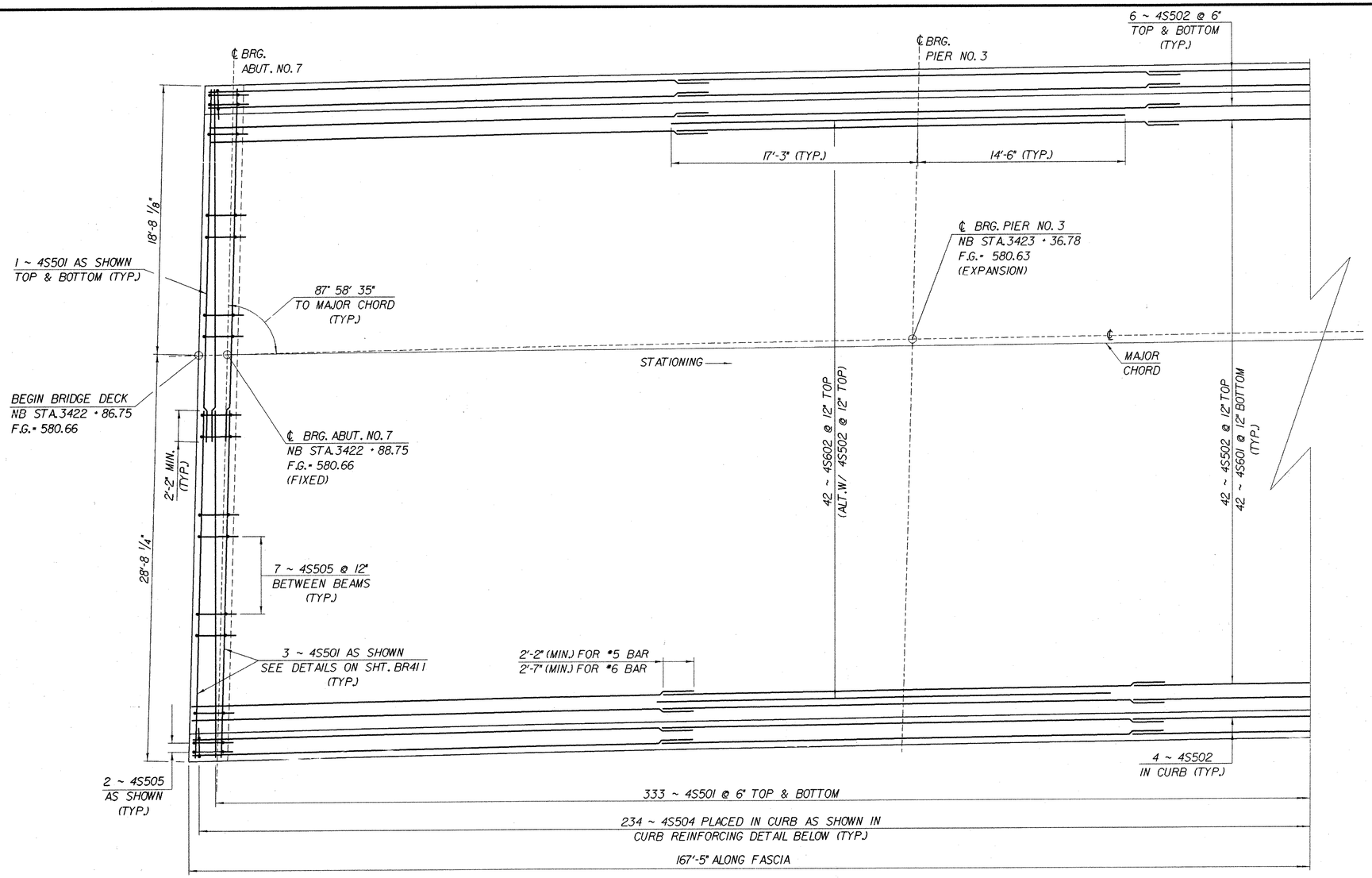

DECK REINFORCING PLAN
SPAN ONE

SCALE: 1/4" = 1'-0"

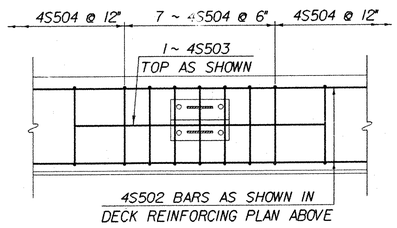

CURB REINFORCING DETAIL

NTS

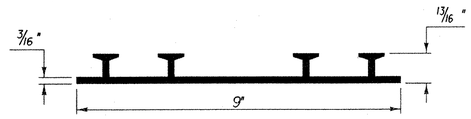

P.V.C. WATERSTOP FOR CONSTRUCTION JOINTS

THE COST FOR P.V.C. WATERSTOP SHALL BE INCLUDED IN THE UNIT PRICE BID FOR ITEM 501.25, "CONCRETE, CLASS B". OTHER CONFIGURATIONS MAY BE USED UPON APPROVAL OF THE STRUCTURES ENGINEER.

IMPORTANT NOTE: BRIDGE FINISHED GRADES ARE CENTERLINE GRADES.

STATE OF VERMONT
AGENCY OF TRANSPORTATION

Town Of FAIRFAX-FAIRFIELD-ST. ALBANS	Bridge No. 88N
Highway No. I-89	Log Sta.
	Surv. Sta.

I-89 OVER ST. ALBANS SOUTH STATE HIGHWAY (EXIT 19)

88N DECK REINFORCING PLAN SPAN NO. 1

Designed By J. ARMSTRONG	Drawn By K. CHISHOLM
Checked By M. LOZIER Date 2/00	Bridge Design Supervisor R.R. WHITCOMB Date 2/00
PROJECT FAIRFAX-FAIRFIELD-ST. ALBANS	PROJECT NO. IM 089 - 3 (27)
I.G.C. Info. 96a056\Structures\sa056sp4.dgn	sa056rp41
Bridge Sheet No. BR412	Sheet 164 of 370

PLOTTED 21-SEP-2000

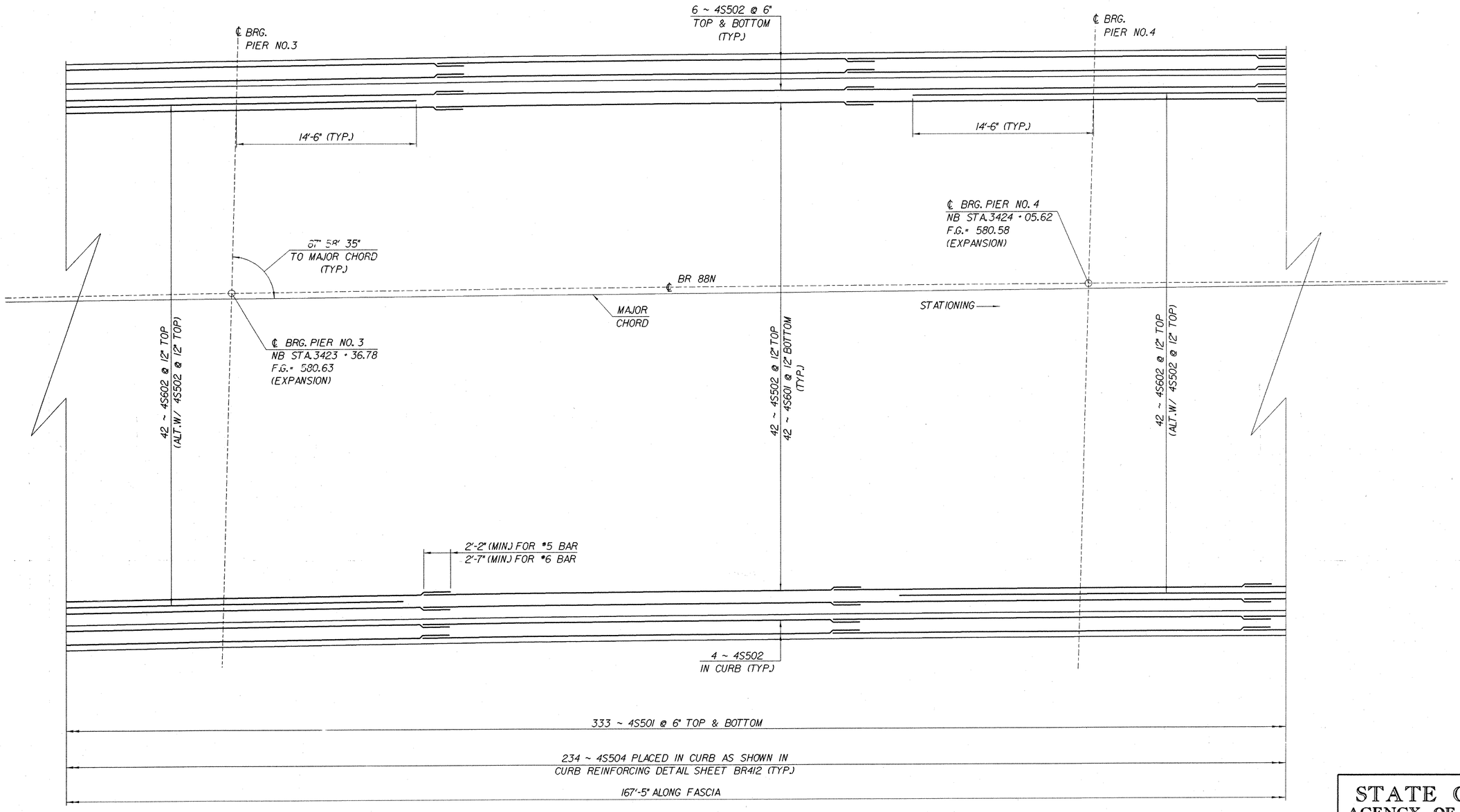

DECK REINFORCING PLAN
SPAN TWO

SCALE: 1/4" = 1'-0"

IMPORTANT NOTE: BRIDGE FINISHED GRADES ARE CENTERLINE GRADES.

STATE OF VERMONT
AGENCY OF TRANSPORTATION

Town Of FAIRFAX-FAIRFIELD- ST. ALBANS	Bridge No. 88N
Highway No. I-89	Log Sta. / Surv. Sta.
I-89 OVER ST. ALBANS SOUTH STATE HIGHWAY (EXIT 19)	
88N DECK REINFORCING PLAN SPAN NO.2	
Designed By J. ARMSTRONG	Drawn By K. CHISHOLM
Checked By M. LOZIER Date 2/00	Bridge Design Supervisor R.R. WHITCOMB Date 2/00
PROJECT FAIRFAX-FAIRFIELD-ST. ALBANS	PROJECT NO. I M 089 - 3 (27)
I.G.C. Info. 96a056\Structures\sa056sp4.dgn	sa056rp5J
Bridge Sheet No. BR413	Sheet 165 of 370

PLOTTED 21-SEP-2000

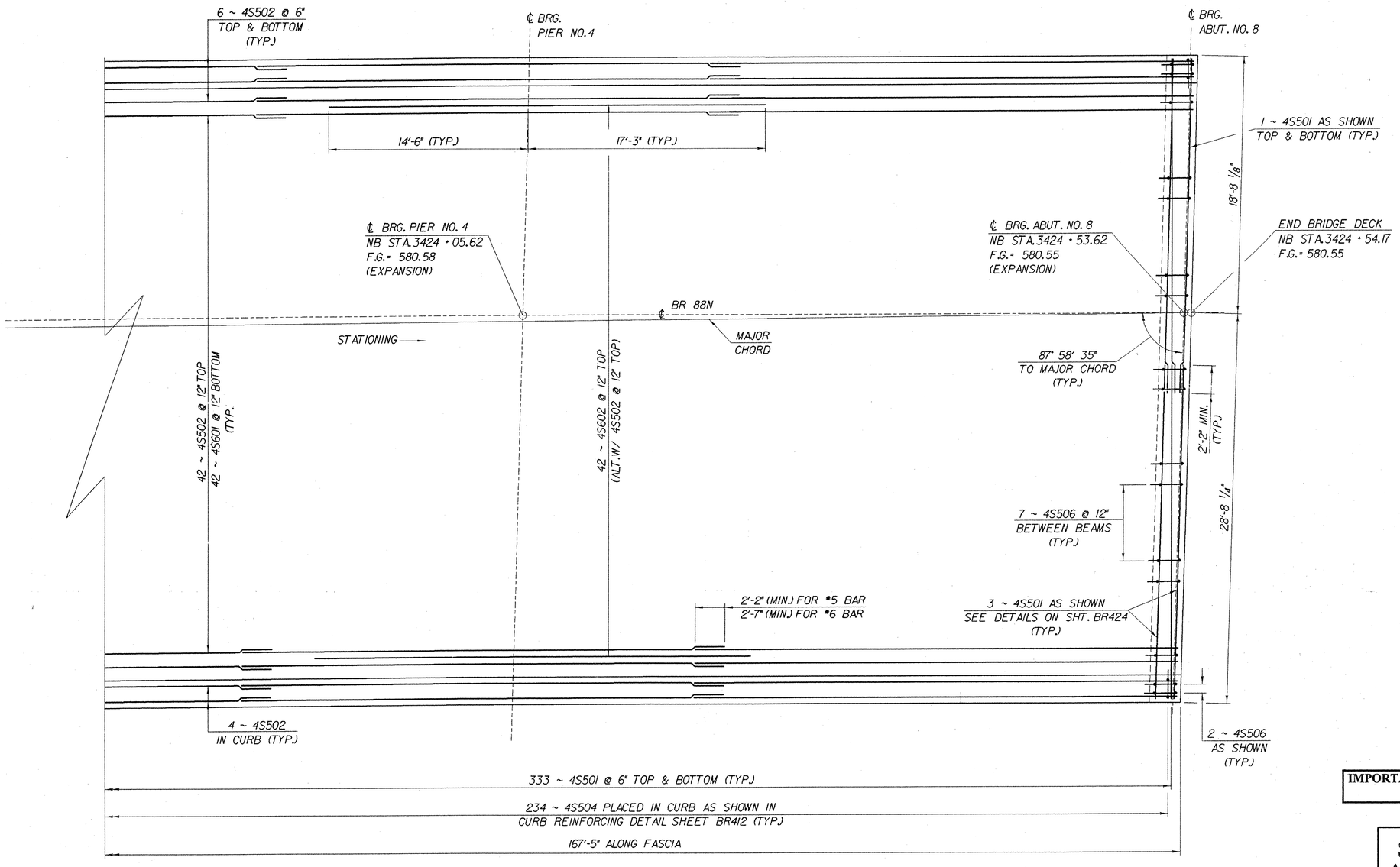

DECK REINFORCING PLAN
SPAN THREE

SCALE: 1/4" = 1'-0"

IMPORTANT NOTE: BRIDGE FINISHED GRADES ARE CENTERLINE GRADES.

STATE OF VERMONT
AGENCY OF TRANSPORTATION

Town Of FAIRFAX-FAIRFIELD-ST. ALBANS	Bridge No. 88N
Highway No. I-89	Log Sta.
	Surv. Sta.
I-89 OVER ST. ALBANS SOUTH STATE HIGHWAY (EXIT 19)	
88N DECK REINFORCING PLAN SPAN NO.3	
Designed By J. ARMSTRONG	Drawn By K. CHISHOLM
Checked By M. LOZIER Date 2/00	Bridge Design Supervisor R.R. WHITCOMB Date 2/00
PROJECT FAIRFAX-FAIRFIELD-ST. ALBANS	PROJECT NO. IM 089 - 3 (27)
I.G.C. Info. 96a056\Structures\sa056sp4.dgn	sa056rp6J
Bridge Sheet No. BR414	Sheet 166 of 370

PLOTTED 21-SEP-2000

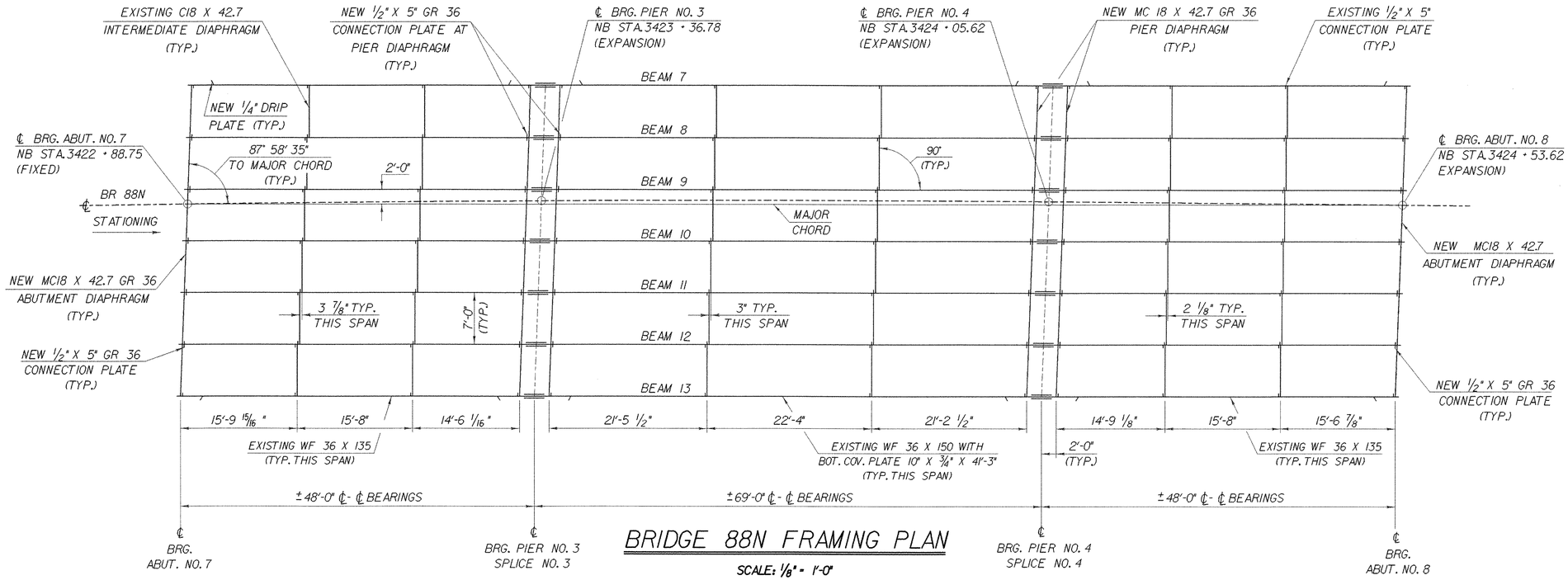

BRIDGE 88N FRAMING PLAN

SCALE: 1/8" = 1'-0"

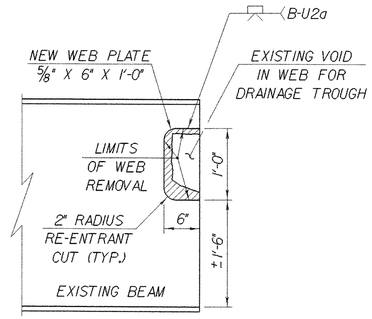

BEAM END @ PIERS REPAIR DETAIL

SCALE: 1" = 1'-0"

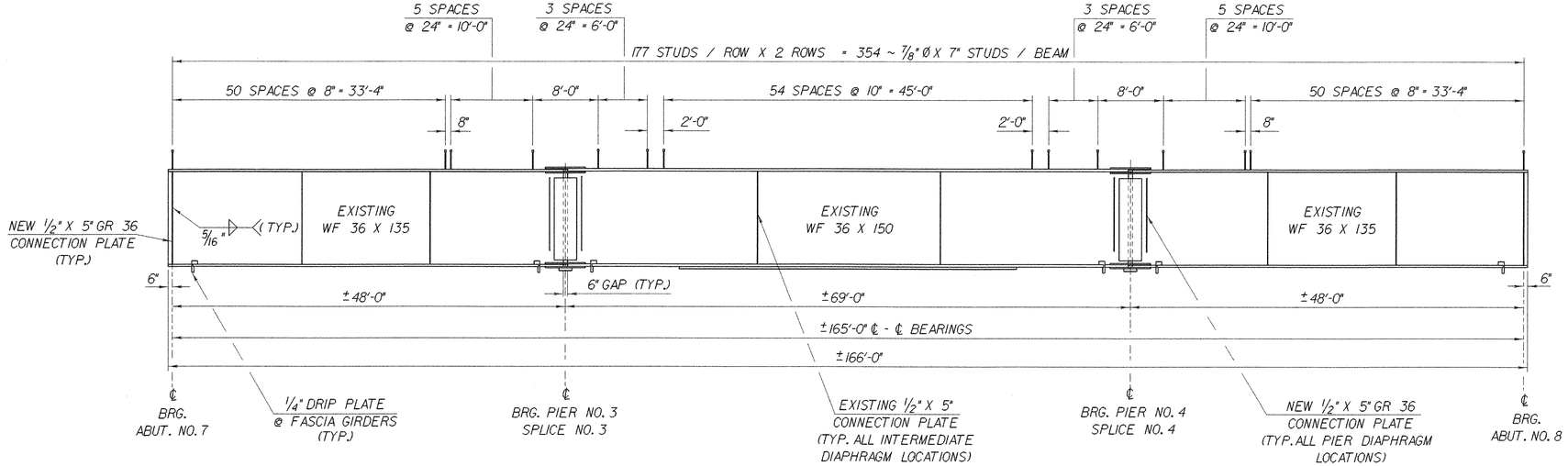

BRIDGE 88N TYPICAL BEAM ELEVATION

HORZ: SCALE: 1/8" = 1'-0"
VERT: SCALE: 1/2" = 1'-0"

SEE PROJECT NOTE 15 ON SHEET BR403 FOR PLUG WELDING OF EXISTING HOLES (NOT SHOWN).

NOTES:

1. THE CUTTING AND WELDING OF THE EXISTING BEAMS SHALL BE IN ACCORDANCE WITH THE APPLICABLE PROVISIONS OF SECTION 506 OF THE VAOT STANDARD SPECIFICATIONS FOR CONSTRUCTION. WELDING PROCEDURES SHALL BE SUBMITTED TO THE STRUCTURES ENGINEER FOR APPROVAL.
2. NEW WEB STEEL SHALL BE AASHTO M270, GRADE 36.
3. PAYMENT FOR ALL MATERIAL, LABOR, AND INCIDENTALS NECESSARY FOR PERFORMING THESE REPAIRS SHALL BE MADE SUBSIDIARY TO ITEM 506.60, "STRUCTURAL STEEL".

STATE OF VERMONT
AGENCY OF TRANSPORTATION

Town Of FAIRFAX-FAIRFIELD-ST. ALBANS	Bridge No. 88N
Highway No. I-89	Log Sta. / Surv. Sta.
I-89 OVER ST. ALBANS SOUTH STATE HIGHWAY (EXIT 19)	
88N FRAMING PLAN DETAILS	
Designed By M. LOZIER	Drawn By K. CHISHOLM
Checked By M. LOZIER Date 2/00	Bridge Design Supervisor R.R. WHITCOMB Date 2/00
PROJECT FAIRFAX-FAIRFIELD-ST. ALBANS	PROJECT NO. I M 089 - 3 (27)
I.G.C. Info. 96a056\Structures\sa056fr3.dgn	sa056gd6J
Bridge Sheet No. BR415	Sheet 167 of 370

PLOTTED 21-SEP-2000

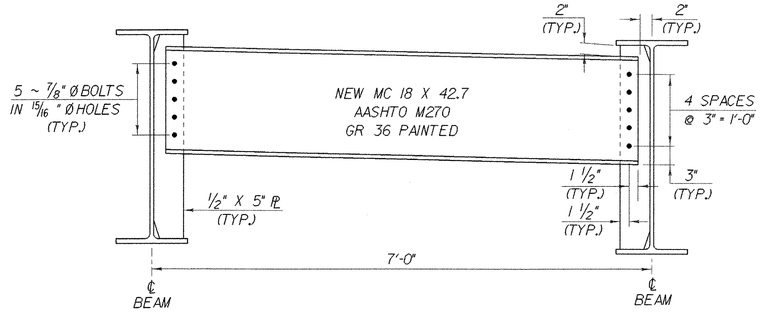

ABUTMENT DIAPHRAGM

SCALE 1" = 1'-0"

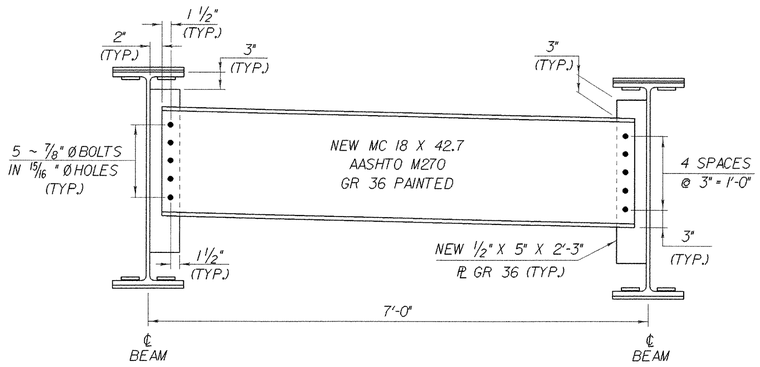

PIER DIAPHRAGM

SCALE 1" = 1'-0"

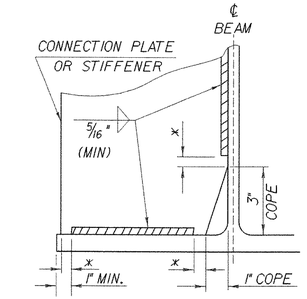

* NO WELD FOR 1/4" MIN. 1/2" MAX.
(EXCEPT MUST MAINTAIN 1" MINIMUM FROM EDGE OF FLANGE)

WELD TERMINATION AND COPING DETAILS FOR STEEL MEMBERS

NTS

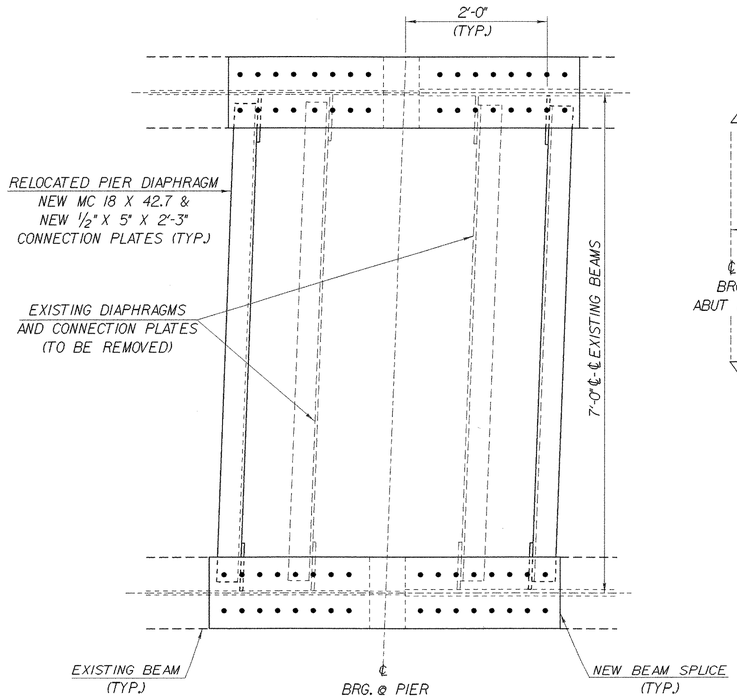

PIER DIAPHRAGM PLAN

SCALE 1" = 1'-0"

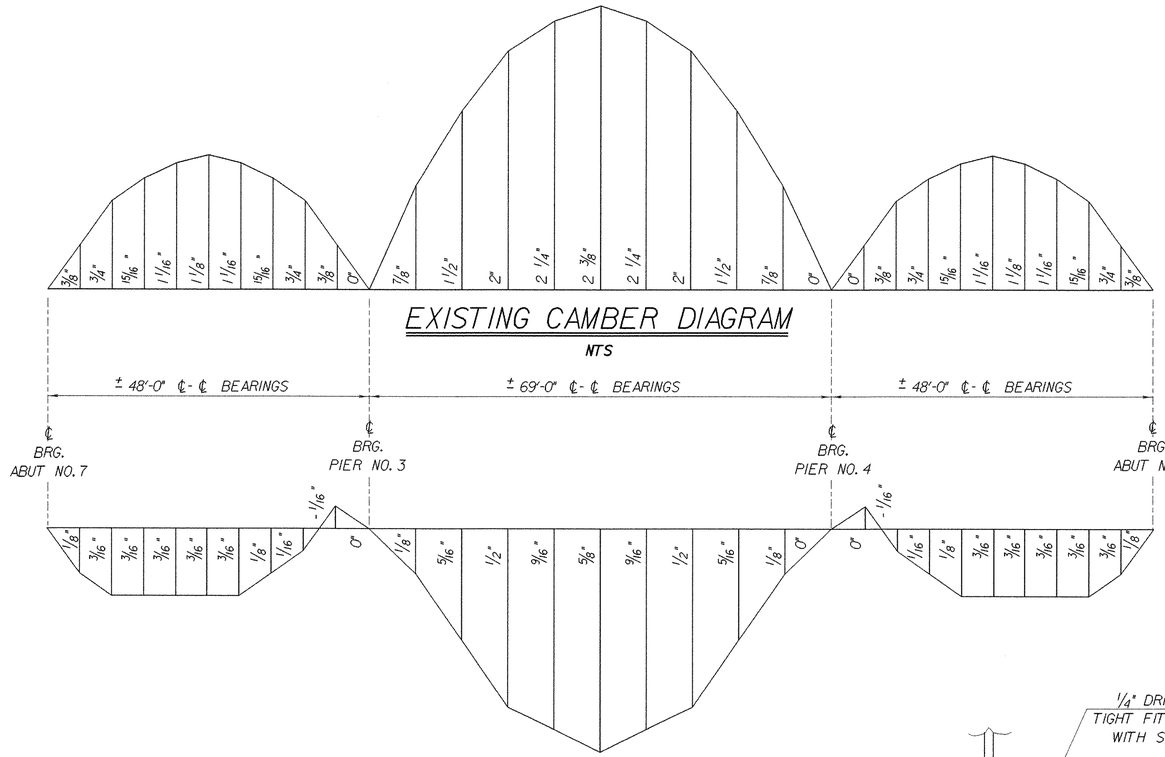

EXISTING CAMBER DIAGRAM

NTS

DEAD LOAD DEFLECTION DIAGRAM

NTS

NOTE:
EXISTING CAMBER AND DEFLECTION MEASUREMENTS ARE GIVEN IN INCHES @ TENTH POINTS.

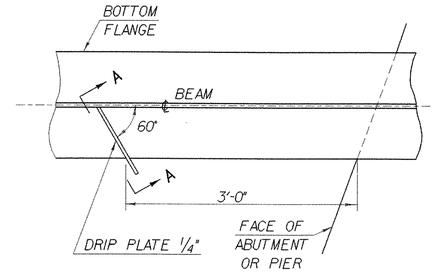

PLAN DRIP PLATE

NTS

NOTE: DRIP PLATES SHALL BE PLACED ON OUTSIDE EDGE OF FASCIA BEAMS ON THE HIGH SIDE OF ALL PIERS AND ABUTMENTS OR AS INDICATED ON PROJECT PLANS.

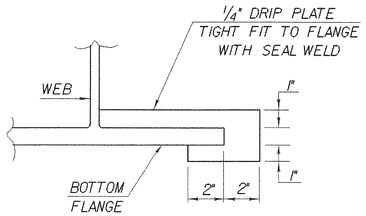

SECTION A - A

NTS

STATE OF VERMONT
AGENCY OF TRANSPORTATION

Town Of FAIRFAX-FAIRFIELD-ST. ALBANS	Bridge No. 88N
Highway No. I-89	Log Sta.
	Surv. Sta.

I-89 OVER ST. ALBANS SOUTH STATE HIGHWAY (EXIT 19)

88N STRUCTURAL STEEL CONNECTION DETAILS

Designed By J. ARMSTRONG	Drawn By K. CHISHOLM
Checked By M. LOZIER Date 2/00	Bridge Design Supervisor R.R. WHITCOMB Date 2/00
PROJECT FAIRFAX-FAIRFIELD-ST. ALBANS	PROJECT NO. IM 089 - 3 (27)
L.G.C. Info. 96a056\Structures\sa056fr3.dgn	sa056gd5J
Bridge Sheet No. BR416	Sheet 168 of 370

PLOTTED 21-SEP-2000

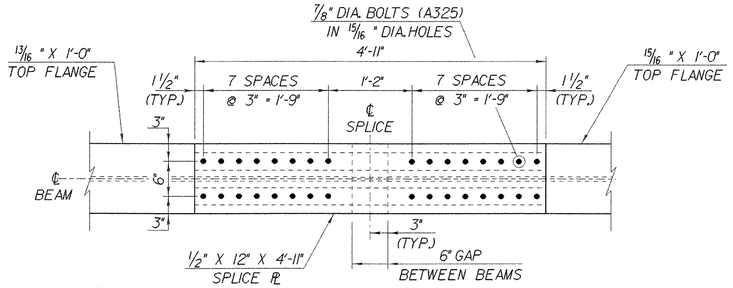

PLAN TOP FLANGE @ PIER NO. 3

(PIER NO. 4 REVERSE IMAGE)
SCALE: 1" = 1'-0"

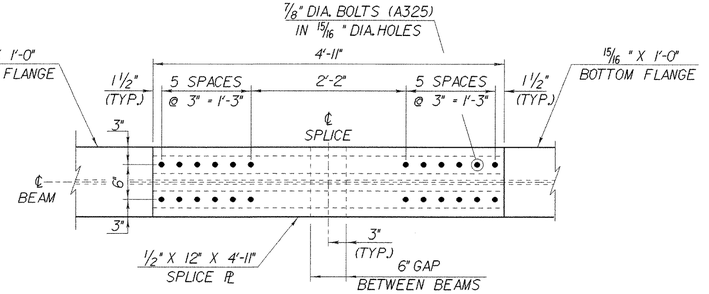

PLAN BOTTOM FLANGE @ PIER NO. 3

(PIER NO. 4 REVERSE IMAGE)
SCALE: 1" = 1'-0"

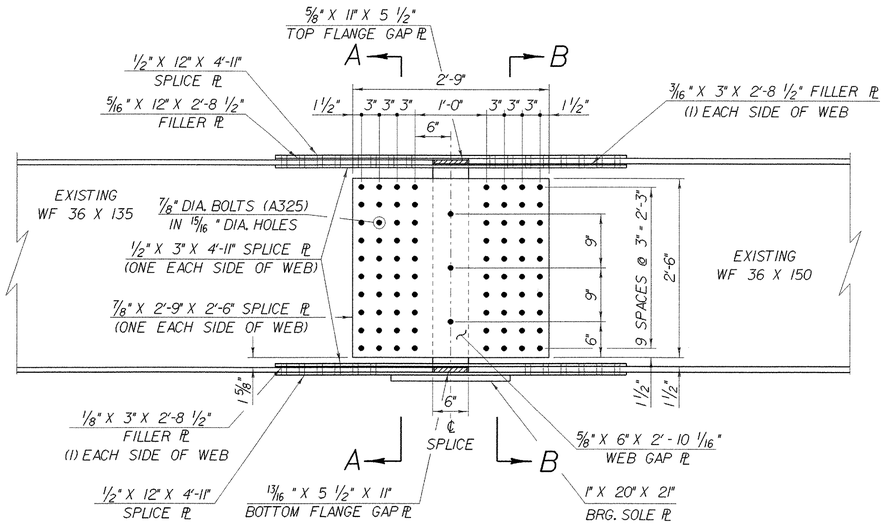

BEAM ELEVATION @ PIER NO. 3

SCALE: 1" = 1'-0"

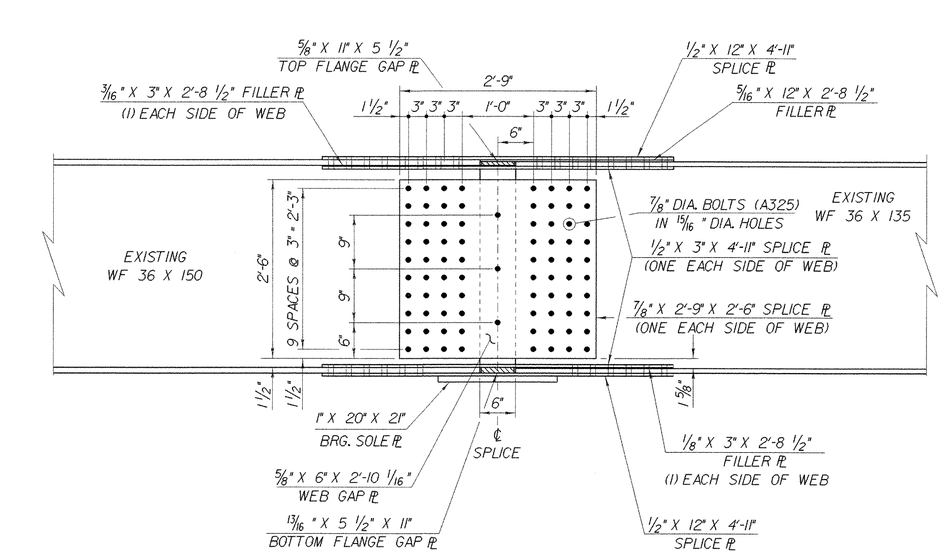

BEAM ELEVATION @ PIER NO. 4

SCALE: 1" = 1'-0"

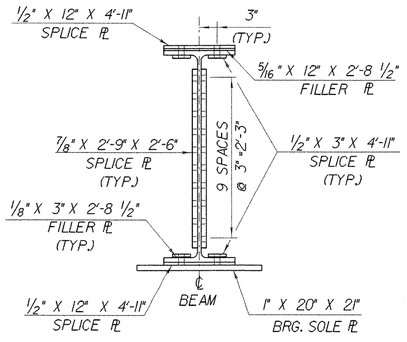

SECTION A-A

SCALE: 1" = 1'-0"

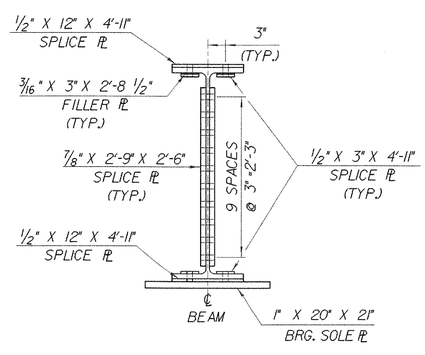

SECTION B-B

SCALE: 1" = 1'-0"

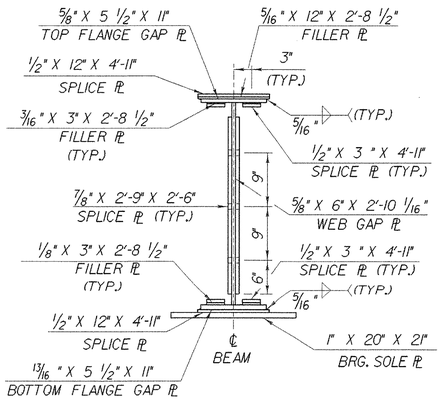

SECTION @ ℄ SPLICE

SCALE: 1" = 1'-0"

NOTES:

1. ALL NEW STEEL FOR SPLICE ASSEMBLY SHALL CONFORM TO AASHTO M270 GR 50 PAINTED.
2. ALL NEW STEEL FOR SPLICE PLATES, EXCLUDING FILLER PLATES, SHALL BE CHARPY V-NOTCH TESTED.

STATE OF VERMONT
AGENCY OF TRANSPORTATION

Town Of FAIRFAX-FAIRFIELD- ST. ALBANS	Bridge No. 88N
Highway No. I-89	Log Sta. / Surv. Sta.

I-89 OVER ST. ALBANS SOUTH STATE HIGHWAY (EXIT 19)

88N STRUCTURAL STEEL SPLICE DETAILS

Designed By J. ARMSTRONG	Drawn By K. CHISHOLM
Checked By M. LOZIER Date 2/00	Bridge Design Supervisor R.R. WHITCOMB Date 2/00
PROJECT FAIRFAX-FAIRFIELD-ST. ALBANS	PROJECT NO. I M 089 - 3 (27)
I.G.C. Info. 96a056\Structures\sa056fr3.dgn	sa056gd41
Bridge Sheet No. BR417	Sheet 169 of 370

PLOTTED 21-SEP-2000

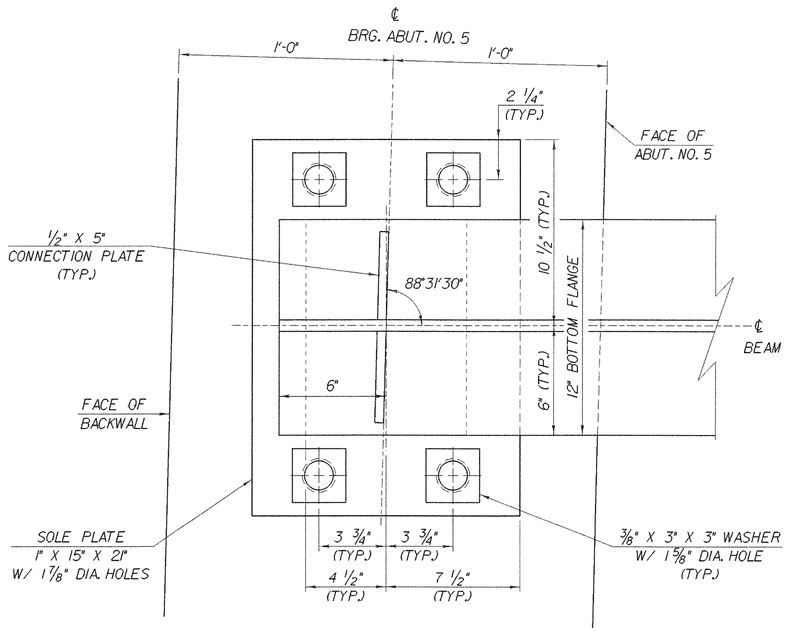

PLAN VIEW
SCALE: 3" = 1'-0"

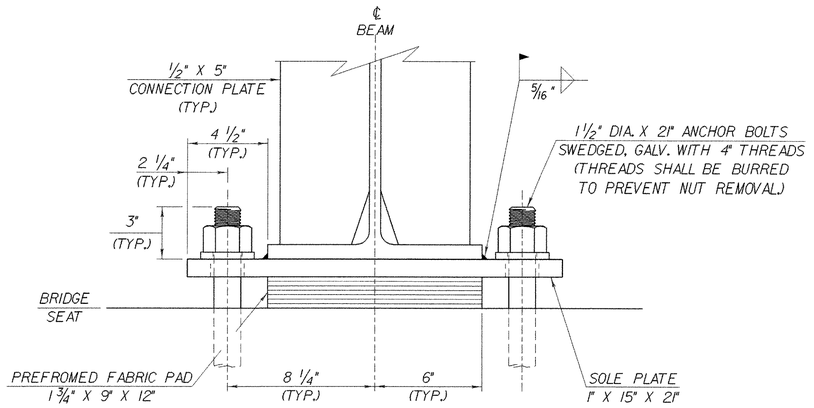

FRONT VIEW
SCALE: 3" = 1'-0"

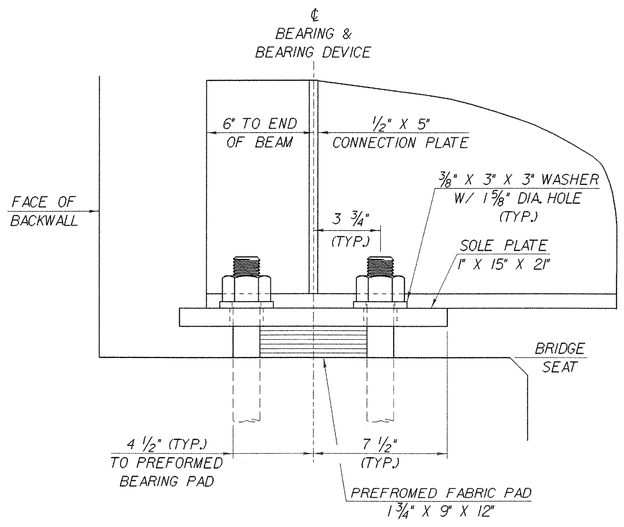

SIDE ELEVATION
SCALE: 3" = 1'-0"

STATE OF VERMONT
AGENCY OF TRANSPORTATION

Town Of FAIRFAX-FAIRFIELD- ST. ALBANS	Bridge No. 88S
Highway No. I - 89	Log Sta. / Surv. Sta.
I-89 OVER ST. ALBANS SOUTH STATE HIGHWAY (EXIT 19)	
88S FIXED BEARING DETAILS ABUT. NO. 5	
Designed By M. LOZIER	Drawn By K. CHISHOLM
Checked By M. LOZIER Date 2/00	Bridge Design Supervisor R. R. WHITCOMB Date 2/00
PROJECT FAIRFAX-FAIRFIELD-ST. ALBANS	PROJECT NO. I M 089 - 3 (27)
I.G.C. Info. 96a056\Structures\sa056fr2.dgn	sa056br2.1
Bridge Sheet No. BR418	Sheet 170 of 370

PLOTTED 21-SEP-2000

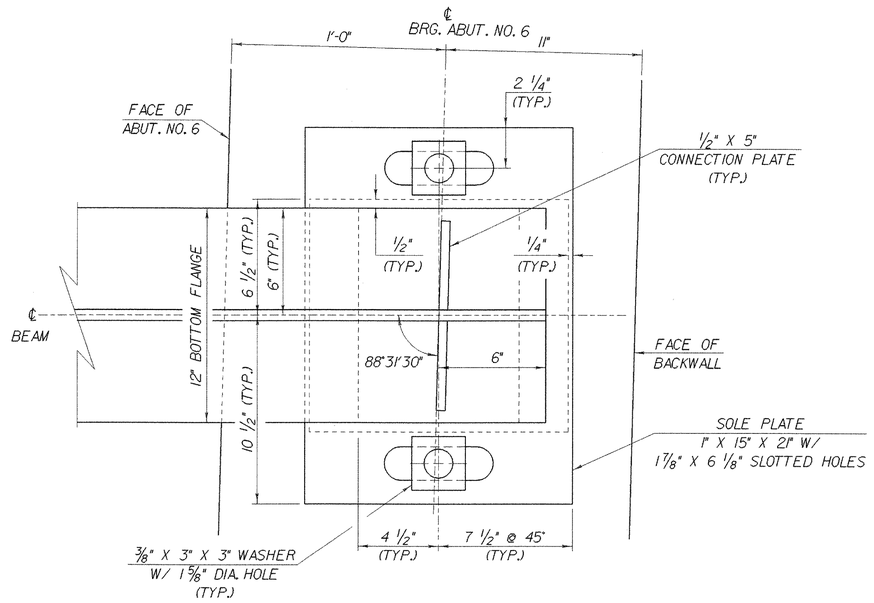

PLAN VIEW
SCALE: 3" = 1'-0"

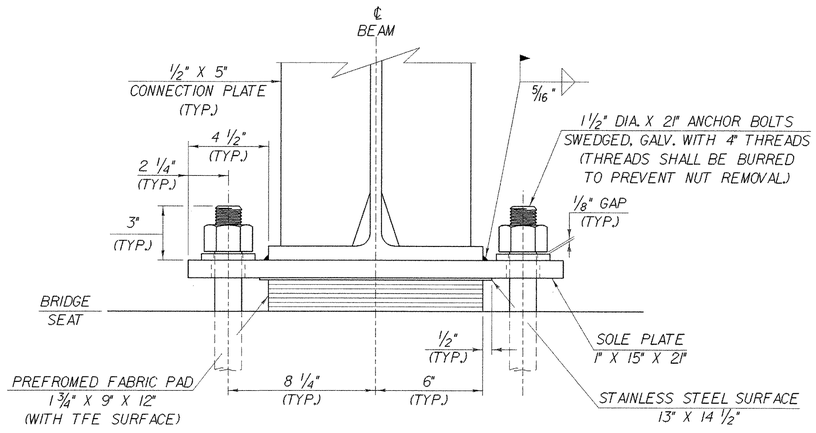

FRONT VIEW
SCALE: 3" = 1'-0"

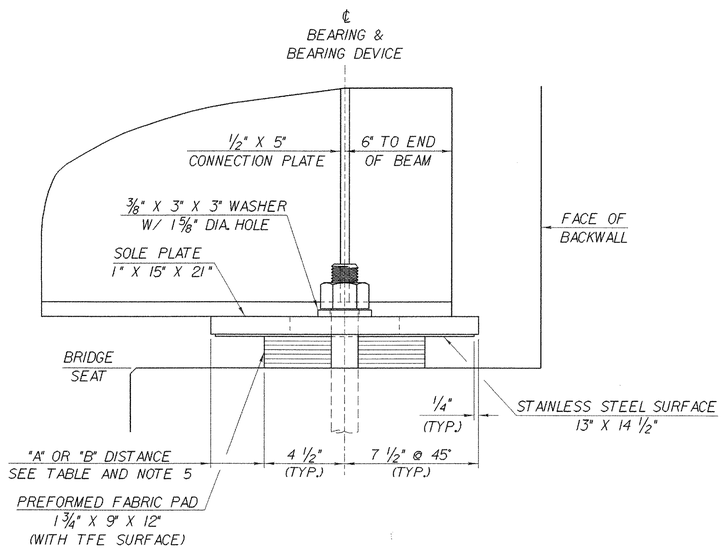

SIDE ELEVATION
SCALE: 3" = 1'-0"

BEARING NOTES

1. BEARINGS SHALL CONFORM TO APPLICABLE SUBSECTIONS OF SECTIONS 531 & 731.
2. BEARINGS SHALL BE PAID FOR UNDER ITEM 531.10 "BEARING DEVICE ASSEMBLY".
3. SHOP DRAWINGS CONFORMING TO SUBSECTION 531.03 SHALL BE SUBMITTED AND ARE TO INCLUDE WELDING AND BONDING PROCEDURES.
4. THE CONCRETE SURFACE UNDER THE BEARING DEVICE SHALL BE LEVEL.
5. "B" DISTANCE IS THE FINAL SETTING FOR THE BEARING PAD AFTER THE CONCRETE SLAB, CURB, PAVEMENT, AND BRIDGE RAIL ARE PLACED. "A" DISTANCE IS LISTED FOR SETTING THE BEARING AFTER THE STRUCTURAL STEEL IS ERECTED AND BEFORE THE CONCRETE DECK IS POURED. THE DIFFERENCE IS THE THEORETICAL ELONGATION OF THE BOTTOM FLANGE DUE TO DEAD LOAD DEFLECTION. THE FINAL "B" DISTANCE, AS SHOWN IN THE TABLE, MUST BE ATTAINED WITHIN 1/8 INCH.
6. DESIGN CRITERIA:
   A. BASE PLATE TO CONCRETE DESIGN PRESSURE = 1000 PSI MAXIMUM.
   B. MINIMUM ALLOWABLE DESIGN ROTATION = 0.015 RADIANS.
   C. HORIZONTAL CAPACITY SHALL BE A MINIMUM OF 10% OF THE VERTICAL LOAD.
   D. DESIGN LOAD PER BEARING @ ABUTMENTS = 100 KIPS.
      DESIGN LOAD PER BEARING @ PIERS = 180 KIPS.
7. ALL STEEL IN BEARING DEVICES (EXCEPT STAINLESS STEEL) SHALL BE AASHTO M-270, GRADE 36.
8. ANCHOR BOLTS SHALL HAVE A MINIMUM OF 15" EMBEDMENT INTO THE CONCRETE AND SHALL CONFORM TO SUBSECTION 714.08.
9. ALL BEARING DEVICES SHALL BE GALVANIZED OR METALIZED AS PER SUBSECTIONS 531.04 (b) AND 506.15 (b) & (c), AS MODIFIED BY THE GENERAL SPECIAL PROVISIONS. IF THE BEARINGS ARE METALIZED, THEY SHALL BE SEALED WITH AN APPROVED SEALER AS SPECIFIED IN SUBSECTION 506.15 (b) OF THE GENERAL SPECIAL PROVISIONS. AREAS OF GALVANIZING OR METALIZING DAMAGED BY FIELD WELDING OR HANDLING SHALL BE REPAIRED IN CONFORMANCE WITH ASTM SPECIFICATION A760/A760M.
10. ALL ANCHOR BOLTS, NUTS, AND WASHERS SHALL BE GALVANIZED. ALL WASHERS SHALL BE 3/8" PLATE (MINIMUM). PAYMENT FOR ANCHOR BOLTS, NUTS, AND WASHERS SHALL BE INCLUDED IN THE UNIT BID PRICE FOR ITEM 531.10, "BEARING DEVICE ASSEMBLY".

ABUTMENT NO. 6
TEMPERATURE SETTING TABLE

TEMP	"A" DIST	"B" DIST
0°F	3 3/4"	3 9/16"
15°F	3 9/16"	3 3/8"
30°F	3 3/8"	3 3/16"
45°F	3 3/16"	3"
60°F	3"	2 13/16"
75°F	2 13/16"	2 5/8"
90°F	2 5/8"	2 7/16"
105°F	2 7/16"	2 1/4"

STATE OF VERMONT
AGENCY OF TRANSPORTATION

Town Of FAIRFAX-FAIRFIELD-ST. ALBANS	Bridge No. 88S
Highway No. I-89	Log Sta. / Surv. Sta.
I-89 OVER ST. ALBANS SOUTH STATE HIGHWAY (EXIT 19)	
88S EXPANSION BEARING DETAILS ABUT. NO. 6	
Designed By M. LOZIER	Drawn By K. CHISHOLM
Checked By M. LOZIER Date 2/00	Bridge Design Supervisor R. R. WHITCOMB Date 2/00
PROJECT FAIRFAX-FAIRFIELD-ST. ALBANS	PROJECT NO. I M 089 - 3 (27)
I.G.C. Info. 96a056\Structures\sa056fr2.dgn	sa056br11
Bridge Sheet No. BR419	Sheet 171 of 370

PLOTTED 21-SEP-2000

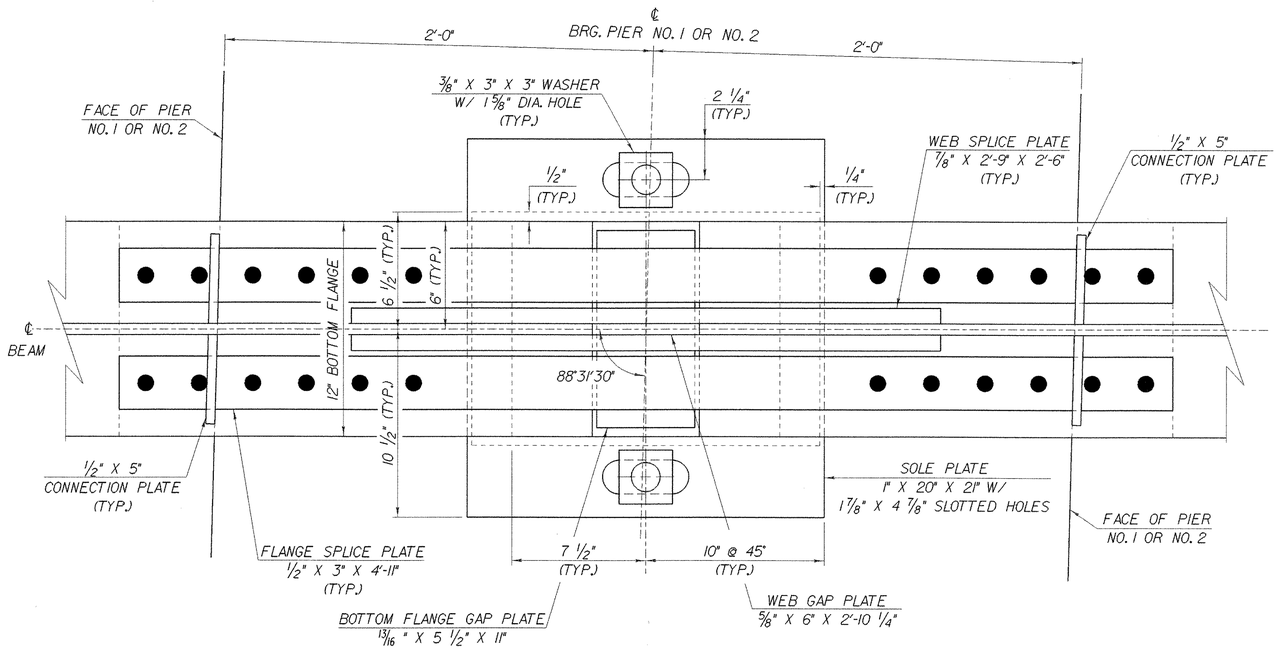

PLAN VIEW
SCALE: 3" = 1'-0"

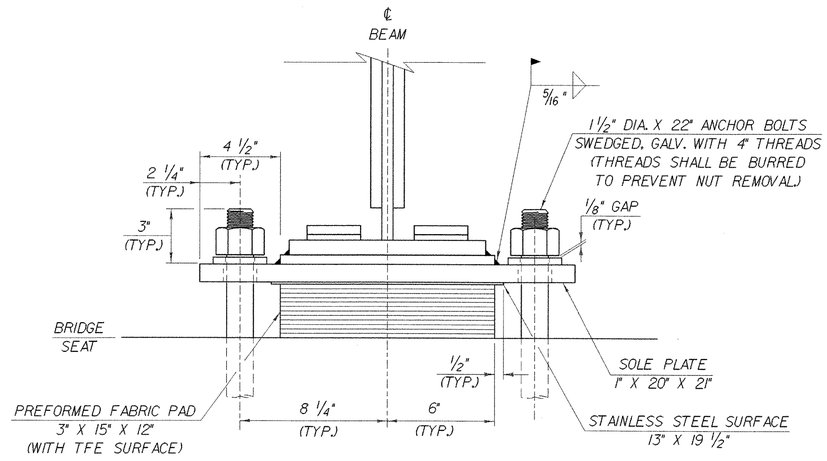

FRONT VIEW
SCALE: 3" = 1'-0"

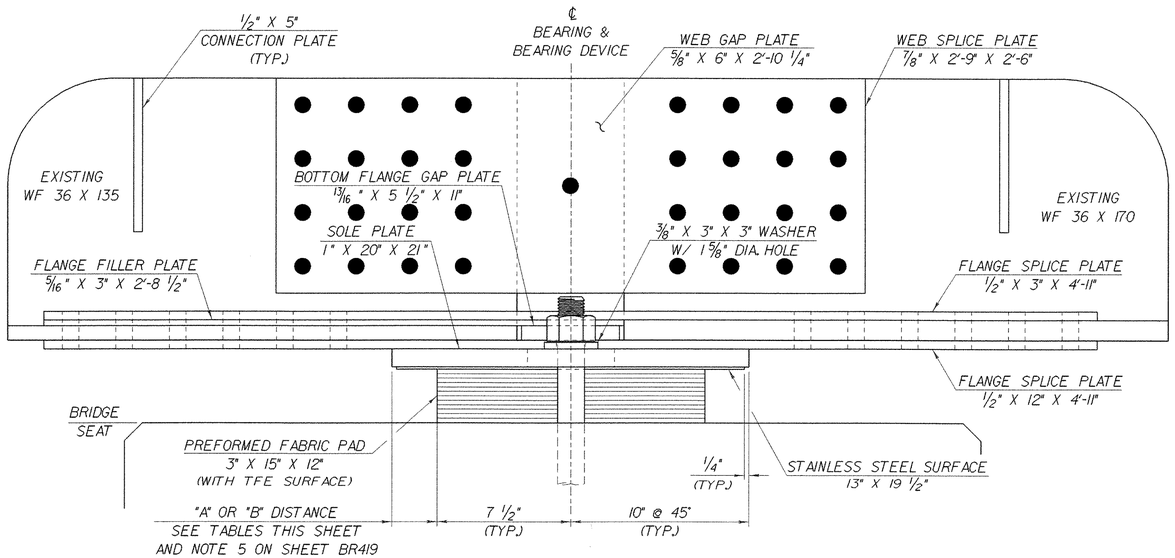

SIDE ELEVATION
SCALE: 3" = 1'-0"

PIER NO. 1
TEMPERATURE SETTING TABLE

TEMP	"A" DIST	"B" DIST
0°F	2 3/4"	2 11/16"
15°F	2 11/16"	2 5/8"
30°F	2 5/8"	2 9/16"
45°F	2 9/16"	2 1/2"
60°F	2 1/2"	2 7/16"
75°F	2 7/16"	2 3/8"
90°F	2 3/8"	2 5/16"
105°F	2 5/16"	2 1/4"

PIER NO. 2
TEMPERATURE SETTING TABLE

TEMP	"A" DIST	"B" DIST
0°F	3"	2 7/8"
15°F	2 7/8"	2 3/4"
30°F	2 3/4"	2 5/8"
45°F	2 5/8"	2 1/2"
60°F	2 1/2"	2 3/8"
75°F	2 3/8"	2 1/4"
90°F	2 1/4"	2 1/8"
105°F	2 1/8"	2"

STATE OF VERMONT
AGENCY OF TRANSPORTATION

Town Of FAIRFAX-FAIRFIELD-ST. ALBANS	Bridge No. 88S
Highway No. I-89	Log Sta.
	Surv. Sta.

I-89 OVER ST. ALBANS SOUTH STATE HIGHWAY (EXIT 19)

88S EXPANSION BEARING DETAILS PIER NOS. 1 & 2

Designed By M. LOZIER	Drawn By K. CHISHOLM
Checked By M. LOZIER Date 2/00	Bridge Design Supervisor R. R. WHITCOMB Date 2/00
PROJECT FAIRFAX-FAIRFIELD-ST. ALBANS	PROJECT NO. IM 089-3 (27)
I.G.C. Info. 96a056\Structures\sa056fr2.dgn	sa056br3J
Bridge Sheet No. BR420	Sheet 172 of 370

PLOTTED 21-SEP-2000

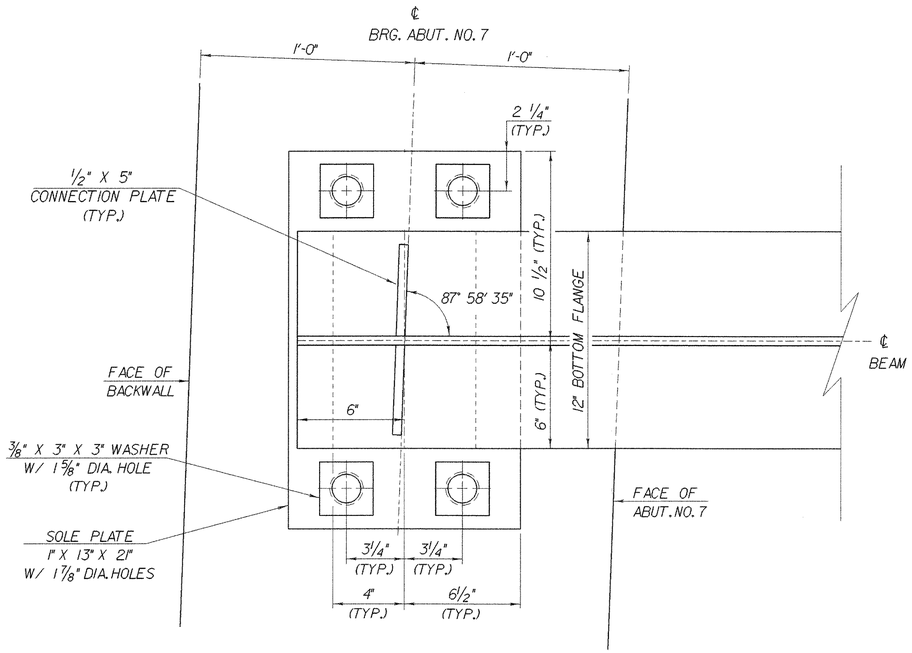

PLAN VIEW
SCALE: 3" = 1'-0"

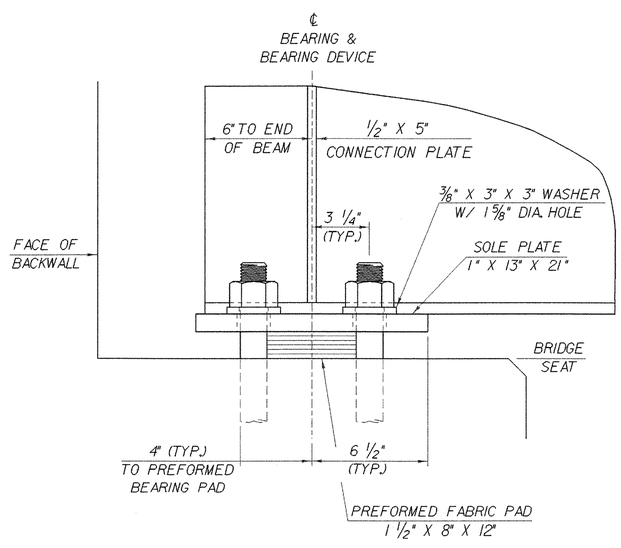

SIDE ELEVATION
SCALE: 3" = 1'-0"

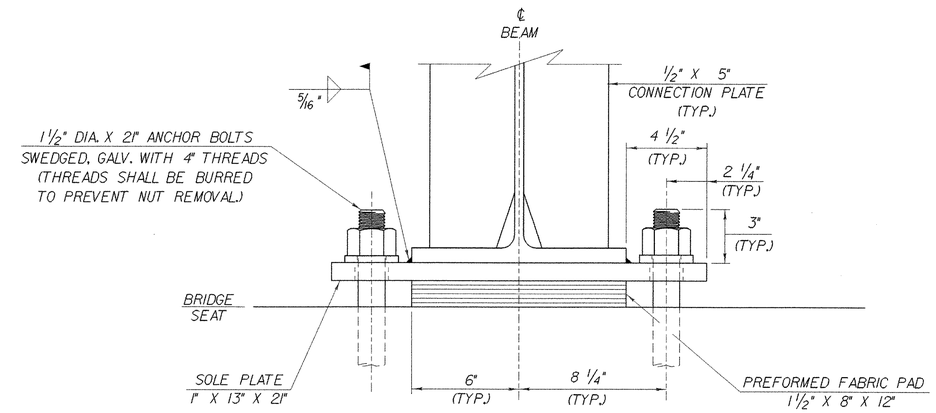

FRONT VIEW
SCALE: 3" = 1'-0"

STATE OF VERMONT
AGENCY OF TRANSPORTATION

Town Of FAIRFAX-FAIRFIELD-ST. ALBANS	Bridge No. 88N
Highway No. I-89	Log Sta. / Surv. Sta.
I-89 OVER ST. ALBANS SOUTH STATE HIGHWAY (EXIT 19)	
88N FIXED BEARING DETAILS ABUT. NO. 7	
Designed By J. ARMSTRONG	Drawn By K. CHISHOLM
Checked By M. LOZIER Date 2/00	Bridge Design Supervisor R.R. WHITCOMB Date 2/00
PROJECT FAIRFAX-FAIRFIELD-ST. ALBANS	PROJECT NO. IM 089-3 (27)
I.G.C. Info. 96a056\Structures\sa056fr3.dgn	sa056br5J
Bridge Sheet No. BR421	Sheet 173 of 370

PLOTTED 21-SEP-2000

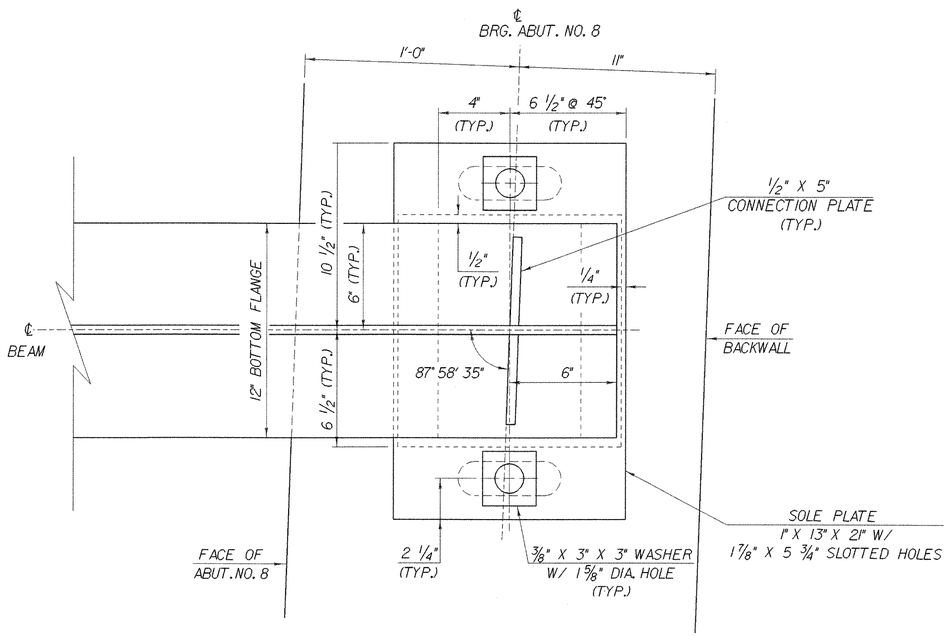

PLAN VIEW
SCALE: 3" = 1'-0"

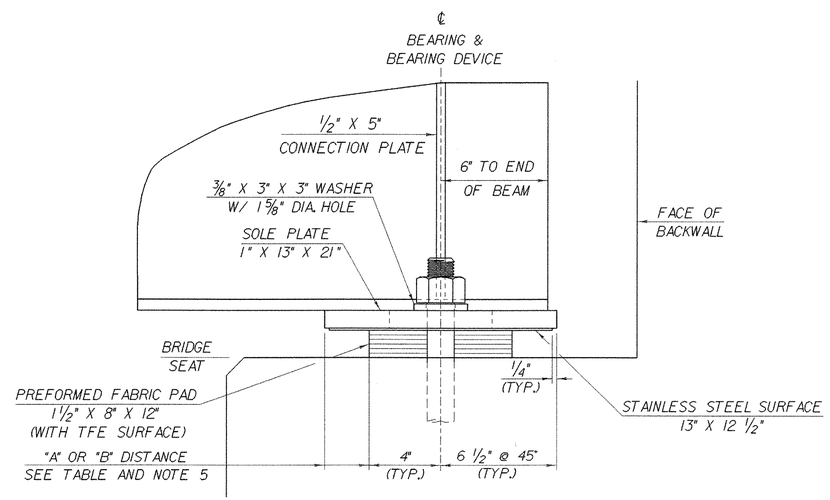

SIDE ELEVATION
SCALE: 3" = 1'-0"

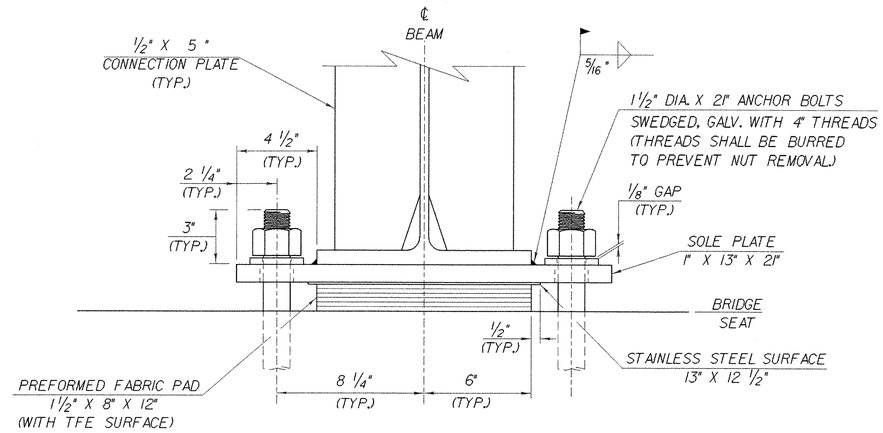

FRONT VIEW
SCALE: 3" = 1'-0"

BEARING NOTES

1. BEARINGS SHALL CONFORM TO APPLICABLE SUBSECTIONS OF SECTIONS 531 & 731.
2. BEARINGS SHALL BE PAID FOR UNDER ITEM 531.10 "BEARING DEVICE ASSEMBLY".
3. SHOP DRAWINGS CONFORMING TO SUBSECTION 531.03 SHALL BE SUBMITTED AND ARE TO INCLUDE WELDING AND BONDING PROCEDURES.
4. THE CONCRETE SURFACE UNDER THE BEARING DEVICE SHALL BE LEVEL.
5. "B" DISTANCE IS THE FINAL SETTING FOR THE BEARING PAD AFTER THE CONCRETE SLAB, CURB, PAVEMENT, AND BRIDGE RAIL ARE PLACED. "A" DISTANCE IS LISTED FOR SETTING THE BEARING AFTER THE STRUCTURAL STEEL IS ERECTED AND BEFORE THE CONCRETE DECK IS POURED. THE DIFFERENCE IS THE THEORETICAL ELONGATION OF THE BOTTOM FLANGE DUE TO DEAD LOAD DEFLECTION. THE FINAL "B" DISTANCE, AS SHOWN IN THE TABLE, MUST BE ATTAINED WITHIN 1/8 INCH.
6. DESIGN CRITERIA:
   A. BASE PLATE TO CONCRETE DESIGN PRESSURE = 1000 PSI MAXIMUM.
   B. MINIMUM ALLOWABLE DESIGN ROTATION = 0.015 RADIANS.
   C. HORIZONTAL CAPACITY SHALL BE A MINIMUM OF 10% OF THE VERTICAL LOAD.
   D. DESIGN LOAD PER BEARING @ ABUTMENTS = 88 KIPS.
      DESIGN LOAD PER BEARING @ PIERS = 163 KIPS.
7. ALL STEEL IN BEARING DEVICES (EXCEPT STAINLESS STEEL) SHALL BE AASHTO M-270, GRADE 36.
8. ANCHOR BOLTS SHALL HAVE A MINIMUM OF 15" EMBEDMENT INTO THE CONCRETE AND SHALL CONFORM TO SUBSECTION 714.08.
9. ALL BEARING DEVICES SHALL BE GALVANIZED OR METALIZED AS PER SUBSECTIONS 531.04 (b) AND 506.15 (b) & (c), AS MODIFIED BY THE GENERAL SPECIAL PROVISIONS. IF THE BEARINGS ARE METALIZED, THEY SHALL BE SEALED WITH AN APPROVED SEALER AS SPECIFIED IN SUBSECTION 506.15 (b) OF THE GENERAL SPECIAL PROVISIONS. AREAS OF GALVANIZING OR METALIZING DAMAGED BY FIELD WELDING OR HANDLING SHALL BE REPAIRED IN CONFORMANCE WITH ASTM SPECIFICATIONS A760 / A760M.
10. ALL ANCHOR BOLTS, NUTS, AND WASHERS SHALL BE GALVANIZED. ALL WASHERS SHALL BE 3/8" PLATE (MINIMUM). PAYMENT FOR ANCHOR BOLTS, NUTS, AND WASHERS SHALL BE INCLUDED IN THE UNIT BID PRICE FOR ITEM 531.10, "BEARING DEVICE ASSEMBLY".

ABUTMENT NO. 8
TEMPERATURE SETTING TABLE

TEMP	"A" DIST	"B" DIST
0°F	3 3/16"	3 1/16"
15°F	3"	2 7/8"
30°F	2 13/16"	2 11/16"
45°F	2 5/8"	2 1/2"
60°F	2 7/16"	2 5/16"
75°F	2 1/4"	2 1/8"
90°F	2 1/16"	1 15/16"
105°F	1 7/8"	1 3/4"

STATE OF VERMONT
AGENCY OF TRANSPORTATION

Town Of: FAIRFAX-FAIRFIELD-ST. ALBANS	Bridge No. 88N
Highway No. I-89	Log Sta. / Surv. Sta.
I-89 OVER ST. ALBANS SOUTH STATE HIGHWAY (EXIT 19)	
88N EXPANSION BEARING DETAILS ABUT. NO. 8	
Designed By J. ARMSTRONG	Drawn By K. CHISHOLM
Checked By M. LOZIER Date 2/00	Bridge Design Supervisor R.R. WHITCOMB Date 2/00
PROJECT FAIRFAX-FAIRFIELD-ST. ALBANS	PROJECT NO. IM 089 - 3 (27)
I.G.C. Info. 96a056\Structures\sa056fr3.dgn	sa056br41
Bridge Sheet No. BR422	Sheet 174 of 370

PLOTTED 21-SEP-2000

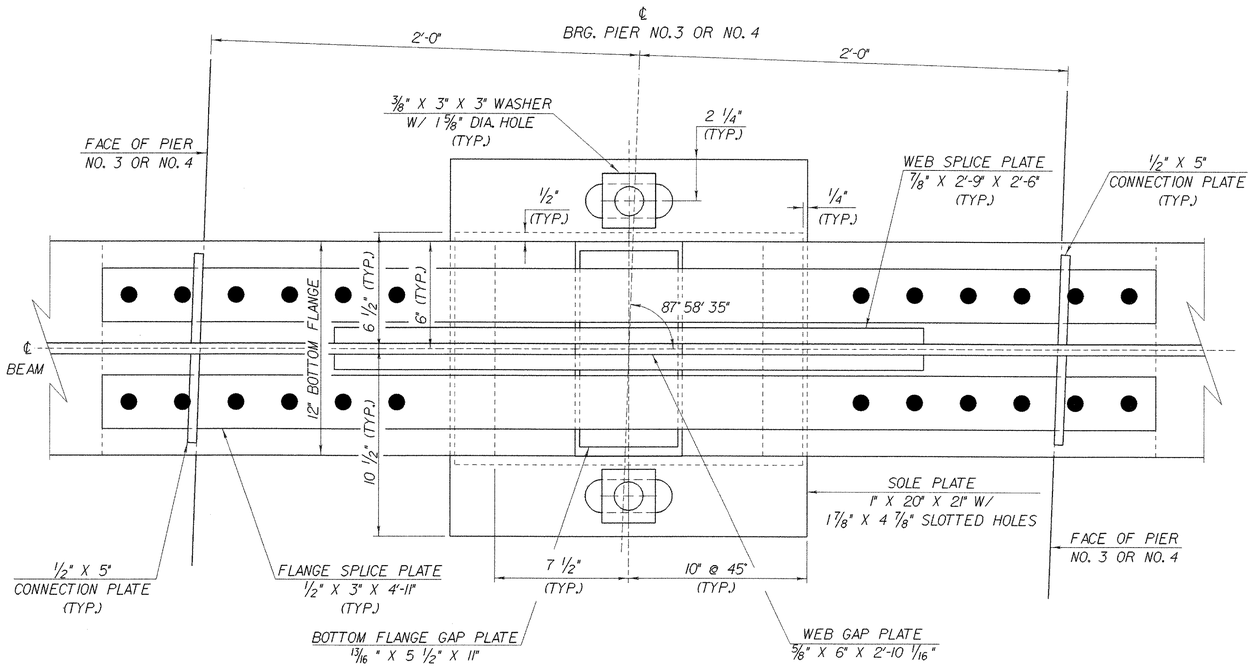

PLAN VIEW
SCALE: 3" = 1'-0"

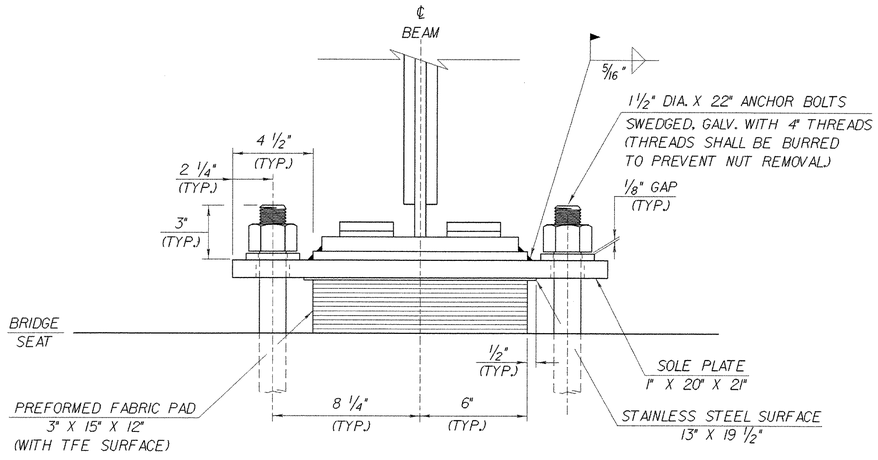

FRONT VIEW
SCALE: 3" = 1'-0"

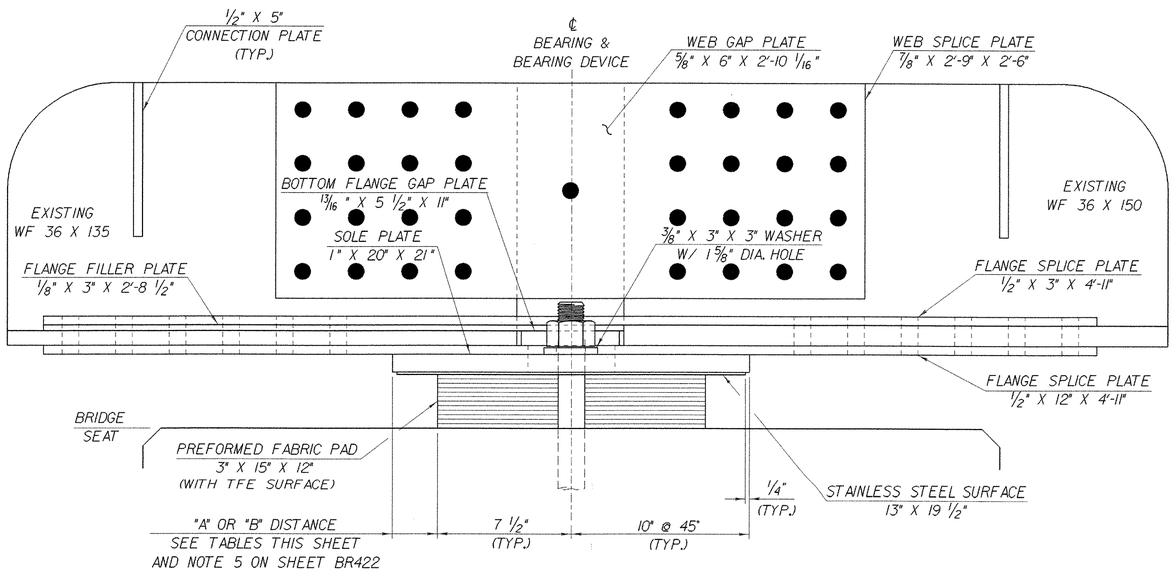

SIDE ELEVATION
SCALE: 3" = 1'-0"

PIER NO. 3
TEMPERATURE SETTING TABLE

TEMP	"A" DIST	"B" DIST
0°F	2 3/4"	2 11/16"
15°F	2 11/16"	2 5/8"
30°F	2 5/8"	2 9/16"
45°F	2 9/16"	2 1/2"
60°F	2 1/2"	2 7/16"
75°F	2 7/16"	2 3/8"
90°F	2 3/8"	2 5/16"
105°F	2 5/16"	2 1/4"

PIER NO. 4
TEMPERATURE SETTING TABLE

TEMP	"A" DIST	"B" DIST
0°F	3"	2 7/8"
15°F	2 7/8"	2 3/4"
30°F	2 3/4"	2 5/8"
45°F	2 5/8"	2 1/2"
60°F	2 1/2"	2 3/8"
75°F	2 3/8"	2 1/4"
90°F	2 1/4"	2 1/8"
105°F	2 1/8"	2"

STATE OF VERMONT
AGENCY OF TRANSPORTATION

Town Of FAIRFAX-FAIRFIELD- ST. ALBANS	Bridge No. 88N
Highway No. I - 89	Log Sta.
	Surv. Sta.

I-89 OVER ST. ALBANS SOUTH STATE HIGHWAY (EXIT 19)
88N EXPANSION BEARING DETAILS PIER NOS. 3 & 4

Designed By J. ARMSTRONG	Drawn By K. CHISHOLM
Checked By M. LOZIER Date 2/00	Bridge Design Supervisor R.R. WHITCOMB Date 2/00
PROJECT FAIRFAX-FAIRFIELD-ST. ALBANS	PROJECT NO. I M 089 - 3 (27)
I.G.C. Info. 96a056\Structures\sa056fr3.dgn	sa056br6J
Bridge Sheet No. BR423	Sheet 175 of 370

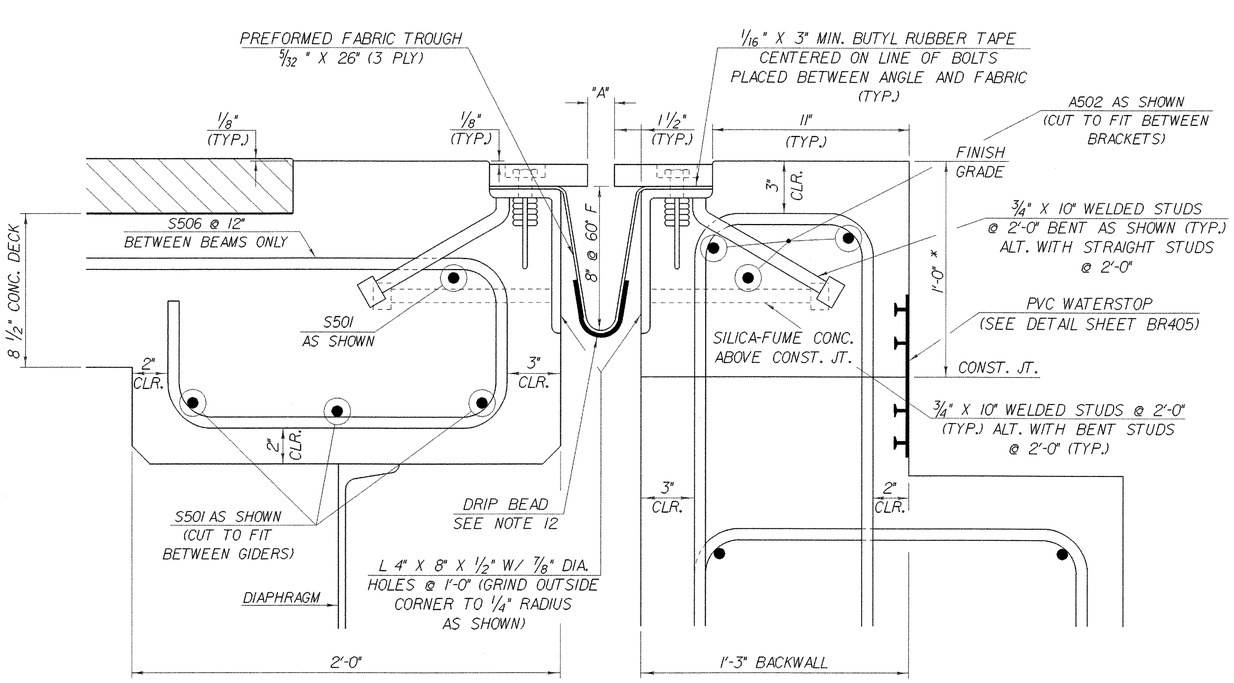

TYPICAL SECTION BETWEEN BEAMS

SCALE: 3" = 1'-0" (NORMAL TO ℄ BEARING)

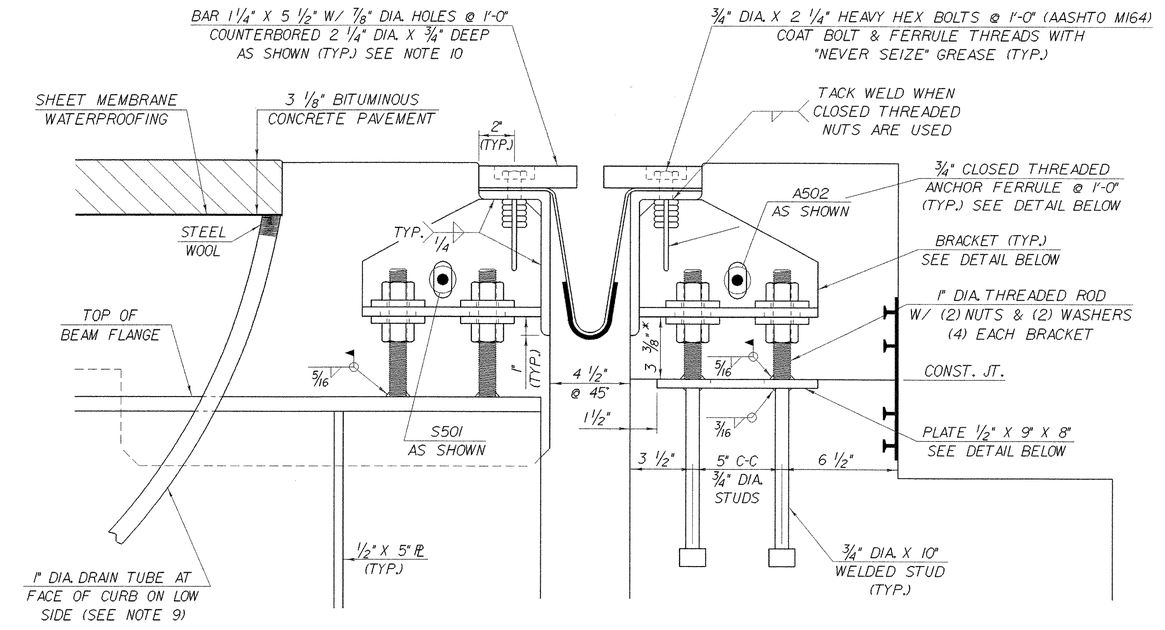

TYPICAL SECTION AT BEAMS

SCALE: 3" = 1'-0" (NORMAL TO ℄ BEARING)

* THESE DIMENSIONS ARE THEORETICAL AND MAY CHANGE DEPENDING UPON THE OUTCOME OF THE BEAM PROFILES.

1. DETAILS ON THIS SHEET ARE FOR ITEM 516.10 "BRIDGE EXPANSION JOINT".
2. PREFORMED FABRIC MATERIAL SHALL BE CONTINUOUS AND SHALL CONFORM TO SUBSECTION 707.07.
3. BUTYL RUBBER TAPE SHALL CONFORM TO AASHTO SPECIFICATION M-198, TYPE II.
4. THE FINAL FINISH OF THE EXPANSION DEVICE SHALL BE COVERED DURING THE PLACING OF BRIDGE DECK CONCRETE.
5. ALL STEEL COMPONENTS SHALL BE AASHTO M270 GRADE 36 GALVANIZED OR METALIZED AS PER SUBSECTION 516.04 AS MODIFIED BY GENERAL SPECIAL PROVISIONS UNLESS OTHERWISE SPECIFIED.
6. THE ITEM "BRIDGE EXPANSION JOINT" SHALL INCLUDE THE FABRICATION AND ERECTION OF THE COMPLETE JOINT ASSEMBLY INCLUDING ALL STEEL PLATES, BRACKETS, ANGLES, WELDED STUDS OR RODS, PREFORMED FABRIC DRAIN TROUGH MATERIAL AND PLASTIC DRAIN TUBES, BUTYL RUBBER TAPE AND ANY OTHER MISCELLANEOUS MATERIAL NECESSARY TO INSTALL JOINT.
7. THE 4" X 8" X 1/2" ANGLES SHALL BE FURNISHED AS ONE CONTINUOUS PIECE. THE 1 1/4" X 5 1/2" BARS EACH SIDE OF THE JOINT SHALL BE PROVIDED IN TWO EQUAL LENGTHS.
8. COAT CONCRETE CONTACT SURFACES WITH EPOXY BONDING COMPOUND MEETING THE REQUIREMENTS OF SUBSECTION 719.02. PAYMENT SHALL BE INCLUDED IN THE UNIT PRICE BID FOR ITEM 516.10 "BRIDGE EXPANSION JOINT".
9. A 1" DIAMETER PLASTIC DRAIN TUBE (PER STD. SPEC. 740.06) SHALL BE INSTALLED AS SHOWN AT THE FACE OF CURB. THE UPPER END IS TO BE PLUGGED WITH STEEL WOOL AND THE LOWER END IS TO EXTEND BELOW THE BOTTOM OF THE ADJACENT BEAM. THE DRAIN TUBES SHALL BE FASTENED TO THE BEAMS USING A METHOD APPROVED BY THE ENGINEER.
10. FILL COUNTERBORED HOLES WITH HOT POURED JOINT SEALER (STD. SPEC. 707.04 AS MODIFIED BY THE GENERAL SPECIAL PROVISIONS) AFTER BOLT INSTALLATION. PAYMENT FOR THE WORK SHALL BE SUBSIDIARY TO ITEM 516.10.
11. PAYMENT FOR WATERSTOP SHALL BE SUBSIDIARY TO ITEM 501.25, "CONCRETE CLASS B".
12. A DRIP BEAD OF 1/4" X 7" STRIP OF PREFORMED MATERIAL SHALL BE CEMENTED TO THE BOTTOM OF THE FABRIC TROUGH USING AN ADHESIVE APPROVED BY THE MANUFACTURER. THE DRIP BEAD SHALL BE APPLIED 1" FROM THE DOWNSPOUT END OF THE TROUGH.
13. FABRIC TROUGH SHALL BE THOROUGHLY CLEANED AND FLUSHED AFTER PAVING OPERATION.
14. THE EXPANSION JOINT SHALL BE SHOP ASSEMBLED AND SHIPPED AS ONE UNIT.

ANCHOR FERRULE DETAIL

SCALE: 3" = 1'-0"

NOTE:
CLOSED THREADED FERRULE NUTS WITHOUT ANCHOR LOOPS MAY BE USED.

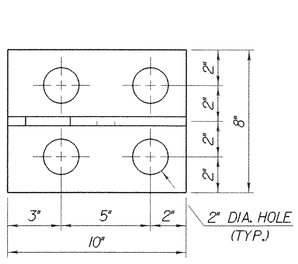

BRACKET PLAN

SCALE: 3" = 1'-0"

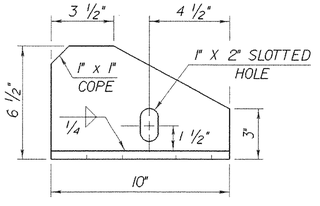

BRACKET ELEVATION

SCALE: 3" = 1'-0"

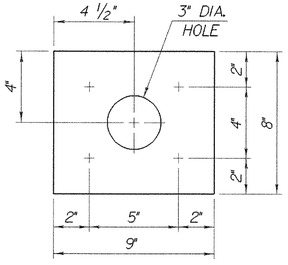

PLATE PLAN

SCALE: 3" = 1'-0"

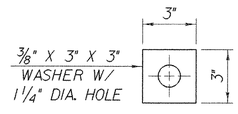

WASHER FOR BRACKET

SCALE: 3" = 1'-0"

ALL PLATES 1/2"

TEMP	"A" DIST
0° F	2 1/16"
15° F	1 7/8"
30° F	1 11/16"
45° F	1 1/2"
60° F	1 5/16"
75° F	1 1/8"
90° F	15/16"
105° F	3/4"

"A" IS THE SETTING BEFORE DEAD LOADS ARE IN PLACE.

STATE OF VERMONT
AGENCY OF TRANSPORTATION

Town Of FAIRFAX-FAIRFIELD-ST. ALBANS	Bridge No. 88 N & S
Highway No. I-89	Log Sta. / Surv. Sta.
I-89 OVER ST. ALBANS SOUTH STATE HIGHWAY (EXIT 19)	
88 N & S EXPANSION JOINT DETAILS	
Designed By M. LOZIER	Drawn By K. CHISHOLM
Checked By M. LOZIER Date 2/00	Bridge Design Supervisor R. R. WHITCOMB Date 2/00
PROJECT FAIRFAX-FAIRFIELD-ST. ALBANS	PROJECT NO. I M 089 - 3 (27)
I.G.C. Info. 96a056\Structures\sa056exp.dgn	sa056exp1
Bridge Sheet No. BR424	Sheet 176 of 370

PLOTTED 21-SEP-2000

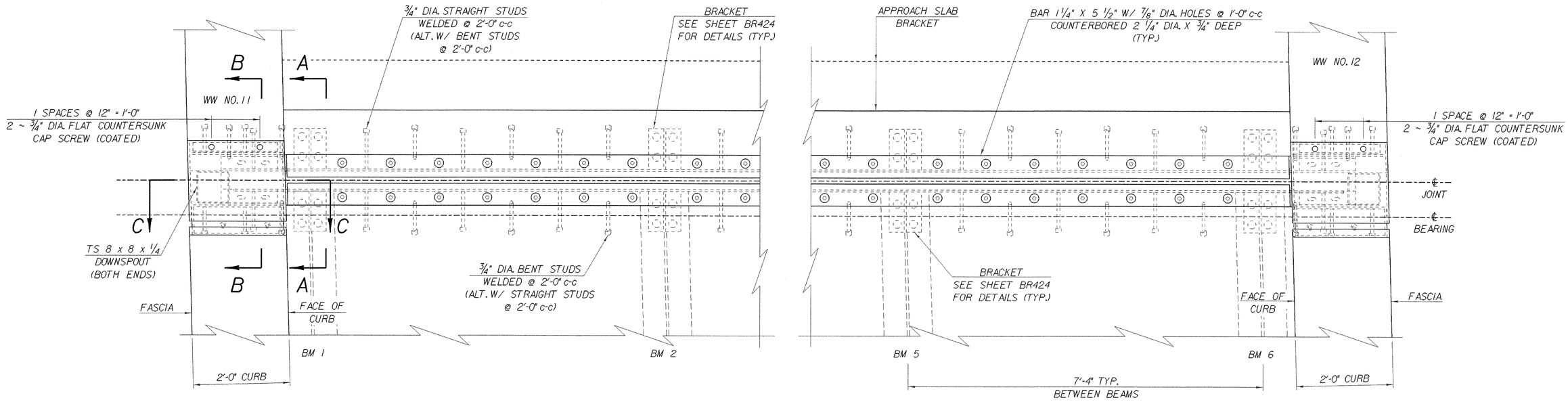

EXPANSION JOINT PLAN @ ABUTMENT NO. 6

SCALE: 1" = 1'-0"

STATE OF VERMONT
AGENCY OF TRANSPORTATION

Town Of: FAIRFAX-FAIRFIELD- ST. ALBANS	Bridge No. 88S
Highway No. I - 89	Log Sta. / Surv. Sta.
I-89 OVER ST. ALBANS SOUTH STATE HIGHWAY (EXIT 19)	
88S EXPANSION JOINT PLAN	
Designed By G. ROY	Drawn By K. CHISHOLM
Checked By M. LOZIER — Date 2/00	Bridge Design Supervisor R. R. WHITCOMB — Date 2/00
PROJECT: FAIRFAX-FAIRFIELD-ST. ALBANS	PROJECT NO. IM 089 - 3 (27)
I.G.C. Info. 96a056\Structures\sa056exp.dgn	sa056ex1J
Bridge Sheet No. BR425	Sheet 177 of 370

PLOTTED 21-SEP-2000

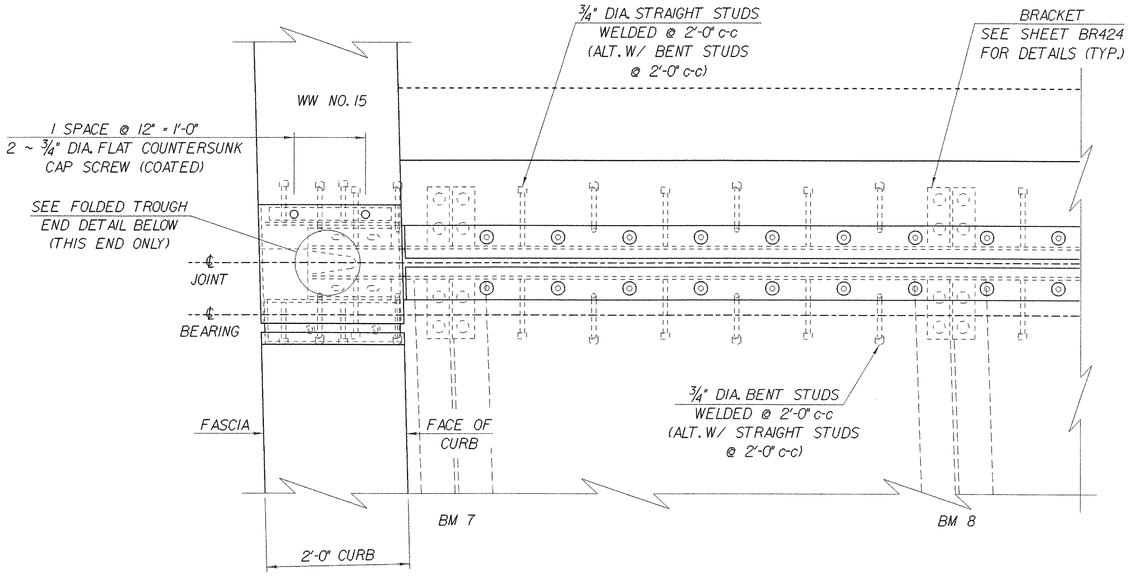

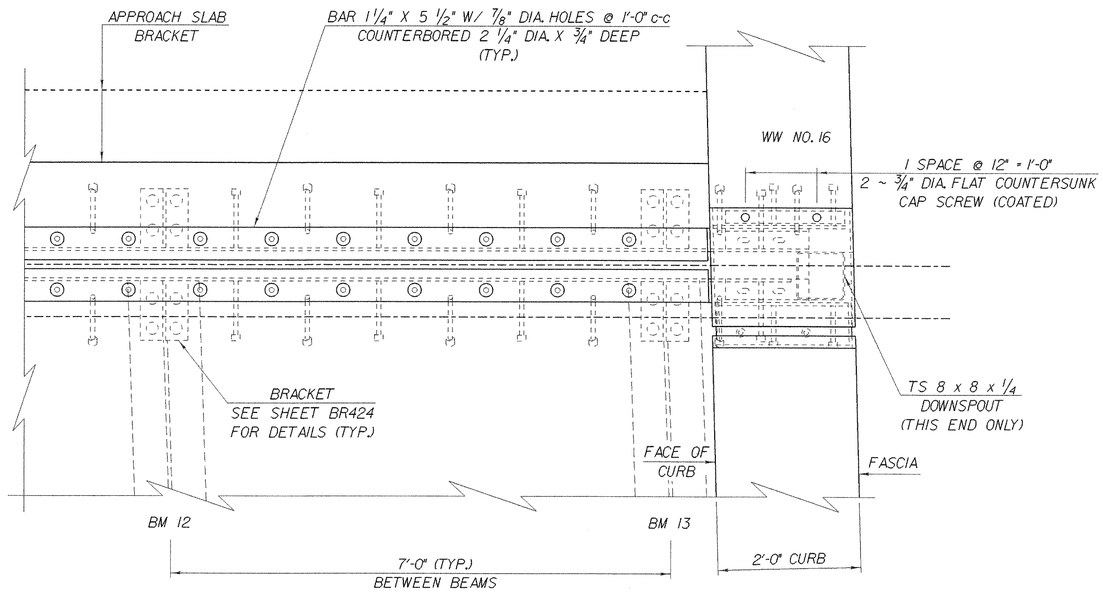

EXPANSION JOINT PLAN @ ABUTMENT NO. 8

SCALE: 1" = 1'-0"

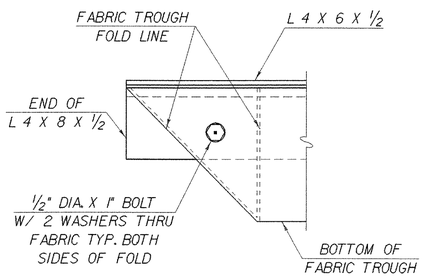

ELEVATION

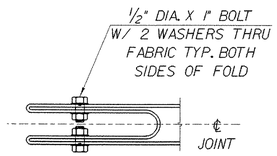

PLAN

FOLDED TROUGH END DETAILS

NOT TO SCALE

STATE OF VERMONT
AGENCY OF TRANSPORTATION

Town Of FAIRFAX-FAIRFIELD- ST. ALBANS	Bridge No. 88N
Highway No. I - 89	Log Sta. / Surv. Sta.
I-89 OVER ST. ALBANS SOUTH STATE HIGHWAY (EXIT 19)	
88N EXPANSION JOINT PLAN	
Designed By G. ROY	Drawn By K. CHISHOLM
Checked By M. LOZIER Date 2/00	Bridge Design Supervisor R. R. WHITCOMB Date 2/00
PROJECT FAIRFAX-FAIRFIELD-ST. ALBANS	PROJECT NO. I M 089 - 3 (27)
I.G.C. Info. 96a056\Structures\sa056exp.dgn	sa056ex4.1
Bridge Sheet No. BR426	Sheet 178 of 370

PLOTTED 21-SEP-2000

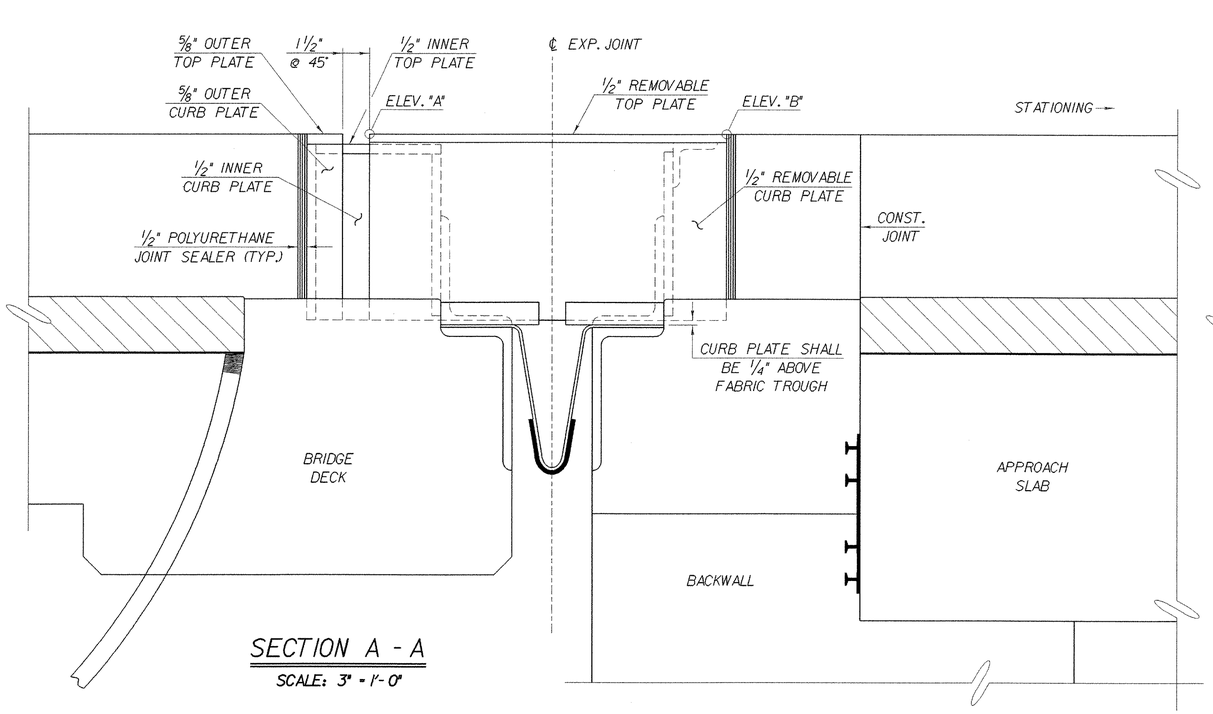

SECTION A - A

SCALE: 3" = 1'-0"

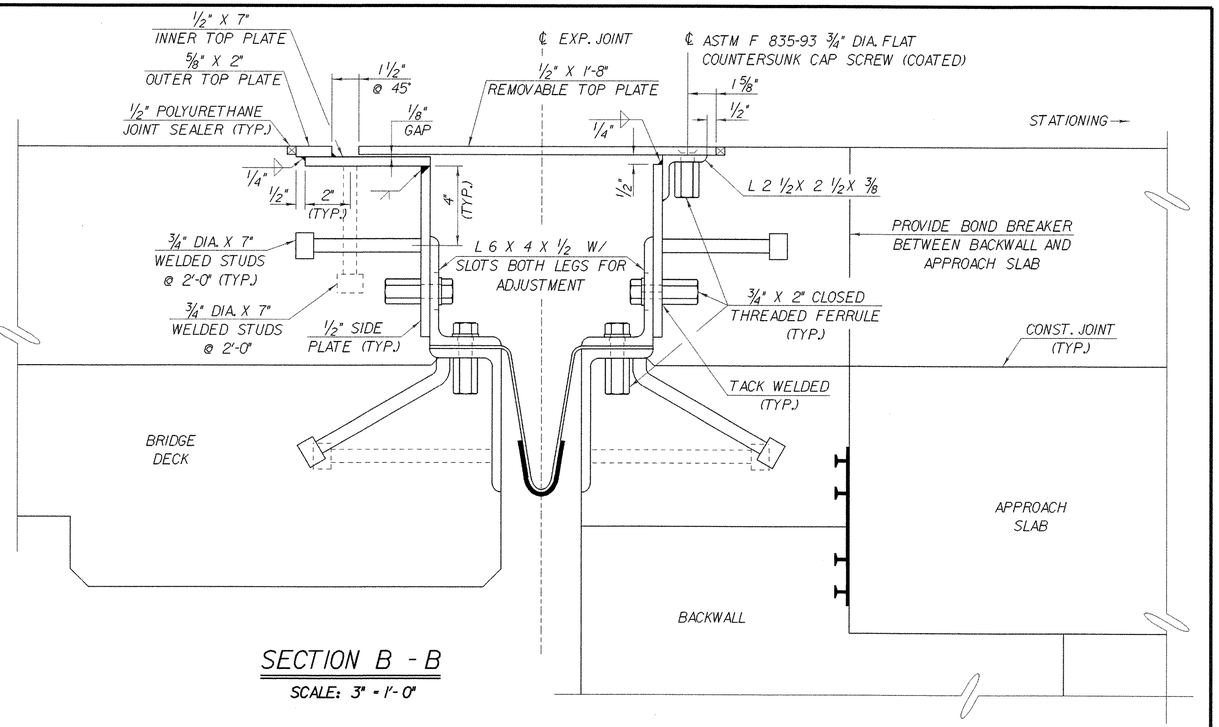

SECTION B - B

SCALE: 3" = 1'-0"

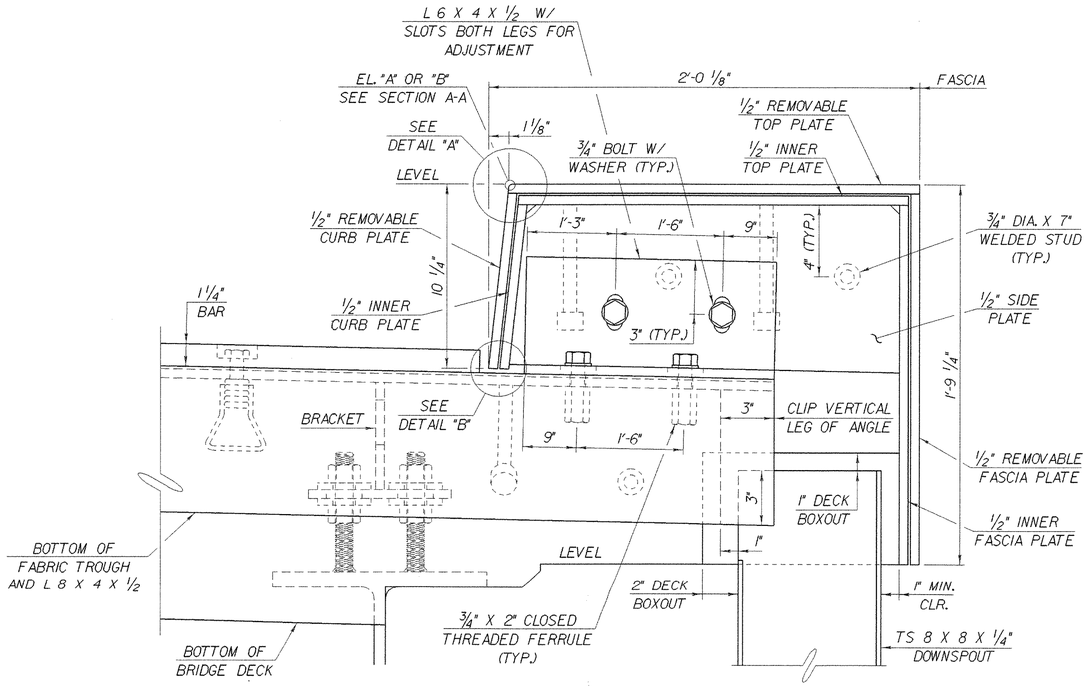

SECTION C - C

SCALE: 3" = 1'-0"

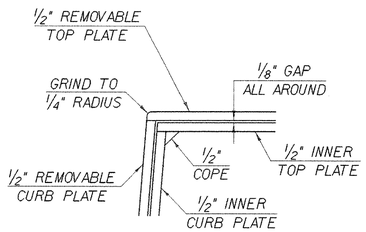

DETAIL "A"

SCALE: 3" = 1'-0"

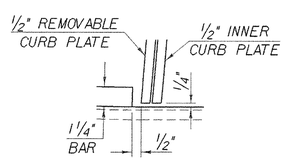

DETAIL "B"

SCALE: 3" = 1'-0"

CURB ELEVATION TABLE		
WINGWALL	"A"	"B"
NO. 11	578.71	578.70
NO. 12	578.81	578.80
NO. 15	581.65	581.65
NO. 16	580.74	580.74

STATE OF VERMONT
AGENCY OF TRANSPORTATION

Town Of FAIRFAX-FAIRFIELD- ST. ALBANS	Bridge No. 88 N & S
Highway No. I - 89	Log Sta. / Surv. Sta.

I-89 OVER ST. ALBANS SOUTH STATE HIGHWAY (EXIT 19)

88 N & S CURB PLATE DETAILS

Designed By G. ROY	Drawn By K. CHISHOLM
Checked By M. LOZIER — Date 2/00	Bridge Design Supervisor R. R. WHITCOMB — Date 2/00
PROJECT FAIRFAX-FAIRFIELD-ST. ALBANS	PROJECT NO. IM 089 - 3 (27)
I.G.C. Info. 96a056\Structures\sa056exp.dgn	sa056ex21
Bridge Sheet No. BR427	Sheet 179 of 370

PLOTTED 21-SEP-2000

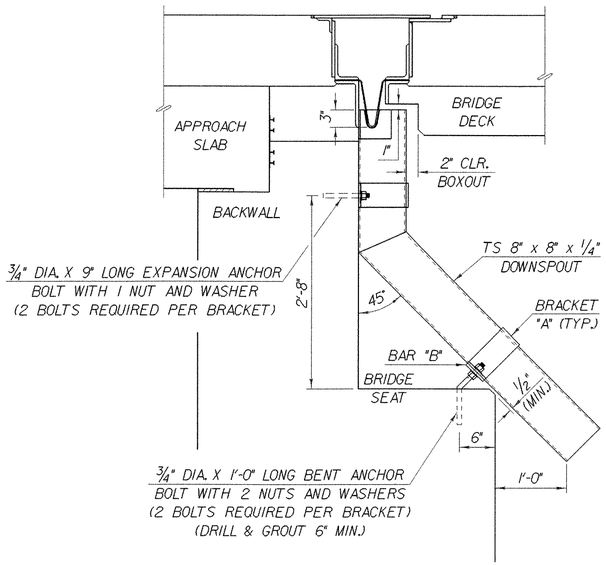

DOWNSPOUT ELEVATION

SCALE: 1" = 1'-0"

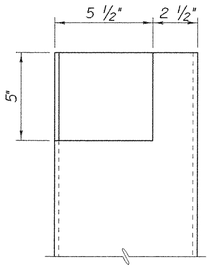

DOWNSPOUT CUTOUT FOR TROUGH

SCALE: 3" = 1'-0"

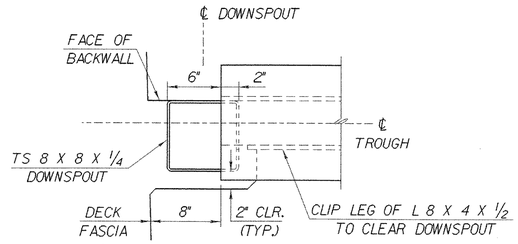

BOTTOM OF DECK TO BE BOXED OUT AS SHOWN TO ALLOW DOWNSPOUT TO COME UP UNDERNEATH THE DRAIN TROUGH. DECK REINFORCING STEEL TO BE CUT AS REQUIRED TO MAINTAIN 3" CLEARANCE FROM BOXOUT

PLAN VIEW OF DECK BOXOUT FOR DOWNSPOUT

SCALE: 1 1/2" = 1'-0"

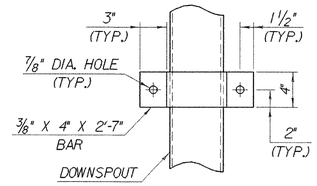

ELEVATION VIEW OF BRACKET "A"

SCALE: 1 1/2" = 1'-0"

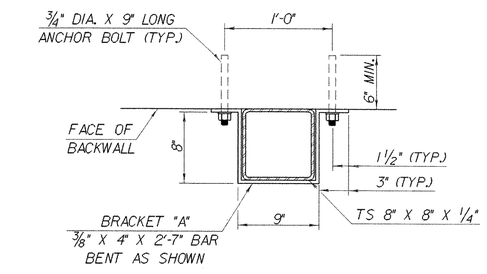

DETAILS FOR ATTACHING DOWNSPOUT TO ABUTMENT

SCALE: 1 1/2" = 1'-0"

DOWNSPOUT NOTES

1. HOLLOW STRUCTURAL STEEL TUBING SHALL CONFORM TO A-500 OR A-501.
2. ALL PLATES, BARS, AND ANGLES SHALL CONFORM TO AASHTO M270 GR. 36.
3. DOWNSPOUTS SHALL BE GALVANIZED IN ACCORDANCE WITH ASTM A-123 AFTER FABRICATION.
4. ALL BOLTS AND RELATED HARDWARE SHALL BE ASTM A-307 AND SHALL BE GALVANIZED IN ACCORDANCE WITH ASTM A-153 (AASHTO M232).
5. AREAS OF GALVANIZING DAMAGED BY CUTTING, BURNING, WELDING, PLACING, OR ANY OTHER MEANS SHALL BE REPAIRED IN CONFORMANCE WITH ASTM SPECIFICATIONS A760 / A760M.
6. DOWNSPOUTS, RELATED HARDWARE AND ALL ANCHOR BOLTS SHALL BE PAID FOR UNDER ITEM 506.60 "STRUCTURAL STEEL".

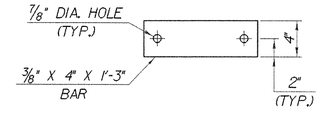

ELEVATION VIEW OF BAR "B"

SCALE: 1 1/2" = 1'-0"

STATE OF VERMONT
AGENCY OF TRANSPORTATION

Town Of FAIRFAX-FAIRFIELD- ST. ALBANS	Bridge No. 88 N & S
Highway No. I - 89	Log Sta. / Surv. Sta.
I-89 OVER ST. ALBANS SOUTH STATE HIGHWAY (EXIT 19)	
88 N & S DOWNSPOUT DETAILS	
Designed By G. ROY	Drawn By K. CHISHOLM
Checked By M. LOZIER Date 2/00	Bridge Design Supervisor R. R. WHITCOMB Date 2/00
PROJECT FAIRFAX-FAIRFIELD-ST. ALBANS	PROJECT NO. IM 089 - 3 (27)
I.G.C. Info. 96a056\Structures\sa056exp.dgn	sa056ex3J
Bridge Sheet No. BR428	Sheet 180 of 370

PLOTTED 21-SEP-2000

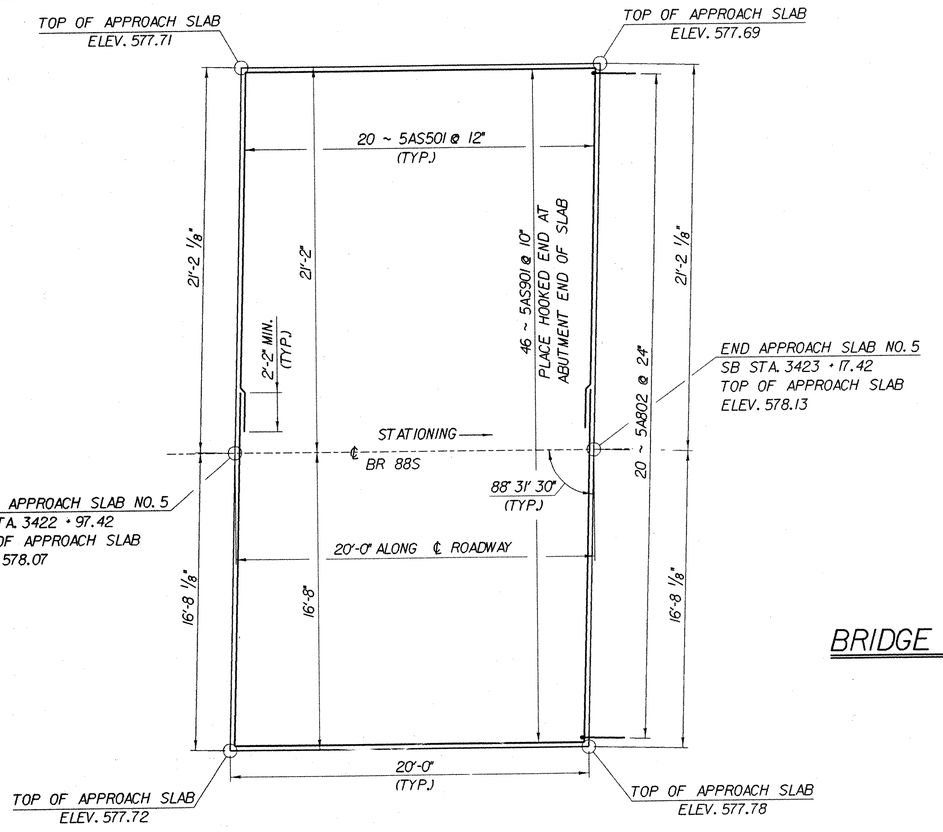

BRIDGE 88S APPROACH SLAB PLAN

SCALE: 1/4" = 1'-0"

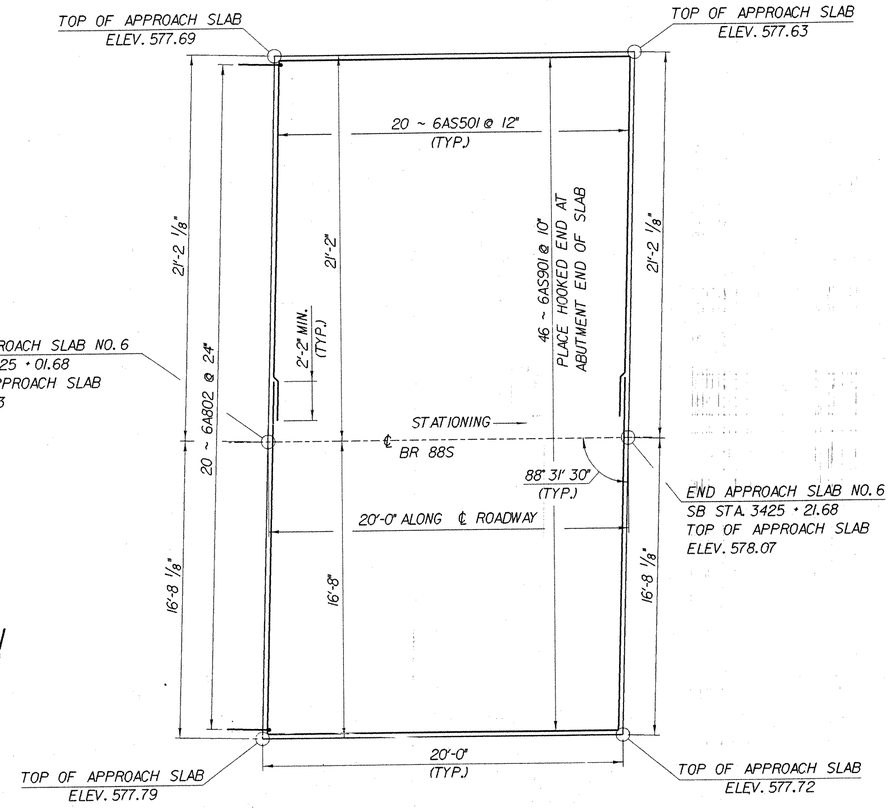

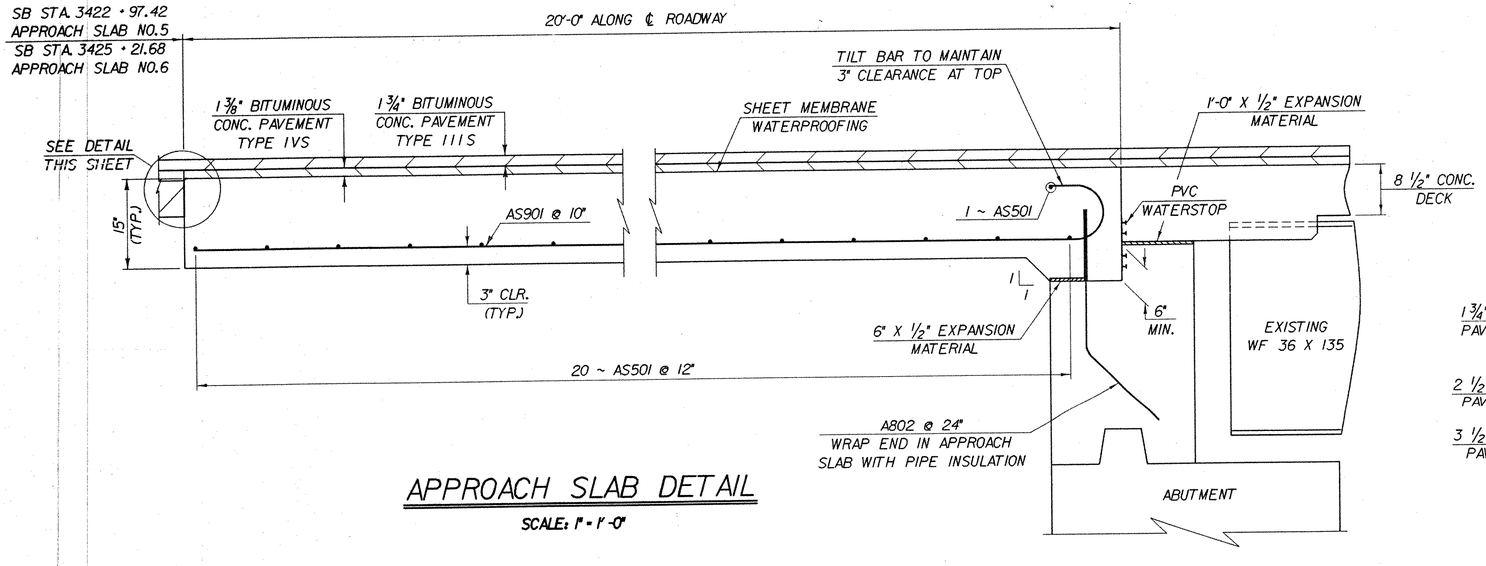

APPROACH SLAB DETAIL

SCALE: 1" = 1'-0"

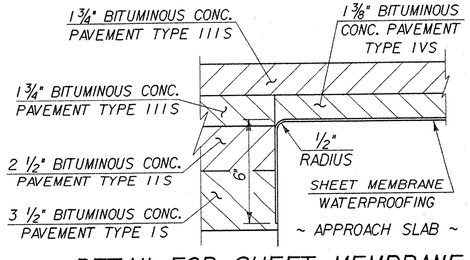

DETAIL FOR SHEET MEMBRANE AT APPROACH SLAB END

SCALE: 3" = 1'-0"

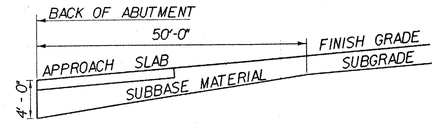

SUBBASE DETAIL AT ABUTMENTS

(ELEVATION IN CUT AND FILL)
NOT TO SCALE

IMPORTANT NOTE: BRIDGE FINISHED GRADES ARE CENTERLINE GRADES.

STATE OF VERMONT
AGENCY OF TRANSPORTATION

Town Of FAIRFAX-FAIRFIELD-ST. ALBANS	Bridge No. 88S
Highway No. I-89	Log Sta.
	Surv. Sta.

I-89 OVER ST. ALBANS SOUTH STATE HIGHWAY (EXIT 19)

88S APPROACH SLAB DETAILS

Designed By M. LOZIER	Drawn By K. CHISHOLM
Checked By M. LOZIER Date 2/00	Bridge Design Supervisor R. R. WHITCOMB Date 2/00
PROJECT FAIRFAX-FAIRFIELD-ST. ALBANS	PROJECT NO. IM 089 - 3 (27)
I.G.C. Info. 96a056\Structures\sa056sp3.dgn	sa056apJ
Bridge Sheet No. BR429	Sheet 181 of 370

PLOTTED 21-SEP-2000

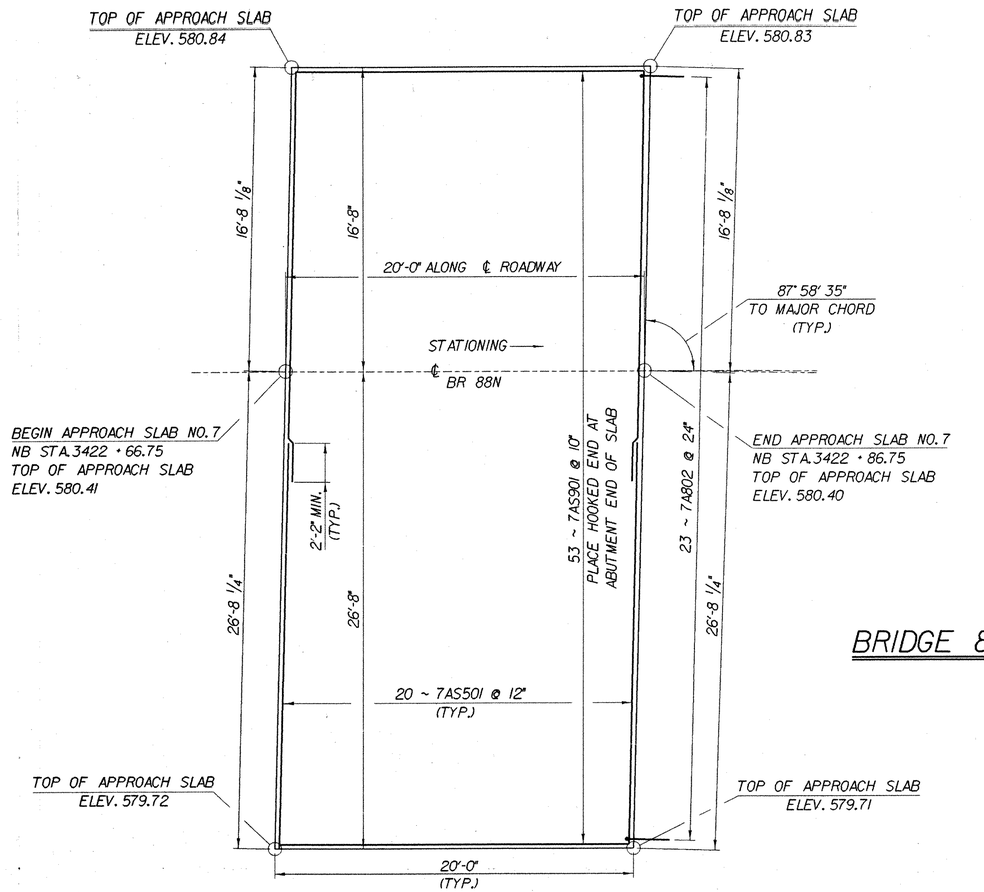

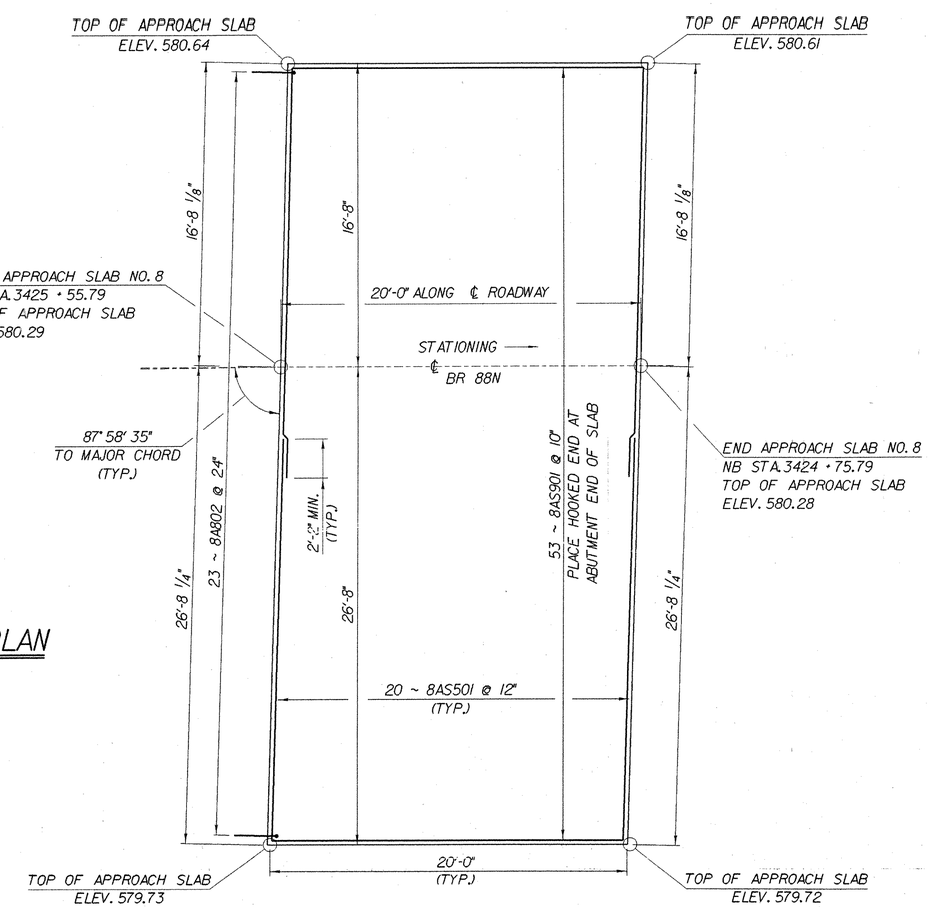

BRIDGE 88N APPROACH SLAB PLAN

SCALE: 1/4" = 1'-0"

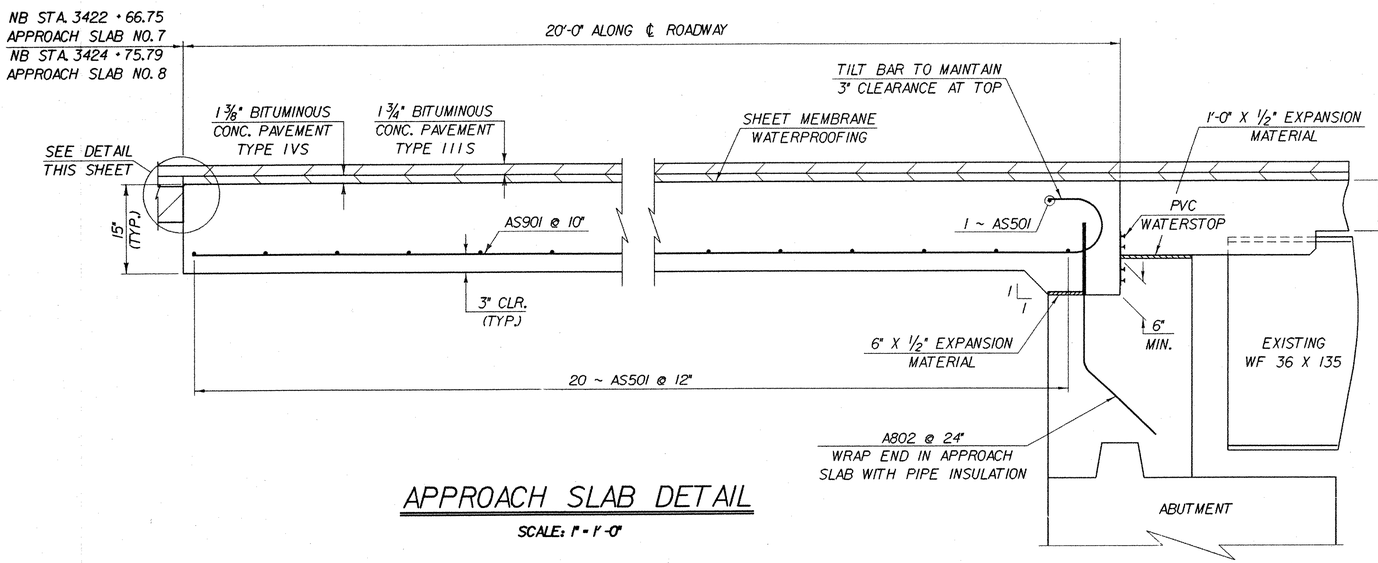

APPROACH SLAB DETAIL

SCALE: 1" = 1'-0"

IMPORTANT NOTE: BRIDGE FINISHED GRADES ARE CENTERLINE GRADES.

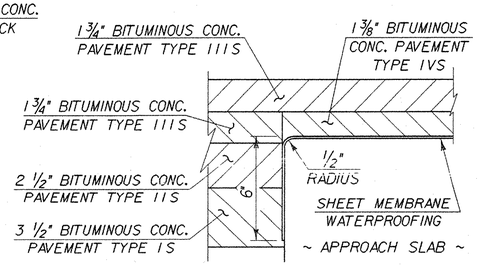

DETAIL FOR SHEET MEMBRANE AT APPROACH SLAB END

SCALE: 3" = 1'-0"

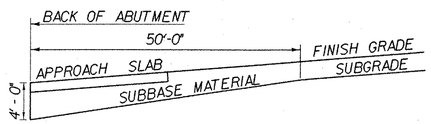

SUBBASE DETAIL AT ABUTMENTS

(ELEVATION IN CUT AND FILL)
NOT TO SCALE

STATE OF VERMONT
AGENCY OF TRANSPORTATION

Town Of FAIRFAX-FAIRFIELD-ST. ALBANS	Bridge No. 88N
Highway No. I-89	Log Sta.
	Surv. Sta.

I-89 OVER ST. ALBANS SOUTH STATE HIGHWAY (EXIT 19)

88N APPROACH SLAB DETAILS

Designed By M. LOZIER	Drawn By K. CHISHOLM
Checked By M. LOZIER Date 2/00	Bridge Design Supervisor R.R. WHITCOMB Date 2/00
PROJECT FAIRFAX-FAIRFIELD-ST. ALBANS	PROJECT NO. IM 089 - 3 (27)
I.G.C. Info. 96a056\Structures\sa056sp4.dgn	sa056ap21
Bridge Sheet No. BR430	Sheet 182 of 370

PLOTTED 21-SEP-2000

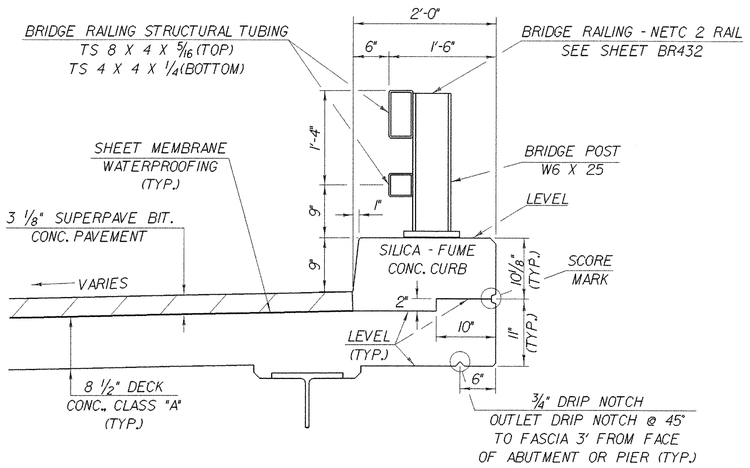

CURB AND RAIL DETAIL

SCALE: 1" = 1'-0"

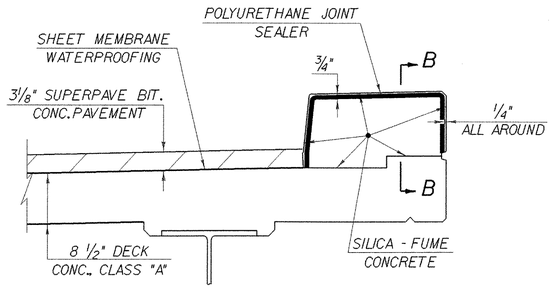

TYPICAL SECTION THROUGH CONCRETE CURB CONSTRUCTION JOINT

NTS

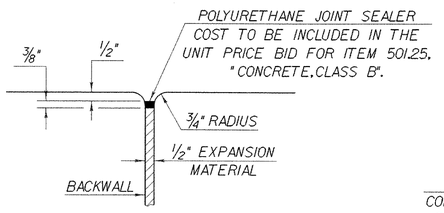

JOINT BETWEEN BACKWALL AND WINGWALL

NTS

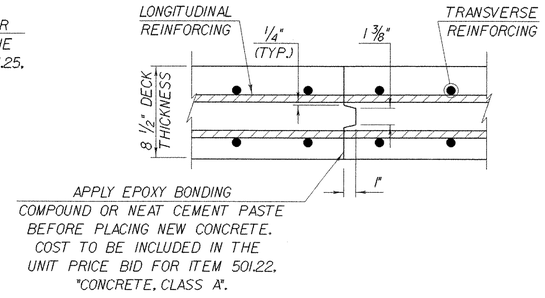

TRANSVERSE BRIDGE DECK CONSTRUCTION JOINT DETAILS

NTS

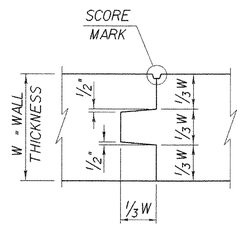

TYPICAL CONCRETE CONSTRUCTION JOINT

NTS

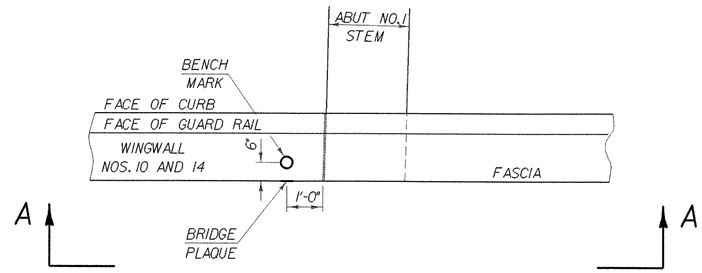

PLAN

NTS

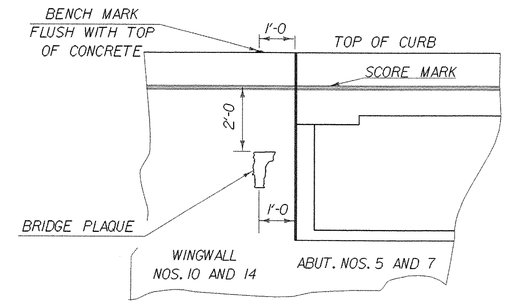

VIEW "A - A"

LOCATE BENCH MARK AND BRIDGE PLAQUE

NTS

THE BENCH MARKS AND BRIDGE PLAQUES WILL BE SUPPLIED BY THE AGENCY OF TRANSPORTATION AND SHALL BE INSTALLED BY THE CONTRACTOR AT ABUTMENT NOS. 5 AND 7 ON THE RIGHT SIDE AS SHOWN OR AS DIRECTED BY THE ENGINEER.

NOTES

1. SHEET MEMBRANE WATERPROOFING SHALL EXTEND TO FACE OF CURB AS SHOWN ABOVE IN TYPICAL SECTION THROUGH CONCRETE CURB CONSTRUCTION JOINT.
2. CONSTRUCTION JOINTS THROUGH CONCRETE CURBS SHALL BE SPACED A MAXIMUM OF 15'-0" CENTER TO CENTER AND SHALL BE 1'-6" MINIMUM FROM THE CENTER OF THE NEAREST BRIDGE RAIL POST. CONCRETE SHALL BE PLACED IN ALTERNATE SECTIONS WITH A MINIMUM OF 48 HOURS DELAY BETWEEN ADJACENT POURS.
3. LONGITUDINAL REINFORCING SHALL PASS THROUGH CONCRETE CONSTRUCTION JOINTS. CURB REINFORCING STIRRUP BARS SHALL BE TURNED AS REQUIRED TO FIT FLARED ENDS.

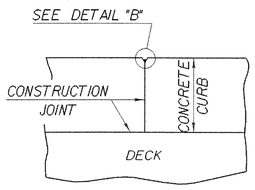

SECTION B - B

NTS

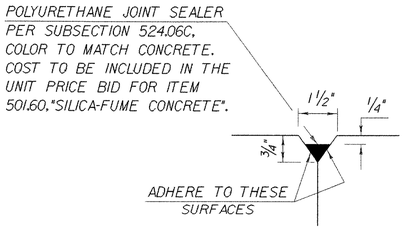

DETAIL "B"

NTS

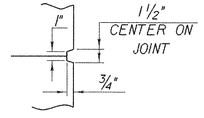

SCORE MARK DETAIL

NTS

STATE OF VERMONT
AGENCY OF TRANSPORTATION

Town Of FAIRFAX-FAIRFIELD- ST. ALBANS	Bridge No. 88 N&S
Highway No. I - 89	Log Sta. / Surv. Sta.
I-89 OVER ST. ALBANS SOUTH STATE HIGHWAY (EXIT 19)	
88 N & S CURB AND RAIL DETAILS	
Designed By M. LOZIER	Drawn By K. CHISHOLM
Checked By M. LOZIER Date 2/00	Bridge Design Supervisor R. R. WHITCOMB Date 2/00
PROJECT FAIRFAX-FAIRFIELD-ST. ALBANS	PROJECT NO. I M 089 - 3 (27)
I.G.C. Info. 96a056\Structures\sa056sp3.dgn	sa056cb21
Bridge Sheet No. BR431	Sheet 183 of 370

PLOTTED 21-SEP-2000

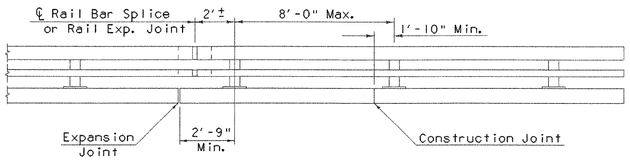

BRIDGE RAILING ELEVATION

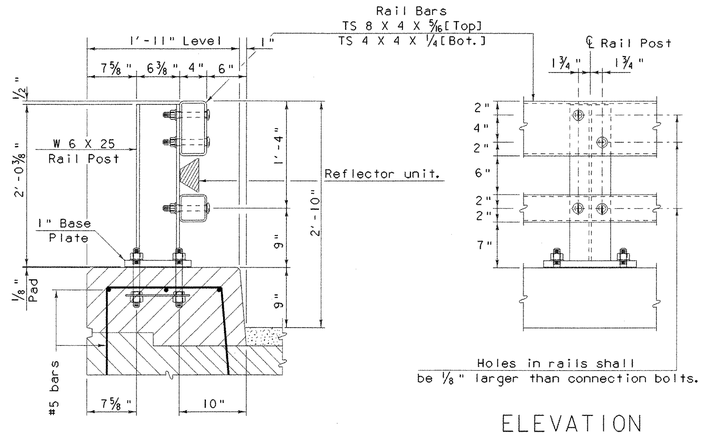

TYPICAL SECTION

ELEVATION

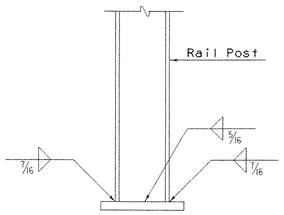

BASE WELD DETAIL

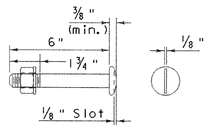

¾" Ø M164 (TYPE I) ROUND HEAD BOLT

[with washer & prevailing torque type lock nut]
[See note No. 9]
Only full diameter body bolts will be allowed

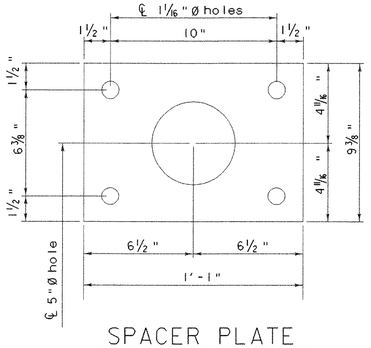

SPACER PLATE

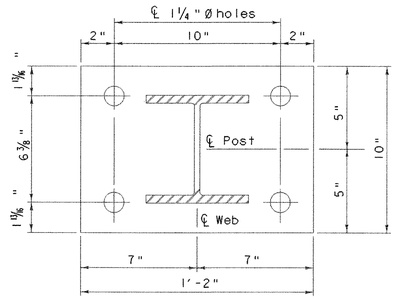

POST & BASE PLATE

NOTES

1. All work and materials shall conform to the provisions of Section 525 - Railings of the Standard Specifications for Construction.

2. Tubing and posts shall meet the requirements of Section 732 - Railing materials of the Standard Specifications for Construction.

3. All exposed cut or sheared edges shall be rounded to a 1/16" radius and be free of burrs.

4. Rail posts shall be set normal to grade.

5. Sections of rail bar shall be attached to a minimum of two [2] rail posts and preferably to at least four [4] posts.

6. Rail bar expansion joints shall be provided in any rail bay spanning a superstructure expansion joint. Expansion joint width shall be "X" at 45 °F and will be adjusted in the field by the Engineer.

7. All parts shall be galvanized after fabrication in accordance with AASHTO M111, except that hardware shall meet the requirements of AASHTO M232.

8. Rail posts anchoring nuts shall be tightened to a snug fit and given an additional ⅛ turn.

9. Rail bars shall be attached using ¾" full diameter body AASHTO M164 (Type I) round head bolts inserted through the face of the bar. Holes in posts shall be 1/16" larger than the bolt size.

10. Holes in rails for rail bar attachment may be field - drilled. Holes shall be coated with an approved zinc - rich paint prior to erection.

11. If there is a conflict between these Standard Details and the Design Drawings, the requirements of the Design drawings shall be followed.

12. Any bending of rail shall be by shop procedure only.

13. The fabricator shall submit shop drawings including welding procedures to the Structures Section for approval in accordance with the provision of 506.04, shop drawings. All welding shall conform with section 506.10.

14. The drop-weight tear test in section 732 shall not apply to the structural tubing on this sheet.

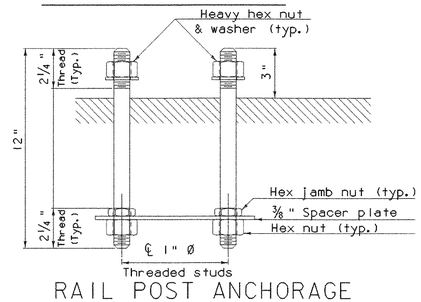

RAIL POST ANCHORAGE

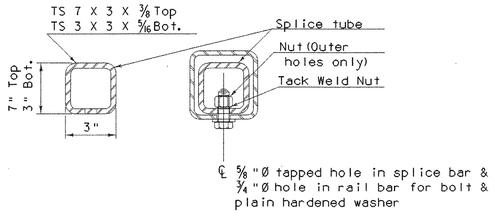

RAIL BAR SPLICE SECTION

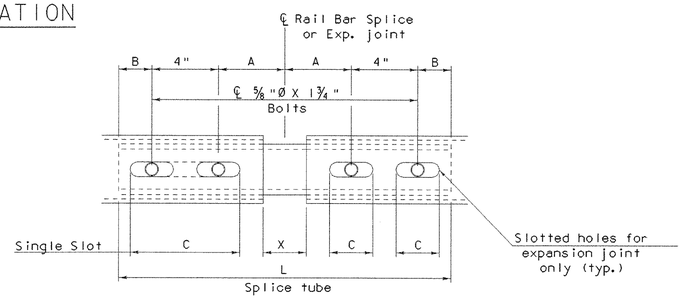

RAIL BAR SPLICE & RAIL EXP. JOINT DETAIL

[Bottom View]

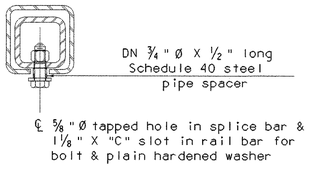

EXPANSION JOINT SECTION

For details not shown, see "Rail Bar Splice Section"

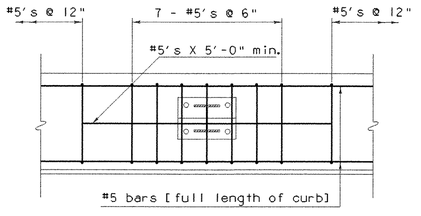

CURB REINFORCING PLAN

SPLICE & EXPANSION JOINT TABLE					
T	A	B	C	L	X
Splice	4"	2"	--	20"	¾"
≤4"	4"	2"	2½"	20"	2½"
>4" ≤ 6½"	5½"	2⅜"	3½"	23¾"	4"
>6½" ≤ 9"	6½"	3⅜"	9"*	27¾"	5"
>9" ≤ 13"	8½"	4⅜"	11"*	33¾"	7"

T = Total Movement * = Single Slot

MATERIALS

Rail bars.....ASTM A500, Grade B or ASTM A501
Rail posts.....ASTM A709/A709M, Grade 50
All other shapes & plates.....ASTM A709/A709M, Grade 36
Anchor studs.....ASTM A449
All other bolts [unless noted].....AASHTO M164, TYPE I

Nuts for AASHTO M164 bolts shall comply with AASHTO M291. Nuts for anchor studs shall comply with ASTM A563.

Washers shall comply with AASHTO M293 (ASTM F436) specification.

⅛" pad shall comply with standard specification subsection 731.01 or 731.02.

Set screws for delineation devices shall conform to ASTM Specification F880, condition CW, Alloy Type 304.

STATE OF VERMONT
AGENCY OF TRANSPORTATION

Town Of FAIRFAX-FAIRFIELD-ST. ALBANS	Bridge No. 88 N & S
Highway No. I-89	Log Sta. / Surv. Sta.
I-89 OVER ST. ALBANS SOUTH STATE HIGHWAY (EXIT 19)	
NETC RAIL DETAILS (1)	
Designed By VAOT	Drawn By VAOT
Checked By VAOT Date	Bridge Design Supervisor R. R. WHITCOMB Date 2/00
PROJECT FAIRFAX-FAIRFIELD-ST. ALBANS	PROJECT NO. IM 089-3 (27)
I.C.C. Info. 96a056\Structures\sa056br2.dgn	sa056ra5J
Bridge Sheet No. BR432	Sheet 184 of 370

PLOTTED 21-SEP-2000

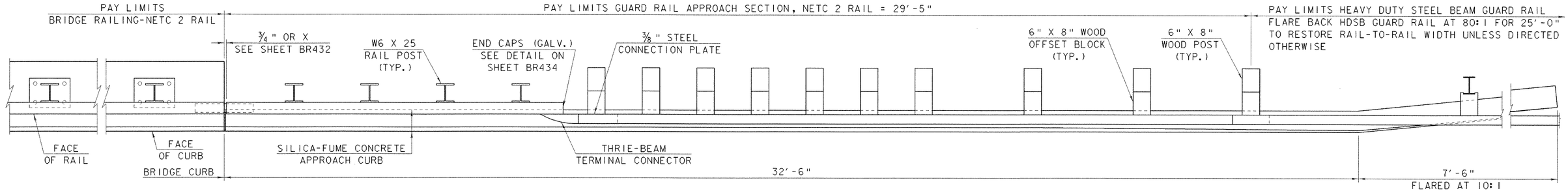

PLAN VIEW - APPROACH RAIL

SCALE: 3/4" = 1'-0"

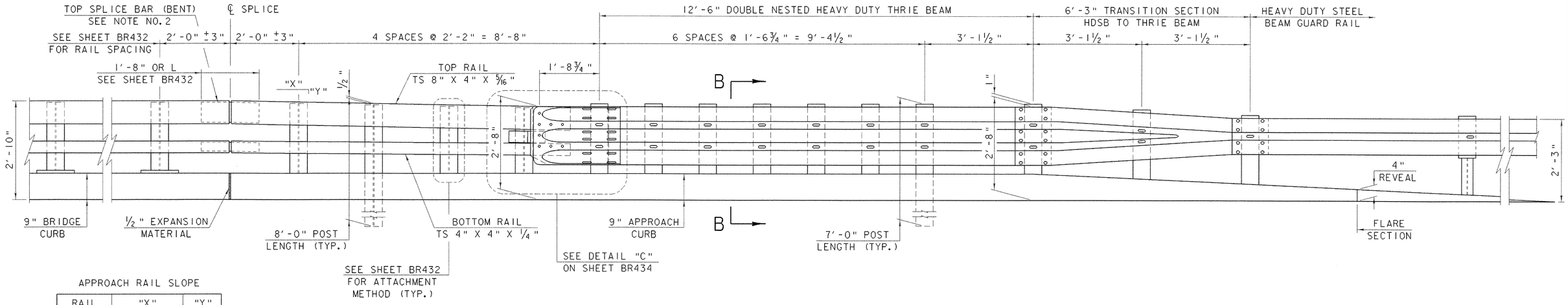

APPROACH RAIL SLOPE

RAIL	"X"	"Y"
TOP	8'-10 1/2"	2"
BOTTOM	8'-10 1/2"	13/16"

ELEVATION VIEW - APPROACH RAIL

SCALE: 3/4" = 1'-0"

NOTES

1. ALL GUARD RAIL APPROACH SECTION MATERIALS, DIMENSION SIZES, AND NOTES SHALL BE THE SAME AS THOSE OF THE BRIDGE RAILING UNLESS OTHERWISE NOTED.
2. WELD TOP SPLICE BAR TO FIT BEND. USE COMPLETE PENETRATION WELD (B-U2).
3. REFER TO SHEET BR432 FOR ADDITIONAL DETAILS, NOTES, AND MATERIAL SPECIFICATIONS.
4. THE REFLECTORIZED ALUMINUM DELINEATOR IS TO BE ERECTED EVERY 30'-0" (OR THE CLOSEST POST) WITH 2 - NO.8 X 3/4" SELF TAPPING SCREWS. DELINEATORS SHALL MEET SPECIFICATION REQUIREMENTS FOR ASTM B209 ALLOY 5052-H32.
5. REFLECTIVE MATERIAL SHALL MEET REQUIREMENTS OF SUBSECTION 750.08 AND SHALL BE ENCAPSULATED LENS SILVER OR AMBER. AMBER IS TO BE INSTALLED ON THE DRIVERS LEFT AND SILVER ON THEIR RIGHT.
6. ON BRIDGES WITH A SIDEWALK, DELINEATORS ARE NOT TO BE INSTALLED ON THE SIDEWALK SIDE OF THE BRIDGE (I.E. DELINEATORS INSTALLED ONLY ON THE CURB SIDE AND ON THE APPROACH ON THE CURB SIDE). PAYMENT SHALL BE SUBSIDIARY TO ALL OTHER ITEMS.
7. ALL APPROACH RAIL SPLICES SHALL BE LAPPED IN THE DIRECTION OF TRAFFIC FLOW.

STATE OF VERMONT
AGENCY OF TRANSPORTATION

Town Of FAIRFAX-FAIRFIELD-ST. ALBANS	Bridge No. 88 N & S
Highway No. I-89	Log Sta. / Surv. Sta.
I-89 OVER ST. ALBANS SOUTH STATE HIGHWAY (EXIT 19)	
NETC RAIL DETAILS (2)	
Designed By G. ROY	Drawn By G. ROY
Checked By M. LOZIER Date 2/00	Bridge Design Supervisor R. R. WHITCOMB Date 2/00
PROJECT FAIRFAX-FAIRFIELD-ST. ALBANS	PROJECT NO. I M 089-3 (27)
I.G.C. Info. 96a056\Structures\sa056br2.dgn	sa056ra6J
Bridge Sheet No. BR433	Sheet 185 of 370

PLOTTED 21-SEP-2000

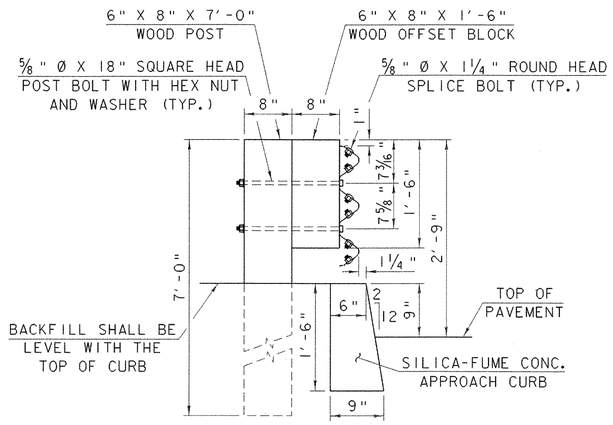

SECTION B-B

SCALE: 1" = 1'-0"

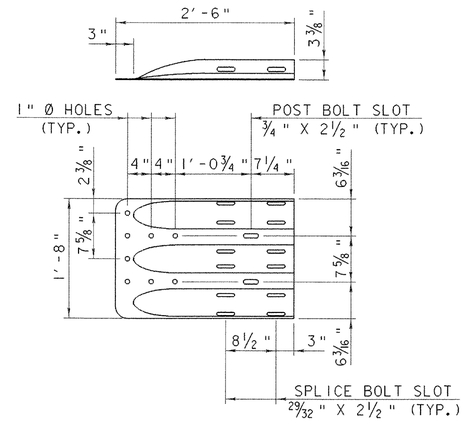

THRIE-BEAM TERMINAL CONNECTOR

SCALE: 1" = 1'-0"

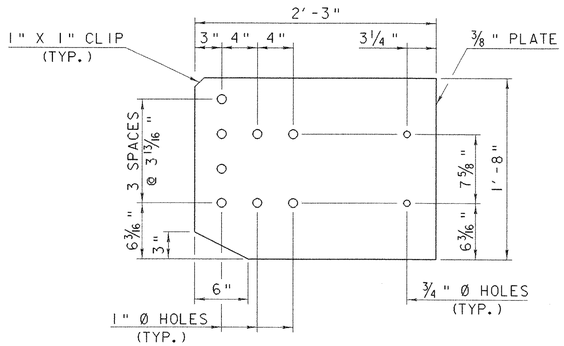

CONNECTION PLATE

SCALE: 1 1/2" = 1'-0"

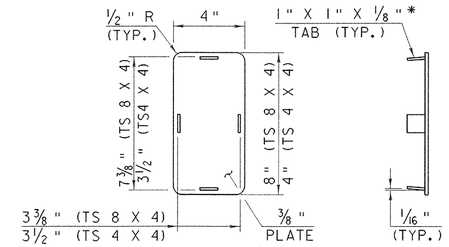

END CAP DETAIL

SCALE: 3" = 1'-0"

* WELD TABS TO END CAP PLATE IN TAPERED POSITION SO CAP CAN BE JAMMED INTO END OF RAIL TUBE.

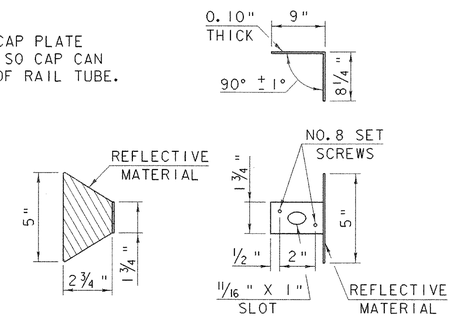

DELINEATION DEVICE DETAIL

SCALE: 3" = 1'-0"

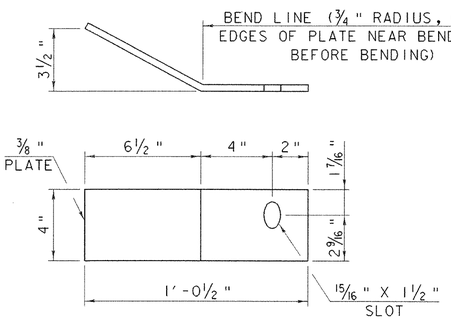

DEFLECTOR PLATE DETAIL

SCALE: 3" = 1'-0"

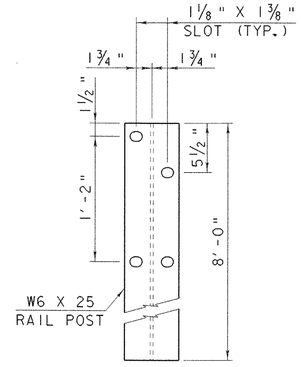

RAIL POST

SCALE: 1 1/2" = 1'-0"

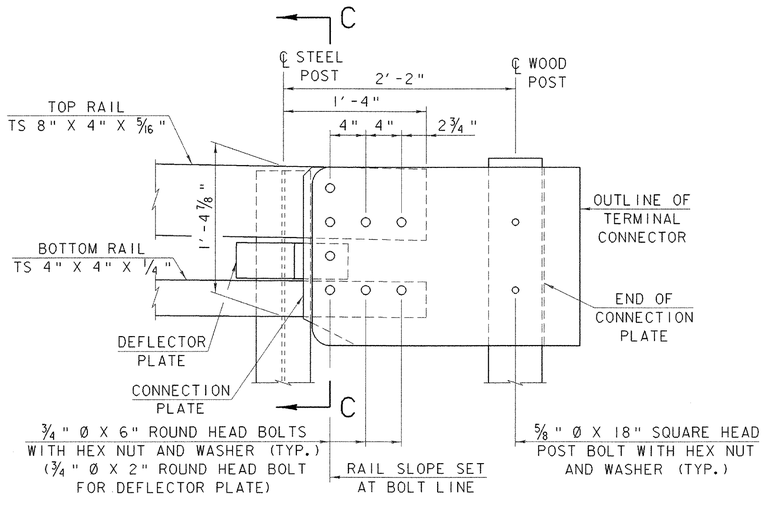

DETAIL "C"

SCALE: 1 1/2" = 1'-0"

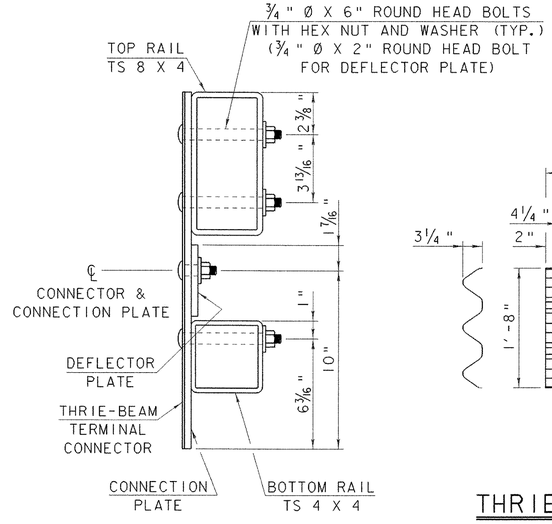

SECTION C-C

SCALE: 3" = 1'-0"

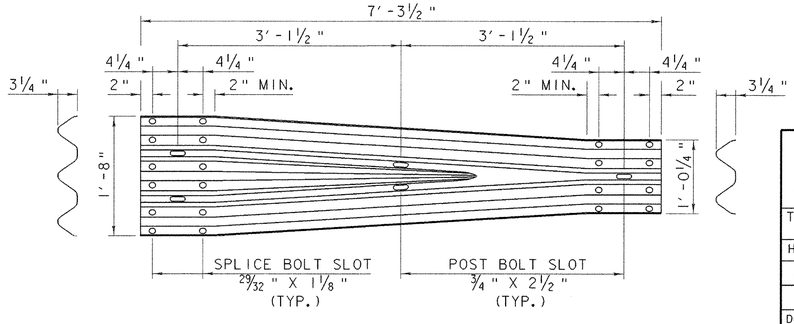

THRIE-BEAM TO W-BEAM TRANSITION SECTION

SCALE: 1" = 1'-0"

STATE OF VERMONT
AGENCY OF TRANSPORTATION

Town Of FAIRFAX-FAIRFIELD-ST. ALBANS	Bridge No. 88 N & S
Highway No. I-89	Log Sta. / Surv. Sta.

I-89 OVER ST. ALBANS SOUTH STATE HIGHWAY (EXIT 19)

NETC RAIL DETAILS (3)

Designed By G. ROY	Drawn By G. ROY
Checked By M. LOZIER Date 2/00	Bridge Design Supervisor R. R. WHITCOMB Date 2/00
PROJECT FAIRFAX-FAIRFIELD-ST. ALBANS	PROJECT NO. I M 089 -3 (27)
I.G.C. Info. 96a056\Structures\sa056br2.dgn	sa056ra7.1
Bridge Sheet No. BR434	Sheet 186 of 370

PLOTTED 21-SEP-2000

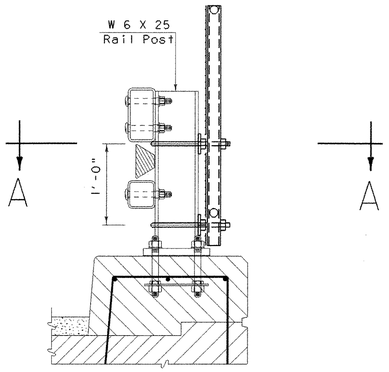

TYPICAL SECTION

NOTE: FOR DIMENSIONS SEE SHEETS BR432 & BR433.

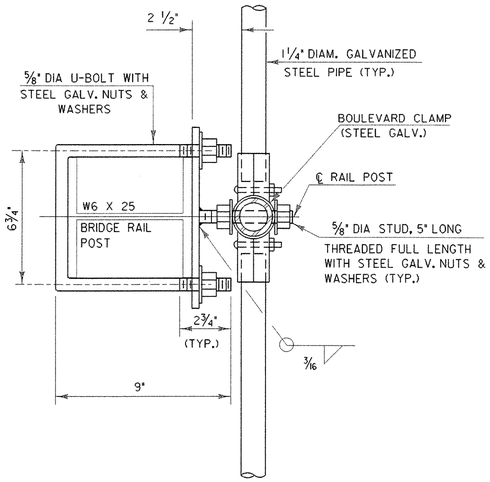

SECTION A-A

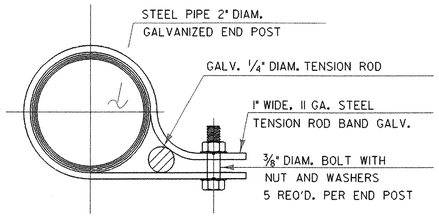

TENSION ROD BAND

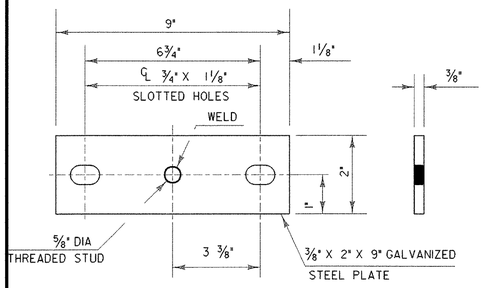

PLATE DETAILS

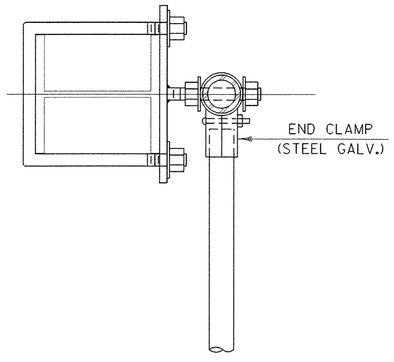

PLAN VIEW AT END POST

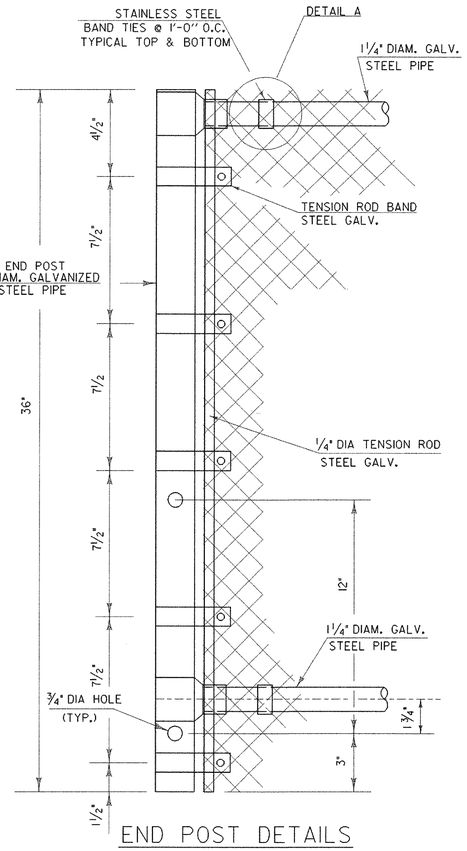

END POST DETAILS

NOTES

1. THREADS OF STUDS AND U-BOLTS TO BE 5/8-11 UNC.
2. ALL CONNECTION PLATES TO BE GALVANIZED AFTER FABRICATION.
3. 1¼" PIPE LENGTH SHALL BE FIELD CUT TO FIT POST SPACING.
4. CHAIN LINK FABRIC TO BE KNUCKLED TOP AND BOTTOM.
5. ALL BOLTS, NUTS AND WASHERS SHALL CONFORM TO THE SPECIFICATIONS FOR ASTM A307.
6. ALL STEEL PLATES SHALL CONFORM TO THE SPECIFICATION FOR AASHTO M270 GRADE 36.
7. ALL GALVANIZING SHALL CONFORM TO THE REQUIREMENTS OF AASHTO M-181 WITH HARDWARE AND FITTINGS CONFORMING TO THE REQUIREMENTS OF AASHTO M-111 OR AASHTO M-232 WHICHEVER IS APPLICABLE. ALL BOLTS, NUTS AND WASHERS SHALL BE EITHER HOT-DIP GALVANIZED IN ACCORDANCE WITH THE ABOVE AASHTO REQUIREMENTS OR MECHANICALLY GALVANIZED USING A MECHANICALLY DEPOSITED PROCESS CONFORMING TO THE REQUIREMENTS OF AASHTO M-298, CLASS 110.
8. GALVANIZED CHAIN-LINK FABRIC SHALL BE TYPE I (ZINC) CLASS D AS SPECIFIED IN AASHTO M-181.
9. SNOW BARRIER SHALL BEGIN AT THE BRIDGE RAIL POST WHICH WILL PROVIDE A MIN. DISTANCE OF 20' (AS SHOWN) OR AS DIRECTED BY THE ENGINEER.
10. ALL REFERENCES TO THE DIAMETERS OF GALVANIZED STEEL PIPE SHALL REFER TO THE OUTSIDE DIAMETER (O. D.).

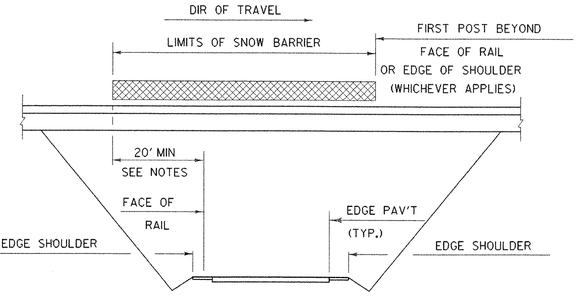

SCHEMATIC SNOW BARRIER LIMITS

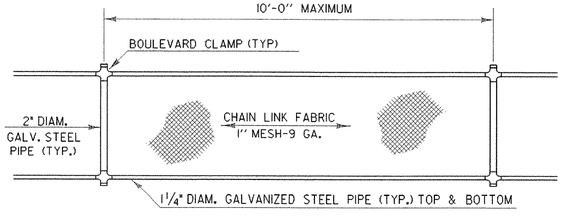

ELEVATION SNOW BARRIER

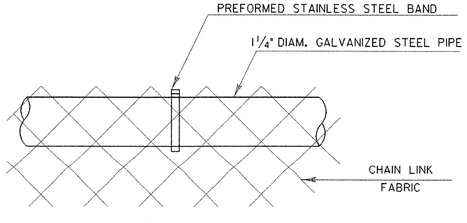

DETAIL A

STATE OF VERMONT
AGENCY OF TRANSPORTATION

Town Of FAIRFAX-FAIRFIELD-ST. ALBANS	Bridge No. 88 N & S
Highway No. I-89	Log Sta. / Surv. Sta.
I-89 OVER ST. ALBANS SOUTH STATE HIGHWAY (EXIT 19)	
NETC RAIL DETAILS (4)	
Designed By VAOT	Drawn By VAOT
Checked By VAOT Date	Bridge Design Supervisor R. R. WHITCOMB Date 2/00
PROJECT FAIRFAX-FAIRFIELD-ST. ALBANS	PROJECT NO. IM 089-3 (27)
I.G.C. Info. 96a056\Structures\sa056br2.dgn	sa056ra81
Bridge Sheet No. BR435	Sheet 187 of 370

PLOTTED 21-SEP-2000

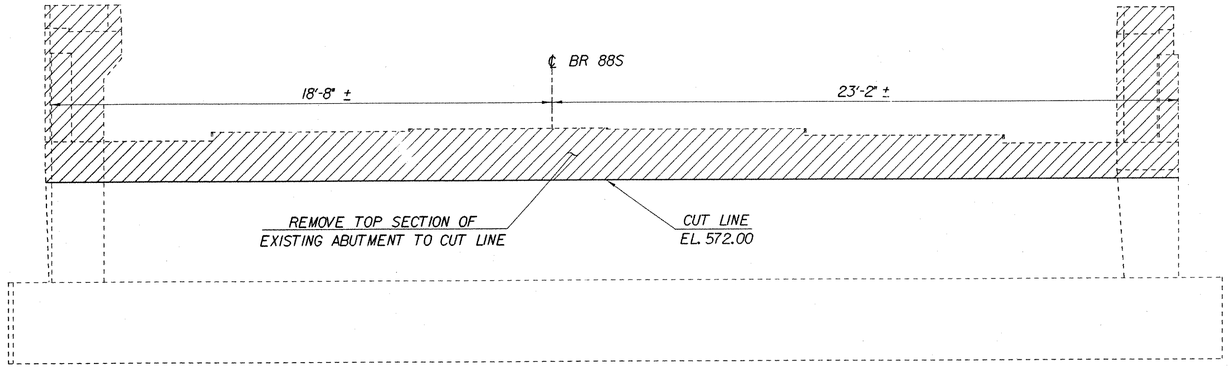

PARTIAL REMOVAL OF EXISTING ABUTMENT NO. 5

SCALE: 3/8" = 1'-0"

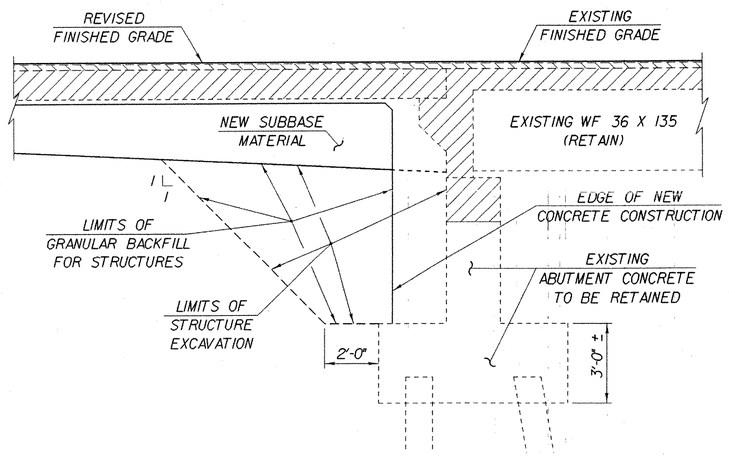

ABUTMENT EARTHWORK TYPICAL

NOT TO SCALE

1. REMOVAL AND DISPOSAL TO BE PAID UNDER ITEM 529.10, "REMOVAL OF BRIDGE PAVEMENT".

   REMOVAL AND DISPOSAL TO BE PAID UNDER ITEM 529.20, "PARTIAL REMOVAL OF STRUCTURE". SEE PROJECT NOTE 8 ON SHEET BR403.

2. ACTUAL EXCAVATION TO BE DETERMINED BY THE CONTRACTOR, BUT PAYMENT FOR STRUCTURE EXCAVATION SHALL BE AS SHOWN. THE CONTRACTOR SHALL NOT EXCAVATE BELOW THE EXISTING BOTTOM OF FOOTING CONCRETE ELEVATION.

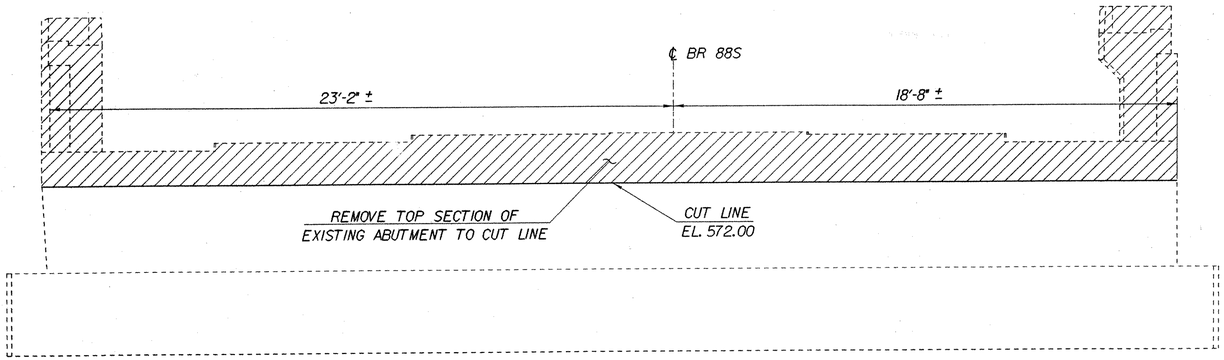

PARTIAL REMOVAL OF EXISTING ABUTMENT NO. 6

SCALE: 3/8" = 1'-0"

IMPORTANT NOTE: BRIDGE FINISHED GRADES ARE CENTERLINE GRADES.

STATE OF VERMONT
AGENCY OF TRANSPORTATION

Town Of FAIRFAX-FAIRFIELD-ST. ALBANS	Bridge No. 88S
Highway No. I-89	Log Sta. / Surv. Sta.
I-89 OVER ST. ALBANS SOUTH STATE HIGHWAY (EXIT 19)	
88S ABUTMENT REMOVAL DETAILS	
Designed By M. LOZIER	Drawn By K. CHISHOLM
Checked By M. LOZIER Date 2/00	Bridge Design Supervisor R. R. WHITCOMB Date 2/00
PROJECT FAIRFAX-FAIRFIELD-ST. ALBANS	PROJECT NO. IM 089 - 3 (27)
I.C.C. Info. 96a056\Structures\sa056ab2.dgn	sa056rmlJ
Bridge Sheet No. BR436	Sheet 188 of 370

PLOTTED 21-SEP-2000

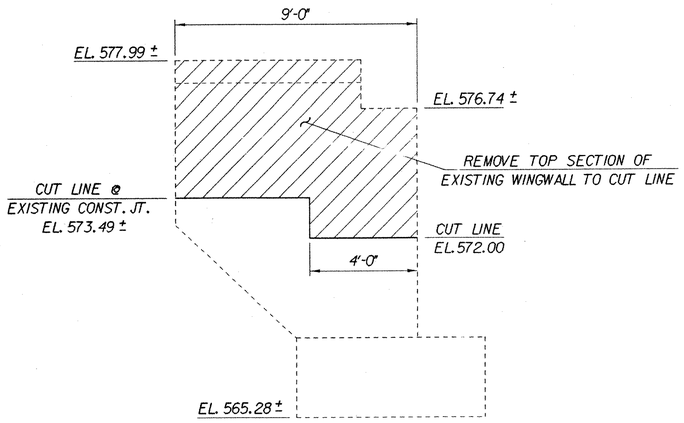

PARTIAL REMOVAL OF EXISTING WINGWALL NO. 10

SCALE: 3/8" = 1'-0"

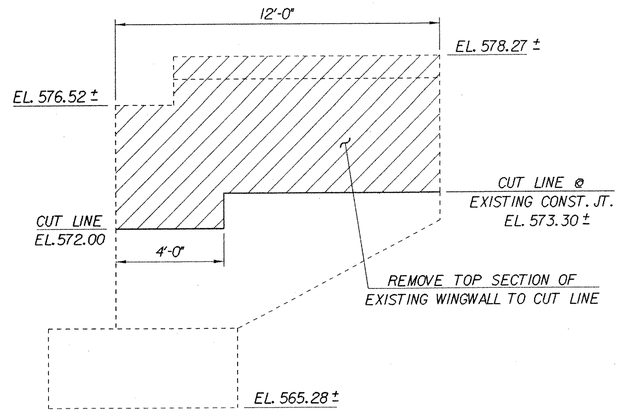

PARTIAL REMOVAL OF EXISTING WINGWALL NO. 9

SCALE: 3/8" = 1'-0"

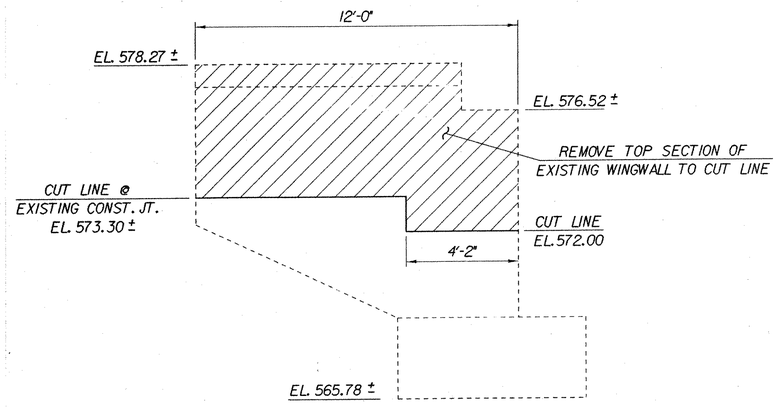

PARTIAL REMOVAL OF EXISTING WINGWALL NO. 11

SCALE: 3/8" = 1'-0"

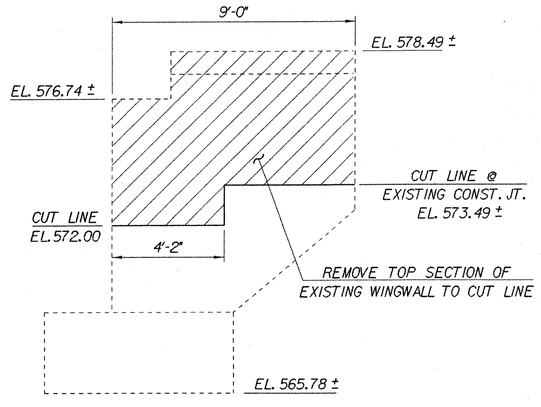

PARTIAL REMOVAL OF EXISTING WINGWALL NO. 12

SCALE: 3/8" = 1'-0"

IMPORTANT NOTE: BRIDGE FINISHED GRADES ARE CENTERLINE GRADES.

STATE OF VERMONT
AGENCY OF TRANSPORTATION

Town Of FAIRFAX-FAIRFIELD- ST. ALBANS	Bridge No. 88S
Highway No. I - 89	Log Sta. / Surv. Sta.
I-89 OVER ST. ALBANS SOUTH STATE HIGHWAY (EXIT 19)	
88S WINGWALL REMOVAL DETAILS	
Designed By M. LOZIER	Drawn By K. CHISHOLM
Checked By M. LOZIER Date 2/00	Bridge Design Supervisor R. R. WHITCOMB Date 2/00
PROJECT FAIRFAX-FAIRFIELD-ST. ALBANS	PROJECT NO. I M 089 - 3 (27)
I.G.C. Info. 96a056\Structures\sa056ab2.dgn	sa056rm2J
Bridge Sheet No. BR437	Sheet 189 of 370

PLOTTED 21-SEP-2000

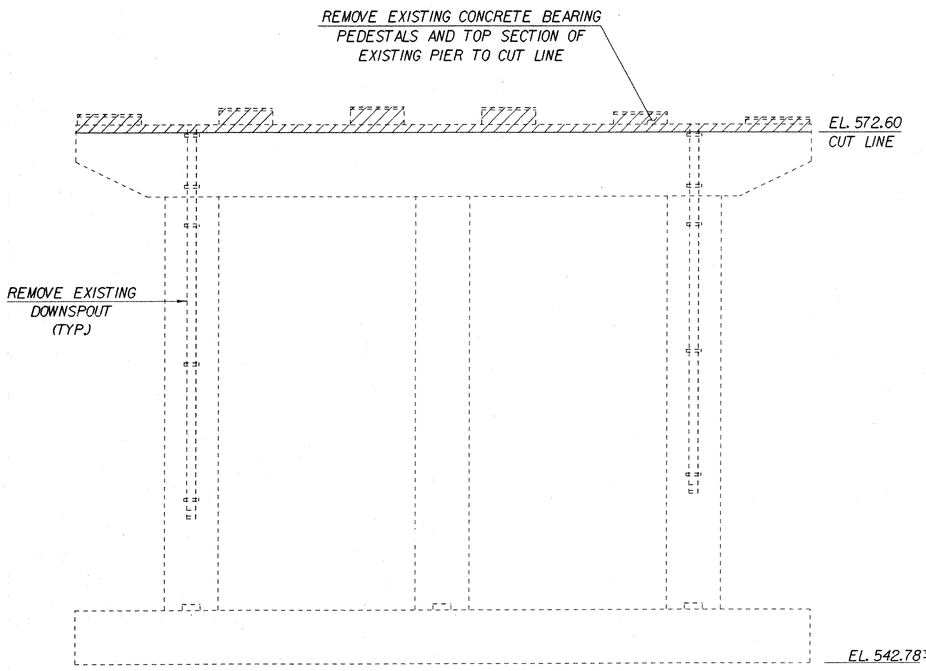

PARTIAL REMOVAL OF EXISTING PIER NO. 1

SCALE: 1/4" - 1'-0"

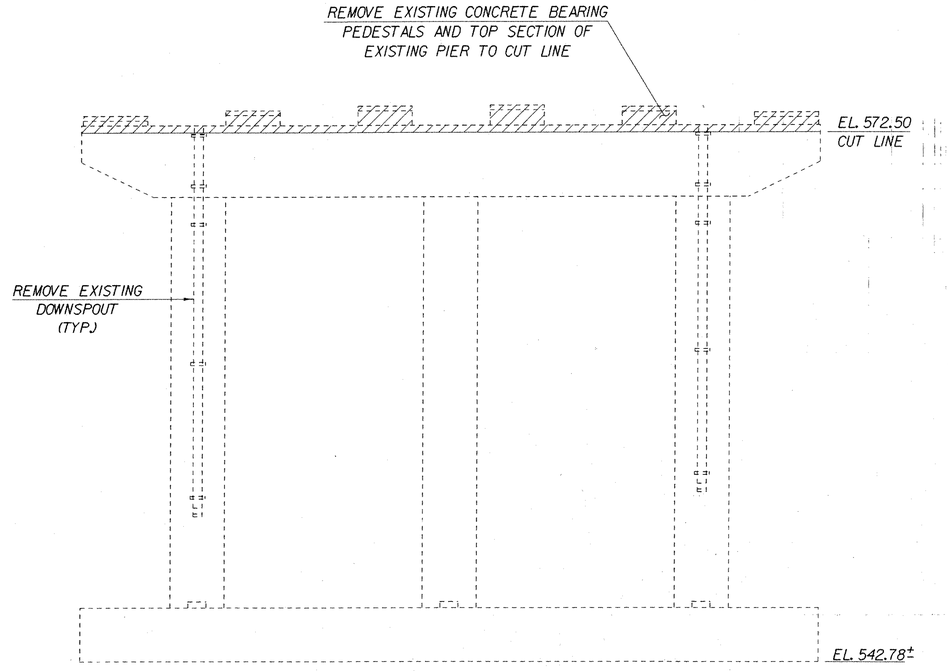

PARTIAL REMOVAL OF EXISTING PIER NO. 2

SCALE: 1/4" - 1'-0"

IMPORTANT NOTE: BRIDGE FINISHED GRADES ARE CENTERLINE GRADES.

STATE OF VERMONT
AGENCY OF TRANSPORTATION

Town Of FAIRFAX-FAIRFIELD- ST. ALBANS	Bridge No. 88S
Highway No. I - 89	Log Sta. / Surv. Sta.
I-89 OVER ST. ALBANS SOUTH STATE HIGHWAY (EXIT 19)	
88S PIER REMOVAL DETAILS	
Designed By M. LOZIER	Drawn By K. CHISHOLM
Checked By M. LOZIER Date 2/00	Bridge Design Supervisor R. R. WHITCOMB Date 2/00
PROJECT FAIRFAX-FAIRFIELD-ST. ALBANS	PROJECT NO. I M 089 - 3 (27)
I.G.C. Info. 96a056\Structures\sa056ab2.dgn	sa056rm3J
Bridge Sheet No. BR438	Sheet 190 of 370

PLOTTED 21-SEP-2000

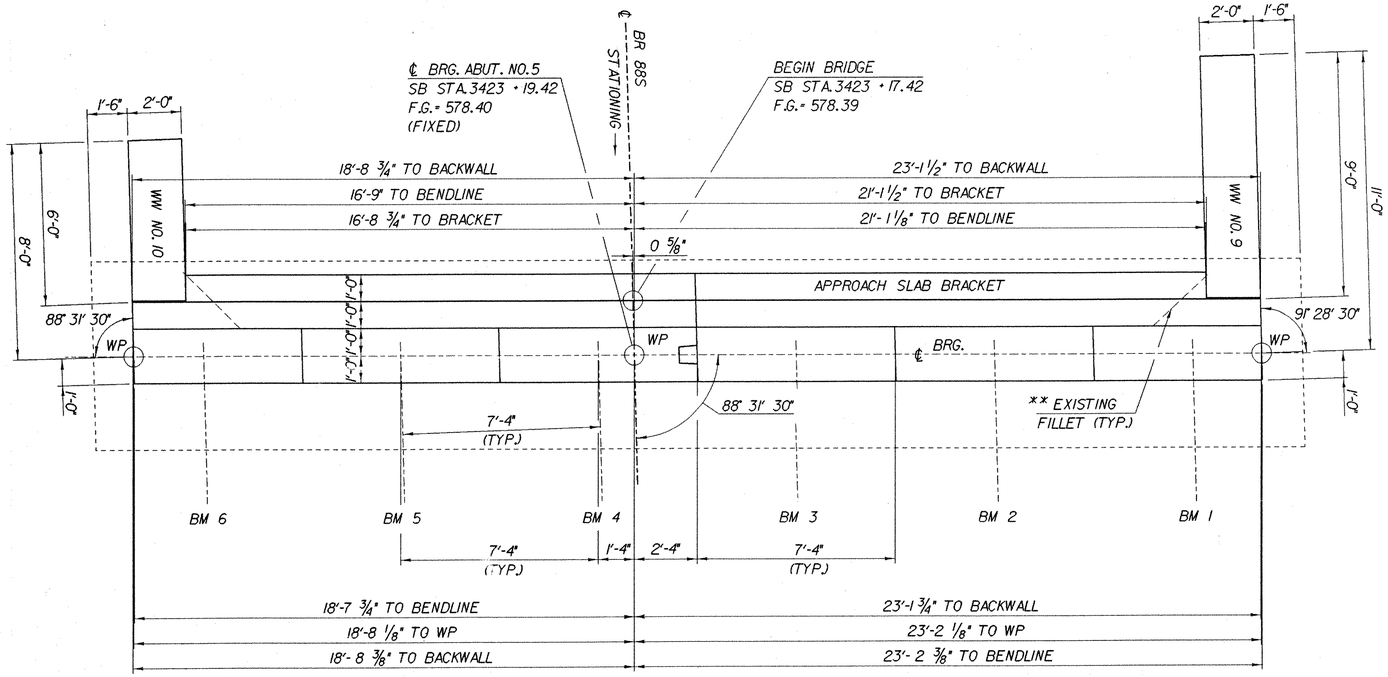

ABUTMENT NO. 5 PLAN

SCALE: 3/8" = 1'-0"

** NOTE:
REMOVE EXISTING FILLETS DOWN TO CUT LINE ELEVATION. BUILD NEW FULL HEIGHT BACKWALL INTO EXISTING FILLETS BELOW CUT LINE DOWN TO TOP OF FOOTING ELEVATION. SEE CORNER DETAIL BELOW CUT LINE THIS SHEET.

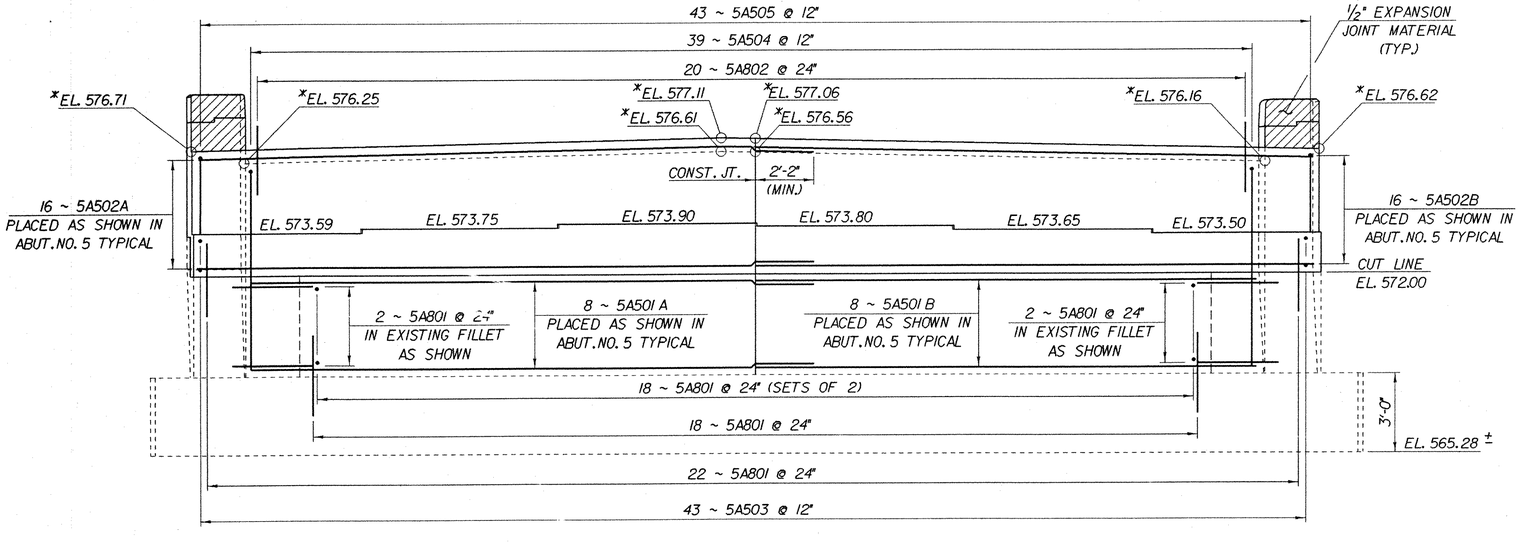

ABUTMENT NO. 5 ELEVATION

SCALE: 3/8" = 1'-0"

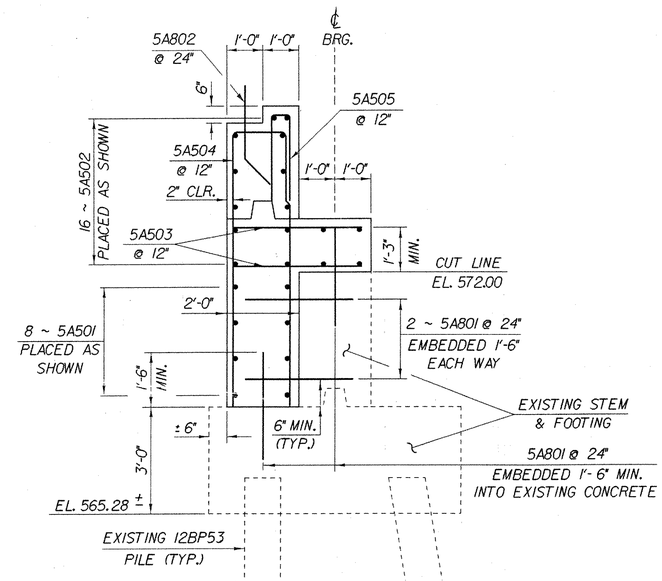

ABUTMENT NO. 5 TYPICAL

SCALE: 1/2" = 1'-0"

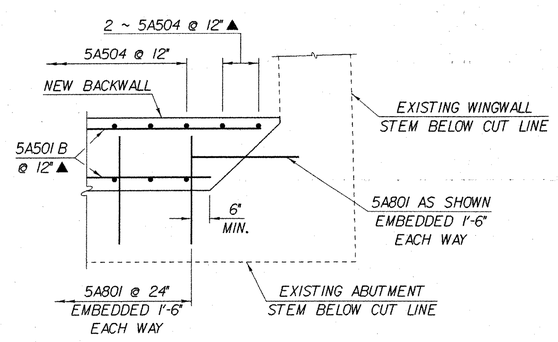

CORNER DETAIL BELOW CUT LINE

(ALL OTHER WINGWALL CORNERS SIMILAR)
SCALE: 1/2" = 1'-0"

* NOTE:
ELEVATIONS AT TOP OF BACKWALL AND APPROACH SLAB BRACKET TO BE VERIFIED BY THE RESIDENT ENGINEER AFTER STRUCTURAL STEEL IS ERECTED.

IMPORTANT NOTE: BRIDGE FINISHED GRADES ARE CENTERLINE GRADES.

NOTE:

NF = NEAR FACE
FF = FAR FACE
EF = EACH FACE
▲ = CUT TO FIT IN FIELD
3" CLR. UNLESS OTHERWISE SPECIFIED ON THE PLANS.

STATE OF VERMONT
AGENCY OF TRANSPORTATION

Town Of FAIRFAX-FAIRFIELD- ST. ALBANS	Bridge No. 88S
Highway No. I - 89	Log Sta. / Surv. Sta.
I-89 OVER ST. ALBANS SOUTH STATE HIGHWAY (EXIT 19)	
ABUTMENT NO. 5 DETAILS	
Designed By M. LOZIER	Drawn By K. CHISHOLM
Checked By M. LOZIER — Date 2/00	Bridge Design Supervisor R. R. WHITCOMB — Date 2/00
PROJECT FAIRFAX-FAIRFIELD-ST. ALBANS	PROJECT NO. I M 089 - 3 (27)
I.G.C. Info. 96a056\Structures\sa056ab2.dgn	sa056ab5J
Bridge Sheet No. BR439	Sheet 191 of 370

PLOTTED 21-SEP-2000

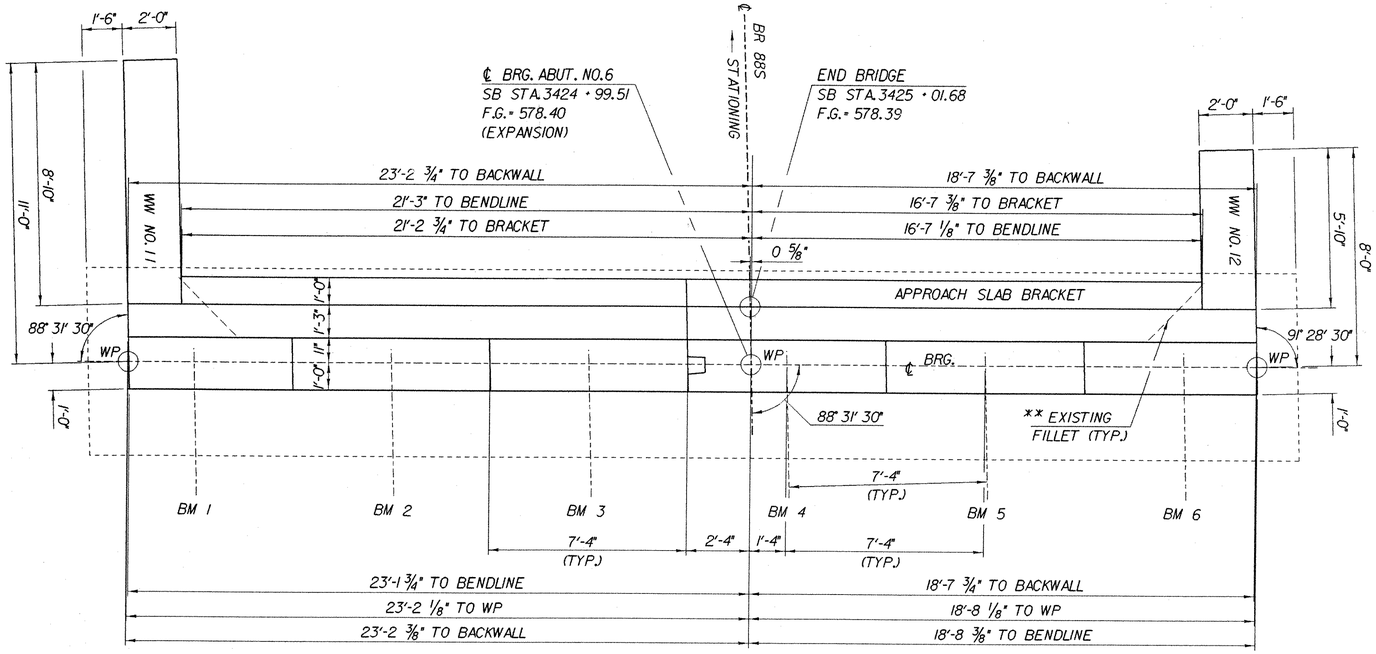

ABUTMENT NO. 6 PLAN

SCALE: 3/8" = 1'-0"

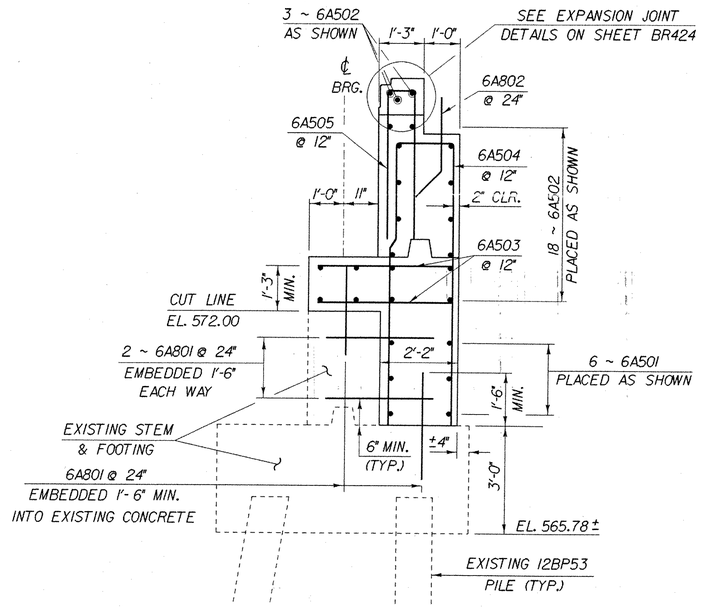

ABUTMENT NO. 6 TYPICAL

SCALE: 1/2" = 1'-0"

** NOTE:
REMOVE EXISTING FILLETS DOWN TO CUT LINE ELEVATION. BUILD NEW FULL HEIGHT BACKWALL INTO EXISTING FILLETS BELOW CUT LINE DOWN TO TOP OF FOOTING ELEVATION. SEE CORNER DETAIL BELOW CUT LINE SHEET BR439.

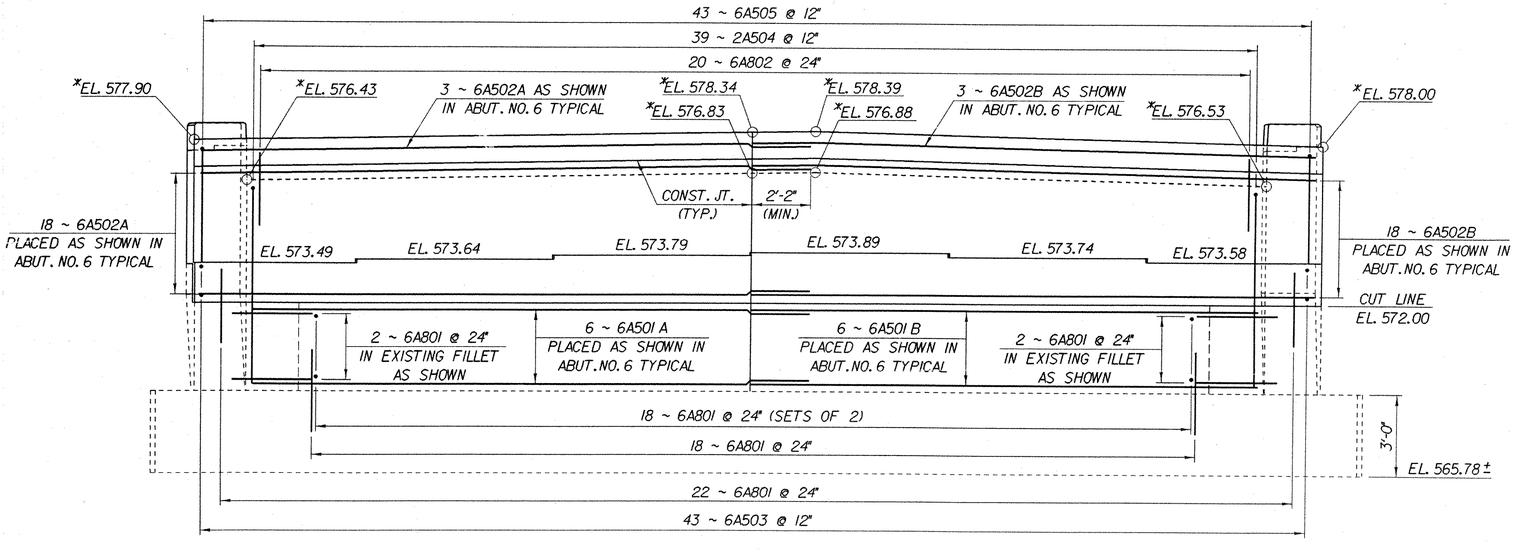

ABUTMENT NO. 6 ELEVATION

SCALE: 3/8" = 1'-0"

* NOTE:
ELEVATIONS AT TOP OF BACKWALL AND APPROACH SLAB BRACKET TO BE VERIFIED BY THE RESIDENT ENGINEER AFTER STRUCTURAL STEEL IS ERECTED.

IMPORTANT NOTE: BRIDGE FINISHED GRADES ARE CENTERLINE GRADES.

NOTE:

NF = NEAR FACE
FF = FAR FACE
EF = EACH FACE
▲ = CUT TO FIT IN FIELD
3" CLR. UNLESS OTHERWISE SPECIFIED ON THE PLANS.

STATE OF VERMONT
AGENCY OF TRANSPORTATION

Town Of FAIRFAX-FAIRFIELD- ST. ALBANS	Bridge No. 88S
Highway No. I - 89	Log Sta. / Surv. Sta.
I-89 OVER ST. ALBANS SOUTH STATE HIGHWAY (EXIT 19)	
ABUTMENT NO. 6 DETAILS	
Designed By M. LOZIER	Drawn By K. CHISHOLM
Checked By M. LOZIER Date 2/00	Bridge Design Supervisor R. R. WHITCOMB Date 2/00
PROJECT FAIRFAX-FAIRFIELD-ST. ALBANS	PROJECT NO. I M 089 - 3 (27)
I.G.C. Info. 96a056\Structures\sa056ab2.dgn	sa056ab6J
Bridge Sheet No. BR440	Sheet 192 of 370

PLOTTED 21-SEP-2000

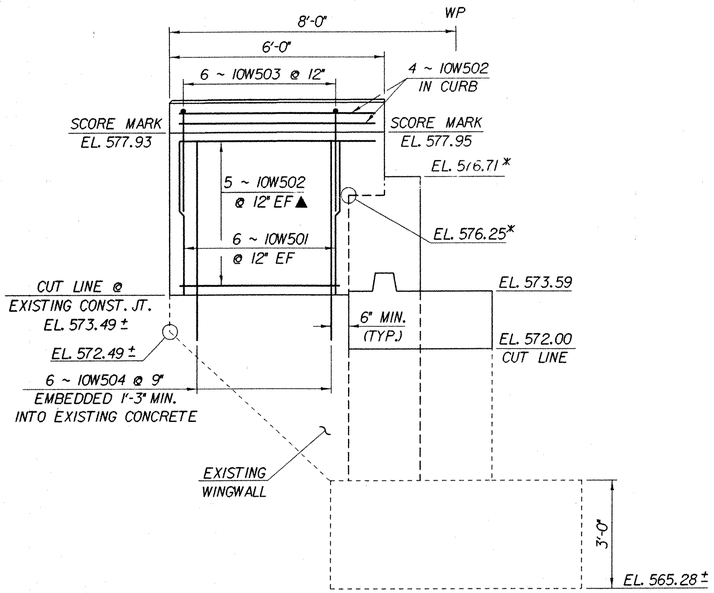

WINGWALL NO. 10 ELEVATION

SCALE: ½" = 1'-0"

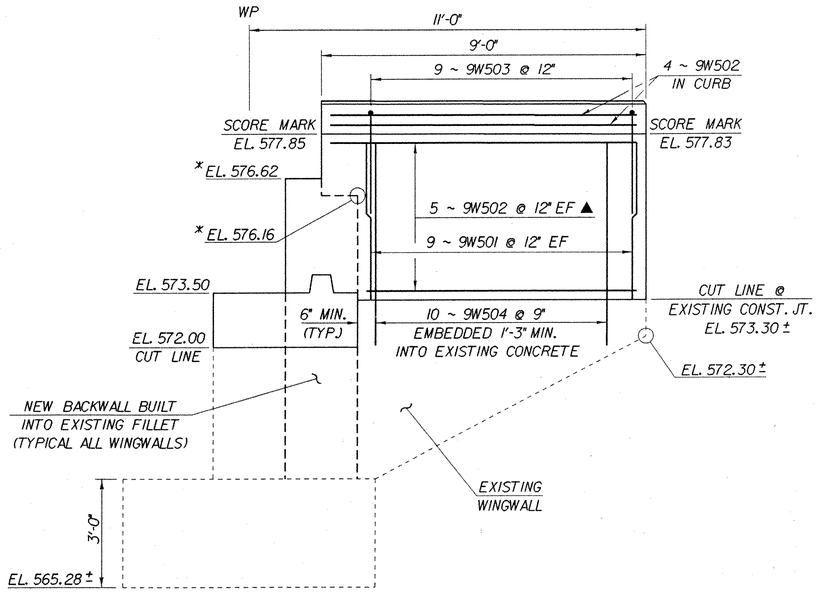

WINGWALL NO. 9 ELEVATION

SCALE: ½" = 1'-0"

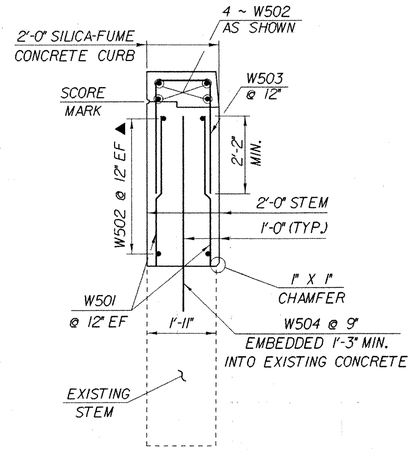

WINGWALL TYPICAL

SCALE: ½" = 1'-0"

IMPORTANT NOTE: BRIDGE FINISHED GRADES ARE CENTERLINE GRADES.

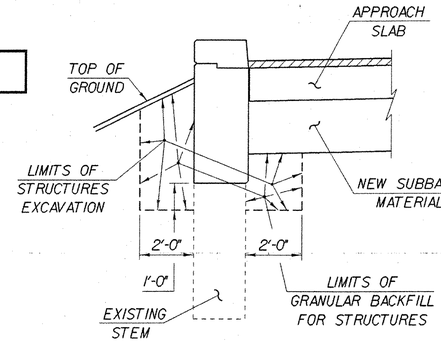

WINGWALL EARTHWORK TYPICAL

NOT TO SCALE

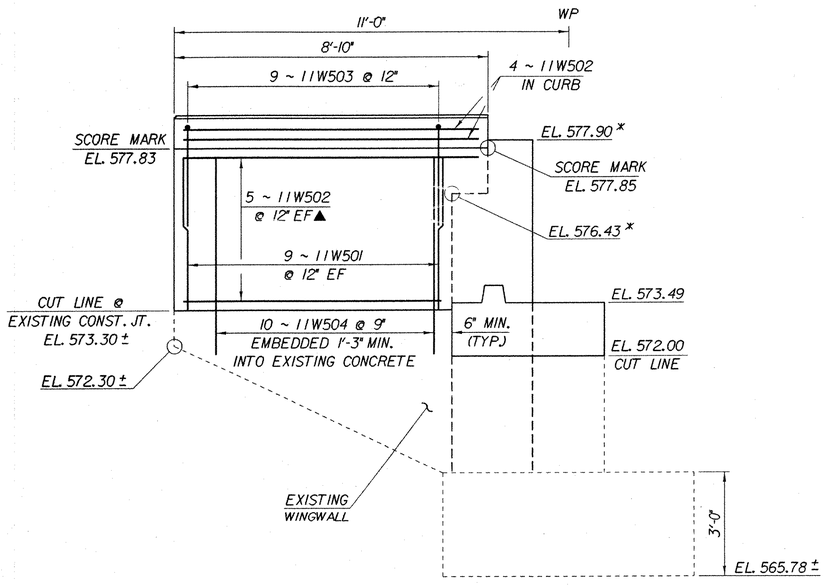

WINGWALL NO. 11 ELEVATION

SCALE: ½" = 1'-0"

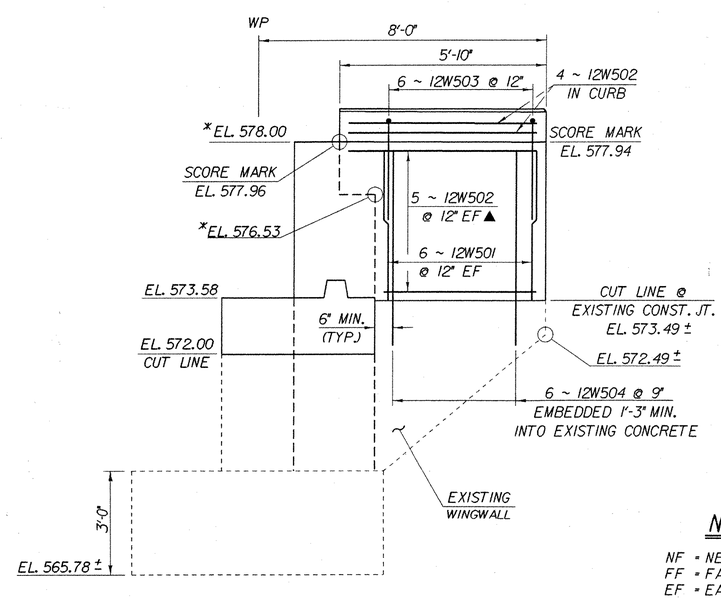

WINGWALL NO. 12 ELEVATION

SCALE: ½" = 1'-0"

NOTE:

NF = NEAR FACE
FF = FAR FACE
EF = EACH FACE
▲ = CUT TO FIT IN FIELD
3" CLR. UNLESS OTHERWISE SPECIFIED ON THE PLANS.

* NOTE:
ELEVATIONS AT TOP OF BACKWALL AND APPROACH SLAB BRACKET TO BE VERIFIED BY THE RESIDENT ENGINEER AFTER STRUCTURAL STEEL IS ERECTED.

STATE OF VERMONT
AGENCY OF TRANSPORTATION

Town Of FAIRFAX-FAIRFIELD- ST. ALBANS	Bridge No. 88S
Highway No. I - 89	Log Sta. / Surv. Sta.

I-89 OVER ST. ALBANS SOUTH STATE HIGHWAY (EXIT 19)

WINGWALL NOS. 9 - 12 ELEVATIONS

Designed By M. LOZIER	Drawn By K. CHISHOLM
Checked By M. LOZIER Date 2/00	Bridge Design Supervisor R. R. WHITCOMB Date 2/00
PROJECT FAIRFAX-FAIRFIELD-ST. ALBANS	PROJECT NO. IM 089 - 3 (27)
I.G.C. Info. 96a056\Structures\sa056ab2.dgn	sa056ww31
Bridge Sheet No. BR441	Sheet 193 of 370

PLOTTED 21-SEP-2000

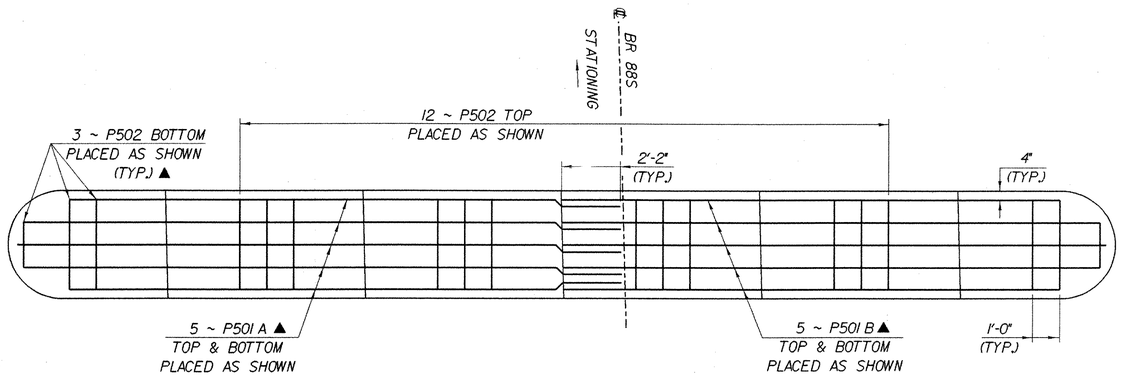

PIER CAP REINFORCING PLAN

SCALE: 3/8" = 1'-0"

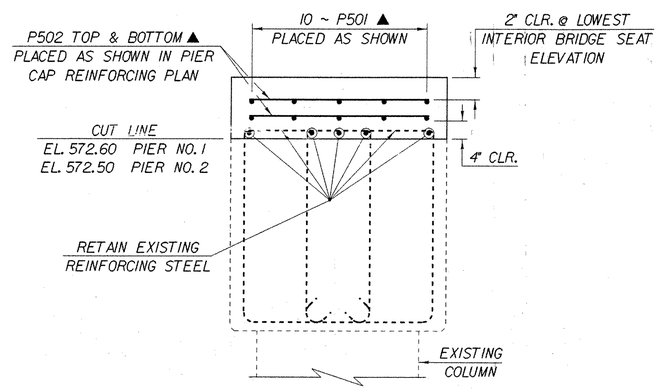

PIER TYPICAL

SCALE: 3/4" = 1'-0"

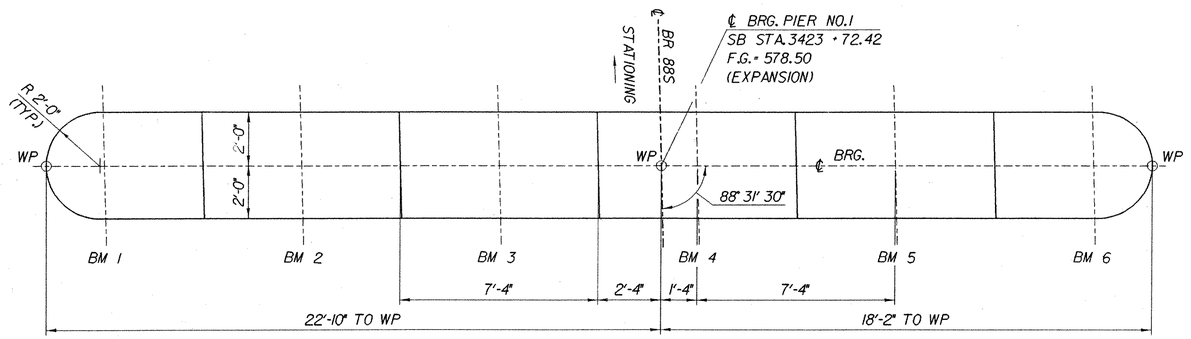

PIER NO. 1 PLAN

SCALE: 3/8" = 1'-0"

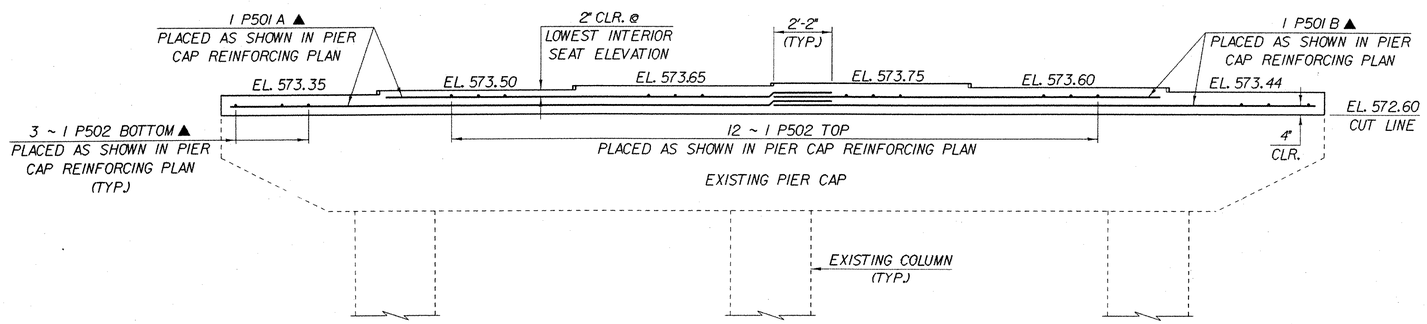

PIER NO. 1 PARTIAL ELEVATION

(LOOKING UPSTATION)
SCALE: 3/8" = 1'-0"

IMPORTANT NOTE: BRIDGE FINISHED GRADES ARE CENTERLINE GRADES.

NOTE:

NF = NEAR FACE
FF = FAR FACE
EF = EACH FACE
▲ = CUT TO FIT IN FIELD
3" CLR. UNLESS OTHERWISE SPECIFIED ON THE PLANS.

STATE OF VERMONT
AGENCY OF TRANSPORTATION

Town Of FAIRFAX-FAIRFIELD- ST. ALBANS	Bridge No. 88S
Highway No. I - 89	Log Sta. / Surv. Sta.

I-89 OVER ST. ALBANS SOUTH STATE HIGHWAY (EXIT 19)

PIER NO. 1 DETAILS

Designed By M. LOZIER	Drawn By K. CHISHOLM
Checked By M. LOZIER Date 2/00	Bridge Design Supervisor R. R. WHITCOMB Date 2/00
PROJECT FAIRFAX-FAIRFIELD-ST. ALBANS	PROJECT NO. IM 089 - 3 (27)
I.G.C. info. 96a056\Structures\sa056ab2.dgn	sa056pr1J
Bridge Sheet No. BR442	Sheet 194 of 370

PLOTTED 21-SEP-2000

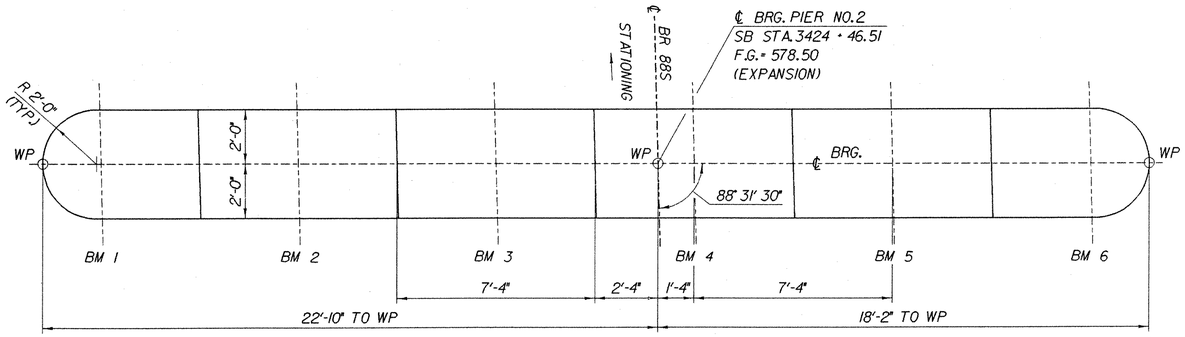

PIER NO. 2 PLAN

SCALE: 3/8" = 1'-0"

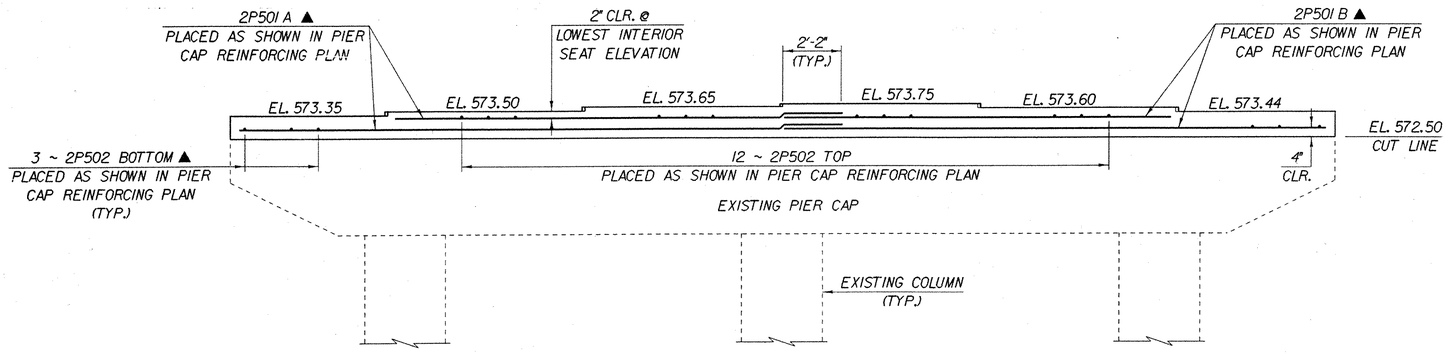

PIER NO. 2 PARTIAL ELEVATION

(LOOKING UPSTATION)
SCALE: 3/8" = 1'-0"

IMPORTANT NOTE: BRIDGE FINISHED GRADES ARE CENTERLINE GRADES.

NOTE:

NF = NEAR FACE
FF = FAR FACE
EF = EACH FACE
▲ = CUT TO FIT IN FIELD
3" CLR. UNLESS OTHERWISE SPECIFIED ON THE PLANS.

STATE OF VERMONT
AGENCY OF TRANSPORTATION

Town Of FAIRFAX-FAIRFIELD-ST. ALBANS	Bridge No. 88S
Highway No. I-89	Log Sta.
	Surv. Sta.

I-89 OVER ST. ALBANS SOUTH STATE HIGHWAY (EXIT 19)

PIER NO. 2 DETAILS

Designed By M. LOZIER	Drawn By K. CHISHOLM
Checked By M. LOZIER Date 2/00	Bridge Design Supervisor R. R. WHITCOMB Date 2/00
PROJECT FAIRFAX-FAIRFIELD-ST. ALBANS	PROJECT NO. IM 089 - 3 (27)
I.G.C. Info. 96a056\Structures\sa056ab2.dgn	sa056pr21
Bridge Sheet No. BR443	Sheet 195 of 370

PLOTTED 21-SEP-2000

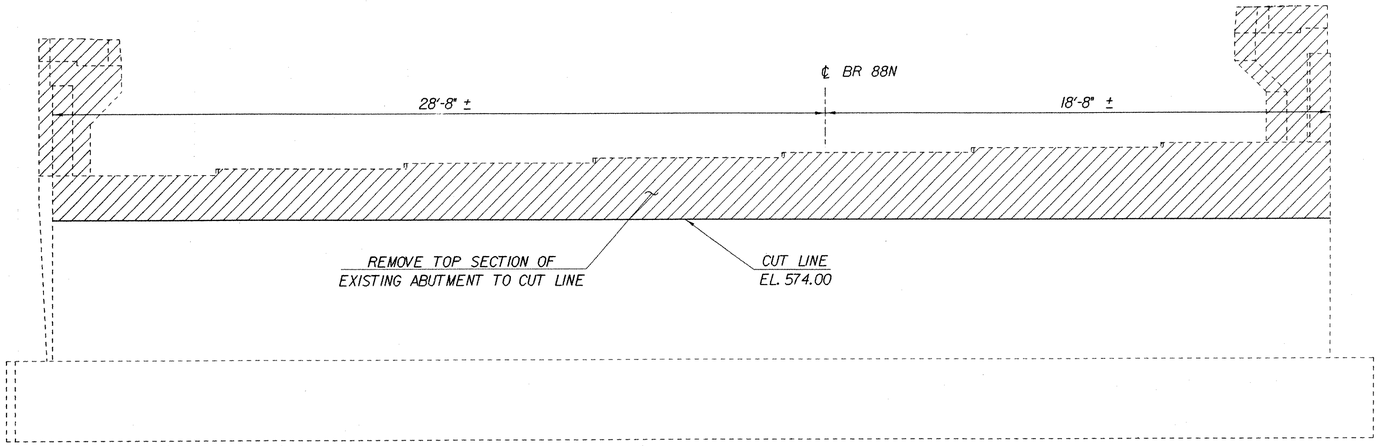

PARTIAL REMOVAL OF EXISTING ABUTMENT NO. 7

SCALE: 3/8" = 1'-0"

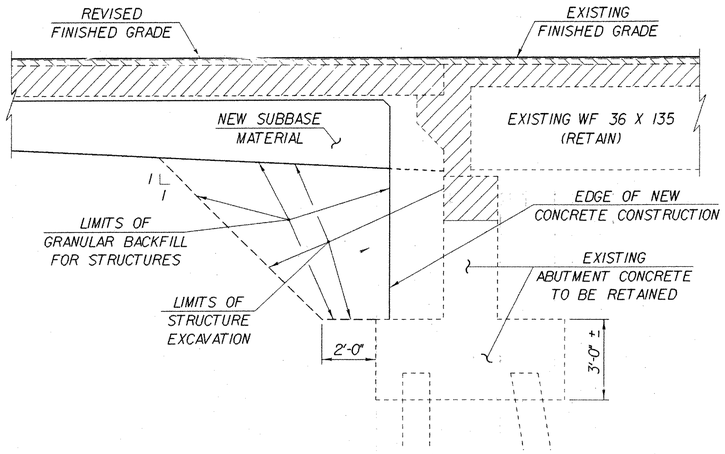

ABUTMENT EARTHWORK TYPICAL

NOT TO SCALE

1. ▨ REMOVAL AND DISPOSAL TO BE PAID UNDER ITEM 529.10, "REMOVAL OF BRIDGE PAVEMENT".

   ▨ REMOVAL AND DISPOSAL TO BE PAID UNDER ITEM 529.20, "PARTIAL REMOVAL OF STRUCTURE". SEE PROJECT NOTE 8 ON SHEET BR403.

2. ACTUAL EXCAVATION TO BE DETERMINED BY THE CONTRACTOR, BUT PAYMENT FOR STRUCTURE EXCAVATION SHALL BE AS SHOWN. THE CONTRACTOR SHALL NOT EXCAVATE BELOW THE EXISTING BOTTOM OF FOOTING CONCRETE ELEVATION.

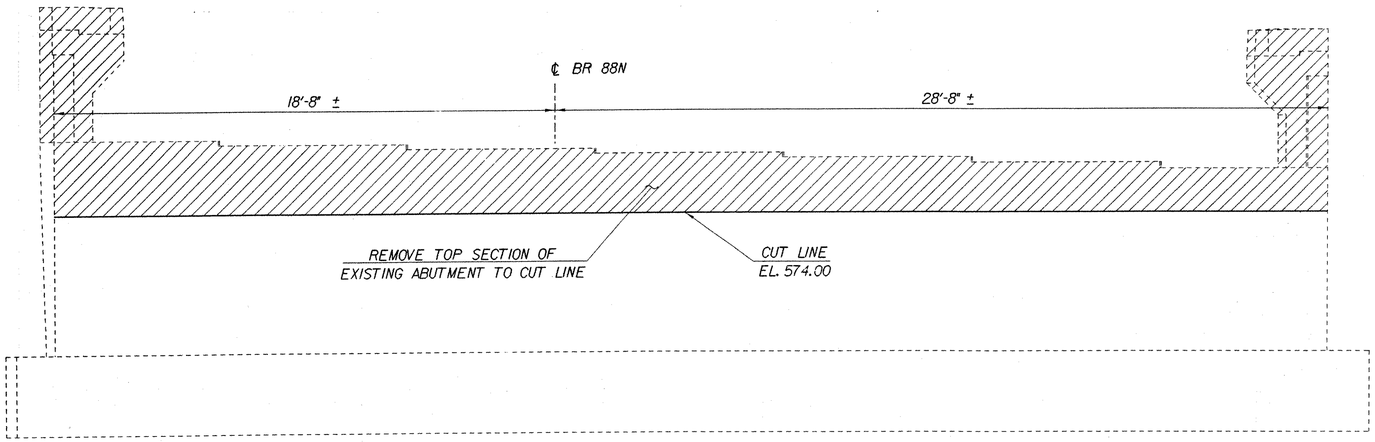

PARTIAL REMOVAL OF EXISTING ABUTMENT NO. 8

SCALE: 3/8" = 1'-0"

IMPORTANT NOTE: BRIDGE FINISHED GRADES ARE CENTERLINE GRADES.

STATE OF VERMONT
AGENCY OF TRANSPORTATION

Town Of FAIRFAX-FAIRFIELD-ST. ALBANS	Bridge No. 88N
Highway No. I-89	Log Sta. / Surv. Sta.
I-89 OVER ST. ALBANS SOUTH STATE HIGHWAY (EXIT 19)	
88N ABUTMENT REMOVAL DETAILS	
Designed By P. PERRY	Drawn By K. CHISHOLM
Checked By M. LOZIER Date 2/00	Bridge Design Supervisor R. R. WHITCOMB Date 2/00
PROJECT FAIRFAX-FAIRFIELD-ST. ALBANS	PROJECT NO. IM 089-3 (27)
I.G.C. info. 96a056\Structures\sa056ab3.dgn	sa056rm41
Bridge Sheet No. BR444	Sheet 196 of 370

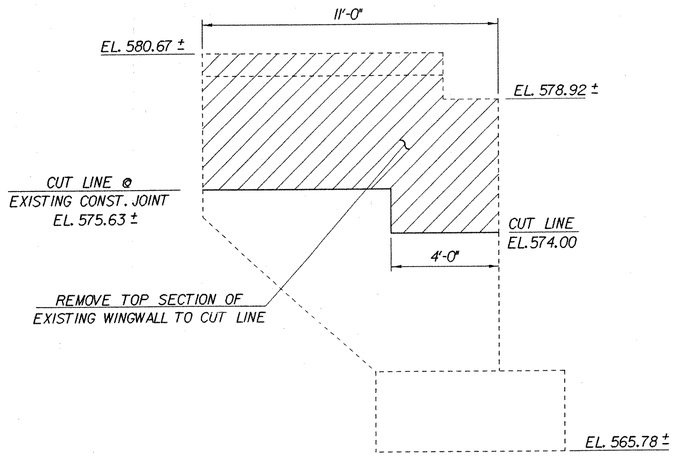

PARTIAL REMOVAL OF EXISTING WINGWALL NO. 14

SCALE: 3/8" - 1'-0"

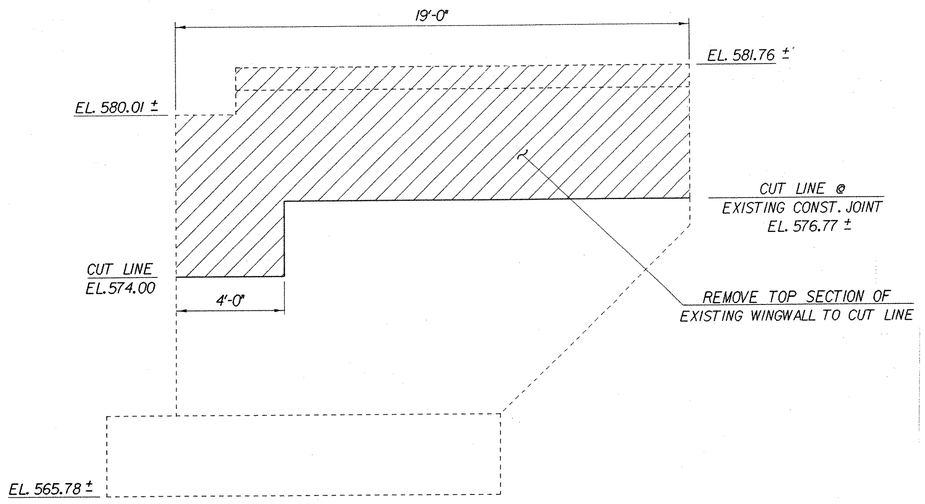

PARTIAL REMOVAL OF EXISTING WINGWALL NO. 13

SCALE: 3/8" - 1'-0"

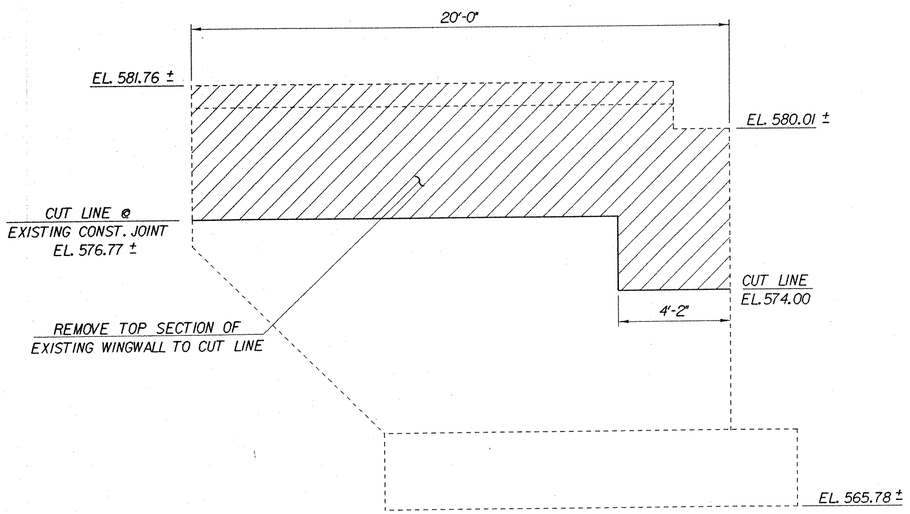

PARTIAL REMOVAL OF EXISTING WINGWALL NO. 15

SCALE: 3/8" - 1'-0"

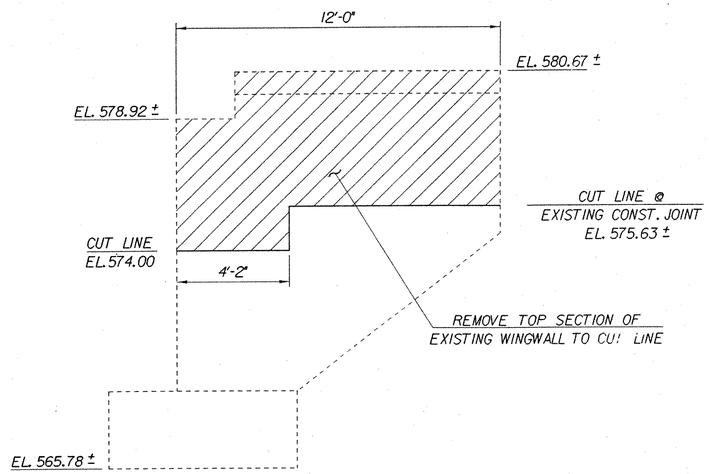

PARTIAL REMOVAL OF EXISTING WINGWALL NO. 16

SCALE: 3/8" - 1'-0"

IMPORTANT NOTE: BRIDGE FINISHED GRADES ARE CENTERLINE GRADES.

STATE OF VERMONT
AGENCY OF TRANSPORTATION

Town Of FAIRFAX-FAIRFIELD-ST. ALBANS	Bridge No. 88N
Highway No. I-89	Log Sta. / Surv. Sta.
I-89 OVER ST. ALBANS SOUTH STATE HIGHWAY (EXIT 19)	
88N WINGWALL REMOVAL DETAILS	
Designed By P. PERRY	Drawn By K. CHISHOLM
Checked By M. LOZIER Date 2/00	Bridge Design Supervisor R. R. WHITCOMB Date 2/00
PROJECT FAIRFAX-FAIRFIELD-ST. ALBANS	PROJECT NO. IM 089 - 3 (27)
I.C.C. Info. 96a056\Structures\sa056ab3.dgn	sa056rm5J
Bridge Sheet No. BR445	Sheet 197 of 370

PLOTTED 21-SEP-2000

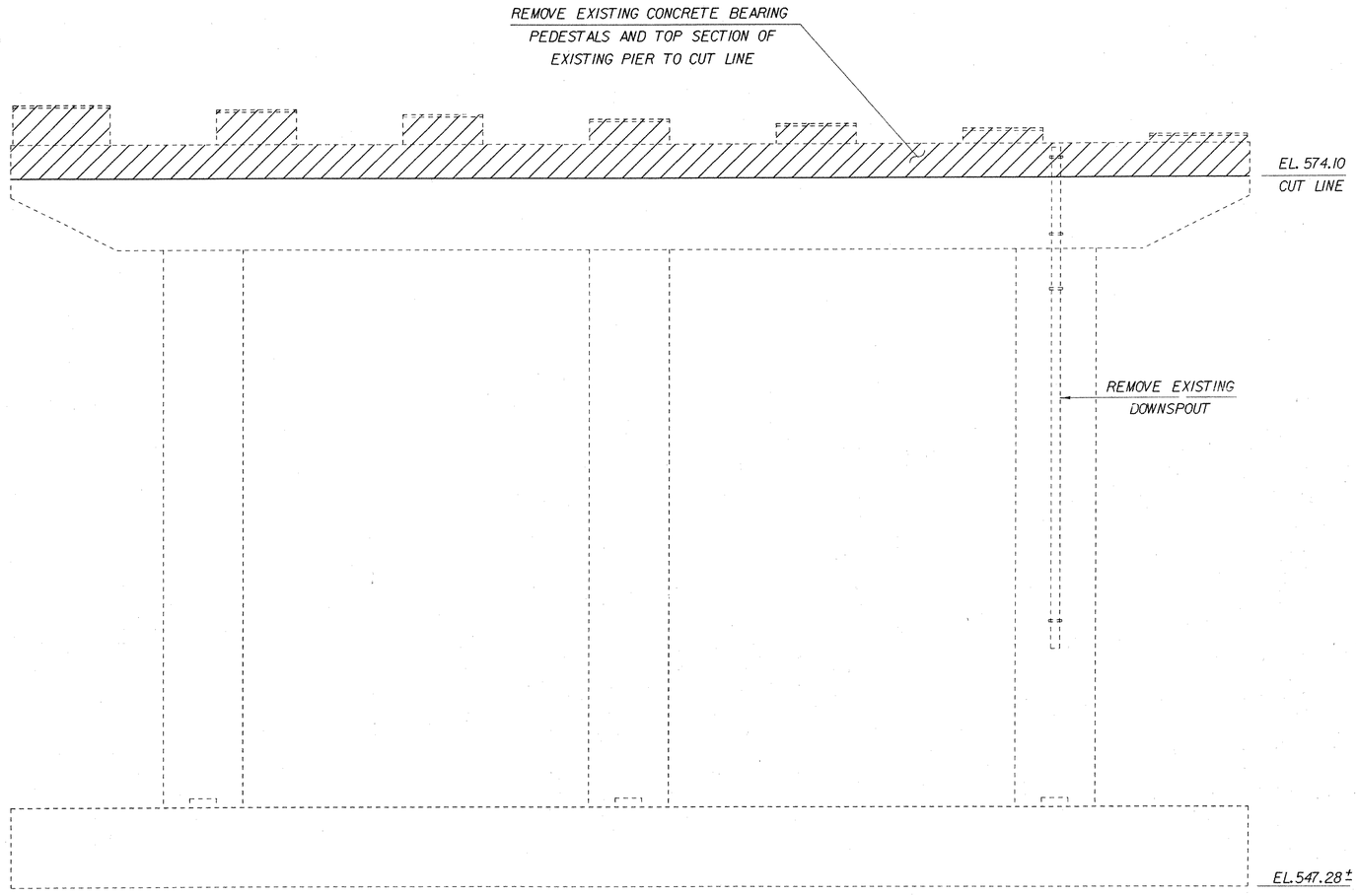

PARTIAL REMOVAL OF EXISTING PIERS NOS. 3 & 4

SCALE: 3/8" = 1'-0"

IMPORTANT NOTE: BRIDGE FINISHED GRADES ARE CENTERLINE GRADES.

STATE OF VERMONT
AGENCY OF TRANSPORTATION

Town Of FAIRFAX-FAIRFIELD-ST. ALBANS	Bridge No. 88N
Highway No. I-89	Log Sta. / Surv. Sta.
I-89 OVER ST. ALBANS SOUTH STATE HIGHWAY (EXIT 19)	
88N PIER REMOVAL DETAILS	
Designed By P. PERRY	Drawn By K. CHISHOLM
Checked By M. LOZIER Date 2/00	Bridge Design Supervisor R. R. WHITCOMB Date 2/00
PROJECT FAIRFAX-FAIRFIELD-ST. ALBANS	PROJECT NO. I M 089 - 3 (27)
I.G.C. Info. 96a056\Structures\sa056ab3.dgn	sa056rm6J
Bridge Sheet No. BR446	Sheet 198 of 370

PLOTTED 21-SEP-2000

** NOTE:
REMOVE EXISTING FILLETS DOWN TO CUT LINE ELEVATION. BUILD NEW FULL HEIGHT BACKWALL INTO EXISTING FILLETS BELOW CUT LINE DOWN TO TOP OF FOOTING ELEVATION. SEE CORNER DETAIL BELOW CUT LINE THIS SHEET.

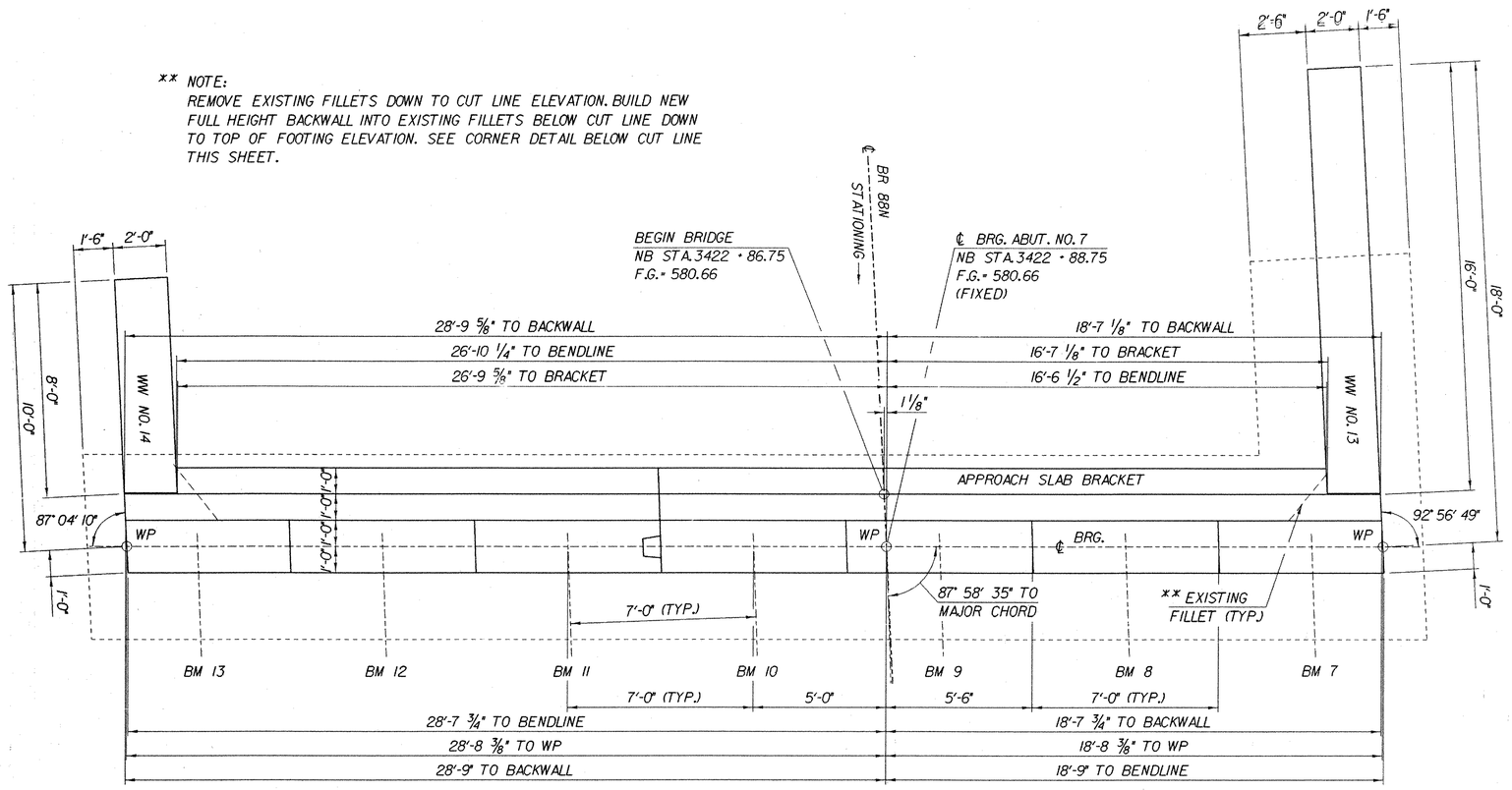

ABUTMENT NO. 7 PLAN
SCALE: 3/8" = 1'-0"

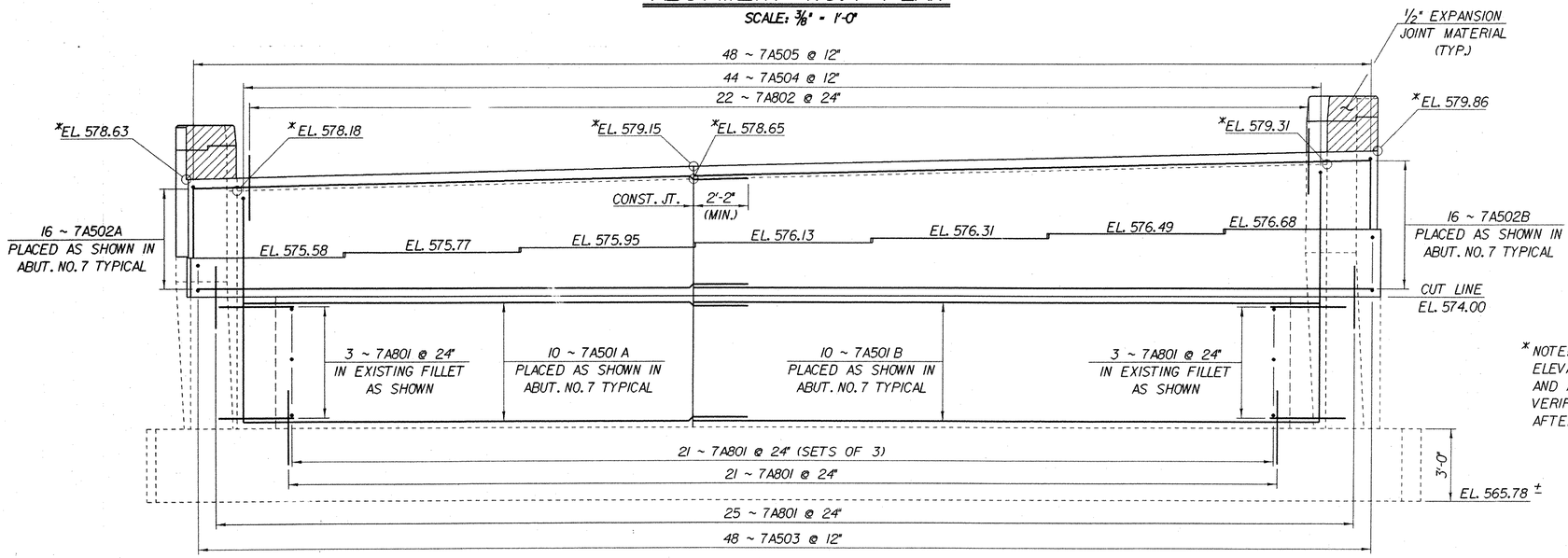

ABUTMENT NO. 7 ELEVATION
SCALE: 3/8" = 1'-0"

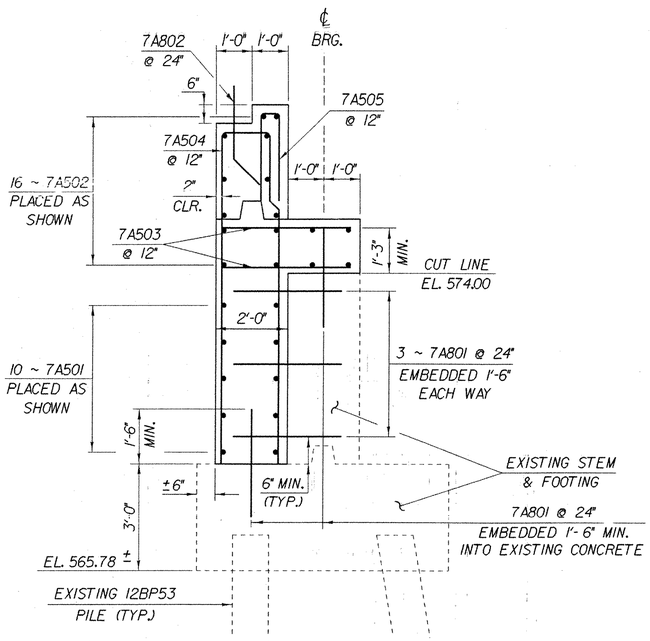

ABUTMENT NO. 7 TYPICAL
SCALE: 1/2" = 1'-0"

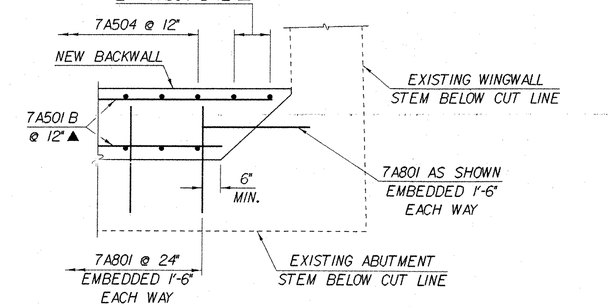

CORNER DETAIL BELOW CUT LINE
(ALL OTHER WINGWALL CORNERS SIMILAR)
SCALE: 1/2" = 1'-0"

IMPORTANT NOTE: BRIDGE FINISHED GRADES ARE CENTERLINE GRADES.

* NOTE:
ELEVATIONS AT TOP OF BACKWALL AND APPROACH SLAB BRACKET TO BE VERIFIED BY THE RESIDENT ENGINEER AFTER STRUCTURAL STEEL IS ERECTED.

NOTE:
NF = NEAR FACE
FF = FAR FACE
EF = EACH FACE
▲ = CUT TO FIT IN FIELD
3" CLR. UNLESS OTHERWISE SPECIFIED ON THE PLANS.

STATE OF VERMONT
AGENCY OF TRANSPORTATION

Town Of FAIRFAX-FAIRFIELD-ST. ALBANS	Bridge No. 88N
Highway No. I-89	Log Sta.
	Surv. Sta.

I-89 OVER ST. ALBANS SOUTH STATE HIGHWAY (EXIT 19)
ABUTMENT NO. 7 DETAILS

Designed By M. LOZIER	Drawn By K. CHISHOLM
Checked By M. LOZIER Date 2/00	Bridge Design Supervisor R. R. WHITCOMB Date 2/00
PROJECT FAIRFAX-FAIRFIELD-ST. ALBANS	PROJECT NO. IM 089 - 3 (27)
I.G.C. Info. 96a056\Structures\sa056ab3.dgn	sa056ab7.1
Bridge Sheet No. BR447	Sheet 199 of 370

PLOTTED 21-SEP-2000

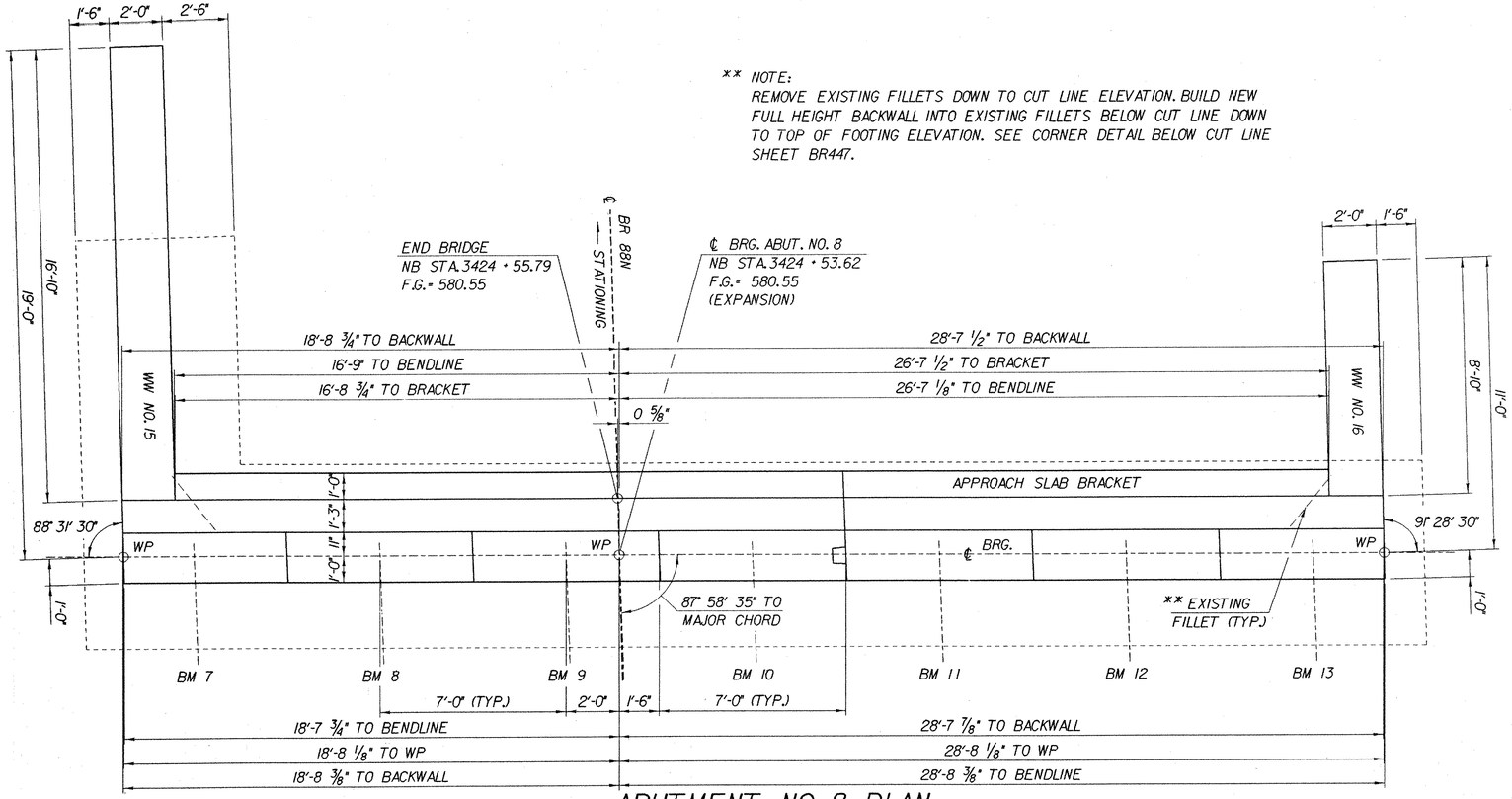

ABUTMENT NO. 8 PLAN

SCALE: 3/8" = 1'-0"

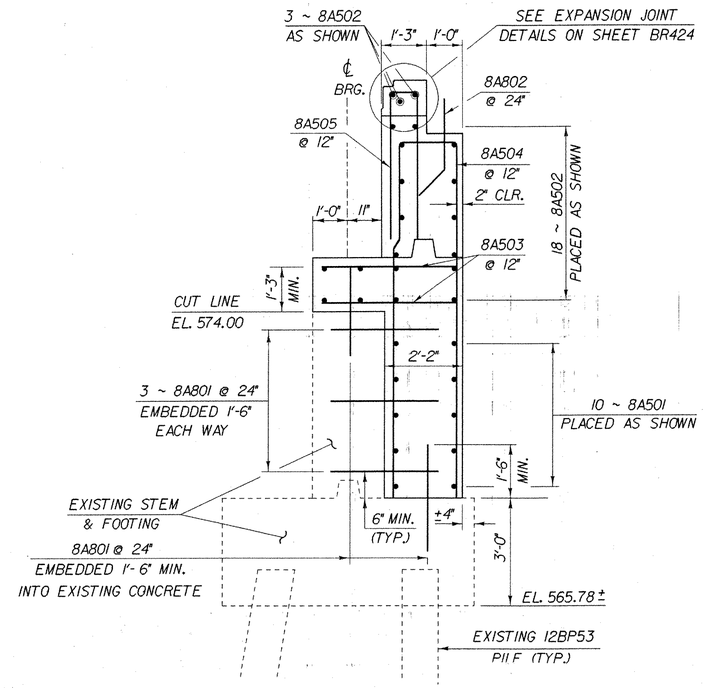

ABUTMENT NO. 8 TYPICAL

SCALE: 1/2" = 1'-0"

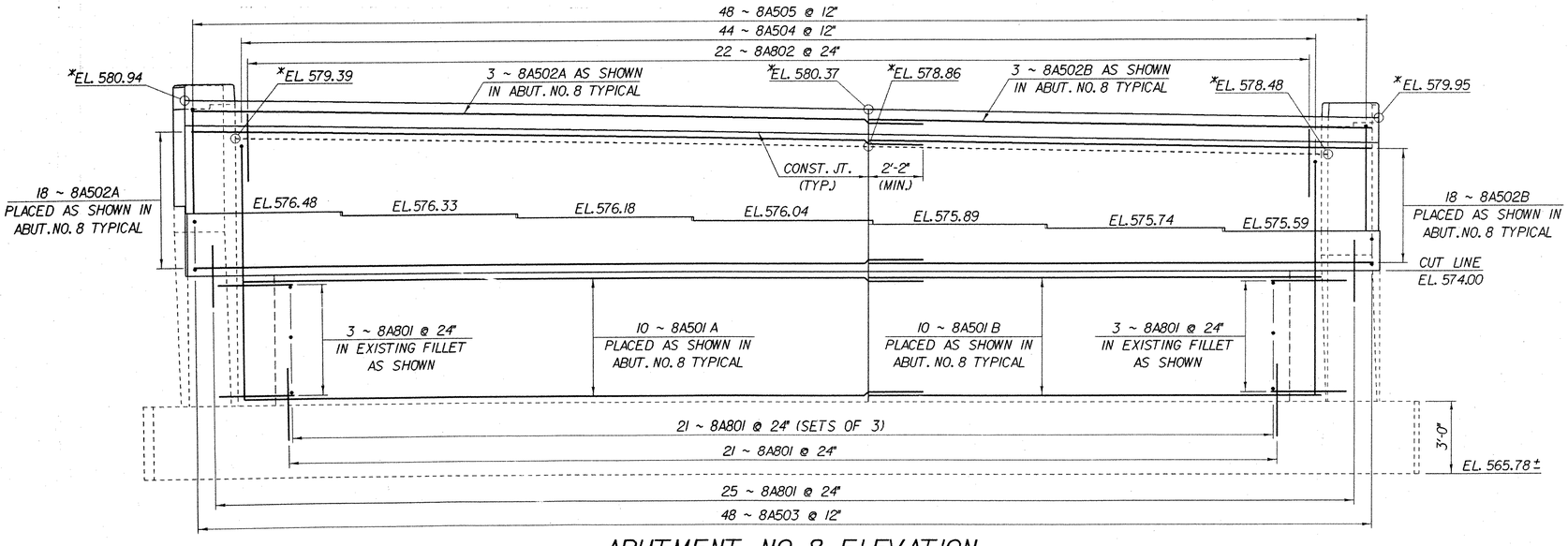

ABUTMENT NO. 8 ELEVATION

SCALE: 3/8" = 1'-0"

* NOTE:
ELEVATIONS AT TOP OF BACKWALL AND APPROACH SLAB BRACKET TO BE VERIFIED BY THE RESIDENT ENGINEER AFTER STRUCTURAL STEEL IS ERECTED.

IMPORTANT NOTE: BRIDGE FINISHED GRADES ARE CENTERLINE GRADES.

NOTE:

NF = NEAR FACE
FF = FAR FACE
EF = EACH FACE
▲ = CUT TO FIT IN FIELD
3" CLR. UNLESS OTHERWISE SPECIFIED ON THE PLANS.

STATE OF VERMONT
AGENCY OF TRANSPORTATION

Town Of FAIRFAX-FAIRFIELD-ST. ALBANS	Bridge No. 88N
Highway No. I-89	Log Sta. / Surv. Sta.
I-89 OVER ST. ALBANS SOUTH STATE HIGHWAY (EXIT 19)	
ABUTMENT NO. 8 DETAILS	
Designed By M. LOZIER	Drawn By K. CHISHOLM
Checked By M. LOZIER Date 2/00	Bridge Design Supervisor R. R. WHITCOMB Date 2/00
PROJECT FAIRFAX-FAIRFIELD-ST. ALBANS	PROJECT NO. I M 089 - 3 (27)
I.G.C. Info. 96a056\Structures\sa056ab3.dgn	sa056ab8J
Bridge Sheet No. BR448	Sheet 206 of 370

PLOTTED 21-SEP-2000

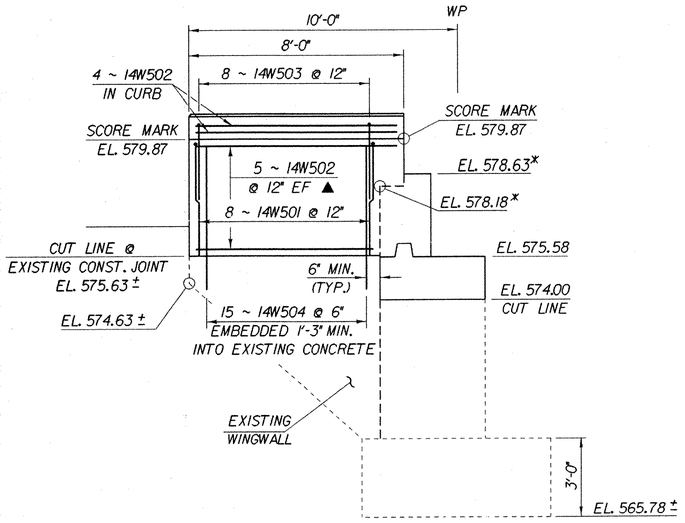

WINGWALL NO. 14 ELEVATION

SCALE: 3/8" = 1'-0"

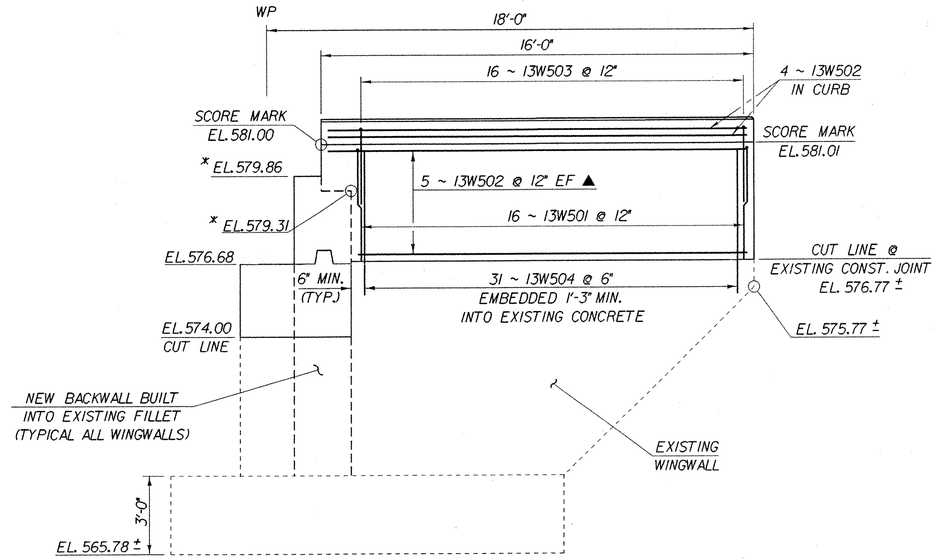

WINGWALL NO. 13 ELEVATION

SCALE: 3/8" = 1'-0"

IMPORTANT NOTE: BRIDGE FINISHED GRADES ARE CENTERLINE GRADES.

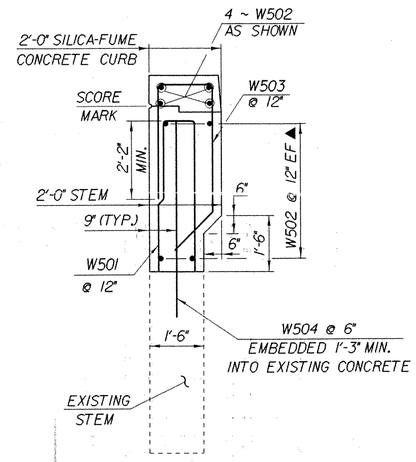

WINGWALL TYPICAL

SCALE: 1/2" = 1'-0"

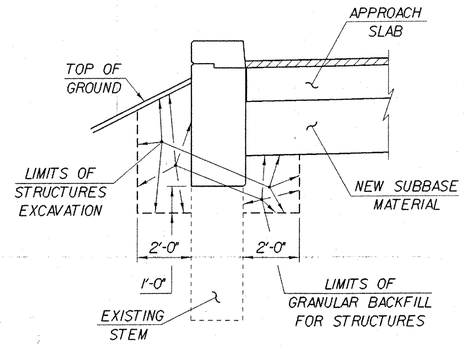

WINGWALL EARTHWORK TYPICAL

NOT TO SCALE

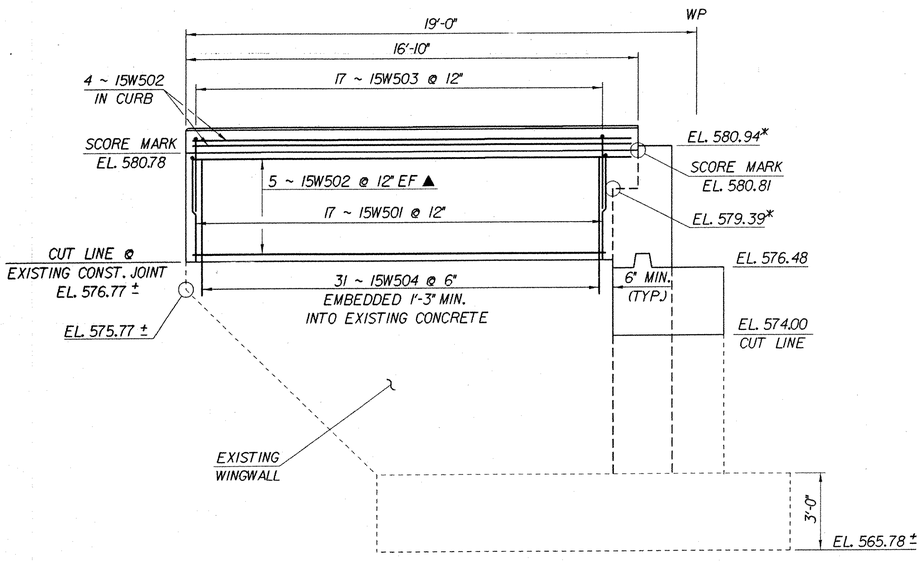

WINGWALL NO. 15 ELEVATION

SCALE: 3/8" = 1'-0"

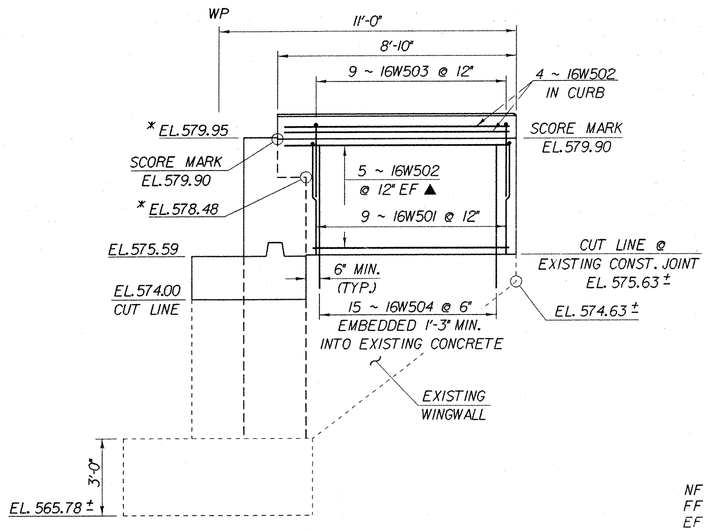

WINGWALL NO. 16 ELEVATION

SCALE: 3/8" = 1'-0"

NOTE:

NF = NEAR FACE
FF = FAR FACE
EF = EACH FACE
▲ = CUT TO FIT IN FIELD
3" CLR. UNLESS OTHERWISE SPECIFIED ON THE PLANS.

* NOTE:
ELEVATIONS AT TOP OF BACKWALL AND APPROACH SLAB BRACKET TO BE VERIFIED BY THE RESIDENT ENGINEER AFTER STRUCTURAL STEEL IS ERECTED.

STATE OF VERMONT
AGENCY OF TRANSPORTATION

Town Of FAIRFAX-FAIRFIELD-ST. ALBANS	Bridge No. 88N
Highway No. I-89	Log Sta.
	Surv. Sta.

I-89 OVER ST. ALBANS SOUTH STATE HIGHWAY (EXIT 19)

WINGWALL NOS. 13 - 16 ELEVATIONS

Designed By P. PERRY	Drawn By K. CHISHOLM
Checked By M. LOZIER Date 2/00	Bridge Design Supervisor R. R. WHITCOMB Date 2/00
PROJECT FAIRFAX-FAIRFIELD-ST. ALBANS	PROJECT NO. I M 089 - 3 (27)
I.G.C. Info. 96a056\Structures\sa056ab3.dgn	sa056ww41
Bridge Sheet No. BR449	Sheet 201 of 370

PLOTTED 21-SEP-2000

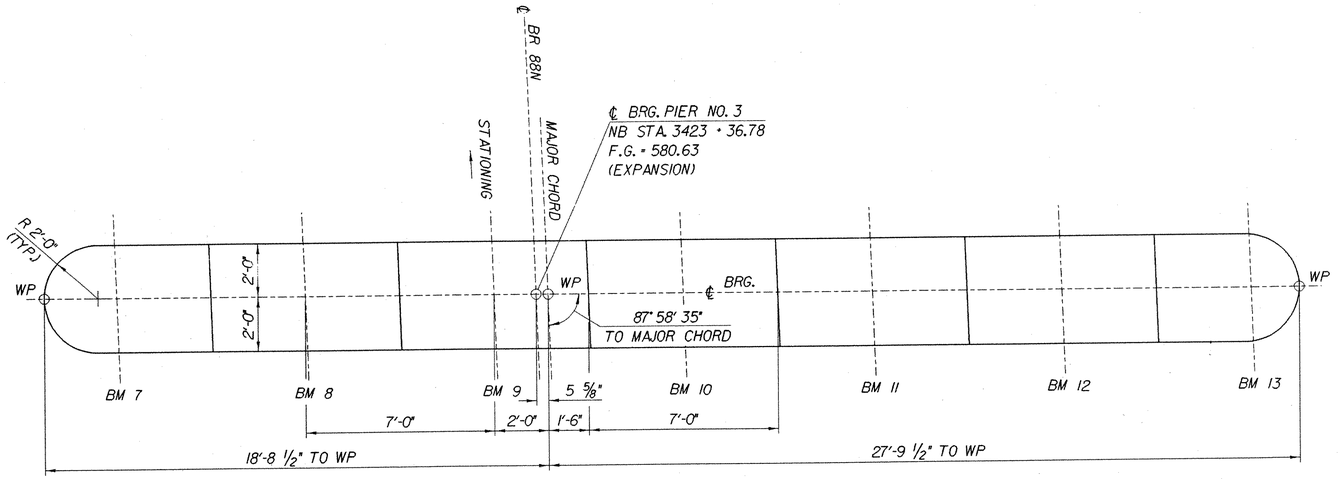

PIER NO. 3 PLAN

SCALE: 3/8" = 1'-0"

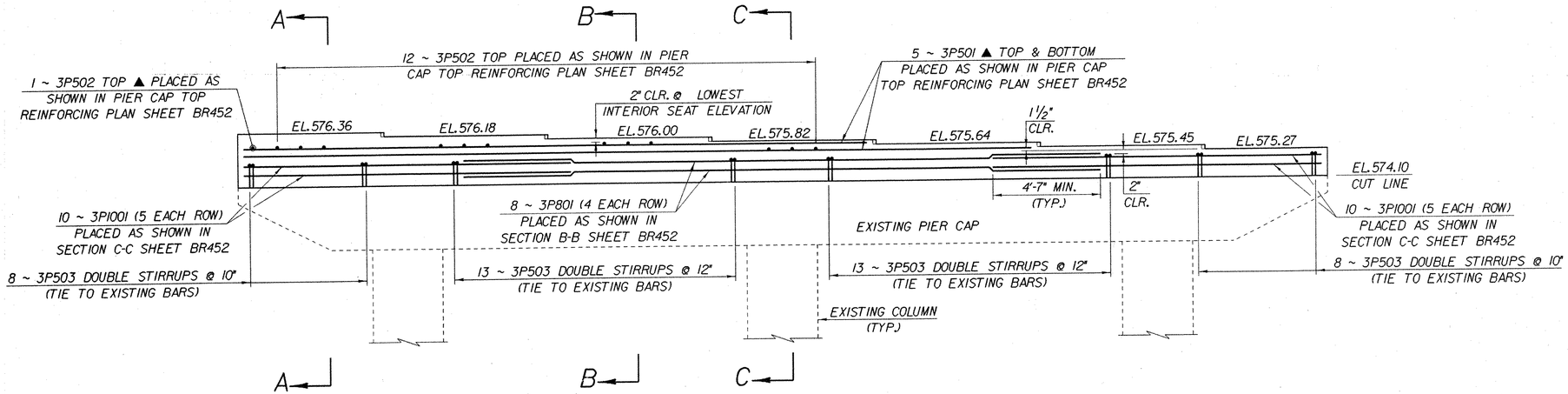

PIER NO. 3 PARTIAL ELEVATION

(LOOKING UPSTATION)
SCALE: 3/8" = 1'-0"

NOTE:

NF = NEAR FACE
FF = FAR FACE
EF = EACH FACE
▲ = CUT TO FIT IN FIELD
3" CLR. UNLESS OTHERWISE SPECIFIED ON THE PLANS.

IMPORTANT NOTE: BRIDGE FINISHED GRADES ARE CENTERLINE GRADES.

STATE OF VERMONT
AGENCY OF TRANSPORTATION

Town Of FAIRFAX-FAIRFIELD- ST. ALBANS	Bridge No. 88N
Highway No. I - 89	Log Sta.
	Surv. Sta.

I-89 OVER ST. ALBANS SOUTH STATE HIGHWAY (EXIT 19)

PIER NO. 3 DETAILS

Designed By P. PERRY	Drawn By K. CHISHOLM
Checked By M. LOZIER Date 2/00	Bridge Design Supervisor R. R. WHITCOMB Date 2/00
PROJECT FAIRFAX-FAIRFIELD-ST. ALBANS	PROJECT NO. I M 089 - 3 (27)
I.G.C. Info. 96a056\Structures\sa056ab3.dgn	sa056pr3J
Bridge Sheet No. BR450	Sheet 202 of 370

PLOTTED 21-SEP-2000

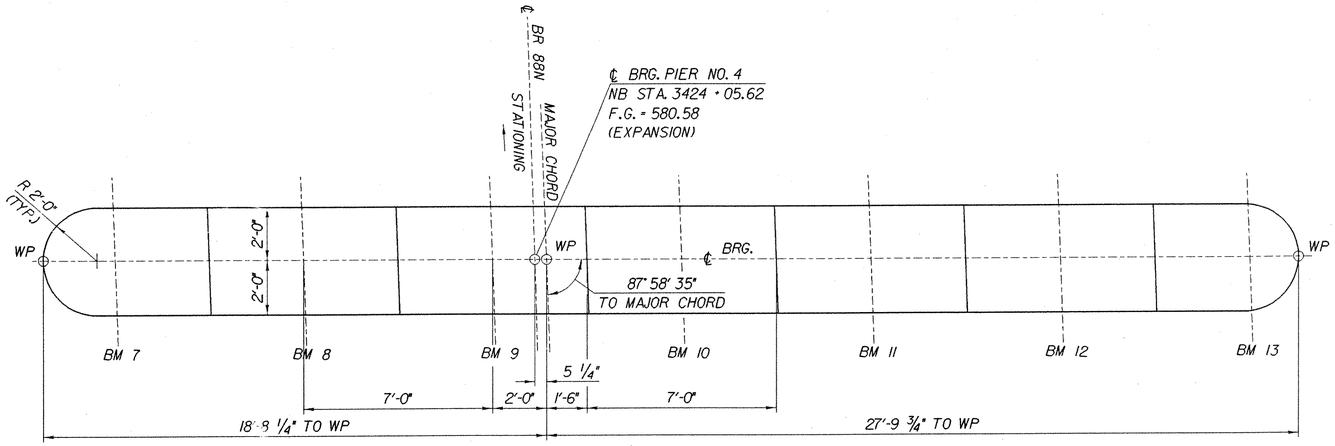

PIER NO. 4 PLAN

SCALE: 3/16" = 1'-0"

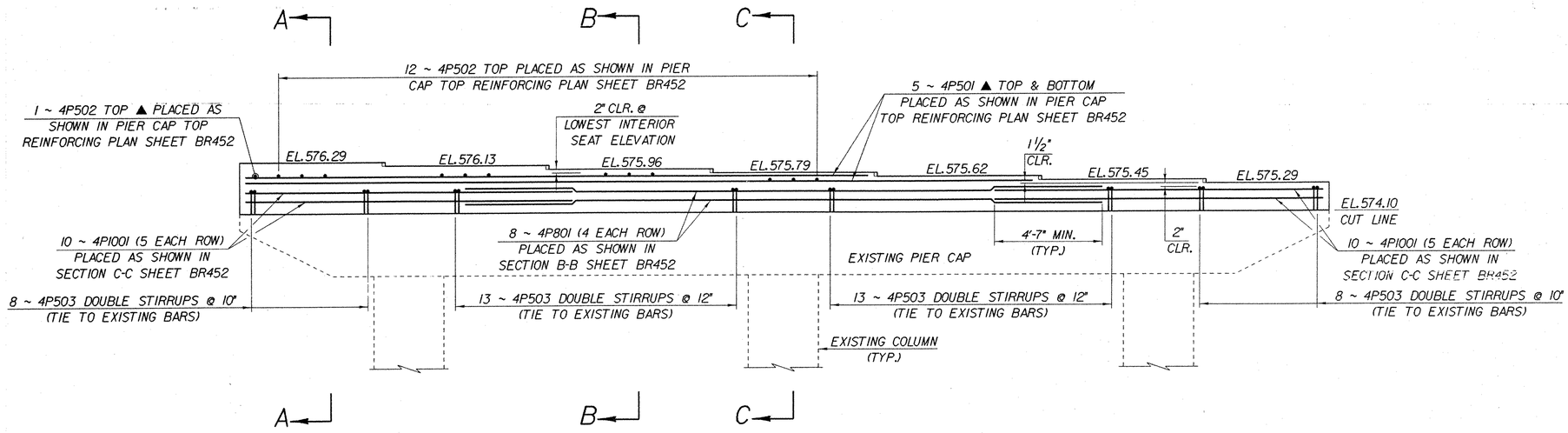

PIER NO. 4 PARTIAL ELEVATION

(LOOKING UPSTATION)
SCALE: 3/8" = 1'-0"

NOTE:

NF = NEAR FACE
FF = FAR FACE
EF = EACH FACE
▲ = CUT TO FIT IN FIELD
3" CLR. UNLESS OTHERWISE SPECIFIED ON THE PLANS.

IMPORTANT NOTE: BRIDGE FINISHED GRADES ARE CENTERLINE GRADES.

STATE OF VERMONT
AGENCY OF TRANSPORTATION

Town Of FAIRFAX-FAIRFIELD-ST. ALBANS	Bridge No. 88N
Highway No. I-89	Log Sta. / Surv. Sta.

I-89 OVER ST. ALBANS SOUTH STATE HIGHWAY (EXIT 19)

PIER NO. 4 DETAILS

Designed By P. PERRY	Drawn By K. CHISHOLM
Checked By M. LOZIER Date 2/00	Bridge Design Supervisor R. R. WHITCOMB Date 2/00
PROJECT FAIRFAX-FAIRFIELD-ST. ALBANS	PROJECT NO. IM 089 - 3 (27)
I.G.C. Info. 96a056\Structures\sa056ab3.dgn	sa056pr4J
Bridge Sheet No. BR45I	Sheet 203 of 370

PLOTTED 21-SEP-2000

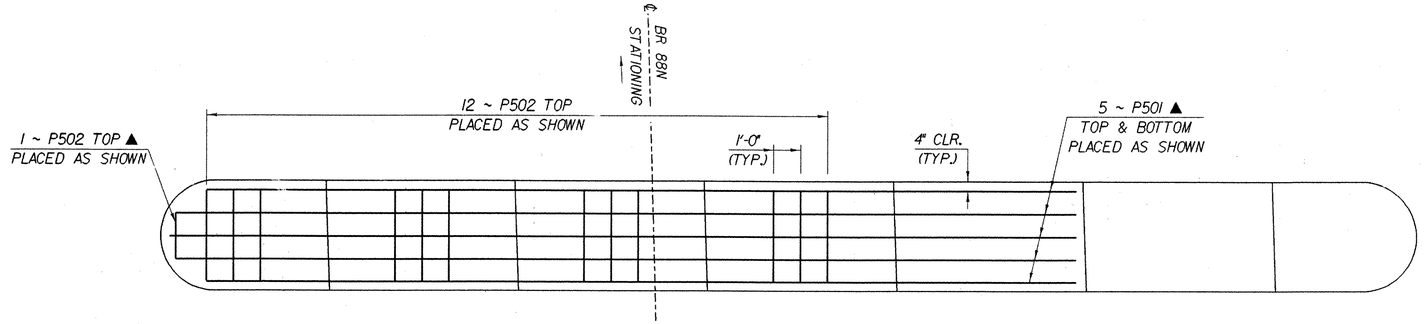

PIER CAP TOP REINFORCING PLAN

SCALE: 3/8" = 1'-0"

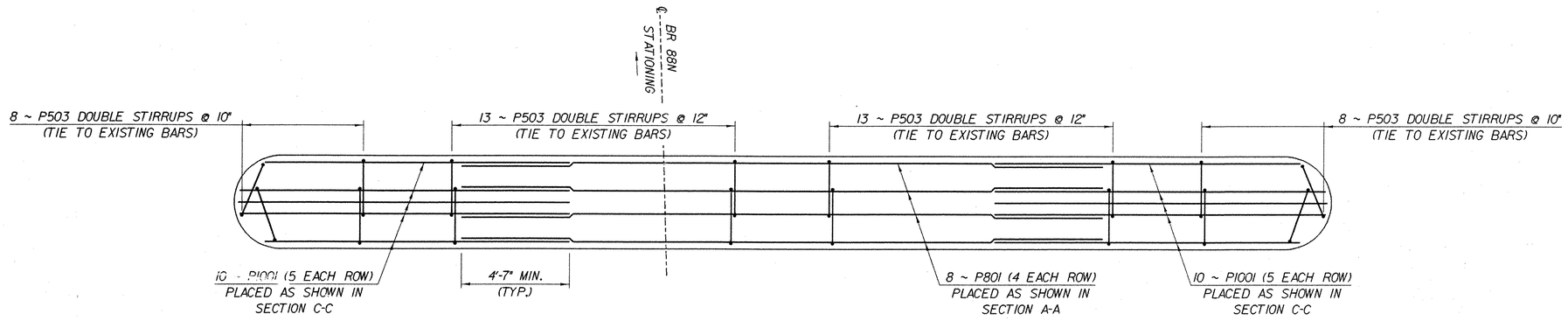

PIER CAP BOTTOM REINFORCING PLAN

SCALE: 3/8" = 1'-0"

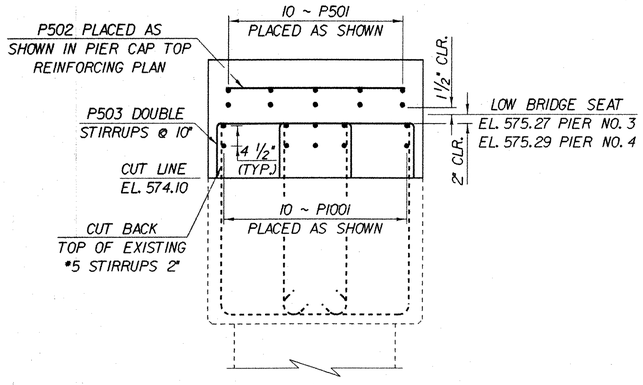

SECTION A-A

SCALE: 3/4" = 1'-0"

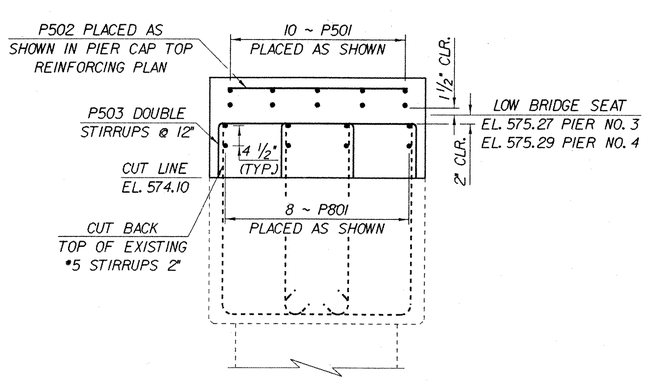

SECTION B-B

SCALE: 3/4" = 1'-0"

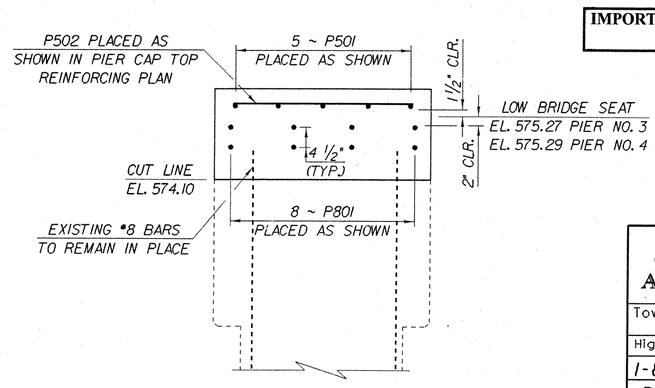

SECTION C-C

SCALE: 3/4" = 1'-0"

IMPORTANT NOTE: BRIDGE FINISHED GRADES ARE CENTERLINE GRADES.

STATE OF VERMONT
AGENCY OF TRANSPORTATION

Town Of FAIRFAX-FAIRFIELD- ST. ALBANS	Bridge No. 88N
Highway No. I - 89	Log Sta.
	Surv. Sta.

I-89 OVER ST. ALBANS SOUTH STATE HIGHWAY (EXIT 19)

PIER NOS. 3 & 4 CAP REINFORCING DETAILS

Designed By P. PERRY	Drawn By K. CHISHOLM
Checked By M. LOZIER Date 2/00	Bridge Design Supervisor R. R. WHITCOMB Date 2/00
PROJECT FAIRFAX-FAIRFIELD-ST. ALBANS	PROJECT NO. I M 089 - 3 (27)
I.G.C. Info. 96a056\Structures\sa056ab3.dgn	sa056pr5.1
Bridge Sheet No. BR452	Sheet 204 of 370

STATE OF VERMONT
AGENCY OF TRANSPORTATION

REINFORCING STEEL SCHEDULE

	EACH	SIZE	LENGTH	MARK	TYPE	A	B	C	D	E	F	G	H	J	K	R	O
88 S DECK																	
✳	1477	5	21'- 9"	3S501	STR												
	408	5	32'- 2"	3S502	STR												
✳	53	5	5'- 0"	3S503	STR		(USE 4 PIECES FOR WINGWALLS)										
	510	5	5'- 7"	3S504	S5	0'- 10"	1'- 3"	1'- 5"	1'- 3"			0'- 10"					
	39	5	5'- 1"	3S505	S5	0'- 10"	0'- 7"	2'- 3"	0'- 7"			0'- 10"					
	39	5	4'- 5"	3S506	S5	0'- 10"	0'- 7"	1'- 7"	0'- 7"			0'- 10"					
✳	217	6	32'- 7"	3S601	STR												
✳	73	6	33'- 0"	3S602	STR												
APPROACH SLAB NO. 5																	
✳	43	5	19'- 10"	5AS501	STR												
	46	9	20'- 9"	5AS901	1	1'- 3"	19'- 6"					---					
APPROACH SLAB NO. 6																	
	42	5	19'- 10"	6AS501	STR												
✳	47	9	20'- 9"	6AS901	1	1'- 3"	19'- 6"					---					
ABUTMENT NO. 5																	
	8	5	21'- 0"	5A501A	STR												
✳	9	5	18'- 6"	5A501B	STR												
	16	5	23'- 0"	5A502A	STR												
	16	5	20'- 7"	5A502B	STR												
	86	5	3'- 7"	5A503	STR												
▲	39	5	17'- 9"	5A504	S10		8'- 1"	1'- 7"	8'- 1"								
	43	5	6'- 2"	5A505	S10		2'- 10"	0'- 6"	2'- 10"								
	80	8	3'- 0"	5A801	STR												
	20	8	3'- 0"	5A802	19		1'- 0"	2'- 0"	---								
WINGWALL NO. 9																	
	18	5	4'- 2"	9W501	STR												
▲	14	5	8'- 6"	9W502	STR												
✳	11	5	5'- 5"	9W504	STR												
	9	5	7'- 9"	9W503	S10		3'- 2"	1'- 5"	3'- 2"								
WINGWALL NO. 10																	
	12	5	4'- 1"	10W501	STR												
▲	14	5	5'- 6"	10W502	STR												
	6	5	5'- 5"	10W504	STR												
	6	5	7'- 9"	10W503	S10		3'- 2"	1'- 5"	3'- 2"								
ABUTMENT NO. 6																	
	6	5	20'- 11"	6A501A	STR												
✳	7	5	18'- 8"	6A501B	STR												
	21	5	22'- 10"	6A502A	STR												
	21	5	20'- 9"	6A502B	STR												
	86	5	3'- 9"	6A503	STR												
▲	39	5	17'- 5"	6A504	S10		7'- 10"	1'- 9"	7'- 10"								
	43	5	8'- 9"	6A505	S10		4'- 0"	0'- 9"	4'- 0"								
	80	8	3'- 0"	6A801	STR												
	20	8	3'- 0"	6A802	19		1'- 0"	2'- 0"	---								
WINGWALL NO. 11																	
	18	5	4'- 2"	11W501	STR												
▲	14	5	8'- 4"	11W502	STR												
✳	11	5	5'- 5"	11W504	STR												
	9	5	7'- 9"	11W503	S10		3'- 2"	1'- 5"	3'- 2"								

ITEM	EACH	SIZE	LENGTH	MARK	TYPE	A	B	C	D	E	F	G	H	J	K	R	O
WINGWALL NO. 12																	
	12	5	4'- 1"	12W501	STR												
▲	14	5	5'- 4"	12W502	STR												
	6	5	5'- 4"	12W504	STR												
	6	5	7'- 9"	12W503	S10		3'- 2"	1'- 5"	3'- 2"								
PIER NO. 1																	
▲	10	5	22'- 4"	1P501A	STR												
✳ ▲	11	5	20'- 3"	1P501B	STR												
▲	18	5	3'- 6"	1P502	STR												
PIER NO. 2																	
▲	10	5	22'- 4"	2P501A	STR												
✳ ▲	11	5	20'- 3"	2P501B	STR												
▲	18	5	3'- 6"	2P502	STR												

~ NOTES ~

1. UNLESS OTHERWISE DESIGNATED, ALL BAR REINFORCEMENT FOR CONCRETE IN SIZES UP TO AND INCLUDING NO. 18 SHALL CONFORM TO THE REQUIREMENTS OF THE "SPECIFICATIONS FOR DEFORMED BILLET-STEEL BARS FOR CONCRETE REINFORCEMENT", AASHTO M 31 (ASTM A 615-SI). ALL BARS SHALL BE GRADE 60, UNLESS OTHERWISE DESIGNATED.
2. FOR TYPICAL BENDING DETAILS, RECOMMENDED PIN DIAMETER "D" OF BENDS AND HOOKS, AND OTHER STANDARD PRACTICE, SEE CURRENT CONCRETE REINFORCING STEEL INSTITUTE "MANUAL OF STANDARD PRACTICE".
3. BARS WHICH REQUIRE MORE ACCURATE BENDING THAN STANDARD PRACTICES SHOULD HAVE LIMITS INDICATED.
4. ALL DIMENSIONS ARE OUT TO OUT OF BAR EXCEPT "A" AND "G" ON STANDARD 180 DEGREE AND 135 DEGREE HOOKS.
5. "J" DIMENSION ON 180 DEGREE HOOKS TO BE SHOWN ONLY WHERE NECESSARY TO RESTRICT HOOK SIZE. OTHERWISE, STANDARD HOOKS ARE TO BE USED.
6. "H" DIMENSION ON STIRRUPS TO BE SHOWN ONLY WHEN NECESSARY TO MAINTAIN CLEARANCES.
7. WHERE SLOPE DIFFERS FROM 45 DEGREES, DIMENSIONS "H" AND "K" MUST BE SHOWN.
8. ▲ DENOTES BARS TO BE CUT IN FIELD.
9. ✳ DENOTES ONE EXTRA BAR ADDED FOR TESTING PURPOSES.
10. ■ DENOTES TWO EXTRA BARS ADDED FOR TESTING PURPOSES.
11. ~~"E" IN PREFIX DENOTES EPOXY COATED REINFORCING STEEL.~~

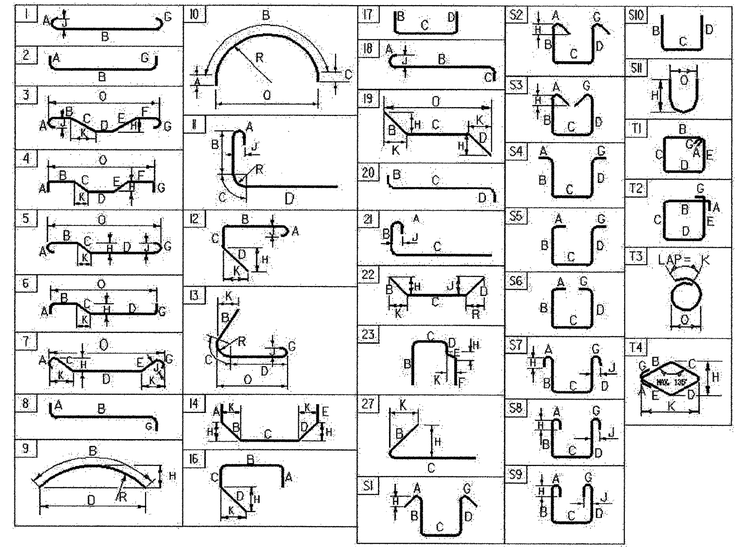

ASTM STANDARD REINFORCING BARS

BAR SIZE DESIGNATION	WEIGHT POUNDS PER FOOT	NOMINAL DIMENSIONS ROUND SECTION		
		DIAMETER INCHES	AREA INCHES^2	PERIMETER INCHES
#3	0.376	0.375	0.11	1.178
#4	0.668	0.500	0.20	1.571
#5	1.043	0.625	0.31	1.963
#6	1.502	0.750	0.44	2.356
#7	2.044	0.875	0.60	2.749
#8	2.670	1.000	0.79	3.142
#9	3.400	1.128	1.00	3.544
#10	4.303	1.270	1.27	3.990
#11	5.313	1.410	1.56	4.430
#14	7.65	1.693	2.25	5.32
#18	13.60	2.257	4.00	7.09

BR453

ALL STEEL DETAILED ON THIS SHEET TO BE EPOXY COATED

PROJECT NAME:	FAIRFAX-FAIRFIELD-ST. ALBANS
PROJECT NUMBER:	IM 089 - 3 (27)
FILE NAME:	\98a056\structures
PROJECT LEADER:	R. R. WHITCOMB
DESIGNED BY:	P. PERRY
PLOT DATE:	9/20/00
DRAWN BY:	P. PERRY
CHECKED BY:	G. ROY
BRIDGE 88S REINFORCING STEEL SCHEDULE	SHEET 205 OF 370

STATE OF VERMONT
AGENCY OF TRANSPORTATION

REINFORCING STEEL SCHEDULE

	EACH	SIZE	LENGTH	MARK	TYPE	A	B	C	D	E	F	G	H	J	K	R	O
88 N DECK																	
✳	1353	5	24'- 6"	4S501	STR												
	370	5	35'- 2"	4S502	STR												
✳	51	5	5'- 0"	4S503	STR		(USE 6 PIECES FOR WINGWALLS)										
	468	5	5'- 7"	4S504	S5	0'- 10"	1'- 3"	1'- 5"	1'- 3"			0'- 10"					
	46	5	5'- 1"	4S505	S5	0'- 10"	0'- 7"	2'- 3"	0'- 7"			0'- 10"					
	46	5	4'- 5"	4S506	S5	0'- 10"	0'- 7"	1'- 7"	0'- 7"			0'- 10"					
✳	211	6	35'- 6"	4S601	STR												
✳	85	6	31'- 9"	4S602	STR												
APPROACH SLAB NO. 7																	
✳	43	5	22'- 7"	7AS501	STR												
	53	9	20'- 9"	7AS901	1	1'- 3"	19'- 6"					---					
APPROACH SLAB NO. 8																	
	42	5	22'- 7"	8AS501	STR												
✳	54	9	20'- 9"	8AS901	1	1'- 3"	19'- 6"					---					
ABUTMENT NO. 7																	
✳	11	5	20'- 4"	7A501A	STR												
	10	5	24'- 10"	7A501B	STR												
	16	5	22'- 2"	7A502A	STR												
	16	5	27'- 0"	7A502B	STR												
	96	5	3'- 7"	7A503	STR												
▲	44	5	22'- 1"	7A504	S10		10'- 3"	1'- 7"	10'- 3"								
	48	5	6'- 2"	7A505	S10		2'- 10"	0'- 6"	2'- 10"								
	115	8	3'- 0"	7A801	STR												
	22	8	3'- 0"	7A802	19		1'- 0"	2'- 0"	---								
WINGWALL NO. 13																	
▲	14	5	15'- 6"	13W502	STR												
✳	32	5	5'- 1"	13W504	STR												
	16	5	8'- 8"	13W501	S10		3'- 10"	1'- 0"	3'- 10"								
	16	5	9'- 5"	13W503	16	3'- 2"	1'- 5"	3'- 4"	1'- 6"								
WINGWALL NO. 14																	
▲	14	5	7'- 6"	14W502	STR												
	15	5	5'- 1"	14W504	STR												
	8	5	8'- 8"	14W501	S10		3'- 10"	1'- 0"	3'- 10"								
	8	5	9'- 5"	14W503	16	3'- 2"	1'- 5"	3'- 4"	1'- 6"								
ABUTMENT NO. 8																	
	10	5	27'- 2"	8A501A	STR												
✳	11	5	17'- 10"	8A501B	STR												
	21	5	29'- 2"	8A502A	STR												
	21	5	20'- 0"	8A502B	STR												
	96	5	3'- 9"	8A503	STR												
▲	44	5	22'- 5"	8A504	S10		10'- 4"	1'- 9"	10'- 4"								
	48	5	8'- 9"	8A505	S10		4'- 0"	0'- 9"	4'- 0"								
	115	8	3'- 0"	8A801	STR												
	22	8	3'- 0"	8A802	19		1'- 0"	2'- 0"	---								
WINGWALL NO. 15																	
▲	14	5	16'- 4"	15W502	STR												
	31	5	4'- 11"	15W504	STR												
	17	5	8'- 4"	15W501	S10		3'- 8"	1'- 0"	3'- 8"								
	17	5	9'- 2"	15W503	16	3'- 2"	1'- 5"	3'- 1"	1'- 6"								

ITEM	EACH	SIZE	LENGTH	MARK	TYPE	A	B	C	D	E	F	G	H	J	K	R	O
WINGWALL NO. 16																	
▲	14	5	8'- 4"	16W502	STR												
✳	16	5	5'- 2"	16W504	STR												
	9	5	8'- 8"	16W501	S10		3'- 10"	1'- 0"	3'- 10"								
	9	5	9'- 4"	16W503	16	3'- 2"	1'- 5"	3'- 4"	1'- 6"								
PIER NO. 3																	
✳ ▲	11	5	33'- 8"	3P501	STR												
▲	13	5	3'- 6"	3P502	STR												
	84	5	4'- 6"	3P503	S10		1'- 0"	2'- 6"	1'- 0"								
✳	9	8	27'- 2"	3P801	STR												
✳	21	10	14'- 0"	3P1001	STR												
PIER NO. 4																	
▲	10	5	33'- 8"	4P501	STR												
▲	13	5	3'- 6"	4P502	STR												
	84	5	4'- 6"	4P503	S10		1'- 0"	2'- 6"	1'- 0"								
	8	8	27'- 2"	4P801	STR												
	20	10	14'- 0"	4P1001	STR												

~ NOTES ~

1. UNLESS OTHERWISE DESIGNATED, ALL BAR REINFORCEMENT FOR CONCRETE IN SIZES UP TO AND INCLUDING NO. 18 SHALL CONFORM TO THE REQUIREMENTS OF THE "SPECIFICATIONS FOR DEFORMED BILLET-STEEL BARS FOR CONCRETE REINFORCEMENT", AASHTO M 31 (ASTM A 615-SI). ALL BARS SHALL BE GRADE 60, UNLESS OTHERWISE DESIGNATED.
2. FOR TYPICAL BENDING DETAILS, RECOMMENDED PIN DIAMETER "D" OF BENDS AND HOOKS, AND OTHER STANDARD PRACTICE, SEE CURRENT CONCRETE REINFORCING STEEL INSTITUTE "MANUAL OF STANDARD PRACTICE".
3. BARS WHICH REQUIRE MORE ACCURATE BENDING THAN STANDARD PRACTICES SHOULD HAVE LIMITS INDICATED.
4. ALL DIMENSIONS ARE OUT TO OUT OF BAR EXCEPT "A" AND "G" ON STANDARD 180 DEGREE AND 135 DEGREE HOOKS.
5. "J" DIMENSION ON 180 DEGREE HOOKS TO BE SHOWN ONLY WHERE NECESSARY TO RESTRICT HOOK SIZE. OTHERWISE, STANDARD HOOKS ARE TO BE USED.
6. "H" DIMENSION ON STIRRUPS TO BE SHOWN ONLY WHEN NECESSARY TO MAINTAIN CLEARANCES.
7. WHERE SLOPE DIFFERS FROM 45 DEGREES, DIMENSIONS "H" AND "K" MUST BE SHOWN.
8. ▲ DENOTES BARS TO BE CUT IN FIELD.
9. ✳ DENOTES ONE EXTRA BAR ADDED FOR TESTING PURPOSES.
10. ■ DENOTES TWO EXTRA BARS ADDED FOR TESTING PURPOSES.
11. ~~"E" IN PREFIX DENOTES EPOXY COATED REINFORCING STEEL.~~

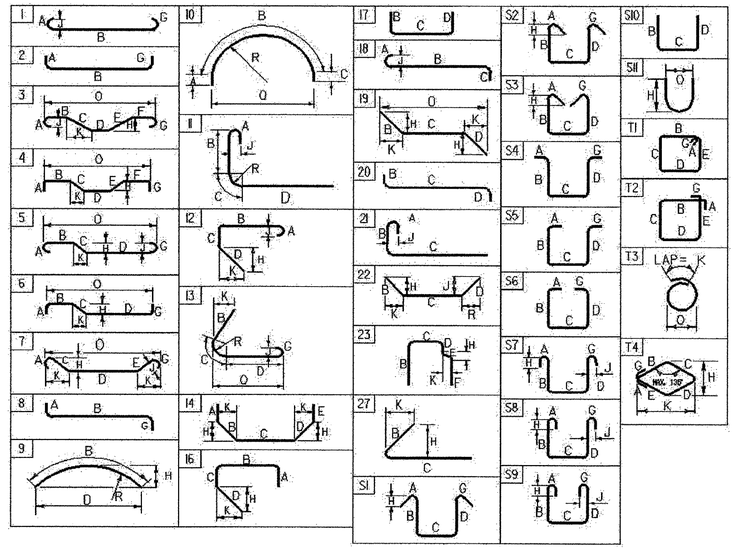

ASTM STANDARD REINFORCING BARS

BAR SIZE DESIGNATION	WEIGHT POUNDS PER FOOT	NOMINAL DIMENSIONS ROUND SECTION		
		DIAMETER INCHES	AREA INCHES^2	PERIMETER INCHES
#3	0.376	0.375	0.11	1.178
#4	0.668	0.500	0.20	1.571
#5	1.043	0.625	0.31	1.963
#6	1.502	0.750	0.44	2.356
#7	2.044	0.875	0.60	2.749
#8	2.670	1.000	0.79	3.142
#9	3.400	1.128	1.00	3.544
#10	4.303	1.270	1.27	3.990
#11	5.313	1.410	1.56	4.430
#14	7.65	1.693	2.25	5.32
#18	13.60	2.257	4.00	7.09

ALL STEEL DETAILED ON THIS SHEET TO BE EPOXY COATED

BR454

PROJECT NAME:	FAIRFAX-FAIRFIELD-ST. ALBANS		
PROJECT NUMBER:	IM 089 - 3 (27)		
FILE NAME:	\96a056\structures	PLOT DATE:	9/20/00
PROJECT LEADER:	R. R. WHITCOMB	DRAWN BY:	P. PERRY
DESIGNED BY:	P. PERRY	CHECKED BY:	G. ROY
BRIDGE 88N REINFORCING STEEL SCHEDULE		SHEET	206 OF 370

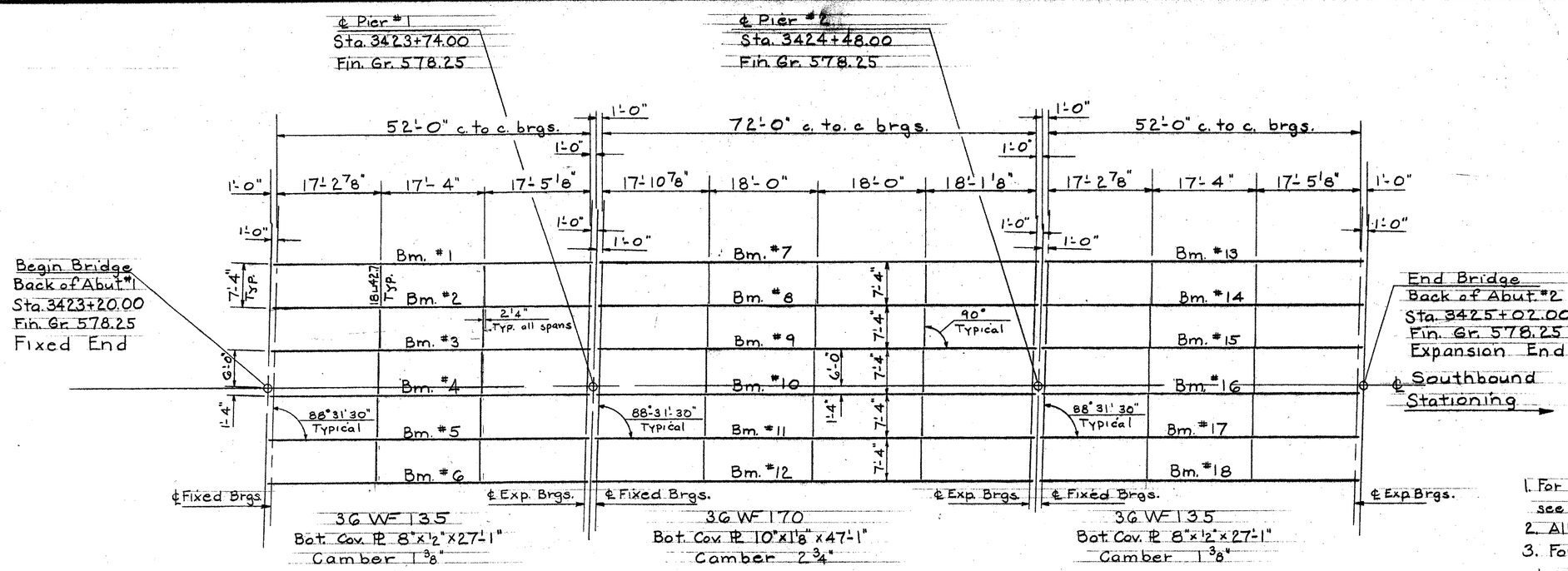

SOUTHBOUND FRAMING PLAN

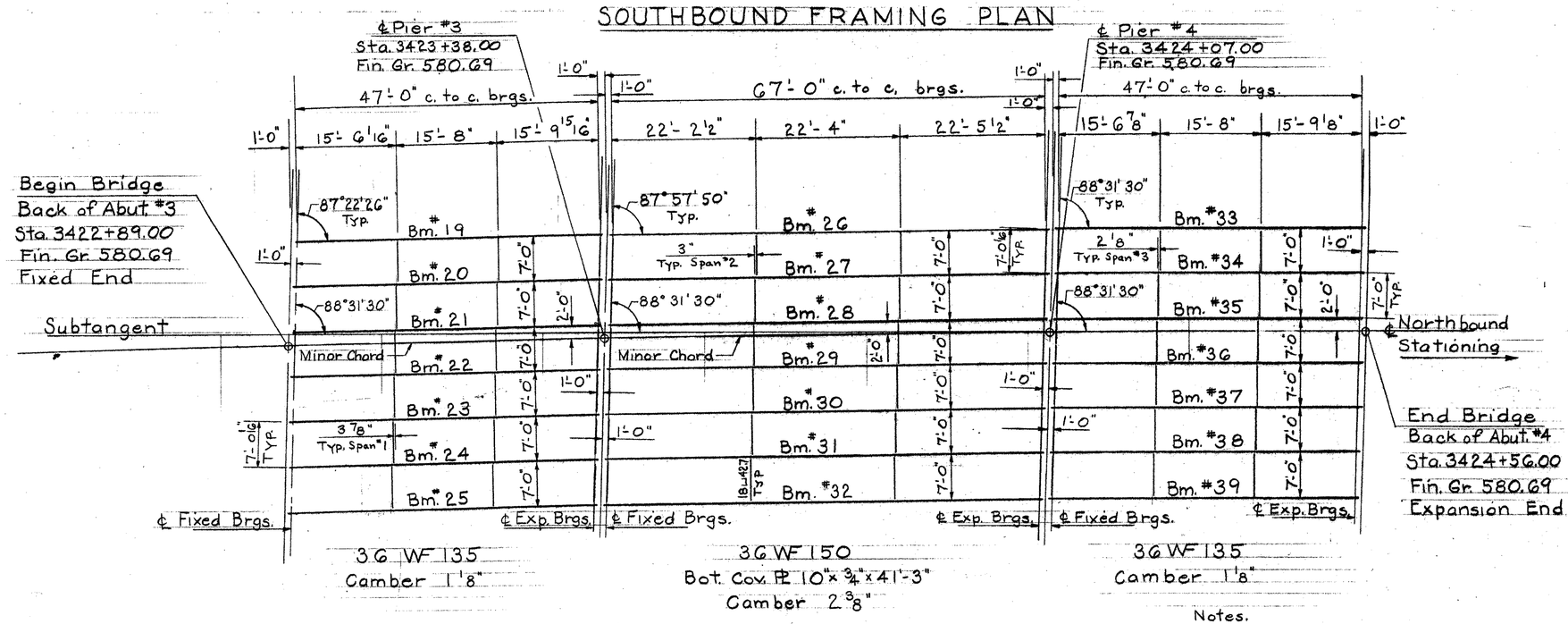

NORTHBOUND FRAMING PLAN

BRIDGE SHEET BR455
REFERENCE SHEET 1 OF 37
SHEET 207 OF 370

Notes.

1. For General Notes and design stresses see Std. Sh. SCB-D1-65.
2. All diaphragms to be 18 ⊔ 42.7.
3. For details of shear connectors, beam haunch, and longitudinal section see Std. Sh. SCB-D2-65, Det. A, B, & C.
4. For details of pier expansion plates and drainage see Std. Sh. SCB-D3-65, Det. A, B, C, & E.
5. For details of cover plates and diaphragms see Std. Sh. SCB-D7-65, Det. A, B, C, D, & E.
6. For details of bearing devices see Std. Sh. SCB-D8-65, Det. A & B and Std. Sh. SCB-D9-65, Det. A.
7. All beams in S.B. bridge to be parallel to ℄ of rdwy (tangent). All beams in Span #1 and #2 in N.B. bridge to be parallel to their respective minor chords. All beams in Span #3 N.B. bridge to be parallel to N.B. tangent.

Notes.

8. See Std. Dwgs. SCB-42-65 and SCB-37.25-65 for details of Typical Bridge Sections not shown on sheet BR-202, Prel. Information Sheet.

Stage 1 Construction

CONTRACT 2

STATE OF VERMONT
DEPARTMENT OF HIGHWAYS

TOWN OF Georgia - Fairfax - Fairfield - St. Albans
ROUTE No. I 89 LOG STA.
Framing Plan
I 89 over Approach Road
SCALE 1" = 10'
DRAWN BY A.J.C. CHECKED BY J.J.C.
PROJECT No. I 89-3(35) Cont. 272
SHEET 198 OF 467

BD-208

No. of Piles	Size	Est. Length of Piles	Splices allowed for piles not exceeding Plan Length (to be paid for only if used.)	Splices estimated for piles exceeding Plan Length (to be paid for only if used.)
10	12BP53	25'	—	2

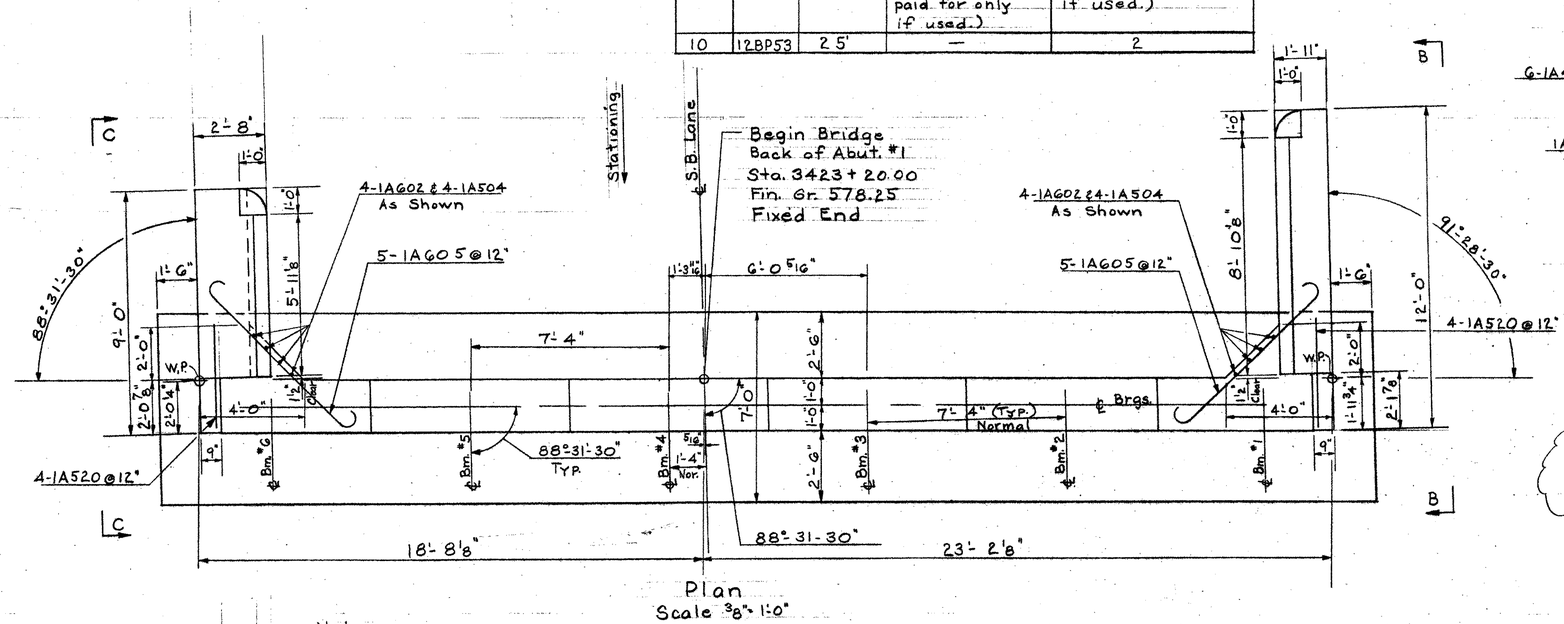

Plan
Scale ⅜"=1'-0"

Note:
Do not construct above this joint until structural steel is in place and final grade is determined. (Typical both sides)

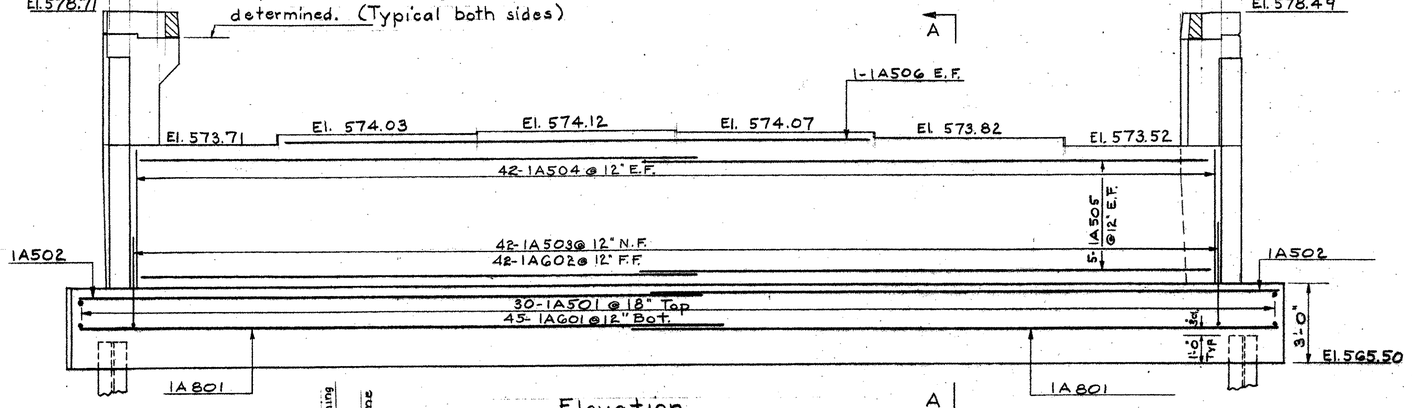

Elevation
Scale ⅜"=1'-0"

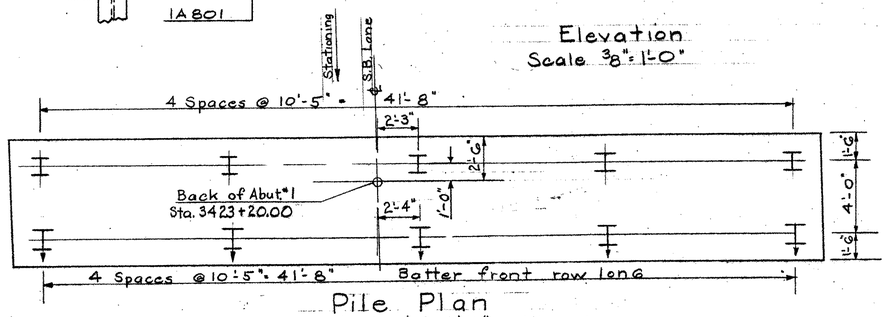

Pile Plan
Scale 1/4"=1'-0"

Notes:
1. For General Notes see Std. Sh. SCB-D1-65.
2. Reinforcing steel is to have a min. clear cover of 3" in footing and 2" above footing.
3. Raise A504 bars above top of footing where bridge seats increase in height.
4. F.F. - Far Face, N.F. - Near Face, E.F. - Each Face.
5. Step bridge seats midway between beams.
6. Steel piles (12BP53) shall be driven to the designed bearing capacity of 45 tons per pile.

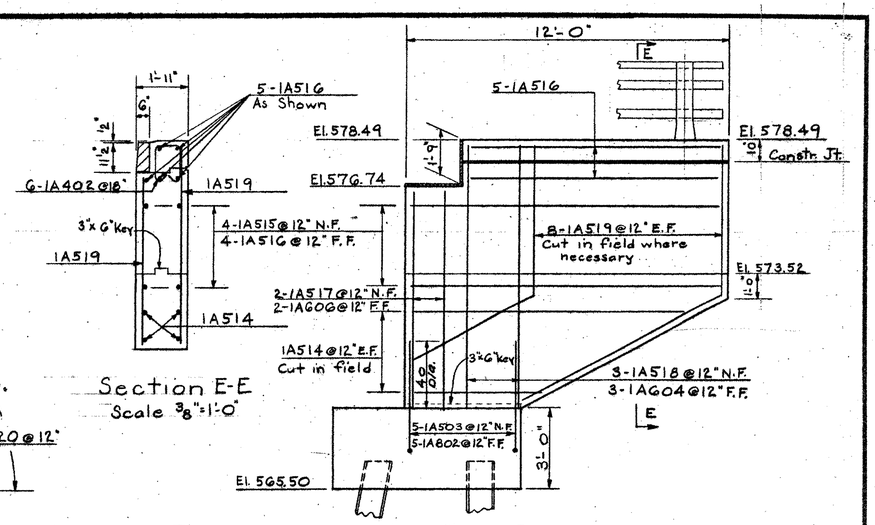

Section E-E
Scale ⅜"=1'-0"

View B-B
Scale ⅜"=1'-0"

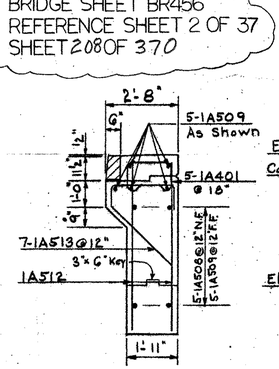

Section D-D
Scale ⅜"=1'-0"

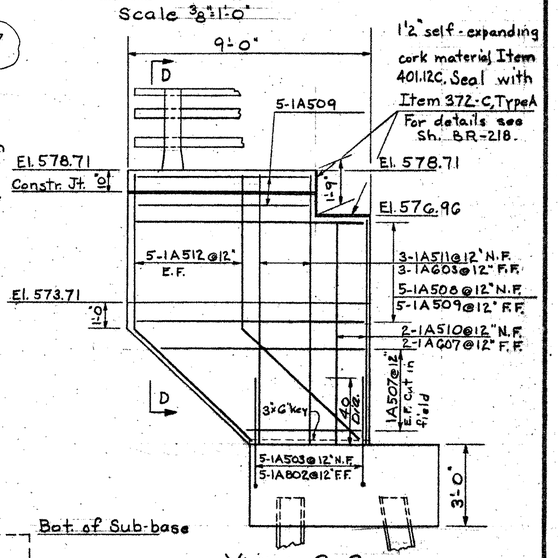

View C-C
Scale ⅜"=1'-0"

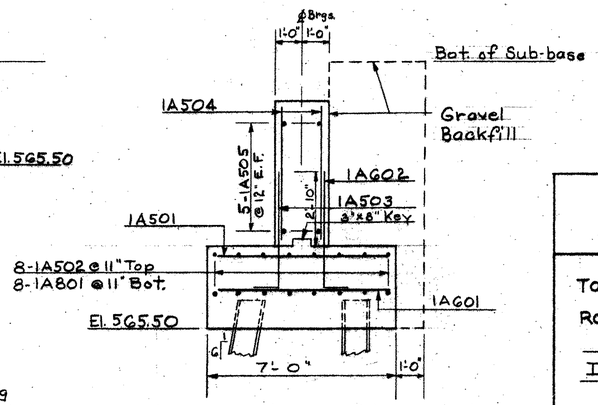

Section A-A
Scale ⅜"=1'-0"

BRIDGE SHEET BR456
REFERENCE SHEET 2 OF 37
SHEET 208 OF 370

Stage 1 Construction
CONTRACT 2

STATE OF VERMONT
DEPARTMENT OF HIGHWAYS

Georgia - Fairfax -
TOWN OF Fairfield - St. Albans
ROUTE NO. I 89 LOG STA. ____
Abutment #1 Details
I 89 over Approach Road
SCALE As Noted

DRAWN BY A.J.C. CHECKED BY J.J.C.
PROJECT NO. I 89-3(35) Cont. #2
SHEET 197 OF 562

No. of Piles	Size	Est. Length of Piles	Splices allowed for piles not exceeding Plan Length (to be paid for only if used.)	Splices estimated for piles exceeding Plan Length (to be paid for only if used.)
10	12BP53	30'	—	2

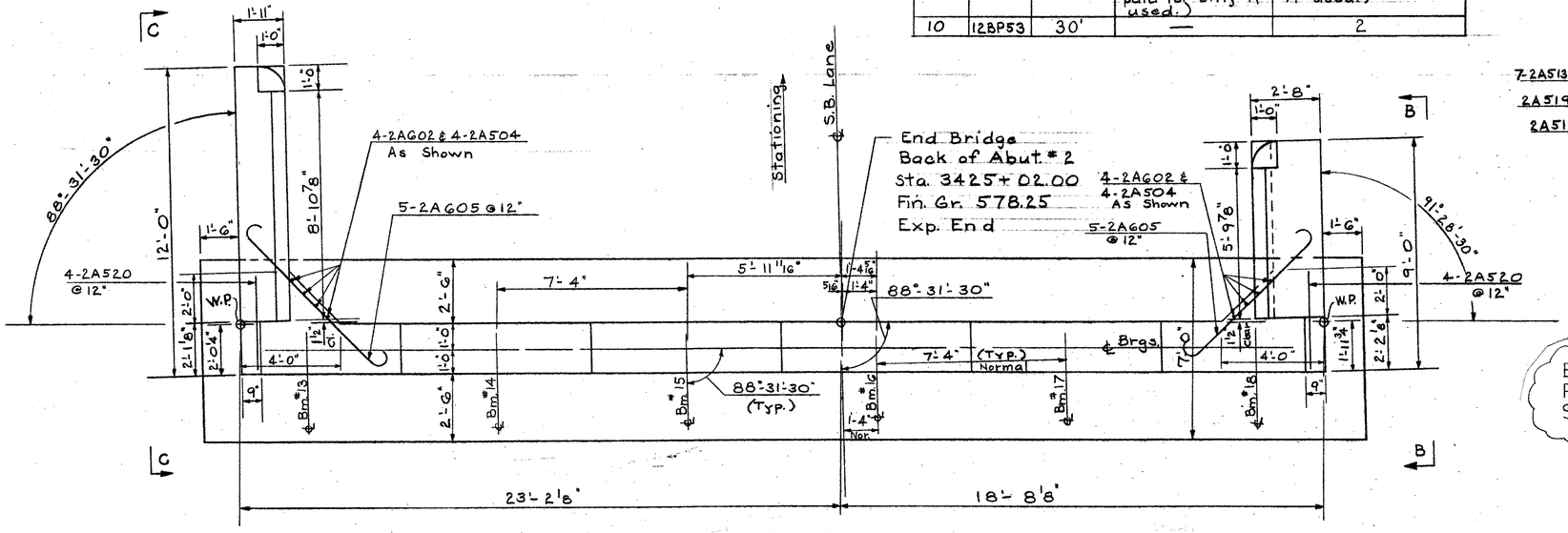

Plan
Scale 3/8" = 1'-0"

Note:
Do not construct above this joint until structural steel is in place and final grade is determined. (Typical both sides)

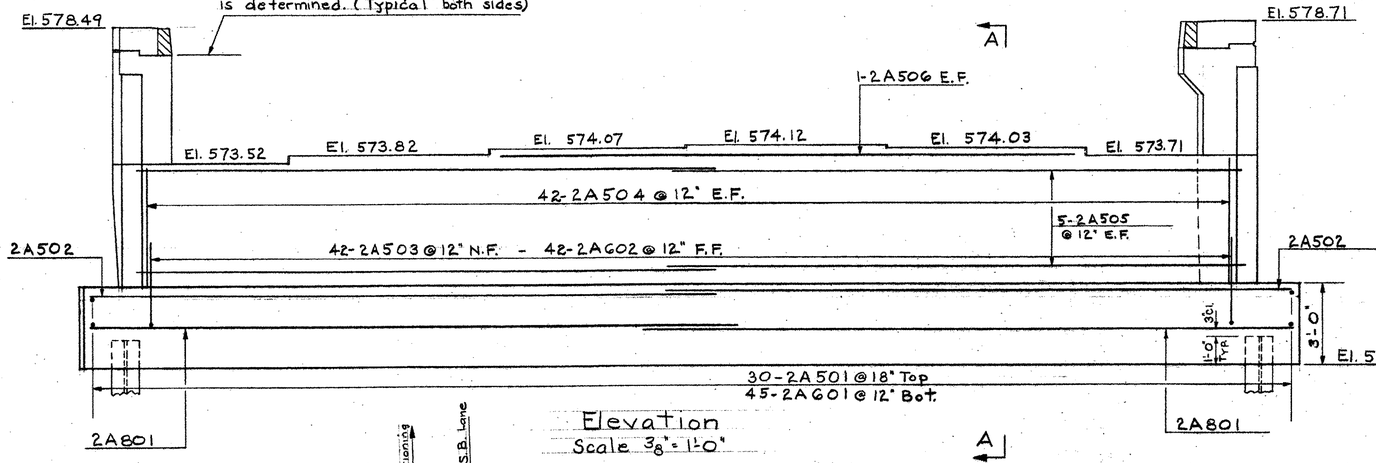

Elevation
Scale 3/8" = 1'-0"

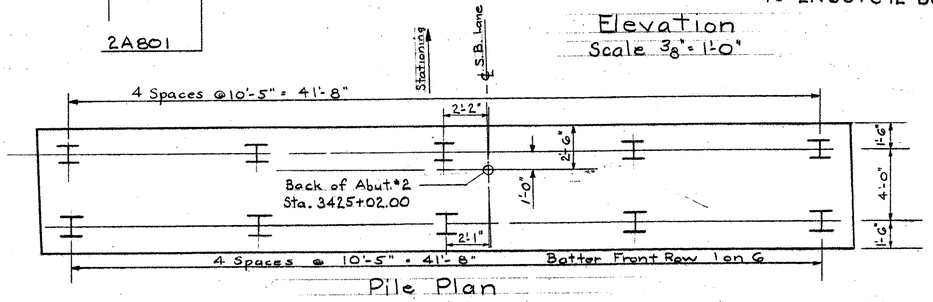

Pile Plan
Scale 1/4" = 1'-0"

Note:
For abutment notes see Abutment #1 Details sh. BR-210.

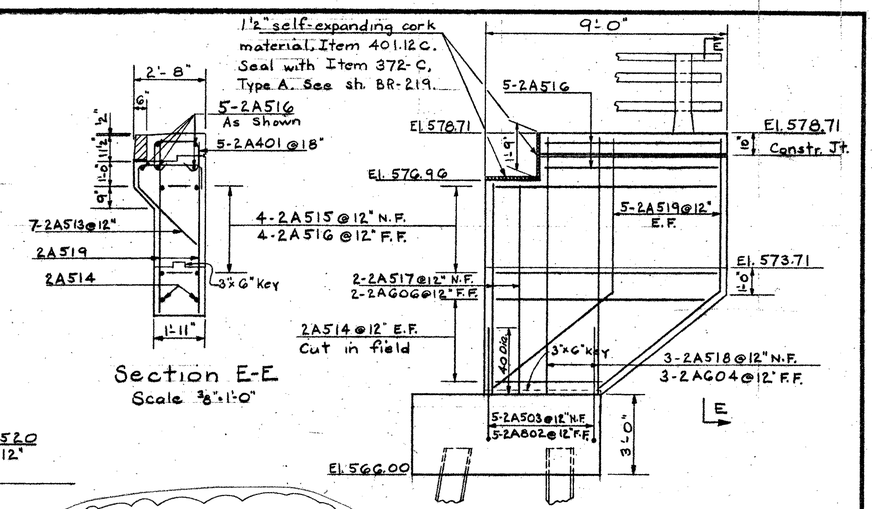

Section E-E
Scale 3/8" = 1'-0"

View B-B
Scale 3/8" = 1'-0"

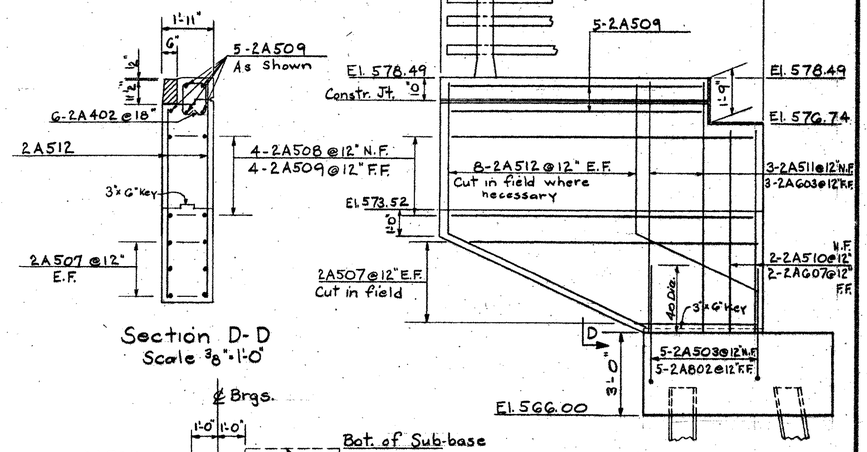

Section D-D
Scale 3/8" = 1'-0"

View C-C
Scale 3/8" = 1'-0"

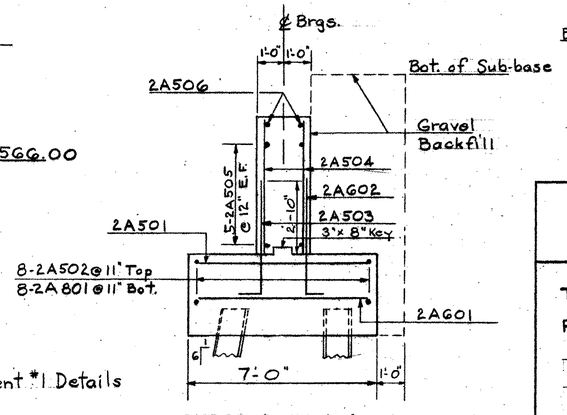

Section A-A
Scale 3/8" = 1'-0"

BRIDGE SHEET BR457
REFERENCE SHEET 3 OF 37
SHEET 209 OF 370

CONTRACT 2

STATE OF VERMONT
DEPARTMENT OF HIGHWAYS

Georgia - Fairfax -
TOWN OF Fairfield - St. Albans
ROUTE NO. I 89 LOG STA.
Abutment #2 Details
I 89 over Approach Road
SCALE As Noted

DRAWN BY A.J.C. CHECKED BY J.J.C.
PROJECT NO. I 89-3(35) Cont.#2
SHEET 198 OF 467

Stage 1 Construction

BRIDGE SHEET BR458
REFERENCE SHEET 4 OF 37
SHEET 210 OF 370

Begin Bridge
Back of Abut. #3
Sta. 3422+89.00
Fin. Gr. 580.69
Fixed End

Back of Abut #3
Sta. 3422+89.00

Pile Plan
Scale 3/16"=1'-0"

Section D-D
Scale 3/8"=1'-0"

Plan
Scale 3/8"=1'-0"

Elevation
Scale 3/8"=1'-0"

View B-B
Scale 3/8"=1'-0"

View C-C
Scale 3/8"=1'-0"

Section A-A
Scale 3/8"=1'-0"

Section E-E
Scale 3/8"=1'-0"

Note
Do not construct above this joint until structural steel is in place and final grade is determined. (Typical both sides)

No. of Piles	Size	Est. Length of Piles	Splices allowed for piles not exceeding Plan Length (to be paid for only if used.)	Splices estimated for piles exceeding Plan Length (to be paid for only if used.)
14	12PB53	20	—	3

Note:
For Abutment Notes see Abutment #1 Details sh. BR-210

1½" self-expanding cork material, Item 401.12C. Seal with Item 372-C, Type A
For details see sheet BR-220.

Gravel Backfill

Stage 1 Construction

CONTRACT 2

STATE OF VERMONT
DEPARTMENT OF HIGHWAYS

Georgia - Fairfax -
TOWN OF Fairfield - St. Albans
ROUTE NO. I 89 LOG STA. ----
Abutment #3 Details
I 89 over Approach Road
SCALE As Noted
DRAWN BY A.J.C. CHECKED BY J.J.C.
PROJECT NO. I 89-3(35)Cent+2
SHEET 199 OF 467

BR-212

No. of Piles	Size	Est. Length of Piles	Splices allowed for piles not exceeding Plan Length (to be paid for only if used.)	Splices estimated for piles exceeding Plan Length (to be paid for only if used.)
14	12BP53	20'	—	3

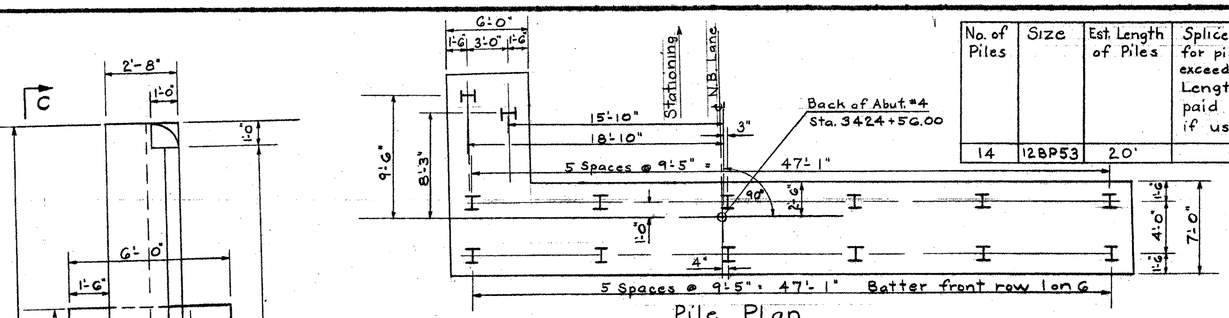

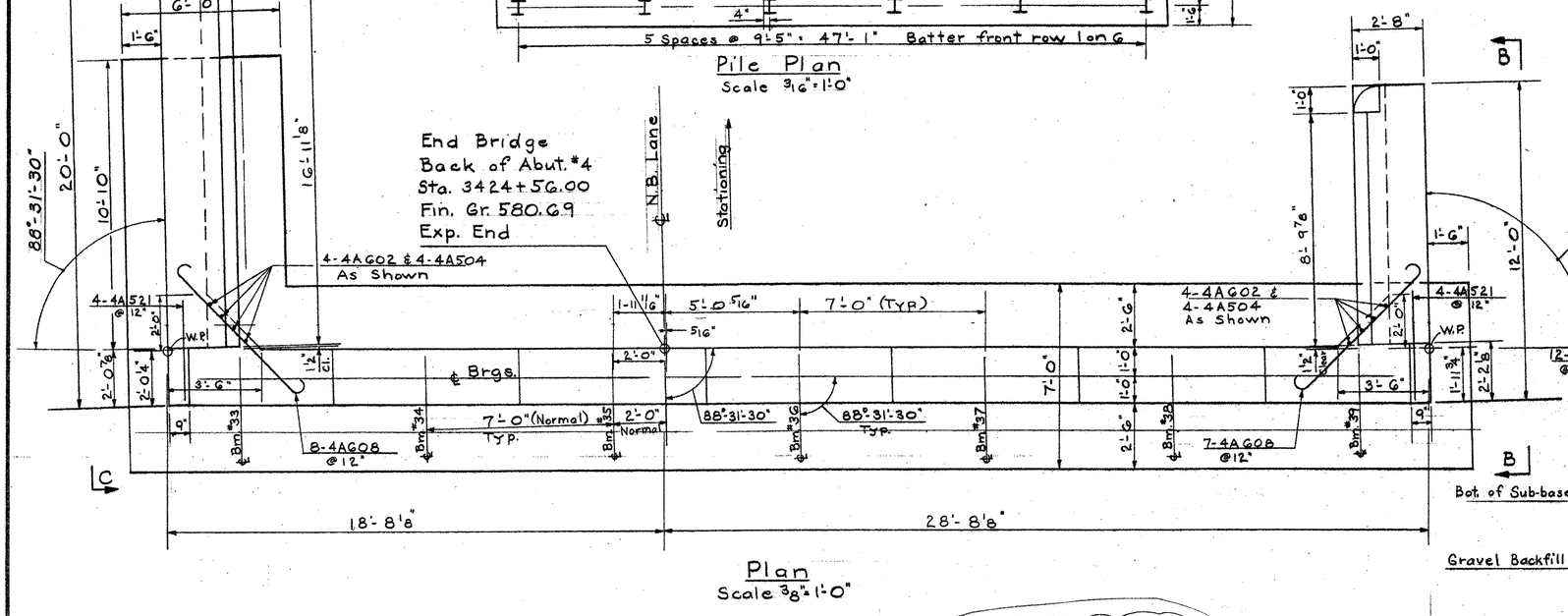

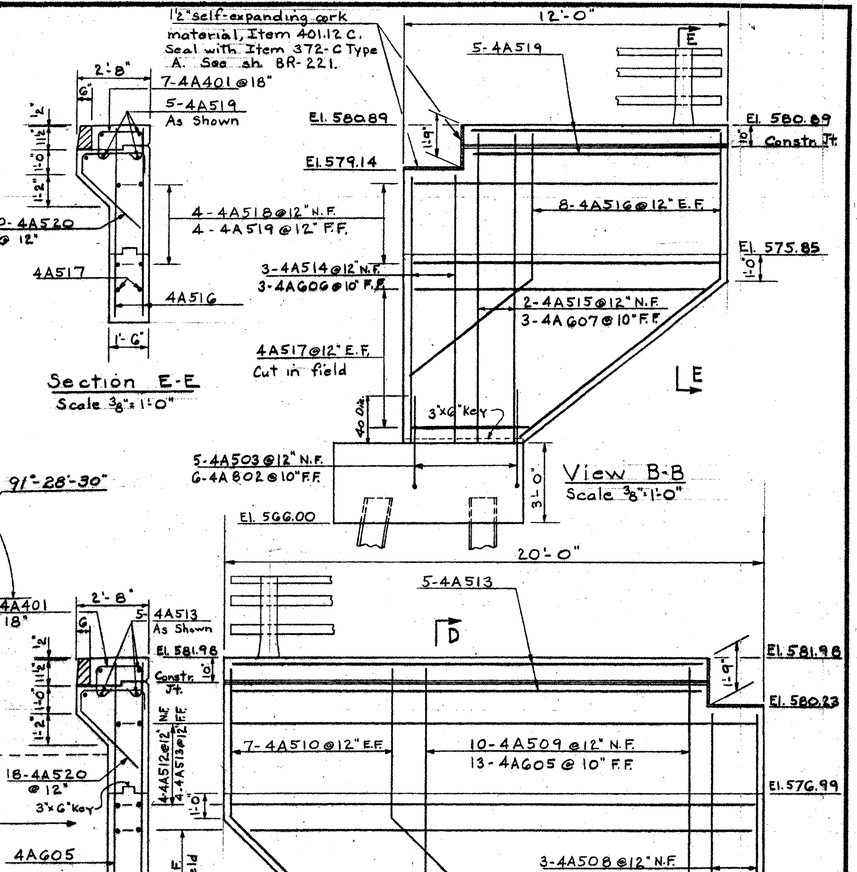

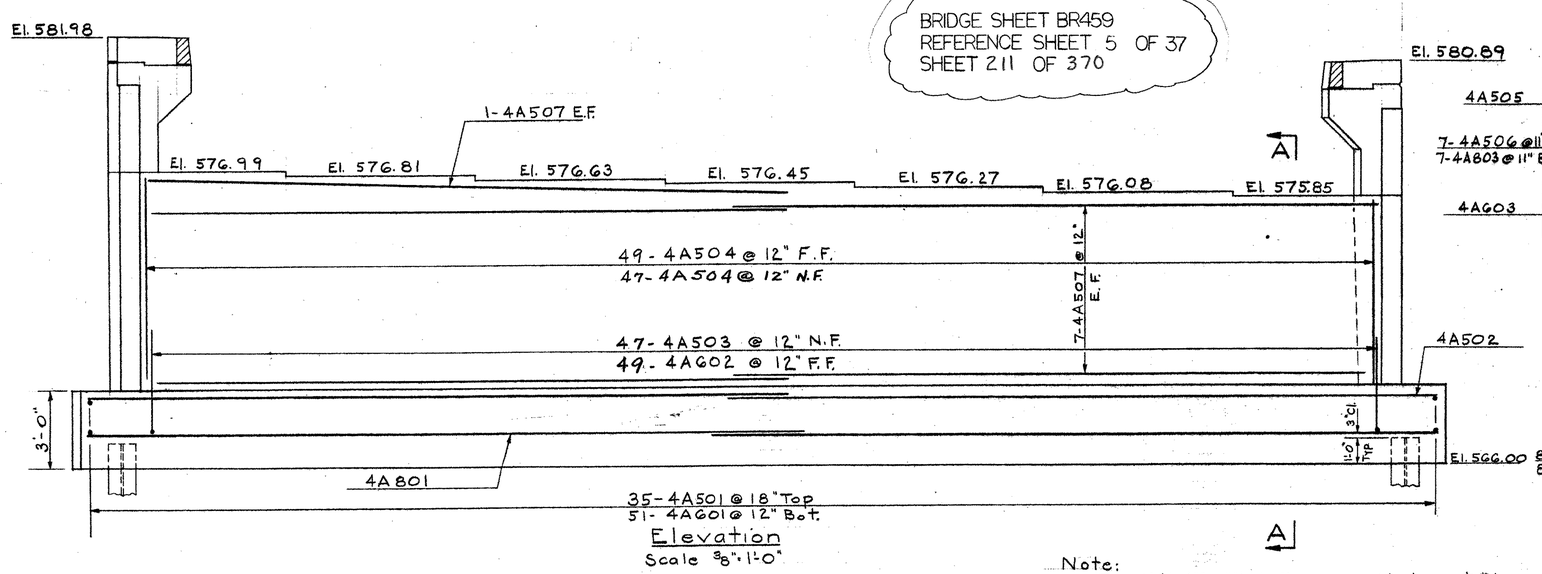

BRIDGE SHEET BR459
REFERENCE SHEET 5 OF 37
SHEET 211 OF 370

Note:
For Abutment Notes see Abutment #1 Details, sheet BR-210.

CONTRACT 2

STATE OF VERMONT
DEPARTMENT OF HIGHWAYS

Georgia - Fairfax -
TOWN OF Fairfield - St Albans
ROUTE NO. I 89 LOG STA.
Abutment #4 Details
I 89 over Approach Road
SCALE As Noted
DRAWN BY A.J.C. CHECKED BY J.J.C.
PROJECT NO. I 89-3(35) Cont#2
SHEET 200 OF 467

Stage 1 Construction

DD-212

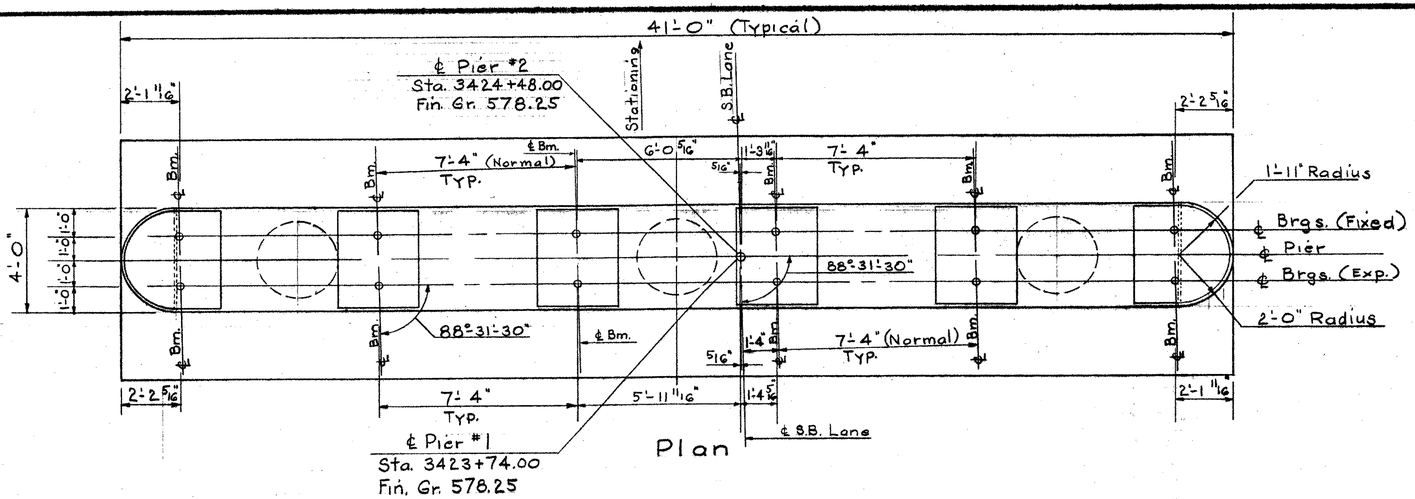

Plan

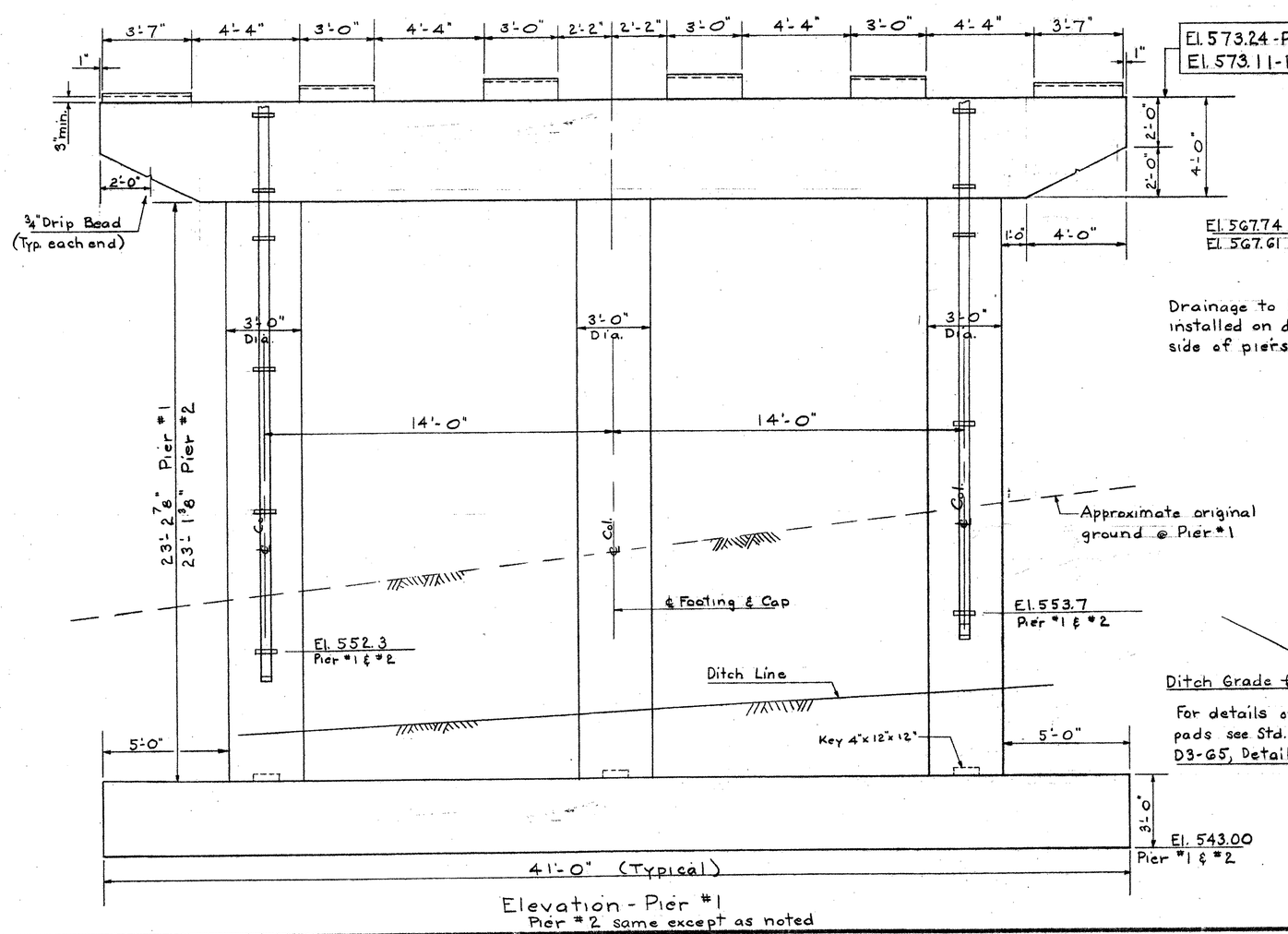

Elevation - Pier #1
Pier #2 same except as noted

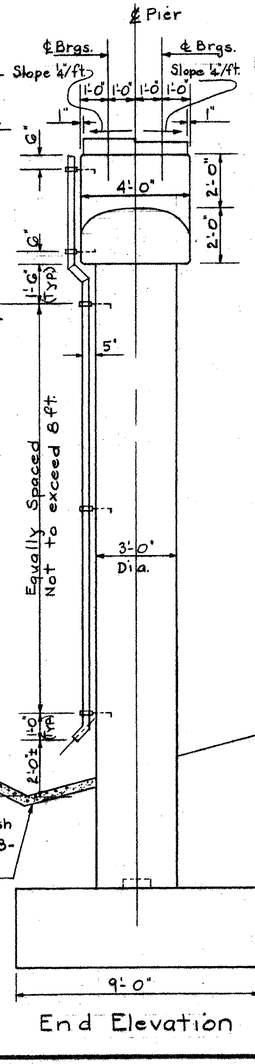

End Elevation

Bm. #1	El. 573.62	El. 573.49	Bm. #7	El. 573.36	El. 573.62	Bm. #13
Bm. #2	El. 573.92	El. 573.79	Bm. #8	El. 573.66	El. 573.92	Bm. #14
Bm. #3	El. 574.17	El. 574.04	Bm. #9	El. 573.91	El. 574.17	Bm. #15
Bm. #4	El. 574.22	El. 574.09	Bm. #10	El. 573.96	El. 574.22	Bm. #16
Bm. #5	El. 574.13	El. 574.00	Bm. #11	El. 573.87	El. 574.13	Bm. #17
Bm. #6	El. 573.81	El. 573.68	Bm. #12	El. 573.55	El. 573.81	Bm. #18

℄ Pier #1 — Stationing — ℄ Pier #2

Bridge Seat Elevations

Notes:

1. For General Notes see Std. Sh. SCB-D1-G5.
2. For details of drainage not shown see Std. Sh. SCB-D3-G5, Type B, Details A, B, C, & E.
3. All piers are designed for a maximum bearing pressure of 2½ tons per square foot.
4. Concrete in the footings is to be Class B, concrete above the top of the footings is to be class AA.
5. Reinforcing steel is to have a minimum clear cover of 3 inches in the footings and 2 inches in columns and cap beam.
6. All spiral reinforcement shall conform to AASHO Designation M 32-60 Cold-Drawn Steel wire for Concrete Reinforcement and shall be paid for under Item 402, Reinforcing Steel.
7. Reinforcing in the top of the piers shall be placed so as to allow for drilling and placing anchor bolts.

Stage 1 Construction

CONTRACT 2

BRIDGE SHEET BR460
REFERENCE SHEET 6 OF 37
SHEET 212 OF 370

STATE OF VERMONT
DEPARTMENT OF HIGHWAYS

TOWN OF Georgia - Fairfax - Fairfield - St. Albans

ROUTE No. I 89 LOG STA.

Pier #1 & #2 Layout Details
I 89 over Approach Road

SCALE 3/8" = 1'-0"

DRAWN BY A.J.C. CHECKED BY J.J.C.

PROJECT No. I 89-3(35)Cont.#2

SHEET 201 OF 467

BR-214

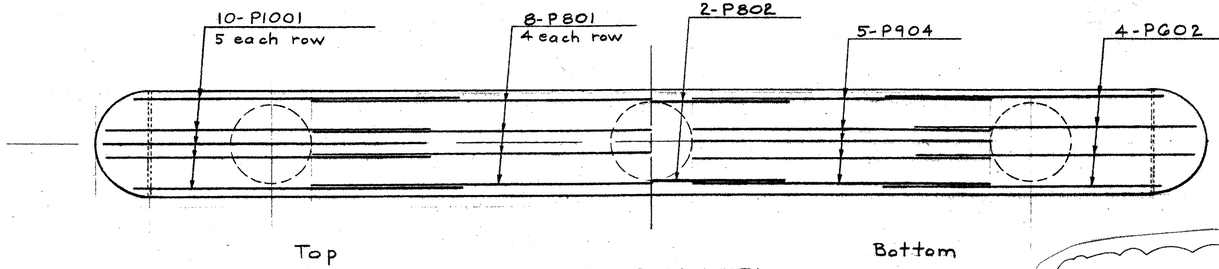

Cap Reinforcing Plan
Scale $\frac{3}{8}$" = 1'-0"

BRIDGE SHEET BR461
REFERENCE SHEET 7 OF 37
SHEET 213 OF 370

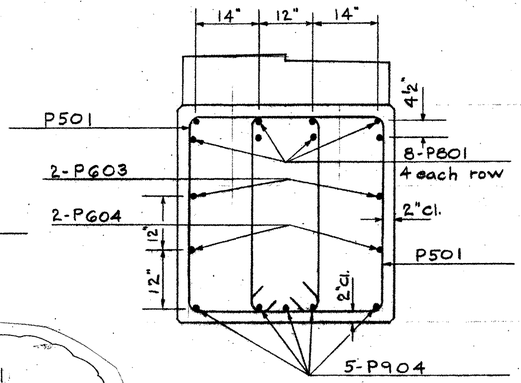

Section A-A
Scale $\frac{3}{4}$" = 1'-0"

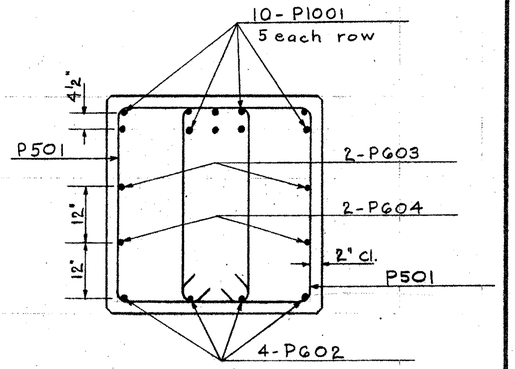

Section B-B
Scale $\frac{3}{4}$" = 1'-0"

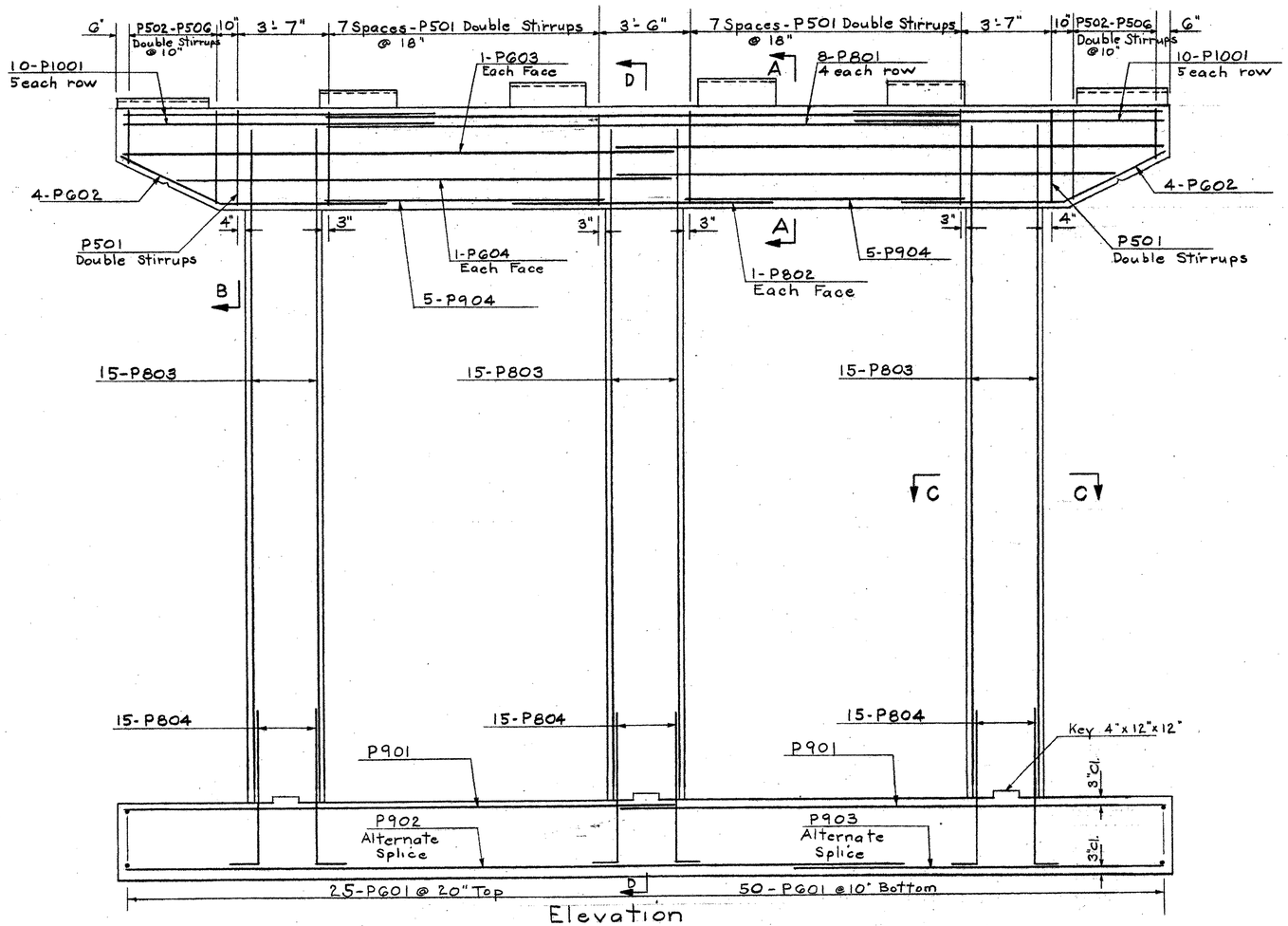

Elevation
Scale $\frac{3}{8}$" = 1'-0"

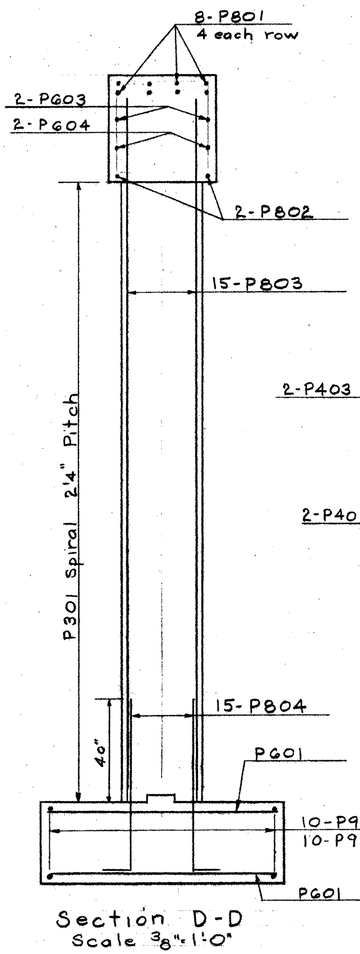

Section D-D
Scale $\frac{3}{8}$" = 1'-0"

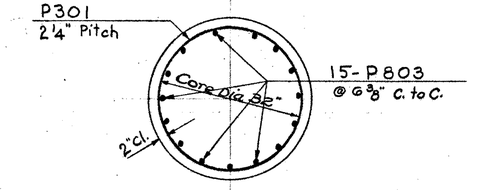

Section C-C
Scale $\frac{3}{4}$" = 1'-0"

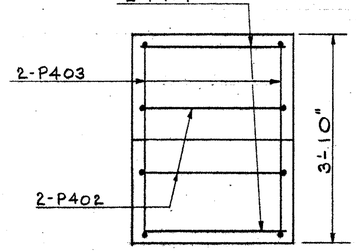

Interior Pad
Scale $\frac{3}{4}$" = 1'-0"

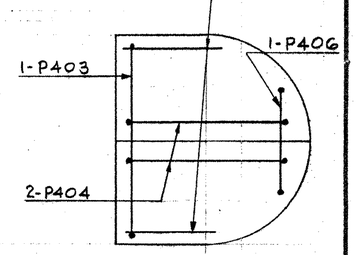

Exterior Pad
Scale $\frac{3}{4}$" = 1'-0"

STATE OF VERMONT
DEPARTMENT OF HIGHWAYS

TOWN OF Georgia-Fairfax-Fairfield-St.Albans
ROUTE NO. I 89 LOG STA. ____
Pier #1 & #2 Reinforcing Steel
I 89 over Approach Road
SCALE As Noted
DRAWN BY A.J.C. CHECKED BY J.J.C.
PROJECT NO. I 89-3(35) Cont. #2
SHEET 202 OF 467

Stage 1 Construction
CONTRACT 2

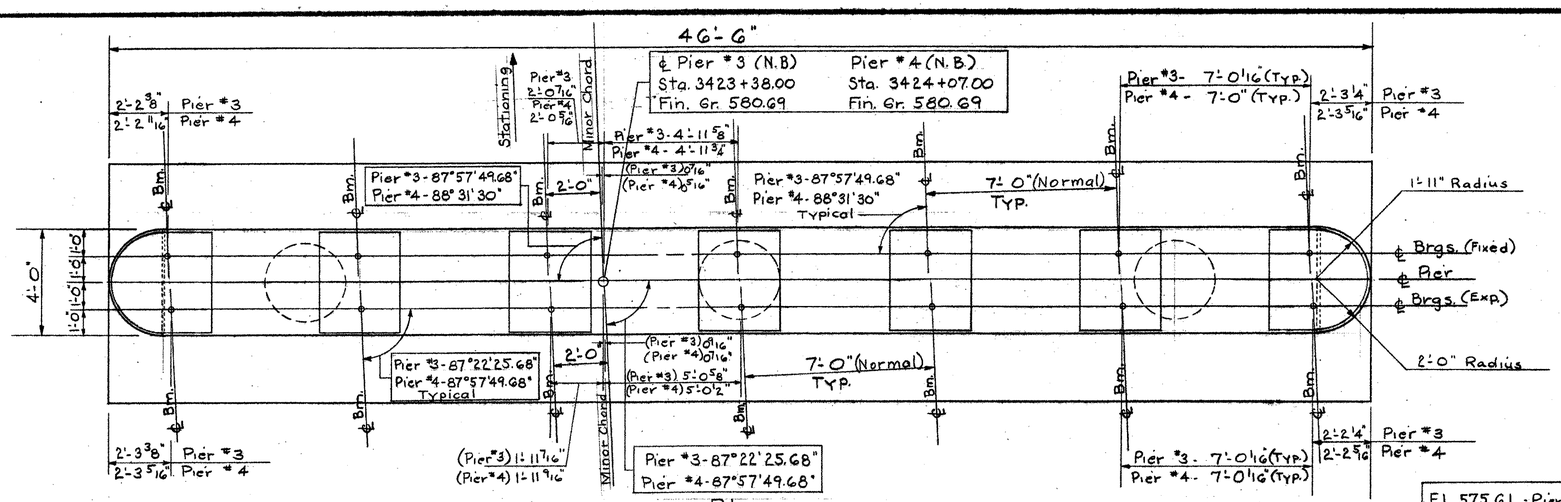

Plan

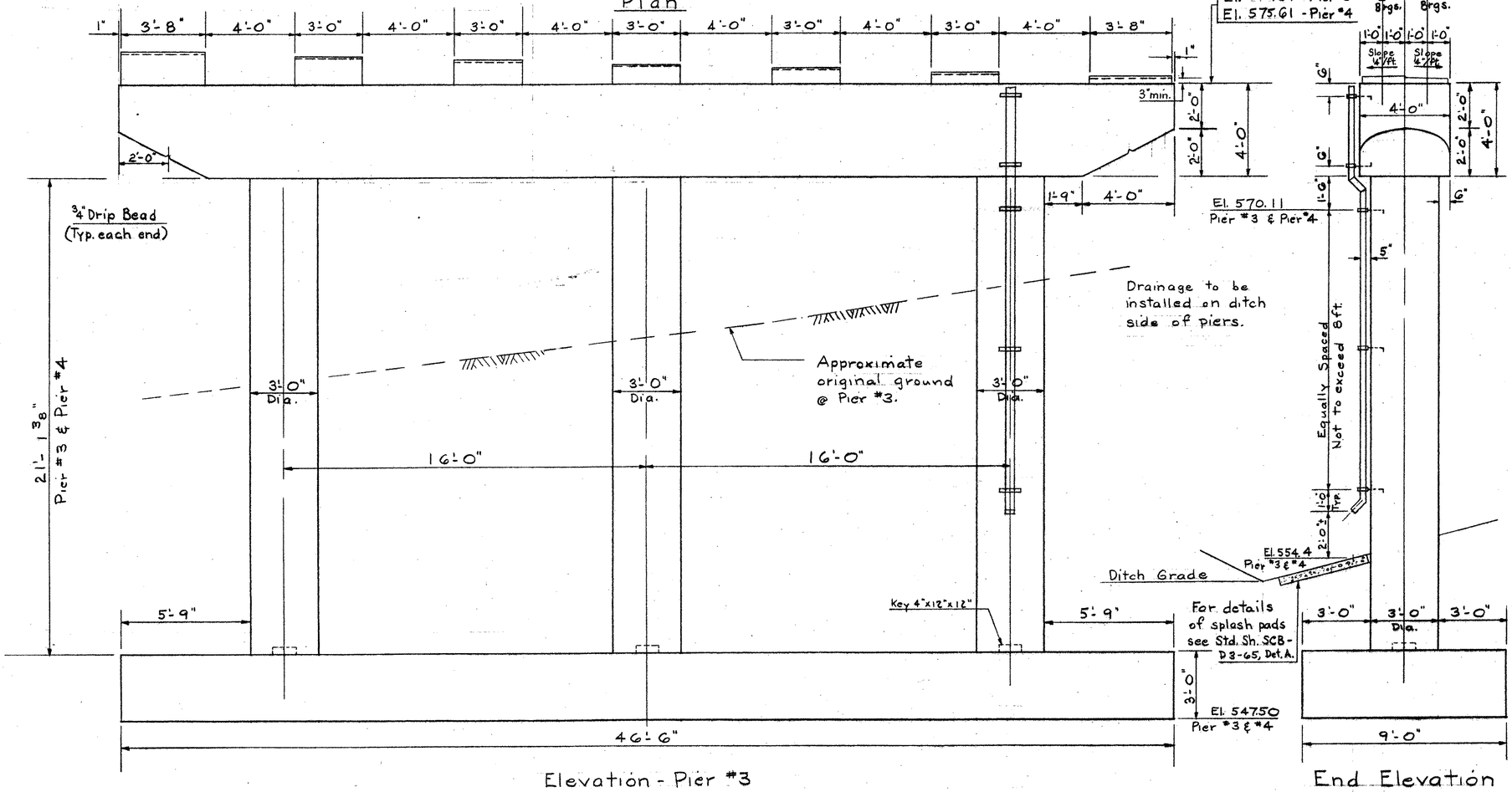

Elevation - Pier #3
Pier #4 same except as noted.

End Elevation

Bm. #19	El. 577.09	El. 577.00	Bm. #26	El. 577.00	El. 577.09 Bm. #33
Bm. #20	El. 576.91	El. 576.82	Bm. #27	El. 576.82	El. 576.91 Bm. #34
Bm. #21	El. 576.73	El. 576.64	Bm. #28	El. 576.64	El. 576.73 Bm. #35
Bm. #22	El. 576.55	El. 576.46	Bm. #29	El. 576.46	El. 576.55 Bm. #36
Bm. #23	El. 576.37	El. 576.28	Bm. #30	El. 576.28	El. 576.37 Bm. #37
Bm. #24	El. 576.18	El. 576.09	Bm. #31	El. 576.09	El. 576.18 Bm. #38
Bm. #25	El. 575.95	El. 575.86	Bm. #32	El. 575.86	El. 575.95 Bm. #39

℄ Pier #3 Stationing ℄ Pier #4

Bridge Seat Elevations

Note:
For Pier Notes see Pier #1 & #2 Layout Details sheet BR-214.

BRIDGE SHEET BR462
REFERENCE SHEET 8 OF 37
SHEET 214 OF 370

Stage 1 Construction

CONTRACT 2

STATE OF VERMONT
DEPARTMENT OF HIGHWAYS

TOWN OF Georgia - Fairfax - Fairfield - St. Albans
ROUTE NO. I 89 LOG STA.
Pier #3 & #4 Layout Details
I 89 over Approach Road
SCALE 3/8"=1'-0"
DRAWN BY A.J.C. CHECKED BY J.J.C.
PROJECT NO. I-89-3(35) Cont. #2
SHEET 203 OF 967

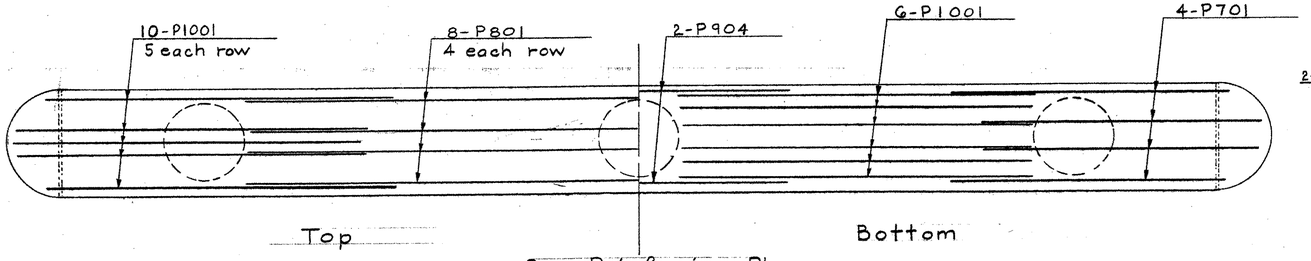

Cap Reinforcing Plan
Scale $\frac{3}{8}$"=1'-0"

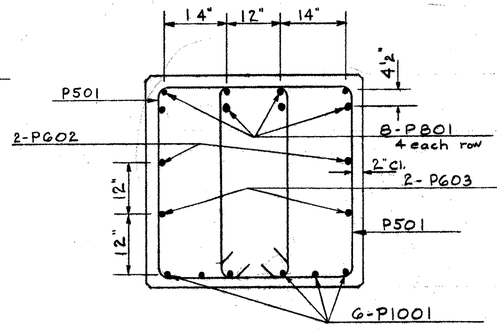

Section A-A
Scale $\frac{3}{4}$"=1'-0"

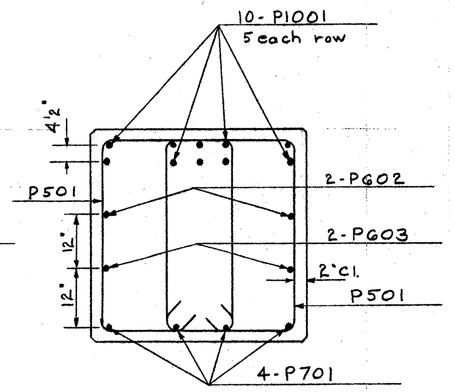

Section B-B
Scale $\frac{3}{4}$"=1'-0"

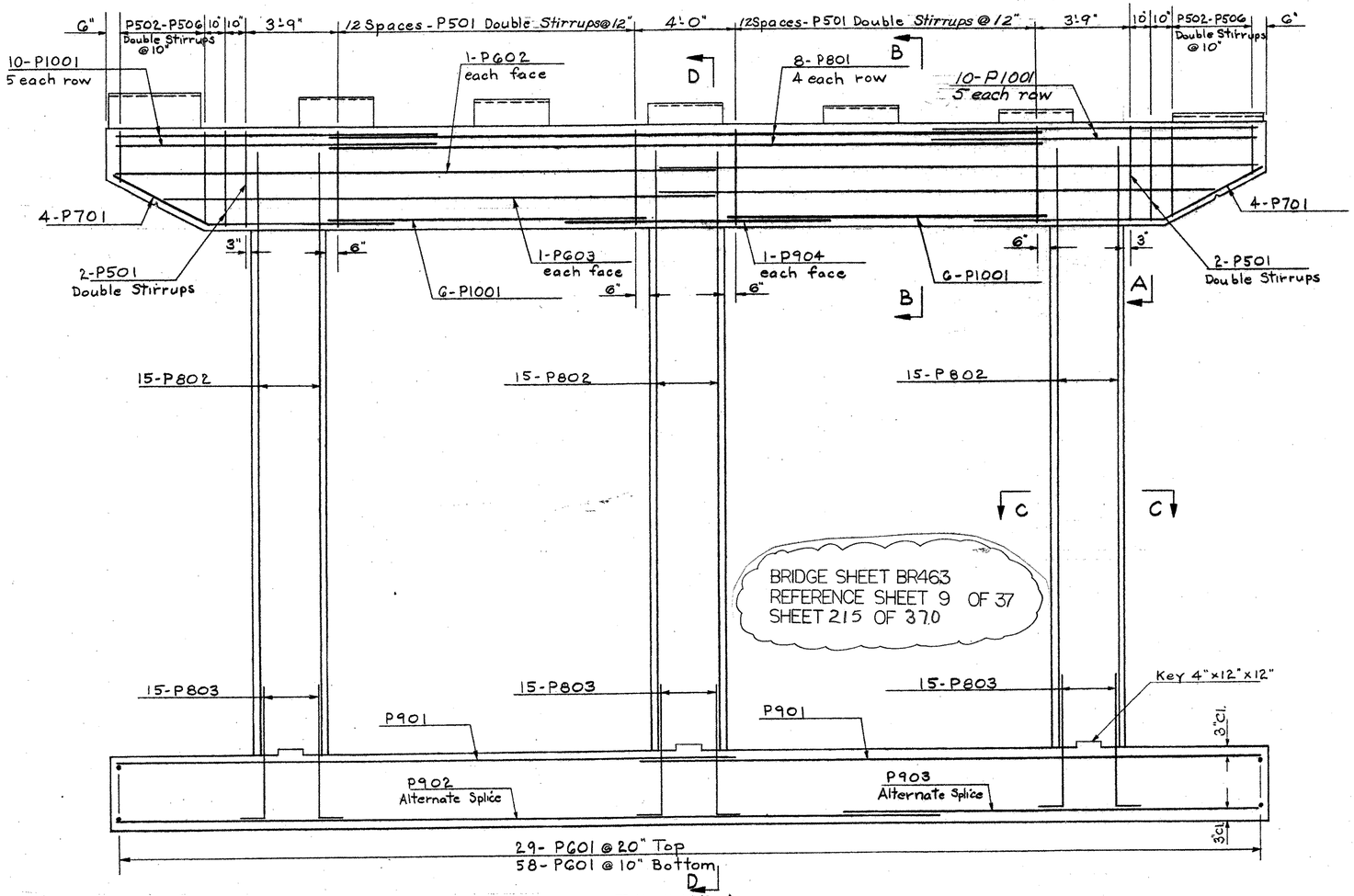

Elevation
Scale $\frac{3}{8}$"=1'-0"

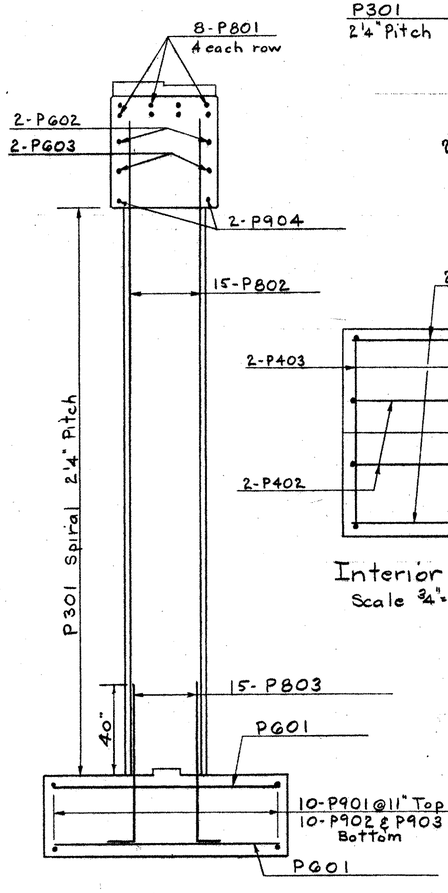

Section D-D
Scale $\frac{3}{8}$"=1'-0"

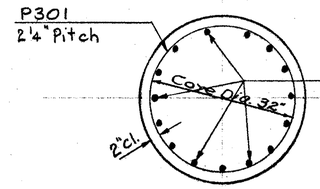

Section C-C
Scale $\frac{3}{4}$"=1'-0"

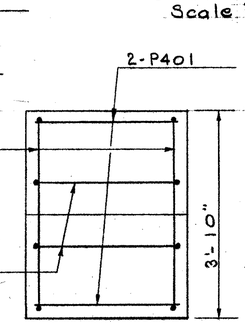

Interior Pad
Scale $\frac{3}{4}$"=1'-0"

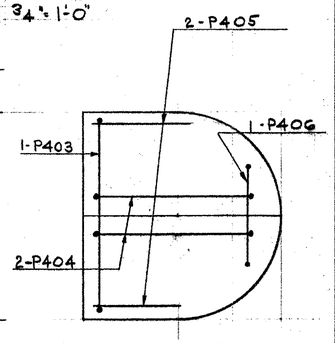

Exterior Pad
Scale $\frac{3}{4}$"=1'-0"

Stage 1 Construction

CONTRACT 2

STATE OF VERMONT
DEPARTMENT OF HIGHWAYS

Georgia - Fairfax -
TOWN OF Fairfield - St. Albans
ROUTE NO. I 89 LOG STA.
Pier #3 & #4 Reinforcing Steel
I 89 over Approach Road
SCALE As Noted
DRAWN BY A.J.C. CHECKED BY J.J.C.
PROJECT NO. I 89-3(35) Cont. #2
SHEET 204 OF 467

BR-217

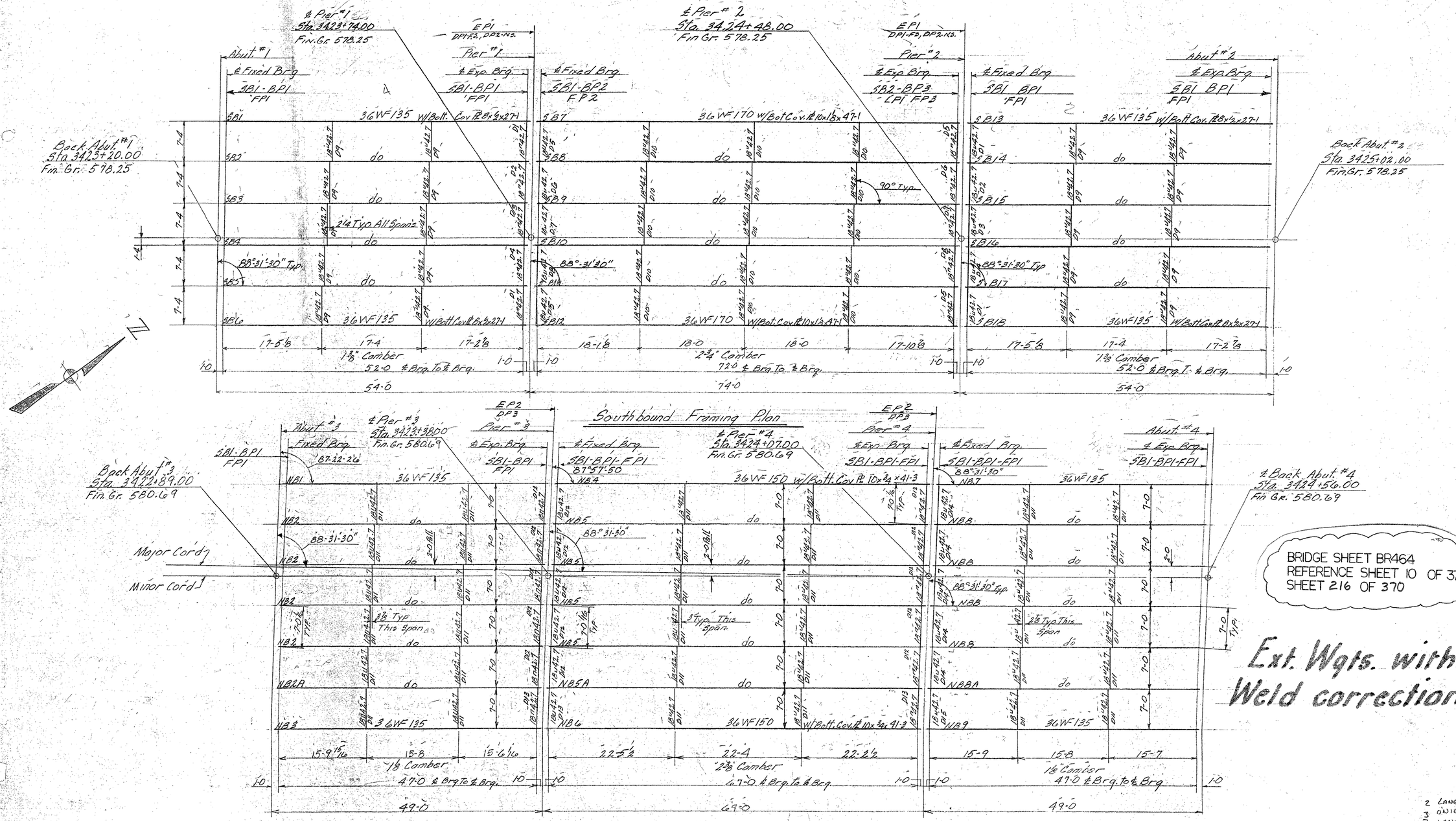

BRIDGE SHEET BR464
REFERENCE SHEET 10 OF 37
SHEET 216 OF 370

Ext. Wgts. with Weld corrections

To be filed with Record Plans

2 LANE 12-28
3 O'NIEL 12-7-66
3 LANE 12-7-66

VERMONT STRUCTURAL STEEL CORPORATION
BURLINGTON, VT.

Proj. #I89-3(35) Cont. #2

		DATE
DRAWN BY	LC	11-7-66
CK'D BY	RLM	11-21-66
HOLES		
BOLTS		
PAINT	R.L. (VT Specs)	

PROJECT I89 Over Approach Road
LOCATION Georgia-Fairfax-Fairfield-St. Albans
CUSTOMER Lane Constr. Co.
ARCHITECT State Of Vermont Dept. Of Hgts.
JOB NO. 66-1184-200 SHEET NO. E1

PRINT RECORD

NO.	FOR	DATE
3	APP	11-21
2	SHOP	11-21
3	APP	11-21
2	SHOP	11-29
3	SHOP	12-5
3	APP	12-7

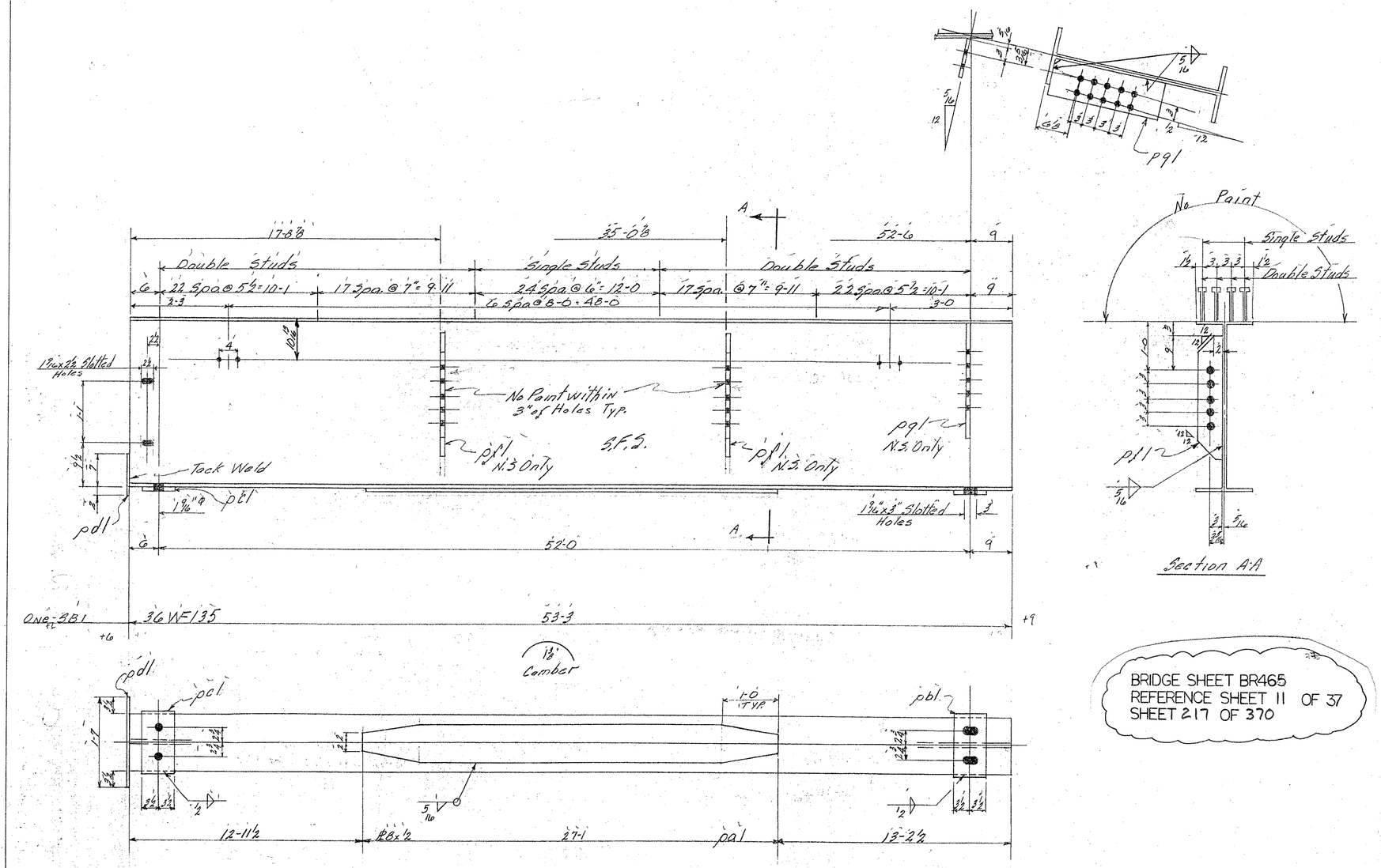

Section A-A

BRIDGE SHEET BR465
REFERENCE SHEET 11 OF 37
SHEET 217 OF 370

BILL OF MATERIAL

NO. PIECES	MARK	DESCRIPTION	LENGTH FT.	LENGTH IN.		WEIGHT

JOB NO. _____ SHEET NO. _____

ASTM-A36

BILL OF MATERIAL

(17)

NO. PIECES	MARK	DESCRIPTION	LENGTH FT.	LENGTH IN.		WEIGHT
		Beam				
1	SB1	36 WF 135	53	3	ord. BB66B2	7189 ✓
1	pal	Bar 8 x 1/2	27	1	ord BB66 79	368 ✓
1	pbl	Bar 7 x 1	1	1	Res @ 20-0	
1	pcl	do	1	1		52 ✓
1	pdl	PL 9 x 1/4	1	7	Res Bltr. 48 x 1/4 x 10-0	13 ✓
2	pfl	Bar 5 x 1/2	2	6	Res @ 20-0	43 ✓
1	pgl	Bar 8 x 1/2	2	0	ord @ 20-0 BB66 79	27 ✓
		1/2" ∠ Weld	2	4		2 ✓
		5/16" ∠ Weld	69	10		~~25~~ ✓ 17
						~~7719~~
						7711
	Cont.	66-1184-226				
366		3/4" φ Shear Studs	0	7	Stk	368 ✓ 368 ✓
						8087

VERMONT STRUCTURAL STEEL CORPORATION
BURLINGTON, VT.

Proj. No. I89-3(35) #2

		DATE
DRAWN BY	LC	11-8-66
OK'D BY	RLM	11-18-66

HOLES 15/16" φ As Noted
BOLTS None
PAINT Red Lead Vt. Specs. (As Noted)

PROJECT I89 Over Approach Road
LOCATION Georgia-Fairfax-Fairfield-St. Albans
CUSTOMER Lane Constr. Co.
ARCHITECT State Of Vt. Dept Of High.
JOB NO. 66-1184-200 STR. ST. 66-1184-226 Shear Studs
SHEET NO. 1

PRINT RECORD

NO.	FOR	DATE
3	APP	11-21
2	SHOP	11-21
2	Shop	12-5
2	STATE	12-8
2	LANE	12-28

SM 1643 GCP

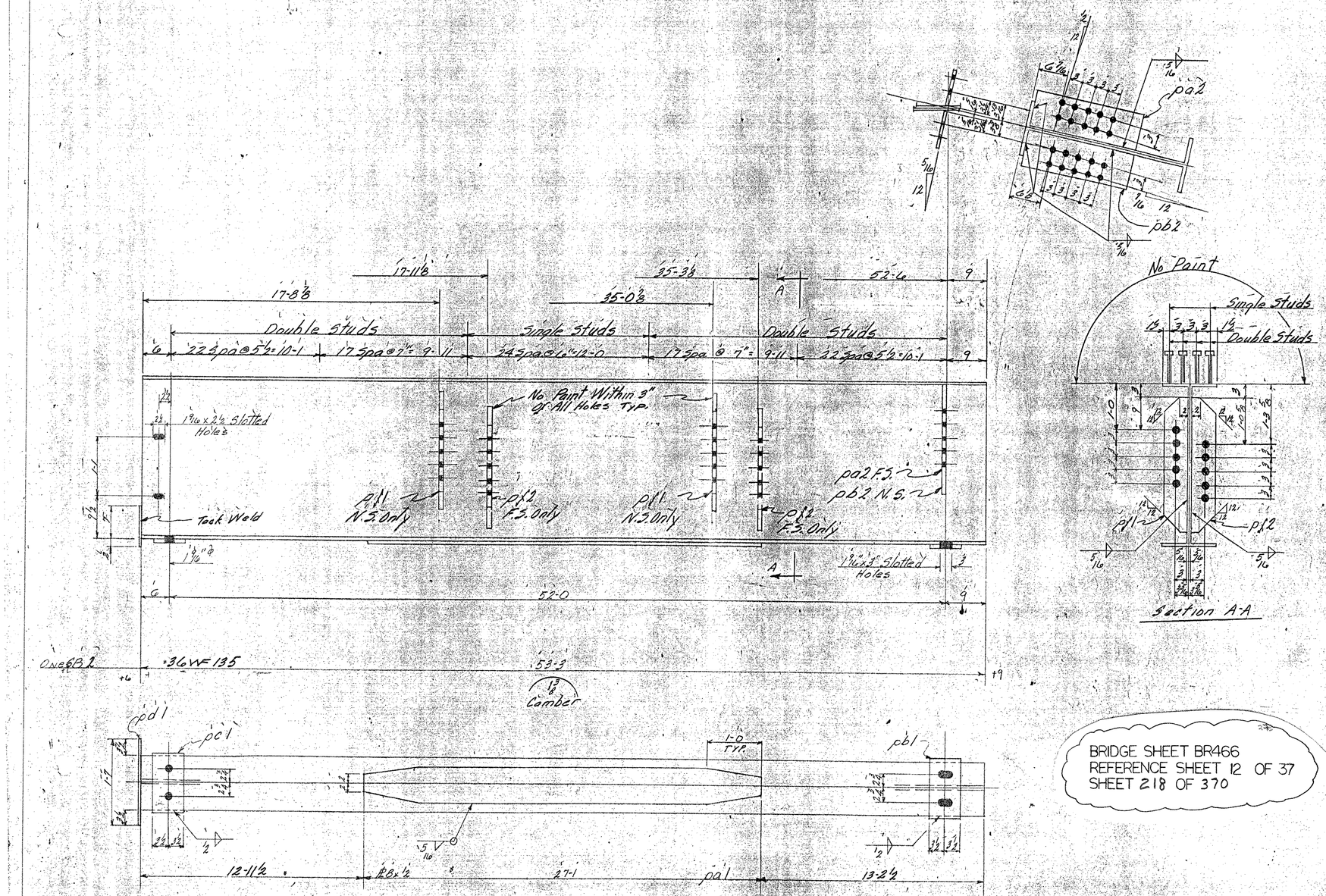

BRIDGE SHEET BR466
REFERENCE SHEET 12 OF 37
SHEET 218 OF 370

BILL OF MATERIAL

NO. PIECES	MARK	DESCRIPTION	LENGTH FT.	LENGTH IN.		WEIGHT	

JOB NO. SHEET NO.

ASTM-A36

BILL OF MATERIAL (17)

NO. PIECES	MARK	DESCRIPTION	LENGTH FT.	LENGTH IN.		WEIGHT	
		Beam					
1	SB2	36 WF 135	53	3	ord BB6682	7189	✓
1	pa1	Bar 8 x ½	27	1	ord BB6679	368	✓
1	pb1	Bar 7 x 1	1	1	Res @ 20-0		
1	pc1	do	1	1		52	✓
1	pd1	PL 9 x ¼	1	7	Res PL 48 x ¼ x 10-0	13	✓
1	pa2	Bar 8 x ½	2	0	ord @ 20-0		
1	pb2	do	2	0	BB6679	54	✓
2	pf1	Bar 5 x ½	2	6			
2	pf2	do	2	6	Res @ 20-0	85	✓
		½" ∫ Weld	2	4		2	✓
		5/16" ∫ Weld	84	9		31	✓ 21
							7794 ✓
							7784
		Cont. #66-1184-226					
366		¾" ⌀ Shear Studs	0	7	STK	368	368 ✓
							8162

VERMONT STRUCTURAL STEEL CORPORATION
BURLINGTON, VT.

Proj. No. I89-3(35)#2

		DATE
DRAWN BY	LC	11-8-66
CK'D BY	RLM	11-18-66

HOLES 15/16" ⌀ As Noted
BOLTS None
PAINT Red Lead
Vt. Specs As Noted

PROJECT I89 Over Approach Road
LOCATION Georgia-Fairfax-Fairfield-St. Albans
CUSTOMER Lane Constr. Co.
ARCHITECT State Of Vt. Dept Of High.
JOB NO. 66-1184-200 STR. SHEET NO. 2
66-1184-226 St. Shear Studs

PRINT RECORD

NO.	FOR	DATE
3	APP.	11-29
2 P	SHOP	11-24
2 0	Shop	12-5
2	STATE	12-8
2	LANE	12-28

SM 10-63 QCP

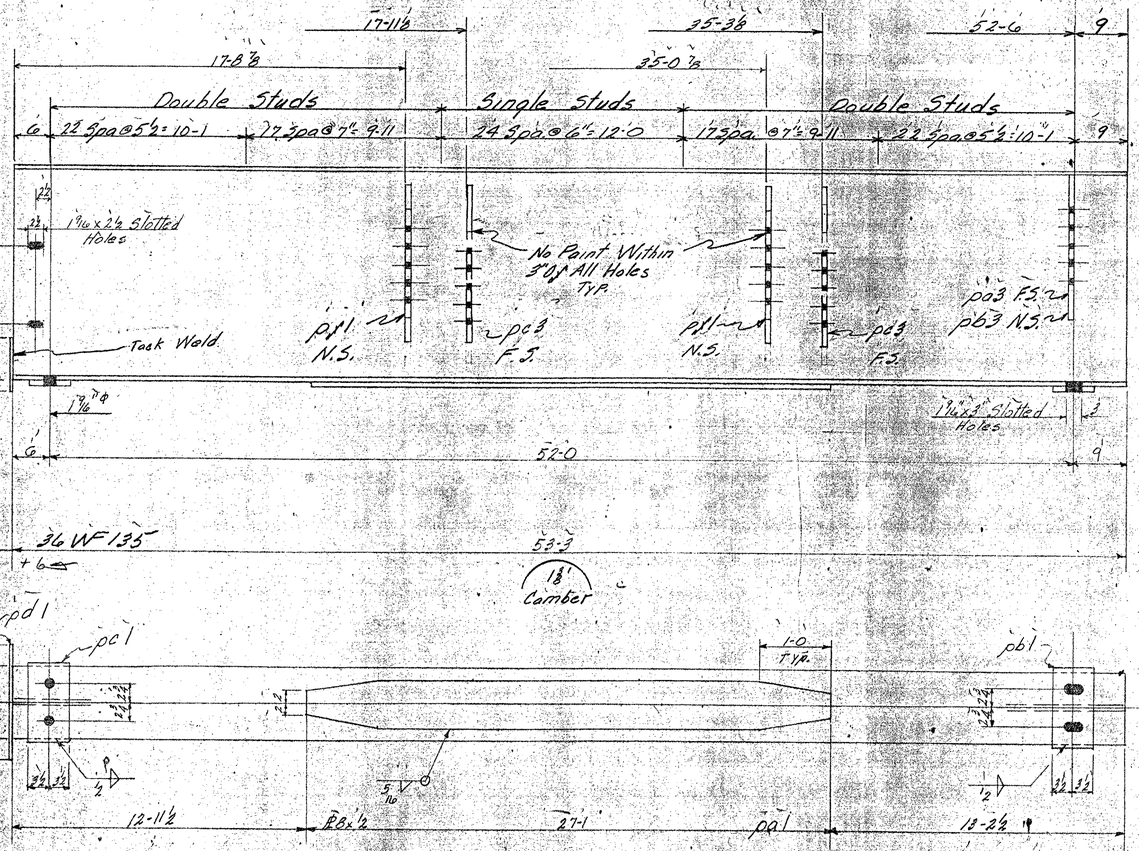

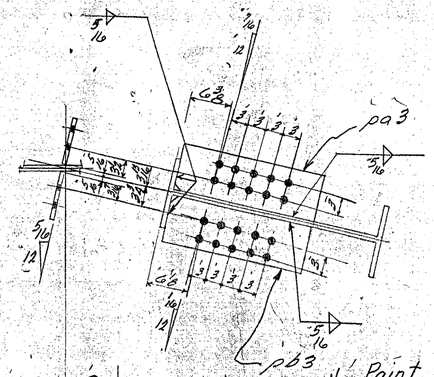

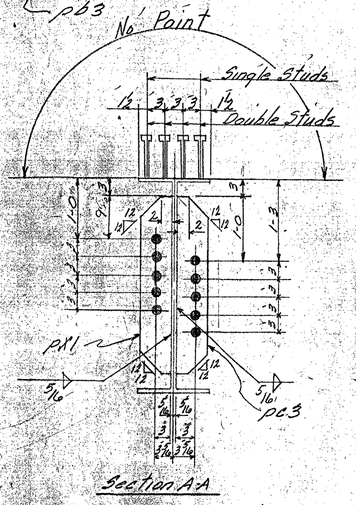

BRIDGE SHEET BR467
REFERENCE SHEET 13 OF 37
SHEET 219 OF 370

BILL OF MATERIAL

NO. PIECES	MARK	DESCRIPTION	LENGTH FT.	LENGTH IN.		WEIGHT	

JOB NO. SHEET NO.

BILL OF MATERIAL

ASTM-A 36

(117)

NO. PIECES	MARK	DESCRIPTION	LENGTH FT.	LENGTH IN.		WEIGHT	
		Beams					
1	PB3	36 WF 135	53	3	ord. BB66B2	7189	✓
1	pa1	Bar 8 x ½	27	1	BB2679	368	✓
1	pb1	Bar 7 x 1	1	1	Reqd @ 20-0		
1	pc1	do	1	1		52	✓
1	pd1	PL 9 x 14	1	7	Reqd PB8x4x10-0	13	✓
1	pa3	Bar 8 x ½	2	0	ord @ 20-0		
1	pb3	do	2	0	BB66 79	54	✓
2	pc3	Bar 5 x ½	2	6	Reqd @ 20-0		
2	pd1	do	2	6		85	✓
		½" ø Weld	2	4		2	✓
		5/16" ø Weld	84	9		31	✓ 21
							7794
							7784
		Cont "66-1184-226					
366		¾" ø Shear Studs	0	7	STK	368	368 ✓
							8162 ✓

VERMONT STRUCTURAL STEEL CORPORATION
BURLINGTON, VT.

Proj. No. I 89-3(35)2

		DATE
DRAWN BY	LC	11-8-66
CK'D BY	RLM	11-18-66
HOLES	¾" ø As Noted	
BOLTS	None	
PAINT	Red Lead VT. SPEC. (As Noted)	

PROJECT I 89 Over Approach Road
LOCATION Georgia-Fairfax-Fairfield-St. Albans
CUSTOMER Lane Const. Co.
ARCHITECT State of Vt. Dept. of Hgh.
JOB NO. 66-1184-206 SHEET NO. 3
66-1184-226 STR. 37. Shear Studs

PRINT RECORD

NO.	FOR	DATE
3	APP	11-21
27	SHOP	11-21
20	Shop	12-5
2	STATE	12-8
2	LANE	12-28

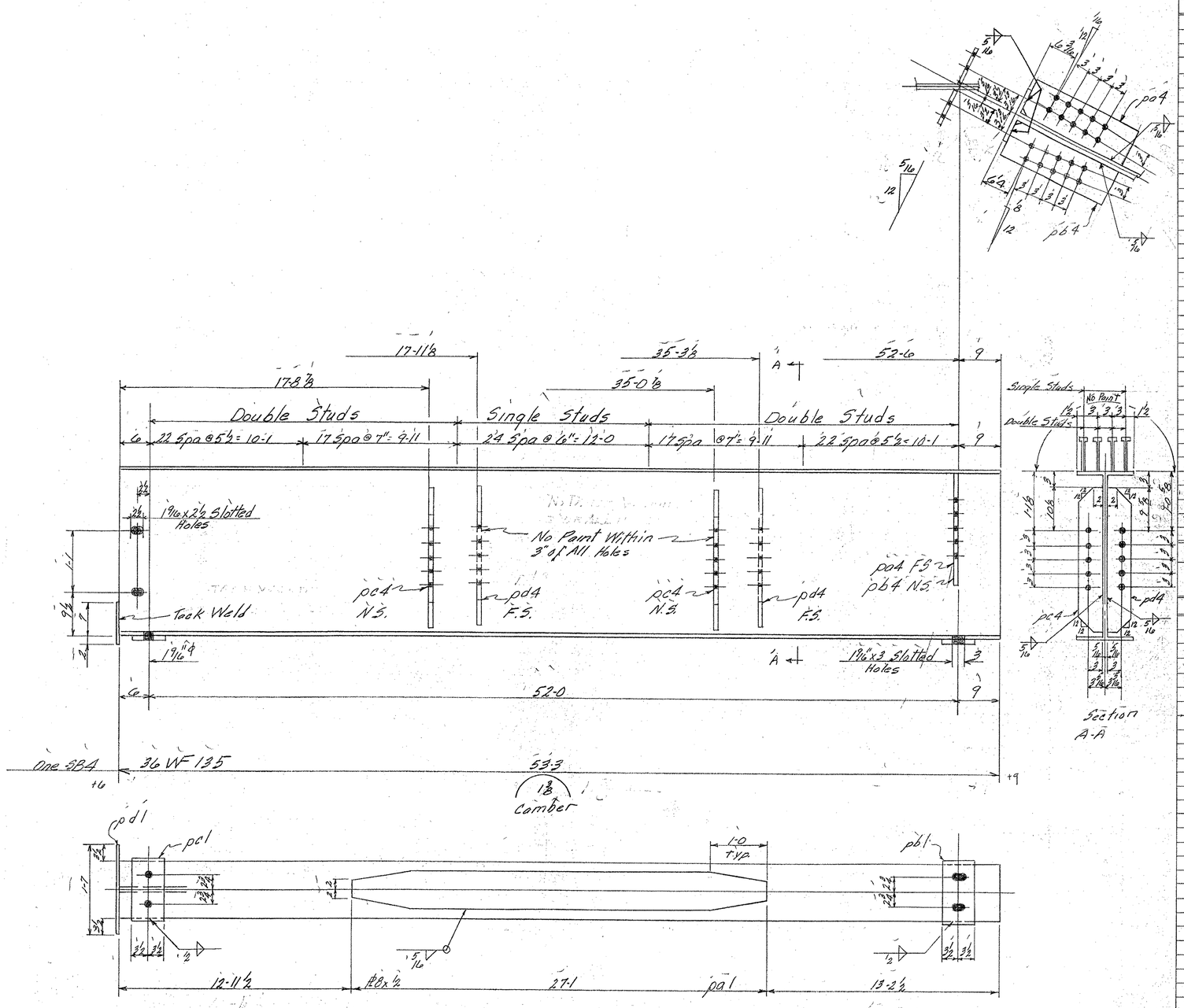

BRIDGE SHEET BR468
REFERENCE SHEET 14 OF 37
SHEET 220 OF 370

BILL OF MATERIAL

NO. PIECES	MARK	DESCRIPTION	LENGTH FT.	LENGTH IN.		WEIGHT

JOB NO. _____ SHEET NO. _____

BILL OF MATERIAL

ASTM-A36 17 (17)

NO. PIECES	MARK	DESCRIPTION	LENGTH FT.	LENGTH IN.		WEIGHT
		Beam				
1	SB4	36 WF 135	53	3	ord. BB6682	7189 ✓
1	pa1	Bar 8 x 1/2	27	1	ord. BB6679	368 ✓
1	pb1	Bar 7 x 1	1	1	Res @ 20-0	
1	pc1	do	1	1		52 ✓
1	pd1	PL 9 x 1/4	1	7	Res PL 48 x 1/4 x 10-0	13 ✓
2	pd4	Bar 5 x 1/2	2	6	Res @ 20-0	43 ✓
1	pa4	Bar 8 x 1/2	2	0	ord @ 20-0	
1	pb4	do	2	0	BB6679	54 ✓
2	pc4	Bar 5 x 1/2	2	6	Res @ 20-0	43 ✓
		1/2" ⌀ Weld	2	4		2 ✓
		5/16" ⌀ Weld	84	9		~~31~~ 21 ✓
		Cont # 66-1184-226				7785 ~~7795~~
366		3/4" ⌀ Shear Studs	0	7	stk	368 368 ✓
						8163

VERMONT STRUCTURAL STEEL CORPORATION
BURLINGTON, VT.

Proj # I89-3(35) Cont # 2

		DATE
DRAWN BY	LC	11-9-66
OK'D BY	RLM	11-21-66

HOLES 15/16" ϕ As Noted
BOLTS None
PAINT Red Lead Vt. Specs As Noted

PROJECT I89 Over Approach Road
LOCATION Georgia-Fair Fax-Fairfield-St. Albans
CUSTOMER Lane Constr. Co.
ARCHITECT State of Vt. Dept. of Highways
JOB NO. 66-1184-200 Str. St. 66-1184-226 Shear Studs
SHEET NO. 4

PRINT RECORD NO.	FOR	DATE
3	APP	11-21
2 P	SHOP	11-21
2 ①	Shop	12-5
2	STATE	12-8
2	LANE	12-28

SM 10-63 GCP

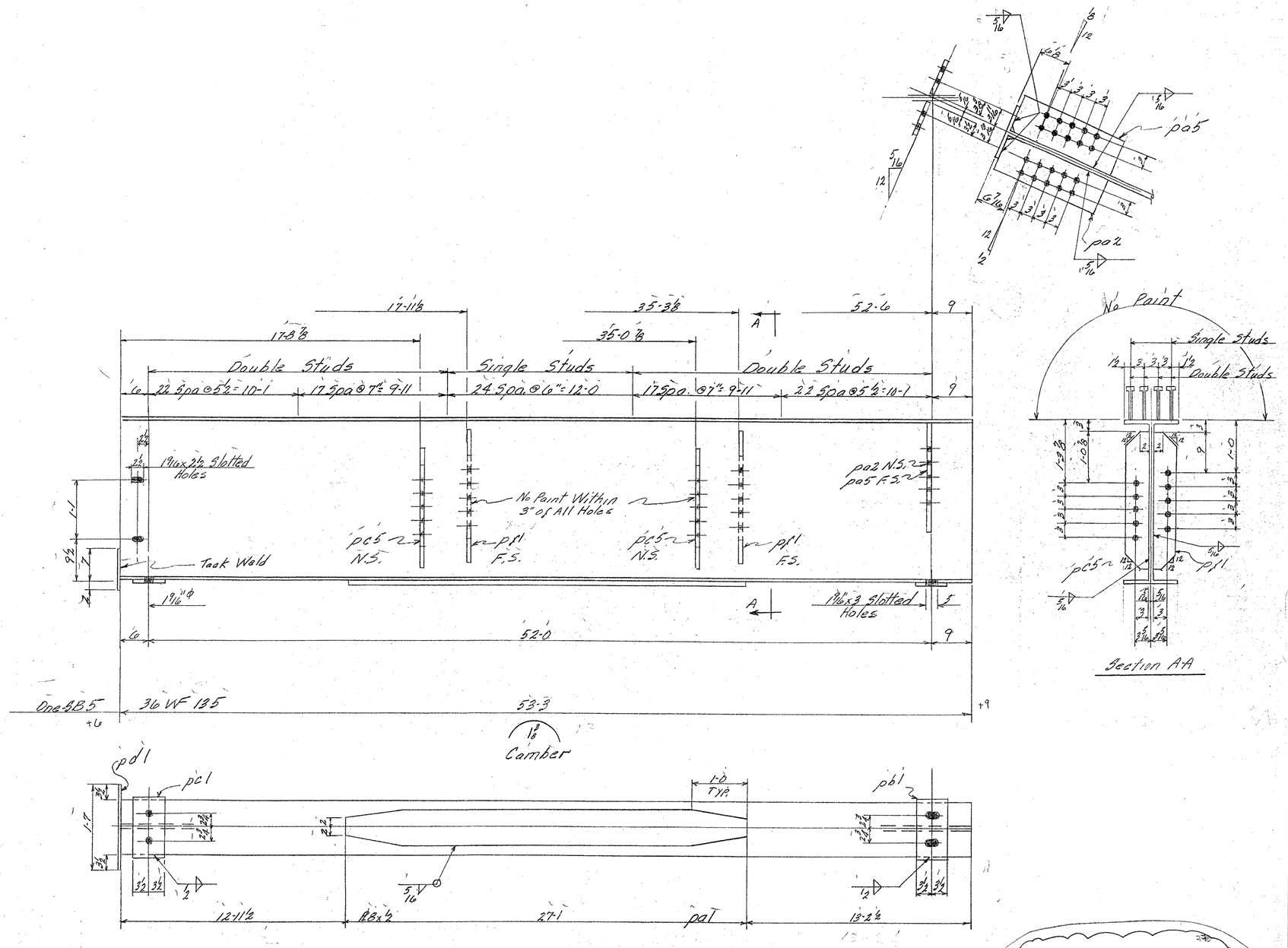

BRIDGE SHEET BR469
REFERENCE SHEET 15 OF 37
SHEET 221 OF 370

BILL OF MATERIAL

NO. PIECES	MARK	DESCRIPTION	LENGTH FT.	LENGTH IN.		WEIGHT

JOB NO. _____ SHEET NO. _____

ASTM-A36 (17)

BILL OF MATERIAL

NO. PIECES	MARK	DESCRIPTION	LENGTH FT.	LENGTH IN.		WEIGHT
		Beams				
1	SB5	36 WF 135	53	3	ord PB1-6&2	7189 ✓
1	pa1	Bar 8 x 1/2	27	1	BB6619	368 ✓
1	pb1	Bar 7 x 1	1	1	Res @ 20-0	
1	pc1	do	1	1		52 ✓
1	pd1	PL 9 x 1/4	1	7	Res PL 4B x 1/4 x 10-0	13 ✓
2	pf1	Bar 5 x 1/2	2	6	Res @ 20-0	43 ✓
1	pa5	Bar 8 x 1/2	2	0	ord @ 20-0	
1	pa2	do	2	0	BB6679	54 ✓
2	pc5	Bar 5 x 1/2	2	6	Res @ 20-0	43 ✓
		1/2 f Weld	2	4		2 ✓
		5/16 f Weld	84	9		~~31~~ ✓ 21
						~~7795~~
						7785
		Cont. #66-1184-226				
366		3/4" Shear Studs	0	7	STK	368 368
						8163 ✓

VERMONT STRUCTURAL STEEL CORPORATION
BURLINGTON, VT.

Proj. # I89-3(35) Cont. # 2

		DATE
DRAWN BY	LC	11-10-66
OK'D BY	RLM	11-18-66

HOLES 15/16" ⌀ & As Noted
BOLTS None
PAINT Red Lead Vt. Specs & As Noted

PROJECT I 89 Over Approach Road
LOCATION Georgia-Fairfax-Fairfield-St. Albans
CUSTOMER Lane Constr. Co.
ARCHITECT State Of Vt. Dept. Of Highways
JOB NO. 66-1184-200 SHEET NO. 5
66-1184-226 Shear Studs

PRINT RECORD

NO.	FOR	DATE
3	APP	11-21
2P	SHOP	11-21
2	Shop	12-5
2	STATE	12-8
2	LANE	12-28

SM 10-63 QCP

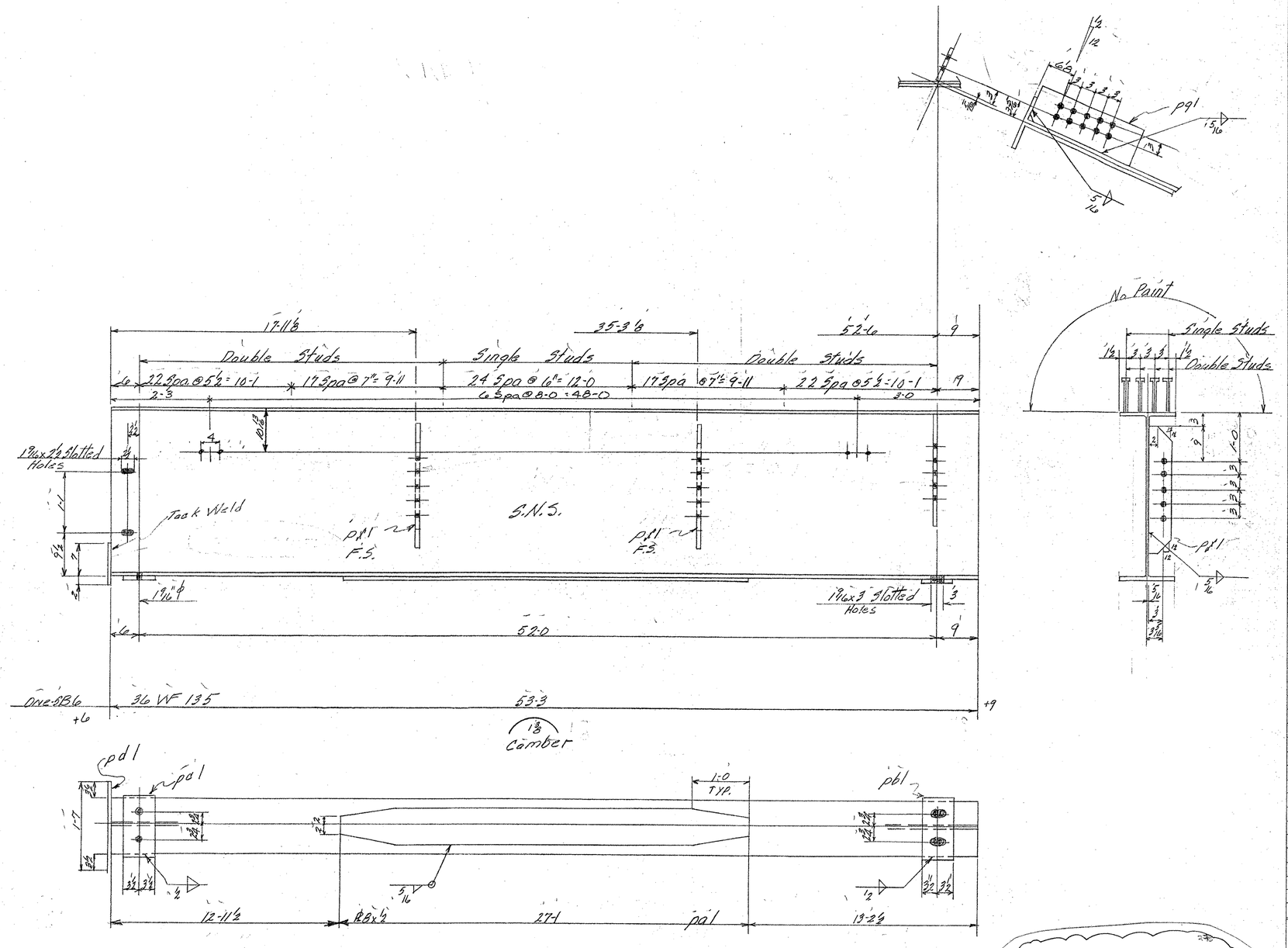

BRIDGE SHEET BR470
REFERENCE SHEET 16 OF 37
SHEET 222 OF 370

BILL OF MATERIAL

NO. PIECES	MARK	DESCRIPTION	LENGTH FT.	LENGTH IN.		WEIGHT	

JOB NO. _____ SHEET NO. _____

BILL OF MATERIAL

ASTM-A36 (17)

NO. PIECES	MARK	DESCRIPTION	LENGTH FT.	LENGTH IN.		WEIGHT	
		Beam					
1	SB6	36 WF 135	53	3	ord B86682	7189	✓
1	pal	Bar 8 x 1/2	27	1	ord B86679	368	✓
1	pbl	Bar 7 x 1	1	1	Res @ 20-0		
1	pdl	do	7	1		52	✓
1	pdl	PL 9 x 1/4	1	7	Res PL 48 x 1/4 x 10-0	13	✓
2	pfl	Bar 5 x 1/2	2	6	Res @ 20-0	43	✓
1	pgl	Bar 8 x 1/2	2	0	ord @ 20-0 B86679	27	✓
		1/2" f Weld	2	4		2	✓
		5/16" f Weld	69	10		~~25~~ 17	✓
						~~7719~~	✓
						7711	
		Cont. 66-1184-226					
366		3/4" ϕ Shear Studs	0	7	STK	368	368 ✓
							8087

VERMONT STRUCTURAL STEEL CORPORATION
BURLINGTON, VT.

Proj. IB-3(35) Cont #2

		DATE
DRAWN BY	L.C.	11-10-66
CK'D BY	RLM	11-21-66

HOLES 15/16" ϕ Ras Noted
BOLTS None
PAINT Red Lead Vt. Specs Ras Noted

PROJECT I 89 Over Approach Road
LOCATION Georgia-Fair Fax-Fair Fax-Fair Fld-St. Albans
CUSTOMER Lane Const. Co.
ARCHITECT State of Vt. Dept. of Highways
JOB NO. 66-1184-200 66-1184-226 STR. ST. SHEET NO. 6 Shear Studs

PRINT RECORD

NO.	FOR	DATE
3	APP	11-21
2P	SHOP	11-21
2Ⓡ	Shop	12-5
2	STATE	12-8
2	LANE	12-28

SM 10-63 QCP

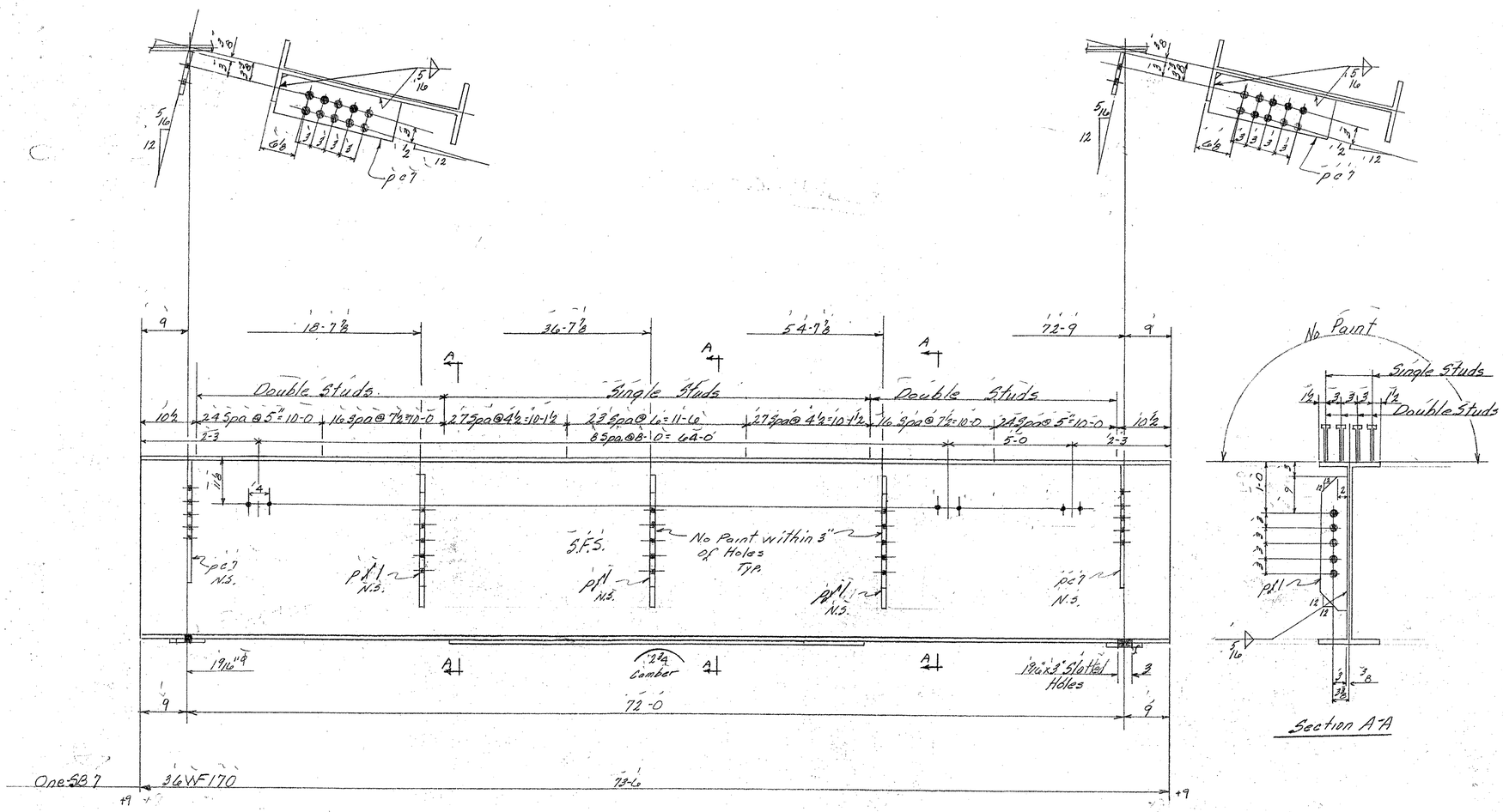

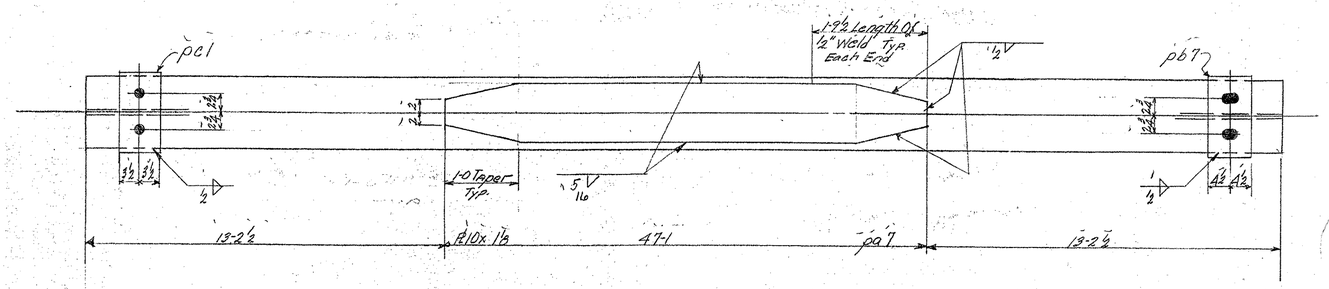

BRIDGE SHEET BR471
REFERENCE SHEET 17 OF 37
SHEET 223 OF 370

BILL OF MATERIAL

NO. PIECES	MARK	DESCRIPTION	LENGTH FT.	LENGTH IN.		WEIGHT

JOB NO. _____ SHEET NO. _____

BILL OF MATERIAL

ASTM-A36

NO. PIECES	MARK	DESCRIPTION	LENGTH FT.	LENGTH IN.		WEIGHT
		Beams				
1	SB7	36WF170	73	6	ord. BB6682	12,495 ✓
1	pc1	Bar 7x1	1	1	Res@20-0	26 ✓
1	pa7	PL 10x1⅛	47	1	BB6681	1832 ✓
1	pb7	PL 9x1½	1	1	Res@1NC. @12-0	53 ✓
2	pa7	Bar 8x½	2	0	ord@20-0 BB6679	54 ✓
3	pf1	Bar 5x½	2	6	Res@20-0	64 ✓
		½" f Weld	11	0		~~9~~ 7
		5/16" f Weld	112	0		~~40~~ 28
		Cont # 66-1184-226				14,559 ~~14,573~~
480		¾"φ Shear Studs	0	7	STK	482 482 ✓
						15,055 ✓

VERMONT STRUCTURAL STEEL CORPORATION
BURLINGTON, VT.

Proj. No. I89-3(35)#2

		DATE
DRAWN BY	L.C.	11-11-66
CK'D BY	RLM	11-18-66

PROJECT I89-Over Approach Road
LOCATION Georgia-Fair Tax-Fair Field-St. Albans
CUSTOMER Lane Constr. Co.

HOLES 15/16"φ & As Noted
BOLTS None
PAINT Red Lead Vt. Specs. (As Noted)

ARCHITECT State of Vt. Dept. of Highways
JOB NO. 66-1184-200 STK. ST. SHEET NO. 7
66-1184-226 Shear Studs

PRINT RECORD

NO.	FOR	DATE
3	APP	11-21
2 P	SHOP	11-21
2 ①	Shop	12-5
2	STATE	12-8
2	LANE	12-28

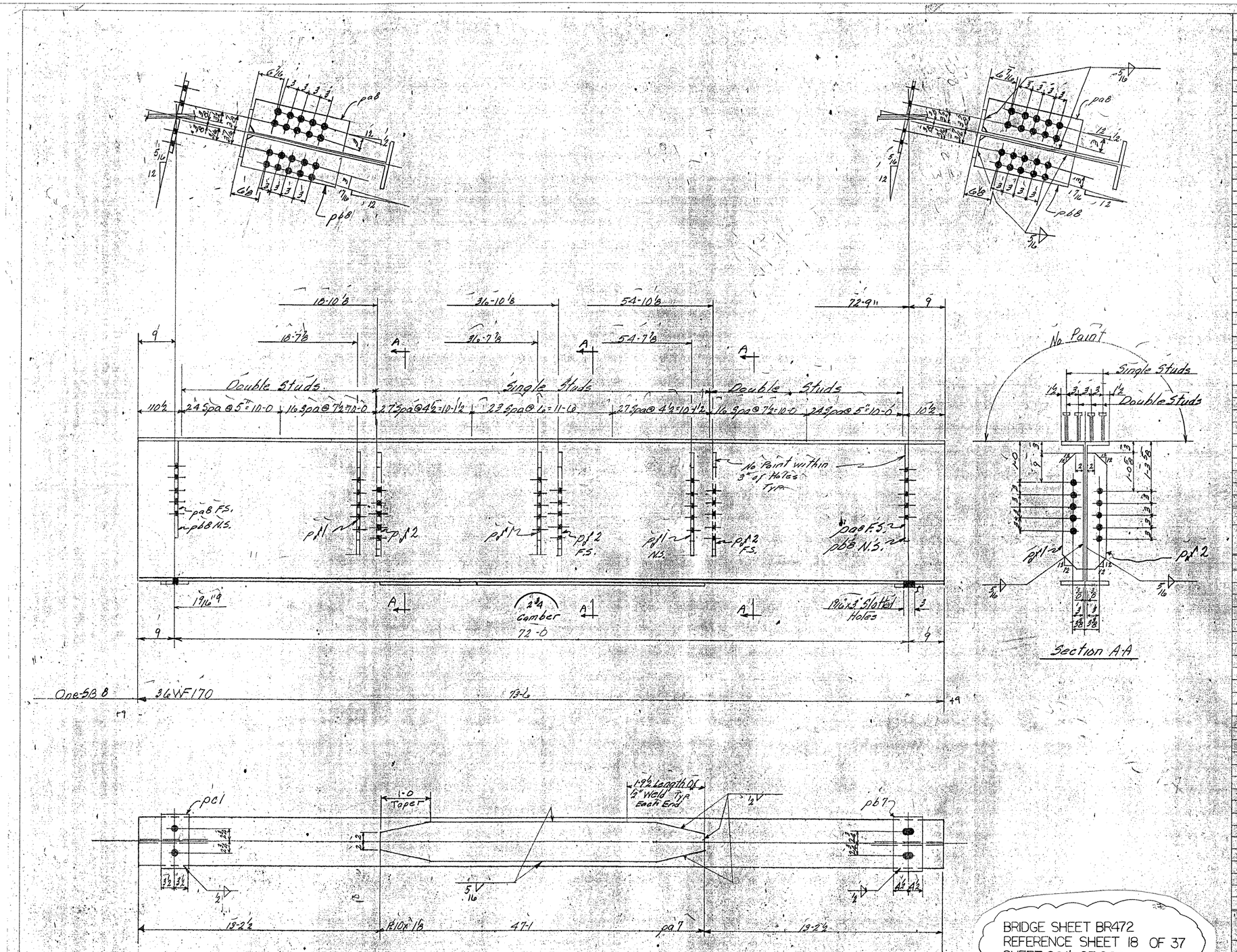

BRIDGE SHEET BR472
REFERENCE SHEET 18 OF 37
SHEET 224 OF 370

BILL OF MATERIAL

NO. PIECES	MARK	DESCRIPTION	LENGTH FT.	LENGTH IN.		WEIGHT

JOB NO. SHEET NO.

BILL OF MATERIAL

(17)

ASTM-A36

NO. PIECES	MARK	DESCRIPTION	LENGTH FT.	LENGTH IN.		WEIGHT
		Beams				
1	SB8	36WF170	73	6	ord. BB66B2	12,495
1	pc1	Bar 7x1	1	1	Res @ 20-0	26
1	pa7	R10x1 1/8	47	1	BB66B1	1832
1	pb7	R9x1 1/2	1	1	Res @ 1 Inc. @ 12-0	53
2	pa8	Bar 8x1/2	2	0	ord. BB66B79 @ 20-0	
2	pb8	do	2	0		109
3	pf1	Bar 5x1/2	2	6	Res @ 20-0	
3	pf2	do	2	6		128
		1/2" Weld	11	0		~~9~~ 7
		5/16" Weld	137	0		~~49~~ 34
		Cont # 66-1184-226				14,684 ~~14,701~~
480		3/4" Shear Studs	0	7	STK	482 482
						15,183

VERMONT STRUCTURAL STEEL CORPORATION
BURLINGTON, VT.

Proj. No. I89-3(35)#2

		DATE
DRAWN BY	L.C.	11-11-66
CK'D BY	RLM	11-18-66

HOLES 15/16" ⌀ As Noted
BOLTS None
PAINT Red Lead Vt. Specs. As Noted

PROJECT I89-Over Approach Road
LOCATION Georgia-Fairfax-Fairfield-St. Albans
CUSTOMER Lane Constr. Co.
ARCHITECT State of Vt. Dept. of Highways
JOB NO. 66-1189-200 STR. ST. SHEET NO. 8
66-1184-226 Shear Studs

PRINT RECORD NO.	FOR	DATE
3	APP	11-21
2 P	SHOP	11-21
2 ①	Shop	12-5
2	STATE	12-8
2	LANE	12-28

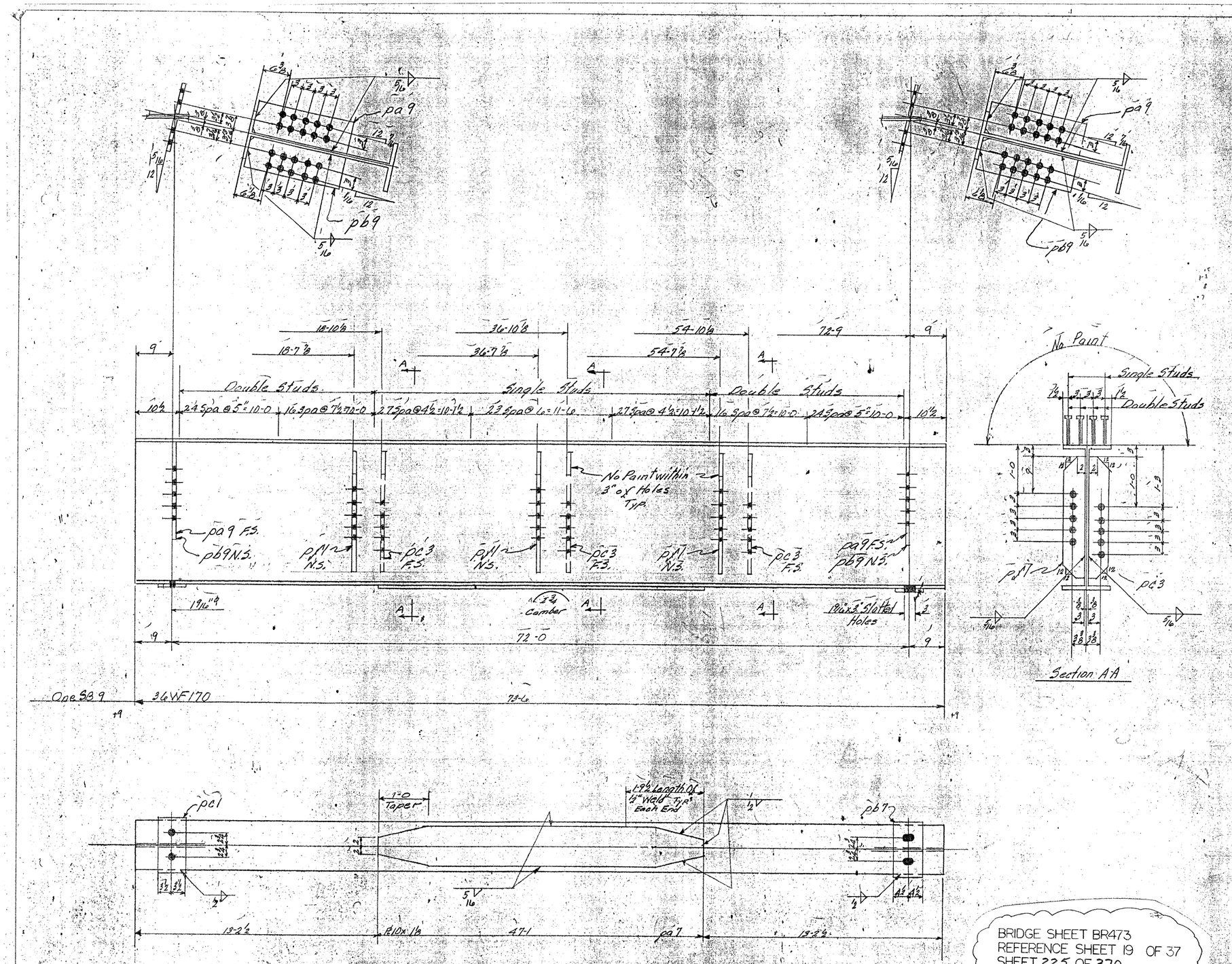

BRIDGE SHEET BR473
REFERENCE SHEET 19 OF 37
SHEET 225 OF 370

BILL OF MATERIAL

NO. PIECES	MARK	DESCRIPTION	LENGTH FT.	LENGTH IN.		WEIGHT

JOB NO. SHEET NO.

ASTM-A36

BILL OF MATERIAL

(17)

NO. PIECES	MARK	DESCRIPTION	LENGTH FT.	LENGTH IN.		WEIGHT
		Beams				
1	SB9	36WF170	73	6	ord. BB66A2	12,495
1	pa1	Bar 7x1	1	1	Res @ 20-0	26
1	pa7	PL 10x1⅛	47	1	BB66A1	1832
1	pb7	PL 9x1½	1	1	Res @ 12-0	53
2	pa9	Bar 8x½	2	0	ord @ 20-0	
2	pb9	do	2	0	BB66 79	109
3	pf1	Bar 5x½	2	6	Res @ 20-0	
3	pc3	do	2	6		128
		½" Weld	11	0		~~9~~ 7
		5/16" Weld	137	0		~~49~~ 34
		Cont # 66-1184-226				14,684 ~~14,701~~
480		¾" Shear Studs	0	7	STK	482
						15,183

VERMONT STRUCTURAL STEEL CORPORATION
BURLINGTON, VT.

Proj. I89-3(35) Cont #2

		DATE
DRAWN BY	L.C.	11-11-66
CK'D BY	RLM	11-18-66

HOLES 15/16" ⌀ As Noted
BOLTS None
PAINT Red Lead Vt. Specs. As Noted

PROJECT I89-Over Approach Road
LOCATION Georgia-Fairfax-Fairfield-St. Albans
CUSTOMER Lane Constr. Co.
ARCHITECT State of Vt. Dept. of Highways
JOB NO. 66-1184-200 STR. ST. SHEET NO. 9
66-1184-226 Shear Studs

PRINT RECORD

NO.	FOR	DATE
3	APP	11-21
2	SHOP	11-21
2D	Shop	12-5
2	STATE	12-8
2	LANE	12-28

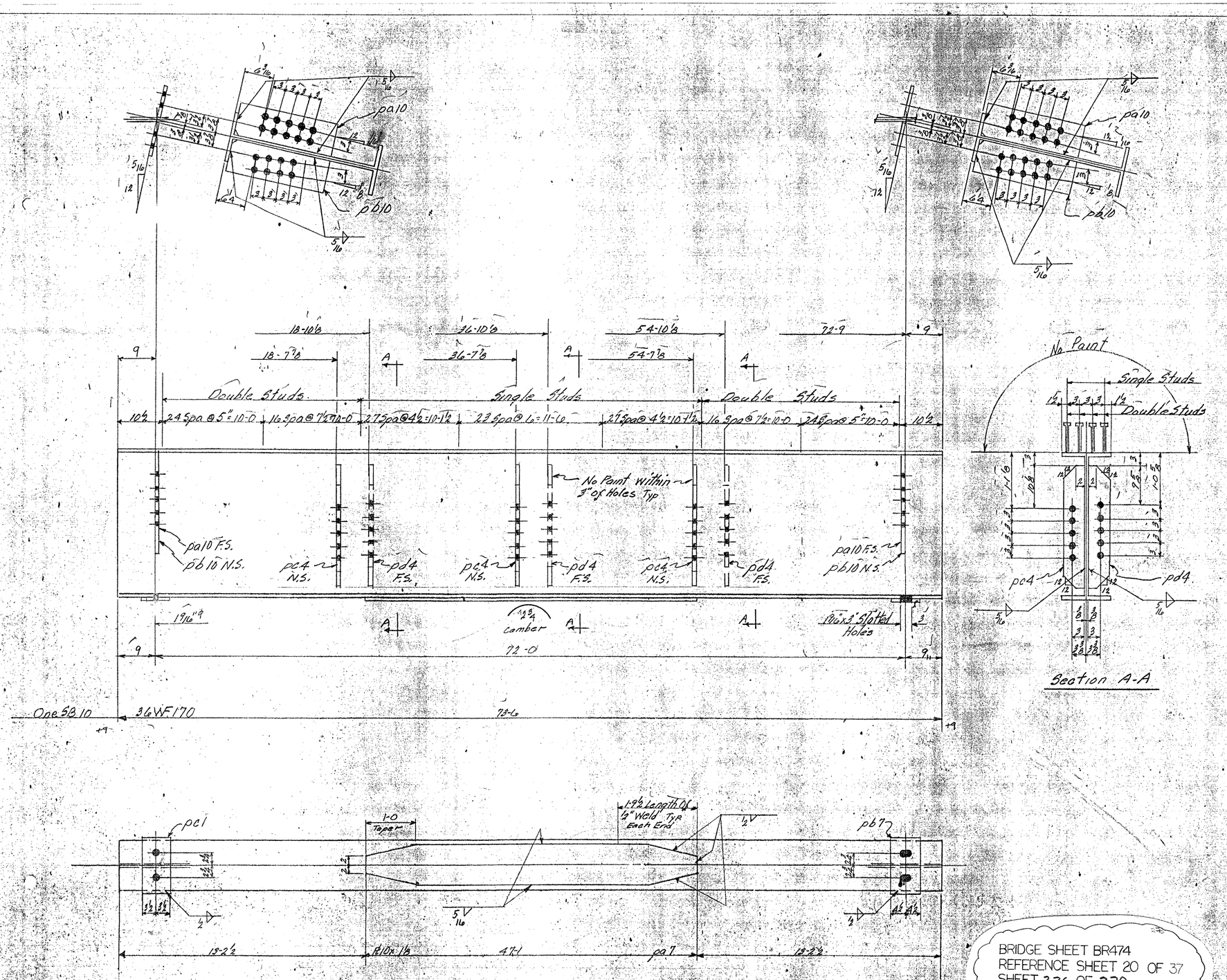

BRIDGE SHEET BR474
REFERENCE SHEET 20 OF 37
SHEET 226 OF 370

BILL OF MATERIAL

NO. PIECES	MARK	DESCRIPTION	LENGTH FT.	LENGTH IN.		WEIGHT

JOB NO. SHEET NO.

BILL OF MATERIAL

(17)

ASTM-A36

NO. PIECES	MARK	DESCRIPTION	LENGTH FT.	LENGTH IN.		WEIGHT
		Beams				
1	SB10	36WF170	73	6	ord. BB6682	12,495
1	pc1	Bar 7x1	1	1	Res @ 20-0	26
1	pa7	PL10x1⅛	47	1	BB6682	1832
1	pb7	PL9x1½	7	7	Res Inc. @ 12-0	53
2	pa10	Bar 8x½	2	0	ord @ 20-0	
2	pb10	do	2	0	BB6679	109
3	pc4	Bar 5x½	2	6	Res @ 20-0	
3	pd4	do	2	6		128
		½" ∫ Weld	11	0		~~9~~ 7
		5/16" ∫ Weld	137	0		~~49~~ 34
		Cont # 66-1184-226				14,684 ~~14,701~~
480		¾" ⌀ Shear Studs	0	7	STK	~~482~~ 15,183

VERMONT STRUCTURAL STEEL CORPORATION
BURLINGTON, VT.

Proj # I89-3(35) #2

		DATE
DRAWN BY	L.C.	11-11-66
CK'D BY	RLM	11-18-66

PROJECT I89-Over Approach Road
LOCATION Georgia-Fairfax-Fairfield-St. Albans
CUSTOMER Lane Constr. Co.
ARCHITECT State of Vt. Dept. of Highways
JOB NO. 66-1184-200 66-1184-226 STR. ST. SHEET NO. 10
Shear Studs

HOLES 15/16" ⌀ & As Noted
BOLTS None
PAINT Red Lead Vt. Specs. & As Noted

PRINT RECORD

NO.	FOR	DATE
3	APP	11-21
2	SHOP	11-21
2	Shop	12-5
2	STATE	12-8
2	LANE	12-28

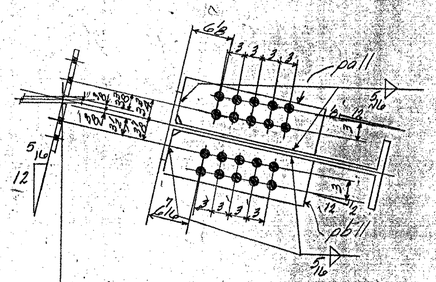

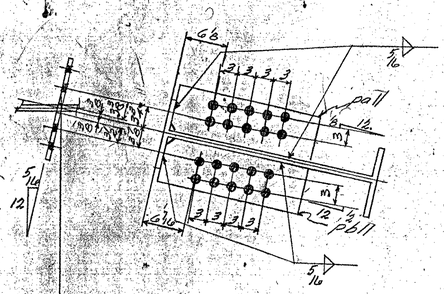

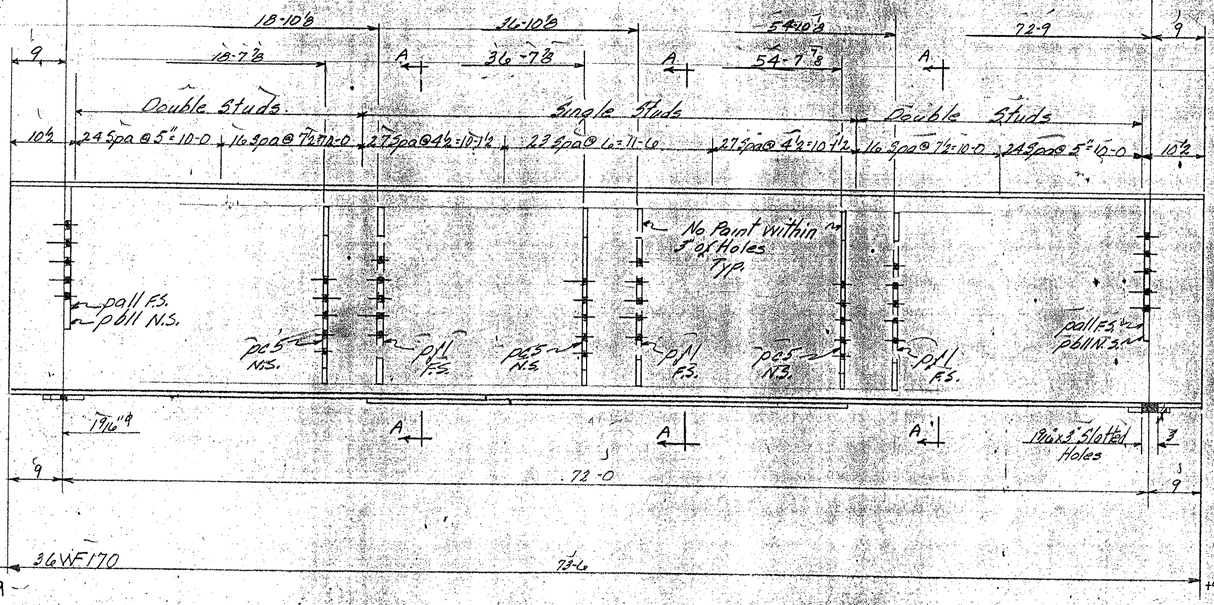

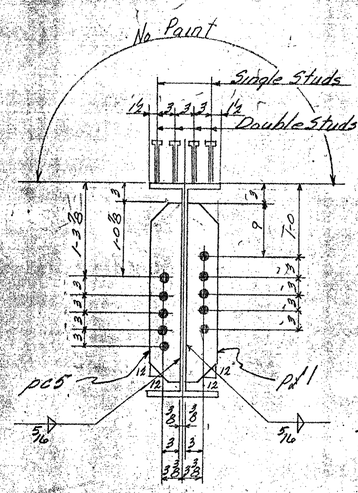

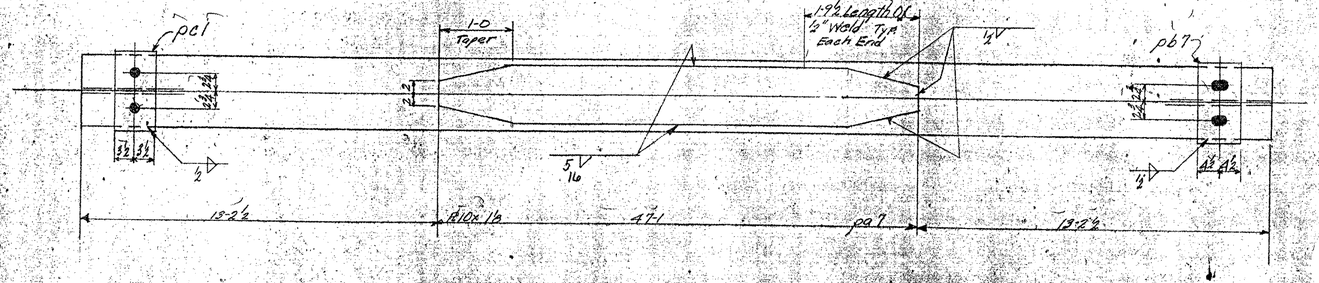

BRIDGE SHEET BR475
REFERENCE SHEET 21 OF 37
SHEET 227 OF 370

BILL OF MATERIAL

NO. PIECES	MARK	DESCRIPTION	LENGTH FT.	LENGTH IN.		WEIGHT	

JOB NO. SHEET NO. (17.)

BILL OF MATERIAL

ASTM-A 36

NO. PIECES	MARK	DESCRIPTION	LENGTH FT.	LENGTH IN.		WEIGHT	
		Beams					
1	sb11	36WF170	73	6	BBL&B2	12,495	#
1	pa1	Bar 7x1	7	1	Res@10-0	36	#
4	pa7	R10x16	47	7	BBL&B1	1832	#
1	pb7	R9.1½	7	1	Fasning @ ends 0.C.@ 22-0. BBL&B79	53	#
2	pa11	Bar 8x½	2	0		109	#
2	pb11	do	2	0			
3	pc5	Bar 5x½	2	6	Res@20-0	128	#
3	pc5	do	2	6			
		½" f Weld	14	0		~~9~~ 7	#
		5/16" f Weld	137	0		~~49~~ 34	#
		Coat # 66-1189-226				14,681	~~14,761~~ #
480		¾" ø Shear Studs	0	7	STK	482	#
						15,183	#

VERMONT STRUCTURAL STEEL CORPORATION
BURLINGTON, VT.

Proj I89-3(36)42

		DATE
DRAWN BY	L.C.	11-11-66
CK'D BY	R.L.M	11-18-66

HOLES 15/16" ø As Noted
BOLTS None
PAINT Red Lead Vt. Specs. As Noted

PROJECT I89-Over Approach Road
LOCATION Georgia-Fair-Tax-Fair-Field-3 Bridges
CUSTOMER Lane Constr. Co.
ARCHITECT State of Vt. Dept of Highways
JOB NO. 66-1189-226 SHEET NO. 11
STR. STL. 66-1189-226 Shear Studs

PRINT RECORD

NO.	FOR	DATE
1	APP	12-2
2	Shop	1-9
3	Shop	1-26
1	STATE	12-8
2	LANE	1-26

SM 10-63 CCP

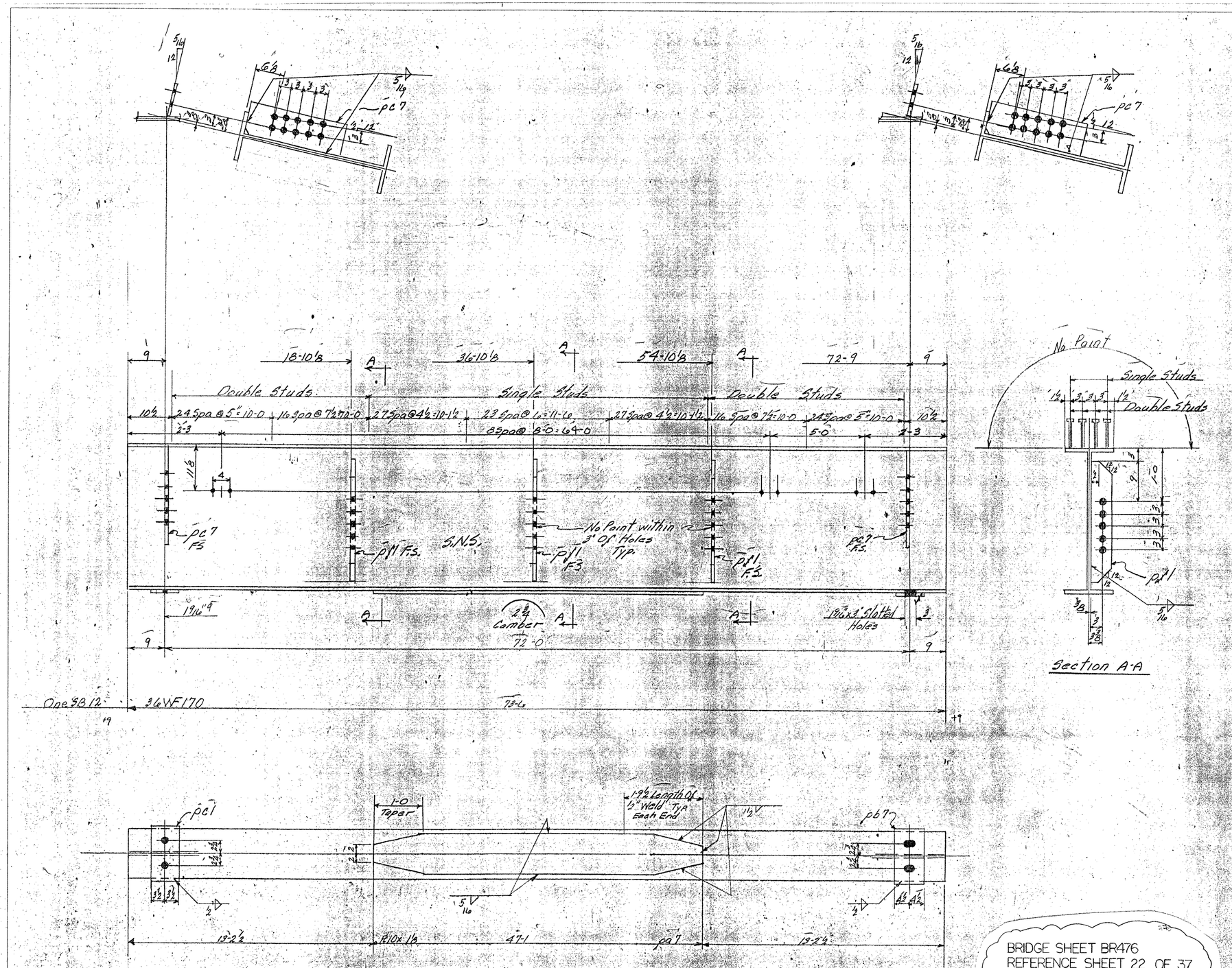

BRIDGE SHEET BR476
REFERENCE SHEET 22 OF 37
SHEET 228 OF 370

BILL OF MATERIAL

NO. PIECES	MARK	DESCRIPTION	LENGTH FT.	LENGTH IN.		WEIGHT

JOB NO. SHEET NO.

ASTM-A36

BILL OF MATERIAL (17)

NO. PIECES	MARK	DESCRIPTION	LENGTH FT.	LENGTH IN.		WEIGHT
		Beams				
1	SB12	36 WF 170	73	6	ord. BB66B2	12,495
1	pc1	Bar 7 x 1	1	1	Res @ 20-0	26
1	pa7	PL 10 x 1/8	47	1	BB66B1	1832
1	pb7	PL 9 x 1 1/2	1	1	Res @ 1 PC. ⌀ @ 12-0	53
2	pc7	Bar 8 x 1/2	2	0	ord @ 20-0 BB66B9	54
3	pf1	Bar 5 x 1/2	2	6	Res @ 20-0	64
		1/2" ⌀ Weld	11	0		~~9~~ 7
		5/16" ⌀ Weld	112	0		~~40~~ 28
		Cont # 66-1184-226				14,559 ~~14,573~~
480		3/4" ⌀ Shear Studs	0	7	STK	482
						15,055

VERMONT STRUCTURAL STEEL CORPORATION
BURLINGTON, VT.

Proj No I89-3(35)2

		DATE
DRAWN BY	L.C.	11-11-66
CK'D BY	RLM	11-12-66

HOLES 15/16" ⌀ As Noted
BOLTS None
PAINT Red Lead Vt. Specs. As Noted

PROJECT I89-Over Approach Road
LOCATION Georgia-Fairfax-Fairfield-St. Albans
CUSTOMER Lane Constr. Co.
ARCHITECT State of Vt. Dept. of Highways
JOB NO. 66-1184-200 STR. ST. SHEET NO. 12
66-1184-226 Shear Studs

PRINT RECORD

NO.	FOR	DATE
3	APP	11-21
2P	SAOP	11-21
20	Shop	12-5
2	STATE	12-8
2	LANE	12-28

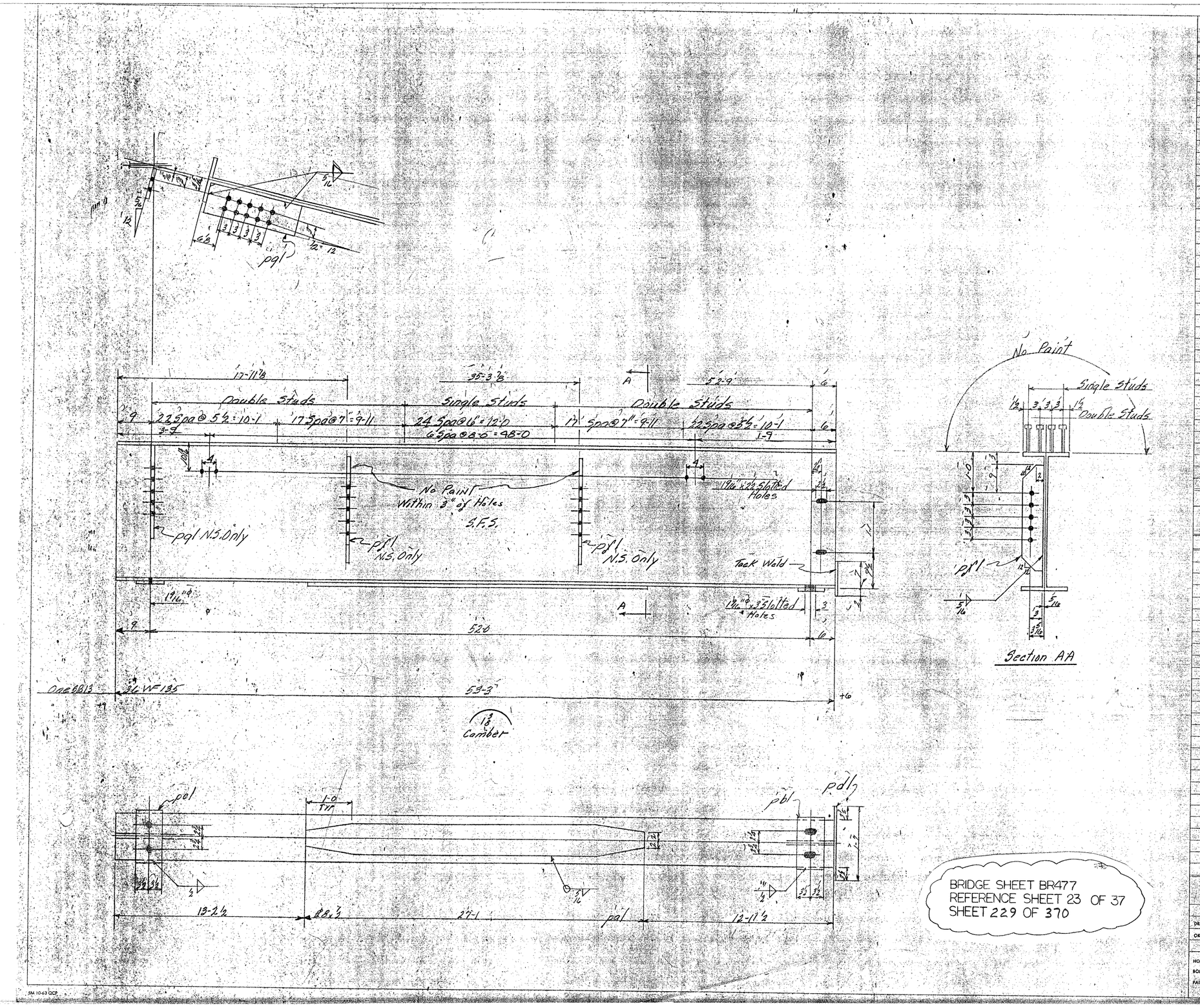

BRIDGE SHEET BR477
REFERENCE SHEET 23 OF 37
SHEET 229 OF 370

BILL OF MATERIAL

NO. PIECES	MARK	DESCRIPTION	LENGTH FT.	LENGTH IN.		WEIGHT

JOB NO. SHEET NO.

BILL OF MATERIAL

(17)

ASTM A36

NO. PIECES	MARK	DESCRIPTION	LENGTH FT.	LENGTH IN.		WEIGHT
		Beam				
1	SB13	36 WF 135	53	3	ord. B86682	7189 ✓
1	pal	Bar 8x 1/2	27	1	B86679	368 ✓
1	pbl	Bar 7x1	1	1	Res @ 20-0	
1	pcl	do	1	1		52 ✓
1	pdl	PL 9x 1/4	1	7	Res. PL 48x 1/4x10-0	13 ✓
2	pfl	Bar 5x 1/2	2	10	Res @ 20-0	43 ✓
1	pgl	Bar 8x 1/2	2	0	ord @ 20-0 B86679	27 ✓
		1/2" x Weld	2	4		2 ✓
		5/16" x Weld	69	10		~~25~~ 17
						~~7719~~ ✓
						7711
		Cont #66-1184-226				
366		3/4" Shear Studs	0	7	STK	368 ✓
						8087 ✓

VERMONT STRUCTURAL STEEL CORPORATION
BURLINGTON, VT.

Proj No I89-3(35)#2

		DATE
DRAWN BY	LC	11-10-66
CK'D BY	RLM	11-18-66

HOLES 15/16" ϕ As Noted
BOLTS None
PAINT Red Lead Vt. Specs (As Noted)

PROJECT I89 Over Approach Road
LOCATION Georgia-Fairfax-Fairfield-St Albans
CUSTOMER Lane Const. Co.
ARCHITECT State of Vt. Dept. of Highways
JOB NO. 66-1184-200 Str. St. 66-1184-226 Shear Studs
SHEET NO. 13

PRINT RECORD

NO.	FOR	DATE
3	APP	11-21
2P	SHOP	11-21
20	Shop	12-5
2	STATE	12-8
2	LANE	12-28

SM 10-63 OCP

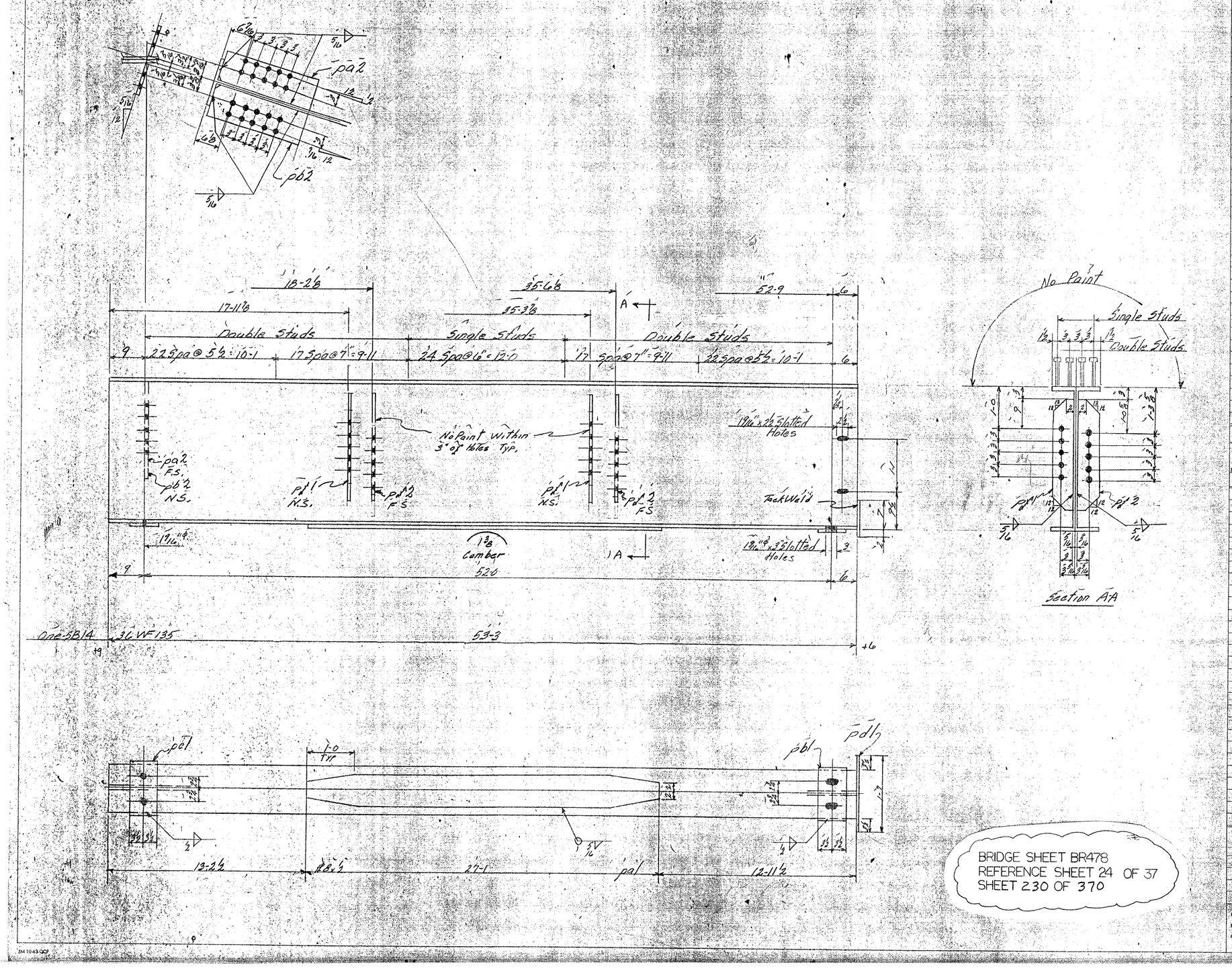

BRIDGE SHEET BR478
REFERENCE SHEET 24 OF 37
SHEET 230 OF 370

BILL OF MATERIAL

NO. PIECES	MARK	DESCRIPTION	LENGTH FT.	LENGTH IN.		WEIGHT	

JOB NO. SHEET NO.

BILL OF MATERIAL

ASTM A36 (17)

NO. PIECES	MARK	DESCRIPTION	LENGTH FT.	LENGTH IN.		WEIGHT	
		Beam					
1	SB14	36 WF 135	53	3	ord BB66B2	7189	✓
1	pa1	Bar 8 x 1/2	27	1	BB66 79	368	✓
1	pb1	Bar 7 x 1	1	1	Res @ 20-0		
1	pc1	do	1	1		52	✓
1	pd1	PL 9 x 1/4	1	7	Res PL 8 x 1/4 x 10-0	13	✓
1	pa2	Bar 8 x 1/2	2	0	ord @ 20-0		
1	pb2	do	2	0	BB66 79	54	✓
2	pf1	Bar 5 x 1/2	2	6	Res @ 20-0		
2	pf2	do	2	6		85	✓
		1/2" ∫ Weld	2	4		2	✓
		5/16" ∫ Weld	84	9		~~31~~	✓ 21
							~~7794~~ ✓
							7784
		Cont. #66-1184-226					
366		3/4" ϕ Shear Studs	0	7	STK	368	368 ✓
							8162 ✓

VERMONT STRUCTURAL STEEL CORPORATION
BURLINGTON, VT.

Proj # I89-3(35) 2

		DATE
DRAWN BY	LC	11-10-66
CK'D BY	RLM	11-18-66

HOLES 15/16" ϕ & As Noted
BOLTS None
PAINT Red Lead Vt. Specs. & As Noted

PROJECT I89 Over Approach Road
LOCATION Georgia-Fairfax-Fairfield-St. Albans
CUSTOMER Lane Const. Co.
ARCHITECT State of Vt. Dept. of Highways
JOB NO. 66-1184-200 Str. SHEET NO. 14
66-1184-226 Shear Studs

PRINT RECORD

NO.	FOR	DATE
3	APP	11-21
2P	Shop	11-21
2D	Shop	12-5
2	STATE	12-8
2	LANE	12-28

SM 10-63 QCP

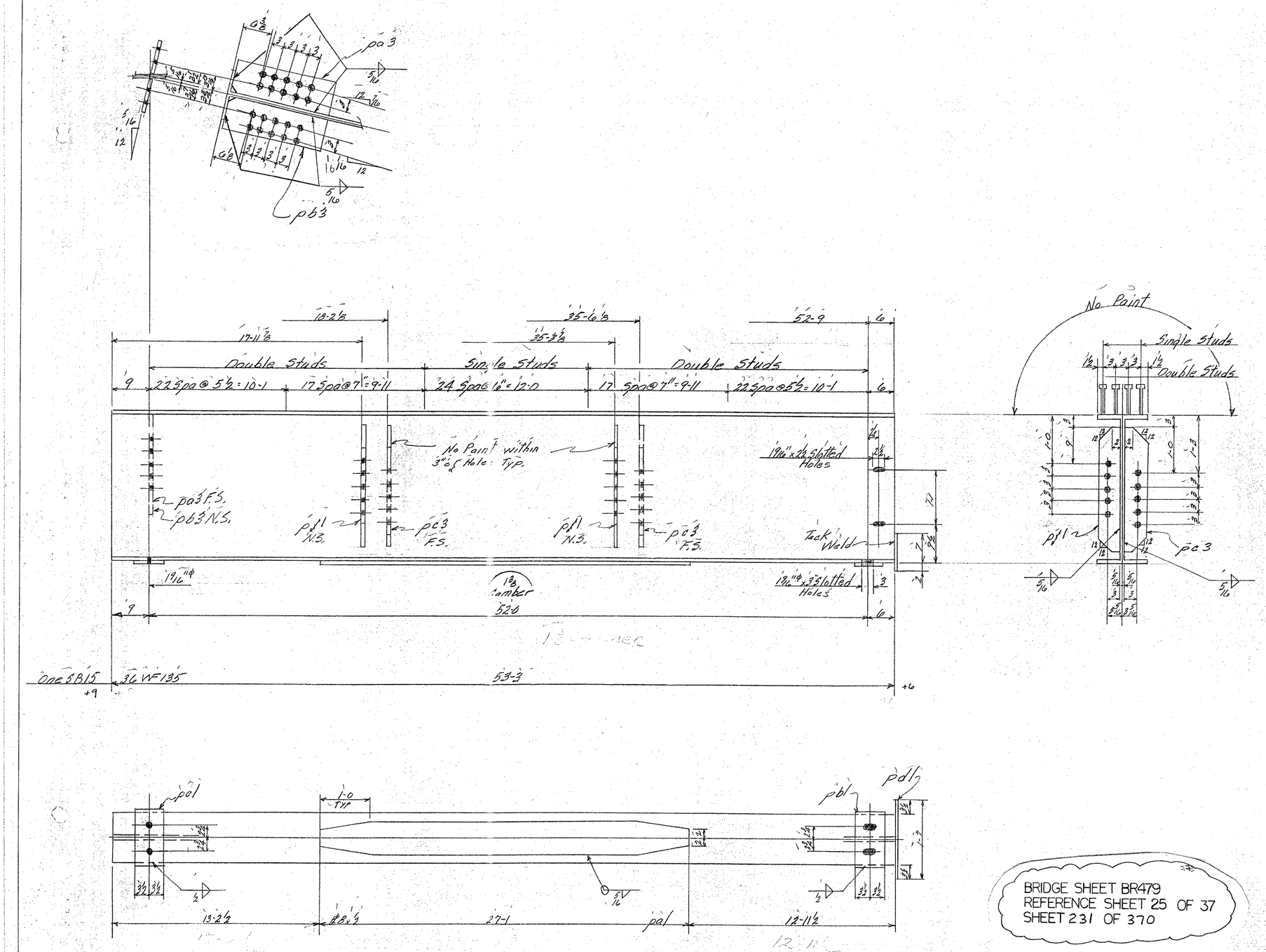

BRIDGE SHEET BR479
REFERENCE SHEET 25 OF 37
SHEET 231 OF 370

BILL OF MATERIAL

NO. PIECES	MARK	DESCRIPTION	LENGTH FT.	LENGTH IN.		WEIGHT	

JOB NO. _____ SHEET NO. _____

BILL OF MATERIAL

ASTM-A36 (17)

NO. PIECES	MARK	DESCRIPTION	LENGTH FT.	LENGTH IN.		WEIGHT	
		Beam					
1	SB15	36WF135	53	3	ord. B36682	7189	✓
1	pa1	Bar 8x1/2	27	1	B8667	368	✓
1	pb1	Bar 7x1	1	1	Res @ 20-0		
1	pc1	do	1	1		52	✓
1	pd1	PL 9x1/4	1	7	Res PL 48x1/4x10-0	13	✓
1	pa3	Bar 8x1/2	2	0	ord @ 20-0		
1	pb3	do	2	0	B86679	54	✓
2	pc3	Bar 5x1/2	2	6	Res @ 20-0		
2	pf1	do	2	6		85	✓
		1/2" f Weld	2	4		2	
		5/16" f Weld	84	9		~~31~~	21
							~~7794~~
		Cont. # 66-1184-226					7784
366		3/4" ϕ Shear Studs	0	7	Stk	368	368
							8162

VERMONT STRUCTURAL STEEL CORPORATION
BURLINGTON, VT.

Cont. #2
proj No. I89-3(35)

		DATE
DRAWN BY	L.C.	11-11-66
OK'D BY	RLM	11-18-66

HOLES 15/16" ϕ & As Noted
BOLTS None
PAINT Red Lead Vt. Specs. & As Noted

PROJECT I89 Over Approach Road
LOCATION Georgia-Fairfax-Fairfield-St. Albans
CUSTOMER Lane Const. Co.
ARCHITECT State of Vt. Dept. of Highways
JOB NO. 66-1184-200 STR. ST. SHEET NO. 15
66-1184-226 Shear Studs

PRINT RECORD

NO.	FOR	DATE
3	APP	11-21
2P	SHOP	11-21
2D	Shop	12-5
2	STATE	12-8
2	LANE	12-28

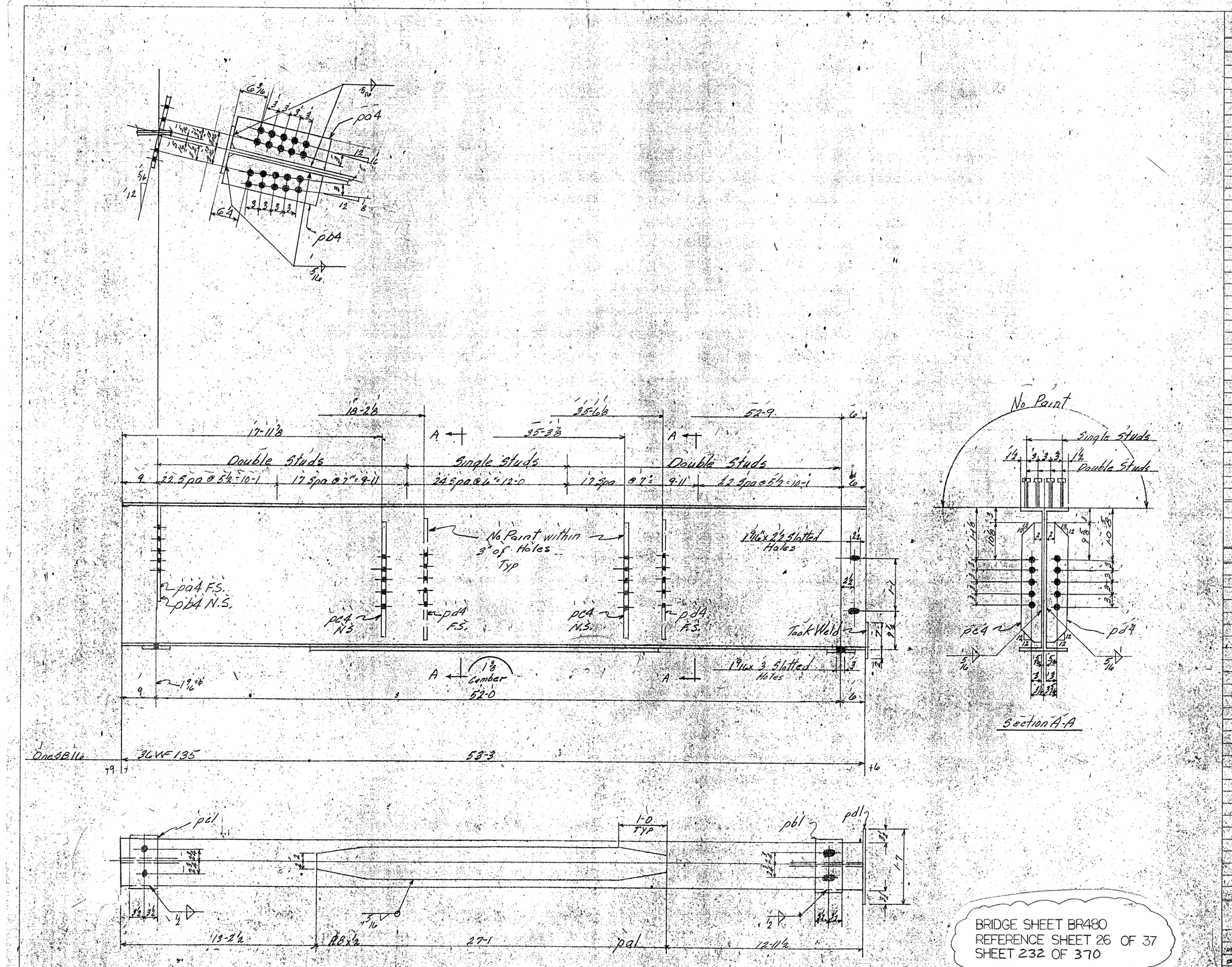

BRIDGE SHEET BR480
REFERENCE SHEET 26 OF 37
SHEET 232 OF 370

BILL OF MATERIAL

NO. PIECES	MARK	DESCRIPTION	LENGTH FT.	LENGTH IN.		WEIGHT

JOB NO. SHEET NO.

BILL OF MATERIAL

ASTM-A36 (17)

NO. PIECES	MARK	DESCRIPTION	LENGTH FT.	LENGTH IN.		WEIGHT
		Beam				
1	2B16	36WF135	53	3	ord. B86682	7189
1	pa1	Bar 8 x 1/2	27	1	B86679	368
1	pb1	Bar 7 x 1	1	1	Res @ 20-0	
1	pc1	do	1	1		52
1	pd1	R 9 x 1/4	1	7	Res R 48 x 4 x 10-0	13
2	pd4	Bar 5 x 1/2	2	6	Res @ 20-0	43
1	pa4	Bar 8 x 1/2	2	0	ord @ 20-0	
1	pb4	do	2	0	B86679	54
2	pc4	Bar 5 x 1/2	2	6	Res @ 20-0	43
		1/2" f Weld	2	4		2
		5/16" f Weld	84	9		~~31~~ 21
						~~7795~~
		Cont # 66-1184-226				7785
366		3/4" Shear Studs	0	7	STK	368 368
						8163

VERMONT STRUCTURAL STEEL CORPORATION
BURLINGTON, VT.

Proj. No. I89-3(35)2

		DATE
DRAWN BY	L.C.	11-11-66
CK'D BY	RLM	11-18-66

PROJECT I89 Over Approach Road
LOCATION Georgia Fairfax Fairfield St. Albans
CUSTOMER Lane Constr. Co.

HOLES 15/16" ⌀ & As Noted
BOLTS None
PAINT Red Lead Vt. Specs & As Noted

ARCHITECT State Of Vt. Dept. Of High
JOB NO. 66-1184-200 Str. St. SHEET NO. 16
66-1184-226 Shear Studs

PRINT RECORD

NO.	JOB	DATE
3	AS	11-21
2	Shop	11-1
0	Shop	12-5
2	State	12-8
2	Lane	12-28

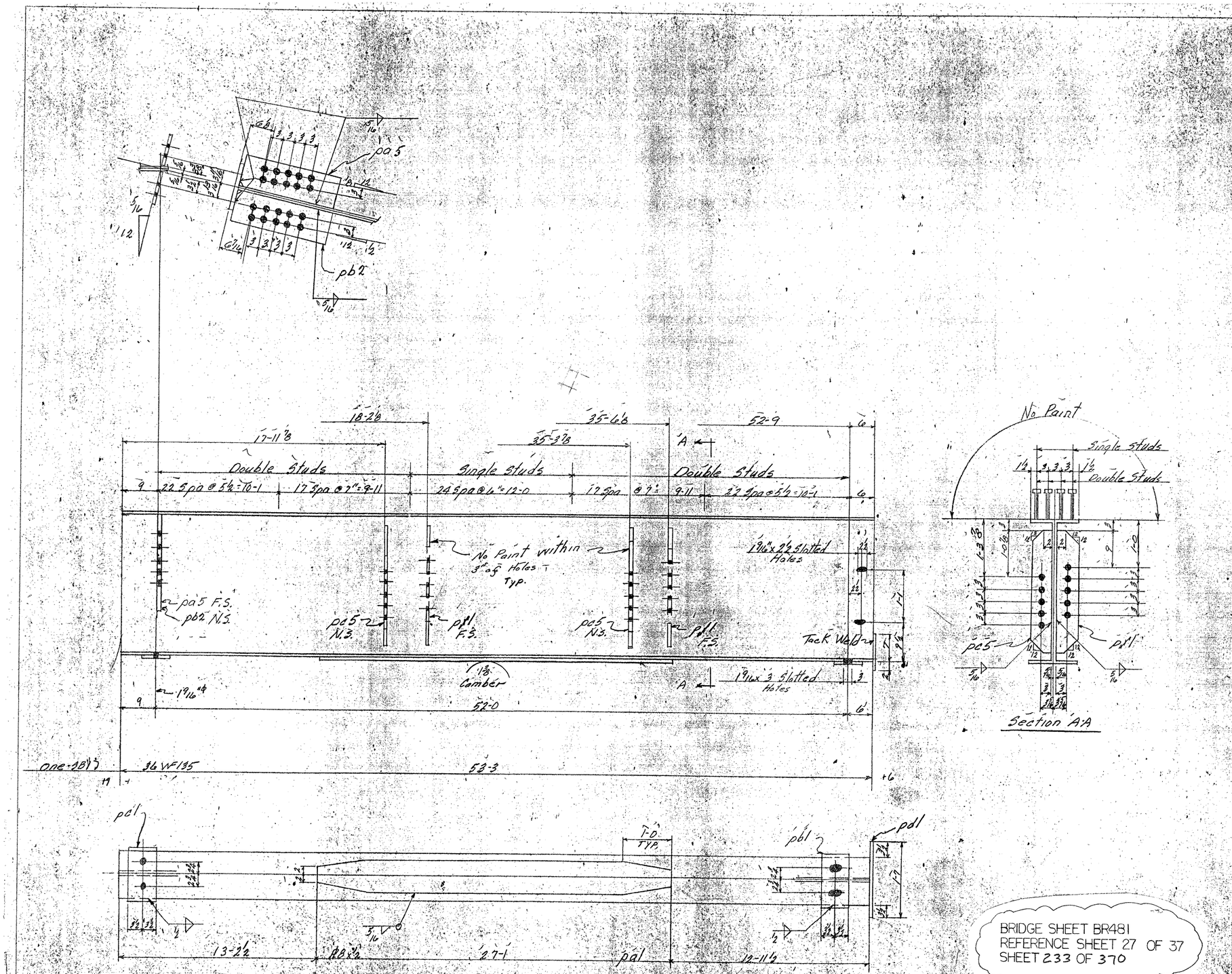

BRIDGE SHEET BR481
REFERENCE SHEET 27 OF 37
SHEET 233 OF 370

BILL OF MATERIAL

NO. PIECES	MARK	DESCRIPTION	LENGTH FT.	LENGTH IN.		WEIGHT

JOB NO. SHEET NO.

BILL OF MATERIAL

ASTM-A36 (17)

NO. PIECES	MARK	DESCRIPTION	LENGTH FT.	LENGTH IN.		WEIGHT
		Beam				
1	3B17	36WF135	53	3	ord BB6682	7189
1	pa1	Bar 8 x ½	27	1	BB6679	368
1	pb1	Bar 7 x 1	1	1	Res @ 20-0	
1	pc1	do	1	1		52
1	pd1	PL 9 x ¼	1	7	Res PL 48 x ¼ x 10-0	13
2	pd1	Bar 5 x ½	2	6	Res @ 20-0	43
1	pa5	Bar 8 x ½	2	0	ord @ 20-0	
1	pb2	do	2	0	BB6679	54
2	pc5	Bar 5 x ½	2	6	Res @ 20-0	43
		½" f Weld	2	4		21
		5/16" f Weld	84	9		~~31~~ 21
						~~7795~~
		Cont #66-1184-226				7785
366		¾" ϕ Shear Studs	0	7	STK	368 ~~368~~
						8163

VERMONT STRUCTURAL STEEL CORPORATION
BURLINGTON, VT.

Proj. I89-3(35)2

		DATE
DRAWN BY	L.C.	11-11-66
CHK'D BY	RLM	11-18-66

PROJECT I89 Over Approach Road
LOCATION Georgia Fair Fax Fair Field St. Albans
CUSTOMER Lane Const. Co.
ARCHITECT State Of Vt. Dept. Of High
JOB NO. 66-1184-200 STR 57 SHEET NO. 17
66-1184-226 Shear St.

NOTES 15/16" ϕ & As Noted
BOLTS None
PAINT Red Lead Vt. Specs & As Noted

PRINT RECORD NO.	FOR	DATE
3	APP.	11-24
2	Shop	11-24
1	Shop	12-5
2	STATE	12-6

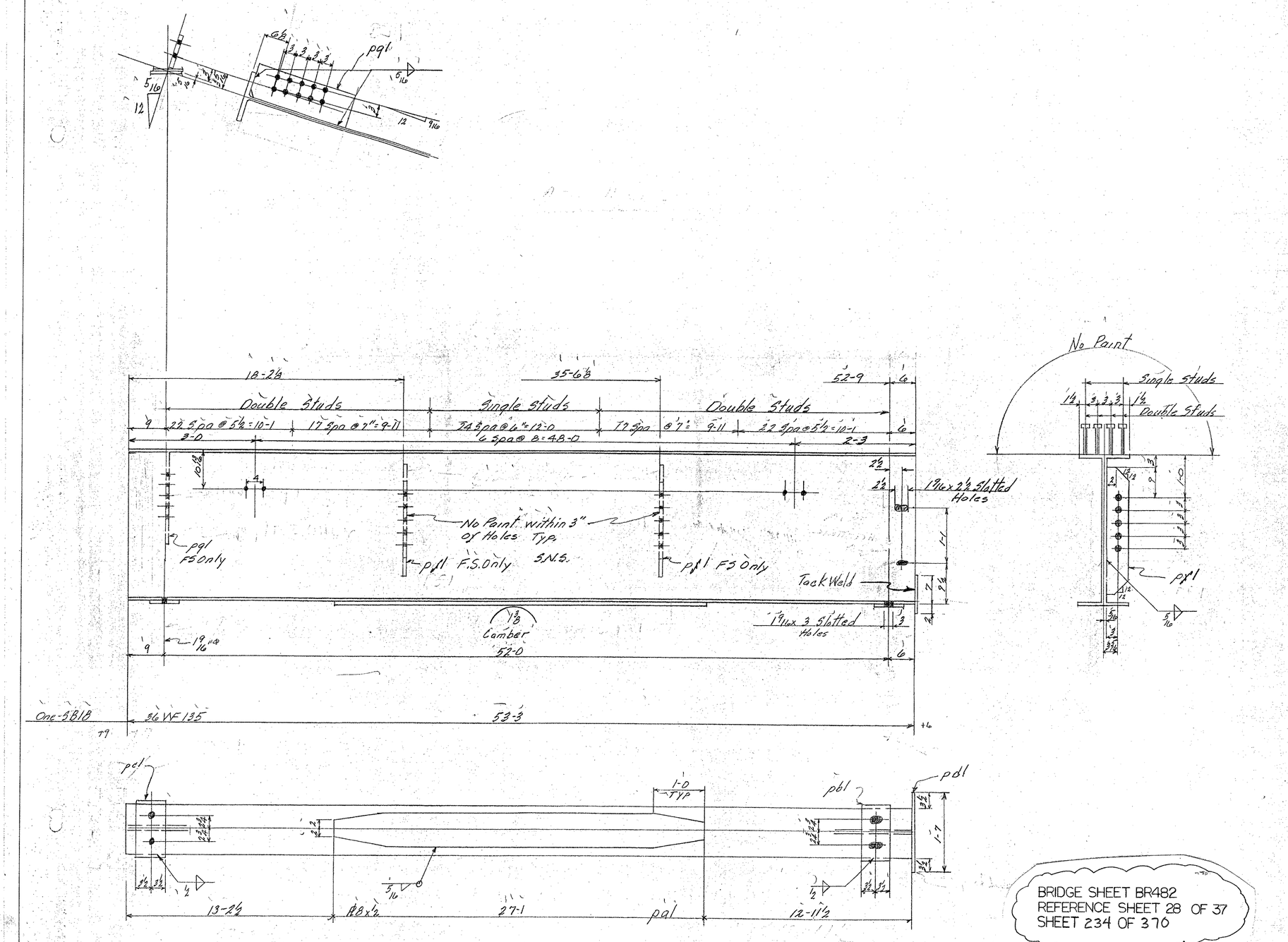

BRIDGE SHEET BR482
REFERENCE SHEET 28 OF 37
SHEET 234 OF 370

BILL OF MATERIAL

NO. PIECES	MARK	DESCRIPTION	LENGTH FT.	LENGTH IN.		WEIGHT

JOB NO. _____ SHEET NO. _____

ASTM-A36

BILL OF MATERIAL

17 (17)

NO. PIECES	MARK	DESCRIPTION	LENGTH FT.	LENGTH IN.		WEIGHT	
		Beam					
1	SB18	36WF135	53	3	ord BB6682	7189	✓
1	pal	Bar 8x½	27	1	BB66-79	368	✓
1	pbl	Bar 7x1	1	1	Res@20-0		
1	pcl	do	1	1		52	✓
1	pdl	PL 9x¼	1	7	Res PL 48x¼x10-0	13	✓
2	pfl	Bar 5x½	2	6	Res@20-0	43	✓
1	pgl	Bar 8x½	2	0	ord@20-0 BB66-79	27	✓
		½" Weld	2	4		2	✓
		5/16" Weld	69	10		~~25~~	✓17
							~~7719~~ ✓
		Cont #66-1184-226					7711
366		¾"φ Shear Studs	0	7	STK	368	368 ✓
							8087 ✓

VERMONT STRUCTURAL STEEL CORPORATION
BURLINGTON, VT.

proj #I89-3(35)#2

		DATE
DRAWN BY	L C	11-11-66
OK'D BY	RLM	11-21-66

HOLES 15/16"φ & As Noted
BOLTS None
PAINT Red Lead Vt. Specs & As Noted

PROJECT I89 Over Approach Road
LOCATION Georgia-Fairfax-Fairfield-St. Albans
CUSTOMER Lane Constr. Co.
ARCHITECT State Of Vt. Dept Of High.
JOB NO. 66-1184-200 STR ST. 66-1184-226 Shear Studs
SHEET NO. 18

PRINT RECORD

NO.	FOR	DATE
3	APP	11-21
2	SHOP	11-21
3	Shop	12-5
2	STATE	12-8
2	LANE	12-28

SM-10-63 QCP

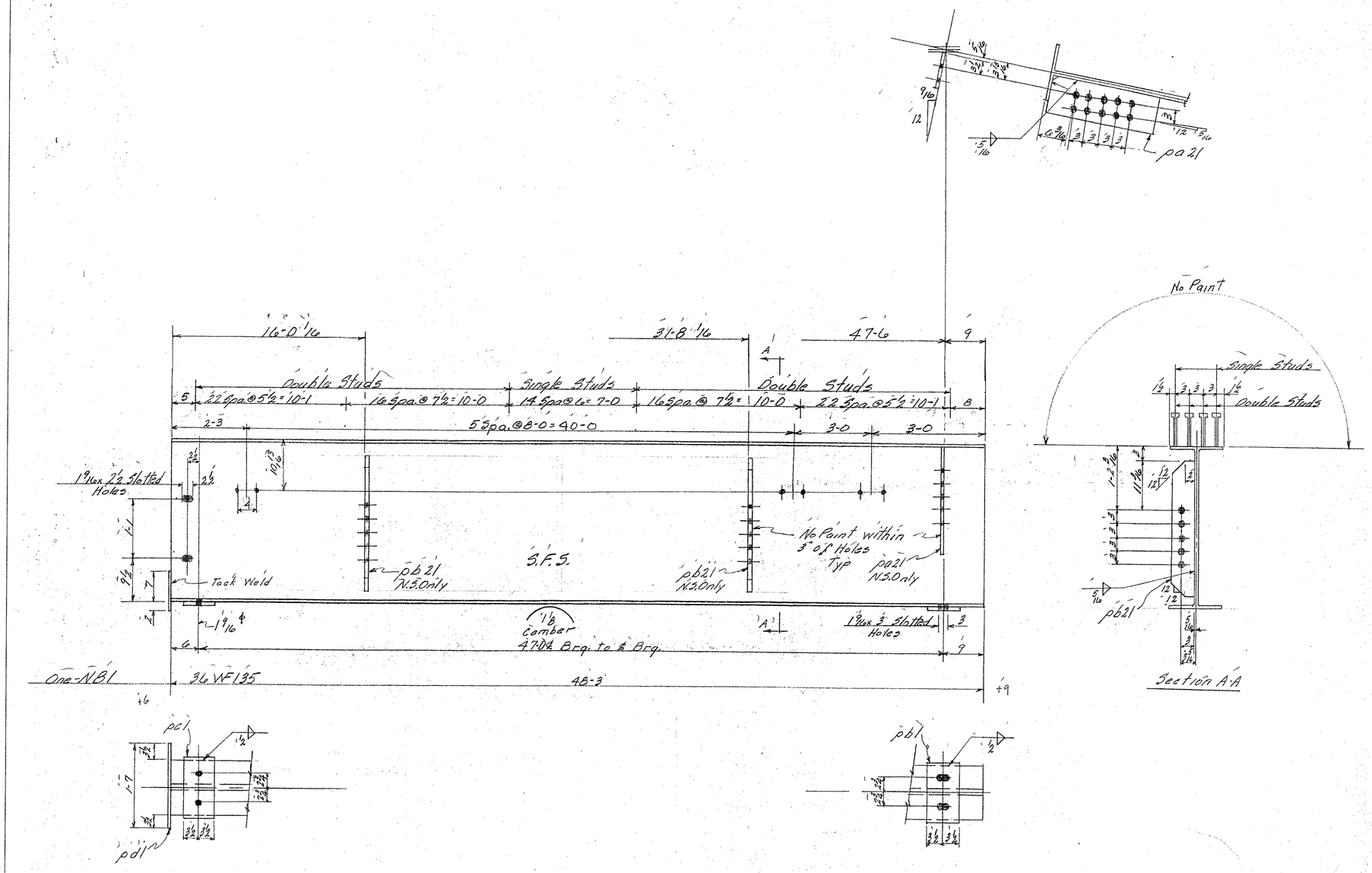

BRIDGE SHEET BR483
REFERENCE SHEET 29 OF 37
SHEET 235 OF 370

BILL OF MATERIAL

NO. PIECES	MARK	DESCRIPTION	LENGTH FT.	LENGTH IN.		WEIGHT	

JOB NO. _____ SHEET NO. _____

BILL OF MATERIAL

(47)

ASTM-A36

NO. PIECES	MARK	DESCRIPTION	LENGTH FT.	LENGTH IN.		WEIGHT	
		Beams					
1	NB1	36 WF 135	48	3	ord BB6682	6514	✓
1	pb1	Bar 7x1	1	1	Res @ 20-0		
1	pc1	do	1	1		52	✓
1	pd1	PL 9x1/4	1	7	Res PL 48x1/4 x 10-0	13	✓
1	pa21	Bar 8x1/2	2	0	ord 20-0 BB6679	27	✓
2	pb21	Bar 5x1/2	2	6	Res @ 20-0	43	✓
		1/2 ⌀ Weld	2	4		2	
		5/16 ⌀ Weld	15	0		~~5~~ 4	
							~~6656~~ 6655
		Cont 1184-226					
338		3/4" ⌀ Shear Studs	0	7	STK	340	340
							6996 ✓

VERMONT STRUCTURAL STEEL CORPORATION
BURLINGTON, VT.

Proj. No. # I89-3(35) # 2

		DATE
DRAWN BY	LC	11-19-66
CK'D BY	RLM	11-29-66

HOLES 15/16" ⌀ As Noted
BOLTS None
PAINT Red Lead VT. Specs As Noted

PROJECT I89 Over Approach Road
LOCATION Georgia-Fairfax-Fairfield St. Albans
CUSTOMER Lane Constr. Co.
ARCHITECT State of Vt. Dept. of Highways
JOB NO. 66-1184-200 St. St. SHEET NO. 21
66-1184-226 - Shear Studs

PRINT RECORD

NO.	FOR	DATE
3	APP.	11-29
2	SHOP	11-29
2	Shop	12-5
2	STATE	12-8
2	LANE	12-28

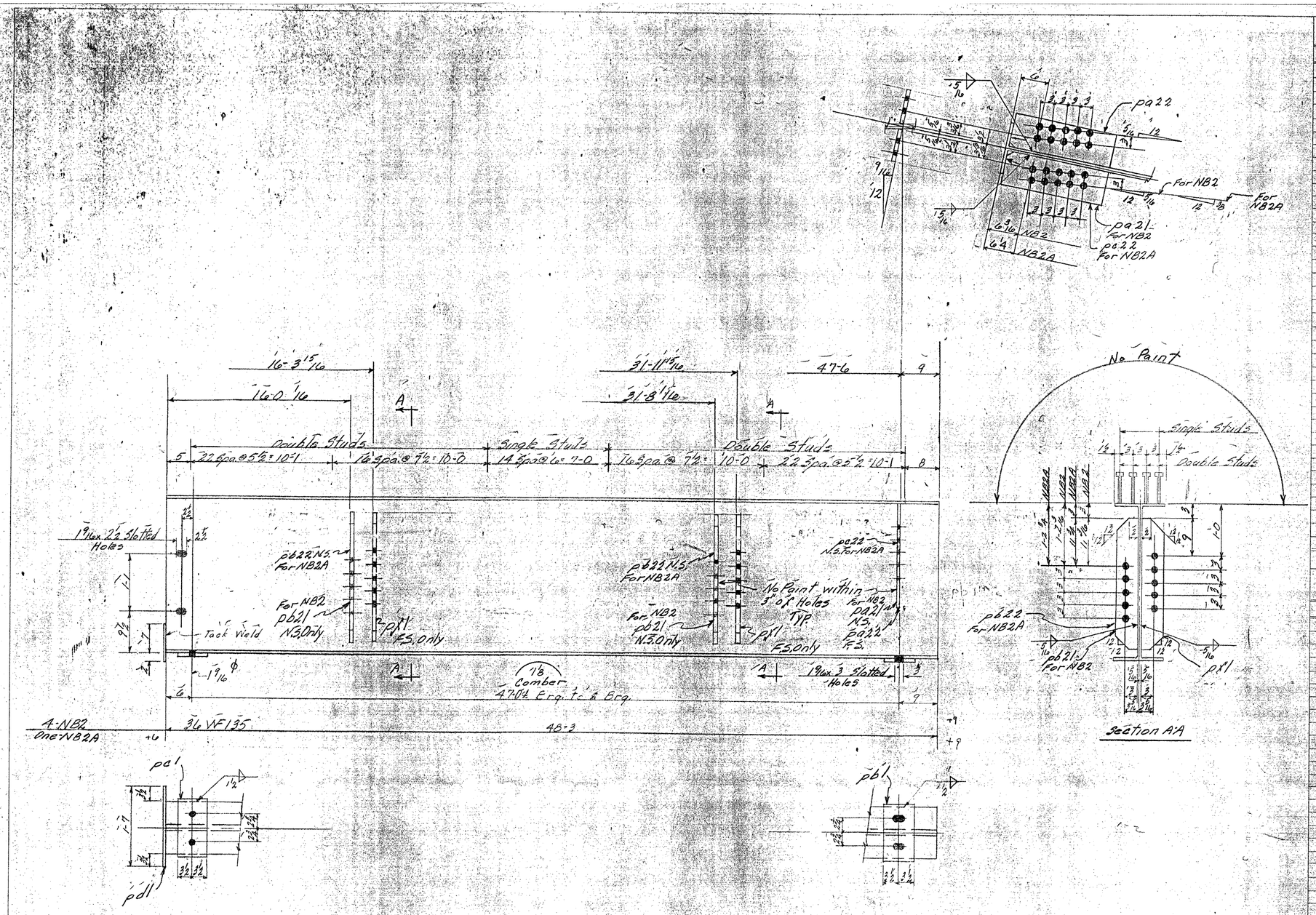

BRIDGE SHEET BR484
REFERENCE SHEET 30 OF 37
SHEET 236 OF 370

BILL OF MATERIAL

NO. PIECES	MARK	DESCRIPTION	LENGTH FT.	LENGTH IN.		WEIGHT

JOB NO. SHEET NO.

ASTM-A36

BILL OF MATERIAL

(47)

NO. PIECES	MARK	DESCRIPTION	LENGTH FT.	LENGTH IN.		WEIGHT
4	NB2	36 WF 135	48	3	ord B86682	32,569
1	NB2A	36 WF 135	48	3		
5	pb1	Bar 7x1	1	1	Res @ 20-0	
5	pc1	do	1	1		258
5	pd1	PL 9 x 1/4	1	7	Res PL 48 x 1/4 x 10-0	64
4	pa21	Bar 8x1/2	2	0	ord @ 20-0 B86679	109
8	pb21	Bar 5x1/2	2	6	Res @ 20-0	170
5	pa22	Bar 8x1/2	2	0	ord @ 20-0 B86679	136
2	pb22	Bar 5x1/2	2	6	Res @ 20-0	43
1	pc22	Bar 8x1/2	2	0	ord @ 20-0 B86679	27
10	px1	Bar 5x1/2	2	6	Res @ 20-0	213
		1/2 f Weld	11	8		~~10~~ 7
		5/16 f Weld	150	0		~~51~~ 37
						~~33,653~~
						33,633
		Cont 66-1184-226				
1690		3/4" ø Shear Studs	6	7	Stk	1698 1698
						35,351

VERMONT STRUCTURAL STEEL CORPORATION
BURLINGTON, VT.

Proj. #I89-3(35) #2

		DATE
DRAWN BY	LC	11-22-66
CK'D BY	RLM	11-29-66

HOLES 15/16 (As Noted)
BOLTS None
PAINT Red Lead Vt. Specs (As Noted)

PROJECT: I89 Over Approach Road
LOCATION Georgia-Fairfax-Fairfield St. Albans
CUSTOMER Lane Constr. Co.
ARCHITECT State of Vt. Dept. of Highways
JOB NO. 66-1184-200 Str. St SHEET NO. 22
66-1184-226 Shear Studs

PRINT RECORD

NO.	FOR	DATE
3	APP	11-29
2	SHOP	11-27
20	Ship	12-5
2	STATE	12-8
2	LANE	12-28

SM 10-63 QCP

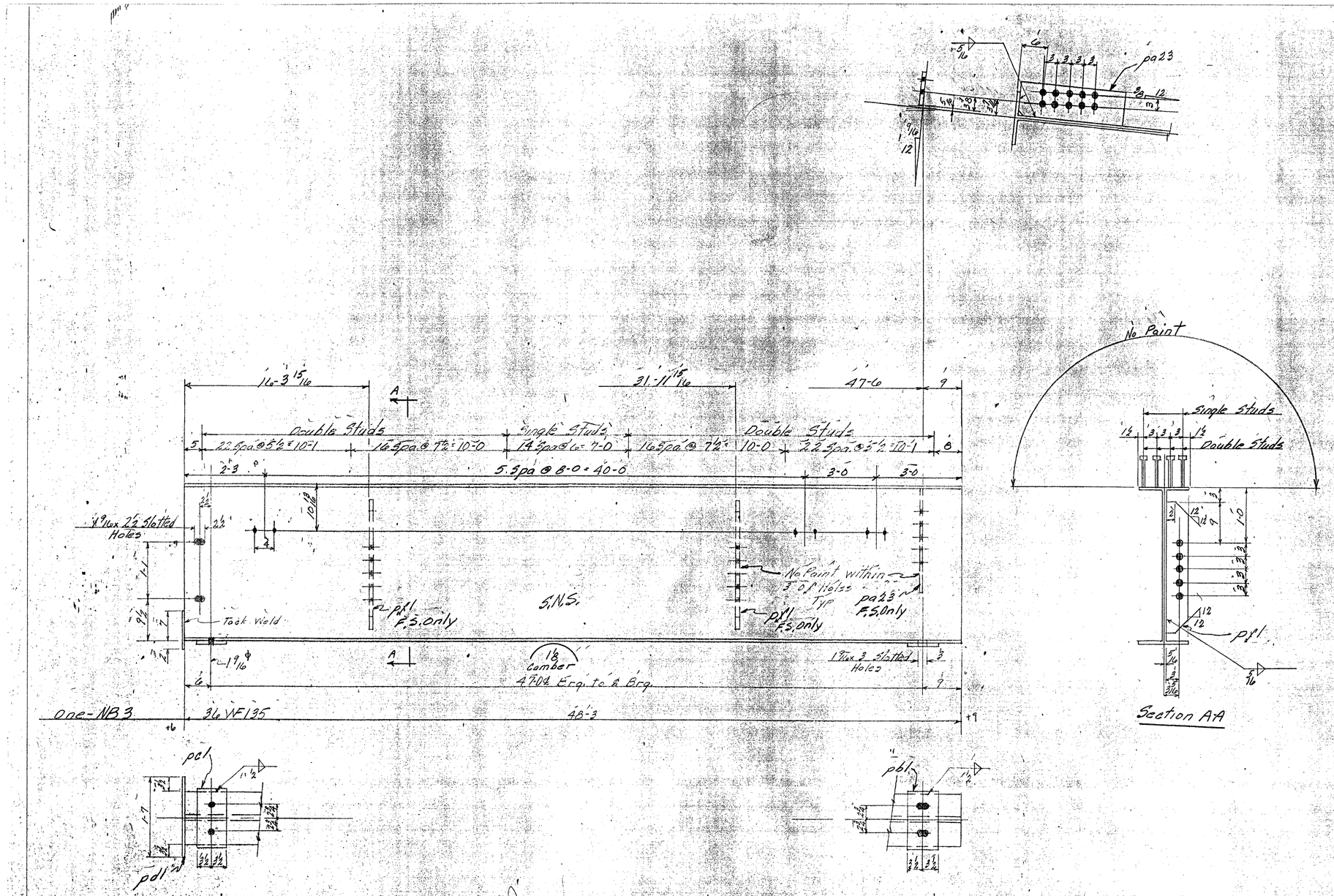

BRIDGE SHEET BR485
REFERENCE SHEET 31 OF 37
SHEET 237 OF 370

BILL OF MATERIAL

NO. PIECES	MARK	DESCRIPTION	LENGTH FT.	LENGTH IN.		WEIGHT

JOB NO. SHEET NO.

ASTM-A36

BILL OF MATERIAL

(47)

NO. PIECES	MARK	DESCRIPTION	LENGTH FT.	LENGTH IN.		WEIGHT
		Beams				
1	B3	36 WF 135	48	3	and B86682	6514 ✓
1	pb1	Bar 7x1	1	1	Res @ 20	
1	pc1	do	1	1		52 ✓
1	pd1	PL 9x1/4	1	7	Res. PL 48x1/4x10-0	13 ✓
1	pa23	Bar 8x1/2	2	0	ord @ 20-0 B86679	27 ✓
2	pf1	Bar 5x1/2	2	6	Res @ 20-0	43 ✓
		1/2 f Weld	2	4		2 ✓
		5/16 f Weld	15	0		~~5~~ 4
						~~6656~~ ✓
						6655
		Cont # 66-1184-226				
338		3/4" ϕ Shear Studs	0	7	STK	340 340 ✓
						6996 ✓

VERMONT STRUCTURAL STEEL CORPORATION
BURLINGTON, VT.

Proj No I89-3(35) #2

		DATE
DRAWN BY	LC	11-20-66
CK'D BY	RLM	11-29-66

HOLES 15/16" ϕ As Noted
BOLTS None
PAINT Red Lead Vt. Specs As Noted

PROJECT I89 Over Approach Road
LOCATION Georgia-Fairfax-Fairfield St. Albans
CUSTOMER Lane Constr. Co.
ARCHITECT State of Vt. Dept. of Highways
JOB NO. 66-1184-200 Str. St SHEET NO. 23
66-1184-226 Shear Studs

PRINT RECORD

NO.	FOR	DATE
3	APP	11-29
2	SHOP	11-29
20	Shop	12-5
2	STATE	12-8
2	LANE	12-28

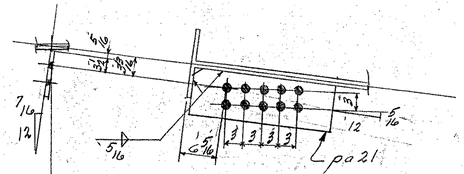

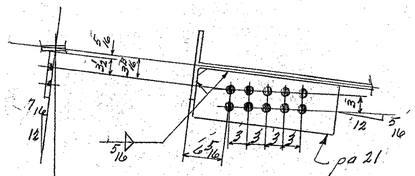

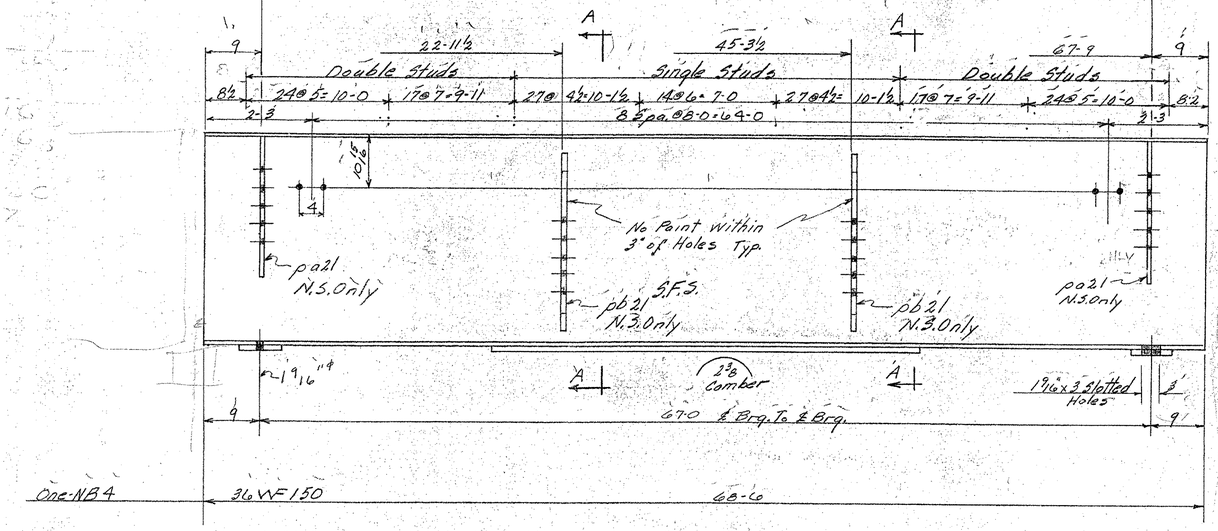

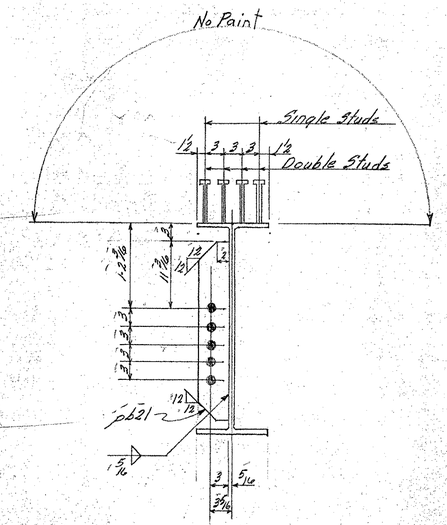

150
13-10½ w/o
41-3 "
13-10½ w/o
67
69

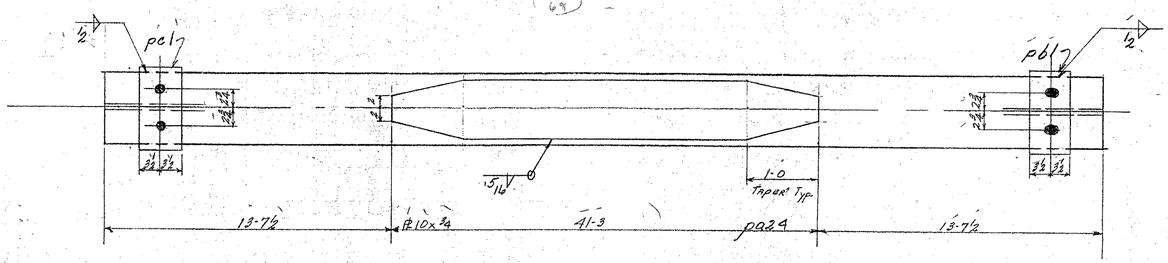

BRIDGE SHEET BR486
REFERENCE SHEET 32 OF 37
SHEET 238 OF 370

BILL OF MATERIAL

	NO. PIECES	MARK	DESCRIPTION	LENGTH FT.	LENGTH IN.		WEIGHT	

JOB NO. _____ SHEET NO. _____

BILL OF MATERIAL

(17)

ASTM-A36

	NO. PIECES	MARK	DESCRIPTION	LENGTH FT.	LENGTH IN.		WEIGHT	
			Beam					
	1	NB4	36WF150	68	6	ord BB4682	10275	V
	1	pb1	Bar 7x1	1	1	@ Res@20-0		
	1	pa1	do	1	1		52	V
	2	pb21	Bar 5x½	2	6	Res@20-0	43	V
	1	pa24	PL10x¾	41	3	BB4682	1070	V
	2	pa21	Bar 8x½	2	0	Res@20-0	54	V
			½"f Weld	2	4		2	V
			5/16"f Weld	103	6		37	V
							~~11,533~~	V
							11,522	
			Cont 66-1184-226					
	470		¾"ϕ Shear Studs	0	7	STK	472	472 V
								12,005 V

VERMONT STRUCTURAL STEEL CORPORATION
BURLINGTON, VT.

Proj No. IB9-3(135)92

		DATE
DRAWN BY	LC	11-21-96
OK'D BY	RLM	11-27-96

PROJECT IB90 Ver Approach Road
LOCATION Georgia-Fairfax-Fairfield-St Albans
CUSTOMER Lane Constr. Co.
ARCHITECT State of Vt. Dept of Highways
JOB NO. 66-1189-200 Str. Sh. SHEET NO. 29
66-1189-226 Shear Studs

HOLES 15/16ϕ as Noted
BOLTS None
PAINT Red Lead-Vt. Spec as Noted

PRINT RECORD

NO.	FOR	DATE
3	APP	11-29
2	SHOP	11-27
20	Shop	12-5
2	STATIC	12-8
2	LANE	12-28

SM-1063 QCF

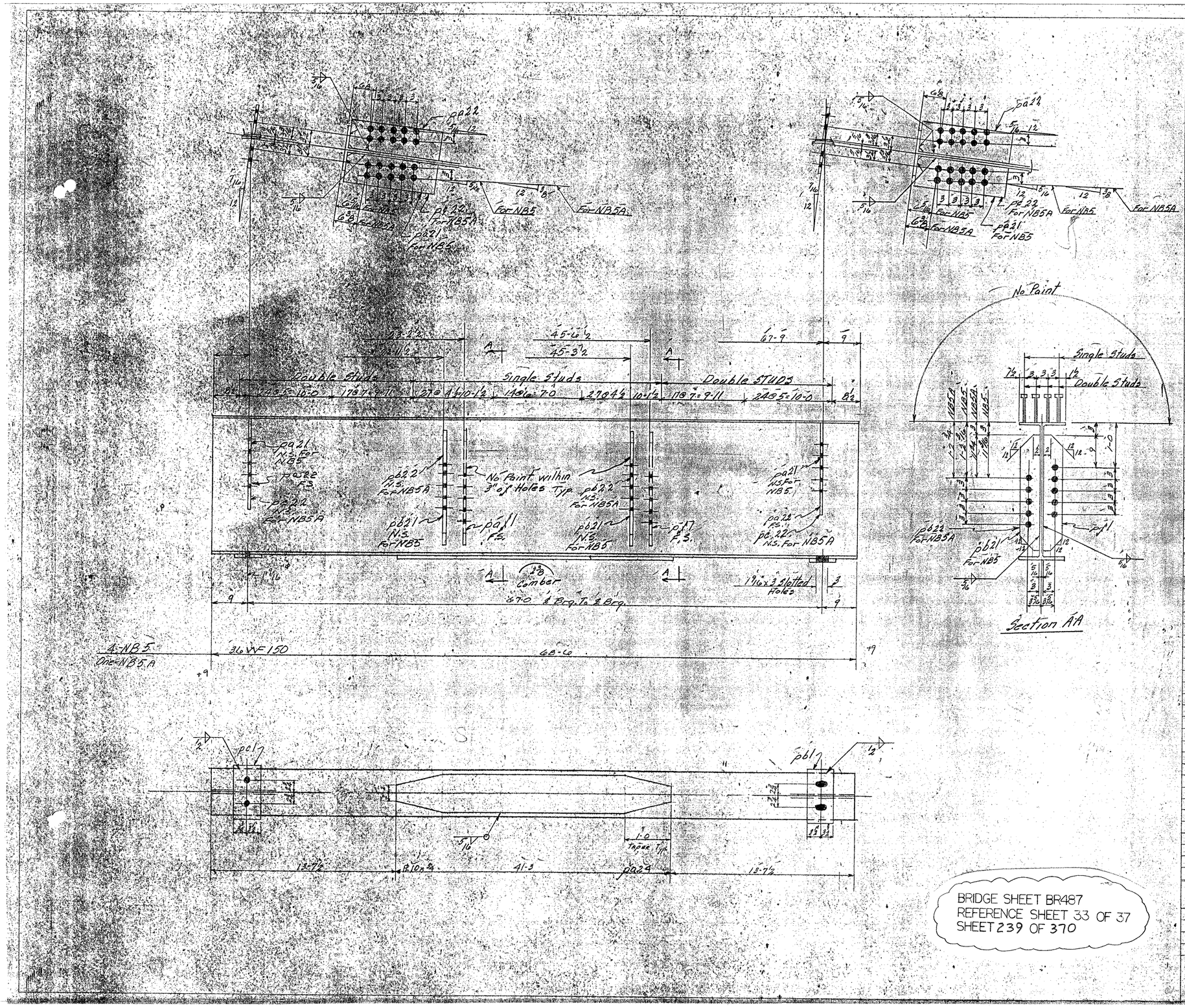

BRIDGE SHEET BR487
REFERENCE SHEET 33 OF 37
SHEET 239 OF 370

BILL OF MATERIAL

NO. PIECES	MARK	DESCRIPTION	LENGTH FT.	LENGTH IN.		WEIGHT

JOB NO. SHEET NO.

ASTM-A36

BILL OF MATERIAL

(17)

NO. PIECES	MARK	DESCRIPTION	LENGTH FT.	LENGTH IN.		WEIGHT
		Beams				
4	NB5	36 WF 150	68	6	ord BB6682	
1	NB5A	do	68	6		51,375 ✓
5	pc1	Bar 7x1	1	1	Res@20-0	
5	pb1	do	1	1		258 ✓
10	pf1	Bar 5x½	2	6	Res@20-0	
8	pb21	do	2	6		383 ✓
8	pa21	Bar 8x½	2	0	ord@20-0	
2	pa22	do	2	0	BB6677	
10	pa22	do	2	0		544 ✓
5	pa24	PL 10x¾	41	3	ord BB6681	5351 ✓
2	pb22	Bar 5x½	2	6	Res@20-0	43 ✓
		½" ∫ Weld	11	8		~~10~~ ✓7
		5/16" ∫ Weld	617	6		~~223~~ ✓154
		Cont 66-1184-226				~~58,186~~ ✓
						58,115
2350		¾" ϕ Shear Studs	0	7	Stk	2362 2362 ✓
						60,548 ✓

VERMONT STRUCTURAL STEEL CORPORATION
BURLINGTON, VT.

Proj No. I89-3(35)#2

		DATE
DRAWN BY	L.E.	11-21-66
CK'D BY	RLM	11-29-66

HOLES 15/16" ϕ As Noted
BOLTS None
PAINT Red Lead Vt. Specs (As Noted

PROJECT I89 Over Approach Road
LOCATION Georgia-Fairfax-Fairfield-St. Albans
CUSTOMER Lane Constr. Co.
ARCHITECT State of Vt. Dept. of Highways
JOB NO. 66-1184-200 Str. St. SHEET NO. 25
66-1184-226 Shear Studs

PRINT RECORD NO.	FOR	DATE
3	APP	11-29
2P	SHOP	11-29
2D	Shop	12-5
2	STATE	12-8
2	LANE	12-28

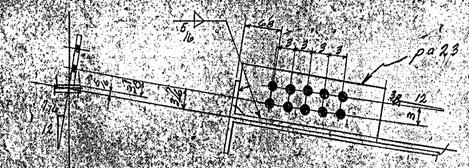

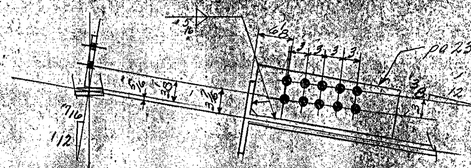

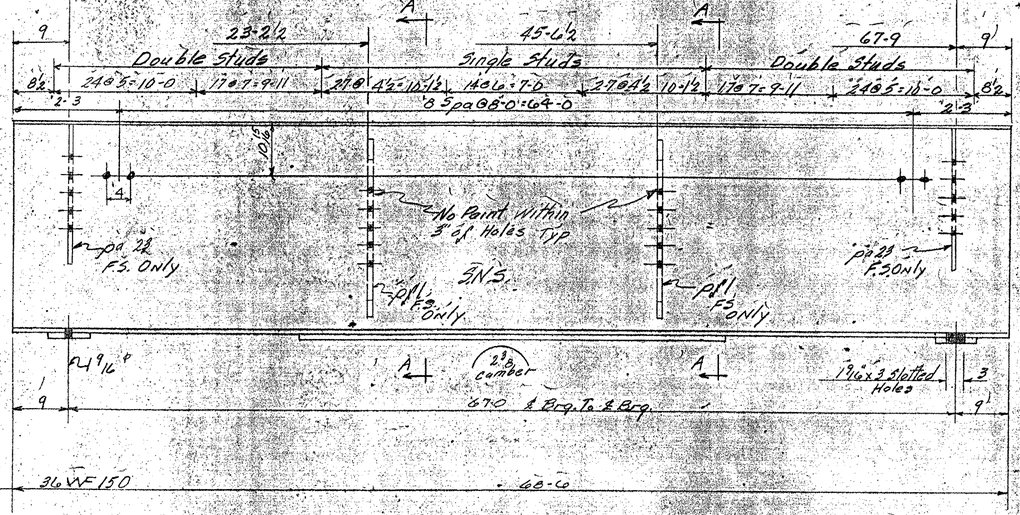

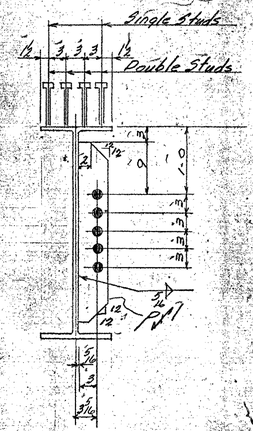

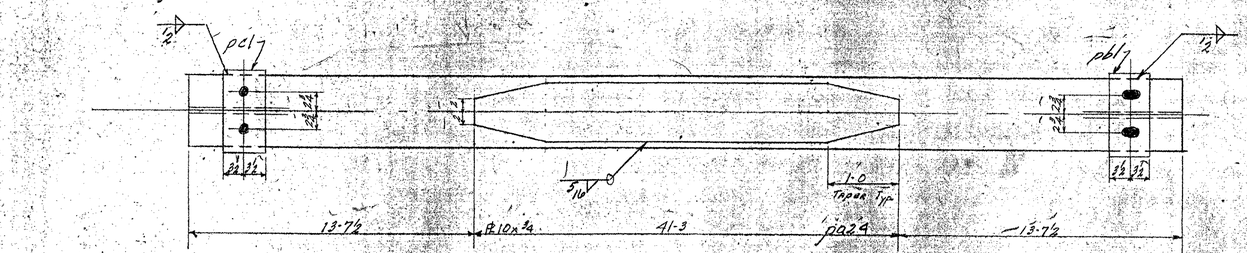

A02-NB16 36WF150 - 68-6

BRIDGE SHEET BR488
REFERENCE SHEET 34 OF 37
SHEET 240 OF 370

BILL OF MATERIAL

NO. PIECES	MARK	DESCRIPTION	LENGTH FT.	LENGTH IN.		WEIGHT	

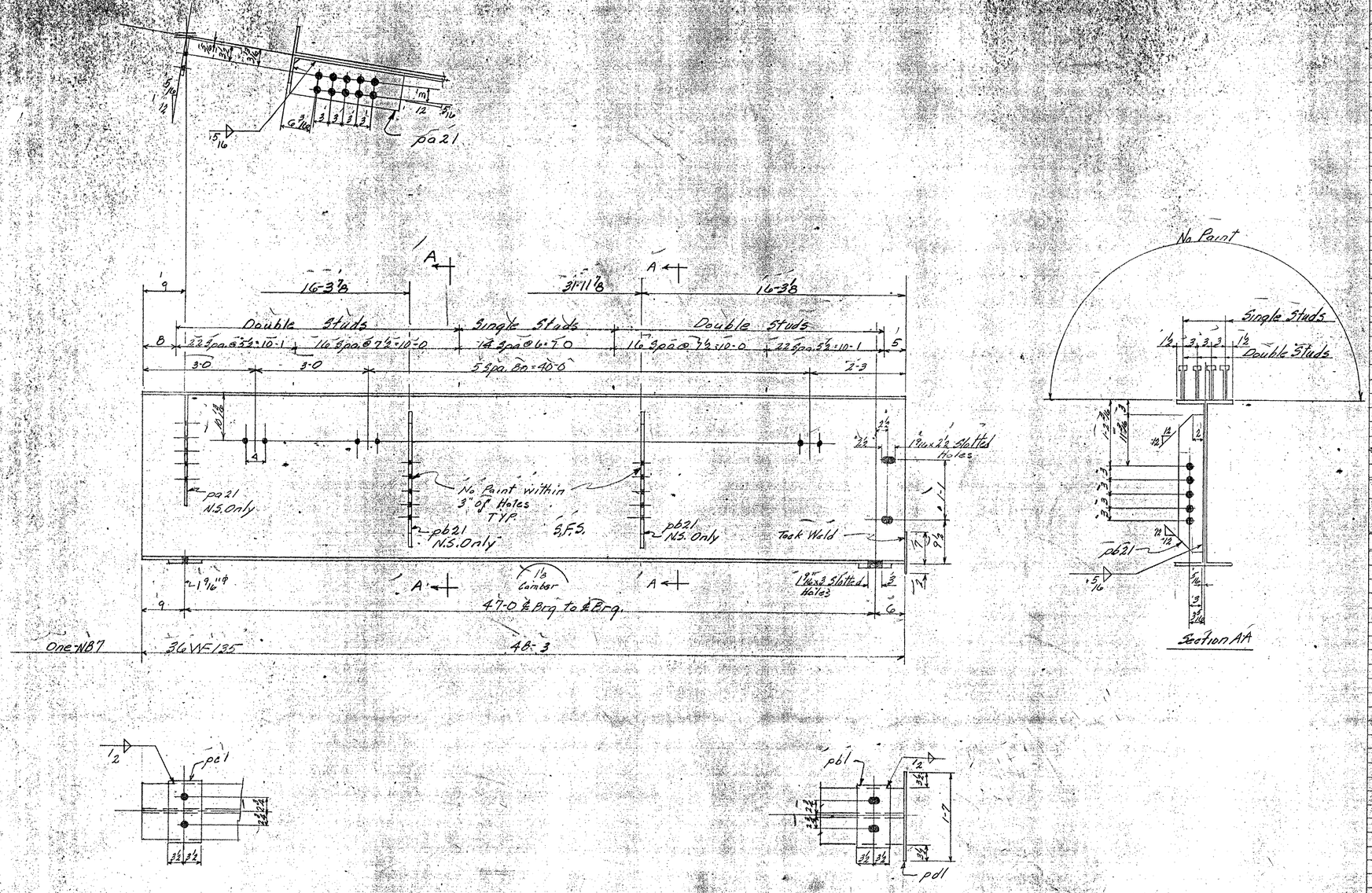

BRIDGE SHEET BR489
REFERENCE SHEET 35 OF 37
SHEET 241 OF 370

BILL OF MATERIAL

NO. PIECES	MARK	DESCRIPTION	LENGTH FT.	LENGTH IN.		WEIGHT

JOB NO. SHEET NO.

ASTM-A36

BILL OF MATERIAL

(47)

NO. PIECES	MARK	DESCRIPTION	LENGTH FT.	LENGTH IN.		WEIGHT
		Beams				
1	NB7	36 WF 135	48	3	ord BB66B2	6514 ✓
1	pb1	Bar 7x1	1	1	Res @ 20-0	
1	pc1	do	1	1		52 ✓
1	pd1	PL 9x1/4	1	7	Res PL 48x1/4x10-0	13 ✓
1	pa21	Bar 8x1/2	2	0	ord @ 20-0 BB66B79	27 ✓
1	pb21	Bar 5x1/2	2	6	Res @ 20-0	21 ✓
		1/2" f Weld	2	4		2 ✓
		5/16" f Weld	15	0		~~5~~ ✓ 4
						~~6634~~ ✓
						6633
		Cont # 66-1184-226				
338		3/4" ϕ Shear Studs	0	7	STK.	340 340 ✓
						6974 ✓

VERMONT STRUCTURAL STEEL CORPORATION
BURLINGTON, VT.

Proj No. # I89-3(35) # 2

		DATE
DRAWN BY	LC.	11-22-66
CK'D BY	RLM	11-29-66

HOLES 7/16" ϕ (As Noted)
BOLTS None
PAINT Red Lead Vt. Specs (As Noted)

PROJECT I89 Over Approach Road
LOCATION Georgia-Fairfax-Fairfield-St. Albans
CUSTOMER Lane Constr. Co.
ARCHITECT State of Vt. Dept of Highways
JOB NO. 66-1184-200 Str. St. SHEET NO. 27
66-1184-226 Shear Studs

PRINT RECORD

NO.	FOR	DATE
3	ARR	11-29
2P	SHOP	11-29
20	Shop	12-5
2	STATE	12-8
2	LANE	12-28

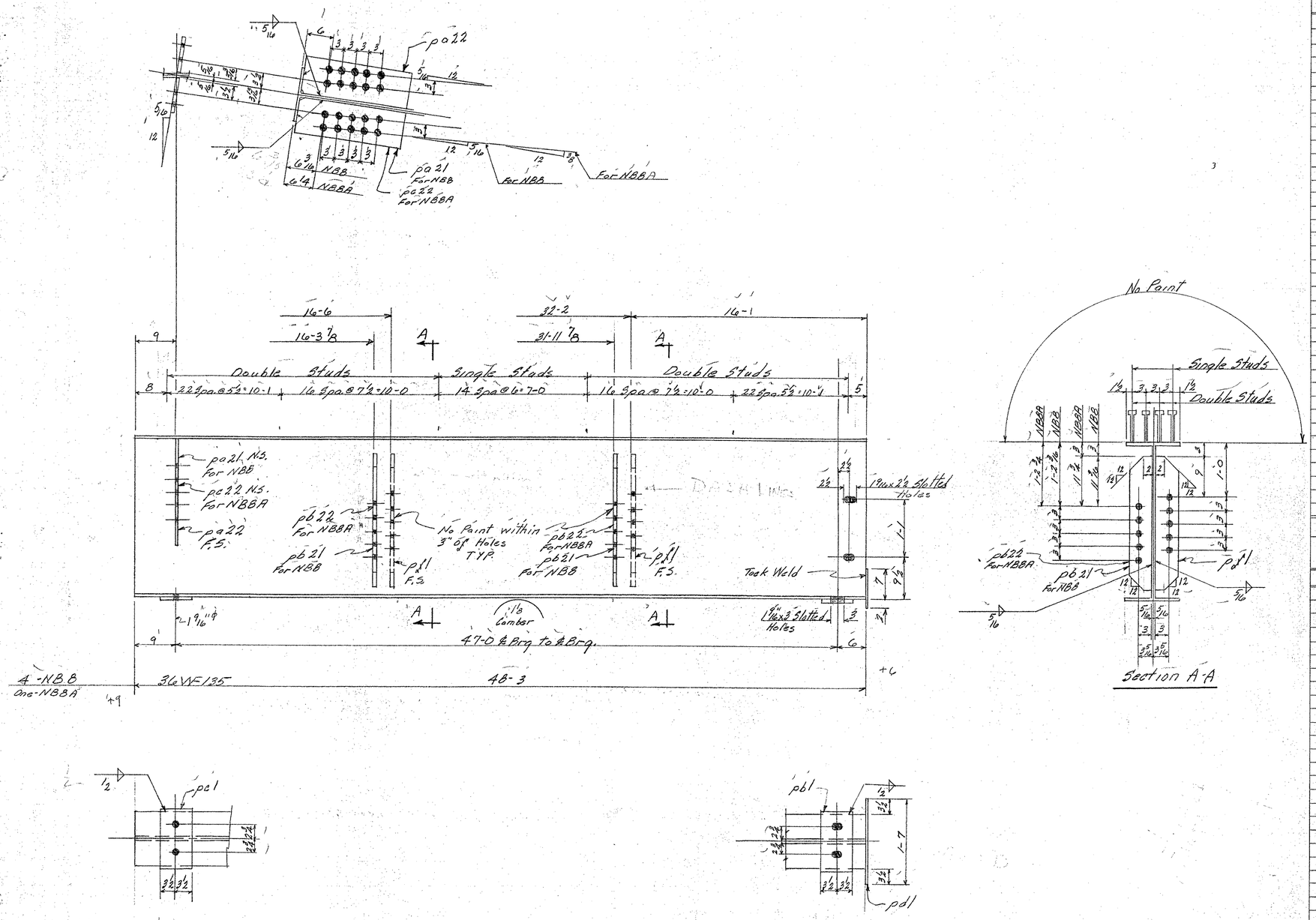

BRIDGE SHEET BR490
REFERENCE SHEET 36 OF 37
SHEET 242 OF 370

BILL OF MATERIAL

NO. PIECES	MARK	DESCRIPTION	LENGTH FT.	LENGTH IN.		WEIGHT

JOB NO. _____ SHEET NO. _____

ASTM-A36

BILL OF MATERIAL

(47)

NO. PIECES	MARK	DESCRIPTION	LENGTH FT.	LENGTH IN.		WEIGHT
1	NBBA	36WF135	48	3	ord. BB6682	32,569
4	NBB	36WF135	48	3		
5	pb1	Bar 7x1	1	1	Res@20-0	
5	pc1	do	1	1		258
5	pd1	PL 9x1/4	1	7	Res PL 48x1/4x10-0	64
4	pa21	Bar 8x1/2	2	0	ord@20-0 BB6679	109
8	pb21	Bar 5x1/2	2	6	Res@20-0	170
5	pa22	Bar 8x1/2	2	0	ord@20-0 BB6679	136
2	pb22	Bar 5x1/2	2	6	Res@20-0	43
1	pc22	Bar 8x1/2	2	0	ord@20-0 BB6679	27
10	pf1	Bar 5x1/2	2	6	Res@20-0	213
		1/2 f Weld	11	8		~~10~~ 7
		5/16 f Weld	150	0		~~54~~ 37
						~~33,653~~
						33,633
		Cont 66-1184-226				
1690		3/4" ϕ Shear Studs	0	7	Stk	1698 1698
						35,351

VERMONT STRUCTURAL STEEL CORPORATION
BURLINGTON, VT.

Proj No. I89-3(35) #2

		DATE
DRAWN BY	L.C.	11-22-66
OK'D BY	R.L.M.	11-29-66

HOLES 15/16" ϕ As Noted
BOLTS None
PAINT Red Lead Vt. Specs As Noted

PROJECT I89 Over Approach Road
LOCATION Georgia-Fairfax-Fairfield-St. Albans
CUSTOMER Lane Constr. Co.
ARCHITECT State of Vt. Dept of Highways
JOB NO. 66-1184-200 Str. St. SHEET NO. 28
66-1184-226 Shear Studs

PRINT RECORD

NO.	FOR	DATE
3	APP	11-29
2P	SHOP	11-29
20	Shop	12-5
2	STATE	12-8
2	LANE	12-28

SM 10-63 QCP

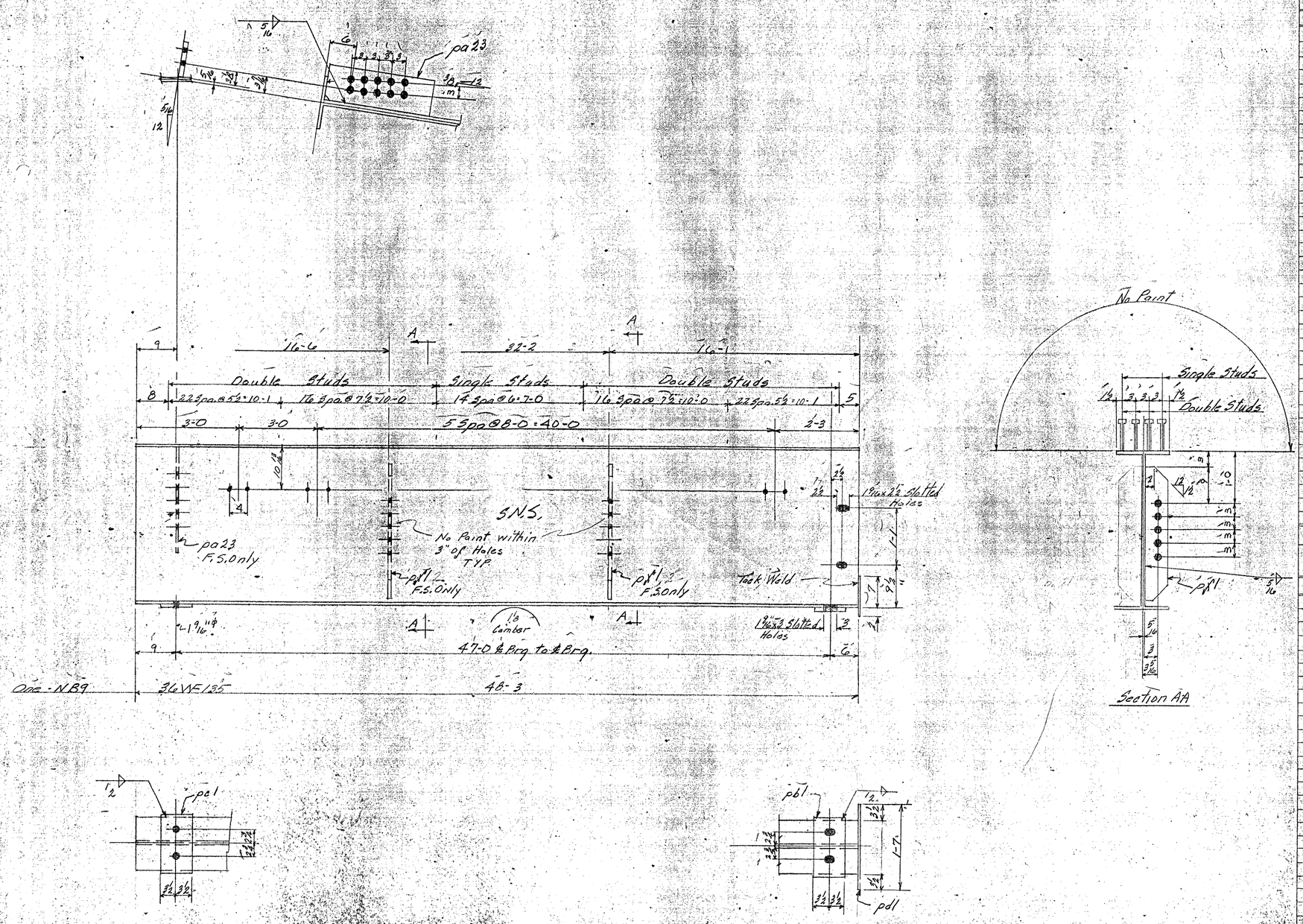

BRIDGE SHEET BR491
REFERENCE SHEET 37 OF 37
SHEET 243 OF 370

BILL OF MATERIAL

NO. PIECES	MARK	DESCRIPTION	LENGTH FT.	LENGTH IN.		WEIGHT	

JOB NO. SHEET NO.

ASTM-A36

BILL OF MATERIAL

(47)

NO. PIECES	MARK	DESCRIPTION	LENGTH FT.	LENGTH IN.		WEIGHT	
		Beam					
1	NB9	36WF135	48	3	ord B86682	6514	✓
1	pb1	Bar 7x1	1	1	Res @ 20-0		
1	pc1	do	1	1		52	✓
1	pd1	PL 9x¼	1	7	Res @ 48x¼x10-0	13	✓
1	pa23	Bar 8x½	2	0	ord @ 20-0 B86679	27	✓
2	pf1	Bar 5x½	2	6	Res @ 20-0	43	✓
		½ f Weld	2	4		2	✓
		5/16 f Weld	15	0		~~5~~	✓4
							~~6656~~ ✓
							6655
		Cont. 66-1184-226					
33B		¾" Shear Studs	0	7	STK	340	340 ✓
							6996 ✓

VERMONT STRUCTURAL STEEL CORPORATION
BURLINGTON, VT.

Proj. No. I89-3(35) #2

		DATE
DRAWN BY	LC	11-22-66
CK'D BY	RLM	11-29-66

HOLES 15/16" ϕ As Noted
BOLTS None
PAINT Red Lead Vt Specs As Noted

PROJECT I89 Over Approach Road
LOCATION Georgia-Fairfax-Fairfield-St. Albans
CUSTOMER Lane Constr. Co.
ARCHITECT State of Vt. Dept of Highways
JOB NO. 66-1184-200 Str. St. SHEET NO. 29
66-1184-226 Shear Studs

PRINT RECORD NO.	FOR	DATE
3	APP	11-29
2P	Shop	11-29
2D	Shop	11-6
2	STATE	12-8
2	LANE	12-25

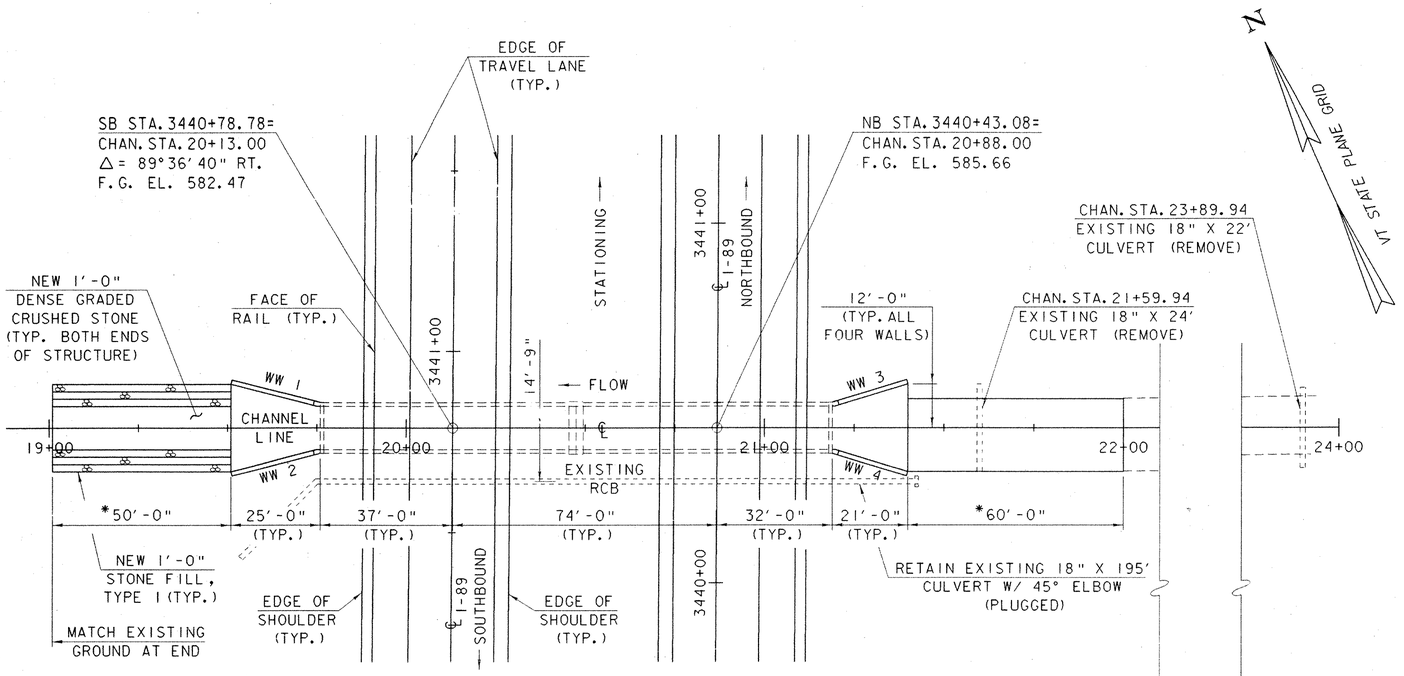

*OR AS DIRECTED BY THE RESIDENT ENGINEER. CONSTRUCT FLOW LINE DRAINAGE TO AVOID PONDING BEFORE AND BEYOND THE INLET AND OUTLET TO THE EXISTING STRUCTURE.

PLAN

SCALE: 1" = 20'-0
20 0 20

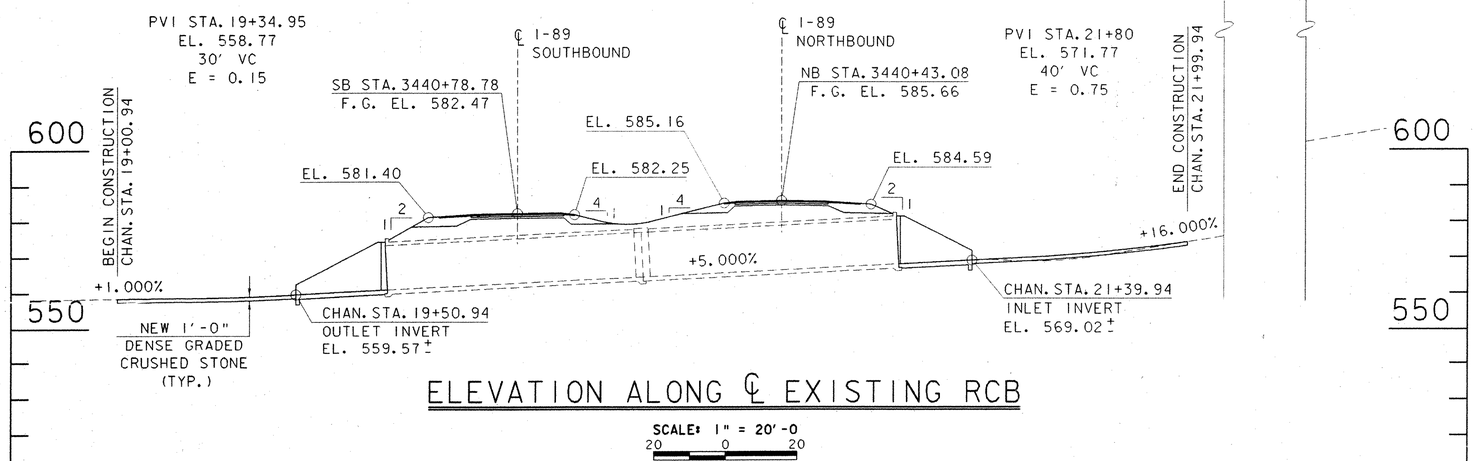

ELEVATION ALONG ℄ EXISTING RCB

SCALE: 1" = 20'-0
20 0 20

IMPORTANT NOTE: BRIDGE FINISHED GRADES ARE CENTERLINE GRADES.

NOTES

1. **SCOPE OF WORK:** REMOVE AND REPLACE WINGWALLS AND APRONS AT BOTH ENDS OF THE EXISTING STRUCTURE. REDIRECT ALL DRAINAGE TO PASS THROUGH THE EXISTING RCB AS SHOWN IN THE PLANS. PERFORM ADDITIONAL CONCRETE REPAIR AND DRAINAGE WORK AS SHOWN IN THE PLANS AND AS DIRECTED BY THE RESIDENT ENGINEER.
2. ALL MATERIALS AND CONSTRUCTION SHALL CONFORM TO AGENCY OF TRANSPORTATION STANDARD SPECIFICATIONS FOR CONSTRUCTION DATED 1990, AND ITS LATEST REVISIONS AND THE AASHTO STANDARD SPECIFICATIONS FOR HIGHWAY BRIDGES, DATED 1996, AND ITS LATEST REVISIONS.
3. THESE PLANS WERE PREPARED USING INFORMATION FROM THE 1966 RECORD PLANS FOR THIS STRUCTURE, AND ANY FIELD MEASUREMENTS THAT HAVE BEEN PERFORMED SINCE ORIGINAL CONSTRUCTION. REFERENCE SHEETS FROM VAOT RECORD PLANS FOR BRIDGE 88-3 ARE INCLUDED IN THE PLANS FOR THE CONTRACTOR'S USE. THESE SHEETS ARE LOCATED AT THE END OF THIS (BR500) SERIES OF BRIDGE SHEETS. THE CONTRACTOR IS RESPONSIBLE FOR VERIFYING IN THE FIELD ANY DIMENSIONS OF EXISTING MATERIAL OR EXISTING ELEVATIONS INCLUDED IN THESE REFERENCE SHEETS OR IN THE PLANS. MINOR MODIFICATIONS MAY BE REQUIRED TO THE DIMENSIONS SHOWN IN THE PLANS IN ORDER TO FIT ACTUAL FIELD CONDITIONS.
4. EXISTING ELEVATIONS SHOWN IN THE PLANS ARE BASED ON A CORRELATION BETWEEN THE RECORD PLANS ELEVATIONS AND THE VAOT SURVEY OF THE PROJECT AREA AND BRIDGE COMPONENTS. THE ADJUSTMENT FACTOR FOR EXISTING ELEVATIONS USED IN DESIGN, RELATIVE TO ELEVATIONS INDICATED IN THE RECORD PLANS, WAS -0.43 FT.
5. A QUANTITY FOR ITEM 580.13, "REPAIR OF CONCRETE SUBSTRUCTURE SURFACE, CLASS I" HAS BEEN INCLUDED FOR ANY REPAIRS TO THE EXISTING BARREL AND FASCIAS OF THE RCB AS DIRECTED BY THE RESIDENT ENGINEER. SEE SUPPLEMENTAL SPECIFICATION 580 FOR ADDITIONAL INFORMATION.

BRIDGE 88-3 QUANTITIES

	ITEM NO.	ITEM	UNIT	INLET	OUTLET	TOTAL	FINAL
Ⓡ	203.15	COMMON EXCAVATION	CY	50	50	100	
Ⓡ	203.31	SAND BORROW	CY	150	150	300	
Ⓡ	204.20	TRENCH EXCAVATION OF EARTH	CY	30		30	
	204.25	STRUCTURE EXCAVATION	CY	260	270	530	
	204.30	GRANULAR BACKFILL FOR STRUCTURES	CY	70	80	150	
Ⓡ	301.35	SUBBASE OF DENSE GRADED CRUSHED STONE	CY	85	65	150	
	501.25	CONCRETE, CLASS B	CY	39	46	85	
	507.17	EPOXY COATED REINFORCING STEEL	LB	5170	6060	11230	
	514.10	WATER REPELLENT	GAL	2.5	2.5	5	
	519.20	SHEET MEMBRANE WATERPROOFING	SY	120	120	240	
	529.25	REMOVAL OF CONCRETE OR MASONRY	CY	33	37	70	
	580.13	REPAIR OF CONCRETE SUBSTRUCTURE SURFACE, CLASS I	SY	5	5	10	
Ⓡ	613.10	STONE FILL, TYPE I	CY		30	30	

Ⓡ DENOTES ROADWAY QUANTITY

INDEX OF SHEETS

BR500	88-3 PRELIMINARY INFORMATION SHEET
BR501	88-3 EARTHWORK TYPICALS
BR502	88-3 APRON PLAN
BR503	88-3 APRON REINFORCING DETAILS
BR504	88-3 WINGWALL ELEVATIONS
BR505	88-3 REINFORCING STEEL SCHEDULE
BR506-508	88-3 REFERENCE SHEETS 1-3

STATE OF VERMONT
AGENCY OF TRANSPORTATION

Town Of FAIRFAX-FAIRFIELD-ST. ALBANS	Bridge No. 88-3
Highway No. I-89	Log Sta. MM 114.06
	Surv. Sta.

I-89 OVER REINFORCED CONCRETE BOX

88-3 PRELIMINARY INFORMATION SHEET

Designed By M.LOZIER	Drawn By G.ROY
Checked By M.LOZIER Date 02/00	Bridge Design Supervisor R.R.WHITCOMB Date 02/00
PROJECT FAIRFAX-FAIRFIELD-ST. ALBANS	PROJECT NO. IM 089-3 (27)
I.G.C. Info. 96a056\structures\sa056pl4.dgn	sa056pl4J
Bridge Sheet No. BR500	Sheet 244 of 370

PLOTTED 21-SEP-2000

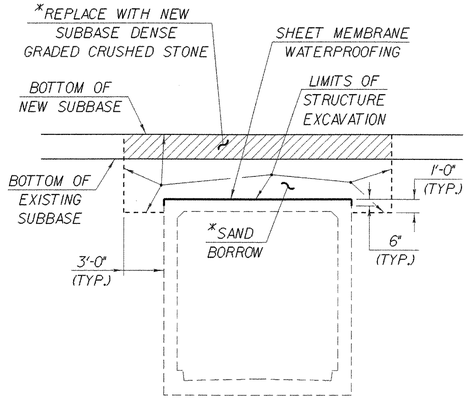

EXISTING RCB EARTHWORK TYPICAL

NTS

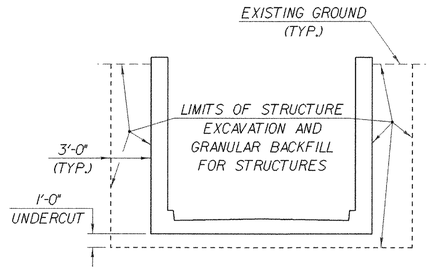

WINGWALL AND APRON EARTHWORK TYPICAL

NTS

* FOR AREAS OUTSIDE OF RECLAIMED EXISTING SUBBASE, BACKFILL COMPLETELY WITH SAND BORROW TO BOTTOM OF NEW SUBBASE. DO NOT PLACE SUBBASE DENSE GRADED CRUSHED STONE DIRECTLY ON NEW SHEET MEMBRANE WATERPROOFING.

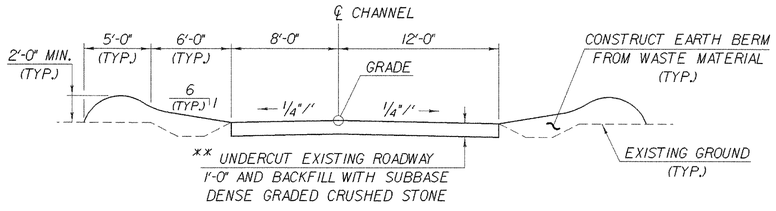

INLET END FLOWLINE TYPICAL

NTS

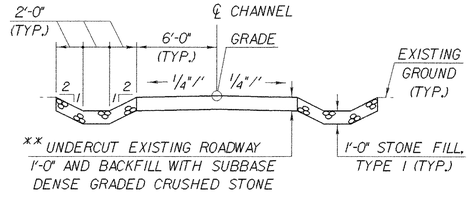

OUTLET END FLOWLINE TYPICAL

NTS

** ALL EXISTING MATERIAL WILL BE REMOVED UNDER ITEM 203.15, "COMMON EXCAVATION".

STATE OF VERMONT
AGENCY OF TRANSPORTATION

Town Of FAIRFAX-FAIRFIELD-ST. ALBANS	Bridge No. 88-3
Highway No. I-89	Log Sta. / Surv. Sta.

I-89 OVER REINFORCED CONCRETE BOX

88-3 EARTHWORK TYPICALS

Designed By M.LOZIER	Drawn By G.ROY
Checked By M.LOZIER Date 02/00	Bridge Design Supervisor R.R.WHITCOMB Date 02/00
PROJECT FAIRFAX-FAIRFIELD-ST. ALBANS	PROJECT NO. IM 089 - 3 (27)
I.C.C. Info. 96a056\structures\sa056pl4.dgn	sa056bx1J
Bridge Sheet No. BR501	Sheet 245 of 370

PLOTTED 21-SEP-2000

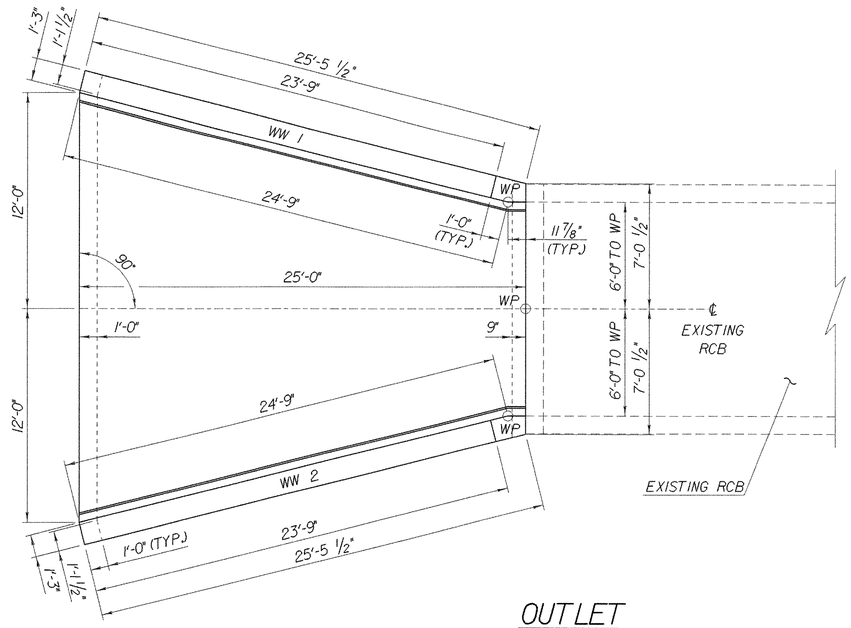

OUTLET

SCALE: 1/4" = 1'-0"

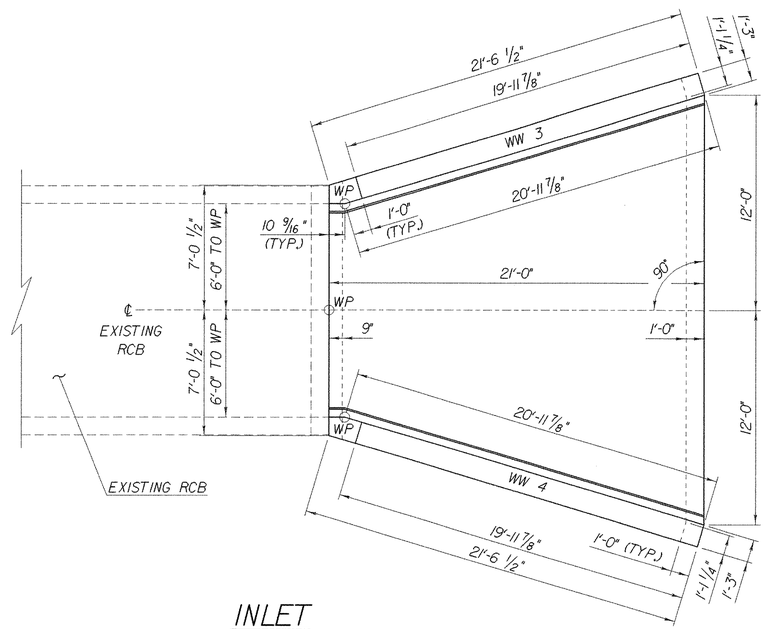

INLET

SCALE: 1/4" = 1'-0"

STATE OF VERMONT
AGENCY OF TRANSPORTATION

Town Of FAIRFAX- FAIRFIELD - ST. ALBANS	Bridge No. 88-3
Highway No. I-89	Log Sta. / Surv. Sta.

I - 89 OVER REINFORCED CONCRETE BOX

88-3 APRON PLAN

Designed By P. PERRY	Drawn By K. CHISHOLM
Checked By P. PERRY Date 02/00	Bridge Design Supervisor R.R. WHITCOMB Date 02/00
PROJECT FAIRFAX- FAIRFIELD - ST. ALBANS	PROJECT NO. I M 089 - 3 (27)
I.G.C. Info. 96a056\structures\sa056ab4.dgn	sa056bx2.1
Bridge Sheet No. BR502	Sheet 246 of 370

PLOTTED 21-SEP-2000

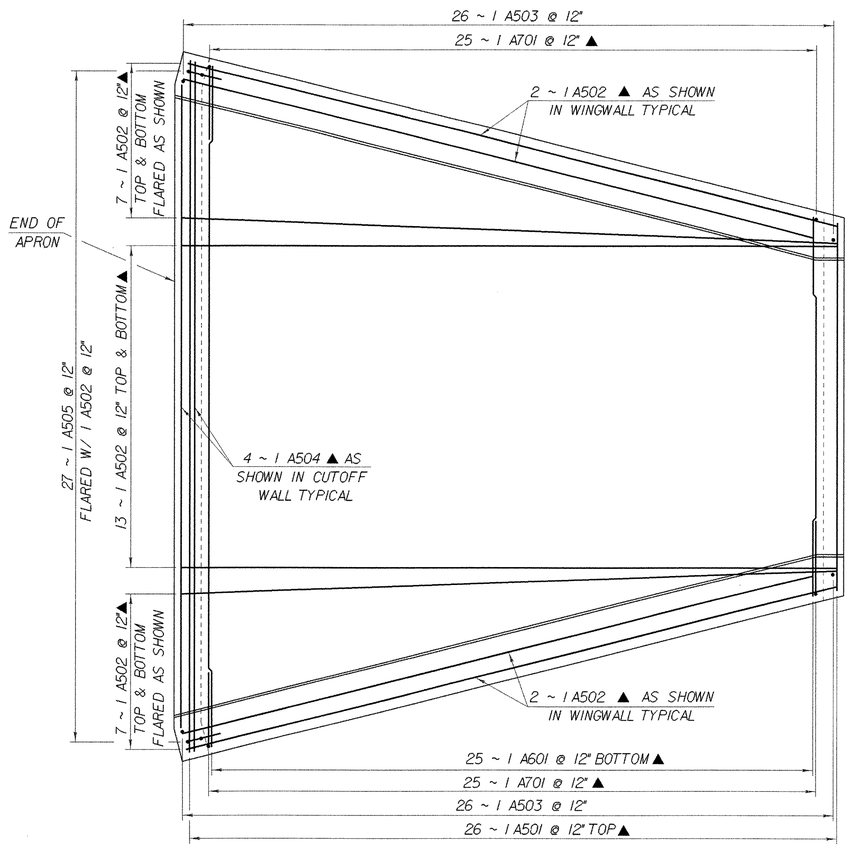

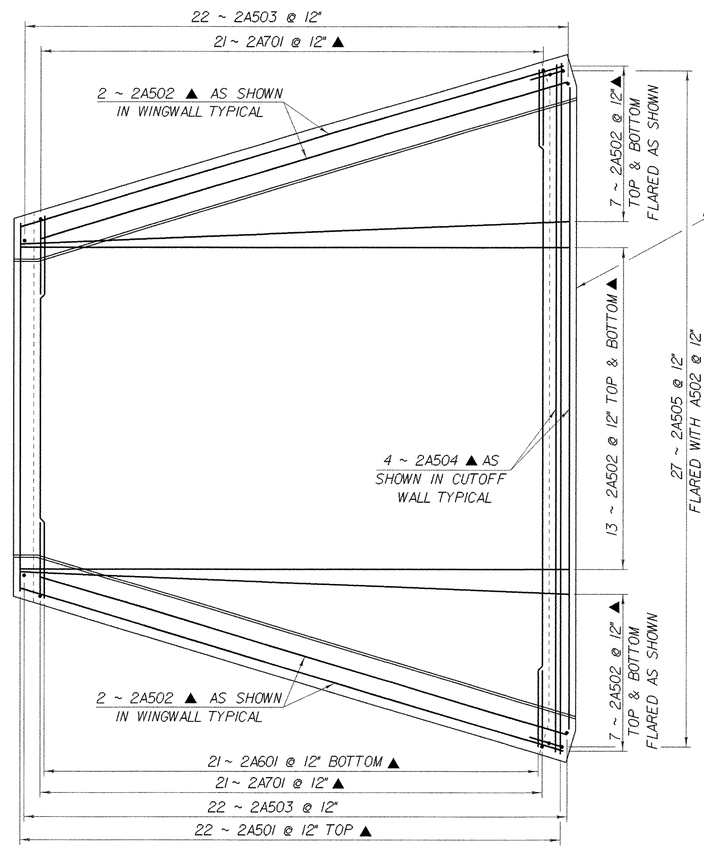

APRON REINFORCING DETAIL

SCALE: 3/8" = 1'-0"

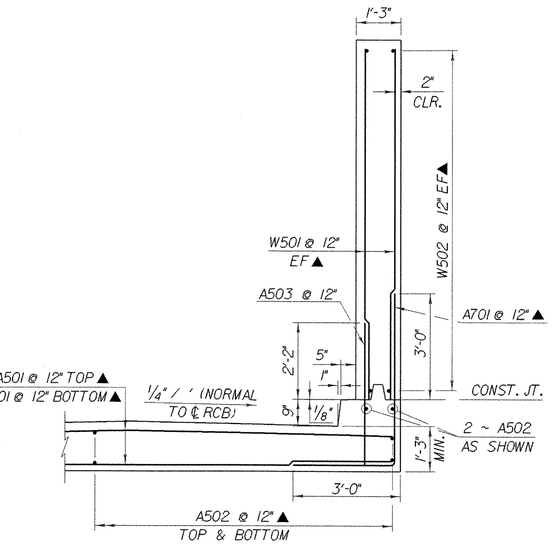

WINGWALL TYPICAL

(SECTION NORMAL TO WINGWALL STEM)
SCALE: 1/2" = 1'-0"

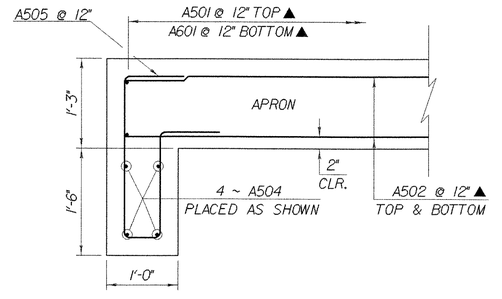

CUTOFF WALL REINFORCING DETAIL

SCALE: 1" = 1'-0"

NOTE:

NF = NEAR FACE
FF = FAR FACE
EF = EACH FACE
▲ = CUT TO FIT IN FIELD
3" CLR. UNLESS OTHERWISE SPECIFIED ON THE PLANS.

STATE OF VERMONT
AGENCY OF TRANSPORTATION

Town Of FAIRFAX- FAIRFIELD - ST.ALBANS	Bridge No. 88-3
Highway No. I-89	Log Sta.
	Surv. Sta.

I - 89 OVER REINFORCED CONCRETE BOX

88-3 APRON REINFORCING DETAILS

Designed By P. PERRY	Drawn By K. CHISHOLM
Checked By P. PERRY Date 02/00	Bridge Design Supervisor R.R.WHITCOMB Date 02/00
PROJECT FAIRFAX- FAIRFIELD - ST.ALBANS	PROJECT NO. I M 089 - 3 (27)
I.G.C. Info. 96a056\structures\sa056ab4.dgn	sa056bx3J
Bridge Sheet No. BR503	Sheet 247 of 370

PLOTTED 21-SEP-2000

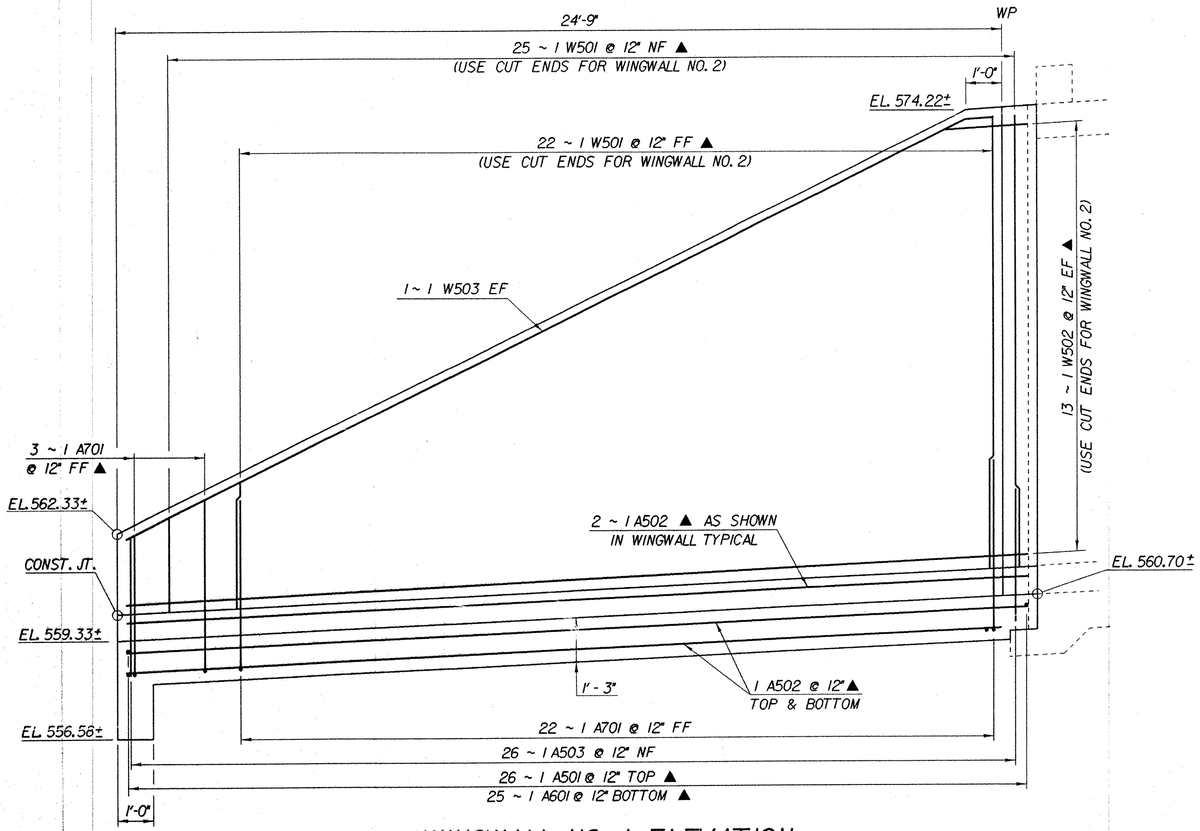

WINGWALL NO. 1 ELEVATION

(WINGWALL NO. 2 SIMILAR)

SCALE: ½" = 1'-0"

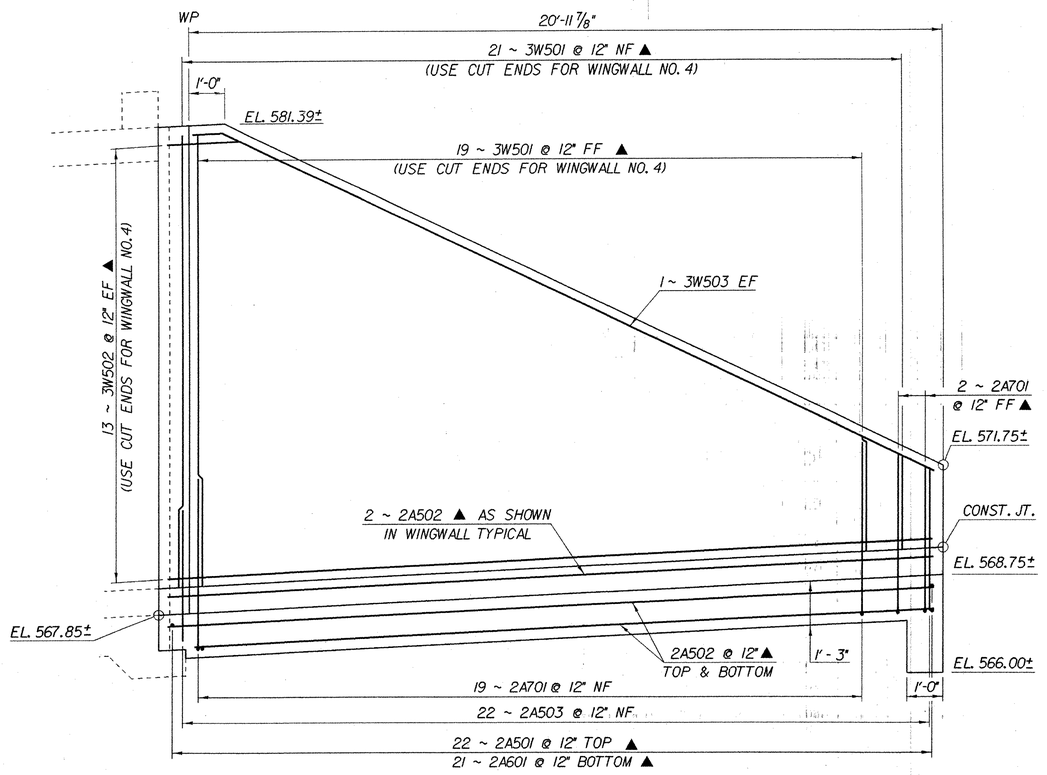

WINGWALL NO. 3 ELEVATION

(WINGWALL NO. 4 SIMILAR)

SCALE: ½" = 1'-0"

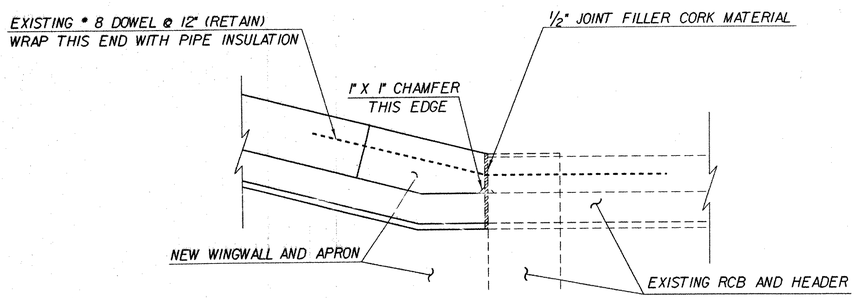

WINGWALL - RCB CORNER DETAIL

SCALE: 1" = 1'-0"

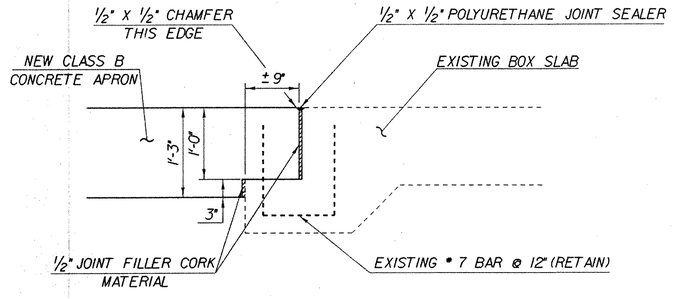

EXPANSION JOINT DETAIL @ APRONS

SCALE: 1" = 1'-0"

NOTE: POLYURETHANE JOINT SEALER SHALL MEET THE REQUIREMENTS OF SUBSECTION 707.05 OF THE STANDARD SPECIFICATIONS. PAYMENT FOR THE JOINT SEALER, ALL CORK EXPANSION MATERIAL, AND THEIR PLACEMENT SHALL BE MADE SUBSIDIARY TO ITEM 501.25, "CONCRETE, CLASS B".

NOTE:

NF = NEAR FACE
FF = FAR FACE
EF = EACH FACE
▲ = CUT TO FIT IN FIELD
3" CLR. UNLESS OTHERWISE SPECIFIED ON THE PLANS.

IMPORTANT NOTE: BRIDGE FINISHED GRADES ARE CENTERLINE GRADES.

STATE OF VERMONT
AGENCY OF TRANSPORTATION

Town Of FAIRFAX- FAIRFIELD - ST. ALBANS	Bridge No. 88-3
Highway No. I-89	Log Sta. / Surv. Sta.

I - 89 OVER REINFORCED CONCRETE BOX
88-3 WINGWALL ELEVATIONS

Designed By P. PERRY	Drawn By K. CHISHOLM
Checked By P. PERRY Date 02/00	Bridge Design Supervisor R.R. WHITCOMB Date 02/00
PROJECT FAIRFAX- FAIRFIELD - ST. ALBANS	PROJECT NO. IM 089 - 3 (27)
I.G.C. Info. 96a056\structures\sa056ab4.dgn	sa056bx41
Bridge Sheet No. BR504	Sheet 248 of 370

PLOTTED 21-SEP-2000

STATE OF VERMONT
AGENCY OF TRANSPORTATION

REINFORCING STEEL SCHEDULE

	EACH	SIZE	LENGTH	MARK	TYPE	A	B	C	D	E	F	G	H	J	K	R	O
OUTLET APRON																	
▲	26	5	25'- 6"	1A501	STR												
▲	58	5	24'- 10"	1A502	STR												
	52	5	3'- 11"	1A503	STR												
▲	4	5	26'- 0"	1A504	STR												
	27	5	5'- 10"	1A505	S5	0'- 10"	2'- 3"	0'- 6"	1'- 5"			0'- 10"					
✳ ▲	26	6	25'- 6"	1A601	STR												
	50	7	7'- 9"	1A701	17		----	3'- 0"	4'- 9"								
WINGWALL NO. 1																	
✳ ▲	48	5	14'- 7"	1W501	STR		(USE CUT ENDS FOR 2W501 IN WINGWALL NO. 2)										
▲	26	5	27'- 6"	1W502	STR		(USE CUT ENDS FOR 2W502 IN WINGWALL NO. 2)										
	2	5	27'- 0"	1W503	19		----	26'- 2"	0'- 10"				0'- 4"		0'- 9"		
WINGWALL NO. 2																	
▲				2W501			(USE CUT ENDS FROM 1W501 IN WINGWALL NO. 1)										
▲				2W502			(USE CUT ENDS FROM 1W502 IN WINGWALL NO. 1)										
	2	5	27'- 0"	2W503	19		----	26'- 2"	0'- 10"				0'- 4"		0'- 9"		
INLET APRON																	
▲	22	5	25'- 6"	2A501	STR												
▲	58	5	21'- 0"	2A502	STR												
	44	5	3'- 11"	2A503	STR												
▲	4	5	26'- 0"	2A504	STR												
	27	5	5'- 10"	2A505	S5	0'- 10"	2'- 3"	0'- 6"	1'- 5"			0'- 10"					
✳ ▲	22	6	25'- 6"	2A601	STR												
	42	7	7'- 9"	2A701	17		----	3'- 0"	4'- 9"								
WINGWALL NO. 3																	
✳ ▲	41	5	14'- 7"	3W501	STR		(USE CUT ENDS FOR 4W501 IN WINGWALL NO. 4)										
▲	26	5	23'- 1"	3W502	STR		(USE CUT ENDS FOR 4W502 IN WINGWALL NO. 4)										
	2	5	22'- 9"	3W503	19		----	21'- 11"	0'- 10"				0'- 4"		0'- 9"		
WINGWALL NO. 4																	
▲				4W501			(USE CUT ENDS FROM 3W501 IN WINGWALL NO. 3)										
▲				4W502			(USE CUT ENDS FROM 3W502 IN WINGWALL NO. 3)										
	2	5	22'- 9"	4W503	19		----	21'- 11"	0'- 10"				0'- 4"		0'- 9"		

ITEM	EACH	SIZE	LENGTH	MARK	TYPE	A	B	C	D	E	F	G	H	J	K	R	O

~ NOTES ~

1. UNLESS OTHERWISE DESIGNATED, ALL BAR REINFORCEMENT FOR CONCRETE IN SIZES UP TO AND INCLUDING NO. 18 SHALL CONFORM TO THE REQUIREMENTS OF THE "SPECIFICATIONS FOR DEFORMED BILLET-STEEL BARS FOR CONCRETE REINFORCEMENT", AASHTO M 31 (ASTM A 615-SI). ALL BARS SHALL BE GRADE 60, UNLESS OTHERWISE DESIGNATED.
2. FOR TYPICAL BENDING DETAILS, RECOMMENDED PIN DIAMETER "D" OF BENDS AND HOOKS, AND OTHER STANDARD PRACTICE, SEE CURRENT CONCRETE REINFORCING STEEL INSTITUTE "MANUAL OF STANDARD PRACTICE".
3. BARS WHICH REQUIRE MORE ACCURATE BENDING THAN STANDARD PRACTICES SHOULD HAVE LIMITS INDICATED.
4. ALL DIMENSIONS ARE OUT TO OUT OF BAR EXCEPT "A" AND "G" ON STANDARD 180 DEGREE AND 135 DEGREE HOOKS.
5. "J" DIMENSION ON 180 DEGREE HOOKS TO BE SHOWN ONLY WHERE NECESSARY TO RESTRICT HOOK SIZE. OTHERWISE, STANDARD HOOKS ARE TO BE USED.
6. "H" DIMENSION ON STIRRUPS TO BE SHOWN ONLY WHEN NECESSARY TO MAINTAIN CLEARANCES.
7. WHERE SLOPE DIFFERS FROM 45 DEGREES, DIMENSIONS "H" AND "K" MUST BE SHOWN.
8. ▲ DENOTES BARS TO BE CUT IN FIELD.
9. ✳ DENOTES ONE EXTRA BAR ADDED FOR TESTING PURPOSES.
10. ■ DENOTES TWO EXTRA BARS ADDED FOR TESTING PURPOSES.
11. ~~"E" IN PREFIX DENOTES EPOXY COATED REINFORCING STEEL.~~

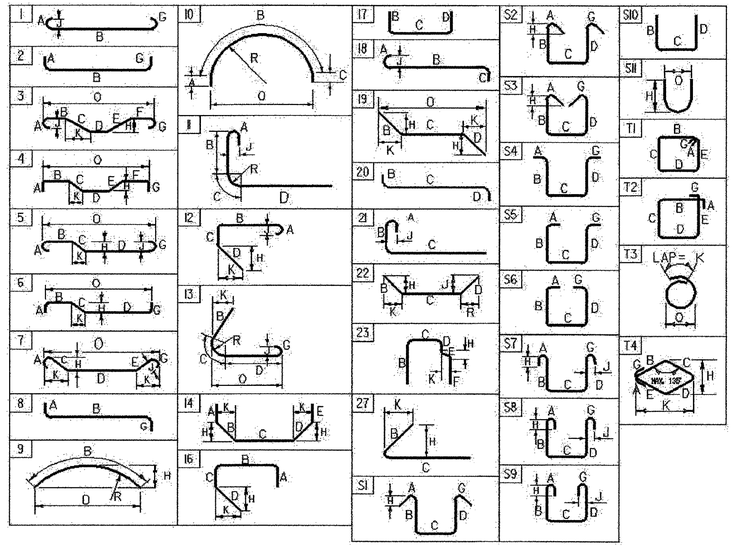

ASTM STANDARD REINFORCING BARS

BAR SIZE DESIGNATION	WEIGHT POUNDS PER FOOT	NOMINAL DIMENSIONS ROUND SECTION		
		DIAMETER INCHES	AREA INCHES^2	PERIMETER INCHES
#3	0.376	0.375	0.11	1.178
#4	0.668	0.500	0.20	1.571
#5	1.043	0.625	0.31	1.963
#6	1.502	0.750	0.44	2.356
#7	2.044	0.875	0.60	2.749
#8	2.670	1.000	0.79	3.142
#9	3.400	1.128	1.00	3.544
#10	4.303	1.270	1.27	3.990
#11	5.313	1.410	1.56	4.430
#14	7.65	1.693	2.25	5.32
#18	13.60	2.257	4.00	7.09

BR505

ALL STEEL DETAILED ON THIS SHEET TO BE EPOXY COATED

PROJECT NAME: **FAIRFAX-FAIRFIELD-ST. ALBANS**
PROJECT NUMBER: **IM 089-3 (27)**

FILE NAME: **sa056_883rf.xls**
PROJECT LEADER: **R. R. WHITCOMB**
DESIGNED BY: **P. PERRY**
88-3 REINFORCING STEEL SCHEDULE

PLOT DATE: **9/20/00**
DRAWN BY: **G. ROY**
CHECKED BY: **G. ROY**
SHEET 249 OF 370

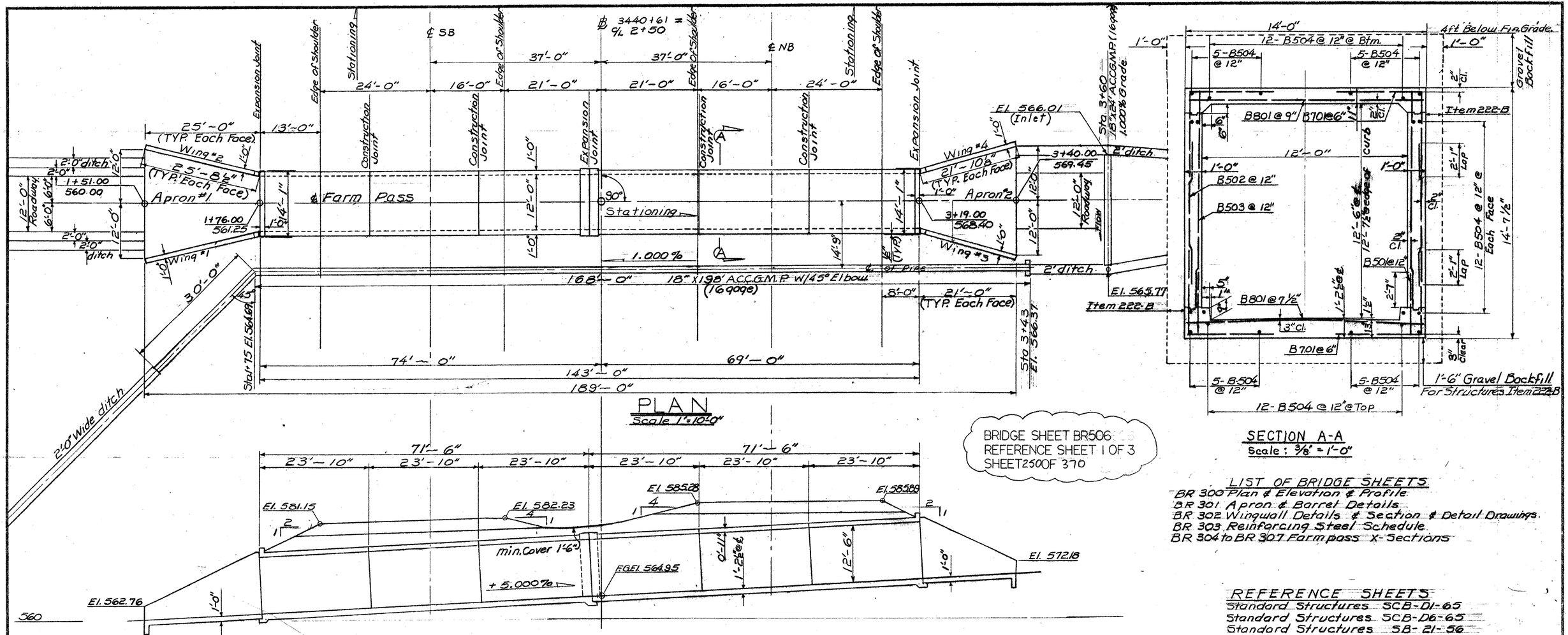

PLAN
Scale 1"=10'-0"

SECTION A-A
Scale: ⅜" = 1'-0"

BRIDGE SHEET BR506
REFERENCE SHEET 1 OF 3
SHEET 250 OF 370

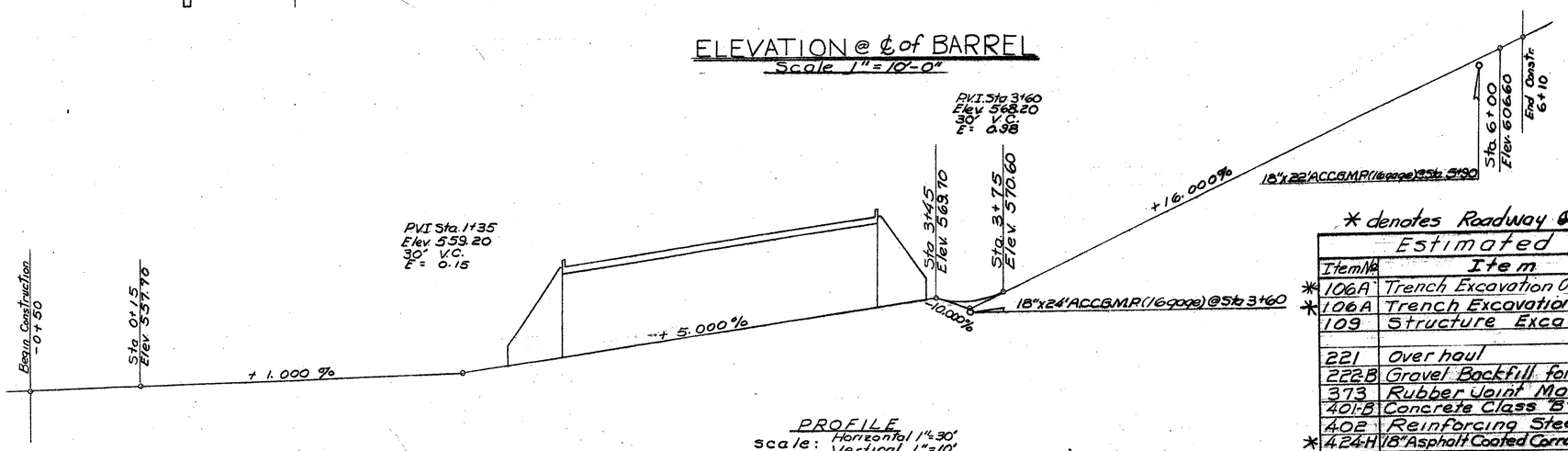

PROFILE
Scale: Horizontal 1"=30'
Vertical 1"=10'

LIST OF BRIDGE SHEETS

BR 300 Plan & Elevation & Profile
BR 301 Apron & Barrel Details
BR 302 Wingwall Details & Section & Detail Drawings
BR 303 Reinforcing Steel Schedule
BR 304 to BR 307 Farm pass X-Sections

REFERENCE SHEETS

Standard Structures SCB-D1-65
Standard Structures SCB-D6-65
Standard Structures SB-21-56

Stage 1 Construction

Interstate 50 Scale Plan (Sta 3428+00 – Sta 3444+00)
Interstate Profile Sheet (Sta 3428+00 – Sta 3444+00)
Interstate X-Sections (NB Sta 3439+50 – Sta 3441+00)
Interstate X-Sections (SB Sta 3439+50 – Sta 3441+00)

CONTRACT 2

For General Notes see Sheet BR 301

* denotes Roadway Quantities (Between ℄ Sta. 1+51 & 3+40)

Estimated Quantities

	Item No.	Item	Unit	Total	Final
*	106A	Trench Excavation Of Earth @ 100%	C.Y.	260	
*	106A	Trench Excavation Of Earth @ 150%	C.Y.	230	
	109	Structure Excavation	C.Y.	2060	
	221	Over haul	C.Y./mi.	9900	
	222B	Gravel Backfill for Structures	C.Y.	470	
	373	Rubber Joint Material	L.F.	54	
	401-8	Concrete Class "B"	C.Y.	364	
	402	Reinforcing Steel	Lbs.	71,300	
*	424-H	18" Asphalt Coated Corrugated Galvanized Metal Pipe (Gage 16)	L.F.	198	

STATE OF VERMONT
DEPARTMENT OF HIGHWAYS

GEORGIA - FAIRFAX
TOWN OF FAIRFIELD - ST. ALBANS
ROUTE No. I 89 LOG STA. ____
Plan & Elevation & Profile of 12'-0" x 12'-6" RCB Farmpass @ Sta 3440+61
SCALE As Noted
SURVEYED BY Gamsby, Millette, & Spaulding
DRAWN BY G.E.H. CHECKED BY R.P.G.
54:86 PROJECT No. I 89-3(35) Cont. #2
SHEET 215 OF 467

BR-300

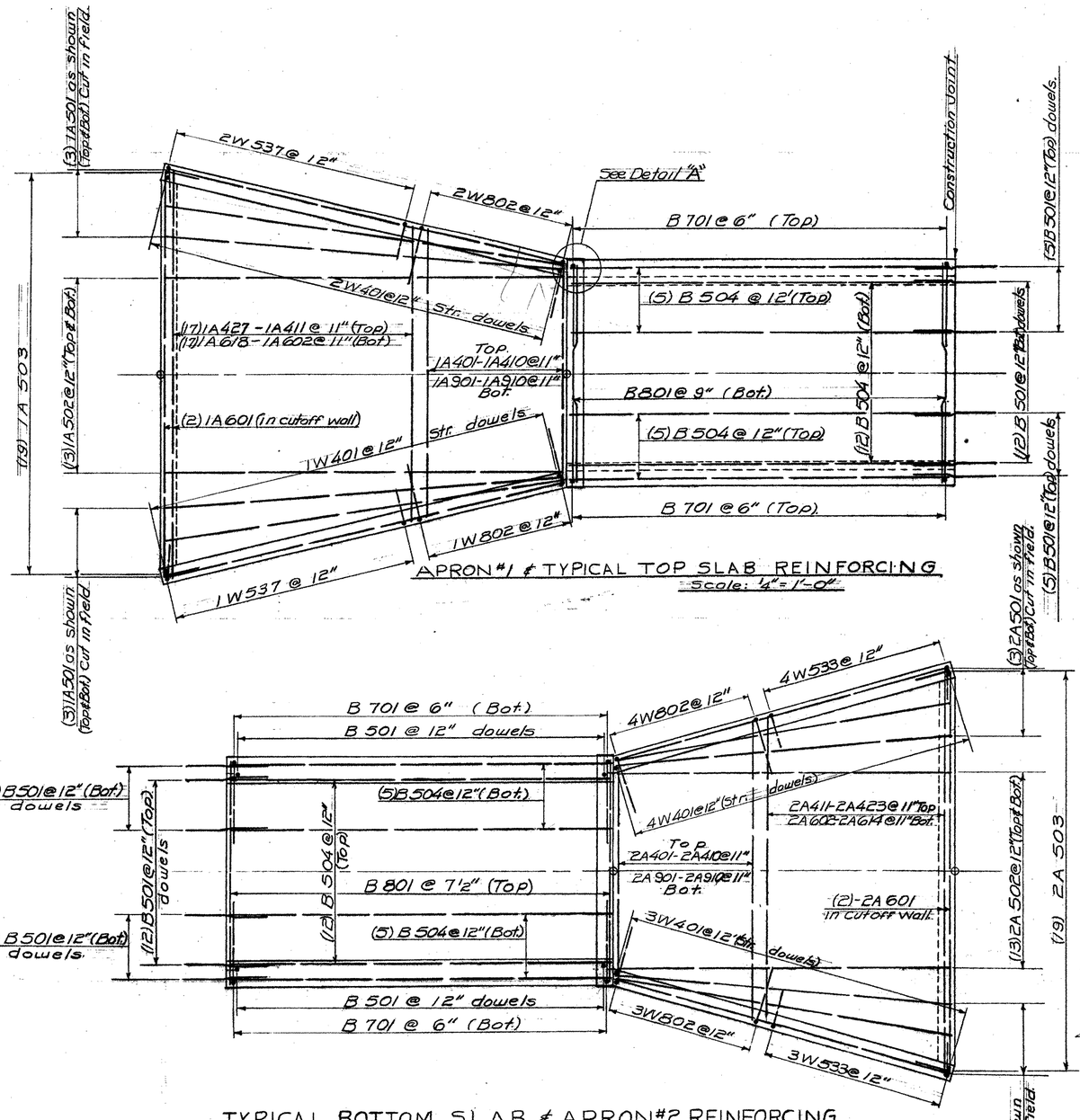

APRON #1 & TYPICAL TOP SLAB REINFORCING
Scale: 1/4" = 1'-0"

TYPICAL BOTTOM SLAB & APRON #2 REINFORCING
Scale: 1/4" = 1'-0"

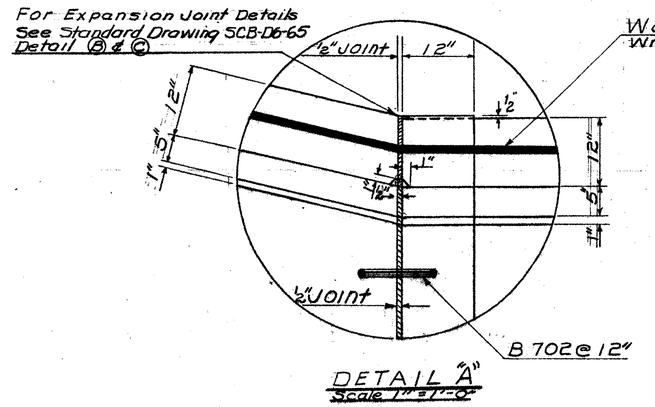

DETAIL "A"
Scale 1" = 1'-0"

GENERAL NOTES:

1. For general notes see Standard Drawing SCB-D1-65
2. Barrel is to be constructed in alternate segments with limits being the joints as indicated.
3. Roadway surface is to be screeded, floated, and broomed.
4. All reinforcing steel is to have a clear cover of 2" unless otherwise noted.
5. All exposed edges of concrete shall be chamfered 1"X1" unless otherwise noted.
6. For Expansion Joint Detail see sheets BR301 & BR302 & Standard Drawing SB-21-56 Detail (F).
7. For typical section of farmpass roadway see x-section sheet No. BR-304.
8. Maintain a minimum of 1'-6" of cover over the 18" ACC.G.M.P @ Stations 3+60 & 5+90.
9. All quantities from Fin.Grade to a depth of 4'-0" below Fin.Grade on the Interstate are Roadway Quantities.

BRIDGE SHEET BR507
REFERENCE SHEET 2 OF 3
SHEET 251 OF 370

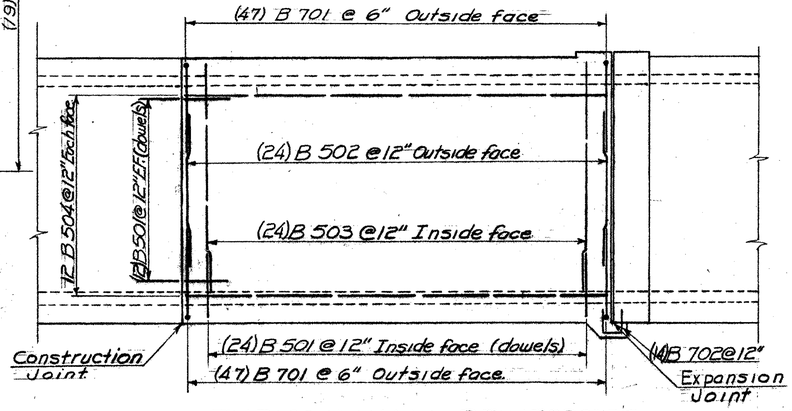

TYPICAL WALL REINFORCING
Scale: 1/4" = 1'-0"

Stage 1 Construction

CONTRACT 2

STATE OF VERMONT
DEPARTMENT OF HIGHWAYS

GEORGIA - FAIRFAX
TOWN OF FAIRFIELD-ST ALBANS
ROUTE No. I 89 LOG STA.
APRON & BARREL DETAILS

SCALE As Noted
SURVEYED BY Gamsby, Millette & Spaulding
DRAWN BY G.E.H. CHECKED BY R.P.G.
54:86 PROJECT No. I 89-3(35) Cont. # 2
SHEET 216 OF 467

BR-301

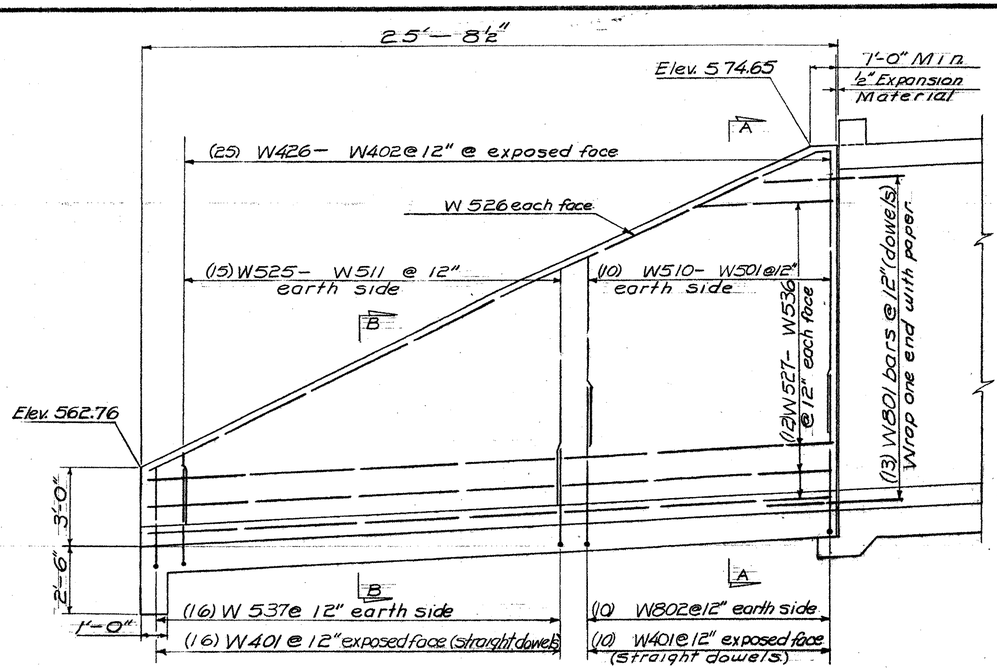

WINGS #1 & #2
Scale: 3/8"=1'-0"

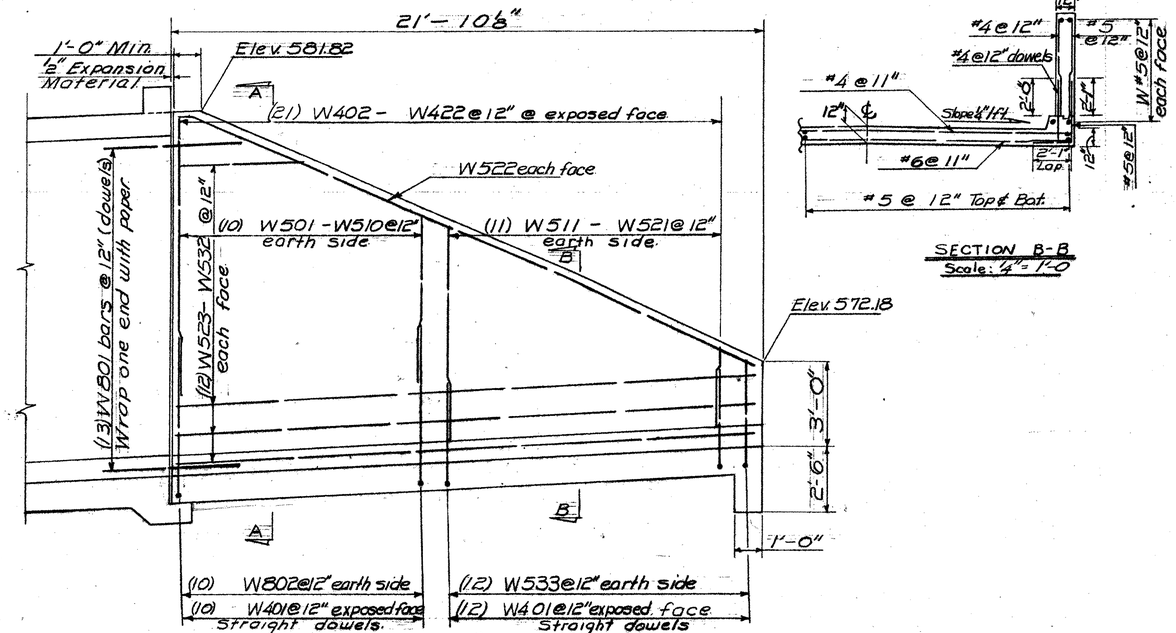

WINGS #3 & #4
Scale ¾"=1'-0"

SECTION B-B
Scale: ¼"=1'-0"

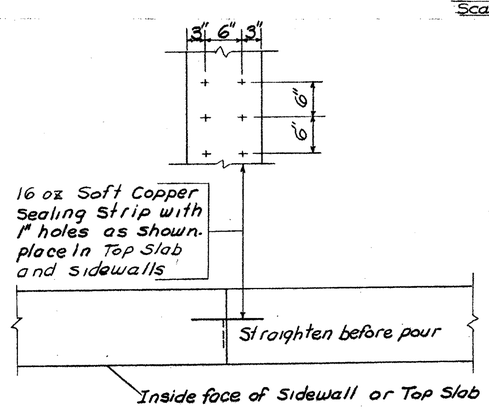

CONSTRUCTION JOINT DETAIL
Scale: 1"=1'-0"

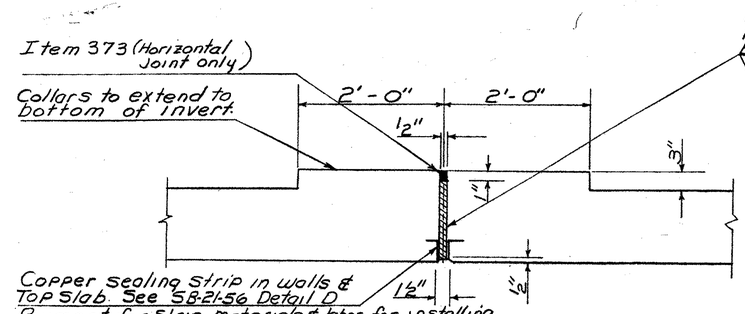

Payment for Strip, materials & labor for installing Shall be included in the unit price bid for Concrete Class "B" Item 4018

SECTION THRU TOP SLAB OR SIDEWALL EXPANSION JOINT
Not to Scale

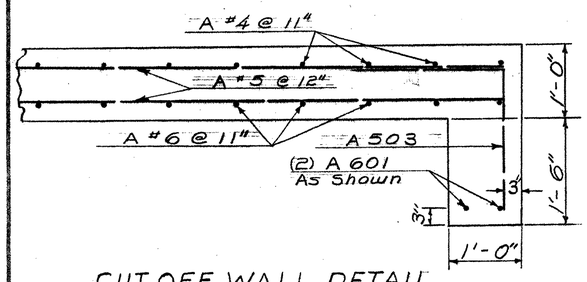

CUT OFF WALL DETAIL
Scale 1"=1'-0"

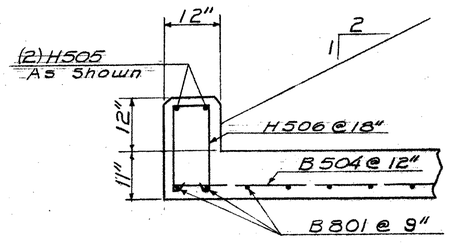

HEADER DETAIL
Scale: ¾" = 1'-0"

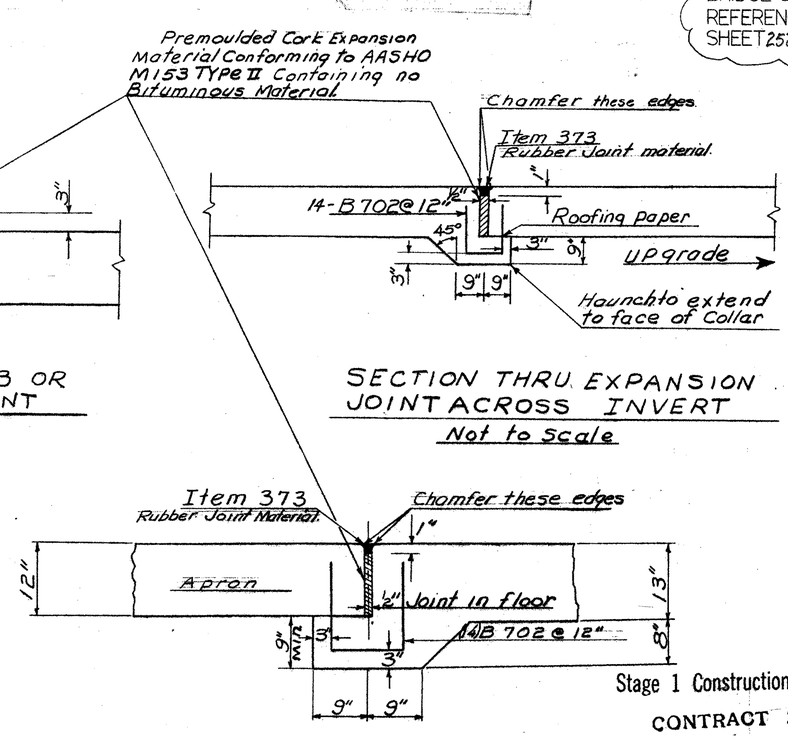

SECTION THRU EXPANSION JOINT ACROSS INVERT
Not to Scale

EXPANSION JOINT DETAIL AT APRONS
Scale: 1"=1'-0"

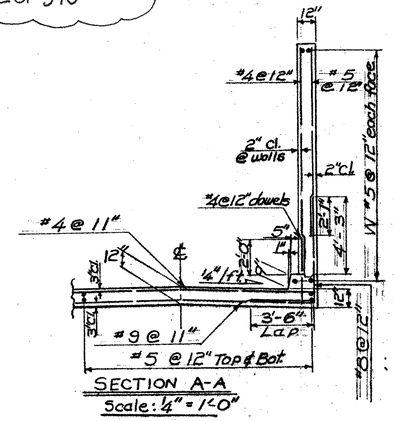

SECTION A-A
Scale: ¼"=1'-0"

BRIDGE SHEET BR508
REFERENCE SHEET 3 OF 3
SHEET 252 OF 370

STATE OF VERMONT
DEPARTMENT OF HIGHWAYS

GEORGIA - FAIRFAX
TOWN OF FAIRFIELD-ST ALBANS
ROUTE No. I 89 LOG STA.
Wingwall Details & Section & Detail Drawings
SCALE As Noted
SURVEYED BY Gamsby, Millette & Spaulding
DRAWN BY G.E.H. CHECKED BY R.P.G.
54:B6 PROJECT No I89-3(35)Cont#2.
SHEET 217 OF 461

Stage 1 Construction
CONTRACT 2

RR-302

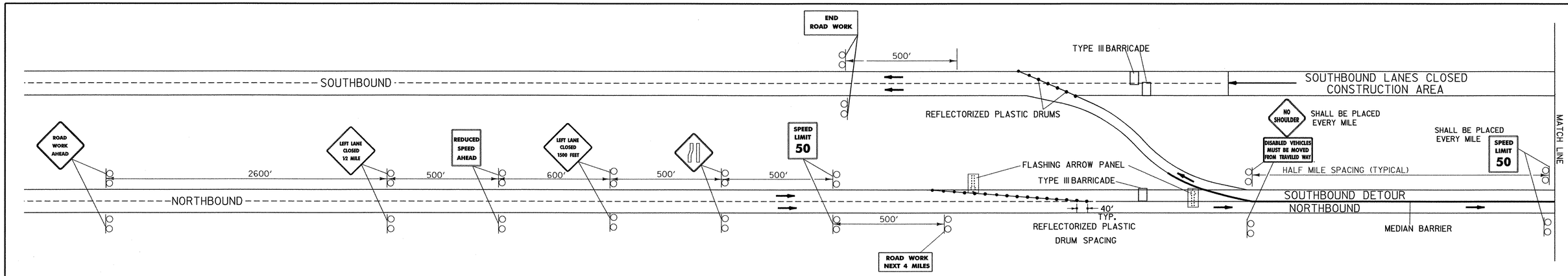

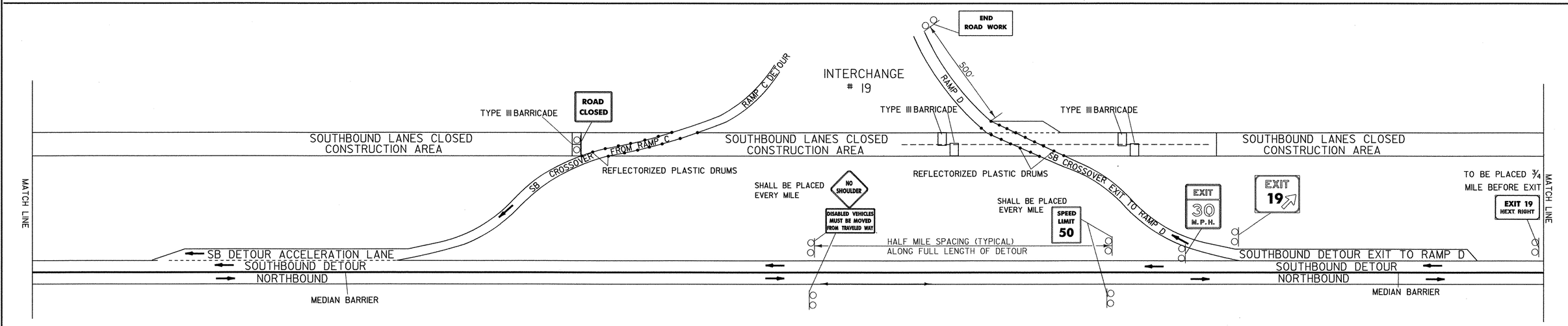

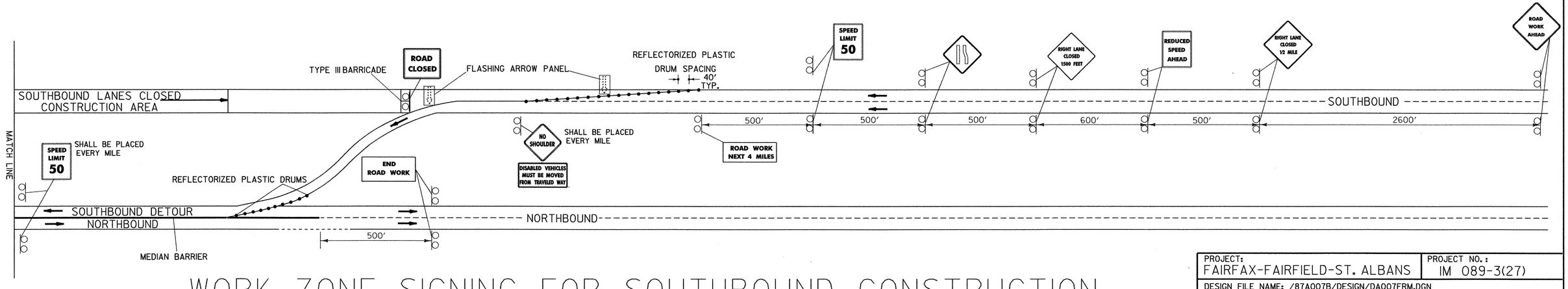

WORK ZONE SIGNING FOR SOUTHBOUND CONSTRUCTION

NOT TO SCALE

PROJECT: FAIRFAX-FAIRFIELD-ST. ALBANS	PROJECT NO.: IM 089-3(27)
DESIGN FILE NAME: /87A007B/DESIGN/DA007FRM.DGN	
IPARM FILE NAME: DA007WZS.I	PLOT DATE: 17-NOV-2000
SURVEYED BY:	SURVEY DATE:
SQUAD LEADER: DELLA SANTA	DRAWN BY: SQUAD B
	SHEET: 263 OF 370

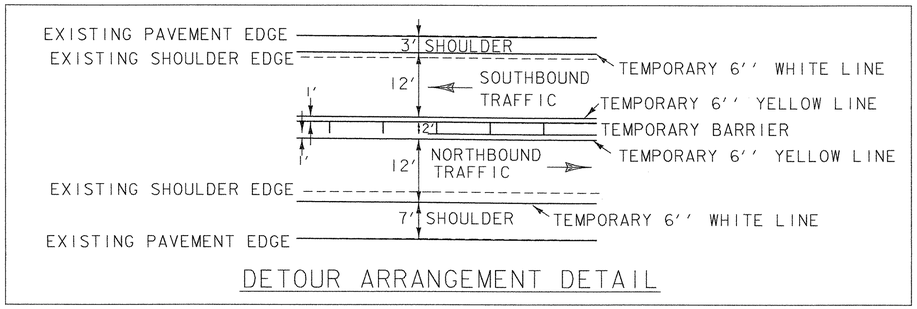

DETOUR ARRANGEMENT DETAIL

SOUTHBOUND WILL BE BUILT FIRST.

PAVEMENT MARKING SEQUENCE FOR SOUTHBOUND DETOUR

1) REMOVE EXISTING PAVEMENT MARKIINGS ON NORTHBOUND.
2) INSTALL TEMPORARY PAVEMENT MARKINGS WITH MEDIAN BARRIER ON NORTHBOUND (ITEMS 646.614 AND 646.615).
3) WHEN SOUTHBOUND IS DONE (BEFORE WINTER):
   A) REMOVE TEMPORARY MARKINGS AND MEDIAN BARRIER FROM NORTHBOUND.
   B) INSTALL PAVEMENT MARKINGS FOR WINTER USE ON BOTH SOUTHBOUND AND NORTHBOUND (ITEMS 646.214 AND 646.215).

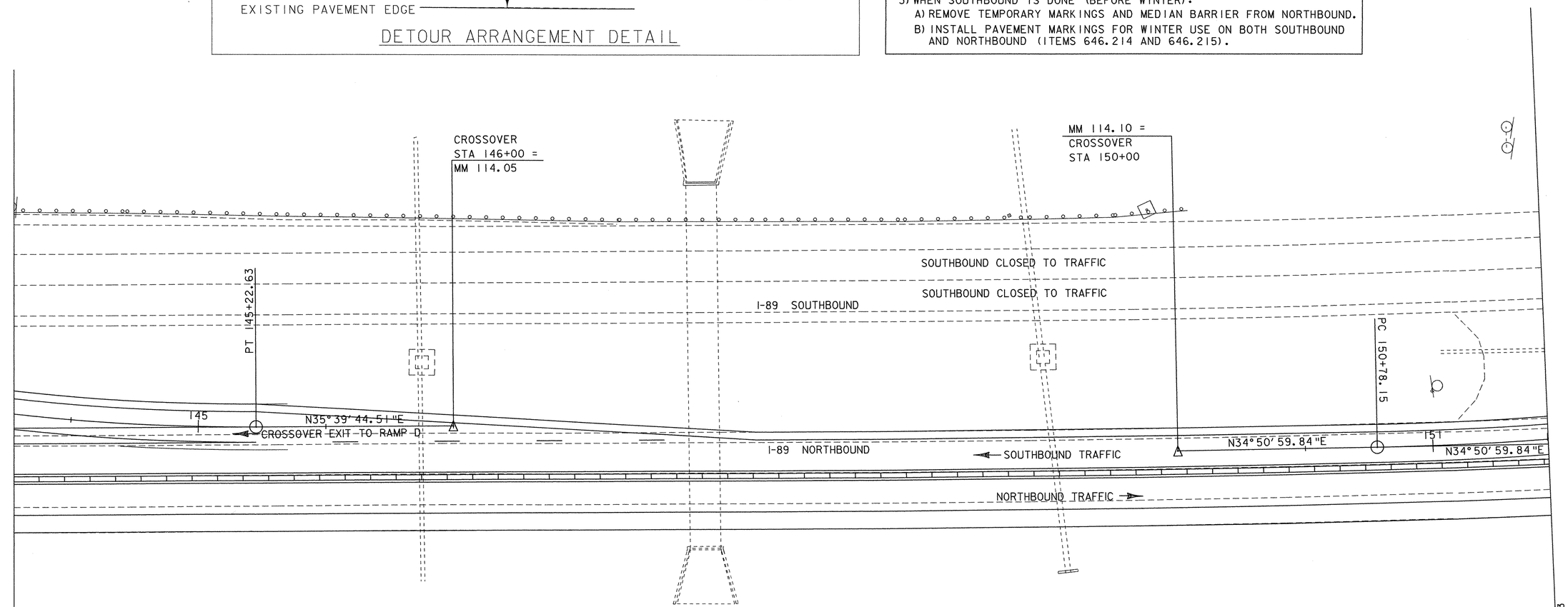

FOR CROSSOVER DETOUR

TEMPORARY 6'' YELLOW LINE

SB CROSSOVER 140+00 - 143+04 (RT. EDGE LINE)
SB CROSSOVER 150+00 - 159+00 (RT. EDGE LINE)

TEMPORARY 6'' WHITE LINE

SB CROSSOVER 140+00 - 143+04 (LT. EDGE LINE)
SB CROSSOVER 150+00 - 159+00 (LT. EDGE LINE)
NB MM 114.03 - 114.07 (DOTTED, DECEL. LANE)

FOR ENTRANCE TRANSITION TO CROSSOVER DETOUR

TEMPORARY 6'' YELLOW LINE (MODIFIED)

SB 114.27 - 114.34 (TRAVELING SB, LEFT EDGE LINE) (APPROXIMATE)

TEMPORARY 6'' WHITE LINE (MODIFIED)

SB 114.27 - 114.34 (TRAVELING SB, RIGHT EDGE LINE) (APPROXIMATE)

DATUM
VERTICAL ASSUMED
HORIZONTAL ASSUMED

CROSSOVER TO BEGIN SOUTHBOUND DETOUR

0 20 40
SCALE IN FEET

PROJECT: FAIRFAX-FAIRFIELD-ST. ALBANS	PROJECT NO.: IM 089-3(27)
DESIGN FILE NAME: /87A007B/DESIGN/DA007SBC.DGN	
IPARM FILE NAME: DA007SCI	PLOT DATE: 19-AUG-2000
SURVEYED BY: GILMAN	SURVEY DATE: 11/95
SQUAD LEADER: DELLA SANTA	DRAWN BY: SQUAD B
	SHEET: 264 OF 370

TEMPORARY TRAFFIC BARRIER
ENDS AT NB MM 114.17
(SEE SHEET 277 FOR BEGINNING LOCATION)
NOTE: EVERY 10TH SECTION WILL BE A MODIFIED BARRIER TO ALLOW SMALL ANIMALS TO CROSS UNDERNEATH. (SEE SHEET 26.)

N APPROXIMATE

CURVE DATA
△ = 16°-15'-32.48" LT.
D = 4°-46'-28.73"
R = 1200'
T = 171.42'
L = 340.53'
E = 12.18'

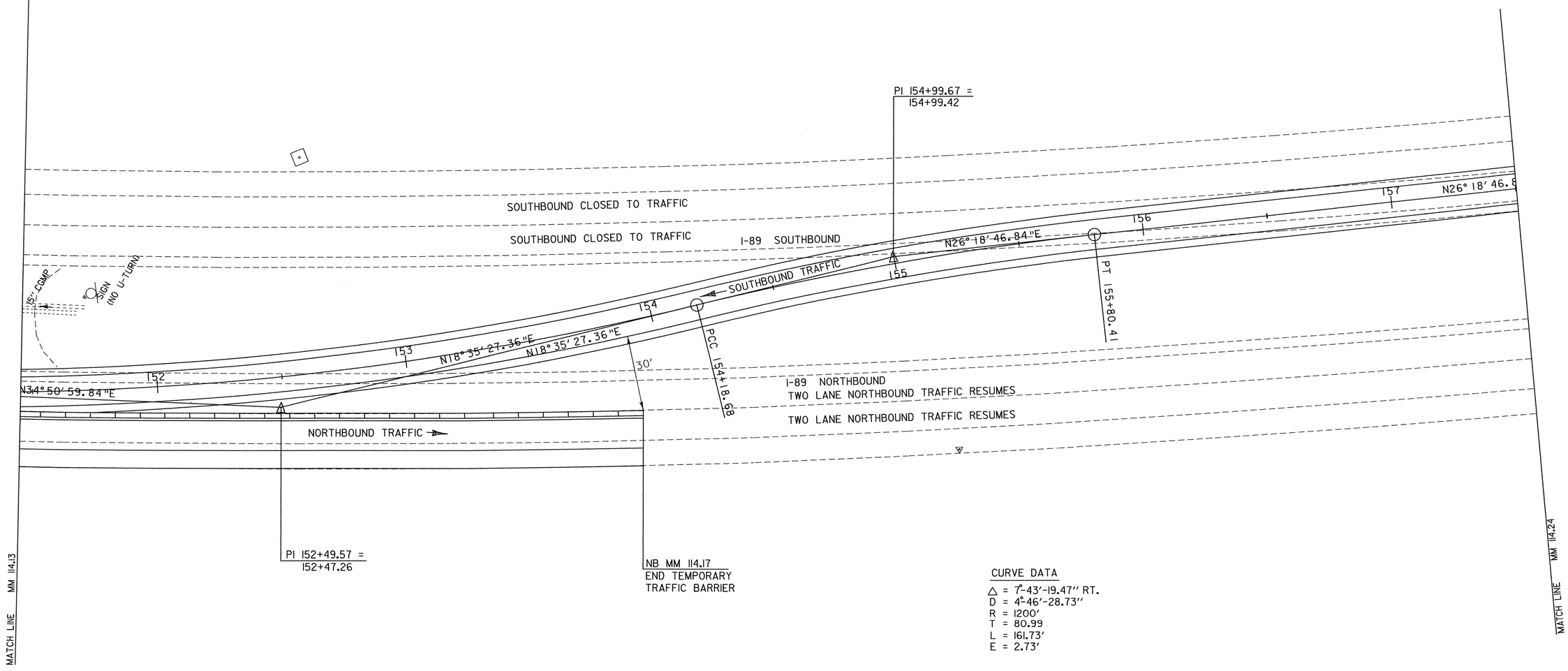

CURVE DATA
△ = 7°-43'-19.47" RT.
D = 4°-46'-28.73"
R = 1200'
T = 80.99
L = 161.73'
E = 2.73'

DATUM
VERTICAL ASSUMED
HORIZONTAL ASSUMED

CROSSOVER TO BEGIN SOUTHBOUND DETOUR

0 20 40
SCALE IN FEET

PROJECT: FAIRFAX-FAIRFIELD-ST. ALBANS	PROJECT NO.: IM 089-3(27)
DESIGN FILE NAME: /87A007B/DESIGN/DA007SBC.DGN	
IPARM FILE NAME: DA007SC2	PLOT DATE: 17-NOV-2000
SURVEYED BY: GILMAN	SURVEY DATE: 11/95
SQUAD LEADER: DELLA SANTA	DRAWN BY: SQUAD B
	SHEET: 265 OF 370

N

APPROXIMATE

CROSSOVER
STA. 159+00.00 =
MM 114.27

MM 114.30

34 "E

158

SOUTHBOUND TRAFFIC

SOUTHBOUND TRAFFIC MERGES LEFT INTO SINGLE LANE
I-89 SOUTHBOUND

I-89 NORTHBOUND

TWO LANE NORTHBOUND TRAFFIC RESUMES

TWO LANE NORTHBOUND TRAFFIC RESUMES

DATUM

VERTICAL ASSUMED

HORIZONTAL ASSUMED

CROSSOVER TO BEGIN SOUTHBOUND DETOUR

0 20 40

SCALE IN FEET

PROJECT: FAIRFAX-FAIRFIELD-ST. ALBANS	PROJECT NO.: IM 089-3(27)
DESIGN FILE NAME: /87A007B/DESIGN/DA007SBC.DGN	
IPARM FILE NAME: DA007SC3	PLOT DATE: 19-AUG-2000
SURVEYED BY: GILMAN	SURVEY DATE: 11/95
SQUAD LEADER: DELLA SANTA	DRAWN BY: SQUAD B
	SHEET: 266 OF 370

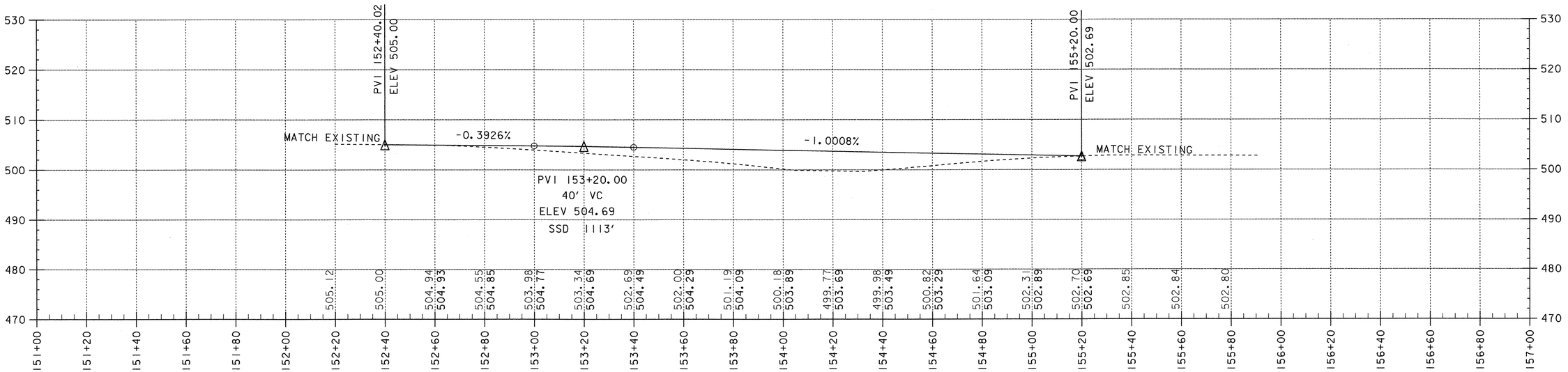

Crossover Profile To Begin Southbound Detour

DATUM

VERTICAL ASSUMED

HORIZONTAL ASSUMED

SCALE IN FEET

0 20 40

20 10 0

PROJECT: FAIRFAX-FAIRFIELD-ST. ALBANS	PROJECT NO.: IM 089-3(27)
DESIGN FILE NAME: /87A007B/DESIGN/DA007SBC.DGN	
IPARM FILE NAME: DA007CP3	PLOT DATE: 19-AUG-2000
SURVEYED BY: GILMAN	SURVEY DATE: 11/95
SQUAD LEADER: DELLA SANTA	DRAWN BY: SQUAD B
	SHEET: 267 OF 370

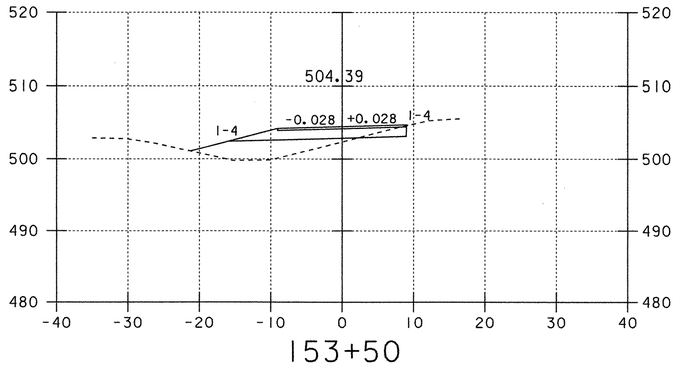

153+50

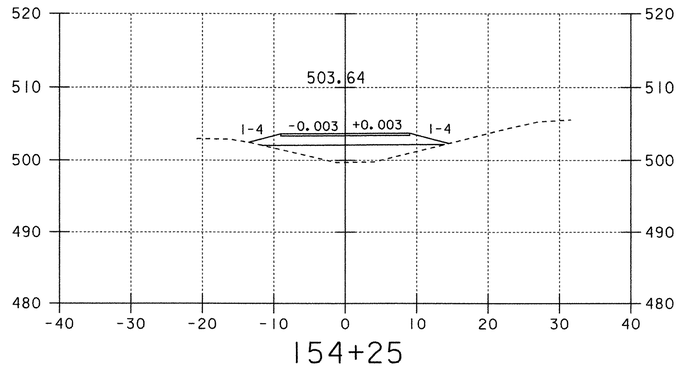

154+25

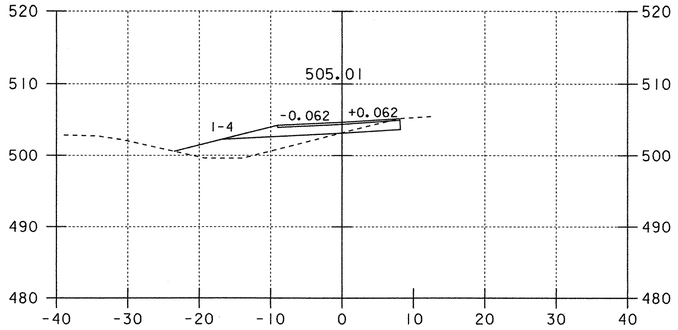

153+25

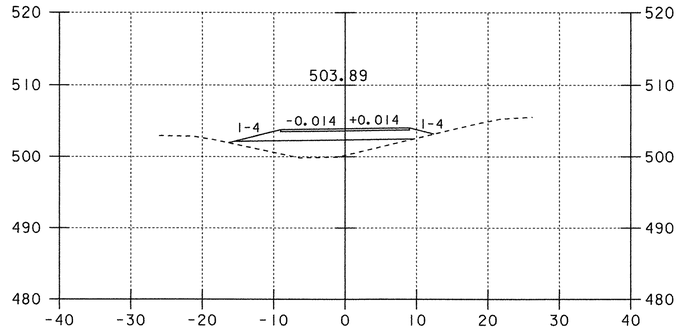

154+00

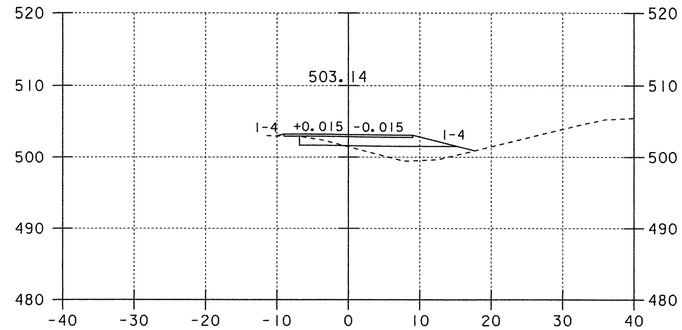

154+75

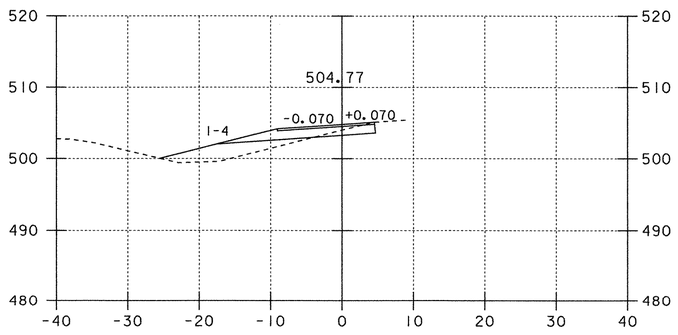

153+00

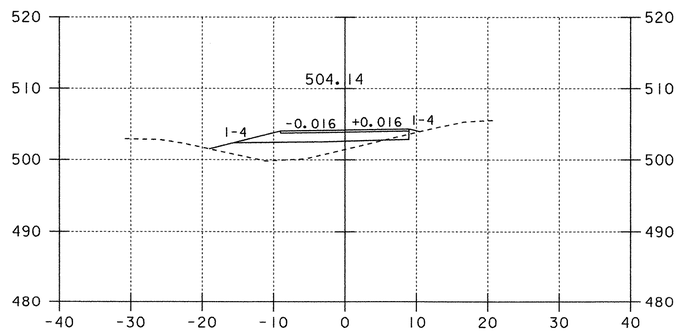

153+75

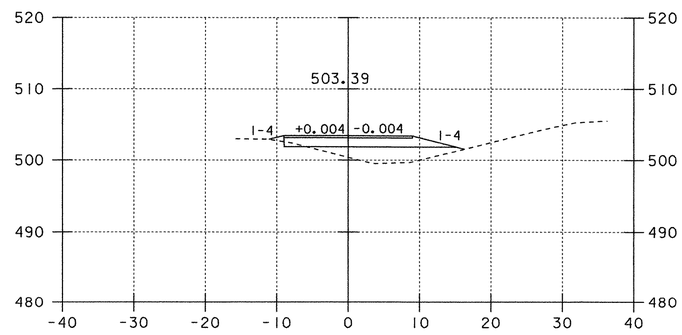

154+50

Crossover Sections To Begin Southbound Detour

0 10 20

SCALE IN FEET

PROJECT: FAIRFAX-FAIRFIELD-ST. ALBANS	PROJECT NO.: IM 089-3(27)
DESIGN FILE NAME: /87A007B/DESIGN/DA007SBC.DGN	
IPARM FILE NAME: DA007SXI	PLOT DATE: 19-AUG-2000
SURVEYED BY: GILMAN	SURVEY DATE: 11/95
SQUAD LEADER: DELLA SANTA	DRAWN BY: SQUAD B
	SHEET: 268 OF 370

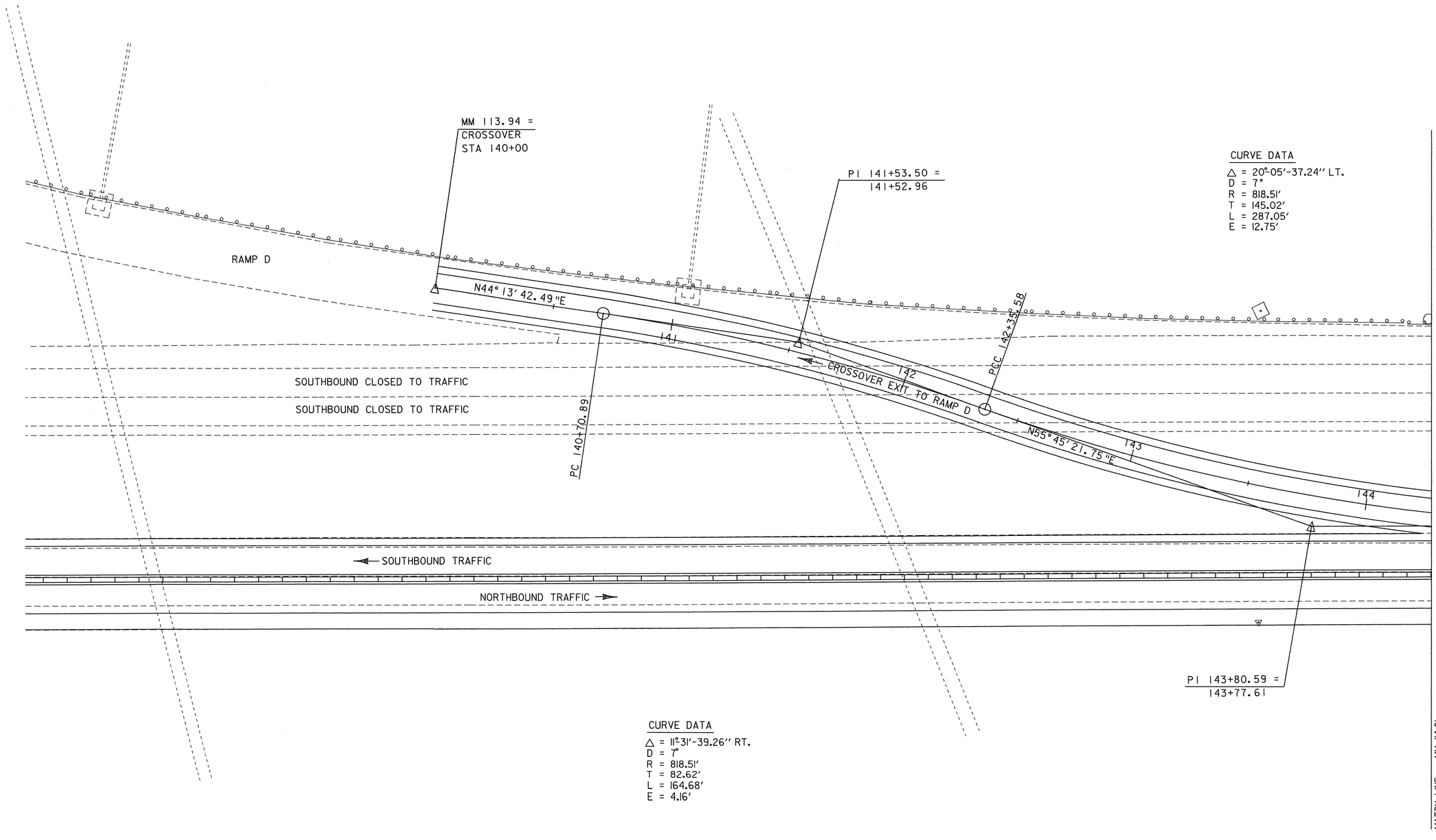

DATUM
VERTICAL ASSUMED
HORIZONTAL ASSUMED

SOUTHBOUND CROSSOVER TO RAMP D

0 20 40
SCALE IN FEET

PROJECT: FAIRFAX-FAIRFIELD-ST. ALBANS	PROJECT NO.: IM 089-3(27)
DESIGN FILE NAME: /87A007B/DESIGN/DA007SBC.DGN	
IPARM FILE NAME: DA007SBE	PLOT DATE: 19-AUG-2000
SURVEYED BY: GILMAN	SURVEY DATE: 11/95
SQUAD LEADER: DELLA SANTA	DRAWN BY: SQUAD B
	SHEET: 269 OF 370

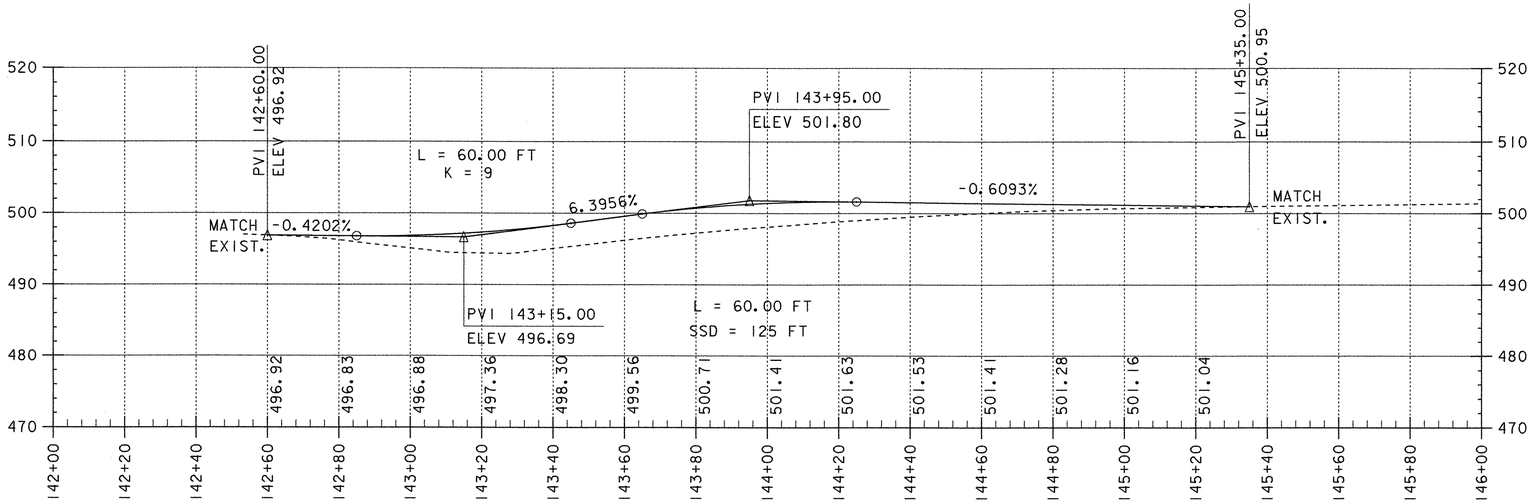

Southbound Crossover Exit Profile
To Ramp D

DATUM
VERTICAL ASSUMED
HORIZONTAL ASSUMED

SCALE IN FEET
0 20 40
20 10 0

PROJECT: FAIRFAX-FAIRFIELD-ST. ALBANS	PROJECT NO.: IM 089-3(27)
DESIGN FILE NAME: /87A007B/DESIGN/DA007SBC.DGN	
IPARM FILE NAME: DA007SBP	PLOT DATE: 19-AUG-2000
SURVEYED BY: GILMAN	SURVEY DATE: 11/95
SQUAD LEADER: DELLA SANTA	DRAWN BY: SQUAD B
	SHEET: 270 OF 370

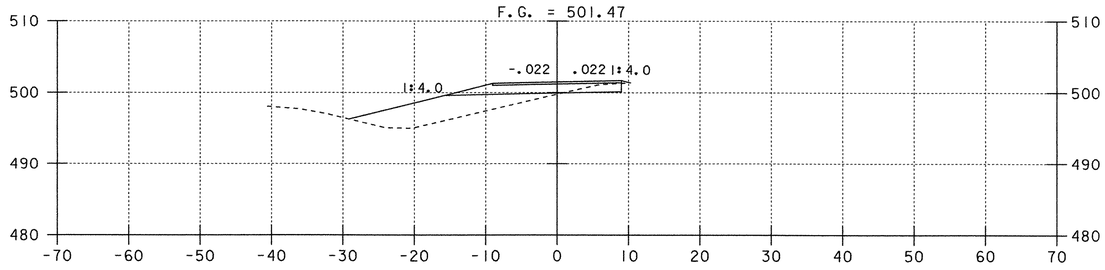

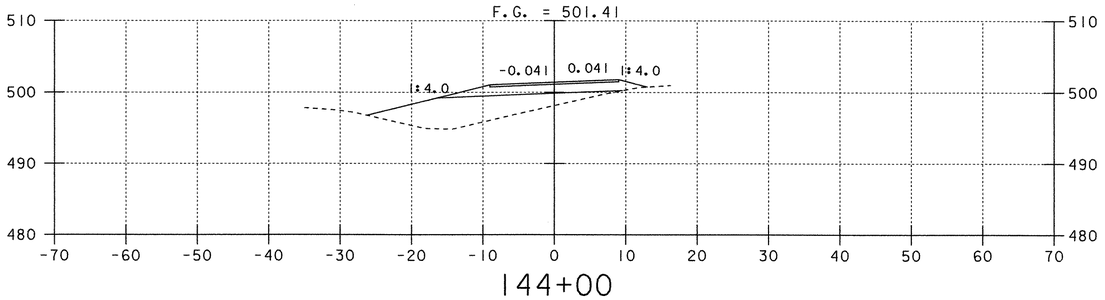

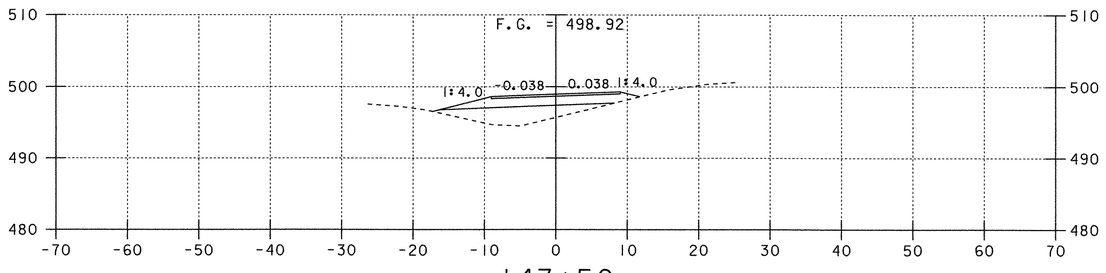

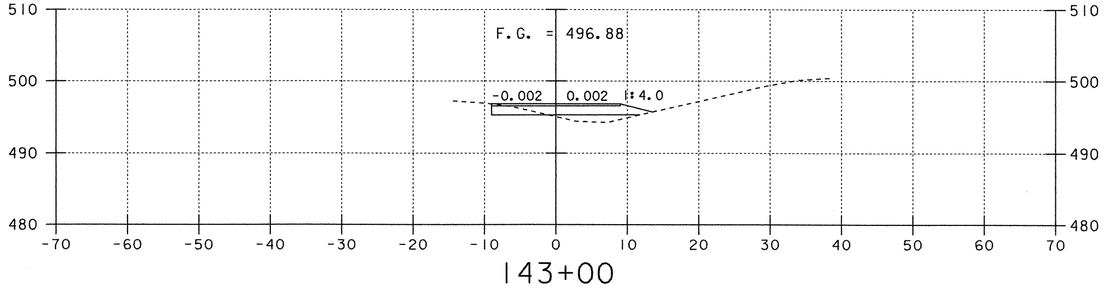

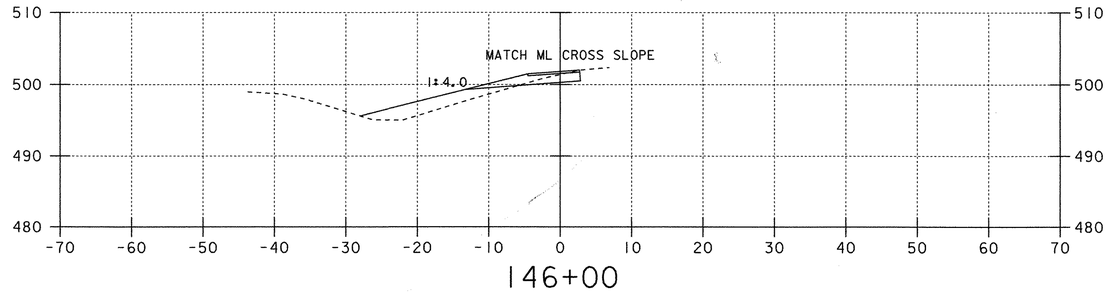

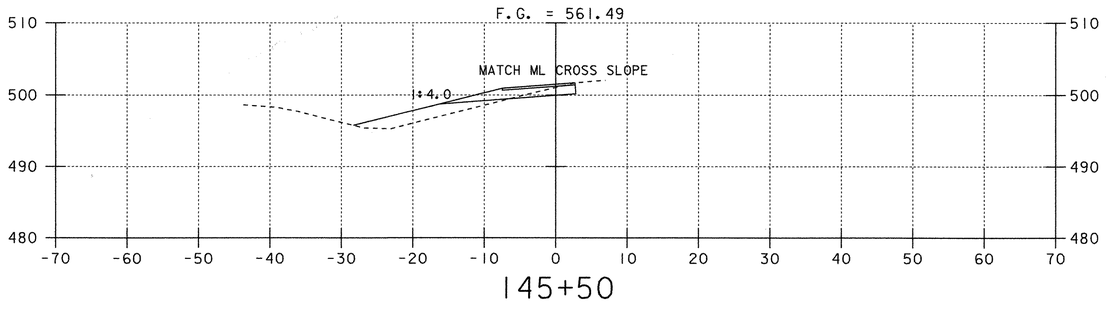

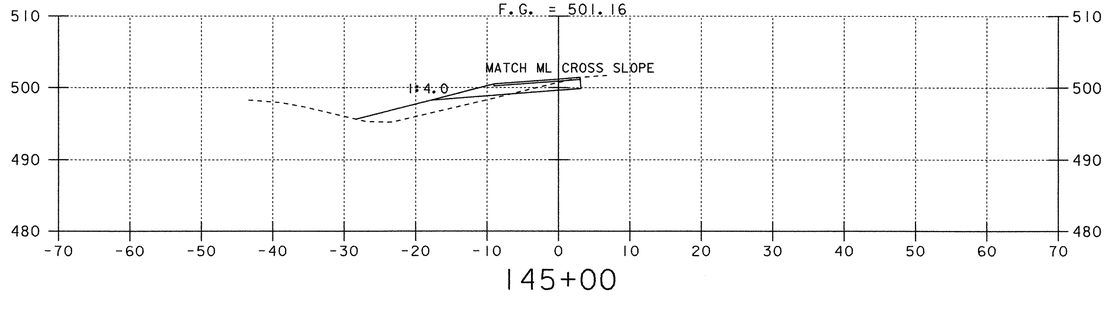

Southbound Crossover Exit Cross Sections

To Ramp D

0 10 20

SCALE IN FEET

PROJECT: FAIRFAX-FAIRFIELD-ST. ALBANS	PROJECT NO.: IM 089-3(27)
DESIGN FILE NAME: /87A007B/DESIGN/DA007SBC.DGN	
IPARM FILE NAME: DA007SX2	PLOT DATE: 19-AUG-2000
SURVEYED BY: GILMAN	SURVEY DATE: 11/95
SQUAD LEADER: DELLA SANTA	DRAWN BY: SQUAD B
	SHEET: 271 OF 370

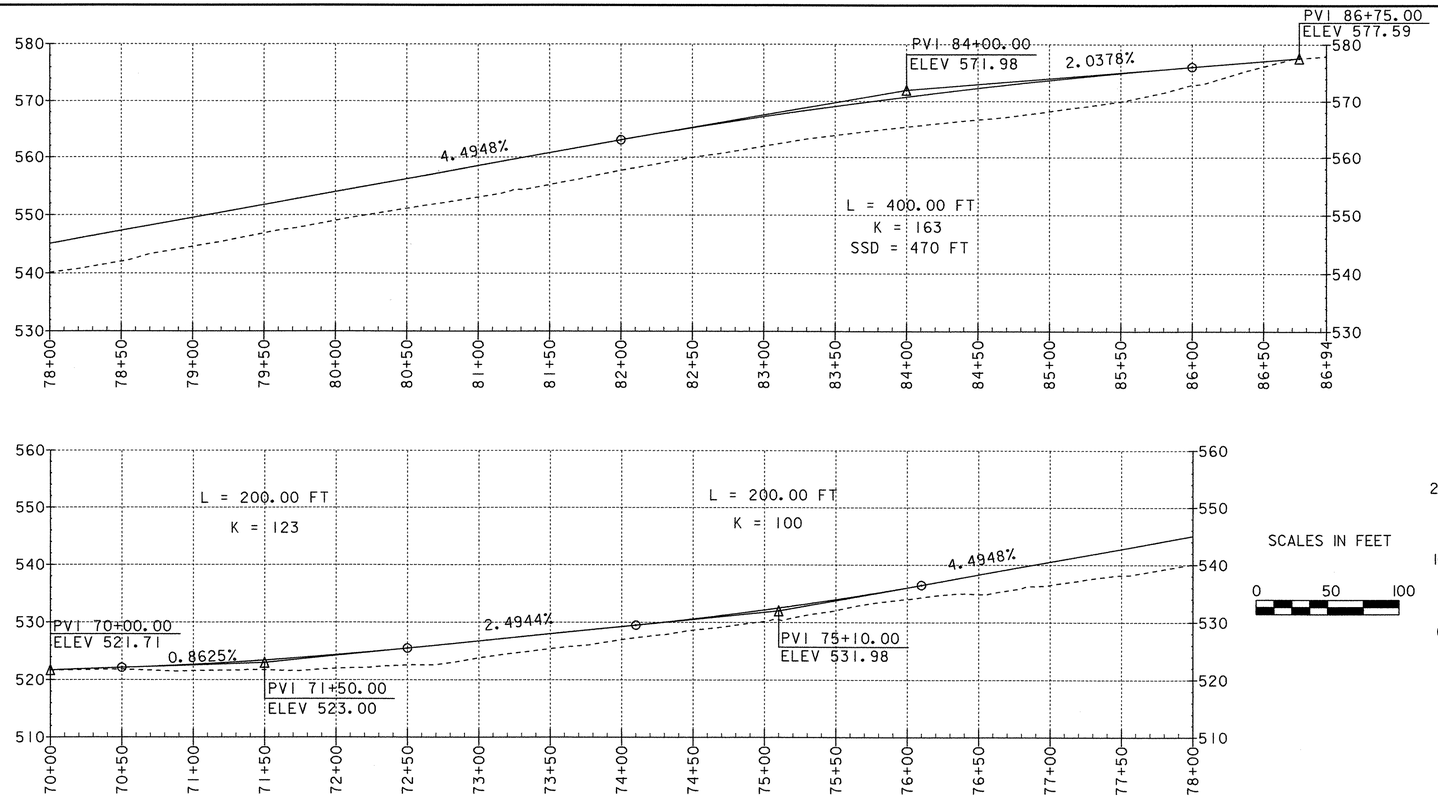

RAMP C DETOUR PROFILE

TEMPORARY TRAFFIC BARRIER
RAMP C DETOUR 71+70 LT - 86+00 LT
RAMP C DETOUR 71+70 RT - 87+08 RT

TEMPORARY 6'' WHITE LINE
RAMP C DETOUR 70+00 RT - 87+00 RT

TEMPORARY 6'' YELLOW LINE
RAMP C DETOUR 70+75 LT - 86+25 LT

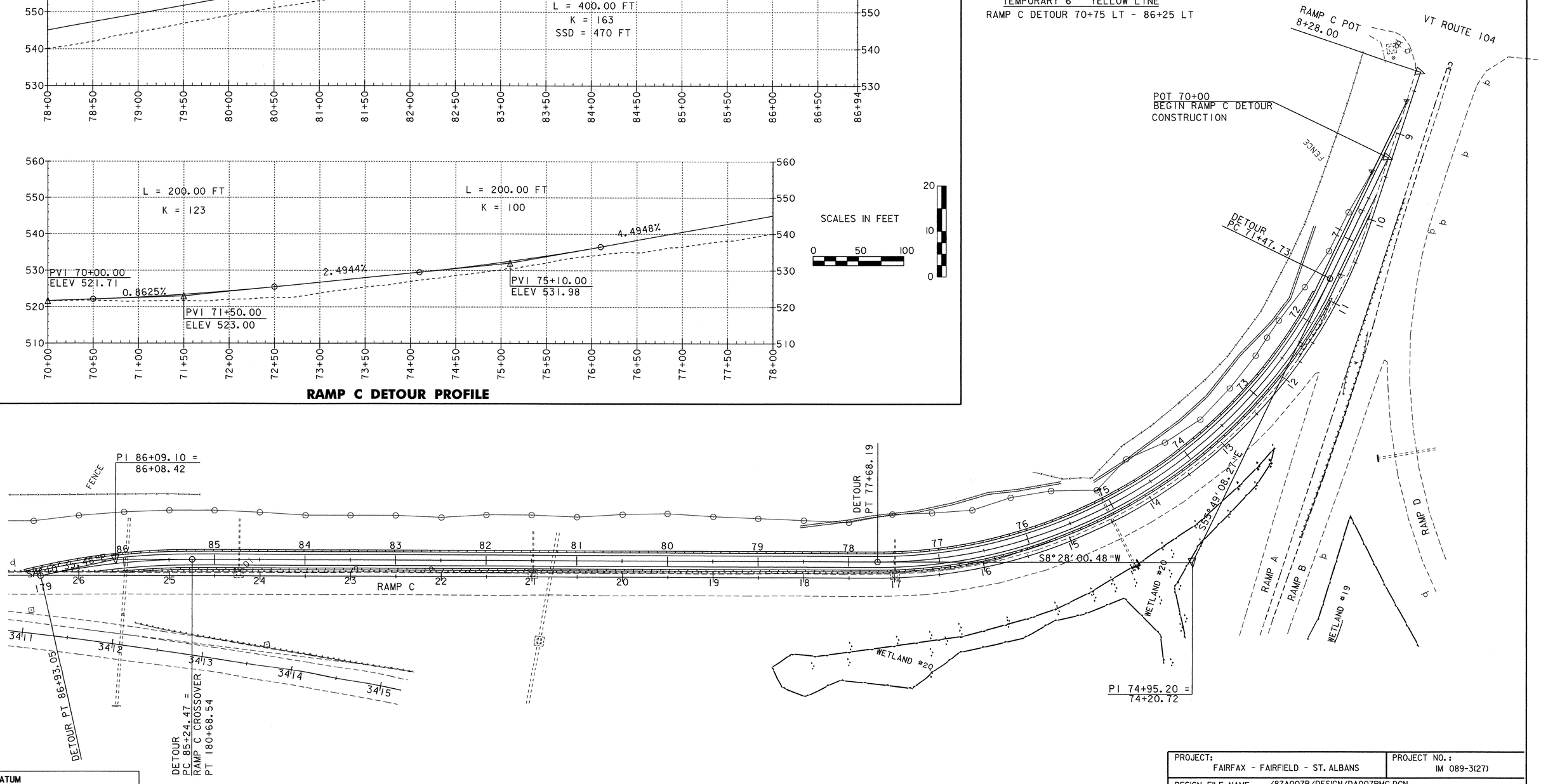

DATUM
VERTICAL NAVD88
HORIZONTAL NAD83(92)

RAMP C DETOUR

0 50 100
PLAN SCALE IN FEET

PROJECT: FAIRFAX - FAIRFIELD - ST. ALBANS	PROJECT NO.: IM 089-3(27)
DESIGN FILE NAME: /87A007B/DESIGN/DA007RMC.DGN	
IPARM FILE NAME: DA007RCD	PLOT DATE: 19-AUG-2000
SURVEYED BY: ORVIS	SURVEY DATE: 6/98
SQUAD LEADER: DELLA SANTA	DRAWN BY: SQUAD B
	SHEET: 272 OF 370

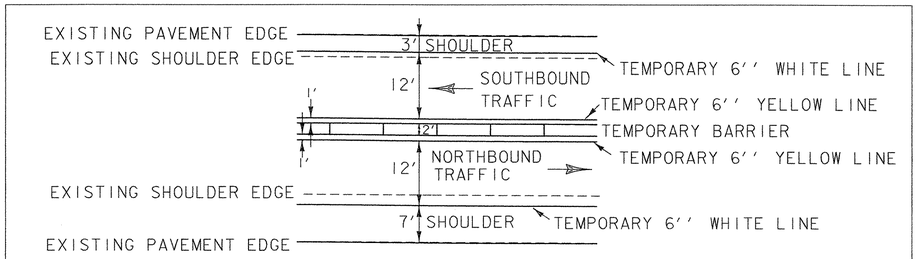

DETOUR ARRANGEMENT DETAIL

PAVEMENT MARKINGS

TEMPORARY 6'' YELLOW LINE
SB CROSSOVER 170+00 - 179+40 (RT. EDGE)

TEMPORARY 6'' WHITE LINE
SB CROSSOVER 172+22 - 172+72 (DASHED, FOR ACCEL. LANE)
SB CROSSOVER 170+00 - 179+00 (LT. EDGE)

VT STATE PLANE GRID

CURVE DATA
△ = 29°-36'-39.89'' LT.
D = 7°-30'
R = 763.94'
T = 201.92'
L = 394.81'
E = 26.23'

RAMP C
POT 33+25.50
END RAMP C
CONSTRUCTION

PI 178+75.63 =
178+66.60

RAMP C CROSSOVER
STA. 180+93.03 =
RAMP C DETOUR
STA. 85+00

N8°27'56.03"E

SOUTHBOUND CLOSED TO TRAFFIC

RAMP C CROSSOVER
STA. 170+00.00 =
NB STA. 3402+52.38
19.25' LT.

PC 172+78.88

SOUTHBOUND TRAFFIC CROSSOVER ENTRANCE FROM RAMP C

N20°08'53.06"W

PCC 176+73.69

CROSSOVER

SOUTHBOUND CROSSOVER ACCELERATION LANE FROM RAMP C

DETOURED SOUTHBOUND TRAFFIC

NORTHBOUND TRAFFIC

N8°27'46.83"E

PI 174+80.80 =
174+71.77

RAMP C

RAMP C+DETOUR

PI 180+68.54

RAMP B

DETOURED SOUTHBOUND TRAFFIC

NORTHBOUND TRAFFIC

CURVE DATA
△ = 29°-36'-49.09'' RT.
D = 7°-30'
R = 763.94'
T = 201.94'
L = 394.85'
E = 26.24'

Profile

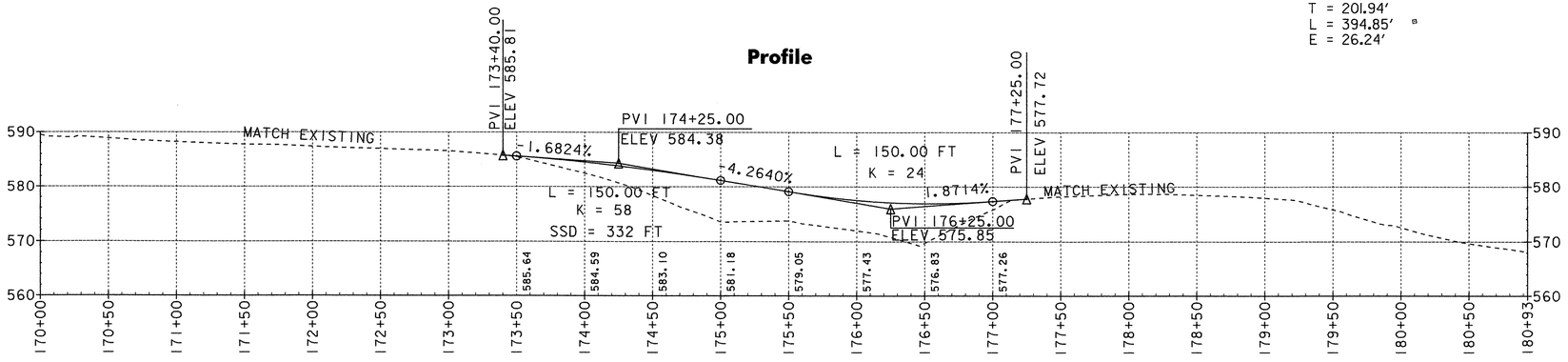

PROFILE SCALES IN FEET
20
10
0
0 50 100

PLAN SCALE IN FEET
0 50 100

DATUM
VERTICAL NAVD88
HORIZONTAL NAD83(92)

SOUTHBOUND CROSSOVER FROM RAMP C

PROJECT: FAIRFAX-FAIRFIELD-ST. ALBANS	PROJECT NO.: IM 089-3(27)
DESIGN FILE NAME: /87A007B/DESIGN/DA007SI9.DGN	
IPARM FILE NAME: DA007CC	PLOT DATE:
SURVEYED BY: GILMAN	SURVEY DATE:
SQUAD LEADER: DELLA SANTA	DRAWN BY:
	SHEET: 273 OF 370

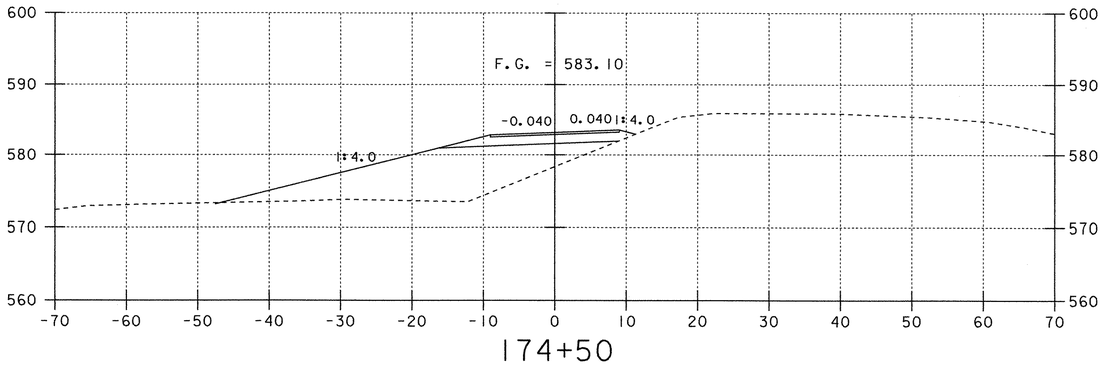

174+50

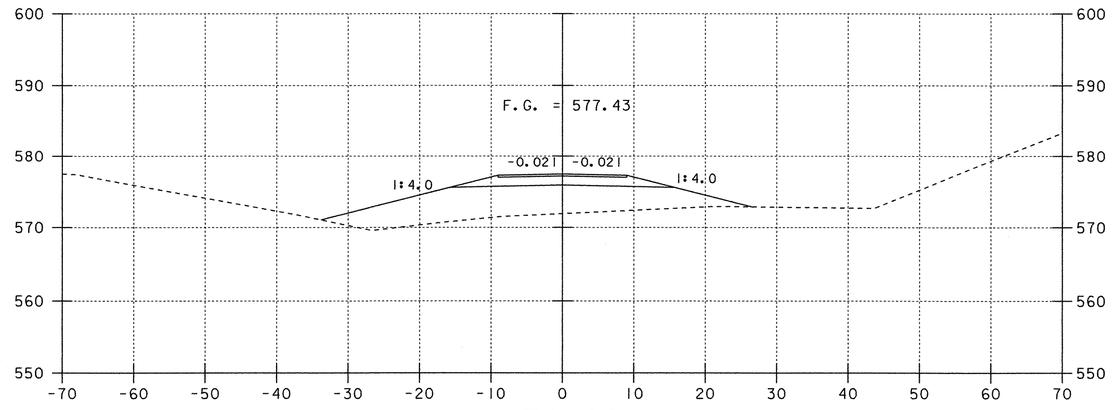

176+00

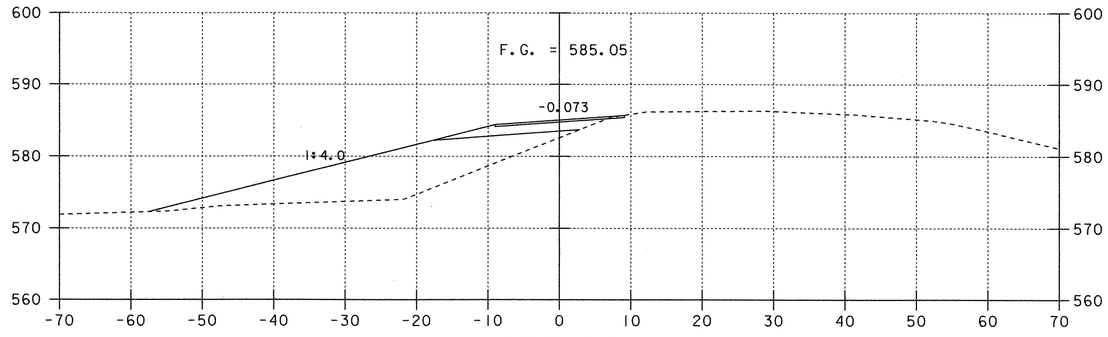

174+00

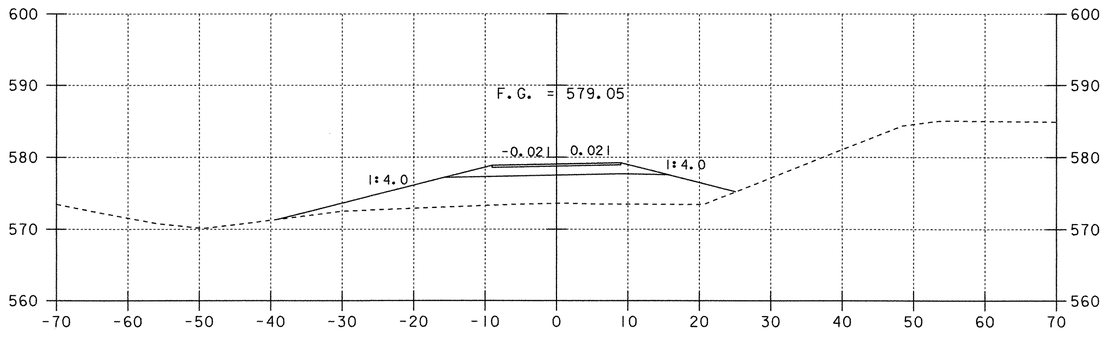

175+50

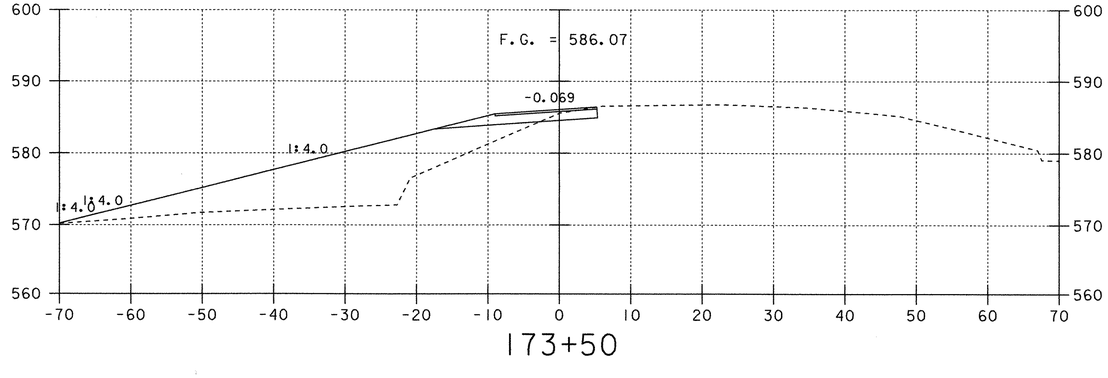

173+50

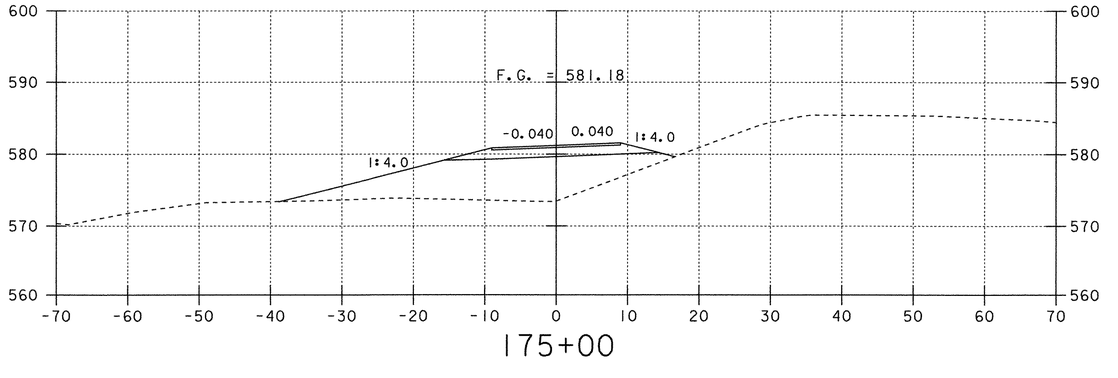

175+00

SOUTHBOUND CROSSOVER FROM RAMP C

0 10 20

SCALE IN FEET

PROJECT: FAIRFAX-FAIRFIELD-ST. ALBANS	PROJECT NO.: IM 089-3(27)
DESIGN FILE NAME: /87A007B/DESIGN/DA007SI9.DGN	
IPARM FILE NAME: DA007SX3	PLOT DATE: 22-AUG-2000
SURVEYED BY: GILMAN	SURVEY DATE: 11/95
SQUAD LEADER: DELLA SANTA	DRAWN BY: SQUAD B
	SHEET: 274 OF 370

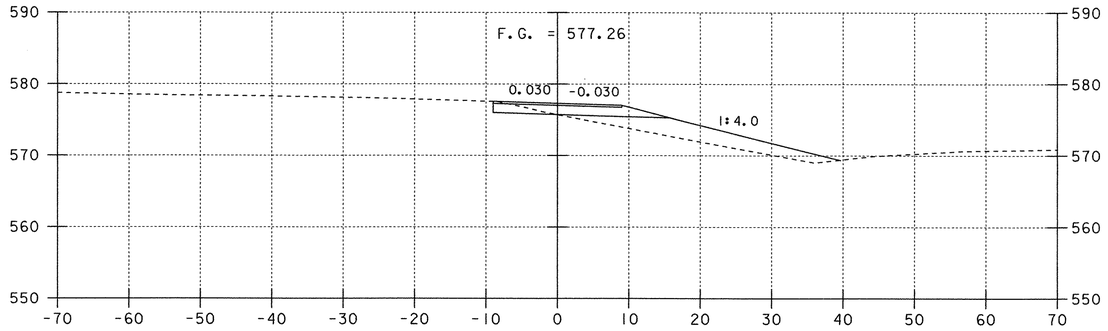

177+00

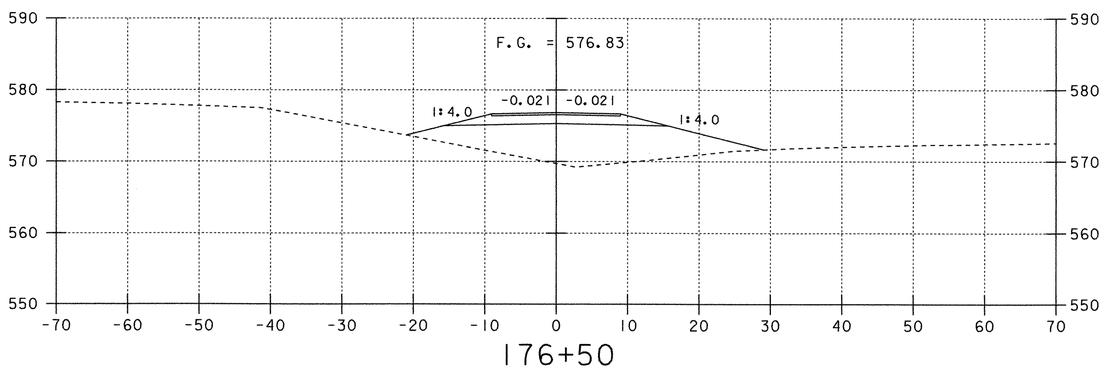

176+50

SOUTHBOUND CROSSOVER FROM RAMP C

0 10 20

SCALE IN FEET

PROJECT: FAIRFAX-FAIRFIELD-ST. ALBANS	PROJECT NO.: IM 089-3(27)
DESIGN FILE NAME: /87A007B/DESIGN/DA007SI9.DGN	
IPARM FILE NAME: DA007SX4	PLOT DATE: 22-AUG-2000
SURVEYED BY: GILMAN	SURVEY DATE: JJ/95
SQUAD LEADER: DELLA SANTA	DRAWN BY: SQUAD B
	SHEET: 275 OF 370

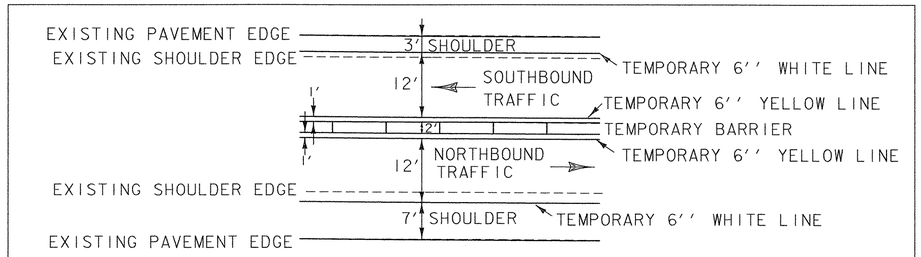

DETOUR ARRANGEMENT DETAIL

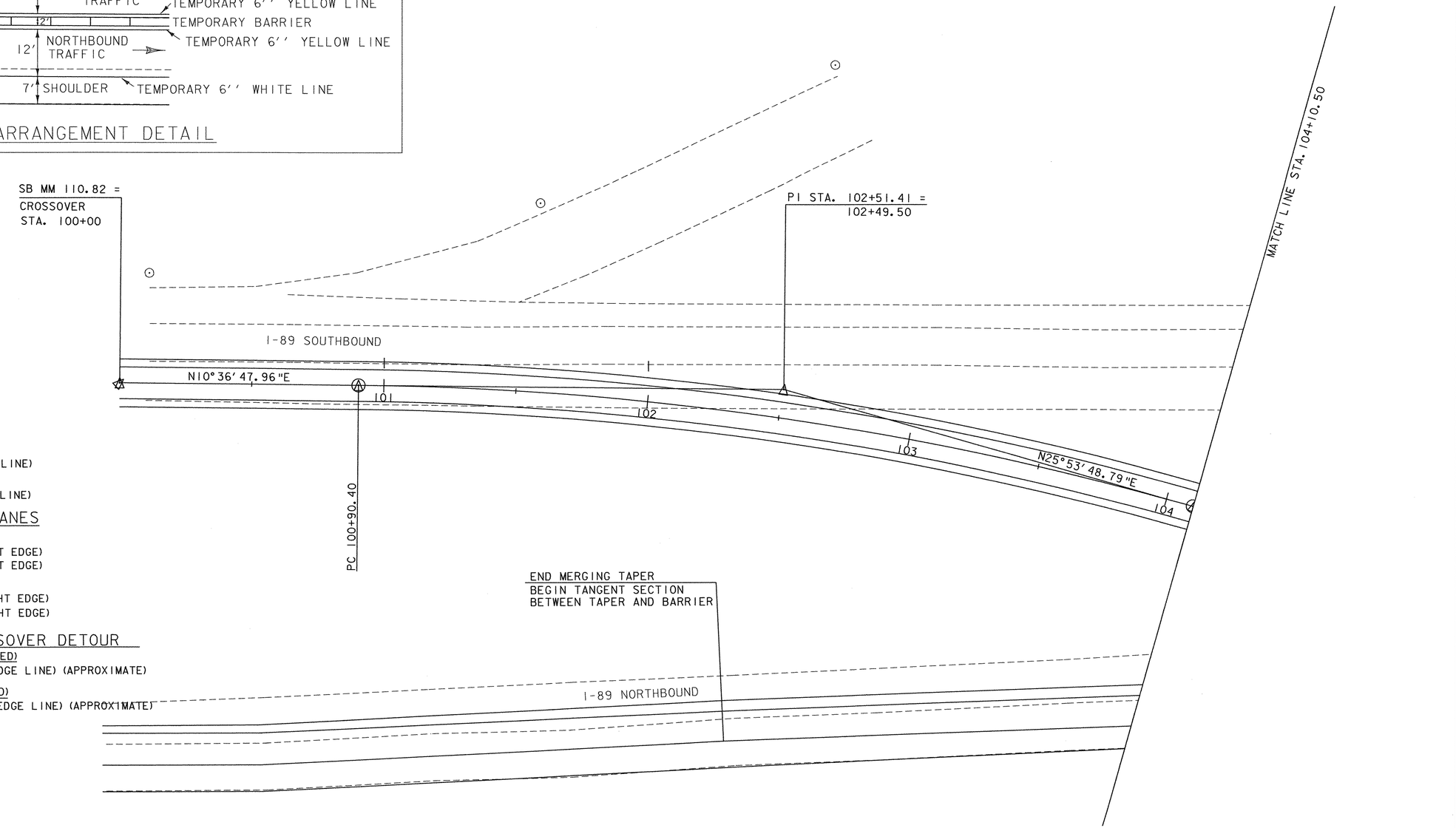

FOR CROSSOVER DETOUR

TEMPORARY 6'' YELLOW LINE

SB CROSSOVER 100+00 - 108+00 (RT. EDGE LINE)

TEMPORARY 6'' WHITE LINE

SB CROSSOVER 100+00 - 108+00 (LT. EDGE LINE)

FOR DETOUR ON NORTHBOUND LANES

TEMPORARY 6'' YELLOW LINE

NB 3276+60 - 3446+50 (TRAVELING NB, LEFT EDGE)

NB 3279+40 - 3446+50 (TRAVELING SB, LEFT EDGE)

TEMPORARY 6'' WHITE LINE

NB 3276+60 - 3446+50 (TRAVELING NB, RIGHT EDGE)

NB 3279+40 - 3446+50 (TRAVELING SB, RIGHT EDGE)

FOR EXIT TRANSITION FROM CROSSOVER DETOUR

TEMPORARY 6'' YELLOW LINE (MODIFIED)

SB MM 110.75 - 110.82 (TRAVELING SB, LEFT EDGE LINE) (APPROXIMATE)

TEMPORARY 6'' WHITE LINE (MODIFIED)

SB MM 110.75 - 110.82 (TRAVELING SB, RIGHT EDGE LINE) (APPROXIMATE)

COLD PLANING-BITUMINOUS PAVEMENT

NB 3276+60 - 3446+50 RT (4' WIDE)
(TO SMOOTH OUT PAVEMENT BETWEEN
TRAVELWAY AND SHOULDER FOR DETOUR)

CURVE DATA

△ = 15°17'-00.83'' RT.
D = 4°46'-28.73''
R = 1200'
T = 161.00'
L = 320.10'
E = 10.75'

DATUM
VERTICAL NAVD88
HORIZONTAL NAD83(92)

CROSSOVER TO END SOUTHBOUND DETOUR

0 20 40
SCALE IN FEET

PROJECT: FAIRFAX - FAIRFIELD - ST. ALBANS	PROJECT NO.: IM 089-3(27)
DESIGN FILE NAME: /87A007B/DESIGN/DA007SBA.DGN	
IPARM FILE NAME: DA007SC4	PLOT DATE: 09-SEP-2000
SURVEYED BY: ORVIS	SURVEY DATE: 6/98
SQUAD LEADER: DELLA SANTA	DRAWN BY: SQUAD B
	SHEET: 276 OF 370

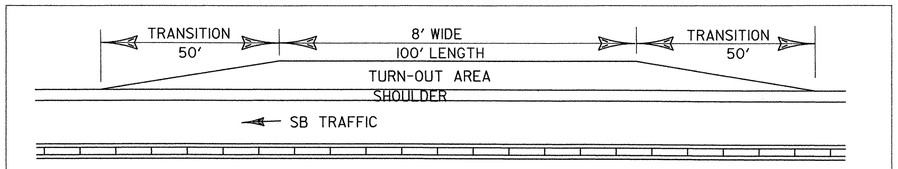

TEMPORARY TURN-OUT PARKING AREA FOR DISABLED VEHICLES

NOT TO SCALE

1) BEGINNING AT NB STA. 3302+00 LT, A TEMPORARY TURN-OUT PARKING AREA IS TO BE PLACED ON THE MEDIAN SIDE APPROXIMATELY EVERY 1500', OR AT LOCATIONS AS DIRECTED BY THE RESIDENT ENGINEER.

2) SUCH TURN-OUT AREAS SHALL BE PLACED WHERE GUARD RAIL IS NOT NEEDED.

3) PAYMENT TO BUILD THESE TURN-OUT AREAS SHALL BE UNDER ITEM 641.10, TRAFFIC CONTROL.

TEMPORARY TRAFFIC BARRIER
BEGINS AT NB MM 110.92
(SEE SHEET 265 FOR ENDING LOCATION)
NOTE: EVERY 10TH SECTION WILL BE A MODIFIED BARRIER TO ALLOW FOR SMALL ANIMALS TO CROSS UNDERNEATH

N
VT STATE PLANE GRID

MATCH LINE STA. 104+10.50

I-89 SOUTHBOUND

CURVE DATA
△ = 18°35'-54.14" LT
D = 4°46'-28.73"
R = 1200'
T = 352.49'
L = 389.52'
E = 15.98'

PT 108+00.03

CROSSOVER
STA. 108+57 =
NB MM 110.98

105
106
107
108

N25°53'48.79"E
N7°17'54.65"E

I-89 NORTHBOUND

END TANGENT SECTION
BETWEEN TAPER AND BARRIER

NB MM 110.92
BEGIN TEMPORARY
TRAFFIC BARRIER

PI 106+07.00 =
106+03.54

DATUM
VERTICAL NAVD88
HORIZONTAL NAD83(92)

CROSSOVER TO END SOUTHBOUND DETOUR

0 20 40
SCALE IN FEET

PROJECT: FAIRFAX - FAIRFIELD - ST. ALBANS	PROJECT NO.: IM 089-3(27)
DESIGN FILE NAME: /87A007B/DESIGN/DA007SBA.DGN	
IPARM FILE NAME: DA007SC5	PLOT DATE: 13-SEP-2000
SURVEYED BY: ORVIS	SURVEY DATE: 6/98
SQUAD LEADER: DELLA SANTA	DRAWN BY: SQUAD B
	SHEET: 277 OF 370

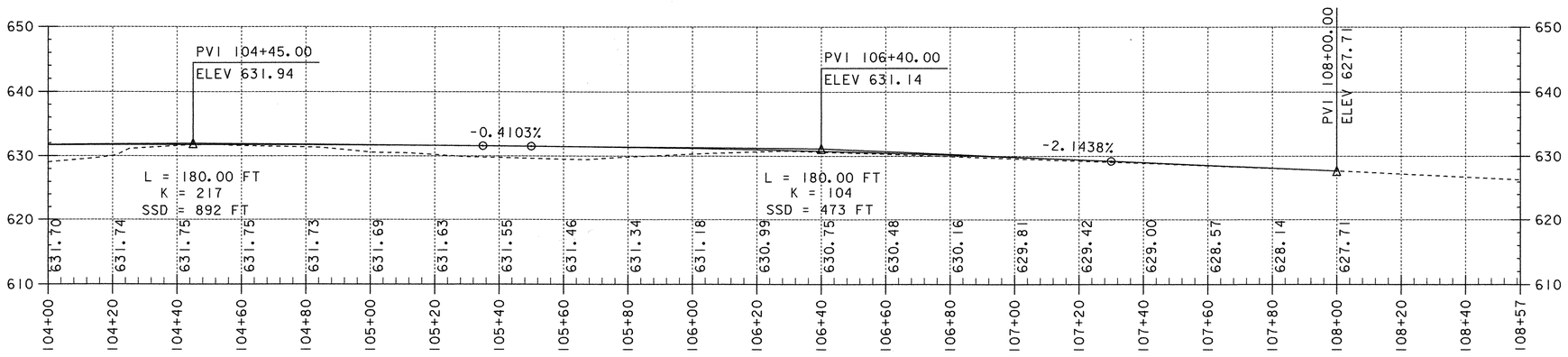

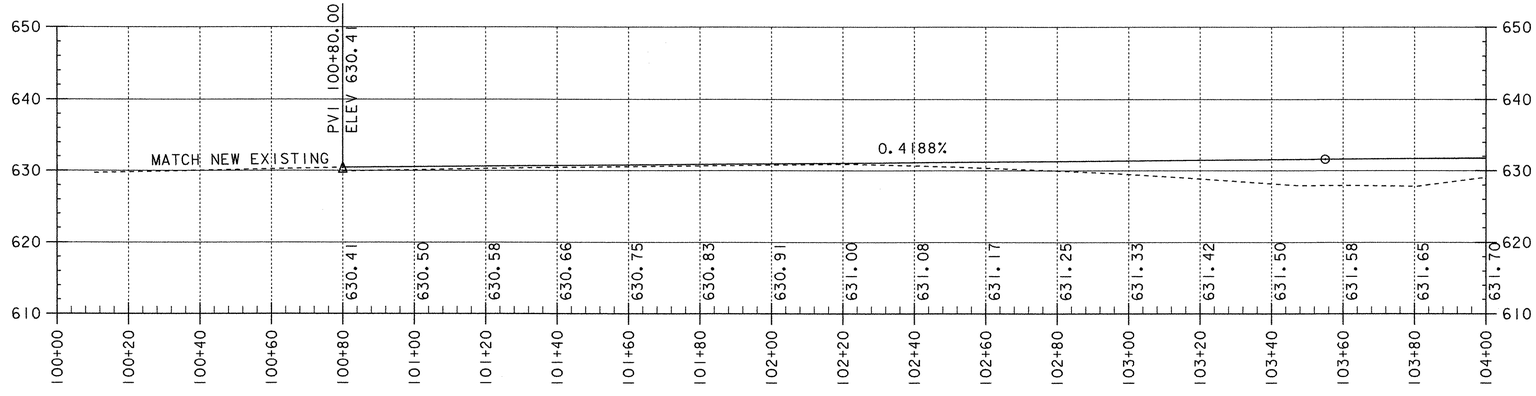

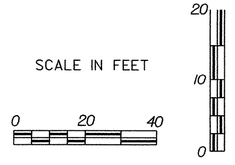

DATUM
VERTICAL NAVD88
HORIZONTAL NAD83(92)

Crossover Profile To End Southbound Detour

PROJECT: FAIRFAX-FAIRFIELD-ST. ALBANS	PROJECT NO.: IM 089-3(27)
DESIGN FILE NAME: /87A007B/DESIGN/DA007SBA.DGN	
IPARM FILE NAME: DA007SCP	PLOT DATE: 13-SEP-2000
SURVEYED BY: ORVIS	SURVEY DATE: 11/95
SQUAD LEADER: DELLA SANTA	DRAWN BY: SQUAD B
	SHEET: 278 OF 370

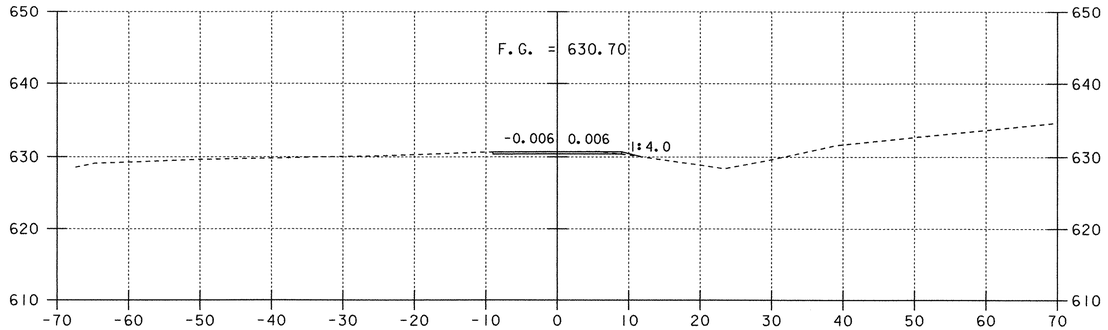

101+50

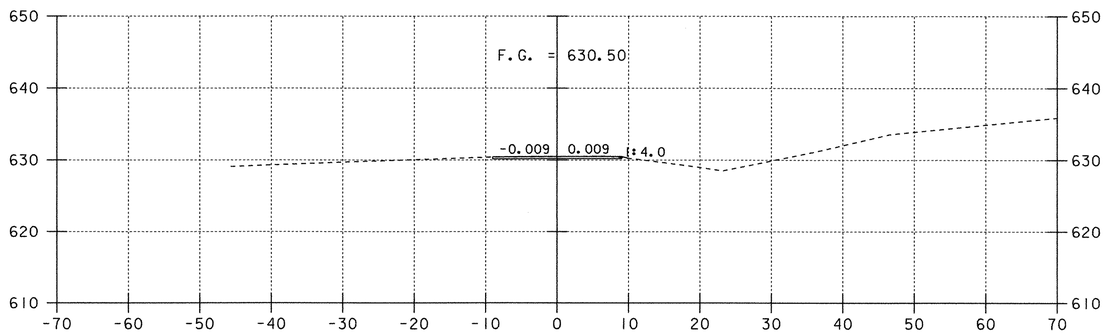

101+00

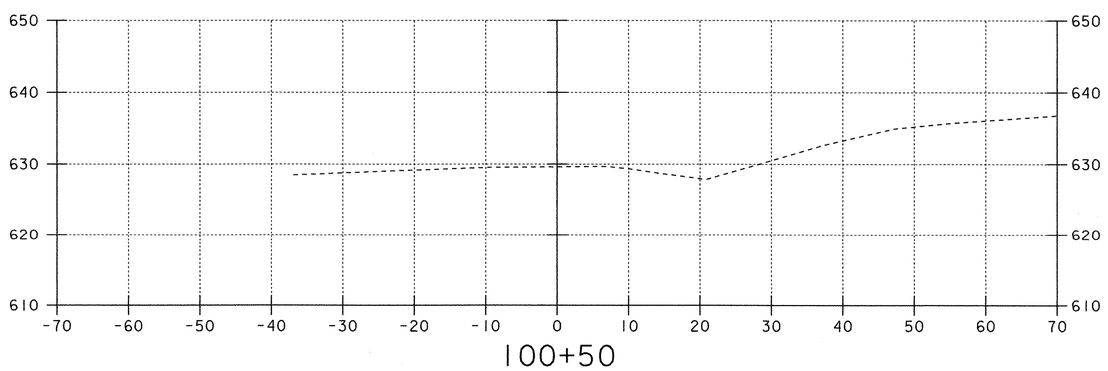

100+50

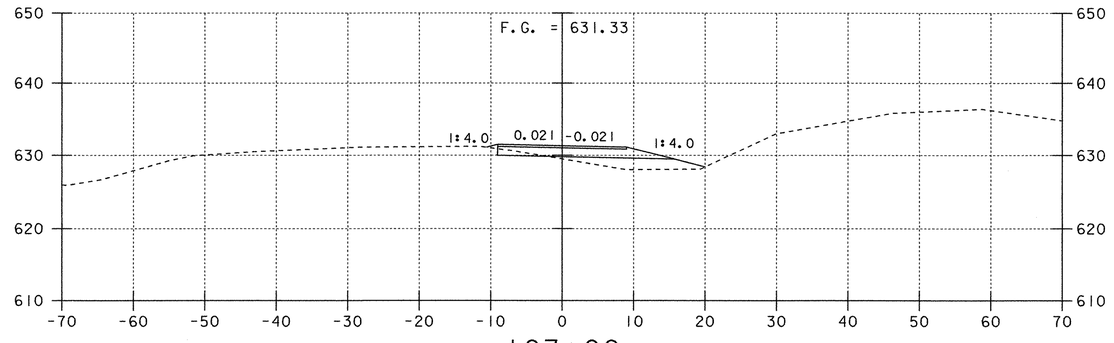

103+00

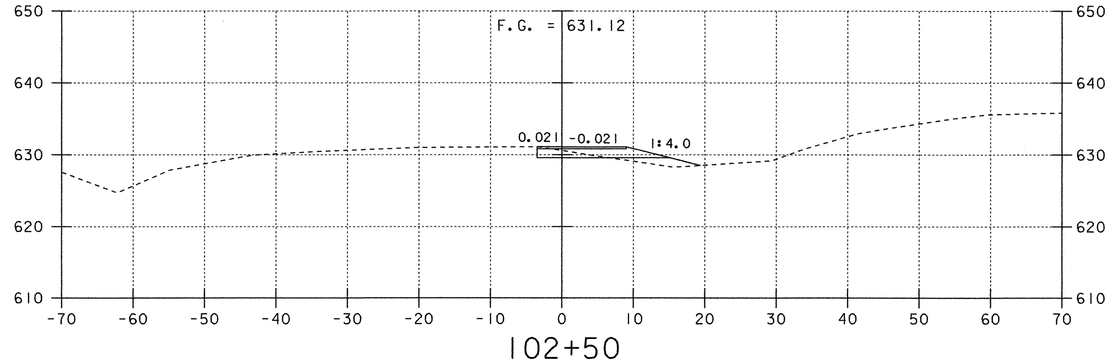

102+50

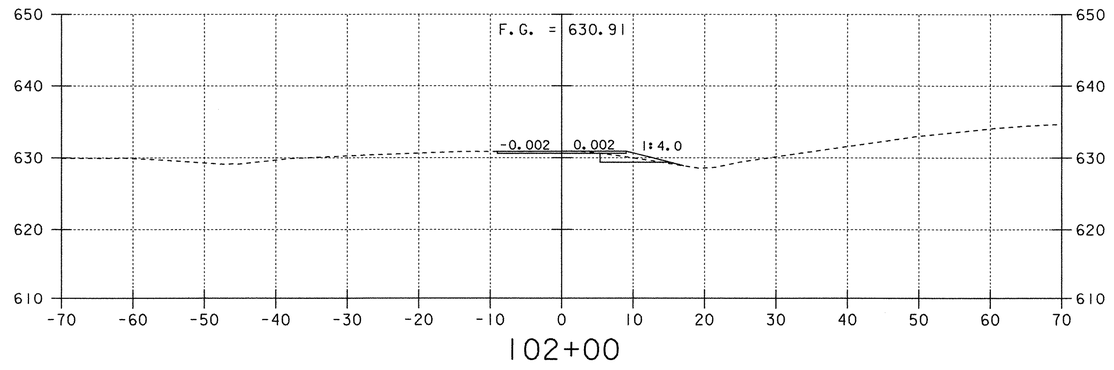

102+00

Crossover Sections To End Southbound Detour

0 10 20

SCALE IN FEET

PROJECT: FAIRFAX-FAIRFIELD-ST. ALBANS	PROJECT NO.: IM 089-3(27)
DESIGN FILE NAME: /87A007B/DESIGN/DA007SBA.DGN	
IPARM FILE NAME: DA007SX5	PLOT DATE: 13-SEP-2000
SURVEYED BY: ORVIS	SURVEY DATE: 11/95
SQUAD LEADER: DELLA SANTA	DRAWN BY: SQUAD B
	SHEET: 279 OF 370

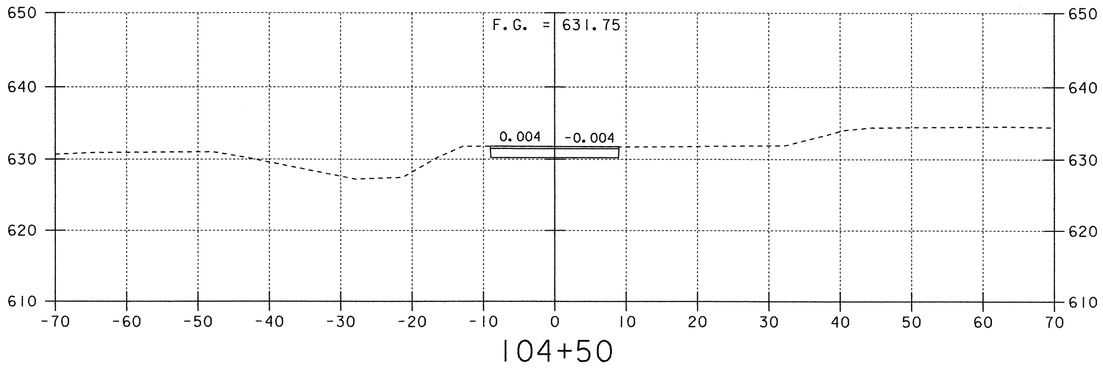

104+50

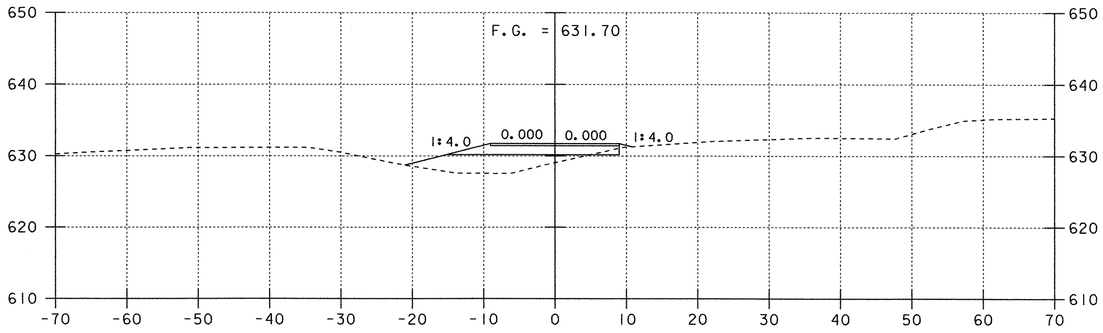

104+00

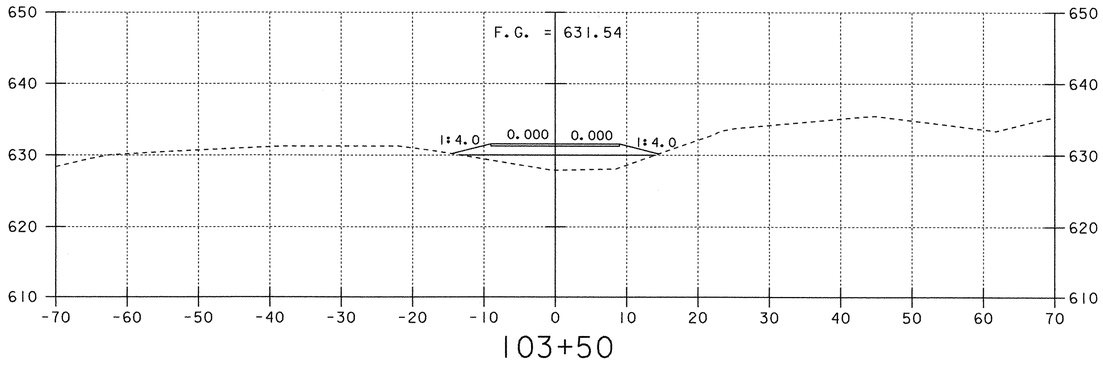

103+50

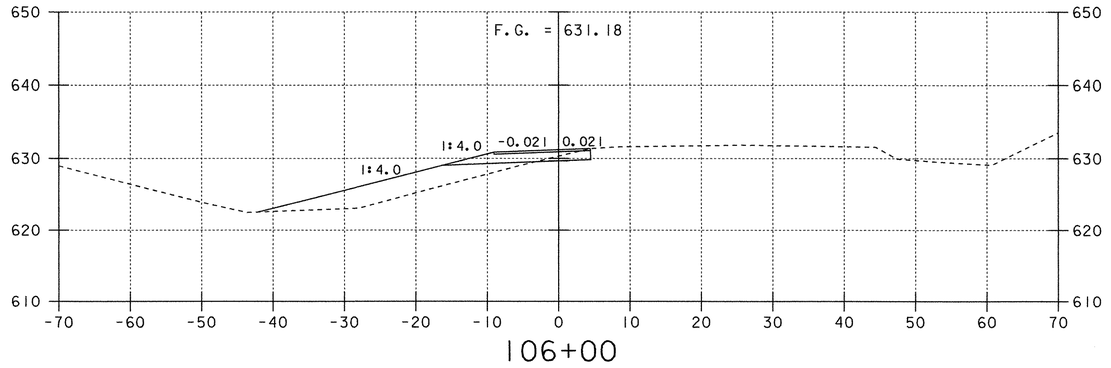

106+00

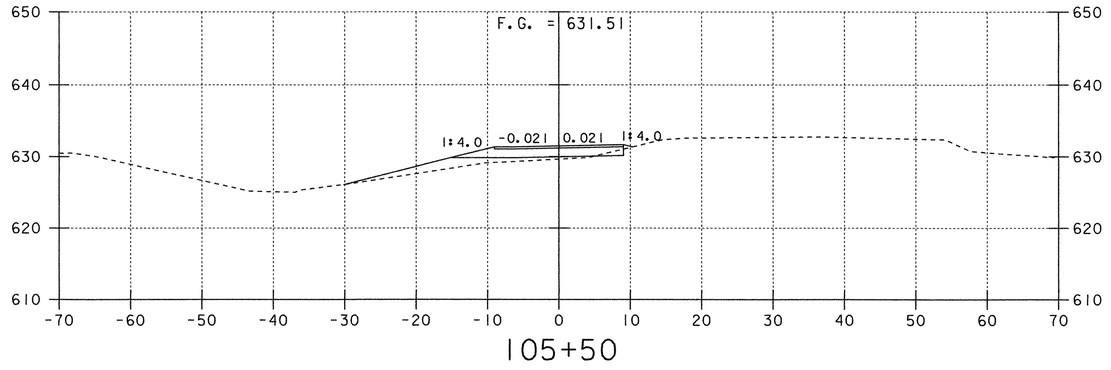

105+50

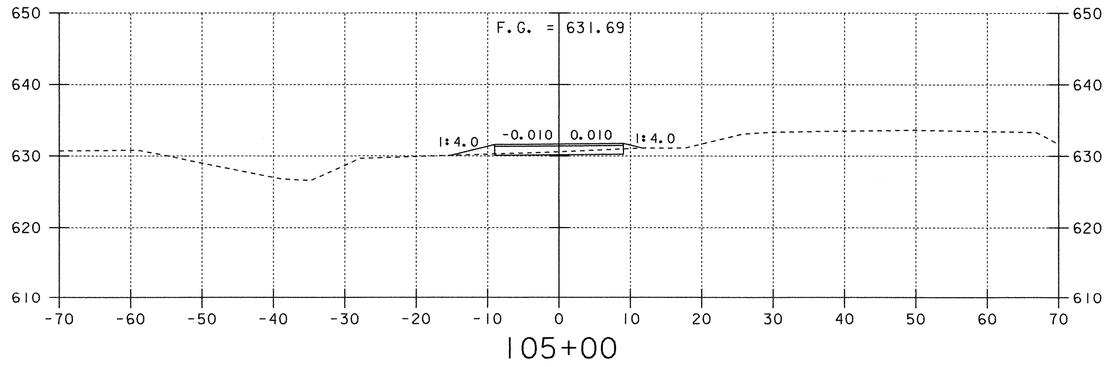

105+00

Crossover Sections To End Southbound Detour

0 10 20

SCALE IN FEET

PROJECT: FAIRFAX-FAIRFIELD-ST. ALBANS	PROJECT NO.: IM 089-3(27)
DESIGN FILE NAME: /87A007B/DESIGN/DA007SBA.DGN	
IPARM FILE NAME: DA007SX6	PLOT DATE: 14-SEP-2000
SURVEYED BY: ORVIS	SURVEY DATE: 11/95
SQUAD LEADER: DELLA SANTA	DRAWN BY: SQUAD B
	SHEET: 280 OF 370

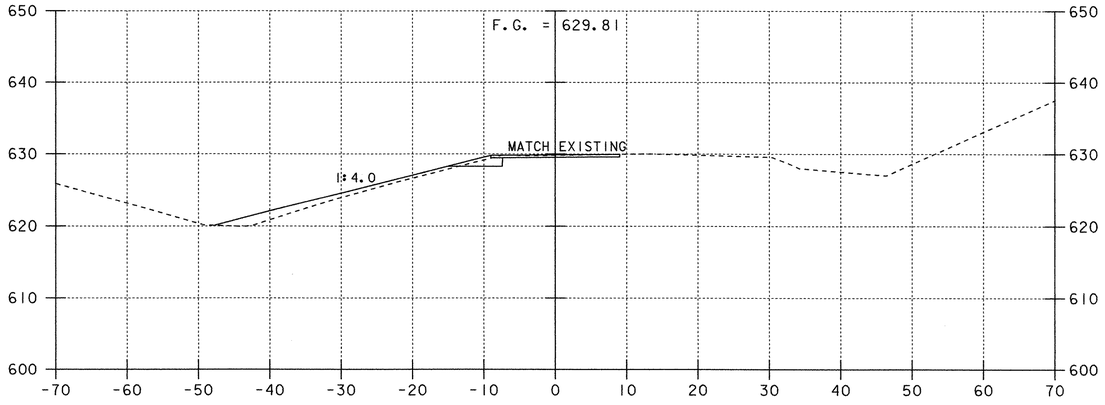

107+00

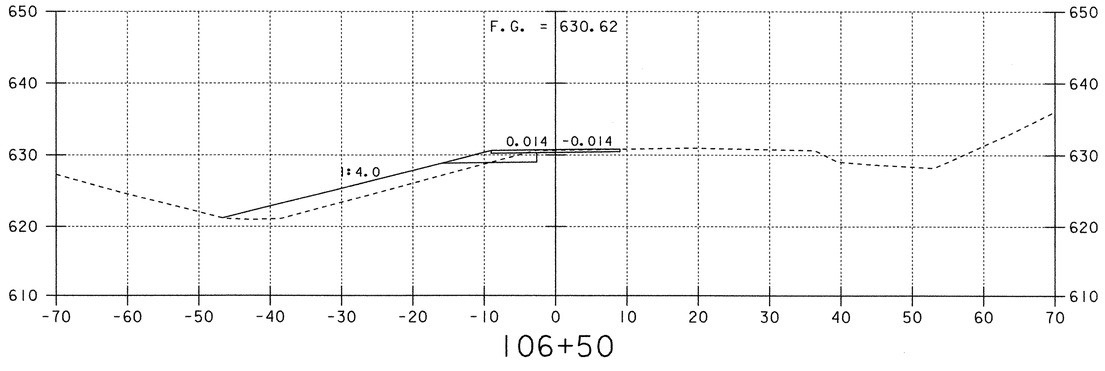

106+50

Crossover Sections To End Southbound Detour

0 10 20

SCALE IN FEET

PROJECT: FAIRFAX-FAIRFIELD-ST. ALBANS	PROJECT NO.: IM 089-3(27)
DESIGN FILE NAME: /87A007B/DESIGN/DA007SBA.DGN	
IPARM FILE NAME: DA007SX7	PLOT DATE: 14-SEP-2000
SURVEYED BY: ORVIS	SURVEY DATE: 11/95
SQUAD LEADER: DELLA SANTA	DRAWN BY: SQUAD B
	SHEET: 281 OF 370

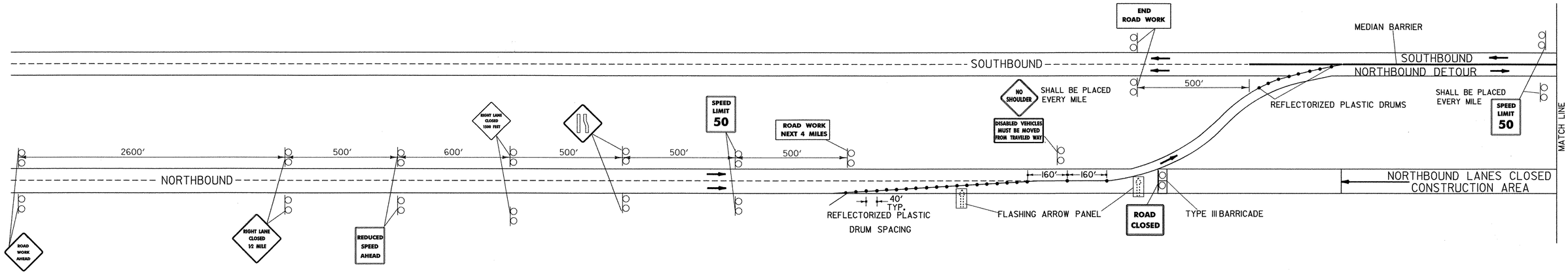

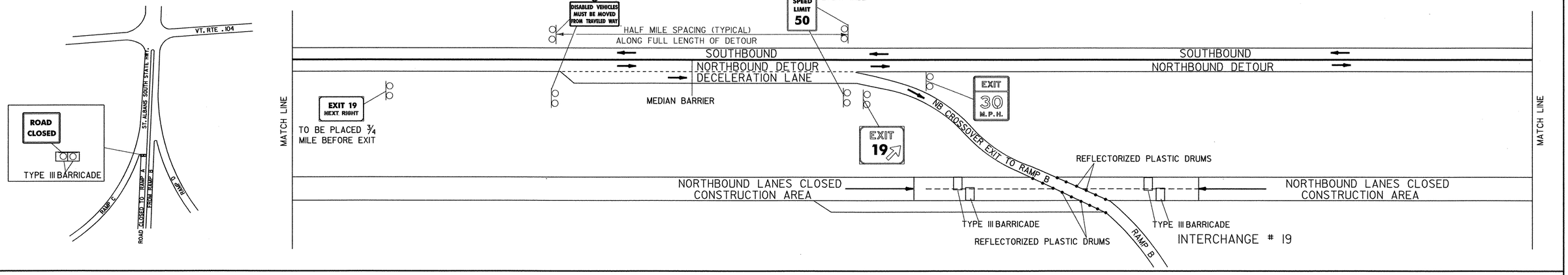

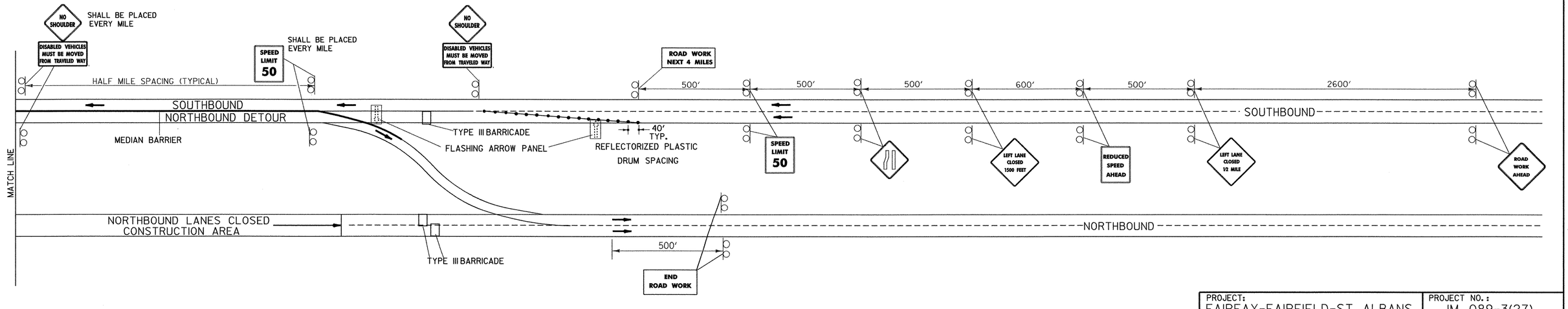

WORK ZONE SIGNING FOR NORTHBOUND CONSTRUCTION

NOT TO SCALE

PROJECT: FAIRFAX-FAIRFIELD-ST. ALBANS	PROJECT NO.: IM 089-3(27)
DESIGN FILE NAME: /87A007B/DESIGN/DA007FRM.DGN	
IPARM FILE NAME: DA007WZN.I	PLOT DATE: 17-NOV-2000
SURVEYED BY:	SURVEY DATE:
SQUAD LEADER: DELLA SANTA	DRAWN BY: SQUAD B
	SHEET: 282 OF 370

PAVEMENT MARKINGS

FOR CROSSOVER DETOUR

TEMPORARY 6'' YELLOW LINE

NB CROSSOVER 200+00 - 208+00 (LT. SOLID EDGE LINE)

TEMPORARY 6'' WHITE LINE

NB CROSSOVER 200+00 - 208+00 (RT. SOLID EDGE LINE)

FOR DETOUR ON SOUTHBOUND LANES

TEMPORARY 6'' YELLOW LINE

SB 3279+00 - 3444+00 (TRAVELING NB, LEFT EDGE, SOLID)
SB 3276+72 - 3444+00 (TRAVELING SB, LEFT EDGE, SOLID)

TEMPORARY 6'' WHITE LINE

SB 3279+00 - 3444+00 (TRAVELING NB, RIGHT EDGE, SOLID)
SB 3276+72 - 3444+00 (TRAVELING SB, RIGHT EDGE, SOLID)

FOR ENTRANCE TRANSITION TO CROSSOVER DETOUR

TEMPORARY 6'' YELLOW LINE (MODIFIED)

NB 110.75 - 110.82 (LEFT SOLID EDGE LINE) (APPROXIMATE)

TEMPORARY 6'' WHITE LINE (MODIFIED)

NB 110.75 - 110.82 (RIGHT SOLID EDGE LINE) (APPROXIMATE)

CURVE DATA

△ = 15°-56'-51.96'' LT
D = 4°-46'-28.73''
R = 1200'
T = 168.09'
L = 334.01'
E = 11.72'

N

VT STATE PLANE GRID

MATCH LINE PCC STA. 203+66.14

I-89 SOUTHBOUND

3270

3271

NB MM 110.82 =
CROSSOVER
STA. 200+00

PC 200+32.13

201

202

203

202 NORTHBOUND TRAFFIC

NORTHBOUND CLOSED TO TRAFFIC

NORTHBOUND CLOSED TO TRAFFIC

I-89 NORTHBOUND

PI 202+00.22 =
201+98.50

PAVEMENT MARKING SEQUENCE FOR NORTHBOUND DETOUR

1) REMOVE EXISTING PAVEMENT MARKIINGS ON SOUTHBOUND.
2) INSTALL TEMPORARY PAVEMENT MARKINGS WITH MEDIAN BARRIER ON SOUTHBOUND (ITEMS 646.614 AND 646.615).
3) WHEN NORTHBOUND IS DONE:
   A) REMOVE MEDIAN BARRIER FROM SOUTHBOUND.
   B) INSTALL FINAL MARKINGS ON BOTH SOUTHBOUND AND NORTHBOUND (ITEMS 646.414 AND 646.415).

CROSSOVER TO BEGIN NORTHBOUND DETOUR

0 20 40
SCALE IN FEET

DATUM
VERTICAL NAVD88
HORIZONTAL NAD83(92)

PROJECT: FAIRFAX - FAIRFIELD - ST. ALBANS
PROJECT NO.: IM 089-3(27)

DESIGN FILE NAME: /87A007B/DESIGN/DA007NBA.DGN
IPARM FILE NAME: DA007NB7
SURVEYED BY: ORVIS
SQUAD LEADER: DELLA SANTA
PLOT DATE: 22-AUG-2000
SURVEY DATE: 6/98
DRAWN BY: SQUAD B
SHEET: 283 OF 370

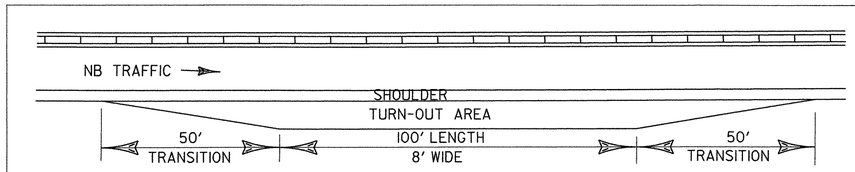

TEMPORARY TURN-OUT PARKING AREA FOR DISABLED VEHICLES

NOT TO SCALE

1) BEGINNING AT SB STA. 3302+00 RT, A TEMPORARY TURN-OUT PARKING AREA IS TO BE PLACED ON THE MEDIAN SIDE APPROXIMATELY EVERY 1500', OR AT LOCATIONS AS DIRECTED BY THE RESIDENT ENGINEER.

2) SUCH TURN-OUT AREAS SHALL BE PLACED WHERE GUARD RAIL IS NOT NEEDED.

3) PAYMENT TO BUILD THESE TURN-OUT AREAS SHALL BE UNDER ITEM 641.10, TRAFFIC CONTROL.

TEMPORARY TRAFFIC BARRIER
BEGINS AT SB MM 110.92
(SEE SHEET 292 FOR ENDING LOCATION)

NOTE: EVERY 10TH SECTION WILL BE A MODIFIED BARRIER TO ALLOW FOR SMALL ANIMALS TO CROSS UNDERNEATH.

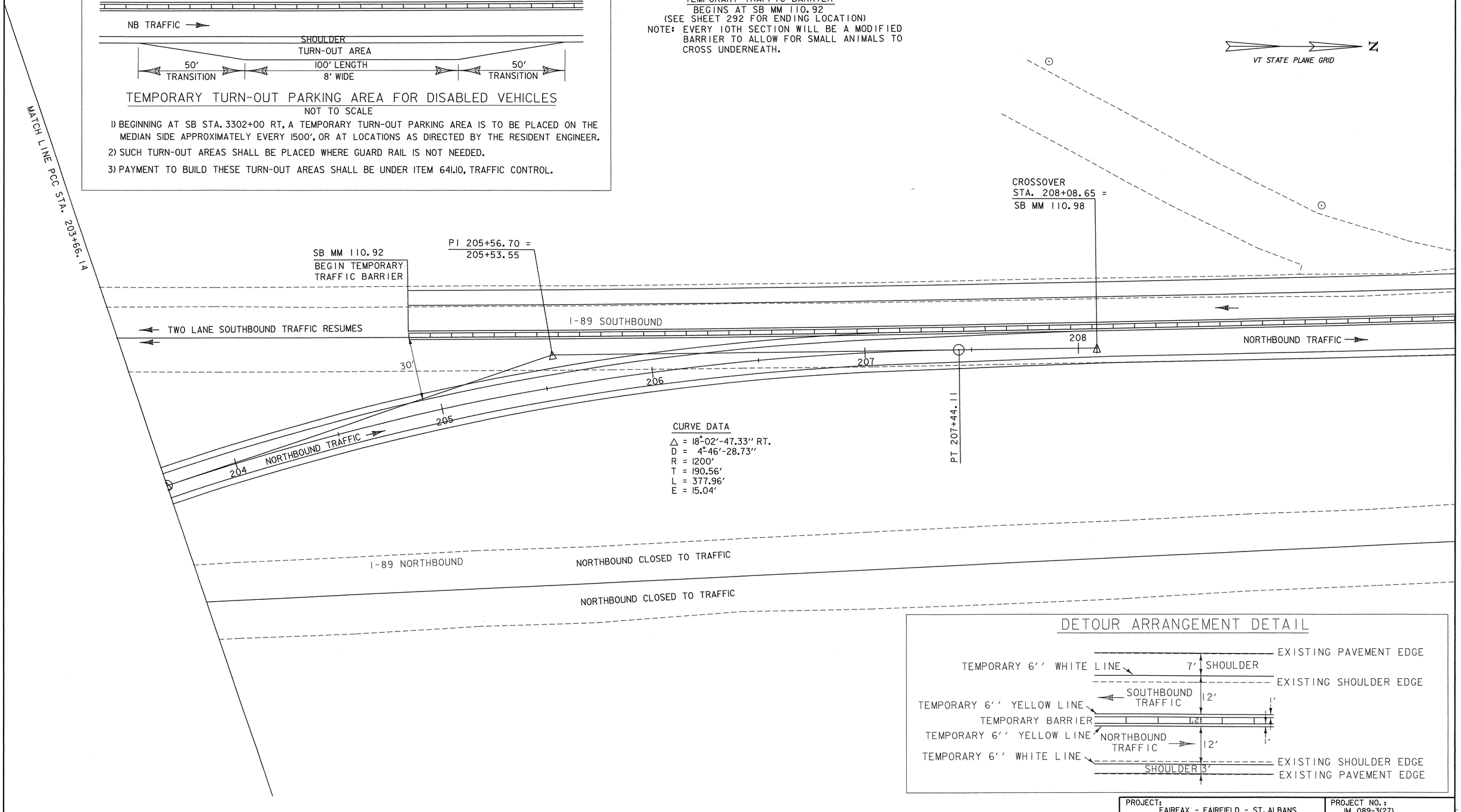

DETOUR ARRANGEMENT DETAIL

DATUM
VERTICAL NAVD88
HORIZONTAL NAD83(92)

CROSSOVER TO BEGIN NORTHBOUND DETOUR

0 20 40
SCALE IN FEET

PROJECT: FAIRFAX - FAIRFIELD - ST. ALBANS	PROJECT NO.: IM 089-3(27)
DESIGN FILE NAME: /87A007B/DESIGN/DA007NBA.DGN	
IPARM FILE NAME: DA007NB8	PLOT DATE: 22-AUG-2000
SURVEYED BY: ORVIS	SURVEY DATE: 6/98
SQUAD LEADER: DELLA SANTA	DRAWN BY: SQUAD B
	SHEET: 284 OF 370

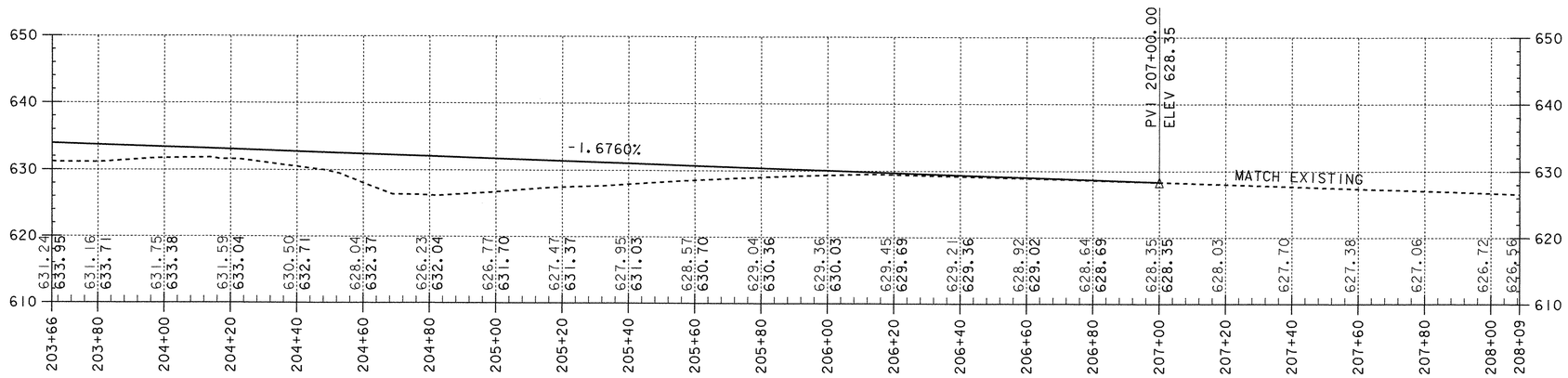

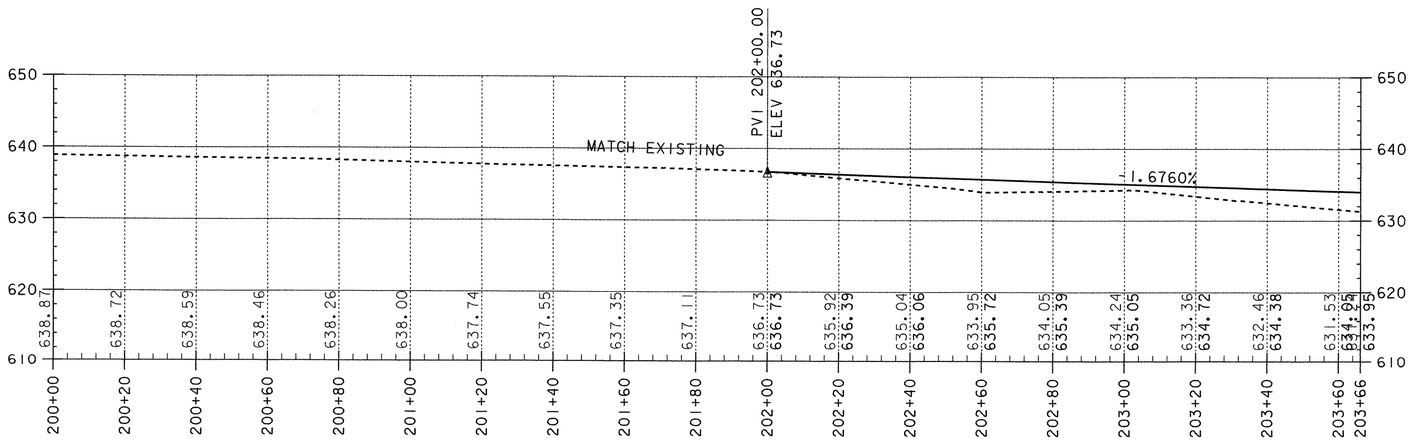

SCALE IN FEET

0 20 40

10 0

DATUM

VERTICAL NAVD88

HORIZONTAL NAD83(92)

Crossover Profile To Begin Northbound Detour

PROJECT: FAIRFAX-FAIRFIELD-ST. ALBANS	PROJECT NO.: IM 089-3(27)
DESIGN FILE NAME: /87A007B/DESIGN/DA007NBA.DGN	
IPARM FILE NAME: DA007NCP	PLOT DATE: 22-AUG-2000
SURVEYED BY: ORVIS	SURVEY DATE: 11/95
SQUAD LEADER: DELLA SANTA	DRAWN BY: SQUAD B
	SHEET: 285 OF 370

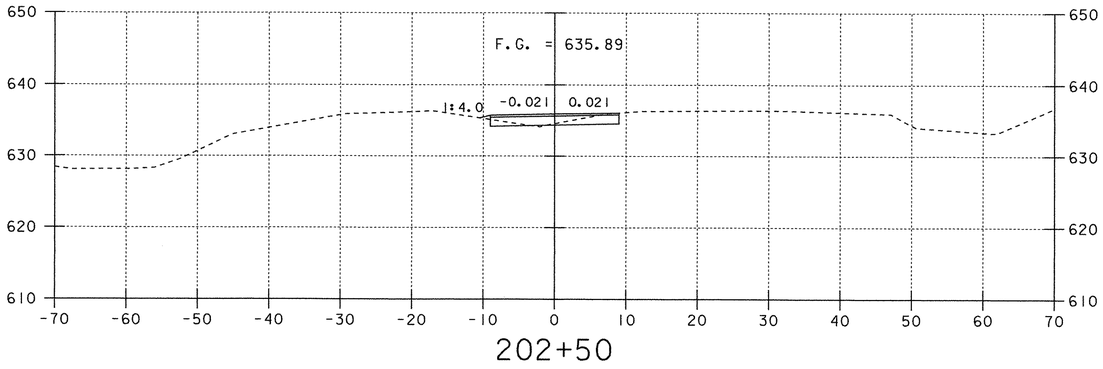

202+50

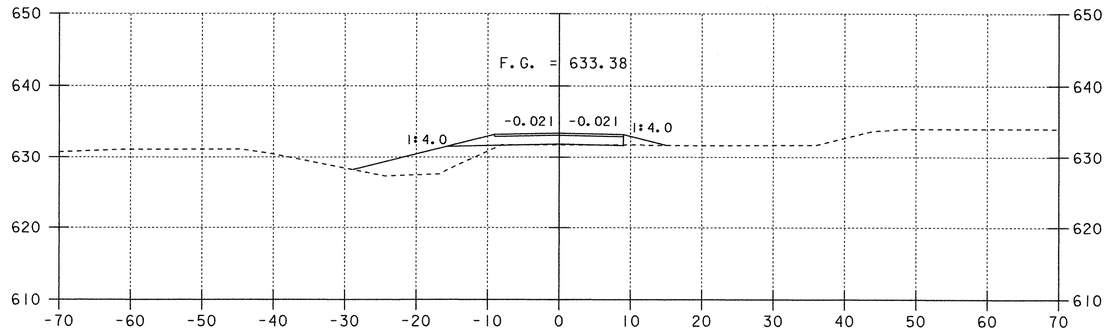

204+00

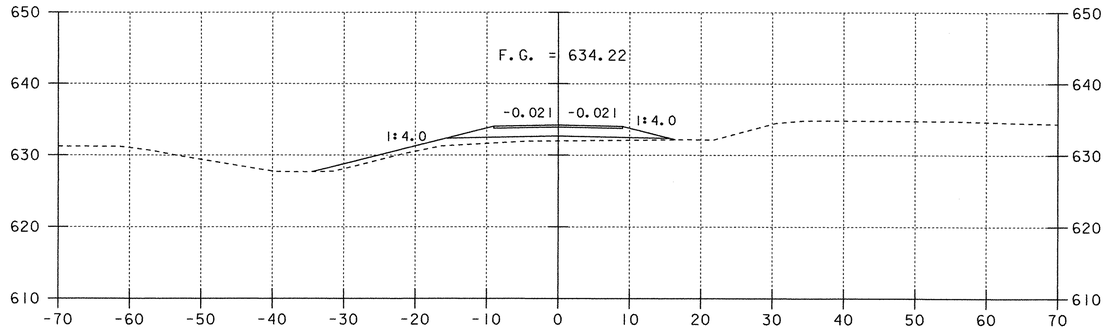

203+50

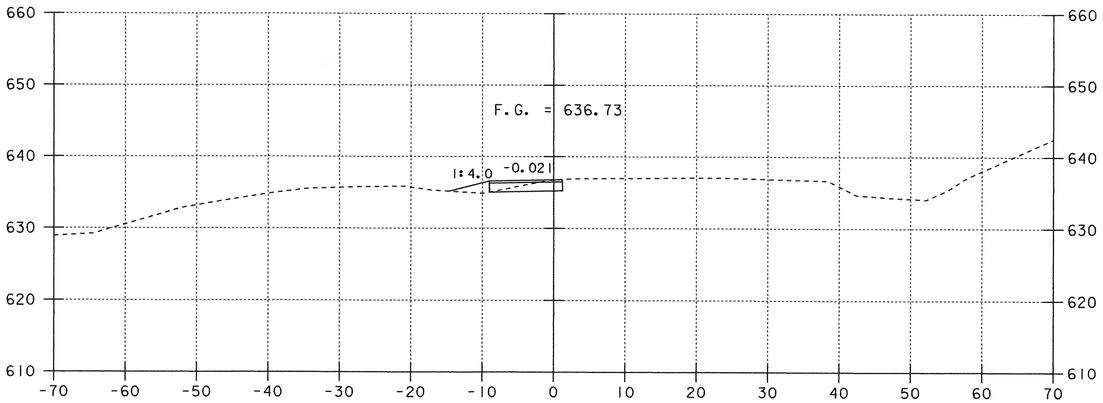

202+00

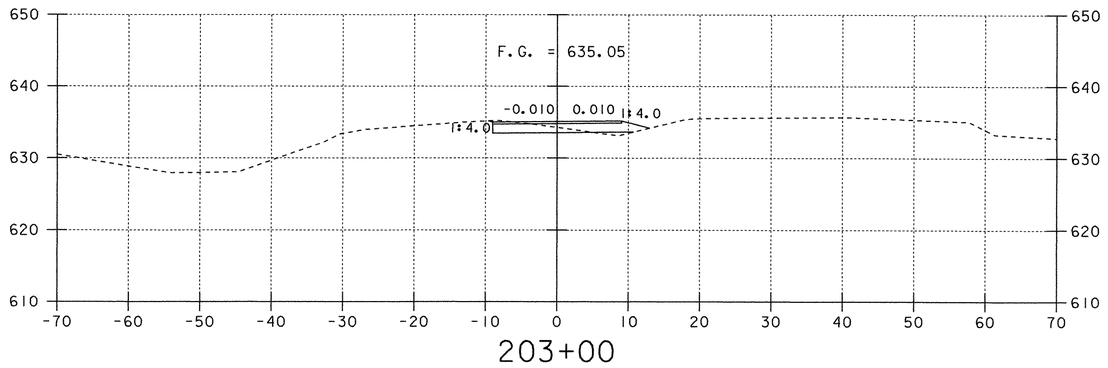

203+00

Crossover Cross Sections To Begin Northbound Detour

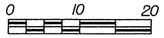

SCALE IN FEET

PROJECT: FAIRFAX-FAIRFIELD-ST. ALBANS	PROJECT NO.: IM 089-3(27)
DESIGN FILE NAME: /87A007B/DESIGN/DA007NBA.DGN	
IPARM FILE NAME: DA007NXI	PLOT DATE: 22-AUG-2000
SURVEYED BY: ORVIS	SURVEY DATE: 11/95
SQUAD LEADER: DELLA SANTA	DRAWN BY: SQUAD B
	SHEET: 286 OF 370

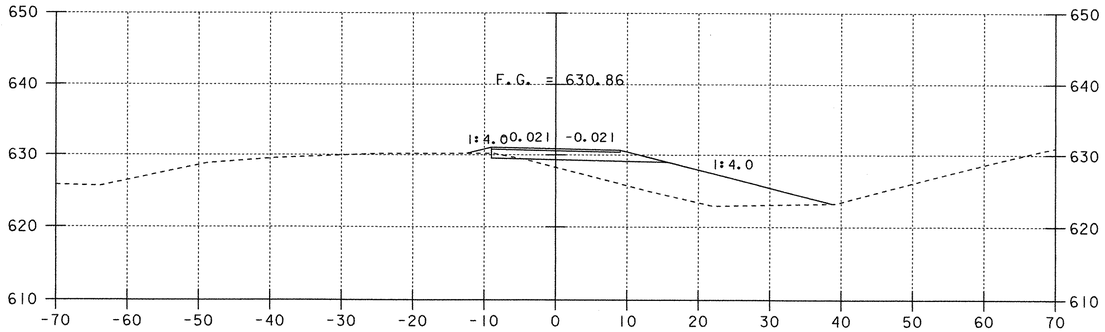

205+50

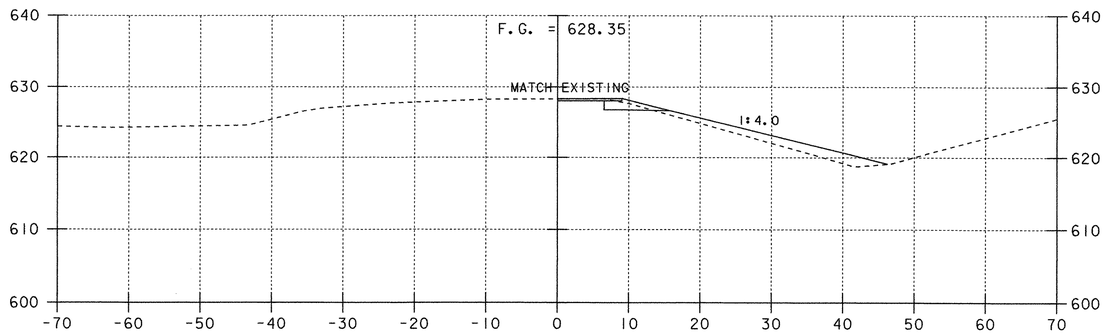

207+00

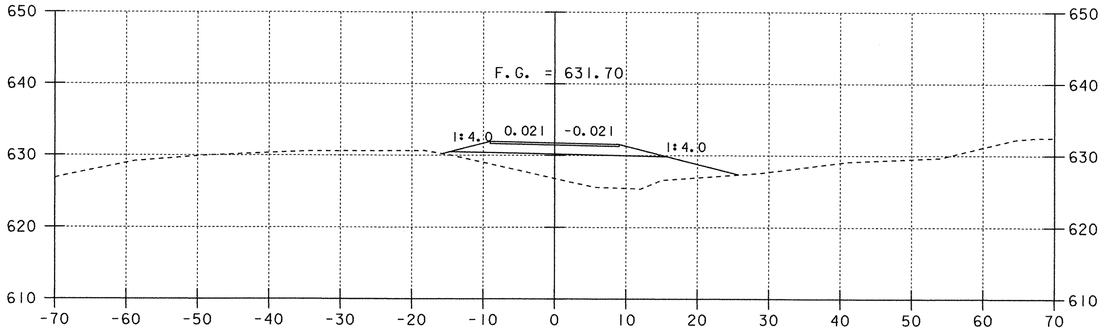

205+00

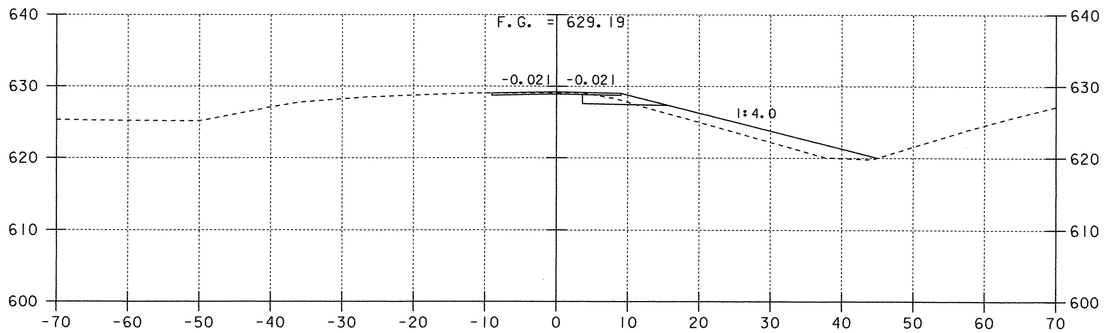

206+50

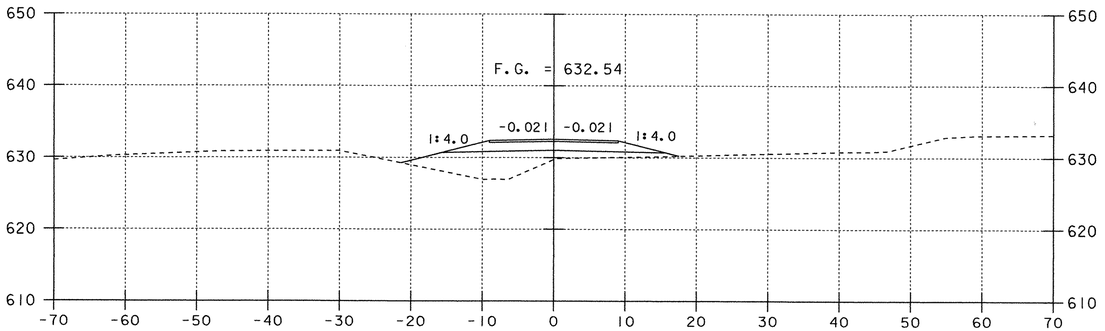

204+50

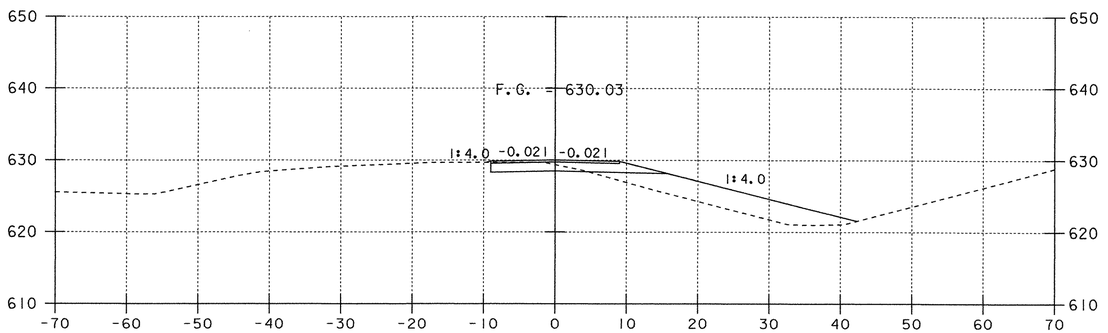

206+00

Crossover Cross Sections To Begin Northbound Detour

0 10 20

SCALE IN FEET

PROJECT: FAIRFAX-FAIRFIELD-ST. ALBANS		PROJECT NO.: IM 089-3(27)	
DESIGN FILE NAME:	/87A007DESIGN/DA007NBA.DGN		
IPARM FILE NAME:	DA007NX2	PLOT DATE:	22-AUG-2000
SURVEYED BY:	ORVIS	SURVEY DATE:	11/95
SQUAD LEADER:	DELLA SANTA	DRAWN BY:	SQUAD B
		SHEET:	287 OF 370

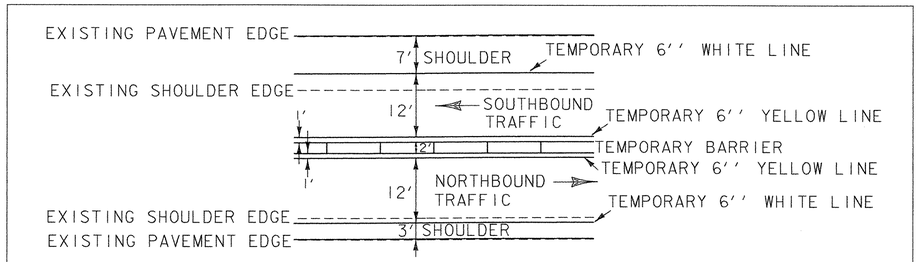

DETOUR ARRANGEMENT DETAIL

TEMPORARY 6'' YELLOW LINE
RAMP B CROSSOVER 42+00 - 47+50 (LT. EDGE SOLID)

TEMPORARY 6'' WHITE LINE
SB 3400+00 - 3404+35 RT (DOTTED, FOR DECEL. LANE ENTRANCE)
SB 3400+00 - 3404+35 (RT. EDGE SOLID)
RAMP B CROSSOVER 40+00 - 47+00 (RT. EDGE SOLID)

N
VT STATE PLANE GRID

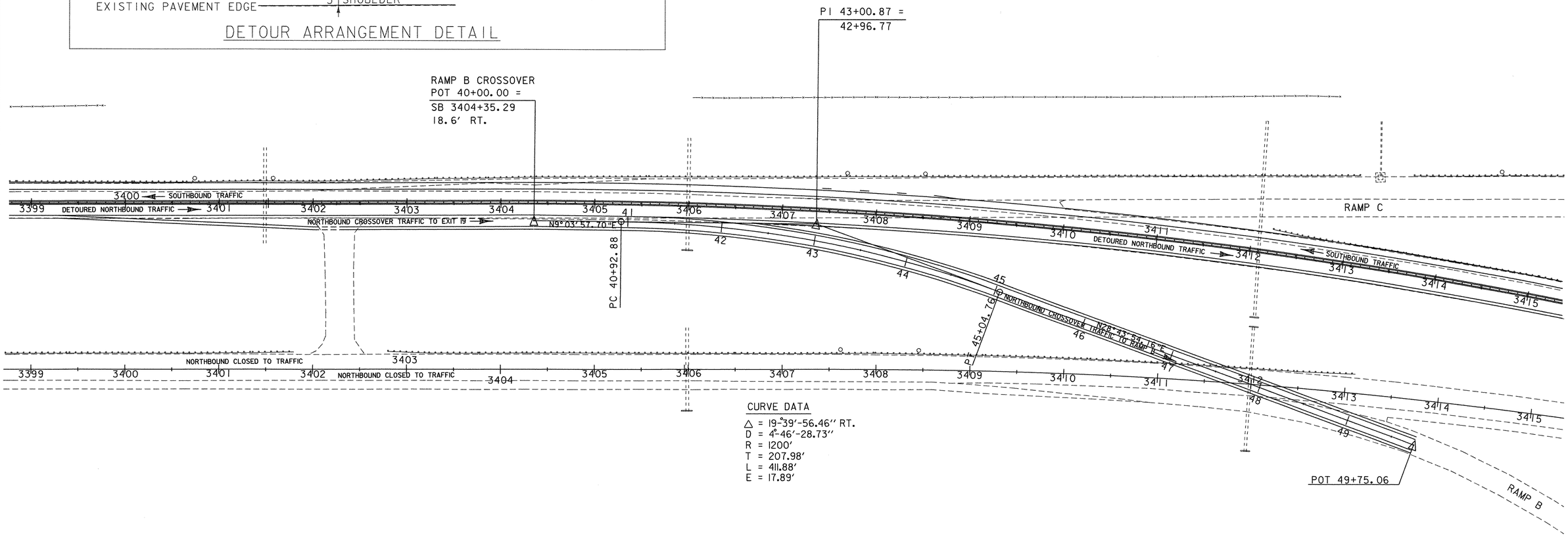

CURVE DATA
△ = 19°39'-56.46'' RT.
D = 4°46'-28.73''
R = 1200'
T = 207.98'
L = 411.88'
E = 17.89'

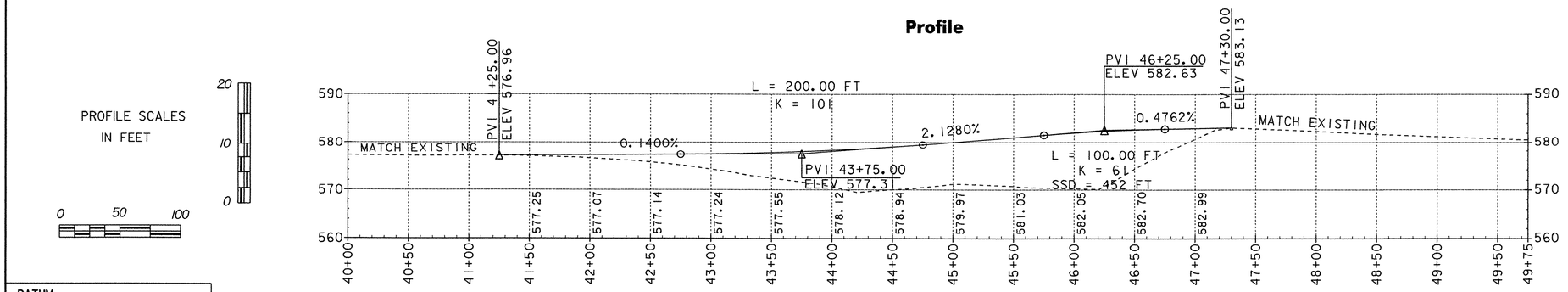

PROFILE SCALES IN FEET
20
10
0
0 50 100

0 50 100
PLAN SCALE IN FEET

DATUM
VERTICAL NAVD88
HORIZONTAL NAD83(92)

NORTHBOUND CROSSOVER TO RAMP B

PROJECT: FAIRFAX-FAIRFIELD-ST. ALBANS	PROJECT NO.: IM 089-3(27)
DESIGN FILE NAME: 87A007B\DESIGN\DA007NI9.DGN	
IPARM FILE NAME: DA007BCI	PLOT DATE: 22-AUG-2000
SURVEYED BY: ORVIS	SURVEY DATE: 11/95
SQUAD LEADER: DELLA SANTA	DRAWN BY: SQUAD B
	SHEET: 288 OF 370

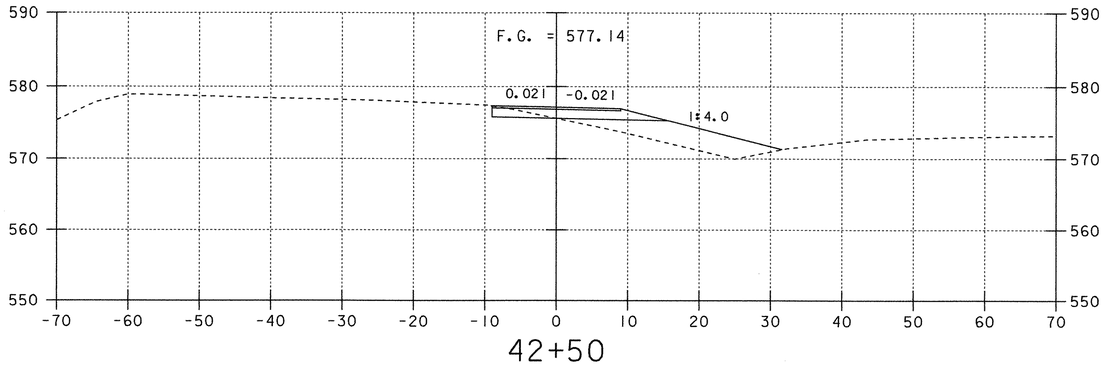

42+50

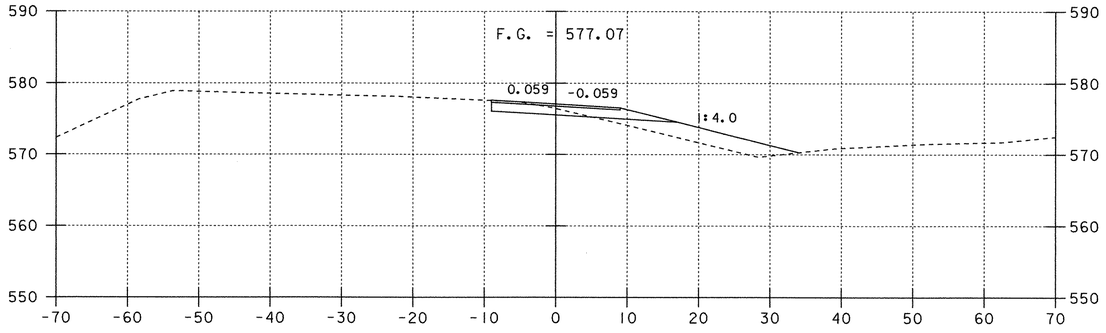

42+00

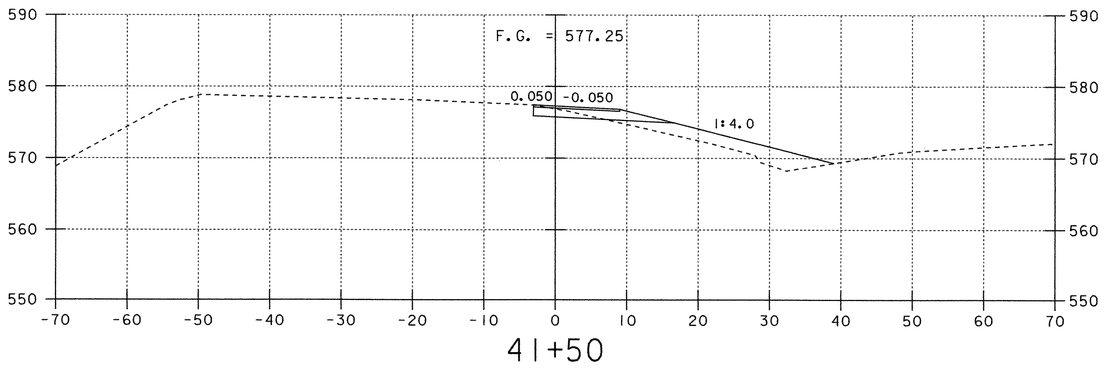

41+50

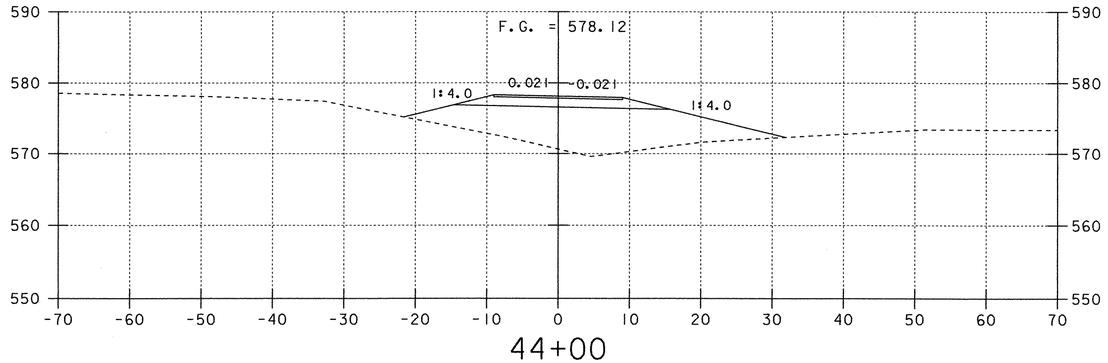

44+00

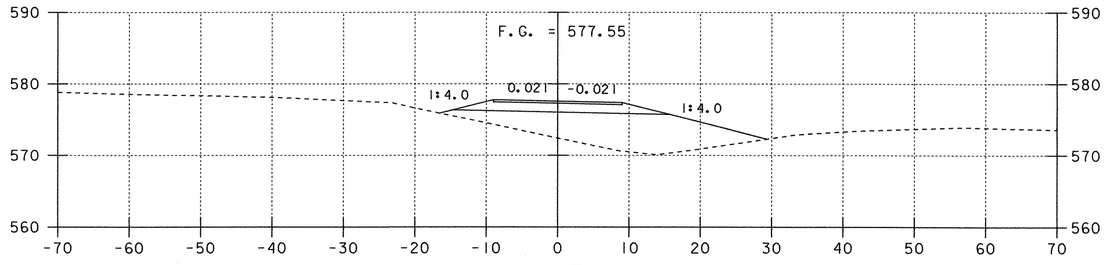

43+50

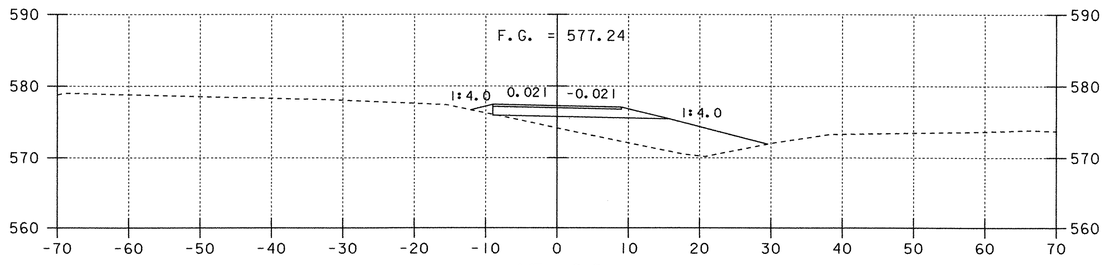

43+00

NORTHBOUND CROSSOVER TO RAMP B

0 10 20
SCALE IN FEET

PROJECT: FAIRFAX-FAIRFIELD-ST. ALBANS	PROJECT NO.: IM 089-3(27)
DESIGN FILE NAME: /87A007B/DESIGN/DA007NI9.DGN	
IPARM FILE NAME: DA007BXI	PLOT DATE: 22-AUG-2000
SURVEYED BY: GILMAN	SURVEY DATE: 11/95
SQUAD LEADER: DELLA SANTA	DRAWN BY: SQUAD B
	SHEET: 289 OF 370

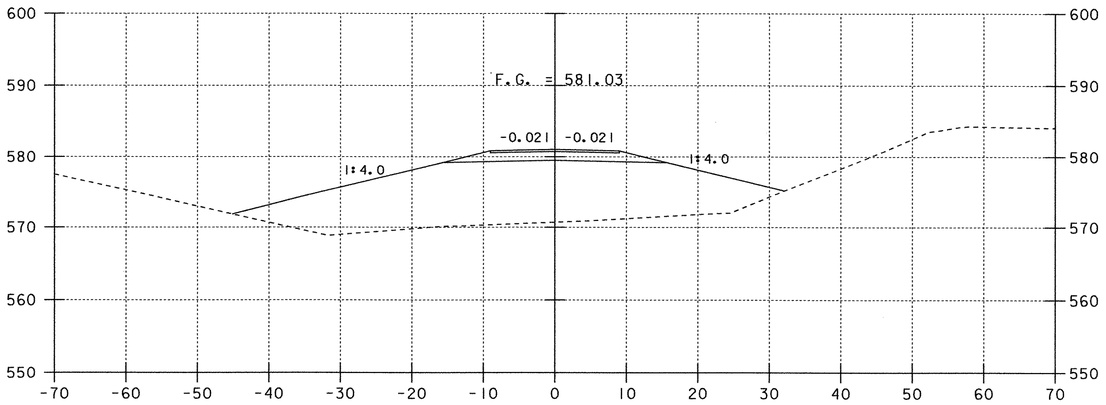

45+50

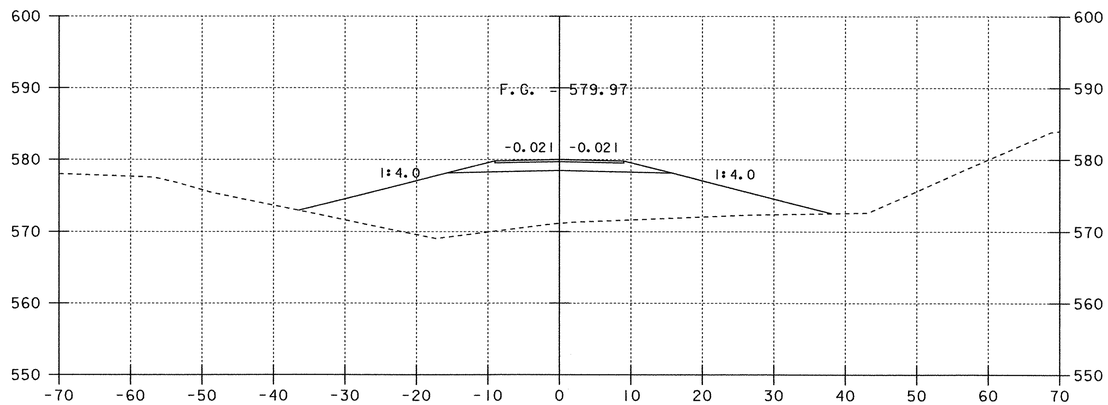

45+00

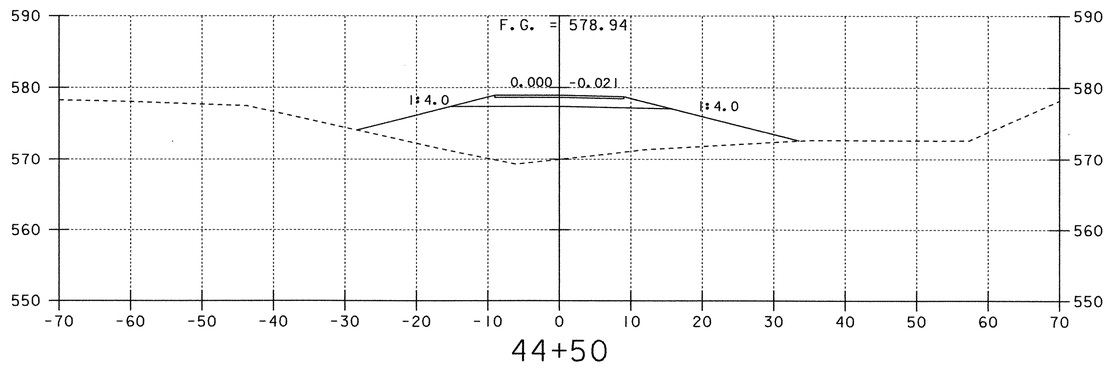

44+50

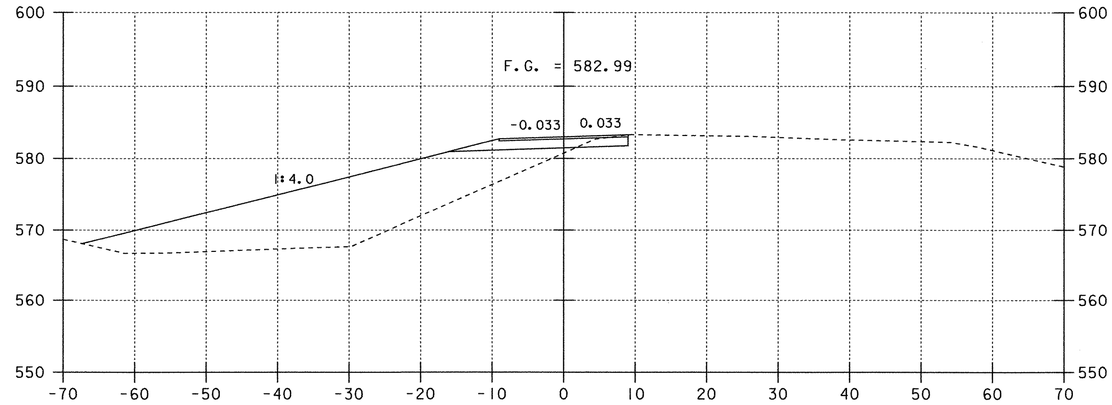

47+00

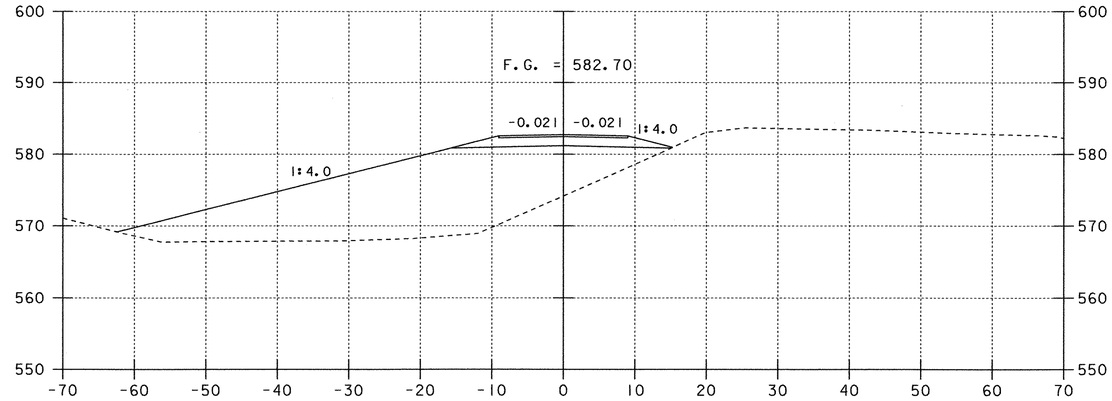

46+50

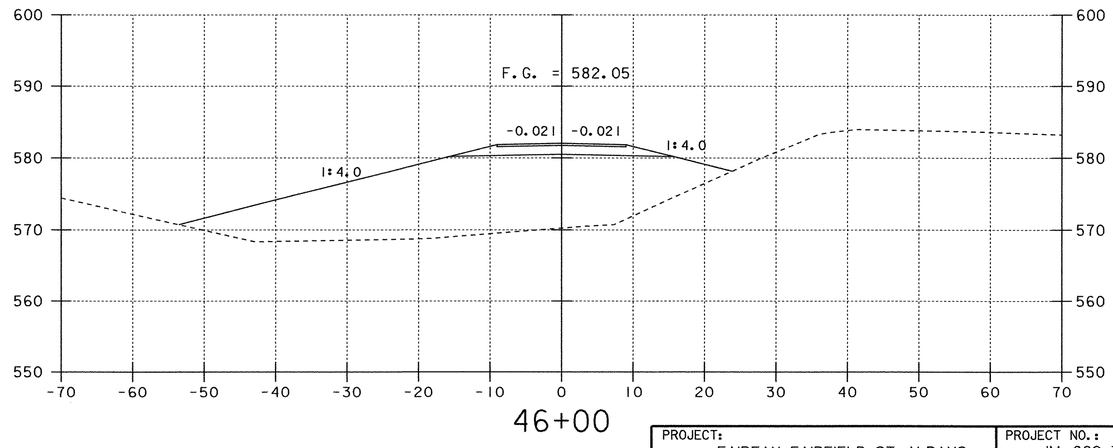

46+00

NORTHBOUND CROSSOVER TO RAMP B

0 10 20

SCALE IN FEET

PROJECT: FAIRFAX-FAIRFIELD-ST. ALBANS	PROJECT NO.: IM 089-3(27)
DESIGN FILE NAME: /87A007B/DESIGN/DA007N19.DGN	
IPARM FILE NAME: DA007BX2	PLOT DATE: 22-AUG-2000
SURVEYED BY: GILMAN	SURVEY DATE: JJ/95
SQUAD LEADER: DELLA SANTA	DRAWN BY: SQUAD B
	SHEET: 290 OF 370

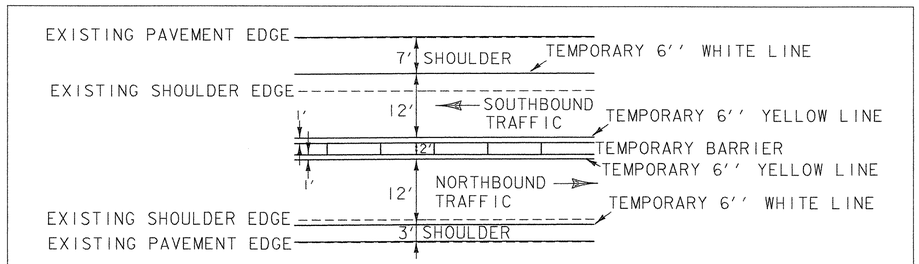

DETOUR ARRANGEMENT DETAIL

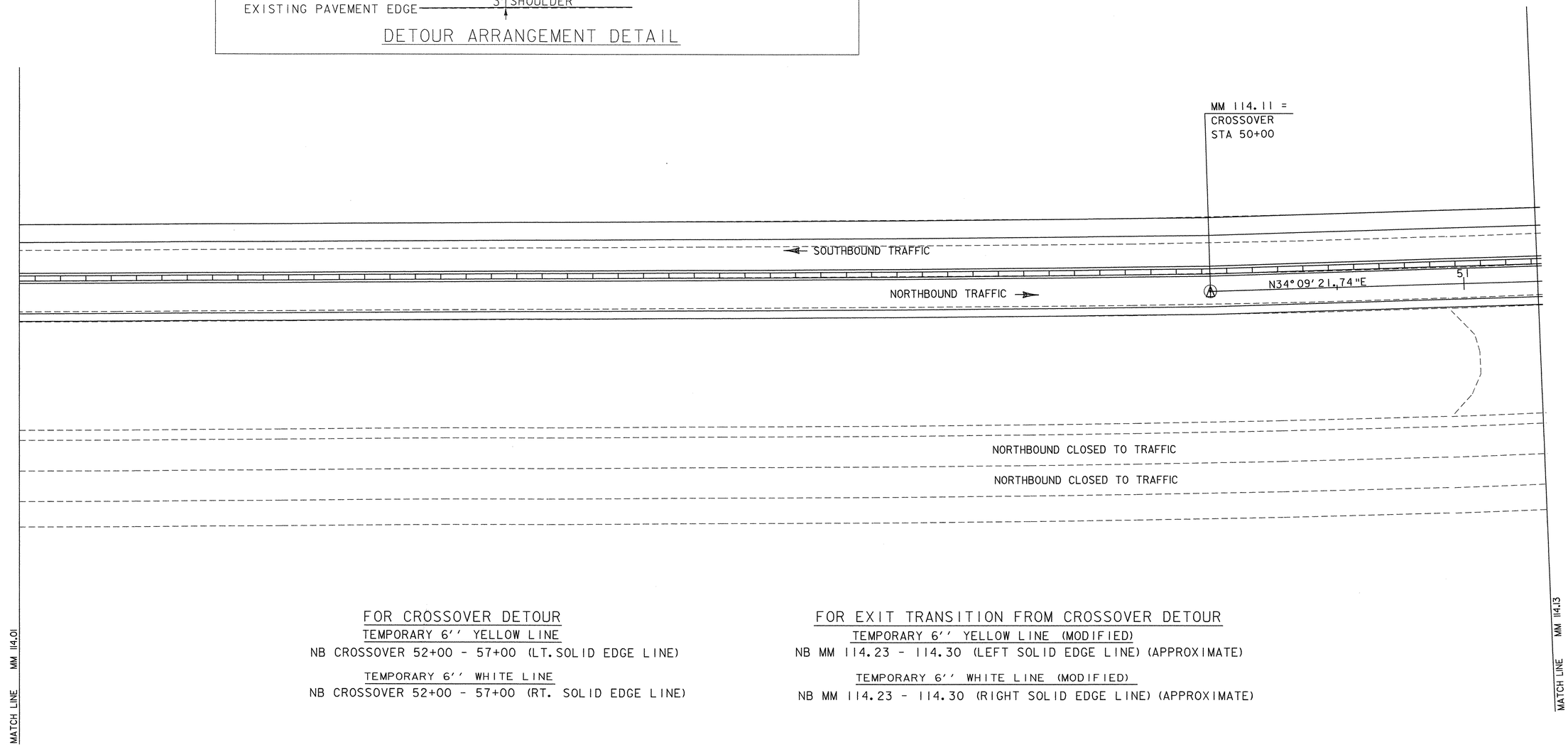

FOR CROSSOVER DETOUR

TEMPORARY 6'' YELLOW LINE

NB CROSSOVER 52+00 - 57+00 (LT. SOLID EDGE LINE)

TEMPORARY 6'' WHITE LINE

NB CROSSOVER 52+00 - 57+00 (RT. SOLID EDGE LINE)

FOR EXIT TRANSITION FROM CROSSOVER DETOUR

TEMPORARY 6'' YELLOW LINE (MODIFIED)

NB MM 114.23 - 114.30 (LEFT SOLID EDGE LINE) (APPROXIMATE)

TEMPORARY 6'' WHITE LINE (MODIFIED)

NB MM 114.23 - 114.30 (RIGHT SOLID EDGE LINE) (APPROXIMATE)

DATUM

VERTICAL ASSUMED

HORIZONTAL ASSUMED

CROSSOVER TO END NORTHBOUND DETOUR

0 20 40

SCALE IN FEET

PROJECT: FAIRFAX-FAIRFIELD-ST. ALBANS	PROJECT NO.: IM 089-3(27)
DESIGN FILE NAME: /87A007B/DESIGN/DA007NBC.DGN	
IPARM FILE NAME: DA007NB4	PLOT DATE: 19-AUG-2000
SURVEYED BY: GILMAN	SURVEY DATE: 11/95
SQUAD LEADER: DELLA SANTA	DRAWN BY: SQUAD B
	SHEET: 291 OF 370

TEMPORARY TRAFFIC BARRIER
ENDS AT SB MM 114.18
(SEE SHEET 284 FOR BEGINNING LOCATION)
NOTE: EVERY 10TH SECTION WILL BE A MODIFIED BARRIER TO ALLOW SMALL ANIMALS TO CROSS UNDERNEATH. (SEE SHEET 26.)

CURVE DATA
△ = 16°-23'-13.45" LT.
D = 4°-46'-28.73"
R = 1200'
T = 172.78'
L = 343.21'
E = 12.38'

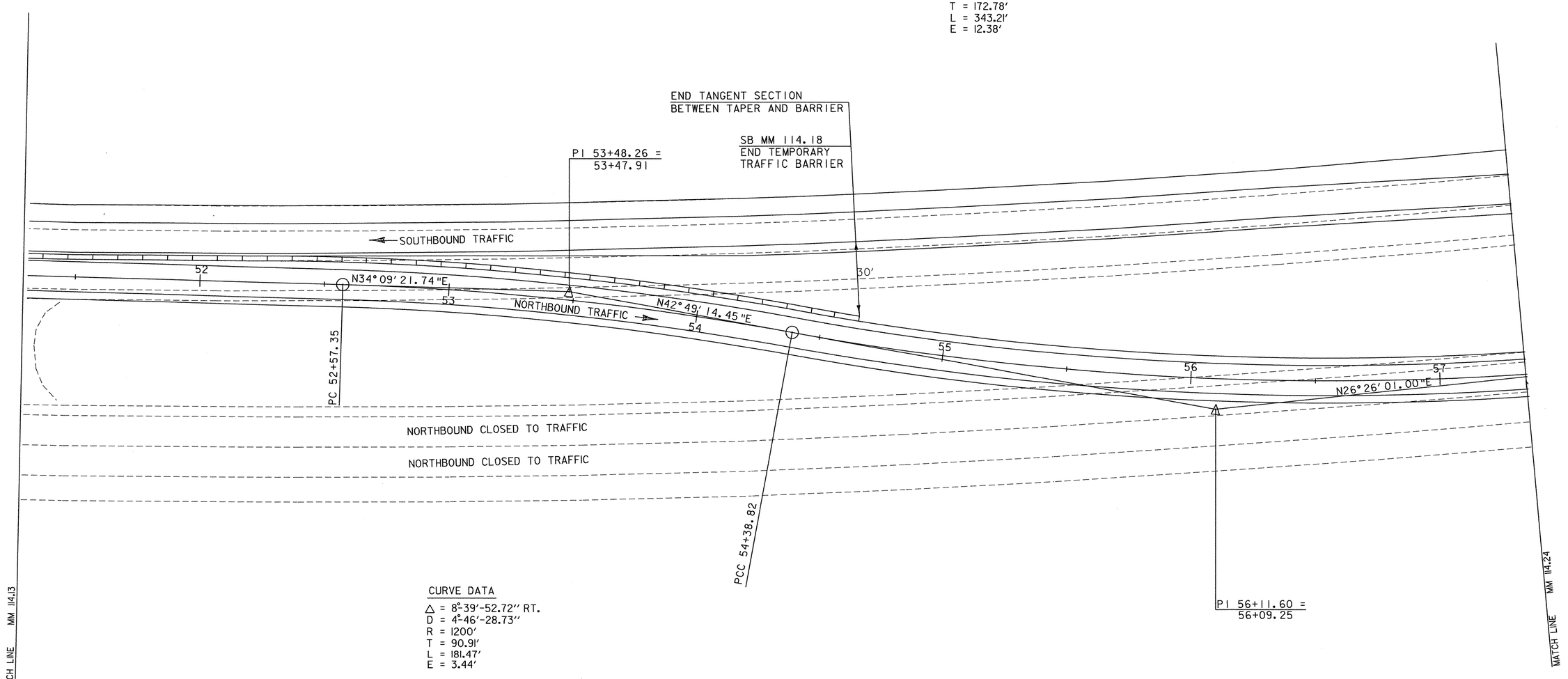

CURVE DATA
△ = 8°-39'-52.72" RT.
D = 4°-46'-28.73"
R = 1200'
T = 90.91'
L = 181.47'
E = 3.44'

DATUM
VERTICAL ASSUMED
HORIZONTAL ASSUMED

CROSSOVER TO END NORTHBOUND DETOUR

0 20 40
SCALE IN FEET

PROJECT: FAIRFAX-FAIRFIELD-ST. ALBANS	PROJECT NO.: IM 089-3(27)
DESIGN FILE NAME: /87A007B/DESIGN/DA007NBC.DGN	
IPARM FILE NAME: DA007NB5	PLOT DATE: 17-NOV-2000
SURVEYED BY: GILMAN	SURVEY DATE: 11/95
SQUAD LEADER: DELLA SANTA	DRAWN BY: SQUAD B
	SHEET: 292 OF 370

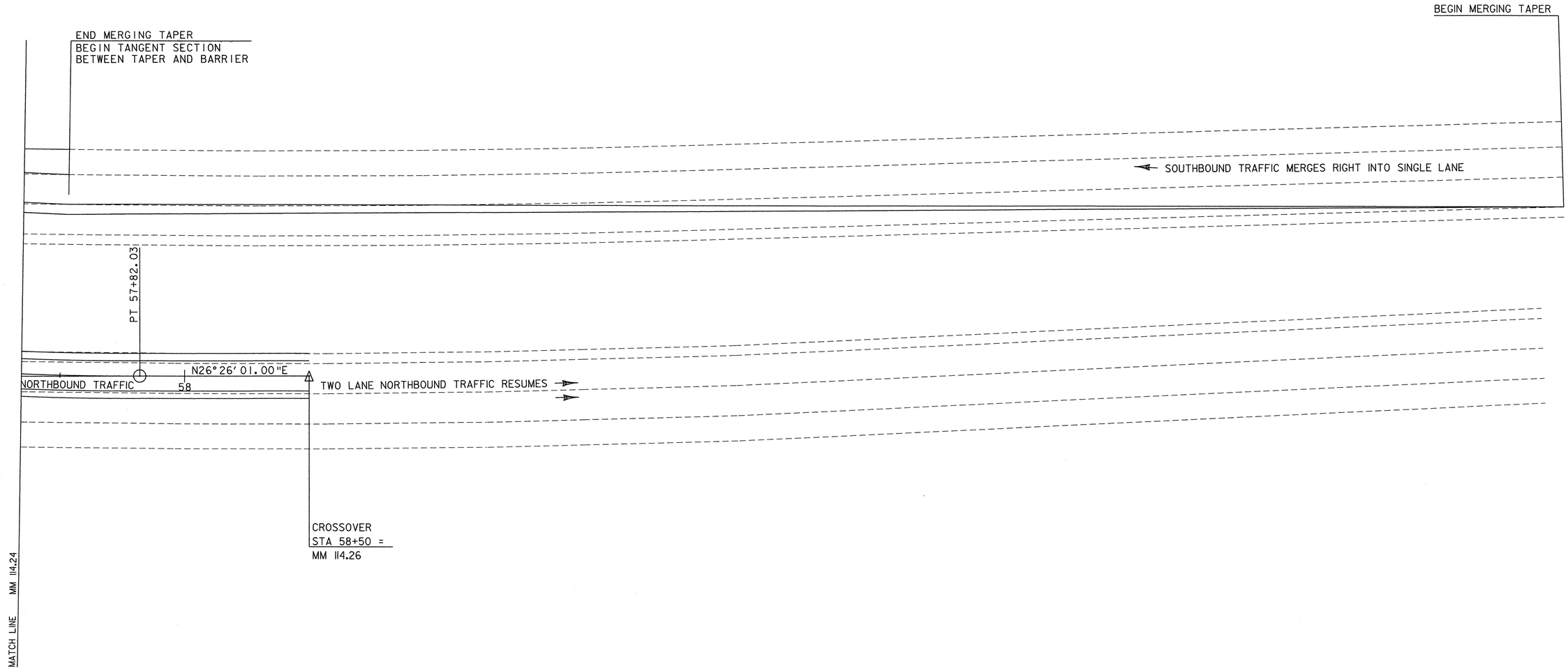

DATUM

VERTICAL	ASSUMED
HORIZONTAL	ASSUMED

CROSSOVER TO END NORTHBOUND DETOUR

0 20 40
SCALE IN FEET

PROJECT: FAIRFAX-FAIRFIELD-ST. ALBANS	PROJECT NO.: IM 089-3(27)
DESIGN FILE NAME: /87A007B/DESIGN/DA007NBC.DGN	
IPARM FILE NAME: DA007NB6	PLOT DATE: 19-AUG-2000
SURVEYED BY: GILMAN	SURVEY DATE: 11/95
SQUAD LEADER: DELLA SANTA	DRAWN BY: SQUAD B
	SHEET: 293 OF 370

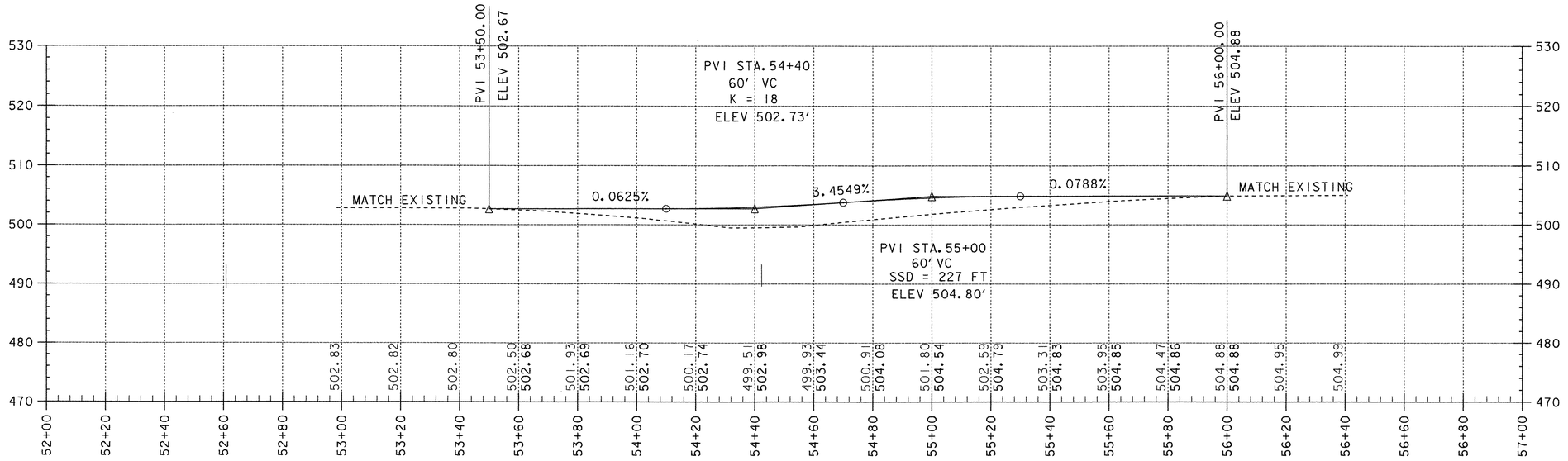

Crossover Profile To End Northbound Detour

SCALE IN FEET

20 10 0

0 20 40

DATUM
VERTICAL ASSUMED
HORIZONTAL ASSUMED

PROJECT: FAIRFAX-FAIRFIELD-ST. ALBANS	PROJECT NO.: IM 089-3(27)
DESIGN FILE NAME: /87A007B/DESIGN/DA007NBC.DGN	
IPARM FILE NAME: DA007NP3	PLOT DATE: 19-AUG-2000
SURVEYED BY: GILMAN	SURVEY DATE: 11/95
SQUAD LEADER: DELLA SANTA	DRAWN BY: SQUAD B
	SHEET: 294 OF 370

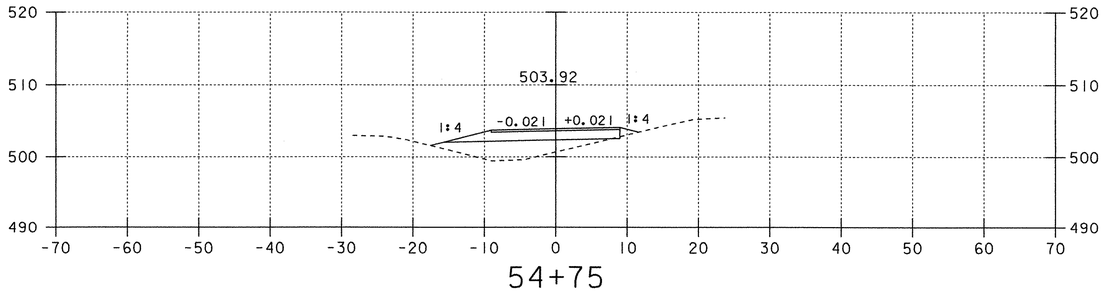

54+75

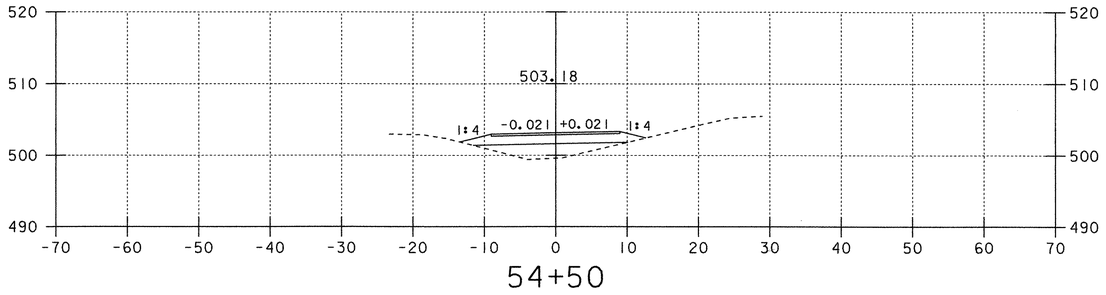

54+50

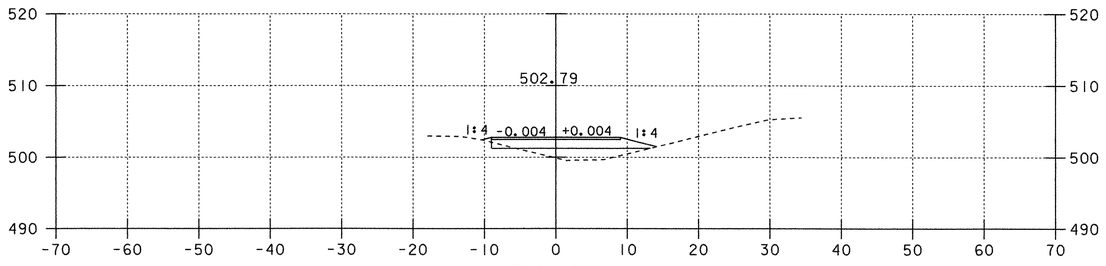

54+25

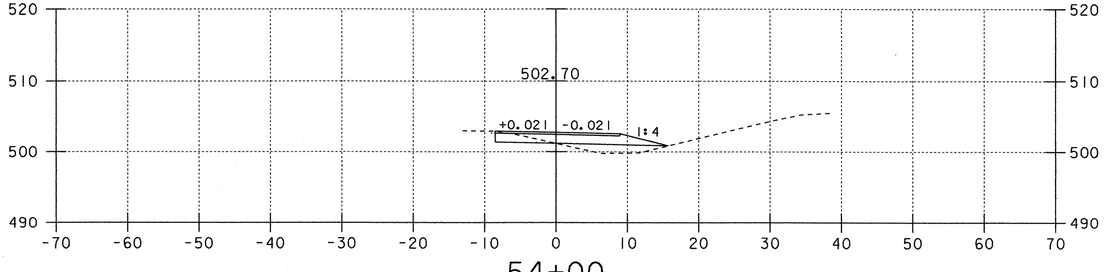

54+00

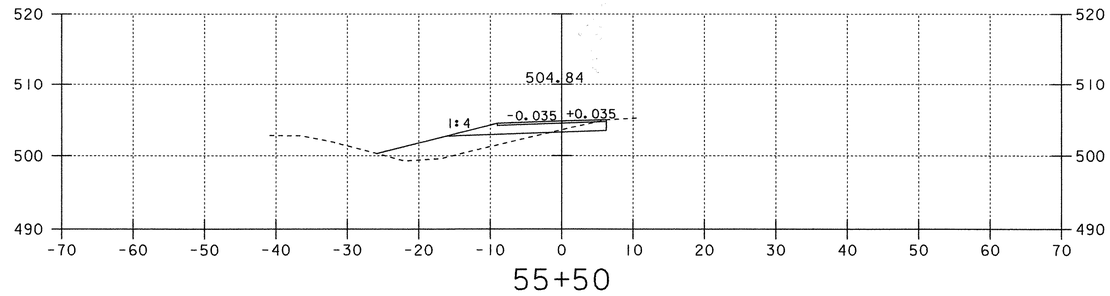

55+50

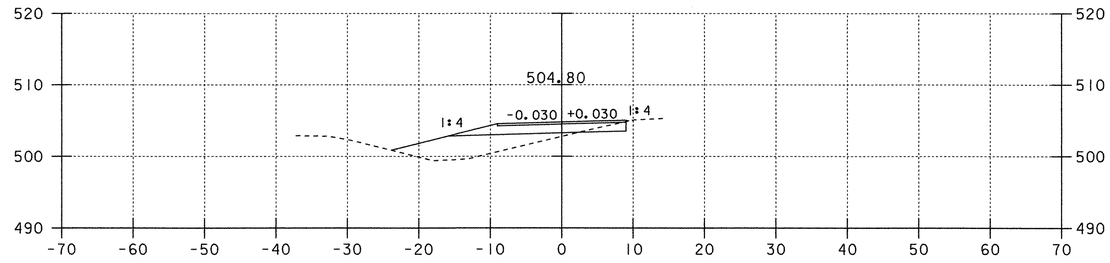

55+25

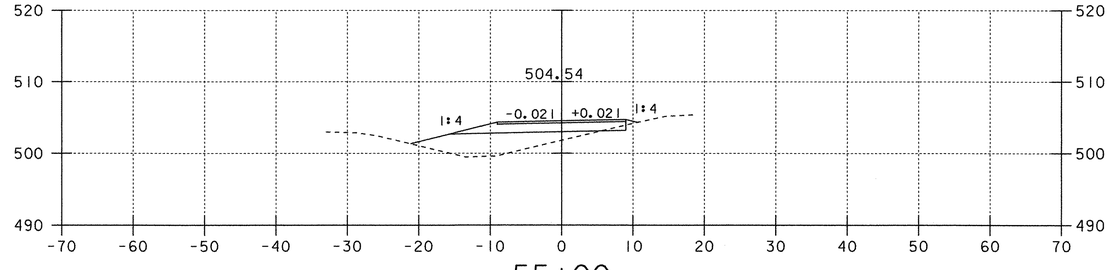

55+00

DATUM
VERTICAL ASSUMED
HORIZONTAL ASSUMED

Crossover Sections To End Northbound Detour

0 10 20
SCALE IN FEET

PROJECT: FAIRFAX-FAIRFIELD-ST. ALBANS
PROJECT NO.: IM 089-3(27)
DESIGN FILE NAME: /87A007B/DESIGN/DA007NBC.DGN
IPARM FILE NAME: DA007NX3
PLOT DATE: 19-AUG-2000
SURVEYED BY: GILMAN
SURVEY DATE: 11/95
SQUAD LEADER: DELLA SANTA
DRAWN BY: SQUAD B
SHEET: 295 OF 370

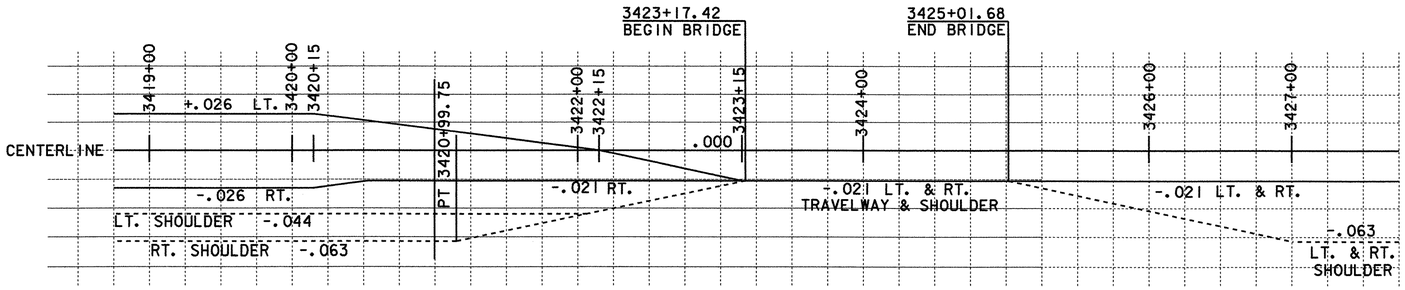

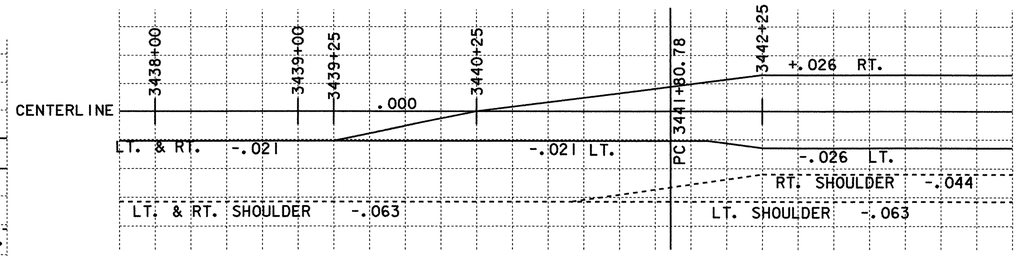

NOTE: AT THE BRIDGE THE SHOULDER CROSS SLOPE SHALL BE THE SAME AS THE TRAVELWAY LANES.

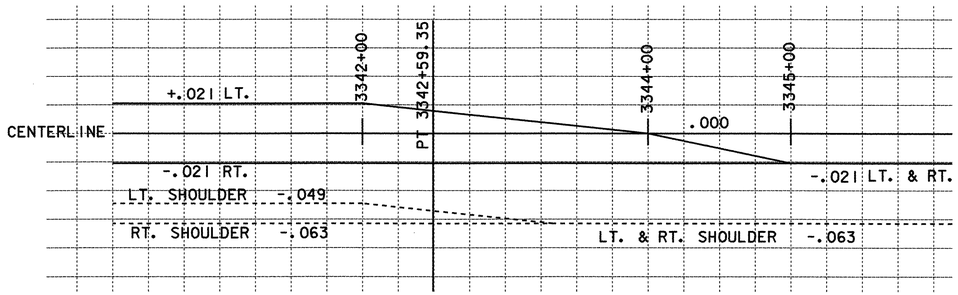

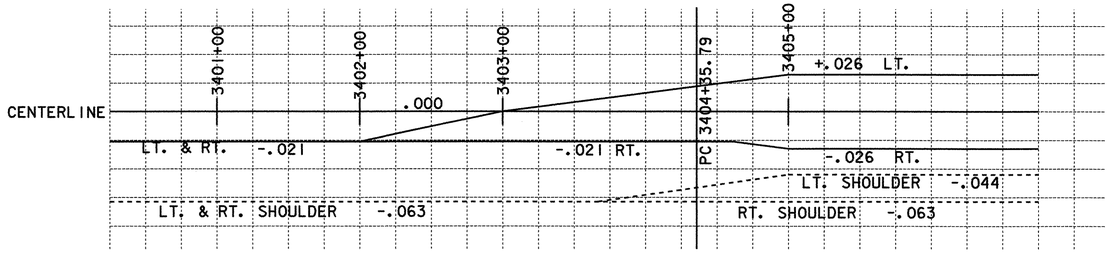

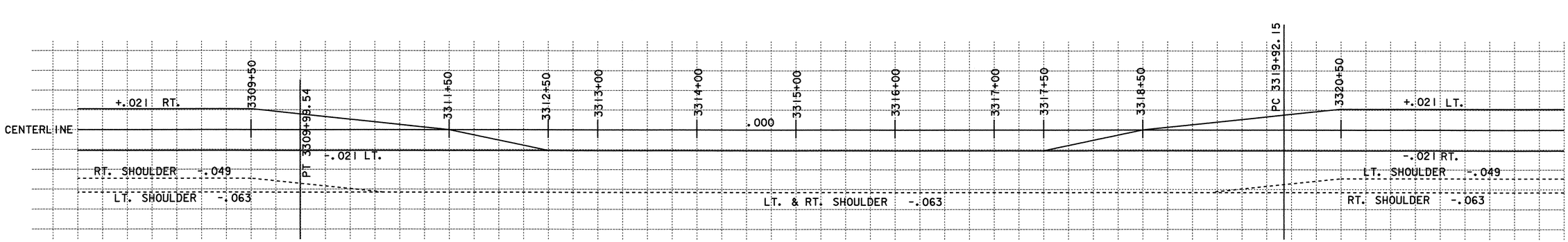

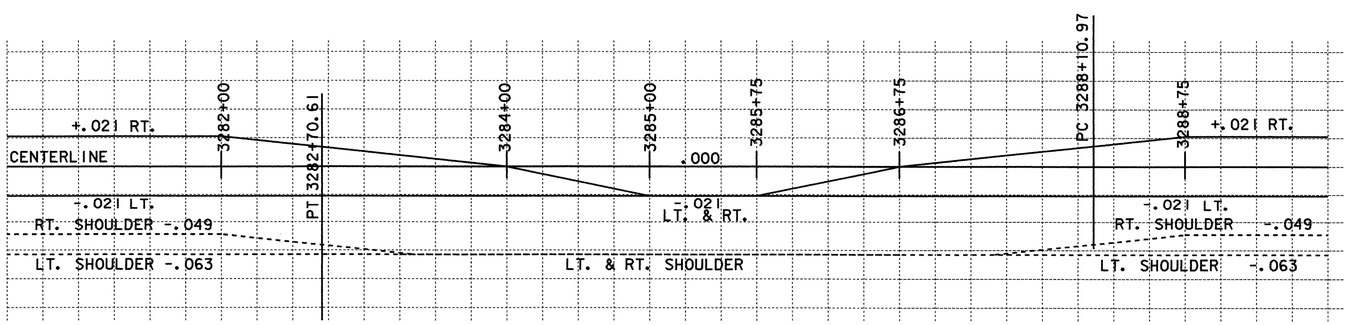

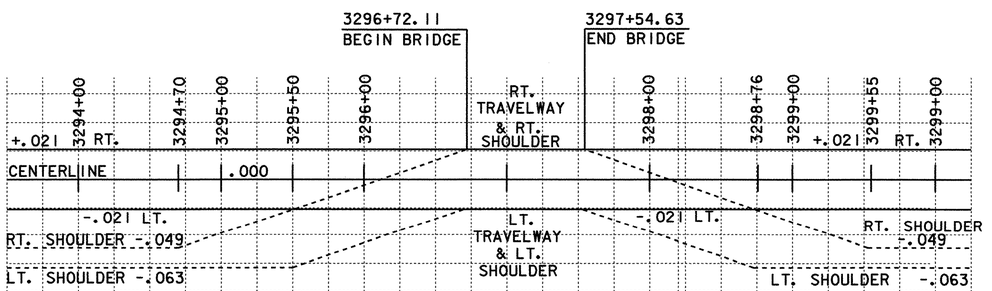

NOTE: AT THE BRIDGE THE SHOULDER CROSS SLOPE SHALL BE THE SAME AS THE TRAVELWAY LANES.

SOUTHBOUND BANKING TRANSITION DIAGRAMS

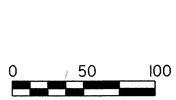

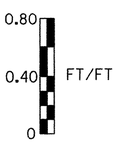

PROJECT: FAIRFAX - FAIRFIELD - ST. ALBANS	PROJECT NO.: IM 089-3(27)
DESIGN FILE NAME: /87A007B/DESIGN/DA007XS2.DGN	
IPARM FILE NAME: DA007BKS	PLOT DATE: 18-AUG-2000
SURVEYED BY: ORVIS	SURVEY DATE: 6/98
SQUAD LEADER: DELLA SANTA	DRAWN BY: SQUAD B
	SHEET: 296 OF 370

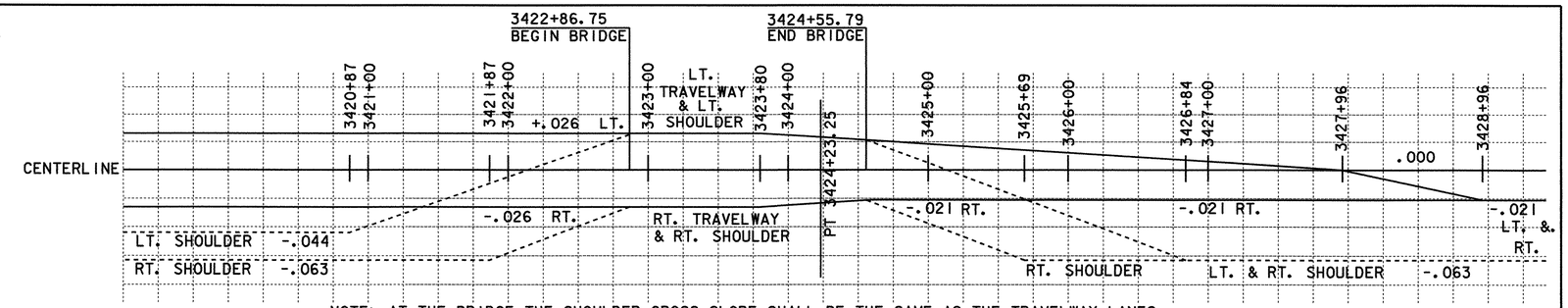

NOTE: AT THE BRIDGE THE SHOULDER CROSS SLOPE SHALL BE THE SAME AS THE TRAVELWAY LANES.

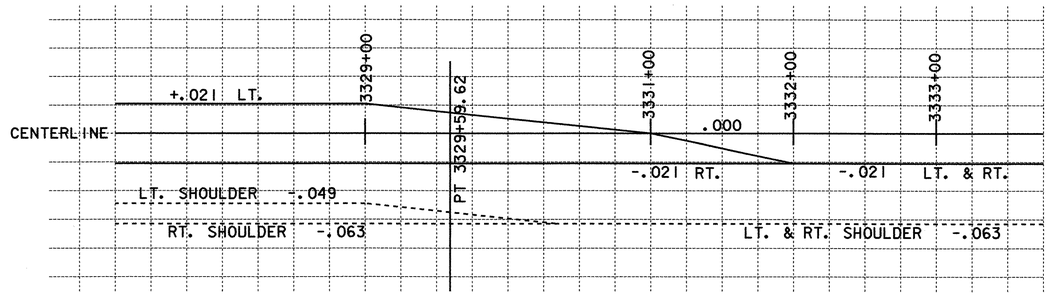

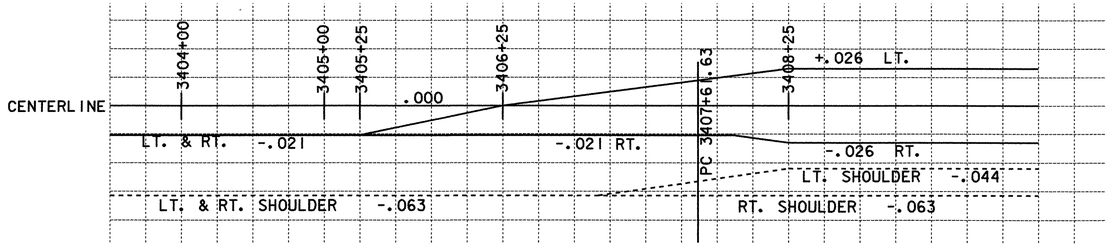

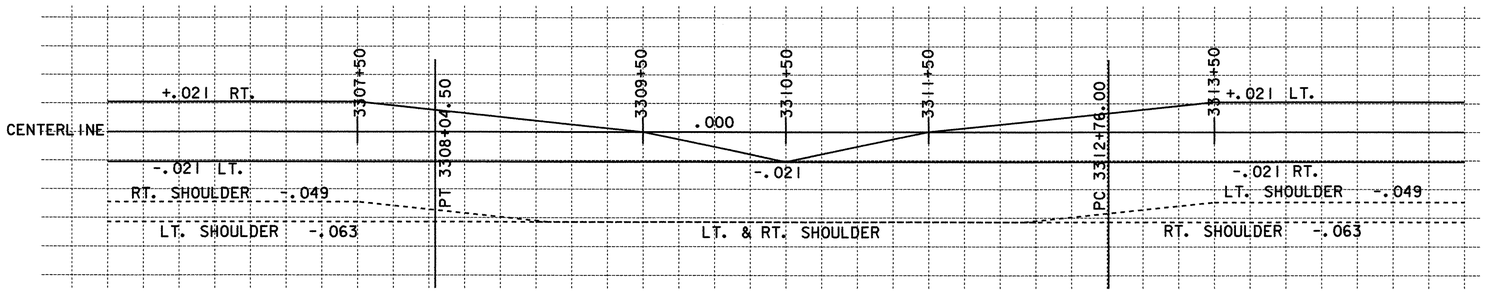

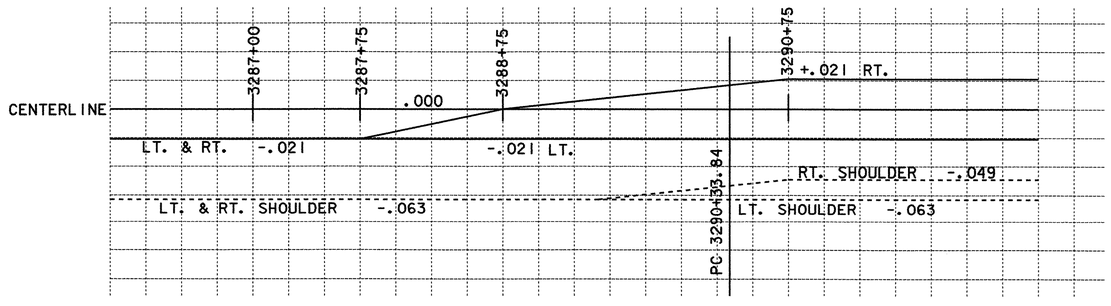

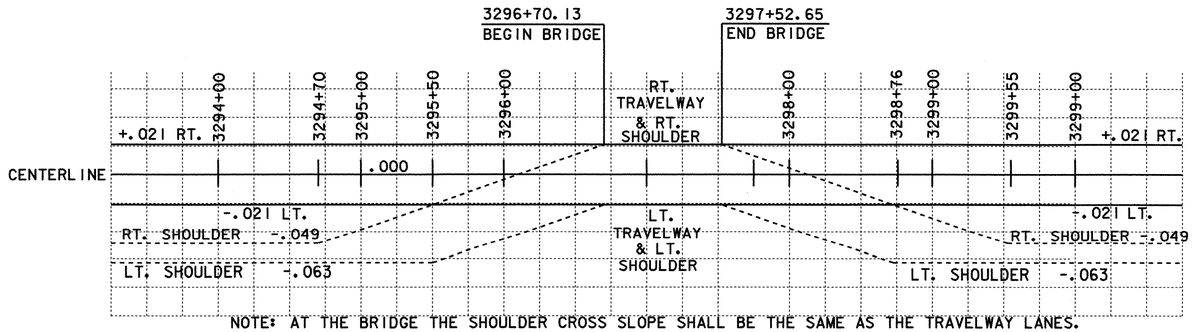

NOTE: AT THE BRIDGE THE SHOULDER CROSS SLOPE SHALL BE THE SAME AS THE TRAVELWAY LANES.

NORTHBOUND BANKING TRANSITION DIAGRAMS

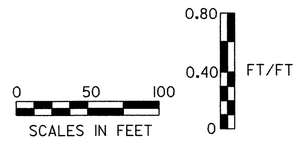

PROJECT: FAIRFAX - FAIRFIELD - ST. ALBANS	PROJECT NO.: IM 089-3(27)
DESIGN FILE NAME: /87A007B/DESIGN/DA007XSI.DGN	
IPARM FILE NAME: DA007BKN	PLOT DATE: 18-AUG-2000
SURVEYED BY: ORVIS	SURVEY DATE: 6/98
SQUAD LEADER: DELLA SANTA	DRAWN BY: SQUAD B
	SHEET: 297 OF 370

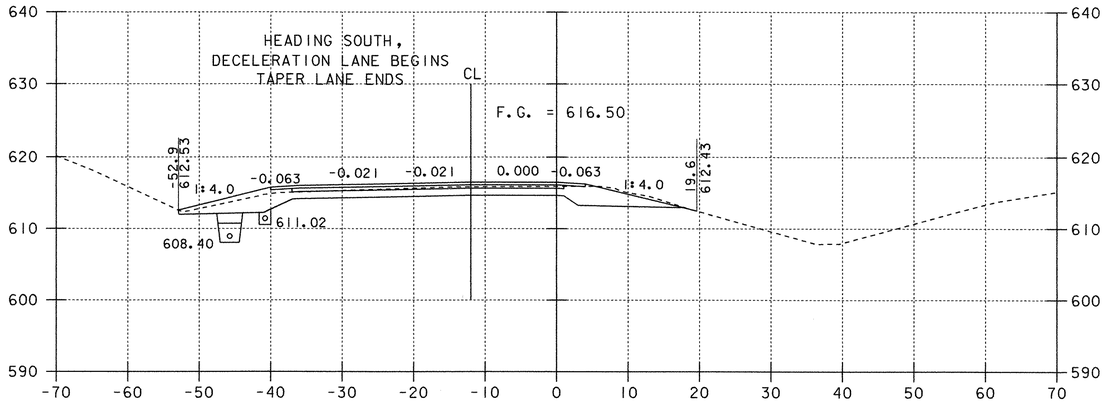

3284+00

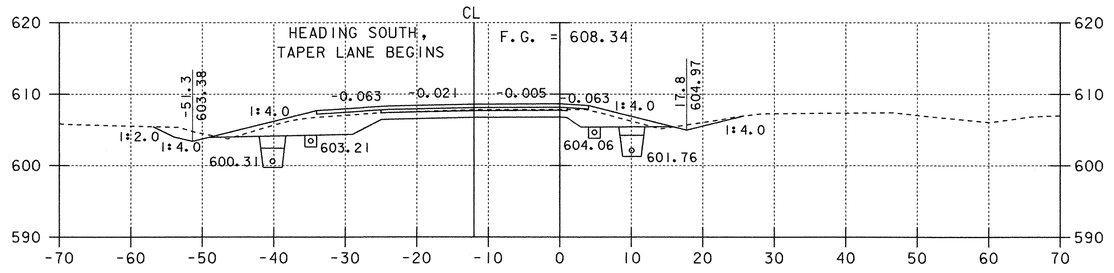

3286+50

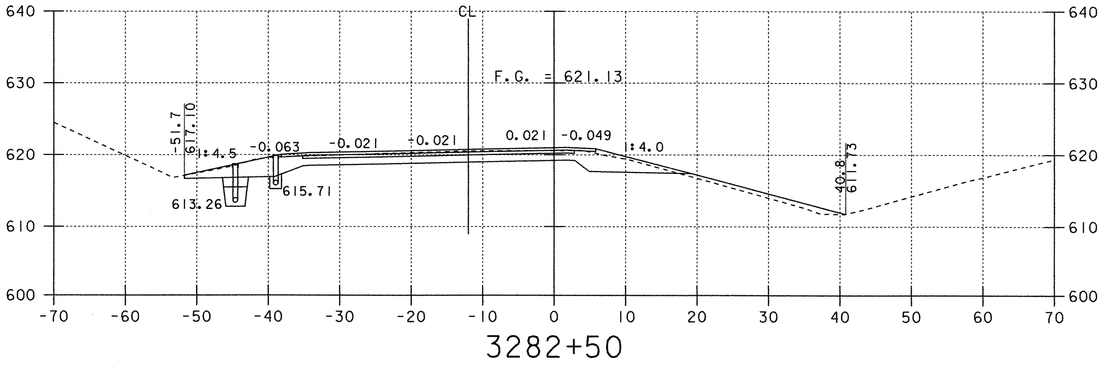

3282+50

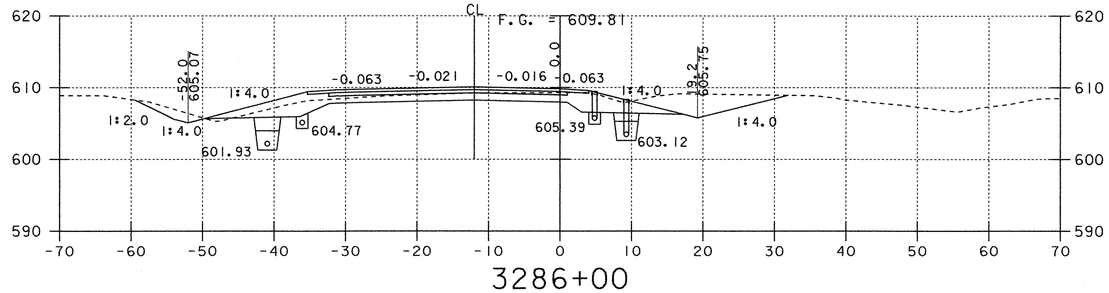

3286+00

NOTE: OFFSET DISTANCES ARE MEASURED FROM THE GRADE LINE.

SOUTHBOUND CROSS SECTIONS

0 10 20
SCALE IN FEET

PROJECT: FAIRFAX - FAIRFIELD - ST. ALBANS	PROJECT NO.: IM 089-3(27)
DESIGN FILE NAME: /87A007B/DESIGN/DA007XS2.DGN	
IPARM FILE NAME: DA007X21	PLOT DATE: 18-AUG-2000
SURVEYED BY: ORVIS	SURVEY DATE: 6/98
SQUAD LEADER: DELLA SANTA	DRAWN BY: SQUAD B
	SHEET: 298 OF 370

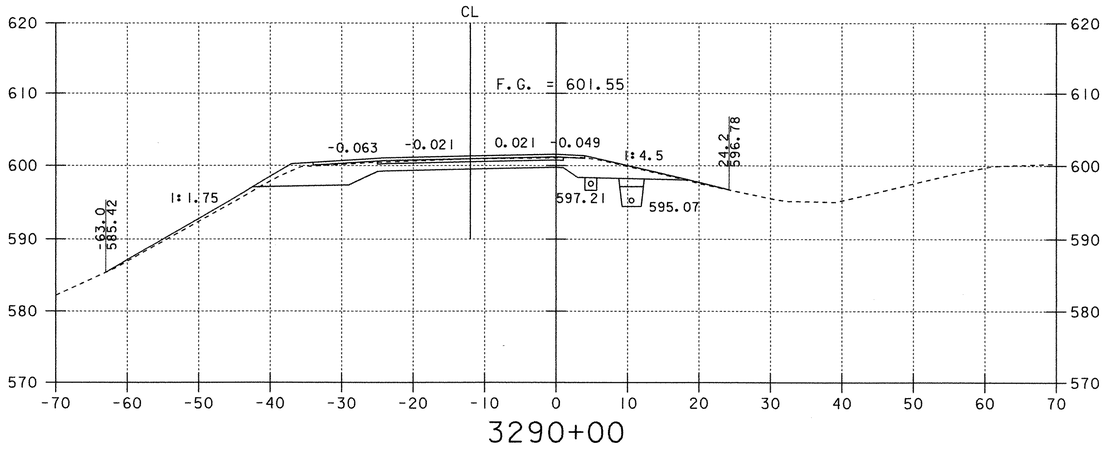

3290+00

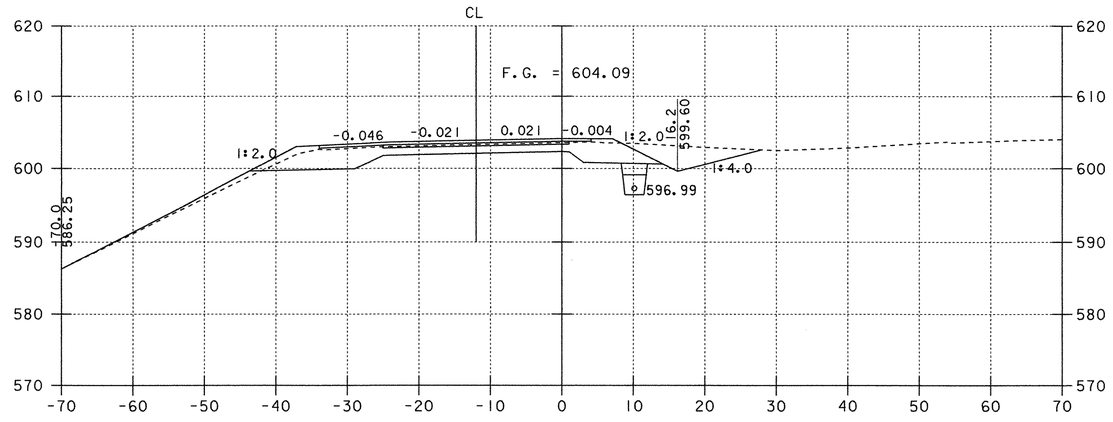

3296+00

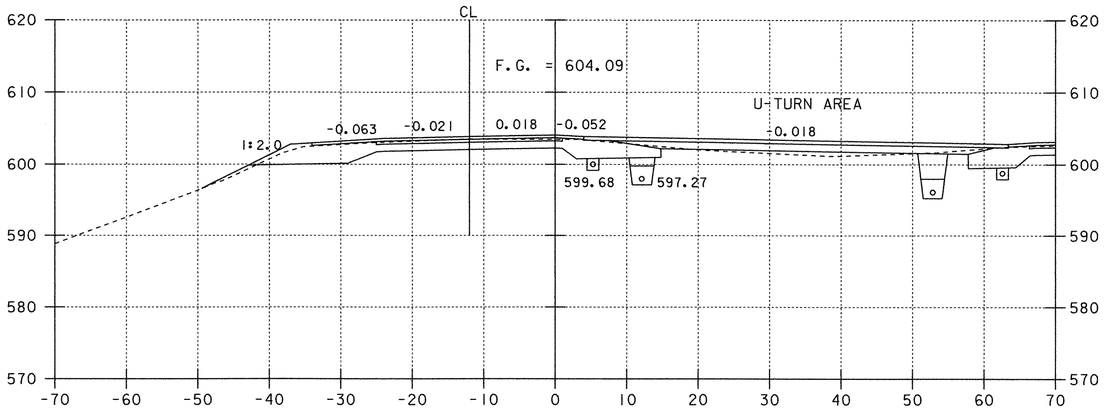

3288+30

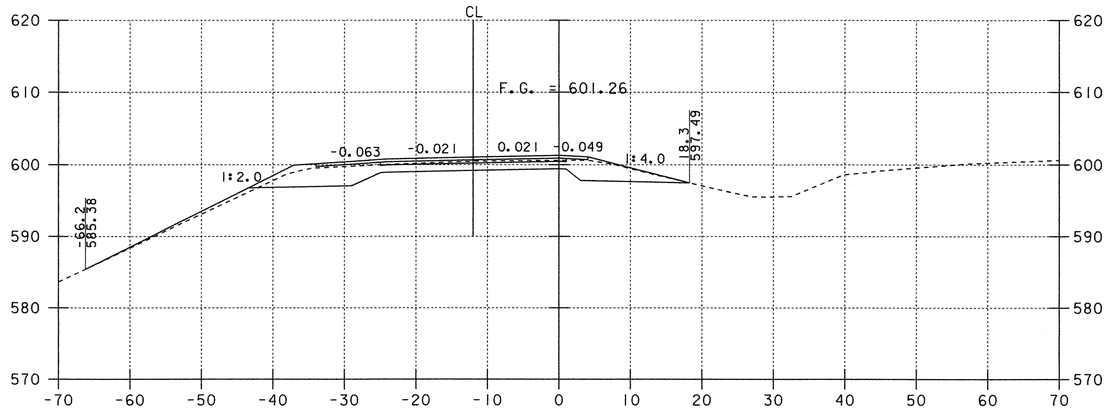

3294+00

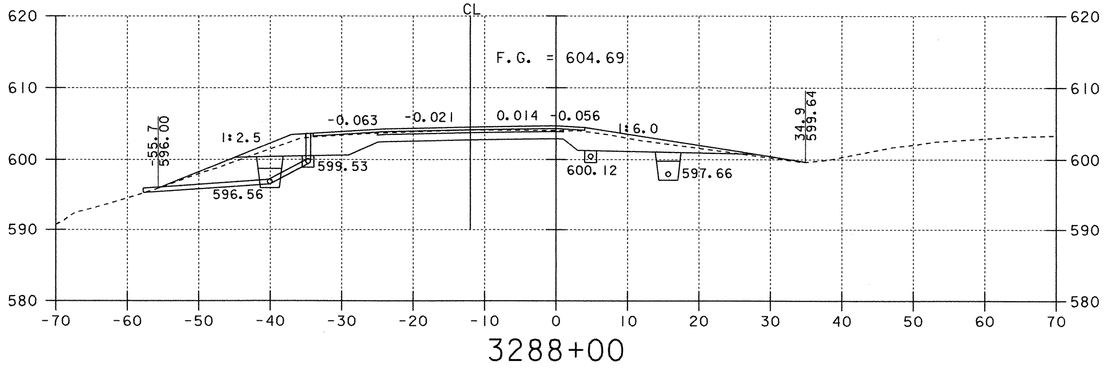

3288+00

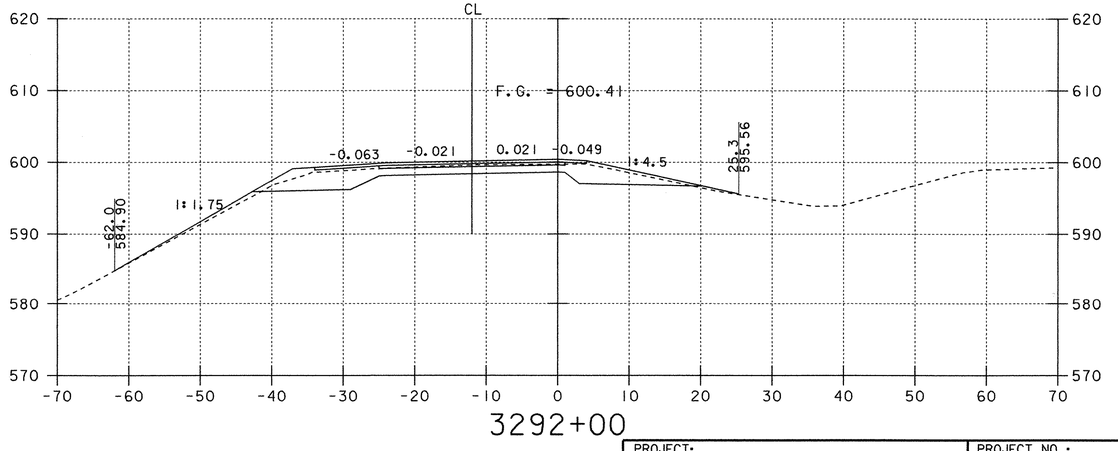

3292+00

NOTE: OFFSET DISTANCES ARE MEASURED FROM THE GRADE LINE.

SOUTHBOUND CROSS SECTIONS

0 10 20
SCALE IN FEET

PROJECT: FAIRFAX - FAIRFIELD - ST. ALBANS	PROJECT NO.: IM 089-3(27)
DESIGN FILE NAME: /87A007B/DESIGN/DA007XS2.DGN	
IPARM FILE NAME: DA007X22	PLOT DATE: 18-AUG-2000
SURVEYED BY: ORVIS	SURVEY DATE: 6/98
SQUAD LEADER: DELLA SANTA	DRAWN BY: SQUAD B
	SHEET: 299 OF 370

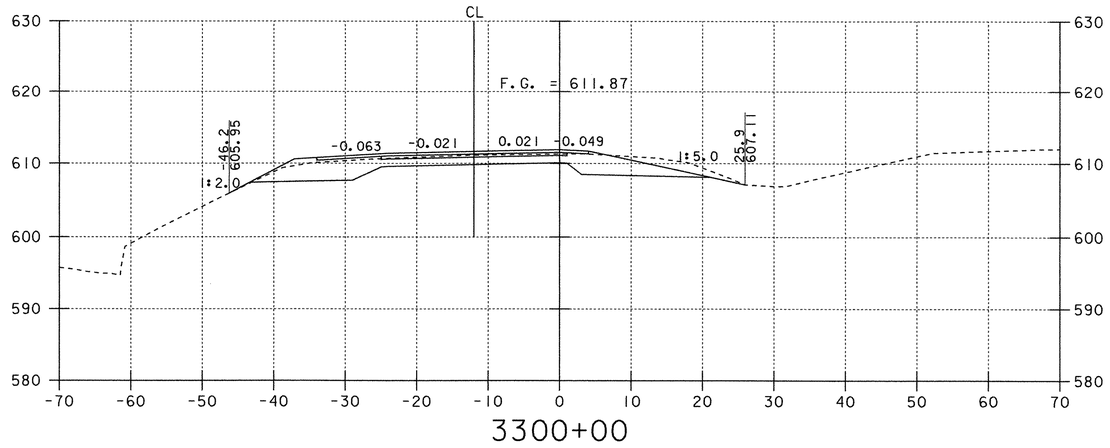

3300+00

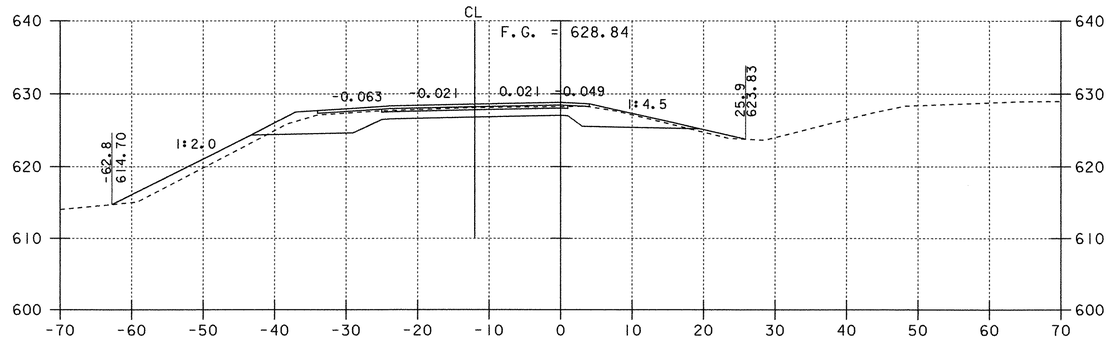

3306+00

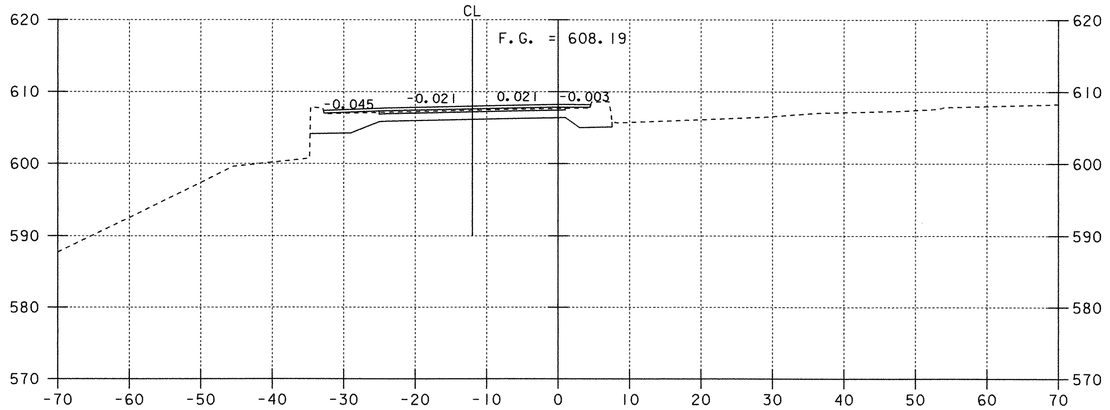

3298+20

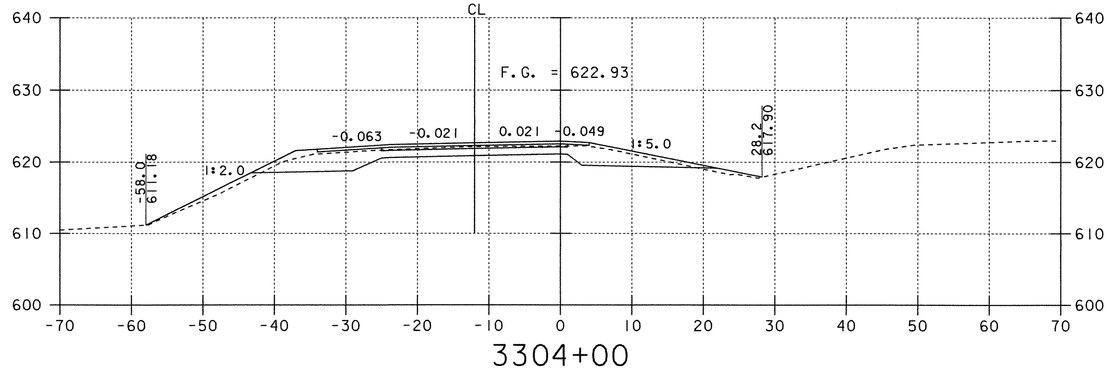

3304+00

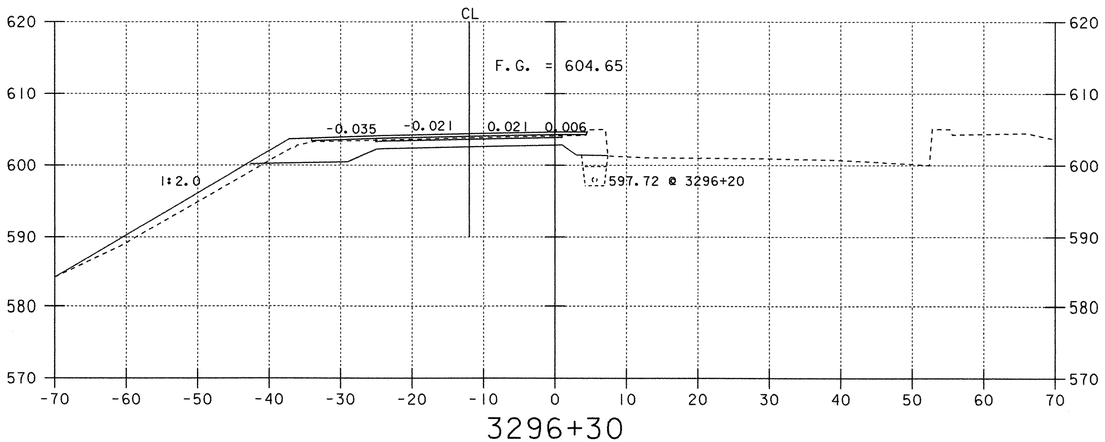

3296+30

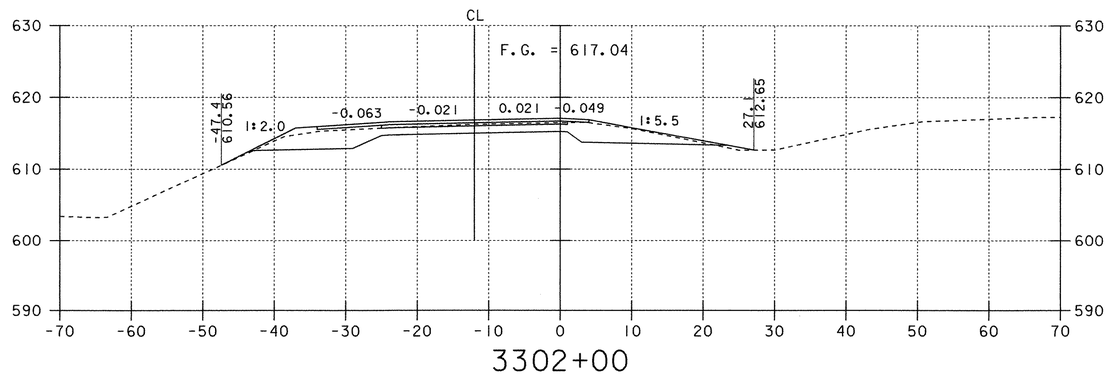

3302+00

NOTE: OFFSET DISTANCES ARE MEASURED FROM THE GRADE LINE.

SOUTHBOUND CROSS SECTIONS

0 10 20
SCALE IN FEET

PROJECT: FAIRFAX - FAIRFIELD - ST. ALBANS	PROJECT NO.: IM 089-3(27)
DESIGN FILE NAME: /87A007B/DESIGN/DA007XS2.DGN	
IPARM FILE NAME: DA007X23	PLOT DATE: 18-AUG-2000
SURVEYED BY: ORVIS	SURVEY DATE: 6/98
SQUAD LEADER: DELLA SANTA	DRAWN BY: SQUAD B
	SHEET: 300 OF 370

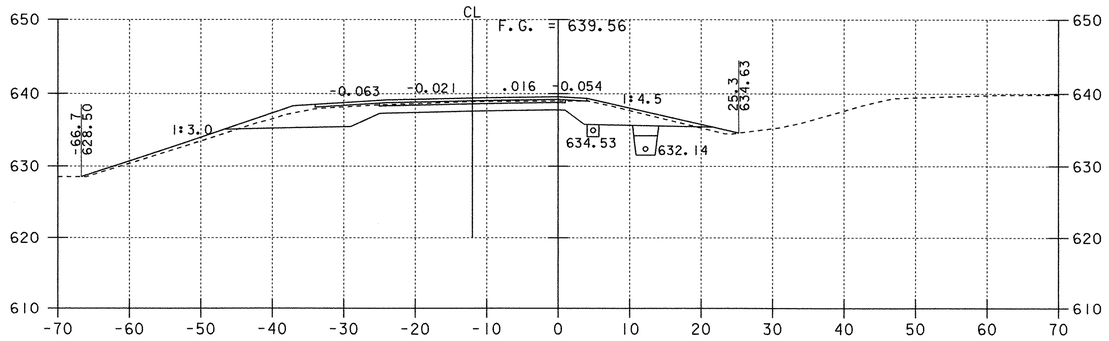

3310+00

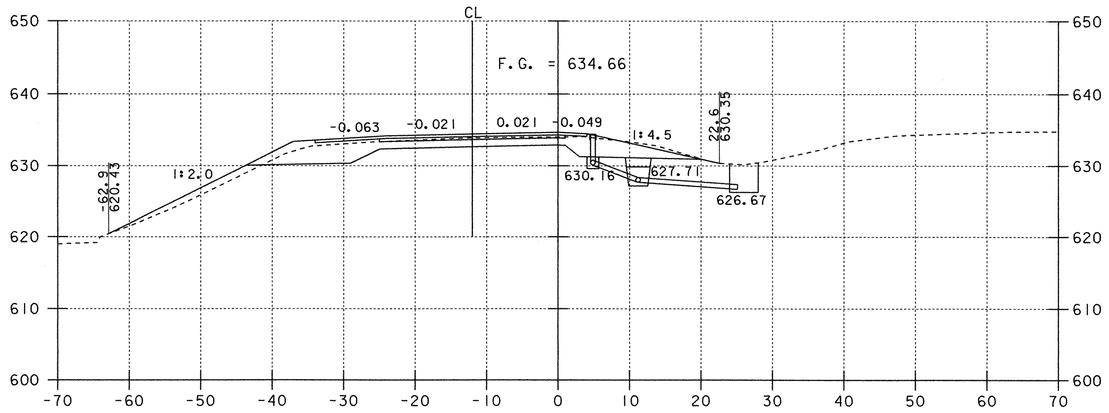

3308+00

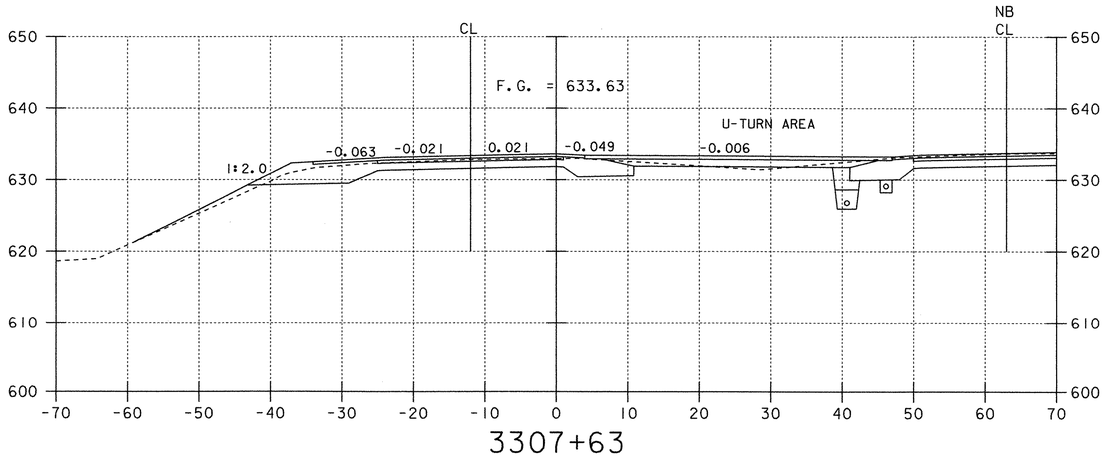

3307+63

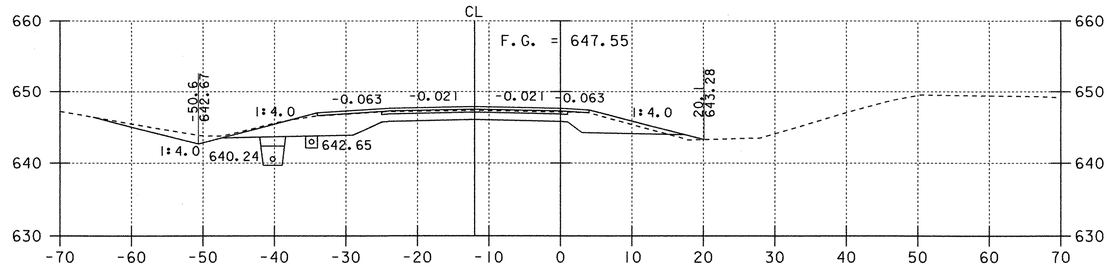

3316+00

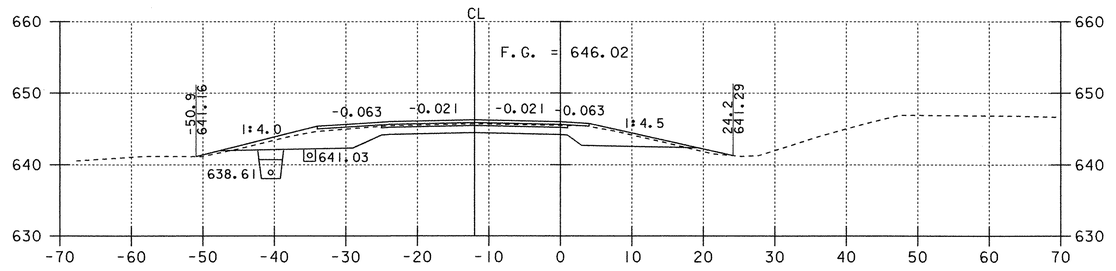

3314+00

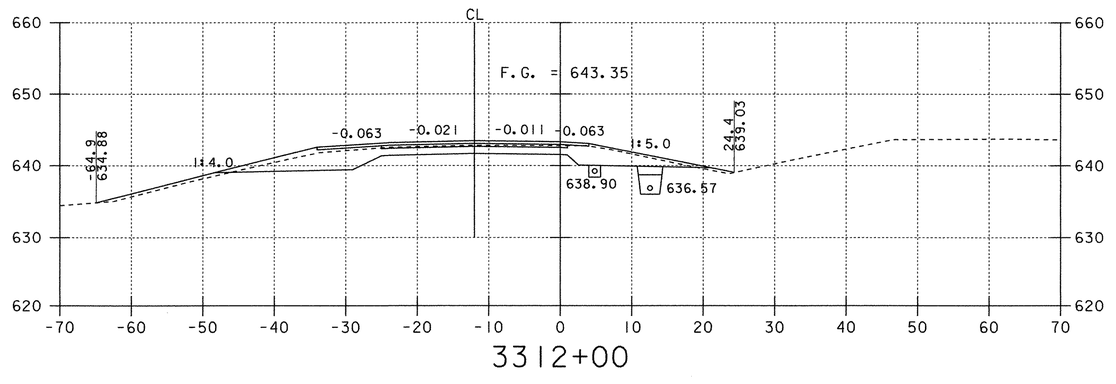

3312+00

NOTE: OFFSET DISTANCES ARE MEASURED FROM THE GRADE LINE.

SOUTHBOUND CROSS SECTIONS

0 10 20
SCALE IN FEET

PROJECT: FAIRFAX - FAIRFIELD - ST. ALBANS	PROJECT NO.: IM 089-3(27)
DESIGN FILE NAME: /87A007B/DESIGN/DA007XS2.DGN	
IPARM FILE NAME: DA007X24	PLOT DATE: 18-AUG-2000
SURVEYED BY: ORVIS	SURVEY DATE: 6/98
SQUAD LEADER: DELLA SANTA	DRAWN BY: SQUAD B
	SHEET: 301 OF 370

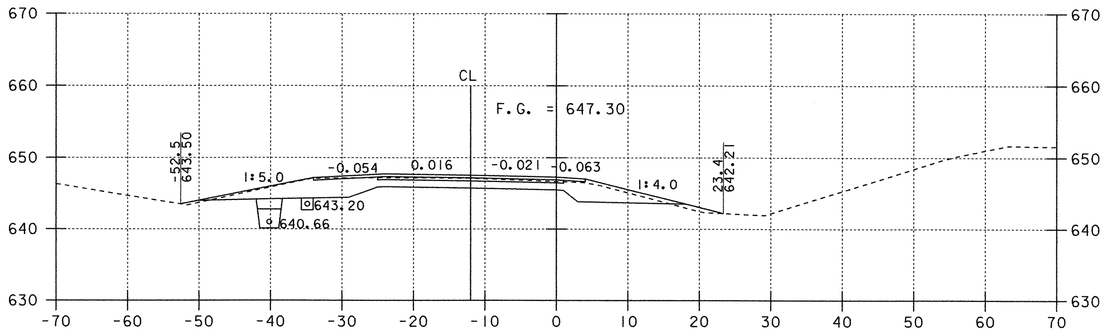

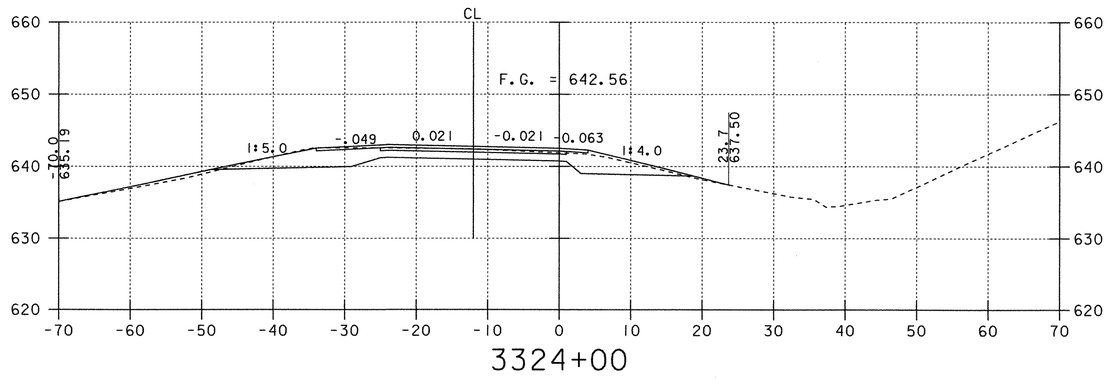

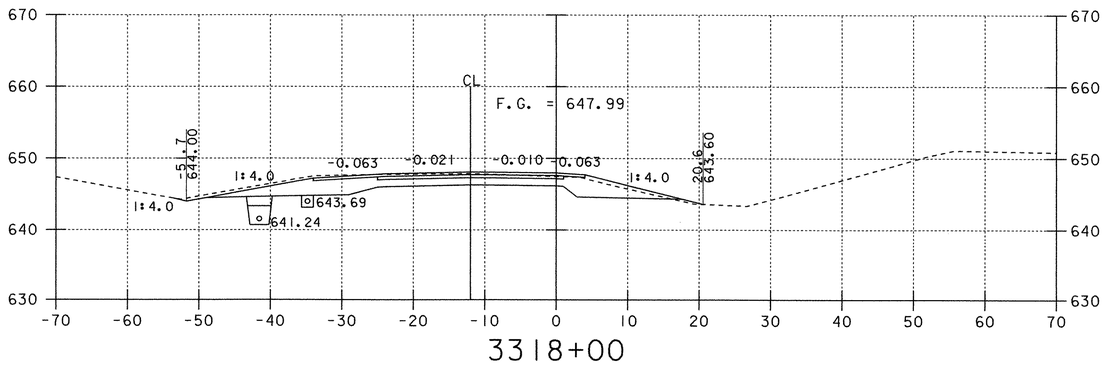

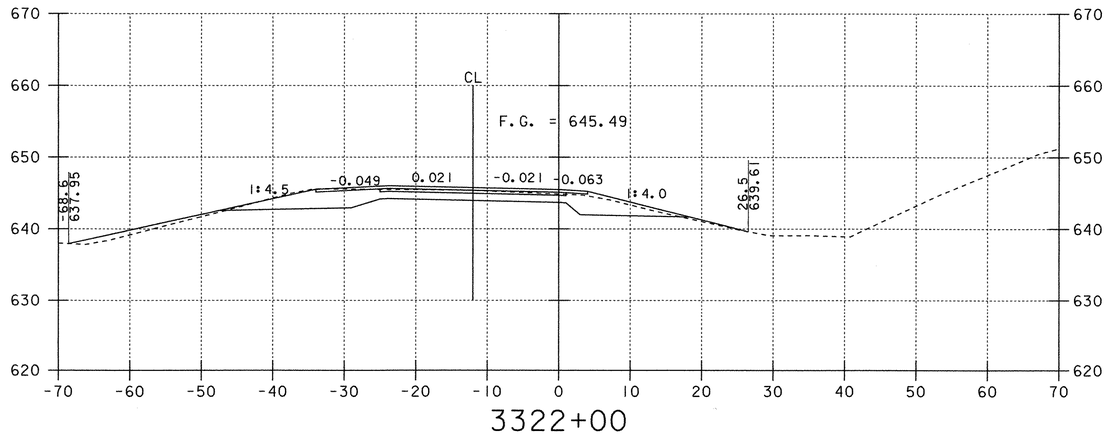

NOTE: OFFSET DISTANCES ARE MEASURED FROM THE GRADE LINE.

SOUTHBOUND CROSS SECTIONS

0 10 20
SCALE IN FEET

PROJECT: FAIRFAX - FAIRFIELD - ST. ALBANS	PROJECT NO.: IM 089-3(27)
DESIGN FILE NAME: /87A007B/DESIGN/DA007XS2.DGN	
IPARM FILE NAME: DA007X25	PLOT DATE: 18-AUG-2000
SURVEYED BY: ORVIS	SURVEY DATE: 6/98
SQUAD LEADER: DELLA SANTA	DRAWN BY: SQUAD B
	SHEET: 302 OF 370

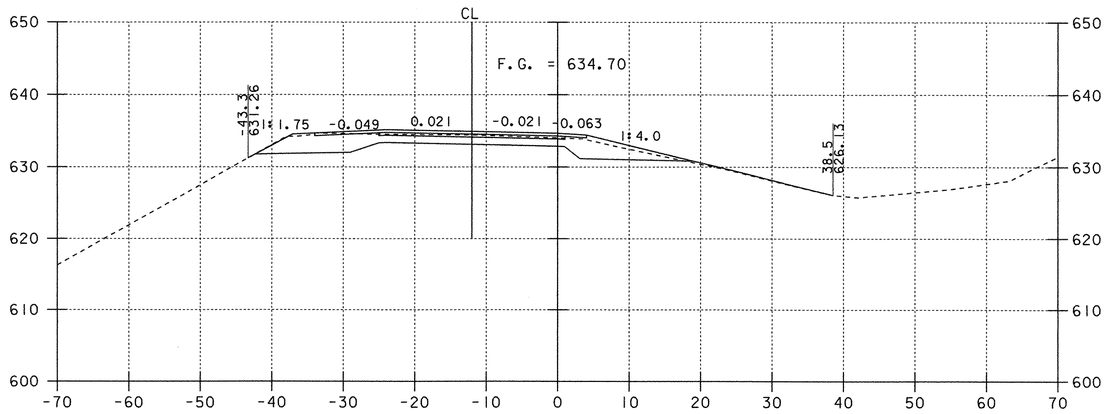

3328+00

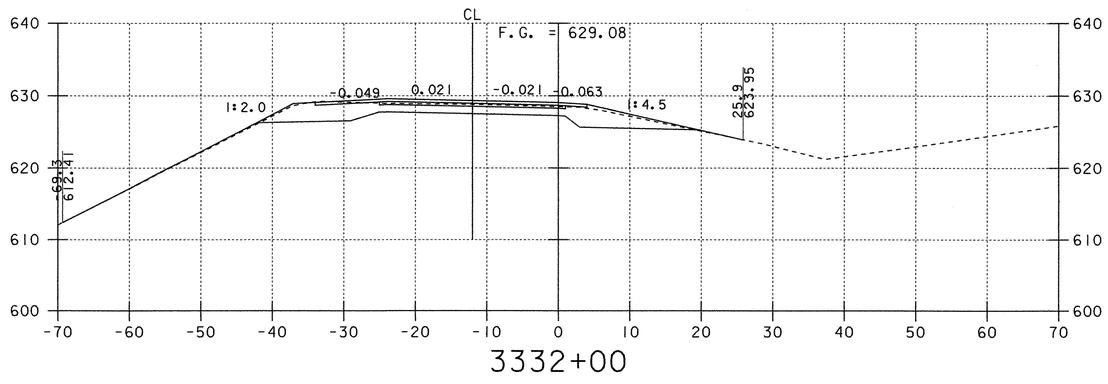

3332+00

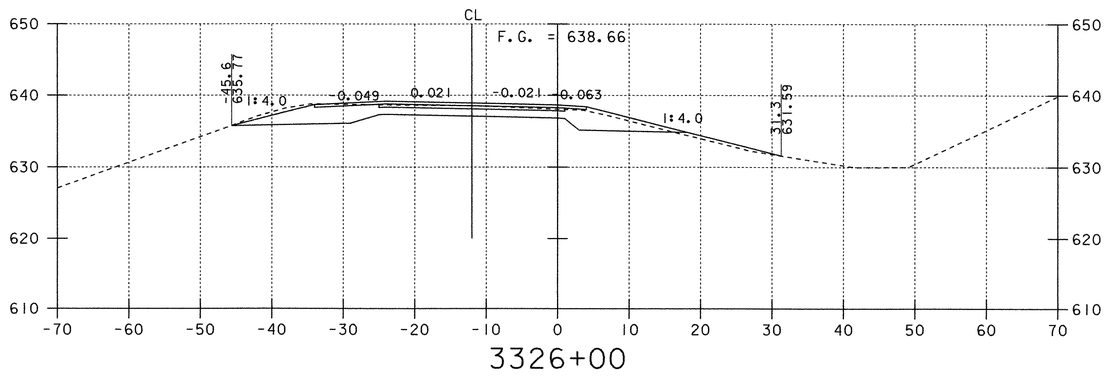

3326+00

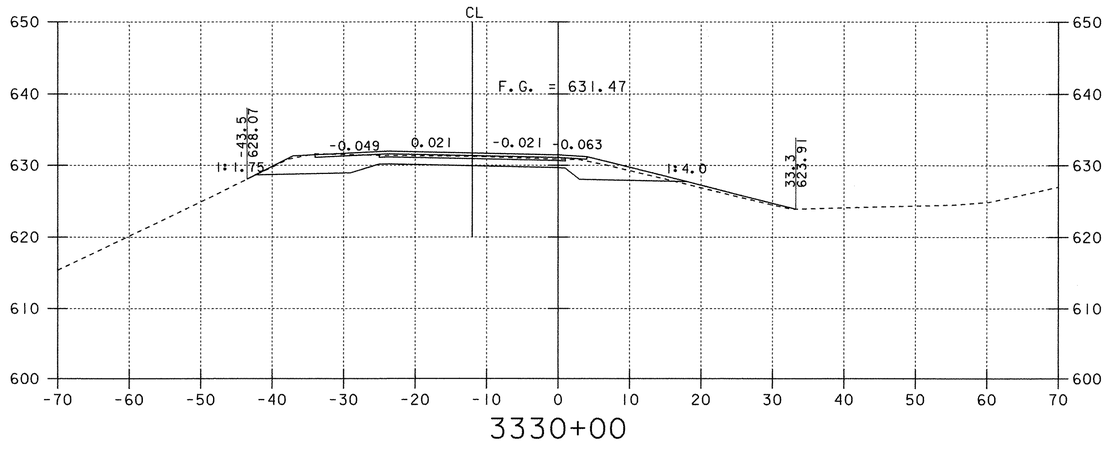

3330+00

NOTE: OFFSET DISTANCES ARE MEASURED FROM THE GRADE LINE.

SOUTHBOUND CROSS SECTIONS

0 10 20
SCALE IN FEET

PROJECT: FAIRFAX - FAIRFIELD - ST. ALBANS			PROJECT NO.: IM 089-3(27)
DESIGN FILE NAME:	/87A007B/DESIGN/DA007XS2.DGN		
IPARM FILE NAME:	DA007X26	PLOT DATE:	18-AUG-2000
SURVEYED BY:	ORVIS	SURVEY DATE:	6/98
SQUAD LEADER:	DELLA SANTA	DRAWN BY:	SQUAD B
		SHEET: 303 OF 370	

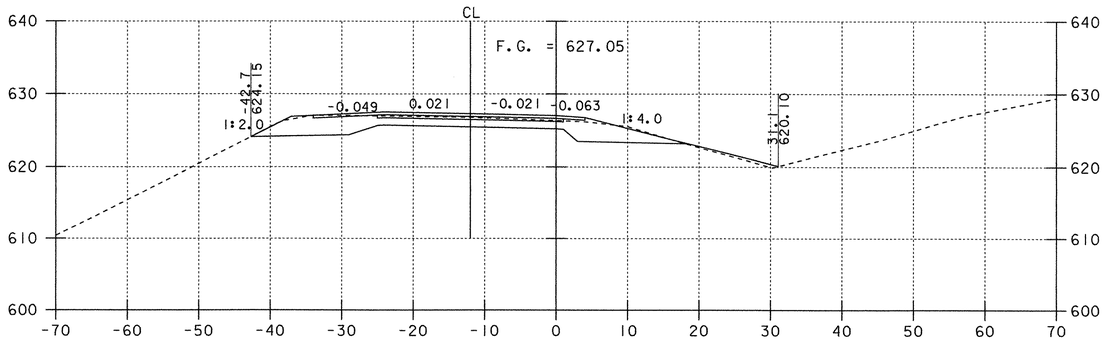

3338+00

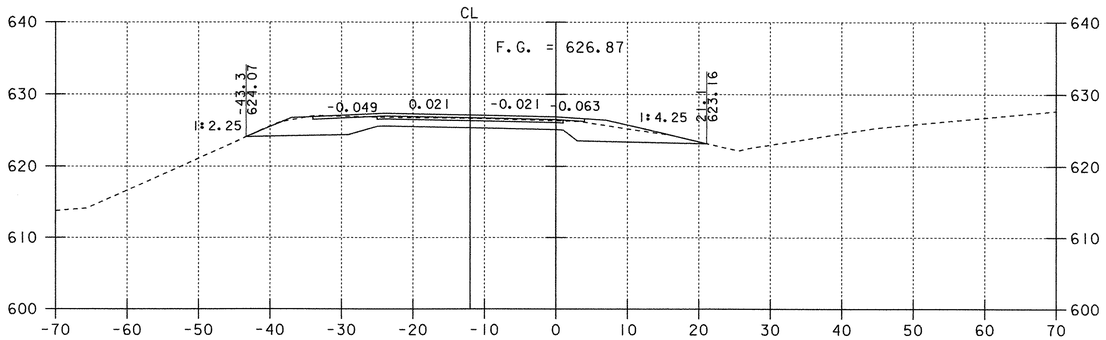

3336+00

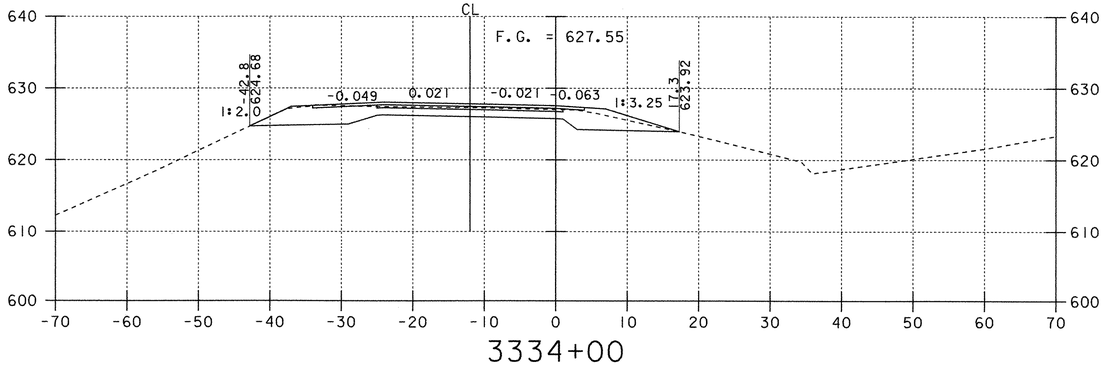

3334+00

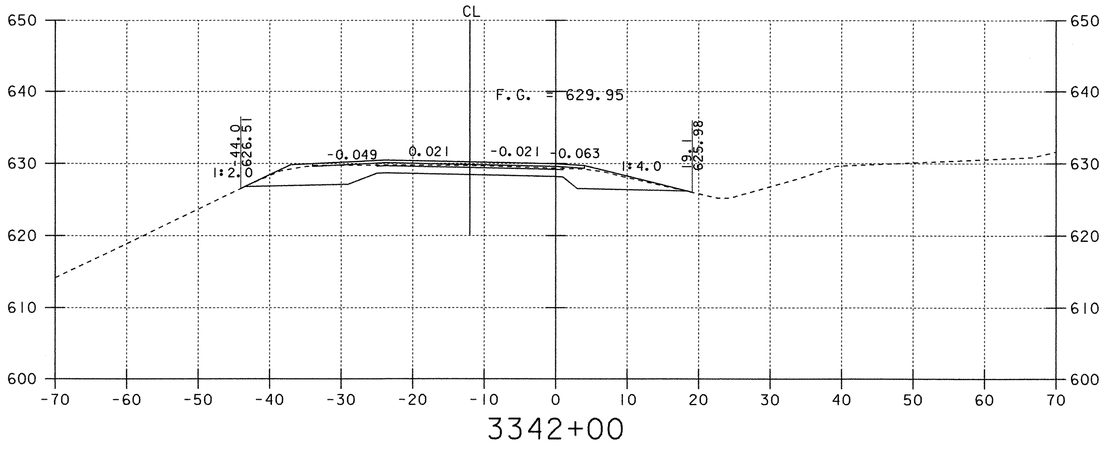

3342+00

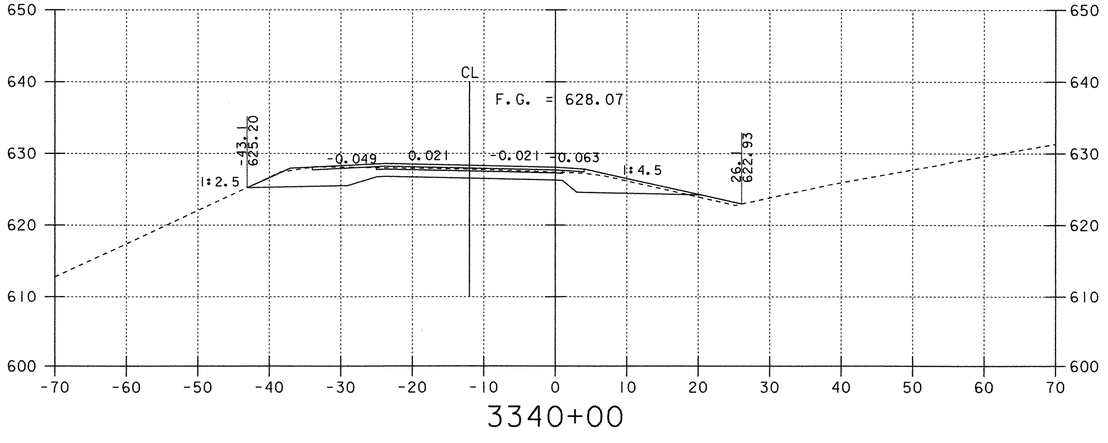

3340+00

NOTE: OFFSET DISTANCES ARE MEASURED FROM THE GRADE LINE.

SOUTHBOUND CROSS SECTIONS

0 10 20
SCALE IN FEET

PROJECT: FAIRFAX - FAIRFIELD - ST. ALBANS	PROJECT NO.: IM 089-3(27)
DESIGN FILE NAME: /87A007B/DESIGN/DA007XS2.DGN	
IPARM FILE NAME: DA007X27	PLOT DATE: 18-AUG-2000
SURVEYED BY: ORVIS	SURVEY DATE: 6/98
SQUAD LEADER: DELLA SANTA	DRAWN BY: SQUAD B
	SHEET: 304 OF 370

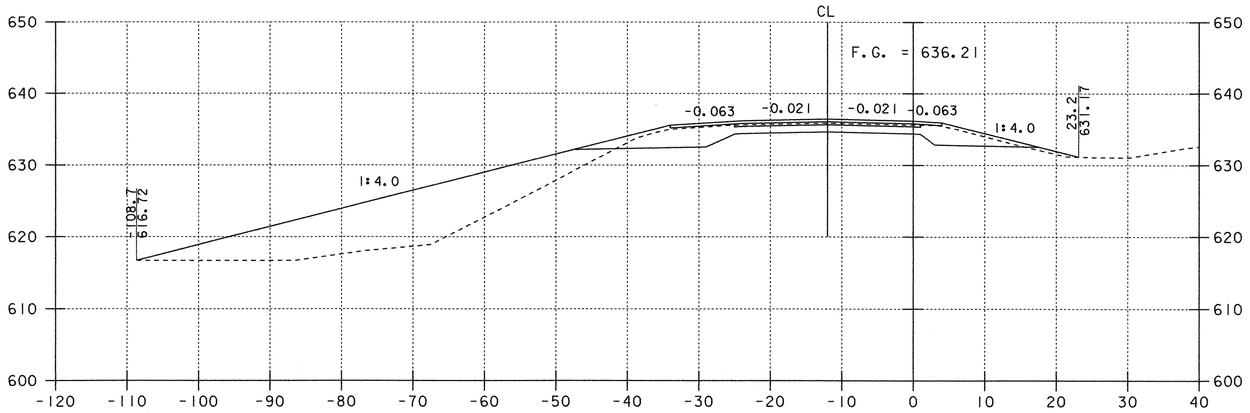

3346+00

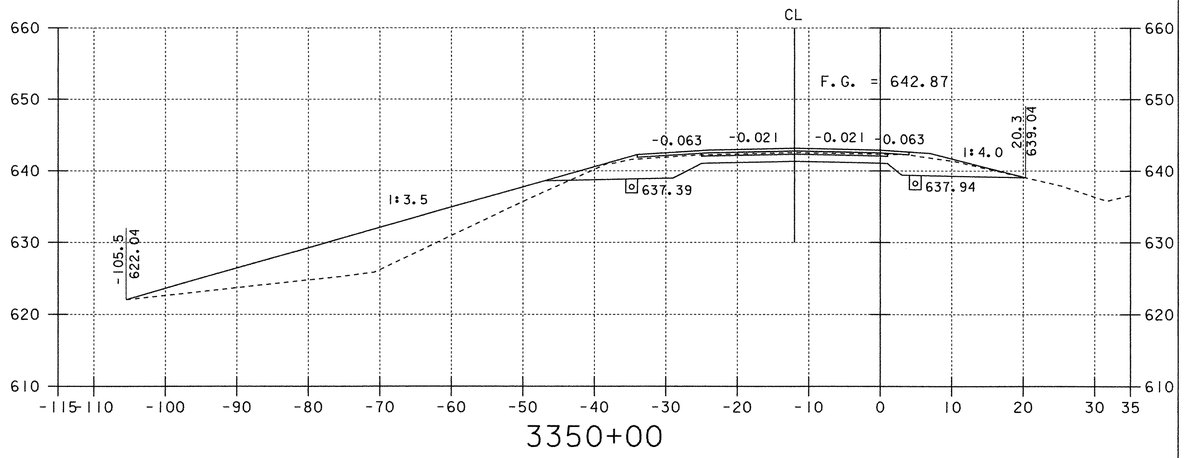

3350+00

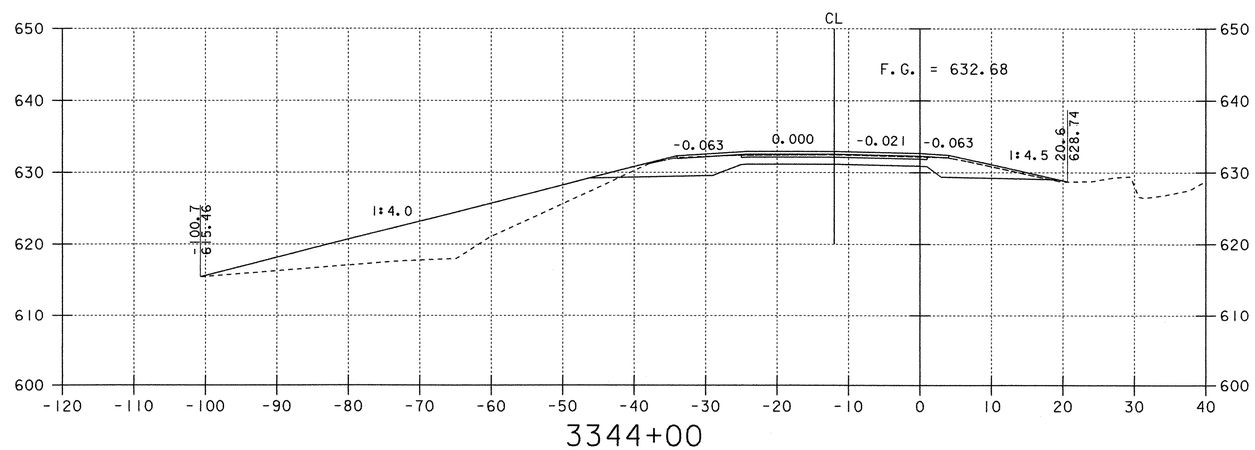

3344+00

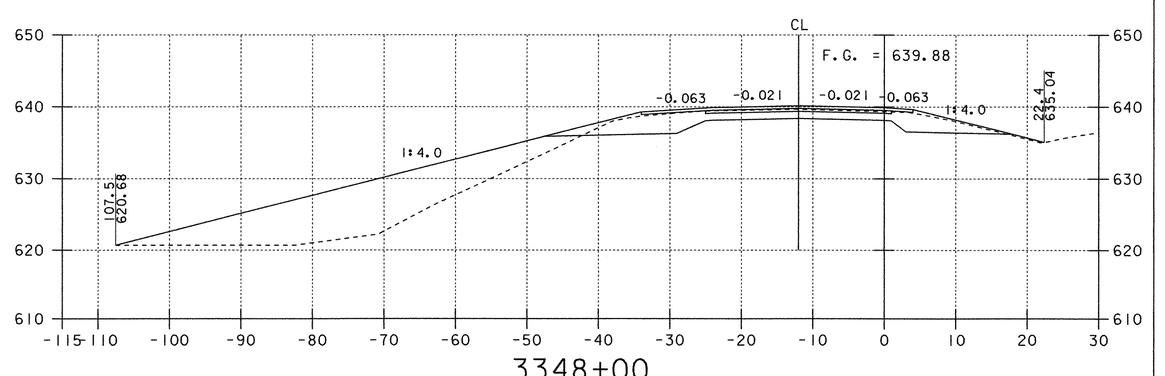

3348+00

NOTE: OFFSET DISTANCES ARE MEASURED FROM THE GRADE LINE.

SOUTHBOUND CROSS SECTIONS

0 10 20
SCALE IN FEET

PROJECT: FAIRFAX - FAIRFIELD - ST. ALBANS	PROJECT NO.: IM 089-3(27)
DESIGN FILE NAME: /87A007B/DESIGN/DA007XS2.DGN	
IPARM FILE NAME: DA007X28	PLOT DATE: 18-AUG-2000
SURVEYED BY: ORVIS	SURVEY DATE: 6/98
SQUAD LEADER: DELLA SANTA	DRAWN BY: SQUAD B
	SHEET: 305 OF 370

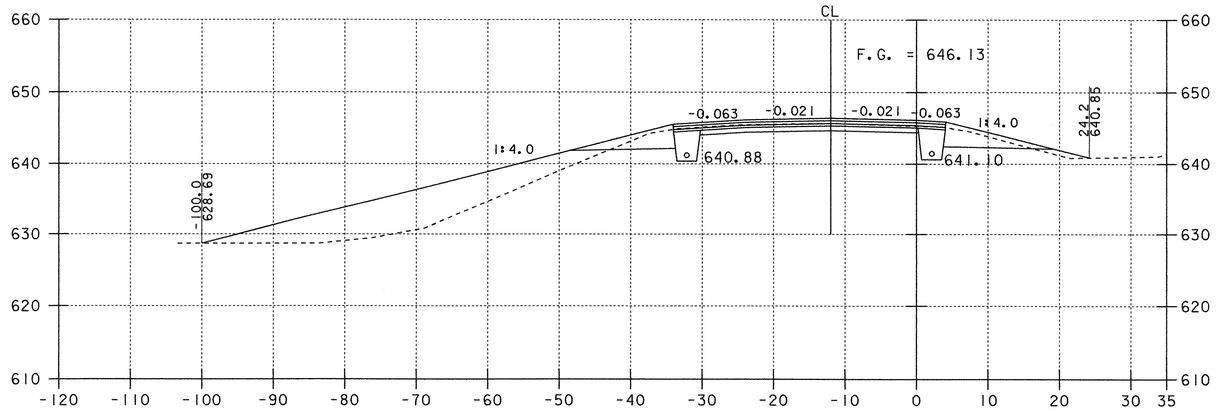

3354+00

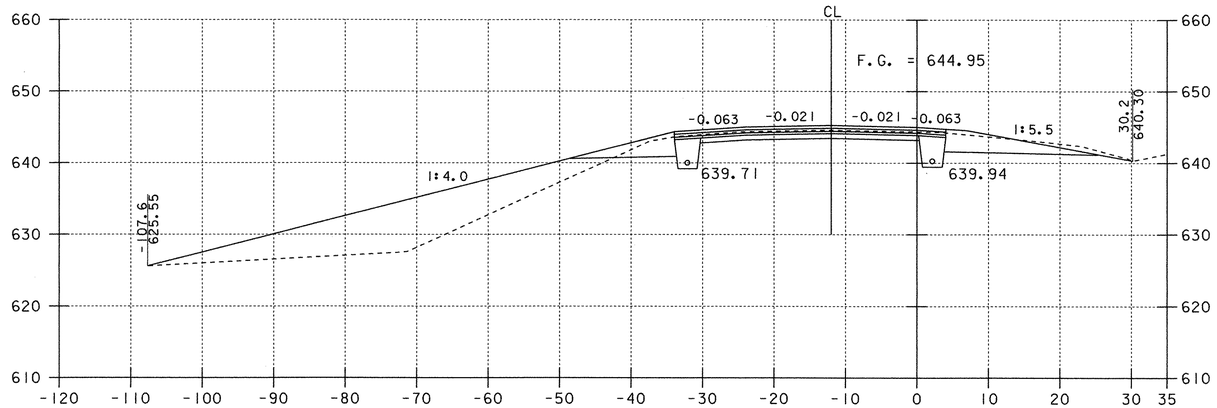

3 370+00

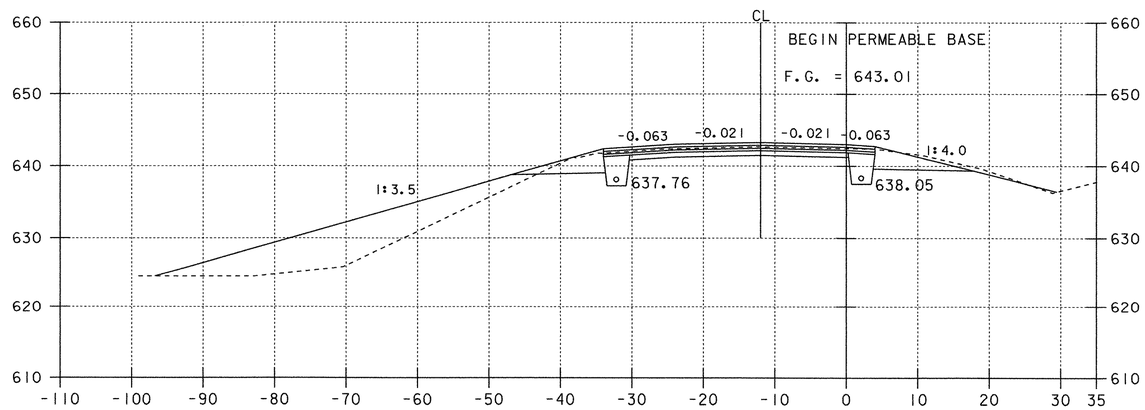

3350+11

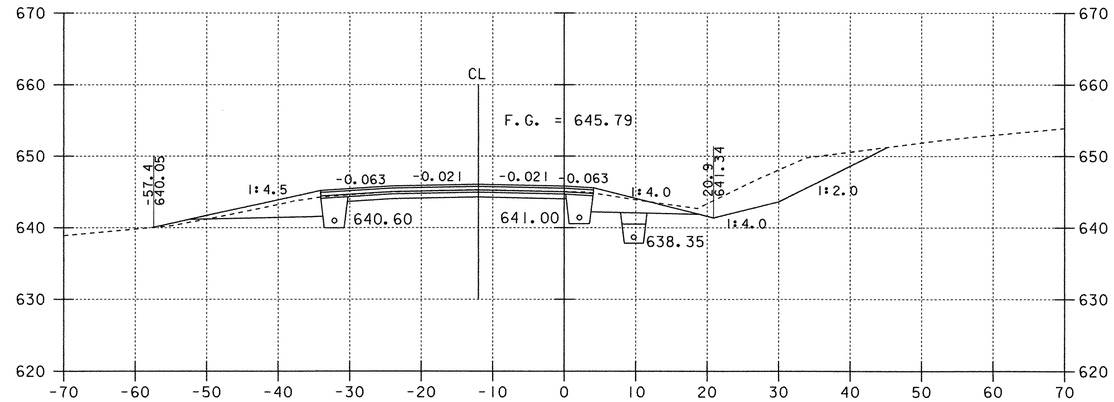

3358+00

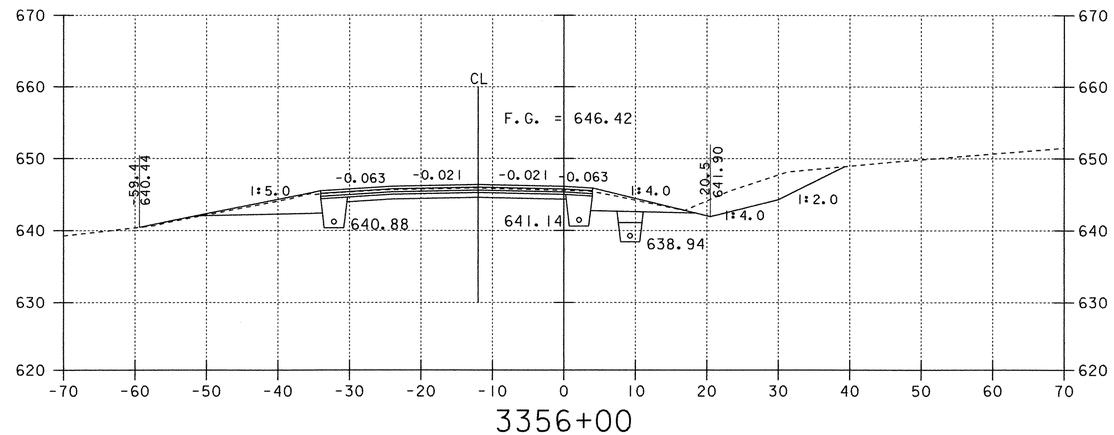

3356+00

NOTE: OFFSET DISTANCES ARE MEASURED FROM THE GRADE LINE.

SOUTHBOUND CROSS SECTIONS

0 10 20
SCALE IN FEET

PROJECT: FAIRFAX - FAIRFIELD - ST. ALBANS	PROJECT NO.: IM 089-3(27)
DESIGN FILE NAME: /87A007B/DESIGN/DA007XS2.DGN	
IPARM FILE NAME: DA007X29	PLOT DATE: 18-AUG-2000
SURVEYED BY: ORVIS	SURVEY DATE: 6/98
SQUAD LEADER: DELLA SANTA	DRAWN BY: SQUAD B
	SHEET: 306 OF 370

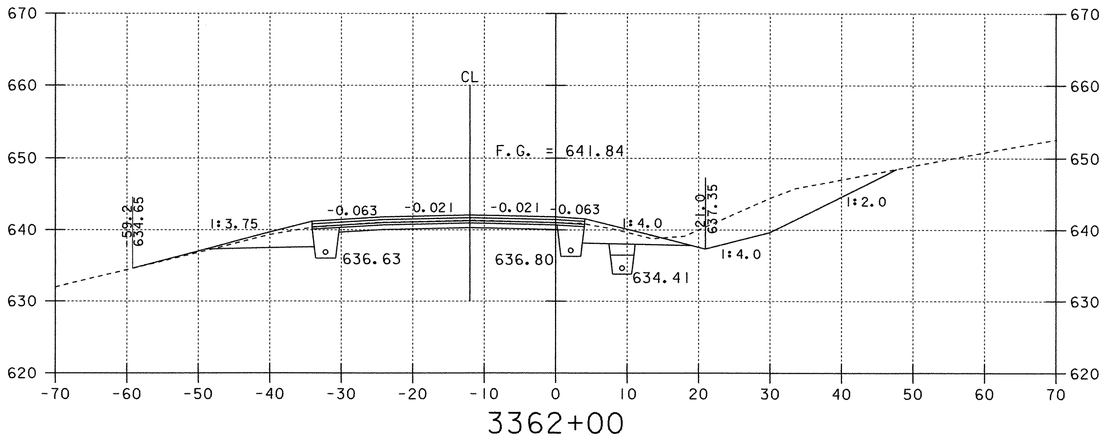

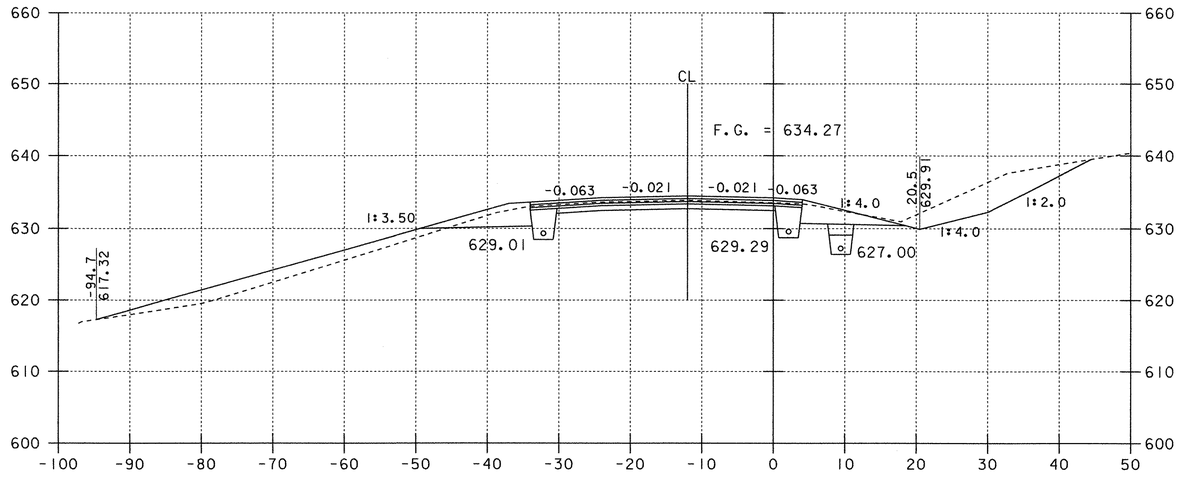

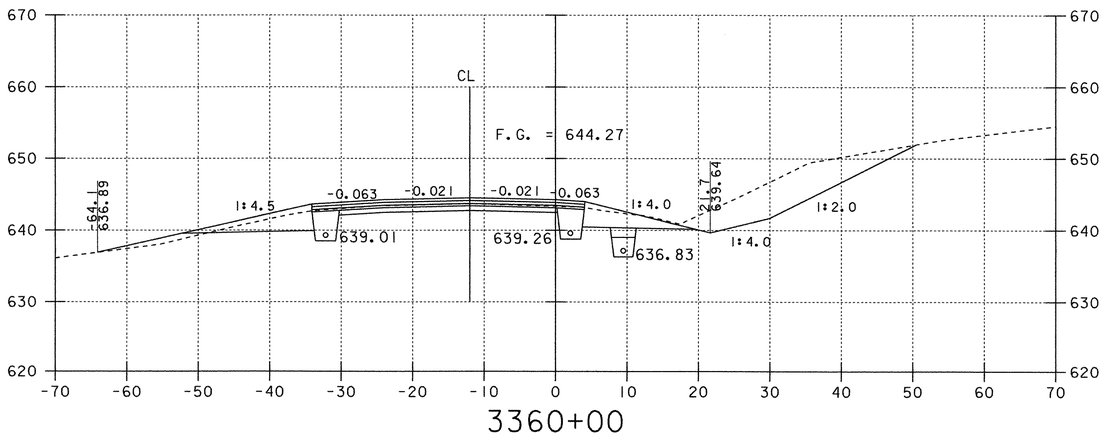

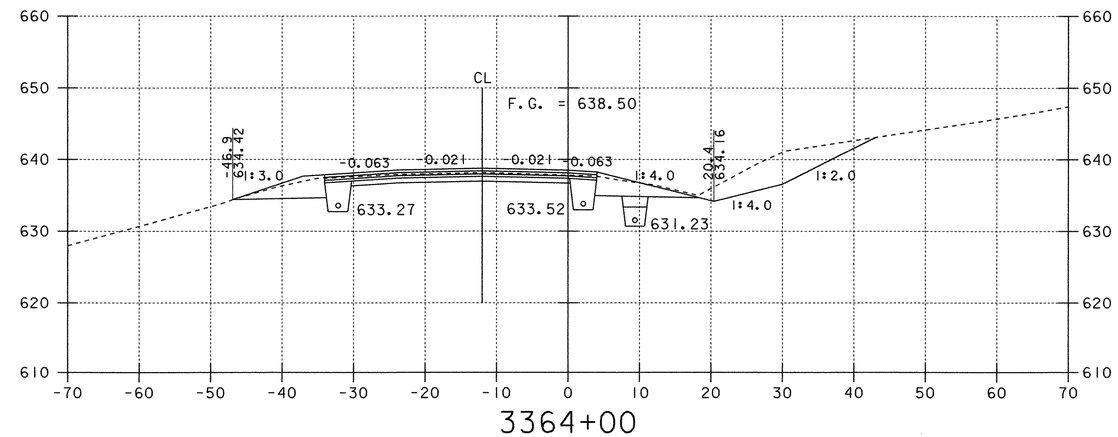

NOTE: OFFSET DISTANCES ARE MEASURED FROM THE GRADE LINE.

SOUTHBOUND CROSS SECTIONS

0 10 20
SCALE IN FEET

PROJECT: FAIRFAX - FAIRFIELD - ST. ALBANS	PROJECT NO.: IM 089-3(27)
DESIGN FILE NAME: /87A007B/DESIGN/DA007XS2.DGN	
IPARM FILE NAME: DA007X30	PLOT DATE: 18-AUG-2000
SURVEYED BY: ORVIS	SURVEY DATE: 6/98
SQUAD LEADER: DELLA SANTA	DRAWN BY: SQUAD B
	SHEET: 307 OF 370

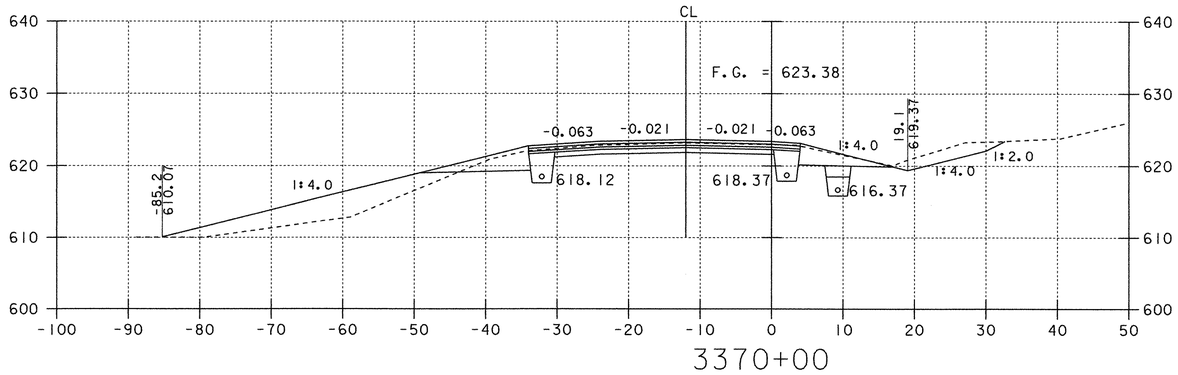

3370+00

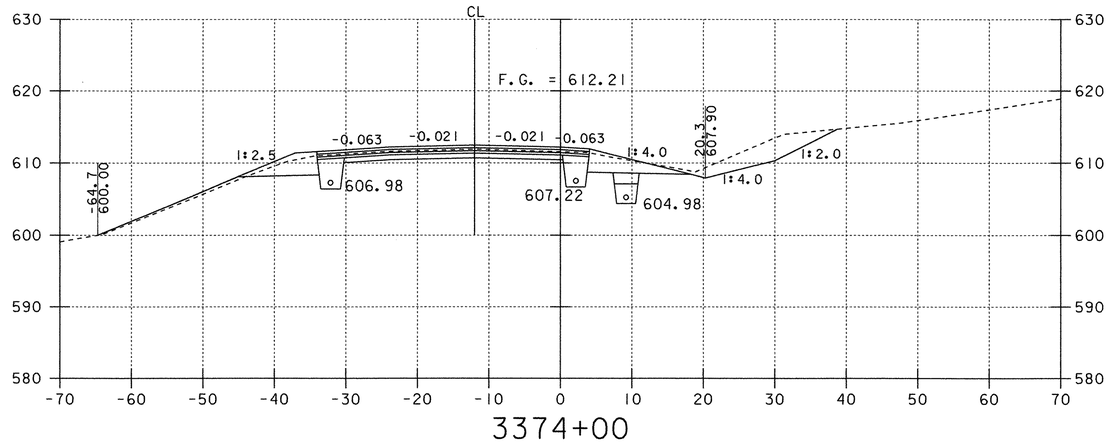

3374+00

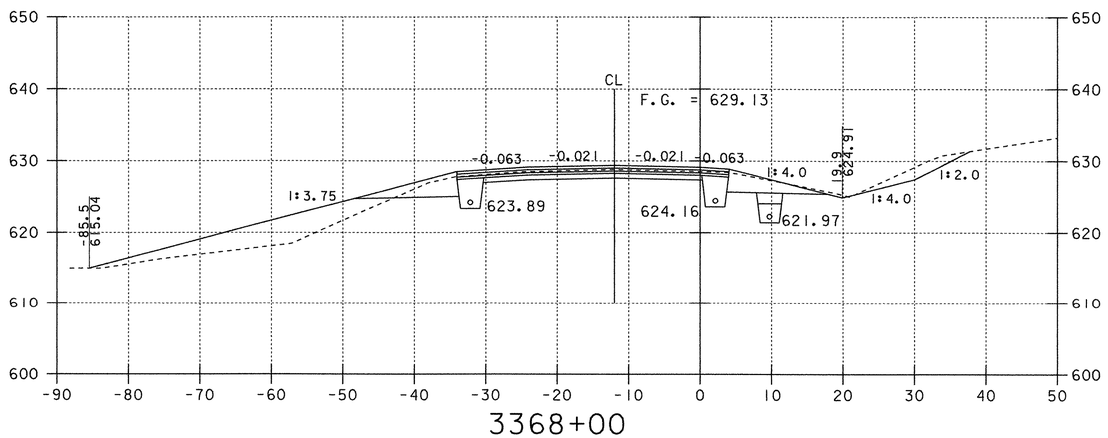

3368+00

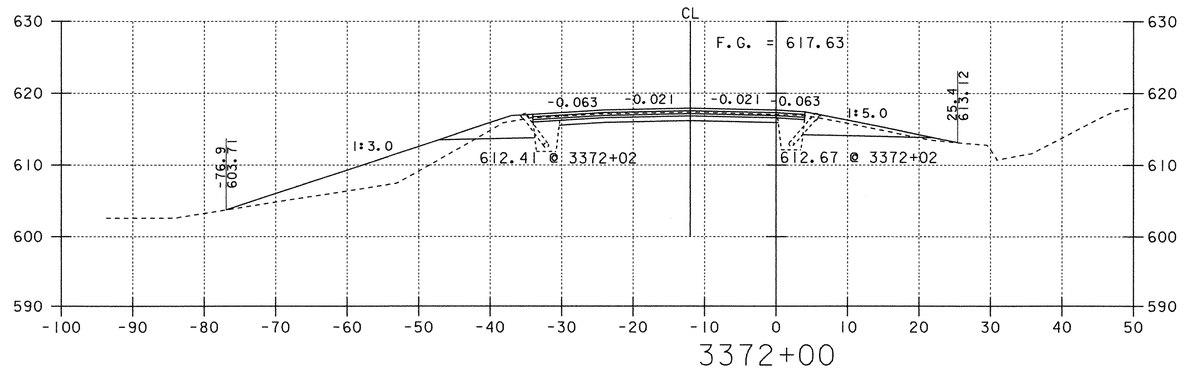

3372+00

NOTE: OFFSET DISTANCES ARE MEASURED FROM THE GRADE LINE.

SOUTHBOUND CROSS SECTIONS

0 10 20
SCALE IN FEET

PROJECT: FAIRFAX - FAIRFIELD - ST. ALBANS	PROJECT NO.: IM 089-3(27)
DESIGN FILE NAME: /87A007B/DESIGN/DA007XS2.DGN	
IPARM FILE NAME: DA007X31	PLOT DATE: 18-AUG-2000
SURVEYED BY: ORVIS	SURVEY DATE: 6/98
SQUAD LEADER: DELLA SANTA	DRAWN BY: SQUAD B
	SHEET: 308 OF 370

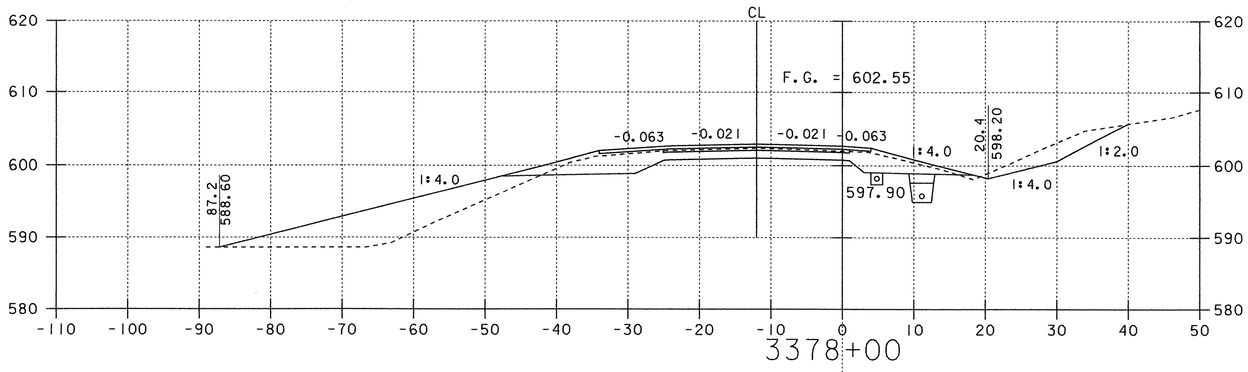

3378+00

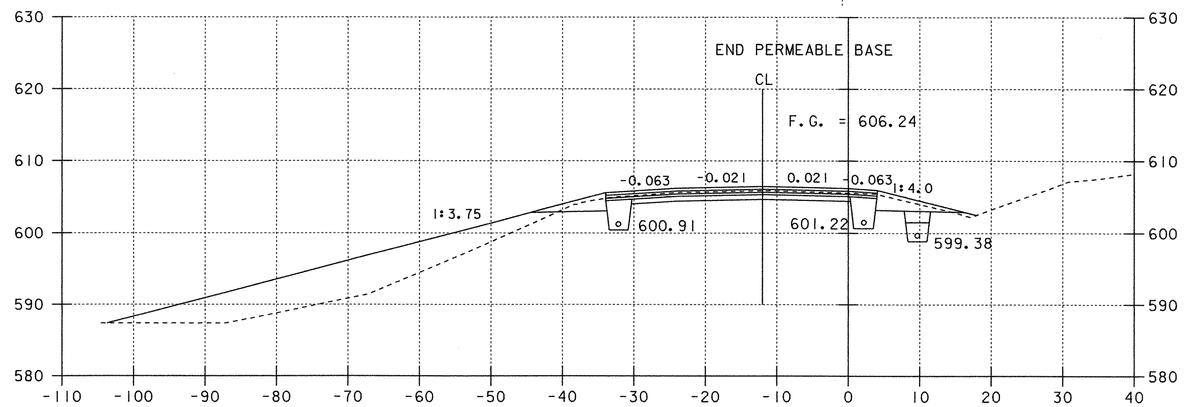

3376+39

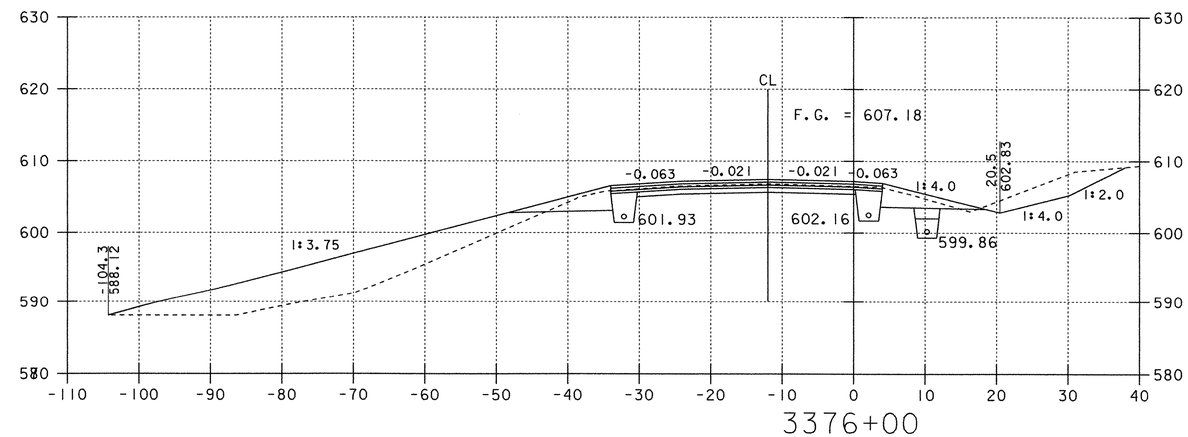

3376+00

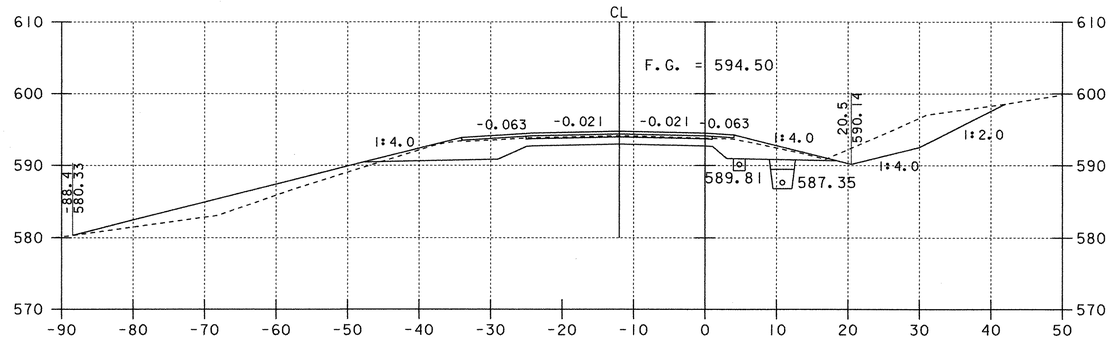

3382+00

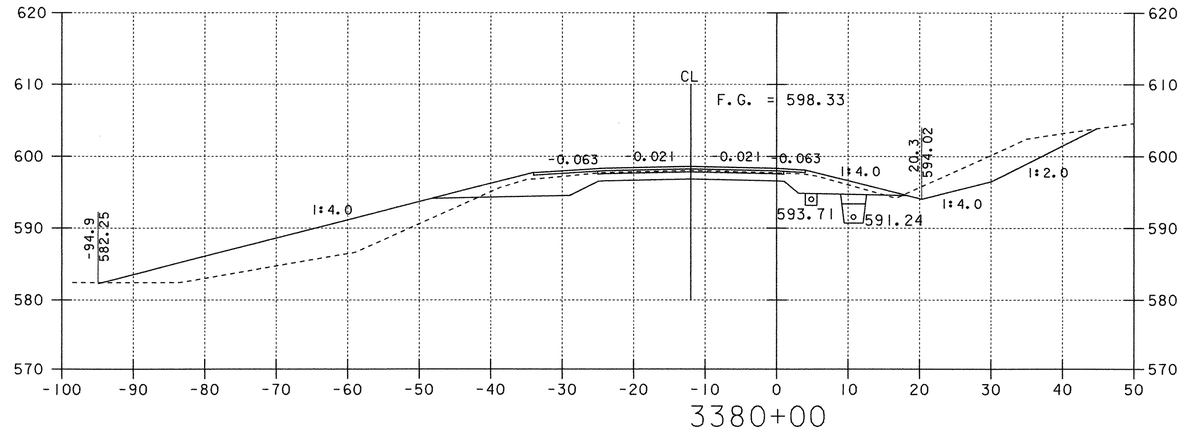

3380+00

NOTE: OFFSET DISTANCES ARE MEASURED FROM THE GRADE LINE.

SOUTHBOUND CROSS SECTIONS

0 10 20
SCALE IN FEET

PROJECT: FAIRFAX - FAIRFIELD - ST. ALBANS	PROJECT NO.: IM 089-3(27)
DESIGN FILE NAME: /87A007B/DESIGN/DA007XS2.DGN	
IPARM FILE NAME: DA007X32	PLOT DATE: 18-AUG-2000
SURVEYED BY: ORVIS	SURVEY DATE: 6/98
SQUAD LEADER: DELLA SANTA	DRAWN BY: SQUAD B
	SHEET: 309 OF 370

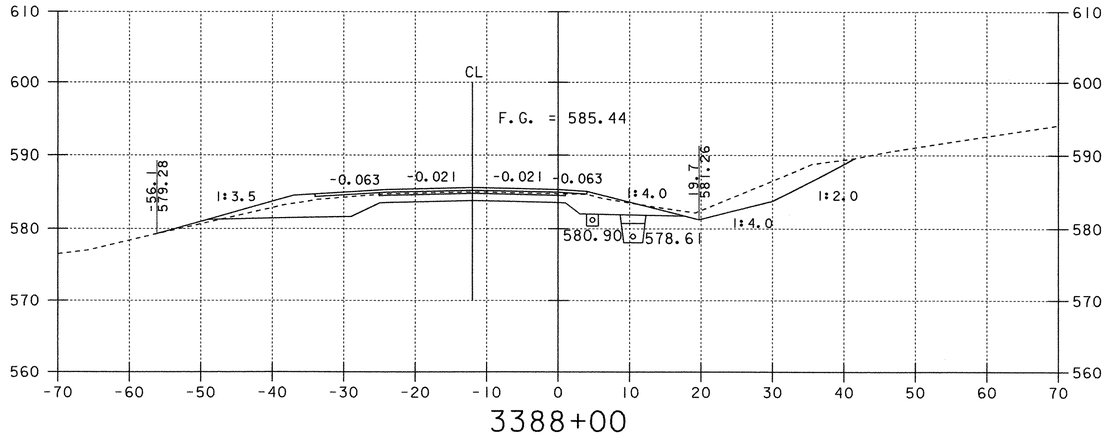

3388+00

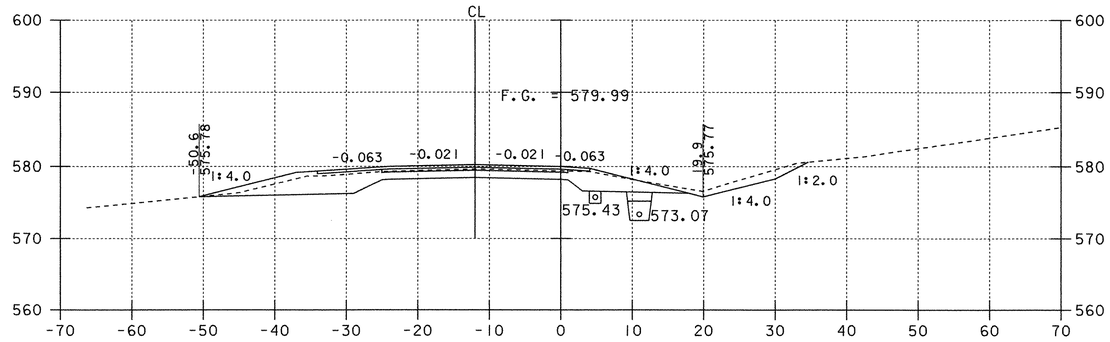

3394+00

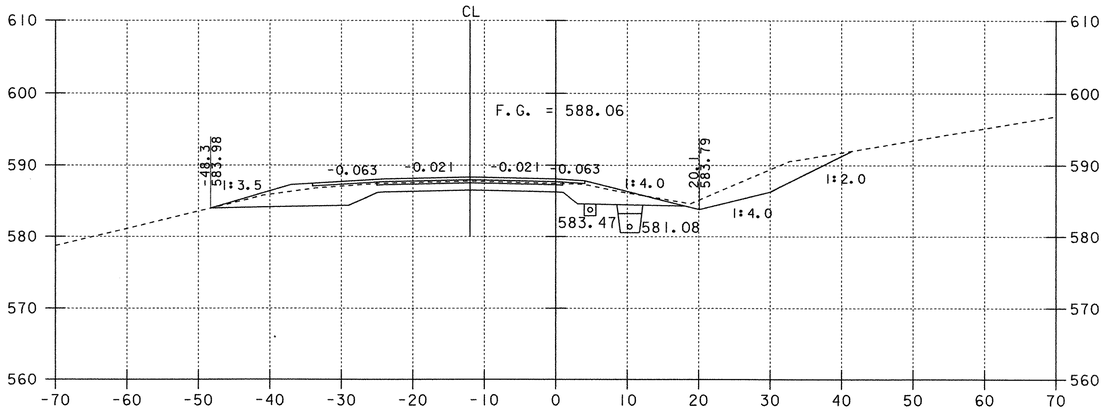

3386+00

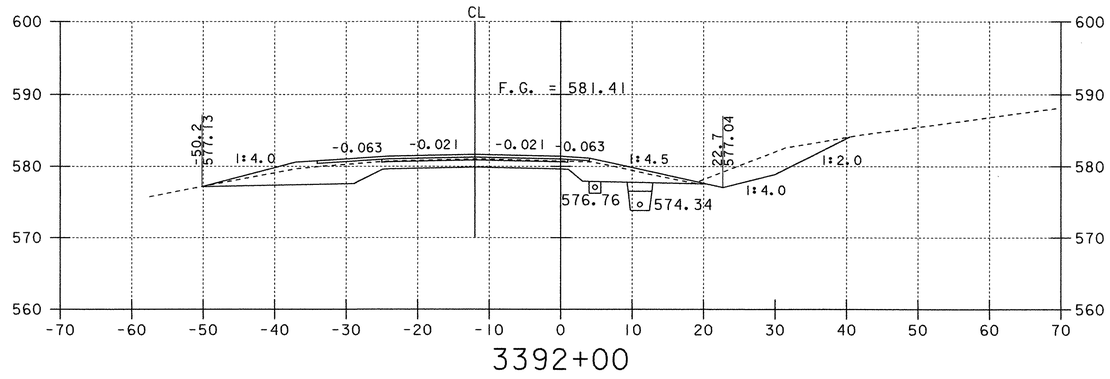

3392+00

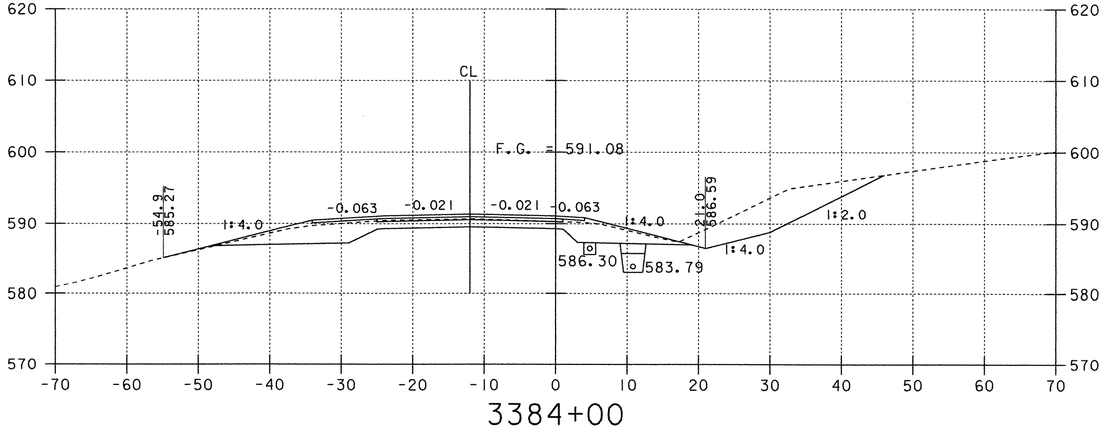

3384+00

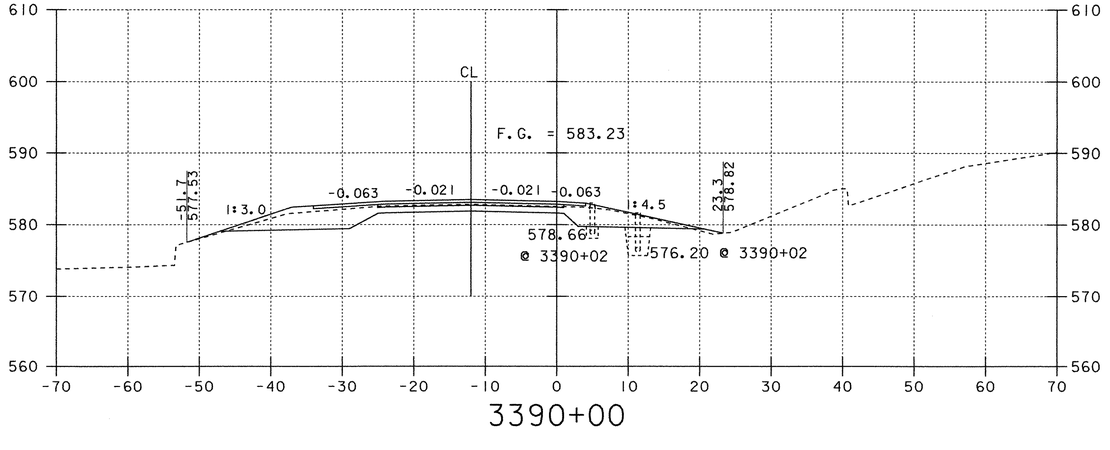

3390+00

NOTE: OFFSET DISTANCES ARE MEASURED FROM THE GRADE LINE.

SOUTHBOUND CROSS SECTIONS

0 10 20
SCALE IN FEET

PROJECT: FAIRFAX - FAIRFIELD - ST. ALBANS	PROJECT NO.: IM 089-3(27)
DESIGN FILE NAME: /87A007B/DESIGN/DA007XS2.DGN	
IPARM FILE NAME: DA007X33	PLOT DATE: 18-AUG-2000
SURVEYED BY: ORVIS	SURVEY DATE: 6/98
SQUAD LEADER: DELLA SANTA	DRAWN BY: SQUAD B
	SHEET: 310 OF 370

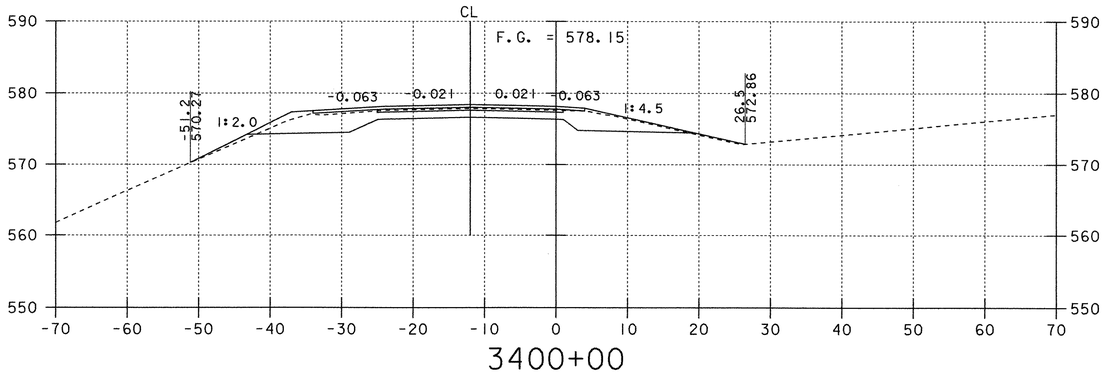

3400+00

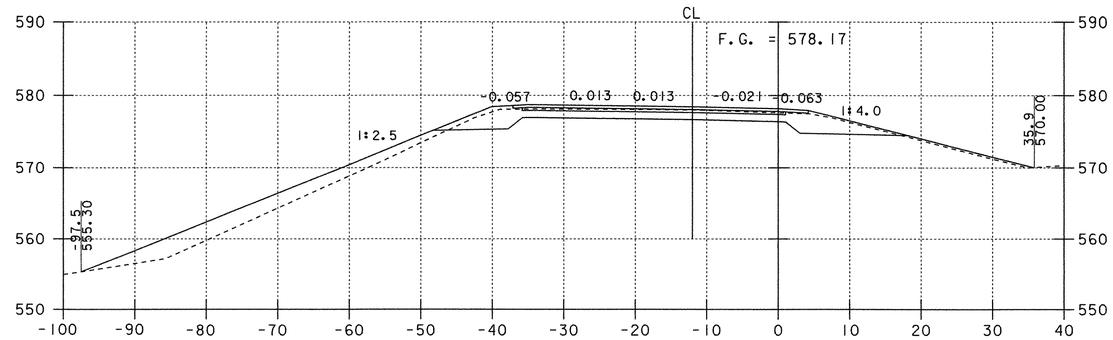

3404+00

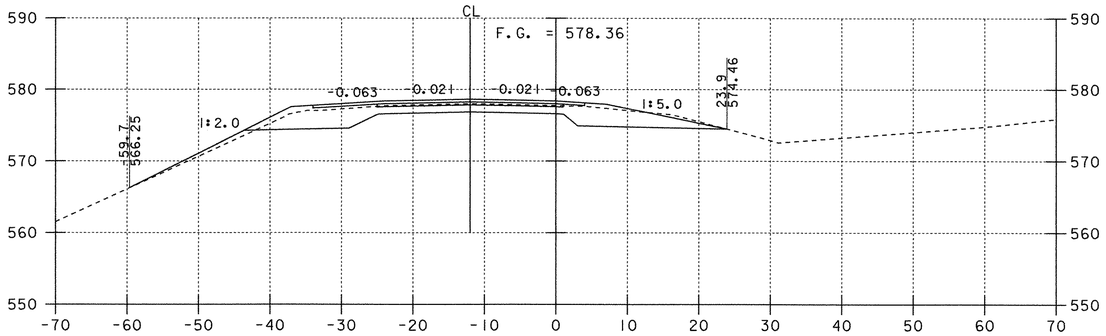

3398+00

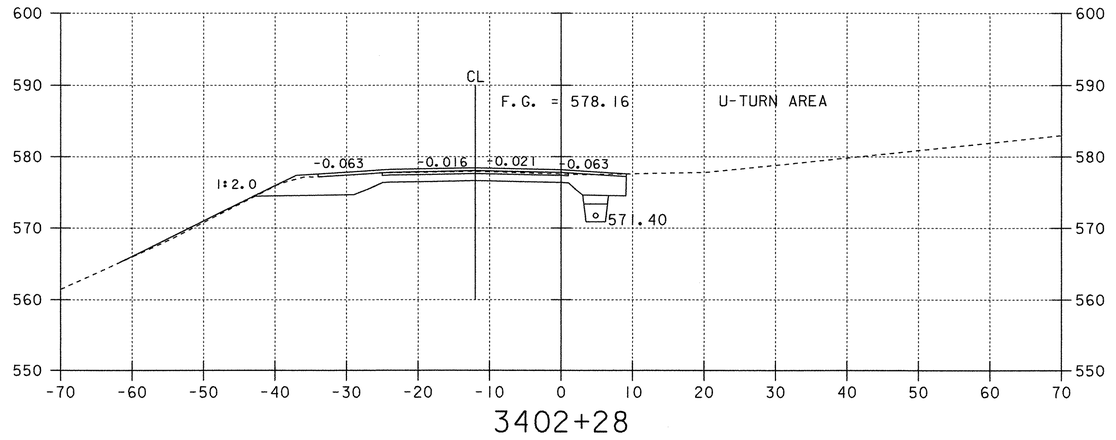

3402+28

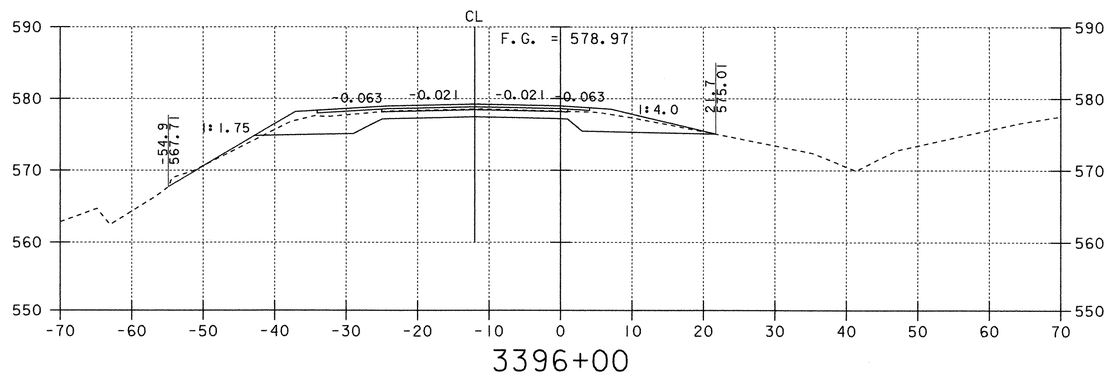

3396+00

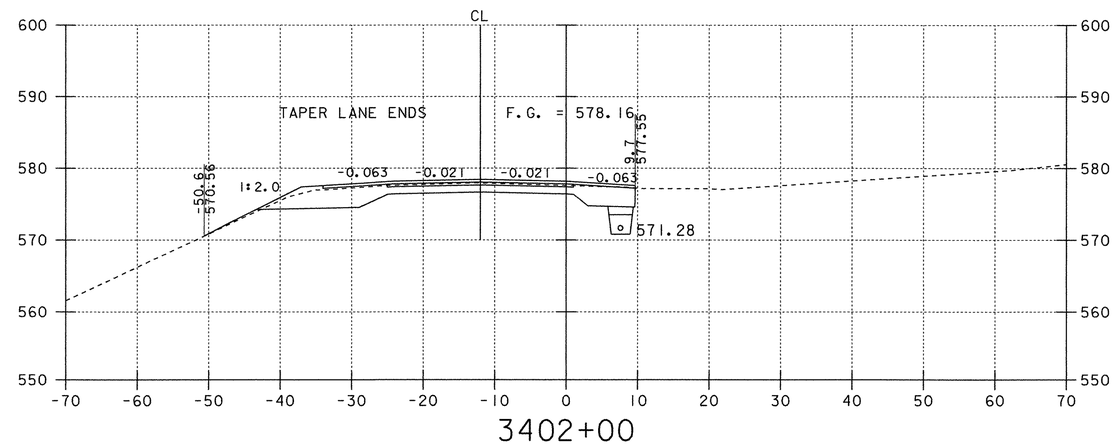

3402+00

NOTE: OFFSET DISTANCES ARE MEASURED FROM THE GRADE LINE.

SOUTHBOUND CROSS SECTIONS

0 10 20
SCALE IN FEET

PROJECT: FAIRFAX - FAIRFIELD - ST. ALBANS	PROJECT NO.: IM 089-3(27)
DESIGN FILE NAME: /87A007B/DESIGN/DA007XS2.DGN	
IPARM FILE NAME: DA007X34	PLOT DATE: 18-AUG-2000
SURVEYED BY: ORVIS	SURVEY DATE: 6/98
SQUAD LEADER: DELLA SANTA	DRAWN BY: SQUAD B
	SHEET: 311 OF 370

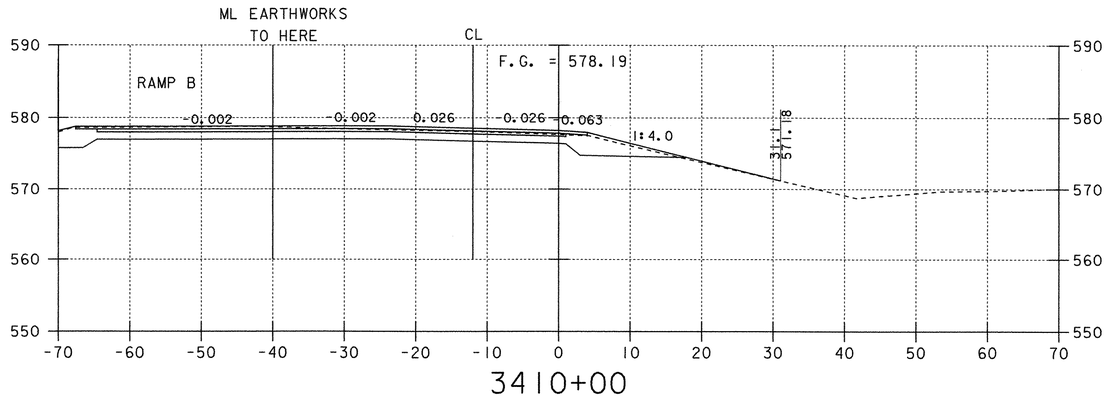

3410+00

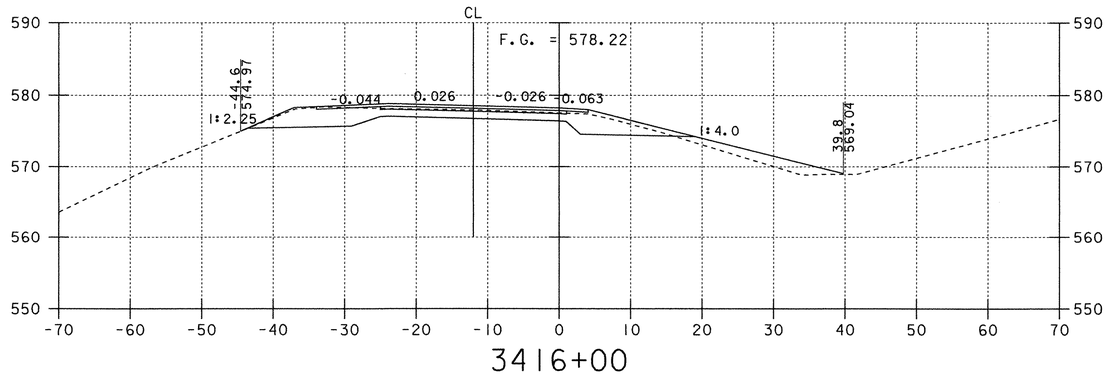

3416+00

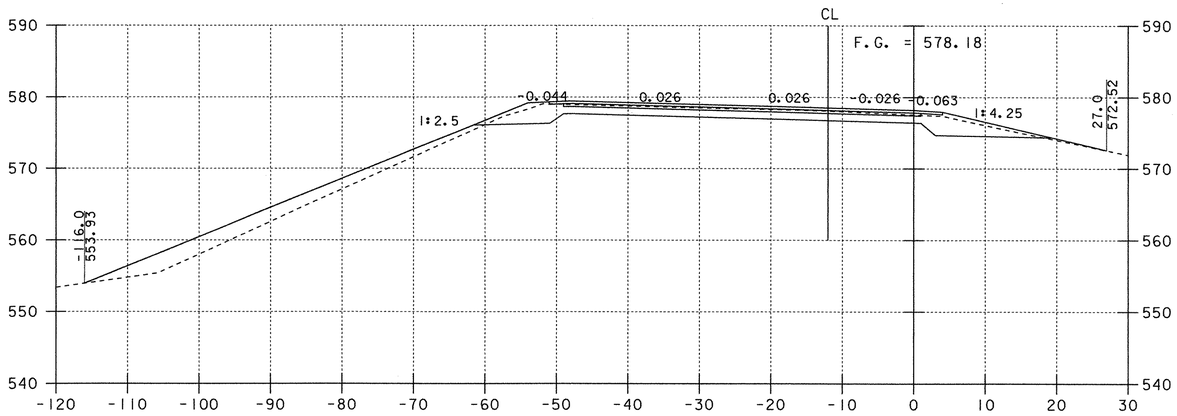

3408+00

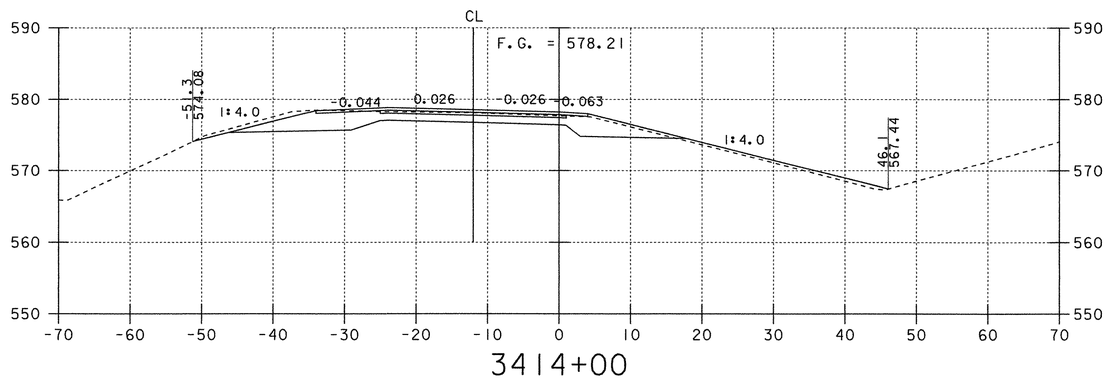

3414+00

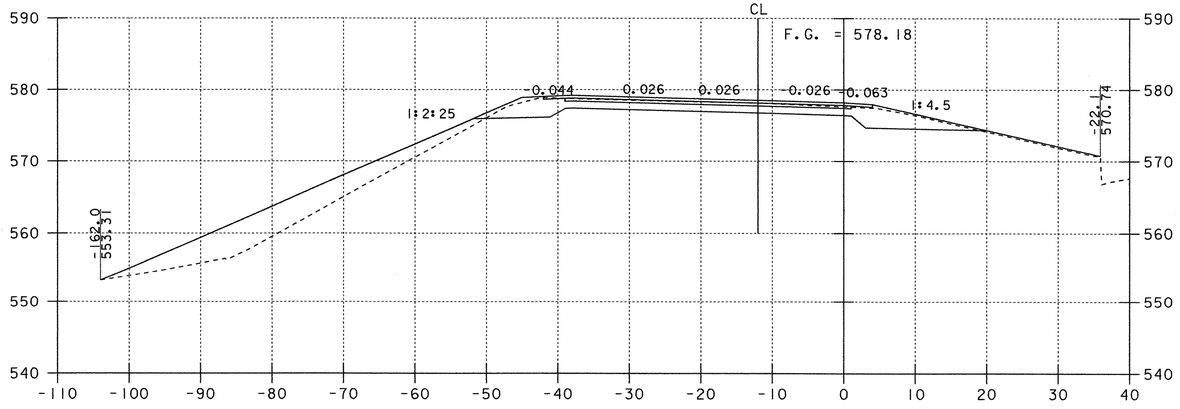

3406+00

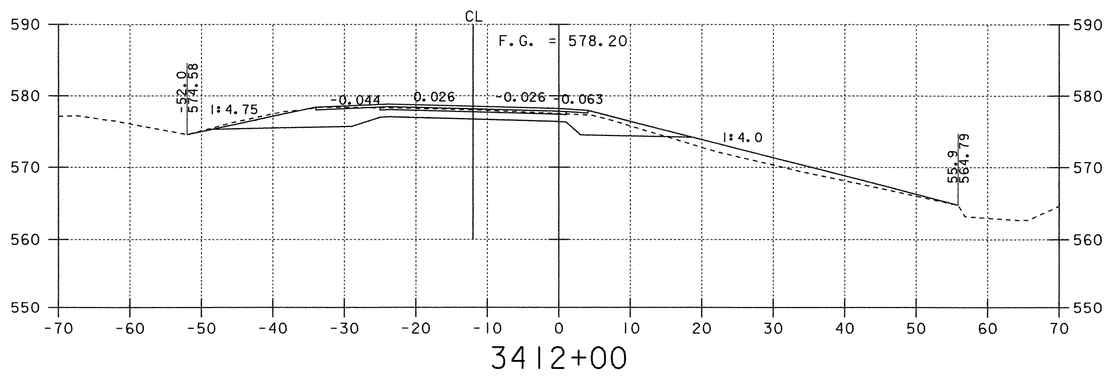

3412+00

NOTE: OFFSET DISTANCES ARE MEASURED FROM THE GRADE LINE.

SOUTHBOUND CROSS SECTIONS

0 10 20
SCALE IN FEET

PROJECT: FAIRFAX - FAIRFIELD - ST. ALBANS	PROJECT NO.: IM 089-3(27)
DESIGN FILE NAME: /87A007B/DESIGN/DA007XS2.DGN	
IPARM FILE NAME: DA007X35	PLOT DATE: 18-AUG-2000
SURVEYED BY: ORVIS	SURVEY DATE: 6/98
SQUAD LEADER: DELLA SANTA	DRAWN BY: SQUAD B
	SHEET: 312 OF 370

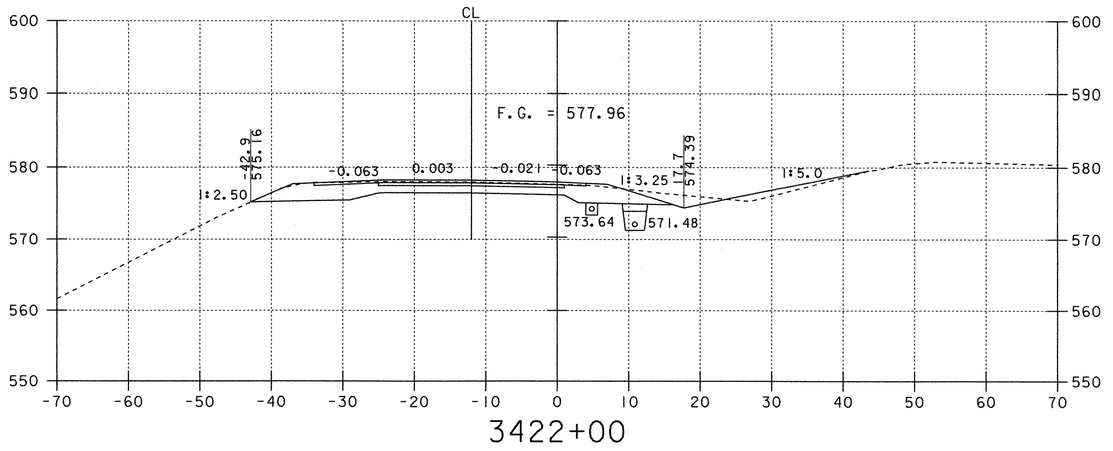

3422+00

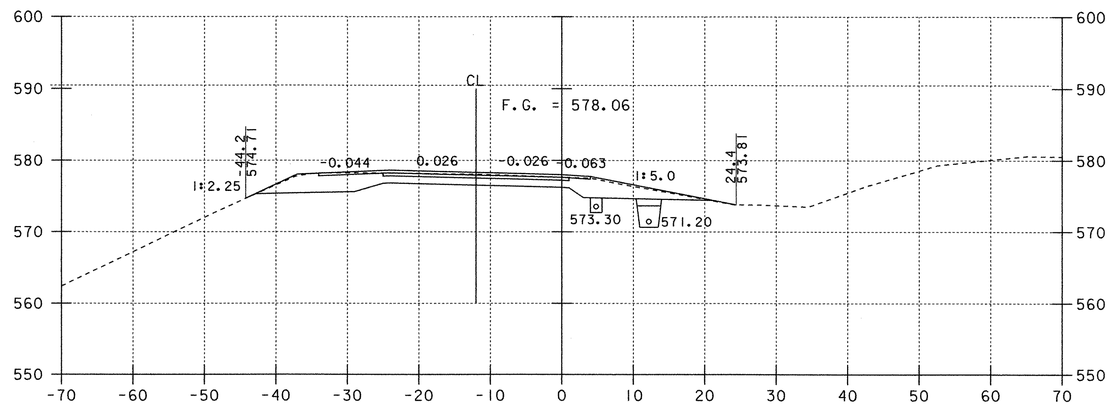

3420+00

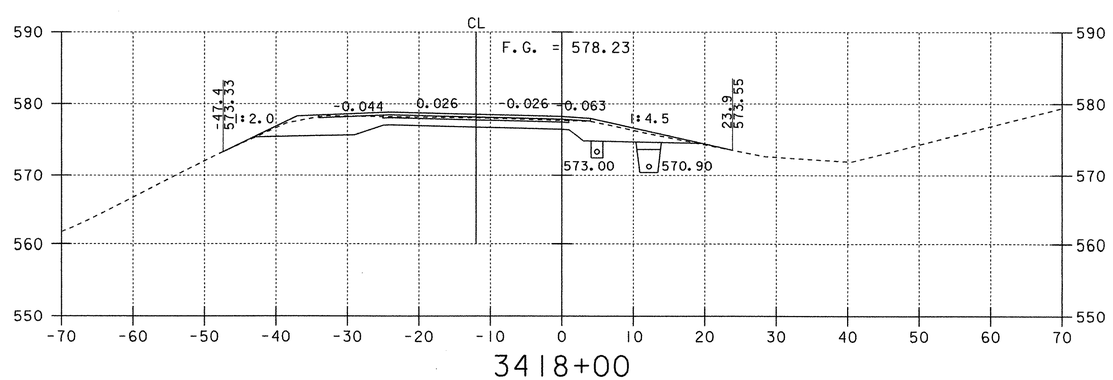

3418+00

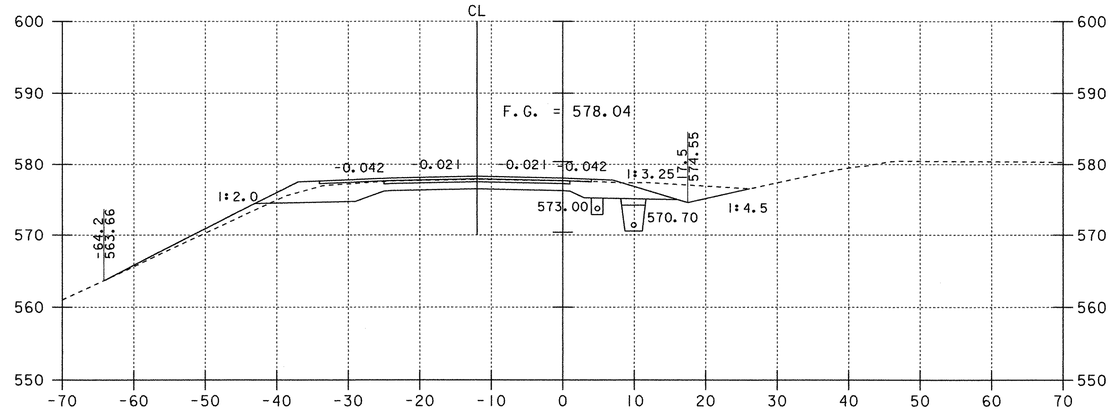

3426+00

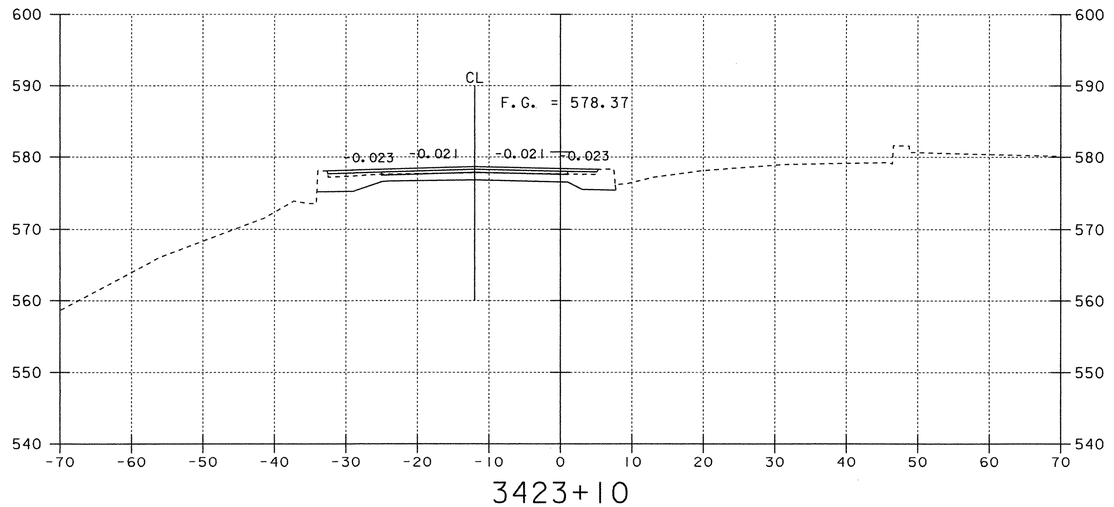

3423+10

NOTE: OFFSET DISTANCES ARE MEASURED FROM THE GRADE LINE.

SOUTHBOUND CROSS SECTIONS

0 10 20
SCALE IN FEET

PROJECT: FAIRFAX - FAIRFIELD - ST. ALBANS	PROJECT NO.: IM 089-3(27)
DESIGN FILE NAME: /87A007B/DESIGN/DA007XS2.DGN	
IPARM FILE NAME: DA007X36	PLOT DATE: 18-AUG-2000
SURVEYED BY: ORVIS	SURVEY DATE: 6/98
SQUAD LEADER: DELLA SANTA	DRAWN BY: SQUAD B
	SHEET: 313 OF 370

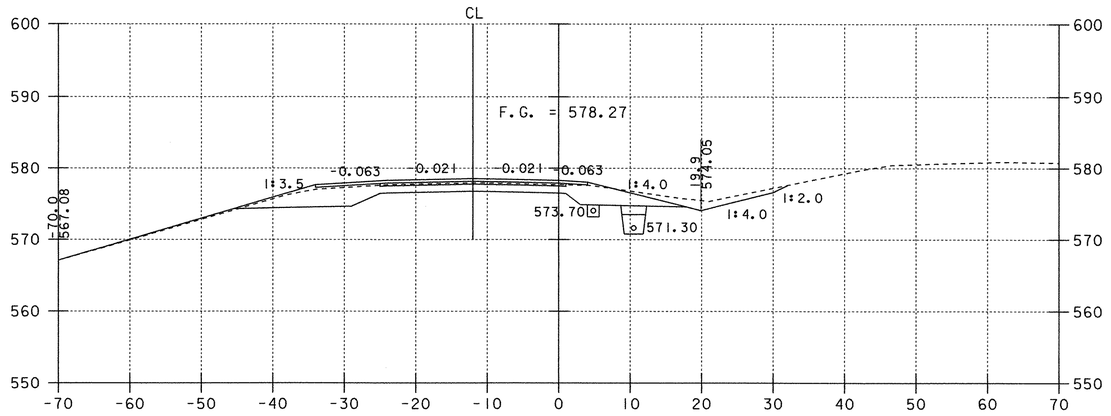

3430+00

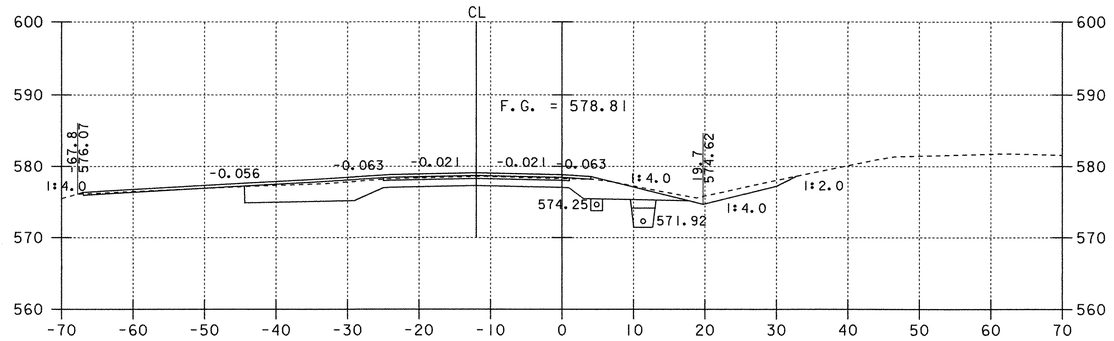

3434+00

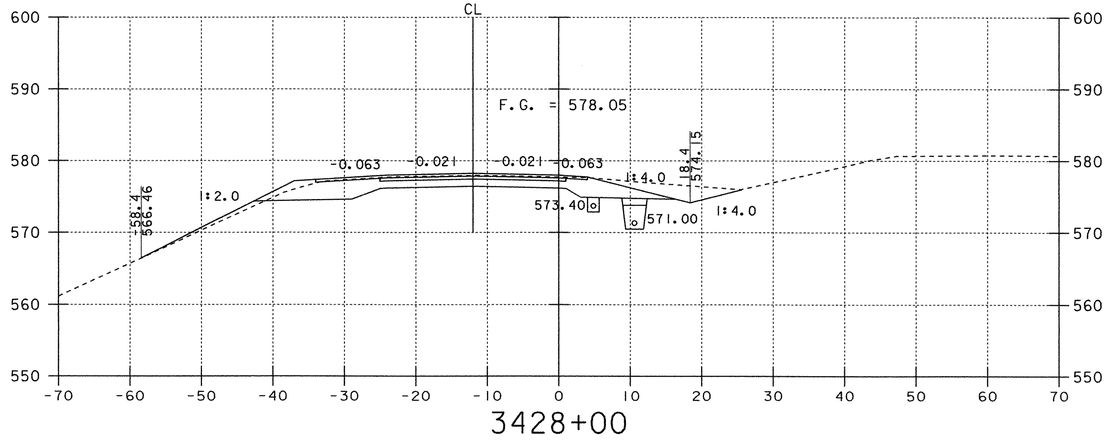

3428+00

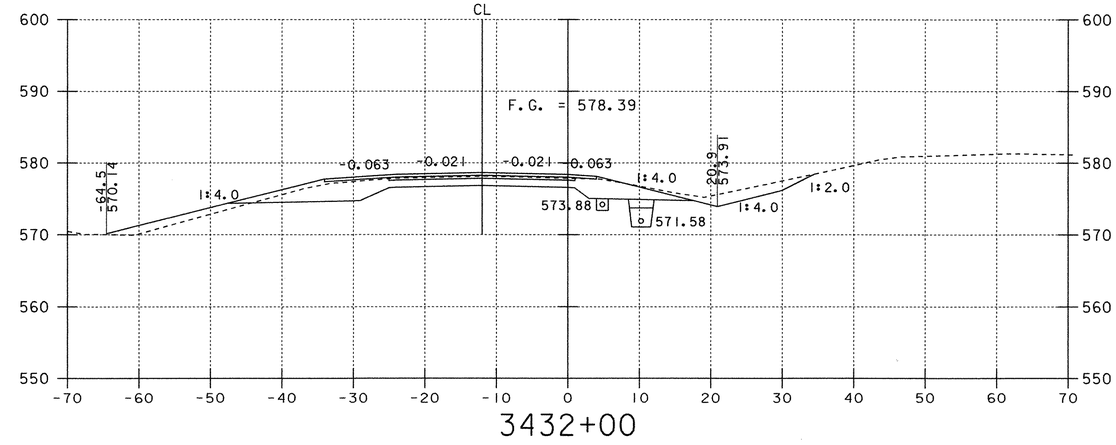

3432+00

NOTE: OFFSET DISTANCES ARE MEASURED FROM THE GRADE LINE.

SOUTHBOUND CROSS SECTIONS

0 10 20
SCALE IN FEET

PROJECT: FAIRFAX - FAIRFIELD - ST. ALBANS	PROJECT NO.: IM 089-3(27)
DESIGN FILE NAME: /87A007B/DESIGN/DA007XS2.DGN	
IPARM FILE NAME: DA007X37	PLOT DATE: 18-AUG-2000
SURVEYED BY: ORVIS	SURVEY DATE: 6/98
SQUAD LEADER: DELLA SANTA	DRAWN BY: SQUAD B
	SHEET: 314 OF 370

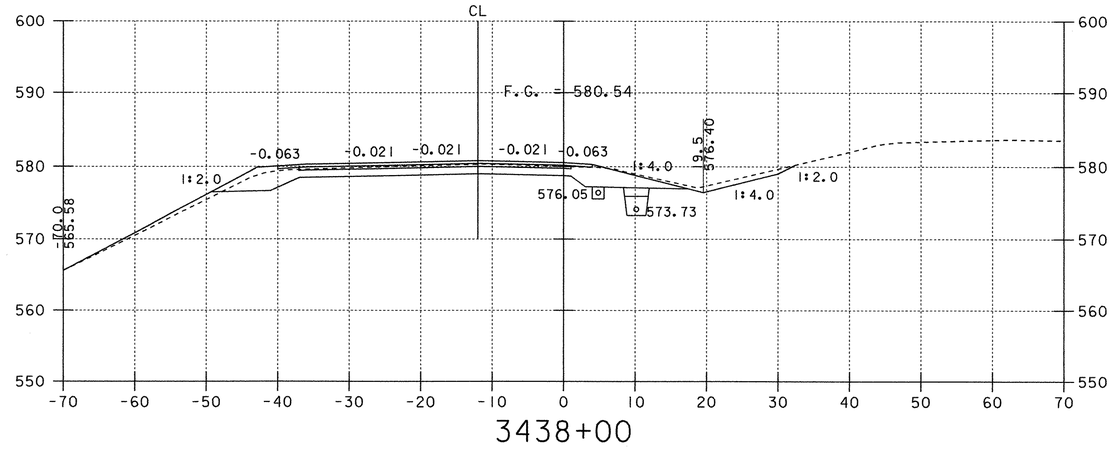

3438+00

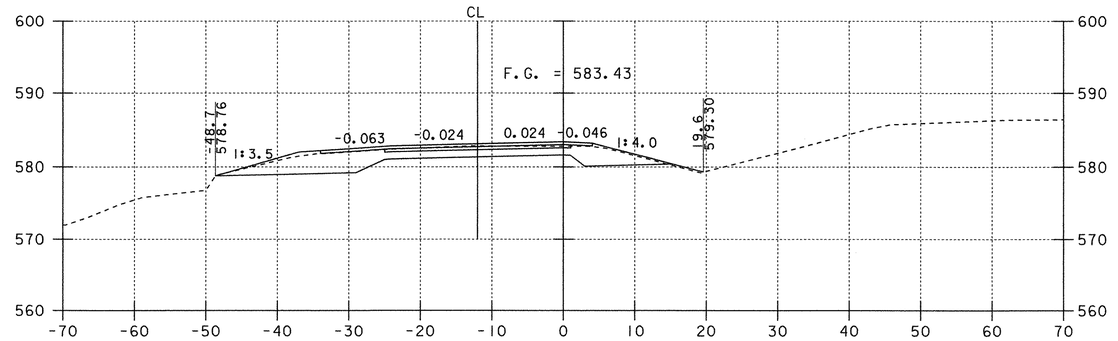

3442+00

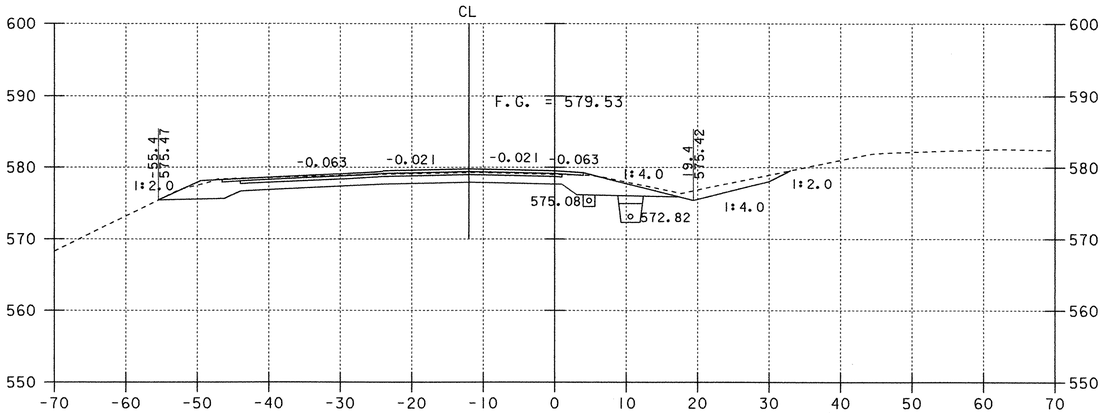

3436+00

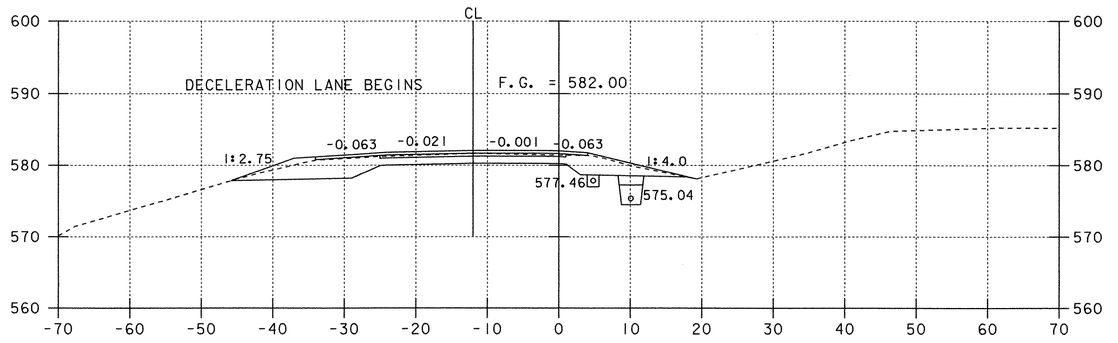

3440+18

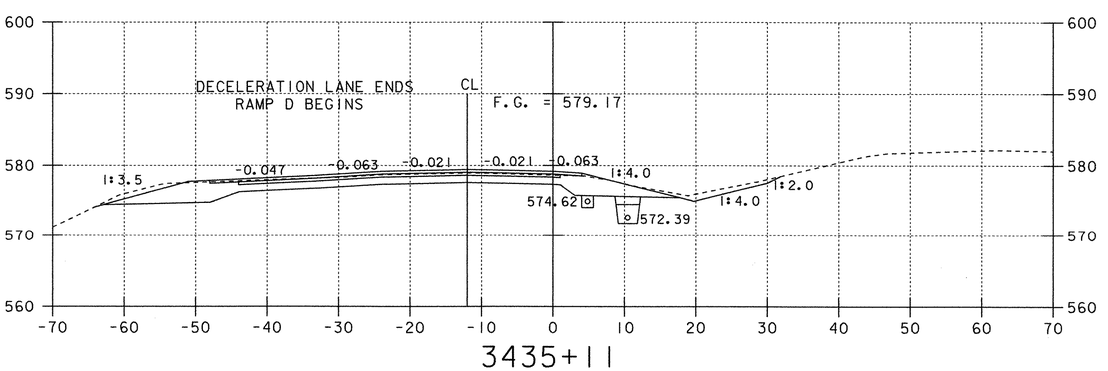

3435+11

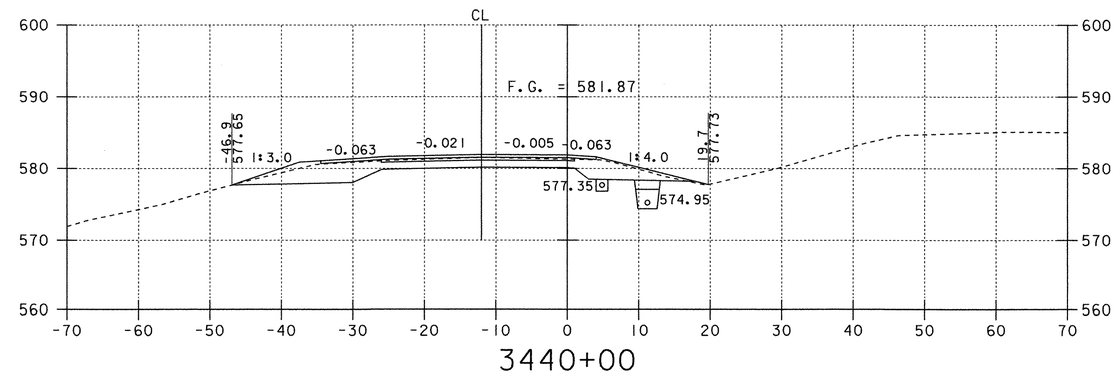

3440+00

NOTE: OFFSET DISTANCES ARE MEASURED FROM THE GRADE LINE.

SOUTHBOUND CROSS SECTIONS

0 10 20
SCALE IN FEET

PROJECT: FAIRFAX - FAIRFIELD - ST. ALBANS	PROJECT NO.: IM 089-3(27)
DESIGN FILE NAME: /87A007B/DESIGN/DA007XS2.DGN	
IPARM FILE NAME: DA007X38	PLOT DATE: 18-AUG-2000
SURVEYED BY: ORVIS	SURVEY DATE: 6/98
SQUAD LEADER: DELLA SANTA	DRAWN BY: SQUAD B
	SHEET: 315 OF 370

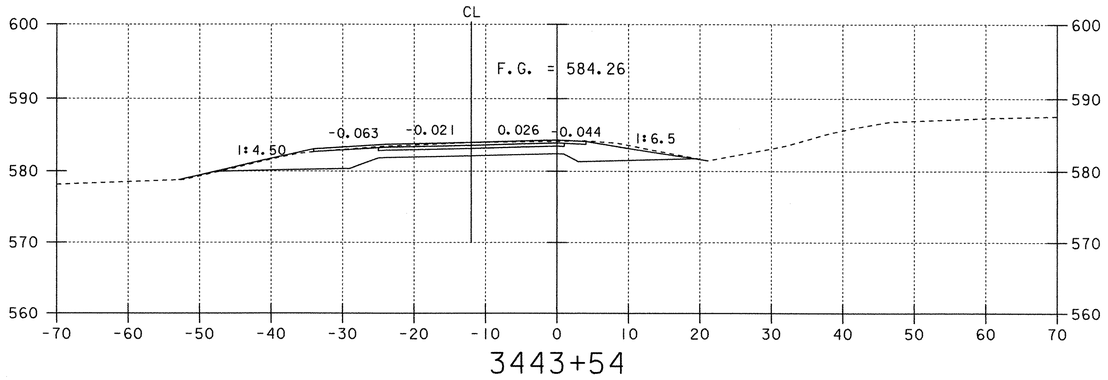

3443+54

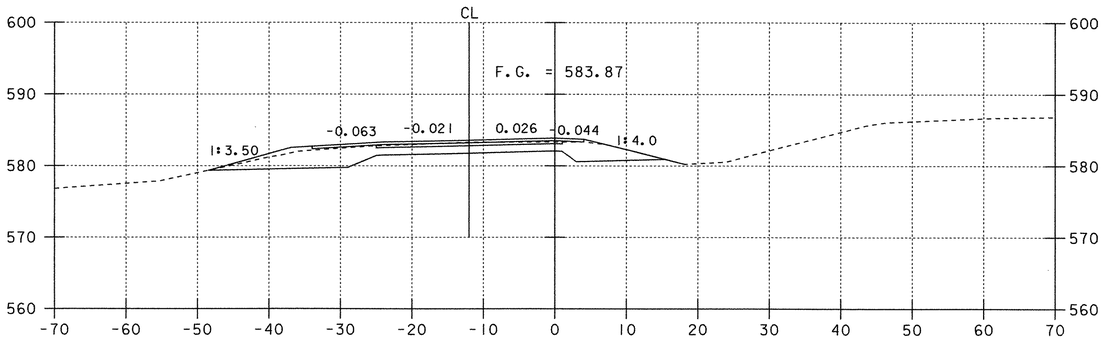

3442+54

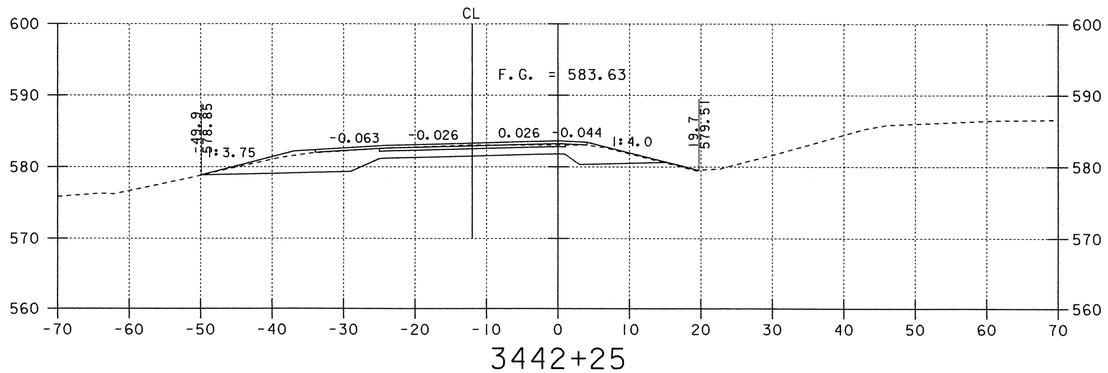

3442+25

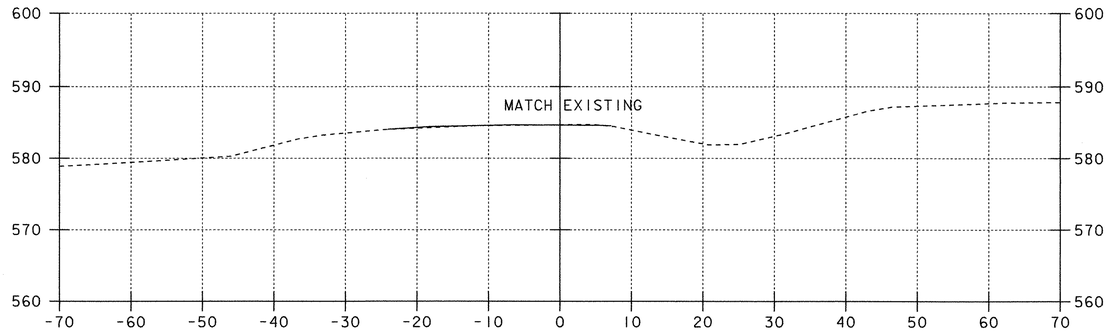

3444+54

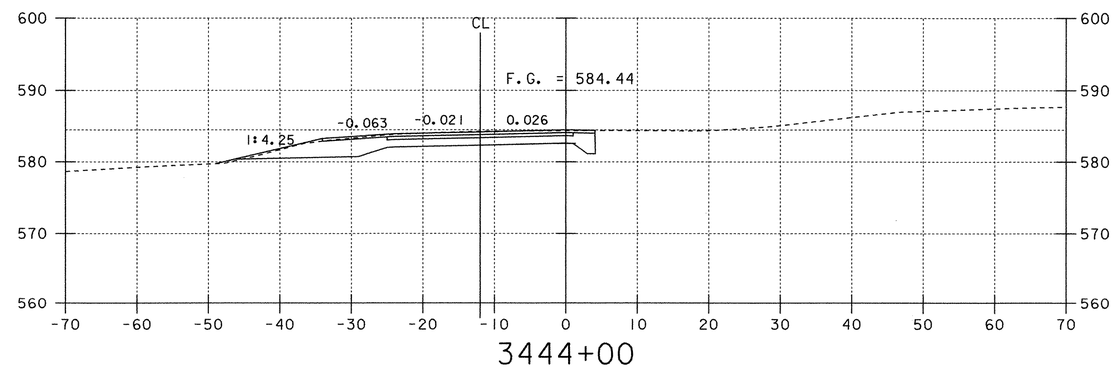

3444+00

NOTE: OFFSET DISTANCES ARE MEASURED FROM THE GRADE LINE.

SOUTHBOUND CROSS SECTIONS

0 10 20
SCALE IN FEET

PROJECT: FAIRFAX - FAIRFIELD - ST. ALBANS	PROJECT NO.: IM 089-3(27)
DESIGN FILE NAME: /87A007B/DESIGN/DA007XS2.DGN	
IPARM FILE NAME: DA007X39	PLOT DATE: 18-AUG-2000
SURVEYED BY: ORVIS	SURVEY DATE: 6/98
SQUAD LEADER: DELLA SANTA	DRAWN BY: SQUAD B
	SHEET: 316 OF 370

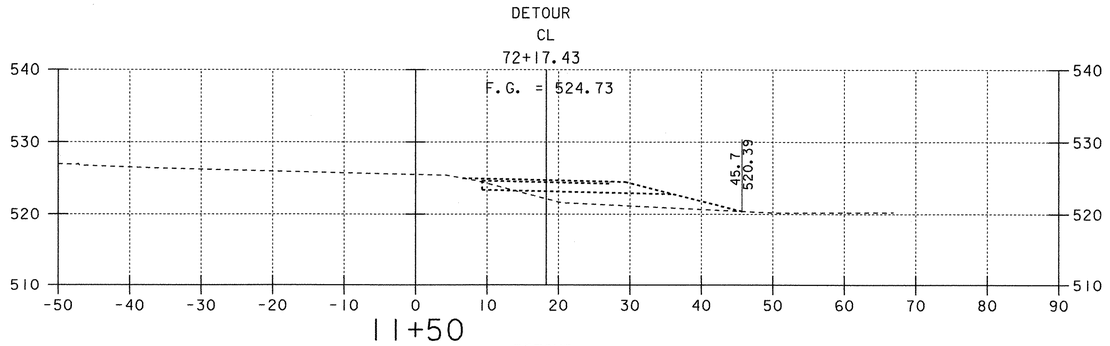

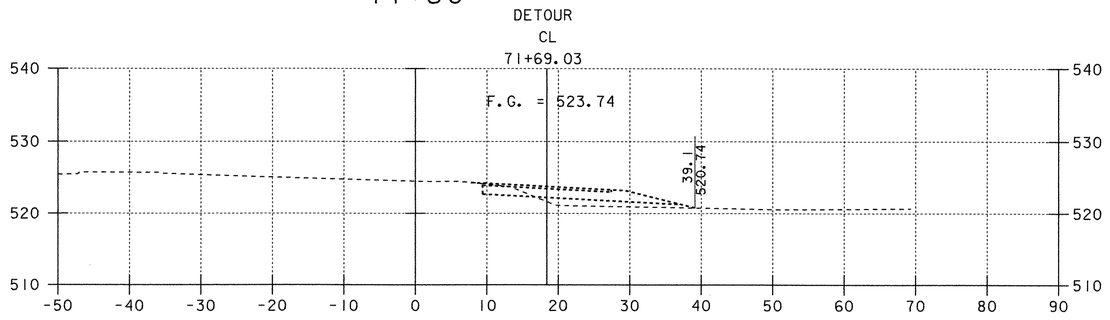

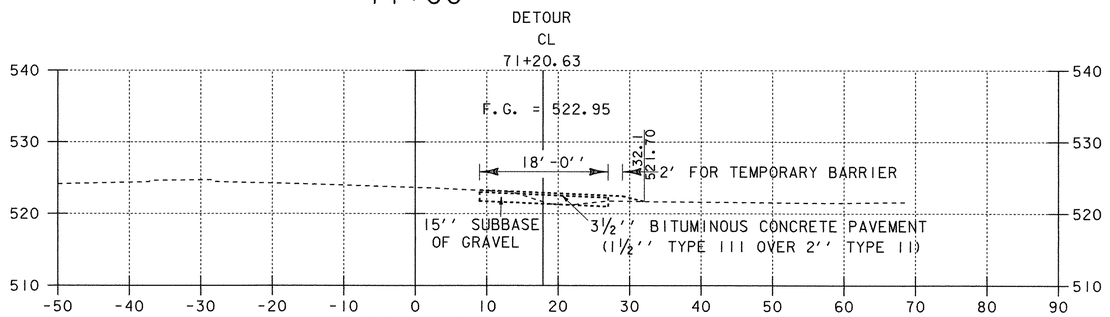

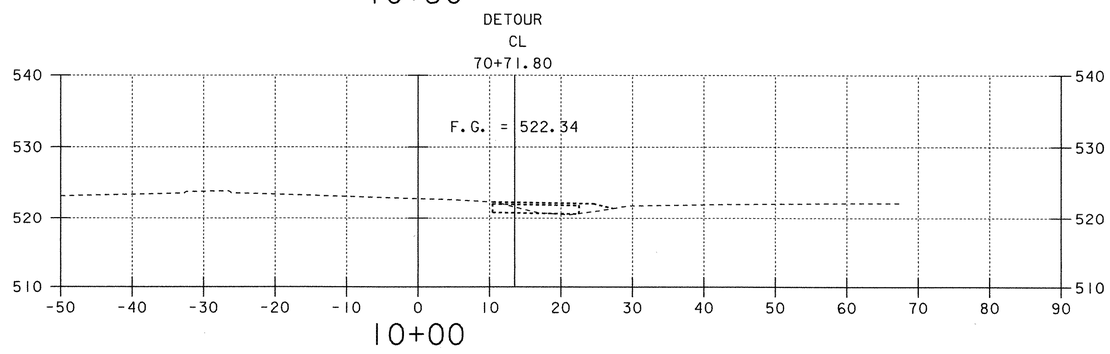

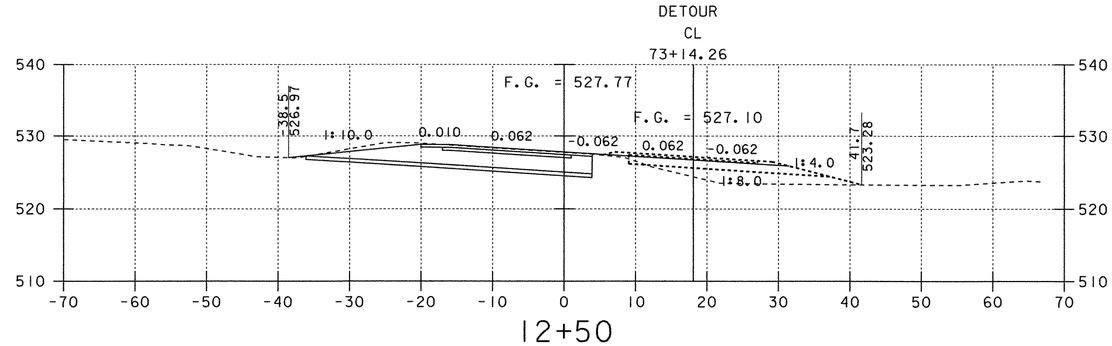

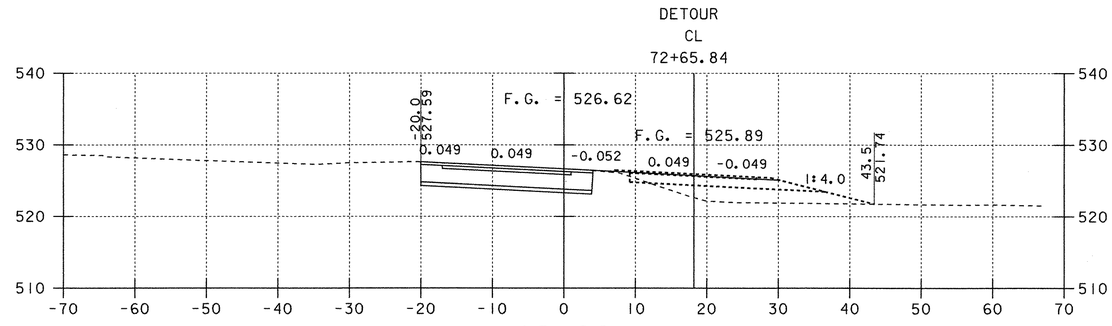

NOTE: WHEN RAMP C RECONSTRUCTION IS DONE, DETOUR MATERIAL ABOVE THIS SOLID LINE WILL BE EXCAVATED. ALSO, ALL DETOUR PAVEMENT WILL BE REPLACED WITH TOPSOIL AND SEEDED. THE REST WILL REMAIN IN PLACE.

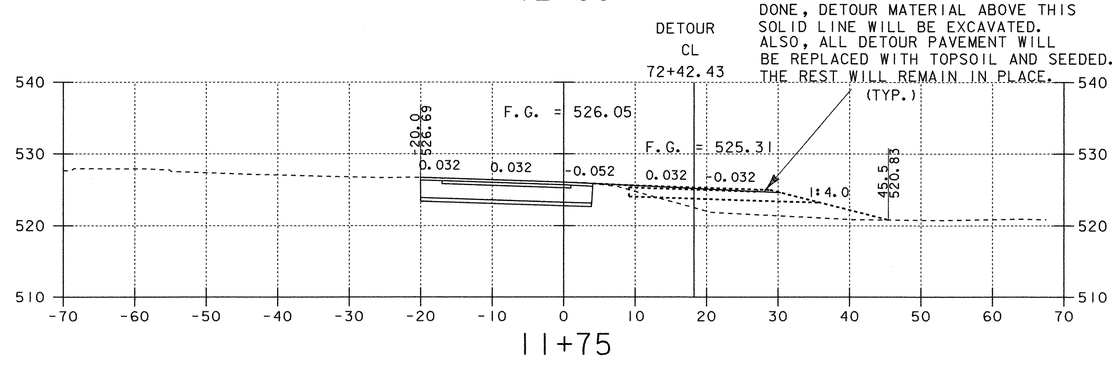

NOTE: OFFSET DISTANCES ARE MEASURED FROM RAMP C GRADE LINE.

RAMP C CROSS SECTIONS

0 10 20
SCALE IN FEET

PROJECT: FAIRFAX - FAIRFIELD - ST. ALBANS		PROJECT NO.: IM 089-3(27)	
DESIGN FILE NAME:	/87A007B/DESIGN/DA007RMC.DGN		
IPARM FILE NAME:	DA007X40	PLOT DATE:	18-AUG-2000
SURVEYED BY:	ORVIS	SURVEY DATE:	6/98
SQUAD LEADER:	DELLA SANTA	DRAWN BY:	SQUAD B
		SHEET:	317 OF 370

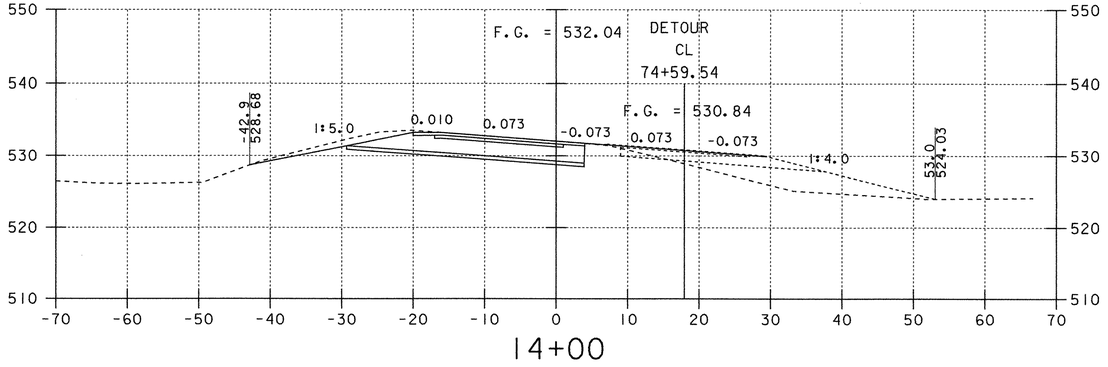

14+00

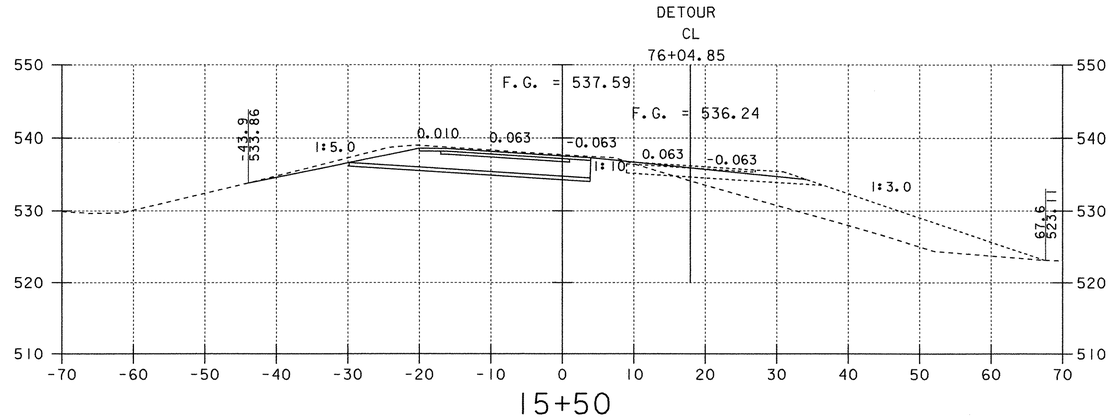

15+50

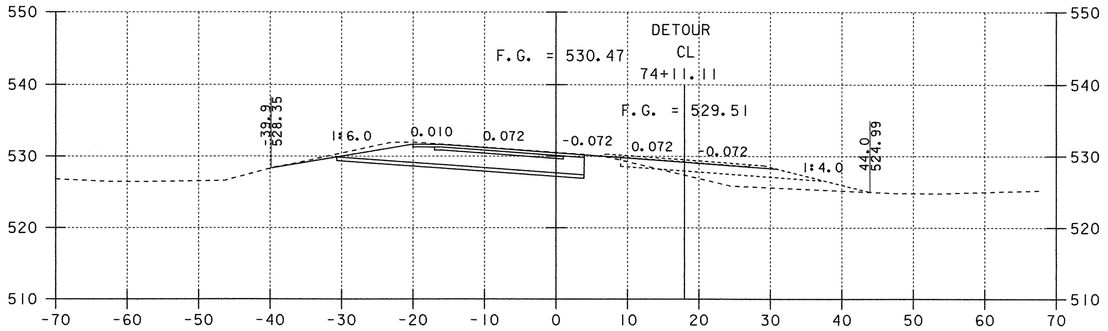

13+50

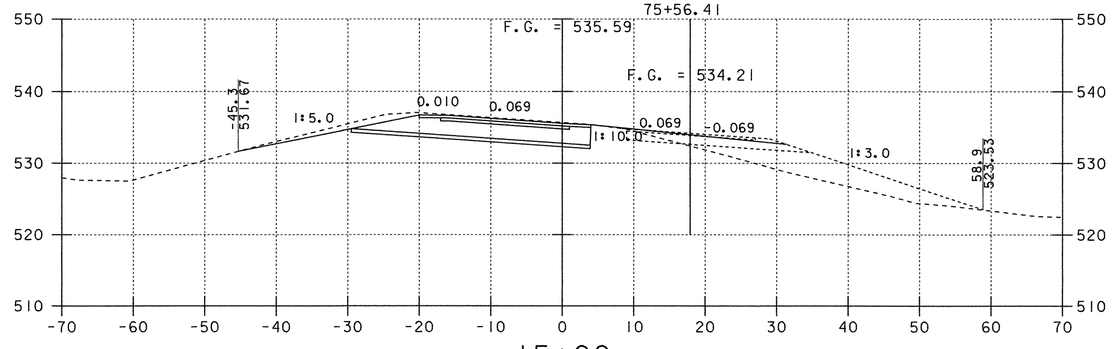

15+00

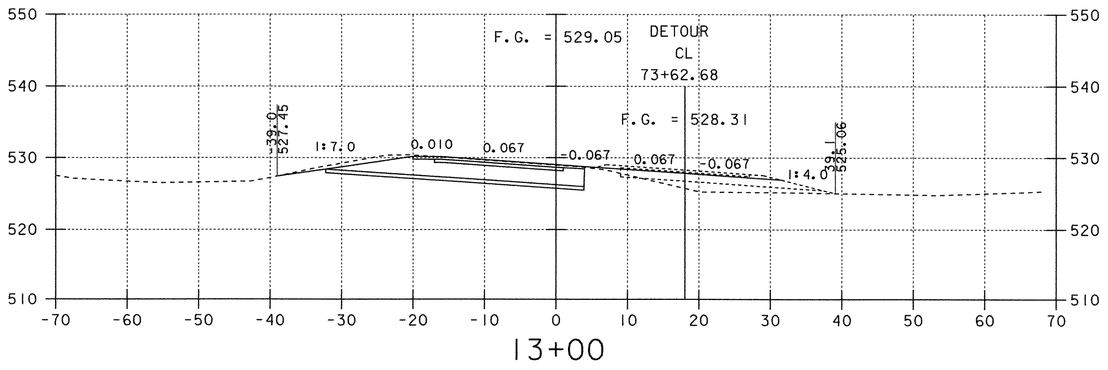

13+00

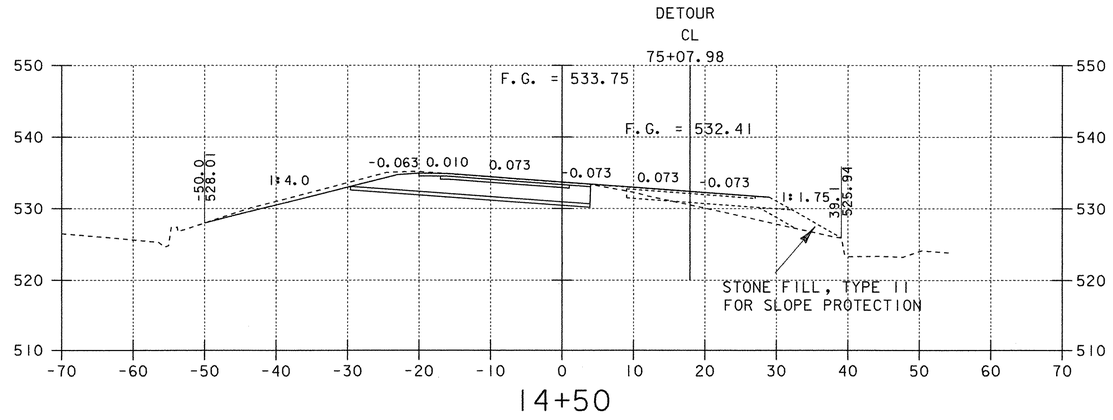

14+50

NOTE: OFFSET DISTANCES ARE MEASURED FROM THE GRADE LINE.

RAMP C CROSS SECTIONS

0 10 20
SCALE IN FEET

PROJECT: FAIRFAX - FAIRFIELD - ST. ALBANS		PROJECT NO.: IM 089-3(27)	
DESIGN FILE NAME:	/87A007B/DESIGN/DA007RMC.DGN		
IPARM FILE NAME:	DA007X41	PLOT DATE:	18-AUG-2000
SURVEYED BY:	ORVIS	SURVEY DATE:	6/98
SQUAD LEADER:	DELLA SANTA	DRAWN BY:	SQUAD B
		SHEET: 318 OF 370	

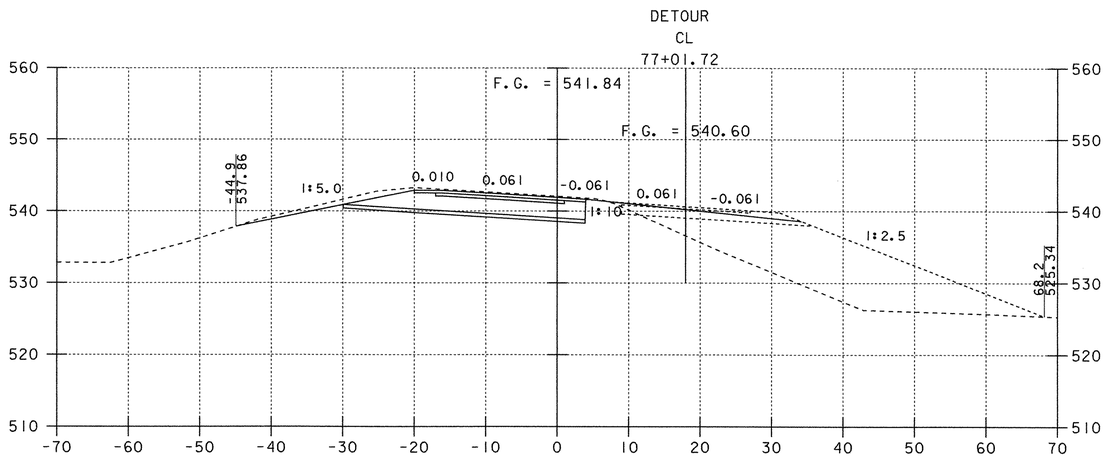

16+50

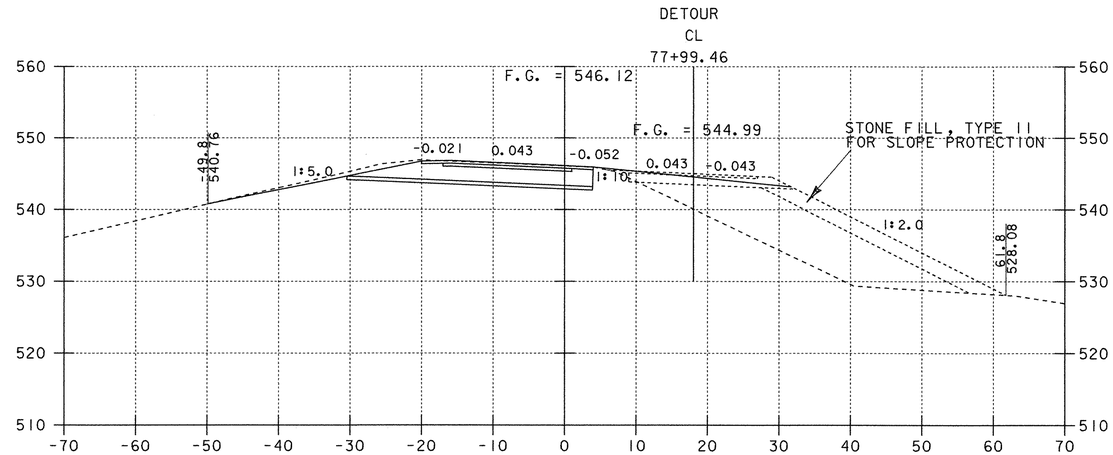

17+50

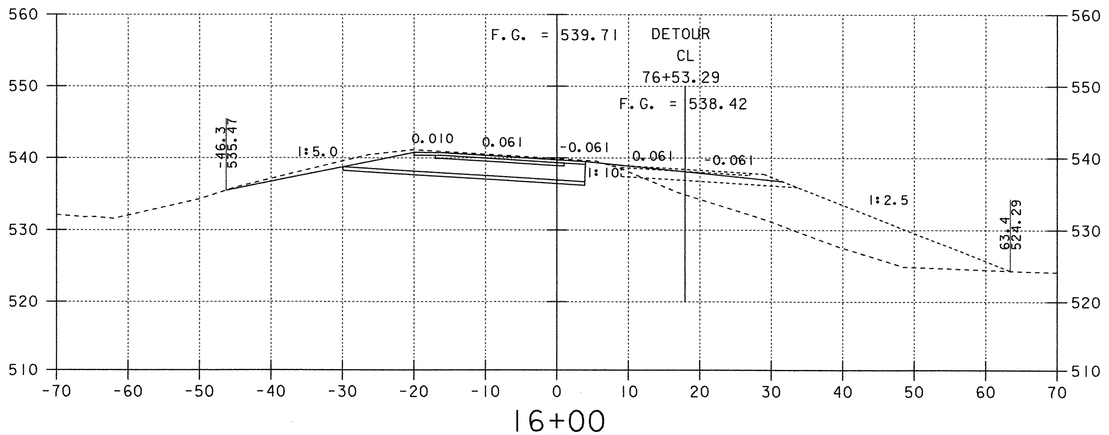

16+00

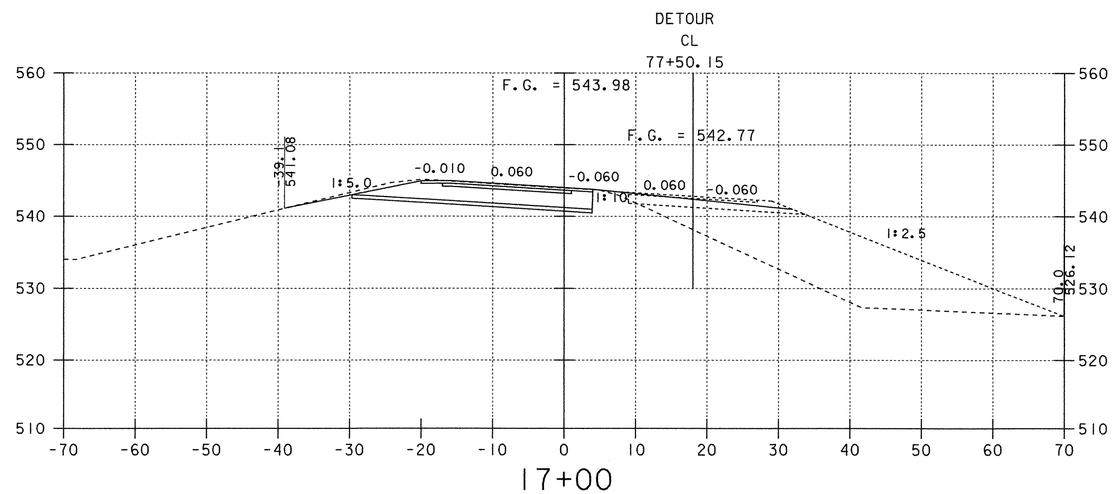

17+00

NOTE: OFFSET DISTANCES ARE MEASURED FROM THE GRADE LINE.

RAMP C CROSS SECTIONS

0 10 20
SCALE IN FEET

PROJECT: FAIRFAX - FAIRFIELD - ST. ALBANS	PROJECT NO.: IM 089-3(27)
DESIGN FILE NAME: /87A007B/DESIGN/DA007RMC.DGN	
IPARM FILE NAME: DA007X42	PLOT DATE: 18-AUG-2000
SURVEYED BY: ORVIS	SURVEY DATE: 6/98
SQUAD LEADER: DELLA SANTA	DRAWN BY: SQUAD B
	SHEET: 319 OF 370

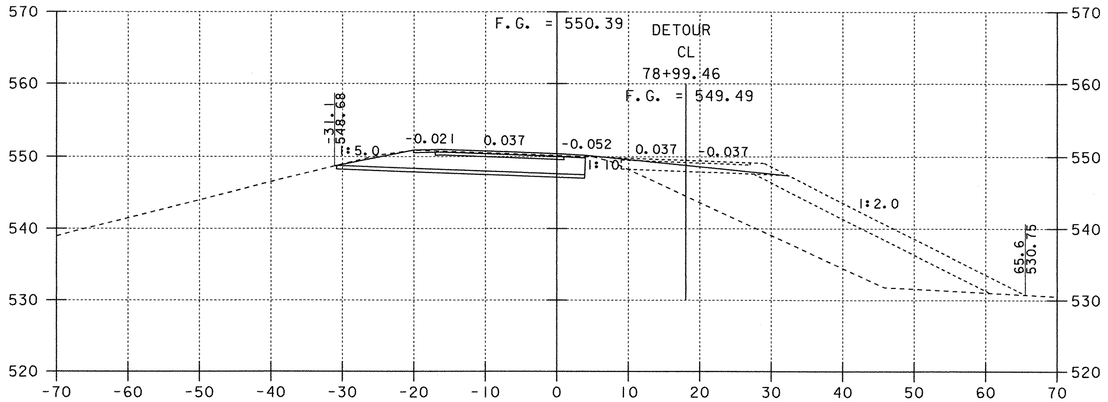

18+50

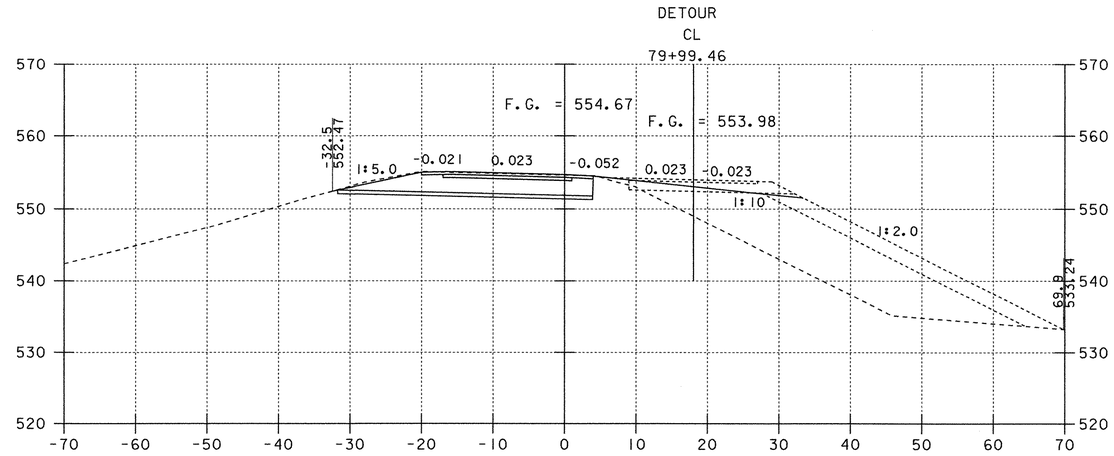

19+50

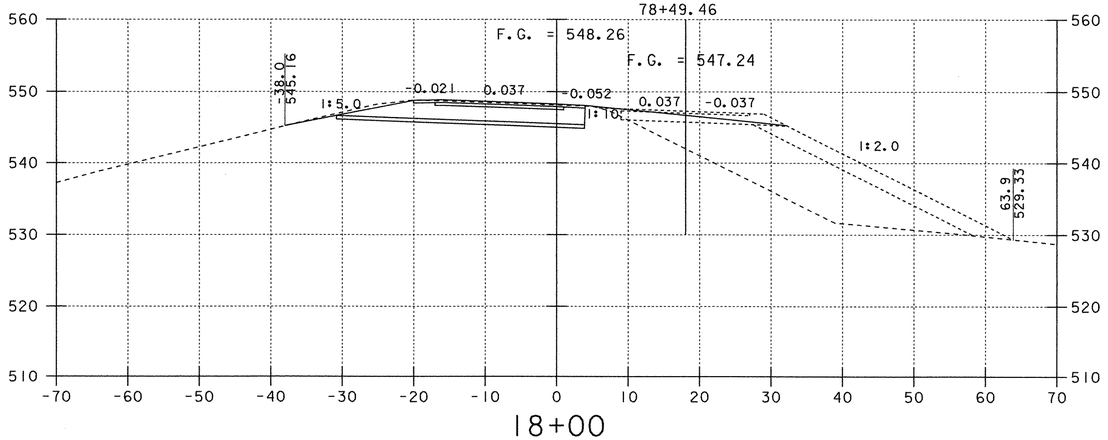

18+00

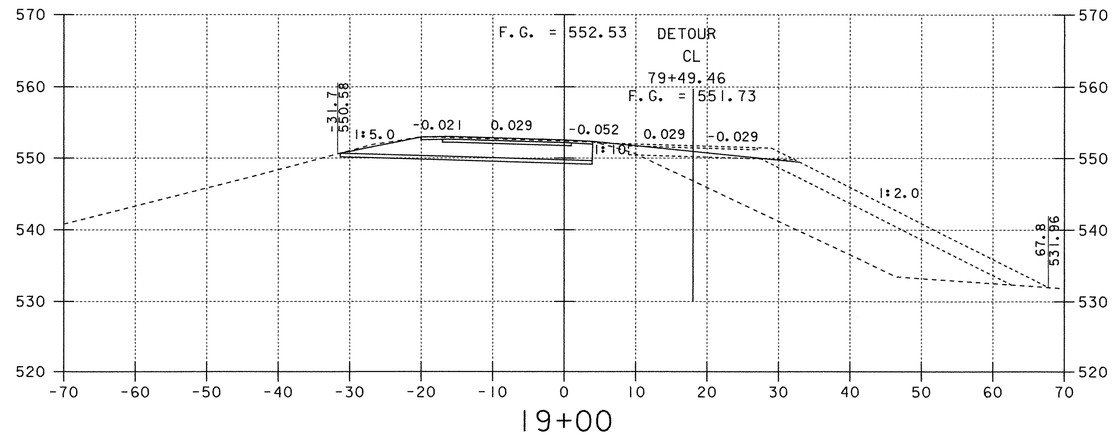

19+00

NOTE: OFFSET DISTANCES ARE MEASURED FROM THE GRADE LINE.

RAMP C CROSS SECTIONS

0 10 20
SCALE IN FEET

PROJECT: FAIRFAX - FAIRFIELD - ST. ALBANS	PROJECT NO.: IM 089-3(127)
DESIGN FILE NAME: /87A007B/DESIGN/DA007RMC.DGN	
IPARM FILE NAME: DA007X43	PLOT DATE: 18-AUG-2000
SURVEYED BY: ORVIS	SURVEY DATE: 6/98
SQUAD LEADER: DELLA SANTA	DRAWN BY: SQUAD B
	SHEET: 320 OF 370

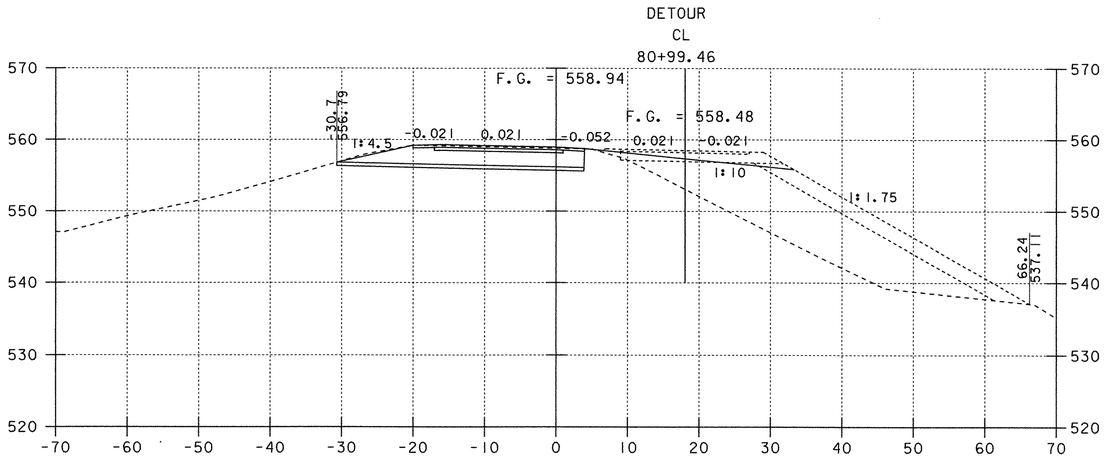

20+50

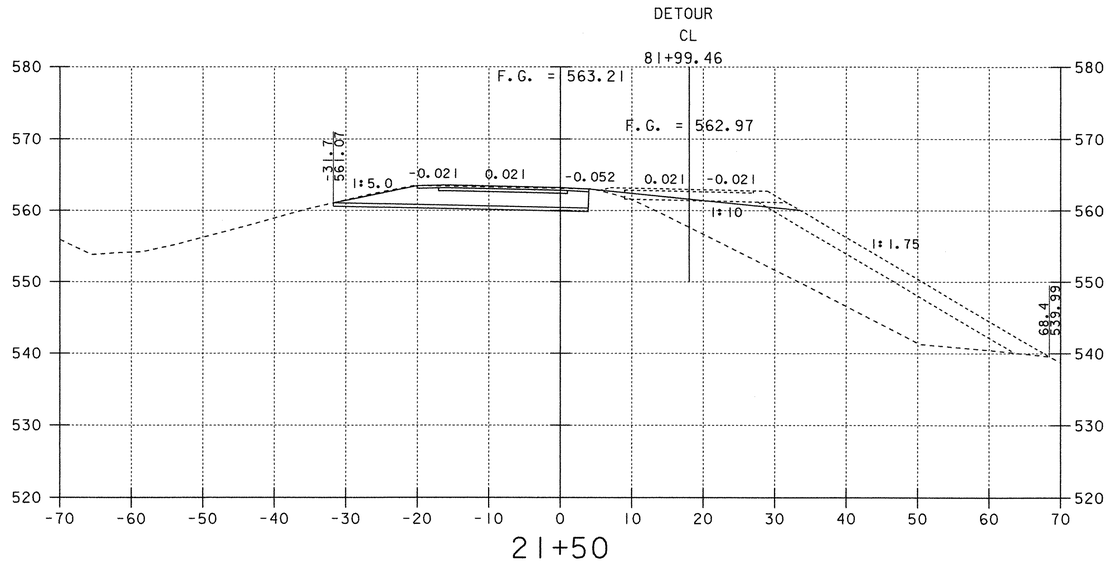

21+50

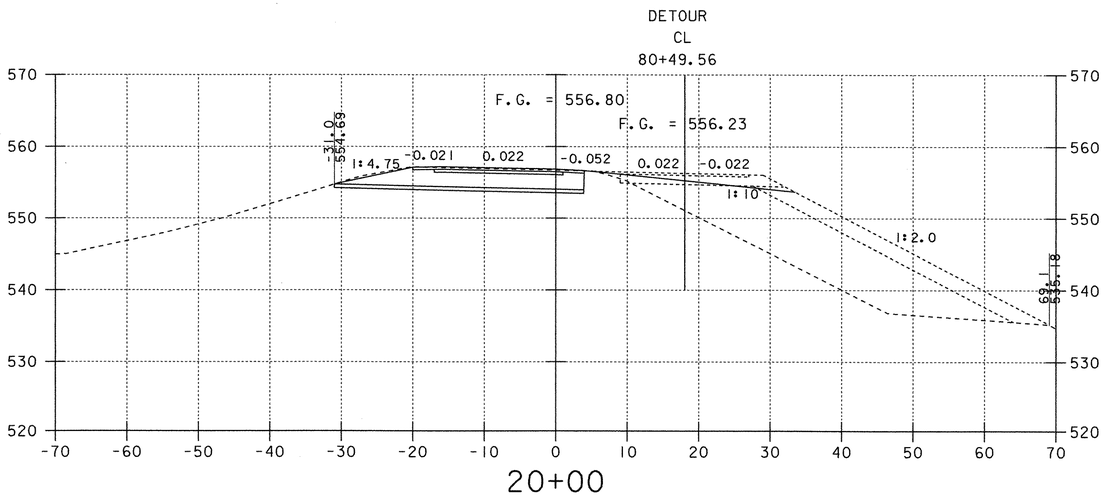

20+00

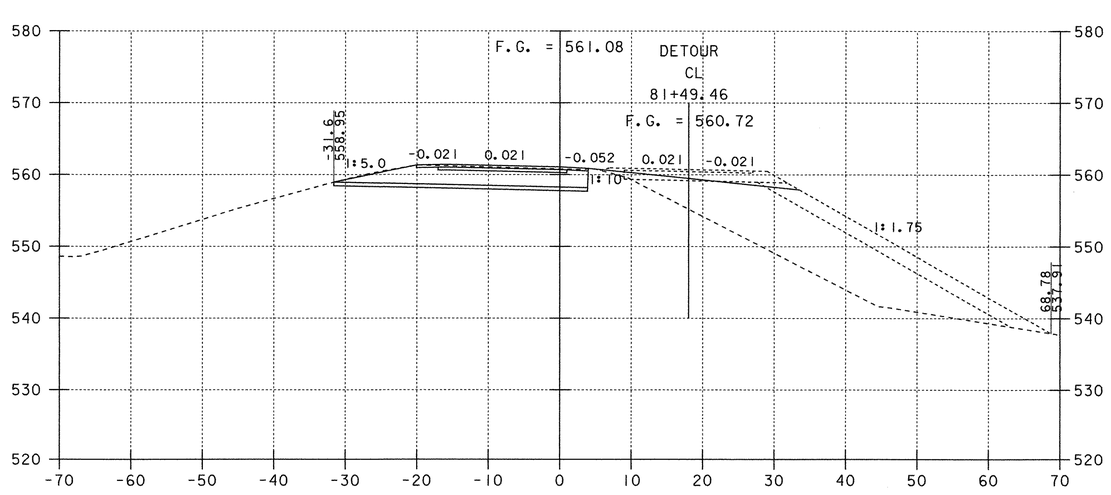

21+00

NOTE: OFFSET DISTANCES ARE MEASURED FROM THE GRADE LINE.

0 10 20
SCALE IN FEET

RAMP C CROSS SECTIONS

PROJECT: FAIRFAX - FAIRFIELD - ST. ALBANS		PROJECT NO.: IM 089-3(27)	
DESIGN FILE NAME:	/87A007B/DESIGN/DA007RMC.DGN		
IPARM FILE NAME:	DA007X44	PLOT DATE:	18-AUG-2000
SURVEYED BY:	ORVIS	SURVEY DATE:	6/98
SQUAD LEADER:	DELLA SANTA	DRAWN BY:	SQUAD B
		SHEET:	321 OF 370

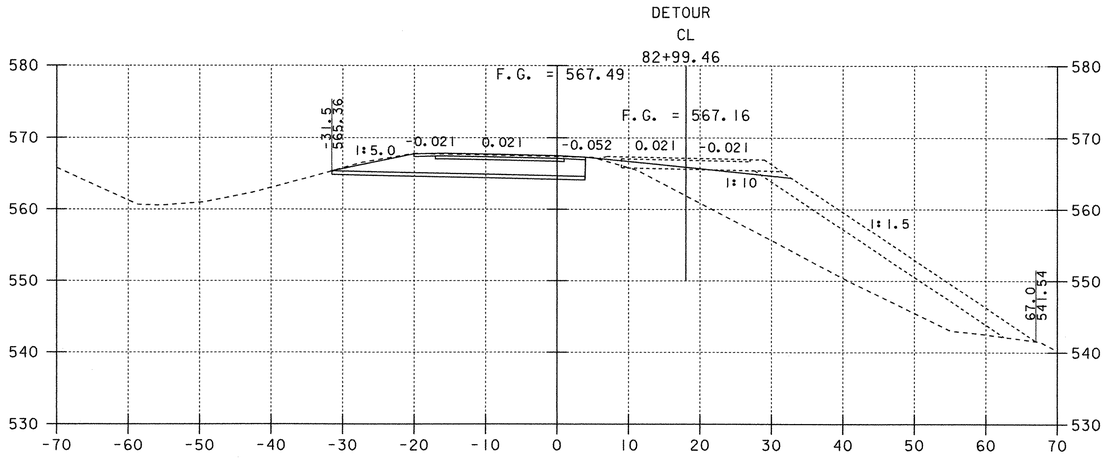

22+50

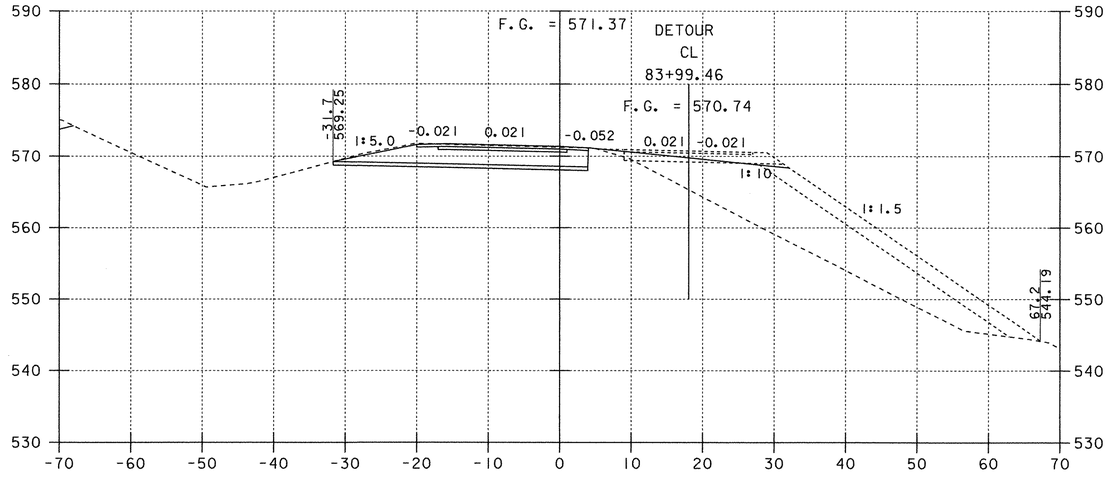

23+50

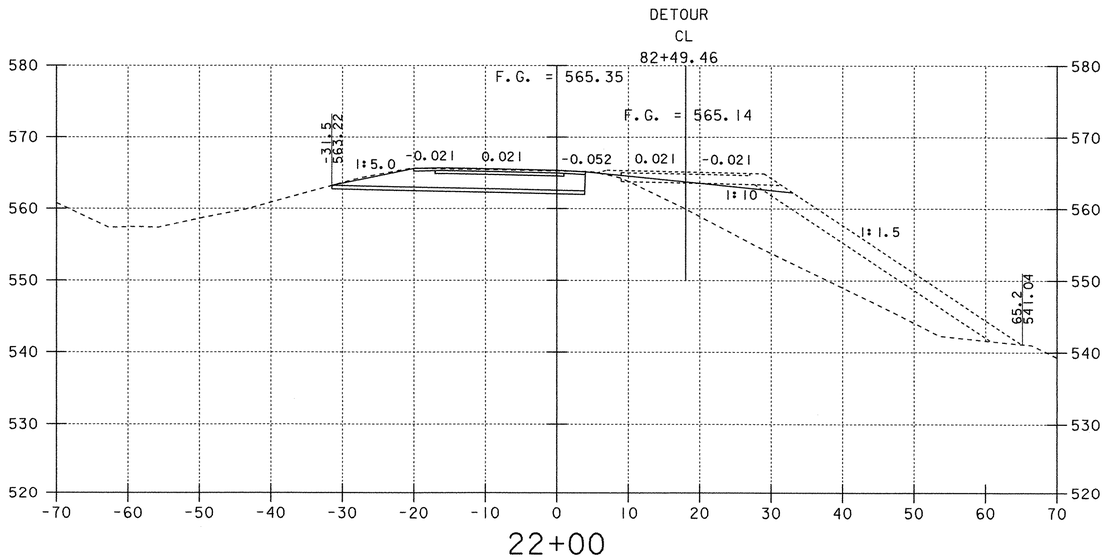

22+00

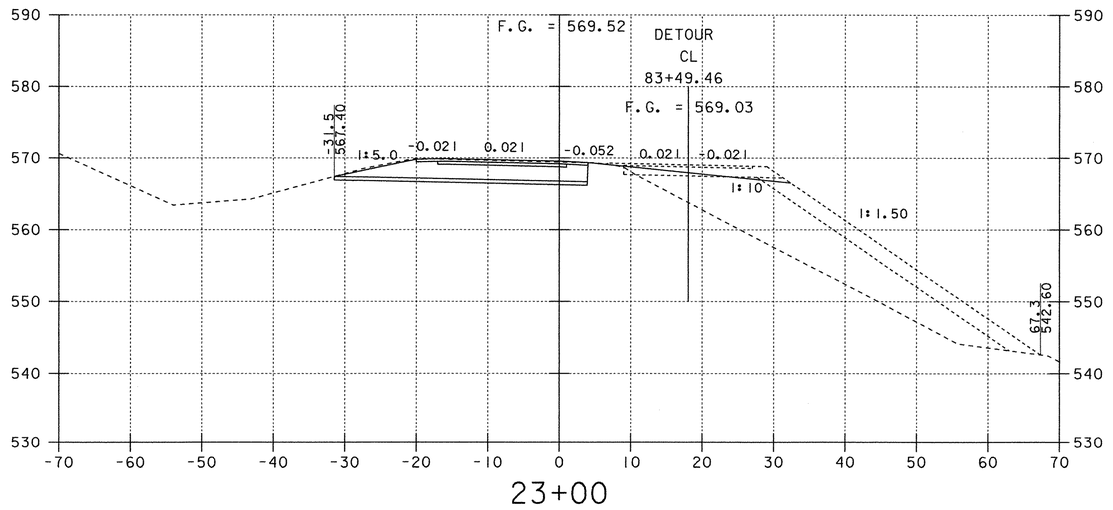

23+00

NOTE: OFFSET DISTANCES ARE MEASURED FROM THE GRADE LINE.

0 10 20
SCALE IN FEET

RAMP C CROSS SECTIONS

PROJECT: FAIRFAX - FAIRFIELD - ST. ALBANS		PROJECT NO.: IM 089-3(27)	
DESIGN FILE NAME:	/87A007B/DESIGN/DA007RMC.DGN		
IPARM FILE NAME:	DA007X45	PLOT DATE:	18-AUG-2000
SURVEYED BY:	ORVIS	SURVEY DATE:	6/98
SQUAD LEADER:	DELLA SANTA	DRAWN BY:	SQUAD B
		SHEET:	322 OF 370

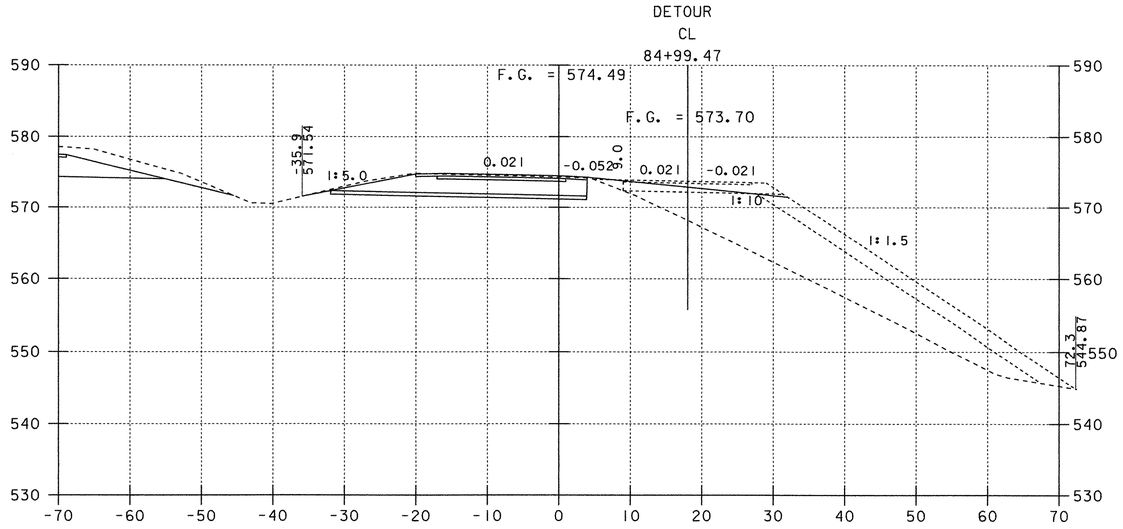

24+50

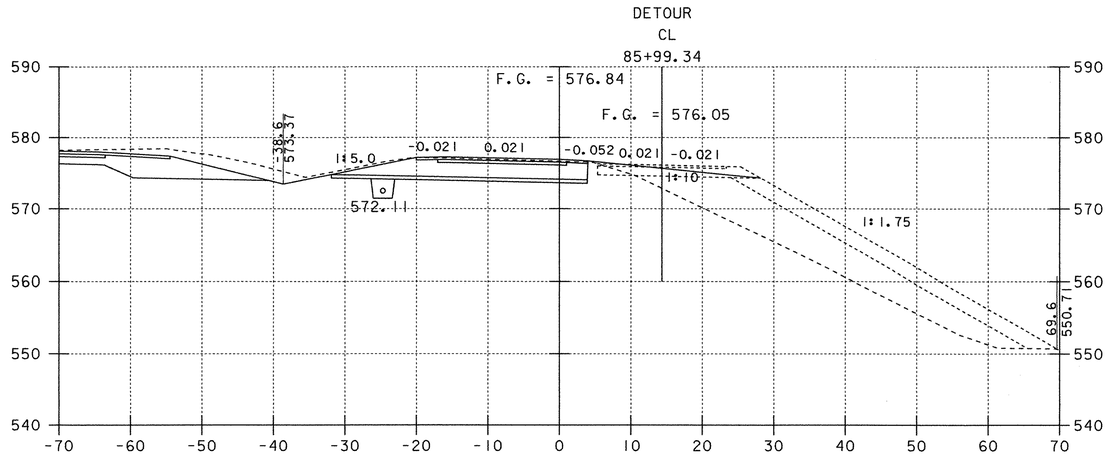

25+50

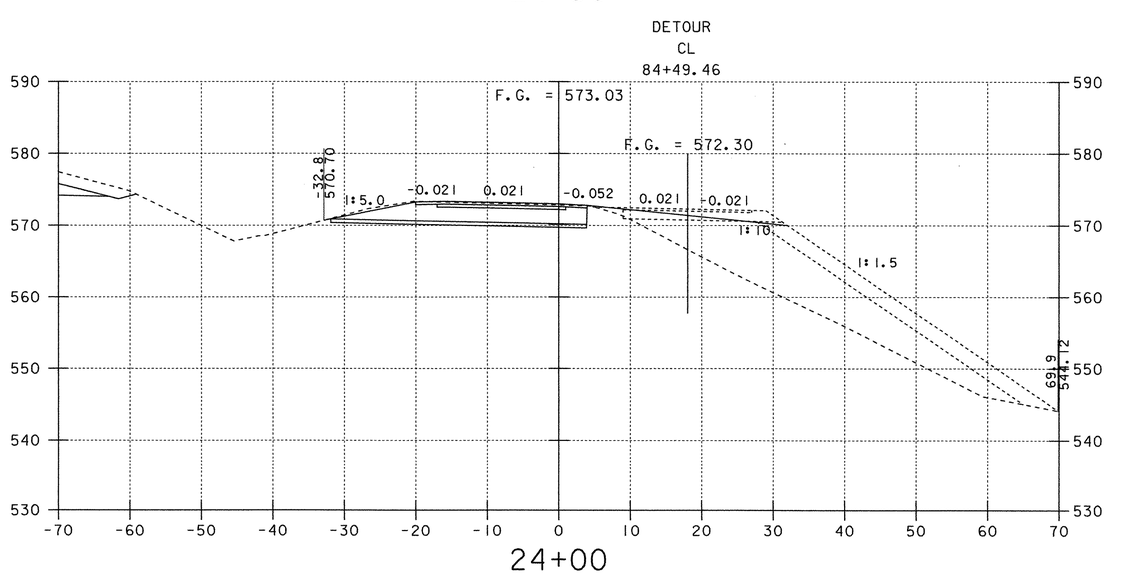

24+00

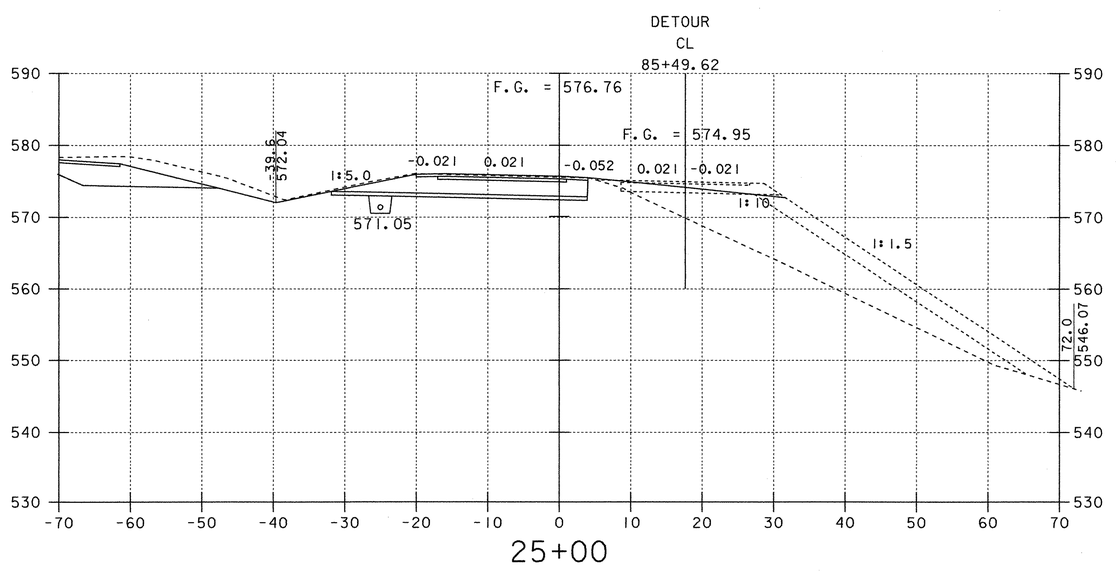

25+00

NOTE: OFFSET DISTANCES ARE MEASURED FROM THE GRADE LINE.

0 10 20
SCALE IN FEET

RAMP C CROSS SECTIONS

PROJECT: FAIRFAX - FAIRFIELD - ST. ALBANS	PROJECT NO.: IM 089-3(27)
DESIGN FILE NAME: /87A007B/DESIGN/DA007RMC.DGN	
IPARM FILE NAME: DA007X46	PLOT DATE: 18-AUG-2000
SURVEYED BY: ORVIS	SURVEY DATE: 6/98
SQUAD LEADER: DELLA SANTA	DRAWN BY: SQUAD B
	SHEET: 323 OF 370

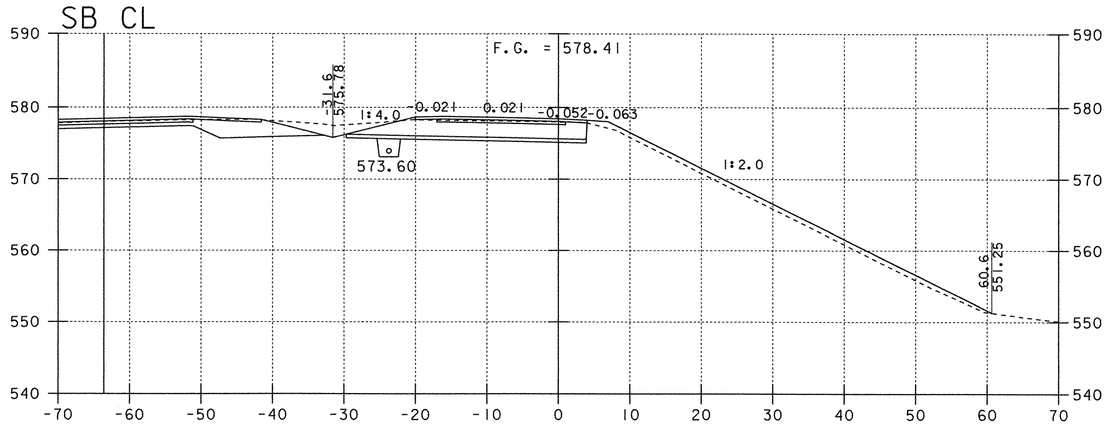

26+50

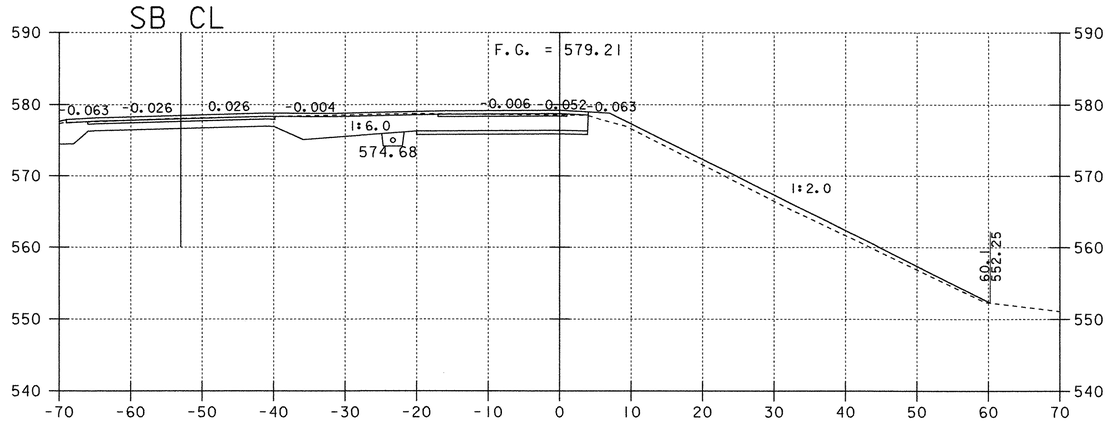

27+50

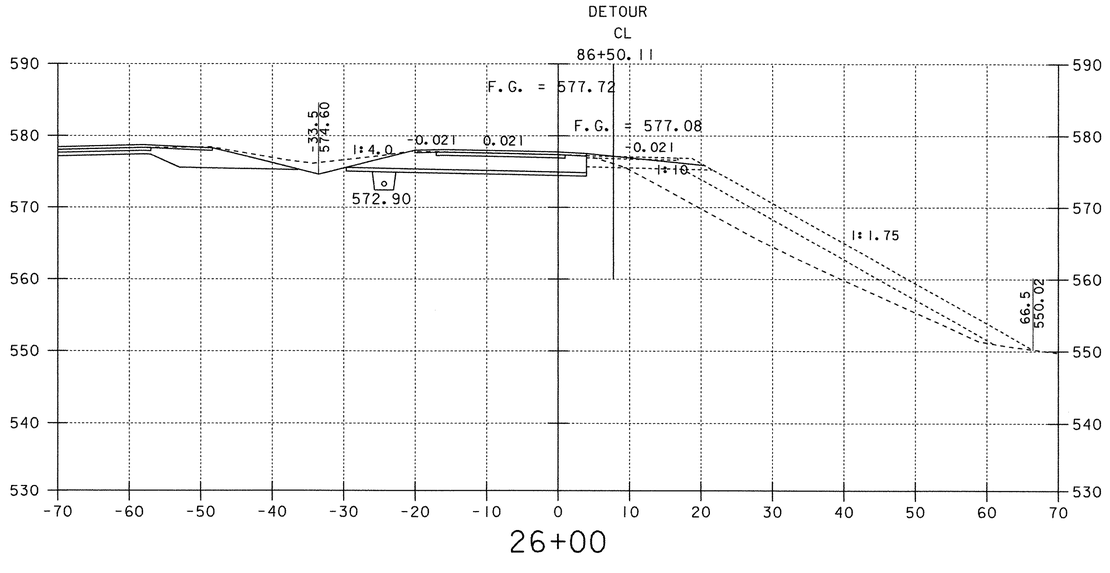

26+00

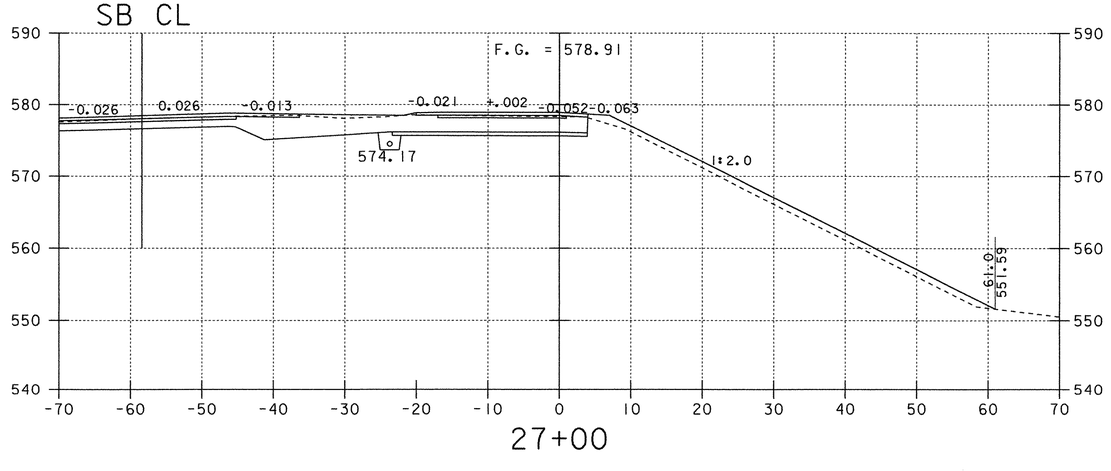

27+00

NOTE: OFFSET DISTANCES ARE MEASURED FROM THE GRADE LINE.

RAMP C CROSS SECTIONS

0 10 20
SCALE IN FEET

PROJECT: FAIRFAX - FAIRFIELD - ST. ALBANS	PROJECT NO.: IM 089-3(27)
DESIGN FILE NAME: /87A007B/DESIGN/DA007RMC.DGN	
IPARM FILE NAME: DA007X47	PLOT DATE: 18-AUG-2000
SURVEYED BY: ORVIS	SURVEY DATE: 6/98
SQUAD LEADER: DELLA SANTA	DRAWN BY: SQUAD B
	SHEET: 324 OF 370

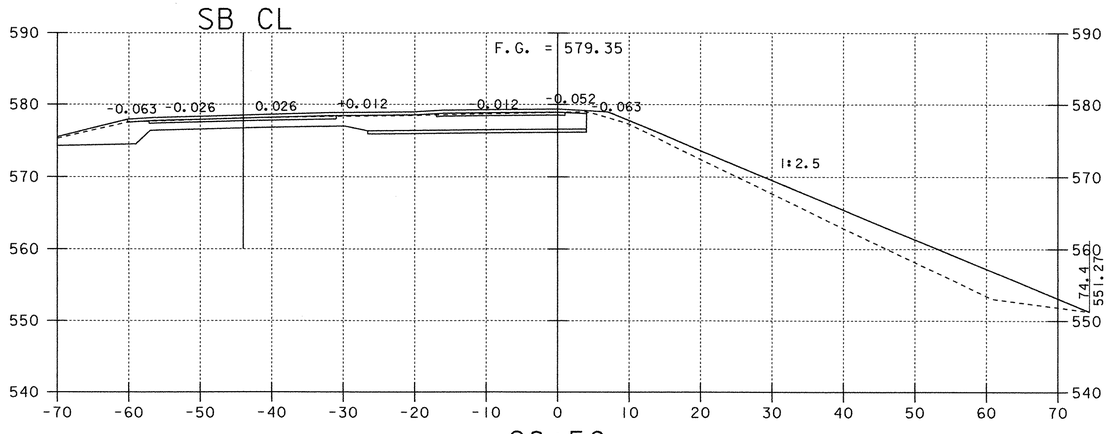

28+50

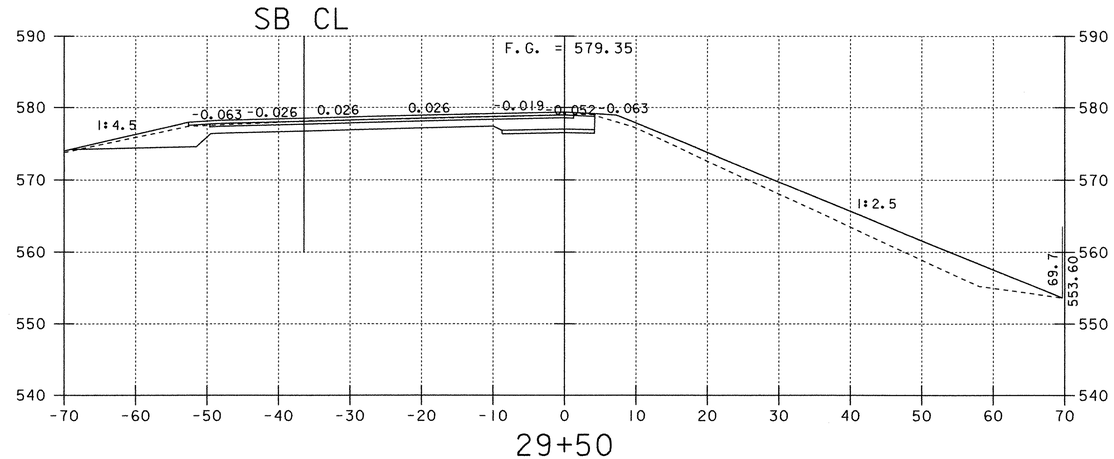

29+50

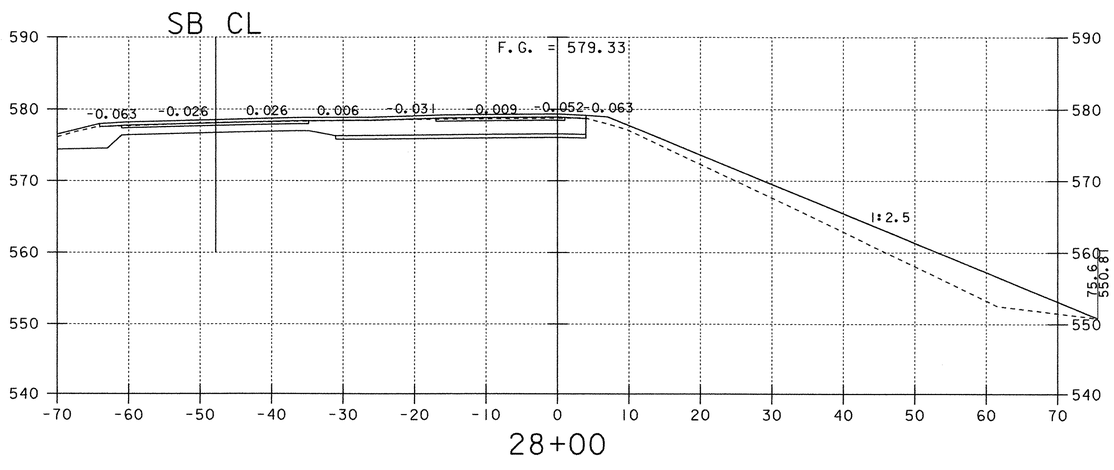

28+00

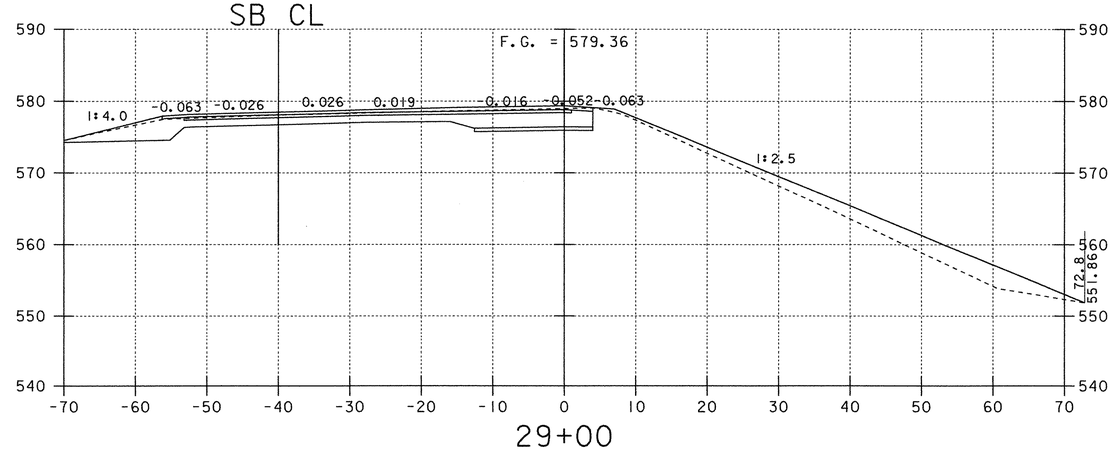

29+00

NOTE: OFFSET DISTANCES ARE MEASURED FROM THE GRADE LINE.

RAMP C CROSS SECTIONS

0 10 20
SCALE IN FEET

PROJECT: FAIRFAX - FAIRFIELD - ST. ALBANS	PROJECT NO.: IM 089-3(27)
DESIGN FILE NAME: /87A007B/DESIGN/DA007RMC.DGN	
IPARM FILE NAME: DA007X48	PLOT DATE: 18-AUG-2000
SURVEYED BY: ORVIS	SURVEY DATE: 6/98
SQUAD LEADER: DELLA SANTA	DRAWN BY: SQUAD B
	SHEET: 325 OF 370

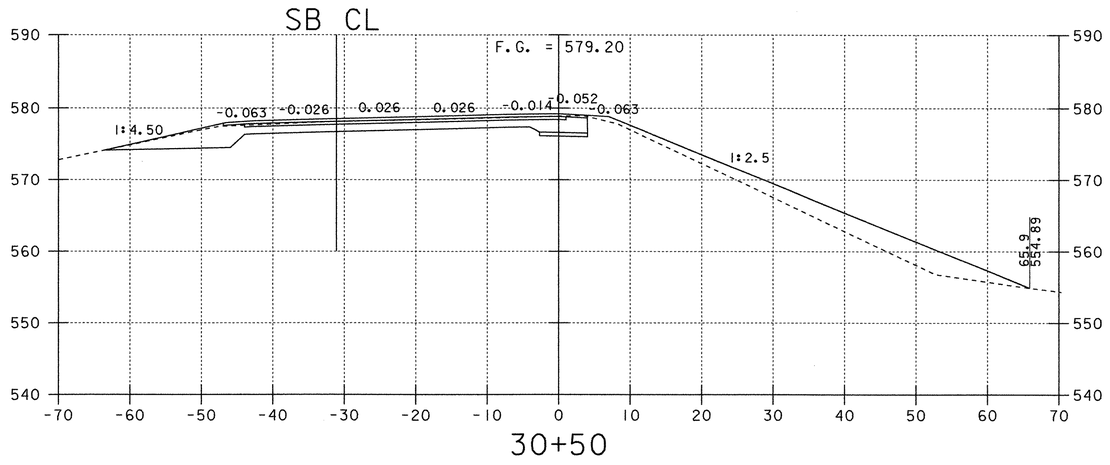

30+50

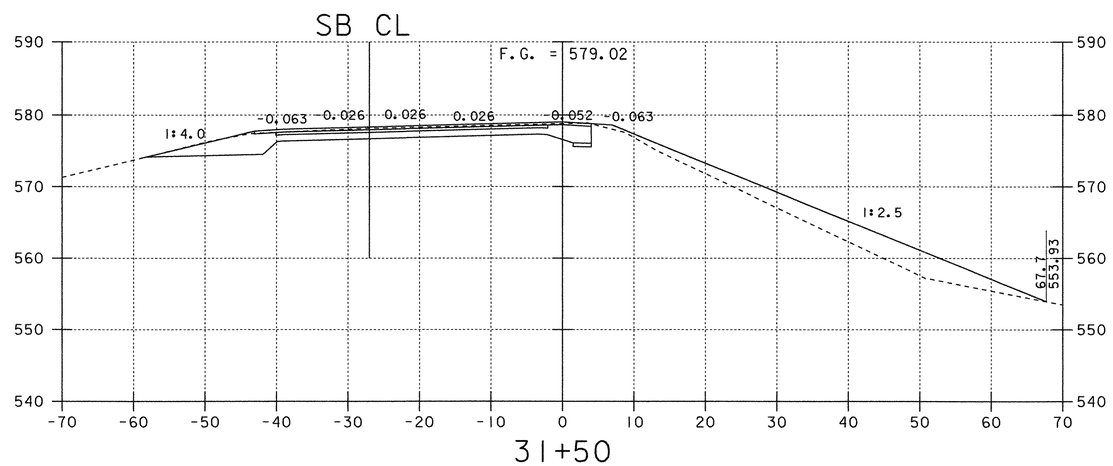

31+50

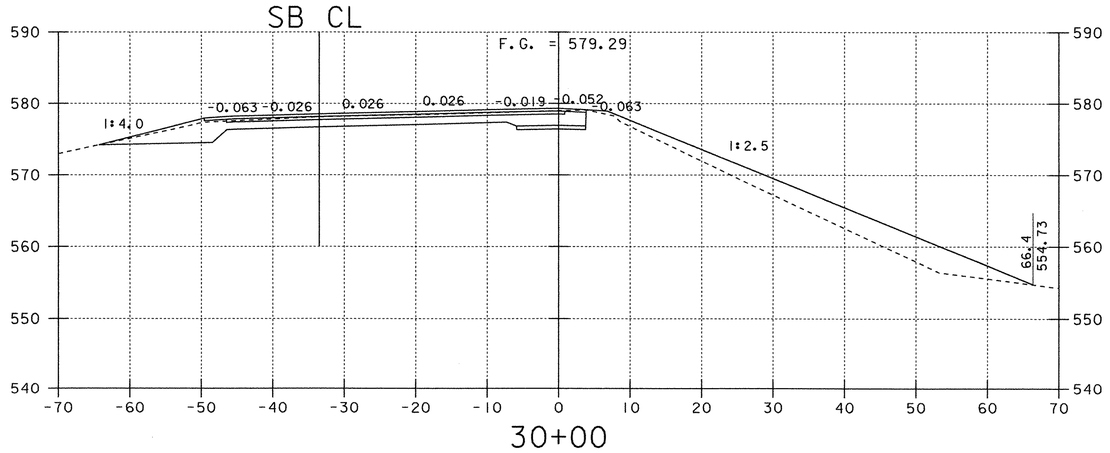

30+00

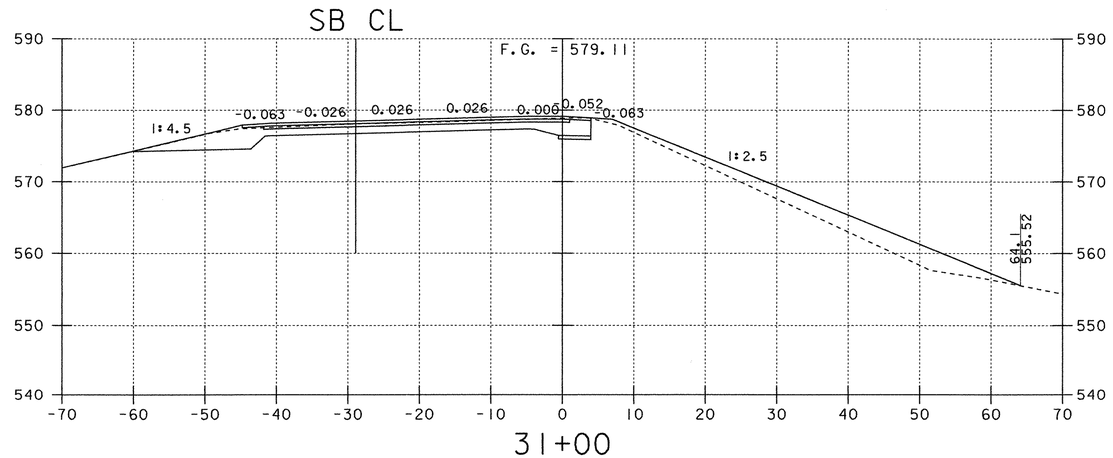

31+00

NOTE: OFFSET DISTANCES ARE MEASURED FROM THE GRADE LINE.

RAMP C CROSS SECTIONS

0 10 20
SCALE IN FEET

PROJECT: FAIRFAX - FAIRFIELD - ST. ALBANS	PROJECT NO.: IM 089-3(127)
DESIGN FILE NAME: /87A007B/DESIGN/DA007RMC.DGN	
IPARM FILE NAME: DA007X49	PLOT DATE: 18-AUG-2000
SURVEYED BY: ORVIS	SURVEY DATE: 6/98
SQUAD LEADER: DELLA SANTA	DRAWN BY: SQUAD B
	SHEET: 326 OF 370

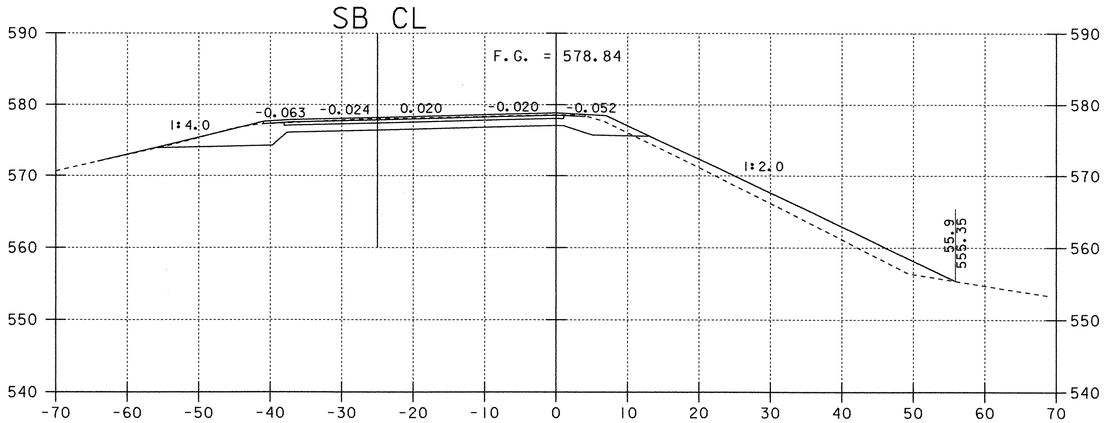

32+50

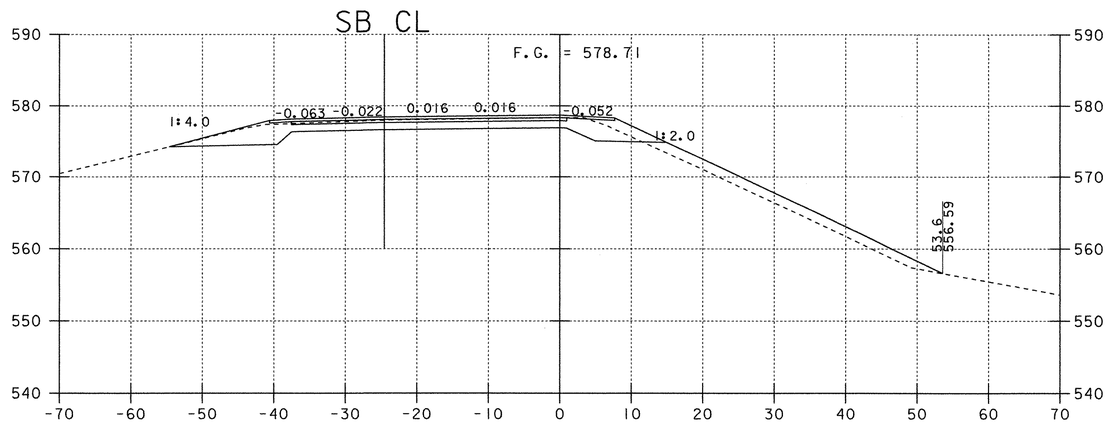

33+25

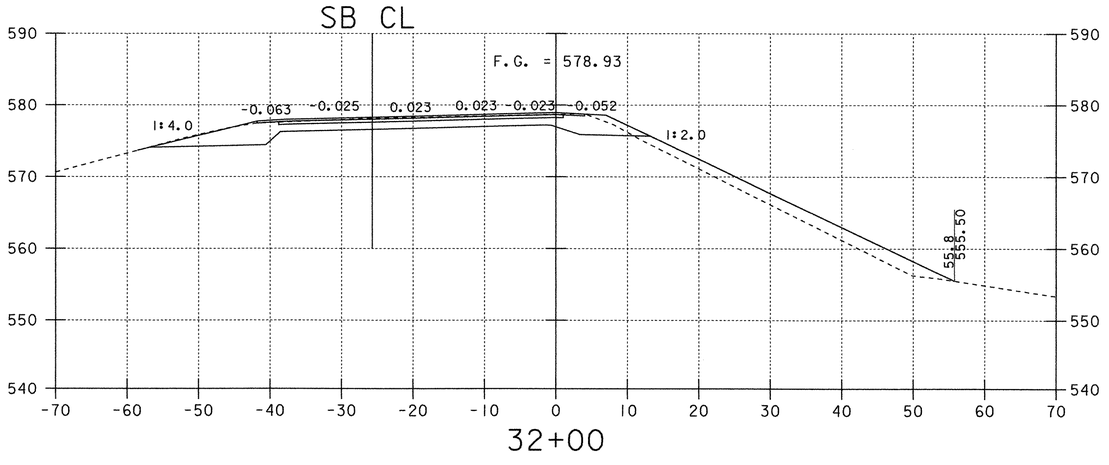

32+00

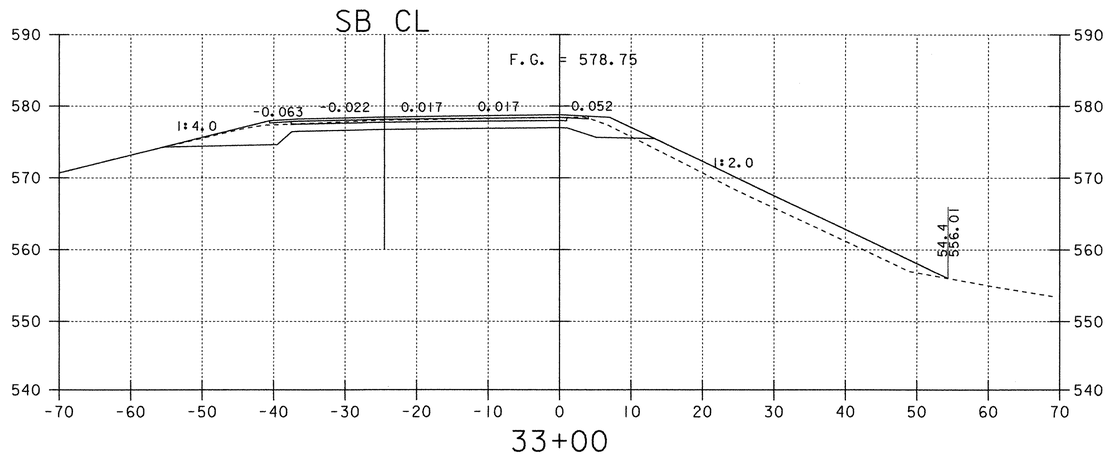

33+00

NOTE: OFFSET DISTANCES ARE MEASURED FROM THE GRADE LINE.

0 10 20
SCALE IN FEET

RAMP C CROSS SECTIONS

PROJECT: FAIRFAX - FAIRFIELD - ST. ALBANS		PROJECT NO.: IM 089-3(27)	
DESIGN FILE NAME:	/87A007B/DESIGN/DA007RMC.DGN		
IPARM FILE NAME:	DA007X50	PLOT DATE:	18-AUG-2000
SURVEYED BY:	ORVIS	SURVEY DATE:	6/98
SQUAD LEADER:	DELLA SANTA	DRAWN BY:	SQUAD B
		SHEET: 327 OF 370	

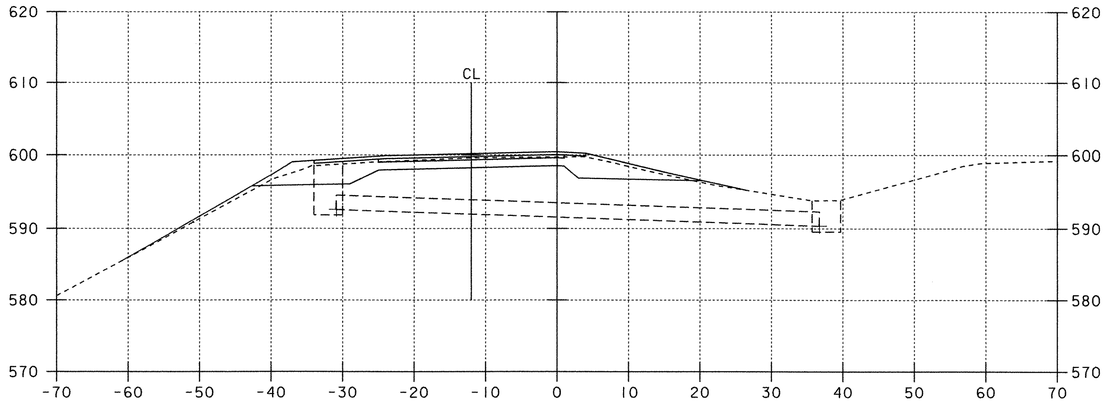

3292+00
EXISTING 24'' ACCGMP

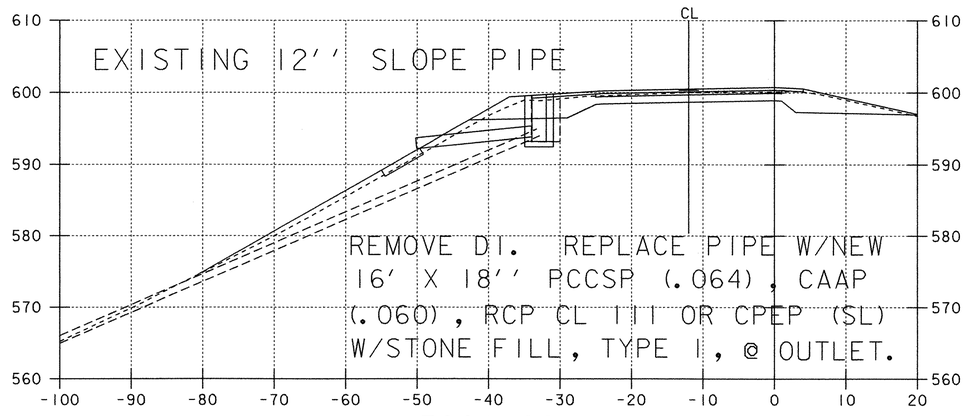

3291+00

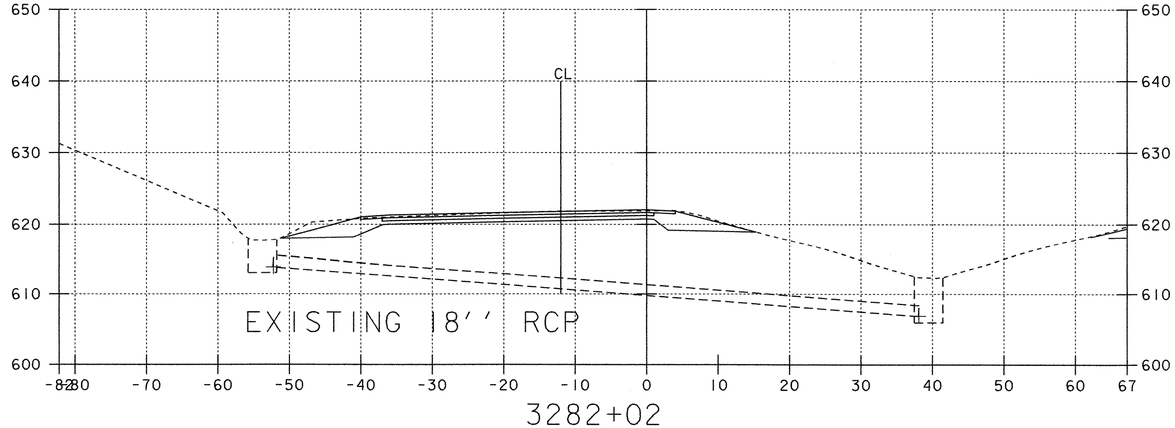

3282+02
EXISTING 18'' RCP

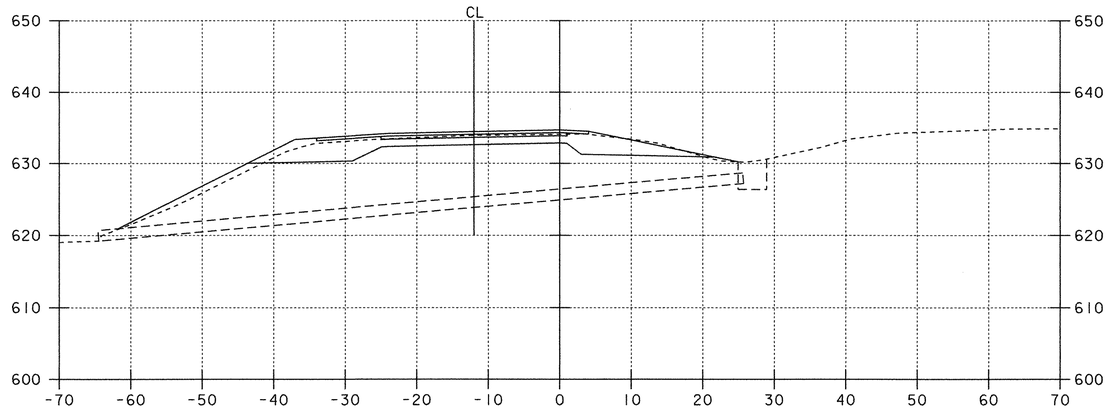

3307+99
EXISTING 18'' ACCGMP

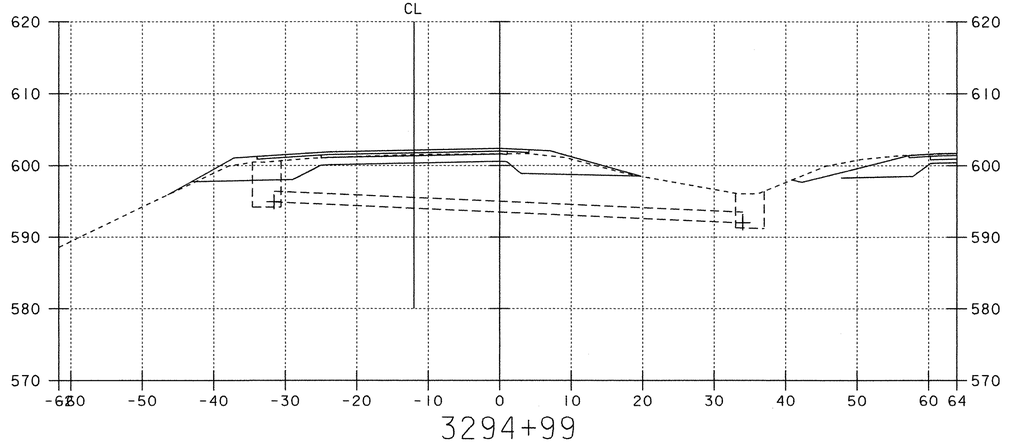

3294+99
EXISTING 18'' RCP

SOUTHBOUND DRAINAGE CROSS SECTIONS

0 10 20
SCALE IN FEET

PROJECT: FAIRFAX - FAIRFIELD - ST. ALBANS	PROJECT NO.: IM 089-3(27)
DESIGN FILE NAME: /87A007B/DESIGN/DA007DXS.DGN	
IPARM FILE NAME: DA007X5I	PLOT DATE: 18-AUG-2000
SURVEYED BY: ORVIS	SURVEY DATE: 6/98
SQUAD LEADER: DELLA SANTA	DRAWN BY: SQUAD B
	SHEET: 328 OF 370

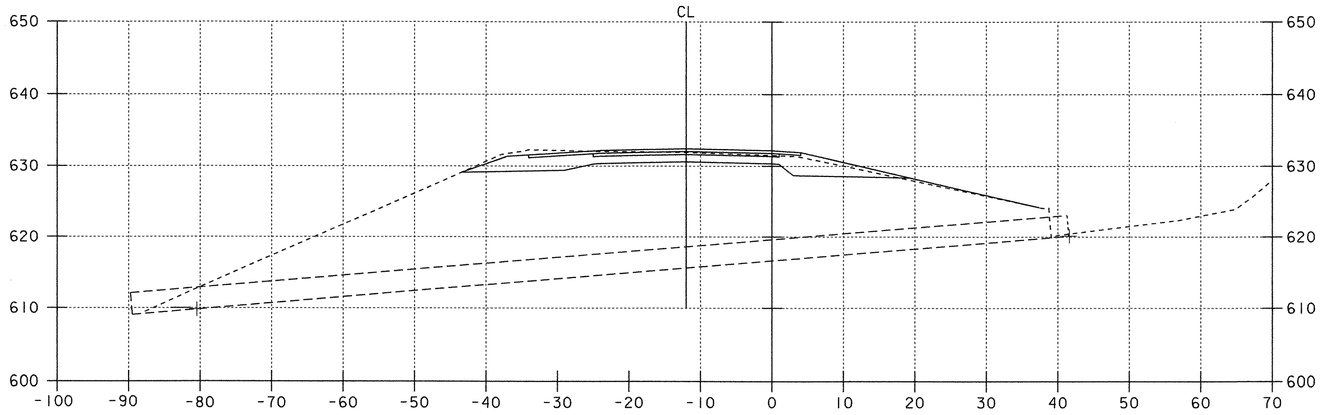

3329+54

EXISTING 36'' ACCGMP

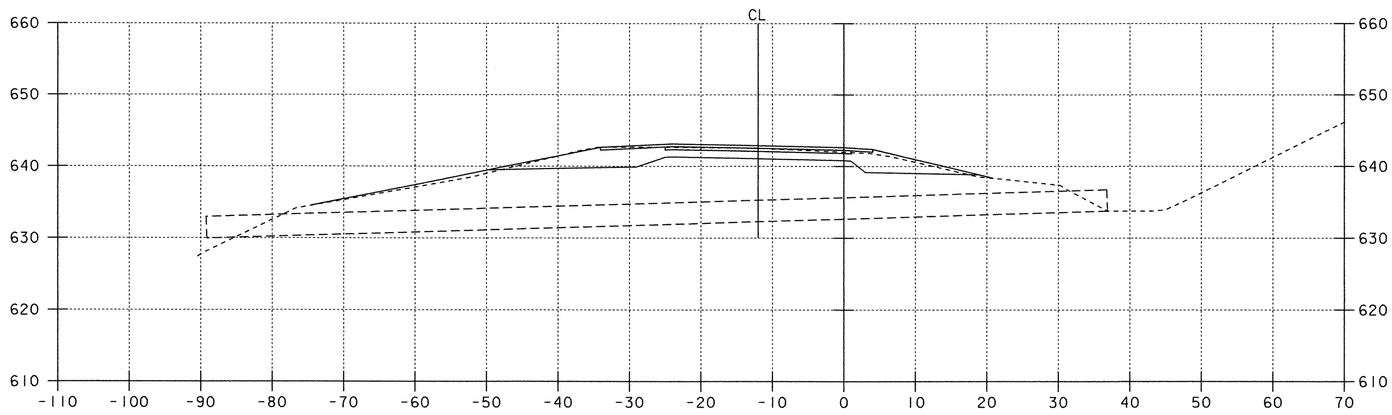

3323+97

EXISTING 36'' ACCGMP

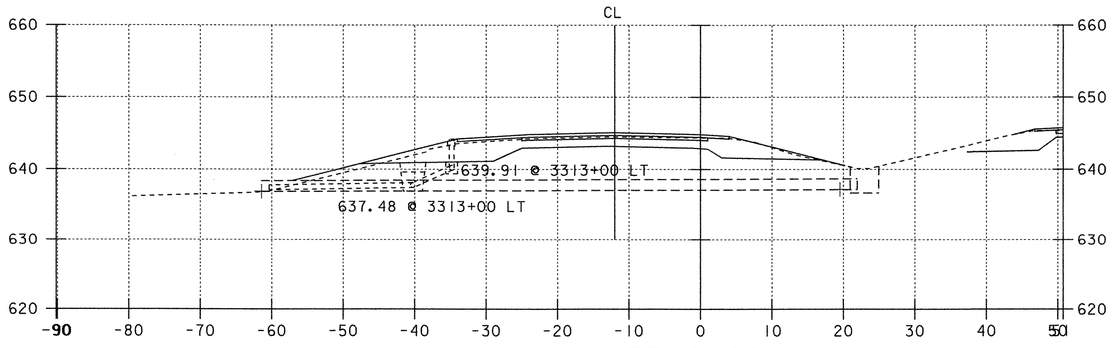

3312+99

EXISTING 18'' ACCGMP

0 10 20

SCALE IN FEET

SOUTHBOUND DRAINAGE CROSS SECTIONS

PROJECT: FAIRFAX - FAIRFIELD - ST. ALBANS	PROJECT NO.: IM 089-3(27)
DESIGN FILE NAME: /87A007B/DESIGN/DA007DXS.DGN	
IPARM FILE NAME: DA007X52	PLOT DATE: 18-AUG-2000
SURVEYED BY: ORVIS	SURVEY DATE: 6/98
SQUAD LEADER: DELLA SANTA	DRAWN BY: SQUAD B
	SHEET: 329 OF 370

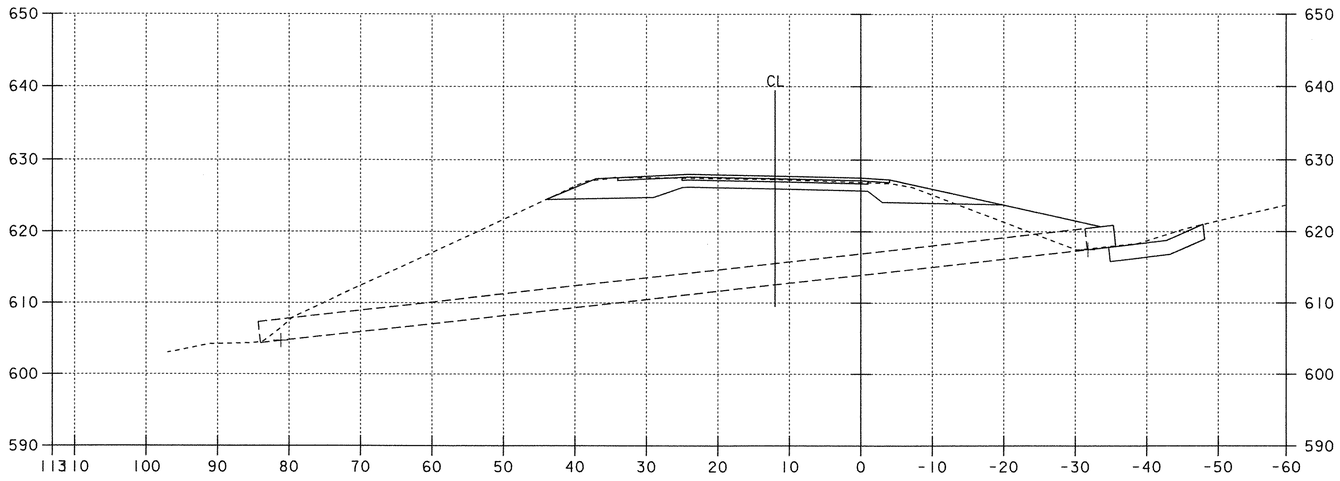

3339+09

EXISTING 48'' ACCGMP

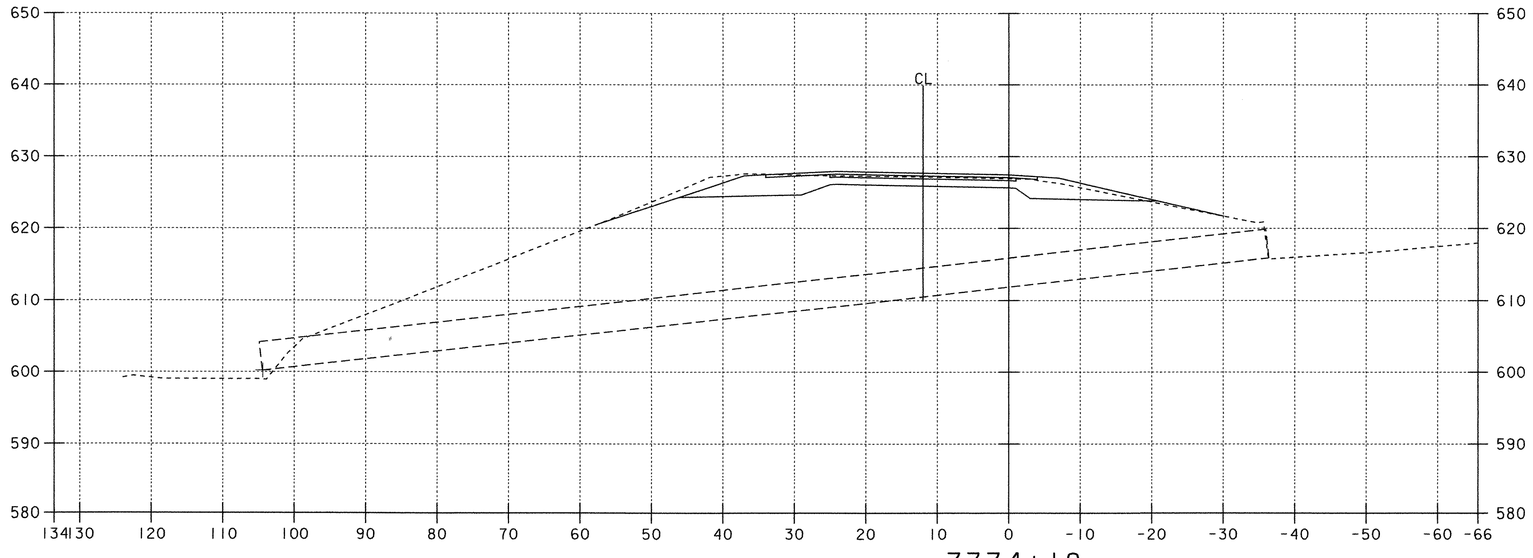

3334+18

EXISTING 48'' ACCGMP

0 10 20

SCALE IN FEET

SOUTHBOUND DRAINAGE CROSS SECTIONS

PROJECT: FAIRFAX - FAIRFIELD - ST. ALBANS	PROJECT NO.: IM 089-3(27)
DESIGN FILE NAME: /87A007B/DESIGN/DA007DXS.DGN	
IPARM FILE NAME: DA007X53	PLOT DATE: 18-AUG-2000
SURVEYED BY: ORVIS	SURVEY DATE: 6/98
SQUAD LEADER: DELLA SANTA	DRAWN BY: SQUAD B
	SHEET: 330 OF 370

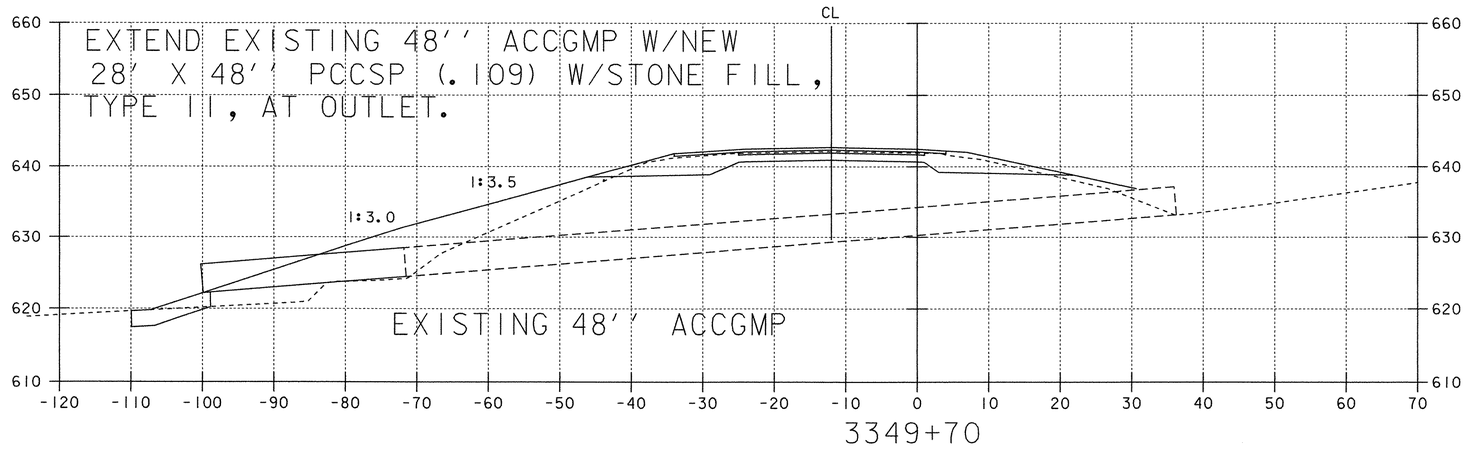

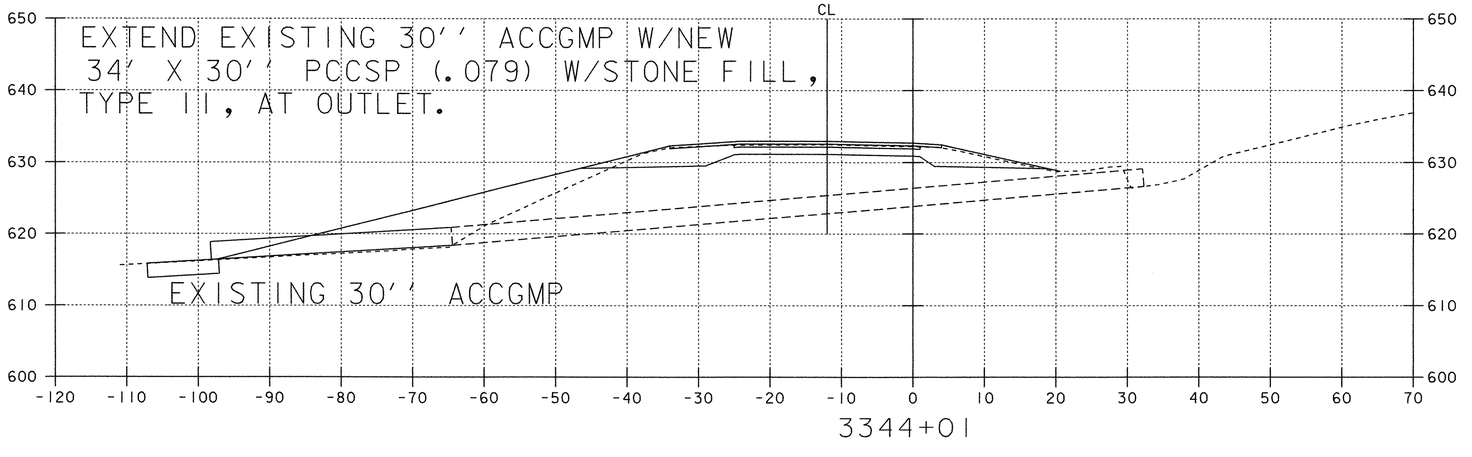

SOUTHBOUND DRAINAGE CROSS SECTIONS

0 10 20
SCALE IN FEET

PROJECT: FAIRFAX - FAIRFIELD - ST. ALBANS	PROJECT NO.: IM 089-3(27)
DESIGN FILE NAME: /87A007B/DESIGN/DA007DXS.DGN	
IPARM FILE NAME: DA007X54	PLOT DATE: 18-AUG-2000
SURVEYED BY: ORVIS	SURVEY DATE: 6/98
SQUAD LEADER: DELLA SANTA	DRAWN BY: SQUAD B
	SHEET: 331 OF 370

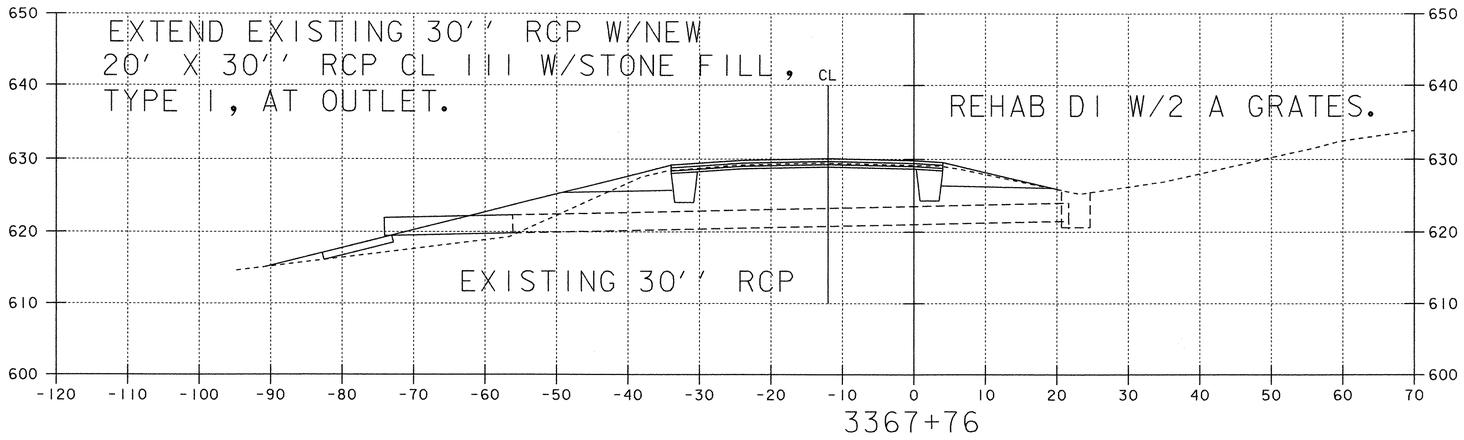

3367+76

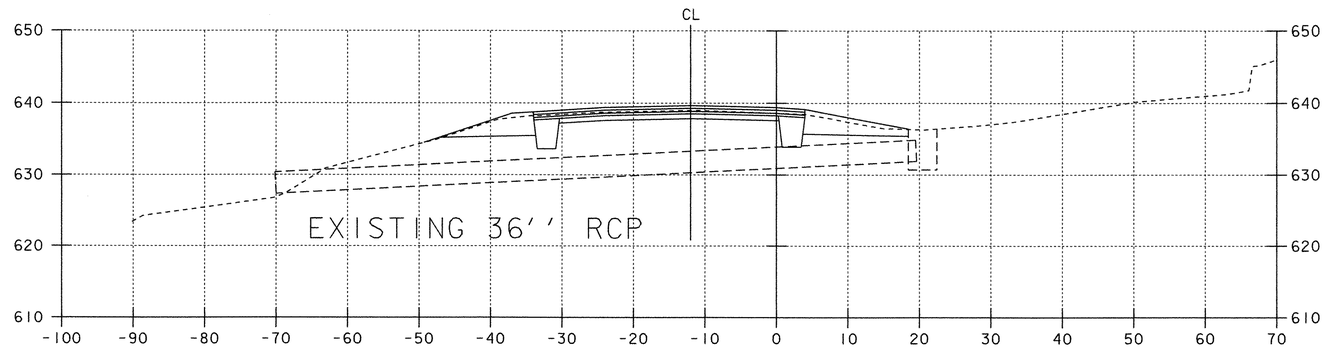

3363+51

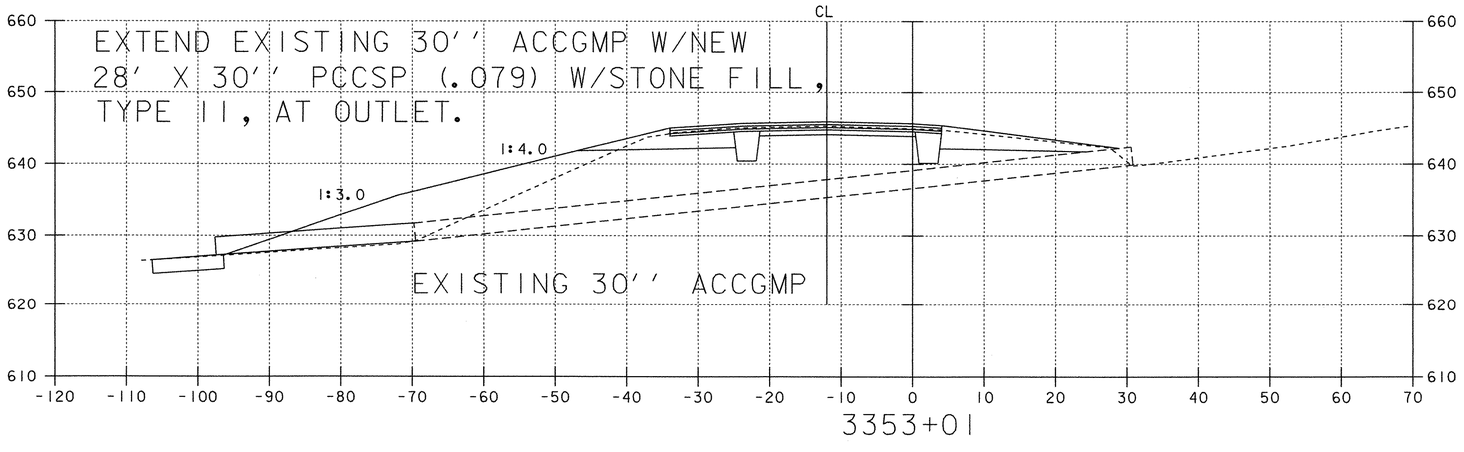

3353+01

0 10 20
SCALE IN FEET

SOUTHBOUND DRAINAGE CROSS SECTIONS

PROJECT: FAIRFAX - FAIRFIELD - ST. ALBANS	PROJECT NO.: IM 089-3(27)
DESIGN FILE NAME: /87A007B/DESIGN/DA007DXS.DGN	
IPARM FILE NAME: DA007X55	PLOT DATE: 18-AUG-2000
SURVEYED BY: ORVIS	SURVEY DATE: 6/98
SQUAD LEADER: DELLA SANTA	DRAWN BY: SQUAD B
	SHEET: 332 OF 370

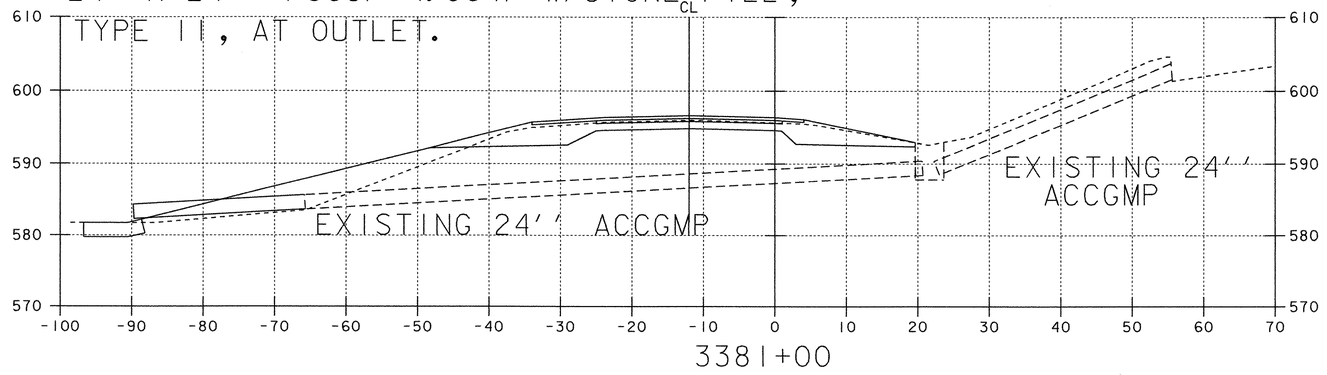

3381+00

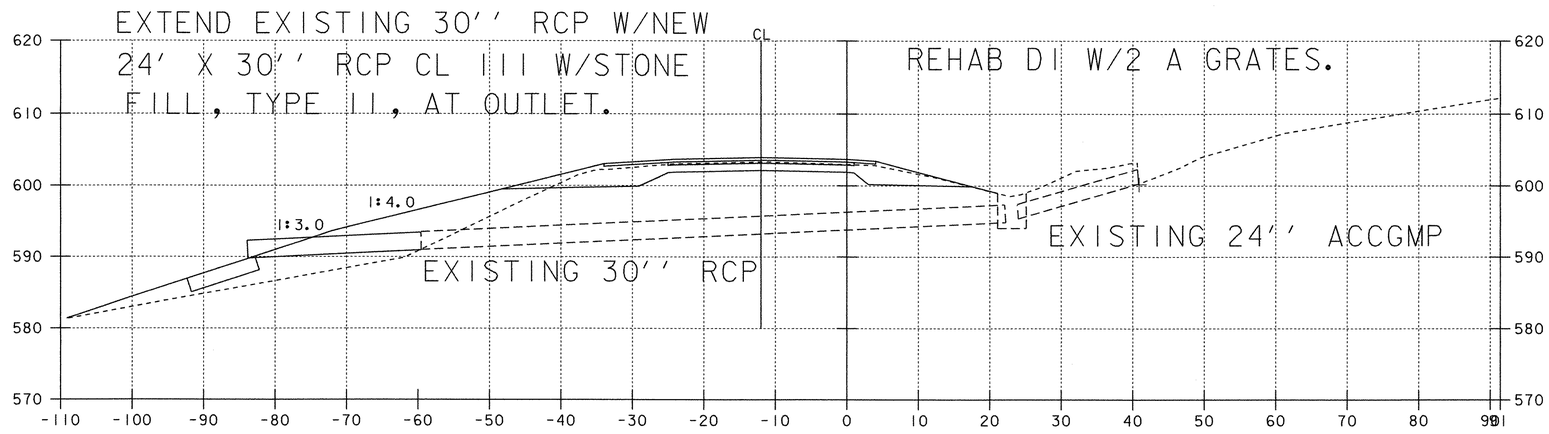

3377+50

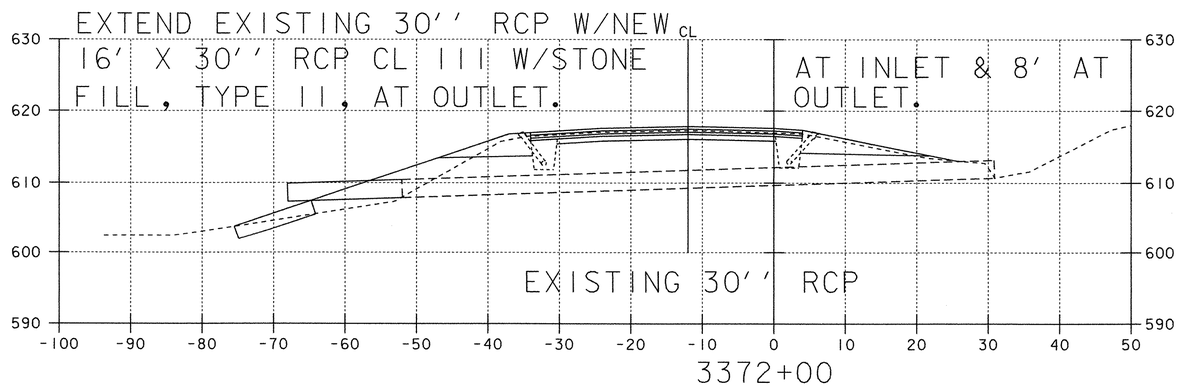

3372+00

0 10 20
SCALE IN FEET

SOUTHBOUND DRAINAGE CROSS SECTIONS

PROJECT: FAIRFAX - FAIRFIELD - ST. ALBANS	PROJECT NO.: IM 089-3(27)
DESIGN FILE NAME: /87A007B/DESIGN/DA007DXS.DGN	
IPARM FILE NAME: DA007X56	PLOT DATE: 18-AUG-2000
SURVEYED BY: ORVIS	SURVEY DATE: 6/98
SQUAD LEADER: DELLA SANTA	DRAWN BY: SQUAD B
	SHEET: 333 OF 370

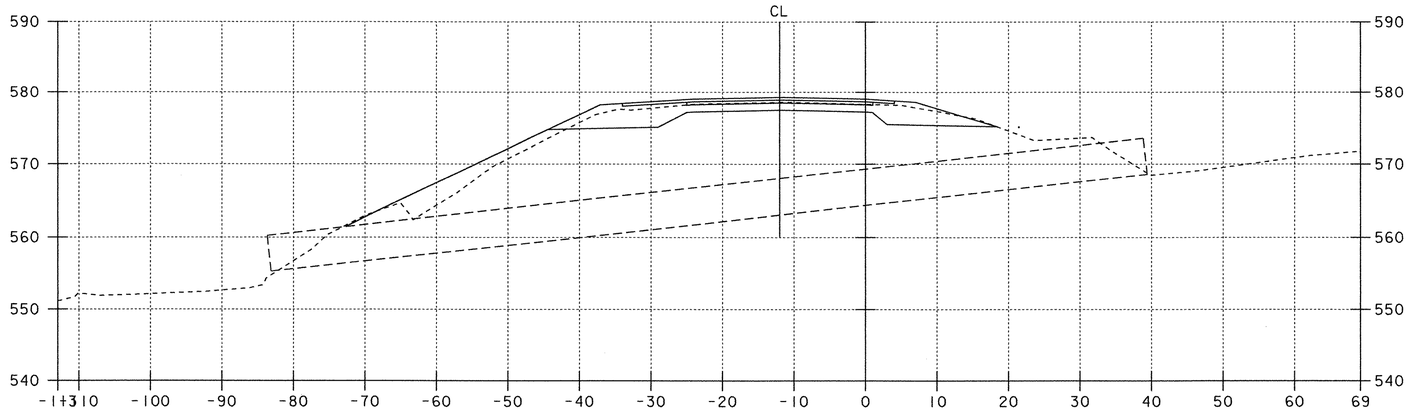

3395+93.10

EXISTING 60'' ACCGMP (REFER TO BRIDGE SERIES 300)

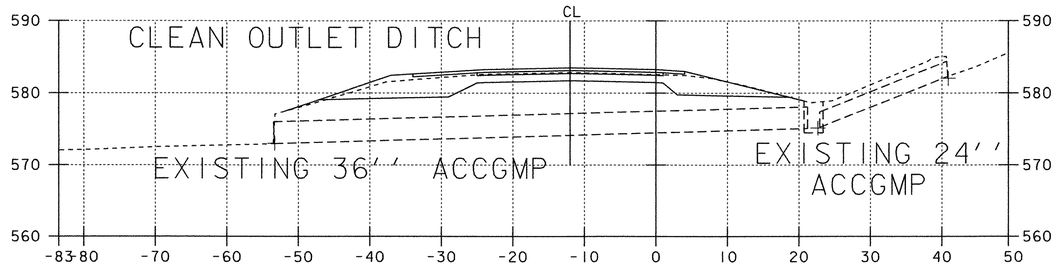

3389+99

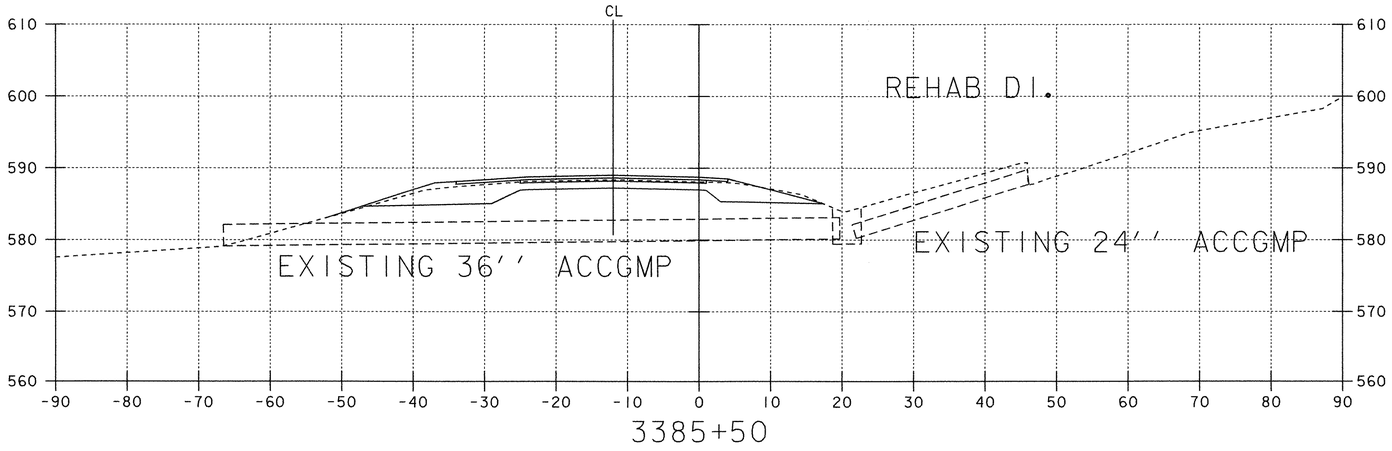

3385+50

0 10 20

SCALE IN FEET

SOUTHBOUND DRAINAGE CROSS SECTIONS

PROJECT: FAIRFAX - FAIRFIELD - ST. ALBANS	PROJECT NO.: IM 089-3(27)
DESIGN FILE NAME: /87A007B/DESIGN/DA007DXS.DGN	
IPARM FILE NAME: DA007X57	PLOT DATE: 03-OCT-2000
SURVEYED BY: ORVIS	SURVEY DATE: 6/98
SQUAD LEADER: DELLA SANTA	DRAWN BY: SQUAD B
	SHEET: 334 OF 370

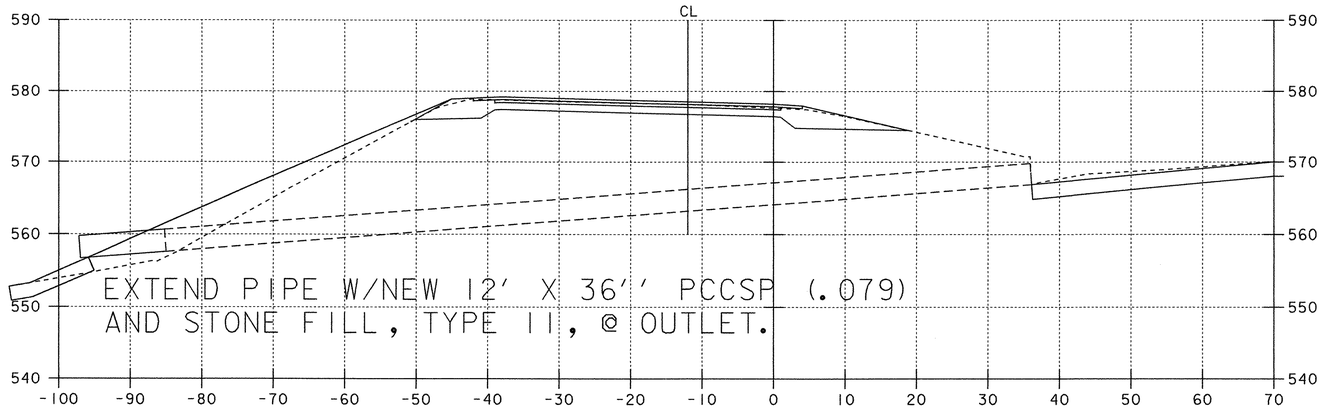

3406+00

EXISTING 36'' ACCGMP

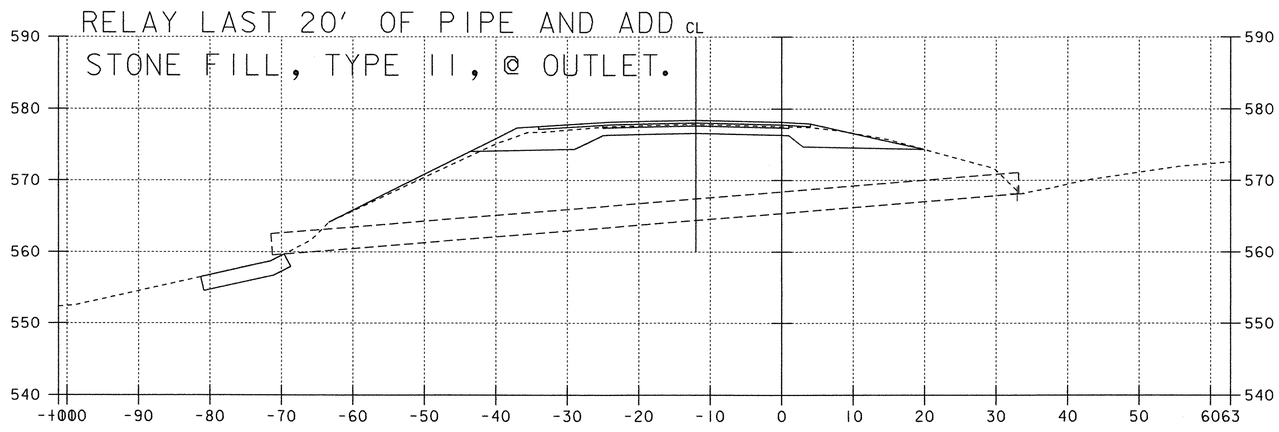

3401+49

EXISTING 36'' ACCGMP

SOUTHBOUND DRAINAGE CROSS SECTIONS

0 10 20
SCALE IN FEET

PROJECT: FAIRFAX - FAIRFIELD - ST. ALBANS	PROJECT NO.: IM 089-3(27)
DESIGN FILE NAME: /87A007B/DESIGN/DA007DXS.DGN	
IPARM FILE NAME: DA007X58	PLOT DATE: 18-AUG-2000
SURVEYED BY: ORVIS	SURVEY DATE: 6/98
SQUAD LEADER: DELLA SANTA	DRAWN BY: SQUAD B
	SHEET: 335 OF 370

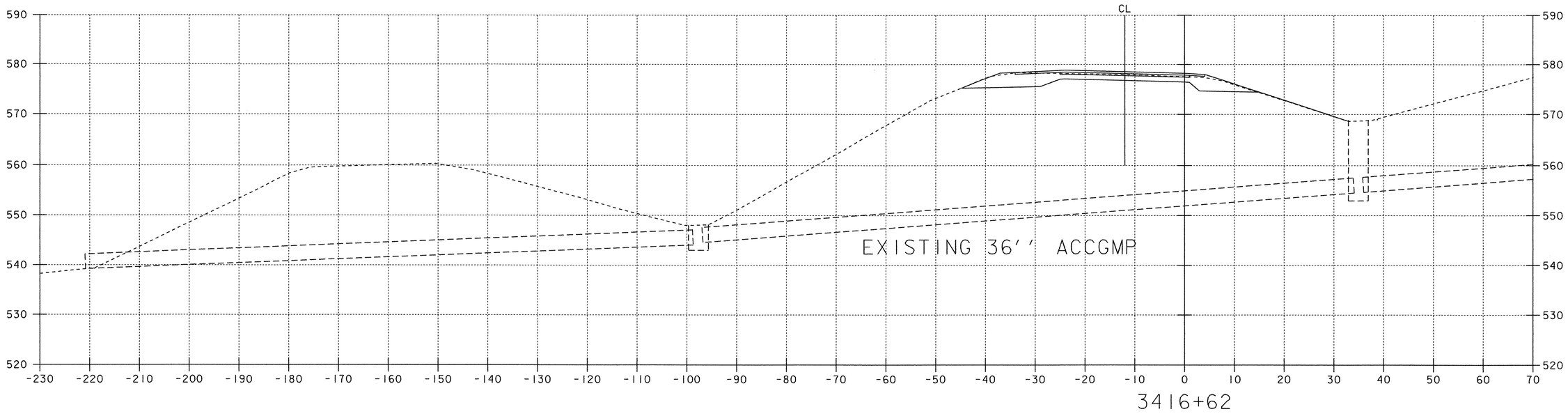

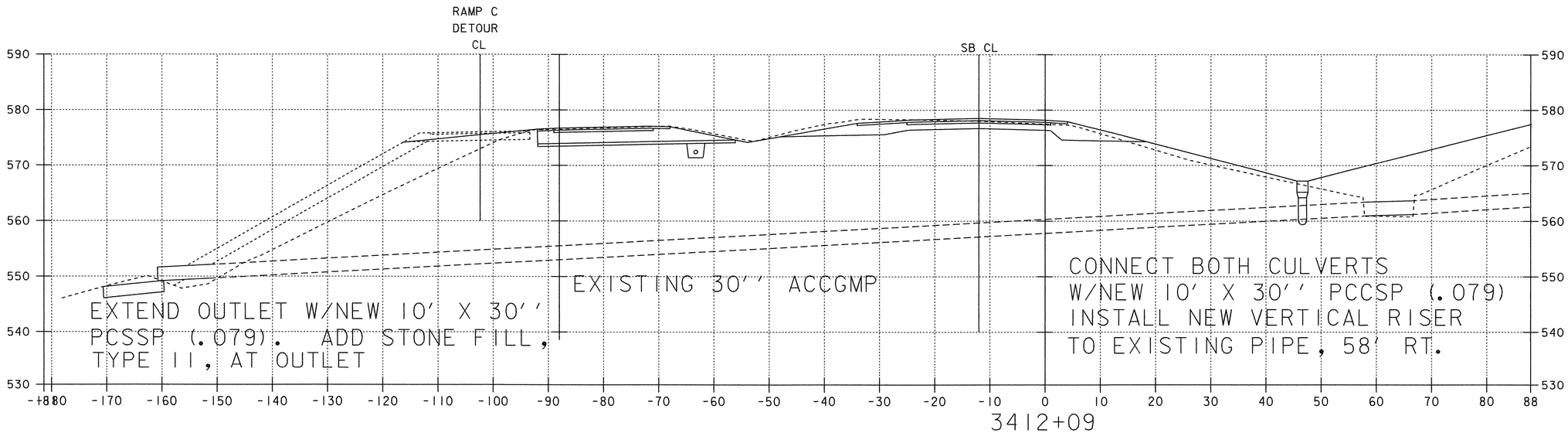

SOUTHBOUND DRAINAGE CROSS SECTIONS

0 10 20
SCALE IN FEET

PROJECT: FAIRFAX - FAIRFIELD - ST. ALBANS	PROJECT NO.: IM 089-3(27)
DESIGN FILE NAME: /87A007B/DESIGN/DA007DXS.DGN	
IPARM FILE NAME: DA007X59	PLOT DATE: 18-AUG-2000
SURVEYED BY: ORVIS	SURVEY DATE: 6/98
SQUAD LEADER: DELLA SANTA	DRAWN BY: SQUAD B
	SHEET: 336 OF 370

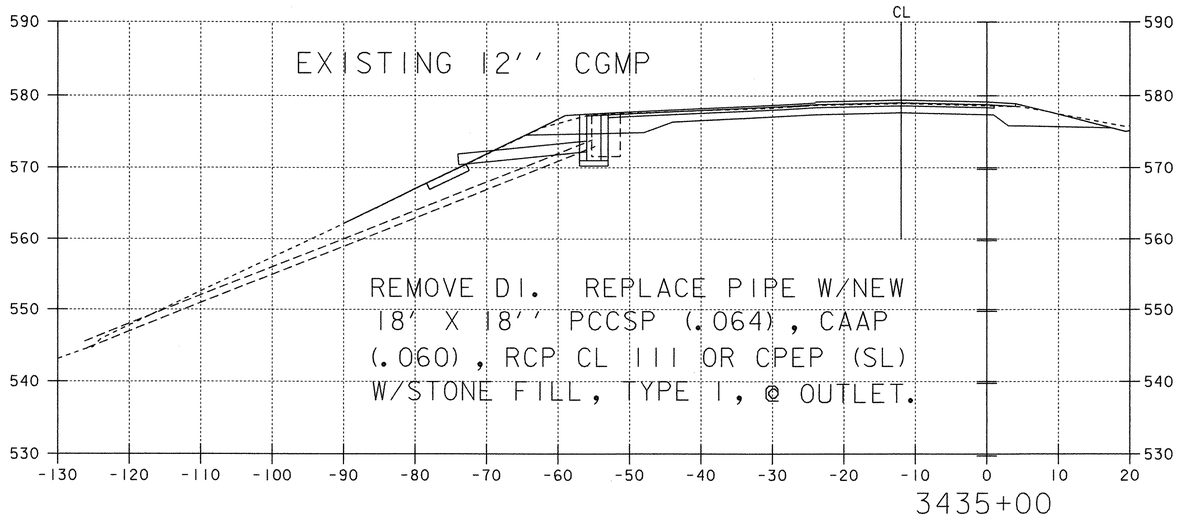

3435+00

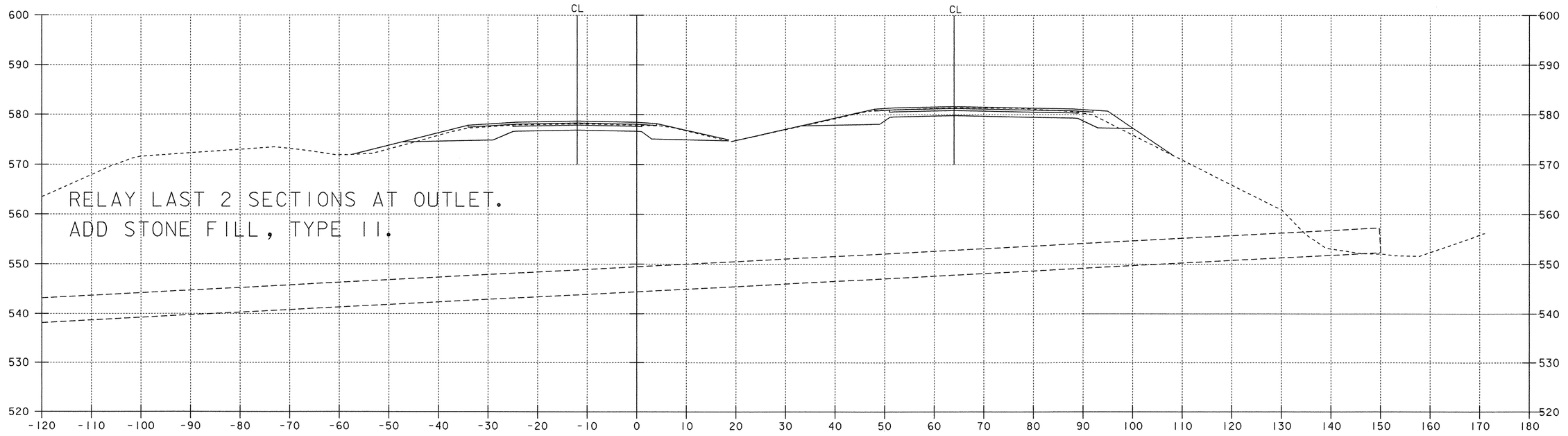

3432+56

EXISTING 60'' ACCGMP

SOUTHBOUND DRAINAGE CROSS SECTIONS

0 10 20

SCALE IN FEET

PROJECT: FAIRFAX - FAIRFIELD - ST. ALBANS	PROJECT NO.: IM 089-3(27)
DESIGN FILE NAME: /87A007B/DESIGN/DA007DXS.DGN	
IPARM FILE NAME: DA007X60	PLOT DATE: 18-AUG-2000
SURVEYED BY: ORVIS	SURVEY DATE: 6/98
SQUAD LEADER: DELLA SANTA	DRAWN BY: SQUAD B
	SHEET: 337 OF 370

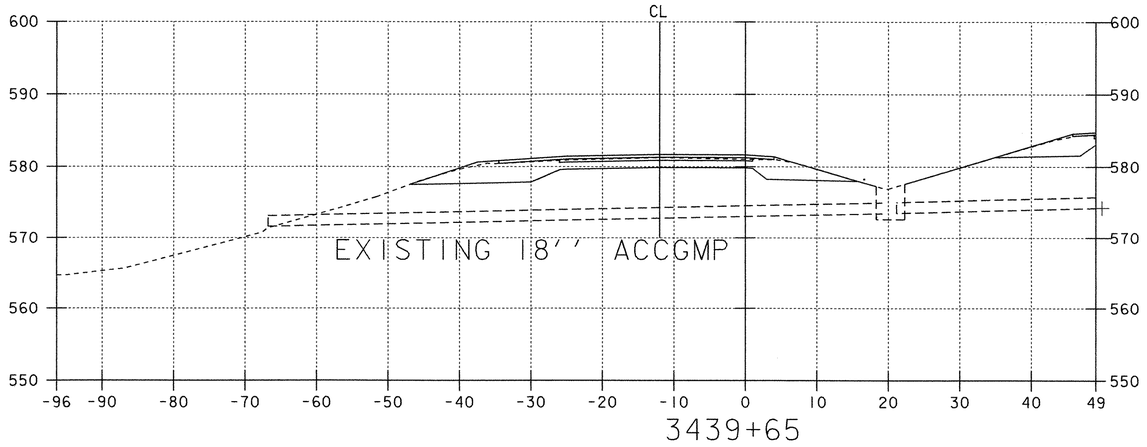

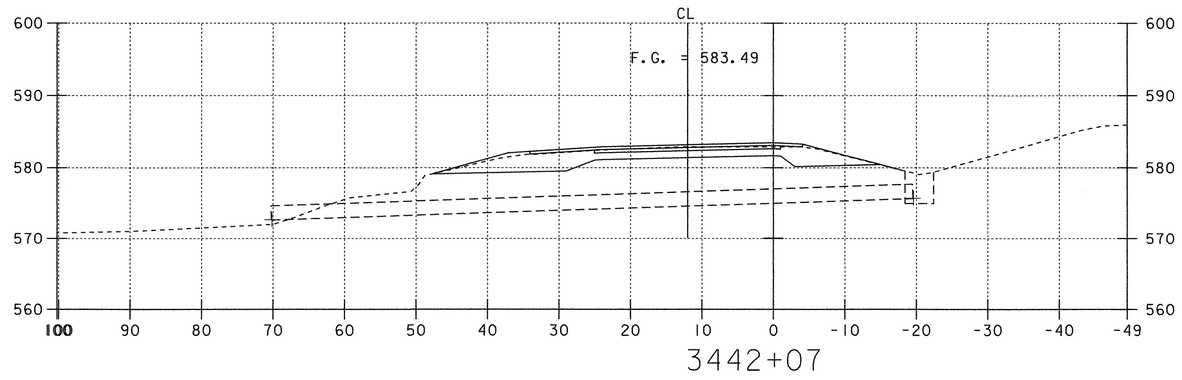

0 10 20
SCALE IN FEET

SOUTHBOUND DRAINAGE CROSS SECTIONS

PROJECT: FAIRFAX - FAIRFIELD - ST. ALBANS	PROJECT NO.: IM 089-3(27)
DESIGN FILE NAME: /87A007B/DESIGN/DA007DXS.DGN	
IPARM FILE NAME: DA007X61	PLOT DATE: 18-AUG-2000
SURVEYED BY: ORVIS	SURVEY DATE: 6/98
SQUAD LEADER: DELLA SANTA	DRAWN BY: SQUAD B
	SHEET: 338 OF 370

EXTEND EXISTING PIPE WITH NEW 18' X 36'' PCCSP (.079)

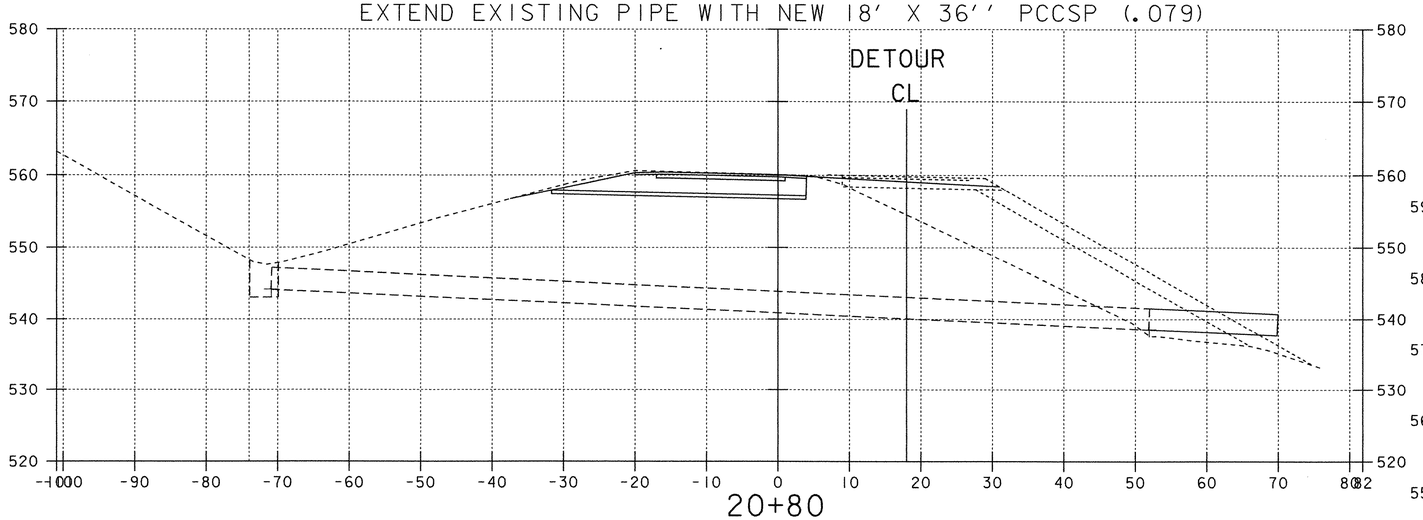

20+80

REMOVE EXISTING DI AND PIPE
NEW 38' X 18'' PCCSP (.064), CAAP (.060),
RCP CL III OR CPEP(SL)

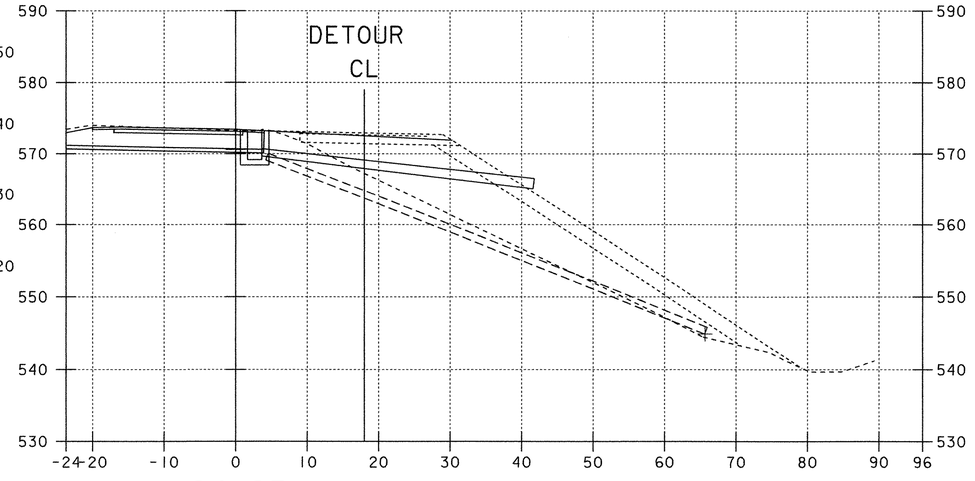

24+23

EXISTING 12'' CGMP

EXISTING 36'' ACCGMP

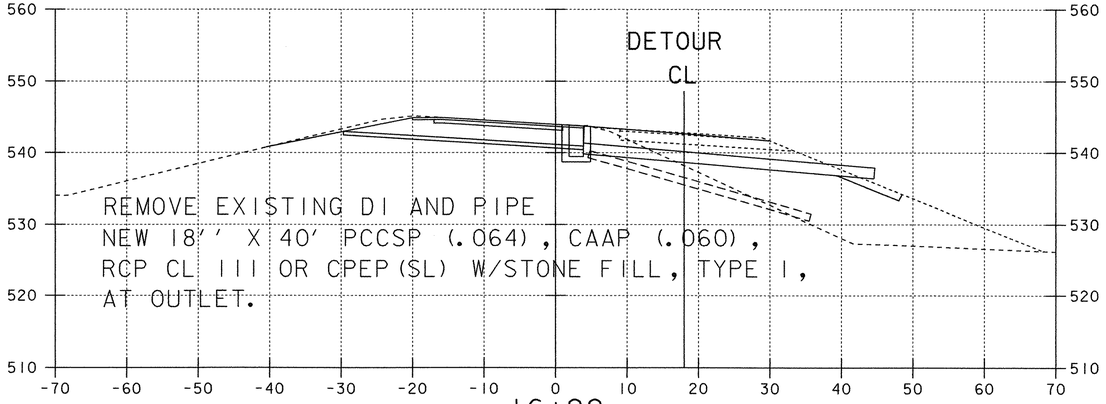

16+99

EXISTING 12'' CGMP

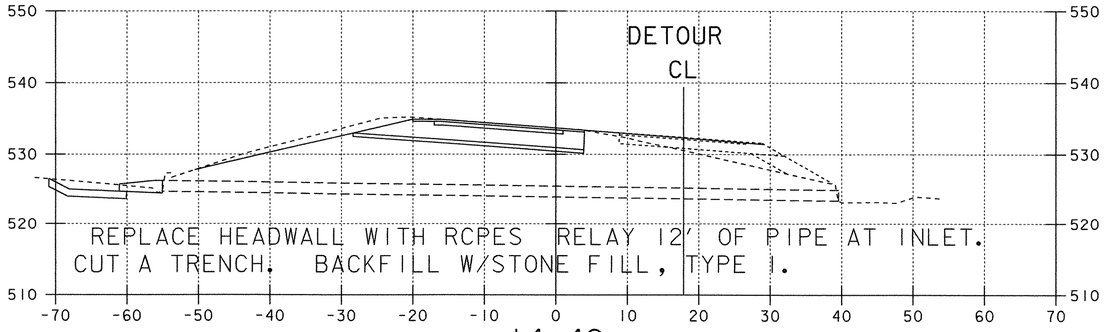

14+49

EXISTING 24'' RCP

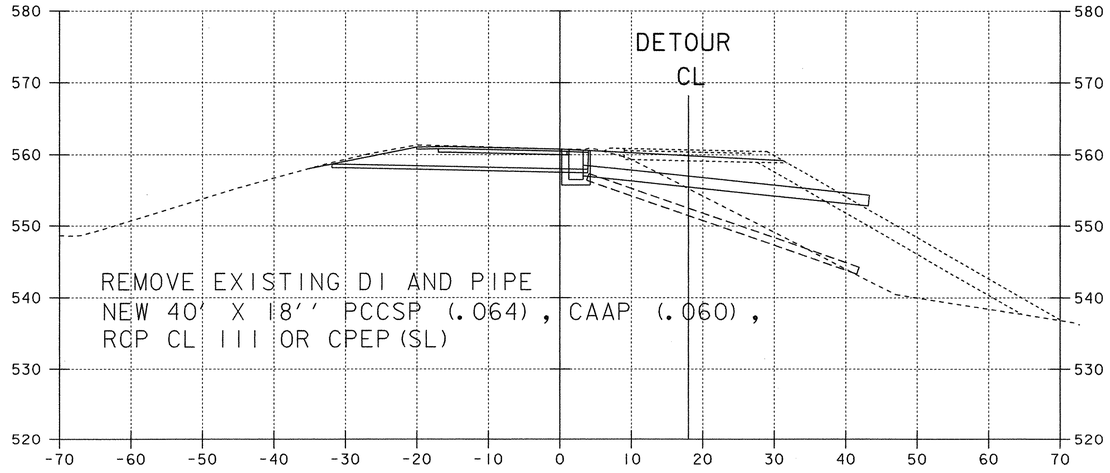

20+99

EXISTING 12'' CGMP

RAMP C DRAINAGE CROSS SECTIONS

0 10 20
SCALE IN FEET

PROJECT: FAIRFAX - FAIRFIELD - ST. ALBANS	PROJECT NO.: IM 089-3(27)
DESIGN FILE NAME: /87A007B/DESIGN/DA007DXS.DGN	
IPARM FILE NAME: DA007X73	PLOT DATE: 18-AUG-2000
SURVEYED BY: ORVIS	SURVEY DATE: 6/98
SQUAD LEADER: DELLA SANTA	DRAWN BY: SQUAD B
	SHEET: 339 OF 370

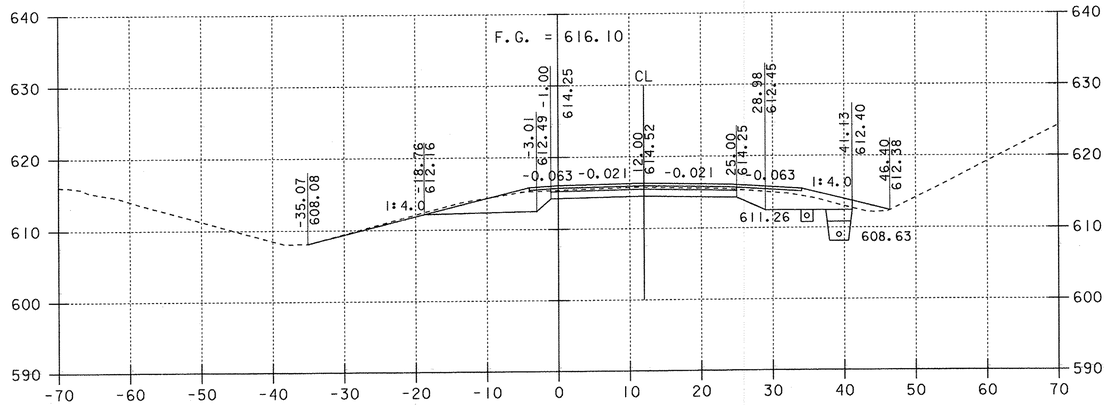

3284+00

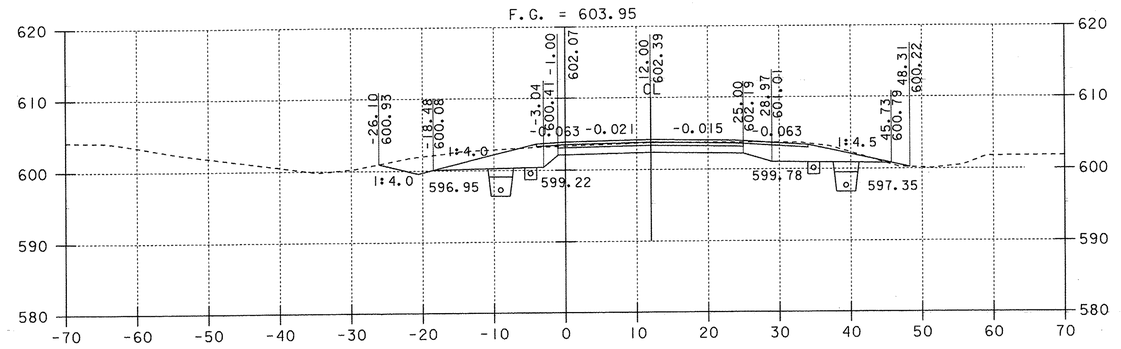

3288+00

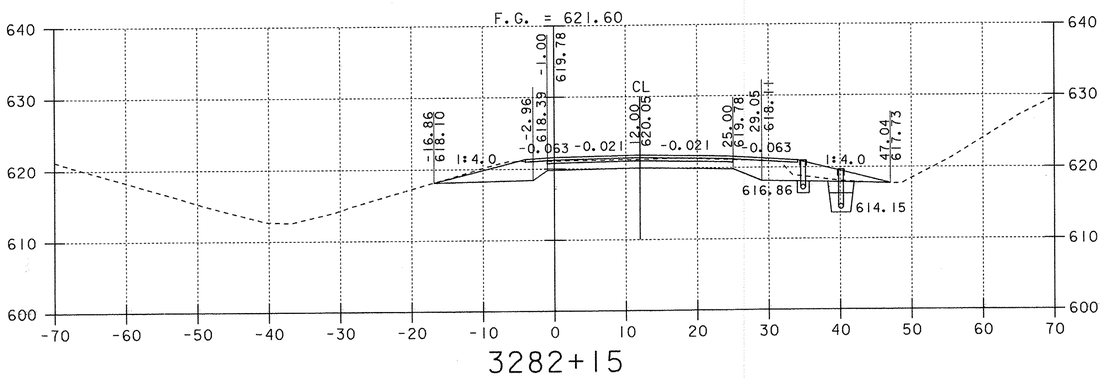

3282+15

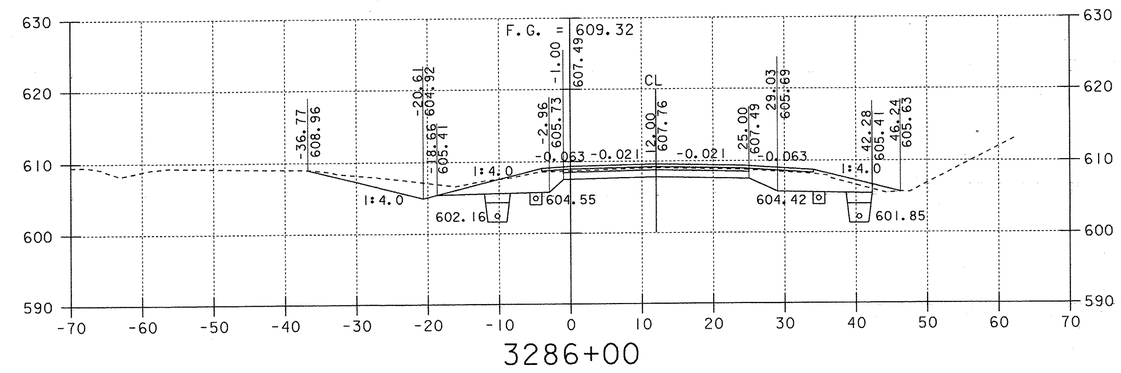

3286+00

NOTE: OFFSET DISTANCES ARE MEASURED FROM THE GRADE LINE.

NORTHBOUND CROSS SECTIONS

0 10 20
SCALE IN FEET

PROJECT: FAIRFAX - FAIRFIELD - ST. ALBANS		PROJECT NO.: IM 089-3(27)	
DESIGN FILE NAME:	/87A007B/DESIGN/DA007XSI.DGN		
IPARM FILE NAME:	DA007X01	PLOT DATE:	25-JAN-2002
SURVEYED BY:	ORVIS	SURVEY DATE:	6/98
SQUAD LEADER:	DELLA SANTA	DRAWN BY:	SQUAD B
		SHEET:	340 OF 370

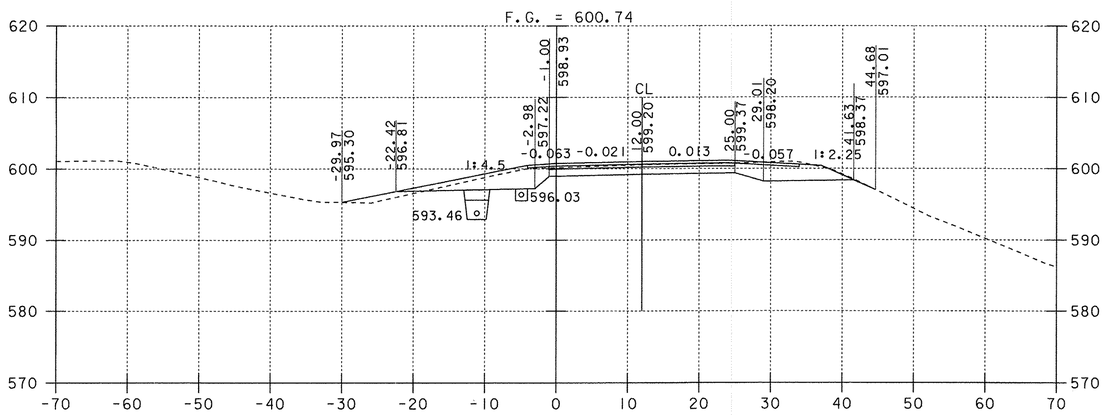

3290+00

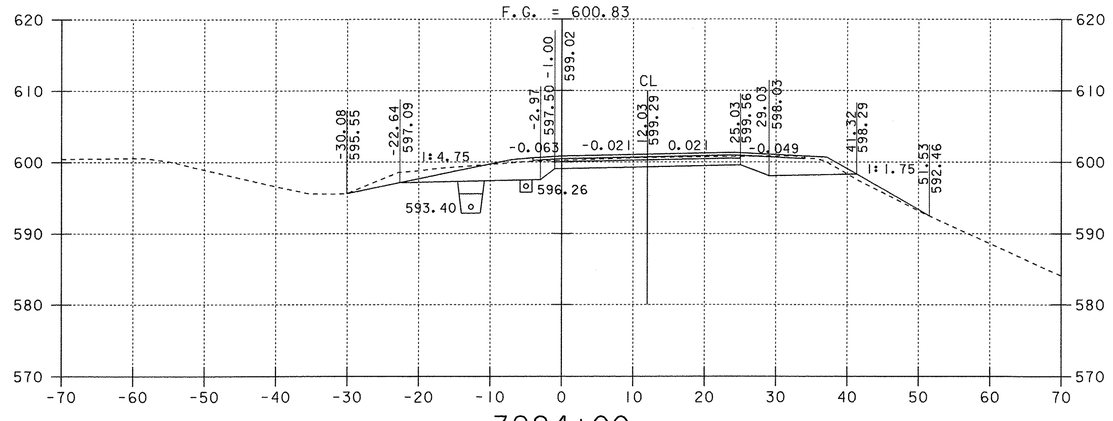

3294+00

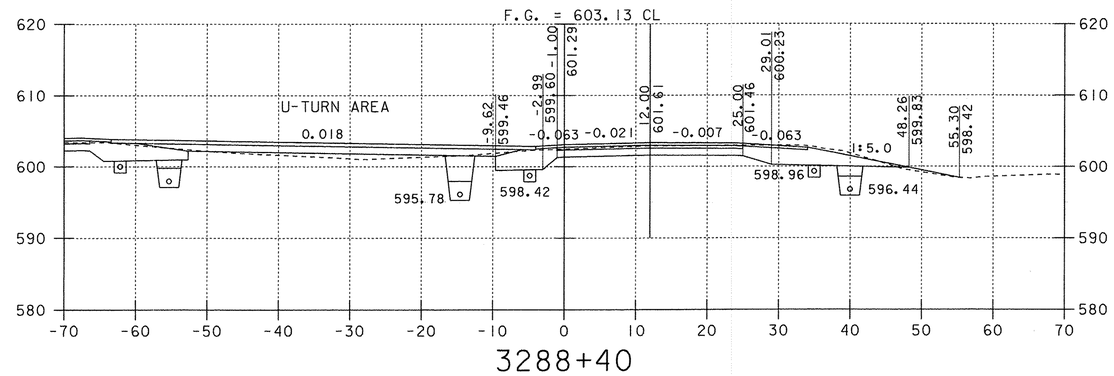

3288+40

F.G. = 599.70

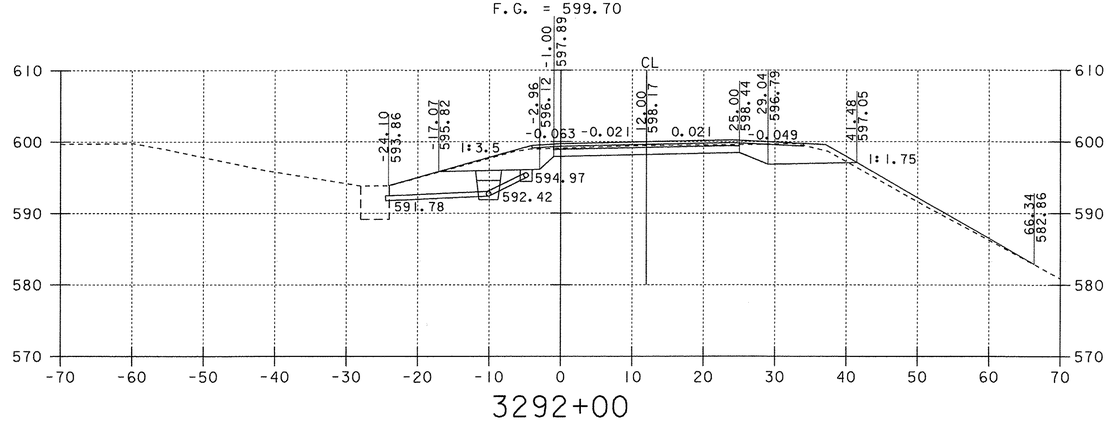

3292+00

NOTE: OFFSET DISTANCES ARE MEASURED FROM THE GRADE LINE.

0 10 20
SCALE IN FEET

NORTHBOUND CROSS SECTIONS

PROJECT: FAIRFAX - FAIRFIELD - ST. ALBANS	PROJECT NO.: IM 089-3(27)
DESIGN FILE NAME: /87A007B/DESIGN/DA007XSI.DGN	
IPARM FILE NAME: DA007X02	PLOT DATE: 01-FEB-2002
SURVEYED BY: ORVIS	SURVEY DATE: 6/98
SQUAD LEADER: DELLA SANTA	DRAWN BY: SQUAD B
	SHEET: 341 OF 370

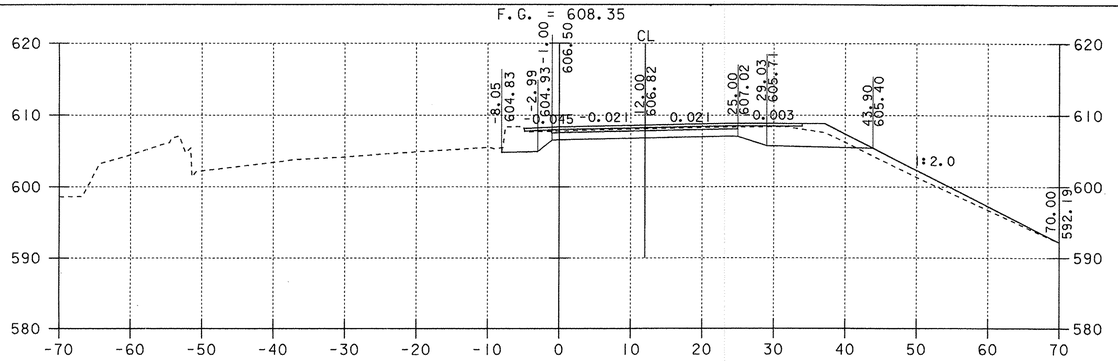

3298+20

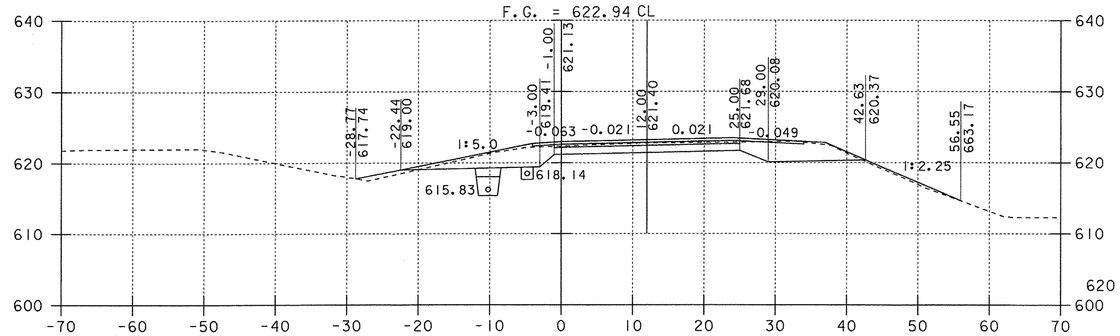

3304+00

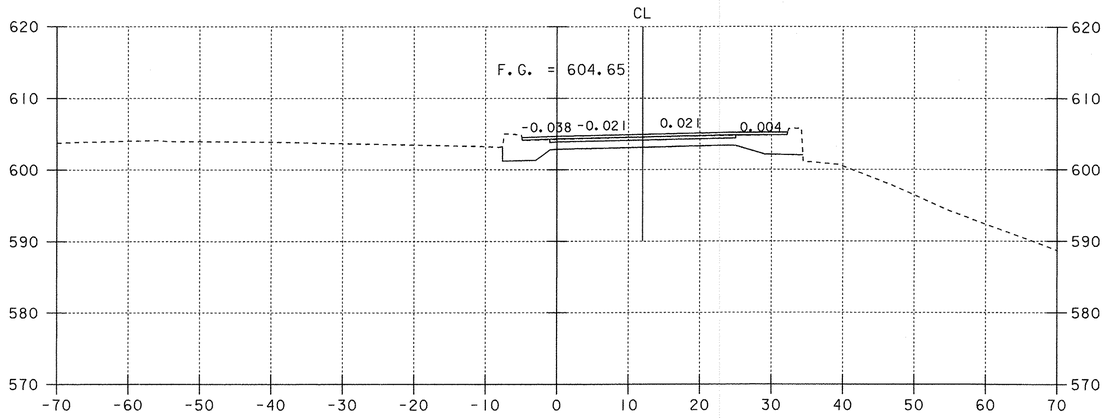

3296+30

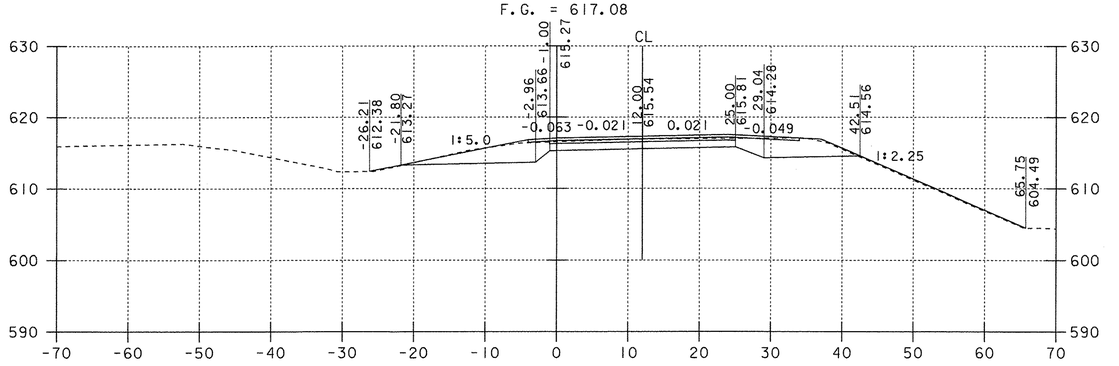

3302+00

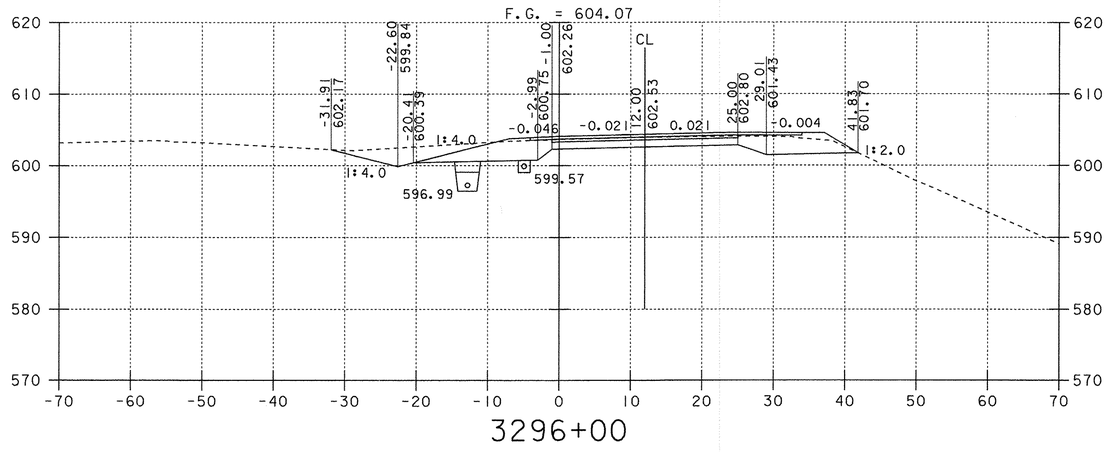

3296+00

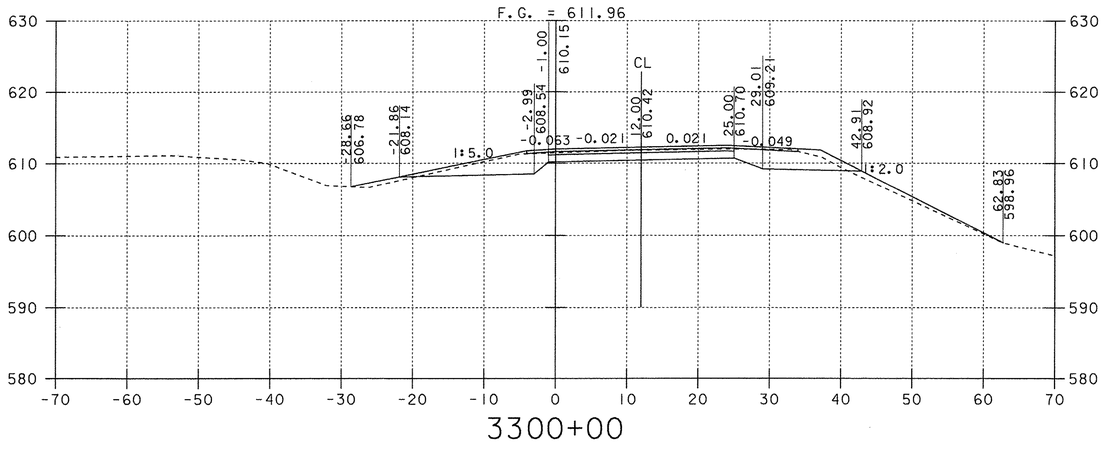

3300+00

NOTE: OFFSET DISTANCES ARE MEASURED FROM THE GRADE LINE.

0 10 20
SCALE IN FEET

NORTHBOUND CROSS SECTIONS

PROJECT: FAIRFAX - FAIRFIELD - ST. ALBANS	PROJECT NO.: IM 089-3(27)
DESIGN FILE NAME: /87A007B/DESIGN/DA007XSI.DGN	
IPARM FILE NAME: DA007X03	PLOT DATE: 01-MAR-2002
SURVEYED BY: ORVIS	SURVEY DATE: 6/98
SQUAD LEADER: DELLA SANTA	DRAWN BY: SQUAD B
	SHEET: 342 OF 370

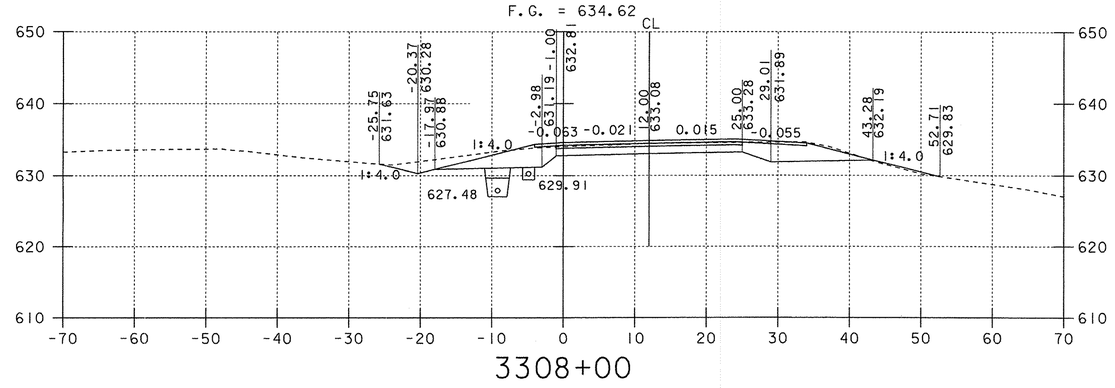

3308+00

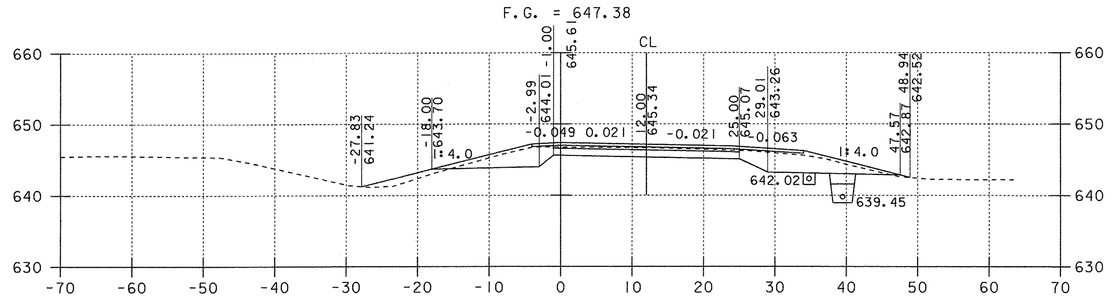

3314+00

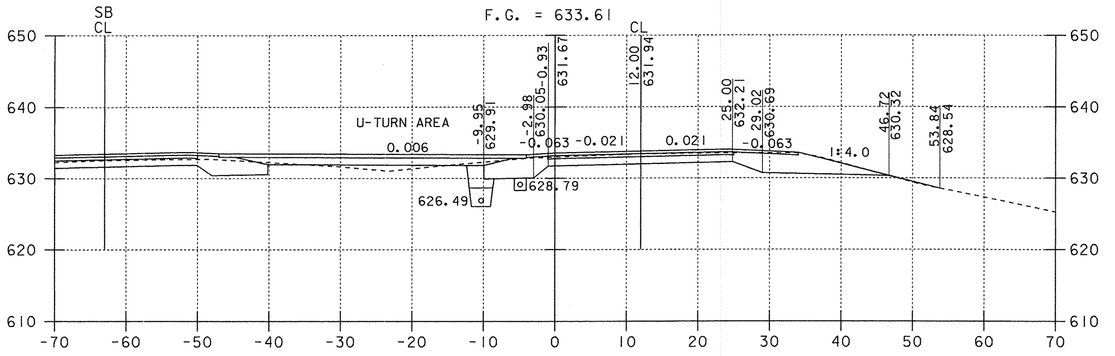

3307+71

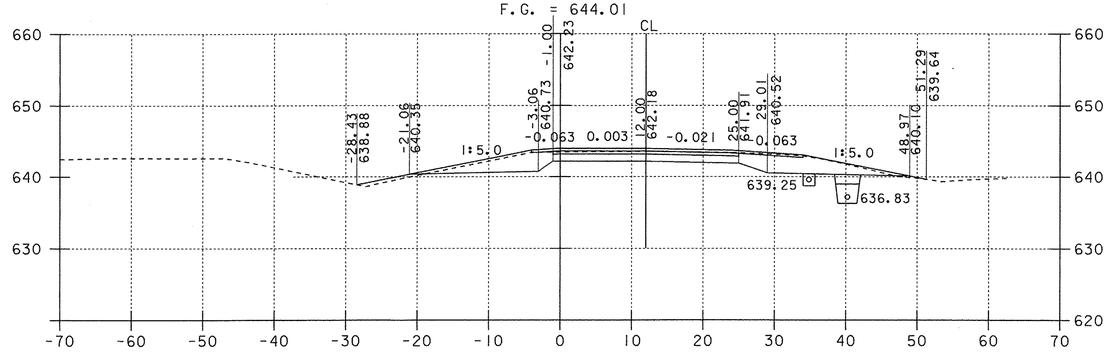

3312+00

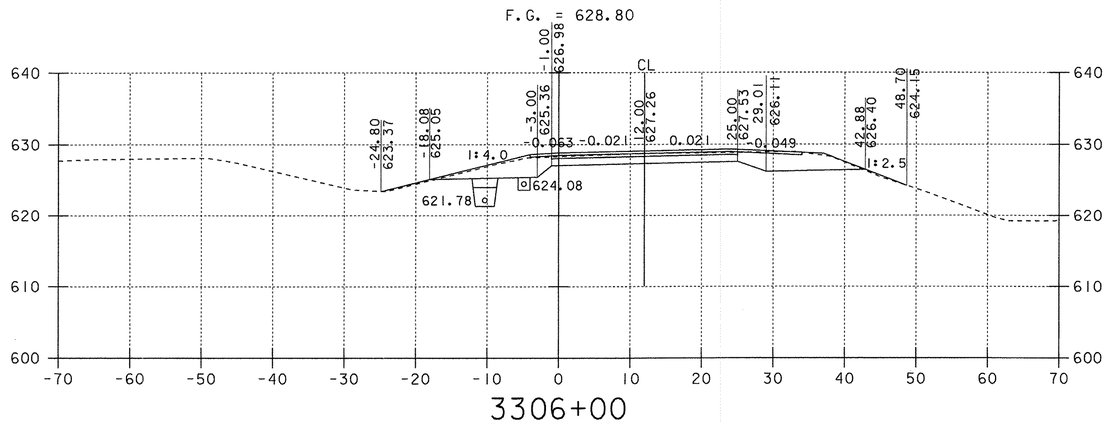

3306+00

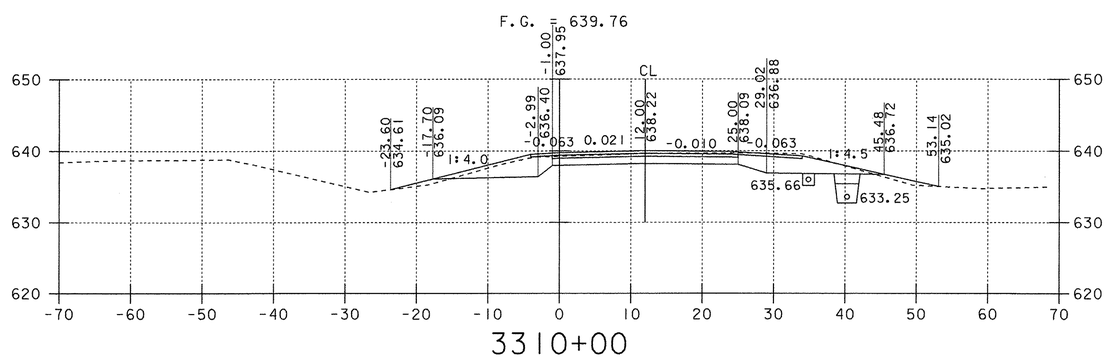

3310+00

NOTE: OFFSET DISTANCES ARE MEASURED FROM THE GRADE LINE.

NORTHBOUND CROSS SECTIONS

0 10 20
SCALE IN FEET

PROJECT: FAIRFAX - FAIRFIELD - ST. ALBANS	PROJECT NO.: IM 089-3(27)
DESIGN FILE NAME: /87A007B/DESIGN/DA007XSI.DGN	
IPARM FILE NAME: DA007X04	PLOT DATE: 01-MAR-2002
SURVEYED BY: ORVIS	SURVEY DATE: 6/98
SQUAD LEADER: DELLA SANTA	DRAWN BY: SQUAD B
	SHEET: 343 OF 370

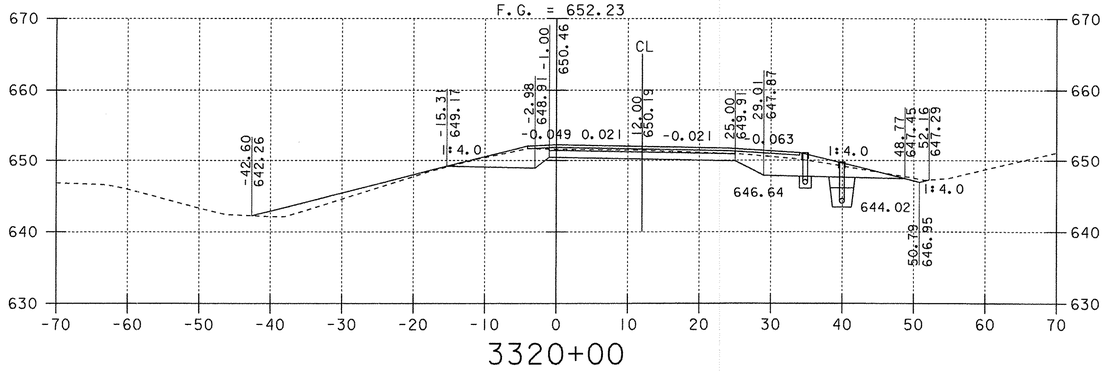

3320+00

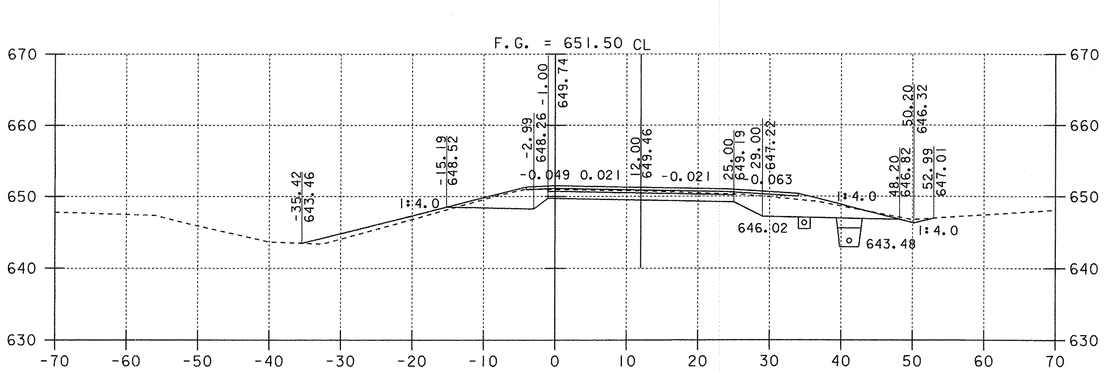

3318+00

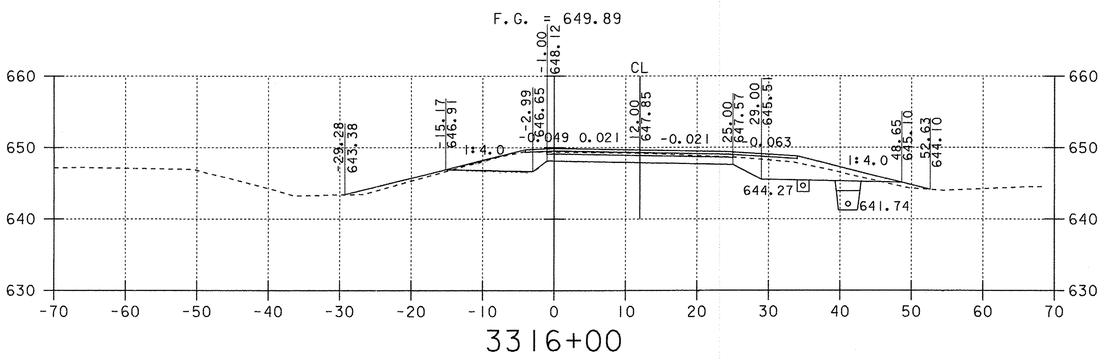

3316+00

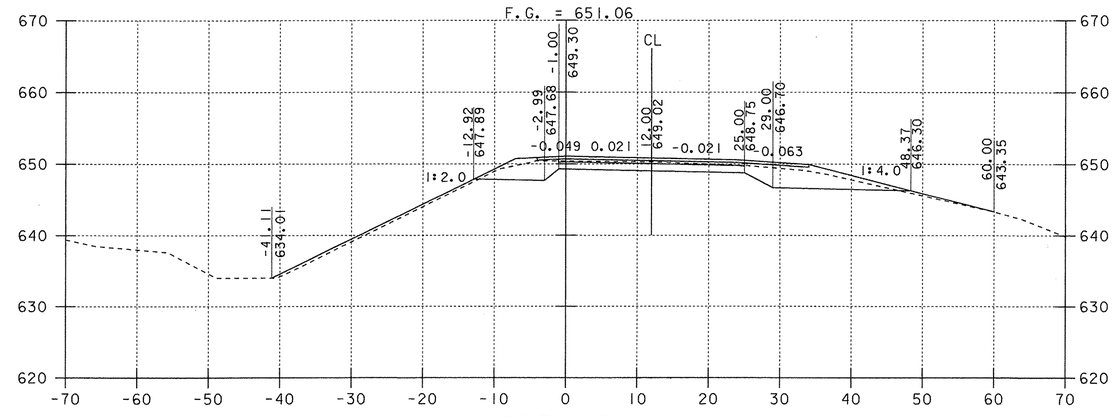

3324+00

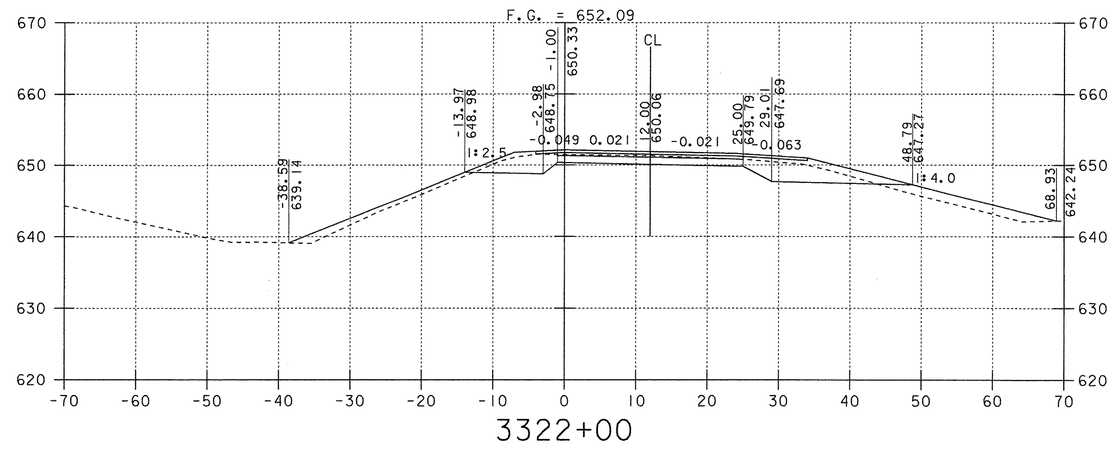

3322+00

NOTE: OFFSET DISTANCES ARE MEASURED FROM THE GRADE LINE.

NORTHBOUND CROSS SECTIONS

0 10 20
SCALE IN FEET

PROJECT: FAIRFAX - FAIRFIELD - ST. ALBANS	PROJECT NO.: IM 089-3(27)
DESIGN FILE NAME: /87A007B/DESIGN/DA007XSI.DGN	
IPARM FILE NAME: DA007X05	PLOT DATE: 01-MAR-2002
SURVEYED BY: ORVIS	SURVEY DATE: 6/98
SQUAD LEADER: DELLA SANTA	DRAWN BY: SQUAD B
	SHEET: 344 OF 370

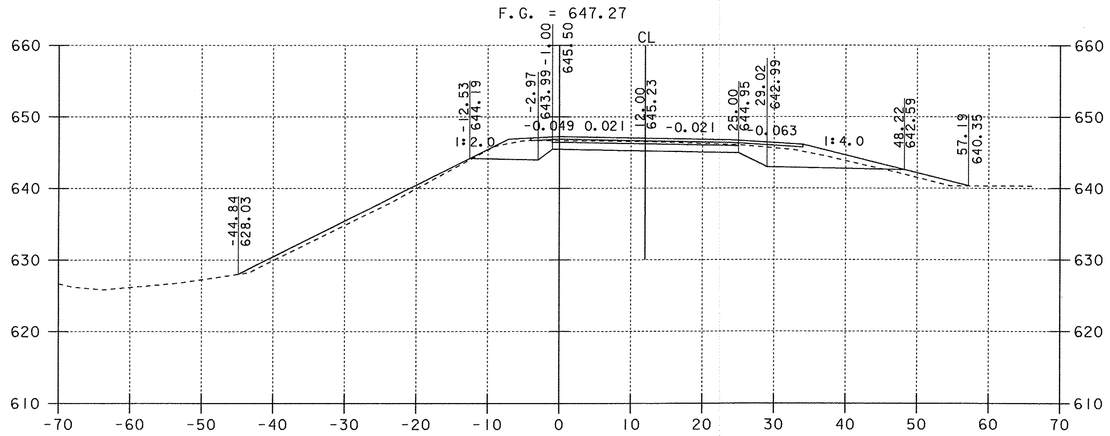

3328+00

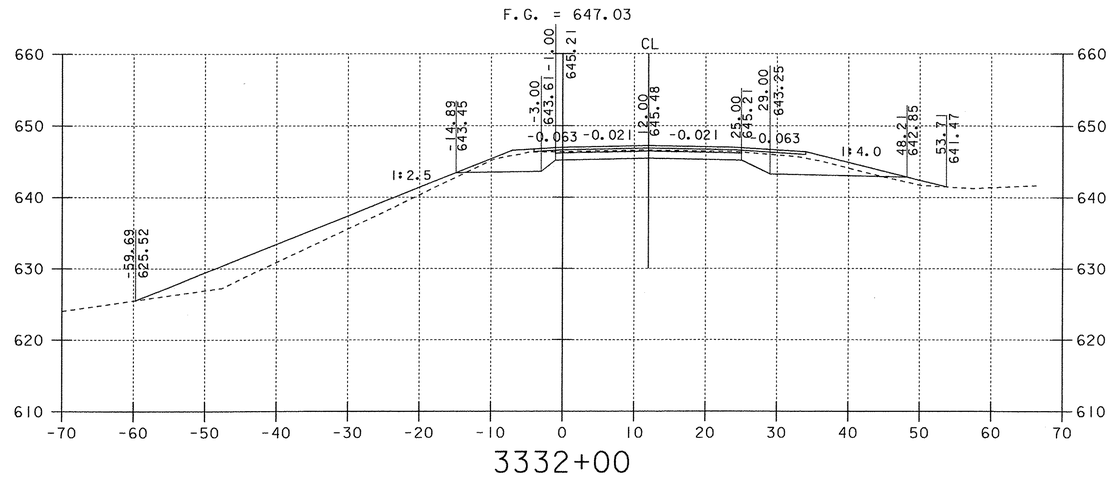

3332+00

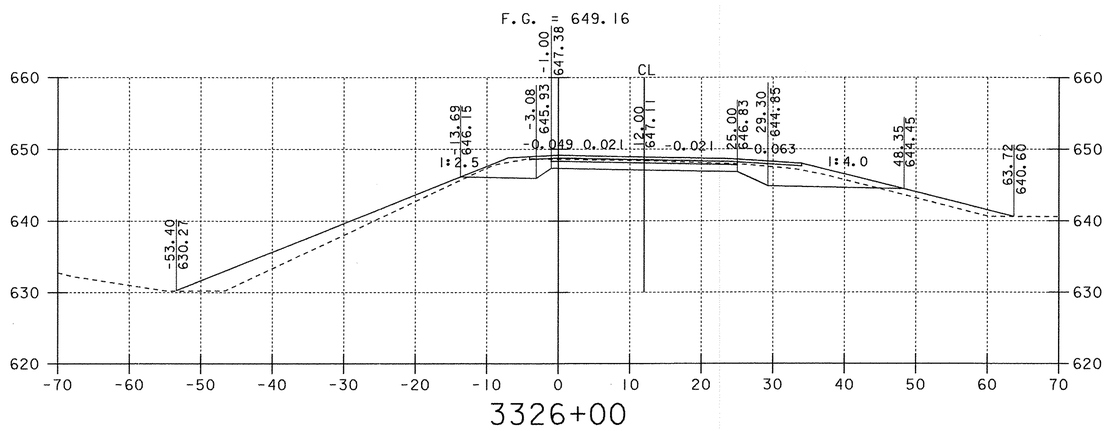

3326+00

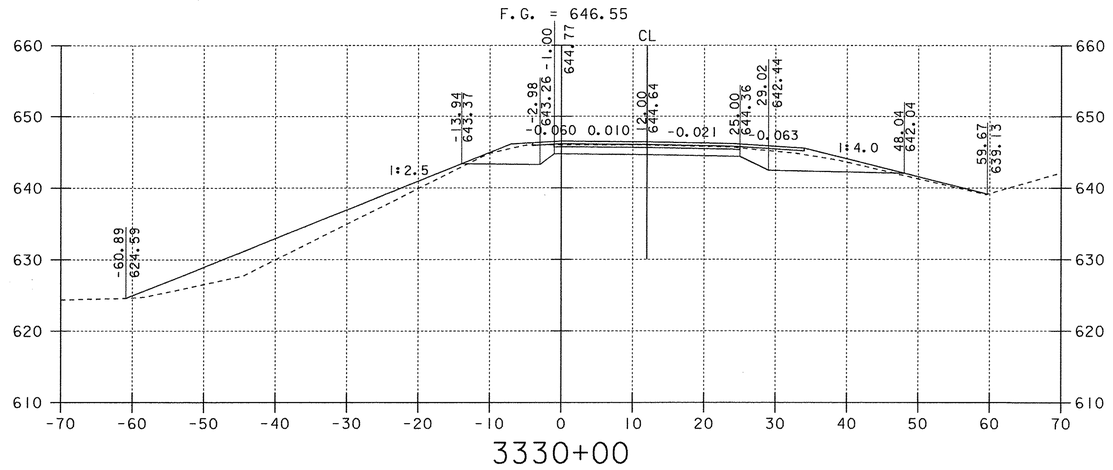

3330+00

NOTE: OFFSET DISTANCES ARE MEASURED FROM THE GRADE LINE.

NORTHBOUND CROSS SECTIONS

0 10 20
SCALE IN FEET

PROJECT: FAIRFAX - FAIRFIELD - ST. ALBANS	PROJECT NO.: IM 089-3(27)
DESIGN FILE NAME: /87A007B/DESIGN/DA007XSI.DGN	
IPARM FILE NAME: DA007X06	PLOT DATE: 01-MAR-2002
SURVEYED BY: ORVIS	SURVEY DATE: 6/98
SQUAD LEADER: DELLA SANTA	DRAWN BY: SQUAD B
	SHEET: 345 OF 370

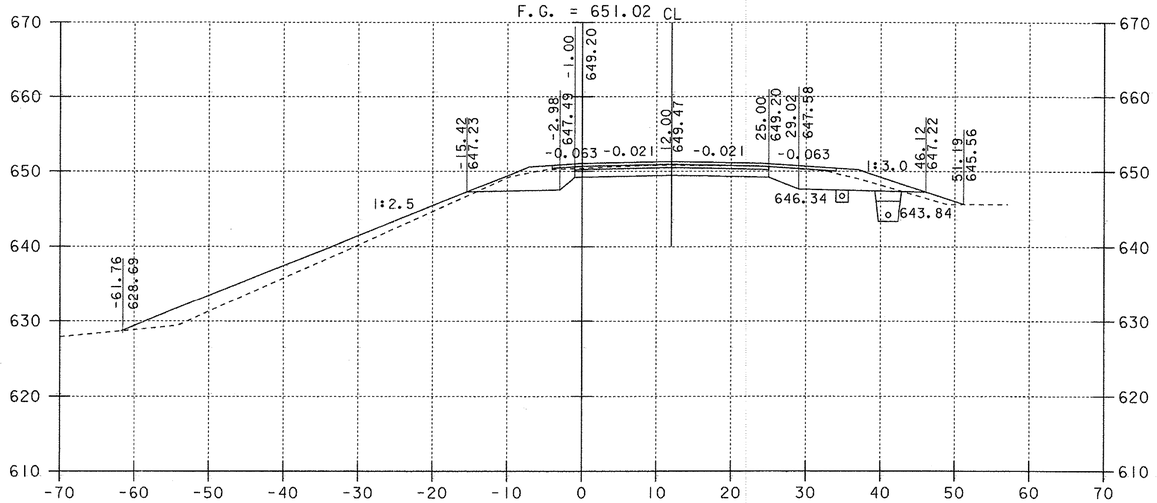

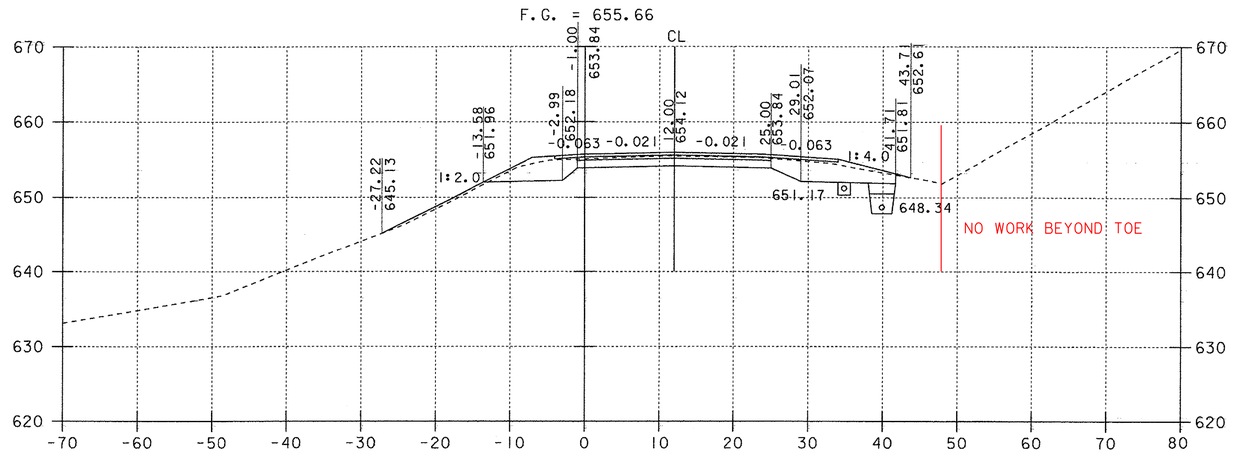

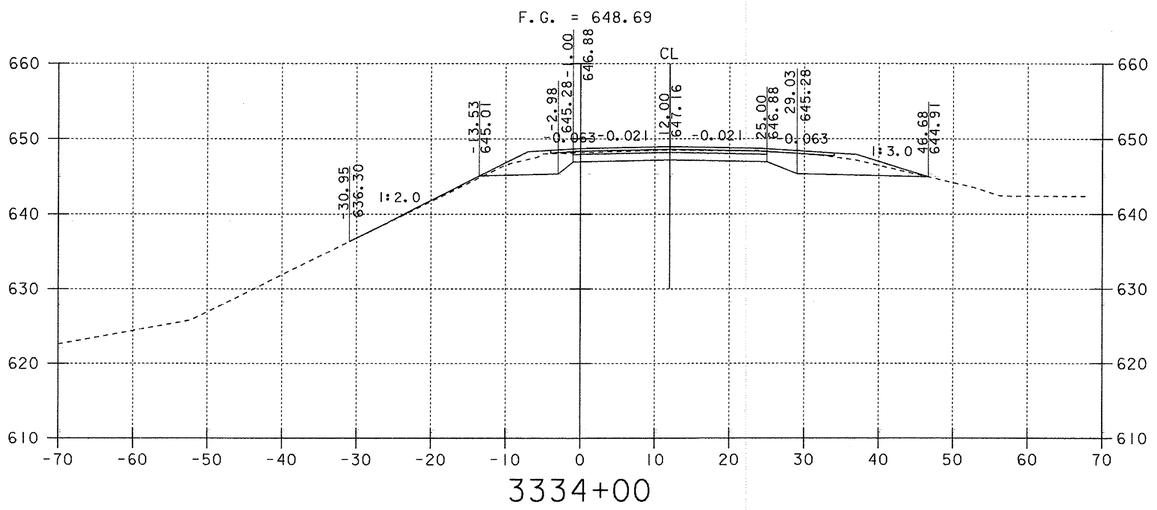

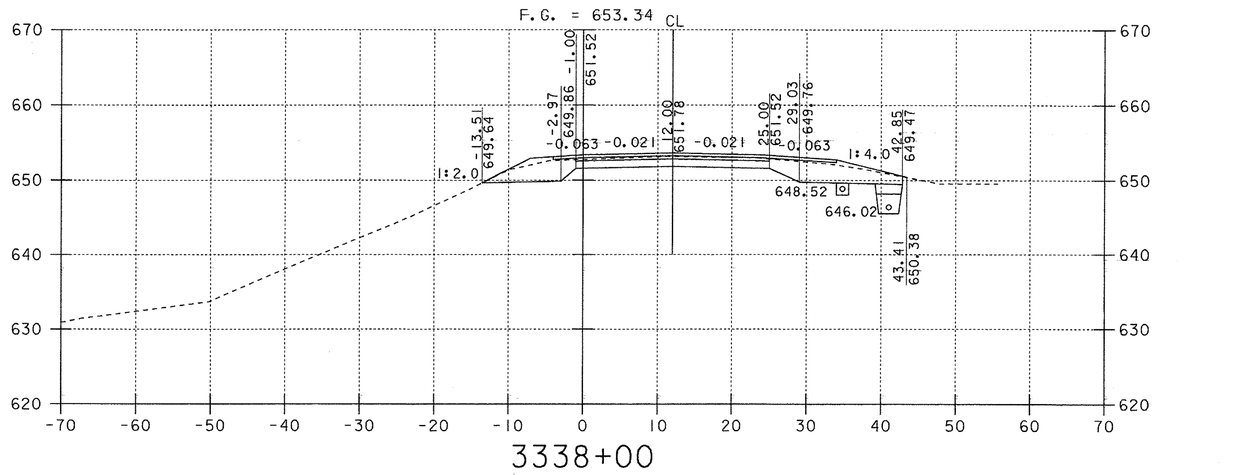

NOTE: OFFSET DISTANCES ARE MEASURED FROM THE GRADE LINE.

NORTHBOUND CROSS SECTIONS

0 10 20
SCALE IN FEET

PROJECT: FAIRFAX - FAIRFIELD - ST. ALBANS	PROJECT NO.: IM 089-3(27)
DESIGN FILE NAME: /87A007B/DESIGN/DA007XSI.DGN	
IPARM FILE NAME: DA007X07	PLOT DATE: 25-JAN-2002
SURVEYED BY: ORVIS	SURVEY DATE: 6/98
SQUAD LEADER: DELLA SANTA	DRAWN BY: SQUAD B
	SHEET: 346 OF 370

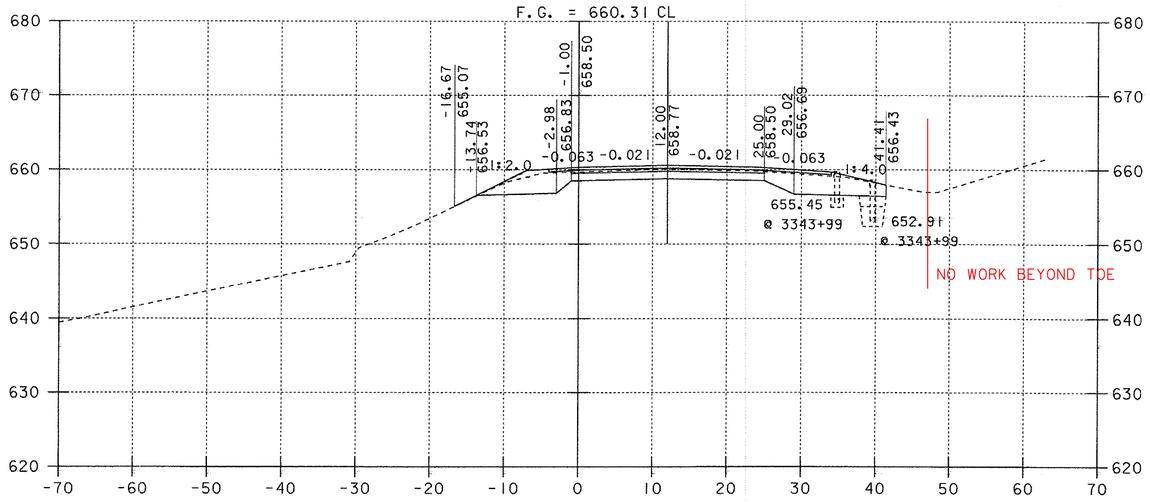

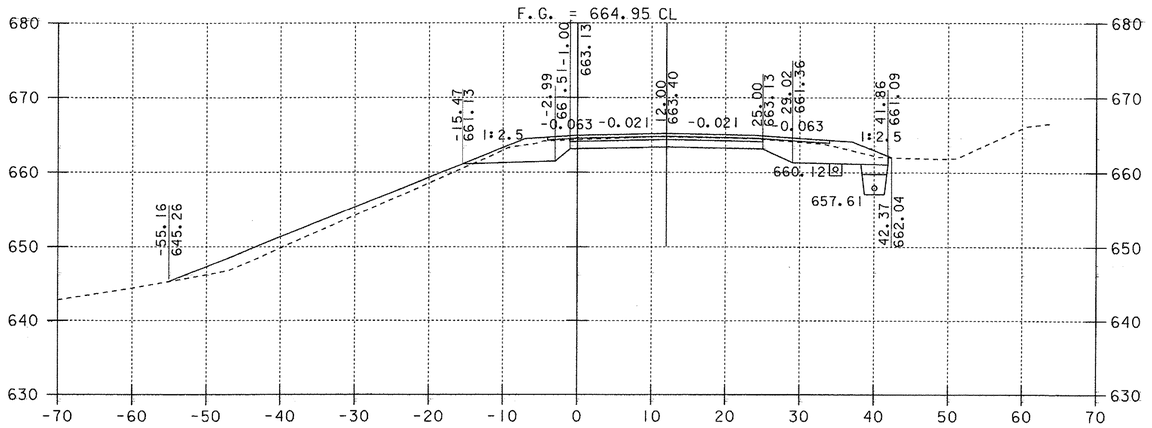

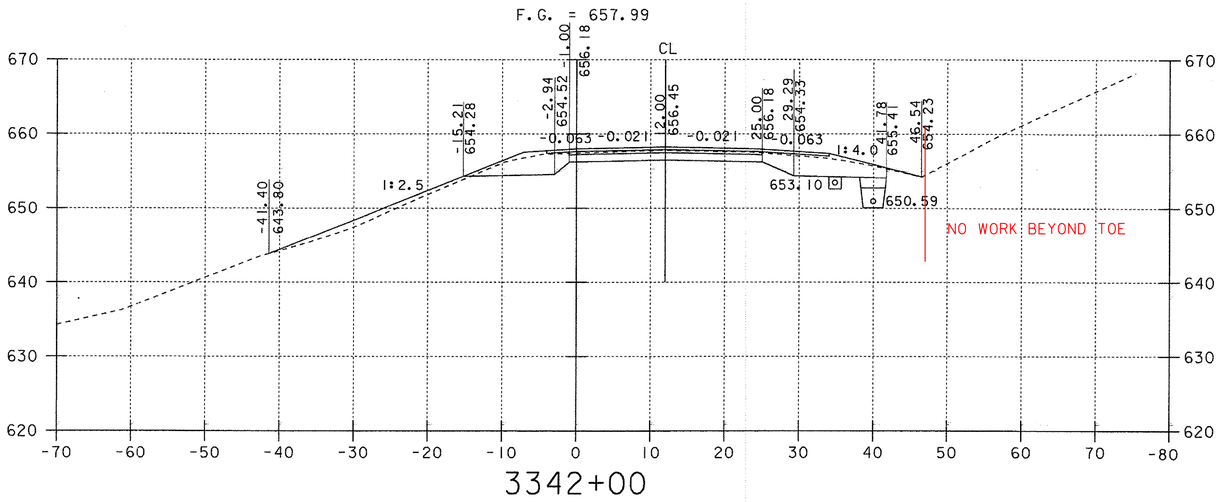

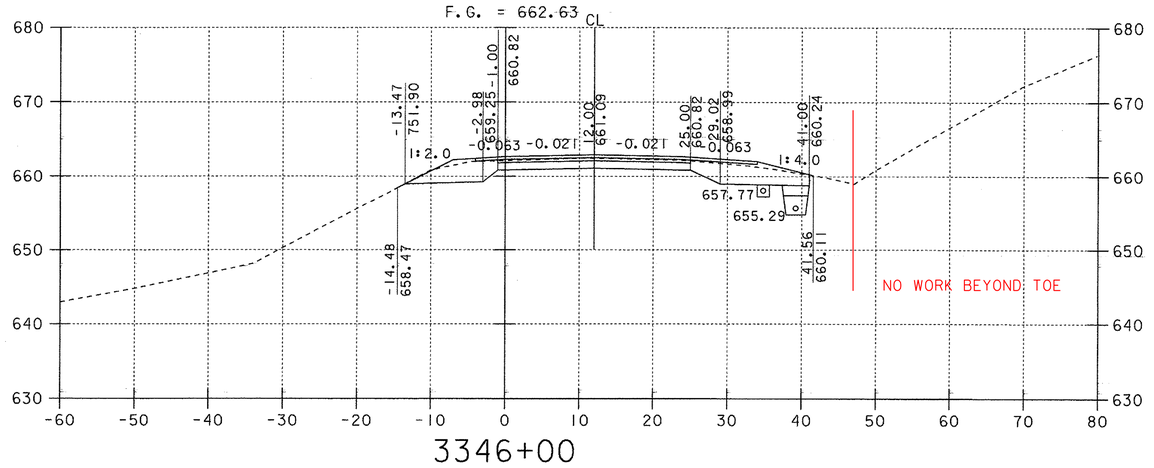

NOTE: OFFSET DISTANCES ARE MEASURED FROM THE GRADE LINE.

NORTHBOUND CROSS SECTIONS

0 10 20
SCALE IN FEET

PROJECT: FAIRFAX - FAIRFIELD - ST. ALBANS	PROJECT NO.: IM 089-3(27)
DESIGN FILE NAME: /87A007B/DESIGN/DA007XSI.DGN	
IPARM FILE NAME: DA007X08	PLOT DATE: 25-JAN-2002
SURVEYED BY: ORVIS	SURVEY DATE: 6/98
SQUAD LEADER: DELLA SANTA	DRAWN BY: SQUAD B
	SHEET: 347 OF 370

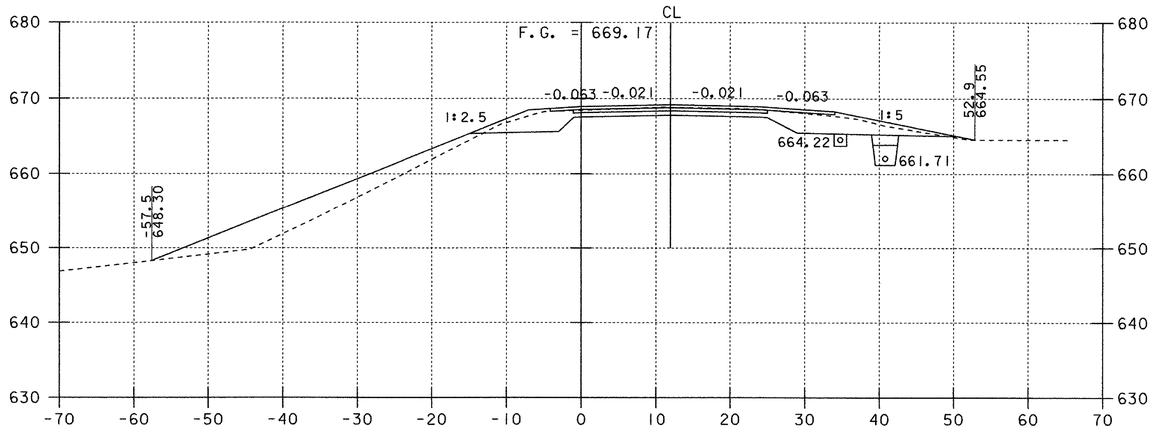

~~3 370+00~~
3352+00

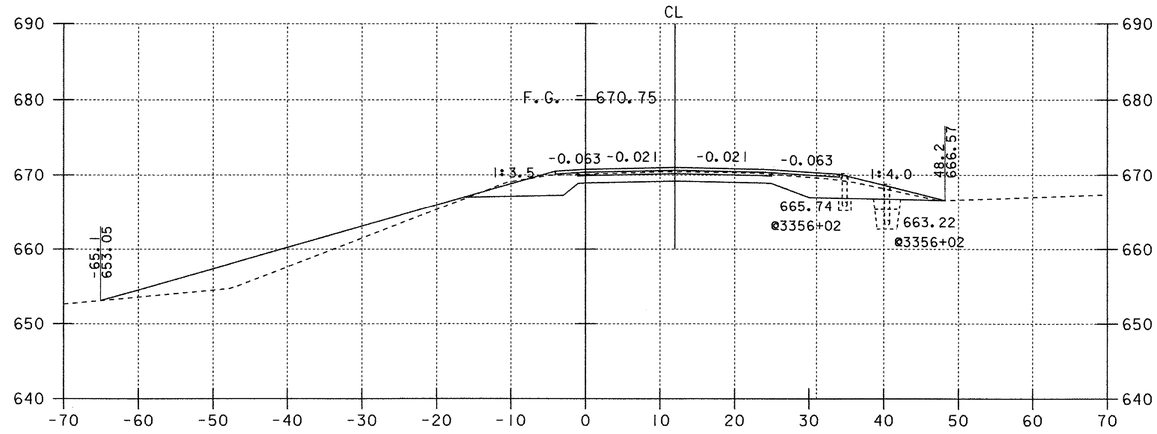

3356+00

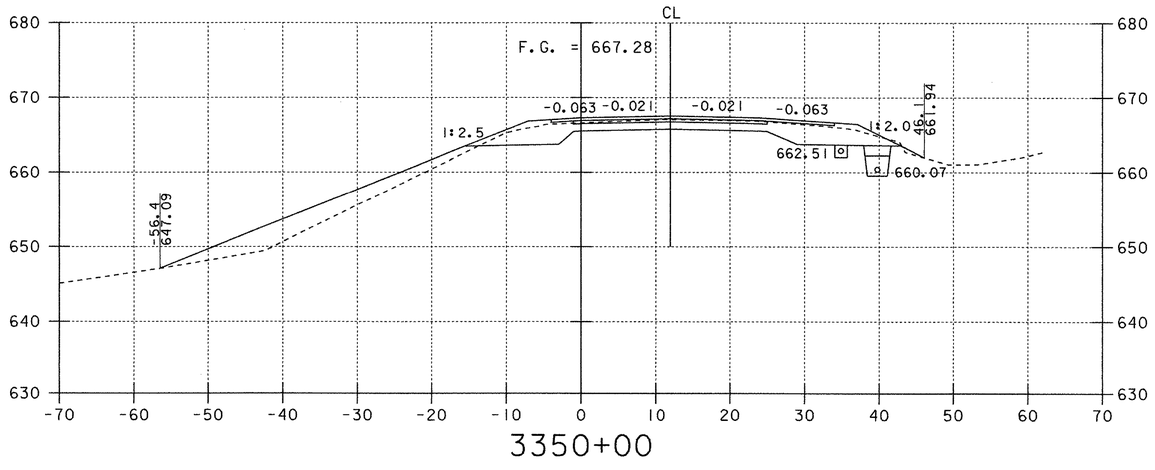

3350+00

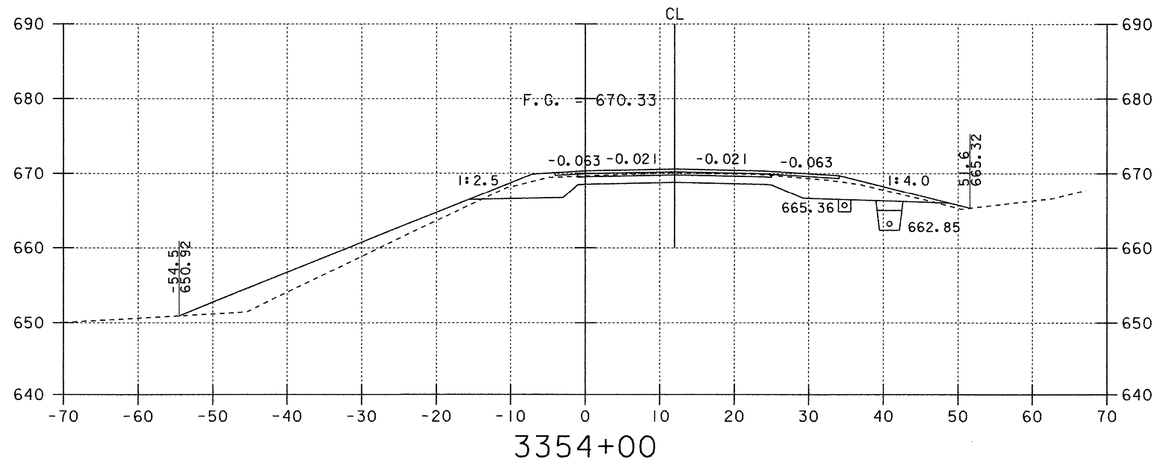

3354+00

NOTE: OFFSET DISTANCES ARE MEASURED FROM THE GRADE LINE.

0 10 20
SCALE IN FEET

NORTHBOUND CROSS SECTIONS

PROJECT: FAIRFAX - FAIRFIELD - ST. ALBANS	PROJECT NO.: IM 089-3(27)
DESIGN FILE NAME: /87A007B/DESIGN/DA007XSL.DGN	
IPARM FILE NAME: DA007X09	PLOT DATE: 17-AUG-2000
SURVEYED BY: ORVIS	SURVEY DATE: 6/98
SQUAD LEADER: DELLA SANTA	DRAWN BY: SQUAD B
	SHEET: 348 OF 370

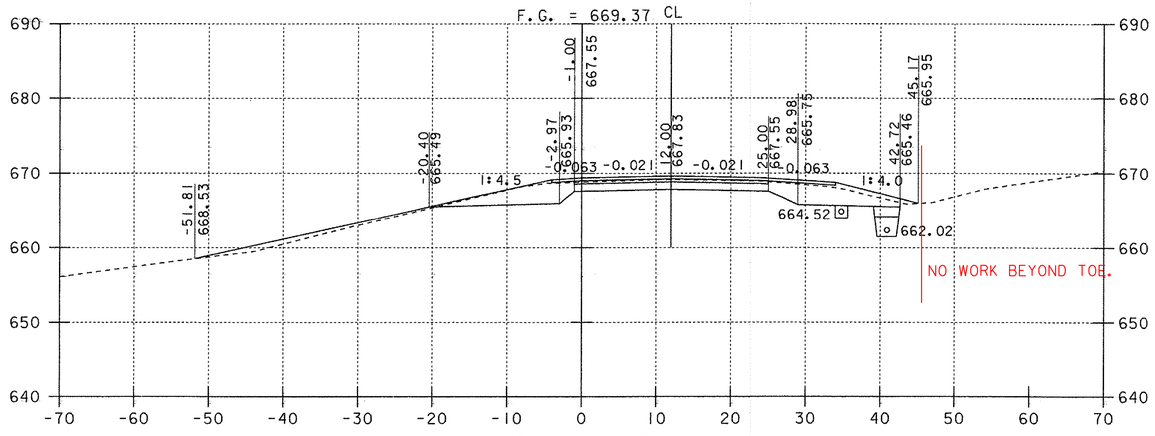

3360+00

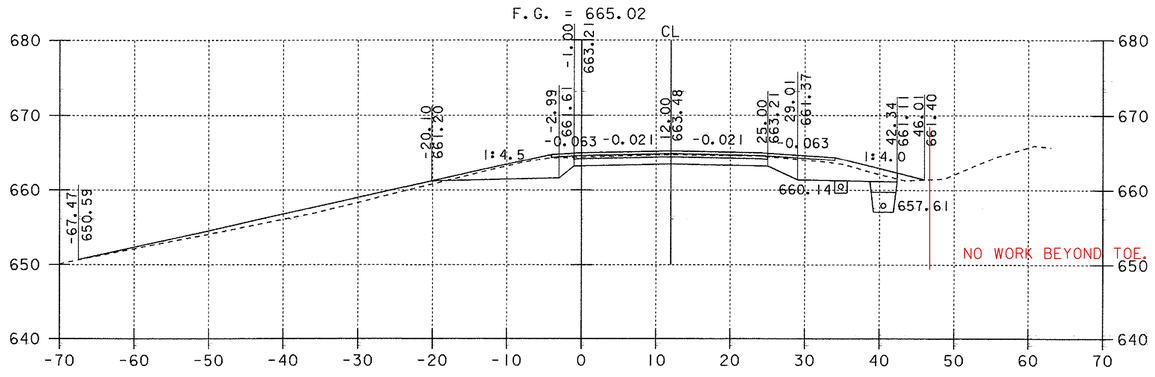

3364+00

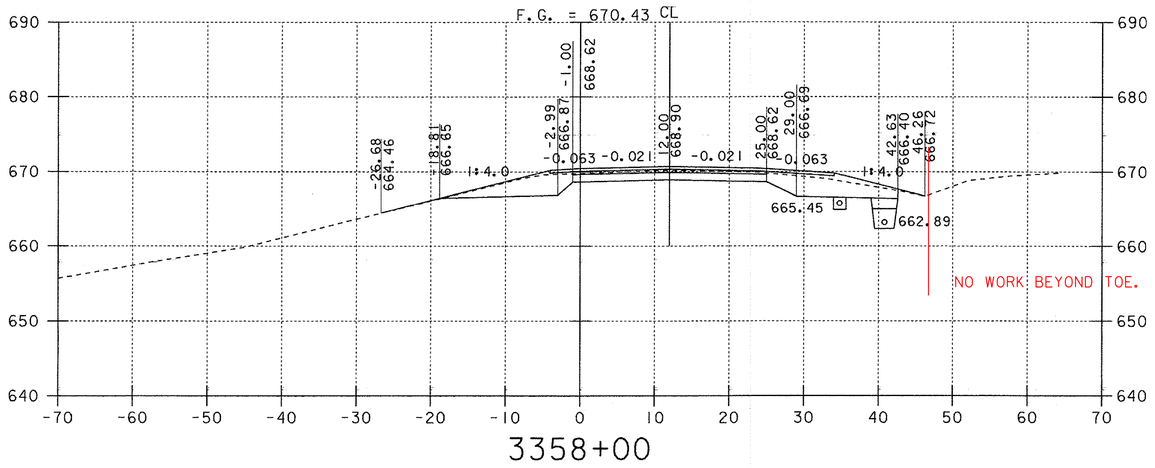

3358+00

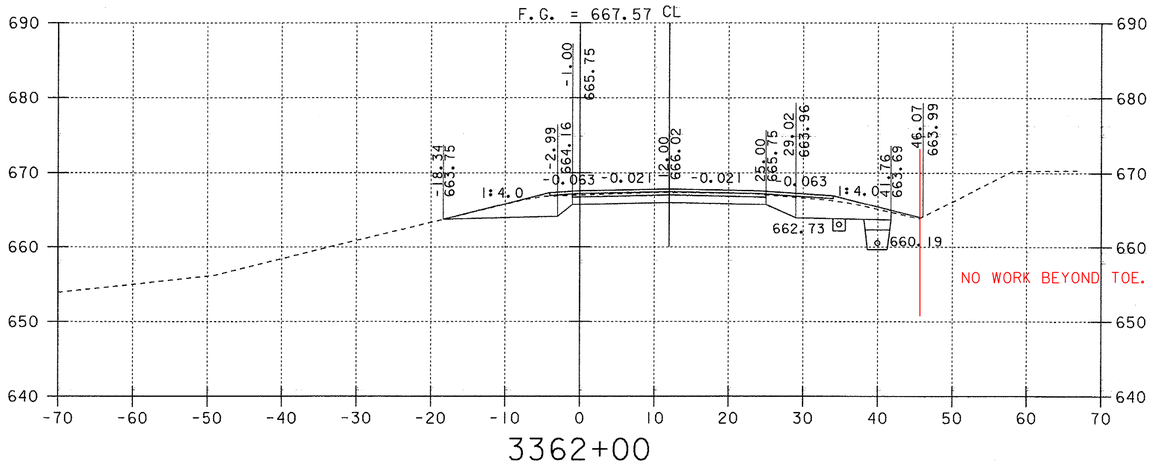

3362+00

NOTE: OFFSET DISTANCES ARE MEASURED FROM THE GRADE LINE.

0 10 20
SCALE IN FEET

NORTHBOUND CROSS SECTIONS

PROJECT: FAIRFAX - FAIRFIELD - ST. ALBANS	PROJECT NO.: IM 089-3(27)
DESIGN FILE NAME: /87A007B/DESIGN/DA007XSI.DGN	
IPARM FILE NAME: DA007XIO	PLOT DATE: 25-JAN-2002
SURVEYED BY: ORVIS	SURVEY DATE: 6/98
SQUAD LEADER: DELLA SANTA	DRAWN BY: SQUAD B
	SHEET: 349 OF 370

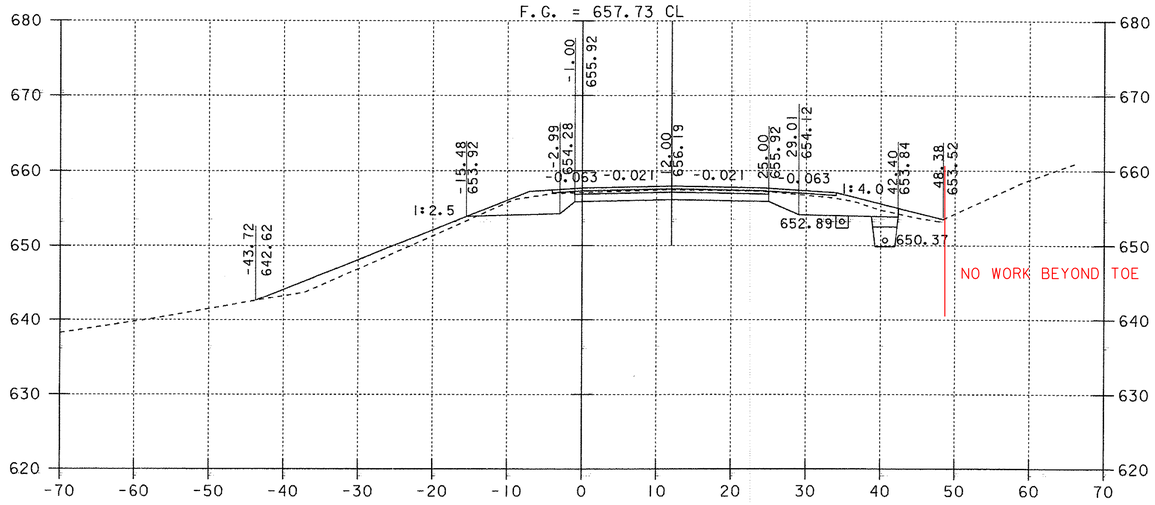

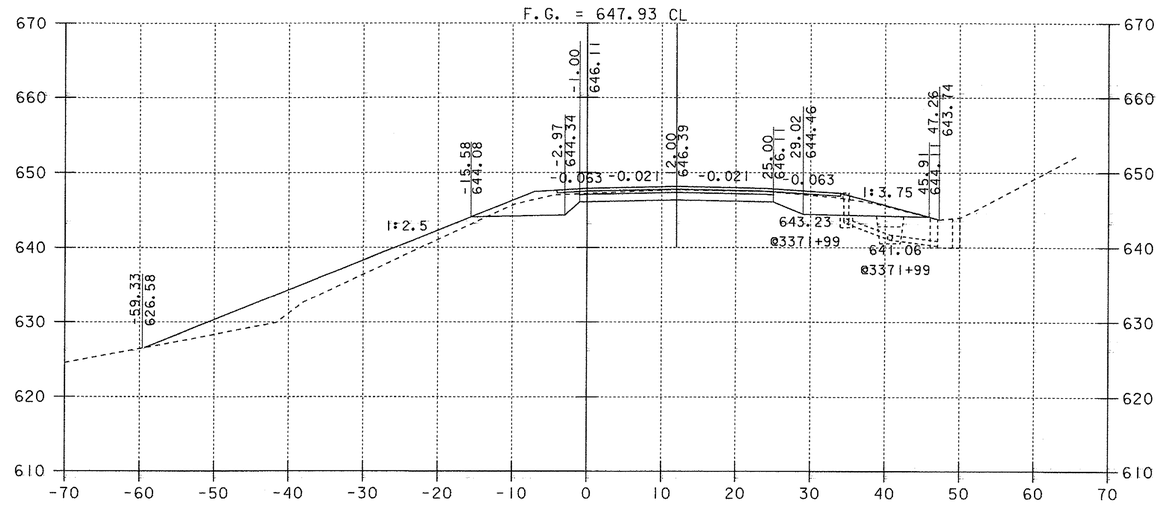

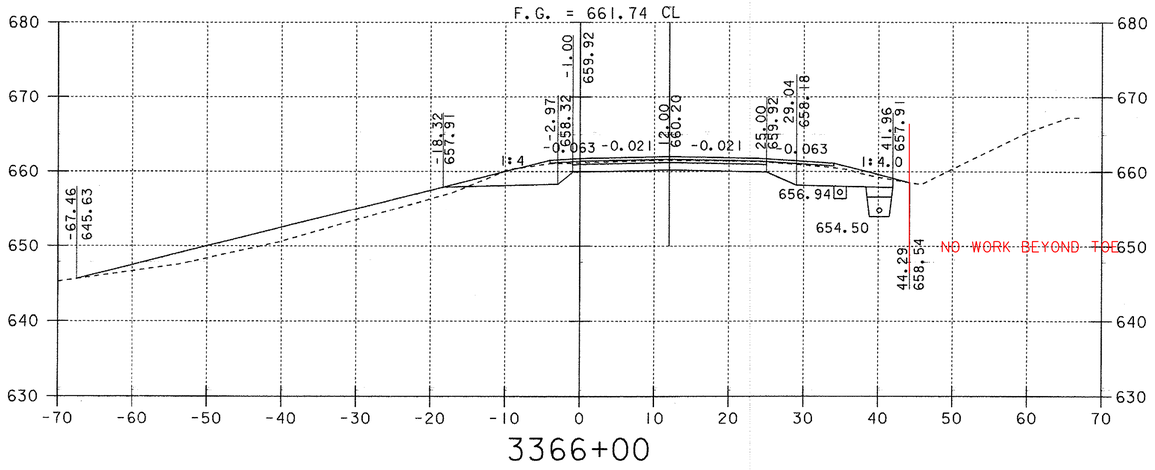

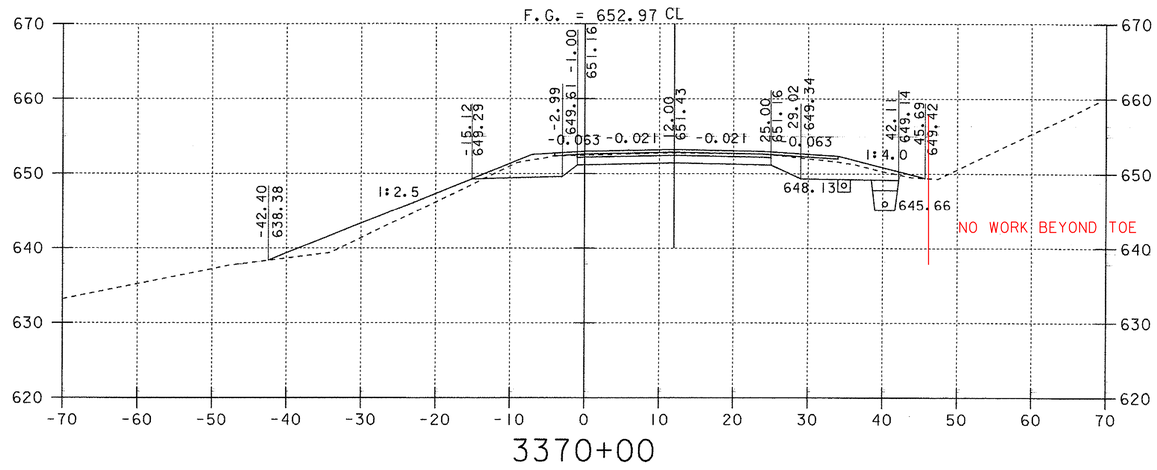

NOTE: OFFSET DISTANCES ARE MEASURED FROM THE GRADE LINE.

0 10 20
SCALE IN FEET

NORTHBOUND CROSS SECTIONS

PROJECT: FAIRFAX - FAIRFIELD - ST. ALBANS	PROJECT NO.: IM 089-3(27)
DESIGN FILE NAME: /87A007B/DESIGN/DA007XSI.DGN	
IPARM FILE NAME: DA007XII	PLOT DATE: 25-JAN-2002
SURVEYED BY: ORVIS	SURVEY DATE: 6/98
SQUAD LEADER: DELLA SANTA	DRAWN BY: SQUAD B
	SHEET: 350 OF 370

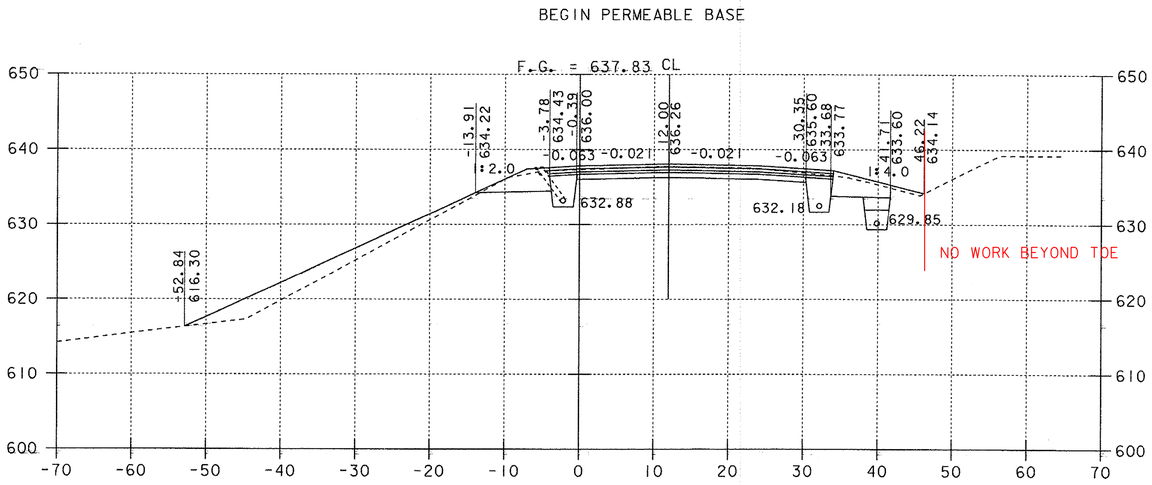

3376+00

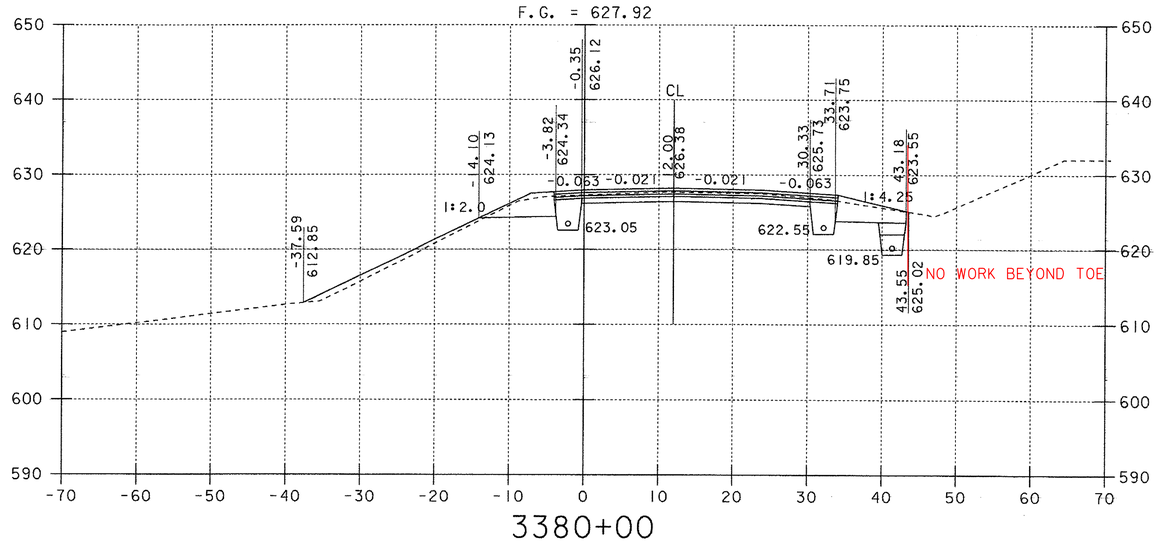

3380+00

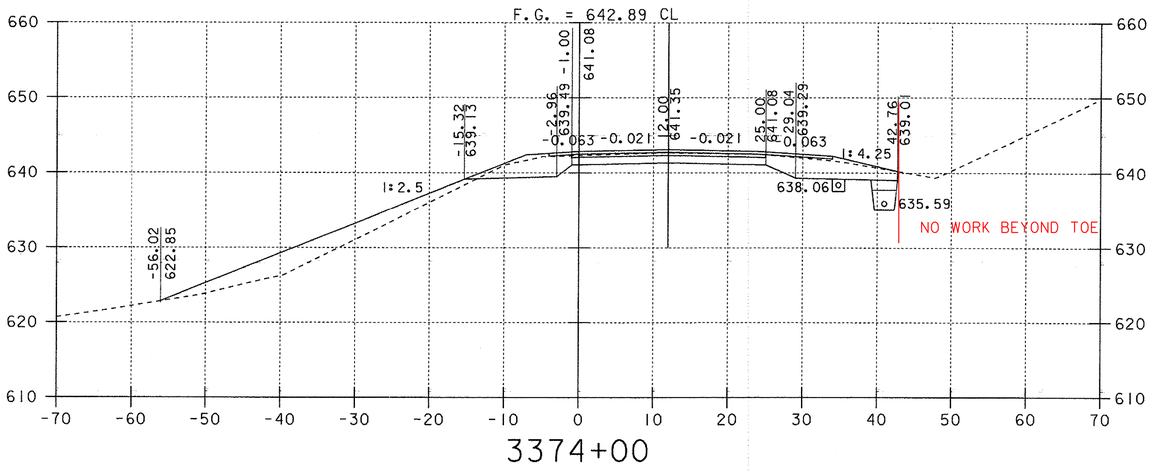

3374+00

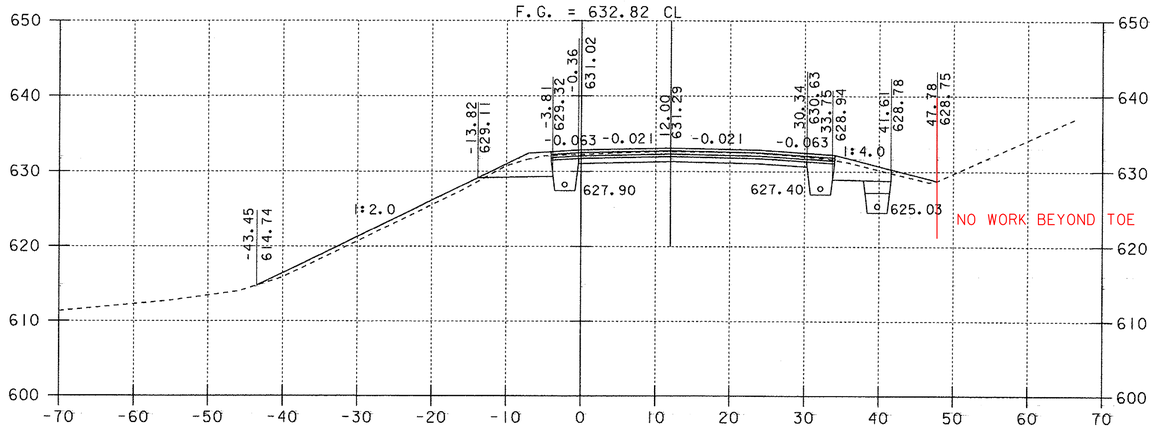

3378+00

NOTE: OFFSET DISTANCES ARE MEASURED FROM THE GRADE LINE.

0 10 20
SCALE IN FEET

NORTHBOUND CROSS SECTIONS

PROJECT: FAIRFAX - FAIRFIELD - ST. ALBANS	PROJECT NO.: IM 089-3(27)
DESIGN FILE NAME: /87A007B/DESIGN/DA007XSI.DGN	
IPARM FILE NAME: DA007XI2	PLOT DATE: 25-JAN-2002
SURVEYED BY: ORVIS	SURVEY DATE: 6/98
SQUAD LEADER: DELLA SANTA	DRAWN BY: SQUAD B
	SHEET: 351 OF 370

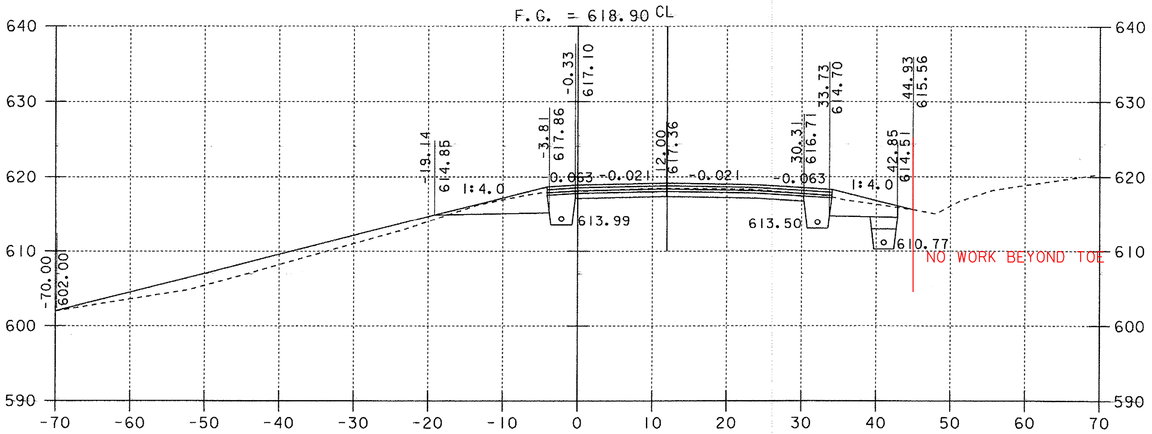

3384+00

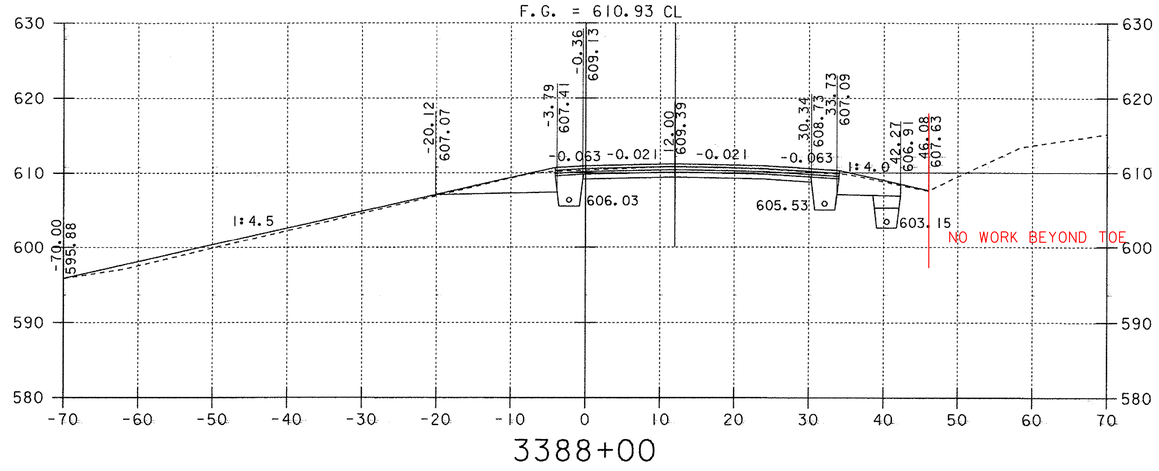

3388+00

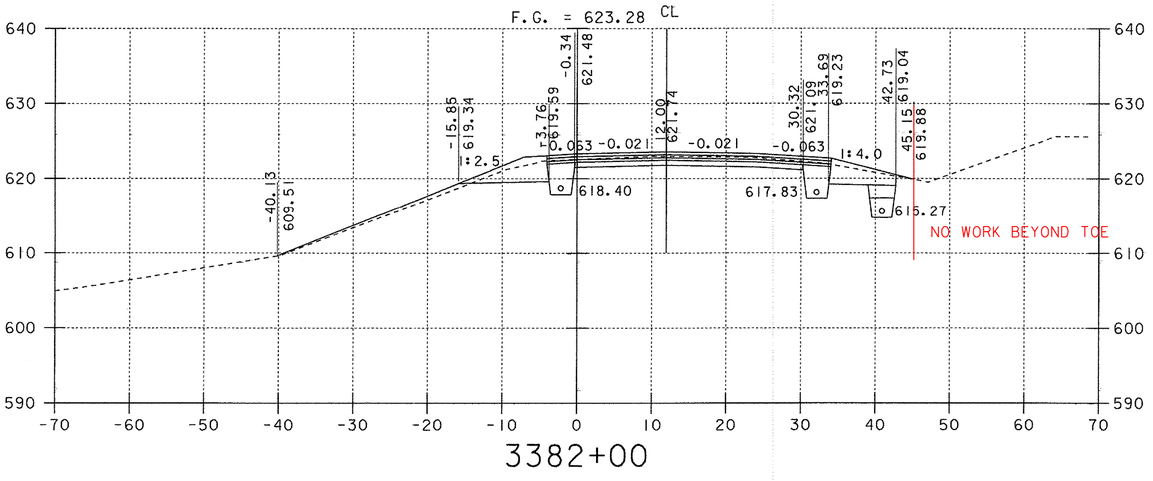

3382+00

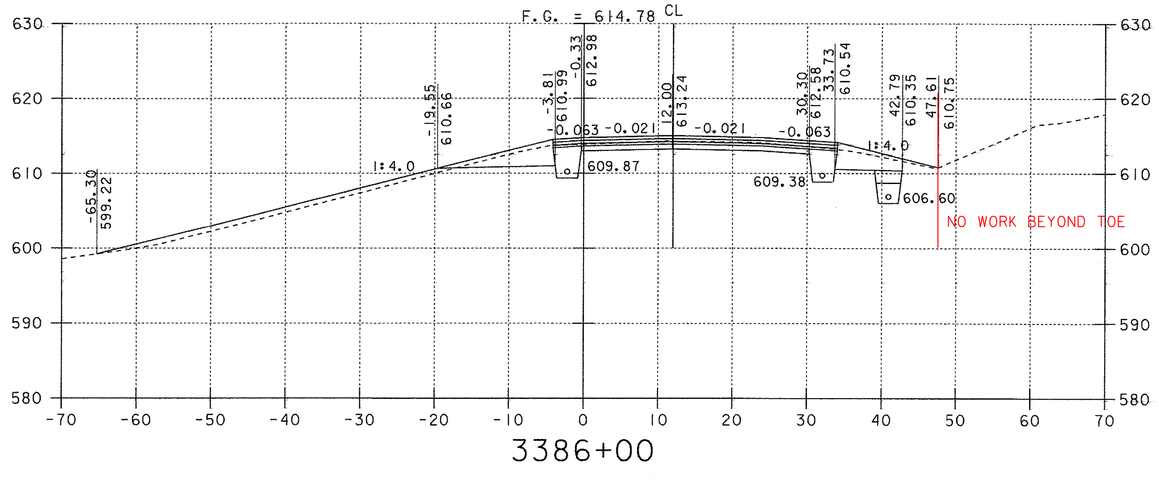

3386+00

NOTE: OFFSET DISTANCES ARE MEASURED FROM THE GRADE LINE.

NORTHBOUND CROSS SECTIONS

0 10 20
SCALE IN FEET

PROJECT: FAIRFAX - FAIRFIELD - ST. ALBANS	PROJECT NO.: IM 089-3(27)
DESIGN FILE NAME: /87A007B/DESIGN/DA007XSI.DGN	
IPARM FILE NAME: DA007XI3	PLOT DATE: 25-JAN-2002
SURVEYED BY: ORVIS	SURVEY DATE: 6/98
SQUAD LEADER: DELLA SANTA	DRAWN BY: SQUAD B
	SHEET: 352 OF 370

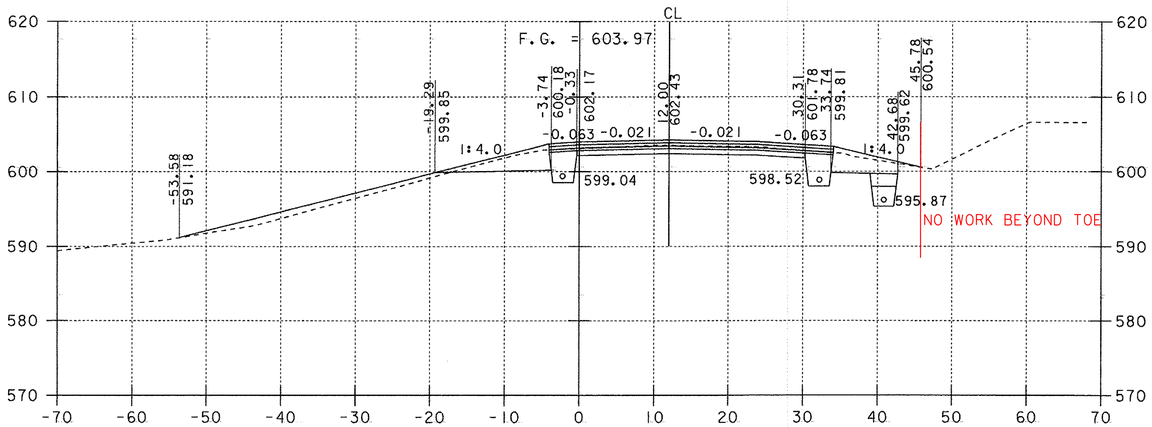

3392+00

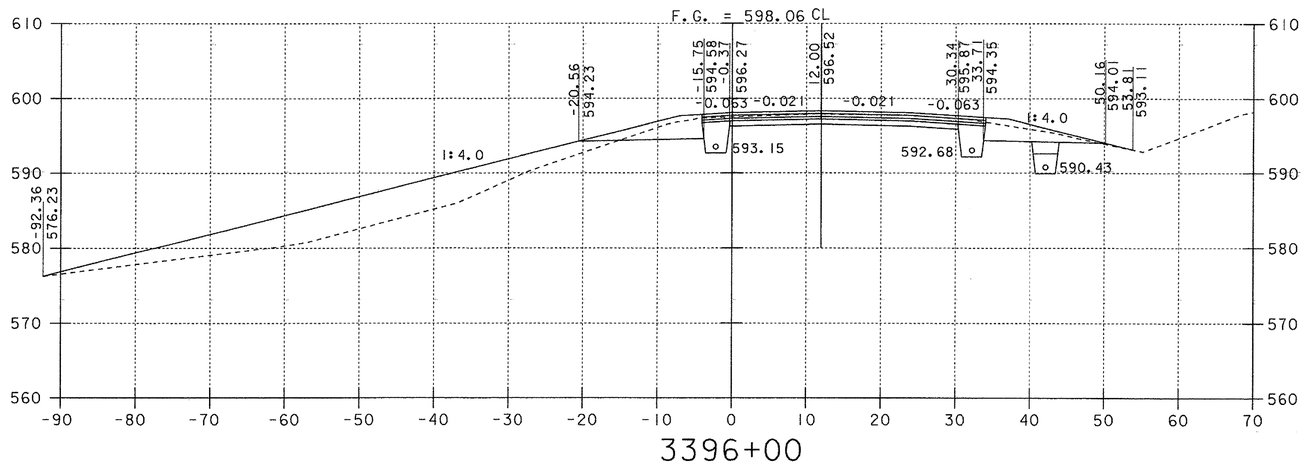

3396+00

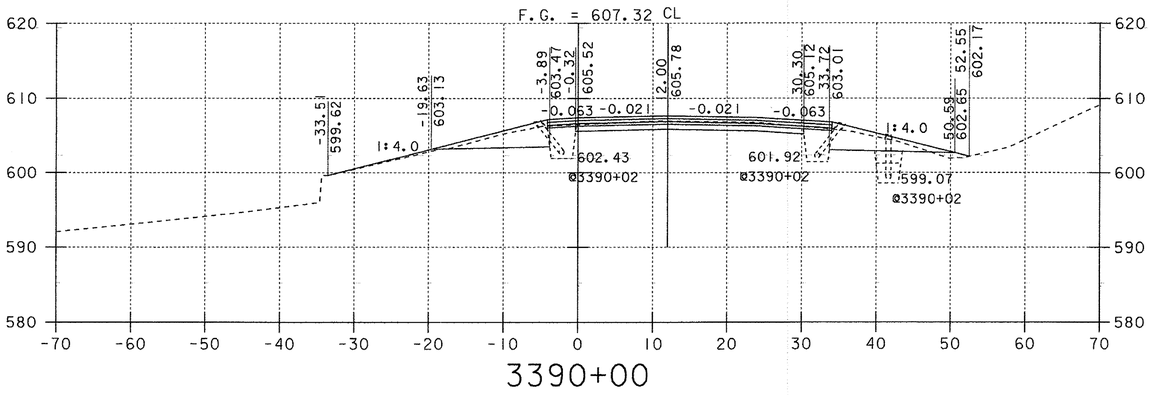

3390+00

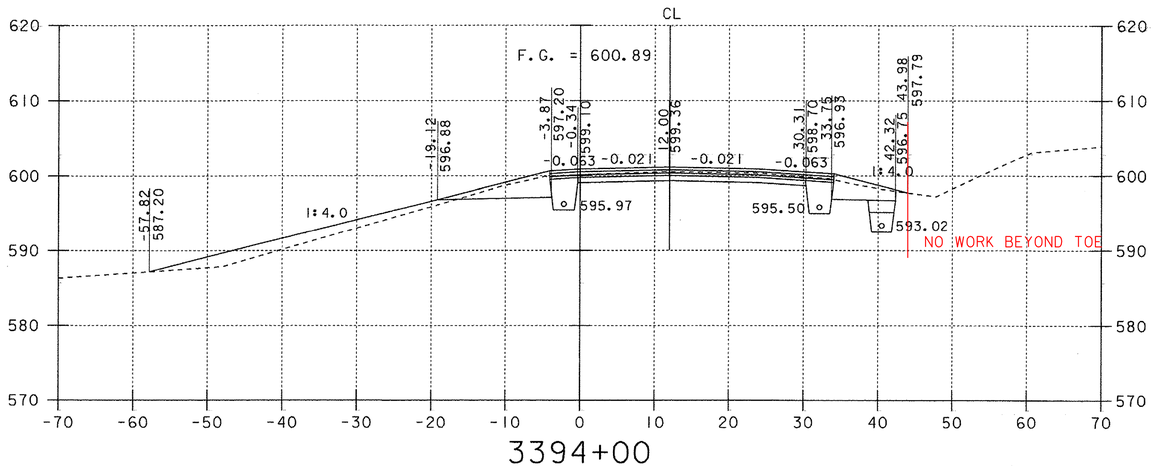

3394+00

NOTE: OFFSET DISTANCES ARE MEASURED FROM THE GRADE LINE.

NORTHBOUND CROSS SECTIONS

0 10 20
SCALE IN FEET

PROJECT: FAIRFAX - FAIRFIELD - ST. ALBANS		PROJECT NO.: IM 089-3(27)	
DESIGN FILE NAME:	/87A007B/DESIGN/DA007XSI.DGN		
IPARM FILE NAME:	DA007XI4	PLOT DATE:	25-JAN-2002
SURVEYED BY:	ORVIS	SURVEY DATE:	6/98
SQUAD LEADER:	DELLA SANTA	DRAWN BY:	SQUAD B
		SHEET: 353	OF 370

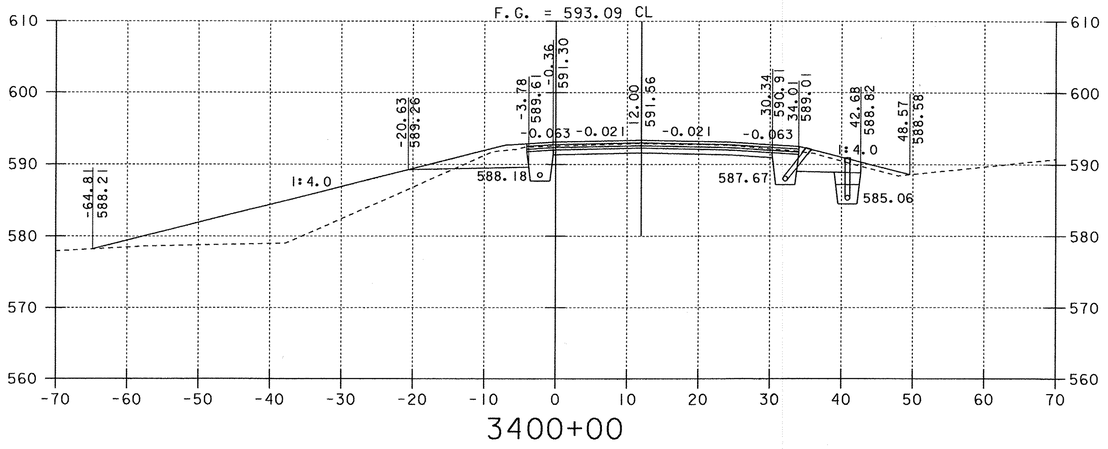

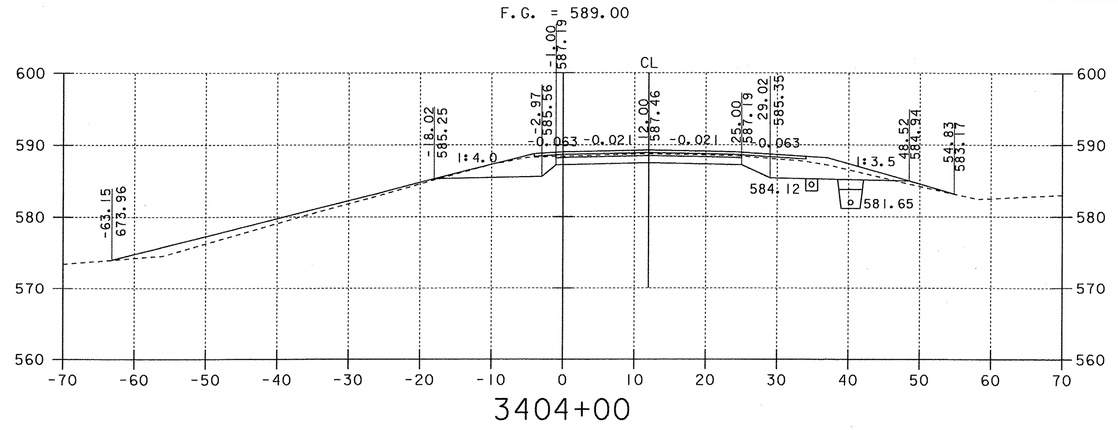

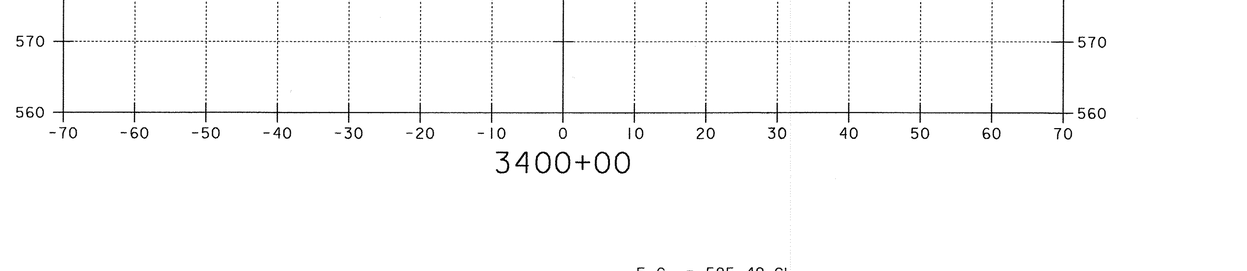

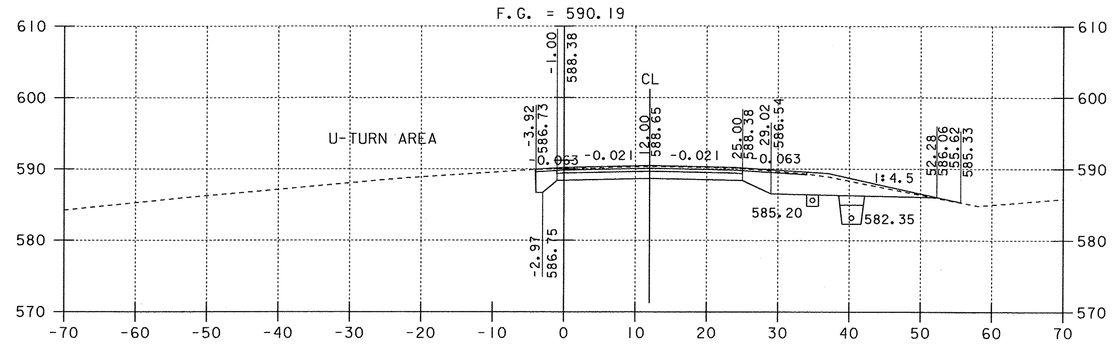

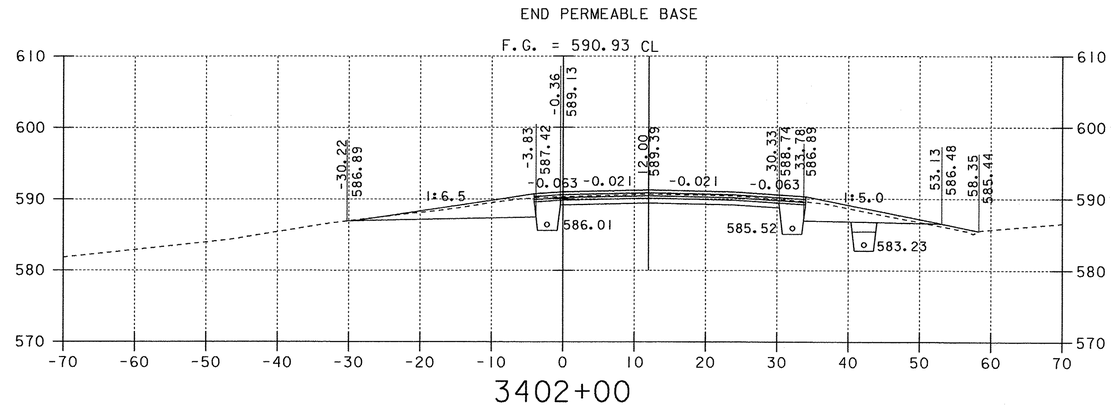

NOTE: OFFSET DISTANCES ARE MEASURED FROM THE GRADE LINE.

0 10 20
SCALE IN FEET

NORTHBOUND CROSS SECTIONS

PROJECT: FAIRFAX - FAIRFIELD - ST. ALBANS	PROJECT NO.: IM 089-3(27)
DESIGN FILE NAME: /87A007B/DESIGN/DA007XSI.DGN	
IPARM FILE NAME: DA007XI5	PLOT DATE: 25-JAN-2002
SURVEYED BY: ORVIS	SURVEY DATE: 6/98
SQUAD LEADER: DELLA SANTA	DRAWN BY: SQUAD B
	SHEET: 354 OF 370

DECELERATION TAPER
LANE BEGINS

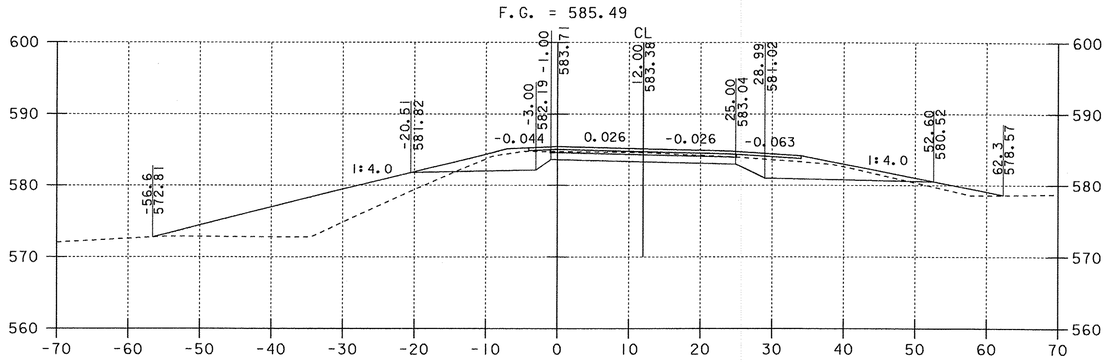

3408+50

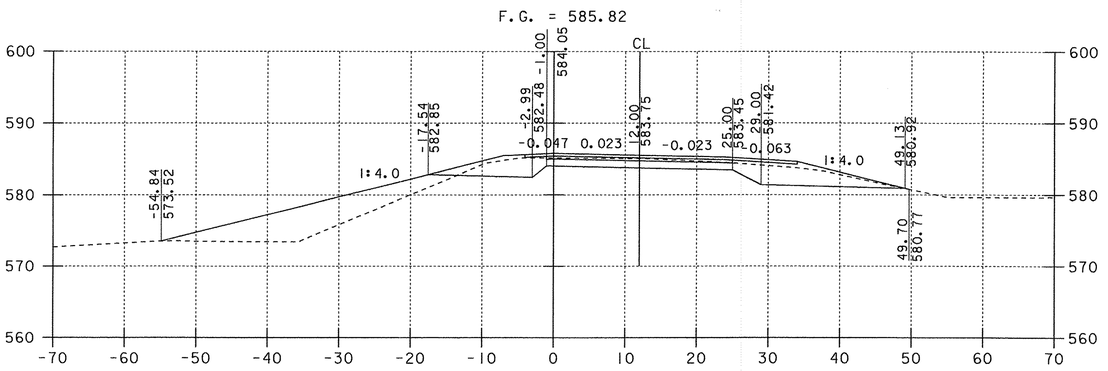

3408+00

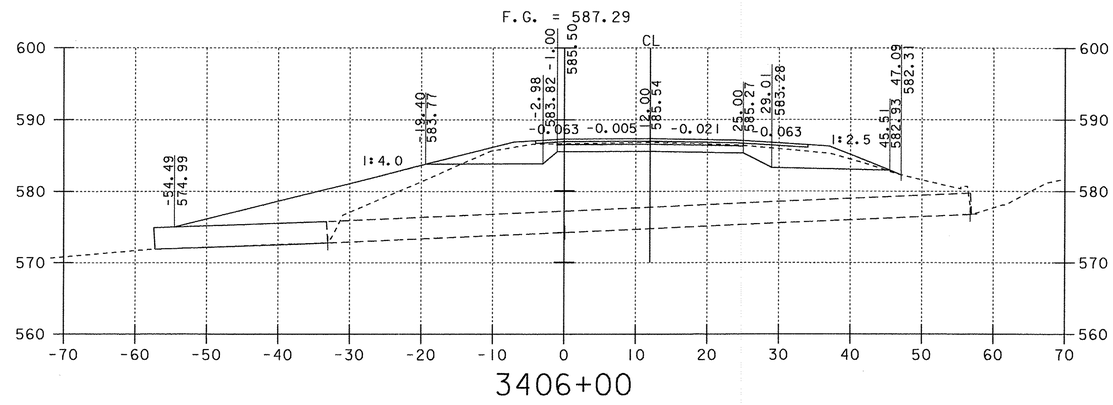

3406+00

F.G. = 583.24 CL
DECELERATION TAPER
LANE ENDS

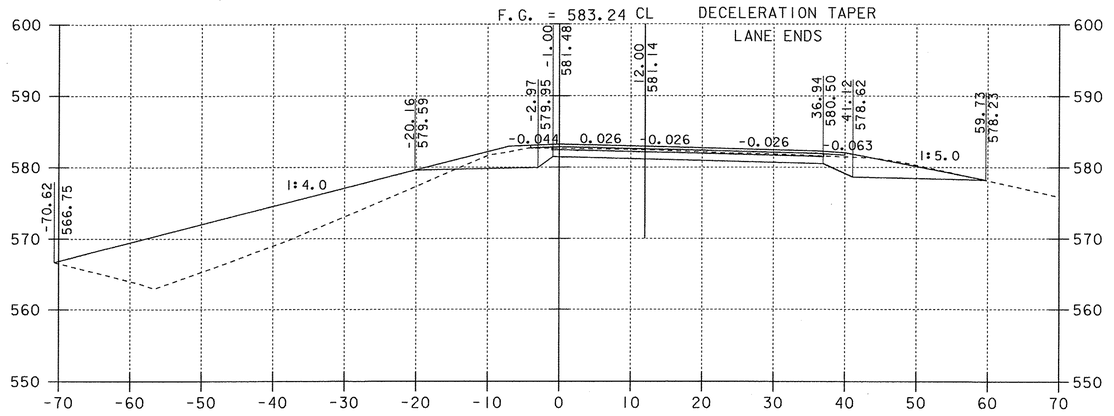

3412+26

F.G. = 583.38 CL

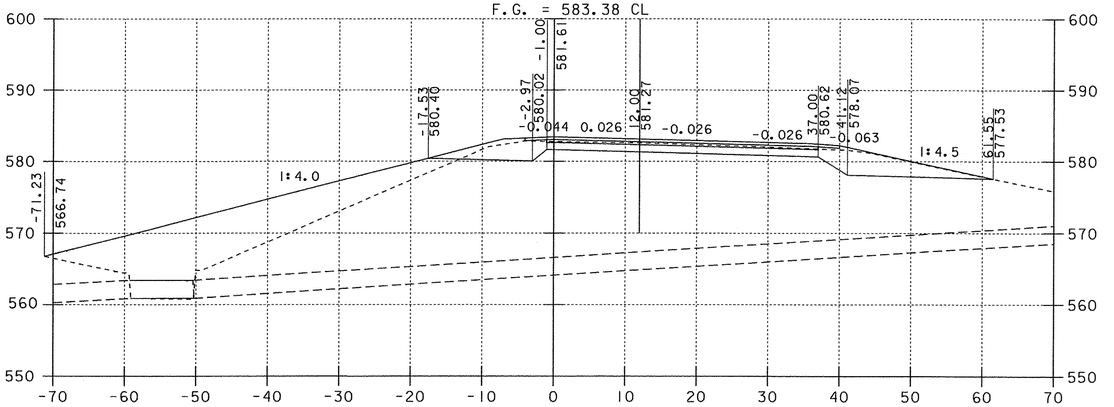

3412+00

F.G. = 584.56 CL

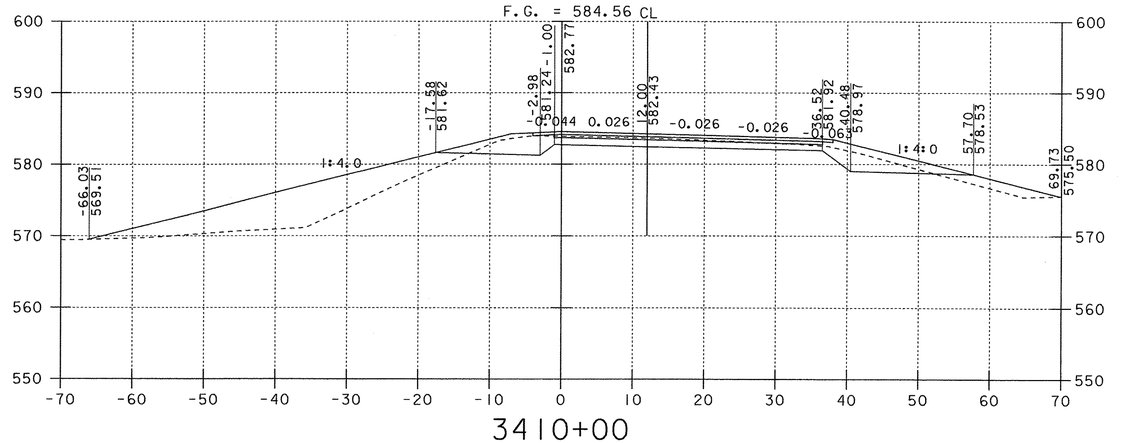

3410+00

NOTE: OFFSET DISTANCES ARE MEASURED FROM THE GRADE LINE.

NORTHBOUND CROSS SECTIONS

0 10 20
SCALE IN FEET

PROJECT: FAIRFAX - FAIRFIELD - ST. ALBANS	PROJECT NO.: IM 089-3(27)
DESIGN FILE NAME: /87A007B/DESIGN/DA007XSI.DGN	
IPARM FILE NAME: DA007XI6	PLOT DATE: 01-MAR-2002
SURVEYED BY: ORVIS	SURVEY DATE: 6/98
SQUAD LEADER: DELLA SANTA	DRAWN BY: SQUAD B
	SHEET: 355 OF 370

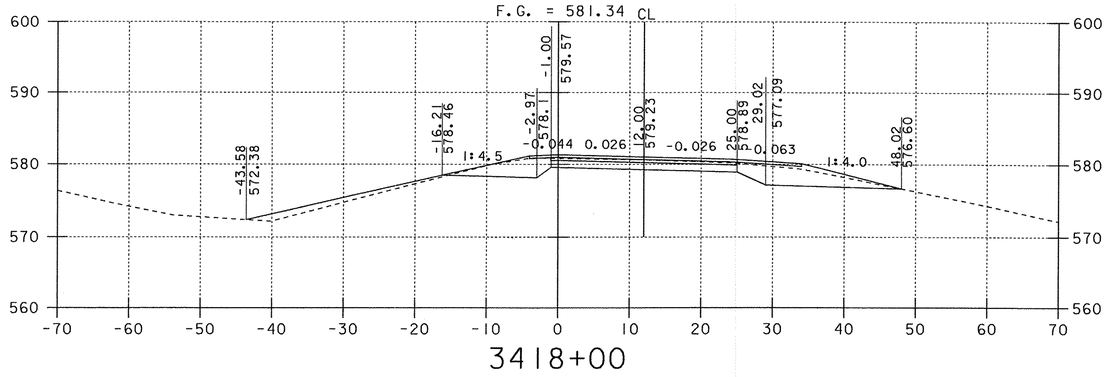

3418+00

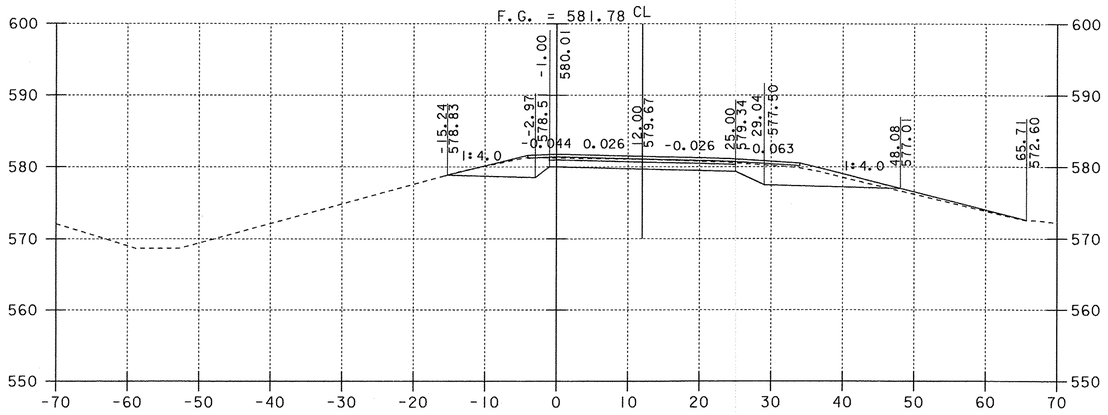

3416+00

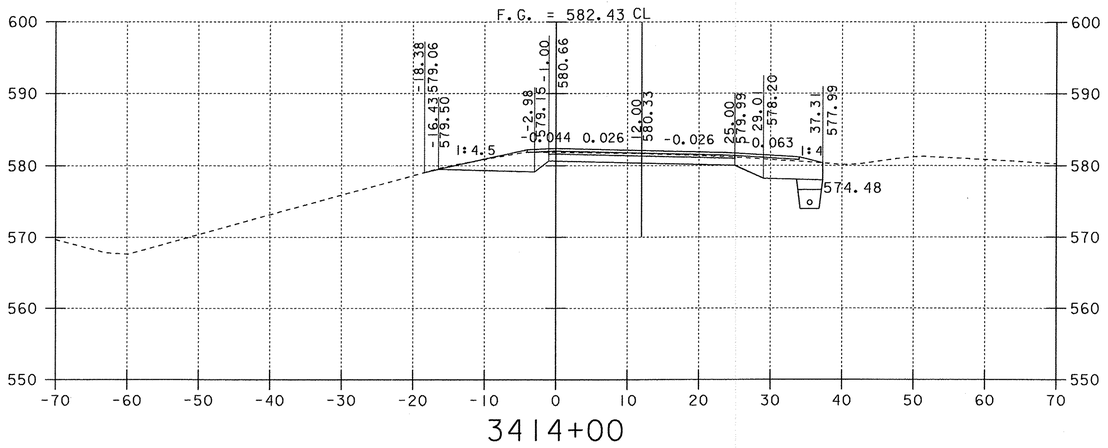

3414+00

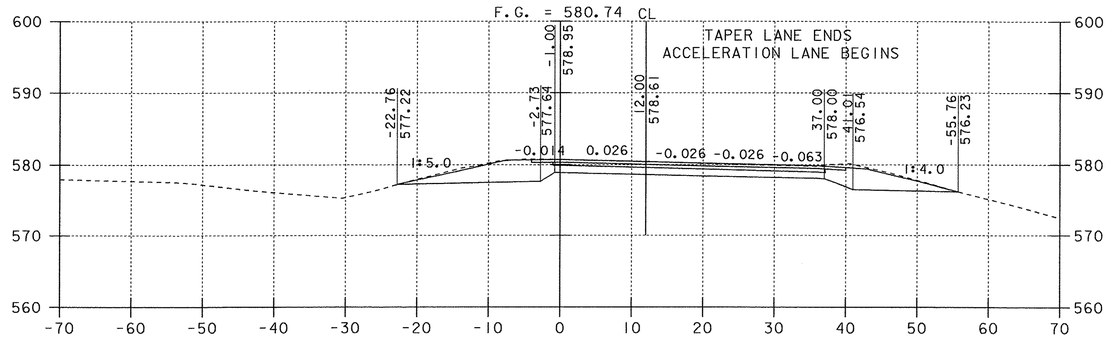

3421+73

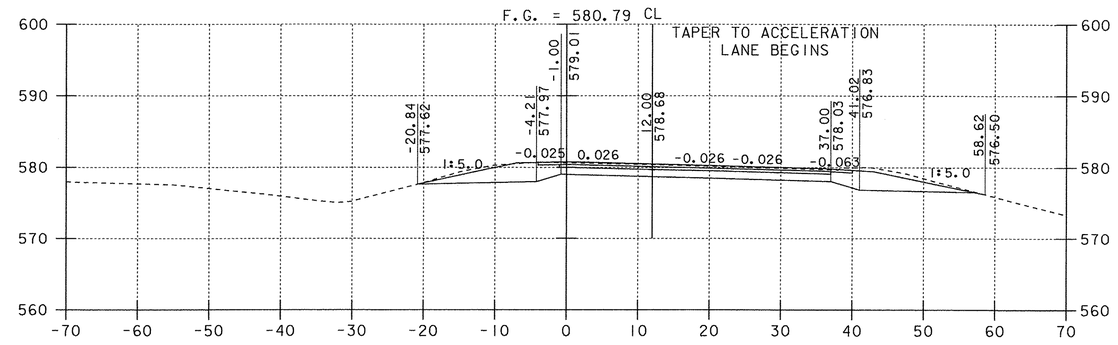

3421+42

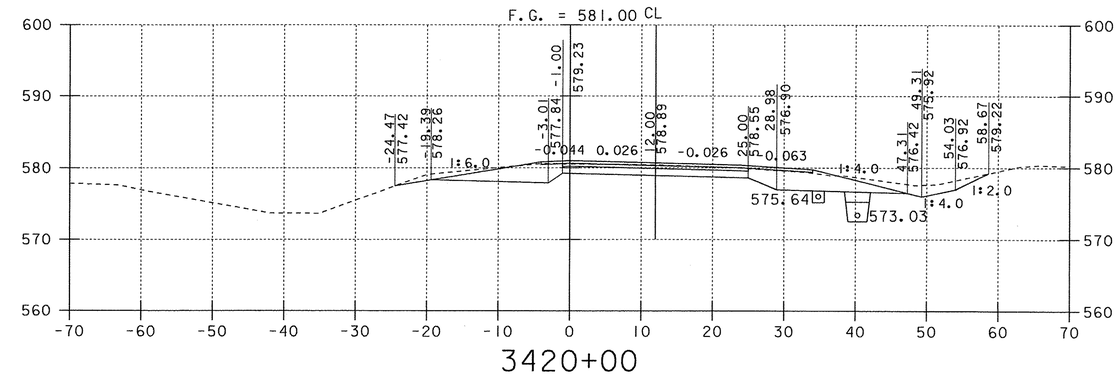

3420+00

NOTE: OFFSET DISTANCES ARE MEASURED FROM THE GRADE LINE.

NORTHBOUND CROSS SECTIONS

0 10 20
SCALE IN FEET

PROJECT: FAIRFAX - FAIRFIELD - ST. ALBANS	PROJECT NO.: IM 089-3(27)
DESIGN FILE NAME: /87A007B/DESIGN/DA007XSI.DGN	
IPARM FILE NAME: DA007XI7	PLOT DATE: 07-MAR-2002
SURVEYED BY: ORVIS	SURVEY DATE: 6/98
SQUAD LEADER: DELLA SANTA	DRAWN BY: SQUAD B
	SHEET: 356 OF 370

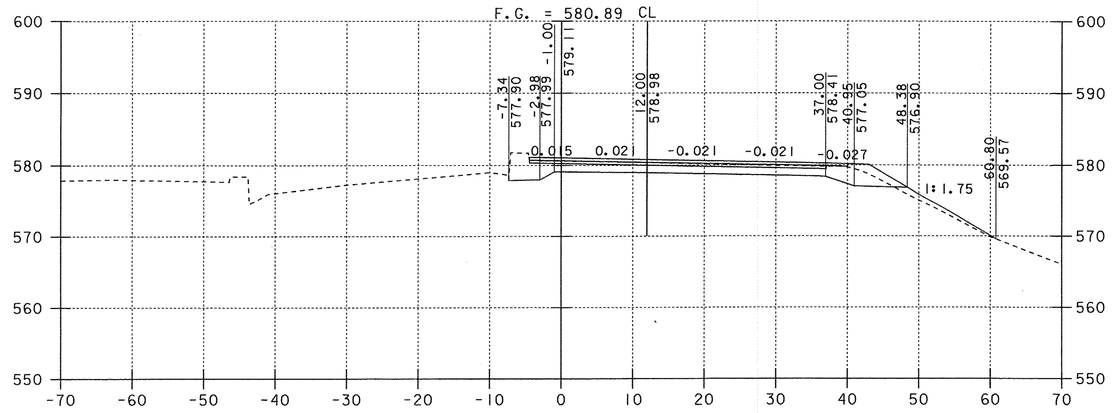

3424+70

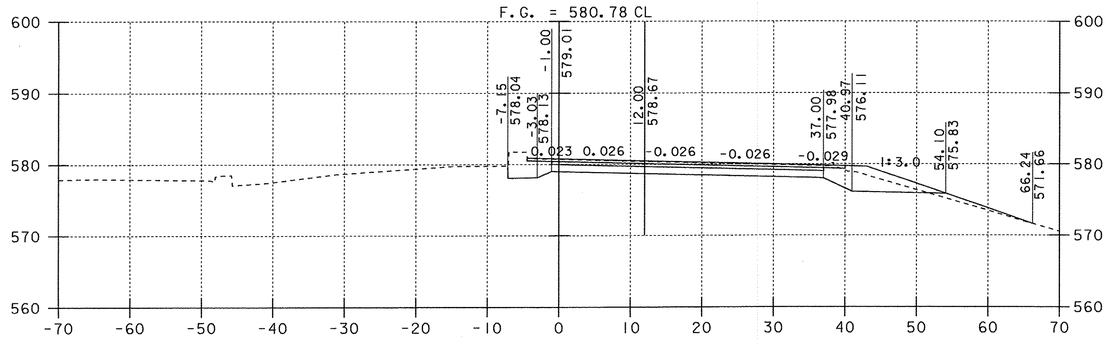

3422+80

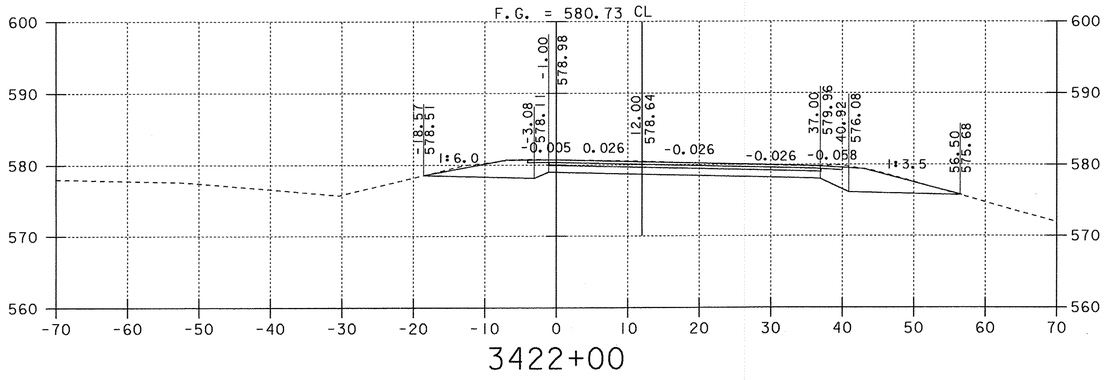

3422+00

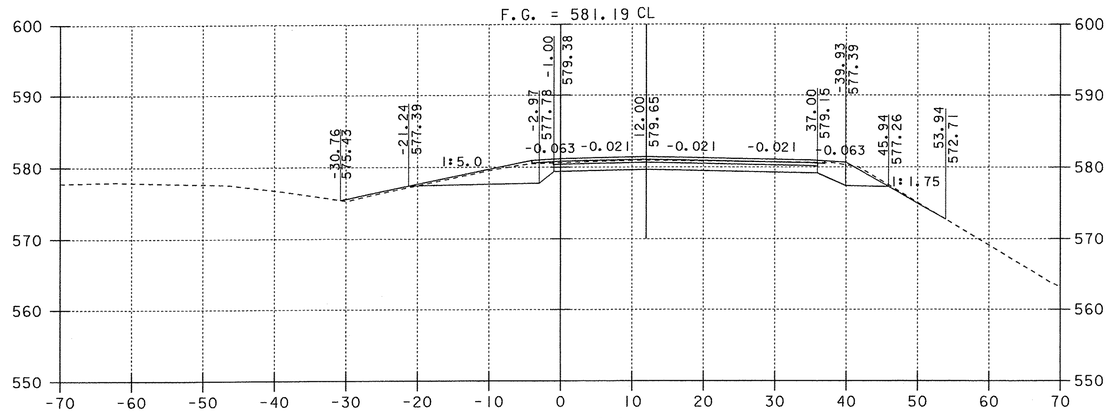

3430+00

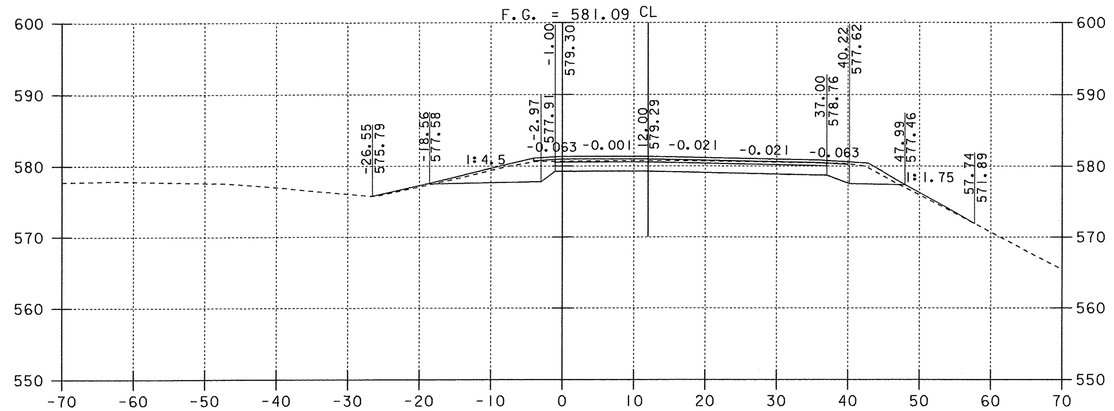

3428+00

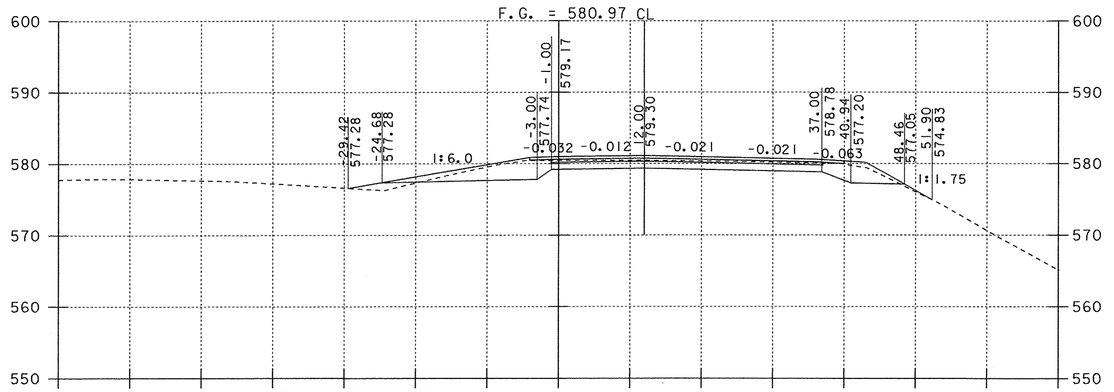

3426+00

NOTE: OFFSET DISTANCES ARE MEASURED FROM THE GRADE LINE.

NORTHBOUND CROSS SECTIONS

0 10 20
SCALE IN FEET

PROJECT: FAIRFAX - FAIRFIELD - ST. ALBANS	PROJECT NO.: IM 089-3(27)
DESIGN FILE NAME: /87A007B/DESIGN/DA007XSI.DGN	
IPARM FILE NAME: DA007XI8	PLOT DATE: 07-MAR-2002
SURVEYED BY: ORVIS	SURVEY DATE: 6/98
SQUAD LEADER: DELLA SANTA	DRAWN BY: SQUAD B
	SHEET: 357 OF 370

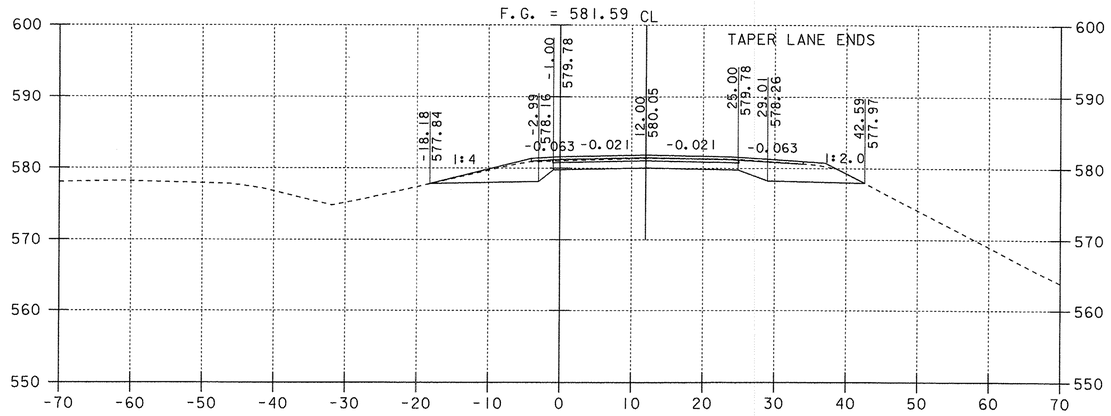

3432+50

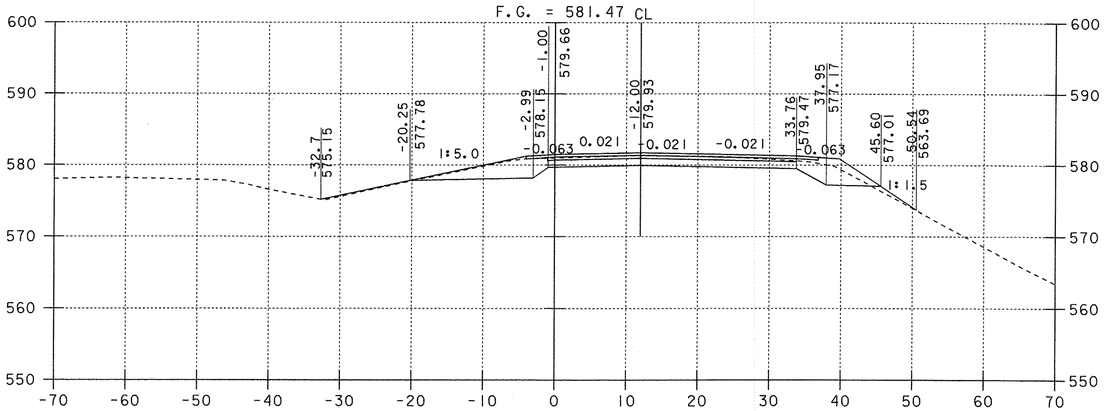

3432+00

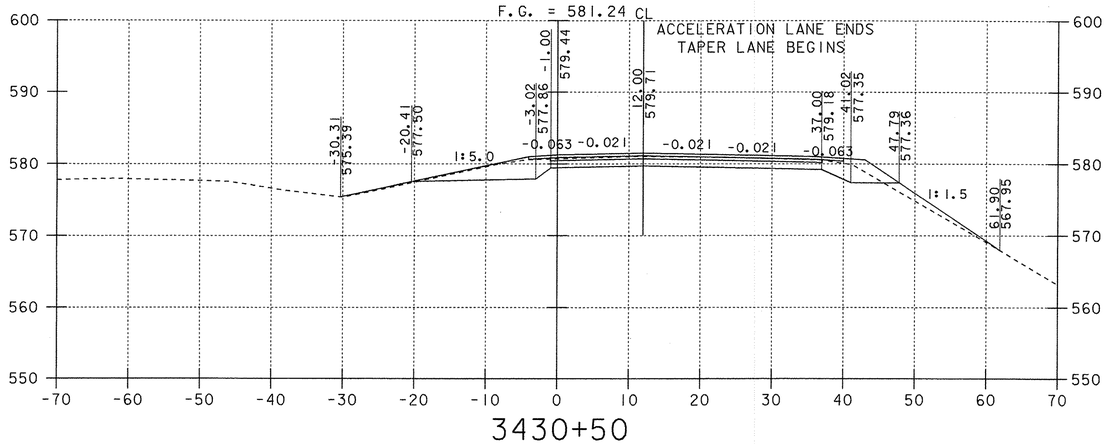

3430+50

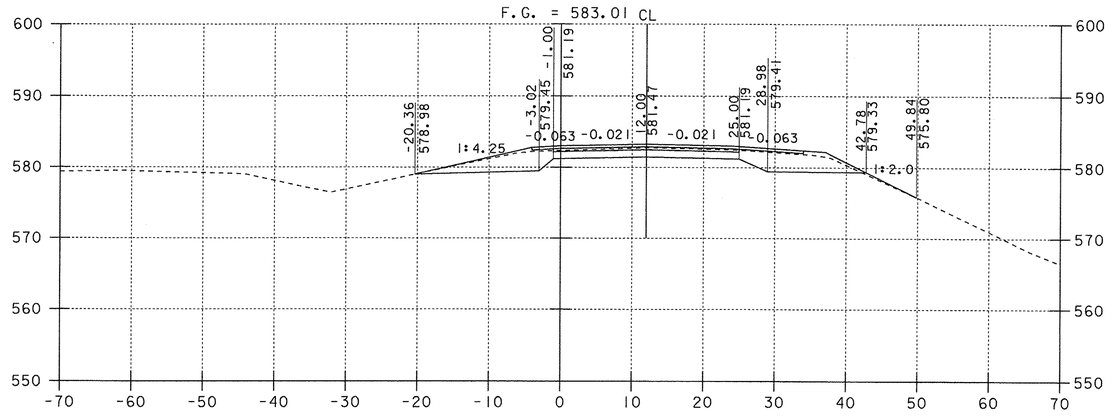

3436+00

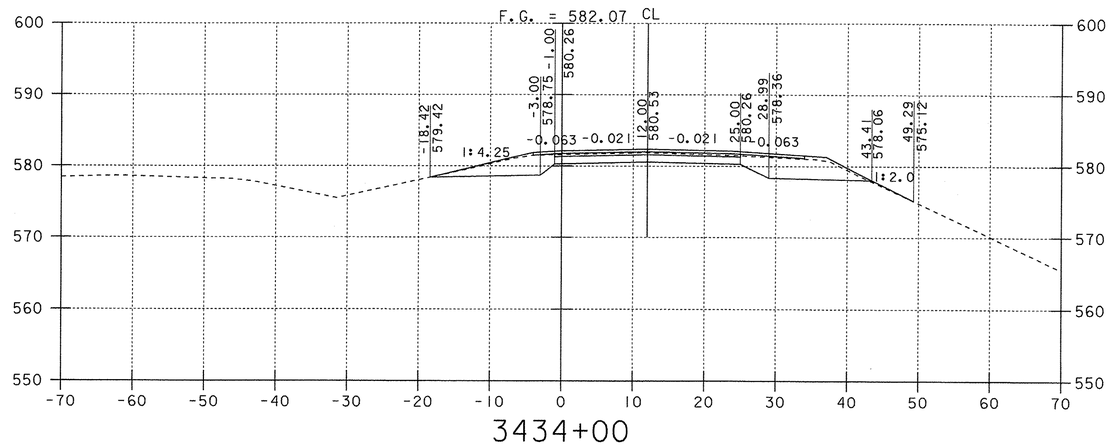

3434+00

NOTE: OFFSET DISTANCES ARE MEASURED FROM THE GRADE LINE.

NORTHBOUND CROSS SECTIONS

0 10 20
SCALE IN FEET

PROJECT: FAIRFAX - FAIRFIELD - ST. ALBANS	PROJECT NO.: IM 089-3(27)
DESIGN FILE NAME: /87A007B/DESIGN/DA007XSI.DGN	
IPARM FILE NAME: DA007XI9	PLOT DATE: 08-MAR-2002
SURVEYED BY: ORVIS	SURVEY DATE: 6/98
SQUAD LEADER: DELLA SANTA	DRAWN BY: SQUAD B
	SHEET: 358 OF 370

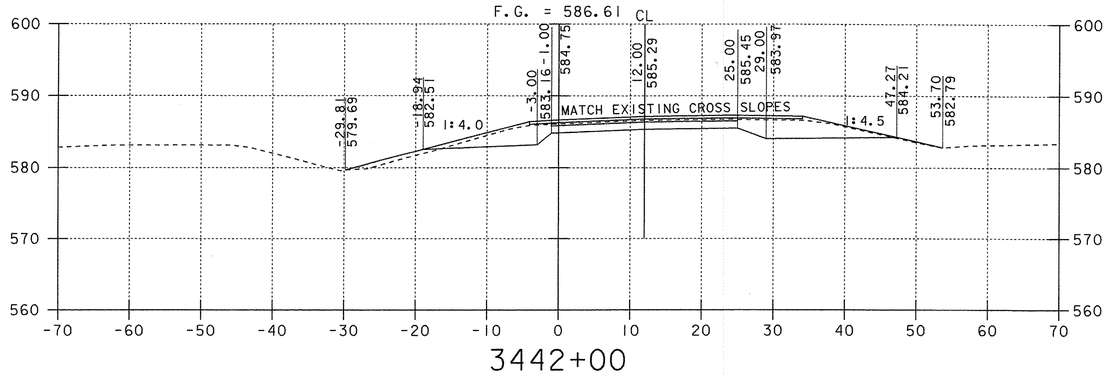

3442+00

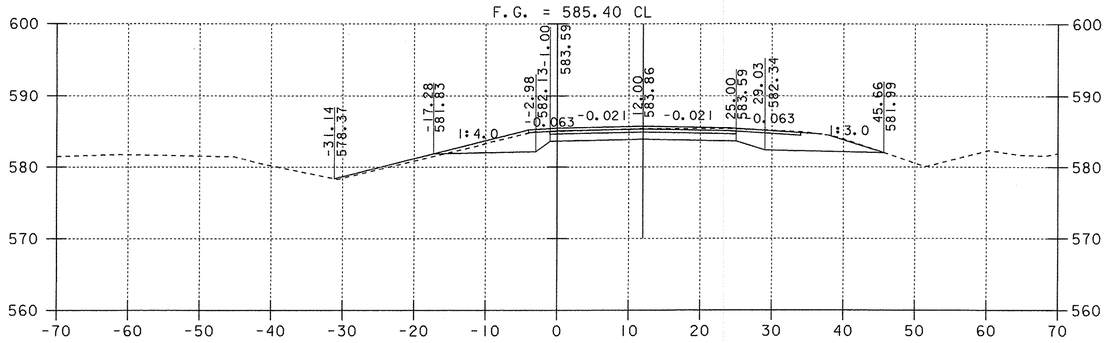

3440+00

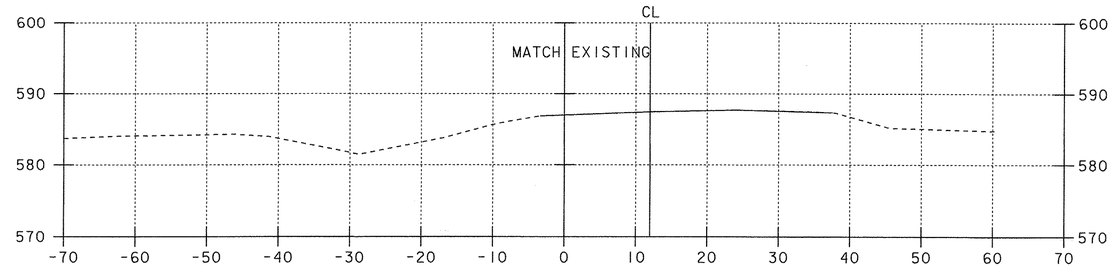

3443+30

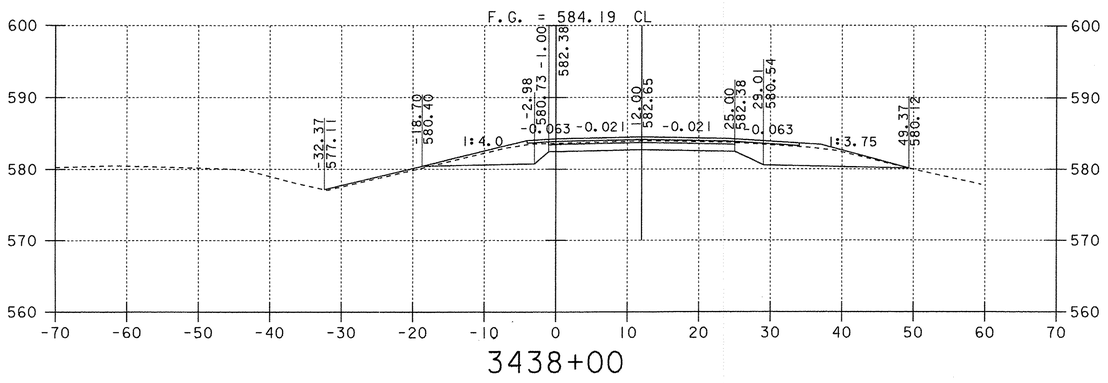

3438+00

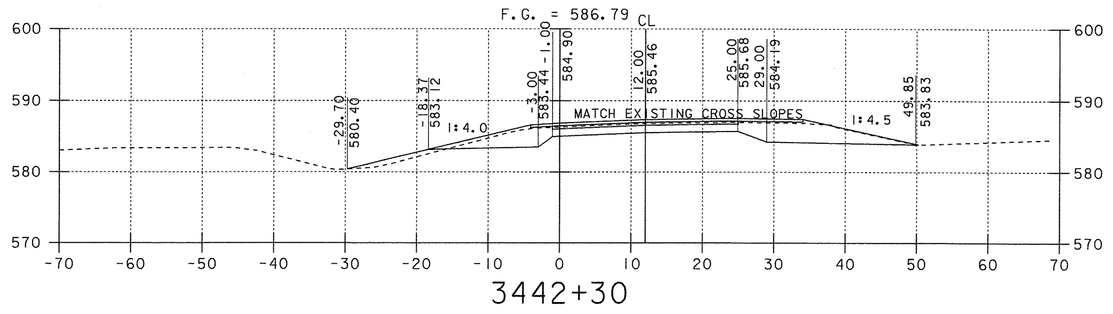

3442+30

NOTE: OFFSET DISTANCES ARE MEASURED FROM THE GRADE LINE.

NORTHBOUND CROSS SECTIONS

0 10 20
SCALE IN FEET

PROJECT: FAIRFAX - FAIRFIELD - ST. ALBANS	PROJECT NO.: IM 089-3(27)
DESIGN FILE NAME: /87A007B/DESIGN/DA007XSI.DGN	
IPARM FILE NAME: DA007X20	PLOT DATE: 08-MAR-2002
SURVEYED BY: ORVIS	SURVEY DATE: 6/98
SQUAD LEADER: DELLA SANTA	DRAWN BY: SQUAD B
	SHEET: 359 OF 370

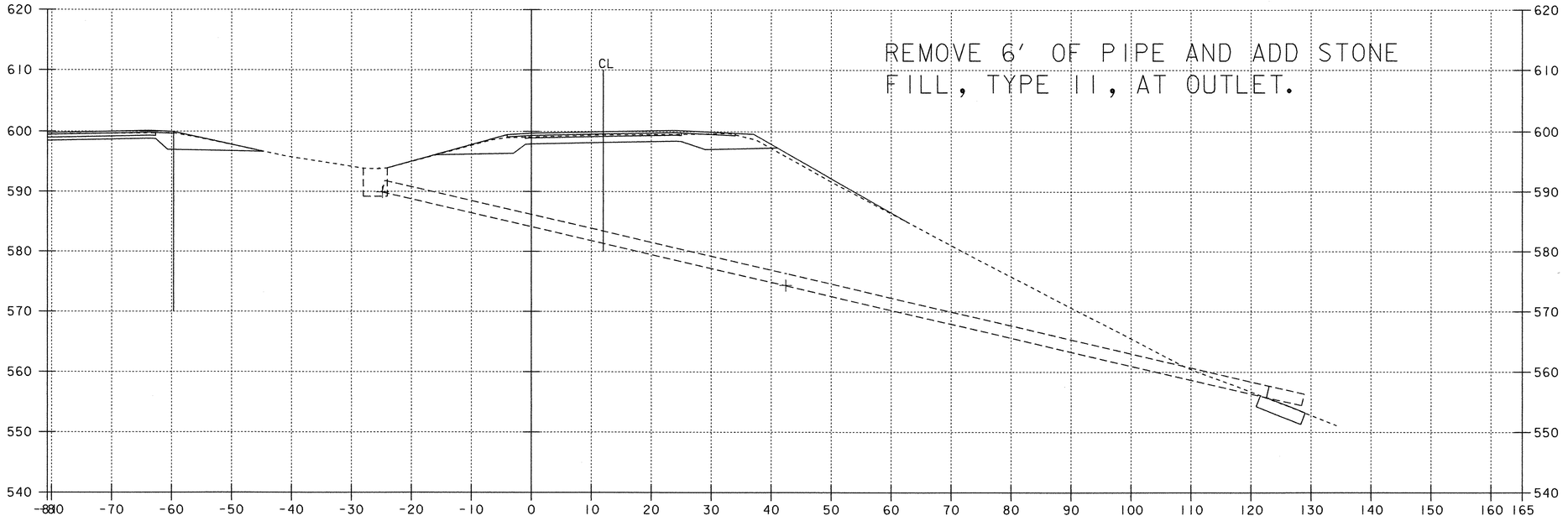

3292+03

EXISTING 24'' ACCGMP

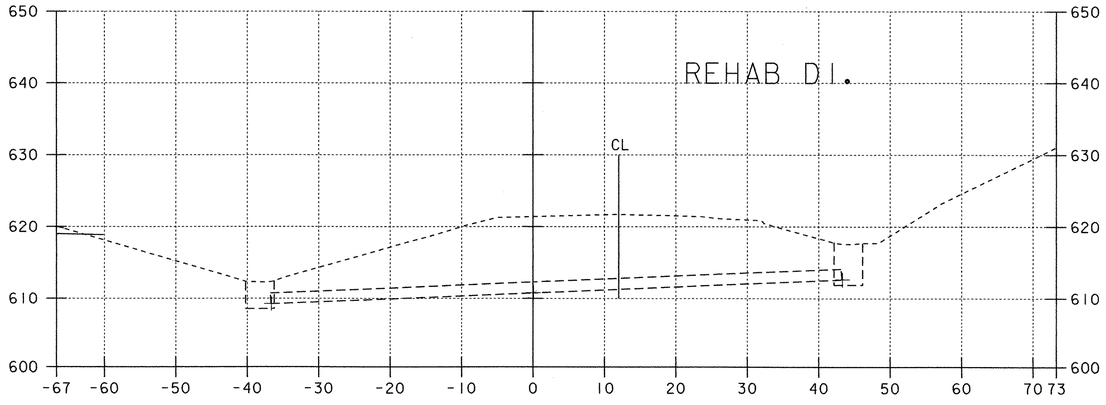

3282+07

EXISTING 18'' RCP

NORTHBOUND DRAINAGE CROSS SECTIONS

0 10 20

SCALE IN FEET

PROJECT: FAIRFAX - FAIRFIELD - ST. ALBANS	PROJECT NO.: IM 089-3(27)
DESIGN FILE NAME: /87A007B/DESIGN/DA007DXS.DGN	
IPARM FILE NAME: DA007X62	PLOT DATE: 17-AUG-2000
SURVEYED BY: ORVIS	SURVEY DATE: 6/98
SQUAD LEADER: DELLA SANTA	DRAWN BY: SQUAD B
	SHEET: 360 OF 370

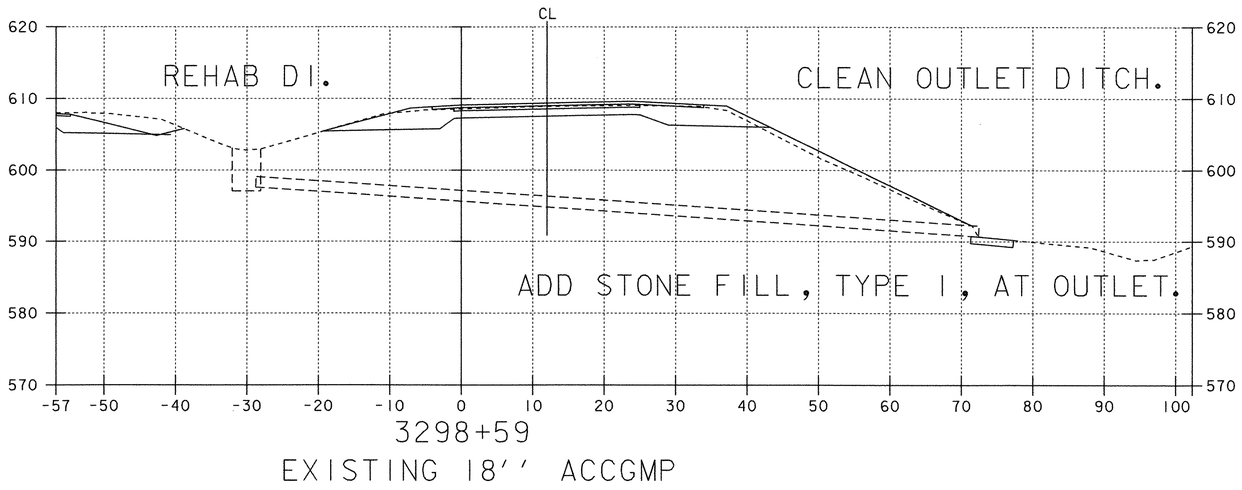

3298+59

EXISTING 18'' ACCGMP

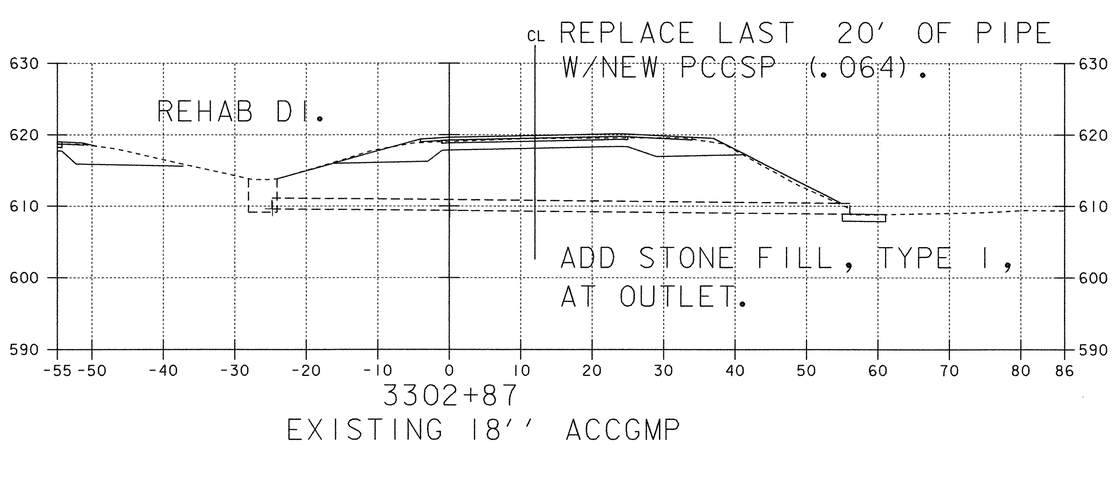

3302+87

EXISTING 18'' ACCGMP

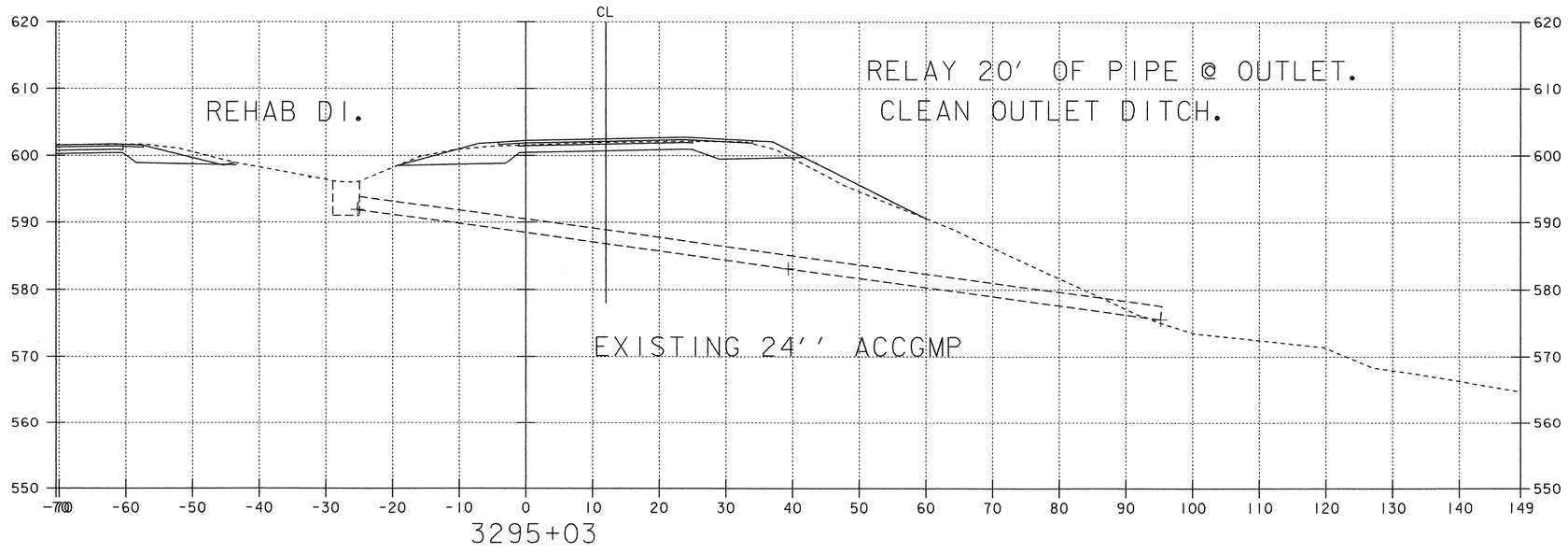

3295+03

0 10 20

SCALE IN FEET

NORTHBOUND DRAINAGE CROSS SECTIONS

PROJECT: FAIRFAX - FAIRFIELD - ST. ALBANS	PROJECT NO.: IM 089-3(27)
DESIGN FILE NAME: /87A007B/DESIGN/DA007DXS.DGN	
IPARM FILE NAME: DA007X63	PLOT DATE: 17-AUG-2000
SURVEYED BY: ORVIS	SURVEY DATE: 6/98
SQUAD LEADER: DELLA SANTA	DRAWN BY: SQUAD B
	SHEET: 361 OF 370

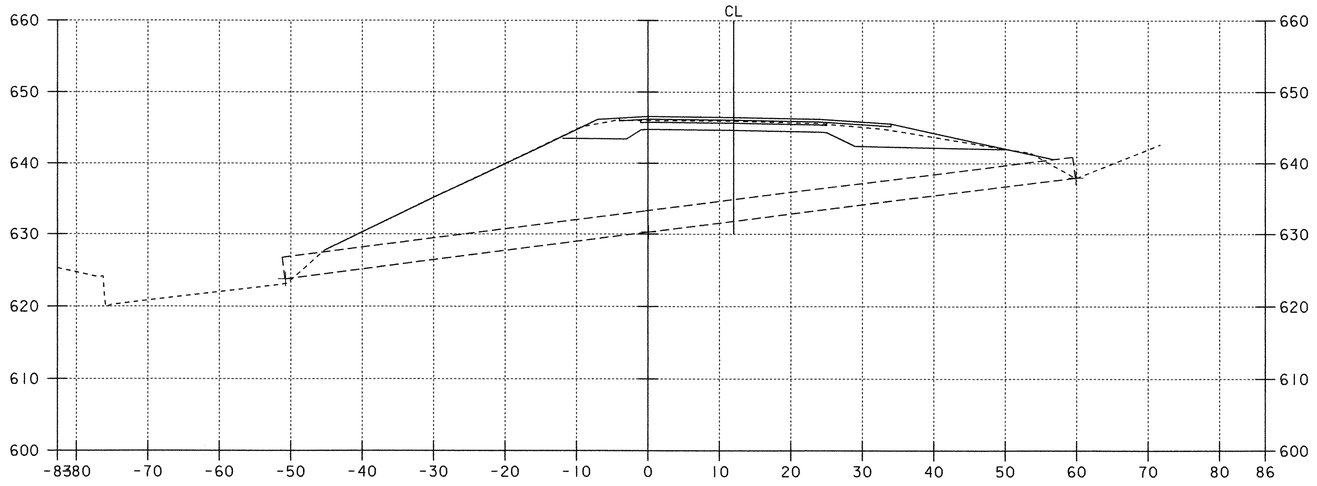

3329+59

EXISTING 36'' ACCGMP

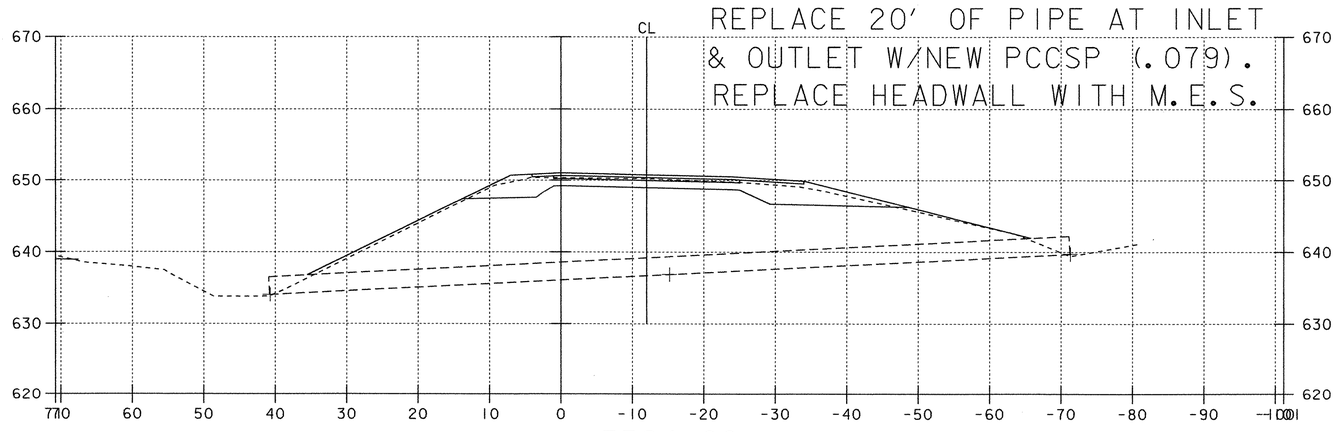

3324+06

EXISTING 30'' ACCGMP

NORTHBOUND DRAINAGE CROSS SECTIONS

0 10 20

SCALE IN FEET

PROJECT: FAIRFAX - FAIRFIELD - ST. ALBANS	PROJECT NO.: IM 089-3(27)
DESIGN FILE NAME: /87A007B/DESIGN/DA007DXS.DGN	
IPARM FILE NAME: DA007X64	PLOT DATE: 17-AUG-2000
SURVEYED BY: ORVIS	SURVEY DATE: 6/98
SQUAD LEADER: DELLA SANTA	DRAWN BY: SQUAD B
	SHEET: 362 OF 370

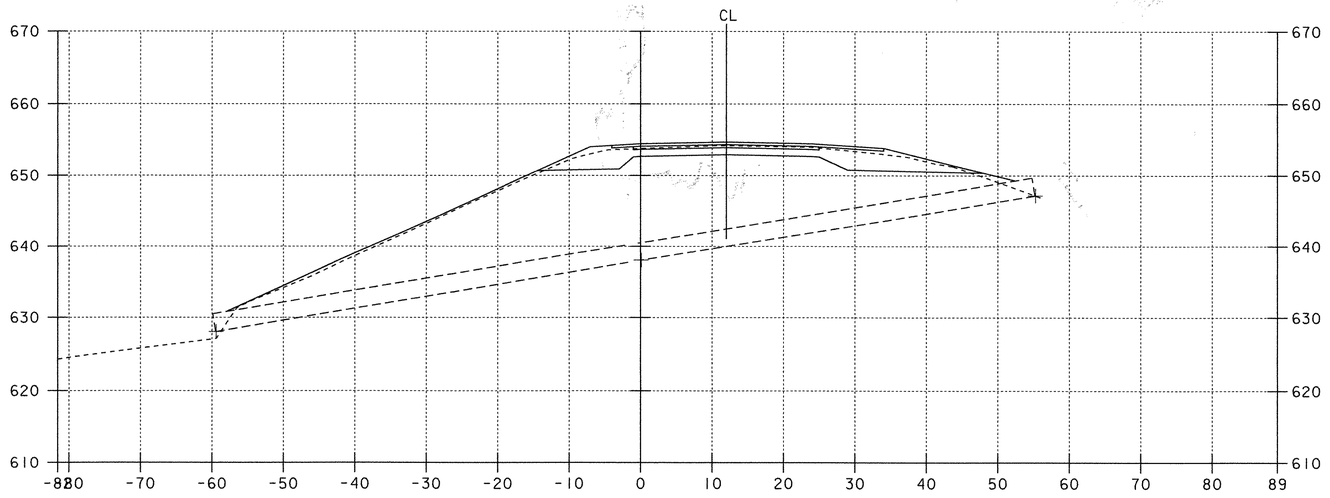

3339+01
EXISTING 30'' ACCGMP

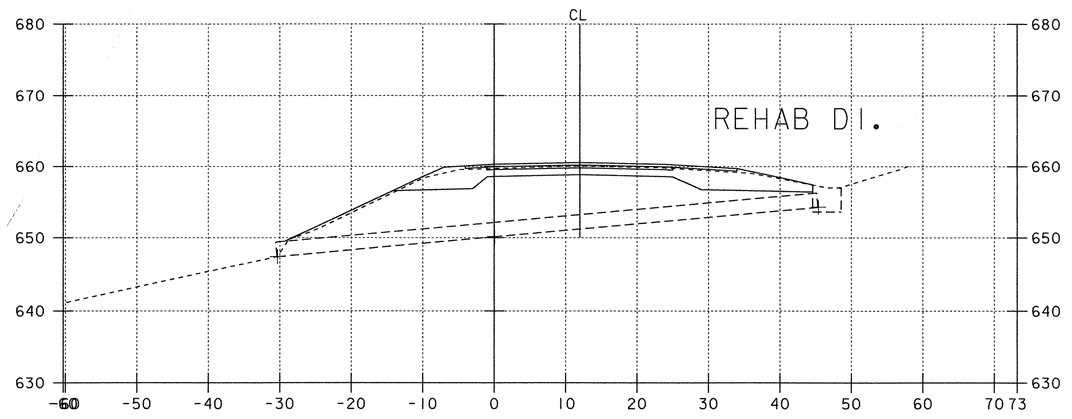

3344+01
EXISTING 24'' ACCGMP

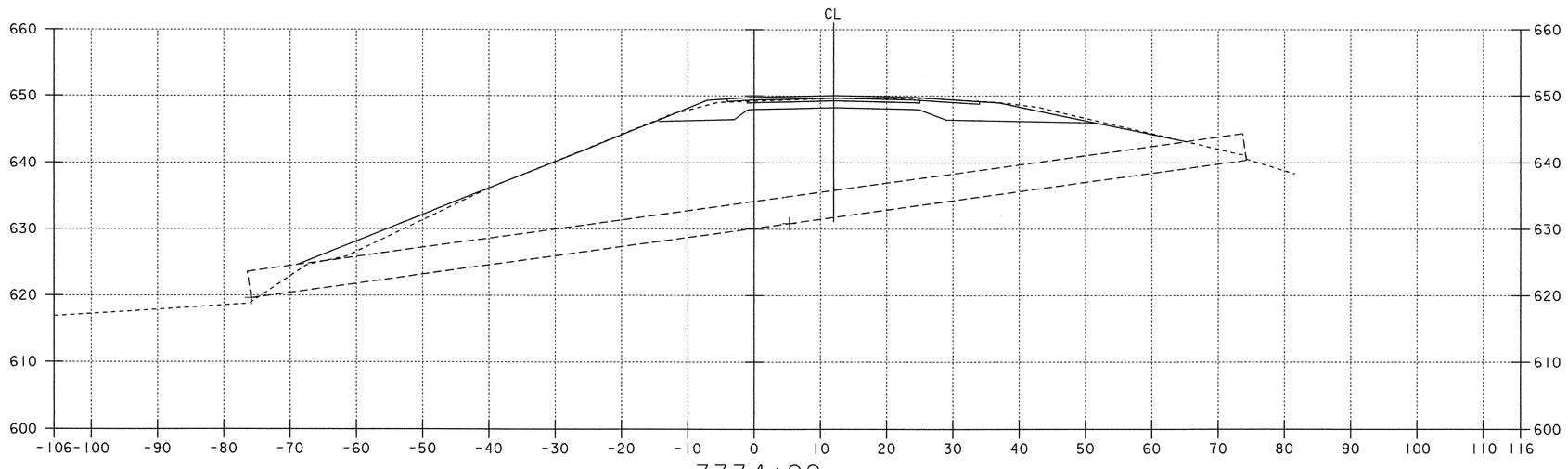

3334+92
EXISTING 48'' ACCGMP

NORTHBOUND DRAINAGE CROSS SECTIONS

0 10 20
SCALE IN FEET

PROJECT: FAIRFAX - FAIRFIELD - ST. ALBANS	PROJECT NO.: IM 089-3(27)
DESIGN FILE NAME: /87A007B/DESIGN/DA007DXS.DGN	
IPARM FILE NAME: DA007X65	PLOT DATE: 17-AUG-2000
SURVEYED BY: ORVIS	SURVEY DATE: 6/98
SQUAD LEADER: DELLA SANTA	DRAWN BY: SQUAD B
	SHEET: 363 OF 370

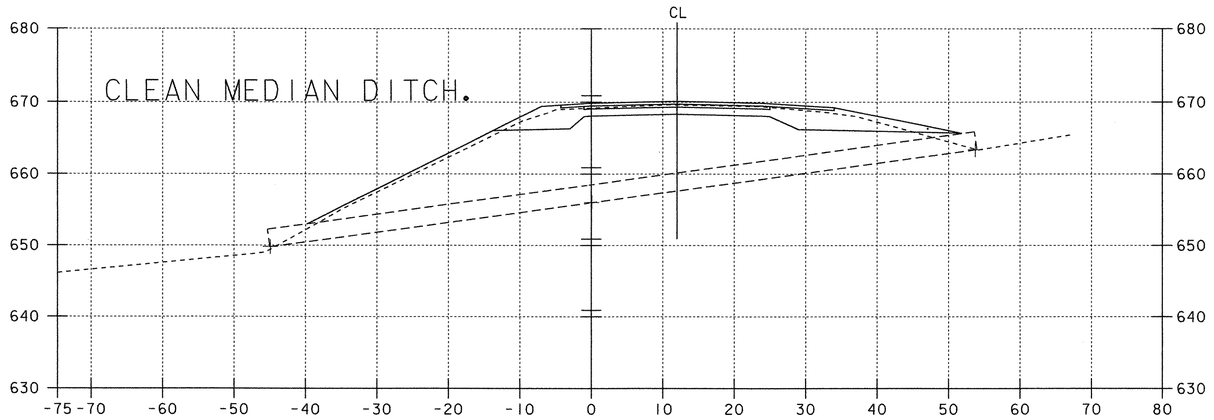

3353+01

EXISTING 30'' ACCGMP

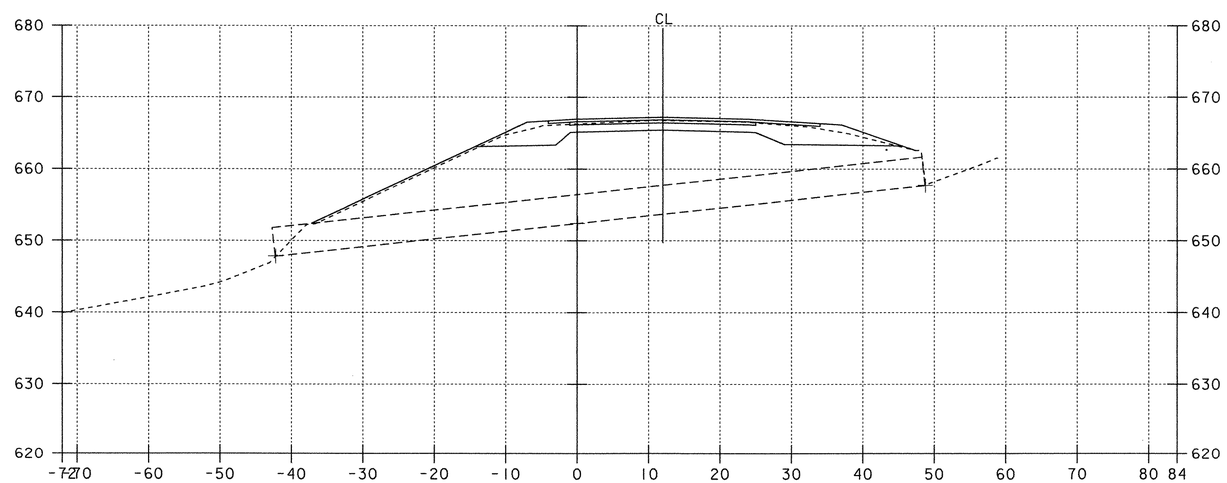

3349+72

EXISTING 48'' ACCGMP

NORTHBOUND DRAINAGE CROSS SECTIONS

0 10 20

SCALE IN FEET

PROJECT: FAIRFAX - FAIRFIELD - ST. ALBANS	PROJECT NO.: IM 089-3(27)
DESIGN FILE NAME: /87A007B/DESIGN/DA007DXS.DGN	
IPARM FILE NAME: DA007X66	PLOT DATE: 17-AUG-2000
SURVEYED BY: ORVIS	SURVEY DATE: 6/98
SQUAD LEADER: DELLA SANTA	DRAWN BY: SQUAD B
	SHEET: 364 OF 370

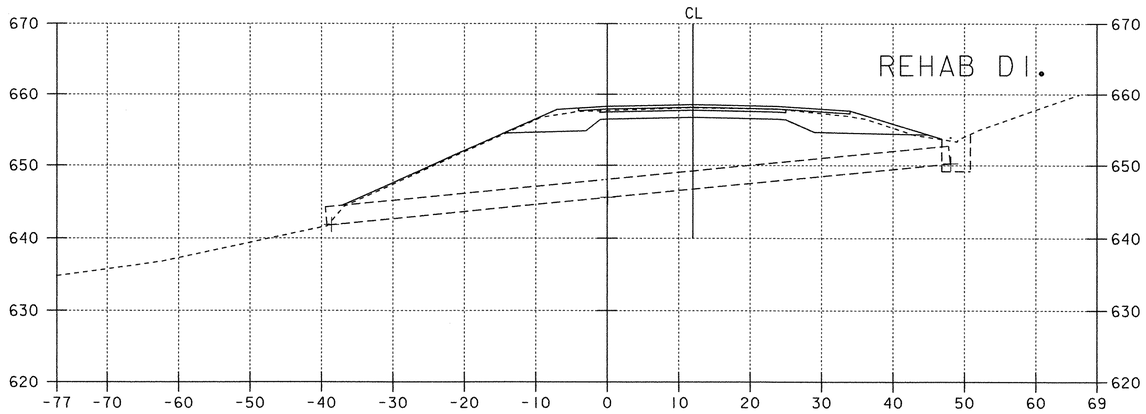

3367+75
EXISTING 30'' ACCGMP

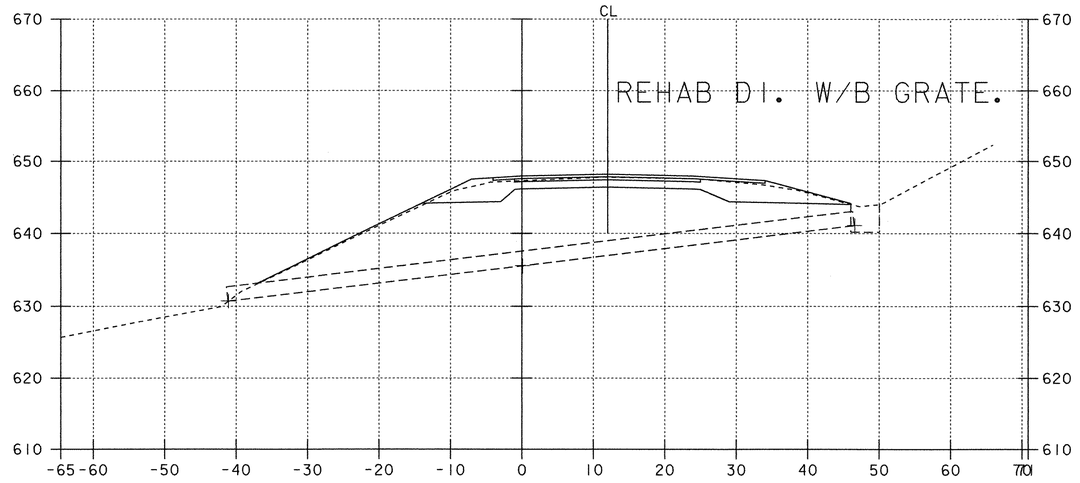

3372+01
EXISTING 24'' ACCGMP

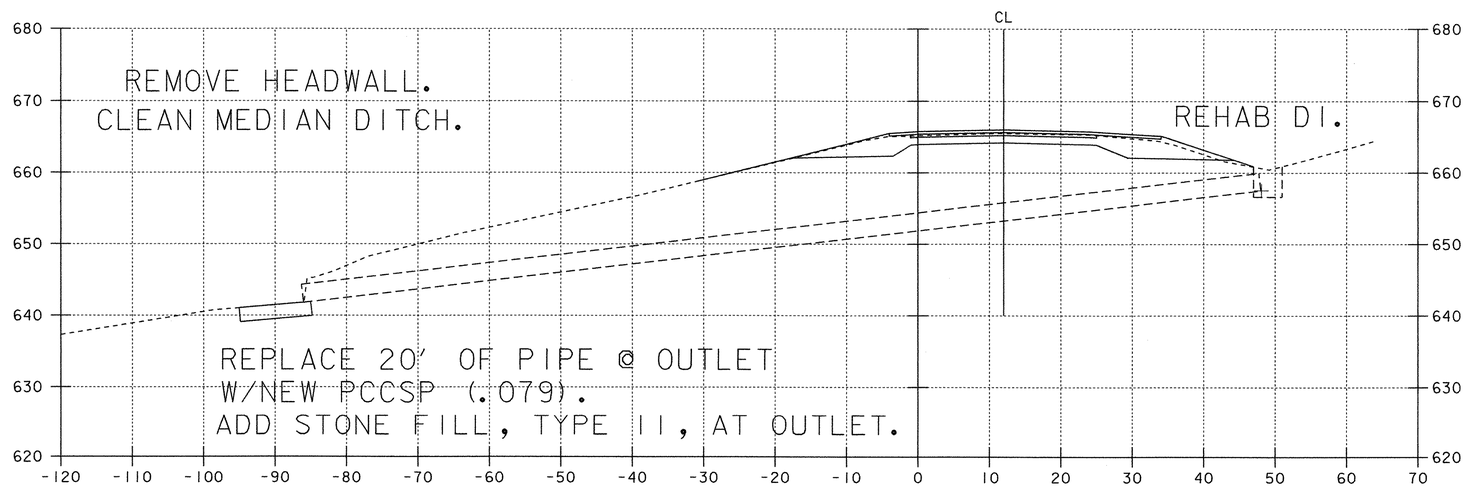

3363+50
EXISTING 30'' ACCGMP

0 10 20
SCALE IN FEET

NORTHBOUND DRAINAGE CROSS SECTIONS

PROJECT: FAIRFAX - FAIRFIELD - ST. ALBANS	PROJECT NO.: IM 089-3(27)
DESIGN FILE NAME: /87A007B/DESIGN/DA007DXS.DGN	
IPARM FILE NAME: DA007X67	PLOT DATE: 17-AUG-2000
SURVEYED BY: ORVIS	SURVEY DATE: 6/98
SQUAD LEADER: DELLA SANTA	DRAWN BY: SQUAD B
	SHEET: 365 OF 370

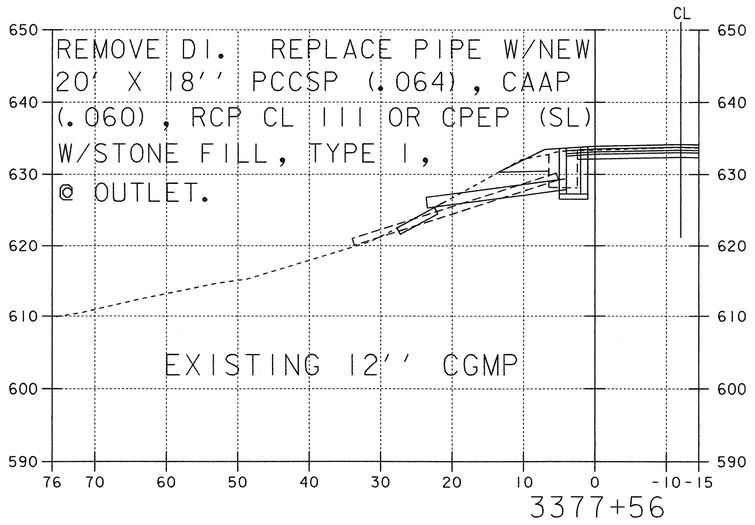

3377+56

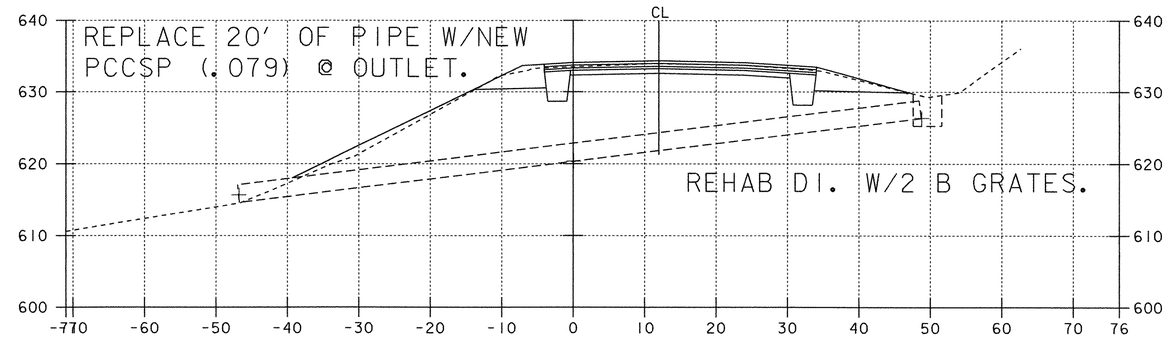

3377+50

EXISTING 30'' ACCGMP

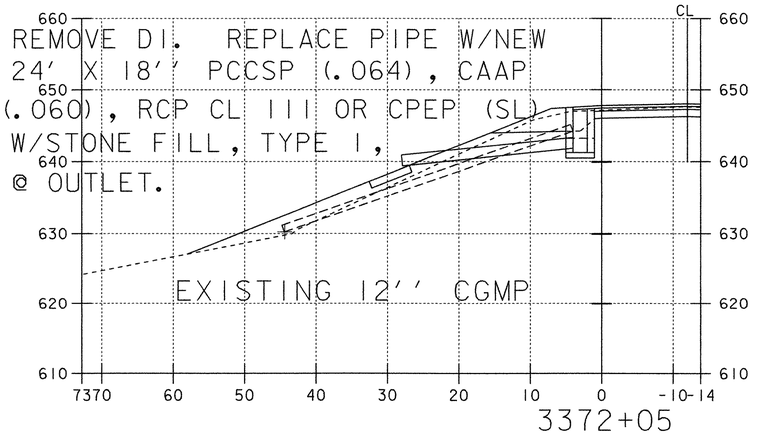

3372+05

REMOVE DI. REPLACE PIPE W/NEW
20' X 18'' PCCSP (.064), CAAP
(.060), RCP CL III OR CPEP (SL)
W/STONE FILL, TYPE I, @ OUTLET.

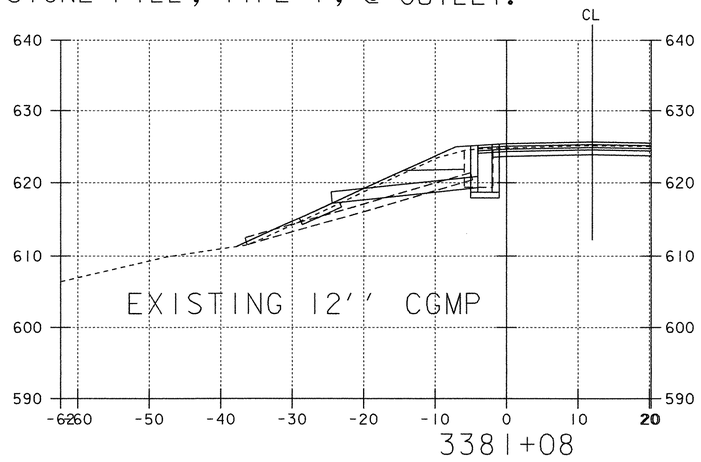

3381+08

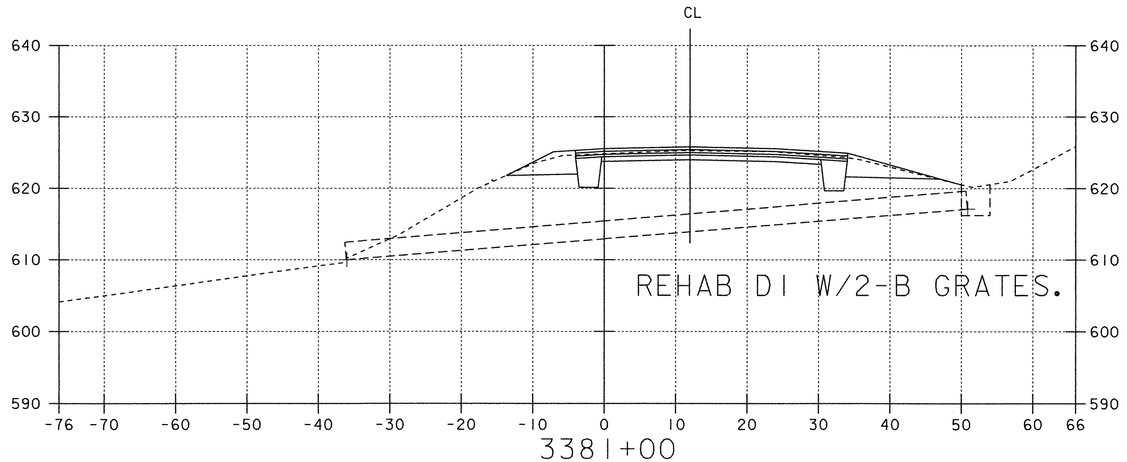

3381+00

EXISTING 30'' ACCGMP

NORTHBOUND DRAINAGE CROSS SECTIONS

0 10 20
SCALE IN FEET

PROJECT: FAIRFAX - FAIRFIELD - ST. ALBANS	PROJECT NO.: IM 089-3(27)
DESIGN FILE NAME: /87A007B/DESIGN/DA007DXS.DGN	
IPARM FILE NAME: DA007X68	PLOT DATE: 17-AUG-2000
SURVEYED BY: ORVIS	SURVEY DATE: 6/98
SQUAD LEADER: DELLA SANTA	DRAWN BY: SQUAD B
	SHEET: 366 OF 370

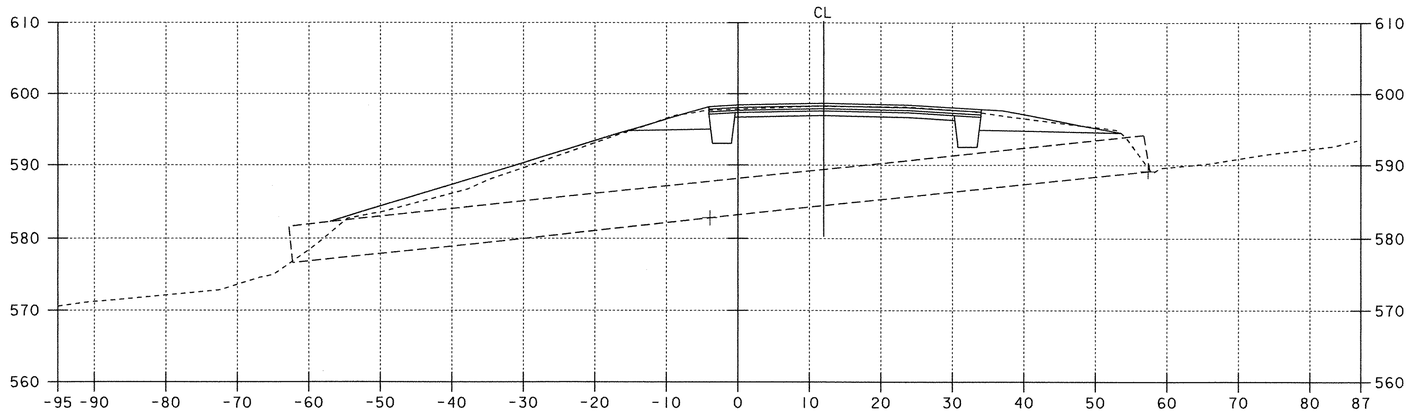

3395+77.05

EXISTING 60'' ACCGMP (REFER TO BRIDGE SERIES 300)

REMOVE HEADWALL.

REPLACE 20' OF PIPE AT OUTLET W/NEW PCCSP (.079).

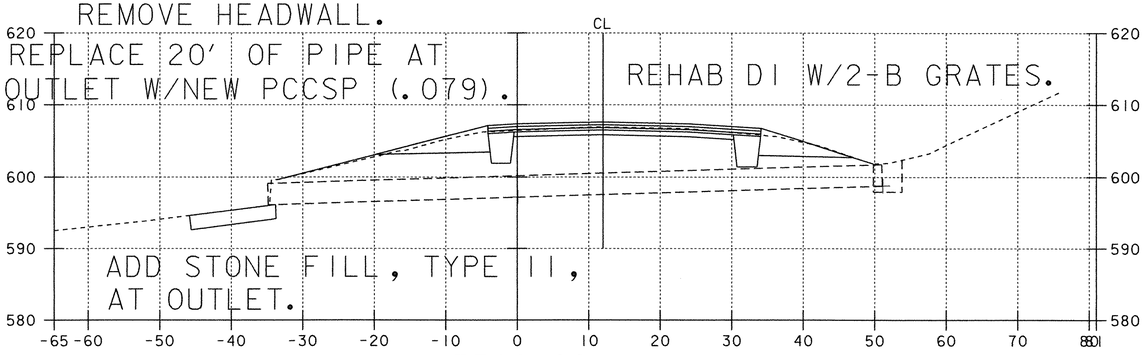

3389+99

EXISTING 36'' ACCGMP

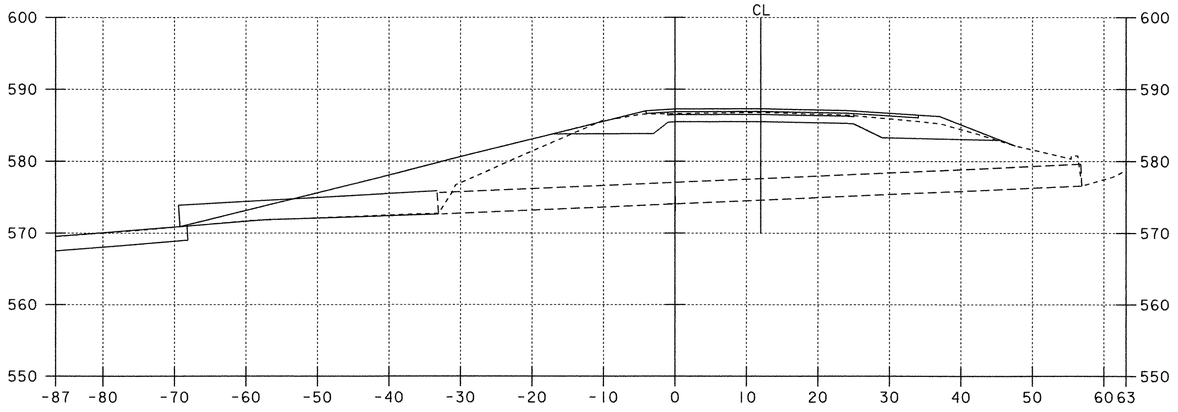

3405+99

EXISTING 36'' RCP

EXTEND EXISTING 36'' RCP AT OUTLET W/NEW 36' X 36'' RCP, CL III.

LINE DITCH BETWEEN CULVERTS WITH STONE FILL, TYPE II

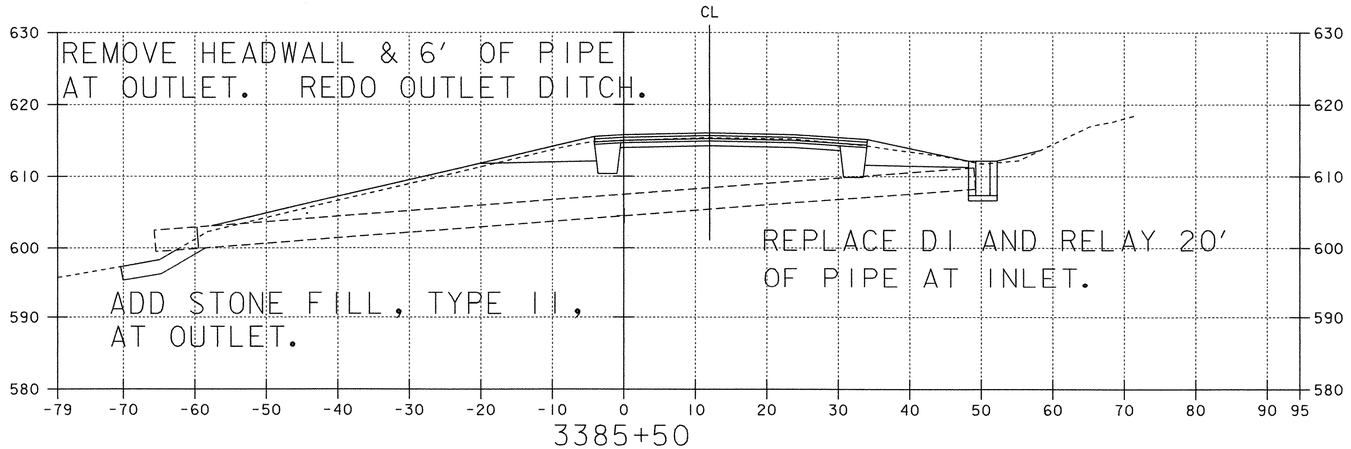

3385+50

EXISTING 36'' ACCGMP

NORTHBOUND DRAINAGE CROSS SECTIONS

0 10 20

SCALE IN FEET

PROJECT: FAIRFAX - FAIRFIELD - ST. ALBANS	PROJECT NO.: IM 089-3(27)
DESIGN FILE NAME: /87A007B/DESIGN/DA007DXS.DGN	
IPARM FILE NAME: DA007X69	PLOT DATE: 03-OCT-2000
SURVEYED BY: ORVIS	SURVEY DATE: 6/98
SQUAD LEADER: DELLA SANTA	DRAWN BY: SQUAD B
	SHEET: 367 OF 370

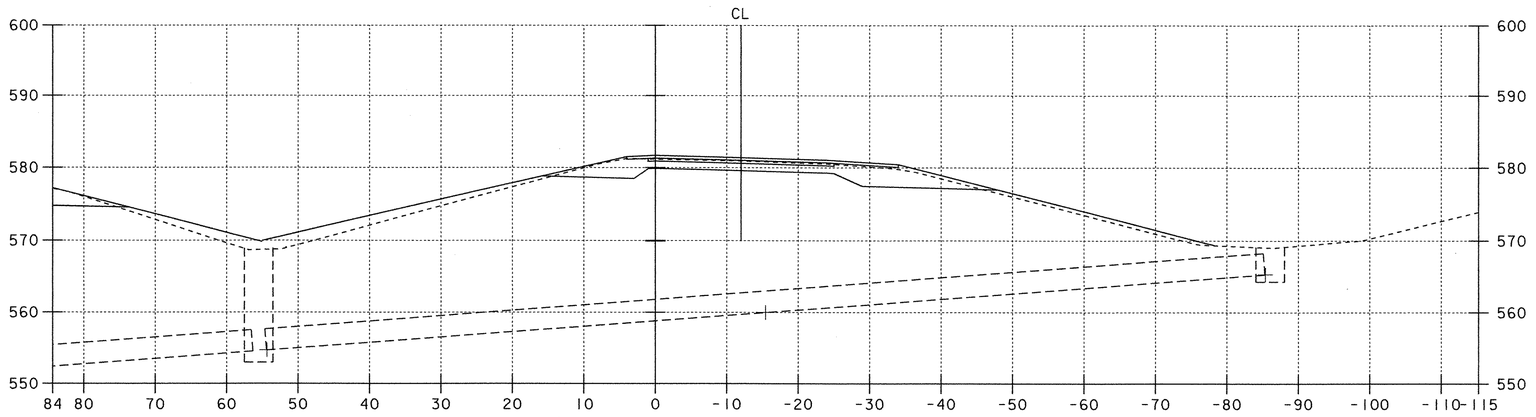

3416+40

EXISTING 36'' ACCGMP

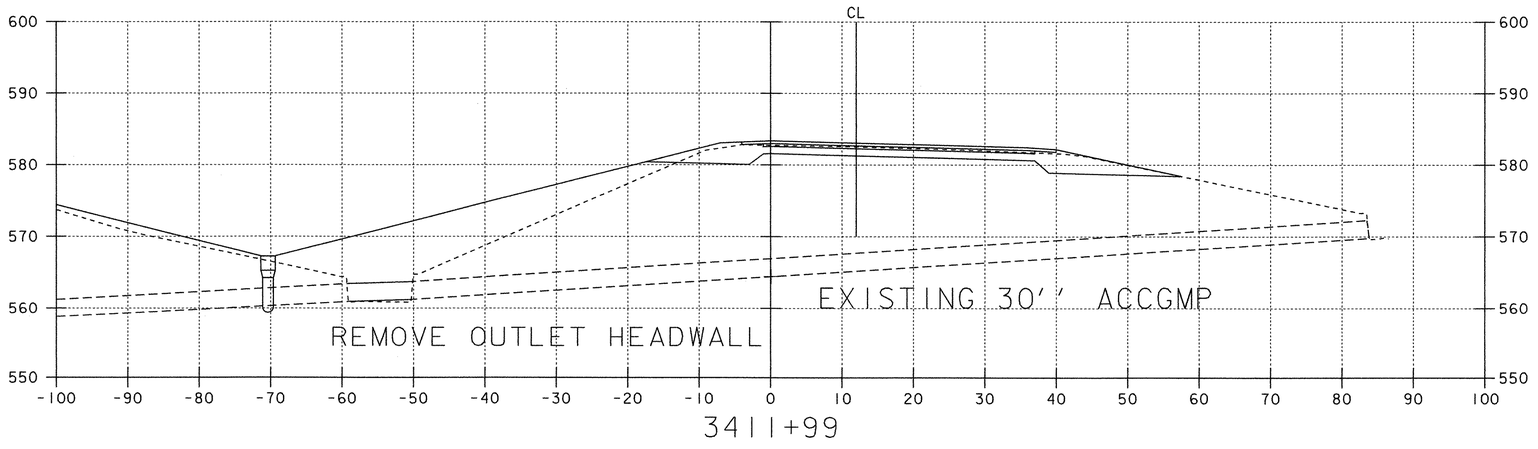

3411+99

0 10 20

SCALE IN FEET

NORTHBOUND DRAINAGE CROSS SECTIONS

PROJECT: FAIRFAX - FAIRFIELD - ST. ALBANS	PROJECT NO.: IM 089-3(27)
DESIGN FILE NAME: /87A007B/DESIGN/DA007DXS.DGN	
IPARM FILE NAME: DA007X70	PLOT DATE: 17-AUG-2000
SURVEYED BY: ORVIS	SURVEY DATE: 6/98
SQUAD LEADER: DELLA SANTA	DRAWN BY: SQUAD B
	SHEET: 368 OF 370

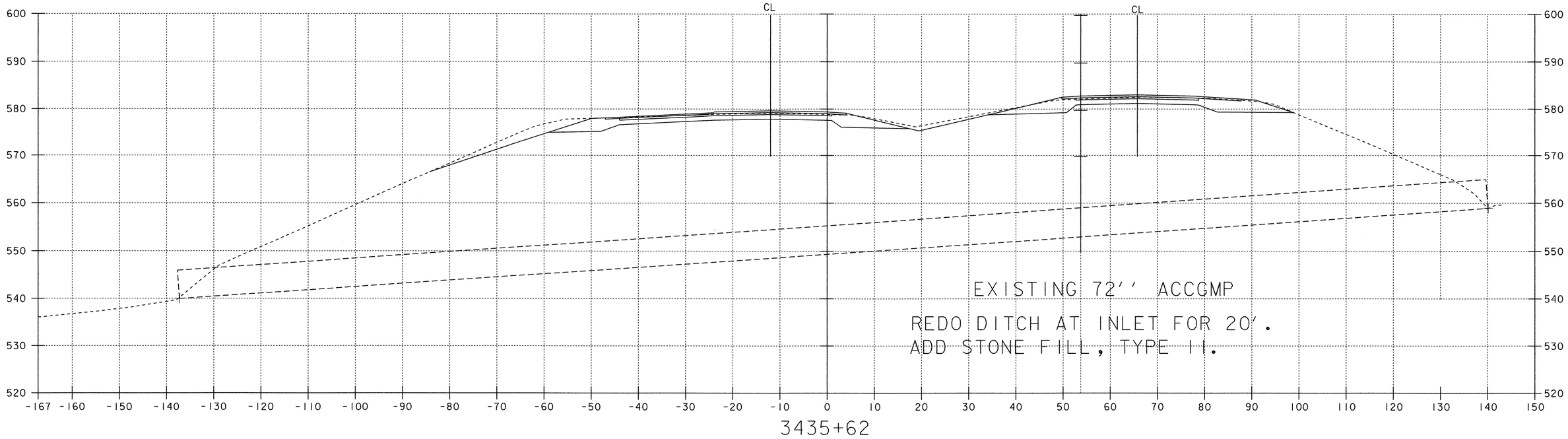

3435+62

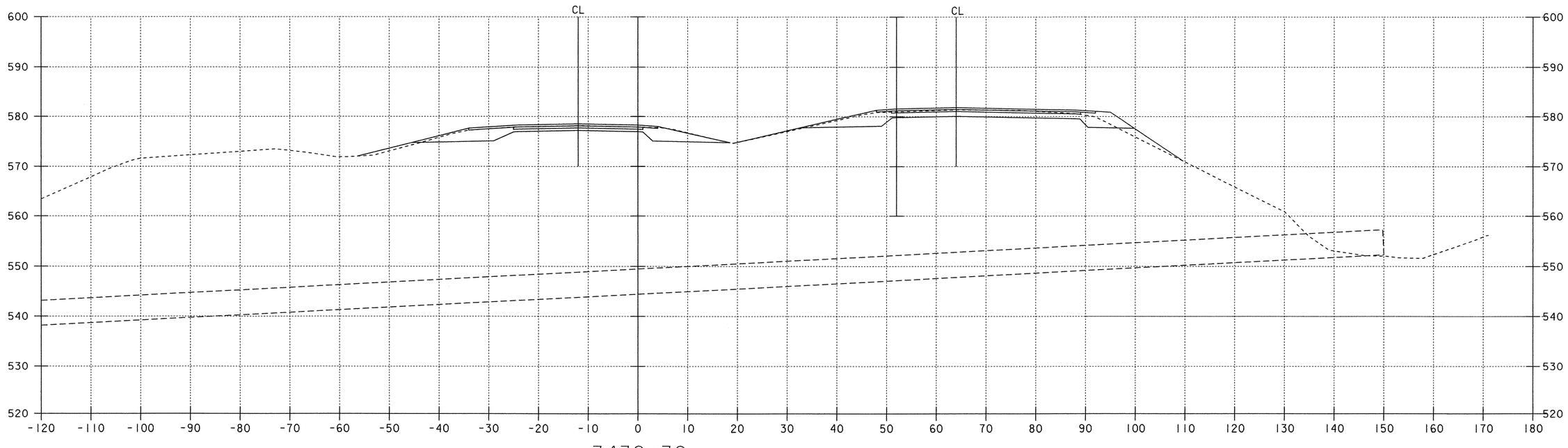

3432+39

EXISTING 60'' ACCGMP

NORTHBOUND DRAINAGE CROSS SECTIONS

SCALE IN FEET

PROJECT: FAIRFAX - FAIRFIELD - ST. ALBANS	PROJECT NO.: IM 089-3(27)
DESIGN FILE NAME: /87A007B/DESIGN/DA007DXS.DGN	
IPARM FILE NAME: DA007X7I	PLOT DATE: 03-OCT-2000
SURVEYED BY: ORVIS	SURVEY DATE: 6/98
SQUAD LEADER: DELLA SANTA	DRAWN BY: SQUAD B
	SHEET: 369 OF 370

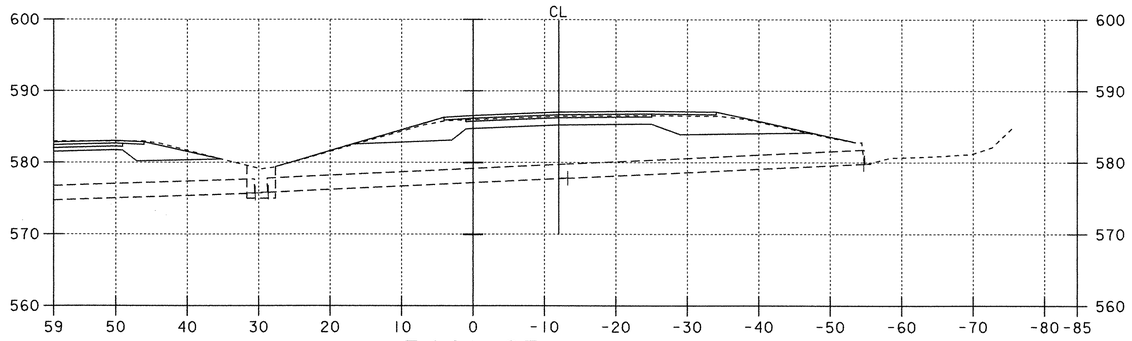

3441+83

EXISTING 24'' ACCGMP

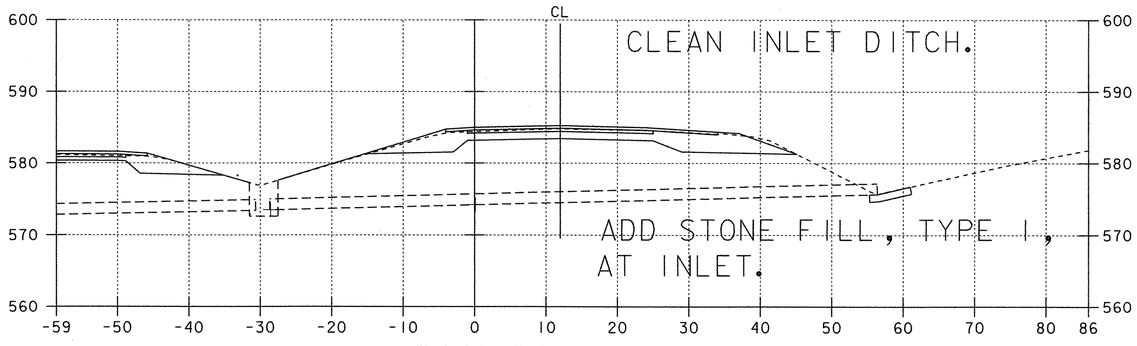

3439+36

EXISTING 18'' ACCGMP

NORTHBOUND DRAINAGE CROSS SECTIONS

0 10 20

SCALE IN FEET

PROJECT: FAIRFAX - FAIRFIELD - ST. ALBANS	PROJECT NO.: IM 089-3(27)
DESIGN FILE NAME: /87A007B/DESIGN/DA007DXS.DGN	
IPARM FILE NAME: DA007X72	PLOT DATE: 17-AUG-2000
SURVEYED BY: ORVIS	SURVEY DATE: 6/98
SQUAD LEADER: DELLA SANTA	DRAWN BY: SQUAD B
	SHEET: 370 OF 370

PLAN SURVEYED BY Spaulding DRAWN Cooley CHECKED DATE 12/62 1/63

DRILLING & BLASTING OF SOLID ROCK SUBGRADE, ITEM 115
N.B. 3273+00 - 3277+00
S.B. 3272+00 - 3284+00
N.B. 3279+50 - 3284+25.00
S.B. 3274+81 - 3282+50 (East Arm)
N.B. 3280+75 - 3283+00

PROPERTY LINE FENCE w/ STEEL POSTS, MOD Item 583-II
S.B. 3268+00 - 3284+00 Lt.
N.B. 3268+00 - 3284+00 Rt.

* JUTE MATTING - ITEM 623
S.B. 3268+00 - 3270+50 Rt.
S.B. 3283+00 - 3284+00 Lt.

INDIVIDUAL WATER SOURCES
DUG SPRING S.B.L. 3274± - 700'± LT.
WATER POOL S.B.L. 3279± - 700'± LT.

NOTE: * DENOTES ITEMS TO BE INCLUDED IN STAGE III CONSTRUCTION.

Rev S.B.
Δ 3°19'00" Lt.
D 0°15'00"
R 22918.82
T 668.52
L 1326.67
E 9.61
Bank 1/4" per ft.

℄ P.O.T. 3273+97.40

℄ P.O.T. 3275+76.75

℄ P.O.T. 3279+35.81

FOR CONSTRUCTION DETAILS OF UTILITY RELOCATION AND REST AREA, SEE FOLLOWING SHEET

BM #150 ASMD ELEV 649.689

BM #151 ASMD ELEV 651.949

℄ P.O.T. 3269+50.00

Rev S.B. P.I. 3276+16.13 = 327?+13.76 ℄ P.O.T. 3276+11.92

Rev S.B. P.O.T. 3282+77.28 = 3282+75.44 ℄ P.O.T. 3282+73.96

N 11°-25'-50" E S.B.

B.L. N 8°-06'-50" E

N 8°-06'-50" E S.B.

N 7°-14'-44" E N.B.

TOWN LINE

Sugar Bush

Pasture

MATCH

CONTROL OF ACCESS IS COMPLETE ON THIS SHEET

GEORGIA-FAIRFAX-FAIRFIELD-ST. ALBANS
189-3 ( ) 44
Sheet 75 of 212

STA. 3268 = MM 110.78

PROPERTY LINE FENCE w/ STEEL POSTS, MOD * THREE CABLE GUARD RAIL W/ LIGHT STEEL POSTS ITEM 538
Item 583-II
S.B. 3284+00-3276+80 Lt
W.B. 3284+00-3276+40 Rt
S.B. 3297+60-3300+00 Lt
N.B. 3297+50-3300+00 Rt

N.B. 3289+00 - 3294 + 21 Rt
S.B. 3283+05 3295+38 Lt

N.B. 3298+84 - 3300+00 Rt

DRILLING & BLASTING OF SOLID ROCK SUBGRADE ITEM 115
S.B. 3284+00-3285+65

* PRECAST CONCRETE CURB ITEM 625
BITUMINOUS CONCRETE CURB ITEM 555 TYPE II
S.B. 3283+00-3296+33 Lt

■ STD. STEEL BEAM GUARD RAIL W/ STEEL POSTS ITEM 545-A (6.3'c/c)
Vt. #104 29+25 - 30+75 Lt } Stage I Constr.
Vt. #104 29+25 - 30+75 Rt

* S.B. 3276+34 Rt - N.B. 3296+47 Lt } Stage II
* S.B. 3298+17 Rt - N.B. 3298+30 Lt } (6.3'c/c)

* Construct U Turn 3288+50

CONTROL OF ACCESS IS COMPLETE ON THIS SHEET.

* JUTE MATTING - ITEM 623
S.B. 3284+00-3287+00 Lt
N.B. 3285+00-3288+00 Rt
N.B. 3285+00-3288+00 Lt
N.B. 3297+00-3300+00 Lt

INDIVIDUAL WATER SOURCES
ST. ALBANS CITY WATER
BL 3297+60 ASk - BL ASk
58L 2786' - 550' Lt.

NOTE: * DENOTES ITEMS TO BE INCLUDED IN STAGE II CONSTRUCTION

℄ Curve Data
Rev. N.B.
Δ 4°36'42" Lt
D 0°14'08"
R 24,323.23'
T 979.42
L 1957.79
E 19.71
Bank ½ Per St.

Δ 5°29'00" Lt
D 0°15'00"
R 22918.32
T 1097.46
L 2193.33
E 26.13

Pasture, Brush & Thorn Apples

BM #152 ASMD. ELEV 629.300

BM #153 ASMD. ELEV 591.030

BM #154 ASMD. ELEV 543.22

BM #155 ASMD. ELEV 580.433

Mill River

Chan. R.O.T. 5+46.61

℄ POT 3288+12.79

Rev. S.B. N. 8°-06'-50" E.

Rev. N.B. N 8°-06'-50" E

N 7°-14'-44" E N.B.

Mill P.O.T. 3273+05 = Co. L. P.O.T. 3+00

Trav. P.O.T. 34+16.30

Trav. P.I. 31+20.00 Δ 7°40'20" Rt

℄ P.O.C. 3297+12.00 = Trav. Line Vt. 104 P.O.T. 30+00.00

Stop Roadway - Begin Bridge SB Sta. 3296+38.00

Stop Roadway - Begin Bridge N.B. Sta. 3296+49.00

Trav. P.I. 26+84.48 Δ 18°-41'-00" Rt

End Bridge - Resume Roadway SB Sta. 3298+15.29

End Bridge - Resume Roadway N.B. Sta. 3298+26.00

℄ P.O.S.T. 3297+10.77 = Trav. P.O.T. 29+83.23 Lt. 87°-17'

℄ P.O.S.T. 3297+27.38 = 3297+27.79

Rev. N.B. P.I. 3297+48.07 = 3297+47.01

APPROX. AERIAL UTILITY RELOC. ROUTE BY C.V.P.S. CORP. (DISTRIBUTION.)

APPROX. UNDERGROUND UTILITIES RELOC. ROUTE BY NET & T. CO.

Trav. P.I. 29+18.00 Δ 35°-14'-30" Lt

Trav. P.I. 34+43.12 Δ 12°-10'-00" Rt

Match Line

Match Line

Chan. O+00

* Bridge Railing for Bridge Approaches Item 570

SB	3295+60	3296+25 Rt
SB	3297+69	3296+33 Lt
NB	3294+66	3296+37 Rt
NB	3294+05	3296+42 Lt
SB	3298+23	3300+00 Rt
SB	3298+33	3300+00 Lt
NB	3298+31	3299+55 Rt
NB	3298+30	3299+47 Lt

GEORGIA: FAIRFAX-FAIRFIELD-ST. ALBANS

I 89-3[redacted]

Sheet [redacted] of [redacted] Sheets

STA 3284 = MM 111.08

PROPERTY LINE FENCE w/STEEL POSTS, MOD.
Item 583 II
S.B. 3300+00 - 3316+00 Lt.
N.B. 3300+00 - 3316+00 Rt.

*THREE CABLE GUARD RAIL W/ LIGHT STEEL POSTS, ITEM 538
N.B. 3300+00 - 3307+30 Rt.
S.B. 3300+00 - 3311+05 Lt.

*JUTE MATTING - ITEM 623
N.B. 3300+00 - 3313+00 Lt.

*Bridge Railing for Bridge Approaches
Item 572
SB 3300+00 - 3300+60 Rt.
SB 3300+00 - 3300+70 Lt.

INDIVIDUAL WATER SOURCES
DUG WELL S.B.L. 3303± - 1200'± Lt
DUG SPRING S.B.L. 3303± - 1300'± Lt

NOTE: * DENOTES ITEMS TO BE INCLUDED IN STAGE II CONSTRUCTION.

CONTROL OF ACCESS IS COMPLETE ON THIS SHEET.

APPROX. AERIAL UTILITIES RELOC.
ROUTE BY C.V.P.S. CORP. (TRANSMISSION)

APPROX. AERIAL UTILITIES RELOC.
ROUTE BY NET & T CO.

BM #156
A.S.M.D. ELEV.
614.843

BM #157
A.S.M.D. ELEV.
634.874

Pasture

Scattered Alders

Alders

Brush

Rev. 3.8

Rev. N.B.

BL.
N 2° 37' 50" E

Rev. N.B. P.T. 3309+26.43 =
P.O.S.T. 3309+04.28
Dif. = +22.15

Rev. N.B. P.C. 3312+27.72
P.O.T. 3312+27.72
Dif. = 0.00

S.B. 3309+00 ℄ 80'-New 18"x13" ACCMP-16 Gage W/Type B Grate

S.B. 3313+00 ℄ 80'-New 18"x13" ACCMP-16 Gage W/Type B Grate

N.B. 3303+85 ℄ 80'-New 15"x13" ACCMP-16 Gage W/Type B Grate

3/4" Water Line

N.B. Sta. 3311+00-3319+50 ℄ Special Ditch Item 703

Rev. N.B. Curve Data
Δ 5° 44' 00" Rt.
D 0° 20' 00"
R 17,188.74'
T 860.72'
L 1720.00'
E 21.49'
Bank RC

PLAN SCALE 1" = 100'

Sheet ■ Construction

GEORGIA-FAIRFAX-FAIRFIELD-ST. ALBANS

I 89-3■ (4)

Sheet 83 of ■ 213

PLAN	DATE
TRACED	1/63
PLOTTED	1/63
NOTE Book	
ALIGNMENT CHECKED	3/63
PROFILE CHECKED	
NO.	

BY Spalding Ewell

STA. 3300 = MM 111.38

3

RIPRAP (light type) Item 513-B
S.B. 3329+51 - 3329+59 Rt.

* THREE CABLE GUARD RAIL w/STEEL POSTS, ITEM 542
N.B. 3321+02 - 3332+00 Lt.
S.B. 3325+85 - 3332+00 Lt.

PROPERTY LINE FENCE w/STEEL POSTS, MOD. Item 583 II
S.B. 3316+00 - 3332+00 Lt.
N.B. 3316+00 - 3332+00 Rt.

INDIVIDUAL WATER SOURCES
POND S.B.L. 3317± - 1100'± Lt.

NOTE: * DENOTES ITEMS TO BE INCLUDED IN STAGE II CONSTRUCTION.

CONTROL OF ACCESS IS COMPLETE ON THIS SHEET.

PLAN	SURVEYED	BY	DATE
	Spaulding		1/63
NOTE BOOK	ALIGNMENT CHECKED	Cooley	4/63
NO.	GRAD. CHECKED		
	TRACED	EWH	3/63

VT. GRID

APPROX. AERIAL UTILITIES RELOC. ROUTE BY NET & T CO.

PALMER

SAM. BELLOIT

BM #158
ASMD. ELEV.
647.612

Rev. N.B.P.I. 3320+98.44 = 3320+97.00

P.O.T. 3319+32.77

S.B. 3324+00 Lt. New 36"x122' ACCAMP .14 Gage

Rev. P.I. 3327+30.96 = 3327+30.09

P.O.T. 3325+95.62

Rev. S.B.P.I. 3331+13.16 = 3331+11.23

APPROX. UTILITIES RELOC. ROUTE (CITY OF ST. ALBANS) (16" WATER MAIN)

Surv. P.O.T. 3329+92.60

BM #159
ASMD Elev.
622.403

S.B. 3329+55.81 Lt. 3327+62 Lt. New 36"x120' ACCAMP .12 Gage

S.B. POC. 3329+00 Lt.

Sugar Bush

Brush & woods

Cleared Area

Brush

Brush & Woods

Water Main

Rev. & P.O.C. 3321+49.19

Rev. S.B.P.C. 3319+65.58 & P.O.T. 3319+65.58

BM 160-A
U.S.C.&G.S.
655.581

N.B. Sta. 3311+00 - 3319+50 Rt. Special Ditch, Item 103

N.B. Sta. 3334+00 Lt. New 30"x106' ACCAMP .14 Gage

N.B. Sta. 3334+50 - 3337+50 Rt. Special Ditch, Item 106

N.B. 3329+46 Lt. - S.B. 3329+56 Rt. Special Ditch, Item 106 Rip-Rap (light type) Item 513-B

N.B. 3329+46 Lt. New 36"x110' ACCAMP .12 Gage

Rev. N.B. Pt. 3329+53.72

N.B. Sta. 3330+00 - 3335+35 Rt. Special Ditch, Item 106

BM 159-A
U.S.C.&G.S.
622.33

Rev. & P.O.T. 3327+30.96 = 3327+30.09

BL. N 2°37'50" E

N 8°21'50" E

Rev. N.B. Curve Data
Δ 5° 44' 00" Rt.
D 0° 20' 00"
R 17188.74
T 860.72
L 1720.00
E 21.49
Bank ¼" per ft. R.C.

Rev. & Curve Data
Δ 5°44'00" Rt.
D 0° 30' 00"
R 11,459.16
T 573.77
L 1146.67
E 14.36

Rev. S.B. Curve Data
Δ 5° 44' 00" Rt.
D 0° 15' 00"
R 22918.32
T 1147.68
L 2293.83
E 28.65
Bank ¼" per ft. R.C.

PLAN SCALE
1" = 100 FEET

Rev. 2 Construction

GEORGIA-FAIRFAX-FAIRFIELD-ST. ALBANS
I 89-3 ( ) (4)

Sheet 86 of 213

STA. 3316 = MM 111.69

4

PROPERTY LINE FENCE w/STEEL POSTS, MOD. Item 583-II
S.B. 3332+00 - 3348+00 Lt.
N.B. 3332+00 - 3348+00 Rt.

* THREE CABLE GUARD RAIL w/ STEEL POSTS, ITEM 542
N.B. 3332+00 - 3348+00 Lt.
S.B. 3332+00 - 3348+00 Lt.

* STD. STEEL BEAM GUARD RAIL w/ LIGHT STEEL POSTS, ITEM 545-A (12'6" c/c)
S.B. 3333+86 - 3335+40 Rt.
N.B. 3333+36 - 3335+80 Rt.

STONE FILL FOR SLOPE PROTECTION ITEM 512
S.B. 3334+16 - 3334+86 Rt.
S.B. 3334+44 - 3334+04 Rt.
N.B. 3335+20 - 3335+50 Rt.

RIPRAP (light type) Item 513-B
S.B. 3334+36 - 3334+44 Rt.
S.B. 3339+00 - 3339+10 Rt.

INDIVIDUAL WATER SOURCES
BEAVER & FARM POND S.B.L. 3334 - 375± LT
BEAVER & FARM POND S.B.L. 3337 - 410'±LT
BEAVER & FARM POND S.B.L. 3340 - 440'±LT

NOTE: * DENOTES ITEMS TO BE INCLUDED IN STAGE II CONSTRUCTION.

CONTROL OF ACCESS IS COMPLETE ON THIS SHEET.

Beaver & Farm Pond (Approx. 300' x 600')
Dame Road
Tel. To Benoit
Approx. Loc. W. To Benoit Ho.
Approx Loc. W. To Benoit Ho.
S.B. 3333+70 Lt. - 3334+40 Rt. New 48" x 14ga ACCMP 10 Gage 13°
S.B. 3334+15 Lt. - 3334+40 Rt. New 48" x 14ga ACCMP 10 Gage
S.B. Sta. 3335+00 - 3337+00 Rt. Special Ditch, Item 108
FAIRFAX FAIRFIELD
S.B. 3339+86 Lt. New 30" x 14ga ACCMP 12 Gage 11°
S.B. 3340+57 - 3342+07 Rt. Special Ditch, Item 103
S.B. 3344+00 Lt. New 30" x 14ga ACCMP 12 Gage 5°
APPROX UTILITIES RELOC. ROUTE BY CITY OF ST. ALBANS 16" WATER MAIN
APPROX AERIAL UTILITIES RELOC. ROUTE BY NET & T CO.
Surv. ℄ P.O.T. 3336+94.21
B.M. # 160 ASMD. ELEV. 609.455
B.M. # 161 ASMD Elev. 610.020
B.M. # 160A U.S. Elev. 622.35
Pasture
Brush & Woods
Water Pipe to Ho
Water Main 7
Exposed Water Main
Orig. Surv. ℄
pasture
Rev. ℄
Stone Fill
Ditch
Woods & alder brush
alder brush
N.8°-21'-50" E
VT. RTE 104
MATCH LINE
MATCH LINE
Rev. S.B. P.O.T. 3332+74.43 = Rev. ℄ P.O.T. 3333+05.86 Eq. = 7.43'
S.B. 3334+40 Rt. - N.B. 3334+55 Lt. Special Ditch, Item 106 Rip Rap (light type) Item 513-B
N.B. Sta. 3330+00 - 3335+35 Rt. Special Ditch - Item 106
N.B. 3335+35 - 3335+36 Rt. 60° Rt. New 48" x 16ga ACCMP 10 Gage
Rev. ℄ P.O.T. 3334+28.73
N.B. 3339+00 Lt. - S.B. 3339+05 Rt. Special Ditch, Item 106 Rip Rap (light type) Item 513-B
N.B. 3339+00 ℄ ACCMP 14 Gage (10 New 30" x 14ga ACCMP 12 Gage 3339+05 Lt. 12 New 6" x 14ga Pipe w/ F.E. 3339+05 N.B. 11° Lt. 12 New 6" x 14ga Pipe w/ F.E. 3339+05 S.B. 11° Rt.
3339+60 - 3340+50 N.B. 45° Lt. 36 New 4" x 14ga Underdrain w/ F.E. Item 522-I
Rev. S.B. P.O.T. 3342+58.86 = Rev. ℄ P.O.T. 3342+54.32 Eq. = +4.54'
S.B. 3344+00 Rt. - N.B. 3344+00 Lt. Special Ditch, Item 106 Rip Rap (light type) Item 513-B
N.B. 3344+00 - 3344+55 N.B. 41° Rt. New 30" x 14ga ACCMP 24 New 6" x 14ga Pipe w/ F.E. 3344+00 N.B. 62° Lt. 24 New 6" x 14ga Pipe w/ F.E. 3344+00 S.B. 62° Rt.
Rev. ℄ P.O.T. 3344+13.61
3344+60 - 3345+00 N.B. 45° Rt. New 4" x 14ga Underdrain w/ F.E. Item 522-I
Rev. S.B. Curve Data
Δ 5°44'00" Rt.
D 0°15'00"
R 22,918.32'
T 1,147.63'
L 2293.33'
E 28.65
Bank ½ Notes 2C
PLAN SCALE 50 0 100 50 FEET
Class ? Construction
GEORGIA-FAIRFAX-FAIRFIELD-ST. ALBANS
I 89-3 [redacted]
Sheet 85 of [redacted] 213

STA. 3332 = MM 111.99

*STANDARD STEEL BEAM GUARD RAIL w/STEEL POSTS-ITEM 545-A (12'6" c/c)
N.B. 3348+75 - 3350+20 Rt.
S.B. 3349+21 - 3350+75 Rt.

RIPRAP-ITEM 513-B
S.B. 3349+71 Rt. - 3349+79 Rt.

*THREE CABLE GUARD RAIL w/ STEEL POSTS, ITEM 542
NB 3348+00 Lt. - 3351+48 Lt.
SB 3363+68 Lt. - 3364+00 Lt.
S.B. 3348+00 Lt. - 3356+64 Lt.

STONE FILL FOR SLOPE PROTECTION
Item 512
S.B. 3349+51 - 3349+71 Rt.
S.B. 3349+79 - 3349+99 Rt.

PROPERTY LINE FENCE w/STEEL POSTS, MOD. Item 583-II
N.B. 3348+00 - 3364+00 Rt.
S.B. 3348+00 - 3364+00 Lt.

INDIVIDUAL WATER SOURCES
DUG FARM POND N.B.L. 3359+75 - 15' LT
DUG FARM POND N.B.L. 3362+60 - 12' RT

NOTE: * DENOTES ITEMS TO BE INCLUDED IN STAGE II CONSTRUCTION.

CONTROL OF ACCESS IS COMPLETE ON THIS SHEET.

FAIRFIELD
ST. ALBANS

BM #162
ASMD. ELEV.
627.909

pit Nov. 9, 1962

APPROX. AERIAL UTILITIES RELOC
ROUTE BY NET & T CO.

Rev. P.O.T. 3358+74.84

Rev. P.O.T. 3348+143.76

MATCH SURV. & STA. 3348+32 TOWN LINE

water course

field

pasture

B.L. N 8°-21'-50" E

Rev. B.L.

Rev. N.B.

Rev. S.B.

PLAN
PUBLISHED
ALIGNMENT CHECKED
R.O.W. CHECKED
DRAWN
NOTE GOOD
NO.
DATE
BY
Gourley
Cooley
Ewell
3/63

GEORGIA-FAIRFAX-FAIRFIELD-ST. ALBANS
I-89-3[redacted](4)
Sheet [redacted] of [redacted] Sheets

STA. 3348 = MM112.29

JUTE MATTING, ITEM 628
NB 3365+00 Rt. - NB 3380+00 Rt.
SB 3365+00 Rt. - SB 3380+00 Rt.

*THREE CABLE GUARD RAIL w/STEEL POSTS ITEM 542
NB 3364+50 Lt. - 3380+00 Lt.
SB 3364+00 Lt. - 3380+00 Lt.

PROPERTY LINE FENCE w/STEEL POSTS, MOD. - ITEM 583-II.
S.B. 3364+00 - 3380+00 Lt.
N.B. 3364+00 - 3380+00 Rt.

~~TREATED TIMBER CURB~~
~~ITEM 555 Item 555-Type II~~
BITUMINOUS CONC. CURB
ITEM 555
N.B. 3374+00 - 3380+00 Lt.
3370+00

NOTE: * DENOTES ITEMS TO BE INCLUDED IN STAGE II CONSTRUCTION.

CONTROL OF ACCESS IS COMPLETE ON THIS SHEET.

BM #164
A.S.M.D. ELEV.
588.76

Rev. P.O.T. 3366+50.00

Rev. P.O.T. 3374+45.01

APPROX. AERIAL UTILITIES RELOC
ROUTE BY NET & T CO.

Pasture

Sugar Orchard - Scattered
(This orchard has been 'logged')

Sugar Rd.

N 8°-21'-50" E

3364 3365 3366 3367 3368 3369 3370 3371 3372 3373 3374 3375 3376 3377 3378 3379 3380

LINE

MATCH

PLAN
DATE 3/63
SURVEYED
PLOTTED
NOTE BOOK
NO.
QUANT. CHECKED
R.O.W. CHECKED
TRACED
BY Spurling, Cooley, Ewell

PLAN SCALE
1" = 100'

State Construction
GEORGIA-FAIRFAX-FAIRFIELD-ST. ALBANS
I 89-3 (4)
Sheet 2 of 3 Sheets

STA. 3364 = MM 112.60

7

PROPERTY LINE FENCE w/STEEL POSTS, MOD., ITEM 583-II
S.B. 3380+00 - 3396+00 Lt. & Rt.
N.B. 3380+00 - 3396+00 Rt.

* THREE CABLE GUARD RAIL w/LIGHT STEEL POSTS, ITEM 538
NB 3380+00 Lt. - 3383+54 Lt.
NB 3394+60 Lt. - 3396+00 Lt.
SB 3380+00 Lt. - 3382+44 Lt.
SB 3394+28 Lt. - 3396+00 Lt.

TREATED TIMBER CURB, ITEM 558
* BITUMINOUS CONCRETE CURB ITEM ~~555~~ TYPE III
NB 3380+00 Lt. - 3383+54 Lt.

* JUTE MATTING - ITEM 623
N.B. 3380+00 - 3387+00 Rt.
S.B. 3380+00 - 3390+00 Rt.

NOTE: * DENOTES ITEMS TO BE INCLUDED IN STAGE II CONSTRUCTION.

INDIVIDUAL WATER SOURCES
DUG SPRING S.B.L. 3386+90 - 190' Lt.
FARM POND S.B.L. 3395+15 - 25' Lt.

4" Water pipe from City Water Main & Pumping Station to Radar Base

1" Pipe Line to Allaire's barn

* STANDARD STEEL BEAM GUARD RAIL w/STEEL (Light) POSTS. ITEM 545-A (12'6" c/c)
NB 3395+00 - 3396+00 Rt.
SB 3395+46 - 3396+00 Rt.

CONTROL OF ACCESS IS COMPLETE ON THIS SHEET.

Vt. GRID N

APPROX AERIAL UTILITIES RELOC. ROUTE BY NET & T CO.

Pasture

SB 3380+00 NB Lt. - 58 Lt.
New 36" x 80' RCCP Class III
w/12" Type B Gates

3381+00 NB Lt. - 58 Lt.
Const. Special Ditch, Item 106
Rip-Rap (Light Type), Item 513-B

3380+00 - 3381+50 SB Rt.
New 6" x 30' Pipe, Item 521-II

SB 3381+50 - 3385+50 SB Rt.
New 6" x 34' Pipe w/F.B. Item 521-II
3385+45 - 3385+93 SB Rt.
New 36" x 80' ACCGMP, 14 Ga.

3385+57 NB Lt. - 3385+74 SB Rt.
Const. Special Ditch, Item 106
Rip-Rap (Light Type), Item 513-B

SB 3385+00 - 3389+76 Rt.
New 6" x 34' Pipe w/F.B. Item 521-I
UNDERDRAIN

3390+00 NB Lt. - 58 Rt.
Const. Special Ditch, Item 106
Rip-Rap (Light Type), Item 513-B

SB 3389+76 - 3390+00 Rt.
New 6" x 76' Pipe w/F.B. Item 521-II
3390+00 - 3390+58 SB Rt.
New 36" x 80' ACCGMP, 14 Ga.

SB 3390+00 - 3392+25 Lt.
New 6" x 56' Pipe w/F.B. Item 521-I
UNDERDRAIN

SB 3392+25 - 3395+50 Lt.
New 6" x 78' Pipe w/F.B. Item 521-II

3" Galv. pipe

small pond

3" POT 3393+50

N 8°-21'-50" E

12" pipe

APPROX. UTILITY RELOC. ROUTE (U.S. AIR FORCE) (4" WATER MAIN)

Rev. POT 3385+91.47

Approx. Loc. 4" water main to radar sta.

NB 3380+00 - 3380+95
New 6" x 95' Pipe, Item 521-II

NB 3380+95 - 3381+00
New 6" x 5' Pipe, CAMP-16 Ga.
w/ CAMP-16 Ga. Elbow

NB 3381+00 - 3381+55
New 6" x 55' Pipe, Item 521-II

NB 3381+55 - 3382+00
New 6" x 45' Pipe, CAMP-16 Ga.
w/ CAMP-16 Ga. Elbow

NB 3382+00 - 3382+44
New 6" x 44' Pipe, CAMP-16 Ga.
w/ CAMP-16 Ga. Elbow

NB 3382+44 - 3383+54
New 6" x 110' Underdrain w/F.B.
Item 521-I

NB 3383+54 - 3384+60
New 6" x 106' Pipe, Item 521-II

NB 3384+60 - 3385+25
New 6" x 65' Underdrain w/F.B.
Item 521-I

NB 3385+25 - 3385+85
New 6" x 60' Pipe, Item 521-II

NB 3385+85 - 3386+85
New 6" x 100' Underdrain w/F.B.
Item 521-I

NB 3386+85 - 3387+00
New 6" x 15' Pipe, Item 521-II

NB 3387+00 - 3387+75
New 6" x 75' Pipe w/F.B. Item 521-II

NB 3387+75 - 3388+00
New 6" x 25' Pipe, Item 521-II

NB 3388+00 - 3389+13
New 6" x 113' Pipe w/F.B. Item 521-I

NB 3389+13 - 3390+00
New 6" x 87' Pipe w/F.B. Item 521-II

NB 3390+00 - 3390+58
New 30" x 58' ACCGMP, 14 Ga.

NB 3390+58 - 3391+84
New 6" x 126' Underdrain w/F.B.
Item 521-I

NB 3391+84 - 3392+25
New 6" x 41' Pipe, Item 521-II

NB 3392+25 - 3395+50
New 6" x 325' Pipe w/F.B. Item 521-II

NB 3395+50 - 3396+00
New 6" x 50' Pipe, Item 521-II

MATCH LINE

MATCH LINE

Construction
GEORGIA-FAIRFAX-FAIRFIELD-ST. ALBANS
I 89-3 (11)
Sheet 23 of 29 Sheets

STA. 3380 = MM 112.90

8

Rprop. Item 519-B
3395+95 - 3396+05 S.B.

PROPERTY LINE FENCE w/ STEEL POSTS, MOD. ITEM 583-II
S.B. 3396+00 - 3412+00 Lt.
N.B. 3396+00 - 3412+00 Rt.

INDIVIDUAL WATER SOURCES			
DUG SPRING	N.B.L. 3400+80	475'	RT
DUG POND	N.B.L. 3403+30	500'	RT
DUG SPRING	N.B.L. 3403+50	600'	RT
DUG POND	N.B.L. 3406	35'	RT
DUG SPRING	S.B.L. 3406+00	215'	LT

Pasture

TREATED TIMBER CURB, ITEM 558
* BITUMINOUS CONCRETE CURB ITEM 555 TYPE II
RAMP 'C' 15+50 - 17+50 Rt.

* JUTE MATTING - ITEM 623
Ramp 'C' 15+50 - 16+50 Median

* THREE CABLE GUARD RAIL w/ LIGHT STEEL POSTS, Item 536
NB 3396+00 Lt. - NB 3401+80 Lt.
NB 3402+28 Lt. - NB 3412+00 Lt.
SB 3396+00 Lt. - SB 3404+36 Lt.
Ramp 'C' 15+55 - 23+28 Rt.

BITUMINOUS CONCRETE SURFACE FOR GUTTERS AND TEXAS ISLANDS, ITEM 654 Median 3411+56 N.B. Lt. - 3412+16 S.B. Lt.

NOTE: * DENOTES ITEMS TO BE INCLUDED IN STAGE II CONSTRUCTION.

CONTROL OF ACCESS IS COMPLETE ON THIS SHEET.

APPROX. AERIAL UTILITIES RELOC. ROUTE BY C.Y.P.S. CORP. (TRANSMISSION)

APPROX. AERIAL UTILITIES RELOC. ROUTE BY NET 2 T. CO. (EXCHANGE)

APPROX. AERIAL UTILITIES RELOC. ROUTE BY NET 2 T. CO. (TOLL)

APPROX. UNDERGROUND UTILITIES RELOC. ROUTE BY NET 2 T. CO.

APPROX. AERIAL UTILITIES RELOC. ROUTE BY C.Y.P.S. CORP.

Pipe from Spring to farm house

to house

to barn

Approx. location of water pipe

Pasture

Water Course

B.M. #168 ASMD Elev. 569.17

B.M. #169 ASMD Elev. 549.33

B.M.
S.O. Bldr.
677.654

Rev. Sta. Eq. 3399+52.630

Sta. Eq. 3402+28.03 Back = 3401+36.00 Ahead

Sta. Eq. 3404+21.71 Back = 3404+36.09 Ahead

Sta. Eq. 3406+03.38 Back = 3406+03.38 Ahead

Sta. Eq. 3409+50.19 Back = 3409+08.50 Ahead

Sta. Eq. 3411+36.65 Back = 3411+36.65 Ahead

N 8°-21'-50" E

3396 3397 3398 3399 3400 3401 3402 3403 3404 3405 3406 3407 3408 3409 3410 3411 3412

3396+00 SB Lt. New 60"x120" ACCGMP Stru. Hed. 10 ga.

3396+00 NB Lt. - 3396+02 SB Lt. Construct Energy Dissipator

3396+00 NB Lt. - 3396+02 SB Lt. New 60"x120" ACCGMP Stru. Hed. 10 ga.

3396+00 - 3396+00 SB Lt. Const. Spec. Ditch, Item 106 Rip Rap (Light Type) Item 513-B

3396+00 - 3396+00 SB Lt. Const. Spec. Ditch, Item 106

3396+00 NB Lt. - 3396+54 Rt. New 30"x51" ACCGMP 14 Ga. Stubbed

3401+50 NB Lt. - 3401+50 SB Lt. Const. Spec. Ditch, Item 106 Rip Rap (Light Type) Item 513-B

3401+55 NB Lt. New 30"x51" ACCGMP 14 Ga.

Approx. location of water pipe at 3400+80 (475' Lt.)

3402+03.38 NB Lt. New 36"x120" ACCGMP 12 Ga.

3402+50.58 Lt. New 36"x100" ACCGMP 12 Ga.

3404+21.71 Ramp 'C' POST

3404+36.09 SB Lt. TEND TAPER

3405+36 NB Lt. New 54"x86" RCP Class III

3406+03.38 - 3406+03.38 Rip Rap (Light Type) Item 513-B

3406+03.38 NB Lt. New 36"x120" ACCGMP 12 Ga.

3409+50.19 Ramp 'C' POST

3409+08.50 Ramp 'C' 15+50 Rt. New 30"x206' ACCGMP 14 Ga.

3411+36.65 NB Lt. - 3411+36.65 Ramp 'C' 15+50 Rt. New 30"x206' ACCGMP 14 Ga.

3411+91 NB Lt. - 3411+91 Ramp 'B' 15+00 Lt. New 30"x156' ACCGMP 14 Ga.

NB EOC 3411+36.65 Ramp 'C' PI 10°34'56"

12cm N.B. P.C. 3407+ 9279'

Selling pond

Water Course

Rev. Sta. Eq. 3402+28.03 Back = 3402+28.03 Ahead

Sta. Eq. 3404+21.71 Back = 3404+36.09 Ahead

Sta. Eq. 3405+36 NB Lt. New 54"x86" RCP Class III

* STANDARD STEEL BEAM GUARD RAIL w/ STEEL POSTS. ITEM 545 'A' (12'6" c/c)
* NB 3396+00' - 3396+54 Rt.
* SB 3396+00 - 3397+00 Rt.

* Construct U Turn 3402+00

B REV. CURVE DATA
Δ 16° 39' 30" Rt.
D 0° 45'
R 7639.44
T 1,118.47
L 2,221.12
E 81.44
Bnk. 1/4 per ft.

PLAN SURVEYED BY Coulson DRAWN BY ALEXANDER CHECKED BY Ezell
NOTE BOOK NO. 1 DATE 6-14-63

STA. 3396 = MM 113.20

Ramp 'C'
POT 13+67.26 =
℄ P.I. 3413+96.50

Rev. SB
P.I. 3412+74.92 =
3412+63.09

2' brook

Rev. ℄
P.I. 3413+96.50 =
3413+80.68
Δ 16°39'30" Rt.
D 0°45'

Rev. NB
P.I. 3416+01.62 =
3415+89.79

Ramp 'B'
P.I. 7+06.37 =
6+59.73

Ramp 'A'
P.I. 5+07.70 =
0+70.39

P.I. 4+15.27 =
3+03.20

Appr. P.O.T. 16+98.52

MATCH

Ramp 'D'
P.I. 11+05.76
Δ 43°44'06" Lt.
D 10°00'42"

CONTROL OF ACCESS IS COMPLETE ON THIS SHEET.

BM #170
ASMD ELEV.
553.56

P.I.
SB 3423+20.00
STOP RDWY.
BEGIN BRIDGE

NB 3422+69.00
STOP RDWY.
BEGIN BRIDGE

SB POT 3424+10.78 =
Appr. P.O.T. 13+27.05
Δ 88°31'30" Lt.

ML ℄ 3423+89.50 =
Appr. P.O.T. 12+90.04
Δ 88°31'30" Lt.

S.B. 3425+02.00
END BRIDGE
RESUME ROADWAY

NB 3424+50.00
END BRIDGE, RESUME RDWY

N.B. POST 3428+72.47 =
N.B. P.O.C. 3425+72.41 =
Appr. P.O.T. 12+52.75
Δ 87°57'47" Lt. to tangent to curve
NB POT 34.24 +83.03 =
SB POT 34.25 + 19.48 =
℄ PT 34.24 +99.15
NB EQ. -16.12
SB EQ. +20.33

DRAINAGE DITCH

PASTURE

Farm Pond

BM 170-12
U.S. Elev.
574.87

PCC 4+37.91
NB POC 3427+78.64

Rev. NB PT 3424+28.62

PT 11+87.25

P.I. 5+27.34 =
5+22.04

PCC 6+12.07
NB POC 3427+78.64

P.I. 10+89.67 =
10+87.56

PCC 9+90.00

PCC 8+30.00

P.I. 9+21.07 =
9+18.93

PC 3+13.54

P.I. 1+72.15 =
1+05.22

P.I. 7+78.48 =
7+69.91

Ramp A PCC 0+00.00

Ramp B PCC 0+00.00

Legend : 1965 ADT 000
1986 ADT (000)
1986 DHV (000)

Traffic Movement Diagram
at Intersection of Interstate
and Vt. Rte. 104.

Rev. NB & SB
Δ 16°39'30" Rt.
D 1°
R 5729.58
T 938.83
L 1665.83
E 61.08
bank 5/16" per ft.

Approach 2: Δ 20°19'25" Lt. | D 10°18'13" | R 556.07 | T 99.67 | L 197.25 | E 3.96 | bank 3/8 per ft.

Approach 3: Δ 24°18'26" Lt. | D 17°21'45" | R 330.00 | T 71.07 | L 140.00 | E 7.86 | bank 5/8 per ft.

Approach 4: Δ 45°53'39" Lt. | D 30°15'04" | R 189.40 | T 80.19 | L 151.71 | E 16.28 | bank 7/8 per ft.

Ramp 'A': Δ 141°33'54" Rt. | D 32°22'14" | R 177.00 | T 507.70 | L 437.51 | E 360.49 | bank 3/16 per ft.

Ramp 'B': Δ 33°56'30" Rt. | D 19°25'18" | R 295.01 | T 90.05 | L 174.76 | E 13.43 | bank 1/16 per ft.

Ramp 'B': Δ 34°15'00" Rt. | D 15°44'26" | R 364.00 | T 112.15 | L 217.59 | E 16.89 | bank 1/16 per ft.

Ramp 'D': Δ 49°11'30" Lt. | D 6°59'50" | R 818.64 | T 374.85 | L 703.02 | E 81.77 | bank 3/16 per ft.

[redacted] Stage 2 Construction

GEORGIA - FAIRFAX -
FAIRFIELD - ST. ALBANS

SURVEYED BY _____ DATE _____
DRAWN BY _____ DATE _____
TRACED BY WJ DATE 3/88

PROJ. [redacted] NO. 89-5[redacted]
SHEET [redacted] OF [redacted] 23 24

STA. 3412 = MM 113.51

THREE CABLE GUARD RAIL W/ LIGHT STEEL POSTS ITEM 583
Ramp 'D' 0+00 - 10+00 Rt. ✓
3428+00 NB Dt. - 3441+44 NB Dt.
3428+00 SB Lt. - 3439+89 SB Lt.
3437+80 S.B. Lt. - 3445+64 SB Lt.
0+00 Ramp D - 10+00 Rt. ✓

BITUMINOUS CONCRETE CURB ITEM 555 Type II
0+00 Ramp 'D' Rt. 10+00 Ramp 'D' Rt. ✓

BITUMINOUS CONCRETE SURFACE for GUTTERS and TRAFFIC ISLANDS, Item 554 Mod.
3442+70 - 3442+80 (Median)

JUTE MATTING - ITEM 623
Ramp 'D' 4+75 - 8+75 Median

STONE FILL for SLOPE PROTECTION ITEM 512
3428+00 - 3432+70 NB Dt.
3432+80 - 3433+00 NB Dt.

PROPERTY LINE FENCE W/STEEL POSTS MOD. ITEM 583 II
S.B. 3428+00 - 3444+00 Lt.
N.B. 3428+00 - 3444+00 Rt.

TREATED TIMBER CURB, ITEM 539
Ramp 'D' 0+00 - 10+00 Rt.

INDIVIDUAL WATER SOURCES

CONS.	COLLECT.	CISTERN	
DUG SPRING			
FARM POND			
DUG SPRING			
DUG SPRING			
DUG SPRING			

N.B. Lt.	3430+/-	1000'± Rt.
N.B. Lt.	3432+/-	1000'± Rt.
S.B. Lt.	3432+/-	Lt.
N.B. Lt.	3435+/-	2500'± Rt.
N.B. Lt.	3438+/-	2100'± Rt.
N.B. Lt.	3438+/-	2600'± Rt.

NOTE: * DENOTES ITEMS TO BE INCLUDED IN STAGE III CONSTRUCTION

* Construct U Turn 3443+85

CONTROL OF ACCESS IS COMPLETE ON THIS SHEET

APPROX AERIAL UTILITIES RELOC. ROUTE BY C.V.P.S. CORP. (TRANSMISSION)

℄ 'NB' & 'SB' Curve Data
Δ 19° 45' 30" Lt.
D 1° 00' 00"
R 5729.58
T 997.85
L 1975.84
E 86.24

VT. GRID

STA 3444+00
END PROJECT I89-3(41)

BM #171
ASMD. ELEV.
541.37

BM #172
ASMD. ELEV.
572.57

Rev. POT 3436+66.51

Ramp 'D' Pvt. 21+88.38
6+98.37

Ramp 'D' 0+00 - 10+00 Rt. ✓

3428+00 - 3432+70 NB Rt. Const. Shoulder Ditch - Item 108-C

3432+70 - 3434+45 Lt. Install 24" x 5'0" service tee with 1/2" x 5'0" service copper water tubes with poly slope division service boxes with poly slope covers 601, 596 & 596

3432+70 - 3433+00 NB Rt. - 0+30 Ramp D Rt. 12" x 30' RCCGMP #16 Gage Mod. w/ 12" x 30' RCCGMP #16 Gage Mod. Safety End Section & Type C Outlet

3433+00 - 3433+45 NB Rt. - 0+75 Ramp D Rt. 12" x 45' RCCGMP #16 Gage Mod. w/ 12" x 45' RCCGMP #16 Gage Mod. Safety End Section & Type C Outlet

3433+00 Ramp D Rt. 12" x 30' RCCGMP #16 Gage Mod. w/ 12" x 30' RCCGMP #16 Gage Mod. Safety End Section & Type C Outlet

3433+45 - 3434+05 NB Rt. - 1+00 Ramp D Rt. 12" x 60' RCCGMP #16 Gage Mod. w/ 12" x 60' RCCGMP #16 Gage Mod. Safety End Section & Type C Outlet

3434+05 - 3434+65 NB Rt. - 1+60 Ramp D Rt. 12" x 60' RCCGMP #16 Gage Mod. w/ 12" x 60' RCCGMP #16 Gage Mod. Safety End Section & Type C Outlet

3434+65 - 3435+25 NB Rt. - 2+20 Ramp D Rt. 12" x 60' RCCGMP #16 Gage Mod. w/ 12" x 60' RCCGMP #16 Gage Mod. Safety End Section & Type C Outlet

3435+25 - 3435+85 NB Rt. - 2+80 Ramp D Rt. 12" x 60' RCCGMP #16 Gage Mod. w/ 12" x 60' RCCGMP #16 Gage Mod. Safety End Section & Type C Outlet

3435+85 - 3436+45 NB Rt. - 3+40 Ramp D Rt. 12" x 60' RCCGMP #16 Gage Mod. w/ 12" x 60' RCCGMP #16 Gage Mod. Safety End Section & Type C Outlet

3436+45 - 3437+05 NB Rt. - 4+00 Ramp D Rt. 12" x 60' RCCGMP #16 Gage Mod. w/ 12" x 60' RCCGMP #16 Gage Mod. Safety End Section & Type C Outlet

3437+05 - 3437+65 NB Rt. - 4+60 Ramp D Rt. 12" x 60' RCCGMP #16 Gage Mod. w/ 12" x 60' RCCGMP #16 Gage Mod. Safety End Section & Type C Outlet

3437+65 - 3438+25 NB Rt. - 5+20 Ramp D Rt. 12" x 60' RCCGMP #16 Gage Mod. w/ 12" x 60' RCCGMP #16 Gage Mod. Safety End Section & Type C Outlet

3438+25 - 3438+85 NB Rt. - 5+80 Ramp D Rt. 12" x 60' RCCGMP #16 Gage Mod. w/ 12" x 60' RCCGMP #16 Gage Mod. Safety End Section & Type C Outlet

3438+85 - 3439+45 NB Rt. - 6+40 Ramp D Rt. 12" x 60' RCCGMP #16 Gage Mod. w/ 12" x 60' RCCGMP #16 Gage Mod. Safety End Section & Type C Outlet

3439+45 - 3440+05 NB Rt. - 7+00 Ramp D Rt. 12" x 60' RCCGMP #16 Gage Mod. w/ 12" x 60' RCCGMP #16 Gage Mod. Safety End Section & Type C Outlet

3440+05 - 3440+65 NB Rt. - 7+60 Ramp D Rt. 12" x 60' RCCGMP #16 Gage Mod. w/ 12" x 60' RCCGMP #16 Gage Mod. Safety End Section & Type C Outlet

3440+65 - 3441+25 NB Rt. - 8+20 Ramp D Rt. 12" x 60' RCCGMP #16 Gage Mod. w/ 12" x 60' RCCGMP #16 Gage Mod. Safety End Section & Type C Outlet

3441+25 - 3441+85 NB Rt. - 8+80 Ramp D Rt. 12" x 60' RCCGMP #16 Gage Mod. w/ 12" x 60' RCCGMP #16 Gage Mod. Safety End Section & Type C Outlet

3441+85 - 3442+45 NB Rt. - 9+40 Ramp D Rt. 12" x 60' RCCGMP #16 Gage Mod. w/ 12" x 60' RCCGMP #16 Gage Mod. Safety End Section & Type C Outlet

3442+45 - 3443+05 NB Rt. - 10+00 Ramp D Rt. 12" x 60' RCCGMP #16 Gage Mod. w/ 12" x 60' RCCGMP #16 Gage Mod. Safety End Section & Type C Outlet

3443+05 - 3443+65 NB Rt. - 10+60 Ramp D Rt. 12" x 60' RCCGMP #16 Gage Mod. w/ 12" x 60' RCCGMP #16 Gage Mod. Safety End Section & Type C Outlet

3443+65 - 3444+25 NB Rt. - 11+20 Ramp D Rt. 12" x 60' RCCGMP #16 Gage Mod. w/ 12" x 60' RCCGMP #16 Gage Mod. Safety End Section & Type C Outlet

3444+25 - 3444+85 NB Rt. - 11+80 Ramp D Rt. 12" x 60' RCCGMP #16 Gage Mod. w/ 12" x 60' RCCGMP #16 Gage Mod. Safety End Section & Type C Outlet

3444+85 - 3445+45 NB Rt. - 12+40 Ramp D Rt. 12" x 60' RCCGMP #16 Gage Mod. w/ 12" x 60' RCCGMP #16 Gage Mod. Safety End Section & Type C Outlet

3445+45 - 3446+05 NB Rt. - 13+00 Ramp D Rt. 12" x 60' RCCGMP #16 Gage Mod. w/ 12" x 60' RCCGMP #16 Gage Mod. Safety End Section & Type C Outlet

3446+05 - 3446+65 NB Rt. - 13+60 Ramp D Rt. 12" x 60' RCCGMP #16 Gage Mod. w/ 12" x 60' RCCGMP #16 Gage Mod. Safety End Section & Type C Outlet

3446+65 - 3447+25 NB Rt. - 14+20 Ramp D Rt. 12" x 60' RCCGMP #16 Gage Mod. w/ 12" x 60' RCCGMP #16 Gage Mod. Safety End Section & Type C Outlet

3447+25 - 3447+85 NB Rt. - 14+80 Ramp D Rt. 12" x 60' RCCGMP #16 Gage Mod. w/ 12" x 60' RCCGMP #16 Gage Mod. Safety End Section & Type C Outlet

3447+85 - 3448+45 NB Rt. - 15+40 Ramp D Rt. 12" x 60' RCCGMP #16 Gage Mod. w/ 12" x 60' RCCGMP #16 Gage Mod. Safety End Section & Type C Outlet

3448+45 - 3449+05 NB Rt. - 16+00 Ramp D Rt. 12" x 60' RCCGMP #16 Gage Mod. w/ 12" x 60' RCCGMP #16 Gage Mod. Safety End Section & Type C Outlet

3449+05 - 3449+65 NB Rt. - 16+60 Ramp D Rt. 12" x 60' RCCGMP #16 Gage Mod. w/ 12" x 60' RCCGMP #16 Gage Mod. Safety End Section & Type C Outlet

3449+65 - 3450+25 NB Rt. - 17+20 Ramp D Rt. 12" x 60' RCCGMP #16 Gage Mod. w/ 12" x 60' RCCGMP #16 Gage Mod. Safety End Section & Type C Outlet

3450+25 - 3450+85 NB Rt. - 17+80 Ramp D Rt. 12" x 60' RCCGMP #16 Gage Mod. w/ 12" x 60' RCCGMP #16 Gage Mod. Safety End Section & Type C Outlet

3450+85 - 3451+45 NB Rt. - 18+40 Ramp D Rt. 12" x 60' RCCGMP #16 Gage Mod. w/ 12" x 60' RCCGMP #16 Gage Mod. Safety End Section & Type C Outlet

3451+45 - 3452+05 NB Rt. - 19+00 Ramp D Rt. 12" x 60' RCCGMP #16 Gage Mod. w/ 12" x 60' RCCGMP #16 Gage Mod. Safety End Section & Type C Outlet

3452+05 - 3452+65 NB Rt. - 19+60 Ramp D Rt. 12" x 60' RCCGMP #16 Gage Mod. w/ 12" x 60' RCCGMP #16 Gage Mod. Safety End Section & Type C Outlet

3452+65 - 3453+25 NB Rt. - 20+20 Ramp D Rt. 12" x 60' RCCGMP #16 Gage Mod. w/ 12" x 60' RCCGMP #16 Gage Mod. Safety End Section & Type C Outlet

3453+25 - 3453+85 NB Rt. - 20+80 Ramp D Rt. 12" x 60' RCCGMP #16 Gage Mod. w/ 12" x 60' RCCGMP #16 Gage Mod. Safety End Section & Type C Outlet

3453+85 - 3454+45 NB Rt. - 21+40 Ramp D Rt. 12" x 60' RCCGMP #16 Gage Mod. w/ 12" x 60' RCCGMP #16 Gage Mod. Safety End Section & Type C Outlet

3454+45 - 3455+05 NB Rt. - 22+00 Ramp D Rt. 12" x 60' RCCGMP #16 Gage Mod. w/ 12" x 60' RCCGMP #16 Gage Mod. Safety End Section & Type C Outlet

3455+05 - 3455+65 NB Rt. - 22+60 Ramp D Rt. 12" x 60' RCCGMP #16 Gage Mod. w/ 12" x 60' RCCGMP #16 Gage Mod. Safety End Section & Type C Outlet

3455+65 - 3456+25 NB Rt. - 23+20 Ramp D Rt. 12" x 60' RCCGMP #16 Gage Mod. w/ 12" x 60' RCCGMP #16 Gage Mod. Safety End Section & Type C Outlet

3456+25 - 3456+85 NB Rt. - 23+80 Ramp D Rt. 12" x 60' RCCGMP #16 Gage Mod. w/ 12" x 60' RCCGMP #16 Gage Mod. Safety End Section & Type C Outlet

3456+85 - 3457+45 NB Rt. - 24+40 Ramp D Rt. 12" x 60' RCCGMP #16 Gage Mod. w/ 12" x 60' RCCGMP #16 Gage Mod. Safety End Section & Type C Outlet

3457+45 - 3458+05 NB Rt. - 25+00 Ramp D Rt. 12" x 60' RCCGMP #16 Gage Mod. w/ 12" x 60' RCCGMP #16 Gage Mod. Safety End Section & Type C Outlet

3458+05 - 3458+65 NB Rt. - 25+60 Ramp D Rt. 12" x 60' RCCGMP #16 Gage Mod. w/ 12" x 60' RCCGMP #16 Gage Mod. Safety End Section & Type C Outlet

3458+65 - 3459+25 NB Rt. - 26+20 Ramp D Rt. 12" x 60' RCCGMP #16 Gage Mod. w/ 12" x 60' RCCGMP #16 Gage Mod. Safety End Section & Type C Outlet

3459+25 - 3459+85 NB Rt. - 26+80 Ramp D Rt. 12" x 60' RCCGMP #16 Gage Mod. w/ 12" x 60' RCCGMP #16 Gage Mod. Safety End Section & Type C Outlet

3459+85 - 3460+45 NB Rt. - 27+40 Ramp D Rt. 12" x 60' RCCGMP #16 Gage Mod. w/ 12" x 60' RCCGMP #16 Gage Mod. Safety End Section & Type C Outlet

3460+45 - 3461+05 NB Rt. - 28+00 Ramp D Rt. 12" x 60' RCCGMP #16 Gage Mod. w/ 12" x 60' RCCGMP #16 Gage Mod. Safety End Section & Type C Outlet

3461+05 - 3461+65 NB Rt. - 28+60 Ramp D Rt. 12" x 60' RCCGMP #16 Gage Mod. w/ 12" x 60' RCCGMP #16 Gage Mod. Safety End Section & Type C Outlet

3461+65 - 3462+25 NB Rt. - 29+20 Ramp D Rt. 12" x 60' RCCGMP #16 Gage Mod. w/ 12" x 60' RCCGMP #16 Gage Mod. Safety End Section & Type C Outlet

3462+25 - 3462+85 NB Rt. - 29+80 Ramp D Rt. 12" x 60' RCCGMP #16 Gage Mod. w/ 12" x 60' RCCGMP #16 Gage Mod. Safety End Section & Type C Outlet

3462+85 - 3463+45 NB Rt. - 30+40 Ramp D Rt. 12" x 60' RCCGMP #16 Gage Mod. w/ 12" x 60' RCCGMP #16 Gage Mod. Safety End Section & Type C Outlet

3463+45 - 3464+05 NB Rt. - 31+00 Ramp D Rt. 12" x 60' RCCGMP #16 Gage Mod. w/ 12" x 60' RCCGMP #16 Gage Mod. Safety End Section & Type C Outlet

3464+05 - 3464+65 NB Rt. - 31+60 Ramp D Rt. 12" x 60' RCCGMP #16 Gage Mod. w/ 12" x 60' RCCGMP #16 Gage Mod. Safety End Section & Type C Outlet

3464+65 - 3465+25 NB Rt. - 32+20 Ramp D Rt. 12" x 60' RCCGMP #16 Gage Mod. w/ 12" x 60' RCCGMP #16 Gage Mod. Safety End Section & Type C Outlet

3465+25 - 3465+85 NB Rt. - 32+80 Ramp D Rt. 12" x 60' RCCGMP #16 Gage Mod. w/ 12" x 60' RCCGMP #16 Gage Mod. Safety End Section & Type C Outlet

3465+85 - 3466+45 NB Rt. - 33+40 Ramp D Rt. 12" x 60' RCCGMP #16 Gage Mod. w/ 12" x 60' RCCGMP #16 Gage Mod. Safety End Section & Type C Outlet

3466+45 - 3467+05 NB Rt. - 34+00 Ramp D Rt. 12" x 60' RCCGMP #16 Gage Mod. w/ 12" x 60' RCCGMP #16 Gage Mod. Safety End Section & Type C Outlet

3467+05 - 3467+65 NB Rt. - 34+60 Ramp D Rt. 12" x 60' RCCGMP #16 Gage Mod. w/ 12" x 60' RCCGMP #16 Gage Mod. Safety End Section & Type C Outlet

3467+65 - 3468+25 NB Rt. - 35+20 Ramp D Rt. 12" x 60' RCCGMP #16 Gage Mod. w/ 12" x 60' RCCGMP #16 Gage Mod. Safety End Section & Type C Outlet

3468+25 - 3468+85 NB Rt. - 35+80 Ramp D Rt. 12" x 60' RCCGMP #16 Gage Mod. w/ 12" x 60' RCCGMP #16 Gage Mod. Safety End Section & Type C Outlet

3468+85 - 3469+45 NB Rt. - 36+40 Ramp D Rt. 12" x 60' RCCGMP #16 Gage Mod. w/ 12" x 60' RCCGMP #16 Gage Mod. Safety End Section & Type C Outlet

3469+45 - 3470+05 NB Rt. - 37+00 Ramp D Rt. 12" x 60' RCCGMP #16 Gage Mod. w/ 12" x 60' RCCGMP #16 Gage Mod. Safety End Section & Type C Outlet

3470+05 - 3470+65 NB Rt. - 37+60 Ramp D Rt. 12" x 60' RCCGMP #16 Gage Mod. w/ 12" x 60' RCCGMP #16 Gage Mod. Safety End Section & Type C Outlet

3470+65 - 3471+25 NB Rt. - 38+20 Ramp D Rt. 12" x 60' RCCGMP #16 Gage Mod. w/ 12" x 60' RCCGMP #16 Gage Mod. Safety End Section & Type C Outlet

3471+25 - 3471+85 NB Rt. - 38+80 Ramp D Rt. 12" x 60' RCCGMP #16 Gage Mod. w/ 12" x 60' RCCGMP #16 Gage Mod. Safety End Section & Type C Outlet

3471+85 - 3472+45 NB Rt. - 39+40 Ramp D Rt. 12" x 60' RCCGMP #16 Gage Mod. w/ 12" x 60' RCCGMP #16 Gage Mod. Safety End Section & Type C Outlet

3472+45 - 3473+05 NB Rt. - 40+00 Ramp D Rt. 12" x 60' RCCGMP #16 Gage Mod. w/ 12" x 60' RCCGMP #16 Gage Mod. Safety End Section & Type C Outlet

3473+05 - 3473+65 NB Rt. - 40+60 Ramp D Rt. 12" x 60' RCCGMP #16 Gage Mod. w/ 12" x 60' RCCGMP #16 Gage Mod. Safety End Section & Type C Outlet

3473+65 - 3474+25 NB Rt. - 41+20 Ramp D Rt. 12" x 60' RCCGMP #16 Gage Mod. w/ 12" x 60' RCCGMP #16 Gage Mod. Safety End Section & Type C Outlet

3474+25 - 3474+85 NB Rt. - 41+80 Ramp D Rt. 12" x 60' RCCGMP #16 Gage Mod. w/ 12" x 60' RCCGMP #16 Gage Mod. Safety End Section & Type C Outlet

3474+85 - 3475+45 NB Rt. - 42+40 Ramp D Rt. 12" x 60' RCCGMP #16 Gage Mod. w/ 12" x 60' RCCGMP #16 Gage Mod. Safety End Section & Type C Outlet

3475+45 - 3476+05 NB Rt. - 43+00 Ramp D Rt. 12" x 60' RCCGMP #16 Gage Mod. w/ 12" x 60' RCCGMP #16 Gage Mod. Safety End Section & Type C Outlet

3476+05 - 3476+65 NB Rt. - 43+60 Ramp D Rt. 12" x 60' RCCGMP #16 Gage Mod. w/ 12" x 60' RCCGMP #16 Gage Mod. Safety End Section & Type C Outlet

3476+65 - 3477+25 NB Rt. - 44+20 Ramp D Rt. 12" x 60' RCCGMP #16 Gage Mod. w/ 12" x 60' RCCGMP #16 Gage Mod. Safety End Section & Type C Outlet

3477+25 - 3477+85 NB Rt. - 44+80 Ramp D Rt. 12" x 60' RCCGMP #16 Gage Mod. w/ 12" x 60' RCCGMP #16 Gage Mod. Safety End Section & Type C Outlet

3477+85 - 3478+45 NB Rt. - 45+40 Ramp D Rt. 12" x 60' RCCGMP #16 Gage Mod. w/ 12" x 60' RCCGMP #16 Gage Mod. Safety End Section & Type C Outlet

3478+45 - 3479+05 NB Rt. - 46+00 Ramp D Rt. 12" x 60' RCCGMP #16 Gage Mod. w/ 12" x 60' RCCGMP #16 Gage Mod. Safety End Section & Type C Outlet

3479+05 - 3479+65 NB Rt. - 46+60 Ramp D Rt. 12" x 60' RCCGMP #16 Gage Mod. w/ 12" x 60' RCCGMP #16 Gage Mod. Safety End Section & Type C Outlet

3479+65 - 3480+25 NB Rt. - 47+20 Ramp D Rt. 12" x 60' RCCGMP #16 Gage Mod. w/ 12" x 60' RCCGMP #16 Gage Mod. Safety End Section & Type C Outlet

3480+25 - 3480+85 NB Rt. - 47+80 Ramp D Rt. 12" x 60' RCCGMP #16 Gage Mod. w/ 12" x 60' RCCGMP #16 Gage Mod. Safety End Section & Type C Outlet

3480+85 - 3481+45 NB Rt. - 48+40 Ramp D Rt. 12" x 60' RCCGMP #16 Gage Mod. w/ 12" x 60' RCCGMP #16 Gage Mod. Safety End Section & Type C Outlet

3481+45 - 3482+05 NB Rt. - 49+00 Ramp D Rt. 12" x 60' RCCGMP #16 Gage Mod. w/ 12" x 60' RCCGMP #16 Gage Mod. Safety End Section & Type C Outlet

3482+05 - 3482+65 NB Rt. - 49+60 Ramp D Rt. 12" x 60' RCCGMP #16 Gage Mod. w/ 12" x 60' RCCGMP #16 Gage Mod. Safety End Section & Type C Outlet

3482+65 - 3483+25 NB Rt. - 50+20 Ramp D Rt. 12" x 60' RCCGMP #16 Gage Mod. w/ 12" x 60' RCCGMP #16 Gage Mod. Safety End Section & Type C Outlet

3483+25 - 3483+85 NB Rt. - 50+80 Ramp D Rt. 12" x 60' RCCGMP #16 Gage Mod. w/ 12" x 60' RCCGMP #16 Gage Mod. Safety End Section & Type C Outlet

3483+85 - 3484+45 NB Rt. - 51+40 Ramp D Rt. 12" x 60' RCCGMP #16 Gage Mod. w/ 12" x 60' RCCGMP #16 Gage Mod. Safety End Section & Type C Outlet

3484+45 - 3485+05 NB Rt. - 52+00 Ramp D Rt. 12" x 60' RCCGMP #16 Gage Mod. w/ 12" x 60' RCCGMP #16 Gage Mod. Safety End Section & Type C Outlet

3485+05 - 3485+65 NB Rt. - 52+60 Ramp D Rt. 12" x 60' RCCGMP #16 Gage Mod. w/ 12" x 60' RCCGMP #16 Gage Mod. Safety End Section & Type C Outlet

3485+65 - 3486+25 NB Rt. - 53+20 Ramp D Rt. 12" x 60' RCCGMP #16 Gage Mod. w/ 12" x 60' RCCGMP #16 Gage Mod. Safety End Section & Type C Outlet

3486+25 - 3486+85 NB Rt. - 53+80 Ramp D Rt. 12" x 60' RCCGMP #16 Gage Mod. w/ 12" x 60' RCCGMP #16 Gage Mod. Safety End Section & Type C Outlet

3486+85 - 3487+45 NB Rt. - 54+40 Ramp D Rt. 12" x 60' RCCGMP #16 Gage Mod. w/ 12" x 60' RCCGMP #16 Gage Mod. Safety End Section & Type C Outlet

3487+45 - 3488+05 NB Rt. - 55+00 Ramp D Rt. 12" x 60' RCCGMP #16 Gage Mod. w/ 12" x 60' RCCGMP #16 Gage Mod. Safety End Section & Type C Outlet

3488+05 - 3488+65 NB Rt. - 55+60 Ramp D Rt. 12" x 60' RCCGMP #16 Gage Mod. w/ 12" x 60' RCCGMP #16 Gage Mod. Safety End Section & Type C Outlet

3488+65 - 3489+25 NB Rt. - 56+20 Ramp D Rt. 12" x 60' RCCGMP #16 Gage Mod. w/ 12" x 60' RCCGMP #16 Gage Mod. Safety End Section & Type C Outlet

3489+25 - 3489+85 NB Rt. - 56+80 Ramp D Rt. 12" x 60' RCCGMP #16 Gage Mod. w/ 12" x 60' RCCGMP #16 Gage Mod. Safety End Section & Type C Outlet

3489+85 - 3490+45 NB Rt. - 57+40 Ramp D Rt. 12" x 60' RCCGMP #16 Gage Mod. w/ 12" x 60' RCCGMP #16 Gage Mod. Safety End Section & Type C Outlet

3490+45 - 3491+05 NB Rt. - 58+00 Ramp D Rt. 12" x 60' RCCGMP #16 Gage Mod. w/ 12" x 60' RCCGMP #16 Gage Mod. Safety End Section & Type C Outlet

3491+05 - 3491+65 NB Rt. - 58+60 Ramp D Rt. 12" x 60' RCCGMP #16 Gage Mod. w/ 12" x 60' RCCGMP #16 Gage Mod. Safety End Section & Type C Outlet

3491+65 - 3492+25 NB Rt. - 59+20 Ramp D Rt. 12" x 60' RCCGMP #16 Gage Mod. w/ 12" x 60' RCCGMP #16 Gage Mod. Safety End Section & Type C Outlet

3492+25 - 3492+85 NB Rt. - 59+80 Ramp D Rt. 12" x 60' RCCGMP #16 Gage Mod. w/ 12" x 60' RCCGMP #16 Gage Mod. Safety End Section & Type C Outlet

3492+85 - 3493+45 NB Rt. - 60+40 Ramp D Rt. 12" x 60' RCCGMP #16 Gage Mod. w/ 12" x 60' RCCGMP #16 Gage Mod. Safety End Section & Type C Outlet

3493+45 - 3494+05 NB Rt. - 61+00 Ramp D Rt. 12" x 60' RCCGMP #16 Gage Mod. w/ 12" x 60' RCCGMP #16 Gage Mod. Safety End Section & Type C Outlet

3494+05 - 3494+65 NB Rt. - 61+60 Ramp D Rt. 12" x 60' RCCGMP #16 Gage Mod. w/ 12" x 60' RCCGMP #16 Gage Mod. Safety End Section & Type C Outlet

3494+65 - 3495+25 NB Rt. - 62+20 Ramp D Rt. 12" x 60' RCCGMP #16 Gage Mod. w/ 12" x 60' RCCGMP #16 Gage Mod. Safety End Section & Type C Outlet

3495+25 - 3495+85 NB Rt. - 62+80 Ramp D Rt. 12" x 60' RCCGMP #16 Gage Mod. w/ 12" x 60' RCCGMP #16 Gage Mod. Safety End Section & Type C Outlet

3495+85 - 3496+45 NB Rt. - 63+40 Ramp D Rt. 12" x 60' RCCGMP #16 Gage Mod. w/ 12" x 60' RCCGMP #16 Gage Mod. Safety End Section & Type C Outlet

3496+45 - 3497+05 NB Rt. - 64+00 Ramp D Rt. 12" x 60' RCCGMP #16 Gage Mod. w/ 12" x 60' RCCGMP #16 Gage Mod. Safety End Section & Type C Outlet

3497+05 - 3497+65 NB Rt. - 64+60 Ramp D Rt. 12" x 60' RCCGMP #16 Gage Mod. w/ 12" x 60' RCCGMP #16 Gage Mod. Safety End Section & Type C Outlet

3497+65 - 3498+25 NB Rt. - 65+20 Ramp D Rt. 12" x 60' RCCGMP #16 Gage Mod. w/ 12" x 60' RCCGMP #16 Gage Mod. Safety End Section & Type C Outlet

3498+25 - 3498+85 NB Rt. - 65+80 Ramp D Rt. 12" x 60' RCCGMP #16 Gage Mod. w/ 12" x 60' RCCGMP #16 Gage Mod. Safety End Section & Type C Outlet

3498+85 - 3499+45 NB Rt. - 66+40 Ramp D Rt. 12" x 60' RCCGMP #16 Gage Mod. w/ 12" x 60' RCCGMP #16 Gage Mod. Safety End Section & Type C Outlet

3499+45 - 3500+05 NB Rt. - 67+00 Ramp D Rt. 12" x 60' RCCGMP #16 Gage Mod. w/ 12" x 60' RCCGMP #16 Gage Mod. Safety End Section & Type C Outlet

3500+05 - 3500+65 NB Rt. - 67+60 Ramp D Rt. 12" x 60' RCCGMP #16 Gage Mod. w/ 12" x 60' RCCGMP #16 Gage Mod. Safety End Section & Type C Outlet

3500+65 - 3501+25 NB Rt. - 68+20 Ramp D Rt. 12" x 60' RCCGMP #16 Gage Mod. w/ 12" x 60' RCCGMP #16 Gage Mod. Safety End Section & Type C Outlet

3501+25 - 3501+85 NB Rt. - 68+80 Ramp D Rt. 12" x 60' RCCGMP #16 Gage Mod. w/ 12" x 60' RCCGMP #16 Gage Mod. Safety End Section & Type C Outlet

3501+85 - 3502+45 NB Rt. - 69+40 Ramp D Rt. 12" x 60' RCCGMP #16 Gage Mod. w/ 12" x 60' RCCGMP #16 Gage Mod. Safety End Section & Type C Outlet

3502+45 - 3503+05 NB Rt. - 70+00 Ramp D Rt. 12" x 60' RCCGMP #16 Gage Mod. w/ 12" x 60' RCCGMP #16 Gage Mod. Safety End Section & Type C Outlet

3503+05 - 3503+65 NB Rt. - 70+60 Ramp D Rt. 12" x 60' RCCGMP #16 Gage Mod. w/ 12" x 60' RCCGMP #16 Gage Mod. Safety End Section & Type C Outlet

3503+65 - 3504+25 NB Rt. - 71+20 Ramp D Rt. 12" x 60' RCCGMP #16 Gage Mod. w/ 12" x 60' RCCGMP #16 Gage Mod. Safety End Section & Type C Outlet

3504+25 - 3504+85 NB Rt. - 71+80 Ramp D Rt. 12" x 60' RCCGMP #16 Gage Mod. w/ 12" x 60' RCCGMP #16 Gage Mod. Safety End Section & Type C Outlet

3504+85 - 3505+45 NB Rt. - 72+40 Ramp D Rt. 12" x 60' RCCGMP #16 Gage Mod. w/ 12" x 60' RCCGMP #16 Gage Mod. Safety End Section & Type C Outlet

3505+45 - 3506+05 NB Rt. - 73+00 Ramp D Rt. 12" x 60' RCCGMP #16 Gage Mod. w/ 12" x 60' RCCGMP #16 Gage Mod. Safety End Section & Type C Outlet

3506+05 - 3506+65 NB Rt. - 73+60 Ramp D Rt. 12" x 60' RCCGMP #16 Gage Mod. w/ 12" x 60' RCCGMP #16 Gage Mod. Safety End Section & Type C Outlet

3506+65 - 3507+25 NB Rt. - 74+20 Ramp D Rt. 12" x 60' RCCGMP #16 Gage Mod. w/ 12" x 60' RCCGMP #16 Gage Mod. Safety End Section & Type C Outlet

3507+25 - 3507+85 NB Rt. - 74+80 Ramp D Rt. 12" x 60' RCCGMP #16 Gage Mod. w/ 12" x 60' RCCGMP #16 Gage Mod. Safety End Section & Type C Outlet

3507+85 - 3508+45 NB Rt. - 75+40 Ramp D Rt. 12" x 60' RCCGMP #16 Gage Mod. w/ 12" x 60' RCCGMP #16 Gage Mod. Safety End Section & Type C Outlet

3508+45 - 3509+05 NB Rt. - 76+00 Ramp D Rt. 12" x 60' RCCGMP #16 Gage Mod. w/ 12" x 60' RCCGMP #16 Gage Mod. Safety End Section & Type C Outlet

3509+05 - 3509+65 NB Rt. - 76+60 Ramp D Rt. 12" x 60' RCCGMP #16 Gage Mod. w/ 12" x 60' RCCGMP #16 Gage Mod. Safety End Section & Type C Outlet

3509+65 - 3510+25 NB Rt. - 77+20 Ramp D Rt. 12" x 60' RCCGMP #16 Gage Mod. w/ 12" x 60' RCCGMP #16 Gage Mod. Safety End Section & Type C Outlet

3510+25 - 3510+85 NB Rt. - 77+80 Ramp D Rt. 12" x 60' RCCGMP #16 Gage Mod. w/ 12" x 60' RCCGMP #16 Gage Mod. Safety End Section & Type C Outlet

3510+85 - 3511+45 NB Rt. - 78+40 Ramp D Rt. 12" x 60' RCCGMP #16 Gage Mod. w/ 12" x 60' RCCGMP #16 Gage Mod. Safety End Section & Type C Outlet

3511+45 - 3512+05 NB Rt. - 79+00 Ramp D Rt. 12" x 60' RCCGMP #16 Gage Mod. w/ 12" x 60' RCCGMP #16 Gage Mod. Safety End Section & Type C Outlet

3512+05 - 3512+65 NB Rt. - 79+60 Ramp D Rt. 12" x 60' RCCGMP #16 Gage Mod. w/ 12" x 60' RCCGMP #16 Gage Mod. Safety End Section & Type C Outlet

3512+65 - 3513+25 NB Rt. - 80+20 Ramp D Rt. 12" x 60' RCCGMP #16 Gage Mod. w/ 12" x 60' RCCGMP #16 Gage Mod. Safety End Section & Type C Outlet

3513+25 - 3513+85 NB Rt. - 80+80 Ramp D Rt. 12" x 60' RCCGMP #16 Gage Mod. w/ 12" x 60' RCCGMP #16 Gage Mod. Safety End Section & Type C Outlet

3513+85 - 3514+45 NB Rt. - 81+40 Ramp D Rt. 12" x 60' RCCGMP #16 Gage Mod. w/ 12" x 60' RCCGMP #16 Gage Mod. Safety End Section & Type C Outlet

3514+45 - 3515+05 NB Rt. - 82+00 Ramp D Rt. 12" x 60' RCCGMP #16 Gage Mod. w/ 12" x 60' RCCGMP #16 Gage Mod. Safety End Section & Type C Outlet

3515+05 - 3515+65 NB Rt. - 82+60 Ramp D Rt. 12" x 60' RCCGMP #16 Gage Mod. w/ 12" x 60' RCCGMP #16 Gage Mod. Safety End Section & Type C Outlet

3515+65 - 3516+25 NB Rt. - 83+20 Ramp D Rt. 12" x 60' RCCGMP #16 Gage Mod. w/ 12" x 60' RCCGMP #16 Gage Mod. Safety End Section & Type C Outlet

3516+25 - 3516+85 NB Rt. - 83+80 Ramp D Rt. 12" x 60' RCCGMP #16 Gage Mod. w/ 12" x 60' RCCGMP #16 Gage Mod. Safety End Section & Type C Outlet

3516+85 - 3517+45 NB Rt. - 84+40 Ramp D Rt. 12" x 60' RCCGMP #16 Gage Mod. w/ 12" x 60' RCCGMP #16 Gage Mod. Safety End Section & Type C Outlet

3517+45 - 3518+05 NB Rt. - 85+00 Ramp D Rt. 12" x 60' RCCGMP #16 Gage Mod. w/ 12" x 60' RCCGMP #16 Gage Mod. Safety End Section & Type C Outlet

3518+05 - 3518+65 NB Rt. - 85+60 Ramp D Rt. 12" x 60' RCCGMP #16 Gage Mod. w/ 12" x 60' RCCGMP #16 Gage Mod. Safety End Section & Type C Outlet

3518+65 - 3519+25 NB Rt. - 86+20 Ramp D Rt. 12" x 60' RCCGMP #16 Gage Mod. w/ 12" x 60' RCCGMP #16 Gage Mod. Safety End Section & Type C Outlet

3519+25 - 3519+85 NB Rt. - 86+80 Ramp D Rt. 12" x 60' RCCGMP #16 Gage Mod. w/ 12" x 60' RCCGMP #16 Gage Mod. Safety End Section & Type C Outlet

3519+85 - 3520+45 NB Rt. - 87+40 Ramp D Rt. 12" x 60' RCCGMP #16 Gage Mod. w/ 12" x 60' RCCGMP #16 Gage Mod. Safety End Section & Type C Outlet

3520+45 - 3521+05 NB Rt. - 88+00 Ramp D Rt. 12" x 60' RCCGMP #16 Gage Mod. w/ 12" x 60' RCCGMP #16 Gage Mod. Safety End Section & Type C Outlet

3521+05 - 3521+65 NB Rt. - 88+60 Ramp D Rt. 12" x 60' RCCGMP #16 Gage Mod. w/ 12" x 60' RCCGMP #16 Gage Mod. Safety End Section & Type C Outlet

3521+65 - 3522+25 NB Rt. - 89+20 Ramp D Rt. 12" x 60' RCCGMP #16 Gage Mod. w/ 12" x 60' RCCGMP #16 Gage Mod. Safety End Section & Type C Outlet

3522+25 - 3522+85 NB Rt. - 89+80 Ramp D Rt. 12" x 60' RCCGMP #16 Gage Mod. w/ 12" x 60' RCCGMP #16 Gage Mod. Safety End Section & Type C Outlet

3522+

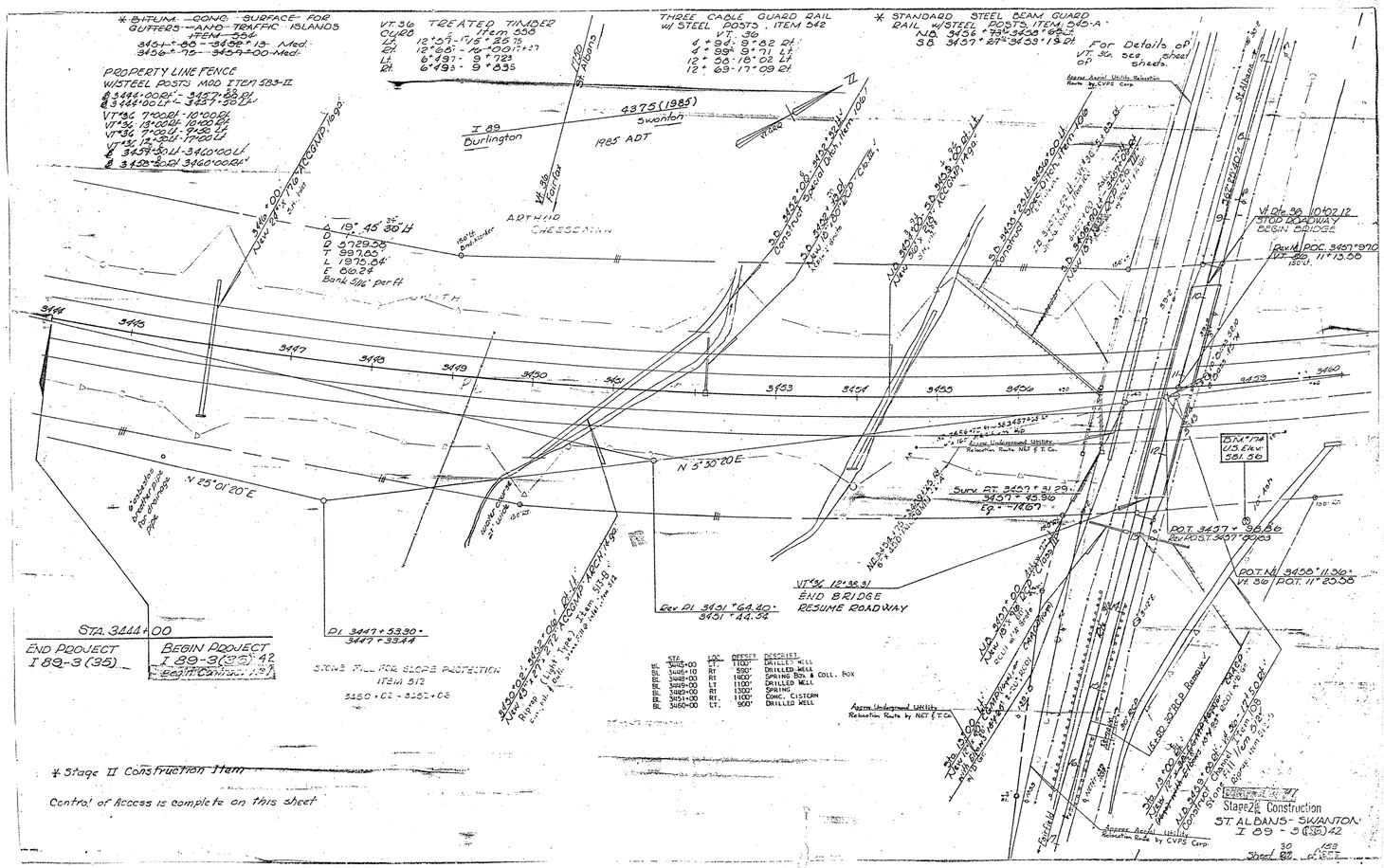

Sta	Loc	Offset	Describe
WL 3445+00	Lt.	1100'	Drilled Well
SL 3445+10	Rt	590'	Drilled Well
SL 3448+00	Rt	1400'	Spring Box & Coll. Box
WL 3449+00	Lt	1100'	Drilled Well
SL 3452+00	Rt	1300'	Spring
WL 3451+00	Rt.	1100'	Conc. Cistern
WL 3460+00	Lt.	900'	Drilled Well

† Stage II Construction Item

Control of Access is complete on this sheet

STA. 3444 = MM 119.11

* BITUM. CONC. SURFACE FOR GUTTERS & TRAFFIC ISLANDS ITEM 554
3461 + 35 - 3461 + 60 Med.
3463 + 25 - 3463 + 75 Med.
3468 + 92 - 3469 + 17 Med.
3474 + 00 - 3474 + 25 Med.

PROPERTY LINE FENCE, ITEM 583-II, MOD.
3460 + 00 - 3476 + 00 Lt. & Rt.

	STA	LOC.	OFFSET	DESCRIPT.
BL	3460+00	LT.	900'	DRILLED WELL
BL	3463+00	LT.	800'	DRILLED WELL

PLAN BY: SURVEYED 3/9/63; PLOTTED TRACED 4/8/63; CHECKED 4/8/63; PLOW CHECKED; NO.

Rev. PT. 3461 + 42.39
Surv. POT. 3461 + 60.42
Eq. = -803'

NB 3459 + 68 Rt. - SB 3461 + 00 Lt.
New 36" x 226' ACCOMP. 14 ga.
Riprap, Horn Cl. E. Smith, Inl., Sch., Out.

SB 3461 + 60
New 18" x 80' ACCOMP. 16 ga.

SB 3461 + 60
New 18" x 80' ACCOMP. 16 ga.

SB 3463 + 80
New 18" x 80' ACCOMP. 16 ga.

PHILIP [illegible] STEN

GREGORY SMITH

P.O.T. 3468 + 77.18

SB 3468 + 82
New 30" x 78' ACCOMP. 14 ga.

+ 150' Lt.

P.O.T. 3472 + 99.21

SB 3474 + 00
New 24" x 94' RCP Cl. III

Vt. 6210

3460 3461 3462 3463 3464 3465 3466 3467 3468 3470 3471 3472 3474 3475 3476

N 5° 30' 20 E

150' Rt.

Tie Bench 28.9' 17.6' 33.4'

NB 3461 + 88
New 18" x 36' ACCGWK, 16 Ga. 5:1

P.T. 3461 + 42.39

NB 3463 + 80
New 18" x 82' ACCOMP. 16 ga.
St., Inl., Dr., Out.

NB 3468 + 00
New 30" x 78' ACCOMP. 14 ga.
St., Inl., Dr., Out.

12' E.

BM # 175
U.S. Elev.
383.54

BM # 175-A
12' E.
Elev. 392.49

NB 3468 + 92 Rt. - NB 3473 + 75 Rt.
Construct Berm Ditch, Item 103

NB 3474 + 00 Rt.
New 24" x 98' RCP Cl. III
80' St., Inl., Dr., Out.

NB 3474 + 00 Rt. - NB 3476 + 75 Rt.
Construct Special Ditch, Item 103

Tie Bench

BM # 175-B
C.M.P. 3 Cy. Bo.
Elev. 399.11

*CONTROL OF ACCESS COMPLETE ON THIS SHEET

* STAGE II CONSTRUCTION ITEM

[redacted]
Stage 2 Construction
STALBANS - SWANTON
I 89 - 3[redacted]42
Sheet 32 of [redacted] 163

K+E

STA. 3460 = MM 114.42

13

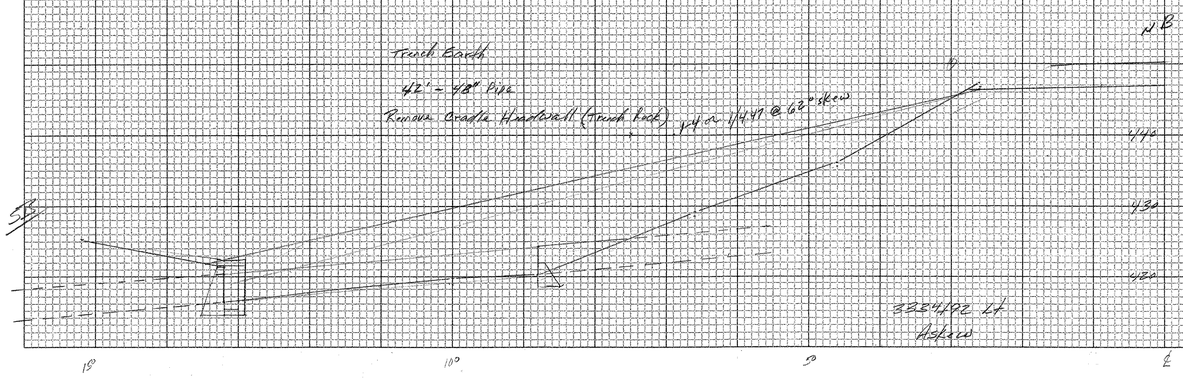

CROSS SECTION SHEET

PROJECT NAME: _____

PROJECT NUMBER: _____

FILE NAME: _____ PLOT DATE: 05-JUN-2000 09

PROJECT LEADER: _____ DRAWN BY: _____

DESIGNED BY: _____ CHECKED BY: _____

const: g:/common/cadd/e-xsection.dgn SHEET 389 OF _____

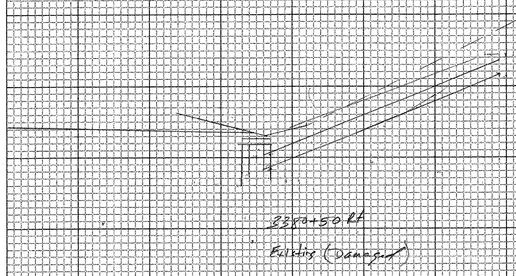

338+50 RT
Failed (Damaged)

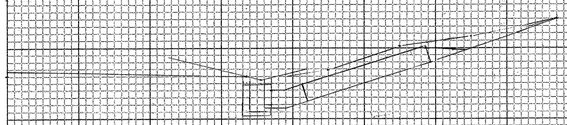

337+75 RT
30"x 18" RCCP } CADD 24
1-30" @ 15°
1-30" MES

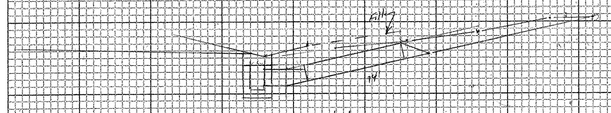

15° Elbow

SB 336+30 RT
30"x 4' RCCP (.075)
1-30° @ 15° Elbow
1-30" M.E.S.

CROSS SECTION SHEET

PROJECT NAME: St Albans
PROJECT NUMBER: IM 089-3(27

FILE NAME:
PROJECT LEADER:
DESIGNED BY:
const: g:/common/cadd/e-xsection.dgn

PLOT DATE: 05-JUN-2000 09
DRAWN BY:
CHECKED BY:
SHEET 385 OF

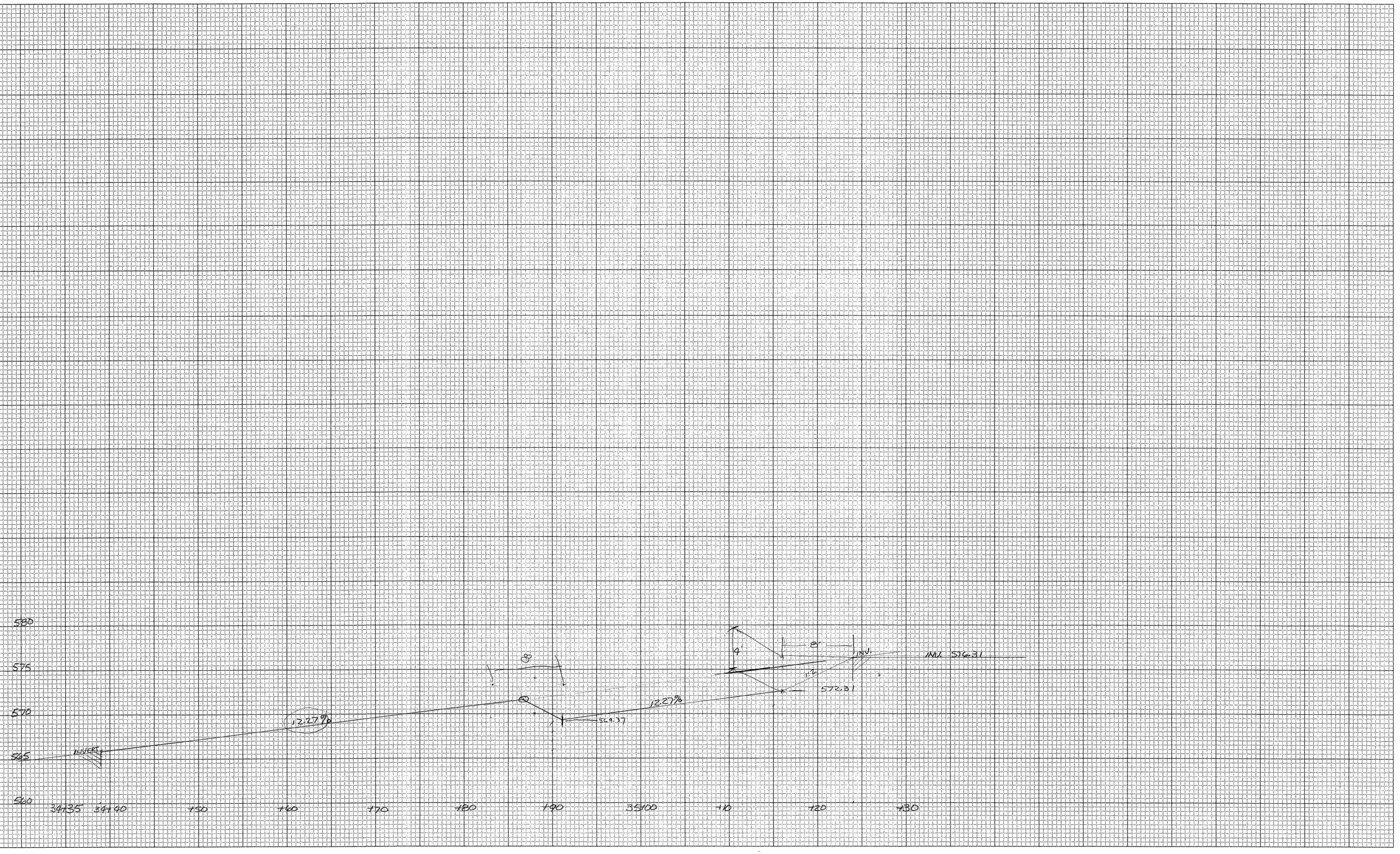

CROSS SECTION SHEET

PROJECT NAME:

PROJECT NUMBER:

FILE NAME:

PROJECT LEADER:

DESIGNED BY:

const: g:/common/cadd/e-xsection.dgn

PLOT DATE: 05-JUN-2000 09

DRAWN BY:

CHECKED BY:

SHEET 386 OF

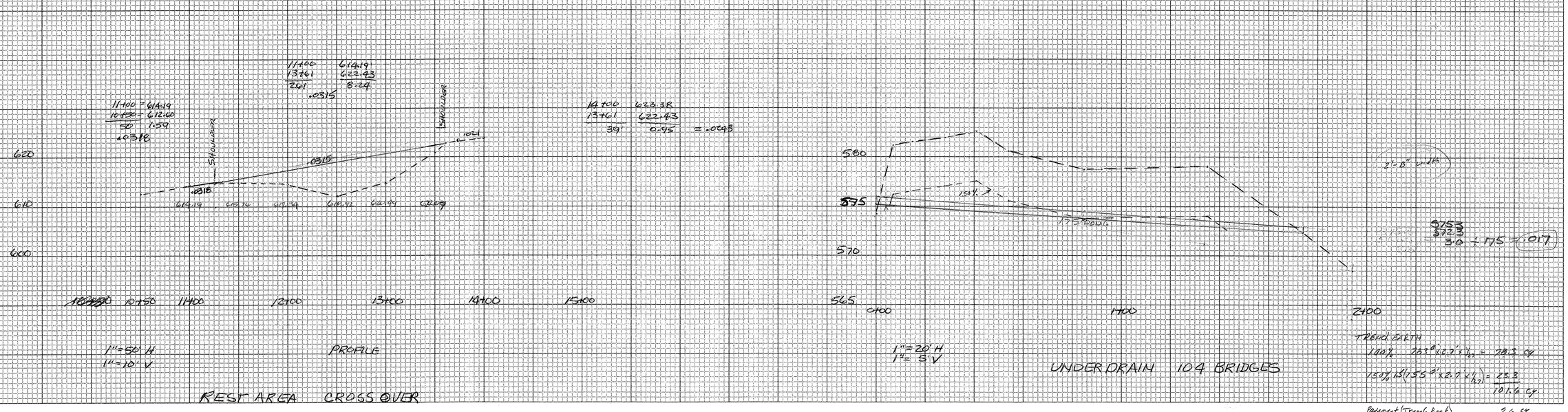

CROSS SECTION SHEET

PROJECT NAME: _____

PROJECT NUMBER: 1.55

FILE NAME: _____ PLOT DATE: 05-JUN-2000 09

PROJECT LEADER: _____ DRAWN BY: _____

DESIGNED BY: _____ CHECKED BY: _____

const: g:/common/cadd/e-xsection.dgn SHEET 387 OF _____

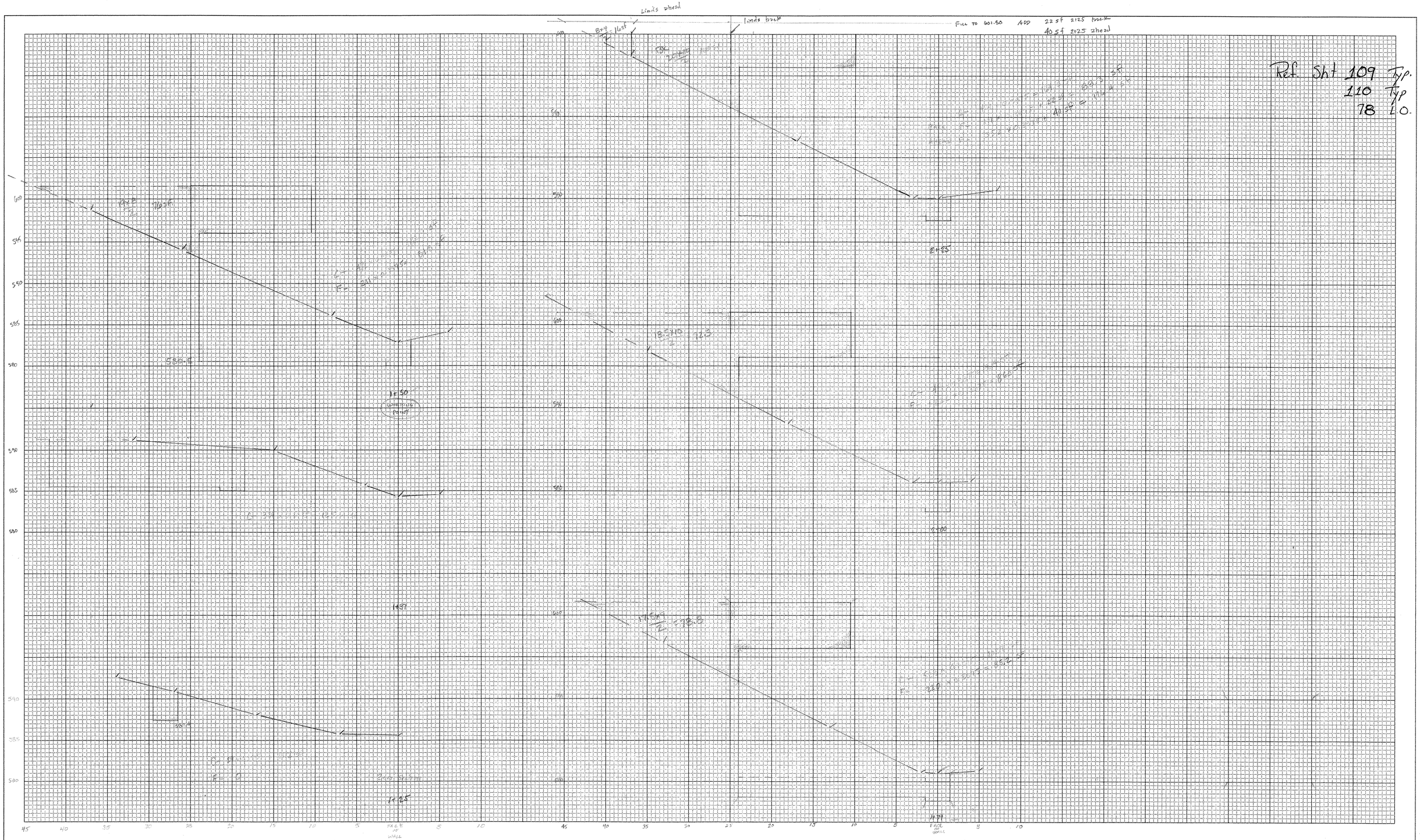

Sht 109
WW #2
Begin

CROSS SECTION SHEET

1" = 5'

PROJECT NAME: FAIRFAX - ST. ALBANS
PROJECT NUMBER: STM 089-3(27)

FILE NAME: STRUCTURE EXCAVATION
PROJECT LEADER: [illegible]
DESIGNED BY:
const: g:/common/cadd/e-xsection.dgn

PLOT DATE: 05-JUN-2000 09
DRAWN BY: [illegible]
CHECKED BY:
SHEET 1 OF 2 388

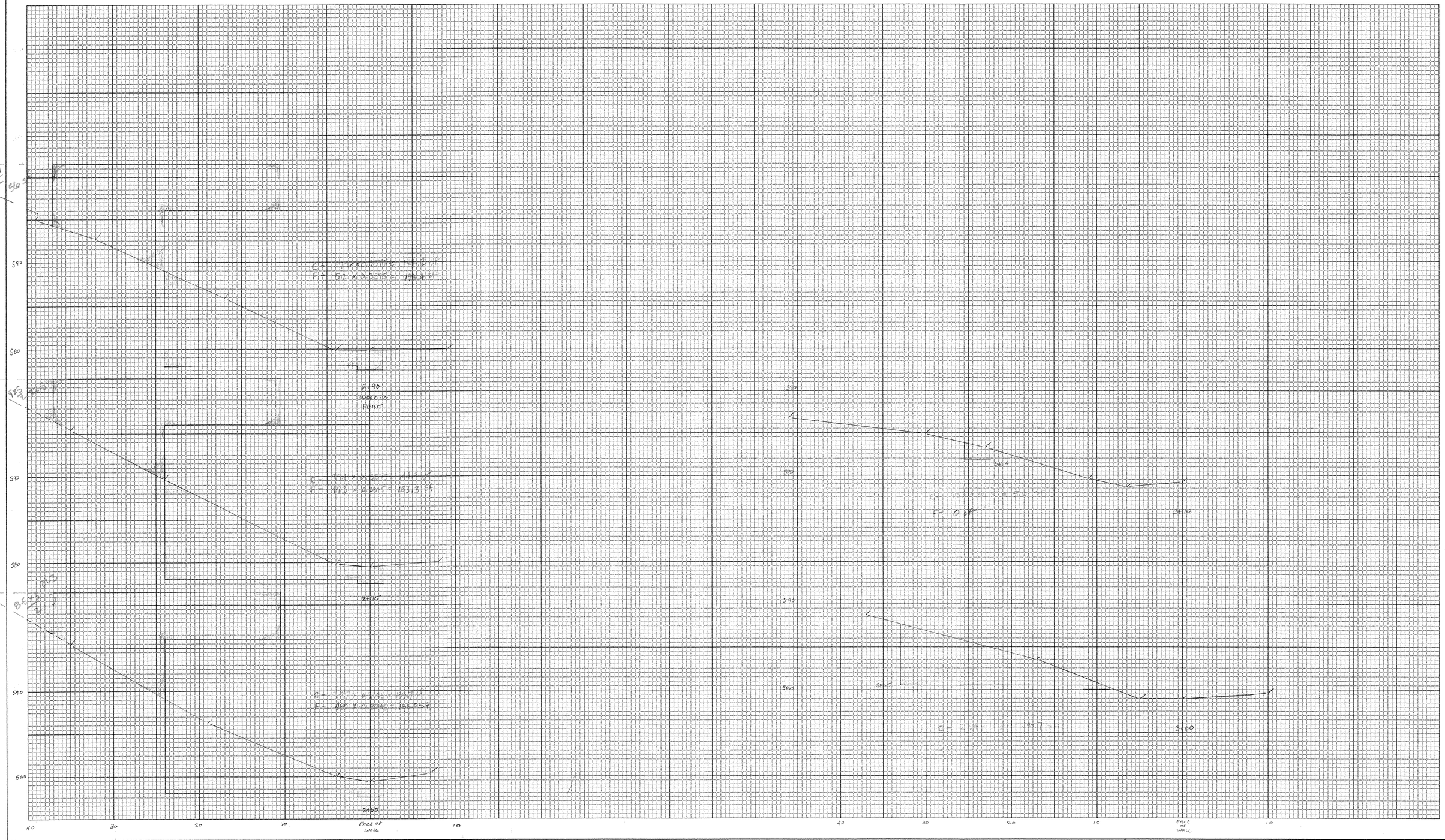
590
580
570
560
550
540
530
520
510
500
490
480
470
460
450
440
430
420
410
400
390
380
370
360
350
340
330
320
310
300
290
280
270
260
250
240
230
220
210
200
190
180
170
160
150
140
130
120
110
100
90
80
70
60
50
40
30
20
10
FACE OF TUNNEL
FACE OF TUNNEL
2435
2450
3410
3400
5805
5905
5905
5805
5805
5805

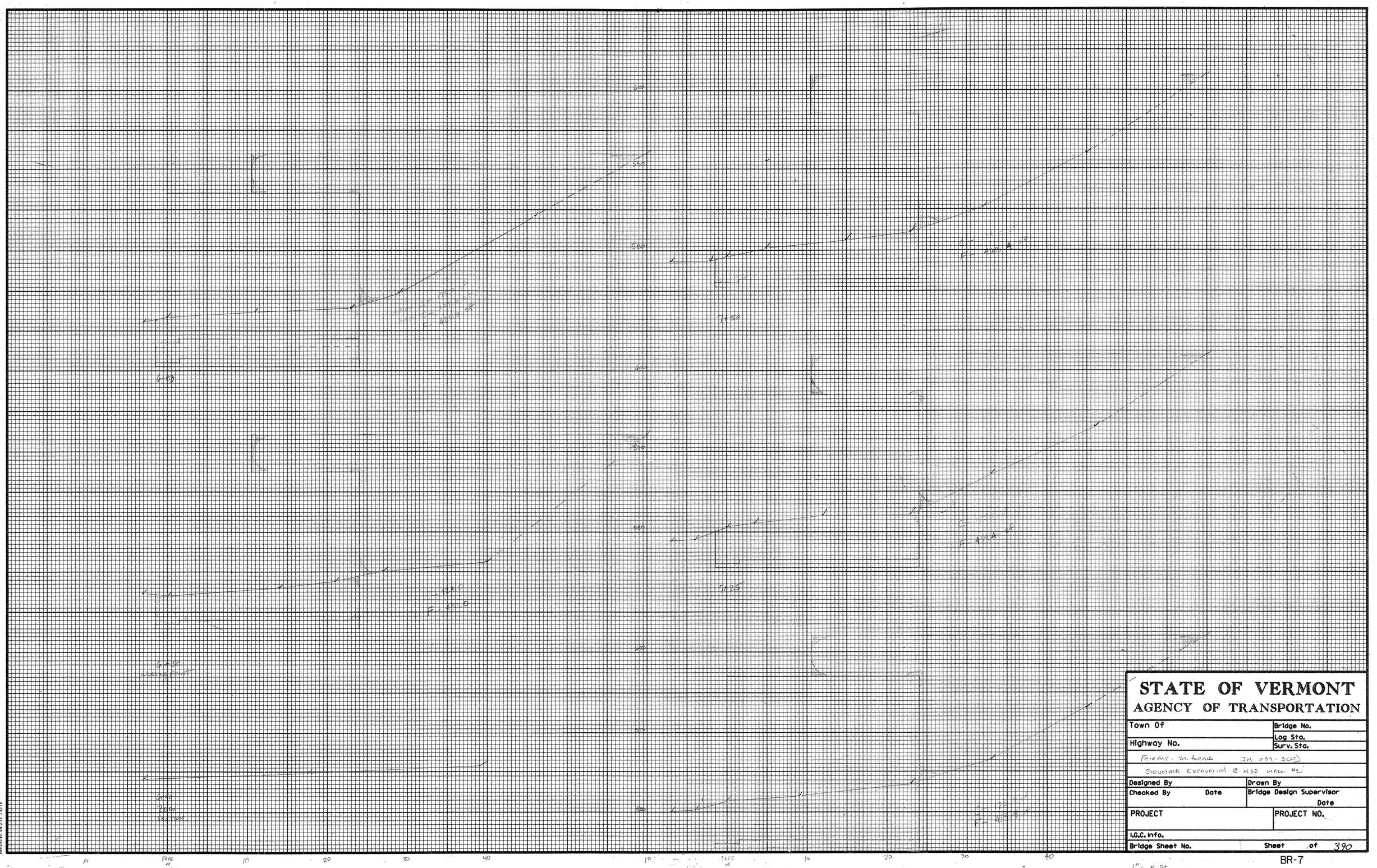
600
590
580
590
580
590
580

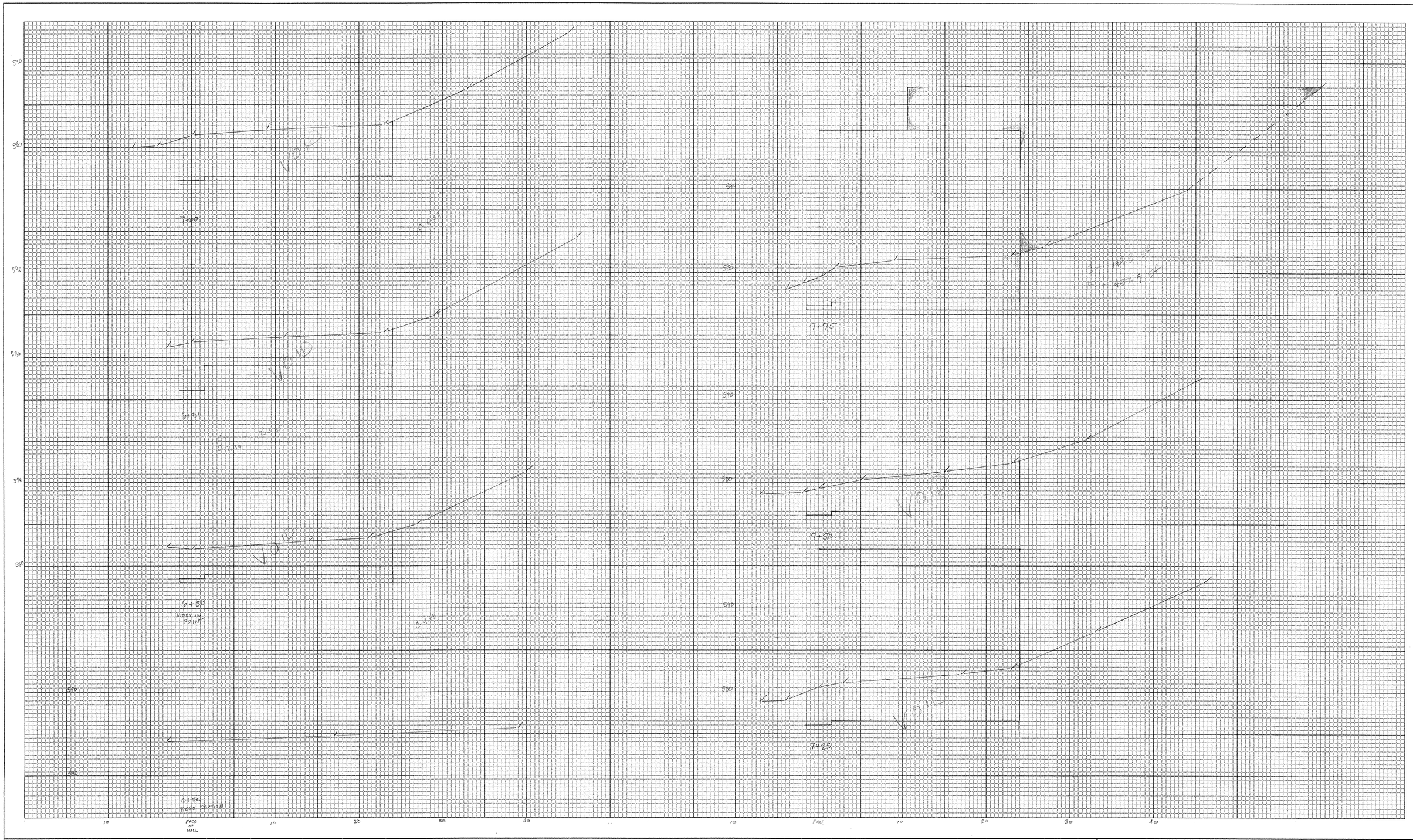

BLUE - STRUCTURE EXCAVATION

GREEN - GRANULAR BORROW

CROSS SECTION SHEET

1" = 5 ft

PROJECT NAME: FAIRFAX - ST. ALBANS IM 089-3(27)

PROJECT NUMBER:

FILE NAME: STRUCTURE EXCAVATION @ MSE WALL #2

PROJECT LEADER:

DESIGNED BY:

const: g:/common/cadd/e-xsection.dgn

PLOT DATE: 05-JUN-2000 09

DRAWN BY: KNIPES

CHECKED BY: 391

SHEET 2 OF 3

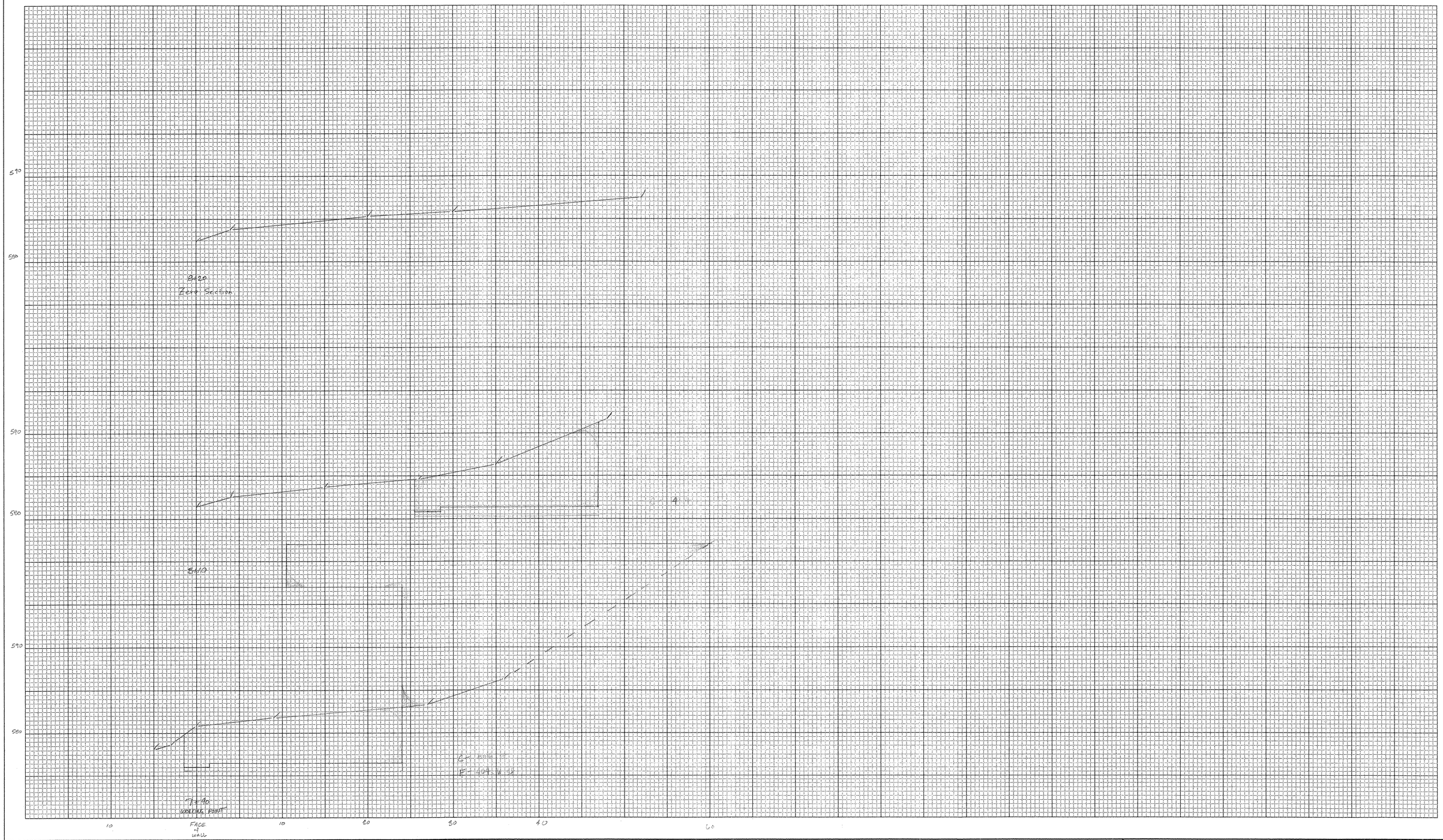

GREEN - GRANULAR BORROW

CROSS SECTION SHEET

Linch - 5 feet

PROJECT NAME: FAIRFAX - St. ALBANS

PROJECT NUMBER: IM 089 - 3(27)

FILE NAME: STRUCTURE EXCAVATION @ NSE WALL #2

PROJECT LEADER:

DESIGNED BY:

const: g:/common/cadd/e-xsection.dgn

PLOT DATE: 05-JUN-2000 09

DRAWN BY: KNIPES

CHECKED BY:

SHEET 3 OF 392

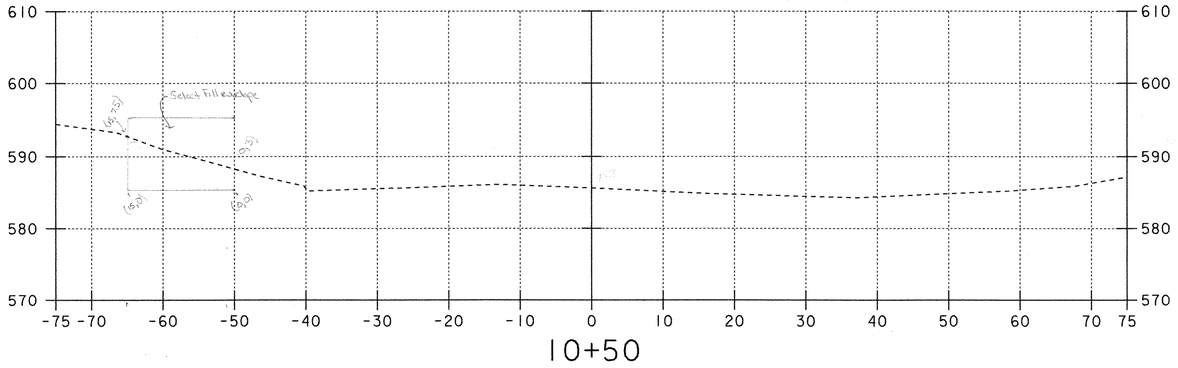

10+50

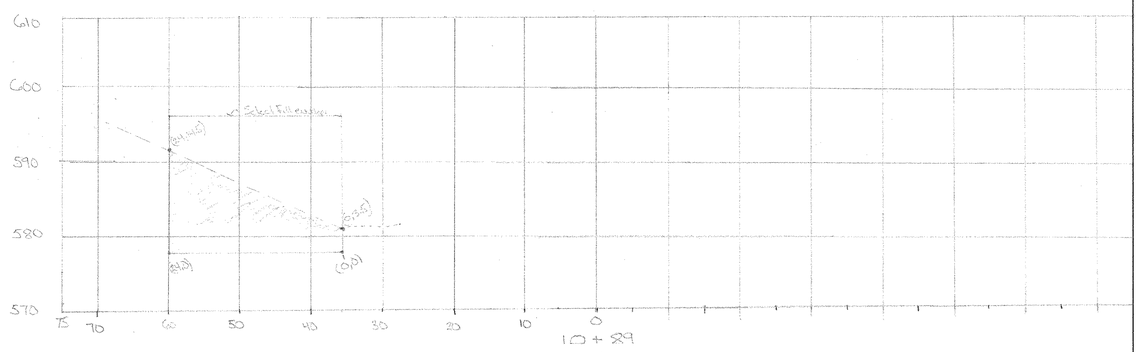

10+89

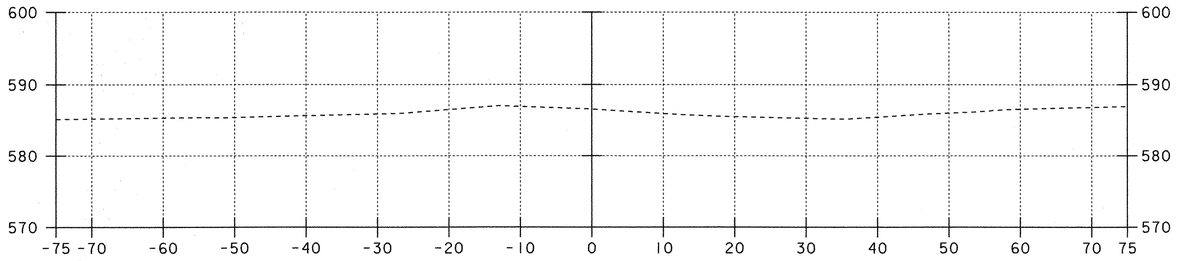

10+25

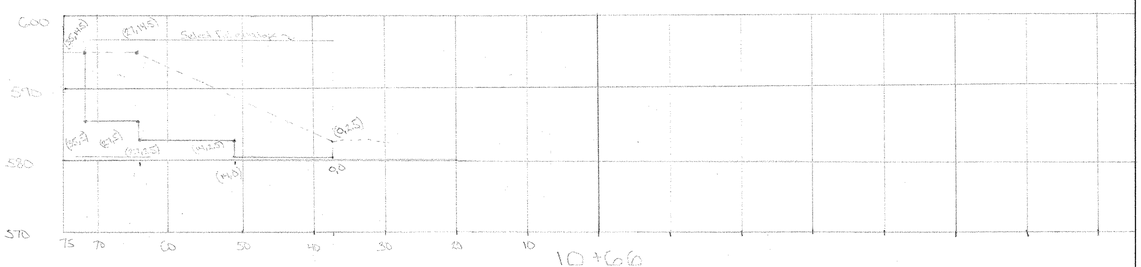

10+66

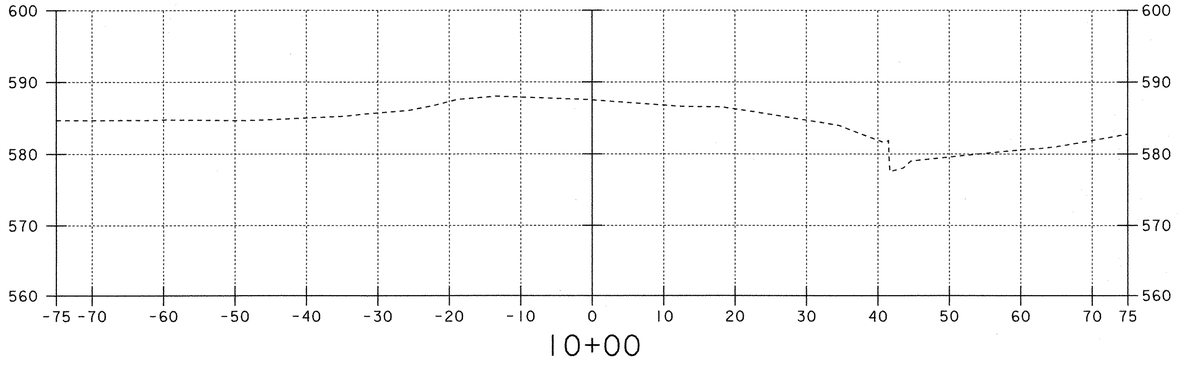

10+00

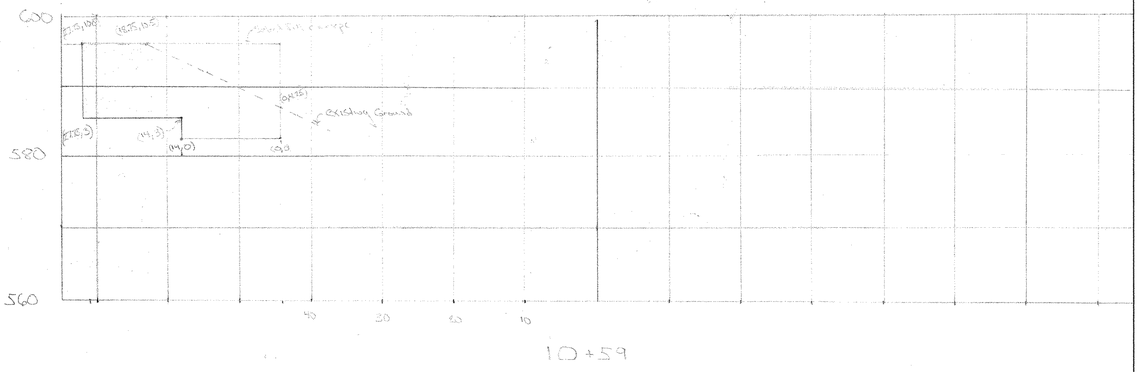

10+59

PROJECT NAME:	Fairfax-Fairfield-St.Albans
PROJECT NUMBER:	IM 089-3 (27)

FILE NAME: 87a007/survey/xa007hsv.dgn	PLOT DATE: 21-MAR-2003
PROJECT LEADER:	DRAWN BY: R. Bullock
DESIGNED BY:	CHECKED BY:
96a056/structures/sa056.alg vt104	SHEET 1 OF 6 393

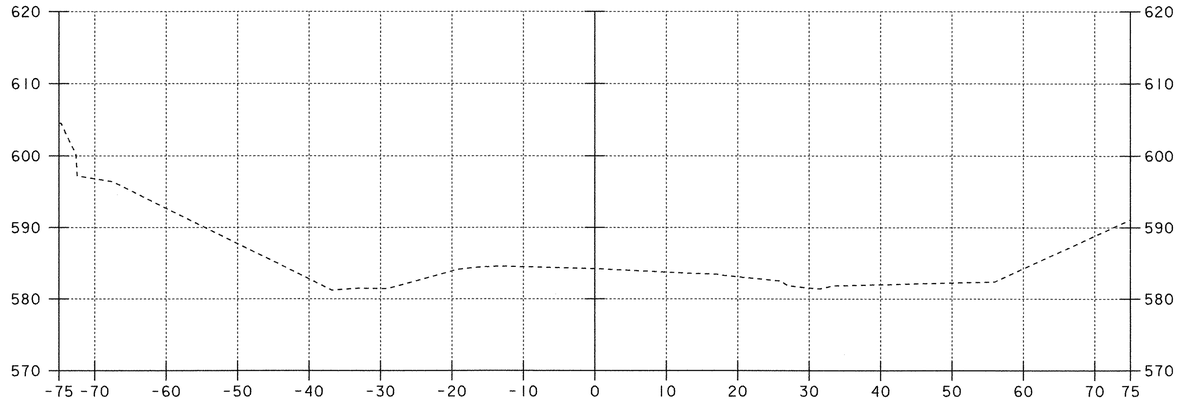

11+00

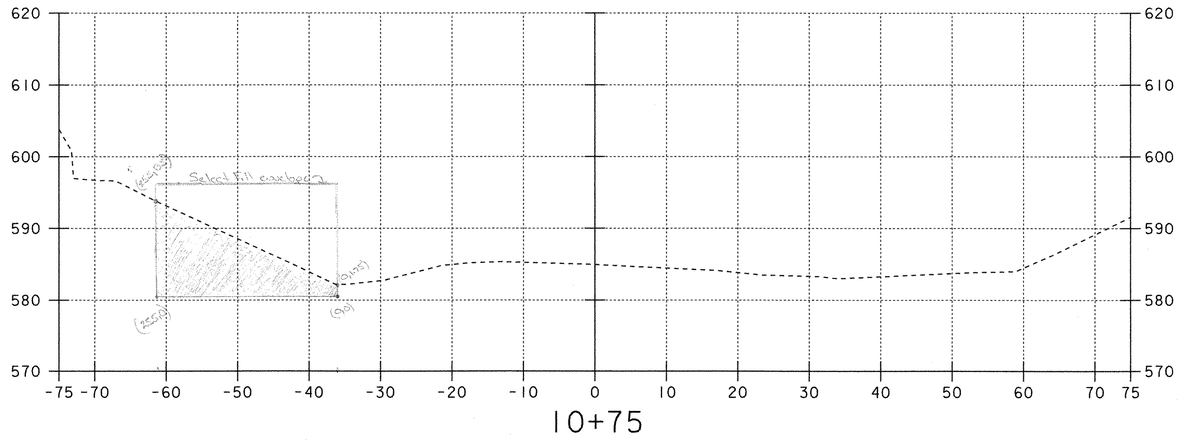

10+75

PROJECT NAME: Fairfax-Fairfield-St.Albans	
PROJECT NUMBER: IM 089-3 (27)	
FILE NAME: 87a007/survey/xa007hsv.dgn	PLOT DATE: 21-MAR-2003
PROJECT LEADER:	DRAWN BY: R. Bullock
DESIGNED BY:	CHECKED BY:
96a056/structures/sa056.alg vt104	SHEET 2 OF 6 394

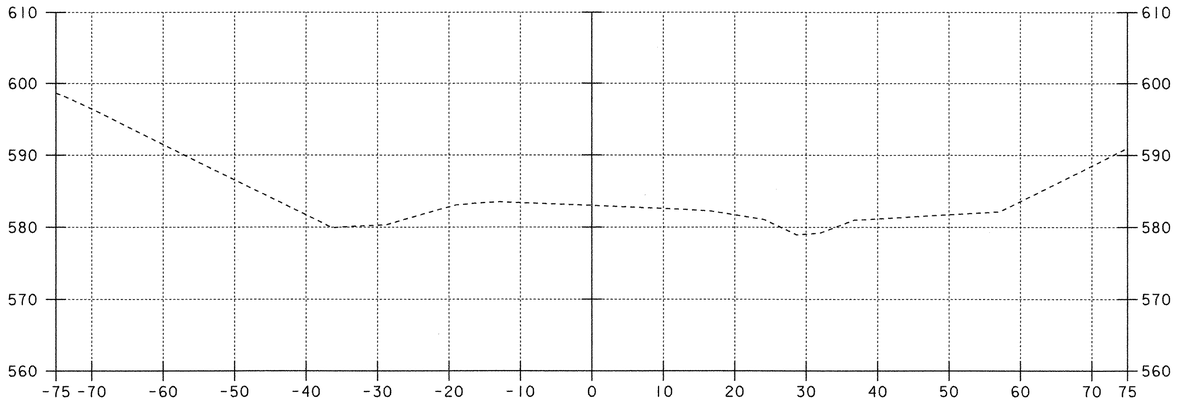

11+50

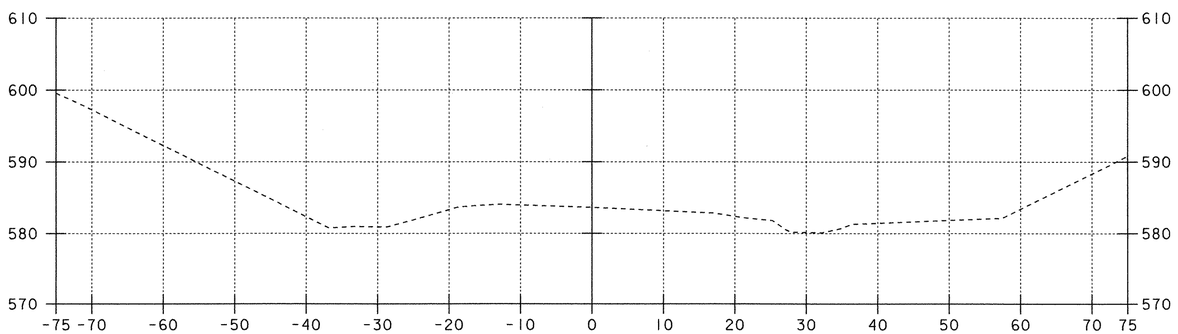

11+25

PROJECT NAME:	Fairfax-Fairfield-St.Albans
PROJECT NUMBER:	IM 089-3 (27)
FILE NAME: 87a007/survey/xa007hsv.dgn	PLOT DATE: 21-MAR-2003
PROJECT LEADER:	DRAWN BY: R. Bullock
DESIGNED BY:	CHECKED BY:
96a056/structures/sa056.alg vt104	SHEET 3 OF 6 395

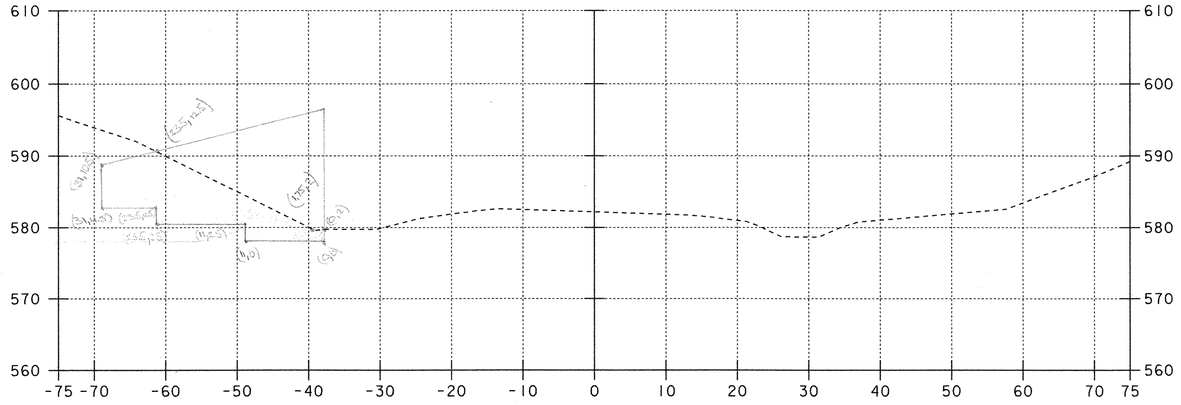

~~12+00~~
12+04

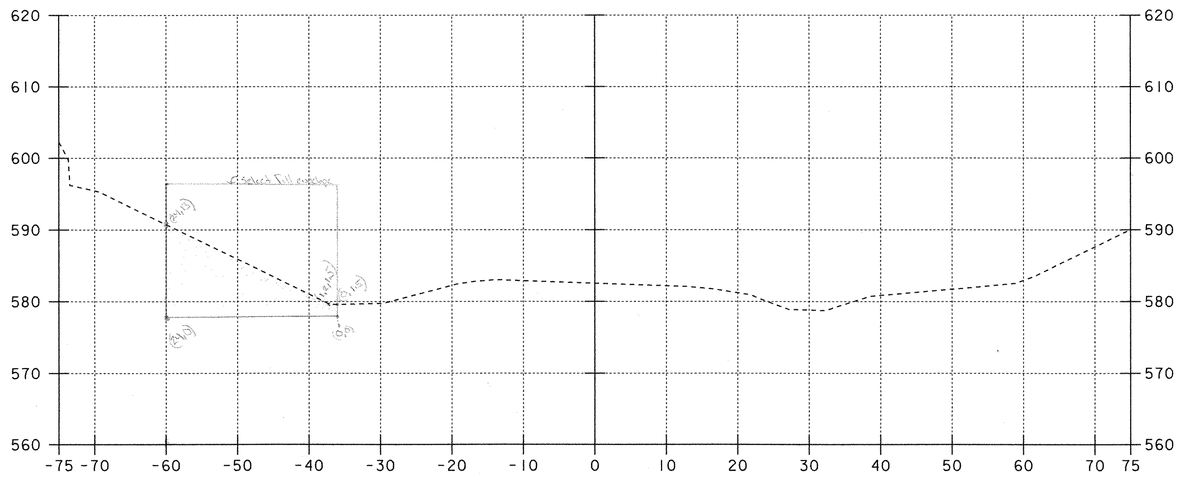

~~11+75~~
11+96

PROJECT NAME:	Fairfax-Fairfield-St.Albans
PROJECT NUMBER:	IM 089-3 (27)

FILE NAME: 87a007/survey/xa007hsv.dgn	PLOT DATE: 21-MAR-2003
PROJECT LEADER:	DRAWN BY: R. Bullock
DESIGNED BY:	CHECKED BY:
96a056/structures/sa056.alg v1104	SHEET 4 OF 6 396

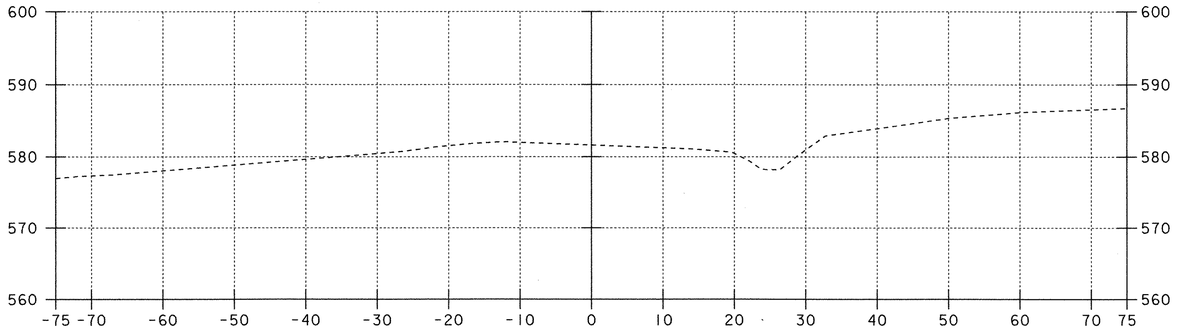

12+50

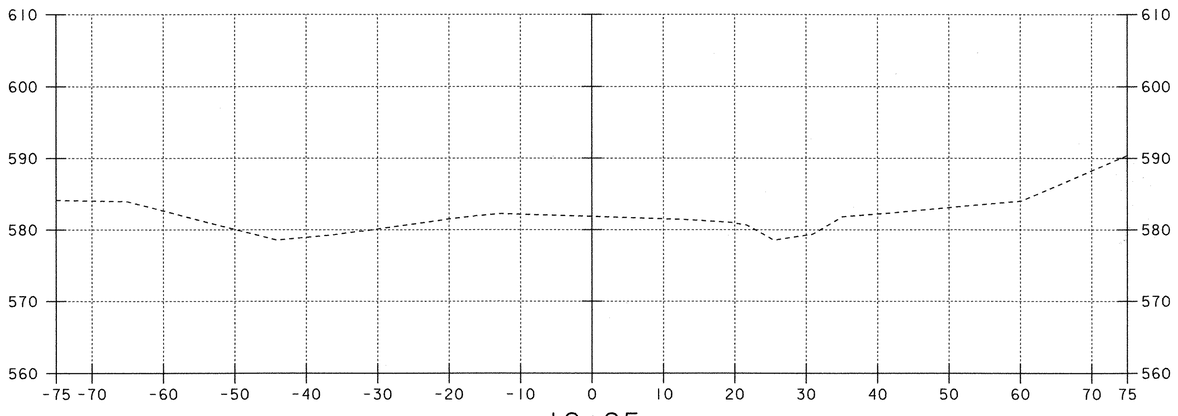

12+25

PROJECT NAME: Fairfax-Fairfield-St.Albans	
PROJECT NUMBER: IM 089-3 (27)	
FILE NAME: 87a007/survey/xa007hsv.dgn	PLOT DATE: 21-MAR-2003
PROJECT LEADER:	DRAWN BY: R. Bullock
DESIGNED BY:	CHECKED BY:
96a056/structures/sa056.alg vt104	SHEET 5 OF 6 397

Dale Norton

IM 089-3(27)

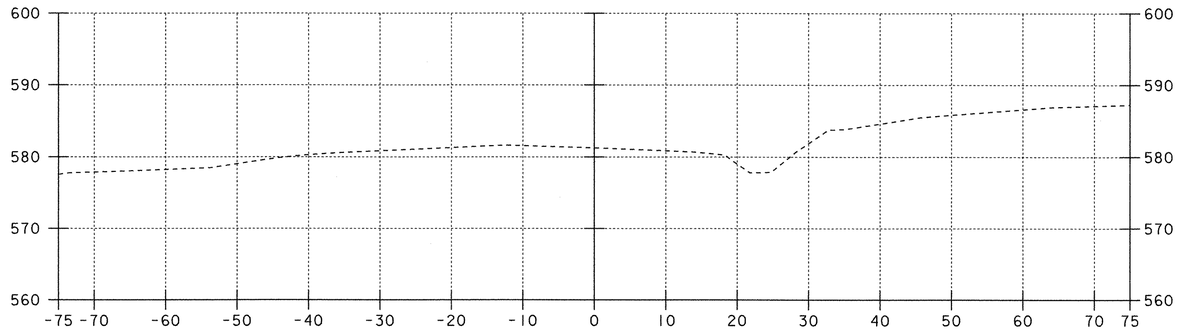

12+86

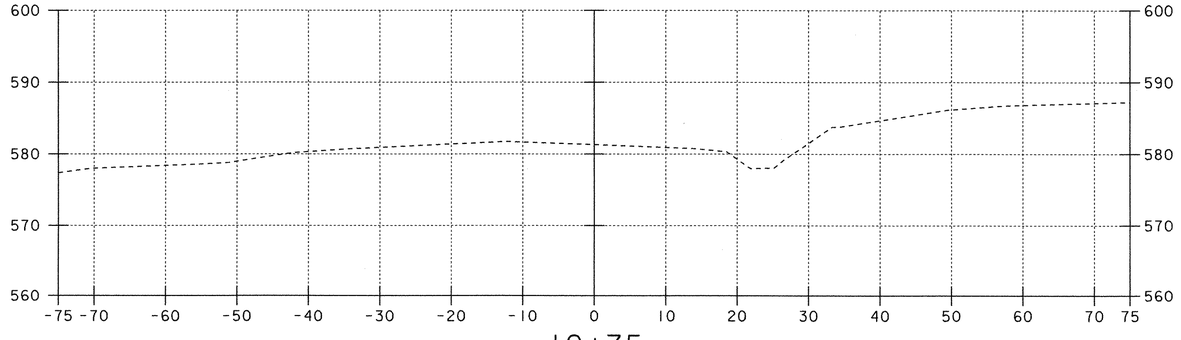

12+75

PROJECT NAME: Fairfax-Fairfield-St.Albans	
PROJECT NUMBER: IM 089-3 (27)	
FILE NAME: 87a007/survey/xa007hsv.dgn	PLOT DATE: 21-MAR-2003
PROJECT LEADER:	DRAWN BY: R. Bullock
DESIGNED BY:	CHECKED BY:
96a056/structures/sa056.alg vt104	SHEET 6 OF 6 398

The Reinforced Earth Company

8614 Westwood Center Drive Suite 1100, Vienna, Virginia 22182 (703) 821-1175

GENERAL NOTES

DESIGN CRITERIA

1. DESIGN IS BASED ON THE ASSUMPTION THAT THE MATERIAL WITHIN THE REINFORCED EARTH VOLUME, METHODS OF CONSTRUCTION AND QUALITY OF PREFABRICATED MATERIALS SHALL CONFORM TO THE CONTRACTING AGENCY'S TECHNICAL SPECIFICATIONS FOR REINFORCED EARTH WALLS.

2. SOILS CHARACTERISTICS ASSUMED FOR DESIGN:

   SELECT GRANULAR BACKFILL
   Ø = 34 degrees, c = 0 p.s.f., γ= 140 p.c.f.

   RANDOM BACKFILL
   Ø = 30 degrees, c = 0 p.s.f., γ= 140 p.c.f.

   FOUNDATION MATERIAL
   Ø = 33 degrees, c = 0 p.s.f. γ= 127 p.c.f. /1

3. THE MAXIMUM APPLIED BEARING PRESSURE AT THE FOUNDATION LEVEL IS AS SHOWN ON THE WALL ELEVATIONS FOR EACH DESIGN CASE. IT IS THE RESPONSIBILITY OF THE OWNER TO DETERMINE THAT THIS APPLIED BEARING PRESSURE IS ALLOWABLE FOR THAT LOCATION.

4. ANY UNSUITABLE FOUNDATION MATERIAL BELOW THE REINFORCED EARTH VOLUME, AS DETERMINED BY THE ENGINEER, SHALL BE EXCAVATED AND REPLACED WITH SELECT GRANULAR BACKFILL OR OTHERWISE STABILIZED AS DIRECTED BY THE ENGINEER. /1

5. REINFORCING STRIPS SHALL BE 50mm WIDE AND 4mm THICK,AND SHALL CONFORM TO THE PHYSICAL AND MECHANICAL PROPERTIES OF ASTM A-572 GRADE 65. GALVANIZATION SHALL BE APPLIED IN ACCORDANCE WITH ASTM A-123 OR AASHTO M111 ($2oz/ft^2$).

WALL CONSTRUCTION

6. STATIONS SHOWN ARE ALONG C/L OF ROADWAY.

7. NOTE NOT USED.

8. FOR LOCATION AND ALIGNMENT OF REINFORCED EARTH WALLS, SEE PLAN - SHEET 2 OF 6 AND CONTRACT PLANS.

9. NOTE NOT USED.

10. IF PILES ARE LOCATED WITHIN THE REINFORCED EARTH VOLUME, THEY SHALL BE DRIVEN PRIOR TO CONSTRUCTION OF THE REINFORCED EARTH WALL UNLESS A METHOD TO PROTECT THE STRUCTURE, WHICH IS ACCEPTABLE TO THE ENGINEER AND THE REINFORCED EARTH COMPANY, AND IS PROPOSED AND APPROVED IN WRITING.

11. BACKFILL MATERIAL SHALL BE COMPACTED IN ACCORDANCE WITH THE SPECIFICATIONS FOR REINFORCED EARTH WALLS TO A LEVEL OF 2" (±) ABOVE THE TIE STRIPS EMBEDDED IN THE PANELS. INSTALLATION OF REINFORCING STRIPS SHALL BE PERMITTED ONLY AFTER PLACEMENT AND COMPACTION OF THE BACKFILL MATERIAL HAS REACHED THE REQUIRED LEVEL.

12. COMPACTION AND OPERATION EQUIPMENT SHALL BE KEPT A MINIMUM DISTANCE OF 3'-0" FROM THE BACK FACE OF THE REINFORCED EARTH PANELS. COMPACTION WITHIN 3'-0" OF THE REINFORCED EARTH PANELS SHALL BE ACHIEVED WITH AT LEAST THREE (3) PASSES OF A LIGHTWEIGHT MECHANICAL TAMPER, ROLLER OR VIBRATORY SYSTEM. NO COMPACTION DENSITY TESTS SHALL BE TAKEN WITHIN THE 3 FT. ZONE.

WALL CONSTRUCTION (CONT.)

13. IF STRUCTURES IN EXCESS OF 20' IN HEIGHT OCCUR, THE FINISHED GRADE IN FRONT OF THE WALL SHALL BE PLACED AND COMPACTED BEFORE WALL CONSTRUCTION EXCEEDS A HEIGHT OF 20'. FINISHED GRADE BACKFILL SHALL BE COMPACTED TO 95% OF ASTM D-698, METHODS 'C' OR 'D', UNLESS OTHERWISE DIRECTED BY THE ENGINEER.

14. IT IS THE CONTRACTOR'S RESPONSIBILITY TO DETERMINE THE LOCATION OF ANY GUARDRAIL POSTS BEHIND THE REINFORCED EARTH PANELS. PRIOR TO PLACEMENT OF THE TOP LAYER OF REINFORCING STRIPS, INDIVIDUAL STRIPS MAY BE SKEWED TO AVOID THE POST LOCATIONS IF AUTHORIZED BY THE REINFORCED EARTH COMPANY. ANY DAMAGE DONE TO THE REINFORCING STRIPS DUE TO THE INSTALLATION OF THE GUARDRAIL SHALL BE REPAIRED BY THE CONTRACTOR AT THE CONTRACTOR'S EXPENSE.

15. IF EXISTING OR FUTURE STRUCTURES, PIPES, FOUNDATIONS OR GUARDRAIL POSTS WHICH ARE WITHIN THE REINFORCED EARTH VOLUME INTERFERE WITH THE NORMAL PLACEMENT OF REINFORCING STRIPS AND SPECIFIC DIRECTION HAS NOT BEEN PROVIDED ON THE PLANS, THE CONTRACTOR SHALL NOTIFY THE REINFORCED EARTH COMPANY TO DETERMINE WHAT COURSE OF ACTION SHOULD BE TAKEN.

16. ALL DETAILING AND CHECKING OF REINFORCING STEEL FOR ANY C.I.P. CONCRETE WORK IS THE RESPONSIBILITY OF THE CONTRACTOR.

17. TOP PANELS BENEATH CAST-IN-PLACE COPING SHALL HAVE #4 DOWELS PROTRUDING FROM THEIR TOP EDGE.

18. FOR OTHER INFORMATION PERTAINING TO WALL CONSTRUCTION PLEASE REFER TO THE REINFORCED EARTH CONSTRUCTION MANUAL.

19. THE CONTRACTOR IS RESPONSIBLE FOR GRADUALLY DEFLECTING UPPER REINFORCING STRIPS DOWNWARD TO AVOID CONFLICTS WITH THE IMPERVIOUS MEMBRANE AND OR SUBGRADE PREPARATION. THE CONTRACTOR'S ATTENTION IS DIRECTED ESPECIALLY TO SITUATIONS WHERE ROADWAY SUPERELEVATION AND OR SOIL MIXING ARE ANTICIPATED.

20. THE CONTRACTOR IS RESPONSIBLE FOR CONTROLLING STORM WATER DRAINAGE IN THE VICINITY OF THE WALL DURING CONSTRUCTION. STORM WATER RUNOFF IS TO BE COLLECTED AND DISCHARGED AWAY FROM THE WALL AND REINFORCED BACKFILL.

MATERIALS NOTES

21. NOMINAL STRIP LENGTHS

    THE REINFORCING STRIP LENGTHS SHOWN ON THE PLANS, MEASURED FROM BACK FACE OF PANEL, ARE THE NOMINAL LENGTHS REQUIRED BY CALCULATION. THE ACTUAL FABRICATED STRIP LENGTHS ARE OFTEN LONGER (UP TO 6") DUE TO MANUFACTURING TOLERANCES. THE REQUIRED HORIZONTAL LIMIT OF GRANULAR BACKFILL IS EQUAL TO THE NOMINAL STRIP LENGTH. ADDITIONAL GRANULAR BACKFILL BEYOND THE NOMINAL STRIP LENGTH IS NOT REQUIRED BY CALCULATION.

22. SELECT BACKFILL QUANTITY

    THE SELECT BACKFILL QUANTITY INDICATED BY THE REINFORCED EARTH COMPANY IS CALCULATED BY MULTIPLYING THE NOMINAL STRIP LENGTHS SHOWN ON THE PLANS (PLUS 1.0 FT.) BY THEIR TRIBUTARY WALL SURFACE AREA AND CONVERTING THE RESULT TO A NEATLINE CUBIC YARD QUANTITY. THIS INFORMATION IS FURNISHED FOR THE CONTRACTOR'S INFORMATION ONLY AND IS NOT INTENDED TO REPRESENT THE ACTUAL QUANTITIES REQUIRED TO COMPLETE THE WORK. THE CONTRACTOR MUST CALCULATE HIS OWN EXCAVATION AND BACKFILL QUANTITIES BASED UPON THE SPECIFIC CONDITIONS OF THE PROJECT.

MATERIALS NOTES (CONT.)

23. PANEL FINISH

    PRECAST FACING PANELS FOR PERMANENT WALLS SHALL HAVE AN ASHLAR STONE FORM LINER FINISH. PRECAST FACING PANELS FOR THE TEMPORARY WALL SHALL HAVE A PLAIN STEEL FORM FINISH. PANEL TYPES "B", "CE" (CORNER ELEMENTS) AND "J" (SLIP JOINT COVERS) SHALL HAVE A PLAIN STEEL FORM FINISH. ALL PRECAST PIECES FOR PERMANENT WALLS SHALL BE COLORED WITH BAYFERROX 330 3.5% (HEAT STABLE) PIGMENT DYE.

24. NOTE TO CONTRACTORS

    ONLY THE FOLLOWING MATERIALS ARE SUPPLIED BY THE REINFORCED EARTH COMPANY:

    - PRECAST CONCRETE FACING PANELS
    - REINFORCING STRIPS
    - BOLT SETS (FOR ATTACHING PANELS TO THE REINFORCING STRIPS)
    - BEARING BLOCKS
    - RUBBER SHIMS
    - FILTER CLOTH AND ADHESIVE (FOR PANEL JOINTS ONLY)

    ANY OTHER MATERIALS CALLED FOR IN THE CONTRACT PLANS OR SPECIFICATIONS ARE TO BE SUPPLIED BY THE CONTRACTOR. ALL MATERIALS REQUIRED FOR THE IMPERVIOUS MEMBRANE AS WELL AS ANY JOINT MATERIALS SHOWN AT THE INTERFACE OF PRECAST PANELS AND CAST-IN-PLACE CONCRETE STRUCTURES ARE TO BE SUPPLIED BY THE ERECTION CONTRACTOR. ALL SANDBLASTING, PAINTING, SEALERS OR OTHER SPECIAL APPLIED COATINGS ARE ALSO SUPPLIED/INSTALLED BY THE CONTRACTOR IN THE FIELD FOLLOWING PANEL ERECTION.

25. THE REINFORCED EARTH COMPANY SUPPLIES PRECAST CONCRETE FACING PANELS AND ACCESSORIES TO BE USED IN CONJUNCTION WITH OTHER MATERIALS IN THE CONSTRUCTION OF THE REINFORCED EARTH® RETAINING WALLS DETAILED HEREIN. THE CONSTRUCTION AND QUALITY CONTROL PROCEDURES MANUAL FURNISHED BY THE REINFORCED EARTH COMPANY IS INTENDED TO PROVIDE A GENERAL EXPLANATION OF THE SYSTEM. IT IS THE CONTRACTOR'S OBLIGATION TO DEVISE AND EXECUTE A PROJECT SPECIFIC ERECTION SEQUENCE, PANEL UNLOADING, HANDLING AND BRACING SYSTEM, AND FALL PROTECTION SYSTEM. THE BRACING SYSTEM SHOWN IN THE CONSTRUCTION AND QUALITY CONTROL PROCEDURES MANUAL IS GENERAL IN NATURE AND DOES NOT ACCOUNT FOR PROJECT SPECIFIC CRITERIA. COMPLIANCE WITH THE GUIDELINES IN THIS MANUAL DOES NOT RELIEVE THE CONTRACTOR OF ITS RESPONSIBILITY TO ADHERE TO THE PROJECT PLANS, SPECIFICATIONS AND CONTRACT DOCUMENTS OR COMPLIANCE WITH ALL FALL PROTECTION, SAFETY, LAWS, STANDARDS AND PROCEDURES AT THE JOBSITE. CONTRACTORS SHOULD TAKE SPECIAL PRECAUTIONS TO PREVENT THE PANELS FROM SHIFTING OR FALLING DURING THE ERECTION PROCESS.

26. SEE CONTRACT PLANS SHEET 108 OF 370 FOR ADDITIONAL NOTES.

INDEX

SHEET NO.	CONTENTS
1	GENERAL NOTES
2	PLAN VIEW/STAGED CONSTRUCTION DETAILS
3	ELEVATION VIEW - WALL NO. 1
4	ELEVATION VIEW - WALL NO. 2
5	DETAILS
6	STANDARD PANEL DETAILS

CERTIFIED WITH RESPECT TO THE INTERNAL STABILITY OF REINFORCED EARTH STRUCTURES ONLY

STATE OF VERMONT
PETER L. ANDERSON
6161
PROFESSIONAL ENGINEER

2/15/01

This drawing contains information proprietary to The Reinforced Earth Company, and is being furnished for the use of VERMONT AGENCY OF TRANSPORTATION only in connection with this project, and the information contained herein is not to be transmitted to any other organization unless specifically authorized in writing by The Reinforced Earth Company. The Reinforced Earth Company is exclusive licensee in the United States under patents issued to Henri Vidal, and the furnishing of this drawing does not constitute an expressed or implied license under the Vidal patents.

The design contained on these drawings is based on information provided by the owner. On the basis of this information, The Reinforced Earth Company has designed, and is responsible for the internal stability of the structure only. External stability, including foundation (bearing capacity and settlement) and slope (global) stability, is the responsibility of the owner.

The Reinforced Earth Company
8614 Westwood Center Drive Suite 1100, Vienna, Virginia 22182 (703) 821-1175

"REINFORCED EARTH" is the registered trademark of The Reinforced Earth Company.

DESIGNED BY: KPB				PROJECT NAME	FAIRFAX-FAIRFIELD-ST. ALBANS I-89 OVER VT 104	DATE 2-15-01
PROJECT ENGR: KPB				LOCATION	FAIRFAX-FAIRFIELD-ST. ALBANS VERMONT	CONTRACT NO. 9360
CHECKED BY: PLA	/1	3/23/01	REVISED PER VT AOT COMMENTS MEMO DATED 3/22/01	OWNER	VT AOT	DRAWING NO. 1 OF 6
ENG. MANAGER	REV.	DATE	DESCRIPTION	DRAWING COVERS	GENERAL NOTES 399MSE	SCALE AS SHOWN

C:\9360\9360_COV.DWG

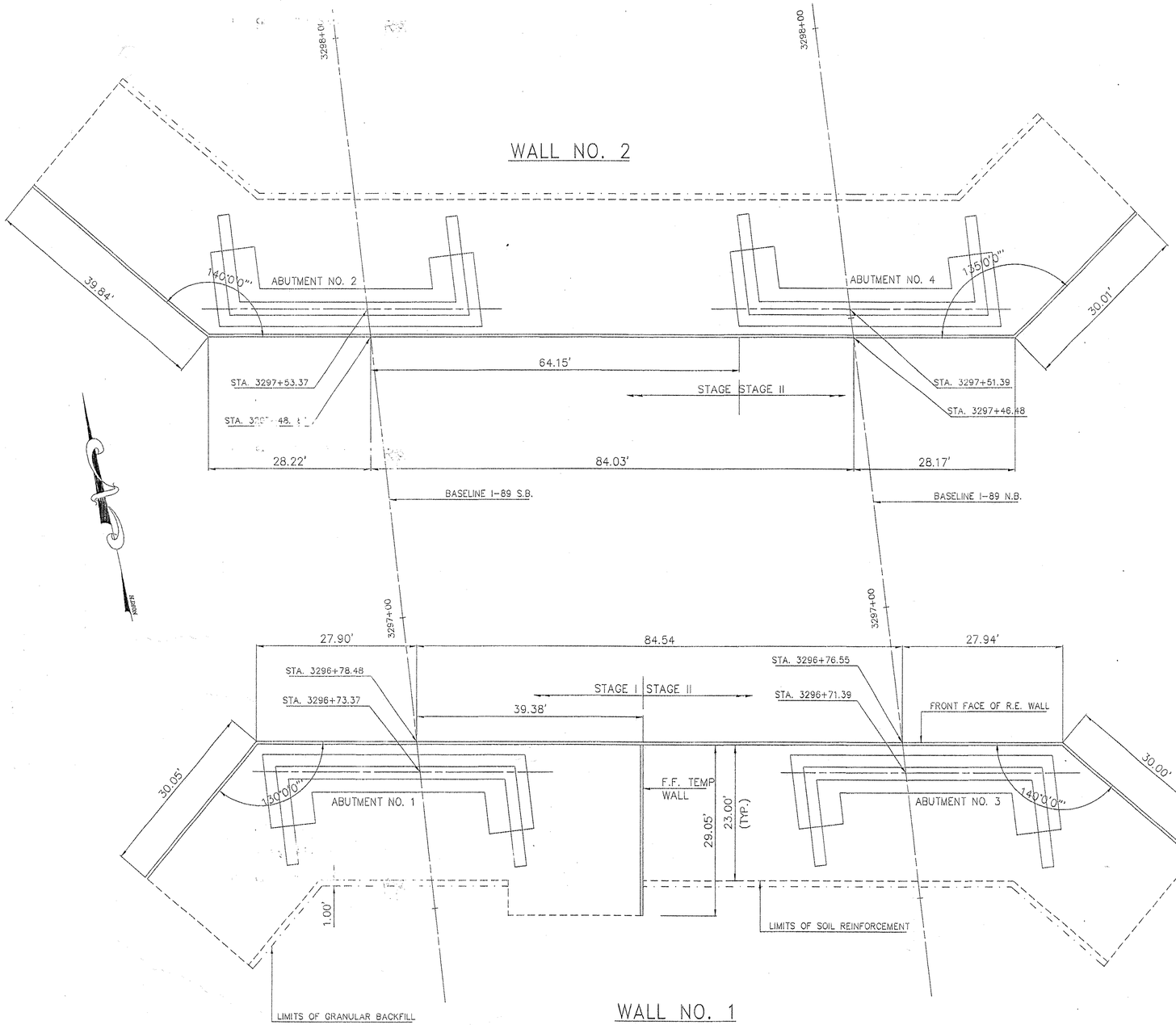

WALL NO. 1

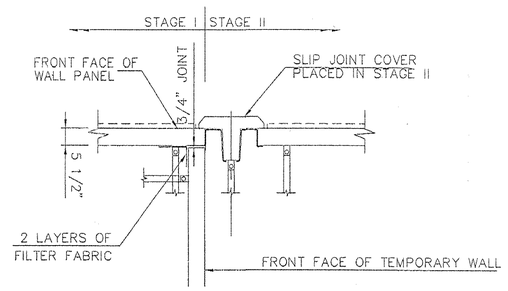

STAGED CONSTRUCTION DETAIL

SCALE: 1/2" = 1'- 0"

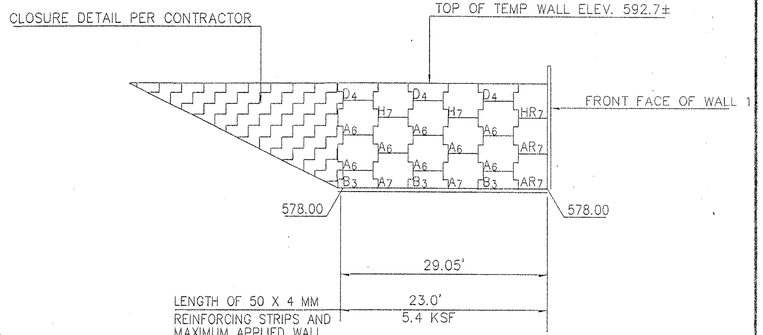

TEMPORARY WALL AT WALL 1

ALL PANELS USED ON TEMP WALL SHALL BE PLAIN STEEL FORM FINISH.

QUANTITY SUMMARY – TEMPORARY WALL	
FACING PANEL AREA	428.4 SF
C.I.P. CONCRETE LEVELING PAD	29 LF

CERTIFIED WITH RESPECT TO THE INTERNAL STABILITY OF REINFORCED EARTH STRUCTURES ONLY

STATE OF VERMONT
PETER L. ANDERSON 6161
PROFESSIONAL ENGINEER
2.15.01

This drawing contains information proprietary to The Reinforced Earth Company, and is being furnished for the use of VERMONT AGENCY OF TRANSPORTATION only in connection with this project, and the information contained herein is not to be transmitted to any other organization unless specifically authorized in writing by The Reinforced Earth Company. The Reinforced Earth Company is exclusive licensee in the United States under patents issued to Henri Vidal, and the furnishing of this drawing does not constitute an expressed or implied license under the Vidal patents.

The design contained on these drawings is based on information provided by the owner. On the basis of this information, The Reinforced Earth Company has designed, and is responsible for the internal stability of the structure only. External stability, including foundation (bearing capacity and settlement) and slope (global) stability, is the responsibility of the owner.

The Reinforced Earth Company
8614 Westwood Center Drive Suite 1100, Vienna, Virginia 22182 (703) 821-1175

"REINFORCED EARTH" is the registered trademark of The Reinforced Earth Company.

DESIGNED BY: KPB				PROJECT NAME	FAIRFAX-FAIRFIELD-ST. ALBANS I-89 OVER VT 104	DATE	2-15-01
PROJECT ENGR: KPB				LOCATION	FAIRFAX-FAIRFIELD-ST. ALBANS VERMONT	CONTRACT NO.	9360
CHECKED BY: PLA				OWNER	VT AOT	DRAWING NO.	2 OF 6
ENG. MANAGER	REV.	DATE	DESCRIPTION	DRAWING COVERS	PLAN VIEW / STAGED CONSTRUCTION DETAILS 400MSE	SCALE	1:10

C:\9360\9360_C1.DWG

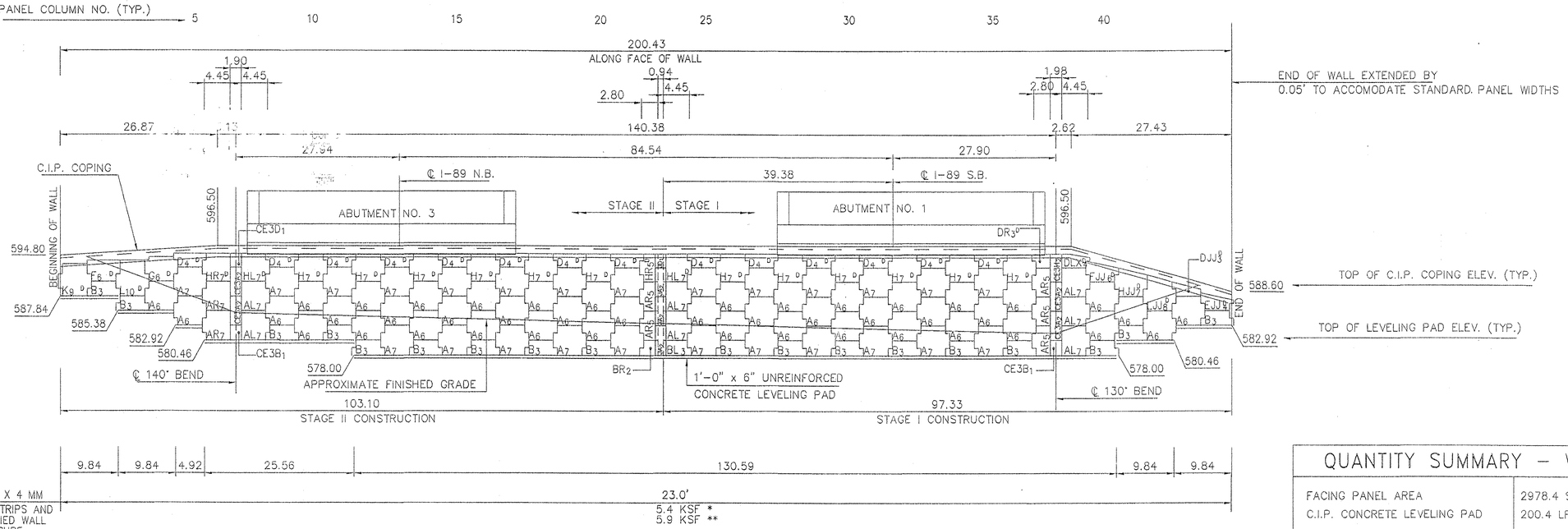

ELEVATION – FRONT FACE – WALL 1

SCALE : 1" = 10'

QUANTITY SUMMARY – WALL NO. 1	
FACING PANEL AREA	2978.4 SF
C.I.P. CONCRETE LEVELING PAD	200.4 LF
C.I.P. CONCRETE COPING	202 LF
SELECT GRANULAR BACKFILL ***	2650 CY

*** SEE NOTE 22 ON SHEET 1 OF 6.

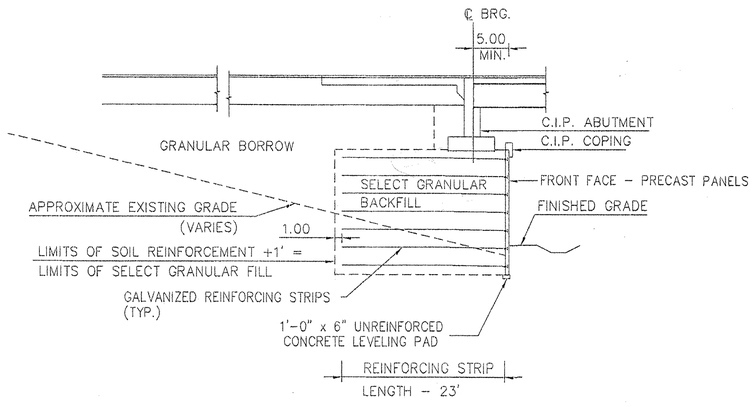

TYPICAL SECTION – R.E. WALLS AT ABUTMENTS

SCALE: 1 : 10

NOTE: SEE SHEET 109 OF 370 FOR ADDITIONAL INFORMATION

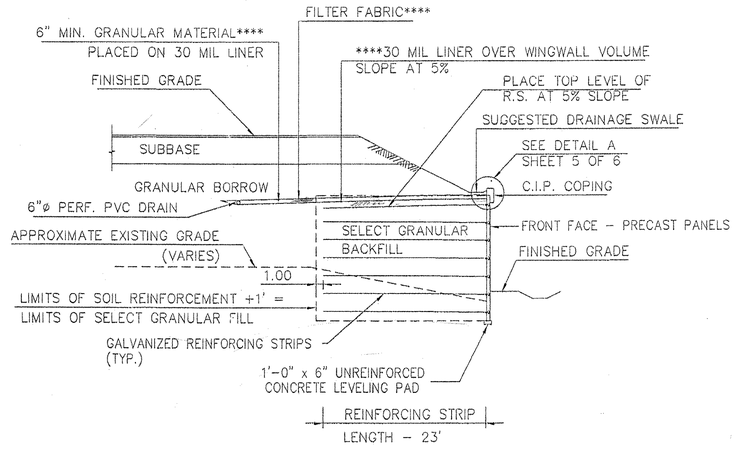

TYPICAL SECTION – R.E. WING WALLS

SCALE: 1 : 10

NOTE: SEE SHEET 110 OF 370 FOR ADDITIONAL INFORMATION

**** SEE NOTE NO. 4 ON SHEET BR231.

NOTES: * BEARING PRESSURE USING SERVICE LOADS
** BEARING PRESSURE USING SPECIFIED LOADS
LENGTH OF LEVELING PAD IS BASED ON INDIVIDUAL PANEL WIDTHS, ℄ OF EAR TO ℄ OF EAR. USE THE STEP DETAIL ON SHEET No. 5 TO DETERMINE THE ACTUAL LEVELING PAD STEP LOCATION.
FOR CORNER DETAILS SEE SHEET No. 5 .
FOR TYPICAL WALL SECTIONS SEE SHEET No.5 .
FOR COPING DETAILS, SEE SHEET No. 5 .
FOR ABUTMENT DETAILS, SEE CONTRACT PLANS.

KEY: PANEL NAME H_4^D — D: COPING DOWELS; 4: NO. OF TIE STRIPS

CERTIFIED WITH RESPECT TO THE INTERNAL STABILITY OF REINFORCED EARTH STRUCTURES ONLY

STATE OF VERMONT
PETER L. ANDERSON
0161
PROFESSIONAL ENGINEER
2-15-01

This drawing contains information proprietary to The Reinforced Earth Company, and is being furnished for the use of VERMONT AGENCY OF TRANSPORTATION only in connection with this project, and the information contained herein is not to be transmitted to any other organization unless specifically authorized in writing by The Reinforced Earth Company. The Reinforced Earth Company is exclusive licensee in the United States under patents issued to Henri Vidal, and the furnishing of this drawing does not constitute an expressed or implied license under the Vidal patents.

The design contained on these drawings is based on information provided by the owner. On the basis of this information, The Reinforced Earth Company has designed, and is responsible for the internal stability of the structure only. External stability, including foundation (bearing capacity and settlement) and slope (global) stability, is the responsibility of the owner.

The Reinforced Earth Company
8614 Westwood Center Drive Suite 1100, Vienna, Virginia 22182 (703) 821-1175

"REINFORCED EARTH" is the registered trademark of The Reinforced Earth Company.

DESIGNED BY: KPB				PROJECT NAME	FAIRFAX–FAIRFIELD–ST. ALBANS I-89 OVER VT 104	DATE	2-15-01
PROJECT ENGR: KPB				LOCATION	FAIRFAX–FAIRFIELD–ST. ALBANS VERMONT	CONTRACT NO.	9360
CHECKED BY: PLA				OWNER	VT AOT	DRAWING NO.	3 OF 6
ENG. MANAGER	REV.	DATE	DESCRIPTION	DRAWING COVERS	ELEVATION – WALL NO. 1	SCALE	AS SHOWN

401MSE

C:\9360\9360_E1.DWG

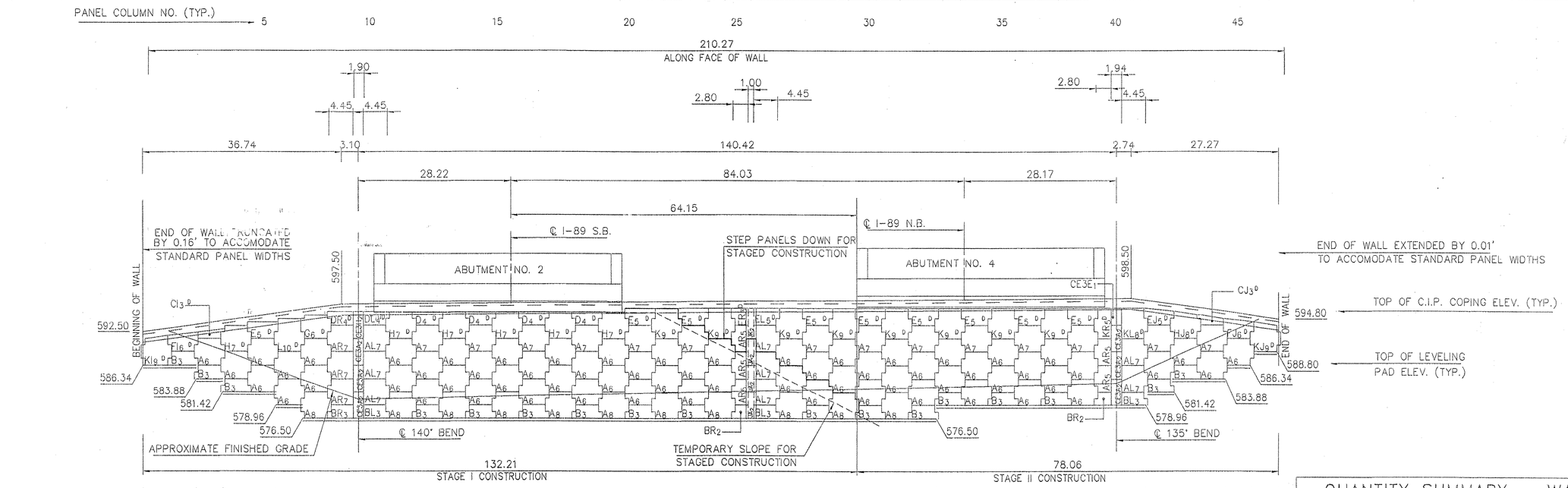

ELEVATION – FRONT FACE – WALL NO. 2

SCALE : 1" = 10'

QUANTITY SUMMARY – WALL NO. 2	
FACING PANEL AREA	3571.1 SF
C.I.P. CONCRETE LEVELING PAD	210 LF
C.I.P. CONCRETE COPING	211 LF
SELECT GRANULAR BACKFILL ***	3175 CY

*** SEE NOTE 22 ON SHEET 1 OF 6.

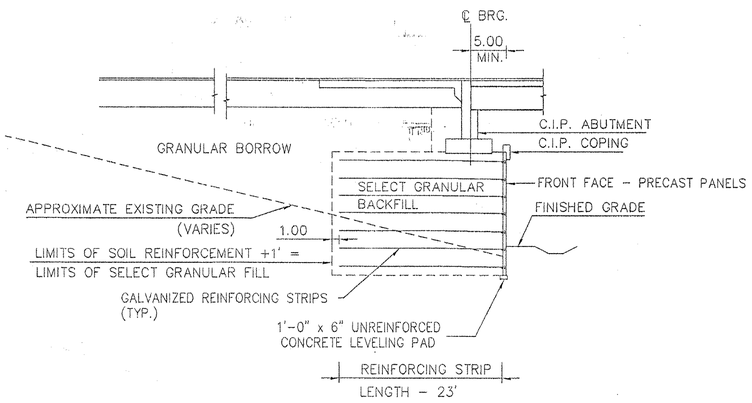

TYPICAL SECTION – R.E. WALLS AT ABUTMENTS

SCALE: 1 : 10

NOTE: SEE SHEET 109 OF 370 FOR ADDITIONAL INFORMATION

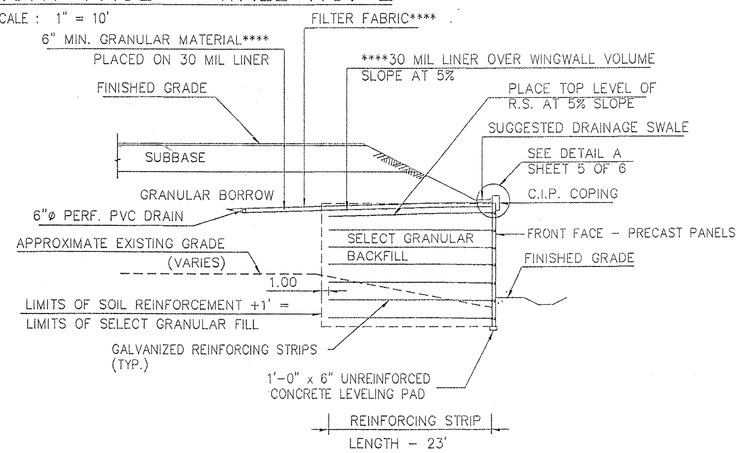

TYPICAL SECTION – R.E. WING WALLS

SCALE: 1 : 10

NOTE: SEE SHEET 110 OF 370 FOR ADDITIONAL INFORMATION

**** SEE NOTE NO. 4 ON SHEET BR231.

NOTES: * BEARING PRESSURE USING SERVICE LOADS
** BEARING PRESSURE USING SPECIFIED LOADS

LENGTH OF LEVELING PAD IS BASED ON INDIVIDUAL PANEL WIDTHS, ℄ OF EAR TO ℄ OF EAR. USE THE STEP DETAIL ON SHEET No. 5 TO DETERMINE THE ACTUAL LEVELING PAD STEP LOCATION.

FOR CORNER DETAILS SEE SHEET No. 5 .
FOR TYPICAL WALL SECTIONS SEE SHEET No. 5 .
FOR COPING DETAILS, SEE SHEET No. 5 .
FOR ABUTMENT DETAILS, SEE CONTRACT PLANS.

KEY: H_4^D — PANEL NAME; D — COPING DOWELS; 4 — NO. OF TIE STRIPS

CERTIFIED WITH RESPECT TO THE INTERNAL STABILITY OF REINFORCED EARTH STRUCTURES ONLY

STATE OF VERMONT — PETER L. ANDERSON 6161 — PROFESSIONAL ENGINEER

2.15.01

This drawing contains information proprietary to The Reinforced Earth Company, and is being furnished for the use of VERMONT AGENCY OF TRANSPORTATION only in connection with this project, and the information contained herein is not to be transmitted to any other organization unless specifically authorized in writing by The Reinforced Earth Company. The Reinforced Earth Company is exclusive licensee in the United States under patents issued to Henri Vidal, and the furnishing of this drawing does not constitute an expressed or implied license under the Vidal patents.

The design contained on these drawings is based on information provided by the owner. On the basis of this information, The Reinforced Earth Company has designed, and is responsible for the internal stability of the structure only. External stability, including foundation (bearing capacity and settlement) and slope (global) stability, is the responsibility of the owner.

The Reinforced Earth Company
8614 Westwood Center Drive Suite 1100, Vienna, Virginia 22182 (703) 821-1175

"REINFORCED EARTH" is the registered trademark of The Reinforced Earth Company.

DESIGNED BY:				PROJECT NAME	FAIRFAX-FAIRFIELD-ST. ALBANS I-89 OVER VT 104	DATE
KPB						2-15-01
PROJECT ENGR: KPB				LOCATION	FAIRFAX-FAIRFIELD-ST. ALBANS VERMONT	CONTRACT NO. 9360
CHECKED BY: PLA				OWNER	VT AOT	DRAWING NO. 4 OF 6
ENG. MANAGER	REV.	DATE	DESCRIPTION	DRAWING COVERS	ELEVATION – WALL NO. 2 402MSE	SCALE AS SHOWN

C:\9360\9360_E2.DWG

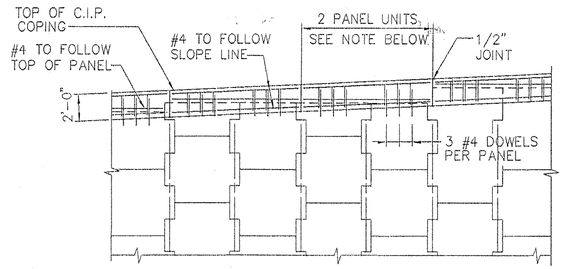

C.I.P. COPING – PARTIAL ELEVATION

SCALE: 3/16" = 1'– 0"

NOTE:
JOINTS IN COPING SHALL BE AT 2 PANEL INTERVALS AND COINCIDE APPROXIMATELY WITH ℄ OF ALIGNMENT DEVICE. REINFORCING STEEL SHALL BE STOPPED 2" SHORT OF EITHER SIDE OF THE CONSTRUCTION AND EXPANSION JOINTS.

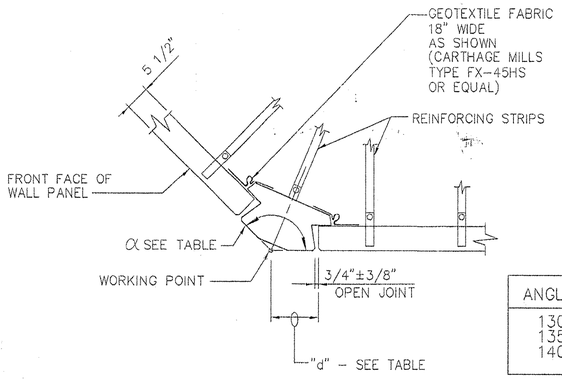

ANGLE ∝	"d"
130°	0.99'
135°	0.97'
140°	0.95'

OBTUSE CORNER ELEMENT DETAIL

SCALE: 3/4" = 1'– 0"

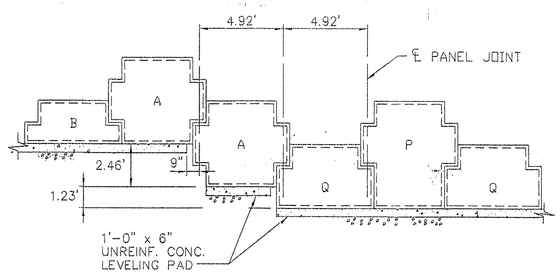

TYP LEVELING PAD STEP DETAIL

NOT TO SCALE

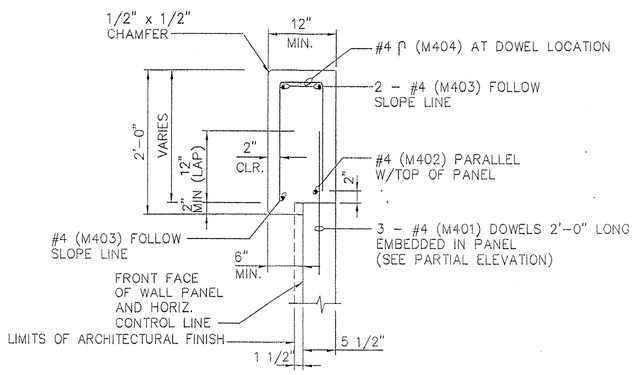

C.I.P. CONC. COPING

SCALE: 1" = 1'– 0"

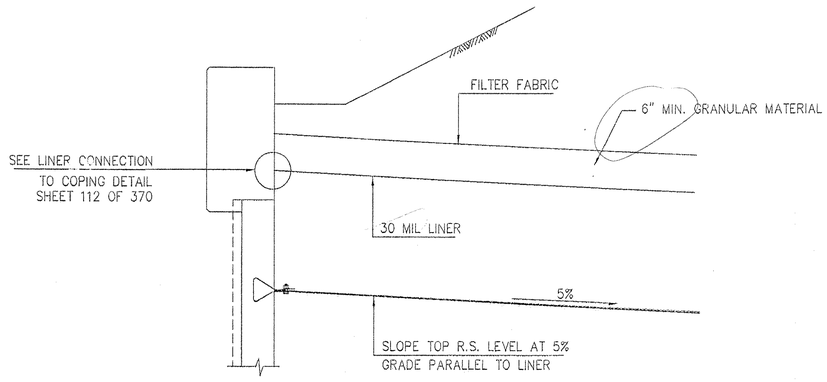

DETAIL A

SCALE: 1" = 1'– 0"

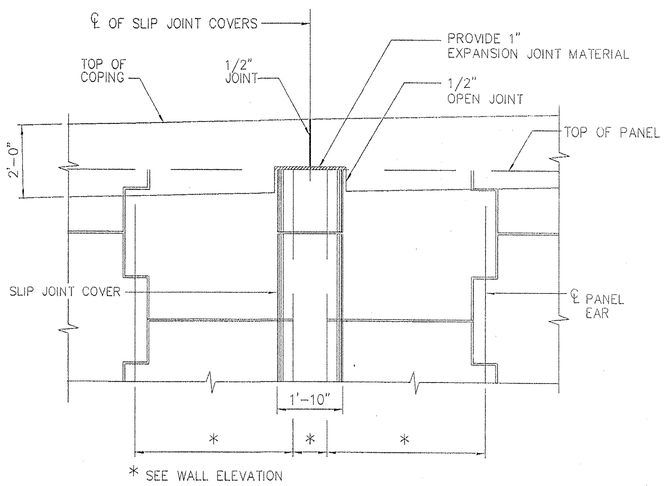

* SEE WALL ELEVATION

C.I.P. COPING OVER SLIP JOINT COVER

SCALE: 1/2" = 1'– 0"

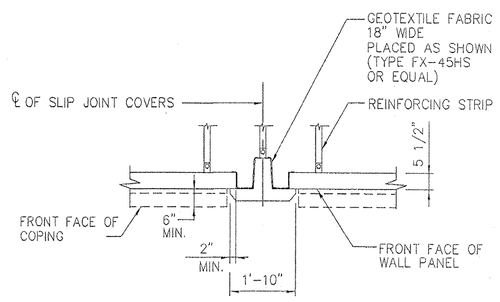

SLIP JOINT COVER DETAIL

SCALE: 1/2" = 1'– 0"

CERTIFIED WITH RESPECT TO THE INTERNAL STABILITY OF REINFORCED EARTH STRUCTURES ONLY

STATE OF VERMONT – PETER L. ANDERSON 6161 – PROFESSIONAL ENGINEER

2.15.01

This drawing contains information proprietary to The Reinforced Earth Company, and is being furnished for the use of VERMONT AGENCY OF TRANSPORTATION only in connection with this project, and the information contained herein is not to be transmitted to any other organization unless specifically authorized in writing by The Reinforced Earth Company. The Reinforced Earth Company is exclusive licensee in the United States under patents issued to Henri Vidal, and the furnishing of this drawing does not constitute an expressed or implied license under the Vidal patents.

The design contained on these drawings is based on information provided by the owner. On the basis of this information, The Reinforced Earth Company has designed, and is responsible for the internal stability of the structure only. External stability, including foundation (bearing capacity and settlement) and slope (global) stability, is the responsibility of the owner.

The Reinforced Earth Company
8614 Westwood Center Drive Suite 1100, Vienna, Virginia 22182 (703) 821-1175

"REINFORCED EARTH" is the registered trademark of The Reinforced Earth Company.

DESIGNED BY: KPB				PROJECT NAME	FAIRFAX–FAIRFIELD–ST. ALBANS I–89 OVER VT 104	DATE	2–15–01
PROJECT ENGR: KPB				LOCATION	FAIRFAX–FAIRFIELD–ST. ALBANS VERMONT	CONTRACT NO.	9360
CHECKED BY: PLA				OWNER	VT AOT	DRAWING NO.	5 OF 6
ENG. MANAGER	REV.	DATE	DESCRIPTION	DRAWING COVERS	DETAILS 403MSE	SCALE	AS SHOWN

C:\9360\9360_D1.DWG

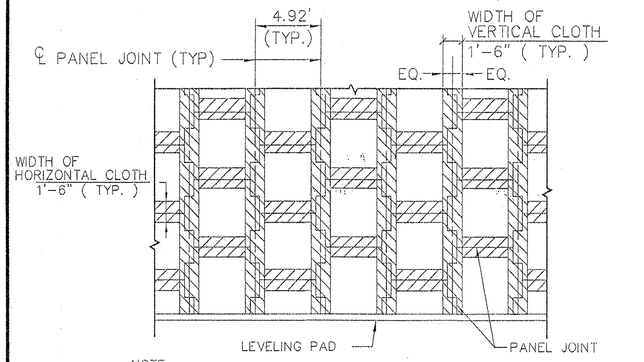

NOTE:
STRIPS OF FILTER CLOTH SHALL BE PLACED ON BACK FACE OF PANEL, OVER PANEL JOINTS. FILTER CLOTH SHALL BE ADHERED TO BACK FACE OF PANELS USING AN ADHESIVE COMPOUND SUPPLIED BY THE REINFORCED EARTH COMPANY.

FILTER CLOTH DETAIL
PARTIAL ELEVATION - BACK FACE
NOT TO SCALE

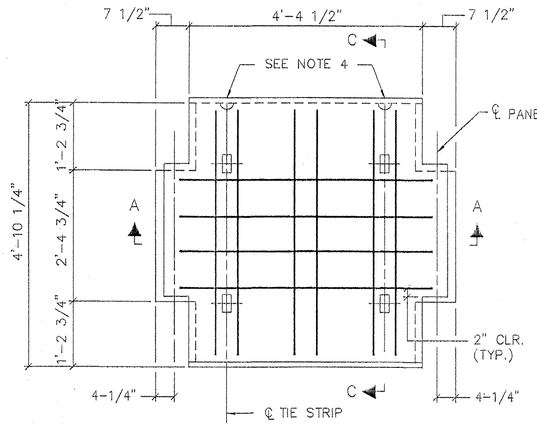

PANEL TYPE "A"
WITH R6 REINFORCEMENT
FRONT VIEW
NOT TO SCALE

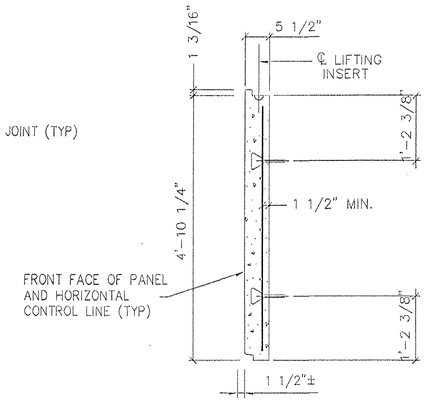

SECTION C-C
NOT TO SCALE

PANEL THICKNESS	REINFORCEMENT DESIGNATION	PANEL REINFORCEMENT	MAXIMUM ALLOWABLE HORIZONTAL STRESS AT FACING (KSF)
5 1/2"			
	R6	6-#3 VERTICAL 4-#4 HORIZONTAL	1.60
	R7	6-#4 VERTICAL 4-#6 HORIZONTAL	2.55

NOTES:

1. REINFORCING STEEL TO BE A615 GRADE 60. (EPOXY COATED)
2. 3/8" x 3/8" CHAMFER SHALL BE PROVIDED ON ALL EXPOSED EDGES (FRONT FACE ONLY).
3. ALL PANEL TYPES AND OTHER RELATED ELEMENTS WILL BE DETAILED ON SHOP DRAWINGS.
4. ALL PANELS SHALL HAVE TWO LIFTING INSERTS OF ONE TON CAPACITY EACH.
5. PANEL DESIGN THICKNESS IS 5 1/2".
6. FACING PANEL FINISH SHALL BE AN ASHLAR STONE FORM LINER FINISH. THE CONCRETE SHALL BE COLORED WITH DYE (BAYFERROX 330; 3.5% - HEAT STABLE).

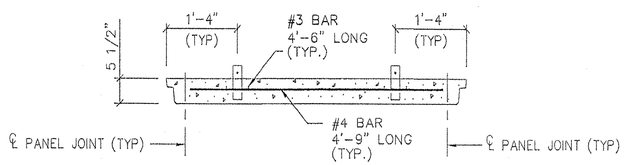

SECTION A-A
NOT TO SCALE

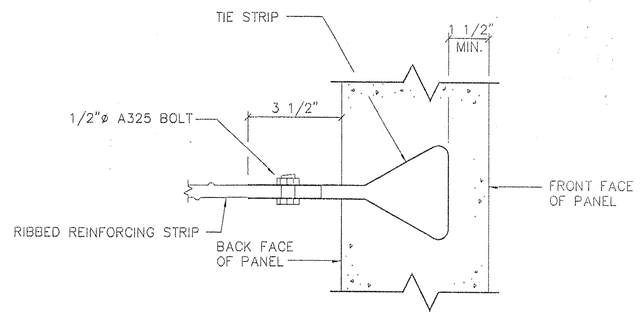

CONNECTION DETAIL
NO SCALE

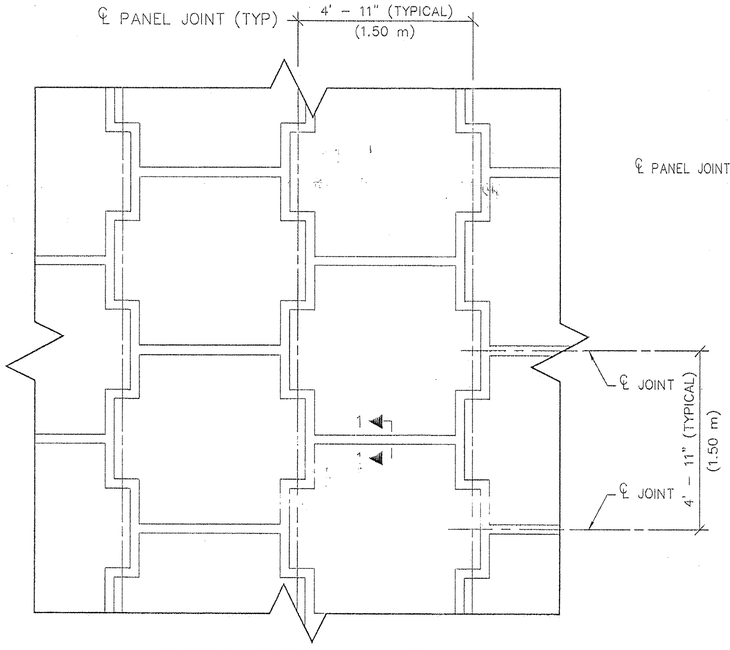

TYPICAL PANEL LAYOUT
PARTIAL ELEVATION - FRONT FACE
NOT TO SCALE

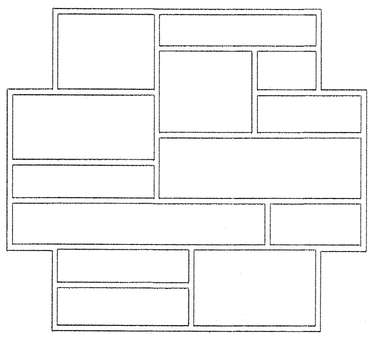

ASHLAR STONE PANEL FINISH
PANEL TYPE A
(LOOKING AT PANEL FACE)

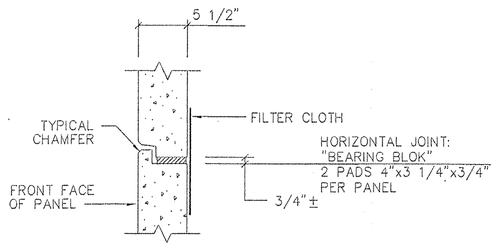

SECTION 1-1

CERTIFIED WITH RESPECT TO THE INTERNAL STABILITY OF REINFORCED EARTH STRUCTURES ONLY

STATE OF VERMONT
PETER L. ANDERSON
9101
PROFESSIONAL ENGINEER
2.15.01

This drawing contains information proprietary to The Reinforced Earth Company, and is being furnished for the use of VERMONT AGENCY OF TRANSPORTATION only in connection with this project, and the information contained herein is not to be transmitted to any other organization unless specifically authorized in writing by The Reinforced Earth Company. The Reinforced Earth Company is exclusive licensee in the United States under patents issued to Henri Vidal, and the furnishing of this drawing does not constitute an expressed or implied license under the Vidal patents.

The design contained on these drawings is based on information provided by the owner. On the basis of this information, The Reinforced Earth Company has designed, and is responsible for the internal stability of the structure only. External stability, including foundation (bearing capacity and settlement) and slope (global) stability, is the responsibility of the owner.

The Reinforced Earth Company
8614 Westwood Center Drive Suite 1100, Vienna, Virginia 22182 (703) 821-1175

"REINFORCED EARTH" is the registered trademark of The Reinforced Earth Company.

DESIGNED BY: KPB				PROJECT NAME	FAIRFAX-FAIRFIELD-ST. ALBANS I-89 OVER VT 104
PROJECT ENGR: KPB				LOCATION	FAIRFAX-FAIRFIELD-ST. ALBANS VERMONT
CHECKED BY: PLA				OWNER	VT AOT
ENG. MANAGER	REV.	DATE	DESCRIPTION	DRAWING COVERS	STANDARD PANEL DETAILS 404/456

DATE	2-15-01
CONTRACT NO.	9360
DRAWING NO.	6 OF 6
SCALE	AS SHOWN

C:\9360\9360_D2.DWG

The Reinforced Earth Company

8614 Westwood Center Drive Suite 1100, Vienna, Virginia 22182 (703) 821-1175

PRECAST PANEL SHOP DRAWINGS

PANEL GENERAL NOTES

1. REINFORCING BARS SHALL BE STEEL ASTM A615 GRADE 60. EPOXY COATED IN ACCORDANCE WITH SECTIONS 507 AND 713 OF VT AOT STANDARD SPECIFICATIONS. (1)
2. TIE STRIPS SHALL BE STEEL ASTM A570 GRADE 50 (GALVANIZED PER ASTM A-123).
2A. LIFTING INSERTS SHALL BE BURKE SPREAD ANCHOR 79050 (OR EQUAL) (GALVANIZED PER ASTM A-123). (1)
3. ALL FRONT EDGES OF PANELS, EXCEPT THE BOTTOM EDGE OF THE BOTTOM PANEL COURSE, SHALL HAVE A 3/8" CHAMFER.
4. TIE STRIPS SHALL BE PLACED WITHIN 1" OF THE DIMENSIONS SHOWN ON THE FABRICATION DRAWINGS.
5. PANEL DESIGN THICKNESS IS 5 1/2". THE 28 DAY COMPRESSIVE STRENGTH OF CONCRETE SHALL BE 4000 psi MINIMUM.
6. DIMENSIONS SPECIFIED ON INDIVIDUAL FABRICATION DRAWINGS SUPERCEDE THOSE CALLED OUT ON THE STANDARD SECTIONS AND DETAILS.
7. VERTICAL REINFORCING BARS SHALL BE PLACED 1 1/2" MIN. - 2" (TYP.) CLEAR FROM THE BACK FACE OF THE 5 1/2" PANEL.
8. ALL REINFORCING BARS SHALL BE STOPPED 2" CLEAR FROM ANY EDGE OF PANEL UNLESS NOTED ON INDIVIDUAL FABRICATION DRAWING OR AS INDICATED IN NOTE #9.
9. IN ALL SLOPED PANELS THE TWO (2) VERTICAL REINFORCING BARS ADJACENT TO A COMMON TIE STRIP SHALL BE OF THE SAME LENGTH.
10. ALL INDIVIDUAL FABRICATION DRAWINGS ARE SHOWN BACK FACE.
11. PRECAST FACING PANELS FOR PERMANENT WALLS SHALL HAVE AN ASHLAR STONE FORM LINER FINISH. PRECAST FACING PANELS FOR THE TEMPORARY WALL SHALL HAVE A PLAIN STEEL FORM FINISH. PANEL TYPES "B", "CE" (CORNER ELEMENTS) AND "J" (SLIP JOINT COVERS) SHALL HAVE A PLAIN STEEL FORM FINISH. ALL PRECAST PANELS FOR PERMANENT WALLS SHALL BE COLORED WITH BAYFERROX 330 3.5% (HEAT STABLE) PIGMENT DYE.

PANEL GENERAL NOTES (CONT.)

12. REINFORCING BARS IN A STANDARD "A" PANEL SHALL BE AS FOLLOWS:

PANEL REINFORCEMENT

PIECE MARK	HORIZONTAL BARS	VERTICAL BARS
XX-XX-R6	4-#4	6-#3
XX-XX-R7	4-#6	6-#4

HORIZONTAL REINFORCEMENT IN THE OTHER PANEL TYPES IS PROPORTIONAL TO THEIR RELATIVE HEIGHT.

13. KEY TO PIECE MARK:

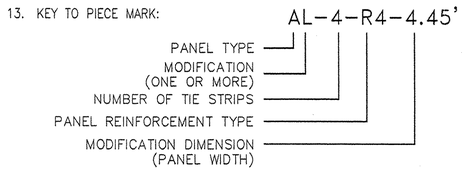

14. KEY TO PANELS:

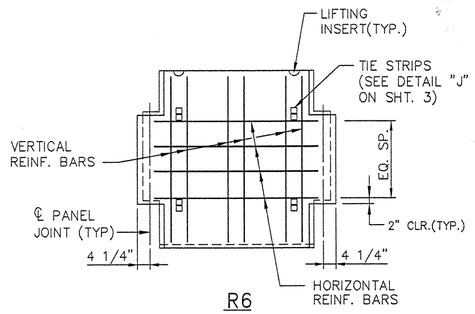

R6
BACK FACE
SCALE: 1/2"=1'-0"

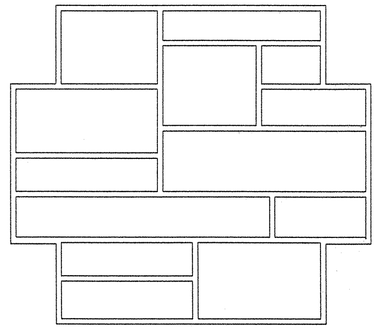

ASHLAR STONE PANEL FINISH
PANEL TYPE A
(LOOKING AT PANEL FACE)

CERTIFIED WITH RESPECT TO THE INTERNAL STABILITY OF REINFORCED EARTH STRUCTURES ONLY

STATE OF VERMONT
PETER L. ANDERSON
6161
PROFESSIONAL ENGINEER

2/15/01

This drawing contains information proprietary to The Reinforced Earth Company, and is being furnished for the use of VERMONT AGENCY OF TRANSPORTATION only in connection with this project, and the information contained herein is not to be transmitted to any other organization unless specifically authorized in writing by The Reinforced Earth Company. The Reinforced Earth Company is exclusive licensee in the United States under patents issued to Henri Vidal, and the furnishing of this drawing does not constitute an expressed or implied license under the Vidal patents.

The design contained on these drawings is based on information provided by the owner. On the basis of this information, The Reinforced Earth Company has designed, and is responsible for the internal stability of the structure only. External stability, including foundation (bearing capacity and settlement) and slope (global) stability, is the responsibility of the owner.

The Reinforced Earth Company
8614 Westwood Center Drive Suite 1100, Vienna, Virginia 22182 (703) 821-1175

"REINFORCED EARTH" is the registered trademark of The Reinforced Earth Company.

DESIGNED BY: KPB				PROJECT NAME	FAIRFAX-FAIRFIELD-ST. ALBANS I-89 OVER VT 104	DATE 2-15-01
PROJECT ENGR: KPB				LOCATION	FAIRFAX-FAIRFIELD-ST. ALBANS VERMONT	CONTRACT NO. 9360
CHECKED BY: PLA	(1)	3/23/01	REVISED PER VT AOT COMMENTS MEMO DATED 3/22/01	OWNER	VERMONT AOT	DRAWING NO. 1 OF 8
ENG. MANAGER	REV.	DATE	DESCRIPTION	DRAWING COVERS	PANEL CASTING NOTES 405rise	SCALE AS SHOWN

C:\9360\SHOP\9360S01.DWG

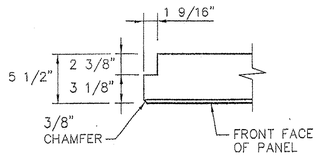

DETAIL "A"
SCALE: 1 1/2"=1'-0"

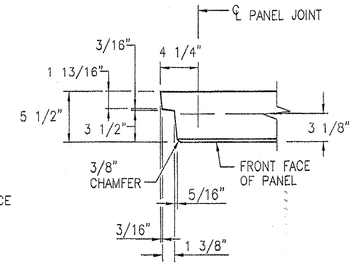

DETAIL "B"
SCALE: 1 1/2"=1'-0"

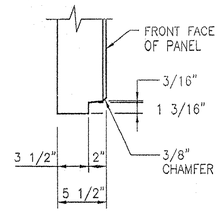

DETAIL "C"
SCALE: 1 1/2"=1'-0"

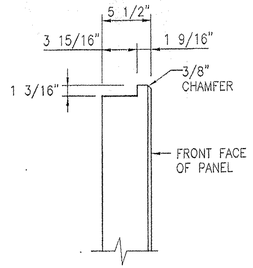

DETAIL "D"
SCALE: 1 1/2"=1'-0"

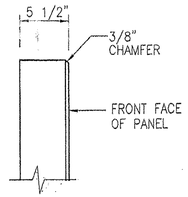

DETAIL "G"
SCALE: 1 1/2"=1'-0"

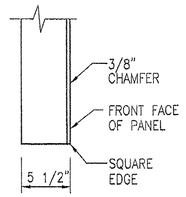

DETAIL "H"
SCALE: 1 1/2"=1'-0"

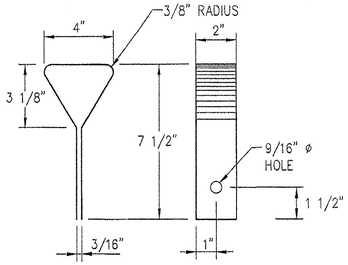

DETAIL "J"
(GENERAL NOTE No. 2)
SCALE: NONE

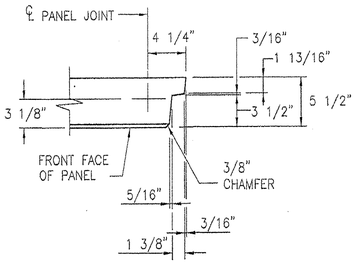

DETAIL "K"
SCALE: 1 1/2"=1'-0"

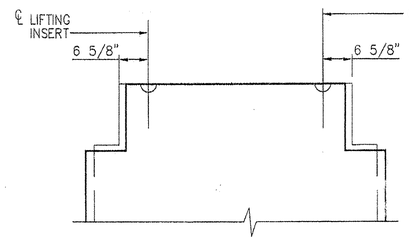

DETAIL "N"
SCALE: 3/4"=1'-0"

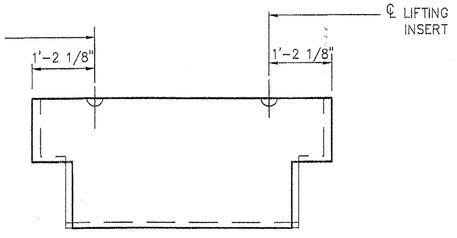

DETAIL "O"
SCALE: 3/4"=1'-0"

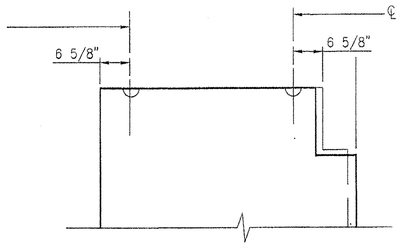

DETAIL "P"
SCALE: 3/4"=1'-0"

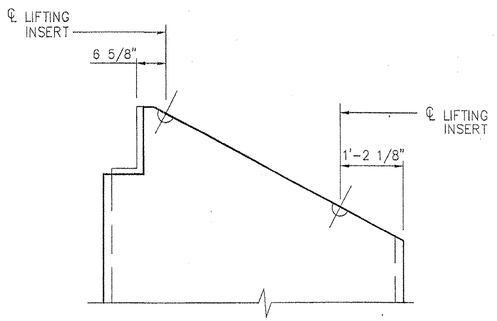

DETAIL "Q"
SCALE: 3/4"=1'-0"

CERTIFIED WITH RESPECT TO THE INTERNAL STABILITY OF REINFORCED EARTH STRUCTURES ONLY

STATE OF VERMONT
PETER L ANDERSON
6161
PROFESSIONAL ENGINEER

2.15.01

This drawing contains information proprietary to The Reinforced Earth Company, and is being furnished for the use of VERMONT AGENCY OF TRANSPORTATION only in connection with this project, and the information contained herein is not to be transmitted to any other organization unless specifically authorized in writing by The Reinforced Earth Company. The Reinforced Earth Company is exclusive licensee in the United States under patents issued to Henri Vidal, and the furnishing of this drawing does not constitute an expressed or implied license under the Vidal patents.

The design contained on these drawings is based on information provided by the owner. On the basis of this information, The Reinforced Earth Company has designed, and is responsible for the internal stability of the structure only. External stability, including foundation (bearing capacity and settlement) and slope (global) stability, is the responsibility of the owner.

The Reinforced Earth Company
8614 Westwood Center Drive Suite 1100, Vienna, Virginia 22182 (703) 821-1175

"REINFORCED EARTH" is the registered trademark of The Reinforced Earth Company.

DESIGNED BY: KPB				PROJECT NAME	FAIRFAX-FAIRFIELD-ST. ALBANS I-89 OVER VT 104	DATE 2-15-01
PROJECT ENGR: KPB				LOCATION	FAIRFAX-FAIRFIELD-ST. ALBANS VERMONT	CONTRACT NO. 9360
CHECKED BY: PLA				OWNER	VERMONT AOT	DRAWING NO. 2 OF 8
ENG. MANAGER	REV.	DATE	DESCRIPTION	DRAWING COVERS	PANEL CASTING DETAILS 406MSE	SCALE AS SHOWN

C:\9360\SHOP\9360S02.DWG

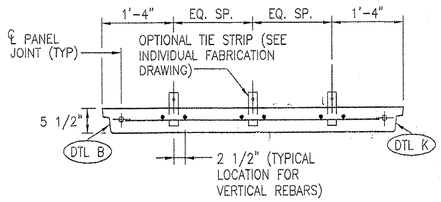

SECTION A–A

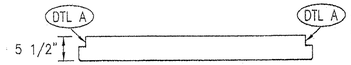

SECTION B–B

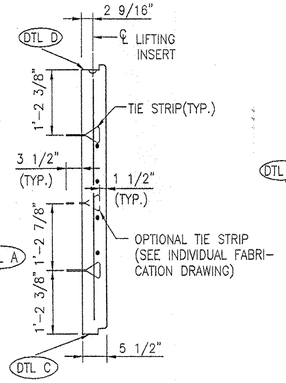

SECTION C–C

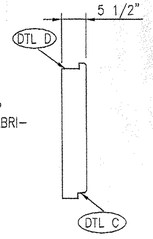

SECTION D–D

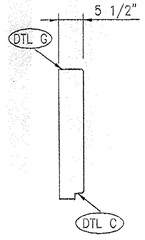

SECTION E–E

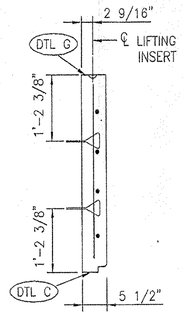

SECTION F–F

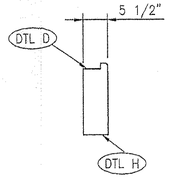

SECTION G–G

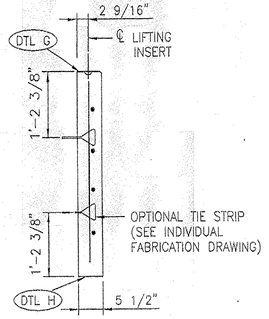

SECTION H–H

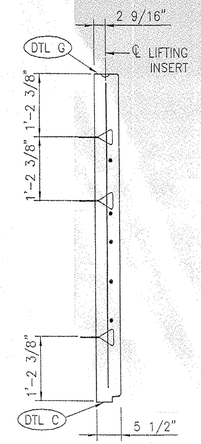

SECTION J–J

SECTION K–K

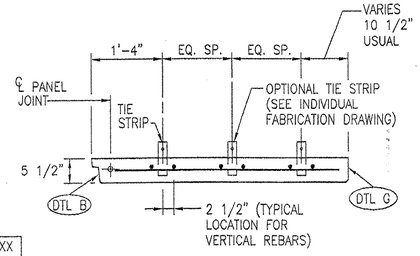

SECTION L–L

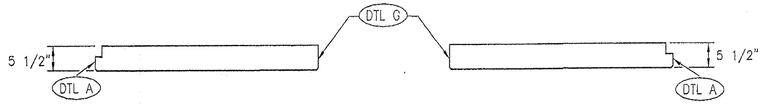

SECTION M–M

SECTION P–P

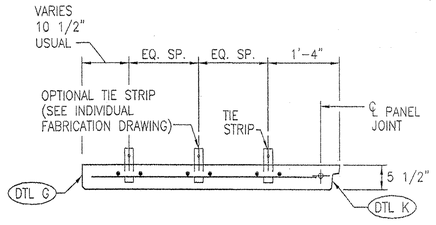

SECTION R–R

SEE INDIVIDUAL FABRICATION DRAWING FOR PLACEMENT OF REBARS.

CERTIFIED WITH RESPECT TO THE INTERNAL STABILITY OF REINFORCED EARTH STRUCTURES ONLY

STATE OF VERMONT
PETER L. ANDERSON
6161
PROFESSIONAL ENGINEER

2.15.01

This drawing contains information proprietary to The Reinforced Earth Company, and is being furnished for the use of VERMONT AGENCY OF TRANSPORTATION only in connection with this project, and the information contained herein is not to be transmitted to any other organization unless specifically authorized in writing by The Reinforced Earth Company. The Reinforced Earth Company is exclusive licensee in the United States under patents issued to Henri Vidal, and the furnishing of this drawing does not constitute an expressed or implied license under the Vidal patents.

The design contained on these drawings is based on information provided by the owner. On the basis of this information, The Reinforced Earth Company has designed, and is responsible for the internal stability of the structure only. External stability, including foundation (bearing capacity and settlement) and slope (global) stability, is the responsibility of the owner.

The Reinforced Earth Company
8614 Westwood Center Drive Suite 1100, Vienna, Virginia 22182 (703) 821-1175

"REINFORCED EARTH" is the registered trademark of The Reinforced Earth Company.

DESIGNED BY: KPB				PROJECT NAME	FAIRFAX–FAIRFIELD–ST. ALBANS I–89 OVER VT 104	DATE 2–15–01
PROJECT ENGR: KPB				LOCATION	FAIRFAX–FAIRFIELD–ST. ALBANS VERMONT	CONTRACT NO. 9360
CHECKED BY: PLA				OWNER	VERMONT AOT	DRAWING NO. 3 OF 8
ENG. MANAGER	REV.	DATE	DESCRIPTION	DRAWING COVERS	PANEL CASTING DETAILS 40 TALL SH	SCALE

C:\9360\SHOP\9360503.DWG

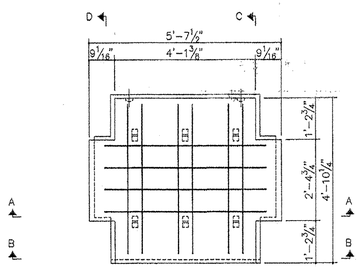

NOTE: FOR LOCATION OF LIFTING INSERTS SEE DETAIL N

A-6-R6

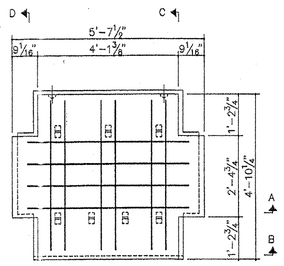

NOTE: FOR LOCATION OF LIFTING INSERTS SEE DETAIL N

A-7-R6

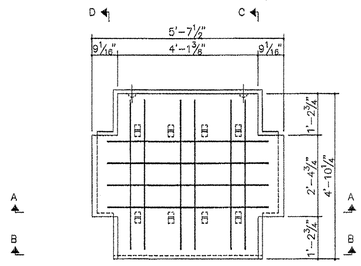

NOTE: FOR LOCATION OF LIFTING INSERTS SEE DETAIL N

A-8-R7

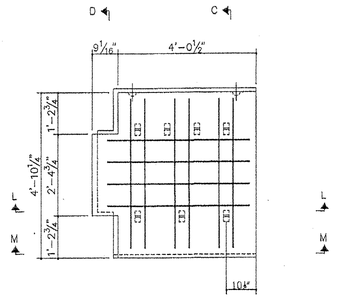

NOTE: FOR LOCATION OF LIFTING INSERTS SEE DETAIL P

AL-7-R6-4.45

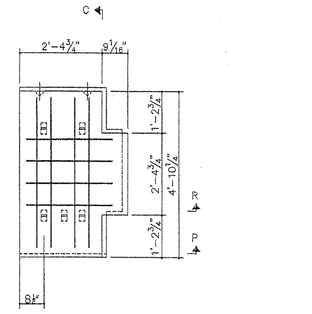

NOTE: FOR LOCATION OF LIFTING INSERTS SEE DETAIL P

AR-5-R6-2.80

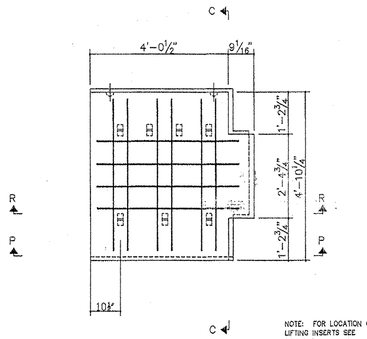

NOTE: FOR LOCATION OF LIFTING INSERTS SEE DETAIL P

AR-7-R6-4.45

THIS PANEL SHALL HAVE A PLAIN STEEL FORM FINISH

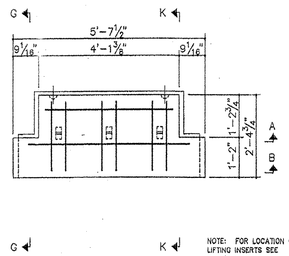

NOTE: FOR LOCATION OF LIFTING INSERTS SEE DETAIL N

B-3-R7

THIS PANEL SHALL HAVE A PLAIN STEEL FORM FINISH

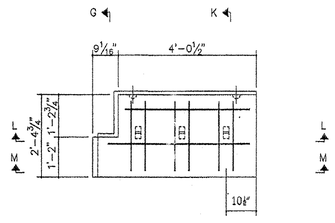

NOTE: FOR LOCATION OF LIFTING INSERTS SEE DETAIL P

BL-3-R7-4.45

THIS PANEL SHALL HAVE A PLAIN STEEL FORM FINISH

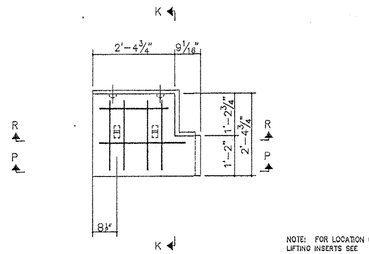

NOTE: FOR LOCATION OF LIFTING INSERTS SEE DETAIL P

BR-2-R7-2.80

THIS PANEL SHALL HAVE A PLAIN STEEL FORM FINISH

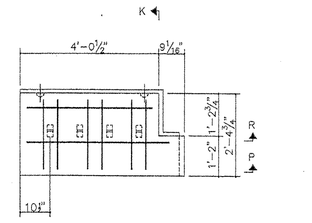

NOTE: FOR LOCATION OF LIFTING INSERTS SEE DETAIL P

BR-4-R7-4.45

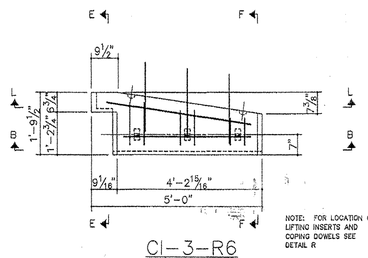

NOTE: FOR LOCATION OF LIFTING INSERTS AND COPING DOWELS SEE DETAIL R

CI-3-R6

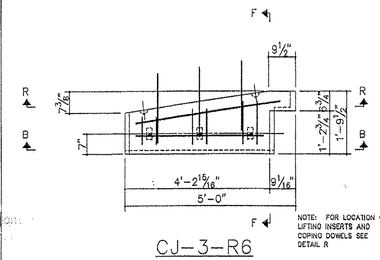

NOTE: FOR LOCATION OF LIFTING INSERTS AND COPING DOWELS SEE DETAIL R

CJ-3-R6

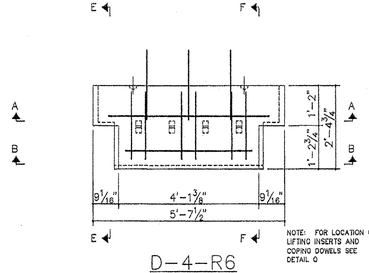

NOTE: FOR LOCATION OF LIFTING INSERTS AND COPING DOWELS SEE DETAIL O

D-4-R6

CERTIFIED WITH RESPECT TO THE INTERNAL STABILITY OF REINFORCED EARTH STRUCTURES ONLY

STATE OF VERMONT
PETER L. ANDERSON
6161
PROFESSIONAL ENGINEER
2.15.01

This drawing contains information proprietary to The Reinforced Earth Company, and is being furnished for the use of VERMONT AGENCY OF TRANSPORTATION only in connection with this project, and the information contained herein is not to be transmitted to any other organization unless specifically authorized in writing by The Reinforced Earth Company. The Reinforced Earth Company is exclusive licensee in the United States under patents issued to Henri Vidal, and the furnishing of this drawing does not constitute an expressed or implied license under the Vidal patents.

The design contained on these drawings is based on information provided by the owner. On the basis of this information, The Reinforced Earth Company has designed, and is responsible for the internal stability of the structure only. External stability, including foundation (bearing capacity and settlement) and slope (global) stability, is the responsibility of the owner.

The Reinforced Earth Company
8614 Westwood Center Drive Suite 1100, Vienna, Virginia 22182 (703) 821-1175

"REINFORCED EARTH" is the registered trademark of The Reinforced Earth Company.

DESIGNED BY: KPB				PROJECT NAME	FAIRFAX-FAIRFIELD-ST. ALBANS I-89 OVER VT 104
PROJECT ENGR: KPB				LOCATION	FAIRFAX-FAIRFIELD-ST. ALBANS VERMONT
CHECKED BY: PLA				OWNER	VERMONT AOT
ENG. MANAGER	REV.	DATE	DESCRIPTION	DRAWING COVERS	PANEL CASTING DRAWINGS 408 MSE

DATE 2-15-01 | CONTRACT NO. 9360 | DRAWING NO. 4 OF 8 | SCALE AS SHOWN

C:\9360\SHOP\9360S04.DWG

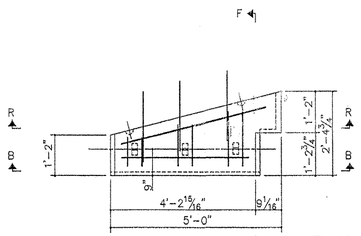

NOTE: FOR LOCATION OF LIFTING INSERTS AND COPING DOWELS SEE DETAIL R

DJJ-3-R6

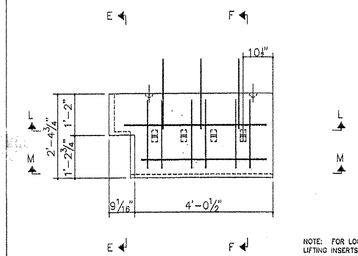

NOTE: FOR LOCATION OF LIFTING INSERTS AND COPING DOWELS SEE DETAIL P

DL-4-R6-4.45

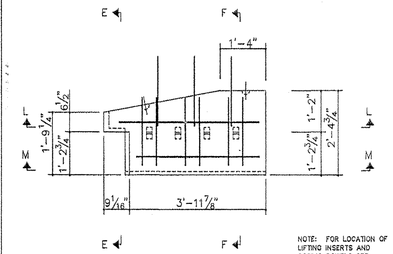

NOTE: FOR LOCATION OF LIFTING INSERTS AND COPING DOWELS SEE DETAIL P

DLX-4-R6-4.45

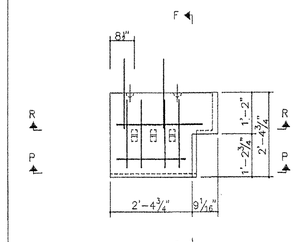

NOTE: FOR LOCATION OF LIFTING INSERTS AND COPING DOWELS SEE DETAIL P

DR-3-R6-2.80

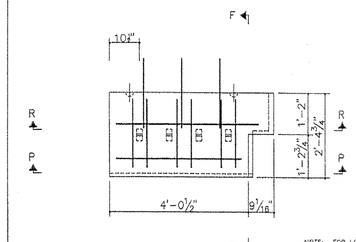

NOTE: FOR LOCATION OF LIFTING INSERTS AND COPING DOWELS SEE DETAIL P

DR-4-R6-4.45

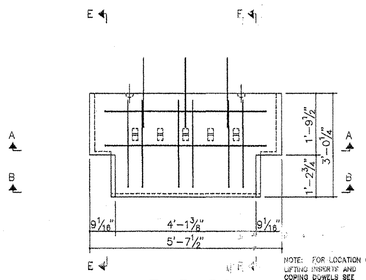

NOTE: FOR LOCATION OF LIFTING INSERTS AND COPING DOWELS SEE DETAIL O

E-5-R6

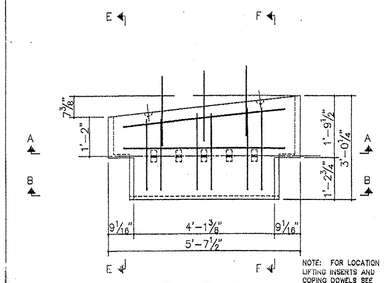

NOTE: FOR LOCATION OF LIFTING INSERTS AND COPING DOWELS SEE DETAIL R

EJ-5-R6

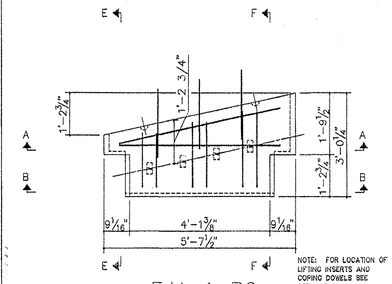

NOTE: FOR LOCATION OF LIFTING INSERTS AND COPING DOWELS SEE DETAIL R

EJJ-4-R6

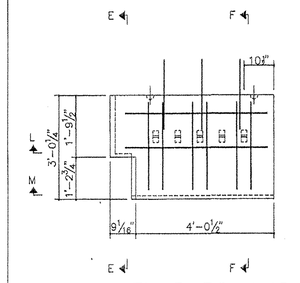

NOTE: FOR LOCATION OF LIFTING INSERTS AND COPING DOWELS SEE DETAIL P

EL-5-R6-4.45

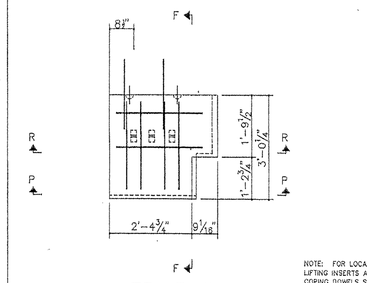

NOTE: FOR LOCATION OF LIFTING INSERTS AND COPING DOWELS SEE DETAIL P

ER-3-R6-2.80

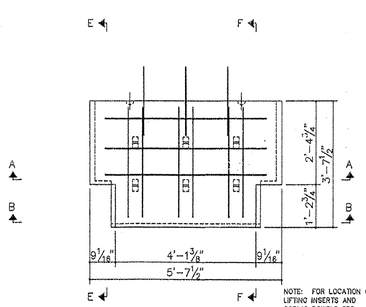

NOTE: FOR LOCATION OF LIFTING INSERTS AND COPING DOWELS SEE DETAIL O

F-6-R6

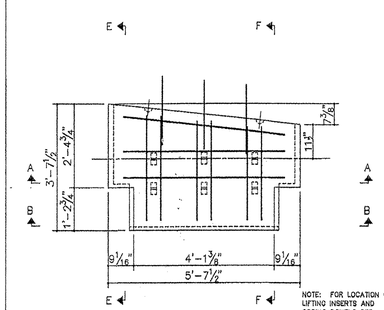

NOTE: FOR LOCATION OF LIFTING INSERTS AND COPING DOWELS SEE DETAIL R

F1-6-R6

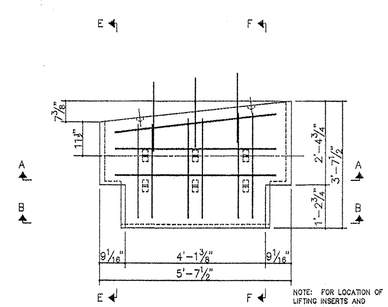

NOTE: FOR LOCATON OF LIFTING INSERTS AND COPING DOWELS SEE DETAIL R

FJ-6-R6

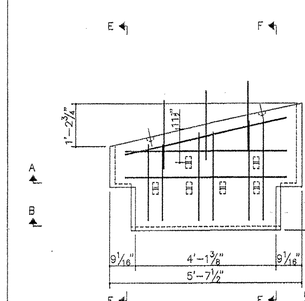

NOTE: FOR LOCATION OF LIFTING INSERTS AND COPING DOWELS SEE DETAIL R

FJJ-6-R6

CERTIFIED WITH RESPECT TO THE INTERNAL STABILITY OF REINFORCED EARTH STRUCTURES ONLY

STATE OF VERMONT
PETER L. ANDERSON
6161
REGISTERED PROFESSIONAL ENGINEER

2.15.01

This drawing contains information proprietary to The Reinforced Earth Company, and is being furnished for the use of VERMONT AGENCY OF TRANSPORTATION only in connection with this project, and the information contained herein is not to be transmitted to any other organization unless specifically authorized in writing by The Reinforced Earth Company. The Reinforced Earth Company is exclusive licensee in the United States under patents issued to Henri Vidal, and the furnishing of this drawing does not constitute an expressed or implied license under the Vidal patents.

The design contained on these drawings is based on information provided by the owner. On the basis of this information, The Reinforced Earth Company has designed, and is responsible for the internal stability of the structure only. External stability, including foundation (bearing capacity and settlement) and slope (global) stability, is the responsibility of the owner.

The Reinforced Earth Company
8614 Westwood Center Drive Suite 1100, Vienna, Virginia 22182 (703) 821-1175

"REINFORCED EARTH" is the registered trademark of The Reinforced Earth Company.

DESIGNED BY: KPB				PROJECT NAME	FAIRFAX-FAIRFIELD-ST. ALBANS I-89 OVER VT 104	DATE 2-15-01
PROJECT ENGR: KPB				LOCATION	FAIRFAX-FAIRFIELD-ST. ALBANS VERMONT	CONTRACT NO. 9360
CHECKED BY: PLA				OWNER	VERMONT AOT	DRAWING NO. 5 OF 8
ENG. MANAGER	REV.	DATE	DESCRIPTION	DRAWING COVERS	PANEL CASTING DRAWINGS 409MSE	SCALE AS SHOWN

C:\9360\SHOP\9360505.DWG

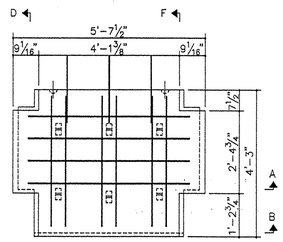

G-6-R6

NOTE: FOR LOCATION OF LIFTING INSERTS AND COPING DOWELS SEE DETAIL N

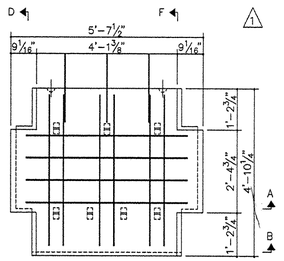

H-7-R6

NOTE: FOR LOCATION OF LIFTING INSERTS AND COPING DOWELS SEE DETAIL N

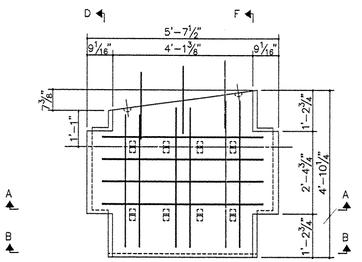

HJ-8-R6

NOTE: FOR LOCATION OF LIFTING INSERTS AND COPING DOWELS SEE DETAIL Q

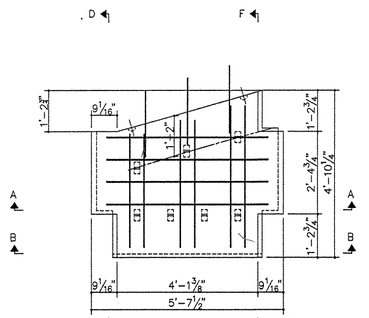

HJJ-7-R6

NOTE: FOR LOCATION OF LIFTING INSERTS AND COPING DOWELS SEE DETAIL Q

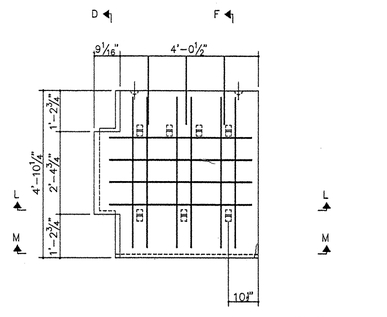

HL-7-R6-4.45

NOTE: FOR LOCATION OF LIFTING INSERTS AND COPING DOWELS SEE DETAIL P

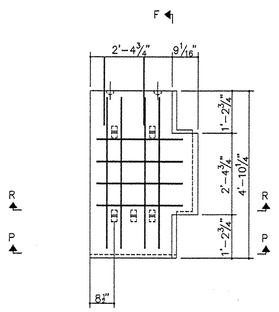

HR-5-R6-2.80

NOTE: FOR LOCATION OF LIFTING INSERTS AND COPING DOWELS SEE DETAIL P

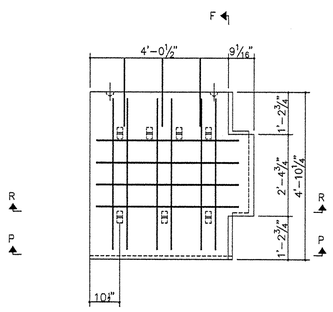

HR-7-R6-4.45

NOTE: FOR LOCATION OF LIFTING INSERTS AND COPING DOWELS SEE DETAIL P

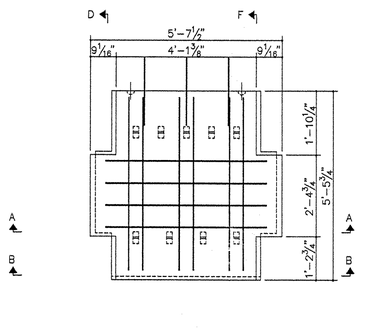

K-9-R6

NOTE: FOR LOCATION OF LIFTING INSERTS AND COPING DOWELS SEE DETAIL N

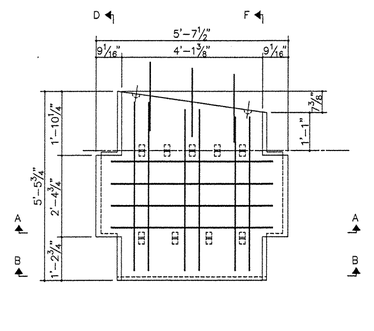

KI-9-R6

NOTE: FOR LOCATION OF LIFTING INSERTS AND COPING DOWELS SEE DETAIL Q

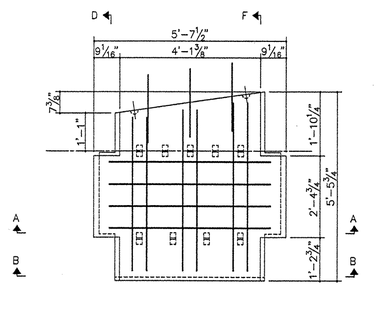

KJ-9-R6

NOTE: FOR LOCATION OF LIFTING INSERTS AND COPING DOWELS SEE DETAIL Q

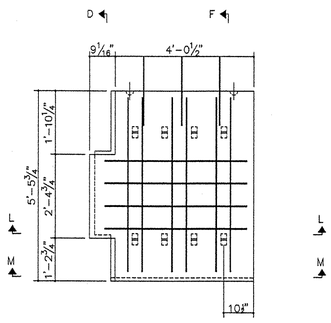

KL-8-R6-4.45

NOTE: FOR LOCATION OF LIFTING INSERTS AND COPING DOWELS SEE DETAIL P

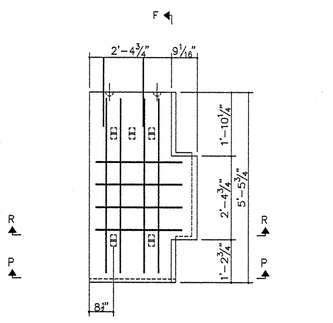

KR-5-R6-2.80

NOTE: FOR LOCATION OF LIFTING INSERTS AND COPING DOWELS SEE DETAIL P

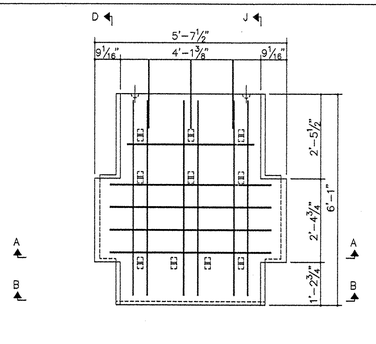

L-10-R6

NOTE: FOR LOCATION OF LIFTING INSERTS AND COPING DOWELS SEE DETAIL N

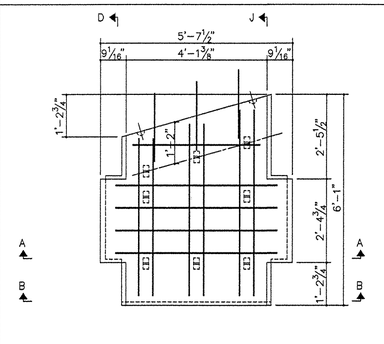

LJJ-8-R6

NOTE: FOR LOCATION OF LIFTING INSERTS AND COPING DOWELS SEE DETAIL Q

CERTIFIED WITH RESPECT TO THE INTERNAL STABILITY OF REINFORCED EARTH STRUCTURES ONLY

STATE OF VERMONT
PETER L. ANDERSON
6161
PROFESSIONAL ENGINEER

2/15/01

This drawing contains information proprietary to The Reinforced Earth Company, and is being furnished for the use of VERMONT AGENCY OF TRANSPORTATION only in connection with this project, and the information contained herein is not to be transmitted to any other organization unless specifically authorized in writing by The Reinforced Earth Company. The Reinforced Earth Company is exclusive licensee in the United States under patents issued to Henri Vidal, and the furnishing of this drawing does not constitute an expressed or implied license under the Vidal patents.

The design contained on these drawings is based on information provided by the owner. On the basis of this information, The Reinforced Earth Company has designed, and is responsible for the internal stability of the structure only. External stability, including foundation (bearing capacity and settlement) and slope (global) stability, is the responsibiity of the owner.

The Reinforced Earth Company
8614 Westwood Center Drive Suite 1100, Vienna, Virginia 22182 (703) 821-1175

"REINFORCED EARTH" is the registered trademark of The Reinforced Earth Company.

DESIGNED BY:				PROJECT NAME	FAIRFAX-FAIRFIELD-ST. ALBANS I-89 OVER VT 104	DATE
KPB						2-15-01
PROJECT ENGR:				LOCATION	FAIRFAX-FAIRFIELD-ST. ALBANS VERMONT	CONTRACT NO.
KPB						9360
CHECKED BY:	1	3/23/01	REVISED PER VT AOT COMMENTS MEMO DATED 3/22/01 (ADJUSTED T.S. LOCATIONS ON PANEL H-7)	OWNER	VERMONT AOT	DRAWING NO.
PLA						6 OF 8
ENG. MANAGER	REV.	DATE	DESCRIPTION	DRAWING COVERS	PANEL CASTING DRAWINGS 410 NSE	SCALE
						AS SHOWN

C:\9360\SHOP\9360S06.DWG

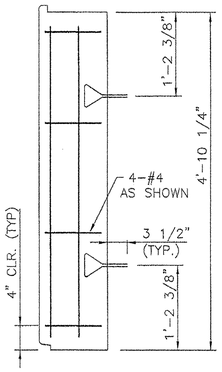

CE3A-2-R4

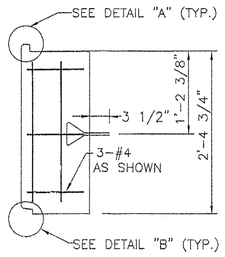

CE3B-1-R4

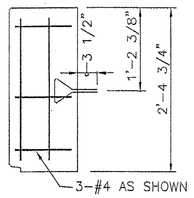

CE3D-1-R4

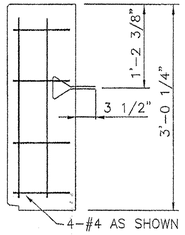

CE3E-2-R4

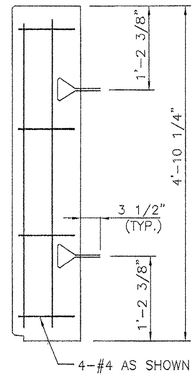

CE3H-2-R4

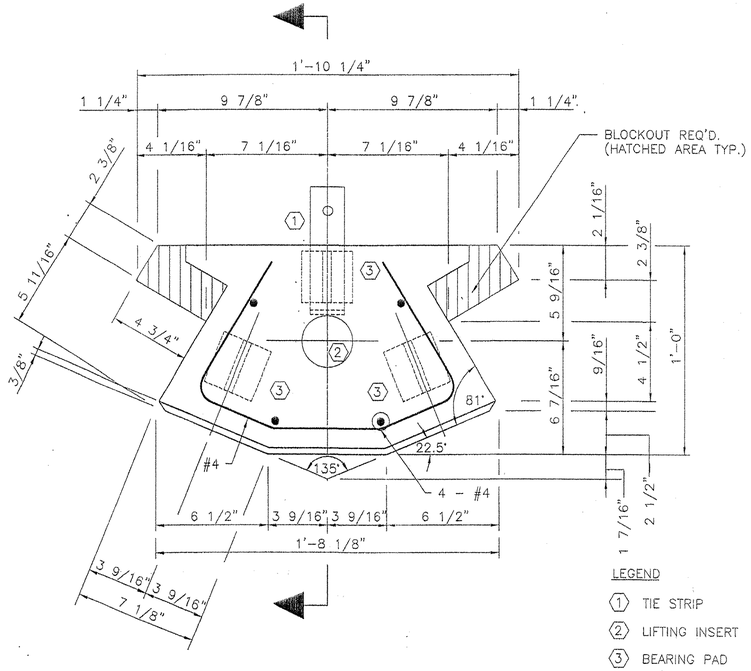

LEGEND

1. TIE STRIP
2. LIFTING INSERT
3. BEARING PAD

CORNER ELEMENT TYPE 3 118°± - 162°±

SCALE: 3" = 1'- 0"

ALL CORNER ELEMENTS SHALL BE PLAIN STEEL FORM FINISH

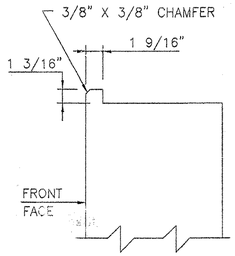

DETAIL "A"

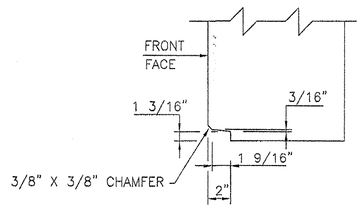

DETAIL "B"

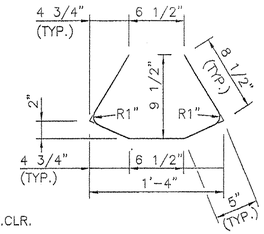

NOTE: 1 1/2" MIN.CLR. ON ALL REBAR.

BAR DETAIL

SCALE: 1 1/2" = 1'-0"

(DIMENSIONS SHOWN ARE OUT TO OUT)

KEY TO PIECE MARK

CE3A-2-R4

- CE3A — CORNER ELEMENT
- 2 — TYPE
- R4 — PANEL HEIGHT
- NO. OF TIE STRIPS
- PANEL REINFORCEMENT

CERTIFIED WITH RESPECT TO THE INTERNAL STABILITY OF REINFORCED EARTH STRUCTURES ONLY.

STATE OF VERMONT
PETER L. ANDERSON
6161
PROFESSIONAL ENGINEER

2-15-01

This drawing contains information proprietary to The Reinforced Earth Company, and is being furnished for the use of VERMONT AGENCY OF TRANSPORTATION only in connection with this project, and the information contained herein is not to be transmitted to any other organization unless specifically authorized in writing by The Reinforced Earth Company. The Reinforced Earth Company is exclusive licensee in the United States under patents issued to Henri Vidal, and the furnishing of this drawing does not constitute an expressed or implied license under the Vidal patents.

The design contained on these drawings is based on information provided by the owner. On the basis of this information, The Reinforced Earth Company has designed, and is responsible for the internal stability of the structure only. External stability, including foundation (bearing capacity and settlement) and slope (global) stability, is the responsibility of the owner.

The Reinforced Earth Company
8614 Westwood Center Drive Suite 1100, Vienna, Virginia 22182 (703) 821-1175

"REINFORCED EARTH" is the registered trademark of The Reinforced Earth Company.

DESIGNED BY:				PROJECT NAME	FAIRFAX-FAIRFIELD-ST. ALBANS I-89 OVER VT 104	DATE
KPB						2-15-01
PROJECT ENGR:				LOCATION	FAIRFAX-FAIRFIELD-ST. ALBANS VERMONT	CONTRACT NO.
KPB						9360
CHECKED BY:				OWNER	VERMONT AOT	DRAWING NO.
PLA						7 OF 8
ENG. MANAGER	REV.	DATE	DESCRIPTION	DRAWING COVERS	CORNER ELEMENT DETAILS 41/135	SCALE
						AS SHOWN

C:\9360\SHOP\9360S07.DWG

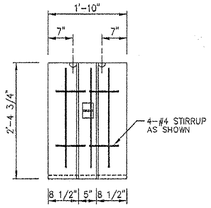

PLAN VIEW
BACK FACE

JD-1-R3

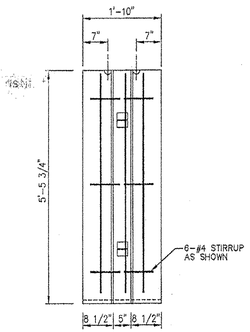

PLAN VIEW
BACK FACE

JK-2-R3

ALL SLIP JOINT COVERS SHALL BE PLAIN STEEL FORM FINISH

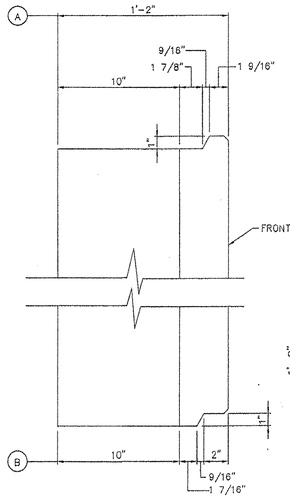

TYPICAL JOINT DETAIL
N.T.S.

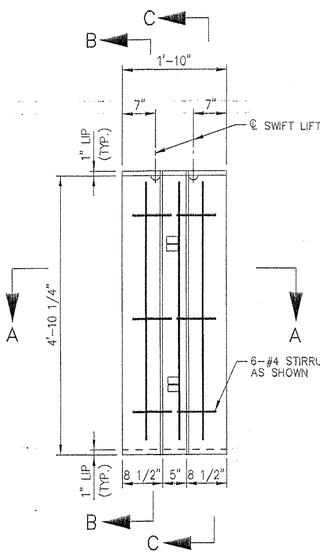

PLAN VIEW
BACK FACE

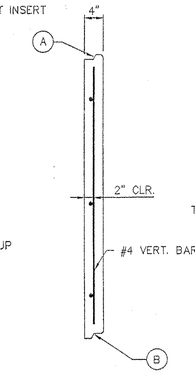

SECTION B-B
SCALE: 1"=1'-0"

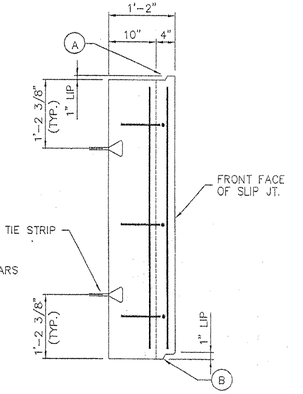

SECTION C-C
SCALE: 1"=1'-0"

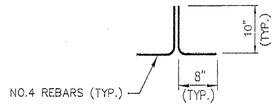

STIRRUP DETAIL
N.T.S.

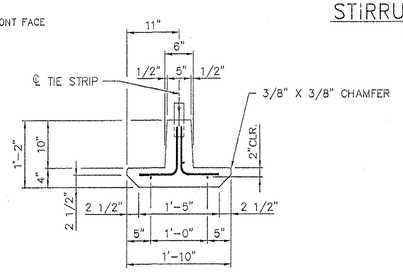

SECTION A-A
SCALE: 1" = 1'-0"

LEGEND

JA-2-R3
- NO. VERTICAL BARS
- NO. OF TIE STRIPS
- PANEL TYPE

MATERIALS LIST SHOWN IS FOR INFORMATION ONLY AND APPLIES TO PANEL "JA-2-R3".		
BURKE LIFT INSERTS	2	3/8"x3/8" LONG
STIRRUPS	6	NO.4 1'-6" LONG
TIE STRIPS	2	SEE ST'D DETAIL SHT. S3
VERTICAL BARS	3	NO.4 4'-6" LONG
CONCRETE	.17 C.Y.	f'c 4000 P.S.I.
PANEL TYPE "JA"	SEE SUM.	SURFACE AREA 4.6 SQ.FT.
ITEM	QUANTITY	REMARKS
LIST OF MATERIALS		
PIECE MARK: JA-2-R3		

CERTIFIED WITH RESPECT TO THE INTERNAL STABILITY OF REINFORCED EARTH STRUCTURES ONLY

STATE OF VERMONT
PETER L. ANDERSON
6161
PROFESSIONAL ENGINEER

2.15.01

This drawing contains information proprietary to The Reinforced Earth Company, and is being furnished for the use of VERMONT AGENCY OF TRANSPORTATION only in connection with this project, and the information contained herein is not to be transmitted to any other organization unless specifically authorized in writing by The Reinforced Earth Company. The Reinforced Earth Company is exclusive licensee in the United States under patents issued to Henri Vidal, and the furnishing of this drawing does not constitute an expressed or implied license under the Vidal patents.

The design contained on these drawings is based on information provided by the owner. On the basis of this information, The Reinforced Earth Company has designed, and is responsible for the internal stability of the structure only. External stability, including foundation (bearing capacity and settlement) and slope (global) stability, is the responsibility of the owner.

The Reinforced Earth Company
8614 Westwood Center Drive Suite 1100, Vienna, Virginia 22182 (703) 821-1175

"REINFORCED EARTH" is the registered trademark of The Reinforced Earth Company.

DESIGNED BY:				PROJECT NAME	FAIRFAX-FAIRFIELD-ST. ALBANS I-89 OVER VT 104	DATE
KPB						2-15-01
PROJECT ENGR: KPB				LOCATION	FAIRFAX-FAIRFIELD-ST. ALBANS VERMONT	CONTRACT NO. 9360
CHECKED BY: PLA				OWNER	VERMONT AOT	DRAWING NO. 8 OF 8
ENG. MANAGER	REV.	DATE	DESCRIPTION	DRAWING COVERS	SLIP JOINT COVER DETAILS 412nse	SCALE AS SHOWN

C:\9360\SHOP\9360S08.DWG

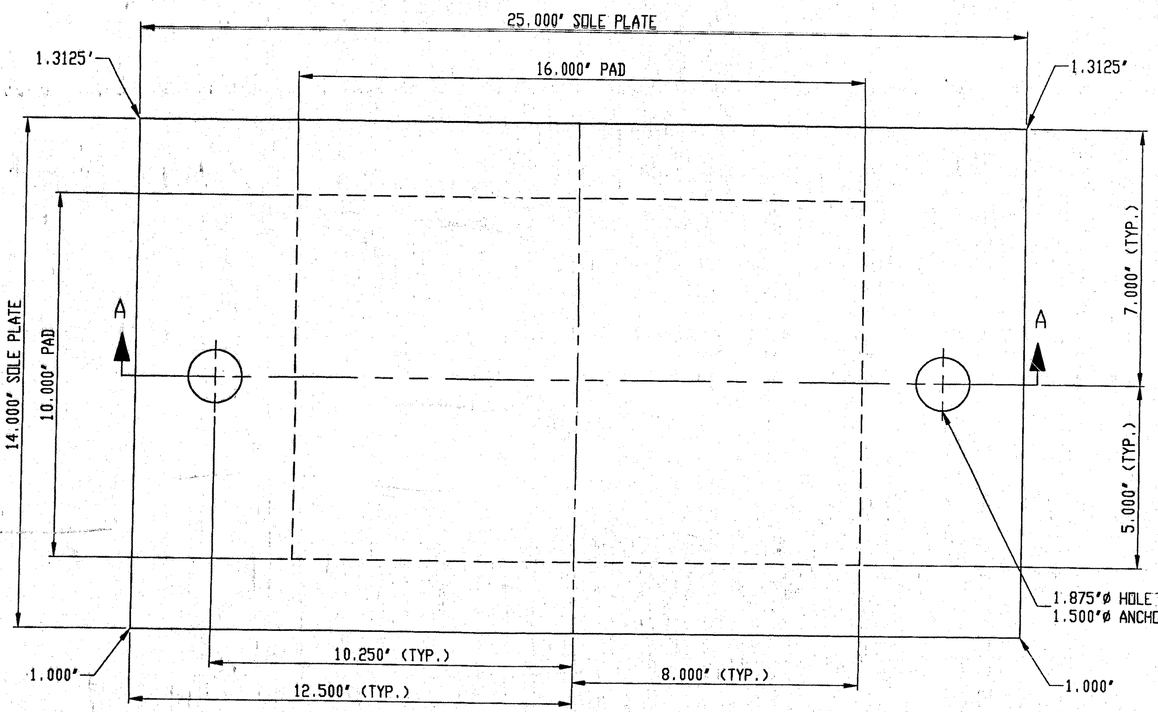

PLAN VIEW

MARK: 2201-1104-A
FIXED BEARING
(5) REQ'D @ ABUT. 1
(5) REQ'D @ ABUT. 3
(10) TOTAL REQ'D

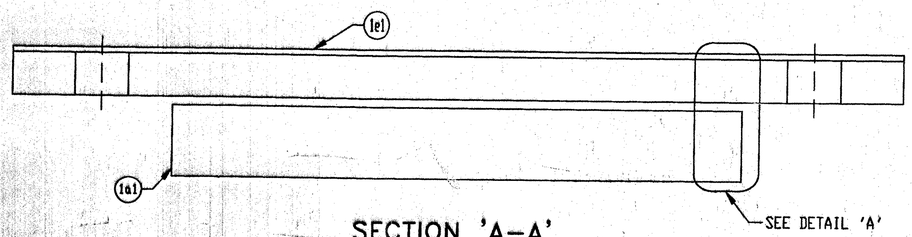

SECTION 'A-A'

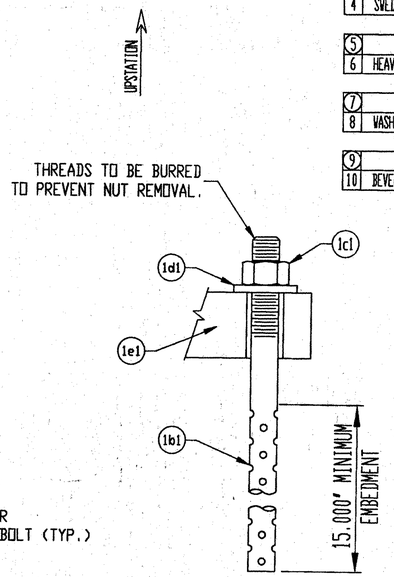

ANCHOR ASSEMBLY DETAIL

LINE	PART	MARK	NO. REQ'D	DESCRIPTION	REMARKS
1		1A	10	PREFORMED FABRIC PAD	
2	FABRIC PAD	1a1	10	2.000" X 10.000" X 16.000"	VERMONT SPEC. 731.01, AASHTO 18.4.10.1
3		1B	20	SWEDGE ANCHOR ROD	
4	SWEDGE ANCHOR ROD	1b1	20	1.5ø X 21.000" MIN. w\4" THREADED, 15° MIN. SWEDGED	ASTM A 36, GALVANIZED A153
5		1C	20	HEAVY HEX NUT	
6	HEAVY HEX NUT	1c1	20	1.5ø	ASTM A-307 GR. DH, GALVANIZED A153
7		1D	20	WASHER PLATE	
8	WASHER PLATE	1d1	20	.375" X 3.000" X 3.000" w\ 1.625"ø HOLE	ASTM A 36, GALVANIZED A123
9		1E	10	SOLE PLATE	
10	BEVELED SOLE PLATE	1e1	10	1.3125"--1.000" X 14.000" X 25.000"	ASTM A709 GR. 36, GALVANIZED A123

GENERAL NOTES:

1. PAD AND MATERIALS SHALL CONFORM TO VERMONT ~~DEPARTMENT~~ AGENCY OF TRANSPORTATION ~~DIVISION OF HIGHWAYS SPECIFICATIONS FOR~~ STANDARD SPECIFICATIONS FOR CONSTRUCTION SECTIONS 531 & 731.

2. THESE SHOP DRAWINGS WERE PREPARED IN ACCORDANCE WITH THE CONTRACT PLANS AND SPECIFICATIONS. THE D.S. BROWN COMPANY DOES NOT ACCEPT LIABILITY FOR THE DESIGN OF THE PRODUCTS DETAILED IN THESE SHOP DRAWINGS.

3. THE BEARINGS SHALL BE SUBJECTED TO RANDOM IN-HOUSE ELASTOMER TESTING AND RANDOM IN-HOUSE PROOF LOAD TESTING IN ACCORDANCE WITH AASHTO DIVISION I, SECTION 14 (METHOD "A") AND AASHTO DIVISION II, SECTION 18.

4. THE D.S. BROWN COMPANY IS TO ONLY SUPPLY THE PARTS SHOWN ON THIS DRAWING.

SU
ME
SH

) OR METALIZED. PRIOR TO GALVANIZING OR
ND EDGES OF STEEL PLATES, SHAPES, ETC.,
1 INCH RADIUS.

ALL MATERIALS AND CONSTRUCTION SHALL CONFORM TO STATE OF VERMONT AGENCY OF TRANSPORTATION STANDARD SPECIFICATIONS FOR CONSTRUCTION DATED 1990, AND ITS LATEST REVISIONS, AND THE AASHTO STANDARD SPECIFICATIONS FOR [illegible]GHWAY BRIDGES, DATED 1996, AND ITS LATEST REVISIONS

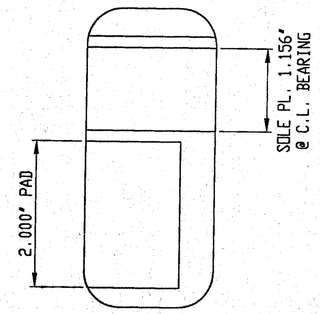

DETAIL 'A'

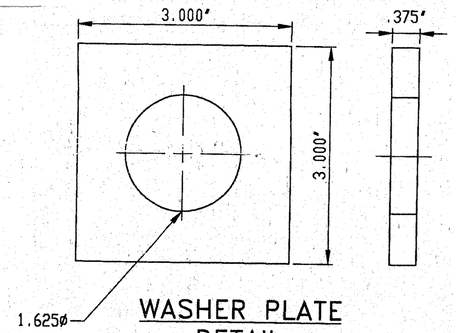

WASHER PLATE DETAIL

V.A.O.T.
RECEIVED
CK'D BY mgl OK'D BY
2/28/01
FEB 26 2001
RESUBMIT APPROVED AS NOTED
BY mgl DATE 3/8/01

D.S. BROWN

2201-1106-1, 10 OF 10
SHEET 1 OF 7

D.S. BROWN

F.A.P. NO.: -
STATE PROJ. NO.: IM-089-3(27)
BRIDGE NO: 87 N & S
DESIGNER: VT AGENCY OF TRANSPORTATION
CONTRACTOR: J.A. MCDONALD

DATE	SYM	REVISION	DR	CK

THE D.S. BROWN COMPANY, INC.
NORTH BALTIMORE, OHIO 45872-0158 U.S.A.

SCALE: N/A
DATE: 1/19/01
CHECKED BY: E. Kelley
DRAWN BY: B.COPPUS

I-89 OVER VT 104
FRANKLIN COUNTY
PREFORMED FABRIC BEARING

413
VERMONT
DRAWING NUMBER
2201-1106-01

DSB FILE NO: 2201-1106\SHT-01

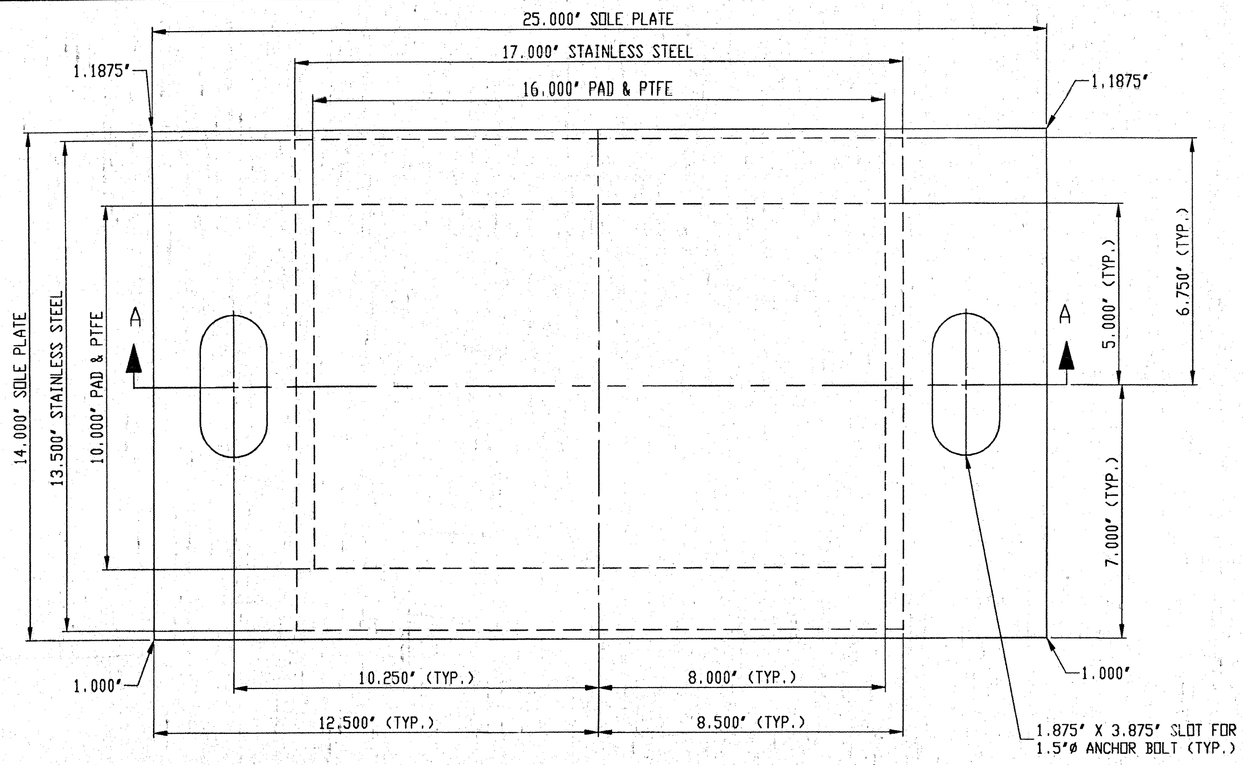

PLAN VIEW

MARK: 2201-1104-B
(5) REQ'D @ ABUT. 2
(5) REQ'D @ ABUT. 4
(10) TOTAL REQ'D

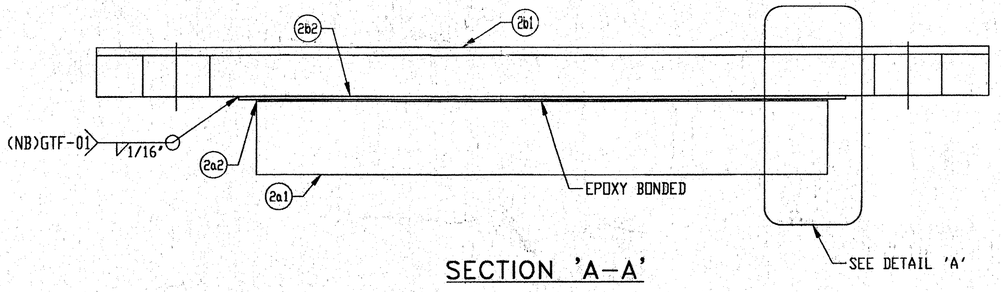

SECTION 'A-A'

LINE	PART	MARK	NO. REQ'D	DESCRIPTION	REMARKS
1		2A	10	PREFORMED FABRIC PAD	
2	FABRIC PAD	2a1	10	2.000" X 10.000" X 16.000"	VERMONT SPEC. 731.01, AASHTO 18.4.10.1
3	PTFE	2a2	10	.0312" X 10.000" X 16.000"	ASTM D1457, EPOXY BONDED
4		2B	10	SOLE PLATE	
5	BEVELED SOLE PLATE	2b1	10	1.188" X 1.000" X 14.000" X 25.000"	ASTM A709 GR. 36, GALVANIZED A123
6	STAINLESS STEEL	2b2	10	14 GA X 13.500" X 17.00"	ASTM A240, TYPE 304 #8 MIRROR FINISH
7		2C	20	SWEDGE ANCHOR ROD	
8	SWEDGE ANCHOR ROD	2c1	20	1.5ø X 21.000" MIN. w\4" THREADED, 15" MIN. SWEDGED	ASTM A36 GALVANIZED A153
9		2D	20	HEAVY HEX NUT	
10	HEAVY HEX NUT	2d1	20	1.5ø	ASTM A307 GR. DH, GALVANIZED A153
11		2E	20	WASHER PLATE	
12	WASHER PLATE	2e1	20	.375" X 3.000" X 3.000" w\ 1.625"ø HOLE	ASTM A36, GALVANIZED A123

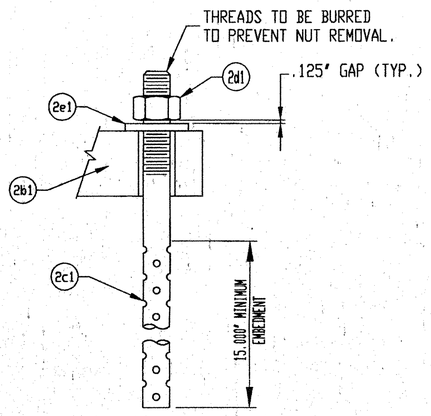

ANCHOR ASSEMBLY DETAIL

ALL MATERIALS AND CONSTRUCTION SHALL CONFORM TO STATE OF VERMONT AGENCY OF TRANSPORTATION STANDARD SPECIFICATIONS FOR CONSTRUCTION DATED 1990, AND ITS LATEST REVISIONS, AND THE AASHTO STANDARD SPECIFICATIONS FOR HIGHWAY BRIDGES, DATED 1996, AND ITS LATEST REVISIONS.

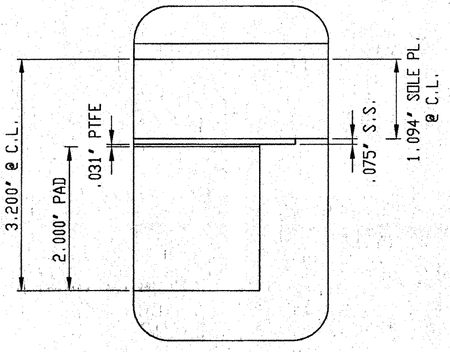

DETAIL 'A'

GENERAL NOTES:

1. PAD AND MATERIALS SHALL CONFORM TO VERMONT ~~DEPARTMENT~~ AGENCY OF TRANSPORTATION ~~DIVISION OF HIGHWAYS SPECIFICATIONS FOR~~ STANDARD SPECIFICATIONS FOR CONSTRUCTION SECTIONS 531 & 731.

2. THESE SHOP DRAWINGS WERE PREPARED IN ACCORDANCE WITH THE CONTRACT PLANS AND SPECIFICATIONS. THE D.S. BROWN COMPANY DOES NOT ACCEPT LIABILITY FOR THE DESIGN OF THE PRODUCTS DETAILED IN THESE SHOP DRAWINGS.

3. THE BEARINGS SHALL BE SUBJECTED TO RANDOM IN-HOUSE ELASTOMER TESTING AND RANDOM IN-HOUSE PROOF LOAD TESTING IN ACCORDANCE WITH AASHTO DIVISION I, SECTION 14 (METHOD "A") AND AASHTO DIVISION II, SECTION 18.

4. THE D.S. BROWN COMPANY IS TO ONLY SUPPLY THE PARTS SHOWN ON THIS DRAWING.

5. STAINLESS STEEL SHEET TO BE BONDED AND THEN WELDED. STAINLESS STEEL SLIDING SURFACE IN CONTACT WITH PTFE SHALL HAVE A NO. 8 MIRROR FINISH AND ALL OTHERS SHALL HAVE A 2B FINISH.

SURFACES TO BE GALVANIZED OR METALIZED. PRIOR TO GALVANIZING OR METALIZING, ALL CORNERS AND EDGES OF STEEL PLATES, SHAPES, ETC., SHALL BE GROUND TO A 1/16 INCH RADIUS.

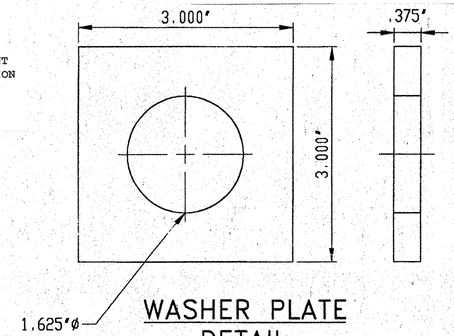

WASHER PLATE DETAIL

V.A.O.T.
RECEIVED
CK'D BY mgl OK'D BY
2.28.01
FEB 2 6 2001
RESUBMIT APPROVED VASANTED
BY mgl DATE 3.8.01

D.S. BROWN

2201-1106-2, 10 OF 10
SHEET 2 OF 7

DSB FILE NO: 2201-1106\SHT-02

D.S. BROWN

DATE	SYM	REVISION	DR	CK

F.A.P. NO.: -
STATE PROJ. NO.: IM-089-3(27)
BRIDGE NO: 87 N & S
DESIGNER: VT AGENCY OF TRANSPORTATION
CONTRACTOR: J.A. MCDONALD

THE D.S. BROWN COMPANY, INC.
NORTH BALTIMORE, OHIO 45872-0158 U.S.A.

SCALE: N/A
DATE: 1/19/01
CHECKED BY:
DRAWN BY: B.COPPUS

I-89 OVER VT 104
FRANKLIN COUNTY
414
VERMONT

PREFORMED FABRIC BEARING
DRAWING NUMBER 2201-1106-02

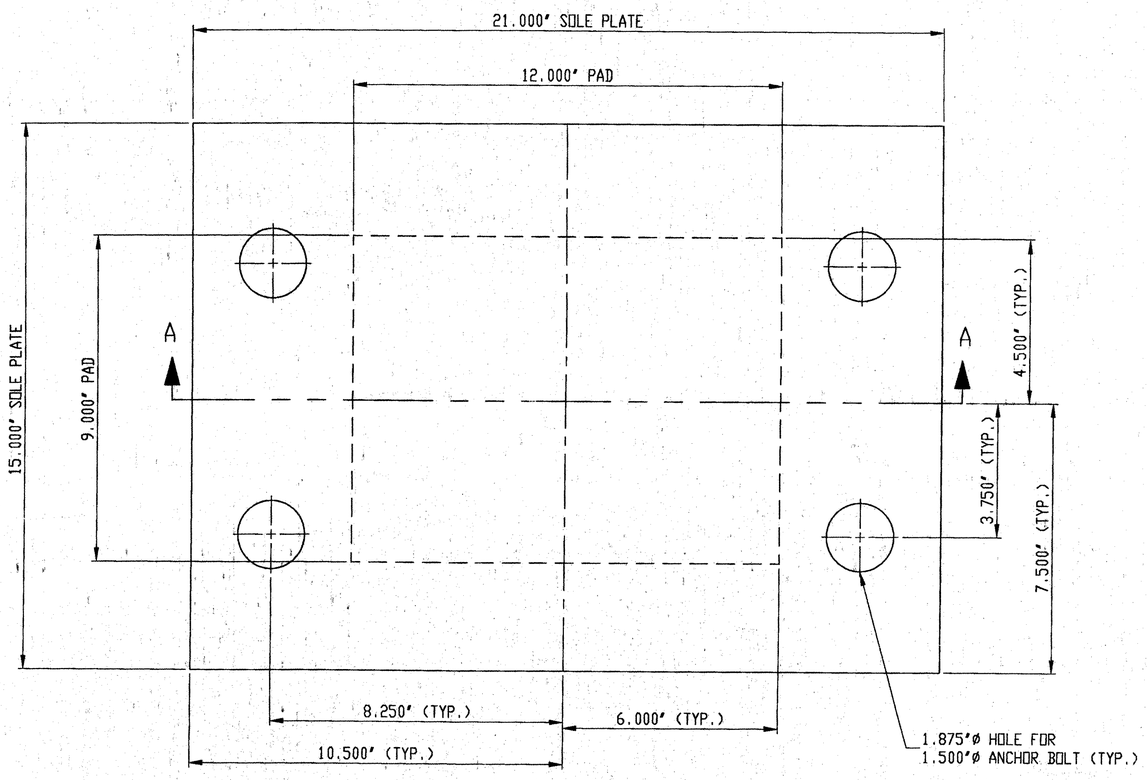

PLAN VIEW

MARK: 2201-1104-C
FIXED BEARING
(6) REQ'D @ ABUT. 5
(6) TOTAL REQ'D

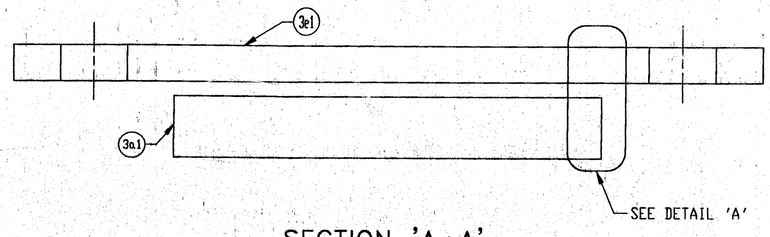

SECTION 'A-A'

LINE	PART	MARK	NO. REQ'D	DESCRIPTION	REMARKS
1		3A	6	PREFORMED FABRIC PAD	
2	FABRIC PAD	3a1	6	1.75" X 9.000" X 12.000"	VERMONT SPEC. 731.01, AASHTO 18.4.10.1
3		3B	24	SWEDGE ANCHOR ROD	
4	SWEDGE ANCHOR ROD	3b2	24	1.5ø X 21.000" w\4" THREADED, 15" MIN. SWEDGED	ASTM A36 GALVANIZED A153
5		3C	24	HEAVY HEX NUT	
6	HEAVY HEX NUT	3c1	24	1.5ø	ASTM A307 GR. DH, GALVANIZED A153
7		3D	24	WASHER PLATE	
8	WASHER PLATE	3d1	24	.375" X 3.000" X 3.000" w\ 1.625"ø HOLE	ASTM A36, GALVANIZED A123
9		3E	6	SOLE PLATE	
10	SOLE PLATE	3e1	6	1.000" X 15.000" X 21.000"	ASTM A709 GR. 36, GALVANIZED A123

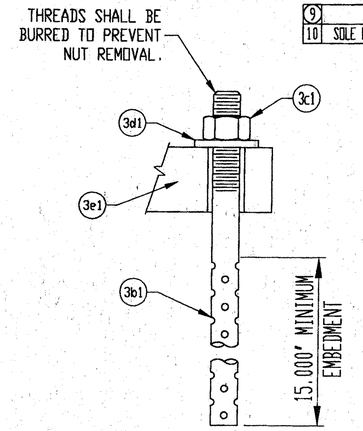

ANCHOR ASSEMBLY DETAIL

ALL MATERIALS AND CONSTRUCTION SHALL CONFORM TO STATE OF VERMONT AGENCY OF TRANSPORTATION STANDARD SPECIFICATIONS FOR CONSTRUCTION DATED 1990, AND ITS LATEST REVISIONS, AND THE AASHTO STANDARD SPECIFICATIONS FOR HIGHWAY BRIDGES, DATED 1996, AND ITS LATEST REVISIONS.

GENERAL NOTES:

1. PAD AND MATERIALS SHALL CONFORM TO VERMONT ~~DEPARTMENT~~ AGENCY OF TRANSPORTATION ~~— DIVISION OF HIGHWAYS SPECIFICATIONS FOR~~ STANDARD SPECIFICATIONS FOR CONSTRUCTION SECTIONS 531 & 731.

2. THESE SHOP DRAWINGS WERE PREPARED IN ACCORDANCE WITH THE CONTRACT PLANS AND SPECIFICATIONS. THE D.S. BROWN COMPANY DOES NOT ACCEPT LIABILITY FOR THE DESIGN OF THE PRODUCTS DETAILED IN THESE SHOP DRAWINGS.

3. THE BEARINGS SHALL BE SUBJECTED TO RANDOM IN-HOUSE ELASTOMER TESTING AND RANDOM IN-HOUSE PROOF LOAD TESTING IN ACCORDANCE WITH AASHTO DIVISION I, SECTION 14 (METHOD "A") AND AASHTO DIVISION II, SECTION 18.

4. THE D.S. BROWN COMPANY IS TO ONLY SUPPLY THE PARTS SHOWN ON THIS DRAWING.

SURFACES TO BE GALVANIZED OR METALIZED. PRIOR TO GALVANIZING OR METALIZING, ALL CORNERS AND EDGES OF STEEL PLATES, SHAPES, ETC., SHALL BE GROUND TO A 1/16 INCH RADIUS.

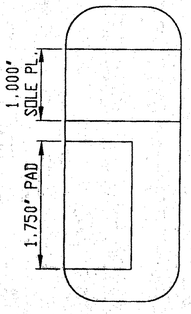

DETAIL 'A'

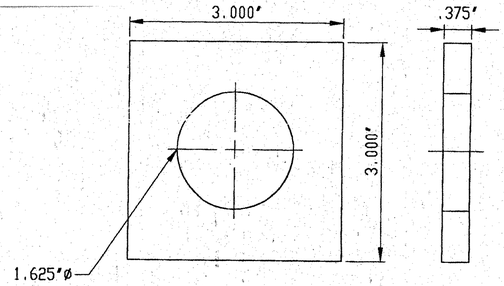

WASHER PLATE DETAIL

V.A.O.T.
RECEIVED
CK'D BY myl CK'D BY
2-28-01
FEB 2 6 2001
RESUBMIT APPROVED V AS NOTED
BY myl DATE 3-8-01

D.S. BROWN

2201-1106-3, 6 OF 6
SHEET 3 OF 7

DATE	SYM	REVISION	DR	CK

D.S. BROWN

F.A.P. NO.: -
STATE PROJ. NO.: IM-089-3(27)
BRIDGE NO: 88S
DESIGNER: VT AGENCY OF TRANSPORTATION
CONTRACTOR: J.A. MCDONALD

DSB FILE NO: 2201-1106\SHT-03

THE D.S. BROWN COMPANY, INC.
NORTH BALTIMORE, OHIO 45872-0158 U.S.A.

SCALE: N/A
DATE: 1/19/01
CHECKED BY: E.K.
DRAWN BY: B.COPPUS 4/5

I-89 OVER ST. ALBANS S. STATE HIGHWAY(EXIT 19)
FRANKLIN COUNTY VERMONT

PREFORMED FABRIC BEARING

DRAWING NUMBER 2201-1106-03

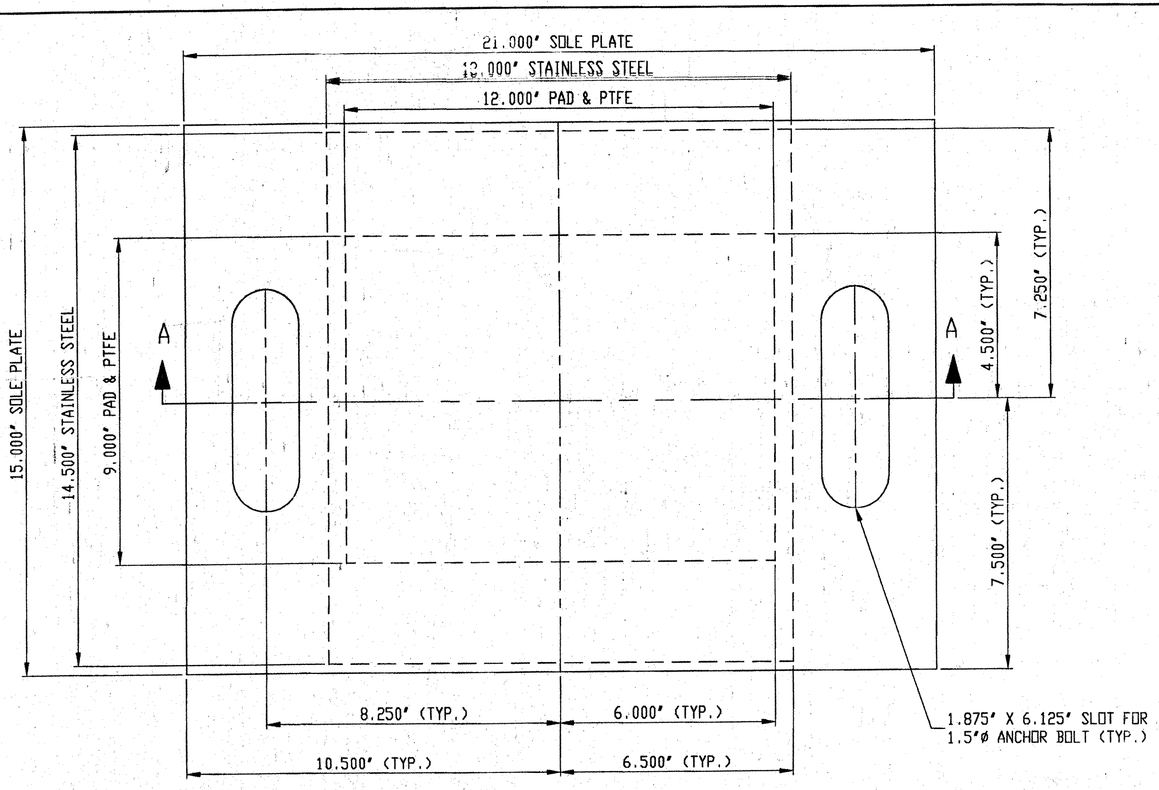

PLAN VIEW

MARK: 2201-1104-D
EXPANSION BEARING
(6) REQ'D @ ABUT. 6
(6) TOTAL REQ'D

LINE	PART	MARK	NO. REQ'D	DESCRIPTION	REMARKS
1		4A	6	PREFORMED FABRIC PAD	
2	FABRIC PAD	4a1	6	1.750" X 9.000" X 12.000"	VERMONT SPEC. 731.01, AASHTO 18.4.10.1
3	PTFE	4a2	6	.0312" X 9.000" X 12.000"	ASTM D1457, EPOXY BONDED
4		4B	6	SOLE PLATE	
5	SOLE PLATE	4b1	6	1.000" X 15.000" X 21.000"	ASTM A709 GR. 36, GALVANIZED A123
6	STAINLESS STEEL	4b2	6	14 GA X 13.000" X 14.500"	ASTM A240, TYPE 304 #8 MIRROR FINISH
7		4C	12	SWEDGE ANCHOR ROD	
8	SWEDGE ANCHOR ROD	4c1	12	1.5ø X 21.000" w\4" THREADED, 15" MIN. SWEDGED	ASTM A 36 GALVANIZED A153
9		4D	12	HEAVY HEX NUT	
10	HEAVY HEX NUT	4d1	12	1.5ø	ASTM A-307 GR. DH, GALVANIZED A153
11		4E	12	WASHER PLATE	
12	WASHER PLATE	4e1	12	.375" X 3.000" X 3.000" w\ 1.625"ø HOLE	ASTM A 36, GALVANIZED A123

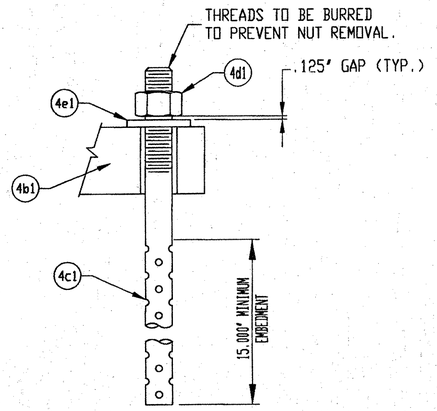

ANCHOR ASSEMBLY DETAIL

SURFACES TO BE GALVANIZED OR METALIZED. PRIOR TO GALVANIZING OR METALIZING, ALL CORNERS AND EDGES OF STEEL PLATES, SHAPES, ETC., SHALL BE GROUND TO A 1/16 INCH RADIUS.

ALL MATERIALS AND CONSTRUCTION SHALL CONFORM TO STATE OF VERMONT AGENCY OF TRANSPORTATION STANDARD SPECIFICATIONS FOR CONSTRUCTION DATED 1990, AND ITS LATEST REVISIONS, AND THE AASHTO STANDARD SPECIFICATIONS FOR HIGHWAY BRIDGES, DATED 1996, AND ITS LATEST REVISIONS.

GENERAL NOTES:

1. PAD AND MATERIALS SHALL CONFORM TO VERMONT ~~DEPARTMENT~~ AGENCY OF TRANSPORTATION ~~— DIVISION OF HIGHWAYS SPECIFICATIONS FOR~~ STANDARD SPECIFICATIONS FOR CONSTRUCTION SECTIONS 531 & 731.

2. THESE SHOP DRAWINGS WERE PREPARED IN ACCORDANCE WITH THE CONTRACT PLANS AND SPECIFICATIONS. THE D.S. BROWN COMPANY DOES NOT ACCEPT LIABILITY FOR THE DESIGN OF THE PRODUCTS DETAILED IN THESE SHOP DRAWINGS.

3. THE BEARINGS SHALL BE SUBJECTED TO RANDOM IN-HOUSE ELASTOMER TESTING AND RANDOM IN-HOUSE PROOF LOAD TESTING IN ACCORDANCE WITH AASHTO DIVISION I, SECTION 14 (METHOD "A") AND AASHTO DIVISION II, SECTION 18.

4. THE D.S. BROWN COMPANY IS TO ONLY SUPPLY THE PARTS SHOWN ON THIS DRAWING.

5. STAINLESS STEEL SLIDING SURFACE IN CONTACT WITH PTFE SHALL HAVE A NO. 8 MIRROR FINISH AND ALL OTHERS SHALL HAVE A 2B FINISH.

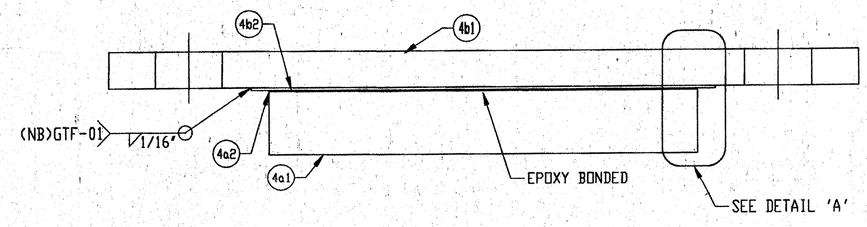

SECTION 'A-A'

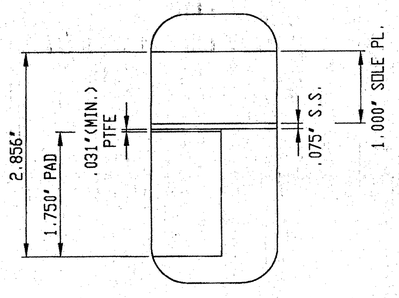

DETAIL 'A'

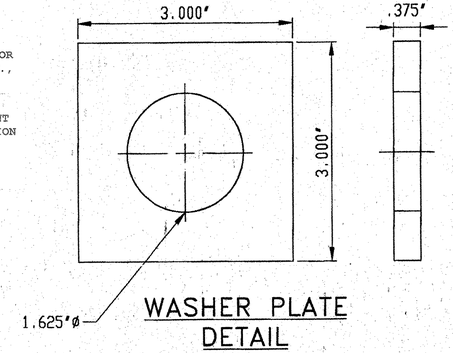

WASHER PLATE DETAIL

V.A.O.T.
RECEIVED
CK'D BY mgl CK'D BY
2-28-01
FEB 26 2001
RESUBMIT APPROVED V AS NOTED
BY mgl DATE 3-3-01

D.S. BROWN

2201-1106-4, 6 OF 6
SHEET 4 OF 7

DSB FILE NO: 2201-1106\SHT-04

DATE	SYM	REVISION	DR	CK

D.S. BROWN

F.A.P. NO.: -
STATE PROJ. NO.: IM-089-3(27)
BRIDGE NO: 88S
DESIGNER: VT AGENCY OF TRANSPORTATION
CONTRACTOR: J.A. MCDONLAD

THE D.S. BROWN COMPANY, INC.
NORTH BALTIMORE, OHIO 45872-0158 U.S.A.

SCALE: N/A | CHECKED BY: E. Kelley | DRAWN BY: B.COPPUS
DATE: 1/19/01 | 4/6

I-89 OVER ST. ALBANS S. STATE HIGHWAY(EXIT 19)
FRANKLIN COUNTY VERMONT

PREFORMED FABRIC BEARING | DRAWING NUMBER 2201-1106-04

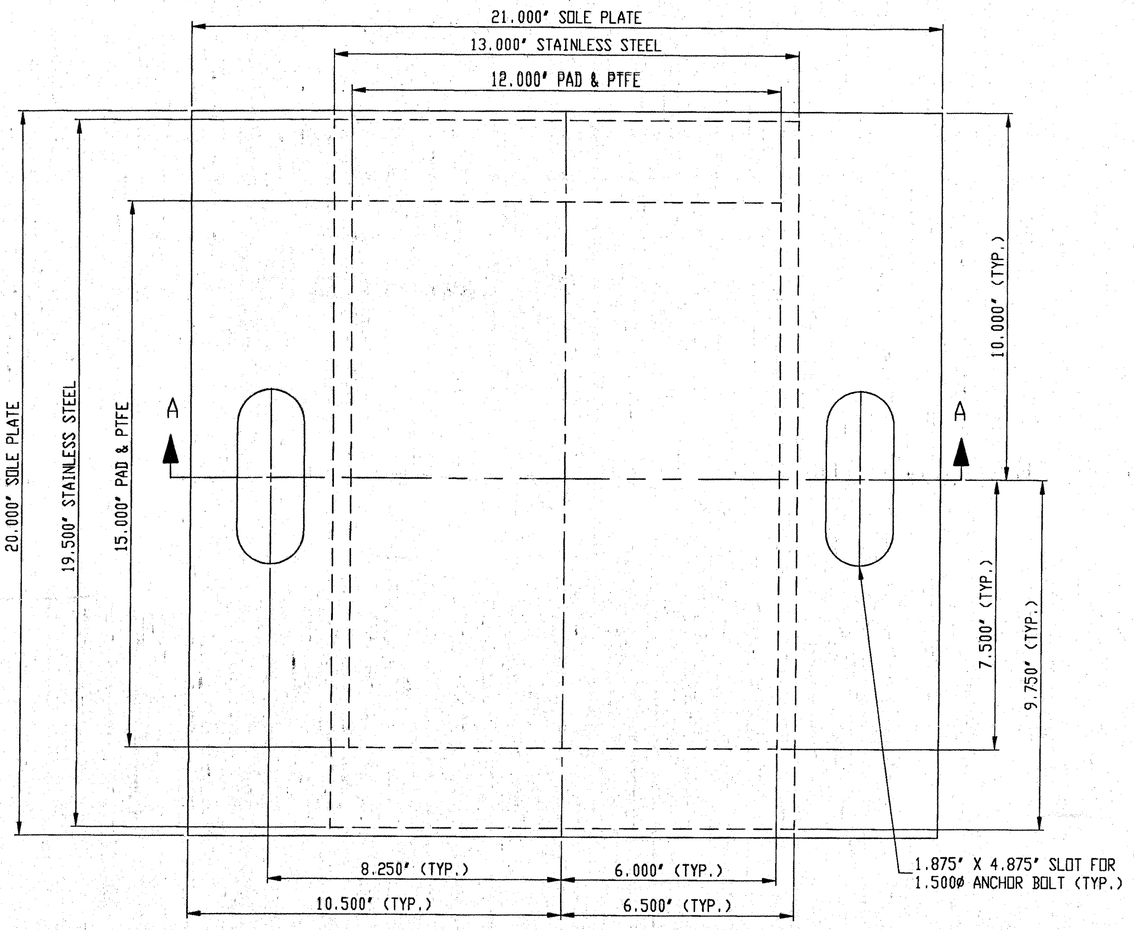

PLAN VIEW

MARK: 2201-1104-E
EXPANSION BEARING
SOUTHBOUND BRIDGE:
(6) REQ'D @ PIER 1
(6) REQ'D @ PIER 2
NORTHBOUND BRIDGE:
(7) REQ'D @ PIER 3
(7) REQ'D @ PIER 4
(26)TOTAL REQ'D

ALL MATERIALS AND CONSTRUCTION SHALL CONFORM TO STATE OF VERMONT AGENCY OF TRANSPORTATION STANDARD SPECIFICATIONS FOR CONSTRUCTION DATED 1990, AND ITS LATEST REVISIONS, AND THE AASHTO STANDARD SPECIFICATIONS FOR HIGHWAY BRIDGES, DATED 1996, AND ITS LATEST REVISIONS.

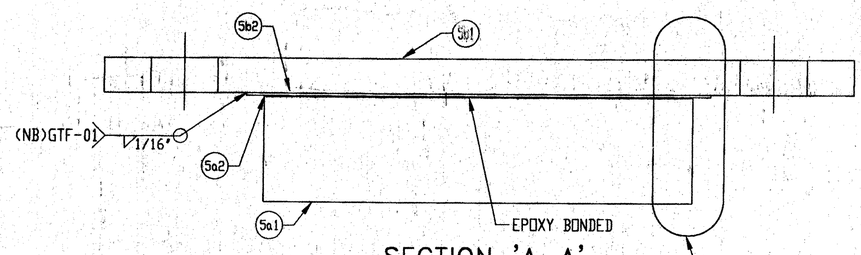

SECTION 'A-A'

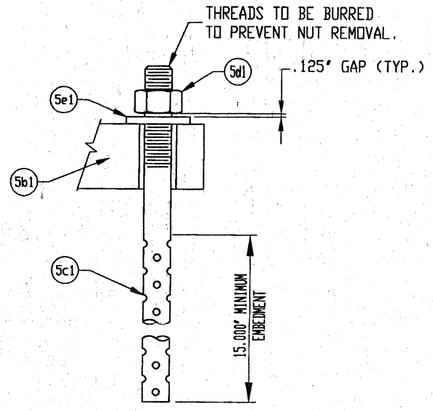

ANCHOR ASSEMBLY DETAIL

SURFACES TO BE GALVANIZED OR METALIZED. PRIOR TO GALVANIZING OR METALIZING, ALL CORNERS AND EDGES OF STEEL PLATES, SHAPES, ETC., SHALL BE GROUND TO A 1/16 INCH RADIUS.

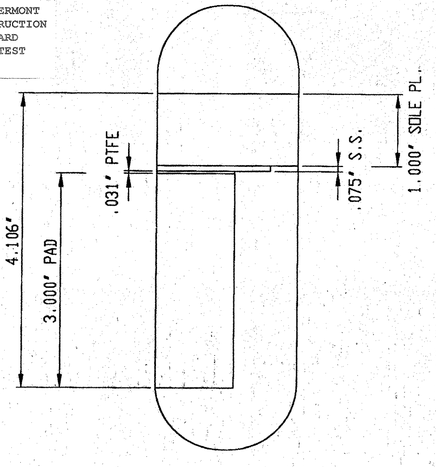

DETAIL 'A'

DSB FILE NO: 2201-1106\SHT-05

LINE	PART	MARK	NO. REQ'D	DESCRIPTION	REMARKS
1		5A	26	PREFORMED FABRIC PAD	
2	FABRIC PAD	5a1	26	3.000" X 15.000" X 12.000"	50±5 DUROMETER, NEOPRENE
3	PTFE	5a2	26	.0312" (MIN.) X 15.000" X 12.000"	ASTM D1457, EPOXY BONDED
4		5B	26	SOLE PLATE	
5	SOLE PLATE	5b1	26	1.000" X 20.000" X 21.000"	ASTM A709 GR. 36, GALVANIZED A123
6	STAINLESS STEEL	5b2	26	14 GA X 19.500" X 13.000"	ASTM A240, TYPE 304 #8 MIRROR FINISH
7		5C	~~32~~ 52	SWEDGE ANCHOR ROD	
8	SWEDGE ANCHOR ROD	5c1	~~32~~ 52	1.5ø X 21.000" MIN. w\4" THREADED, 15" MIN. SWEDGED	ASTM A 36, GALVANIZED A153
9		5D	~~32~~ 52	HEAVY HEX NUT	
10	HEAVY HEX NUT	5d1	~~32~~ 52	1.5ø	ASTM A307 GR. DH, GALVANIZED A153
11		5E	~~32~~ 52	WASHER PLATE	
12	WASHER PLATE	5e1	~~32~~ 52	.375" X 3.000" X 3.000" w\ 1.625"ø HOLE	ASTM A36, GALVANIZED A123

GENERAL NOTES:

1. PAD AND MATERIALS SHALL CONFORM TO VERMONT ~~DEPARTMENT~~ AGENCY OF TRANSPORTATION~~— DIVISION OF HIGHWAYS SPECIFICATIONS FOR~~ 531 & 731. ~~STANDARD SPECIFICATIONS FOR CONSTRUCTION~~ SECTIONS

2. THESE SHOP DRAWINGS WERE PREPARED IN ACCORDANCE WITH THE CONTRACT PLANS AND SPECIFICATIONS. THE D.S. BROWN COMPANY DOES NOT ACCEPT LIABILITY FOR THE DESIGN OF THE PRODUCTS DETAILED IN THESE SHOP DRAWINGS.

3. THE BEARINGS SHALL BE SUBJECTED TO RANDOM IN-HOUSE ELASTOMER TESTING AND RANDOM IN-HOUSE PROOF LOAD TESTING IN ACCORDANCE WITH AASHTO DIVISION I, SECTION 14 (METHOD "A") AND AASHTO DIVISION II, SECTION 18.

4. THE D.S. BROWN COMPANY IS TO ONLY SUPPLY THE PARTS SHOWN ON THIS DRAWING.

5. STAINLESS STEEL SIDING SURFACE IN CONTACT WITH PTFE SHALL HAVE A NO. 8 MIRROR FINISH AND ALL OTHERS SHALL HAVE A 2B FINISH.

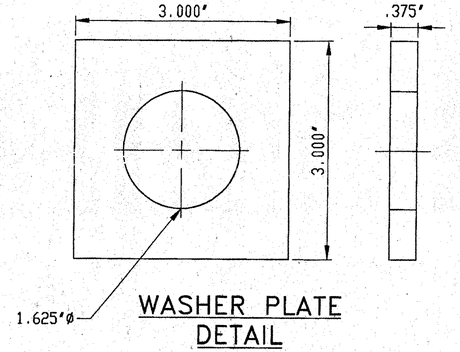

WASHER PLATE DETAIL

V.A.O.T.
RECEIVED
CK'D BY ~~zzyl~~ OK'D BY
2-28-01
FEB 26 2001
RESUBMIT APPROVED ✓ AS NOTED
BY mgl DATE 3.8.01

D.S. BROWN

2201-1106-5, 26 OF 26
SHEET 5 OF 7

DATE	SYM	REVISION	DR	CK

D.S. BROWN

F.A.P. NO.: —
STATE PROJ. NO.: IM-089-3(27)
BRIDGE NO: ~~88S~~ 89 N&S
DESIGNER: VT AGENCY OF TRANSPORTATION
CONTRACTOR: J.A. MCDONALD

THE D.S. BROWN COMPANY, INC.
NORTH BALTIMORE, OHIO 45872-0156 U.S.A.

SCALE: N/A	CHECKED BY: E. Kelley	DRAWN BY: B.COPPUS
DATE: 1/19/01		417

I-89 OVER ST. ALBANS S. STATE HIGHWAY(EXIT19)
FRANKLIN COUNTY VERMONT
PREFORMED FABRIC BEARING
DRAWING NUMBER 2201-1106-05

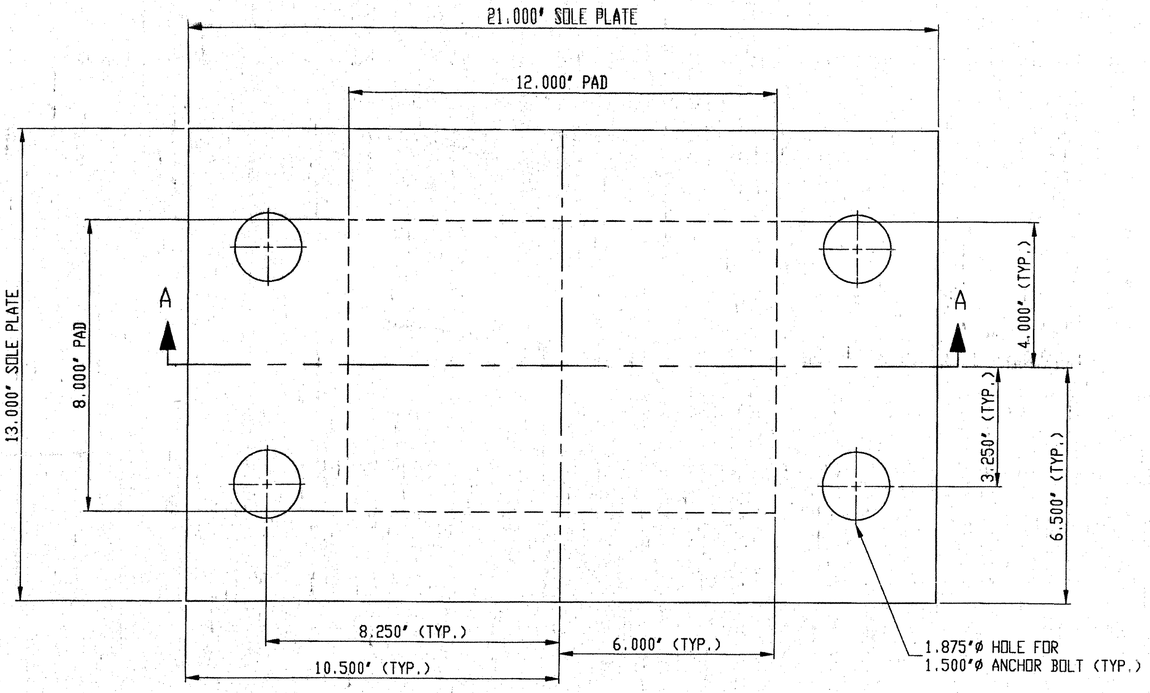

PLAN VIEW

MARK: 2201-1104-F
FIXED BEARING
(7) REQ'D @ ABUT. 7
(7) TOTAL REQ'D

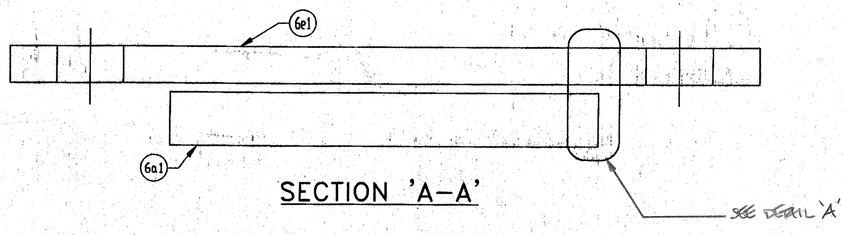

SECTION 'A-A'

LINE	PART	MARK	NO. REQ'D	DESCRIPTION	REMARKS
1		6A	7	PREFORMED FABRIC PAD	
2	FABRIC PAD	6a1	7	1.500" X 8.000" X 12.000"	VERMONT SPEC. 731.01, AASHTO 18.4.10.1
3		6B	28	SWEDGE ANCHOR ROD	
4	SWEDGE ANCHOR ROD	6b1	28	1.5# X 21.000" w\4" THREADED, 15" MIN. SWEDGED	ASTM A 36, GALVANIZED A153
5		6C	28	HEAVY HEX NUT	
6	HEAVY HEX NUT	6c1	28	1.5#	ASTM A-307 GR. DH, GALVANIZED A153
7		6D	28	WASHER PLATE	
8	WASHER PLATE	6d1	28	.375" X 3.000" X 3.000" w\ 1.625"Ø HOLE	ASTM A 36, GALVANIZED A123
9		6E	7	SOLE PLATE	
10	SOLE PLATE	6e1	7	1.000" X 13.000" X 21.000"	ASTM A709 GR. 36, GALVANIZED A123

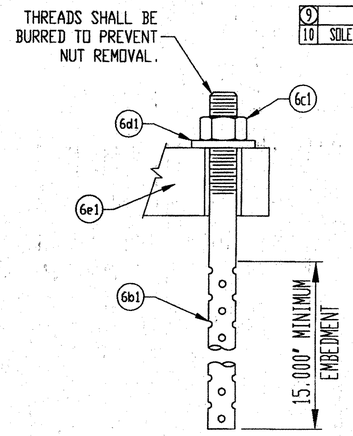

ANCHOR ASSEMBLY DETAIL

ALL MATERIALS AND CONSTRUCTION SHALL CONFORM TO STATE OF VERMONT AGENCY OF TRANSPORTATION STANDARD SPECIFICATIONS FOR CONSTRUCTION DATED 1990, AND ITS LATEST REVISIONS, AND THE AASHTO STANDARD SPECIFICATIONS FOR HIGHWAY BRIDGES, DATED 1996, AND ITS LATEST REVISIONS.

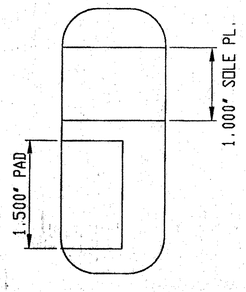

DETAIL 'A'

GENERAL NOTES:

1. PAD AND MATERIALS SHALL CONFORM TO VERMONT ~~DEPARTMENT~~ AGENCY OF TRANSPORTATION ~~DIVISION OF HIGHWAYS SPECIFICATIONS FOR~~ STANDARD SPECIFICATIONS FOR CONSTRUCTION SECTIONS 531 & 731.

2. THESE SHOP DRAWINGS WERE PREPARED IN ACCORDANCE WITH THE CONTRACT PLANS AND SPECIFICATIONS. THE D.S. BROWN COMPANY DOES NOT ACCEPT LIABILITY FOR THE DESIGN OF THE PRODUCTS DETAILED IN THESE SHOP DRAWINGS.

3. THE BEARINGS SHALL BE SUBJECTED TO RANDOM IN-HOUSE ELASTOMER TESTING AND RANDOM IN-HOUSE PROOF LOAD TESTING IN ACCORDANCE WITH AASHTO DIVISION I, SECTION 14 (METHOD "A") AND AASHTO DIVISION II, SECTION 18.

4. THE D.S. BROWN COMPANY IS TO ONLY SUPPLY THE PARTS SHOWN ON THIS DRAWING.

SURFACES TO BE GALVANIZED OR METALIZED. PRIOR TO GALVANIZING OR METALIZING, ALL CORNERS AND EDGES OF STEEL PLATES, SHAPES, ETC., SHALL BE GROUND TO A 1/16 INCH RADIUS.

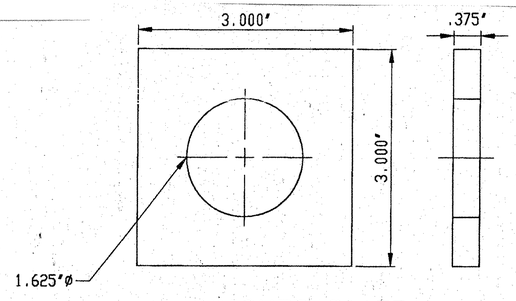

WASHER PLATE DETAIL

V.A.O.T.
RECEIVED
OK'D BY mgl OK'D BY
2.28.01
FEB 26 2001
RESUBMIT APPROVED AS NOTED
BY mgl DATE 3.8.01

DSB FILE NO: 2201-1106\SHT-06

D.S. BROWN

2201-1106-6, 7 OF 7
SHEET 6 OF 7

D.S. BROWN

DATE	SYM.	REVISION	DR	CK

F.A.P. NO.: -
STATE PROJ. NO.: IM-089-3(27)
BRIDGE NO: 88N
DESIGNER: VT AGENCY OF TRANSPORTATION
CONTRACTOR: J.A. MCDONALD

THE D.S. BROWN COMPANY, INC.
NORTH BALTIMORE, OHIO 45872-0158 U.S.A.

SCALE: N/A
DATE: 1/19/01
CHECKED BY: E. Kelley
DRAWN BY: B.COPPUS 4/8

I-89 OVER ST. ALBANS S. STATE HIGHWAY(EXIT 19)
FRANKLIN COUNTY VERMONT

PREFORMED FABRIC BEARING

DRAWING NUMBER
2201-1106-06

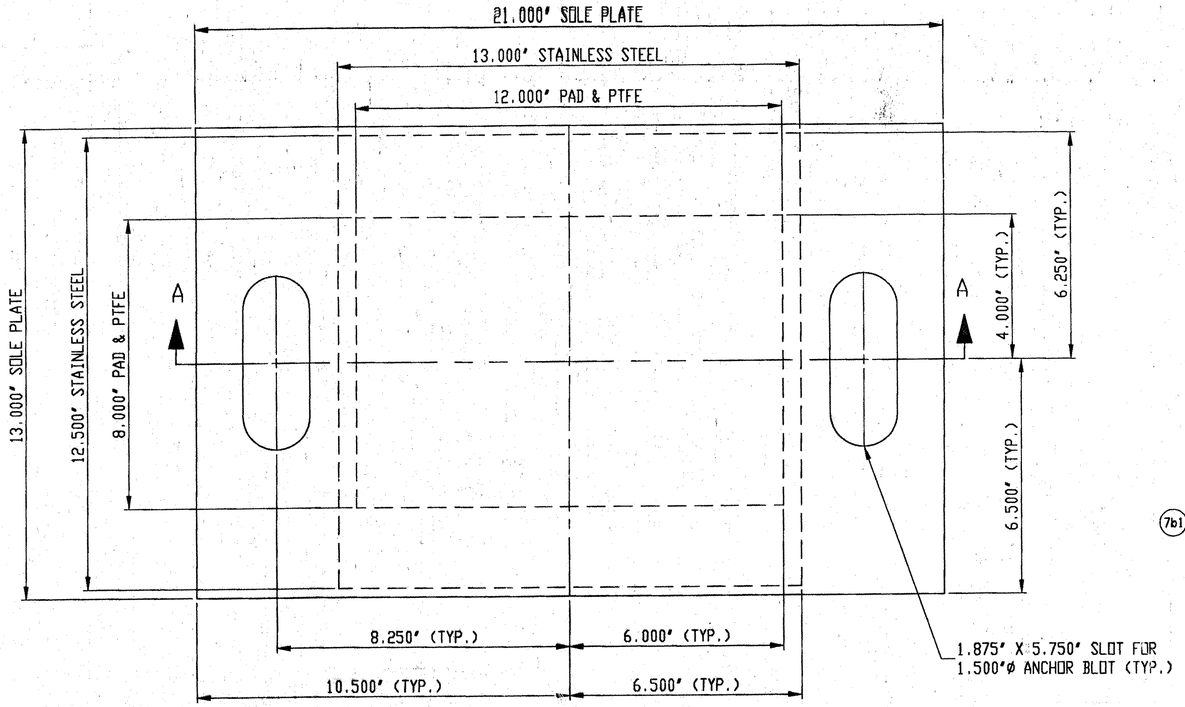

PLAN VIEW

MARK: 2201-1104-G
EXPANSION BEARING
(7) REQ'D @ ABUT. 8
(7)TOTAL REQ'D

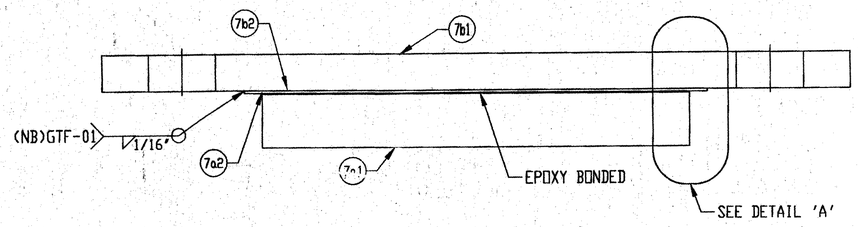

SECTION 'A-A'

LINE	PART	MARK	NO. REQ'D	DESCRIPTION	REMARKS
(1)		7A	7	PREFORMED FABRIC PAD	
2	FABRIC PAD	7a1	7	1.500' X 8.000' X 12.000'	VERMONT SPEC. 731.01, AASHTO 18.4.10.1
3	PTFE	7a2	7	.0312' (MIN.) X 8.000' X 12.000'	ASTM D1457, EPOXY BONDED
(4)		7B	7	SOLE PLATE	
5	SOLE PLATE	7b1	7	1.000' X 13.000' X 21.000'	ASTM A709 GR. 36, GALVANIZED A123
6	STAINLESS STEEL	7b2	7	14 GA X 12.500' X 13.000'	ASTM A240, TYPE 304 #8 MIRROR FINISH
(7)		7C	14	SWEDGE ANCHOR ROD	
8	SWEDGE ANCHOR ROD	7c1	14	1.5ø X 21.000' w\4' THREADED, 15' MIN. SWEDGED	ASTM A 36 GALVANIZED A153
(9)		7D	14	HEAVY HEX NUT	
10	HEAVY HEX NUT	7d1	14	1.5ø	ASTM A-307 GR. IH, GALVANIZED A153
(11)		7E	14	WASHER PLATE	
12	WASHER PLATE	7e1	14	.375' X 3.000' X 3.000' w\ 1.625'ø HOLE	ASTM A 36, GALVANIZED A123

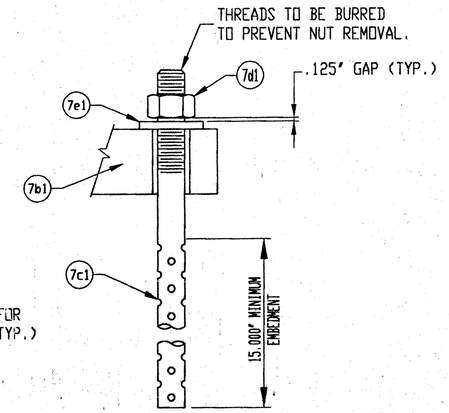

ANCHOR ASSEMBLY DETAIL

SURFACES TO BE GALVANIZED OR METALIZED. PRIOR TO GALVANIZING OR METALIZING, ALL CORNERS AND EDGES OF STEEL PLATES, SHAPES, ETC., SHALL BE GROUND TO A 1/16 INCH RADIUS.

ALL MATERIALS AND CONSTRUCTION SHALL CONFORM TO STATE OF VERMONT AGENCY OF TRANSPORTATION STANDARD SPECIFICATIONS FOR CONSTRUCTION DATED 1990, AND ITS LATEST REVISIONS, AND THE AASHTO STANDARD SPECIFICATIONS FOR HIGHWAY BRIDGES, DATED 1996, AND ITS LATEST REVISIONS.

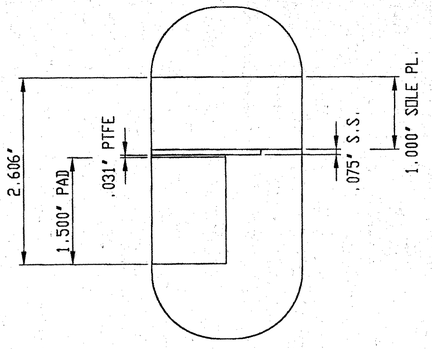

DETAIL 'A'

GENERAL NOTES:

1. PAD AND MATERIALS SHALL CONFORM TO VERMONT ~~DEPARTMENT~~ AGENCY OF TRANSPORTATION~~— DIVISION OF HIGHWAYS SPECIFICATIONS FOR~~ 531 & 731. ~~STANDARD SPECIFICATIONS FOR CONSTRUCTION~~ SECTIONS

2. THESE SHOP DRAWINGS WERE PREPARED IN ACCORDANCE WITH THE CONTRACT PLANS AND SPECIFICATIONS. THE D.S. BROWN COMPANY DOES NOT ACCEPT LIABILITY FOR THE DESIGN OF THE PRODUCTS DETAILED IN THESE SHOP DRAWINGS.

3. THE BEARINGS SHALL BE SUBJECTED TO RANDOM IN-HOUSE ELASTOMER TESTING AND RANDOM IN-HOUSE PROOF LOAD TESTING IN ACCORDANCE WITH AASHTO DIVISION I, SECTION 14 (METHOD "A") AND AASHTO DIVISION II, SECTION 18.

4. THE D.S. BROWN COMPANY IS TO ONLY SUPPLY THE PARTS SHOWN ON THIS DRAWING.

5. STAINLESS STEEL SLIDING SURFACE IN CONTACT WITH PTFE SHALL HAVE A NO. 8 MIRROR FINISH AND ALL OTHERS HAVE A 2B FINISH.

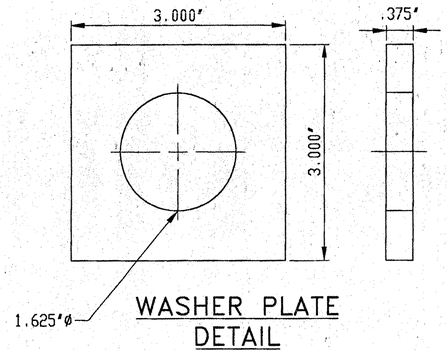

WASHER PLATE DETAIL

V.A.O.T.
RECEIVED
CK'D BY mgl CK'D BY
2-28-01
FEB 26 2001
RESUBMIT APPROVED ✓ AS NOTED
BY mgl DATE 3-8-01

DSB FILE NO: 2201-1106\SHT-07

D.S. BROWN

2201-1106-7, 7 OF 7
SHEET 7 OF 7

DATE	SYM	REVISION	DR	CK

D.S. BROWN

F.A.P. NO.: -
STATE PROJ. NO.: IM-089-3(27)
BRIDGE NO: 88N
DESIGNER: VT AGENCY OF TRANSPORTATION
CONTRACTOR: J.A. MCDONALD

THE D.S. BROWN COMPANY, INC.
NORTH BALTIMORE, OHIO 45872-0158 U.S.A.

SCALE: N/A CHECKED BY: E.K.
DATE: 1/19/01 DRAWN BY: B.COPPUS
I-89 OVER ST. ALBANS ST. STATE HIGHWAY(EXIT19)
FRANKLIN COUNTY VERMONT
PREFORMED FABRIC BEARING
DRAWING NUMBER 2201-1106-07

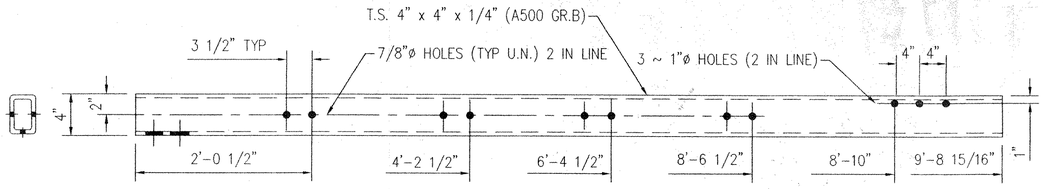

PC 30298 BOTTOM TUBE

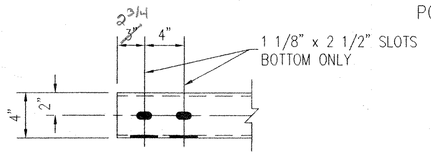

VIEW OF SLOTS ON THE BOTTOM

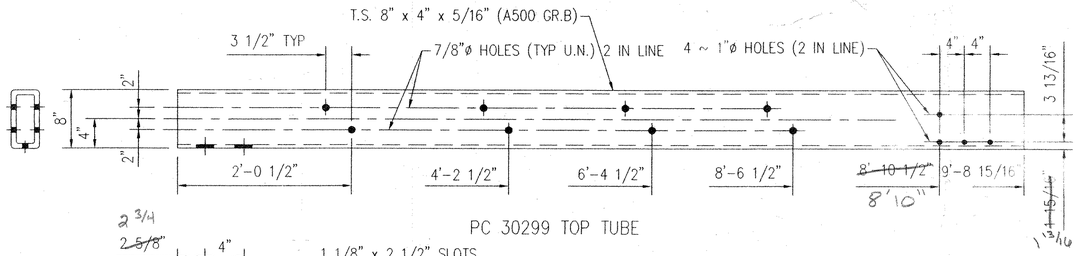

PC 30299 TOP TUBE

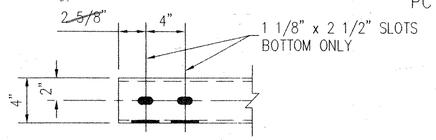

VIEW OF SLOTS ON THE BOTTOM

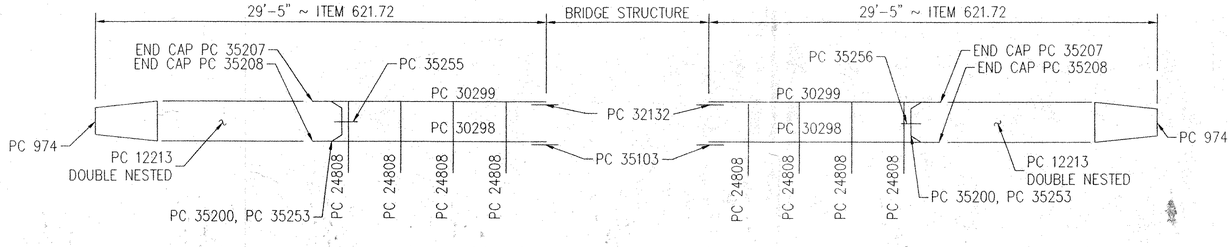

KEY LAYOUT (VIEWING TRAFFIC FACE) NORTH SIDE

KEY LAYOUT (VIEWING NON TRAFFIC FACE) SOUTH SIDE

BRIDGE NO. 87/88 N. & S.

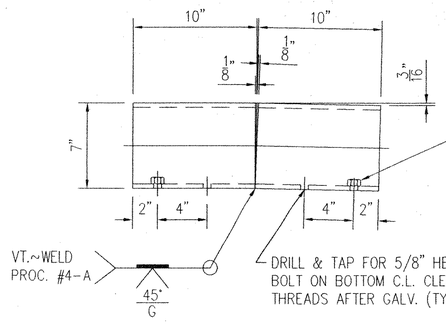

TACK WELD A GALVANIZED LOCK NUT PC# 3352G AFTER GALVANIZING AT BOTH ENDS OF SPLICE. REPAIR GALV. AS NECESSARY.
FOR PROPER ALIGNMENT OF THE LOCK NUT, A BOLT MUST BE PLACED THRU. THE TAPPED HOLE THEN APPLY NUT AND TACK WELD IN PLACE.

PC#32132 ~ SPLICE (T.S. 7 x 3 x 3/8" x 1'-8") (A500 GR B)

NOTE:
FIELD DRILL BOTTOM RAIL CONNECTION HOLES IN POSTS. REPAIR GALVANIZING AS NECESSARY.

NOTE:
ALL WOOD COMPONENTS, NOT BY TRINITY

BILL OF MATERIAL				
PRODUCT CODE	QTY	DESCRIPTION	WT EACH	REMARKS
30299G	16	T.S. 8" x 4" x 5/16" x 9'-8 15/16"	241#	
30298G	16	T.S. 4" x 4" x 1/4" x 9'-8 15/16"	119#	
12213G	32	T12/12'-6/6@1'-6.75: 3'-1.5/S	97.4#	
32132A	16	T.S. 7 x 3 x 3/8 x 1'-8"	39#	

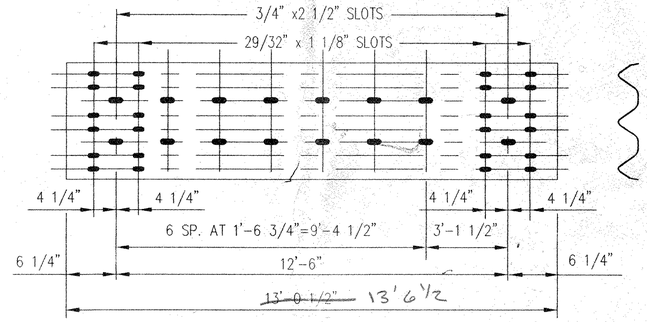

12 GA. T GR 12'-6" C/C

PC 12213 ~ THRIE BEAM (M-180)

NOTES

1. All work and materials shall conform to the provisions of Section 525 – Railings of the Standard Specifications for Construction.
2. Rail posts shall be set normal to grade.
3. Sections of rail bar shall be attached to a minimum of two [2] rail posts and preferably to at least four [4] posts.
4. Rail bar expansion joints shall be provided in any rail bay spanning a superstructure expansion joint. Expansion joint width shall be 65mm at 15°C and will be adjusted in the field by the Engineer.
5. All parts shall be galvanized after fabrication in accordance with AASHTO M111, except that hardware shall meet the requirements of AASHTO M232. Prior to galvanizing, all corners and edges of steel plates, shapes, etc., shall be ground to a 1/16" min radius.
6. Rail posts anchoring nuts shall be tightened to a snug fit and given an additional 45 degree turn.
7. Any bending of rail shall be by shop procedure only.
8. Holes in rails for rail bar attachment may be field drilled. Holes shall be coated with an approved zinc-rich paint prior to erection.
9. Shop Inspection is required.

GIRARD ENGINEERING DEPT.
ISSUED
MAY 17 2001
TRINITY INDUSTRIES, INC.
1170 N. STATE STREET
GIRARD, OHIO 44420

APPROVAL DRAWING

FOR DETAILS SEE 30-102392-D2

VADJ
RECEIVED
CK'D BY JEL 5-30-01
OK'D BY G. Roy 6-4-01
MAY 24 2001
RESUBMIT_____ APPROVED AS NOTED
BY G. Roy DATE 6-4-01

REV.	CHK'D	BY	DATE	REMARKS

PAY ITEM 621.72 BRIDGE APPROACH RAIL T2

STATE OF VERMONT AGENCY OF TRANSPORTATION
INTERSTATE 89
TOWNS OF FAIRFAX, FAIRLAND & ST. ALBANS COUNTY OF FRANKLIN
STATE PROJECT NO. IM 089-3 (27) BRIDGE NO. 87/88

CUSTOMER NORTHLAND SPECIALTIES P.O. No. VERBAL

TRINITY INDUSTRIES, INC.
HIGHWAY SAFETY PRODUCTS
2525 STEMMONS FREEWAY, DALLAS, TX 75207

DRAWN	SAR
CHECKED	S.H.
SCALE	N.T.S.
DATE	4/27/01
ENG. FILE #	30-102392-D1
SHT.No.	D1 OF 2
TRINITY SALES ORDER NO.	(30) 102392
REV.	0

This drawing and the information shown thereon is the sole property of TRINITY INDUSTRIES, INC. Neither the drawing nor such information is to be used for any purpose other than that for which it was specifically furnished by TRINITY INDUSTRIES, INC., nor is any reproduction authorized without written permission.

F:\RH\Share\Engineering\WP\VT\102392\30-10239.dwg Thu May 17 13:42:19 2001 PLOTTED BY: STATION 1

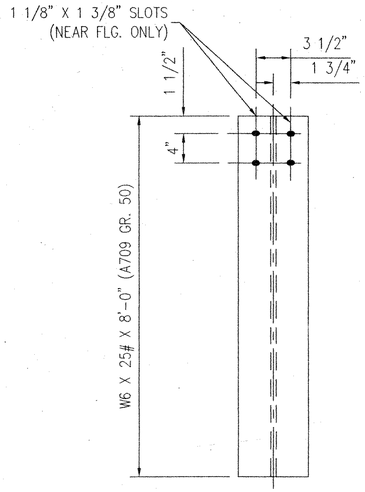

PC 24808 POST

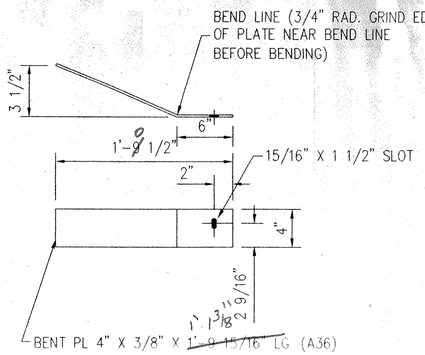

PC 35255 DEFLECTOR PL (AS SHOWN)
PC 35256 DEFLECTOR PL (OPP. HAND)

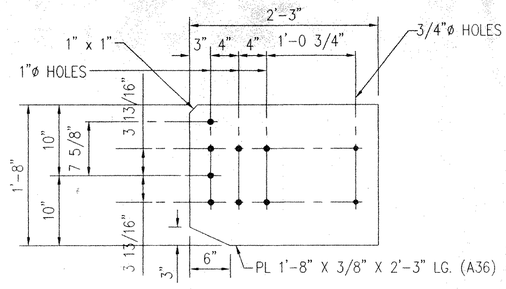

PC 35253 CONNECTION PL

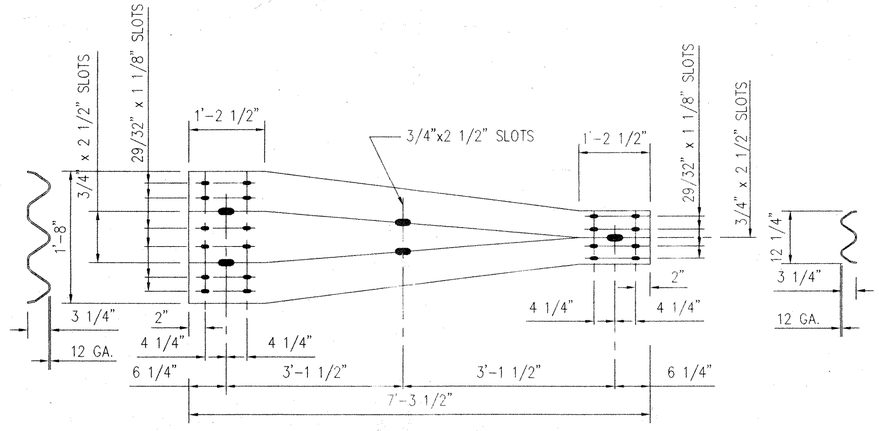

PC 974 TRANSITION
(M180)

TACK WELD LOCK NUT PC 3352G AFTER GALV. BOTH ENDS OF SPLICE. ONLY REPAIR GALV. AS NECESSARY.

FOR PROPER ALIGNMENT OF THE NUT, A BOLT MUST BE PLACED THRU THE TAPPED HOLE AND NUT THEN TACKWELD IN PLACE

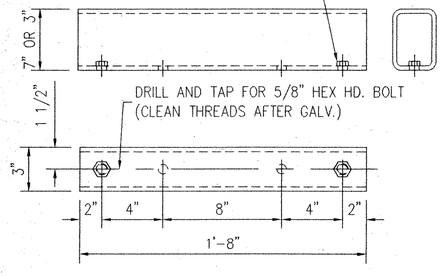

PC 35103 BOTTOM SPLICE TS 3" x 3" x 5/16" (A500 GR B)

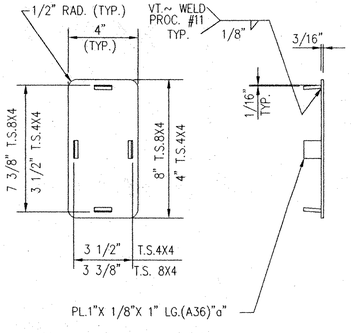

P.C.~32876 8" x 4" END CAP
P.C.~32877 4" x 4" END CAP

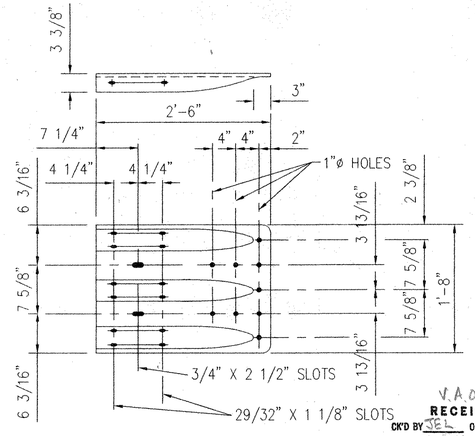

PC 35200 TRI-GARD TERMINAL
10 GA. (M180)

V.A.O.T.
RECEIVED
CK'D BY JEL OK'D BY G.Roy
5:30PM 6.4.01
MAY 24 2001
RESUBMIT ____ APPROVED AS NOTED
BY G.Roy DATE 6.4.01

BILL OF MATERIAL

PRODUCT CODE	QTY	DESCRIPTION	WT EACH	REMARKS
24808G	64	W6 x 25# x 8'-0" POST	212 #	
974G	16	TRANSITION	76 #	
35200A	16	TRI-GARD TERMINAL	34 #	
35253G	16	CONN. PL 1'-8" x 3/8" x 2'-3"	60 #	
35255G	8	DEFLECTOR PL 4" x 3/8" x ~~1'-9 15/16"~~ 1'-3 13/16"	10 #	AS SHOWN
35256G	8	DEFLECTOR PL 4" x 3/8" x ~~1'-9 15/16"~~ 1'-3 13/16"	10 #	OPP. HAND
32876A	16	TOP END CAP 8" x 4"	2 #	
32877A	16	BOTTOM END CAP 4" x 4"	1 #	
35209G	128	PIPE SPACER (3/4"ø SCH. 40 X 1/2")	.01 #	(A53) (GALV A123) NOT DETAILED
35103A	16	BOTTOM SPLICE TS 3" x 3" x 5/16"	19 #	

HARDWARE

3310G	128	5/8" LOCKWASHER		F436 GALV. A153
3300G	128	5/8" WASHER		F844 GALV. A153
3320G	304	PLATE WASHER		A36 A123 NOT DETAILED
3340G	384	5/8" HGR NUT		A563 GR. A GALV. A153
3386G	384	5/8"ø x 1 1/2" HGR BOLT		A307 GR A GALV. A153
3390G	128	5/8"ø x 1 3/4" HEX HD. BOLT		A307 GR A GALV. A153
3446G	128	5/8" WASHER, 1 3/4" O.D.	TYPE A HARDENED	F436 GALV. A153
3580G	304	5/8"ø x 1'-6" HGR BOLT		A307 GR A GALV. A153
3669G	16	3/4"ø x 2" CARRIAGE BOLT		A307 GR. A GALV. A153
3702G	256	3/4" WASHER, 2" O.D.	TYPE A HARDENED	F436 GALV. A153
3704G	256	3/4" HEX NUT		A563 DH GALV. A153
3710G	256	3/4" HEX NUT		A563 GR.A GALV. A153
4789G	112	3/4"ø x 6" CARRIAGE BOLT		A307 GR. A GALV. A153
3637G	256	3/4"ø x 6" WRENCH HD. BOLT		A325 GALV. A123

PAY QUANTITY

472 LIN. FT	ITEM 621.72 (16 RUNS @ 29'-5")	APPROACH RAIL, TYPE T-2

GIRARD ENGINEERING DEPT.
ISSUED
MAY 17 2001
TRINITY INDUSTRIES, INC.
1170 N. STATE STREET
GIRARD, OHIO 44420

APPROVAL DRAWING

SEE NOTES ON SHEET 30-102392-D1

ERECTION DETAILS ARE ON SHEET 30-102392-D1

REV.	CHK'D	BY	DATE	REMARKS

PAY ITEM 621.72 BRIDGE APPROACH RAIL T2

STATE OF VERMONT AGENCY OF TRANSPORTATION
INTERSTATE 89
TOWNS OF FAIRFAX, FAIRLAND & ST. ALBANS COUNTY OF FRANKLIN
STATE PROJECT NO. IM 089-3 (27) BRIDGE NO. 87/88

CUSTOMER NORTHLAND SPECIALTIES | P.O. No. VERBAL

TRINITY INDUSTRIES, INC. 421
HIGHWAY SAFETY PRODUCTS
2525 STEMMONS FREEWAY, DALLAS, TX 75207

DRAWN	SAR
CHECKED	S.H.
SCALE	N.T.S.
DATE	4/27/01
ENG. FILE #	30-102392-D2
SHT.No.	D2 OF 2
TRINITY SALES ORDER NO.	(30) 102392
REV.	0

This drawing and the information shown thereon is the sole property of TRINITY INDUSTRIES, INC. Neither the drawing nor such information is to be used for any purpose other than that for which it was specifically furnished by TRINITY INDUSTRIES, INC., nor is any reproduction authorized without written permission.

F:\Pr\Share Engineering\WIP\VT102392\30-10240.dwg Thu May 17 13:34:22 2001 PLOTTED BY: STATION 1

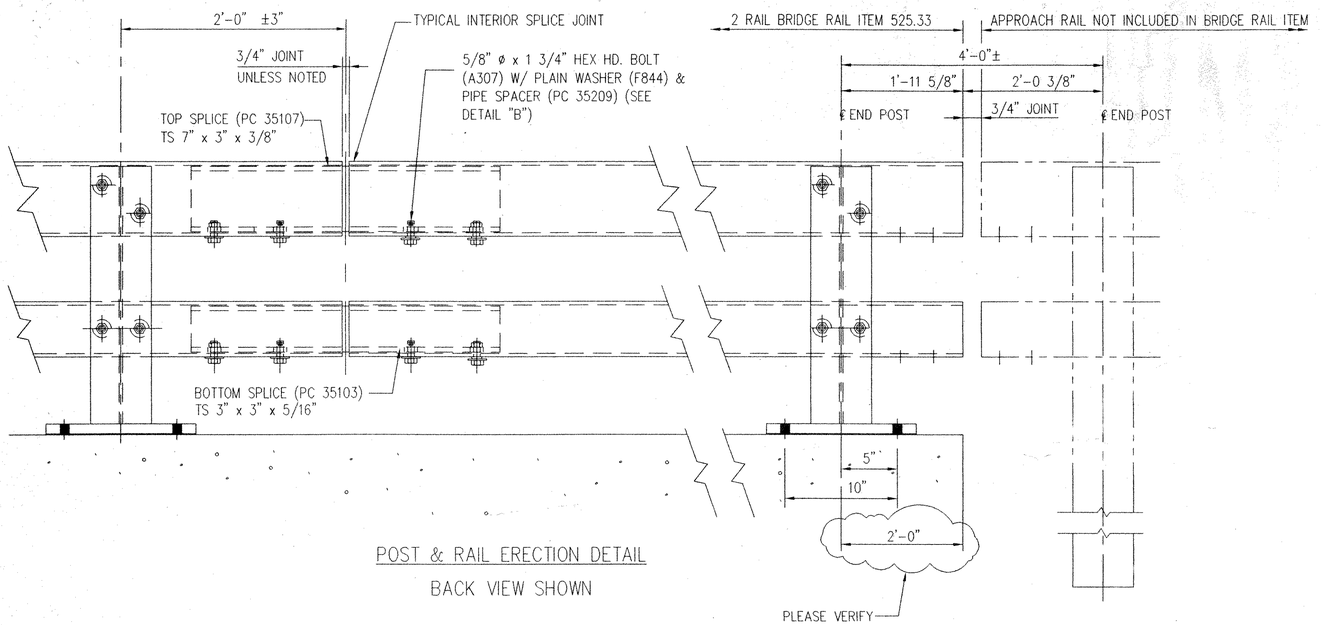

POST & RAIL ERECTION DETAIL

BACK VIEW SHOWN

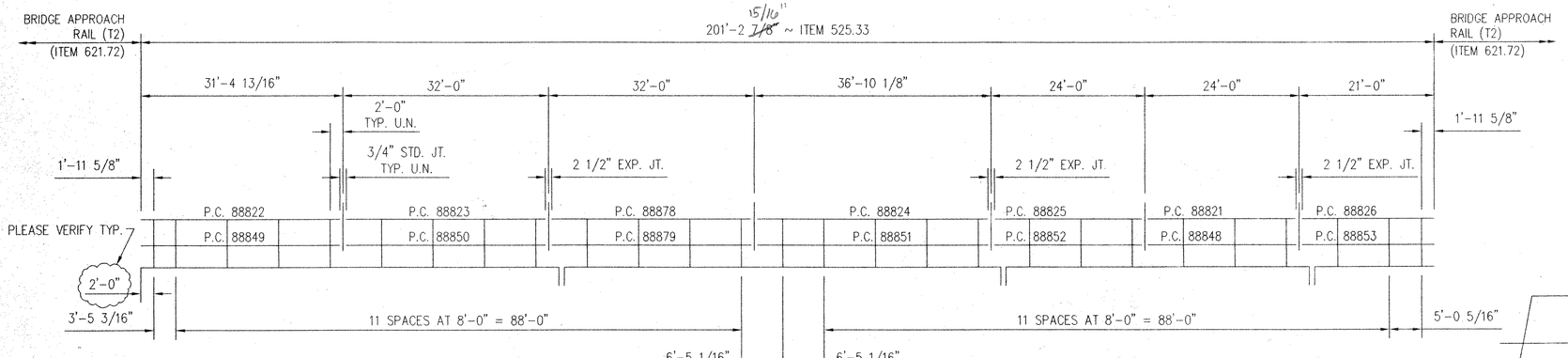

WEST RAILING – LOOKING WEST

BRIDGE 88 NORTHBOUND

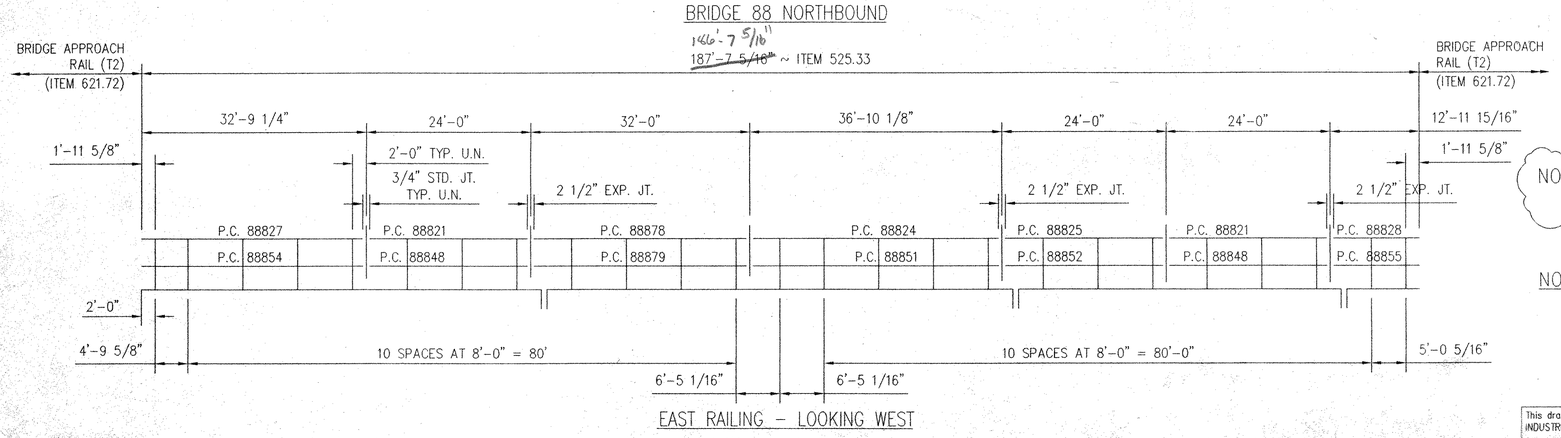

EAST RAILING – LOOKING WEST

BRIDGE 88 NORTHBOUND

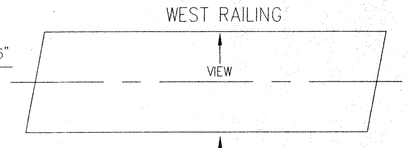

PLAN VIEW

BR. No. 88

NORTH BOUND

NOTE:

CUSTOMER PLEASE VERIFY POST SPACING AND EXP. JOINT LOCATIONS.

NOTES:

1. ALL RAILING POSTS ARE PC 27782.
2. ALL TS 8" x 4" RAIL SPLICES ARE PC 35107.
3. ALL TS 4" x 4" RAIL SPLICES ARE PC 35103.
4. TOTAL PAY LENGTH: 1231.48 LIN. FT.
5. FINISH: GALV. A123, HARDWARE: GALV. A153.

This drawing and the information shown thereon is the sole property of TRINITY INDUSTRIES, INC. Neither the drawing nor such information is to be used for any purpose other than that for which it was specifically furnished by TRINITY INDUSTRIES, INC. nor is any reproduction authorized without written permission

V.A.O.T.
RECEIVED
CK'D BY JEL OK'D BY G.Bay
5.30.01 6.4.01
MAY 24 2001
RESUBMIT_____ APPROVED AS NOTED
BY G.Bay DATE 6.4.01

NOTES

1. All work and materials shall conform to the provisions of Section 525 – Railings of the Standard Specifications for Construction.
2. Rail posts shall be set normal to grade.
3. Sections of rail bar shall be attached to a minimum of two [2] rail posts and preferably to at least four [4] posts.
4. Rail bar expansion joints shall be provided in any rail bay spanning a superstructure expansion joint. Expansion joint width shall be ~~65mm~~ 82½" at ~~7°C~~ 45°F and will be adjusted in the field by the Engineer.
5. All parts shall be galvanized after fabrication in accordance with AASHTO M111, except that hardware shall meet the requirements of AASHTO M232. Prior to galvanizing, all corners and edges of steel plates, shapes, etc., shall be ground to a ~~16mm~~ ½" radius.
6. Rail posts anchoring nuts shall be tightened to a snug fit and given an additional 45 degree turn.
7. Any bending of rail shall be by shop procedure only.
8. Holes in rails for rail bar attachment may be field drilled. Holes shall be coated with an approved zinc-rich paint prior to erection.
9. Shop Inspection is required.

APPROVAL DRAWING

FOR REMAINDER OF ERECTION DETAILS REFERENCE TO SHT. E3 OF 3
FOR DETAILS SEE SHEET D1, D2, D3 & D4 OF 4 (22) 102392

REV.	CHK'D	BY	DATE	REMARKS
				GIRARD ENGINEERING DEPT. ISSUED MAY 17 2001 TRINITY INDUSTRIES, INC. 1170 N. STATE STREET GIRARD, OHIO 44420

ITEM NUMBER 525.33 T2 STEEL BRIDGE RAIL (PL2)

STATE OF VERMONT AGENCY OF TRANSPORTATION
ITERSTATE ROUTE 89
TOWNS OF FAIRFAX, FAIRLAND & ST. ALBANS COUNTY OF FRANKLIN
STATE PROJECT NO. IM 089-3(27) BRIDGE NO. 87/88

CUSTOMER NORTHLAND SPECIALTIES P.O. No. VERBAL

TRINITY INDUSTRIES, INC. 422
HIGHWAY SAFETY PRODUCTS
2525 STEMMONS FREEWAY, DALLAS, TX 75207

DRAWN	SAR
CHECKED	S.H.
SCALE:	N.T.S.
DATE	4/30/01
ENG. FILE #	22-102392-E1
SHT.No.	E1 OF 3
TRINITY SALES ORDER NO.	(22) 102392
REV.	0

I:\SH\Share\Engineering\WIP\VT\102392\22-10239-E1.DWG Thu May 17 10:55:09 2001 PLOTTED BY: STATION 1

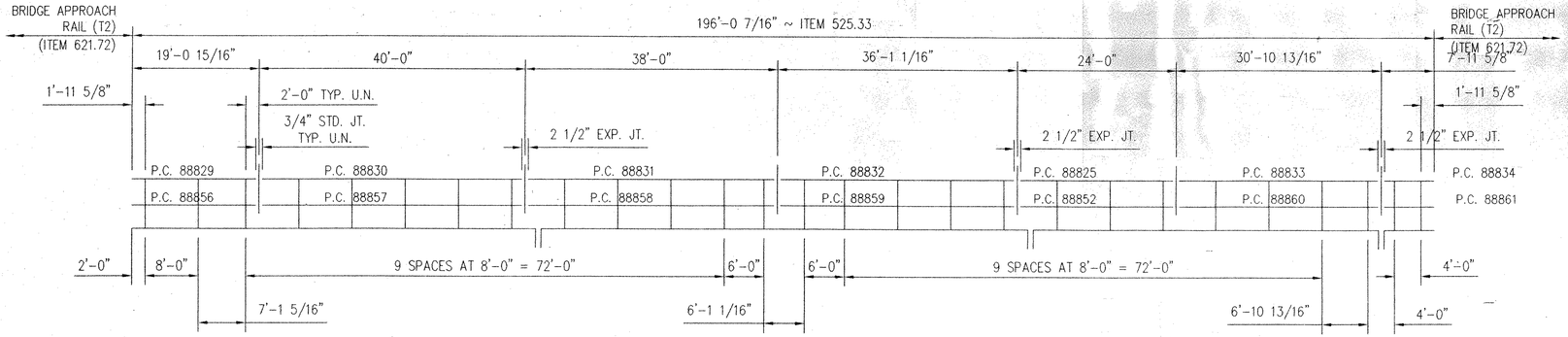

EAST RAILING - LOOKING WEST
BRIDGE 88 SOUTHBOUND

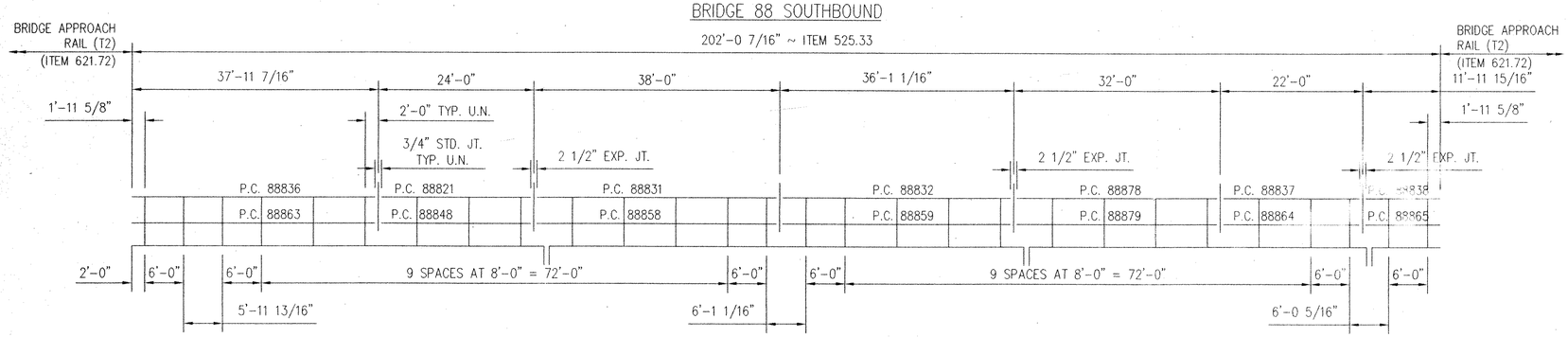

WEST RAILING - LOOKING WEST
BRIDGE 88 SOUTHBOUND

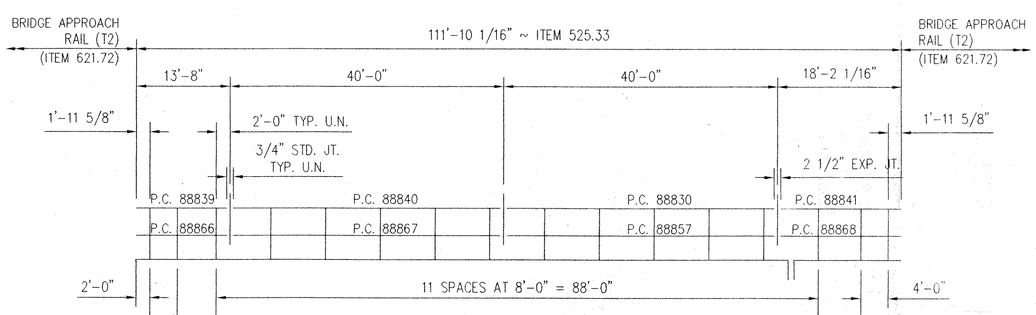

EAST RAILING - LOOKING WEST
BRIDGE 87 NORTHBOUND

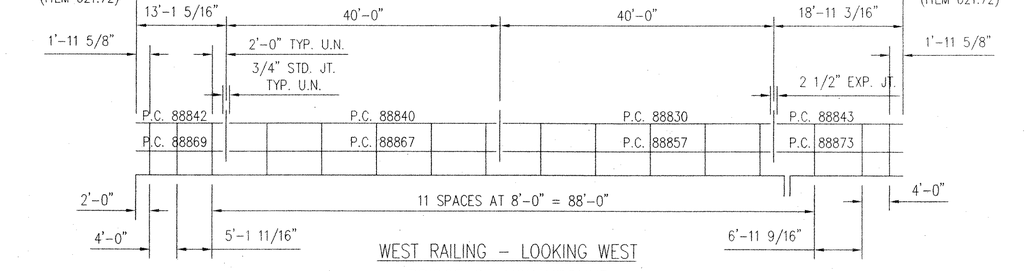

WEST RAILING - LOOKING WEST
BRIDGE 87 NORTHBOUND

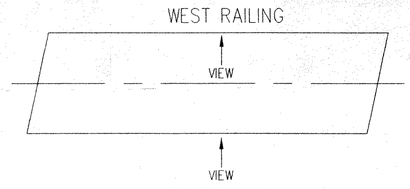

PLAN VIEW
BR. No.88
SOUTH BOUND

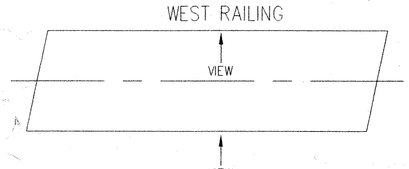

PLAN VIEW
BR. No.87
NORTH BOUND

GIRARD ENGINEERING DEPT.
ISSUED
MAY 17 2001
TRINITY INDUSTRIES, INC.
1170 N. STATE STREET
GIRARD, OHIO 44420

APPROVAL DRAWING

FOR DETAILS SEE SHEET D1, D2, D3 & D4 OF 4 (22) 102392

V.A.O.T.
RECEIVED
CK'D BY JEL 5-30-01 OK'D BY G.Roy 6.4.01
MAY 24 2001
RESUBMIT____ APPROVED X
BY G.Roy DATE 6.4.01

NOTES:

1. ALL RAILING POSTS ARE PC~27782.
2. ALL TS 8" x 4" RAIL SPLICES ARE PC 35107.
3. ALL TS 4" x 4" RAIL SPLICES ARE PC 35103.
4. TOTAL PAY LENGTH: 1231.48 LIN. FT.
5. FINISH: GALV. A123,
   HARDWARE: GALV. A153.

This drawing and the information shown thereon is the sole property of TRINITY INDUSTRIES, INC. Neither the drawing nor such information is to be used for any purpose other than that for which it is specifically furnished by TRINITY

REV.	CHK'D	BY	DATE	REMARKS

ITEM NUMBER 525.33 T2 STEEL BRIDGE RAIL (PL2)

STATE OF VERMONT AGENCY OF TRANSPORTATION
ITERSTATE ROUTE 89
TOWNS OF FAIRFAX, FAIRLAND & ST. ALBANS COUNTY OF FRANKLIN
STATE PROJECT NO. IM 089-3(27) BRIDGE NO. 87/88

CUSTOMER NORTHLAND SPECIALTIES P.O. No. VERBAL

TRINITY INDUSTRIES, INC. 423
HIGHWAY SAFETY PRODUCTS
2525 STEMMONS FREEWAY, DALLAS, TX 75207

DRAWN	SAR
CHECKED	S.H.
SCALE:	N.T.S.
DATE	4/30/01
ENG. FILE #	22-102392-E2
SHT.No.	E2 OF 3
TRINITY SALES ORDER NO. (22) 102392	REV. 0

H:\Share\Engineering\WP\VT102392\22-102392-E2.dwg Thu May 17 10:55:39 2001 PLOTTED BY: STATION 1

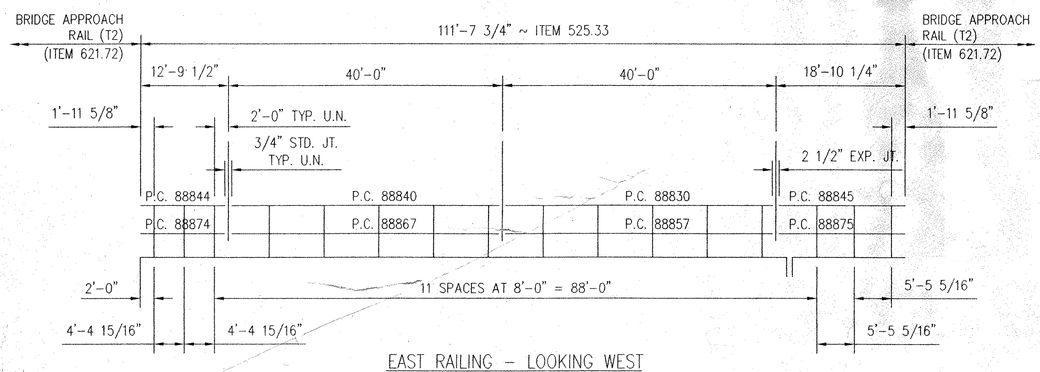

EAST RAILING – LOOKING WEST
BRIDGE 87 SOUTHBOUND

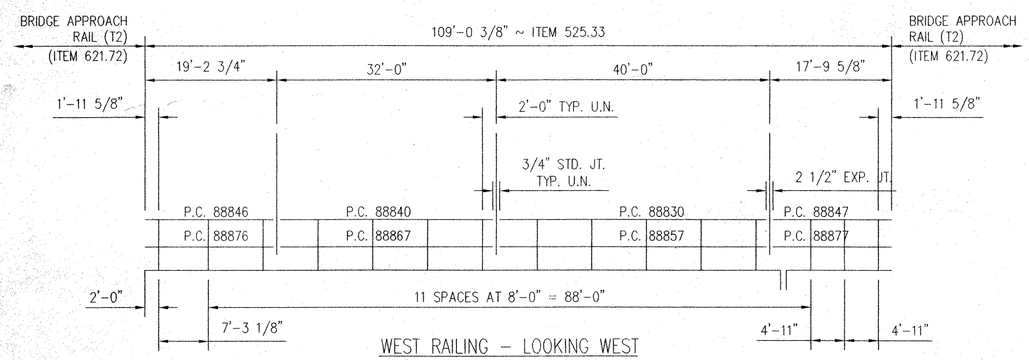

WEST RAILING – LOOKING WEST
BRIDGE 87 SOUTHBOUND

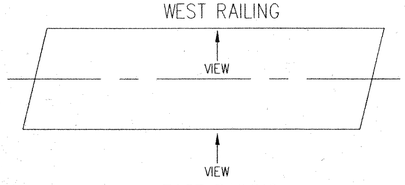

PLAN VIEW
BR. No.87
SOUTH BOUND

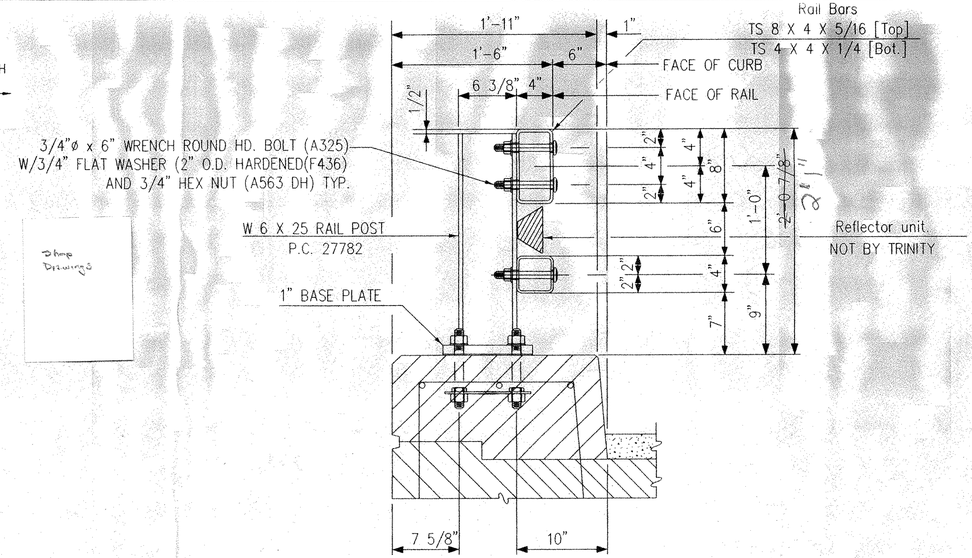

TYPICAL SECTION

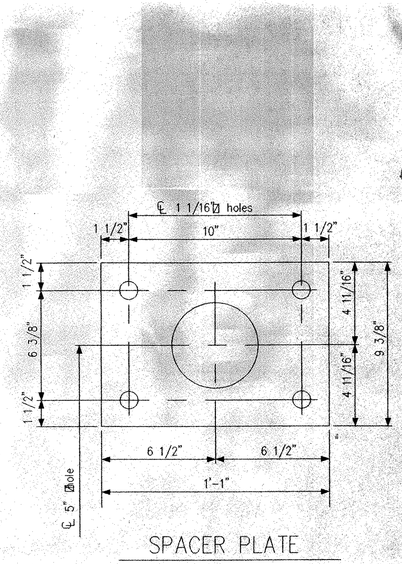

SPACER PLATE

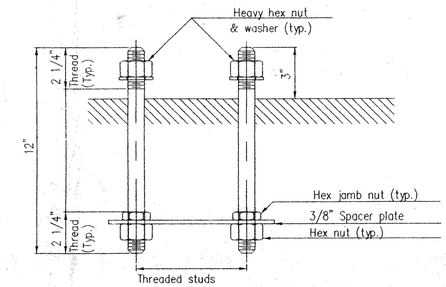

RAIL POST ANCHORAGE

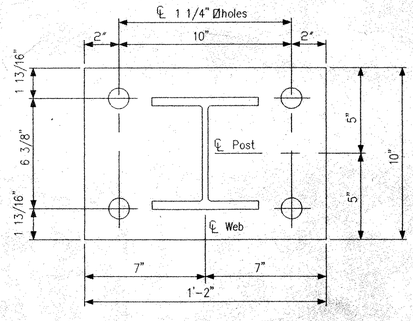

POST & BASE PLATE

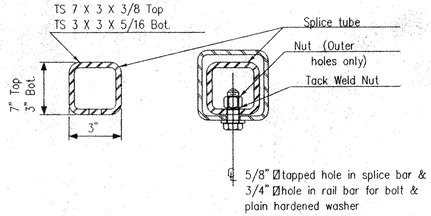

RAIL BAR SPLICE SECTION

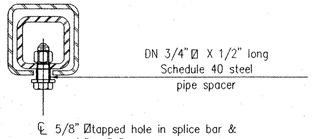

EXPANSION JOINT SECTION
For details not shown, see "Rail Bar Splice Section"

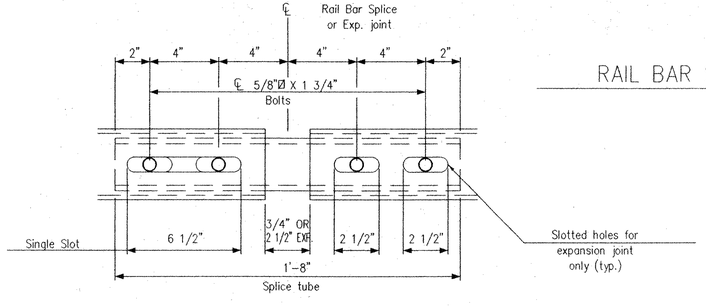

RAIL BAR SPLICE & EXP. JOINT DETAIL
[Bottom View]

NOTES:

1. ALL RAILING POSTS ARE PC 27882.
2. ALL TS 8" x 4" RAIL SPLICES ARE PC 35107.
3. ALL TS 4" x 4" RAIL SPLICES ARE PC 35103.
4. TOTAL PAY LENGTH: 1231.48 LIN. FT.
5. FINISH: GALV. A123, HARDWARE: GALV. A153.

This drawing and the information shown thereon is the sole property of TRINITY INDUSTRIES, INC. Neither the drawing nor such information is to be used for any purpose other than that for which it was specifically furnished by TRINITY INDUSTRIES, INC. nor is any reproduction authorized will not or any part thereof

V.A.O.T.
RECEIVED
CK'D BY JEL OK'D BY G.Roy
6-4-01
MAY 24 2001
RESUBMIT ____ APPROVED AS NOTED
BY G.Roy DATE 6.4.01

GIRARD ENGINEERING DEPT.
ISSUED
MAY 17 2001
TRINITY INDUSTRIES, INC.
1170 N. STATE STREET
GIRARD, OHIO 44420

APPROVAL DRAWING

FOR DETAILS SEE SHEET D1, D2, D3 & D4 OF 4 (22) 102392

REV.	CHK'D	BY	DATE	REMARKS

ITEM NUMBER 525.33 T2 STEEL BRIDGE RAIL (PL2)

STATE OF VERMONT AGENCY OF TRANSPORTATION
ITERSTATE ROUTE 89
TOWNS OF FAIRFAX, FAIRLAND & ST. ALBANS COUNTY OF FRANKLIN
STATE PROJECT NO. IM 089-3(27) BRIDGE NO. 87

CUSTOMER NORTHLAND SPECIALTIES P.O. No. VERBAL

TRINITY INDUSTRIES, INC. 424
HIGHWAY SAFETY PRODUCTS
2525 STEMMONS FREEWAY, DALLAS, TX 75207

DRAWN	SAR
CHECKED	S.H.
SCALE:	N.T.S.
DATE	4/30/01
ENG. FILE #	22-102392-E3
SHT.No.	E3 OF 3
TRINITY SALES ORDER NO.	(22) 102392
REV.	0

C:\H\Share\Engineering\WIP\VT102392\22-10239-E3.DWG Thu May 17 10:55:57 2001 PLOTTED BY: STATION 1

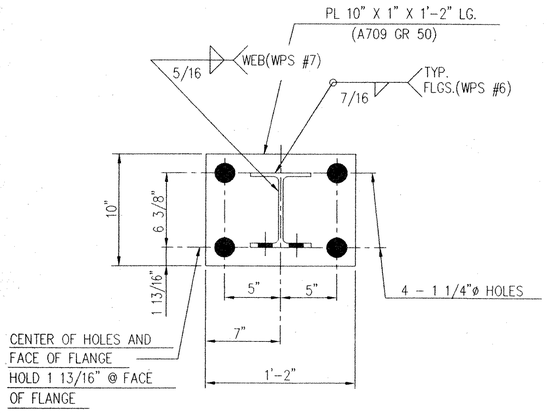

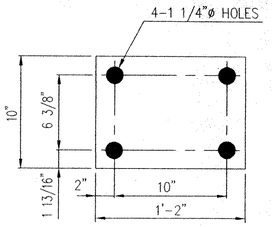

PC 5218 BEARING PAD

1/8" THIICK ELASTOMERIC PAD
(AASHTO M251)
(50 DUROMETER ELASTOMER)

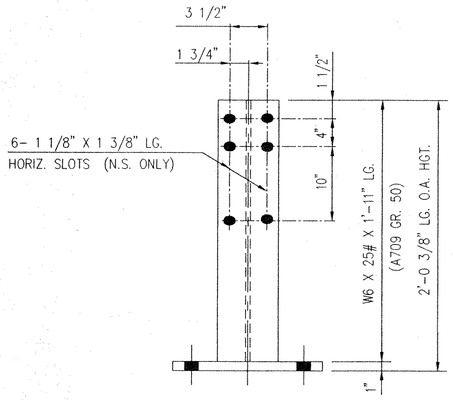

PC 27782 POST

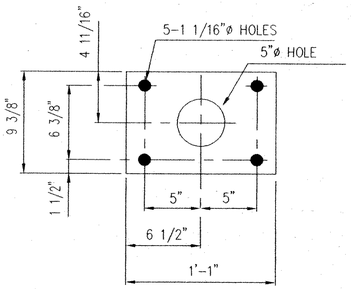

(*) PC 32816 ANCHOR PLATE

PL 9 3/8" X 3/8" X 1'-1" LG
(A 36)

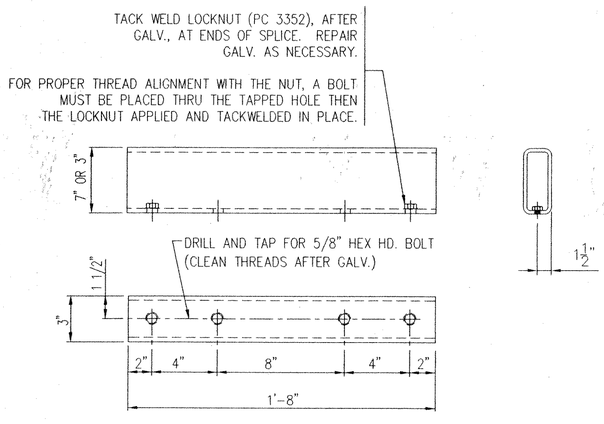

PC 35107 SPLICE TS 7" X 3" X 3/8" LG. (A500 GR B)

PC 35103 SPLICE TS 3" X 3" X 5/16" LG. (A500 GR B)

BILL OF MATERIAL

	PRODUCT CODE	QTY.	DESCRIPTION	WT. EA.	REMARKS
	27782A	169	POST	98 #	
*	32816G	169	ANCHOR PLATE	10 #	
	5218B	169	BEARING PAD	1 #	NOT GALVANIZED
	35107A	36	SPLICE (TS 7" x 3" x 3/8" x 1'-8")	39 #	
	35103A	36	SPLICE (TS 3" x 3" x 5/16" x 1'-8")	19 #	
			FIELD HARDWARE		
	35209G	64	3/4" ø SCH. 40 PIPE x 1/2" LG.	0.1 #	A53 NOT DETAILED A123
	3390G	144	5/8" ø x 1 3/4 LG. HEX HD. BOLT		A307 GR A A153
	3300G	144	5/8" WASHER		F844 A153
	3637G	676	3/4" ø x 6" LG. RD. WR. HD. BOLT		A325 A153
	3702G	676	3/4" WASHER, 2" O.D. (HARDENED)	TYPE A	F436 A153
	3704G	676	3/4" HEX NUT		A563 DH A153
			ANCHORAGE HARDWARE		
*	4914G	676	1" ø x 1'-0" LG. ANCHOR STUD	FULLY THRD.	A449 A153
*	3908G	676	1" HEX NUT		A563 DH A153
*	3910G	676	1" HEX NUT		A563 A153
*	4910G	676	1" HEX JAM NUT		A563 A153
*	4902G	676	1" PLAIN WASHER		F436 A153

PAY QUANTITY

1231.48 LIN. FT. | ITEM NO. 525.33 ~ T2 STEEL BRIDGE RAIL (PL2)

(*) ANCHORAGE TO BE SHIPPED PRIOR TO REMAINDER OF MATERIAL.

NOTES:

Tubing and posts shall meet the requirements of Section 732 - Railing materials of the Standard Specifications for Construction.
All exposed cut or sheared edges shall be rounded to a 1.6 mm 1/16" radius and be free of burrs.
GALVANIZED SURFACES SHALL HAVE A UNIFORM APPEARANCE AND GALVANIZED MATERIAL SHALL BE PROPERLY STORED WITH WOOD BLOCKING BETWEEN PIECES.
Rail bars.....ASTM A500, Grade B or ASTM A501
SEE SECTION 732.03, SUBSECTION 3
Rail posts.....ASTM A709/A709M, Grade 345 CVN
SEE SECTION 732.03, SUBSECTION 2
All other shapes & plates.....AS NOTED ON DETAILS (NO CVN REQD)
BEARING PAD SHALL COMPLY WITH 731.01 OR 731.02.

GIRARD ENGINEERING DEPT.
ISSUED
MAY 17 2001
TRINITY INDUSTRIES, INC.
1701 N. STATE STREET
GIRARD, OHIO 44420

APPROVAL DRAWING

FOR ERECTION LAYOUT SEE SHEET E1, E2 & E3 OF 3 (22) 102392

V.A.O.T.
RECEIVED
GK'D BY SEL 5/30/01 OK'D BY E. Roy 6.4.01
MAY 24 2001
REBUBMIT ____ APPROVED AS NOTED
BY E Roy DATE 6.4.01

REV.	CHK'D	BY	DATE	REMARKS

PAY ITEM NUMBER 525.33 ~ T2 STEEL BRIDGE RAIL (PL2)

STATE OF VERMONT AGENCY OF TRANSPORTATION
INTERSTATE ROUTE 89
TOWNS OF FAIRFAX, FAIRLAND & ST. ALBANS COUNTY OF FRANKLIN
STATE PROJECT NO. IM-089-3(27) BRIDGE NOs. 87/88 N & S

CUSTOMER NORTHLAND SPECIALTIES | P.O. No. VERBAL

TRINITY INDUSTRIES, INC.
HIGHWAY SAFETY PRODUCTS
2525 STEMMONS FREEWAY, DALLAS, TX 75207

DRAWN	SAR
CHECKED	S.H.
SCALE:	N.T.S.
DATE	4/26/01
ENG. FILE #	22-102392-D1
SHT.No.	D1 OF 4
TRINITY SALES ORDER NO.	REV.
(22) 102392	0

This drawing and the information shown thereon is the sole property of TRINITY INDUSTRIES, INC. Neither the drawing nor such information is to be used for any purpose other than that for which it was specifically furnished by TRINITY INDUSTRIES, INC., nor is same to be reproduced, retransmitted without written permission.

C:\RrlShare\Engineering\M2F\VT\102392\22-102392-01.DWG Thu May 17 10:56:14 2001 PLOTTED BY: STATION 1

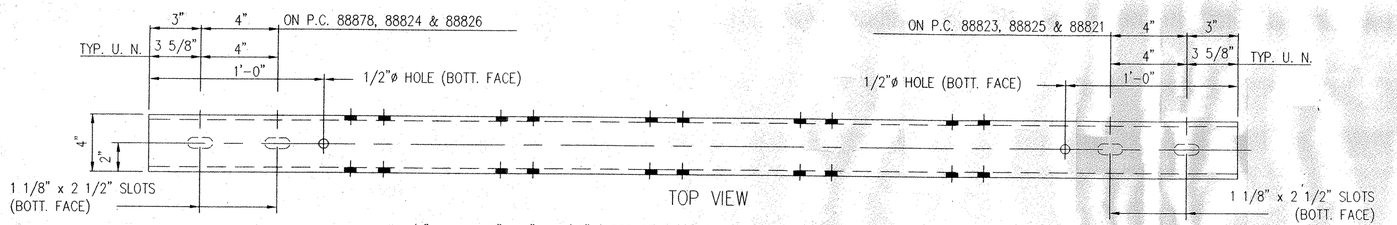

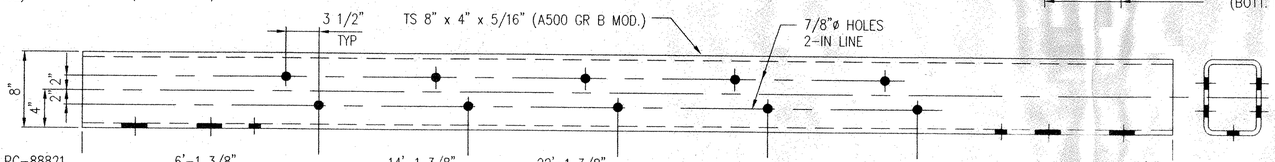

PC-88821	6'-1 3/8"	14'-1 3/8"	22'-1 3/8"			23'-10 3/8"
PC-88822	2'-1 3/8"	5'-5 9/16"	13'-5 9/16"	21'-5 9/16"	29'-5 9/16"	31'-4 7/16"
PC-88823	6'-1 3/8"	14'-1 3/8"	22'-1 3/8"	30'-1 3/8"		31'-10 3/8"
PC-88824	4'-6 7/16"	10'-11 1/2"	18'-11 1/2"	26'-11 1/2"	34'-11 1/2"	36'-8 1/2"
PC-88825	6'-0 1/2"	14'-0 1/2"	22'-0 1/2"			23'-10 3/8"
PC-88826	6'-0 1/2"	14'-0 1/2"	19'-0 13/16"			20'-10 3/4"
PC-88827	2'-1 3/8"	6'-11"	~~8'-11"~~ 14'-11"	22'-11"	30'-11"	32'-8 7/8"
PC-88828	6'-0 1/2"	11'-0 13/16"				12'-10 11/16"
PC-88829	2'-1 3/8"	10'-1 3/8"	~~18'-1 3/8"~~ 17'-2 11/16"			~~19'-1 9/16"~~ 19'-0 9/16"
PC-88830	6'-1 3/8"	14'-1 3/8"	22'-1 3/8"	30'-1 3/8"	38'-1 3/8"	39'-10 3/8"
PC-88878	6'-0 1/2"	14'-0 1/2"	22'-0 1/2"	30'-0 1/2"		31'-10 3/8"

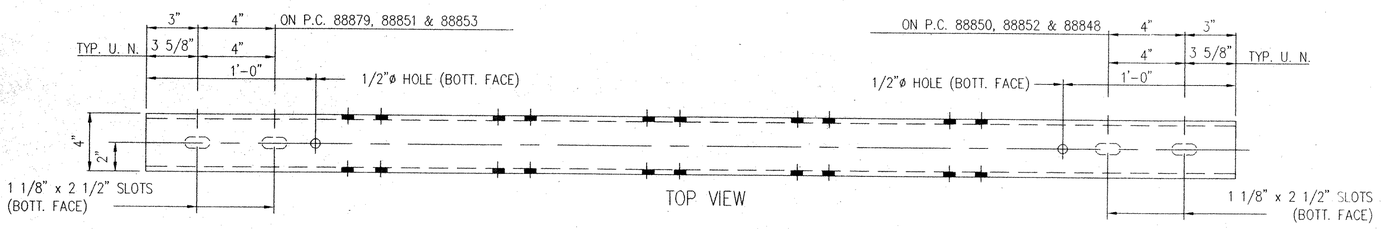

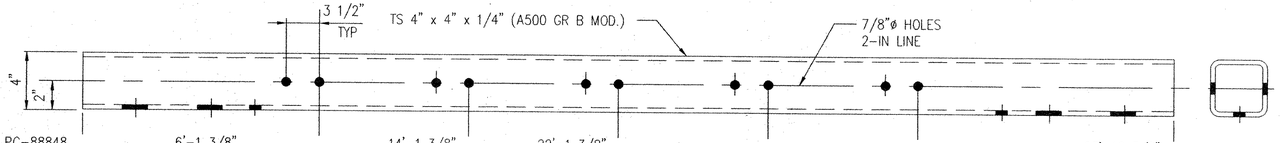

PC-88848	6'-1 3/8"	14'-1 3/8"	22'-1 3/8"			23'-10 3/8"
PC-88849	2'-1 3/8"	5'-5 9/16"	13'-5 9/16"	21'-5 9/16"	29'-5 9/16"	31'-4 7/16"
PC-88850	6'-1 3/8"	14'-1 3/8"	22'-1 3/8"	30'-1 3/8"		31'-10 3/8"
PC-88851	4'-6 7/16"	10'-11 1/2"	18'-11 1/2"	26'-11 1/2"	34'-11 1/2"	36'-8 1/2"
PC-88852	6'-0 1/2"	14'-0 1/2"	22'-0 1/2"			23'-10 3/8"
PC-88853	6'-0 1/2"	14'-0 1/2"	19'-0 13/16"			20'-10 3/4"
PC-88854	2'-1 3/8"	6'-11"	~~8'-11"~~ 14'-11"	22'-11"	30'-11"	32'-8 7/8"
PC-88855	6'-0 1/2"	11'-0 13/16"				12'-10 11/16"
PC-88856	2'-1 3/8"	10'-1 3/8"	~~18'-1 3/8"~~ 17'-2 11/16"			~~19'-1 9/16"~~ 19'-0 9/16"
PC-88857	6'-1 3/8"	14'-1 3/8"	22'-1 3/8"	30'-1 3/8"	38'-1 3/8"	39'-10 3/8"
PC-88879	6'-0 1/2"	14'-0 1/2"	22'-0 1/2"	30'-0 1/2"		31'-10 3/8"

BILL OF MATERIAL

PRODUCT CODE	QTY.	DESCRIPTION	WT. (lbs)	REMARKS
88821G	4	TS 8" x 4" x 5/16" x 23'-10 3/8"	590	
88822G	1	TS 8" x 4" x 5/16" x 31'-4 7/16"	776	
88823G	1	TS 8" x 4" x 5/16" x 31'-10 3/8"	788	
88824G	2	TS 8" x 4" x 5/16" x 36'-8 1/2"	908	
88825G	3	TS 8" x 4" x 5/16" x 23'-10 3/8"	590	
88826G	1	TS 8" x 4" x 5/16" x 20'-10 3/4"	517	
88827G	1	TS 8" x 4" x 5/16" x 32'-8 7/8"	810	
88828G	1	TS 8" x 4" x 5/16" x 12'-10 11/16"	319	
88829G	1	TS 8" x 4" x 5/16" x ~~19'-1 9/16"~~ 19'-0 9/16"	473	
88830G	5	TS 8" x 4" x 5/16" x 39'-10 3/8"	986	
88878G	3	TS 8" x 4" x 5/16" x 31'-10 3/8"	788	
88848G	4	TS 4" x 4" x 1/4" x 23'-10 3/8"	309	
88849G	1	TS 4" x 4" x 1/4" x 31'-4 7/16"	406	
88850G	1	TS 4" x 4" x 1/4" x 31'-10 3/8"	412	
88851G	2	TS 4" x 4" x 1/4" x 36'-8 1/2"	475	
88852G	3	TS 4" x 4" x 1/4" x 23'-10 3/8"	309	
88853G	1	TS 4" x 4" x 1/4" x 20'-10 3/4"	270	
88854G	1	TS 4" x 4" x 1/4" x 32'-8 7/8"	424	
88855G	1	TS 4" x 4" x 1/4" x 12'-10 11/16"	167	
88856G	1	TS 4" x 4" x 1/4" x ~~19'-1 9/16"~~ 19'-0 9/16"	248	
88857G	5	TS 4" x 4" x 1/4" x 39'-10 3/8"	516	
88879G	3	TS 4" x 4" x 1/4" x 31'-10 3/8"	412	

GIRARD ENGINEERING DEPT.
ISSUED
MAY 17 2001
TRINITY INDUSTRIES, INC.
1170 N. STATE STREET
GIRARD, OHIO 44420

APPROVAL DRAWING

NOTES:

1. FOR GENERAL NOTES PLEASE REFER TO SHEET D1 OF 4
2. FOR ERECTION LAYOUT SEE SHEET E1, E2 & E3 OF 3 (22) 102392

V.A.O.T.
RECEIVED
CK'D BY JEL 5:30:01 OK'D BY G.Roy 6.4.01
MAY 24 2001
RESUBMIT _____ APPROVED AS NOTED
BY G.Roy DATE 6.4.01

REV.	CHK'D	BY	DATE	REMARKS

ITEM NUMBER 525.33 T2 STEEL BRIDGE RAIL (PL2)

STATE OF VERMONT AGENCY OF TRANSPORTATION
INTERSTATE ROUTE 89
TOWNS OF FAIRFAX, FAIRLAND & ST. ALBANS COUNTY OF FRANKLIN
STATE PROJECT NO. IM 089-3(27) BRIDGE NOs. 87/88

CUSTOMER NORTHLAND SPECIALTIES | P.O. No. VERBAL

DRAWN	SAR
CHECKED	S.H.
SCALE:	N.T.S.
DATE	5/1/01
ENG. FILE #	22-102392-D2
SHT.No.	D2 OF 4
TRINITY SALES ORDER NO.	REV.

TRINITY INDUSTRIES, INC. 426
HIGHWAY SAFETY PRODUCTS
2525 STEMMONS FREEWAY, DALLAS, TX 75207

This drawing and the information shown thereon is the sole property of TRINITY INDUSTRIES, INC. Neither the drawing nor such information is to be used for any purpose other than that for which it is specifically furnished by TRINITY

H:\Shared\Engineering\WIP\VT102392\22-102392-D2.dwg Thu May 17 11:28:26 2001 PLOTTED BY: STATION 1

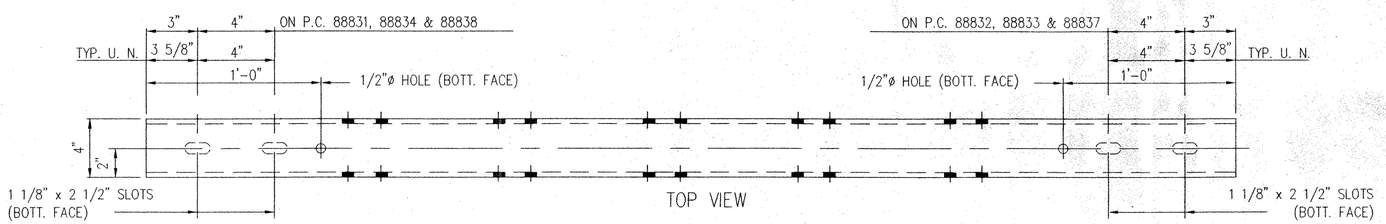

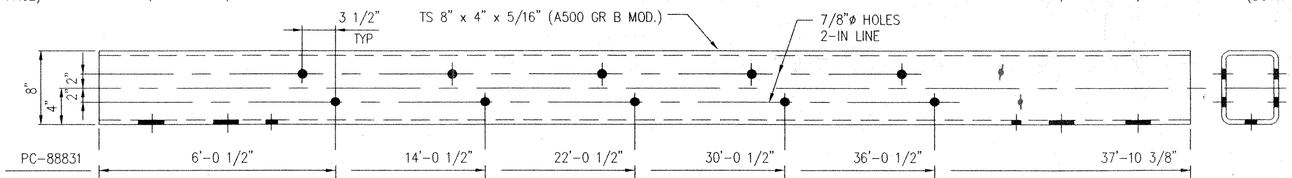

PC-88831	6'-0 1/2"	14'-0 1/2"	22'-0 1/2"	30'-0 1/2"	36'-0 1/2"	37'-10 3/8"
PC-88832	4'-2 7/16"	10'-2 7/16"	18'-2 7/16"	26'-2 7/16"	34'-2 7/16"	35'-11 7/16"
PC-88833	6'-1 3/8"	14'-1 3/8"	22'-1 3/8"	29'-0 3/16"		30'-9 3/16"
PC-88834	2'-0 1/2"	6'-0 1/2"				7'-10 3/8"
PC-88836	2'-1 3/8"	~~9'-1 3/8"~~	~~15'-1 3/16"~~	~~23'-1 3/16"~~	~~31'-1 3/16"~~	37'-11 1/16"
PC-88837	6'-1 3/8"	14'-1 3/8"	20'-1 3/8"			21'-10 3/8"
PC-88838	4'-0 13/16"	10'-0 13/16"				11'-10 11/16"
PC-88839	2'-1 3/8"	~~7'-1 3/8"~~	~~12'-9 3/4"~~			13'-7 5/8"
PC-88840	6'-1 3/8"	14'-1 3/8"	22'-1 3/8"	30'-1 3/8"	38'-1 3/8"	39'-11 1/4"

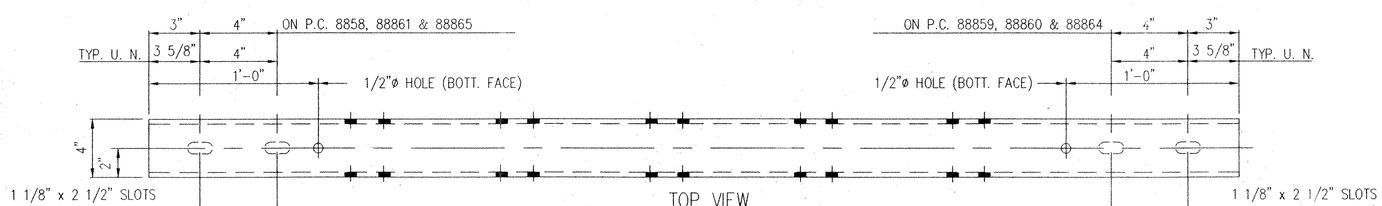

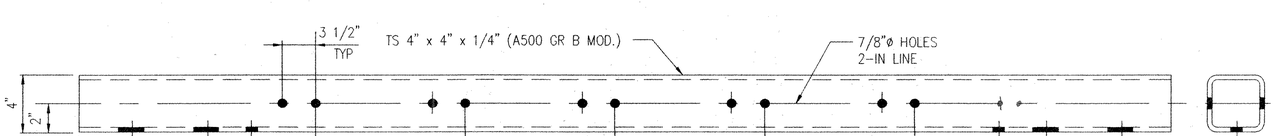

PC-88858	6'-0 1/2"	14'-0 1/2"	22'-0 1/2"	30'-0 1/2"	36'-0 1/2"	37'-10 3/8"
PC-88859	4'-2 7/16"	10'-2 7/16"	18'-2 7/16"	26'-2 7/16"	34'-2 7/16"	35'-11 7/16"
PC-88860	6'-1 3/8"	14'-1 3/8"	22'-1 3/8"	29'-0 3/16"		30'-9 3/16"
PC-88861	2'-0 1/2"	6'-0 1/2"				7'-10 3/8"
PC-88863	2'-1 3/8"	~~9'-1 3/8"~~	~~15'-1 5/16"~~	~~23'-1 5/16"~~	~~31'-1 5/16"~~	37'-11 1/16"
PC-88864	6'-1 3/8"	14'-1 3/8"	20'-1 3/8"			21'-10 3/8"
PC-88865	4'-0 13/16"	10'-0 13/16"				11'-10 11/16"
PC-88866	2'-1 3/8"	~~7'-1 3/8"~~	~~12'-9 3/4"~~			13'-7 5/8"
PC-88867	6'-1 3/8"	14'-1 3/8"	22'-1 3/8"	30'-1 3/8"	38'-1 3/8"	39'-11 1/4"

BILL OF MATERIAL

PRODUCT CODE	QTY.	DESCRIPTION	WT. (lbs)	REMARKS
88831G	2	TS 8" x 4" x 5/16" x 37'-10 3/8"	937	
88832G	2	TS 8" x 4" x 5/16" x 35'-11 7/16"	889	
88833G	1	TS 8" x 4" x 5/16" x 30'-9 3/16"	761	
88834G	1	TS 8" x 4" x 5/16" x 7'-10 3/8"	195	
88836G	1	TS 8" x 4" x 5/16" x 37' 11 1/16"	938	
88837G	1	TS 8" x 4" x 5/16" x 21'-10 3/8"	541	
88838G	1	TS 8" x 4" x 5/16" x 11'-10 11/16"	294	
88839G	1	TS 8" x 4" x 5/16" x 13'-7 5/8"	337	
88840G	4	TS 8" x 4" x 5/16" x 39'-11 1/4"	988	
88858G	2	TS 4" x 4" x 1/4" x 37'-10 3/8"	490	
88859G	2	TS 4" x 4" x 1/4" x 35'-11 7/16"	465	
88860G	1	TS 4" x 4" x 1/4" x 30'-9 3/16"	398	
88861G	1	TS 4" x 4" x 1/4" x 7'-10 3/8"	102	
88863G	1	TS 4" x 4" x 1/4" x 37'-11 1/16"	491	
88864G	1	TS 4" x 4" x 1/4" x 21'-10 3/8"	283	
88865G	1	TS 4" x 4" x 1/4" x 11'-10 11/16"	154	
88866G	1	TS 4" x 4" x 1/4" x 13'-7 5/8"	176	
88867G	4	TS 4" x 4" x 1/4" x 39'-11 1/4"	517	

GIRARD ENGINEERING DEPT.
ISSUED
MAY 17 2001
TRINITY INDUSTRIES, INC.
1170 N. STATE STREET
GIRARD, OHIO 44420

APPROVAL DRAWING

NOTES:

1. FOR GENERAL NOTES PLEASE REFER TO SHEET D1 OF 4
2. FOR ERECTION LAYOUT SEE SHEET E1, E2 & E3 OF 3 (22) 102392

V.A.O.T.
RECEIVED
CK'D BY JEL 5.30.01 OK'D BY C.Roy 6.4.01
MAY 24 2001
RESUBMIT ____ APPROVED AS NOTED
BY G Roy DATE 6.4.01

REV.	CHK'D	BY	DATE	REMARKS

ITEM NUMBER 525.33 T2 STEEL BRIDGE RAIL (PL2)

STATE OF VERMONT AGENCY OF TRANSPORTATION
INTERSTATE ROUTE 89
TOWNS OF FAIRFAX, FAIRLAND & ST. ALBANS COUNTY OF FRANKLIN
STATE PROJECT NO. IM 089-3(27) BRIDGE NOs. 87/88

DRAWN	SAR
CHECKED	S.H.
SCALE:	N.T.S.
DATE	5/2/01
ENG. FILE #	22-102392-D3
SHT.No.	D3 OF 4
TRINITY SALES ORDER NO.	(22) 102392
REV.	0

CUSTOMER NORTHLAND SPECIALTIES P.O. No. VERBAL

TRINITY INDUSTRIES, INC. 427
HIGHWAY SAFETY PRODUCTS
2525 STEMMONS FREEWAY, DALLAS, TX 75207

This drawing and the information shown thereon is the sole property of TRINITY INDUSTRIES, INC. Neither the drawing nor such information is to be used for any purpose other than that for which it was specifically furnished by TRINITY INDUSTRIES, INC. nor is it to be reproduced without written permission.

I:\Share\Engineering\WIP\V102392\22-102392-D3.dwg Thu May 17 11:39:52 2001 PLOTTED BY: STATION 1

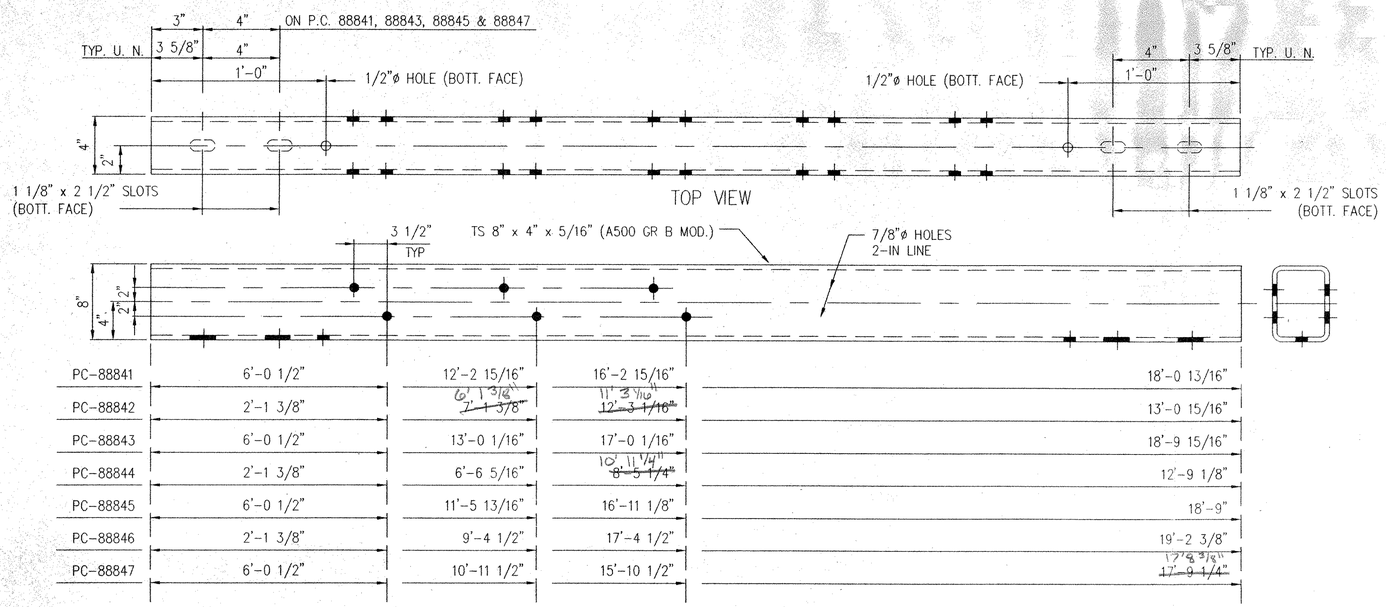

PC-88841	6'-0 1/2"	12'-2 15/16"	16'-2 15/16"	18'-0 13/16"
PC-88842	2'-1 3/8"	~~7'-1 3/8"~~ 6' 1 3/16"	~~12'-3 1/16"~~ 11' 3 7/16"	13'-0 15/16"
PC-88843	6'-0 1/2"	13'-0 1/16"	17'-0 1/16"	18'-9 15/16"
PC-88844	2'-1 3/8"	6'-6 5/16"	~~8'-5 1/4"~~ 10' 11 1/4"	12'-9 1/8"
PC-88845	6'-0 1/2"	11'-5 13/16"	16'-11 1/8"	18'-9"
PC-88846	2'-1 3/8"	9'-4 1/2"	17'-4 1/2"	19'-2 3/8"
PC-88847	6'-0 1/2"	10'-11 1/2"	15'-10 1/2"	~~17'-9 1/4"~~ 17'8 3/8"

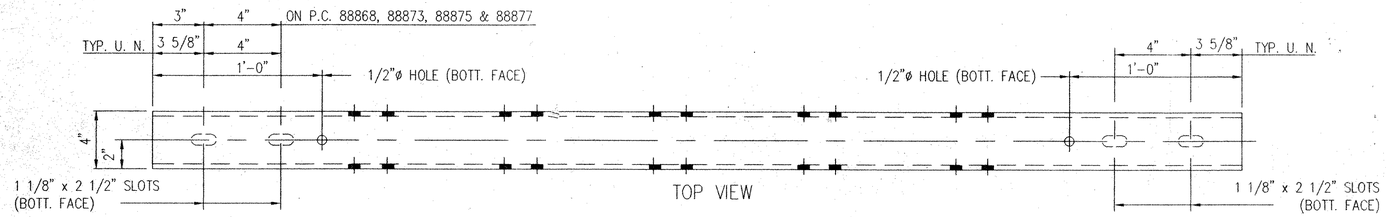

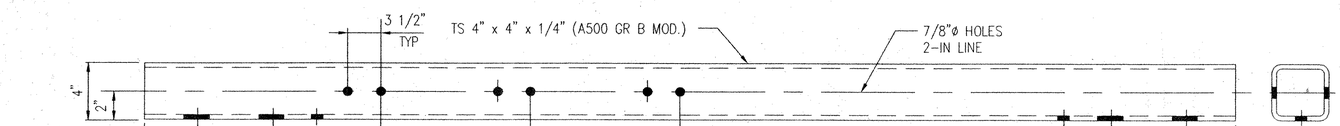

PC-88868	6'-0 1/2"	12'-2 15/16"	16'-2 15/16"	18'-0 13/16"
PC-88869	2'-1 3/8"	~~7'-1 3/8"~~ 6' 1 3/16"	~~12'-3 1/16"~~ 11' 3 7/16"	13'-0 15/16"
PC-88873	6'-0 1/2"	13'-0 1/16"	17'-0 1/16"	18'-9 15/16"
PC-88874	2'-1 3/8"	6'-6 5/16"	~~8'-5 1/4"~~ 10' 11 1/4"	12'-9 1/8"
PC-88875	6'-0 1/2"	11'-5 13/16"	16'-11 1/8"	18'-9"
PC-88876	2'-1 3/8"	9'-4 1/2"	17'-4 1/2"	19'-2 3/8"
PC-88877	6'-0 1/2"	10'-11 1/2"	15'-10 1/2"	~~17'-9 1/4"~~ 17'8 3/8"

BILL OF MATERIAL

PRODUCT CODE	QTY.	DESCRIPTION	WT. (lbs)	REMARKS
88841G	1	TS 8" x 4" x 5/16" x 18'-0 13/16"	447	
88842G	1	TS 8" x 4" x 5/16" x 13'-0 15/16"	324	
88843G	1	TS 8" x 4" x 5/16" x 18'-9 15/16"	466	
88844G	1	TS 8" x 4" x 5/16" x 12'-9 1/8"	316	
88845G	1	TS 8" x 4" x 5/16" x 18'-9"	464	
88846G	1	TS 8" x 4" x 5/16" x 19'-2 3/8"	475	
88847G	1	TS 8" x 4" x 5/16" x ~~17'-9 1/4"~~ 17'8 3/8"	440	
88868G	1	TS 4" x 4" x 1/4" x 18'-0 13/16"	234	
88869G	1	TS 4" x 4" x 1/4" x 13'-0 15/16"	169	
88873G	1	TS 4" x 4" x 1/4" x 18'-9 15/16"	244	
88874G	1	TS 4" x 4" x 1/4" x 12'-9 1/8"	165	
88875G	1	TS 4" x 4" x 1/4" x 18'-9"	243	
88876G	1	TS 4" x 4" x 1/4" x 19'-2 3/8"	278	
88877G	1	TS 4" x 4" x 1/4" x ~~17'-9 1/4"~~ 17'8 3/8"	236	

GIRARD ENGINEERING DEPT.
ISSUED
MAY 17 2001
TRINITY INDUSTRIES, INC.
1170 N. STATE STREET
GIRARD, OHIO 44420

NOTES: APPROVAL DRAWING

1. FOR GENERAL NOTES PLEASE REFER TO SHEET D1 OF 4
2. FOR ERECTION LAYOUT SEE SHEET E1, E2 & E3 OF 3 (22) 102392

V.A.O.T.
RECEIVED
OK'D BY JFL 5-30-01 OK'D BY Gilroy 6.4.01
MAY 24 2001
RESUBMIT ____ APPROVED AS NOTED
BY G.Roy DATE 6.4.01

REV.	CHK'D	BY	DATE	REMARKS

ITEM NUMBER 525.33 T2 STEEL BRIDGE RAIL (PL2)

STATE OF VERMONT AGENCY OF TRANSPORTATION
INTERSTATE ROUTE 89
TOWNS OF FAIRFAX, FAIRLAND & ST. ALBANS COUNTY OF FRANKLIN
STATE PROJECT NO. IM 089-3(27) BRIDGE NOs. 87/88

CUSTOMER NORTHLAND SPECIALTIES P.O. No. VERBAL

DRAWN SAR
CHECKED S.H.
SCALE: N.T.S.
DATE 5/2/01
ENG. FILE # 22-102392-D4
SHT.No. D4 OF 4
TRINITY SALES ORDER NO. (22) 102392
REV. 0

TRINITY INDUSTRIES, INC. 428
HIGHWAY SAFETY PRODUCTS
2525 STEMMONS FREEWAY, DALLAS, TX 75207

This drawing and the information shown thereon is the sole property of TRINITY INDUSTRIES, INC. Neither the drawing nor such information is to be used for any purpose other than that for which it was specifically furnished by TRINITY INDUSTRIES, INC. nor is any reproduction thereof to be released without written permission.

C:\Art\Share\Engineering\WIP\VT102392\22-102392-D4.dwg Thu May 17 10:56:40 2001 PLOTTED BY: STATION 1

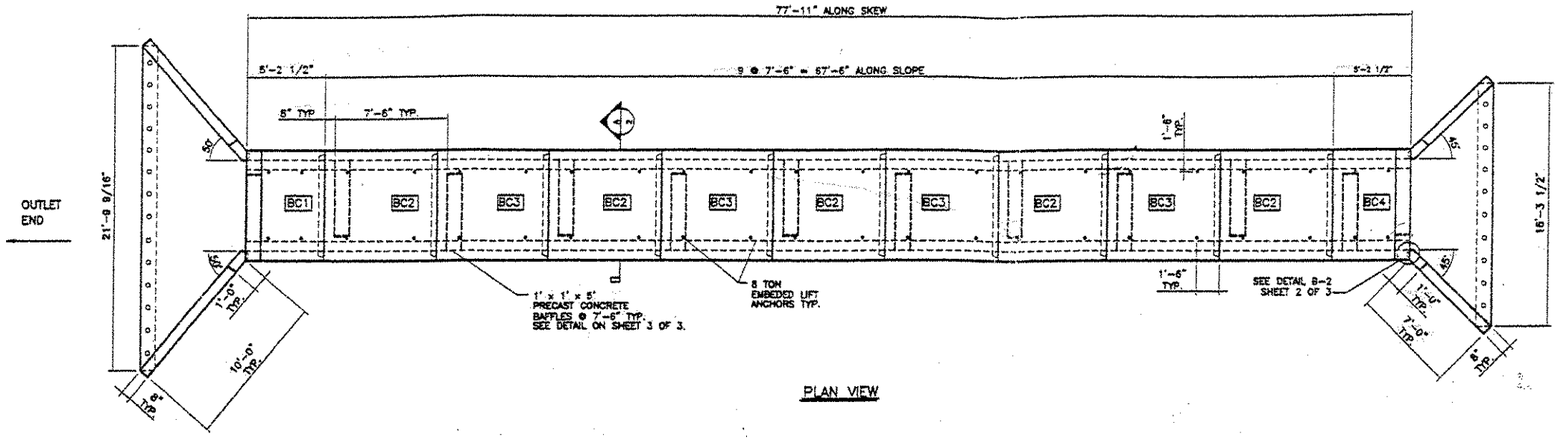

PLAN VIEW

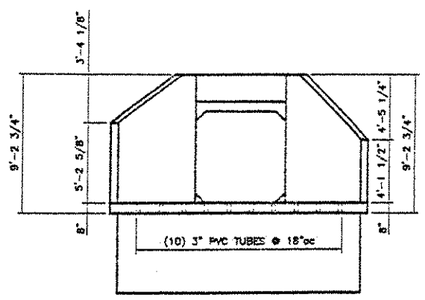

INLET END VIEW

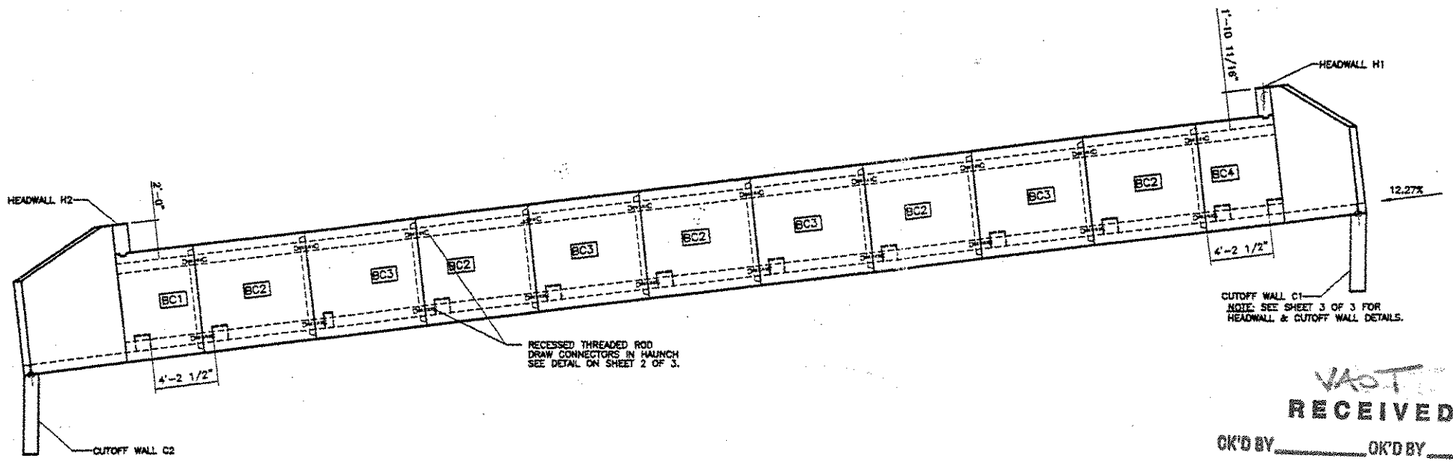

ELEVATION

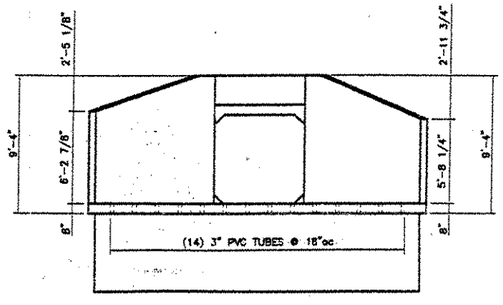

OUTLET END VIEW

— STRUCTURES FILE —

VAOT
RECEIVED
OK'D BY _____ OK'D BY _____
MAR 0 1 2002
RESUBMIT _____ APPROVED ✓
BY RRW DATE 4-9-02

GENERAL NOTES:

1. REINFORCING STEEL SHALL MEET ASTM A615, GRADE 60 SPECIFICATIONS
2. REINFORCING STEEL TO BE WIRE TIED AND HELD IN POSITION WITH PLASTIC CHAIRS AND REBAR SPACERS AS NEEDED.
3. EXPOSED EDGES OF FASCIA ENDS SHALL BE CHAMFERED 1" x 1".
4. WORKING TOLERANCES SHALL BE AS PER AASHTO M273-87.
5. CONCRETE COVER SHALL BE 1" UNLESS NOTED OTHERWISE.
6. THE G.C. SHALL APPLY A 2 FOOT WIDE STRIP OF (CLASS A) MEMBRANE WATERPROOFING AT EACH SIDE JOINT. THE MEMBRANE SHALL BE CENTERED ON THE JOINT AND SHALL RUN THE ENTIRE HEIGHT OF THE JOINT. THE ENTIRE TOP OF THE BOX CULVERT SHALL THEN BE COVERED WITH MEMBRANE. THE MEMBRANE SHEETS SHALL OVERLAP THE EDGES OF THE CULVERT BY 1 FOOT ON EACH SIDE AS SHOWN IN THE PLANS.

DESIGN NOTES:

1. ASSUMED EARTH COVER = 1'
2. CONCRETE STRENGTH TO BE:
   PRECAST TO BE 5000 PSI MIN. @ 28 DAYS WITH 5.0% – 9.0% ENTRAINED AIR CONTENT.
3. DESIGN LIVE LOADING = AASHTO HS-25 PLUS IMPACT.

Resubmittal

STATE OF VERMONT
RALPH VERRASTRO
#18-0006974
REGISTERED
PROFESSIONAL ENGINEER
Ralph Verrastro
6-29-01

TABLE OF UNITS				
MARK	QTY	LENGTH	VOL. (C.Y.)	WEIGHT (TONS)
BC1	1	5'-2 1/2"	3.6	7.29
BC2	5	7'-6"	5.2	10.5
BC3	4	7'-6"	5.2	10.5
BC4	1	5'-2 1/2"	3.6	7.29
INLET	1	5'-5"	4.1	8.29
OUTLET	1	6'-11"	6.4	12.9

DELTA ENGINEERS, P.C.
ENGINEERS • ARCHITECTS

TOWN OF ST. ALBANS, VT
6'-0" x 6'-0" x 78'-0"
BR 87-3 NORTHBOUND
CONTRACTOR: 429
ENGINEER:
DWN BY: GAS CKD BY: RET
DWG ID: 1004-01 SCALE: NONE REV: 1 DATE: 6/29/01

SHEET 1 OF 3

CAMP PRECAST CONCRETE PRODUCTS

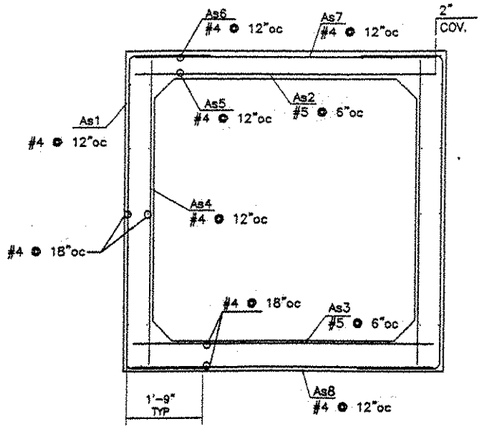

MK	Size	Spcg	Len	Type	A	B	C
As1	4	12"	127"	"U"	1'-9"	7'-1"	1'-9"
As2	5	6"	86"	Str.	---	7'-2"	---
As3	5	6"	86"	Str.	---	7'-2"	---
As4	4	12"	84"	Str.	---	7'-0"	---
As5	4	12"	85"	Str.	---	7'-1"	---
As6	4	12"	85"	Str.	---	7'-1"	---
As7	4	12"	86"	Str.	---	7'-2"	---
As8	4	12"	86"	Str.	---	7'-2"	---

REBAR REINFORCEMENT TABLE

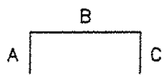

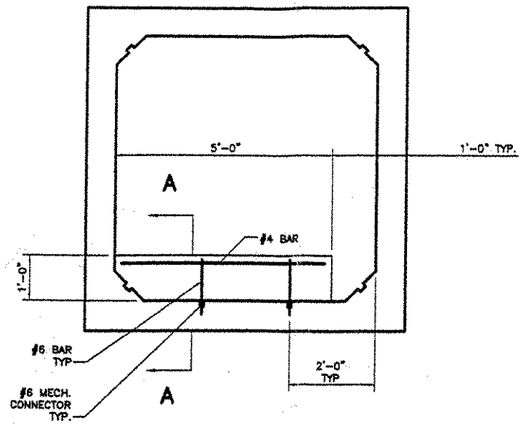

BAFFLE DETAIL

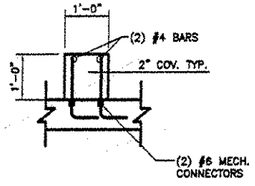

SECTION A-A

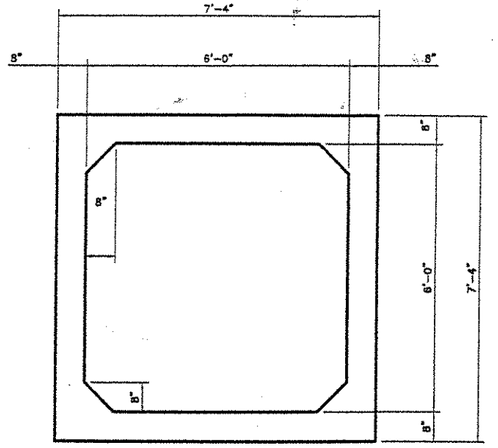

SECTION A-2

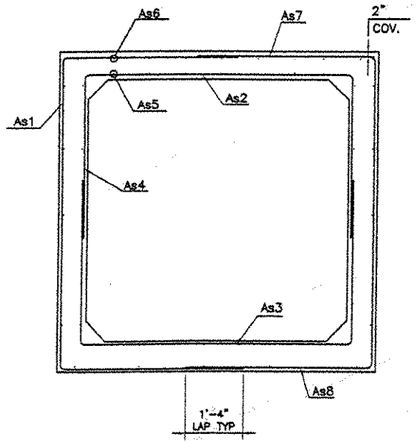

MK	As REQ. in²
As1	0.192
As2	0.432
As3	0.454
As4	0.192
As5	0.192
As6	0.192
As7	0.192
As8	0.192

MESH REINFORCEMENT TABLE

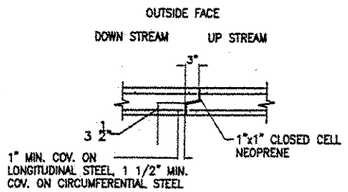

JOINT DETAIL

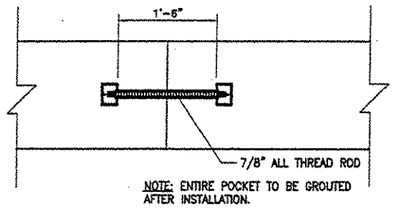

RECESSED DRAW
CONNECTOR
(4 PER SECTION)

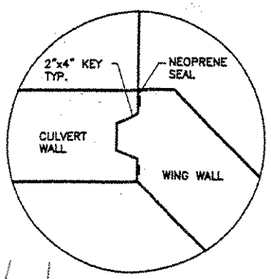

DETAIL B-2

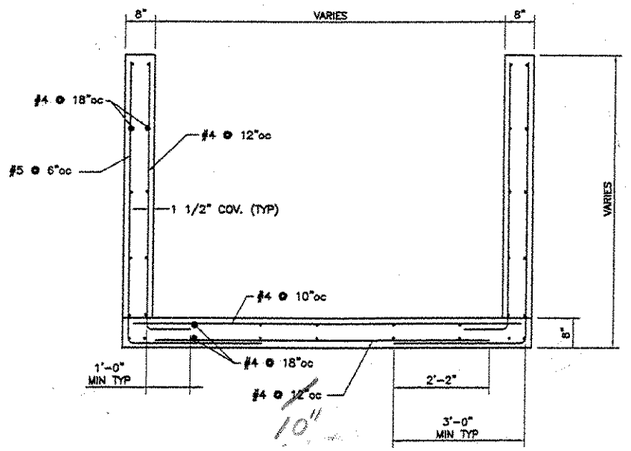

TYPICAL END SECTION

VAOT
RECEIVED
CK'D BY_____ OK'D BY_____
MAR 0 1 2002
RESUBMIT_____ APPROVED As Noted
BY RRW DATE 4-9-02

STATE OF VERMONT
RALPH VERRASTRO
#18-0006974
REGISTERED
PROFESSIONAL ENGINEER
Ralph Verrastro
6-29-01

DELTA ENGINEERS, P.C.
ENGINEERS • ARCHITECTS
164 COURT STREET, BINGHAMTON, NY 13904-3334
TEL: (607) 231-6600 FAX: (607) 231-6650

TOWN OF ST. ALBANS, VT.
6'-0" x 6'-0" x 78'-0"
BR 87-3 NORTHBOUND
SHEET 2 OF 3
CONTRACTOR:
ENGINEER: 430
DWN BY: GAS CKD BY: RET

CAMP PRECAST CONCRETE PRODUCTS

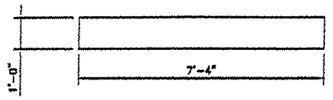

HEADWALL H1 PLAN VIEW

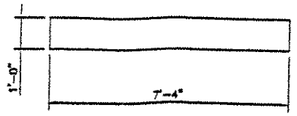

HEADWALL H2 PLAN VIEW

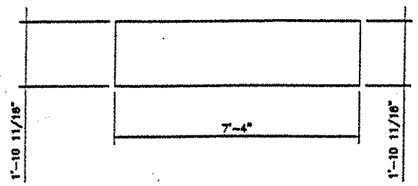

HEADWALL H1 ELEVATION VIEW

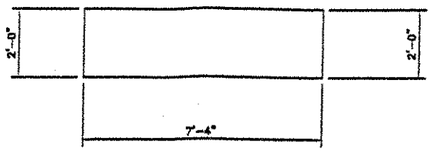

HEADWALL H2 ELEVATION VIEW

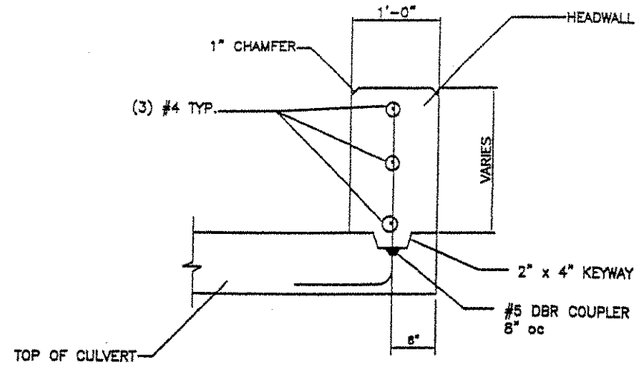

HEADWALL DETAIL

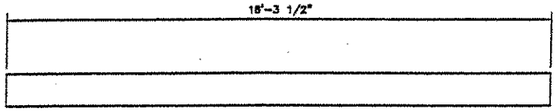

CUTOFF WALL C1 PLAN VIEW

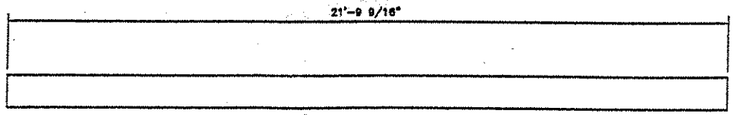

CUTOFF WALL C2 PLAN VIEW

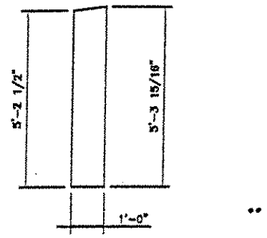

CUTOFF WALL C1 END VIEW

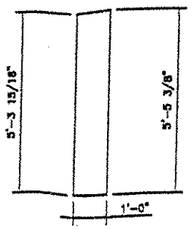

CUTOFF WALL C2 END VIEW

V.A.O.T.
RECEIVED
MAR 2 1 2001

CK'D BY E. Ray 3.21.01 CK'D BY mgl 3-29-01

RESUBMIT ____ APPROVED ✓

BY mgl DATE 3-29-01

STATE OF VERMONT
RALPH VERRASTRO
#18-0006974
REGISTERED
PROFESSIONAL ENGINEER

Ralph Verrastro
2/21/01

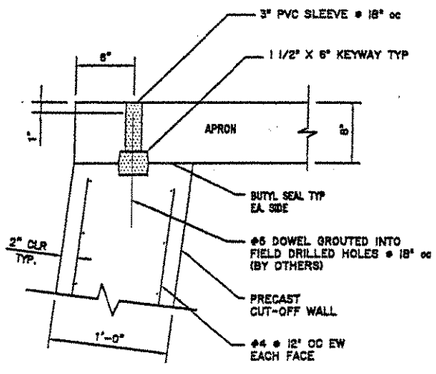

CUTOFF WALL DETAIL

DELTA ENGINEERS, P.C.
ENGINEERS • ARCHITECTS

TOWN OF ST. ALBANS, VT.

6'-0" x 6'-0" x 78'-0"
BR 87-3 NORTHBOUND

SHEET 3 OF 3

CONTRACTOR:
ENGINEER: 431

CAMP PRECAST

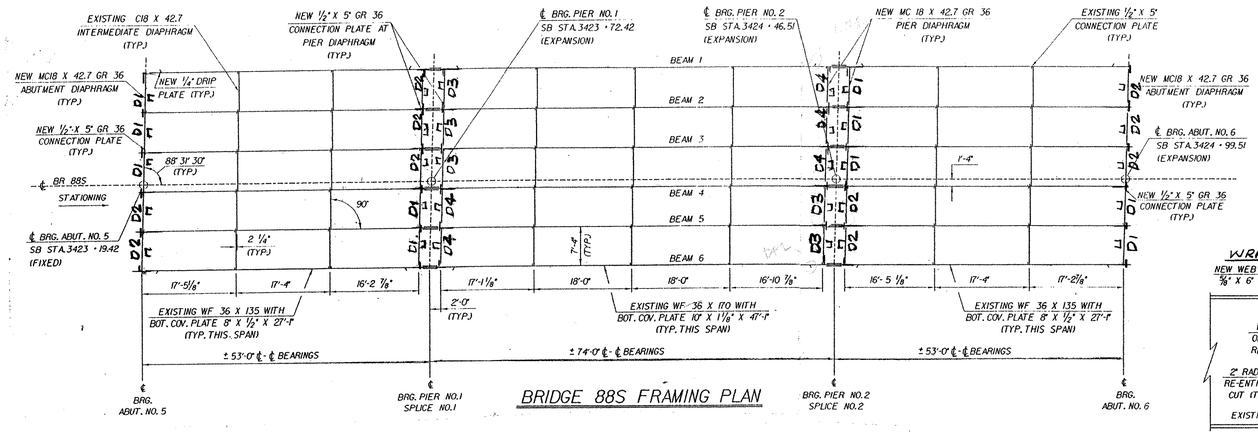

BRIDGE 88S FRAMING PLAN

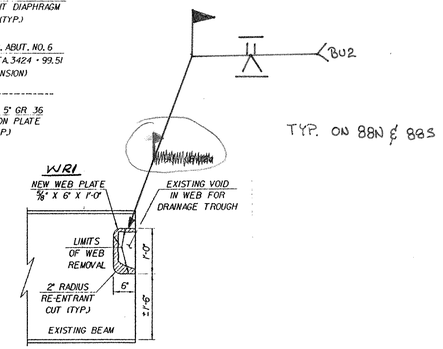

BEAM END @ PIERS REPAIR DETAIL

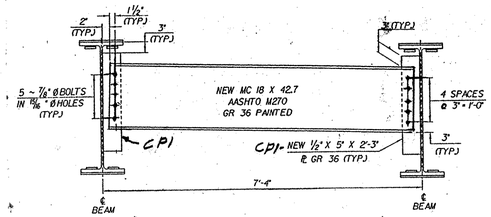

PIER DIAPHRAGM

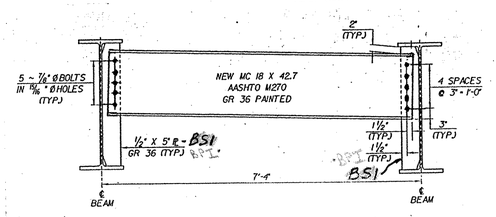

ABUTMENT DIAPHRAGM

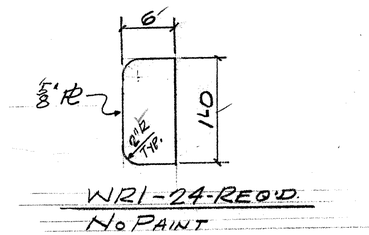

WR1-24-REQ'D
NO PAINT

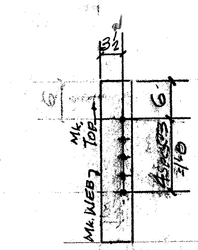

½ x 5 x 2'-3"
CP1-40-REQD.
NO PAINT

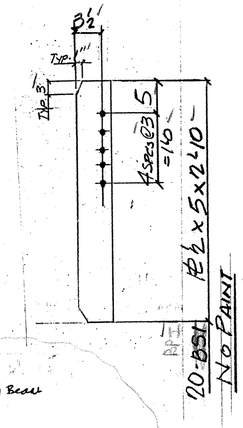

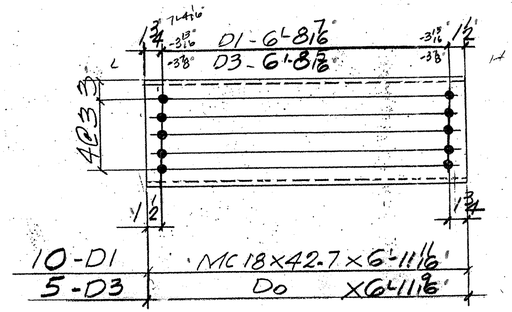

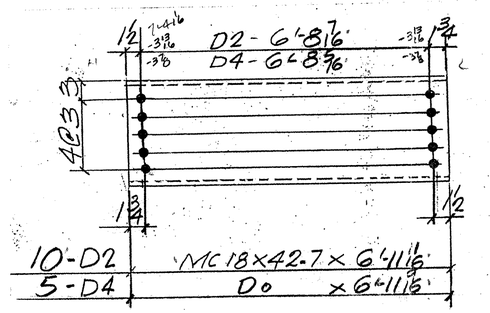

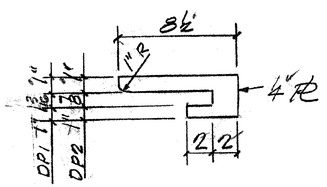

DP1 - 4 - REQ'D (@W36x170)
DP2 - 8 - REQ'D (@W36x135)
NO PAINT
FIELD WELDED SEAL WELD ALL AROUND

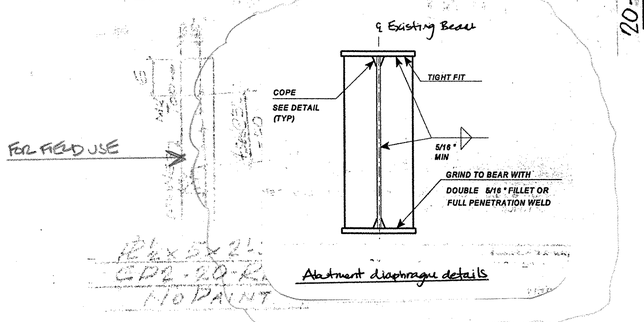

Abutment diaphragm details

ABM INFO		SHOP BILL					JOB NO. 132	DRG. NO. 51
PAGE	LINE	NO.	DESCRIPTION	FT	IN	ASSEM. MARK	SHIPPING MARK	REMARKS	WEIGHT
		10	MC18x42.7	6	11⅛"		D1		
		10	D0	6	11⅛"		D2		
		5	D0	6	11⅛"		D3		
		5	D0	6	11⅛"		D4		
		40	PL½ x 5"	2	3"		CP1	NO PAINT	
		20	PL½ x 5"	2	10"		BP1	NO PAINT	
		4	PL¼ x 3⅞"		8½"		DP1	NO PAINT	
		8	PL¼ x 2⅞"		8½"		DP2	D0	
		24	PL⅝ x 6"	1	0"		WR1	NO PAINT	
		300	¾ø H.S. BOLTS		24"		FIELD W/NEW NUTS-TYPE 1 GALV		

ALL MATERIALS AND CONSTRUCTION SHALL CONFORM TO STATE OF VERMONT AGENCY OF TRANSPORTATION STANDARD SPECIFICATIONS FOR CONSTRUCTION DATED 1990, AND ITS LATEST REVISIONS, AND THE AASHTO STANDARD SPECIFICATIONS FOR HIGHWAY BRIDGES, DATED 1996, AND ITS LATEST REVISIONS.

PAY ITEM 506.60

V.A.O.T. RECEIVED MAR 15 2001
CK'D BY JEL 3-7-01 CK'D BY C.Bay 3-8-01
RESUBMIT ____ APPROVED ✓AS NOTED
BY mgl DATE 3-22-01

OUT FOR APPROVAL	2-26-01										
OUT FOR APPROVAL											
ISSUED TO SHOP											
FIELD & OFFICE											
REV.	REMARKS	DATE	DWN	CHK	APP	Q.A.	NO.	DIA.	LGT	TYPE	WASHER

PROJECT NO. IM-089-3(27) STATE BRIDGE NO. 88S
MATERIAL AASHTO M270 Gr 36 ELECTRODES: PER PROC HOLES: 15 11/16ø SHOP BOLTS: —
SURFACE PREP. & PAINT: SSPC-SP10
PRIMER: WASSER MC-ZINC
INTERMEDIATE: WASSER FERROX B
FINISH: WASSER FERROX A COLOR # 14062

	DRAWN BY	DATE
DESCRIPTION: MISC. STRUCTURAL ITEMS	JPF	2-01
JOB: BRIDGE 88S	CHKD BY	
I-89 OVER ST. ALBANS SO. STATE HIGHWAY	EJ.	
FAIRFAX-FAIRFIELD-ST. ALBANS, VT.	APPROV BY	
	Q.A.	
CUSTOMER: J.A. McDONALD	JOB NO.	DRG. NO.

CASCO BAY STEEL STRUCTURES, INC.
75 SPRING HILL ROAD SACO, MAINE 04072
PHONE (207) 282-7360 FAX. (207) 282-1179

JOB NO.	DRG. NO.
132	51
432	REV. △

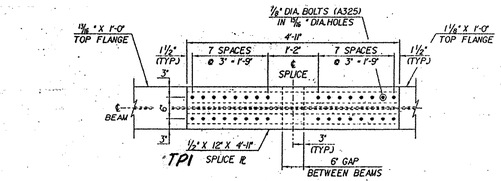

PLAN TOP FLANGE @ PIER NO. 1

(PIER NO. 2 REVERSE IMAGE)

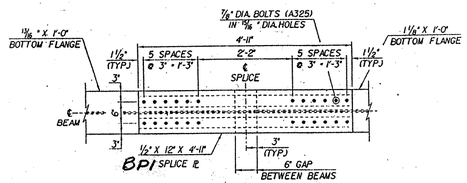

PLAN BOTTOM FLANGE @ PIER NO. 1

(PIER NO. 2 REVERSE IMAGE)

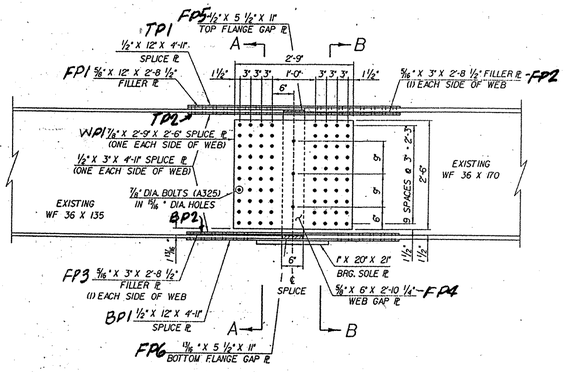

BEAM ELEVATION @ PIER NO. 1

SOLE PL'S BY OTHERS

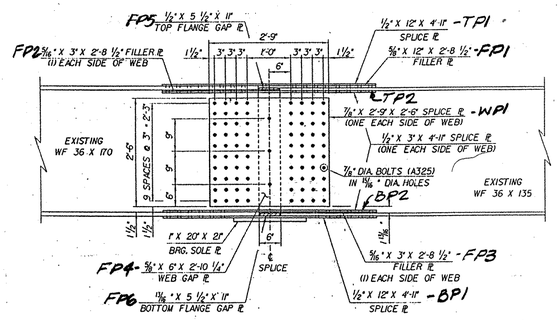

BEAM ELEVATION @ PIER NO. 2

SOLE PL'S BY OTHERS.

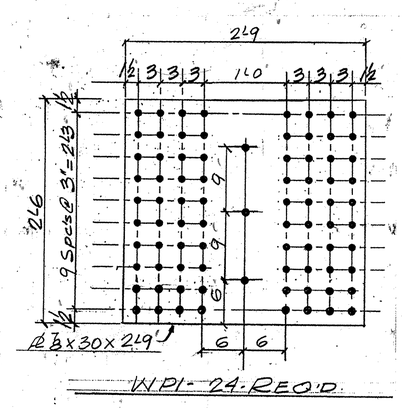

WP1 - 24 - REQ'D.

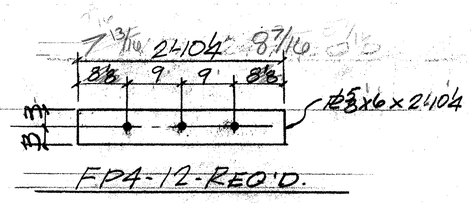

FP4 - 12 - REQ'D.

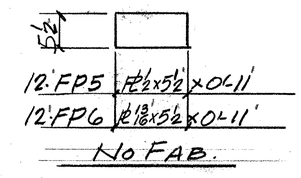

NO FAB.

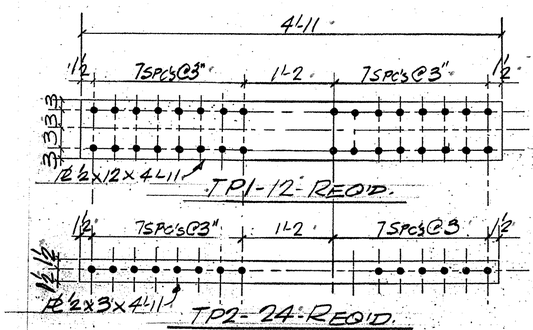

TP1 - 12 - REQ'D.

TP2 - 24 - REQ'D.

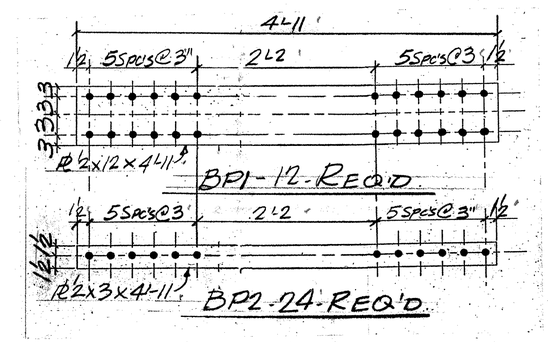

BP1 - 12 - REQ'D.

BP2 - 24 - REQ'D.

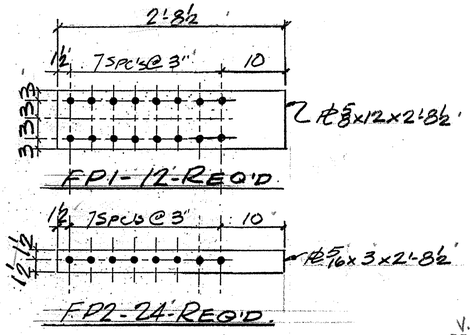

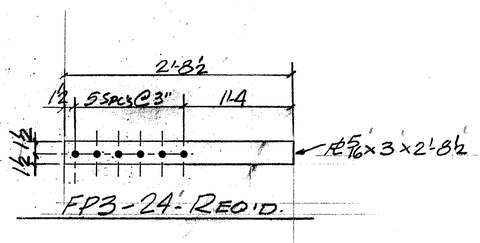

SHOP NOTE: SPLICE PLATES PRIME ONLY

V.A.O.T.
RECEIVED
CK'D BY JEL 3.7.01 OK'D BY G.Ray 3.8.01
MAR 0 5 2001
RESUBMIT ____ APPROVED √AS NOTED
BY mjc DATE 3-22-01

ABM INFO PAGE	LINE	NO.	DESCRIPTION	FT	IN	ASSEM. MARK	SHIPPING MARK	REMARKS	WEIGHT
		24	PL 1/2 x 30	2	9		WP1	CVN	
		12	PL 1/2 x 12	4	11		TP1	CVN	
		12	DO	4	11		BP1	CVN	
		24	PL 1/2 x 3	4	11		TP2	CVN	
		24	DO	4	11		BP2	CVN	
		12	PL 5/16 x 12	2	8 1/2		FP1		
		24	PL 5/16 x 3	2	8 1/2		FP2		
		24	DO	2	8 1/2		FP3		
		12	PL 5/8 x 6	2	10 1/4		FP4		
		12	PL 1/2 x 5 1/2		11		FP5	NO FAB	
		12	PL 1 1/16 x 5 1/2		11		FP6	NO FAB.	
		FIELD BOLTS (M164-TYPE 1-GALV.) W/ NUT & WASH							
		(38)	3/4" H.S. BOLTS		3 1/2		FIELD	TOP FLG. & WEB	
		288	DO		3 1/2			BOT. FLG.	

DAY ITEM 506.60

OUT FOR APPROVAL	2-26-01									
OUT FOR APPROVAL										
ISSUED TO SHOP										
FIELD & OFFICE										
REV.	REMARKS	DATE	DWN	CHK	APP	Q.A.	NO.	DIA.	LGT	TYPE	WASHER

PROJECT NO. IM-089-3(27) STATE BRIDGE NO. 885

MATERIAL AASHTO M270 Gr 50 ELECTRODES: — HOLES: 15/16" ⌀ SHOP BOLTS: —

SURFACE PREP. & PAINT: SSPC-SP10

PRIMER - WASSER MC-ZINC

DESCRIPTION: SPLICE PLATES

JOB: BRIDGE 885

I-89 OVER ST. ALBANS SO. STATE HIGHWAY

FAIRFAX-FAIRFIELD-ST. ALBANS, VT.

CUSTOMER: J.A. MCDONALD

DRAWN BY	DATE
JPF	2-01
CHK'D BY	
EJ.	
APPROV BY	
Q.A.	

CASCO BAY STEEL STRUCTURES, INC.
75 SPRING HILL ROAD SACO, MAINE 04072
PHONE (207) 282-7360 FAX. (207) 282-1179

JOB NO.	DRG. NO.
132	S2
433	REV. △

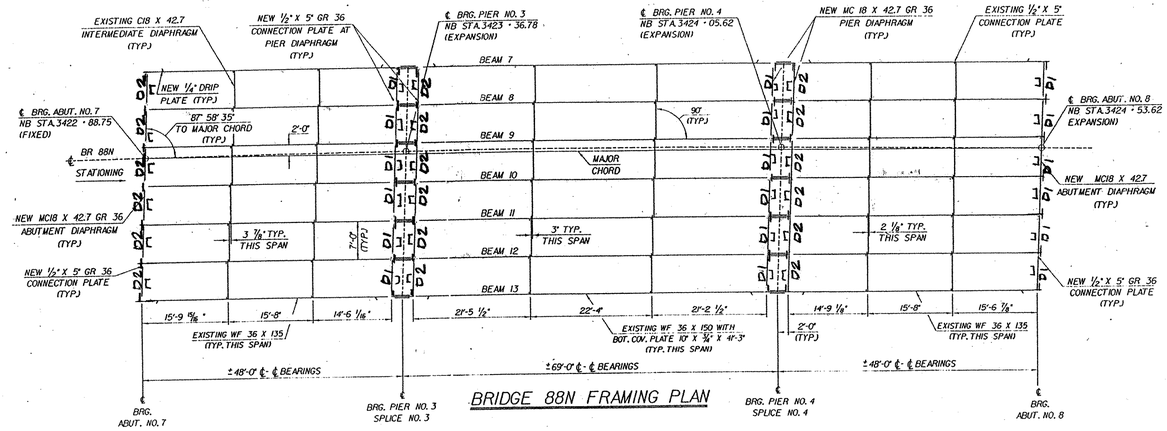

BRIDGE 88N FRAMING PLAN

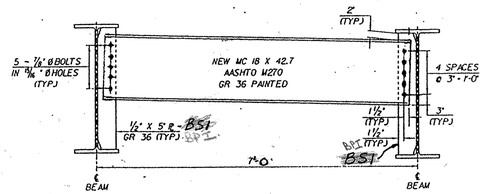

ABUTMENT DIAPHRAGM

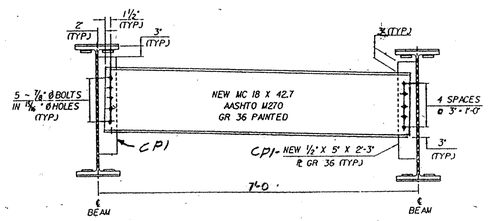

PIER DIAPHRAGM

FOR FIELD USE

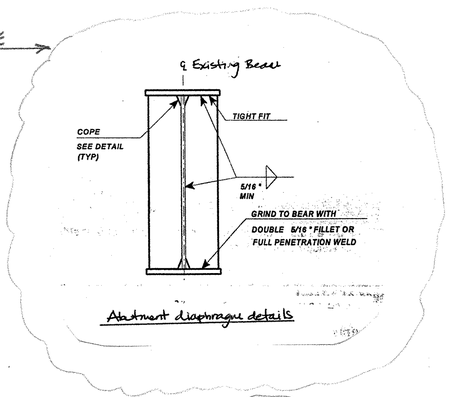

Abutment diaphragm details

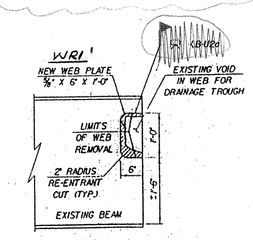

BEAM END @ PIERS REPAIR DETAIL

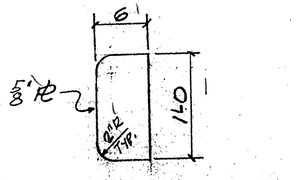

WR1 - 28 - REQ'D
NO PAINT

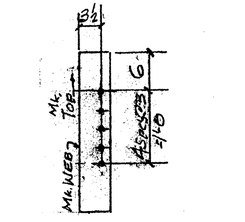

½" X 5" X 2'-3"
CP1 - 48 - REQD.
NO PAINT

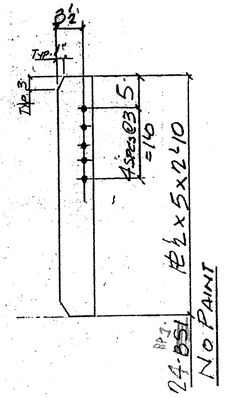

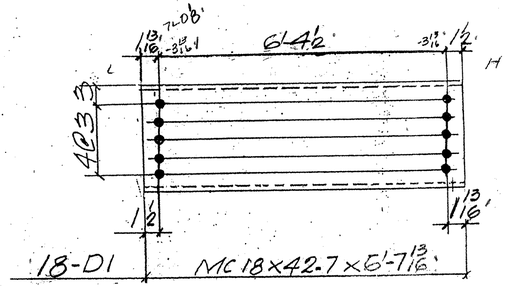

18 - D1 MC 18 X 42.7 X 6'-7 13/16"

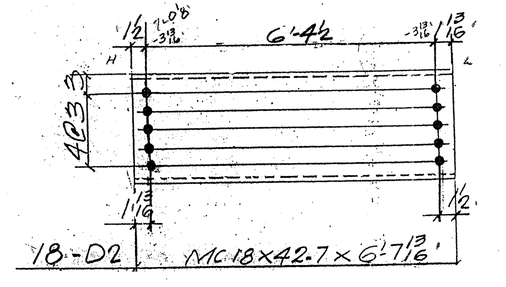

18 - D2 MC 18 X 42.7 X 6'-7 13/16"

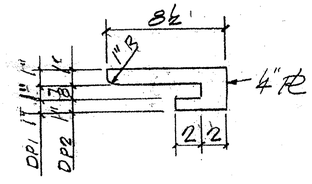

DP1 - 4 - REQ'D (@ W36 X 150)
DP2 - 8 - REQ'D (@ W36 X 135)
NO PAINT.

FIELD WELD SEAL WELD ALL AROUND

ALL MATERIALS AND CONSTRUCTION SHALL CONFORM TO STATE OF VERMONT AGENCY OF TRANSPORTATION STANDARD SPECIFICATIONS FOR CONSTRUCTION DATED 1990, AND ITS LATEST REVISIONS, AND THE AASHTO STANDARD SPECIFICATIONS FOR HIGHWAY BRIDGES, DATED 1996, AND ITS LATEST REVISIONS.

V.A.O.T.
RECEIVED
OK'D BY JEL 3-7-01 OK'D BY C.Pey 3-30-1
MAR 0 2 2001
RESUBMIT ____ APPROVED ✓ AS NOTED
BY Jorgl DATE 3-22-01

SHOP BILL

JOB NO. 132 DRG. NO. S3

ABM INFO PAGE	LINE	NO.	DESCRIPTION	FT	IN	ASSEM. MARK	SHIPPING MARK	REMARKS	WEIGHT
		18	MC18x42.7	6	7 13/16"		D1		
		18	D0	6	7 13/16"		D2		
		48	PL½x5	2	3"		CP1	NO PAINT	
		24	PL½x5	2	10"		BP1	NO PAINT	
		4	PL4x3		8½"		DP1	NO PAINT	
		8	PL4x2⅞		8½"		DP2	DO	
		28	PL⅜x6	1	0		WR1	NO PAINT	
		360	¾" H.S. BOLTS		24		FIELD	W/ NEW M164-TYPE1 GALV.	

PAY ITEM 506.60

REV.	REMARKS	DATE	DWN	CHK	APP	Q.A.	NO.	DIA.	LGT	TYPE	WASHER
	OUT FOR APPROVAL	2-26-01									
	OUT FOR APPROVAL										
	ISSUED TO SHOP										
	FIELD & OFFICE										

PROJECT NO. IM-089-3(27) STATE BRIDGE NO. 88N
MATERIAL: AASHTO M270 Gr 36 ELECTRODES: HOLES: SHOP BOLTS: —
SURFACE PREP. & PAINT: PREP: SSPC-SP10.
PRIMER: WASSER MC-ZINC
INTERMEDIATE: WASSER FERROX B
FINISH: WASSER FERROX A COLOR # 14062
DESCRIPTION: MISC-STRUCTURAL ITEMS
JOB: BRIDGE 88N
I-89 OVER ST. ALBANS SO. STATE HIGHWAY
FAIRFAX - FAIRFIELD - ST. ALBANS, VT.
CUSTOMER: J.A. McDONALD

DRAWN BY JPF 2-01
CHKD BY EJ
APPROV BY
Q.A.

CASCO BAY STEEL STRUCTURES, INC.
75 SPRING HILL ROAD SACO, MAINE 04072
PHONE (207) 282-7360 FAX. (207) 282-1179

JOB NO. 132 DRG. NO. S3
434 REV. △

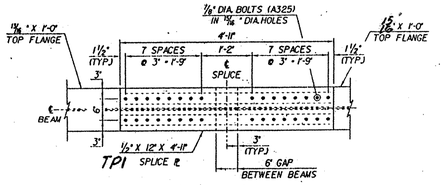

PLAN TOP FLANGE @ PIER NO.3

(PIER NO.4 REVERSE IMAGE)

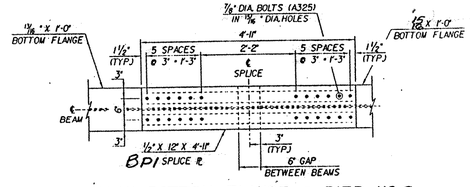

PLAN BOTTOM FLANGE @ PIER NO.3

(PIER NO.4 REVERSE IMAGE)

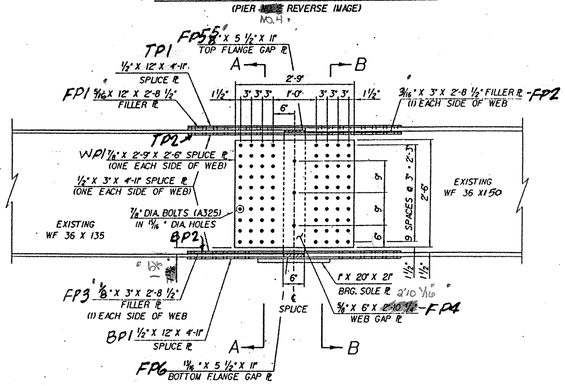

BEAM ELEVATION @ PIER NO.3

SOLE P.L'S BY OTHERS

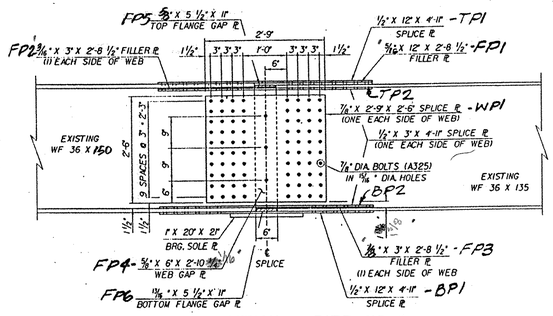

BEAM ELEVATION @ PIER NO.4

SOLE P.L'S BY OTHERS

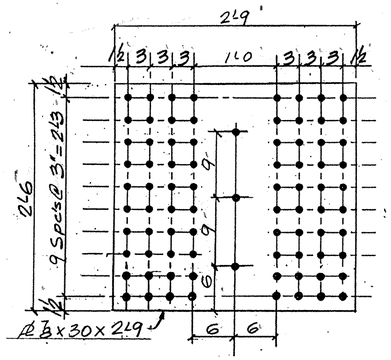

WP1 - 28 REQ'D.

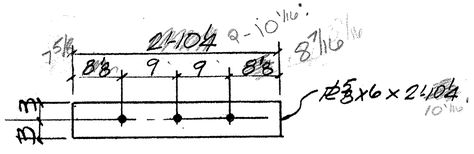

FP4 - 14 REQ'D.

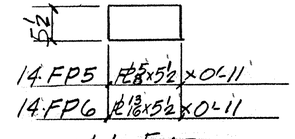

NO FAB.

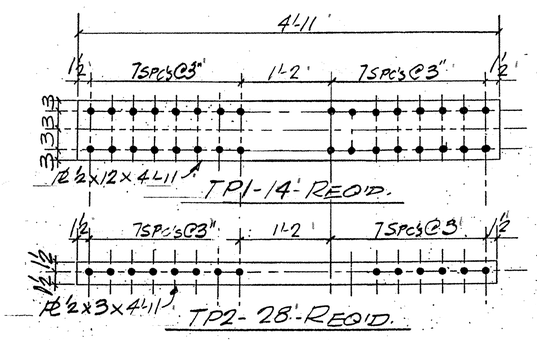

TP1 - 14 REQ'D.

TP2 - 28 REQ'D.

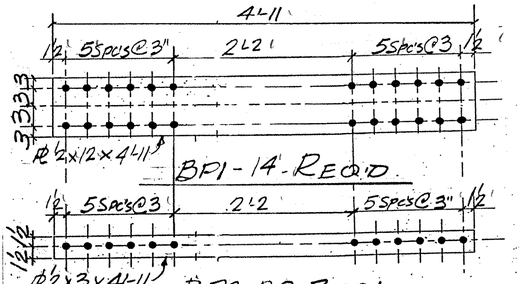

BP1 - 14 REQ'D.

BP2 - 28 REQ'D.

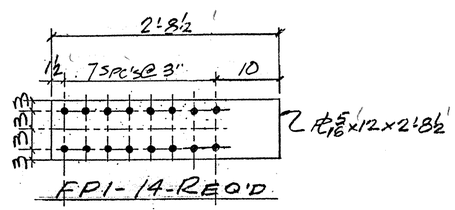

FP1 - 14 REQ'D.

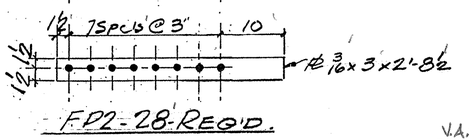

FP2 - 28 REQ'D.

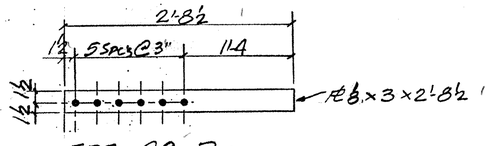

FP3 - 28 REQ'D.

V.A.O.T.
RECEIVED
CK'D BY JEL 3.7.01 OK'D BY E. Roy 3.8.01
MAR 0 2 2001
RESUBMIT ____ APPROVED √AS NOTED
BY mgl DATE 3.22.01

SHOP NOTE: SPLICE PLATES PRIME ONLY

ABM INFO		SHOP BILL					JOB NO. 132	DRG. NO. S4
PAGE	LINE	NO.	DESCRIPTION	FT	IN	ASSEM. MARK	SHIPPING MARK	REMARKS / WEIGHT
		28	℔ 7/8 x 30	2	9		WP1	CVN
		14	℔ 1/2 x 12	4	11		TP1	CVN
		14	DO	4	11		BP1	CVN
		28	℔ 1/2 x 3	4	11		TP2	CVN
		28	DO	4	11		BP2	CVN
		14	℔ 5/16 x 12	2	8 1/2		FP1	
		28	℔ 3/16 x 3	2	8 1/2		FP2	
		28	℔ 3/8 x 3	2	8 1/2		FP3	
		14	℔ 5/8 x 6	2	10 1/4 10 1/16		FP4	
		14	℔ 5/8 x 5 1/2		11		FP5	NO FAB
		14	℔ 13/16 x 5 1/2		11		FP6	NO FAB
		FIELD BOLTS (M164-TYPE 1-GALV.) W/NUT & WASH						
		1120	7/8" H.S. BOLTS		3 3/4		FIELD WEB	
		336	DO		3 1/4		DO BOT. FLG.	
		448	DO		3 1/2		DO TOP FLG.	

PAY ITEM 506.60

REV.	REMARKS	DATE	DWN	CHK	APP	Q.A.	NO.	DIA.	LGT	TYPE	WASHER
	OUT FOR APPROVAL	8.26.01									
	OUT FOR APPROVAL										
	ISSUED TO SHOP										
	FIELD & OFFICE										

PROJECT NO. IM-089-3(27) STATE BRIDGE NO. 88N

MATERIAL M270 Gr 50 (A709 Gr 50) ELECTRODES: — HOLES: 13/16" ϕ SHOP BOLTS: —

SURFACE PREP. & PAINT: PREP: SSPC-SP10

PRIMER - WASSER MC-ZINC

DESCRIPTION: SPLICE PLATES PIER 3&4

JOB: BRIDGE 88N

I-89 OVER ST. ALBANS SO. STATE HIGHWAY

FAIRFAX-FAIRFIELD-ST. ALBANS, VT.

CUSTOMER: J.A. MC DONALD

DRAWN BY	DATE
JPF	2-01
CHK'D BY	
EJ.	
APPROV BY	
Q.A.	

CASCO BAY STEEL STRUCTURES, INC.

75 SPRING HILL ROAD SACO, MAINE 04072

PHONE (207) 282-7360 FAX. (207) 282-1179

JOB NO.	DRG. NO.
132	S4
435	REV. △

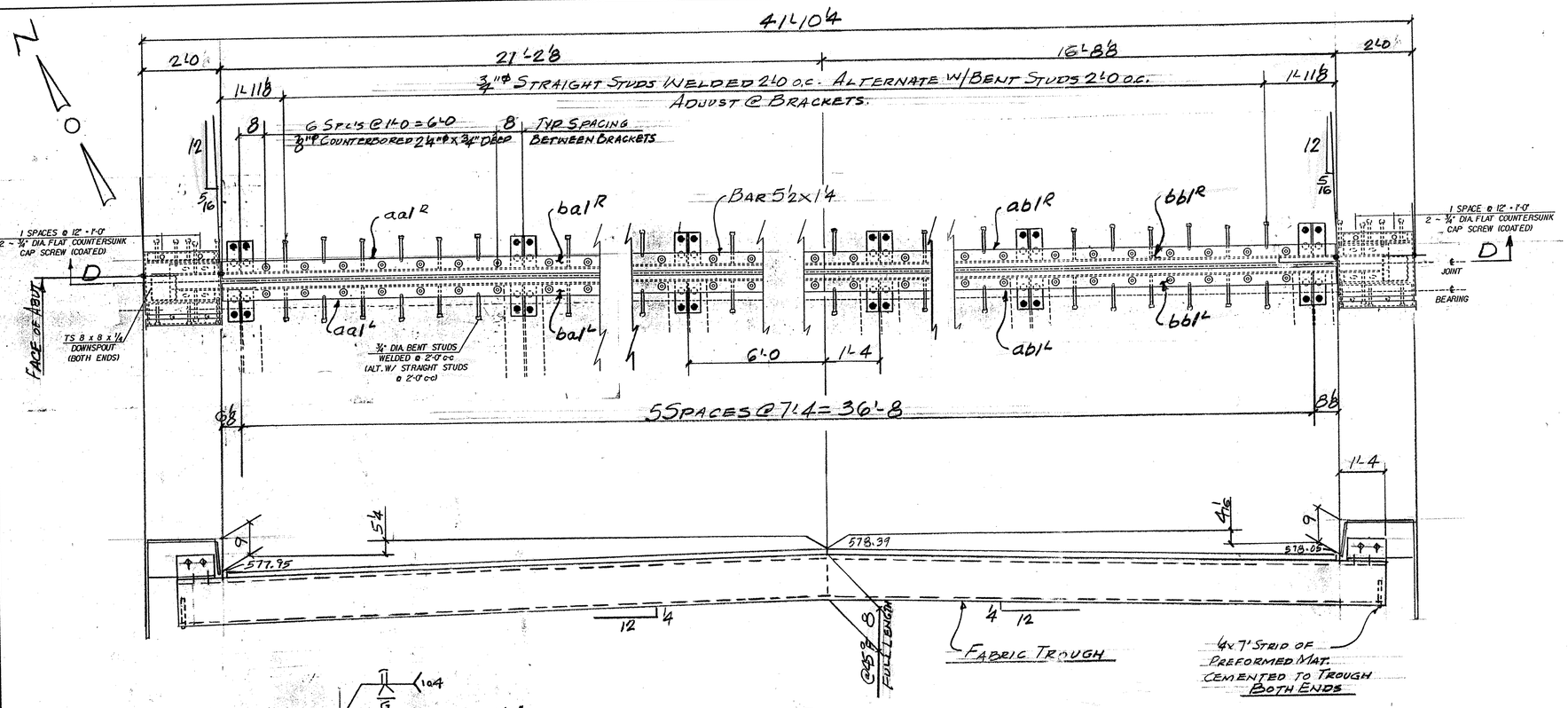

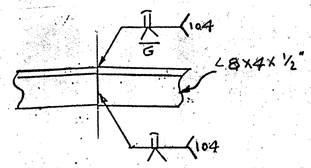

WELDING DETAIL

D-D

EJ1-S - ONE REQ'D (@ ABUT. NO. 6)

WORK THIS DWG. W/ DWG. J1A

AEM INFO PAGE	LINE	NO.	DESCRIPTION	FT	IN	ASSEM. MARK	SHIPPING MARK	REMARKS	WEIGHT
		1	EXP. JNT. ASS'Y	42	0±		EJ1-S		—
		2	L 8 x 4 x 1/2	22	6 1/4	aal R			
		2	DO	18	0 4	abl R			
		2	BAR 5 1/2 x 1/4	21	1 3/4	bal L			
		2	DO	16	7 3/4	bbl L			
		12	PL 1/2 x 8		10	bcl			
		12	PL 1/2 x 6		10	bal			
		70	3/4"ø H.S. BOLTS		24	mal			
		70	3/4"ø CLOSED THREADED ANC FERRULES			mbl			
		74	3/4"ø ANC STUDS		10	mcl			
		1	PREFORMED FABR 5 1/2 x 26 RUBBER	42	0	mfl		BAY PER SUPPER 702.07 AASHTO SPEC M-198 TYPE II	
		2	BOLT SLEEVE TAPE 1/8 x 3	42	0				
		48	1"ø THREADED RODS		7		TS1		
		96	1"ø HEX NUTS						
		96	BAR 3 x 3/8		3	W1		WASHER	
		6	PL 1/2 x 9		9		API	NOT GALV	
		24	3/4"ø ANC STUDS		10	mcl			
		8	L 4 x 4 x 3/8	1	0 1/2	sal			
		16	3/4"ø H.S. BOLTS		3			W/ 1 WASH	
			CURBS						
		2	PL 1/2 x 20	1	10 1/2	cp1			
		2	PL 1/2 x 9 1/2 3/4	1	8	cp1a			
		2	PL 1/2 x 20	1	8 3/4	cp1b			
		2	PL 1/2 x 7	1	9 1/4	cp2			
		2	DO		9 1/4	cp2a			
		2	DO	1	8 4	cp2b			
		2	PL 5/8 x 2	1	10	cp3			
		2	DO		9 3/8	cp3a		9 3/8	
		2	DO	1	8 3/8	cp3b			
		2	PL 1/2 x 9	1	10	cp4			
		2	PL 1/2 x 9	1	11	cp5			
		2	L 2 1/2 x 2 1/2 x 3/8	1	10	ca1			
		2	L 6 x 4 x 1/2	1	2	ca2			
		16	3/4"ø H.S. BOLTS		2	mdl		W/ 1 WASH.	
		20	3/4"ø CLOSED THREADED FERRULES			mgl			
		4	3/4"ø F.H. CAP SCREWS		2	mhl		ASTM F 835-98	
		16	3/4"ø ANC STUDS		7	mel			

ALL MATERIALS AND CONSTRUCTION SHALL CONFORM TO STATE OF VERMONT AGENCY OF TRANSPORTATION STANDARD SPECIFICATIONS FOR CONSTRUCTION DATED 1990, AND ITS LATEST REVISIONS, AND THE AASHTO STANDARD SPECIFICATIONS FOR HIGHWAY BRIDGES, DATED 1996, AND ITS LATEST REVISIONS.

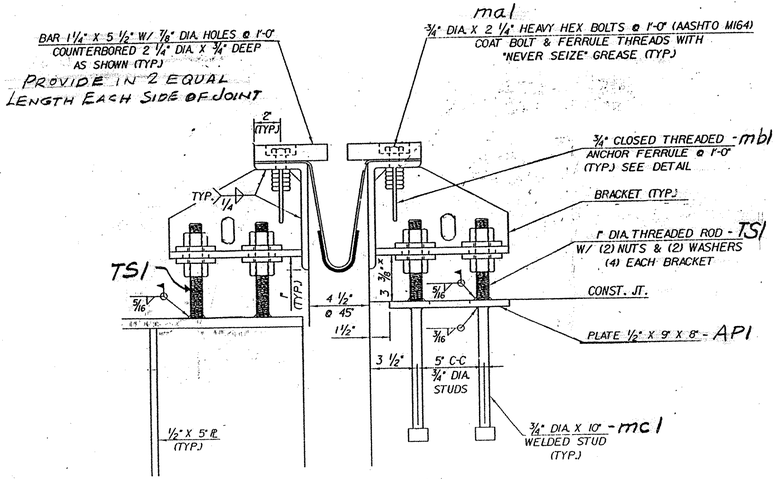

TYPICAL SECTION AT BEAMS

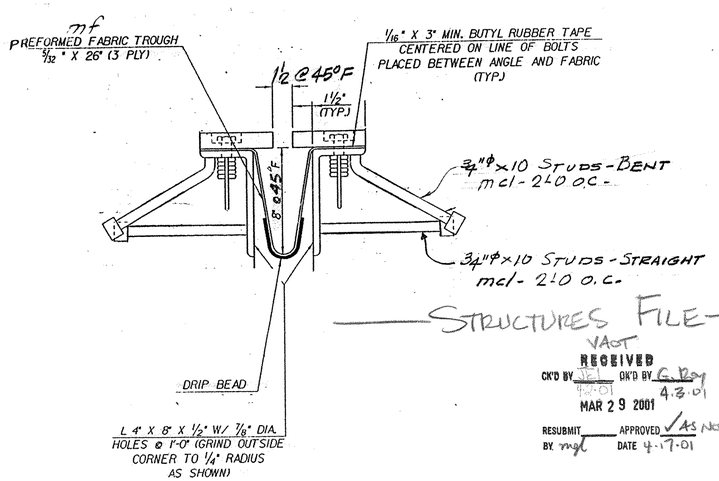

TYPICAL SECTION BETWEEN BEAMS

STRUCTURES FILE

VAOT RECEIVED MAR 29 2001

CK'D BY VEL 4.3.01 OK'D BY G. Roy 4.3.01

RESUBMIT ____ APPROVED ✓ AS NOTED

BY mgl DATE 4.17.01

PAY ITEM 516.10

OUT FOR APPROVAL	3-23-01									
OUT FOR APPROVAL										
ISSUED TO SHOP										
FIELD & OFFICE										
REV.	REMARKS	DATE	DWN	CHK	APP	Q.A.	NO.	DIA.	LGT	TYPE	WASHER

PROJECT NO. IM-089-3(27) STATE BRIDGE NO. 885

MATERIAL: AASHTO M270-GR36 ELECTRODES: PER PROC. HOLES: AS NOTED SHOP BOLTS: 3/4"ø H.S. (M-164)

SURFACE PREP. & PAINT: GALVANIZED AFTER FAB

DESCRIPTION: EXP. JOINT - ABUT. NO. 6

JOB: BRIDGE 885 I-89 OVER ST. ALBANS SO. STATE HIGHWAY FAIRFAX - FAIRFIELD - ST. ALBANS, VT.

CUSTOMER: J.A. McDONALD

DRAWN BY	DATE
JPF	3-01
CHKD BY	
APPROV BY	
Q.A.	
JOB NO.	DRG. NO.
132	J1
436	REV. △

CASCO BAY STEEL STRUCTURES, INC.
75 SPRING HILL ROAD SACO, MAINE 04072
PHONE (207) 282-7360 FAX. (207) 282-1179

JOB NO. 132 | DRG. NO. J1A

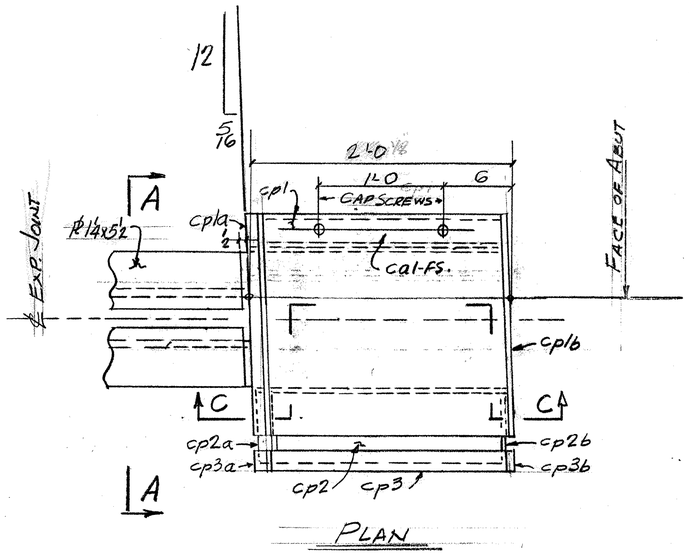

PLAN

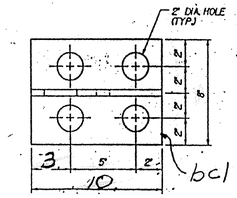

BRACKET PLAN

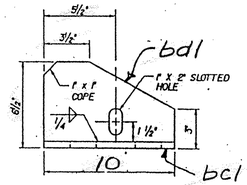

BRACKET ELEVATION

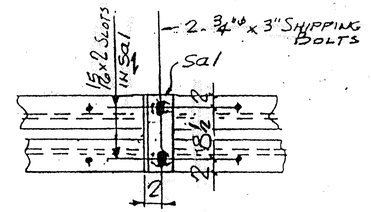

SHIPPING DEVICE
SPACED 540. OC. MAX. (8 REQ'D)

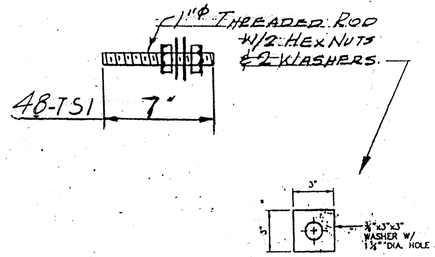

WASHER FOR BRACKET
W1

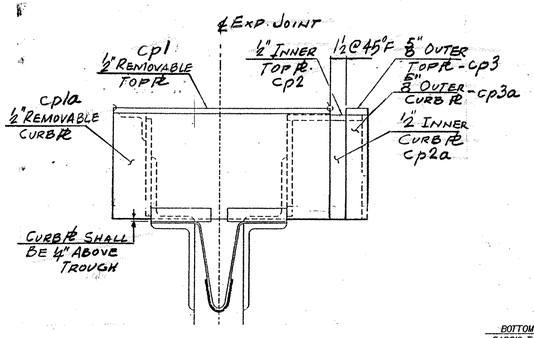

SECTION A-A

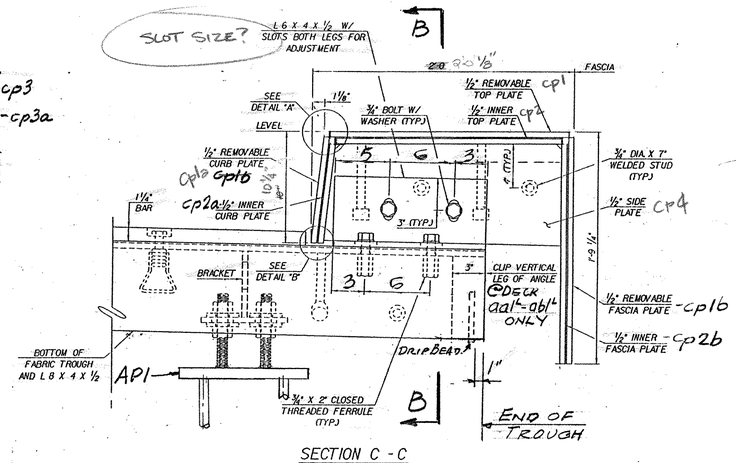

SECTION C - C

RIGHT END BRUSH CURB SHOWN
LEFT END - OPP HAND.

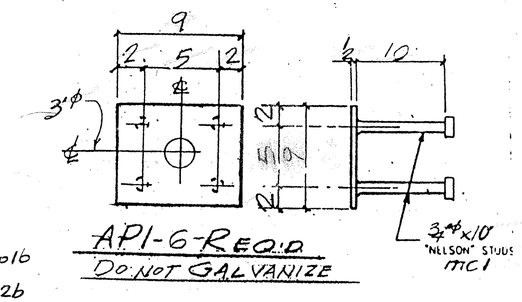

API-6-REQ'D
DO NOT GALVANIZE

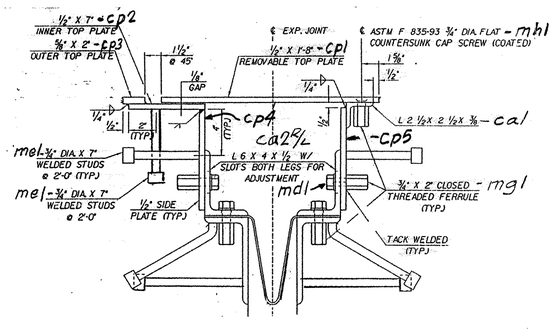

SECTION B-B

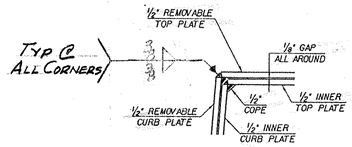

DETAIL "A"

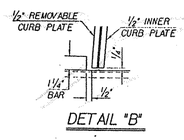

DETAIL "B"

VAOT
RECEIVED
CK'D BY SC OK'D BY C.Ley 4.3.01
MAR 29 2001
RESUBMIT ____ APPROVED √As NOTED
BY mgl DATE 4.17.01

REV.	REMARKS	DATE	DWN	CHK	APP	Q.A.	NO.	DIA.	LGT	TYPE	WASHER
	OUT FOR APPROVAL	3-23-01									
	OUT FOR APPROVAL										
	ISSUED TO SHOP										
	FIELD & OFFICE										

PROJECT NO. IM-089-3(27) STATE BRIDGE NO. 885
MATERIAL AASHTO M270 GR 50 | ELECTRODES: PER PROC. | HOLES: AS NOTED | SHOP BOLTS: 7/8" HS (M-164)
SURFACE PREP. & PAINT:
GALVANIZED AFTER FAB. - U.N.

DESCRIPTION: EXP JOINT - ABUT. NO. 6
JOB: BRIDGE 885
I-89 over St. Albans So. State Highway
Fairfax - Fairfield - St. Albans, Vt.
CUSTOMER: J.A. McDONALD

	DRAWN BY	DATE
	JPF	3-01
CHKD BY		
APPROV BY		
Q.A.		

CASCO BAY STEEL STRUCTURES, INC.
75 SPRING HILL ROAD SACO, MAINE 04072
PHONE (207) 282-7360 FAX. (207) 282-1179

JOB NO.	DRG. NO.
132	J1A
437	REV. 1

WORK THIS DWG. W/ DWG. J1

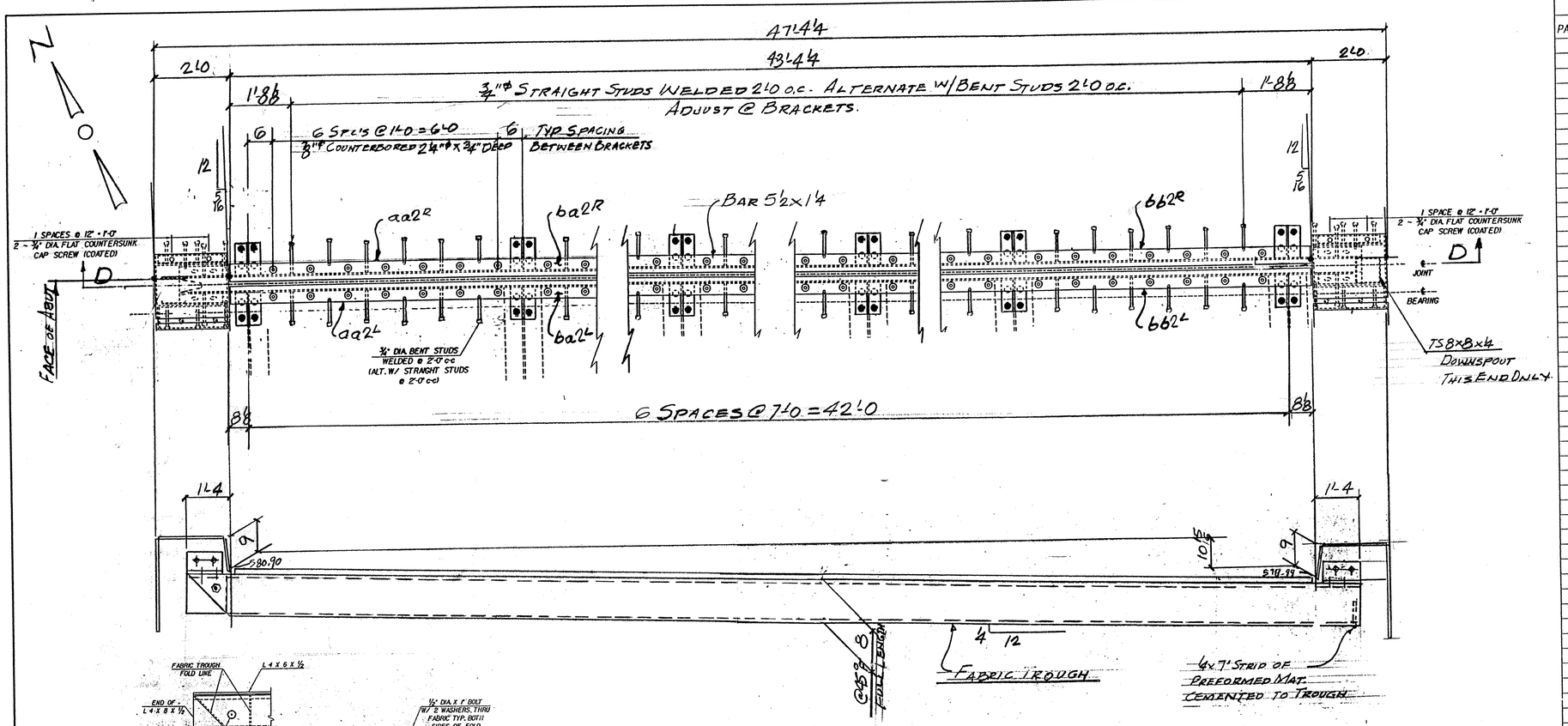

D-D

EJ2-N-ONE REQ'D (@ABUT. No. 8)

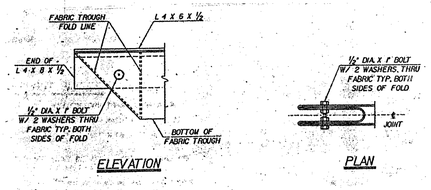

FOLDED TROUGH END DETAILS

WORK THIS DWG. W/DWG. J2A

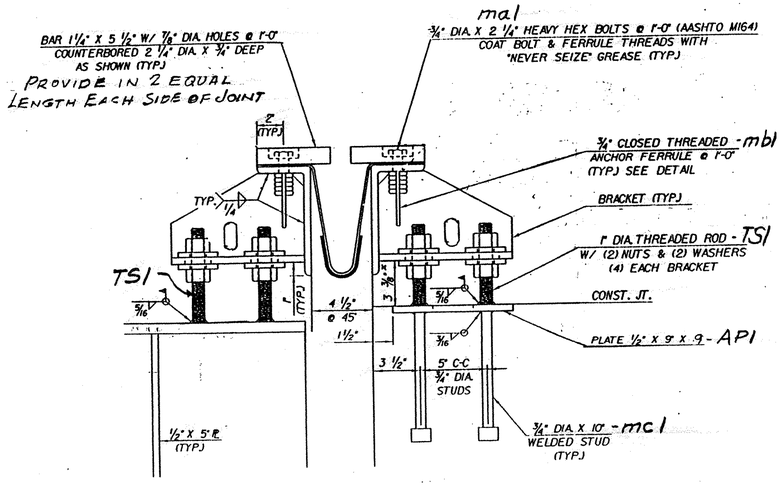

TYPICAL SECTION AT BEAMS

ANCHOR FERRULE DETAIL - mb1

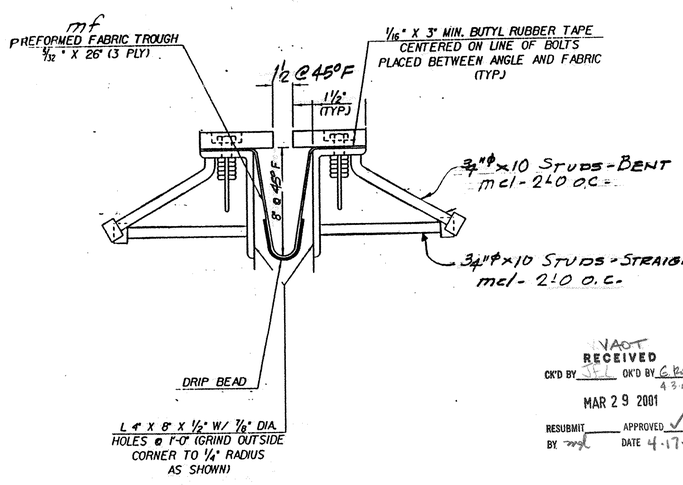

VAOT RECEIVED MAR 29 2001

CK'D BY JFL OK'D BY C.Roy 4.3.01

RESUBMIT BY ____ APPROVED ✓ AS NOTED DATE 4.17.01

TYPICAL SECTION BETWEEN BEAMS

PAY ITEM 516.10

ABM INFO PAGE	LINE	NO.	DESCRIPTION	FT	IN	ASSEM. MARK	SHIPPING MARK	REMARKS	WEIGHT
		1	EXP. JNT. ASS'Y				EJ2-N		
		2	L 8x4x1/2	46	0 1/2	aa2R			
		2	BAR 5 1/2 x 1/4	21	7 3/4	ba2R			
		2	DO	21	7 3/4	bb2R			
		14	PL 1/2 x 8		10	bc1			
		14	PL 1/2 x 6		10	ba1			
		84	3/4"ø H.S. BOLTS		2 4	ma1			
		84	3/4"ø CLOSED THREADED ANC. FERRULES			mb1			
		82	3/4"ø ANC. STUDS		10	mc1			
		1	PREFORMED FABR. 1/32 x 26	47	0	mf1		SAY PER SUPER. TO 207 PLUS 10%	
		2	BUTYL RUBBER TAPE 1/16 x 3	47	0			SPEC'D AS 198 TYPE II	
		2	1"ø BOLTS		1"			GALV. W/ N&W WASH.	
		56	1"ø THREADED RODS		7		TS1		
		112	1"ø HEX NUTS						
		56	BAR 3x3/8		3	W1		WASHER	
		7	PL 1/2 x 9		9		API	NOT GALV	
		28	3/4"ø ANC. STUDS		10	mc1			
		9	L 4x4x3/8	1	0 1/2	sa1			
		18	3/4"ø H.S. BOLTS		3			W/1 WASH	
			CURBS						
		2	PL 1/2 x 20	1	10 1/2	cp1			
		2	PL 1/2 x 9 1/2	1	8	cp1a			
		2	PL 1/2 x 20	1	8 3/4	cp1b			
		2	PL 1/2 x 7	1	9 1/4	cp2			
		2	DO		9	cp2a			
		2	DO	1	8 3/4	cp2b			
		2	PL 5/8 x 2	1	10	cp3			
		2	DO		9 3/8	cp3a			
		2	DO	1	8 5/8	cp3b			
		2	PL 1/2 x 9	1	10	cp4			
		2	PL 1/2 x 9	1	11	cp5			
		2	L 2 1/2 x 2 1/2 x 3/8	1	10	ca1			
		2	L 6x4x1/2	1	2	ca2			
		16	3/4"ø H.S. BOLTS		2	ma1		W/1 WASH	
		20	3/4"ø CLOSED THREADED FERRULES		2	mg1			
		4	3/4"ø F.H. CAP SCREWS		2	mh1		ASTM F-835-93	
		16	3/4"ø ANC. STUDS		7	me1			

REV.	REMARKS	DATE	DWN	CHK	APP	Q.A.	NO.	DIA.	LGT	TYPE	WASHER
	OUT FOR APPROVAL	3-23-01									
	OUT FOR APPROVAL										
	ISSUED TO SHOP										
	FIELD & OFFICE										

PROJECT NO. IM-089-3(27) STATE BRIDGE NO. 88N

MATERIAL AASHTO M270 GR 36 ELECTRODES: PER PROC. HOLES: AS NOTED SHOP BOLTS: 7/8" H.S. (M-164)

SURFACE PREP. & PAINT: GALVANIZED AFTER FAB

DESCRIPTION: EXP. JOINT - ABUT. No. 8

JOB: BRIDGE 88N

I-89 OVER ST. ALBANS SO. STATE HIGHWAY

FAIRFAX - FAIRFIELD - ST. ALBANS, VT.

CUSTOMER: J.A. McDONALD

DRAWN BY	DATE
JPF	3-01
CHK'D BY	
APPROV BY	
Q.A.	

CASCO BAY STEEL STRUCTURES, INC.

75 SPRING HILL ROAD SACO, MAINE 04072
PHONE (207) 282-7360 FAX. (207) 282-1179

JOB NO.	DRG. NO.
132	J2
438	REV. △

JOB NO. 132 DRG. NO. J2A

JOB NO. 132 | DRG. NO. J2A

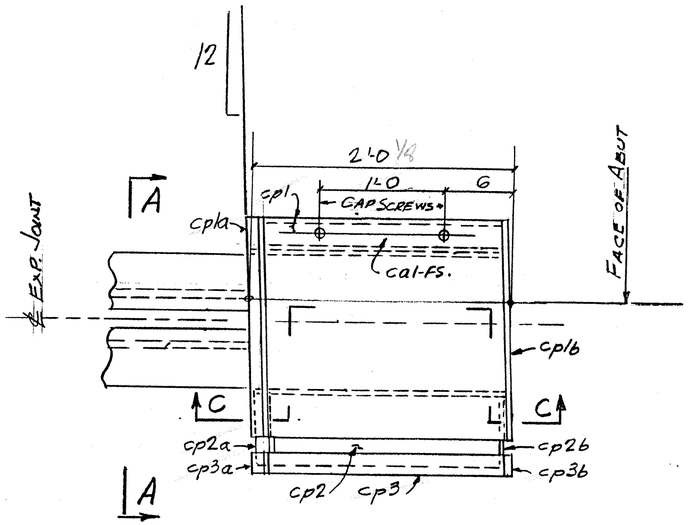

PLAN

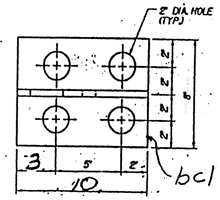

BRACKET PLAN

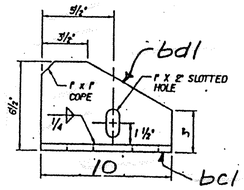

BRACKET ELEVATION

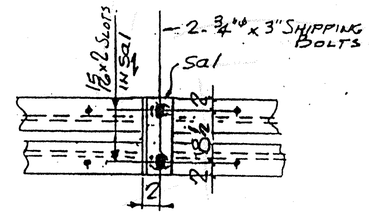

SHIPPING DEVICE
SPACED 5'-0" OC. MAX. (9 REQ'D)

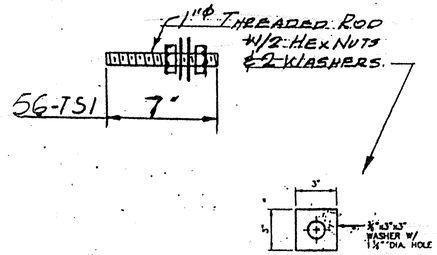

WASHER FOR BRACKET
W1

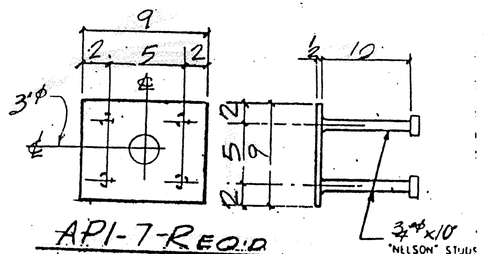

API-7-REQ'D
DO NOT GALVANIZE

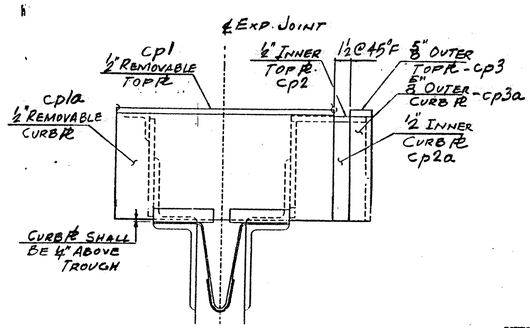

SECTION A-A

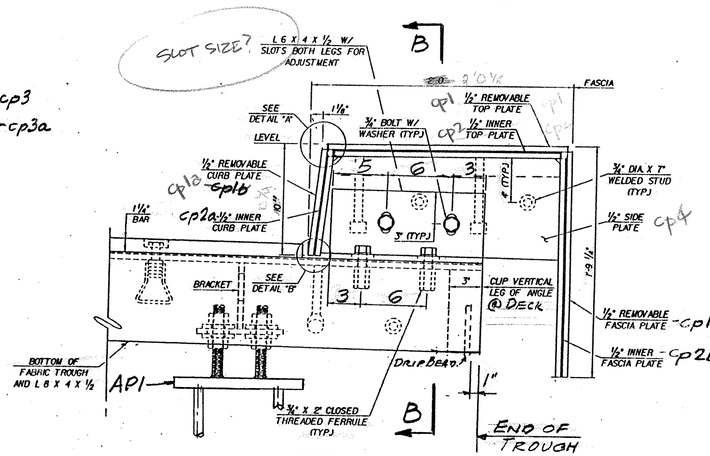

SECTION C-C

RIGHT END BRUSH CURB SHOWN
LEFT END - OPP HAND.

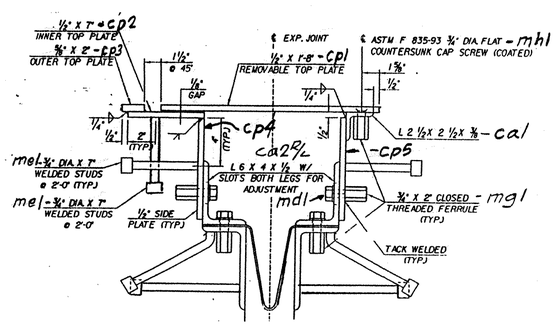

SECTION B-B

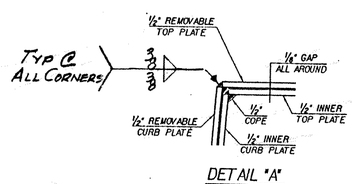

DETAIL "A"

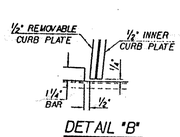

DETAIL "B"

VACT
RECEIVED
CK'D BY JEL OK'D BY G. Ray 4.3.01
MAR 29 2001
RESUBMIT BY mgL APPROVED ✓AS NOTED DATE 4.17.01

REV.	REMARKS	DATE	DWN	CHK	APP	Q.A.	NO.	DIA.	LGT	TYPE	WASHER
	OUT FOR APPROVAL	3-23-01									
	OUT FOR APPROVAL										
	ISSUED TO SHOP										
	FIELD & OFFICE										

PROJECT NO. IM-089-3(27) STATE BRIDGE NO. 88N
MATERIAL: AASHTO M270 GR 50W | ELECTRODES: PER PROC. | HOLES: AS NOTED | SHOP BOLTS: ⅞" HS. (M-164)
SURFACE PREP. & PAINT:

GALVANIZED AFTER FAB. - U.N.

DESCRIPTION: EXP. JOINT - ABUT. NO. 8
JOB: BRIDGE 88N
I-89 OVER ST. ALBANS SO. STATE HIGHWAY
FAIRFAX - FAIRFIELD - ST. ALBANS, VT.
CUSTOMER: J.A. MC DONALD

	DRAWN BY	DATE
	JPF	3-01
CHK'D BY		
APPROV BY		
Q.A.		
JOB NO.	DRG. NO.	
132	J2A	
439	REV.	1

CASCO BAY STEEL STRUCTURES, INC.
75 SPRING HILL ROAD SACO, MAINE 04072
PHONE (207) 282-7360 FAX. (207) 282-1179

WORK THIS DWG. W/ DWG. J2

ABM INFO		SHOP BILL						JOB NO. 132	DRG. NO. D1
PAGE	LINE	NO.	DESCRIPTION	FT	IN	ASSEM. MARK	SHIPPING MARK	REMARKS	WEIGHT
		2	DOWNSPOUT	5	0±		DS1		—
		1	DO	5	0±		DS2		—
		3	TS 8x8x¼	6	2½±1			ASTM A500-A501	
		3	BAR 4x⅜	1	3		SB1		
		6	DO	2	7±		SA1	BEND	
		6	¾"Φ THREADED ROD	1	0		BA1	BEND	
		12	¾"Φ HEX NUTS						
		12	¾"Φ WASHER						
		6	¾"Φ EXP. ANC		9		MA1	W/NEW.	

PAY ITEM 506.60

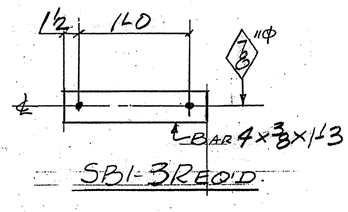

SB1-3 REQ'D.

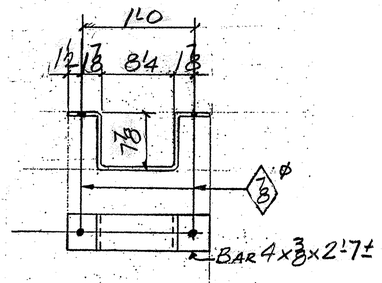

SA1-6 REQ'D

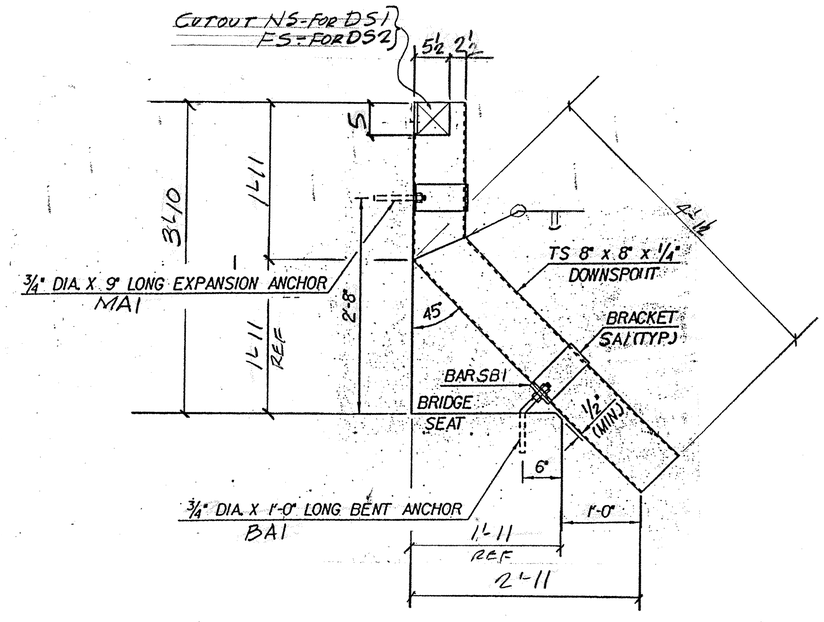

DS1- 2 REQ'D (@ EAST END OF ABUT. 6 & 8)
DS2- ONE REQ'D. (@ WEST END OF ABUT. 8)

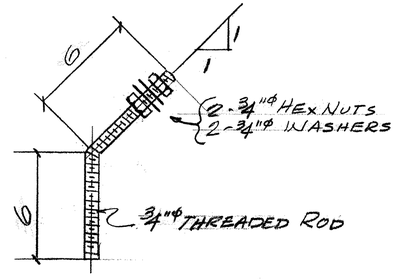

BA1- 6 REQ'D

VAOT
RECEIVED
CK'D BY ____ OK'D BY C. Roy 4.3.01
MAR 29 2001
RESUBMIT ____ APPROVED ✓
BY mgt DATE 4.17.01

REV.	REMARKS	DATE	DWN	CHK	APP	Q.A.	NO.	DIA.	LGT	TYPE	WASHER
	OUT FOR APPROVAL	3-23-01									
	OUT FOR APPROVAL										
	ISSUED TO SHOP										
	FIELD & OFFICE										

PROJECT NO. IM-089-3(27) STATE BRIDGE NO. 885 & 88N
MATERIAL AASHTO M270-Gr36 ELECTRODES: PER PROC. HOLES: AS NOTED SHOP BOLTS: —
SURFACE PREP. & PAINT:
GALVANIZED AFTER FAB. PER ASTM-A-123

DESCRIPTION: DOWNSPOUTS ABUTS 6 & 8
JOB: BRIDGE 885 & 88N
I-89 OVER ST. ALBANS SO. STATE HIGHWAY
FAIRFAX-FAIRFIELD-ST. ALBANS, VT.
CUSTOMER: J.A. MCDONALD

	DRAWN BY	DATE
	JPF	3-01
CHKD BY	EJ	
APPROV BY		
Q.A.		

CASCO BAY STEEL STRUCTURES, INC.
75 SPRING HILL ROAD SACO, MAINE 04072
PHONE (207) 282-7360 FAX. (207) 282-1179

JOB NO.	DRG. NO.
132	D1
440	REV. △

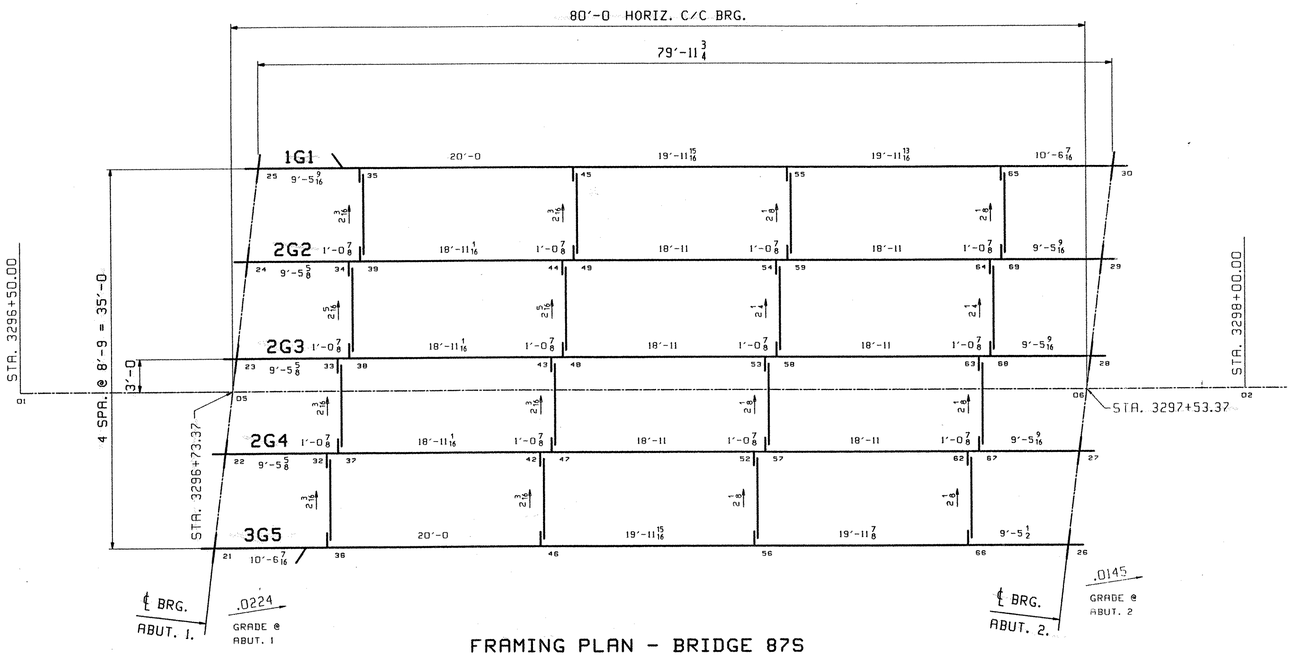

FRAMING PLAN - BRIDGE 87S

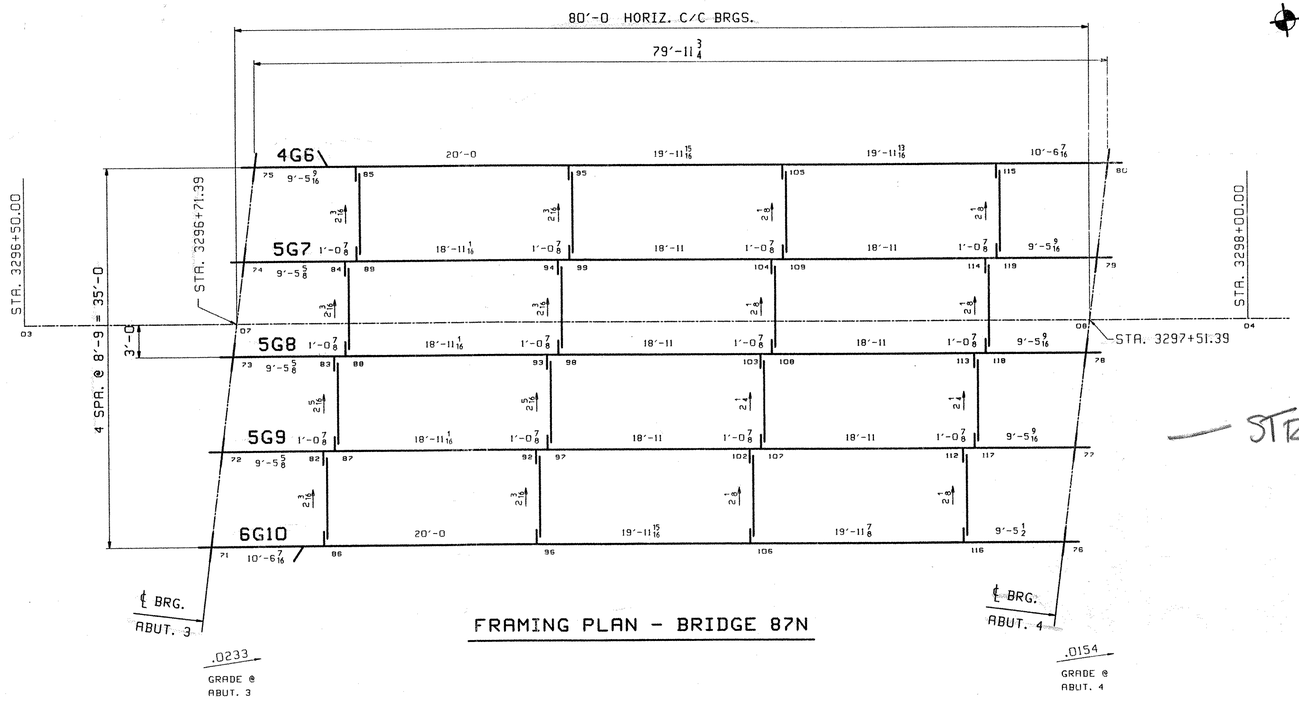

FRAMING PLAN - BRIDGE 87N

— STRUCTURES COPY —

VAOT
RECEIVED
CK'D BY mgl 4.9.01 OK'D BY G. Roy 4.18.01
MAR 29 2001
RESUBMIT BY mgl APPROVED ✓ DATE 4.18.01

**** NOTE ****
THE PURPOSE OF THIS DRAWING IS TO COORDINATE GEOMETRIC CONTROL INFORMATION. THIS DWG IS SUBMITTED FOR INFORMATION ONLY AND IS NOT INTENDED FOR SHOP FABRICATION.

NOTES
1. LONGITUDINAL DIMENSIONS ARE SLOPING ALONG BOTT OF WEB WITH CORRECTIONS MADE FOR VERTICAL CURVE, GRADE & DL CAMBER (UN).
2. TRANSVERSE DIMENSIONS ARE IN A HORIZ. PLANE (UN).
3. ARROW POINTS TOWARDS LOW END OF MEMBER.
4. ENDS OF GIRDERS AND BRG. STIFF'S ARE VERTICAL AFTER DL ROTATION.
5. DIAPH. STIFFENERS ARE NORMAL TO GRADE.
6. BOTT PT NUMBERS = TOP PT NUMBERS + 100
7. FOR LAYOUTS SEE DWG TD1.
8. COMBINE DIAPHRAGM STIFFENERS FOR DIFF IN DROPS OF +/- 1/8
9. DIAPHRAGM DROPS ARE CALCULATED IN THEIR FINAL POSITION.

REV.	REMARKS	DATE	DWN	CHK	APP	Q.A.	NO.	DIA.	LGT	TYPE	WASHER
	OUT FOR APPROVAL	3-26-01									
	OUT FOR APPROVAL										
	ISSUED TO SHOP										
	FIELD & OFFICE										

MATERIAL:	ELECTRODES:	HOLES:	SHOP BOLTS:
M270 GR. 50W		15/16 Ø U.N.	

SURFACE PREP. & PAINT: NONE

DESCRIPTION: CALCULATION PLAN	DRAWN BY	DATE
JOB: I-89 OVER VT 104	JAK	03/12
BRIDGE 87S & 87 N	CHKD BY	
I-89 IMPROVEMENTS	WMJ	3/15
FAIRFAX FRANKLIN COUNTY	APPROV BY	
TENSOR 2126	SUPERVISOR	W. J. GATTI
PROJ NO. IM 089-3(27)	Q.A.	
CUSTOMER: VERMONT AGENCY OF TRANSPORTATION		

CASCO BAY STEEL STRUCTURES, INC.
75 SPRING HILL ROAD SACO, MAINE 04072
PHONE (207) 282-7360 FAX. (207) 282-1179

JOB NO.	DRG. NO.
131	WS1
441	REV. △

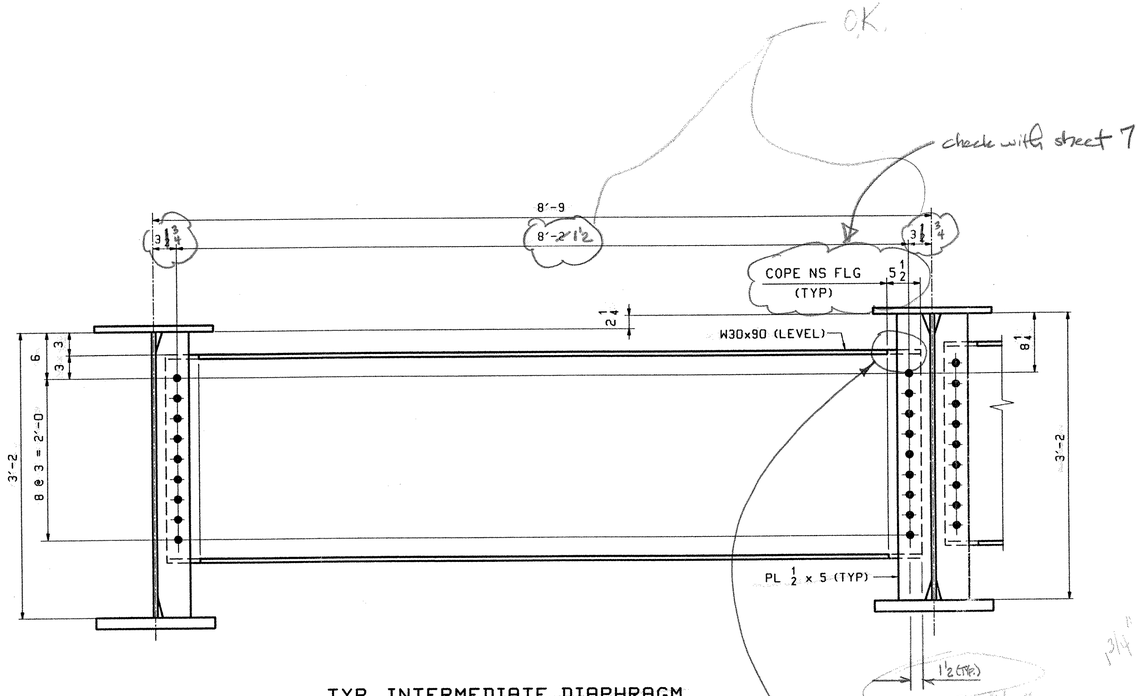

TYP. INTERMEDIATE DIAPHRAGM

(LOOKING UPSTATION)

SHOP NOTE

REENTRANT CUTS AT FLANGE COPES TO HAVE A 2 INCH MIN. RADIUS (TYP). CUT NS FLANGE FLUSH

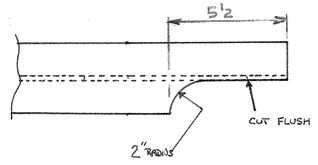

INTERMEDIATE DIAPHRAGM

TYP. BOTH ENDS

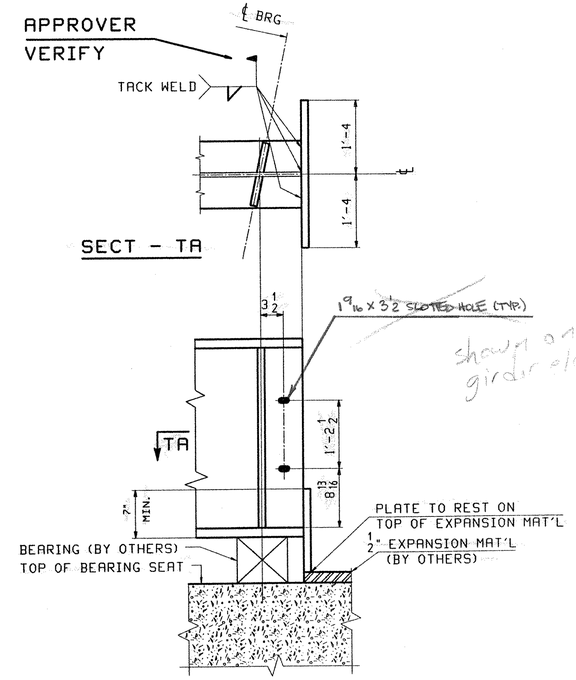

TYP. @ EACH END

VAOT
RECEIVED
CK'D BY mgl 3-30-01 OK'D BY G Roy 4-18-01
MAR 29 2001
RESUBMIT ____ APPROVED ✓AS NOTED
BY mgl DATE 4.18.01

DETAILER NOTE

ALL EDGE DISTANCES ARE 1 3/4" U.N.

**** NOTE ****
THE PURPOSE OF THIS DRAWING IS TO COORDINATE GEOMETRIC CONTROL INFORMATION AND CONNECTION SPACING. THIS DWG IS SUBMITTED FOR INFORMATION ONLY & IS NOT INTENDED FOR SHOP FABRICATION. DETAIL DWGS WILL SHOW ALL WELDING AND DIMENSIONS REQ'D FOR FABRICATION.

SCALE: 1/8" = 1'-0

REV.	REMARKS	DATE	DWN	CHK	APP	Q.A.	NO.	DIA.	LGT	TYPE	WASHER
	OUT FOR APPROVAL	3-26-01									
	OUT FOR APPROVAL										
	ISSUED TO SHOP										
	FIELD & OFFICE										

MATERIAL: M270 GR. 50W
ELECTRODES:
HOLES: 15/16Ø U.N.
SHOP BOLTS:
SURFACE PREP. & PAINT:

DESCRIPTION: DIAPHRAGM LAYOUT
JOB: I-89 OVER VT 104, BRIDGE 87S & 87N, I-89 IMPROVEMENTS, FAIRFAX, FRANKLIN COUNTY
TENSOR 2126
PROJ NO. IM 089-3(27)
CUSTOMER: VERMONT AGENCY OF TRANSPORTATION

DRAWN BY	DATE
JAK	03/12
CHKD BY	
WMJ	3/15
APPROV BY	
SUPERVISOR	W. J. GATTI
Q.A.	

CASCO BAY STEEL STRUCTURES, INC.
75 SPRING HILL ROAD, SACO, MAINE 04072
PHONE (207) 282-7360 FAX. (207) 282-1179

JOB NO.	DRG. NO.
131	TD1
442	REV. △

JAK Fri Mar 16 09:44:21 EST 2001 /users/jobs/2126/TD1.dwg

GENERAL NOTES

CONSTRUCTION SPECIFICATIONS

1). ALL MATERIAL AND WORKMANSHIP TO BE IN ACCORDANCE WITH THE STATE OF VERMONT AGENCY OF TRANSPORTATION STANDARD SPECIFICATIONS DATED 1990 WITH LATEST REVISIONS AND THE SPECIAL PROVISIONS.

DESIGN SPECIFICATIONS

1). AMERICAN ASSOCIATION OF STATE HIGHWAY AND TRANSPORTATION OFFICIALS (A.A.S.H.T.O) STANDARD SPECIFICATIONS FOR HIGHWAY BRIDGES, 1996 EDITION WITH LATEST REVISIONS.

MATERIAL SPECIFICATIONS

1). UNLESS NOTED, ALL STEEL TO BE AASHTO M270M GRADE 50W (ASTM A709-50W).

2). HIGH STRENGTH BOLTS: AASHTO M164M (ASTM A325M) 7/8" (22mm) DIA., TYPE 3, IN 15/16" (24mm) DIAMETER HOLES, UNLESS NOTED.

3). ALL MAIN MEMBERS SUBJECT TO TENSION AND REVERSAL OF STRESS SHALL BE CHARPY V NOTCH TESTED IN ACCORDANCE WITH THE REQUIREMENTS OF VERMONT STANDARD SPECIFICATIONS. DRAWINGS SHALL CALL OUT "H2-3" FOR EACH APPLICABLE ITEM IN THE BILLS OF MATERIAL.

4). "BUY AMERICA" PROVISIONS OF VERMONT SPEC. 107.22. AS MODIFIED IN SPECIAL PROVISIONS ITEM ~~51~~ 42 (DATED ~~2-8-93~~ 5-4-99)

GG-EML

FABRICATION

1). ALL HOLES SHALL BE PUNCHED OR DRILLED FULL SIZE UNLESS NOTED.

2). STUDS ARE FURNISHED AND FIELD APPLIED BY OTHERS.

WELDING

1). THE CONFIGURATION OF THE WELD JOINTS AND ALL WELDING PROCEDURES SHALL BE IN ACCORDANCE WITH AASHTO/AWS D1.5-96 BRIDGE WELDING CODE AND IN ADDITION TO SPECIFICATIONS SHOWN ABOVE. ALL WELDING WILL BE DETAILED TO PRE-QUALIFIED JOINTS, UNLESS PROHIBITED BY THE DESIGNER.

2). WELDING OF MAIN LOAD CARRYING MEMBERS AND ATTACHMENTS SHALL BE PERFORMED USING THE AUTOMATIC SUBMERGED ARC & SHIELDED METAL ARC PROCESSES. ALL WELDS ARE CONTINUOUS U.N.

3). NON DESTRUCTIVE TESTING OF WELDS SHALL BE IN ACCORDANCE WITH THE REFERENCED SPECIFICATION.

4). TERMINATE STIFFENER WELD AS SHOWN IN DETAIL "WS1"

CLEANING

1). SSPC SP-10 PER SPEC. 506.14(a)

FIELD CONNECTIONS

1). ALL FIELD CONNECTIONS SHALL BE MADE WITH 7/8" (22mm) DIAMETER HIGH STRENGTH A-325 BOLTS TYPE 3, IN 15/16 (24mm) DIAMETER HOLES, UNLESS OTHERWISE NOTED. INSTALLED PER 506.19(c) AND SPECIAL PROVISIONS.

2). BOLTS SHALL HAVE HEAVY HEX NUT, HEX HEAD, & ONE FLAT WASHER EACH (WASHER TO BE PLACED UNDER TURNED ELEMENT).

3). PIECE MARKS WILL BE LOCATED AS SHOWN ON ERECTION DRAWINGS.

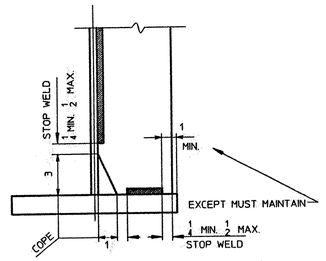

DETAIL "WS1"

NOTE TO ENGINEER:
THESE NOTES ARE NOT INTENDED TO BE ALL INCLUSIVE AND COMPLIANCE WITH RELEVANT SPECIFICATIONS REMAIN UNCHANGED

VAOT
RECEIVED
CK'D BY mgk 3-30-01 OK'D BY G Bay 4.13.01
MAR 29 2001
RESUBMIT ____ APPROVED √AS NOTED
BY mgk DATE 4.13.01

REV.	REMARKS	DATE	DWN	CHK	APP	Q.A.	NO.	DIA.	LGT	TYPE	WASHER
	OUT FOR APPROVAL	3-26-01									
	OUT FOR APPROVAL										
	ISSUED TO SHOP										
	FIELD & OFFICE										

MATERIAL:	ELECTRODES:	HOLES:	SHOP BOLTS:

SURFACE PREP. & PAINT:

OUTSIDE SURFACE OF FASCIA GIRDERS SHALL BE CLEANED OF FOREIGN MATERIAL TO PRODUCE A UNIFORM WEATHERING SURFACE. STRUCTURAL STEEL SHALL NOT BE PAINTED.

DESCRIPTION: GENERAL NOTES		DRAWN BY	DATE
JOB: I-89 OVER VT 104 BRIDGE 87S & 87 N I-89 IMPROVEMENTS FAIRFAX FRANKLIN COUNTY		JAK	3/12/01
		CHK'D BY	
		WMJ	3/15/01
		APPROV BY	
		SUPERVISOR	W. J. GATTI
PROJ NO. IM 089-3(27)		Q.A.	
CUSTOMER: VERMONT AGENCY OF TRANSPORTATION		SHEET GN1 of GN1	
CASCO BAY STEEL STRUCTURES, INC.		JOB NO.	DRG. NO.
75 SPRING HILL ROAD SACO, MAINE 04072		131	GN1
PHONE (207) 282-7360 FAX. (207) 282-1179		443	REV. △

TENSOR 2126

WMJ Fri Mar 16 09:39:59 EST 2001 /users/jak/2126/GN1.dgn

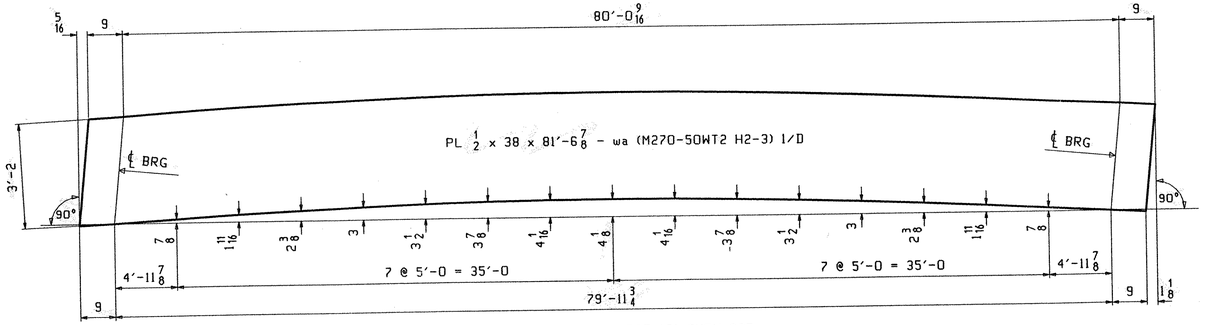

CAMBER DIAGRAM FOR 1G1 THRU 3G5

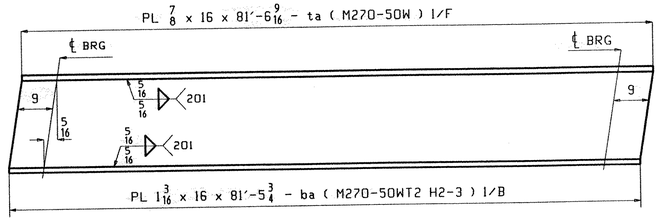

FLANGE DIAGRAM FOR 1G1 THRU 3G5

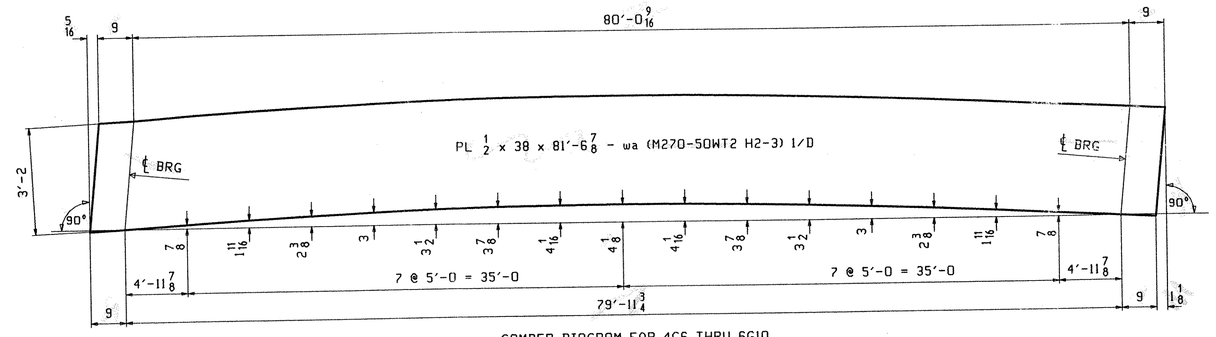

CAMBER DIAGRAM FOR 4G6 THRU 6G10

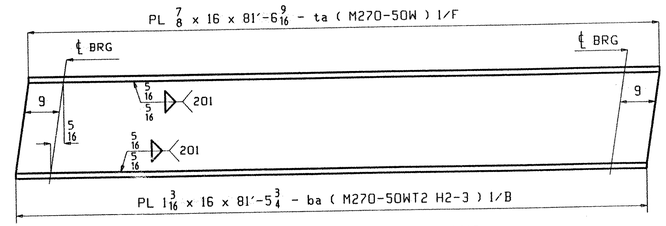

FLANGE DIAGRAM FOR 4G6 THRU 6G10

REV.	REMARKS	DATE	DWN	CHK	APP	Q.A.	NO.	DIA.	LGT	TYPE	WASHER
	OUT FOR APPROVAL	3 26 01									
	OUT FOR APPROVAL										
	ISSUED TO SHOP										
	FIELD & OFFICE										

MATERIAL:	ELECTRODES:	HOLES:	SHOP BOLTS:
M270 GR. 50W		15/16 ø U.N.	

SURFACE PREP. & PAINT:

VAOT
RECEIVED
CK'D BY mgl 4.4.01 OK'D BY G Ray 4-18-01
MAR 29 2001
RESUBMIT BY mgl APPROVED ✓ DATE 4.18.01

SEE SHT. GN1 FOR GENERAL NOTES.

DESCRIPTION: CAMBER & FLANGE DIAGRAMS	DRAWN BY: JAK 03/12
JOB: I-89 OVER VT 104 BRIDGE 87S & 87 N I-89 IMPROVEMENTS FAIRFAX FRANKLIN COUNTY	CHK'D BY: WMJ 3/15
	APPROV BY:
	SUPERVISOR: W. J. GATTI
PROJ NO. IM 089-3(27)	Q.A.
CUSTOMER: VERMONT AGENCY OF TRANSPORTATION	

TENSOR 2126

CASCO BAY STEEL STRUCTURES, INC.
75 SPRING HILL ROAD SACO, MAINE 04072
PHONE (207) 282-7360 FAX. (207) 282-1179

JOB NO.	DRG. NO
131	C1
444	REV. △

JAK Thu Mar 15 17:28:47 EST 2001 /users/jobs/2126/c1.dwg

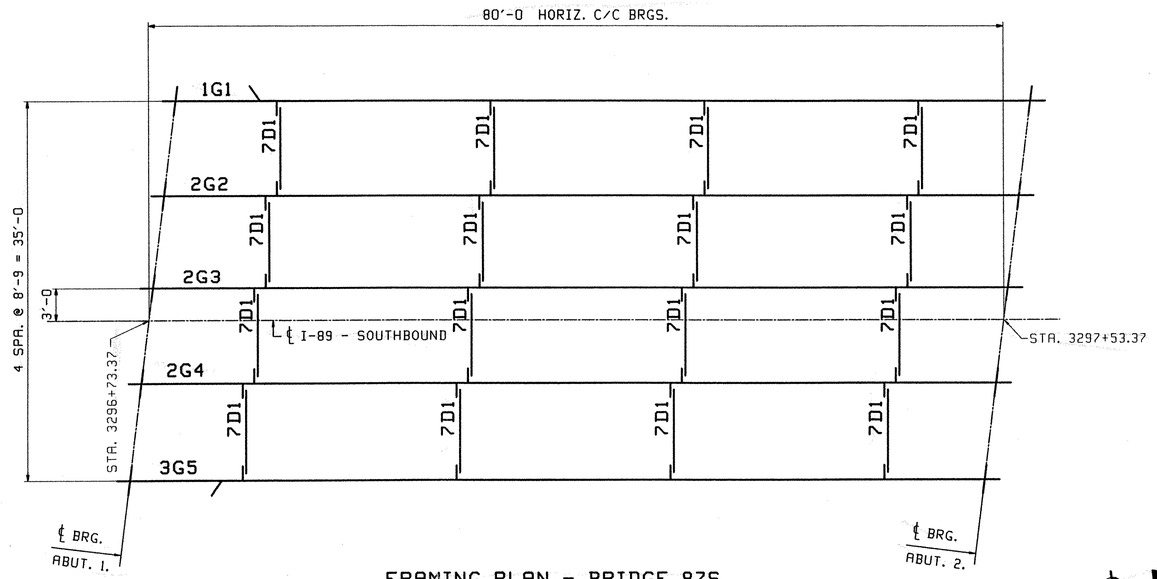

FRAMING PLAN - BRIDGE 87S

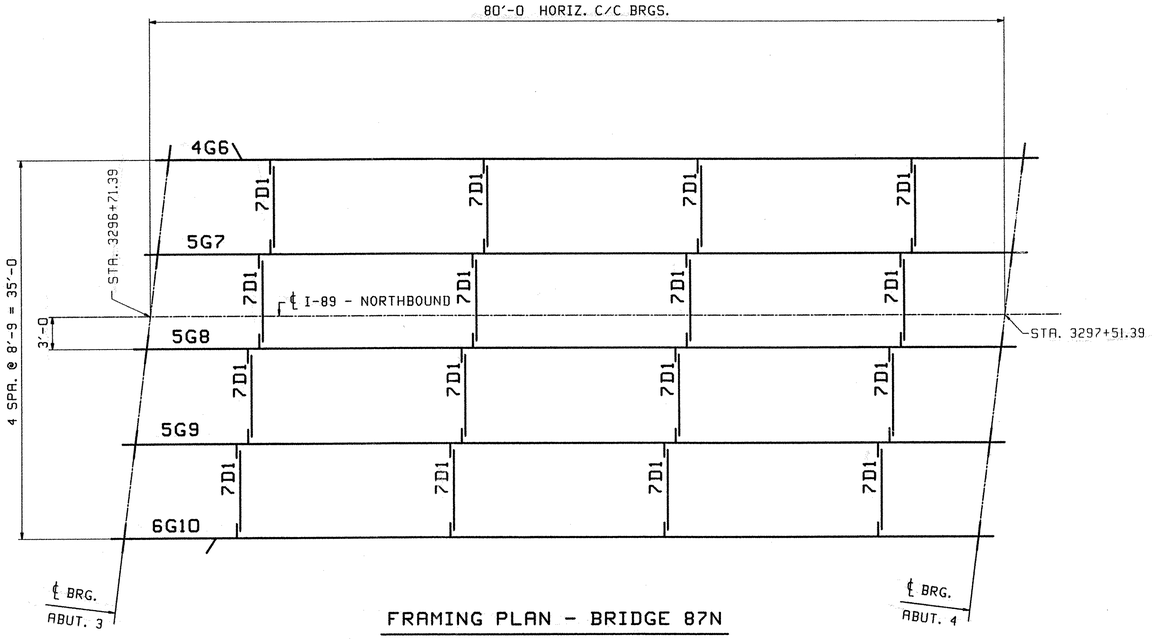

FRAMING PLAN - BRIDGE 87N

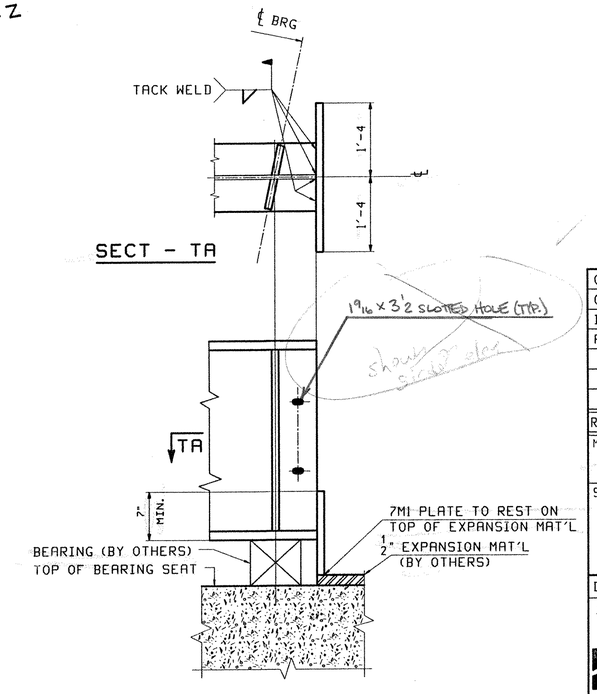

TYP. @ EACH END

FIELD BOLT LIST						A325 Type 3 BOLTS								
LINE	NO REQ'D.	BOLT DIAM.	BOLT LEN.	BOLTS /CONN.	# OF CONN.	GRIP	THICKNESS OF PCS. CONNECTED						WASH CODE	PIECES CONNECTED AND REMARKS
1														
2	576	7/8	2 1/2	9	64	1	1/2	1/2					1	DIAPHRAGMS
3														
WASHER CODES														
1: 1 Hard Flat Washer														

VAOT
RECEIVED
CK'D BY mgl 3-30-01 OK'D BY GRoy 4-18-01
MAR 29 2001
RESUBMIT BY mgl APPROVED ✓AS NOTED DATE 4.18.01

REV.	REMARKS	DATE	DWN	CHK	APP	Q.A.	NO.	DIA.	LGT	TYPE	WASHER
	OUT FOR APPROVAL	3-26-01									
	OUT FOR APPROVAL										
	ISSUED TO SHOP										
	FIELD & OFFICE										

MATERIAL:	ELECTRODES:	HOLES:	SHOP BOLTS:
M270 GR. 50W		15/16Ø U.N.	

SURFACE PREP. & PAINT: NONE

DESCRIPTION:	CALCULATION PLAN	DRAWN BY	DATE
JOB:	I-89 OVER VT 104	JAK	3/12/01
	BRIDGE 87S & 87 N	CHKD BY	
	I-89 IMPROVEMENTS	JB	3/22/01
TENSOR 2126	FAIRFAX FRANKLIN COUNTY	APPROV BY	
		SUPERVISOR	W. J. GATTI
PROJ NO.	IM 089-3(27)	Q.A.	
CUSTOMER:	VERMONT AGENCY OF TRANSPORTATION		

CASCO BAY STEEL STRUCTURES, INC.
75 SPRING HILL ROAD SACO, MAINE 04072
PHONE (207) 282-7360 FAX. (207) 282-1179

JOB NO.	DRG. NO.
131	E1
445	REV. △

VAJ Thu Mar 22 10:04:24 EST 2001 /users/jak-2126/E1.1 Rev=0

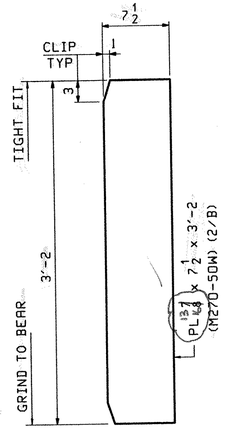

40 ~ x1a
ABUT BRG STIFF

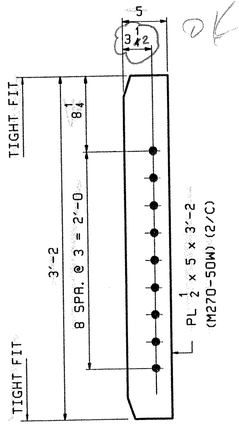

32 ~ x1b
INT. CONN STIFF
HIGH SIDE

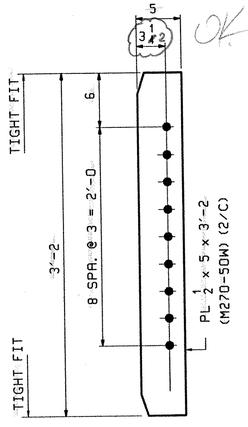

32 ~ x1c
INT. CONN STIFF
LOW SIDE

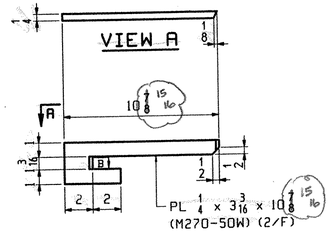

2 ~ x1d
DRIP PL

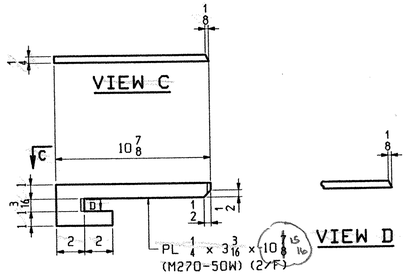

2 ~ x1f
DRIP PL

FOR GENERAL NOTES SEE GN1.

REV.	REMARKS	DATE	DWN	CHK	APP	Q.A.	NO.	DIA.	LGT	TYPE	WASHER
	OUT FOR APPROVAL	3-26-01									
	OUT FOR APPROVAL										
	ISSUED TO SHOP										
	FIELD & OFFICE										

MATERIAL: M270 GR. 50W
ELECTRODES:
HOLES: 15/16 Ø U.N.
SHOP BOLTS:
SURFACE PREP. & PAINT:

DESCRIPTION: GIRDER STANDARDS
JOB: I-89 OVER VT 104
BRIDGE 87S & 87 N
I-89 IMPROVEMENTS
FAIRFAX FRANKLIN COUNTY
TENSOR 2126
PROJ NO. IM 089-3(27)
CUSTOMER: VERMONT AGENCY OF TRANSPORTATION

DRAWN BY	DATE
JAK	3/16/01
CHKD BY	
JB	3/22/01
APPROV BY	
SUPERVISOR	W. J. GATTI
Q.A.	

CASCO BAY STEEL STRUCTURES, INC.
75 SPRING HILL ROAD SACO, MAINE 04072
PHONE (207) 282-7360 FAX. (207) 282-1179

JOB NO.	DRG. NO.
131	X1
446	REV. △

VAOT
RECEIVED
CK'D BY mgl 3-30-01 OK'D BY E. Roy 4-18-01
MAR 29 2001
RESUBMIT ____ APPROVED ✓ AS NOTED
BY mgl DATE 4-18-01

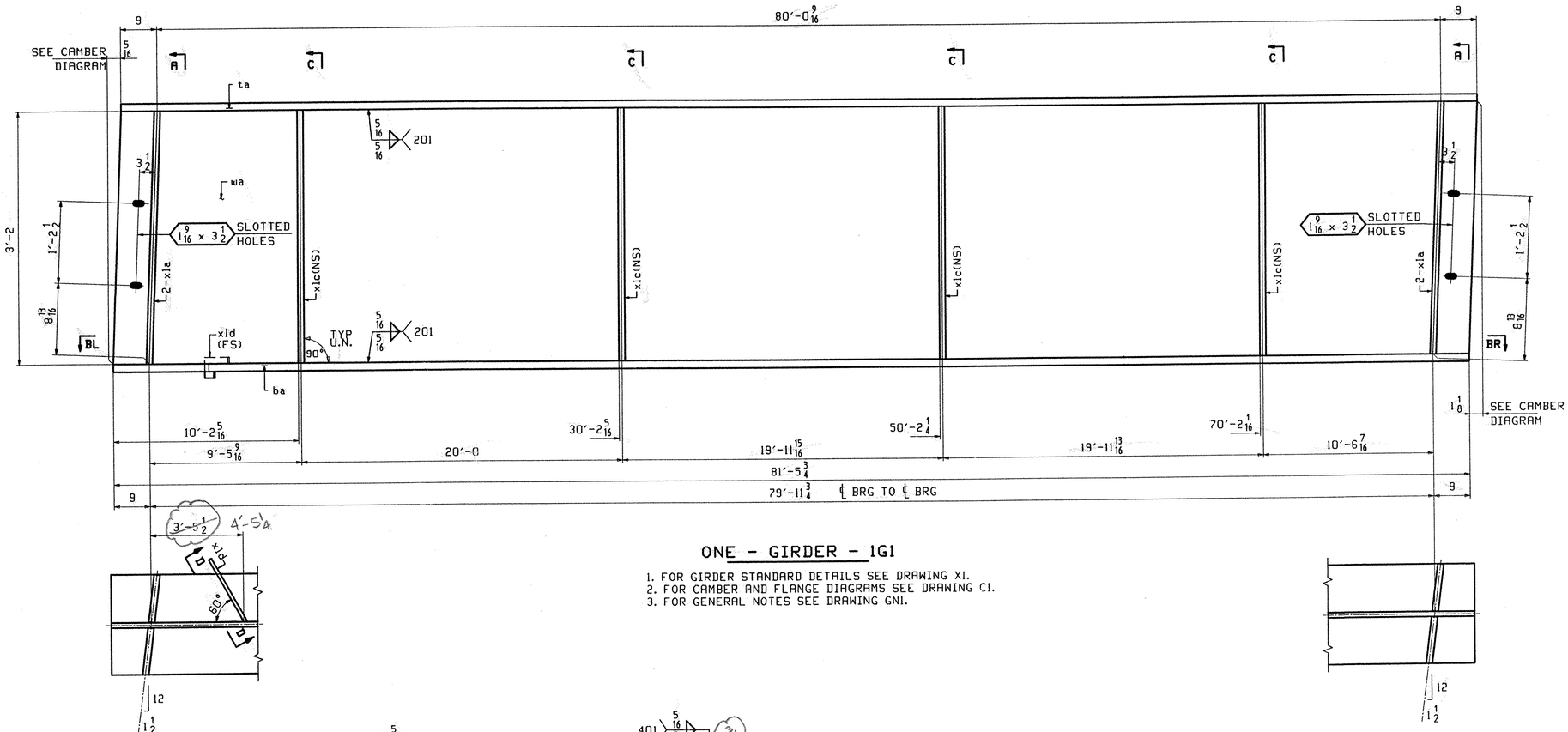

SECTION-BL

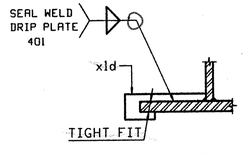

SECTION-D

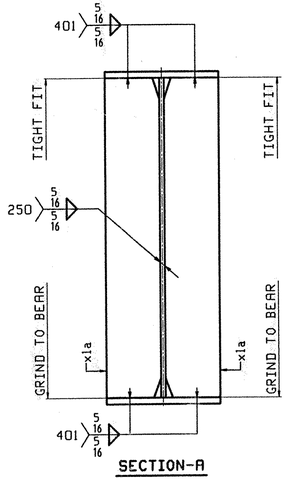

SECTION-A

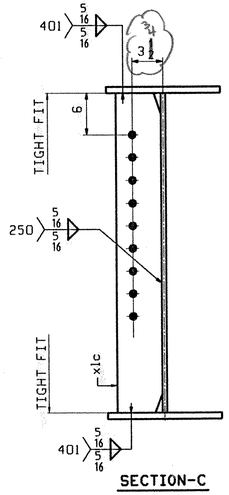

SECTION-C

SECTION-BR

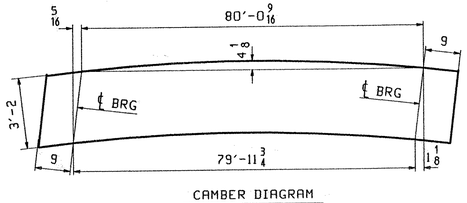

CAMBER DIAGRAM

ONE - GIRDER - 1G1

1. FOR GIRDER STANDARD DETAILS SEE DRAWING X1.
2. FOR CAMBER AND FLANGE DIAGRAMS SEE DRAWING C1.
3. FOR GENERAL NOTES SEE DRAWING GN1.

ABM INFO PAGE	ABM INFO LINE	SHIP MARK	QTY	MARK	MATERIAL	LENGTH FT	LENGTH INCHES	REMARKS	WT	PROCUREMENT NOTES
		1G1	1		GIRDER				14820	
1	D		1	wa	PL 1/2×38	81	6 7/8	(M270-50W12) (H2-3)		
1	F		1	ta	PL 7/8×16	81	6 9/16			
1	B		1	ba	PL 1 3/16×16	81	5 3/4	(M270-50W12) (H2-3)		
2	B		4	x1a	PL 1/2×7 1/2	3	2			
2	C		4	x1c	PL 1/2×5	3	2			
2	F		1	x1d	PL 1/4×3 3/16	0	10 5/8	DRIP PLATE		

13/16 OK to use 7/8" 13/16 not readily available RRW

VAOT RECEIVED MAR 29 2001
CK'D BY mgl 4-9-01 OK'D BY E Ray 4-18-01
RESUBMIT ____ APPROVED ✓AS NOTED
BY mgl DATE 4-18-01

REV.	REMARKS	DATE	DWN	CHK	APP	Q.A.
	OUT FOR APPROVAL	3-26-01				
	OUT FOR APPROVAL					
	ISSUED TO SHOP					
	FIELD & OFFICE					

NO.	DIA.	LGT	TYPE	WASHER

MATERIAL: M270 GR. 50W
ELECTRODES:
HOLES: 15/16 Ø U.N.
SHOP BOLTS:
SURFACE PREP. & PAINT:

DESCRIPTION: GIRDER 1G1
JOB: I-89 OVER VT 104 BRIDGE 87S & 87 N I-89 IMPROVEMENTS FAIRFAX FRANKLIN COUNTY
PROJ NO. IM 089-3(27)
CUSTOMER: VERMONT AGENCY OF TRANSPORTATION

	DRAWN BY	DATE
	JAK	03/16
	CHKD BY	
	JB	3/22/01
	APPROV BY	
	SUPERVISOR	W. J. GATTI
	Q.A.	

CASCO BAY STEEL STRUCTURES, INC.
75 SPRING HILL ROAD SACO, MAINE 04072
PHONE (207) 282-7360 FAX. (207) 282-1179

JOB NO.	DRG. NO.
131	1
447	REV. △

VMJ Thu Mar 22 13:41:00 EST 2001 /users/jobs/21841/1.dwg

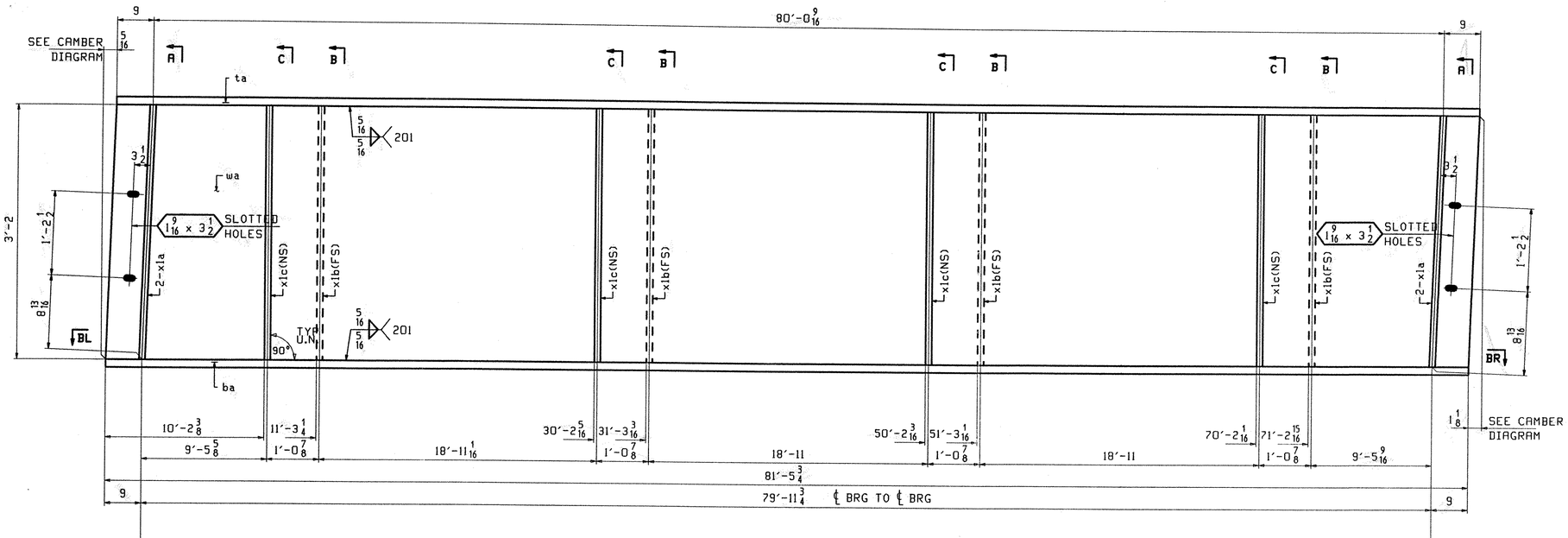

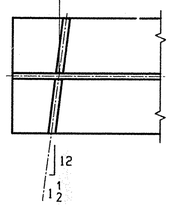

SECTION-BL

ONE - GIRDER - 2G2
ONE - GIRDER - 2G3
ONE - GIRDER - 2G4
} ALIKE

1. FOR GIRDER STANDARD DETAILS SEE DRAWING X1.
2. FOR CAMBER AND FLANGE DIAGRAMS SEE DRAWING C1.
3. FOR GENERAL NOTES SEE DRAWING GN1.

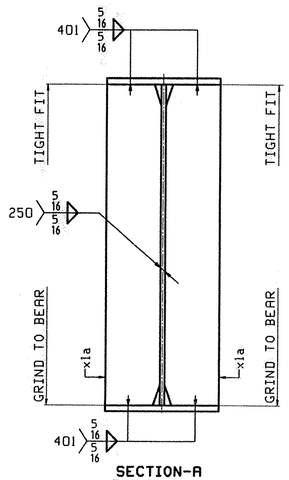

SECTION-A

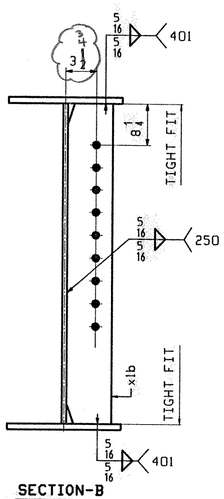

SECTION-B

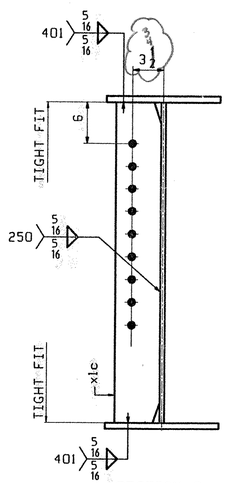

SECTION-C

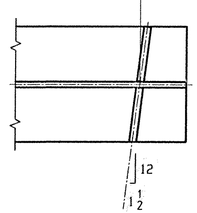

SECTION-BR

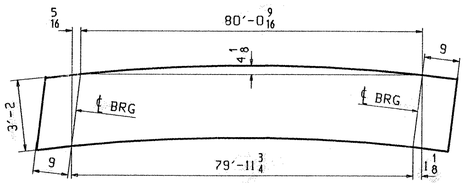

CAMBER DIAGRAM

ABM INFO		SHIP	BILL OF MATERIAL					JOB NO.	DRAWING NO.		REV.
									2		
PAGE	LINE	MARK	QTY	MARK	MATERIAL	LENGTH FT	LENGTH INCHES	REMARKS	WT	PROCUREMENT NOTES	
		2G2	1		GIRDER				14925		
		2G3	1		GIRDER				14925		
		2G4	1		GIRDER				14925		
1	D		3	wa	PL 1/2 x 38	81	6 7/8	(M270-50W12) (H2-3)			
1	F		3	ta	PL 7/8 x 16	81	6 9/16				
1	B		3	ba	PL 1 3/16 x 16	81	5 3/4	(M270-50W12) (H2-3)			
2	B		12	xla	PL 7/8 x 7 1/2	3	2				
2	C		12	xlc	PL 1/2 x 5	3	2				
2	C		12	xlb	PL 1/2 x 5	3	2				

VAOT
RECEIVED
CK'D BY mgl 4-9-01 OK'D BY C Roy 4-18-01
MAR 29 2001
RESUBMIT ____ APPROVED ✓AS NOTED
BY mgl DATE 4-18-01

REV.	REMARKS	DATE	DWN	CHK	APP	Q.A.
	OUT FOR APPROVAL	3-26-01				
	OUT FOR APPROVAL					
	ISSUED TO SHOP					
	FIELD & OFFICE					

NO.	DIA.	LGT	TYPE	WASHER

MATERIAL: M270 GR. 50W
ELECTRODES:
HOLES: 15/16 Ø U.N.
SHOP BOLTS:
SURFACE PREP. & PAINT:

DESCRIPTION: GIRDERS 2G2, 2G3, & 2G4
JOB: I-89 OVER VT 104, BRIDGE 87S & 87N, I-89 IMPROVEMENTS, FAIRFAX FRANKLIN COUNTY
PROJ NO. IM 089-3(27)
CUSTOMER: VERMONT AGENCY OF TRANSPORTATION

DRAWN BY	DATE
JAK	03/16
CHK'D BY	
JB	3/22/01
APPROV BY	
SUPERVISOR	W. J. GATTI
Q.A.	

TENSOR 2126

CASCO BAY STEEL STRUCTURES, INC.
75 SPRING HILL ROAD SACO, MAINE 04072
PHONE (207) 282-7360 FAX. (207) 282-1179

JOB NO.	DRG. NO.
131	2
448	REV. △

VM2 Thu Mar 29 10:43:18 EST 2001 /users/jak/2126-2.4.dwg

ABM INFO		SHIP	BILL OF MATERIAL					JOB NO.	DRAWING NO.	REV.
									3	
PAGE	LINE	MARK	QTY	MARK	MATERIAL	LENGTH FT	LENGTH INCHES	REMARKS	WT	PROCUREMENT NOTES
		3G5	1		GIRDER				14820	
1	D		1	wa	PL $\frac{1}{2}$×38	81	$6\frac{7}{8}$	(M270-50WT2) (M2-3)		
1	F		1	ta	PL $\frac{7}{8}$×16	81	$6\frac{9}{16}$			
1	B		1	ba	PL $\frac{3}{16}$×16	81	$5\frac{3}{4}$	(M270-50WT2) (M2-3)		
2	B		4	x1a	PL $\frac{7}{8}$×$7\frac{1}{2}$	3	2			
2	C		4	x1b	PL $\frac{1}{2}$×5	3	2			
2	F		1	x1f	PL $\frac{1}{4}$×$3\frac{3}{16}$	0	$10\frac{1}{8}$	DRIP PLATE		

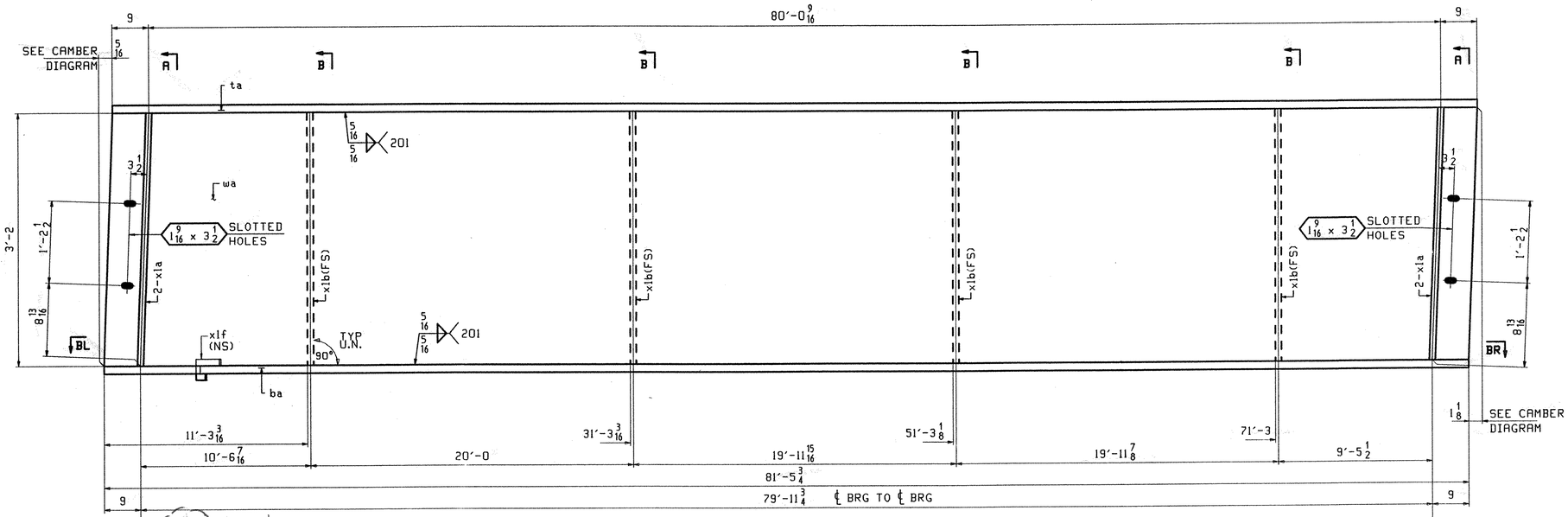

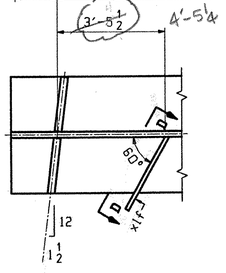

SECTION-BL

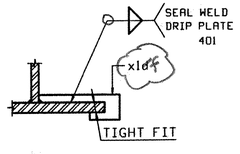

SECTION-D

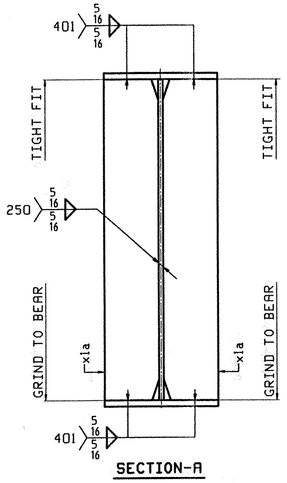

SECTION-A

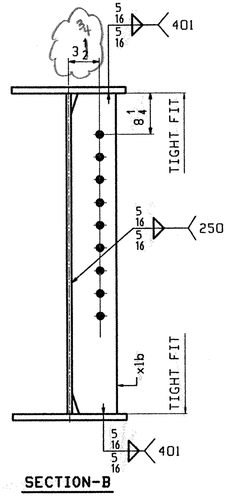

SECTION-B

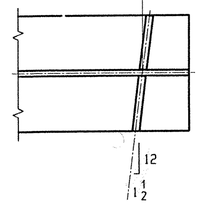

SECTION-BR

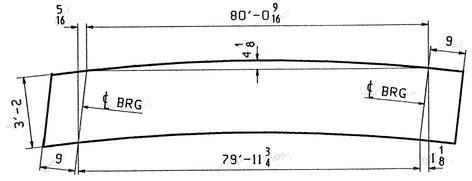

CAMBER DIAGRAM

ONE - GIRDER - 3G5

1. FOR GIRDER STANDARD DETAILS SEE DRAWING X1.
2. FOR CAMBER AND FLANGE DIAGRAMS SEE DRAWING C1.
3. FOR GENERAL NOTES SEE DRAWING GN1.

VAOT
RECEIVED
CK'D BY mgl 4.9.01 OK'D BY E Roy 4.18.01
MAR 29 2001
RESUBMIT BY mgl APPROVED ✓ AS NOTED DATE 4.18.01

OUT FOR APPROVAL	3-26-01										
OUT FOR APPROVAL											
ISSUED TO SHOP											
FIELD & OFFICE											
REV.	REMARKS	DATE	DWN	CHK	APP	Q.A.	NO.	DIA.	LGT	TYPE	WASHER

MATERIAL:	ELECTRODES:	HOLES:	SHOP BOLTS:
M270 GR. 50W		$\frac{15}{16}$ø U.N.	

SURFACE PREP. & PAINT:

DESCRIPTION: GIRDER 3G5	DRAWN BY	DATE
JOB: I-89 OVER VT 104 BRIDGE 87S & 87 N I-89 IMPROVEMENTS FAIRFAX FRANKLIN COUNTY	JAK	03/16
	CHKD BY	
	APPROV BY	
TENSOR 2126	SUPERVISOR	W. J. GATTI
PROJ NO. IM 089-3(27)	Q.A.	
CUSTOMER: VERMONT AGENCY OF TRANSPORTATION		

CASCO BAY STEEL STRUCTURES, INC.
75 SPRING HILL ROAD SACO, MAINE 04072
PHONE (207) 282-7360 FAX. (207) 282-1179

JOB NO.	DRG. NO.
131	3
449	REV. △

VM2 Thu Mar 22 11:08:18 EST 2001 /users/jak/2126/3 : Rev0

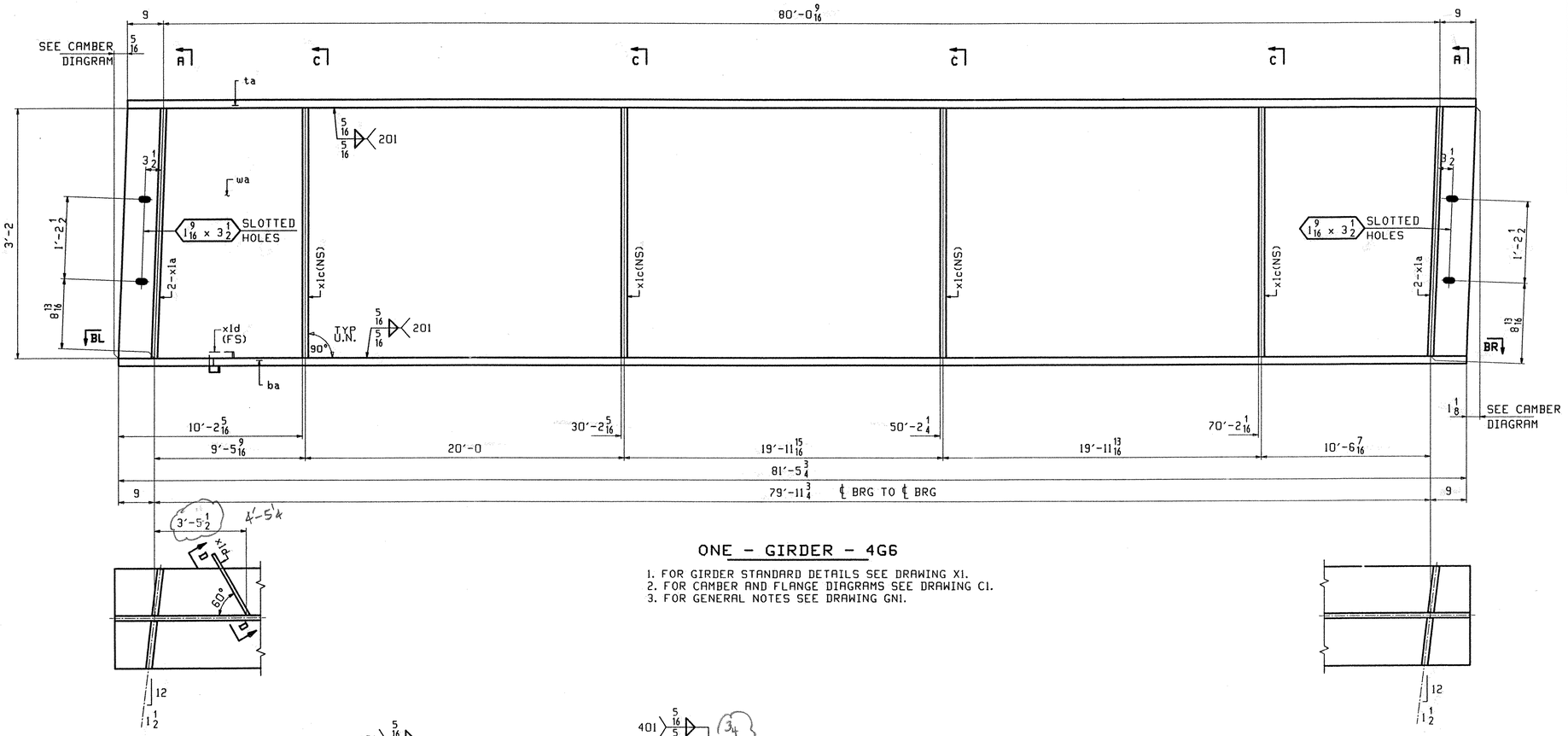

SECTION-BL

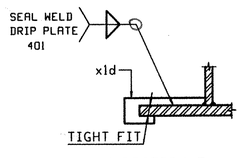

SECTION-D

ONE - GIRDER - 4G6

1. FOR GIRDER STANDARD DETAILS SEE DRAWING X1.
2. FOR CAMBER AND FLANGE DIAGRAMS SEE DRAWING C1.
3. FOR GENERAL NOTES SEE DRAWING GN1.

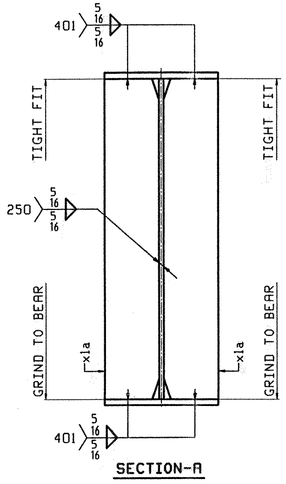

SECTION-A

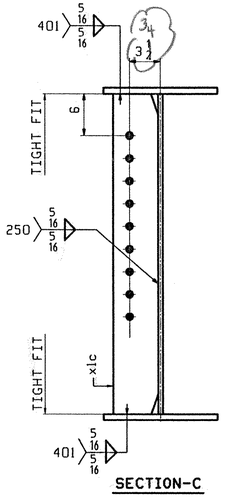

SECTION-C

SECTION-BR

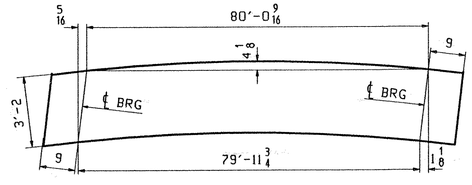

CAMBER DIAGRAM

ABM INFO		SHIP	BILL OF MATERIAL					JOB NO.	DRAWING NO.		REV.
									4		
PAGE	LINE	MARK	QTY	MARK	MATERIAL	LENGTH FT	LENGTH INCHES	REMARKS	WT	PROCUREMENT NOTES	
		4G6	1		GIRDER				14820		
1	D		1	wa	PL 1/2x38	81	6 7/8	(M270-50WT2) (H2-3)			
1	F		1	ta	PL 7/8x16	81	6 9/16				
1	B		1	ba	PL 1 3/16x16	81	5 3/4	(M270-50WT2) (H2-3)			
2	B		4	x1a	PL 7/8x7 1/2	3	2				
2	C		4	x1c	PL 1/2x5	3	2				
2	F		1	x1d	PL 1/4x3 3/16	0	10 3/8	DRIP PLATE			

VAOT
RECEIVED
CK'D BY mgl 4.17.01 OK'D BY G Ray 4.18.01
MAR 29 2001
RESUBMIT ____ APPROVED √ AS NOTED
BY mgl DATE 4.18.01

REV.	REMARKS	DATE	DWN	CHK	APP	Q.A.
	OUT FOR APPROVAL	3-26-01				
	OUT FOR APPROVAL					
	ISSUED TO SHOP					
	FIELD & OFFICE					

NO.	DIA.	LGT	TYPE	WASHER

MATERIAL: M270 GR. 50W

ELECTRODES:

HOLES: 15/16 Ø U.N.

SHOP BOLTS:

SURFACE PREP. & PAINT:

DESCRIPTION: GIRDER 4G6

JOB: I-89 OVER VT 104
BRIDGE 87S & 87 N
I-89 IMPROVEMENTS
FAIRFAX FRANKLIN COUNTY

TENSOR 2126

PROJ NO. IM 089-3(27)

CUSTOMER: VERMONT AGENCY OF TRANSPORTATION

	DRAWN BY	DATE
	JAK	03/16
	CHKD BY	
	APPROV BY	
	SUPERVISOR	W. J. GATTI
	Q.A.	

CASCO BAY STEEL STRUCTURES, INC.

75 SPRING HILL ROAD SACO, MAINE 04072
PHONE (207) 282-7360 FAX. (207) 282-1179

JOB NO.	DRG. NO.
131	4
450	REV. △

Thu Mar 29 11:07:28 EST 2001 /users/jak/2126-4.dwg

ABM INFO		SHIP	BILL OF MATERIAL						JOB NO.	DRAWING NO.	REV.
										5	
PAGE	LINE	MARK	QTY	MARK	MATERIAL	LENGTH FT	LENGTH INCHES	REMARKS		WT	PROCUREMENT NOTES
		5G7	1		GIRDER					14925	
		5G8	1		GIRDER					14925	
		5G9	1		GIRDER					14925	
1	D		3	wa	PL $\frac{1}{2}$x38	81	$6\frac{7}{8}$	(M270-50WT2) (H2-3)			
1	F		3	ta	PL $\frac{7}{8}$x16	81	$6\frac{9}{16}$				
1	B		3	ba	PL $1\frac{3}{16}$x16	81	$5\frac{3}{4}$	(M270-50WT2) (H2-3)			
2	B		12	x1a	PL $\frac{7}{8}$x$7\frac{1}{2}$	3	2				
2	C		12	x1c	PL $\frac{1}{2}$x5	3	2				
2	C		12	x1b	PL $\frac{1}{2}$x5	3	2				

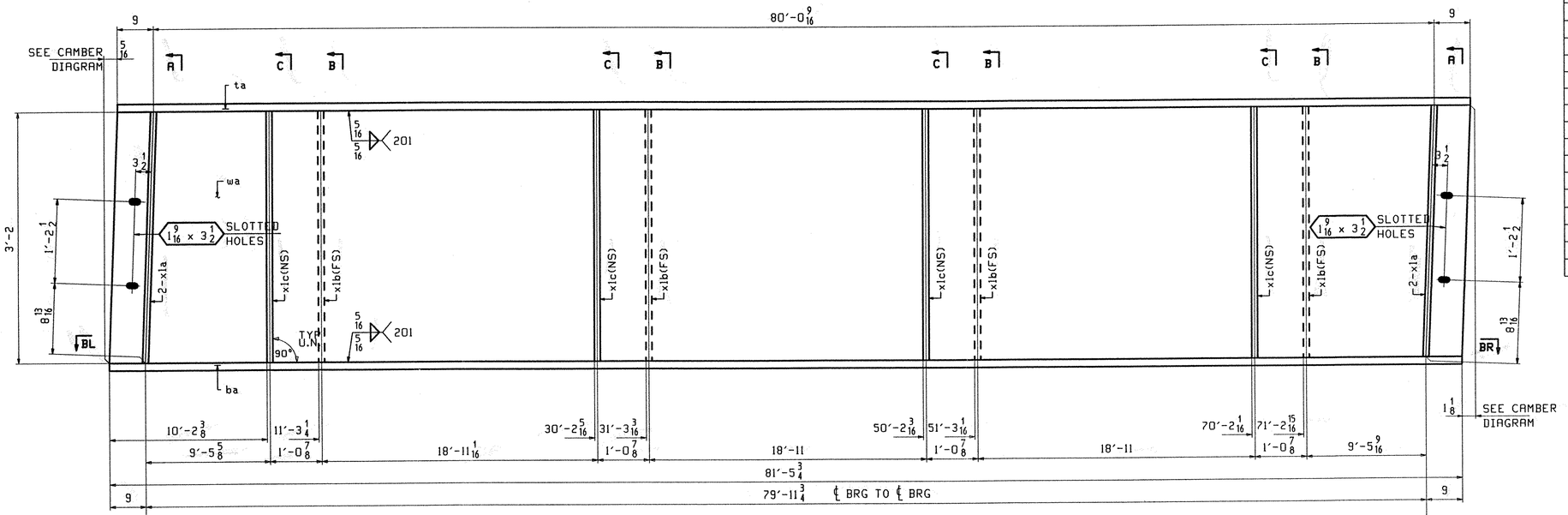

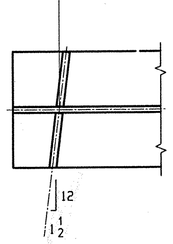

SECTION-BL

ONE - GIRDER - 5G7
ONE - GIRDER - 5G8
ONE - GIRDER - 5G9
ALIKE

1. FOR GIRDER STANDARD DETAILS SEE DRAWING X1.
2. FOR CAMBER AND FLANGE DIAGRAMS SEE DRAWING C1.
3. FOR GENERAL NOTES SEE DRAWING GN1.

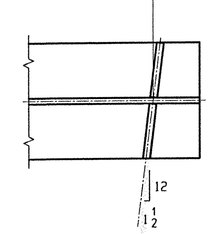

SECTION-BR

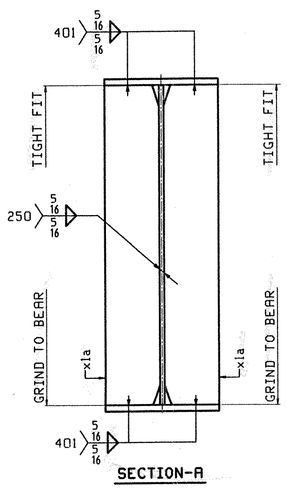

SECTION-A

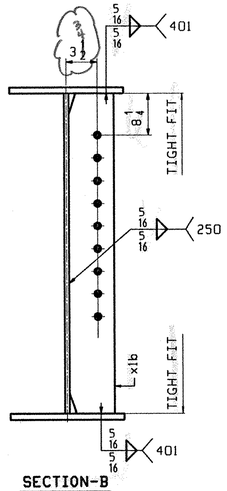

SECTION-B

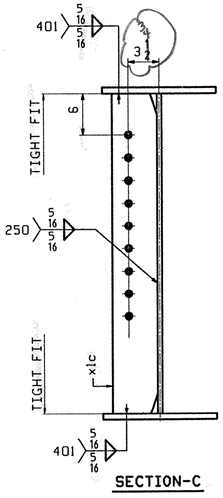

SECTION-C

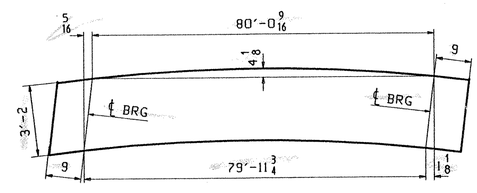

CAMBER DIAGRAM

VAOT
RECEIVED
CK'D BY mgl 4.9.01 OK'D BY E. Roy 4.18.01
MAR 29 2001
RESUBMIT ___ APPROVED ✓ AS NOTED
BY mgl DATE 4.18.01

OUT FOR APPROVAL	3-26-01										
OUT FOR APPROVAL											
ISSUED TO SHOP											
FIELD & OFFICE											
REV.	REMARKS	DATE	DWN	CHK	APP	Q.A.	NO.	DIA.	LGT	TYPE	WASHER

MATERIAL: M270 GR. 50W
ELECTRODES:
HOLES: $\frac{15}{16}$ø U.N.
SHOP BOLTS:
SURFACE PREP. & PAINT:

DESCRIPTION: GIRDERS 5G7, 5G8, & 5G9
JOB: I-89 OVER VT 104
BRIDGE 87S & 87 N
I-89 IMPROVEMENTS
FAIRFAX FRANKLIN COUNTY
TENSOR 2126
PROJ NO. IM 089-3(27)
CUSTOMER: VERMONT AGENCY OF TRANSPORTATION

DRAWN BY	DATE
JAK	03/16
CHKD BY	
APPROV BY	
SUPERVISOR	W. J. GATTI
Q.A.	

CASCO BAY STEEL STRUCTURES, INC.
75 SPRING HILL ROAD SACO, MAINE 04072
PHONE (207) 282-7360 FAX. (207) 282-1179

JOB NO.	DRG. NO.
131	5
451	REV. △

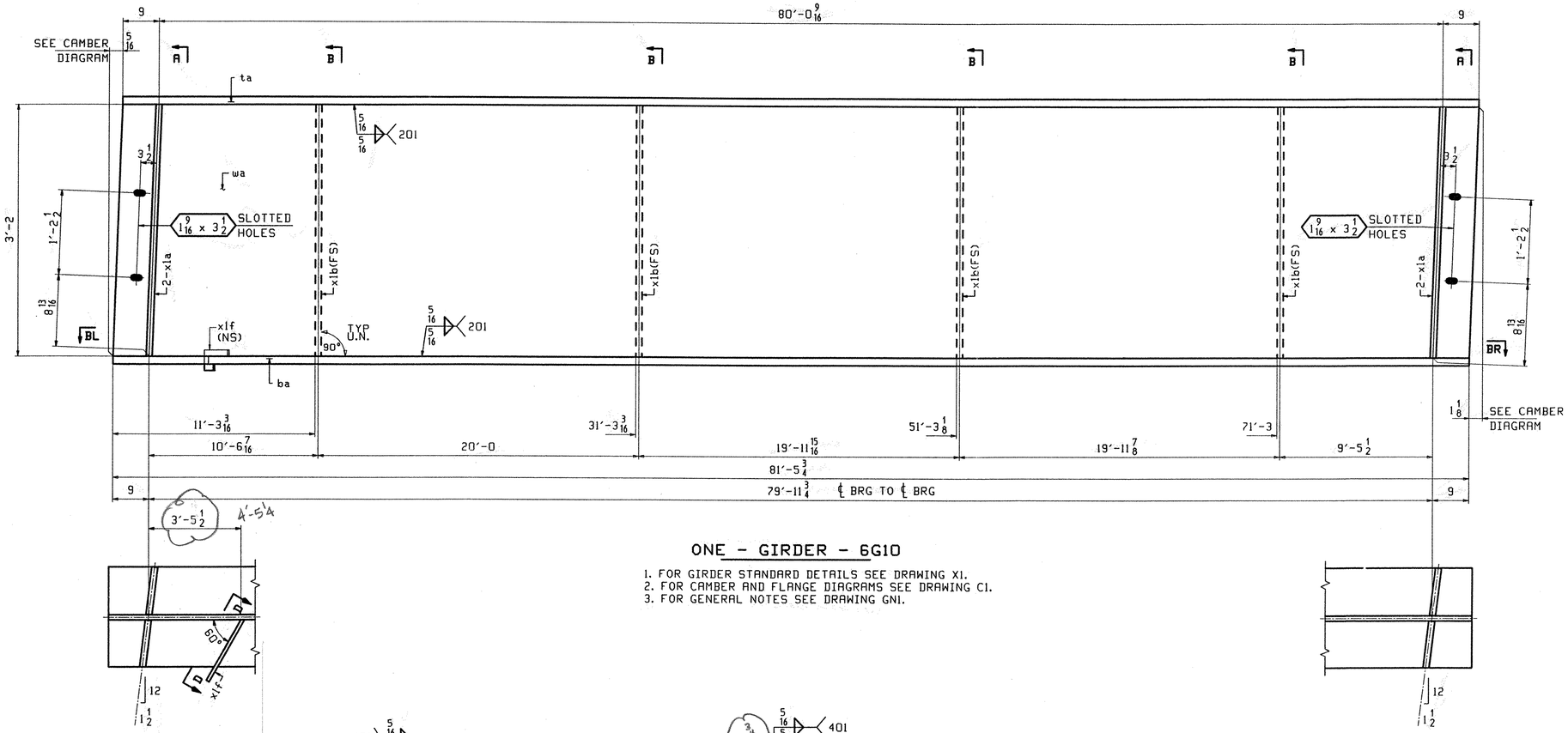

ONE - GIRDER - 6G10

1. FOR GIRDER STANDARD DETAILS SEE DRAWING X1.
2. FOR CAMBER AND FLANGE DIAGRAMS SEE DRAWING C1.
3. FOR GENERAL NOTES SEE DRAWING GN1.

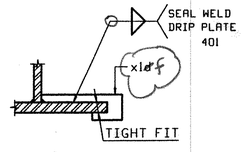

SECTION-D

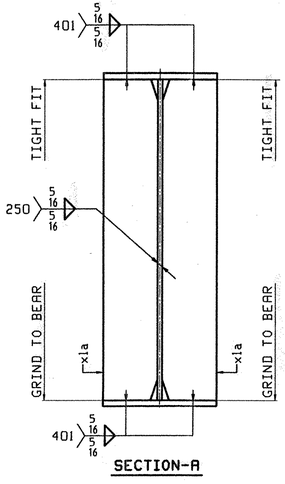

SECTION-A

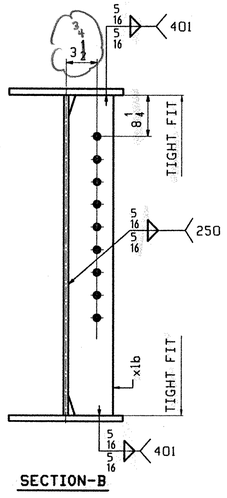

SECTION-B

SECTION-BR

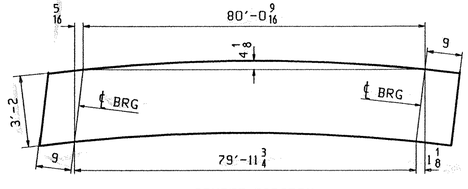

CAMBER DIAGRAM

ABM INFO		SHIP	BILL OF MATERIAL					JOB NO.	DRAWING NO.	REV.
PAGE	LINE	MARK	QTY	MARK	MATERIAL	LENGTH FT	LENGTH INCHES	REMARKS	WT	PROCUREMENT NOTES
									6	
		6G10	1		GIRDER				14820	
1	D		1	wa	PL 1/2 x 38	81	6 7/8	(M270-50WT2) (H2-3)		
1	F		1	ta	PL 9/16 x 16	81	6 9/16			
1	B		1	ba	PL 1 3/16 x 16	81	5 3/4	(M270-50WT2) (H2-3)		
2	B		4	x1a	PL 1/2 x 7 1/2	3	2			
2	C		4	x1b	PL 1/2 x 5	3	2			
2	F		1	x1f	PL 1/4 x 3 3/16	0	10 5/8	DRIP PLATE		

VAOT
RECEIVED
CK'D BY mgk 4.9.01 OK'D BY G.Roy 4.18.01
MAR 29 2001
RESUBMIT____ APPROVED ✓ AS NOTED
BY mgk DATE 4.18.01

REV.	REMARKS	DATE	DWN	CHK	APP	Q.A.
	OUT FOR APPROVAL	3-26-01				
	OUT FOR APPROVAL					
	ISSUED TO SHOP					
	FIELD & OFFICE					

NO.	DIA.	LGT	TYPE	WASHER

MATERIAL: M270 GR. 50W
ELECTRODES:
HOLES: 15/16 Ø U.N.
SHOP BOLTS:
SURFACE PREP. & PAINT:

DESCRIPTION: GIRDER 6G10
JOB: I-89 OVER VT 104
BRIDGE 87S & 87 N
I-89 IMPROVEMENTS
FAIRFAX FRANKLIN COUNTY
PROJ NO. IM 089-3(27)
CUSTOMER: VERMONT AGENCY OF TRANSPORTATION

TENSOR 2126

DRAWN BY	DATE
JAK	3/16/01
CHKD BY	
JB	3/22/01
APPROV BY	
SUPERVISOR	W. J. GATTI
Q.A.	

CASCO BAY STEEL STRUCTURES, INC.
75 SPRING HILL ROAD SACO, MAINE 04072
PHONE (207) 282-7360 FAX. (207) 282-1179

JOB NO.	DRG. NO.
131	6
452	REV. △

VM2 Thu Mar 22 09:20:58 EST 2001 /users/jak/2126/6 1.0x=0

ABM INFO		SHIP	BILL OF MATERIAL					JOB NO.	DRAWING NO.	REV.
									7	
PAGE	LINE	MARK	QTY	MARK	MATERIAL	LENGTH FT	LENGTH INCHES	REMARKS	WT	PROCUREMENT NOTES
					DIAPHRAGMS		4			
2	L	7D1	32		W 30x90	8	5 1/2		761	
					END PLATES					
2	G	7M1	20		PL 1/4 x10	2	8		34	
					FIELD BOLTS					
3	C		591		7/8 ø HSB	0	2 1/2	(A325-3)		
3	F		591		7/8 ø HSW			(F436W)		

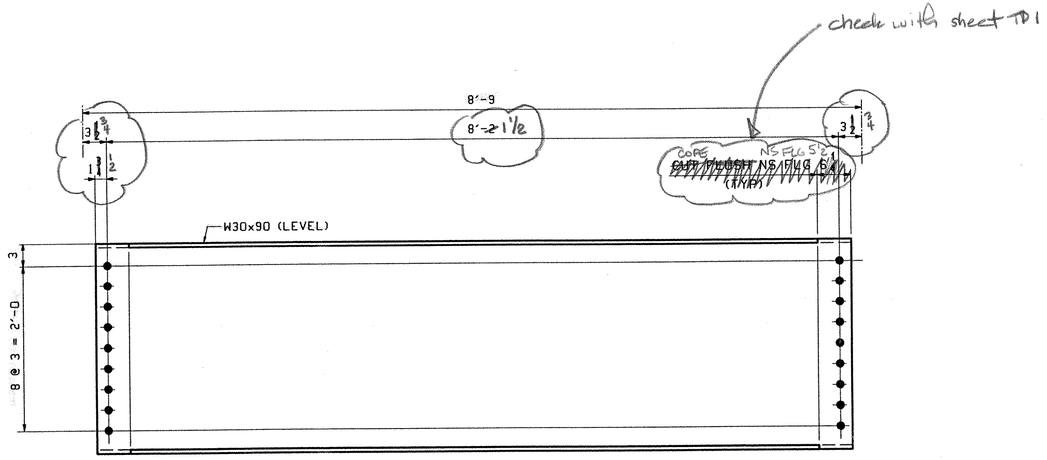

32 ~ DIAPHRAGMS ~ 7D1

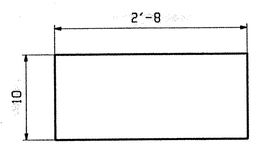

20 ~ END PLATES ~ 7M1

SHOP NOTE:

REENTRANT CUTS AT FLANGE COPES TO HAVE 2" MIN. RADIUS

VAOT
RECEIVED
CK'D BY mgl 4.4.01 OK'D BY E. Roy 4.13.01
MAR 29 2001
RESUBMIT ____ APPROVED ✓ AS NOTED
BY mgl DATE 4.18.01

OUT FOR APPROVAL	3-26-01										
OUT FOR APPROVAL											
ISSUED TO SHOP											
FIELD & OFFICE											
REV.	REMARKS	DATE	DWN	CHK	APP	Q.A.	NO.	DIA.	LGT	TYPE	WASHER

MATERIAL:	ELECTRODES:	HOLES:	SHOP BOLTS:
M270 GR. 50W		15/16 ø U.N.	

SURFACE PREP. & PAINT:

DESCRIPTION: DIAPHRAGMS	DRAWN BY	DATE
JOB: I-89 OVER VT 104	JAK	3/16/01
BRIDGE 87S & 87 N	CHKD BY	
I-89 IMPROVEMENTS	JB	3/22/01
FAIRFAX FRANKLIN COUNTY	APPROV BY	
TENSOR 2126	SUPERVISOR	W. J. GATTI
PROJ NO. IM 089-3(27)	Q.A.	
CUSTOMER: VERMONT AGENCY OF TRANSPORTATION		

CASCO BAY STEEL STRUCTURES, INC.
75 SPRING HILL ROAD SACO, MAINE 04072
PHONE (207) 282-7360 FAX. (207) 282-1179

JOB NO.	DRG. NO.
131	7
453	REV. △

*REMOVE EXISTING STUDS IN THIS AREA

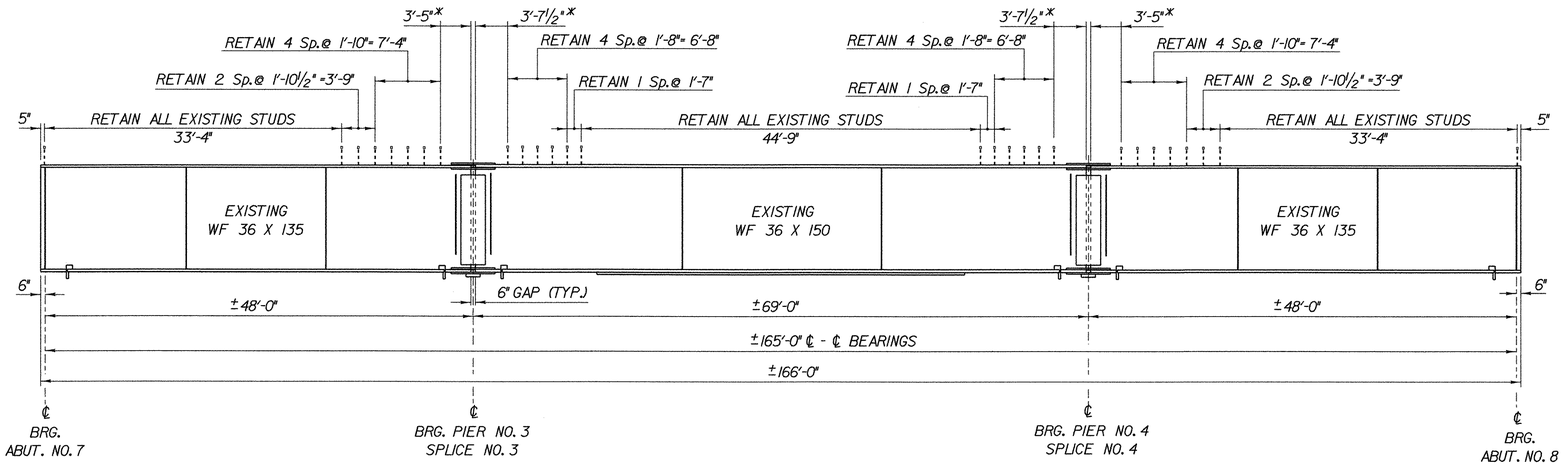

BRIDGE 88N TYPICAL BEAM ELEVATION & SHEAR STUD LAYOUT

HORZ: SCALE: 1/8" = 1'-0"
VERT: SCALE: 1/2" = 1'-0"

SPACINGS SHOWN FOR RETAINED SHEAR CONNECTORS ARE BASED ON SHOP DRAWINGS FOR EXISTING BEAMS. ACTUAL SPACINGS MAY VARY SLIGHTLY FROM THOSE SHOWN. COMPLETE ROW OF CONNECTORS SHALL BE RETAINED AT EACH SPACING.

THE EXISTING CONNECTORS BETWEEN THE RETAINED STUDS SHALL BE REMOVED AND AREAS REPAIRED AS DESCRIBED IN NOTE 14 ON SHEET 155 OF CONTRACT PLANS.

ALL RETAINED SHEAR CONNECTORS SHALL BE TESTED AS DESCRIBED IN SUBSECTION 508.04 (b) OF THE STANDARD SPECIFICATIONS. DEFECTIVE STUDS AND ANY THAT ARE DESIGNATED TO BE RETAINED AND ARE DAMAGED DURING THE DECK REMOVAL OPERATION SHALL BE REPLACED IN KIND.

STATE OF VERMONT
AGENCY OF TRANSPORTATION

Town of FAIRFAX-FAIRFIELD- ST. ALBANS	Bridge No. 88N
Highway No. I-89	Log Sta.
	Surv. Sta.
I-89 OVER ST. ALBANS SOUTH STATE HIGHWAY (EXIT 19)	
88N SHEAR CONNECTOR LAYOUT	
Designed By M. LOZIER	Drawn By R.R. WHITCOMB
Checked By G ROY Date 3/02	Bridge Design Supervisor R.R. WHITCOMB Date 3/02
PROJECT FAIRFAX-FAIRFIELD-ST. ALBANS	PROJECT NO. I M 089 - 3 (27)
I.G.C. Info. 96a056\Structures\sa056fr3.dgn	sa056sclJ
Bridge Sheet No. BR415 A	Sheet 454 of

PLOTTED 17-APR-2002

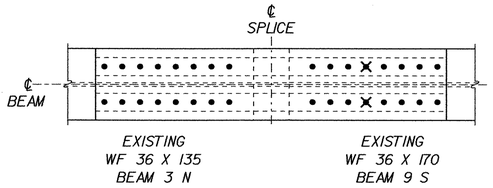

BEAM NO. 3 TO BEAM NO. 9

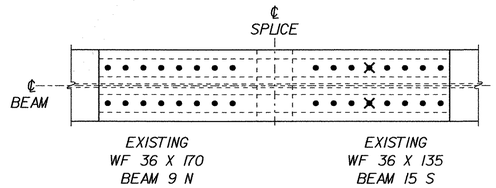

BEAM NO. 9 TO BEAM NO. 15

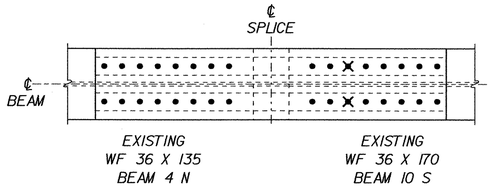

BEAM NO. 4 TO BEAM NO. 10

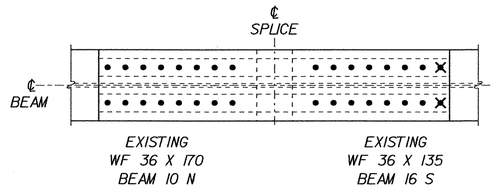

BEAM NO. 10 TO BEAM NO. 16

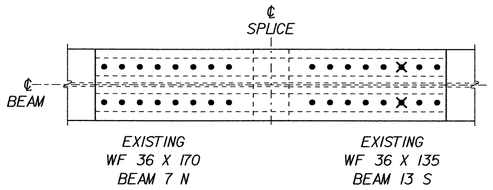

BEAM NO. 7 TO BEAM NO. 13

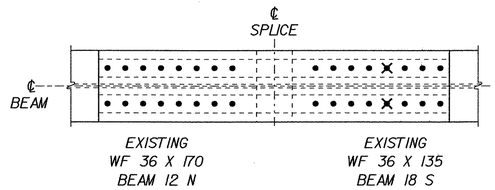

BEAM NO. 12 TO BEAM NO. 18

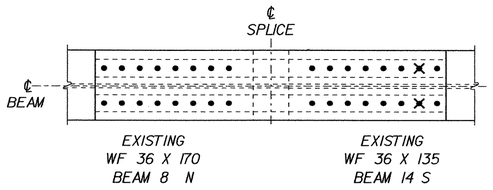

BEAM NO. 8 TO BEAM NO. 14

STRUCTURES COPY

SCALE: 1" = 1'-0"

STATE OF VERMONT
AGENCY OF TRANSPORTATION

Town Of FAIRFAX-FAIRFIELD- ST. ALBANS	Bridge No. 88S
Highway No. I-89	Log Sta. / Surv. Sta.
I-89 OVER ST. ALBANS SOUTH STATE HIGHWAY (EXIT 19)	
88S BEAM SPLICE MODIFICATIONS - TOP FLANGE	
Designed By M. LOZIER	Drawn By G. ROY
Checked By M. LOZIER Date 8/01	Bridge Design Supervisor R.R. WHITCOMB Date 8/01
PROJECT FAIRFAX-FAIRFIELD-ST. ALBANS	PROJECT NO. I M 089 - 3 (27)
I.G.C. Info. 96a056\Structures\sa056bwl.dgn	sa056tf1.1
Bridge Sheet No.	Sheet 1 of 2 455

PLOTTED 21-AUG-2001

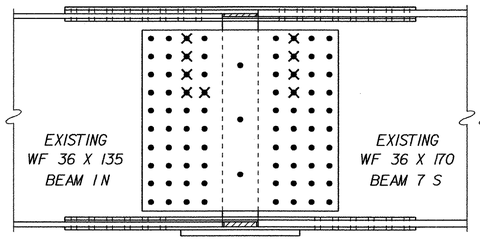

BEAM NO. 1 TO BEAM NO. 7

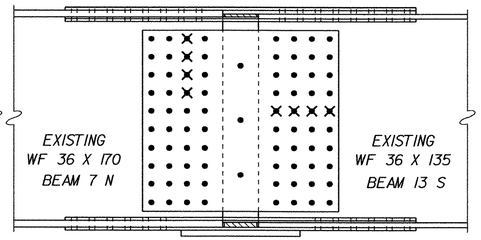

BEAM NO. 7 TO BEAM NO. 13

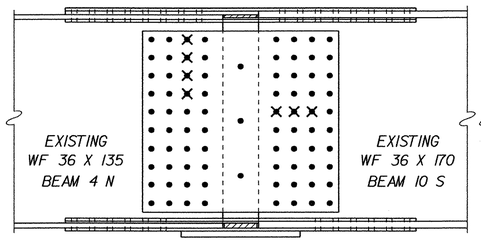

BEAM NO. 4 TO BEAM NO. 10

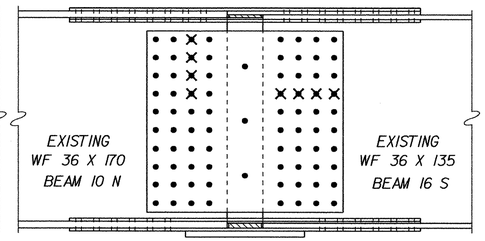

BEAM NO. 10 TO BEAM NO. 16

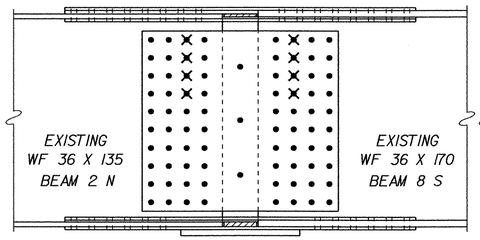

BEAM NO. 2 TO BEAM NO. 8

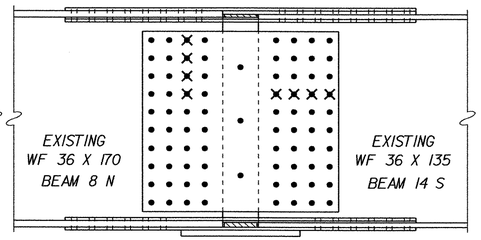

BEAM NO. 8 TO BEAM NO. 14

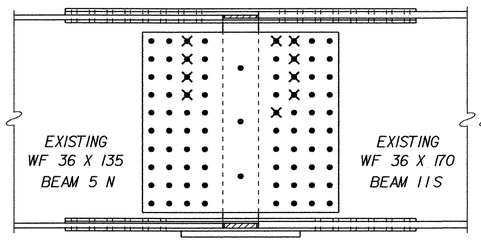

BEAM NO. 5 TO BEAM NO. 11

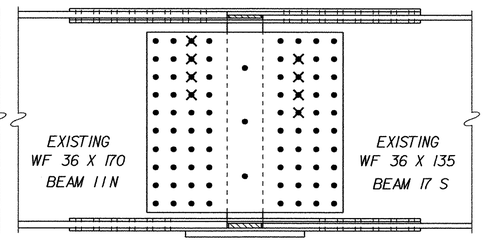

BEAM NO. 11 TO BEAM NO. 17

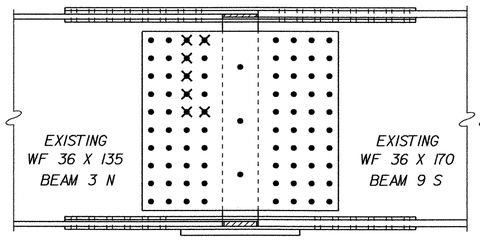

BEAM NO. 3 TO BEAM NO. 9

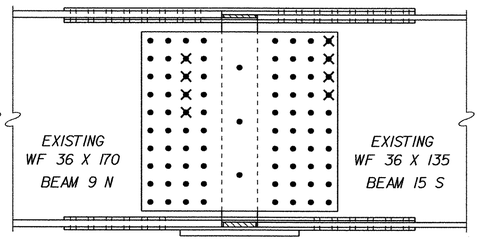

BEAM NO. 9 TO BEAM NO. 15

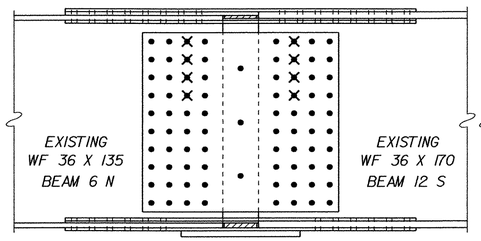

BEAM NO. 6 TO BEAM NO. 12

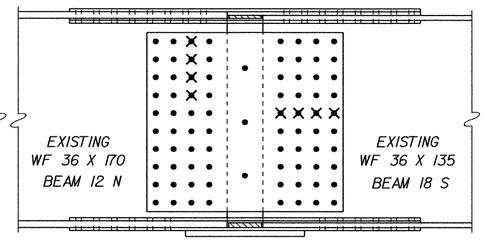

BEAM NO. 12 TO BEAM NO. 18

STRUCTURES COPY

SCALE: 1" = 1'-0"

STATE OF VERMONT
AGENCY OF TRANSPORTATION

Town Of FAIRFAX-FAIRFIELD-ST. ALBANS	Bridge No. 88S
Highway No. I-89	Log Sta.
	Surv. Sta.

I-89 OVER ST. ALBANS SOUTH STATE HIGHWAY (EXIT 19)

88S BEAM SPLICE MODIFICATIONS - WEB

Designed By M. LOZIER	Drawn By G. ROY
Checked By M. LOZIER Date 8/01	Bridge Design Supervisor R.R. WHITCOMB Date 8/01
PROJECT FAIRFAX-FAIRFIELD-ST. ALBANS	PROJECT NO. IM 089-3 (27)
I.G.C. Info. 96a056\Structures\sa056bwl.dgn	sa056bwl.1
Bridge Sheet No.	Sheet 2 of 2 456

PLOTTED 21-AUG-2001

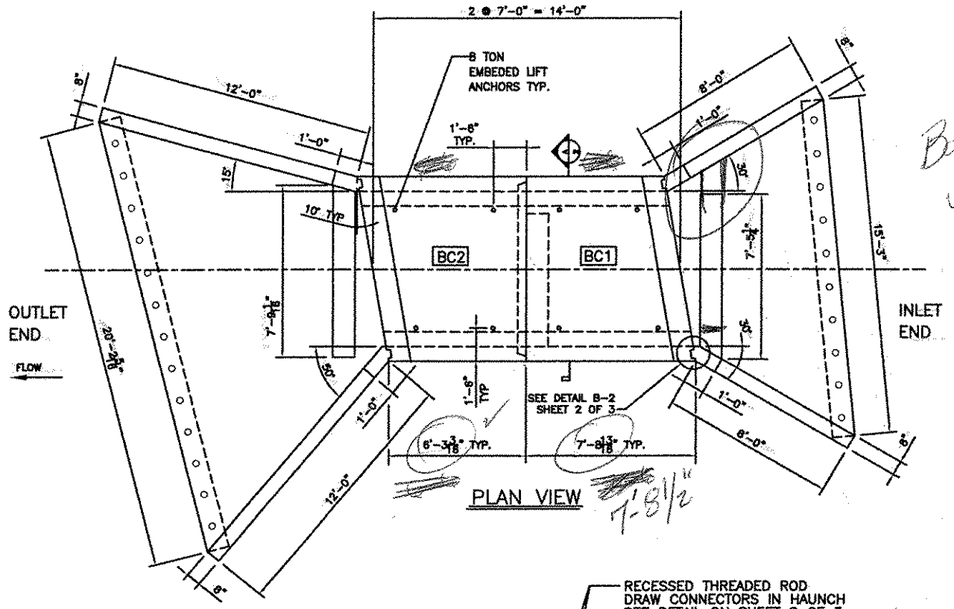

PLAN VIEW

7-8 1/2"

Baffle opening on wrong end. Camp will change. RLW 8-29-01

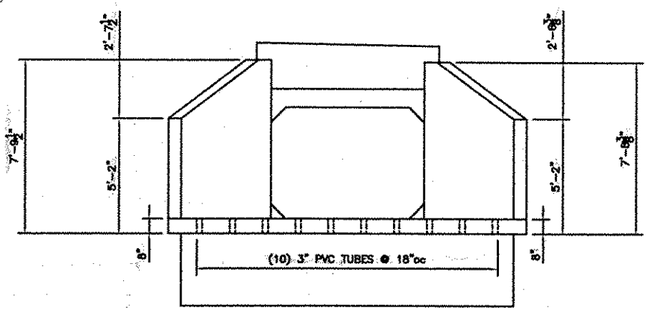

INLET END VIEW

NOTE: BAFFLES NOT SHOWN FOR CLARITY

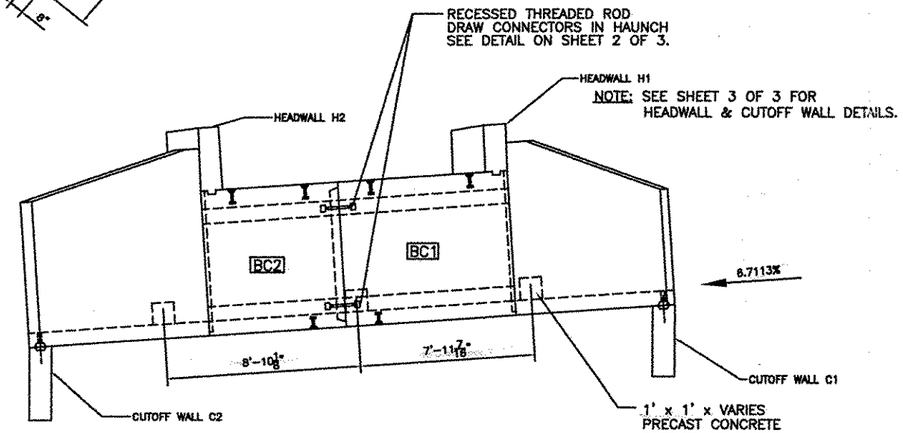

ELEVATION

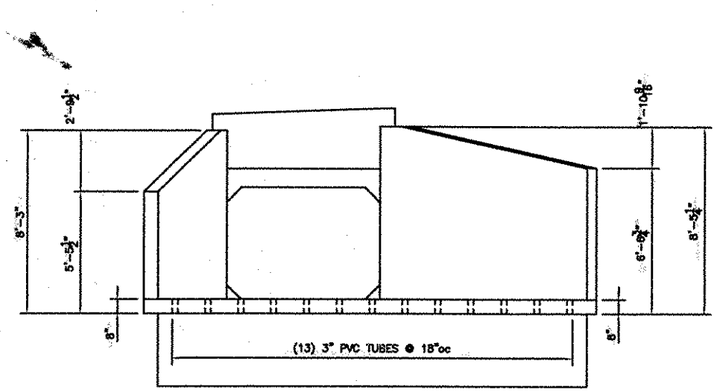

OUTLET END VIEW

NOTE: BAFFLES NOT SHOWN FOR CLARITY

GENERAL NOTES:

1. REINFORCING STEEL SHALL MEET ASTM A615, GRADE 60 SPECIFICATIONS
2. REINFORCING STEEL TO BE WIRE TIED AND HELD IN POSITION WITH PLASTIC CHAIRS AND REBAR SPACERS AS NEEDED.
3. EXPOSED EDGES OF FASCIA ENDS SHALL BE CHAMFERED 1" x 1".
4. WORKING TOLERANCES SHALL BE AS PER AASHTO M273-87.
5. CONCRETE COVER SHALL BE 1" UNLESS NOTED OTHERWISE.
6. THE G.C. SHALL APPLY A 2 FOOT WIDE STRIP OF (CLASS A) MEMBRANE WATERPROOFING AT EACH SIDE JOINT. THE MEMBRANE SHALL BE CENTERED ON THE JOINT AND SHALL RUN THE ENTIRE HEIGHT OF THE JOINT. THE ENTIRE TOP OF THE BOX CULVERT SHALL THEN BE COVERED WITH MEMBRANE. THE MEMBRANE SHEETS SHALL OVERLAP THE EDGES OF THE CULVERT BY 1 FOOT ON EACH SIDE AS SHOWN IN THE PLANS.

DESIGN NOTES:

1. ASSUMED EARTH COVER = 1'
2. CONCRETE STRENGTH TO BE:
   PRECAST TO BE 5000 PSI MIN. @ 28 DAYS WITH 5.0% - 9.0% ENTRAINED AIR CONTENT.
3. DESIGN LIVE LOADING = AASHTO HS-25 PLUS IMPACT.

STATE OF VERMONT
RALPH VERRASTRO
#18-0006974
REGISTERED
PROFESSIONAL ENGINEER

Ralph Verrastro
2/21/01

- STRUCTURES FILE -

V.A.O.T.
RECEIVED
CK'D BY G Roy 3-21-01 CK'D BY mgl 3-29-01
MAR 21 2001
RESUBMIT ____ APPROVED ✓
BY mgl DATE 3-29-01

TABLE OF UNITS				
MARK	QTY	LENGTH	VOL (C.Y.)	WEIGHT (TONS)
BC1	1	7'-0"	5.2	10.53
BC2	1	7'-0"	5.2	10.53
INLET	1	7'-3"	4.6	9.32
OUTLET	1	10'-9"	7.8	15.88

DELTA ENGINEERS, P.C.
ENGINEERS • ARCHITECTS
164 COURT STREET, BINGHAMTON, NY 13904-3694
TEL. (607) 231-6600 FAX (607) 231-6650
E-MAIL: mail@deltaengineers.com

TOWN OF ST. ALBANS, VT

7'-0" x 5'-0" x 14'-0" DRIVE BOX CULVERT

SHEET 1 OF 3

CONTRACTOR:
ENGINEER: 457

DWN BY: GAS CKD BY: RET

DWG ID: 1004-01 SCALE: NONE REV: 0 DATE: 2/12/01

CAMP PRECAST CONCRETE PRODUCTS

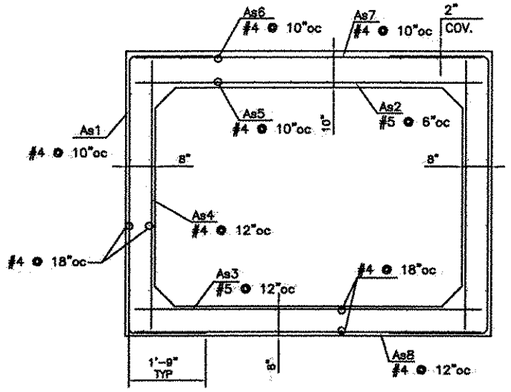

MK	Size	Spcg	Len	Type	A	B	C
As1	4	10"	117"	"U"	1'-9"	6'-3"	1'-9"
As2	5	6"	96"	Str.	---	8'-0"	---
As3	5	12"	96"	Str.	---	8'-0"	---
As4	4	12"	72"	Str.	---	6'-0"	---
As5	4	10"	--	Str.	---	A/N	---
As6	4	10"	--	Str.	---	A/N	---
As7	4	10"	96"	Str.	---	8'-0"	---
As8	4	12"	96"	Str.	---	8'-0"	---

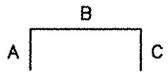

REINFORCEMENT TABLE

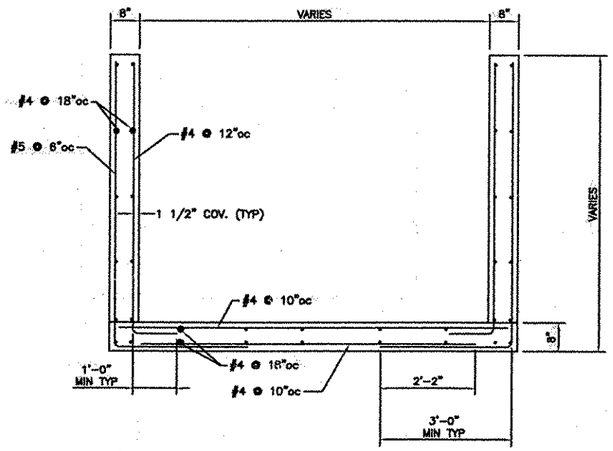

TYPICAL END SECTION

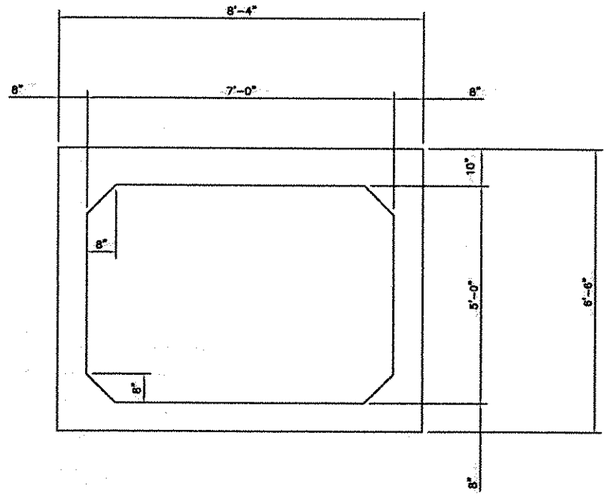

SECTION A-2

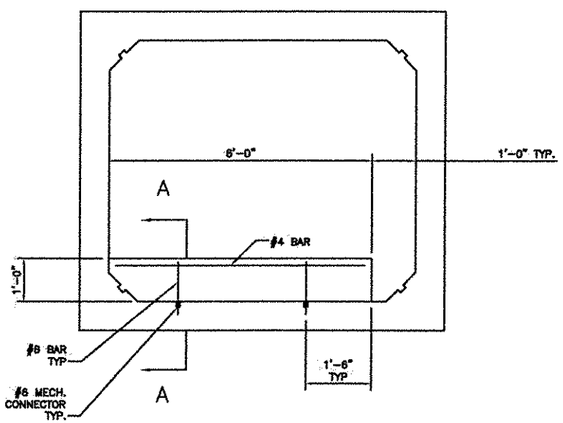

BAFFLE DETAIL

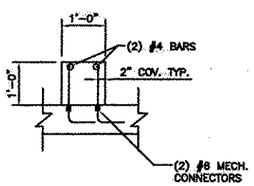

SECTION A-A

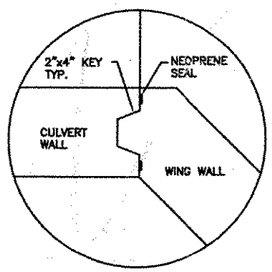

DETAIL B-2

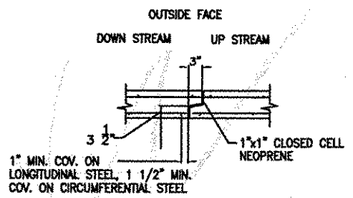

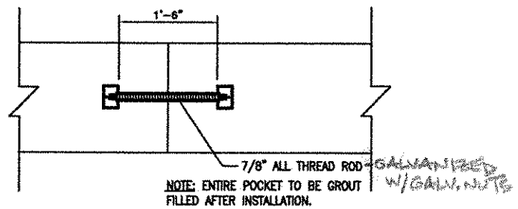

JOINT DETAIL

RECESSED DRAW
CONNECTOR V.A.O.T.
(4 PER SECTION) RECEIVED
CK'D BY G. Roy 3.21.01 CK'D BY mgl 3.29.01
MAR 21 2001
REQUEST _____ APPROVED ✓ AS NOTED
BY mgl DATE 3.29.01

STATE OF VERMONT
RALPH VERRASTRO
#18-0006974
REGISTERED
PROFESSIONAL ENGINEER

Ralph Verrastro
2/21/01

DELTA ENGINEERS, P.C.
ENGINEERS • ARCHITECTS
164 COURT STREET, BINGHAMTON, NY 13901-3594
TEL: (607) 231-6600 FAX: (607) 231-6650
E-MAIL: mail@deltaengineers.com

TOWN OF ST. ALBANS, VT.

7'-0" x 5'-0" x 14'-0"
DRIVE BOX CULVERT

SHEET 2 OF 3

CONTRACTOR:
ENGINEER: 458

DWN BY: GAS CKD BY: RET

DWG ID: 1004-01d SCALE: NONE REV: 0 DATE: 2/12/01

CAMP PRECAST CONCRETE PRODUCTS

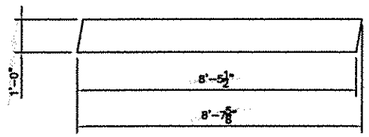

HEADWALL H1 PLAN VIEW

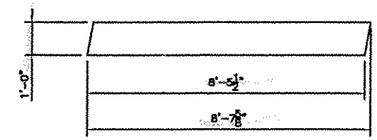

HEADWALL H2 PLAN VIEW

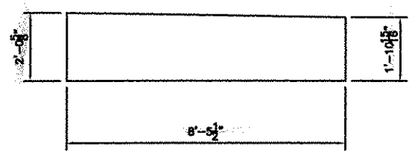

HEADWALL H1 ELEVATION VIEW

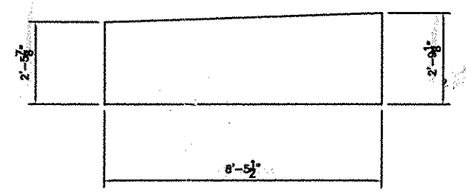

HEADWALL H2 ELEVATION VIEW

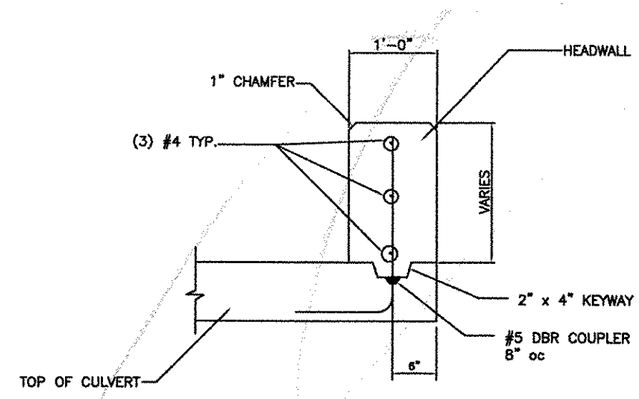

HEADWALL DETAIL

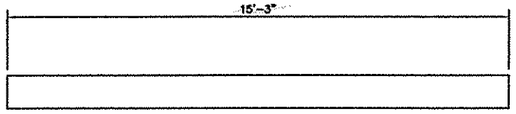

CUTOFF WALL C1 PLAN VIEW

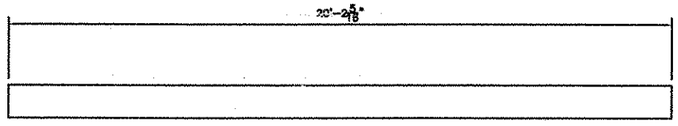

CUTOFF WALL C2 PLAN VIEW

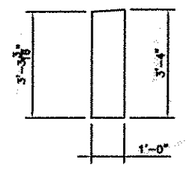

CUTOFF WALL C1 END VIEW

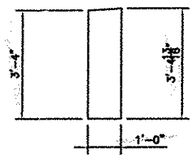

CUTOFF WALL C2 END VIEW

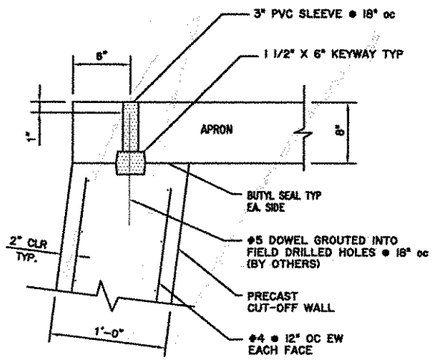

CUTOFF WALL DETAIL

V.A.O.T.
RECEIVED
CK'D BY C. Ray 3.21.01 CK'D BY mgl 3.29.01
MAR 2 1 2001
RESUBMIT _____ APPROVED ✓
BY mgl DATE 3.29.01

STATE OF VERMONT
RALPH VERRASTRO
#18-0006974
REGISTERED
PROFESSIONAL ENGINEER

Ralph Verrastro
2/21/01

DELTA ENGINEERS, P.C.
ENGINEERS • ARCHITECTS
164 COURT STREET, BINGHAMTON, NY 13901-3314
TEL: (607) 231-6600 FAX: (607) 231-6650
E-MAIL: mail@deltaengineers.com

TOWN OF ST. ALBANS, VT.

7'-0" x 5'-0" x 14'-0"
DRIVE BOX CULVERT

SHEET 3 OF 3

CONTRACTOR:
ENGINEER: 459

DWN BY: GAS CKD BY: RET

DWG ID: 1004-01d SCALE: NONE REV: 0 DATE: 2/12/01

CAMP PRECAST CONCRETE PRODUCTS

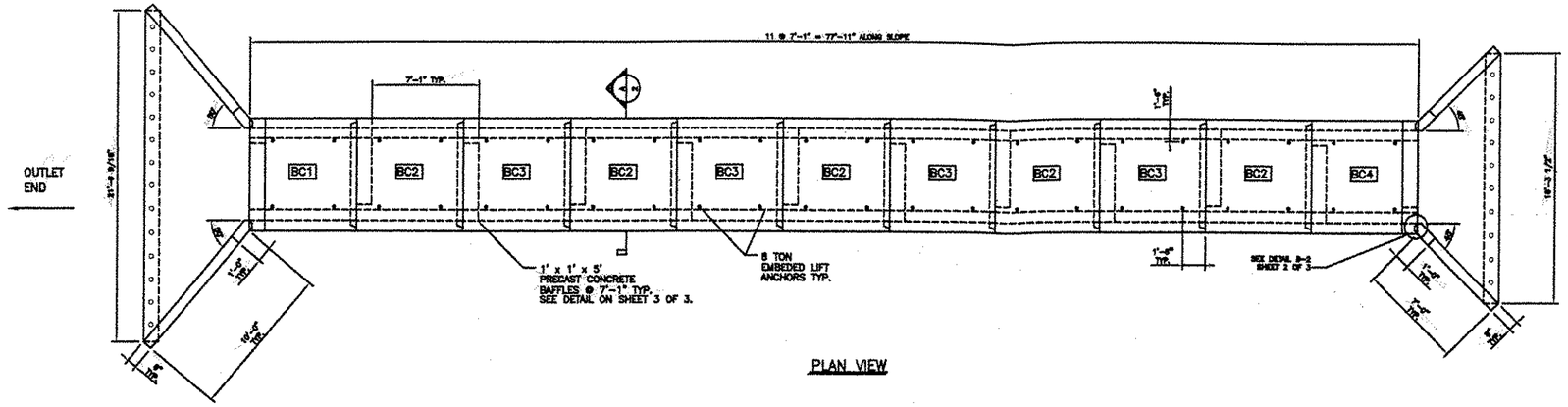

PLAN VIEW

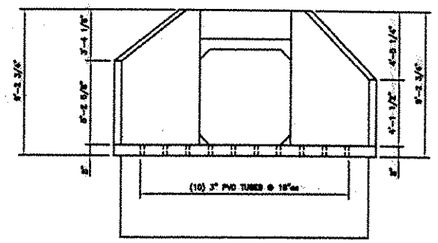

INLET END VIEW

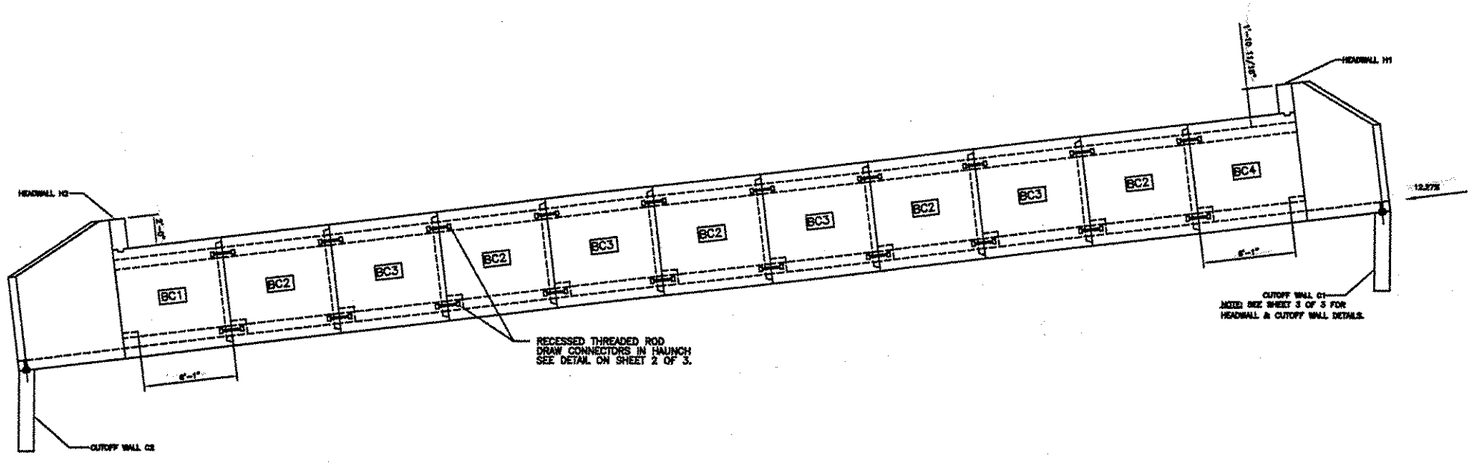

ELEVATION

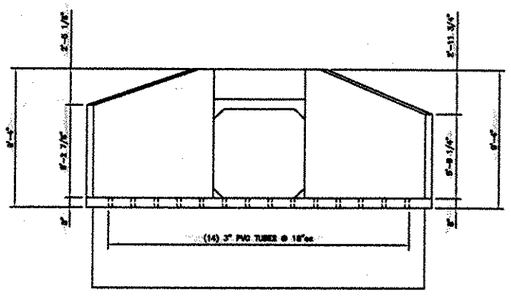

OUTLET END VIEW

V.A.O.T.
RECEIVED
CK'D BY G. Ray 3.21.01 CK'D BY mgl 3.29.01
MAR 2 1 2001
RESUBMIT _____ APPROVED ✓ AS NOTED
BY mgl DATE 3.29.01

TABLE OF UNITS				
MARK	QTY	LENGTH	VOL. (C.Y.)	WEIGHT (TONS)
BC1	1	7'-1"	4.9	9.92
BC2	5	7'-1"	4.9	9.92
BC3	4	7'-1"	4.9	9.92
BC4	1	7'-1"	4.9	9.92
INLET	1	5'-5"	4.1	8.29
OUTLET	1	6'-11"	6.4	12.9

GENERAL NOTES:

1. REINFORCING STEEL SHALL MEET ASTM A615, GRADE 60 SPECIFICATIONS
2. REINFORCING STEEL TO BE WIRE TIED AND HELD IN POSITION WITH PLASTIC CHAIRS AND REBAR SPACERS AS NEEDED.
3. EXPOSED EDGES OF FASCIA ENDS SHALL BE CHAMFERED 1" x 1".
4. WORKING TOLERANCES SHALL BE AS PER AASHTO M273-87.
5. CONCRETE COVER SHALL BE 1" UNLESS NOTED OTHERWISE.
6. THE G.C. SHALL APPLY A 2 FOOT WIDE STRIP OF (CLASS A) MEMBRANE WATERPROOFING AT EACH SIDE JOINT. THE MEMBRANE SHALL BE CENTERED ON THE JOINT AND SHALL RUN THE ENTIRE HEIGHT OF THE JOINT. THE ENTIRE TOP OF THE BOX CULVERT SHALL THEN BE COVERED WITH MEMBRANE. THE MEMBRANE SHEETS SHALL OVERLAP THE EDGES OF THE CULVERT BY 1 FOOT ON EACH SIDE AS SHOWN IN THE PLANS.

DESIGN NOTES:

1. ASSUMED EARTH COVER = 12.5'
2. CONCRETE STRENGTH TO BE:
   PRECAST TO BE 5000 PSI MIN. @ 28 DAYS WITH 5.0% - 9.0% ENTRAINED AIR CONTENT.
3. DESIGN LIVE LOADING = AASHTO HS-25 PLUS IMPACT.

STATE OF VERMONT
RALPH VERRASTRO
#18-0006974
REGISTERED
PROFESSIONAL ENGINEER

Ralph Verrastro
2/21/01

DELTA ENGINEERS, P.C.
ENGINEERS • ARCHITECTS

TOWN OF ST. ALBANS, VT

6'-0" x 6'-0" x 78'-0"
BR 87-3 NORTHBOUND

SHEET 1 OF 3

CONTRACTOR:
ENGINEER: 460

DWN BY: GAS CKD BY: RET

DWG ID: 1004-01 SCALE: NONE REV: 0 DATE: 2/9/01

CAMP PRECAST CONCRETE PRODUCTS

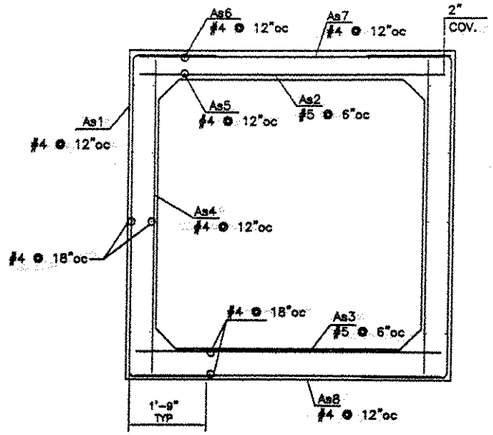

MK	Size	Spcg	Len	Type	A	B	C
As1	4	12"	127"	"U"	1'-9"	7'-1"	1'-9"
As2	5	6"	86"	Str.	----	7'-2"	----
As3	5	6"	86"	Str.	----	7'-2"	----
As4	4	12"	84"	Str.	----	7'-0"	----
As5	4	12"	85"	Str.	----	7'-1"	----
As6	4	12"	85"	Str.	----	7'-1"	----
As7	4	12"	86"	Str.	----	7'-2"	----
As8	4	12"	86"	Str.	----	7'-2"	----

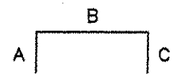

REBAR REINFORCEMENT TABLE

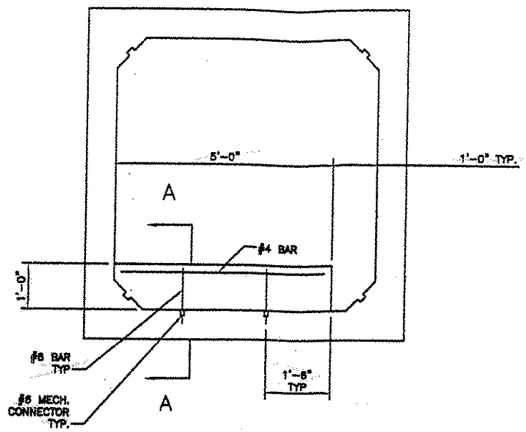

BAFFLE DETAIL

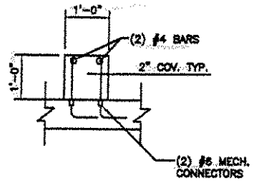

SECTION A-A

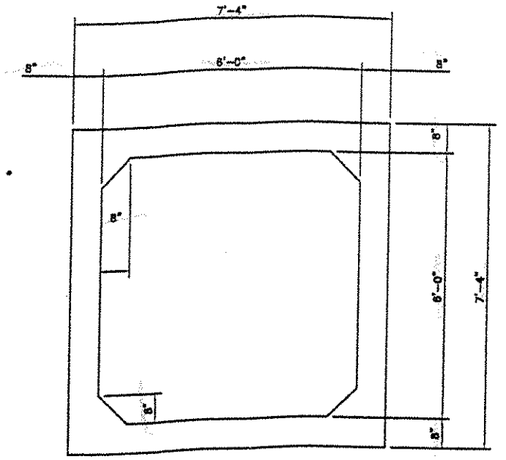

SECTION A-2

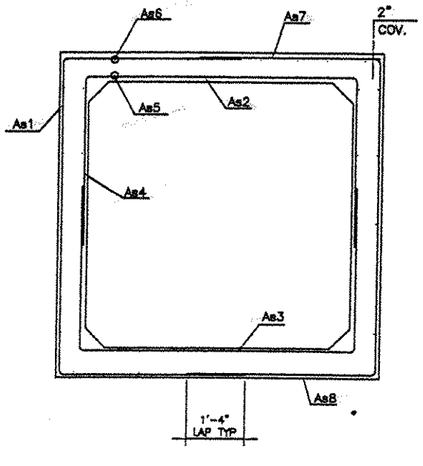

MK	As REQ. in²
As1	0.192
As2	0.432
As3	0.454
As4	0.192
As5	0.192
As6	0.192
As7	0.192
As8	0.192

MESH REINFORCEMENT TABLE

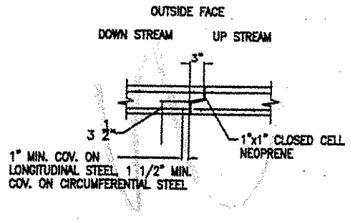

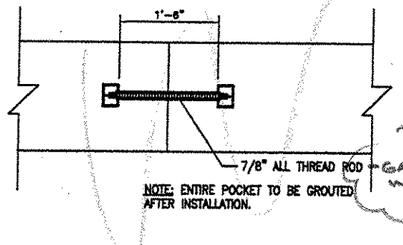

RECESSED DRAW CONNECTOR (4 PER SECTION)

JOINT DETAIL

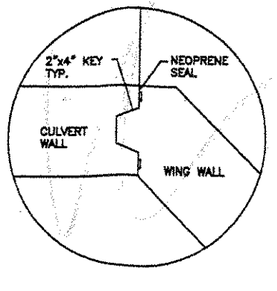

DETAIL B-2

V.A.O.T.
RECEIVED
CK'D BY C. Ray 3.21.01 CK'D BY mjl 3.29.01
MAR 21 2001
REQUIRMT ____ APPROVED AS NOTED
BY mjl DATE 3-29-01

STATE OF VERMONT
RALPH VERRASTRO
#18-0006974
REGISTERED
PROFESSIONAL ENGINEER
Ralph Verrastro
2/21/01

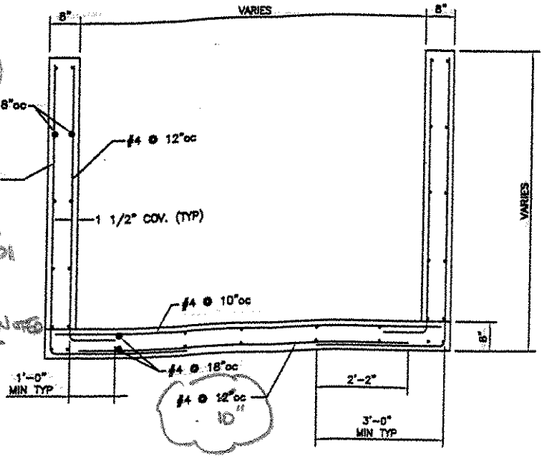

TYPICAL END SECTION

DELTA ENGINEERS, P.C.
ENGINEERS • ARCHITECTS
154 COURT STREET, BINGHAMTON, NY 13901-3394

TOWN OF ST. ALBANS, VT.
6'-0" x 6'-0" x 78'-0"
BR 87-3 NORTHBOUND
SHEET 2 OF 3
CONTRACTOR:
ENGINEER: 461
DWN BY: GAS CK'D BY: RET
1004-01 SCALE: NONE REV: 0 DATE: 2/12/01

CAMP PRECAST CONCRETE PRODUCTS

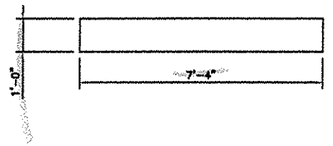

HEADWALL H1 PLAN VIEW

HEADWALL H2 PLAN VIEW

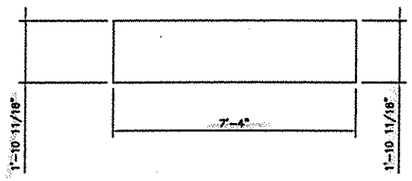

HEADWALL H1 ELEVATION VIEW

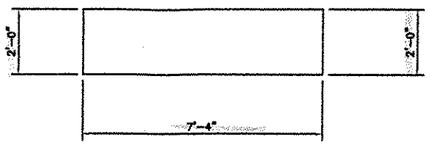

HEADWALL H2 ELEVATION VIEW

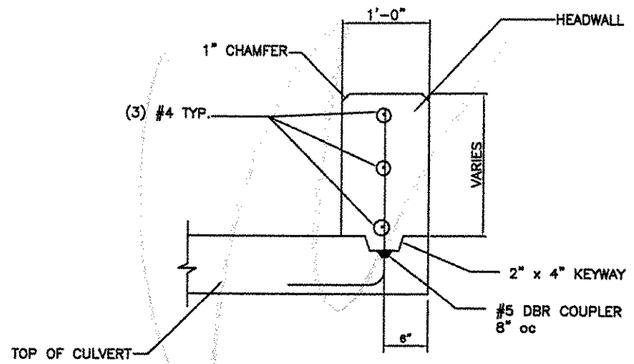

HEADWALL DETAIL

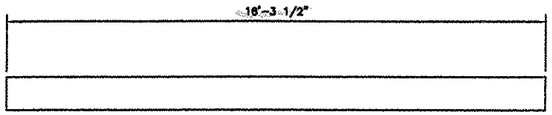

CUTOFF WALL C1 PLAN VIEW

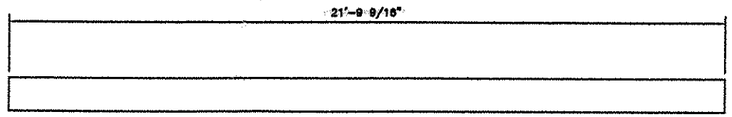

CUTOFF WALL C2 PLAN VIEW

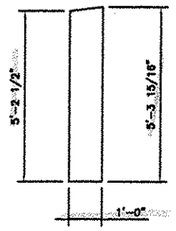

CUTOFF WALL C1 END VIEW

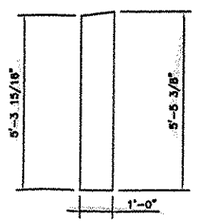

CUTOFF WALL C2 END VIEW

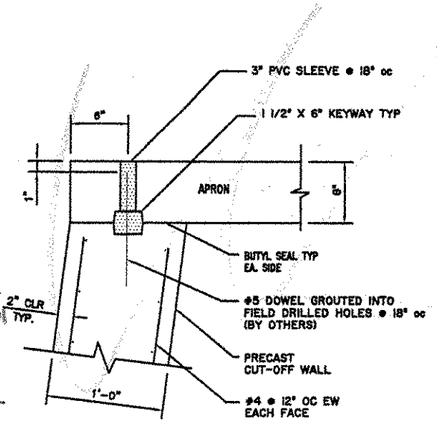

CUTOFF WALL DETAIL

V.A.O.T.
RECEIVED
CK'D BY G. Roy 3-21-01 CK'D BY mgl 3-29-01
MAR 2 1 2001
RESUBMIT ____ APPROVED ✓
BY mgl DATE 3-29-01

STATE OF VERMONT
RALPH VERRASTRO
#18-0006974
REGISTERED
PROFESSIONAL ENGINEER

Ralph Verrastro
2/21/01

DELTA ENGINEERS, P.C.
ENGINEERS • ARCHITECTS
164 COURT STREET, BINGHAMTON, NY 13901-3914
TEL: (607) 231-6800 FAX: (607) 231-6850
E-MAIL: mail@deltaengineers.com

TOWN OF ST. ALBANS, VT.

6'-0" x 6'-0" x 78'-0"
BR 87-3 NORTHBOUND

CONTRACTOR:
ENGINEER: 462

DWN BY: GAS CKD BY: RET

DWG ID: 1004-01 SCALE: NONE REV: 0 DATE: 2/12/01

SHEET 3 OF 3

CAMP PRECAST CONCRETE PRODUCTS

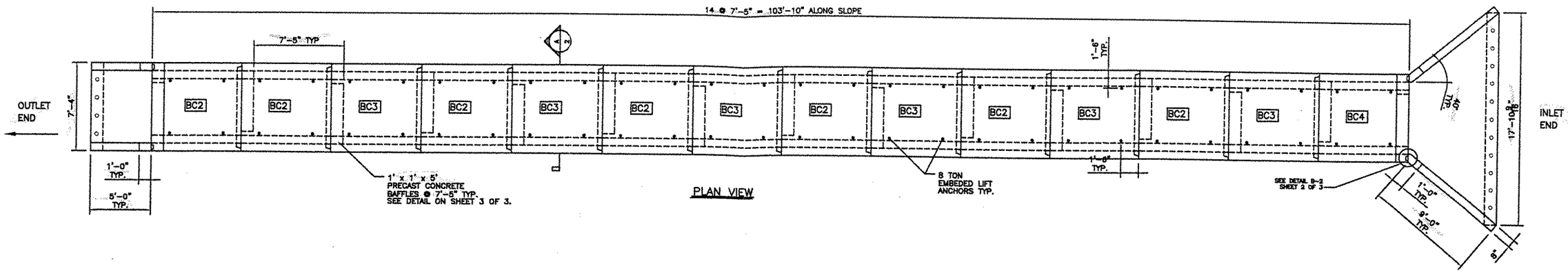

PLAN VIEW

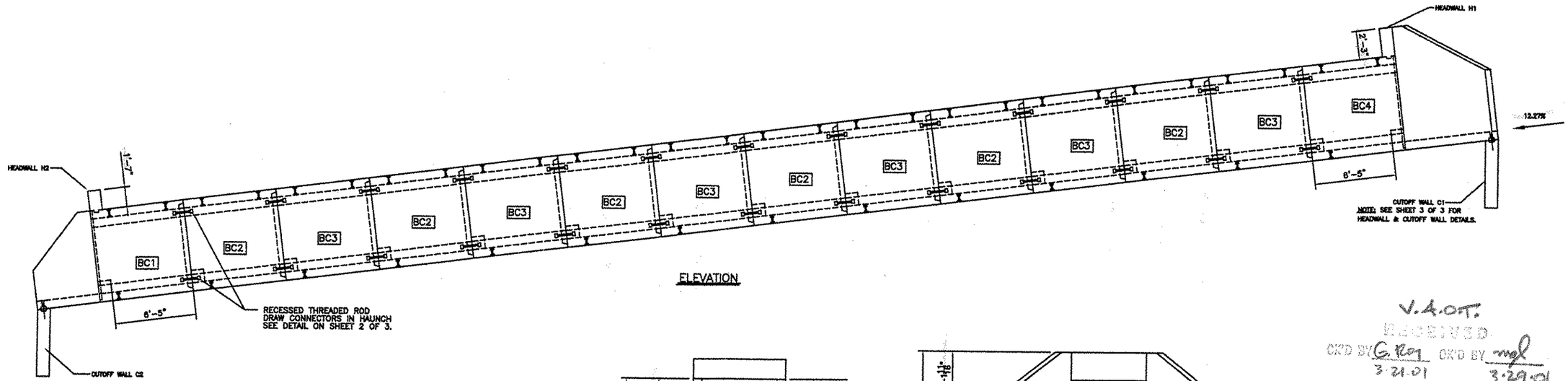

ELEVATION

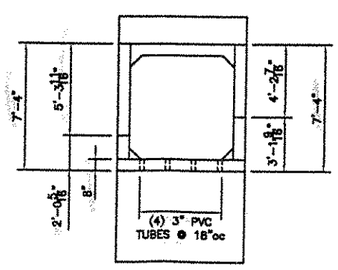

OUTLET END VIEW

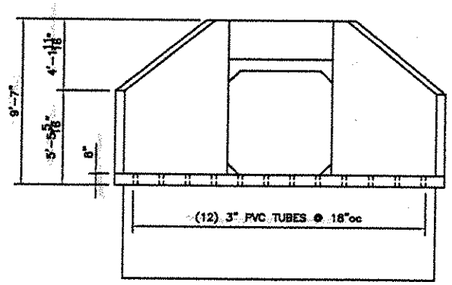

INLET END VIEW

V.A.O.T.
RECEIVED
CK'D BY G. Roy 3-21-01 OK'D BY mgl 3-29-01
MAR 2 1 2001
RESUBMIT _____ APPROVED ✓ AS NOTED
BY mgl DATE 3-29-01

GENERAL NOTES:

1. REINFORCING STEEL SHALL MEET ASTM A615, GRADE 60 SPECIFICATIONS
2. REINFORCING STEEL TO BE WIRE TIED AND HELD IN POSITION WITH PLASTIC CHAIRS AND REBAR SPACERS AS NEEDED.
3. EXPOSED EDGES OF FASCIA ENDS SHALL BE CHAMFERED 1" x 1".
4. WORKING TOLERANCES SHALL BE AS PER AASHTO M273-87.
5. CONCRETE COVER SHALL BE 1" UNLESS NOTED OTHERWISE.
6. THE G.C. SHALL APPLY A 2 FOOT WIDE STRIP OF (CLASS A) MEMBRANE WATERPROOFING AT EACH SIDE JOINT. THE MEMBRANE SHALL BE CENTERED ON THE JOINT AND SHALL RUN THE ENTIRE HEIGHT OF THE JOINT. THE ENTIRE TOP OF THE BOX CULVERT SHALL THEN BE COVERED WITH MEMBRANE. THE MEMBRANE SHEETS SHALL OVERLAP THE EDGES OF THE CULVERT BY 1 FOOT ON EACH SIDE AS SHOWN IN THE PLANS.

DESIGN NOTES:

1. ASSUMED EARTH COVER = ~~1'~~ 12.5'
2. CONCRETE STRENGTH TO BE:
   PRECAST TO BE 5000 PSI MIN. @ 28 DAYS WITH 5.0% – 9.0% ENTRAINED AIR CONTENT.
3. DESIGN LIVE LOADING = AASHTO HS-25 PLUS IMPACT.

STATE OF VERMONT
RALPH VERRASTRO
#18-0006974
REGISTERED
PROFESSIONAL ENGINEER

Ralph Verrastro
2/21/01

TABLE OF UNITS				
MARK	QTY	LENGTH	VOL (C.Y.)	WEIGHT (TONS)
BC1	1	7'-5"	5.2	10.4
BC2	6	7'-5"	5.2	10.4
BC3	6	7'-5"	5.2	10.4
BC1	1	7'-5"	5.2	10.4
INLET	1	7'-4"	5.7	11.6
OUTLET	1	5'-0"	2.1	4.33

DELTA ENGINEERS, P.C.
ENGINEERS • ARCHITECTS

TOWN OF ST. ALBANS, VT
6'-0" x 6'-0" x 104'-0"
BR 87-3 SOUTHBOUND
CONTRACTOR:
ENGINEER: 463
DWN BY: GAS CKD BY: RET
DWG ID: 1004-01 SCALE: NONE REV: 0 DATE: 2/9/01

SHEET 1 OF 3

CAMP PRECAST CONCRETE PRODUCTS

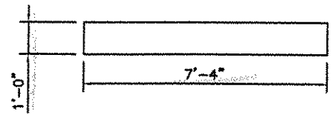

HEADWALL H1 PLAN VIEW

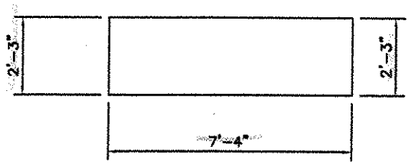

HEADWALL H1 ELEVATION VIEW

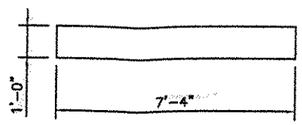

HEADWALL H2 PLAN VIEW

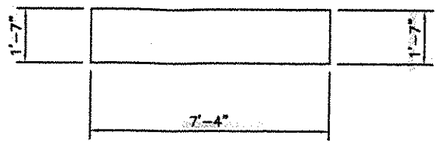

HEADWALL H2 ELEVATION VIEW

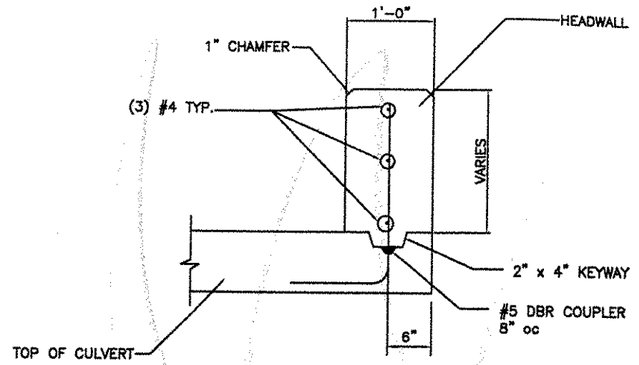

HEADWALL DETAIL

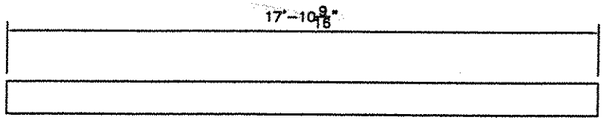

CUTOFF WALL C1 PLAN VIEW

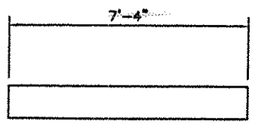

CUTOFF WALL C2 PLAN VIEW

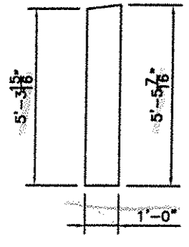

CUTOFF WALL C1 END VIEW

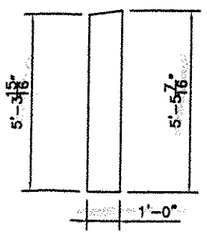

CUTOFF WALL C2 END VIEW

V.A.O.T.
RECEIVED
CKD BY cpf 3.21.01 CKD BY mgl 3-29-01
MAR 2 1 2001
RESUBMIT ____ APPROVED ✓
BY mgl DATE 3-29-01

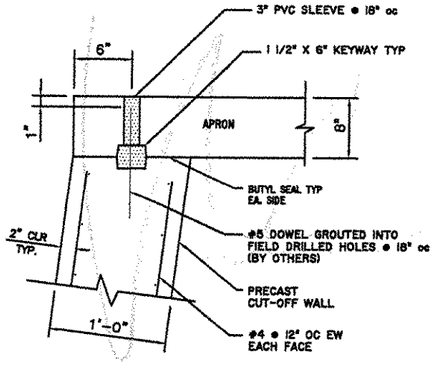

CUTOFF WALL DETAIL

STATE OF VERMONT
RALPH VERRASTRO
#18-0006974
REGISTERED
PROFESSIONAL ENGINEER

Ralph Verrastro
2/21/01

DELTA ENGINEERS, P.C.
ENGINEERS ◦ ARCHITECTS
154 COURT STREET, BINGHAMTON, NY 13901-3294
TEL: (607) 723-9500 FAX: (607) 723-9550

TOWN OF ST. ALBANS, VT.
6'-0" x 6'-0" x 104'-0" BR 87-3 SOUTHBOUND
SHEET 2 OF 3
CONTRACTOR:
ENGINEER: 464
DWN BY: GAS CKD BY: RET
DWG ID: 1004-015 SCALE: NONE REV: 0 DATE: 2/12/01

CAMP PRECAST CONCRETE PRODUCTS

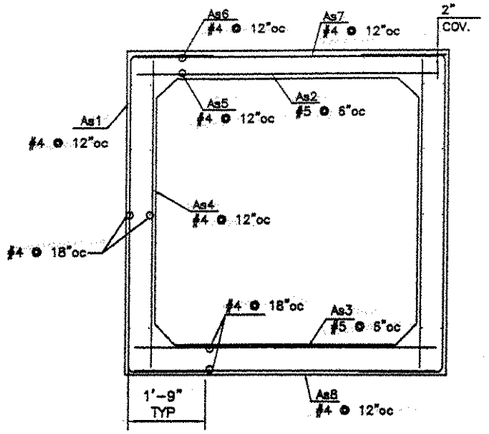

MK	Size	Spcg	Len	Type	A	B	C
As1	4	12'	127"	"U"	1'-9"	7'-1"	1'-9"
As2	5	6"	86"	Str.	---	7'-2"	---
As3	5	6"	86"	Str.	---	7'-2"	---
As4	4	12"	84"	Str.	---	7'-0"	---
As5	4	12"	85"	Str.	---	7'-1"	---
As6	4	12"	85"	Str.	---	7'-1"	---
As7	4	12"	86"	Str.	---	7'-2"	---
As8	4	12"	86"	Str.	---	7'-2"	---

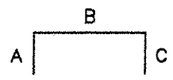

REBAR REINFORCEMENT TABLE

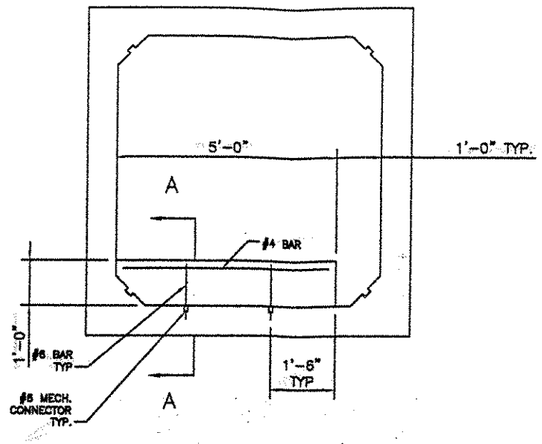

BAFFLE DETAIL

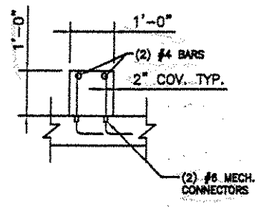

SECTION A-A

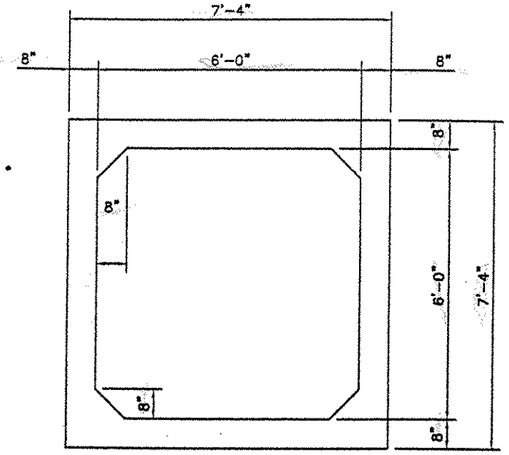

SECTION A-2

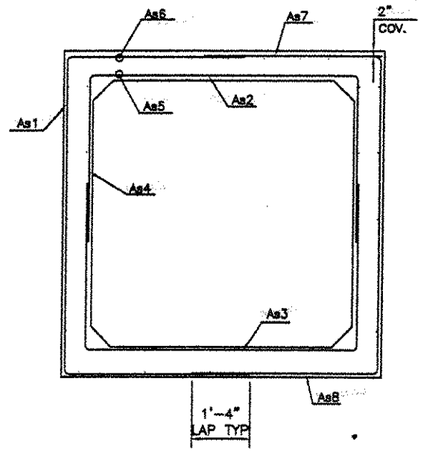

MK	As REQ. in²
As1	0.192
As2	0.432
As3	0.454
As4	0.192
As5	0.192
As6	0.192
As7	0.192
As8	0.192

MESH REINFORCEMENT TABLE

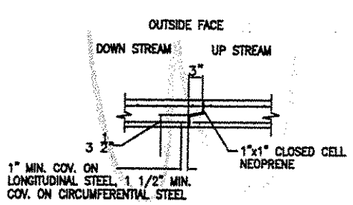

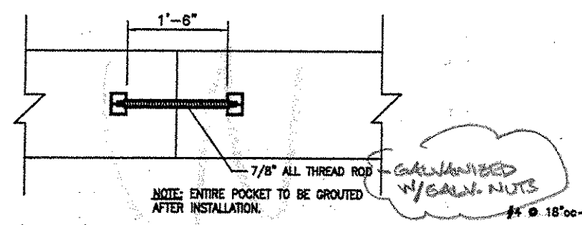

RECESSED DRAW
CONNECTOR
(4 PER SECTION)

JOINT DETAIL

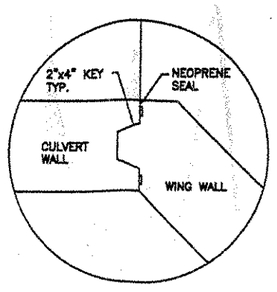

DETAIL B-2

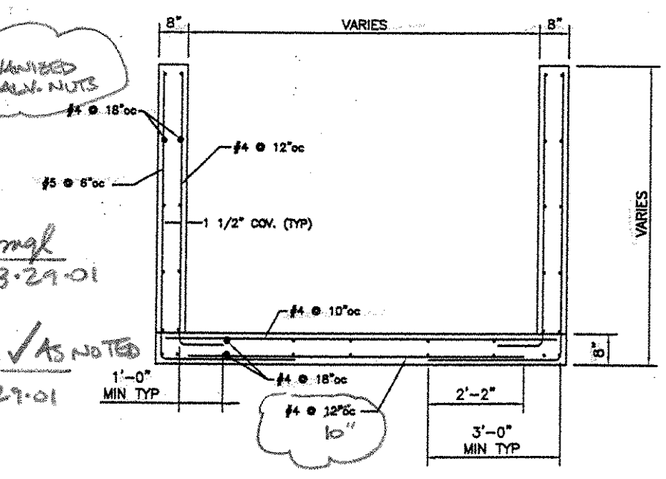

TYPICAL END SECTION

V.A.O.T.
RECEIVED
CK'D BY G. Roy 3.21.01 CK'D BY mgl 3.29.01
MAR 2 1 2001
RESUBMIT _____ APPROVED ✓ AS NOTED
BY mgl DATE 3.29.01

STATE OF VERMONT
RALPH VERRASTRO
#18-0006974
REGISTERED
PROFESSIONAL ENGINEER

Ralph Verrastro
2/21/01

DELTA ENGINEERS, P.C.
ENGINEERS • ARCHITECTS
164 COURT STREET, BINGHAMTON, NY 13901-3694
TEL: (607) 231-9600 FAX: (607) 231-9650

TOWN OF ST. ALBANS, VT.

6'-0" x 6'-0" x 104'-0"
BR 87-3 SOUTHBOUND

SHEET 3 OF 3

CONTRACTOR:
ENGINEER: 465

DWN BY: GAS CKD BY: RET

CAMP PRECAST CONCRETE PRODUCTS

RAMP D CURVE DATA

△ = 9°-07'-12.70" RT.
D = 2°
R = 2864.79'
T = 228.49'
L = 456.01'
E = 9.10'
BANK = 0.026 FT / FT

VT STATE PLANE GRID

#71

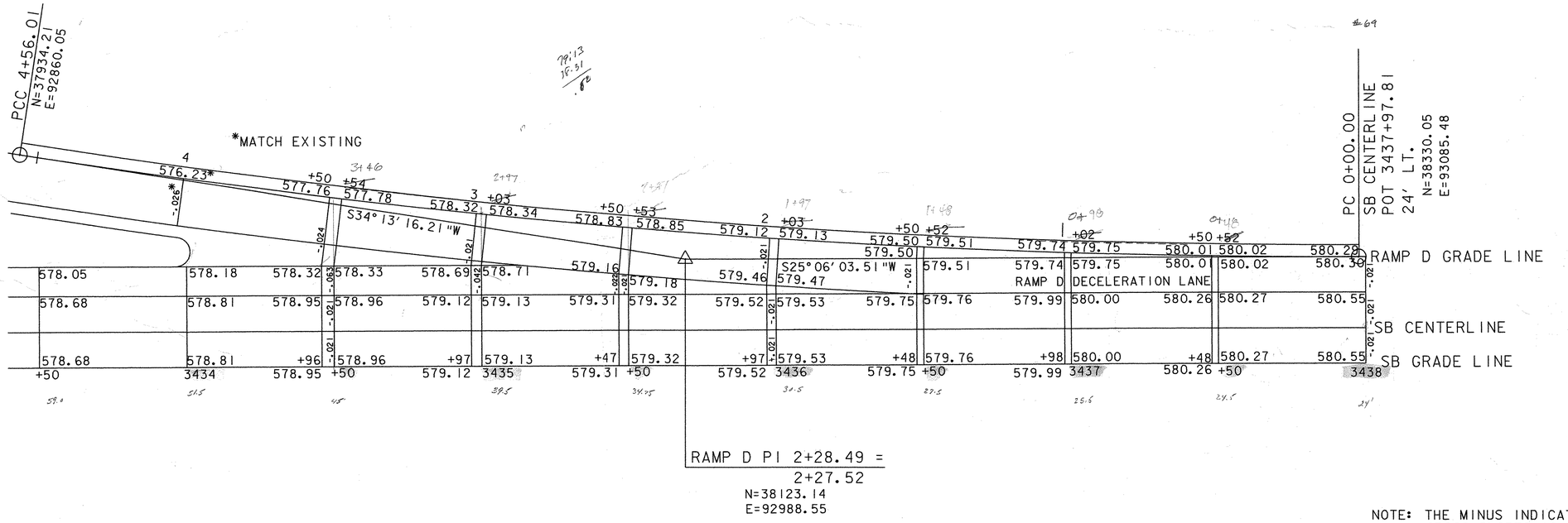

NOTE: THE MINUS INDICATION ON THE CROSS SLOPES IS IN REFERENCE TO THE SOUTHBOUND CENTERLINE.

20 scale

0 20 40
SCALE IN FEET

PROJECT: FAIRFAX - FAIRFIELD - ST. ALBANS	PROJECT NO.: IM 089-3(27)
DESIGN FILE NAME: /87A007B/DESIGN/DA007NUI.DGN	
IPARM FILE NAME: DA007DSP	PLOT DATE: 17-MAY-2001
SURVEYED BY: ORVIS	SURVEY DATE: 6/98
SQUAD LEADER: DELLA SANTA	DRAWN BY: SQUAD B

466

SPLINE SHEET FOR RAMP D MERGING WITH SOUTHBOUND

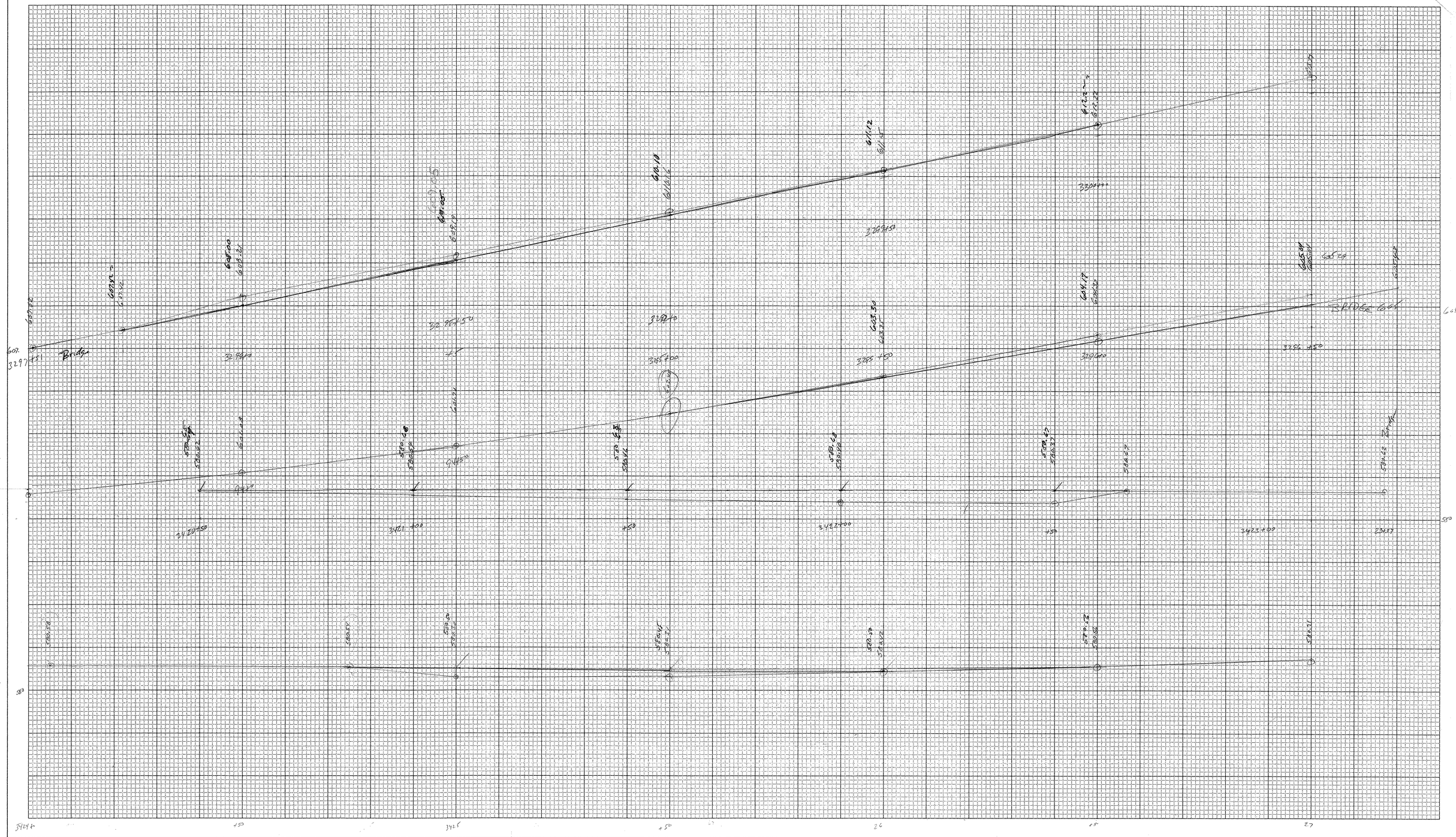

CROSS SECTION SHEET

PROJECT NAME: _____

PROJECT NUMBER: _____

FILE NAME: _____ PLOT DATE: 05-JUN-2000 09

PROJECT LEADER: _____ DRAWN BY: _____

DESIGNED BY: _____ CHECKED BY: _____

const: g:/common/cadd/e-xsection.dgn SHEET ~~413~~ OF 467

PROJECT NAME:	Fairfax-Fairfield-St.Albans
PROJECT NUMBER:	IM 089-3 (27)
FILE NAME: 87a007/survey/xa007hsv.dgn	PLOT DATE: 21-MAR-2003
PROJECT LEADER:	DRAWN BY: R. Bullock
DESIGNED BY:	CHECKED BY:
	SHEET 1 ~~414~~ OF 1468