SEE NEXT SHEET FOR INDEX OF SHEETS

STATE OF VERMONT
AGENCY OF TRANSPORTATION

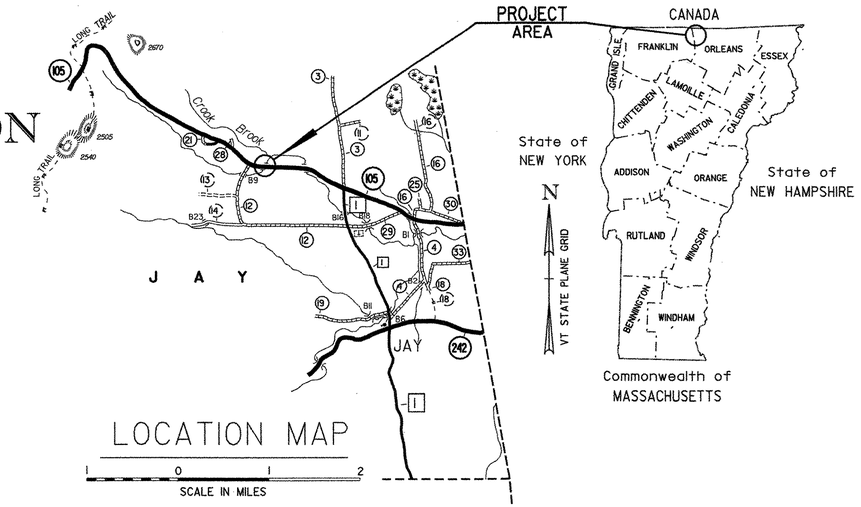

PROPOSED IMPROVEMENT
BRIDGE PROJECT
TOWN OF JAY
COUNTY OF ORLEANS

ROUTE NO : VT 105 (MINOR ARTERIAL) BRIDGE # 50

PROJECT LOCATION
BEGINNING AT A POINT ON VT. ROUTE 105 APPROXIMATELY 6.15 MILES EASTERLY OF THE RICHFORD / JAY TOWN LINE AND EXTENDING EASTERLY FOR 0.007 MILES.

PROJECT DESCRIPTION
CONSTRUCTION OF A NEW BOX CULVERT ON THE EXISTING ALIGNMENT WITH NECESSARY ROADWAY APPROACHES AND CHANNEL WORK.

LENGTH OF STRUCTURE :	17.00 FEET	0.0032 MILES
LENGTH OF ROADWAY :	19.00 FEET	0.0036 MILES
LENGTH OF PROJECT :	36.00 FEET	0.0068 MILES

RECORD PLANS

CONTRACTOR: S.D. IRELAND BROTHERS CORP. - BURLINGTON, VT
RESIDENT ENGINEER: DOUG BUMPS
CONSTRUCTION BEGAN: JULY 16, 2007
CONSTRUCTION COMPLETE: AUGUST 1, 2007
RECORD PLANS BY: DOUG BUMPS &CHIP PIERCE

I HEREBY CERTIFY THAT ALL THE CONSTUCTION REQUIRED BY THIS SET OF DRAWINGS HAS BEEN ACCOMPLISHED AS INDICATED HEREIN.

BY _____ RESIDENT ENGINEER
DATE 3/5/08

NOTE: Any further information concerning final quantities, amounts or other details relative to this project may be found at Central Files in the electronic archives.

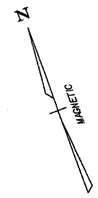

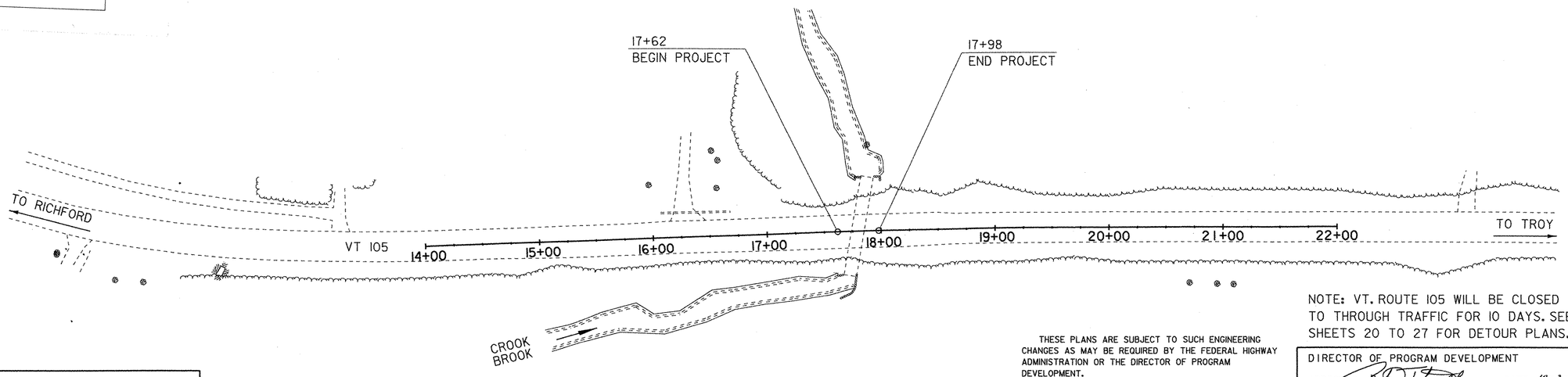

NOTE: VT. ROUTE 105 WILL BE CLOSED TO THROUGH TRAFFIC FOR 10 DAYS. SEE SHEETS 20 TO 27 FOR DETOUR PLANS.

CONVENTIONAL SYMBOLS

COUNTY LINE
TOWN LINE
LIMITS OF ACCESS
POINT OF ACCESS
FENCE LINE
STONE WALL
TRAVELED WAY
GUARD RAIL
RAILROAD
SURVEY LINE
CULVERT
POWER POLE
TELEPHONE POLE
TREES
CONTROL OF ACCESS
PROPERTY LINE
R.O.W. TAKING LINE
SLOPE RIGHTS
TOP OF CUT
TOE OF SLOPE

SURVEYED BY : R.GILMAN
SURVEYED DATE : NOVEMBER 2004

DATUM
VERTICAL ASSUMED
HORIZONTAL ASSUMED

THESE PLANS ARE SUBJECT TO SUCH ENGINEERING CHANGES AS MAY BE REQUIRED BY THE FEDERAL HIGHWAY ADMINISTRATION OR THE DIRECTOR OF PROGRAM DEVELOPMENT.

CONSTRUCTION IS TO BE CARRIED ON IN ACCORDANCE WITH THESE PLANS AND THE STANDARD SPECIFICATIONS FOR CONSTRUCTION DATED 2006, AS APPROVED BY THE FEDERAL HIGHWAY ADMINISTRATION ON JUNE 15, 2006 FOR USE ON THIS PROJECT, INCLUDING ALL SUBSEQUENT REVISIONS AND SUCH REVISED SPECIFICATIONS AND SPECIAL PROVISIONS AS ARE INCORPORATED IN THESE PLANS.

02-OCT-2006 04b140t1t1e.1

DIRECTOR OF PROGRAM DEVELOPMENT
APPROVED _____ DATE 10-3-06
PROJECT MANAGER : W. SYMONDS

PROJECT NAME : JAY
PROJECT NUMBER : ST STP CULV (2)

SHEET 1 OF 39 SHEETS

STATE OF VERMONT
AGENCY OF TRANSPORTATION

PRELIMINARY INFORMATION SHEET

INDEX OF SHEETS

1.	TITLE SHEET
2.	PRELIMINARY INFORMATION SHEET
3.	TYPICAL SECTIONS SHEET
4.	TIE SHEET
5.-6.	QUANTITY SHEETS
7.	PLAN SHEET
8.	PROFILE AND MATERIAL TRANSITIONS SHEET
9.-10.	BLANK
11.-12.	EROSION CONTROL NARRATIVE SHEETS
13.-15.	EROSION CONTROL PLAN SHEETS
16.-19.	EROSION CONTROL DETAIL SHEETS
20.-27.	DETOUR SHEETS
28.	BORING INFORMATION SHEET
29.	BORING LOG SHEET
30.	GENERAL NOTES
31.	BOX LAYOUT SHEET
32.	PLAN & ELEVATION SHEET
33.-35.	MAINLINE CROSS SECTION SHEETS
36.-39.	CHANNEL CROSS SECTION SHEETS

STANDARDS

B-5	6/1/1994
D-3	6/1/1994
E-100	1/2/2004
E-100A	1/2/2004
E-101	5/30/2003
E-102	6/30/2003
E-102A	5/1/2004
E-107A	8/8/1995
E-127	8/8/1995
E-136A	8/8/1995
E-136B	8/8/1995
E-160	5/20/1999
E-161	8/18/1995
E-163	5/20/1999
E-164	5/20/1999
G-1	1/3/2000
G-1D	1/3/2000
G-19	11/15/2002

FINAL HYDRAULIC REPORT

HYDROLOGIC DATA

Date: March 11, 2005

DRAINAGE AREA : 1.5 sq. mi.
CHARACTER OF TERRAIN : Hilly to mountainous, mostly forested.
STREAM CHARACTERISTICS : Moderately steep, mostly stable with some bank erosion.
NATURE OF STREAMBED : Mostly cobles and gravel.

PEAK FLOW DATA

Q 2.33 =	95 cfs	Q 50 =	310 cfs
Q 10 =	200 cfs	Q 100 =	360 cfs
Q 25 =	260 cfs	Q 500 =	500 cfs

DATE OF FLOOD OF RECORD : Unknown
ESTIMATED DISCHARGE: Unknown
WATER SURFACE ELEV.: Unknown
NATURAL STREAM VELOCITY : @ Q50 = 10.3 fps
ICE CONDITIONS : Moderate
DEBRIS: Moderate
DOES THE STREAM REACH MAXIMUM HIGHWATER ELEV. RAPIDLY? Yes
IS ORDINARY RISE RAPID? Yes
IS STAGE AFFECTED BY UPSTREAM OR DOWNSTREAM CONDITIONS? No
IF YES, DESCRIBE:

WATERSHED STORAGE: 1% HEADWATERS:
UNIFORM: X
IMMEDIATELY ABOVE SITE:

EXISTING STRUCTURE INFORMATION

STRUCTURE TYPE: 10'-8" X 6'-11" CGMPPA
YEAR BUILT: 1955
CLEAR SPAN(NORMAL TO STREAM): 10'-8"
VERTICAL CLEARANCE ABOVE STREAMBED: 6'-11"
WATERWAY OF FULL OPENING: 58 sq. ft.
DISPOSITION OF STRUCTURE: Remove
TYPE OF MATERIAL UNDER SUBSTRUCTURE: Unknown

WATER SURFACE ELEVATIONS AT:

Q2.33 =	1244.0'	VELOCITY =	9.3 fps
Q10 =	1246.2'	"	11.8 fps
Q25 =	1247.0'	"	12.8 fps
Q50 =	1247.6'	"	13.5 fps
Q100 =	1248.4'	"	14.1 fps

LONG TERM STREAMBED CHANGES: Probable streambed degradation downstream.
Scour hole at outlet.

IS THE ROADWAY OVERTOPPED BELOW Q100: No
FREQUENCY: Above Q100
RELIEF ELEVATION: 1249.5'
DISCHARGE OVER ROAD @Q100: None

UPSTREAM STRUCTURE

TOWN:	Jay	DISTANCE:	1,300'
HIGHWAY # :	T.H. 12	STRUCTURE #:	9
CLEAR SPAN:	8'	CLEAR HEIGHT:	9'
YEAR BUILT:	Unknown	FULL WATERWAY:	72 sq. ft.
STRUCTURE TYPE:	Bridge		

DOWNSTREAM STRUCTURE

TOWN:	Jay	DISTANCE:	2,800'
HIGHWAY # :	VT 105	STRUCTURE #:	51
CLEAR SPAN:	15'-10"	CLEAR HEIGHT:	9'-10"
YEAR BUILT:	1955	FULL WATERWAY:	122 sq. ft.
STRUCTURE TYPE:	CGMPPA		

TRAFFIC DATA

YEAR	ADT	DHV	% D	% T	ADTT
2005	610	130	60	21	120
2025	790	140	60	29	210

20 year ESAL for flexible pavement from 2006 to 2026 : 1,240,000
40 year ESAL for flexible pavement from 2006 to 2046 : 3,110,000
Design Speed : 50 mph

PROPOSED STRUCTURE

STRUCTURE TYPE: Precast concrete box with stone fill in the bottom.

CLEAR SPAN(NORMAL TO STREAM): 15'
VERTICAL CLEARANCE ABOVE STREAMBED: 6' maximum to 4.7' minimum
WATERWAY OF FULL OPENING: 81 sq. ft.

WATER SURFACE ELEVATIONS AT:

Q2.33 =	1244.0'	VELOCITY=	8.2 fps
Q10 =	1245.8'	"	7.6 fps
Q25 =	1246.2'	"	8.7 fps
Q50 =	1246.5'	"	9.5 fps
Q100 =	1246.8'	"	10.1 fps

IS THE ROADWAY OVERTOPPED BELOW Q100: No
FREQUENCY: Above Q100
RELIEF ELEVATION: 1249.5'
DISCHARGE OVER ROAD @Q100: None

AVERAGE LOW ELEVATION OF SUPERSTRUCTURE: 1247.2'
VERTICAL CLEARANCE: @ Q50 = 0.7'

SCOUR: NR/NA

REQUIRED CHANNEL PROTECTION: Stone Fill, Type III

PERMIT INFORMATION

AVERAGE DAILY FLOW:	3 cfs	DEPTH OR ELEVATION:
ORDINARY LOW WATER:	1 cfs	Less than 0.5'
ORDINARY HIGH WATER:	40 cfs	2.0'

TEMPORARY BRIDGE REQUIREMENTS

STRUCTURE TYPE: No temporary bridge required.
CLEAR SPAN (NORMAL TO STREAM):
VERTICAL CLEARANCE ABOVE STREAMBED:
WATERWAY AREA OF FULL OPENING:

ADDITIONAL INFORMATION

DESIGN CRITERIA

1. DESIGN LIVE LOAD AASHTO HS-25
2. DESIGN SPAN 15' CLEAR SPAN
3. ALLOWABLE LOAD FOR SPREAD FOOTINGS ON SOIL
   ON LEDGE
4. ALLOWABLE LOAD FOR PILING
   TYPE
   ESTIMATED LENGTH
5. STRUCTURAL STEEL AASHTO M270M/M270 GRADE N/A
6. REINFORCING STEEL GRADE 60
7. CONCRETE, HIGH PERFORMANCE CLASS A fc: N/A
   CONCRETE, HIGH PERFORMANCE CLASS B fc: 3500 psi
8. DESIGN SOIL UNIT WEIGHT 140 pcf
9. DESIGN LOAD FOR SPREAD FOOTINGS ON SOIL

TRAFFIC MAINTENANCE

1. IS TRAFFIC TO BE MAINTAINED? ROAD CLOSED TO THROUGH TRAFFIC *
   IF YES, ON EXISTING STRUCTURE? NA
   OR ON TEMPORARY BRIDGE? NA
   ONE OR TWO-WAY TRAVEL? NA
2. TRAFFIC CONTROL SIGNALS REQUIRED? NA
3. ARE SIDEWALKS REQUIRED? NA
   IF SO, ON WHAT SIDE? NA

* SEE SHEETS 20-27 FOR DETOUR PLAN

PROJECT NAME: JAY
PROJECT NUMBER: ST STP CULV (2)

FILE NAME: s04b140pi.xls
PROJECT MANAGER: W. SYMONDS
DESIGNED BY: T. FILLBACH
PRELIMINARY INFORMATION SHEET

PLOT DATE: 10/11/2006
DRAWN BY: G. SHANGRAW
CHECKED BY: T. SUMNER
SHEET 2 OF 39

MATERIAL ITEM	TOLERANCE
PAVEMENT	± 1/4 " TOTAL THICKNESS
BASE COURSE	± 1/2 "
SUBBASE	± 1 "
SAND BORROW	± 1 "

3 '' BITUMINOUS CONCRETE PAVEMENT, TYPE III (2 - 1 1/2'' LIFTS) (PG 58-34)
6 '' BITUMINOUS CONCRETE PAVEMENT, TYPE I OR II (2 - 3'' LIFTS) (PG 58-34)
18 '' SUBBASE OF DENSE GRADED CRUSHED STONE
24 '' SAND BORROW

SEEDING FORMULA
RURAL AREAS

% WT.	LBS./A.	NAME	PUR %	GERM %
37.5	22.5	CREEPING RED FESCUE	98	85
37.5	22.5	TALL FESCUE	95	90
5.0	3.0	RED TOP	95	90
15.0	9.0	BIRDSFOOT TREFOIL	98	85
5.0	3.0	ANNUAL RYEGRASS	95	85
100.0	60.0			

GENERAL NOTES

SEED MIXTURE: SHALL NOT HAVE A WEED CONTENT EXCEEDING 0.40% BY WEIGHT AND SHALL BE FREE OF ALL NOXIOUS SEED.

SEED: TO BE APPLIED PER SEEDING FORMULAS OR AS DIRECTED BY THE ENGINEER.

FERTILIZER: FORMULA 10-20-10, TO BE USED WITH SEED, APPLIED AT THE RATE OF 500 LBS./ACRE. (HYDRO SEEDERS MAY USE 19-19-19 FORMULA).

AGRICULTURAL LIMESTONE: TO BE APPLIED AT THE RATE OF 2 TONS/ACRE, OR AS DIRECTED BY THE ENGINEER.

HAY MULCH: TO BE PLACED ON EARTH SLOPES AT THE RATE OF 2 TONS/ACRE, OR AS DIRECTED BY THE ENGINEER.

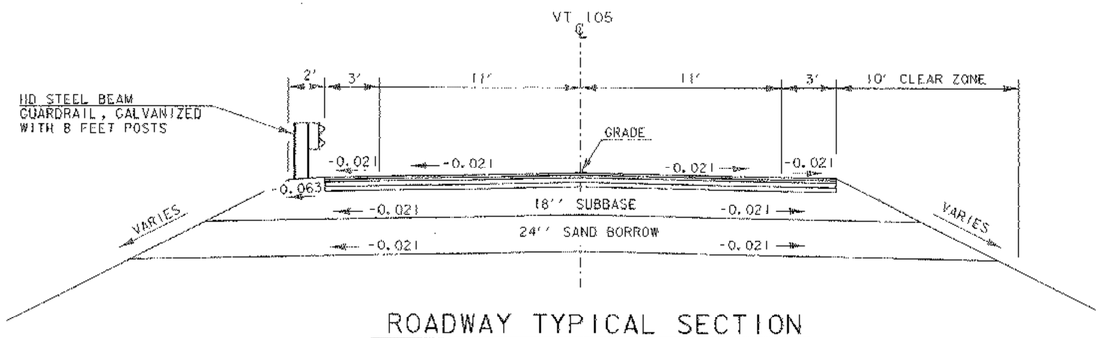

ROADWAY TYPICAL SECTION

NOT TO SCALE

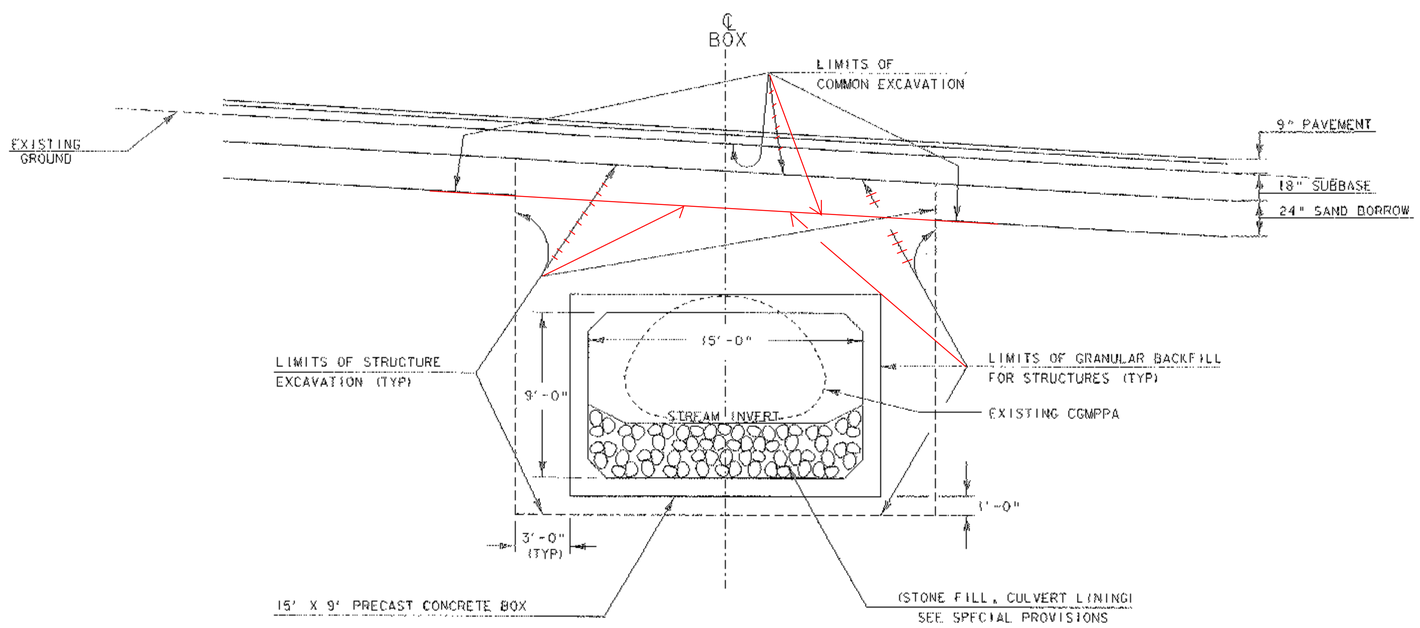

TYPICAL BOX SECTION

NOT TO SCALE

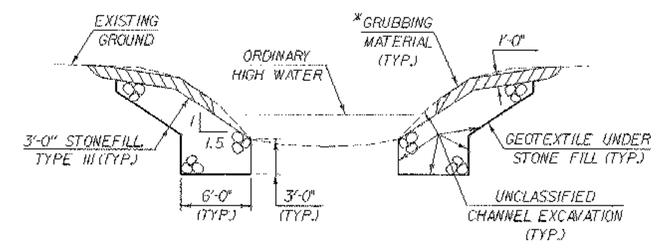

TYPICAL CHANNEL SECTION

(NOT TO SCALE)

*GRUBBING MATERIAL SHALL NOT BE PLACED ON THE STONE FILL IN THE BOX.
WHENEVER CHANNEL SLOPE INTERSECTS ROADWAY SUBBASE, GRUBBING MATERIAL SHALL BEGIN AT THE BOTTOM OF SUBBASE.

TYPICAL SECTIONS

PROJECT NAME: JAY
PROJECT NUMBER: ST STP CULV (2)

FILE NAME: 04b140\s04b140typ.dgn
PROJECT LEADER: W. SYMONDS
DESIGNED BY: T. FILLBACH
04b140typ.i

PLOT DATE: 23-OCT-2006
DRAWN BY: G. SHANGRAW
CHECKED BY: T. SUMNER
SHEET 3 OF 39

GPS CONTROL POINTS

TRAVERSE TIES

HVCTRL #1

NORTH = 10000.00
EAST = 50000.00
ELEV. = 1294.92

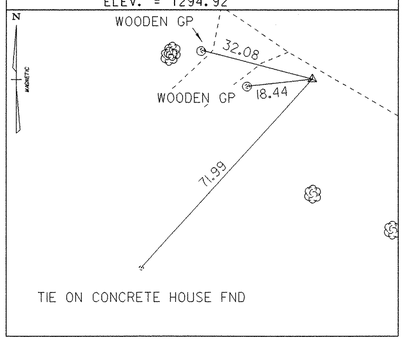

HVCTRL #2

NORTH = 9663.61
EAST = 50924.21
ELEV. = 1236.68

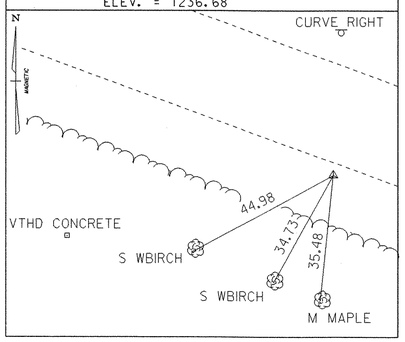

* Traverse Completed 11-08-2004 by R. Gilman P.C. & P.Winters

ALIGNMENT TIES

PC 17+35.11

NORTH = 9798.94
EAST = 50585.16

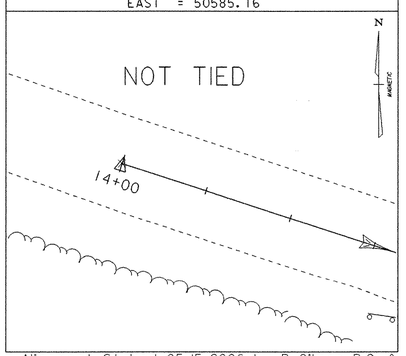

PT 19+81.01

NORTH = 9719.32
EAST = 50817.81

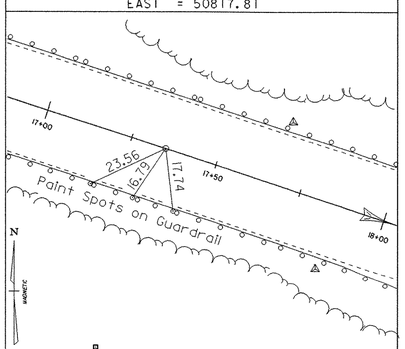

POE 21+99.97

NORTH = 9645.05
EAST = 51023.79

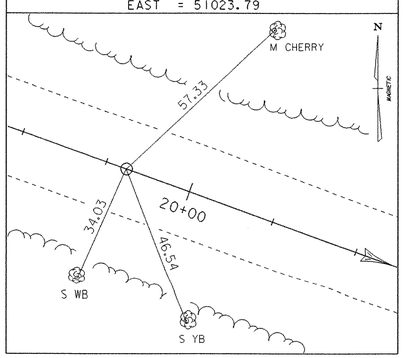

* Alignment Staked 05-15-2006 by R. Gilman P.C. & P.Winters

DATUM	
VERTICAL	NAVD 1929
HORIZONTAL	ASSUMED
ADJUSTMENT	N\A

TIE SHEET

PROJECT NAME: JAY
PROJECT NUMBER: ST STP CULV (2)

FILE NAME: 04b140\survey\x04b140t1.dgn
PROJECT LEADER: W. SYMONDS
DESIGNED BY: R. Gilman
s04b140tie.1

PLOT DATE: 23-OCT-2006
DRAWN BY: R. BULLOCK
CHECKED BY: P. WINTERS
SHEET 4 OF 39

STATE OF VERMONT
AGENCY OF TRANSPORTATION

QUANTITY SHEET

SUMMARY OF ESTIMATED QUANTITIES							TOTALS		DESCRIPTIONS			
ROADWAY	EROSION CONTROL	BRIDGE	FULL C.E. ITEMS				GRAND TOTAL	FINAL	UNIT	ITEMS	ITEM NUMBER	ROUND
1							1		LS	CLEARING AND GRUBBING, INCLUDING INDIVIDUAL TREES AND STUMPS	201.10	
520							520		CY	COMMON EXCAVATION	203.15	
		210					210		CY	UNCLASSIFIED CHANNEL EXCAVATION	203.27	
130							130		CY	SAND BORROW	203.31	
10	10						20		CY	TRENCH EXCAVATION OF EARTH	204.20	
		900					900		CY	STRUCTURE EXCAVATION	204.25	
		500					500		CY	GRANULAR BACKFILL FOR STRUCTURES	204.30	
315							315		SY	COLD PLANING, BITUMINOUS PAVEMENT	210.10	
170							170		CY	SUBBASE OF DENSE GRADED CRUSHED STONE	301.35	
3							3		CWT	EMULSIFIED ASPHALT	404.65	
250							250		TON	MEDIUM DUTY BITUMINOUS CONCRETE PAVEMENT (PG 58-34)	406.27	
		80					80		SY	SHEET MEMBRANE WATERPROFING, PREFORMED SHEET	519.21	
		1					1		EACH	REMOVAL OF STRUCTURE (975 SF - EST.)	529.15	
		1					1		LS	PRECAST CONCRETE STRUCTURE (15' X 9' X 80' BOX)	540.10	
10							10		HR	ALL PURPOSE EXCAVATOR RENTAL, TYPE I	608.25	
8							8		CY	STONE FILL, TYPE I	613.10	
		12					12		CY	STONE FILL, TYPE II	613.11	
		200					200		CY	STONE FILL, TYPE III	613.12	
450							450		LF	HD STEEL BEAM GUARDRAIL, GALVANIZED W/8 FEET POSTS	621.215	
3							3		EACH	MANUFACTURED TERMINAL SECTION, FLARED	621.50	
434							434		LF	REMOVAL AND DISPOSAL OF GUARDRAIL	621.80	
100							100		HR	FLAGGERS	630.15	
			1				1		LS	FIELD OFFICE, ENGINEERS	631.10	
			1				1		LS	TESTING EQUIPMENT, BITUMINOUS	631.17	
			1				1		LU	FIELD OFFICE TELEPHONE (N.A.B.I.)	631.25	
1							1		LS	MOBILIZATION/DEMOBILIZATION	635.11	
1							1		LS	TRAFFIC CONTROL	641.10	
2							2		EACH	PORTABLE CHANGEABLE MESSAGE SIGN	641.15	
410							410		LF	DURABLE 4 INCH WHITE LINE, THERMOPLASTIC	646.402	
410							410		LF	DURABLE 4 INCH YELLOW LINE, THERMOPLASTIC	646.412	
		275					275		SY	GEOTEXTILE UNDER STONE FILL	649.31	
	10						10		LB	SEED	651.15	
	60						60		LB	FERTILIZER	651.18	
	.5						.5		TON	AGRICULTURAL LIMESTONE	651.20	
	.5						.5		TON	HAYMULCH	651.25	
	70						70		SY	GRUBBING MATERIAL	651.40	
	1						1		LS	EPSC PLAN	652.10	
	15						15		HR	MONITORING EPSC PLAN	652.20	
	1						1		LU	MAINTENANCE OF EPSC PLAN (N.A.B.I)	652.30	
	620						620		SY	TEMPORARY EROSION MATTING	653.20	

DETAILED SUMMARY OF QUANTITIES

QUANTITIES	UNIT	ITEMS

PROJECT NAME: JAY
PROJECT NUMBER: ST STP CULV(2)

FILE NAME: S04B140QS.XLS
PROJECT MANAGER: W. SYMONDS
DESIGNED BY: T. FILLBACH
QUANTITY SHEET #1

PLOT DATE: 10/10/2006
DRAWN BY: G. SHANGRAW
CHECKED BY: J. LACROIX
SHEET 5 OF 39

STATE OF VERMONT
AGENCY OF TRANSPORTATION

QUANTITY SHEET

SUMMARY OF ESTIMATED QUANTITIES									TOTALS		DESCRIPTIONS				DETAILED SUMMARY OF QUANTITIES		
						ROADWAY	EROSION CONTROL	BRIDGE	FULL C.E. ITEMS	GRAND TOTAL	FINAL	UNIT	ITEMS	ITEM NUMBER	ROUND	QUANTITIES	UNIT	ITEMS
							10			10		CY	TEMPORARY STONE CHECK DAM, TYPE I	653.25				
							10			10		CY	VEHICLE TRACKING PAD	653.35				
							650			650		LF	PROJECT DEMARCATION FENCE	653.55				
						8				8		LF	FLANGED CHANNEL SIGN POST	675.301				
						1				1		EACH	REMOVING SIGNS	675.50				
						1				1		EACH	ERECTING SALVAGED SIGNS	675.60				
								135		135		CY	SPECIAL PROVISION (STONE FILL, CULVERT LINING)	900.608				
								4		4		GAL	SPECIAL PROVISION (WATER REPELLENT, SILANE)	900.625				
						1				1		LS	SPECIAL PROVISION (TEMPORARY RELOCATION OF STREAM)	900.645				
						1				1		LU	SPECIAL PROVISION (INCENTIVE/DISINCENTIVE)(N.A.B.I)	900.650				

PROJECT NAME: JAY
PROJECT NUMBER: ST STP CULV(2)

FILE NAME: S04B140QS.XLS
PROJECT MANAGER: W. SYMONDS
DESIGNED BY: T. FILLBACH
QUANTITY SHEET #2

PLOT DATE: 10/10/2006
DRAWN BY: G. SHANGRAW
CHECKED BY: J. LACROIX
SHEET 6 OF 39

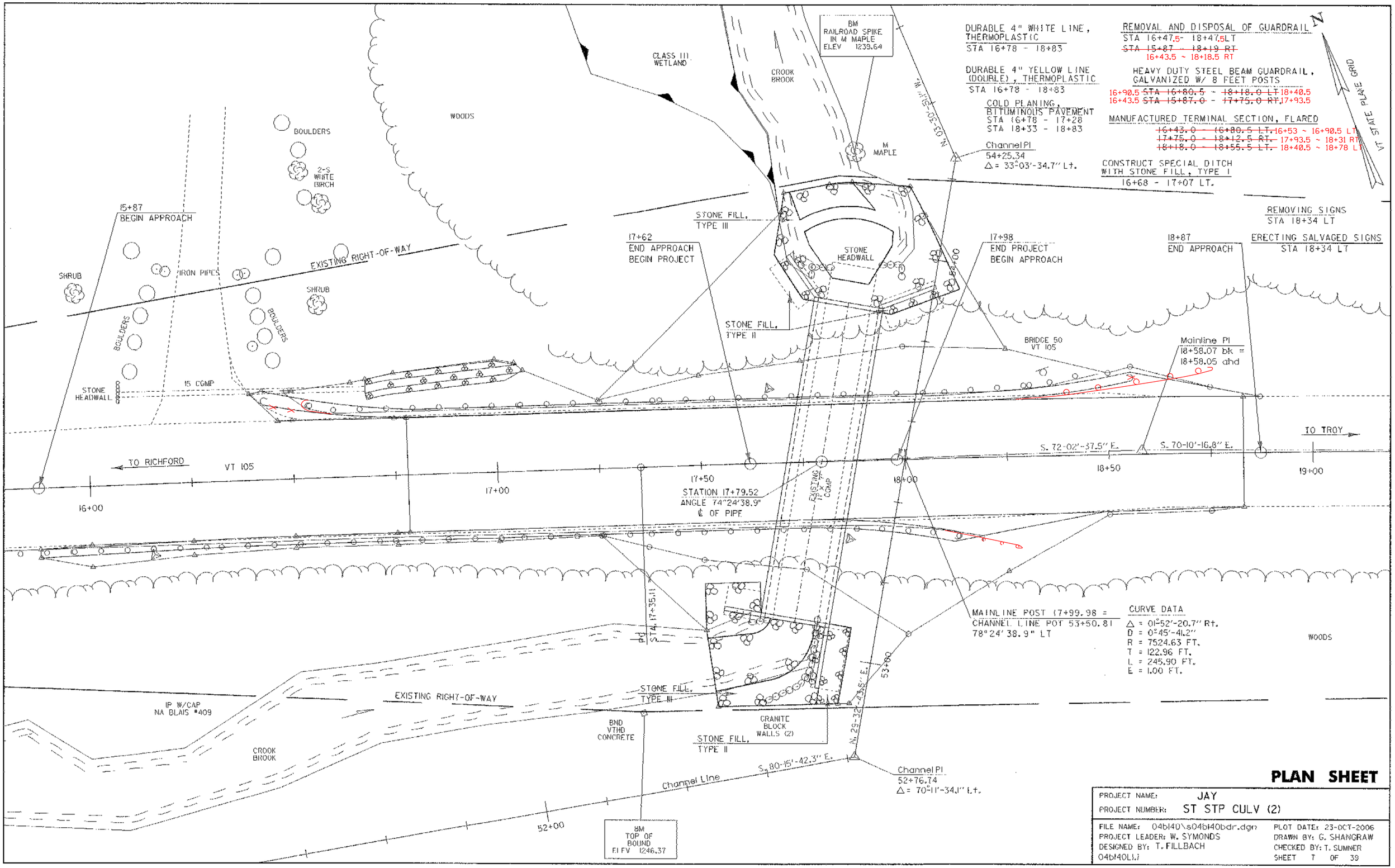

PLAN SHEET

PROJECT NAME: JAY	
PROJECT NUMBER: ST STP CULV (2)	
FILE NAME: 04b140\s04b140bdr.dgn	PLOT DATE: 23-OCT-2006
PROJECT LEADER: W. SYMONDS	DRAWN BY: G. SHANGRAW
DESIGNED BY: T. FILLBACH	CHECKED BY: T. SUMNER
04b140L1.1	SHEET 7 OF 39

PROFILE

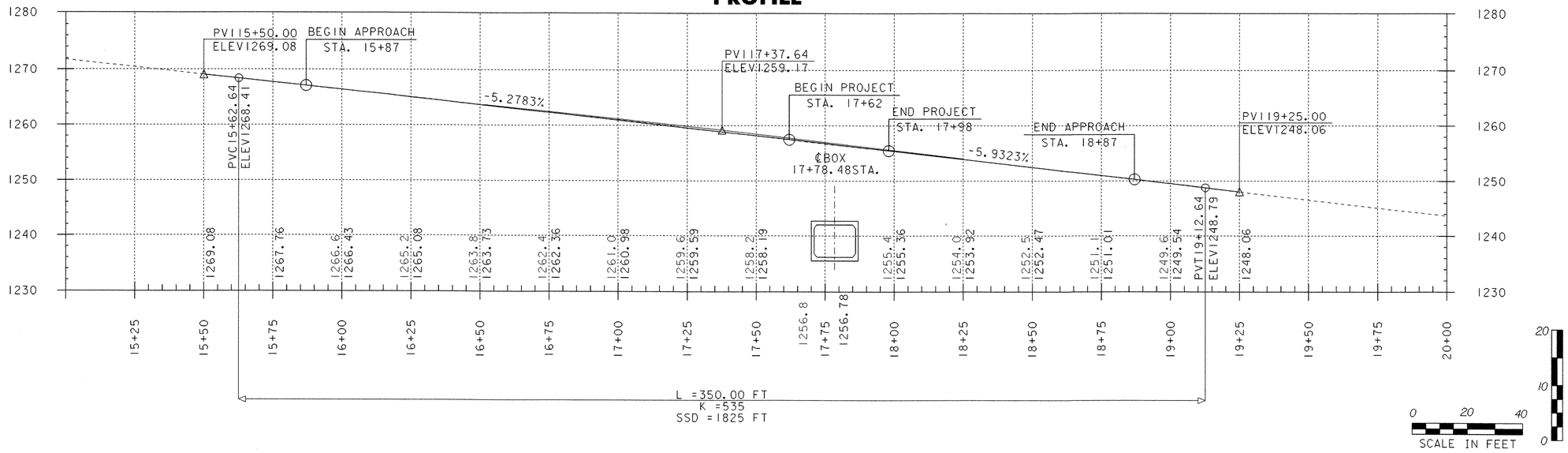

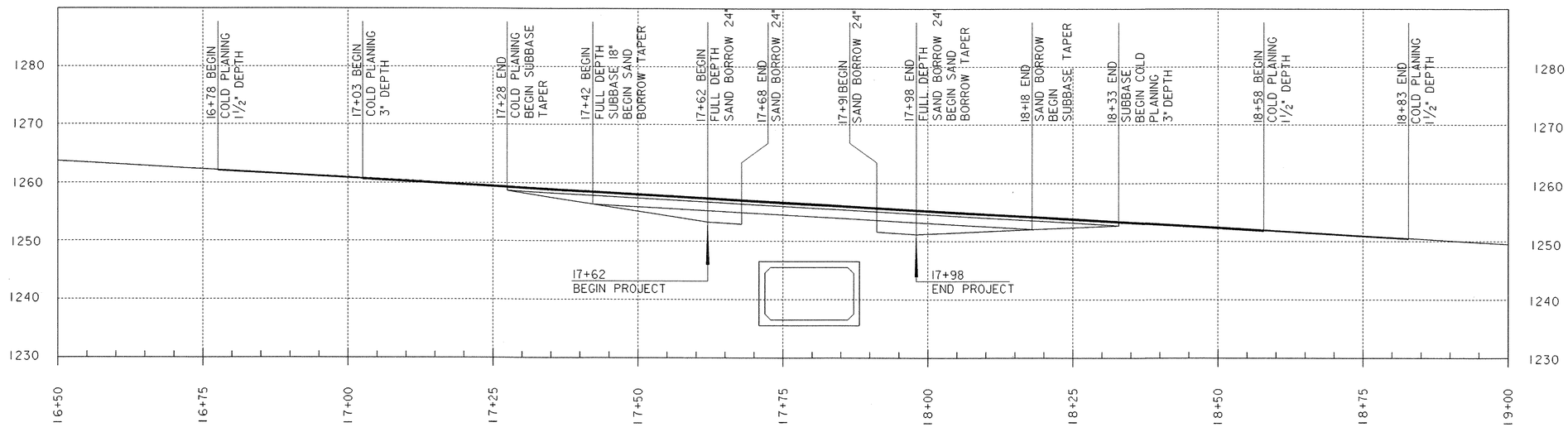

MATERIAL TRANSITIONS

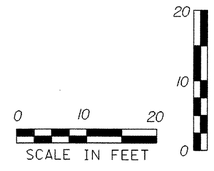

PROFILE AND MATERIAL TRANSITIONS

PROJECT NAME: JAY	
PROJECT NUMBER: ST STP CULV (2)	
FILE NAME: 04bl40\s04bl40bdr.dgn	PLOT DATE: 23-OCT-2006
PROJECT LEADER: W. SYMONDS	DRAWN BY: G. SHANGRAW
DESIGNED BY: T. FILLBACH	CHECKED BY: T. SUMNER
04bl40profile.l	SHEET 8 OF 39

STATE OF VERMONT
AGENCY OF TRANSPORTATION

EROSION CONTROL NARRATIVE

GENERAL EROSION PROVENTION & SEDIMENT CONTROL (EPSC) GUIDELINES

The Erosion Control plans are intended as a guide for preventing soil erosion and controlling sediment. The work outlined in this narrative consists of applying measures throughout the duration of the project to control erosion and minimize the sedimentation of the receiving waters.

A Temporary erosion control plan will be submitted by the contractor for approval by the Agency of Transportation.

The contractor will use other temporary or permanent erosion control devices as necessitated by the sequence of construction and as directed by the Resident Engineer. See Subsection 105.23 of the 2006 Vermont Standard Specifications for Construction.

The contractor shall coordinate the installation, use, and removal of erosion and sediment control measures with construction activities to assure economical, effective, and continuous erosion and sediment control. The contractor shall employ temporary stabilization practices in incremental stages as construction activities proceed.

The Resident Engineer may direct the installation of certain erosion control measures in order to forestall or mitigate potential or existing erosion problems, or to respond to storm events or damage by construction operations.

The contractor shall install erosion and sediment control measures as sequenced on the EPSC Plan, or as directed by the Resident Engineer. The type, size, and location of any erosion control device shall not be changed unless prior approval is obtained from the Resident Engineer. Any approved changes shall be noted on the EPSC Plans and discussed in the weekly report. The contractor shall inspect all erosion control measures daily and after each rainfall event. The contractor shall repair all damaged erosion control measures immediately. All erosion control measures that trap sediment, such as sediment basins and silt fences, shall be cleaned out when their capacity reaches 50%.

The Resident Engineer' s approval should be obtained prior to installing any erosion controls not specified in the EPSC Plans. However, in emergency situations where the Resident Engineer is not immediately available, the contractor should repair or install the erosion controls as he/she deems necessary and report the incident to the Resident Engineer as soon as it is practical.

The contractor shall control all sediment-laden runoff within the project site. Clean runoff from outside the project site shall be routed through the project site using diversion berms, diversion channels, and temporary or permanent culverts.

Construction equipment will not be allowed to operate on the outside of the perimeter control measures.

Construction equipment will not be allowed to cross a flowing stream, or disturb the existing stream banks, unless authorized by the Resident Engineer.

All in-stream construction must take place in a dry channel between June 1st and October 1st.

In general, preserve existing vegetation, shrubs, and trees whenever possible.

Silt fence shall be placed at the toes of all fill slopes and shall be constructed so that flows cannot bypass the ends. Areas directly below (downhill) of the silt fences must be un-disturbed and vegetated.

As construction progresses, implementation of additional erosion control measures may be required as deemed necessary by the On-Site Coordinator and as approved by the Resident Engineer.

INFORMATION REQUIRED FROM CONTRACTOR

Much of the erosion control information shown on the erosion control plans and described in this narrative is general in nature. More site specific information is not yet available as a contractor has not yet been selected. The following list outlines some of the specific information that is not included in the erosion control plans and described in this narrative:

1. The location of vehicle tracking pads.
2. The location of stockpiles, staging areas, and disposal areas.
3. A specific timetable of construction and earthwork activities.
4. The name, title, qualifications, and contact information for the on-site project coordinator.
5. The sequencing of construction activities and specific measures that will be implemented in conjunction with these activities.
6. The Contractor is required to submit the "EPSC Contractor Checklist" for review and approval by the VTrans Construction Environmental Engineer prior to commencement of construction.

DESCRIPTION OF PROJECT

This project involves reconstruction of bridge # 50 over Crook Brook on VT 105 in the town of Jay. Crook Brook is characterized as a moderately steep stream with some bank erosion but mostly stable. The streambed consists of Gravel and Cobbles. The total drainage area is 1.5 square miles.

Features of concern with respect to erosion control include embankments immediately adjacent to the project. A new buried precast concrete box will be constructed on the existing alignment.
Traffic will be maintained with a detour as shown on the project plans. The construction limits do not approach any buildings or any other structures outside the project limits.

It is anticipated that the project will last one construction season.

Disturbed area (excluding waste, borrow, and staging areas) = 0.20 acres. Estimated Total disturbed area (including waste, staging, and borrow) is anticipated to be less than 1 Acre.

SITE INVENTORY ANALYSIS

1. OFF SITE DRAINAGE CHARACTERISTICS AND TOPGRAPHY

The area outside the immediate vicinity of this project is primarily Mixed dense woods, and is hilly to mountainous. VT Route 105 is a paved state highway, and is in excess of 6% gradient. There is very limited development, consisting mainly of farms which are located approximately 3000 feet westerly of the project. There is a gravel drive approximately 150 feet westerly of the outlet end of the culvert. A drive culvert beneath the drive drains roadside and drainage from a mown field into the wetland area near the outlet end of the culvert.

2. DRAINAGE, WATERWAYS, AND BODIES OF WATER.

There is a manmade pond and a large mown field northwesterly of the project, approximately 100 feet distance from the nearest disturbed soils, and at a higher elevation than the project. The Pond eventually drains into Crook Brook further downstream of the project. A Wetland area has been identified and is located along the northwestern streambank, just outside the project limits. It is shown on the project plans.

3. DESCRIPTION OF EXISTING VEGETATIVE COVER

In the immediate vicinity of the project, the existing ground cover is mostly grassy with intermittent deciduous shrubs and small trees, as depicted on the plans by the area survey.

4. DESCRIPTION OF EXISTING SOILS

A detailed description of the soil types expected to be encountered in the project area is unavailable at this time. For the purpose of this narrative we are using engineering judgment to classify the soils expected to be encountered.

The soils are mostly engineered fills from a previous project. This soil exhibits a high percolation rate that results in low erodability.

5. SENSITIVE RESOURCE AREAS

In the immediate vicinity of the project, only identified area are Crook Brook, and the Riparian Buffer.

DESCRIPTION OF SLOPES

The existing shape of the project area can be seen by looking at the erosion control existing conditions sheet where the existing contours are shown. The contours are shown in dashed and depict the half foot interval. Major contours are shown at 5 foot intervals, and are labeled.

EXISTING SLOPES

Generally speaking, the project impacts steep but short slopes.

PROPOSED SLOPES

Fill slopes that are 1-2 (50%) or flatter will be seeded and mulched, 1-1.5 slopes will be sodded or lined with stone fill. These slopes will be protected until they are fully vegetated. The slopes along the channel banks will be lined with heavy stone and are at 1-1.5 (67%) slope.

MAINTENANCE PLAN FOR EROSION AND SEDIMENT CONTROLS

The following maintenance schedule will be followed throughout the duration of the project.

1. An assigned individual who can be associated with the day-to-day operations of the project shall do monitoring of the construction site. The inspector will be familiar with this plan and with erosion & sediment control procedures and with road and bridge construction techniques. Site reviews will be performed at least once every seven calendar days, and within 24 hours of a storm event great enough to cause water to leave the construction site.
2. A copy of the Erosion Prevention and Sediment Control Weekly Plan Review prepared by the site reviewer shall be given to the Resident Engineer each week. The report will be filled out in accordance with the item 652.20 MONITORING EPSC Plan.
3. The plan preparer will be available for on-site consultations with the Resident Engineer within twenty four hours of the request.
4. All silt fences and stone check dams will be inspected each site visit by the designated inspector, as described below:
   - i. These controls will be maintained in good condition. Any silt fence or stone check dam that is ineffective will be repaired or replaced immediately.
   - ii. Sediment deposits will be removed when they reach one-half the height of the sediment control device.
   - iii. All sediments removed will be deposited in an upland portion of the project site, or disposed off-site in the designated project waste site.
5. All slopes will be checked each site visit and any eroded areas will be immediately repaired. Temporary stabilization methods will be used as necessary until final stabilization measures are in place.
6. Both temporary & permanent seeding & mulching will be checked each site visit for vegetative growth. Any areas requiring re-vegetation will be repaired immediately.
7. Drainage structures will be cleaned as necessary to remove any sediment buildup in the sump of the structures or at the inlet of the structure.
   - i. Any inlet control found to be ineffective will be replaced as necessary and will be done immediately.
   - ii. All sediments removed will be deposited in an upland portion of the project site, or disposed off-site in the designated project waste site.
8. Temporary construction accesses will be monitored each site visit. Any control found to be ineffective will be promptly replaced.
9. All temporary erosion control devices will stay in place until final grass growth has been established and complete stabilization of the areas has occurred.
10. Once stabilization has occurred, all temporary erosion control measures will be removed and all disturbed areas will be stabilized with erosion matting and/or seed & mulch.

STATE OF VERMONT
AGENCY OF TRANSPORTATION

EROSION CONTROL NARRATIVE

SPECIFIC GUIDELINES

PHASE 1 - ESTABLISH PERIMETER EROSION CONTROLS

Prior to any construction or staging, the contractor will install Vehicle Tracking pads leading to staging areas and the project site to prevent the tracking of silts and sediments offsite. Coarse stone fill over filter fabric should be utilized where an already established stable entrance does not exist. The crushed stone product used for the construction of the Vehicle Tracking pads shall be monitored for sediment accumulation and replaced as necessary as directed by the Resident Engineer. Vehicle Tracking pads shall also be established and maintained at all offsite waste and borrow areas.

After the clearing of trees and shrubs, but prior to any grubbing and excavation, construct perimeter controls to ensure that any sediment does not leave the site. Water treated with Sediment traps and basins may be directed to nearby streams or swales.

Install perimeter silt barrier in areas of proposed work as shown on the plans prior to grubbing and filling activities. In areas of high exposure, it may be necessary to double up protection with additional silt fencing or placement of hay bales behind the silt fencing. In areas of exposed ledge, stone check dams will be utilized.

During grubbing operations, stone check dam barriers shall be installed at any obvious concentrated flow discharge points, or as directed by the Resident Engineer.

After the grubbing activity all areas of exposed soils shall be temporarily stabilized with mulching & seeding, erosion matting, as soon as practicable and before any predicted rainfall event. These temporary erosion control measures can be placed in any combination in areas of potential erosion as deemed necessary by the Resident Engineer.

After perimeter controls are in place, and prior to grading operations, construct temporary onsite sediment traps and provide inlet protection where necessary. Grade disturbed areas to drain towards sediment trap where possible.

All material stockpiles, including but not limited to, grubbing material, sand borrow, earth borrow, granular borrow, topsoil, subbase, and any excavated waste piles shall also have silt fence installed around the base of the stockpile. The Contractor is required to obtain clearance by the VTrans Environmental Section prior to commencement of construction.

PHASE 2 - ESTABLISH CULVERT EROSION CONTROLS

New slopes steeper than 50% (1-2 slope) will be constructed with stone fill for slope stabilization as the embankment construction progresses. All collected sediments should be removed from the settling structures and the ground shaped to its final grade and slope. Dispose of the collected sediments in an upland portion of the project, or in a manner approved by the Resident Engineer that will not result in sediments or pollutants entering the stream. The final design of the Sediment Basin will be provided by the Contractor.

PHASE 3 - ESTABLISH ROADWAY EROSION CONTROLS

On any partially completed permanent cut and fill slopes, all exposed soils will be stabilized with erosion matting or seeded and mulched.

The subbase material should be placed as soon as the subgrade has reached its final grade and slope. The traveling surface will be graded to promote sheet flow off the surface onto slopes, or flows will be directed to collection areas and shall be transported down the fill slopes to sediment traps or settling basins.

All graded areas shall be permanently stabilized following final grading activities. All areas that are graded outside of the growing season shall be treated with slope stabilization until seeding & mulching can be performed.

PHASE 4 - FINAL EROSION CONTROLS

Removal of silt fence shall commence only after all upslope areas are stabilized and well established, and the Resident Engineers has approved the removal.

Remove perimeter silt fences, and sediment traps, only after any toe-of-fill ditches have stabilized and vegetation is well established.

Remove all remaining temporary erosion control measures, regrade any areas if necessary, treat all regraded areas with erosion matting and or mulch & seed, and establishment of any final erosion control devices as deemed necessary by the Resident Engineer.

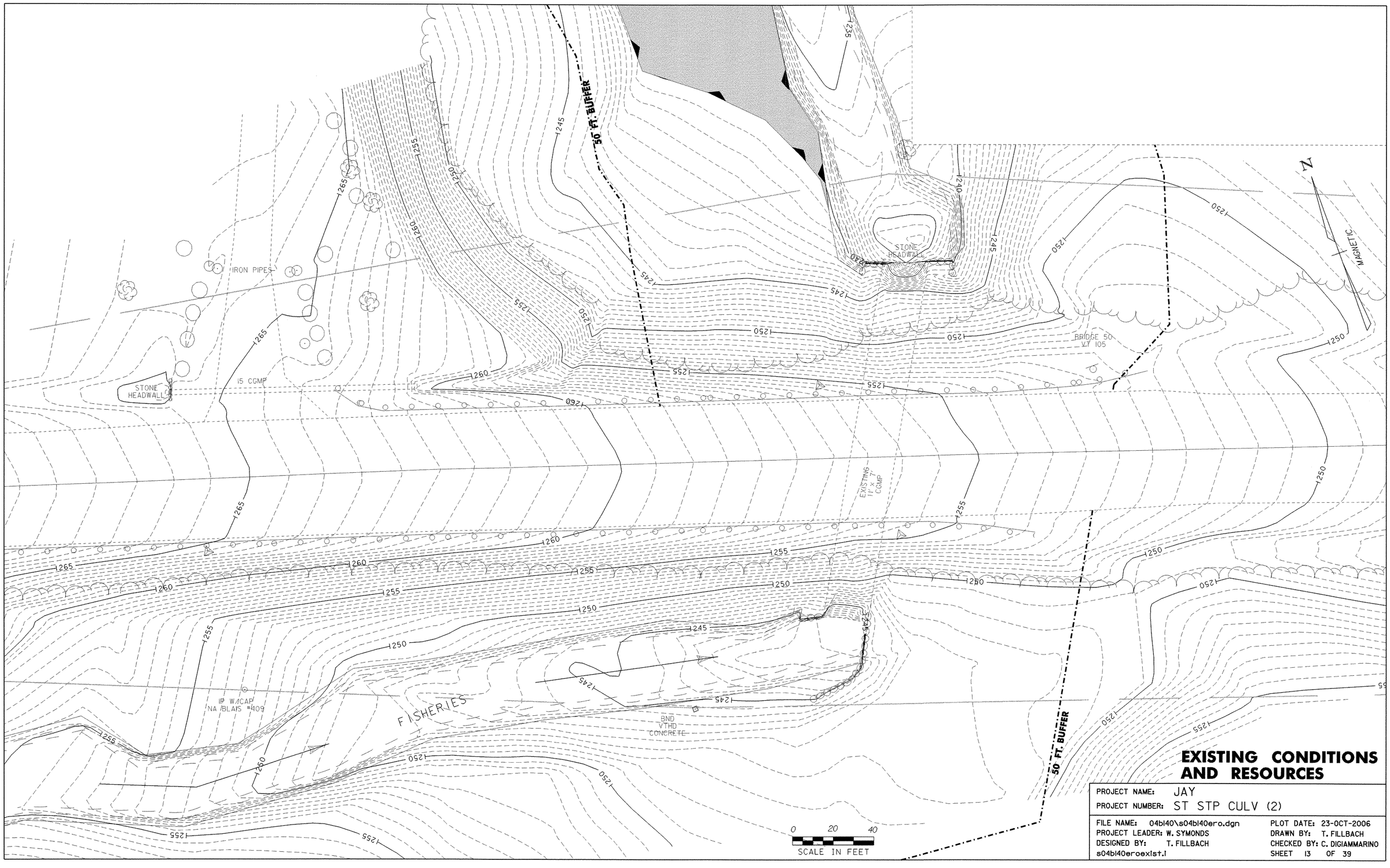

EXISTING CONDITIONS AND RESOURCES

PROJECT NAME: JAY	
PROJECT NUMBER: ST STP CULV (2)	
FILE NAME: 04b140\s04b140ero.dgn	PLOT DATE: 23-OCT-2006
PROJECT LEADER: W. SYMONDS	DRAWN BY: T. FILLBACH
DESIGNED BY: T. FILLBACH	CHECKED BY: C. DIGIAMMARINO
s04b140eroexist.I	SHEET 13 OF 39

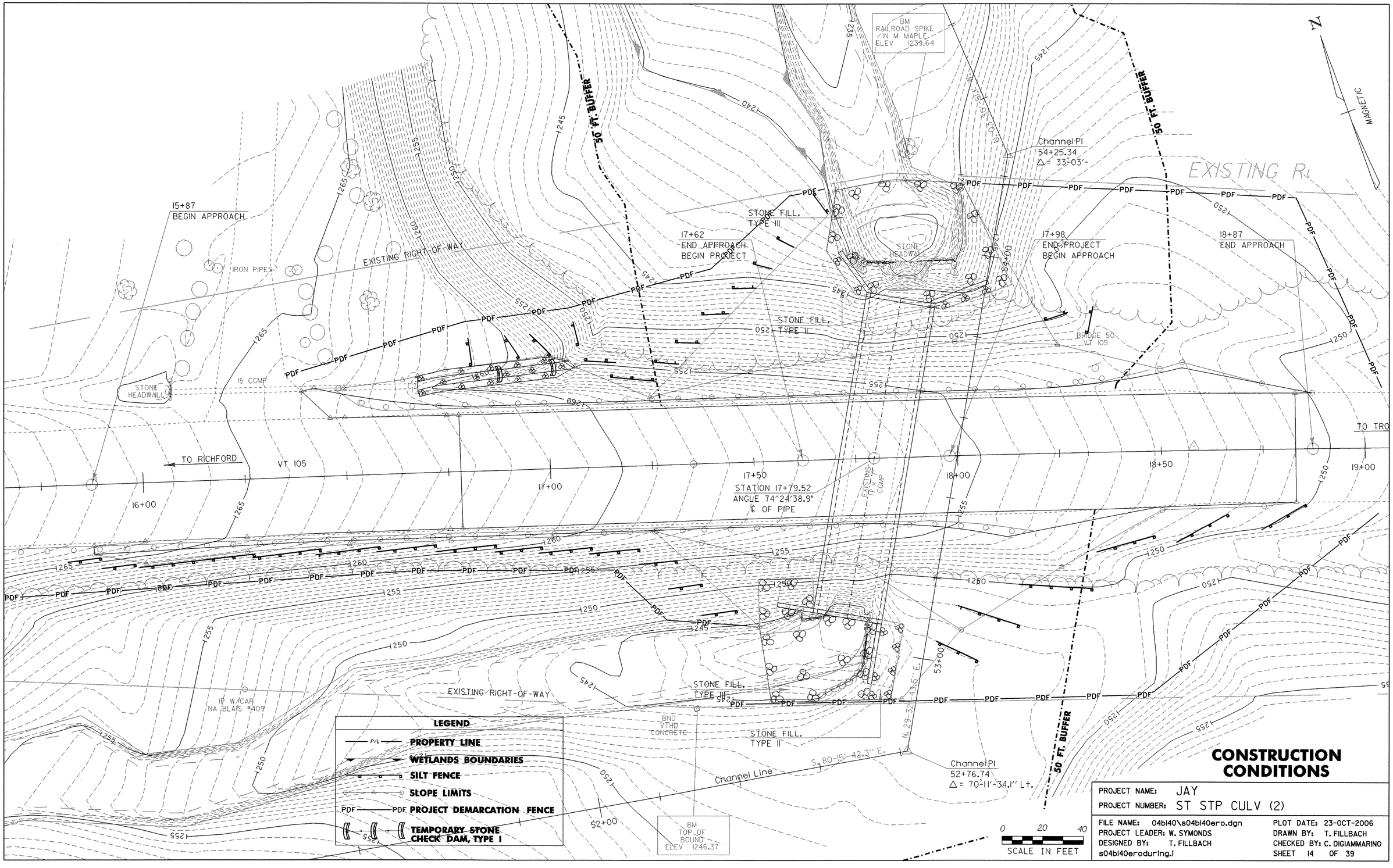

CONSTRUCTION CONDITIONS

PROJECT NAME: JAY
PROJECT NUMBER: ST STP CULV (2)

FILE NAME: 04bl40\s04bl40ero.dgn
PROJECT LEADER: W. SYMONDS
DESIGNED BY: T. FILLBACH
s04bl40erodurlng.l

PLOT DATE: 23-OCT-2006
DRAWN BY: T. FILLBACH
CHECKED BY: C. DIGIAMMARINO
SHEET 14 OF 39

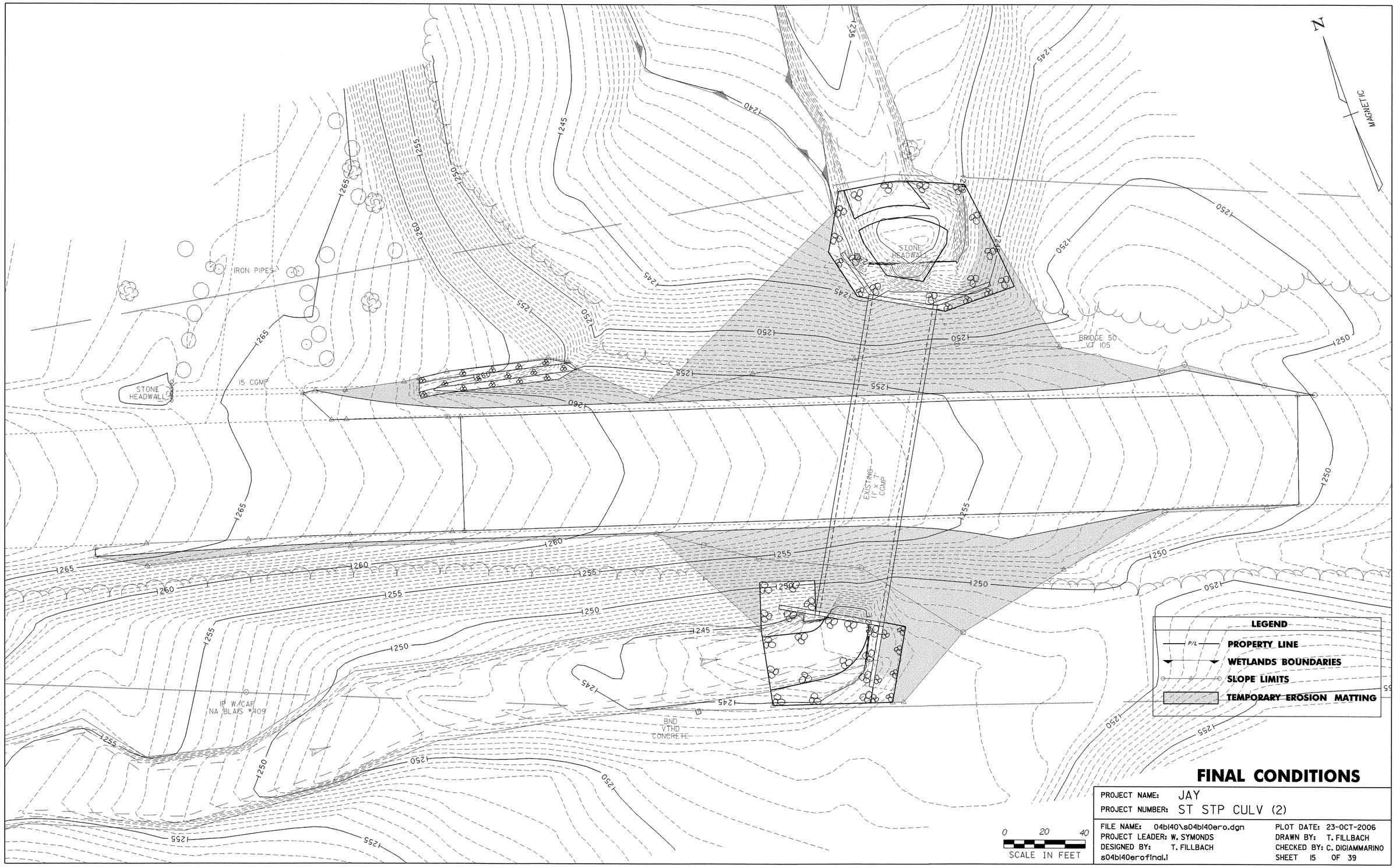

FINAL CONDITIONS

PROJECT NAME: JAY
PROJECT NUMBER: ST STP CULV (2)

FILE NAME: 04b140\s04b140ero.dgn
PROJECT LEADER: W. SYMONDS
DESIGNED BY: T. FILLBACH
s04b140erofinal.1

PLOT DATE: 23-OCT-2006
DRAWN BY: T. FILLBACH
CHECKED BY: C. DIGIAMMARINO
SHEET 15 OF 39

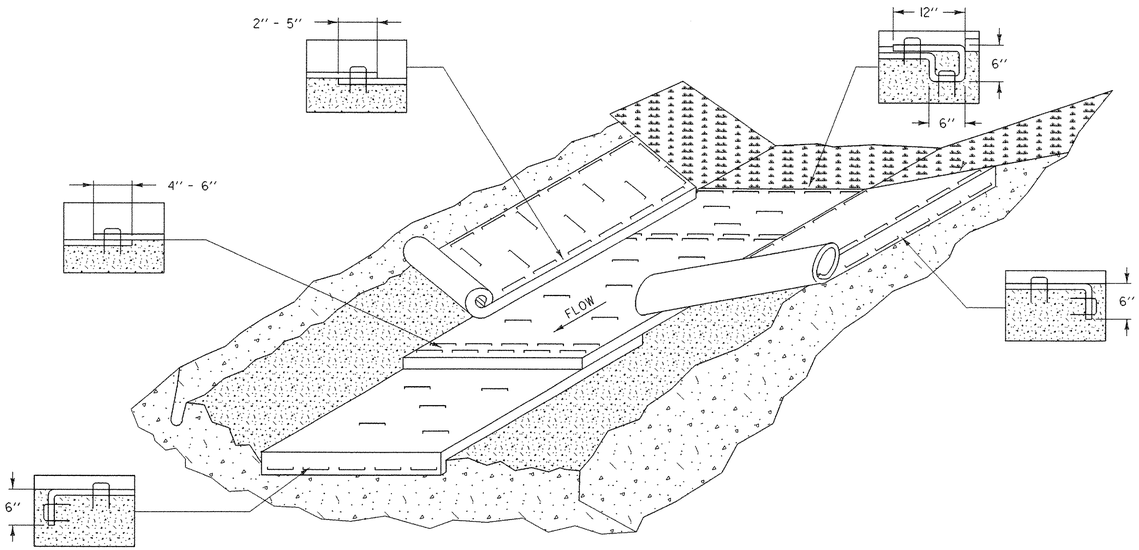

EROSION MATTING FOR DITCHES

APPLICATION NOTES:

A. THE PURPOSE OF LINING THE DITCH WITH EROSION MATTING IS TO REDUCE EROSION AND AID THE ESTABLISHMENT OF VEGETATION AT LOW VELOCITIES.

B. TYPE OF EROSION MATTING TO BE USED SHOULD BE BASED ON FACTORS SPECIFIC TO EACH APPLICATION. SEE SPECIFICATIONS AND PRODUCT RECOMMENDATIONS FOR SUITABILITY.

GENERAL NOTES:

1. WATER MAY NEED TO BE DIVERTED TO ALLOW PROPER MATTING INSTALLATION.
2. GRADE AND SMOOTH CHANNEL TO PROVIDE GOOD MATTING TO SOIL SURFACE CONTACT.
3. APPLY FERTILIZER, LIME, AND SEED PRIOR TO PLACING MATTING.
4. INSTALL MATTING IN THE CENTER OF THE CHANNEL, IN THE DIRECTION OF THE WATER FLOW.
5. INSTALL MATTING ON THE SIDE SLOPES OF THE CHANNEL, OVERLAPPING THE CENTER MAT.
6. ANCHOR MATTING AS SHOWN, UTILIZING ANCHOR STAPLES. STAPLE PLACEMENT SHALL BE DETERMINED BY THE MANUFACTURER'S INTALLATION INSTRUCTIONS.
7. EROSION MATTING SHALL BE INSPECTED EVERY SEVEN (7) CALENDAR DAYS AND WITHIN 24 HOURS OF A STORM EVENT GREAT ENOUGH TO CAUSE WATER TO LEAVE THE CONSTRUCTION SITE.
8. EROSION MATTING SHALL BE REPAIRED AND RESTAPLED AS NECESSARY TO ENSURE PROPER FUNCTION.

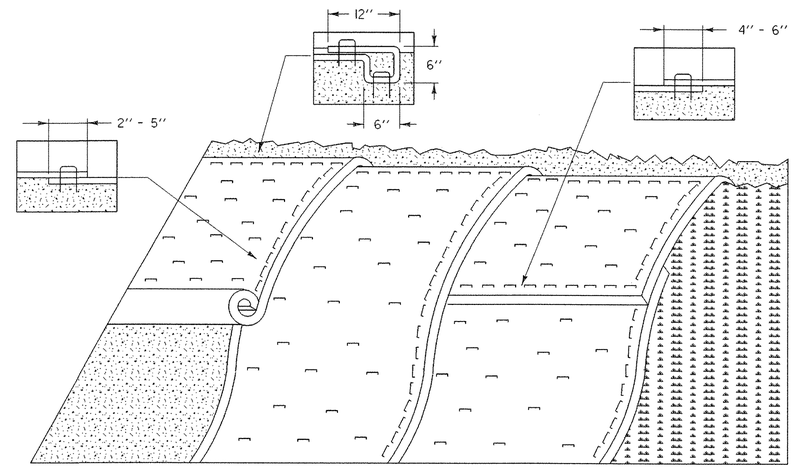

EROSION MATTING FOR SLOPES

APPLICATION NOTES:

A. THE PURPOSE OF EROSION MATTING ON SLOPES IS TO REDUCE EROSION AND AID THE ESTABLISHMENT OF VEGETATION

B. EROSION CONTROL MATTING SHALL BE USED FOR THE FOLLOWING REASONS:

- SLOPES > 3H:1V
- AREAS WHERE SEED AND MULCH WILL NOT STAY IN PLACE ALONE
- WHERE SEEDING IS OUTSIDE THE GROWING SEASON.

GENERAL NOTES:

1. GRADE AND SMOOTH THE SLOPE TO PROVIDE GOOD MATTING TO SOIL SURFACE CONTACT.
2. APPLY FERTILIZER, LIME, AND SEED PRIOR TO PLACING MATTING.
3. ANCHOR MATTING AS SHOWN, UTILIZING ANCHOR STAPLES. STAPLE PLACEMENT SHALL BE DETERMINED BY THE MANUFACTURER'S INTALLATION INSTRUCTIONS.
4. UNROLL EROSION MATTING VERTICALLY DOWN SLOPE IN THE DIRECTION OF WATER FLOW.
5. OVERLAP UPPER MATTING OVER LOWER MATTING AS SHOWN.
6. OVERLAP ADJACENT MATTING AS SHOWN.
7. CUT EXCESS MATTING AT END OF SLOPE AND ANCHOR THE END.
8. EROSION MATTING SHALL BE INSPECTED EVERY SEVEN (7) CALENDAR DAYS AND WITHIN 24 HOURS OF A STORM EVENT GREAT ENOUGH TO CAUSE WATER TO LEAVE THE CONSTRUCTION SITE.
9. EROSION MATTING SHALL BE REPAIRED AND RESTAPLED AS NECESSARY TO ENSURE PROPER FUNCTION.

REVISIONS AND CORRECTIONS

JULY 15, 2005 N. GARBACIK

EROSION PREVENTION & SEDIMENT CONTROL DETAILS

EROSION MATTING FOR DITCHES & SLOPES

PROJECT NAME: JAY
PROJECT NUMBER: ST STP CULV (2)

FILE NAME: 04b140\epsc.dgn
PROJECT LEADER: W. SYMONDS
DESIGNED BY: T. FILLBACH
epscl.i

PLOT DATE: 23-OCT-2006
DRAWN BY: G. SHANGRAW
CHECKED BY: J. LACROIX
SHEET 16 OF 39

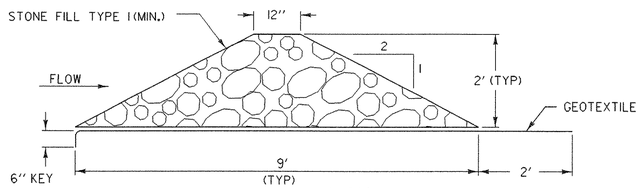

CROSS SECTION

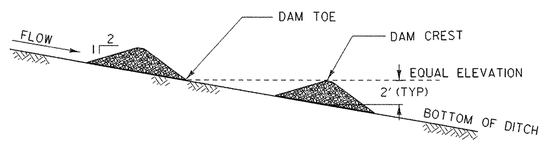

PROFILE

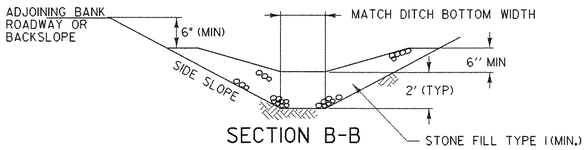

SECTION B-B

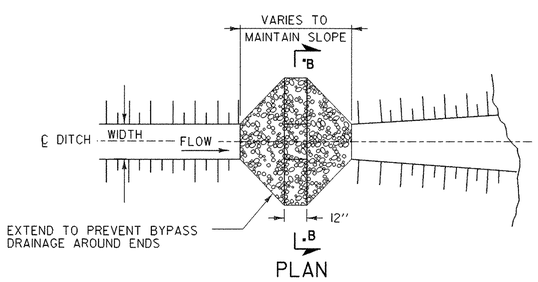

PLAN

TEMPORARY STONE CHECK DAM
TYPE I

NOT TO SCALE

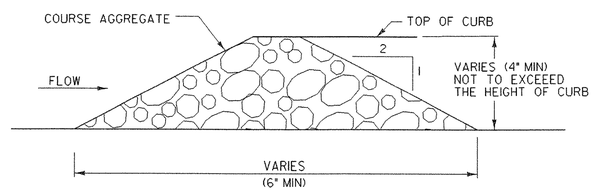

CROSS SECTION

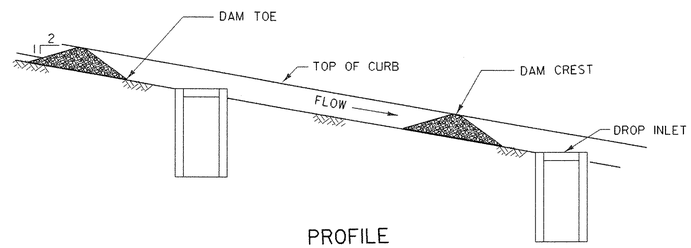

PROFILE

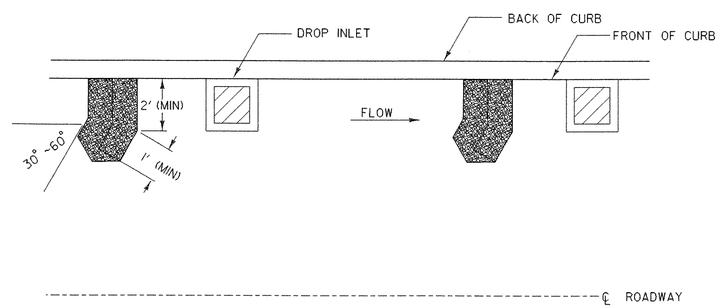

PLAN

TEMPORARY STONE CHECK DAM
TYPE II

NOT TO SCALE

TEMPORARY CHECK DAMS

APPLICATION NOTES:

A. TEMPORARY CHECK DAM TYPE I IS USED FOR CHANNEL FLOW. CHECK DAM TYPE II IS USED FOR FLOW ALONG A CURB.

B. THE PRIMARY PURPOSE OF A TEMPORARY STONE CHECK DAM (TYPE I) IS TO REDUCE EROSION IN A CHANNEL BY REDUCING FLOW VELOCITY.

C. THE PRIMARY PURPOSE OF A TEMPORARY STONE CHECK DAM (TYPE II) IS TO LIMIT THE AMOUNT OF SEDIMENT ENTERING A CLOSED DRAINAGE SYSTEM WITH STORMWATER RUNOFF.

D. TEMPORARY CHECK DAMS WILL CAPTURE SEDIMENT THAT FALLS OUT OF SUSPENSION BEHIND THE CHECK DAMS DUE TO DECREASED VELOCITY. CHECK DAMS ARE NOT INTENDED TO FILTER SEDIMENT FROM STORMWATER.

E. DETAILS SHOWN SHALL BE USED FOR TEMPORARY INSTALLATION ONLY.

F. USE OF PREFABRICATED TEMPORARY CHECK DAMS SHALL BE AS APPROVED IN THE EPSCP.

GENERAL NOTES:

1. GEOTEXTILE SHALL BE INSTALLED UNDER TEMPORARY STONE CHECK DAMS TYPE I. IT SHALL BE KEYED IN ON THE UPHILL END AND SHALL EXTEND 2 FEET BEYOND THE STONE ON THE DOWNHILL END.
2. STONE FOR TEMPORARY STONE CHECK DAMS SHALL MEET THE GRADATION REQUIREMENTS SPECIFIED IN THE CONTRACT DOCUMENTS.
3. PREFABRICATED TEMPORARY CHECK DAMS SHALL BE INSTALLED PER MANUFACTURERS RECOMMENDATIONS.
4. TEMPORARY CHECK DAMS SHALL BE INSPECTED EVERY SEVEN (7) CALENDAR DAYS AND WITHIN 24 HOURS OF A STORM EVENT GREAT ENOUGH TO CAUSE WATER TO LEAVE THE CONSTRUCTION SITE.
5. TEMPORARY CHECK DAMS SHALL BE CLEANED AND REPAIRED AS NEEDED. SEDIMENT SHALL BE REMOVED WHEN ACCUMULATION REACHES ONE-HALF OF THE HEIGHT OR AS RECOMMENDED BY THE MANUFACTURER. SEDIMENT SHALL BE DISPOSED OF AT AN APPROVED WASTE SITE.
6. AT TIME OF REMOVAL OF THE TEMPORARY CHECK DAM, THE DISTURBED AREA SHALL BE REPAIRED AND STABILIZED.

STONE CHECK DAM PLACEMENT INTERVAL

DITCH SLOPE	PLACEMENT INTERVAL **
1%	200 FT
2 %	100 FT
3 %	65 FT
4 %	50 FT
5 %	40 FT
6 %	30 FT
8 %	25 FT
10 %	20 FT

** BASED ON 2' TYPICAL HEIGHT

REVISIONS AND CORRECTIONS

JULY 15, 2005 N. GARBACIK

EROSION PREVENTION & SEDIMENT CONTROL DETAILS TEMPORARY CHECK DAMS

PROJECT NAME: JAY
PROJECT NUMBER: ST STP CULV (2)

FILE NAME: 04b140\epsc.dgn
PROJECT LEADER: W. SYMONDS
DESIGNED BY: T. FILLBACH
epsc2.i

PLOT DATE: 23-OCT-2006
DRAWN BY: J. REED
CHECKED BY: J. LACROIX
SHEET 17 OF 39

SILT FENCE

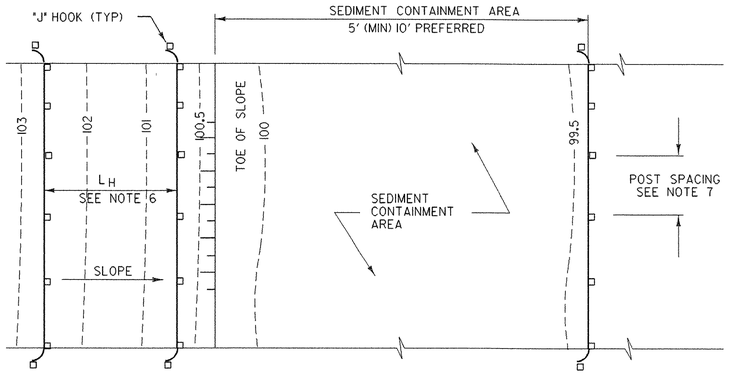

PLAN

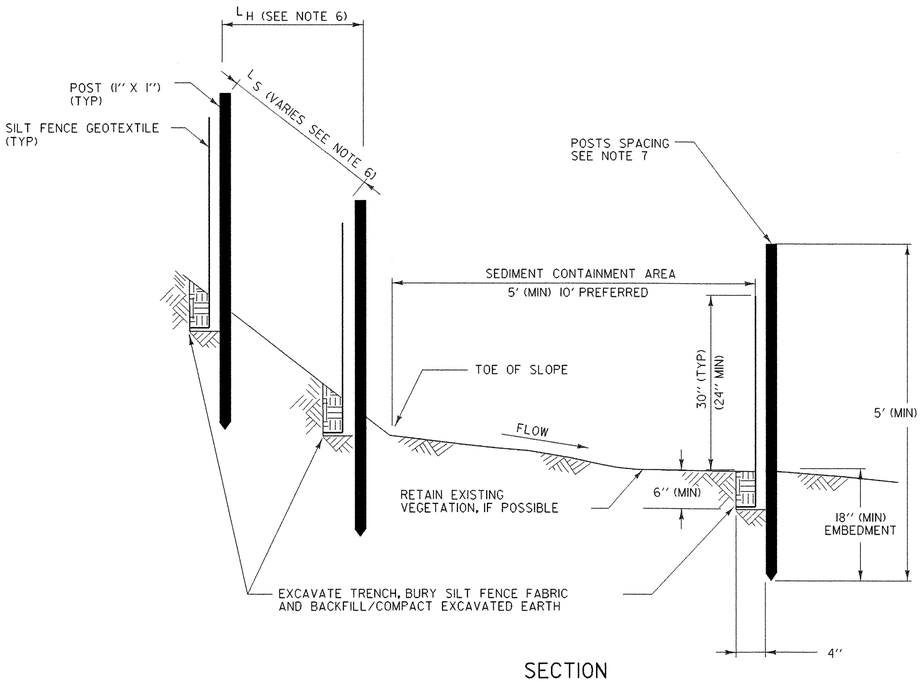

SECTION

SILT FENCE - TEMPORARY

NOT TO SCALE

APPLICATION NOTES:

A. THE PRIMARY PURPOSE OF SILT FENCE IS TO REDUCE RUNOFF VELOCITY AND TRAP SEDIMENT. VELOCITY IS REDUCED, WATER IS IMPOUNDED BEHIND THE MEASURE, AND SEDIMENT FALLS OUT OF SUSPENSION.

B. SILT FENCE SHALL NOT BE USED ACROSS CONCENTRATED FLOW.

GENERAL NOTES:

1. SILT FENCE SHALL GENERALLY BE PLACED A MINIMUM OF 5 FEET BEYOND TOE OF SLOPE, 10 FEET PREFERRED, TO PROVIDE ADEQUATE AREA FOR SEDIMENT STORAGE AND FACILITATE MAINTENANCE OF SEDIMENT CONTAINMENT AREA.
2. SILT FENCE SHALL BE INSTALLED ON A LINE OF EQUAL ELEVATION (CONTOUR). IT MAY BE INSTALLED AT INTERMEDIATE POINTS UP SLOPES AS WELL AS AT THE BOTTOM, AS SHOWN IN THE DETAIL.
3. ALL ENDS SHALL BE "J" HOOKED TO TRAP SEDIMENT.
4. IN AREAS WITH TWO SLOPES, SILT FENCE SHALL BE USED TO ERECT A DAM AND TRAP SEDIMENT AT THE BASE OF THE STEEPER SLOPE.
5. THE BOTTOM EDGE OF SILT FENCE SHALL BE BURIED A MINIMUM OF 6 INCHES BELOW GROUND, AND KEYED IN 4 INCHES. THE FENCE SHALL BE INSTALLED WITH THE POSTS ON THE DOWNSTREAM SIDE OF THE FABRIC.
6. MAXIMUM DRAINAGE AREA TRIBUTARY TO 100 FEET OF SILT FENCE SHALL BE 0.25 ACRES.
7. THE FOLLOWING ARE MAXIMUM LENGTHS FOR SILT FENCE INSTALATIONS:

CONSTRUCTED SLOPE	SLOPE LENGTH (LS) FT	HORIZONTAL LENGTH (LH) FT
3H : 1V	80	75
4H : 1V	130	125
5H : 1V	200	200
> 5H : 1V	250	250

8. WHERE ELONGATION IS >50%, POST SPACING SHALL NOT EXCERED 4 FEET. WHERE ELONGATION IS <50%, POST SPACING SHALL NOT EXCEED 6 FEET.
9. SILT FENCE SHALL BE INSPECTED EVERY SEVEN (7) CALENDAR DAYS AND WITHIN 24 HOURS OF A STORM EVENT GREAT ENOUGH TO CAUSE WATER TO LEAVE THE CONSTRUCTION SITE.
10. SILT FENCE SHALL BE CLEANED AND REPAIRED AS NEEDED. SEDIMENT SHALL BE REMOVED WHEN ACCUMULATION REACHES ONE-HALF OF THE MEASURE HEIGHT. SEDIMENT SHALL BE DISPOSED OF AT AN APPROVED WASTE SITE.
11. SILT FENCE SHALL BE REMOVED WHEN THE AREA HAS BEEN STABILIZED. AT TIME OF REMOVAL OF THE SILT FENCE, THE DISTURBED AREA SHALL BE REPAIRED AND STABILIZED.

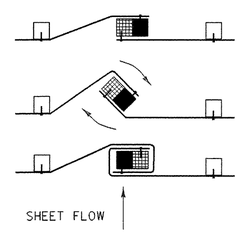

1. PLACE THE END POST OF ONE FENCE INSIDE THE END POST OF THE OTHER FENCE.
2. ROTATE BOTH POSTS AT LEAST 180 DEGREES IN A CLOCKWISE DIRECTION TO CREATE A TIGHT SEAL WITH THE FABRIC MATERIAL
3. DRIVE BOTH POSTS 18 INCHES INTO THE GROUND AND BURY THE FLAP IN THE TRENCH.

SPLICING DETAIL

NOT TO SCALE

REVISIONS AND CORRECTIONS

JULY 15, 2005 N. GARBACIK

EROSION PREVENTION & SEDIMENT CONTROL DETAILS SILT FENCE

PROJECT NAME: JAY
PROJECT NUMBER: ST STP CULV (2)

FILE NAME: 04b140\epsc.dgn
PROJECT LEADER: W. SYMONDS
DESIGNED BY: T. FILLBACH
epsc3.i

PLOT DATE: 23-OCT-2006
DRAWN BY: G. SHANGRAW
CHECKED BY: J. LACROIX
SHEET 18 OF 39

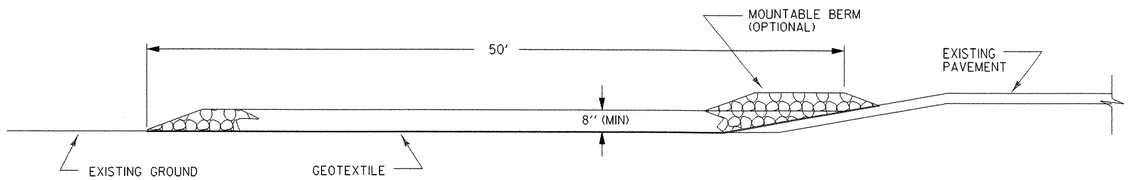

TYPICAL VEHICLE TRACKING PAD PROFILE
(CUT AND DITCH SECTIONS)

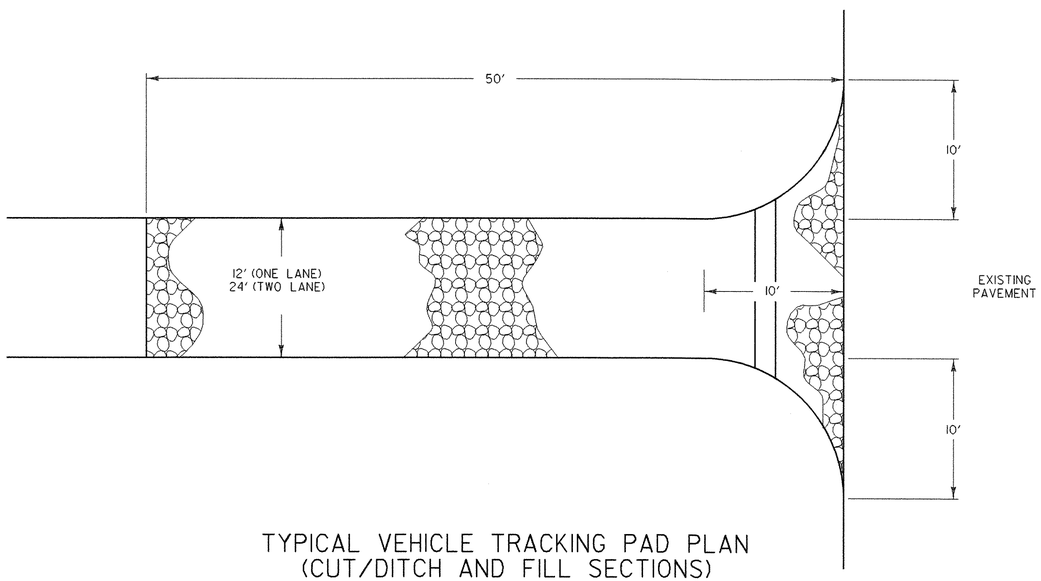

TYPICAL VEHICLE TRACKING PAD PLAN
(CUT/DITCH AND FILL SECTIONS)

STABILIZED VEHICLE TRACKING PAD

APPLICATION NOTES:

A. THE PURPOSE OF A STABILIZED VEHICLE TRACKING PAD IS TO REDUCE OR ELIMINATE THE TRACKING OF SEDIMENT ONTO PUBLIC RIGHTS OF WAY OR STREETS.

GENERAL NOTES:

1. STONE SIZE - USE CLEAN STONE WITH GRADATION BETWEEN 2 INCHES AND 4 INCHES .
2. LENGTH - 50 FEET (MIN)
3. THICKNESS - 18 INCHES (MIN)
4. WIDTH - 12 FEET (MIN)
5. GEOTEXTILE UNDER STONE WILL BE PLACED OVER THE ENTIRE AREA PRIOR TO PLACING OF STONE.
6. SURFACE WATER - ALL SURFACE WATER FLOWING OR DIVERTED TOWARD VEHICLE TRACKING PADS SHALL BE PIPED ACROSS THE ENTRANCE AS DIRECTED BY THE ENGINEER. IF PIPING IS IMPRACTICAL, A MOUNTABLE BERM WITH 5:1 SLOPES WILL BE PERMITTED.
7. PROPOSED DRAINAGE PIPES SHALL BE SIZED WITH SUFFICIENT CAPACITY TO CARRY DITCH FLOWS. ALTERNATIVE WAYS OF TRANSPORTING DITCH DRAINAGE ACROSS VEHICLE TRACKING PADS MAY BE PROPOSED BY THE CONTRACTOR FOR APPROVAL BY THE ENGINEER.
8. WHEN WASHING OF VEHICLE IS NECESSARY, IT SHALL BE DONE ON AN AREA STABILIZED WITH STONE WHICH DRAINS INTO AN APPROVED SEDIMENT TRAPPING DEVICE.
9. MEASURES SHALL BE INSPECTED EVERY SEVEN (7) CALENDAR DAYS AND WITHIN 24 HOURS OF A STORM EVENT GREAT ENOUGH TO CAUSE WATER TO LEAVE THE CONSTRUCTION SITE.
10. MAINTENANCE- THE ENTRANCE SHALL BE MAINTAINED IN A CONDITION WHICH WILL PREVENT TRACKING OR FLOWING OF SEDIMENT ONTO PUBLIC RIGHTS-OF-WAY. ALL SEDIMENT SPILLED, DROPPED, WASHED, OR TRACKED ONTO PUBLIC RIGHTS-OF-WAY MUST BE REMOVED IMMEDIATELY.
11. AT THE TIME OF REMOVAL OF THE STABILIZED VEHICLE TRACKING PAD THE DISTURBED AREA SHALL BE REPAIRED AND STABILIZED.
12. PAYMENT OF THE STABILIZED VEHICLE TRACKING PAD SHALL BE MADE UNDER APPLICABLE ITEMS INCLUDED IN THE CONTRACT PLANS OR UNDER THE FIELD MAINTENANCE OF EROSION & SEDIMENT CONTROL PLAN ITEM.
13. PAYMENT FOR MONITORING STABILIZED VEHICLE TRACKING PADS SHALL BE MADE UNDER THE MONITORING EROSION & SEDIMENT CONTROL PLAN ITEM.
14. PAYMENT FOR MAINTAINING THE VEHICLE TRACKING PAD SHALL BE MADE UNDER THE MAINTENANCE OF EROSION & SEDIMENT CONTROL PLAN ITEM, UNLESS MAINTENANCE IS REQUIRED DUE TO POOR INSTALLATION PRACTICES.

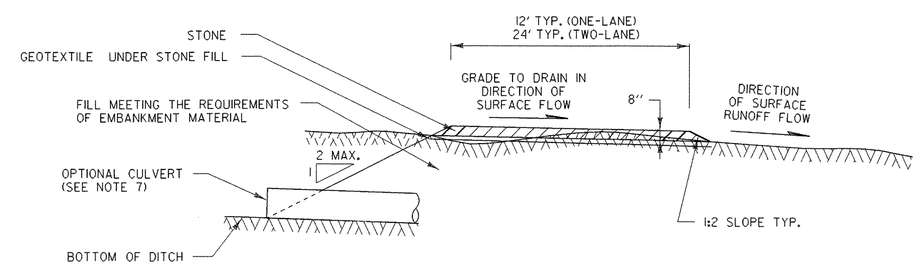

TYPICAL VEHICLE TRACKING PAD SECTION

REVISIONS AND CORRECTIONS

MAY 18, 2004 N. GARBACIK

EROSION PREVENTION & SEDIMENT CONTROL DETAILS VEHICLE TRACKING PAD

PROJECT NAME: JAY
PROJECT NUMBER: ST STP CULV (2)

FILE NAME: 04b140\epsc.dgn
PROJECT LEADER: W. SYMONDS
DESIGNED BY: T. FILLBACH
epsc4.i

PLOT DATE: 23-OCT-2006
DRAWN BY: G. SHANGRAW
CHECKED BY: J. LACROIX
SHEET 19 OF 39

THIS PROJECT WILL REQUIRE TWO (2) PORTABLE CHANGABLE MESSAGE SIGNS.

THE TWO PORTABLE CHANGABLE MESSAGE SIGNS SHALL BE FULLY OPERATIONAL A MINIMUM OF TWO WEEKS PRIOR TO THE CLOSURE OF VT. 105. SEE DETOUR SHEET #1 FOR PLACEMENT DETAILS AND THE PROPOSED MESSAGE.

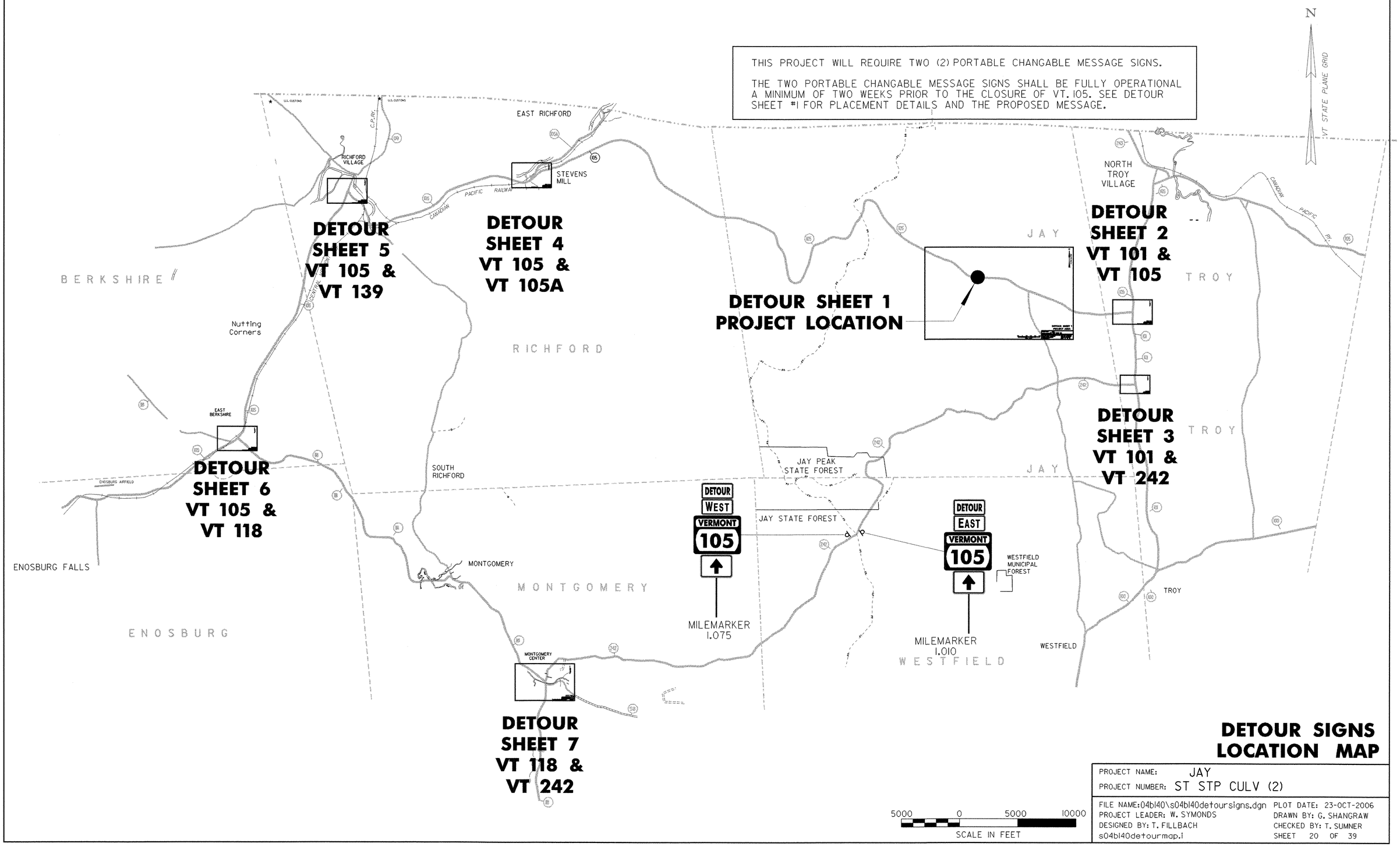

DETOUR SIGNS LOCATION MAP

PROJECT NAME: JAY	
PROJECT NUMBER: ST STP CULV (2)	
FILE NAME: 04bl40\s04bl40detoursigns.dgn	PLOT DATE: 23-OCT-2006
PROJECT LEADER: W. SYMONDS	DRAWN BY: G. SHANGRAW
DESIGNED BY: T. FILLBACH	CHECKED BY: T. SUMNER
s04bl40detourmap.i	SHEET 20 OF 39

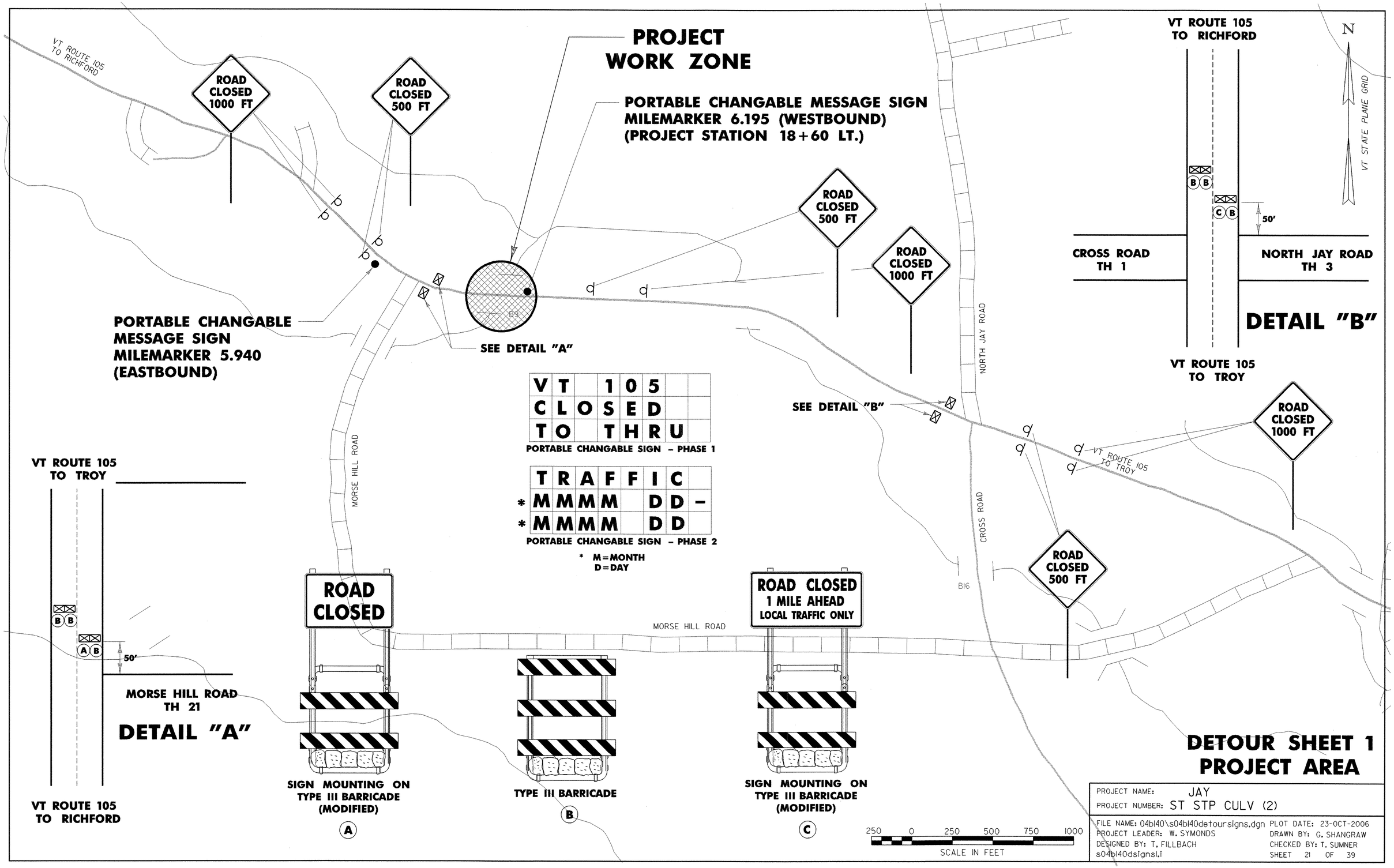

V	T		1	0	5		
C	L	O	S	E	D		
T	O		T	H	R	U	

PORTABLE CHANGABLE SIGN – PHASE 1

	T	R	A	F	F	I	C
*	M	M	M	M		D	D –
*	M	M	M	M		D	D

PORTABLE CHANGABLE SIGN – PHASE 2

* M=MONTH
D=DAY

PROJECT NAME: JAY	
PROJECT NUMBER: ST STP CULV (2)	
FILE NAME: 04b140\s04b140detoursigns.dgn	PLOT DATE: 23-OCT-2006
PROJECT LEADER: W. SYMONDS	DRAWN BY: G. SHANGRAW
DESIGNED BY: T. FILLBACH	CHECKED BY: T. SUMNER
s04b140dsignsl.i	SHEET 21 OF 39

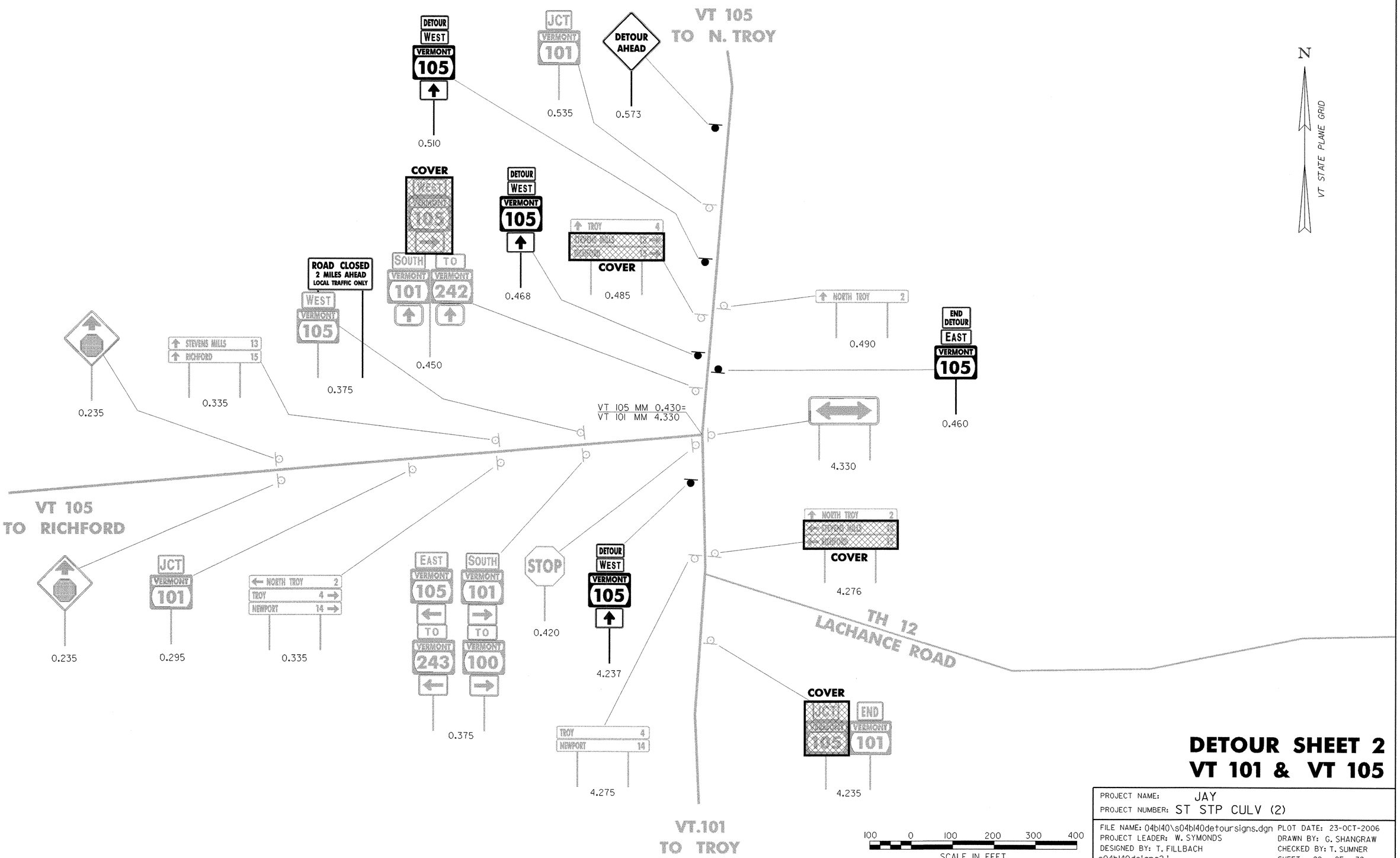

DETOUR SHEET 2
VT 101 & VT 105

PROJECT NAME: JAY	
PROJECT NUMBER: ST STP CULV (2)	
FILE NAME: 04bl40\s04bl40detoursigns.dgn	PLOT DATE: 23-OCT-2006
PROJECT LEADER: W. SYMONDS	DRAWN BY: G. SHANGRAW
DESIGNED BY: T. FILLBACH	CHECKED BY: T. SUMNER
s04bl40dsigns2.1	SHEET 22 OF 39

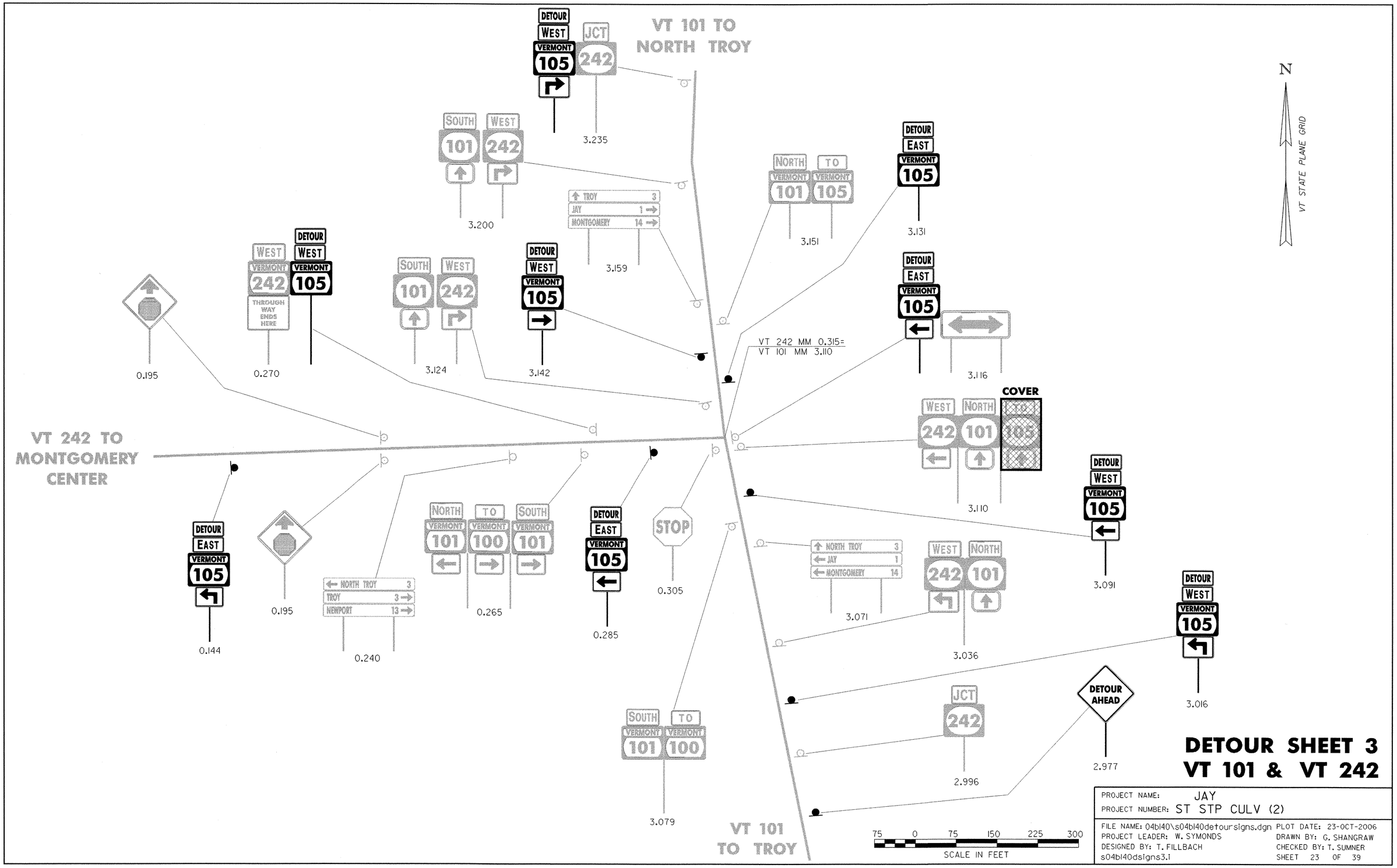

DETOUR SHEET 3
VT 101 & VT 242

PROJECT NAME: JAY	
PROJECT NUMBER: ST STP CULV (2)	
FILE NAME: 04b140\s04b140detoursigns.dgn	PLOT DATE: 23-OCT-2006
PROJECT LEADER: W. SYMONDS	DRAWN BY: G. SHANGRAW
DESIGNED BY: T. FILLBACH	CHECKED BY: T. SUMNER
s04b140dsigns3.i	SHEET 23 OF 39

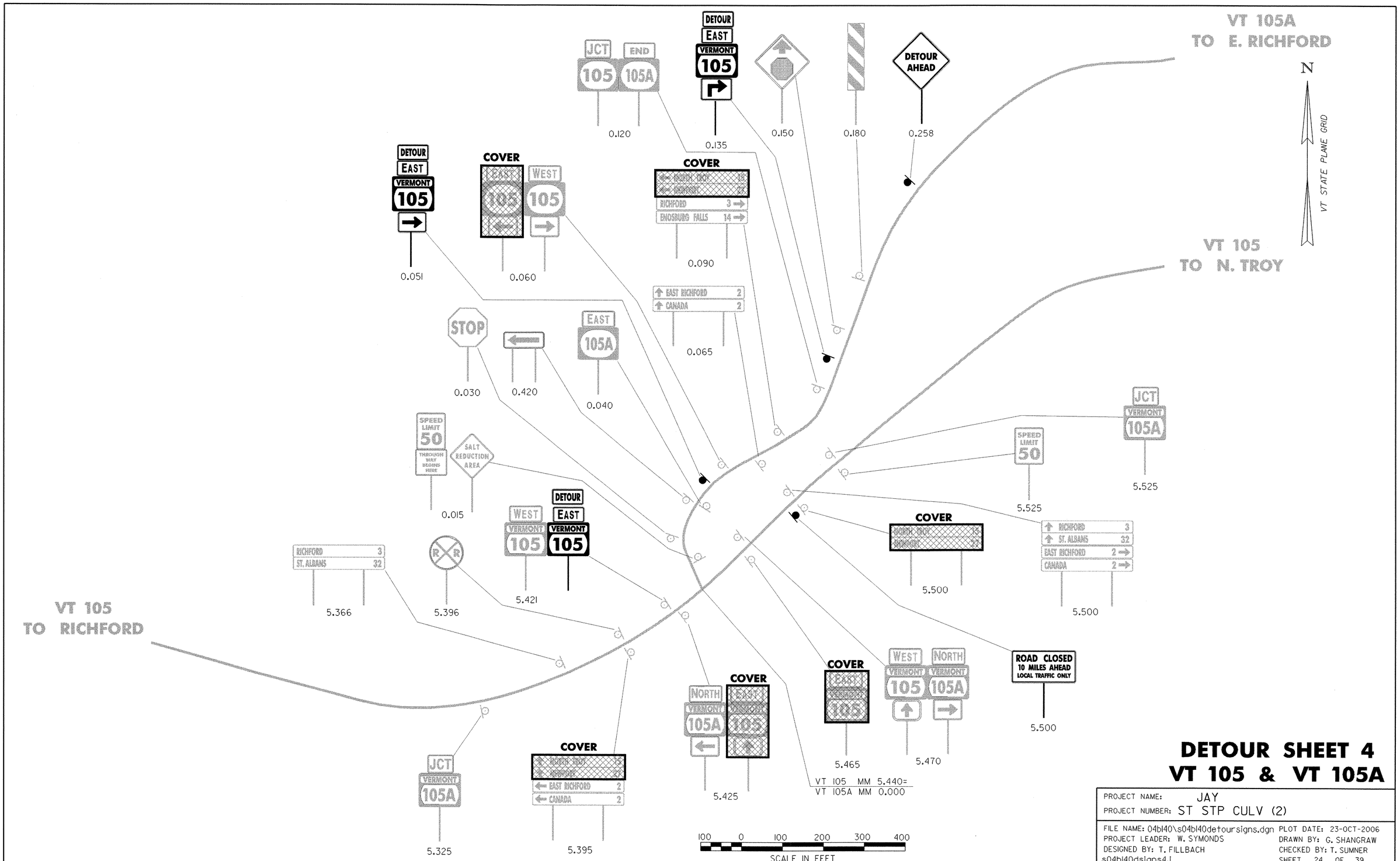

DETOUR SHEET 4
VT 105 & VT 105A

PROJECT NAME: JAY
PROJECT NUMBER: ST STP CULV (2)

FILE NAME: 04bl40\s04bl40detoursigns.dgn PLOT DATE: 23-OCT-2006
PROJECT LEADER: W. SYMONDS DRAWN BY: G. SHANGRAW
DESIGNED BY: T. FILLBACH CHECKED BY: T. SUMNER
s04bl40dsigns4.i SHEET 24 OF 39

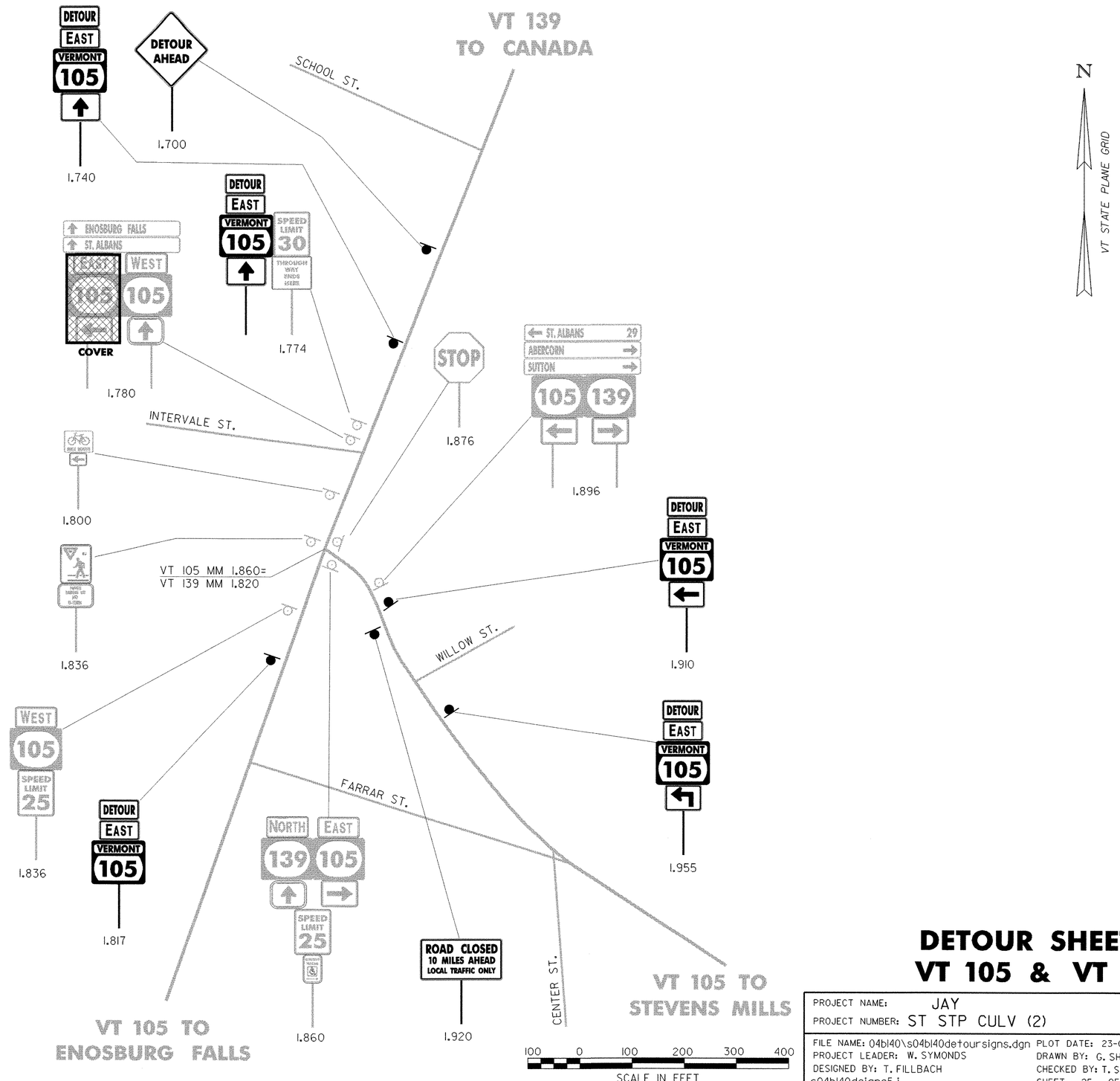

DETOUR SHEET 5
VT 105 & VT 139

PROJECT NAME: JAY
PROJECT NUMBER: ST STP CULV (2)

FILE NAME: 04bl40\s04bl40detoursigns.dgn PLOT DATE: 23-OCT-2006
PROJECT LEADER: W. SYMONDS DRAWN BY: G. SHANGRAW
DESIGNED BY: T. FILLBACH CHECKED BY: T. SUMNER
s04bl40dsigns5.i SHEET 25 OF 39

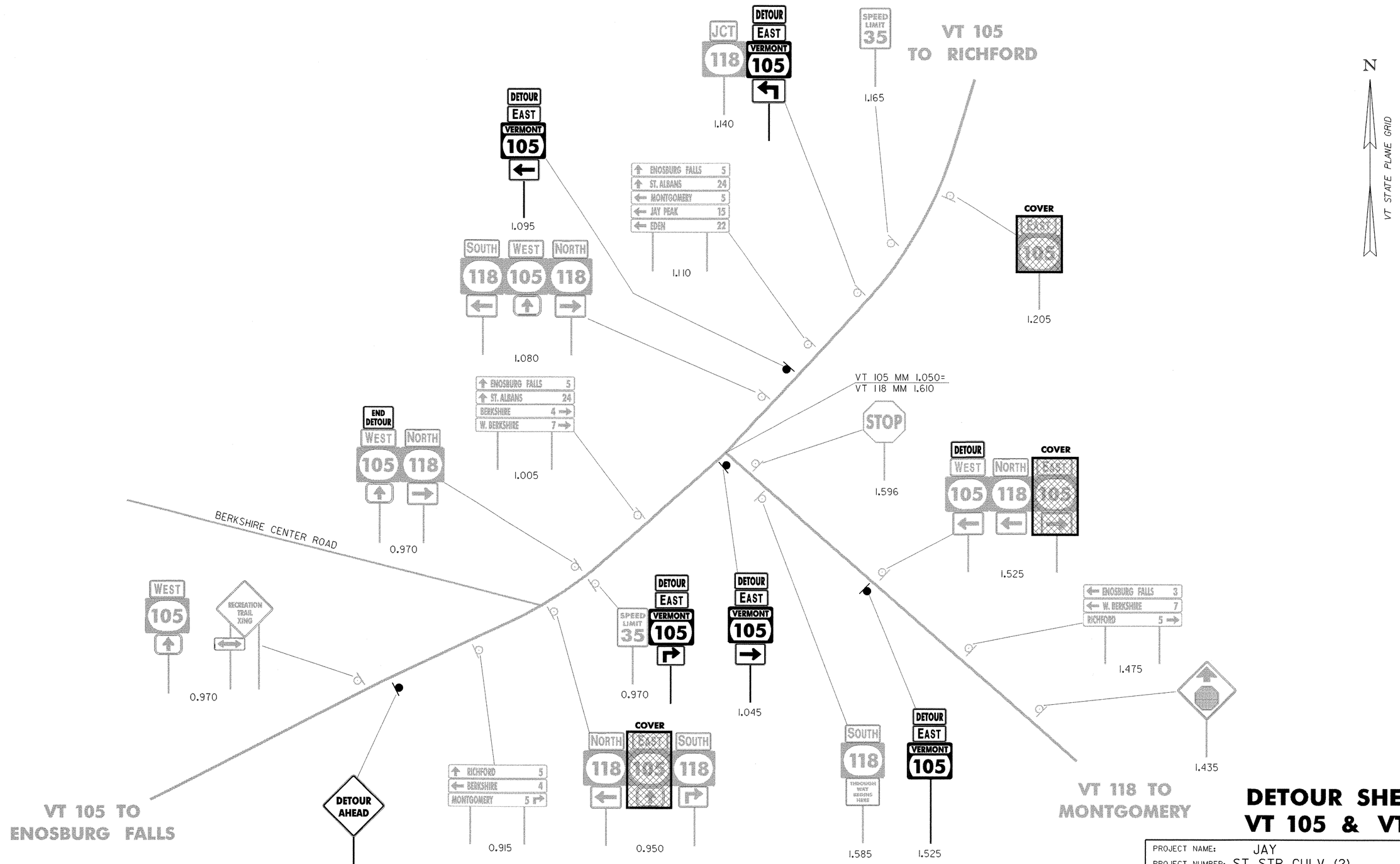

DETOUR SHEET 6
VT 105 & VT 118

PROJECT NAME: JAY
PROJECT NUMBER: ST STP CULV (2)

FILE NAME: 04bl40/s04bl40detoursigns.dgn
PROJECT LEADER: W. SYMONDS
DESIGNED BY: T. FILLBACH
s04bl40dsigns6.i

PLOT DATE: 23-OCT-2006
DRAWN BY: G. SHANGRAW
CHECKED BY: T. SUMNER
SHEET 26 OF 39

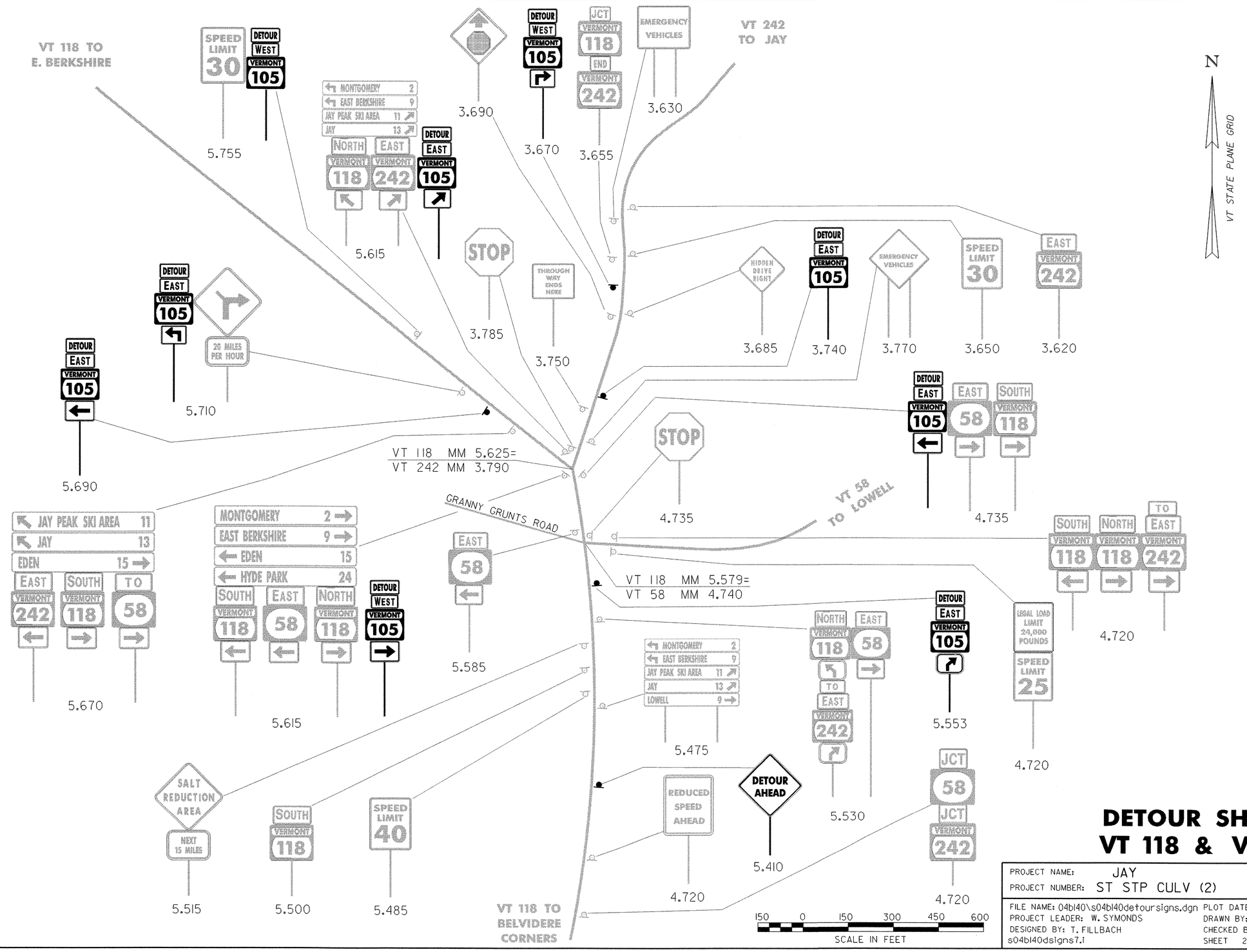

DETOUR SHEET 7
VT 118 & VT 242

PROJECT NAME: JAY	
PROJECT NUMBER: ST STP CULV (2)	
FILE NAME: 04bl40\s04bl40detoursigns.dgn	PLOT DATE: 23-OCT-2006
PROJECT LEADER: W. SYMONDS	DRAWN BY: G. SHANGRAW
DESIGNED BY: T. FILLBACH	CHECKED BY: T. SUMNER
s04bl40dsigns7.i	SHEET 27 OF 39

SOIL CLASSIFICATION

AASHTO

A1	Gravel and Sand
A3	Fine Sand
A2	Silty or Clayey Gravel and Sand
A4	Silty Soil - Low Compressibility
A5	Silty Soil - Highly Compressible
A6	Clayey Soil - Low Compressibility
A7	Clayey Soil - Highly Compressible

ROCK QUALITY DESIGNATION

R.Q.D. (%)	ROCK DESCRIPTION
<25	Very Poor
25 to 50	Poor
51 to 75	Fair
76 to 90	Good
>90	Excellent

SHEAR STRENGTH

UNDRAINED SHEAR STRENGTH IN P.S.F.	CONSISTENCY
<250	Very Soft
250-500	Soft
500-1000	Med. Stiff
1000-2000	Stiff
2000-4000	Very Stiff
>4000	Hard

CORRELATION GUIDE OF "N" TO DENSITY/CONSISTENCY

DENSITY (GRANULAR SOILS)

N	DESCRIPTIVE TERM
<5	Very Loose
5-10	Loose
11-24	Med. Dense
25-50	Dense
>50	Very Dense

CONSISTENCY (COHESIVE SOILS)

N	DESCRIPTIVE TERM
<2	Very Soft
2-4	Soft
5-8	Med. Stiff
9-15	Stiff
16-30	Very Stiff
31-60	Hard
>60	Very Hard

COMMONLY USED SYMBOLS

▼	Water Elevation
⊗	Standard Penetration Boring
⊕	Auger Boring
⊙	Rod Sounding
S	Sample
N	Standard Penetration Test Blow Count Per Foot For: 2" O.D. Sampler 1 3/8" I.D. Sampler Hammer Weight Of 140 Lbs. Hammer Fall Of 30"
VS	Field Vane Shear Test
US	Undisturbed Soil Sample
B	Blast
DC	Diamond Core
MD	Mud Drill
WA	Wash Ahead
HSA	Hollow Stem Auger
AX	Core Size 1 1/8"
BX	Core Size 1 5/8"
NX	Core Size 2 1/8"
M	Double Tube Core Barrel Used
LL	Liquid Limit
PL	Plastic Limit
PI	Plasticity Index
NP	Non Plastic
w	Moisture Content (Dry Wgt. Basis)
D	Dry
M	Moist
MTW	Moist To Wet
W	Wet
Sat	Saturated
Bo	Boulder
Gr	Gravel
Sa	Sand
Si	Silt
Cl	Clay
HP	Hardpan
Le	Ledge
NLTD	No Ledge To Depth
CNPF	Can Not Penetrate Further
TLOB	To Ledge Or Boulder
NR	No Recovery
Rec.	Recovery
%Rec.	Percent Recovery
RQD	Rock Quality Designation
CBR	California Bearing Ratio
<	Less Than
>	Greater Than
R	Refusal (N > 100)

COLOR

blk	Black	pnk	Pink
bl	Blue	pu	Purple
brn	Brown	rd	Red
dk	Dark	tn	Tan
gry	Gray	wh	White
gn	Green	yel	Yellow
lt	Light	mltc	Multicolored
or	Orange		

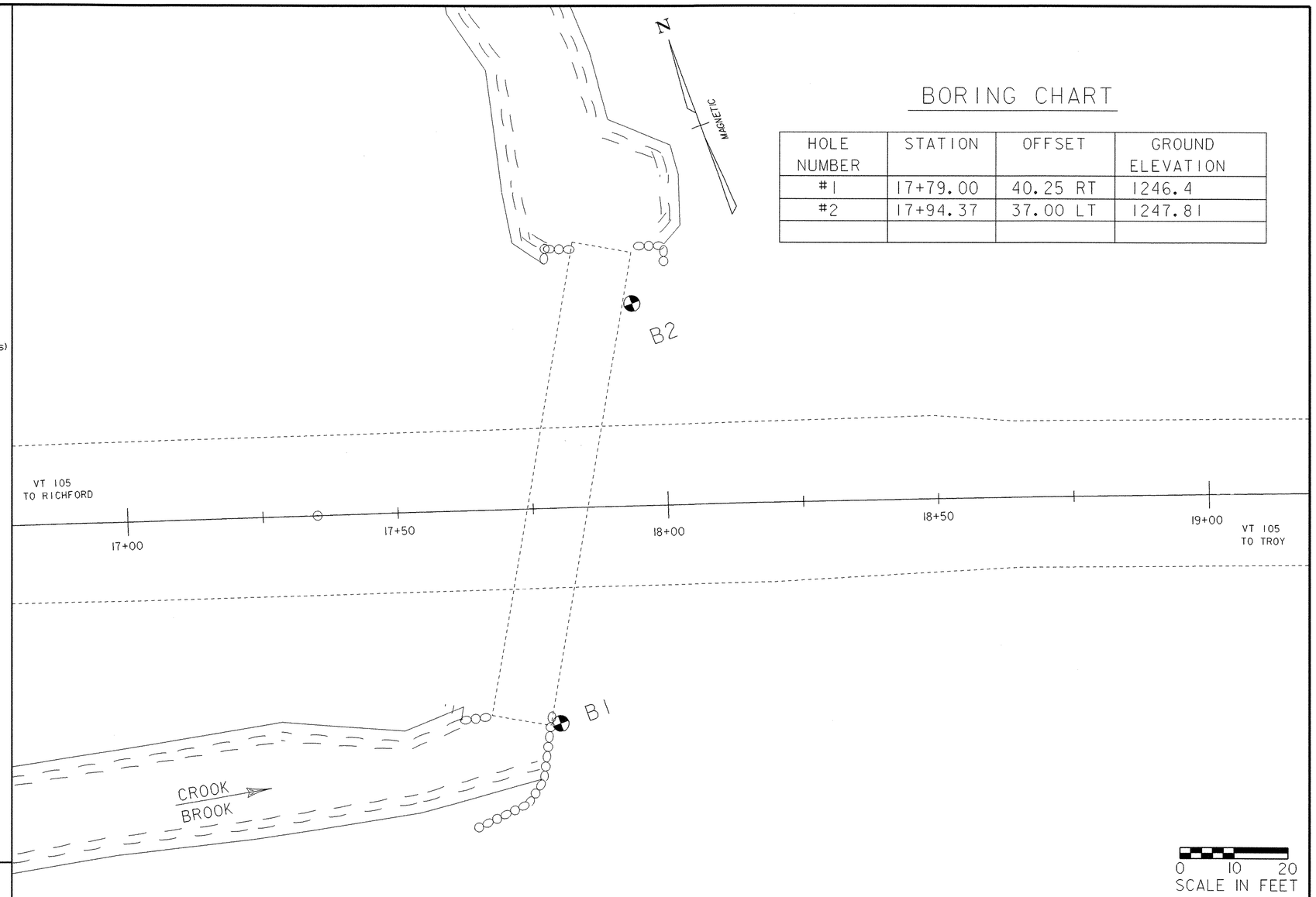

BORING CHART

HOLE NUMBER	STATION	OFFSET	GROUND ELEVATION
#1	17+79.00	40.25 RT	1246.4
#2	17+94.37	37.00 LT	1247.81

DEFINITIONS (AASHTO)

BEDROCK (LEDGE) - Rock in its native location of indefinite thickness.

BOULDER - A rock fragment with an average dimension > 12 inches.

COBBLE - Rock fragments with an average dimension between 3 and 12 inches.

GRAVEL - Rounded particles of rock < 3" and > 0.0787" (#10 sieve).

SAND - Particles of rock < 0.0787" (#10 sieve) and > 0.0029" (#200 sieve).

SILT - Soil < 0.0029" (#200 sieve), non or slightly plastic and exhibits no strength when air-dried.

CLAY - Fine grained soil, exhibits plasticity when moist and considerable strength when air-dried.

VARVED - Alternate layers of silt and clay.

HARDPAN - Extremely dense soil, cemented layer, not softened when wet.

MUCK - Soft organic soil (containing > 10% organic material.

MOISTURE CONTENT - Weight of water divided by dry weight of soil.

FLOWING SAND - Granular soil so saturated (loose) that it flows into drill casing during extraction of wash rod.

STRIKE - Angle from magnetic north to line of intersection of bed with a horizontal plane.

DIP - Inclination of bed with a horizontal plane.

GENERAL NOTES

1. The subsurface explorations shown herein were made between 6/30/05 and 7/14/05 by the Agency.
2. Soil and rock classifications, properties and descriptions are based on engineering interpretation from available subsurface information by the Agency and may not necessarily reflect actual variations in subsurface conditions that may be encountered between individual boring or sample locations.
3. Observed water levels and/or conditions indicated are as recorded at the time of exploration and may vary according to the prevailing rainfall, methods of exploration and other factors.
4. Engineering judgement was exercised in preparing the subsurface information presented herein. Analysis and interpretation of subsurface data was performed and interpreted for Agency design and estimating purposes. Presentation of the information in the Contract is intended to provide the Contractor access to the same data available to the Agency. The subsurface information is presented in good faith and is not intended as a substitute for personal investigation, independent interpretation, independent analysis or judgement by the Contractor.
5. Pictorial structure details shown on the boring plan layout or soils profile are for illustrative purposes only and may not accurately portray final contract details.
6. Terminology used on boring logs to describe the hardness, degree of weathering, and spacing of fractures, joints and other discontinuities in the bedrock is defined in the AASHTO Manual on Subsurface Investigations, 1988.

s04b140bor.i

STATE OF VERMONT
AGENCY OF TRANSPORTATION

Town Of JAY	Bridge No. 50
Highway No. VT 105	Log Sta. / Surv. Sta.

BORING INFORMATION SHEET

Designed By T. FILLBACH	Drawn By G. SHANGRAW
Checked By T. SUMNER Date	Bridge Design Supervisor W. SYMONDS Date
PROJECT JAY	PROJECT NO. ST STP CULV (2)
I.G.C. Info.	
Bridge Sheet No.	Sheet 28 of 39

STATE OF VERMONT
AGENCY OF TRANSPORTATION
MATERIALS & RESEARCH SECTION
SUBSURFACE INFORMATION

BORING NUMBER: B-1
SHEET 1 of 1
DATE STARTED: 6/30/05
DATE COMPLETED: 7/08/05

PROJECT NAME: JAY
SITE NAME: VT-105
STATION: 17+80.28
OFFSET: 39.93

PROJECT NUMBER: STCULV(2)
SITE NUMBER: BR-50
GROUND ELEVATION: 1246.4 ft
GROUNDWATER DEPTH: 2.3 ft 7/08/05

BORING CREW
CREW CHIEF: GARROW
DRILLER: GARROW
LOGGER: RUSSELL

BORING RIG: LAG TRACK RIG
BORING TYPE: WASH BORE
SAMPLE TYPE: SPLIT BARREL
CHECKED BY: DLG

INLET INVERT ELEV. 1241.23

DEPTH (ft)	CLASSIFICATION OF MATERIALS (Description)	BLOWS PER FOOT	M.C. (%)	GRAVEL (%)	SAND (%)	FINES (%)
	A-1-b, SiGrSa, brn, Moist, Rec. = 0.9 ft	8	8.2	32.3	47.6	20.1
	A-1-b, SaGr, brn, Moist, Rec. = 1.1 ft	6	5.0	48.5	41.5	10.0
	Boulder, NXGC, 4.0 ft - 5.0 ft					
	A-1-a, SaGr, brn, Moist, Rec. = 0.8 ft	32	11.2	64.3	26.3	9.4
	A-1-b, SiSaGr HP, gry, Moist, Rec. = 0.8 ft	45	11.1	44.9	30.8	24.3
10	A-4, Si HP, gry, Moist, Rec. = 1.7 ft	31	14.9	13.8	14.5	71.7
	A-4, SaSi HP, gry, Moist, Rec. = 1.8 ft	25	16.7	7.7	22.6	69.7
	A-4, SaSi HP, gry, Moist, Rec. = 1.7 ft, Broken Rock was within sample	23	12.0	19.8	31.0	49.2
	A-4, GrSaSi HP, gry, Moist, Rec. = 0.6 ft, Broken Rock was within sample	R	10.8	28.9	31.3	39.8
	A-4, GrSaSi HP, gry, Moist, Rec. = 1.0 ft, Broken Rock was within sample	105	10.6	30.1	32.8	37.1
20	A-2-4, SiGrSa, gry, Moist, Rec. = 0.4 ft, Broken Rock was within sample	R	8.5	32.3	37.3	30.4
	A-2-4, GrSiSa, gry, Moist, Rec. = 1.5 ft, Broken Rock was within sample	35	13.3	29.4	40.8	29.8
30	A-2-4, SiSa, gry, Moist, Rec. = 1.7 ft, Broken Rock was within sample	98	14.9	18.6	48.7	32.7
	A-4, SiSa HP, gry, Moist, Rec. = 1.6 ft	98	16.2	15.4	44.4	40.2
40	A-1-b, SaGr, gry-brn, Moist, Rec. = 1.6 ft	44	10.9	43.2	40.6	16.2
	A-4, Si, gry-brn, Moist		21.1	2.1	12.6	85.3
	A-4, SaSi, brn-gry, Moist, Rec. = 1.3 ft	R	16.2	14.2	27.6	58.2
50	Visual Class: A-2-4, Sa Si with some weathered rock, brn-gry, Moist, Rec. = 0.4 ft, 50.0 ft - 50.4 ft	R	10.0			
	Visual Class: Broken Rock, brn-gry, Moist, 55.0 ft - 55.1 ft	R				
	Boulder, BXMDC, 55.1 ft - 58.0 ft					
60	Visual Class: A-2-4, Sa Si with Broken rock pieces, gry, Moist, Rec. = 0.25 ft, 60.0 ft - 60.4 ft, Insufficient sample for testing	R				

Hole stopped @ 60.4 ft

LOG OF BORING JAY STCULV(2).GPJ VT AOT.GDT 8/23/05

STATE OF VERMONT
AGENCY OF TRANSPORTATION
MATERIALS & RESEARCH SECTION
SUBSURFACE INFORMATION

BORING NUMBER: B-2
SHEET 1 of 1
DATE STARTED: 7/12/05
DATE COMPLETED: 7/14/05

PROJECT NAME: JAY
SITE NAME: VT-105
STATION: 17+96.08
OFFSET: -31.53

PROJECT NUMBER: STCULV(2)
SITE NUMBER: BR-50
GROUND ELEVATION: 1247.81 ft
GROUNDWATER DEPTH:

BORING CREW
CREW CHIEF: TALLMAN
DRILLER: TALLMAN
LOGGER: PORTER

BORING RIG: LARGE SKID RIG
BORING TYPE: WASH BORE
SAMPLE TYPE: SPLIT BARREL
CHECKED BY: DLG

OUTLET INVERT ELEV. 1237.77

DEPTH (ft)	CLASSIFICATION OF MATERIALS (Description)	BLOWS PER FOOT	M.C. (%)	GRAVEL (%)	SAND (%)	FINES (%)
	A-2-4, GrSa, brn, Moist, Rec. = 0.6 ft	WH	17.4	23.2	64.8	12.0
10	Boulder, No sample, 10.0 ft - 11.5 ft	R				
	A-1-b, SaGr, gry, Moist, Rec. = 0.75 ft, Broken Rock was within sample	36	10.4	50.1	32.5	17.4
20	A-4, SaGrSi, gry, Moist, Rec. = 1.4 ft, Broken Rock was within sample	46	10.9	33.4	29.7	36.9
	A-4, GrSaSi, gry, Moist, Rec. = 1.7 ft, Broken Rock was within sample	56	10.1	27.5	36.2	36.3
30	~~A-2-4, GrSiSa, gry, Moist, Rec. = 1.0 ft, Broken Rock was within~~ sample	R	11.5	32.0	35.4	32.6
	A-1-b, SiSaGr, gry, Moist, Rec. = 0.9 ft, Broken Rock was within sample	R	8.8	48.8	28.9	22.3
40	A-2-4, SiSaGr, gry, Moist, Rec. = 1.0 ft	R	9.3	34.0	33.5	32.5
	A-1-b, SaGr, gry-brn, Moist, Rec. = 0.9 ft	R	9.0	49.7	30.8	19.5
50	A-1-b, SaGr, gry-brn, Moist, Rec. = 1.0 ft	R	10.8	41.6	38.6	19.8

Hole stopped @ 51.0 ft

LOG OF BORING JAY STCULV(2).GPJ VT AOT.GDT 9/7/05

BORING LOGS

PROJECT NAME: JAY
PROJECT NUMBER: ST STP CULV (2)

FILE NAME: 04b140/s04b140bor.dgn
PROJECT LEADER: W. SYMONDS
DESIGNED BY: T. FILLBACH
s04b140borlogs.i

PLOT DATE: 23-OCT-2006
DRAWN BY: G. SHANGRAW
CHECKED BY: T. SUMNER
SHEET 29 OF 39

STATE OF VERMONT
AGENCY OF TRANSPORTATION

GENERAL NOTES

GENERAL

1. ALL MATERIALS AND CONSTRUCTION SHALL CONFORM TO THE AGENCY OF TRANSPORTATION'S STANDARD SPECIFICATIONS FOR CONSTRUCTION, DATED 2006, AND ITS LATEST REVISIONS, AND THE AASHTO STANDARD SPECIFICATIONS FOR HIGHWAY BRIDGES, SEVENTEENTH (17TH) EDITION, AND ITS LATEST REVISIONS.

2. IN-STREAM CONSTRUCTION SHALL BE RESTRICTED TO JUNE 1 TO OCTOBER 1 UNLESS THE CONTRACTOR OBTAINS WRITTEN PERMISSION FROM THE AGENCY OF NATURAL RESOURCES TO DO WORK OUTSIDE OF THAT TIME FRAME.

3. ALL DIMENSIONS ARE HORIZONTAL OR VERTICAL AND ARE GIVEN AT 68 DEGREES F UNLESS OTHERWISE NOTED.

4. ITEM 404.65 EMULSIFIED ASPHALT IS TO BE APPLIED AT A RATE OF .015 GAL/SY BETWEEN SUCCESSIVE COURSES OF PAYMENT OR AS DIRECTED BY THE ENGINEER.

5. ITEM 900.625 SPECIAL PROVISION (WATER REPELLENT, SILANE) SHALL BE APPLIED TO ALL EXPOSED SURFACES OF THE WINGWALLS AND HEADWALLS. WATER REPELLENT, SILANE SHALL BE APPLIED TO THE EXPOSED INSIDE SURFACE OF THE BOX STARTING AT THE OPENING AT EACH END AND EXTENDING 3 FEET INTO THE BOX, INCLUDING THE TOP SURFACE OF THE BOTTOM SLAB AND THE BOTTOM SURFACE OF THE TOP SLAB.

6. ITEM 529.15 "REMOVAL OF STRUCTURE" SHALL BE USED FOR REMOVAL OF THE PIPE AND ANY PORTIONS OF THE HEADWALLS AND WINGWALLS NOT REMOVED UNDER THE ITEMS "STRUCTURE EXCAVATION" OR "UNCLASSIFIED CHANNEL EXCAVATION".

7. REINFORCING STEEL PLACEMENT TOLERANCES SHALL BE AS FOLLOWS:

   SPACING +/- 1"
   CLEARANCE +/- ¼"

8. ALL EXPOSED EDGES OF CONCRETE SHALL BE CHAMFERED 1" X 1".

9. W150 x 13.5 STEEL POSTS AND OFFEST BLOCKS SHALL BE USED WITH HEAVY DUTY STEEL GUARDRAIL.

TRAFFIC CONTROL

10. THE CONTRACTOR SHALL BE RESPONSIBLE FOR THE REGIONAL DETOUR PACKAGE AS SHOWN IN THE PLANS.

11. THE CONTRACTOR SHALL BE RESPONSIBLE FOR SUPPLYING THE LOCAL TRAFFIC CONTROL PACKAGE IDENTIFYING THE CONSTRUCTION PROJECT BEFORE, DURING, AND AFTER THE BRIDGE CLOSURE PERIOD. THE CONTRACTOR SHALL SUBMIT A DETAILED TRAFFIC CONTROL PLAN TO THE RESIDENT ENGINEER FOR ALL STAGES OF CONSTRUCTION. ALL COSTS SHALL BE INCLUDED IN ITEM 641.10, TRAFFIC CONTROL.

12. ACCESS TO ALL EXISTING DRIVES SHALL BE MAINTAINED AT ALL TIMES DURING ALL PHASES OF CONSTRUCTION.

13. INSTALLATION OF DETOUR SIGNS SHALL NOT BLOCK ANY EXISTING TRAFFIC CONTROL SIGN ASSEMBLIES. THE CONTRACTOR SHALL TRY TO MAINTAIN AT LEAST 200 FEET BETWEEN SIGN ASSEMBLIES.

14. THE CONTRACTOR SHALL CONTACT DIG SAFE AT 1-888-344-7233 PRIOR TO BREAKING GROUND TO INSTALL ANY SIGN POSTS.

15. ALL SIGNS THAT ARE 36" x 36" OR LARGER SHALL BE ON TWO POSTS.

PRECAST CONCRETE NOTES

16. DESIGN CRITERIA:

    A. SOIL UNIT WEIGHT = 140 PCF
    B. DESIGN LIVE LOAD = HS-25-44
    C. MAX. WINGWALL FOOTING PRESSURE = 4 KSF
    D. FACTOR OF SAFETY FOR SLIDING >= 2.0
    E. FACTOR OF SAFETY FOR OVERTURNING >= 1.5
    F. DESIGN FILL OVER BOX = 11 FEET

17. ALL CONCRETE SHALL BE PRECAST. ITEM 540.10 PRECAST CONCRETE STRUCTURE INCLUDES ALL BOX SEGMENTS, HEADWALLS, AND WINGWALLS. ALL CONNECTIONS SHALL BE DESIGNED BY THE FABRICATOR AND SHALL BE CONSIDERED INCIDENTAL TO ITEM 540.10. ALL CONNECTIONS MUST BE SUBMITTED TO THE PROJECT MANAGER FOR APPROVAL.

18. THE PRECAST BOX SECTIONS ARE SHOWN FOR REFERENCE ONLY. THE ACTUAL DIMENSIONS AND SHAPE WILL BE DEPENDENT ON THE FABRICATOR. ALL UNITS EXCEPT THE FIRST AND LAST WILL BE THE SAME SHAPE AND THE SAME LENGTH. THE MINIMUM INSIDE DIMENSIONS SHALL BE 9'-0" IN HEIGHT AND 15'-0" IN WIDTH. THE OVERALL LENGTH OF THE BOX SHALL BE 80'-0" ALONG THE STREAMBED GRADE. THE EXPOSED ENDS OF THE FIRST AND LAST UNITS SHALL BE VERTICAL.

19. THE EXTERIOR (TOP AND SIDES) OF ALL CONCRETE BOX JOINTS ALONG WITH ALL LIFTING HOLES SHALL BE FILLED WITH MORTAR TYPE IV AFTER BEING SET IN THEIR FINAL POSITION. THIS WORK SHALL BE CONSIDERED INCIDENTAL TO ITEM 540.10.

20. A TWO (2) FOOT WIDE STRIP OF MEMBRANE WATERPROOFING SHALL BE APPLIED AT EACH BOX JOINT (TOP AND SIDES). MEMBRANE SHALL BE CENTERED ON THE JOINT AND COVER THE FULL WIDTH OF THE TOP AND FULL HEIGHT OF THE SIDES. THE SIDES SHALL BE COVERED FIRST AND THE TOP WILL FOLLOW. ANY OVERLAPPING OF MEMBRANE SHALL BE DONE IN A SHINGLE TYPE STYLE TO SHED WATER AND SHALL OVERLAP A MINIMUM OF ONE FOOT. PAYMENT FOR MEMBRANE SHALL BE UNDER ITEM 519.21 SHEET MEMBRANE WATERPROOFING, PREFORMED SHEET.

21. THE STRUCTURE WILL BE AT A 4.33% GRADE SIMULATING THAT OF THE STREAM.

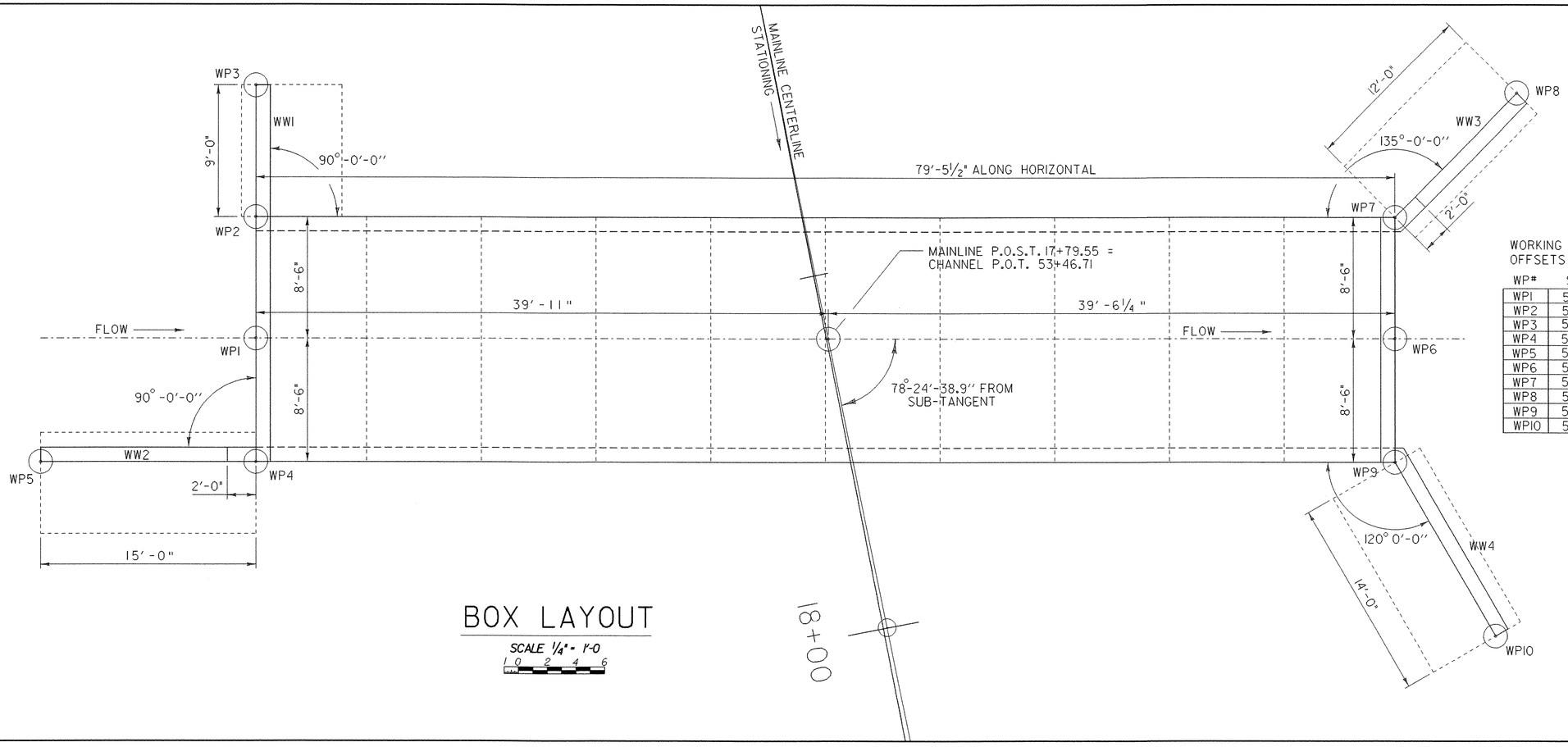

WORKING POINTS STATIONS & OFFSETS FROM CHANNEL LINE

WP#	STATION	OFFSET
WP1	53+06.78	20.02 LT.
WP2	53+06.78	28.52 LT.
WP3	53+06.78	37.52 LT.
WP4	53+06.78	11.52 LT.
WP5	52+91.78	11.52 LT.
WP6	53+86.23	20.02 LT.
WP7	53+86.23	28.52 LT.
WP8	53+94.71	37.00 LT.
WP9	53+86.23	11.52 LT.
WP10	53+93.23	0.61 RT.

BOX LAYOUT

SCALE 1/4" = 1'-0

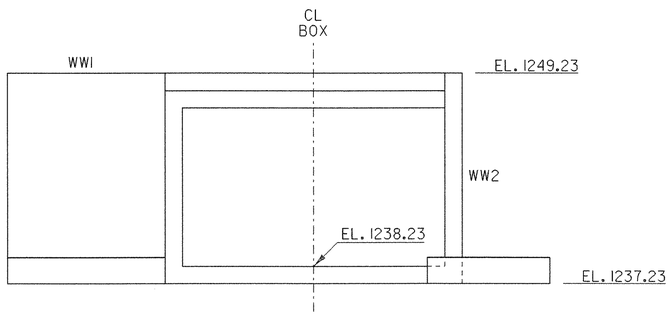

INLET ELEVATION

SCALE 1/4" = 1'-0

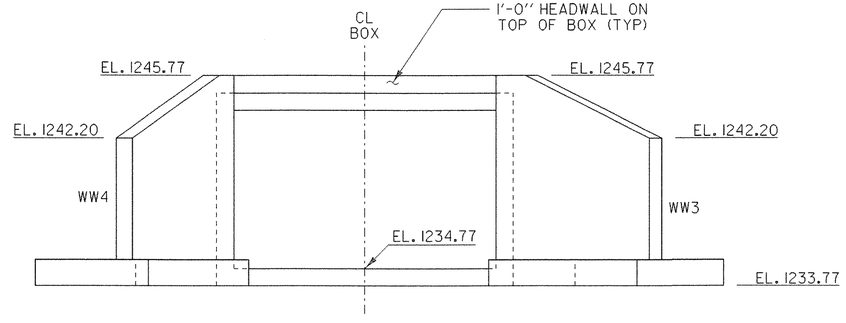

OUTLET ELEVATION

SCALE 1/4" = 1'-0

NOTE: DIMENSIONS SHOWN ARE BASED ON AN ASSUMED WALL THICKNESS OF 1'-0".

BOX LAYOUT

PROJECT NAME: JAY
PROJECT NUMBER: ST STP CULV (2)

FILE NAME: Structures/s04bl40boxplan.dgn PLOT DATE: 23-OCT-2006
PROJECT LEADER: W. SYMONDS DRAWN BY: G. SHANGRAW
DESIGNED BY: T. FILLBACH CHECKED BY: T. SUMNER
s04bl40boxplan.1 SHEET 31 OF 39

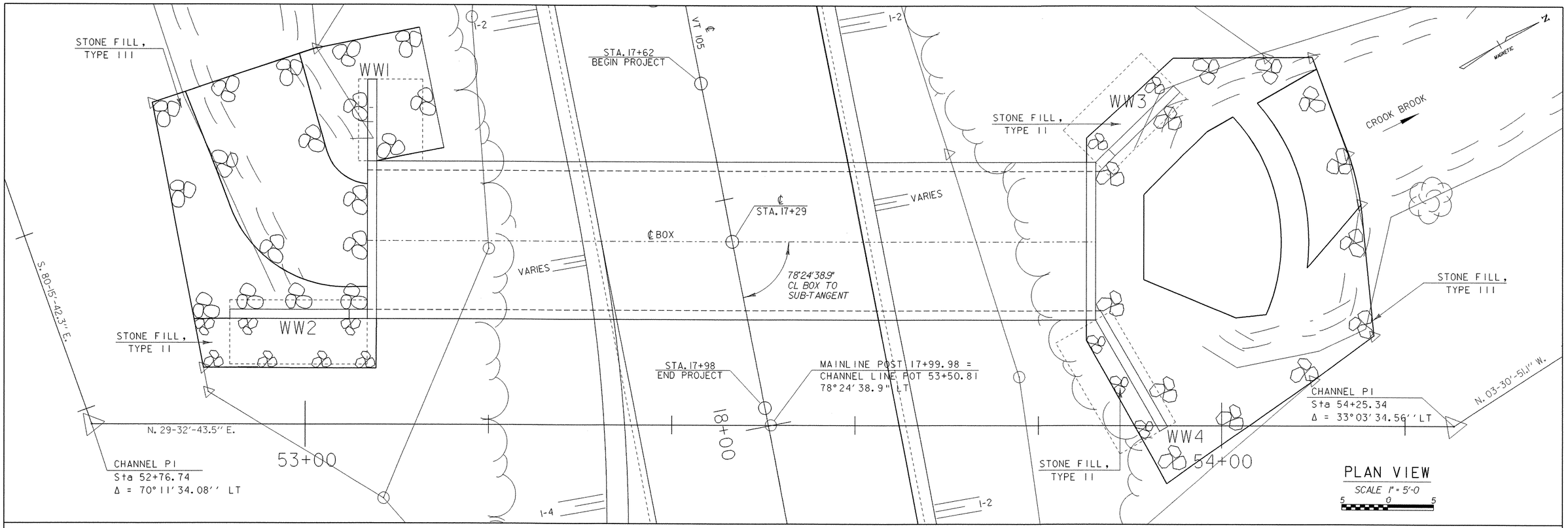

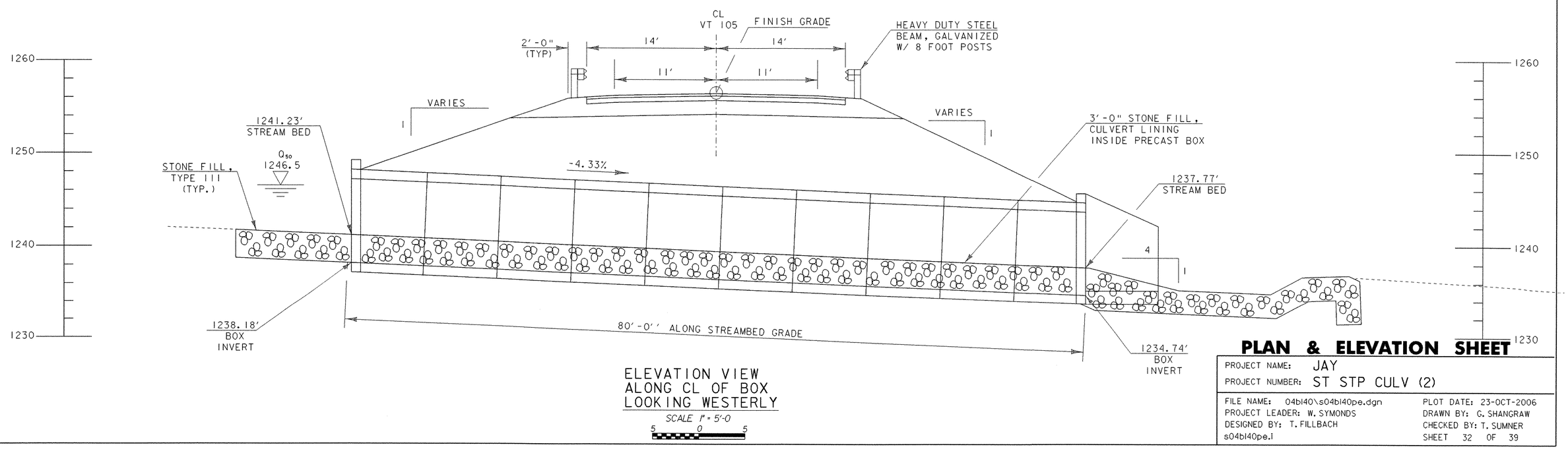

PLAN & ELEVATION SHEET

PROJECT NAME: JAY
PROJECT NUMBER: ST STP CULV (2)

FILE NAME: 04b140\s04b140pe.dgn
PROJECT LEADER: W. SYMONDS
DESIGNED BY: T. FILLBACH
s04b140pe.i

PLOT DATE: 23-OCT-2006
DRAWN BY: G. SHANGRAW
CHECKED BY: T. SUMNER
SHEET 32 OF 39

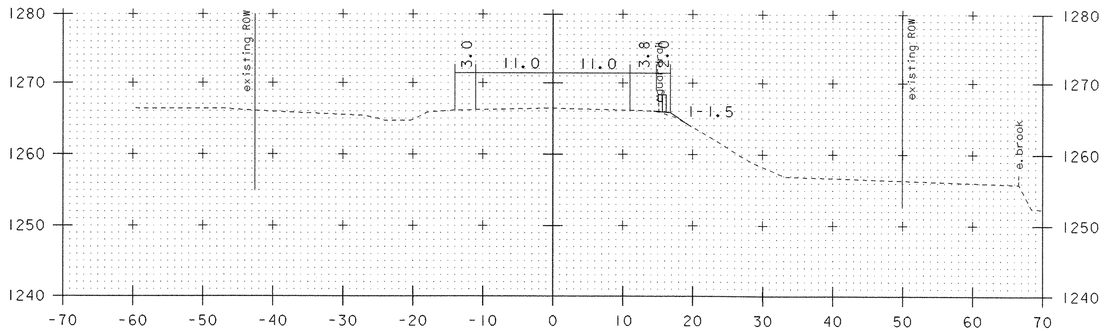

BEGIN APPROACH STA 15+87

16+00

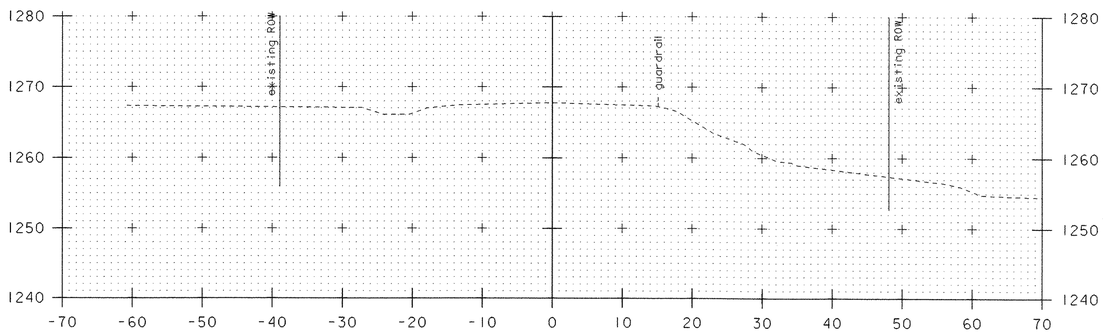

15+75

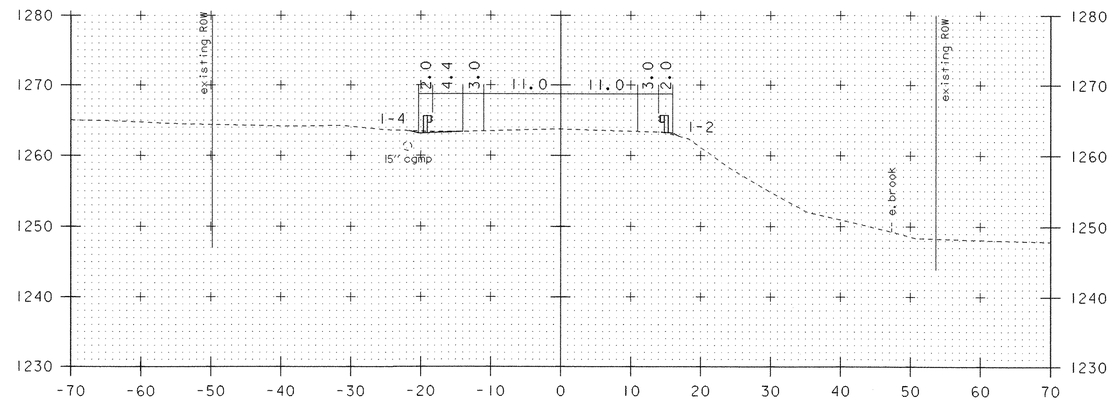

16+50

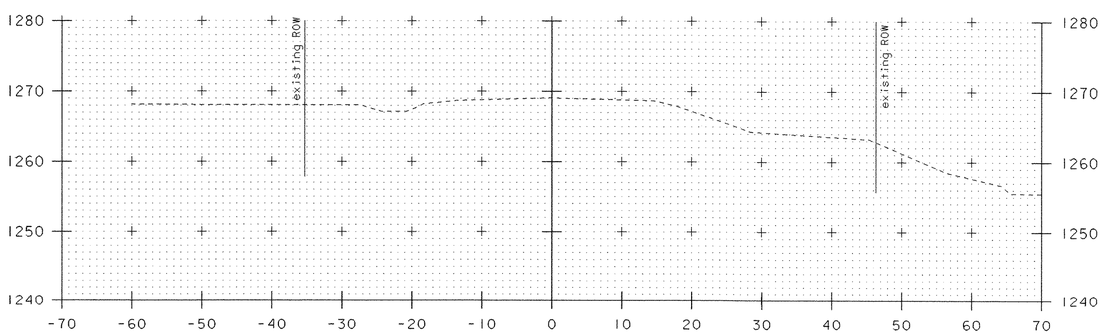

15+50

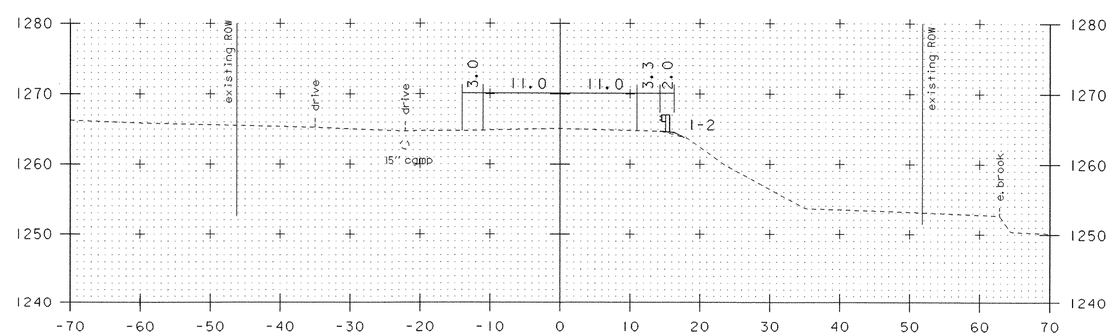

16+25

MAINLINE CROSS SECTIONS

PROJECT NAME: JAY	
PROJECT NUMBER: ST STP CULV (2)	
FILE NAME: 04b140\s04b140bdr.dgn	PLOT DATE: 23-OCT-2006
PROJECT LEADER: W. SYMONDS	DRAWN BY: G. SHANGRAW
DESIGNED BY: T. SUMNER	CHECKED BY: J. LACROIX
04b140xsl.i	SHEET 33 OF 39

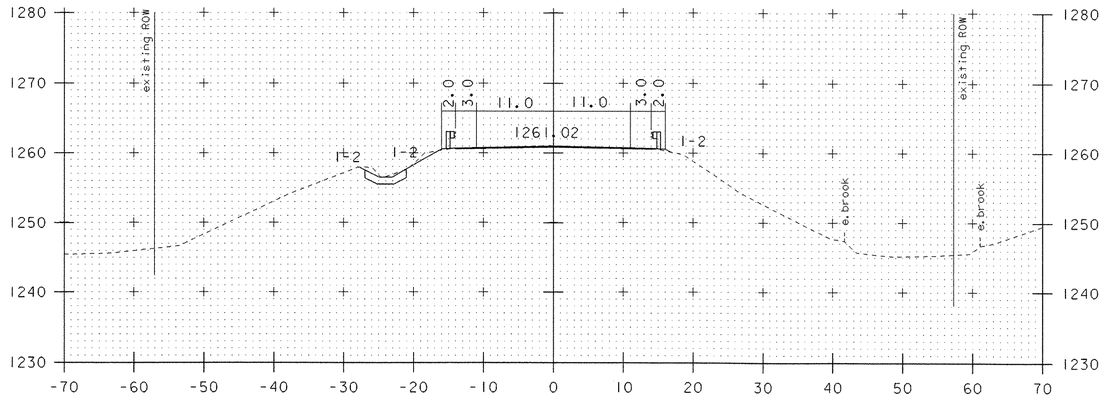

17+00

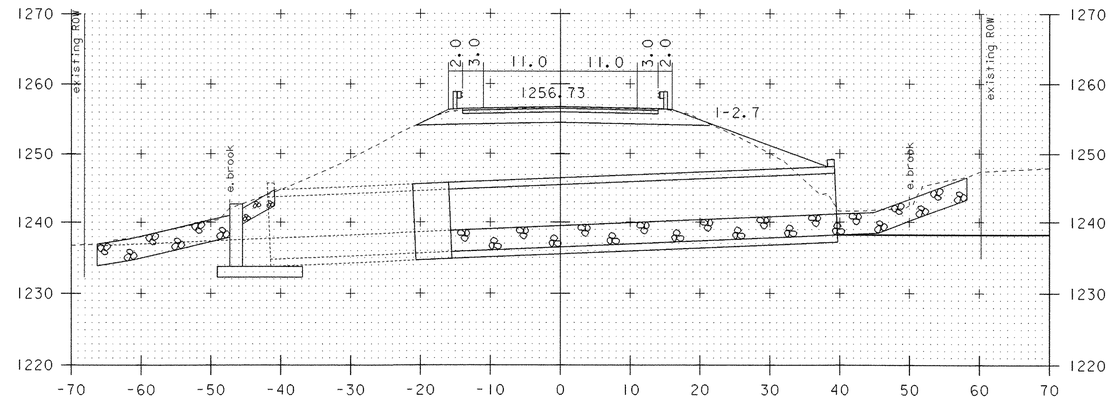

17+75

17+62 BEGIN PROJECT

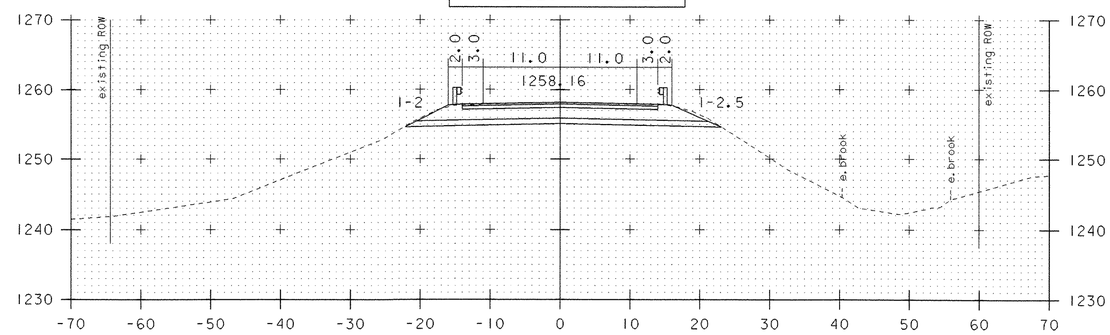

17+50

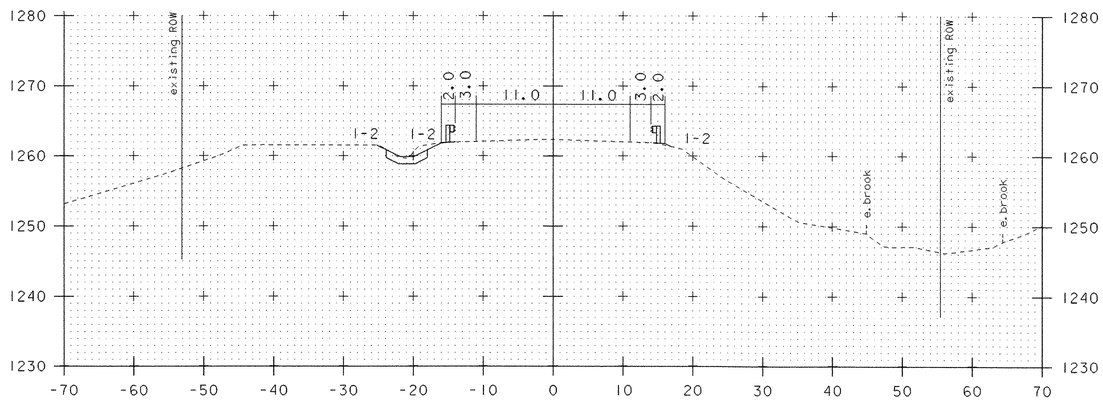

16+75

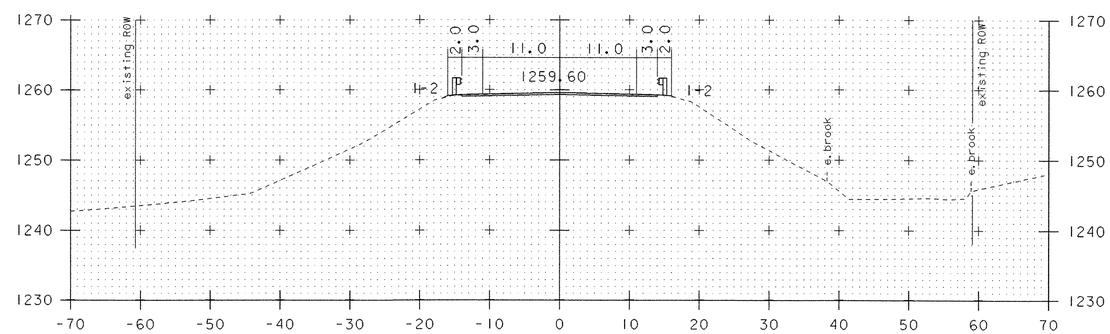

17+25

MAINLINE CROSS SECTIONS

PROJECT NAME: JAY	
PROJECT NUMBER: ST STP CULV (2)	
FILE NAME: 04b140\s04b140bdr.dgn	PLOT DATE: 23-OCT-2006
PROJECT LEADER: W. SYMONDS	DRAWN BY: G. SHANGRAW
DESIGNED BY: T. SUMNER	CHECKED BY: J. LACROIX
04b140xs2.1	SHEET 34 OF 39

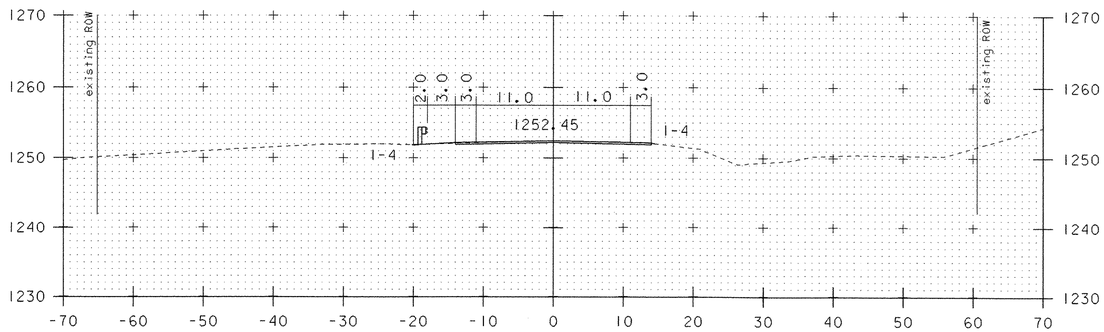

18+50

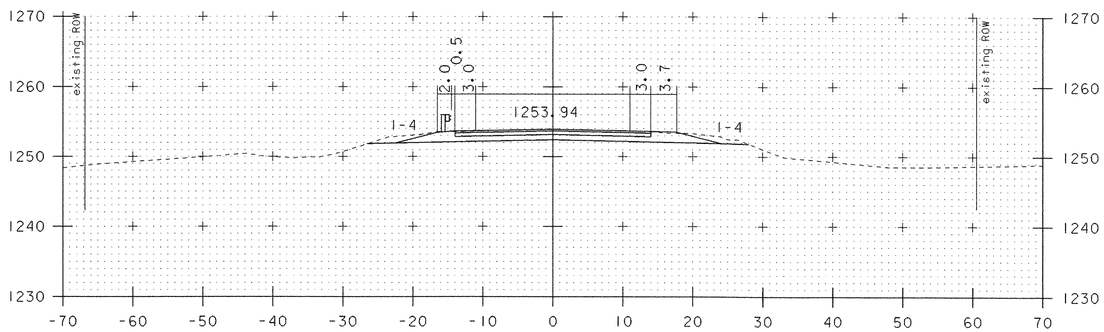

18+25

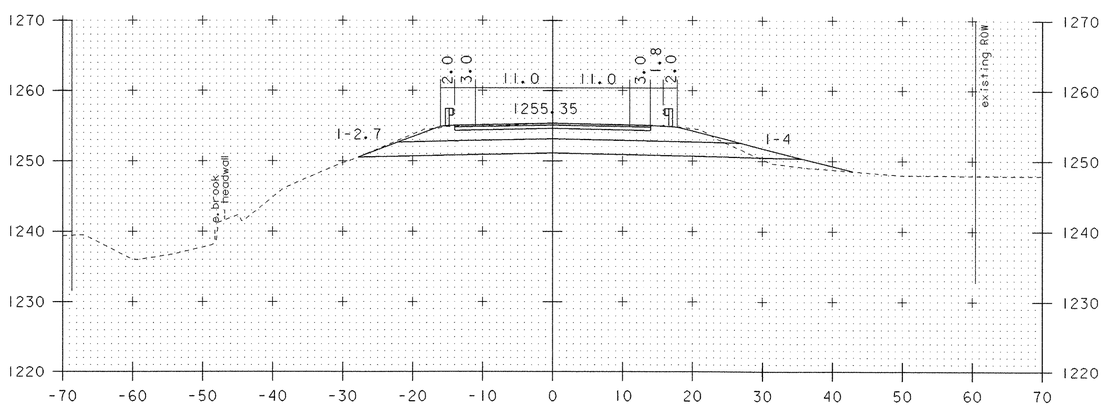

18+00

17+98 END PROJECT

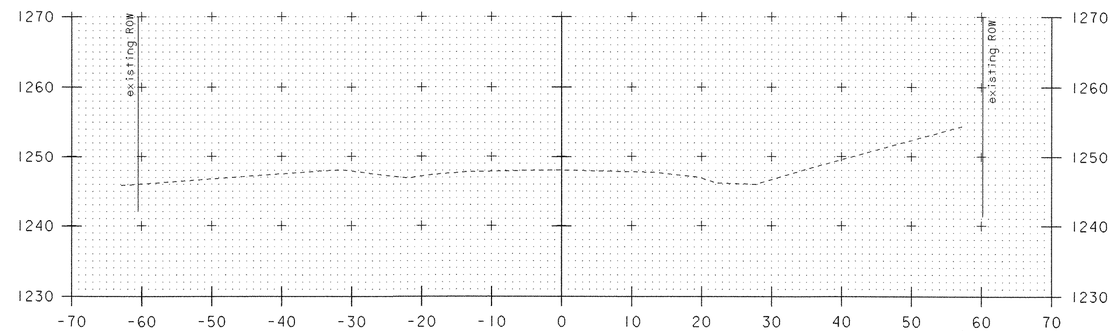

19+25

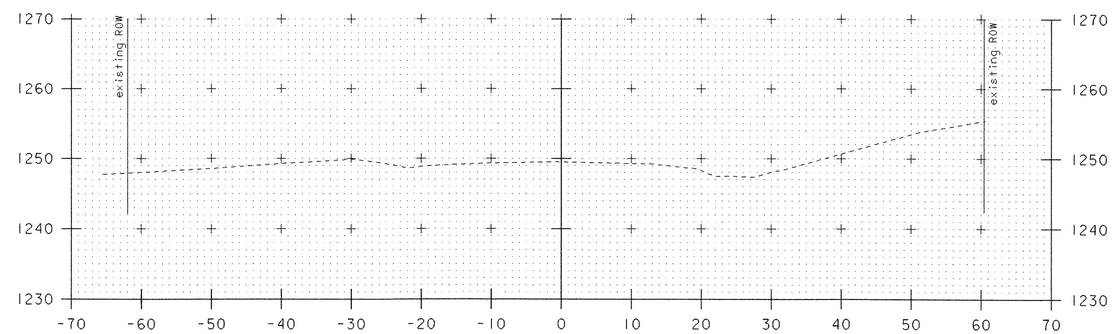

19+00

END APPROACH STA 18+87

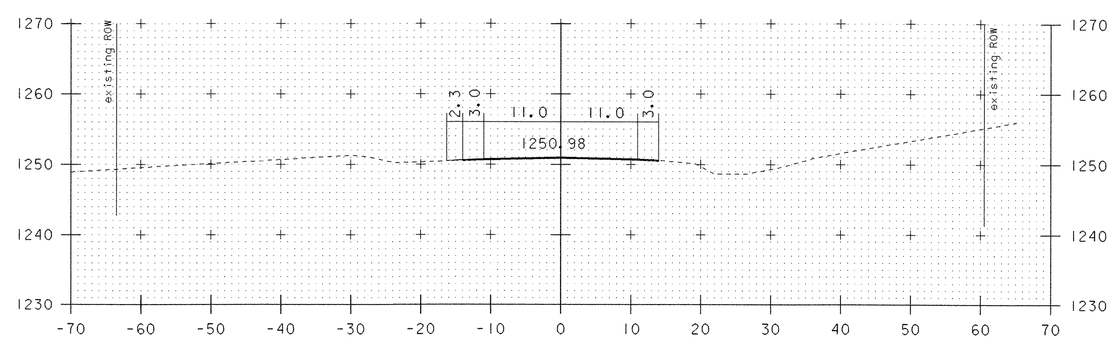

18+75

MAINLINE CROSS SECTIONS

PROJECT NAME: JAY	
PROJECT NUMBER: ST STP CULV (2)	
FILE NAME: 04b140\s04b140bdr.dgn	PLOT DATE: 23-OCT-2006
PROJECT LEADER: W. SYMONDS	DRAWN BY: G. SHANGRAW
DESIGNED BY: T. SUMNER	CHECKED BY: J. LACROIX
04b140xs3.i	SHEET 35 OF 39

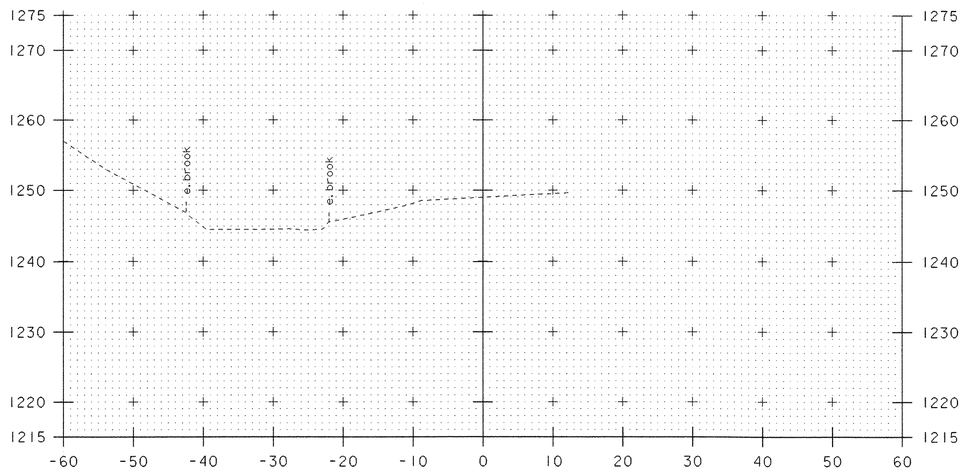

52+20

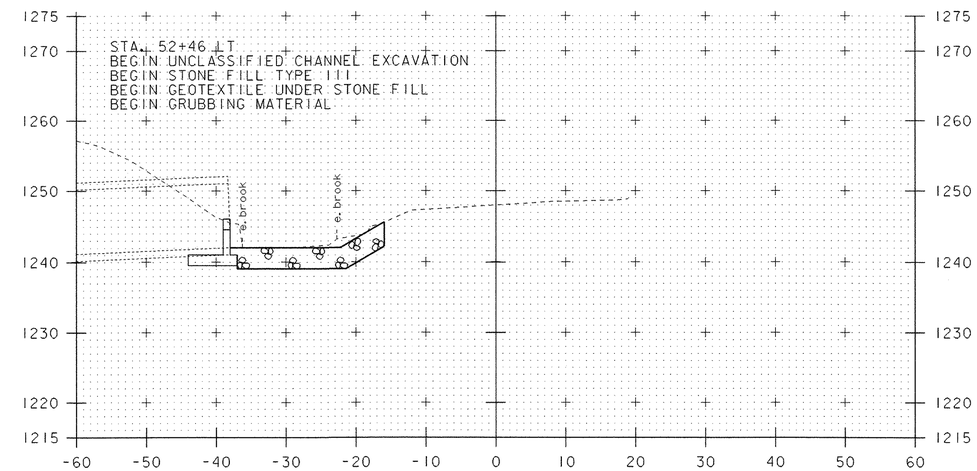

52+60

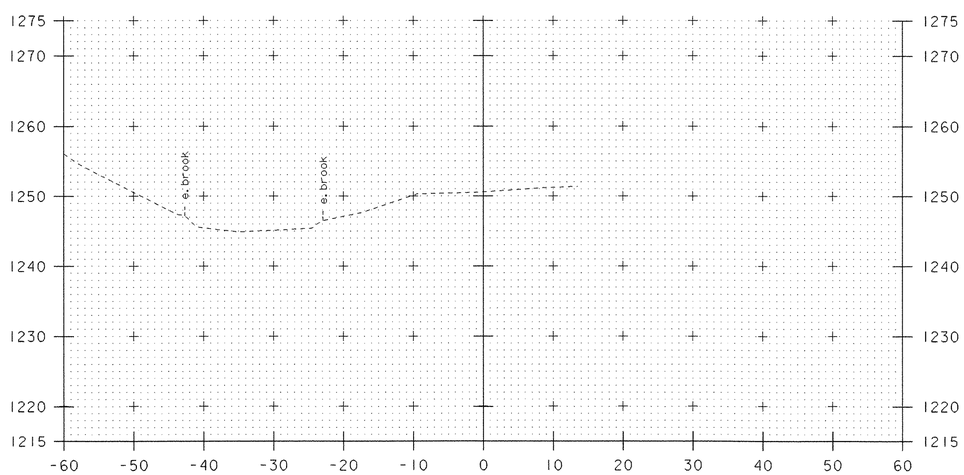

52+00

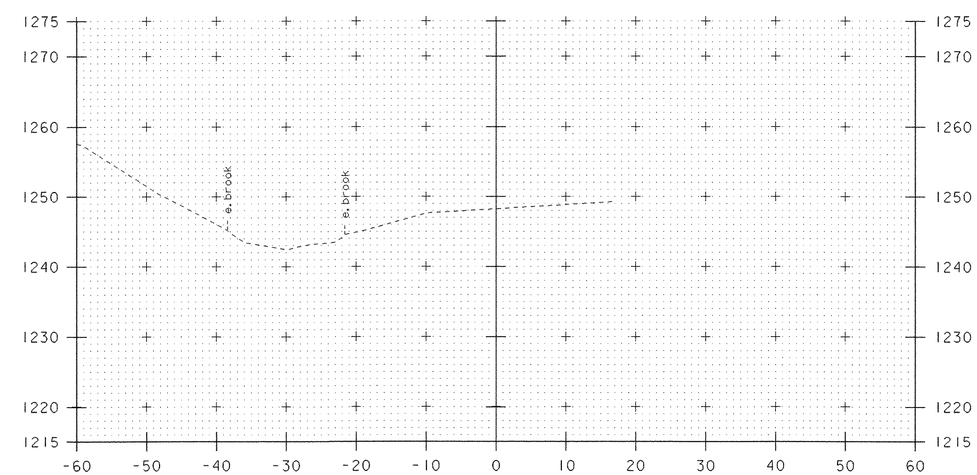

52+40

CHANNEL CROSS SECTIONS

PROJECT NAME: JAY	
PROJECT NUMBER: ST STP CULV (2)	
FILE NAME: 04b140\s04b140bdr.dgn	PLOT DATE: 23-OCT-2006
PROJECT LEADER: W. SYMONDS	DRAWN BY: G. SHANGRAW
DESIGNED BY: T. SUMNER	CHECKED BY: J. LACROIX
04b140chxsl.i	SHEET 36 OF 39

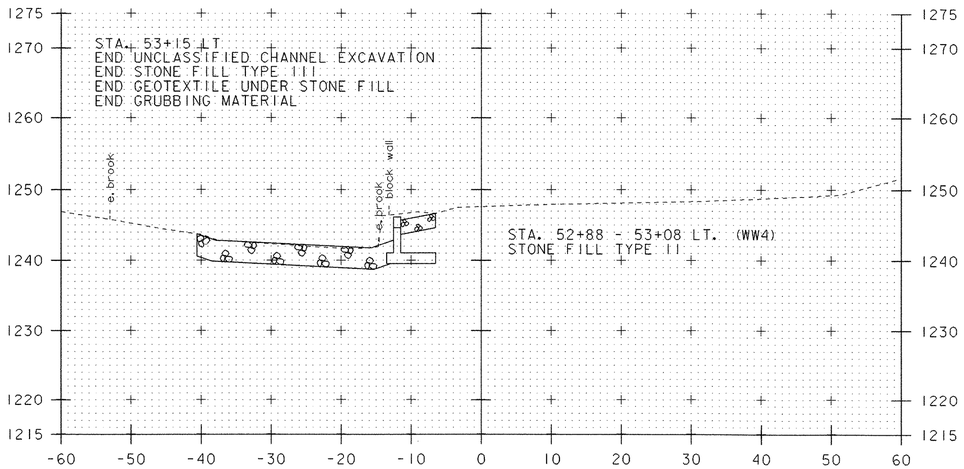

53+00

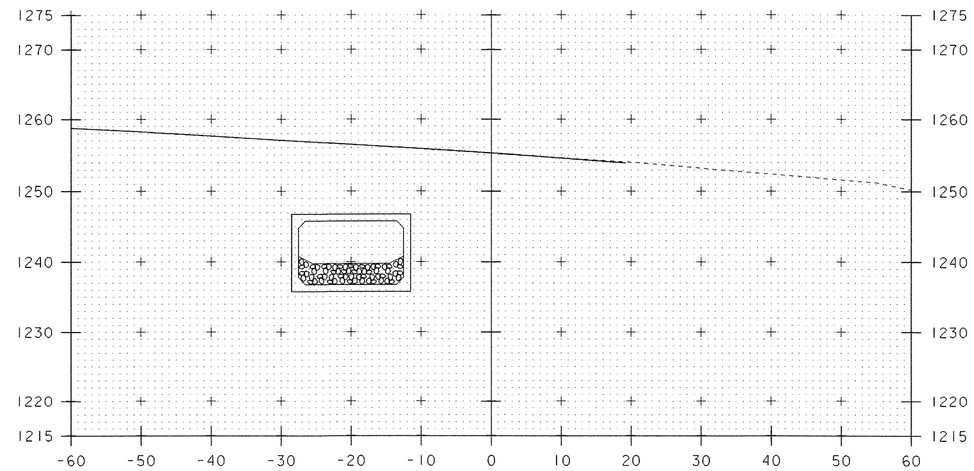

53+40

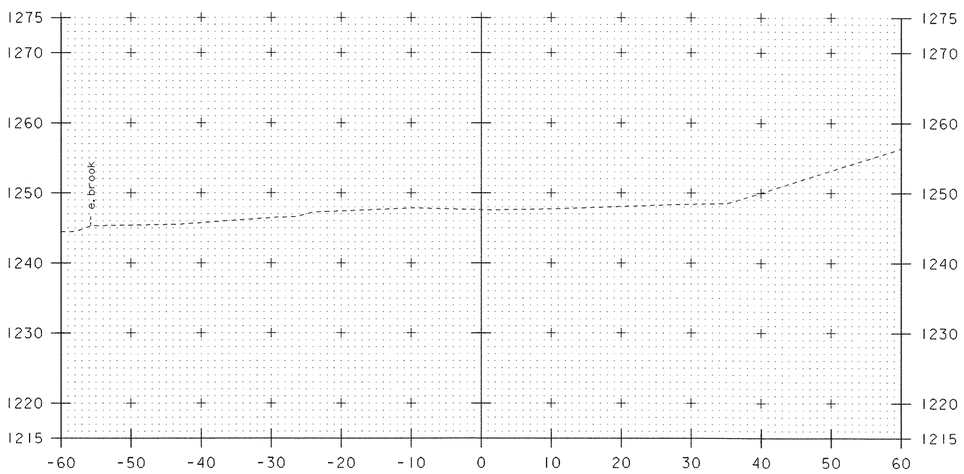

52+80

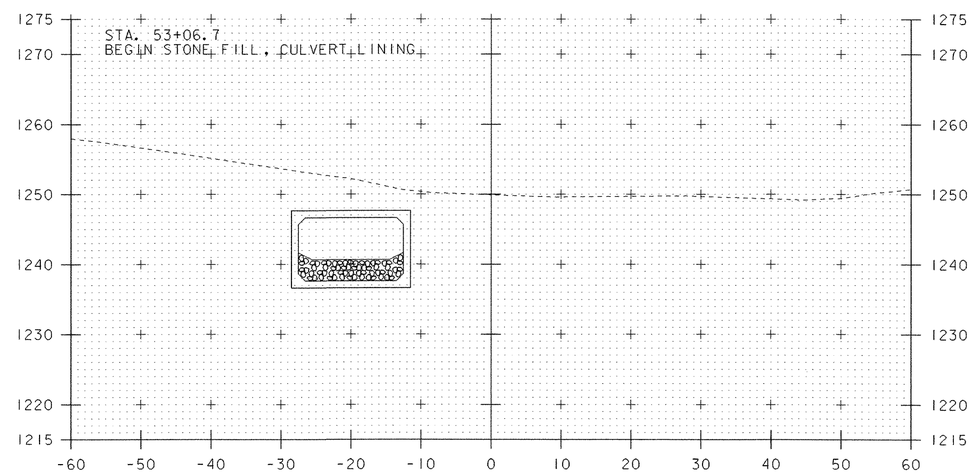

53+20

53+06.7
BEGIN BOX

CHANNEL CROSS SECTIONS

PROJECT NAME:	JAY
PROJECT NUMBER:	ST STP CULV (2)

FILE NAME: 04b140\s04b140bdr.dgn	PLOT DATE: 23-OCT-2006
PROJECT LEADER: W. SYMONDS	DRAWN BY: G. SHANGRAW
DESIGNED BY: T. SUMNER	CHECKED BY: J. LACROIX
04b140chxs2.i	SHEET 37 OF 39

53+86.2
END BOX

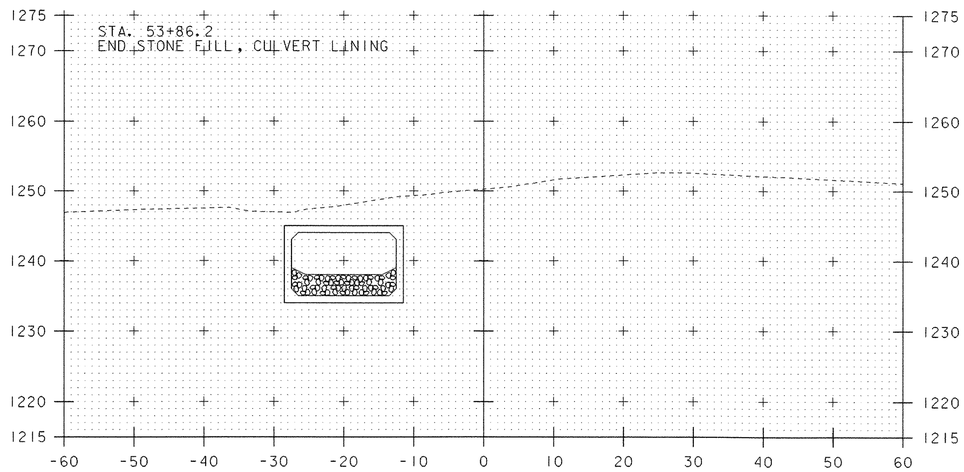

53+80

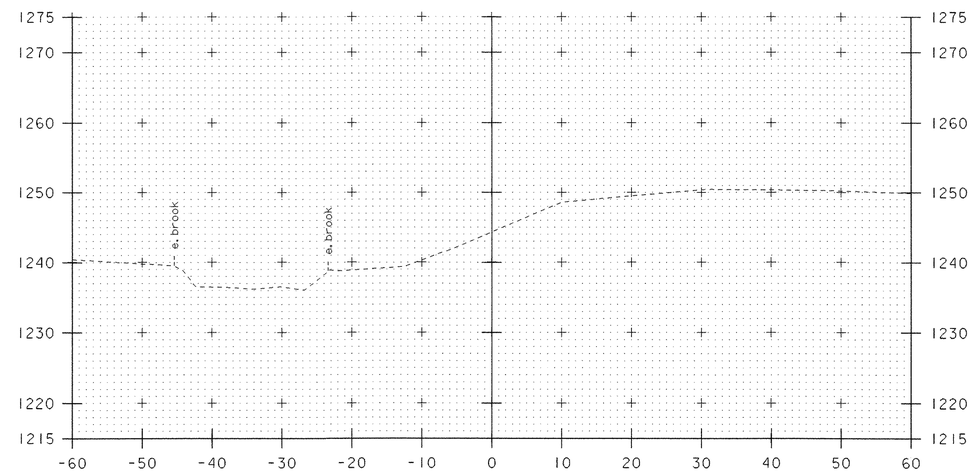

54+20

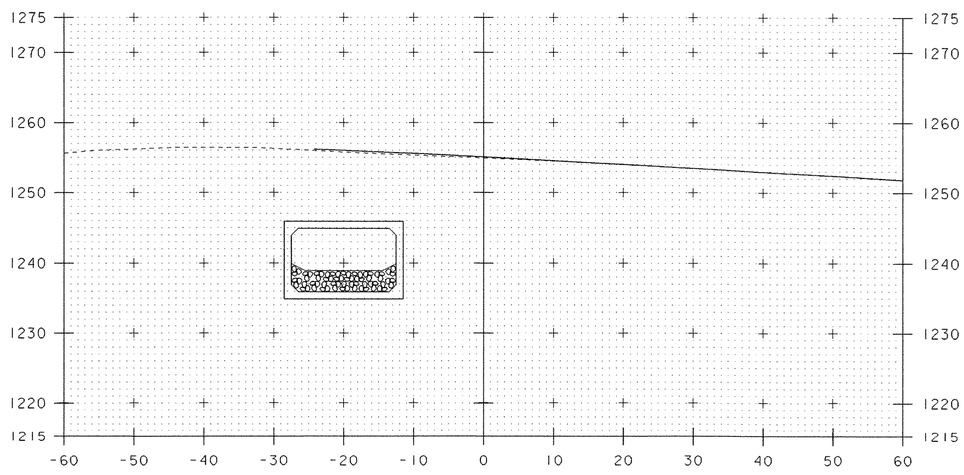

53+60

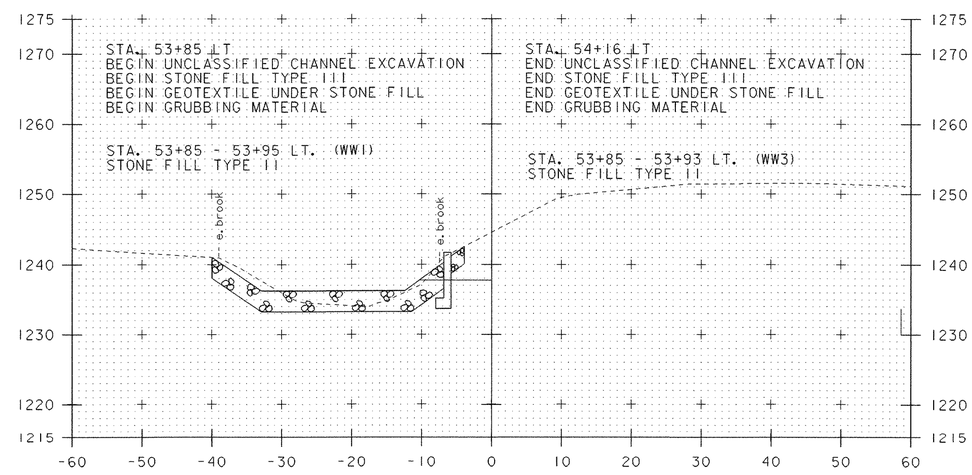

54+00

CHANNEL CROSS SECTIONS

PROJECT NAME:	JAY
PROJECT NUMBER:	ST STP CULV (2)

FILE NAME: 04b140\s04b140bdr.dgn	PLOT DATE: 23-OCT-2006
PROJECT LEADER: W. SYMONDS	DRAWN BY: G. SHANGRAW
DESIGNED BY: T. SUMNER	CHECKED BY: J. LACROIX
04b140chxs3.i	SHEET 38 OF 39

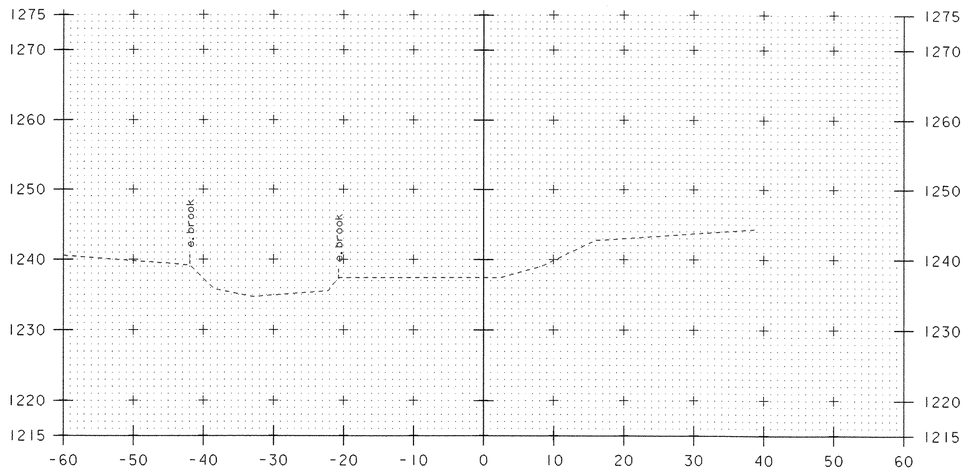

54+60

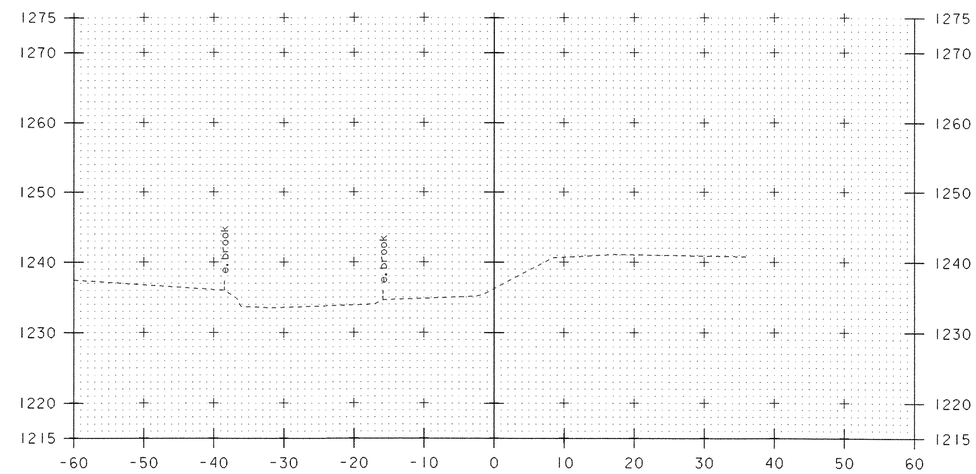

55+00

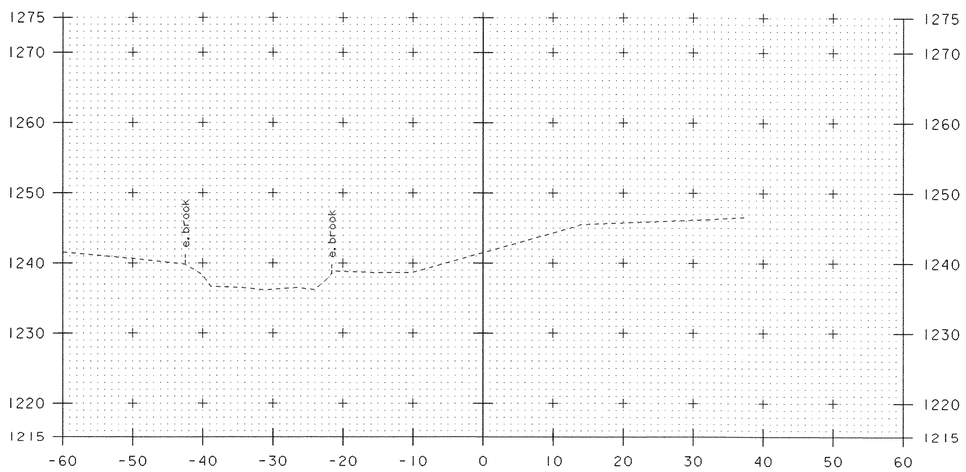

54+40

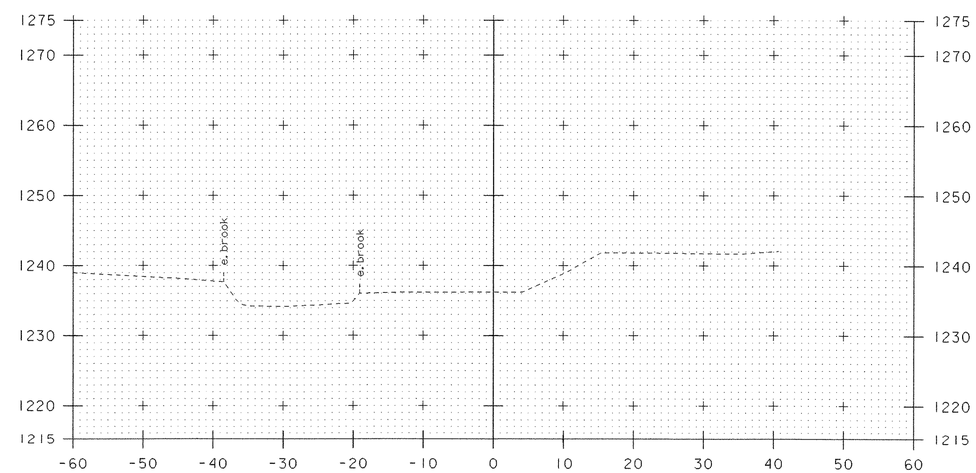

54+80

CHANNEL CROSS SECTIONS

PROJECT NAME: JAY
PROJECT NUMBER: ST STP CULV (2)

FILE NAME: 04bl40\s04bl40bdr.dgn
PROJECT LEADER: W. SYMONDS
DESIGNED BY: T. SUMNER
04bl40chxs4.i

PLOT DATE: 23-OCT-2006
DRAWN BY: G. SHANGRAW
CHECKED BY: J. LACROIX
SHEET 39 OF 39

RECEIVED
OK'D BY JEL OK'D BY
MAY 2 5 2007
RESUBMIT APPROVED 5/29/07
BY DATE

DESIGN COMPUTATIONS FOR

VT 105, Bridge #50
15'-0" x 9'-0" Box Culvert
Jay, Vermont
County of Orleans
(Wingwalls Revised 5/24/07)

PREPARED FOR:

Camp Precast Concrete Products
78 Precast Road
Milton, Vermont 05468

PREPARED BY:

DELTA ENGINEERS

184 Court Street, Binghamton, New York 13901
TEL: 607-231-6600 FAX: 607-231-6650
EMAIL: precast@deltaengineers.com
INTERNET: www.deltaengineers.com

STATE OF VERMONT
RALPH VERRASTRO
#18-0005974
REGISTERED PROFESSIONAL ENGINEER

5-24-07

BOXCAR

Version 2.00 for Windows
12 May 2000

A Computer Program for the Structural
Design of Reinforced Concrete Box
Culverts

Developed by

Simpson Gumpertz & Heger Inc.
Arlington Massachusetts
in cooperation with

The Federal Highway Administration
and
The American Concrete Pipe Association

✓ SDG
5/16/07

The successful application and use of this software product is dependent on the application of skilled engineering judgment and is the responsibility of the user. The user must select input values suitable to his specific installation. The information presented in the computer output is for review, interpretation, application and approval by a qualified engineer.

****

ANY IMPLIED OR EXPRESS WARRANTIES COVERING THE SOFTWARE PROGRAM OR PROGRAM USER MANUAL INCLUDING ANY WARRANTIES OF MERCHANTABILITY OR FITNESS FOR A PARTICULAR PURPOSE ARE EXPRESSLY EXCLUDED. SIMPSON GUMPERTZ & HEGER INC., THE AMERICAN CONCRETE PIPE ASSOCIATION, AND THE FEDERAL HIGHWAY ADMINISTRATION SHALL NOT BE LIABLE FOR SPECIAL, INCIDENTAL, CONSEQUENTIAL INDIRECT OR OTHER SIMILAR DAMAGES ARISING FROM BREACH OF WARRANTY, BREACH OF CONTRACT OR OTHER LEGAL THEORY EVEN IF SUCH PARTIES HAVE BEEN ADVISED OF SUCH DAMAGES.

****

Date: 05-10-2007
Time: 09:31:23

Filename - 070402
Job Description - 15'x9' Box Culvert

GEOMETRY			
Span	15. ft	Top Slab Thickness	12. in.
Rise	9. ft	Bottom Slab Thickness	12. in.
Min. Depth of Fill	11. ft	Sidewall Thickness	10. in.
Max. Depth of Fill	11. ft	Length of Precast Section	6.25 ft
Depth Increment	0. ft		

HAUNCH DIMENSIONS		CONCRETE COVERS	
Top Vertical	8. in.	Top Outside	1.00 in.
Top Horizontal	8. in.	Bottom Outside	1.00 in.
Bottom Vertical	8. in.	Sidewall Outside	1.00 in.
Bottom Horizontal	8. in.	Top Inside	1.00 in.
		Bottom Inside	1.00 in.
		Sidewall Inside	1.00 in.

MATERIAL PROPERTIES		
Main Reinforcing Yield Stress	60000.	psi
Design Concrete Strength	5000.	psi
Concrete Density	150.	pcf

DESIGN SPECIFICATION	AASHTO Standard
LOAD FACTORS	
Dead Load: Shear and Moment	1.30
Thrust	1.00
Live Load: Shear and Moment	2.17
Thrust	1.00
LOAD MODIFIERS	
Dead Load: Shear and Moment	1.00
Thrust	1.00
Live Load: Shear and Moment	1.00
Thrust	1.00
STRENGTH REDUCTION FACTORS	
Flexure	0.90
Shear	0.85

REINFORCING DATA

	DIAMETER	SPACING
Top Slab Outside Face(AS7)	0.5 in.	8 in.
Bottom Slab Outside Face(AS8)	0.5 in.	8 in.
Sidewall Outside Face(AS1)	1 in.	9 in.
Top Slab Inside Face(AS2)	1.128 in.	7 in.
Bottom Slab Inside Face(AS3)	1 in.	6 in.
Sidewall Inside Face(AS4)	0.5 in.	10 in.

The diameters are used to estimate depth to tension reinforcing from compression face. They do not represent required reinforcing diameters.

SOIL LOAD DATA

Soil Density	140 pcf
Minimum Lateral Pressure Coefficient	0.25
Maximum Lateral Pressure Coefficient	0.50
Installation Type	Embankment/Compacted
Soil-Structure Interaction Factor	1.132

LIVE LOAD DATA

Live Load	AASHTO HS-Series
Live Load Magnitude	25 US tons
Tire Footprint Length	.0 in.
Tire Footprint Width	.0 in.
Live Load Distribution Factor	1.75
Direction of travel	Parallel to span
Impact Factor	1.00
Lane Load	0.0 psf

SURCHARGE LOADS

Vertical Pressure	0.0 psf
Horiz. Pressure at Culvert Top	0.0 psf
Horiz. Pressure at Culvert Bottom	0.0 psf
Application Code	Additional Dead Load

FLUID LOADS

Depth of Fluid	9.0 ft
Fluid Density	62.5 pcf

BOX CULVERT DESIGN SUMMARY SHEET
15.00 ft Span x 9.00 ft Rise

****

INSTALLATION DATA

Height of Fill Over Culvert, ft	11.00
Soil Unit Weight, pcf	140.
Minimum Lateral Soil Pressure Coefficient	0.250
Maximum Lateral Soil Pressure Coefficient	0.500
Soil-Structure Interaction Factor	1.132
Installation Type	Embankment/Compacted

LOADING DATA

Design Specification	AASHTO Standard
Dead Load Factor - Moment and Shear	1.30
Dead Load Factor - Thrust	1.00
Live Load Factor - Moment and Shear	2.17
Live Load Factor - Thrust	1.00
Dead Load Modifier - Moment and Shear	1.00
Dead Load Modifier - Thrust	1.00
Live Load Modifier - Moment and Shear	1.00
Live Load Modifier - Thrust	1.00
Strength Reduction Factor-Flexure	0.90
Strength Reduction Factor-Diagonal Tension	0.85
Live Load	
Live Load Type	AASHTO HS-Series
Live Load Magnitude, US tons	25.
Tire Footprint Length, in.	1.0
Tire Footprint Width, in.	1.0
Live Load Distribution Factor	1.75
Direction of travel	Parallel to span
Impact Factor	1.00
Lane Load, psf	0.0

MATERIAL PROPERTIES

Minimum Specified Reinforcing Yield Strength, ksi	60.0
Concrete - Specified Compressive Strength, ksi	5.0

GEOMETRY

Top Slab Thickness, in.	12.0
Side Wall Thickness, in.	10.0
Bottom Slab Thickness, in.	12.0
Top Horizontal Haunch Dimension, in.	8.0
Bottom Horizontal Haunch Dimension, in.	8.0
Top Vertical Haunch Dimension, in.	8.0

G E O M E T R Y (Continued)

Bottom Vertical Haunch Dimension, in.	8.0
Concrete Cover Over Steel, in.	
Top Slab - Outside Face	1.00
Bottom Slab - Outside Face	1.00
Side Wall - Outside Face	1.00
Top Slab - Inside Face	1.00
Bottom Slab - Inside Face	1.00
Side Wall - Inside Face	1.00

R E I N F O R C I N G D A T A

LOCATION	AREA (in.²/ft)	STIRRUPS REQUIRED?
TRANSVERSE		
Side Wall - Outside Face (AS1)	1.012	No
Top Slab - Inside Face (AS2)	1.643	No
Bottom Slab - Inside Face (AS3)	1.574	No
Side Wall - Inside Face (AS4)	0.240	No
Top Slab - Outside Face (AS7)	0.288	No
Bottom Slab - Outside Face (AS8)	0.288	No

Notes:

1 Sidewall outside face steel (AS1) is bent at the culvert corners and extended 27 in. from the bend point into the top slab. The top slab outside face steel (AS7) must lap the AS1 steel in accordance with AASHTO provisions for tension lap splices. To obtain the total AS1 extension into the top slab, the tension lap splice length must be calculated and added to the 27 in.extension length.

2 Sidewall outside face steel (AS1) is bent at the culvert corners and extended 27 in. from the bend point into the bottom slab. The bottom outside face steel (AS8) must lap the AS1 steel in accordance with AASHTO provisions for tension lap splices. To obtain the total AS1 extension into the bottom slab, the tension lap splice length must be calculated and added to the 27 in. extension length.

3 There may be negative moment from the outside corner of the box to 34 in. across the top slab

4 There may be negative moment from the outside corner of the box to 37 in. across the bottom slab.

5 BOXCAR does not check for differential deflection of the top slab between adjacent box sections for service live load.

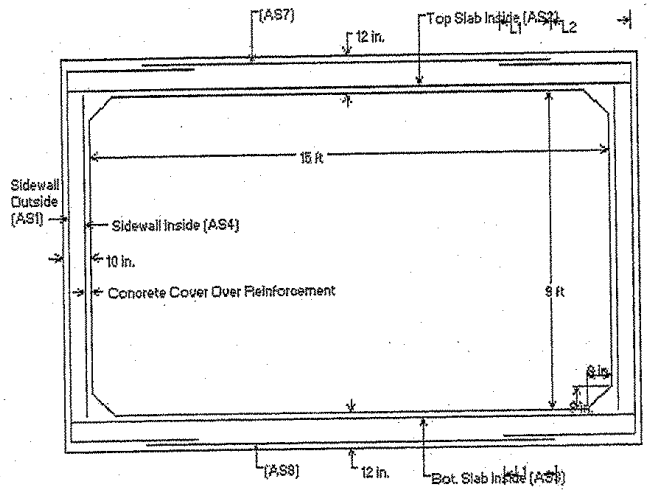

* <L1> is Splice Length
* <L2> is AS1 Extension
* (AS7) is Top Slab Outside
* (AS8) is Bottom Slab Outside
* See Box Culvert Design Summary Sheet for transverse and distribution reinforcement, as required.
* For sidewall thicknesses of 6 in. and above, extend AS2 and AS3 a min. of 4 in. beyond the inside face of the sidewall. For thicknesses less than 6 in., extend AS2 and AS3 at least to within 1-1/2 in. of the outside face of the sidewall.

Notes:

1) Other reinforcement schemes that provide the required reinforcement areas at all locations identified in the program output are acceptable.
2) Longitudinal reinforcement is not shown for clarity, see AASHTO M259 for longitudinal reinforcement and for additional requirements.

Delta Engineers, PC
184 Court Street
Binghamton, NY 13901
(607)231-6600 Fax (607)231-6650

Project:	County of Orleans VT105
	15' x 9' Culvert
Client:	Camp Precast
Job Number:	2007.004.002
File Name:	Cantwall.xls
Entered By:	CJB 5/26
Checked By:	KES
Date:	5/24/2007
Sheet:	9 of 11

DESIGN DATA

SOIL

Soil Density=	140	pcf
Soil Friction Angle (Phi)=	34	deg.
Angle of wall friction (delta)=	22	deg.
Back slope angle (beta)=	21	deg.
Broken backslope angle (beta')=	21	deg.
Slope - Back face of wall=	90	deg.
Allowable Bearing Capacity=	4000	psf
Ka=	0.3458	
KaH=	0.3206	
KaV=	0.1295	
EP=	48.41	
EP(H)=	44.88	
EP(V)=	18.13	

Denotes Input field

WALL GEOMETRY

Stem Height hs=	10.50	ft
Stem Thickness ts=	10.00	in
Base Thickness tb=	18.00	in
Toe Width lt=	1.00	ft
Heel Width lh=	6.5	ft
Surcharge hsc=	0	ft

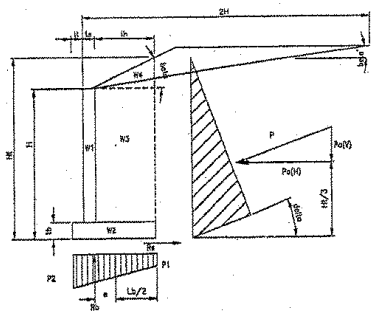

Wall Height-H=	12.00	ft
Total Base Width Lb=	8.33	ft
Weight of Wall & Slab =	3188	lbs/ft
Bar cover stem =	1.5	in
Bar cover toe/heel =	1.5	in
Height at back of soil wedge Ht =	14.50	ft

ACTIVE FORCES

			Moment Arm	Moment
Pq(H)=	0.00		7.25	0.00 ft-lbs/ft
Pa(H)=	4715.31	lb/ft	4.83 ft	22782.97 ft-lbs/ft
			Overturning Mom., Mo=	22782.97 ft-lbs/ft

RETAINING FORCES

Stem Wall - w1=	1312.50	lbs	1.42 ft	1859.38 ft-lbs/ft
Base Slab - w2=	1875.00	lbs	4.17 ft	7812.50 ft-lbs/ft
Soil above heel - w3=	9555.00	lbs	5.08 ft	48571.25 ft-lbs/ft
Soil wedge - w4=	1135.28	lbs	6.17 ft	7000.88 ft-lbs/ft
PaV=	1905.11	lb/ft	8.33 ft	15875.89 ft-lbs/ft
Total W=	15782.89	lbs	Resisting Mom., Mr=	81119.90 ft-lbs/ft

Safety factor against overturning= 3.56 OK

RESULTANT OF WALL FORCES

Sum of vertical forces Rv=	15783	lbs	
Resultant location a =	3.70	ft	
Ecentricity e=	0.47	ft	L/6= 1.39
Pressure at toe of wall=			Resultant in middle third
P1	2535.47	psf	OK
p2	1252.42	psf	

CHECK SLIDING

Sliding Coeff, =	0.45	
Safety Factor, Sliding =	1.51	OK

Delta Engineers, PC
184 Court Street
Binghamton, NY 13901
(607)231-6600 Fax (607)231-6650

Project:	County of Orleans VT105
	15' x 9' Culvert
Client:	Camp Precast
Job Number:	2007.004.002
File Name:	Cantwall.xls
Entered By:	CJB 15DG
Checked By:	RCA
Date:	5/24/2007
Sheet:	10 of 11

REINFORCING DESIGN

TECHNICAL DATA

Concrete Strength	5	ksi
Yield Strength	60	ksi
Unit Weight of Concrete	150	pcf
E	4.03E+06	
n	7.2	
k	0.403	
j	0.866	
K	392	

b1= 0.8 (.85-.05(fc-4))

Rho min	0.003333333	(200/Fy)
Rho max	0.025153061	(.75Rho-b)
Zmax	130	Severe Exposure

Capacity Reduction Factors:

Phi - Moment	0.9
Phi - Shear	0.85

Load Factors:

Gamma	1.3
Beta - LL	1.3
Beta - DL	1

References:
1. "Specifications for Highway Bridges, 17th Ed." - AASHTO
2. "Design Manual for Segmental Retaining Walls" - Concrete Masonry Association
3. "Building Code Requirements for Structural Concrete" - ACI 318.

Delta Engineers, PC
184 Court Street
Binghamton, NY 13901
(607)231-6600 Fax (607)231-6650

Project:	County of Orleans VT105
	15' x 9' Culvert
Client:	Camp Precast
Job Number:	2007.004.002
File Name:	Cantwall.xls
Entered By:	CJB /SDG
Checked By:	RCr
Date:	5/24/2007
Sheet:	11 of 11

Stem Vert. Moments.

Design Height, hw=	13.00 ft
Force, P1=	3789.89 lbs/ft
Cantilever Moment, Ma=	16416.69 '-lbs/ft
Mu=	27.74
Stem d=	8.125 in

Trial Bar Size and Spacing As= 0.88 in.sq/ft.
Rho 0.009062287 Rho*n= 0.06520425

a=As*Fy/.85*fc*b	1.039 in		
ΦMn	30.24 kip-ft	>	Mu(27.74 kip-ft) ,OK
k=	0.302		
j=	0.899		
fs=	30.51 ksi		
dc=	1.875 in		
A=	22.5 sq.in		
Z=	108.1 kips/in		

Use # 6 @ 6 in

Heel Reinf.

Total Weight=	2044.32 lbs/ft
Design Span, s=	6.50 ft.
Cantilever Mom., Mdl=	48105.72 ft-lbs/ft
Mu=	62.54
Heel d=	16.0625 in

Trial Bar Size and Spacing As= 1.20 in.sq/ft.
Use # 7 @ 6 in
Rho 0.006239382 Rho*n= 0.04489311

a=As*Fy/.85*fc*b	1.415 in		
ΦMn	83.10 kip-ft	>	Mu(62.54 kip-ft) ,OK
k=	0.258		
j=	0.914		
fs=	32.70 ksi		
dc=	1.9375 in		
A=	23.25 sq.in		
Z=	116.2 kips/in		

Toe Reinf.

Design Span, s=	1.00 ft.
Cantilever Mom., Mdl=	1242.08 ft-lbs/ft
Mu=	1.61
Toe d=	16.25 in

Trial Bar Size and Spacing As= 0.20 in.sq/ft.
Use # 4 @ 12 in
Rho 0.001006921 Rho*n= 0.00724492

a=As*Fy/.85*fc*b	0.231 in		
ΦMn	14.26 kip-ft	>	Mu(1.61 kip-ft) ,OK
k=	0.113		
j=	0.962		
fs=	4.85 ksi		
dc=	1.75 in		
A=	42 sq.in		
Z=	20.3 kips/in		

Check Shear Stresses

Stem wall Vu=	6404.92 lbs	Vn=	11720.29 lbs	OK
Heel Vu=	19554.49 lbs	Vn=	23170.12 lbs	OK

RECEIVED

OK'D BY JEL OK'D BY _____

MAY 2 5 2007

RESUBMIT — APPROVED 5/29/07 (As Noted)

BY DATE

MANUFACTURED BY:

CAMP

PRECAST INC.
78 PRECAST ROAD
MILTON, VERMONT 05468
PHONE(802)893-2401 FAX(802)893-1542

PROJECT:

VT 105, BRIDGE #50
15'-0" X 9'-0" BOX CULVERT
JAY, VT
COUNTY OF ORLEANS

PREPARED BY:

DELTA ENGINEERS

184 COURT STREET, BINGHAMTON, NY 13901
PHONE(607)231-6600 FAX(607)231-6650

ENGINEER OF RECORD:

STATE OF VERMONT
AGENCY OF TRANSPORTATION

DESIGN NOTES

AS PROVIDED BY EOR:
1. DESIGN PER AASHTO 17TH EDITION WITH HS-25 LOADING.
2. UNIT WEIGHT OF SOIL = 140 PCF
3. ALLOWABLE BEARING PRESSURE = 4000 PSF
4. DESIGN EARTH COVER = 11'

ASSUMPTIONS: (TO BE VERIFIED BY EOR)
1. f'c @ 28 DAYS = 5000 PSI
2. REINFORCEMENT = BAR PER ASTM A615, GRADE 60
3. COEFFICIENT OF SLIDING = 0.45
4. MATERIALS AND MANUFACTURING PER ASTM C1433.

GENERAL NOTES:

1. ALL EXPOSED EDGES OF CONCRETE & TOP SLAB EXTERIOR EDGES SHALL BE CHAMFERED 1"X1"
2. REINFORCING STEEL PLACEMENT TOLERANCE
   A) SPACING: ±1"
   B) CLEARANCE: ±¼"

DRAWING SCHEDULE

SHEET NO.	DESCRIPTION	REVISIONS REV. NO.	REVISIONS DATE
1	COVER SHEET	1	5/21/07
2	PLAN VIEW, & ELEVATION VIEW	2	5/24/07
3	END VIEWS & WINGWALL SECTION	2	5/24/07
4	REINFORCING & CONNECTION DETAILS	1	5/21/07
5	WINGWALL DETAILS	2	5/24/07
6	WINGWALL DETAILS	2	5/24/07

STATE OF VERMONT
RALPH VERRASTRO
#18-0006974
REGISTERED PROFESSIONAL ENGINEER

5-24-07

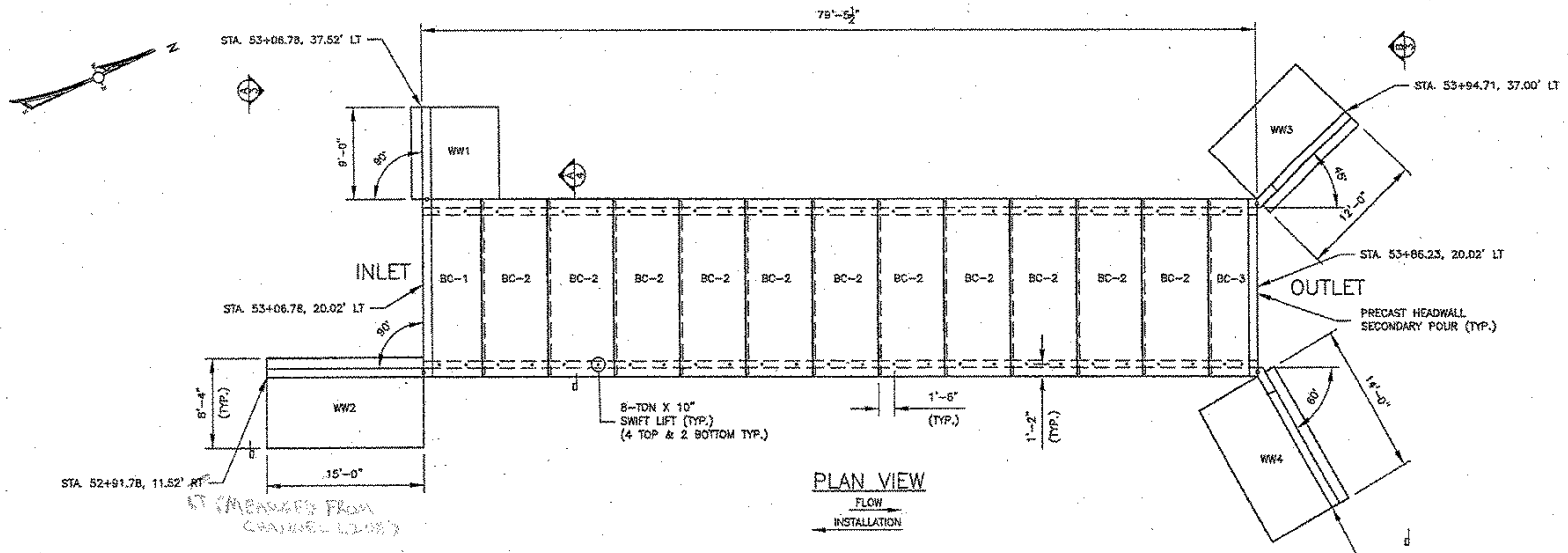

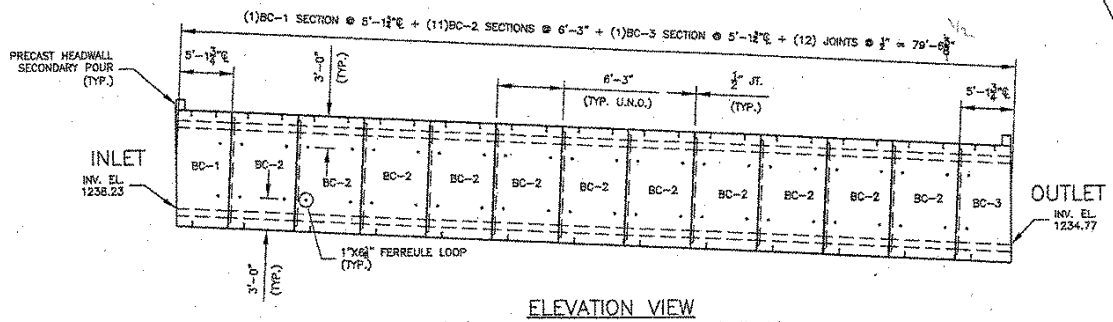

ELEVATION VIEW
(PRECAST WINGWALLS NOT SHOWN IN THIS VIEW FOR CLARITY)

TABLE OF UNITS				
MARK	QTY	℄ LENGTH	VOL (CY)	WEIGHT (LBS)
BC-1	1	5'-1¾"	9.94	40,250
BC-2	11	6'-3"	11.39	46,150
BC-3	1	5'-1¾"	9.94	40,250
WW1	1	9'-0"	6.83	27,660
WW2	1	15'-0"	11.38	46,130
WW3	1	12'-0"	9.11	36,900
WW4	1	14'-0"	10.63	43,050

NOTE: CULVERT WEIGHTS INCLUDE HEADWALLS

RECEIVED

CK'D BY JEL OK'D BY _____

MAY 2 5 2007

RESUBMIT _____ APPROVED 5/29/07 (WW3)

BY SY DATE

STATE OF VERMONT
RALPH VERHASTRO
#18-0036974
PROFESSIONAL ENGINEER
REGISTERED
PROFESSIONAL ENGINEER

5-24-07

REV.NO.	DATE	REVISION
2	5/24/07	REVISED WINGWALLS
1	5/21/07	REVISED WINGWALLS

PREPARED BY:
DELTA ENGINEERS
164 COURT STREET, BINGHAMTON, NY 13901
TEL: (607) 231-6500 FAX: (607) 231-6650

PREPARED FOR:
CAMP
PRECAST INC.
78 PRECAST ROAD
MILTON, VERMONT 05468
PHONE(802)893-2401 FAX(802)893-1542

DATE: 5/15/07 | SHEET TITLE: PLAN VIEW & ELEVATION VIEW | DRAWN BY: CJB
SCALE: N.T.S. | CHK'D BY: SJL
PROJECT: VT 105, BRIDGE #50
15'-0" X 9'-0" BOX CUVLERT
JAY, VT
CONTRACTOR:
DELTA PROJ. NO.: 2007.004.002
DWG. I.D.: SD-01
SHT. NO.: 2 OF 6

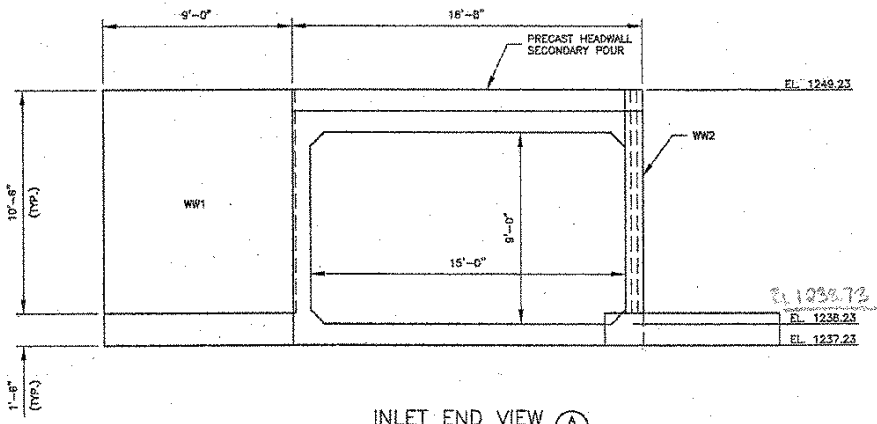

EL. 1238.73 (Top of footing)

INLET END VIEW (A/3)

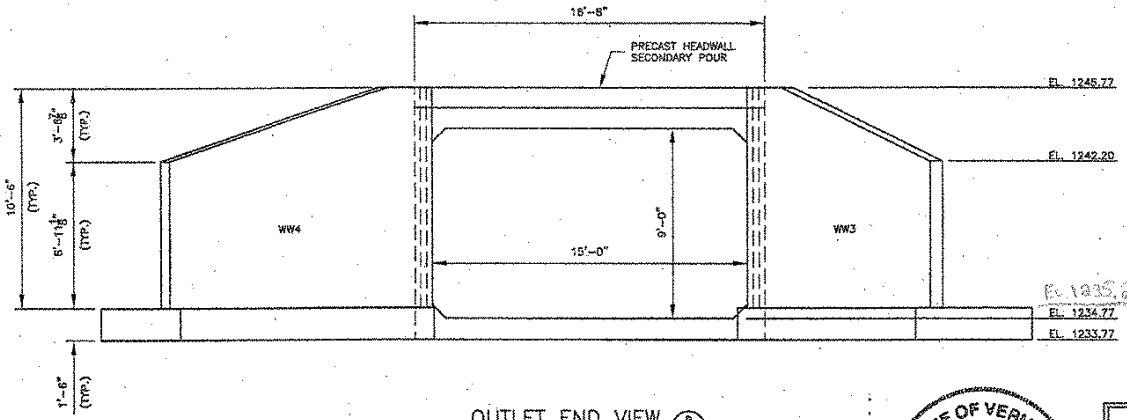

EL. 1235.27 (Top of footing)

OUTLET END VIEW (B/3)

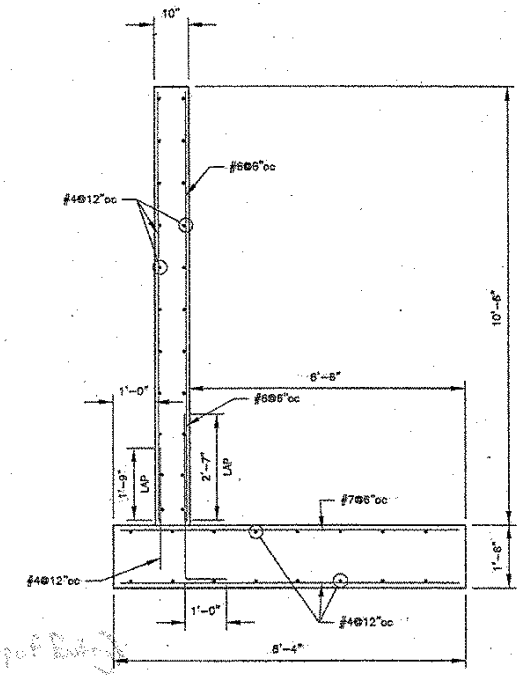

WINGWALL REINFORCING SECTION
(ALL COVER 1 1/2")

RECEIVED

CK'D BY JBL OK'D BY _____

MAY 2 5 2007

RESUBMIT _____ APPROVED 5/29/07 (As Noted)

BY WW DATE

STATE OF VERMONT
RALPH VERBASTO
#18-0008974
REGISTERED PROFESSIONAL ENGINEER

Ralph Verbasto
5-24-07

REV.NO.	DATE	REVISION
2	5/24/07	REVISED WINGWALLS
1	5/21/07	REVISED WINGWALL DETAIL

PREPARED BY:

DELTA ENGINEERS
184 COURT STREET, BINGHAMTON, NY 13901
TEL: (607) 231-6600 FAX: (607) 231-6650

PREPARED FOR:

CAMP
PRECAST INC.
78 PRECAST ROAD
MILTON, VERMONT 05468
PHONE(802)893-2401 FAX(802)893-1542

DATE: 5/15/07	SHEET TITLE: END VIEWS & WINGWALL SECTION	DRWN BY: CJB	
SCALE: N.T.S.		CKD BY: SJL	
PROJECT: VT 105, BRIDGE #50 15'-0" X 9'-0" BOX CULVERT JAY, VT			
CONTRACTOR:		DWG. ID.	SD-01
DELTA PROJ. NO.:	2007.004.002	SHT. NO.	3 OF 6

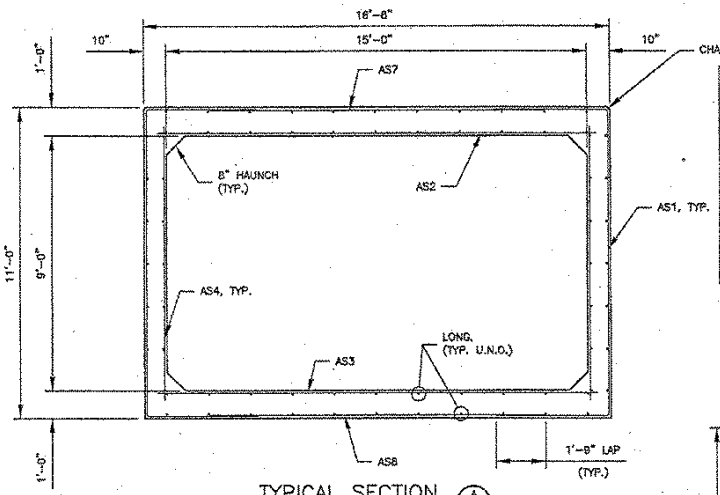

TYPICAL SECTION (A/4)
(1" CLR. TYP.)

BAR LIST							
MARK	SIZE	SPA	TYPE	LENGTH	A	B	C
AS1	8	9"	"U"	18'-10"	4'-0"	10'-10"	4'-0"
AS2	9	7"	STR.	15'-8"	---	---	---
AS3	8	6"	STR.	15'-8"	---	---	---
AS4	4	10"	STR.	9'-8"	---	---	---
AS7	4	8"	STR.	12'-0"	---	---	---
AS8	4	8"	STR.	12'-0"	---	---	---
LONG.	4	12"	STR.	6'-1"	---	---	---

NOTE: BAR LIST FOR STANDARD 6'-3" SECTIONS. ADJUST QTY'S & LENGTHS AS REQ'D FOR END SECTIONS

A
B
C

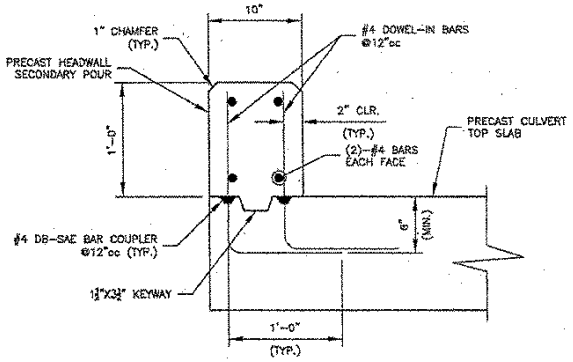

TYPICAL HEADWALL DETAIL

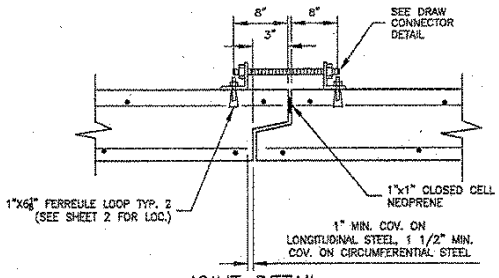

JOINT DETAIL

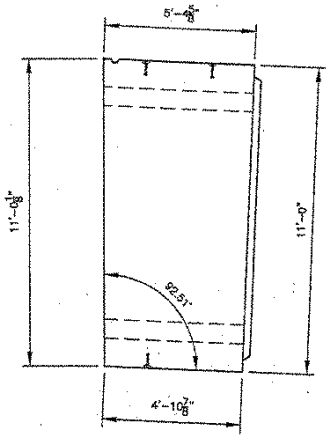

PIECEMARK BC-1
ELEVATION VIEW
(HEADWALL NOT SHOWN)

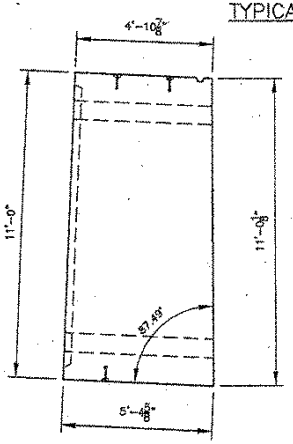

PIECEMARK BC-3
ELEVATION VIEW
(HEADWALL NOT SHOWN)

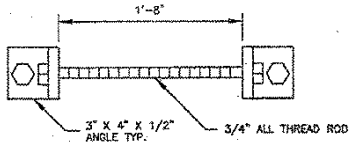

DRAW CONNECTOR DETAIL
(DRAW CONNECTORS TO BE REMOVED AFTER INSTALLATION)

RECEIVED
CK'D BY JEL OK'D BY
MAY 25 2007
RESUBMIT APPROVED 5/29/07
BY DATE

STATE OF VERMONT
RALPH VERHAGEN
#18-0006374
PROFESSIONAL ENGINEER
5-24-07

REV. NO.	DATE	REVISION
1	5/21/07	REVISED PER COMMENTS

PREPARED BY:
DELTA ENGINEERS
184 COURT STREET, BINGHAMTON, NY 13901
TEL: (607) 231-6600 FAX: (607) 231-6850

PREPARED FOR:
CAMP
PRECAST INC.
78 PRECAST ROAD
MILTON, VERMONT 05468
PHONE(802)893-2401 FAX(802)893-1542

DATE 5/15/07 | SHEET TITLE: REINFORCING & CONNECTION DETAILS | DRAWN BY: CJB
SCALE: N.T.S. | CKD BY: SDL
PROJECT: VT 105, BRIDGE #50
15'-0" X 9'-0" BOX CULVERT
JAY, VT
CONTRACTOR:
DELTA PROJ. NO: 2007.004.002
DWG. NO. SD-01
SHT. NO. 4 OF 5

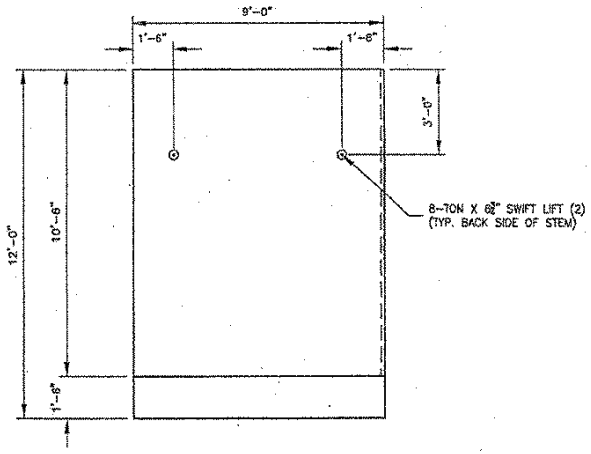

ELEVATION VIEW WW1

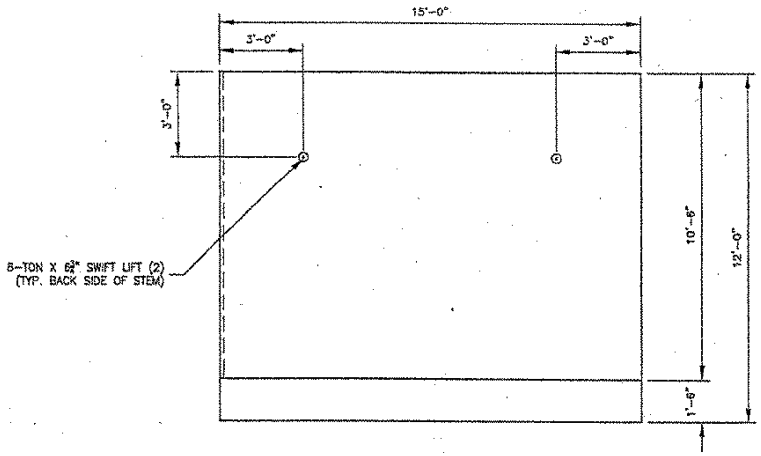

ELEVATION VIEW WW2

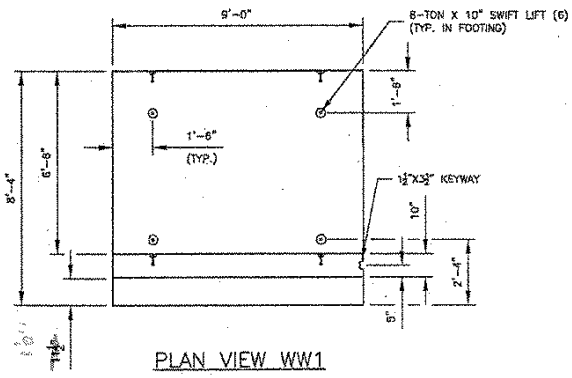

PLAN VIEW WW1

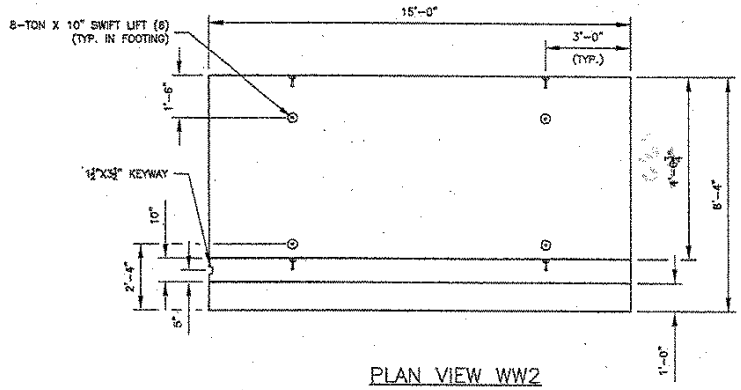

PLAN VIEW WW2

6¾" – 10,900 @ 3500 PSI – 13,000 @ 5000 PSI	10" – 16,000 @ 3500 PSI (MAX)	

*NOTE: EXTRA LIFT INSERTS FOR MANUFACTURING PURPOSES

RECEIVED

CK'D BY JEL OK'D BY _____

MAY 2 5 2007

RESUBMIT _____ APPROVED 5/29/07 (As Noted)

BY WYW DATE 5-24-07

STATE OF VERMONT RALPH VERRASTRO #18-0006974 PROFESSIONAL ENGINEER REGISTERED

REV. NO.	DATE	REVISION
2	5/24/07	REVISED WINGWALLS
1	5/21/07	REVISED PER COMMENTS

PREPARED BY:

DELTA ENGINEERS
184 COURT STREET, BINGHAMTON, NY 13901
TEL: (607) 281-6600 FAX: (607) 281-6650

PREPARED FOR:

CAMP
PRECAST INC.
76 PRECAST ROAD
MILTON, VERMONT 05468
PHONE(802)893-2401 FAX(802)893-1542

DATE: 5/15/07 | SHEET TITLE: WINGWALL DETAILS | DRWN BY: CJB
SCALE: N.T.S. | CKD BY: SDL

PROJECT: VT 105, BRIDGE #50
15'-0" X 9'-0" BOX CULVERT
JAY, VT

CONTRACTOR:
DELTA PROJ. NO.: 2007.004.002
DWG. ID.: SD-01
SHT. NO.: 5 OF 6

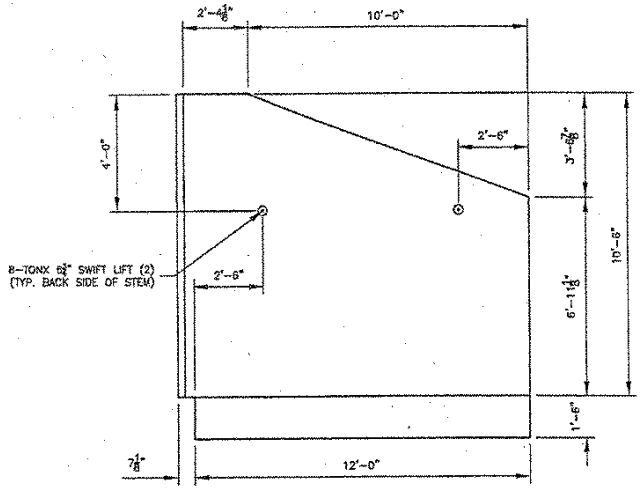

ELEVATION VIEW WW3

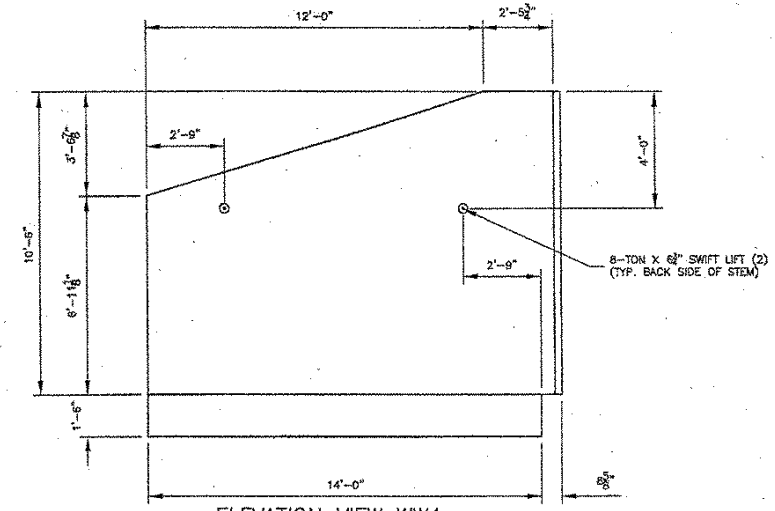

ELEVATION VIEW WW4

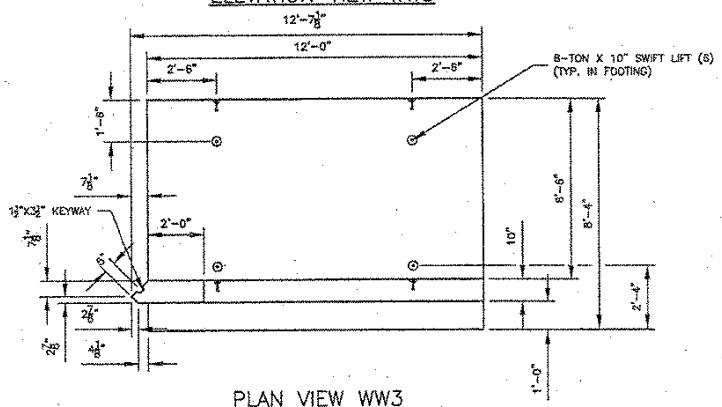

PLAN VIEW WW3

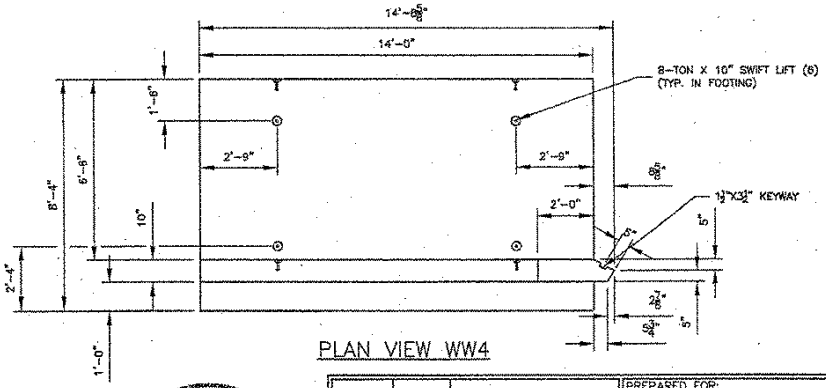

PLAN VIEW WW4

RECEIVED

CK'D BY JEL OK'D BY

MAY 2 5 2007

RESUBMIT APPROVED 5/29/07

BY DATE

STATE OF VERMONT
RALPH VERGASTO
#18-0006074
PROFESSIONAL ENGINEER
5-24-07

REV.NO.	DATE	REVISION
2	5/24/07	REVISED WINGWALLS
1	5/21/07	REVISED PER COMMENTS

PREPARED BY:

DELTA ENGINEERS
184 COURT STREET, BINGHAMTON, NY 13901
TEL: (607) 231-6600 FAX: (607) 231-6650

PREPARED FOR:

CAMP
PRECAST INC.
78 PRECAST ROAD
MILTON, VERMONT 05468
PHONE(802)893-2401 FAX(802)893-1542

DATE: 5/15/07 SHEET TITLE: WINGWALL DETAILS DRAWN BY: CJB
SCALE: N.T.S. CHK'D BY: SDL

PROJECT:
VT 105, BRIDGE #50
15'-0" X 9'-0" BOX CULVERT
JAY, VT

CONTRACTOR: DWG. NO. SD-01
DELTA PROJ. NO.: 2007.004.002 SHT. NO. 5 OF 5