INDEX OF SHEETS
SEE SHEET 2

INDEX OF STANDARDS
SEE SHEET 2

STATE OF VERMONT
AGENCY OF TRANSPORTATION

PROPOSED IMPROVEMENT
TOWN OF BENNINGTON
COUNTY OF BENNINGTON
WWII VETERANS MEMORIAL HIGHWAY
VT ROUTE 279, PRINCIPAL ARTERIAL
BENNINGTON AC NH 019-1(53)

BEGINNING AT STA. NB 8+515, AT A POINT APPROXIMATELY 180 METERS WEST OF CHAPEL ROAD AND EXTENDING TO STA. NB 9+672.770, ENDING AT A POINT APPROXIMATELY 300 METERS EAST OF EXISTING U.S. RTE 7 IN A NORTH AND WEST DIRECTION. WORK TO BE PERFORMED UNDER THIS PROJECT INCLUDES GRADING, DRAINAGE, SUBBASE, AND PAVEMENT FOR STATE HIGHWAY. THIS PROJECT ALSO INCLUDES FURNACE BROOK BRIDGE, EAST ROAD BRIDGE, RAMP G, ROUTE 7 DRAINAGE SWALE, LEDGE REMOVAL AT EXIT 2 AND STAGE ONE SITES MATERIAL DEPOSIT SITES.

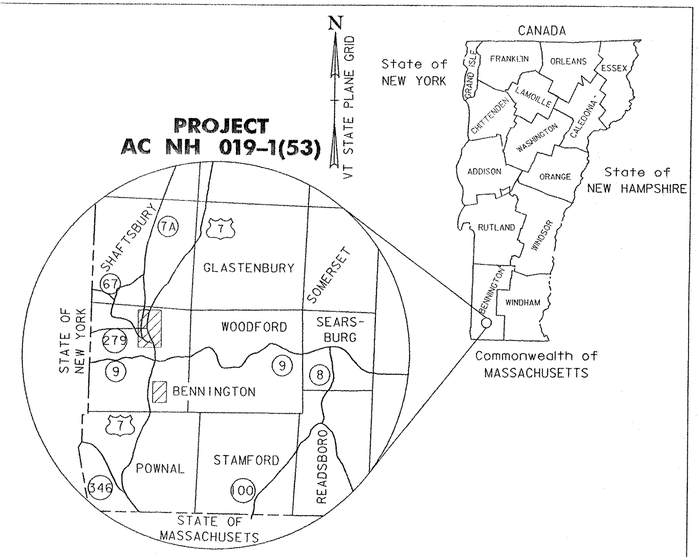

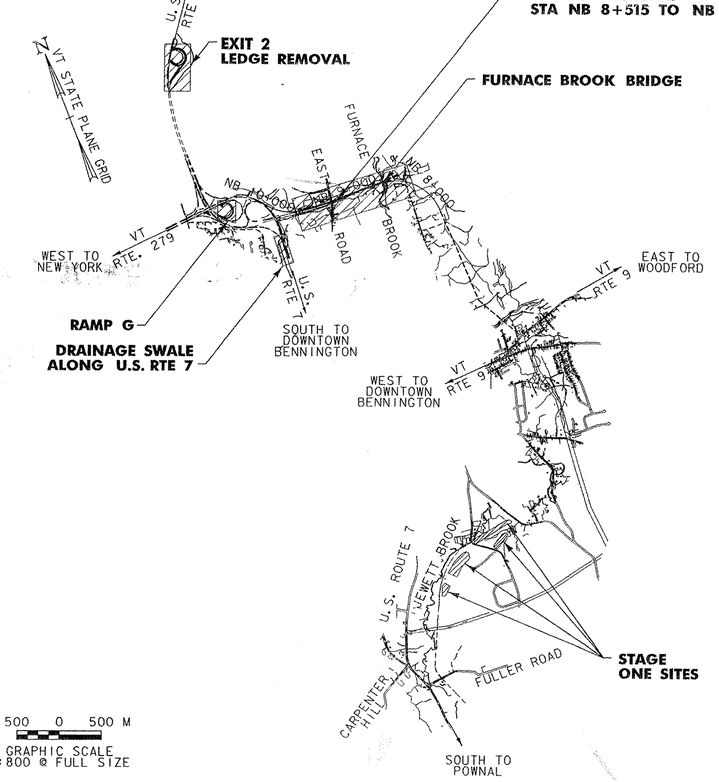

TRAFFIC DATA

2010 ADT	= 9,100
2030 ADT	= 11,800
2010 DHV	= 1,365
2030 DHV	= 1,770
% TRUCKS	= 6.12
DESIGN SPEED	= 100 km/h

CONVENTIONAL SYMBOLS

COUNTY LINE
TOWN LINE
LIMITS OF ACCESS
POINT OF ACCESS
FENCE LINE
STONE WALL
TRAVELED WAY
GUARDRAIL
RAILROAD
SURVEY LINE
CULVERT
POWER POLE
TELEPHONE POLE
TREES
CONTROL OF ACCESS
PROPERTY LINE
R.O.W. TAKING LINE
SLOPE RIGHTS (SR SR SR)
TOP OF CUT
TOE OF SLOPE
ARCHEOLOGICAL
CLEAR ZONE
WETLAND DELINEATION

\\V1993-vol1\hwy\85000\25_mrp\portal\plan\drawing-construct_3\ss85125t1.dgn

BITUMINOUS CONCRETE PAVEMENT
SUPERPAVE MIX DESIGN CRITERIA

DESIGN GYRATION	100
PERFORMANCE GRADE BINDER	PG 64-28
DESIGN ESAL	
VT ROUTE 279	10,050,000
EAST ROAD	999,000
SURVEYED BY :	VERMONT SURVEY & ENGINEERING
SURVEYED DATE :	1995
DATUM	
VERTICAL	NAVD88
HORIZONTAL	NAD83 (1992)

500 0 500 M
GRAPHIC SCALE
1:800 @ FULL SIZE

RECORD PLANS

CONTRACTOR: J. A. MCDONALD INC. – LYNDON CENTER, VT
RESIDENT ENGINEER: RON LEMAIRE
CONSTRUCTION BEGAN: AUGUST 3, 2007
CONSTRUCTION COMPLETE: DECEMBER 3, 2010
RECORD PLANS BY: RON LEMAIRE & AMOS KEMPTON

I HEREBY CERTIFY THAT ALL THE CONSTUCTION REQUIRED BY THIS SET OF DRAWINGS HAS BEEN ACCOMPLISHED AS INDICATED HEREIN.

BY _____ RESIDENT ENGINEER
DATE Jan 23, 2012 Ronald Lemaire

NOTE: Any further information concerning final quantities, amounts or other details relative to this project may be found at Central Files in the electronic archives.

STATE OF VERMONT
GARY A. SANTY
NO. 7563
LICENSED PROFESSIONAL ENGINEER
May 21, 2007

VAOT Metric
UNLESS NOTED OTHERWISE
STATIONS ARE IN KILOMETERS
ELEVATIONS ARE IN METERS
DIMENSIONS ARE IN MILLIMETERS

Stantec

THESE PLANS ARE SUBJECT TO SUCH ENGINEERING CHANGES AS MAY BE REQUIRED BY THE FEDERAL HIGHWAY ADMINISTRATION OR THE DIRECTOR OF PROGRAM DEVELOPMENT.

CONSTRUCTION IS TO BE CARRIED ON IN ACCORDANCE WITH THESE PLANS AND THE STANDARD SPECIFICATIONS FOR CONSTRUCTION DATED 2006, AS APPROVED BY THE FEDERAL HIGHWAY ADMINISTRATION ON JUNE 15, 2006 FOR USE ON THIS PROJECT, INCLUDING ALL SUBSEQUENT REVISIONS AND SUCH REVISED SPECIFICATIONS AND SPECIAL PROVISIONS AS ARE INCORPORATED IN THESE PLANS.

DEPARTMENT OF TRANSPORTATION
FEDERAL HIGHWAY ADMINISTRATION
APPROVED Mark D. Richter for DATE 5-30-07
DIVISION ADMINISTRATOR

DIRECTOR OF PROGRAM DEVELOPMENT
APPROVED _____ DATE 5-22-07

PROJECT MANAGER : JAMES HARRIS

PROJECT NAME : BENNINGTON
PROJECT NUMBER : AC NH 019-1(53)

SHEET 1 OF 577 SHEETS

VAOT Metric

INDEX OF SHEETS

SHEET NUMBER	DESIGNATION	TITLE
1	-	TITLE SHEET
2	IND-1	INDEX OF STANDARDS/SHEETS
3-10	TS-01 to TS-08	TYPICAL SECTION SHEETS
11	CT-1	TIE SHEET
12-18	-	QUANTITY SHEETS
19	-	ITEM DETAIL SHEETS
20-22	-	DRAINAGE DETAIL SHEETS
23-24	-	EARTHWORK SUMMARY SHEETS
25	MD-1	MISCELLANEOUS DETAIL SHEET
26-31	-	ROW DETAILS
32-43	ROW-12 to ROW-33	ROW PLANS
44-52	ROW-1 to ROW-9	SOS-ROW PLANS
53-65	A-01 to A-13	ALIGNMENT PLAN SHEETS
66-77	PR-1 to PR-14	ROADWAY PROFILES
78-91	P-01 to P-14	GENERAL PLAN SHEETS
92-102	DP-01 to DP-11	DRAINAGE PLAN SHEETS
103-109	-	DRAINAGE PROFILES
110-112	DD-1 to DD-3	DRAINAGE DETAIL SHEETS
113-116	SWM-1 to SWM-4	STORMWATER MANAGEMENT DETAIL SHEETS
117-133	EC-01 to EC-14	EROSION CONTROL PLAN SHEETS
134-143	-	EROSION CONTROL DETAIL SHEETS
144-151	SP-01 to SP-08	SIGNING PLAN SHEETS
152-153	TSS-01 to TSS-02	TRAFFIC SIGN SUMMARY SHEETS
154	TSD-01	SIGN DETAIL SHEET
155-162	U-01 to U-08	UTILITY SHEETS
163-165	TU-01 to TU-03	TEMPORARY UTILITY PLANS
166	-	CONSTRUCTION APPROACH SIGNING
167-168	TC-01 to TC-02	TRAFFIC CONTROL SHEETS
169-178	ERD-01 to ERD-10	EAST ROAD DETOUR SHEETS
179-184	-	EXIT 2 DETOUR REMOVAL SHEETS
185-191	L-1 to L-7	LANDSCAPING SHEETS
192-246	BR-500 to BR-554	FURNACE BROOK BRIDGE PLANS
247-297	BR-600 to BR-650	EAST ROAD BRIDGE PLANS
298-331	-	MAINLINE CROSS SECTIONS
332-346	-	CROSSOVER CROSS SECTIONS
347-361	-	EAST ROAD CROSS SECTIONS
362-372	-	RAMP G CROSS SECTIONS
373-383	-	WC WASTE SITE CROSS SECTIONS
384-400	-	SWALE 3 CROSS SECTIONS
401-422	-	RAMP A CROSS SECTIONS
423	SLP-1	SOS-SITE LAYOUT PLAN
424-426	TS-1 to TS-3	SOS-TYPICAL SECTIONS
427-429	EW-1 to EW-3	SOS-EARTHWORK SHEETS
430	HC-1	SOS-HORIZONTAL CONTROL TABLE
431-437	P-1 to P-7	SOS-GENERAL PLAN
438	PR-1	SOS-PROFILE
439-442	SOS-1 to SOS-4	SOS-DETAILS
443	TCP-1	SOS-TRAFIC CONTROL PLAN
444-445	CAS-1 to CAS-2	SOS-CONSTRUCTION APPROACH SIGNING
446-448	ECN-1 to ECN-3	SOS-GENERAL EROSION NARRATIVE
449-450	SM-1 to SM-2	SOS-SOIL MAP
451-454	ECD-1 to ECD-4	SOS-EROSION CONTROL DETAILS
455-461	EXP-1 to EXP-7	SOS-EXISTING CONDITIONS PLAN
462-479	ECP-1 to ECP-18	SOS-EROSION CONTROL PLAN
480-577	XSC-1 to XSC-98	SOS-CROSS SECTIONS

INDEX OF METRIC STANDARDS

SHEET NUMBER	REVISION DATE	SHEET NUMBER	REVISION DATE
A-78M	03-15-05	C-3BM	09-01-04
A-79M	03-15-05	E-194M	03-15-05
A-80M	05-02-03	E-195M	03-15-05
C-3AM	09-01-04	RR-1M	06-13-97

INDEX OF ENGLISH STANDARDS

SHEET NUMBER	REVISION DATE	SHEET NUMBER	REVISION DATE
		E-121	08-08-95
A-61	06-01-94	E-123	03-16-04
B-1	06-01-94	E-126	02-01-00
B-5	06-01-94	E-130	08-08-95
B-11	06-01-94	E-131	08-08-95
B-12	06-01-94	E-131B	05-30-03
B-17	02-23-95	E-134	08-08-95
B-71	07-08-05	E-136A	08-08-95
C-1	01-03-00	E-136B	08-08-95
C-2A	10-14-05	E-142	09-20-95
C-2B	10-14-05	E-143	06-15-04
D-3	06-01-94	E-144	03-29-99
D-4	06-01-94	E-150	05-01-04
D-6	06-01-94	E-151	05-01-04
D-8	01-03-00	E-153B	05-30-03
D-9	06-01-94	E-155	05-01-04
D-10	06-01-94	E-160	05-20-99
D-11	06-01-94	E-161	08-18-95
D-13	01-03-00	E-162	05-20-99
D-15	06-01-94	E-163	05-20-99
D-16	06-01-94	E-164	05-20-99
D-20	03-03-03	E-175	11-17-93
D-22	03-10-95	E-190	06-30-03
E-100	01-02-04	E-191	02-01-99
E-100A	01-02-04	E-192	10-12-00
E-101	05-30-03	E-193	08-18-95
E-102	06-30-03	E-197	04-01-05
E-102A	05-01-04	E-198	04-01-05
E-103	03-01-04	E-199	04-01-05
E-104	02-03-99	F-1	06-01-94
E-104A	12-27-96	G-1	01-03-00
E-105	05-01-04	G-1D	01-03-00
E-106	03-01-04	G-17A	09-27-02
E-107	06-30-03	G-17B	09-27-02
E-107A	08-08-95	G-18	06-01-94
E-108	08-18-95	G-19	11-15-02
E-110	08-08-95	J-1	06-01-94
E-120	08-08-95	J-3	08-07-95

VERMONT AGENCY OF TRANSPORTATION

Stantec

PROJECT NAME: BENNINGTON
PROJECT NUMBER: AC NH 019-1(53)

FILE NAME: ...\plot_files\zd307c3frm.ptf
DESIGN SUPERVISOR: GREG EDWARDS
DESIGNED BY: MARC FOISY
INDEX OF STANDARDS / SHEET IND-1

PLOT DATE: 5/13/2011
DRAWN BY: STANTEC
CHECKED BY: GARY SANTY
SHEET 2 OF 577

V:\1953\active\195300021\transportation\drawing\contract_3\plot_files\zd307c3frm.ptf

TYPICAL SECTION - MAINLINE (NB)

MATERIAL ITEM		THICKNESS TOLERANCE
PAVEMENT	(TOTAL DEPTH)	+/- 15
SUBBASE	(TOTAL DEPTH)	+/- 30
SAND BORROW	(TOTAL DEPTH)	+/- 30

	50	FUTURE PAVEMENT COURSE, SUPERPAVE BITUMINOUS CONCRETE PAVEMENT (TYPE IIIS)	**NOT PART OF THIS CONTRACT**
	80	BINDER COURSE, SUPERPAVE BITUMINOUS CONCRETE PAVEMENT (TYPE IIS) PG 64 - 28	
	100	BASE COURSE, SUPERPAVE BITUMINOUS CONCRETE PAVEMENT (TYPE IS) PG 64 - 28	
	600	SUBBASE OF DENSE GRADED CRUSHED STONE	
	400	SAND BORROW	
SHOULDERS:	50	FUTURE PAVEMENT COURSE, SUPERPAVE BITUMINOUS CONCRETE PAVEMENT (TYPE IIIS)	**NOT PART OF THIS CONTRACT**
	80	SUPERPAVE BITUMINOUS CONCRETE PAVEMENT (TYPE IIS)	

NOTE:

1) DESIGN FROST DEPTH - 1230

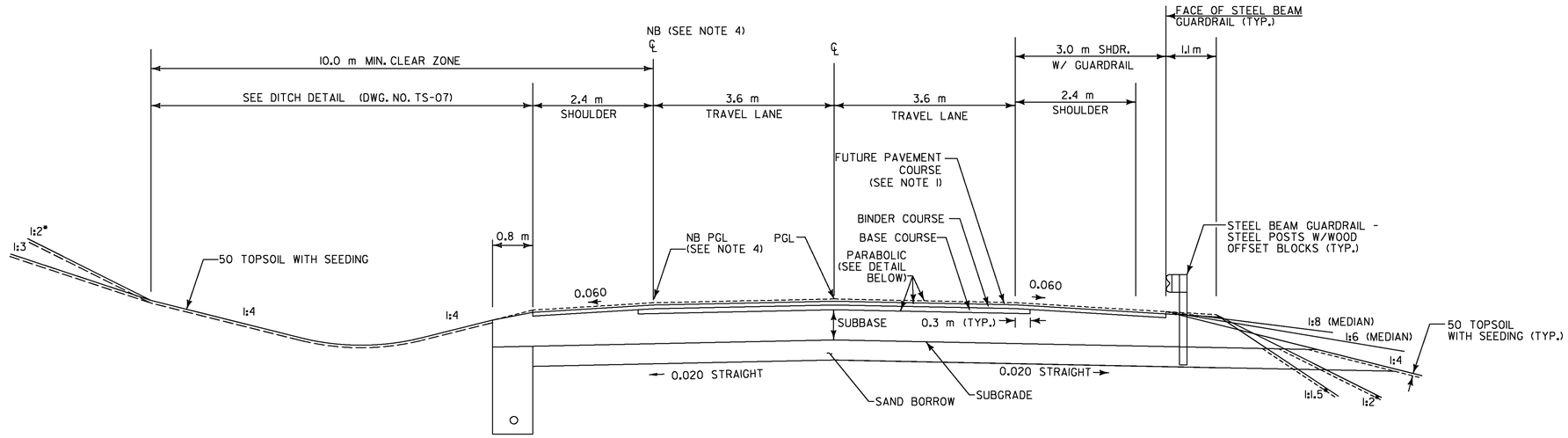

NORMAL SECTION

NOTES:

1. THE TOP 50 PAVEMENT COURSE (TYPE IIIS), ON THE MAINLINE AND CROSSOVER TRAVEL WAY AND SHOULDERS, WILL NOT BE CONSTRUCTED AS PART OF THIS CONTRACT. THIS CONTRACT ONLY INCLUDES 100 OF TYPE IS AND 80 OF TYPE IIS, SUPERPAVE BITUMINOUS CONCRETE PAVEMENT (ITEM 490.30). THE TOP 50 WILL BE PAVED ON THE FURNACE BROOK BRIDGE ONLY.
2. ELIMINATE TOPSOIL AND SEEDING BEHIND GUARDRAIL TO SUBGRADE CATCH POINT.
3. REFER TO TS-06 FOR SEEDING FORMULA AND ADDITIONAL GENERAL NOTES
4. NB ℄ & PGL CARRIED AT LEFT TRAVEL WAY FROM NB 8+958.000 TO 9+672.770.
5. ANY DIMENSION NOTED AS "VARIES" IS REFERENCED TO ALIGNMENT PLANS/ SECTIONS FOR DETAIL.
6. SEE BANKING DIAGRAM ON PROFILES FOR CROSS SLOPE.
7. GUARDRAIL TO BE SET FOR ULTIMATE PAVEMENT ELEVATION.
8. EMULSIFIED ASPHALT TO BE APPLIED ON EXISTING PAVEMENT, BETWEEN ALL COURSES OF SUPERPAVE BITUMINOUS CONCRETE PAVEMENT AND ON COLD PLANED SURFACES, AT THE RATE OF 0.068 L/m² OR AS DIRECTED BY THE ENGINEER.
9. TEMPORARY EROSION MATTING SHALL BE INSTALLED ON ALL SLOPES GREATER THAN 1:3, TO STABILIZE THE SLOPE.

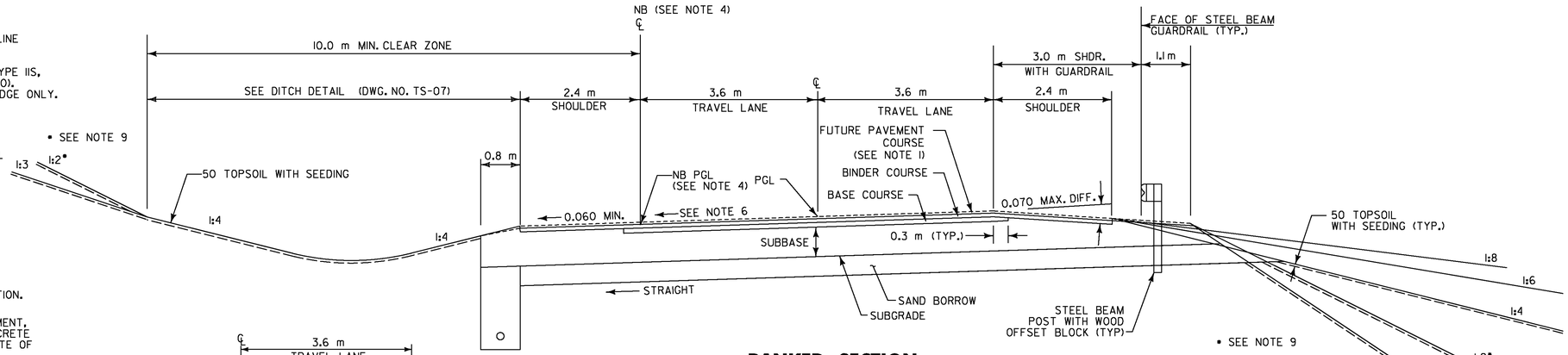

BANKED SECTION

SLOPE VARIES, SEE BANKING DIAGRAM ON PROFILE SHEETS.

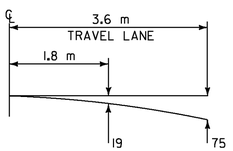

PARABOLIC DETAIL NORMAL SECTION

NOTE: ALL DIMENSIONS ARE IN MILLIMETERS (mm) EXCEPT WHERE NOTED.

PGL=PROFILE GRADE LINE

VERMONT AGENCY OF TRANSPORTATION

Stantec

PROJECT NAME: BENNINGTON
PROJECT NUMBER: AC NH 019-1(53)

FILE NAME: ...\plot_files\zd307c3typ.ptf
DESIGN SUPERVISOR: GREG EDWARDS
DESIGNED BY: MARC FOISY
TYPICAL SECTIONS TS-01

PLOT DATE: 5/16/2011
DRAWN BY: STANTEC
CHECKED BY: GARY SANTY
SHEET 3 OF 577

v:\853\active\85300002\transportation\drawing\contract_3\plot_files\zd307c3typ.ptf

TYPICAL SECTION - MAINLINE: WITH CLIMBING LANES

MATERIAL ITEM		THICKNESS TOLERANCE
PAVEMENT	(TOTAL DEPTH)	+/- 15 mm
SUBBASE	(TOTAL DEPTH)	+/- 30 mm
SAND BORROW	(TOTAL DEPTH)	+/- 30 mm

	50	FUTURE PAVEMENT COURSE, SUPERPAVE BITUMINOUS CONCRETE PAVEMENT (TYPE IIIS)	**NOT PART OF THIS CONTRACT**
	80	BINDER COURSE, SUPERPAVE BITUMINOUS CONCRETE PAVEMENT (TYPE IIS) PG 64 - 28	
	100	BASE COURSE, SUPERPAVE BITUMINOUS CONCRETE PAVEMENT (TYPE IS) PG 64 - 28	
	600	SUBBASE OF DENSE GRADED CRUSHED STONE	
	400	SAND BORROW	
SHOULDERS:	50	FUTURE PAVEMENT COURSE, SUPERPAVE BITUMINOUS CONCRETE PAVEMENT (TYPE IIIS)	**NOT PART OF THIS CONTRACT**
	80	SUPERPAVE BITUMINOUS CONCRETE PAVEMENT (TYPE IIS)	

NOTE:

1) DESIGN FROST DEPTH - 1230

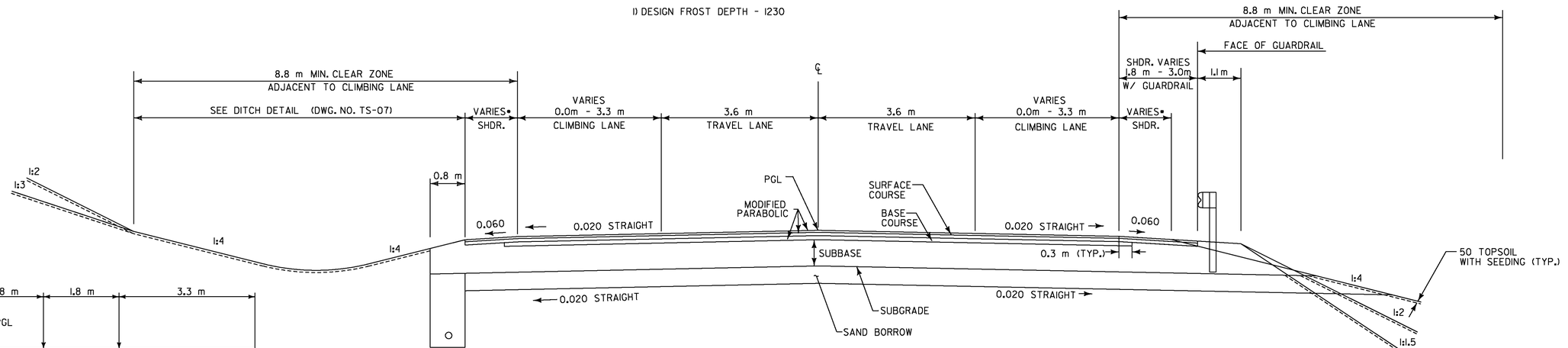

NORMAL SECTION W/ CLIMBING LANES

- SHOULDER DIMENSION VARIES FROM 1.2 m TO 2.4 m (SEE ALIGNMENT PLANS)

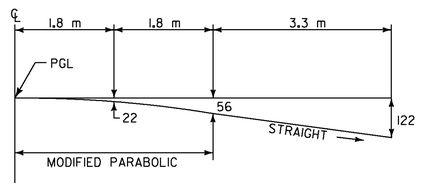

PARABOLIC DETAIL NORMAL SECTION

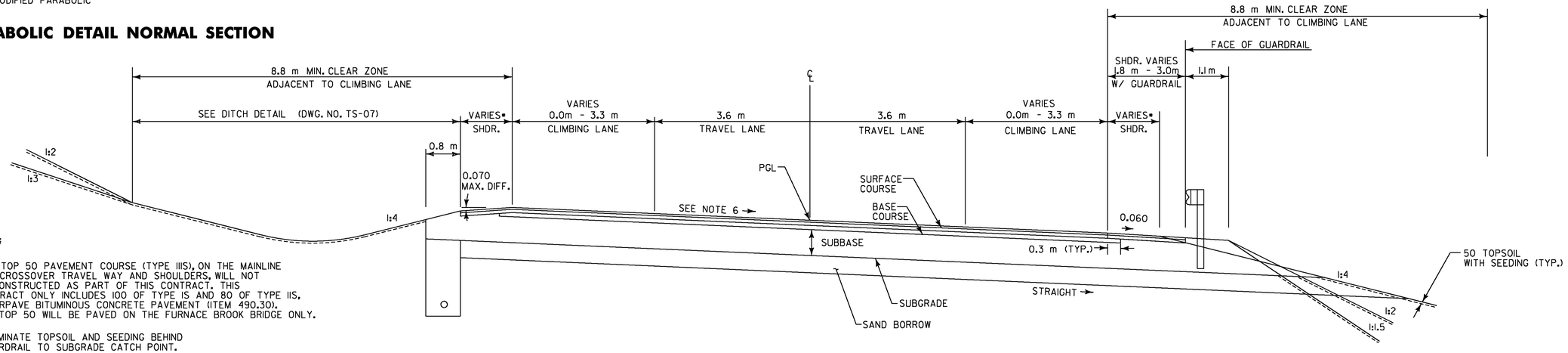

NOTES:

1. THE TOP 50 PAVEMENT COURSE (TYPE IIIS), ON THE MAINLINE AND CROSSOVER TRAVEL WAY AND SHOULDERS, WILL NOT BE CONSTRUCTED AS PART OF THIS CONTRACT. THIS CONTRACT ONLY INCLUDES 100 OF TYPE IS AND 80 OF TYPE IIS, SUPERPAVE BITUMINOUS CONCRETE PAVEMENT (ITEM 490.30). THE TOP 50 WILL BE PAVED ON THE FURNACE BROOK BRIDGE ONLY.
2. ELIMINATE TOPSOIL AND SEEDING BEHIND GUARDRAIL TO SUBGRADE CATCH POINT.
3. REFER TO TS-06 FOR SEEDING FORMULA AND ADDITIONAL GENERAL NOTES
4. NB ℄ & PGL CARRIED AT LEFT TRAVEL WAY FROM NB 8+958.000 TO 9+672.770.
5. ANY DIMENSION NOTED AS " VARIES" IS REFERENCED TO ALIGNMENT PLANS/ SECTIONS FOR DETAIL.
6. SEE BANKING DIAGRAM ON PROFILES FOR CROSS SLOPE.
7. GUARDRAIL TO BE SET FOR ULTIMATE PAVEMENT ELEVATION.
8. EMULSIFIED ASPHALT TO BE APPLIED ON EXISTING PAVEMENT, BETWEEN ALL COURSES OF SUPERPAVE BITUMINOUS CONCRETE PAVEMENT AND ON COLD PLANED SURFACES, AT THE RATE OF 0.068 L/m² OR AS DIRECTED BY THE ENGINEER.
9. TEMPORARY EROSION MATTING SHALL BE INSTALLED ON ALL SLOPES GREATER THAN 1:3, TO STABILIZE THE SLOPE.

BANKED SECTION W/ CLIMBING LANES

- SHOULDER DIMENSION VARIES FROM 1.2 m TO 2.4 m (SEE ALIGNMENT PLANS)

PGL=PROFILE GRADE LINE

NOTE: ALL DIMENSIONS ARE IN MILLIMETERS (mm) EXCEPT WHERE NOTED.

VERMONT AGENCY OF TRANSPORTATION

Stantec

PROJECT NAME: BENNINGTON
PROJECT NUMBER: AC NH 019-1(53)

FILE NAME: ...\plot_files\zd307c3typ.ptf
DESIGN SUPERVISOR: GREG EDWARDS
DESIGNED BY: MARC FOISY
TYPICAL SECTIONS TS-01a
PLOT DATE: 5/16/2011
DRAWN BY: STANTEC
CHECKED BY: GARY SANTY
SHEET 3a OF 577

v:\853\active\853002\transportation\drawing\contract_3\plot_files\zd307c3typ.ptf

TYPICAL SECTION - CROSSOVER (XO)

MATERIAL ITEM		THICKNESS TOLERANCE
PAVEMENT	(TOTAL DEPTH)	+/- 15
SUBBASE	(TOTAL DEPTH)	+/- 30
SAND BORROW	(TOTAL DEPTH)	+/- 30

	50	FUTURE PAVEMENT COURSE, SUPERPAVE BITUMINOUS CONCRETE PAVEMENT (TYPE IIIS)	**NOT PART OF THIS CONTRACT**
	80	BINDER COURSE, SUPERPAVE BITUMINOUS CONCRETE PAVEMENT (TYPE IIS) PG 64 - 28	
	100	BASE COURSE, SUPERPAVE BITUMINOUS CONCRETE PAVEMENT (TYPE IS) PG 64 - 28	
	600	SUBBASE OF DENSE GRADED CRUSHED STONE	
	400	SAND BORROW	
SHOULDERS:	50	FUTURE PAVEMENT COURSE, SUPERPAVE BITUMINOUS CONCRETE PAVEMENT (TYPE IIIS)	**NOT PART OF THIS CONTRACT**
	80	SUPERPAVE BITUMINOUS CONCRETE PAVEMENT (TYPE IIS)	

NOTE:

1) DESIGN FROST DEPTH - 1230

NOTES:

1. THE TOP 50 PAVEMENT COURSE (TYPE IIIS), ON THE MAINLINE AND CROSSOVER TRAVEL WAY AND SHOULDERS, WILL NOT BE CONSTRUCTED AS PART OF THIS CONTRACT. THIS CONTRACT ONLY INCLUDES 100 OF TYPE IS AND 80 OF TYPE IIS, SUPERPAVE BITUMINOUS CONCRETE PAVEMENT (ITEM 490.30). THE TOP 50 WILL BE PAVED ON THE FURNACE BROOK BRIDGE ONLY.
2. ELIMINATE TOPSOIL AND SEEDING BEHIND GUARDRAIL TO SUBGRADE CATCH POINT.
3. REFER TO TS-06 FOR SEEDING FORMULA AND ADDITIONAL GENERAL NOTE.
4. ANY DIMENSION NOTED AS "VARIES" IS REFERENCED TO ALIGNMENT PLANS/SECTIONS FOR DETAIL.
5. SEE BANKING DIAGRAM ON PROFILES FOR CROSS SLOPE
6. GUARDRAIL TO BE SET FOR ULTIMATE PAVEMENT ELEVATION.
7. EMULSIFIED ASPHALT TO BE APPLIED ON EXISTING PAVEMENT, BETWEEN ALL COURSES OF SUPERPAVE BITUMINOUS CONCRETE PAVEMENT AND ON COLD PLANED SURFACES, AT THE RATE OF 0.068 L/m² OR AS DIRECTED BY THE ENGINEER.
8. TEMPORARY EROSION MATTING SHALL BE INSTALLED ON ALL SLOPES GREATER THAN 1:3, TO STABILIZE THE SLOPE.

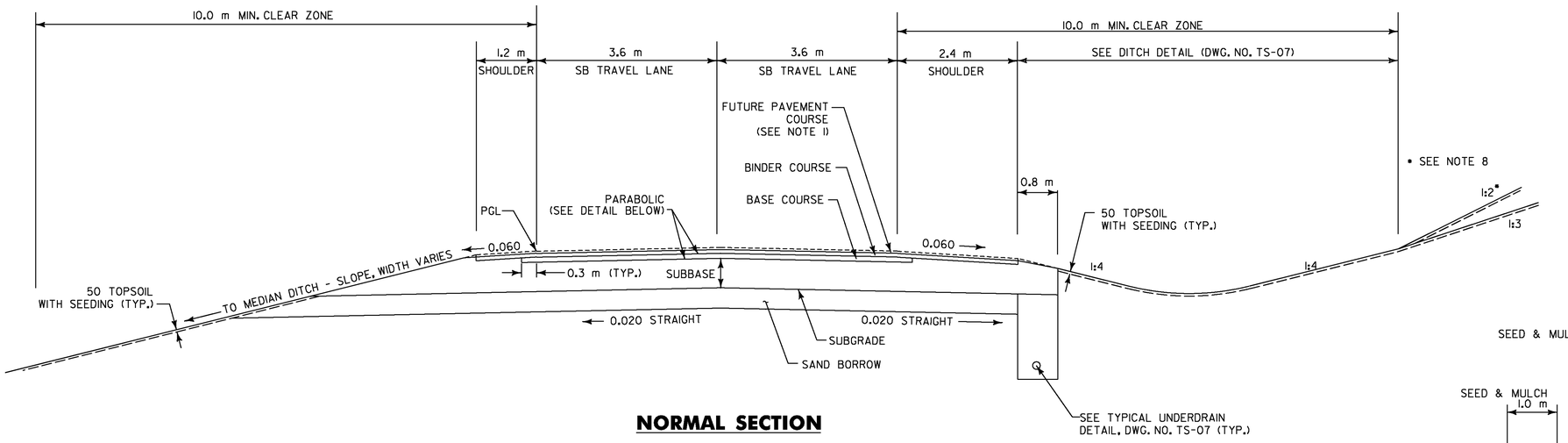

NORMAL SECTION

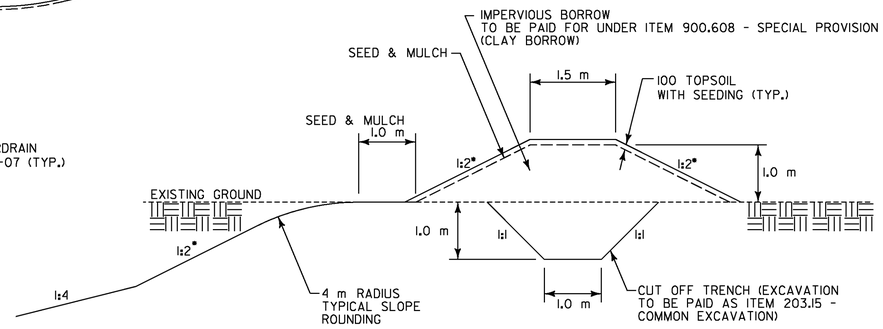

BERM FOR WETLAND "W"

STA. XO 1+179, RT. TO XO 1+220, RT.

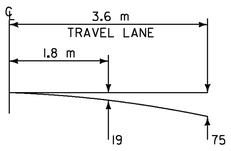

PARABOLIC DETAIL NORMAL SECTION

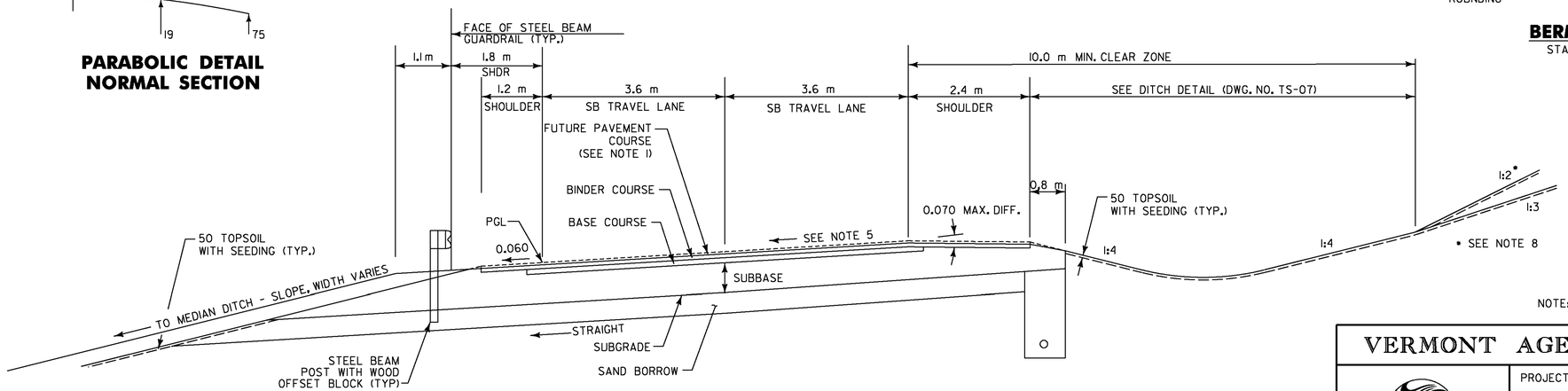

BANKED SECTION

NOTE: ALL DIMENSIONS ARE IN MILLIMETERS (mm) EXCEPT WHERE NOTED.

PGL = PROFILE GRADE LINE

VERMONT AGENCY OF TRANSPORTATION

Stantec

PROJECT NAME: BENNINGTON
PROJECT NUMBER: AC NH 019-1(53)

FILE NAME: ...\plot_files\zd307c3typ.ptf
DESIGN SUPERVISOR: GREG EDWARDS
DESIGNED BY: MARC FOISY
TYPICAL SECTIONS TS-02

PLOT DATE: 5/16/2011
DRAWN BY: STANTEC
CHECKED BY: GARY SANTY
SHEET 4 OF 577

V:\1853\active\853100021\transportation\drawing\contract_3\plot_files\zd307c3typ.ptf

MATERIAL ITEM		THICKNESS TOLERANCE
PAVEMENT	(TOTAL DEPTH)	+/- 15
SUBBASE	(TOTAL DEPTH)	+/- 30
SAND BORROW	(TOTAL DEPTH)	+/- 30

TYPICAL SECTION - EAST ROAD (ER)

	50	SURFACE COURSE, SUPERPAVE BITUMINOUS CONCRETE PAVEMENT (TYPE IIIS) PG 64 - 28
	100	BASE COURSE, SUPERPAVE BITUMINOUS CONCRETE PAVEMENT (TYPE IS) PG 64 - 28
	450	SUBBASE OF DENSE GRADED CRUSHED STONE
	300	SAND BORROW
SHOULDERS:	50	SUPERPAVE BITUMINOUS CONCRETE PAVEMENT, TYPE IIIS

NOTE:

1) DESIGN FROST DEPTH - 900

SHARED USE PATH

50	SURFACE COURSE, BITUMINOUS CONCRETE PAVEMENT PG 64 - 28 (TOLERANCE +/-5)
300	SUBBASE OF DENSE GRADED CRUSHED STONE

NOTES:

1. REFER TO TS-06 FOR SEEDING FORMULA AND ADDITIONAL GENERAL NOTES.
2. REFER TO STANDARD SHEET A-78M FOR ADDITIONAL DETAILS OF SHARED USE PATH CONSTRUCTION.
3. SEE BANKING DIAGRAM ON PROFILES FOR CROSS SLOPE
4. TOPSOIL LOCATIONS: STA ER 0+950 - STA ER 1+345 LEFT/RIGHT
5. EMULSIFIED ASPHALT TO BE APPLIED ON EXISTING PAVEMENT, BETWEEN ALL COURSES OF A SUPERPAVE BITUMINOUS CONCRETE PAVEMENT AND ON COLD PLANED SURFACES, AT THE RATE OF 0.068 L/m² OR AS DIRECTED BY THE ENGINEER.
6. TEMPORARY EROSION MATTING SHALL BE INSTALLED ON ALL SLOPES GREATER THAN 1:3, TO STABILIZE THE SLOPE.
7. FOR RURAL AREA SEEDING FORMULA SEE SHEET TS-06.
8. SURFACE COURSE OF SHARED USE PATH TO BE PAVED WITH ITEM 406.25, BITUMINOUS CONCRETE. SURFACE COURSE OF ROADWAY TO BE PAVED WITH ITEM 490.30 SUPERPAVE BITUMINOUS CONCRETE PAVEMENT

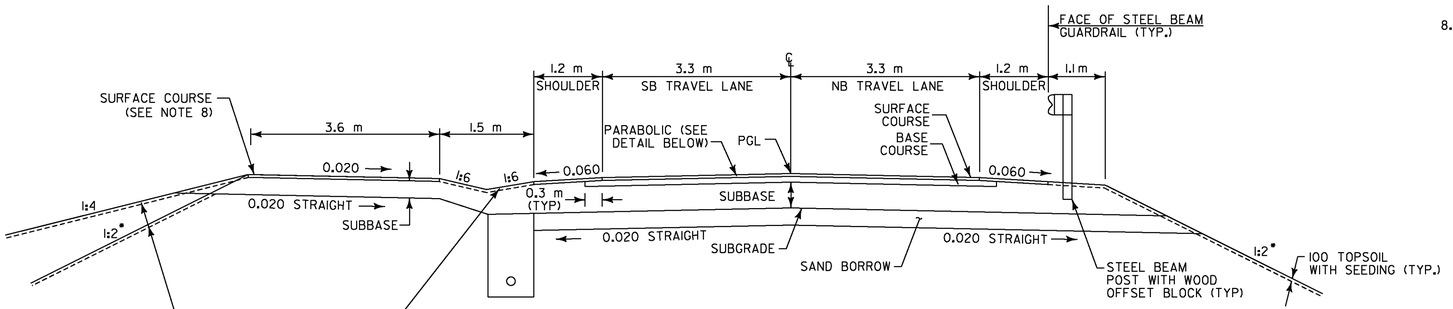

NORMAL SECTION W/SHARED USE PATH

* SEE NOTE 6

100 TOPSOIL WITH SEEDING (TYP.)

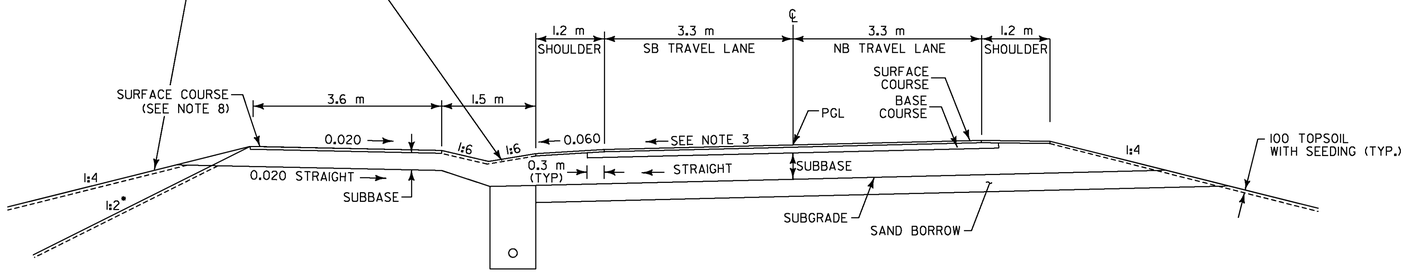

MAXIMUM BANKED SECTION W/SHARED USE PATH

SLOPE VARIES, SEE BANKING DIAGRAM ON PROFILE SHEETS.

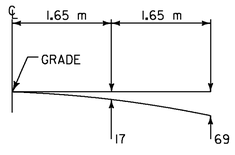

PARABOLIC DETAIL NORMAL SECTION

PGL=PROFILE GRADE LINE

NOTE: ALL DIMENSIONS ARE IN MILLIMETERS (mm) EXCEPT WHERE NOTED.

VERMONT AGENCY OF TRANSPORTATION

Stantec

PROJECT NAME: BENNINGTON
PROJECT NUMBER: AC NH 019-1(53)

FILE NAME: ...\plot_files\zd307c3typ.ptf
DESIGN SUPERVISOR: GREG EDWARDS
DESIGNED BY: MARC FOISY
PLOT DATE: 5/16/2011
DRAWN BY: STANTEC
CHECKED BY: GARY SANTY
TYPICAL SECTIONS TS-03
SHEET 5 OF 577

v:\853\active\85300002\transportation\drawing\contract_3\plot_files\zd307c3typ.ptf

TYPICAL SECTION - RAMP G

MATERIAL ITEM		THICKNESS TOLERANCE
PAVEMENT	(TOTAL DEPTH)	+/- 15
SUBBASE	(TOTAL DEPTH)	+/- 30
SAND BORROW	(TOTAL DEPTH)	+/- 30

	50	SURFACE COURSE, SUPERPAVE BITUMINOUS CONCRETE PAVEMENT (TYPE IIIS) PG 64 - 28
	80	BINDER COURSE, SUPERPAVE BITUMINOUS CONCRETE PAVEMENT (TYPE IIS) PG 64 - 28
	100	BASE COURSE, SUPERPAVE BITUMINOUS CONCRETE (TYPE IS) PG 64 - 28
	600	SUBBASE OF DENSE GRADED CRUSHED STONE
	400	SAND BORROW
SHOULDERS:	130	SUPERPAVE BITUMINOUS CONCRETE PAVEMENT (50 TYPE IIIS, 80 TYPE IIS)

NOTE:

1) DESIGN FROST DEPTH - 1230

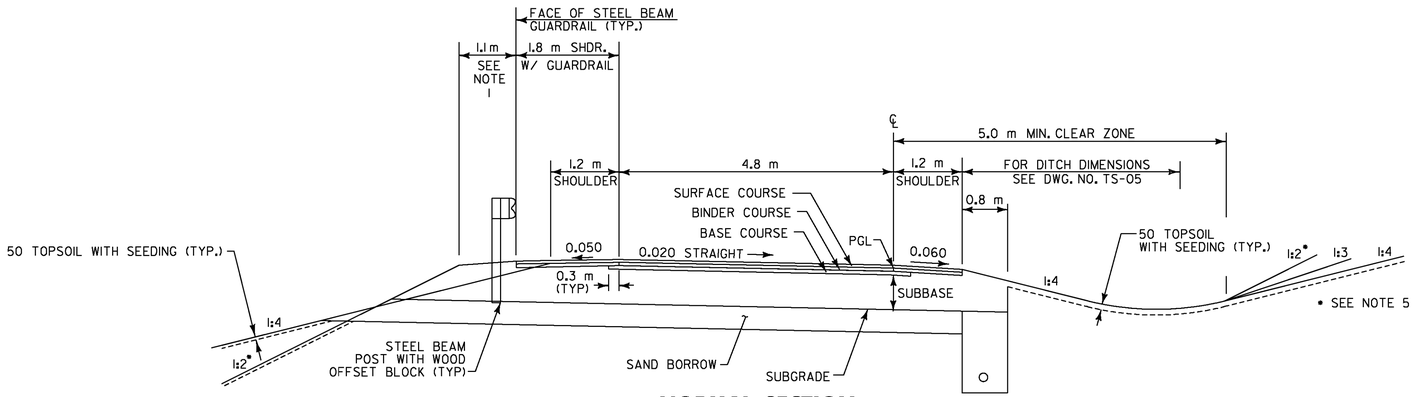

NORMAL SECTION

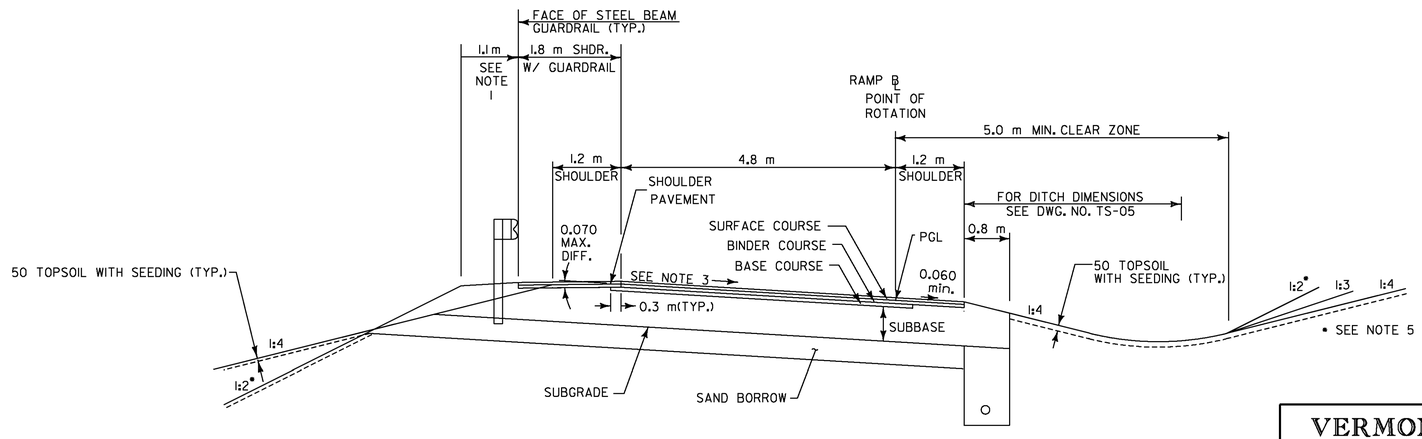

BANKED SECTION

PGL = PROFILE GRADE LINE

NOTES:

1. ELIMINATE TOPSOIL AND SEEDING BEHIND GUARDRAIL TO SUBGRADE CATCH POINT.
2. REFER TO TS-06 FOR SEEDING FORMULA AND ADDITIONAL GENERAL NOTES.
3. SEE BANKING DIAGRAM ON PROFILES FOR CROSS SLOPE.
4. EMULSIFIED ASPHALT TO BE APPLIED ON EXISTING PAVEMENT, BETWEEN ALL COURSES OF A SUPERPAVE BITUMINOUS CONCRETE PAVEMENT AND ON COLD PLANED SURFACES, AT THE RATE OF 0.068 L/m² OR AS DIRECTED BY THE ENGINEER.
5. TEMPORARY EROSION MATTING SHALL BE INSTALLED ON ALL SLOPES GREATER THAN 1:3, TO STABILIZE THE SLOPE.

NOTE: ALL DIMENSIONS ARE IN MILLIMETERS (mm) EXCEPT WHERE NOTED.

VERMONT AGENCY OF TRANSPORTATION

Stantec

PROJECT NAME: BENNINGTON
PROJECT NUMBER: AC NH 019-1(53)

FILE NAME: ...\plot_files\zd307c3typ.ptf
DESIGN SUPERVISOR: GREG EDWARDS
DESIGNED BY: MARC FOISY
TYPICAL SECTIONS TS-04

PLOT DATE: 5/16/2011
DRAWN BY: STANTEC
CHECKED BY: GARY SANTY
SHEET 6 OF 577

v:\1953\active\195300021\transportation\drawing\contract_3\plot_files\zd307c3typ.ptf

TYPICAL SECTIONS - EXIT 2

RAMP A

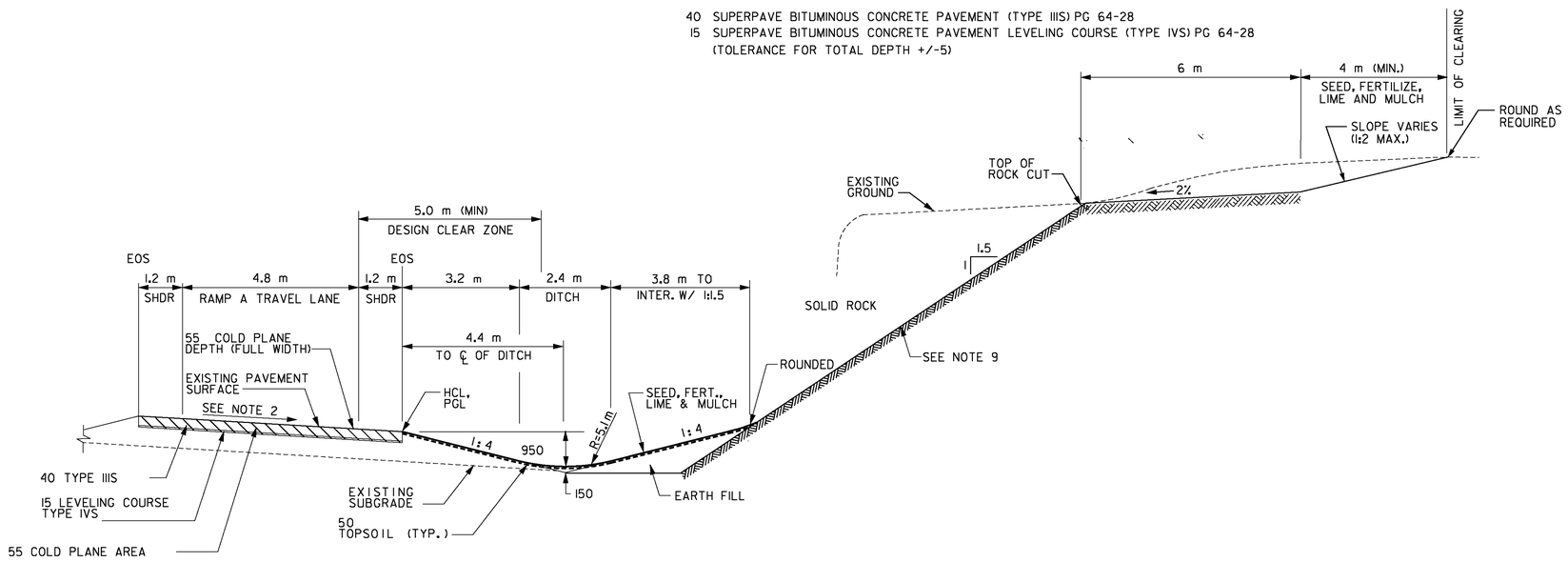

COLD PLANE AND RESURFACE
STA. A 1+095 – STA. A 1+408
STA. B 1+027 – STA. B 1+460

DITCH AND ROCK CUT
STA. A 1+240, RT – STA A 1+408, RT

NOTES:

1. FOR SEEDING FORMULA AND ADDITIONAL GENERAL NOTES, SEE DRAWING TS-06.
2. MAINTAIN EXISTING CROSS SLOPE OF TRAVEL LANE AND SHOULDERS.
3. THE SUPERPAVE BITUMINOUS CONCRETE PAVEMENT WEARING COURSE SHALL BE TYPE IIIS. THE ESTIMATED 15 LEVELING COURSE SHALL BE TYPE IVS UNLESS OTHERWISE DIRECTED BY THE ENGINEER. ALL ASPHALT CEMENT USED IN THE SUPERPAVE BITUMINOUS CONCRETE PAVEMENT SHALL BE PG 64-28.
4. GRASS GROWING ADJACENT TO PAVEMENT OR THROUGH CRACKS IN THE PAVEMENT WHICH MAY HAMPER THE PLACEMENT OF NEW SUPERPAVE BITUMINOUS CONCRETE PAVEMENT SHALL BE REMOVED BY THE CONTRACTOR AS DIRECTED BY THE ENGINEER. PAYMENT FOR THIS WORK WILL NOT BE MADE DIRECTLY, BUT WILL BE CONSIDERED INCIDENTAL TO ITEM 490.30 - SUPERPAVE BITUMINOUS CONCRETE PAVEMENT.
5. SUPERPAVE BITUMINOUS CONCRETE PAVEMENT THICKNESS TOLERANCE = +- 5 (TOTAL DEPTH).
6. EMULSIFIED ASPHALT TO BE APPLIED ON EXISTING PAVEMENT, BETWEEN ALL COURSES OF SUPERPAVE BITUMINOUS CONCRETE PAVEMENT AND ON COLD PLANED SURFACES, AT THE RATE OF 0.068 L/m² OR AS DIRECTED BY THE ENGINEER.
7. COLD PLANING TO BE COMPLETED ACCORDING TO THE TYPICAL, AS OTHERWISE NOTED ON THE PLANS, OR AS DIRECTED BY THE RESIDENT ENGINEER.
8. COLD PLANE GRINDINGS SHALL REMAIN THE PROPERTY OF THE STATE OF VERMONT AND SHALL BE REMOVED FROM THE PROJECT AS DIRECTED BY THE RESIDENT ENGINEER. ALL GRINDINGS SHALL BE DELIVERED TO THE TOWN OF BENNINGTON PIT, LOCATED ON HOUGHTON LANE, FOR STOCKPILING. PLEASE CONTACT VTRANS DISTRICT 1 OFFICE AT (802) 447-2790 TO MAKE ARRANGEMENTS FOR DELIVERY.
9. AN ADDITIONAL 0.3 M OF LEDGE OVER-BREAKAGE MAY BE REQUIRED. PAYMENT INCIDENTAL TO ITEM 203.16 - SOLID ROCK EXCAVATION AS DIRECTED BY THE RESIDENT ENGINEER.

LOW SIDE OF NORMAL SECTION

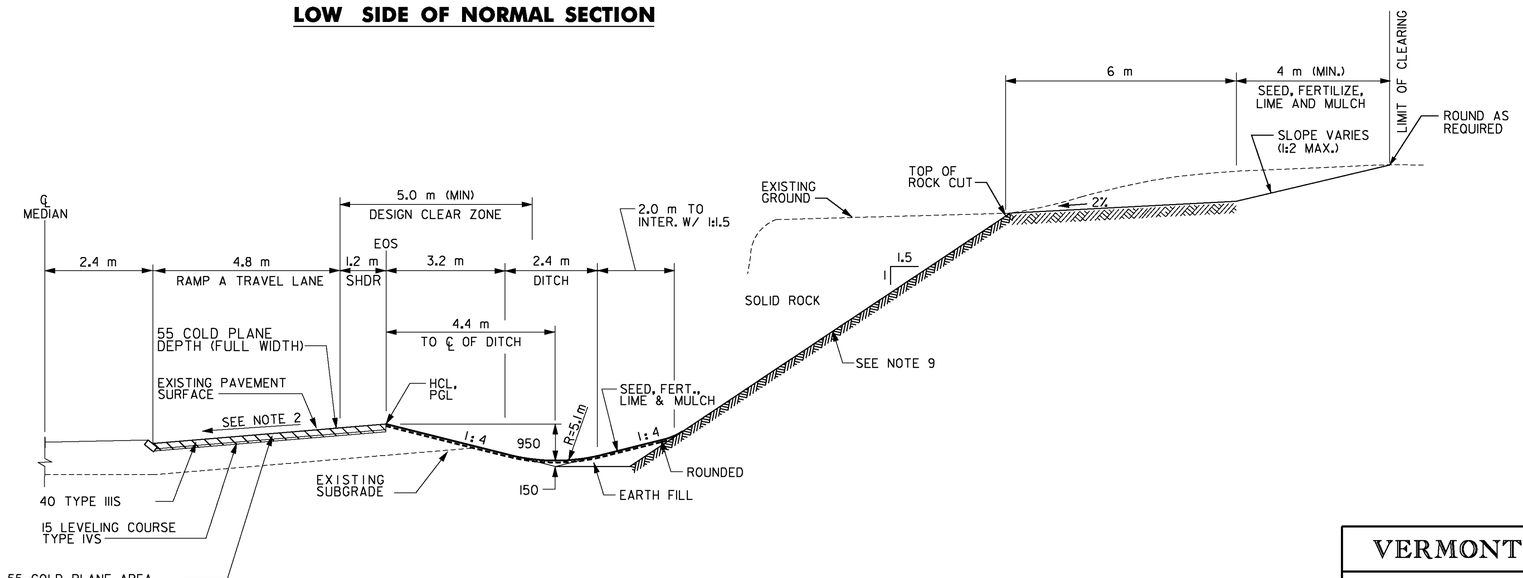

COLD PLANE AND RESURFACE
STA. A 1+408 – STA. A 1+705
STA. B 1+027 – STA. B 1+460

DITCH AND ROCK CUT
STA. A 1+408, RT – STA. A 1+680, RT

HIGH SIDE OF BANKED SECTION

EOS = EDGE OF SHOULDER
HCL = HORIZONTAL CONTROL LINE
PGL = PROFILE GRADE LINE

NOTE: ALL DIMENSIONS ARE IN MILLIMETERS (mm) EXCEPT WHERE NOTED.

VERMONT AGENCY OF TRANSPORTATION

Stantec

PROJECT NAME: BENNINGTON
PROJECT NUMBER: AC NH 019-1(53)

FILE NAME: ...\plot_files\zd307c3typ.ptf
DESIGN SUPERVISOR: GREG EDWARDS
DESIGNED BY: MARC FOISY
TYPICAL SECTIONS TS-05

PLOT DATE: 5/16/2011
DRAWN BY: STANTEC
CHECKED BY: GARY SANTY
SHEET 7 OF 577

v:\1953\active\19530002\transportation\drawing\contract_3\plot_files\zd307c3typ.ptf

TYPICAL SECTIONS
MISCELLANEOUS DETAILS

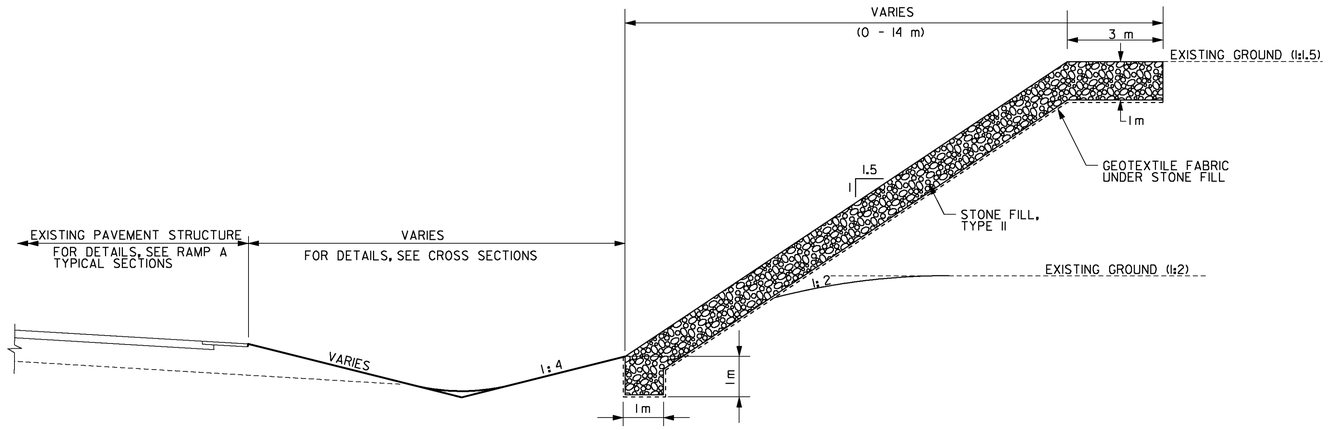

EXIT 2
TRANSITION ZONE SECTION
1:1.5 TO 1:2 BACKSLOPE

STA. A 1+243 RT – STA. A 1+260 RT
STA. A 1+660 RT – STA. A 1+673 RT

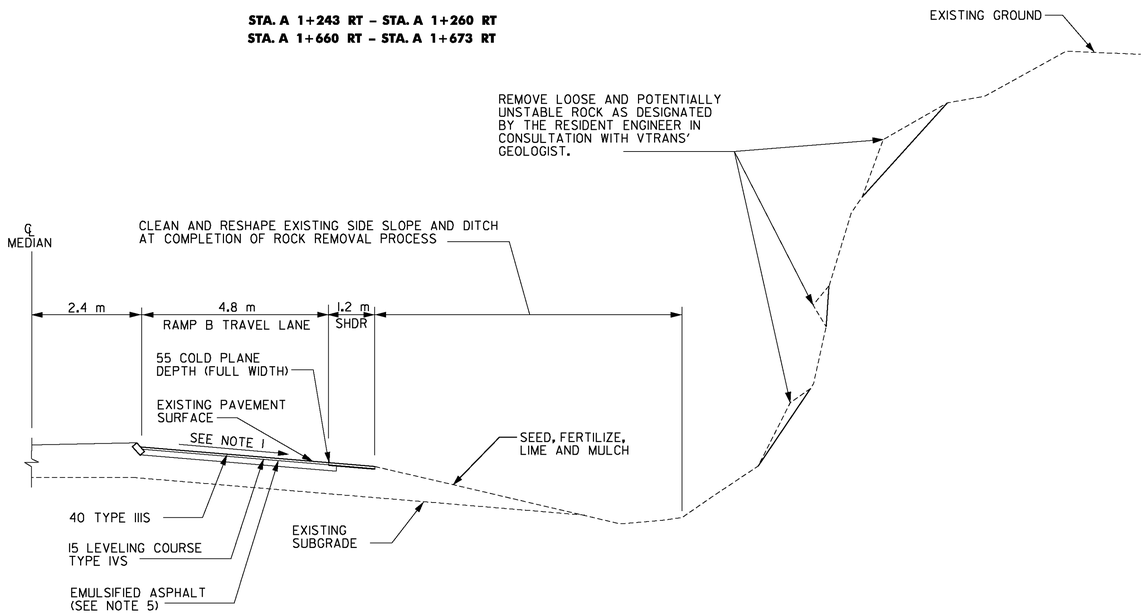

COLD PLANE SECTION
STA. B 1+027 – STA. B 1+460

EXIT 2
RAMP B SECTION
40 SUPERPAVE BITUMINOUS CONCRETE PAVEMENT (TYPE IIIS) PG 64-28
15 SUPERPAVE BITUMINOUS CONCRETE PAVEMENT LEVELING COURSE (TYPE IVS) PG 64-28
(TOLERANCE FOR TOTAL DEPTH +/-5)

NOTES:

1. MAINTAIN EXISTING CROSS SLOPE OF TRAVEL LANE AND SHOULDERS.
2. THE SUPERPAVE BITUMINOUS CONCRETE PAVEMENT WEARING COURSE SHALL BE TYPE IIIS. THE ESTIMATED 15 LEVELING COURSE SHALL BE TYPE IVS UNLESS OTHERWISE DIRECTED BY THE ENGINEER. ALL ASPHALT CEMENT USED IN THE SUPERPAVE BITUMINOUS CONCRETE PAVEMENT SHALL BE PG 64-28.
3. GRASS GROWING ADJACENT TO PAVEMENT OR THROUGH CRACKS IN THE PAVEMENT WHICH MAY HAMPER THE PLACEMENT OF NEW SUPERPAVE BITUMINOUS CONCRETE PAVEMENT SHALL BE REMOVED BY THE CONTRACTOR AS DIRECTED BY THE ENGINEER. PAYMENT FOR THIS WORK WILL NOT BE MADE DIRECTLY, BUT WILL BE CONSIDERED INCIDENTAL TO ITEM 490.30 - SUPERPAVE BITUMINOUS CONCRETE PAVEMENT.
4. SUPERPAVE BITUMINOUS CONCRETE PAVEMENT THICKNESS TOLERANCE = +- 5 (TOTAL DEPTH).
5. EMULSIFIED ASPHALT TO BE APPLIED ON EXISTING PAVEMENT, BETWEEN ALL COURSES OF SUPERPAVE BITUMINOUS CONCRETE PAVEMENT AND ON COLD PLANED SURFACES, AT THE RATE OF 0.068 L/m² OR AS DIRECTED BY THE ENGINEER.
6. COLD PLANING TO BE COMPLETED ACCORDING TO THE TYPICAL, AS OTHERWISE NOTED ON THE PLANS, OR AS DIRECTED BY THE RESIDENT ENGINEER.
7. COLD PLANE GRINDINGS SHALL REMAIN THE PROPERTY OF THE STATE OF VERMONT AND SHALL BE REMOVED FROM THE PROJECT AS DIRECTED BY THE RESIDENT ENGINEER. ALL GRINDINGS SHALL BE DELIVERED TO THE TOWN OF BENNINGTON PIT, LOCATED ON HOUGHTON LANE, FOR STOCKPILING. PLEASE CONTACT VTRANS DISTRICT 1 OFFICE AT (802) 447-2790 TO MAKE ARRANGEMENTS FOR DELIVERY.

SEEDING FORMULA RURAL AREAS

% MASS	KG/HA	NAME	PUR %	GERM %
37.14	26.0	CREEPING RED FESCUE	98	85
37.14	26.0	TALL FESCUE	95	90
5.71	4.0	RED TOP	95	90
14.30	10.0	BIRDSFOOT TREFOIL	98	85
5.71	4.0	ANNUAL RYEGRASS	95	85
100.00	70.00			

THE SEED MIXTURE SHALL NOT HAVE A WEED CONTENT EXCEEDING 0.40% BY MASS AND SHALL BE FREE OF ALL NOXIOUS SEED.

SEED TO BE APPLIED PER SEEDING FORMULA AS DIRECTED BY THE ENGINEER.

FERTILIZER: FORMULA 10-20-10 TO BE USED WITH SEED, APPLIED AT RATE OF 560 KG/HA. (HYDRO SEEDERS MAY USE 19-19-19 FORMULA.

AGRICULTURAL LIMESTONE TO BE APPLIED AT THE RATE OF 4.5 TON/HA OR AS DIRECTED BY THE ENGINEER.

HAY MULCH TO BE PLACED ON EARTH SLOPES AT THE RATE OF 4.5 TON/HA OR AS DIRECTED BY THE ENGINEER.

TOPSOIL TO BE USED WITH SEED AS INDICATED ON THE PLANS OR AS DIRECTED BY THE ENGINEER.

NOTE: ALL DIMENSIONS ARE IN MILLIMETERS (mm) EXCEPT WHERE NOTED.

VERMONT AGENCY OF TRANSPORTATION

Stantec

PROJECT NAME: BENNINGTON
PROJECT NUMBER: AC NH 019-1(53)

FILE NAME: ...\plot_files\zd307c3typ.ptf
DESIGN SUPERVISOR: GREG EDWARDS
DESIGNED BY: MARC FOISY
PLOT DATE: 5/16/2011
DRAWN BY: STANTEC
CHECKED BY: GARY SANTY
TYPICAL SECTIONS TS-06
SHEET 8 OF 577

v:\1953\active\195300021\transportation\drawing\contract_3\plot_files\zd307c3typ.ptf

TYPICAL SECTIONS
MISCELLANEOUS DETAILS

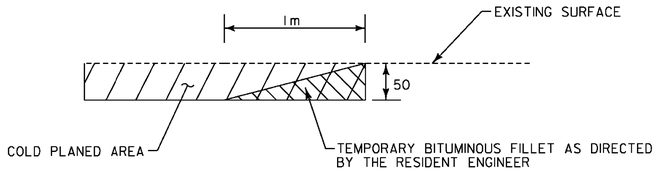

TEMPORARY FILLET
AT VERTICAL COLD PLANE JOINTS

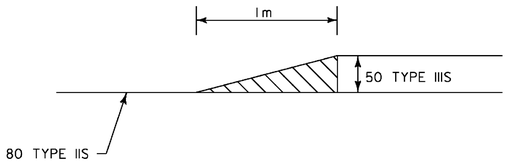

TRANSITION FILLET FOR
TOP 50 PAVEMENT AT FURNACE BROOK BRIDGE

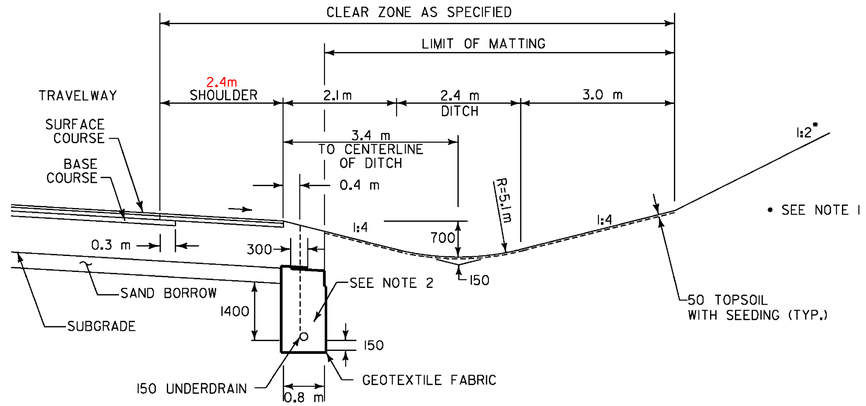

TYPICAL UNDERDRAIN AND DITCH DETAIL

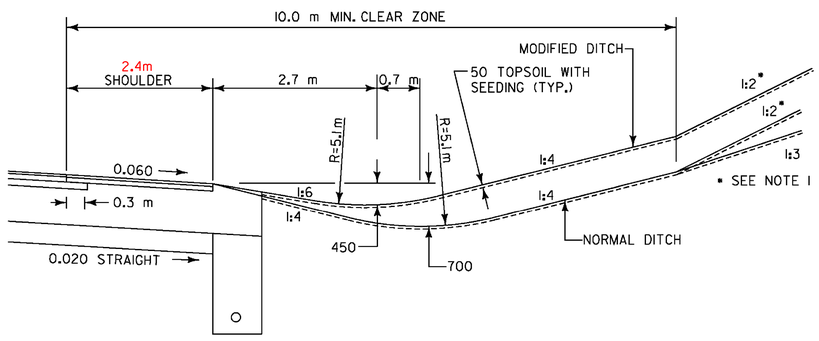

MODIFIED DITCH SECTION
NB 9+245 TO NB 9+300 RT.

NOTES:

1. TEMPORARY EROSION MATTING SHALL BE INSTALLED ON ALL SLOPES GREATER THAN 1:3, TO STABILIZE THE SLOPE. TEMPORARY EROSION MATTING SHALL BE INSTALLED IN DITCHES PER THE DETAIL ON THIS SHEET IN THE AREAS INDICATED ON THE EROSION CONTROL PLANS.
2. UNDERDRAIN TRENCH SHALL BE BACKFILLED WITH DRAINAGE AGGREGATE, REFER TO 2006 VAOT STANDARD SPECIFICATIONS 704.16, FOR MORE DETAIL.

PGL=PROFILE GRADE LINE

NOTE: ALL DIMENSIONS ARE IN MILLIMETERS (mm) EXCEPT WHERE NOTED.

VERMONT AGENCY OF TRANSPORTATION

Stantec

PROJECT NAME: BENNINGTON
PROJECT NUMBER: AC NH 019-1(53)

FILE NAME: ...\plot_files\zd307c3typ.ptf
DESIGN SUPERVISOR: GREG EDWARDS
DESIGNED BY: MARC FOISY
TYPICAL TS-07

PLOT DATE: 5/16/2011
DRAWN BY: STANTEC
CHECKED BY: GARY SANTY
SHEET 9 OF 577

v:\1953\active\195310002\transportation\drawing\contract_3\plot_files\zd307c3typ.ptf

TYPICAL SECTIONS
MISCELLANEOUS DETAILS
SELECTED MATERIALS AND PAVEMENT TRANSITION

RAMP G PAVEMENT TRANSITION DETAIL

NOT TO SCALE

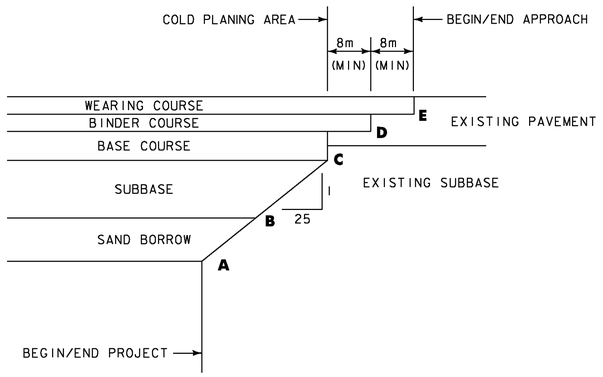

RAMP G					
	A	B	C	D	E
SOUTH TERMINOUS	1+707.607	1+717.607	1+732.607	1+740.607	1+748.607
NORTH TERMINOUS	1+336.433	1+326.433	1+311.433	1+303.433	1+295.433

EAST ROAD PAVEMENT TRANSITION DETAIL

NOT TO SCALE

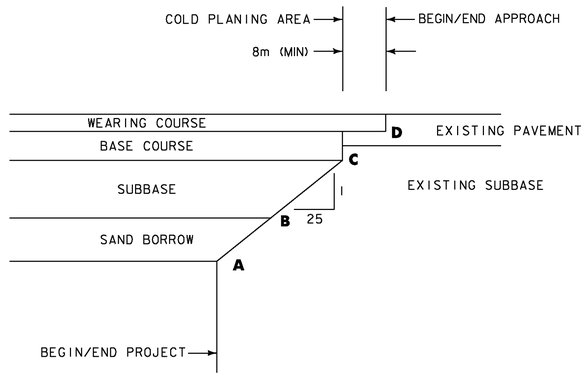

EAST ROAD				
	A	B	C	D
SOUTH TERMINOUS	0+985.00	0+977.50	0+966.25	0+958.25
NORTH TERMINOUS	1+310.00	1+317.50	1+328.75	1+336.75

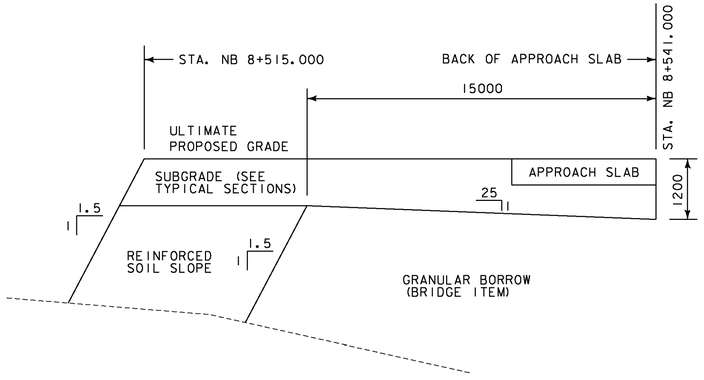

NOTE:
REINFORCED SOIL SLOPE SHALL BE PAID UNDER ITEM 900.675 - SPECIAL PROVISION (REINFORCED SOIL SLOPE).

SUBBASE TRANSITION
EAST ABUTMENT
FURNACE BROOK BRIDGE

NOT TO SCALE

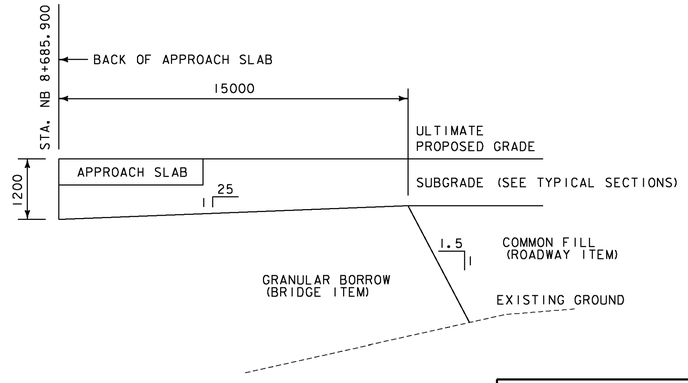

SUBBASE TRANSITION
WEST ABUTMENT
FURNACE BROOK BRIDGE

NOT TO SCALE

NOTES:

1. FOR ALL PAVEMENT AND SELECT MATERIAL DEPTHS, SEE TYPICALS SHEETS TS-01 TO TS-06.
2. ALL DIMENSIONS ARE IN MILLIMETERS (mm) EXCEPT WHERE NOTED.

VERMONT AGENCY OF TRANSPORTATION

Stantec

PROJECT NAME: BENNINGTON
PROJECT NUMBER: AC NH 019-1(53)

FILE NAME: ...\plot_files\zd307c3typ.ptf
DESIGN SUPERVISOR: GREG EDWARDS
DESIGNED BY: MARC FOISY
TYPICAL TS-08

PLOT DATE: 5/16/2011
DRAWN BY: STANTEC
CHECKED BY: GARY SANTY
SHEET 10 OF 577

v:\953\active\95300002\transportation\drawing\contract_3\plot_files\zd307c3typ.ptf

MAINLINE TIE DATA

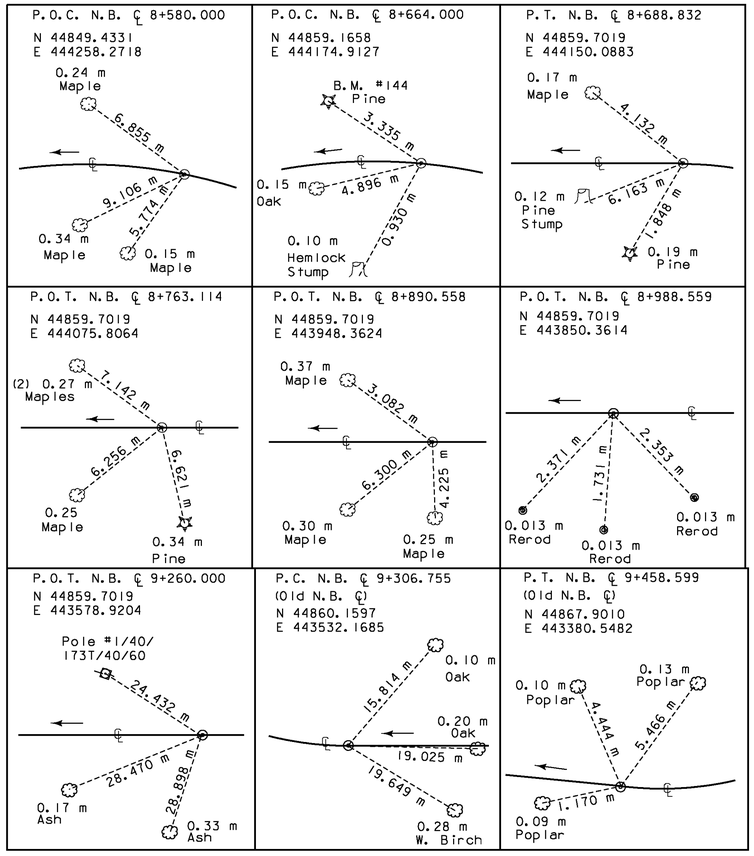

EAST ROAD TIE DATA

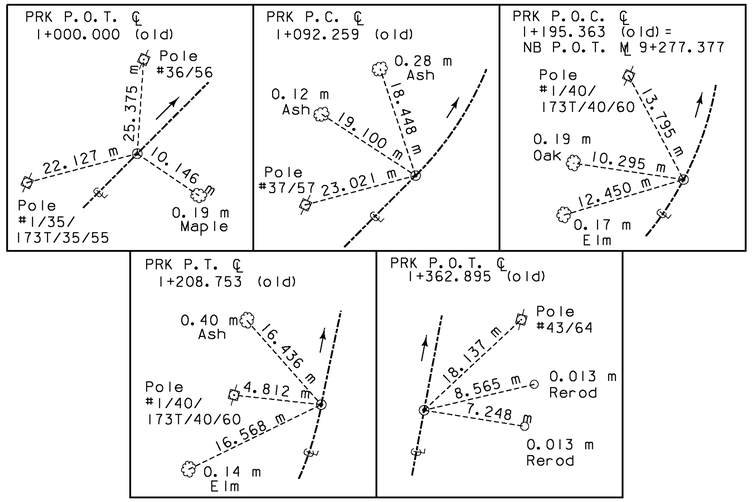

CHAPEL ROAD TIE DATA

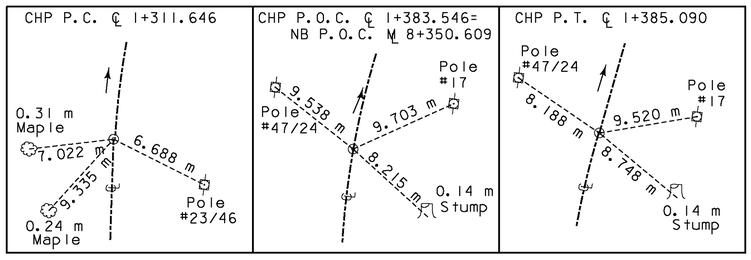

G.P.S. TIE DATA

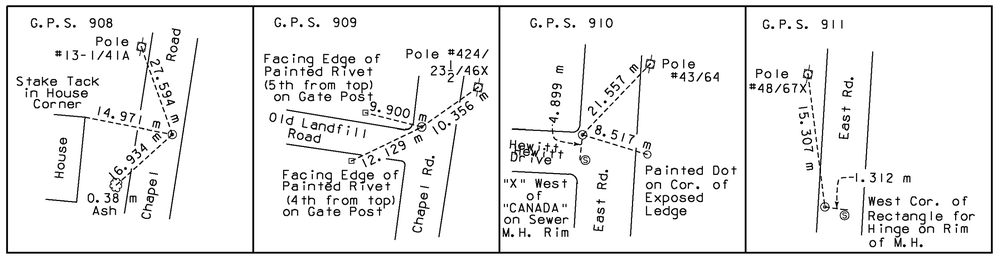

NORTH IS COMMON TO ALL INSERTS

N

VT. STATE PLANE GRID

VAOT Metric

VERMONT AGENCY OF TRANSPORTATION		
Stantec	PROJECT NAME: BENNINGTON	
	PROJECT NUMBER: AC NH 019-1(53)	
	FILE NAME: ...\plot_files\zd307c3tie.ptf	PLOT DATE: 5/16/2011
	DESIGN SUPERVISOR: GREG EDWARDS	DRAWN BY: STANTEC
	DESIGNED BY: MARC FOISY	CHECKED BY: GARY SANTY
	CONTROL TIE SHEET CT-1	SHEET 11 OF 577

v:\1953\active\195310002\transportation\drawing\contract_3\plot_files\zd307c3tie.ptf

STATE OF VERMONT
AGENCY OF TRANSPORTATION

QUANTITY SHEET

Metric

SUMMARY OF ESTIMATED QUANTITIES

ROADWAY	ROADWAY (STAGE ONE SITES)	TRAINING	LANDSCAPING	EROSION CONTROL	UTILITIES	FURNACE BROOK BRIDGE	EAST ROAD + SUP BRIDGE	FULL C.E. ITEMS	GRAND TOTAL	FINAL	UNIT	ITEMS	ITEM NUMBER	ROUND
.5	.5								1		LS	CLEARING AND GRUBBING, INCLUDING INDIVIDUAL TREES AND STUMPS	201.10	-
411600	6500					14900			433000		CM	COMMON EXCAVATION	203.15	618
142500									142500		CM	SOLID ROCK EXCAVATION	203.16	96
110						3690			3800		CM	UNCLASSIFIED EXCAVATION	203.17	10
						3300			3300		CM	UNCLASSIFIED CHANNEL EXCAVATION	203.27	-
1020	650								1670		CM	EXCAVATION OF SURFACES AND PAVEMENTS	203.28	10
12500									12500		CM	SAND BORROW	203.31	-
	35					3000	1240		4275		CM	GRANULAR BORROW	203.32	-
10500									10500		CM	TRENCH EXCAVATION OF EARTH	204.20	-
70									70		CM	TRENCH EXCAVATION OF ROCK	204.21	4
84						690	1386		2160		CM	STRUCTURE EXCAVATION	204.25	9
5						1665	1150		2820		CM	GRANULAR BACKFILL FOR STRUCTURES	204.30	1
						800			800		CM	COFFERDAM EXCAVATION, EARTH	208.30	-
						320			320		CM	COFFERDAM EXCAVATION, ROCK	208.35	-
						1			1		LS	COFFERDAM (ABUTMENT)	208.40	-
						1			1		LS	COFFERDAM (PIER)	208.40	-
9040	360								9400		SM	COLD PLANING, BITUMINOUS PAVEMENT	210.10	137
27100	11670					130			38900		CM	SUBBASE OF DENSE GRADED CRUSHED STONE	301.35	-
	300								300		CM	AGGREGATE SURFACE COURSE	401.10	-
810	40								850		T	AGGREGATE SHOULDERS	402.12	8
2808	190					212			3210		KG	EMULSIFIED ASPHALT	404.65	31
350									350		T	BITUMINOUS CONCRETE PAVEMENT (PG 64-28)	406.25	-
1									1		LU	PRICE ADJUSTMENT, ASPHALT CEMENT (N.A.B.I.)	406.50	-
11630	205					506	159		12500		T	SUPERPAVE BITUMINOUS CONCRETE PAVEMENT (PG 64-28)	490.30	-
1									1		LU	AIR VOIDS PAY ADJUSTMENT (N.A.B.I.)	490.31	-
1									1		LU	MAT DENSITY PAY ADJUSTMENT (N.A.B.I.)	490.32	-
1									1		LU	SURFACE TOLERANCE PAY ADJUSTMENT (N.A.B.I.)	490.33	-
						58			58		CM	CONCRETE, HIGH PERFORMANCE CLASS A	501.33	-
												BEGIN ALTERNATE BID ITEM		
						636	311		947		CM	CONCRETE, HIGH PERFORMANCE CLASS A (FPQ)	501.33	-
						636	311		947		CM	CONCRETE, HIGH PERFORMANCE CLASS A (SIPCMF)(FPQ)	501.33	-
												END ALTERNATE BID ITEM		
						1127	622		1749		CM	CONCRETE, HIGH PERFORMANCE CLASS B	501.34	-
							40750		40750		KG	STRUCTURAL STEEL, PLATE GIRDER	506.55	-
							117787		117787		KG	STRUCTURAL STEEL, CURVED PLATE GIRDER	506.56	-
						628020			628020		KG	STRUCTURAL STEEL, CURVED PLATE GIRDER (2800 WEB DEPTH)	506.56	-
						360	190		550		KG	STRUCTURAL STEEL	506.60	-
2785						125324	25392		153501		KG	REINFORCING STEEL	507.15	-
						113935	52431		166366		KG	EPOXY COATED REINFORCING STEEL	507.17	-
							1		1		LS	SHEAR CONNECTORS (2244 - 22 x 180)	508.15	-

TOTALS

DESCRIPTIONS

DETAILED SUMMARY OF QUANTITIES

QUANTITIES	UNIT	ITEMS
		ITEM 203.31 - SAND BORROW
6686	CM	NORTHBOUND
4231	CM	CROSSOVER
734	CM	RAMP G
777	CM	EAST ROAD
12429	CM	SUBTOTAL
71	CM	ROUNDING
12500	CM	TOTAL
		ITEM 204.20 - TRENCH EXCAVATION OF EARTH
7261	CM	DRAINAGE
3210	CM	UNDERDRAIN
10471	CM	SUBTOTAL
29	CM	ROUNDING
10500	CM	TOTAL
		ITEM 301.35 - SUBBASE OF DENSE GRADED CRUSHED STONE
13267	CM	NORTHBOUND
7672	CM	CROSSOVER
2216	CM	RAMP G
2682	CM	EAST ROAD
895	CM	EAST ROAD DETOUR
280	CM	DETENTION POND ACCESS
11670	CM	STAGE 1 ROADWAY
130	CM	FURNACE BROOK BRIDGE
38812	CM	SUBTOTAL
88	CM	ROUNDING
38900	CM	TOTAL
		ITEM 406.25 - BITUMINOUS CONCRETE PAVEMENT
297	T	EAST ROAD DETOUR
53	T	EAST ROAD SHARED USE PATH
350	T	SUBTOTAL
0	T	ROUNDING
350	T	TOTAL

PROJECT NAME: **BENNINGTON**
PROJECT NUMBER: **AC NH 019-1(53)**

FILE NAME: ZD307C3VAOT_QUANT.XLS
PROJECT LEADER: G.SANTY
DESIGNED BY: M. FOISY
QUANTITY SHEET #1

PLOT DATE: 5/17/2007
DRAWN BY: STANTEC
CHECKED BY: G. SANTY
SHEET 12 OF 577

v:\1953\active\195310002\transportation\drawing\contract_3\plot_files\zd307c3vaot_quant07.plf

STATE OF VERMONT
AGENCY OF TRANSPORTATION

QUANTITY SHEET

Metric

SUMMARY OF ESTIMATED QUANTITIES

ROADWAY	ROADWAY (STAGE ONE SITES)	TRAINING	LANDSCAPING	EROSION CONTROL	UTILITIES	FURNACE BROOK BRIDGE	EAST ROAD + SUP BRIDGE	FULL C.E. ITEMS	GRAND TOTAL	FINAL	UNIT	ITEMS	ITEM NUMBER	ROUND
						1			1		LS	SHEAR CONNECTORS (2790 - 22 x 200)	508.15	-
						1			1		LS	SHEAR CONNECTORS (2790 - 22 x 230)	508.15	-
							1		1		LS	SHEAR CONNECTORS (756 - 22 x 125)	508.15	-
						1			1		LS	STRUCTURAL PAINTING, SHOP APPLIED (54 METRIC TONS)	513.25	-
							1		1		LS	STRUCTURAL PAINTING, SHOP APPLIED (7 METRIC TONS)	513.25	-
						1			1		LS	SURFACE PREPARATION, SHOP (54 METRIC TONS)	513.40	-
							1		1		LS	SURFACE PREPARATION, SHOP (7 METRIC TONS)	513.40	-
						375	335		710		L	WATER REPELLENT, SILANE	514.10	-
							10		10		M	BRIDGE EXPANSION JOINT, ASPHALTIC PLUG	516.10	-
						33	10		43		M	BRIDGE EXPANSION JOINT, VERMONT	516.11	-
						2165	635		2800		SM	SHEET MEMBRANE WATERPROOFING, TORCH APPLIED	519.20	-
							4		4		M	JOINT SEALER, HOT POURED	524.11	-
						319			319		M	BRIDGE RAILING, GALVANIZED NETC 2 RAIL	525.33	-
							164		164		M	BRIDGE RAILING, GALVANIZED NETC 4 RAIL	525.34	-
	1								1		LS	ONE-WAY TEMPORARY BRIDGE (56 SM - EST.)	528.10	-
							8		8		EACH	BEARING DEVICE ASSEMBLY, PREFORMED FABRIC PAD	531.10	-
							10		10		EACH	BEARING DEVICE ASSEMBLY, POT	531.12	-
						12			12		EACH	BEARING DEVICE ASSEMBLY, HIGH LOAD MULTI-ROTATIONAL (EXPANSION)	531.15	-
						6			6		EACH	BEARING DEVICE ASSEMBLY, HIGH LOAD MULTI-ROTATIONAL (FIXED)	531.15	-
	57								57		CM	CONCRETE, CLASS B	541.25	-
	36								36		M	450 CSP 1.63 (68 X 12)	601.0015	-
	22								22		M	1500 CAAP 3.43 (68 X 12)	601.0268	-
												BEGIN OPTION AA		
	304								304		M	450 RCP CLASS III	601.0815	-
	304								304		M	450 CPEP(SL)	601.2615	-
												END OPTION AA		
												BEGIN OPTION BB		
	105								105		M	450 RCP CLASS IV	601.0816	-
	105								105		M	450 CPEP(SL)	601.2615	-
												END OPTION BB		
												BEGIN OPTION CC		
	145								145		M	450 CAAP 1.52 (68 X 12)	601.0215	-
	145								145		M	450 PCCSP 1.63 (68 X 12)	601.0415	-
												END OPTION CC		
												BEGIN OPTION DD		
	226								226		M	600 CAAP 1.52 (68 X 12)	601.0225	-
	226								226		M	600 PCCSP 1.63 (68 X 12)	601.0425	-
												END OPTION DD		
												BEGIN OPTION EE		
	344								344		M	750 CAAP 1.91 (68 X 12)	601.0236	-

DETAILED SUMMARY OF QUANTITIES

QUANTITIES	UNIT	ITEMS
		ITEM 490.30 - SUPERPAVE BIT. CONC. PVT.
		TYPE IS
2500	T	NORTHBOUND
1538	T	CROSSOVER
407	T	RAMP G
520	T	EAST ROAD
4965	T	SUBTOTAL
		TYPE IIS
2534	T	NORTHBOUND
1615	T	CROSSOVER
498	T	RAMP G
4647	T	SUBTOTAL
		TYPE IIIS
383	T	EXIT 2 RAMP A
267	T	EXIT 2 RAMP B
482	T	RAMP G
597	T	EAST ROAD
1729	T	SUBTOTAL
		TYPE IVS
17	T	NORTHBOUND
144	T	EXIT 2 RAMP A
100	T	EXIT 2 RAMP B
261	T	SUBTOTAL
11602	T	TOTAL ALL FOUR TYPES
205	T	STAGE 1 SITES
506	T	FURNACE BROOK BRIDGE
159	T	EAST ROAD BRIDGE
28	T	ROUNDING
12500	T	GRAND TOTAL
		ITEM 613.10 - STONE FILL, TYPE I
96	CM	DRAINAGE
147	CM	EXIT 2
67	CM	EAST ROAD BRIDGE
310	CM	SUBTOTAL
10	CM	ROUNDING
320	CM	TOTAL

PROJECT NAME: **BENNINGTON**
PROJECT NUMBER: **AC NH 019-1(53)**

FILE NAME: ZD307C3VAOT_QUANT.XLS
PROJECT LEADER: G.SANTY
DESIGNED BY: M. FOISY
QUANTITY SHEET #2

PLOT DATE: 5/17/2007
DRAWN BY: STANTEC
CHECKED BY: G. SANTY
SHEET 13 OF 577

v:\1953\active\195300021\transportation\drawing\contract_3\plot_files\zd307c3vaot_quant07.prf

STATE OF VERMONT
AGENCY OF TRANSPORTATION

QUANTITY SHEET

Metric

SUMMARY OF ESTIMATED QUANTITIES

ROADWAY	ROADWAY (STAGE ONE SITES)	TRAINING	LANDSCAPING	EROSION CONTROL	UTILITIES	FURNACE BROOK BRIDGE	EAST ROAD + SUP BRIDGE	FULL C.E. ITEMS	GRAND TOTAL	FINAL	UNIT	ITEMS	ITEM NUMBER	ROUND
344									344		M	750 PCCSP 2.01 (68 X 12)	601.0436	-
												END OPTION EE		
												BEGIN OPTION FF		
270									270		M	900 CAAP 1.52 (75 X 25)	601.0310	-
270									270		M	900 PCCSP 2.01 (68 X 12)	601.0446	-
												END OPTION FF		
												BEGIN OPTION GG		
46									46		M	1200 CAAP 2.67 (68 X 12)	601.0257	-
46									46		M	1200 PCCSP 2.77 (68 X 12)	601.0457	-
												END OPTION GG		
												BEGIN OPTION HH		
259									259		M	450 CAAP 1.52 (68 X 12)	601.0215	-
259									259		M	450 PCCSP 1.63 (68 X 12)	601.0415	-
259									259		M	450 RCP CLASS III	601.0815	-
259									259		M	450 CPEP(SL)	601.2615	-
												END OPTION HH		
												BEGIN OPTION II		
172									172		M	450 CAAP 1.52 (68 X 12)	601.0215	-
172									172		M	450 PCCSP 1.63 (68 X 12)	601.0415	-
172									172		M	450 RCP CLASS IV	601.0816	-
172									172		M	450 CPEP(SL)	601.2615	-
												END OPTION II		
												BEGIN OPTION JJ		
	30								30		M	375 CSP 1.63 (68 X 12)	601.0010	-
	30								30		M	375 RCP CLASS III	601.0810	-
	30								30		M	375 CPEP	601.0910	-
	30								30		M	375 CPEP(SL)	601.2610	-
												END OPTION JJ		
												BEGIN OPTION KK		
	2								2		EACH	375 CSPES 1.63 (68 X 12)	601.6010	-
	2								2		EACH	375 RCPES CLASS III	601.6810	-
	2								2		EACH	375 CPEPES	601.7010	-
												END OPTION KK		
19									19		EACH	CONCRETE CATCH BASIN WITH CAST IRON GRATE	604.10	-
3									3		EACH	CONCRETE MANHOLE WITH CAST IRON COVER	604.11	-
					7				7		EACH	SANITARY SEWER MANHOLE	604.22	-
6									6		EACH	CAST IRON GRATE WITH FRAME, TYPE A	604.45	-
15									15		EACH	CAST IRON GRATE WITH FRAME, TYPE B	604.46	-
3									3		EACH	CAST IRON GRATE WITH FRAME, TYPE D	604.47	-
3218						32			3250		M	150 MM UNDERDRAIN PIPE	605.10	585

DETAILED SUMMARY OF QUANTITIES

QUANTITIES	UNIT	ITEMS
		ITEM 613.11 - STONE FILL, TYPE II
361	CM	DRAINAGE
120	CM	FOREBAY
1100	CM	SWALE 2
85	CM	STAGE 1 SITES
3610	CM	FURNACE BROOK BRIDGE
5276	CM	SUBTOTAL
4	CM	ROUNDING
5280	CM	TOTAL
		ITEM 649.31 - GEOTEXTILE UNDER STONE FILL
3364	SM	DRAINAGE
450	SM	EXIT 2
1499	SM	PERMANENT STONE CHECK DAMS
280	SM	STAGE ONE SITES
7445	SM	FURNACE BROOK BRIDGE
218	SM	EAST ROAD BRIDGE
13256	SM	SUBTOTAL
4	SM	ROUNDING
13260	SM	TOTAL
		ITEM 651.35 - TOPSOIL
3197	CM	NORTHBOUND/CROSSOVER
368	CM	EAST ROAD
382	CM	RAMP G
566	CM	EXIT 2
2711	CM	SI FILL AREA
529	CM	SWALE 3
7	CM	CLAY BERM
700	CM	STAGE 1 SITES
8460	CM	SUBTOTAL
15	CM	ROUNDING
8475	CM	TOTAL

PROJECT NAME: **BENNINGTON**
PROJECT NUMBER: **AC NH 019-1(53)**

FILE NAME: ZD307C3VAOT_QUANT.XLS
PROJECT LEADER: G.SANTY
DESIGNED BY: M. FOISY
QUANTITY SHEET #3

PLOT DATE: 5/17/2007
DRAWN BY: STANTEC
CHECKED BY: G. SANTY
SHEET 14 OF 577

v:\1953\active\195300021\transportation\drawing\contract_3\plot_files\zd307c3vaot_quant07.prf

STATE OF VERMONT
AGENCY OF TRANSPORTATION

QUANTITY SHEET

Metric

SUMMARY OF ESTIMATED QUANTITIES									TOTALS		DESCRIPTIONS				DETAILED SUMMARY OF QUANTITIES		
ROADWAY	ROADWAY (STAGE ONE SITES)	TRAINING	LANDSCAPING	EROSION CONTROL	UTILITIES	FURNACE BROOK BRIDGE	EAST ROAD + SUP BRIDGE	FULL C.E. ITEMS	GRAND TOTAL	FINAL	UNIT	ITEMS	ITEM NUMBER	ROUND	QUANTITIES	UNIT	ITEMS
290									290		M	150 MM UNDERDRAIN CARRIER PIPE	605.20	6.3			
7									7		EACH	UNDERDRAIN FLUSHING BASIN	605.95	-			
55									55		HR	BULLDOZER RENTAL, TYPE II	608.11	-			
55									55		HR	POWER GRADER RENTAL	608.15	-			
55									55		HR	ALL PURPOSE EXCAVATOR RENTAL, TYPE I	608.25	-			
55									55		HR	ALL PURPOSE EXCAVATOR RENTAL, TYPE II	608.26	-			
40									40		HR	POWER BROOM RENTAL, TYPE I	608.30	-			
55									55		HR	POWER BROOM RENTAL, TYPE II	608.31	-			
55									55		HR	TRUCK RENTAL	608.37	-			
55									55		HR	LOADER RENTAL, TYPE I	608.40	-			
6000									6000		CM	DUST CONTROL WITH WATER	609.10	54			
10									10		T	DUST AND ICE CONTROL WITH CALCIUM CHLORIDE	609.15	-			
253							67		320		CM	STONE FILL, TYPE I	613.10	-			
1585	85					3610			5280		CM	STONE FILL, TYPE II	613.11	-			
						3220			3220		CM	STONE FILL, TYPE IV	613.13	-			
50						40			90		M	CAST-IN-PLACE CONCRETE CURB, TYPE B	616.28	3			
4									4		T	BITUMINOUS CONCRETE CURB, TYPE B	616.31	-			
2									2		EACH	RELOCATE MAILBOX, SINGLE SUPPORT	617.10	-			
51	2								53		EACH	YIELDING MARKER POSTS	619.17	-			
530									530		M	CHAIN-LINK FENCE, 1.8 M	620.12	8			
11									11		M	GATE FOR CHAIN-LINK FENCE, 1.8 M	620.16	0.3			
13									13		EACH	BRACING ASSEMBLY FOR CHAIN-LINK FENCE, 1.8 M	620.21	-			
1960									1960		M	WOVEN WIRE FENCE WITH STEEL POSTS	620.25	13			
35									35		EACH	STEEL BRACE FOR WOVEN WIRE FENCE	620.40	1			
1250									1250		M	REMOVAL OF EXISTING FENCE	620.55	2			
						25	92		117		M	SNOW BARRIER, GALVANIZED	620.75	-			
251.8	244.4								496.2		M	STEEL BEAM GUARDRAIL, GALVANIZED	621.20	-			
147.8									147.8		M	THRIE BEAM GUARDRAIL	621.25	-			
4									4		EACH	MANUFACTURED TERMINAL SECTION, FLARED	621.50	-			
2									2		EACH	MANUFACTURED TERMINAL SECTION, TANGENT	621.51	-			
3									3		EACH	ENERGY ABSORPTION ATTENUATOR	621.56	-			
	2								2		EACH	ANCHOR FOR STEEL BEAM RAIL	621.60	-			
						4			4		EACH	GUARDRAIL APPROACH SECTION, GALVANIZED NETC 2 RAIL	621.72	-			
							4		4		EACH	GUARDRAIL APPROACH SECTION, GALVANIZED NETC 4 RAIL	621.73	-			
660	450								1110		M	TEMPORARY TRAFFIC BARRIER	621.90	1			
					4				4		CM	INSULATION BOARD	622.10	-			
					16				16		M	PVC SEWER PIPE (100 MM)	628.35	-			
					253				253		M	PVC SEWER PIPE (200 MM)	628.35	-			
					1				1		LS	TRANSFER TO NEW SYSTEM, SANITARY SEWER	628.42	-			
					10				10		M	SEAMLESS COPPER WATER TUBE (19 MM)	629.23	1			

PROJECT NAME: **BENNINGTON**
PROJECT NUMBER: **AC NH 019-1(53)**

FILE NAME: ZD307C3VAOT_QUANT.XLS
PROJECT LEADER: G.SANTY
DESIGNED BY: M. FOISY
QUANTITY SHEET #4

PLOT DATE: 5/17/2007
DRAWN BY: STANTEC
CHECKED BY: G. SANTY
SHEET 15 OF 577

v:\1953\active\195300021\transportation\drawing\contract_3\plot_files\zd307c3vaot_quant07.prf

STATE OF VERMONT
AGENCY OF TRANSPORTATION

QUANTITY SHEET

Metric

SUMMARY OF ESTIMATED QUANTITIES										TOTALS		DESCRIPTIONS				DETAILED SUMMARY OF QUANTITIES		
	ROADWAY	ROADWAY (STAGE ONE SITES)	TRAINING	LANDSCAPING	EROSION CONTROL	UTILITIES	FURNACE BROOK BRIDGE	EAST ROAD + SUP BRIDGE	FULL C.E. ITEMS	GRAND TOTAL	FINAL	UNIT	ITEMS	ITEM NUMBER	ROUND	QUANTITIES	UNIT	ITEMS
						10				10		M	SEAMLESS COPPER WATER TUBE (25 MM)	629.23	1			
						5				5		M	DUCTILE IRON PIPE, CEMENT-LINED (150 MM)	629.24	-			
						5				5		M	DUCTILE IRON PIPE, CEMENT-LINED (200 MM)	629.24	-			
	10									10		M	DUCTILE IRON PIPE, CEMENT-LINED (300 MM)	629.24	-			
						181				181		M	DUCTILE IRON PIPE, CEMENT-LINED (400 MM)	629.24	-			
						2				2		EACH	EXTENSION SERVICE BOX AND CURB STOP (25 MM)	629.25	-			
						1				1		EACH	GATE VALVE WITH VALVE BOX (150 MM)	629.27	-			
						1				1		EACH	GATE VALVE WITH VALVE BOX (200 MM)	629.27	-			
	1									1		EACH	GATE VALVE WITH VALVE BOX (300 MM)	629.27	-			
						4				4		EACH	GATE VALVE WITH VALVE BOX (400 MM)	629.27	-			
						1				1		EACH	HYDRANT	629.28	-			
						1				1		EACH	REMOVE HYDRANT	629.30	-			
						2				2		EACH	CORPORATION STOP (25 MM)	629.39	-			
						1				1		LS	TRANSFER TO NEW SYSTEM, WATER SYSTEM	629.42	-			
	1100	250								1350		HR	UNIFORMED TRAFFIC OFFICERS	630.10	13.2			
	14950	7500								22450		HR	FLAGGERS	630.15	21			
									1	1		LS	TESTING EQUIPMENT, CONCRETE	631.16	-			
									1	1		LS	TESTING EQUIPMENT, BITUMINOUS	631.17	-			
			1560							1560		HR	EMPLOYEE TRAINEESHIP	634.10	-			
	1									1		LS	MOBILIZATION/DEMOBILIZATION	635.11	-			
	1									1		LS	TRAFFIC CONTROL	641.10	-			
	1									1		LS	PUBLIC RELATIONS OFFICER	641.12	-			
	4	2								6		EACH	PORTABLE CHANGEABLE MESSAGE SIGN	641.15	-			
	840									840		M	DURABLE 100 MM WHITE LINE, THERMOPLASTIC	646.402	10			
	810	520								1330		M	DURABLE 100 MM YELLOW LINE, THERMOPLASTIC	646.412	4			
	1500									1500		M	DURABLE 150 MM WHITE LINE, THERMOPLASTIC	646.422	5			
	1460									1460		M	DURABLE 150 MM YELLOW LINE, THERMOPLASTIC	646.432	5			
	5									5		M	DURABLE 600 MM STOP BAR, THERMOPLASTIC	646.482	0.5			
	4									4		EACH	DURABLE LETTER OR SYMBOL, THERMOPLASTIC	646.492	-			
	1680									1680		M	TEMPORARY 100 MM WHITE LINE, PAINT	646.602	20			
	1620									1620		M	TEMPORARY 100 MM YELLOW LINE, PAINT	646.612	8			
	3440									3440		M	TEMPORARY 150 MM WHITE LINE, PAINT	646.622	10			
	3280									3280		M	TEMPORARY 150 MM YELLOW LINE, PAINT	646.632	10			
	10									10		M	TEMPORARY 600 MM STOP BAR, PAINT	646.682	1			
	8									8		EACH	TEMPORARY LETTER OR SYMBOL, PAINT	646.692	-			
	584	25								609		EACH	LINE STRIPING TARGETS	646.76	-			
	20									20		SM	REMOVAL OF EXISTING PAVEMENT MARKINGS	646.85	0.5			
	26810									26810		SM	GEOTEXTILE FOR ROADBED SEPARATOR	649.11	4			
	5317	280					7445	218		13260		SM	GEOTEXTILE UNDER STONE FILL	649.31	4			
		6000			1585					7585		SM	GEOTEXTILE FOR SILT FENCE	649.51	0.1			

PROJECT NAME: **BENNINGTON**
PROJECT NUMBER: **AC NH 019-1(53)**

FILE NAME: ZD307C3VAOT_QUANT.XLS
PROJECT LEADER: G.SANTY
DESIGNED BY: M. FOISY
QUANTITY SHEET #5

PLOT DATE: 5/17/2007
DRAWN BY: STANTEC
CHECKED BY: G. SANTY
SHEET 16 OF 577

v:\1953\active\195300021\transportation\drawing\contract_3\plot_files\zd307c3vaot_quant07.prf

STATE OF VERMONT
AGENCY OF TRANSPORTATION

QUANTITY SHEET

Metric

SUMMARY OF ESTIMATED QUANTITIES									TOTALS		DESCRIPTIONS				DETAILED SUMMARY OF QUANTITIES		
ROADWAY	ROADWAY (STAGE ONE SITES)	TRAINING	LANDSCAPING	EROSION CONTROL	UTILITIES	FURNACE BROOK BRIDGE	EAST ROAD + SUP BRIDGE	FULL C.E. ITEMS	GRAND TOTAL	FINAL	UNIT	ITEMS	ITEM NUMBER	ROUND	QUANTITIES	UNIT	ITEMS
				150					150		SM	GEOTEXTILE FOR FILTER CURTAIN	649.61	-			
1065	450		85						1600		KG	SEED	651.15	5.4			
				2500					2500		KG	SEED, WINTER RYE	651.17	9.5			
8500	3500								12000		KG	FERTILIZER	651.18	22.8			
75	30								105		T	AGRICULTURAL LIMESTONE	651.20	6.9			
	30			235					265		T	HAY MULCH	651.25	6.8			
7775	700								8475		CM	TOPSOIL	651.35	-			
						5200			5200		SM	GRUBBING MATERIAL	651.40	-			
				1					1		LS	EROSION PREVENTION & SEDIMENT CONTROL PLAN	652.10	-			
	1000			1300					2300		HR	MONITORING EROSION PREVENTION & SEDIMENT CONTROL PLAN	652.20	40			
				1					1		LU	MAINTENANCE OF EROSION PREVENTION & SEDIMENT CONTROL PLAN (N.A.B.I.)	652.30	-			
	50000			77260					127260		SM	TEMPORARY EROSION MATTING	653.20	8			
				475					475		SM	PERMANENT EROSION MATTING	653.21	9			
	115			60					175		CM	TEMPORARY STONE CHECK DAM, TYPE I	653.25	6			
	8								8		EACH	PREFABRICATED CHECK DAM	653.30	-			
	170			160					330		CM	VEHICLE TRACKING PAD	653.35	2			
				18					18		EACH	INLET PROTECTION DEVICE, TYPE I	653.40	-			
				3					3		EACH	FILTER BAG	653.45	-			
	710			2280					2990		M	BARRIER FENCE	653.50	5			
	4850			6610					11460		M	PROJECT DEMARCATION FENCE	653.55	3			
			33						33		EACH	EVERGREEN TREES (PICEA GLAUCA 900-1200 HT)(BALLED AND BURLAPPED)	656.20	-			
			31						31		EACH	EVERGREEN TREES (PINUS STROBUS 900-1200 HT)(BALLED AND BURLAPPED)	656.20	-			
			5						5		EACH	DECIDUOUS TREES (ACER NEGUNDO 1200-1500 HT)(BALLED AND BURLAPPED)	656.30	-			
			33						33		EACH	DECIDUOUS TREES (ACER RUBRUM 40-45 CAL)(BALLED AND BURLAPPED)	656.30	-			
			26						26		EACH	DECIDUOUS TREES (ACER SACCHARUM 40-45 CAL)(BALLED AND BURLAPPED)	656.30	-			
			3						3		EACH	DECIDUOUS TREES (BETULA NIGRA 1200-1500 HT)(BALLED AND BURLAPPED)	656.30	-			
			42						42		EACH	DECIDUOUS TREES (CELTIS OCCIDENTALIS 40-45 CAL)(BALLED AND BURLAPPED)	656.30	-			
			6						6		EACH	DECIDUOUS TREES (POPULUS DELTOIDES 1200-1500 HT)(BALLED AND BURLAPPED)	656.30	-			
			28						28		EACH	DECIDUOUS TREES (QUERCUS RUBRA 40-45 CAL)(BALLED AND BURLAPPED)	656.30	-			
			9						9		EACH	DECIDUOUS SHRUBS (CORNUS AMOMUM 600-900 HT)(CONTAINER)	656.35	-			
			20						20		EACH	DECIDUOUS SHRUBS (CORNUS RACEMOSA 600-900 HT)(CONTAINER)	656.35	-			
			13						13		EACH	DECIDUOUS SHRUBS (HAMAMELIS VIRGINIANA 600-900 HT)(CONTAINER)	656.35	-			
			28						28		EACH	DECIDUOUS SHRUBS (VIBURNUM LENTAGO 600-900 HT)(CONTAINER)	656.35	-			
			80						80		CM	LANDSCAPE BACKFILL, TRUCK MEASUREMENT	656.80	-			
18.88									18.88		SM	TRAFFIC SIGNS, TYPE A	675.20	-			
2.7									2.7		SM	TRAFFIC SIGNS, TYPE B	675.21	-			
142.6									142.6		M	FLANGED CHANNEL SIGN POST	675.301	-			
129									129		EACH	REMOVING SIGNS	675.50	-			
12									12		EACH	ERECTING SALVAGED SIGNS	675.60	-			
129									129		EACH	DELINEATOR WITH STEEL POST	676.10	-			

PROJECT NAME: **BENNINGTON**
PROJECT NUMBER: **AC NH 019-1(53)**

FILE NAME: ZD307C3VAOT_QUANT.XLS
PROJECT LEADER: G.SANTY
DESIGNED BY: M. FOISY
QUANTITY SHEET #6

PLOT DATE: 5/17/2007
DRAWN BY: STANTEC
CHECKED BY: G. SANTY
SHEET 17 OF 577

v:\1953\active\195310002\transportation\drawing\contract_3\plot_files\zd307c3vaot_quant07.plt

STATE OF VERMONT
AGENCY OF TRANSPORTATION

QUANTITY SHEET

Metric

SUMMARY OF ESTIMATED QUANTITIES

ROADWAY	ROADWAY (STAGE ONE SITES)	TRAINING	LANDSCAPING	EROSION CONTROL	UTILITIES	FURNACE BROOK BRIDGE	EAST ROAD + SUP BRIDGE	FULL C.E. ITEMS	GRAND TOTAL	FINAL	UNIT	ITEMS	ITEM NUMBER	ROUND
240									240		EACH	REMOVAL OF EXISTING DELINEATOR	676.12	-
					486				486		M	ELECTRICAL CONDUIT (100 MM)(PVC)(SCH 80)	678.21	-
					162				162		M	ELECTRICAL CONDUIT (125 MM)(PVC)(SCH 80)	678.21	-
					18				18		M	ELECTRICAL CONDUIT SLEEVE (200 MM)(PVC)(SCH 80)	678.30	-
1									1		LU	PRICE ADJUSTMENT, FUEL (N.A.B.I.)	690.50	-
250									250		CM	SPECIAL PROVISION (CLAY BORROW)	900.608	2
						320			320		CM	SPECIAL PROVISION (HIGH PERFORMANCE CONCRETE, MASS POUR)	900.608	-
260									260		CM	SPECIAL PROVISION (PERMANENT STONE CHECK DAM, TYPE I)	900.608	0.88
							4		4		EACH	SPECIAL PROVISION (GUARDRAIL APPROACH SECTION, GALVANIZED 3 RAIL)	900.620	-
				3					3		EACH	SPECIAL PROVISION (INLET PROTECTION, STEEL PLATE)	900.620	-
						4			4		EACH	SPECIAL PROVISION (MODIFIED SETTLEMENT PLATFORM)	900.620	-
						2			2		EACH	SPECIAL PROVISION (PIER SURVEY TARGET)	900.620	-
						266390			266390		KG	SPECIAL PROVISION (HIGH PERFORMANCE STEEL, GRADE 485W)	900.635	-
							4		4		M	SPECIAL PROVISION (BRIDGE EXPANSION JOINT, SLIDING PLATE)	900.640	-
							163		163		M	SPECIAL PROVISION (BRIDGE RAILING, GALVANIZED 3 RAIL)	900.640	-
							165		165		M	SPECIAL PROVISION (PROTECTIVE SCREENING)	900.640	-
							1		1		LS	SPECIAL PROVISION (SEWER MAIN ON BRIDGE)(200 MM)	900.645	-
							1		1		LS	SPECIAL PROVISION (WATER MAIN ON BRIDGE)(400 MM)	900.645	-
						1290			1290		SM	SPECIAL PROVISION (REINFORCED SOIL SLOPE)	900.675	-
			5						5		T	SPECIAL PROVISION (STRAW MULCH)	900.680	-

TOTALS

DESCRIPTIONS

DETAILED SUMMARY OF QUANTITIES

QUANTITIES	UNIT	ITEMS

PROJECT NAME:	**BENNINGTON**
PROJECT NUMBER:	**AC NH 019-1(53)**
FILE NAME:	**ZD307C3VAOT_QUANT.XLS**
PROJECT LEADER:	**G.SANTY**
DESIGNED BY:	**M. FOISY**
QUANTITY SHEET #7	
PLOT DATE:	**5/17/2007**
DRAWN BY:	**STANTEC**
CHECKED BY:	**G. SANTY**
SHEET	**18** OF **577**

v:\1953\active\195310002\transportation\drawing\contract_3\plot_files\zd307c3vaot_quant07.plt

STATE OF VERMONT
AGENCY OF TRANSPORTATION

ITEM DETAIL SHEET

Metric

CURB

BEGIN STATION km + m	END STATION km + m	POSITION LEFT M	POSITION RIGHT M
BITUMINOUS CONCRETE CURB			
NORTHBOUND			
NB 8+694.5	NB 8+780.0	2.3 T	
NB 8+780.0	NB 8+823.0	1.2 T	
	SUBTOTAL	3.5 T	
CAST-IN-PLACE CONCRETE CURB			
EAST ROAD BRIDGE APPROACHES			
ER 1+135.9	ER 1+147.7	11.8	11.8
ER 1+208.2	ER 1+221.0	11.8	11.8
	SUBTOTAL	47.2	

GUARDRAIL

BEGIN STATION km + m	END STATION km + m	POSITION LEFT m	POSITION RIGHT m	END TREATMENT BEGIN ea	END TREATMENT END ea
STEEL BEAM GUARDRAIL					
NB 8+694.5	8+823.7	137.2			
NB 8+694.5	8+770.5		76.0		1
ER 1+127.5	ER 1+131.3		3.8	1	
ER 1+127.5	ER 1+136.5	9.0			
ER 1+230.6	ER 1+247.6	17.0			
ER 1+238.8	ER 1+247.6		8.8		
	SUBTOTAL	163.2	88.6	1	1
THREE BEAM GUARDRAIL					
NB 9+255	NB 9+311	147.8			
	SUBTOTAL	147.8			

UNDERDRAIN CARRIER PIPE

STRUCTURE	OFFSET	DIA. mm	LENGTH IN m	LENGTH OUT m	LENGTH TOTAL m
RAMP G					
CB214	3.30	150	3.78	3.78	7.56
CB215	3.30	150	3.78	3.78	7.56
CB216	3.30	150	3.78	3.78	7.56
CB217	3.30	150	3.78	3.78	7.56
CB218	3.30	150	3.78	3.78	7.56
MAINLINE					
DI310	4.30	150	5.20	5.20	10.39
DI313	4.30	150	5.2	5.2	10.39
DI314	3.60	150	4.21	4.3	8.51
DI315	3.00	150	3.36		3.36
CB316	3.40	150	3.92	3.92	7.85
CB317	3.40	150	3.92	3.92	7.85
DI318	3.40	150	3.92	3.92	7.85
DI319	3.40	150	3.92	3.92	7.85
DI320	3.40	150	3.92	3.92	7.85
DI321	3.30	150	3.78	3.78	7.56
DI322	3.40	150	3.92	3.92	7.85
DI323	4.90	150	6.04	6.04	12.09
DI324	3.40	150	3.92	3.92	7.85
CB330	3.30	150	3.78	3.78	7.56
DI332	3.40	150	3.92	3.92	7.85
DI333	8.60	150	11.28	11.28	22.55
CB334	3.30	150	3.78	3.78	7.56
DI335	3.40	150	3.92	3.92	7.85
DI336	9.00	150	11.84	11.84	23.69
CB337	3.40	150	3.92	3.92	7.85
DI340	8.60	150	11.28		11.28
CB341	5.90	150	7.46	7.46	14.92
CB345	7.40	150	9.58	9.58	19.16
CARRIER PIPE FOR FLUSHING BASINS					
7 FLUSHING BASINS AT 1.2 m PER FLUSHING BASIN =					8.4
		ITEM 605.20 SUBTOTAL =			283.7

UNDERDRAIN

BEGIN STATION km + m	END STATION km + m	TYPE	POSITION	DIA. mm	LENGTH m	TRENCH EARTH m^3	TRENCH ROCK m^3	FB ea	FB(MOD) C/O ea	MKR PST ea
NORTHBOUND										
NB 8+720.0	8+775.0	U 309	LT	150	50.3 ~~58.5~~	71.3		1		1
NB 8+720.0	8+775.0	U 310A	RT	150	50.6 ~~58.5~~	71.3		1		1
NB 8+775.0	8+875.0	U 313	LT	150	93.7 ~~103.5~~	126.2			1	
NB 8+775.0	8+875.0	U 310	RT	150	93.4 ~~103.5~~	126.2			1	
NB 8+~~875.0~~ 888.9	8+955.0	U 315	LT	150	71.5 ~~83.0~~	101.2		1	~~1~~	1
NB 8+875.0	8+955.0	U 314	RT	150	73.7 ~~83.0~~	101.2			1	
NB 8+955.0	9+045.0	U 317	LT	150	83.8 ~~93.0~~	113.4			1	
NB 8+955.0	9+045.0	U 316	RT	150	83.3 ~~93.0~~	113.4			1	
NB 9+045.0	9+130.0	U 319	LT	150	78.7 ~~88.5~~	107.9			1	
NB 9+045.0	9+130.0	U 318	RT	150	78.9 ~~88.0~~	107.3			1	
NB 9+130.0	9+225.0	U 320	RT	150	89.0 ~~98.0~~	119.5			1	
NB 9+136.0	9+225.0	U 321	LT	150	84.3 ~~93.0~~	113.4		1		1
NB 9+~~225.0~~ 295.0	9+380.0	U 322-2	RT	150	82.7 ~~157.5~~	192.0			1	
NB 9+295.0	9+225.0	U3224	RT		58.7				1	
NB 9+225.0	9+~~380.0~~ 295	U 323D	LT	150	62.2~~161.0~~	196.3			1	
NB 9+295.0	9+380.0	U3236	LT		73.1				1	
NB 9+380.0	9+475.0	U 332	RT	150	89 ~~98.5~~	120.1			1	
NB 9+380.0	9+475.0	U 333	LT	150	79.4 ~~102.5~~	125.0			1	
NB 9+475.0	9+560.0	U 336	LT	150	69.3 94.0	114.6			1	
Crossover XO 0+884.0	0+974.3	U 337	RT	150	78.3 ~~95.0~~	115.8			1	
XO 0+974.3	1+060.2	U 336A	RT	150	79.7 ~~90.0~~	109.7			1	
XO 1+060.2	1+155.8	U 333A	RT	150	90.4 ~~99.0~~	120.7			1	
XO 1+155.8	1+240.0	U 323B	RT	150	80.1 ~~88.0~~	107.3			1	
XO 1+240.0	1+310.5	U 323A	RT	150	65.4 ~~74.0~~	90.2			1	
XO 1+310.5	NB 9+130.0, LT	U 324	RT	150	89.9 ~~97.0~~	118.2			1	
RAMP G										
G 1+464.0	1+506.0	U217A	RT	150	39.6 ~~45.0~~	54.9		1		1
G 1+464.0	1+506.0	U218	LT	150	41.8 ~~48.0~~	58.5		1		1
G 1+506.0	1+558.0	U217	RT	150	46.4 ~~53.0~~	64.6			1	
G 1+506.0	1+610.0	U214A	LT	150	106.4 ~~115.0~~	140.2			1	
G 1+558.0	1+610.0	U216	RT	150	47.0 ~~55.0~~	67.1			1	
G 1+610.0	1+678.5	U215	RT	150	38.9 ~~70.0~~	85.3		1		1
		U215	NEW RT		44.2			1		1
G 1+610.0	1+652.5	U214	LT	150	~~47.0~~	57.3		1		1
		ITEM 605.10 SUBTOTAL			2633	3210.1		7	23	7
XO FACE OF LEDGE NB 9+410 LT	XO 1+105 RT	U	-	150	22.0	42.0		1		1
NB FACE OF LEDGE		U	-	150	37.0	53.0		1		1
					2352.7			11	24	11

PROJECT NAME: **BENNINGTON**
PROJECT NUMBER: **AC NH 019-1(53)**

FILE NAME: zd307c3id.xls
PROJECT LEADER: GREG EDWARDS
DESIGNED BY: MARC FOISY
ITEM DETAIL SHEET #1

PLOT DATE: 5/11/2007
DRAWN BY: STANTEC
CHECKED BY: GARY SANTY
SHEET 19 OF 577

STATE OF VERMONT
AGENCY OF TRANSPORTATION

DRAINAGE DETAIL SHEET #1

Metric

STATION km + m	STATION km + m	POS.	ASKEW no. deg.	INLET/OUTLET TYPE INLET	INLET/OUTLET TYPE OUTLET	DITCH IN	DITCH OUT	PIPE ARCH SPAN mm	PIPE ARCH RISE mm	PIPE ARCH L m	PIPE D mm	PIPE L m	ALLOWABLE OPTIONS PCCSP mm	ALLOWABLE OPTIONS CAAP mm	ALLOWABLE OPTIONS RCP CL	ALLOWABLE OPTIONS CSP mm	ALLOWABLE OPTIONS CPEP SL mm	ALLOWABLE OPTIONS PCCSP PI mm	PIPE ELBOW no. deg.	ES ea	CB ea	MANHOLE ea	PRECOI	DEPTH OF STRUCT. mm	DROP INLET CONC. CLASS m^3	DROP INLET REINF. STEEL kg	CONCRETE HEADWALL CONC. CLAS m^3	CONCRETE HEADWALL REINF. STEEL kg	STRUCT. GRATE type	TRENCH EXCAVATION (1) EARTH m^3	TRENCH EXCAVATION (1) ROCK m^3	COMM EXC m^3	UNC CHAN m^3	STRUCT EXCAV m^3	GRAN BKFILL m^3	GRAN BORR m^3	EROS MATT m^2	STONE FILL VOL m^3	STONE FILL type	MARKER POSTS LT ea	MARKER POSTS RT ea	GEOTEXTILE UNDER SONTE FILL m^2	REMARKS
MAINLINE NORTHBOUND																																									
NB 8+545.0	NB 8+585.3	LT-LT	451	HDWL	MH450						600	52.5	1.63	1.52													8.18	229		80.49								70	II			135	CONST. REINFORCED CONCRETE HEADWALL CONST STONE INLET PROTECTION, TYPE II CONST PIPE CONNECTION COLLARS AT 12 M INTERVALS.
NB 8+585.3	NB 8+607.0	LT-LT	450	MH450	STONE						900	20.0	2.01	1.91								1		2400					1-CVR	83.29							4	II	2		10	CONST STONE OUTLET PROTECTION, TYPE II MARKER POSTS AT STRUCTURE AND OUTLET
MAINLINE NORTHBOUND																																									
NB 8+698.2	NB 8+775.0	LT-LT	309	DI309	CB312						450	75.8	1.63	1.52	III		X							2100	3.08	142			2-B	212.42												1200x1800 DI
NB 8+775.0		RT-RT	310	DI310	CB311						450	3.8			III		X							1350	1.71	89			1-A	13.43										1		1200x1200 DI
NB 8+775.0		LT-RT	311	CB311	CB312						450	15.0			IV		X				1			2400					1-B	43.59												
NB 8+775.0		LT-LT	312	CB312	DI313						450	3.7	1.63	1.52	IV		X				1			3000					1-B	37.56												
NB 8+775.0	NB 8+875.0	LT-LT	313	DI313	DI315						450	99.5	1.63	1.52	III		X							2100	2.52	138			1-A	247.42									1		1200x1200 DI
NB 8+875.0		LT-RT	314	DI314	DI315						450	25.4			IV		X							1650	2.03	107			1-A	66.91										1		1200x1200 DI
NB 8+875.0	NB 8+955.0	LT-LT	315	DI315	CB317						450	79.2			III		X							1950	2.36	124			1-A	214.70									1		1200x1200 DI
NB 8+955.0		LT-RT	316	DI316	CB317						450	29.1			III		X							1200	1.55	86			1-A	59.50										1		1200x1200 DI
NB 8+955.0	NB 9+045.0	LT-LT	317	CB317	CB319						600	88.8	1.63	1.52							1			1800					1-A	500.88									1		
NB 9+100.0		RT	300																										108.00							64	II			142	CONST. SLOPE DITCH WITH STONE FILL, TYPE II
NB 9+045.0		LT-RT	318	DI318	CB319						450	30.4			III		X							1200	1.55	86			1-A	57.51										1		1200x1200 DI
NB 9+045.0	NB 9+130.0	LT-LT	319	CB319	CB321						600	84.2	1.63	1.52							1			1650					1-B	283.09									1		
NB 9+130.0		LT-RT	320	DI320	CB321						450	31.0			III		X							1350	1.71	89			1-B	64.08										1		1200x1200 DI
NB 9+225.0		LT-RT	322	DI322	DI323						450	19.1			III		X							1200	1.55	86			1-B	39.84									1	1	1200x1200 DI
NB 9+225.0	XO 1+310.5	LT-RT	323	DI323	CB324						450	18.3			III		X							1500	1.87	103			1-B	44.61									1		1200x1200 DI
NB 9+290.0	NB 9+295.0	LT-RT	328	DI328	DI329						450	20.7			IV		X							2100	2.52	138			1-B	68.68										1	1200x1200 DI
NB 9+295.0	XO 1+240.0	LT-RT	329	DI329	CB330						450	20.4			IV		X							1800	2.20	120			1-B	73.24									1		1200x1200 DI
NB 9+380.0		LT-RT	332	DI332	DI333						450	21.6	1.63	1.52	III		X							1200	1.55	86			1-B	45.86										1	1200x1200 DI
NB 9+380.0	XO 1+155.8	LT-RT	333	DI333	CB334						450	21.8	1.63	1.52	IV		X							1350	1.71	89			1-B	64.57										1	1200x1200 DI
NB 9+475.0		LT-RT	335	DI335	DI336						450	22.2	1.63	1.52	III		X							1200	1.55	86			1-B	41.18										1	1200x1200 DI
NB 9+475.0	XO 1+060.2	LT-RT	336	DI336	CB337						450	22.7			IV		X							1350	1.71	89			1-B	71.51									1		1200x1200 DI
NB 9+560.0		RT-LT	339	DI339	DI340						450	24.7	1.63	1.52	III		X							1200	1.55	86			1-B	47.62										1	1200x1200 DI
NB 9+560.0	XO 0+974.3	LT-RT	340	DI340	CB341						450	28.0			III		X							1350	1.71	89			1-B	59.81									1		1200x1200 DI
NB 9+650.0		RT-LT	343	DI343	DI344						450	26.2	1.63	1.52	IV		X							1200	1.55	86			1-B	52.94										1	1200x1200 DI
NB 9+650.0	XO 0+884.0	LT-RT	344	DI344	CB345						450	29.5			III		X							1350	1.71	89			1-B	65.11									1		1200x1200 DI
NB 9+650.0	NB 9+688.9	LT	345	CB345	CB346						900	75.4	2.01	1.91							1			3600					1-B	345.66									1		
NB 9+712.9	NB 9+737.2	LT	346	CB346	346A						1200	17.7	2.77	2.67							1			2400					1-B	85.03											
L																																									
L 1+382.9	L 1+319.9	LT	346A	346	CV309																																	203	II			650	CONST. SWALE WITH STONE FILL TYPE II
L 1+319.9	L 1+299.6	LT	CV309	346A	309A						1500	21.3		3.43																					75						
L 1+299.6	L 1+288.7	LT	309A	CV309	STONE																																	20	II			84	CONST. SWALE WITH STONE FILL TYPE II
L 1+288.7	L 1+260.4	LT	398A	309A	398B																																	120	II			400	CONST. FOREBAY STONE FILL TYPE II.
L 1+260.4	L 1+159.7	LT	398B	398B	MH398																																	61	I			200	CONST WETPOND. CONST. STONE FILL TYPE I AT INLET SEE EARTHWORKS SHEET.
SEE DRAINAGE DETAIL SHEET 3 FOR ALL TOTALS																																									

PIPE ALLOWABLE OPTIONS
#1: RCP, CPEP(SL)
#2: PCCSP, CAAP
#3: PCCSP, CAAP, RCP, CPEP (SL)
#4: CSP, RCP, CPEP, CPEP(SL)

NOTE: 1. CPEP(SL) NOT ALLOWABLE OPTION FOR PIPES OVER 900 MM DIAMETER
2. GRATES/COVER FOR CB/MH ARE PAID UNDER THOSE STRUCTURES
3. GRATES FOR DI WILL BE PAID SEPARATELY

RCP = REINFORCED CONCRETE PIPE
CPEP(SL) = CORRUGATED POLYETHYLENE PIPE- SMOOTH LINED
PCCSP = POLYMERIC COATED CORRUGATED STEEL PIPE
CAAP = CORRUGATED ALUMINUM ALLOY PIPE
CSP = CORRUGATED STEEL PIPE

PROJECT NAME: BENNINGTON
PROJECT NUMBER: AC NH 019-1(53)

FILE NAME: zd307c3dds.xls
PROJECT LEADER: GREG EDWARDS
DESIGNED BY: JJS/MARC FOISY
DRAINAGE DETAIL SHEET #1

PLOT DATE: 5/17/2007
DRAWN BY: STANTEC
CHECKED BY: GARY SANTY
SHEET 20 OF 577

STATE OF VERMONT
AGENCY OF TRANSPORTATION

DRAINAGE DETAIL SHEET #2

Metric

STATION km + m	STATION km + m	POS.	ASKEW no. deg.	INLET/OUTLET TYPE INLET	OUTLET	DITCH IN	OUT	PIPE ARCH SPAN mm	RISE mm	L m	PIPE D mm	L m	ALLOWABLE OPTIONS PCCSP mm	CAAP mm	RCP CL	CSP mm	CPEP SL mm	PCCSP PI mm	PIPE ELBOW no. deg.	ES ea	CB ea	MAN HOLE ea	PRCDI	DEPTH OF STRUCT mm	DROP INLET CONC CLASS m³	REINF STEEL kg	CONCRETE HEADWALL CONC CLAS m³	REINF STEEL kg	STRUCT GRATE type	TRENCH EXCAVATION (1) EARTH m³	ROCK m³	COMM EXC m³	UNC CHAN m³	STRUCT EXCAV m³	GRAN BKFILL m³	GRAN BORR m³	EROS MATT m²	STONE FILL VOL m³	type	MARKER POSTS LT ea	RT ea	GEOTEXTILE UNDER SONTE FILL m²	REMARKS
L 1+174.0	L 1+172.1	LT-RT	398	DMH398	STONE						1200	27.6	2.77	2.67								1							1-CVR	220.82								33	I			110	CONSTRUCT STONE FILL TYPE I AT OUTLET SEE EARTHWORKS SHEET.
CROSSOVER																																										
XO 0+884.0	XO 0+974.3	RT-RT	341	CB341	CB345						900	88.6	2.01	1.91							1			3000					1-B	413.28										1			
XO 1+240.0	XO 1+310.5	RT-RT	324	CB324	CB330						750	69.9	2.01	1.91							1			1800					1-B	232.28											1		
XO 1+310.5	NB 9+130.0	RT-LT	321	CB321	CB324						750	94.0	2.01	1.91							1			1800					1-B	225.19											1		
XO 1+155.8	XO 1+240.0	RT-RT	330	CB330	CB334						750	84.5	2.01	1.91							1			2400					1-B	335.72											1		
XO 1+060.2	XO 1+155.8	RT-RT	334	CB334	CB337						750	94.7	2.01	1.91							1			2400					1-B	389.49											1		
XO 0+974.3	XO 1+060.2	RT-RT	337	CB337	CB341						900	86.0	2.01	1.91							1			3000					1-B	424.98											1		
EAST ROAD																																										
ER 1+080.0		RT-LT	CV308		STONE						450	26.5	1.63	1.52													1.57	165		28.28								1	I		1	3	CONST. REINFORCED CONCRETE HEADWALL AT INLET CONST. STONE FILL, TYPE I AT OUTLET
ER 1+105.0	ER 1+122.0	RT-RT	CV307								450	11.7	1.63	1.52																1.33													
ER 1+135.4	XO 1+240.0	LT-RT	330A	CB330B	CB330A						450	27.0	1.63	1.52							1			4200					1-B	160.72													
ER 1+135.2	ER 1+135.4	LT	330B	CB330B	CB330						450	8.1	1.63	1.52							1			3600					1-B	40.12													
ER 1+230.0		LT-LT	326	DI326	MH327						450	11.4	1.63	1.52										2100	2.52	138			1-D	27.32										1			1200x1200 DI
ER 1+230.0	ER 1+240.0	LT-RT	392	DI392	DI326						450	14.4	1.63	1.52	III		X					1		1650	2.03	107			1-D	30.09											1		1200x1200 DI
ER 1+230.0	NB 9+290.0	LT-RT	327	MH327	DI328						450	23.8	163	1.52										2400	2.00				1-CVR	100.02											1		CONST. PIPE CONNECTION COLLARS AT 12 M INTERVALS
ER 1+240.0	ER 1+275.6	RT-RT	393	DI393	DI392						450	35.4			III		X							2100	2.52	138			1-D	96.56											1		1200x1200 DI
RAMP G																																										
G 1+506.0		LT-RT	218	CB218	CB217						450	12.6	1.63	1.52	IV		X				1			2400					1-A	72.34										1			
G 1+506.0	G 1+558.0	RT-RT	217	CB217	CB216						450	47.5	1.63	1.52	IV		X				1			3000					1-A	262.77											1		
G 1+558.0	G 1+610.0	RT-RT	216	CB216	CB215						450	47.3	1.63	1.52	IV		X				1			2400					1-A	206.55											1		
G 1+610 .0		RT-LT	215	CB215	CB214						450	12.5	1.63	1.52	IV		X				1			2400					1-A	73.72											1		
G 1+607.0	G 1+610.0	LT-LT	214	CB214	EX						450	36.1	1.63	1.52							1			3600					1-A	310.95										1			CONNECT TO EXISTING INLET. CONNECTION INCIDENTAL TO PIPE CONSTRUCTION.
SWALE																																										
SW 3+000.0	SW 3+459.5	CL	399																													*											CONST. SWALE TO FURNACE BROOK
SWALE 2																																										
NB 10+346.9	NB 10+476.8	RT	219																													426					1100	II			1600	CONST. SWALE WITH STONE FILL TYPE II
STAGE ONE SITES																																										
MP 1+409.0	MP 1+437.0	LT			ES						375	30.0																		35												CPEP
SEE DRAINAGE DETAIL SHEET 3 FOR ALL TOTALS																																										

PIPE ALLOWABLE OPTIONS
#1: RCP, CPEP(SL)
#2: PCCSP, CAAP
#3: PCCSP, CAAP, RCP, CPEP (SL)
#4: CSP, RCP, CPEP, CPEP(SL)

NOTE: 1. CPEP(SL) NOT ALLOWABLE OPTION FOR PIPES OVER 900 MM DIAMETER
2. GRATES/COVER FOR CB/MH ARE PAID FOR UNDER THOSE STRUCTURES
3. GRATES FOR DI WILL BE PAID SEPARATELY

* REFER TO EARTHWORK SUMMARY FOR COMMON EXCAVATION QUANTITY

RCP = REINFORCED CONCRETE PIPE
CPEP(SL) = CORRUGATED POLYETHYLENE PIPE- SMOOTH LINED
PCCSP = POLYMERIC COATED CORRUGATED STEEL PIPE
CAAP = CORRUGATED ALUMINUM ALLOY PIPE
CSP = CORRUGATED STEEL PIPE

PROJECT NAME: BENNINGTON
PROJECT NUMBER: AC NH 019-1(53)

FILE NAME: zd307c3dds.xls
PROJECT LEADER: GREG EDWARDS
DESIGNED BY: JJS/MARC FOISY
DRAINAGE DETAIL SHEET #2
PLOT DATE: 5/29/2007
DRAWN BY: STANTEC
CHECKED BY: GARY SANTY
SHEET 21 OF 577

STATE OF VERMONT
AGENCY OF TRANSPORTATION

DRAINAGE DETAIL SHEET #3

Metric

STATION km + m	STATION km + m	POS.	ASKEW no. deg.	INLET/OUTLET TYPE INLET	INLET/OUTLET TYPE OUTLET	DITCH IN	DITCH OUT	PIPE ARCH SPAN mm	PIPE ARCH RISE mm	PIPE ARCH L m	PIPE D mm	PIPE L m	ALLOWABLE OPTIONS PCCSP mm	CAAP mm	RCP CL	CSP mm	CPEP SL mm	PCCSP PI mm	PIPE ELBOW no. deg.	ES ea	CB ea	MAN HOLE ea	PROCODI	DEPTH OF STRUCT. mm	DROP INLET CONC. CLASS B m³	DROP INLET REINF STEEL kg	CONCRETE HEADWALL CONC. CLASS B m³	CONCRETE HEADWALL REINF STEEL kg	STRUCT GRATE type	TRENCH EXCAVATION (1) EARTH m³	TRENCH EXCAVATION (1) ROCK m³	COMMV EXC m³	UNC CHAN m³	STRUCT EXCAV m³	GRAN BKFILL m³	GRAN BORR m³	EROS MATT m²	STONE FILL VOL m³	STONE FILL type	MARKER POSTS LT ea	MARKER POSTS RT ea	GEOTEXTILE UNDER SONTE FILL m²	REMARKS
EXISTING PIPES AND STRUCTURES																																										
NB 9+259	XO 1+222	LT-RT	EX700	EX700																										111.38	25.9												REMOVE EXISTING PIPE AND INLET STRUCTURE (ESTIMATED VOLUME)
NB 9+584	NB 9+660	RT-RT	EX701	EX701	EX704																									151.88	9.9												REMOVE EXISTING PIPE AND INLET STRUCTURE (ESTIMATED VOLUME)
XO 0+874	XO 0+874	RT-LT	EX702	EX702	EX703																									53.66	9.9												REMOVE EXISTING PIPE AND INLET STRUCTURE (ESTIMATED VOLUME)
NB 9+660	NB 9+660	LT-RT	EX703	EX703	EX704																									50.63	9.9												REMOVE EXISTING PIPE AND INLET STRUCTURE (ESTIMATED VOLUME)
NB 9+660	NB 9+661	RT-RT	EX704	EX704																										4.05	9.9												REMOVE INLET STRUCTURE AND PLUG EXISTING PIPE (ESTIMATED VOLUME)
UN 9+508.0		LT-RT	EX718																																								RETAIN EXISTING PIPES (2) & INLET STRUCTURES
UN 9+583.4		LT	EX719																																								RETAIN EXISTING PIPES (2) & INLET STRUCTURES
UN 9+643.3		LT	EX720																																								RETAIN EXISTING PIPES (2) & INLET STRUCTURES
UN 9+657.9		RT	EX721																																								RETAIN EXISTING PIPES (2) & INLET STRUCTURES
UN 9+686.1		RT	EX717																																					8	II			30	REMOVE 8 M OF EXISTING CULVERT. CONST STONE FILL TYPE II AT OUTLET
GG 1+293.5	GG 1+446.5	RT	EX722																																								REMOVE EXISTING PIPE AND INLET STRUCTURE
GG 1+293.5		LT-RT	EX723																																								REMOVE EXISTING PIPE AND INLET STRUCTURE
SI 1+337.0	SI 1+356.0	LT	EX724																						0.25					23.64													PLUG AND ABANDON
GG 1+466.5	GG 1+517.2	RT	EX725																																								REMOVE EXISTING PIPE AND INLET STRUCTURE, RETAIN OUTLET STRUCTURE.
PROJECT TOTATLS								PIPE OPTION 1			450	304	WITH RCP CLASS III								19	3		47.01	2391	9.75	394		7261.3	65.5	426 *		75				95	I	18	24	3364	
											450	105	WITH RCP CLASS IV																											1581	II				
								PIPE OPTION 2			450	145																																
											600	226																														
											750	344																														
											900	270																														
											1200	46																														
								PIPE OPTION 3			450	259	WITH RCP CLASS III																																
											450	172	WITH RCP CLASS IV																														
								PIPE OPTION 4			375	30																																
								CAAP			1500	22																																
								GRATES/FRAMES																																					
								SEPARATE PAYITEM																																					
								COST INCLUDED WITH STRUCTURE																																					
								SEPARATE PAYITEM																																					
								COST INCLUDED WITH STRUCTURE																																					
								SEPARATE PAYITEM																																					
								COST INCLUDED WITH STRUCTURE																																					
								SEPARATE PAYITEM																																					
								COST INCLUDED WITH STRUCTURE																																					

PIPE ALLOWABLE OPTIONS	#1: RCP, CPEP(SL)		
	#2: PCCSP, CAAP		
	#3: PCCSP, CAAP, RCP, CPEP (SL)		
	#4: CSP, RCP, CPEP, CPEP(SL)		

NOTE: 1. CPEP(SL) NOT ALLOWABLE OPTION FOR PIPES OVER 900 MM DIAMETER
2. GRATES/COVER FOR CB/MH ARE PAID FOR UNDER THOSE STRUCTURES
3. GRATES FOR DI WILL BE PAID SEPARATELY

* FORWARD TO EARTHWORK SUMMARY

RCP	=	REINFORCED CONCRETE PIPE
CPEP(SL)	=	CORRUGATED POLYETHYLENE PIPE- SMOOTH LINED
PCCSP	=	POLYMERIC COATED CORRUGATED STEEL PIPE
CAAP	=	CORRUGATED ALUMINUM ALLOY PIPE
CSP	=	CORRUGATED STEEL PIPE

PROJECT NAME: **BENNINGTON**
PROJECT NUMBER: **AC NH 019-1(53)**

FILE NAME: zd307c3dds.xls
PROJECT LEADER: GREG EDWARDS
DESIGNED BY: JJS/MARC FOISY
DRAINAGE DETAIL SHEET #3

PLOT DATE: 5/29/2007
DRAWN BY: STANTEC
CHECKED BY: GARY SANTY
SHEET 22 OF 577

STATE OF VERMONT
AGENCY OF TRANSPORTATION

EARTHWORKS

Metric

STATION km + m	DIST m	TOTAL EXCAVATION EARTH AND ROCK AREA m^2	TOTAL EXCAVATION EARTH AND ROCK VOLUME m^3	ROCK EXCAVATION AREA m^2	ROCK EXCAVATION VOLUME m^3	EMBANKMENT AREA m^2	EMBANKMENT VOLUME m^3	AREA m^2	VOLUME m^3
NB Mainline									
8+529									
	11						4290	CUT	0
8+540						780		ROCK	0
	20						12738	R.FAC	0.495
8+560						494		FILL	17028
								F.FAC	1.15
Bridge								EX. F	-19582
8+680		6				120			
	20		60				2000		
8+700						80			
	20		110				830		
8+720		11				3			
	20		750				30	CUT	7580
8+740		64						ROCK	0
	20		1700					R.FAC	0.495
8+760		106						FILL	2860
	20		2310					F.FAC	1.15
8+780		125						EX. C	4291
	20		2650						
8+800		140							
	20		3190						
8+820		179							
	20		4470						
8+840		268							
	20		6610						
8+860		393							
	20		9420						
8+880		549							
	20		14600					CUT	167480
8+900		911						ROCK	0
	20		20910					R.FAC	0.495
8+920		1180						FILL	0
	20		23810					F.FAC	1.15
8+940		1201						EX. C	167480
	20		25530						
8+960		1352							
	20		28630						
8+980		1511							
	20		30310						
9+000		1520							
	20		29990						
9+020		1479							
	20		27610						
9+040		1282							
	20		16040						
9+060		322							
	20		5790						
9+080		257							
	20		3020					CUT	84530
9+100		45						ROCK	0
	20		640					R.FAC	0.495
9+120		19						FILL	0
	20		350					F.FAC	1.15
9+140		16						EX. C	84530
	20		300						
9+160		14							
	20		320						
9+180		18							
	20		470						
9+200		29							
	20		630						
9+220		34							
	20		1120						
9+240		78							
	20		2730						
9+260		195							
	20		4040						
9+280		209							
	20		3920					CUT	26590
9+300		183						ROCK	0
	20		3360					R.FAC	0.495
9+320		153						FILL	0
	20		2830					F.FAC	1.15
9+340		130						EX. C	26590
	20		2530						
9+360		123							
	20		2560						
9+380		133							
	20		2870						
9+400		154							
	20		3320						
9+420		178							
	20		3720						
9+440		194							
	20		3990						
9+460		205							
	20		3820						
9+480		177							
	20		3040					CUT	19270
9+500		127						ROCK	0
	20		1290				50	R.FAC	0.495

STATION km + m	DIST m	TOTAL EXCAVATION EARTH AND ROCK AREA m^2	TOTAL EXCAVATION EARTH AND ROCK VOLUME m^3	ROCK EXCAVATION AREA m^2	ROCK EXCAVATION VOLUME m^3	EMBANKMENT AREA m^2	EMBANKMENT VOLUME m^3	AREA m^2	VOLUME m^3
9+520		2				5		FILL	420
	20		30				110	F.FAC	1.15
9+540		1				6		EX. C	18787
	20		20				120		
9+560		1				6			
	20		10				90		
9+580						3			
	20		30				50		
9+600		3				2			
	20		50				30		
9+620		2				1			
	20		50				20	CUT	167
9+640		3				1		ROCK	0
	20		50				30	R.FAC	0.495
9+660		2				2		FILL	97
	17		17				17	F.FAC	1.15
9+677		0				0		EX. C	55
Crossover									
0+857						0			
	4						18		
0+861						9			
	19						152		
0+880						7			
	20						110		
0+900						4			
	20						80	CUT	0
0+920						4		ROCK	0
	20						100	R.FAC	0.495
0+940						6		FILL	830
	20						100	F.FAC	1.15
0+960						4		EX. F	-955
	20						120		
0+980						8			
	20						150		
1+000						7			
	20						110		
1+020						4			
	20		2250				40		
1+040		225							
	20		5130						
1+060		288							
	20		5890						
1+080		301							
	20		5640					CUT	35935
1+100		263						ROCK	0
	20		4770					R.FAC	0.495
1+120		214						FILL	240
	20		3917					F.FAC	1.15
1+140		178						EX. C	35659
	20		3184						
1+160		141							
	20		2700				30		
1+180		129				3			
	20		2454				60		
1+200		116				3			
	20		2400				60		
1+220		124				3			
	20		2626				30		
1+240		139							
	20		2980						
1+260		159							
	20		3124						
1+280		153							
	20		2120					CUT	16110
1+300		59						ROCK	0
	20		930					R.FAC	0.495
1+320		34						FILL	90
	20		590					F.FAC	1.15
1+340		25						EX. C	16007
	20		470						
1+360		22							
	20		430						
1+380		21							
	20		440						
1+400		23							
	20		420					CUT	624
1+420		19						ROCK	0
	11		204					R.FAC	0.495
1+431		18						FILL	0
								F.FAC	1.15
								EX. C	624
East Road									
								CUT	240
0+960								ROCK	0
	20		71					R.FAC	0.495
0+980		7						FILL	0
	20		169					F.FAC	1.15
1+000		10						EX. C	240
	20		141						
1+020		4							

STATION km + m	DIST m	TOTAL EXCAVATION EARTH AND ROCK AREA m^2	TOTAL EXCAVATION EARTH AND ROCK VOLUME m^3	ROCK EXCAVATION AREA m^2	ROCK EXCAVATION VOLUME m^3	EMBANKMENT AREA m^2	EMBANKMENT VOLUME m^3	AREA m^2	VOLUME m^3
1+040									
	20		65						
1+040		2							
	20		22				142		
1+060									
	20						532	CUT	228
1+080								ROCK	0
	20						953	R.FAC	0.495
1+100								FILL	4803
	20						1410	F.FAC	1.15
1+120								EX. F	-5295
	20						1765		
1+140									
BRIDGE									
1+227									
	13		26				51		
1+240		4							
	20		155				89		
1+260		12							
	20		261				50	CUT	979
1+280		15						ROCK	0
	20		254				134	R.FAC	0.495
1+300		11						FILL	509
	20		202				143	F.FAC	1.15
1+320		9						EX. C	394
	17		81				42		
1+337									
Ramp G									
1+340		11							
	20		260					CUT	1350
1+360		15						ROCK	0
	20		380					R.FAC	0.495
1+380		23						FILL	0
	20		710					F.FAC	1.15
1+400		48						EX. C	1350
	20		1090						
1+420		61							
	20		970						
1+440		36							
	20		580						
1+460		22							
	20		370						
1+480		15							
	20		600					CUT	13761
1+500		45						ROCK	0
	20		1330					R.FAC	0.495
1+520		88						FILL	0
	20		1996					F.FAC	1.15
1+540		112						EX. C	13761
	20		2246						
1+560		113							
	20		2290						
1+580		116							
	20		2290						
1+600		113							
	20		2110						
1+620		98							
	20		1410				10		
1+640		43				1		CUT	4260
	20		440				50	ROCK	0
1+660		1				4		R.FAC	0.495
	20		80				120	FILL	260
1+680		7				8		F.FAC	1.15
	20		220				80	EX. C	3961
1+700		15							
SI Fill									
1+000						0			
	20						2271		
1+020						227			
	20						10527		
1+040						826			
	20						17975		
1+060						972			
	20						19393		
1+080						967			
	20						17053	CUT	0
1+100						738		ROCK	0
	20						12244	R.FAC	0.495
1+120						487		FILL	110122
	20						8941	F.FAC	1.15
1+140						408		EX. F	-126641
	20						7706		
1+160						363			
	20						7143		
1+180						351			
	20						6869		
1+200						335			

SUMMARY AND BALANCES

STATION km + m	TO STATION km + m	TOT EXC. EARTH & ROCK m^3	ROCK EXCAV m^3	EMBANK m^3	EXCESSES CUT	EXCESSES FILL	ACUMULATIVE EXCESSES CUT	ACUMULATIVE EXCESSES FILL
NB MAINLINE								
8+529	8+560			17,028		-19,582		-19,582
8+680	8+800	7,580		2,860	4,291			-15,291
8+800	9+000	167,480			167,480		152,189	
9+000	9+200	84,530			84,530		236,719	
9+200	9+400	26,590			26,590		263,309	
9+400	9+600	19,270		420	18,787		282,096	
9+600	9+677	167		97	55		282,151	
CROSSOVER								
0+857	1+000			830		-955	281,196	
1+000	1+200	35,935		240	35,659		316,855	
1+200	1+400	16,110		90	16,007		332,862	
1+400	1+431	624			624		333,486	
EAST ROAD								
0+960	1+000	240			240		333,726	
1+000	1+140	228		4,803		-5,295	328,431	
1+227	1+337	979		509	394		328,825	
Ramp G								
1+340	1+400	1,350			1,350		330,175	
1+400	1+600	13,761			13,761		343,936	
1+600	1+700	4,260		260	3,961		347,897	

REMARKS

EARTH AND ROCK EXCAVATION
SOLID ROCK EXCAVATION
EARTH EXCAVATION

PLANIMETERED FILL
LESS FACTORED SOLID ROCK (1.30)
LESS DISPLACEMENT OF ANY LARGE STRUCTURES
NET PLANIMETERED FILL
FACTOR (0.15)
PLANIMETERED FILL INCLUDING FACTOR

MATERIALS AVAILABLE FOR FILLS
EARTH EXCAVATION
CHANNEL EXCAVATION (UNCLASSIFIED)
UNDERDRAIN EXCAVATION
STRUCTURE EXCAVATION

TOTAL MATERIAL AVAILABLE FOR FILL

TOTAL FILL INCLUDING FACTOR
TOTAL MATERIAL FOR FILL
BORROW
EXCESS EXCAVATION

PROJECT NAME: **BENNINGTON**
PROJECT NUMBER: **AC NH 019-1(53)**

FILE NAME: zd307c3ew.xls
PROJECT LEADER: GREG EDWARDS
DESIGNED BY: MARC FOISY
EARTHWORK SHEET #1

PLOT DATE: 3/13/2007
DRAWN BY: STANTEC
CHECKED BY: GARY SANTY
SHEET 23 OF 577

STATE OF VERMONT
AGENCY OF TRANSPORTATION

EARTHWORKS

Metric

		TOTAL EXCAVATION EARTH AND ROCK		ROCK EXCAVATION		EMBANKMENT			
STATION	DIST	AREA	VOLUME	AREA	VOLUME	AREA	VOLUME	AREA	VOLUME
km + m	m	m^2	m^3	m^2	m^3	m^2	m^3	m^2	m^3
	20						7025		
1+220						367			
	20						7700		
1+240						403			
	20						8611		
1+260						458			
	20						9303	CUT	0
1+280						472		ROCK	0
	20						10283	R.FAC	0.495
1+300						556		FILL	70760
	20						12730	F.FAC	1.15
1+320						717		EX. F	-81374
	20						11139		
1+340						397			
	20						3969		
1+360						0			
SWALE 3									
2+981		0							
	19		206						
3+000		22							
	20		240				13		
3+020		2				1			
	20		148				13		
3+040		12							
	20		433						
3+060		31							
	20		887					CUT	6085
3+080		58						ROCK	0
	20		1217					R.FAC	.495
3+100		64						FILL	26
	20		1144					F.FAC	1.15
3+120		51						EX. C	6055
	20		819						
3+140		31							
	20		573						
3+160		26							
	20		417						
3+180		16							
	20		241						
3+200		8							
	20		103				23		
3+220		2				2			
	20		20				183		
3+240						16			
	20						503		
3+260						34			
	20						779	CUT	364
3+280						44		ROCK	0
	20						794	R.FAC	.495
3+300						36		FILL	4725
	20						671	F.FAC	1.15
3+320						31		EX. F	5070
	20						626		
3+340						31			
	20						599		
3+360						28			
	20						547		
3+380						26			
	20						613		
3+400						35			
	20						564	CUT	0
3+420						21		ROCK	0
	20						331	R.FAC	.495
3+440						12		FILL	1619
	19						111	F.FAC	1.15
3+459								EX. F	1862
Exit 2									
1+240		0		0					
	20		670		650				
1+260		67		65					
	20		1330		1300				
1+280		66		65					
	20		1490		1460				
1+300		83		81					
	20		2010		1970			CUT	27430
1+320		118		116				ROCK	27220
	20		3290		3250			R.FAC	0.495
1+340		211		209				FILL	0
	20		4890		4870			F.FAC	1.15
1+360		278		278				EX. C	40904
	20		6190		6190				
1+380		341		341					
	20		7560		7530				
1+400		415		412					
	24		10392		10332				
1+420		451		449					
	26		11830		11778				
1+440		459		457					
	26		12922		12870				
1+460		535		533					
	26		13559		13520				

		TOTAL EXCAVATION EARTH AND ROCK		ROCK EXCAVATION		EMBANKMENT			
STATION	DIST	AREA	VOLUME	AREA	VOLUME	AREA	VOLUME	AREA	VOLUME
km + m	m	m^2	m^3	m^2	m^3	m^2	m^3	m^2	m^3
1+480		508		507					
	26		12987		12961			CUT	101052
1+500		491		490				ROCK	100638
	26		12155		12116			R.FAC	0.495
1+520		444		442				FILL	0
	25		9363		9325			F.FAC	1.15
1+540		305		304				EX. C	150867
	24		7452		7428				
1+560		316		315					
	24		6156		6120				
1+580		197		195					
	24		4236		4188				
1+600		156		154					
	23		3278		3232				
1+620		129		127					
	23		2438		2404			CUT	7300
1+640		83		82				ROCK	7187
	23		1277		1254			R.FAC	0.495
1+660		28		27				FILL	0
	22		308		297			F.FAC	1.15
1+680		0		0				EX. C	10858
Stormwater Pond			31625				1104	CUT	31625
								ROCK	0
								R.FAC	0.50
								FILL	1104
								F.FAC	1.15
								EX. C	30355

		TOTAL EXCAVATION EARTH AND ROCK		ROCK EXCAVATION		EMBANKMENT			
STATION	DIST	AREA	VOLUME	AREA	VOLUME	AREA	VOLUME	AREA	VOLUME
km + m	m	m^2	m^3	m^2	m^3	m^2	m^3	m^2	m^3

SUMMARY AND BALANCES

STATION TO STATION		TOT EXC. EARTH & ROCK	ROCK EXCAV	EMBANK	EXCESSES		ACUMULATIVE EXCESSES	
km + m	km + m	m^3	m^3	m^3	CUT	FILL	CUT	FILL
SI FILL								
1+000	1+200			110,122		-126,641	221,256	
1+200	1+360			70,760		-81,374	139,882	
SWALE 3								
2+981	3+180	6085		26	6055		145,937	
3+180	3+380	364		4,725		-5070	140,867	
3+380	3+459			1,619		-1,862	139,005	
EXIT 2								
1+240	1+400	27,430	27,220		40,904		179,909	
1+400	1+600	101,052	100,638		150,867		330,776	
1+600	1+680	7,300	7,187		10,858		341,634	
OVERBREAKAGE			7,359					
STRMWTR POND		31,625		1,104	30,355		30,355	
STAGE ONE SITES		6,500		187,146		-216,200	-185,845	
SWALE 2 (FROM DRAINAGE SUMM.)		426			426		-185,419	
FURNACE BROOK BRIDGE		14,900			14,900		-170,519	
PROJECT TOTALS								
NB MAINLINE TOT.		305,617		20,405				
CROSSOVER TOT.		52,669		1,160				
EAST ROAD TOT.		1,447		5,312				
RAMP G TOT.		19,371		260				
SI FILL TOT.				180,882				
SWALE 3 TOT.		6,449		6,370				
SWALE 2 TOT.		426						
EXIT 2 TOT.		135,782	142,404					
STAGE ONE SITES		6,500		187,146				
STRMWTR POND		31,625		1,104				
FB BRIDGE		14,900						
TOTALS		574,786	142,404	402,639				

REMARKS

EARTH AND ROCK EXCAVATION	574,786
SOLID ROCK EXCAVATION	142,404
EARTH EXCAVATION	432,382
PLANIMETERED FILL	402,639
LESS FACTORED SOLID ROCK (0.30)	185,125
LESS DISPLACEMENT OF ANY LARGE STRUCTURES	-
NET PLANIMETERED FILL	217,514
FACTOR (0.15)	32,627
PLANIMETERED FILL INCLUDING FACTOR	250,141
MATERIALS AVAILABLE FOR FILLS	
EARTH EXCAVATION	432,382
CHANNEL EXCAVATION	3,300
UNDERDRAIN EXCAVATION	3,901
STRUCTURE EXCAVATION	2,076
UNCLASSIFIED EXCAVATION	3,690
TOTAL MATERIAL AVAILABLE FOR FILL	445,349
TOTAL FILL INCLUDING FACTOR	250,141
TOTAL MATERIAL FOR FILL	445,349
BORROW	0
EXCESS EXCAVATION	195,208

PROJECT NAME: **BENNINGTON**
PROJECT NUMBER: **AC NH 019-1(53)**

FILE NAME: zd307c3ew.xls
PROJECT LEADER: GREG EDWARDS
DESIGNED BY: MARC FOISY
EARTHWORK SHEET #2

PLOT DATE: 3/13/2007
DRAWN BY: STANTEC
CHECKED BY: GARY SANTY
SHEET 24 OF 577

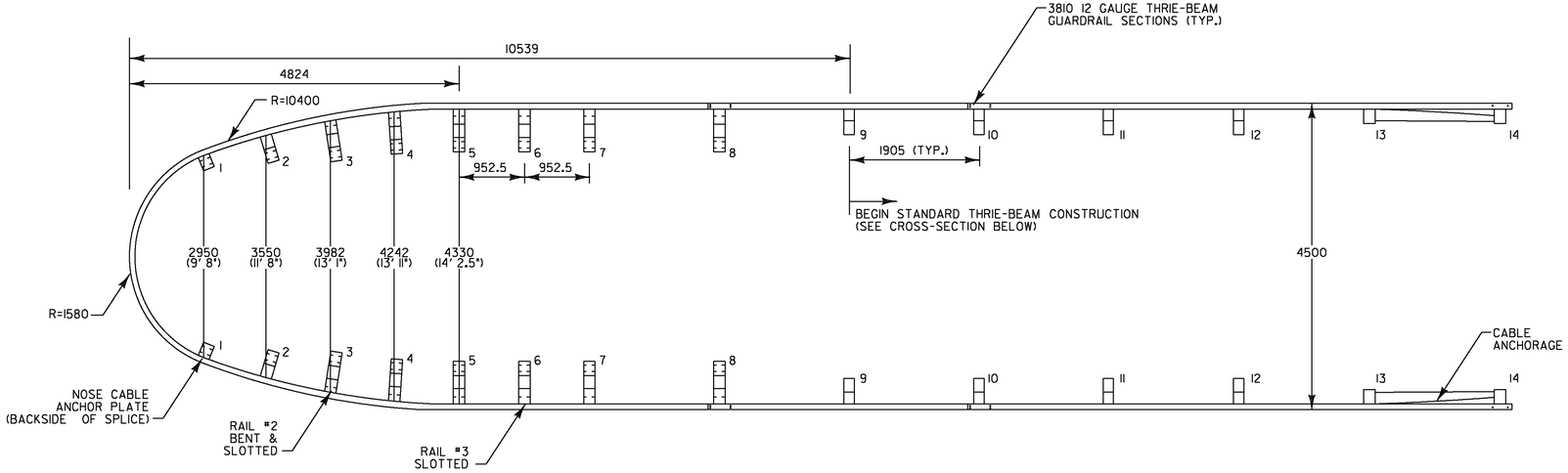

THRIE BEAM DETAIL

STA. NB 9+255.0 TO 9+311.0

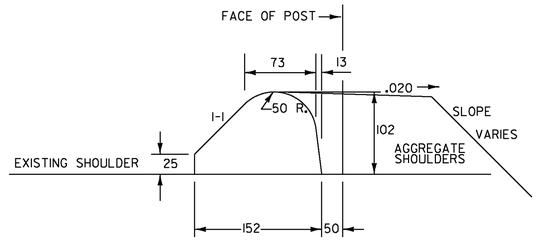

BITUMINOUS CURB DETAIL

NOTE:

1. USE ONLY WITH STEEL BEAM GUARDRAIL.
2. THE PREPARATION OF PLACING AND SEALING OF BITUMINOUS CONCRETE CURB SHALL BE IN CONFORMANCE WITH SECTION 616.
3. APPROXIMATE WEIGHT OF CURB = .009 TON/LF (FOR ESTIMATING TONNAGE)

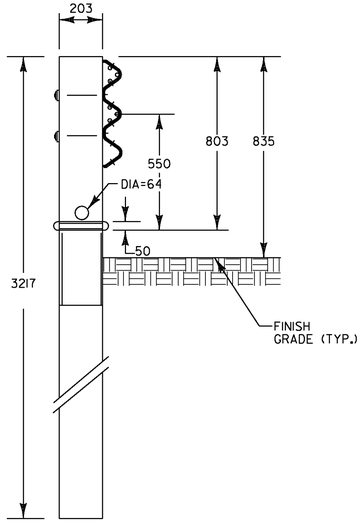

THRIE BEAM BCT POST 2440 FOUNDATION TUBE

(POST 1)

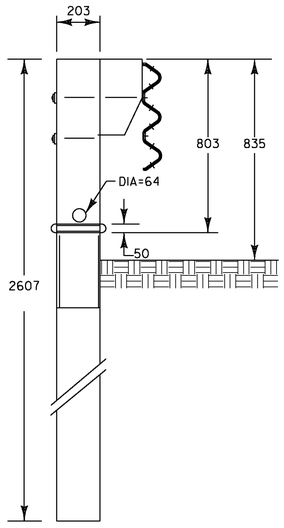

THRIE BEAM BCT POST 1830 FOUNDATION TUBE & 360 TAPERED BLOCK

(POST 2)

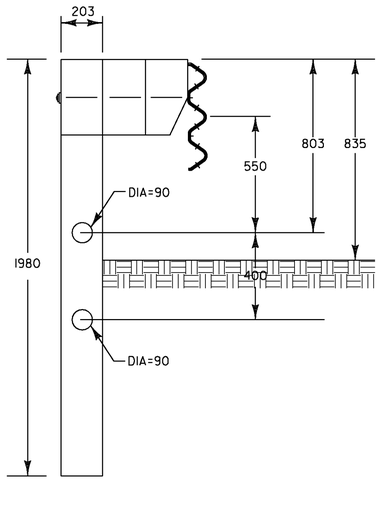

THRIE BEAM CRT POST 1980 LONG W/360 BLOCK & 360 TAPERED BLOCK

(POSTS 3, 4, 5, 6, 7, 8)

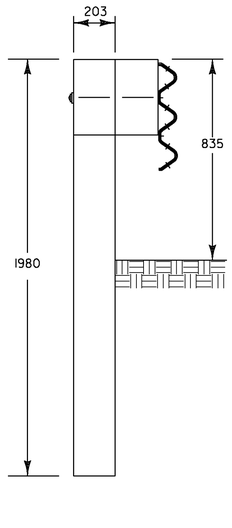

THRIE BEAM CRT POST 1980 LONG W/360 BLOCK

(POSTS 9, 10, 11, 12,)

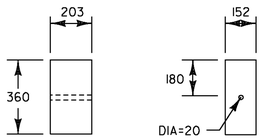

STANDARD BLOCK

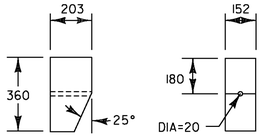

TAPERED BLOCK

NOTE:

1. TOP OF BLOCK TO BE SET 835 ABOVE FINISH GRADE.
2. DETAILS NOT DRAWN TO SCALE.

NOTE: ALL DIMENSIONS ARE IN MILLIMETERS (mm) EXCEPT WHERE NOTED.

VERMONT AGENCY OF TRANSPORTATION

Stantec

PROJECT NAME: BENNINGTON
PROJECT NUMBER: AC NH 019-1(53)

FILE NAME: ...\plot_files\zd307c3det_msc.ptf
DESIGN SUPERVISOR: GREG EDWARDS
DESIGNED BY: MARC FOISY
MISCELLANEOUS DETAILS MD-1

PLOT DATE: 5/16/2011
DRAWN BY: STANTEC
CHECKED BY: GARY SANTY
SHEET 25 OF 577

v:\953\active\95530002\transportation\drawing\contract_3\plot_files\zd307c3det_msc.ptf

STATE OF VERMONT
AGENCY OF TRANSPORTATION

RIGHT - OF - WAY DETAIL SHEET

Metric

TABLE OF PROPERTY ACQUISITION

PARCEL NO.	PROPERTY OWNER	SHEET NO.	BEGINNING STATION	ENDING STATION	TAKE	REMAINDER	RIGHT			RECORDING DATA					REMARKS
					AREA ±	AREA ±	TYPE	(T)/(P)	AREA ±	TITLE	DATE	TOWN / CITY	BOOK	PAGE	
21A	CENTRAL VERMONT PUBLIC	6,28,AA	NB 6+078.15 LT	NB 6+315.52 LT	2.9± HA							BENNINGTON			7.2± A LIMITED ACCESS
	SERVICE CORPORATION														
		6,28	NB 6+077.6 LT	NB 6+202.6 LT			INSTALL	T	0.15± HA						0.37± A EROSION CONTROL & PDF
		6	NB 6+234.4 LT	NB 6+274.5 LT			CONST	T	0.071± HA						0.18± A INCL PDF & TEMP. SED. BASIN
21B		27,AA	VT 1+221.93 RT	VT 1+331.16 LT	0.080± HA		ALL R, T, & I								0.20± A HWY EASE TH 2 / VT RTE 9
		27	VT 1+227.5 LT	VT 1+243.8 LT			SR	T	8± SM						86± SF
		27	VT 1+245.3 LT				INSTALL & MAINTAIN	P							SIGN
		27	VT 1+249.1 LT				DRIVE	T							4.6 m GRAVEL
		27	VT 1+227.54 LT	VT 1+331.16 LT			DISCON & RECON	T							WATER & SEWER SERVICES
		6A,27	DRN 60+008.2 CL	DRN 60+288± CL			CUL, DIT, & DR	P	0.26± HA						0.64± A
		6A,27	VT 1+249.1 LT	DRN 60+283.0 RT			ACCESS	P	0.15± HA						0.37± A ACCESS FOLLOWS EXISTING
															FIELD DRIVE
		6A,27	DRN 60+030.6 LT	DRN 60+104.1 LT			CONST	T	96± SM						1033± SF INCLUDES PDF
		6A,27	DRN 60+031.7 RT	DRN 60+104.1 RT			CONST	T	92± SM						990± SF INCLUDES PDF
		27	DRN 60+107.0 RT	DRN 60+151.6 RT			CONST	T	0.016± HA						1722± SF INCLUDES PDF
		27	DRN 60+197.2 LT	DRN 60+287.1 LT			CONST	T	0.012± HA						1292± SF
		27	DRN 60+202.9 RT	DRN 60+290.4 RT			CONST	T	0.010± HA						1076± SF
		6A,27	DRN 60+008.2 RT	DRN 60+290.2 RT			LANDSCAPE	T							
21C		6,AA	NB 6+223.95 LT	NB 6+321.28 LT	0.17± HA										0.42± A LIMITED ACCESS
21D		7	NB 6+459.60 RT	NB 6+531.75 LT			ALL R, T, & I		0.42± HA						1.0± A UTILITY EASEMENT
		7	NB 6+459.60 RT	NB 6+531.75 LT					0.42± HA						EXCEPT & RESERVE UTILITY FACILITIES
21E		7,8,9A	NB 6+529.2 LT	NB 7+413.3 RT			ALL R, T, & I		2.2± HA						5.4± A UTILITY EASEMENT
21F		9A,10	NB 7+354.57 LT	NB 7+677.3 LT			ALL R, T, & I		0.70± HA						1.7± A UTILITY EASEMENT
21G		5A,6,28,	NB 6+081.49 RT	NB 6+291.64 RT	1.4± HA										3.5± A
		29,AA													
21H		12,13	NB 8+297.6 LT	NB 8+472.26 RT			ALL R, T, & I		0.41± HA						1.0± A UTILITY EASEMENT
				TOTAL	4.55± HA										11.24± A
22A	SLEEMAN, RICHARD A. ESTATE	27,28,	VT 1+360.00 LT	VT 1+433.63 LT	0.27± HA							BENNINGTON			0.67± A LIMITED ACCESS
		AA													
		27	VT 1+331.4 LT				DRIVE	T							3.4 m GRAVEL
		27	VT 1+340.6 LT	VT 1+360.0 LT			UE	P	14± SM						151± SF
		27	VT 1+331.16 LT	VT 1+360.00 LT			DISCON & RECON	T							WATER & SEWER SERVICES
		27	VT 1+359.8 LT				REMOVE	T							REGRADE, SEED & MULCH EX GRAV DR
		28	NB 6+030.1 LT	NB 6+057.2 LT			INSTALL	T	58± SM						624± SF PDF & EROSION CONTROL
		27	VT 1+331.2 LT	VT 1+360.0 LT			LANDSCAPE	T							
		28	NB 6+060.9 LT	NB 6+077.6 LT			INSTALL	T	90± SM						969± SF PDF
		27	VT 1+339.9 LT	VT 1+359.3 LT			DRIVE	T							4.9 m GRAVEL
		27	VT 1+348.6 LT	VT 1+356.5 LT			ALL R, T, & I								FOUNDATION
22B		27,28,	VT 1+329.12 LT	VT 1+433.63 RT	0.079± HA		ALL R, T, & I								0.20± A HWY EASE TH 2 / VT RTE 9
		AA													
				TOTAL	0.349± HA										0.87± A
23A	WATSON, CYNTHIA W.	12	NB 8+194.22 RT	NB 8+256.49 RT			UE	P	0.13± HA	EASEMENT	6/3/2005	BENNINGTON	421	24	0.32± A
23B		12	NB 8+260.88 RT	NB 8+354.95 RT			UE	P	0.44± HA	EASEMENT	6/3/2005		421	24	1.10± A
23C		12	NB 8+354.95 RT	NB 8+378.64 RT			UE	P	0.056± HA	EASEMENT	6/3/2005		421	24	0.14± A HWY EASE TH 16
23D		12	CH 1+430.6 RT				DRIVE	T							4.5 m GRAVEL
		12	CH 1+435.4 RT	CH 1+449.8 RT			SR	P	40± SM						431± SF
		12	CH 1+438.6 RT	CH 1+458.6 RT			ALL R,T,& I								STONE WALL
24A	SLEEMAN, ROSEMARY TRUSTEE	28,AA	VT 1+474.17 LT	NB 6+081.49 RT	0.25± HA							BENNINGTON			0.62± A LIMITED ACCESS
	SLEEMAN, ROSEMARY LIVING TRUST														
24B		28,AA	VT 1+474.15 RT	VT 1+514.91 RT	0.031± HA		ALL R, T, & I								3337± SF HWY EASE TH 2 / VT RTE 9
				TOTAL	0.281± HA										0.69± A
25A	SEWARD, LILLIAN A. TRUSTEE	28,AA	VT 1+514.90 LT	VT 1+555.67 LT	0.25± HA							BENNINGTON			0.62± A LIMITED ACCESS
	SEWARD, LILLIAN A. LIVING TRUST														
25B		28,AA	VT 1+514.90 LT	VT 1+555.67 RT	0.031± HA		ALL R, T, & I								3337± SF HWY EASE TH 2 / VT RTE 9
				TOTAL	0.281± HA										0.69± A
26A	NILES, MELODY V. & MARK J.	28,AA	VT 1+517.20 RT	VT 1+543.54 RT	65± SM							BENNINGTON			700± SF
		28	VT 1+517.1 RT	VT 1+543.3 RT			REMOVE & RESET	T							PICKET FENCE/STOCKADE FENCE
		28	VT 1+517.20 RT	VT 1+543.54 RT			DISCON & RECON	T							WATER & SEWER SERVICE
		28	VT 1+502.5 RT				DRIVE	T							3.6 m BIT.
		28	VT 1+517.2 RT	VT 1+543.5 RT			LANDSCAPE	T							
26B		28,AA	VT 1+517.45 RT	VT 1+543.48 RT	0.019± HA		ALL R, T, & I								2045± SF HWY EASE TH 2 / VT RTE 9
				TOTAL	0.026± HA										2745± SF
27A	SWEET, DOUGLAS & LINDA	28,AA	VT 1+543.48 RT	VT 1+556.19 RT	31± SM							BENNINGTON			334± SF
		28	VT 1+543.5 RT	VT 1+556.1 RT			LANDSCAPE	T							
		28	VT 1+547.63 RT	VT 1+556.23 RT			SR	T	4± SM						43± SF
27B		28,29,	VT 1+543.30 RT	VT 1+563.82 RT	0.017± HA		ALL R, T, & I								1841± SF HWY EASE TH 2 / VT RTE 9,
		AA													& TH 508
				TOTAL	0.020± HA										2175± SF
28A	QUALITY PLUMBING & HEATING, INC.,	28,29,AA	VT 1+555.67 LT	VT 1+624.17 LT	0.023± HA							BENNINGTON			2476± SF
	LESSEE	28,29	VT 1+555.7 LT	VT 1+624.2 LT			UE	P	0.028± HA						3014± SF
	GOODRICH, STEVEN H. & JANICE E.	29	VT 1+555.67 LT	VT 1+624.17 LT			DISCON & RECON	T							WATER & SEWER SERVICE
	LESSOR	29	VT 1+573.6 LT				DRIVE	T							12.0 m GRAVEL
		29	VT 1+612.6 LT				DRIVE	T							6.5 m GRAVEL
		28	VT 1+555.67 LT	VT 1+555.67 LT			REMOVE & REPLACE	T							PROPERTY CORNER MONUMENT
		29	VT 1+624.17 LT	VT 1+624.17 LT			REMOVE & REPLACE	T							PROPERTY CORNER MONUMENT
28B		28,29,	VT 1+555.67 LT	VT 1+624.17 LT	0.052± HA		ALL R, T, & I								0.13± A HWY EASE TH 2 / VT RTE 9
		AA													
				TOTAL	0.075± HA										0.19± A

TABLE OF REVISIONS

REVISION NO.	SHEET NO.	DESCRIPTION	DATE

PLAN LEGEND

- EXISTING RIGHT-OF-WAY
- TAKING WITH ACCESS
- TAKING WITHOUT ACCESS
- CLEAR ZONE (CZ)
- PROPERTY LINE (P/L)
- TOE OF SLOPE
- TOP OF CUT
- SLOPE RIGHT (SR (P))
- CONSTRUCTION RIGHT (CONST. (T))

(P) -PERMANENT
(T) -TEMPORARY
DR. -DRAINAGE RIGHT
DIT. -DITCHING RIGHT
CH. -CHANNEL RIGHT
DRIVE -DRIVE RIGHT
CUL. -CULVERT RIGHT
C&T -CLEARING & TRIMMING RIGHT
SR -SLOPE RIGHT
UE -UTILITY EASEMENT

APPROVED: ROGER P. DUMAS DATE: 12-07-05
CHIEF, PLANS & TITLES

PROJECT NAME:	BENNINGTON		
PROJECT NUMBER:	AC NH 019-1(53)		
FILE NAME:	NORTH.XLS	PLOT DATE:	05/21/07
PROJECT LEADER:	VSE	DRAWN BY:	GAK
DESIGNED BY:	D-H	CHECKED BY:	JDP
R.O.W. DETAIL SHEET #3		SHEET 26 OF 577	

STATE OF VERMONT
AGENCY OF TRANSPORTATION

RIGHT - OF - WAY DETAIL SHEET

Metric

TABLE OF PROPERTY ACQUISITION

PARCEL NO.	PROPERTY OWNER	SHEET NO.	BEGINNING STATION	ENDING STATION	TAKE	REMAINDER	RIGHT			RECORDING DATA					REMARKS
					AREA ±	AREA ±	TYPE	(T)/(P)	AREA ±	TITLE	DATE	TOWN / CITY	BOOK	PAGE	
36	NOT USED														
37A	HARRINGTON, MICHAEL L. & DEBRA L.	30,AA	VT 1+713.88 RT	VT 1+735.97 RT	13± SM							BENNINGTON			140± SF
		30	VT 1+716.1 RT				DRIVE	T							3.2 m GRAVEL
		30	VT 1+713.89 RT	VT 1+735.97 RT			DISCON & RECON	T							WATER & SEWER SERVICES
		30	VT 1+731.9 RT				ALL R, T, & I								PLANTER
		30	LINDEN ST 4+018.0 LT				DRIVE	T							3.6 m GRAVEL
		30	VT 1+731.9 RT				REMOVE	T							PLANTER
37B		30,AA	VT 1+713.83 RT	VT 1+743.58 RT	0.023± HA		ALL R, T, & I								2475± SF HWY EASE VT RTE. 9 & LINDEN ST
				TOTAL	0.024± HA										2615± SF
38A	BUBIER, TODD J. & AMANDA M.	30,AA	VT 1+751.21 RT	VT 1+766.77 RT	11± SM							BENNINGTON			118± SF
		30	VT 1+751.2 RT	VT 1+763.1 RT			SR	T	10± SM						108± SF
		30	VT 1+766.76 RT				REMOVE & RESET	T							WOVEN WIRE FENCE
38B		30,AA	VT 1+743.50 RT	VT 1+766.76 RT	0.018± HA		ALL R, T, & I								1937± SF HWY EASE VT RTE. 9 & LINDEN ST
				TOTAL	0.019± HA										2055± SF
39A	ELLIOTT, WILLIAM P. SR.	30,AA	VT 1+766.76 RT	VT 1+784.96 RT	13± SM							BENNINGTON			140± SF
		30	VT 1+781.2 RT				DRIVE	T							5.5 m GRAVEL
		30	VT 1+766.76 RT				REMOVE & RESET	T							WOVEN WIRE FENCE
		30	VT 1+784.96 RT				REMOVE & RESET	T							CHAINLINK FENCE
		30	VT 1+784.94 RT	VT 1+784.96 RT			REMOVE & REPLACE	T							PROPERTY CORNER MONUMENT
39B		30,AA	VT 1+766.68 RT	VT 1+784.95 RT	0.014± HA		ALL R, T, & I								1507± SF HWY EASE VT RTE. 9
				TOTAL	0.015± HA										1647± SF
40A	SHERMAN, CARL W. & SANDRA L.	30,AA	VT 1+784.95 RT	VT 1+827.13 RT			EASE	P	35± SM			BENNINGTON			377± SF FOR CLEAR ZONE PURPOSES
		30	VT 1+793.0 RT				DRIVE	T							13.6 m BIT.
		30	VT 1+800.0 RT				REMOVE	T							SIGN, REAL ESTATE
		30	VT 1+784.95 RT				REMOVE & RESET	T							CHAINLINK FENCE
		30	VT 1+784.94 RT	VT 1+784.96 RT			REMOVE & REPLACE	T							PROPERTY CORNER MONUMENT
		30	VT 1+826.96 RT	VT 1+827.13 RT			REMOVE & REPLACE	T							PROPERTY CORNER MONUMENT
40B		30,AA	VT 1+784.87 RT	VT 1+826.98 RT	0.031± HA		ALL R, T, & I								3337± SF HWY EASE VT RTE. 9
				TOTAL	0.035± HA										3714± SF
41	HALL, JOSEPH H. & MARY I. MAGUIRE, MARY H. & SCOTT R.	10,10A	NB 7+641.64 RT	NB 8+012.15 RT								BENNINGTON			EXCEPT & RESERVE 15.24 m (50.00') R.O.W.
42A	SLEEMAN, ISABELL R.	28,AA	VT 1+433.63 LT	NB 6+080.30 RT	0.25± HA							BENNINGTON			0.62± A LIMITED ACCESS
42B		28,AA	VT 1+433.63 RT	VT 1+474.17 LT	0.031± HA		ALL R, T, & I								3337± SF HWY EASE TH 2 / VT RTE 9
42C		29,30,AA	VT 1+693.35 LT	VT 1+825.71 LT	98± SM										1055± SF
		29,30	VT 1+693.17 LT	VT 1+780.63 LT			UE	P	0.021± HA						2260± SF
		29,30	VT 1+711.1 LT				DRIVE	T							9.3 m GRAVEL
42D		29,30,AA	VT 1+693.42 LT	VT 1+825.71 RT	0.10± HA		ALL R, T, & I								0.25± A HWY EASE VT RTE. 9
				TOTAL	0.391± HA										0.97± A
43A	HARRINGTON, TRACY L., BARTLETT, WILLIAM J. & HARRINGTON, REUBEN A. LIFE ESTATE	27,28, 31,AA	VT 1+356.08 RT	VT 1+392.62 RT	0.18± HA							BENNINGTON			0.45± A
43B		27,28, AA	VT 1+368.76 RT	VT 1+393.67 RT	0.018± HA		ALL R, T, & I								1937± SF HWY EASE TH 2 / VT RTE 9
				TOTAL	0.198± HA										0.49± A
44A	VERMONT TRANSCO LLC	6-8,9A, 10	NB 6+223.95 LT	NB 7+567.32 RT			ALL R, T, & I		6.9± HA			BENNINGTON			17.0± A UTILITY EASEMENT
44B		7,8	NB 6+663.71 LT	NB 6+759.02 LT			ALL R, T, & I		0.038± HA						0.094± A UTILITY EASEMENT
44C		8	NB 6+951.90 LT	NB 7+008.7 LT			ALL R, T, & I		0.068± HA						0.17± A UTILITY EASEMENT
44D		8,9,9A	NB 7+027.93 LT	NB 7+327.2 LT			ALL R, T, & I		1.3± HA						3.2± A UTILITY EASEMENT
44E		10,11	NB 7+440.1 RT	NB 7+816.67 LT			ALL R, T, & I		1.2± HA						3.0± A UTILITY EASEMENT
44F		12	NB 8+160.30 LT	NB 8+429.82 RT			ALL R, T, & I		0.92± HA						2.3± A UTILITY EASEMENT

TABLE OF REVISIONS

REVISION NO.	SHEET NO.	DESCRIPTION	DATE

PLAN LEGEND

- EXISTING RIGHT-OF-WAY
- TAKING WITH ACCESS
- TAKING WITHOUT ACCESS
- CLEAR ZONE (CZ)
- PROPERTY LINE (P / L)
- TOE OF SLOPE
- TOP OF CUT
- SLOPE RIGHT (SR (P))
- CONSTRUCTION RIGHT (CONST. (T))

(P)	-PERMANENT
(T)	-TEMPORARY
DR.	-DRAINAGE RIGHT
DIT.	-DITCHING RIGHT
CH.	-CHANNEL RIGHT
DRIVE	-DRIVE RIGHT
CUL.	-CULVERT RIGHT
C&T	-CLEARING & TRIMMING RIGHT
SR	-SLOPE RIGHT
UE	-UTILITY EASEMENT

APPROVED: ROGER P. DUMAS DATE: 12-07-05
CHIEF, PLANS & TITLES

PROJECT NAME: **BENNINGTON**
PROJECT NUMBER: **AC NH 019-1(53)**

FILE NAME: **NORTH.XLS** PLOT DATE: **05/21/07**
PROJECT LEADER: **VSE** DRAWN BY: **GAK**
DESIGNED BY: **D-H** CHECKED BY: **JDP**
R.O.W. DETAIL SHEET #5 SHEET **27** OF **577**

STATE OF VERMONT
AGENCY OF TRANSPORTATION

RIGHT - OF - WAY DETAIL SHEET

Metric

TABLE OF PROPERTY ACQUISITION

PARCEL NO.	PROPERTY OWNER	SHEET NO.	BEGINNING STATION	ENDING STATION	TAKE	REMAINDER	RIGHT			RECORDING DATA					REMARKS
					AREA ±	AREA ±	TYPE	(T)/(P)	AREA ±	TITLE	DATE	TOWN / CITY	BOOK	PAGE	
54A	CANNISTRACI, ANTHONY A. & ANGELA J.	11,EE	NB 7+945.56 RT	NB 8+043.77 LT	0.51± HA							BENNINGTON			1.3± A LIMITED ACCESS
54B		11	NB 8+012.15 RT	NB 8+051.28 LT	0.050± HA										0.12± A LIMITED ACCESS
54C		11	NB 8+018.39 RT	NB 8+063.99 LT	0.074± HA										0.18± A LIMITED ACCESS
															INCLUDES STONE WALL
		11	NB 8+054.7 LT	NB 8+066.6 LT			CONST	T	20± SM						215± SF INCLUDES PDF
54D		11,11A	NB 7+936.73 RT	NB 8+012.15 RT	0.30± HA										0.74± A
54E		11,11A	NB 7+934.40 RT	NB 8+018.39 RT	0.14± HA										0.35± A
54F		11,11A	NB 7+994.19 RT	NB 8+024.77 RT	0.030± HA										0.074± A INCLUDES STONE WALL
54G		11A	NB 7+925.70 RT	NB 7+982.10 RT	0.15± HA										0.37± A
54H		11A	NB 7+952.04 RT	NB 7+997.93 RT	0.078± HA										0.19± A
				TOTAL	1.332± HA										3.3± A
55A	GEORGE E. HADWEN, TRUST	11A,12A,	NB 8+044.82 RT	NB 8+093.14 RT	0.12± HA							BENNINGTON			0.30± A
	GEORGE E. HADWEN TRUSTEE	EE													
55B		11A,12A	NB 8+056.64 RT	NB 8+101.36 RT	0.052± HA										0.13± A
55C		11,11A,	NB 8+060.18 RT	NB 8+286.20 RT	1.8± HA										4.4± A INCLUDES STONE WALLS
		12,12A													
55D		11,12	NB 8+114.69 RT	NB 8+303.69 RT	0.80± HA										2.0± A LIMITED ACCESS
															INCLUDES STONE WALLS
55E		12	NB 8+171.86 LT	NB 8+337.60 LT	0.52± HA										1.3± A LIMITED ACCESS
															INCLUDES STONE WALLS
		12	CH 1+240.7 RT	CH 1+316.4 RT			CONST	T	0.023± HA						0.057± A INCLUDES PDF
		12	CH 1+247.5 RT	CH 1+320.9 RT			DIT & DR	P	0.036± HA						0.089± A
55F		12	NB 8+316.47 LT	NB 8+368.11 RT	0.10± HA		ALL R, T, & I								0.25± A HWY EASE TH 16
		12	NB 8+362.02 RT	NB 8+385.38 RT			UE	P	0.056± HA						0.14± A (WITHIN TH 16 R/O/W)
		12,13	NB 8+375.0 RT	NB 8+431.4 RT			UE	P	0.13± HA						0.32± A
		12	CH 1+422.5 LT	CH 1+425.4 LT			DETOUR	T	3± SM						32 ± SF
		12	CH 1+422.5 LT	CH 1+434.4 LT			SR	T	4± SM						43± SF
		12	CH 1+422.5 LT	CH 1+453.1 LT			INSTALL	T	73± SM						786± SF PDF
		12	CH 1+424.2 LT	CH 1+467.7 LT			INSTALL	T	0.055± HA						0.14± A EXCLUSIONARY FENCE
55G		12	NB 8+174.51 LT	NB 8+316.47 LT	0.40± HA										0.99± A BY OPTION ONLY
															INCLUDES STONE WALL
55H		12	NB 8+234.42 LT	CH 1+276.12 RT	0.045± HA										0.11± A BY OPTION ONLY
															INCLUDES STONE WALL
55I		12	CH 1+230.53 RT	CH 1+327.21 CL	0.071± HA		ALL R, T, & I								0.18± A HWY EASE TH 16
															BY OPTION ONLY
55J		12,13	NB 8+348.12 LT	NB 8+600.25 RT	2.6± HA										6.4± A LIMITED ACCESS
		12	NB 8+399.3 LT	NB 8+483.0 LT			INSTALL	T	57± SM						614± SF EXCLUSIONARY FENCE
		13	NB 8+510.9 RT	NB 8+604.4 RT			CONST	T	0.38± HA						0.94± A HAUL ROAD INCLUDES PDF
		13	NB 8+604.4 RT	NB 8+609.5 RT			INSTALL	T	0.014± HA						1474± SF EXCLUSIONARY FENCE
		13	NB 8+457.0 LT	NB 8+475.0 LT			DRIVE	T							4.8 m GRAVEL
55K		12,13	NB 8+337.48 LT	NB 8+472.26 RT	0.54± HA										1.3± A LIMITED ACCESS
		12	CH 1+285.7 LT	CH 1+347.2 LT			INSTALL	T	0.18± HA						0.44± A PDF & EROSION CONTROL
		12	CH 1+285.7 LT	CH 1+333.0 LT			DETOUR	T	0.041± HA						0.10± A
		12	CH 1+320.4 LT				DRIVE	T							3.6 m GRAVEL
		12	CH 1+316.9 LT	CH 1+323.6 LT			CUL	T							
		12	CH 1+320.4 LT				INSTALL	T							GATE
		13	NB 8+455.6 RT	NB 8+490.8 RT			INSTALL	T	0.028± HA						0.069± A EXCLUSIONARY FENCE
55 L		13	NB 8+599.65 LT	NB 618.07 LT	0.26± HA		ALL R, T, & I								0.64± A LIMITED ACCESS
															HWY EASE TH 85 (CLASS 4)
		13	NB 8+603.1 RT	NB 8+608.7 RT			INSTALL	T	0.014± HA						1474± SF EXCLUSIONARY FENCE
55M		13	NB 8+613.57 RT	NB 8+645.67 LT	0.37± HA										0.91± A LIMITED ACCESS
				TOTAL	7.678± HA										18.9± A

TABLE OF REVISIONS

REVISION NO.	SHEET NO.	DESCRIPTION	DATE

PLAN LEGEND

- EXISTING RIGHT-OF-WAY
- TAKING WITH ACCESS
- TAKING WITHOUT ACCESS
- CLEAR ZONE (CZ)
- PROPERTY LINE (P / L)
- TOE OF SLOPE
- TOP OF CUT
- SLOPE RIGHT (SR (P))
- CONSTRUCTION RIGHT (CONST. (T))

(P) -PERMANENT
(T) -TEMPORARY
DR. -DRAINAGE RIGHT
DIT. -DITCHING RIGHT
CH. -CHANNEL RIGHT
DRIVE -DRIVE RIGHT
CUL. -CULVERT RIGHT
C&T -CLEARING & TRIMMING RIGHT
SR -SLOPE RIGHT
UE -UTILITY EASEMENT

APPROVED: ROGER P. DUMAS DATE: 12-07-05
CHIEF, PLANS & TITLES

PROJECT NAME: **BENNINGTON**
PROJECT NUMBER: **AC NH 019-1(53)**

FILE NAME: **NORTH.XLS** PLOT DATE: **06/21/07**
PROJECT LEADER: **VSE** DRAWN BY: **GAK**
DESIGNED BY: **D-H** CHECKED BY: **JDP**
R.O.W. DETAIL SHEET #7 SHEET **28** OF **577**

STATE OF VERMONT
AGENCY OF TRANSPORTATION

RIGHT - OF - WAY DETAIL SHEET

Metric

TABLE OF PROPERTY ACQUISITION

PARCEL NO.	PROPERTY OWNER	SHEET NO.	BEGINNING STATION	ENDING STATION	TAKE	REMAINDER	RIGHT			RECORDING DATA					REMARKS
					AREA ±	AREA ±	TYPE	(T)/(P)	AREA ±	TITLE	DATE	TOWN / CITY	BOOK	PAGE	
56	SLOCUM, ALBERT J. & PATRICIA W.	12	CH 1+261.6 LT				DRIVE	T				BENNINGTON			7.2 m GRAVEL
		12	CH 1+267.8 LT	CH 1+285.8 LT			SR	T	58± SM						624± SF
		12	CH 1+272.9 LT	CH 1+285.8 LT			DETOUR	T	18± SM						194± SF
		12	CH 1+220 LT	CH 1+280 LT			LANDSCAPE	T							
57	JELLEY, KEITH R. & FRANCINE M.	13	NB 8+605.4 LT	NB 8+630.1 LT			INSTALL	T	0.048± HA			BENNINGTON			0.12± A EXCLUSIONARY FENCE
		13	NB 8+613.2 LT				DR	P							
		12	NB 8+344.1 LT	NB 8+393.6 LT			ALL R, T, & I								RIGHT-OF-WAY, INCLUDING GATE
		13	NB 8+475.0 LT	NB 8+477.0 LT			DRIVE	T							4.8 m GRAVEL
		13	NB 8+642.6 LT	NB 8+653.0 LT			INSTALL	T	11± SM						118± SF EXCLUSIONARY FENCE
58	BENNINGTON COUNTY	13	NB 8+638.74 LT	NB 8+728.7 LT			CONST	T	0.17± HA			BENNINGTON			0.42± A INCL. EXCLUSIONARY FENCE,
	INDUSTRIAL CORPORATION														PDF, HAUL ROAD & EROSION CONTROL
		13	NB 8+688.8 LT	NB 8+696.2 LT			INSTALL	T	55± SM						592± SF EXCLUSIONARY FENCE
		13,14	NB 8+774.3 LT	NB 8+795.7 LT			INSTALL	T	0.10± HA						0.25± A EXCLUSIONARY FENCE
59A	MOUNTAIN MOZZARELLA, LLC	33,FF	ER 0+959.17 RT	ER 1+031.03 RT	0.010± HA							BENNINGTON			1087± SF
		33	ER 0+993.0 RT				DRIVE	T							5.4 m GRAVEL
		33	ER 1+020.0 RT				DRIVE	T							15.0 m GRAVEL
59B		33	ER 0+958.96 RT	ER 1+030.26 RT	0.053± HA		ALL R, T, & I								0.13± A HWY EASE TH 5
				TOTAL	0.063± HA										0.16± A
60	THE PATRICIA HOOD REVOCABLE TRUST,	15,33,	ER 1+046.01 RT	ER 1+144.86 RT	0.030± HA							BENNINGTON			3249± SF
	PATRICIA HOOD & ALAN HOOD	FF													
	CO-TRUSTEES	15,33	ER 1+046.8 RT	ER 1+096.4 RT			SR	T	0.012± HA						1292± SF
		15	ER 1+081.1 RT				CUL	P							INCLUDES DROP INLET
		15	ER 1+121.6 RT	ER 1+128.0 RT			CUL	T							INCLUDES EROSION CONTROL
		15	ER 1+106.5 RT				DRIVE	T							3.6 m GRAVEL
		15	ER 1+140.4 RT				INSTALL & MAINTAIN	P							GUY WIRE
		15	ER 1+122.0 RT	ER 1+145.5 RT			SR	T	0.020± HA						0.049± A INCL EROSION CONTROL
		15	ER 1+141.5 RT	ER 1+145.8 RT			INSTALL	T							PDF
		15,33	ER 1+046.80 RT	ER 1+144.86 RT			DISCON & RECON	T							WATER & SEWER SERVICES
		15	ER 1+140 RT				REMOVE	T							GRAVEL DRIVE, INCLUDES GRADING,
															SEED & MULCH
				TOTAL	0.030± HA										3249± SF
61	WILKINSON, ROY & CAROLYN	15	ER 1+246.7 RT	ER 1+267.0 RT			SR	T	63± SM			BENNINGTON			678± SF
		15	ER 1+257.8 RT				INSTALL & MAINTAIN	P							POLE & GUY
		15	ER 1+265.0 RT	ER 1+276.7 RT			CUL	P							INCL DROP INLET & EROSION CONTROL
		15	ER 1+271.0 RT				DRIVE	T							2.2 m CONCRETE
		15	ER 1+276.1 RT	ER 1+314.8 RT			SR	T	0.012± HA						1292± SF
		15	ER 1+296.3 RT	ER 1+315.6 RT			UE	P	0.011± HA						1183± SF
		15	ER 1+246.58 RT	ER 1+314.76 RT			DISCON & RECON	T							WATER & SEWER SERVICES
62	MOUNT ANTHONY UNION HIGH SCHOOL	15	ER 1+314.8 RT	ER 1+341.9 RT			SR	T	55± SM			BENNINGTON			592± SF
	DISTRICT NO. 14	15	ER 1+314.8 RT	ER 1+405.0 RT			UE	P	0.11± HA						0.27± A
		15	ER 1+319.2 RT				INTALL & MAINTAIN	P							GUY WIRE
		15	ER 1+400.4 RT				INTALL & MAINTAIN	P							GUY WIRE
63	APPLEGATE HOUSING	19A	DRN 20+060.8 RT	DRN 20+252.2 RT			CONST	T	0.018± HA			BENNINGTON			1937± SF INCL PDF & EROSION CONTROL
	LIMITED PARTNERSHIP	19A	DRN 20+157.8 LT	DRN 20+231.1 LT			CONST	T	0.029± HA						3122± SF INCL PDF & EROSION CONTROL
		19A	DRN 20+060 RT	DRN 20+220 RT			INSTALL	T							TEMPORARY FENCE
		19A	DRN 20+180 RT				ACCESS	P							INCLUDES 2 GATES 2.4 m (8') WIDE EACH
		19A	DRN 20+154.2 CL	DRN 20+234 CL			CUL	P							
		19A	DRN 19+993.5 RT	DRN 20+203.5 RT			ACCESS	P	0.17± HA						0.42± A EXISTING PAVED DRIVE
		19A	DRN 20+060 RT	DRN 20+240 RT			LANDSCAPE	T							
		19A	DRN 20+061 RT	DRN 20+220 RT			REMOVE & RESET	T							CHAINLINK FENCE
		19A	DRN 20+234 CL	DRN 20+246 CL			DIT & DR	P	21 ± SM						226± SF
		19A	DRN 20+120 RT				ACCESS	P							INCLUDES 2 GATES 2.4 m (8') WIDE EACH
64	LEMAIRE, LAURENCE P. JR. &	19A	DRN 20+061.2 RT	DRN 20+157.8 LT			CONST	T	38± SM			BENNINGTON			409± SF
	LINDA L. ZENO	19A	DRN 20+063 CL	DRN 20+156 CL			CUL	P	0.057± HA						0.14± A
		19A	DRN 20+065.3 LT	DRN 20+160.9 LT			CONST	T	0.016± HA						1722± SF INCL PDF & EROSION CONTROL
		19A	DRN 20+065 LT	DRN 20+160 LT			LANDSCAPE	T							
		19A	DRN 20+096 RT	DRN 20+151 RT			REMOVE	T							FENCE
65	BENNINGTON SCHOOL DISTRICT, INC.	17,22,													NOT AFFECTED
		22A, GG													

TABLE OF REVISIONS

REVISION NO.	SHEET NO.	DESCRIPTION	DATE

PLAN LEGEND

- EXISTING RIGHT-OF-WAY
- TAKING WITH ACCESS
- TAKING WITHOUT ACCESS
- CLEAR ZONE (CZ)
- PROPERTY LINE (P / L)
- TOE OF SLOPE
- TOP OF CUT
- SLOPE RIGHT (SR (P))
- CONSTRUCTION RIGHT (CONST. (T))

(P) -PERMANENT
(T) -TEMPORARY
DR. -DRAINAGE RIGHT
DIT. -DITCHING RIGHT
CH. -CHANNEL RIGHT
DRIVE -DRIVE RIGHT
CUL. -CULVERT RIGHT
C&T -CLEARING & TRIMMING RIGHT
SR -SLOPE RIGHT
UE -UTILITY EASEMENT

APPROVED: ROGER P. DUMAS DATE: 12-07-05
CHIEF, PLANS & TITLES

PROJECT NAME: BENNINGTON
PROJECT NUMBER: AC NH 019-1(53)

FILE NAME: NORTH.XLS
PROJECT LEADER: VSE
DESIGNED BY: D-H
R.O.W. DETAIL SHEET #8
PLOT DATE: 05/21/07
DRAWN BY: GAK
CHECKED BY: JDP
SHEET 29 OF 577

STATE OF VERMONT
AGENCY OF TRANSPORTATION

RIGHT - OF - WAY DETAIL SHEET

Metric

TABLE OF PROPERTY ACQUISITION

PARCEL NO.	PROPERTY OWNER	SHEET NO.	BEGINNING STATION	ENDING STATION	TAKE	REMAINDER	RIGHT			RECORDING DATA					REMARKS
					AREA ±	AREA ±	TYPE	(T)/(P)	AREA ±	TITLE	DATE	TOWN / CITY	BOOK	PAGE	
66A	TOWN OF BENNINGTON	11,12	NB 8+024.77 RT	NB 8+171.86 LT	0.74± HA							BENNINGTON			1.8± A LIMITED ACCESS
															INCLUDES STONE WALLS
		11	NB 8+064.0 LT	NB 8+084.5 LT			CONST	T	64± SM						689± SF INCLUDES PDF
		11	NB 8+064.0 LT	NB 8+077.4 LT			SR	P	18± SM						194± SF
		11	NB 8+073.2 LT				DR	P							
66B		12	NB 8+160.30 LT	NB 8+174.51 LT	22± SM										237± SF LIMITED ACCESS
															INCLUDES STONE WALL
66C		11,11A	NB 8+000.95 RT	NB 8+114.69 RT	1.0± HA										2.5± A INCL STONE WALLS
66D		11,11A	NB 7+941.69 RT	NB 8+051.28 LT	0.12± HA		ALL R, T, & I								0.30± A PENT ROAD
66E		11A	NB 7+997.93 RT	NB 8+060.18 RT	0.071± HA										0.18± A
66F		11A	NB 7+973.59 RT	NB 8+071.36 RT	0.69± HA										1.7± A, EXCEPT & RESERVE 20' R.O.W.
66G		12	CH 1+327.21 CL	CH 1+425.47 CL	0.15± HA		ALL R, T, & I								0.37± A HWY EASE TH 16
		12	CH 1+215.0 CL	CH 1+327.21 CL			APPROACH	T							TH 16
		12	CH 1+425.47 CL	CH 1+475.0 CL			APPROACH	T							TH 16
66H															NOT USED
66I															NOT USED
66J		13	NB 8+599.65 LT	NB 8+625.6 RT	0.26± HA		ALL R, T, & I								0.65± A HWY EASE TH 85
66K		33	ER 0+950.00 RT	ER 0+959.17 RT			APPROACH	T							TH 5
		33	ER 0+972.0 LT				DRIVE	T							7.4 m BIT.
		33	ER 1+054.0 LT				DRIVE	T							8.2 m BIT.
		33	ER 1+050.5 LT	ER 1+059.2 LT			INSTALL	T							PDF
		33	ER 1+059.3 LT				INSTALL & MAINTAIN	P							GUY WIRE
		15,33	ER 1+059.9 LT	ER 1+100.8 LT			UE	P	78± SM						840± SF
		15,33	ER 1+061.6 LT	ER 1+100.8 LT			INSTALL	T	0.072± HA						7750± SF EXCLUSIONARY FENCES
		15,33	ER 1+080.0 LT				DIT & DR	P	1± SM						11± SF
		15	ER 1+085.5 LT	ER 1+100.8 LT			DETOUR	T	47± SM						506± SF INCL EROSION CONTROL
		15	NB 9+433.0 LT	NB 9+458.4 LT			INSTALL	T	27± SM						291± SF PDF
		16	NB 9+679.8 LT	NB 9+715.8 LT			CONST	T	58± SM						624± SF INCLUDES PDF
		17,22	N 1+193.5 RT	N 1+294.3 RT			CONST	T	0.020± HA						2152± SF INCL EXCLUSIONARY FENCE
		17,22	N 1+193.8 RT	N 1+238.7 RT			INSTALL	T	0.059± HA						0.15± A EXCLUSIONARY FENCE
66L		15	ER 1+314.25 CL	ER 1+345.00 CL			APPROACH	T							TH 5
66M		27-29	VT 1+200.00 CL	VT 1+658.90 RT	0.69± HA		ALL R, T, & I								1.7± A HWY EASE TH 2/VT RTE 9, TH 508,
															& TH 104
		28,29	TH 508 2+012.7 CL	TH 508 2+016.99 CL			APPROACH	T							TH 508
		29	TH 104 3+010.0 CL	TH 104 3+020.30 CL			APPROACH	T							TH 104
		29	TH 104 3+008.0 RT				INSTALL	T							POLE & OVERHEAD WIRE
66N		32	NB 5+914.5 RT												DRIVE PERMIT REQUIRED FROM TOWN
66O		30	VT 1+735.93 RT	VT 1+751.21 RT	0.013± HA		ALL R, T, & I								1399± SF HWY EASE VT RTE 9 &
															LINDEN ST
		30	LINDEN ST 4+014.7 CL	LINDEN ST 4+021.7 CL			APPROACH	T							LINDEN ST
66P		29,30	VT 1+693.35 LT	VT 1+708.72 LT	20± SM		ALL R, T, & I								215± SF R.O.W. OVER PARCEL 42C
66Q		33	ER 1+030.26 RT	ER 1+046.80 RT	42± SM										452± SF
		33	SD 1+008.6 CL	SD 1+026.4 CL			APPROACH	T							TH 100
				TOTAL	2.507± HA										6.2± A
67	THE GREEN MOUNTAIN CLUB, INC.	8,9,9A	NB 6+992.9 RT	NB 7+133.50 LT			ALL R, T, & I		0.12± HA			BENNINGTON			0.30± A RIGHT-OF-WAY
		8,9,9A	NB 7+002.13 RT	NB 7+127.40 LT											3.05m (10.00') PED. CROSSING EASE.
68	THE WALLY J. BIRK REVOCABLE TRUST,	10,10A	NB 7+637.98 LT	NB 7+656.91 RT			ALL R, T, & I		0.33± HA			BENNINGTON			0.82± A RIGHT-OF-WAY
	WALLY J. BIRK, TRUSTEE	10,10A, 11	NB 7+641.64 RT	NB 8+012.15 RT											EXCEPT & RESERVE 15.24 m (50.00') R.O.W.
69	VERIZON	9,9A,10, 11,11A, 12A	NB 7+112.37 LT	NB 8+101.36 RT			ALL R, T, & I		0.97± HA			BENNINGTON			2.4± A UTILITY EASEMENT
70	TELCOVE OF VERMONT, INC.											BENNINGTON			UTILITY
71	MOUNTAIN CABLE COMPANY, L.P. d/b/a ADELPHIA CABLE COMMUNICATIONS, INC.											BENNINGTON			UTILITY
72	TOWN OF BENNINGTON WATER & SEWER											BENNINGTON			UTILITY
	RELINQUISHMENT ZONE #1	11,11A, 12	QR 1+341.72 RT	QR 1+787.83 CL								BENNINGTON			RELOCATED PENT ROAD AREA = 0.74± HA (1.8± A)
	RELINQUISHMENT ZONE #2	15,33	ER 0+946.90 CL	ER 1+100.76 CL								BENNINGTON			TH 5 AREA = 0.38± HA (0.94± A)
	RELINQUISHMENT ZONE #3	15	ER 1+246.58 CL	ER 1+314.25 CL								BENNINGTON			TH 5 AREA = 0.10± HA (0.25± A)
	MAINTENANCE AGREEMENT ZONE #1	27	VT 1+200.00 CL	VT 1+260.00 CL								BENNINGTON			LENGTH = 60.00 m (196.85') TH 2
	MAINTENANCE AGREEMENT ZONE #2	29	TH 508 2+016.99 CL	TH 508 2+022.50 CL								BENNINGTON			LENGTH = 5.51 m (18.08') TH 508
	MAINTENANCE AGREEMENT ZONE #3	29	TH 104 3+020.30 CL	TH 104 3+026.20 CL								BENNINGTON			LENGTH = 5.90 m (19.36') TH 104
	MAINTENANCE AGREEMENT ZONE #4	30	LINDEN ST 4+021.71 RT	LINDEN ST 4+026.70 CL								BENNINGTON			LENGTH = 4.99 m (16.37') LINDEN ST
	MAINTENANCE AGREEMENT ZONE #5	12	CH 1+327.21 CL	CH 1+425.47 CL								BENNINGTON			LENGTH = 98.26 m (322.37') TH 16
	MAINTENANCE AGREEMENT ZONE #6	15	ER 1+100.76 CL	ER 1+246.58 CL								BENNINGTON			LENGTH = 145.82 m (478.41') TH 5

TABLE OF REVISIONS

REVISION NO.	SHEET NO.	DESCRIPTION	DATE

PLAN LEGEND

- EXISTING RIGHT-OF-WAY
- TAKING WITH ACCESS
- TAKING WITHOUT ACCESS
- CLEAR ZONE (CZ)
- PROPERTY LINE (P / L)
- TOE OF SLOPE
- TOP OF CUT
- SLOPE RIGHT (SR (P))
- CONSTRUCTION RIGHT (CONST.(T))

(P) -PERMANENT
(T) -TEMPORARY
DR. -DRAINAGE RIGHT
DIT. -DITCHING RIGHT
CH. -CHANNEL RIGHT
DRIVE -DRIVE RIGHT
CUL. -CULVERT RIGHT
C&T -CLEARING & TRIMMING RIGHT
SR -SLOPE RIGHT
UE -UTILITY EASEMENT

APPROVED: ROGER P. DUMAS DATE: 12-07-05
CHIEF, PLANS & TITLES

PROJECT NAME: **BENNINGTON**
PROJECT NUMBER: **AC NH 019-1(53)**

FILE NAME: **NORTH.XLS** PLOT DATE: **06/21/07**
PROJECT LEADER: **VSE** DRAWN BY: **GAK**
DESIGNED BY: **D-H** CHECKED BY: **JDP**
R.O.W. DETAIL SHEET #9 SHEET **30** OF **577**

STATE OF VERMONT
AGENCY OF TRANSPORTATION

RIGHT - OF - WAY DETAIL SHEET

Metric

TABLE OF PROPERTY ACQUISITION

PARCEL NO.	PROPERTY OWNER	SHEET NO.	BEGINNING STATION	ENDING STATION	TAKE	REMAINDER	RIGHT			RECORDING DATA					REMARKS
					AREA ±	AREA ±	TYPE	(T)/(P)	AREA ±	TITLE	DATE	TOWN / CITY	BOOK	PAGE	
100	STATE OF VERMONT	8	3+356.11 RT	3+584.50 RT						WD	1/19/2005	BENNINGTON	417	110	FORMERLY LaBEAU, RICHARD & STEPHANIE
101A	HELENA R. RICE LIFE ESTATE, HENRY W. McLENITHAN & SHIRLEY R.	1-4	1+346.89 RT	2+285.10 RT	7.1± HA							BENNINGTON			17.5± A LIMITED ACCESS
	McLENITHAN, TRUSTEES OF THE HENRY W.	1,2	1+391.1 RT	1+604.68 LT			ALL R, T, & I								STONE WALL
	AND SHIRLEY R. McLENITHAN REVOCABLE	3	2+188.4 RT	2+285.10 RT			ALL R, T, & I								STONE WALL
	TRUST, & RONALD B. RICE	3	2+267.3 RT	2+285.10 RT			ALL R, T, & I								STONE WALL
101B		1	1+339.35 RT	1+367.15 RT	0.028± HA		ALL R, T, & I								2960± SF HWY EASE TH 50, INCLUDES STONE WALL
				TOTAL	7.128± HA										17.61± A
102	PAGE, MARK O. & SUSAN J.	1,2	1+647.56 RT	1+838.78 RT	0.87± HA							BENNINGTON			2.1±A LIMITED ACCESS, INCLUDES STONE WALL
				TOTAL	0.87± HA										2.1± A
103	NEW ENGLAND TROPICAL CONSERVATORY, INC. JOINED BY VERMONT LAND TRUST, INC. &	3-5	2+189.65 RT	2+885.23 RT	6.4± HA							BENNINGTON			15.8± A LIMITED ACCESS, INCLUDES STONE WALL
	VERMONT HOUSING AND CONSERVATION	3	2+188.4 RT	2+285.10 RT			ALL R, T, & I								STONE WALL
	BOARD	3	2+267.3 RT	2+285.10 RT			ALL R, T, & I								STONE WALL
		4	2+711.47 LT	2+885.23 RT			ALL R, T, & I								STONE WALL
		4	2+881.30 RT	2+885.23 RT			ALL R, T, & I								STONE WALL
		5	AR 1+252.7 RT				DRIVE	T							6.0 m GRAVEL
		5	AR 1+245.9 RT	AR 1+261.8 RT			CONST	T	87± SM						936± SF INCL PDF & EROSION CONTROL
		5	2+881.30 RT	AR 1+250.9 RT			ALL R, T, & I								STONE WALL
		5,6	AR 1+008.7 CL	AR 1+254.3 CL											R.O.W. OVER PARCEL 104C
				TOTAL	6.4± HA										15.8± A
104A	HOWE, ARTHUR M. & JUDY A.	5-7	2+711.47 LT	3+111.11 RT	3.0± HA							BENNINGTON			7.4± A LIMITED ACCESS
		4	2+881.30 RT	2+885.23 RT			ALL R, T, & I								STONE WALL
		4	2+711.47 LT	2+885.23 RT			ALL R, T, & I								STONE WALL
104B		6,7	3+027.06 LT	3+120.45 RT	0.10± HA		ALL R, T, & I								0.25± A HWY EASE TH 49
104C		5,6	AR 1+001.08 LT	AR 1+256.59 LT	0.49± HA										1.2± A INCLUDES STONE WALL
		5,6	AR 1+008.7 CL	AR 1+254.3 CL											EXCEPT & RESERVE R.O.W. OVER PARCEL 104C
				TOTAL	3.59± HA										8.85± A
105A	O'NEILL, PHILIP J.	6-8	3+049.29 LT	3+429.32 LT	3.3± HA							BENNINGTON			8.2± A
105B		6,7	3+042.21 LT	3+141.77 RT	0.098± HA		ALL R, T, & I								0.24± A HWY EASE TH 49
105C		7	3+020.95 LT	3+128.79 LT	0.43± HA										1.1± A
105D		7	3+014.01 LT	3+049.29 LT	0.069± HA		ALL R, T, & I								0.17± A HWY EASE TH 49
				TOTAL	3.897± HA										9.71± A
106A	JONES, HELEN M. & GAIL M.	6-8	3+141.77 RT	3+464.46 RT	4.7± HA							BENNINGTON			11.6± A
106B		6,7	3+135.82 RT	3+200.38 RT	0.11± HA		ALL R, T, & I								0.27± A HWY EASE TH 49
				TOTAL	4.81± HA										11.87± A
107	CENTRAL VERMONT PUBLIC SERVICE CORPORATION	2	1+914.50 LT	1+967.5 RT			ALL R, T, & I		0.32± HA			BENNINGTON			0.79± A UTILITY EASE
		2	1+914.50 LT	1+967.5 RT					0.32± HA						EXCEPT & RESERVE UTILITY EASE
108	TOWN OF BENNINGTON	6,7	3+027.06 LT	3+141.77 RT	0.24± HA		ALL R, T, & I					BENNINGTON			0.59± A HWY EASE TH 49
				TOTAL	0.24± HA										0.59± A
	MAINTENANCE AGREEMENT ZONE #1	6,7	MP 1+394.36 CL	MP 1+562.84 CL								BENNINGTON			LENGTH = 168.48 m (552.76')

TABLE OF REVISIONS

REVISION NO.	SHEET NO.	DESCRIPTION	DATE
1	4	PARCEL NO. 101 HELENA R. RICE LIFE ESTATE, HENRY W. McLENITHAN & SHIRLEY R. McLENITHAN, TRUSTEES OF THE HENRY W. AND SHIRLEY R. McLENITHAN REVOCABLE TRUST, & RONALD B. RICE. LOSS OF ACCESS PARCELS NOT ACQUIRED. RIGHTS REMOVED ON DETAIL SHEET #1 (4 OF 13) PER C.O. 9486	3/12/07

PLAN LEGEND

- EXISTING RIGHT-OF-WAY
- TAKING WITH ACCESS
- TAKING WITHOUT ACCESS
- CLEAR ZONE (CZ)
- PROPERTY LINE (P / L)
- TOE OF SLOPE
- TOP OF CUT
- SLOPE RIGHT (SR (P))
- CONSTRUCTION RIGHT (CONST. (T))

(P) -PERMANENT
(T) -TEMPORARY
DR. -DRAINAGE RIGHT
DIT. -DITCHING RIGHT
CH. -CHANNEL RIGHT
DRIVE -DRIVE RIGHT
CUL. -CULVERT RIGHT
C&T -CLEARING & TRIMMING RIGHT
SR -SLOPE RIGHT
UE -UTILITY EASEMENT

APPROVED: ROGER P. DUMAS DATE: 12-07-05
CHIEF, PLANS & TITLES

PROJECT NAME: **Bennington**
PROJECT NUMBER: **AC NH 019-1(53)**

FILE NAME: **SOUTH.XLS** PLOT DATE: **06-21-07**
PROJECT LEADER: **JDP** DRAWN BY: **GAK**
DESIGNED BY: **CHA** CHECKED BY: **JDP**
R.O.W. DETAIL SHEET #1 SHEET **31** OF **577**

VAOT Metric

CURVE CHI	
Δ =	13°20'29.3"
R. =	315.411m
T. =	36.889m
L. =	73.444m
E. =	2.150m
BANK =	0.044
PI STA. CH	1+348.535
N =	44729.2251
E =	444458.9346
PC N =	44692.4025
E =	444456.7224
PT N =	44764.5435
E =	444469.5841

CURVE NB7	
Δ =	90°45'02.2"
R. =	575.000m
T. =	582.583m
L. =	910.741m
E. =	243.552m
BANK=	0.078
PI STA.	NB8+360.674
N =	44859.7020
E =	444732.6710
PC N =	44277.1693
E =	444725.0391
PT N =	44859.7019
E =	444150.0883

CURVE SB7	
Δ =	90°45'0.1"
R. =	547.500m
T. =	554.714m
L. =	867.178m
E. =	231.900m
BANK=	N/A
PI STA.	SB8+320.410
N =	44832.2019
E =	444704.8017
PC N =	44277.5357
E =	444697.5410
PT N =	44832.2019
E =	444150.0879

CURVE QR1	
Δ =	57°51'50.8"
R. =	603.300m
T. =	333.480m
L. =	609.284m
E. =	86.033m
BANK=	N/A
PI STA.	QR1+520.333
N =	44610.2574
E =	444757.7022
PC N =	44276.8060
E =	444753.3381
PT N =	44791.3254
E =	444477.6607

DRIVE GATE FOR CHAIN LINK FENCE (TYPE II)
STA. CH 1+412.3, RT. (QUARRY ACCESS ROAD)
STA. CH 1+320.4, LT.

CONSTRUCT DRIVE
STA. CH 1+261.6, LT. (7.2 m GRAVEL)
STA. CH 1+320.4, LT. (3.6 m GRAVEL)
STA. CH 1+430.6, RT. (4.5 m GRAVEL)

POT STA. CH 1+225.000
BEGIN APPROACH

CH 1+230.53
7.54 m (24.75') RT

CH 1+230.30 ℄

POT STA. CH 1+260.000
END APPROACH
BEGIN CONSTRUCTION

SLOCUM, ALBERT J. & PATRICIA W.

TOWN OF BENNINGTON

EXISTING CVPS UTILITY EASEMENT
EXISTING VT TRANSCO UTILITY EASEMENT

NB 8+234.42
112.14 m (367.91') LT

BEGIN MAINTENANCE AGREEMENT ZONE 5
STA. CH 1+327.21 ℄ =
STA. NB 8+327.23
51.66 m (169.49') LT

GEORGE E. HADWEN, TRUSTEE
GEORGE E. HADWEN TRUST

NB 8+174.51
55.00 m (180.45') LT

L=12.85 m (42.16')
R=520.00 m (1706.03')

[L=87.10 m (285.76')
R=520.00 m (1706.03')]

NB 8+160.30
55.00 m (180.45') LT

11.02 m (36.15')

4.15 m (13.62')

NB 8+171.86
51.62 m (169.36') LT

CH 1+276.12
7.54 m (24.75') RT

NB 8+316.47
53.11 m (174.25') LT
END LIMITED ACCESS

120.31 m (420.96')

POC STA. NB 8+331.583
STOP ROADWAY
BEGIN BRIDGE

[L=91.38 m (299.47')]

EXISTING VT TRANSCO UTILITY EASEMENT
138.73 m (455.23')

CURVE SB7

SB 8+100

SB 8+200

VT 279 SB

VT 279 NB

NB 8+200

NB 8+300

CURVE NB7

MATCH LINE STA. NB 8+120, ROW-11

[L=177.71 m (583.04')
R=595.76 m (1954.59')]

CURVE QR1

QR 1+600

QR 1+700

15.24 m (50.00') WIDE
RELOCATED PENT RD

RELOCATED UTILITY EASEMENT

[145.76 m (478.21')]

MATCH LINE ROW-12A

STATE OF VERMONT
BK. 408/PG. 137
FORMERLY
PARK, JASON E. & TRACY D.

GEORGE E. HADWEN, TRUSTEE
GEORGE E. HADWEN TRUST

WATSON, CYNTHIA W.

WATSON, CYNTHIA W.

GEORGE E. HADWEN, TRUSTEE
GEORGE E. HADWEN TRUST

GEORGE E. HADWEN, TRUSTEE
GEORGE E. HADWEN TRUST

GEORGE E. HADWEN, TRUSTEE
GEORGE E. HADWEN TRUST

GEORGE E. HADWEN, TRUSTEE
GEORGE E. HADWEN TRUST

55H 55I 55G 55E 55D 55C 56 66B 66A 44F 55F 55J 21H 66G 9C 9A 9B 55K 23C 23D 23B 23A

Septic Tank
Drilled Well
Garage
Gravel Drive
DRIVE (T)
LANDSCAPE (T)
DETOUR (T)
INSTALL (T)
Brush
Mixed Woods
Hardwoods
Sugarhouse
2 SWF House
Sm. Spruce
Gravel Drive
Old Drive
Pond
Stone Area
CHAMPLAIN VALLEY EXPO
CURVE CH1
CH 1+300
CH 1+350
CH 1+400
CH 1+450
ALL R1,R4
DIT & DR (P)
CONST (T)
PDF
IRF
#424/25/21/48

NB 8+303.69
8.02 m (26.31') RT

NB 8+286.20
20.76 m (68.11') RT

NB 8+337.60
13.76 m (45.14') LT

NB 8+348.91
20.76 m (68.11') RT
BEGIN LIMITED ACCESS

L=64.98 m (213.19')
R=595.76 m (1954.59')

STA. QR 1+787.83 ℄
END RELINQUISHMENT ZONE #1

NB 8+352.71
35.84 m (117.59') RT

NB 8+354.95
44.51 m (146.03') RT

NB 8+362.02
40.23 m (131.99') RT

POT STA. CH 1+430.000
END CONSTRUCTION
BEGIN APPROACH

POT STA. CH 1+465.000
END APPROACH

NB 8+348.12
55.06 m (180.64') LT

NB 8+352.45
57.00 m (187.01') LT

R=518.00 m (1699.47')
L=121.06 m (397.18')

POC STA. SB 8+400.855 =
POC STA. CH 1+383.198

NB 8+337.48
50.10 m (164.36') LT
BEGIN LIMITED ACCESS

POC STA. NB 8+365.523
END BRIDGE
RESUME ROADWAY

NB 8+351.04
28.90 m (71.85') LT

NB 8+344.36
17.66 m (57.94') LT

L=167.92 m (550.92')

POC STA. NB 8+350.609 =
POC STA. CH 1+383.546

PT STA. QR 1+796.137 =
POT STA. CH 1+413.060

NB 8+368.11
35.40 m (116.14') RT
END LIMITED ACCESS

[66.98 m (219.75')]

END MAINTENANCE AGREEMENT ZONE 5
STA. CH 1+425.47 ℄ =
STA. NB 8+362.02
40.23 m (131.99') RT
LENGTH=98.26 m (322.37')

RELOCATED UTILITY EASEMENT UE (P)

NB 8+385.38 RT
(FOR REFERENCE)

MATCH LINE STA. NB 8+420, ROW-13

VT. STATE PLANE GRID

DATUM
VERTICAL NAVD 88
HORIZONTAL NAD 83 (1992)

LINES SHOWN ON THIS PLAN AS EXISTING PROPERTY LINES P/L ARE BELIEVED TO BE ACCURATE BUT SHOULD NOT BE RELIED UPON FOR PURPOSES UNRELATED TO THE STATE OF VERMONT'S ACQUISITION OF LAND AND RIGHTS FOR THIS PROJECT.

THIS SHEET TO BE USED FOR RIGHT-OF-WAY INFORMATION ONLY

0 10 20 30
SCALE 1:500
@ FULL SIZE

R.O.W. PLAN
ROW-12

PROJECT NAME: BENNINGTON
PROJECT NUMBER: AC NH 019-1(53)
DESIGN FILE NAME: c:\dh\bennington\row
PROJECT LEADER: JDP
PLOT DATE: 05-21-07
DRAWN BY: MBB
CHECKED BY: GAK
SHEET: 32 OF 577

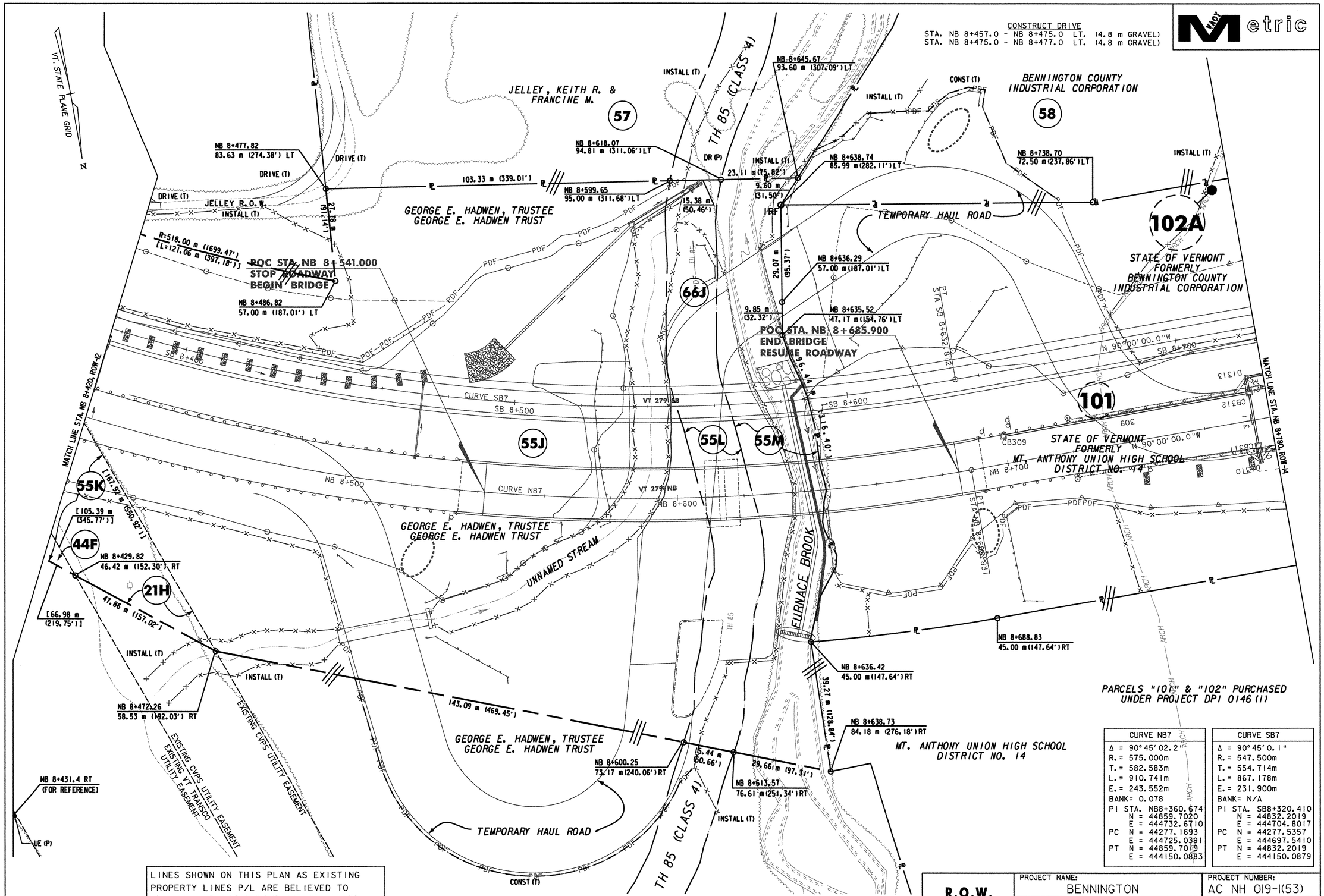

CURVE NB7	
Δ = 90° 45' 02.2"	
R. = 575.000m	
T. = 582.583m	
L. = 910.741m	
E. = 243.552m	
BANK= 0.078	
PI STA. NB8+360.674	
N = 44859.7020	
E = 444732.6710	
PC N = 44277.1693	
E = 444725.0391	
PT N = 44859.7019	
E = 444150.0883	

CURVE SB7	
Δ = 90° 45' 0.1"	
R. = 547.500m	
T. = 554.714m	
L. = 867.178m	
E. = 231.900m	
BANK= N/A	
PI STA. SB8+320.410	
N = 44832.2019	
E = 444704.8017	
PC N = 44277.5357	
E = 444697.5410	
PT N = 44832.2019	
E = 444150.0879	

LINES SHOWN ON THIS PLAN AS EXISTING PROPERTY LINES P/L ARE BELIEVED TO BE ACCURATE BUT SHOULD NOT BE RELIED UPON FOR PURPOSES UNRELATED TO THE STATE OF VERMONT'S ACQUISITION OF LAND AND RIGHTS FOR THIS PROJECT.

THIS SHEET TO BE USED FOR RIGHT-OF-WAY INFORMATION ONLY

DATUM
VERTICAL NAVD 88
HORIZONTAL NAD 83 (1992)

R.O.W. PLAN ROW-13

PROJECT NAME: BENNINGTON
PROJECT NUMBER: AC NH 019-1(53)
DESIGN FILE NAME: c:\dh\bennington\row
PROJECT LEADER: JDP
PLOT DATE: 05-21-07
DRAWN BY: MBB
CHECKED BY: GAK
SHEET: 33 OF 577

VAOT Metric

VT. STATE PLANE GRID
N

N/F SIRIUS CYBERNETICS REALTY, INC.

BENNINGTON COUNTY INDUSTRIAL CORPORATION

58

INSTALL (T)

SR. EASE. (T)
ACQUIRED UNDER PROJECT DPI 0146 (1)

SR. (T)
ACQUIRED UNDER PROJECT DPI 0146 (1)

STATE OF VERMONT
FORMERLY
BENNINGTON COUNTY
INDUSTRIAL CORPORATION

102A

STATE OF VERMONT

BB

VT 279 SB

N 90°00'00.0" W

SB 8+900

SB 8+800

SB 9+000

CZ

CROSSOVER

CURVE X02

XO 1+500

VT 279 NB

NB 9+100

NB 9+000

N 90°00'00.0" W

NB 8+900

NB 8+800

MATCH LINE STA. NB 8+780, ROW-13

MATCH LINE STA. NB 9+130, ROW-15

POT STA. NB 8+958.000 LT. =
PT STA. XO 1+578.825

101

STATE OF VERMONT
FORMERLY
MT. ANTHONY UNION HIGH SCHOOL
DISTRICT NO. 14

NB 8+838.00
45.00 m (147.64') RT

NB 8+915.00
72.00 m (236.22') RT

NB 8+980.00
86.00 m (282.15') RT

NB 9+060.00
86.00 m (282.15') RT

NB 9+120.00
75.00 m (246.06') RT

MT. ANTHONY UNION HIGH SCHOOL
DISTRICT NO. 14

MT. ANTHONY UNION HIGH SCHOOL
DISTRICT NO. 14

PARCEL "BB" PURCHASED
UNDER PROJECT F 019-1 (6)
PARCELS "101" AND "102" PURCHASED
UNDER PROJECT DPI 0146 (1)

CURVE X02
Δ = 4°12'34.4" RT.
R. = 2500.000m
T. = 91.880m
L. = 183.677m
E. = 1.688m
BANK = 0.021
PI STA. XO1+487.027
N = 44859.7018
E = 443789.0399
PC N = 44852.9574
E = 443697.4078
PT N = 44859.7018
E = 443880.9198

LINES SHOWN ON THIS PLAN AS EXISTING PROPERTY LINES P/L ARE BELIEVED TO BE ACCURATE BUT SHOULD NOT BE RELIED UPON FOR PURPOSES UNRELATED TO THE STATE OF VERMONT'S ACQUISITION OF LAND AND RIGHTS FOR THIS PROJECT.

THIS SHEET TO BE USED FOR RIGHT-OF-WAY INFORMATION ONLY

DATUM
VERTICAL NAVD 88
HORIZONTAL NAD 83 (1992)

0 10 20 30
SCALE 1:500
@ FULL SIZE

R.O.W. PLAN
ROW-14

PROJECT NAME: BENNINGTON
PROJECT NUMBER: AC NH 019-1(53)
DESIGN FILE NAME: c:\dh\bennington\row
PROJECT LEADER: JDP
PLOT DATE: 05-21-07
DRAWN BY: MBB
CHECKED BY: GAK
SHEET: 34 OF 577

CONSTRUCT DRIVE
STA. ER 1+106.5, RT. (3.6 m GRAVEL)
STA. ER 1+271.0, RT. (2.2 m CONC.)

N/F SIRIUS CYBERNETICS REALTY, INC.

THE PATRICIA HOOD REVOCABLE TRUST, PATRICIA HOOD & ALAN HOOD CO-TRUSTEES

TOWN OF BENNINGTON

MATCH LINE STA. ER 1+080, ROW-33

ER 1+100.76
8.30 m (27.23') RT

ER 1+125.63
8.30 m (27.23') RT

NB 9+217.29
72.50 m (237.86') LT

SR. EASE. (T)
ACQUIRED UNDER PROJECT DPI 0146 (1)

REMOVE EXIST. DRIVEWAY MATERIAL, REGRADE, PLACE 10 cm TOPSOIL & SEED

SR (T)
ACQUIRED UNDER PROJECT DPI 0146 (1)

NB 9+282.89
51.50 m (168.98') LT
END LIMITED ACCESS

NB 9+211.27
57.48 m (188.58') LT

INACTIVE Well

DISCONNECT & RECONNECT (T)

DRIVE (T)

CUL. (T)

REMOVE (T)
19.66 m (64.51')

INSTALL & MAINTAIN (P)

INSTALL (T)

POC STA. SB 9+227.629 =
POC STA. ER 1+167.952

POC STA. XO 1+265.090
POC STA. ER 1+179.436

ER 1+144.86
11.18 m (36.68') RT
5.49 m (18.01')

PC STA SB 9+164.340

PT STA XO 1+319.012

102A

103A

103B

60

AA

66K

66L

BB

CC

61

62

101

104A

104B

105A

105B

STA. ER 1+100.76 CL =
STA. NB 9+298.96
92.04 m (301.97') LT
END RELINQUISHMENT ZONE 2
BEGIN MAINTENANCE AGREEMENT ZONE 6

NB 9+316.16, 86.99 m (285.39') LT =
ER 1+100.76, 18.55 m (60.86') LT
BEGIN LIMITED ACCESS

INSTALL (T)

DIT. & DR (P)

CUL. (P)

SR (T)

TH 5

EAST ROAD

CURVE ER1

CURVE NB8

CURVE XO2

CURVE CD3

CURVE XO1

CURVE ER1

PT STA CD 2+316.074

PC STA CD 2+263.153

POT STA. CD 2+442.348 =
POC STA. XO 1+209.770, 7.200 m RT.

COLLECTOR DISTRIBUTOR

MATCH LINE STA. CD 2+260, ROW-16

MATCH LINE STA. SB 9+440, ROW-16

MATCH LINE STA. SB 9+500, ROW-16

MATCH LINE STA. NB 9+130, ROW-14

VT. STATE PLANE GRID N

STATE OF VERMONT

STATE OF VERMONT
FORMERLY
MOUNT ANTHONY UNION HIGH SCHOOL
DISTRICT NO. 14

STATE OF VERMONT
FORMERLY
LYONS, BETTY M.
EXECUTRIX OF THE
ESTATE OF HENRY B. LYONS

WILKINSON, ROY & CAROLYN

MOUNT ANTHONY UNION HIGH SCHOOL
DISTRICT NO. 14

N/F SCHUELER

CROSS OVER

VT 279 SB

VT 279 NB

SB 9+100

SB 9+200

SB 9+300

SB 9+400

XO 1+300

XO 1+200

XO 1+100

NB 9+200

NB 9+400

N 85° 47' 25.5" E

N 90° 00' 00.0" W

PC
STA NB 9+260.987

NB 9+290.63
24.57 m (80.61') RT
END LIMITED ACCESS

POC STA. NB 9+278.312=
POC STA. ER 1+138.229

NB 9+423.619
℄ TURNAROUND

NB 9+263.32
49.91 m (163.76') RT
BEGIN LIMITED ACCESS

NB 9+140.37
39.95 m (131.07') RT

NB 9+139.04
69.92 m (229.41') RT

NB 9+498.37
50.60 m (166.02') RT

CMF

STA. ER 1+246.58 CL =
STA. NB 9+271.05
50.84 m (166.80') RT
END MAINTENANCE AGREEMENT ZONE 6
LENGTH = 145.82 m (478.41')
BEGIN RELINQUISHMENT ZONE 3

POT STA. ER 1+310.000
END CONSTRUCTION
BEGIN APPROACH

STA. ER 1+314.25 CL
END RELINQUISHMENT ZONE 3

POT STA. ER 1+345.000
END APPROACH

SEE MATCH LINE THIS SHEET

SEE MATCH LINE THIS SHEET

PARCELS "AA", "BB" & "CC" PURCHASED UNDER PROJECT F 019-1(6)
PARCELS "101", "102", "103", "104", & "105" PURCHASED UNDER PROJECT D.P.I. 0146 (1)

CURVE NB8	
Δ =	7° 15' 00.0" RT.
R. =	2380.000m
T. =	150.780m
L. =	301.157m
E. =	4.771m
BANK =	0.021
PI STA.	NB9+411.766
N =	44859.7018
E =	443427.1540
PC N =	44859.7018
E =	443577.9337
PT N =	44878.7300
E =	443277.5798

CURVE XO2	
Δ =	4° 12' 34.4" RT.
R. =	2500.000m
T. =	91.880m
L. =	183.677m
E. =	1.688m
BANK =	0.021
PI STA.	XO1+487.027
N =	44859.7018
E =	443789.0399
PC N =	44852.9574
E =	443697.4078
PT N =	44859.7018
E =	443880.9198

CURVE CD3	
Δ =	12° 01' 40.6" LT.
R. =	395.000m
T. =	41.614m
L. =	82.921m
E. =	2.186m
BANK =	0.000
PI STA.	CD2+304.767
N =	44824.4065
E =	443375.0412
PC N =	44829.6580
E =	443333.7603
PT N =	44827.8727
E =	443416.5101

CURVE XO1	
Δ =	11° 27' 34.4" RT.
R. =	1595.000m
T. =	160.040m
L. =	317.012m
E. =	8.009m
BANK =	0.021
PI STA.	XO1+160.040
N =	44835.6210
E =	443461.8693
PC N =	44855.8178
E =	443303.1092
PT N =	44847.3686
E =	443621.4772

CURVE ER1	
Δ =	16° 42' 48.2" LT.
R. =	800.000m
T. =	117.516m
L. =	233.363m
E. =	8.585m
BANK =	0.000
PI STA.	ER 1+121.710
N =	44784.9938
E =	443552.3856
PC N =	44677.5126
E =	443504.8830
PT N =	44901.6072
E =	443566.9699

0 10 20 30
SCALE 1:500
@ FULL SIZE

DATUM
VERTICAL NAVD 88
HORIZONTAL NAD 83 (1992)

LINES SHOWN ON THIS PLAN AS EXISTING PROPERTY LINES P/L ARE BELIEVED TO BE ACCURATE BUT SHOULD NOT BE RELIED UPON FOR PURPOSES UNRELATED TO THE STATE OF VERMONT'S ACQUISITION OF LAND AND RIGHTS FOR THIS PROJECT.

THIS SHEET TO BE USED FOR RIGHT-OF-WAY INFORMATION ONLY

R.O.W. PLAN
ROW-15

PROJECT NAME: BENNINGTON
PROJECT NUMBER: AC NH 019-1(53)
DESIGN FILE NAME: c:\dh\bennington\row
PROJECT LEADER: JDP
PLOT DATE: 05-21-07
DRAWN BY: MBB
CHECKED BY: GAK
SHEET: 35 OF 577

CURVE NB8	
Δ = 7° 15′ 00.0" RT.	
R. = 2380.000m	
T. = 150.780m	
L. = 301.157m	
E. = 4.771m	
BANK = 0.021	
PI STA. NB9+411.767	
N = 44859.7018	
E = 443427.1540	
PC N = 44859.7018	
E = 443577.9337	
PT N = 44878.7300	
E = 443277.5798	

CURVE EI	
Δ = 47° 02′ 33.6" RT.	
R. = 340.000m	
T. = 147.987m	
L. = 276.157m	
E. = 30.810m	
BANK = 0.060	
PI STA EI+152.477	
N = 44931.1345	
E = 442951.2506	
PC N = 44912.4568	
E = 443098.0539	
PT N = 45051.3022	
E = 442864.8804	

CURVE NI	
Δ = 93° 41′ 00.4" RT.	
R. = 318.482m	
T. = 339.644m	
L. = 520.745m	
E. = 147.124m	
BANK = 0.060	
PI STA. NI+339.644	
N = 44878.5329	
E = 442883.0050	
PC N = 44539.5464	
E = 442861.8761	
PT N = 44835.6697	
E = 443219.9338	

CURVE XOI	
Δ = 4° 12′ 34.4" RT.	
R. = 2500.000m	
T. = 91.880m	
L. = 183.677m	
E. = 1.688m	
BANK = 0.000	
PI STA XO I+487.027	
N = 44859.7018	
E = 443789.0399	
PC N = 44852.9574	
E = 443697.4078	
PT N = 44859.7018	
E = 443880.9198	

VAOT Metric

TOWN OF BENNINGTON

66K

VT. STATE PLANE GRID

N

MATCH LINE STA. N I+300, ROW-17

POT STA. SB 9+481.154, 3.600 m RT. =
PC STA. XO I+000.000

POT STA. CD 2+149.478, 8.400 m RT. =
PT STA. N I+520.745

CONST (T)

CURVE NI

RAMP N

ROUTE 7 CONNECTOR DETOUR

N I+400

COLLECTOR DISTRIBUTOR

MATCH LINE STA. CD 2+260, ROW-15

MATCH LINE STA. CD I+940, ROW-17

MATCH LINE STA. SB 9+440, ROW-15

VT 279 SB

STATE OF VERMONT

MATCH LINE STA. SB 9+780, ROW-17

MATCH LINE STA. NB 9+500, ROW-15

CURVE NB8

VT 279 NB

750 mm (30" RCP)

MATCH LINE STA. NB 9+440, ROW-17

CURVE EI

RAMP E

POT NB 9+740.000, 10.800 m RT. =
POT E I+000.000

PT STA. NB 9+562.940

MATCH LINE STA. E I+100, ROW-23

N/F SCHUELER

LINES SHOWN ON THIS PLAN AS EXISTING PROPERTY LINES P/L ARE BELIEVED TO BE ACCURATE BUT SHOULD NOT BE RELIED UPON FOR PURPOSES UNRELATED TO THE STATE OF VERMONT'S ACQUISITION OF LAND AND RIGHTS FOR THIS PROJECT.

THIS SHEET TO BE USED FOR RIGHT-OF-WAY INFORMATION ONLY

DATUM
VERTICAL NAVD 88
HORIZONTAL NAD 83 (1992)

0 10 20 30
SCALE 1:500
@ FULL SIZE

R.O.W. PLAN
ROW-16

PROJECT NAME: BENNINGTON
PROJECT NUMBER: AC NH 019-1(53)
DESIGN FILE NAME: c:\dh\bennington\row
PROJECT LEADER: JDP
PLOT DATE: 05-21-07
DRAWN BY: MBB
CHECKED BY: GAK

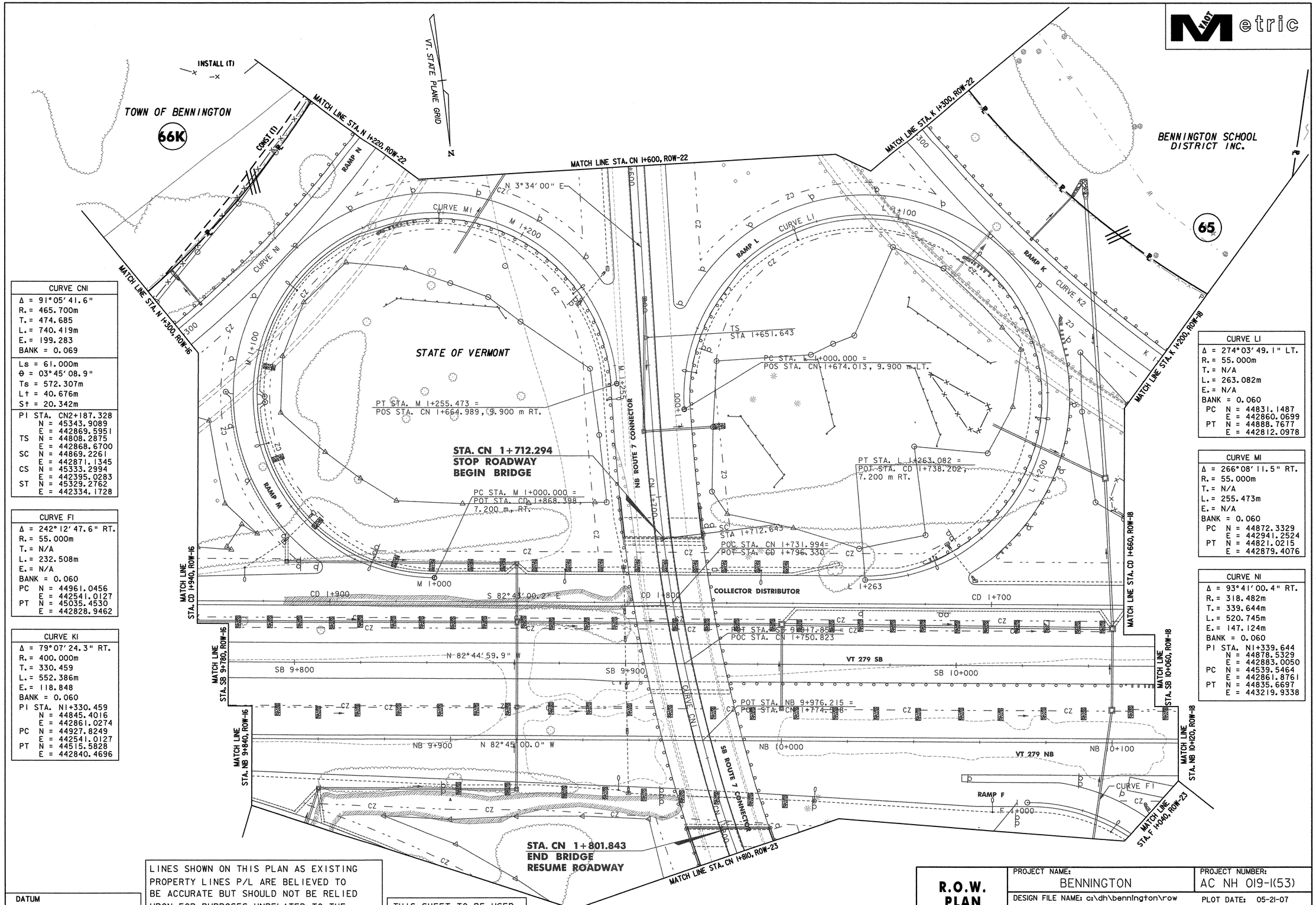

CURVE CNI
Δ = 91°05'41.6"
R. = 465.700m
T. = 474.685
L. = 740.419m
E. = 199.283
BANK = 0.069
Ls = 61.000m
θ = 03°45'08.9"
Ts = 572.307m
Lt = 40.676m
St = 20.342m
PI STA. CN2+187.328
N = 45343.9089
E = 442869.5951
TS N = 44808.2875
E = 442868.6700
SC N = 44869.2261
E = 442871.1345
CS N = 45333.2994
E = 442395.0283
ST N = 45329.2762
E = 442334.1728

CURVE FI
Δ = 242°12'47.6" RT.
R. = 55.000m
T. = N/A
L. = 232.508m
E. = N/A
BANK = 0.060
PC N = 44961.0456
E = 442541.0127
PT N = 45035.4530
E = 442828.9462

CURVE KI
Δ = 79°07'24.3" RT.
R. = 400.000m
T. = 330.459
L. = 552.386m
E. = 118.848
BANK = 0.060
PI STA. NI+330.459
N = 44845.4016
E = 442861.0274
PC N = 44927.8249
E = 442541.0127
PT N = 44515.5828
E = 442840.4696

CURVE LI
Δ = 274°03'49.1" LT.
R. = 55.000m
T. = N/A
L. = 263.082m
E. = N/A
BANK = 0.060
PC N = 44831.1487
E = 442860.0699
PT N = 44888.7677
E = 442812.0978

CURVE MI
Δ = 266°08'11.5" RT.
R. = 55.000m
T. = N/A
L. = 255.473m
E. = N/A
BANK = 0.060
PC N = 44872.3329
E = 442941.2524
PT N = 44821.0215
E = 442879.4076

CURVE NI
Δ = 93°41'00.4" RT.
R. = 318.482m
T. = 339.644m
L. = 520.745m
E. = 147.124m
BANK = 0.060
PI STA. NI+339.644
N = 44878.5329
E = 442883.0050
PC N = 44539.5464
E = 442861.8761
PT N = 44835.6697
E = 443219.9338

DATUM	
VERTICAL	NAVD 88
HORIZONTAL	NAD 83 (1992)

LINES SHOWN ON THIS PLAN AS EXISTING PROPERTY LINES P/L ARE BELIEVED TO BE ACCURATE BUT SHOULD NOT BE RELIED UPON FOR PURPOSES UNRELATED TO THE STATE OF VERMONT'S ACQUISITION OF LAND AND RIGHTS FOR THIS PROJECT.

THIS SHEET TO BE USED FOR RIGHT-OF-WAY INFORMATION ONLY

R.O.W. PLAN

ROW-17

PROJECT NAME:	PROJECT NUMBER:
BENNINGTON	AC NH 019-1(53)
DESIGN FILE NAME: c:\dh\bennington\row	PLOT DATE: 05-21-07
PROJECT LEADER: JDP	DRAWN BY: MBB
	CHECKED BY: GAK
	SHEET: 37 OF 577

VAOT Metric

VT. STATE PLANE GRID N

D&D JOLIVETTE ELECTRIC SUPPLY INC.

RIGHTS FOR PROPOSED SEWER TO BE ACQUIRED BY OTHERS

LEMAIRE, LAURENCE P. JR. & LINDA L. ZENO

LEMAIRE, LAURENCE P. JR. & LINDA L. ZENO

BENNINGTON SCHOOL DISTRICT INC.

STATE OF VERMONT

STATE OF VERMONT

ORCHARD ROAD

PC STA. K 1+000.000 =
POC STA. CD 1+465.069, 7.200 m RT.

MATCH LINE STA. K 1+200, ROW-17

MATCH LINE SEE SHEET ROW-19A

CURVE K1

RAMP K

K 1+100

K 1+000

CD 1+400

CURVE CD2

CD 1+500

PT STA. CD 1+536.565

SC STA. SB 10+204.896

CURVE SB9

SB 10+300

CD 1+600

SB 10+200

VT 279 SB

TS STA. SB 10+143.483

N 82° 44' 59.9" W

SB 10+100

MATCH LINE STA. CD 1+660, ROW-17

MATCH LINE STA. SB 10+400, ROW-19

NB 10+300

CURVE NB9

NB 10+400

MATCH LINE STA. SB 10+060, ROW-17

MATCH LINE STA. NB 10+440, ROW-19

NB 10+200

SC STA. NB 10+257.012

TS STA. NB 10+196.912

N 82° 45' 00.0" W

VT 279 NB

MATCH LINE STA. NB 10+020, ROW-17

MATCH LINE ROW-23

MATCH LINE ROW-24

MATCH LINE ROW-24

FUTURE WELCOME CENTER SITE

CURVE SB9

CURVE NB9
Δ = 76°32'26.4"
R. = 527.595m
T. = 416.226m
L. = 704.807m
E. = 144.417m
BANK = 0.079
Ls = 60.400m
Os = 3°16'46.8"
Ts = 498.050m
Lt = 40.274m
St = 20.140m
PI STA. NB10+673.238
N = 45043.6252
E = 442179.2121
TS N = 44958.7993
E = 44958.7993
SC N = 44967.5622
E = 442588.4319
CS N = 45459.3070
E = 442157.9418
ST N = 45519.6931
E = 442157.1585

CURVE K1
Δ = 79°07'24.3" RT.
R. = 400.000m
T. = 330.459
L. = 552.386m
E. = 118.848
BANK = 0.060
PI STA. N1+330.459
N = 44845.4016
E = 442861.0274
PC N = 44927.8249
E = 442541.0127
PT N = 44515.5828
E = 442840.4696

CURVE CD2
Δ = 38°11'00.4"
R. = 569.473m
T. = 197.106m
L. = 379.512m
E. = 33.146m
BANK = 0.057
PI STA. CD1+354.159
N = 44946.2264
E = 442417.4518
PCC N = 45086.6515
E = 442279.1353
PT N = 44921.3520
E = 442612.9817

CURVE SB9
Δ = 76°40'45.2"
R. = 550.702m
T. = 435.537m
L. = 737.007m
E. = 151.413m
BANK = 0.079
Ls = 61.713m
Os = 3°12'37.3"
Ts = 519.185m
Lt = 41.149m
St = 20.577m
PI STA. SB10+640.432
N = 45023.7967
E = 442156.5660
TS N = 44935.7938
E = 442645.9195
SC N = 44944.7226
E = 4425844.8645
CS N = 45458.7909
E = 442134.8315
ST N = 45520.4904
E = 442134.0560

LINES SHOWN ON THIS PLAN AS EXISTING PROPERTY LINES P/L ARE BELIEVED TO BE ACCURATE BUT SHOULD NOT BE RELIED UPON FOR PURPOSES UNRELATED TO THE STATE OF VERMONT'S ACQUISITION OF LAND AND RIGHTS FOR THIS PROJECT.

THIS SHEET TO BE USED FOR RIGHT-OF-WAY INFORMATION ONLY

DATUM
VERTICAL NAVD 88
HORIZONTAL NAD 83 (1992)

0 10 20 30
SCALE 1:500
@ FULL SIZE

R.O.W. PLAN
ROW-18

PROJECT NAME: BENNINGTON
PROJECT NUMBER: AC NH 019-1(53)
DESIGN FILE NAME: c:\dh\bennington\row
PROJECT LEADER: JDP
PLOT DATE: 05-21-07
DRAWN BY: MBB
CHECKED BY: GAK

VAOT Metric

CURVE G1
Δ = 236°03'34.7" RT.
R. = 90.000m
T. = N/A
L. = 370.802m
E. = N/A
BANK = 0.060
PI STA. G1+396.514
N = 45179.3415
E = 442268.2761
PC N = 45305.8601
E = 442346.1949
PCC N = 45159.4245
E = 442284.5381
PT N = 45200.7744
E = 442254.0714

CURVE NB9
Δ = 76°32'26.4"
R. = 527.595m
T. = 416.226m
L. = 704.807m
E. = 144.417m
BANK = 0.079
Ls = 60.400m
Θs = 3°16'46.8"
Ts = 498.050m
Lt = 40.274m
St = 20.140m
PI STA. NB10+673.238
N = 45043.6252
E = 442179.2121
TS N = 44958.7993
E = 44958.7993
SC N = 44967.5622
E = 442588.4319
CS N = 45459.3070
E = 442157.9418
ST N = 45519.6931
E = 442157.1585

Δ = 76°40'45.2"
R. = 550.702m
T. = 435.537m
L. = 737.007m
E. = 151.413m
BANK = 0.079
Ls = 61.713m
Θs = 3°12'37.3"
Ts = 519.185m
Lt = 41.149m
St = 20.577m
PI STA. SB10+640.432
N = 45023.7967
E = 442156.5660
TS N = 44935.7938
E = 442645.9195
SC N = 44944.7226
E = 4425844.8645
CS N = 45458.7909
E = 442134.8315
ST N = 45520.4904
E = 442134.0560

VT. STATE PLANE GRID N

MATCH LINE SHEET ROW-19A

MATCH LINE STA. SB 10+400, ROW-18

MATCH LINE STA. NB 10+440, ROW-18

MATCH LINE STA. G 1+210, ROW-24

MATCH LINE ROW-25

MATCH LINE STA. J 1+200, ROW-20

MATCH LINE STA. SB 10+720, ROW-20

MATCH LINE STA. NB 10+760, ROW-20

VT 279 SB

VT 279 NB

CURVE SB9

CURVE NB9

CURVE G1

CURVE CD1

RAMP G

RAMP J

SB 10+500

SB 10+600

SB 10+700

NB 10+500

NB 10+600

NB 10+700

G 1+300

J 1+300

STATE OF VERMONT

N/F GAUTHIER

N/F DICKIE

N/F DICKIE

STATE OF VERMONT

POT STA. J 1+300.00
BEGIN CONSTRUCTION

POC STA. SB 10+693.550, 4.80
POT STA. CD 1+000.000

STA. CD 1+035.958

S 23°22'34" E

POC NB 10+627.540, 10.800 m RT. =
PT STA. G 1+370.802

CURVE CD1
Δ = 21°11'30.7" LT.
R. = 327.400m
T. = 61.247m
L. = 121.095m
E. = 5.680m
BANK = 0.021
PI STA. CD1+097.206
N = 45130.2863
E = 442236.1561
PC N = 45186.5070
E = 442211.8570
PCC N = 45086.6515
E = 442279.1353

CURVE CD2
Δ = 38°11'00.4"
R. = 569.473m
T. = 197.106m
L. = 379.512m
E. = 33.146m
BANK = 0.057
PI STA. CD1+354.159
N = 44946.2264
E = 442417.4518
PCC N = 45086.6515
E = 442279.1353
PT N = 44921.3520
E = 442612.9817

DATUM
VERTICAL NAVD 88
HORIZONTAL NAD 83 (1992)

LINES SHOWN ON THIS PLAN AS EXISTING PROPERTY LINES P/L ARE BELIEVED TO BE ACCURATE BUT SHOULD NOT BE RELIED UPON FOR PURPOSES UNRELATED TO THE STATE OF VERMONT'S ACQUISITION OF LAND AND RIGHTS FOR THIS PROJECT.

THIS SHEET TO BE USED FOR RIGHT-OF-WAY INFORMATION ONLY

0 10 20 30
SCALE 1:500
@ FULL SIZE

R.O.W. PLAN
ROW-19

PROJECT NAME: BENNINGTON
PROJECT NUMBER: AC NH 019-1(53)
DESIGN FILE NAME: c:\dh\bennington\row
PROJECT LEADER: JDP
PLOT DATE: 05-21-07
DRAWN BY: MBB
CHECKED BY: GAK

VT. STATE PLANE GRID

BENNINGTON SCHOOL DISTRICT INC.

65

MATCH LINE STA. K 1+300, ROW-17

MATCH LINE SHEET ROW-22A

SWALE

PT STA. K 1+552.386 =
POT STA. CN 1+357.751, 9.900 m LT.

RAMP K

CURVE K1

K 1+400

K 1+500

STATE OF VERMONT

SB ROUTE 7 CONNECTOR

NB ROUTE 7 CONNECTOR

N 3°34'00" E

CN 1+300

CN 1+400

CN 1+500

MATCH LINE STA. CN 1+600, ROW-17

N 1+000

PC STA. N 1+000.00 =
POT STA. CN 1+383.000,
9.900 m RT.

N 1+100

RAMP N

CURVE N1

N 1+200

TOWN OF BENNINGTON

66K

CONST (T)

INSTALL (T)

MATCH LINE STA. N 1+220, ROW-17

CURVE N1	
Δ = 93°41'00.4" RT.	
R. = 318.482m	
T. = 339.644m	
L. = 520.745m	
E. = 147.124m	
BANK = 0.060	
PI STA. N1+339.644	
N = 44878.5329	
E = 442883.0050	
PC	N = 44539.5464
E = 442861.8761	
PT	N = 44835.6697
E = 443219.9338	

CURVE K1	
Δ = 79°07'24.3" RT.	
R. = 400.000m	
T. = 330.459	
L. = 552.386m	
E. = 118.848	
BANK = 0.060	
PI STA. N1+330.459	
N = 44845.4016	
E = 442861.0274	
PC	N = 44927.8249
E = 442541.0127	
PT	N = 44515.5828
E = 442840.4696	

LINES SHOWN ON THIS PLAN AS EXISTING PROPERTY LINES P/L ARE BELIEVED TO BE ACCURATE BUT SHOULD NOT BE RELIED UPON FOR PURPOSES UNRELATED TO THE STATE OF VERMONT'S ACQUISITION OF LAND AND RIGHTS FOR THIS PROJECT.

THIS SHEET TO BE USED FOR RIGHT-OF-WAY INFORMATION ONLY

DATUM

VERTICAL NAVD 88

HORIZONTAL NAD 83 (1992)

0 10 20 30

SCALE 1:500
@ FULL SIZE

R.O.W. PLAN

ROW-22

PROJECT NAME: BENNINGTON

PROJECT NUMBER: AC NH 019-1(53)

DESIGN FILE NAME: c:\dh\bennington\row

PROJECT LEADER: JDP

PLOT DATE: 05-21-07

DRAWN BY: MBB

CHECKED BY: GAK

SHEET: 40 OF 577

VLOT Metric

VT. STATE PLANE GRID

N

N/F FURNACE BROOK INVESTMENTS, LLC

BENNINGTON SCHOOL DISTRICT INC.

65

FURNACE BROOK

SWALE

TO DOWNTOWN BENNINGTON

U.S. ROUTE 7
TO SYSTEMS INTERCHANGE

CN 1+000

CN 1+100

CN 1+200

MATCH LINE SHEET ROW-22

N/F GRACE CHRISTIAN SCHOOL CORP.

TOWN OF BENNINGTON

DATUM

VERTICAL NAVD 88

HORIZONTAL NAD 83 (1992)

LINES SHOWN ON THIS PLAN AS EXISTING PROPERTY LINES P/L ARE BELIEVED TO BE ACCURATE BUT SHOULD NOT BE RELIED UPON FOR PURPOSES UNRELATED TO THE STATE OF VERMONT'S ACQUISITION OF LAND AND RIGHTS FOR THIS PROJECT.

THIS SHEET TO BE USED FOR RIGHT-OF-WAY INFORMATION ONLY

0 10 20 30

SCALE 1:500
@ FULL SIZE

R.O.W. PLAN

ROW-22A

PROJECT NAME: BENNINGTON

DESIGN FILE NAME: c:\dh\bennington\row

PROJECT LEADER: JDP

PROJECT NUMBER: AC NH 019-1(53)

PLOT DATE: 05-21-07

DRAWN BY: MBB

CHECKED BY: GAK

SHEET: 41 OF 577

CURVE CN2
Δ = 91°06'59.6" LT.
R. = 468.400m
T. = 477.618m
L. = 744.889m
E. = 200.568m
BANK = 0.069
Ls = 61.177m
Os = 3°44'29.9"
Ts = 575.534m
Lt = 40.793m
St = 20.400m
PI STA. CN 2+187.929
N = 45346.7621
E = 442872.3761
TS N = 44808.0314
E = 442871.3593
SC N = 44848.7459
E = 442873.8348
CS N = 45335.9968
E = 442394.8794
ST N = 45335.5370
E = 442374.4841

CURVE RI
Δ = 84°46'06.2" RT.
R. = 70.000m
T. = 63.883m
L. = 103.564m
E. = 24.769m
BANK = 0.060
PI STA. RI+528.649
N = 45318.1042
E = 442458.0418
PC N = 45312.5036
E = 442394.4044
PT N = 45255.2425
E = 442469.4216

Δ = 236°03'34.7" RT.
R. = 90.000m
T. = N/A
L. = 370.802m
E. = N/A
BANK = 0.060
PI STA. GI+396.514
N = 45179.3415
E = 442268.2761
PC N = 45305.8601
E = 442346.1949
PCC N = 45159.4245
E = 442284.5381
PT N = 45200.7744
E = 442254.0714

CURVE HI
Δ = 93°31'06.3" RT.
R. = 200.000m
T. = 212.675m
L. = 326.441m
E. = 91.943m
BANK = 0.060
PI STA. H I+212.675
N = 45330.8404
E = 442166.8007
PC N = 45342.5925
E = 442379.1505
PT N = 45543.5112
E = 442168.1025

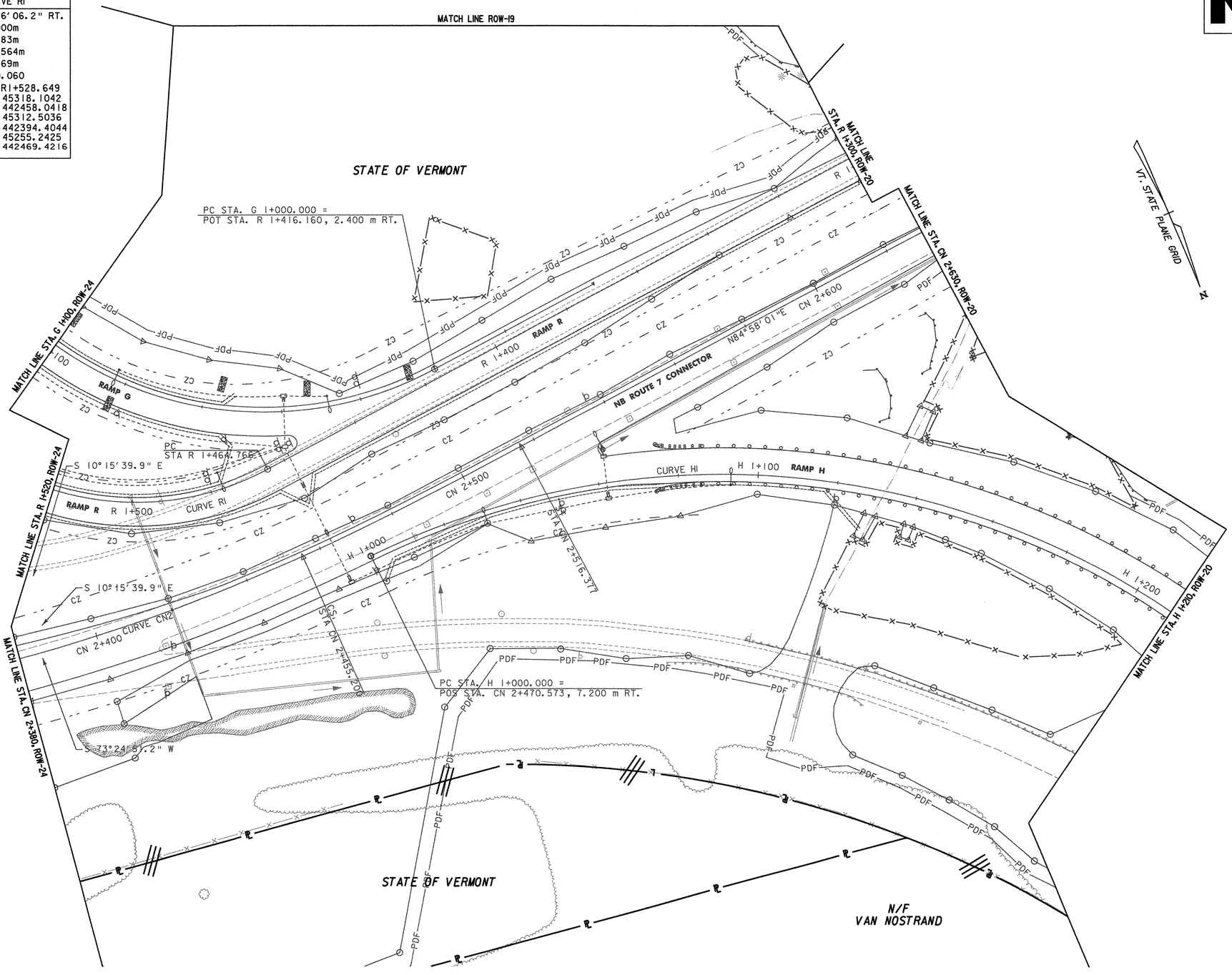

DATUM

VERTICAL NAVD 88

HORIZONTAL NAD 83 (1992)

LINES SHOWN ON THIS PLAN AS EXISTING PROPERTY LINES P/L ARE BELIEVED TO BE ACCURATE BUT SHOULD NOT BE RELIED UPON FOR PURPOSES UNRELATED TO THE STATE OF VERMONT'S ACQUISITION OF LAND AND RIGHTS FOR THIS PROJECT.

THIS SHEET TO BE USED FOR RIGHT-OF-WAY INFORMATION ONLY

0 10 20 30
SCALE 1:500
@ FULL SIZE

R.O.W. PLAN

ROW-25

PROJECT NAME: BENNINGTON

PROJECT NUMBER: AC NH 019-1(53)

DESIGN FILE NAME: c:\dh\bennington\row

PROJECT LEADER: JDP

PLOT DATE: 05-21-07
DRAWN BY: MBB
CHECKED BY: GAK

SHEET: 42 OF 577

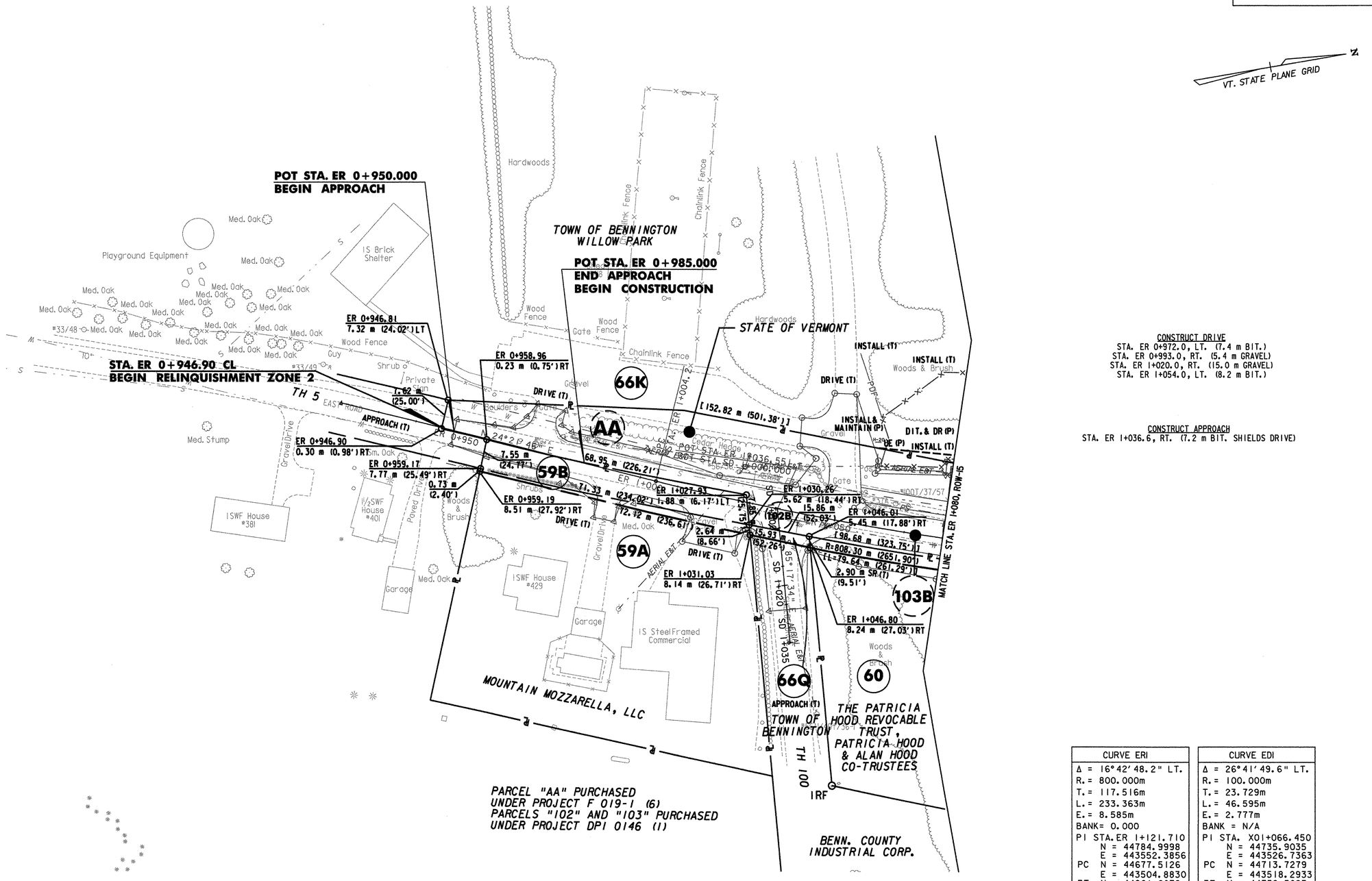

CONSTRUCT DRIVE
STA. ER 0+972.0, LT. (7.4 m BIT.)
STA. ER 0+993.0, RT. (5.4 m GRAVEL)
STA. ER 1+020.0, RT. (15.0 m GRAVEL)
STA. ER 1+054.0, LT. (8.2 m BIT.)

CONSTRUCT APPROACH
STA. ER 1+036.6, RT. (7.2 m BIT. SHIELDS DRIVE)

CURVE ERI	
Δ =	16°42'48.2" LT.
R. =	800.000m
T. =	117.516m
L. =	233.363m
E. =	8.585m
BANK =	0.000
PI STA. ER	1+121.710
N =	44784.9998
E =	443552.3856
PC N =	44677.5126
E =	443504.8830
PT N =	44901.6072
E =	443566.9699

CURVE EDI	
Δ =	26°41'49.6" LT.
R. =	100.000m
T. =	23.729m
L. =	46.595m
E. =	2.777m
BANK =	N/A
PI STA.	X01+066.450
N =	44735.9035
E =	443526.7363
PC N =	44713.7279
E =	443518.2933
PT N =	44759.5083
E =	443524.3164

DATUM
VERTICAL NAVD 88
HORIZONTAL NAD 83 (1992)

LINES SHOWN ON THIS PLAN AS EXISTING PROPERTY LINES P/L ARE BELIEVED TO BE ACCURATE BUT SHOULD NOT BE RELIED UPON FOR PURPOSES UNRELATED TO THE STATE OF VERMONT'S ACQUISITION OF LAND AND RIGHTS FOR THIS PROJECT.

THIS SHEET TO BE USED FOR RIGHT-OF-WAY INFORMATION ONLY

0 10 20 30
SCALE 1:500
@ FULL SIZE

R.O.W. PLAN
ROW-33

PROJECT NAME: BENNINGTON
PROJECT NUMBER: AC NH 019-1(53)
DESIGN FILE NAME: c:\dh\bennington\row
PROJECT LEADER: JDP
PLOT DATE: 05-21-07
DRAWN BY: MBB
CHECKED BY: GAK
SHEET: 43 OF 577

CURVE N.B. 2	CURVE F 1	CURVE DR 1
P.C.C.= STA. 1+103.528	P.C. = STA. F20+091.479	P.C. = STA. DR1+047.519
P.T. = STA. 1+330.758	P.T. = STA. F20+122.842	P.T. = STA. DR1+059.533
Δ=20° 20' 34"	Δ=32° 40' 20" LT.	Δ=45° 53' 32" LT.
R=640.000 m	R=55.000 m	R=15.000 m
T=114.824 m	T=16.121 m	T=6.350 m
L=227.230 m	L=31.363 m	L=12.015 m
E=10.219 m	E=2.314 m	E=1.289 m
θmax=0.075 DN. RT.	θmax=0.079 DN. LT.	θmax=N/A

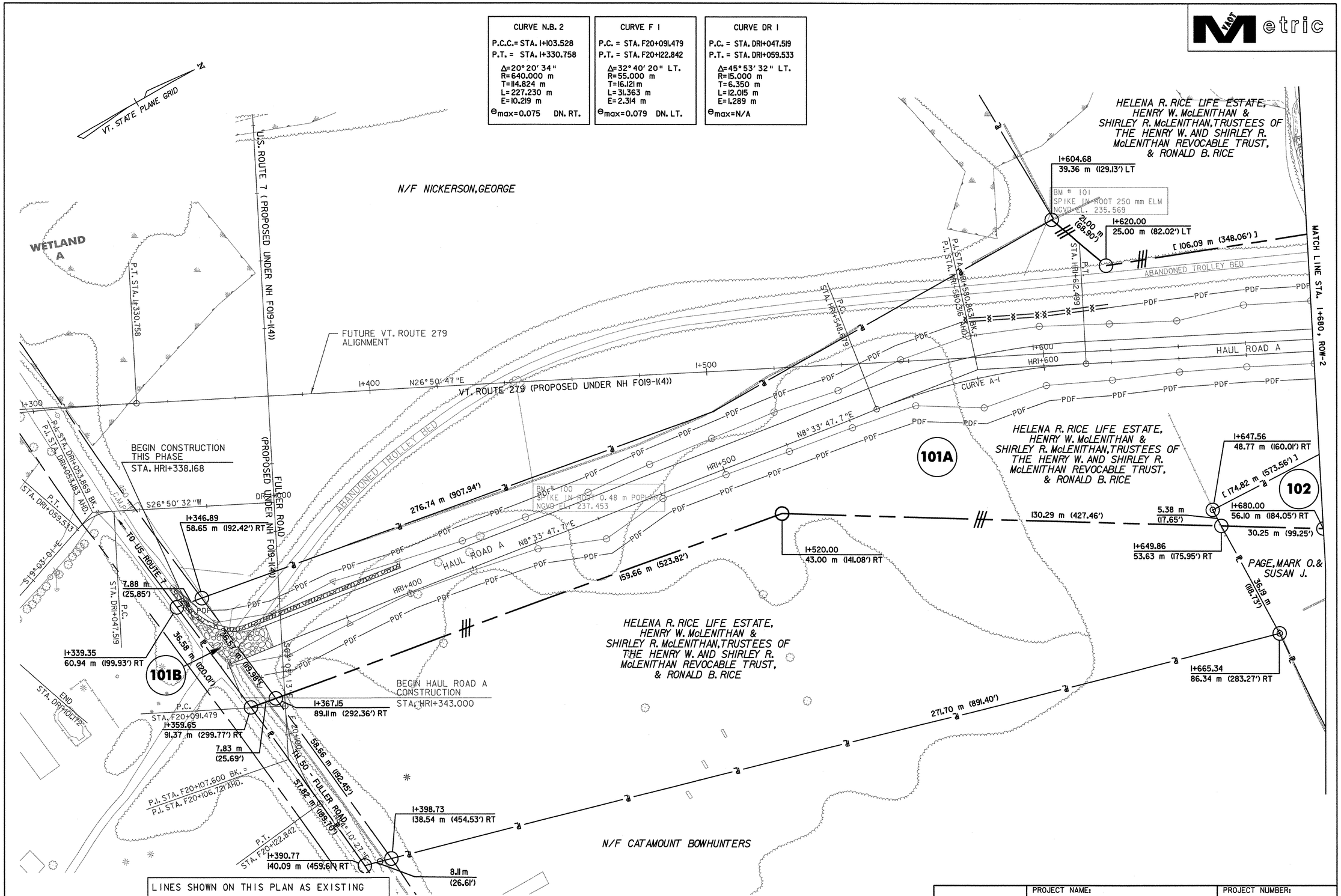

LINES SHOWN ON THIS PLAN AS EXISTING PROPERTY LINES P/L ARE BELIEVED TO BE ACCURATE BUT SHOULD NOT BE RELIED UPON FOR PURPOSES UNRELATED TO THE STATE OF VERMONT'S ACQUISITION OF LAND AND RIGHTS FOR THIS PROJECT.

THIS SHEET TO BE USED FOR RIGHT-OF-WAY INFORMATION ONLY

DATUM	
VERTICAL	NAVD 88
HORIZONTAL	NAD 83 (1992)

0 10 20 30
SCALE 1:500
@ FULL SIZE

R.O.W. PLAN ROW-1

PROJECT NAME: BENNINGTON	PROJECT NUMBER: AC NH 019-1(53)
DESIGN FILE NAME: c:\dh\bennington\row	PLOT DATE: 05-21-07
PROJECT LEADER: JDP	DRAWN BY: MBB
	CHECKED BY: GAK
	SHEET: 44 OF 577

Metric

N

VT. STATE PLANE GRID

WETLAND A

HELENA R. RICE LIFE ESTATE, HENRY W. McLENITHAN & SHIRLEY R. McLENITHAN, TRUSTEES OF THE HENRY W. AND SHIRLEY R. McLENITHAN REVOCABLE TRUST, & RONALD B. RICE

N/F MERRITT, MATTHEW J., III & MORIARTY, FRANCIS X.

BM # 102
SPIKE IN TREE 300 mm CHERRY
NGVD EL. 234.770

BM # 103
SPIKE IN ROOT 500 mm POPLAR
NGVD EL. 232.478

CVPS EASEMENT

I+945.63
49.18 m (161.35') LT

I+914.50
48.54 m (159.25') LT

I+747.35
37.74 m (123.82') LT

I+840.00
47.00 m (154.20') LT

I+725.56
35.56 m (116.67') LT

[277.08 m (909.05')]

74.51 m (244.45')

31.14 m (102.17')

93.11 m (305.48')

[106.09 m (348.06')]

BROOK

ABANDONED TROLLEY BED

32.84 m (107.74')

30.71 m (100.75')

22.06 m (72.38')

I+728.78
26.05 m (85.47') LT

I+750.79
27.59 m (90.52') LT

I+806.80
23.37 m (76.67') LT

101A

MATCH LINE STA. 1+680, ROW-1

VT. ROUTE 279 (PROPOSED UNDER NH F019-1(4))

N26° 50' 47"E

N26° 50' 47.0"E

I+700
HRI+700

I+800
HRI+800

I+900
HRI+900

N26° 50' 47.0"E

P.I. STA. HRI+974.474 BK.
P.I. STA. HRI+974.228 AHD

P.T. STA. HRI+998.799

P.C. STA. HRI+949.903

2+000

CURVE A-2

HR2+000

N40°

MATCH LINE STA. 2+020.00, ROW-3

100'

CVPS EASEMENT

107

EXCEPT & RESERVE

I+967.47
45.14 m (148.10') RT

I+969.89
43.55 m (142.88') RT

9.36 m (30.71')

I+939.06
57.53 m (188.75') RT

22.82 m (74.87')

15.99 m (52.46')

2.89 m (9.48')

[153.75 m (504.43')]

I+976.28
58.20 m (190.94') RT

LOSS OF ACCESS

82.35 m (270.18')

[187.54 m 615.29']

2+009.17
133.66 m (438.52') RT

[174.82 m (573.56')]

PAGE, MARK O. & SUSAN J.

102

DENSE TREES

85.30 m (279.86')

HELENA R. RICE LIFE ESTATE, HENRY W. McLENITHAN & SHIRLEY R. McLENITHAN, TRUSTEES OF THE HENRY W. AND SHIRLEY R. McLENITHAN REVOCABLE TRUST, & RONALD B. RICE

I+680.00
56.10 m (184.05') RT

40.98 m (134.45')

80.62 m (264.50')

38.78 m (127.23')

I+800.00
55.00 m (180.45') RT

I+720.00
65.00 m (213.25') RT

100.29 m (329.03')

I+838.78
55.70 m (182.74') RT

HELENA R. RICE LIFE ESTATE, HENRY W. McLENITHAN & SHIRLEY R. McLENITHAN, TRUSTEES OF THE HENRY W. AND SHIRLEY R. McLENITHAN REVOCABLE TRUST, & RONALD B. RICE
LOSS OF ACCESS

63.24 m (207.48')

102.91 m (337.63')

I+948.42
57.70 m (189.30') RT

N/F ECKNER, JOCHEN K. & BISCHOFF, BARBARA

DENSE TREES

HELENA R. RICE LIFE ESTATE, HENRY W. McLENITHAN & SHIRLEY R. McLENITHAN, TRUSTEES OF THE HENRY W. AND SHIRLEY R. McLENITHAN REVOCABLE TRUST, & RONALD B. RICE

I+862.49
114.33 m (375.10') RT

DATUM	
VERTICAL	NAVD 88
HORIZONTAL	NAD 83 (1992)

LINES SHOWN ON THIS PLAN AS EXISTING PROPERTY LINES P/L ARE BELIEVED TO BE ACCURATE BUT SHOULD NOT BE RELIED UPON FOR PURPOSES UNRELATED TO THE STATE OF VERMONT'S ACQUISITION OF LAND AND RIGHTS FOR THIS PROJECT.

THIS SHEET TO BE USED FOR RIGHT-OF-WAY INFORMATION ONLY

0 10 20 30
SCALE 1:500
@ FULL SIZE

R.O.W. PLAN
ROW-2

PROJECT NAME:	PROJECT NUMBER:
BENNINGTON	AC NH 019-1(53)
DESIGN FILE NAME: c:\dh\bennington\row	PLOT DATE: 05-21-07
PROJECT LEADER: JDP	DRAWN BY: MBB
	CHECKED BY: GAK
	SHEET: 45 OF 577

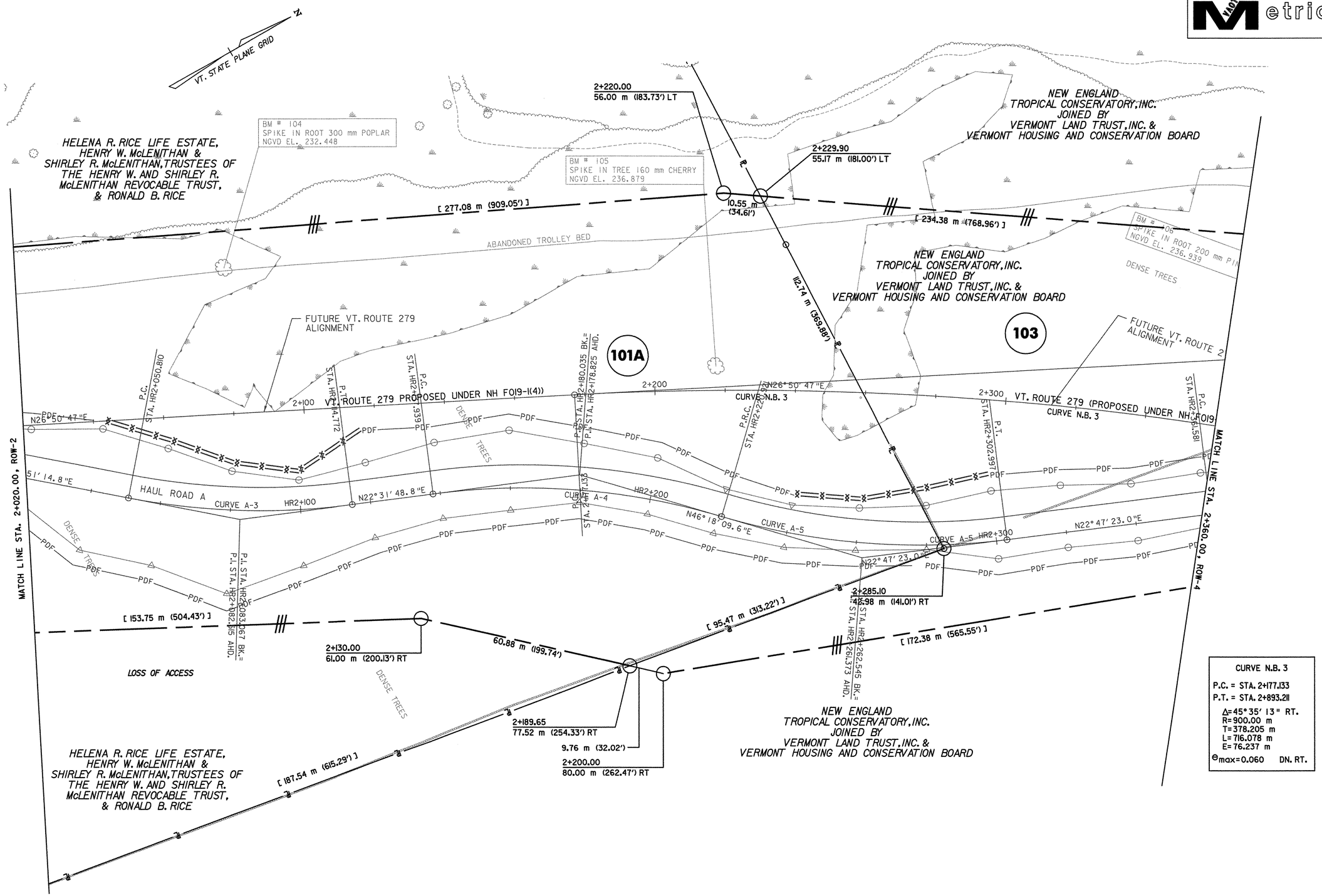

CURVE N.B. 3
P.C. = STA. 2+177.133
P.T. = STA. 2+893.211
Δ=45°35'13" RT.
R=900.00 m
T=378.205 m
L=716.078 m
E=76.237 m
Θ_{max}=0.060 DN. RT.

LINES SHOWN ON THIS PLAN AS EXISTING PROPERTY LINES P/L ARE BELIEVED TO BE ACCURATE BUT SHOULD NOT BE RELIED UPON FOR PURPOSES UNRELATED TO THE STATE OF VERMONT'S ACQUISITION OF LAND AND RIGHTS FOR THIS PROJECT.

THIS SHEET TO BE USED FOR RIGHT-OF-WAY INFORMATION ONLY

DATUM
VERTICAL NAVD 88
HORIZONTAL NAD 83 (1992)

0 10 20 30
SCALE 1:500
@ FULL SIZE

R.O.W. PLAN ROW-3

PROJECT NAME: BENNINGTON
PROJECT NUMBER: AC NH 019-1(53)
DESIGN FILE NAME: c:\dh\bennington\row
PROJECT LEADER: JDP
PLOT DATE: 05-21-07
DRAWN BY: MBB
CHECKED BY: GAK
SHEET: 46 OF 577

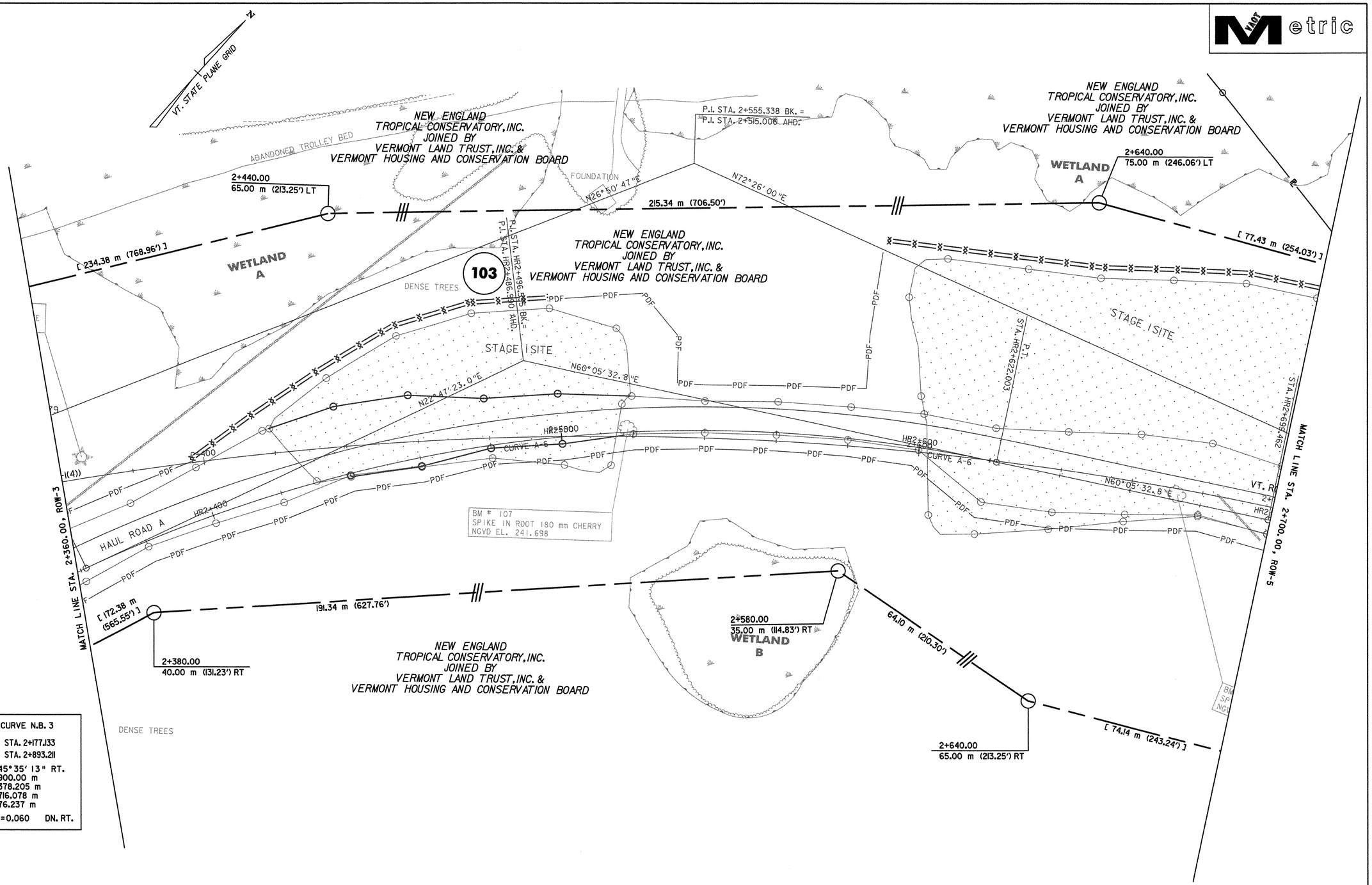

CURVE N.B. 3

P.C. = STA. 2+177.133
P.T. = STA. 2+893.211
Δ=45°35'13" RT.
R=900.00 m
T=378.205 m
L=716.078 m
E=76.237 m
Θ_{max}=0.060 DN. RT.

DATUM	
VERTICAL	NAVD 88
HORIZONTAL	NAD 83 (1992)

LINES SHOWN ON THIS PLAN AS EXISTING PROPERTY LINES P/L ARE BELIEVED TO BE ACCURATE BUT SHOULD NOT BE RELIED UPON FOR PURPOSES UNRELATED TO THE STATE OF VERMONT'S ACQUISITION OF LAND AND RIGHTS FOR THIS PROJECT.

THIS SHEET TO BE USED FOR RIGHT-OF-WAY INFORMATION ONLY

0 10 20 30
SCALE 1:500
@ FULL SIZE

R.O.W. PLAN ROW-4

PROJECT NAME: BENNINGTON	PROJECT NUMBER: AC NH 019-1(53)
DESIGN FILE NAME: c:\dh\bennington\row	PLOT DATE: 05-21-07
PROJECT LEADER: JDP	DRAWN BY: MBB
	CHECKED BY: GAK
	SHEET: 47 OF 577

VAOT Metric

N

VT. STATE PLANE GRID

MATCH LINE STA. 2+700.00, ROW-4

MATCH LINE STA. 2+960.00, ROW-6

2+711.47
68.48 m (224.67') LT

2+780.00
68.00 m (223.10') LT

[255.30 m (837.60')]

73.71 m (241.83')

[77.43m
(254.03')]

DENSE TREES

DENSE TREES

BM # 109
SPIKE IN ROOT 200 mm ASH
NGVD EL. 252.378

HOWE, ARTHUR M.& JUDY A.

PDF

103

NEW ENGLAND
TROPICAL CONSERVATORY, INC.
JOINED BY
VERMONT LAND TRUST, INC. &
VERMONT HOUSING AND CONSERVATION BOARD

R 204.77 m (671.82')

P.I. STA. HR2+796.375 BK.=
P.I. STA. HR2+795.624 AHD.

104A

P.T.
STA. HR2+892.537

FUTURE VT. ROUTE 279
ALIGNMENT

N72° 26' 00"E

2+900
HR2+900

N72° 26' 00.1"E

2+800
HR2+800

UTE 279 (PROPOSED UNDER NH F-019-1(4))

CURVE N.B. 3

CURVE A-7

700 HAUL ROAD A

2+885.23
40.83 m (133.96') RT

P.T.
STA. 2+893.211

P.I. STA. AR1+202.691 BK.=
P.I. STA. AR1+202.077 AHD.

BM #
SPIK
NGVD

2+881.30
51.34 m (168.44') RT

R 115 m (376.58')

39.00 m (127.95')

CONST (T)

DRIVE (T)

104C

ACCESS ROAD

CURVE AR-5

S68° 31' 02.4"W

23.58 m (83.27')

S57° 09' 57.8"W

S81° 02' 56.4"W

[229.19 m (751.93')]

AR1+200

CURVE AR-4

[209.55 m (687.50')]

46.90 m (153.87')

AR 1+209.97
4.50 m (14.76') LT

P.R.C.
STA. AR1+181.067

2+840.00
50.00 m (164.04') RT

113.68 m (372.97')

108
KE IN ROOT 190 mm ASH
D EL. 245.955

DENSE TREES

[74.14 m
(243.24')]

NEW ENGLAND
TROPICAL CONSERVATORY, INC.
JOINED BY
VERMONT LAND TRUST, INC. &
VERMONT HOUSING AND CONSERVATION BOARD

AR 1+256.59
5.55 m (18.21') LT

2+720.00
70.00 m (229.66') RT

P.T.
STA. AR1+243.038

P.I. STA. AR1+233.164 BK.=
P.I. STA. AR1+233.100 AHD.

P.R.C.
STA. AR1+223.226

HOWE, ARTHUR M.& JUDY A.

CURVE N.B. 3

P.C. = STA. 2+177.133
P.T. = STA. 2+893.211

Δ=45° 35' 13" RT.
R=900.00 m
T=378.205 m
L=716.078 m
E=76.237 m

emax=0.060 DN. RT.

DATUM
VERTICAL NAVD 88
HORIZONTAL NAD 83 (1992)

LINES SHOWN ON THIS PLAN AS EXISTING PROPERTY LINES P/L ARE BELIEVED TO BE ACCURATE BUT SHOULD NOT BE RELIED UPON FOR PURPOSES UNRELATED TO THE STATE OF VERMONT'S ACQUISITION OF LAND AND RIGHTS FOR THIS PROJECT.

THIS SHEET TO BE USED FOR RIGHT-OF-WAY INFORMATION ONLY

0 10 20 30
SCALE 1:500
@ FULL SIZE

R.O.W. PLAN
ROW-5

PROJECT NAME: BENNINGTON
PROJECT NUMBER: AC NH 019-1(53)
DESIGN FILE NAME: c:\dh\bennington\row
PROJECT LEADER: JDP
PLOT DATE: 05-21-07
DRAWN BY: MBB
CHECKED BY: GAK
SHEET: 48 OF 577

VAOT Metric

CURVE AR-1	CURVE AR-2	CURVE AR-3	CURVE AR-4
P.C. = STA. AR1+012.283	P.R.C. = STA. AR1+080.051	P.R.C. = STA. AR1+107.877	P.C. = STA. AR1+168.634
P.R.C. = STA. AR1+080.051	P.R.C. = STA. AR1+107.877	P.T. = STA. AR1+159.163	P.T. = STA. AR1+280.000
Δ= 15°31'52.4" RT.	Δ= 15°56'36.0" LT.	Δ= 11°45'14.0" RT.	Δ= 12°45'41.6" LT.
R= 250.000 m	R= 100.000 m	R= 250.000 m	R= 500.000 m
T= 34.093 m	T= 14.004 m	T= 25.733 m	T= 55.914 m
L= 67.768 m	L= 27.826 m	L= 51.286 m	L= 111.366 m
E= 2.314 m	E= 0.976 m	E= 1.321 m	E= 3.117 m
emax= N/A	emax= N/A	emax= N/A	emax= N/A

N

VT. STATE PLANE GRID

MATCH LINE ROW-7

MATCH LINE STA. 2+960.00, ROW-5

MATCH LINE ROW-8

EL. 252.461

104A

104B

104C

108

105A

105B

106A

106B

O'NEILL, PHILIP J.

JONES, HELEN M. & GAIL M.

HOWE, ARTHUR M. & JUDY A.

N/F HOWE

N/F GAILLARD

N/F CASMIER & KIRKPATRICK

BM # 111
SPIKE IN ROOT 280 mm PINE
NGVD EL. 235.908

BEGIN ACCESS ROAD
STA. AR1+000.000=
MIDDLE POWNAL ROAD
P.O.T. STA. MP1+412.000

ACCESS ROAD

CURVE AR-3

CURVE AR-2

CURVE AR-1

S64° 09' 58.8" W

S80° 06' 34.8" W

S64° 34' 42.4" W

S38° 02' 56.6" W

[209.55 m (687.50')]

[305.41m (1002.00')]

153.92 m (504.99') RT

[128.62 m (421.96')]

N62° 25' 24" W

[137.72 m (451.84')]

N33° 53' 36" W

21.40m (69.82')

3+111.11
51.00 m (167.32') RT

3+141.77
68.55 m (224.90') RT

7.54 m (24.75')

3+135.82
72.89 m (239.14') RT

3.80 m (12.47')

3+137.97
75.97 m (249.25') RT

142.17 m (466.44')

135.31m (443.88')

AR 1+001.08
13.80 m (45.28') LT

9.68 m (31.76')

TH 49 - MIDDLE POWNAL ROAD

P.I. STA. AR1+144.978 BK. =
P.I. STA. AR1+144.44 AHD.

P.R.C. STA. AR1+107.877

P.R.C. STA. AR1+080.051

P.I. STA. AR1+046.376 BK. =
P.I. STA. AR1+045.958 AHD.

P.C. STA. AR1+012.283

P.I. STA. MP 1+328.159 BK. =
P.I. STA. MP 1+327.867 AHD.

P.R.C. STA. HRB1+365.598

HAUL ROAD CURVE B-1

N44° 46' 46" E

HRB1+400

HRB1+300

N60° 46' 32" E

MPR 1+300

P.C. STA. HRB1+309.757

P.I. STA. HRB1+337.860 BK. =
P.I. STA. HRB1+337.494 AHD.

P.C.C. STA. MP 1+293.968

BEGIN HAUL ROAD B CONSTRUCTION
STA. HRB1+278.000

P.C. STA. MPR 1+256.613

BEGIN PAVING & STRIPING
STA. MP1+280.000

3+193.55
195.78 m (642.32') RT

P.O.T. STA. MPR 1+221.744 =
P.C. STA. MP 1+221.744

N3° 49' 59" W

CURVE MP 1

MIDDLE POWNAL ROAD

16.0 m

N 23° 09' 41" W

P.I. STA. MP 1+259.212 BK. =
P.I. STA. MP 1+256.500 AHD.

3+200.38
194.36 m (637.66') RT

7.64 m (25.07')

[289.31m (949.18')]

P.T. STA. MP 1+362.058

CURVE MP 2

BEGIN MAINTENANCE AGREEMENT ZONE #1
STA. MP 1+394.36 CL

0 10 20 30
SCALE 1:500
@ FULL SIZE

DATUM	
VERTICAL	NAVD 88
HORIZONTAL	NAD 83 (1992)

LINES SHOWN ON THIS PLAN AS EXISTING PROPERTY LINES P/L ARE BELIEVED TO BE ACCURATE BUT SHOULD NOT BE RELIED UPON FOR PURPOSES UNRELATED TO THE STATE OF VERMONT'S ACQUISITION OF LAND AND RIGHTS FOR THIS PROJECT.

THIS SHEET TO BE USED FOR RIGHT-OF-WAY INFORMATION ONLY

R.O.W. PLAN
ROW-6

PROJECT NAME:	PROJECT NUMBER:
BENNINGTON	AC NH 019-1(53)
DESIGN FILE NAME: c:\dh\bennington\row	PLOT DATE: 05-21-07
PROJECT LEADER: JDP	DRAWN BY: MBB
	CHECKED BY: GAK
	SHEET: 49 OF 577

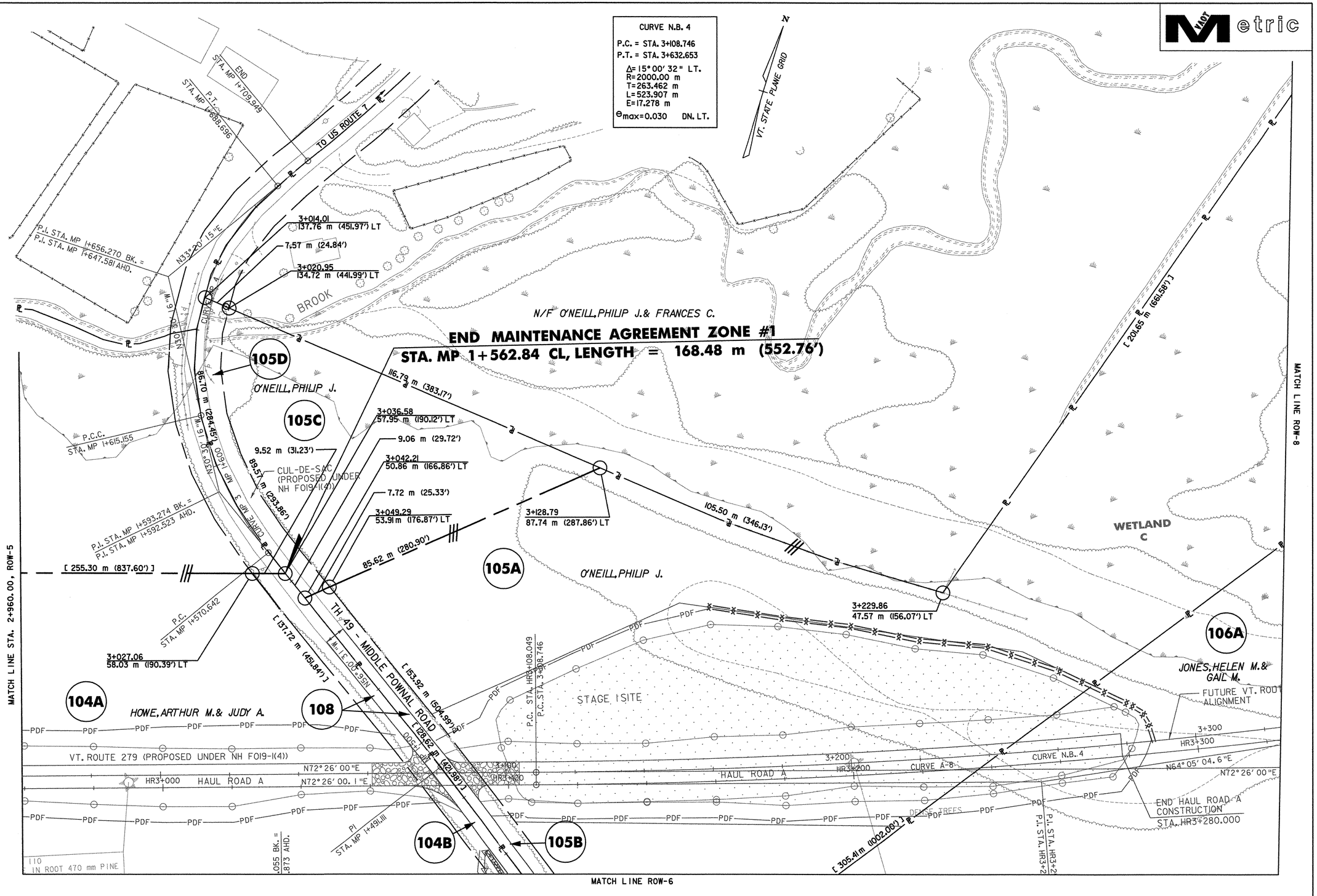

DATUM	
VERTICAL	NAVD 88
HORIZONTAL	NAD 83 (1992)

LINES SHOWN ON THIS PLAN AS EXISTING PROPERTY LINES P/L ARE BELIEVED TO BE ACCURATE BUT SHOULD NOT BE RELIED UPON FOR PURPOSES UNRELATED TO THE STATE OF VERMONT'S ACQUISITION OF LAND AND RIGHTS FOR THIS PROJECT.

THIS SHEET TO BE USED FOR RIGHT-OF-WAY INFORMATION ONLY

0 10 20 30
SCALE 1:500
@ FULL SIZE

R.O.W. PLAN ROW-7

PROJECT NAME: BENNINGTON	PROJECT NUMBER: AC NH 019-1(53)
DESIGN FILE NAME: c:\dh\bennington\row	PLOT DATE: 05-21-07
PROJECT LEADER: JDP	DRAWN BY: MBB
	CHECKED BY: GAK
	SHEET: 50 OF 577

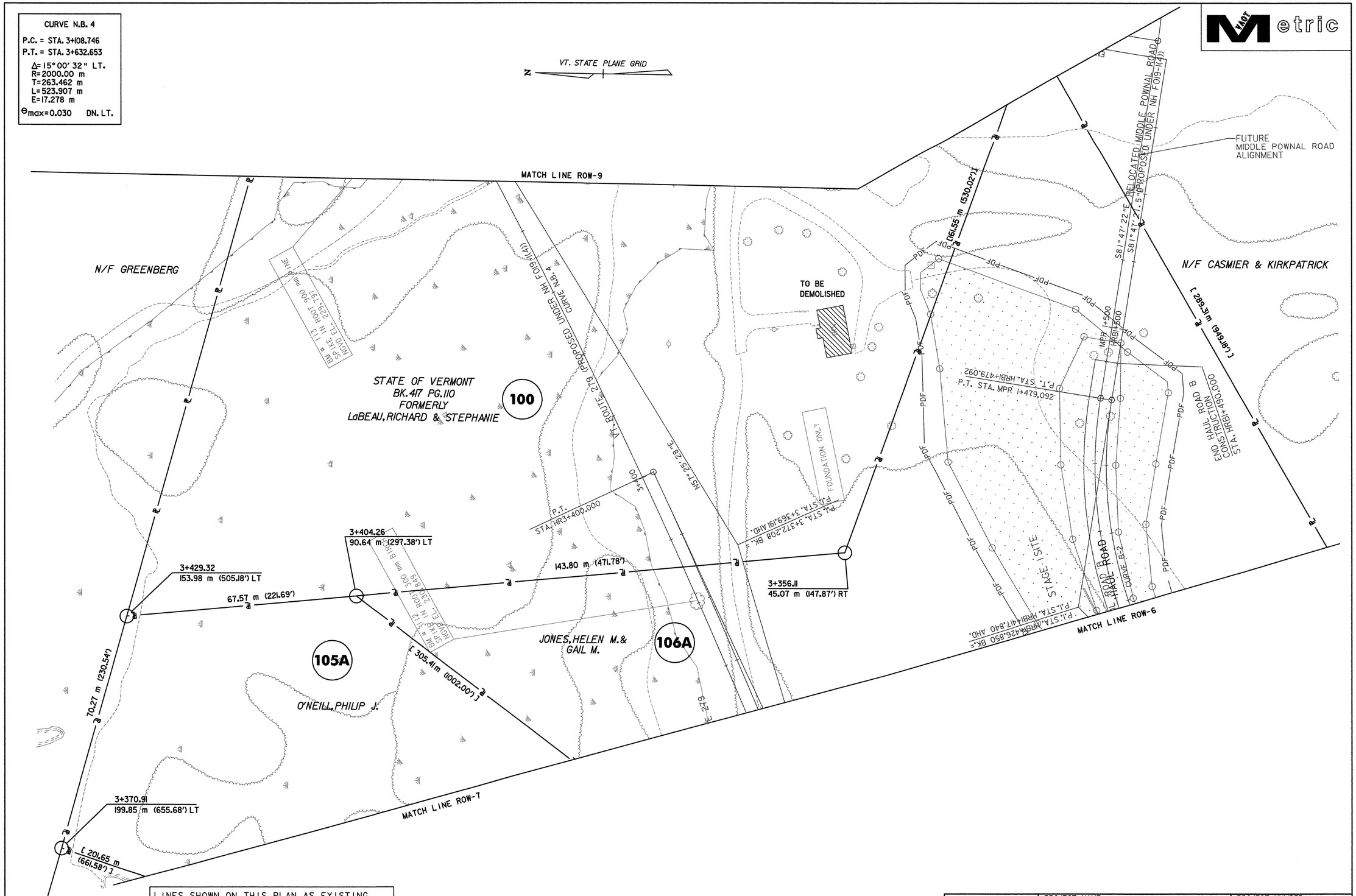

LINES SHOWN ON THIS PLAN AS EXISTING PROPERTY LINES P/L ARE BELIEVED TO BE ACCURATE BUT SHOULD NOT BE RELIED UPON FOR PURPOSES UNRELATED TO THE STATE OF VERMONT'S ACQUISITION OF LAND AND RIGHTS FOR THIS PROJECT.

THIS SHEET TO BE USED FOR RIGHT-OF-WAY INFORMATION ONLY

DATUM	
VERTICAL	NAVD 88
HORIZONTAL	NAD 83 (1992)

0 10 20 30
SCALE 1:500
@ FULL SIZE

R.O.W. PLAN ROW-8

PROJECT NAME: BENNINGTON	PROJECT NUMBER: AC NH 019-1(53)
DESIGN FILE NAME: c:\dh\bennington\row	PLOT DATE: 05-21-07
PROJECT LEADER: JDP	DRAWN BY: MBB
	CHECKED BY: GAK
	SHEET: 51 OF 577

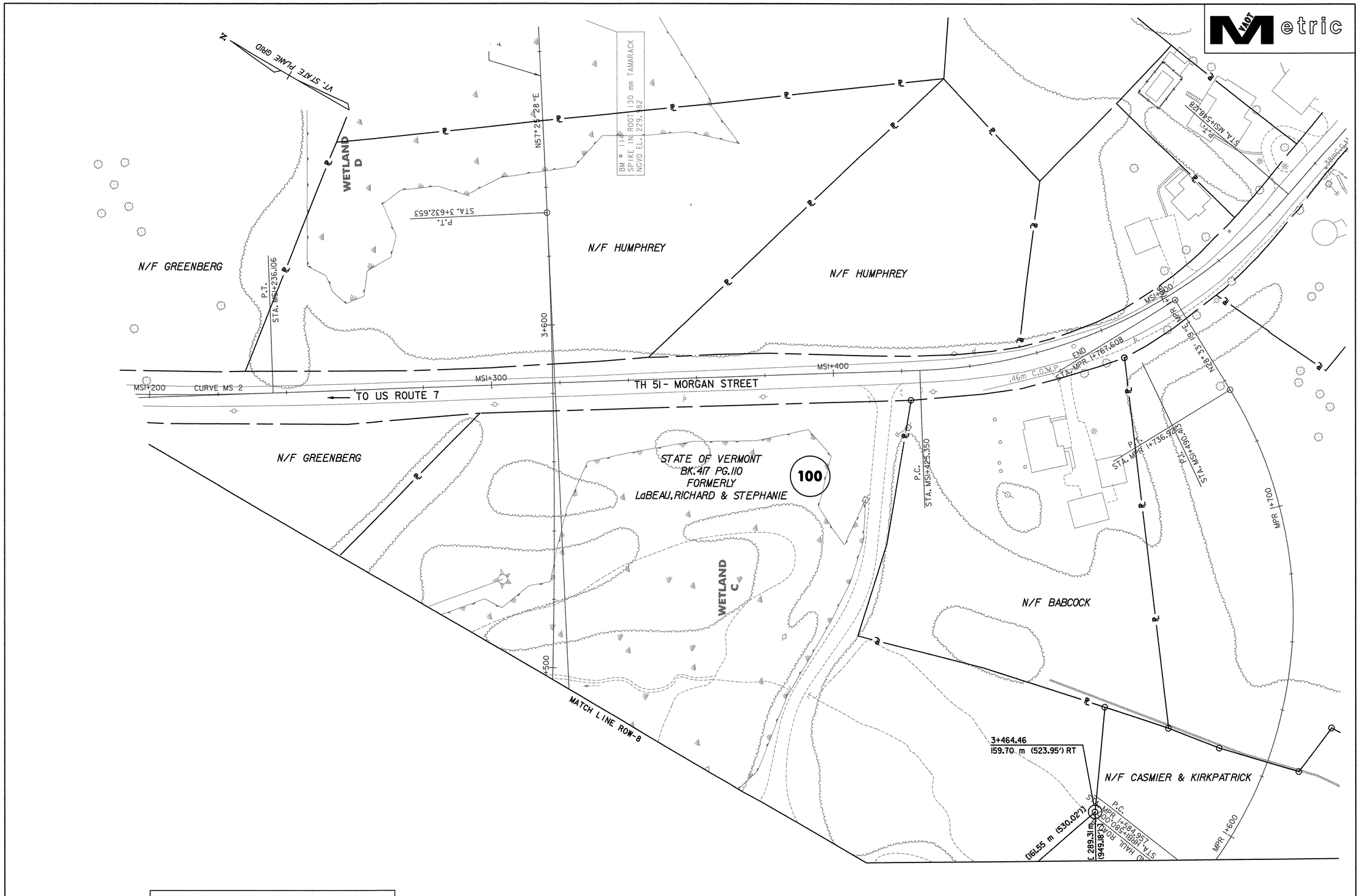

Metric

DATUM	
VERTICAL	NAVD 88
HORIZONTAL	NAD 83 (1992)

LINES SHOWN ON THIS PLAN AS EXISTING PROPERTY LINES P/L ARE BELIEVED TO BE ACCURATE BUT SHOULD NOT BE RELIED UPON FOR PURPOSES UNRELATED TO THE STATE OF VERMONT'S ACQUISITION OF LAND AND RIGHTS FOR THIS PROJECT.

THIS SHEET TO BE USED FOR RIGHT-OF-WAY INFORMATION ONLY

0 10 20 30
SCALE 1:500
@ FULL SIZE

R.O.W. PLAN ROW-9

PROJECT NAME: BENNINGTON	PROJECT NUMBER: AC NH 019-1(53)
DESIGN FILE NAME: c:\dh\bennington\row	PLOT DATE: 05-21-07
PROJECT LEADER: JDP	DRAWN BY: MBB
	CHECKED BY: GAK
	SHEET: 52 OF 577

VAOT Metric

VT STATE PLANE GRID

N

CH 1+200

N 3°26'17.0"E

GH 1+390

PC CH 1+311.646

CHAPEL ROAD

CURVE CH1

PI CH 1+348.535

E 444500 N 44700

E 444500 N 44700

E 444500 N 44700

BM # 142
SPIKE IN ROOT 0.39 m PINE
NAVD EL. 266.754

NB 8+100

CURVE NB7

NB 8+200

VT 279 NB

NB 8+300

NB 8+400

PT CH 1+385.090

CH 1+400

N 16°46'46.3"E

MATCH LINE STA. NB 8+420, SEE SHEET A-02

CURVE NB7	
Δ =	90°45'02.2"
R. =	575.000m
T. =	582.583m
L. =	910.741m
E. =	243.552m
BANK=	0.078
PI STA. NB	8+360.674
N =	44859.7020
E =	444732.6710
PC STA. NB	7+778.091
N =	44277.1693
E =	444725.0391
PT STA. NB	8+688.832
N =	44859.7019
E =	444150.0883

CURVE CH1	
Δ =	13°20'29.3"
R. =	315.411m
T. =	36.889m
L. =	73.444m
E. =	2.150m
BANK=	N/A
PI STA. CH	1+348.535
N =	44729.2251
E =	444458.9346
PC STA. CH	1+311.646
N =	44692.4025
E =	444456.7224
PT STA. CH	1+385.090
N =	44764.5435
E =	444469.5841

KEY MAP

1:500 SCALE
@ FULL SIZE

VERMONT AGENCY OF TRANSPORTATION

Stantec

PROJECT NAME: BENNINGTON
PROJECT NUMBER: AC NH 019-1(53)

FILE NAME: ...\plot_files\zd307c3alg.ptf
DESIGN SUPERVISOR: GREG EDWARDS
DESIGNED BY: MARC FOISY
ALIGNMENT PLAN A-01

PLOT DATE: 5/16/2011
DRAWN BY: STANTEC
CHECKED BY: GARY SANTY
SHEET 53 OF 577

v:\1953\active\195300021\transportation\drawing\contract_3\plot_files\zd307c3alg.ptf

VAOT Metric

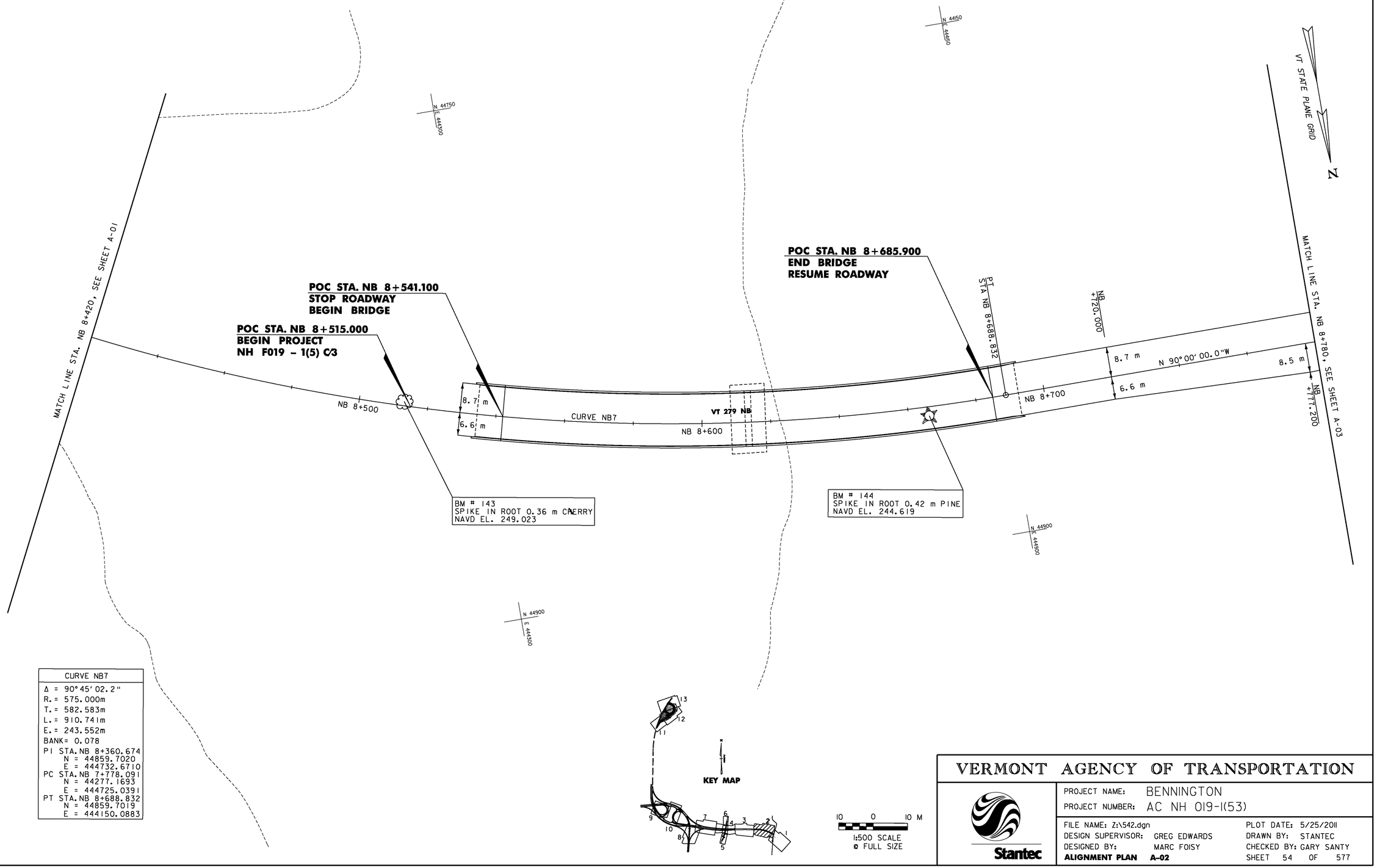

CURVE NB7
Δ = 90° 45' 02.2"
R. = 575.000m
T. = 582.583m
L. = 910.741m
E. = 243.552m
BANK= 0.078
PI STA. NB 8+360.674
N = 44859.7020
E = 444732.6710
PC STA. NB 7+778.091
N = 44277.1693
E = 444725.0391
PT STA. NB 8+688.832
N = 44859.7019
E = 444150.0883

10 0 10 M
1:500 SCALE
@ FULL SIZE

VERMONT AGENCY OF TRANSPORTATION

Stantec

PROJECT NAME: BENNINGTON
PROJECT NUMBER: AC NH 019-1(53)

FILE NAME: Z:\542.dgn
DESIGN SUPERVISOR: GREG EDWARDS
DESIGNED BY: MARC FOISY
ALIGNMENT PLAN A-02

PLOT DATE: 5/25/2011
DRAWN BY: STANTEC
CHECKED BY: GARY SANTY
SHEET 54 OF 577

Z:\542.dgn

VAOT Metric

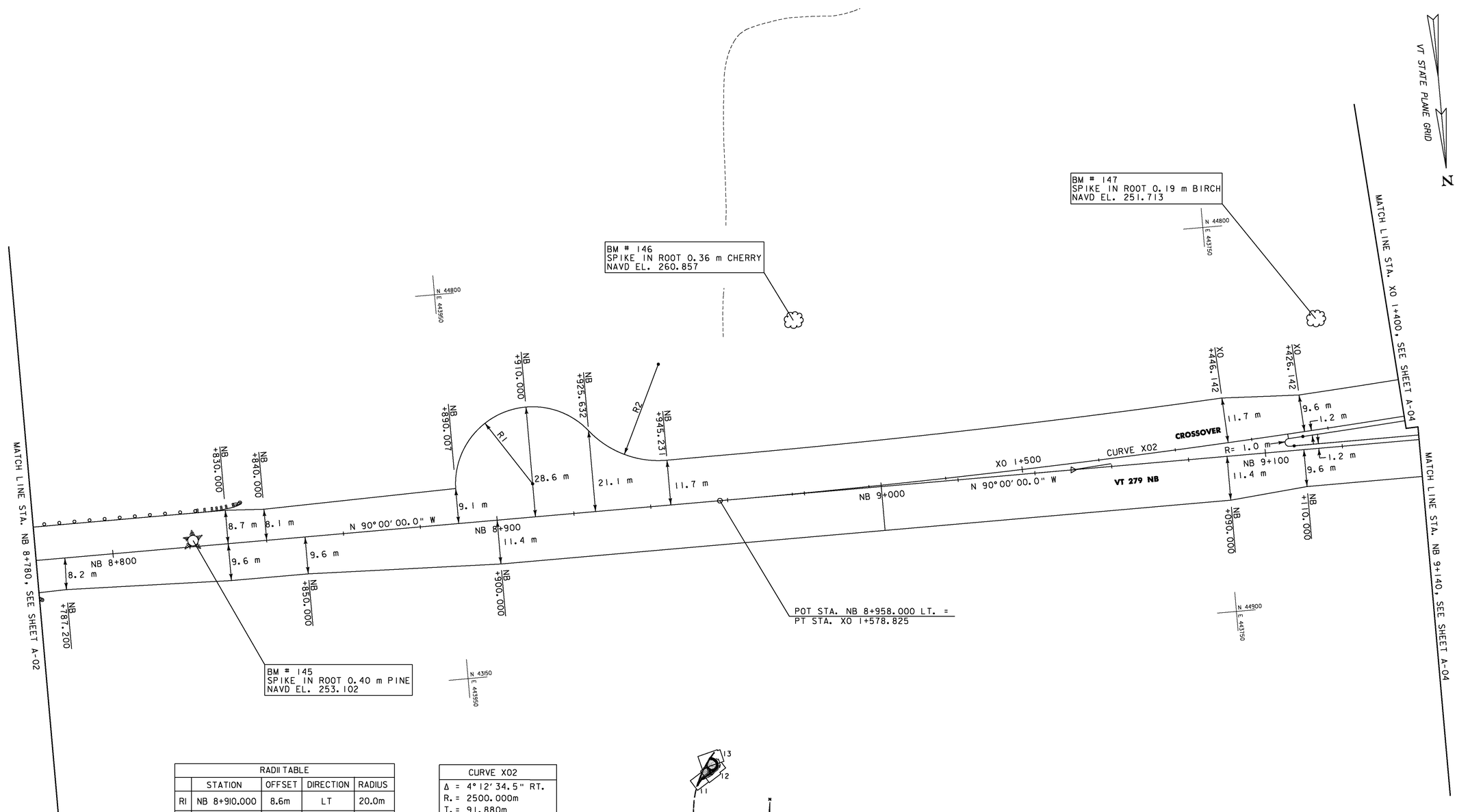

RADII TABLE				
	STATION	OFFSET	DIRECTION	RADIUS
R1	NB 8+910.000	8.6m	LT	20.0m
R2	NB 8+945.172	36.7m	LT	25.0m

CURVE X02
Δ = 4° 12' 34.5" RT.
R. = 2500.000m
T. = 91.880m
L. = 183.677m
E. = 1.688m
BANK = 0.020
PI STA. XO 1+487.027
N = 44859.7018
E = 443789.0399
PC STA. XO 1+395.148
N = 44852.9574
E = 443697.4078
PT STA. XO 1+578.825
N = 44859.7018
E = 443880.9198

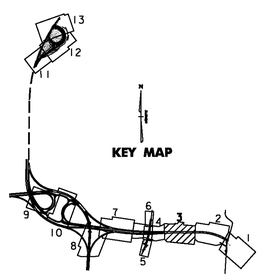

10 0 10 M
1:500 SCALE
@ FULL SIZE

VERMONT AGENCY OF TRANSPORTATION

Stantec

PROJECT NAME: BENNINGTON
PROJECT NUMBER: AC NH 019-1(53)

FILE NAME: ...\plot_files\zd307c3alg.ptf
DESIGN SUPERVISOR: GREG EDWARDS
DESIGNED BY: MARC FOISY
ALIGNMENT PLAN A-03

PLOT DATE: 5/16/2011
DRAWN BY: STANTEC
CHECKED BY: GARY SANTY
SHEET 55 OF 577

v:\1953\active\195310002\transportation\drawing\contract_3\plot_files\zd307c3alg.ptf

Metric

SUPERSEDED BY PRECEDING SHEET

CURVE DR1
Δ = 63°00'57.141"LT.
R. = 10.000m
T. = 6.130m
L. = 10.998m
E. = 1.729m
BANK = N/A
PI STA. DR 2+013.760
N = 44769.8540
E = 443553.4281
PC STA. DR 2+007.630
N = 44771.5943
E = 443547.5504
PT STA. DR 2+018.628
N = 44774.3021
E = 443557.6459

CURVE DR2
Δ = 54°11'30.685"RT.
R. = 10.000m
T. = 5.116m
L. = 9.458m
E. = 1.233m
BANK = N/A
PI STA. DR 2+042.265
N = 44791.4540
E = 443573.9100
PC STA. DR 2+037.149
N = 44787.7414
E = 443570.3896
PT STA. DR 2+046.607
N = 44790.7711
E = 443578.9806

CURVE NB8
Δ = 7°15'00.000" RT.
R. = 2380.000m
T. = 150.780m
L. = 301.157m
E. = 4.771m
BANK = 0.025
PI STA. NB 9+411.766
N = 44859.7018
E = 443427.1540
PC STA. NB 9+260.986
N = 44859.7018
E = 443577.9337
PT STA. NB 9+562.143
N = 44878.7300
E = 443277.5798

CURVE ERI
Δ = 16°42'48.2" LT.
R. = 800.000m
T. = 117.516m
L. = 233.363m
E. = 8.585m
BANK = 0.020
PI STA. ER 1+121.710
N = 44784.9998
E = 443552.3856
PC STA. ER 1+004.194
N = 44677.5126
E = 443504.8830
PT STA. ER 1+237.557
N = 44901.6072
E = 443566.9699

CURVE XOI
Δ = 11°27'34.5" RT.
R. = 1595.000m
T. = 160.040m
L. = 319.012m
E. = 8.009m
BANK = 0.037
PI STA. XO 1+160.040
N = 44835.6210
E = 443461.8693
PC STA. XO 1+000.000
N = 44855.8178
E = 443303.1092
PT STA. XO 1+319.012
N = 44847.3686
E = 443621.4772

CURVE XO2
Δ = 4°12'34.5" RT.
R. = 2500.000m
T. = 91.880m
L. = 183.677m
E. = 1.688m
BANK = 0.020
PI STA. XO 1+487.027
N = 44859.7018
E = 443789.0399
PC STA. XO 1+395.148
N = 44852.9574
E = 443697.4078
PT STA. XO 1+578.825
N = 44859.7018
E = 443880.9198

RADII TABLE				
	STATION	OFFSET	DIRECTION	RADIUS
R3	ER 1+100.225	9.2m	RT	4.8m
R4	ER 1+111.956	8.0m	RT	3.5m
R5	ER 1+116.605	7.6m	RT	8.2m

NOTE:
1) SEE SHEETS TC-02 & TC-03 FOR ALIGNMENT DATA RELATING TO EAST ROAD AND SHEETS TC-01 & TC-02 FOR THE EAST ROAD DETOUR.

KEY MAP

1:500 SCALE
@ FULL SIZE

BM # 148
SPIKE IN ROOT 0.35 m ASH
NAVD EL. 237.048

VERMONT AGENCY OF TRANSPORTATION

Stantec

PROJECT NAME: BENNINGTON
PROJECT NUMBER: AC NH 019-1(53)

FILE NAME: ...\plot_files\zd307c3alg.ptf
DESIGN SUPERVISOR: GREG EDWARDS
DESIGNED BY: MARC FOISY
ALIGNMENT PLAN A-04
PLOT DATE: 5/18/2007
DRAWN BY: STANTEC
CHECKED BY: GARY SANTY
SHEET 56 OF 577

Y:\1953\active\195310002\transportation\drawing\contract_3\plot_files\zd307c3alg.ptf

CURVE DR1
Δ = 63°00'57.141"LT.
R. = 10.000m
T. = 6.130m
L. = 10.998m
E. = 1.729m
BANK = N/A
PI STA. DR 2+013.760
N = 44769.8540
E = 443553.4281
PC STA. DR 2+007.630
N = 44771.5943
E = 443547.5504
PT STA. DR 2+018.628
N = 44774.3021
E = 443557.6459

CURVE DR2
Δ = 54°11'30.685"RT.
R. = 10.000m
T. = 5.116m
L. = 9.458m
E. = 1.233m
BANK = N/A
PI STA. DR 2+042.265
N = 44791.4540
E = 443573.9100
PC STA. DR 2+037.149
N = 44787.7414
E = 443570.3896
PT STA. DR 2+046.607
N = 44790.7711
E = 443578.9806

CURVE NB8
Δ = 7°15'00.000" RT.
R. = 2380.000m
T. = 150.780m
L. = 301.157m
E. = 4.771m
BANK = 0.025
PI STA. NB 9+411.766
N = 44859.7018
E = 443427.1540
PC STA. NB 9+260.986
N = 44859.7018
E = 443577.9337
PT STA. NB 9+562.143
N = 44878.7300
E = 443277.5798

CURVE ERI
Δ = 16°42'48.2" LT.
R. = 800.000m
T. = 117.516m
L. = 233.363m
E. = 8.585m
BANK= 0.020
PI STA. ER 1+121.710
N = 44784.9998
E = 443552.3856
PC STA. ER 1+004.194
N = 44677.5126
E = 443504.8830
PT STA. ER 1+237.557
N = 44901.6072
E = 443566.9699

CURVE XO1
Δ = 11°27'34.5" RT.
R. = 1595.000m
T. = 160.040m
L. = 319.012m
E. = 8.009m
BANK = 0.037
PI STA. XO 1+160.040
N = 44835.6210
E = 443461.8693
PC STA. XO 1+000.000
N = 44855.8178
E = 443303.1092
PT STA. XO 1+319.012
N = 44847.3686
E = 443621.4772

CURVE XO2
Δ = 4°12'34.5" RT.
R. = 2500.000m
T. = 91.880m
L. = 183.677m
E. = 1.688m
BANK = 0.020
PI STA. XO 1+487.027
N = 44859.7018
E = 443789.0399
PC STA. XO 1+395.148
N = 44852.9574
E = 443697.4078
PT STA. XO 1+578.825
N = 44859.7018
E = 443880.9198

RADII TABLE				
	STATION	OFFSET	DIRECTION	RADIUS
R3	ER 1+100.225	9.2m	RT	4.8m
R4	ER 1+111.956	8.0m	RT	3.5m
R5	ER 1+116.605	7.6m	RT	8.2m

NOTE:
1) SEE SHEETS TC-02 & TC-03 FOR ALIGNMENT DATA RELATING TO EAST ROAD AND SHEETS TC-01 & TC-02 FOR THE EAST ROAD DETOUR.

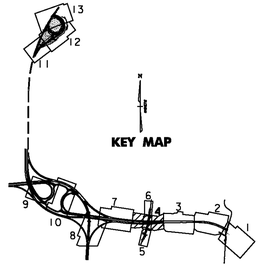

1:500 SCALE
@ FULL SIZE

VERMONT AGENCY OF TRANSPORTATION

Stantec

PROJECT NAME: BENNINGTON
PROJECT NUMBER: AC NH 019-1(53)

FILE NAME: ...\plot_files\zd307c3alg.ptf
DESIGN SUPERVISOR: GREG EDWARDS
DESIGNED BY: MARC FOISY
ALIGNMENT PLAN A-04
PLOT DATE: 5/16/2011
DRAWN BY: STANTEC
CHECKED BY: GARY SANTY
SHEET 56 OF 577

v:\1953\active\195300021\transportation\drawing\contract_3\plot_files\zd307c3alg.ptf

VAOT Metric

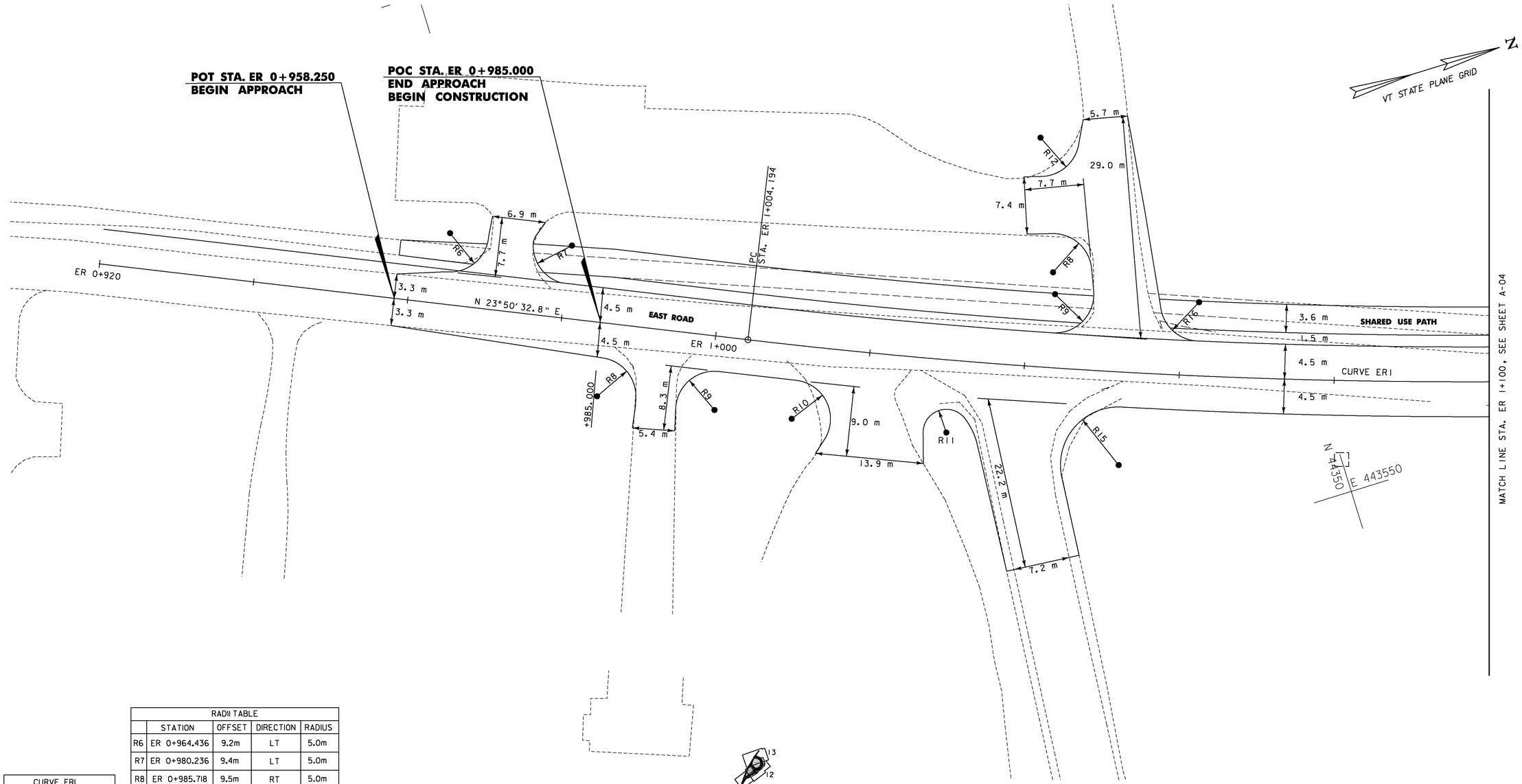

CURVE ER1
Δ = 16°42'48.2" LT.
R. = 800.000m
T. = 117.516m
L. = 233.363m
E. = 8.585m
BANK= 0.020
PI STA.ER 1+121.710
N = 44784.9998
E = 443552.3856
PC STA.ER 1+004.194
N = 44677.5126
E = 443504.8830
PT STA.ER 1+237.557
N = 44901.6072
E = 443566.9699

RADII TABLE				
	STATION	OFFSET	DIRECTION	RADIUS
R6	ER 0+964.436	9.2m	LT	5.0m
R7	ER 0+980.236	9.4m	LT	5.0m
R8	ER 0+985.718	9.5m	RT	5.0m
R9	ER 1+000.955	9.5m	RT	5.0m
R10	ER 1+010.901	9.5m	RT	5.0m
R11	ER 1+030.691	9.4m	RT	3.0m
R12	ER 1+039.967	29.5m	LT	5.0m
R13	ER 1+042.866	12.3m	LT	5.0m
R14	ER 1+043.324	9.5m	LT	5.0m
R15	ER 1+052.855	12.0m	RT	7.5m
R16	ER 1+062.153	9.5m	LT	5.0m

NOTE: 1) SEE SHEETS TC-02 & TC-03 FOR ALIGNMENT DATA RELATING TO EAST ROAD DETOUR.

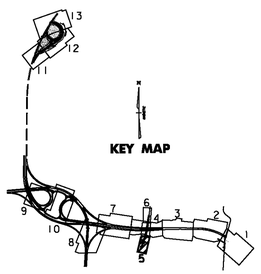

5 0 5
1:250 SCALE @ FULL SIZE

VERMONT AGENCY OF TRANSPORTATION

Stantec

PROJECT NAME: BENNINGTON
PROJECT NUMBER: AC NH 019-1(53)

FILE NAME: ...\plot_files\zd307c3alg.ptf
DESIGN SUPERVISOR: GREG EDWARDS
DESIGNED BY: MARC FOISY
ALIGNMENT PLAN A-05

PLOT DATE: 5/16/2011
DRAWN BY: STANTEC
CHECKED BY: GARY SANTY
SHEET 57 OF 577

v:\853\active\853002\transportation\drawing\contract_3\plot_files\zd307c3alg.ptf

VAOT Metric

N

VT STATE PLANE GRID

POT STA. ER 1+310.000
END CONSTRUCTION
BEGIN APPROACH

POT STA. ER 1+336.750
END APPROACH

SHIELDS DRIVE

MATCH LINE STA. ER 1+260, SEE SHEET A-04

SHARED USE PATH

3.6 m
1.5 m
4.5 m
4.2 m
4.5 m
4.5 m
9.8 m

EAST ROAD

N 07° 07' 44.6"E

ER 1+300

ER 1+363

ER 1+316.749

R17

R18

10.5 m

2.2 m

RADII TABLE				
		OFFSET	DIRECTION	RADIUS
R17	ER 1+264.820	9.5m	RT	5.0m
R18	ER 1+278.452	9.5m	RT	5.0m

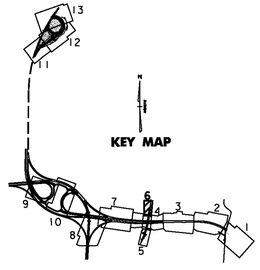

NOTE: 1) SEE SHEETS TC-02 & TC-03 ALIGNMENT DATA RELATING TO EAST ROAD DETOUR.

5 0 5

1:250 SCALE
@ FULL SIZE

VERMONT AGENCY OF TRANSPORTATION

Stantec

PROJECT NAME: BENNINGTON
PROJECT NUMBER: AC NH 019-1(53)

FILE NAME: ...\plot_files\zd307c3alg.ptf
DESIGN SUPERVISOR: GREG EDWARDS
DESIGNED BY: MARC FOISY
ALIGNMENT PLAN A-06

PLOT DATE: 5/16/2011
DRAWN BY: STANTEC
CHECKED BY: GARY SANTY
SHEET 58 OF 577

v:\1953\active\195310002\transportation\drawing\contract_3\plot_files\zd307c3alg.ptf

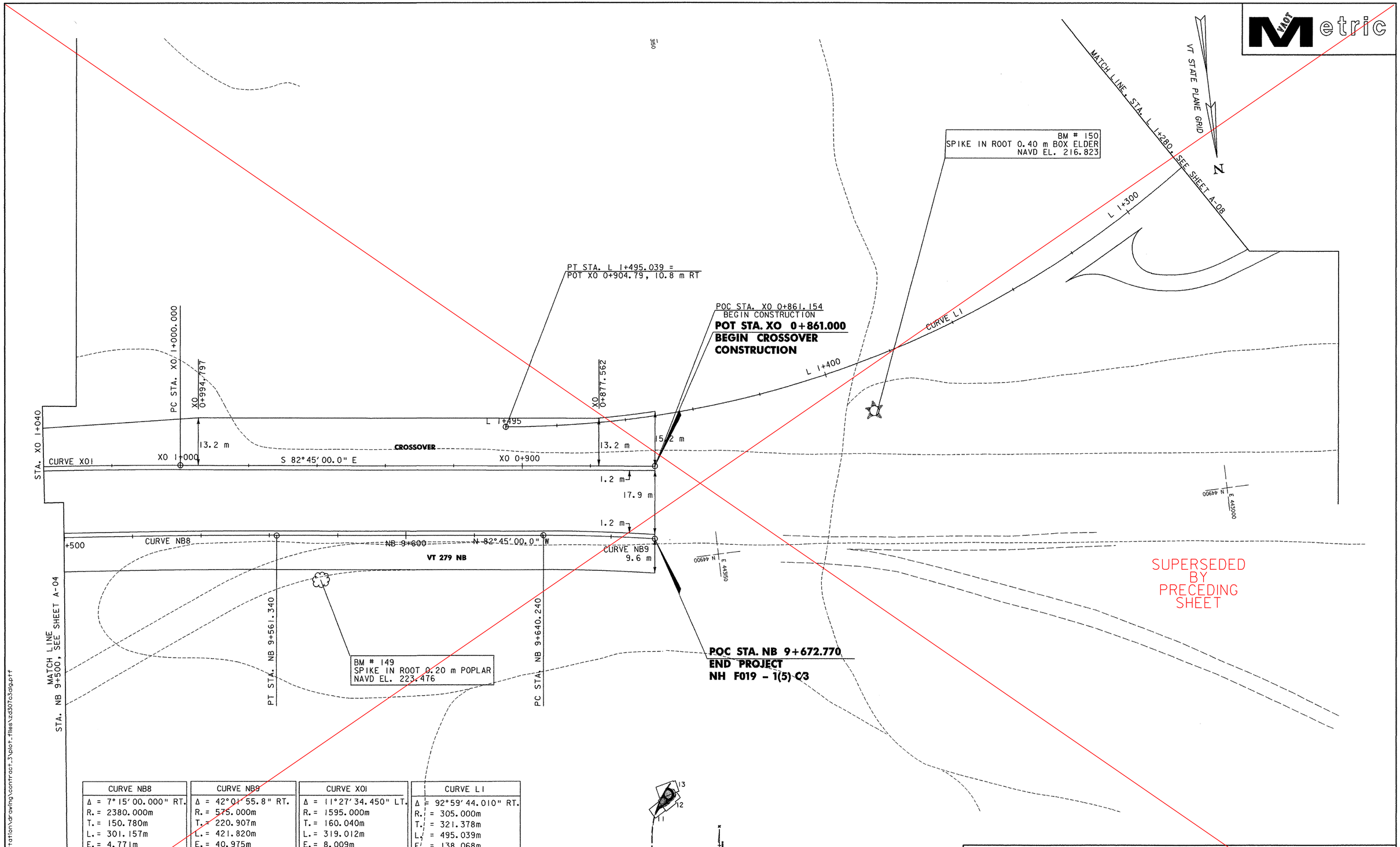

CURVE NB8	CURVE NB9	CURVE XO1	CURVE L1
Δ = 7°15'00.000" RT.	Δ = 42°01'55.8" RT.	Δ = 11°27'34.450" LT.	Δ = 92°59'44.010" RT.
R. = 2380.000m	R. = 575.000m	R. = 1595.000m	R. = 305.000m
T. = 150.780m	T. = 220.907m	T. = 160.040m	T. = 321.378m
L. = 301.157m	L. = 421.820m	L. = 319.012m	L. = 495.039m
E. = 4.771m	E. = 40.975m	E. = 8.009m	E. = 138.068m
BANK = 0.025	BANK = 0.078	BANK = 0.037	PI STA. L 1+321.378
PI STA. NB 9+411.766	PI STA. NB 9+861.703	PI STA. XO 1+160.040	N = 44897.6760
N = 44859.7018	N = 44916.5342	N = 44835.6210	E = 442888.4934
E = 443427.1540	E = 442980.4150	E = 443461.8693	PC STA. L 1+000.000
PC STA. NB 9+260.986	PC STA. NB 9+640.796	PC STA. XO 1+000.000	N = 44577.1835
N = 44859.7018	N = 44888.6559	N = 44855.8178	E = 442864.6522
E = 443577.9337	E = 443199.5559	E = 443303.1092	PT STA. L 1+495.039
PT STA. NB 9+562.143	PT STA. NB 10+062.616	PT STA. XO 1+319.012	N = 44857.1188
N = 44878.7300	N = 45083.9665	N = 44847.3686	E = 443207.3020
E = 443277.5798	E = 442836.3098	E = 443621.4772	

VERMONT AGENCY OF TRANSPORTATION

Stantec

PROJECT NAME: BENNINGTON
PROJECT NUMBER: AC NH 019-1(53)

FILE NAME: ...\plot_files\zd307c3alg.ptf
DESIGN SUPERVISOR: GREG EDWARDS
DESIGNED BY: MARC FOISY
ALIGNMENT PLAN A-07

PLOT DATE: 5/18/2007
DRAWN BY: STANTEC
CHECKED BY: GARY SANTY
SHEET 59 OF 577

v:\1953\active\195310002\transportation\drawing\contract_3\plot_files\zd307c3alg.ptf

VAOT Metric

MATCH LINE, STA. L 1+280, SEE SHEET A-08

VT STATE PLANE GRID

N

BM # 150
SPIKE IN ROOT 0.40 m BOX ELDER
NAVD EL. 216.823

L 1+300

L 1+400

CURVE L1

PT STA. L 1+495.039 =
POT XO 0+904.79, 10.8 m RT

POC STA. XO 0+861.154
BEGIN CONSTRUCTION
POT STA. XO 0+861.000
BEGIN CROSSOVER CONSTRUCTION

PC STA. XO 1+000.000

XO 0+994.797

XO 0+877.562

L 1+495

13.2 m

13.2 m

15.2 m

CROSSOVER

STA. XO 1+040

CURVE XO1

XO 1+000

S 82°45'00.0" E

XO 0+900

1.2 m

17.9 m

N 02°45'-00" W

N 449000 E 443000

+500

CURVE NB8

NB 9+600

N 82°45'00.0" W

VT 279 NB

N 449000 E 443000

MATCH LINE
STA. NB 9+500, SEE SHEET A-04

PT STA. NB 9+561.340

BM # 149
SPIKE IN ROOT 0.20 m POPLAR
NAVD EL. 223.476

POC STA. NB 9+672.770
END PROJECT
NH F019 - 1(5) C3

DELETED

CURVE NB8	CURVE NB9	CURVE XO1	CURVE L1
Δ = 7°15'00.000" RT.	Δ = 42°01'55.8" RT.	Δ = 11°27'34.450" LT.	Δ = 92°59'44.010" RT.
R. = 2380.000m	R. = 575.000m	R. = 1595.000m	R. = 305.000m
T. = 150.780m	T. = 220.907m	T. = 160.040m	T. = 321.378m
L. = 301.157m	L. = 421.820m	L. = 319.012m	L. = 495.039m
E. = 4.771m	E. = 40.975m	E. = 8.009m	E. = 138.068m
BANK = 0.025	BANK = 0.078	BANK = 0.037	PI STA. L 1+321.378
PI STA. NB 9+411.766	PI STA. NB 9+861.703	PI STA. XO 1+160.040	N = 44897.6760
N = 44859.7018	N = 44916.5342	N = 44835.6210	E = 442888.4934
E = 443427.1540	E = 442980.4150	E = 443461.8693	PC STA. L 1+000.000
PC STA. NB 9+260.986	PC STA. NB 9+640.796	PC STA. XO 1+000.000	N = 44577.1835
N = 44859.7018	N = 44888.6559	N = 44855.8178	E = 442864.6522
E = 443577.9337	E = 443199.5559	E = 443303.1092	PT STA. L 1+495.039
PT STA. NB 9+562.143	PT STA. NB 10+062.616	PT STA. XO 1+319.012	N = 44857.1188
N = 44878.7300	N = 45083.9665	N = 44847.3686	E = 443207.3020
E = 443277.5798	E = 442836.3098	E = 443621.4772	

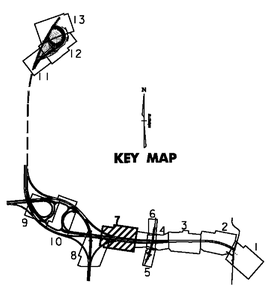

10 0 10 M
1:500 SCALE
@ FULL SIZE

VERMONT AGENCY OF TRANSPORTATION

Stantec

PROJECT NAME: BENNINGTON
PROJECT NUMBER: AC NH 019-1(53)

FILE NAME: ...\plot_files\zd307c3alg.ptf
DESIGN SUPERVISOR: GREG EDWARDS
DESIGNED BY: MARC FOISY
ALIGNMENT PLAN A-07

PLOT DATE: 5/16/2011
DRAWN BY: STANTEC
CHECKED BY: GARY SANTY
SHEET 59 OF 577

v:\1853\active\853000021\transportation\drawing\contract_3\plot_files\zd307c3alg.ptf

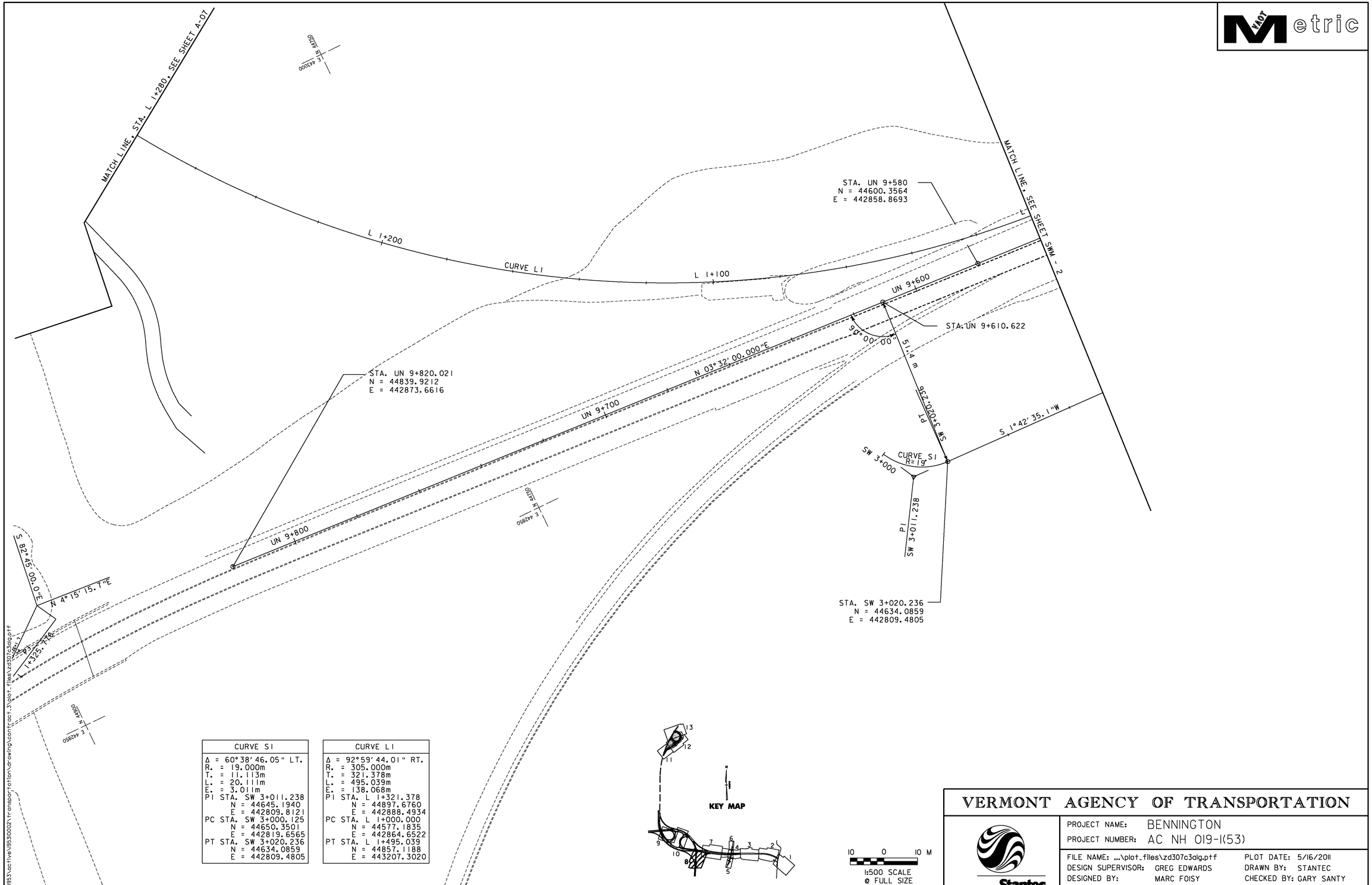

CURVE S1
Δ = 60°38'46.05" LT.
R. = 19.000m
T. = 11.113m
L. = 20.111m
E. = 3.011m
PI STA. SW 3+011.238
N = 44645.1940
E = 442809.8121
PC STA. SW 3+000.125
N = 44650.3501
E = 442819.6565
PT STA. SW 3+020.236
N = 44634.0859
E = 442809.4805

CURVE L1
Δ = 92°59'44.01" RT.
R. = 305.000m
T. = 321.378m
L. = 495.039m
E. = 138.068m
PI STA. L 1+321.378
N = 44897.6760
E = 442888.4934
PC STA. L 1+000.000
N = 44577.1835
E = 442864.6522
PT STA. L 1+495.039
N = 44857.1188
E = 443207.3020

VERMONT AGENCY OF TRANSPORTATION

Stantec

PROJECT NAME: BENNINGTON
PROJECT NUMBER: AC NH 019-1(53)

FILE NAME: ...\plot_files\zd307c3alg.ptf
DESIGN SUPERVISOR: GREG EDWARDS
DESIGNED BY: MARC FOISY
ALIGNMENT PLAN A-08

PLOT DATE: 5/16/2011
DRAWN BY: STANTEC
CHECKED BY: GARY SANTY
SHEET 60 OF 577

v:\1953\active\195310002\transportation\drawing\contract_3\plot_files\zd307c3alg.ptf

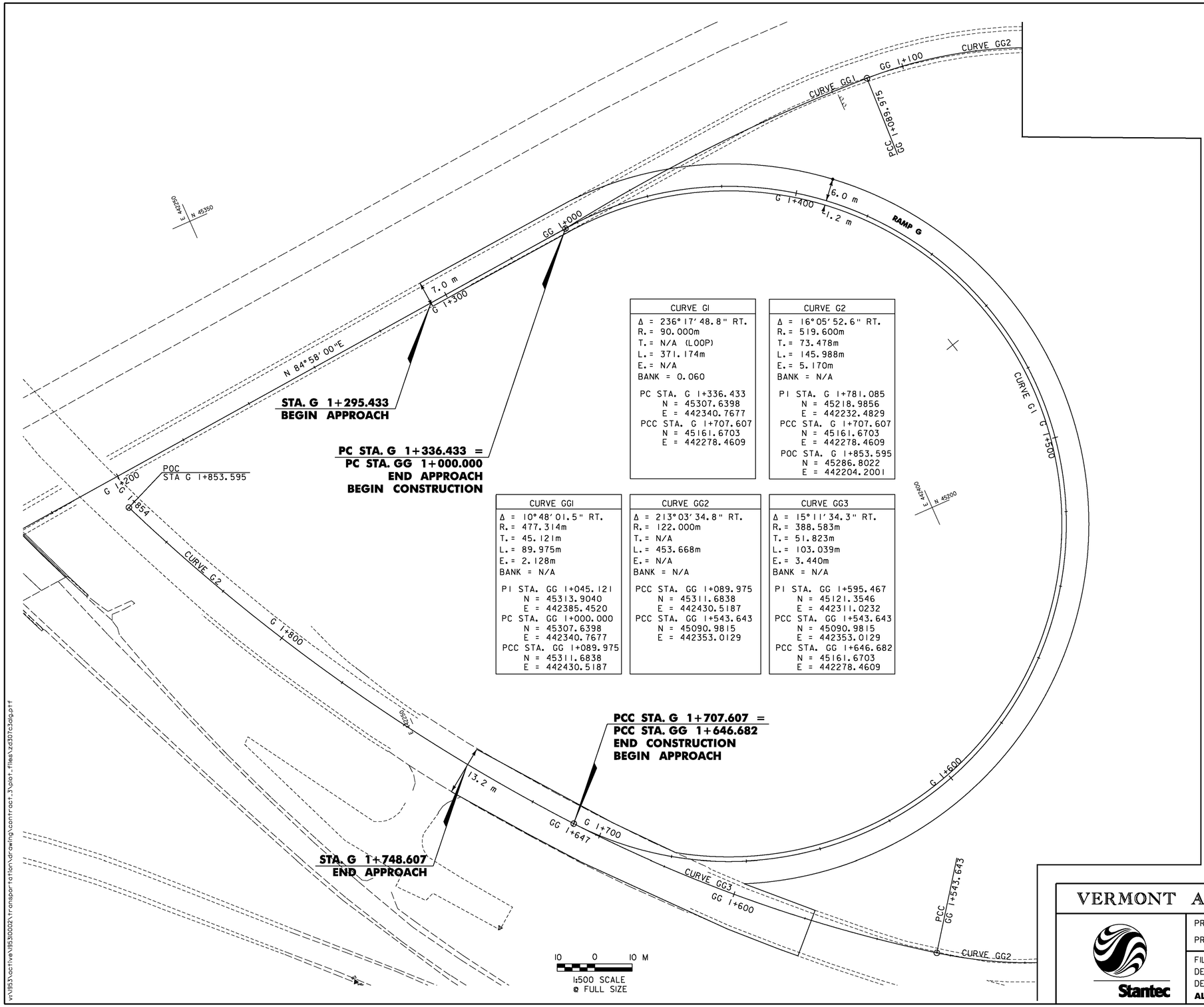

CURVE G1	CURVE G2
Δ = 236°17'48.8" RT.	Δ = 16°05'52.6" RT.
R. = 90.000m	R. = 519.600m
T. = N/A (LOOP)	T. = 73.478m
L. = 371.174m	L. = 145.988m
E. = N/A	E. = 5.170m
BANK = 0.060	BANK = N/A
PC STA. G 1+336.433	PI STA. G 1+781.085
N = 45307.6398	N = 45218.9856
E = 442340.7677	E = 442232.4829
PCC STA. G 1+707.607	PCC STA. G 1+707.607
N = 45161.6703	N = 45161.6703
E = 442278.4609	E = 442278.4609
	POC STA. G 1+853.595
	N = 45286.8022
	E = 442204.2001

CURVE GG1	CURVE GG2	CURVE GG3
Δ = 10°48'01.5" RT.	Δ = 213°03'34.8" RT.	Δ = 15°11'34.3" RT.
R. = 477.314m	R. = 122.000m	R. = 388.583m
T. = 45.121m	T. = N/A	T. = 51.823m
L. = 89.975m	L. = 453.668m	L. = 103.039m
E. = 2.128m	E. = N/A	E. = 3.440m
BANK = N/A	BANK = N/A	BANK = N/A
PI STA. GG 1+045.121	PCC STA. GG 1+089.975	PI STA. GG 1+595.467
N = 45313.9040	N = 45311.6838	N = 45121.3546
E = 442385.4520	E = 442430.5187	E = 442311.0232
PC STA. GG 1+000.000	PCC STA. GG 1+543.643	PCC STA. GG 1+543.643
N = 45307.6398	N = 45090.9815	N = 45090.9815
E = 442340.7677	E = 442353.0129	E = 442353.0129
PCC STA. GG 1+089.975		PCC STA. GG 1+646.682
N = 45311.6838		N = 45161.6703
E = 442430.5187		E = 442278.4609

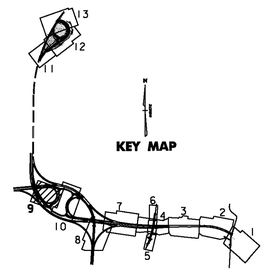

VERMONT AGENCY OF TRANSPORTATION

Stantec

PROJECT NAME: BENNINGTON
PROJECT NUMBER: AC NH 019-1(53)

FILE NAME: ...\plot_files\zd307c3alg.ptf
DESIGN SUPERVISOR: GREG EDWARDS
DESIGNED BY: MARC FOISY
ALIGNMENT PLAN A-09

PLOT DATE: 5/16/2011
DRAWN BY: STANTEC
CHECKED BY: GARY SANTY
SHEET 61 OF 577

v:\1953\active\195310002\transportation\drawing\contract_3\plot_files\zd307c3alg.ptf

VAOT Metric

GG 1+500

E 442400
N 45950

MATCH LINE, SEE SHEET A-09

VT STATE PLANE GRID

N

SW 14+149.900
N = 45340.4348
E = 442504.4885

E 442550
N 45350

SW 4+100

CURVE GG2
Δ = 213°03'34.8" RT.
R. = 122.000m
T. = N/A
L. = 453.668m
E. = N/A
BANK = N/A
PCC1 STA. GG 1+089.975
N = 45311.6838
E = 442430.5187
PCC2 STA. GG 1+543.643
N = 45090.9815
E = 442353.0129

GG 1+200

GG 1+400

E 442550
N 45200

CURVE GG2

GG 1+300

SI 1+020.000
N = 44971.2597
E = 442480.6398

SI 1+361.352
N = 45283.3022
E = 442619.0259

N23°54'59.586"E

SI 1+100

SI 1+200

SI 1+300

SI 1+361

SW 4+000

SW 3+940.000
N = 45272.2433
E = 442703.0043

SW 3+940

E 442550
N 45050

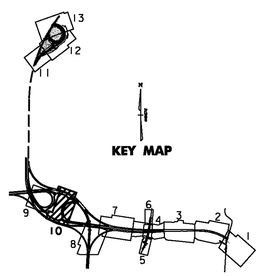

10 0 10 M
1:500 SCALE
@ FULL SIZE

VERMONT AGENCY OF TRANSPORTATION

Stantec

PROJECT NAME: BENNINGTON
PROJECT NUMBER: AC NH 019-1(53)

FILE NAME: ...\plot_files\zd307c3alg.ptf
DESIGN SUPERVISOR: GREG EDWARDS
DESIGNED BY: MARC FOISY
ALIGNMENT PLAN A-10

PLOT DATE: 5/16/2011
DRAWN BY: STANTEC
CHECKED BY: GARY SANTY
SHEET 62 OF 577

v:\1853\active\18530002\transportation\drawing\contract_3\plot_files\zd307c3alg.ptf

Metric

N

VT STATE PLANE GRID

U.S. ROUTE 7 NB

STA. A 1+095.000
BEGIN CONSTRUCTION
BEGIN COLD PLANING
AND RESURFACING

PT
STA. A 1+164.912

MATCH LINE STA. A 1+220, SEE SHEET A-12

A 1+200
N 56° 45' 45.3" E

RAMP A

A 1+100

EXIT 2

CURVE A1

BEGIN RAMP A
STA. A 1+000.000

A 1+000

N 19° 41' 28.6" E

STA. A 1+007.687
PC

CURVE A1
Δ = 37° 04' 16.7" RT.
R. = 243.00m
T. = 81.475m
L. = 157.225m
E. = 13.295m
BANK= N/A
PI STA. A 1+089.162
N = 46860.3189
E = 442266.2393
PC STA. A 1+007.687
N = 46783.6085
E = 442238.7862
PT STA. A 1+164.912
N = 46904.9760
E = 442334.3853

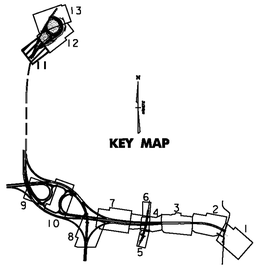

10 0 10 M
1:500 SCALE
@ FULL SIZE

VERMONT AGENCY OF TRANSPORTATION

Stantec

PROJECT NAME: BENNINGTON
PROJECT NUMBER: AC NH 019-1(53)

FILE NAME: ...\plot_files\zd307c3alg.ptf
DESIGN SUPERVISOR: GREG EDWARDS
DESIGNED BY: MARC FOISY
ALIGNMENT PLAN A-11

PLOT DATE: 5/16/2011
DRAWN BY: STANTEC
CHECKED BY: GARY SANTY
SHEET 63 OF 577

v:\1953\active\195300021\transportation\drawing\contract_3\plot_files\zd307c3alg.ptf

VAOT Metric

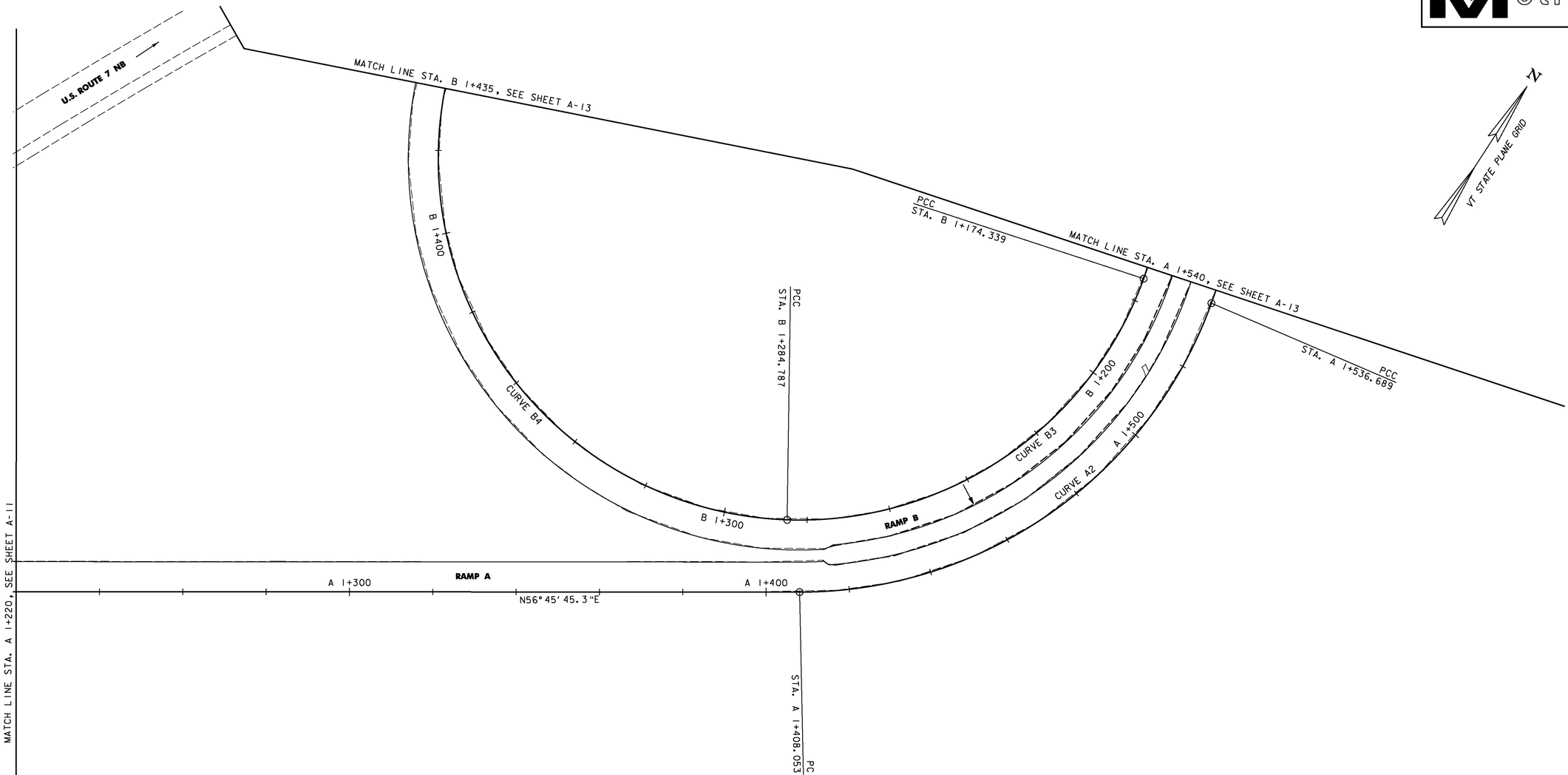

CURVE A2
Δ = 70° 08' 32.3" LT.
R. = 105.077m
T. = 73.770m
L. = 128.637m
E. = 23.310m
BANK= N/A
PI STA. A 1+481.823
N = 47078.6779
E = 442599.4516
PC STA. A 1+408.053
N = 47038.2437
E = 442537.7496
PCC STA. A 1+536.689
N = 47150.4460
E = 442582.3809

CURVE B3
Δ = 72° 05' 29.3" LT.
R. = 87.780m
T. = 63.883m
L. = 110.448m
E. = 20.785m
BANK= N/A
PI STA. B 1+238.222
N = 47084.2943
E = 442580.3361
PCC STA. B 1+174.339
N = 47146.4434
E = 442565.5534
PCC STA. B 1+284.787
N = 47051.1170
E = 442525.7439

CURVE B4
Δ = 152° 13' 17.7" LT.
R. = 86.750m
T. = 350.824m
L. = 230.475m
E. = 274.640m
BANK= N/A
PI STA. B 1+635.610
N = 46868.9189
E = 442225.9421
PCC STA. B 1+284.787
N = 47051.1170
E = 442525.7439
PT STA. B 1+515.261
N = 47169.8436
E = 442406.2796

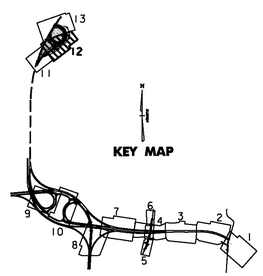

10 0 10 M
1:500 SCALE
@ FULL SIZE

VERMONT AGENCY OF TRANSPORTATION

Stantec

PROJECT NAME: BENNINGTON
PROJECT NUMBER: AC NH 019-1(53)

FILE NAME: ...\plot_files\zd307c3alg.ptf
DESIGN SUPERVISOR: GREG EDWARDS
DESIGNED BY: MARC FOISY
ALIGNMENT PLAN A-12

PLOT DATE: 5/16/2011
DRAWN BY: STANTEC
CHECKED BY: GARY SANTY
SHEET 64 OF 577

v:\1953\active\19530022\transportation\drawing\contract_3\plot_files\zd307c3alg.ptf

CURVE A3
Δ = 65°46'51.6" LT.
R. = 130.697m
T. = 84.521m
L. = 150.053m
E. = 24.948m
BANK= N/A
PI STA. A 1+621.210
N = 47232.6728
E = 442562.8224
PCC STA. A 1+536.689
N = 47150.4460
E = 442582.3809
PCC STA. A 1+686.742
N = 47248.5674
E = 442479.8095

CURVE A4
Δ = 3°33'13.9" LT.
R. = 317.297m
T. = 9.844m
L. = 19.681m
E. = 0.153m
BANK= N/A
PI STA. A 1+696.586
N = 47250.4185
E = 442470.1415
PCC STA. A 1+686.742
N = 47248.5674
E = 442479.8095
PT STA. A 1+706.423
N = 47251.6668
E = 442460.3774

CURVE B1
Δ = 3°33'13.9" RT.
R. = 300.000m
T. = 9.307m
L. = 18.608m
E. = 0.144m
BANK= N/A
PI STA. B 1+034.844
N = 47233.3292
E = 442467.4158
PC STA. B 1+025.537
N = 47234.5094
E = 442458.1839
PCC STA. B 1+044.145
N = 47231.5790
E = 442476.5567

CURVE B2
Δ = 65°46'51.6" RT.
R. = 113.400m
T. = 73.335m
L. = 130.194m
E. = 21.647m
BANK= N/A
PI STA. B 1+117.480
N = 47217.7880
E = 442548.5834
PCC STA. B 1+044.145
N = 47231.5790
E = 442476.5567
PCC STA. B 1+174.339
N = 47146.4434
E = 442565.5534

CURVE B4
Δ = 152°13'17.7" RT.
R. = 86.750m
T. = 350.824m
L. = 230.475m
E. = 274.640m
BANK= N/A
PI STA. B 1+635.610
N = 46868.9189
E = 442225.9421
PCC STA. B 1+284.787
N = 47051.1170
E = 442525.7439
PT STA. B 1+515.261
N = 47169.8436
E = 442406.2796

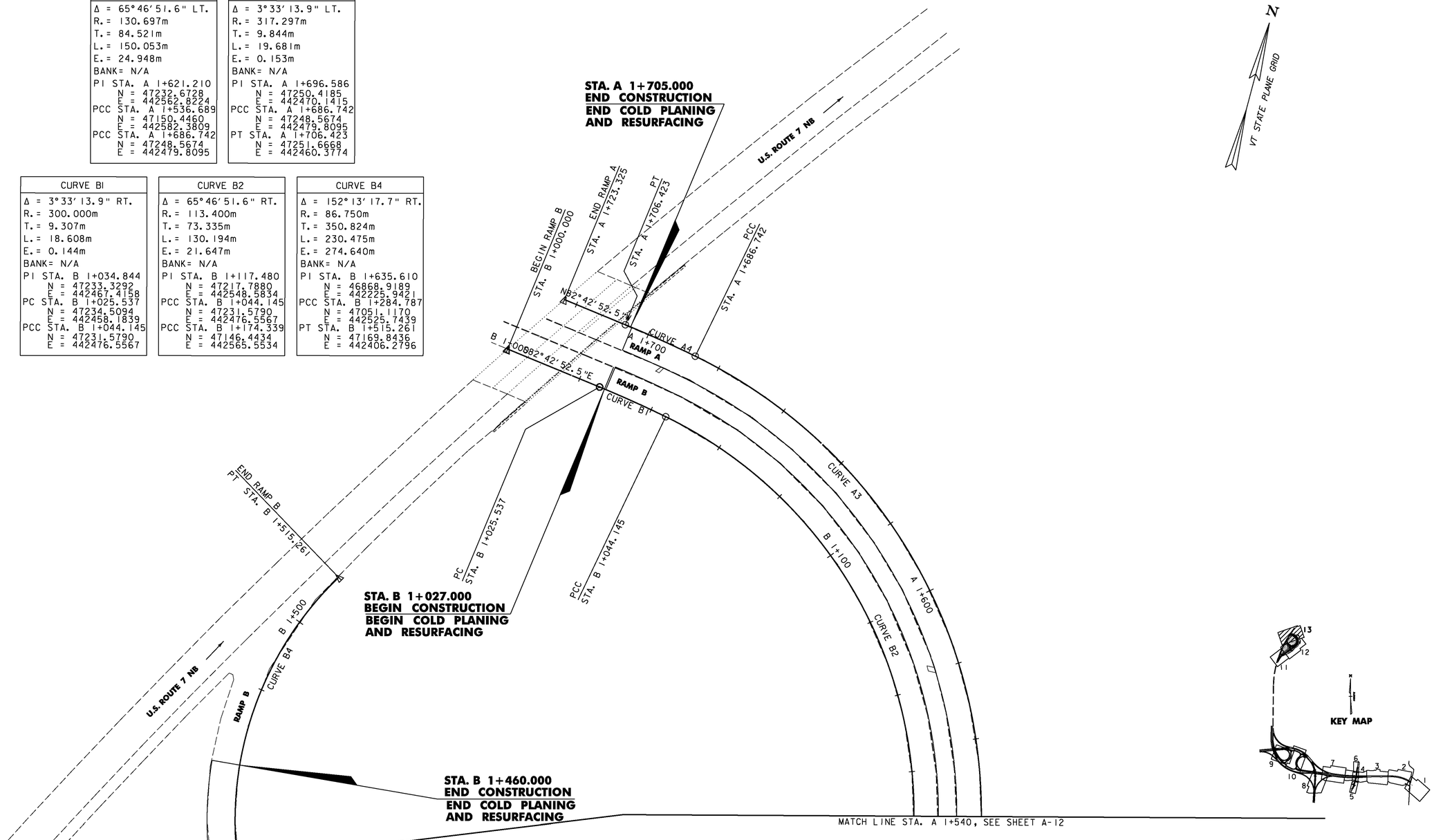

VERMONT AGENCY OF TRANSPORTATION

PROJECT NAME: BENNINGTON
PROJECT NUMBER: AC NH 019-1(53)

FILE NAME: ...\plot_files\zd307c3alg.ptf
DESIGN SUPERVISOR: GREG EDWARDS
DESIGNED BY: MARC FOISY
ALIGNMENT PLAN A-13

PLOT DATE: 5/16/2011
DRAWN BY: STANTEC
CHECKED BY: GARY SANTY
SHEET 65 OF 577

Stantec

v:\153\active\153300021\transportation\drawing\contract_3\plot_files\zd307c3alg.ptf

VAOT Metric

POC STA. NB 8+541.100
END ROADWAY
BEGIN BRIDGE

PVI NB 8+550.000
ELEV= 255.941
L = 200 m
M.O. = 0.637
K = 79

FINISHED GRADE
ALONG CONST. ℄, PGL.

PVT NB 8+650.000
ELEV 253.674

POC STA. NB 8+685.900
END BRIDGE
BEGIN ROADWAY

BRIDGE APPROACH SLAB
SEE NOTE 1.

ULTIMATE PROPOSED
GRADE

-4.8140%

-2.2671%

1.5

APPROXIMATE LOCATION
OF BRIDGE ACCESS.

EXISTING GROUND
ALONG CONST. ℄

SUBBASE TRANSITION
SEE NOTE 2.

POC STA. NB 8+515.000
BEGIN PROJECT
NH F019 - 1(5) C3

SEE NOTE 3

℄ UNNAMED
STREAM

℄ FURNACE BROOK

SUPERSEDED
BY
PRECEDING
SHEET

NOTE:
ELEVATIONS SHOWN ARE FOR THE ULTIMATE FINISHED GRADE. THE TOP 50 MM PAVEMENT COURSE (TYPE IIIS) WILL NOT BE CONSTRUCTED AS PART OF THIS CONTRACT. THIS CONTRACT ONLY INCLUDES 100 MM OF TYPE IS AND 80 MM OF TYPE IIS SUPERPAVE BITUMINOUS CONCRETE PAVEMENT (ITEM 490.30). PLEASE REFER TO THE ROADWAY TYPICAL SECTIONS FOR DETAILS.

EL 231.2

0100

RIGHT e = +0.078

LEFT e = -0.078

STA. = NB 8+700
e = 0.070

STA. = NB 8+720
e = 0.047

STA. = NB 8+740
e = 0.023

STA. = NB 8+760
RT e = 0.000

STA. = NB 8+780
RT e = 0.020

LT e = -0.020

STA. NB 8+693

STA. NB 8+742

STA. NB 8+777

	NB 8+420	NB 8+440	NB 8+460	NB 8+480	NB 8+500	NB 8+520	NB 8+540	NB 8+560	NB 8+580	NB 8+600	NB 8+620	NB 8+640	NB 8+660	NB 8+680	NB 8+700	NB 8+720	NB 8+740	NB 8+760	NB 8+780
℄	253.55	252.94	252.53	252.03	250.36	246.62	240.42	235.36	231.00	230.50	230.20	228.50	239.76	246.77	249.80	251.40	252.61	253.00	253.00
EP	262.199	261.236	260.280	259.368	258.507	257.697	256.938	256.230	255.573	254.967	254.411	253.907	253.447	252.994	252.540	252.087	251.634	251.180	250.727

NOTES:

1. FOR MORE INFORMATION ON THE BRIDGE APPROACH SLAB SEE BRIDGE PLANS.
2. FOR SUBBASE TRANSITION DETAIL, AT BRIDGE ABUTMENT AND UNDERNEATH APPROACH SLAB, SEE SHEET TS-08.
3. FOR DETAILS AT ABUTMENT 1 AND ABUTMENT 2 SEE BR501 SHEET 193.

4 M
2
H 1:500 SCALE
V 1:100 SCALE
@ FULL SIZE
10 20 M

VERMONT AGENCY OF TRANSPORTATION

Stantec

PROJECT NAME: BENNINGTON
PROJECT NUMBER: AC NH 019-1(53)

FILE NAME: ...\plot_files\zd307c3pro_nb.ptf
DESIGN SUPERVISOR: GREG EDWARDS
DESIGNED BY: MARC FOISY
NORTHBOUND - PR-1

PLOT DATE: 5/18/2007
DRAWN BY: STANTEC
CHECKED BY: GARY SANTY
SHEET 66 OF 577

Y:\1853\active\185300021\transportation\drawing\contract 3\plot_files\zd307c3pro_nb.ptf

RECORD PLANS

VAOT Metric

-4.8140%

PVC 8+452.300
ELEV 260.644

ULTIMATE PROPOSED GRADE

LIMIT OF PROFILE CHANGE
STA. NB 8+440.000

EXISTING GROUND ALONG CONST. ℄

POC STA. NB 8+515.000
BEGIN PROJECT
NH F019 - 1(5) C3

POC STA. NB 8+541.100
END ROADWAY
BEGIN BRIDGE

PVI NB 8+552.300
ELEV= 255.830
L = 200 m
W.O. = 0.639
K = 78

FINISHED GRADE ALONG CONST. ℄, PGL.

1 : 1.5

℄ UNNAMED STREAM

℄ FURNACE BROOK

EL.2312 Q100

PVT 8+652.300
ELEV 253.574

POC STA. NB 8+685.900
END BRIDGE
BEGIN ROADWAY

-2.2564%

NOTE:
ELEVATIONS SHOWN ARE FOR THE ULTIMATE FINISHED GRADE. THE TOP 50 MM PAVEMENT COURSE (TYPE IIIS) WILL NOT BE CONSTRUCTED AS PART OF THIS CONTRACT. THIS CONTRACT ONLY INCLUDES 100 MM OF TYPE IS AND 80 MM OF TYPE IIS SUPERPAVE BITUMINOUS CONCRETE PAVEMENT (ITEM 490.30). PLEASE REFER TO THE ROADWAY TYPICAL SECTIONS FOR DETAILS.

REVISED
4-3-2009

RIGHT e = +0.078

LEFT e = -0.078

STA. = NB 8+700 e = 0.070

STA. = NB 8+720 e = 0.047

STA. = NB 8+740 e = 0.023

STA. = NB 8+760 RT e = 0.000

STA. = NB 8+780 RT e = 0.020

LT e = -0.020

STA. NB 8+693

STA. NB 8+742

STA. NB 8+777

	8+420	8+440	8+460	8+480	8+500	8+520	8+540	8+560	8+580	8+600	8+620	8+640	8+660	8+680	8+700	8+720	8+740	8+760	8+780
	253.55	252.94	252.53	252.03	250.36	246.62	240.42	235.36	231.00	230.50	230.20	228.50	239.76	246.77	249.80	251.40	252.61	253.00	253.00
	262.199	261.236	260.278	259.360	258.484	257.678	256.914	256.201	255.540	254.929	254.370	253.861	253.400	252.949	252.498	252.045	251.595	251.144	250.693

+0.080
+0.060
+0.040
+0.020
LEVEL
-0.020
-0.040
-0.060
-0.080

4 M
2
H 1:500 SCALE
V 1:100 SCALE
@ FULL SIZE
10 20 M

RECEIVED
JUN 17 2009

VERMONT AGENCY OF TRANSPORTATION

Stantec

PROJECT NAME: BENNINGTON
PROJECT NUMBER: AC NH 019-1(53)

FILE NAME: ...\zd307c3revised.pro.nb.ptf
DESIGN SUPERVISOR: GREG EDWARDS
DESIGNED BY: MARC FOISY
NORTHBOUND - PR-1

PLOT DATE: 6/16/2009
DRAWN BY: STANTEC
CHECKED BY: GARY SANTY
SHEET 66 OF 577

V:\1953\active\195310002\transportation\drawing\contract_3\vertical revision\zd307c3revised.pro_nb.ptf

VAOT Metric

EXISTING GROUND
ALONG CONST. ℄

POT STA. NB 8+958.000 =
PT STA. XO 1+578.825

FINISHED GRADE
ALONG CONST. ℄, PGL.

PVC NB 9+000.000
ELEV 245.739

PVI NB 9+100.000
ELEV= 243.472
L = 200 m
M.O. = -0.429
SSD = 218 m
K = 117

-2.2671%

-3.9835%

NOTE:
ELEVATIONS SHOWN ARE FOR THE ULTIMATE FINISHED GRADE. THE TOP 50 MM PAVEMENT COURSE (TYPE IIIS) WILL NOT BE CONSTRUCTED AS PART OF THIS CONTRACT. THIS CONTRACT ONLY INCLUDES 100 MM OF TYPE IS AND 80 MM OF TYPE IIS SUPERPAVE BITUMINOUS CONCRETE PAVEMENT (ITEM 490.30). PLEASE REFER TO THE ROADWAY TYPICAL SECTIONS FOR DETAILS.

SUPERSEDED
BY
PRECEDING
SHEET

STA. = NB 9+106.321

+0.080
+0.060
+0.040
+0.020
LEVEL
-0.020
-0.040
-0.060
-0.080

CONST ℄ (PGL)

RIGHT & LEFT e = -0.020

RIGHT e = -0.020

NB 8+780	NB 8+800	NB 8+820	NB 8+840	NB 8+860	NB 8+880	NB 8+900	NB 8+920	NB 8+940	NB 8+960	NB 8+980	NB 9+000	NB 9+020	NB 9+040	NB 9+060	NB 9+080	NB 9+100	NB 9+120	NB 9+140
253.00	252.80	252.87	254.07	255.37	257.01	258.73	259.78	261.12	261.95	263.00	262.30	261.23	259.75	258.41	256.76	254.68	252.61	250.70
250.727	250.273	249.820	249.366	248.913	248.460	248.006	247.553	247.099	246.646	246.193	245.739	245.269	244.764	244.224	243.651	243.043	242.401	241.724

4 M
2
10 20 M

H 1:500 SCALE
V 1:100 SCALE
@ FULL SIZE

VERMONT AGENCY OF TRANSPORTATION

Stantec

PROJECT NAME: BENNINGTON
PROJECT NUMBER: AC NH 019-1(53)

FILE NAME: ...\plot_files\zd307c3pro_nb.ptf
DESIGN SUPERVISOR: GREG EDWARDS
DESIGNED BY: MARC FOISY
NORTHBOUND - PR-2

PLOT DATE: 5/18/2007
DRAWN BY: STANTEC
CHECKED BY: GARY SANTY
SHEET 67 OF 577

K:\1953\active\19530002\transportation\drawing\contract_3\plot_files\zd307c3pro_nb.ptf

Metric

RECORD PLANS

REVISED
4-3-2009

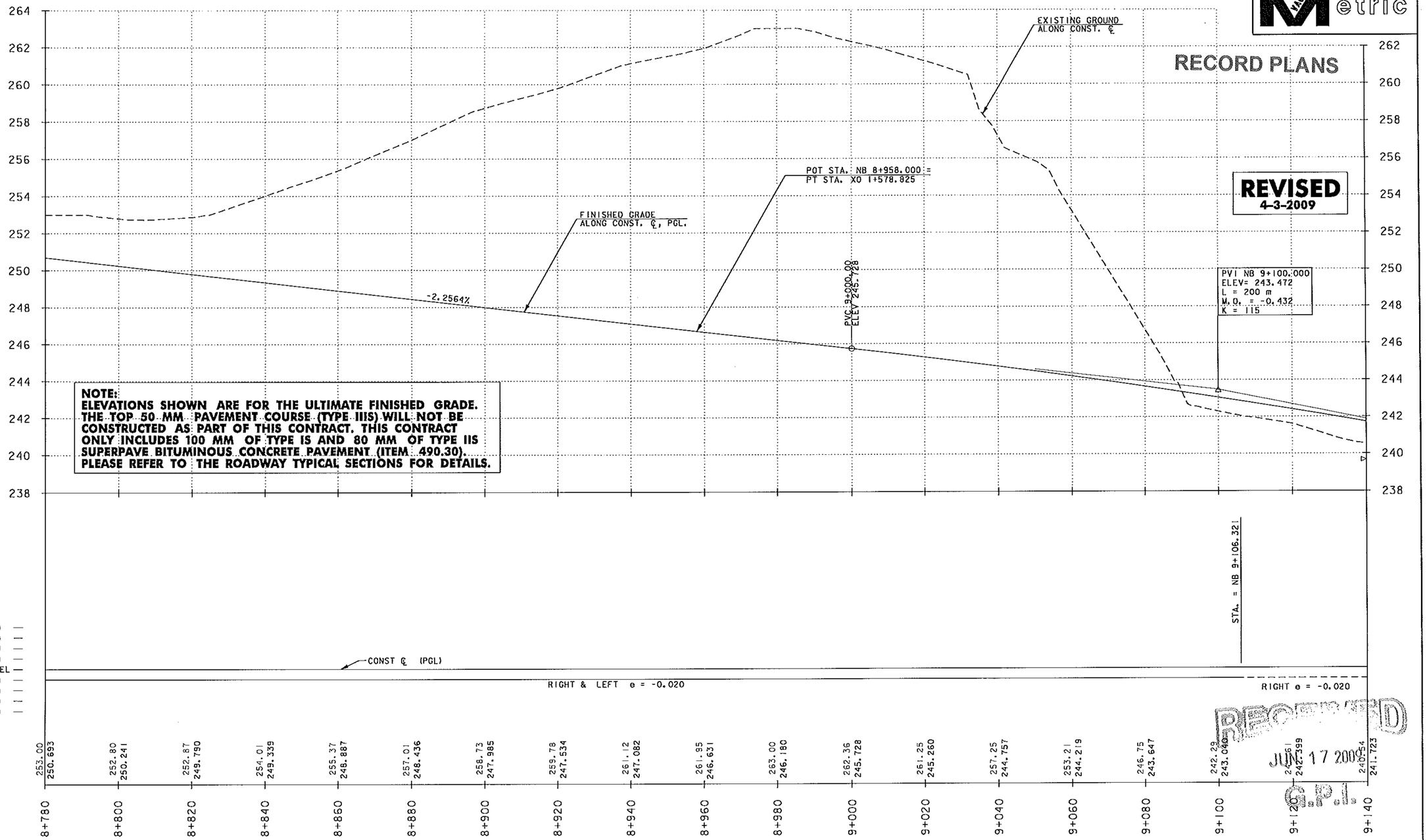

NOTE:
ELEVATIONS SHOWN ARE FOR THE ULTIMATE FINISHED GRADE. THE TOP 50 MM PAVEMENT COURSE (TYPE IIIS) WILL NOT BE CONSTRUCTED AS PART OF THIS CONTRACT. THIS CONTRACT ONLY INCLUDES 100 MM OF TYPE IS AND 80 MM OF TYPE IIS SUPERPAVE BITUMINOUS CONCRETE PAVEMENT (ITEM 490.30). PLEASE REFER TO THE ROADWAY TYPICAL SECTIONS FOR DETAILS.

4 M
2
H 1:500 SCALE
V 1:100 SCALE
℄ FULL SIZE
10 20 M

RECEIVED
JUN 17 2009
G.P.I.

VERMONT AGENCY OF TRANSPORTATION

Stantec

PROJECT NAME: BENNINGTON
PROJECT NUMBER: AC NH 019-1(53)

FILE NAME: ...\zd307c3revised.pro_nb.ptf
DESIGN SUPERVISOR: GREG EDWARDS
DESIGNED BY: MARC FOISY
NORTHBOUND - PR-2

PLOT DATE: 6/16/2009
DRAWN BY: STANTEC
CHECKED BY: GARY SANTY
SHEET 67 OF 577

v:\1953\active\19532002\transportation\drawing\contract_3\vertical revision\zd307c3revised pro_nb.prf

VAOT Metric

POC STA. NB 9+278.312=
POC STA. ER 1+195.229

EAST ROAD STRUCTURE

FINISHED GRADE ALONG CONST. ℄, PGL.

PVT NB 9+200.000
ELEV 239.488

MINIMUM VERTICAL CLEARANCE SEE BRIDGE PLANS

EXISTING GROUND ALONG CONST. ℄

-3.9835%

NOTE:
ELEVATIONS SHOWN ARE FOR THE ULTIMATE FINISHED GRADE. THE TOP 50 MM PAVEMENT COURSE (TYPE IIIS) WILL NOT BE CONSTRUCTED AS PART OF THIS CONTRACT. THIS CONTRACT ONLY INCLUDES 100 MM OF TYPE IS AND 80 MM OF TYPE IIS SUPERPAVE BITUMINOUS CONCRETE PAVEMENT (ITEM 490.30). PLEASE REFER TO THE ROADWAY TYPICAL SECTIONS FOR DETAILS.

SUPERSEDED BY PRECEDING SHEET

STA. = NB 9+268
e = -0.020

STA. = NB 9+281
e = -0.025

CONST ℄ (PGL)

RIGHT e = -0.020

RIGHT e = -0.025

+0.080
+0.060
+0.040
+0.020
LEVEL
-0.020
-0.040
-0.060
-0.080

	NB 9+140	NB 9+160	NB 9+180	NB 9+200	NB 9+220	NB 9+240	NB 9+260	NB 9+280	NB 9+300	NB 9+320	NB 9+340	NB 9+360	NB 9+380	NB 9+400	NB 9+420	NB 9+440	NB 9+460	NB 9+480	NB 9+500
	250.70	248.84	247.14	246.16	245.34	244.16	242.83	241.93	239.55	238.13	236.91	236.15	235.74	235.67	235.55	235.17	234.80	233.60	231.20
	241.724	241.013	240.268	239.488	238.692	237.895	237.098	236.302	235.505	234.708	233.911	233.115	232.318	231.521	230.725	229.928	229.131	228.335	227.538

4 M
2
H 1:500 SCALE
V 1:100 SCALE
@ FULL SIZE
10 20 M

VERMONT AGENCY OF TRANSPORTATION

Stantec

PROJECT NAME: BENNINGTON
PROJECT NUMBER: AC NH 019-1(53)

FILE NAME: ...\plot_files\zd307c3pro_nb.ptf
DESIGN SUPERVISOR: GREG EDWARDS
DESIGNED BY: MARC FOISY
NORTHBOUND - PR-3

PLOT DATE: 5/21/2007
DRAWN BY: STANTEC
CHECKED BY: GARY SANTY
SHEET 68 OF 577

I:\1953\active\19530002\transportation\drawing\contract_3\plot_files\zd307c3pro_nb.ptf

Metric

RECORD PLANS

REVISED
4-3-2009

POC STA. NB 9+278.312=
POC STA. ER 1+195.229

FINISHED GRADE
ALONG CONST. ℄, PGL.

LIMIT OF PROFILE CHANGE
STA. NB 9+160.000

EAST ROAD
STRUCTURE

℄

MINIMUM
VERTICAL
CLEARANCE
SEE BRIDGE
PLANS

EXISTING GROUND
ALONG CONST. ℄

PVI 9+200.00
ELEV 239.488

-3.9835%

NOTE:
ELEVATIONS SHOWN ARE FOR THE ULTIMATE FINISHED GRADE. THE TOP 50 MM PAVEMENT COURSE (TYPE IIIS) WILL NOT BE CONSTRUCTED AS PART OF THIS CONTRACT. THIS CONTRACT ONLY INCLUDES 100 MM OF TYPE IS AND 80 MM OF TYPE IIS SUPERPAVE BITUMINOUS CONCRETE PAVEMENT (ITEM 490.30). PLEASE REFER TO THE ROADWAY TYPICAL SECTIONS FOR DETAILS.

252 250 248 246 244 242 240 238 236 234 232 230 228 226

STA. = NB 9+268
℮ = -0.020

STA. = NB 9+281
℮ = -0.025

+0.080
+0.060
+0.040
+0.020
LEVEL
-0.020
-0.040
-0.060
-0.080

CONST ℄ (PGL)

RECEIVED
JUN 17 2009
G.P.L.

9+140	9+160	9+180	9+200	9+220	9+240	9+260	9+280	9+300	9+320	9+340	9+360	9+380	9+400	9+420	9+440	9+460	9+480	9+500
240.54	239.89	239.65	239.13	237.68	237.60	239.92	241.93	239.55	238.13	236.91	236.15	235.74	235.67	235.55	235.17	234.80	233.60	231.20
241.723	241.013	240.268	239.488	238.692	237.895	237.098	236.302	235.505	234.708	233.912	233.115	232.318	231.521	230.725	229.928	229.131	228.335	227.538

4 M
2
H 1:500 SCALE
V 1:100 SCALE
@ FULL SIZE
10 20 M

VERMONT AGENCY OF TRANSPORTATION

Stantec

PROJECT NAME: BENNINGTON
PROJECT NUMBER: AC NH 019-1(53)

FILE NAME: ...\zd307c3revised.pro_nb.ptf
DESIGN SUPERVISOR: GREG EDWARDS
DESIGNED BY: MARC FOISY
NORTHBOUND - PR-3

PLOT DATE: 6/16/2009
DRAWN BY: STANTEC
CHECKED BY: GARY SANTY
SHEET 68 OF 577

v:\1853\vactive\95300002\transportation\drawing\contract_3\vertical revision\zd307c3revised.pro_nb.ptf

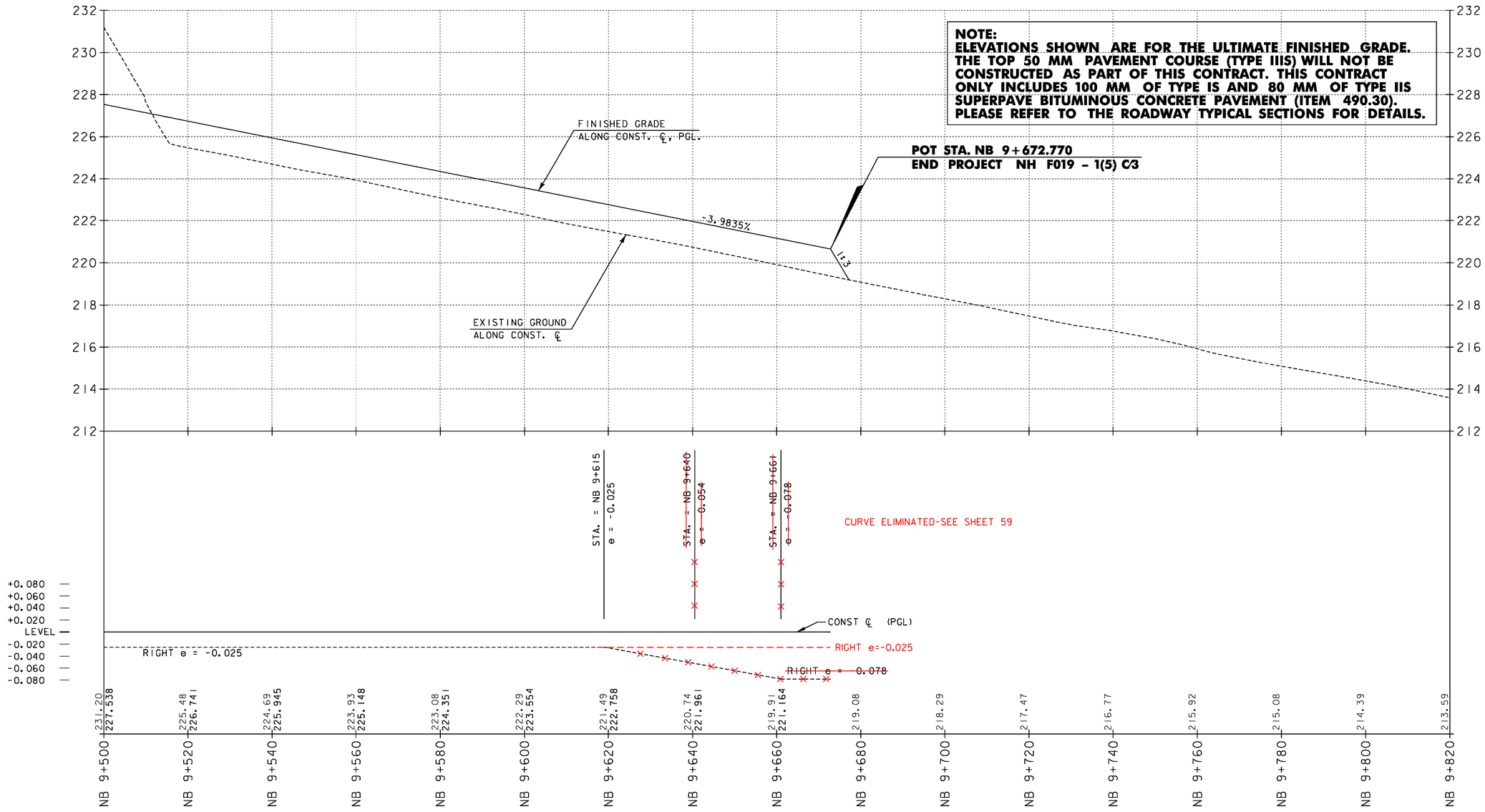

VERMONT AGENCY OF TRANSPORTATION

Stantec

PROJECT NAME: BENNINGTON
PROJECT NUMBER: AC NH 019-1(53)

FILE NAME: ...\plot_files\zd307c3pro_nb.ptf
DESIGN SUPERVISOR: GREG EDWARDS
DESIGNED BY: MARC FOISY
NORTHBOUND - PR-4

PLOT DATE: 5/16/2011
DRAWN BY: STANTEC
CHECKED BY: GARY SANTY

v:\1953\active\195310002\transportation\drawing\contract_3\plot_files\zd307c3pro_nb.ptf

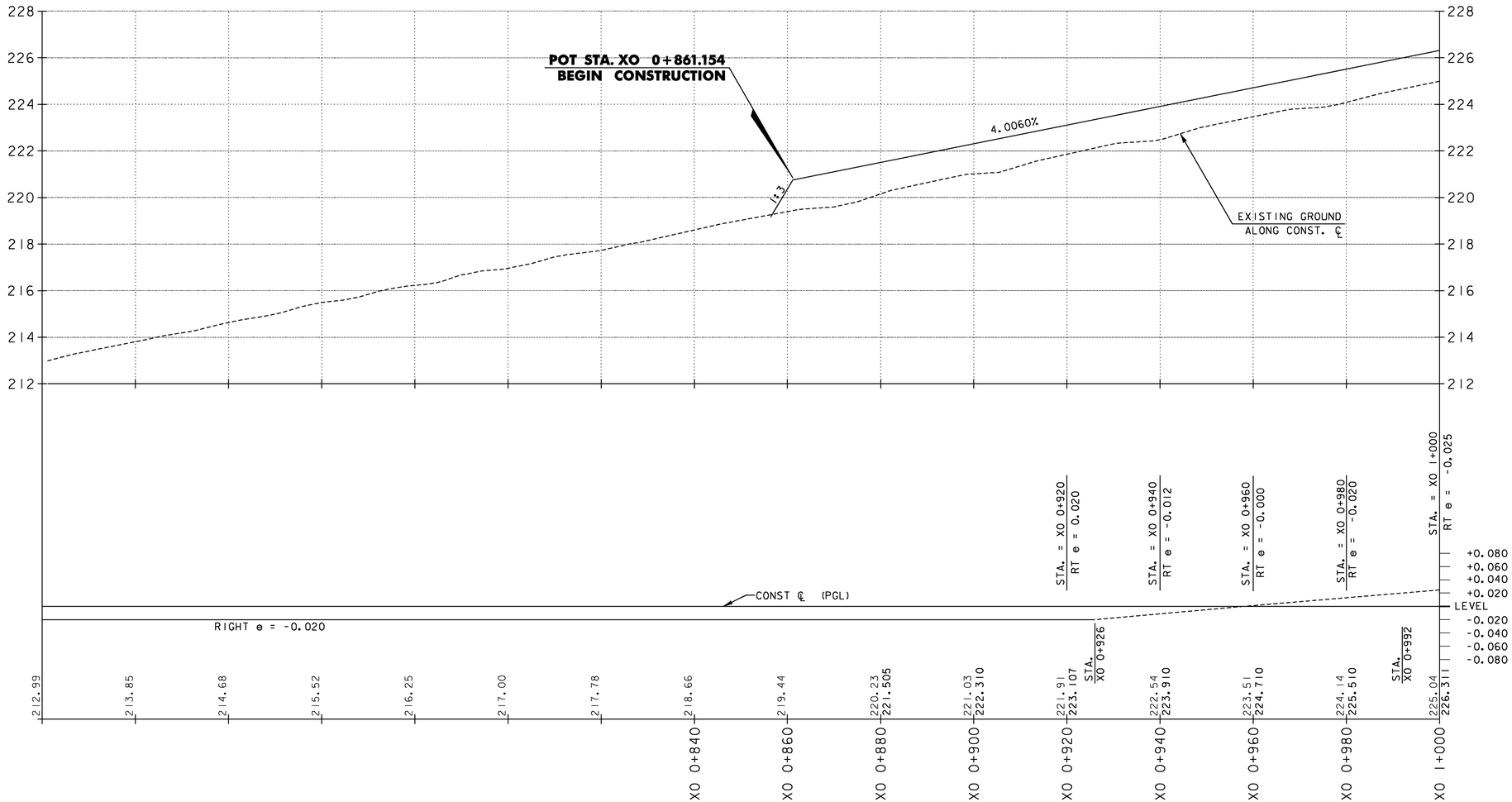

NOTE:
ELEVATIONS SHOWN ARE FOR THE ULTIMATE FINISHED GRADE. THE TOP 50 MM PAVEMENT COURSE (TYPE IIIS) WILL NOT BE CONSTRUCTED AS PART OF THIS CONTRACT. THIS CONTRACT ONLY INCLUDES 100 MM OF TYPE IS AND 80 MM OF TYPE IIS SUPERPAVE BITUMINOUS CONCRETE PAVEMENT (ITEM 490.30). PLEASE REFER TO THE ROADWAY TYPICAL SECTIONS FOR DETAILS.

H 1:500 SCALE
V 1:100 SCALE
@ FULL SIZE

20 M 10 2 4 M

VERMONT AGENCY OF TRANSPORTATION

Stantec

PROJECT NAME: BENNINGTON
PROJECT NUMBER: AC NH 019-1(53)

FILE NAME: ...\plot_files\zd307c3pro_xo.ptf
DESIGN SUPERVISOR: GREG EDWARDS
DESIGNED BY: MARC FOISY
CROSSOVER PR-5

PLOT DATE: 5/26/2011
DRAWN BY: STANTEC
CHECKED BY: GARY SANTY
SHEET 70 OF 577

V:\953\active\953000\2\transportation\drawing\contract_3\plot_files\zd307c3pro_xo.ptf

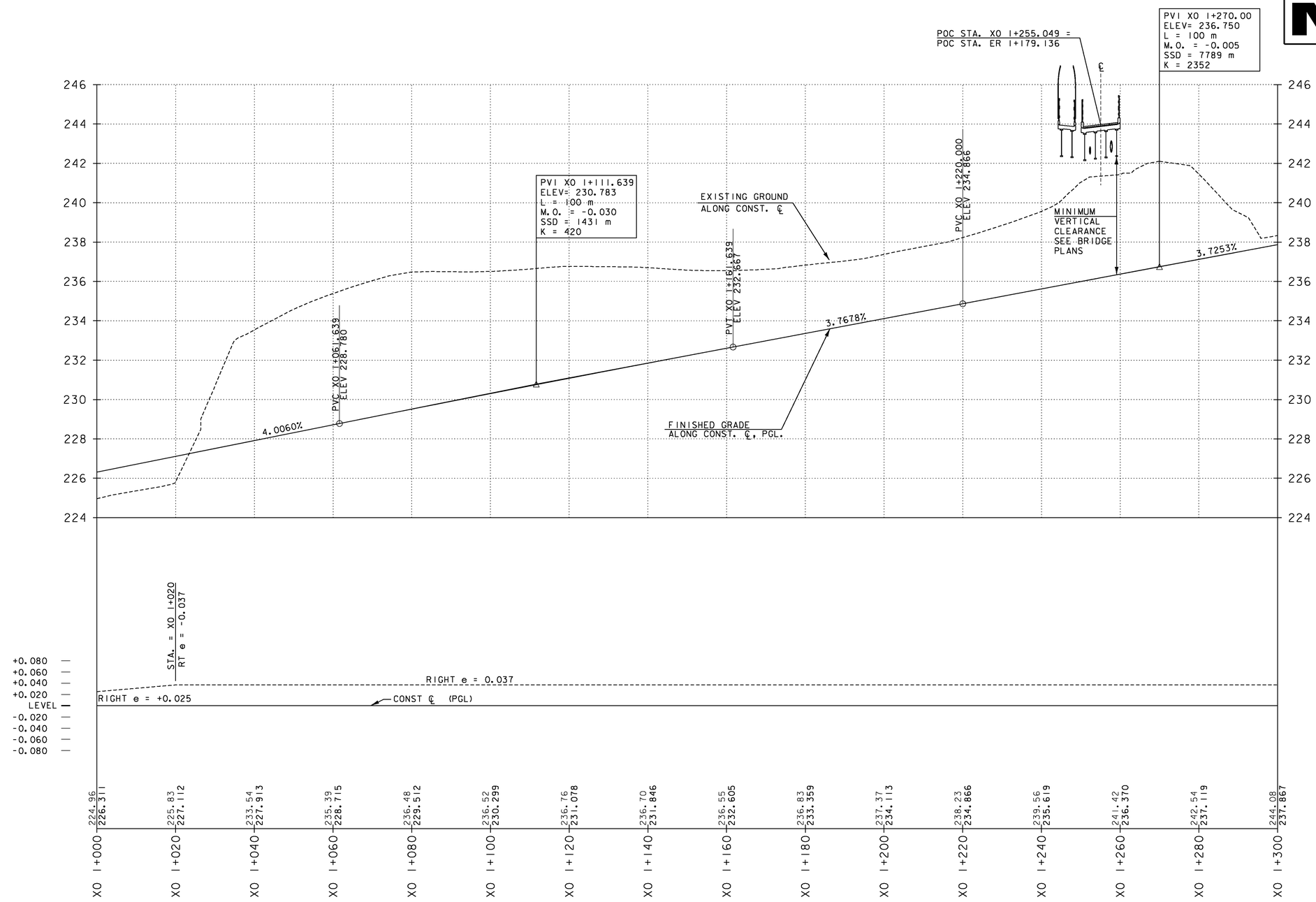

NOTE:
ELEVATIONS SHOWN ARE FOR THE ULTIMATE FINISHED GRADE. THE TOP 50 MM PAVEMENT COURSE (TYPE IIIS) WILL NOT BE CONSTRUCTED AS PART OF THIS CONTRACT. THIS CONTRACT ONLY INCLUDES 100 MM OF TYPE IS AND 80 MM OF TYPE IIS SUPERPAVE BITUMINOUS CONCRETE PAVEMENT (ITEM 490.30). PLEASE REFER TO THE ROADWAY TYPICAL SECTIONS FOR DETAILS.

4 M
2
10 20 M
H 1:500 SCALE
V 1:100 SCALE
@ FULL SIZE

VERMONT AGENCY OF TRANSPORTATION

Stantec

PROJECT NAME: BENNINGTON
PROJECT NUMBER: AC NH 019-1(53)

FILE NAME: ...\plot_files\zd307c3pro_xo.ptf
DESIGN SUPERVISOR: GREG EDWARDS
DESIGNED BY: MARC FOISY
CROSS OVER PR-6
PLOT DATE: 5/26/2011
DRAWN BY: STANTEC
CHECKED BY: GARY SANTY
SHEET 71 OF 577

V:\1953\active\19530002\transportation\drawing\contract_3\plot_files\zd307c3pro_xo.ptf

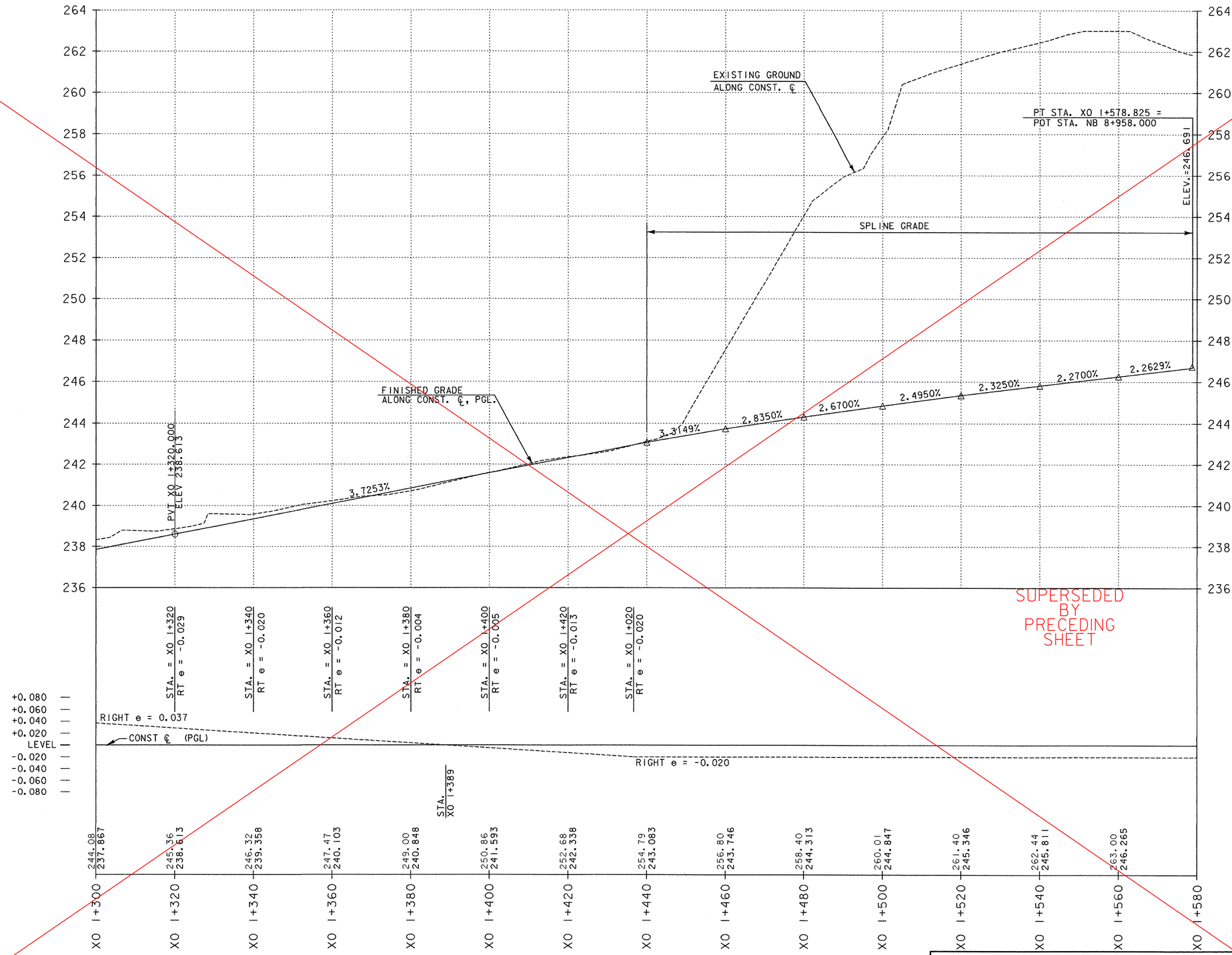

NOTE:
ELEVATIONS SHOWN ARE FOR THE ULTIMATE FINISHED GRADE. THE TOP 50 MM PAVEMENT COURSE (TYPE IIIS) WILL NOT BE CONSTRUCTED AS PART OF THIS CONTRACT. THIS CONTRACT ONLY INCLUDES 100 MM OF TYPE IS AND 80 MM OF TYPE IIS SUPERPAVE BITUMINOUS CONCRETE PAVEMENT (ITEM 490.30). PLEASE REFER TO THE ROADWAY TYPICAL SECTIONS FOR DETAILS.

4 M
2
H 1:500 SCALE
V 1:100 SCALE
@ FULL SIZE
10 20 M

VERMONT AGENCY OF TRANSPORTATION

Stantec

PROJECT NAME: BENNINGTON
PROJECT NUMBER: AC NH 019-1(53)

FILE NAME: ...\plot_files\zd307c3pro_xo.ptf
DESIGN SUPERVISOR: GREG EDWARDS
DESIGNED BY: MARC FOISY
CROSS OVER PR-7

PLOT DATE: 5/18/2007
DRAWN BY: STANTEC
CHECKED BY: GARY SANTY
SHEET 72 OF 577

V:\1953\active\195310002\transportation\drawing\contract_3\plot_files\zd307c3pro_xo.ptf

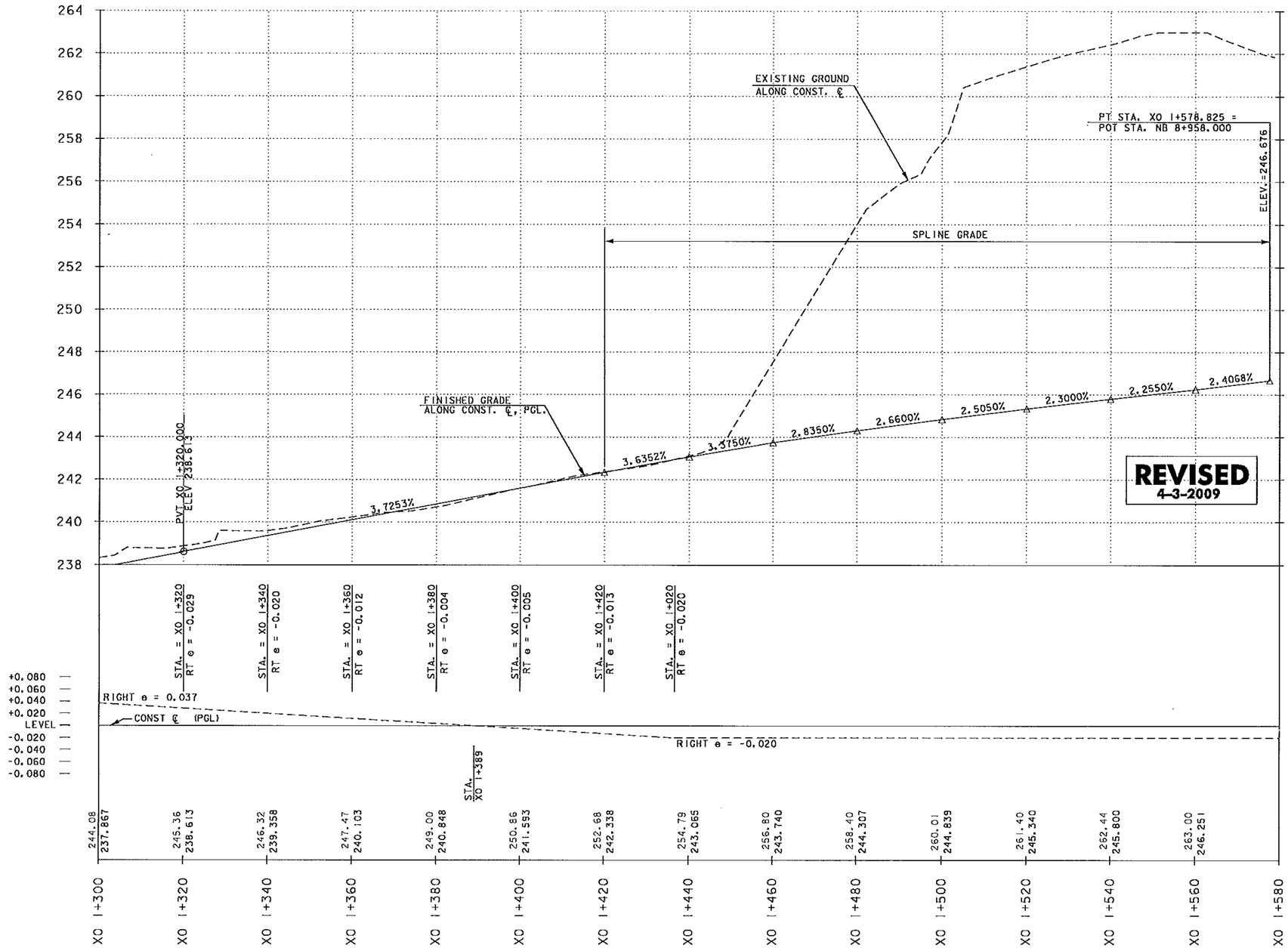

RECORD PLANS

REVISED
4-3-2009

RECEIVED
JUN 17 2009
G.P.L.

NOTE:
ELEVATIONS SHOWN ARE FOR THE ULTIMATE FINISHED GRADE. THE TOP 50 MM PAVEMENT COURSE (TYPE IIIS) WILL NOT BE CONSTRUCTED AS PART OF THIS CONTRACT. THIS CONTRACT ONLY INCLUDES 100 MM OF TYPE IS AND 80 MM OF TYPE IIS SUPERPAVE BITUMINOUS CONCRETE PAVEMENT (ITEM 490.30). PLEASE REFER TO THE ROADWAY TYPICAL SECTIONS FOR DETAILS.

4 M
2
10 20 M
H 1:500 SCALE
V 1:100 SCALE
@ FULL SIZE

VERMONT AGENCY OF TRANSPORTATION

Stantec

PROJECT NAME: BENNINGTON
PROJECT NUMBER: AC NH 019-1(53)

FILE NAME: ...\zd307c3revised.pro_nb.ptf
DESIGN SUPERVISOR: GREG EDWARDS
DESIGNED BY: MARC FOISY
CROSS OVER PR-7

PLOT DATE: 6/16/2009
DRAWN BY: STANTEC
CHECKED BY: GARY SANTY
SHEET 72 OF 577

V:\853\active\853600021\transportation\drawing\contract_3\vertical revision\zd307c3revised pro_nb.ptf

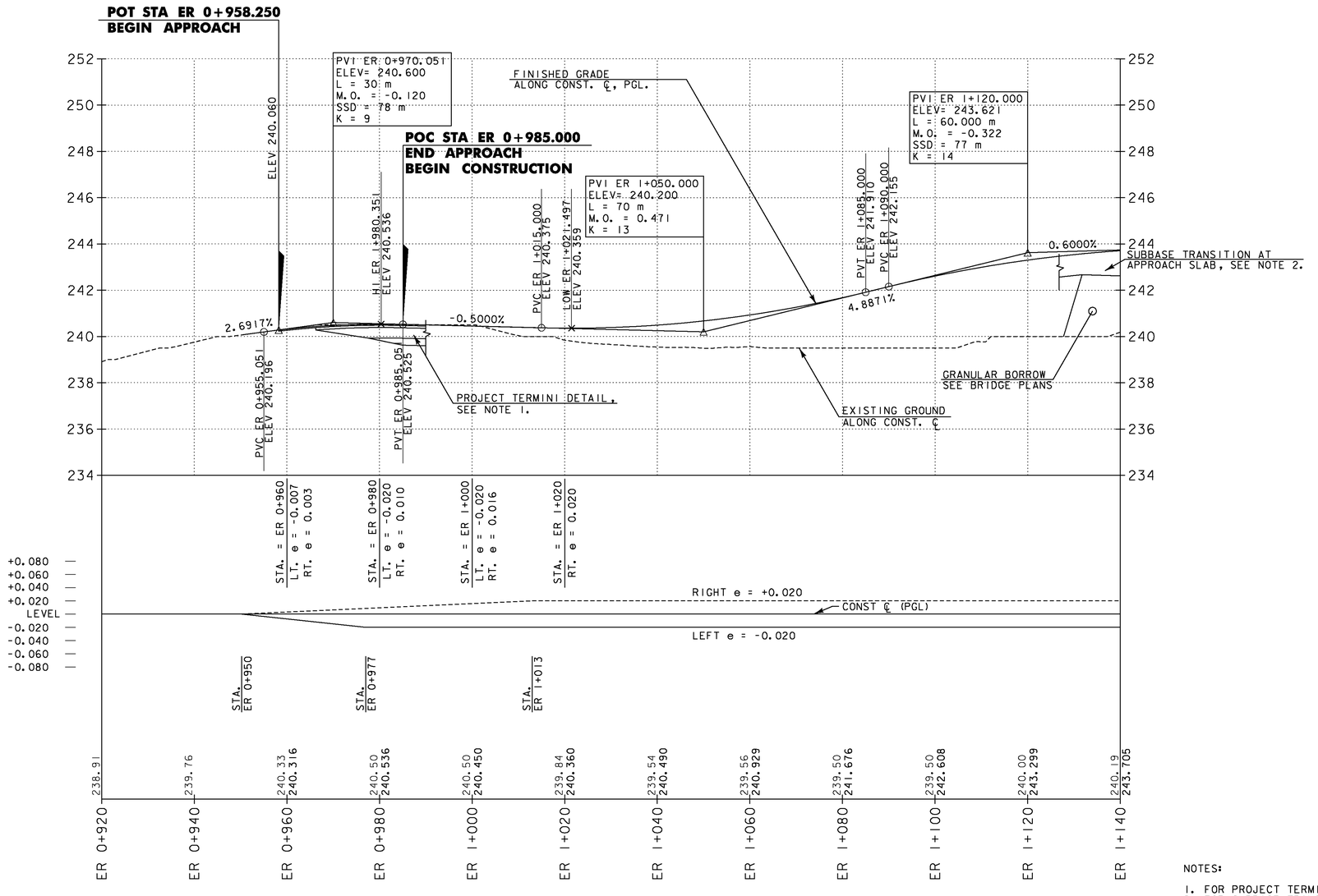

NOTES:

1. FOR PROJECT TERMINI DETAIL, SEE SHEET TS-08.
2. FOR SUBBASE TRANSITION DETAIL, AT BRIDGE ABUTMENT AND UNDERNEATH APPROACH SLAB, SEE SHEET TS-08.

4 M
2
10 20 M
H 1:500 SCALE
V 1:100 SCALE
@ FULL SIZE

VERMONT AGENCY OF TRANSPORTATION

Stantec

PROJECT NAME: BENNINGTON
PROJECT NUMBER: AC NH 019-1(53)

FILE NAME: ...\plot_files\zd307c3pro_east.ptf PLOT DATE: 5/16/2011
DESIGN SUPERVISOR: GREG EDWARDS DRAWN BY: STANTEC
DESIGNED BY: MARC FOISY CHECKED BY: GARY SANTY
EAST ROAD – PR-8 SHEET 73 OF 577

v:\1953\active\195300021\transportation\drawing\contract_3\plot_files\zd307c3pro_east.ptf

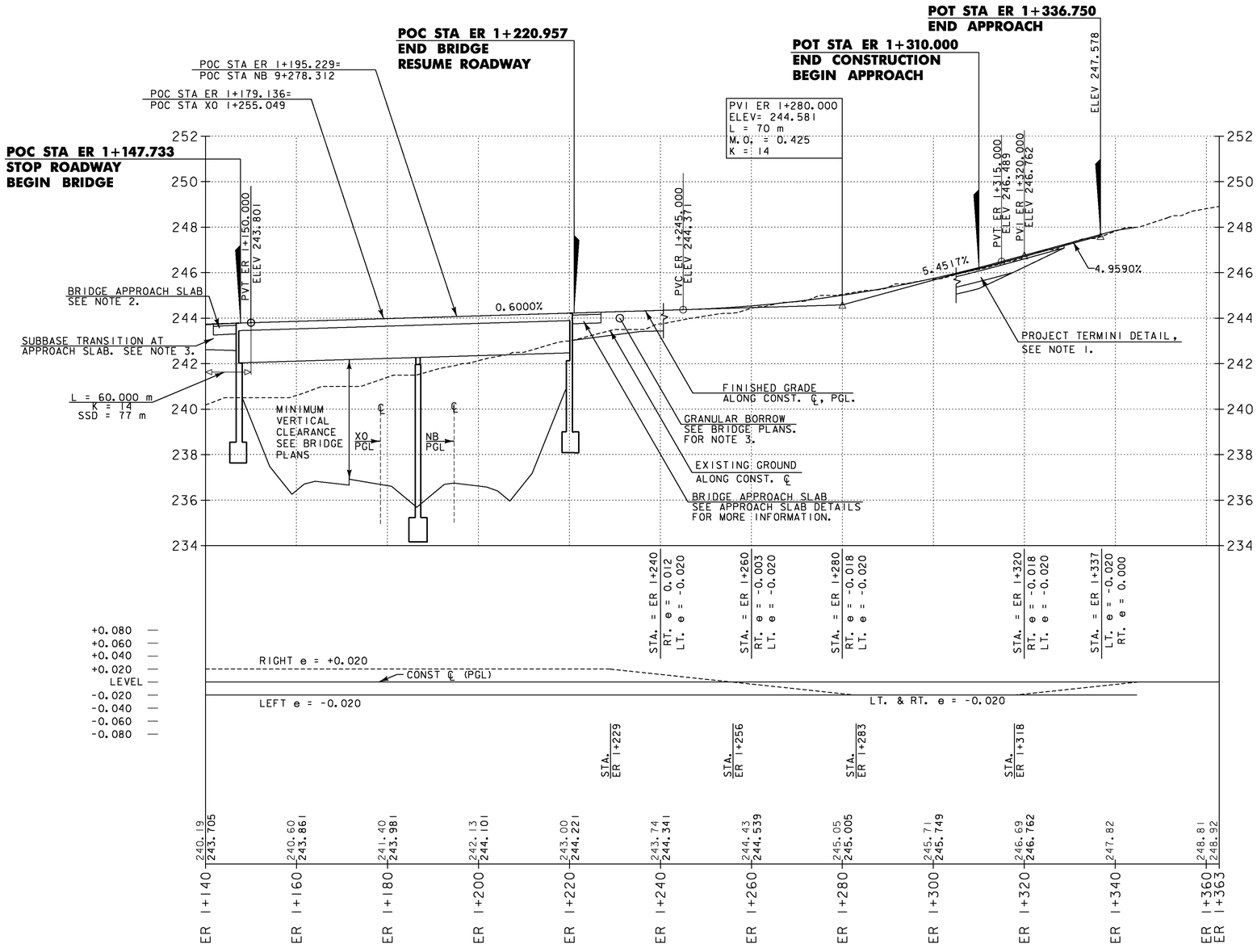

NOTES:

1. FOR PROJECT TERMINI DETAIL, SEE SHEET TS-08.
2. FOR MORE INFORMATION ON THE BRIDGE APPROACH SLAB SEE BRIDGE PLANS.
3. FOR SUBBASE TRANSITION DETAIL, AT BRIDGE ABUTMENT AND UNDERNEATH APROACH SLAB, SEE SHEET TS-08.

4 M
2
H 1:500 SCALE
V 1:100 SCALE
@ FULL SIZE
10 20 M

VERMONT AGENCY OF TRANSPORTATION

Stantec

PROJECT NAME: BENNINGTON
PROJECT NUMBER: AC NH 019-1(53)

FILE NAME: ...\plot_files\zd307c3pro_east.ptf PLOT DATE: 5/16/2011
DESIGN SUPERVISOR: GREG EDWARDS DRAWN BY: STANTEC
DESIGNED BY: MARC FOISY CHECKED BY: GARY SANTY
EAST ROAD – PR-9 SHEET 74 OF 577

v:\953\active\95300002\transportation\drawing\contract_3\plot_files\zd307c3pro_east.ptf

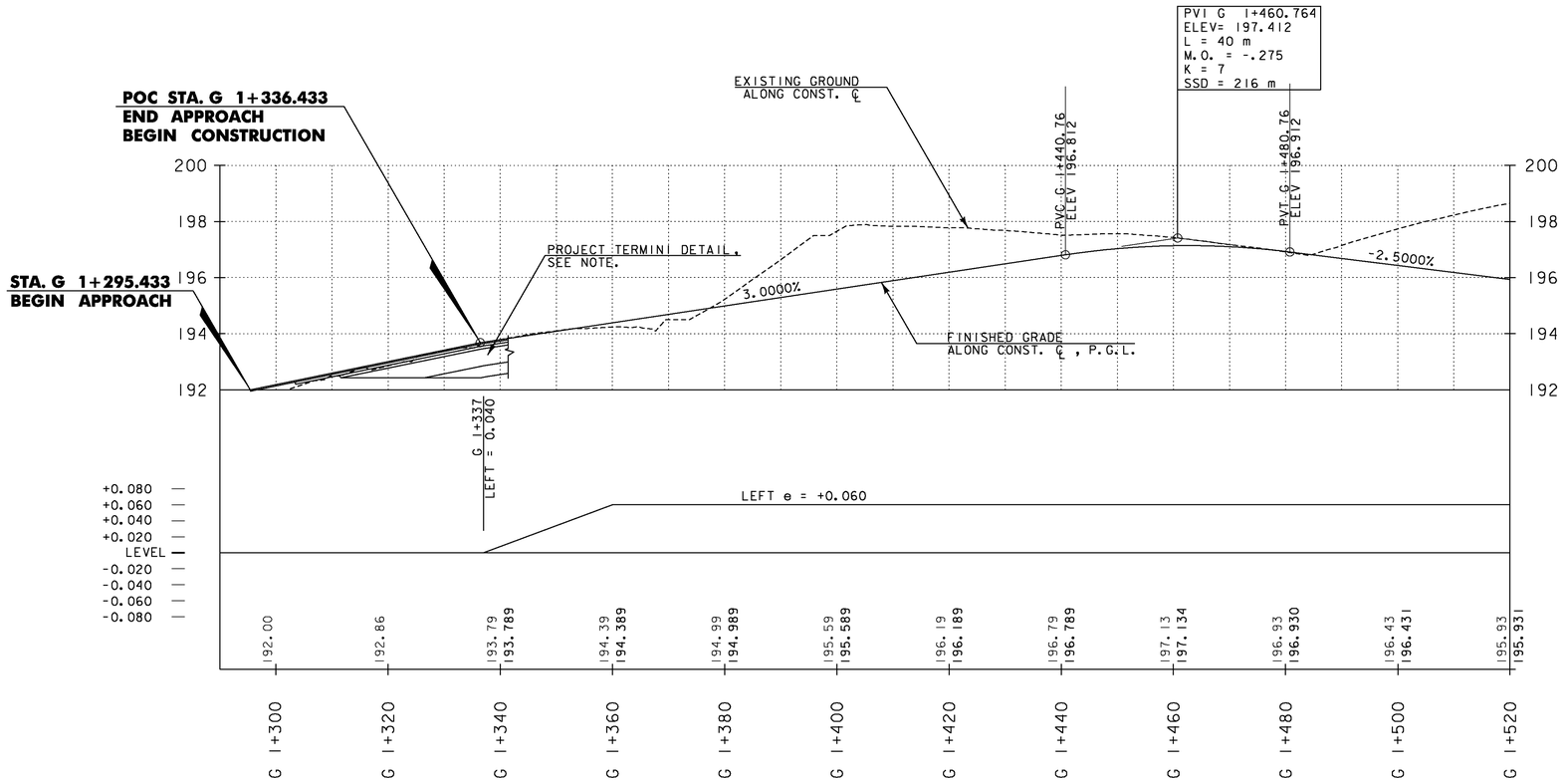

NOTE:
FOR PROJECT TERMINI DETAIL SEE SHEET TS-08

4 M
2
10 20 M
H 1:500 SCALE
V 1:100 SCALE
@ FULL SIZE

VERMONT AGENCY OF TRANSPORTATION

Stantec

PROJECT NAME: BENNINGTON
PROJECT NUMBER: AC NH 019-1(53)

FILE NAME: ...\zd307c3pro_ramp_g.ptf
DESIGN SUPERVISOR: GREG EDWARDS
DESIGNED BY: MARC FOISY
RAMP G PR-10

PLOT DATE: 5/16/2011
DRAWN BY: STANTEC
CHECKED BY: GARY SANTY
SHEET 75 OF 577

v:\1953\active\195300021\transportation\drawing\contract_3\plot_files\zd307c3pro_ramp_g.ptf

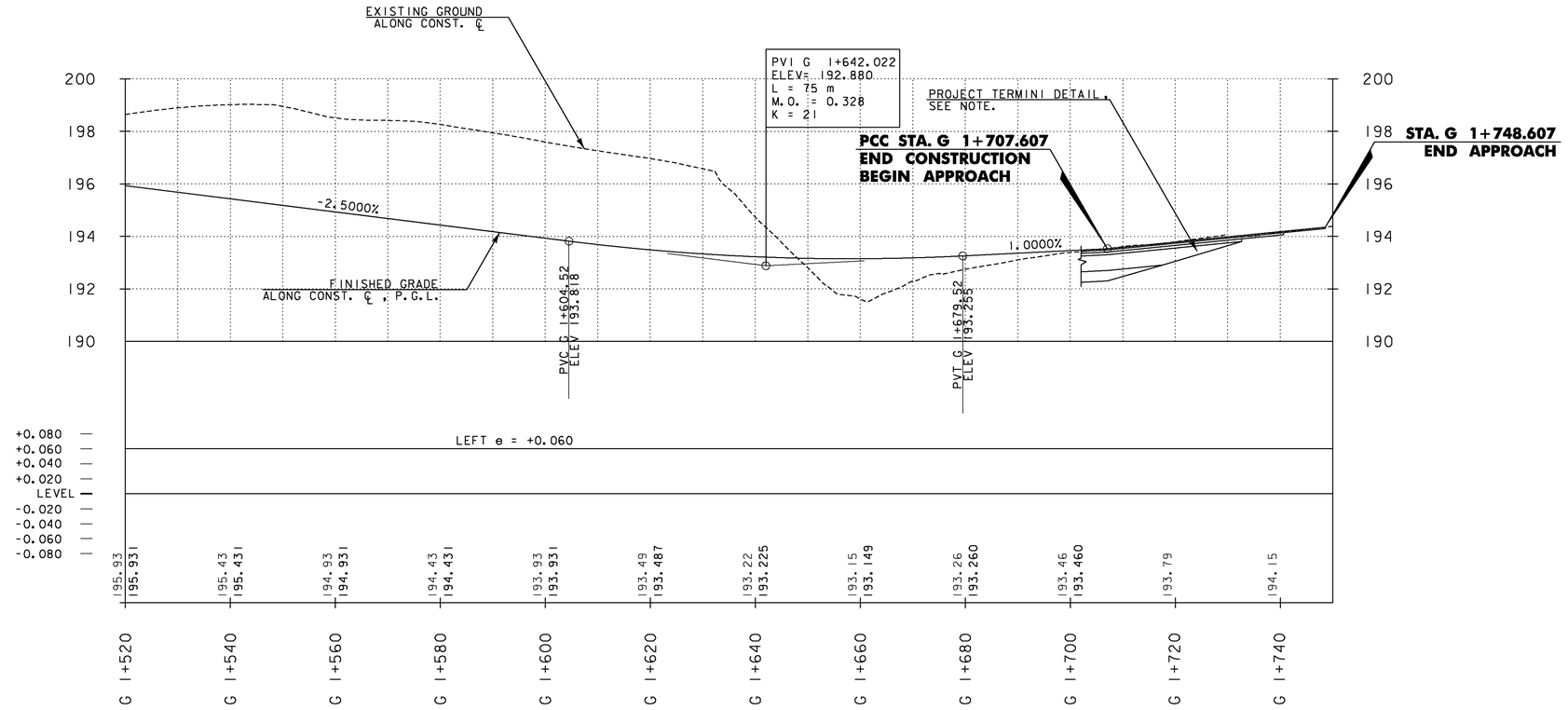

NOTE:
FOR PROJECT TERMINI SEE SHEET TS-08

4 M
2
H 1:500 SCALE
V 1:100 SCALE
@ FULL SIZE
10 20 M

VERMONT AGENCY OF TRANSPORTATION

Stantec

PROJECT NAME: BENNINGTON
PROJECT NUMBER: AC NH 019-1(53)

FILE NAME: ...\zd307c3pro_ramp_g.ptf
DESIGN SUPERVISOR: GREG EDWARDS
DESIGNED BY: MARC FOISY
RAMP G PR-11

PLOT DATE: 5/16/2011
DRAWN BY: STANTEC
CHECKED BY: GARY SANTY
SHEET 76 OF 577

v:\1953\active\195300021\transportation\drawing\contract_3\plot_files\zd307c3pro_ramp_g.ptf

Metric

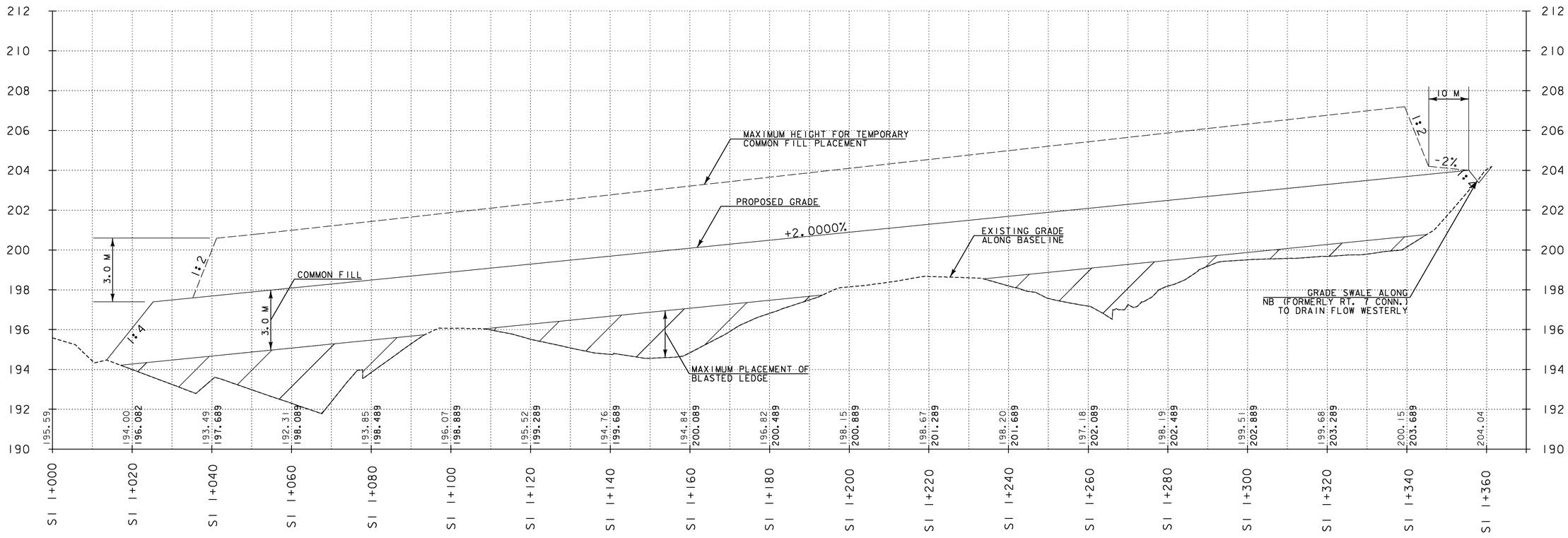

4 M
2
H 1:500 SCALE
V 1:100 SCALE
@ FULL SIZE
10 20 M

VERMONT AGENCY OF TRANSPORTATION

Stantec

PROJECT NAME: BENNINGTON
PROJECT NUMBER: AC NH 019-1(53)

FILE NAME: ...\zd307c3pro_sl_fill.ptf
DESIGN SUPERVISOR: GREG EDWARDS
DESIGNED BY: MARC FOISY
WC WASTE SITE PR-12

PLOT DATE: 5/16/2011
DRAWN BY: STANTEC
CHECKED BY: GARY SANTY
SHEET 77 OF 577

v:\1953\active\195300021\transportation\drawing\contract_3\plot_files\zd307c3pro_sl_fill.ptf

ELECTRICAL CONDUIT (100 SCH 80)
STA. CH 1+330.5, 8.744m LT. - STA. CH 1+496.2, 8.957m LT.
STA. CH 1+330.5, 8.869m LT. - STA. CH 1+496.2, 9.082m LT.
STA. CH 1+330.6, 9.266m LT. - STA. CH 1+496.2, 9.481m LT.

ELECTRICAL CONDUIT (125 SCH 80)
STA. CH 1+330.5, 8.334m LT. - STA. CH 1+496.2, 8.546m LT.

BARRIER FENCE
STA. NB 8+351.2 - NB 8+420.0, LT & RT

PROJECT DEMARCATION FENCE
STA. CH 1+326.6 - CH 1+353.3 LT.
STA. CH 1+424.0 - CH 1+501.5 LT.

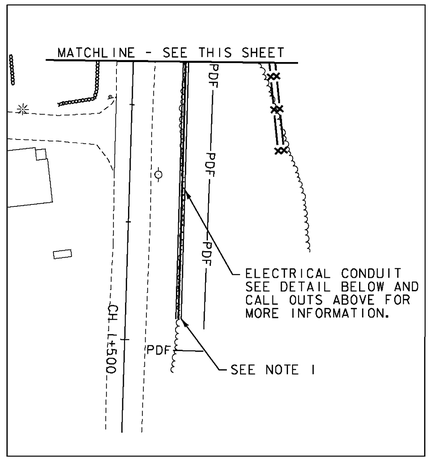

NOTE:

1. ALL ELECTRICAL CONDUITS SHALL BE CAPPED AND THE ENDS TIED OFF AND MARKED FOR FUTURE USE. THIS WORK IS INCIDENTAL TO ITEM 678.21, ELECTRICAL CONDUIT.
2. ELECTRICAL CONDUITS SHALL NOT INCLUDE ANY RELOCATED UTILITIES.

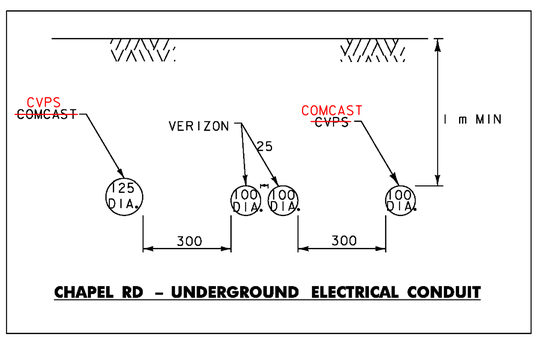

CHAPEL RD - UNDERGROUND ELECTRICAL CONDUIT

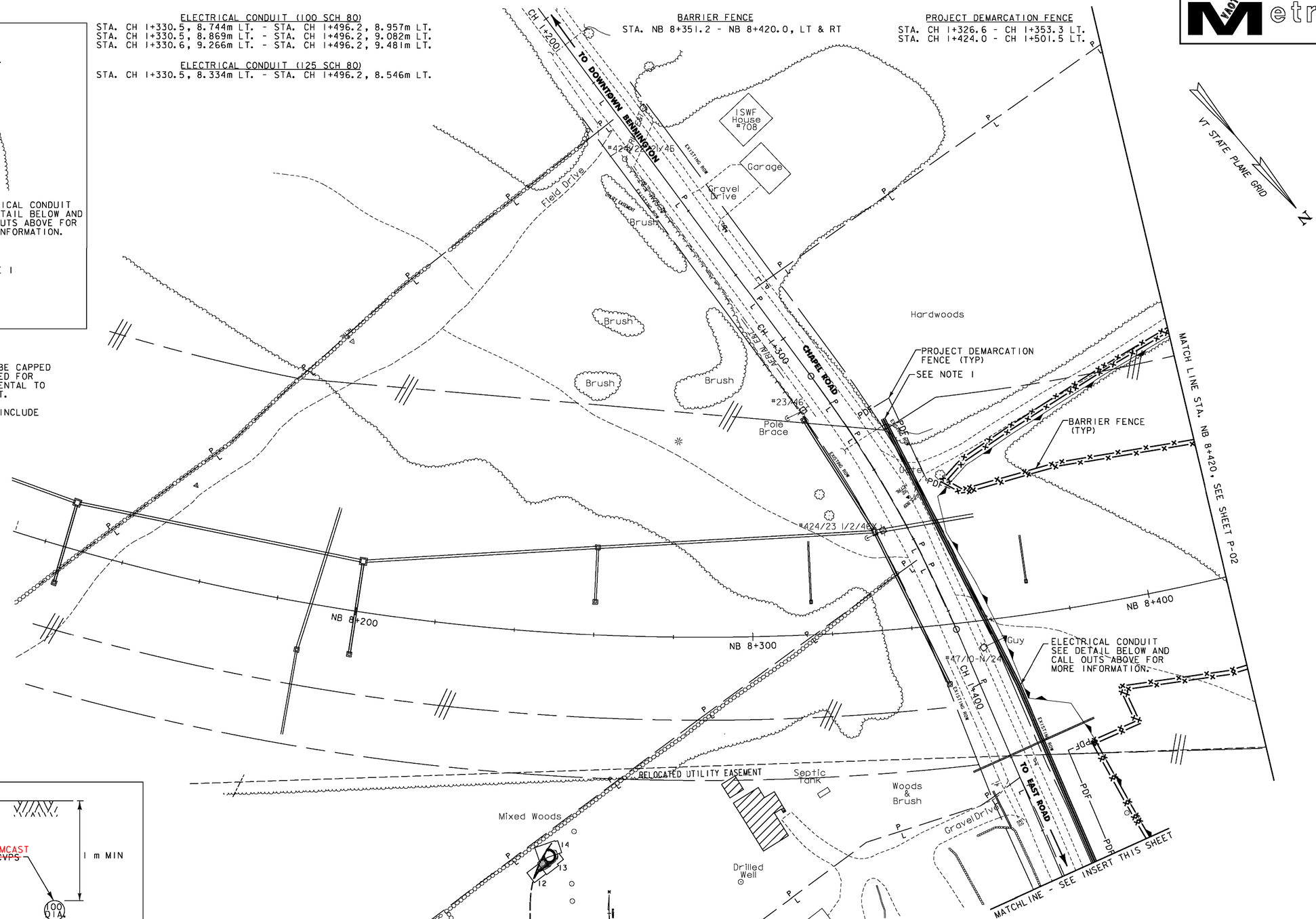

VERMONT AGENCY OF TRANSPORTATION

PROJECT NAME: BENNINGTON
PROJECT NUMBER: AC NH 019-1(53)

Stantec

FILE NAME: ...\zd307c3gen_plans.ptf
DESIGN SUPERVISOR: GREG EDWARDS
DESIGNED BY: MARC FOISY
GENERAL PLAN P-01 CHAPEL ROAD

PLOT DATE: 5/16/2011
DRAWN BY: STANTEC
CHECKED BY: GARY SANTY
SHEET 78 OF 577

v:\1953\active\195310002\transportation\drawing\contract_3\plot_files\zd307c3gen_plans.ptf

MANUFACTURED TERMINAL SECTION (FLARED)
STA. NB 8+770.5, RT.

STEEL BEAM GUARDRAIL
STA. NB 8+694.5 - NB 8+780.0, LT.
STA. NB 8+694.5 - NB 8+770.5, RT.

BARRIER FENCE
STA. NB 8+420.0 - NB 8+495.5, LT.
STA. NB 8+420.0 - NB 8+505.0, RT.
STA. NB 8+462.2 - NB 8+506.3, RT.
STA. NB 8+528.4, RT. - NB 8+629.9, LT.
STA. NB 8+530.0, RT. -NB 8+618.1, LT.
STA. NB 8+607.9, RT. - NB 8+620.7, LT.
STA. NB 8+630.2, LT. - NB 8+696.9, LT.
STA. NB 8+634.6, LT. - NB 8+639.6, LT.
STA. NB 8+644.5, RT. - NB 8+654.1, RT.
STA. NB 8+729.0 - NB 8+780.0, RT.
STA. NB 8+736.2 - NB 8+780.0, LT.

PROJECT DEMARCATION FENCE
STA. NB 8+486.1 - NB 8+605.0, LT
STA. NB 8+505.5 - NB 8+603.2, RT
STA. NB 8+654.0 - NB 8+729.0, RT
STA. NB 8+697.0 - NB 8+736.7, LT

BITUMINOUS CONCRETE CURB
STA. NB 8+694.5 - NB 8+780.0, LT.
CURB TRANSFERED TO CONTRACT 54

WOVEN WIRE FENCE WITH STEEL POSTS
STA. NB 8+639.0 - NB 8+780.0,LT.
STA. NB 8+637.0 - NB 8+780.0,RT.

VAOT Metric

NOTE:
THIS HAUL ROAD CORRIDOR SHALL BE MADE AVAILABLE TO ANY CONTRACTOR THAT MAY NEED TO ACCESS IT. THE TEMPORARY BRIDGE OVER FURNACE BROOK AND THE TEMPORARY CULVERT FOR THE UNNAMED STREAM SHALL BE MAINTAINED UNTIL THE FURNACE BROOK BRIDGE IS OPERATIONAL OR AS DIRECTED BY THE RESIDENT ENGINEER. SEE SPECIAL PROVISIONS.

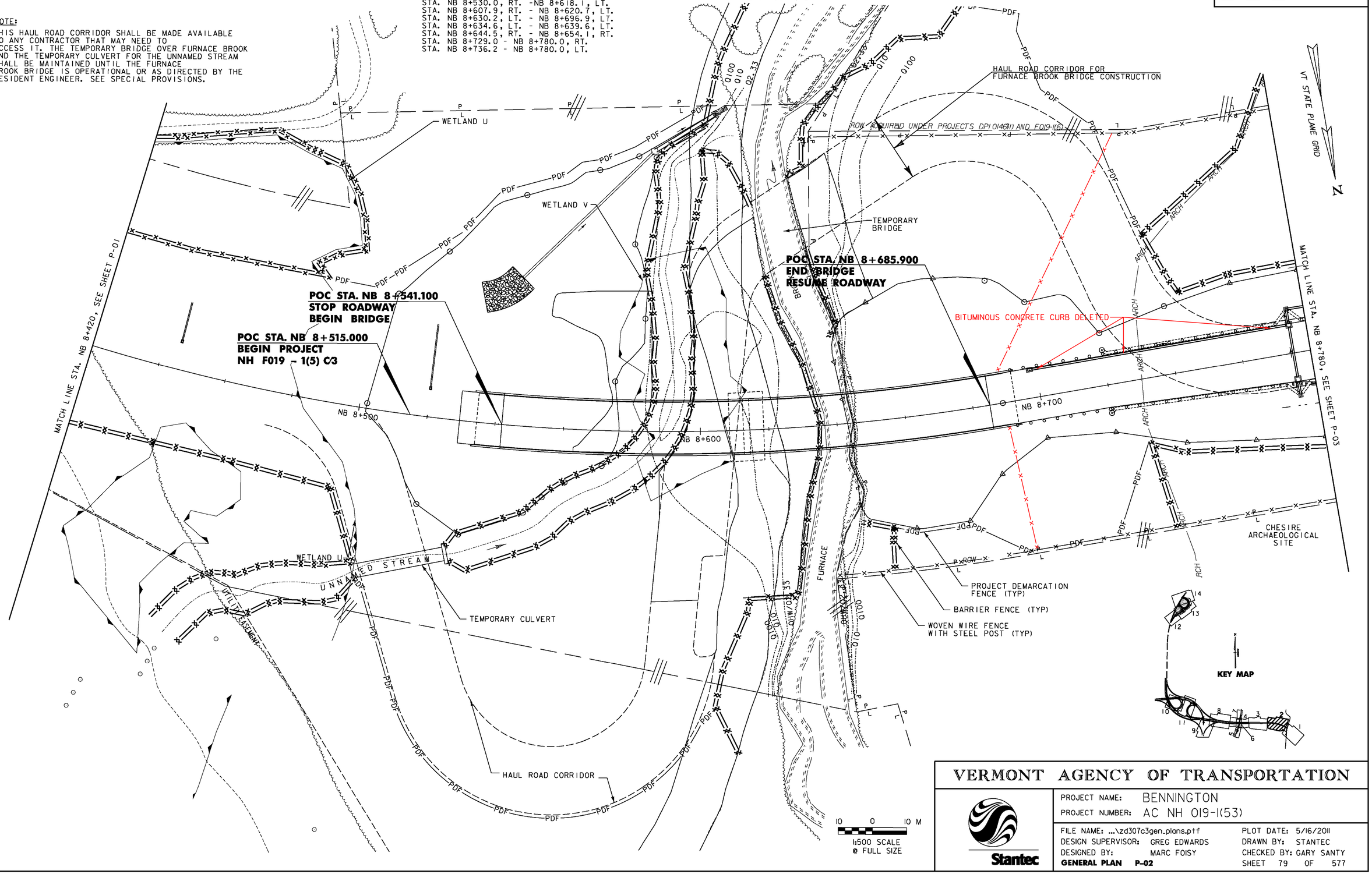

VERMONT AGENCY OF TRANSPORTATION

Stantec

PROJECT NAME: BENNINGTON
PROJECT NUMBER: AC NH 019-1(53)

FILE NAME: ...\zd307c3gen_plans.ptf
DESIGN SUPERVISOR: GREG EDWARDS
DESIGNED BY: MARC FOISY
GENERAL PLAN P-02

PLOT DATE: 5/16/2011
DRAWN BY: STANTEC
CHECKED BY: GARY SANTY
SHEET 79 OF 577

v:\1853\active\185300021\transportation\drawing\contract_3\plot_files\zd307c3gen_plans.ptf

MANUFACTURED TERMINAL SECTION (FLARED)
STA. NB 8+823.7, LT.

STEEL BEAM GUARDRAIL
STA. NB 8+780.0 - NB 8+823.7, LT.

BITUMINOUS CONCRETE CURB
STA. NB 8+780.0 - NB 8+823.0, LT.

WOVEN WIRE FENCE WITH STEEL POSTS
STA. NB 8+780.0 - NB 9+140.0, LT.
STA . NB 8+780.0 - NB 9+140.0, RT.

BARRIER FENCE
STA. NB 8+780.0 - NB 8+789.6, LT.
STA. NB 8+780.0 - NB 8+868.7, LT.
STA. NB 8+780.0 - NB 8+850.5, RT.

PROJECT DEMARCATION FENCE
STA. NB 8+864.5, LT - XO 1+400.0, RT
STA. NB 8+850.2 - NB 9+140.0, RT

SLEEVES FOR UTILITIES, 200
STA. XO 1+411.9, 15.0 m RT. - XO 1+413.1, 2.0 m LT.

REMOVAL OF EXISTING FENCE
STA. NB 9+028.9 - NB 9+140.0, LT.
STA. NB 9+028.9 - NB 9+140.0, RT.
STA. NB 9+028.9, 71.4m LT., 85.2m RT.

VT STATE PLANE GRID
N

CHESIRE
ARCHAEOLOGICAL
SITE

EXISTING ROW

UTILITY SLEEVE
NB 9+126.57
19.66 LT
ELEV 240.836

SNOWPLOW
TURNAROUND

CROSSOVER

XO 1+500

NB 9+126.53
3.67 LT
ELEV 240.375

NB 9+100

NB 9+000

NB 8+900

VT 279 NB

NB 8+800

MATCH LINE STA. NB 8+780, SEE SHEET P-02

MATCH LINE STA. NB 9+140, SEE SHEET P-04

POT STA. NB 8+958.000 LT. =
PT STA. XO 1+578.829

BARRIER
FENCE (TYP)

ROW ACQUIRED UNDER PROJECTS PLOWED AND FOWLER

CHESIRE
ARCHAEOLOGICAL
SITE

PROJECT DEMARCATION
FENCE (TYP)

NO CUT SLOPE ROUNDING SHALL
BE ALLOWED BETWEEN STA.
NB 8+980 AND NB 9+020, RT.

WOVEN WIRE FENCE
WITH STEEL POST (TYP)

KEY MAP

10 0 10 M
1:500 SCALE
@ FULL SIZE

VERMONT AGENCY OF TRANSPORTATION

Stantec

PROJECT NAME: BENNINGTON
PROJECT NUMBER: AC NH 019-1(53)

FILE NAME: ...\zd307c3gen_plans.ptf
DESIGN SUPERVISOR: GREG EDWARDS
DESIGNED BY: MARC FOISY
GENERAL PLAN P-03

PLOT DATE: 5/16/2011
DRAWN BY: STANTEC
CHECKED BY: GARY SANTY
SHEET 80 OF 577

v:\1951\active\195130022\transportation\drawing\contract_3\plot_files\zd307c3gen_plans.ptf

NOTES:

1. EAST ROAD DETAILED ON SHEETS P-05 TO P-07.
2. FOR PROJECT DEMARCATION FENCE AROUND THE WASTE/BORROW/STAGING AREA, SEE EROSION CONTROL SHEET EC-05.
3. FOR EAST ROAD GUARDRAIL LOCATIONS, SEE SHEET P-06.

WOVEN WIRE FENCE WITH STEEL POSTS
STA. NB 9+140.0 - NB 9+265.5, RT.
STA. NB 9+283.3 - NB 9+500.0, RT.
STA. XO 1+035.4 - XO 1+217.6, RT.
STA. XO 1+252.0 - XO 1+400.0, RT.

PROJECT DEMARCATION FENCE
STA. NB 9+140.0 - NB 9+265.7, RT.
STA. XO 1+040.0 - XO 1+178.5, RT.
STA. XO 1+252.0 - XO 1+400.0, RT.

THRIE BEAM GUARDRAIL
STA. NB 9+255.0, LT. TO 9+311.0, LT.
(FOR DETAILS SEE SHEET MD-1)

CONSTRUCT U-TURN
STA. NB 9+320.0, LT.
FOR DETAILS, SEE
VTrans STD. B-17

CLAY BORROW
STA. XO 1+179.0 - 1+220.0, RT.

SLEEVES FOR UTILITIES, 200
STA. NB 9+397.9 LT -RT

BARRIER FENCE
STA. XO 1+179.5 - XO 1+210.8, RT

REMOVAL OF EXISTING FENCE
STA. NB 9+140.0 - NB 9+215.9, LT.
STA. NB 9+140.0 - NB 9+265.1, RT.
STA. NB 9+205.7, 45.9m - NB 9+215.9, 71.5m, LT.
STA. NB 9+205.7 - NB 9+275.4, LT.
STA. NB 9+275.4, 33.5m, LT. - NB 9+265.1, 41.9m, RT.
STA. NB 9+499.2 - NB 9+500.0, LT.
STA. NB 9+499.2, 72.7m - NB 9+500.0, 36.8m, LT.

VT STATE PLANE GRID
N

MATCH LINE STA. ER 1+100, SEE SHEET P-05
EXISTING ROW
1/2 SWF House
Gravel Drive
AERIAL E&T
POC STA. ER 1+147.733
END ROADWAY
BEGIN BRIDGE
WOVEN WIRE FENCE WITH STEEL POST (TYP)
BARRIER FENCE (TYP)
PROJECT DEMARCATION FENCE (TYP)
WETLAND BERM SEE DETAIL ON TS-02
CROSSOVER
XO 1+300
XO 1+200
XO 1+100
VT 279 SB
VT 279 NB
NB 9+200
NB 9+300
NB 9+400
UTILITY SLEEVE
NB 9+398.21 7.05 LT ELEV 230.692
NB 9+397.79 13.28 RT ELEV 229.990
EAST ROAD DETOUR
Chainlink Fence (Approx. Location)
EAST ROAD
Guy
Guy Wire
Med. Oak
POC STA. ER 1+220.957
END BRIDGE
RESUME ROADWAY
ROW ACQUIRED UNDER PARCEL 2 DEPOT AND FOGHUT
EXISTING HAUL ROAD
DRIVE GATE
MATCH LINE STA. NB 9+140, SEE SHEET P-03
MATCH LINE STA. NB 9+500, SEE SHEET P-08
MATCH LINE STA. ER 1+260, SEE SHEET P-07

KEY MAP

10 0 10 M
1:500 SCALE
@ FULL SIZE

VERMONT AGENCY OF TRANSPORTATION

Stantec

PROJECT NAME: BENNINGTON
PROJECT NUMBER: AC NH 019-1(53)

FILE NAME: ...\zd307c3gen_plans.ptf
DESIGN SUPERVISOR: GREG EDWARDS
DESIGNED BY: MARC FOISY
GENERAL PLAN P-04

PLOT DATE: 5/16/2011
DRAWN BY: STANTEC
CHECKED BY: GARY SANTY
SHEET 81 OF 577

V:\1953\active\19531002\transportation\drawing\contract_3\plot_files\zd307c3gen_plans.ptf

BARRIER FENCE
STA. ER 1+059.3 - ER 1+100.0, LT. (WETLAND W)

CONSTRUCT DRIVE
STA. ER 0+972.0, LT. (7.4 m BIT.)
STA. ER 0+993.0, RT. (5.4 m GRAVEL)
STA. ER 1+020.0, RT. (15.0 m GRAVEL)
STA. ER 1+037.0, RT. (9.5m BIT)
STA. ER 1+054.0, LT. (8.2 m BIT.)

RELOCATE MAILBOX, SINGLE SUPPORT
STA. ER 0+987.7, RT.

Metric

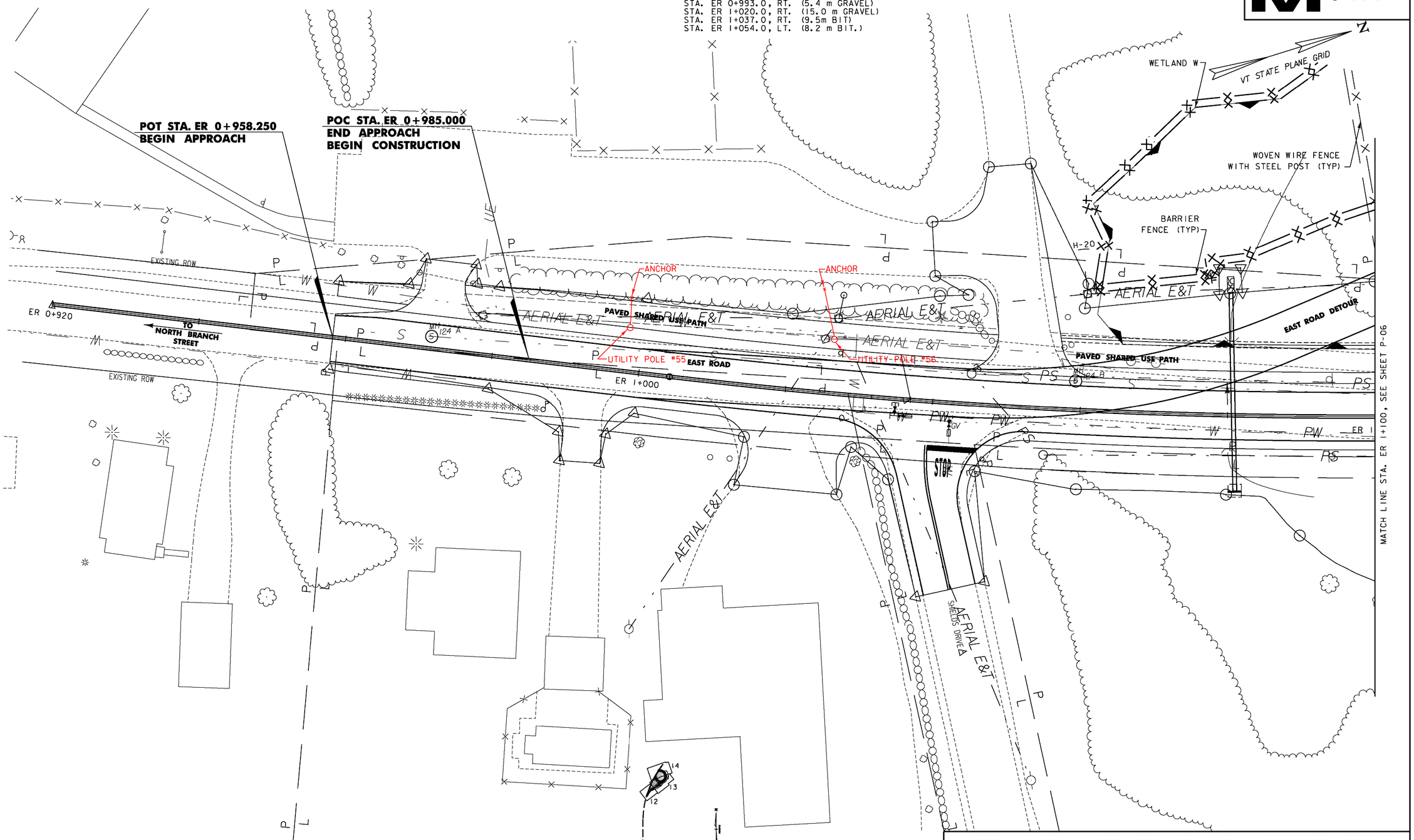

NOTE: 1) SEE SHEETS ERD-02 AND ERD-03 FOR ALIGNMENT DATA RELATING TO EAST ROAD DETOUR.
2) SEE SHEETS U-01 THROUGH U-05 FOR UTILITY DATA.

5 0 5 M
1:250 SCALE
@ FULL SIZE

VERMONT AGENCY OF TRANSPORTATION

Stantec

PROJECT NAME: BENNINGTON
PROJECT NUMBER: AC NH 019-1(53)

FILE NAME: ...\zd307c3gen_plans.ptf
DESIGN SUPERVISOR: GREG EDWARDS
DESIGNED BY: MARC FOISY
GENERAL PLAN P-05 EAST ROAD

PLOT DATE: 5/16/2011
DRAWN BY: STANTEC
CHECKED BY: GARY SANTY
SHEET 82 OF 577

v:\1953\active\195310002\transportation\drawing\contract_3\plot_files\zd307c3gen_plans.ptf

MANUFACTURED TERMINAL SECTION (TANGENT)
STA. ER 1+124.0, LT.
STA. ER 1+241.7, LT.

MANUFACTURED TERMINAL SECTION (FLARED)
STA. ER 1+124.2, RT.
STA. ER 1+245.9, RT.

STEEL BEAM GUARDRAIL
STA. ER 1+124.0 - ER 1+136.5, LT.
STA. ER 1+124.2 - ER 1+131.3, RT.
STA. ER 1+230.6 - ER 1+241.7, LT.
STA. ER 1+238.8 - ER 1+245.9, RT.

CONSTRUCT DRIVE
STA. ER 1+106.5, RT. (3.6 m GRAVEL)

VAOT Metric

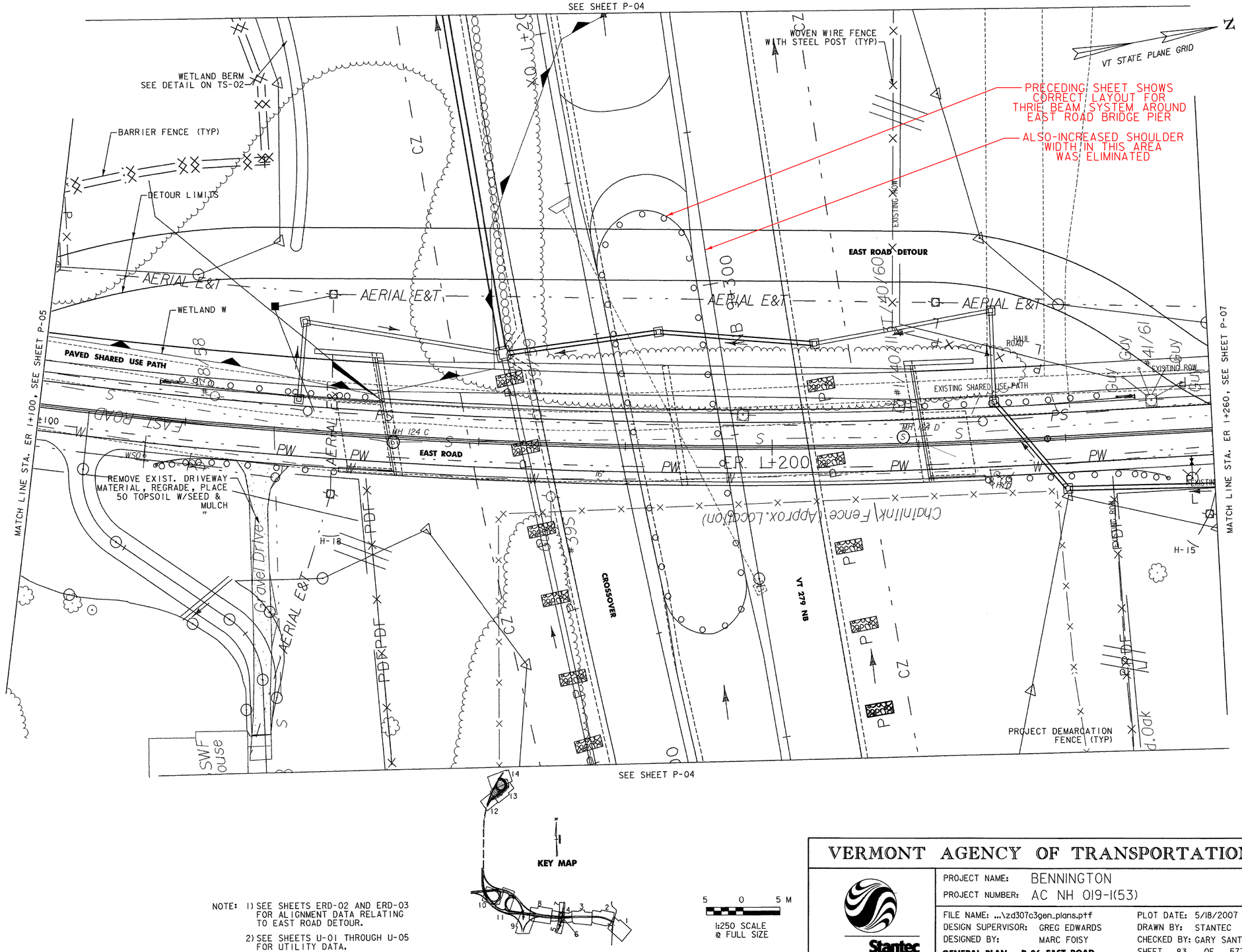

NOTE: 1) SEE SHEETS ERD-02 AND ERD-03 FOR ALIGNMENT DATA RELATING TO EAST ROAD DETOUR.

2) SEE SHEETS U-01 THROUGH U-05 FOR UTILITY DATA.

5 0 5 M
1:250 SCALE @ FULL SIZE

VERMONT AGENCY OF TRANSPORTATION

Stantec

PROJECT NAME: BENNINGTON
PROJECT NUMBER: AC NH 019-1(53)

FILE NAME: ...\zd307c3gen_plans.ptf
DESIGN SUPERVISOR: GREG EDWARDS
DESIGNED BY: MARC FOISY
GENERAL PLAN P-06 EAST ROAD

PLOT DATE: 5/18/2007
DRAWN BY: STANTEC
CHECKED BY: GARY SANTY
SHEET 83 OF 577

V:\1953\active\953000021\transportation\drawing\contract_3\plot_files\zd307c3gen_plans.ptf

MANUFACTURED TERMINAL SECTION (TANGENT)
STA. ER 1+124.0, LT.
STA. ER 1+241.7, LT.

MANUFACTURED TERMINAL SECTION (FLARED)
STA. ER 1+124.2, RT.
STA. ER 1+245.9, RT.

STEEL BEAM GUARDRAIL
STA. ER 1+124.0 - ER 1+136.5, LT.
STA. ER 1+124.2 - ER 1+131.3, RT.
STA. ER 1+230.6 - ER 1+241.7, LT.
STA. ER 1+238.8 - ER 1+245.9, RT.

CONSTRUCT DRIVE
STA. ER 1+106.5, RT. (3.6 m GRAVEL)

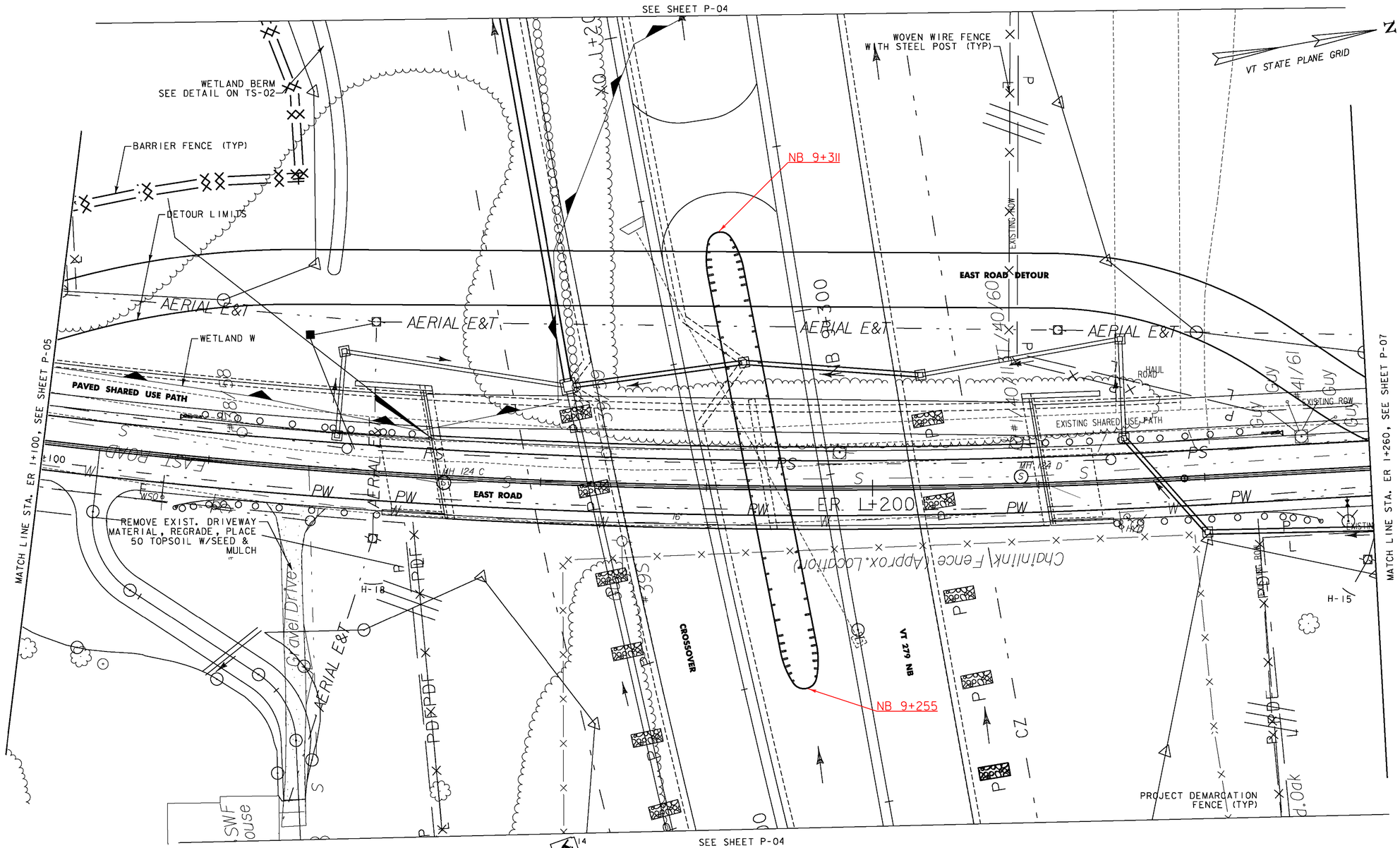

KEY MAP

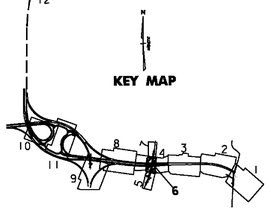

NOTE: 1) SEE SHEETS ERD-02 AND ERD-03 FOR ALIGNMENT DATA RELATING TO EAST ROAD DETOUR.

2) SEE SHEETS U-01 THROUGH U-05 FOR UTILITY DATA.

5 0 5 M
1:250 SCALE
@ FULL SIZE

GUARDRAIL PROTECTION FOR EAST RD
PIER-OPTION 8/22/08
OPTION-HOLD STATIONS AS PER CONTRACT PLANS

VERMONT AGENCY OF TRANSPORTATION

Stantec

PROJECT NAME: BENNINGTON
PROJECT NUMBER: AC NH 019-1(53)

FILE NAME: ...\zd307c3gen_plans.ptf
DESIGN SUPERVISOR: GREG EDWARDS
DESIGNED BY: MARC FOISY
PLOT DATE: 5/16/2011
DRAWN BY: STANTEC
CHECKED BY: GARY SANTY
GENERAL PLAN P-06 EAST ROAD
SHEET 83 OF 577

v:\0953\active\95300002\transportation\drawing\contract_3\plot_files\zd307c3gen_plans.ptf

PROJECT DEMARCATION FENCE
STA. ER 1+345, LT - NB 9+516, RT
(SEE NOTE 1)

CONSTRUCT DRIVE
STA. ER 1+271.0, RT. (2.2 m GRAVEL)

RELOCATE MAILBOX, SINGLE SUPPORT
STA. ER 1+276.7, RT.

VT STATE PLANE GRID

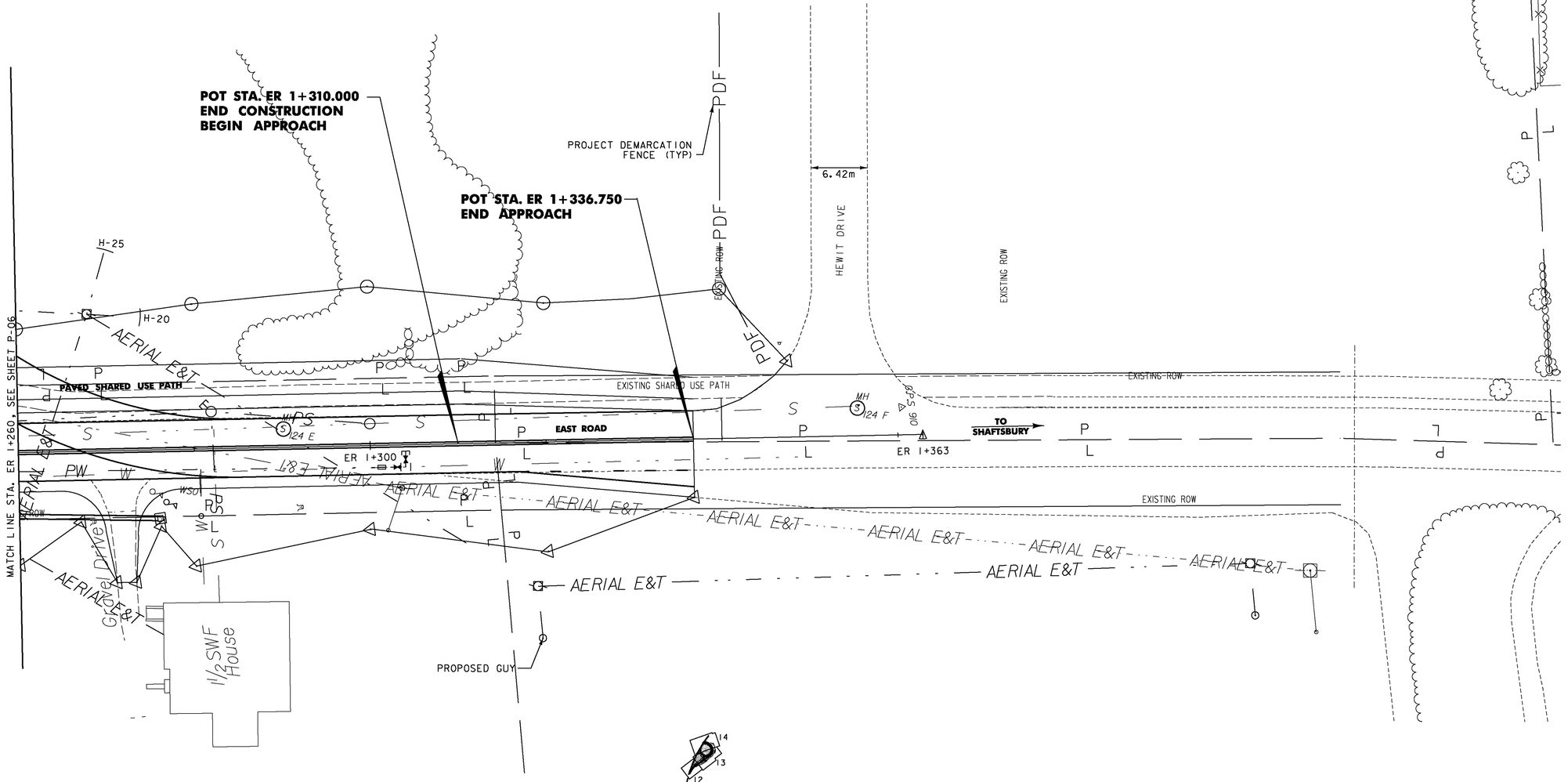

NOTES:

1. FOR PROJECT DEMARCATION FENCE AROUND THE WASTE/BORROW/STAGING AREA, SEE EROSION CONTROL SHEET EC-05.
2. SEE SHEETS ERD-02 AND ERD-03 FOR ALIGNMENT DATA RELATING TO EAST ROAD DETOUR.
3. SEE SHEETS U-01 THROUGH U-05 FOR UTILITY DATA.

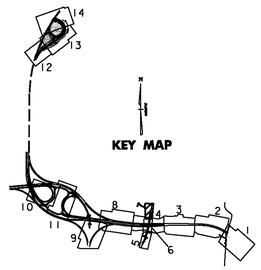

5 0 5 M
1:250 SCALE
@ FULL SIZE

VERMONT AGENCY OF TRANSPORTATION

Stantec

PROJECT NAME: BENNINGTON
PROJECT NUMBER: AC NH 019-1(53)

FILE NAME: ...\zd307c3gen_plans.ptf
DESIGN SUPERVISOR: GREG EDWARDS
DESIGNED BY: MARC FOISY
GENERAL PLAN P-07 EAST ROAD

PLOT DATE: 5/16/2011
DRAWN BY: STANTEC
CHECKED BY: GARY SANTY
SHEET 84 OF 577

v:\1853\active\185300021\transportation\drawing\contract_3\plot_files\zd307c3gen_plans.ptf

CONSTRUCT DRIVE
STA. L 1+310.0, LT. (4.5m GRAVEL)
POND ACCESS DRIVE

PROJECT DEMARCATION FENCE
STA. NB 9+500.0 - NB 9+672.8, RT.
STA. XO 0+904.8 - XO 1+040.0, RT.
STA. L 1+280.0, LT. - L 1+495.0, RT.
STA. L 1+282.8, LT. - L 1+447.9, LT.

WOVEN WIRE FENCE WITH STEEL POSTS
STA. NB 9+500.0 - NB 9+704.8, RT.

CHAIN LINK FENCE; 1.8m
STA. L 1+280.0 - L 1+305.5, LT.
STA L 1+316.2, LT. - L 1+282.8, LT.

GATE FOR CHAIN LINK FENCE; 1.8m
STA. L 1+305.5 - L 1+316.2 LT.

VAOT Metric

VT STATE PLANE GRID
N

MATCH LINE, STA. L 1+280, SEE SHEET P-09

EXISTING TRAIL

EXISTING ROW

PT STA. L 1+495.039 =
POT XO 0+904.79, 10.8 m RT

POT STA. XO 0+861.000
BEGIN CROSSOVER CONSTRUCTION

EXISTING RAMP EMBANKMENT

L 1+300

L 1+400

L 1+495

CHAIN LINK FENCE, 1.8m

XO STA. 1+040

XO 1+000

XO 0+900

+500

NB 9+600

VT 279 NB

EXISTING TRAIL

(30" RCP)

HAUL ROAD

MATCH LINE
STA. NB 9+500, SEE SHEET P-04

PROJECT DEMARCATION FENCE (TYP)

POC STA. NB 9+672.770
END PROJECT
NH F019 - 1(5) C/3

WOVEN WIRE FENCE WITH STEEL POST

EXISTING ROW

EXISTING RAMP EMBANKMENT

EXISTING TRAIL

EXISTING ROW

N/F SCHUELER

KEY MAP

10 0 10 M
1:500 SCALE
@ FULL SIZE

VERMONT AGENCY OF TRANSPORTATION

Stantec

PROJECT NAME: BENNINGTON
PROJECT NUMBER: AC NH 019-1(53)

FILE NAME: ...\zd307c3gen_plans.ptf
DESIGN SUPERVISOR: GREG EDWARDS
DESIGNED BY: MARC FOISY
GENERAL PLAN P-08

PLOT DATE: 5/16/2011
DRAWN BY: STANTEC
CHECKED BY: GARY SANTY
SHEET 85 OF 577

v:\1853\active\18530002\transportation\drawing\contract_3\plot_files\zd307c3gen_plans.ptf

VAOT Metric

PROJECT DEMARCATION FENCE
STA. UN 9+688.0, 29.4m RT. - UN 9+862.5, 13.3m RT.
STA. UN 9+853.6, 89.4m RT. - UN 9+862.5, 13.3m RT.
STA. L 1+126.6, LT. - L 1+280, RT.

CHAIN LINK FENCE; 1.8m
STA. UN 9+690.6, 28.9m RT. - UN 9+859.7, 15.7m RT.
STA. UN 9+851.7, 89.1m RT. - UN 9+859.7, 15.7m RT.
STA. L 1+128.7 - L 1+280.0, LT.

VT STATE PLANE GRID

MATCH LINE, STA. L 1+280, SEE SHEET P-08

EXISTING ROW

PROJECT DEMARCATION FENCE (TYP)

L 1+100

L 1+200

EMBANKMENT

UN 9+600

UN 9+700

UN 9+800

MATCH LINE STA. UN 9+540 SEE SHEET SWM-1

MATCH LINE STA. SW 3+090 SEE SHEET SWM-1

SW 3+000

SWALE 3
FOR MORE DETAIL
SEE SHEET SWM-8

CHAIN LINK FENCE, 1.8m

EXISTING ROW

KEY MAP

10 0 10 M
1:500 SCALE
@ FULL SIZE

VERMONT AGENCY OF TRANSPORTATION

Stantec

PROJECT NAME: BENNINGTON
PROJECT NUMBER: AC NH 019-1(53)

FILE NAME: ...\zd307c3gen_plans.ptf
DESIGN SUPERVISOR: GREG EDWARDS
DESIGNED BY: MARC FOISY
GENERAL PLAN P-09

PLOT DATE: 5/16/2011
DRAWN BY: STANTEC
CHECKED BY: GARY SANTY
SHEET 86 OF 577

v:\9531\active\85300021\transportation\drawing\contract_3\plot_files\zd307c3gen_plans.ptf

VAOT Metric

N

VT STATE PLANE GRID

START OF SUBBASE G 1+340

GG 1+000

GG 1+100

G 1+300

G 1+400

DENSE GRADED OVER ROCK

CZ

PDF

PROJECT DEMARCATION FENCE (TYP)

START OF GEOTEXTILE G 1+450

DENSE GRADED OVER GEOTEXTILE

STA. G 1+295.433
BEGIN APPROACH

PC STA. G 1+336.433 =
PC STA. GG 1+000.000
END APPROACH
BEGIN CONSTRUCTION

BARRIER FENCE (TYP)

G 1+200

G 1+854

G 1+800

G 1+500

G 1+600

START OF UNDERCUT G 1+530, UNDERCUT BACKFILLED WITH 600mm OF TYPE II STONE FILL 7.2m WIDE

UNDERCUT, GEOTEXTILE, DENSE GRADED

PCC STA. G 1+707.607 =
PCC STA. GG 1+646.682
END CONSTRUCTION
BEGIN APPROACH

G 1+700

GG 1+647

GG 1+600

STA. G 1+748.607
END APPROACH

MATCH LINE SEE SHEET P-11

NOTE:
CONSTRUCT AND PAVE NEW RAMP G BEFORE REMOVING EXISTING RAMP.

PROJECT DEMARCATION FENCE
STA. G 1+295.4 - G 1+740.0, RT

BARRIER FENCE
STA. G 1+313.0 - G 1+339.0, RT

EXCAVATION OF SURFACES AND PAVEMENT
STA. GG 1+009.0 - GG 1+181.0, LT.
STA. GG 1+517.0 - G 1+707.6, LT.

KEY MAP

10 0 10 M
1:500 SCALE
@ FULL SIZE

VERMONT AGENCY OF TRANSPORTATION

Stantec

PROJECT NAME: BENNINGTON
PROJECT NUMBER: AC NH 019-1(53)

FILE NAME: ...\zd307c3gen_plans.ptf
DESIGN SUPERVISOR: GREG EDWARDS
DESIGNED BY: MARC FOISY
GENERAL PLAN P-10 RAMP G

PLOT DATE: 5/16/2011
DRAWN BY: STANTEC
CHECKED BY: GARY SANTY
SHEET 87 OF 577

v:\19531\active\19530002\transportation\drawing\contract_3\plot_files\zd307c3gen_plans.ptf

EXCAVATION OF SURFACES AND PAVEMENT
STA. GG 1+181.0 - GG 1+517.0, LT.

PROJECT DEMARCATION FENCE
STA. SI 1+011.6, 3.6m RT. - SI 1+103.5, 52.1m RT.
STA. SI 1+111.2, 61.2m RT. - SI 1+299.8, 78.6m RT.
STA. SI 1+315.2, 76.7m RT. - SI 1+343.2, 50.9m RT.
STA. SW 3+953.0, 44.2m RT. - SW 4+000.6, 7.3m LT.
STA. SW 3+959.0, 47.1m RT. - SW 4+149.0, 3.8m LT.

NOTE:

1. CONSTRUCT AND PAVE NEW RAMP G BEFORE REMOVING EXISTING RAMP.
2. FOR FULL DETAIL OF SWALE SEE SHEET SWM-4.

VT STATE PLANE GRID

MATCH LINE SEE SHEET P-10

PLUGGED PIPE 0.25cm

PROJECT DEMARCATION FENCE (TYP)

SEE NOTE 2

SI FILL BASELINE

SI 1+100 SI 1+200 SI 1+300 SI 1+361

GG 1+500 GG 1+400 GG 1+300 GG 1+200

SW 3+940

EMBANKMENT

BUFFER ZONE CLASS II

15.25 METER

KEY MAP

10 0 10 M
1:500 SCALE
@ FULL SIZE

VERMONT AGENCY OF TRANSPORTATION

Stantec

PROJECT NAME: BENNINGTON
PROJECT NUMBER: AC NH 019-1(53)

FILE NAME: ...\zd307c3gen_plans.ptf
DESIGN SUPERVISOR: GREG EDWARDS
DESIGNED BY: MARC FOISY
GENERAL PLAN **P-11 WC WASTESITE**

PLOT DATE: 5/16/2011
DRAWN BY: STANTEC
CHECKED BY: GARY SANTY
SHEET 88 OF 577

v:\1853\active\185300021\transportation\drawing\contract_3\plot_files\zd307c3gen_plans.ptf

PROJECT DEMARCATION FENCE
STA. A 1+000.0 - A 1+220.0, RT.
STA. A 1+150.6 - A 1+220.0, LT.

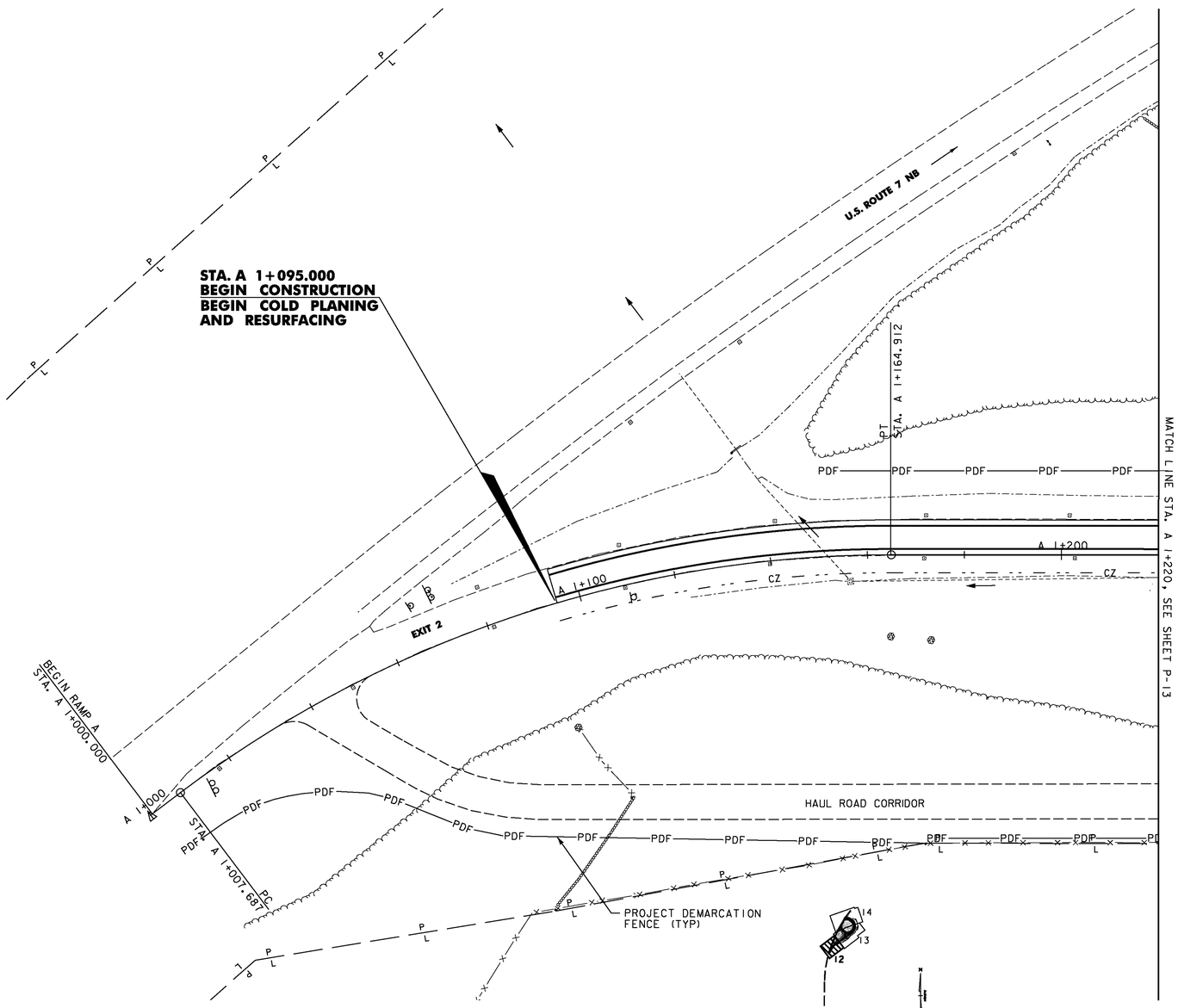

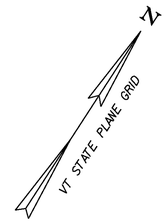

NOTE:
FOR EXIT 2 GENERAL NOTES SEE SHEET P-14

VERMONT AGENCY OF TRANSPORTATION

Stantec

PROJECT NAME: BENNINGTON
PROJECT NUMBER: AC NH 019-1(53)

FILE NAME: ...\zd307c3gen_plans.ptf
DESIGN SUPERVISOR: GREG EDWARDS
DESIGNED BY: MARC FOISY
GENERAL PLAN P-12 EXIT 2

PLOT DATE: 5/16/2011
DRAWN BY: STANTEC
CHECKED BY: GARY SANTY
SHEET 89 OF 577

v:\953\active\95330002\transportation\drawing\contract_3\plot_files\zd307c3gen_plans.ptf

NOTE:
FOR EXIT 2 GENERAL NOTES SEE SHEET P-14

STONE FILL, TYPE II
STA. A 1+242.8 - A 1+259.9, RT.

SOLID ROCK EXCAVATION - ROCK SCALING
STA. B 1+172.0 - B 1+385.0, RT.

PROJECT DEMARCATION FENCE
STA. A 1+220.0, 17.3m - A 1+333.8, 31.2m LT.
STA. A 1+220.0, 58.4m - A 1+540.0, 81.0m RT.
STA. B 1+171.5, 22.7m - B 1+435.0, 10.0m RT.
STA. B 1+350.8, 17.2m - B 1+435.0, 16.6m LT.

SOLID ROCK EXCAVATION - TRIM BLASTING
STA. B 1+172.0 - B 1+385.0, RT.

VAOT Metric

U.S. ROUTE 7 NB

MATCH LINE STA. B 1+435, SEE SHEET P-14

MATCH LINE STA. A 1+220, SEE SHEET P-12

PROJECT DEMARCATION FENCE (TYP)

PCC STA. B 1+174.339

PCC STA. B 1+284.787

PCC STA. A 1+536.689

PC STA. A 1+408.053

B 1+100

B 1+200

B 1+300

A 1+300

A 1+400

A 1+500

EXIT 2

HAUL ROAD CORRIDOR

PDF

CZ

VT STATE PLANE GRID

KEY MAP

10 0 10 M
1:500 SCALE
@ FULL SIZE

VERMONT AGENCY OF TRANSPORTATION

Stantec

PROJECT NAME: BENNINGTON
PROJECT NUMBER: AC NH 019-1(53)

FILE NAME: ...\zd307c3gen_plans.ptf
DESIGN SUPERVISOR: GREG EDWARDS
DESIGNED BY: MARC FOISY
GENERAL PLAN P-13 EXIT 2

PLOT DATE: 5/16/2011
DRAWN BY: STANTEC
CHECKED BY: GARY SANTY
SHEET 90 OF 577

v:\1953\active\195300021\transportation\drawing\contract_3\plot_files\zd307c3gen_plans.ptf

EXIT 2 GENERAL NOTES:

1. FOR DETAILS ON PROTECTING THE EXISTING CATCH BASINS DURING THE ROCK CUT OPERATIONS, SEE SHEET EP&SC DETAILS-10.
2. FOR EROSION CONTROL GENERAL NOTES AND DETAILS, SEE SHEET EP&SC DETAILS-1.
3. IT SHALL BE THE RESPONSIBILITY OF THE CONTRACTOR TO PROTECT AND MAINTAIN THE EXISTING CURBED MEDIAN DURING CONSTRUCTION. ANY DAMAGE TO THE CURBED MEDIAN INCLUDING, BUT NOT LIMITED TO, THE MOUNTABLE STONE CURB, TURF, GUARDRAIL AND DRAINAGE STRUCTURES SHALL BE RESTORED/REPLACED BY THE CONTRACTOR AT NO ADDITIONAL COST TO VTRANS. PRIOR TO THE START OF ANY WORK, THE RESIDENT ENGINEER AND CONTRACTOR SHALL INSPECT THE MEDIAN TO IDENTIFY AND DOCUMENT ANY PRE-EXISTING PROBLEMS AND/OR CONDITIONS.
4. IT SHALL BE THE RESPONSIBILITY OF THE CONTRACTOR TO ENSURE THERE WILL BE NO DAMAGE TO THE PAVEMENT STRUCTURE BELOW THE COLD PLANE DEPTH OF 55mm. THE RESIDENT ENGINEER SHALL HAVE THE ULTIMATE SAY AS TO THE DEFINITION OF "DAMAGED". SHOULD ANY DAMAGE OCCUR, IT SHALL BE THE RESPONSIBILITY OF THE CONTRACTOR TO REPAIR THE DAMAGE AT NO ADDITIONAL COST TO VTRANS. ALL NECESSARY REPAIR WORK SHALL BE COMPLETE PRIOR TO RE PAVING.
5. IT SHALL BE THE RESPONSIBILITY OF THE CONTRACTOR TO MAINTAIN THE EXISTING EXIT 2 DETOUR, INCLUDING ALL SIGNS AND TRAFFIC CONTROL DEVICES DURING THE ENTIRE EXIT 2 CONSTRUCTION OPERATION. THE CONSTRUCTION OPERATION INCLUDES THE REMOVAL, RESHAPING AND SEEDING OF THE EXISTING JUGHANDLE LOCATED AT THE INTERSECTION OF U.S. ROUTE 7 AND THE EXIT 2 ACCESS ROAD. IT SHALL BE THE RESPONSIBILITY OF THE CONTRACTOR TO REMOVE THE DETOUR UPON COMPLETION OF THIS CONSTRUCTION OPERATION. ALL SIGNS AND TRAFFIC CONTROL DEVICES SHALL BE DELIVERED TO THE VAOT DISTRICT 1 MAINTENANCE FACILITY IN BENNINGTON. FOR THIS EXIT 2 DETOUR SIGNING, SEE SHEETS SP-06 TO SP-08.
6. THE CONTRACTOR HAS THE OPTION OF USING EXCAVATED ROCK FROM EXIT 2 FOR OTHER USES ON THE PROJECT SUCH AS SUBBASE OF DENSE GRADED CRUSHED STONE AND STONE FILL. USE OF THIS EXCAVATED ROCK REQUIRES THAT IT MEET THE REQUIREMENTS OF THE APPROPRIATE STANDARD SPECIFICATION.
7. DRILLING AND BLASTING FOR SOLID ROCK EXCAVATION WILL BE CARRIED OUT IN ACCORDANCE WITH SECTION 900 - SPECIAL PROVISION ITEMS, DRILLING AND BLASTING. THIS WORK WILL NOT BE PAID FOR SEPARATELY BUT WILL BE INCIDENTAL TO ITEM 203.16 SOLID ROCK EXCAVATION.

PROJECT DEMARCATION FENCE
STA. A 1+540.0 - A 1+656.2, 156 m RT.
STA. A 1+653.7 - A 1+703.3, RT.
STA. B 1+009.7 - B 1+171.4, RT.
STA. B 1+435.0 - B 1+470.8, RT.
STA. B 1+435.0 - B 1+456.8, LT.

SOLID ROCK EXCAVATION - ROCK SCALING
STA. B 1+045.0 - B 1+172.0, RT.

SOLID ROCK EXCAVATION - TRIM BLASTING
STA. B 1+045.0 - B 1+172.0, RT.

STONE FILL, TYPE II
STA. A 1+660.0 - A 1+674.6, RT.

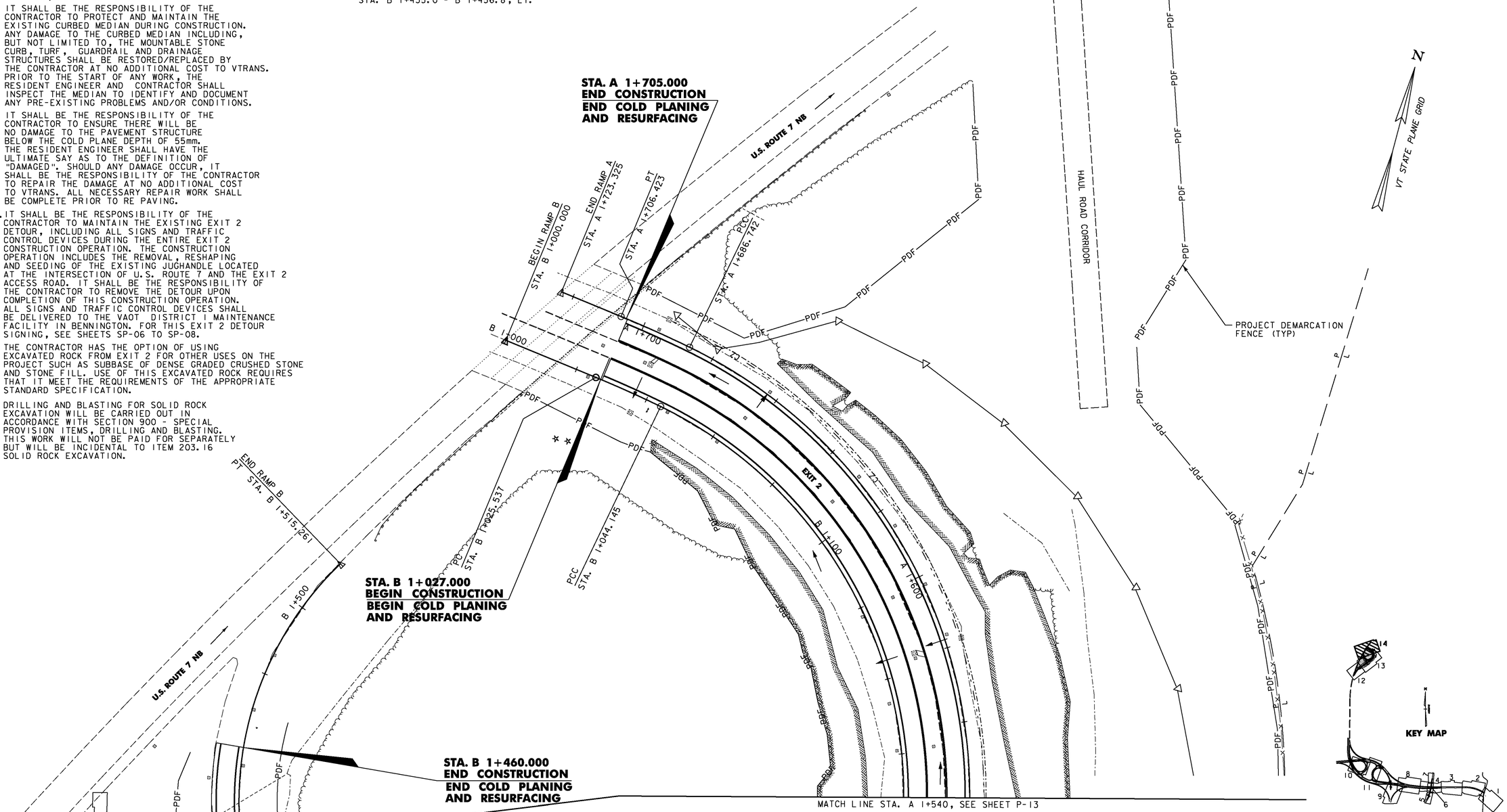

10 0 10 M
1:500 SCALE
@ FULL SIZE

VERMONT AGENCY OF TRANSPORTATION

Stantec

PROJECT NAME: BENNINGTON
PROJECT NUMBER: AC NH 019-1(53)

FILE NAME: ...\zd307c3gen_plans.ptf
DESIGN SUPERVISOR: GREG EDWARDS
DESIGNED BY: MARC FOISY
GENERAL PLAN P-14 EXIT 2
PLOT DATE: 5/16/2011
DRAWN BY: STANTEC
CHECKED BY: GARY SANTY
SHEET 91 OF 577

v:\1853\active\853000\transportation\drawing\contract_3\plot_files\zd307c3gen_plans.ptf

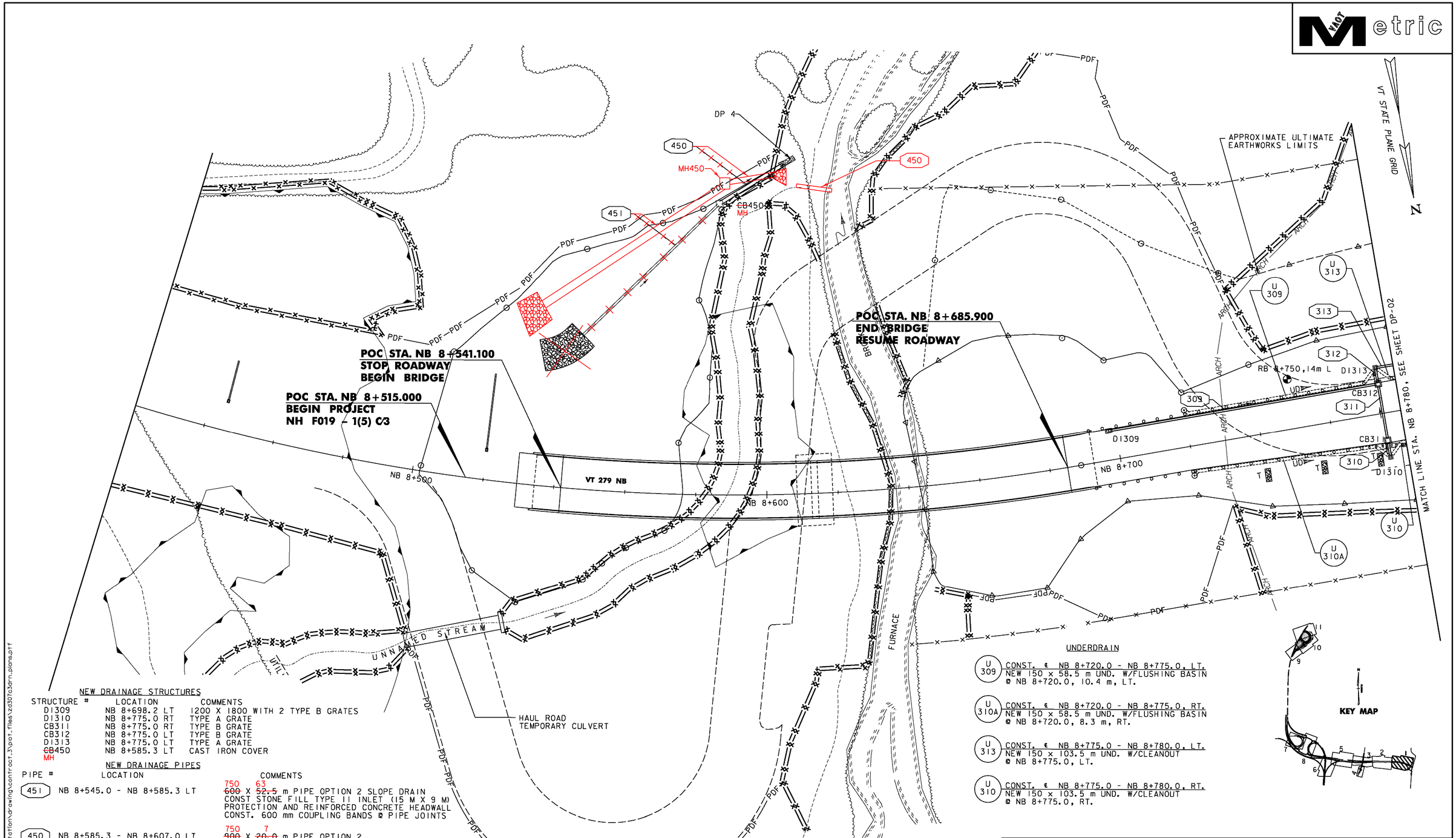

NEW DRAINAGE STRUCTURES

STRUCTURE #	LOCATION	COMMENTS
D1309	NB 8+698.2 LT	1200 X 1800 WITH 2 TYPE B GRATES
D1310	NB 8+775.0 RT	TYPE A GRATE
CB311	NB 8+775.0 RT	TYPE B GRATE
CB312	NB 8+775.0 LT	TYPE B GRATE
D1313	NB 8+775.0 LT	TYPE A GRATE
~~CB~~450 MH	NB 8+585.3 LT	CAST IRON COVER

NEW DRAINAGE PIPES

PIPE #	LOCATION	COMMENTS
451	NB 8+545.0 - NB 8+585.3 LT	~~600~~ 750 X ~~52.5~~ 63 m PIPE OPTION 2 SLOPE DRAIN CONST STONE FILL TYPE II INLET (15 M X 9 M) PROTECTION AND REINFORCED CONCRETE HEADWALL CONST. 600 mm COUPLING BANDS @ PIPE JOINTS
450	NB 8+585.3 - NB 8+607.0 LT	~~900~~ 750 X ~~20.0~~ 7 m PIPE OPTION 2 OUTLET CONST. STONE FILL TYPE II OUTLET PROTECTION (1.8 M X 3.6 M)
309	NB 8+698.2 - NB 8+775.0 LT	450 X 75.8 m PIPE OPTION 3
310	NB 8+775.0 RT	450 X 3.8 m PIPE OPTION 1
311	NB 8+775.0 LT-RT	450 X 15.0 m PIPE OPTION 1
312	NB 8+775.0 LT	450 X 3.7 m PIPE OPTION 3
313	NB 8+775.0 - NB 8+780.0 LT	450 X 99.5 m PIPE OPTION 3

UNDERDRAIN

U 309 CONST. ℄ NB 8+720.0 - NB 8+775.0, LT. NEW 150 x 58.5 m UND. W/FLUSHING BASIN @ NB 8+720.0, 10.4 m, LT.

U 310A CONST. ℄ NB 8+720.0 - NB 8+775.0, RT. NEW 150 x 58.5 m UND. W/FLUSHING BASIN @ NB 8+720.0, 8.3 m, RT.

U 313 CONST. ℄ NB 8+775.0 - NB 8+780.0, LT. NEW 150 x 103.5 m UND. W/CLEANOUT @ NB 8+775.0, LT.

U 310 CONST. ℄ NB 8+775.0 - NB 8+780.0, RT. NEW 150 x 103.5 m UND. W/CLEANOUT @ NB 8+775.0, RT.

NOTES:

1. FOR DIMENSIONS AND CONSTRUCTION DETAILS OF STONE OUTLET PROTECTION REFER TO DRAINAGE DETAILS DD-2.
2. PIPE STATIONING REFLECTS BREAKS AT SHEET MATCHLINES. PIPE LENGTHS REFLECT ACTUAL PIPE SEGMENTS & MATCH THE SUMMARY SHEETS.
3. SEE SHEET DD-1 FOR PIPE CONNECTION COLLAR DETAIL.

10 0 10 M
1:500 SCALE @ FULL SIZE

VERMONT AGENCY OF TRANSPORTATION

Stantec

PROJECT NAME: BENNINGTON
PROJECT NUMBER: AC NH 019-1(53)

FILE NAME: ...\zd307c3drn_plans.ptf
DESIGN SUPERVISOR: GREG EDWARDS
DESIGNED BY: MARC FOISY
DRAINAGE PLAN DP-01

PLOT DATE: 5/16/2011
DRAWN BY: STANTEC
CHECKED BY: GARY SANTY
SHEET 92 OF 577

v:\1953\active\195310002\transportation\drawing\contract_3\plot_files\zd307c3drn_plans.ptf

NEW DRAINAGE PIPES

PIPE #	LOCATION	COMMENTS
313	NB 8+780 - NB 8+875.0 LT	450 X 99.5 m PIPE OPTION 3
314	NB 8+875.0 LT-RT	450 X 25.4 m PIPE OPTION 1
315	NB 8+875.0 - NB 8+955.0 LT	450 X 79.2 m PIPE OPTION 1
316	NB 8+955.0 LT-RT	450 X 29.1 m PIPE OPTION 1
317	NB 8+955.0 - NB 9+045.0 LT	600 X 88.8 m PIPE OPTION 2
318	NB 9+045.0 LT-RT	450 X 30.4 m PIPE OPTION 1
319	NB 9+045.0 - NB 9+130.0 LT	600 X 84.2 m PIPE OPTION 2
320	NB 9+130.0 LT-RT	450 X 31.0 m PIPE OPTION 1
321	XO 1+400.0 RT - XO 1+406.0 RT	750 X 94.0 m PIPE OPTION 2

NEW DRAINAGE STRUCTURES

STRUCTURE #	LOCATION	COMMENTS
D1314	NB 8+875.0 RT	TYPE A GRATE
D1315	NB 8+875.0 LT	TYPE A GRATE
D1316	NB 8+955.0 RT	TYPE A GRATE
CB317	NB 8+955.0 LT	TYPE A GRATE
D1318	NB 9+045.0 RT	TYPE A GRATE
CB319	NB 9+045.0 LT	TYPE B GRATE
D1320	NB 9+130.0 RT	TYPE B GRATE
CB321	NB 9+130.0 LT	TYPE B GRATE

STORMWATER MANAGEMENT

STRUCTURE #	LOCATION	COMMENTS
300	NB 9+100.0, 13.0 m- 42 m RT	CONST. SLOPE DITCH W/ STONE FILL, TYPE II (SEE NOTE 1)

UNDERDRAIN

U 310 — CONST. ℄ NB 8+780.0 - NB 8+875.0, RT.
NEW 150 x 103.5 m UND.

U 313 — CONST. ℄ NB 8+780.0 - NB 8+875.0, LT.
NEW 150 x 103.5 m UND.

U 314 — CONST. ℄ NB 8+875.0 - NB 8+955.0, RT.
NEW 150 x 83.0 m UND. W/CLEANOUT
@ NB 8+875.0, RT.

U 315 — CONST. ℄ NB 8+888.9 - NB 8+955.0, LT.
NEW 150 x 74.0 m UND. W/FLUSHING BASIN
@ NB 8+888.9, LT.

U 316 — CONST. ℄ NB 8+955.0 - NB 9+045.0, RT.
NEW 150 x 93.0 m UND. W/CLEANOUT
@ NB 8+955.0, RT.

U 317 — CONST. ℄ NB 8+955.0 - NB 9+045.0, LT.
NEW 150 x 93.0 m UND. W/CLEANOUT
@ NB 8+955.0, LT.

U 318 — CONST. ℄ NB 9+045.0 - NB 9+130.0, RT.
NEW 150 x 88.0 m UND. W/CLEANOUT
@ NB 9+045.0, RT.

U 319 — CONST. ℄ NB 9+045.0 - NB 9+130.0, LT.
NEW 150 x 88.5 m UND. W/CLEANOUT
@ NB 9+045.0, LT.

U 320 — CONST. ℄ NB 9+130.0 - NB 9+140.0, RT.
NEW 150 x 98.0 m UND. W/CLEANOUT
@ NB 9+130.0, RT.

U 321 — CONST. ℄ NB 9+136.0 - NB 9+137.0, LT.
NEW 150 x 93.0 m UND. W/FLUSHING BASIN
@ NB 9+136.0, 3.5 m, LT.

U 321A — CONST. ℄ NB 9+130.0 - NB 9+137.0, LT.
NEW 150 x 97.0 m UND. W/CLEANOUT
@ NB 9+130.0, LT.

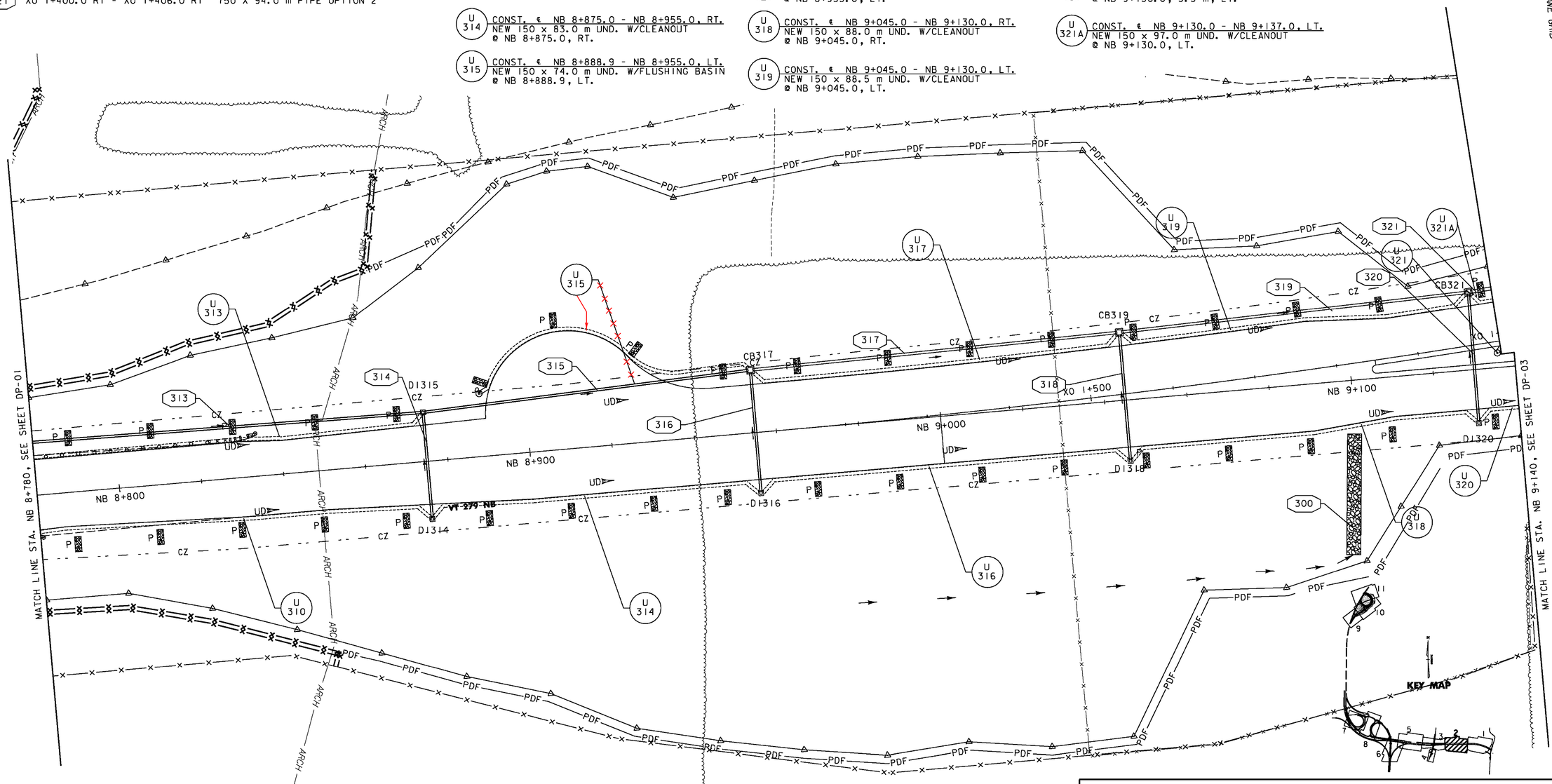

NOTES:

1. SEE SHEET DD-2 FOR DIMENSIONS AND CONSTRUCTION DETAILS OF SLOPE DITCH. EARTHWORK FOR SLOPE DITCH SHALL BE PAID FOR UNDER ITEM 204.20 (TRENCH EXCAVATION).
2. PIPE STATIONING REFLECTS BREAKS AT SHEET MATCHLINES. PIPE LENGTHS REFLECT ACTUAL PIPE SEGMENTS & MATCH THE SUMMARY SHEETS.

10 0 10 M
1:500 SCALE
@ FULL SIZE

VERMONT AGENCY OF TRANSPORTATION

Stantec

PROJECT NAME: BENNINGTON
PROJECT NUMBER: AC NH 019-1(53)

FILE NAME: ...\zd307c3drn_plans.ptf
DESIGN SUPERVISOR: GREG EDWARDS
DESIGNED BY: MARC FOISY
PLOT DATE: 5/16/2011
DRAWN BY: STANTEC
CHECKED BY: GARY SANTY
SHEET 93 OF 577

DRAINAGE PLAN DP-02

V:\1853\active\185300021\transportation\drawing\contract_3\plot_files\zd307c3drn_plans.ptf

NEW DRAINAGE PIPES

PIPE #	LOCATION	COMMENTS
321	XO 1+400.0 RT - XO 1+310.5 RT	750 X 94.0 m PIPE OPTION 2
322	NB 9+225.0 LT-RT	450 X 19.1 m PIPE OPTION 1
323	NB 9+225.0 LT - XO 1+310.5 RT	450 X 18.3 m PIPE OPTION 1
324	XO 1+240.0 - XO 1+310.5 RT	750 X 69.9 m PIPE OPTION 2
326	ER 1+230.0 LT	450 X 11.4 m PIPE OPTION 2 CONST. 600 mm PIPE COUPLING BANDS @ PIPE JOINTS
327	ER 1+230.0 LT - NB 9+290.0 RT	450 X 23.8 m PIPE OPTION 2 CONST. 600 mm PIPE COUPLING BANDS @ PIPE JOINTS
328	NB 9+290.0 RT - NB 9+295.0 LT	450 X 20.7 m PIPE OPTION 1
329	NB 9+295.0 LT - XO 1+240.0 RT	450 X 20.4 m PIPE OPTION 1
330	XO 1+155.8 RT - XO 1+240.0 RT	750 X 84.5 m PIPE OPTION 2
330A	ER 1+135.4 XO 1+240.0 LT-RT	450 X 27.0 m PIPE OPTION 2 CONST. 600 mm PIPE COUPLING BANDS @ PIPE JOINTS
330B	ER 1+135.2 - ER 1+135.4 LT	450 X 8.1 m PIPE OPTION 2
332	NB 9+380.0 LT-RT	450 X 21.6 m PIPE OPTION 3
333	NB 9+380 LT - XO 1+155.8 RT	450 X 21.8 m PIPE OPTION 3
334	XO 1+060.2 RT - XO 1+155.8 RT	750 X 94.7 m PIPE OPTION 2

NEW DRAINAGE PIPES

PIPE #	LOCATION	COMMENTS
335	NB 9+475.0 RT-LT	450 X 22.2 m PIPE OPTION 3
336	NB 9+475.0 LT - XO 1+060.2 RT	450 X 22.7 m PIPE OPTION 1
337	XO 1+040.0 RT - XO 1+060.2 RT	900 X 85.9 m PIPE OPTION 2
392	ER 1+230.0 LT - ER 1+240.0 RT	450 X 14.4 m PIPE OPTION 3
393	ER 1+240.0 - ER 1+275.6 RT	450 X 35.4 m PIPE OPTION 1
~~CV307~~	~~ER 1+128.0 - ER 1+122.0 RT~~	~~450 X 11.7 m PIPE OPTION 2~~ DELETED

UNDERDRAIN

U 320	CONST. ℄ NB 9+140.0 - NB 9+225.0, RT. NEW 150 mm x 98.0 m UND.
U 321	CONST. ℄ NB 9+137.0 - NB 9+225.0, LT. NEW 150 x 93.0 m UND.
U 321A	CONST. ℄ NB 9+137.0, RT - XO 1+310.5, LT NEW 150 x 97.0 m UND.
U ~~322~~ 290	CONST. ℄ NB 9+~~225~~.0 - NB 9+380.0, RT. NEW 150 x 157.5 m UND. W/CLEANOUT @ NB 9+~~225~~.0, RT.
U ~~323~~ 290 / ~~323~~ 295	CONST. ℄ NB 9+~~225~~.0 - NB 9+295.0, LT. NEW 150 x 74.0 m UND. W/CLEANOUT @ NB 9+~~225~~.0, LT.
U 329 295	CONST. ℄ NB 9+295.0 - NB 9+380.0, LT. NEW 150 x 91.0 m UND. W/CLEANOUT @ NB 9+295.0, LT.
U 323A	CONST. ℄ XO 1+240.0 - XO 1+310.5, RT NEW 150 x 74.0 m UND. W/CLEANOUT @ XO 1+310.5, RT.
U 323B	CONST. ℄ XO 1+155.8 - XO 1+240.0, RT. NEW 150 x 88.0 m UND. W/CLEANOUT @ XO 1+240.0, RT.
U 332	CONST. ℄ NB 9+380.0 - NB 9+475.0, RT. NEW 150 x 98.5 m UND. W/CLEANOUT @ NB 9+380.0, RT.
U 333	CONST. ℄ NB 9+380.0 - NB 9+475.0, LT. NEW 150 x 102.5 m UND. W/CLEANOUT @ NB 9+380.0, LT.
U 333A	CONST. ℄ XO 1+060.2 - XO 1+155.8, RT. NEW 150 x 99.0 m UND. W/CLEANOUT @ XO 1+155.8, RT.
U 336	CONST. ℄ NB 9+475.0 - NB 9+495.0, LT. NEW 150 x 94.0 m UND. W/CLEANOUT @ NB 9+475.0, LT.
U 336A	CONST. ℄ XO 1+040.0 - XO 1+060.2, RT NEW 150 x 90.0 m UND. W/CLEANOUT @ XO 1+060.2, RT.
U 322-1	NB 9+225 - NB 9+290 RT W/ CLEANOUT AT NB 9+225 RT
U 323D	NB 9+225 - NB 9+295 LT W/ CLEANOUT AT NB 9+225 LT

EXISTING DRAINAGE PIPES

PIPE #	LOCATION	COMMENTS
EX700	NB 9+260.0 LT - NB 9+313.7 LT	REMOVE EXISTING PIPE & INLET STRUCTURE.

NEW DRAINAGE STRUCTURES

STRUCTURE #	LOCATION	COMMENTS
DI322	NB 9+225.0 RT	TYPE B GRATE
DI323	NB 9+225.0 LT	TYPE B GRATE
DI326	ER 1+230.0 LT	TYPE D GRATE
DI328	NB 9+290.0 RT	TYPE B GRATE
DI329	NB 9+295.0 LT	TYPE B GRATE
DI332	NB 9+380.0 RT	TYPE B GRATE
DI333	NB 9+380.0 LT	TYPE B GRATE
DI335	NB 9+475.0 RT	TYPE B GRATE
DI336	NB 9+475.0 LT	TYPE B GRATE
DI392	ER 1+240.0 RT	TYPE D GRATE
DI393	ER 1+275.6 RT	TYPE D GRATE
CB324	XO 1+310.5 RT	TYPE B GRATE
CB337	XO 1+060.2 RT	TYPE B GRATE
CB330	XO 1+240.0 RT	TYPE B GRATE
CB330A	ER 1+135.4 LT	TYPE B GRATE
CB330B	ER 1+135.2 LT	TYPE B GRATE
CB334	XO 1+155.8 RT	TYPE B GRATE
MH327	ER 1+230.0 LT	CAST IRON COVER

UNDERDRAIN

XO FACE OF LEDGE	XO 1+105 RT (CONNECTS TO U333A) TO XO 1+125 LT W/ FB @ XO 1+125 LT
NB FACE OF LEDGE	NB 9+405 LT (CONNECTS TO U333) TO NB 9+385 RT W/ FB @ NB 9+385 RT

NOTES:
1. PIPE STATIONING REFLECTS BREAKS AT SHEET MATCHLINES. PIPE LENGTHS REFLECT ACTUAL PIPE SEGMENTS & MATCH THE SUMMARY SHEETS.

KEY MAP

10 0 10 M
1:500 SCALE @ FULL SIZE

VERMONT AGENCY OF TRANSPORTATION

Stantec

PROJECT NAME: BENNINGTON
PROJECT NUMBER: AC NH 019-1(53)

FILE NAME: ...\zd307c3drn_plans.ptf
DESIGN SUPERVISOR: GREG EDWARDS
DESIGNED BY: MARC FOISY
DRAINAGE PLAN DP-03

PLOT DATE: 5/16/2011
DRAWN BY: STANTEC
CHECKED BY: GARY SANTY
SHEET 94 OF 577

V:\1953\active\53530002\transportation\drawing\contract_3\port_files\zd307c3drn_plans.ptf

NEW DRAINAGE PIPES

PIPE #	LOCATION	COMMENTS
CV308	ER 1+080.0 RT - LT	450 X 26.5 m PIPE OPTION 2 REINFORCED CONCRETE HEADWALL AT INLET CONST STONE FILL TYPE I AT OUTLET (0.9 M X 1.8 M)

VAOT Metric

VT STATE PLANE GRID

POT STA. ER 0+958.250
BEGIN APPROACH

POC STA. ER 0+985.000
END APPROACH
BEGIN CONSTRUCTION

ER 0+920

ER 1+000

AERIAL E&T

MH 124 A

MH 124 B

EAST ROAD

EXISTING DI

18.3m
375 CPEP

DI-B

PIPE B
23.94m
300 CPEP

25.76m
300 CPEP

DI-A

PIPE A

24.88m
300 CPEP

PIPE C

DI-C

CV308

GV

STOP

23.94m
375 CPEP

PIPE D

SHIELDS DRIVE

ER 1

MATCH LINE STA. ER 1+100, SEE SHEET DP-03

THE REMAINDER OF THE EXISTING AND PROPOSED DRAINAGE PIPES AND STRUCTURES ASSOCIATED WITH EAST ROAD ARE SHOWN ON DP-3.

KEY MAP

5 0 5 M

1:250 SCALE
@ FULL SIZE

GENERAL NOTES:

1. ALL EXISTING STORM DRAINAGE PIPES AND STRUCTURES NOT ADDRESSED IN THE CONSTRUCTION NOTES, FOUND TO BE COMPLETELY WITHIN THE PROPOSED ROADWAY, ARE TO BE REMOVED OR ABANDONED AS DIRECTED BY THE ENGINEER.

2. EXISTING DRAINAGE PIPES FROM OFFSITE SYSTEMS ARE TO BE TIED INTO THE PROPOSED DRAINAGE SYSTEM AS SHOWN. ANY EXISTING DRAINAGE PIPES ENCOUNTERED DURING CONSTRUCTION WHICH ARE NOT SHOWN ON THE PLANS BUT WHICH DO ORIGINATE FROM OTHER OFFSITE SYSTEMS ARE TO BE CONNECTED TO THE PROPOSED DRAINAGE SYSTEM AS DIRECTED BY THE ENGINEER. PAYMENT WILL BE MADE AS EXTRA WORK AND WILL BE COVERED UNDER ITEM 109.06 OF THE VTRANS SPECIFICATIONS.

VERMONT AGENCY OF TRANSPORTATION

PROJECT NAME: BENNINGTON
PROJECT NUMBER: AC NH 019-1(53)

FILE NAME: ...\zd307c3drn_plans.ptf
DESIGN SUPERVISOR: GREG EDWARDS
DESIGNED BY: MARC FOISY
DRAINAGE PLAN DP-04

PLOT DATE: 5/16/2011
DRAWN BY: STANTEC
CHECKED BY: GARY SANTY
SHEET 95 OF 577

Stantec

v:\1353\active\135300021\transportation\drawing\contract_3\pot_files\zd307c3drn_plans.ptf

NEW DRAINAGE PIPES

PIPE #	LOCATION	COMMENTS
337	XO 0+974.3 RT - XO 1+040.0 RT	900 mm X 85.9 m PIPE OPTION 2
339	NB 9+560.0 RT-LT	450 mm X 24.7 m PIPE OPTION 3
340	NB 9+560.0 LT - XO 0+974.3 RT	450 mm X 28.0 m PIPE OPTION 1
341	XO 0+884.0 RT - XO 0+974.3 RT	900 mm X 88.6 m PIPE OPTION 2
343	NB 9+650.0 RT-LT	450 mm X 26.2 m PIPE OPTION 3
344	NB 9+650.0 LT - XO 0+884.0 RT	450 mm X 29.5 m PIPE OPTION 1
345	NB 9+650.0 LT - NB 9+712.2 LT	900 mm X 75.4 m PIPE OPTION 2
346	NB 9+712.9 LT - NB 9+737.2 LT	1200 mm X 17.7 m PIPE OPTION 2 CONSTRUCT STONE FILL TYPE I @ OUTLET PAD.
CV309	L 1+319.9 LT - L 1+299.6 LT	1500 mm X 21.3 m PIPE OPTION 2 CONSTRUCT STONE FILL TYPE I @ OUTLET PAD.

NEW DRAINAGE STRUCTURES

STRUCTURE #	LOCATION	COMMENTS
D1339	NB 9+560.0 RT	TYPE B GRATE
D1340	NB 9+560.0 LT	TYPE B GRATE
D1343	NB 9+650.0 RT	TYPE B GRATE
D1344	NB 9+650.0 LT	TYPE B GRATE
CB341	XO 0+974.3 RT	TYPE B GRATE
CB345	XO 0+884.0 RT	TYPE B GRATE
CB346	NB 9+712.8 LT	TYPE B GRATE

UNDERDRAIN

- U 336 — CONST. ℄ NB 9+495.0 - NB 9+560.0, LT. NEW 150 mm x 94.0 m UND.
- U 336A — CONST. ℄ XO 0+974.3 - XO 1+040.0, RT. NEW 150 mm x 90.0 m UND.
- U 337 — CONST. ℄ XO 0+884.0 - XO 0+974.3, RT. NEW 150 mm x 95.0 m UND. W/ CLEANOUT @ XO 0+974.3, RT.

EXISTING DRAINAGE PIPES

PIPE #	LOCATION	COMMENTS
EX701	NB 9+584.9 RT - NB 9+661.2 RT	REMOVE EXISTING PIPE & INLET STUCTURE
EX702	NB 9+659.8 LT - NB 9+660.3 LT	REMOVE EXISTING PIPE & INLET STUCTURE
EX703	NB 9+660.3 LT - NB 9+661.2 RT	REMOVE EXISTING PIPE & INLET STUCTURE
EX704	NB 9+661.2 RT - NB 9+727.2 RT	REMOVE 20 M OF EXISTING PIPE & INLET STRUCTURE. PLUG & ABANDON REMAINDER

STORMWATER MANAGEMENT

STRUCTURE #	LOCATION	COMMENTS
346A	L 1+382.9 LT - L 1+319.9 LT	CONST. SWALE W/ STONE FILL, TYPE II (SEE SHEET SWM-1 FOR DETAILS)
309A	L 1+299.6 LT - L 1+288.7 LT	CONST. SWALE W/ STONE FILL, TYPE II (SEE SHEET SWM-1 FOR DETAILS)

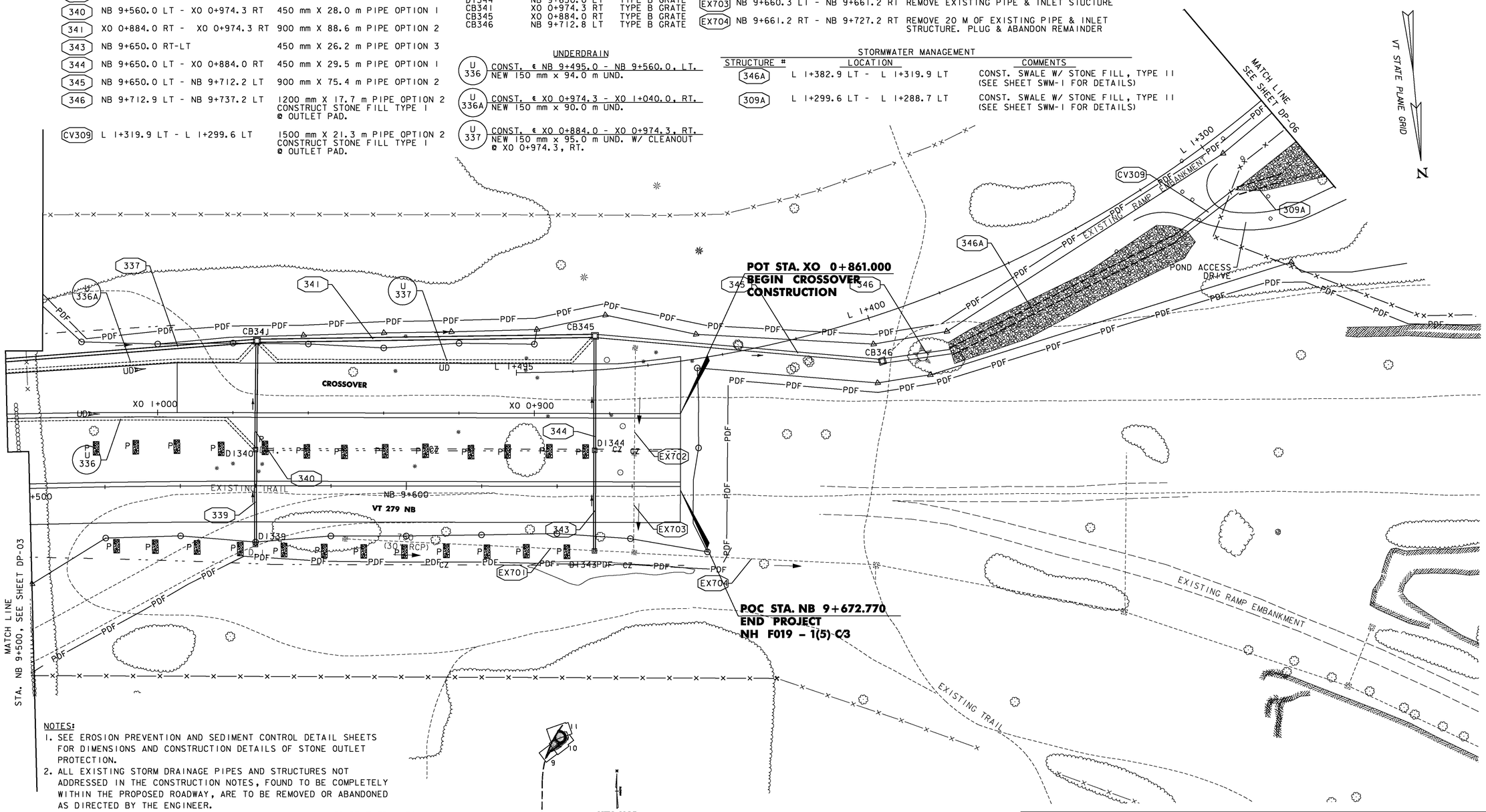

NOTES:

1. SEE EROSION PREVENTION AND SEDIMENT CONTROL DETAIL SHEETS FOR DIMENSIONS AND CONSTRUCTION DETAILS OF STONE OUTLET PROTECTION.
2. ALL EXISTING STORM DRAINAGE PIPES AND STRUCTURES NOT ADDRESSED IN THE CONSTRUCTION NOTES, FOUND TO BE COMPLETELY WITHIN THE PROPOSED ROADWAY, ARE TO BE REMOVED OR ABANDONED AS DIRECTED BY THE ENGINEER.
3. EXISTING DRAINAGE PIPES FROM OFFSITE SYSTEMS ARE TO BE TIED INTO THE PROPOSED DRAINAGE SYSTEM AS SHOWN. ANY EXISTING DRAINAGE PIPES ENCOUNTERED DURING CONSTRUCTION WHICH ARE NOT SHOWN ON THE PLANS BUT WHICH DO ORIGINATE FROM OTHER OFFSITE SYSTEMS ARE TO BE CONNECTED TO THE PROPOSED DRAINAGE SYSTEM AS DIRECTED BY THE ENGINEER. PAYMENT WILL BE MADE AS EXTRA WORK AND WILL BE COVERED UNDER ITEM 109.06 OF THE VTRANS SPECIFICATIONS.
4. PIPE STATIONING REFLECTS BREAKS AT SHEET MATCHLINES. PIPE LENGTHS REFLECT ACTUAL PIPE SEGMENTS & MATCH THE SUMMARY SHEETS.

10 0 10 M
1:500 SCALE
@ FULL SIZE

VERMONT AGENCY OF TRANSPORTATION

Stantec

PROJECT NAME: BENNINGTON
PROJECT NUMBER: AC NH 019-1(53)

FILE NAME: ...\zd307c3drn_plans.ptf
DESIGN SUPERVISOR: GREG EDWARDS
DESIGNED BY: MARC FOISY
DRAINAGE PLAN DP-05

PLOT DATE: 5/16/2011
DRAWN BY: STANTEC
CHECKED BY: GARY SANTY
SHEET 96 OF 577

v:\853\active\85300002\transportation\drawing\contract_3\plot_files\zd307c3drn_plans.ptf

NEW DRAINAGE PIPES

PIPE #	LOCATION	COMMENTS
398	L 1+174.0 LT - L 1+172.1 RT	1200 X 27.6 m PIPE OPTION 2 CONSTRUCT STONE FILL, TYPE II @ OUTLET. SEE SWM-3 FOR DETAILS

NEW DRAINAGE STRUCTURES

STRUCTURE #	LOCATION	COMMENTS
DMH398	L 1+174.0 LT	CAST IRON COVER

EXISTING DRAINAGE PIPES

PIPE #	LOCATION	COMMENTS
EX717	UN 9+686.1 RT - UN 9+623.6 LT	REMOVE 8M OF EXISTING CULVERT CONSTRUCT STONE PAD TYPE II @ OUTLET. (3.6 M X 7.2 M)
EX719	UN 9+584.6 LT - UN 9+583.4 LT	RETAIN EXISTING PIPES (2) & INLET STRUCTURES (2)
EX720	UN 9+643.2 LT - UN 9+635.4 LT	RETAIN EXISTING PIPE & INLET STRUCTURE
EX721	UN 9+675.8 LT - NB 9+675.8 RT	RETAIN EXISTING PIPE & INLET STRUCTURE

STORMWATER MANAGEMENT

STRUCTURE #	LOCATION	COMMENTS
398A	L 1+288.7 LT - L 1+260.4 LT	CONST. WETPOND FOREBAY (SEE SHEET SWM-1 FOR DETAILS)
398B	L 1+260.4 LT - L 1+159.7 LT	CONST. WETPOND (SEE SHEET SWM-1 FOR DETAILS)
399	SW 3+000.0 ℄ - SW 3+070.9 ℄	CONST. SWALE TO FURNACE BROOK (SEE SHEET SWM-2 FOR DETAILS)

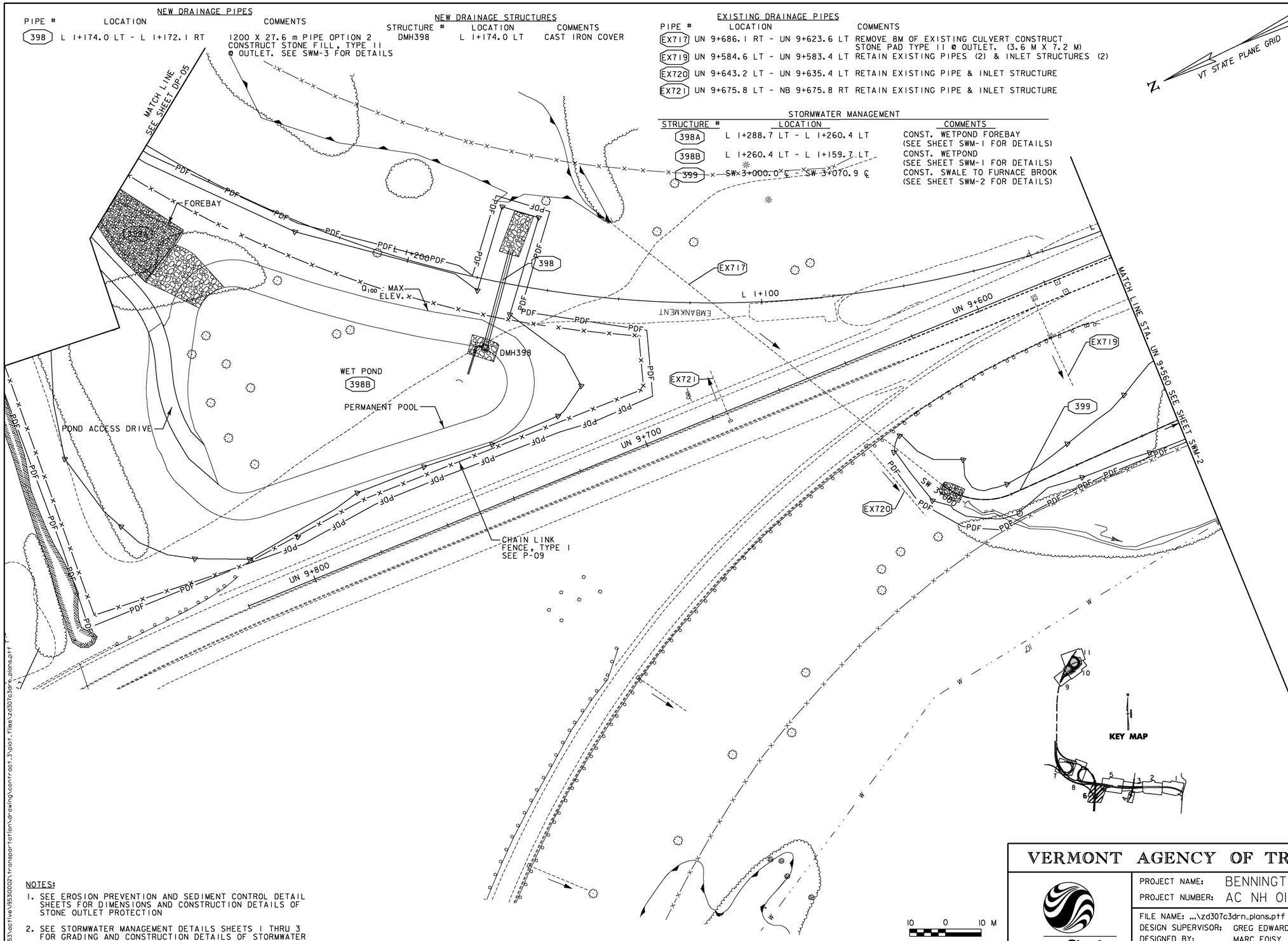

NOTES:

1. SEE EROSION PREVENTION AND SEDIMENT CONTROL DETAIL SHEETS FOR DIMENSIONS AND CONSTRUCTION DETAILS OF STONE OUTLET PROTECTION
2. SEE STORMWATER MANAGEMENT DETAILS SHEETS 1 THRU 3 FOR GRADING AND CONSTRUCTION DETAILS OF STORMWATER POND AND SWALE.

v:\1953\active\195310002\transportation\drawing\contract_3\plot_files\zd307c3drn_plans.ptf

VERMONT AGENCY OF TRANSPORTATION

Stantec

PROJECT NAME: BENNINGTON
PROJECT NUMBER: AC NH 019-1(53)

FILE NAME: ...\zd307c3drn_plans.ptf
DESIGN SUPERVISOR: GREG EDWARDS
DESIGNED BY: MARC FOISY
DRAINAGE PLAN DP-06

PLOT DATE: 5/16/2011
DRAWN BY: STANTEC
CHECKED BY: GARY SANTY
SHEET 97 OF 577

NEW DRAINAGE PIPES

PIPE #	LOCATION	COMMENTS
214	G 1+607.0 - G 1+610.0 LT	450 mm X 36.1 m PIPE OPTION 2 CONNECT TO EXISTING STRUCTURE @ 1+607.0, 41 m LT. (CONNECTION SHALL BE INCIDENTAL TO PIPE CONSTRUCTION.)
215	G 1+610.0 RT - LT	450 mm X 12.5 m PIPE OPTION 3
216	G 1+558.0- G 1+610.0 RT	450 mm X 47.3 m PIPE OPTION 3
217	G 1+506.0 - G 1+558.0 RT	450 mm X 47.5 m PIPE OPTION 3
218	G 1+506.0 LT - RT	450 mm X 12.6 m PIPE OPTION 3

NEW DRAINAGE STRUCTURES

STRUCTURE #	LOCATION	COMMENTS
CB214	G 1+610.0 LT	TYPE A GRATE
CB215	G 1+610.0 RT	TYPE A GRATE
CB216	G 1+558.0 RT	TYPE A GRATE
CB218	G 1+506.0 LT	TYPE A GRATE
CB217	G 1+506.0 RT	TYPE A GRATE

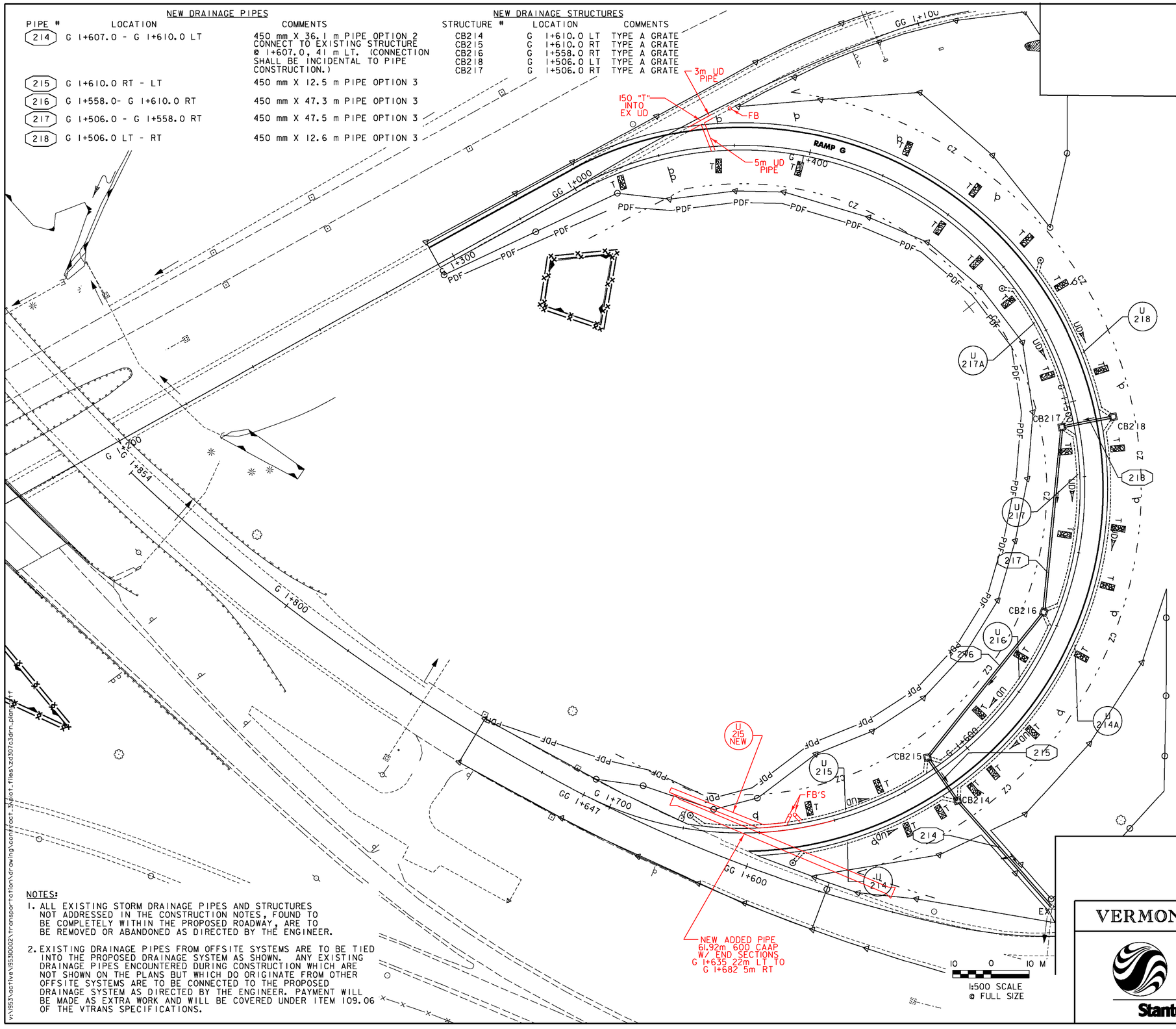

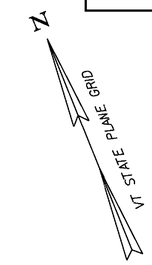

UNDERDRAIN

U 214	CONST. ℄ G 1+610.0 - G 1+652.5, LT. NEW 150 x 47.0 m UND. W/FLUSHING BASIN @ G 1+652.5, 7.4 m LT.
U 215	CONST. ℄ G 1+610.0 - G 1+~~678.5~~ 652, RT. NEW 150 x 70.0 m UND. W/FLUSHING BASIN @ G 1+678.5, 2.6 m RT.
U 214A	CONST. ℄ G 1+506.0 - G 1+610.0, LT. NEW 150 x 115 m UND. W/CLEANOUT @ G 1+506.0, LT.
U 216	CONST. ℄ G 1+558.0- G 1+610.0, RT. NEW 150 x 55.0 m UND. W/CLEANOUT @ G 1+558.0, RT.
U 217A	CONST. ℄ G 1+464.0 - G 1+506.0, RT. NEW 150 x 45.0 m UND. W/FLUSHING BASIN @ G 1+464.0, 2.6 m RT.
U 217	CONST. G 1+506.0 - G 1+558.0, RT. NEW 150 x 53.0 m UND. W/CLEANOUT @ G 1+506.0, RT.
U 218	CONST. G 1+464.0 - G 1+506.0, LT. NEW 150 x 48.0 m UND. W/FLUSHING BASIN @ G 1+464.0, 7.4 m LT.
U 215 NEW	G 1+652 - G 1+685 RT W/ FB @ G 1+652 RT

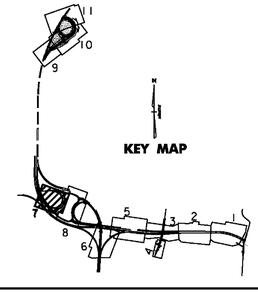

NOTES:

1. ALL EXISTING STORM DRAINAGE PIPES AND STRUCTURES NOT ADDRESSED IN THE CONSTRUCTION NOTES, FOUND TO BE COMPLETELY WITHIN THE PROPOSED ROADWAY, ARE TO BE REMOVED OR ABANDONED AS DIRECTED BY THE ENGINEER.
2. EXISTING DRAINAGE PIPES FROM OFFSITE SYSTEMS ARE TO BE TIED INTO THE PROPOSED DRAINAGE SYSTEM AS SHOWN. ANY EXISTING DRAINAGE PIPES ENCOUNTERED DURING CONSTRUCTION WHICH ARE NOT SHOWN ON THE PLANS BUT WHICH DO ORIGINATE FROM OTHER OFFSITE SYSTEMS ARE TO BE CONNECTED TO THE PROPOSED DRAINAGE SYSTEM AS DIRECTED BY THE ENGINEER. PAYMENT WILL BE MADE AS EXTRA WORK AND WILL BE COVERED UNDER ITEM 109.06 OF THE VTRANS SPECIFICATIONS.

v:\1953\active\195310002\transportation\drawing\contract_3\plot_files\zd307c3drn_plans.ptf

VERMONT AGENCY OF TRANSPORTATION

Stantec

PROJECT NAME: BENNINGTON
PROJECT NUMBER: AC NH 019-1(53)

FILE NAME: ...\zd307c3drn_plans.ptf
DESIGN SUPERVISOR: GREG EDWARDS
DESIGNED BY: MARC FOISY
DRAINAGE PLAN DP-07

PLOT DATE: 5/16/2011
DRAWN BY: STANTEC
CHECKED BY: GARY SANTY
SHEET 98 OF 577

STORMWATER MANAGEMENT

STRUCTURE #	LOCATION	COMMENTS
219	3+955.8 RT - 4+141.1 ℄	CONST. SWALE, STONE FILL, TYPE II. SEE SHEET SWM-4 FOR DETAILS,

EXISTING DRAINAGE PIPES

PIPE #	LOCATION	COMMENTS
EX722	GG 1+293.5 RT - GG 1+446.5 RT	REMOVE EXISTING DRAINAGE PIPE AND DROP INLET.
EX723	GG 1+23.5 LT-RT	REMOVE EXISTING DRAINAGE PIPE AND DROP INLET.
EX724	SI 1+337.0 LT - SI 1+356.0 LT	REMOVE 11m OF EXISTING DRAINAGE CULVERT (6m NORTH, 5m SOUTH) PLUG AND ABANDON EXISTING CULVERT.
EX725	GG 1+466.5 RT - GG 1+517.2 RT	REMOVE EXISTING DRAINAGE PIPE AND DROP INLET, RETAIN OUTLET STRUCTURE.

MATCH LINE SEE SHEET DP-07

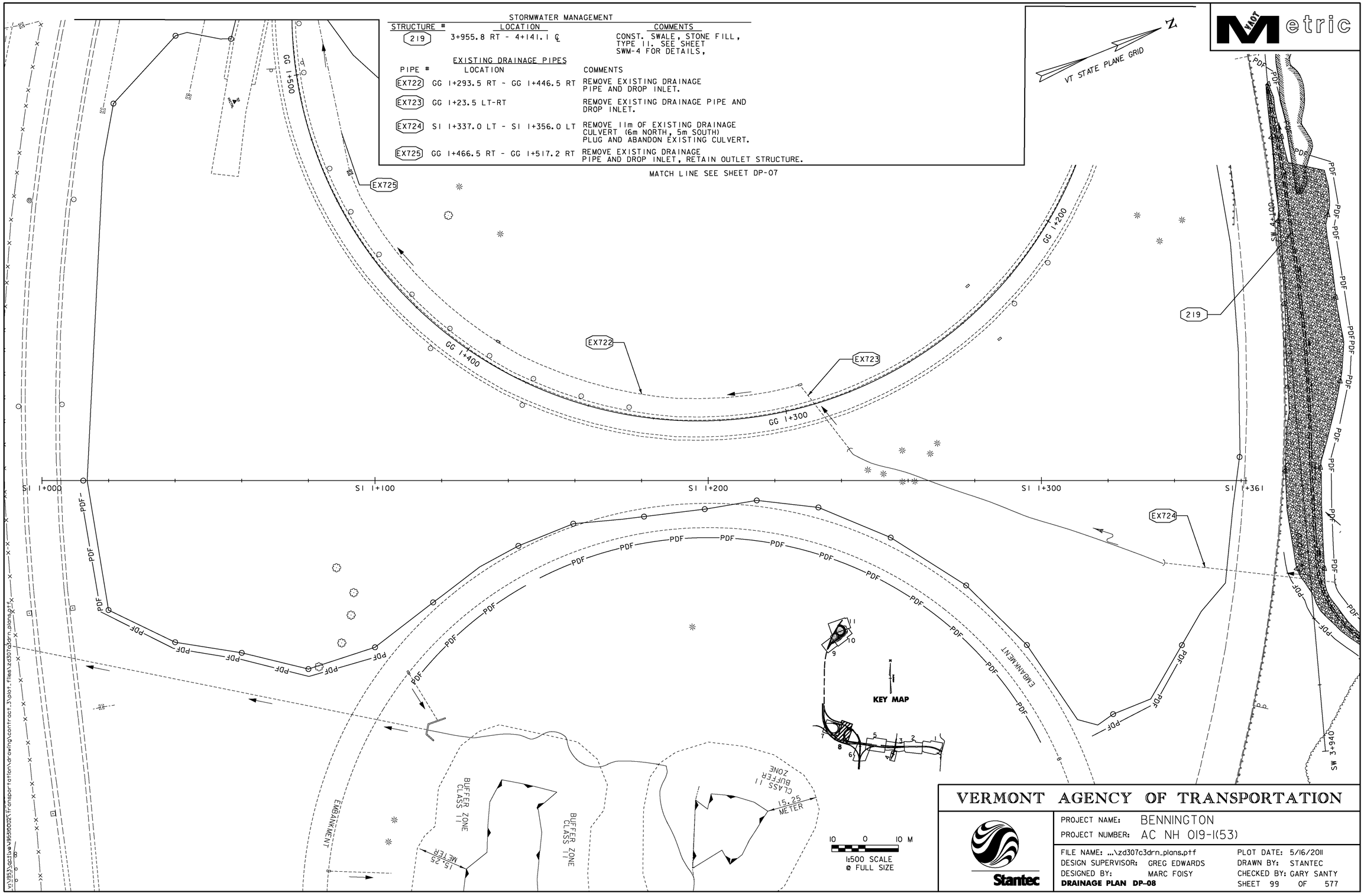

VERMONT AGENCY OF TRANSPORTATION

Stantec

PROJECT NAME: BENNINGTON
PROJECT NUMBER: AC NH 019-1(53)

FILE NAME: ...\zd307c3drn_plans.ptf
DESIGN SUPERVISOR: GREG EDWARDS
DESIGNED BY: MARC FOISY
DRAINAGE PLAN DP-08

PLOT DATE: 5/16/2011
DRAWN BY: STANTEC
CHECKED BY: GARY SANTY
SHEET 99 OF 577

VAOT Metric

N

VT STATE PLANE GRID

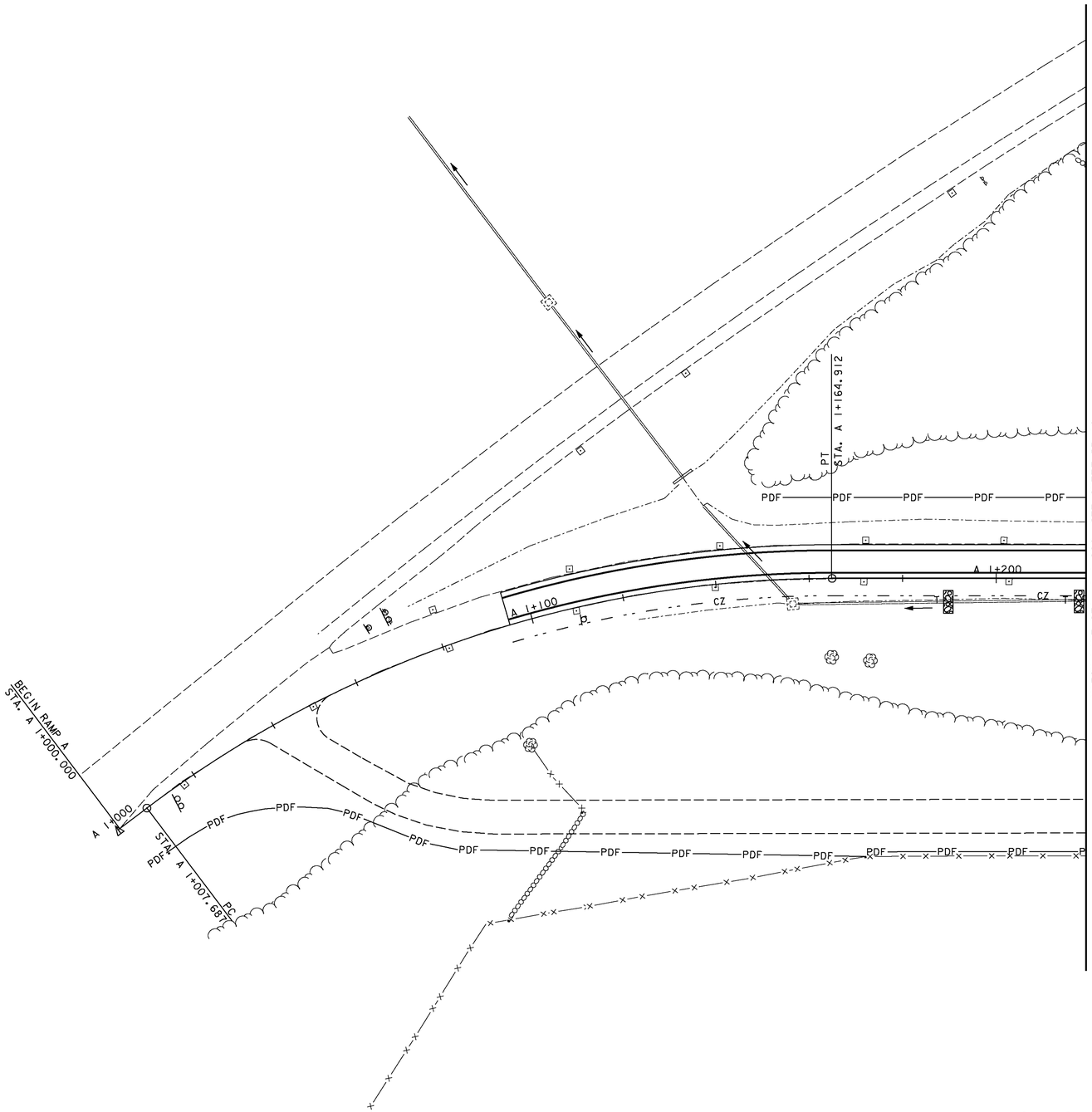

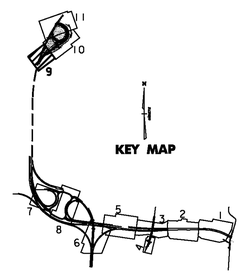

10 0 10

1:500 SCALE
@ FULL SIZE

VERMONT AGENCY OF TRANSPORTATION

Stantec

PROJECT NAME: BENNINGTON
PROJECT NUMBER: AC NH 019-1(53)

FILE NAME: ...\zd307c3drn_plans.ptf
DESIGN SUPERVISOR: GREG EDWARDS
DESIGNED BY: MARC FOISY
DRAINAGE PLAN DP-09

PLOT DATE: 5/16/2011
DRAWN BY: STANTEC
CHECKED BY: GARY SANTY
SHEET 100 OF 577

V:\1953\active\953100021\transportation\drawing\contract_3\plot_files\zd307c3drn_plans.ptf

VAOT Metric

MATCH LINE STA. A 1+220, SEE SHEET DP-09

MATCH LINE STA. B 1+435, SEE SHEET DP-11

MATCH LINE STA. A 1+540, STA. B 1+171.403, SEE SHEET DP-11

CONTROL PT. 124
N 46966.377
E 442374.722
ELEV. = 271.944

CONTROL PT. 125
N 47015.292
E 442438.907
ELEV. = 278.964

PCC
STA. B 1+174.339

PCC
STA. B 1+284.787

PCC
STA. A 1+536.689

STA. A 1+408.053 PC

B 1+100

B 1+200

B 1+300

A 1+500

A 1+300

A 1+400

PDF

CZ

N

VT STATE PLANE GRID

KEY MAP

1:500 SCALE
@ FULL SIZE

NOTES:

1. ALL DRAINAGE AND STORMWATER FEATURES TO BE RETAINED AND RESTORED TO ORIGINAL CONDITION OR BETTER AT COMPLETION OF WORK. THIS WORK WILL BE CONSIDERED INCIDENTIAL TO THE CONTRACT IN ACCORDANCE WITH SUBSECTION 104.07.

2. FOR DETAILS ON PROTECTING THE EXISTING CATCH BASINS DURING THE ROCK CUT OPERATIONS, SEE SHEET SEE EP & SC DETAILS-10.

3. FOR EROSION CONTROL GENERAL NOTES AND DETAILS, SEE SHEET EP & SC DETAILS-1.

VERMONT AGENCY OF TRANSPORTATION

Stantec

PROJECT NAME: BENNINGTON
PROJECT NUMBER: AC NH 019-1(53)

FILE NAME: ...\zd307c3drn_plans.ptf
DESIGN SUPERVISOR: GREG EDWARDS
DESIGNED BY: MARC FOISY
DRAINAGE PLAN DP-10

PLOT DATE: 5/16/2011
DRAWN BY: STANTEC
CHECKED BY: GARY SANTY
SHEET 101 OF 577

v:\1953\active\953100002\transportation\drawing\contract_3\plot_files\zd307c3drn_plans.ptf



NOTES:

1. FOR DETAILS ON PROTECTING THE EXISTING CATCH BASINS DURING THE ROCK CUT OPERATIONS, SEE SHEET DD-3.
2. FOR EROSION CONTROL GENERAL NOTES AND DETAILS, SEE SHEET EC-1.
3. ALL DRAINAGE AND STORMWATER FEATURES TO BE RETAINED AND RESTORED TO ORIGINAL CONDITION OR BETTER AT COMPLETION OF WORK. THIS WORK WILL BE CONSIDERED INCIDENTIAL TO THE CONTRACT IN ACCORDANCE WITH SUBSECTION 104.07.

10 0 10
1:500 SCALE
@ FULL SIZE

VERMONT AGENCY OF TRANSPORTATION

Stantec

PROJECT NAME: BENNINGTON
PROJECT NUMBER: AC NH 019-1(53)

FILE NAME: ...\zd307c3drn_plans.ptf
DESIGN SUPERVISOR: GREG EDWARDS
DESIGNED BY: MARC FOISY
DRAINAGE PLAN DP-11

PLOT DATE: 5/16/2011
DRAWN BY: STANTEC
CHECKED BY: GARY SANTY
SHEET 102 OF 577

v:\1953\active\195310002\transportation\drawing\contract_3\plot_files\zd307c3drn_plans.ptf

DP-XX = REFERENCE TO CORRESPONDING DRAINAGE PLAN SHEET

VAOT Metric

PIPE NO. 451 – PIPE NO. 450
NB 8+545 – NB 8+607

DP-01

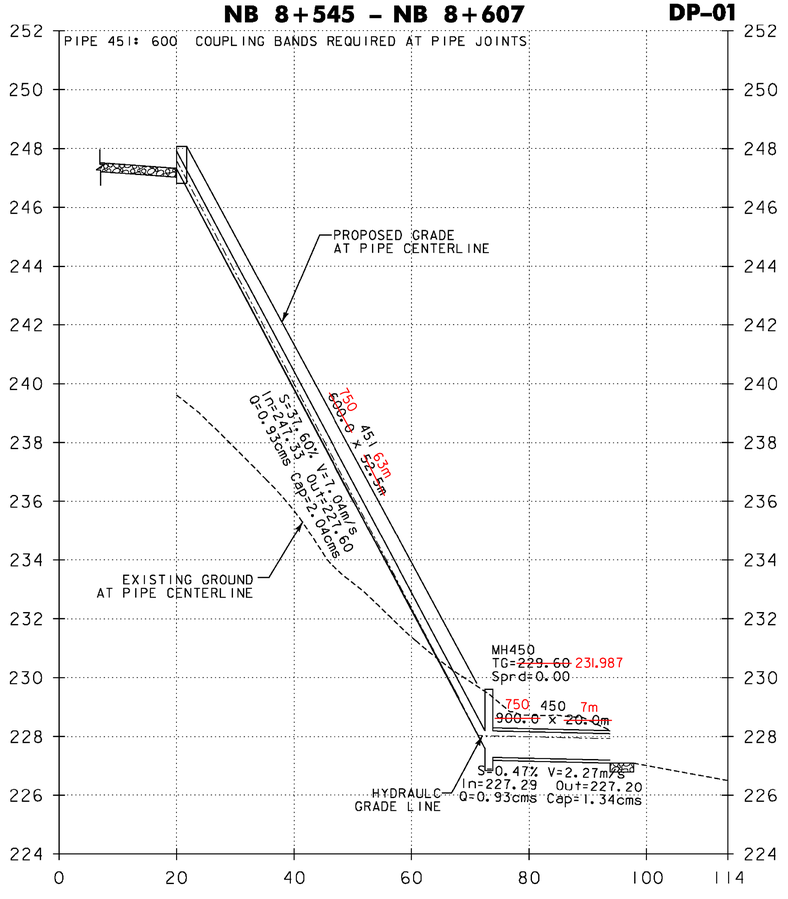

4 M
2
H 1:500 SCALE
V 1:100 SCALE
@ FULL SIZE
10 20 M

NOTE: ALL DIMENSIONS ARE IN MILLIMETERS (mm) EXCEPT WHERE NOTED.

SYSTEM 4

VERMONT AGENCY OF TRANSPORTATION

Stantec

PROJECT NAME: BENNINGTON
PROJECT NUMBER: AC NH 019-1(53)

FILE NAME: ...\plot_files\zd307c3drn_pro.ptf
PLOT DATE: 5/16/2011
DESIGN SUPERVISOR: GREG EDWARDS
DRAWN BY: STANTEC
DESIGNED BY: MARC FOISY
CHECKED BY: GARY SANTY
DRAINAGE PROFILE SHEET 1
SHEET 103 OF 577

V:\1853\active\185316002\transportation\drawing\contract_3\plot_files\zd307c3drn_pro.ptf

DP-XX = REFERENCE TO CORRESPONDING DRAINAGE PLAN SHEET

VAOT Metric

CB309 – DI319
NB 8+700 – NB 9+045 LT

DP-01,DP-02

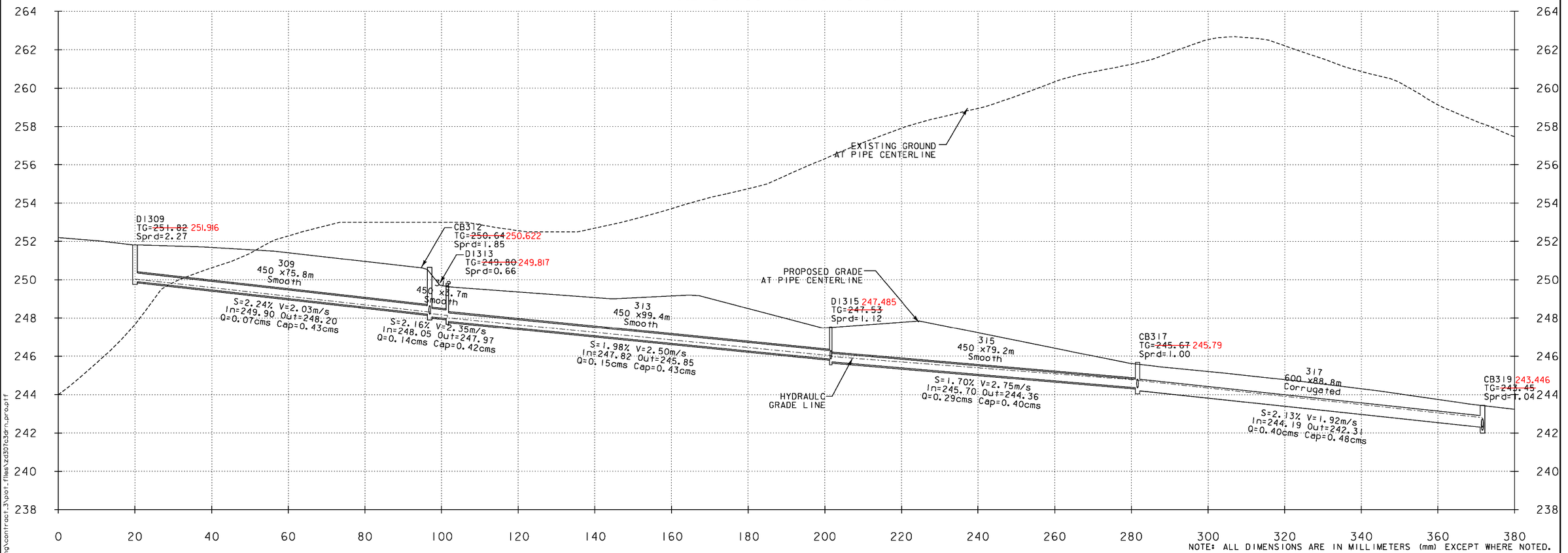

NOTE: ALL DIMENSIONS ARE IN MILLIMETERS (mm) EXCEPT WHERE NOTED.

4 M
2
H 1:500 SCALE
V 1:100 SCALE
@ FULL SIZE
10 20 M

SYSTEM 3

VERMONT AGENCY OF TRANSPORTATION

Stantec

PROJECT NAME: BENNINGTON
PROJECT NUMBER: AC NH 019-1(53)

FILE NAME: ...\plot_files\zd307c3drn_pro.ptf
PLOT DATE: 5/16/2011
DESIGN SUPERVISOR: GREG EDWARDS
DRAWN BY: STANTEC
DESIGNED BY: MARC FOISY
CHECKED BY: GARY SANTY
DRAINAGE PROFILE SHEET 2
SHEET 104 OF 577

v:\0953\active\09530002\transportation\drawing\contract_3\plot_files\zd307c3drn_pro.ptf

DP-XX = REFERENCE TO CORRESPONDING DRAINAGE PLAN SHEET

VAOT Metric

CB319-CB334
NB 9+045 - NB 9+380 LT

DP-02,DP-03

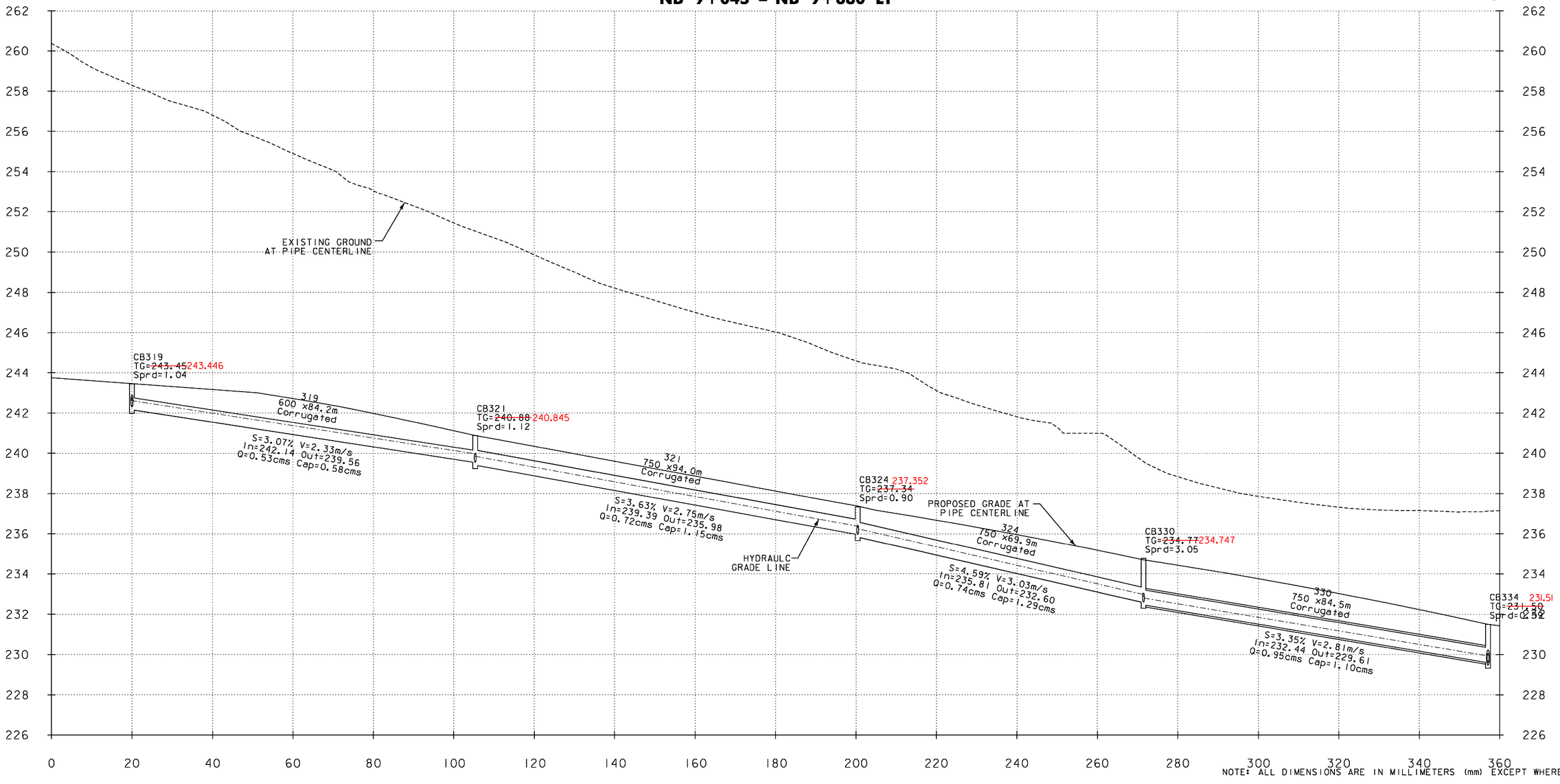

NOTE: ALL DIMENSIONS ARE IN MILLIMETERS (mm) EXCEPT WHERE NOTED.

4 M
2
10 20 M

H 1:500 SCALE
V 1:100 SCALE
@ FULL SIZE

SYSTEM 3

VERMONT AGENCY OF TRANSPORTATION

Stantec

PROJECT NAME: BENNINGTON
PROJECT NUMBER: AC NH 019-1(53)

FILE NAME: ...\plot_files\zd307c3drn_pro.ptf
PLOT DATE: 5/16/2011
DESIGN SUPERVISOR: GREG EDWARDS
DRAWN BY: STANTEC
DESIGNED BY: MARC FOISY
CHECKED BY: GARY SANTY
DRAINAGE PROFILE SHEET 3
SHEET 105 OF 577

v:\1853\active\183000\2\transportation\drawing\contract_3\plot_files\zd307c3drn_pro.ptf

DP-XX = REFERENCE TO CORRESPONDING DRAINAGE PLAN SHEET

Metric

334
CB~~324~~ - CB346
NB 9+380 - NB 9+721 LT

DP-03,DP-05

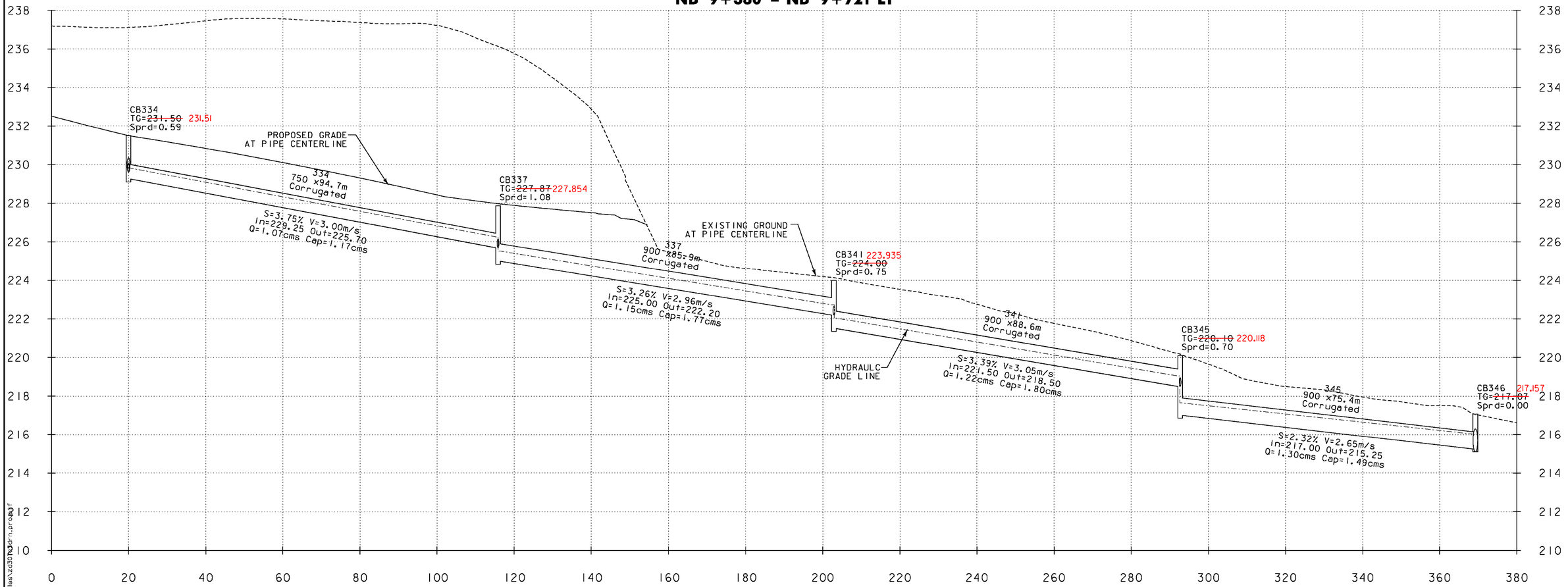

NOTE: ALL DIMENSIONS ARE IN MILLIMETERS (mm) EXCEPT WHERE NOTED.

4 M
2
H 1:500 SCALE
V 1:100 SCALE
@ FULL SIZE
10 20 M

SYSTEM 3

VERMONT AGENCY OF TRANSPORTATION

Stantec

PROJECT NAME: BENNINGTON
PROJECT NUMBER: AC NH 019-1(53)

FILE NAME: ...\plot_files\zd307c3drn_pro.ptf
DESIGN SUPERVISOR: GREG EDWARDS
DESIGNED BY: MARC FOISY
DRAINAGE PROFILE SHEET 4

PLOT DATE: 5/16/2011
DRAWN BY: STANTEC
CHECKED BY: GARY SANTY
SHEET 106 OF 577

v:\1953\active\195310002\transportation\drawing\contract_3\plot_files\zd307c3drn_pro.plf

DP-XX = REFERENCE TO CORRESPONDING DRAINAGE PLAN SHEET

VAOT Metric

DI313 – DI310
NB 8+775 LT – RT
DP-01

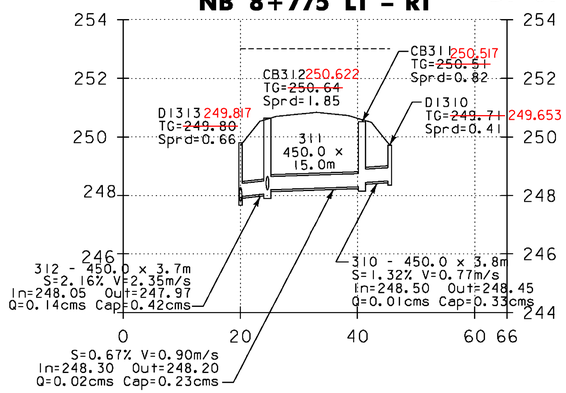

DI315 – DI314
NB 8+875 LT-RT
DP-02

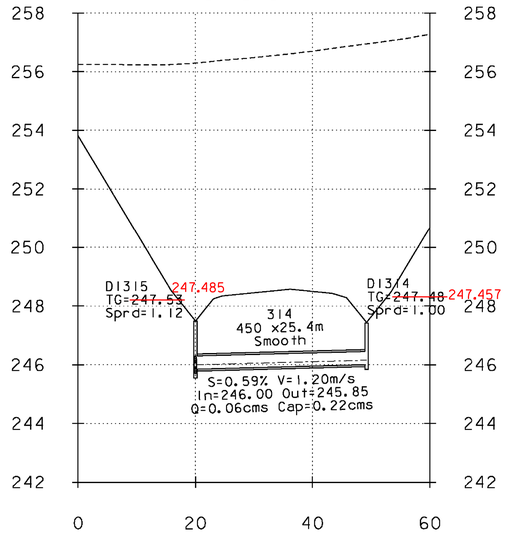

CB317 – DI316
NB 9+045 LT-RT
DP-02

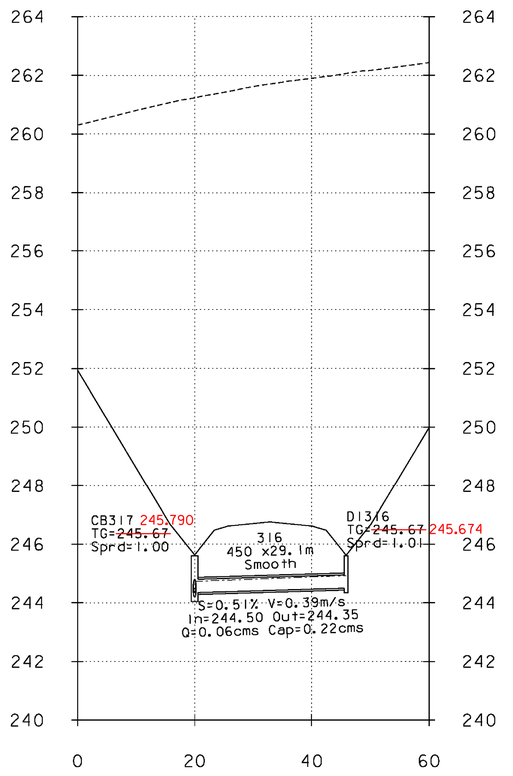

CB319 – DI318
NB 9+045 LT-RT
DP-02

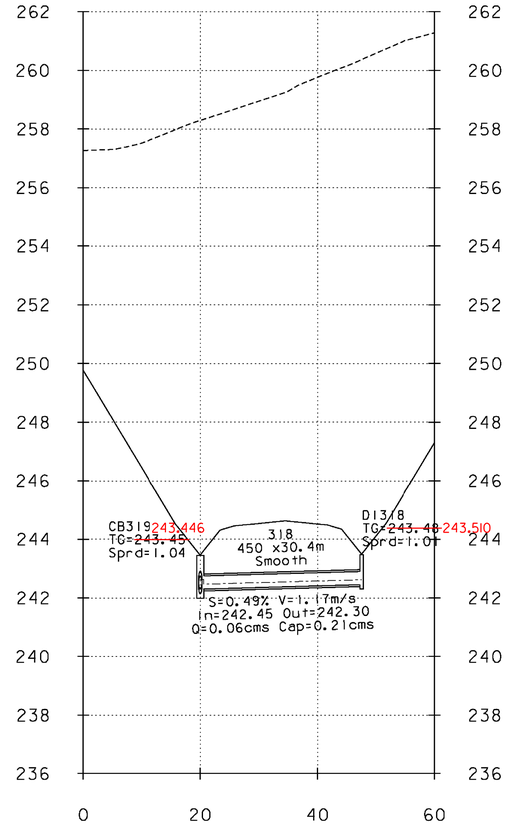

CB321 – DI320
NB 9+130 LT-RT
DP-02

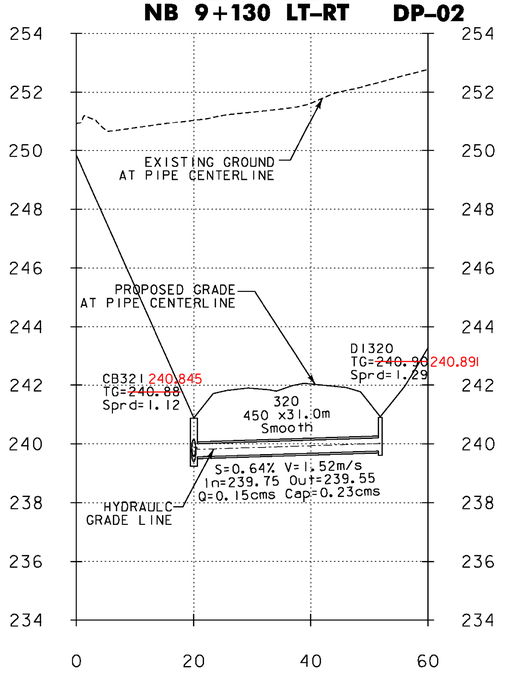

CB324 – DI322
XO 1+310.5 RT – NB 9+225 RT
DP-03

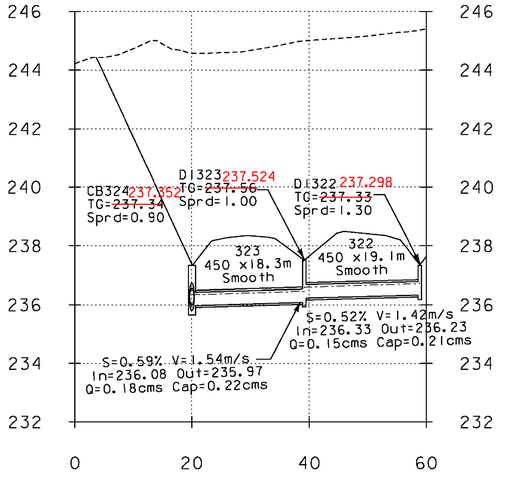

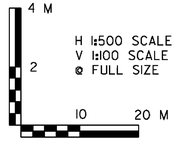

NOTE: ALL DIMENSIONS ARE IN MILLIMETERS (mm) EXCEPT WHERE NOTED.

SYSTEM 3

VERMONT AGENCY OF TRANSPORTATION

Stantec

PROJECT NAME: BENNINGTON
PROJECT NUMBER: AC NH 019-1(53)

FILE NAME: ...\plot_files\zd307c3drn_pro.ptf
PLOT DATE: 5/16/2011
DESIGN SUPERVISOR: GREG EDWARDS
DRAWN BY: STANTEC
DESIGNED BY: MARC FOISY
CHECKED BY: GARY SANTY
DRAINAGE PROFILE SHEET 5
SHEET 107 OF 577

v:\953\active\VB530002\transportation\drawing\contract_3\plot_files\zd307c3drn_pro.ptf

DP-XX = REFERENCE TO CORRESPONDING DRAINAGE PLAN SHEET

VAOT Metric

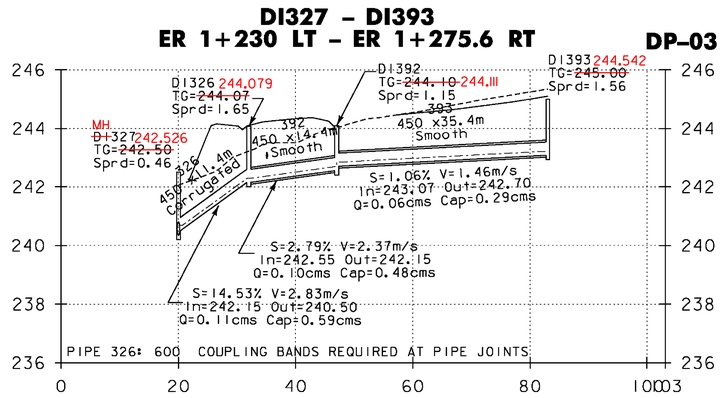

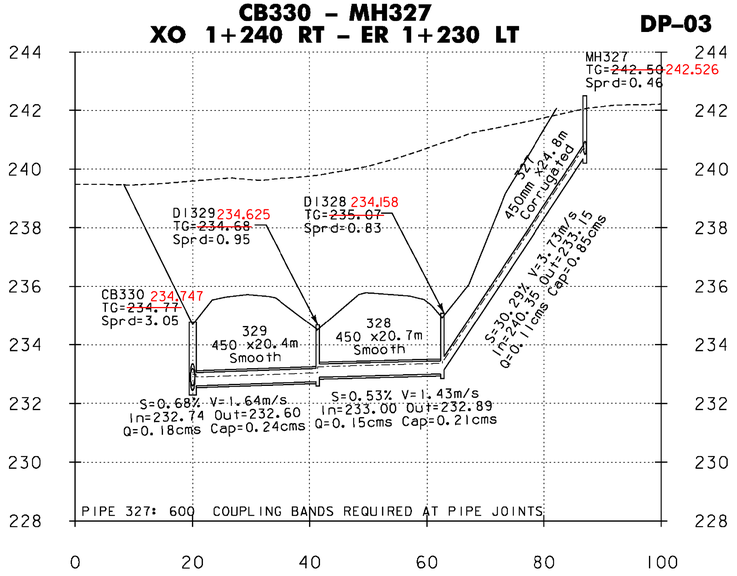

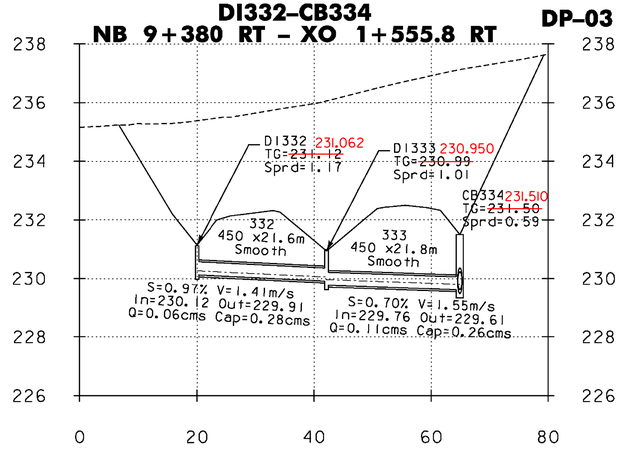

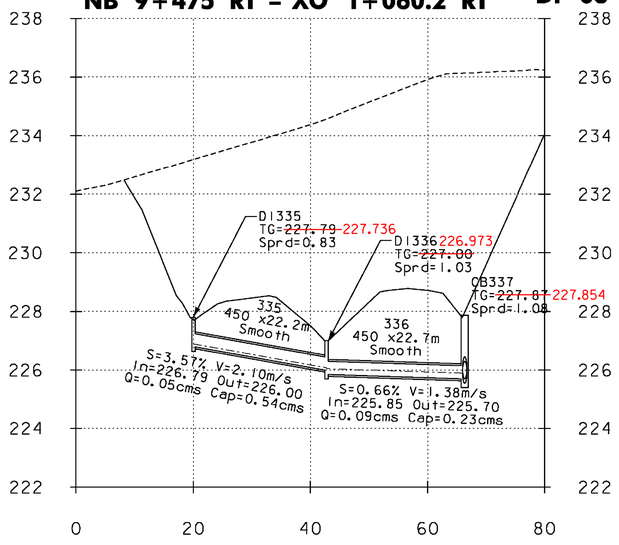

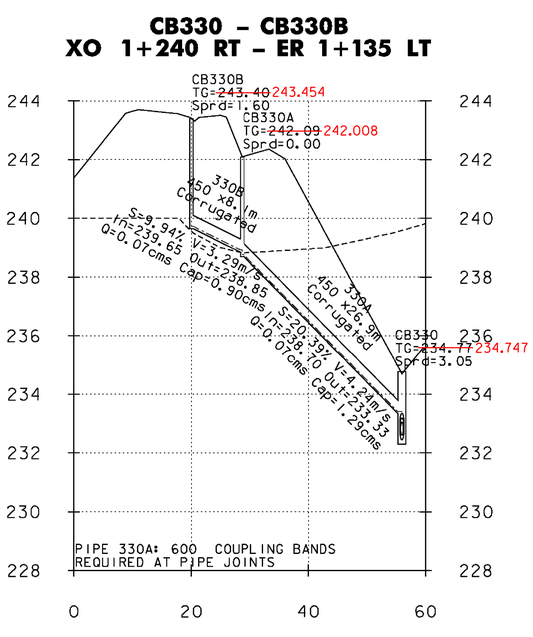

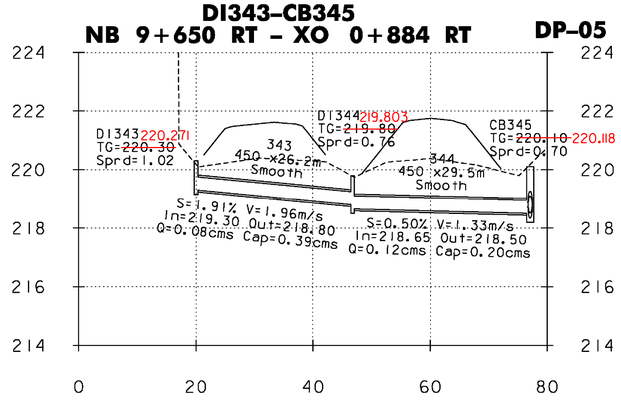

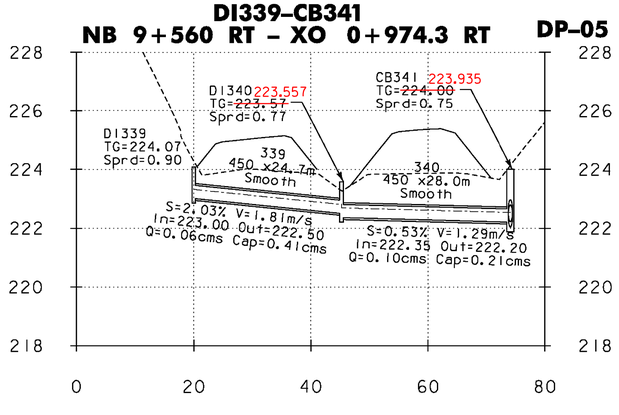

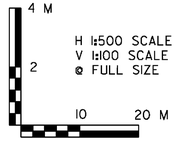

NOTE: ALL DIMENSIONS ARE IN MILLIMETERS (mm) EXCEPT WHERE NOTED.

SYSTEM 3

VERMONT AGENCY OF TRANSPORTATION

Stantec

PROJECT NAME: BENNINGTON
PROJECT NUMBER: AC NH 019-1(53)

FILE NAME: ...\plot_files\zd307c3drn_pro.ptf
PLOT DATE: 5/16/2011
DESIGN SUPERVISOR: GREG EDWARDS
DRAWN BY: STANTEC
DESIGNED BY: MARC FOISY
CHECKED BY: GARY SANTY
DRAINAGE PROFILE SHEET 6
SHEET 108 OF 577

v:\1953\active\830002\transportation\drawing\contract_3\plot_files\zd307c3drn_pro.ptf

DP-XX = REFERENCE TO CORRESPONDING DRAINAGE PLAN SHEET

VAOT Metric

CV307 - ELIMINATED
ER 1+105 – ER 1+122 RT
DP-03

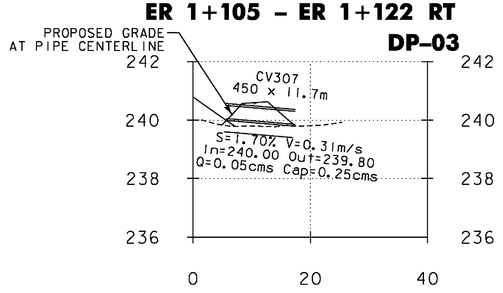

CB218 – EXISTING
G 1+506 LT – G 1+607 LT
DP-06

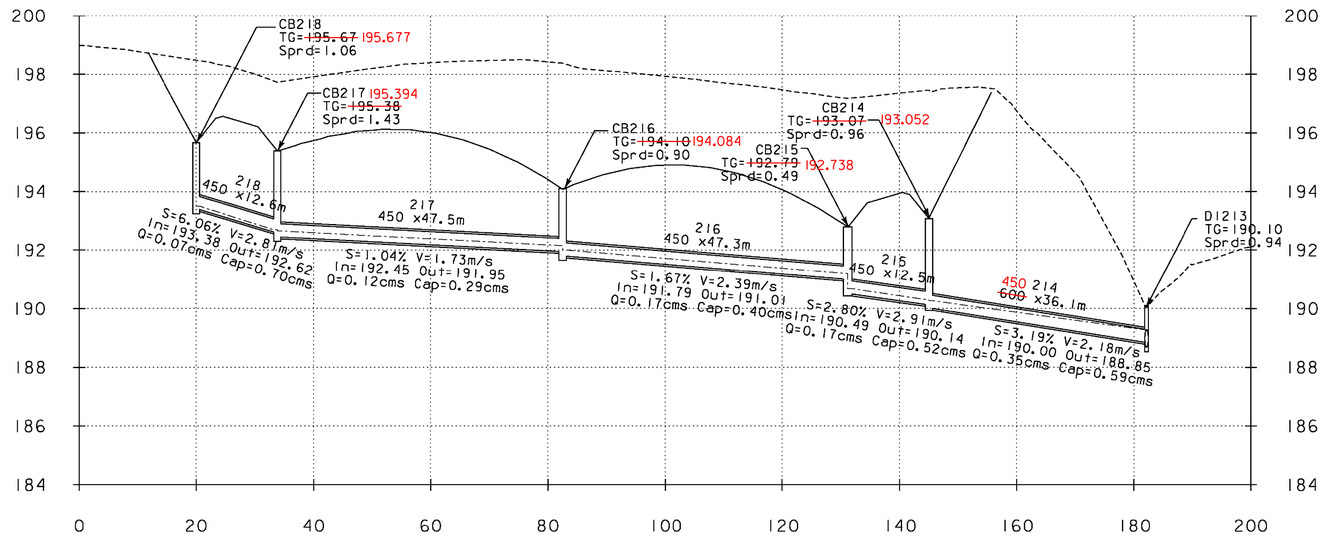

DMH398 – PIPE NO. 398
L 1+174.0 – L 1+172.1 LT-RT
DP-06

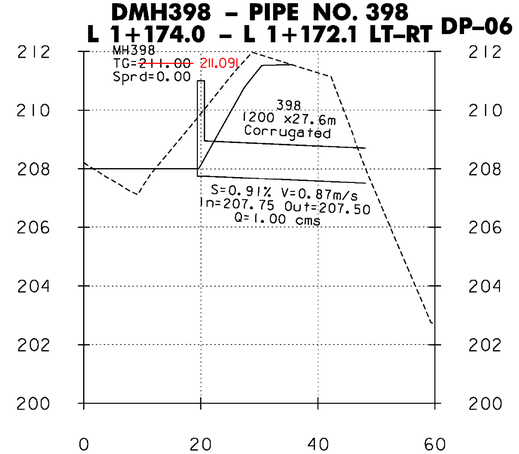

CB346–CV309
NB 9+712.9 – L 1+299.6 LT
DP-05

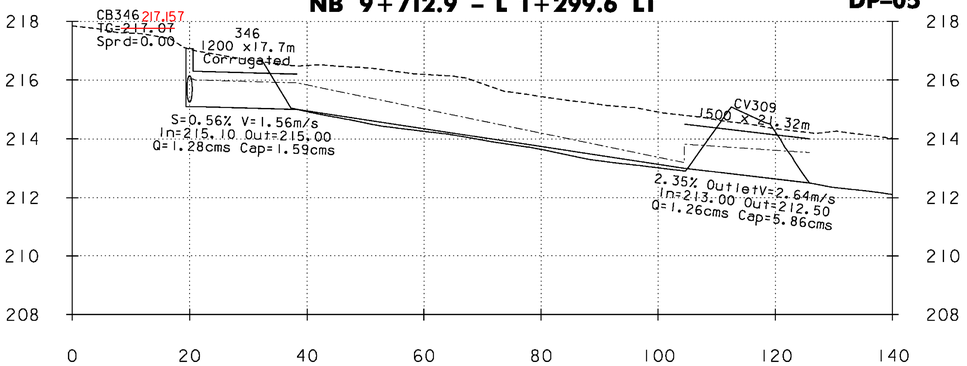

CV308
ER 1+080 RT – LT
DP-04

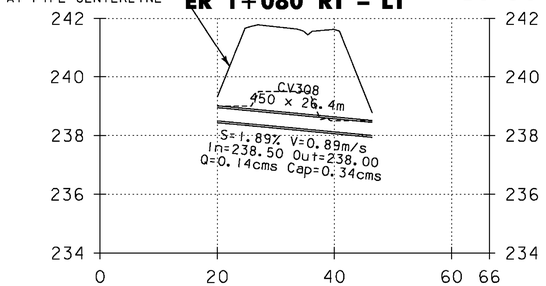

NOTE: ALL DIMENSIONS ARE IN MILLIMETERS (mm) EXCEPT WHERE NOTED.

4 M
2
H 1:500 SCALE
V 1:100 SCALE
@ FULL SIZE
10 20 M

SYSTEM 3

VERMONT AGENCY OF TRANSPORTATION

Stantec

PROJECT NAME: BENNINGTON
PROJECT NUMBER: AC NH 019-1(53)

FILE NAME: ...\plot_files\zd307c3drn_pro.ptf PLOT DATE: 5/16/2011
DESIGN SUPERVISOR: GREG EDWARDS DRAWN BY: STANTEC
DESIGNED BY: MARC FOISY CHECKED BY: GARY SANTY
DRAINAGE PROFILE SHEET 7 SHEET 109 OF 577

v:\1953\active\19531002\transportation\drawing\contract_3\plot_files\zd307c3drn_pro.ptf

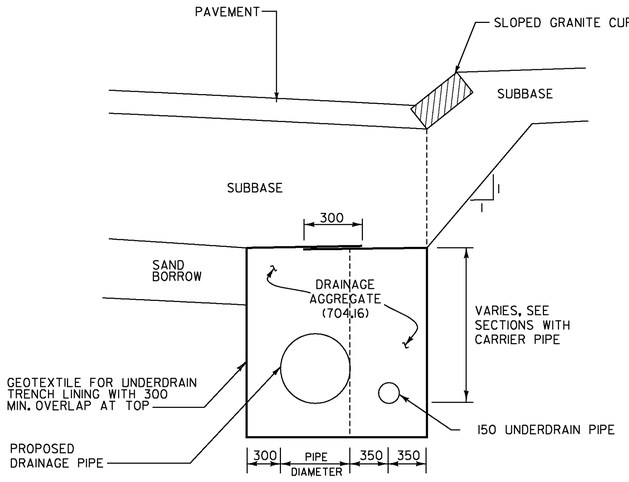

UNDERDRAIN WITH DRAINAGE PIPE *

NOT TO SCALE

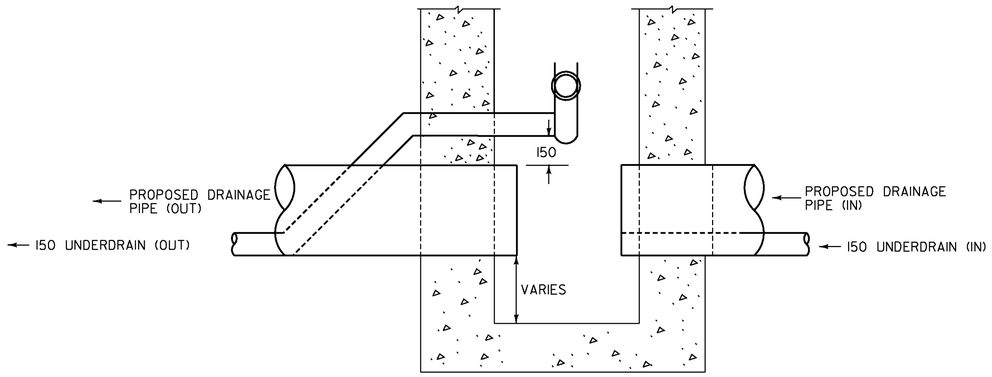

SECTION A–A

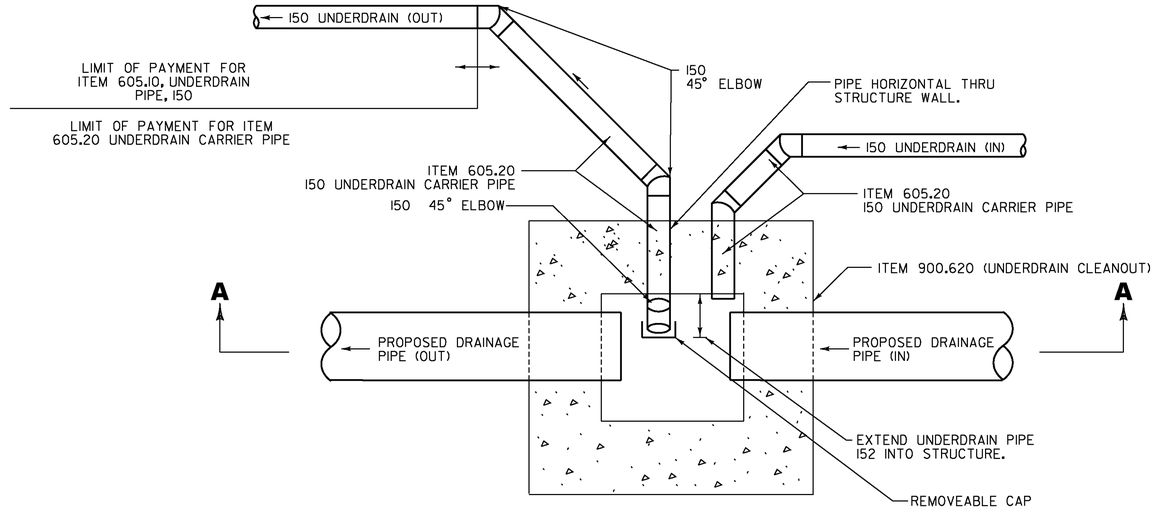

PLAN

UNDERDRAIN CLEANOUT DETAIL (IN DRAINAGE STRUCTURES)

NOT TO SCALE

NOTE: ALL DIMENSIONS ARE IN MILLIMETERS (mm) EXCEPT WHERE NOTED.

* FOR EXACT LOCATION OF DRAINAGE PIPE OR UNDERDRAIN WITH OR WITHOUT DRAINAGE PIPE, SEE DRAINAGE PLAN SHEETS AND CROSS SECTIONS. IN ACCORDANCE WITH SUBSECTION 605.06, PAYMENT FOR DRAINAGE AGGREGATE AND GEOTEXTILE IS INCLUDED IN THE COST FOR ITEM 605.10.

VERMONT AGENCY OF TRANSPORTATION

Stantec

PROJECT NAME: BENNINGTON
PROJECT NUMBER: AC NH 019-1(53)

FILE NAME: ...\plot_files\zd307c3det_drn.ptf
DESIGN SUPERVISOR: GREG EDWARDS
DESIGNED BY: MARC FOISY
DRAINAGE DETAILS DD– 1

PLOT DATE: 5/16/2011
DRAWN BY: STANTEC
CHECKED BY: GARY SANTY
SHEET 110 OF 577

V:\1953\active\19530002\transportation\drawing\contract_3\plot_files\zd307c3det_drn.ptf

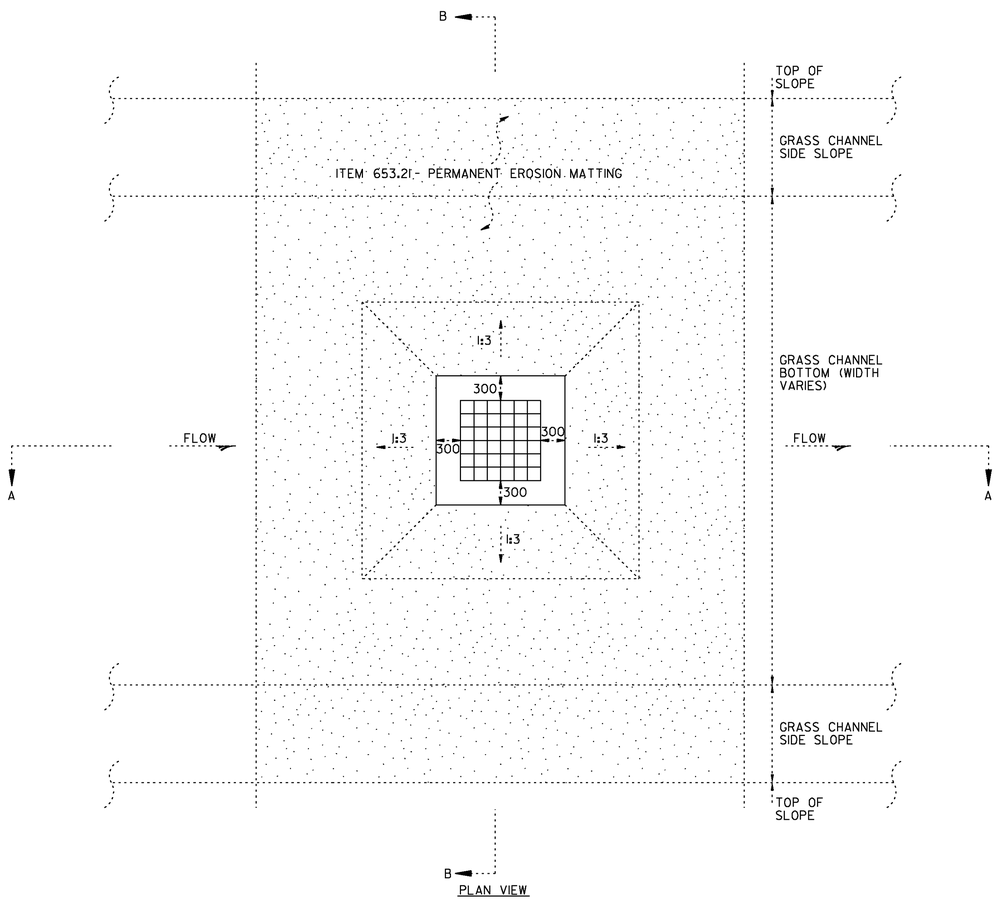

PLAN VIEW

STRUCTURE #	STATION	RIM HEIGHT ABOVE FINISH GRADE OF GRASS CHANNEL
DI216	G 1+558.0, RT.	100
DI323	NB 9+225.0, LT.	75
DI328	NB 9+290.0, RT.	75
DI329	NB 9+295.0, LT.	75
CB330	XO 1+240.0, RT.	75
DI333	NB 9+380.0, LT.	75
CB337	XO 1+060.2, RT.	75
DI339	NB 9+560.0, RT.	75
DI340	NB 9+560.0, LT.	75
CB341	XO 0+974.3, RT.	75

STONE OUTLET PAD SIZING

OUTLET PIPE	STATION	VELOCITY	PAD LENGTH	PAD WIDTH	STONE TYPE
450	NB 8+607.0, LT.	2.27 m/s	3.6 m	1.35 m	I
CV308	ER 1+080.0, LT.	2.67 m/s	1.8 m	0.90 m	II
345	XO 0+884.0, RT.	0.89 m/s	3.6 m	1.35 m	II

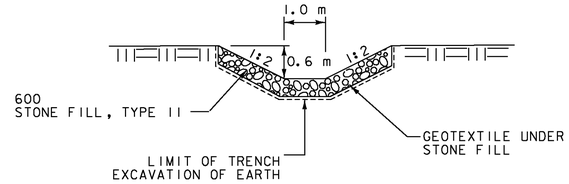

DETAIL OF SLOPE DITCH
NB 9+100, 13 m RT TO 42 m RT

NOT TO SCALE

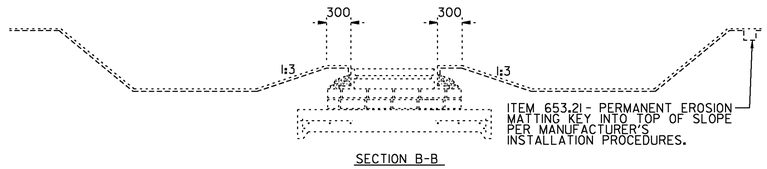

SECTION B-B

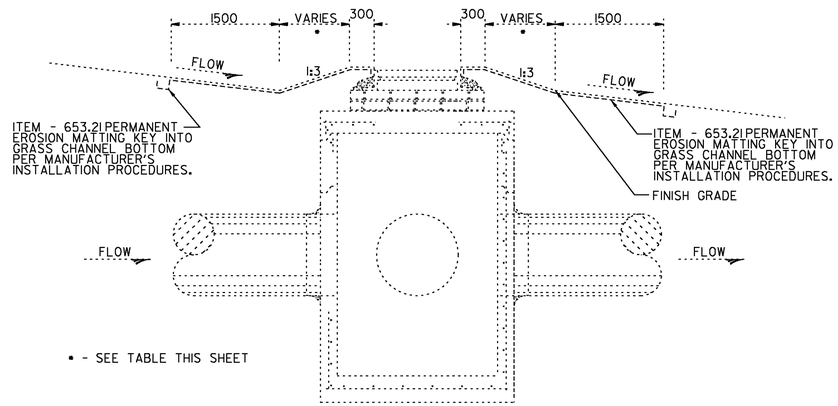

SECTION A-A

DRAINAGE STRUCTURE WITH RAISED RIM DETAIL

NOT TO SCALE

NOTE: ALL DIMENSIONS ARE IN MILLIMETERS (mm) EXCEPT WHERE NOTED.

VERMONT AGENCY OF TRANSPORTATION

Stantec

PROJECT NAME: BENNINGTON
PROJECT NUMBER: AC NH 019-1(53)

FILE NAME: ...\plot_files\zd307c3det_drn.ptf
PLOT DATE: 5/16/2011
DESIGN SUPERVISOR: GREG EDWARDS
DRAWN BY: STANTEC
DESIGNED BY: MARC FOISY
CHECKED BY: GARY SANTY
DRAINAGE DETAILS DD-2
SHEET III OF 577

v:\1953\active\195300021\transportation\drawing\contract_3\plot_files\zd307c3det_drn.ptf

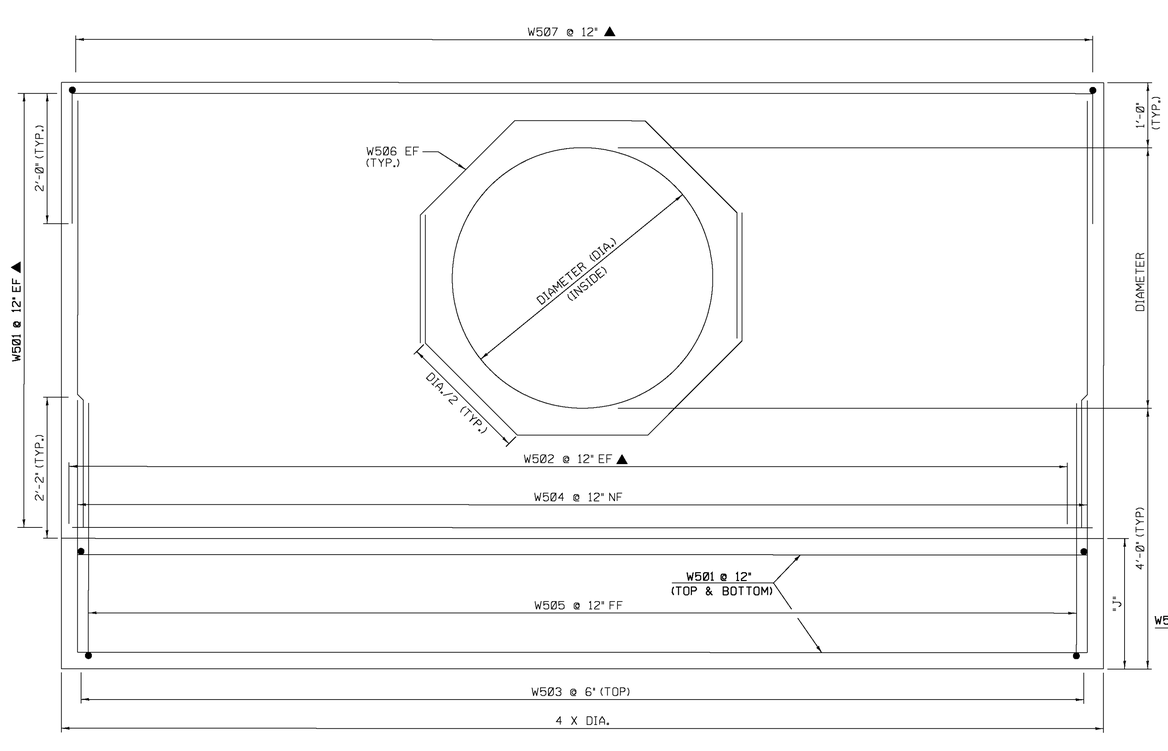

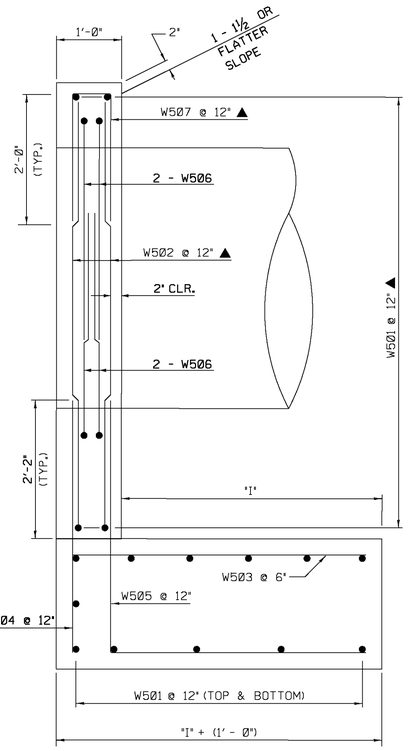

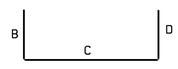

REBAR TYPE: 17

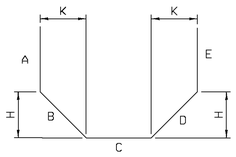

REBAR TYPE: 14



REBAR TYPE: S10

DESIGN CRITERIA

1. ASSUMED ALLOWABLE LOAD FOR SPREAD FOOTINGS
   - ON SOIL: 4 ksf
   - ON LEDGE: 10 ksf
2. REINFORCING STEEL GRADE: 60 ksi
3. CONCRETE CLASS B: 3500 psi
4. SOIL UNIT WEIGHT: 140 psf
5. ASSUMED FOOTING FRICTION COEFFICIENT: 0.55
6. SOIL FRICTION ANGLE: 33.67
7. DEDUCT VOLUME OF PIPE
8. ALL EXPOSED EDGES WILL BE CHAMFERED ONE INCH
9. ALL REBAR CLEARANCES SHALL BE 3 INCHES UNLESS OTHERWISE NOTED.

REBAR NOTES:

NF = NEAR FACE
FF = FAR FACE
EF = EACH FACE
▲ = CUT TO FIT IN FIELD

STEEL SCHEDULE FOR REINFORCED CONCRETE HEADWALL DIAM. 48"

ITEM	EACH	SIZE	LENGTH	MARK	TYPE	A	B	C	D	E	H	K
1	28	5	15'-6"	W501	STR.							
2	34	5	6'-9"	W502	STR.							
3	33	5	4'-6"	W503	STR.							
4	17	5	3'-11"	W504	STR.							
5	17	5	7'-10"	W505	17		3'-11"	3'-11"	——			
6	4	5		W506	14	2'-0"	2'-0"	2'-0"	2'-0"	2'-0"	1'-5"	1'-5"
7	17	5		W507	S10		2'-0"	0'-7"	2'-0"			

STEEL SCHEDULE FOR REINFORCED CONCRETE HEADWALL DIAM. 42"

ITEM	EACH	SIZE	LENGTH	MARK	TYPE	A	B	C	D	E	H	K
1	26	5	13'-6"	W501	STR.							
2	30	5	6'-3"	W502	STR.							
3	29	5	4'-6"	W503	STR.							
4	15	5	3'-11"	W504	STR.							
5	15	5	7'-10"	W505	17		3'-11"	3'-11"	——			
6	4	5		W506	14	1'-9"	1'-9"	1'-9"	1'-9"	1'-9"	1'-2⅞"	1'-2⅞"
7	15	5		W507	S10		2'-0"	0'-7"	2'-0"			

STEEL SCHEDULE FOR REINFORCED CONCRETE HEADWALL DIAM. 36"

ITEM	EACH	SIZE	LENGTH	MARK	TYPE	A	B	C	D	E	H	K
1	24	5	11'-6"	W501	STR.							
2	26	5	6'-3"	W502	STR.							
3	25	5	4'-0"	W503	STR.							
4	13	5	3'-5"	W504	STR.							
5	13	5	6'-10"	W505	17		3'-5"	3'-5"	——			
6	4	5		W506	14	1'-6"	1'-6"	1'-6"	1'-6"	1'-6"	1'-0¾"	1'-0¾"
7	13	5		W507	S10		2'-0"	0'-7"	2'-0"			

STEEL SCHEDULE FOR REINFORCED CONCRETE HEADWALL DIAM. 30"

ITEM	EACH	SIZE	LENGTH	MARK	TYPE	A	B	C	D	E	H	K
1	24	5	9'-6"	W501	STR.							
2	22	5	5'-9"	W502	STR.							
3	21	5	4'-10"	W503	STR.							
4	11	5	3'-5"	W504	STR.							
5	11	5	6'-10"	W505	17		3'-5"	3'-5"	——			
6	4	5		W506	14	1'-3"	1'-3"	1'-3"	1'-3"	1'-3"	0'-10⅝"	0'-10⅝"
7	11	5		W507	S10		2'-0"	0'-7"	2'-0"			

STEEL SCHEDULE FOR REINFORCED CONCRETE HEADWALL DIAM. 24"

ITEM	EACH	SIZE	LENGTH	MARK	TYPE	A	B	C	D	E	H	K
1	24	5	7'-6"	W501	STR.							
2	18	5	5'-9"	W502	STR.							
3	17	5	3'-6"	W503	STR.							
4	9	5	2'-11"	W504	STR.							
5	9	5	5'-10"	W505	17		2'-11"	2'-11"	——			
6	4	5		W506	14	1'-0"	1'-0"	1'-0"	1'-0"	1'-0"	0'-8½"	0'-8½"
7	9	5		W507	S10		2'-0"	0'-7"	2'-0"			

STEEL SCHEDULE FOR REINFORCED CONCRETE HEADWALL DIAM. 18"

ITEM	EACH	SIZE	LENGTH	MARK	TYPE	A	B	C	D	E	H	K
1	22	5	5'-6"	W501	STR.							
2	14	5	5'-3"	W502	STR.							
3	13	5	3'-6"	W503	STR.							
4	7	5	2'-11"	W504	STR.							
5	7	5	5'-10"	W505	17		2'-11"	2'-11"	——			
6	4	5		W506	14	0'-9"	0'-9"	0'-9"	0'-9"	0'-9"	0'-6⅜"	0'-6⅜"
7	7	5		W507	S10		2'-0"	0'-7"	2'-0"			

PIPE DIAMETER	48"	42"	36"	30"	24"	18"
DIMENSION "I"	48"	48"	42"	42"	36"	36"
DIMENSION "J"	24"	24"	18"	18"	12"	12"
CONCRETE QUANTITY (CY)	9.61	8.20	5.63	4.54	2.85	2.05
LENGTH OF BARS	1130	949	761	629	483	348
WEIGHT OF BARS (LB)	1179	990	794	656	504	363

REINFORCED CONCRETE HEADWALL

LOCATION	DESCRIPTION
STA. NB 8+545 LT.	PIPE 451 INLET
STA. ER 1+080 RT.	CV 308 INLET

NOT TO SCALE

VERMONT AGENCY OF TRANSPORTATION

Stantec

PROJECT NAME: BENNINGTON
PROJECT NUMBER: AC NH 019-1(53)

FILE NAME: ...\plot_files\zd307c3det_drn.ptf
PLOT DATE: 5/16/2011
DESIGN SUPERVISOR: GREG EDWARDS
DRAWN BY: STANTEC
DESIGNED BY: MARC FOISY
CHECKED BY: GARY SANTY
DRAINAGE DETAILS DD-3
SHEET 112 OF 577

v:\9530002\active\95300002\transportation\drawing\contract_3\plot_files\zd307c3det_drn.ptf

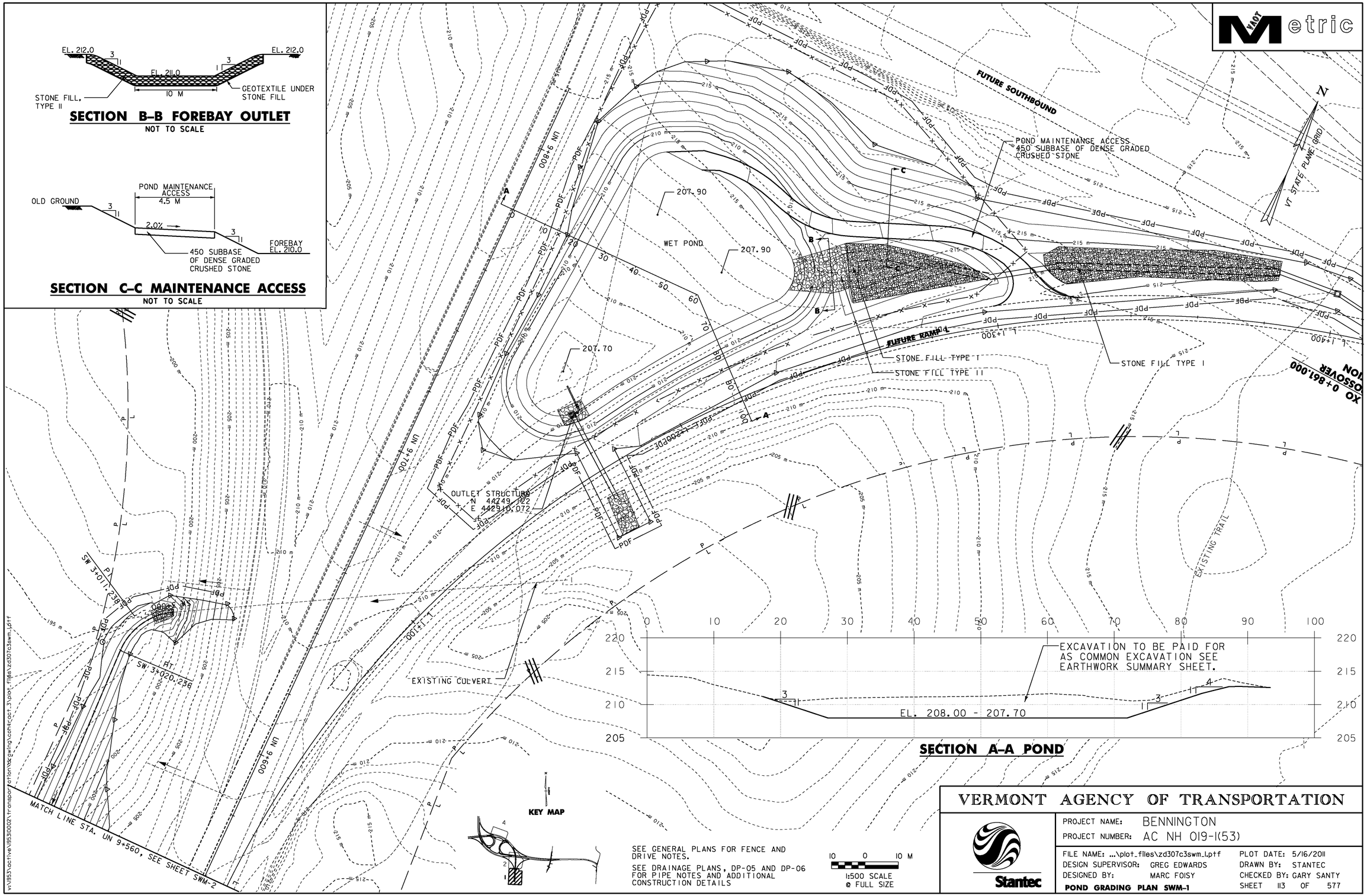

SEE GENERAL PLANS FOR FENCE AND DRIVE NOTES.

SEE DRAINAGE PLANS, DP-05 AND DP-06 FOR PIPE NOTES AND ADDITIONAL CONSTRUCTION DETAILS

10 0 10 M

1:500 SCALE @ FULL SIZE

VERMONT AGENCY OF TRANSPORTATION

Stantec

PROJECT NAME: BENNINGTON

PROJECT NUMBER: AC NH 019-1(53)

FILE NAME: ...\plot_files\zd307c3swm_1.ptf

DESIGN SUPERVISOR: GREG EDWARDS

DESIGNED BY: MARC FOISY

PLOT DATE: 5/16/2011

DRAWN BY: STANTEC

CHECKED BY: GARY SANTY

SHEET 113 OF 577

POND GRADING PLAN SWM-1

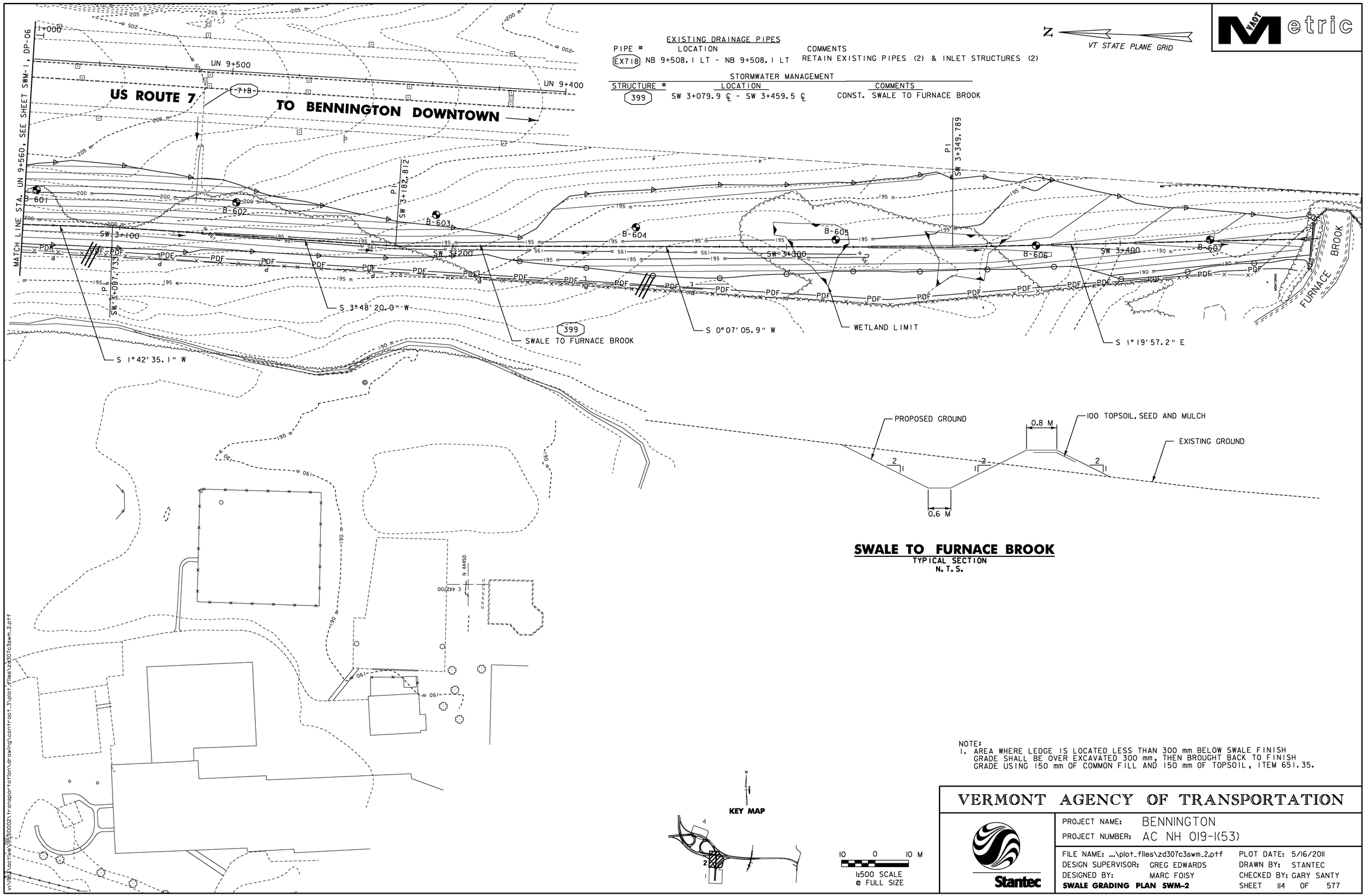

NOTE:
1. AREA WHERE LEDGE IS LOCATED LESS THAN 300 mm BELOW SWALE FINISH GRADE SHALL BE OVER EXCAVATED 300 mm, THEN BROUGHT BACK TO FINISH GRADE USING 150 mm OF COMMON FILL AND 150 mm OF TOPSOIL, ITEM 651.35.

VERMONT AGENCY OF TRANSPORTATION

Stantec

PROJECT NAME: BENNINGTON
PROJECT NUMBER: AC NH 019-1(53)

FILE NAME: ...\plot_files\zd307c3swm_2.ptf
DESIGN SUPERVISOR: GREG EDWARDS
DESIGNED BY: MARC FOISY
SWALE GRADING PLAN SWM-2

PLOT DATE: 5/16/2011
DRAWN BY: STANTEC
CHECKED BY: GARY SANTY
SHEET 114 OF 577

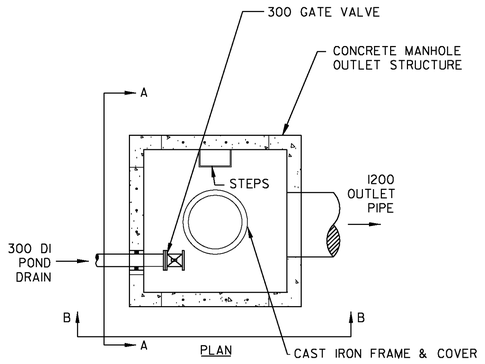

CONCRETE MANHOLE WET POND OUTLET (TOP VIEW)
NOT TO SCALE

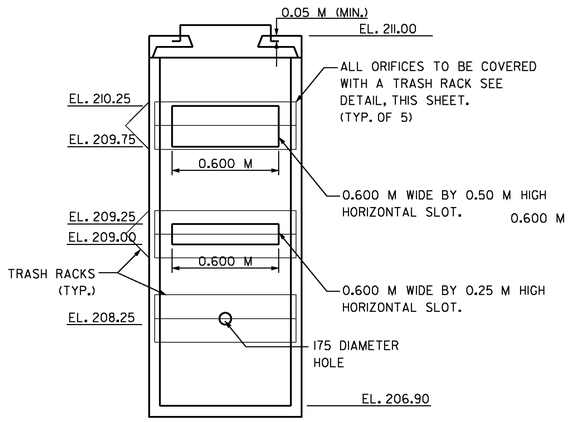

CONCRETE MANHOLE WET POND OUTLET (FRONT VIEW A–A)
NOT TO SCALE

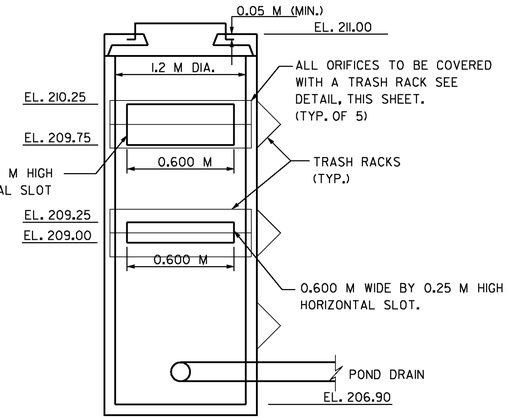

CONCRETE MANHOLE WET POND OUTLET (SIDE VIEW B–B)
NOT TO SCALE

GENERAL NOTES:

1. THE WET POND AREA SHALL BE CLEARED OF ALL TREES, ROOTS, STUMPS, BOULDERS AND SOD TO A MINIMUM DEPTH OF 300 BELOW FINAL GRADE.

2. CONCRETE MANHOLE WET POND OUTLET TO BE CAST-IN-PLACE WITH HOLE SIZES AND SPACING AS SHOWN WITH ANY FIELD ADJUSTMENTS APPROVED BY THE ENGINEER. HOLES SHALL BE CAST WITH THE SECTION TO AVOID POSSIBLE RUST STAINS FROM EXPOSED REINFORCEMENT. FOR ADDITIONAL DETAILS SEE STANDARD D-13.

3. SEED AND MULCH ALL EARTH SLOPES WITHIN 24 HOURS OF COMPLETION OF FINAL GRADING. STABILIZE THE INLET AREA WITH REQUIRED EROSION CONTROL MEASURES. SEE EPSC SHEETS.

4. REMOVE ACCUMULATED SEDIMENT FROM WET POND AT COMPLETION OF PROJECT. AT THE DIRECTION OF THE ENGINEER.

5. ANTI-SEEP COLLARS SHALL BE INSTALLED AS SHOWN TO RESIST FLOW ALONG THE OUTSIDE OF THE PIPE. COLLARS SHOULD PROJECT A MINIMUM OF 0.6 M FROM THE PIPE. MAXIMUM SPACING OF COLLARS IS 6 M.

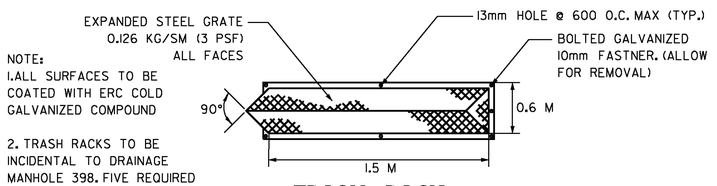

NOTE:
1. ALL SURFACES TO BE COATED WITH ERC COLD GALVANIZED COMPOUND

2. TRASH RACKS TO BE INCIDENTAL TO DRAINAGE MANHOLE 398. FIVE REQUIRED THIS STRUCTURE.

TRASH RACK
NOT TO SCALE

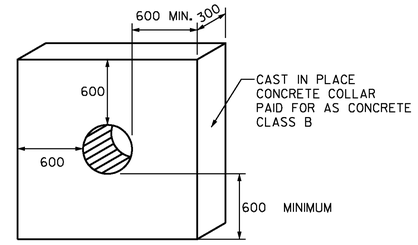

ANTI-SEEP COLLAR
NOT TO SCALE

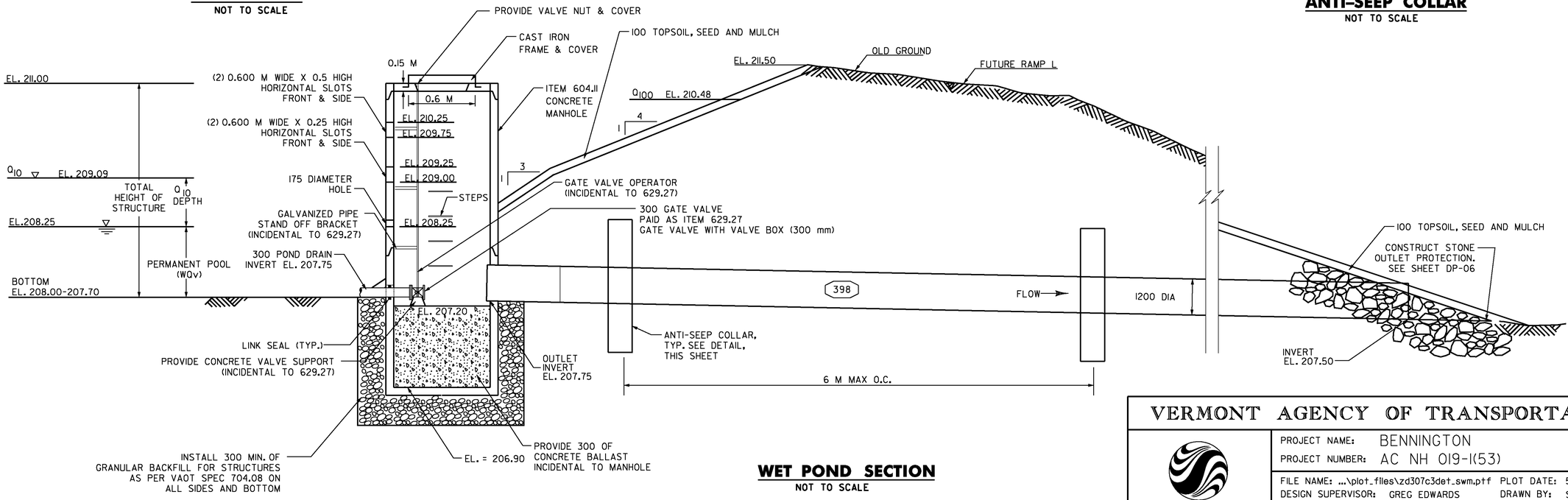

WET POND SECTION
NOT TO SCALE

VERMONT AGENCY OF TRANSPORTATION

PROJECT NAME: BENNINGTON
PROJECT NUMBER: AC NH 019-1(53)

FILE NAME: ...\plot_files\zd307c3det_swm.ptf PLOT DATE: 5/16/2011
DESIGN SUPERVISOR: GREG EDWARDS DRAWN BY: STANTEC
DESIGNED BY: MARC FOISY CHECKED BY: GARY SANTY
STORMWATER MANAGEMENT DETAILS SWM-3 SHEET 115 OF 577

Stantec

v:\1853\active\185300021\transportation\drawing\contract_3\plot_files\zd307c3det_swm.ptf

VAOT Metric

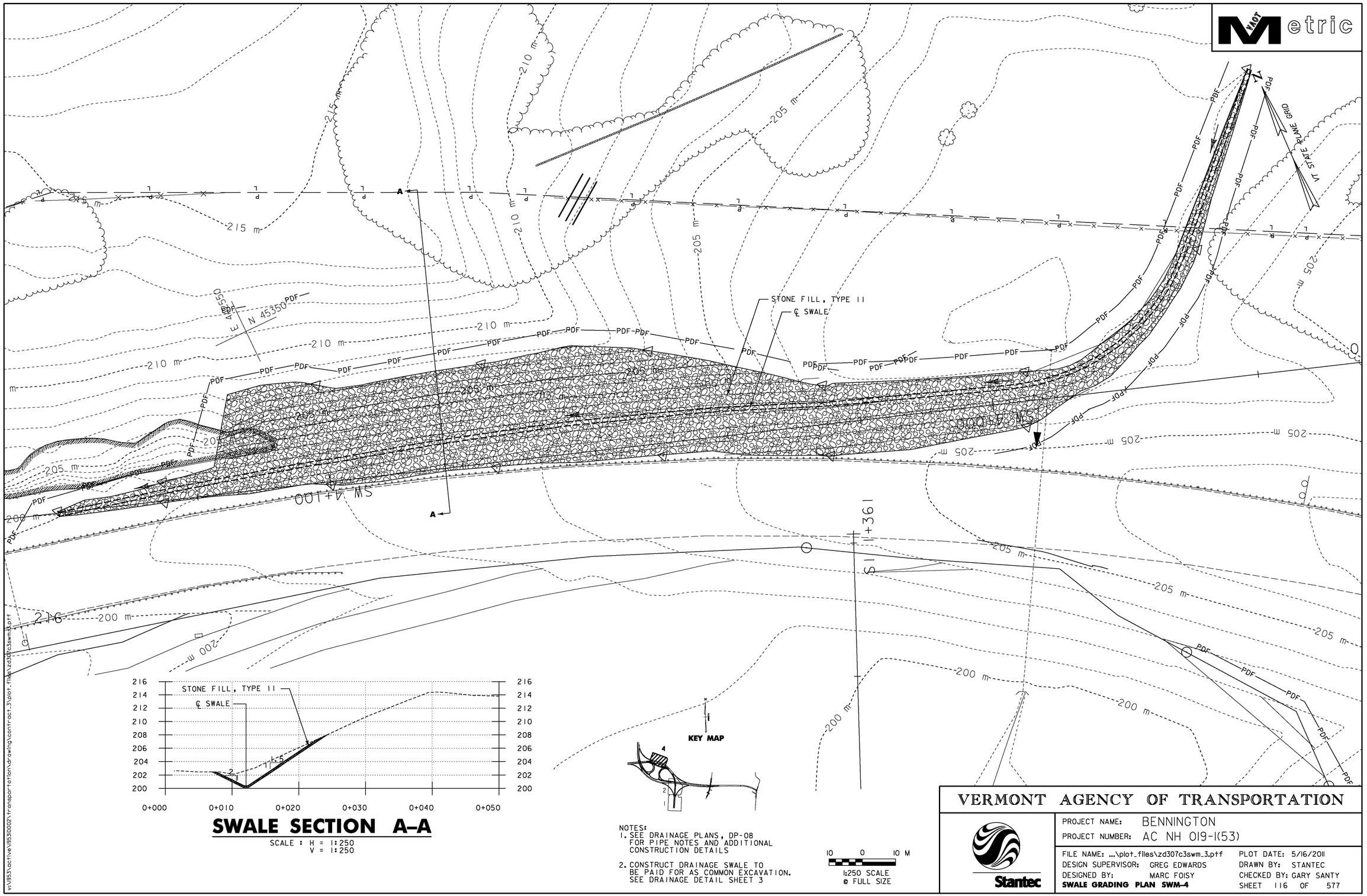

SWALE SECTION A–A

SCALE : H = 1:250
V = 1:250

NOTES:
1. SEE DRAINAGE PLANS, DP-08 FOR PIPE NOTES AND ADDITIONAL CONSTRUCTION DETAILS
2. CONSTRUCT DRAINAGE SWALE TO BE PAID FOR AS COMMON EXCAVATION. SEE DRAINAGE DETAIL SHEET 3

10 0 10 M
1:250 SCALE
@ FULL SIZE

VERMONT AGENCY OF TRANSPORTATION

Stantec

PROJECT NAME: BENNINGTON
PROJECT NUMBER: AC NH 019-1(53)

FILE NAME: ...\plot_files\zd307c3swm_3.ptf
DESIGN SUPERVISOR: GREG EDWARDS
DESIGNED BY: MARC FOISY
SWALE GRADING PLAN SWM-4

PLOT DATE: 5/16/2011
DRAWN BY: STANTEC
CHECKED BY: GARY SANTY
SHEET 116 OF 577

v:\1953\active\195310002\transportation\drawing\contract_3\plot_files\zd307c3swm_3.ptf

HAY MULCH
STA NB 8+350, 33 m LT - STA NB 8+420, RT

SEED, WINTER RYE
STA NB 8+350, LT - STA NB 8+420, RT

VEHICLE TRACKING PAD
STA CH 1+385, LT

NOTES:

1. FOR STABILIZED CONSTRUCTION ENTRANCE, SEE SHEET EP & SC DETAILS 6. ITEM IS PAID FOR AS 653.35 - VEHICLE TRACKING PAD
2. FOR ROLLED EROSION CONTROL PRODUCT, SEE SHEET EP & SC DETAILS 5. ITEM PAID FOR AS 653.20 - TEMPORARY EROSION MATTING
3. FOR SILT FENCE, SEE SHEET EP & SC DETIALS 4. ITEM IS PAID FOR AS 649.51- GEOTEXTILE FOR SILT FENCE.
4. FOR FILTER FABRIC DROP INLET PROTECTION OR STONE & BLOCK DROP INLET PROTECTION, SEE SHEET EP & SC DETAILS 2. ITEM IS PAID FOR AS 653.40- INLET PROTECTION DEVICE, TYPE I.
5. FOR CHECK DAM, SEE SHEET EP & SC DETAILS 3. ITEM IS PAID FOR AS 653.25 - TEMPORARY STONE CHECK DAM, TYPE I



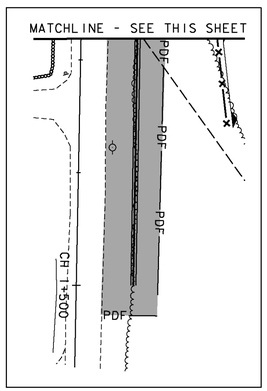

LEGEND

- VTP — VEHICLE TRACKING PAD
- TEMPORARY EROSION MATTING
- SEED AND MULCH
- SILT FENCE
- INLET PROTECTION DEVICE, TYPE I (CATCH BASIN OR DROP INLET)
- INLET PROTECTION DEVICE, TYPE I (CULVERT)
- FILTER BAG
- P — PERMANENT STONE CHECK DAM
- T — TEMPORARY STONE CHECK DAM
- STONE OUTLET PROTECTION

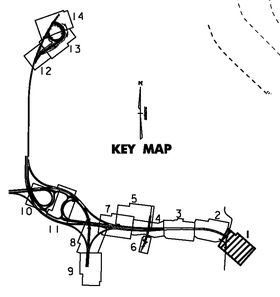

10 0 10 M
1:500 SCALE
@ FULL SIZE

VERMONT AGENCY OF TRANSPORTATION

Stantec

PROJECT NAME: BENNINGTON
PROJECT NUMBER: AC NH 019-1(53)

FILE NAME: ...\zd307c3ero_plans.ptf
DESIGN SUPERVISOR: GREG EDWARDS
DESIGNED BY: MARC FOISY
EROSION CONTROL PLAN EC-01

PLOT DATE: 5/16/2011
DRAWN BY: STANTEC
CHECKED BY: GARY SANTY
SHEET 117 OF 577

v:\1953\active\195310002\transportation\drawing\contract_3\plot_files\zd307c3ero_plans.ptf

NOTES:

1. FOR STABILIZED CONSTRUCTION ENTRANCE, SEE SHEET EP & SC DETAILS 6. ITEM IS PAID FOR AS 653.35 - VEHICLE TRACKING PAD
2. FOR ROLLED EROSION CONTROL PRODUCT, SEE SHEET EP & SC DETAILS 5. ITEM PAID FOR AS 653.20 - TEMPORARY EROSION MATTING
3. FOR SILT FENCE, SEE SHEET EP & SC DETIALS 4. ITEM IS PAID FOR AS 649.51- GEOTEXTILE FOR SILT FENCE.
4. FOR FILTER FABRIC DROP INLET PROTECTION OR STONE & BLOCK DROP INLET PROTECTION, SEE SHEET EP & SC DETAILS 2. ITEM IS PAID FOR AS 653.40- INLET PROTECTION DEVICE, TYPE I.
5. FOR CHECK DAM, SEE SHEET EP & SC DETAILS 3. ITEM IS PAID FOR AS 653.25- TEMPORARY STONE CHECK DAM, TYPE I
6. SEE DP-01 FOR PIPE AND STRUCTURE NOTES.

GEOTEXTILE FOR SILT FENCE

STA NB 8+528, 35 m RT - STA NB 8+534, 27 m RT
STA NB 8+529, 45 m RT - STA NB 8+553, 57 m RT
STA NB 8+547, 18 m RT - STA NB 8+547, 25 m RT
STA NB 8+563, 08 m RT - STA NB 8+563, 13 m RT
STA NB 8+573, 50 m LT - STA NB 8+577, 09 m RT
STA NB 8+608, 75 m LT - STA NB 8+610, 64 m LT
STA NB 8+641, 79 m LT - STA NB 8+679, 108 m LT
STA NB 8+660, 42 m LT - STA NB 8+692, 70 m LT
STA NB 8+688, 92 m LT - STA NB 8+710, 107 m LT
STA NB 8+694, 35 m LT - STA NB 8+742, 42 m LT
STA NB 8+701, 14 m RT - STA NB 8+704, 12 m LT

TEMPORARY EROSION MATTING (ROADSIDE DITCHES)

STA NB 8+720 - 8+780, RT
STA NB 8+767 - 8+780, LT

SEED, WINTER RYE

STA NB 8+420, LT - NB 8+507, LT & RT
STA NB 8+525, RT - NB 8+590, RT
STA NB 8+635, LT - NB 8+780, LT
STA NB 8+648, LT - NB 8+702, LT
STA NB 8+687, LT - NB 8+723, LT
STA NB 8+674, RT - NB 8+780, RT

HAY MULCH

STA NB 8+420, LT - NB 8+507, LT & RT
STA NB 8+525, RT - NB 8+590, RT
STA NB 8+635, LT - NB 8+780, LT
STA NB 8+648, LT - NB 8+702, LT
STA NB 8+687, LT - NB 8+723, LT
STA NB 8+674, RT - NB 8+780, RT

TEMPORARY STONE CHECK DAM, TYPE I

STA NB 8+740 - 8+772, RT

FILTER BAG

STA NB 8+525, 2 L RT
STA NB 8+590, 20 M RT
STA NB 8+700, 102 M LT

TEMPORARY EROSION MATTING (SLOPES)

STA NB 8+506 - 8+534, RT
STA NB 8+506 - 8+586, LT
STA NB 8+700 - 8+727, LT
STA NB 8+700 - 8+720, RT

VAOT Metric

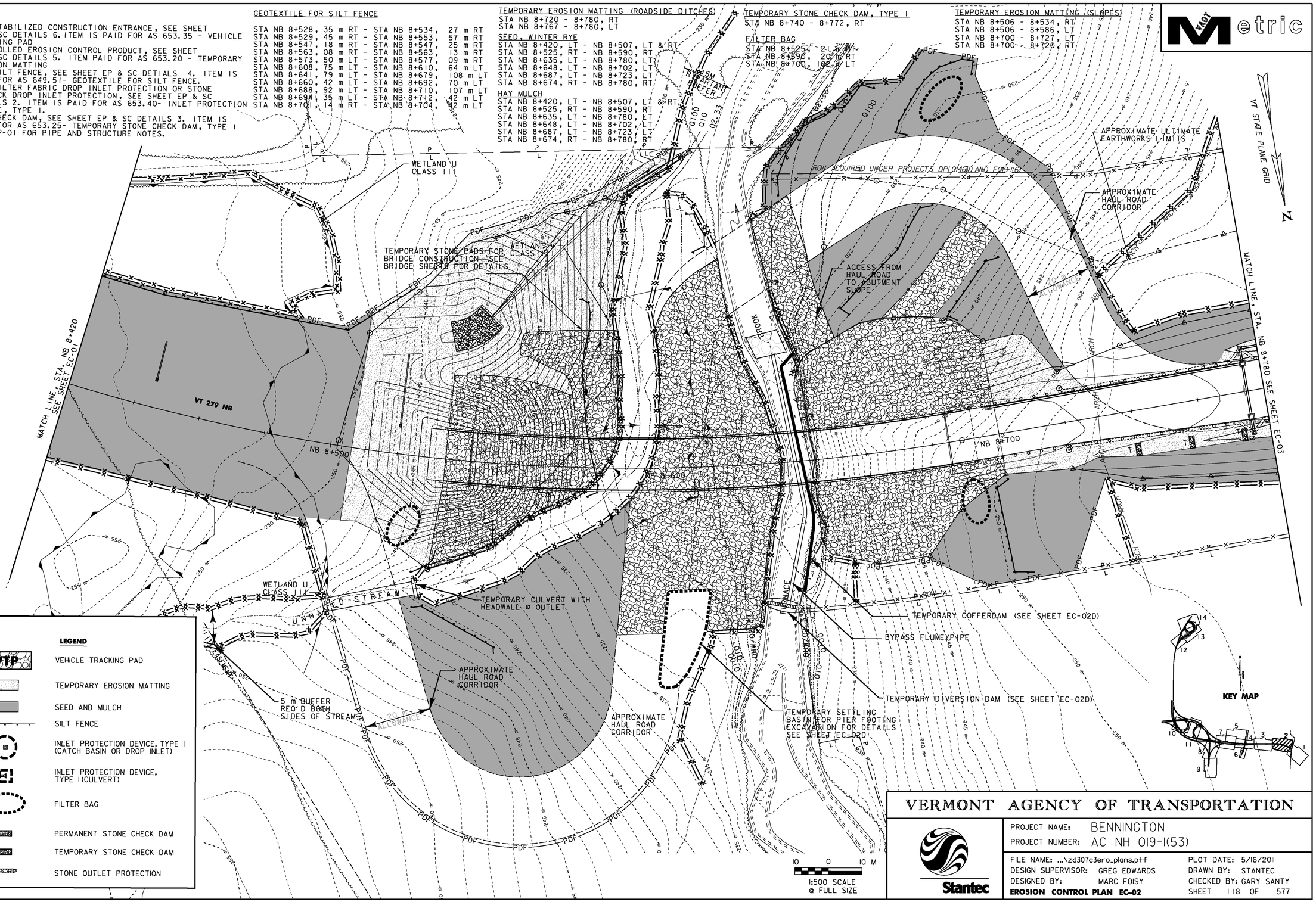

LEGEND

- VTP — VEHICLE TRACKING PAD
- TEMPORARY EROSION MATTING
- SEED AND MULCH
- SILT FENCE
- INLET PROTECTION DEVICE, TYPE I (CATCH BASIN OR DROP INLET)
- INLET PROTECTION DEVICE, TYPE I (CULVERT)
- FILTER BAG
- P — PERMANENT STONE CHECK DAM
- T — TEMPORARY STONE CHECK DAM
- STONE OUTLET PROTECTION

10 0 10 M
1:500 SCALE @ FULL SIZE

VERMONT AGENCY OF TRANSPORTATION

Stantec

PROJECT NAME: BENNINGTON
PROJECT NUMBER: AC NH 019-1(53)

FILE NAME: ...\zd307c3ero_plans.ptf
DESIGN SUPERVISOR: GREG EDWARDS
DESIGNED BY: MARC FOISY
EROSION CONTROL PLAN EC-02

PLOT DATE: 5/16/2011
DRAWN BY: STANTEC
CHECKED BY: GARY SANTY
SHEET 118 OF 577

v:\1953\active\195310002\transportation\drawing\contract_3\plot_files\zd307c3ero_plans.ptf

VAOT Metric

TEMPORARY BRIDGE PAID FOR INCIDENTAL TO CONSTRUCTION OF THE BRIDGE (SEE NOTE 7A ON EC-02C)

STONE CHECK DAM (REFER TO DETAIL ON EC-02D) PAID FOR UNDER ITEM 208.40 COFFERDAM (ABUTMENT)

TEMPORARY COFFERDAM (ABUTMENT)

15 m RIPIRIAN BUFFER

15 m RIPIRIAN BUFFER

STONE PAD

FILTER BAG

Q100 Q10 Q2.33

Q2.33 Q10 Q100

ACCESS FROM HAUL ROAD TO ABUTMENT SLOPE, PAID INCIDENTAL TO BRIDGE CONSTRUCTION.

APPROXIMATE HAUL ROAD (20 m CORRIDOR)

N

TEMPORARY STONE PAD TO BE CONSTRUCTED AT OR ABOVE "Q10" PAID INCIDENTAL TO CONSTRUCTION OF THE BRIDGE. SEE DETAIL SHEET EC-02D.

FILTER BAG

VT ROUTE 279

NB 8+500

NB 8+600

NB 8+700

NB 8+800

℄ CONST.

BROOK

FURNACE

LIMITS OF STONE FILL TYPE III

LIMITS OF STONE FILL TYPE II

LIMITS OF STONE FILL TYPE IV

TEMPORARY CULVERT PAID INCIDENTAL TO CONSTRUCTION OF THE BRIDGE (450 min.)

UNNAMED STREAM

5 m BUFFER BOTH SIDES OF STREAM

APPROXIMATE HAUL ROAD (20 m CORRIDOR)

FILTER BAG

CLEAR EXISTING TREES AND VEGETATION AND PLACE GEOTEXTILE OVER EXISTING SOIL PRIOR TO CONSTRUCTING TEMPORARY STONE PADS (TYP.) PAYMENT INCIDENTAL TO CONSTRUCTION OF THE BRIDGE.

DIVERSION PIPE - TWIN 900 CORRUGATED PIPE PAID INCIDENTAL TO ITEM 208.40 COFFERDAM (ABUTMENT).

TEMPORARY DIVERSION DAM (REFER TO DETAIL ON EC-02D) PAID INCIDENTAL TO ITEM 208.40 COFFERDAM (ABUTMENT).

ARMOR EDGES OF TEMPORARY STONE PADS PAID INCIDENTAL TO CONSTRUCTION OF THE BRIDGE, SEE DETAIL ON EC-02D.

TEMPORARY SETTLING BASIN FOR PIER FOOTING EXCAVATION PAID INCIDENTAL TO CONSTRUCTION OF THE BRIDGE.

PLAN
SCALE: 1:500

NOTE:
UNLESS OTHERWISE SPECIFIED, ALL CONSTRUCTUION SHOWN SHALL BE CONSIDERED INCIDENTAL TO THE CONSTRUCTION OF THE FURNACE BROOK BRIDGE.

0 10 20 30
SCALE 1:500
@ FULL SIZE

TVGA CONSULTANTS

STATE OF VERMONT
AGENCY OF TRANSPORTATION

Town Of BENNINGTON	Bridge No.
Highway No.	Log Sta. / Surv. Sta.

VT ROUTE 279 OVER FURNACE BROOK

CONSTRUCTION IMPACTS PLAN

Designed By D.R. GOODISON	Drawn By T.J.B./R.A.B.
Checked By Date D.R. GOODISON	Bridge Design Supervisor K. M. WOJTKOWSKI Date
PROJECT BENNINGTON	PROJECT NO. AC NH 019-1(53)
Drawing No. ...\plot_files\zd307c3tvga3.ptf	Date
FURNACE BROOK EP & SC EC-02B	Sheet 119 of 577

V:\1953\active\19530002\transportation\drawing\contract_3\plot_files\zd307c3tvga3.ptf

CONSTRUCTION AND PHASING NOTES FOR EROSION PREVENTION AND SEDIMENT CONTROL AT FURNACE BROOK

1. LOCATE BOUNDARIES OF RIPARIAN BUFFER ZONES, WETLANDS, ARCHEOLOGICAL SITES AND OTHER AREAS WHICH MUST REMAIN UNDISTURBED DURING CONSTRUCTION, AND DELINEATE THOSE BOUNDARIES USING BARRIER FENCE.

2. CONSTRUCT VEHICLE TRACKING PADS AT ENTRANCES TO THE CONSTRUCTION SITE AS SHOWN ON EROSION PREVENTION AND SEDIMENT CONTROL DETAILS, OR AS DIRECTED BY THE ON SITE COORDINATOR. NOTE: TRACKING PAD LOCATIONS ARE NOT SHOWN AS CONSTRUCTION ENTRANCE LOCATIONS ARE TO BE DETERMINED.

3. FOR LOCATIONS OUTSIDE TEMPORARY STONE PAD LIMITS, ESTABLISH AND DELINEATE LOCATIONS OF TOPSOIL STOCKPILES, STAGING AREAS, EQUIPMENT STORAGE AREAS, AND REFUELING AND MAINTENANCE AREAS USING ORANGE SNOW FENCE. CONTROL SEDIMENT FROM THESE AREAS USING SILT FENCE. DELINEATE LIMITS OF WORK USING BARRIER FENCE.

4. CLEAR THE SITE AS REQUIRED, AND AS SHOWN ON THE EROSION CONTROL PLANS (THIS DOES NOT INCLUDE CLEARING OF WEST ABUTMENT SLOPE). WOODY VEGETATION TO BE CUT TO GROUND LEVEL, AND NOT GRUBBED, AT THIS TIME.

5. INSTALL TEMPORARY EROSION PREVENTION AND SEDIMENT CONTROL MEASURES AS SHOWN, AS REQUIRED, OR AS DIRECTED BY THE ON SITE COORDINATOR, IN THE FOLLOWING ORDER:

   A. DIVERSION STRUCTURES (DIVERSION DIKES OR CHANNELS).
   B. FILTER BARRIERS (SILT FENCE OR GEOSYNTHETIC BARRIERS).
   C. TEMPORARY SETTLING BASINS.
   D. PAYMENT FOR NOTED MEASURES WILL BE INCIDENTIAL TO OTHER ITEMS OF WORK.

6. GRUB THE SITE AS REQUIRED. STUMPS, EXCESS SOILS AND OTHER WASTE MATERIALS SHALL BE DISPOSED OF IN A LOCATION APPROVED BY THE ON SITE COORDINATOR AND THE AGENCY OF NATURAL RESOURCES. NOTE: GRUBBING IS ONLY TO OCCUR IN EXCAVATION AREAS.

7. COMMENCE CONSTRUCTION AS SHOWN ON THE BRIDGE CONSTRUCTION IMPACTS PLAN.

   A. CONTRACTOR MAY CONSTRUCT ONE TEMPORARY BRIDGE OVER THE MAIN CHANNEL. THE LOW STEEL OF THE BRIDGE SHALL BE AT "Q10" MINIMUM. TEMPORARY BRIDGES SHALL BE REMOVED DURING THE NON-CONSTRUCTION SEASON, AND WHEN RISING WATER PREDICTIONS INDICATE THE BRIDGES TO BE IMPACTED.

   B. CONTRACTOR MAY CONSTRUCT ONE TEMPORARY BRIDGE OVER THE UNNAMED CHANNEL (WITHIN THE "Q100" LIMITS) WITH A MINIMUM 0.5 m CLEARANCE OVER CHANNEL INVERT. A CULVERT WILL ALSO BE REQUIRED ABOVE "Q100" FOR THE HAUL ROAD. STABILIZE OUTLET OF CULVERT WITH A HEADWALL.

   C. AS CONSTRUCTION PROGRESSES, IMPLEMENT ADDITIONAL TEMPORARY EROSION CONTROLS AS SHOWN, AS REQUIRED, OR AS DIRECTED BY THE ON SITE COORDINATOR, INCLUDING TEMPORARY BERMS AND FLEXIBLE SLOPE DRAINS, STONE CHECK DAMS, SEEDING AND MULCHING, SEDIMENT SETTLING STRUCTURES, ROCK BARRIER INLET PROTECTION AND ROCK BARRIER CULVERT INLET PROTECTION. INSPECT AND MAINTAIN EROSION PREVENTION AND SEDIMENT CONTROL MEASURES IN ACCORDANCE WITH THE SPECIFICATIONS AND SPECIAL PROVISIONS. DISPOSE OF COLLECTED SEDIMENT AND OTHER POLLUTANTS IN A MANNER APPROVED BY THE ON SITE COORDINATOR THAT WILL RESULT IN NO SEDIMENTS AND POLLUTANTS ENTERING WATERS OF THE STATE.

   D. CONSTRUCT TEMPORARY PADS TO "Q10" ELEVATION FOR THE PURPOSE OF:
   - GENERAL STAGING AND ACCESS
   - COFFERDAM CONSTRUCTION
   - PIER EXCAVATION AND BACKFILL
   - SUPERSTRUCTURE ERECTION (CRANE AND SHORING)
   - SUPERSTRUCTURE ACCESS (DECK FORMING AND FORM REMOVAL)

   E. CONSTRUCTION OF TEMPORARY STONE PADS WILL REQUIRE SOME EXCAVATION OF EXISTING MATERIAL TO BRING ELEVATION OF STAGING AREAS DOWN TO TEMPORARY "Q10" ELEVATION. ALL TEMPORARY STONE PADS TO BE BEDDED ON A LAYER OF GEOTEXTILE. WORK ADJACENT TO THE STREAM MUST BE ABOVE THE LEVEL OF THE STREAM WHILE THE STONE PADS ARE BEING PLACED AND REMOVED. THIS WORK SHALL BE PAID INCIDENTAL TO THE CONSTRUCTION OF THE FURNACE BROOK BRIDGE.

   F. DEWATER AS REQUIRED. FILTER DISCHARGE USING TEMPORARY SETTLING STRUCTURES AS SHOWN.

   G. STONE PADS SHALL BE LEFT IN PLACE OVER THE WINTER, AND REMOVED UPON COMPLETION OF THE PROJECT.

   H. WORK WITHIN THE 100 YEAR FLOOD PLAIN IS LIMITED BETWEEN THE DATES OF MAY 1 AND NOVEMBER 1. ADDITIONALLY, CONSTRUCTION SHALL NOT COMMENCE UNTIL THE STREAM IS BELOW Q2.33. CONSTRUCTION IN THE CHANNEL (BELOW OHW) IS LIMITED TO BETWEEN THE DATES OF JUNE 1 AND AUGUST 31.

   I. THROUGHOUT CONSTRUCTION, DURING WHICH THE TEMPORARY STONE PADS ARE IN PLACE, THE CONTRACTOR SHALL MONITOR THE STREAM CHANNEL IN THE IMMEDIATE VICINITY OF THE STONE PADS FOR ANY CHANGES IN GEOMETRY DUE TO SCOUR. THE MONITORING PROGRAM SHALL CONSIST OF AN INITIAL SURVEY TO ESTABLISH THE PRE-CONSTRUCTION STREAM CHANNEL GEOMETRY; AND ADDITIONAL SURVEYS FOLLOWING: ANNUAL SPRING HIGH WATER, RAINFALL EVENTS OF TWO (2) INCHES OR MORE, TO COMPARE TO THE PRE-CONSTRUCTION GEOMETRY. THE SURVEYS SHALL CONSIST OF CHANNEL CROSS-SECTIONS, TAKEN AT THE FOLLOWING MINIMUM FOUR LOCATIONS: ONE SOUTH OF THE WESTERN HAUL ROAD; ONE NEAR THE DOWNSTREAM END OF THE CONSTRUCTION AREA; ONE JUST UPSTREAM OF THE PIER; AND ONE AT THE UPSTREAM END OF THE CONSTRUCTION AREA. THE FREQUENCY OF SHOTS FOR EACH CROSS-SECTION SHALL BE SUFFICIENT TO DETERMINE ANY CHANGES IN CHANNEL GEOMETRY, AS DETERMINED BY THE ON SITE COORDINATOR. ADDITIONALLY, WATER QUALITY MONITORING WILL BE REQUIRED AT THE FOLLOWING FOUR LOCATIONS: (1) INLET TO STORMWATER BASIN, (2) OUTLET OF STORMWATER BASIN, (3) IN STREAM UPSTREAM OF PROJECT, AND (4) IN STREAM DOWNSTREAM OF PROJECT. IT WILL INVOLVE TAKING A 1/2 NEPHLEMETRIC TURBIDITY UNIT 1/2 TO EACH LOCATION TO GRAB SAMPLES, AT A FREQUENCY TO BE DETERMINED BY THE ON SITE COORDINATOR. THE CONTRACTOR SHALL SUBMIT AN EROSION AND WATER QUALITY MONITORING PLAN TO THE ON SITE COORDINATOR, WHICH INCLUDES METHODS AND EQUIPMENT TO BE UTILIZED IN THE MONITORING PROGRAM. THE PLAN SHALL BE APPROVED BY THE ON SITE COORDINATOR PRIOR TO BEGINNING CONSTRUCTION OF THE TEMPORARY STONE PADS.

   J. THE FOLLOWING REPRESENTS A GENERAL SEQUENCE FOR CONSTRUCTION OF THE WEST ABUTMENT SLOPE. THE CONTRACTOR SHALL PROVIDE A DETAILED EROSION AND SEDIMENT CONTROL PLAN FOR THE ON SITE COORDINATOR'S APPROVAL PRIOR TO CONSTRUCTION. WORK BELOW OHW MUST BE PERFORMED DURING PERIODS OF LOW FLOW, AND BETWEEN JUNE 1 AND AUGUST 31.

   PHASE I: CONSTRUCT THE WEST ABUTMENT TOE

   i. WORK UNDER THIS PHASE, BELOW OHW, (i.e., STEPS 7.J.ii.-7.J.v. BELOW) IS LIMITED TO TWO WEEKS DURATION, MAXIMUM.

   ii. CONSTRUCT DIVERSION DAM IN BROOK, 40 m (MIN.) UPSTREAM OF THE PROPOSED CENTERLINE OF BRIDGE, AND CONVEY WATER (VIA CULVERT, FLUME, OR OTHER ADEQUATE MEANS) DOWNSTREAM OF THE TOE. DIVERSION CONDUIT SHALL BE MADE OF 900 mm CORRUGATED METAL PIPE, OR OTHER ADEQUATE MEANS CAPABLE OF CONVEYING 2.27 CMS (80 CFS). CONSTRUCT CHECK DAM AT DOWNSTREAM END OF DIVERSION CONDUIT. CONTRACTOR SHALL RECEIVE APPROVAL FROM THE ONSITE COORDINATOR OF ALTERNATE DIVERSION TECHNIQUES.

   iii. EXCAVATE AND CONSTRUCT THE WEST ABUTMENT SLOPE TOE, WITH KEY OF STONE FILL, TYPE IV IN ACCORDANCE WITH THE PLANS. ANY SECTION OF THE TOE WHICH IS BEGUN MUST BE COMPLETED WITH ALL STONE FILL IN PLACE BY THE END OF THE SAME DAY.

   iv. FOLLOWING COMPLETION OF TOE CONSTRUCTION, CONSTRUCT TEMPORARY DAM ALONG ENTIRE TOE OF WEST ABUTMENT SLOPE AS ILLUSTRATED IN THE ACCOMPANYING PLAN AND DETAIL. THIS SYSTEM SHALL ACT AS A SEDIMENT TRAP FOR ANY UNAVOIDABLE RUNOFF FROM THE WEST ABUTMENT SLOPE. DISCHARGE TURBID WATER VIA PUMPING TO THE TEMPORARY SEDIMENT BASIN ON THE EAST SIDE OF FURNACE BROOK.

   v. DISMANTLE TEMPORARY DIVERSION SYSTEM, BEGINNING AT THE OUTLET END AND WORKING UPSTREAM.

   PHASE II: CONSTRUCT THE WEST ABUTMENT SLOPE

   vi. STARTING AT THE TOP OF THE WEST SLOPE, CLEAR TREES WITHIN THE LIMITS OF PROPOSED SLOPE WORK.

   vii. STARTING AT THE TOP OF THE WEST SLOPE, EXCAVATE IN ORDER TO LAY BACK THE SLOPE DOWN TO GRADE (i.E., BOTTOM OF PROPOSED TYPE II STONE FILL) SHOWN ON THE PLANS. NO MORE THAN 9m OF SLOPE, MEASURING PARALLEL TO CENTERLINE OF CONSTRUCTION, MAY BE EXPOSED AT ANY GIVEN TIME (REFER TO DETAIL). EXPOSED SLOPE MUST BE COVERED WITH A POLYETHYLENE LINER, OR OTHER IMPERVIOUS SHEETING APPROVED BY THE ONSITE COORDINATOR, UNTIL STONE FILL IS PLACED. INSTALL TEMPORARY TRIANGULAR DIKE ALONG TOE OF EACH EXPOSED SECTION, AS SHOWN IN DETAIL, AND PIPE WATER TO COFFERDAM AT THE TOE OF THE WEST ABUTMENT SLOPE. AS WORK PROGRESSES DOWN THE SLOPE, THE POLYETHYLENE LINER MUST BE EXTENDED TO THE TOE OF THE EXPOSED SLOPE AT THE END OF EACH WORK DAY.

   viii. WORK ON THE SLOPE WILL NOT BE ALLOWED DURING ANY RAINFALL EVENT THAT PRODUCES RUNOFF. IF THIS OCCURS, THE CONTRACTOR SHALL SHUT DOWN CONSTRUCTION ACTIVITY IN ACCORDANCE WITH THE CONTRACT DOCUMENTS, AND ENSURE SLOPE IS STABILIZED.

   ix. REPLACE POLYETHYLENE LINER WITH GEOTEXTILE, INCREMENTALLY AS THE SLOPE IS PREPARED TO ACCEPT STONE FILL. PLACE TYPE II STONE FILL ON THE WEST ABUTMENT SLOPE IN ACCORDANCE WITH THE PLANS, STARTING AT THE TOE OF SLOPE, AND MOVING UPWARD. CONTRACTOR SHALL REMOVE ONLY AS MUCH POLYETHYLENE LINER AS CAN BE REPLACED WITH THE STONE FILL IN ANY GIVEN DAY.

   x. UPON STABILIZATION OF THE SLOPE AS APPROVED BY THE ONSITE COORDINATOR, REMOVE TEMPORARY DAM.

8. UPON COMPLETION OF EARTHWORK (FINAL GRADING)

   A. ANY ACCESS ROADS, PARKING AREAS OR TRAILS USED FOR CONSTRUCTION ACCESS, MATERIAL STOCKPILING, WORKING AREAS OR OTHER CONSTRUCTION RELATED ACTIVITIES SHALL BE REMOVED TO REVERSE COMPACTION AND TO RETURN THE SOIL TO ORIGINAL OR BETTER CONDITION. THE SOIL UNDER THESE AREAS SHALL BE LOOSENED BY ROTOTILLING OR EQUIVALENT MEANS, OR BY HAND AS REQUIRED.

   B. COMPLETE FINAL STABILIZATION OF THE SITE, INCLUDING CHANNEL LININGS, SEEDING AND MULCHING (PERMANENT TURF ESTABLISHMENT), CHECK DAMS AND OUTLET PROTECTION.

   C. PLANTINGS OF ALL DISTURBED AREAS SHALL BE ACCOMPLISHED IN ACCORDANCE WITH A STREAM CORRIDOR RESTORATION PLAN, TO BE APPROVED BY THE CORPS OF ENGINEERS AND VERMONT AGENCY OF NATURAL RESOURCES.

9. REMOVE ALL TEMPORARY EROSION PREVENTION AND SEDIMENT CONTROL MEASURES UPON PROJECT COMPLETION OR FINAL SITE STABILIZATION AS APPROVED BY THE ONSITE COORDINATOR, WHICHEVER OCCURS LAST, AND STABILIZE ANY AREAS DISTURBED BY THE REMOVAL OF THE TEMPORARY MEASURES.

V:\1953\active\195300021\transportation\drawing\contract_3\plot_files\zd307c3tvga2.ptf

STATE OF VERMONT
AGENCY OF TRANSPORTATION

Town Of BENNINGTON	Bridge No.
Highway No.	Log Sta. / Surv. Sta.
VT ROUTE 279 OVER FURNACE BROOK	
CONSTRUCTION IMPACTS NOTES	
Designed By D.R. GOODISON	Drawn By T.J.B./R.A.B.
Checked By D.R. GOODISON Date	Bridge Design Supervisor K. M. WOJTKOWSKI Date
PROJECT BENNINGTON	PROJECT NO. AC NH 019-1(53)
Drawing No. ...\plot_files\zd307c3tvga2.ptf Date	
FURNACE BROOK EP & SC EC-02C	Sheet 120 of 577

TVGA CONSULTANTS

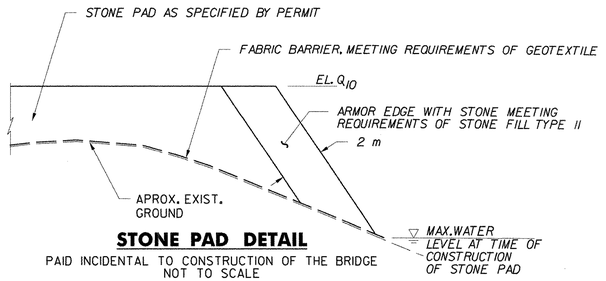

STONE PAD DETAIL

PAID INCIDENTAL TO CONSTRUCTION OF THE BRIDGE
NOT TO SCALE

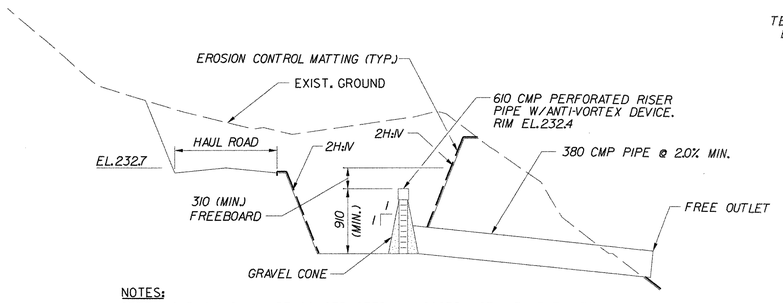

NOTES:

1. SETTLING BASIN SHALL BE CONSTRUCTED IN ACCORDANCE WITH THE "VERMONT HANDBOOK FOR SOIL EROSION AND SEDIMENT CONTROL ON CONSTRUCTION SITES", SPECIAL PUBLICATION NO. 3, VERMONT GEOLOGICAL SURVEY, LATEST EDITION.
2. WATER QUALITY MONITORING WILL BE REQUIRED FOR THE SETTLING BASIN OUTLET DURING CONSTRUCTION.

TEMPORARY SETTLING BASIN DETAIL

APPROXIMATE SCALE: (H) 1:200, (V) 1:40
PAID INCIDENTAL TO CONSTRUCTION OF THE BRIDGE
•SEE NOTE 4, SHEET EC-02C

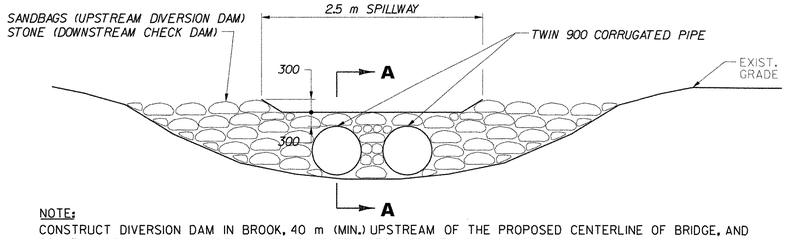

NOTE:

CONSTRUCT DIVERSION DAM IN BROOK, 40 m (MIN.) UPSTREAM OF THE PROPOSED CENTERLINE OF BRIDGE, AND CONVEY WATER (VIA CULVERT, FLUME, OR OTHER ADEQUATE MEANS) DOWNSTREAM OF THE TOE. DIVERSION CONDUIT SHALL BE MADE OF 900 mm CORRUGATED METAL PIPE, OR OTHER ADEQUATE MEANS CAPABLE OF CONVEYING 2.27 CMS (80 CFS). CONSTRUCT CHECK DAM AT DOWNSTREAM END OF DIVERSION CONDUIT. CONTRACTOR SHALL RECEIVE APPROVAL FROM THE ON-SITE COORDINATOR OF ALTERNATE DIVERSION TECHNIQUES.

TEMPORARY DIVERSION DAM & STONE CHECK DAM DETAIL

NOT TO SCALE
•SEE NOTE 4, SHEET EC-02C
PAID FOR AS ITEM 208.40
COFFERDAM (ABUTMENT)

WEST ABUTMENT SLOPE CONSTRUCTION

(REFER TO NOTES 7.J.vi - 7.J.x. ON EC-02C)

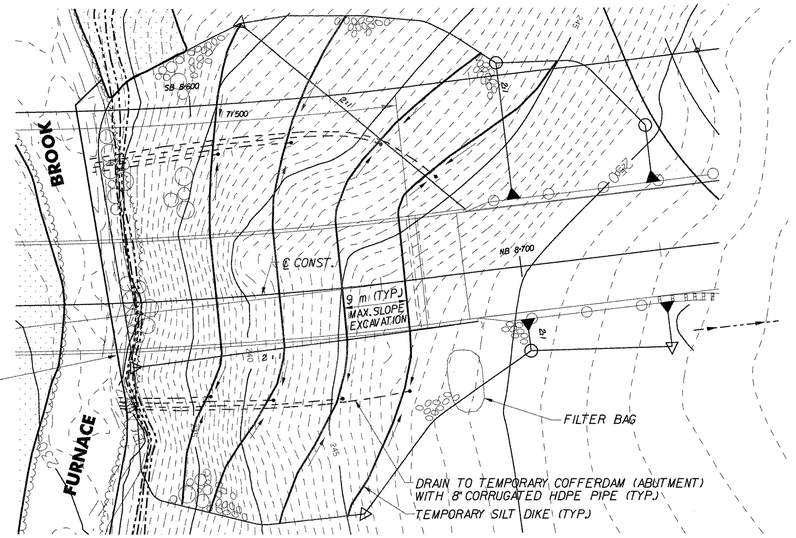

PLAN

0 2 4 8 12 16 20
SCALE = 1:400

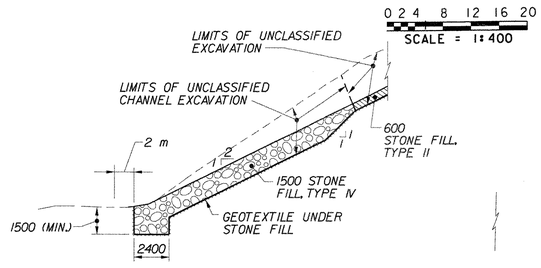

ABUTMENT # 2 SLOPE DETAIL

NOT TO SCALE

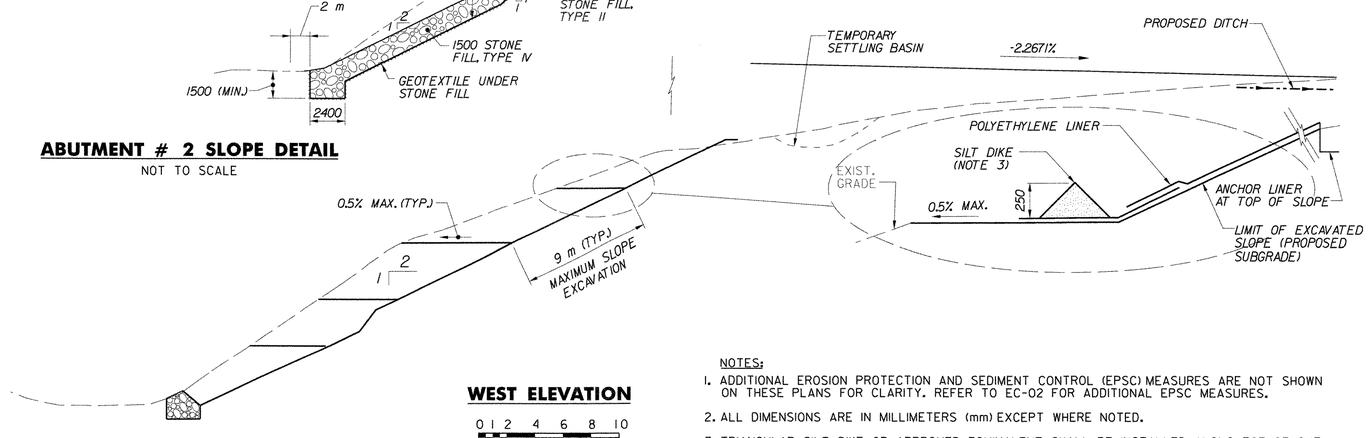

WEST ELEVATION

0 1 2 4 6 8 10
SCALE = 1:200

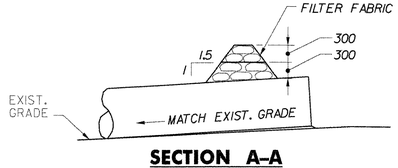

SECTION A-A

NOT TO SCALE

NOTES:

1. ADDITIONAL EROSION PROTECTION AND SEDIMENT CONTROL (EPSC) MEASURES ARE NOT SHOWN ON THESE PLANS FOR CLARITY. REFER TO EC-02 FOR ADDITIONAL EPSC MEASURES.
2. ALL DIMENSIONS ARE IN MILLIMETERS (mm) EXCEPT WHERE NOTED.
3. TRIANGULAR SILT DIKE, OR APPROVED EQUIVALENT SHALL BE INSTALLED ALONG TOE OF CUT. SECURE TO GROUND PER MANUFACTURER'S RECOMMENDATIONS, PAID INCIDENTAL TO CONSTRUCTION OF THE BRIDGE.

VERMONT AGENCY OF TRANSPORTATION

TVGA CONSULTANTS

PROJECT NAME: BENNINGTON
PROJECT NUMBER: AC NH 019-1(53)

FILE NAME: ...\plot_files\zd307c3tvgal.ptf
PLOT DATE: 08/24/2005
DESIGN SUPERVISOR: DEAN GOODISON
DRAWN BY: DAWN URBINO
DESIGNED BY: BRIAN CARLSON
CHECKED BY: BRIAN CARLSON
FURNACE BROOK EP&SC EC-02D
SHEET 121 OF 577

V:\1853\active\19530002\transportation\drawing\contract_3\plot_files\zd307c3tvgal.ptf

LEGEND

VTP	VEHICLE TRACKING PAD
	TEMPORARY EROSION MATTING
	SEED AND MULCH
	SILT FENCE
	INLET PROTECTION DEVICE, TYPE I (CATCH BASIN OR DROP INLET)
	INLET PROTECTION DEVICE, TYPE I (CULVERT)
	FILTER BAG
P	PERMANENT STONE CHECK DAM
T	TEMPORARY STONE CHECK DAM
	STONE OUTLET PROTECTION

TEMPORARY EROSION MATTING (ROADSIDE DITCHES)
STA NB 8+780 - NB 9+140, LT & RT

PERMANENT STONE CHECK DAM, TYPE I
STA NB 8+780, 12 m RT - NB 9+140, 12 m RT
STA NB 8+780, 12 m LT - XO 1+400, 13 m RT

SEED, WINTER RYE
STA NB 8+780 - NB 9+140, LT & RT

HAY MULCH
STA NB 8+780 - NB 9+140, LT & RT

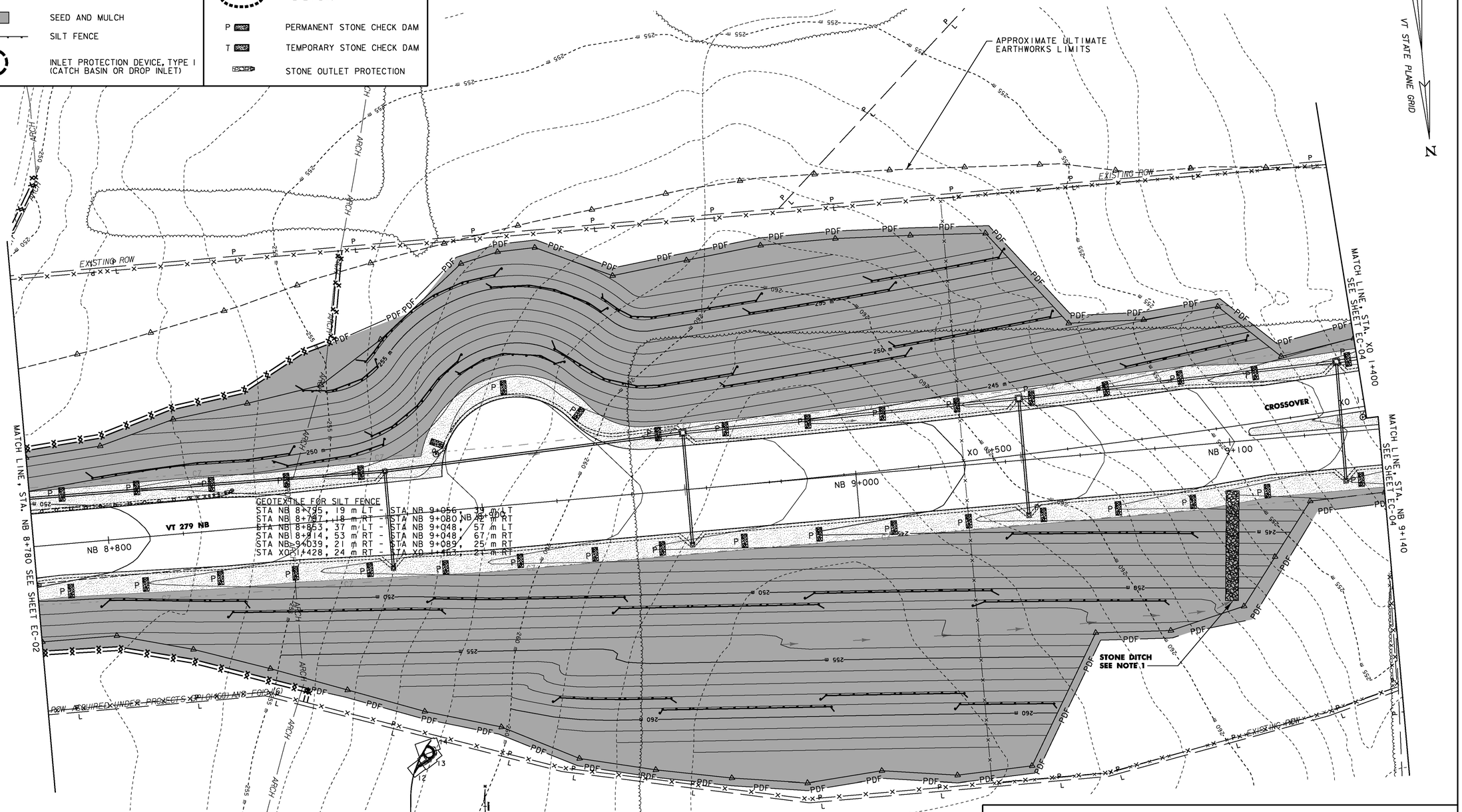

NOTES:

1. FOR STABILIZED CONSTRUCTION ENTRANCE, SEE SHEET EP & SC DETAILS 6. ITEM IS PAID FOR AS 653.35 - VEHICLE TRACKING PAD
2. FOR ROLLED EROSION CONTROL PRODUCT, SEE SHEET EP & SC DETAILS 5. ITEM PAID FOR AS 653.20 - TEMPORARY EROSION MATTING
3. FOR SILT FENCE, SEE SHEET EP & SC DETIALS 4. ITEM IS PAID FOR AS 649.51- GEOTEXTILE FOR SILT FENCE.
4. FOR FILTER FABRIC DROP INLET PROTECTION OR STONE & BLOCK DROP INLET PROTECTION, SEE SHEET EP & SC DETAILS 2. ITEM IS PAID FOR AS 653.40- INLET PROTECTION DEVICE, TYPE I.
5. FOR CHECK DAM, SEE SHEET EP & SC DETAILS 3. ITEM IS PAID FOR AS 653.25- TEMPORARY STONE CHECK DAM, TYPE I
6. FOR CONSTRUCTION DETAILS OF SLOPE DITCH, SEE DRAINAGE DETAILS DD-2

VERMONT AGENCY OF TRANSPORTATION

Stantec

PROJECT NAME: BENNINGTON
PROJECT NUMBER: AC NH 019-1(53)

FILE NAME: ...\zd307c3ero_plans.ptf
DESIGN SUPERVISOR: GREG EDWARDS
DESIGNED BY: MARC FOISY
EROSION CONTROL PLAN EC-03

PLOT DATE: 5/16/2011
DRAWN BY: STANTEC
CHECKED BY: GARY SANTY
SHEET 122 OF 577

v:\1953\active\195310002\transportation\drawing\contract_3\plot_files\zd307c3ero_plans.ptf

LEGEND

VTP	VEHICLE TRACKING PAD
	TEMPORARY EROSION MATTING
	TEMPORARY SEEDING AND MULCHING
	SILT FENCE
	INLET PROTECTION DEVICE, TYPE I (CATCH BASIN OR DROP INLET)
	INLET PROTECTION DEVICE, TYPE I (CULVERT)
	FILTER BAG
P	PERMANENT STONE CHECK DAM
T	TEMPORARY STONE CHECK DAM
	STONE OUTLET PROTECTION

TEMPORARY EROSION MATTING (IN ROADSIDE DITCHES)
STA NB 9+140, 13 m RT - NB 9+500, 12 m RT
STA NB 9+145, 4 m LT - NB 9+316, 7 m LT
STA NB 9+325, 6 m LT - NB 9+500, 6 m LT
STA XO 1+041, 15 m RT - XO 1+400, 13 m RT

TEMPORARY EROSION MATTING (ON SLOPES)
STA NB 9+460 - NB 9+500, RT
STA XO 1+030 - XO 1+267, RT

INLET PROTECTION DEVICE, TYPE I (CULVERT)
STA ER 1+122, 20 m RT

SEED, WINTER RYE
STA NB 9+140 - NB 9+500, RT
STA XO 1+030 - XO 1+180, RT
STA XO 1+262 - XO 1+400, RT
STA ER 1+100 - ER 1+140, LT & RT

TEMPORARY STONE CHECK DAMS
STA NB 9+140, 12 m RT - NB 9+225, 13 m RT
STA XO 1+311, 17 m RT - XO 1+400, 12 m RT
STA NB 9+225, 7 m LT - NB 9+290, 8 m LT

PERMANENT STONE CHECK DAMS
STA NB 9+225, 13 m RT - NB 9+290, 13 m RT
STA XO 1+062, 15 m RT - XO 1+105, 13 m RT
STA XO 1+240, 18 m RT - XO 1+311, 17 m RT

HAY MULCH
STA NB 9+140 - NB 9+500, RT
STA XO 1+030 - XO 1+180, RT
STA XO 1+262 - XO 1+400, RT
STA ER 1+100 - ER 1+140, LT & RT

VEHICLE TRACKING PAD
STA ER 1+234, LT & RT

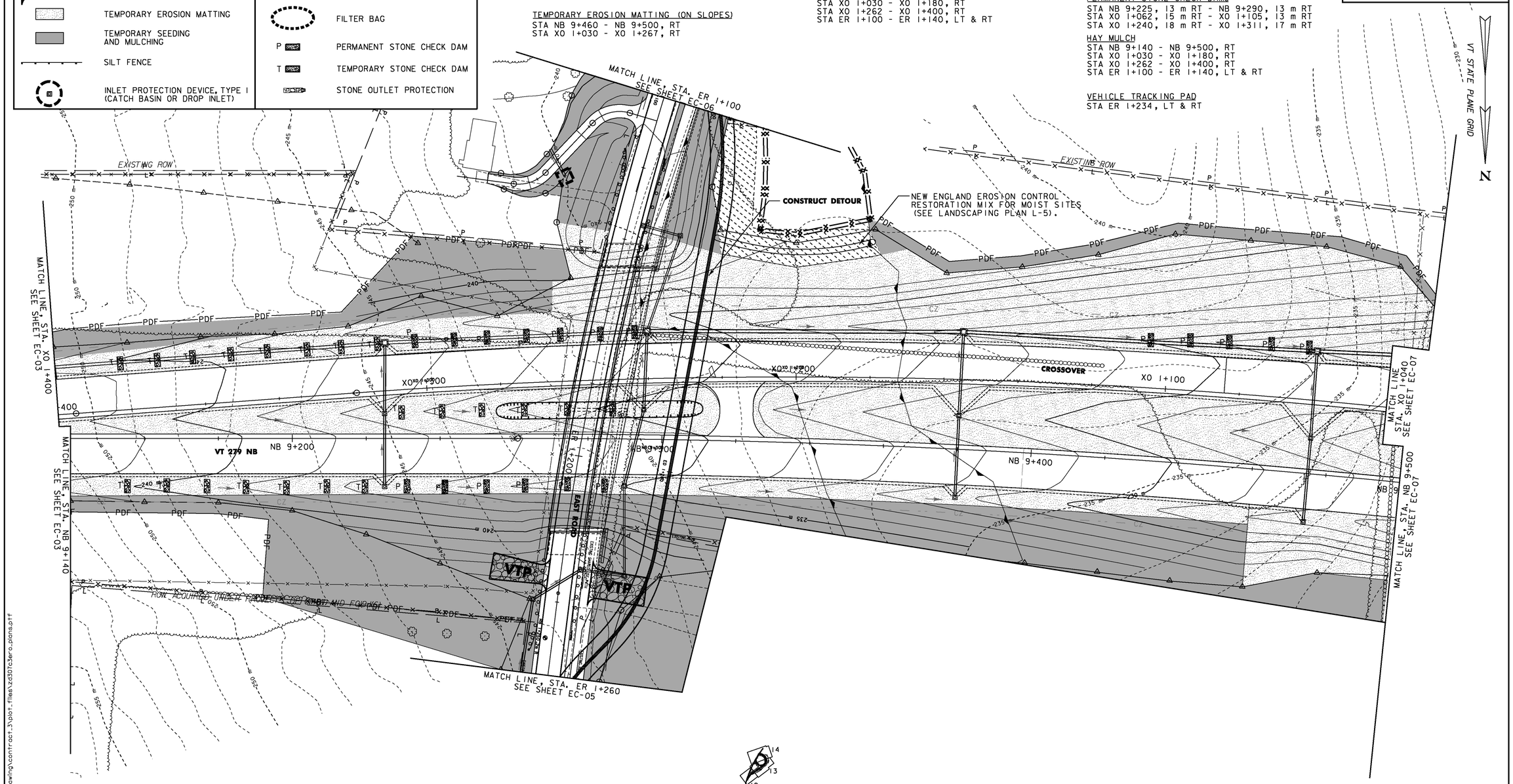

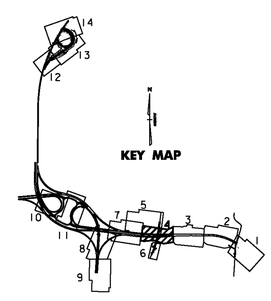

10 0 10 M
1:500 SCALE @ FULL SIZE

NOTES:

1. FOR STABILIZED CONSTRUCTION ENTRANCE, SEE SHEET EP & SC DETAILS 6. ITEM IS PAID FOR AS 653.35 - VEHICLE TRACKING PAD
2. FOR ROLLED EROSION CONTROL PRODUCT, SEE SHEET EP & SC DETAILS 5. ITEM PAID FOR AS 653.20 - TEMPORARY EROSION MATTING
3. FOR SILT FENCE, SEE SHEET EP & SC DETIALS 4. ITEM IS PAID FOR AS 649.51- GEOTEXTILE FOR SILT FENCE.
4. FOR FILTER FABRIC DROP INLET PROTECTION OR STONE & BLOCK DROP INLET PROTECTION, SEE SHEET EP & SC DETAILS 2. ITEM IS PAID FOR AS 653.40- INLET PROTECTION DEVICE, TYPE I.
5. FOR CHECK DAM, SEE SHEET EP & SC DETAILS 3. ITEM IS PAID FOR AS 653.25- TEMPORARY STONE CHECK DAM, TYPE I

v:\1953\active\19530002\transportation\drawing\contract_3\plot_files\zd307c3ero_plans.ptf

VERMONT AGENCY OF TRANSPORTATION

Stantec

PROJECT NAME: BENNINGTON
PROJECT NUMBER: AC NH 019-1(53)

FILE NAME: ...\zd307c3ero_plans.ptf
DESIGN SUPERVISOR: GREG EDWARDS
DESIGNED BY: MARC FOISY
EROSION CONTROL PLAN EC-04

PLOT DATE: 5/16/2011
DRAWN BY: STANTEC
CHECKED BY: GARY SANTY
SHEET 123 OF 577

GEOTEXTILE FOR SILT FENCE
STA ER 1+314, 215m LT - ER 1+316, 227m LT
STA ER 1+314, 214m LT - ER 1+340, 207m LT
STA ER 1+317, 217m LT - ER 1+318, 228m LT
STA ER 1+317, 216m LT - ER 1+339, 210m LT
STA ER 1+322, 207m LT - ER 1+353, 236m LT
STA ER 1+340, 212m LT - ER 1+349, 235m LT

HAY MULCH
STA ER 1+345, LT - NB 9+509, RT
STA ER 1+260 - ER 1+271, RT
STA ER 1+273 - ER 1+337, RT

SEED, WINTER RYE
STA ER 1+345, LT - NB 9+509, RT

INLET PROTECTION DEVICE, TYPE I (CATCH BASIN)
STA ER 1+276, 7.8m RT

VT STATE PLANE GRID
N

MATCH LINE
SEE SHEET EC-04

MATCH LINE, STA. ER 1+260
SEE SHEET EC-04

WETLAND W
CLASS III

EXISTING ROW

EXISTING HAUL ROAD

WASTE /BORROW /STAGING
AREA

BROKEN CONCRETE

HEWITT DRIVE

EXISTING ROW

LEGEND

- VTP — VEHICLE TRACKING PAD
- TEMPORARY EROSION MATTING
- SEED AND MULCH
- SILT FENCE
- INLET PROTECTION DEVICE, TYPE I (CATCH BASIN OR DROP INLET)
- INLET PROTECTION DEVICE, TYPE I (CULVERT)
- FILTER BAG
- P — PERMANENT STONE CHECK DAM
- T — TEMPORARY STONE CHECK DAM
- STONE OUTLET PROTECTION

NOTES:

1. FOR STABILIZED CONSTRUCTION ENTRANCE, SEE SHEET EP & SC DETAILS 6. ITEM IS PAID FOR AS 653.35 - VEHICLE TRACKING PAD
2. FOR ROLLED EROSION CONTROL PRODUCT, SEE SHEET EP & SC DETAILS 5. ITEM PAID FOR AS 653.20 - TEMPORARY EROSION MATTING
3. FOR SILT FENCE, SEE SHEET EP & SC DETIALS 4. ITEM IS PAID FOR AS 649.51- GEOTEXTILE FOR SILT FENCE.
4. FOR FILTER FABRIC DROP INLET PROTECTION OR STONE & BLOCK DROP INLET PROTECTION, SEE SHEET EP & SC DETAILS 2. ITEM IS PAID FOR AS 653.40- INLET PROTECTION DEVICE, TYPE I.
5. FOR CHECK DAM, SEE SHEET EP & SC DETAILS 3. ITEM IS PAID FOR AS 653.25- TEMPORARY STONE CHECK DAM, TYPE I

KEY MAP

10 0 10 M
1:500 SCALE
@ FULL SIZE

VERMONT AGENCY OF TRANSPORTATION

Stantec

PROJECT NAME: BENNINGTON
PROJECT NUMBER: AC NH 019-1(53)

FILE NAME: ...\zd307c3ero_plans.ptf
DESIGN SUPERVISOR: GREG EDWARDS
DESIGNED BY: MARC FOISY
EROSION CONTROL PLAN EC-05

PLOT DATE: 5/16/2011
DRAWN BY: STANTEC
CHECKED BY: GARY SANTY
SHEET 124 OF 577

v:\1953\active\195300021\transportation\drawing\contract_3\plot_files\zd307c3ero_plans.ptf

GEOTEXTILE FOR SILT FENCE
STA ER 1+063, 18 m LT - ER 1+074, 18 m LT
STA ER 1+082, 19 m LT - ER 1+099, 20 m LT

SEED, WINTER RYE
STA ER 0+958 - ER 1+100, LT & RT

INLET PROTECTION DEVICE, TYPE I(CULVERT)
STA ER 1+081, 11m RT

HAY MULCH
STA ER 0+958 - ER 1+100, LT & RT

VAOT Metric

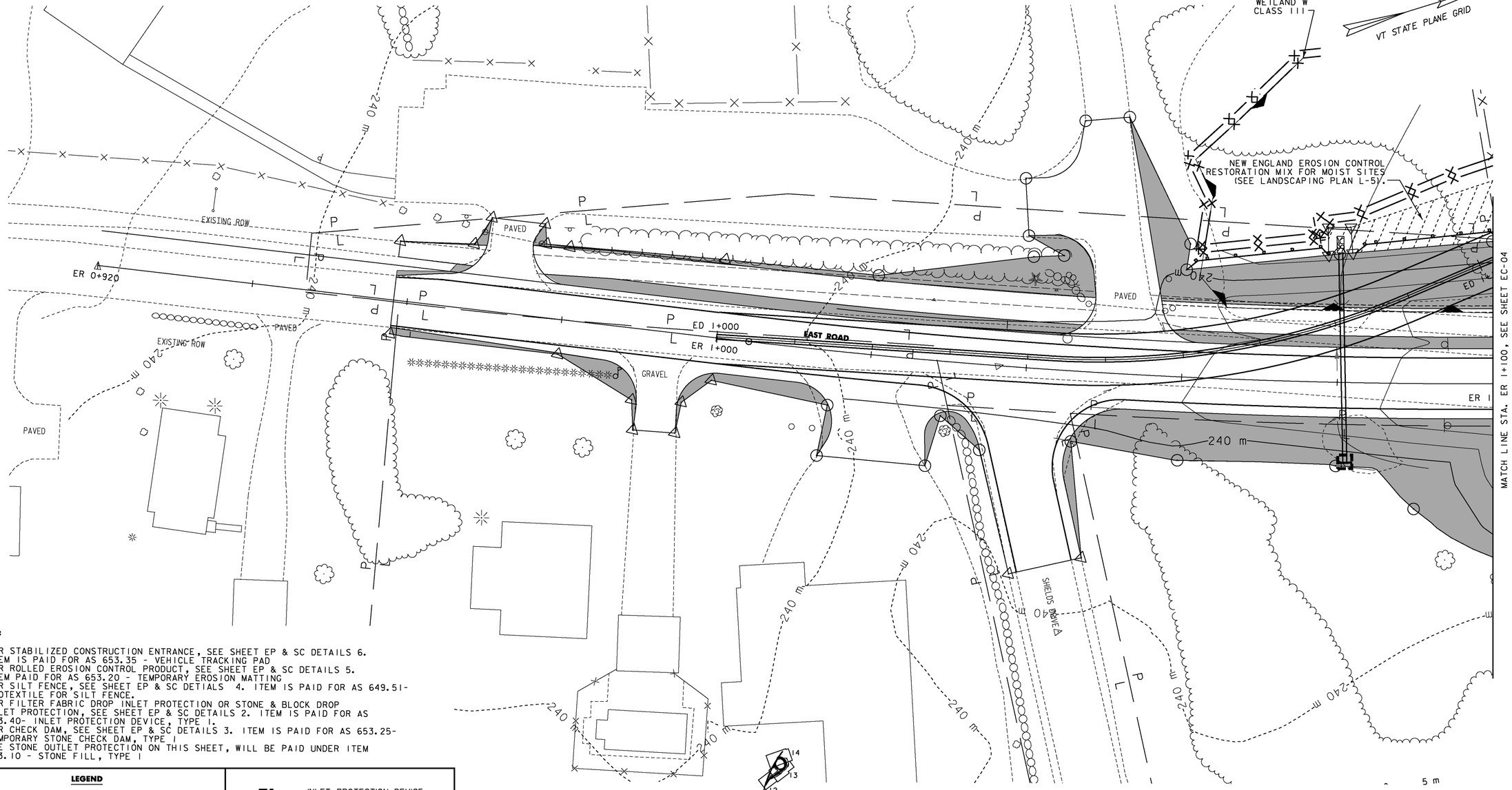

NOTES:

1. FOR STABILIZED CONSTRUCTION ENTRANCE, SEE SHEET EP & SC DETAILS 6. ITEM IS PAID FOR AS 653.35 - VEHICLE TRACKING PAD
2. FOR ROLLED EROSION CONTROL PRODUCT, SEE SHEET EP & SC DETAILS 5. ITEM PAID FOR AS 653.20 - TEMPORARY EROSION MATTING
3. FOR SILT FENCE, SEE SHEET EP & SC DETIALS 4. ITEM IS PAID FOR AS 649.51- GEOTEXTILE FOR SILT FENCE.
4. FOR FILTER FABRIC DROP INLET PROTECTION OR STONE & BLOCK DROP INLET PROTECTION, SEE SHEET EP & SC DETAILS 2. ITEM IS PAID FOR AS 653.40- INLET PROTECTION DEVICE, TYPE I.
5. FOR CHECK DAM, SEE SHEET EP & SC DETAILS 3. ITEM IS PAID FOR AS 653.25- TEMPORARY STONE CHECK DAM, TYPE I
6. THE STONE OUTLET PROTECTION ON THIS SHEET, WILL BE PAID UNDER ITEM 613.10 - STONE FILL, TYPE I

LEGEND

VTP — VEHICLE TRACKING PAD (SEE NOTE 1)	INLET PROTECTION DEVICE, TYPE I(CULVERT)
TEMPORARY EROSION MATTING	FILTER BAG
SEED AND MULCH	P — PERMANENT STONE CHECK DAM
SILT FENCE	T — TEMPORARY STONE CHECK DAM
INLET PROTECTION DEVICE, TYPE I (CATCH BASIN OR DROP INLET)	STONE OUTLET PROTECTION

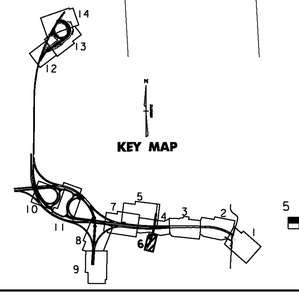

5 0 5 M
1:250 SCALE
@ FULL SIZE

VERMONT AGENCY OF TRANSPORTATION

Stantec

PROJECT NAME: BENNINGTON
PROJECT NUMBER: AC NH 019-1(53)

FILE NAME: ...\zd307c3ero_plans.ptf
DESIGN SUPERVISOR: GREG EDWARDS
DESIGNED BY: MARC FOISY
EROSION CONTROL PLAN EC-06

PLOT DATE: 5/16/2011
DRAWN BY: STANTEC
CHECKED BY: GARY SANTY
SHEET 125 OF 577

v:\1953\active\195310002\transportation\drawing\contract_3\plot_files\zd307c3ero_plans.ptf

TEMPORARY EROSION MATTING (IN ROADSIDE DITCHES)
STA NB 9+500, LT - NB 9+677, LT
STA NB 9+500, RT - NB 9+687, RT
STA XO 0+857, RT - XO 1+040, RT

TEMPORARY EROSION MATTING (ON SLOPES)
STA XO 0+905 - STA XO 1+040, RT
STA L 1+280 - STA L 1+451, LT
STA L 1+421 - STA L 1+495, LT

PERMANENT STONE CHECK DAMS
STA NB 9+514, 9 m LT - NB 9+648, 9 m LT
STA NB 9+522, 15 m RT - NB 9+643, 17 m RT

SEED, WINTER RYE
STA XO 0+905 - STA XO 1+030, RT
STA L 1+280 - STA L 1+421, LT
STA L 1+280, 60m - STA L 1+454, 43m LT
STA L 1+421 - STA L 1+495, RT

HAY MULCH
STA XO 0+905 - STA XO 1+030, RT
STA L 1+280 - STA L 1+421, LT
STA L 1+280, 60m - STA L 1+454, 43m LT
STA L 1+421 - STA L 1+495, RT

VAOT Metric

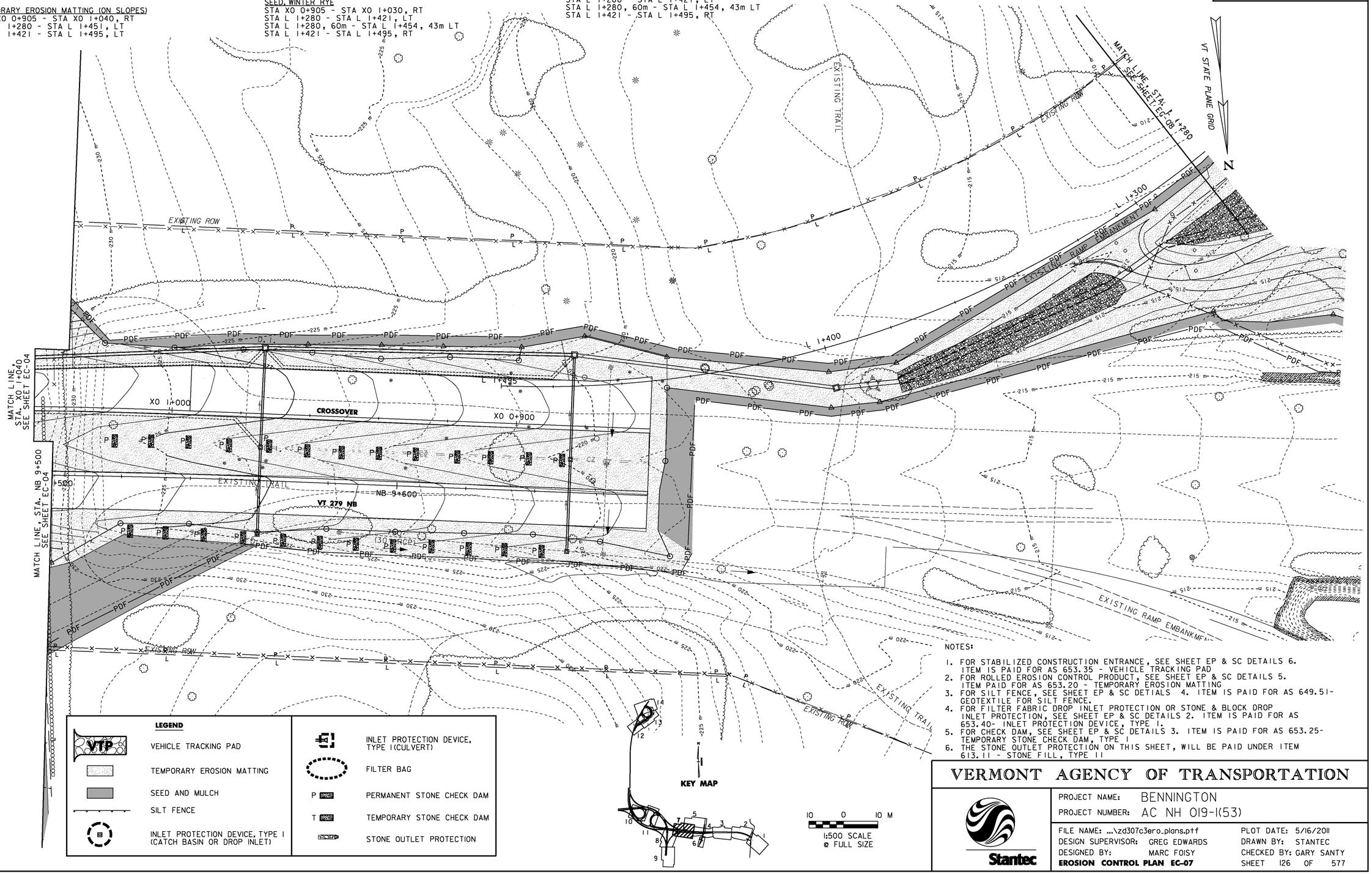

LEGEND

VTP — VEHICLE TRACKING PAD	INLET PROTECTION DEVICE, TYPE I (CULVERT)
TEMPORARY EROSION MATTING	FILTER BAG
SEED AND MULCH	P — PERMANENT STONE CHECK DAM
SILT FENCE	T — TEMPORARY STONE CHECK DAM
INLET PROTECTION DEVICE, TYPE I (CATCH BASIN OR DROP INLET)	STONE OUTLET PROTECTION

KEY MAP

10 0 10 M
1:500 SCALE
@ FULL SIZE

NOTES:

1. FOR STABILIZED CONSTRUCTION ENTRANCE, SEE SHEET EP & SC DETAILS 6. ITEM IS PAID FOR AS 653.35 - VEHICLE TRACKING PAD
2. FOR ROLLED EROSION CONTROL PRODUCT, SEE SHEET EP & SC DETAILS 5. ITEM PAID FOR AS 653.20 - TEMPORARY EROSION MATTING
3. FOR SILT FENCE, SEE SHEET EP & SC DETIALS 4. ITEM IS PAID FOR AS 649.51- GEOTEXTILE FOR SILT FENCE.
4. FOR FILTER FABRIC DROP INLET PROTECTION OR STONE & BLOCK DROP INLET PROTECTION, SEE SHEET EP & SC DETAILS 2. ITEM IS PAID FOR AS 653.40- INLET PROTECTION DEVICE, TYPE I.
5. FOR CHECK DAM, SEE SHEET EP & SC DETAILS 3. ITEM IS PAID FOR AS 653.25- TEMPORARY STONE CHECK DAM, TYPE I
6. THE STONE OUTLET PROTECTION ON THIS SHEET, WILL BE PAID UNDER ITEM 613.11 - STONE FILL, TYPE II

VERMONT AGENCY OF TRANSPORTATION

Stantec

PROJECT NAME: BENNINGTON
PROJECT NUMBER: AC NH 019-1(53)

FILE NAME: ...\zd307c3ero_plans.ptf
DESIGN SUPERVISOR: GREG EDWARDS
DESIGNED BY: MARC FOISY
EROSION CONTROL PLAN EC-07

PLOT DATE: 5/16/2011
DRAWN BY: STANTEC
CHECKED BY: GARY SANTY
SHEET 126 OF 577

V:\1953\active\195310002\transportation\drawing\contract3\plot_files\zd307c3ero_plans.ptf

HAY MULCH
STA UN 9+701 - UN 9+851, RT
STA. UN 9+540 - UN 9+643, LT

SEED, WINTER RYE
STA UN 9+701 - UN 9+851, RT
STA. UN 9+540 - UN 9+643, LT

TEMPORARY EROSION MATTING (IN ROADSIDE DITCHES)
STA. UN 9+540 - UN 9+640, LT
STA. L 1+148 - L 1+280, LT
STA. L 1+168 - L 1+179, RT

VT STATE PLANE GRID

VAOT Metric

MATCH LINE STA. L 1+280
SEE SHEET EC-07

MATCH LINE STA. UN 9+540
SEE SHEET EC-08

EXISTING ROW

WETLAND H
CLASS III

EMBANKMENT

ROUTE 7 CONNECTOR

UN 9+600

UN 9+700

UN 9+800

L 1+000

L 1+200

EXISTING ROW

PDF

LEGEND

VTP — VEHICLE TRACKING PAD	INLET PROTECTION DEVICE, TYPE I (CULVERT)
TEMPORARY EROSION MATTING	FILTER BAG
SEED AND MULCH	P — PERMANENT STONE CHECK DAM
SILT FENCE	T — TEMPORARY STONE CHECK DAM
INLET PROTECTION DEVICE, TYPE I (CATCH BASIN OR DROP INLET)	STONE OUTLET PROTECTION

KEY MAP

10 0 10 M
1:500 SCALE
@ FULL SIZE

NOTES:

1. FOR STABILIZED CONSTRUCTION ENTRANCE, SEE SHEET EP & SC DETAILS 6. ITEM IS PAID FOR AS 653.35 - VEHICLE TRACKING PAD
2. FOR ROLLED EROSION CONTROL PRODUCT, SEE SHEET EP & SC DETAILS 5. ITEM PAID FOR AS 653.20 - TEMPORARY EROSION MATTING
3. FOR SILT FENCE, SEE SHEET EP & SC DETIALS 4. ITEM IS PAID FOR AS 649.51- GEOTEXTILE FOR SILT FENCE.
4. FOR FILTER FABRIC DROP INLET PROTECTION OR STONE & BLOCK DROP INLET PROTECTION, SEE SHEET EP & SC DETAILS 2. ITEM IS PAID FOR AS 653.40- INLET PROTECTION DEVICE, TYPE I.
5. FOR CHECK DAM, SEE SHEET EP & SC DETAILS 3. ITEM IS PAID FOR AS 653.25- TEMPORARY STONE CHECK DAM, TYPE I
6. THE STONE OUTLET PROTECTION ON THIS SHEET, WILL BE PAID UNDER ITEM 613.10 - STONE FILL, TYPE I

VERMONT AGENCY OF TRANSPORTATION

Stantec

PROJECT NAME: BENNINGTON
PROJECT NUMBER: AC NH 019-1(53)

FILE NAME: ...\zd307c3ero_plans.ptf
DESIGN SUPERVISOR: GREG EDWARDS
DESIGNED BY: MARC FOISY
EROSION CONTROL PLAN EC-08

PLOT DATE: 5/16/2011
DRAWN BY: STANTEC
CHECKED BY: GARY SANTY
SHEET 127 OF 577

v:\0953\active\95300002\transportation\drawing\contract_3\plot_files\zd307c3ero_plans.ptf

VAOT Metric

TEMPORARY EROSION MATTING (IN ROADSIDE DITCHES)
STA. SW 3+091 - SW 3+458, LT & RT

SEED, WINTER RYE
STA. SW 3+091 - SW 3+459, LT & RT

HAY MULCH
STA. SW 3+091 - SW 3+459, LT & RT

VEHICLE TRACKING PAD
STA. UN 9+440, LT.

VT STATE PLANE GRID N

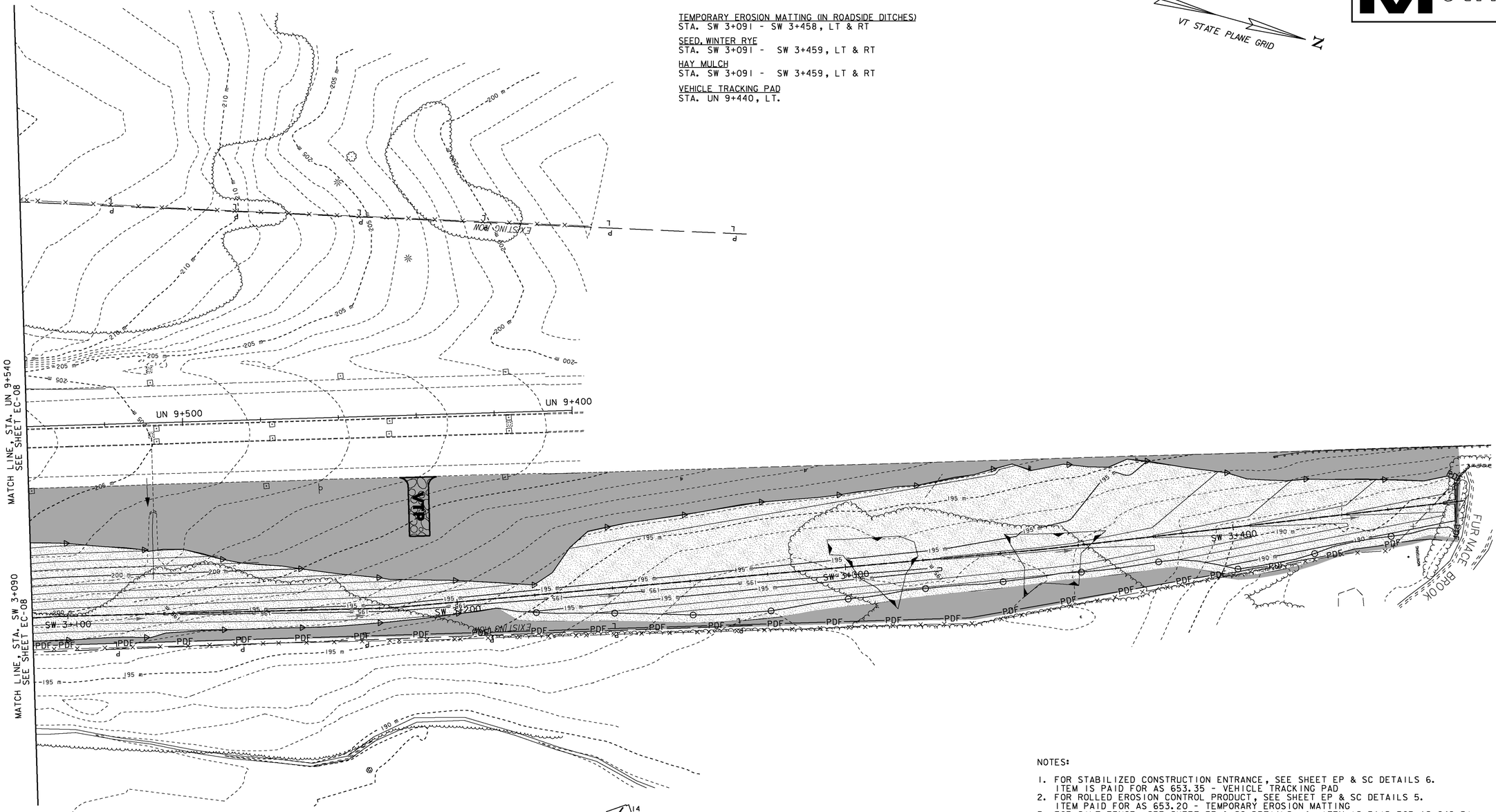

LEGEND

- VTP — VEHICLE TRACKING PAD
- TEMPORARY EROSION MATTING
- SEED AND MULCH
- SILT FENCE
- INLET PROTECTION DEVICE, TYPE I (CATCH BASIN OR DROP INLET)
- INLET PROTECTION DEVICE, TYPE I (CULVERT)
- FILTER BAG
- P — PERMANENT STONE CHECK DAM
- T — TEMPORARY STONE CHECK DAM
- STONE OUTLET PROTECTION

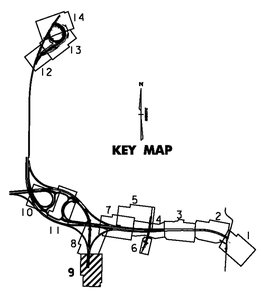

10 0 10 M
1:500 SCALE
@ FULL SIZE

NOTES:

1. FOR STABILIZED CONSTRUCTION ENTRANCE, SEE SHEET EP & SC DETAILS 6. ITEM IS PAID FOR AS 653.35 - VEHICLE TRACKING PAD
2. FOR ROLLED EROSION CONTROL PRODUCT, SEE SHEET EP & SC DETAILS 5. ITEM PAID FOR AS 653.20 - TEMPORARY EROSION MATTING
3. FOR SILT FENCE, SEE SHEET EP & SC DETIALS 4. ITEM IS PAID FOR AS 649.51- GEOTEXTILE FOR SILT FENCE.
4. FOR FILTER FABRIC DROP INLET PROTECTION OR STONE & BLOCK DROP INLET PROTECTION, SEE SHEET EP & SC DETAILS 2. ITEM IS PAID FOR AS 653.40- INLET PROTECTION DEVICE, TYPE I.
5. FOR CHECK DAM, SEE SHEET EP & SC DETAILS 3. ITEM IS PAID FOR AS 653.25- TEMPORARY STONE CHECK DAM, TYPE I

VERMONT AGENCY OF TRANSPORTATION

Stantec

PROJECT NAME: BENNINGTON
PROJECT NUMBER: AC NH 019-1(53)

FILE NAME: ...\zd307c3ero_plans.ptf
DESIGN SUPERVISOR: GREG EDWARDS
DESIGNED BY: MARC FOISY
EROSION CONTROL PLAN EC-09

PLOT DATE: 5/16/2011
DRAWN BY: STANTEC
CHECKED BY: GARY SANTY
SHEET 128 OF 577

v:\1953\active\19530002\transportation\drawing\contract_3\plot_files\zd307c3ero_plans.ptf

TEMPORARY EROSION MATTING (ON SLOPES)
STA G 1+295 - G 1+749 RT
STA G 1+370 - G 1+661 LT

GEOTEXTILE FOR SILT FENCE
STA. G 1+339, RT 11 M

HAY MULCH
STA G 1+295 - G 1+336, LT
STA G 1+442 - G 1+660, LT
STA GG 1+000 - GG 1+132, LT
STA GG 1+123 - GG 1+132, RT

INLET PROTECTION DEVICE, TYPE I(CATCH BASIN)
STA G 1+610, 4.5 m RT
STA G 1+610, 9.3 m LT
STA G 1+610, 46.2 m LT

SEED, WINTER RYE
STA G 1+295 - G 1+336, LT
STA G 1+442 - G 1+660, LT
STA GG 1+000 - GG 1+132, LT
STA GG 1+123 - GG 1+132, RT

TEMPORARY STONE CHECK DAMS
STA G 1+347, 5.0 m RT - STA G 1+400, 5.0 m RT
STA G 1+423, 9.3 m LT - STA G 1+624, 9.3 m LT
STA G 1+440, 4.5 m RT - STA G 1+646, 4.5 m RT

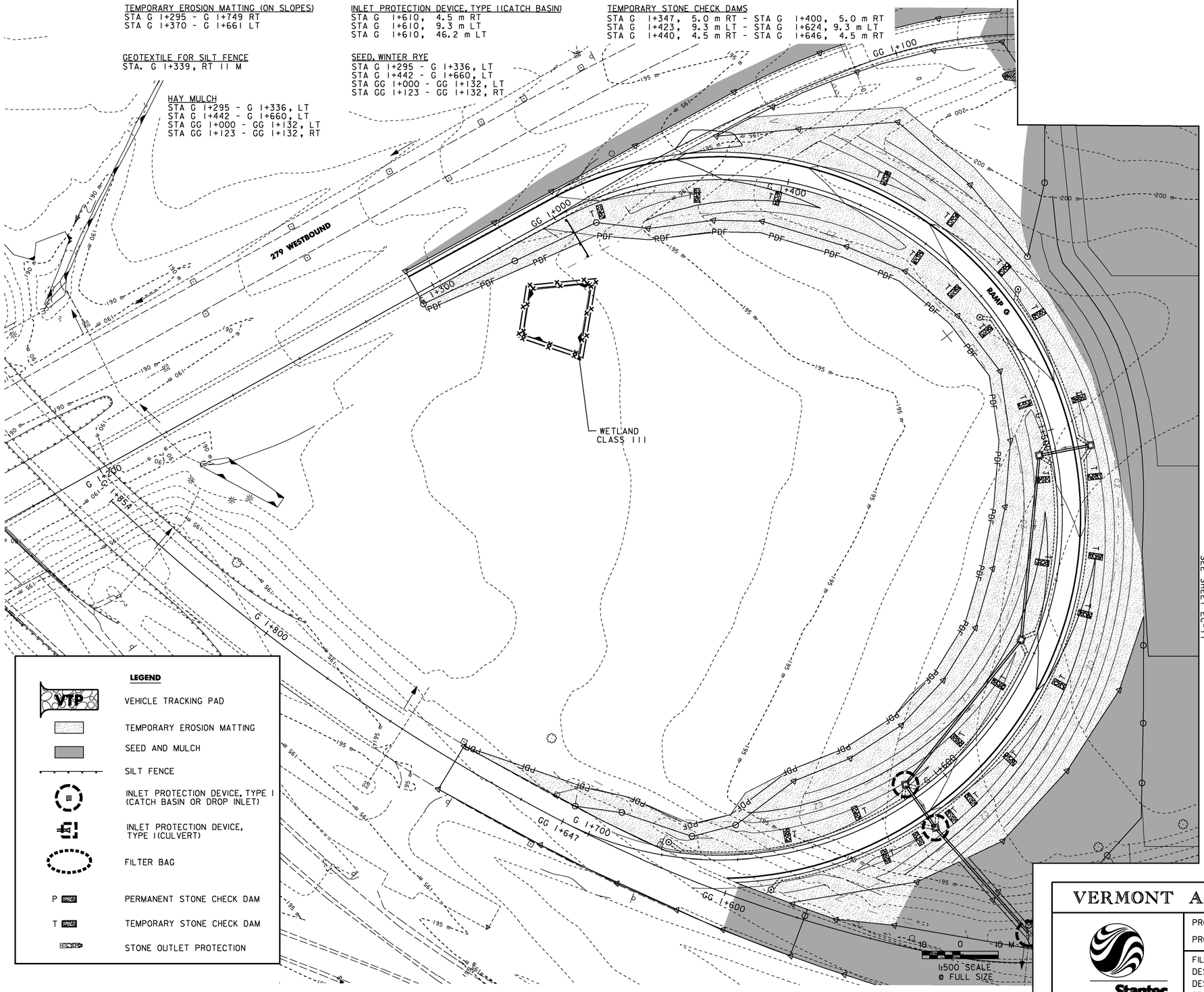

LEGEND

- VTP — VEHICLE TRACKING PAD
- TEMPORARY EROSION MATTING
- SEED AND MULCH
- SILT FENCE
- INLET PROTECTION DEVICE, TYPE I (CATCH BASIN OR DROP INLET)
- INLET PROTECTION DEVICE, TYPE I(CULVERT)
- FILTER BAG
- P — PERMANENT STONE CHECK DAM
- T — TEMPORARY STONE CHECK DAM
- STONE OUTLET PROTECTION

N
VT STATE PLANE GRID

NOTES:

1. FOR STABILIZED CONSTRUCTION ENTRANCE, SEE SHEET EP & SC DETAILS 6. ITEM IS PAID FOR AS 653.35 - VEHICLE TRACKING PAD
2. FOR ROLLED EROSION CONTROL PRODUCT, SEE SHEET EP & SC DETAILS 5. ITEM PAID FOR AS 653.20 - TEMPORARY EROSION MATTING
3. FOR SILT FENCE, SEE SHEET EP & SC DETIALS 4. ITEM IS PAID FOR AS 649.51- GEOTEXTILE FOR SILT FENCE.
4. FOR FILTER FABRIC DROP INLET PROTECTION OR STONE & BLOCK DROP INLET PROTECTION, SEE SHEET EP & SC DETAILS 2. ITEM IS PAID FOR AS 653.40- INLET PROTECTION DEVICE, TYPE I.
5. FOR CHECK DAM, SEE SHEET EP & SC DETAILS 3. ITEM IS PAID FOR AS 653.25 - TEMPORARY STONE CHECK DAM, TYPE I

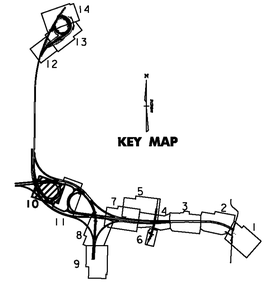

VERMONT AGENCY OF TRANSPORTATION

Stantec

PROJECT NAME: BENNINGTON
PROJECT NUMBER: AC NH 019-1(53)

FILE NAME: ...\zd307c3ero_plans.ptf
DESIGN SUPERVISOR: GREG EDWARDS
DESIGNED BY: MARC FOISY
EROSION CONTROL PLAN EC-10
PLOT DATE: 5/16/2011
DRAWN BY: STANTEC
CHECKED BY: GARY SANTY
SHEET 129 OF 577

v:\953\active\953300021\transportation\drawing\contract_3\plot_files\zd307c3ero_plans.ptf

NOTE:
1. FOR FULL DETAIL OF SWALE SEE SHEET SWM-4.

HAY MULCH
STA SI 1+011 - SI 1+359, RT & LT
STA SW 4+001 - SW 4+141, RT
STA SW 4+001 - SW 4+150, LT

SEED, WINTER RYE
STA SI1+011 - SI1+359, RT & LT
STA SW 4+001 - SW 4+141, RT
STA SW 4+001 - SW 4+150, LT

TEMPORARY EROSION MATTING
STA SW 4+005 - SW 4+136, RT
STA SW 4+009 - SW 4+136, LT

VEHICLE TRACKING PAD
STA SW 4+006, LT

VT STATE PLANE GRID

MATCH LINE
SEE SHEET EC-10

PLUGGED PIPE ADBE

PLUGGED INLET ADBE

GG 1+500
GG 1+400
GG 1+300
GG 1+200

SI 1+100
SI 1+200
SI 1+300
SI 1+361

SW 3+969

EMBANKMENT

SEE NOTE 1 ABOVE

BUFFER ZONE CLASS II

NOTES:
1. FOR STABILIZED CONSTRUCTION ENTRANCE, SEE SHEET EP & SC DETAILS 6. ITEM IS PAID FOR AS 653.35 - VEHICLE TRACKING PAD
2. FOR ROLLED EROSION CONTROL PRODUCT, SEE SHEET EP & SC DETAILS 5. ITEM PAID FOR AS 653.20 - TEMPORARY EROSION MATTING
3. FOR SILT FENCE, SEE SHEET EP & SC DETIALS 4. ITEM IS PAID FOR AS 649.51- GEOTEXTILE FOR SILT FENCE.
4. FOR FILTER FABRIC DROP INLET PROTECTION OR STONE & BLOCK DROP INLET PROTECTION, SEE SHEET EP & SC DETAILS 2. ITEM IS PAID FOR AS 653.40- INLET PROTECTION DEVICE, TYPE I.
5. FOR CHECK DAM, SEE SHEET EP & SC DETAILS 3. ITEM IS PAID FOR AS 653.25 - TEMPORARY STONE CHECK DAM, TYPE I

LEGEND

- VTP — VEHICLE TRACKING PAD
- TEMPORARY EROSION MATTING
- SEED AND MULCH
- SILT FENCE
- INLET PROTECTION DEVICE, TYPE I (CATCH BASIN OR DROP INLET)
- INLET PROTECTION DEVICE, TYPE I (CULVERT)
- FILTER BAG
- P — PERMANENT STONE CHECK DAM
- T — TEMPORARY STONE CHECK DAM
- STONE OUTLET PROTECTION

KEY MAP

10 0 10 M
1:500 SCALE
@ FULL SIZE

VERMONT AGENCY OF TRANSPORTATION

Stantec

PROJECT NAME: BENNINGTON
PROJECT NUMBER: AC NH 019-1(53)

FILE NAME: ...\zd307c3ero_plans.ptf
DESIGN SUPERVISOR: GREG EDWARDS
DESIGNED BY: MARC FOISY
EROSION CONTROL PLAN EC-11
PLOT DATE: 5/16/2011
DRAWN BY: STANTEC
CHECKED BY: GARY SANTY
SHEET 130 OF 577

v:\1953\active\195310002\transportation\drawing\contract_3\plot_files\zd307c3ero_plans.ptf

TEMPORARY EROSION MATTING
STA. A 1+132 - A 1+220, LT.
STA. A 1+148 - A 1+220, RT.

VEHICLE TRACKING PAD
STA. A 1+032

SEED, WINTER RYE
STA. A 1+008 - A 1+220, RT.
STA. A 1+058 - A 1+153, LT.

HAY MULCH
STA. A 1+008 - A 1+220, RT.
STA. A 1+058 - A 1+153, LT.

INLET PROTECTION DEVICE, TYPE I (CULVERT)
STA. A 1+136, LT.

INLET PROTECTION DEVICE, TYPE I (CATCH BASIN)
STA. A 1+159, RT.

TEMPORARY STONE CHECK DAMS
STA. A 1+159 - STA. A 1+220, RT.

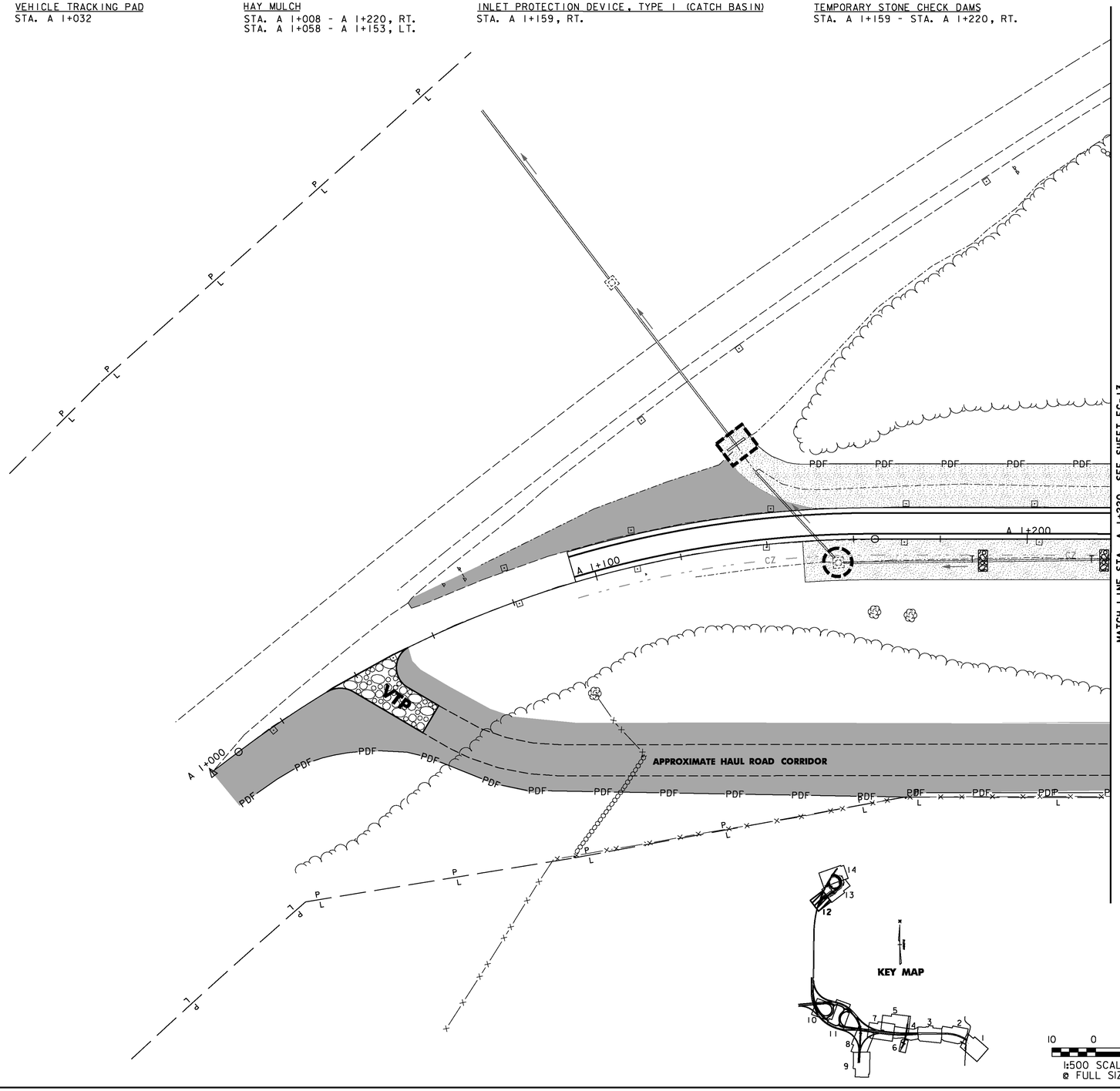

10 0 10
1:500 SCALE
@ FULL SIZE

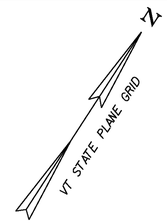

VAOT Metric

NOTES:

1. FOR EROSION CONTROL GENERAL NOTES AND DETAILS, SEE DRAWING EP&SC-1.

NOTES:

1. FOR STABILIZED CONSTRUCTION ENTRANCE, SEE SHEET EP & SC DETAILS 6. ITEM IS PAID FOR AS 653.35 - VEHICLE TRACKING PAD
2. FOR ROLLED EROSION CONTROL PRODUCT, SEE SHEET EP & SC DETAILS 5. ITEM PAID FOR AS 653.20 - TEMPORARY EROSION MATTING
3. FOR SILT FENCE, SEE SHEET EP & SC DETIALS 4. ITEM IS PAID FOR AS 649.51- GEOTEXTILE FOR SILT FENCE.
4. FOR FILTER FABRIC DROP INLET PROTECTION OR STONE & BLOCK DROP INLET PROTECTION, SEE SHEET EP & SC DETAILS 2. ITEM IS PAID FOR AS 653.40- INLET PROTECTION DEVICE, TYPE I.
5. FOR CHECK DAM, SEE SHEET EP & SC DETAILS 3. ITEM IS PAID FOR AS 653.25 - TEMPORARY STONE CHECK DAM, TYPE I

LEGEND

- VTP — VEHICLE TRACKING PAD
- TEMPORARY EROSION MATTING
- SEED AND MULCH
- SILT FENCE
- INLET PROTECTION DEVICE, TYPE I (CATCH BASIN OR DROP INLET)
- INLET PROTECTION DEVICE, TYPE I (CULVERT)
- FILTER BAG
- P — PERMANENT STONE CHECK DAM
- T — TEMPORARY STONE CHECK DAM
- STONE OUTLET PROTECTION

VERMONT AGENCY OF TRANSPORTATION

Stantec

PROJECT NAME: BENNINGTON
PROJECT NUMBER: AC NH 019-1(53)

FILE NAME: ...\zd307c3ero_plans.ptf
DESIGN SUPERVISOR: GREG EDWARDS
DESIGNED BY: MARC FOISY
EROSION CONTROL PLAN EC-12

PLOT DATE: 5/16/2011
DRAWN BY: STANTEC
CHECKED BY: GARY SANTY
SHEET 131 OF 577

V:\1853\active\185300021\transportation\drawing\contract_3\plot_files\zd307c3ero_plans.ptf

NOTES:

1. IT SHALL BE THE RESPONSIBILITY OF THE CONTRACTOR TO PROTECT AND MAINTAIN THE EXISTING CURBED MEDIAN DURING CONSTRUCTION. ANY DAMAGE TO THE CURBED MEDIAN INCLUDING, BUT NOT LIMITED TO, THE MOUNTABLE STONE CURB, TURF, GUARDRAIL AND DRAINAGE STRUCTURES SHALL BE RESTORED/REPLACED BY THE CONTRACTOR AT NO ADDITIONAL COST TO THE AGENCY. PRIOR TO THE START OF ANY WORK, THE RESIDENT ENGINEER AND CONTRACTOR SHALL INSPECT THE MEDIAN TO IDENTIFY AND DOCUMENT ANY PRE-EXISTING PROBLEMS AND/OR CONDITIONS.
2. FOR DETAILS ON PROTECTING THE EXISTING CATCH BASINS DURING THE ROCK CUT OPERATIONS, SEE DRAWING DD-3.
3. FOR EROSION CONTROL GENERAL NOTES AND DETAILS, SEE DRAWING EC-1.
4. THE CONTRACTOR HAS THE OPTION OF USING EXCAVATED ROCK FOR STONE FILL, TYPE II (ITEM 613.11). THE EXCAVATED ROCK SHALL MEET THE GRADATION REQUIREMENTS OF STANDARD SPECIFICATION SECTION 706.04.
5. FOR STABILIZED CONSTRUCTION ENTRANCE, SEE SHEET EP & SC DETAILS 6. ITEM IS PAID FOR AS 653.35 - VEHICLE TRACKING PAD
6. FOR ROLLED EROSION CONTROL PRODUCT, SEE SHEET EP & SC DETAILS 5. ITEM PAID FOR AS 653.20 - TEMPORARY EROSION MATTING
7. FOR SILT FENCE, SEE SHEET EP & SC DETIALS 4. ITEM IS PAID FOR AS 649.51- GEOTEXTILE FOR SILT FENCE.
8. FOR FILTER FABRIC DROP INLET PROTECTION OR STONE & BLOCK DROP INLET PROTECTION, SEE SHEET EP & SC DETAILS 2. ITEM IS PAID FOR AS 653.40- INLET PROTECTION DEVICE, TYPE I.
9. FOR CHECK DAM, SEE SHEET EP & SC DETAILS 3. ITEM IS PAID FOR AS 653.25 - TEMPORARY STONE CHECK DAM, TYPE I

MATCH LINE STA. B 1+435, SEE SHEET EC-14

MATCH LINE STA. A 1+540, STA. B 1+171.403, SEE SHEET EC-14

MATCH LINE STA. A 1+220, SEE SHEET EC-12

CONTROL PT. 125
N 47015.292
E 442438.907
ELEV. = 278.964

CONTROL PT. 124
N 46966.377
E 442374.722
ELEV. = 271.944

B 1+100
B 1+200
B 1+300
A 1+500
A 1+300
A 1+400
PDF
P
L

N
VT STATE PLANE GRID

KEY MAP

1:500 SCALE
@ FULL SIZE

LEGEND

- VTP — VEHICLE TRACKING PAD
- TEMPORARY EROSION MATTING
- SEED AND MULCH
- SILT FENCE
- INLET PROTECTION DEVICE, TYPE I (CATCH BASIN OR DROP INLET)
- INLET PROTECTION DEVICE, TYPE I (CULVERT)
- FILTER BAG
- P — PERMANENT STONE CHECK DAM
- T — TEMPORARY STONE CHECK DAM
- STONE OUTLET PROTECTION

INLET PROTECTION, STEEL PLATE
STA. A 1+248, RT.
STA. A 1+339, RT.

INLET PROTECTION DEVICE, TYPE I (CATCH BASIN)
STA. A 1+248, LT.
STA. B 1+192, LT.
STA. B 1+320, LT.
STA. B 1+320, RT.
STA. B 1+396, RT.

TEMPORARY EROSION MATTING
STA. A 1+220 - A 1+415, LT.
STA. A 1+220 - A 1+540, RT.
STA. B 1+171 - B 1+435, RT.
STA. B 1+276 - B 1+432, LT.

SEED, WINTER RYE
STA. A 1+220 - A 1+540, RT.

HAY MULCH
STA. A 1+220 - A 1+540, RT.

VERMONT AGENCY OF TRANSPORTATION

Stantec

PROJECT NAME: BENNINGTON
PROJECT NUMBER: AC NH 019-1(53)

FILE NAME: ...\zd307c3ero_plans.ptf
DESIGN SUPERVISOR: GREG EDWARDS
DESIGNED BY: MARC FOISY
EROSION CONTROL PLAN EC-13

PLOT DATE: 5/16/2011
DRAWN BY: STANTEC
CHECKED BY: GARY SANTY
SHEET 132 OF 577

V:\953\active\953130002\transportation\drawing\contract_3\plot_files\zd307c3ero_plans.ptf

LEGEND

- VTP — VEHICLE TRACKING PAD
- TEMPORARY EROSION MATTING
- SEED AND MULCH
- SILT FENCE
- INLET PROTECTION DEVICE, TYPE I (CATCH BASIN OR DROP INLET)
- INLET PROTECTION DEVICE, TYPE I (CULVERT)
- FILTER BAG
- P — PERMANENT STONE CHECK DAM
- T — TEMPORARY STONE CHECK DAM
- STONE OUTLET PROTECTION

NOTES:

1. FOR STABILIZED CONSTRUCTION ENTRANCE, SEE SHEET EP & SC DETAILS 6. ITEM IS PAID FOR AS 653.35 - VEHICLE TRACKING PAD
2. FOR ROLLED EROSION CONTROL PRODUCT, SEE SHEET EP & SC DETAILS 5. ITEM PAID FOR AS 653.20 - TEMPORARY EROSION MATTING
3. FOR SILT FENCE, SEE SHEET EP & SC DETIALS 4. ITEM IS PAID FOR AS 649.51- GEOTEXTILE FOR SILT FENCE.
4. FOR FILTER FABRIC DROP INLET PROTECTION OR STONE & BLOCK DROP INLET PROTECTION, SEE SHEET EP & SC DETAILS 2. ITEM IS PAID FOR AS 653.40- INLET PROTECTION DEVICE, TYPE I.
5. FOR CHECK DAM, SEE SHEET EP & SC DETAILS 3. ITEM IS PAID FOR AS 653.25 - TEMPORARY STONE CHECK DAM, TYPE I
6. IT SHALL BE THE RESPONSIBILITY OF THE CONTRACTOR TO PROTECT AND MAINTAIN THE EXISTING CURBED MEDIAN DURING CONSTRUCTION. ANY DAMAGE TO THE CURBED MEDIAN INCLUDING, BUT NOT LIMITED TO, THE MOUNTABLE STONE CURB, TURF, GUARDRAIL AND DRAINAGE STRUCTURES SHALL BE RESTORED/REPLACED BY THE CONTRACTOR AT NO ADDITIONAL COST TO THE AGENCY. PRIOR TO THE START OF ANY WORK, THE RESIDENT ENGINEER AND CONTRACTOR SHALL INSPECT THE MEDIAN TO IDENTIFY AND DOCUMENT ANY PRE-EXISTING PROBLEMS AND/OR CONDITIONS.
7. FOR DETAILS ON PROTECTING THE EXISTING CATCH BASINS DURING THE ROCK CUT OPERATIONS, SEE DRAWING DD-3.
8. FOR EROSION CONTROL GENERAL NOTES AND DETAILS, SEE DRAWING EC-1.
9. THE CONTRACTOR HAS THE OPTION OF USING EXCAVATED ROCK FOR STONE FILL, TYPE II (ITEM 613.11). THE EXCAVATED ROCK SHALL MEET THE GRADATION REQUIREMENTS OF STANDARD SPECIFICATION SECTION 706.04.

TEMPORARY EROSION MATTING
STA. A 1+540.0 - A 1+723.3, RT.
STA. B 1+000.0 - B 1+171.4, RT.
STA. B 1+435.0 - B 1+515.3, RT.
STA. B 1+435.0 - B 1+466.0, LT.

VEHICLE TRACKING PAD
STA. A 1+666, 112 m RT.

SEED, WINTER RYE
STA. A 1+540 - A 1+705, RT.

HAY MULCH
STA. A 1+540 - A 1+705, RT.

TEMPORARY STONE CHECK DAMS
STA. A 1+680 - STA. A 1+780, RT.

INLET PROTECTION DEVICE, TYPE I (CATCH BASIN)
STA. A 1+695, RT.
STA. B 1+038, LT.
STA. B 1+038, RT.
STA. B 1+136, LT.
STA. B 1+136, RT.

INLET PROTECTION - STEEL PLATE
STA. A 1+581, LT.

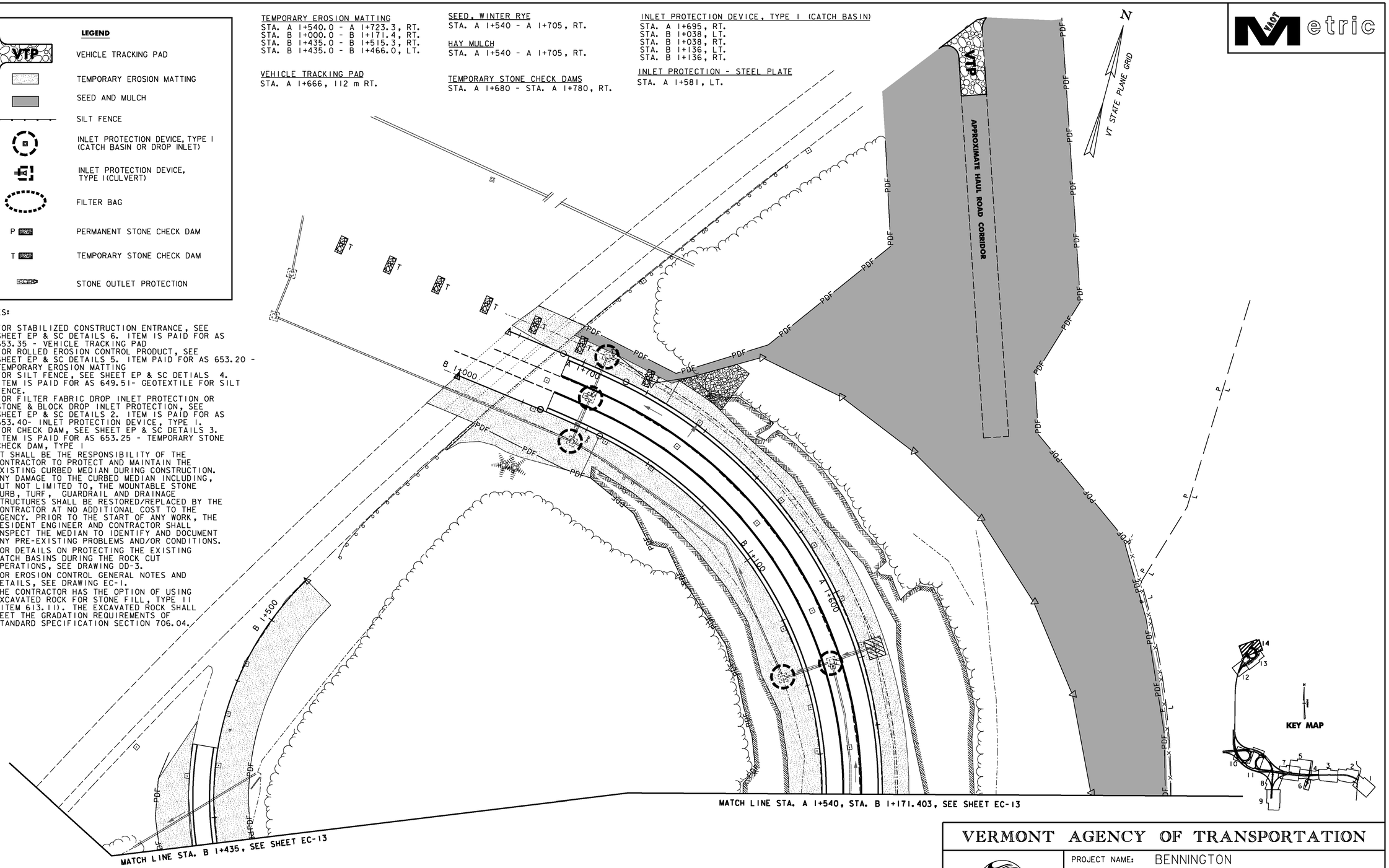

10 0 10
1:500 SCALE
@ FULL SIZE

VERMONT AGENCY OF TRANSPORTATION

Stantec

PROJECT NAME: BENNINGTON
PROJECT NUMBER: AC NH 019-1(53)

FILE NAME: ...\zd307c3ero_plans.ptf
DESIGN SUPERVISOR: GREG EDWARDS
DESIGNED BY: MARC FOISY
EROSION CONTROL PLAN EC-14

PLOT DATE: 5/16/2011
DRAWN BY: STANTEC
CHECKED BY: GARY SANTY
SHEET 133 OF 577

v:\1953\active\195310002\transportation\drawing\contract_3\plot_files\zd307c3ero_plans.ptf

EROSION PREVENTION AND SEDIMENT CONTROL PLAN GENERAL NOTES

1. CONTRACTOR'S RESPONSIBILITIES FOR EROSION PREVENTION AND SEDIMENT CONTROL

   A. ESTABLISH AND MARK BOUNDARIES FOR ANY UNDISTURBED RIPARIAN BUFFER ZONES AND MAINTAIN ALL EXISTING STREAMS AND REPARIAN BUFFER ZONES IN THEIR NATURAL CONDITION.

   B. IT SHALL BE THE RESPONSIBILITY OF THE CONTRACTOR TO AMEND / UPDATE ALL PLANS AND EXISTING PERMITS WHEN ADDING DETAILED CONSTRUCTION PHASING OR ADDITIONAL WASTE / BORROW / STAGING AREAS , OR ANYTHING ELSE THAT MAY DEVIATE FROM THE APPROVED PLANS AS DIRECTED BY THE RESIDENT ENGINEER.

   C. FURNISH, INSTALL, INSPECT AND MAINTAIN EROSION PREVENTION AND SEDIMENT CONTROL MATERIALS IN CONJUNCTION WITH THE GENERAL CLEARING, GRADING AND EXCAVATION OF THE SITE.

   D. ESTABLISH LIMITS OF SOIL DISTURBANCE: LOCATION(S) OF TOPSOIL STOCKPILES; CONSTRUCTION STAGING AREAS; STORAGE AREAS; REFUELING AND MAINTENANCE AREAS.

   E. LOCATE AREAS FOR DISPOSAL OF STUMPS, EXCESS SOILS AND COLLECTED SEDIMENT AND OTHER POLLUTANTS, AND DISPOSE OF THESE MATERIALS IN A MANNER THAT WILL NOT RESULT IN SEDIMENTS AND POLLUTANTS ENTERING WATERS OF THE STATE.

   F. SEQUENCE CONSTRUCTION ACTIVITIES TO MINIMIZE THE EXTENT OF DISTURBED SOILS LEFT OPEN TO EROSION AT ANY GIVEN TIME AS DETAILED IN THE CONSTRUCTION PHASING AND EROSION PREVENTION AND SEDIMENT CONTROL PLANS.

   G. IF POSSIBLE AVOID ALL LAND DISTURBANCES WITHIN 15m OF ALL WATER BODIES, MEASURED FROM THE TOP OF BANK, AND WETLANDS, EXCEPT WHERE NECESSARY FOR THE RECONSTRUCTION OF EXISTING ROADS AND THE CONSTRUCTION OF BRIDGES, STREAM CROSSINGS, AND COMPONENTS OF STORMWATER MANAGEMENT SYSTEMS WHICH BY NECESSITY MUST BE LOCATED IN THIS ZONE.

   H. MAINTAIN AND PRESERVE TO THE EXTENT POSSIBLE THE SITE'S NATURAL DRAINAGE WAYS THAT CONVEY STORMWATER TO STREAMS, RIVERS, LAKES, PONDS AND WETLANDS.

   I. PREVENT OFF-SITE STORMWATER FROM ENTERING AREAS OF DISTURBED SOIL ON-SITE.

   J. PREVENT THE OFF-SITE DISCHARGE OF SEDIMENT MOBILIZED ON THE CONSTRUCTION SITE, INCLUDING OFF-SITE TRACKING OF SEDIMENT ONTO PAVED PUBLIC OR PRIVATE ROADWAYS BY CONSTRUCTION VEHICLES.

   K. DISPOSE OF SEDIMENTS AND OTHER POLLUTANTS WHICH HAVE BEEN COLLECTED AND REMOVED IN THE COURSES OF STORMWATER TREATMENT IN A MANNER THAT WILL NOT RESULT IN THE SEDIMENTS AND POLLUTANTS ENTERING WATERS OF THE STATE. DISPOSAL SITES REQUIRE RELATIVELY LEVEL TERRAIN WITH AN ISOLATION DISTANCE OF AT LEAST 30m FROM ANY SURFACE WATERS, INCLUDING WETLANDS.

   L. AS DIRECTED BY THE CONTRACTOR'S ON-SITE PLAN COORDINATOR, AND ACCEPTED BY THE RESIDENT ENGINEER, INSTALL EROSION PREVENTION AND SEDIMENT CONTROL MEASURES FOR UNEXPECTED CONDITIONS ENCOUNTERED IN THE FIELD.

2. LIMITATIONS AND PROHIBITIONS

   A. THE CONTRACTOR SHALL SCHEDULE EARTHWORK COMPLETION, SITE STABILIZATION BY PERENIAL COVER AND ESTABLISHMENT OF NON-VEGETATIVE PROTECTION MEASURES NO LATER THAN OCTOBER 15. TO ASSURE ESTABLISHMENT OF VEGETATED COVER, SEEDING AND MULCHING ACTIVITIES SHALL BE COMPLETED BY SEPTEMBER 15.

   FOR PROJECTS EXTENDING BEYOND THESE END DATES, LIMIT EXPOSURE OF SOILS AND MINIMIZE ADDITIONAL EARTHWORKS. ANY PROPOSED SOIL DISTURBANCE AND EARTHWORKS BETWEEN THE END DATES AND THE START DATES WILL REQUIRE DEVELOPMENT OF A SPECIFIC WINTER EROSION PREVENTION AND SEDIMENT CONTROL PLAN ADDRESSING THE SPECIFIC CONCERNS OF WINTER CONSTRUCTION. THIS PLAN MUST BE FILED WITH, AND APPROVED BY, THE PERMITTING AUTHORITY BY THE END CONSTRUCTION DATE. IF IT IS DETERMINED BY THE ENGINEER OR THE PERMITTING AUTHORITY THAT WINTER CONSTRUCTION WOULD PRESENT A SIGNIFICANT RISK TO WATER QUALITY, THE CONTRACTOR WILL NEED TO REQUEST A WINTER SHUTDOWN IN ACCORDANCE WITH THE PROVISIONS OF THE CONTRACT DOCUMENTS.

   B. OFF-SITE DISCHARGES OF ANY MATERIAL OTHER THAN STORMWATER, SUCH AS VEHICLE AND EQUIPMENT MAINTENANCE SPILLS, FUELS, WASH WATER, CONSTRUCTION DEBRIS, OIL, WET CONCRETE (INCLUDING WASHOUT WATER FROM CONCRETE BATCH TRUCKS OR EQUIPMENT USED TO MIX CONCRETE), AND OTHER SUBSTANCES, ARE PROHIBITED.

   C. NO SILT FENCE SHALL BE UTILIZED IN AREAS OF CONCENTRATED FLOWS, SUCH AS CHANNELS OR DITCHES.

   D. DISPOSAL OF SEDIMENT IN A WETLAND OR ANY CORRECTIVE ACTION UNDERTAKEN TO REMOVE SEDIMENT FROM A WETLAND IS PROHIBITED.

   E. THE FAILURE TO PROMPTLY ABATE THE DISCHARGE OF SEDIMENT OR ANY OTHER WASTE WHICH CAUSES A VISIBLE DISCOLORATION OF SURFACE WATERS (INCLUDING WETLANDS), OR IS FOUND TO BE EXCEEDING WATER QUALITY STANDARDS BASED ON MONITORING, IS PROHIBITED.

3. GENERAL CONSTRUCTION NOTES

   A. VEHICLE AND EQUIPMENT STORAGE AREAS OR AREAS ADJACENT TO CONSTRUCTION TRAILER OR OTHER HIGH TRAFFIC AREAS SHALL BE COVERED WITH GEOTEXTILE FABRIC AND 300 OF GRAVEL. FOLLOWING COMPLETION OF CONSTRUCTION, ALL NON-NATIVE MATERIALS SHALL BE REMOVED FROM THE STAGING AREA. COMPACTED, RUTTED, OR OTHERWISE DISTURBED SOILS SHALL BE TILLED, RAKED, SEEDED AND MULCHED.

   B. ERODIBLE MATERIALS STOCKPILED WITHIN THE MATERIAL STORAGE AREAS SHALL BE ISOLATED WITH SILT FENCE OR OTHER ACCEPTABLE SEDIMENT BARRIER. SOIL STOCKPILED ON THE SITE SHALL BE SEEDED AND MULCHED.

   C. ALL DISTURBED AREAS SHALL BE SEEDED AND MULCHED WITHIN 48 HOURS OF BEING STRIPPED OR BACKFILLED AND GRADED. IF RAIN IS FORECASTED, DISTURBED AREAS SHALL BE SEEDED AND MULCHED TO THE SATISFACTION OF THE ONSITE COORDINATOR WITHIN 24 HOURS, OR THE FOLLOWING WORK DAY.

   D. STOCKPILES SHALL BE MULCHED IF THEY WILL BE UNDISTURBED FOR MORE THAN 48 HOURS.

4. INSPECTION

   A. THE ONSITE PLAN COORDINATOR SHALL INSPECT ALL EROSION AND SEDIMENT CONTROL STRUCTURES AND MEASURES, AT LEAST ONCE EVERY SEVEN (7) CALENDAR DAYS AND NO LATER THAN 24 HOURS AFTER ANY STORM EVENT WHICH GENERATES A DISCHARGE OF STORMWATER RUNOFF FROM THE CONSTRUCTION SITE, TO ENSURE THEY ARE OPERATING CORRECTLY.

   B. THE ONSITE PLAN COORDINATOR SHALL INSPECT ANY SITES THAT HAVE BEEN TEMPORARILY OR FINALLY STABILIZED A MINIMUM OF ONCE A MONTH.

   C. THE CONTRACTOR SHALL INSPECT CHANNEL LININGS, EMBANKMENTS AND CHANNEL BEDS DAILY FOR ANY SIGN OF EROSION.

   D. THE CONTRACTOR SHALL INSPECT DISCHARGE POINTS DAILY TO VISUALLY ASSESS WHETHER EROSION CONTROL MEASURES ARE EFFECTIVE IN PREVENTING IMPACTS TO RECEIVING WATERS.

   E. IN THE CASE OF SOIL DISTURBANCE OR EARTHWORK OCCURRING OVER THE WINTER PERIOD (OCT. 15 TO MAY 1), DAILY MONITORING OF ALL EROSION PREVENTION, SEDIMENT CONTROL AND CONSTRUCTION ACTIVITIES SHALL BE REQUIRED IN AREAS WHERE SUCH SOIL DISTURBANCES, OR EARTHWORK ACTIVITIES ARE ONGOING. IN AREAS THAT HAVE BEEN SHUT DOWN FOR THE WINTER, THE ONSITE COORDINATOR SHALL INSPECT EROSION PREVENTION AND SEDIMENT CONTROL DEVICES IN THE FIELD MONTHLY, NO LATER THAN 24 HOURS, OR THE FOLLOWING WORK DAY, AFTER ANY STORM EVENT WHICH GENERATES A DISCHARGE OF STORMWATER RUNOFF FROM THE CONSTRUCTION SITE, OR DURING A THAW.

   F. THE ONSITE PLAN COORDINATOR AND THE CONTRACTOR SHALL INSPECT FOR THE EVIDENCE OF, OR THE POTENTIAL FOR, SEDIMENT LEAVING FROM ALL DISTURBED AREAS OR MATERIAL STORAGE AREAS.

   G. AN EROSION PREVENTION AND SEDIMENT CONTROL MONITORING REPORT FORM COMPLETED BY THE ONSITE PLAN COORDINATOR, STATING THE DATE OF REVIEW AND DESCRIBING THE EROSION PREVENTION AND SEDIMENT CONTROL AND STORMWATER MANAGEMENT MEASURES REVIEWED, THE EFFECTIVENESS OF THEIR OPERATION, ANY DEFICIENCIES, AND CORRECTIVE ACTION TO BE UNDERTAKEN, SHALL BE PREPARED AFTER EACH REVIEW. A COPY SHALL BE PROVIDED TO THE ENGINEER AND MAINTAINED ON FILE AT THE PROJECT SITE.

5. MAINTENANCE

   A. THE CONTRACTOR SHALL KEEP ALL SEEDED AREAS WATERED AND IN GOOD CONDITION, RE-SEEDING IF AND WHEN NECESSARY UNTIL A GOOD, HEALTHY, UNIFORM GROWTH IS ESTABLISHED OVER THE ENTIRE AREA SEEDED.

   B. THE CONTRACTOR SHALL REPAIR ALL EROSION PREVENTION AND SEDIMENT CONTROL STRUCTURES AND MEASURES THAT ARE DETERMINED TO BE FAILING, OR NOT FUNCTIONING AS DESIGNED, WITHIN 24 HOURS OF INSPECTION.

   C. THE CONTRACTOR SHALL REMOVE ACCUMULATED SEDIMENT FROM CONTAINMENT SYSTEMS AND OTHER SEDIMENT CONTROL STRUCTURES AS REQUIRED, SUCH THAT PERFORMANCE OF THESE SYSTEMS IS NOT COMPROMISED OR IN ANY WAY IMPAIRED.

   D. THE CONTRACTOR SHALL REMOVE ALL DEBRIS AND REPAIR ALL DAMAGES CAUSED BY SOIL EROSION OR CONSTRUCTION EQUIPMENT AT OR BEFORE THE END OF EACH WORKING DAY.

6. CORRECTIVE ACTION

   A. THE CONTRACTOR SHALL NOTIFY THE RESIDENT ENGINEER AS SOON AS POSSIBLE, BUT WITHIN 24 HOURS AFTER ANY EVIDENCE OF MEASURABLE AMOUNTS OF SEDIMENT OR SEDIMENT-LADEN WATER LEAVING THE CONSTRUCTION SITE OR ANY VISIBLE DISCOLORATION OF SURFACE WATERS (INCLUDING WETLANDS).

   B. THE CONTRACTOR SHALL TAKE IMMEDIATE ACTION TO CORRECT THE DISCHARGE, INCLUDING HALTING OR REDUCING CONSTRUCTION ACTIVITIES AS NECESSARY UNTIL THE DISCHARGE AND/OR THE CONDITION IS FULLY CORRECTED.

   C. ALL CORRECTIVE ACTION REQUIRED TO MAINTAIN THE EROSION PREVENTION AND SEDIMENT CONTROL PLAN SHALL BE PAID UNDER THE MAINTENANCE OF EROSION PREVENTION AND SEDIMENT CONTROL ITEM, UNLESS MAINTENANCE IS REQUIRED DUE TO POOR INSTALLATION PRACTICES, AS DETERMINED BY THE RESIDENT ENGINEER.

   D. IT SHALL BE THE RESPONSIBILITY OF THE CONTRACTOR TO REPORT TO THE APPROPRIATE REGULATING AUTHORITIES AS REQUIRED BY THE PROJECT'S PERMIT CONDITIONS.

NOTE: ALL DIMENSIONS ARE IN MILLIMETERS (mm) EXCEPT WHERE NOTED.

VERMONT AGENCY OF TRANSPORTATION

Stantec

PROJECT NAME: BENNINGTON
PROJECT NUMBER: AC NH 019-1(53)

FILE NAME: ...\plot_files\zd307c3det_epsc.ptf PLOT DATE: 5/16/2011
DESIGN SUPERVISOR: GREG EDWARDS DRAWN BY: STANTEC
DESIGNED BY: MARC FOISY CHECKED BY: GARY SANTY

EP & SC DETAILS - 1 SHEET 134 OF 577

v:\1953\active\953000\transportation\drawing\contract_3\plot_files\zd307c3det_epsc.ptf

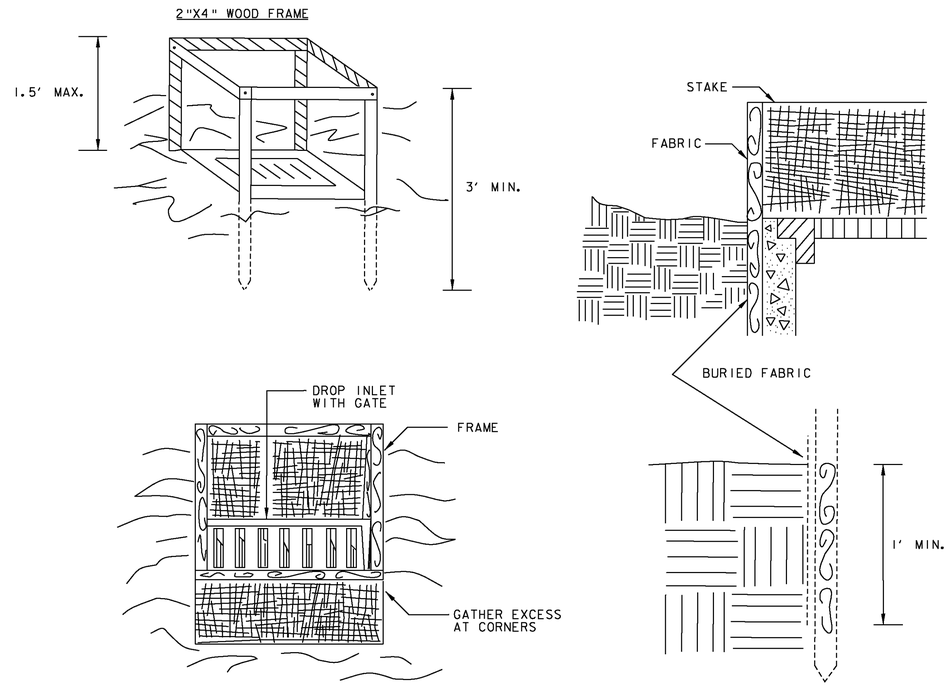

FILTER FABRIC DROP INLET PROTECTION

CONSTRUCTION SPECIFICATION

1. FILTER FABRIC SHALL HAVE AN EOS OF 40-85. BURLAP MAY BE USED FOR SHORT TERM APPLICATIONS.
2. CUT FABRIC FROM A CONTINUOUS ROLL TO ELIMINATE JOINTS. IF JOINTS ARE NEEDED THEY WILL BE OVERLAPPED TO THE NEXT STAKE.
3. STAKE MATERIALS WILL BE STANDARD 2" x 4" WOOD OR EQUIVALENT. METAL WITH A MINIMUM LENGTH OF 3 FEET.
4. SPACE STAKES EVENLY AROUND INLET 3 FEET APART AND DRIVE A MINIMUM 18 INCHES DEEP. SPANS GREATER THAN 3 FEET MAY BE BRIDGED WITH THE USE OF WIRE MESH BEHIND THE FILTER FABRIC FOR SUPPORT.
5. FABRIC SHALL BE EMBEDDED 1 FOOT MINIMUM BELOW GROUND AND BACKFILLED. IT SHALL BE SECURELY FASTENED TO THE STAKES AND FRAME.
6. A 2" x 4" WOOD FRAME SHALL BE COMPLETED AROUND THE CREST OF THE FABRIC FOR OVER FLOW STABILITY.
7. MAXIMUM DRAINAGE AREA 1 ACRE.
8. THIS ITEM SHALL BE PAID FOR UNDER ITEM 653.40 INLET PROTECTION DEVICE, TYPE I.

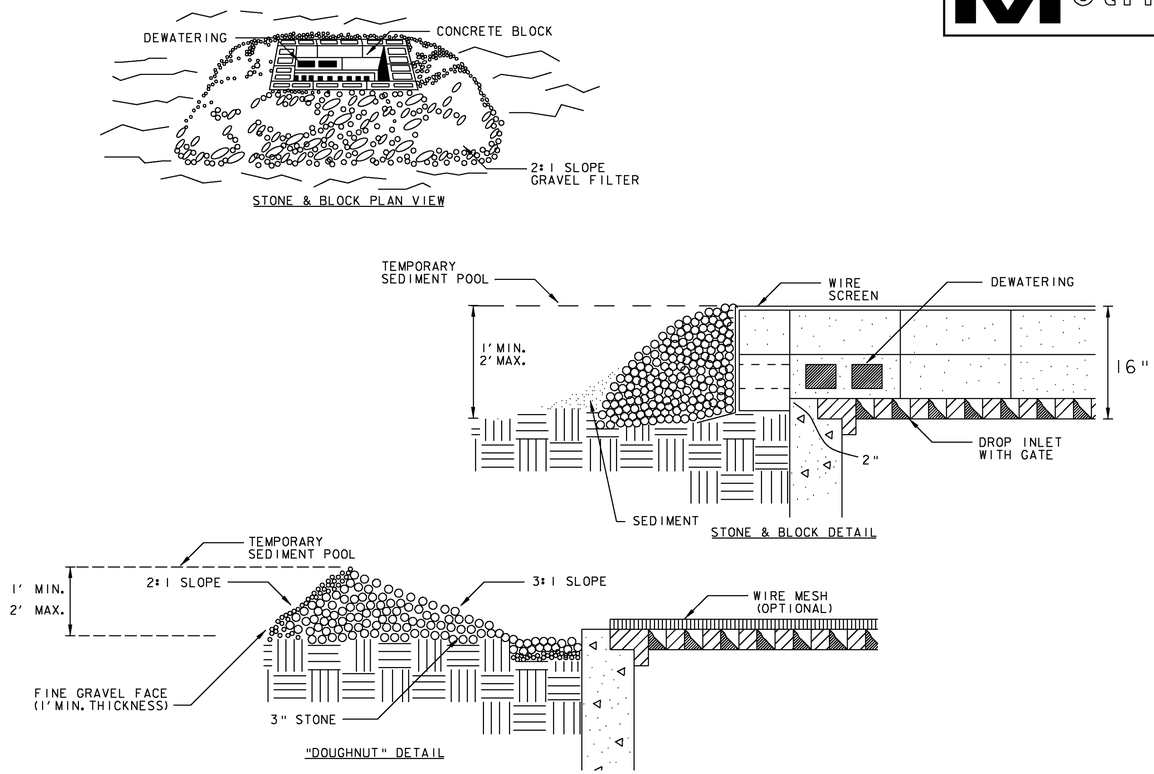

STONE & BLOCK DROP INLET PROTECTION

CONSTRUCTION SPECIFICATION

1. LAY ONE BLOCK ON EACH SIDE OF THE STRUCTURE ON ITS SIDE FOR DEWATERING. FOUNDATION SHALL BE 2 INCHES MINIMUM BELOW REST OF INLET AND BLOCKS SHALL BE PLACED AGAINST INLET FOR SUPPORT.
2. HARDWARE CLOTH OR ½" WIRE MESH SHALL BE PLACED OVER BLOCK OPENINGS TO SUPPORT STONE.
3. USE CLEAN STONE OR GRAVEL ½ - ¾ INCH IN DIAMETER PLACED 2 INCHES BELOW TOP OF THE BLOCK ON A 2:1 SLOPE OR FLATTER.
4. FOR STONE STRUCTURES ONLY, A 1 FOOT THICK LAYER OF THE FILTER STONE WILL BE PLACED AGAINST THE 3 INCH STONE AS SHOWN ON THE DRAWINGS.
5. MAXIMUM DRAINAGE AREA 1 ACRE.
6. THIS ITEM SHALL BE PAID FOR UNDER ITEM 653.40 INLET PROTECTION DEVICE, TYPE I.

NOTES:

1. FILTER FABRIC AND DROP INLET PROTECTION OR STONE & BLOCK DROP INLET PROTECTION PAID FOR AS ITEM 653.40-INLET PROTECTION DEVICE, TYPE I
2. ADAPTED FROM DETAILS PROVIDED BY: NEW YORK STATE DEC ORIGINALLY DEVELOPED BY USDA-NRCS VERMONT DEPARTMENT OF ENVIRONMENTAL CONSERVATION.
3. REFER TO "THE VERMONT STANDARDS & SPECIFICATIONS FOR EROSION PREVENTION & SEDIMENT CONTROL -2006- " FROM THE VT AGENCY OF NATURAL RESOURCES FOR ADDITIONAL GUIDANCE.
4. ENGLISH UNITS RETAINED FROM ORIGINAL DETAIL.

VERMONT AGENCY OF TRANSPORTATION

PROJECT NAME: BENNINGTON
PROJECT NUMBER: AC NH 019-1(53)

FILE NAME: ...\plot_files\zd307c3det_epsc.ptf PLOT DATE: 5/16/2011
DESIGN SUPERVISOR: DRAWN BY:
DESIGNED BY: CHECKED BY:
EP & SC DETAILS - 2 SHEET 135 OF 577

v:\953\active\95300021\transportation\drawing\contract_3\plot_files\zd307c3det_epsc.ptf

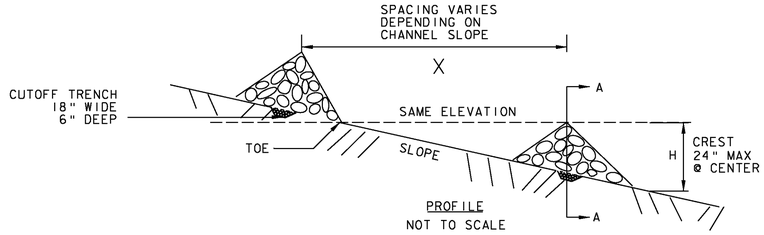

PROFILE
NOT TO SCALE

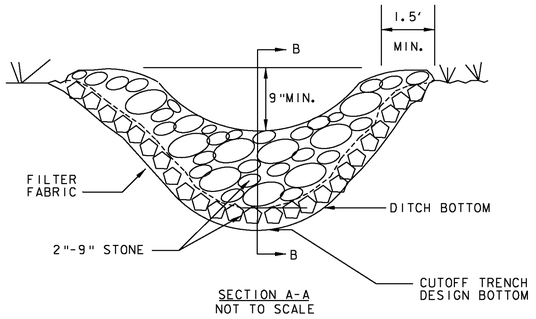

SECTION A-A
NOT TO SCALE

$$X = \frac{H\ (Ft)}{SLOPE\ (FT/FT)}$$

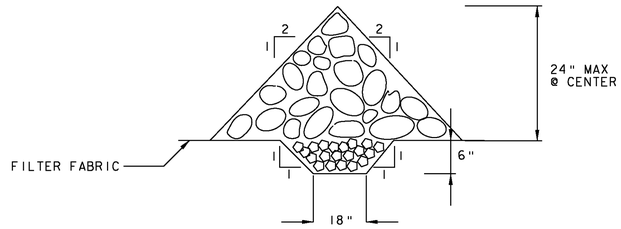

SECTION B-B
NOT TO SCALE

CHECK DAM

CONSTRUCTION SPECIFICATION

1. STONE WILL BE PLACED ON A FILTER FABRIC FOUNDATION.
2. SET SPACING OF CHECK DAMS SO THAT THE ELEVATION OF THE CREST OF THE DOWNSTREAM DAM IS AT THE SAME ELEVATION AS THE TOE OF THE UPSTREAM DAM.
3. EXTEND THE STONE A MINIMUM OF 1.5 FEET BEYOND THE DITCH BANKS TO PREVENT CUTTING AROUND THE DAM.
4. PROTECT THE CHANNEL DOWNSTREAM OF THE LOWEST CHECK DAM FROM SCOUR AND EROSION WITH STONE OR LINER AS APPROPRIATE.
5. ENSURE THAT CHANNEL APPURTENANCES SUCH AS CULVERT ENTRANCES BELOW CHECK DAMS ARE NOT SUBJECT TO DAMAGE OR BLOCKAGE FROM DISPLACED STONE.
6. MAXIMUM DRAINAGE AREA 2 ACRES.
7. THIS ITEM SHALL BE PAID FOR UNDER ITEM 653.25 TEMPORARY STONE CHECK DAM, TYPE 1.

NOTES:

1. CHECK DAM PAID FOR AS ITEM 653.25 - TEMPORARY STONE CHECK DAM
2. REFER TO "THE VERMONT STANDARDS & SPECIFICATIONS FOR EROSION PREVENTION & SEDIMENT CONTROL -2006- " FROM THE VT AGENCY OF NATURAL RESOURCES FOR ADDITIONAL GUIDANCE.
3. ADAPTED FROM DETAILS PROVIDED BY: NEW YORK STATE DEC
ORIGINALLY DEVELOPED BY USDA-NRCS
VERMONT DEPARTMENT OF ENVIRONMENTAL CONSERVATION

VERMONT AGENCY OF TRANSPORTATION

PROJECT NAME: BENNINGTON
PROJECT NUMBER: AC NH 019-1(53)

FILE NAME: ...\plot_files\zd307c3det_epsc.ptf PLOT DATE: 5/16/2011
DESIGN SUPERVISOR: DRAWN BY:
DESIGNED BY: CHECKED BY:
EP & SC DETAILS – 3 SHEET 136 OF 577

v:\953\active\95330002\transportation\drawing\contract_3\plot_files\zd307c3det_epsc.ptf

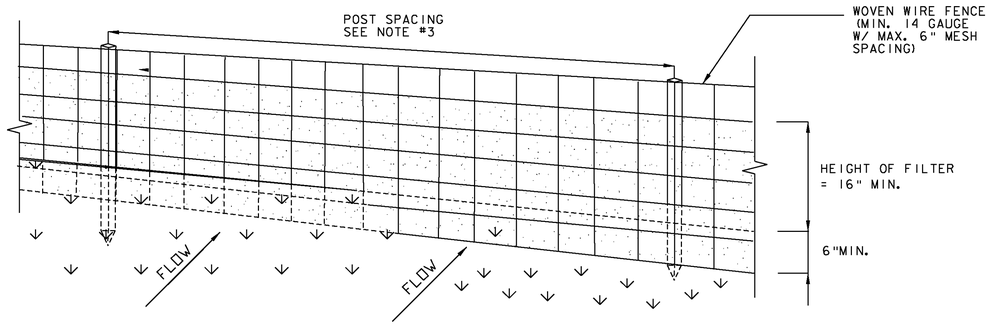

PERSPECTIVE VIEW

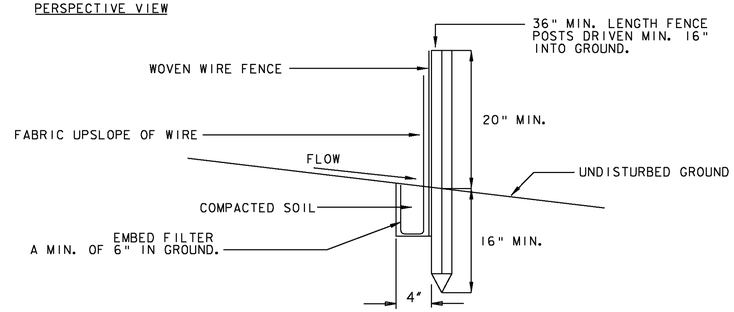

SECTION VIEW

SILT FENCE

CONSTRUCTION SPECIFICATION

1. WOVEN WIRE FENCE REINFORCEMENT IS ONLY REQUIRED WITHIN 100 FT UPSLOPE OF RECEIVING WATERS.
2. WHERE REQUIRED FENCE SHALL BE WOVEN WIRE, MIN. 14 GAUGE WITH A 6" MAXIMUM MESH OPENING. FILTER CLOTH SHALL BE EITHER FILTER X, MIRAFI 100X, STABILINKA T140N OR APPROVED EQUIVALENT.
3. POST SPACING FOR WIRE-BACKED FENCE SHALL BE 10' MAXIMUM. FOR FILTER-CLOTH FENCE, WHEN ELONGATION IS >50%, POST SPACING SHALL NOT EXCEED 4'. FOR FILTER-CLOTH FENCE, WHEN ELONGATION IS <50%, POST SPACING SHALL NOT EXCEED 6'.
4. WOVEN WIRE FENCE IS TO BE FASTENED SECURELY TO FENCE POSTS WITH WIRE TIES. FILTER CLOTH IS TO BE FASTENED SECURELY TO WOVEN WIRE FENCE WITH TIES SPACED EVERY 24" AT TOP AND MID SECTION.
5. WHEN TWO SECTIONS OF FILTER CLOTH ADJOIN EACH OTHER THEY SHALL BE OVER-LAPPED BY SIX INCHES AND FOLDED.
6. PREFABRICATED UNITS SHALL BE GEOFAB, ENVIROFENCE, OR APPROVED EQUIVALENT.
7. MAINTENANCE SHALL BE PERFORMED AS NEEDED AND MATERIAL REMOVED WHEN SEDIMENT REACHES HALF OF FABRIC HEIGHT.
8. THIS ITEM SHALL BE PAID FOR UNDER ITEM 649.51 GEOTEXTILE FOR SILT FENCE.

NOTES:

1. SILT FENCE PAID FOR AS ITEM 649.51 - GEOTEXTILE FOR SILT FENCE
2. REFER TO "THE VERMONT STANDARDS & SPECIFICATIONS FOR EROSION PREVENTION & SEDIMENT CONTROL -2006- " FROM THE VT AGENCY OF NATURAL RESOURCES FOR ADDITIONAL GUIDANCE.
3. ADAPTED FROM DETAILS PROVIDED BY: NEW YORK STATE DEC
ORIGINALLY DEVELOPED BY USDA-NRCS
VERMONT DEPARTMENT OF ENVIRONMENTAL CONSERVATION

VERMONT AGENCY OF TRANSPORTATION

PROJECT NAME: BENNINGTON
PROJECT NUMBER: AC NH 019-1(53)

FILE NAME: ...\plot_files\zd307c3det_epsc.ptf PLOT DATE: 5/16/2011
DESIGN SUPERVISOR: DRAWN BY:
DESIGNED BY: CHECKED BY:
EP & SC DETAILS - 4 SHEET 137 OF 577

v:\953\active\95300021\transportation\drawing\contract_3\plot_files\zd307c3det_epsc.ptf

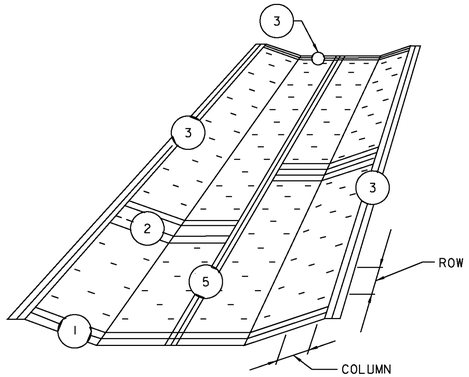

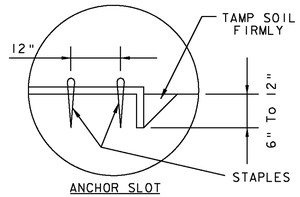

ANCHOR SLOT
JUTE MESH
EXCELSIOR BLANKET
EROSION CONTROL PAPER
DETAIL 3

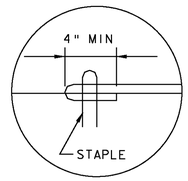

TERMINAL FOLD
JUTE MESH ONLY

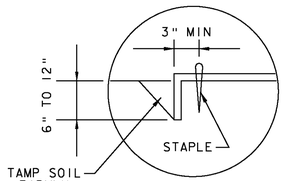

TERMINAL FOLD
EXCELSIOR BLANKET
EROSION CONTROL PAPER

DETAIL 1

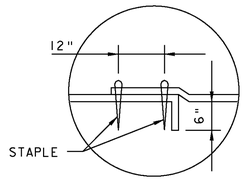

JUNCTION SLOT
JUTE MESH
EROSION CONTROL PAPER

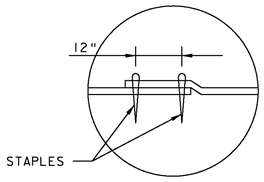

JUNCTION SLOT
EXCELSIOR BLANKET

DETAIL 2

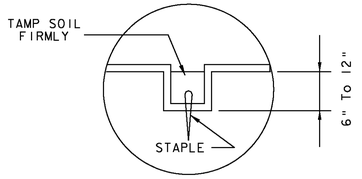

CHECK SLOT
EROSION CONTROL PAPER
DETAIL 4

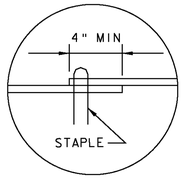

LAP JOINT
JUTE MESH, EROSION CONTROL PAPER
EXCELSIOR BLANKET SHALL BE BUTTED TOGETHER
DETAIL 5

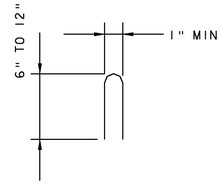

STAPLE DETAIL

ROLLED EROSION CONTROL PRODUCT (RECP)

CONSTRUCTION SPECIFICATION

1. SPACING: INSTALL RECP EVERY 50' ON SLOPES MORE THAN 4% AND LESS THAN 6%. ON SLOPES OF 6% OR MORE, THEY SHALL BE SPACED SO THAT ONE OCCURS WITHIN EACH 25'.
2. STAPLES ARE TO BE PLACED ALTERNATIVELY, IN COLUMNS APPROXIMATELY 2' APART AND IN ROWS APPROXIMATELY 3' APART. APPROXIMATELY 175 STAPLES ARE REQUIRED PER 4' X 225' ROLL OF MATERIAL AND 125 STAPLES ARE REQUIRED PER 4' X 150' ROLL OF MATERIAL.
3. DISTURBED AREA SHALL BE SMOOTHLY GRADED TO ENSURE CLOSE CONTACT BETWEEN RECP AND GROUND.
4. EROSION CONTROL MATERIAL SHALL BE PLACED LOOSLEY OVER GROUND SURFACE. DO NOT STRETCH.
5. ALL TERMINAL ENDS AND TRANSVERSE LAPS SHALL BE STAPLED AT APPROXIMATELY 12" INTERVALS.
6. THIS ITEM SHALL BE PAID FOR UNDER ITEM 653.20 TEMPORARY EROSION MATTING.

NOTES:

1. ROLLED EROSION CONTROL PRODUCT PAID FOR AS ITEM 653.20 - TEMPORARY EROSION MATTING
2. REFER TO "THE VERMONT STANDARDS & SPECIFICATIONS FOR EROSION PREVENTION & SEDIMENT CONTROL -2006- " FROM THE VT AGENCY OF NATURAL RESOURCES FOR ADDITIONAL GUIDANCE.
3. ADAPTED FROM DETAILS PROVIDED BY: NEW YORK STATE DEC ORIGINALLY DEVELOPED BY USDA-NRCS VERMONT DEPARTMENT OF ENVIRONMENTAL CONSERVATION

VERMONT AGENCY OF TRANSPORTATION

PROJECT NAME: BENNINGTON
PROJECT NUMBER: AC NH 019-1(53)

FILE NAME: ...\plot_files\zd307c3det_epsc.ptf PLOT DATE: 5/16/2011
DESIGN SUPERVISOR: DRAWN BY:
DESIGNED BY: CHECKED BY:
EP & SC DETAILS - 5 SHEET 138 OF 577

v:\953\active\95300002\transportation\drawing\contract_3\plot_files\zd307c3det_epsc.ptf

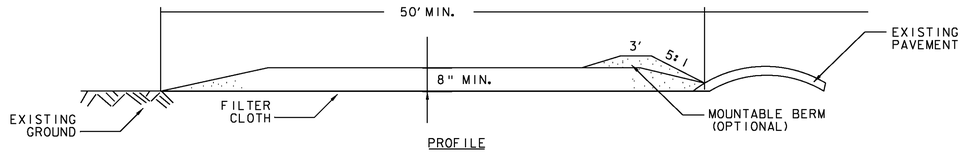

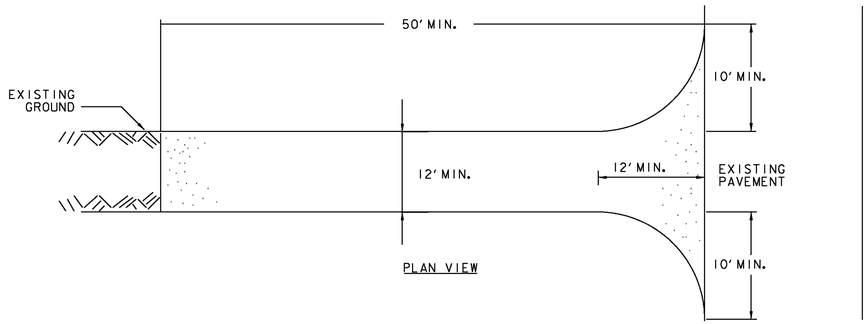

STABILIZED CONSTRUCTION ENTRANCE

CONSTRUCTION SPECIFICATION

1. STONE SIZE - USE 1-4" STONE, OR RECLAIMED OR RECYCLED CONCRETE EQUIVALENT.
2. LENGTH - NOT LESS THAN 50 FEET (EXCEPT ON A SINGLE RESIDENCE LOT WHERE A 30 FOOT MINIMUM LENGTH APPLIES).
3. THICKNESS - NOT LESS THAN EIGHT (8) INCHES.
4. WIDTH - TWELVE (12) FOOT MINIMUM, BUT NOT LESS THAN THE FULL WIDTH AT POINTS WHERE INGRESS OR EGRESS OCCURS. TWENTY-FOUR (24) FOOT IF SINGLE ENTRANCE TO SITE.
5. GEOTEXTILE MUST BE PLACED OVER THE ENTIRE AREA PRIOR TO PLACING STONE.
6. SURFACE WATER - ALL SURFACE WATER FLOWING OR DIVERTED TOWARD CONSTRUCTION ENTRANCES SHALL BE PIPED BENEATH THE ENTRANCE. IF PIPING IS IMPRACTICAL, A MOUNTABLE BERM WITH 5:1 SLOPES WILL BE PERMITTED.
7. MAINTENANCE - THE ENTRANCE SHALL BE MAINTAINED IN A CONDITION WHICH WILL PREVENT TRACKING OR FLOWING OF SEDIMENT ONTO PUBLIC RIGHTS-OF-WAY, ALL SEDIMENT SPILLED, DROPPED, WASHED OR TRACKED ONTO PUBLIC RIGHTS-OF-WAY MUST BE REMOVED IMMEDIATELY.
8. WHEN WASHING IS REQUIRED, IT SHALL BE DONE ON AN AREA STABILIZED WITH STONE AND WHICH DRAINS INTO AN APPROVED SEDIMENT TRAPPING DEVICE.
9. PERIODIC INSPECTION AND NEEDED MAINTENANCE SHALL BE PROVIDED ACCORDING TO PERMIT REQUIREMENTS.
10. THIS ITEM SHALL BE PAID FOR UNDER ITEM 653.35 VEHICLE TRACKING PAD.

NOTES:

1. STABILIZED CONSTRUCTION ENTRANCE PAID FOR AS ITEM 653.35 - VEHICLE TRACKING PAD
2. REFER TO "THE VERMONT STANDARDS & SPECIFICATIONS FOR EROSION PREVENTION & SEDIMENT CONTROL -2006- " FROM THE VT AGENCY OF NATURAL RESOURCES FOR ADDITIONAL GUIDANCE.
3. ADAPTED FROM DETAILS PROVIDED BY: NEW YORK STATE DEC ORIGINALLY DEVELOPED BY USDA-NRCS VERMONT DEPARTMENT OF ENVIRONMENTAL CONSERVATION

VERMONT AGENCY OF TRANSPORTATION

PROJECT NAME: BENNINGTON
PROJECT NUMBER: AC NH 019-1(53)

FILE NAME: ...\plot_files\zd307c3det_epsc.ptf PLOT DATE: 5/16/2011
DESIGN SUPERVISOR: DRAWN BY:
DESIGNED BY: CHECKED BY:
EP & SC DETAILS - 6 SHEET 139 OF 577

v:\953\active\95300002\transportation\drawing\contract_3\plot_files\zd307c3det_epsc.ptf

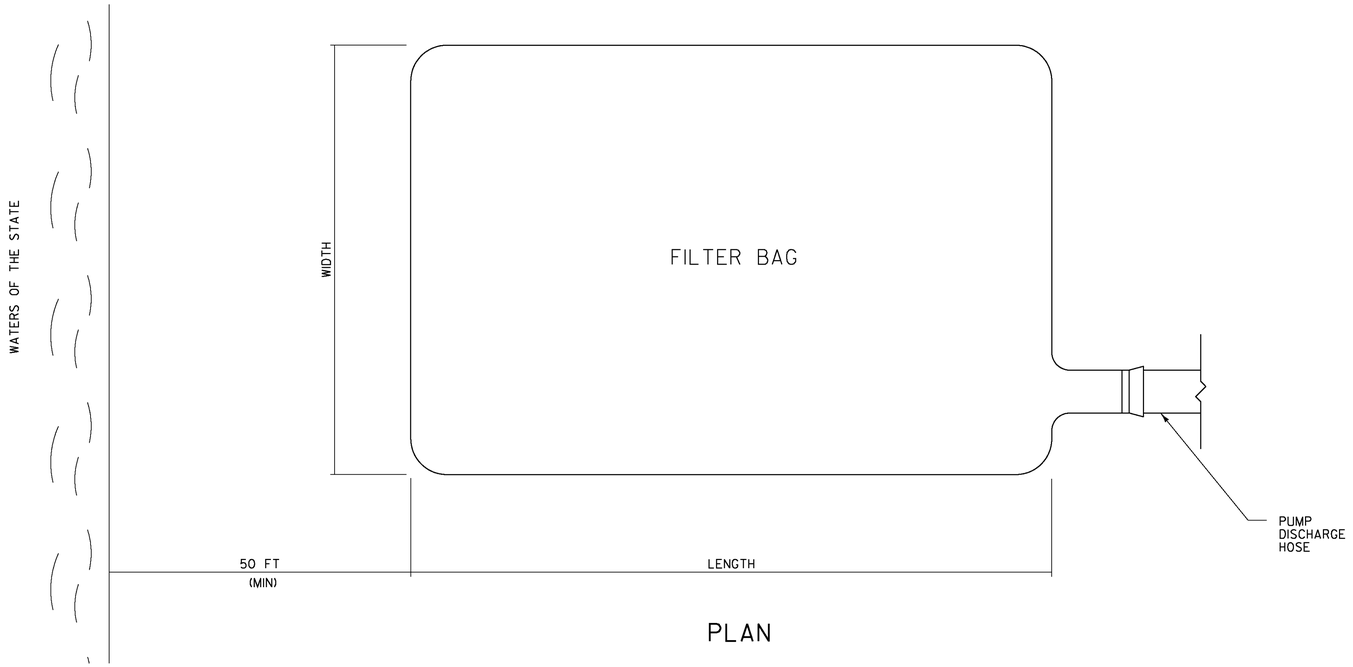

PLAN

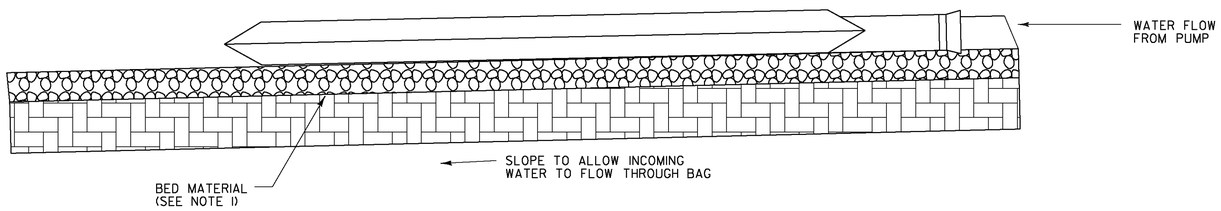

PROFILE

FILTER BAG
NOT TO SCALE

FILTER BAG

APPLICATION NOTES:

A. THE PRIMARY PURPOSE OF THE FILTER BAG IS TO RETAIN SILT, SAND, AND FINES DURING DEWATERING OPERATIONS WHILE ALLOWING WATER TO PASS THROUGH THE BAG.

GENERAL NOTES:

1. FILTER BAG SHALL BE INSTALLED ON A VEGETATED SLOPE TO ALLOW INCOMING WATER TO FLOW THROUGH THE BAG. FILTER BAGS MAY ALSO BE PLACED ON COARSE AGGREGATE, STONE, OR HAYBALES TO INCREASE FILTRATION EFFICIENCY.
2. FILTER BAG SHALL BE LOCATED A MINIMUM OF 50 FEET FROM WATERS OF THE STATE UNLESS OTHERWISE APPROVED BY THE ENGINEER.
3. THE NECK OF THE FILTER BAG SHALL BE STRAPPED TIGHTLY TO THE DISCHARGE HOSE.
4. FILTER BAG SHALL BE INSPECTED DAILY FOR TEARS, PUNCTURES OR ANY IMPERFECTIONS THAT COULD CAUSE THE BAG TO MALFUNCTION IN ANY MANNER.
5. A FILTER BAG IS FULL WHEN IT NO LONGER CAN EFFICIENTLY FILTER SEDIMENT OR ALLOW WATER TO PASS AT A REASONABLE RATE. FILTER BAG SHALL BE DISPOSED OF AS APPROVED IN THE EPSCP OR AS DIRECTED BY THE ENGINEER.
6. THIS ITEM SHALL BE PAID UNDER ITEM 653.45 FILTER BAG.

NOTE:
ENGLISH UNITS RETAINED FROM ORIGINAL DETAIL.

EROSION PREVENTION & SEDIMENT CONTROL DETAILS FILTER BAG

VERMONT AGENCY OF TRANSPORTATION

PROJECT NAME: BENNINGTON
PROJECT NUMBER: AC NH 019-1(53)

FILE NAME: ...\plot_files\zd307c3det_epsc.ptf PLOT DATE: 5/16/2011
DESIGN SUPERVISOR: DRAWN BY:
DESIGNED BY: CHECKED BY:
EP & SC DETAILS - 7 SHEET 140 OF 577

v:\1953\active\19530002\transportation\drawing\contract_3\plot_files\zd307c3det_epsc.ptf

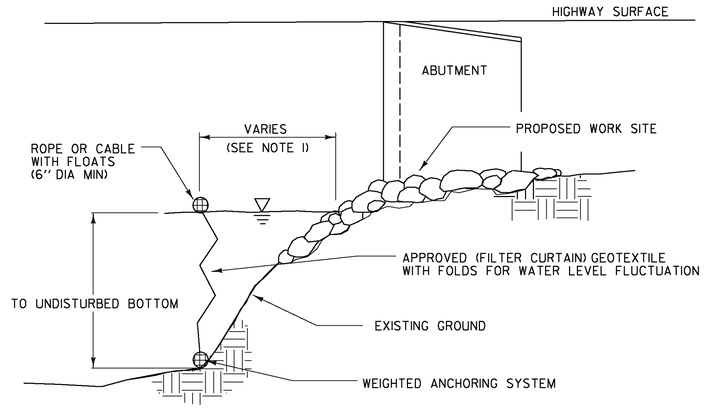

SECTION A-A
NOT TO SCALE

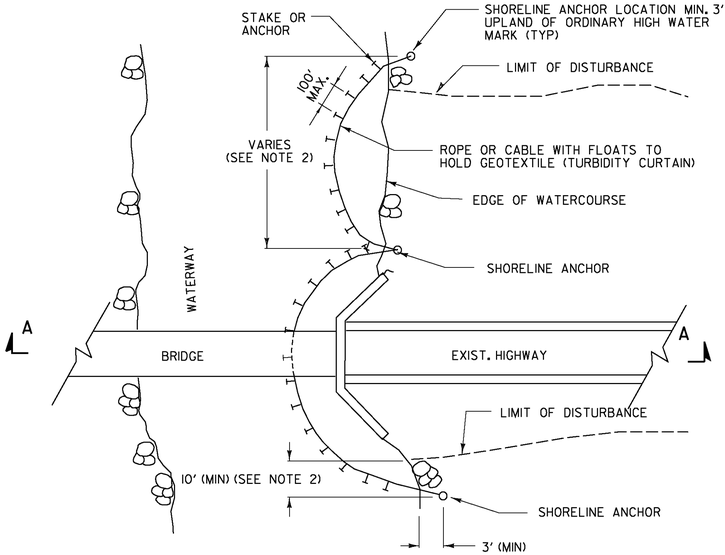

PLAN

FILTER CURTAIN
NOT TO SCALE

FILTER CURTAIN

APPLICATION NOTES:

A. THE PRIMARY PURPOSE OF A FILTER CURTAIN IS TO PROVIDE SEDIMENTATION PROTECTION FOR A WATERCOURSE FROM UP-SLOPE LAND DISTURBANCE OR FROM DREDGING OR FILLING WITHIN WATERCOURSE.

B. FILTER CURTAINS SHALL NOT BE PLACED ACROSS A FLOWING WATERWAY, OR IN A WATERWAY WITH VELOCITIES GREATER THAN MANUFACTURER'S RECOMMENDATIONS.

C. FILTER CURTAINS SHOULD NOT BE PLACED AT THE OUTLET OF A CULVERT OR DITCH UNLESS THE VELOCITY DOES NOT EXCEED 1.5 FT/SEC.

D. DETAILS DEPICT WORK AT A BRIDGE LOCATION, BUT FILTER CURTAINS MAY BE APPLIED AT OTHER LOCATIONS.

GENERAL NOTES:

1. FILTER CURTAINS SHALL BE PLACED AS CLOSE TO THE WORK AS POSSIBLE WITHOUT INTERFERING WITH CONSTRUCTION OPERATIONS.
2. FILTER CURTAINS SHALL BE A MAXIMUM OF 100 FEET LONG BETWEEN SHORELINE ANCHORS. LAST SECTION SHALL TERMINATE A MINIMUM OF 10 FEET BEYOND THE LIMIT OF DISTURBANCE.
3. THE CONTRACTOR SHALL MONITOR THE FILTER CURTAIN, TAKING INTO ACCOUNT WEATHER PATTERNS AND PREVAILING WIND DIRECTIONS THAT MAY AFFECT WATER LEVELS, VELOCITY AND MOVEMENT OF THE TURBIDITY CURTAIN.
4. SEAMS IN THE FILTER CURTAIN FABRIC SHALL BE EITHER VULCANIZED WELDED OR SEWN, AND SHALL DEVELOP THE FULL STRENGTH OF THE FABRIC.
5. SOIL PARTICLES TRAPPED BY THE FILTER CURTAIN SHOULD ONLY BE REMOVED IF THERE HAS BEEN A SIGNIFICANT CHANGE IN THE ORIGINAL CONTOURS OF THE AFFECTED AREA IN THE WATERCOURSE.
6. SOIL PARTICLES SHALL BE ALLOWED 6-12 HOURS TO SETTLE PRIOR TO THEIR REMOVAL OR THE REMOVAL OF THE FILTER CURTAIN.
7. FILTER CURTAINS SHALL BE REMOVED BY SLOWLY PULLING TOWARDS THE SHORE TO MINIMIZE ESCAPE OF SEDIMENTS INTO THE WATERWAY.
8. THIS ITEM SHALL BE PAID UNDER ITEM 649.61 - GEOTEXTILE FOR FILTER CURTAIN.

NOTE:
ENGLISH UNITS RETAINED FROM ORIGINAL DETAIL.

EROSION PREVENTION & SEDIMENT CONTROL DETAILS FILTER CURTAIN

VERMONT AGENCY OF TRANSPORTATION	
	PROJECT NAME: BENNINGTON PROJECT NUMBER: AC NH 019-1(53)
	FILE NAME: ...\plot_files\zd307c3det_epsc.ptf PLOT DATE: 5/16/2011 DESIGN SUPERVISOR: DRAWN BY: DESIGNED BY: CHECKED BY: **EP & SC DETAILS - 8** SHEET 141 OF 577

v:\1953\active\19530002\transportation\drawing\contract_3\plot_files\zd307c3det_epsc.ptf

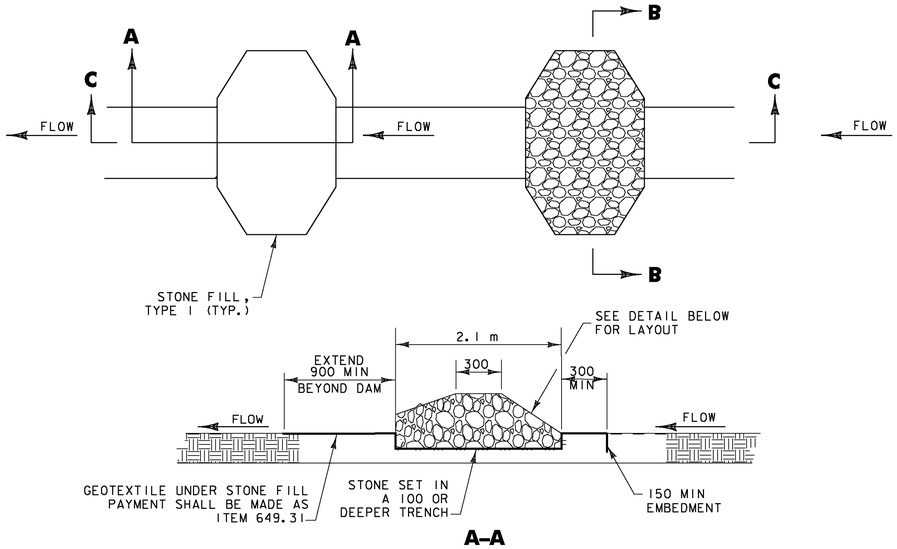

A–A

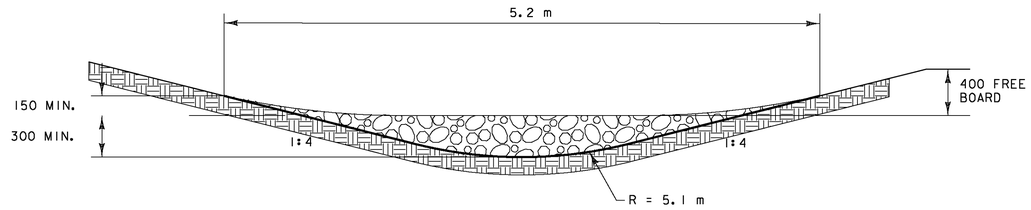

B–B

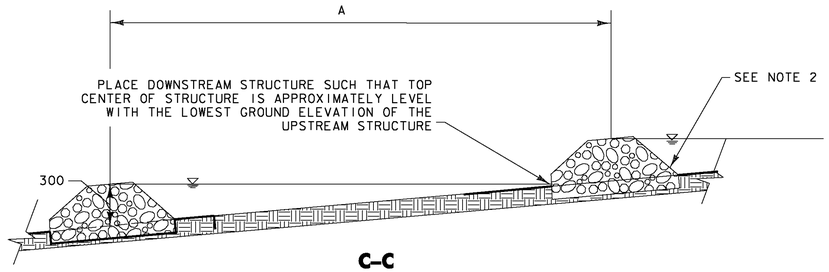

C–C

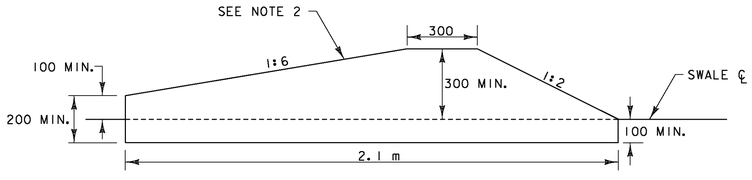

DETAILED LAYOUT

ITEM 900.608 PERMANENT STONE CHECK DAMS, TYPE 1

NOT TO SCALE

STONE CHECK DAM PLACEMENT INTERVAL	
DITCH SLOPE	INTERVAL DIMENSION 'A'
1 %	30 m
2 %	15 m
3 %	10 m
4 %	7.5 m
5 %	6 m
6 %	5 m
8 %	3.75 m
10 %	3 m

NOTES:

2. SIDE SLOPES FACING ONCOMING TRAFFIC SHALL BE 1v:6h ALL OTHER SLOPES SHALL BE 1v:2h.

VERMONT AGENCY OF TRANSPORTATION

Stantec

PROJECT NAME: BENNINGTON
PROJECT NUMBER: AC NH 019-1(53)

FILE NAME: ...\plot_files\zd307c3det_epsc.ptf PLOT DATE: 5/16/2011
DESIGN SUPERVISOR: GREG EDWARDS DRAWN BY: STANTEC
DESIGNED BY: MARC FOISY CHECKED BY: GARY SANTY
SHEET 142 OF 577

v:\1953\active\195300002\transportation\drawing\contract_3\plot_files\zd307c3det_epsc.ptf

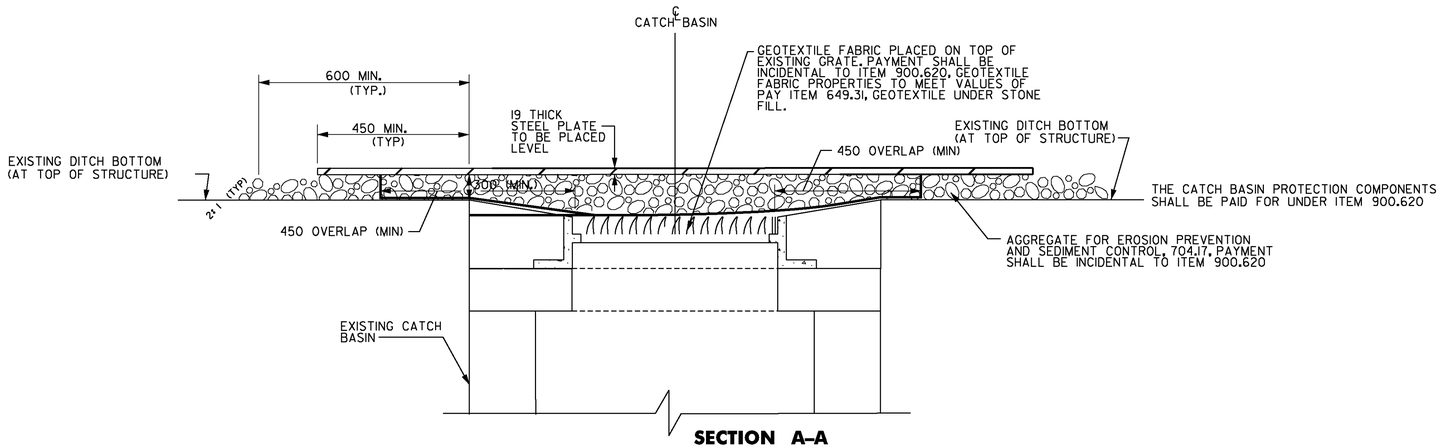

SECTION A-A

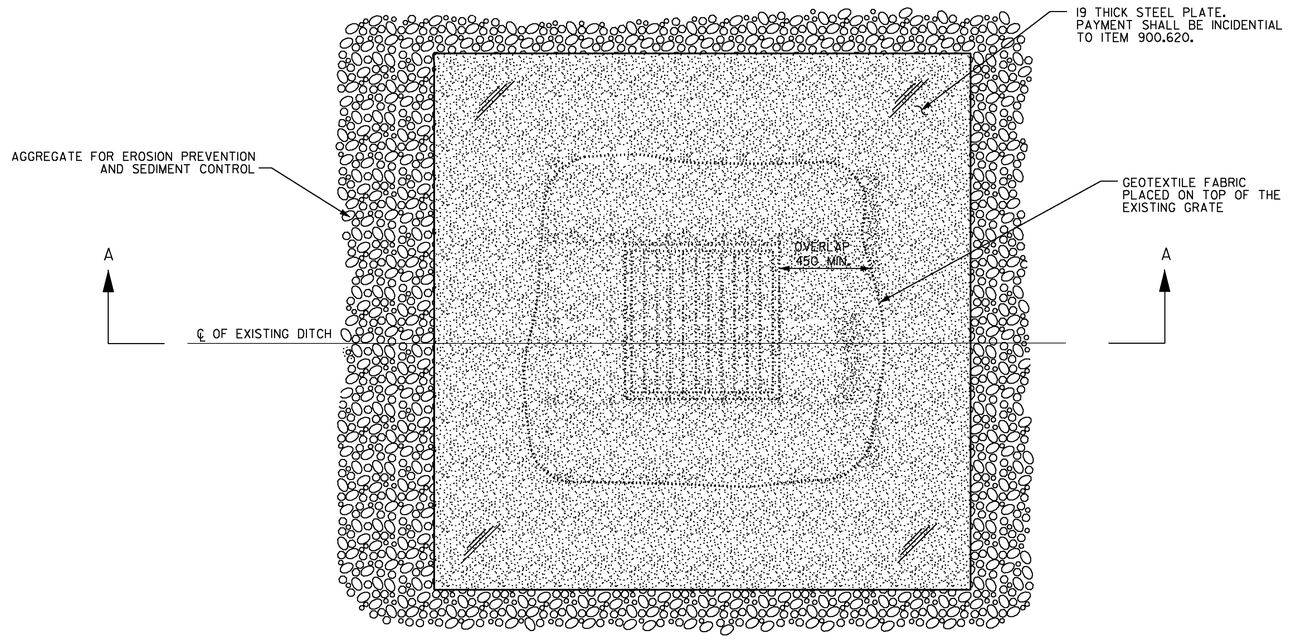

PLAN

(SEE NOTE 1)
NOT TO SCALE

INLET PROTECTION - STEEL PLATE DETAIL (ITEM 900.620)

NOTE:

1. CATCH BASIN PROTECTION COMPONENTS SHALL BE PAID UNDER ITEM 900.620, INLET PROTECTION STEEL PLATE.
2. ALL DIMENSIONS ARE IN MILLIMETERS (mm) EXCEPT WHERE NOTED.

VERMONT AGENCY OF TRANSPORTATION

Stantec

PROJECT NAME: BENNINGTON
PROJECT NUMBER: AC NH 019-1(53)

FILE NAME: ...\plot_files\zd307c3det_epsc.ptf PLOT DATE: 5/16/2011
DESIGN SUPERVISOR: GREG EDWARDS DRAWN BY: STANTEC
DESIGNED BY: MARC FOISY CHECKED BY: GARY SANTY
SHEET 143 OF 577

v:\193\active\195300021\transportation\drawing\contract_3\plot_files\zd307c3det_epsc.ptf

DURABLE 100 WHITE LINE, THERMOPLASTIC
STA. ER 0+958.3 TO ER 1+100.0, SOLID LT. & RT.

TEMPORARY 100 WHITE LINE, PAINT
STA. ER 0+958.3 TO ER 1+100.0, SOLID LT. & RT.

DURABLE 100 YELLOW LINE, THERMOPLASTIC
STA. ER 0+958.3 TO ER 1+100.0, SOLID LT. & RT.
STA. ER 1+040.0, DOUBLE SOLID RT.
(SHIELDS DRIVE CENTERLINE)

TEMPORARY 100 YELLOW LINE, PAINT
STA. ER 0+958.3 TO ER 1+100.0, SOLID LT. & RT.
STA. ER 1+040.0, DOUBLE SOLID RT.
(SHIELDS DRIVE CENTERLINE)

DURABLE 600 STOP BAR, THERMOPLASTIC
STA. ER 1+040.0, RT. (SHIELDS DRIVE)

TEMPORARY 600 STOP BAR, PAINT
STA. ER 1+040.0, RT. (SHIELDS DRIVE)

REMOVING SIGNS
STA. ER 1+027.6, LT.
STA. ER 1+046.4, RT. (3 SIGNS)

DURABLE LETTER OR SYMBOL, THERMOPLASTIC
STA. ER 1+040.0, RT. - "STOP"
(SHIELDS DRIVE)

TEMPORARY LETTER OR SYMBOL, PAINT
STA. ER 1+040.0, RT. - "STOP"
(SHIELDS DRIVE)

ERECTING SALVAGED SIGNS
STA. 1+046.4, RT. (2 SIGNS)

VTrans Metric

VT STATE PLANE GRID

POT STA. ER 0+958.250
BEGIN APPROACH

POC STA. ER 0+985.000
END APPROACH
BEGIN CONSTRUCTION

ER 1+027.6, LT.
R — NO PARKING THIS SIDE OF STREET
N — THIS SIDE OF STREET
N
R

+958.3
+985.0
0.6 m*
3.0 m*
3.3 m*
0.6 m*
1.2 m
3.3 m
3.3 m
1.2 m
3.6 m

ER 1+000

EAST ROAD

ER 1

DURABLE 100 YELLOW LINE (DOUBLE)

DURABLE 100 WHITE LINE

DURABLE LETTER-THERMOPLASTIC
STA ER 0+970 RT
"SCHOOL"

STOP

DURABLE 600 STOP BAR

ER 1+046.4, RT.
EAST RD S
STOP N
SHIELDS DR S
N

ER 1+046.4, RT.
EAST RD R&S
STOP R
SHIELDS DR R&S
R

1.0 m
3.6 m*
3.6 m*
1.3 m
SHIELDS DR.

MATCH LINE STA. ER 1+100, SEE SHEET SP-02

SIGN & DELINEATOR LEGEND

N	= NEW
R	= REMOVE
R&S	= REMOVE & SALVAGE
S	= SALVAGE SIGN
RET	= RETAIN
	= NEW SIGN & POST
	= RETURN TO TOWN OF BENNINGTON
	= TYPE I (WHITE)
	= TYPE I (AMBER)
	= TYPE I (WHITE W/REF PLAQUE)
	= TYPE II
	= TYPE III (WHITE)
	= TYPE III (AMBER)
*	= MATCH EXISTING CONDITIONS

NOTE: 1) FOR ANY TOWN HIGHWAY OR STREET DETAILS, SEE VTrans STANDARD E-193

KEY MAP

5 0 5 M
1:250 SCALE
@ FULL SIZE

NOTE: ALL DIMENSIONS ARE IN MILLIMETERS (mm) EXCEPT WHERE NOTED.

VERMONT AGENCY OF TRANSPORTATION

Stantec

PROJECT NAME: BENNINGTON
PROJECT NUMBER: AC NH 019-1(53)

FILE NAME: ...\zd307c3sgn_plans.ptf
DESIGN SUPERVISOR: GREG EDWARDS
DESIGNED BY: MARC FOISY
SIGNS, MARKINGS & DELINEATORS SP-01
PLOT DATE: 5/16/2011
DRAWN BY: STANTEC
CHECKED BY: GARY SANTY
SHEET 144 OF 577

v:\1853\active\18530002\transportation\drawing\contract_3\plot_files\zd307c3sgn_plans.ptf

DURABLE 100 WHITE LINE, THERMOPLASTIC
STA. ER 1+100.0 TO ER 1+260.0, SOLID LT. & RT.

TEMPORARY 100 WHITE LINE, PAINT
STA. ER 1+100.0 TO ER 1+260.0, SOLID LT. & RT.

DURABLE 100 YELLOW LINE, THERMOPLASTIC
STA. ER 1+100.0 TO ER 1+260.0, SOLID LT. & RT.

TEMPORARY 100 YELLOW LINE, PAINT
STA. ER 1+100.0 TO ER 1+260.0, SOLID LT. & RT.

REMOVING SIGNS
STA. ER 1+120.9, LT.
STA. ER 1+121.2, RT.

VAOT Metric

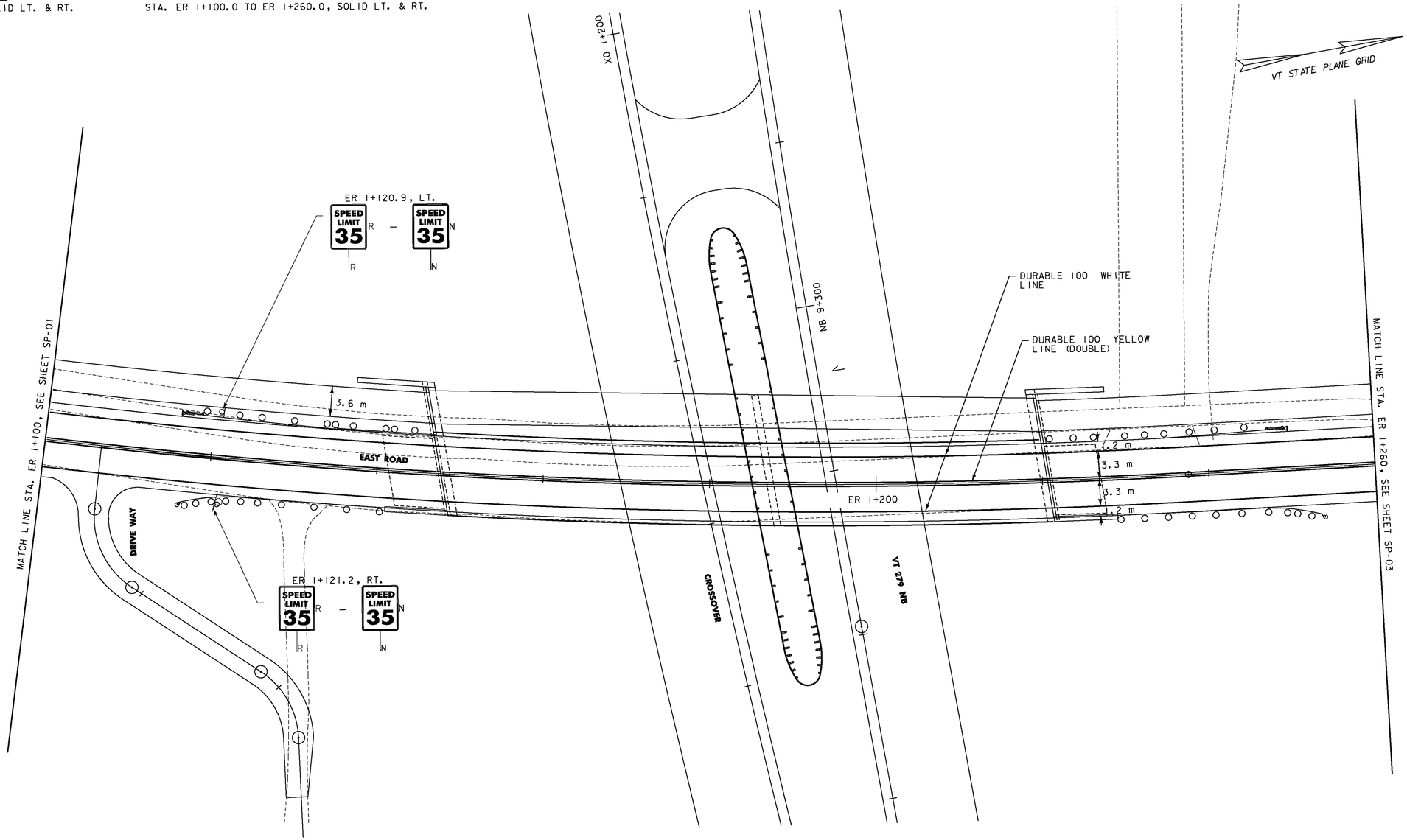

SIGN & DELINEATOR LEGEND

N	= NEW
R	= REMOVE
R&S	= REMOVE & SALVAGE
S	= SALVAGE SIGN
RET	= RETAIN
⊙	= NEW SIGN & POST
①	= RETURN TO TOWN OF BENNINGTON
⊙	= TYPE I (WHITE)
●	= TYPE I (AMBER)
⊙	= TYPE I (WHITE W/REF PLAQUE)
⊙	= TYPE II
⊙	= TYPE III (WHITE)
●	= TYPE III (AMBER)
*	= MATCH EXISTING CONDITIONS

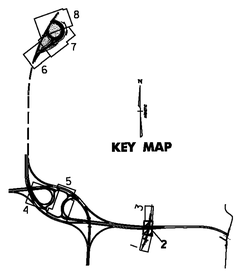

5 0 5 M
1:250 SCALE
@ FULL SIZE

NOTE: ALL DIMENSIONS ARE IN MILLIMETERS (mm) EXCEPT WHERE NOTED.

VERMONT AGENCY OF TRANSPORTATION

Stantec

PROJECT NAME: BENNINGTON
PROJECT NUMBER: AC NH 019-1(53)

FILE NAME: ...\zd307c3sgn_plans.ptf
DESIGN SUPERVISOR: GREG EDWARDS
DESIGNED BY: MARC FOISY
PLOT DATE: 5/16/2011
DRAWN BY: STANTEC
CHECKED BY: GARY SANTY

SIGNS, MARKINGS & DELINEATORS SP-02

SHEET 145 OF 577

v:\1953\active\195300021\transportation\drawing\contract_3\plot_files\zd307c3sgn_plans.ptf

DURABLE 100 WHITE LINE, THERMOPLASTIC
STA. ER 1+260.0 TO ER 1+336.750, SOLID LT. & RT.

TEMPORARY 100 WHITE LINE, PAINT
STA. ER 1+260.0 TO ER 1+336.750, SOLID LT. & RT.
STA. ER 1+316.813 TO ER 1+336.750, DOTTED RT.

DURABLE 100 YELLOW LINE, THERMOPLASTIC
STA. ER 1+260.0 TO ER 1+336.750, SOLID LT. & RT.

TEMPORARY 100 YELLOW LINE, PAINT
STA. ER 1+260.0 TO ER 1+336.750, SOLID LT. & RT.

VT STATE PLANE GRID

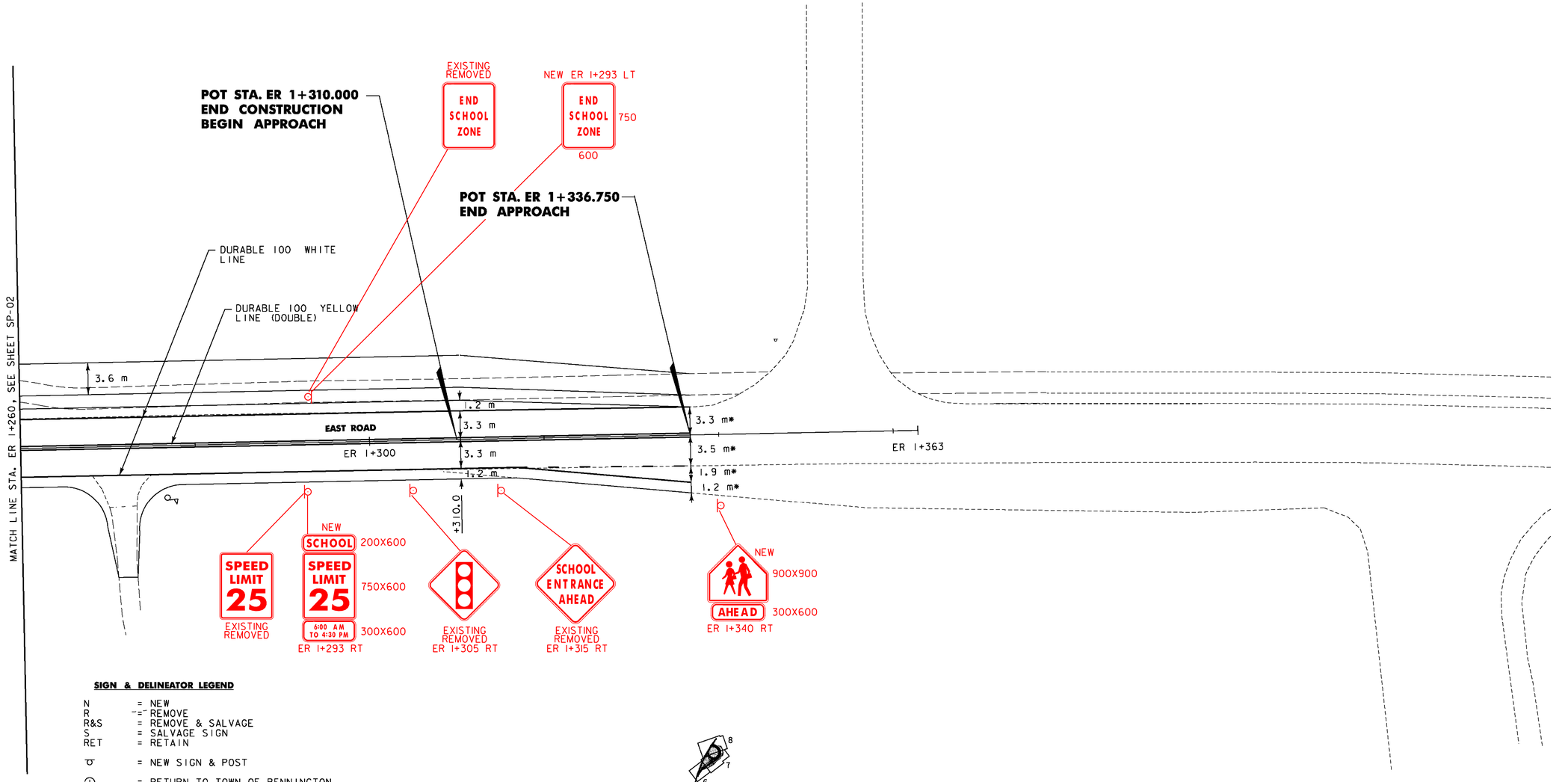

SIGN & DELINEATOR LEGEND

N	=	NEW
R	=	REMOVE
R&S	=	REMOVE & SALVAGE
S	=	SALVAGE SIGN
RET	=	RETAIN
	=	NEW SIGN & POST
Ⓣ	=	RETURN TO TOWN OF BENNINGTON
	=	TYPE I (WHITE)
	=	TYPE I (AMBER)
	=	TYPE I (WHITE W/REF PLAQUE)
	=	TYPE II
	=	TYPE III (WHITE)
	=	TYPE III (AMBER)
*	=	MATCH EXISTING CONDITIONS

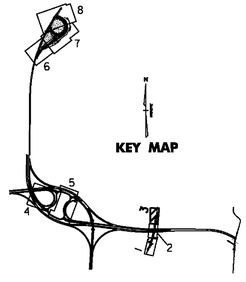

5 0 5 M
1:250 SCALE @ FULL SIZE

NOTE: ALL DIMENSIONS ARE IN MILLIMETERS (mm) EXCEPT WHERE NOTED.

VERMONT AGENCY OF TRANSPORTATION

Stantec

PROJECT NAME: BENNINGTON
PROJECT NUMBER: AC NH 019-1(53)

FILE NAME: ...\zd307c3sgn_plans.ptf
DESIGN SUPERVISOR: GREG EDWARDS
DESIGNED BY: MARC FOISY
PLOT DATE: 5/16/2011
DRAWN BY: STANTEC
CHECKED BY: GARY SANTY
SIGNS, MARKINGS & DELINEATORS SP-03
SHEET 146 OF 577

v:\1953\active\19530002\transportation\drawing\contract_3\plot_files\zd307c3sgn_plans.ptf

NOTES

1. FOR ALL PAVEMENT MARKING DETAILS, SEE VTrans STANDARDS E-191, E-192, & E-193.
2. FOR LOCATION OF CHEVRONS SEE VTRANS STANDARD E-126.

DURABLE 150 YELLOW LINE, THERMOPLASTIC
STA. G 1+295.4 TO STA. G 1+748.6, SOLID LT.

DURABLE 150 WHITE LINE, THERMOPLASTIC
STA. G 1+295.4 TO STA. G 1+748.6, SOLID RT.

DELINEATOR WITH STEEL POST
AS SHOWN - 29
SEE VTRANS STD. E-197 FOR DETAILS

REMOVAL OF EXISTING DELINEATOR
AS SHOWN - 24

REMOVING SIGNS
AS SHOWN - 6

G 1+404.799
R
35 M.P.H.
R
R

DURABLE 150 YELLOW LINE
DURABLE 150 WHITE LINE
RAMP G
MATCH LINE, SEE SHEET SP-05

G 1+358
G ~~1+020.0~~, RT.
RAMP 25 M.P.H.
N N N

SEE NOTE 2
N
N
CHEVRONS-15EA FROM G 1+365 TO G 1+663 LT

SEE NOTE 2
N
N

G 1+798
G ~~1+789.8~~, RT.
N TO NORTH 7
N N

G 1+735.8, LT.
RET
RET

G 1+768.5, RT.
NORTH 7
R R

GG 1+660.8, RT.
N
N

SEE NOTE 2
N
N

SEE NOTE 2
N
N

G 1+685 LT.
GG ~~1+637.8, LT.~~
N ONE WAY
N N

G 1+684.~~907~~, LT.
WRONG WAY
N RET
N RET

GG 1+574.3, RT.
R
R

GG 1+537.9, LT.
R ONE WAY
R R

10 0 10 M
1:500 SCALE
@ FULL SIZE

N
VT STATE PLANE GRID

KEY MAP

NOTE: ALL DIMENSIONS ARE IN MILLIMETERS (mm) EXCEPT WHERE NOTED.

SIGN & DELINEATOR LEGEND

N	= NEW
R	= REMOVE
R&S	= REMOVE & SALVAGE
S	= SALVAGE SIGN
RET	= RETAIN
	= NEW SIGN & POST
	= RETURN TO TOWN OF BENNINGTON
	= TYPE I (WHITE)
	= TYPE I (AMBER)
	= TYPE I (AMBER - BACK TO BACK)
	= TYPE I (WHITE W/REF PLAQUE)
	= TYPE II (WHITE)
	= TYPE III (WHITE)
	= TYPE III (AMBER)
*	= MATCH EXISTING CONDITIONS

VERMONT AGENCY OF TRANSPORTATION

Stantec

PROJECT NAME: BENNINGTON
PROJECT NUMBER: AC NH 019-1(53)

FILE NAME: ...\zd307c3sgn_plans.ptf
DESIGN SUPERVISOR: GREG EDWARDS
DESIGNED BY: MARC FOISY
SIGNS, MARKINGS & DELINEATORS SP-04

PLOT DATE: 5/16/2011
DRAWN BY: STANTEC
CHECKED BY: GARY SANTY
SHEET 147 OF 577

v:\1953\active\195300021\transportation\drawing\contract_3\plot_files\zd307c3sgn_plans.ptf

VAOT Metric

REMOVING SIGNS
AS SHOWN - 4

REMOVAL OF EXISTING DELINEATORS
AS SHOWN - 32

MATCH LINE, SEE SHEET SP-04

GG 1+502.3, LT.
WRONG WAY
R

GG 1+310.0, LT.
R

GG 1+245.4, LT.
R

GG 1+500
GG 1+400
GG 1+300
GG 1+200
SW 4+100
SW 4+000
SW 3+940

SI 1+100
SI 1+200
SI 1+300
SI 1+361

SIGN & DELINEATOR LEGEND

N	= NEW
R	= REMOVE
R&S	= REMOVE & SALVAGE
S	= SALVAGE SIGN
RET	= RETAIN
d	= NEW SIGN & POST
①	= RETURN TO TOWN OF BENNINGTON
	= TYPE I (WHITE)
	= TYPE I (AMBER)
	= TYPE I (AMBER - BACK TO BACK)
	= TYPE I (WHITE W/REF PLAQUE)
	= TYPE II (WHITE)
	= TYPE III (WHITE)
	= TYPE III (AMBER)
*	= MATCH EXISTING CONDITIONS

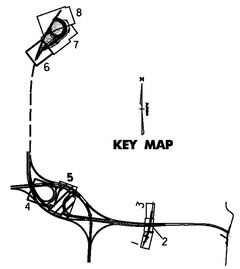

VERMONT AGENCY OF TRANSPORTATION

Stantec

PROJECT NAME: BENNINGTON
PROJECT NUMBER: AC NH 019-1(53)

FILE NAME: ...\zd307c3sgn_plans.ptf
DESIGN SUPERVISOR: GREG EDWARDS
DESIGNED BY: MARC FOISY
PLOT DATE: 5/16/2011
DRAWN BY: STANTEC
CHECKED BY: GARY SANTY

SIGNS, MARKINGS & DELINEATORS SP-05

v:\853\active\B530002\transportation\drawing\contract_3\plot_files\zd307c3sgn_plans.ptf

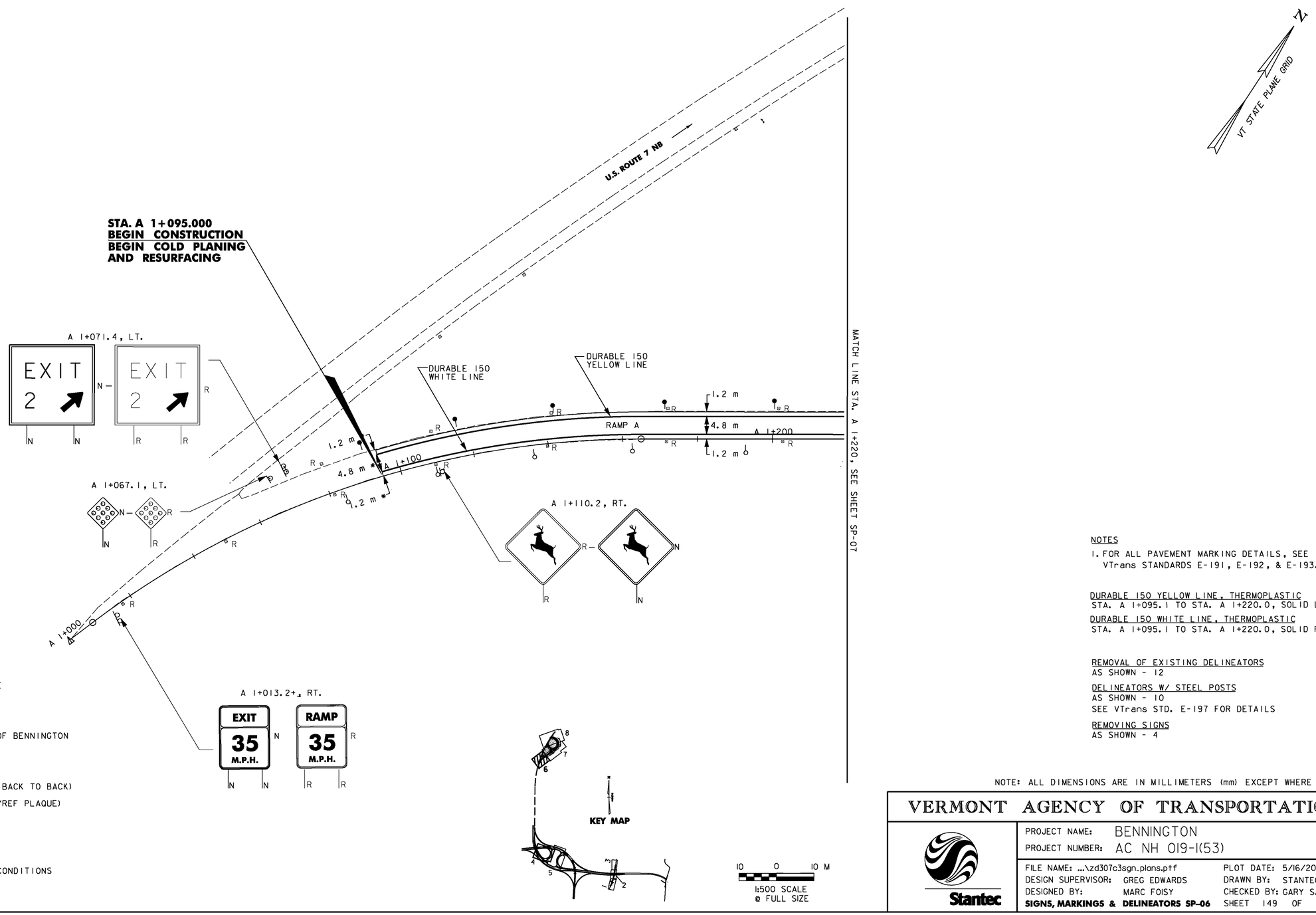

SIGN & DELINEATOR LEGEND

N	= NEW
R	= REMOVE
R&S	= REMOVE & SALVAGE
S	= SALVAGE SIGN
RET	= RETAIN
	= NEW SIGN & POST
	= RETURN TO TOWN OF BENNINGTON
	= TYPE I (WHITE)
	= TYPE I (AMBER)
	= TYPE I (AMBER - BACK TO BACK)
	= TYPE I (WHITE W/REF PLAQUE)
	= TYPE II (WHITE)
	= TYPE III (WHITE)
	= TYPE III (AMBER)
*	= MATCH EXISTING CONDITIONS

NOTES

1. FOR ALL PAVEMENT MARKING DETAILS, SEE VTrans STANDARDS E-191, E-192, & E-193.

DURABLE 150 YELLOW LINE, THERMOPLASTIC
STA. A 1+095.1 TO STA. A 1+220.0, SOLID LT.

DURABLE 150 WHITE LINE, THERMOPLASTIC
STA. A 1+095.1 TO STA. A 1+220.0, SOLID RT.

REMOVAL OF EXISTING DELINEATORS
AS SHOWN - 12

DELINEATORS W/ STEEL POSTS
AS SHOWN - 10
SEE VTrans STD. E-197 FOR DETAILS

REMOVING SIGNS
AS SHOWN - 4

NOTE: ALL DIMENSIONS ARE IN MILLIMETERS (mm) EXCEPT WHERE NOTED.

VERMONT AGENCY OF TRANSPORTATION

Stantec

PROJECT NAME: BENNINGTON
PROJECT NUMBER: AC NH 019-1(53)

FILE NAME: ...\zd307c3sgn_plans.ptf
DESIGN SUPERVISOR: GREG EDWARDS
DESIGNED BY: MARC FOISY
SIGNS, MARKINGS & DELINEATORS SP-06

PLOT DATE: 5/16/2011
DRAWN BY: STANTEC
CHECKED BY: GARY SANTY
SHEET 149 OF 577

v:\1953\active\19530002\transportation\drawing\contract_3\plot_files\zd307c3sgn_plans.ptf

VAOT Metric

NOTES

1. FOR ALL PAVEMENT MARKING DETAILS, SEE VTrans STANDARDS E-191, E-192, & E-193.

DURABLE 150 YELLOW LINE, THERMOPLASTIC
STA. A 1+220.0 TO STA. A 1+540.0, SOLID LT.
STA. B 1+171.4 TO STA. B 1+435.0, SOLID LT.

DURABLE 150 WHITE LINE, THERMOPLASTIC
STA. A 1+220.0 TO STA. A 1+540.0, SOLID RT.
STA. B 1+171.4 TO STA. B 1+435.0, SOLID RT.

REMOVAL OF EXISTING DELINEATORS
AS SHOWN - 36

DELINEATORS WITH STEEL POSTS
AS SHOWN - 56
SEE VTrans STD. E-197 FOR DETAILS

REMOVING SIGNS
AS SHOWN - 4

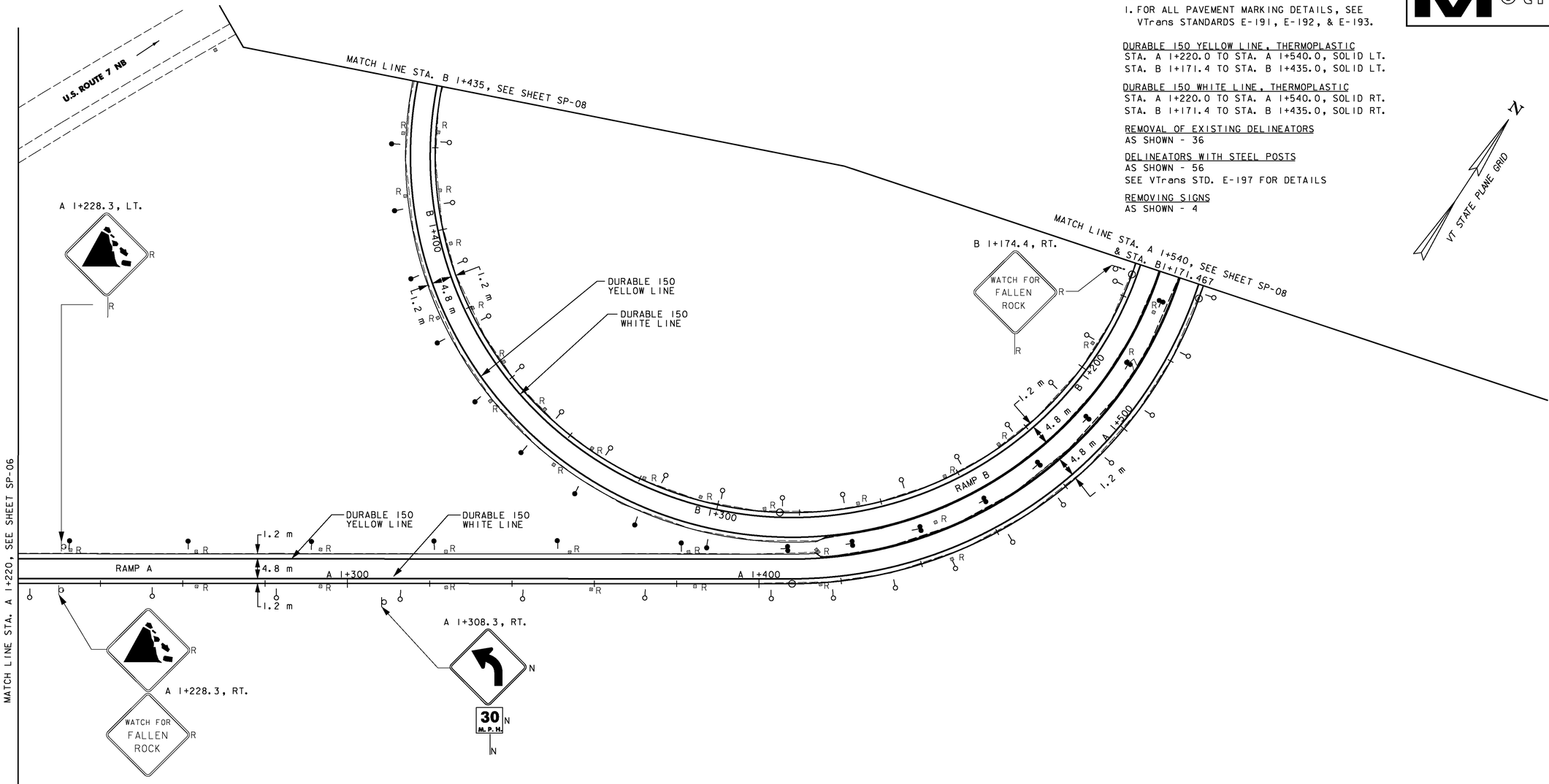

SIGN & DELINEATOR LEGEND

N	= NEW
R	= REMOVE
R&S	= REMOVE & SALVAGE
S	= SALVAGE SIGN
RET	= RETAIN
⊙	= NEW SIGN & POST
Ⓘ	= RETURN TO TOWN OF BENNINGTON
	= TYPE I (WHITE)
	= TYPE I (AMBER)
	= TYPE I (AMBER - BACK TO BACK)
	= TYPE I (WHITE W/REF PLAQUE)
	= TYPE II (WHITE)
	= TYPE III (WHITE)
	= TYPE III (AMBER)
*	= MATCH EXISTING CONDITIONS

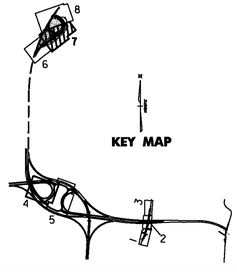

10 0 10 M
1:500 SCALE @ FULL SIZE

NOTE: ALL DIMENSIONS ARE IN MILLIMETERS (mm) EXCEPT WHERE NOTED.

VERMONT AGENCY OF TRANSPORTATION

Stantec

PROJECT NAME: BENNINGTON
PROJECT NUMBER: AC NH 019-1(53)

FILE NAME: ...\zd307c3sgn_plans.ptf
DESIGN SUPERVISOR: GREG EDWARDS
DESIGNED BY: MARC FOISY
PLOT DATE: 5/16/2011
DRAWN BY: STANTEC
CHECKED BY: GARY SANTY

SIGNS, MARKINGS & DELINEATORS SP-07
SHEET 150 OF 577

v:\1953\active\195300021\transportation\drawing\contract_3\plot_files\zd307c3sgn_plans.ptf

SIGN & DELINEATOR LEGEND

N	= NEW
R	= REMOVE
R&S	= REMOVE & SALVAGE
S	= SALVAGE SIGN
RET	= RETAIN
	= NEW SIGN & POST
	= RETURN TO TOWN OF BENNINGTON
	= TYPE I (WHITE)
	= TYPE I (AMBER)
	= TYPE I (AMBER - BACK TO BACK)
	= TYPE I (WHITE W/REF PLAQUE)
	= TYPE II (WHITE)
	= TYPE III (WHITE)
	= TYPE III (AMBER)
*	= MATCH EXISTING CONDITIONS

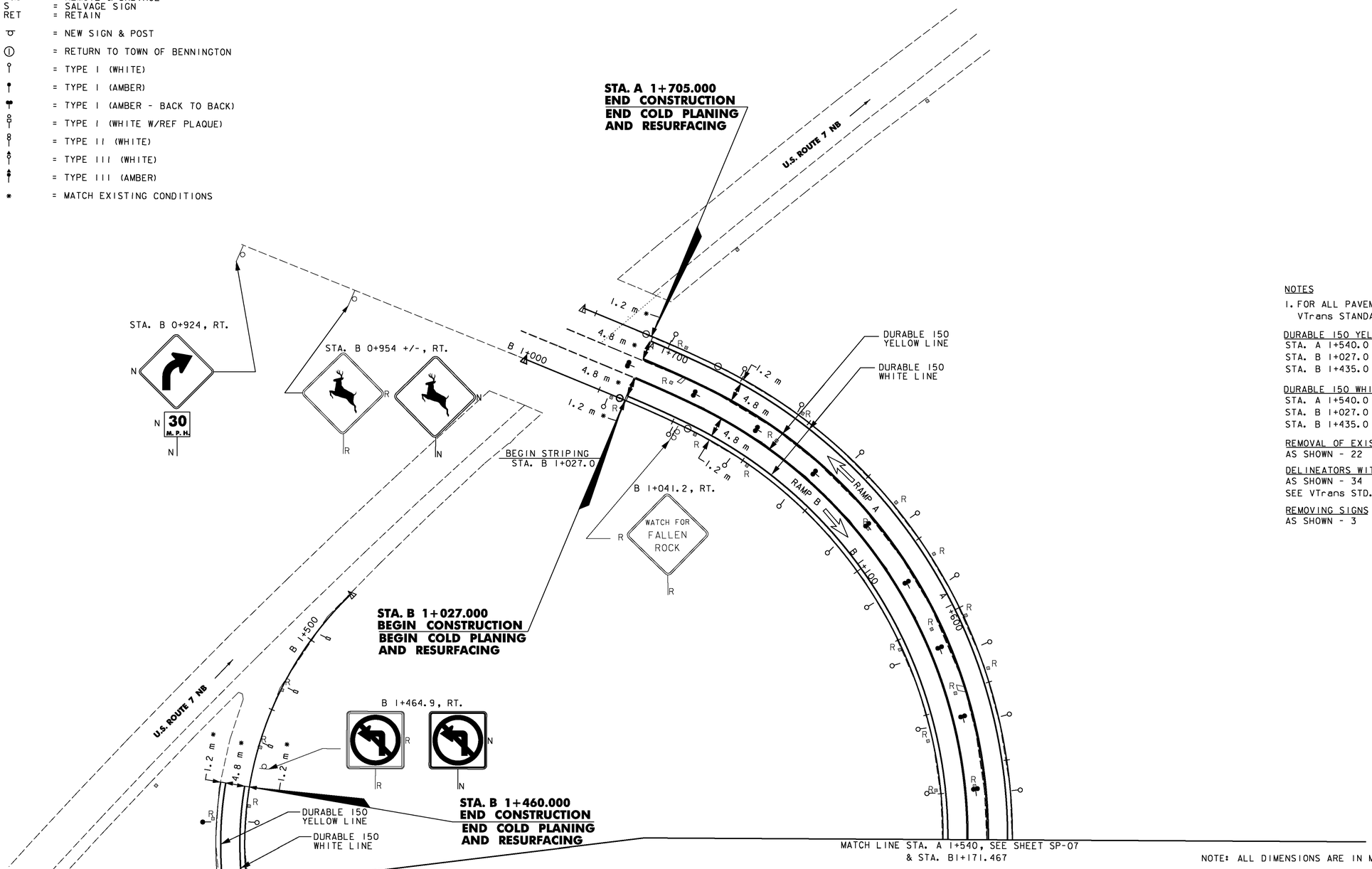

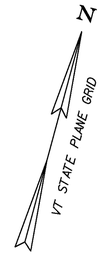

NOTES

1. FOR ALL PAVEMENT MARKING DETAILS, SEE VTrans STANDARDS E-191, E-192, & E-193.

DURABLE 150 YELLOW LINE, THERMOPLASTIC
STA. A 1+540.0 TO STA. A 1+705.0, SOLID LT.
STA. B 1+027.0 TO B 1+171.4, LT.
STA. B 1+435.0 TO B 1+460.0, LT.

DURABLE 150 WHITE LINE, THERMOPLASTIC
STA. A 1+540.0 TO STA. A 1+705.0, SOLID RT.
STA. B 1+027.0 TO STA. B 1+171.4, SOLID RT.
STA. B 1+435.0 TO STA. B 1+460.0, SOLID RT.

REMOVAL OF EXISTING DELINEATORS
AS SHOWN - 22

DELINEATORS WITH STEEL POSTS
AS SHOWN - 34
SEE VTrans STD. E - 197

REMOVING SIGNS
AS SHOWN - 3

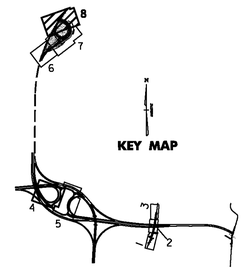

NOTE: ALL DIMENSIONS ARE IN MILLIMETERS (mm) EXCEPT WHERE NOTED.

10 0 10 M
1:500 SCALE
@ FULL SIZE

VERMONT AGENCY OF TRANSPORTATION

Stantec

PROJECT NAME: BENNINGTON
PROJECT NUMBER: AC NH 019-1(53)

FILE NAME: ...\zd307c3sgn_plans.ptf
DESIGN SUPERVISOR: GREG EDWARDS
DESIGNED BY: MARC FOISY
SIGNS, MARKINGS & DELINEATORS SP-08
PLOT DATE: 5/16/2011
DRAWN BY: STANTEC
CHECKED BY: GARY SANTY
SHEET 151 OF 577

v:\1853\active\853100021\transportation\drawing\contract_3\plot_files\zd307c3sgn_plans.ptf

STATE OF VERMONT
AGENCY OF TRANSPORTATION

TRAFFIC SIGN SUMMARY SHEET

VAOT Metric

KILOMETER MARKER, STATION, OR SIGN NUMBER	SIGN LEGEND	SIGN DIMENSIONS EA	WIDTH	HEIGHT	NEW & SALVAGED SIGNS "A"	"B"	SALV SIGN	SALV TIS	EXIST POST RETAIN	EXIST POST SALVAGE	NEW SIGN POSTS NO. OF POSTS	FLANGED CHANNEL kg/m 1.7	3.0	4.5	SQUARE STEEL kg/m 3.4	3.9	5.0	ANCHOR	SLEEVE	TUBULAR ALUMINUM Ø kg/m 75 1.9	100 2.5	100 MOD 2.5	TUBULAR STEEL Ø FOUNDATION	kg/m 75 11.3	89 13.4	100 16.1	125 21.7	W-SHAPE STEEL FTG. SIZE 600	750	WEIGHT	POST SIZE	SIGN FRAME REQUIRED	REMARKS	SIGN DETAIL DETAIL ON SHEET NUMBER	STD. SHEET NUMBER
OPTION ITEMS																																					
RAMP G I+358 G ~~I+020.0~~, RT.	RAMP 25 M.P.H.	1	900	1200	1.08						2			9.45 ~~9.2~~																					W13-3		E-150
SEE SHEET SP-04 FOR LOCATIONS		15 ~~11~~	750	900	10.13 ~~7.43~~						15 ~~11~~			63.4 ~~50.6~~																					W1-8		E-150
~~G~~ I+685 ~~G6 I+637.8~~, LT.	ONE WAY	1	900	300	0.27						2			7.32 ~~9.2~~																							
G I+660.8, RT.		1	900	900	0.81						2 ~~1~~			8.84 ~~4.6~~																					R3-2		E-143
I+798 G ~~I+789.8~~, RT.	TO NORTH 7	1 1 1 1	750 750 900 600	375 375 900 450	0.28 0.28 0.81 0.27						2 ~~1~~			10.7 ~~4.6~~																							
EAST ROAD ER I+027.6, LT.	R THIS SIGN ON STREET	1	300	450	0.14						1			4.6																						TSD-01	
ER I+046.4, RT.	EAST RD STOP SIGNALS AHD	1	750	750	0.56		1 1				1			4.6																					MOUNT NEW STOP SIGN WITH SALVAGED STREET SIGNS. INSTALL SALVAGED STREET SIGNS 90° TO EACH OTHER, 150 ABOVE THE STOP SIGN USING POST TOP MOUNTING BRACKET ON A NEW POST.	- -	- -
																																		RI-1		E-143
ER I+120.9, LT.	SPEED LIMIT 35	1	600	750	0.45						1			4.6																					R2-1		E-142
ER I+121.2, RT.	SPEED LIMIT 35	1	600	750	0.45						1			4.6																					R2-1		E-142
EXIT 2 RAMP A A I+013.2, RT.	EXIT 35 M.P.H.	1	900	1200	1.08						2			9.3 ~~9.2~~																					W13-2		E-150
A I+067.1, LT.		1	450	450	0.20						1			3.8 ~~4.6~~																					OM-1		E-150
A I+071.4, LT.	EXIT 2	1	1800	1500		2.70					~~2~~ 0			~~9.2~~ 0	INSTALLED ON EXISTING POSTS																					E5-1a		E-131
												m	m	m	m	m	m	EA	kg	kg	kg		kg	kg	kg	kg								
TOTALS			m² 14.11	m² 2.70	EA. 2	m²						m 119.6		m					kg		EA.		kg				EA.	EA.	kg					

FINAL POST LENGTHS ARE TO BE DETERMINED IN THE FIELD. POST SIZES ARE COMPUTED BASED ON INFORMATION FURNISHED ON THE STANDARD SHEETS AND THE TRAFFIC & SAFETY DIVISION'S "SIGN POST DESIGN GUIDELINE."

PROJECT NAME: BENNINGTON
PROJECT NUMBER: AC NH 019-1(53)

FILE NAME: tsss.dgn
PROJECT LEADER: GREG EDWARDS
DESIGNED BY: MARC FOISY
PLOT DATE: 5/25/2011
DRAWN BY: STANTEC
CHECKED BY: GARY SANTY

TRAFFIC SIGN SUMMARY TSS-01

ADDITIONAL NEW SIGNS ON EAST ROAD

TYPE A SIGNS

FLANGED CHANNEL POSTS 4.5 Kg/m

STA ER 1+293 LT

S5-2 — END SCHOOL ZONE — 600mm x 750mm (24" x 30") — 0.45 M² ✓ — 1 @ 4.0m

STA ER 1+293 RT

S4-3 — SCHOOL — 200 x 600 (8" x 24") — 0.12 M² ✓

R2-1 — SPEED LIMIT 25 — 600 x 750 (24" x 30") — 0.45 M² ✓ — 1 @ 4.3m

S4-1 — 6:00AM TO 4:30PM — 300 x 600 (12" x 24") — 0.18 M² ✓

STA ER 1+340 RT

S1-1 — 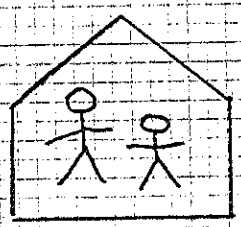 — 900 x 900 (36" x 36") — 0.81 M² ✓ — 1 @ 4.3m

W16-9P — AHEAD — 300 x 600 (12" x 24") — 0.18 M² ✓

TOTAL PAID 2.19 M² ✓

Computed by PWK Date 11-12-09 Checked by [illegible] Date 11.13.09

STATE OF VERMONT
AGENCY OF TRANSPORTATION

TRAFFIC SIGN SUMMARY SHEET

VAOT Metric

KILOMETER MARKER, STATION, OR SIGN NUMBER	SIGN LEGEND	SIGN DIMENSIONS EA	WIDTH	HEIGHT	NEW & SALVAGED SIGNS "A"	"B"	SALV SIGN	SALV TIS	EXIST POST RETAIN	SALVAGE	NEW SIGN POSTS NO. OF POSTS	FLANGED CHANNEL kg/m 1.7	3.0	4.5	SQUARE STEEL 44 kg/m 3.4	50 kg/m 3.9	63 kg/m 5.0	ANCHOR	SLEEVE	TUBULAR ALUMINUM Ø 75 kg/m 1.9	100 kg/m 2.5	100 MOD kg/m 2.5	TUBULAR STEEL Ø FOUND-ATION	75 kg/m 11.3	89 kg/m 13.4	100 kg/m 16.1	125 kg/m 21.7	W-SHAPE STEEL FTG. SIZE 600	750	WEIGHT	POST SIZE	SIGN FRAME REQUIRED	REMARKS	SIGN DETAIL DETAIL ON SHEET NUMBER	STD. SHEET NUMBER
OPTION ITEMS																																				
A 1+110.2, RT. B 0+954, RT.		2 ~~1~~	900	900	1.62 ~~0.81~~						4 ~~1~~			17.16 ~~4.6~~																					WI1-3	TSD-01	
A 1+308.3, RT.		1	900	900	0.81						2 ~~1~~			9.46 ~~4.6~~																					WI-2L		E-151
		1	600	600	0.36																														WI3-1		E-155
EXIT 2 RAMP B B 0+924.0, RT.		1	900	900	0.81						2 ~~1~~			9.54 ~~4.6~~																					WI-2R		E-151
		1	600	600	0.36																														WI3-1		E-155
B 0+954.0, RT.		~~1~~	~~900~~	~~900~~	~~0.81~~	SEE ABOVE					~~1~~			~~4.6~~																					WI1-3	TSD-01	
B 1+464.9, RT.		1	900	900	0.81						2 ~~1~~			9.28 ~~4.6~~																					R3-2		E-143
	SHT. TSS-02 TOTALS				4.77									23.0																						
	SHT. TSS-01 TOTALS				14.11	2.70	2							119.6																						
	SUB TOTALS				18.88	2.70	2							142.6																						
	ROUNDING				0	0	0							0																						
												m	m	m	m	m	m	EA	kg	kg	kg		kg	kg	kg	kg									
TOTALS					m² 18.88	m² 2.70	EA. 2	m²				m 142.6			m				kg			EA.	kg				EA.	EA.	kg						

FINAL POST LENGTHS ARE TO BE DETERMINED IN THE FIELD. POST SIZES ARE COMPUTED BASED ON INFORMATION FURNISHED ON THE STANDARD SHEETS AND THE TRAFFIC & SAFETY DIVISION'S "SIGN POST DESIGN GUIDELINE."

PROJECT NAME: BENNINGTON
PROJECT NUMBER: AC NH 019-1(53)

FILE NAME: tsss.dgn
PROJECT LEADER: GREG EDWARDS
DESIGNED BY: MARC FOISY
TRAFFIC SIGN SUMMARY TSS-02

PLOT DATE: 5/25/2011
DRAWN BY: STANTEC
CHECKED BY: GARY SANTY
SHEET 153 OF 577

Metric

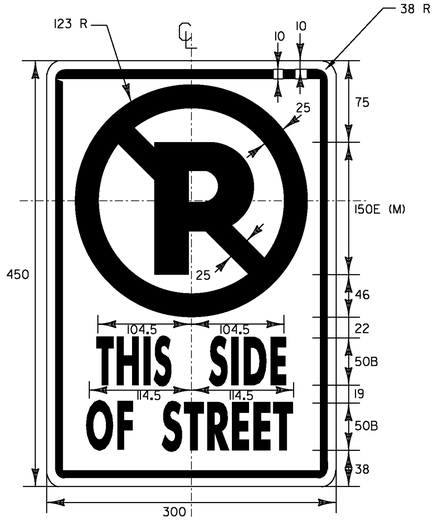

RED (REFL.) LEGEND AND BORDER
WHITE (REFL.) BACKGROUND
BLACK "P"
SEE VTrans STANDARD E-143 FOR MATERIALS

LOCATIONS

STA. ER 1+027.6, LT.

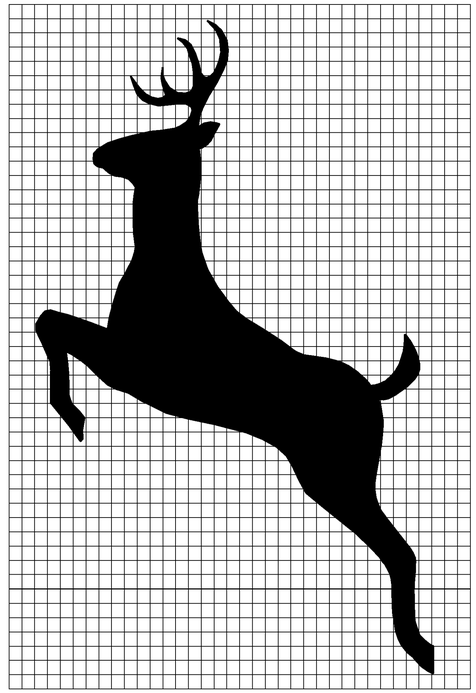

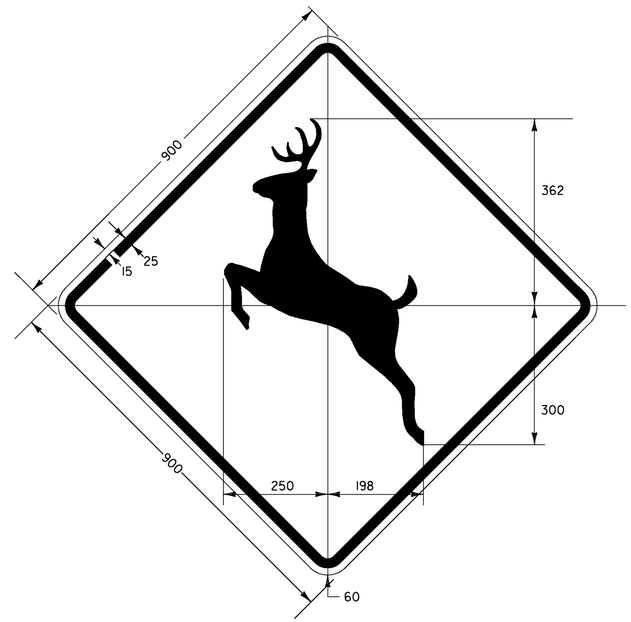

YELLOW RETRO REFLECTIVE BACKGROUND
WITH BLACK SYMBOL AND BORDER.

SEE VTRANS STANDARD
E-151 FOR MATERIALS

LOCATIONS

EXIT 2 STA. A 1+110.2,RT.
EXIT 2 STA. B 0+954.0,RT.

V:\1953\active\95300002\transportation\drawing\contract_3\plot_files\zd307c3det_sgn.ptf

VERMONT AGENCY OF TRANSPORTATION

Stantec

PROJECT NAME: BENNINGTON
PROJECT NUMBER: AC NH 019-1(53)

FILE NAME: ...\plot_files\zd307c3det_sgn.ptf PLOT DATE: 5/25/2011
DESIGN SUPERVISOR: GREG EDWARDS DRAWN BY: STANTEC
DESIGNED BY: MARC FOISY CHECKED BY: GARY SANTY
TRAFFIC SIGN DETAILS TSD-01 SHEET 154 OF 577

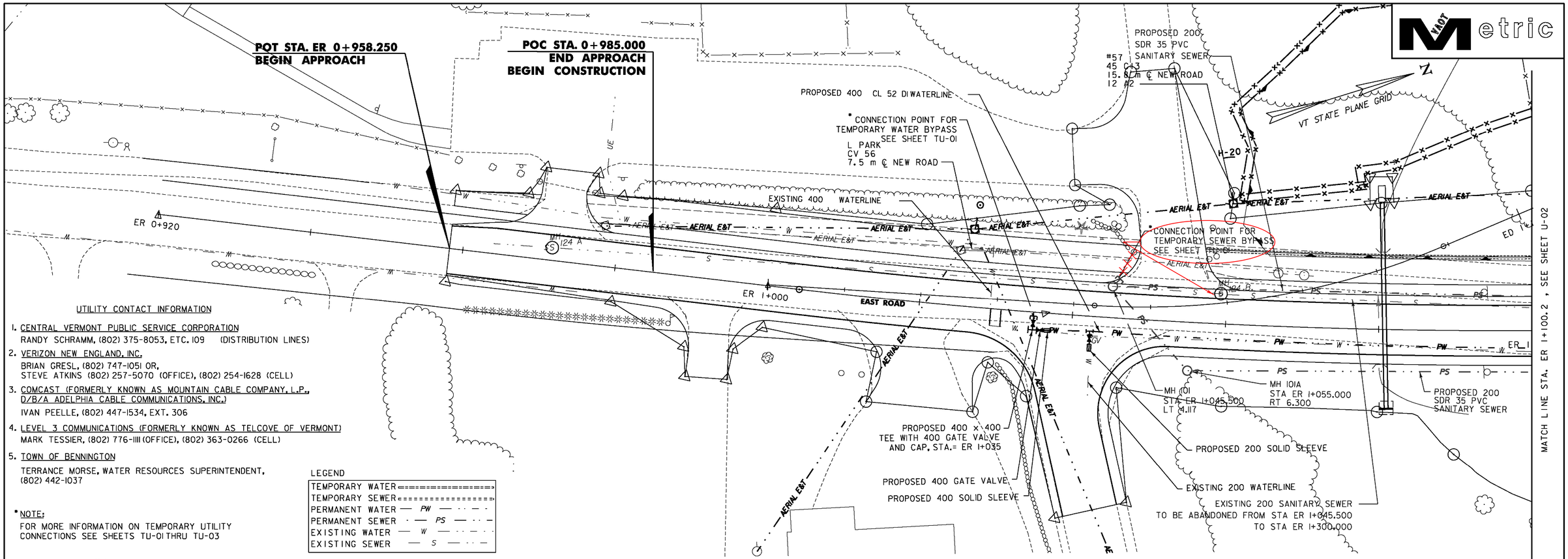

UTILITY CONTACT INFORMATION

1. CENTRAL VERMONT PUBLIC SERVICE CORPORATION
   RANDY SCHRAMM, (802) 375-8053, ETC. 109 (DISTRIBUTION LINES)
2. VERIZON NEW ENGLAND, INC.
   BRIAN GRESL, (802) 747-1051 OR,
   STEVE ATKINS (802) 257-5070 (OFFICE), (802) 254-1628 (CELL)
3. COMCAST (FORMERLY KNOWN AS MOUNTAIN CABLE COMPANY, L.P., D/B/A ADELPHIA CABLE COMMUNICATIONS, INC.)
   IVAN PEELLE, (802) 447-1534, EXT. 306
4. LEVEL 3 COMMUNICATIONS (FORMERLY KNOWN AS TELCOVE OF VERMONT)
   MARK TESSIER, (802) 776-1111 (OFFICE), (802) 363-0266 (CELL)
5. TOWN OF BENNINGTON
   TERRANCE MORSE, WATER RESOURCES SUPERINTENDENT, (802) 442-1037

*NOTE:
FOR MORE INFORMATION ON TEMPORARY UTILITY CONNECTIONS SEE SHEETS TU-01 THRU TU-03

LEGEND

TEMPORARY WATER	
TEMPORARY SEWER	
PERMANENT WATER	PW
PERMANENT SEWER	PS
EXISTING WATER	W
EXISTING SEWER	S

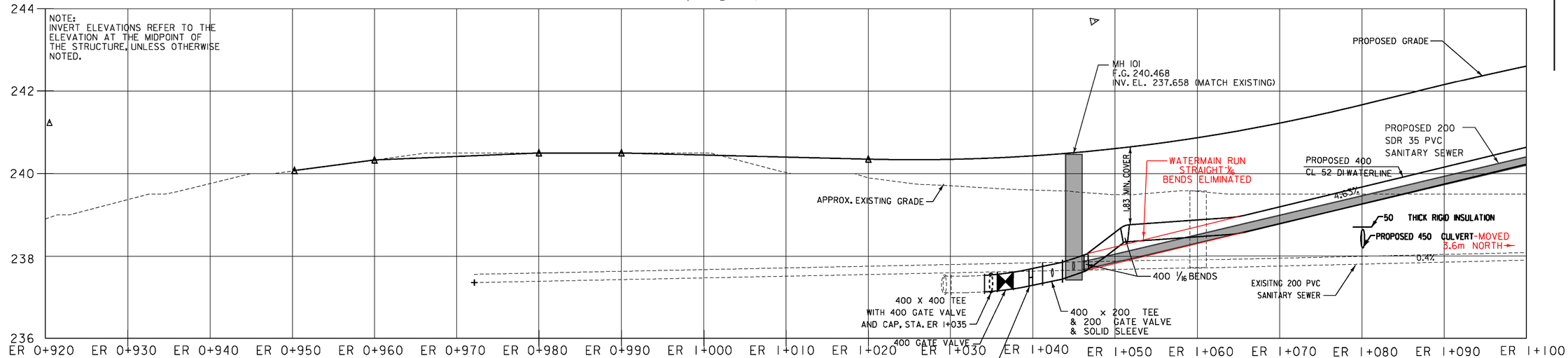

PROFILE OF WATER AND SEWER MAIN ER 0+920 TO ER 1+100

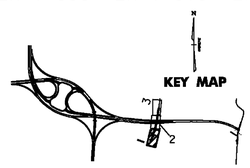

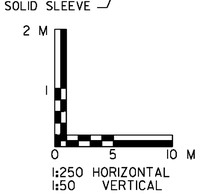

1:250 HORIZONTAL
1:50 VERTICAL

NOTE: ALL DIMENSIONS ARE IN MILLIMETERS (mm) EXCEPT WHERE NOTED.

VERMONT AGENCY OF TRANSPORTATION

Stantec

PROJECT NAME: BENNINGTON	
PROJECT NUMBER: AC NH 019-1(53)	
FILE NAME: ...\plot_files\zd307c3utl_1.ptf	PLOT DATE: 5/25/2011
DESIGN SUPERVISOR: GREG EDWARDS	DRAWN BY: STANTEC
DESIGNED BY: T. KNIGHT	CHECKED BY: M. CHENETTE
UTILITY PLAN U-01	SHEET 155 OF 577

v:\1953\active\195310002\transportation\drawing\contract_3\plot_files\zd307c3utl_1.ptf

VT STATE PLANE GRID

LEGEND

TEMPORARY WATER	==========
TEMPORARY SEWER	==========
PERMANENT WATER	— PW —
PERMANENT SEWER	— PS —
EXISTING WATER	— W —
EXISTING SEWER	— S —

NOTES:

1. FOR MORE INFORMATION ON TEMPORARY UTILITY CONNECTIONS SEE SHEETS TC-04 AND TC-05.
2. POWER STANCHION, SEWER HEAT TRACE, SEWER HEAT TRACE CONTROLLERS, AND ELECTRICAL CONDUIT (50 SCH 80) SHALL BE PAID INCIDENTIAL TO ITEM 900.645 - SPECIAL PROVISION (SEWER MAIN ON BRIDGE) (200 MM).

KEY MAP

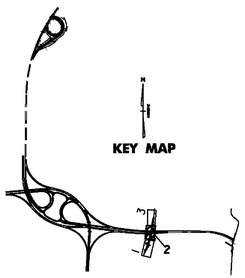

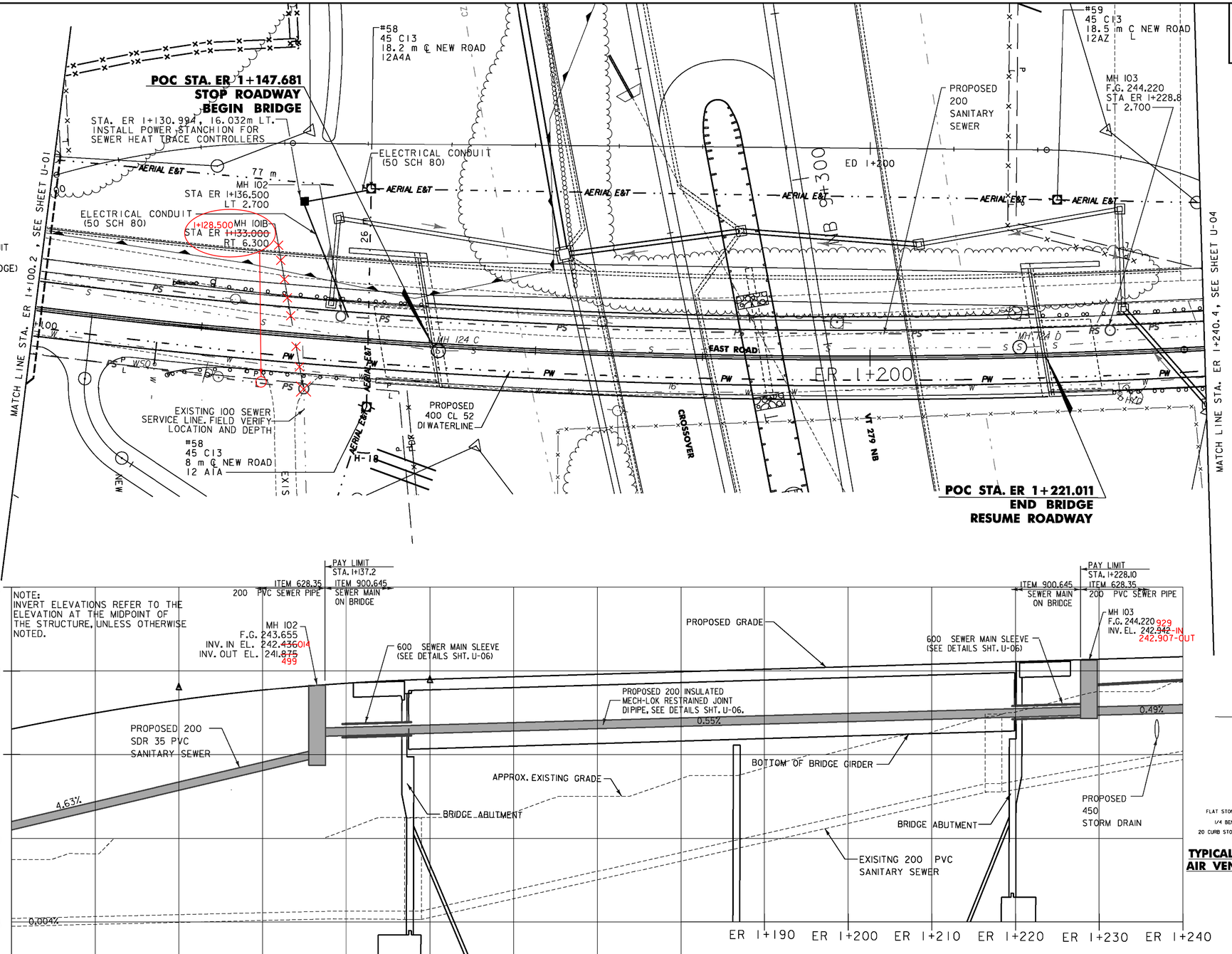

PROFILE OF SEWER MAIN
ER 1+100 TO ER 1+240

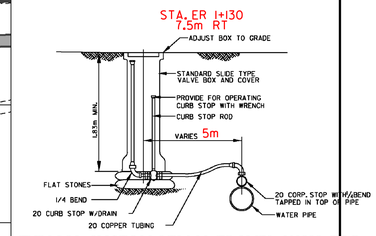

TYPICAL INSTALLATION-TRAVEL WAY FOR AIR VENT OR CHLORINATION INJECTION
NOT TO SCALE

2 M
1
0 5 10 M
1:250 HORIZONTAL
1:50 VERTICAL

NOTE: ALL DIMENSIONS ARE IN MILLIMETERS (mm) EXCEPT WHERE NOTED.

VERMONT AGENCY OF TRANSPORTATION

Stantec

PROJECT NAME: BENNINGTON
PROJECT NUMBER: AC NH 019-1(53)

FILE NAME: ...\plot_files\zd307c3utl_2.ptf
DESIGN SUPERVISOR: GREG EDWARDS
DESIGNED BY:
UTILITY PLAN U-02

PLOT DATE: 5/25/2011
DRAWN BY: STANTEC
CHECKED BY:
SHEET 156 OF 577

v:\1853\active\185300021\transportation\drawing\contract_3\plot_files\zd307c3utl_2.ptf

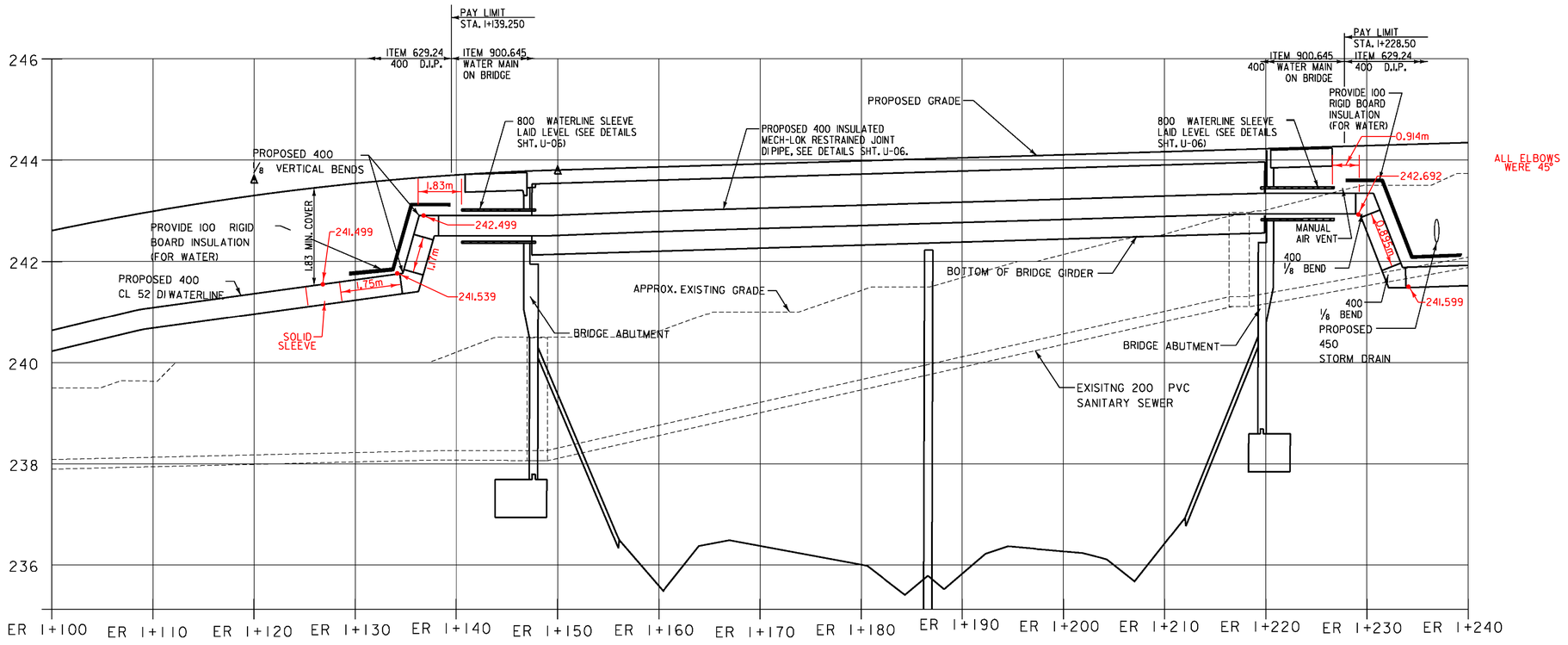

PROFILE OF WATERLINE
ER 1+100 TO ER 1+240

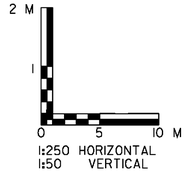

NOTE: ALL DIMENSIONS ARE IN MILLIMETERS (mm) EXCEPT WHERE NOTED.

VERMONT AGENCY OF TRANSPORTATION

Stantec

PROJECT NAME: BENNINGTON
PROJECT NUMBER: AC NH 019-1(53)

FILE NAME: ...\plot_files\zd307c3utl_3.ptf
DESIGN SUPERVISOR: GREG EDWARDS
DESIGNED BY: T. KNIGHT
UTILITY PLAN U-03

PLOT DATE: 5/25/2011
DRAWN BY: STANTEC
CHECKED BY: M. CHENETTE
SHEET 157 OF 577

v:\1853\active\185300021\transportation\drawing\contract_3\plot_files\zd307c3utl_3.ptf

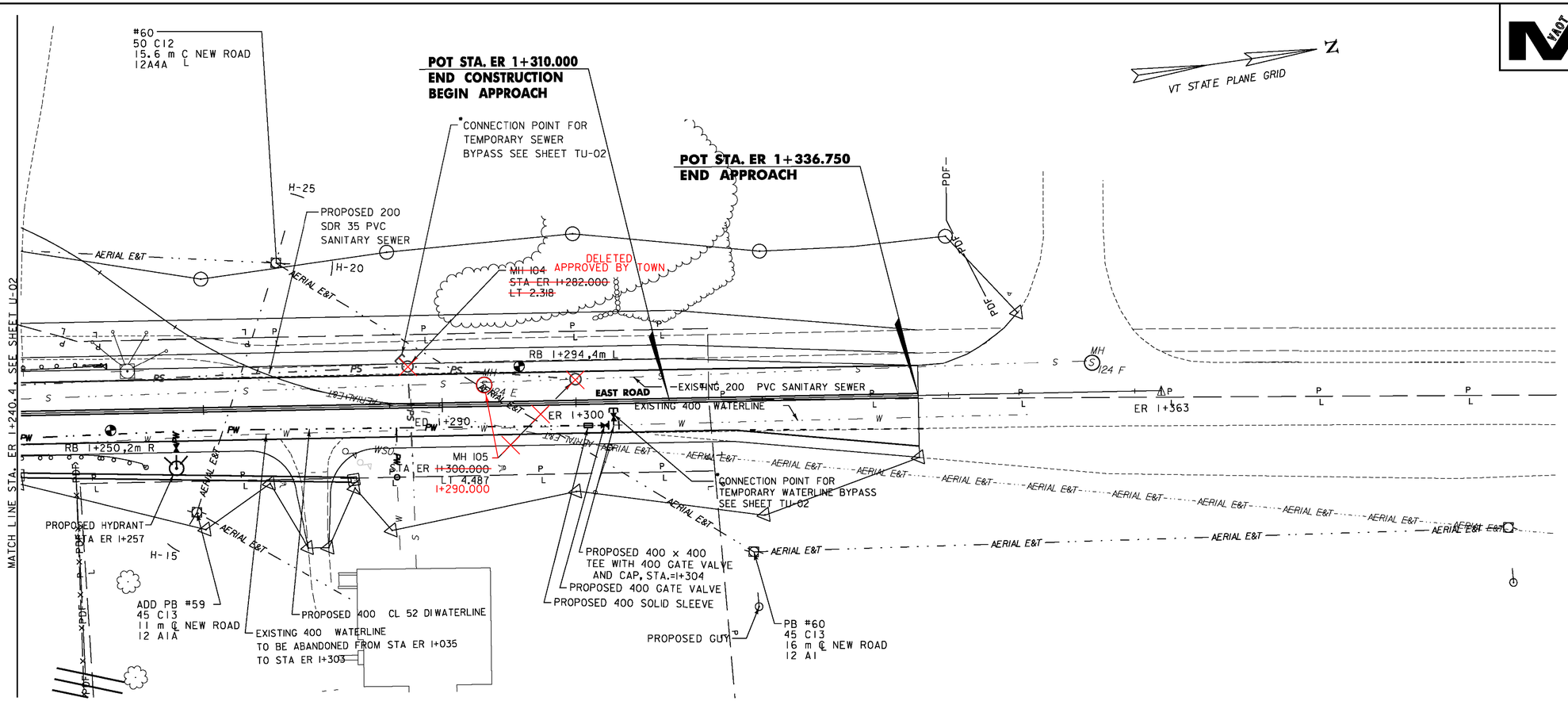

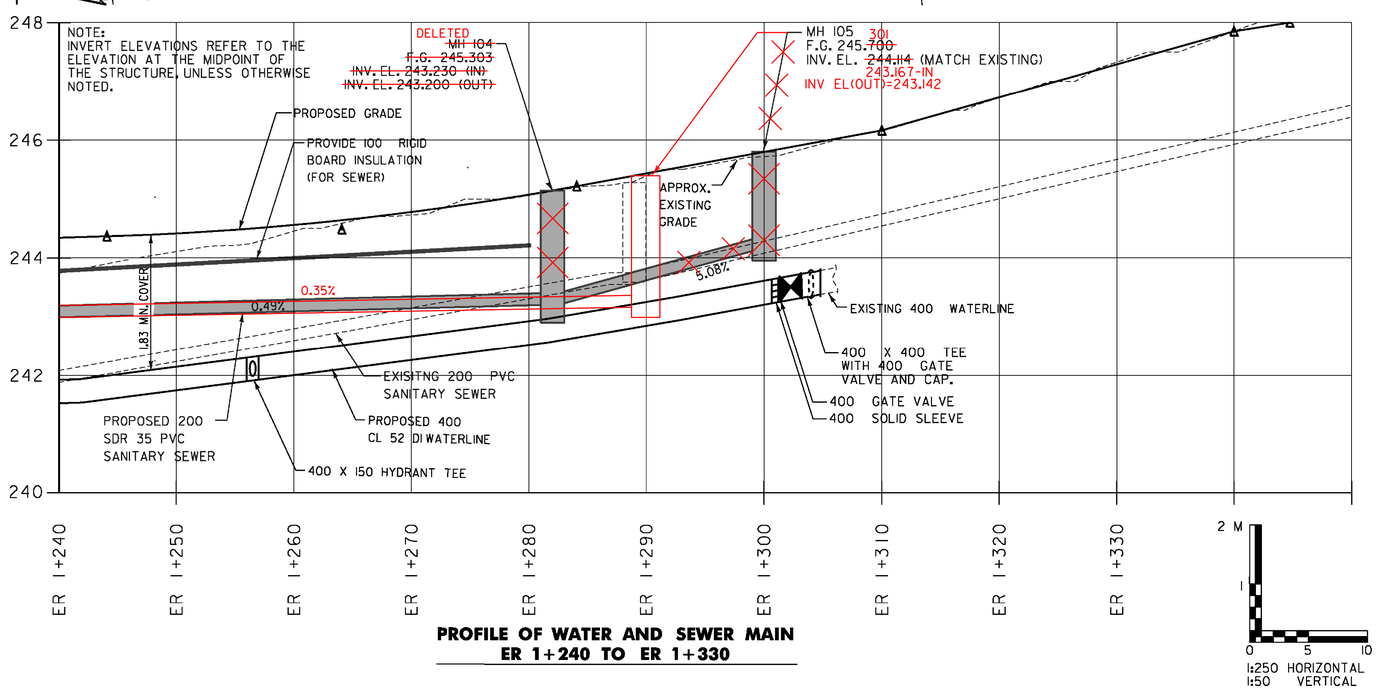

PROFILE OF WATER AND SEWER MAIN
ER 1+240 TO ER 1+330

2 M
1
0 5 10 M
1:250 HORIZONTAL
1:50 VERTICAL

LEGEND

TEMPORARY WATER	==========
TEMPORARY SEWER	==========
PERMANENT WATER	— PW — · · — ·
PERMANENT SEWER	· — PS — · · —
EXISTING WATER	— W — · · — ·
EXISTING SEWER	— S — · · —

*NOTE:
FOR MORE INFORMATION ON TEMPORARY UTILITY CONNECTIONS SEE SHEETS TC-01 THRU TC-03

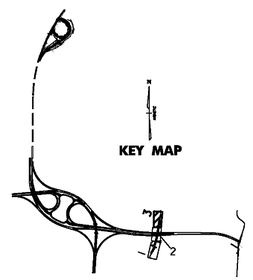

NOTE: ALL DIMENSIONS ARE IN MILLIMETERS (mm) EXCEPT WHERE NOTED.

VERMONT AGENCY OF TRANSPORTATION

Stantec

PROJECT NAME: BENNINGTON
PROJECT NUMBER: AC NH 019-1(53)

FILE NAME: ...\plot_files\zd307c3utl_4.ptf
DESIGN SUPERVISOR: GREG EDWARDS
DESIGNED BY: T. KNIGHT
UTILITY PLAN U-04
PLOT DATE: 5/25/2011
DRAWN BY: STANTEC
CHECKED BY: M. CHENETTE
SHEET 158 OF 577

v:\1853\active\18530002\transportation\drawing\contract_3\plot_files\zd307c3utl_4.ptf

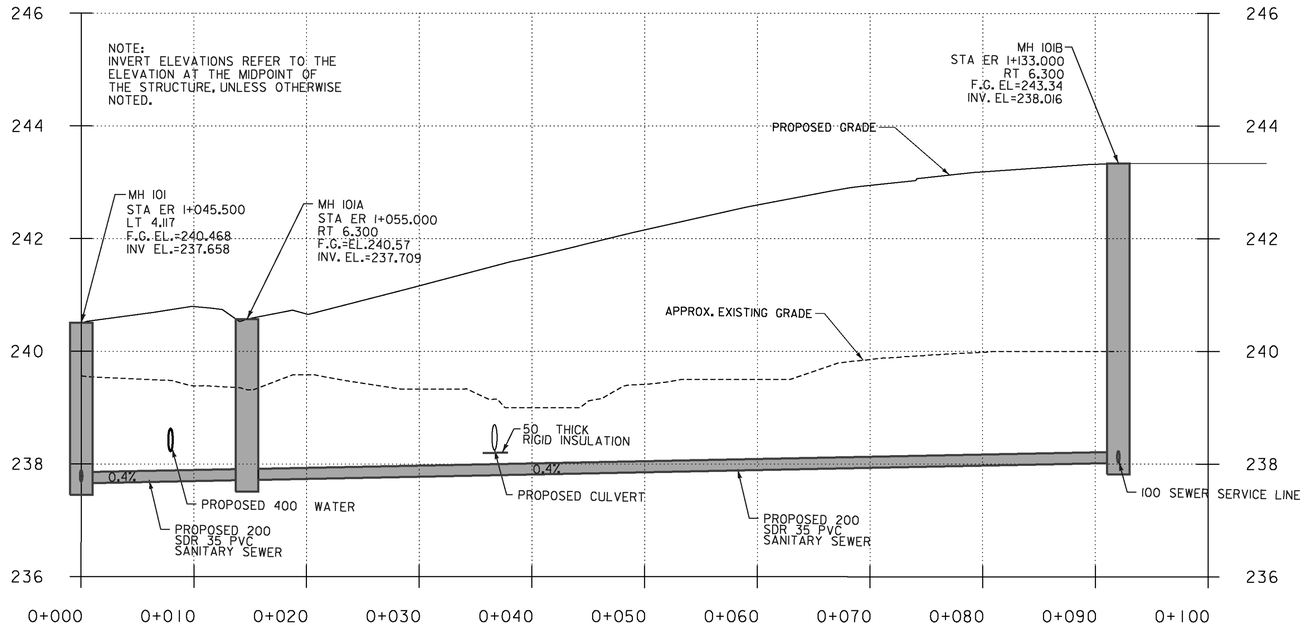

PROFILE OF HOOD SEWER LINE

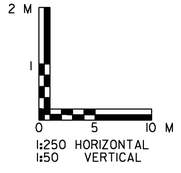

NOTE: ALL DIMENSIONS ARE IN MILLIMETERS (mm) EXCEPT WHERE NOTED.

VERMONT AGENCY OF TRANSPORTATION

Stantec

PROJECT NAME: BENNINGTON
PROJECT NUMBER: AC NH 019-1(53)

FILE NAME: ...\plot_files\zd307c3utl_5.ptf
DESIGN SUPERVISOR: GREG EDWARDS
DESIGNED BY: T. KNIGHT
UTILITY PLAN U-05

PLOT DATE: 5/25/2011
DRAWN BY: STANTEC
CHECKED BY: M. CHENETTE
SHEET 159 OF 577

v:\1953\active\95300002\transportation\drawing\contract_3\plot_files\zd307c3utl_5.ptf

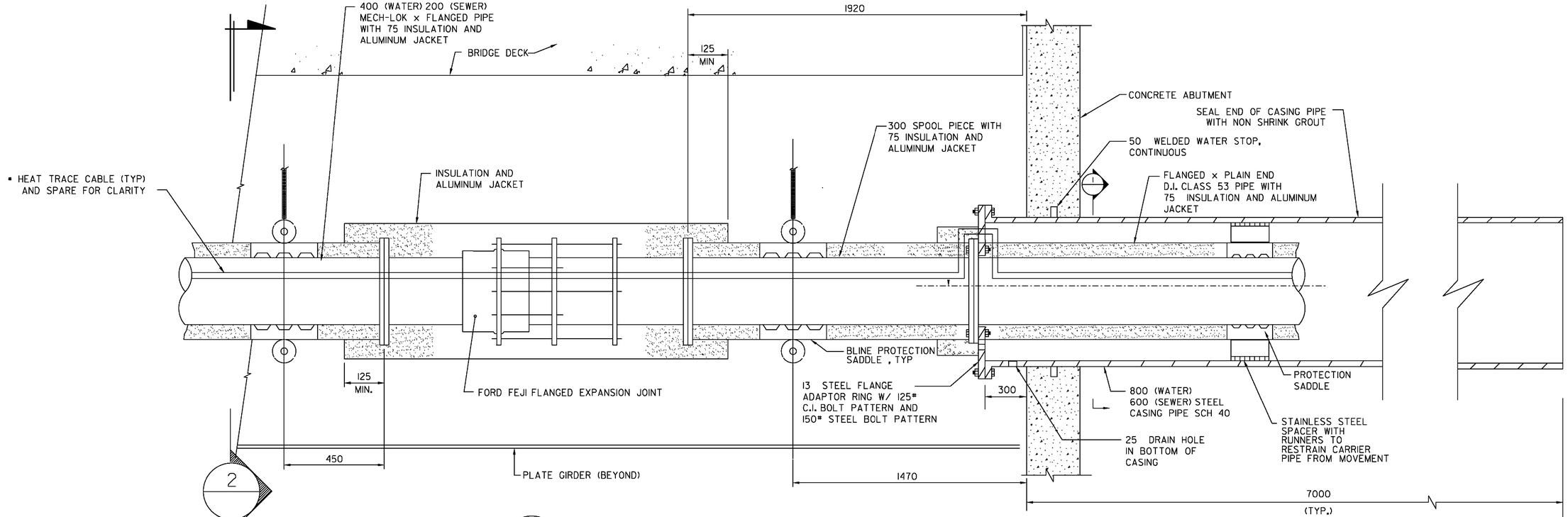

3 EXPANSION JOINT AND SUPPORT DETAIL

NOT TO SCALE TYPICAL BOTH ENDS OF BRIDGE

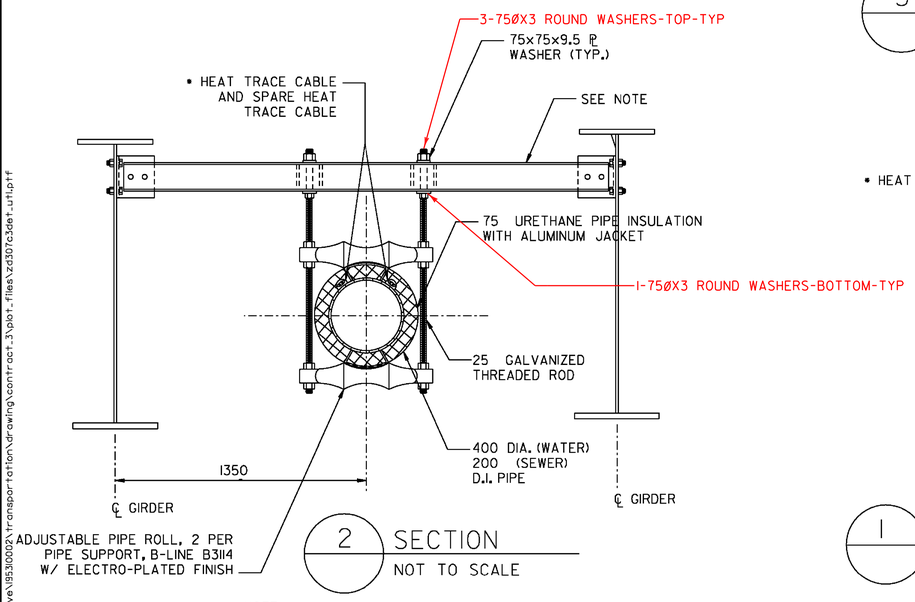

2 SECTION

NOT TO SCALE

NOTE:
SEE BRIDGE STRUCTURAL DRAWINGS FOR STEEL SUPPORT DETAILS.

• HEAT TRACE CABLES ON 600 SEWER LINE ONLY.

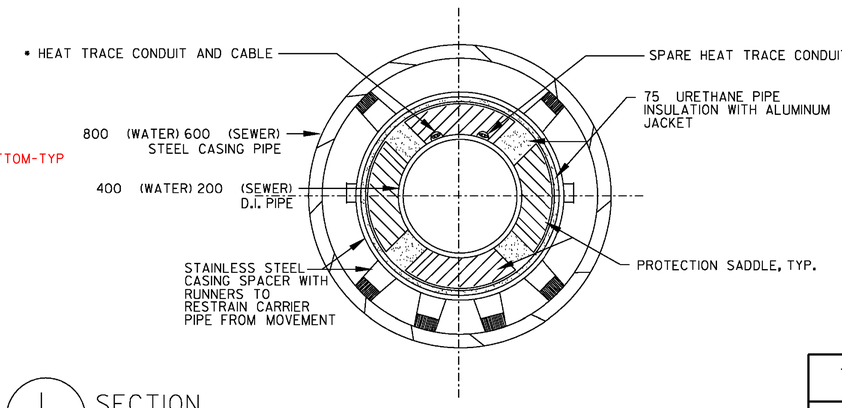

1 SECTION

NOT TO SCALE

NOTE:
INSTALL 3 STAINLESS STEEL SPACERS INSIDE STEEL CASING PIPE PER LENGTH OF DUCTILE IRON PIPE AT BOTH ENDS OF THE BRIDGE

NOTES:

1. INFORMATION ON THIS SHEET SHOULD ONLY BE CONSTRUED TO REPRESENT WATER MAIN, SEWER, AND APPURTENANCES. OTHER INFORMATION SHOWING STRUCTURAL ITEMS, IS SHOWN ONLY FOR RELATIVE RELATIONSHIPS ONLY. THIS INFORMATION SHOULD BE OBTAINED FROM OTHER DRAWINGS.
2. DUCTILE IRON PIPE FOR BRIDGE CROSSING SHALL BE ANSI/AWWA C151/A21.51 CLASS 53 CEMENT LINED WITH SEAL COATING INSIDE AND OUTSIDE. PIPE SHALL BE GRIFFIN MECH-LOK RESTRAINED JOINT PIPE, OR EQUAL. JOINTS SHALL BE LAYED OUT TO AVOID HANGER LOCATIONS WITH PIPE LENGTHS MODIFIED, IF NECESSARY.

NOTE: ALL DIMENSIONS ARE IN MILLIMETERS (mm) EXCEPT WHERE NOTED.

VERMONT AGENCY OF TRANSPORTATION

Stantec

PROJECT NAME: BENNINGTON
PROJECT NUMBER: AC NH 019-1(53)

FILE NAME: ...\plot_files\zd307c3det_utl.ptf
DESIGN SUPERVISOR: GREG EDWARDS
DESIGNED BY: MARC FOISY
UTILITY DETAILS U-06

PLOT DATE: 5/16/2011
DRAWN BY: STANTEC
CHECKED BY: GARY SANTY
SHEET 160 OF 577

v:\0953\active\095300002\transportation\drawing\contract_3\plot_files\zd307c3det_utl.ptf

8/6/08
J.A.M.
EOB

EAST ROAD BRIDGE SEWER LINE
UTILITY HANGER REVISIONS
& Expansion Joint offset Revisions

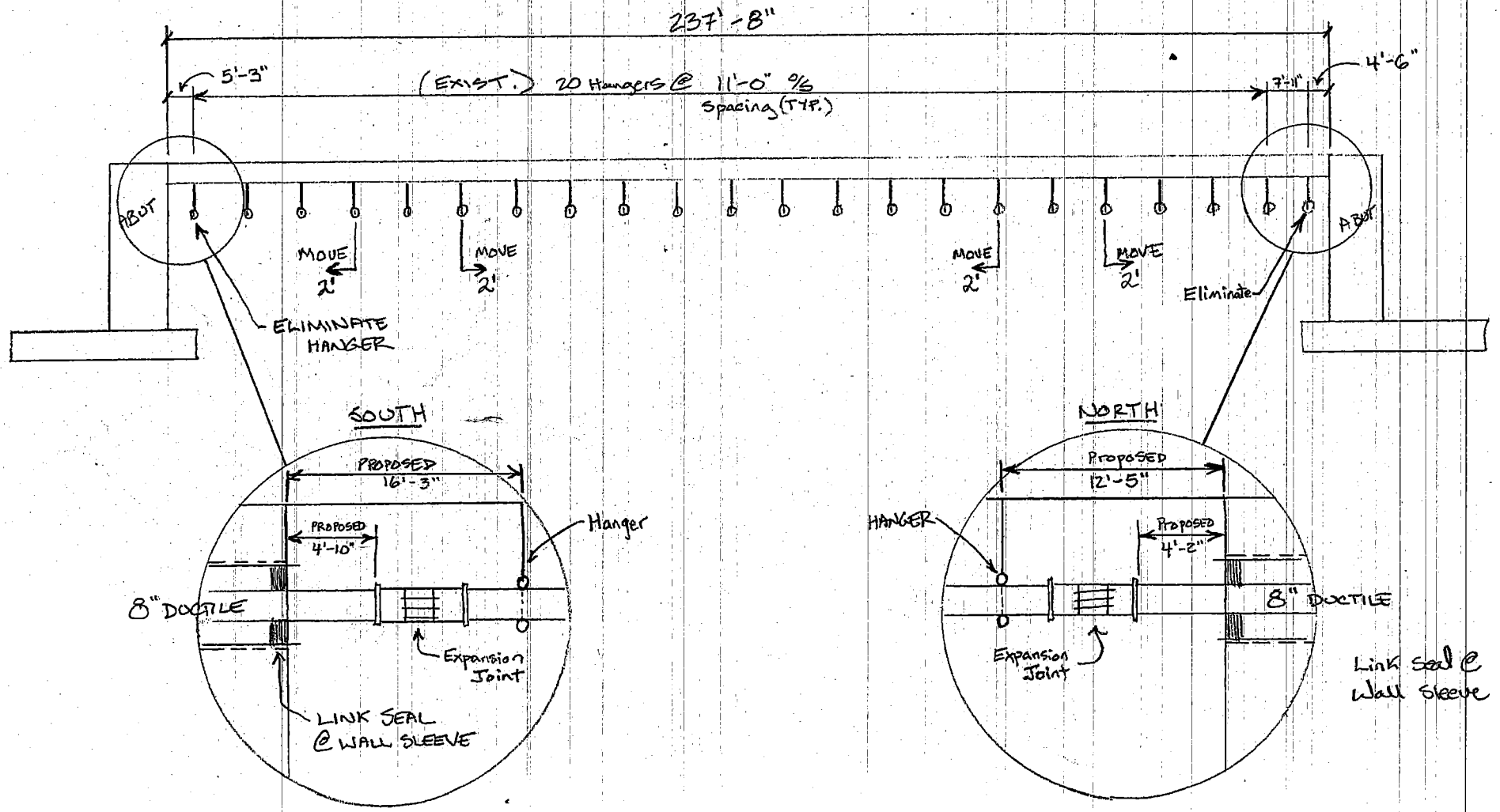

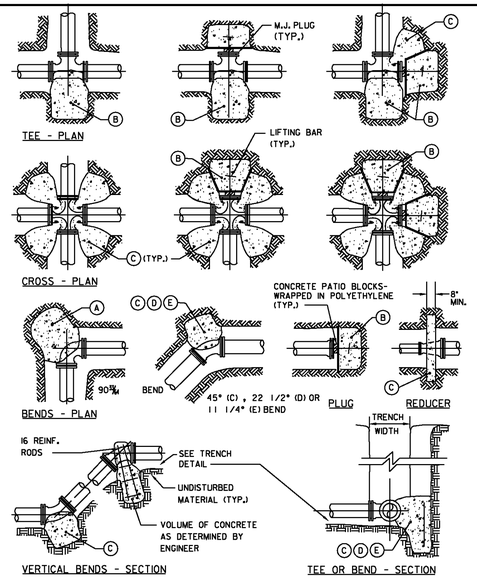

THRUST BLOCK DETAILS

NOT TO SCALE

THRUST BLOCK SCHEDULE
SQUARE METERS OF CONCRETE THRUST
BLOCKING BEARING ON UNDISTURBED MATERIAL

REACTION TYPE	PIPE SIZE											
	100mm	150mm	200mm	250mm	300mm	350mm	400mm	450mm	500mm	600mm	750mm	900mm
(A)	0.125	0.305	0.546	0.776	1.202	1.521	2.148	2.511	3.353	4.827	7.502	10.785
(B)	0.090	0.144	0.384	0.584	0.849	1.167	1.518	1.934	2.370	3.413	5.304	7.626
(C)	0.068	0.167	0.296	0.420	0.650	0.824	1.163	1.353	1.815	2.613	4.059	5.837
(D)	0.035	0.084	0.150	0.215	0.330	0.420	0.593	0.693	0.926	1.332	2.07	2.975
(E)	0.018	0.042	0.075	0.108	0.167	0.212	0.308	0.350	0.464	0.668	1.038	1.493
	TEST PRESSURE TO BE 1035 kN/m^2 MIN. AT LOW END OF THE TEST SECTION.											

NOTES:

1. POUR THRUST BLOCKS AGAINST UNDISTURBED MATERIAL. WHERE TRENCH WALL HAS BEEN DISTURBED, EXCAVATE LOOSE MATERIAL AND EXTEND THRUST BLOCK TO UNDISTURBED MATERIAL. NO JOINTS SHALL BE COVERED WITH CONCRETE.
2. ON BENDS AND TEES, EXTEND THRUST BLOCKS FULL LENGTH OF FITTING.
3. PLACE CONCRETE PATIO BLOCKS IN FRONT OF ALL PLUGS BEFORE POURING THRUST BLOCK.
4. REQUIREMENTS OF THE ABOVE TABLE PRESUME MINIMUM SOIL BEARING OF 96 kN PER SQUARE METER, AND MAY BE VARIED BY THE ENGINEER TO MEET OTHER CONDITIONS ENCOUNTERED.
5. MEGA-LUG RETAINER GLANDS ARE REQUIRED FOR ALL MECHANICAL JOINTS. THESE GLANDS DO NOT REDUCE THE REQUIREMENTS FOR THRUST RESTRAINT.
6. ALL FITTINGS SHALL BE WRAPPED IN POLYETHYLENE OR BUILDING PAPER PRIOR TO INSTALLATION OF CONCRETE RESTRAINT.
7. THREADED ROD SHALL BE ANSI A242 FY50 PIPE RESTRAINT NUTS TO MATCH AWWA C111. THREADED RODS AND NUTS TO BE FIELD COATED WITH BITUMINOUS PAINT.
8. THRUST RESTRAINT IS REQUIRED FOR ALL TEES, BENDS, REDUCERS, CAPS, PLUGS, OR CROSSES.
9. INSTALL LIFT HOOKS INTO THRUST BLOCKS AT END CAPS AND PLUGS.

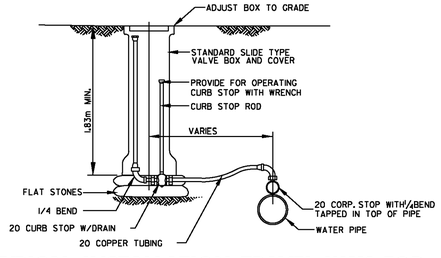

TYPICAL INSTALLATION-TRAVEL WAY FOR AIR VENT OR CHLORINATION INJECTION

NOT TO SCALE

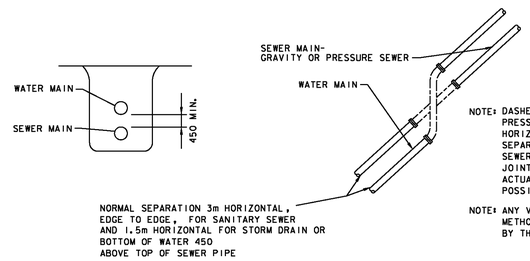

NOTE: DASHED PIPE SECTIONS SHALL BE PRESSURE TYPE PIPE UNTIL 3 M HORIZONTAL OR 450 VERTICAL SEPARATION WITH WATER MAIN ABOVE SEWER IS MAINTAINED. PIPE JOINTS SHALL BE AS FAR FROM ACTUAL CROSSING POINT AS POSSIBLE.

NOTE: ANY VARIATION FROM THIS METHOD MUST BE APPROVED BY THE ENGINEER

CROSSING DETAIL

NOT TO SCALE

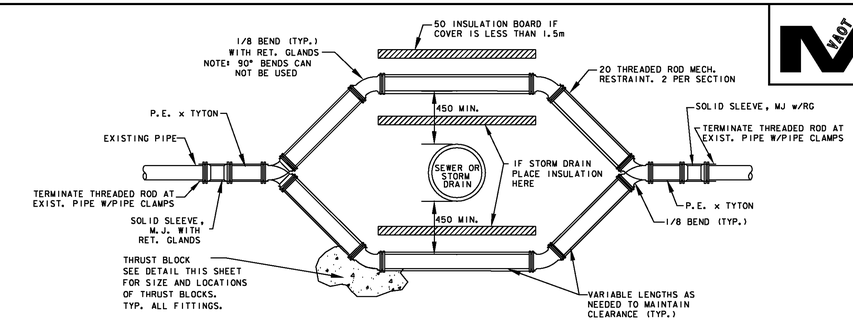

SECTION - WATER MAIN RELOCATION DETAIL

NOT TO SCALE

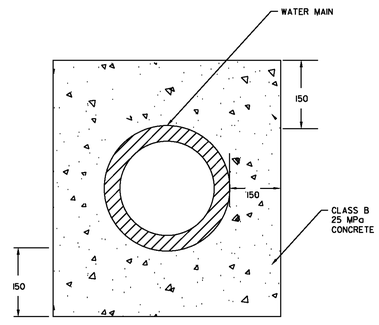

NOTE:
CONCRETE ENCASEMENT OF WATER MAINS WILL BE REQUIRED WHERE THEY CROSS SEWERS AND STORM DRAINS, AND WHERE 450 VERTICAL SEPARATION CAN NOT BE MAINTAINED

CONCRETE ENCASEMENT TYPICAL PIPE PROTECTION DETAIL

NOT TO SCALE

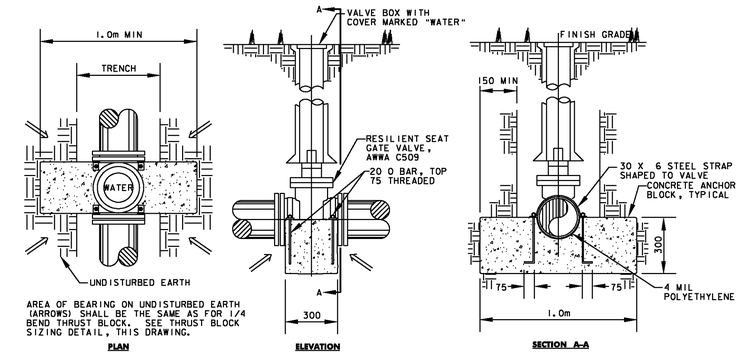

NOTE: GATE VALVES SHALL BE WATEROUS SERIES 500, OPEN RIGHT.

GATE VALVE ANCHOR DETAILS

NOT TO SCALE

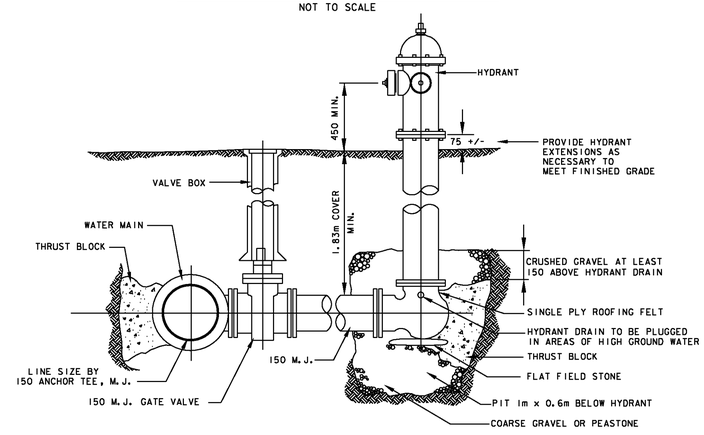

NOTE: HYDRANTS SHALL BE WATEROUS WB-67 OR KENNEDY GUARDIAN, OPEN RIGHT

HYDRANT ASSEMBLY DETAIL

NOT TO SCALE

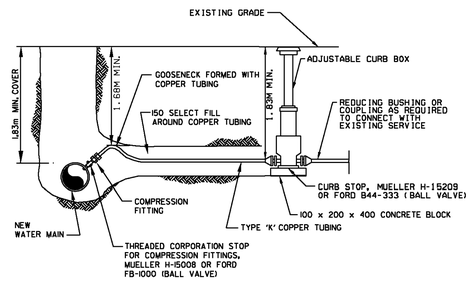

TYPICAL SERVICE CONNECTION DETAIL

NOT TO SCALE

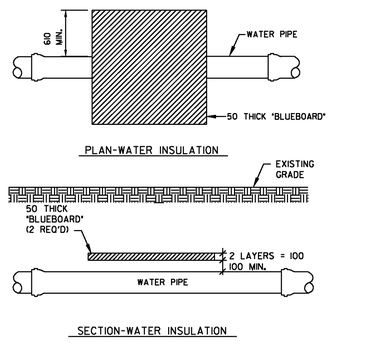

RIGID BOARD INSULATION DETAIL

NOT TO SCALE

NOTE: ALL DIMENSIONS ARE IN MILLIMETERS (MM) EXCEPT WHERE NOTED.

VERMONT AGENCY OF TRANSPORTATION

Stantec

PROJECT NAME: BENNINGTON
PROJECT NUMBER: AC NH 019-1(53)

FILE NAME: ...\plot_files\zd307c3det_utl.ptf
DESIGN SUPERVISOR: GREG EDWARDS
DESIGNED BY: MARC FOISY
UTILITY DETAILS U-07

PLOT DATE: 5/16/2011
DRAWN BY: STANTEC
CHECKED BY: GARY SANTY
SHEET 161 OF 577

v:\1953\active\195300021\transportation\drawing\contract_3\plot_files\zd307c3det_utl.ptf

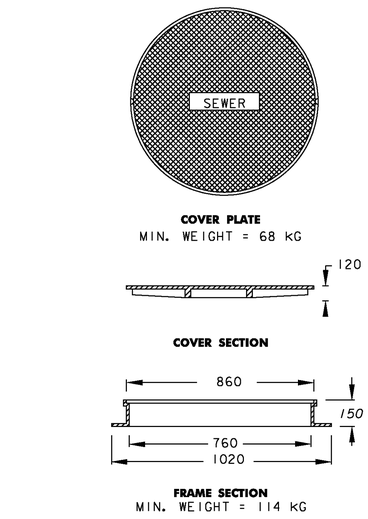

COVER PLATE
MIN. WEIGHT = 68 KG

COVER SECTION

FRAME SECTION
MIN. WEIGHT = 114 KG

MANHOLE FRAME AND COVER DETAIL
NOT TO SCALE

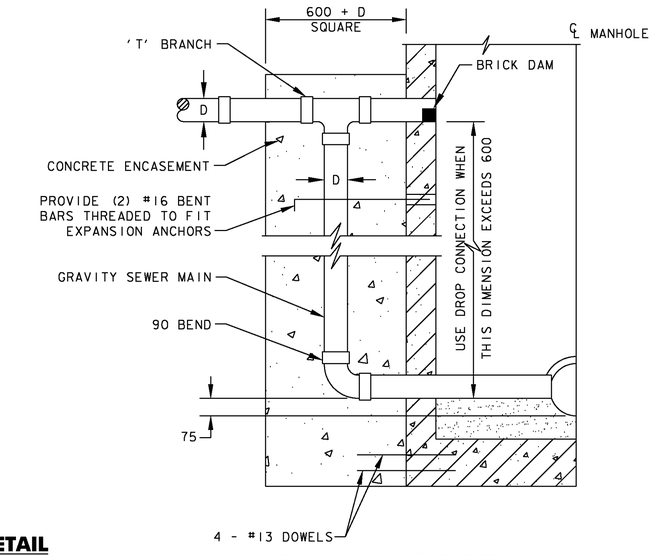

DROP MANHOLE DETAIL
NOT TO SCALE

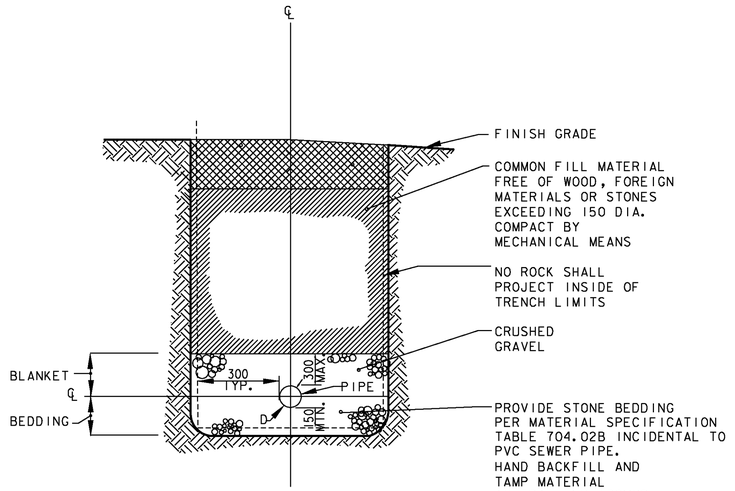

SANITARY SEWER TYPICAL BEDDING DETAIL
NOT TO SCALE

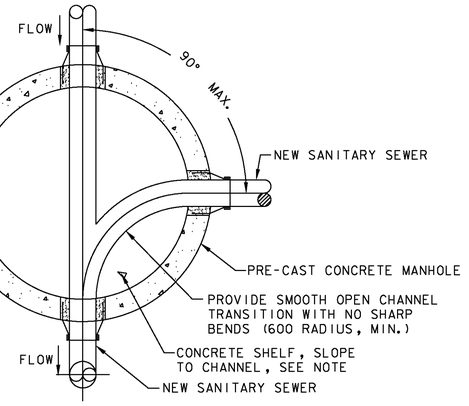

TYPICAL MANHOLE CHANNEL
NOT TO SCALE

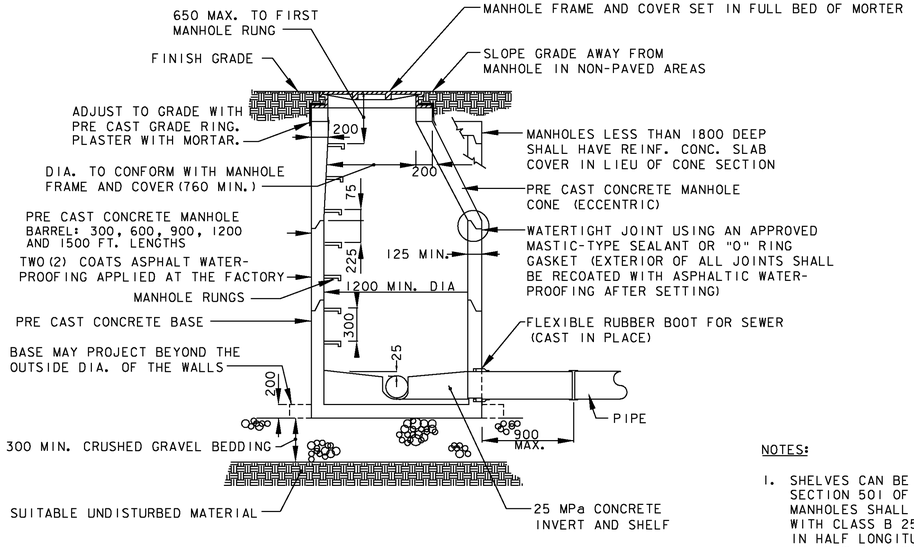

SANITARY SEWER MANHOLE
NOT TO SCALE
TO BE PAID FOR AS ITEM
604.22 SANITARY SEWER MANHOLE

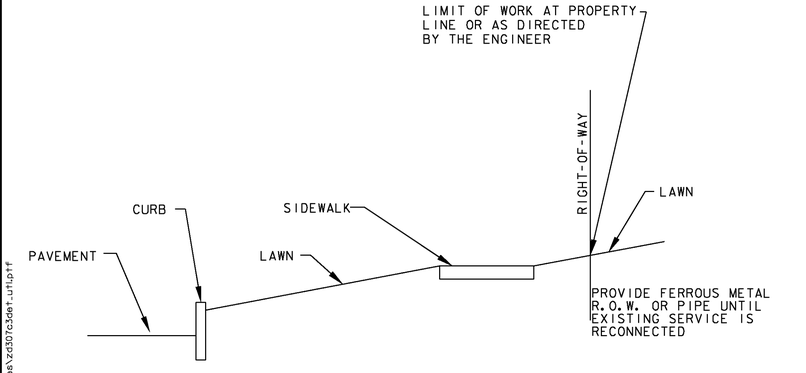

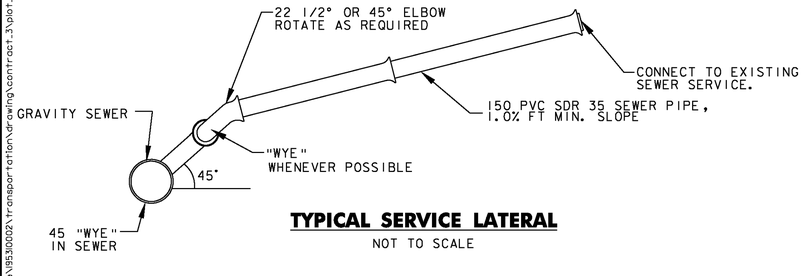

TYPICAL SERVICE LATERAL
NOT TO SCALE

NOTES:

1. SHELVES CAN BE CONSTRUCTED WITH CLASS B 25 MPa CONCRETE AS DEFINED IN SECTION 501 OF THE VERMONT STANDARD SPECIFICATIONS. INVERTS FOR SEWER MANHOLES SHALL BE AS SHOWN ON THE PLANS AND DETAILS AND SHALL BE CONSTRUCTED WITH CLASS B 25 MPa CONCRETE, OR FOR STRAIGHT RUNS, SEGMENTS OF PIPE CUT IN HALF LONGITUDINALLY. INVERTS SHALL HAVE THE EXACT SHAPE AND SLOPE OF THE SEWER TO WHICH THEY ARE CONNECTED, AND ANY CHANGE IN SIZE OR DIRECTION SHALL BE GRADUAL AND EVEN.
2. PRE-CAST CONCRETE MANHOLE SHALL BE PAID UNDER ITEM 604.22 SANITARY SEWER MANHOLE.
3. NOTE: ALL DIMENSIONS ARE IN MILLIMETERS (mm) EXCEPT WHERE NOTED.

VERMONT AGENCY OF TRANSPORTATION

Stantec

PROJECT NAME: BENNINGTON
PROJECT NUMBER: AC NH 019-1(53)

FILE NAME: ...\plot_files\zd307c3det_utl.ptf
DESIGN SUPERVISOR: GREG EDWARDS
DESIGNED BY: MARC FOISY
UTILITY DETAILS U-08

PLOT DATE: 5/16/2011
DRAWN BY: STANTEC
CHECKED BY: GARY SANTY
SHEET 162 OF 577

v:\1953\active\19530002\transportation\drawing\contract_3\plot_files\zd307c3det_utl.ptf

UTILITY NOTES:

TEMPORARY SEWER MAIN RELOCATION

1. ALL TEMPORARY SEWER MAIN RELOCATION WORK INCLUDING CONSTRUCTION OF 200 (SDR-35) SEWER MAIN, SEWER MANHOLES, CLEANOUTS, SERVICES, TESTING, INCLUDING REMOVAL OF ALL TEMPORARY SEWER MAIN AND APPURTENANCES UPON COMPLETION OF TRANSFER TO THE NEW SYSTEM, SHALL BE PAID FOR UNDER ITEM 628.42, TRANSFER TO NEW SYSTEM, SANITARY SEWER.
2. TEMPORARY SEWER MAIN AND APPURTENANCES SHALL BE CONSTRUCTED IN ACCORDANCE WITH TYPICAL DETAILS SHOWN ON SHEET U-08.
3. NO TEMPORARY SEWER SERVICE FOR THE HOOD PROPERTY LOCATED AT STA. ER 1+133, RT., IS PROPOSED. CONTRACTOR SHALL CONSTRUCT NEW SEWER SERVICE TO THE HOOD PROPERTY PRIOR TO BRINGING THE TEMPORARY SEWER MAIN ON-LINE.

TEMPORARY WATER MAIN RELOCATION

1. ALL TEMPORARY WATER MAIN RELOCATION WORK INCLUDING CONSTRUCTION OF 400 (DI CLASS 52 OR C900 PVC) WATER MAIN, FITTINGS, HYDRANT ASSEMBLY, SERVICES, TESTING AND DISINFECTION, INCLUDING REMOVAL OF ALL TEMPORARY WATER MAIN AND APPURTENANCES UPON COMPLETION OF TRANSFER TO THE NEW SYSTEM, SHALL BE PAID FOR UNDER ITEM 629.42, TRANSFER TO NEW SYSTEM, WATER SYSTEM.
2. TEMPORARY WATER MAIN AND APPURTENANCES SHALL BE CONSTRUCTED IN ACCORDANCE WITH TYPICAL DETAILS SHOWN ON SHEET U-07.

UTILITY GENERAL NOTES

1. CONTRACTOR SHALL PREPARE AND SUBMIT A PLAN OF BOTH THE TEMPORARY WATER AND SEWER RELOCATIONS FOR REVIEW AND APPROVAL BY THE TOWN OF BENNINGTON AND VAOT PRIOR TO CONSTRUCTION.
2. CONTRACTOR SHALL RETAIN OWNERSHIP OF ALL TEMPORARY WATER AND SEWER MATERIALS UPON TRANSFER TO THE NEW SYSTEMS.
3. FOR PERMANENT WATER AND SEWER LAYOUT AND DETAILS SEE SHEETS U-01 THROUGH U-08

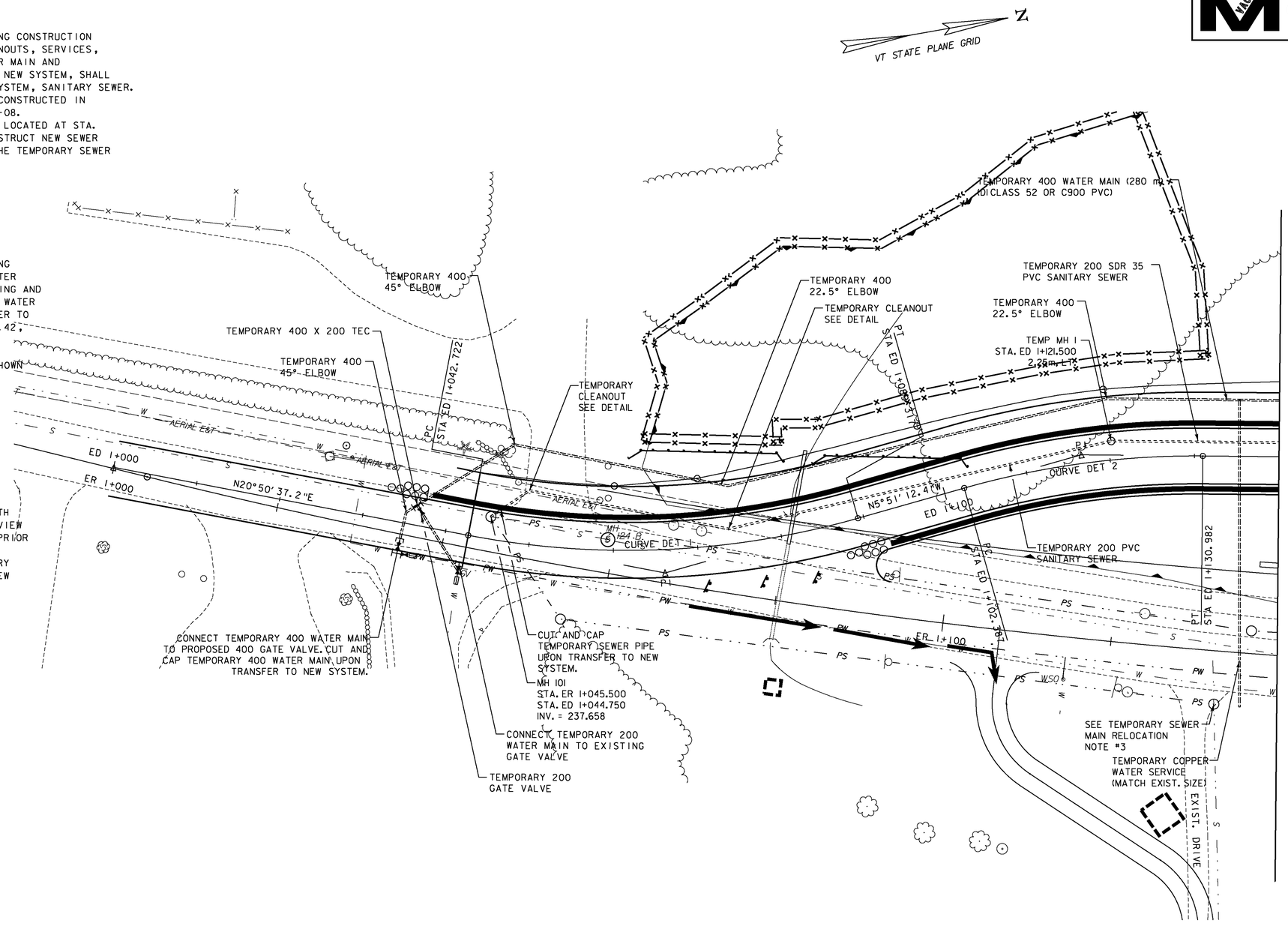

NOTE: ALL DIMENSIONS ARE IN MILLIMETERS (mm) EXCEPT WHERE NOTED.

LEGEND

TEMPORARY WATER	==========
TEMPORARY SEWER	==========
PERMANENT WATER	— PW — ·· — · ·
PERMANENT SEWER	· — PS — ·· —
EXISTING WATER	— W — ·· — · ·
EXISTING SEWER	— S — ·· —

5 0 5 m
1:250 SCALE @ FULL SIZE

VERMONT AGENCY OF TRANSPORTATION

Stantec

PROJECT NAME: BENNINGTON
PROJECT NUMBER: AC NH 019-1(53)

FILE NAME: ...\zd307c3tc_east_rd4u.ptf
DESIGN SUPERVISOR: GREG EDWARDS
DESIGNED BY: MARC FOISY
TEMPORARY UTILITY PLAN TU-01
PLOT DATE: 5/16/2011
DRAWN BY: STANTEC
CHECKED BY: GARY SANTY
SHEET 163 OF 577

v:\1953\active\195300021\transportation\drawing\contract_3\plot_files\zd307c3tc_east_rd4u.ptf

VAOT Metric

UTILITY NOTES

1. FOR ALL SEWER GENERAL NOTES REFER TO SHEET TC-4.

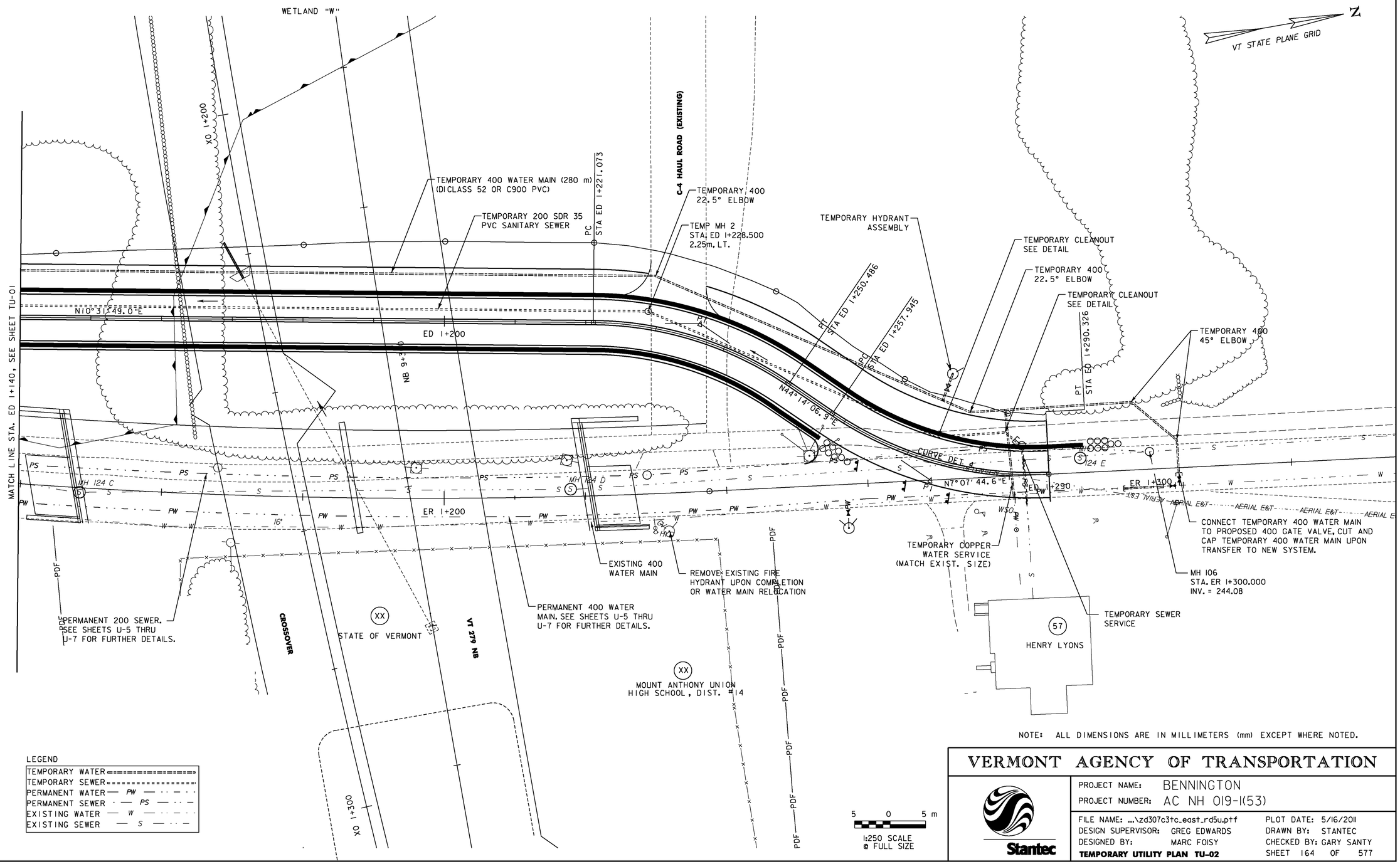

NOTE: ALL DIMENSIONS ARE IN MILLIMETERS (mm) EXCEPT WHERE NOTED.

LEGEND

TEMPORARY WATER	
TEMPORARY SEWER	
PERMANENT WATER	PW
PERMANENT SEWER	PS
EXISTING WATER	W
EXISTING SEWER	S

5 0 5 m

1:250 SCALE @ FULL SIZE

VERMONT AGENCY OF TRANSPORTATION

Stantec

PROJECT NAME: BENNINGTON
PROJECT NUMBER: AC NH 019-1(53)

FILE NAME: ...\zd307c3tc_east_rd5u.ptf
DESIGN SUPERVISOR: GREG EDWARDS
DESIGNED BY: MARC FOISY
TEMPORARY UTILITY PLAN TU-02

PLOT DATE: 5/16/2011
DRAWN BY: STANTEC
CHECKED BY: GARY SANTY
SHEET 164 OF 577

v:\953\active\95300002\transportation\drawing\contract_3\plot_files\zd307c3tc_east_rd5u.ptf

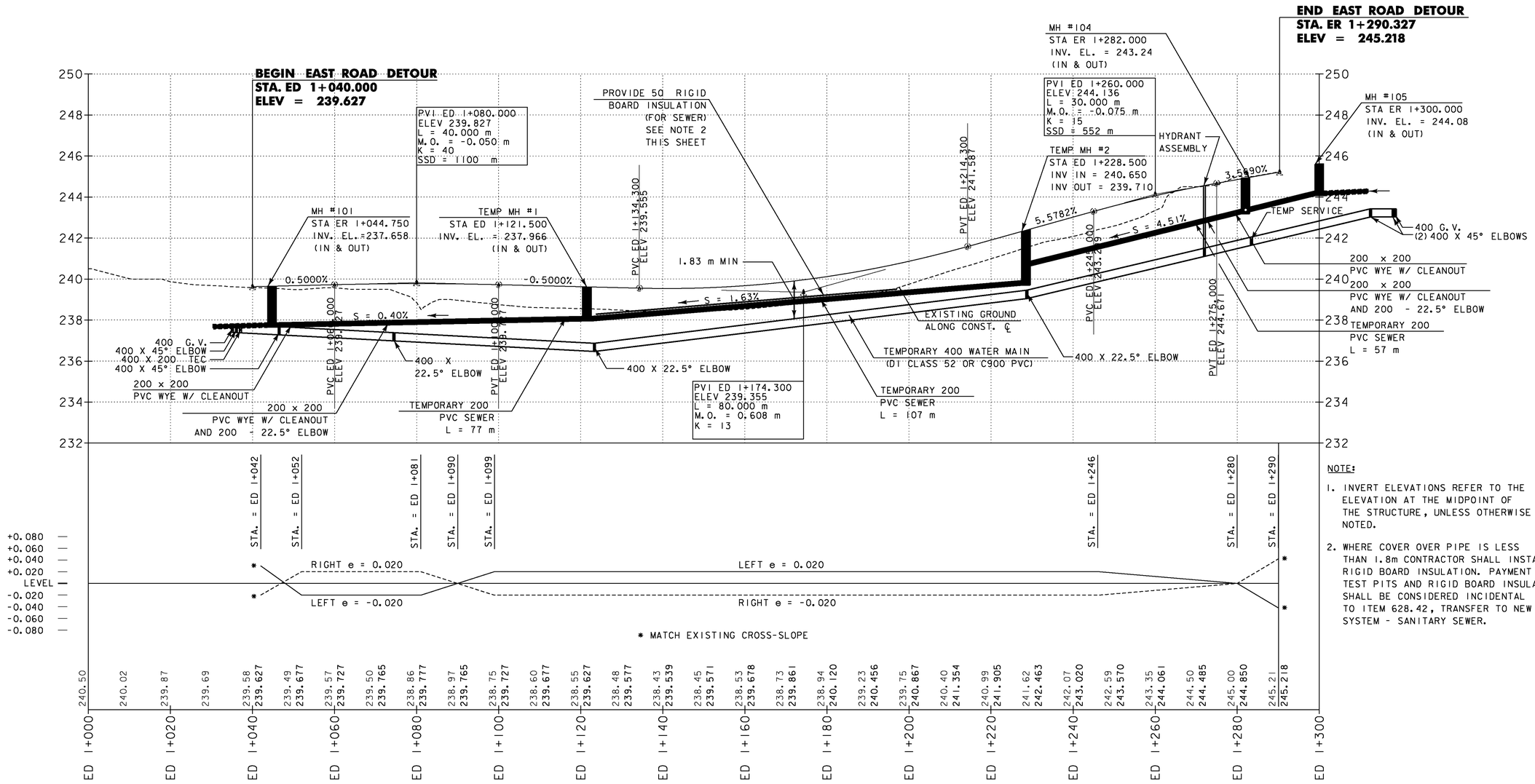

NOTE:

1. INVERT ELEVATIONS REFER TO THE ELEVATION AT THE MIDPOINT OF THE STRUCTURE, UNLESS OTHERWISE NOTED.
2. WHERE COVER OVER PIPE IS LESS THAN 1.8m CONTRACTOR SHALL INSTALL RIGID BOARD INSULATION. PAYMENT FOR TEST PITS AND RIGID BOARD INSULATION SHALL BE CONSIDERED INCIDENTAL TO ITEM 628.42, TRANSFER TO NEW SYSTEM - SANITARY SEWER.

NOTE: ALL DIMENSIONS ARE IN MILLIMETERS (mm) EXCEPT WHERE NOTED.

4 m
2
H 1:500 SCALE
V 1:100 SCALE
@ FULL SIZE
10 20 m

VERMONT AGENCY OF TRANSPORTATION

Stantec

PROJECT NAME: BENNINGTON
PROJECT NUMBER: AC NH 019-1(53)

FILE NAME: ...\zd307c3pro_eastd.ptf
DESIGN SUPERVISOR: GREG EDWARDS
DESIGNED BY: MARC FOISY
TEMPORARY UTILITY PLAN TU-03

PLOT DATE: 5/16/2011
DRAWN BY: STANTEC
CHECKED BY: GARY SANTY
SHEET 165 OF 577

v:\1953\active\195310002\transportation\drawing\contract_3\plot_files\zd307c3pro_eastd.ptf

VAOT Metric

CONSTRUCTION APPROACH SIGNING

NOT TO SCALE

SEE VTrans STANDARD E-100 FOR SIGN PLACEMENT.

NOTES:

1. DUE TO THE LEDGE REMOVAL ON EXIT 2, END OF ROAD WORK SIGN SHALL BE INSTALLED IN THIS LOCATION, AND REMOVED UPON COMPLETION.
2. END OF ROAD WORK SIGN SHALL BE INSTALLED IN THIS LOCATION UPON COMPLETION OF WORK ON EXIT 2.
3. ROAD WORK AHEAD SIGNS SHALL BE REMOVED UPON COMPLETION OF WORK ON EXIT 2.
4. ALL WORK TO BE PERFORMED ON THIS SHEET SHALL BE PAID UNDER ITEM 641.10 TRAFFIC CONTROL.
5. FOR TRAFFIC CONTROL AT THE STAGE ONE SITES REFER TO CAS-1, SHEET 444.

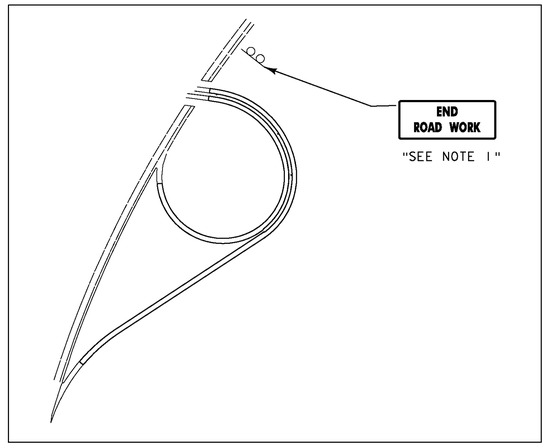

EXIT 2 DETAIL



LEGEND

ERW = END ROAD WORK
RW500 = ROAD WORK 500 FT
RW1500 = ROAD WORK 1500 FT
RWA = ROAD WORK AHEAD
SRWA = SIDE ROAD WORK AHEAD
SRW 500 = SIDE ROAD WORK 500 FT

LOCATION	RWA	RW500	RW1500	ERW	SRWA	SRW500
RAMP G	2	2	2	-	-	-
EAST ROAD	4	4	-	2	-	-
CHAPEL ROAD	-	-	-	-	4	4
EXIT 2	2	-	-	1	-	-
SI	2	2	-	1	-	-
TOTALS	10	8	2	4	4	4

VERMONT AGENCY OF TRANSPORTATION

Stantec

PROJECT NAME: BENNINGTON
PROJECT NUMBER: AC NH 019-1(53)

FILE NAME: ...\plot_files\zd307c3cas.ptf
DESIGN SUPERVISOR: GREG EDWARDS
DESIGNED BY: MARC FOISY
CONSTRUCTION APPROACH SIGNING

PLOT DATE: 5/16/2011
DRAWN BY: STANTEC
CHECKED BY: GARY SANTY
SHEET 166 OF 577

v:\9531\active\95300002\transportation\drawing\contract_3\plot_files\zd307c3cas.ptf

TRAFFIC CONTROL TYPICAL SECTIONS-RAMP G

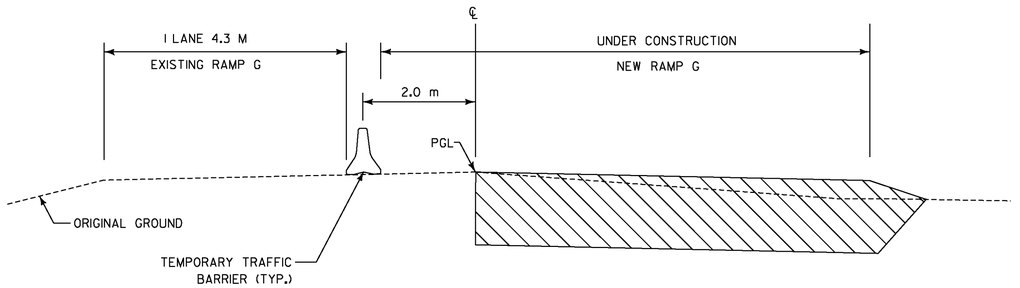

STA. G 1+230 – STA. GG 1+078

TRAFFIC CONTROL TYPICAL SECTIONS-RAMP G

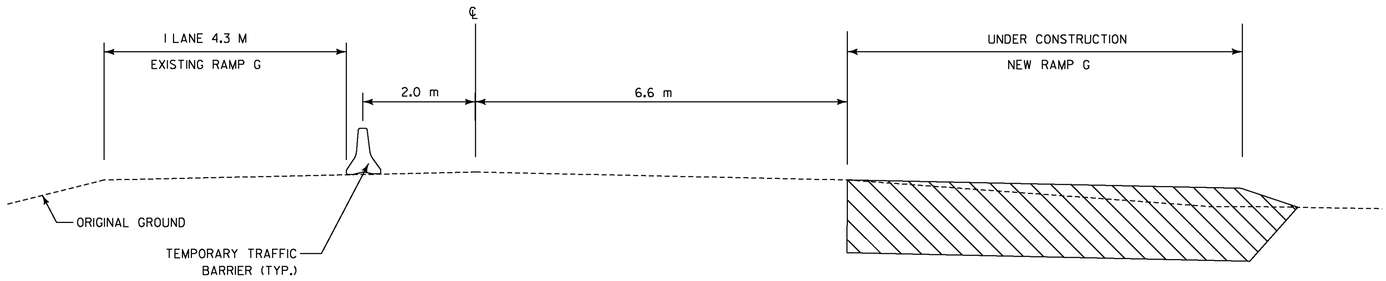

STA. GG 1+530 – STA. G 1+851

NOTE: ALL DIMENSIONS ARE IN MILLIMETERS (mm) EXCEPT WHERE NOTED.

PGL=PROFILE GRADE LINE

VERMONT AGENCY OF TRANSPORTATION

Stantec

PROJECT NAME: BENNINGTON
PROJECT NUMBER: AC NH 019-1(53)

FILE NAME: ...\plot_files\zd307c3tc_typ.ptf
DESIGN SUPERVISOR: GREG EDWARDS
DESIGNED BY: MARC FOISY
RAMP G TRAFFIC CONTROL TC-01

PLOT DATE: 5/16/2011
DRAWN BY: STANTEC
CHECKED BY: GARY SANTY
SHEET 167 OF 577

v:\953\active\95330002\transportation\drawing\contract_3\plot_files\zd307c3tc_typ.ptf

VAOT Metric

STA. G 1+229.900
BEGIN DETOUR CONSTRUCTION

TEMPORARY 150 WHITE LINE (TYP.)

ENERGY ABSORPTION ATTENUATOR

STA G 1+278
END LANE TAPER

STA. G 1+801
BEGIN LANE TAPER

STA. G 1+851.454
END DETOUR CONSTRUCTION

STA. G 1+760
END TEMPORARY 100 WHITE LINE
MATCH EXISTING

TEMPORARY
TRAFFIC BARRIER (TYP.)

GG 1+100
GG 1+200
GG 1+300
GG 1+400
GG 1+500
GG 1+600
GG 1+647
G 1+300
G 1+400
G 1+500
G 1+600
G 1+700
G 1+800
G 1+854

PDF

N
VT STATE PLANE GRID

ENERGY ABSORPTION ATTENUATOR,
SAND FILLED PLASTIC BARREL
STA G 1+272, LT

TEMPORARY TRAFFIC BARRIER
STA G 1+278 LT. TO G 1+380 LT.
STA G 1+629 LT. TO G 1+729 LT.

TEMPORARY 150 WHITE LINE
STA G 1+230, 4.9m LT. TO G 1+399, 31.6m LT.
STA G 1+230, 0.0m LT. TO G 1+401, 27.4m LT.
STA G 1+617, 45.6m LT. TO G 1+851, 3.6m RT.
STA G 1+618, 49.8m LT. TO G 1+760, 7.3m LT.

GENERAL NOTES:
1. END OF BARRIER TO BE INSTALLED IN ACCORDANCE WITH THE MUTCD.
2. DESIGN CRITERIA FOR ITEM 621.56- ENERGY ABSORPTION ATTENUATOR
   DESIGN SPEED: 100 KPH
   DESIGN VEHICLE: WB-20

10 0 10 M
1:500 SCALE
@ FULL SIZE

v:\1953\active\195310002\transportation\drawing\contract_3\plot_files\zd307c3tc_ramp_g.ptf

VERMONT AGENCY OF TRANSPORTATION

Stantec

PROJECT NAME: BENNINGTON
PROJECT NUMBER: AC NH 019-1(53)

FILE NAME: ...\zd307c3tc_ramp_g.ptf
DESIGN SUPERVISOR: GREG EDWARDS
DESIGNED BY: MARC FOISY
RAMP G TRAFFIC CONTROL TC-02

PLOT DATE: 5/16/2011
DRAWN BY: STANTEC
CHECKED BY: GARY SANTY
SHEET 168 OF 577

TRAFFIC CONTROL TYPICAL SECTIONS
EAST ROAD DETOUR

MATERIAL ITEM	THICKNESS TOLERANCE
PAVEMENT COURSES (TOTAL DEPTH)	+/- 5
SUBBASE	+/- 30

100 SUPERPAVE BITUMINOUS CONCRETE PAVEMENT (TYPE IIIS)
400 SUBBASE OF DENSE GRADED CRUSHED STONE OR CRUSHED GRAVEL

NOTES:

1. ELIMINATE TOPSOIL AND SEEDING BEHIND GUARDRAIL TO SUBGRADE CATCH POINT.
2. FOR SLOPES IN SOLID ROCK EXCAVATION AND DRILLING AND BLASTING OF SOLID ROCK SUBGRADE, SEE STD. SHEET A-60 AND A-62 AND DETAILS
3. REFER TO TYPICAL SECTION SHEET, TS-06 FOR SEEDING FORMULA AND ADDITIONAL GENERAL NOTES.

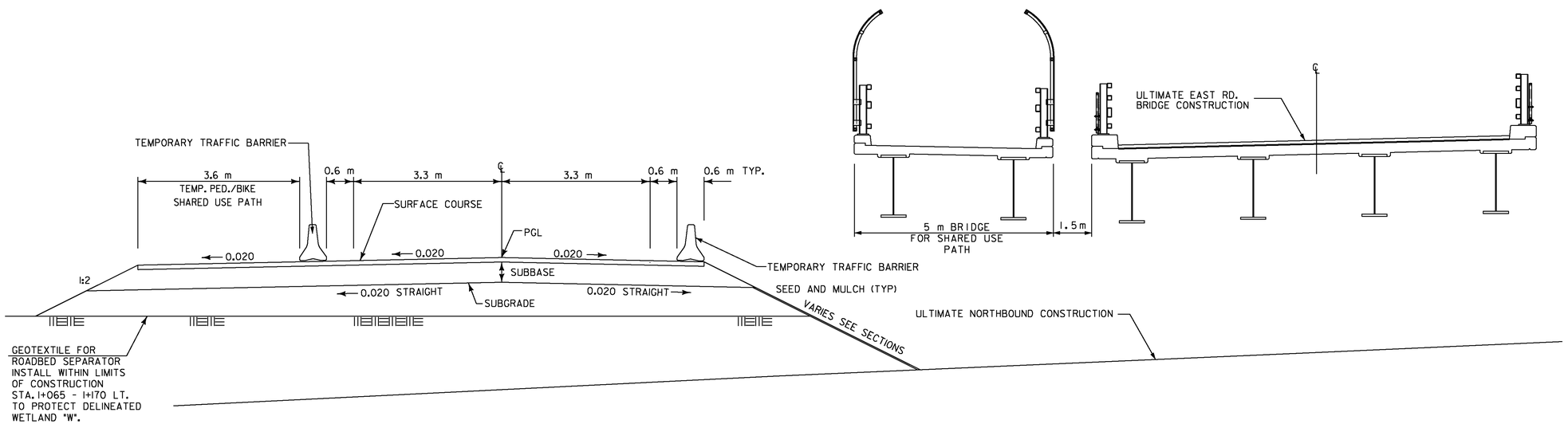

NORMAL SECTION

NOT TO SCALE

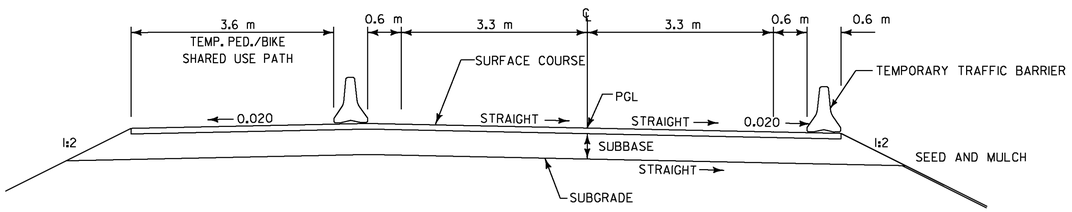

MAXIMUM BANKED SECTION

NOT TO SCALE

NOTE: ALL DIMENSIONS ARE IN MILLIMETERS (mm) EXCEPT WHERE NOTED.

PGL=PROFILE GRADE LINE

VERMONT AGENCY OF TRANSPORTATION

Stantec

PROJECT NAME: BENNINGTON
PROJECT NUMBER: AC NH 019-1(53)

FILE NAME: ...\plot_files\zd307c3tc_typ.ptf
DESIGN SUPERVISOR: GREG EDWARDS
DESIGNED BY: MARC FOISY
EAST ROAD DETOUR ERD - 01

PLOT DATE: 5/16/2011
DRAWN BY: STANTEC
CHECKED BY: GARY SANTY
SHEET 169 OF 577

v:\1953\active\195300021\transportation\drawing\contract_3\plot_files\zd307c3tc_typ.ptf

NOTE: FOR DETOUR DELINEATION AND SIGNING SEE STANDARD E-107

PHASE I

A. CONSTRUCT EXCLUSIONARY FENCE TO PROTECT WETLANDS STA 1+064 TO 1+165, LT.
B. CLEAR, BUT NO GRUBBING OF SITE.
C. INSTALL GEOTEXTILE IN FILL AREAS.
D. CONSTRUCT DETOUR FROM ED 1+000 - ED 1+290 MAINTAINING A SMOOTH TRANSITION FROM ONSET OF DETOUR - EAST ROAD SOUTH. CONSTRUCT PARTIAL NEW DRIVE AT EAST ROAD STA. ER 1+107 RT
E. CONSTRUCT TEMP. WATER & SEWER RELOCATION
F. CONSTRUCT NEW DRIVE AT ER 1+107, RT.
G. SWITCH TRAFFIC TO DETOUR.
H. CONSTRUCT REQUIRED CONSTRUCTION APPROACHES TO EAST ROAD BRIDGE.
I. CONSTRUCT VEHICULAR & PEDESTRIAN BRIDGES.

PHASE II

A. COMPLETE PERMANENT WATER & SEWER WORK, TRANSFER TO NEW SYSTEMS.
B. COMPLETE EAST SIDE OF EAST ROAD FOR A ONE LANE ROADWAY.
C. SHIFT NORTHBOUND TRAFFIC TO NEW EAST ROAD.
D. REMOVE NORTHBOUND LANE OF DETOUR TO COMPLETE EAST ROAD CONSTRUCTION.
E. REMOVE DETOUR AND ALL TEMPORARY LINE STRIPING. ESTABLISH SIDE SLOPES TO NEW LINE AND GRADE.

ROADWAY GENERAL NOTES

1. FOR INFORMATION ON THE WATER AND SEWER RELOCATION SEE SHEETS TU-01 THROUGH TU-03.
2. DURING WORK HOURS, ONE-WAY TRAFFIC MAY BE MAINTAINED BY THE USE OF FLAGGERS, CONES, DRUMS, AND/OR UNIFORMED OFFICERS WITH VEHICLE.
3. TWO-WAY TRAFFIC SHALL BE MAINTAINED DURING ALL NON-WORK HOURS, HOLIDAYS, AND WEEKENDS.
4. SEE GENERAL PLAN FOR NEW DRIVEWAY DESIGN OF HOOD PROPERTY, STA ER 1+107, RT.
5. MAINTAIN ACCESS TO PRIVATE DRIVES AT ER 1+107, RT. AND ER 1+270, RT.
6. MAINTAIN A 1:1.5 SLOPE OR FLATTER ON EAST SIDE OF DETOUR.
7. ALL TRAFFIC CONTROL DEVICES (REFLECTORIZED DRUMS, BARRICADES, ETC.) SHALL BE CONSTRUCTED ACCORDING TO THE LATEST VERSION OF THE MANUAL ON UNIFORM TRAFFIC CONTROL DEVICES.
8. ALL TRAFFIC CONTROL DEVICES (REFLECTORIZED DRUMS, BARRICADES, ETC.) SHALL BE CONSIDERED INCIDENTAL TO ITEM 641.10. FLAGGERS AND UNIFORMED TRAFFIC OFFICERS SHALL BE PAID FOR UNDER THEIR RESPECTIVE ITEMS.
9. DESIGN CRITERIA FOR ITEM 621.56 - ENERGY ABSORPTION ATTENUATOR:
   DESIGN SPEED: 50 KPH
   DESIGN VEHICLE: WB-15

ENERGY ABSORPTION ATTENUATOR, SAND FILLED PLASTIC BARRELS

STA. ED 1+035, LT.
STA. ED 1+090, RT.

TEMPORARY TRAFFIC BARRIER

STA. ED 1+037 to STA. ED 1+140, LT.
STA. ED 1+092 to STA. ED 1+140, RT.

CURVE DET 1
Δ = 26°41'49.6" LT.
R.= 100.000m
T.= 23.729m
L.= 46.595m
E.= 2.777m
BANK= 0.020
PI STA ED 1+066.450
N: 44735.9035
E: 443526.7363
PC STA ED 1+042.722
N: 44713.7279
E: 443518.2933
PT STA ED 1+089.317
N: 44759.5083
E: 443524.3164

CURVE DET 2
Δ = 16°23'01.4" RT.
R.= 100.000m
T.= 14.396m
L.= 28.595m
E.= 1.031m
BANK= 0.020
PI STA ED 1+116.783
N: 44786.8307
E: 443521.5153
PC STA ED 1+102.387
N: 44772.5101
E: 443522.9835
PT STA ED 1+130.982
N: 44800.9840
E: 443524.1462

TEMPORARY 100 WHITE LINE

STA. ED 1+000 to STA. ED 1+140, SOLID LT. & RT.

TEMPORARY 100 YELLOW LINE

STA. ED 1+000 to STA. ED 1+140 (DOUBLE)

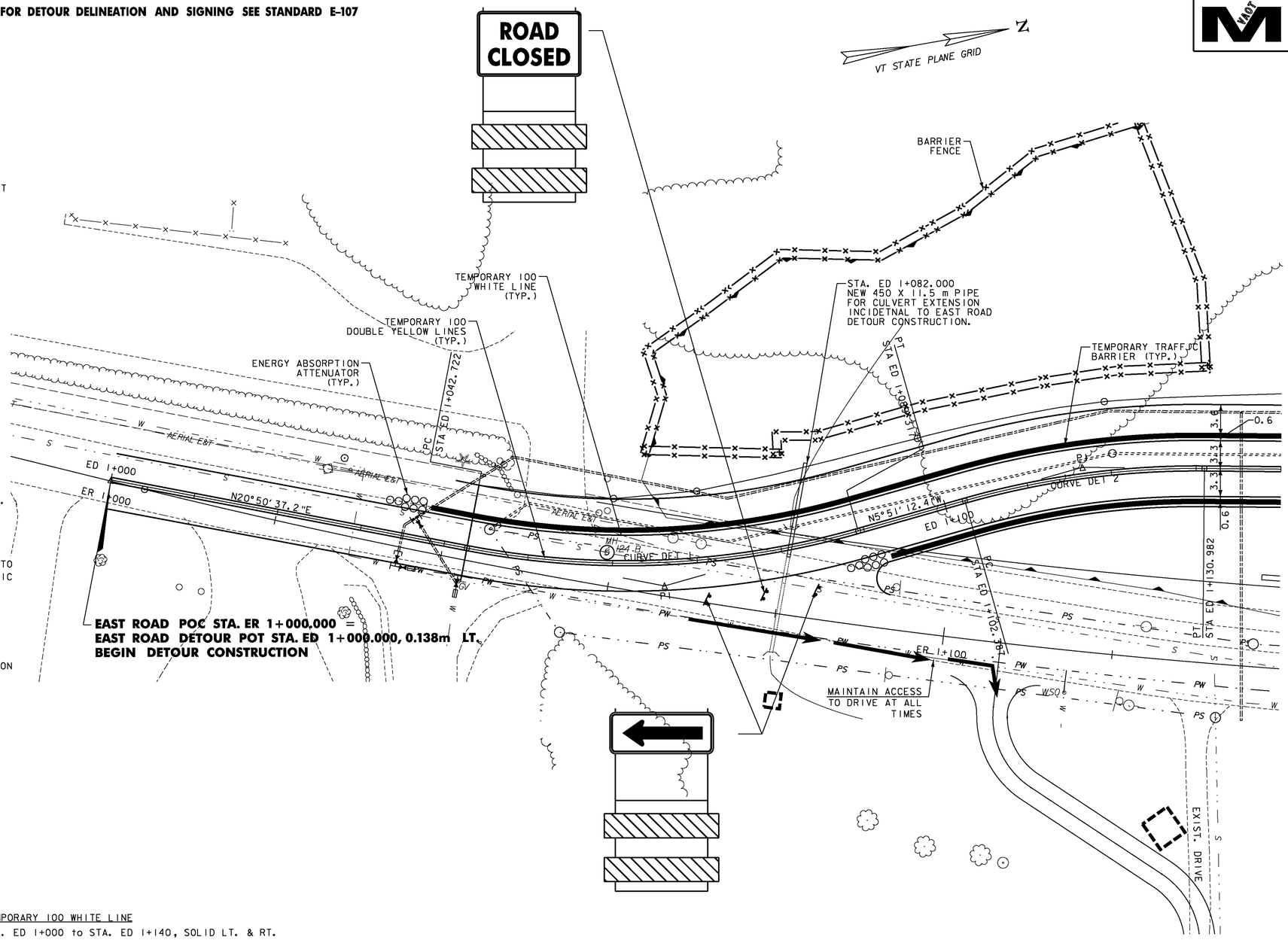

EAST ROAD POC STA. ER 1+000.000 =
EAST ROAD DETOUR POT STA. ED 1+000.000, 0.138m LT.
BEGIN DETOUR CONSTRUCTION

NOTE: ALL DIMENSIONS ARE IN MILLIMETERS (mm) EXCEPT WHERE NOTED.

5 0 5 m
1:250 SCALE @ FULL SIZE

VERMONT AGENCY OF TRANSPORTATION

PROJECT NAME: BENNINGTON
PROJECT NUMBER: AC NH 019-1(53)

FILE NAME: ...\zd307c3tc_east_rd2.ptf
DESIGN SUPERVISOR: GREG EDWARDS
DESIGNED BY: MARC FOISY
EAST ROAD DETOUR ERD-02

PLOT DATE: 5/25/2011
DRAWN BY: STANTEC
CHECKED BY: GARY SANTY
SHEET 170 OF 577

Stantec

V:\953\active\95300002\transportation\drawing\contract_3\plot_files\zd307c3tc_east_rd2.ptf

NOTES:

1. ALL DIMENSIONS ARE IN MILLIMETERS (mm) EXCEPT WHERE NOTED.
2. FOR EXACT PLACEMENT OF ROAD CLOSED AND ARROW SIGNS, REFER TO VTRANS STANDARD E-107.
3. DURING CONSTRUCTION OF THE EAST ROAD BRIDGE PIER, IT WILL BE THE RESPONSIBILITY OF THE CONTRACTOR TO MAINTAIN DEWATERING OF THE SITE AS APPROVED BY THE RESIDENT ENGINEER.
4. AS PART OF THE DETOUR CONSTRUCTION, THE EXISTING PIPE WILL NEED TO BE EXTENDED. THIS PIPE EXTENTION WILL BE INCIDENTAL TO THE DETOUR CONSTRUCTION.
5. DESIGN CRITERIA FOR ITEM - 621.56 ENERGY ABSORPTION ATTENUATOR:
   DESING SPEED: 50 KPH
   DESING VEHICLE: WB-15

ENERGY ABSORPTION ATTENUATOR, SAND FILLED PLASTIC BARRELS
STA. ED 1+261, RT.
STA. ER 1+293, LT.

TEMPORARY TRAFFIC BARRIER
STA. ED 1+140 to STA. ED 1+259, RT.
STA. ED 1+140 to STA. ER 1+291, LT.

TEMPORARY 100 WHITE LINE
STA. ED 1+140 to STA. ED 1+290, SOLID LT. & RT.

TEMPORARY 100 YELLOW LINE
STA. ED 1+140 to STA. ED 1+290, DOUBLE

ROADWAY GENERAL NOTES
1. FOR ALL ROADWAY GENERAL NOTES REFER TO SHEET ERD-02.

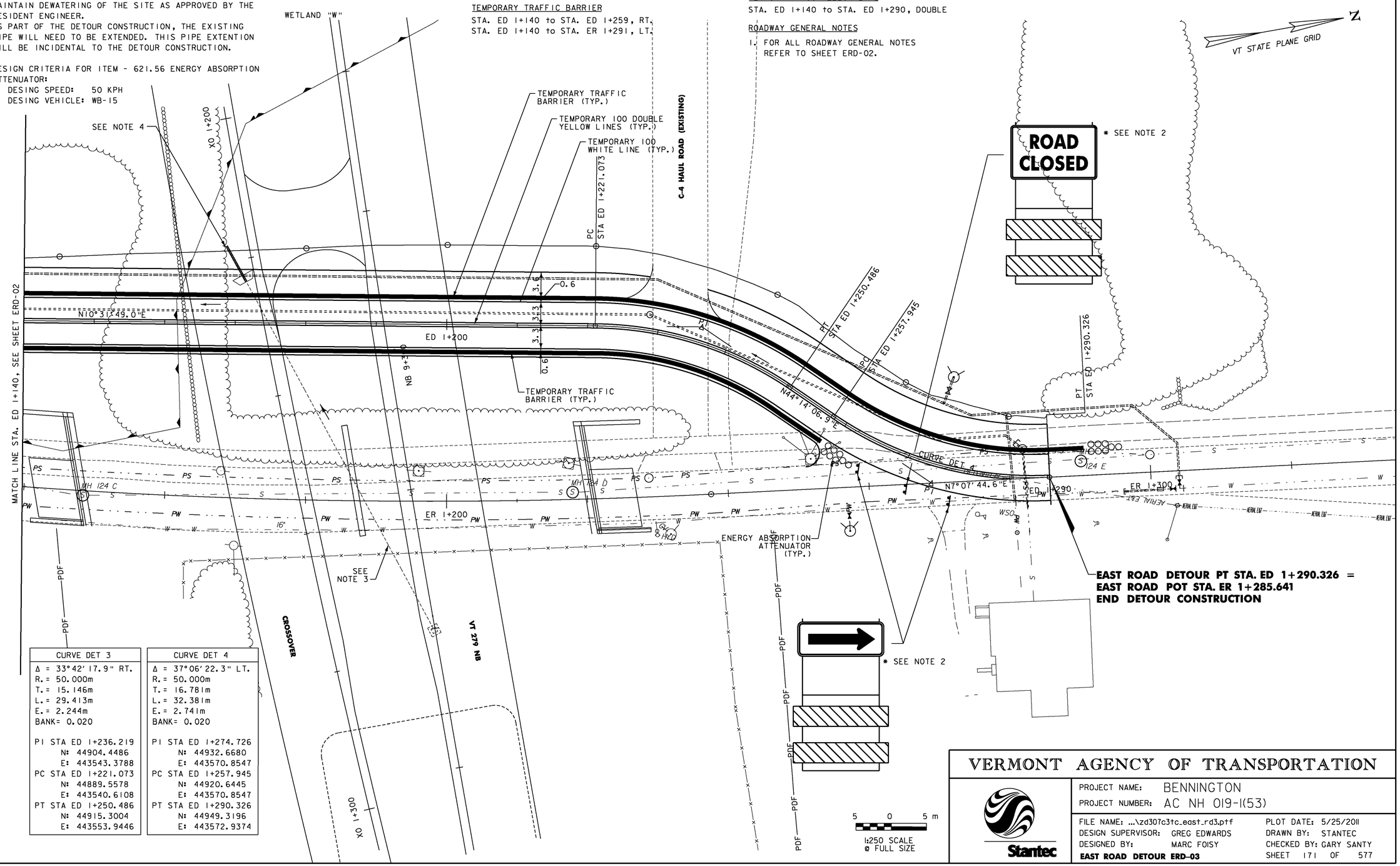

EAST ROAD DETOUR PT STA. ED 1+290.326 =
EAST ROAD POT STA. ER 1+285.641
END DETOUR CONSTRUCTION

CURVE DET 3
Δ = 33°42'17.9" RT.
R. = 50.000m
T. = 15.146m
L. = 29.413m
E. = 2.244m
BANK= 0.020
PI STA ED 1+236.219
N: 44904.4486
E: 443543.3788
PC STA ED 1+221.073
N: 44889.5578
E: 443540.6108
PT STA ED 1+250.486
N: 44915.3004
E: 443553.9446

CURVE DET 4
Δ = 37°06'22.3" LT.
R. = 50.000m
T. = 16.781m
L. = 32.381m
E. = 2.741m
BANK= 0.020
PI STA ED 1+274.726
N: 44932.6680
E: 443570.8547
PC STA ED 1+257.945
N: 44920.6445
E: 443570.8547
PT STA ED 1+290.326
N: 44949.3196
E: 443572.9374

5 0 5 m
1:250 SCALE @ FULL SIZE

VERMONT AGENCY OF TRANSPORTATION

Stantec

PROJECT NAME: BENNINGTON
PROJECT NUMBER: AC NH 019-1(53)

FILE NAME: ...\zd307c3tc_east_rd3.ptf
DESIGN SUPERVISOR: GREG EDWARDS
DESIGNED BY: MARC FOISY
EAST ROAD DETOUR ERD-03
PLOT DATE: 5/25/2011
DRAWN BY: STANTEC
CHECKED BY: GARY SANTY
SHEET 171 OF 577

V:\1953\active\19530002\transportation\drawings\contract_3\plot_files\zd307c3tc_east_rd3.ptf

Metric

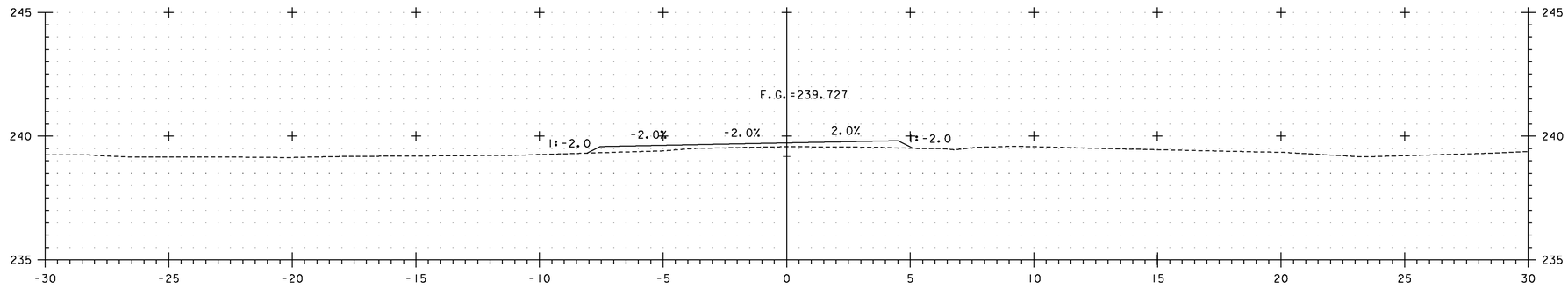

ED 1+060

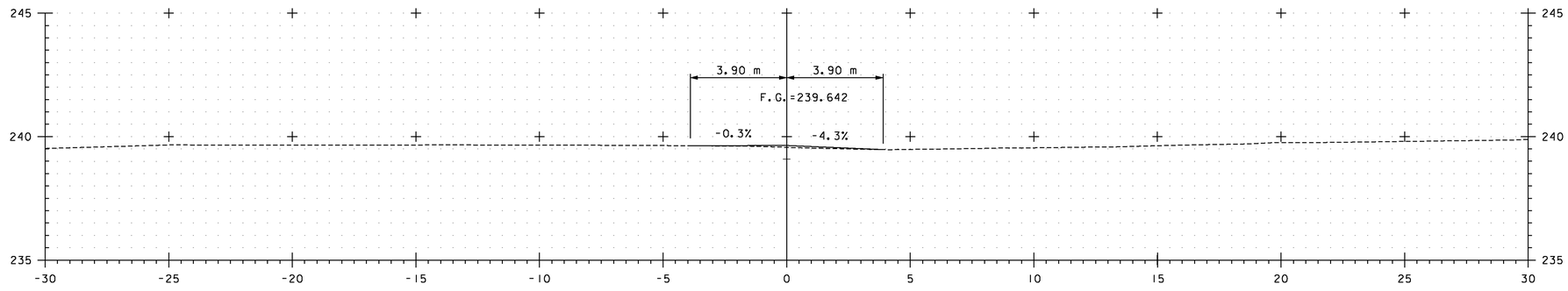

ED 1+043

4 m
2
2 4 m

H 1:100 SCALE
V 1:100 SCALE
@ FULL SIZE

VERMONT AGENCY OF TRANSPORTATION

Stantec

PROJECT NAME: BENNINGTON
PROJECT NUMBER: AC NH 019-1(53)

FILE NAME: ...\plot_files\zd307c3xs_eastd.ptf PLOT DATE: 5/26/2011
DESIGN SUPERVISOR: GREG EDWARDS DRAWN BY: STANTEC
DESIGNED BY: MARC FOISY CHECKED BY: GARY SANTY
EAST ROAD DETOUR ERD-04 SHEET 172 OF 577

V:\1953\active\195300021\transportation\drawing\contract_3\plot_files\zd307c3xs_eastd.ptf

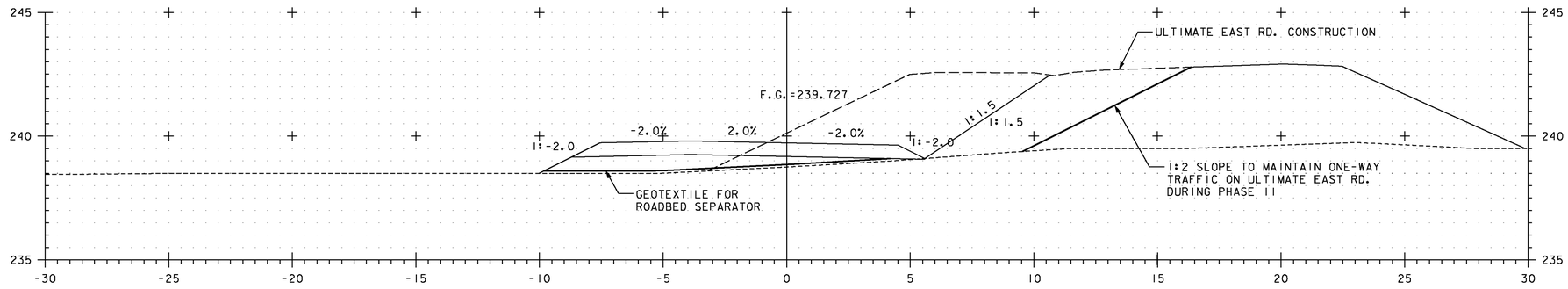

ED 1+100

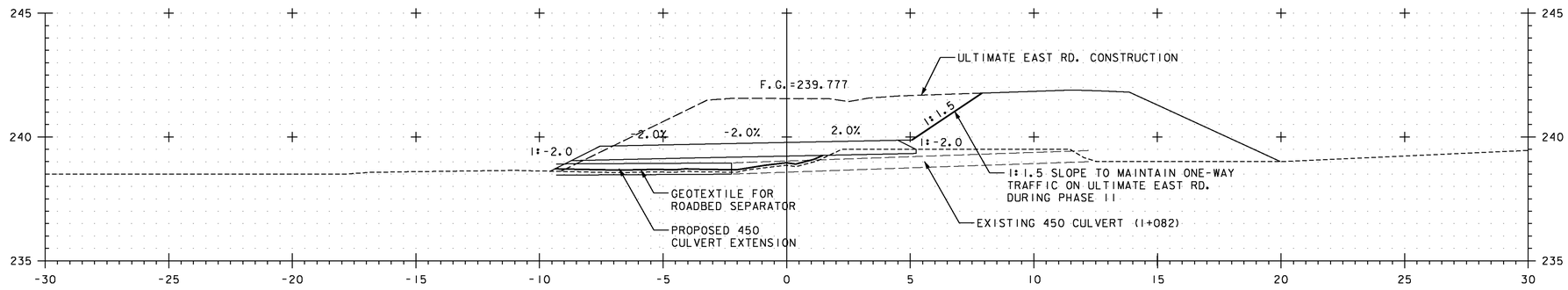

ED 1+080

4 m
2
2 4 m

H 1:100 SCALE
V 1:100 SCALE
@ FULL SIZE

VERMONT AGENCY OF TRANSPORTATION

Stantec

PROJECT NAME: BENNINGTON
PROJECT NUMBER: AC NH 019-1(53)

FILE NAME: ...\plot_files\zd307c3xs_eastd.ptf PLOT DATE: 5/26/2011
DESIGN SUPERVISOR: GREG EDWARDS DRAWN BY: STANTEC
DESIGNED BY: MARC FOISY CHECKED BY: GARY SANTY
EAST ROAD DETOUR ERD-05 SHEET 173 OF 577

V:\1953\active\19530002\transportation\drawing\contract_3\plot_files\zd307c3xs_eastd.ptf

Metric

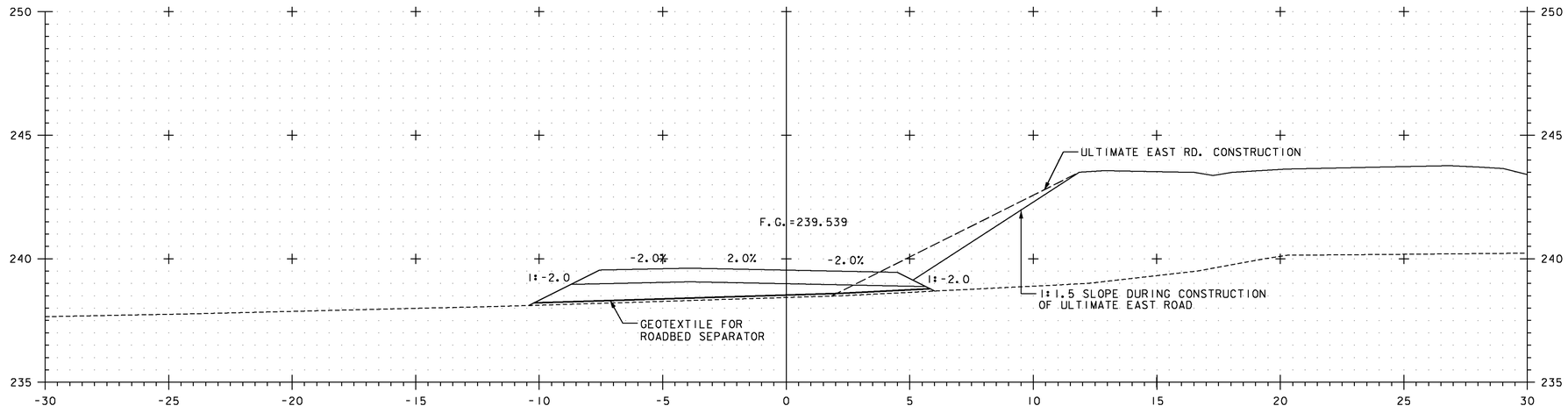

ED 1+140

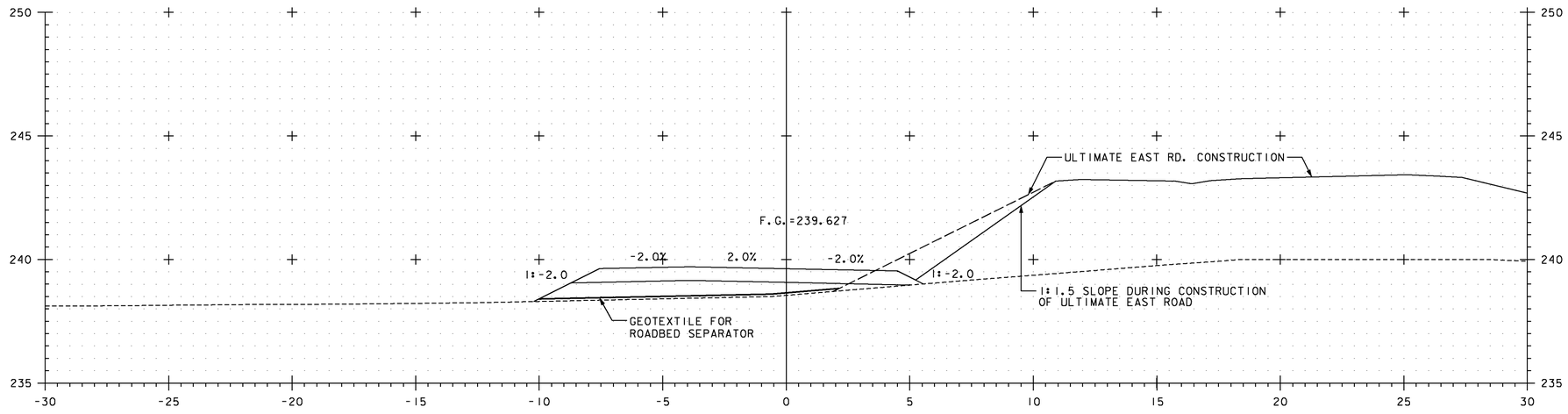

ED 1+120

4 m
2
2 4 m

H 1:100 SCALE
V 1:100 SCALE
@ FULL SIZE

VERMONT AGENCY OF TRANSPORTATION

Stantec

PROJECT NAME: BENNINGTON
PROJECT NUMBER: AC NH 019-1(53)

FILE NAME: ...\plot_files\zd307c3xs_eastd.ptf PLOT DATE: 5/26/2011
DESIGN SUPERVISOR: GREG EDWARDS DRAWN BY: STANTEC
DESIGNED BY: MARC FOISY CHECKED BY: GARY SANTY
EAST ROAD DETOUR ERD-06 SHEET 174 OF 577

V:\1953\active\195300021\transportation\drawing\contract_3\plot_files\zd307c3xs_eastd.ptf

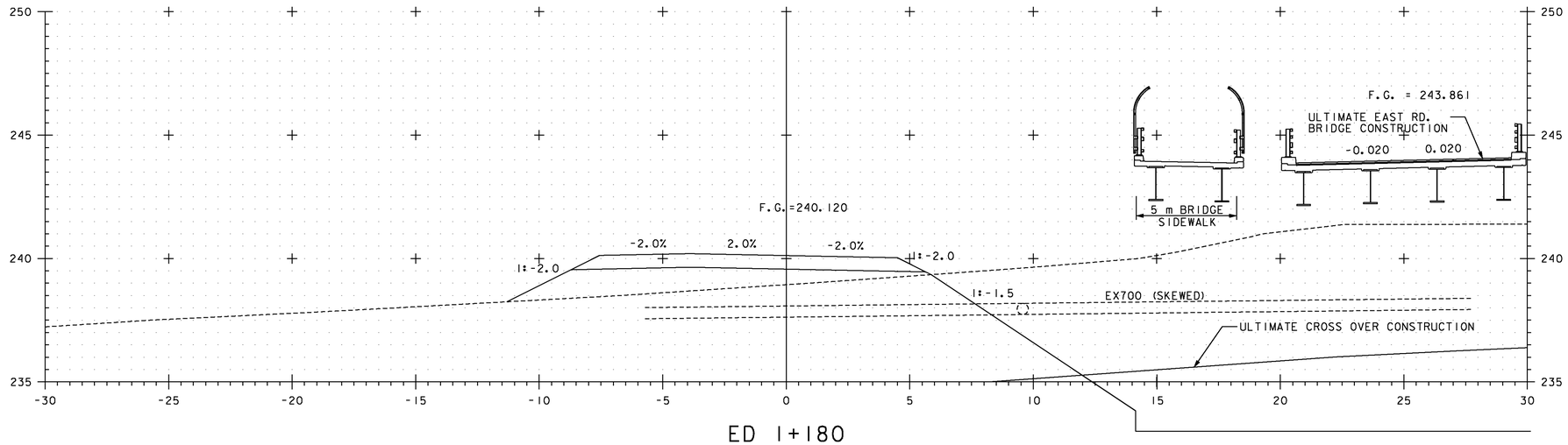

ED 1+180

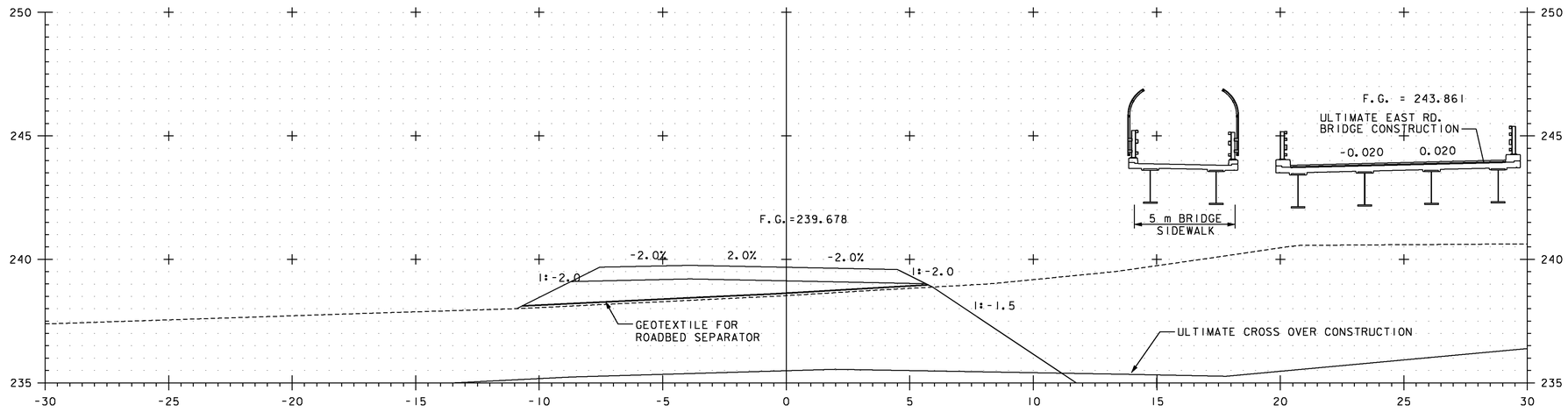

ED 1+160

4 m
2
2 4 m

H 1:100 SCALE
V 1:100 SCALE
@ FULL SIZE

VERMONT AGENCY OF TRANSPORTATION

PROJECT NAME: BENNINGTON
PROJECT NUMBER: AC NH 019-1(53)

FILE NAME: ...\plot_files\zd307c3xs_eastd.ptf PLOT DATE: 5/26/2011
DESIGN SUPERVISOR: GREG EDWARDS DRAWN BY: STANTEC
DESIGNED BY: MARC FOISY CHECKED BY: GARY SANTY
EAST ROAD DETOUR ERD-07 SHEET 175 OF 577

Stantec

V:\1953\active\195300021\transportation\drawing\contract_3\plot_files\zd307c3xs_eastd.ptf

Metric

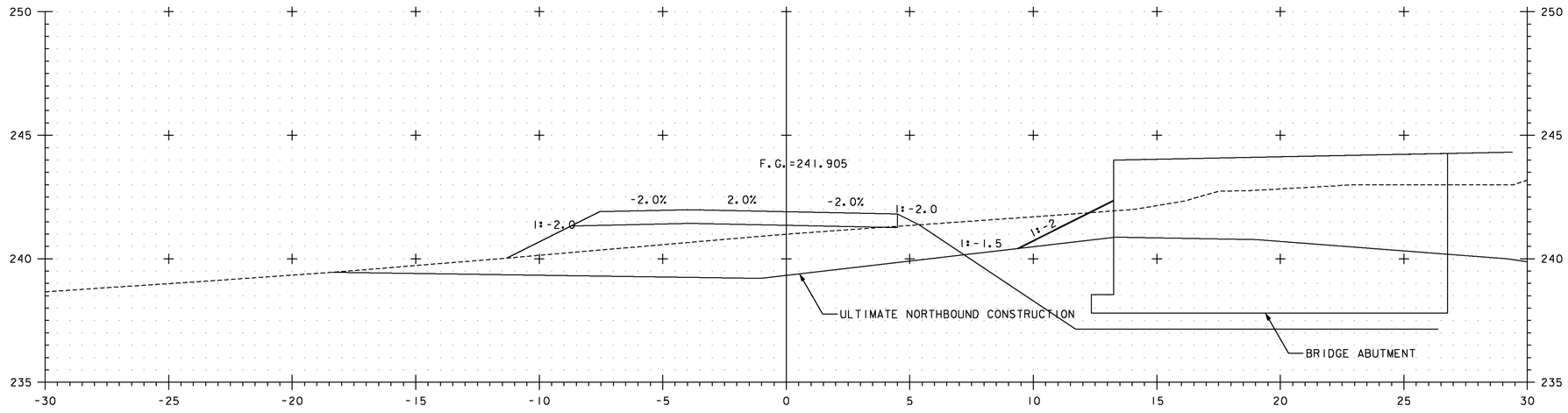

ED 1+220

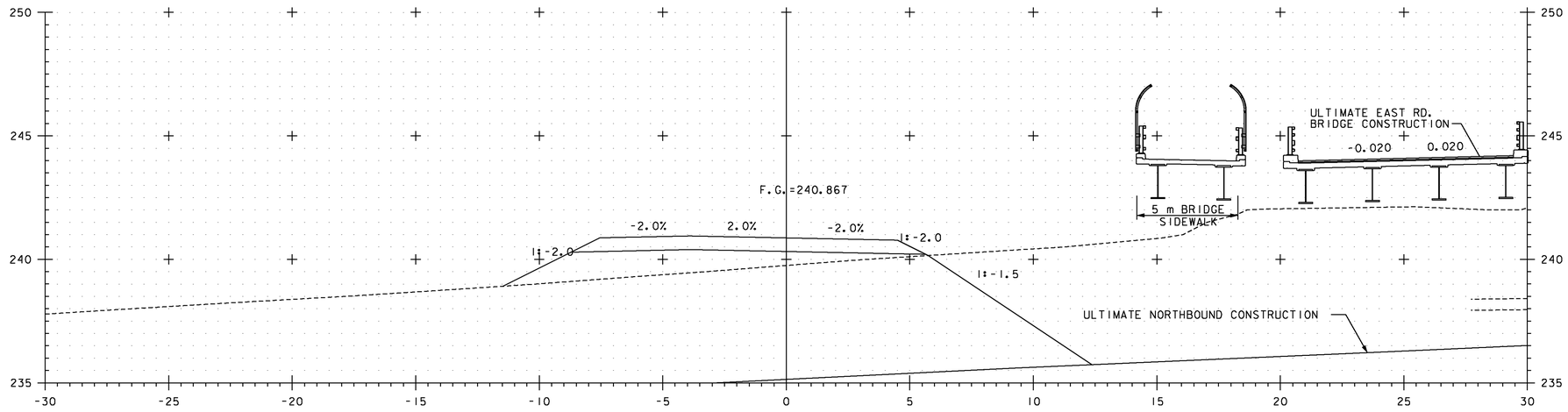

ED 1+200

4 m
2
2 4 m

H 1:100 SCALE
V 1:100 SCALE
@ FULL SIZE

VERMONT AGENCY OF TRANSPORTATION

Stantec

PROJECT NAME: BENNINGTON
PROJECT NUMBER: AC NH 019-1(53)

FILE NAME: ...\plot_files\zd307c3xs_eastd.ptf PLOT DATE: 5/26/2011
DESIGN SUPERVISOR: GREG EDWARDS DRAWN BY: STANTEC
DESIGNED BY: MARC FOISY CHECKED BY: GARY SANTY
EAST ROAD DETOUR ERD-08 SHEET 176 OF 577

V:\1953\active\195300021\transportation\drawing\contract_3\plot_files\zd307c3xs_eastd.ptf

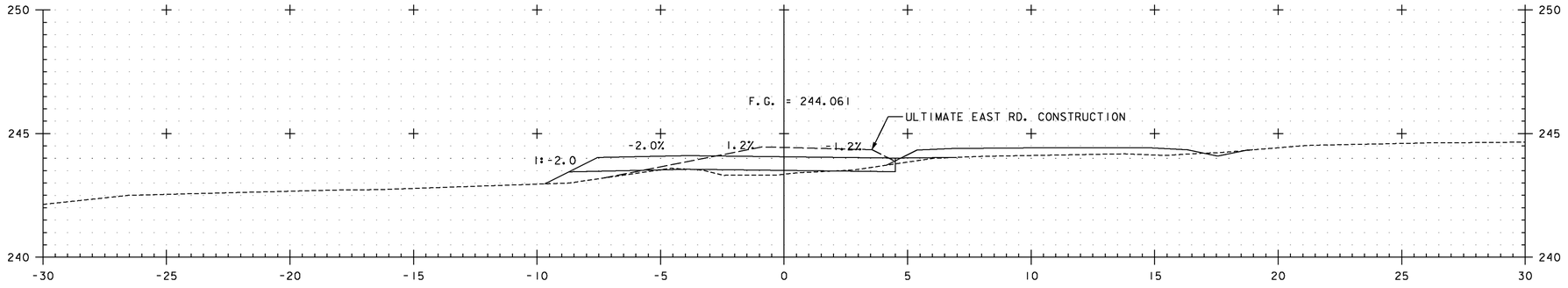

ED 1+260

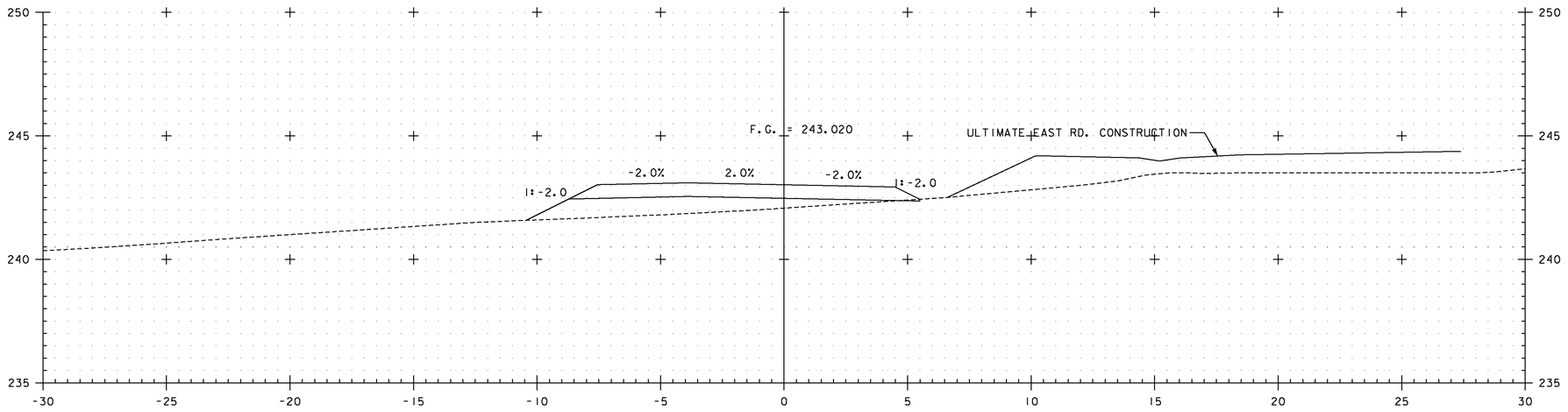

ED 1+240

4 m
2
2 4 m

H 1:100 SCALE
V 1:100 SCALE
@ FULL SIZE

VERMONT AGENCY OF TRANSPORTATION

Stantec

PROJECT NAME: BENNINGTON
PROJECT NUMBER: AC NH 019-1(53)

FILE NAME: ...\plot_files\zd307c3xs_eastd.ptf PLOT DATE: 5/26/2011
DESIGN SUPERVISOR: GREG EDWARDS DRAWN BY: STANTEC
DESIGNED BY: MARC FOISY CHECKED BY: GARY SANTY
EAST ROAD DETOUR ERD-09 SHEET 177 OF 577

V:\1953\active\195300021\transportation\drawing\contract_3\plot_files\zd307c3xs_eastd.ptf

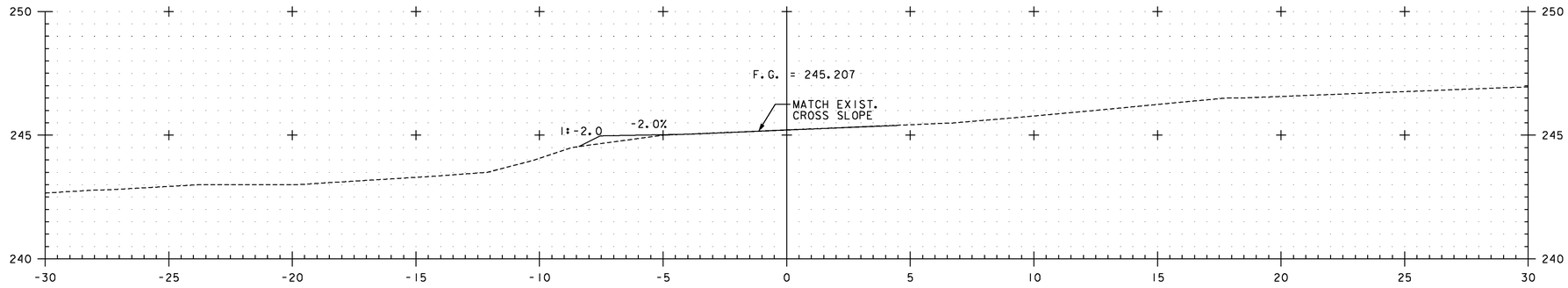

ED 1+290

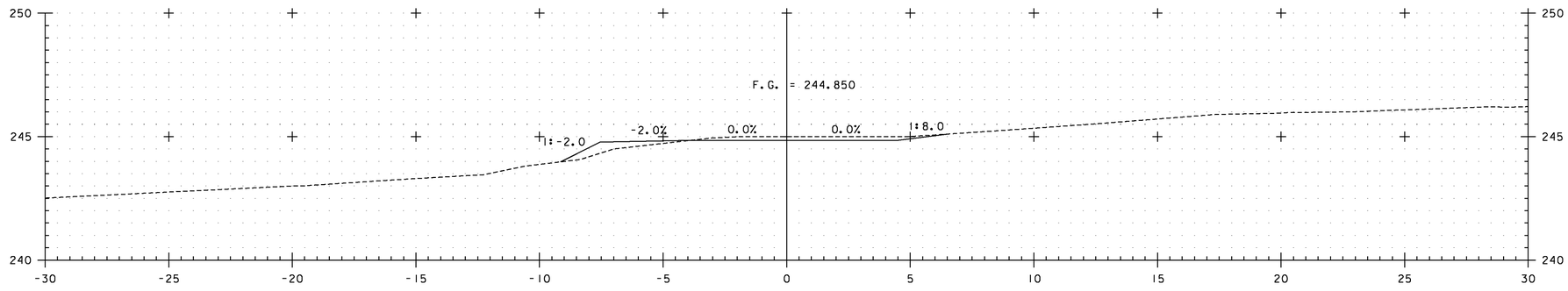

ED 1+280

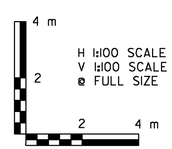

VERMONT AGENCY OF TRANSPORTATION

Stantec

PROJECT NAME: BENNINGTON
PROJECT NUMBER: AC NH 019-1(53)

FILE NAME: ...\plot_files\zd307c3xs_eastd.ptf
PLOT DATE: 5/26/2011
DESIGN SUPERVISOR: GREG EDWARDS
DRAWN BY: STANTEC
DESIGNED BY: MARC FOISY
CHECKED BY: GARY SANTY
EAST ROAD DETOUR ERD-10
SHEET 178 OF 577

V:\1953\active\19530002\transportation\drawing\contract_3\plot_files\zd307c3xs_eastd.ptf

REMOVING SIGNS
AS SHOWN - 7

ERECTING SALVAGED SIGNS
AS SHOWN - 2

REMOVAL OF EXISTING PAVEMENT MARKINGS
MM 6.03 RT. TO MM 6.09 RT., SOLID WHITE
MM 6.36 RT. TO MM 6.48 RT., SOLID WHITE

REMOVAL OF EXISTING DELINEATOR
MM 6.03 RT. TO MM 6.09 RT.
MM 6.36 RT. TO MM 6.48 RT.

VAOT Metric

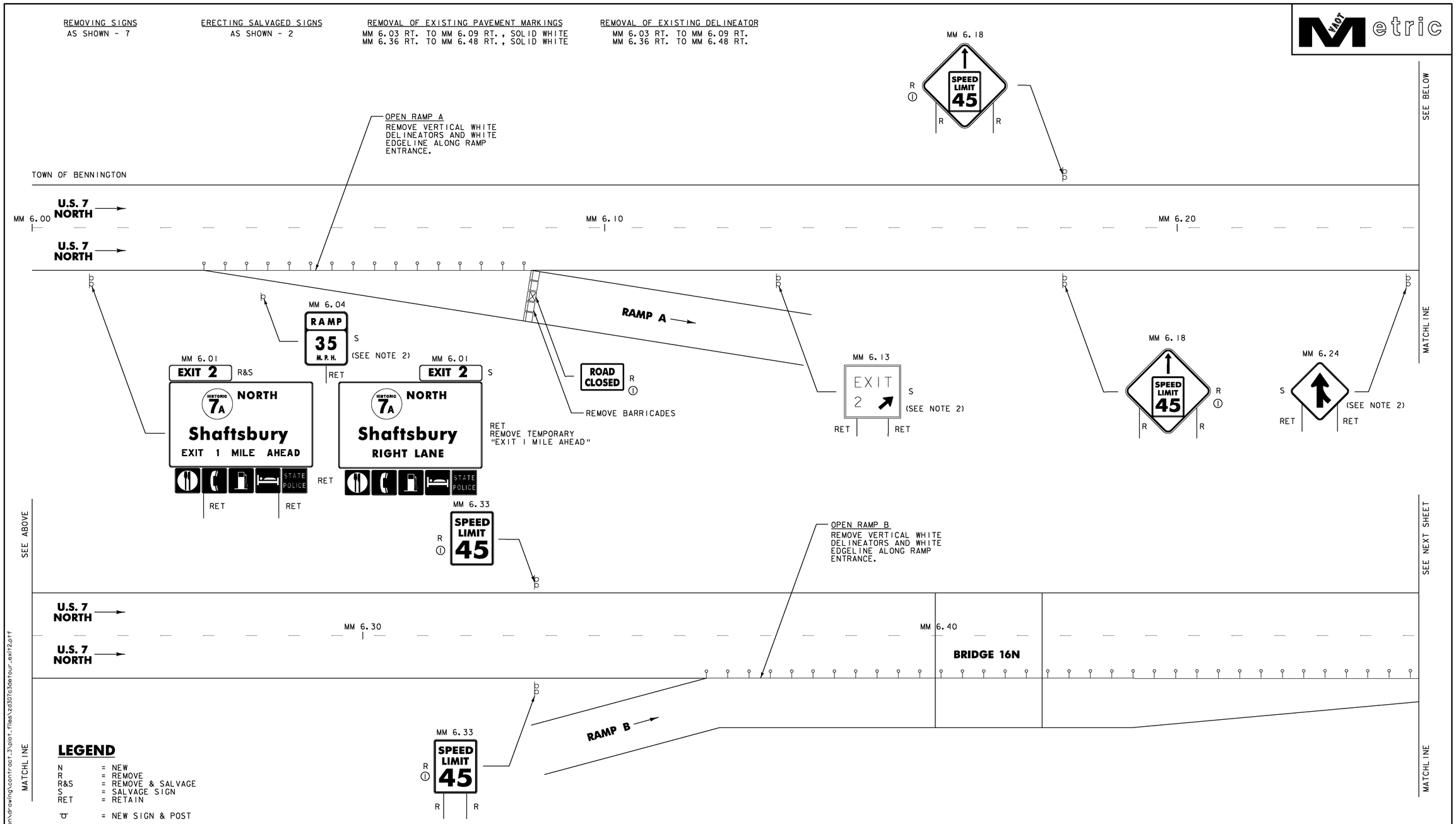

LEGEND

N	= NEW
R	= REMOVE
R&S	= REMOVE & SALVAGE
S	= SALVAGE SIGN
RET	= RETAIN
	= NEW SIGN & POST
	= EXISTING SIGN & POST
Ⓘ	= RETURN TO DISTRICT I MAINTENANCE FACILITY
	= EXISTING TYPE I (WHITE) DELINEATOR
	= EXISTING TYPE I (YELLOW) DELINEATOR
	= EXISTING CONCRETE MEDIAN BARRIER
	= EXISTING TYPE III BARRICADES
	= EXISTING TYPE III BARRICADES (MOD.)

NOTES:

1. AT MM 6.01 REMOVE "EXIT 2" FROM UPPER LEFT HAND SIDE OF ASSEMBLY TO A RIGHT-HAND JUSTIFIED POSITION. REMOVE "EXIT 1 MILE AHEAD" TAPE TO REVEAL "RIGHT LANE" TEXT.
2. THIS SIGN WAS REMOVED DURING INSTALLATION OF THE DETOUR AND WAS STORED AT THE DISTRICT 1 GARAGE. THE CONTACT PERSON AT THE DISTRICT GARAGE IS NELSON BLANCHARD 447-2790. INSTALL SALVAGED SIGNS AS SHOWN OR AS DIRECTED BY RESIDENT ENGINEER.

NOT TO SCALE

VERMONT AGENCY OF TRANSPORTATION

Stantec

PROJECT NAME: BENNINGTON
PROJECT NUMBER: AC NH 019-1(53)

FILE NAME: ...\zd307c3detour_exit2.ptf
DESIGN SUPERVISOR: GREG EDWARDS
DESIGNED BY: MARC FOISY
EXIT 2 DETOUR REMOVAL SHEET 1

PLOT DATE: 5/25/2011
DRAWN BY: STANTEC
CHECKED BY: GARY SANTY
SHEET 179 OF 577

v:\1953\active\195300021\transportation\drawing\contract_3\plot_files\zd307c3detour_exit2.ptf

REMOVING SIGNS
AS SHOWN - 7

ERECTING SALVAGED SIGNS
AS SHOWN - 1

DURABLE 150mm WHITE LINE
MM 6.70 TO MM 6.94, DASHED ℄

REMOVAL OF EXISTING PAVEMENT MARKINGS
MM 6.48 RT. TO MM 6.53 RT., SOLID WHITE
MM 6.82 LT. TO MM 6.97 ℄, SOLID YELLOW

REMOVAL OF EXISTING DELINEATOR
MM 6.48 RT. TO MM 6.53 RT.
MM 6.82 LT. TO MM 6.97 ℄

VAOT Metric

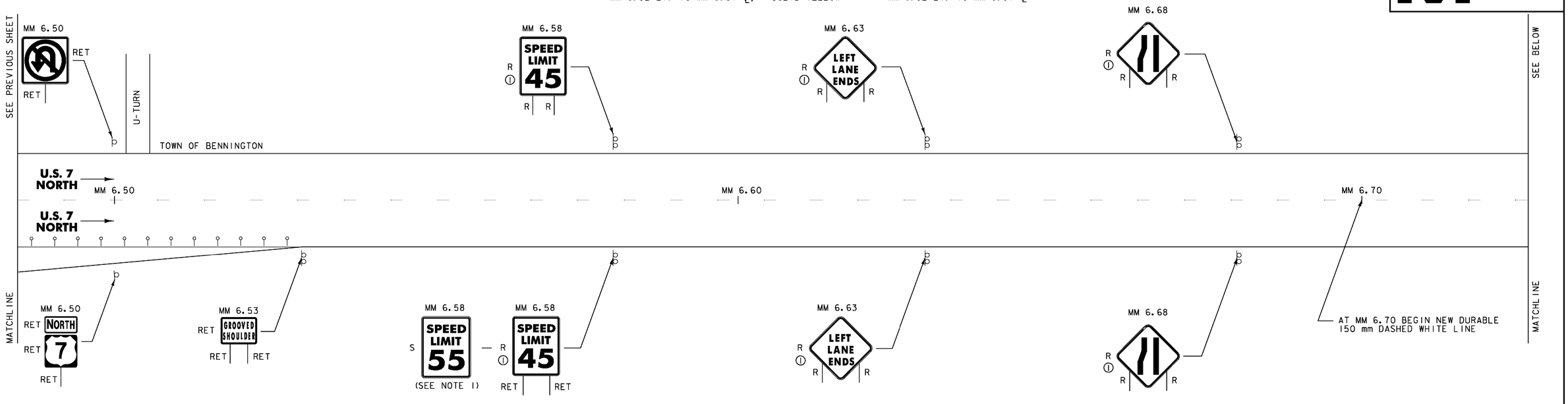

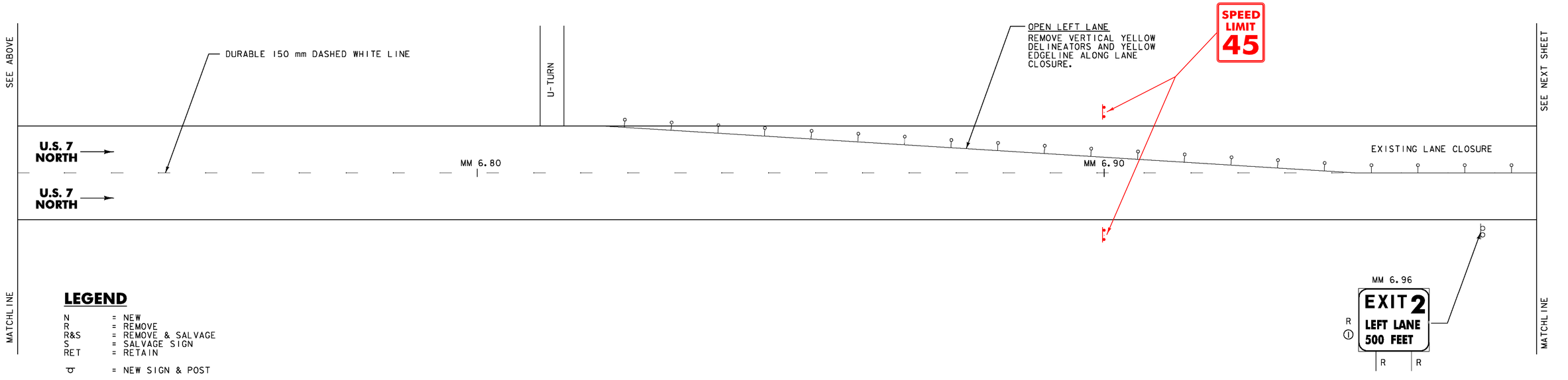

LEGEND

N	=	NEW
R	=	REMOVE
R&S	=	REMOVE & SALVAGE
S	=	SALVAGE SIGN
RET	=	RETAIN
	=	NEW SIGN & POST
	=	EXISTING SIGN & POST
Ⓘ	=	RETURN TO DISTRICT 1 MAINTENANCE FACILITY
	=	EXISTING TYPE 1 (WHITE) DELINEATOR
	=	EXISTING TYPE 1 (YELLOW) DELINEATOR
	=	EXISTING CONCRETE MEDIAN BARRIER
	=	EXISTING TYPE III BARRICADES
	=	EXISTING TYPE III BARRICADES (MOD.)

NOTE:

1. AT MM 6.58, RT. REMOVE "SPEED LIMIT 45" SIGN, RETAIN POSTS. INSTALL "SPEED LIMIT 55" SIGN SALVAGED FROM SHAFTSBURY MM 0.25, RT. REMOVE "SPEED LIMIT 45" SIGN AT 6.58 LT.

2. SIGNS REMOVED DURING INSTALLATION OF DETOUR WERE STORED AT DISTRICT 1 GARAGE. CONTACT AT DISTRICT GARAGE IS NELSON BLANCHARD 447-2790. INSTALL SALVAGED SIGNS AS SHOWN OR AS DIRECTED BY RESIDENT ENGINEER.

NOT TO SCALE

VERMONT AGENCY OF TRANSPORTATION

Stantec

PROJECT NAME: BENNINGTON
PROJECT NUMBER: AC NH 019-1(53)

FILE NAME: ...\zd307c3detour_exit2.ptf
DESIGN SUPERVISOR: GREG EDWARDS
DESIGNED BY: MARC FOISY
EXIT 2 DETOUR REMOVAL SHEET 2

PLOT DATE: 5/25/2011
DRAWN BY: STANTEC
CHECKED BY: GARY SANTY
SHEET 180 OF 577

v:\1853\active\185300021\transportation\drawing\contract_3\plot_files\zd307c3detour_exit2.ptf

REMOVING SIGNS
AS SHOWN - 13

ERECTING SALVAGED SIGNS
AS SHOWN - 1

DURABLE 150mm YELLOW LINE
MM 7.13 TO MM 7.14 LT., SOLID EDGELINE

REMOVAL OF EXISTING DELINEATOR
MM 6.97 ℄ TO MM 7.054 LT.
MM 7.077 ℄ TO MM 7.13 LT.
MM 7.27 LT. TO MM 7.31 LT.

REMOVAL OF EXISTING PAVEMENT MARKINGS
MM 6.97 ℄ TO MM 7.054 LT., SOLID YELLOW
MM 7.054 LT. TO MM 7.14 LT., "↰", "ONLY"
MM 7.077 ℄ TO MM 7.13 LT., SOLID WHITE
MM 7.11 LT. TO MM 7.27 LT., SOLID YELLOW

VAOT Metric

SEE PREVIOUS SHEET

TOWN OF BENNINGTON

OPEN LEFT LANE
REMOVE VERTICAL YELLOW DELINEATORS AND YELLOW EDGELINE ALONG LANE CLOSURE.

EXISTING LANE CLOSURE

MM 7.00

MM 7.054 — ONLY — R ① R R

MM 7.054 — RAMP 15 M.P.H. — R ① R R

MM 7.092 — LEFT LANE ONLY — R ① R; 15 M.P.H. — R ① R

REMOVE CONCRETE MEDIAN BARRIER.
REMOVE YELLOW EDGELINE.

REMOVE BARRICADE WITH SIGN

~~REMOVE TEMPORARY RAMP. REPLACE WITH 100 mm TOPSOIL, SEED AND MULCH.~~
SEE ATTACHED SHEET

RESTORE YELLOW EDGELINE

MM 7.19 — KEEP RIGHT EXCEPT TO PASS — S (SEE NOTE 2) R ①
MM 7.19 — SPEED LIMIT 45 — RET RET
MM 7.19 — R (4) ① R
MM 7.19 — DO NOT ENTER — RET RET
MM 7.19 — ALL TRAFFIC — RET RET

EXISTING LANE CLOSURE

GRASS MEDIAN

U.S. 7 SOUTH

SEE BELOW

U.S. 7 NORTH

MM 7.10

MM 7.20

U.S. 7 NORTH

MATCHLINE

MM 7.02 — RET RET RET

MM 7.054 — ONLY — R ① R R

AT MM 7.077 REMOVE SOLID WHITE LINE & DELINEATORS.

MM 7.12 — S (SEE NOTE 2) RET

MM 7.12 — WRONG WAY — RET (2) RET RET

MM 7.14 — EXIT 2 — R ①; 15 M.P.H. — R R

MM 7.19 — DO NOT ENTER — RET RET

MM 7.22 — EXIT 2 — RET
HISTORIC VERMONT 7A
Shaftsbury
Bennington
½ MILE
RET RET

MM 7.33 — ALL TRAFFIC — RET RET

MM 7.40 — RET RET RET

SEE ABOVE

REMOVE CONCRETE MEDIAN BARRIER.
REMOVE YELLOW EDGELINE.

REMOVE ENERGY ABSORPTION ATTENUATOR

REMOVE DELINEATORS

U.S. 7 SOUTH

U.S. 7 SOUTH

U.S. 7 NORTH

MM 7.30

MM 7.40

U.S. 7 NORTH

U.S. 7 NORTH

U.S. 7 NORTH

SEE NEXT SHEET

MATCHLINE

LEGEND

N	= NEW
R	= REMOVE
R&S	= REMOVE & SALVAGE
S	= SALVAGE SIGN
RET	= RETAIN
	= NEW SIGN & POST
	= EXISTING SIGN & POST
①	= RETURN TO DISTRICT 1 MAINTENANCE FACILITY
	= EXISTING TYPE I (WHITE) DELINEATOR
	= EXISTING TYPE I (YELLOW) DELINEATOR
	= EXISTING CONCRETE MEDIAN BARRIER
	= EXISTING TYPE III BARRICADES
	= EXISTING TYPE III BARRICADES (MOD.)

NOTE:
1. AT MM 7.054 TO MM 7.14 REMOVE LEFT ARROW AND "ONLY" PAVEMENT MARKING STENCILS.
2. THIS SIGN WAS REMOVED DURING INSTALLATION OF THE DETOUR AND WAS STORED AT THE DISTRICT 1 GARAGE. THE CONTACT PERSON AT THE DISTRICT GARAGE IS NELSON BLANCHARD 447-2790. INSTALL SALVAGED SIGNS AS SHOWN OR AS DIRECTED BY RESIDENT ENGINEER.

NOT TO SCALE

V:\1853\active\185300021\transportation\drawing\contract_3\plot_files\zd307c3detour_exit2.ptf

VERMONT AGENCY OF TRANSPORTATION

Stantec

PROJECT NAME: BENNINGTON
PROJECT NUMBER: AC NH 019-1(53)

FILE NAME: ...\zd307c3detour_exit2.ptf
DESIGN SUPERVISOR: GREG EDWARDS
DESIGNED BY: MARC FOISY
EXIT 2 DETOUR REMOVAL SHEET 3

PLOT DATE: 5/25/2011
DRAWN BY: STANTEC
CHECKED BY: GARY SANTY
SHEET 181 OF 577

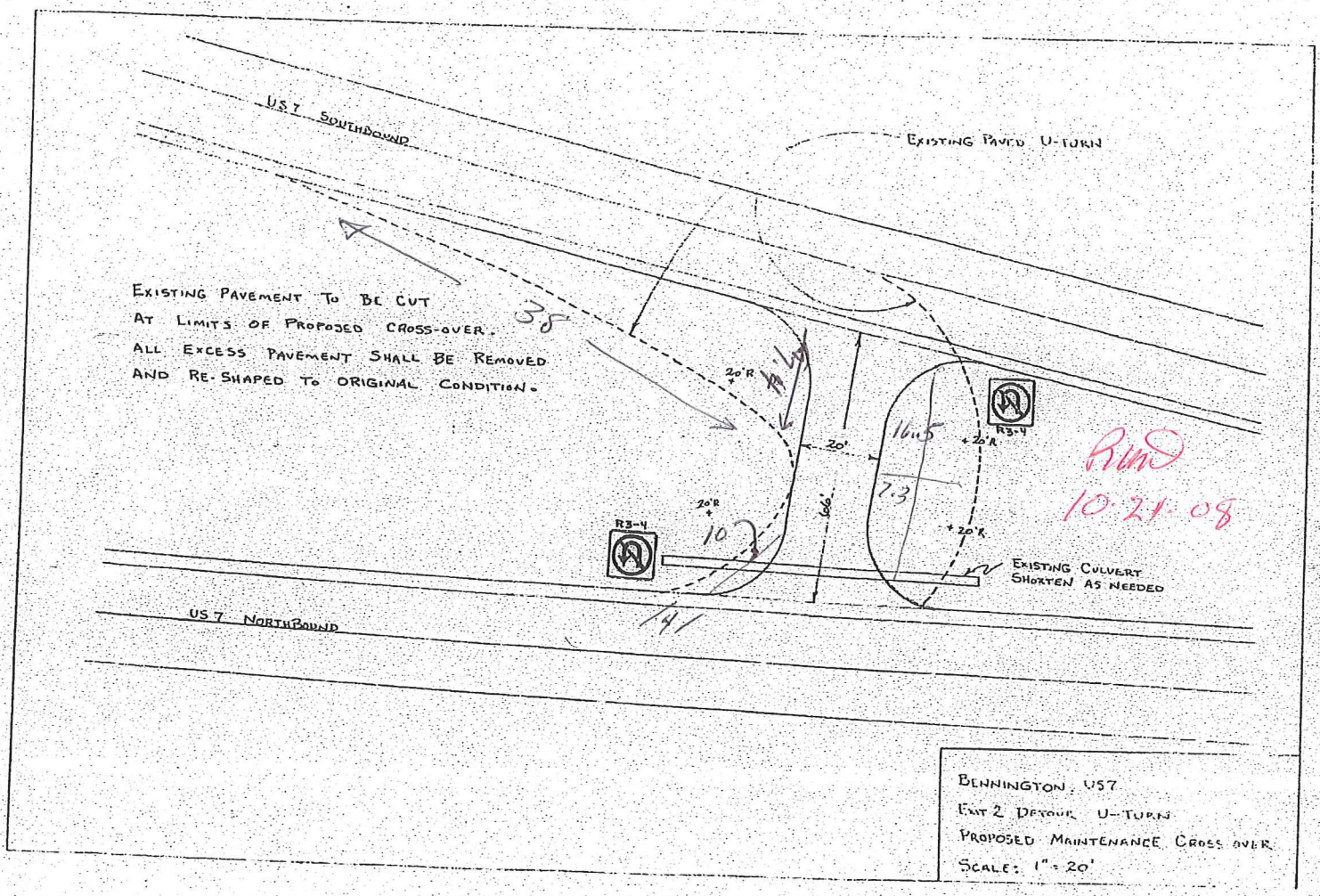
US 7 SOUTHBOUND
EXISTING PAVED U-TURN
EXISTING PAVEMENT TO BE CUT
AT LIMITS OF PROPOSED CROSS-OVER.
ALL EXCESS PAVEMENT SHALL BE REMOVED
AND RE-SHAPED TO ORIGINAL CONDITION.
38
20'R
20'
16.5
7.3
R3-4
20'R
20'R
10
20'R
R3-4
EXISTING CULVERT
SHORTEN AS NEEDED
US 7 NORTHBOUND
BENNINGTON, US7
EXIT 2 DETOUR U-TURN
PROPOSED MAINTENANCE CROSS OVER
SCALE: 1" = 20'

Rmd
10-21-08

REMOVING SIGNS
AS SHOWN - 6

VAOT Metric

SEE PREVIOUS SHEET

MM 7.46
North Bennington
NEXT 2 EXITS
RET RET RET

MM 7.52
R
SPEED LIMIT 45
R R

MM 0.05
ALL TRAFFIC KEEP RIGHT
RET RET RET

MM 0.13
RET EXIT 2
HISTORIC VERMONT 7A
Shaftsbury
Bennington
1 MILE
RET RET RET

SEE BELOW

U.S. 7 SOUTH

U.S. 7 NORTH

U.S. 7 NORTH

MM 7.50 MM 0.00 MM 0.10

MATCHLINE

MM 7.52
R
SPEED LIMIT 45
R R

BENNINGTON
SHAFTSBURY

MM 7.52 = MM 0.00

MM 0.085
RET
WEATHER INFO
TUNE RADIO TO
102.7 FM
98.1 FM
RET RET

MM 0.25
SPEED LIMIT 45
R
R R

MM 0.40
R
SPEED LIMIT 45
R R

SEE ABOVE

U.S. 7 SOUTH

U.S. 7 NORTH

U.S. 7 NORTH

MM 0.20 MM 0.30 MM 0.40

MATCHLINE

R&S
SPEED LIMIT 55
R R

MM 0.25
SPEED LIMIT 45
R

MM 0.40
R
SPEED LIMIT 45
R R

LEGEND

N	= NEW
R	= REMOVE
R&S	= REMOVE & SALVAGE
S	= SALVAGE SIGN
RET	= RETAIN
	= NEW SIGN & POST
	= EXISTING SIGN & POST
	= RETURN TO DISTRICT 1 MAINTENANCE FACILITY
	= EXISTING TYPE I (WHITE) DELINEATOR
	= EXISTING TYPE I (YELLOW) DELINEATOR
	= EXISTING CONCRETE MEDIAN BARRIER
	= EXISTING TYPE III BARRICADES
	= EXISTING TYPE III BARRICADES (MOD.)

NOTE:
1. SIGNS REMOVED DURING INSTALLATION OF DETOUR WERE STORED AT DISTRICT 1 GARAGE. CONTACT AT DISTRICT GARAGE IS NELSON BLANCHARD 447-2790. INSTALL SALVAGED SIGNS AS SHOWN OR AS DIRECTED BY RESIDENT ENGINEER.

NOT TO SCALE

VERMONT AGENCY OF TRANSPORTATION

Stantec

PROJECT NAME: BENNINGTON
PROJECT NUMBER: AC NH 019-1(53)

FILE NAME: ...\zd307c3detour_exit2.ptf
DESIGN SUPERVISOR: GREG EDWARDS
DESIGNED BY: MARC FOISY
EXIT 2 DETOUR REMOVAL SHEET 4

PLOT DATE: 5/25/2011
DRAWN BY: STANTEC
CHECKED BY: GARY SANTY
SHEET 182 OF 577

v:\1953\active\195300021\transportation\drawing\contract_3\plot_files\zd307c3detour_exit2.ptf

REMOVING SIGNS
AS SHOWN - 40

ERECTING SALVAGED SIGNS
AS SHOWN - 1

REMOVAL OF EXISTING PAVEMENT MARKINGS
MM 2.37 (JUGHANDLE, LT.) SOLID YELLOW EDGELINE
MM 2.37 (JUGHANDLE, RT.) SOLID WHITE EDGELINE
MM 2.37 (JUGHANDLE) "STOP AHEAD"
MM 2.37 (JUGHANDLE) STOP BAR
NORTH STATE HIGHWAY

REMOVAL OF EXISTING DELINEATOR
NORTH STATE HIGHWAY

EXCAVATION OF SURFACES AND PAVEMENT
JUGHANDLE

SEED
JUGHANDLE

HAY MULCH
JUGHANDLE

VAOT Metric

N

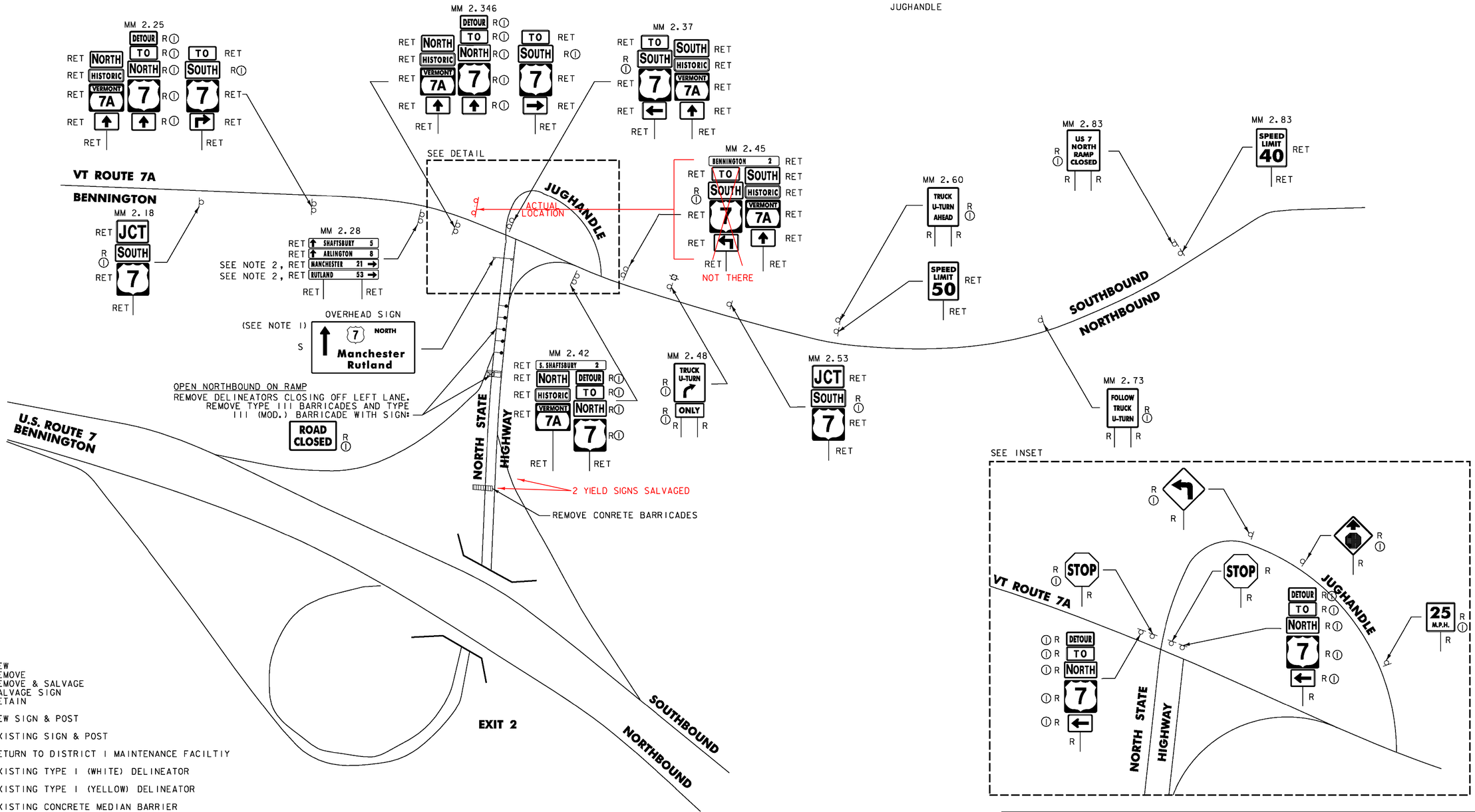

LEGEND

N	= NEW
R	= REMOVE
R&S	= REMOVE & SALVAGE
S	= SALVAGE SIGN
RET	= RETAIN
	= NEW SIGN & POST
	= EXISTING SIGN & POST
(I)	= RETURN TO DISTRICT I MAINTENANCE FACILTIY
	= EXISTING TYPE I (WHITE) DELINEATOR
	= EXISTING TYPE I (YELLOW) DELINEATOR
	= EXISTING CONCRETE MEDIAN BARRIER
	= EXISTING TYPE III BARRICADES
	= EXISTING TYPE III BARRICADES (MOD.)

NOTES:
1. OVERHEAD SIGN STORED AT DISTRICT I GARAGE
2. UNCOVER MANCHESTER DESTINATION SIGN. RUTLAND DESTINATION SIGN IS REVERSED AND UPSIDE DOWN. TURN SIGN AROUND AND RIGHT SIDE UP SO IT IS FACING NORTHBOUND TRAFFIC.

NOT TO SCALE

VERMONT AGENCY OF TRANSPORTATION

Stantec

PROJECT NAME: BENNINGTON
PROJECT NUMBER: AC NH 019-1(53)

FILE NAME: ...\zd307c3detour_vt7a.ptf
DESIGN SUPERVISOR: GREG EDWARDS
DESIGNED BY: MARC FOISY
EXIT 2 DETOUR REMOVAL SHEET 5
PLOT DATE: 5/25/2011
DRAWN BY: STANTEC
CHECKED BY: GARY SANTY
SHEET 183 OF 577

v:\1853\active\185310002\transportation\drawing\contract_3\plot_files\zd307c3detour_vt7a.ptf

NOTE: REMOVE DETOUR SIGN ASSEMBLY (5 SIGNS) AT MM 3.53 NEXT TO VT ROUTE 7A ROUTE MARKER ASSEMBLY (RETAIN).

REMOVE SIGNS
AS SHOWN - 29

N

VT ROUTE 67

VT ROUTE 7A

BUCK HILL RD

AIRPORT RD

SOUTH SHAFTSBURY

TUNIC RD

WEST MOUNTAIN RD

SHAFTSBURY CENTER

HIDDEN VALLEY RD.

STATE PARK ENT.

OLD DEPOT RD

CIDER MILL RD

WARM BROOK RD

VT ROUTE 313

SHAFTSBURY

MM 1.20
RET SHAFTSBURY 3
RET ARLINGTON 10
RET NORTH DETOUR R(I)
RET HISTORIC TO R(I)
RET VERMONT 7A NORTH R(I)
7 R(I)
RET RET

MM 3.60
DETOUR R(I)
TO R(I)
NORTH R(I)
7 R(I)
R

MM 6.55
DETOUR R(I)
TO R(I)
NORTH R(I)
7 R(I)
R

MM 1.45
DETOUR R(I)
TO R(I)
NORTH R(I)
7 R(I)
R

MM 5.00
R(I) DETOUR
R(I) TO
R(I) NORTH
R(I) 7
R

MM 2.47
NORTH RET
HISTORIC WEST EAST TO RET (4)
VERMONT 7A VERMONT 313 VERMONT 313 7 RET (4)
RET (4)
RET RET

MM 1.48
R(I) DETOUR
R(I) TO
R(I) NORTH
R(I) 7
R

MM 2.47
DETOUR R(I)
TO R(I)
NORTH R(I)
7 R(I)
R(I)
R

LEGEND

N	= NEW
R	= REMOVE
R&S	= REMOVE & SALVAGE
S	= SALVAGE SIGN
RET	= RETAIN
	= NEW SIGN & POST
	= EXISTING SIGN & POST
(I)	= RETURN TO DISTRICE I MAINTENANCE FACILITY
	= EXISTING TYPE I (WHITE) DELINEATOR
	= EXISTING TYPE I (YELLOW) DELINEATOR
	= EXISTING CONCRETE MEDIAN BARRIER
	= EXISTING TYPE III BARRICADES
	= EXISTING TYPE III BARRICADES (MOD.)

NOT TO SCALE

VERMONT AGENCY OF TRANSPORTATION

Stantec

PROJECT NAME: BENNINGTON
PROJECT NUMBER: AC NH 019-1(53)

FILE NAME: ...\zd307c3detour_vt7a.ptf
DESIGN SUPERVISOR: GREG EDWARDS
DESIGNED BY: MARC FOISY
EXIT 2 DETOUR REMOVAL SHEET 6

PLOT DATE: 5/25/2011
DRAWN BY: STANTEC
CHECKED BY: GARY SANTY
SHEET 184 OF 577

v:\1953\active\19530002\transportation\drawing\contract_3\plot_files\zd307c3detour_vt7a.ptf

PLANT LIST

APPROXIMATE SUMMARY OF QUANTITIES

QUANTITY	UNIT	KEY	BOTANICAL NAME	COMMON NAME	SIZE	SPACING	REMARKS	
			SEED					651.15
8	KG	EC/R	NONE	NEW ENGLAND EROSION CONTROL RESTORATION MIX	SEED	40KG/HA	SOLE SOURCE NEWP	
9.2	KG	LM	LOLIUM MULTIFLORUM	ANNUAL RYE	SEED	22KG/HA	-	
1	KG	CM	NONE	CONSERVATION MIX	SEED	67KG/HA	-	
15	KG	SRM	NONE	STREAMBANK RESTORATION SEED MIX	SEED	44KG/HA	-	
1.2	KG	NWGS	NONE	NORTHEAST WETLAND GRASS SEED MIX	SEED	17KG/HA	-	
			EVERGREEN TREES					656.20
33	EA	PG	PICEA GLAUCA	WHITE SPRUCE	900-1200 HT	4M	B&B	
31	EA	PS	PINUS STROBUS	WHITE PINE	900-1200 HT	4M	B&B	
			DECIDUOUS TREES					656.30
5	EA	AN	ACER NEGUNDO	BOX ELDER	1200-1500 HT	8M	B&B	
33	EA	AR	ACER RUBRUM	RED MAPLE	40-45 CAL	8M	B&B	
26	EA	AS	ACER SACCHARUM	SUGAR MAPLE	40-45 CAL	8M	B&B	
3	EA	BN	BETULA NIGRA	RIVER BIRCH	1200-1500 HT	8M	B&B	
42	EA	CO	CELTIS OCCIDENTALIS	HACKBERRY	40-45 CAL	8M	B&B	
6	EA	PD	POPULUS DELTOIDES	COTTONWOOD	1200-1500 HT	8M	B&B	
28	EA	QR	QUERCUS RUBRA	RED OAK	40-45 CAL	8M	B&B	
			DECIDUOUS SHRUBS					656.35
9	EA	CAM	CORNUS AMOMUM	SILKY DOGWOOD	600-900 HT	1.8M	CONTAINER	
20	EA	CRM	CORNUS RACEMOSA	GRAY DOGWOOD	600-900 HT	1.8M	CONTAINER	
13	EA	HMV	HAMAMELIS VIRGINIANA	WITCH HAZEL	600-900 HT	1.8M	CONTAINER	
28	EA	VLT	VIBURNUM LENTAGO	NANNYBERRY	600-900 HT	1.8M	CONTAINER	

B&B = BALLED AND BURLAPPED

NOTE: ALL PLANTS TO BE OBTAINED FROM NURSERIES LOCATED IN NEW ENGLAND
* NEWP * NEW ENGLAND WETLAND PLANTS, INC., 820 WEST AMHERST, MA 01002, 413-548-800
ST SOUTHERN TIER CONSULTING, INC, 1-800-848-7614

GENERAL NOTES FOR SEEDED AREAS

1. SEED MIXTURE: SHALL NOT HAVE A WEED CONTENT EXCEEDING 0.40% BY WEIGHT AND SHALL BE FREE OF ALL NOXIOUS SEED.

2. SEED:
RURAL: USE VAOT'S 'RURAL CONSERVATION MIX' IN THE INDICATED AREAS AND FOR ALL ESTABLISHED UPLAND AREAS DISTURBED BY THE LANDSCAPE CONTRACTOR.

WETLAND: USE NEW ENGLAND EROSION CONTROL/RESTORATION MIX/MOIST (EC/R) IN TEMPORARY WETLAND IMPACT RESTORATION AREAS; EAST ROAD DETOUR/WETLAND W BERM (SB 9+250 TO 9+300) AND AT WET SWALE LOCATION (SB ROUTE 7 CONNECTOR STA 1+500 RT) AS SHOWN ON THE PLANS.

USE NORTHEAST WETLAND GRASS SEED MIX IN WETLAND RESTORATION AREA AT FURNACE BROOK (STA. 8+600) AS SHOWN ON THE PLANS.

USE STREAMBANK RESTORATION MIX IN RIPARIAN ZONE RESTORATION AREA AT FURNACE BROOK (STA. 8+600) AS SHOWN ON THE PLANS.

3. FERTILIZER: FORMULA 5-10-5 SHALL BE APPLIED AT THE RATE OF 2KG/100SM OR 330 KG/HA (HYDROSEEDERS MAY USE 10-10-10 FORMULA)

4. LIME: PELLETIZED AGRICULTURAL LIMESTONE TO BE APPLIED AT THE RATE OF 50 KG/SM OR 4.5 T/HA.

5. TOPSOIL: TO BE USED WITH SEED AS INDICATED ON THE PLANS, OR AS DIRECTED BY THE RESIDENT ENGINEER.

6. SOILS IMPACTED BY CONSTRUCTION ACTIVITY SHALL BE LOOSENED TO A DEPTH OF APPROXIMATELY 50mm BEFORE PLANTING.

NOTES FOR SHEET L-3 WETLAND & RIPARIAN CORRIDOR RESTORATION

1) PLANTING LOCATIONS MAY BE ADJUSTED IN THE FIELD BY THE RESIDENT ENGINEER AND FIELD NATURALIST, BASED ON ACTUAL FIELD CONDITIONS AT TIME OF PLANTING.
2) BASE LAYER OF STONE PADS TO BE LEFT IN PLACE DIRECTLY UNDERNEATH THE BRIDGE, AS SHOWN ON PLANS, TO PROVIDE LONG-TERM STABILIZATION AND EROSION CONTROL.
3) IN AREAS OF STONE PAD AND HAUL ROAD REMOVAL, LOOSEN SOIL BY ROTOTILLING OR EQUIVALENT PRIOR TO PLANTING.
4) NORTHEAST WETLAND GRASS SEED MIX TO BE PLANTED BETWEEN MAY 1 AND NOVEMBER 1.
5) STREAMBANK RESTORATION SEED MIX TO BE PLANTED AUGUST 21 AND SEPTEMBER 21. IF CONSTRUCTION COMPLETED BEFORE AUGUST 21, STABILIZE AREA IMMEDIATELY BY PLANTING OF LOLIUM MULTIFLORUM (ANNUAL RYE) AT 17 KG/HA AND STRAW MULCHING AT 4MG/HA. STREAMBANK RESTORATION SEED MIX THEN TO BE OVERSEEDED BETWEEN AUGUST 21 AND SEPTEMBER 21.
6) NEW ENGLAND EROSION CONTROL/RESTORATION MOIST MIX TO BE PLANTED AS DIRECTED ON PLANT LIST SHEET.
7) PLANTING DATES MAY BE EXTENDED BY THE RESIDENT ENGINEER AND FIELD NATURALIST, DEPENDING UPON CONDITIONS AT THE TIME OF PLANTING.
8) SHRUBS TO BE PLANTED IN NATURAL-LOOKING, NON-LINEAR CLUSTERS, WITH AVERAGE SPACING OF SIX (6) FEET ON CENTER.
9) SOIL OF ENTIRE SHRUB CLUSTER PLANTING BEDS TO BE LOOSENED BY ROTO-TILLING TO A A DEPTH OF 150mm OR EQUIVALENT, THEN COVERED WITH WEED SEPARATOR FABRIC. SHRUBS TO BE SET INTO SLITS IN FABRIC. ENTIRE BED THEN TO BE COVERED WITH BARK MULCH.

NEW ENGLAND EROSION CONTROL RESTORATION MIX/MOIST

SPECIES	COMMON NAME	% MIX
AGROSTIS STOLONIFERA	CREEPING BENT GRASS	15.0
ANDROPOGON GERARDII	BIG BLUESTEM	6.0
ANDROPOGON SCOPARIUS	LITTLE BLUESTEM, CAMPER	6.0
ASTER NOVAE-ANGLIAE	NEW ENGLAND ASTER	2.0
CAREX VULPINOIDEA	FOX SEDGE	13.0
ELYMUS VIRGINICUS	VIRGINIA WILD RYE	22.0
EUPATORIUM MACULATUM	SPOTTED JOE PYE WEED	1.0
FESTUCA RUBRA	CREEPING RED FESCUE	18.0
JUNCUS EFFUSUS	SOFT RUSH	4.0
PANICUM VIRGATUM	SWITCH GRASS	8.0
SCIRPUS ATROVIRENS	GREEN BULRUSH	2.0
VERBENA HASTATA	BLUE VERVAIN	3.0

SUGGESTED APPLICATION RATE: 40 KG/HA
MULCH WITH WEED FREE STRAW AT 4 T/HA
PLANT BETWEEN MAY 15 AND SEPT.1, OR BETWEEN OCTOBER 15 AND NOVEMBER 15. THE RESIDENT ENGINEER MAY APPROVE PLANTING BEYOND THESE DATES. IF COMPLETION OF CONSTRUCTION OCCURS BETWEEN SEPTEMBER 1 AND OCTOBER 15, AREAS OF NEW ENGLAND EROSION CONTROL/RESTORATION MIX TO BE STABILIZED BY PLANTING LOLIUM MULTIFLORUM (ANNUAL RYE) AT 40 KG/HA AND MULCHED WITH WEED-FREE STRAW AT 3.6 MG/HA IMMEDIATELY UPON COMPLETION OF CONSTRUCTION. NEW ENGLAND EROSION CONTROL/RESTORATION MIX THEN TO BE PLANTED BETWEEN OCTOBER 15 AND NOVEMBER 15. AVAILABLE FROM NEW ENGLAND WETLAND PLANTS, INC., 1-413-548-8000.

VAOT Metric

WETLAND SEED MIX SUPPLIERS

NEW ENGLAND WETLAND PLANTS, INC.
820 MAIN ST.
AMHERST, MA 01002

ERNST CONSERVATION SEEDS
9006 MERCER PIKE
MEADVILLE, PA 16335

SOUTHERN TIER CONSULTING, INC.
P.O. BOX 30.
WEST CLARKSVILLE, NY 14786

STREAMBANK RESTORATION SEED MIX

% WEIGHT	KG/HA	SCIENTIFIC NAME	COMMON NAME
25.0	11.0	PANICUM CLANDESTINUM	DEERTONGUE
25.0	11.0	ELYMUS VIRGINICUS	VIRGINIA WILD-RYE
25.0	11.0	FESTUCA RUBRA	RED FESCUE
25.0	11.0	LOLIUM MULTIFLORUM	ANNUAL RYEGRASS

PLANT AT 44 KG/HA.
NO FERTILIZER.
PLANT BETWEEN AUGUST 21 AND SEPTEMBER 21. PLANTING DATES MAY BE EXTENDED BY RESIDENT ENGINEER AND FIELD NATURALIST IF CONDITIONS ARE APPROPRIATE.
IF CONSTRUCTION COMPLETED BEFORE AUGUST 21, STABILIZE SITE IMMEDIATELY WITH PLANTING OF LOLIUM MULTIFLORUM AT 17 KG/HA.
PLANTING BY HYDROSEEDING WITH STANDARD HYDROSEED MULCH RECOMMENDED.
IF HAND-SEEDING, MULCH WITH STRAW MULCH AT 4 T/HA.
AVAILABLE FROM NEW ENGLAND WETLAND PLANTS 1-413-548-8000

NORTHEAST WETLAND GRASS SEED MIX

% BY NO. OF SEEDS (NOT BY WEIGHT)	SCIENTIFIC NAME	COMMON NAME
63.0	AGROSTIS STOLONIFERA	CREEPING BENTGRASS
17.0	POA TRIVIALIS	ROUGH BLUEGRASS
11.0	ALOPECURUS ARUNDINACEUS	MEADOW FOXTAIL
4.5	LOLIUM MULTIFLORUM	ANNUAL RYEGRASS
4.5	PANICUM CLANDESTINUM	DEERTONGUE

PLANT AT 17 KG/HA.
NO LIME OR FERTILIZER.
MULCH WITH WEED-FREE STRAW AT 4 T/HA.
PLANT BETWEEN MAY 1 AND NOVEMBER 1.
PLANT WITH ADDITIONAL LOLIUM MULTIFLORUM (ANNUAL RYEGRASS) AT A RATE OF 17 KG/HA.
AVAILABLE FROM SOUTHERN TIER CONSULTING, INC. 1-800-848-7614

NOTE

THIS SHEET TO BE USED FOR LANDSCAPING INFORMATION ONLY.

VERMONT AGENCY OF TRANSPORTATION

DuBois & King inc.

PROJECT NAME: BENNINGTON - NORTH
PROJECT NUMBER: BENNINGTON AC NH 019-1(53)

FILE NAME: ...\Bennington\C3details.dgn
DESIGN SUPERVISOR: J. BENSON
DESIGNED BY: J. STEELE/C. BRODIE
LANDSCAPE PLAN L-1
PLOT DATE: 05/18/2007
DRAWN BY: E. SMALL
CHECKED BY: J. STEELE
SHEET 185 OF 577

C:\Documents and Settings\RBarnes\Desktop\Bennington\C3details.dgn

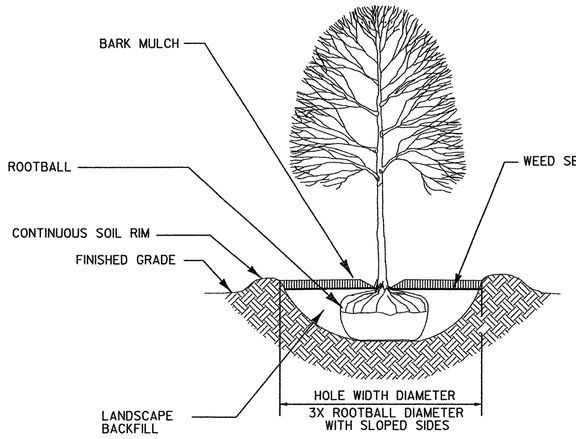

DECIDUOUS TREE PLANTING DETAIL

NOT TO SCALE

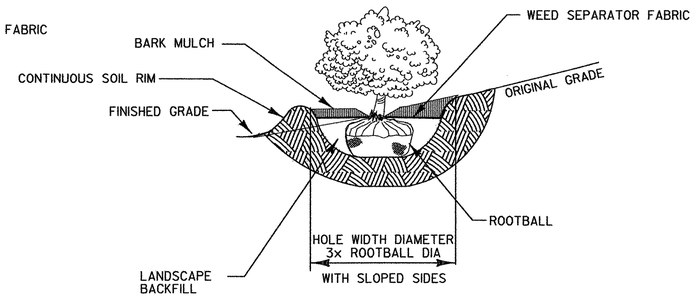

SHRUB PLANTING ON SLOPES DETAIL

NOT TO SCALE

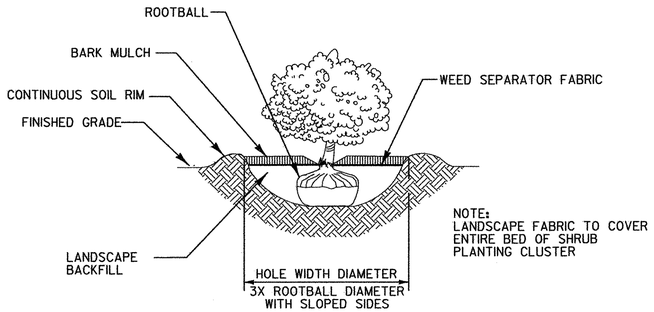

SHRUB PLANTING DETAIL

NOT TO SCALE

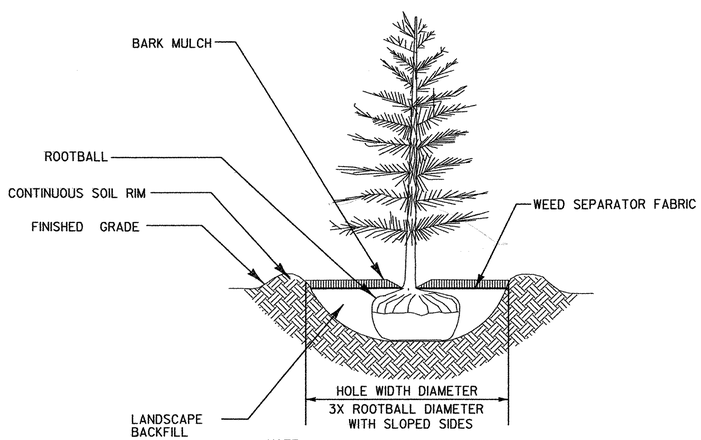

EVERGREEN TREE PLANTING DETAIL

NOT TO SCALE

CONSTRUCTION NOTES

1. THE CONTRACTOR SHALL MINIMIZE DISTURBANCE TO ALL EXISTING TREES, SHRUBS, WETLAND, TURF AND OTHER VEGETATED AREAS WITHIN THE CONSTRUCTION EASEMENT DURING THE PROJECT CONSTRUCTION PERIOD.
2. LIMITS OF ALL LANDSCAPE CONSTRUCTION ACTIVITIES SHALL NOT ENCROACH WITHIN 10 FEET OF ANY EXISTING TREE LINE UNLESS OTHERWISE DIRECTED BY THE RESIDENT ENGINEER.
3. ALL DISTURBED AREAS SHALL BE SEEDED AND MULCHED AS SPECIFIED, WITHIN 2 WEEKS OF FINAL GRADING UNLESS OTHERWISE DIRECTED BY THE RESIDENT ENGINEER.
4. ALL PLANTING LOCATIONS SHALL BE STAKED OUT PRIOR TO PLANTING. THE RESIDENT ENGINEER IN CONSULTATION WITH VAOT'S NATURALIST MAY ADJUST THE STAKES, AS NEEDED PRIOR TO INSTALLATION. THE CONTRACTOR SHALL BE RESPONSIBLE FOR MAINTAINING THE STAKES DURING CONSTRUCTION.
5. ALL LANDSCAPE CONSTRUCTION ACTIVITIES SHALL BE CONFINED TO WITHIN THE LIMITS OF DISTURBANCE AS IDENTIFIED ON THE PLANS OR AS OTHERWISE DIRECTED BY THE RESIDENT ENGINEER. THE CONTRACTOR SHALL NOT PLACE EQUIPMENT OR PERFORM WORK ON ADJACENT PROPERTIES WITHOUT WRITTEN PERMISSION FROM THE LANDOWNER AND RESIDENT ENGINEER.
6. THE CONTRACTOR SHALL VERIFY ALL PLANTING LOCATIONS AND QUANTITIES WITH THE RESIDENT ENGINEER PRIOR TO THE PLANTING. ADJUSTMENTS TO THE PLANTING DESIGN AND LAYOUT MAY BE REQUIRED BASED UPON ACTUAL FIELD CONDITIONS. QUANTITIES SHOWN ARE ESTIMATES ONLY AND ARE SUBJECT TO CHANGE.
7. THE CONTRACTOR SHALL PRESERVE AND PROTECT ALL EXISTING VEGETATION OUTSIDE THE LIMITS OF THE CONSTRUCTION EASEMENTS USING BARRIER FENCE AS DIRECTED BY THE RESIDENT ENGINEER . NO STORAGE OF HEAVY EQUIPMENT OR MATERIAL IS ALLOWED BEYOND THE LIMITS OF CONSTRUCTION.

GENERAL NOTES FOR PLANTING

1. MYCORRHIZA: SHALL BE APPLIED TO ALL TREE AND SHRUB PLANTINGS PER MANUFACTURERS INSTRUCTION USE "MYCOR TREE SAVER" BY PLANT HEALTH CARE, INC. 1-800-421-9051 OR APPROVED EQUAL
2. SETTING PLANTS: PLACE ROOTBALL ON TOP OF STABLE SOIL SO THAT THE TRUNK FLARE/ROOTBALL IS 25 TO 50 HIGHER THAN FINISHED GRADE, AVOID PLANTING TOO DEEP, REMOVE TWINE AND BURLAP FROM TOP HALF OF ROOTBALL, IF SYNTHETIC, REMOVE WRAP OR CONTAINER, REMOVE THE TOP HALF OF WIRE BASKET.
3. CONTINUOUS SOIL RING: FORM A 75mm HIGH CONTINUOUS SOIL RIM AROUND TREES AND SHRUBS, THE DIAMETER OF THE RIM SHALL BE 3 TIMES THE DIAMETER OF THE ROOTBALL.
4. TREES: ALL TREES SHALL BE GROWN AS TREE FORMS AND TRAINED IN THE NURSERY TO A SINGLE STRAIGHT TRUNK.
5. PLANT LOCATIONS: TREES AND SHRUBS MAY BE ADJUSTED AT THE TIME OF THEIR PLANTING FOR OPTIMUM LOCATION AS DIRECTED BY THE RESIDENT ENGINEER.
6. RODENT GUARDS (755.14) TO BE INSTALLED ON ALL TREES WITHIN THE AREA OF STONE PAD REMOVAL AND WETLAND AND STREAM RESTORATION AT THE FURNACE BROOK CROSSING (STA. 8+580 TO STA. 8+650). ANTICIPATED QUANTITY IS 25 RODENT GUARDS.

NOTE

THIS SHEET TO BE USED FOR LANDSCAPING INFORMATION ONLY.

C:\Documents and Settings\RBarnes\Desktop\Bennington\C3details.dgn

VERMONT AGENCY OF TRANSPORTATION

DuBois & King inc.

PROJECT NAME: BENNINGTON - NORTH
PROJECT NUMBER: BENNINGTON AC NH 019-1(53)

FILE NAME: ...\Bennington\C3details.dgn
DESIGN SUPERVISOR: J. BENSON
DESIGNED BY: J. STEELE/C. BRODIE
LANDSCAPE PLAN L-2
PLOT DATE: 05/18/2007
DRAWN BY: E. SMALL
CHECKED BY: J. STEELE
SHEET 186 OF 577

NOTE:
SEE PLANT LIST SHEET
FOR ADDITIONAL NOTES.

VAOT Metric

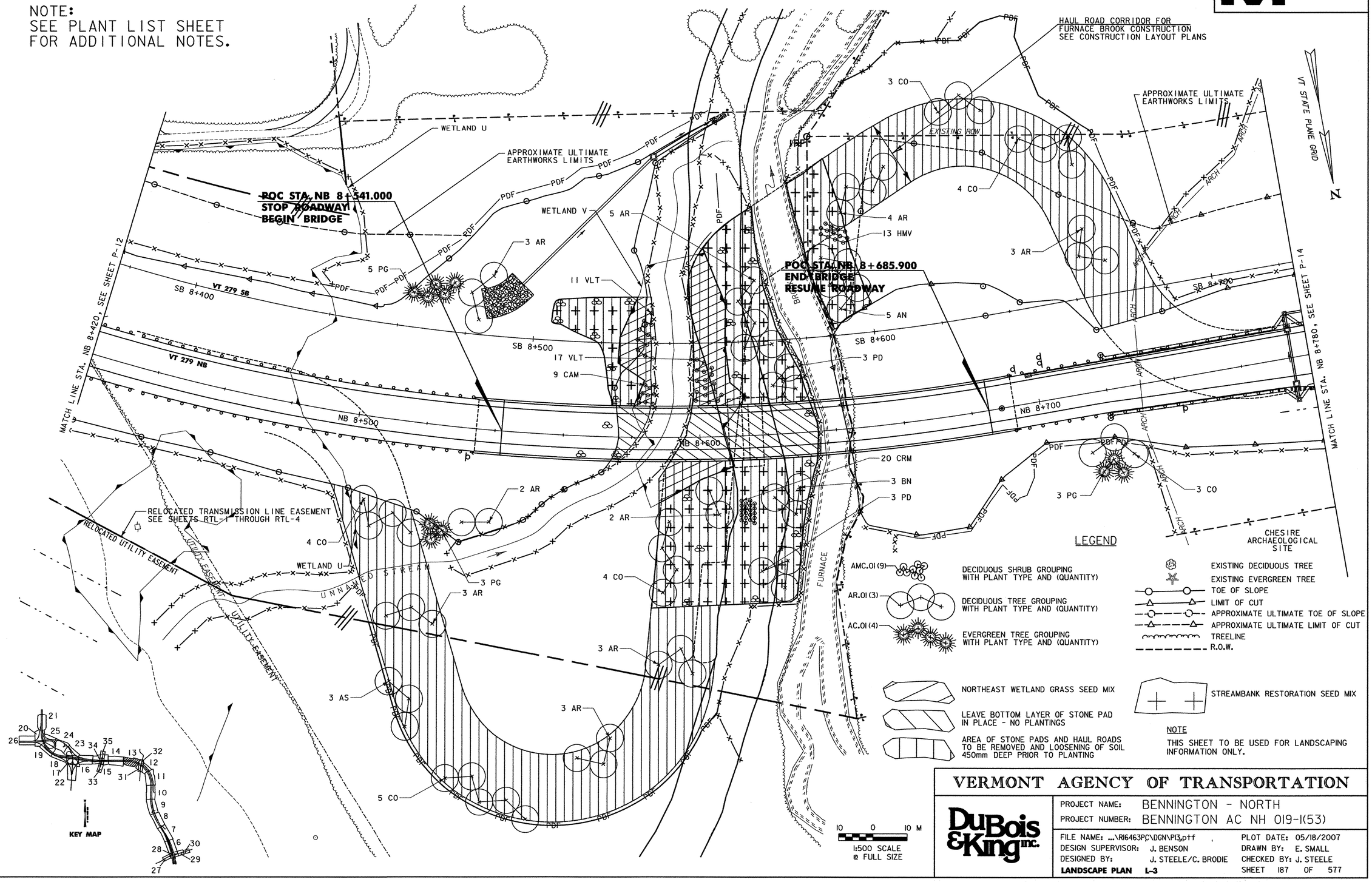

LEGEND

- AMC.01 (9) — DECIDUOUS SHRUB GROUPING WITH PLANT TYPE AND (QUANTITY)
- AR.01 (3) — DECIDUOUS TREE GROUPING WITH PLANT TYPE AND (QUANTITY)
- AC.01 (4) — EVERGREEN TREE GROUPING WITH PLANT TYPE AND (QUANTITY)
- EXISTING DECIDUOUS TREE
- EXISTING EVERGREEN TREE
- TOE OF SLOPE
- LIMIT OF CUT
- APPROXIMATE ULTIMATE TOE OF SLOPE
- APPROXIMATE ULTIMATE LIMIT OF CUT
- TREELINE
- R.O.W.
- NORTHEAST WETLAND GRASS SEED MIX
- LEAVE BOTTOM LAYER OF STONE PAD IN PLACE - NO PLANTINGS
- AREA OF STONE PADS AND HAUL ROADS TO BE REMOVED AND LOOSENING OF SOIL 450mm DEEP PRIOR TO PLANTING
- STREAMBANK RESTORATION SEED MIX

NOTE

THIS SHEET TO BE USED FOR LANDSCAPING INFORMATION ONLY.

10 0 10 M
1:500 SCALE
@ FULL SIZE

VERMONT AGENCY OF TRANSPORTATION

DuBois & King inc.

PROJECT NAME: BENNINGTON - NORTH
PROJECT NUMBER: BENNINGTON AC NH 019-1(53)

FILE NAME: ...\RI6463PC\DGN\PL3.ptf
DESIGN SUPERVISOR: J. BENSON
DESIGNED BY: J. STEELE/C. BRODIE
PLOT DATE: 05/18/2007
DRAWN BY: E. SMALL
CHECKED BY: J. STEELE
LANDSCAPE PLAN L-3
SHEET 187 OF 577

\\Elrond\Projects\RI6463PC\DGN\PL3.ptf

LEGEND

AMC.01(9) — DECIDUOUS SHRUB GROUPING WITH PLANT TYPE AND (QUANTITY)

AR.01(3) — DECIDUOUS TREE GROUPING WITH PLANT TYPE AND (QUANTITY)

AC.01(4) — EVERGREEN TREE GROUPING WITH PLANT TYPE AND (QUANTITY)

EXISTING DECIDUOUS TREE
EXISTING EVERGREEN TREE
TOE OF SLOPE
LIMIT OF CUT
APPROXIMATE ULTIMATE TOE OF SLOPE
APPROXIMATE ULTIMATE LIMIT OF CUT
TREELINE
R.O.W.

VAOT Metric

VT STATE PLANE GRID
N

APPROXIMATE ULTIMATE EARTHWORKS LIMITS

CHESIRE ARCHAEOLOGICAL SITE

ARCH

EXISTING ROW

MAINTENANCE VEHICLE TURN AROUND 20M RADIUS

VT 279 SB

VT 279 NB

CROSSOVER

XO 1

XO 1+500

NB 9+100

NB 9+000

NB 8+900

NB 8+800

CZ

P

PDF

2 AS
4 AS
3 PS
2 QR
3 PG
5 CO
1 QR
3 QR
4 CO
2 CO
5 AS

MATCH LINE STA. NB 8+780, SEE SHEET P-13

MATCH LINE STA. NB 9+140, SEE SHEET P-15

KEY MAP

NOTE:
1. STA 8+920 - 8+970, RT PDF WILL BE LOCATED WITHIN EXISTING ROW.

NOTE
THIS SHEET TO BE USED FOR LANDSCAPING INFORMATION ONLY.

10 0 10 M
1:500 SCALE
@ FULL SIZE

\\Erond\Projects\RI3463PC\DGN\PI4.ptf

VERMONT AGENCY OF TRANSPORTATION

DuBois & King inc.

PROJECT NAME: BENNINGTON - NORTH
PROJECT NUMBER: BENNINGTON AC NH 019-1(53)

FILE NAME: ...\RI3463PC\DGN\PI4.ptf
DESIGN SUPERVISOR: J. BENSON
DESIGNED BY: J. STEELE/C. BRODIE
LANDSCAPE PLAN L-4
PLOT DATE: 05/18/2007
DRAWN BY: E. SMALL
CHECKED BY: J. STEELE
SHEET 188 OF 577

LEGEND

AMC.01(9) — DECIDUOUS SHRUB GROUPING WITH PLANT TYPE AND (QUANTITY)

AR.01(3) — DECIDUOUS TREE GROUPING WITH PLANT TYPE AND (QUANTITY)

AC.01(4) — EVERGREEN TREE GROUPING WITH PLANT TYPE AND (QUANTITY)

EXISTING DECIDUOUS TREE

EXISTING EVERGREEN TREE

TOE OF SLOPE

LIMIT OF CUT

APPROXIMATE ULTIMATE TOE OF SLOPE

APPROXIMATE ULTIMATE LIMIT OF CUT

TREELINE

R.O.W.

NEW ENGLAND EROSION CONTROL / RESTORATION MIX FOR MOIST SITES

VAOT Metric

VT STATE PLANE GRID

N

MATCH LINE, SEE SHEET P-33

MATCH LINE STA. NB 9+140, SEE SHEET P-14

MATCH LINE STA. NB 9+500, SEE SHEET P-16

EXISTING ROW

REMOVE EXIST. DRIVEWAY MATERIAL, REGRADE, PLACE 10 cm TOPSOIL & SEED

POC STA. ER 1+147.733
END ROADWAY
BEGIN BRIDGE

WETLAND BERM

WETLAND W

CROSSOVER

VT 279 NB

VT 279 SB

EAST ROAD

Gravel Drive

Mixed Woods

Hardwoods

Coniferous Swamp

Cattail Marsh

Aerial Edge (Approx. Location)

Aerial Cable

Guy

Culvert

Stone Wall

Wire Fence

Concrete Pad

Broken Concrete

W/S SWF House

Med. Oak

NB 9+200

NB 9+300

NB 9+400

XO 1+300

XO 1+200

XO 1+100

NOTES:
1) SEE SHEETS P-33 THROUGH P-35 FOR A DETAILED DESIGN OF EAST ROAD
2) STA CD 2+300 - 2 +340 RT. PDF WILL BE LOCATION WITHIN EXISTING ROW.

NOTE
THIS SHEET TO BE USED FOR LANDSCAPING INFORMATION ONLY.

KEY MAP

10 0 10 M
1:500 SCALE @ FULL SIZE

VERMONT AGENCY OF TRANSPORTATION

DuBois & King inc.

PROJECT NAME: BENNINGTON - NORTH
PROJECT NUMBER: BENNINGTON AC NH 019-1(53)

FILE NAME: ...\R13463PC\DGN\P15.ptf
DESIGN SUPERVISOR: J. BENSON
DESIGNED BY: J. STEELE/C. BRODIE
LANDSCAPE PLAN L-5

PLOT DATE: 05/18/2007
DRAWN BY: E. SMALL
CHECKED BY: J. STEELE
SHEET 189 OF 577

\\Elrond\Projects\R13463PC\DGN\P15.ptf

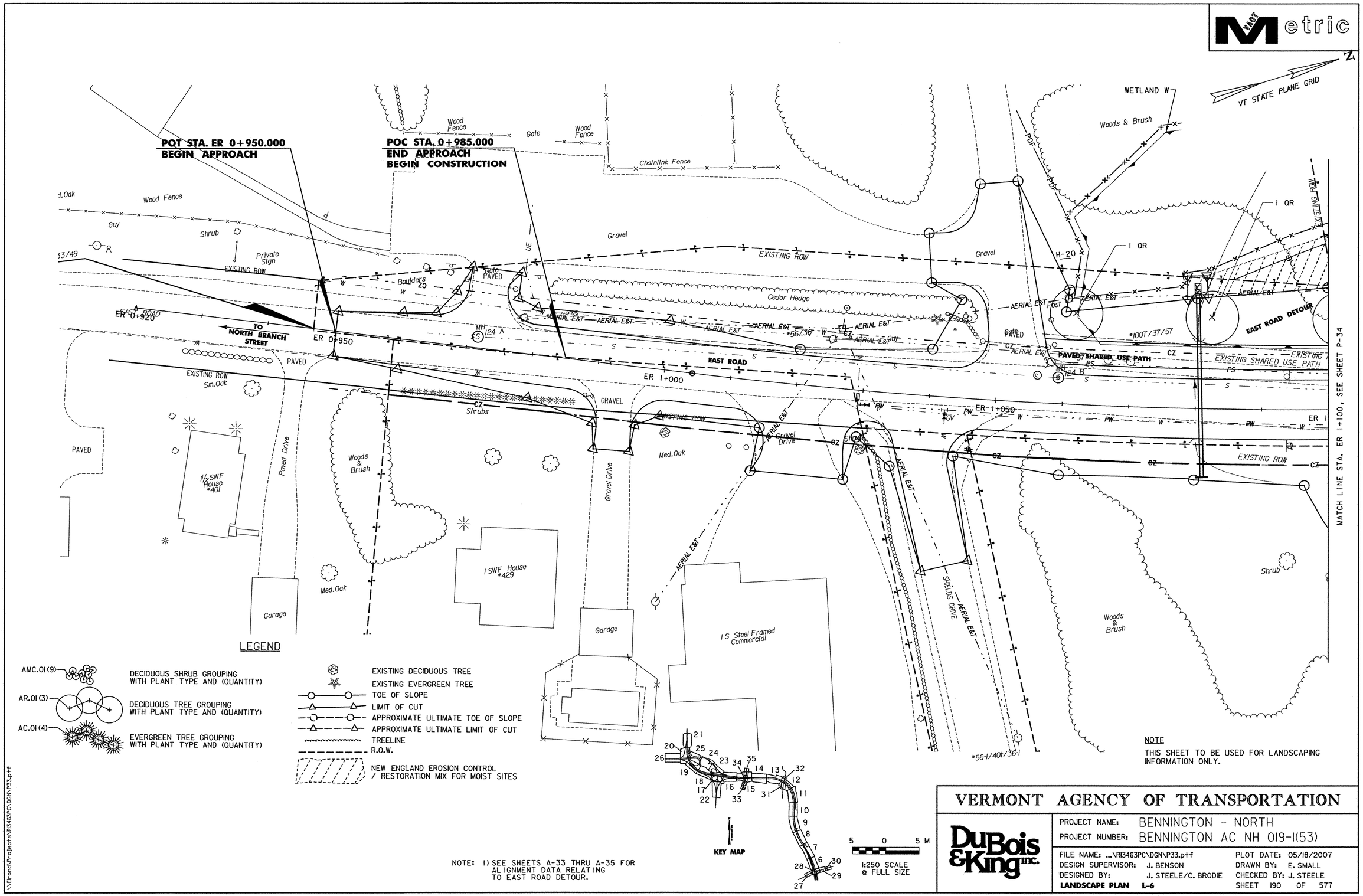

NOTE: 1) SEE SHEETS A-33 THRU A-35 FOR ALIGNMENT DATA RELATING TO EAST ROAD DETOUR.

NOTE
THIS SHEET TO BE USED FOR LANDSCAPING INFORMATION ONLY.

VERMONT AGENCY OF TRANSPORTATION

DuBois & King inc.

PROJECT NAME:	BENNINGTON - NORTH
PROJECT NUMBER:	BENNINGTON AC NH 019-1(53)
FILE NAME:	...\R13463PC\DGN\P33.ptf
DESIGN SUPERVISOR:	J. BENSON
DESIGNED BY:	J. STEELE/C. BRODIE
LANDSCAPE PLAN	L-6
PLOT DATE:	05/18/2007
DRAWN BY:	E. SMALL
CHECKED BY:	J. STEELE
SHEET	190 OF 577

\\Elrond\Projects\R13463PC\DGN\P33.ptf

STATE OF VERMONT
AGENCY OF TRANSPORTATION

ITEM DETAIL SHEET

Metric

PLANTING SUMMARY

SEGMENT DESCRIPTION	PLANT BED	STATION BEGIN km + m	STATION END km + m	OFFSET BEGIN m	OFFSET END m	PLANT MATERIAL TREES ea	PLANT MATERIAL SHRUBS ea	PLANT MATERIAL PERENNIALS ea	SPACING m
L-3		NB 8+510.9	NB 8+523.5	L 37.6	L 42.0	5 PG			
		NB 8+532.1	NB 8+535.5	L 31.9	L 45.0	3 AR			
		NB 8+585.6	NB 8+586.0	L 36.3	L 23.1	11 VLT			
		NB 8+583.9	NB 8+586.1	L 15.3	L 9.8	9 CAM			
		NB 8+599.5	NB 8+606.7	L 22.7	L 12.3	17 VLT			
		NB 8+618.1	NB 8+622.6	L 45.3	L 26.4	5 AR			
		NB 8+627.1	NB 8+629.0	L 19.3	L 13.0	3 PD			
		NB 8+639.9	NB 8+644.7	L 50.4	L 35.1	5 AN			
		NB 8+642.4	NB 8+647.5	L 60.3	L 54.3	13 HMV			
		NB 8+647.6	NB 8+663.5	L 62.9	L 74.9	4 AR			
		NB 8+684.8	NB 8+697.7	L 88.7	L 87.1	3 CO			
		NB 8+707.2	NB 8+721.3	L 76.6	L 66.5	4 CO			
		NB 8+720.9	NB 8+726.1	L 47.5	L 37.4	3 AR			
		NB 8+504.8	NB 8+519.1	R 24.1	R 32.0	4 CO			
		NB 8+515.3	NB 8+527.8	R 57.0	R 57.9	3 AR			
		NB 8+518.1	NB 8+523.5	R 75.9	R 88.2	3 AS			
		NB 8+524.0	NB 8+527.6	R 38.8	R 30.4	3 PG			
		NB 8+532.8	NB 8+540.4	R 27.4	R 26.6	2 AR			
		NB 8+534.9	NB 8+555.4	R 101.9	R 112.3	5 CO			
		NB 8+567.5	NB 8+575.7	R 93.6	R 87.5	3 AR			
		NB 8+588.0	NB 8+596.9	R 66.3	R 68.9	3 AR			
		NB 8+591.0	NB 8+589.2	R 24.5	R 45.2	4 CO			
		NB 8+602.4	NB 8+605.1	R 15.6	R 22.6	2 AR			
		NB 8+611.5	NB 8+615.1	R 18.7	R19.7	20 CRM			
		NB 8+616.4	NB 8+622.4	R 39.5	R 44.7	3 PD			
		NB 8+620.9	NB 8+628.1	R 18.3	R 15.8	3 BN			
		NB 8+712.8	NB 8+724.8	R 17.4	R 19.8	3 CO			
		NB 8+715.2	NB 8+720.7	R 23.3	R 24.6	3 PG			
L-4		NB 8+916.0	NB 8+923.7	L 40.8	L 38.6	2 QR			
		NB 8+933.3	NB 8+938.0	L 31.6	L 31.9	3 PG			
		NB 8+947.5	NB 8+975.1	L 29.7	L 30.2	5 CO			
		NB 8+997.5	NB 9+019.2	L 61.1	L 59.2	4 AS			
		NB 9+025.2	NB 9+032.5	L 58.8	L 58.5	3 PS			
		NB 9+038.4	NB 9+045.0	L 58.7	L 56.3	2 AS			
		NB 8+903.6	NB 8+918.2	R 34.2	R 33.5	3 QR			
		NB 8+924.7	NB 8+945.2	R 28.9	R 31.5	4 CO			
		NB 8+939.4	NB 8+946.1	R 71.5	R 75.5	2 CO			
		NB 8+961.5	NB 8+989.3	R 75.3	R 76.9	5 AS			
		NB 9+029.8	NB 9+037.4	R 38.3	R 36.3	2 QR			
		NB 9+041.5	NB 9+047.4	R 40.8	R 39.5	3 PS			
		NB 9+053.4		R 36.8		1 QR			
		NB 9+076.1		R 40.2		1 QR			
		NB 9+082.0	NB 9+089.1	R 41.7	R 40.2	3 PS			

PLANTING SUMMARY

SEGMENT DESCRIPTION	PLANT BED	STATION BEGIN km + m	STATION END km + m	OFFSET BEGIN m	OFFSET END m	PLANT MATERIAL TREES ea	PLANT MATERIAL SHRUBS ea	PLANT MATERIAL PERENNIALS ea	SPACING m
L-5		NB 9+227.9	NB 9+238.3	L 44.1	L 42.6	3 QR			
		NB 9+238.1	NB 9+252.2	L 53.6	L 51.7	6 PG			
		NB 9+244.9	NB 9+265.8	L 46.9	L 50.2	5 CO			
		NB 9+266.8		L 44.1		1 PG			
		NB 9+272.4	NB 9+279.2	L 46.0	L 42.3	3 QR			
		ER 1+101.7		L 13.6		1 QR			
		ER 1+123.2		L 13.6		1 QR			
		ER 1+142.8		L 13.4		1 QR			
		ER 1+242.5	ER 1+257.7	L 30.0	L 23.1	4 QR			
		ER 1+247.8	ER 1+254.6	L 24.5	L 28.0	5 PS			
		ER 1+263.9	ER 1+276.9	L 24.4	L 28.8	5 PS			
		ER 1+264.1	ER 1+306.5	L 18.5	L 25.7	7 AS			
		ER 1+298.3	ER 1+303.7	L 30.2	L 30.7	3 PS			
		NB 9+199.3	NB 9+213.6	R 40.4	R 34.9	3 CO			
		NB 9+212.9	NB 9+219.4	R 42.1	R 33.8	5 PG			
		NB 9+221.4	NB 9+240.7	R 43.0	R 34.4	5 AR			
		NB 9+234.0	NB 9+239.9	R 45.9	R 42.2	5 PG			
		NB 9+245.6	NB 9+262.9	R 40.6	R 46.9	4 QR			
		NB 9+245.7		R 47.0		1 PG			
		NB 9+257.0		R 47.2		1 PG			
		NB 9+297.4	NB 9+309.0	R 33.7	R 35.3	3 AS			
		NB 9+314.9	NB 9+323.3	R 33.8	R 38.5	4 PS			
		NB 9+325.6	NB 9+331.3	R 33.0	R 38.5	2 AS			
		NB 9+331.7	NB 9+342.4	R 32.7	R 37.1	5 PS			
L-6		ER 1+061.6		L 13.6		1 QR			
		ER 1+082.3		L 13.7		1 QR			

PLANTING SUMMARY

SEGMENT DESCRIPTION	PLANT BED	STATION BEGIN km + m	STATION END km + m	OFFSET BEGIN m	OFFSET END m	PLANT MATERIAL TREES ea	PLANT MATERIAL SHRUBS ea	PLANT MATERIAL PERENNIALS ea	SPACING m

NOTE: THIS SHEET TO BE USED FOR LANDSCAPING INFORMATION ONLY.

PROJECT NAME:	BENNINGTON - NORTH		
PROJECT NUMBER:	BENNINGTON AC NH 019-1(53)		
FILE NAME:	\DGN\C3METPLANT-SUM.XLS	PLOT DATE:	02/13/07
PROJECT LEADER:	J. BENSON	DRAWN BY:	E. SMALL
DESIGNED BY:	J. STEELE	CHECKED BY:	J. STEELE
LANDSCAPE PLAN L-7		SHEET 191 OF 577	

Metric

INDEX OF SHEETS

SHEET	SHEET NO.	DRAWING TITLE
BR500	191	INDEX OF SHEETS
BR501	192	PRELIMINARY INFORMATION SHEET
BR502	193	QUANTITY SHEET (1 OF 2)
BR503	194	QUANTITY SHEET (2 OF 2)
BR504	195	BORING INFORMATION SHEET (1 OF 2)
BR505	196	BORING INFORMATION SHEET (2 OF 2)
BR506	197	BORING LOGS (1 OF 4)
BR507	198	BORING LOGS (2 OF 4)
BR508	199	BORING LOGS (3 OF 4)
BR509	200	BORING LOGS (4 OF 4)
BR510	201	GENERAL PLAN AND ELEVATION
BR511	202	GENERAL NOTES
BR512	203	TYPICAL BRIDGE DETAILS
BR513	204	TRANSVERSE SECTION
BR514	205	DECK REINFORCEMENT
BR515	206	RAILING LAYOUT
BR516	207	FRAMING PLAN (1 OF 2)
BR517	208	FRAMING PLAN (2 OF 2)
BR518	209	GIRDER ELEVATION
BR519	210	GIRDER TABLES
BR520	211	STEEL DETAILS (1 OF 2)
BR521	212	STEEL DETAILS (2 OF 2)
BR522	213	SPLICE DETAILS
BR523	214	FIXED BEARING DETAILS
BR524	215	EXPANSION BEARING DETAILS
BR525	216	EXPANSION JOINT PLAN
BR526	217	EXPANSION JOINT DETAILS (1 OF 2)
BR527	218	EXPANSION JOINT DETAILS (2 OF 2)
BR528	219	DOWNSPOUT DETAILS

SHEET	SHEET NO.	DRAWING TITLE
BR529	221	APPROACH SLAB LAYOUT AND DETAILS
BR530	222	ABUTMENT 1 MASONRY
BR531	223	ABUTMENT 1 REINFORCEMENT PLANS
BR532	224	ABUTMENT 1 REINFORCEMENT DETAILS
BR533	225	ABUTMENT 2 MASONRY
BR534	226	ABUTMENT 2 REINFORCEMENT PLANS
BR535	227	ABUTMENT 2 REINFORCEMENT DETAILS
BR536	228	WINGWALL MASONRY
BR537	229	PIER MASONRY
BR538	230	PIER REINFORCEMENT (1 OF 2)
BR539	231	PIER REINFORCEMENT (2 OF 2)
BR540	232	BRIDGE RAILING - NETC 2 RAIL
BR541	233	BRIDGE RAILING - NETC 2 RAIL - THRIE BEAM APPROACH RAIL
BR542	234	BRIDGE RAILING - NETC 2 RAIL - THRIE BEAM APPROACH RAIL
BR543	235	SNOW FENCE FOR BRIDGE RAILING - NETC 2 RAIL
BR544	236	SLOPE AND CHANNEL DETAILS
BR545	237	REINFORCING STEEL SCHEDULE
BR546	238	REINFORCING STEEL SCHEDULE
BR547	239	CHANNEL CROSS SECTIONS (1 OF 8)
BR548	240	CHANNEL CROSS SECTIONS (2 OF 8)
BR549	241	CHANNEL CROSS SECTIONS (3 OF 8)
BR550	242	CHANNEL CROSS SECTIONS (4 OF 8)
BR551	243	CHANNEL CROSS SECTIONS (5 OF 8)
BR552	244	CHANNEL CROSS SECTIONS (6 OF 8)
BR553	245	CHANNEL CROSS SECTIONS (7 OF 8)
BR554	246	CHANNEL CROSS SECTIONS (8 OF 8)



THIS SEAL ONLY APPLIES TO DRAWINGS SHOWING TVGA CONSULTANTS

TVGA CONSULTANTS

STATE OF VERMONT
AGENCY OF TRANSPORTATION

Town Of BENNINGTON	Bridge No. BI2
Highway No. VT RTE 279	Log Sta. / Surv. Sta.
VT ROUTE 279 OVER FURNACE BROOK	
INDEX OF SHEETS	
Designed By M.D. BOWER	Drawn By D.J. HENDERSON
Checked By B.J. CARLSON Date 04/07	Bridge Design Supervisor K.M. WOJTKOWSKI Date 04/07
PROJECT BENNINGTON	PROJECT NO. AC NH F019-1(53)
TVGA CAD Drawing No. FBIndex.dgn	Date 04/10/2007
Bridge Sheet No. BR500	Sheet 192 of 577

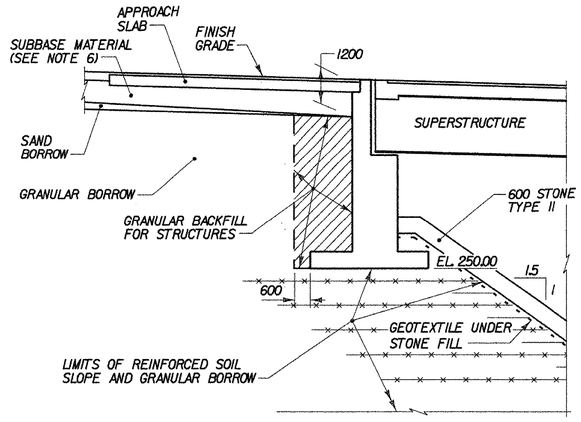

TYPICAL ABUTMENT 1 SECTION

NOT TO SCALE

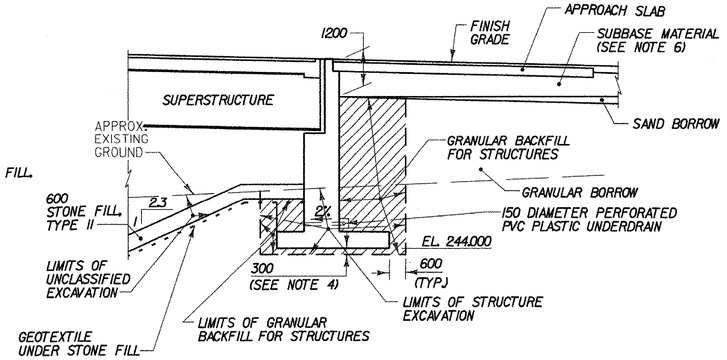

TYPICAL ABUTMENT 2 SECTION

NOT TO SCALE

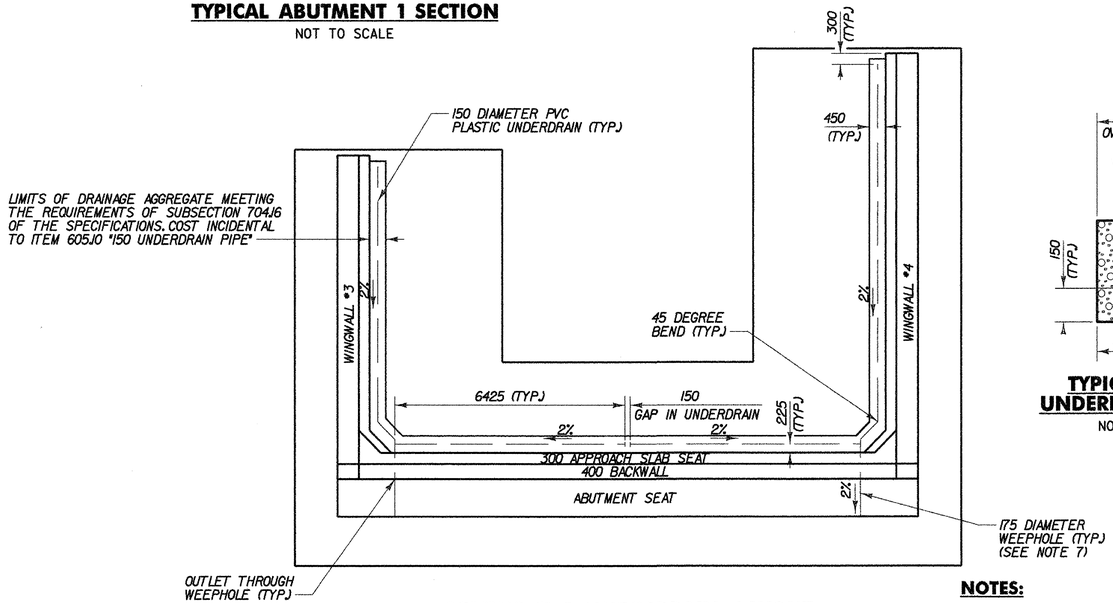

ABUTMENT 2 UNDERDRAIN LAYOUT

NOT TO SCALE

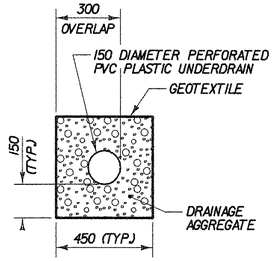

TYPICAL BRIDGE UNDERDRAIN DETAIL

NOT TO SCALE

NOTES:

1. COFFERDAM SIZE TO BE DETERMINED BY THE CONTRACTOR.
2. CUT OFF THE COFFERDAM STEEL SHEET PILING AT THE GROUND SURFACE ELEVATION (SO IT IS NOT VISIBLE), WITH THE PORTION BELOW GROUND TO BE LEFT IN PLACE. AFTER THE PIER HAS BEEN CONSTRUCTED. THE COST OF THE SHEET PILING THAT IS TO REMAIN IN PLACE SHALL BE INCIDENTAL TO THE COFFERDAM ITEM. STEEL SHEET PILING THAT IS LEFT IN PLACE SHALL MEET THE REQUIREMENTS OF SUBSECTION 107.22 OF THE SPECIFICATION.
3. THE PAY LIMITS OF "COFFERDAM EXCAVATION, EARTH" AND "COFFERDAM EXCAVATION, ROCK" SHALL BE 600 OUTSIDE THE PERIMETER OF THE FOOTING.
4. 300 UNDERCUT AS DETERMINED NECESSARY BY THE RESIDENT ENGINEER. 300 UNDERCUT WAS USED
5. THE CONTRACTOR SHALL PLACE THE TYPE IV STONE FILL SO AS NOT TO DAMAGE THE PIER AND PIER FOOTING. THE STONE SHALL BE PLACED AROUND THE PIER AND NOT DROPPED.
6. TRANSITION THE SUBBASE OVER 15 m FROM THE BACK OF ABUTMENT. REFER TO THE HIGHWAY PLANS FOR DETAILS.
7. THE CONTRACTOR SHALL OUTLET THE 150 DIAMETER UNDERDRAIN THROUGH THE 175 DIAMETER WEEP. AFTER INSTALLATION OF THE UNDERDRAIN, THE ANNULAR SPACE BETWEEN THE UNDERDRAIN AND WEEP SHALL BE FILLED WITH TYPE IV MORTAR CONFORMING TO SECTION 707.03 OF THE SPECIFICATIONS.
8. ALL DIMENSIONS ON SHEETS BR501 TO BR554 ARE IN MILLIMETERS (mm) UNLESS OTHERWISE NOTED.

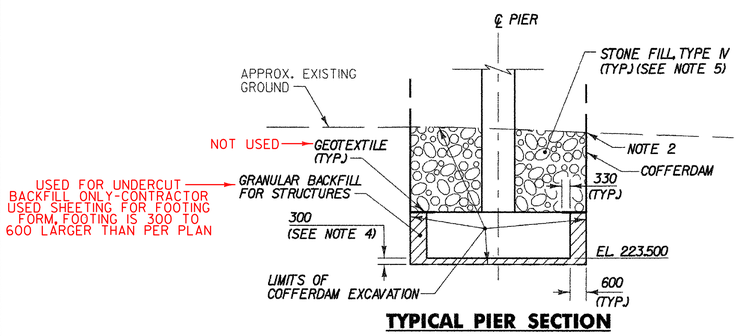

TYPICAL PIER SECTION

NOT TO SCALE

FINAL HYDRAULICS REPORT

VTrans Metric

HYDROLOGIC DATA

DRAINAGE AREA= 29.1 sq. km
CHARACTER OF TERRAIN= Mountainous
CHARACTER & TYPE OF STREAM= Sinuous, perennial in alluvium
NATURE OF STREAMBED= Cobble layer interlaced with sand & gravel

Q2.33= 27 cms Q50= 63 cms
Q10= 46 cms Q100= 71 cms
Q25= 56 cms Q500= 121 cms

DATE OF FLOOD OF RECORD= Unknown
WATER SURFACE ELEV.= Unknown ESTIMATED DISCHARGE= Unknown
NATURAL STREAM VELOCITY @ Q50 = 2.49 mps
ICE CONDITIONS= Moderate DEBRIS= Slight
DOES THE STREAM REACH MAXIMUM HIGHWATER ELEVATION RAPIDLY? Yes
IS ORDINARY RISE RAPID? Yes
IS STAGE AFFECTED BY UPSTREAM OR DOWNSTREAM CONDITIONS? No
IF YES, DESCRIBE.

WATERSHED STORAGE ____ HEADWATERS ____ UNIFORM THROUGHOUT WATERSHED ____ IMMEDIATELY ABOVE SITE ____

EXISTING STRUCTURE

STRUCTURE TYPE= N/A YEAR BUILT= N/A
CLEAR SPAN (NORMAL TO STREAM)= N/A
VERTICAL CLEARANCE ABOVE STREAMBED= N/A
WATERWAY OF FULL OPENING= N/A
DISPOSITION OF STRUCTURE= N/A

TYPE OF MATERIAL UNDER SUBSTRUCTURE= N/A

WATER SURFACE ELEV. @ Q2.33= 230.4 VELOCITY= 1.94 mps
Q10= 230.8 " 2.31 mps
Q25= 231.0 " 2.44 mps
Q50= 231.1 " 2.49 mps
Q100= 231.2 " 2.60 mps

LONG TERM STREAM BED CHANGES= N/A

IS THE ROADWAY OVERTOPPED BELOW THE Q100? N/A FREQUENCY= N/A
RELIEF ELEVATION= N/A DISCHARGE OVER ROAD @ Q100= N/A

UPSTREAM STRUCTURE: TOWN= N/A DISTANCE=
HIGHWAY NO.= STRUCTURE NO.=
STRUCTURE TYPE=
CLEAR SPAN= CLEAR HEIGHT=
YEAR BUILT= FULL WATERWAY=

DOWNSTREAM STRUCTURE: TOWN= BENNINGTON DISTANCE= 0.9 km
HIGHWAY NO.= N. BRANCH ST. STRUCTURE NO.= 24
STRUCTURE TYPE= SINGLE SPAN PRECAST CONCRETE VOIDED SLAB BRIDGE
CLEAR SPAN= 12.50 m CLEAR HEIGHT= 1.70 m
YEAR BUILT= 2000 FULL WATERWAY= 18.50 sm

PROPOSED STRUCTURE

STRUCTURE TYPE= Two span curved plate girder bridge

CLEAR SPAN (NORMAL TO STREAM)= 143 m
VERTICAL CLEARANCE ABOVE STREAMBED= 20 m
WATERWAY OF FULL OPENING= 2100 sq. m

WATER SURFACE ELEV. @ Q2.33= 230.5 VELOCITY= 1.81 mps
Q10= 230.9 " = 2.18 mps
Q25= 231.0 " = 2.35 mps
Q50= 231.1 " = 2.48 mps
Q100= 231.2 " = 2.61 mps

IS THE ROADWAY OVERTOPPED BELOW THE Q100? No FREQUENCY= N.A.
RELIEF ELEVATION= N.A. DISCHARGE OVER ROAD @ Q100= None

AVERAGE LOW ELEVATION OF SUPERSTRUCTURE= 251.8
VERTICAL CLEARANCE @ Q 100 = 19 m

SCOUR= Channel = 0.8 m, Pier = 4.5 m
REQUIRED CHANNEL PROTECTION= Stone Fill, Type IV

PERMIT INFORMATION

AVERAGE DAILY FLOW= 4.3 cms
ORDINARY LOW WATER= 2.3 cms ELEV.= 229.3
ORDINARY HIGH WATER= 12.7 cms ELEV.= 230.0

TEMPORARY BRIDGE REQUIREMENTS

STRUCTURE TYPE= N/A

CLEAR SPAN (NORMAL TO STREAM)= N/A

VERTICAL CLEARANCE ABOVE STREAMBED= N/A
WATERWAY OF FULL OPENING= N/A

DESIGN CRITERIA:
1. DESIGN METHOD SUPERSTRUCTURE - LOAD FACTOR DESIGN; SUBSTRUCTURE - SERVICE LOAD DESIGN
2. DESIGN LIVE LOAD AASHTO MS-22.5
3. DESIGN SPAN 71.50 m - 71.50 m
4. ALLOWABLE LOAD FOR SPREAD FOOTINGS ON SOIL 290 kPa (ABUT. 1), 480 kPa (PIER) & 380 kPa (ABUT. 2) ON LEDGE N/A
5. ALLOWABLE LOAD FOR PILING N/A TYPE N/A ESTIMATED LENGTH N/A
6. STRUCTURAL STEEL AASHTO GRADE AASHTO M270M/M270 GR345W Fy = 345 MPa HYBRID WITH AASHTO M270M/M270 GR485W, Fy = 485 MPa WEATHERING STEEL
7. REINFORCING STEEL GRADE 420
8. CONCRETE, HIGH PERFORMANCE CLASS A (MOD. - STAY-IN-PLACE CORRUGATED METAL FORMS) (FP) f'_c = 30 MPa
   CONCRETE, HIGH PERFORMANCE CLASS A f'_c = 30 MPa
   CONCRETE, HIGH PERFORMANCE CLASS B f'_c = 25 MPa

TRAFFIC MAINTENANCE:
1. IS TRAFFIC TO BE MAINTAINED? NO IF YES, ON EXISTING STRUCTURE N/A OR ON TEMPORARY BRIDGE N/A
2. TEMPORARY BRIDGE REQUIREMENTS: ONE OR TWO WAY N/A TRAFFIC CONTROL SIGNALS REQUIRED N/A
   MINIMUM CLEAR SPAN (NORMAL TO STREAM)= N/A VERTICAL CLEARANCE ABOVE STREAMBED= N/A
   WATERWAY AT FULL OPENING= N/A
   ARE SIDEWALKS REQUIRED? N/A IF SO, ON WHAT SIDE? N/A

LOAD FACTOR LOAD RATING (LFD) (METRIC TONS)

LOADING LEVELS (LOAD FACTOR)	TRUCK						
	M18	M518	3S2	6 AXLE	3A. STR.	4A. STR.	5A. SEMI
INVENTORY A=2.17; B=1.00	24	45					
POSTED A=1.55; B=1.40	34	63	166		154	153	169
OPERATING A=1.30; B=1.67		75	199	204	184	182	

STRENGTH RF = $\frac{\phi M_N - 1.3\,M_{DL}}{A \times M_{LL+I}}$ SERVICEABILITY RF = $B\left[\frac{.95\,F_y S_{LL+I} - M_{DL_{SS}} \frac{S_{LL+I}}{S_{SS}} - M_{SDL_{SS}} \frac{S_{LL+I}}{S_{SS}}}{1.67\,M_{LL+I}}\right]$

STATE OF VERMONT
AGENCY OF TRANSPORTATION

Town Of BENNINGTON	Bridge No. BI2
Highway No. VT RTE 279	Log Sta. / Surv. Sta.
VT ROUTE 279 OVER FURNACE BROOK	
PRELIMINARY INFORMATION SHEET	
Designed By J.J. MANUSE	Drawn By D.J. HENDERSON
Checked By B.J. CARLSON Date 04/07	Bridge Design Supervisor K.M. WOJTKOWSKI Date 04/07
PROJECT BENNINGTON	PROJECT NO. AC NH F019-1(53)
TVGA CAD Drawing No. FBPIS.dgn	Date 04/11/2007
Bridge Sheet No. BR501	Sheet 193 of 577

TVGA CONSULTANTS

STATE OF VERMONT
AGENCY OF TRANSPORTATION

QUANTITY SHEET

VTrans Metric

SUMMARY OF ESTIMATED QUANTITIES						TOTALS				DESCRIPTIONS	
SUPER - STRUCTURE.	APPR. SLABS 1 & 2	ABUT. 1 & 2	PIER	CHANNEL	FURNACE BROOK TOTAL	ROUND	GRAND TOTAL	FINAL	UNIT	ITEMS	ITEM NUMBER
		14900			14900		14900		CM	COMMON EXCAVATION	203.15
		3690			3690		3690		CM	UNCLASSIFIED EXCAVATION	203.17
				3300	3300		3300		CM	UNCLASSIFIED CHANNEL EXCAVATION	203.27
		3000			3000		3000		CM	GRANULAR BORROW	203.32
		690			690		690		CM	STRUCTURE EXCAVATION	204.25
		1490	175		1665		1665		CM	GRANULAR BACKFILL FOR STRUCTURES	204.30
			800		800		800		CM	COFFERDAM EXCAVATION, EARTH	208.30
			320		320		320		CM	COFFERDAM EXCAVATION, ROCK	208.35
			1		1		1		LS	COFFERDAM (PIER)	208.40
		1			1		1		LS	COFFERDAM (ABUTMENT)	208.40
	130				130		130		CM	SUBBASE OF DENSE GRADED CRUSHED STONE	301.35
181	31				212		212		KG	EMULSIFIED ASPHALT	404.65
467	39				506		506		MT	SUPERPAVE BITUMINOUS CONCRETE PAVEMENT (PG 64-28)	490.30
										BEGIN ALTERNATE BID ITEMS	
636					636		636		CM	CONCRETE, HIGH PERFORMANCE CLASS A (FPQ) NOT USED	501.33
636					636		636		CM	CONCRETE, HIGH PERFORMANCE CLASS A (SIPCMF)(FPQ) USED	501.33
										END ALTERNATE BID ITEMS	
51	7				58		58		CM	CONCRETE, HIGH PERFORMANCE CLASS A	501.33
	69	661	397		1127		1127		CM	CONCRETE, HIGH PERFORMANCE CLASS B	501.34
628020					628020		628020		KG	STRUCTURAL STEEL, CURVED PLATE GIRDER (2800 WEB DEPTH)	506.56
360					360		360		KG	STRUCTURAL STEEL	506.60
		45180	80144		125324		125324		KG	REINFORCING STEEL	507.15
103840	4605	5490			113935		113935		KG	EPOXY COATED REINFORCING STEEL	507.17
1					1		1		LS	SHEAR CONNECTORS (2790 - 22 X 200)	508.15
1					1		1		LS	SHEAR CONNECTORS (2790 - 22 X 230)	508.15
1					1		1		LS	STRUCTURAL PAINTING, SHOP APPLIED (54 METRIC TONS)	513.25
1					1		1		LS	SURFACE PREPARATION, SHOP (54 METRIC TONS)	513.40
140		100	135		375		375		L	WATER REPELLANT, SILANE	514.10
33					33		33		M	BRIDGE EXPANSION JOINT, VERMONT	516.11
2165					2165		2165		SM	SHEET MEMBRANE WATERPROOFING, TORCH APPLIED	519.20
288	31				319		319		M	BRIDGE RAILING, GALVANIZED NETC 2 RAIL	525.33

TVGA CONSULTANTS

STATE OF VERMONT
AGENCY OF TRANSPORTATION

Town Of BENNINGTON	Bridge No. BI2
Highway No. VT RTE 279	Log Sta. / Surv. Sta.
VT ROUTE 279 OVER FURNACE BROOK	
QUANTITY SHEETS (1 OF 2)	
Designed By M.D. BOWER	Drawn By D.J. HENDERSON
Checked By B.J. CARLSON Date 04/07	Bridge Design Supervisor K.M. WOJTKOWSKI Date 04/07
PROJECT BENNINGTON	PROJECT NO. AC NH F019-1(53)
TVGA CAD Drawing No. FBEQ1.dgn	Date 04/16/2007
Bridge Sheet No. BR502	Sheet 194 of 577

STATE OF VERMONT
AGENCY OF TRANSPORTATION

QUANTITY SHEET

VTrans Metric

SUMMARY OF ESTIMATED QUANTITIES						TOTALS				DESCRIPTIONS	
SUPER - STRUCTURE.	APPR. SLABS 1 & 2	ABUT. 1 & 2	PIER	CHANNEL	FURNACE BROOK TOTAL	ROUND	GRAND TOTAL	FINAL	UNIT	ITEMS	ITEM NUMBER
		12			12		12		EA	BEARING DEVICE ASSEMBLY, HIGH LOAD MULTI-ROTATIONAL (EXPANSION)	531.15
			6		6		6		EA	BEARING DEVICE ASSEMBLY, HIGH LOAD MULTI-ROTATIONAL (FIXED)	531.15
		32			32		32		M	150 mm UNDERDRAIN PIPE	605.10
		3610			3610		3610		CM	STONE FILL, TYPE II	613.11
			630	2590	3220		3220		CM	STONE FILL, TYPE IV	613.13
	40				40		40		M	CAST-IN-PLACE CONCRETE CURB, TYPE B	616.28
25					25		25		M	SNOW BARRIER, GALVANIZED	620.75
	4				4		4		EA	GUARDRAIL APPROACH SECTION, GALVANIZED NETC 2 RAIL	621.72
		5540	55	1850	7445		7445		SM	GEOTEXTILE UNDER STONE FILL	649.31
		4080		1120	5200		5200		SM	GRUBBING MATERIAL	651.40
			320		320		320		CM	SPECIAL PROVISION (HIGH PERFORMANCE CONCRETE, MASS POUR)	900.608
			4		4		4		EA	SPECIAL PROVISION (MODIFIED SETTLEMENT PLATFORM)	900.620
			2		2		2		EA	SPECIAL PROVISION (PIER SURVEY TARGET)	900.620
266390					266390		266390		KG	SPECIAL PROVISION (HIGH PERFORMANCE STEEL, GRADE 485W)	900.635
		1290			1290		1290		SM	SPECIAL PROVISION (REINFORCED SOIL SLOPE) CHANGED	900.675

TVGA CONSULTANTS

STATE OF VERMONT
AGENCY OF TRANSPORTATION

Town Of BENNINGTON	Bridge No. BI2
Highway No. VT RTE 279	Log Sta. / Surv. Sta.
VT ROUTE 279 OVER FURNACE BROOK	
QUANTITY SHEETS (2 OF 2)	
Designed By M.D. BOWER	Drawn By D.J. HENDERSON
Checked By B.J. CARLSON Date 04/07	Bridge Design Supervisor K.M. WOJTKOWSKI Date 04/07
PROJECT BENNINGTON	PROJECT NO. AC NH F019-1(53)
TVGA CAD Drawing No. FBEQ2.dgn	Date 04/12/2007
Bridge Sheet No. BR503	Sheet 195 of 577

SOIL CLASSIFICATION

AASHTO	
A1	Gravel and Sand
A3	Fine Sand
A2	Silty or Clayey Gravel and Sand
A4	Silty Soil - Low Compressibility
A5	Silty Soil - Highly Compressible
A6	Clayey Soil - Low Compressibility
A7	Clayey Soil - Highly Compressible

ROCK QUALITY DESIGNATION

R.Q.D. (%)	ROCK DESCRIPTION
<25	Very Poor
25 to 50	Poor
51 to 75	Fair
76 to 90	Good
>90	Excellent

SHEAR STRENGTH

UNDRAINED SHEAR STRENGTH IN kPa	CONSISTENCY
<12	Very Soft
12-24	Soft
24-48	Med. Stiff
48-96	Stiff
96-192	Very Stiff
>192	Hard

CORRELATION GUIDE OF "N" TO DENSITY/CONSISTENCY

DENSITY (GRANULAR SOILS)		CONSISTENCY (COHESIVE SOILS)	
N	DESCRIPTIVE TERM	N	DESCRIPTIVE TERM
<5	Very Loose	<2	Very Soft
5-10	Loose	2-4	Soft
11-24	Med. Dense	5-8	Med. Stiff
25-50	Dense	9-15	Stiff
>50	Very Dense	16-30	Very Stiff
		31-60	Hard
		>60	Very Hard

COMMONLY USED SYMBOLS

▼	Water Elevation
⊗	Standard Penetration Boring
⊕	Auger Boring
⊙	Rod Sounding
S	Sample
N	Standard Penetration Test Blow Count Per 300 mm For: 50.8 mm O.D. Sampler 35.0 mm I.D. Sampler Hammer Weight Of 63.5 kg. Hammer Fall Of 762 mm
VS	Field Vane Shear Test
US	Undisturbed Soil Sample
B	Blast
DC	Diamond Core
MD	Mud Drill
WA	Wash Ahead
HSA	Hollow Stem Auger
AX	Core Size 30.1mm
BX	Core Size 42.0 mm
NX	Core Size 54.7 mm
M	Double Tube Core Barrel Used
LL	Liquid Limit
PL	Plastic Limit
PI	Plasticity Index
NP	Non Plastic
w	Moisture Content (Dry Wgt. Basis)
D	Dry
M	Moist
MTW	Moist To Wet
W	Wet
Sat	Saturated
Bo	Boulder
Gr	Gravel
Sa	Sand
Si	Silt
Cl	Clay
HP	Hardpan
Le	Ledge
NLTD	No Ledge To Depth
CNPF	Can Not Penetrate Further
TLOB	To Ledge Or Boulder
NR	No Recovery
Rec.	Recovery
%Rec.	Percent Recovery
RQD	Rock Quality Designation
CBR	California Bearing Ratio
<	Less Than
>	Greater Than
R	Refusal (N > 100)

COLOR

blk	Black	pnk	Pink
bl	Blue	pu	Purple
brn	Brown	rd	Red
dk	Dark	tn	Tan
gry	Gray	wh	White
gn	Green	yel	Yellow
lt	Light	mltc	Multicolored
or	Orange		

DEFINITIONS (AASHTO)

BEDROCK (LEDGE) - Rock in its native location of indefinite thickness.

BOULDER - A rock fragment with an average dimension > 304.8 mm.

COBBLE - Rock fragments with an average dimension between 76.2 and 304.8 mm.

GRAVEL - Rounded particles of rock < 76.2 mm and > 2 mm (#10 sieve).

SAND - Particles of rock < 2 mm (#10 sieve) and > 75 μm (#200 sieve).

SILT - Soil< 75 μm (#200 sieve), non or slightly plastic and exhibits no strength when air-dried.

CLAY - Fine grained soil, exhibits plasticity when moist and considerable strength when air-dried.

VARVED - Alternate layers of silt and clay.

HARDPAN - Extremely dense soil, cemented layer, not softened when wet.

MUCK - Soft organic soil (containing > 10% organic material.

MOISTURE CONTENT - Weight of water divided by dry weight of soil.

FLOWING SAND - Granular soil so saturated (loose) that it flows into drill casing during extraction of wash rod.

STRIKE - Angle from magnetic north to line of intersection of bed with a horizontal plane.

DIP - Inclination of bed with a horizontal plane.

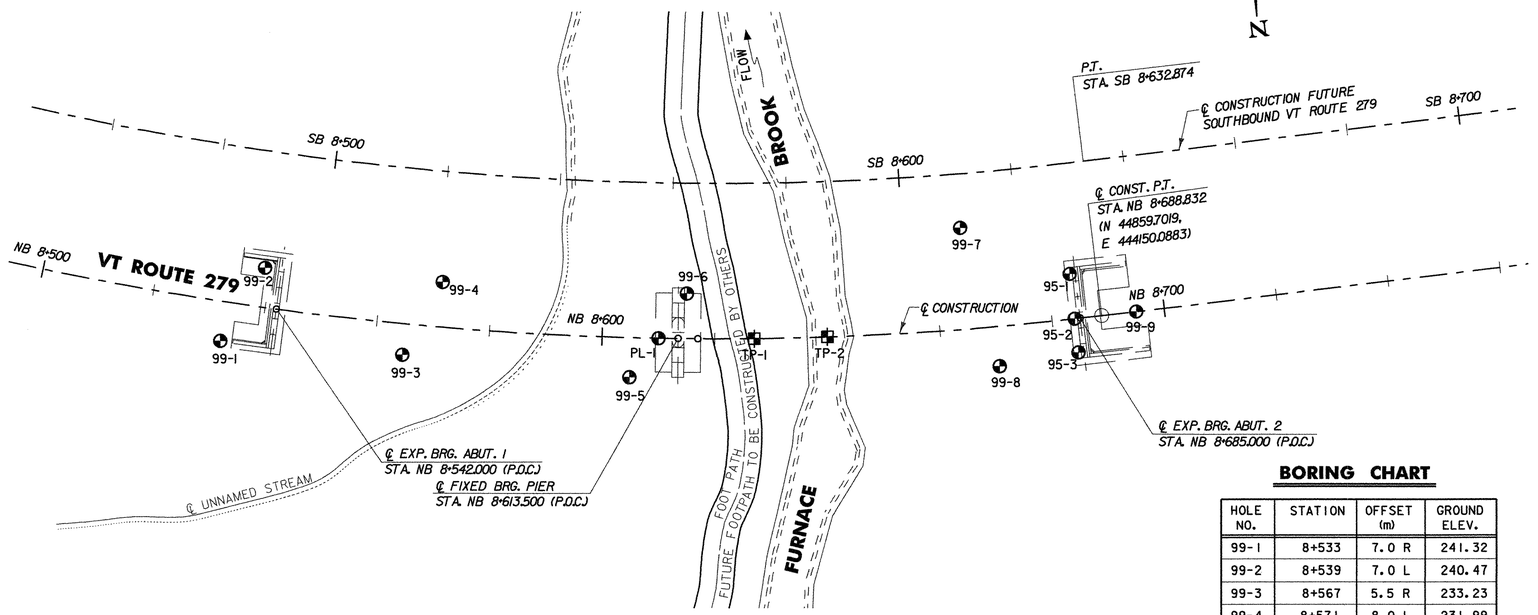

PLAN
SCALE 1:500

BORING CHART

HOLE NO.	STATION	OFFSET (m)	GROUND ELEV.
99-1	8+533	7.0 R	241.32
99-2	8+539	7.0 L	240.47
99-3	8+567	5.5 R	233.23
99-4	8+571	8.0 L	231.99
99-5	8+605	7.0 R	230.45
99-6	8+615	8.0 L	230.02
99-7	8+665	18.0 L	238.18
99-8	8+670	7.0 R	245.54
99-9	8+695	0.0	249.26
95-1	8+684	8.0 L	245.90
95-2	8+684	0.0	246.20
95-3	8+684	6.0 R	248.30
TP-1	8+627	0.0	229.87
TP-2	8+640	0.0	231.00
PL-1	8+610	0.0	230.23

LEGEND

- 99-1 — 1999 BORING
- 95-1 — 1995 BORING
- TP-1 — TEST PIT
- PL-1 — PRESSUREMETER LOG

0 10 20 30 40 50m

SCALE 1:500

NOTES:

1. PARTIAL BORING LOGS ARE ONLY SHOWN TO APPROXIMATELY 6.5 METERS BELOW BOTTOM OF PROPOSED FOOTING. THE FULL DEPTH BORING LOGS ARE AVAILABLE TO THE CONTRACTOR IN THE GEOTECHNICAL ENGINEERING REPORT.
2. IF THERE IS A CONFLICT IN THE INFORMATION ON THE BORING LOGS SHOWN ON BRIDGE SHEETS BR506 THROUGH BR509, THE INFORMATION ON BORING INFORMATION SHEET (2 OF 2), BRIDGE SHEET BR505, SUPERCEDES THE GENERAL NOTES ON THIS SHEET.
3. U.S. CUSTOMARY UNITS AND TERMS USED ON THE ORIGINAL BORING LOGS HAVE BEEN RETAINED, WITH METRIC ADDITIONS AS NECESSARY.

GENERAL NOTES

1. The subsurface explorations shown herein were made between 01-17-95 and 02-07-00 by GZA GeoEnvironmental.
2. Soil and rock classifications, properties and descriptions are based on engineering interpretation from available subsurface information by the Agency and may not necessarily reflect actual variations in subsurface conditions that may be encountered between individual boring or sample locations.
3. Observed water levels and/or conditions indicated are as recorded at the time of exploration and may vary according to the prevailing rainfall, methods of exploration and other factors.
4. Engineering judgement was exercised in preparing the subsurface information presented herein. Analysis and interpretation of subsurface data was performed and interpreted for Agency design and estimating purposes. Presentation of the information in the Contract is intended to provide the Contractor access to the same data available to the Agency. The subsurface information is presented in good faith and is not intended as a substitute for personal investigation, independent interpretation, independent analysis or judgement by the Contractor.
5. Pictorial structure details shown on the boring plan layout or soils profile are for illustrative purposes only and may not accurately portray final contract details.
6. Terminology used on boring logs to describe the hardness, degree of weathering, and spacing of fractures, joints and other discontinuities in the bedrock is defined in the AASHTO Manual on Subsurface Investigations, 1988.

TVGA CONSULTANTS

STATE OF VERMONT
AGENCY OF TRANSPORTATION

Town Of BENNINGTON	Bridge No. BI2
Highway No. VT RTE 279	Log Sta. / Surv. Sta.
VT ROUTE 279 OVER FURNACE BROOK	
BORING INFORMATION SHEET (1 OF 2)	
Designed By J.J. MANUSE	Drawn By D.J. HENDERSON
Checked By B.J. CARLSON Date 04/07	Bridge Design Supervisor K.M. WOJTKOWSKI Date 04/07
PROJECT BENNINGTON	PROJECT NO. AC NH F019-1(53)
TVGA CAD Drawing No. FBBISOI.dgn	Date 04/10/2007
Bridge Sheet No. BR504	Sheet 196 of 577

GZA GeoEnvironmental, Inc. *Engineers and Scientists*

Bennington Bypass North
Bennington, Vermont

Boring No.: _____
Page: _____ of _____
File No.: 15634
Check: _____

Contractor: New Hampshire Boring
Foreman: _____
Logged by: _____
Date Start/Finish: _____
Boring Location: See Exploration Location Plan
GS Elev.: _____ Datum: NGVD

Auger/Casing Type: _____ _____
I.D. (mm): _____ _____
Hammer Wt.: _____ _____
Hammer Fall: _____ _____
Rig Type: _____ Sampler

GROUNDWATER READINGS

Date	Time	Depth	Casing	Stab

Depth (feet)	Depth (meters)	Sample Information: No.	Rec. (m)	Depth (m)	Blows/0.15m	N Value	Sample Description & Classification	Stratum Desc.		Equipment Installed
1.	2.	3.	4.	5.	6.	7.	8.	9.	10.	11.

1. Numbers in this column are the depth in feet below ground surface.
2. Number in this column are the depth in meters below ground surface.
3. The sample number and type are designated in this column.
   e.g., S-1
   S = Sample type (S = Split Spoon Sample)
   1 = Sample number
4. The values shown are the length of the soil sample recovered, in meters.
5. The numbers in this column designate the depth, in meters, from the ground surface of the sample identified in column 3.
6. Numbers in this column report the number of blows required to drive a split spoon sampler (35 mm inside diameter) 0.15 meters with a 63.5 kg hammer free-falling 0.76 m.
7. The Standard Penetration Test N-value, which is the sum of the blows recorded over the second and third 0.15 meter interval (column 6), is recorded in this column for soil samples.
8. Description of soil samples include:
   - the relative density or consistency;
   - color;
   - a listing of the Major or Minor soil components based on particle size distribution and plasticity;
   - other pertinent characteristics; and
   - AASHTO classifications based on visual perception.

   For example:
   - Medium dense, brown, fine to medium SAND, trace Silt, stratified.

   A solid line indicates a boundary between geologic deposits.

   A dashed line indicates a gradation change within a geologic deposit.
9. Geologic deposit (e.g., Lacustrine).
10. Pertinent observations made while advancing the test boring are identified in this column opposite the depth the observation was made. The observation is explained at the bottom of the page under "Notes" next to the appropriate number.
11. Equipment installed within the borehole and graphically presented in this column. If no equipment was installed, this column is blank.

GZA

BORING LOG LEGEND

DESCRIPTION OF SOIL SAMPLES

1. Density or Consistency:

   The density or consistency listed is determined from the Standard Penetration Test N-Value according to the following table:

Density of Granular Soils	SPT N-Value		Consistency of Cohesive Soils
Very Loose	0-4	0-2	Very Soft
Loose	4-10	2-4	Soft
Medium Dense	10-30	4-8	Medium
Dense	30-50	8-15	Stiff
Very Dense	50+	15-30	Very Stiff
		30+	Hard

   WOR - indicates weight of rods
   WOH - indicates weight of hammer

2. Color: Visual perception.
3. Soil Components:

   3.1 Description: The components of a soil sample are described by visually estimating the percentage of each component by weight of the total sample.

   a. Major Component: The major soil component (>50 Percent) is written with upper case letters for granular soil (e.g., SAND, GRAVEL) and a combination of the upper and lower case letters for fine grained soil (e.g., Silty CLAY, Clayey SILT).

   b. Minor Component: The minor soil components (<50 Percent) are written with the first letter of each soil type in upper case, and the remaining letters in the lower case (e.g., Gravel, Silt). The minor components are identified and prefaced in the description based on the following percentages:

Description	Percentage
and	35-50
some	20-35
little	10-20
trace	0-10

   c. Note: The actual percentage of gravel soils may differ from that measured when sampling with a standard split spoon sampler and/or auger type sampler because of the relatively small sampler diameter. Also, it is not possible to identify the presence of boulders and cobbles using a standard split spoon sampler and/or auger type sampler.

   d. Fill: Fill is a material placed by other than natural processes. It is described by its major component(s) and additional significant components are listed.

3.2 Definitions:

a. Granular Soil: A granular soil sample is defined by the following particle sizes as referenced to a standard sieve.

Material		Standard Sieve Upper	Limit Lower
GRAVEL	-coarse	3 inch	3/4 inch
	-fine	3/4 inch	No. 4
SAND	-coarse	No. 4	No. 10
	-medium	No. 10	No. 40
	-fine	No. 40	No. 200

The Gravel/Sand portions of a granular soil are further divided based on the following visually estimated proportions:

Gravel/Sand	Proportion
fine to coarse	>10% all fractions
coarse	<10% fine and medium
medium to coarse	<10% fine
medium	<10% fine and coarse
fine to medium	<10% coarse
fine	<10% medium to coarse

b. Cohesive: A cohesive soil is classified by visually estimating the degree of plasticity based upon the minimum diameter thread which a sample can be rolled with the finger in the palm of the hand.

Material	Degree of Plasticity	Smallest Diameter Thread (inches)
SILT	Non-plastic	None
Clayey SILT	Slight	1/4
SILT and CLAY	Low	1/8
CLAY and SILT	Medium	1/16
Silty CLAY	High	1/32
CLAY	Very High	1/64

GZA

BORING LOG LEGEND

c. Organic Soils: An organic soil sample is classified by observation of the sample structure.

Material	Description
Topsoil	• Typically well-graded fine granular soil with organic matter.
Fibrous Peat	• Can see vegetative structure • Spongy, water squeezes out
Fine Grained Peat	• Little vegetative matter • Spongy
Organic Silt	• H_2S odor • Shell fragments • Often contains Sand

4. Other Pertinent Characteristics:

   Soil Structure: Produced by deposition of sediments.

Stratified	-	Random soil deposits of varying components or color
Varved	-	Alternating soil deposits of varying thickness (i.e., clays or silts)
Stratum	-	Soil deposit >12 inches thick
Layer	-	Soil deposit 3 inches to 12 inches thick
Seam	-	Soil deposit 1/8 inch to 3 inches thick
Parting/Lens	-	Soil deposit <1/8 inch thick

GZA

BORING LOG LEGEND

TVGA CONSULTANTS

STATE OF VERMONT
AGENCY OF TRANSPORTATION

Town Of BENNINGTON	Bridge No. BI2
Highway No. VT RTE 279	Log Sta. / Surv. Sta.
VT ROUTE 279 OVER FURNACE BROOK	
BORING INFORMATION SHEET (2 OF 2)	
Designed By J.J. MANUSE	Drawn By D.J. HENDERSON
Checked By B.J. CARLSON Date 04/07	Bridge Design Supervisor K.M. WOJTKOWSKI Date 04/07
PROJECT BENNINGTON	PROJECT NO. AC NH F019-1(53)
TVGA CAD Drawing No. FBBIS02.dgn	Date 04/10/2007
Bridge Sheet No. BR505	Sheet 197 of 577

VTRANS Metric

PARTIAL BORING LOG 99-1

BOTTOM OF ABUT. I FOOTING
EL 250.000 METERS

8.68 m

GZA GeoEnvironmental, Inc. *Engineers and Scientists*

Bennington Bypass North
Bennington, Vermont

Boring No.: 8+533, 7m R
Page: 1 of 3
File No.: 15634
Check: TAD

Contractor: New Hampshire Boring
Foreman: J. Michaud
Logged by: S. Raymond
Date Start/Finish: 8-25-99 / 8-25-99
Boring Location: See Exploration Location Plan
GS Elev.: 241.32m **Datum:** NGVD

	Auger/ Casing	Sampler
Type:	PW/HW	SS
I.D. (mm):	127/102	35
Hammer Wt.:	136.1 kg	63.5 kg
Hammer Fall:	0.61 m	0.76 m
Rig Type:	Mobile B-53 Bomb	

GROUNDWATER READINGS

Date	Time	Depth	Casing	Stab
NO MEASUREMENTS TAKEN				

Depth (feet)	Depth (meters)	Sample Information: No.	Rec. (m)	Depth (m)	Blows/ 0.15m	N Value	Sample Description & Classification	Stratum Desc.	Rmks.	Equipment Installed
		S-1	0.51	0-0.61	6-7	17	Medium dense, dark brown, fine to medium SAND, some Silt, trace Gravel, trace Organics. (A-2-4)	TOPSOIL 0.15m		NO EQUIPMENT INSTALLED
					10-13					
5'	1.5	S-2	0.25	1.52-	6-10	24	Medium dense, light brown, fine to coarse SAND, some Gravel, little Silt. (A-2-4)			
				2.13	14-16					
10'	3.0	S-3	0.13	3.05-	7-14	32	Dense, light brown, fine to coarse SAND, some Silt, little Gravel. (A-2-4)	ABLATION TILL		
				3.66	18-15					
15'	4.6	S-4	0	4.57-	9-	100	No recovery. Spoon bouncing on Cobble or Boulder at 4.82 meters.	4.88m		
				4.82	100/					
					102mm					
20'	6.1	S-5	0.46	6.10-	20-23	52	Hard, brown, Clayey SILT, little fine to coarse Sand, little Gravel. (A-4)	LODGEMENT TILL		
				6.71	29-26					
25'	7.6	S-6	0.41	7.62-	21-31	77	Hard, brown, Clayey SILT, some Gravel, little fine to coarse Sand. (A-4)			
				8.23	46-70					

REMARKS

Stratification lines represent approximate boundaries between soil types, transitions may be gradual. Water level readings have been made at times and under conditions stated. Fluctuations of groundwater may occur due to other factors than those present at the time measurements were made.

Boring No.: 8+533, 7m R

PARTIAL BORING LOG 99-2

BOTTOM OF ABUT. I FOOTING
EL 250.000 METERS

9.53 m

GZA GeoEnvironmental, Inc. *Engineers and Scientists*

Bennington Bypass North
Bennington, Vermont

Boring No.: 8+539, 7m L
Page: 1 of 3
File No.: 15634
Check: TAD

Contractor: New Hampshire Boring
Foreman: J. Michaud
Logged by: S. Raymond
Date Start/Finish: 8-26-99 / 8-27-99
Boring Location: See Exploration Location Plan
GS Elev.: 240.47m **Datum:** NGVD

	Auger/ Casing	Sampler
Type:	HW	SS
I.D. (mm):	102	35
Hammer Wt.:	136.1 kg	63.5 kg
Hammer Fall:	0.61 m	0.76 m
Rig Type:	Mobile B-53 Bomb	

GROUNDWATER READINGS

Date	Time	Depth	Casing	Stab
8-27-99	0800	4.27m	None	15 hrs.

Depth (feet)	Depth (meters)	Sample Information: No.	Rec. (m)	Depth (m)	Blows/ 0.15m	N Value	Sample Description & Classification	Stratum Desc.	Rmks.	Equipment Installed
		S-1	0.25	0-0.61	5-4	11	Medium dense, dark brown, fine to medium SAND, some Silt, trace Gravel, trace Organics. (A-2-4)	TOPSOIL 0.15m		PROTECTIVE CASING; CONCRETE SEAL 0.30m
					7-6					
5'	1.5	S-2	0.36	1.52-	5-7	16	Medium dense, light brown, fine to coarse SAND, some Silt, trace Gravel. (A-2-4)			FILTER SAND
				2.13	9-9					
10'	3.0	S-3	0.30	3.05-	16-12	24	Medium dense, light brown, fine to coarse SAND, little Silt, little Gravel. (A-2-4)	ABLATION TILL		3.66m
				3.66	12-11		Encountered nested cobbles and boulders from approximately 4.27 to 6.10 meters.			BENTONITE SEAL
15'	4.6	S-4	0	4.57-	100/0	100	No recovery. Spoon bouncing on cobble or boulder.			5.18m
				4.57						
20'	6.1	S-5	0.30	6.10-	100/	100	Hard, brown, Clayey SILT and Gravel, trace fine to coarse Sand. (A-4)	6.10m LODGEMENT TILL		FILTER SAND
				6.13	25mm					
25'	7.6	S-6	0.38	7.62-	8-12	30	Hard, brown, Clayey SILT, some fine to coarse Sand, little Gravel. (A-4)			19mm SOLID SCH. 40 PVC RISER
				8.23	18-20					

REMARKS

Stratification lines represent approximate boundaries between soil types, transitions may be gradual. Water level readings have been made at times and under conditions stated. Fluctuations of groundwater may occur due to other factors than those present at the time measurements were made.

Boring No.: 8+539, 7m L

STATE OF VERMONT
AGENCY OF TRANSPORTATION

Town Of BENNINGTON	Bridge No. BI2
Highway No. VT RTE 279	Log Sta. / Surv. Sta.
VT ROUTE 279 OVER FURNACE BROOK	
BORING LOGS (1 OF 4)	
Designed By J.J. MANUSE	Drawn By D.J. HENDERSON
Checked By B.J. CARLSON Date 04/07	Bridge Design Supervisor K.M. WOJTKOWSKI Date 04/07
PROJECT BENNINGTON	PROJECT NO. AC NH F019-1(53)
TVGA CAD Drawing No. FBBL01.dgn	Date 04/10/2007
Bridge Sheet No. BR506	Sheet 198 of 577

TVGA CONSULTANTS

PARTIAL BORING LOG 99-5

GZA GeoEnvironmental, Inc. *Engineers and Scientists*

Bennington Bypass North
Bennington, Vermont

Boring No.: 8+605, 7m R
Page: 1 of 5
File No.: 15634
Check: TAD

Contractor: New Hampshire Boring
Foreman: M. Misiaszek
Logged by: S. Raymond
Date Start/Finish: 8-25-99 / 8-27-99
Boring Location: See Exploration Location Plan
GS Elev.: 230.45m **Datum:** NGVD

	Auger/ Casing	Sampler
Type:	HW	SS
I.D. (mm):	102	35
Hammer Wt.:	NA	63.5 kg
Hammer Fall:	NA	0.76 m
Rig Type:	CME 750 ATV	

GROUNDWATER READINGS

Date	Time	Depth	Casing	Stab
8-27-99	0730	4.11m	None	14.5 hrs.

6.949 m

BOTTOM OF PIER FOOTING EL. 223.500 METERS

Depth (feet)	Depth (meters)	No.	Rec. (m)	Depth (m)	Blows/ 0.15m	N Value	Sample Description & Classification	Stratum Desc.	Rmks.
		S-1	0.51	0-0.61	2-3	5	Loose, dark brown, fine to medium SAND, some Silt with roots and wood. (A-2-4)	TOPSOIL 0.15m	
					2-4				
							Encountered nested cobbles and boulders from 0.91 meters to 3.66 meters.		
5'	1.5						No sample taken due to presence of boulder.	FLUVIAL DEPOSITS	
10'	3.0						No sample taken due to presence of cobbles/boulder.	3.66m	
15'	4.6	S-2	0.08	4.57-	5-9	23	Very stiff, light brown, Clayey SILT, little fine to coarse Sand, trace Gravel with white Clay lenses. Gravel occurred as Quartz fragments. (A-7-6)	LACUSTRINE	
				5-18	14-17				
20'	6.1	S-3	0.05	6.10-	7-10	25	Medium dense, light brown, fine to coarse SAND, some Silt, trace Gravel. (A-4)		
				6.71	15-20				
25'	7.6	S-4	0.03	7.62-	8-12	33	Hard, light brown, SILT, little medium coarse Sand with white Clay lenses. (A-7-6)		
				8.23	21-26				

Equipment Installed: PROTECTIVE CASING; CONCRETE SEAL 0.30m; FILTER SAND; 3.05m; BENTONITE SEAL; 4.57m; FILTER SAND; 19mm SOLID SCH. 40 PVC RISER

REMARKS

Stratification lines represent approximate boundaries between soil types, transitions may be gradual. Water level readings have been made at times and under conditions stated. Fluctuations of groundwater may occur due to other factors than those present at the time measurements were made.

Boring No.: 8+605, 7m R

PARTIAL BORING LOG 99-5 (CONT'D.)

GZA GeoEnvironmental, Inc. *Engineers and Scientists*

Bennington Bypass North
Bennington, Vermont

Boring No.: 8+605, 7m R
Page: 2 of 5
File No.: 15634
Check: TAD

Contractor: New Hampshire Boring
Foreman: M. Misiaszek
Logged by: S. Raymond
Date Start/Finish: 8-25-99 / 8-27-99
Boring Location: See Exploration Location Plan
GS Elev.: 230.45m **Datum:** NGVD

	Auger/ Casing	Sampler
Type:	HW	SS
I.D. (mm):	102	35
Hammer Wt.:	NA	63.5 kg
Hammer Fall:	NA	0.76 m
Rig Type:	CME 750 ATV	

GROUNDWATER READINGS

Date	Time	Depth	Casing	Stab
8-27-99	0730	4.11m	None	14.5 hrs.

Depth (feet)	Depth (meters)	No.	Rec. (m)	Depth (m)	Blows/ 0.15m	N Value	Sample Description & Classification	Stratum Desc.	Rmks.
		S-5	0.23	9.14-	9-12	30	Hard, light brown, SILT, little fine Sand with white Clay lenses. (A-7-6)		
				9.75	18-21				
35'	10.7	S-6	0.48	10.67-	5-11	27	Very stiff, light brown, SILT, little fine Sand with white Clay lenses and reddish brown, medium Sand and Silt lenses. (A-7-6)		
				11.28	16-21				
40'	12.2	S-7	0.56	12.19-	10-20	46	Hard, light brown, SILT, little fine Sand with white Clay lenses and reddish brown Silt lenses. (A-7-6)		
				12.80	26-29				
45'	13.7	S-8	0.41	13.72-	10-19	45	Hard, light brown, CLAY and SILT, trace fine Sand with white Clay lenses and reddish brown, fine to medium Sand lenses. (A-7-6)	LACUSTRINE	1
				14.33	26-33				
50'	15.2	S-9	0.53	15.24-	14-27	71	Hard, light brown, SILT, trace fine to medium Sand with white Clay seams and lenses and reddish brown, fine Sand lenses. (A-7-6)		
				15.85	44-73				
55'	16.8	S-10	0.61	16.76-	10-18	46	Hard, reddish brown, SILT, little fine Sand with brown, fine Sand seams, white Clay seams and reddish brown, fine Sand lenses. (A-7-6)		
				17.37	28-42				

Equipment Installed: 9.14m; 19mm ID SCH. 40 PVC SCREEN (0.01" SLOT); 12.19m; FILTER SAND

REMARKS

1. Laboratory AASHTO classifications performed on S-8 and S-9.

Stratification lines represent approximate boundaries between soil types, transitions may be gradual. Water level readings have been made at times and under conditions stated. Fluctuations of groundwater may occur due to other factors than those present at the time measurements were made.

Boring No.: 8+605, 7m R

TVGA CONSULTANTS

STATE OF VERMONT
AGENCY OF TRANSPORTATION

Town Of BENNINGTON	Bridge No. BI2
Highway No. VT RTE 279	Log Sta. / Surv. Sta.
VT ROUTE 279 OVER FURNACE BROOK	
BORING LOGS (2 OF 4)	
Designed By J.J. MANUSE	Drawn By D.J. HENDERSON
Checked By B.J. CARLSON Date 04/07	Bridge Design Supervisor K.M. WOJTKOWSKI Date 04/07
PROJECT BENNINGTON	PROJECT NO. AC NH F019-1(53)
TVGA CAD Drawing No. FBBL02.dgn	Date 04/10/2007
Bridge Sheet No. BR507	Sheet 199 of 577

Metric

PARTIAL BORING LOG 99-6

GZA GeoEnvironmental, Inc. *Engineers and Scientists*

Bennington Bypass North
Bennington, Vermont

Boring No.: 8+615, 8m L
Page: 1 of 5
File No.: 15634
Check: TAD

Contractor: New Hampshire Boring
Foreman: J. Garside / M. Misiaszek
Logged by: J. Gaudreau
Date Start/Finish: 8-19-99 / 8-25-99
Boring Location: See Exploration Location Plan
GS Elev.: 230.02m Datum: NGVD

	Auger/ Casing	Sampler
Type:	HW	SS
I.D. (mm):	102	35
Hammer Wt.:	NA	63.5 kg
Hammer Fall:	NA	0.76 m
Rig Type:	CME 750 ATV	

GROUNDWATER READINGS

Date	Time	Depth	Casing	Stab
8-25-99	0700	1.22m	None	13 hrs.

Depth (feet)	Depth (meters)	Sample Info: No.	Rec. (m)	Depth (m)	Blows/ 0.15m	N Value	Sample Description & Classification	Stratum Desc.	Rmks.	Equipment Installed
		S-1	0.18	0-0.61	1-2	9	Loose, brown, fine to medium SAND, little Gravel, trace Silt with roots and wood. (A-1-b)	TOPSOIL 0.15m		
					7-12		Encountered nested cobbles and boulders from 0.76 to 1.83 meters.	FLUVIAL DEPOSITS		
5'	1.5						No sample taken due to presence of boulder.	1.83m		NO EQUIPMENT INSTALLED
10'	3.0	S-2	0.38	3.05-	7-9	23	Very stiff, light brown, Silty CLAY, trace fine to medium Sand with white Clay lenses and brown Silt lenses. (A-7-5)		1	
				3.66	14-24					
15'	4.6	S-3	0.15	4.57-	14-15	38	Hard, light brown, Silty CLAY, little fine Sand, Gravel with white Clay seams and brown Silt lenses. (A-7-5)	LACUSTRINE		
				5-18	23-31					
20'	6.1	S-4	0.46	6.10-	19-19	40	Hard, light brown, SILT, trace fine Sand and Gravel with white Clay seams, gray Clay lenses, and brown Silt lenses. (A-7-5)			
				6.71	21-36					
25'	7.6	S-5	0.25	7.62-	22-18	39	Hard, light brown, SILT, trace fine Sand with white and gray Clay lenses. (A-7-5)			
				8.23	21-25					

6.52 m

BOTTOM OF PIER FOOTING EL. 223.500 METERS

REMARKS
1. Laboratory AASHTO classifications performed on S-2, S-3, S-6, and S-7.

Stratification lines represent approximate boundaries between soil types, transitions may be gradual. Water level readings have been made at times and under conditions stated. Fluctuations of groundwater may occur due to other factors than those present at the time measurements were made.

Boring No.: 8+615, 8m L

BORING LOG 99-6 (CONT'D)

GZA GeoEnvironmental, Inc. *Engineers and Scientists*

Bennington Bypass North
Bennington, Vermont

Boring No.: 8+615, 8m L
Page: 2 of 5
File No.: 15634
Check: TAD

Contractor: New Hampshire Boring
Foreman: J. Garside / M. Misiaszek
Logged by: J. Gaudreau
Date Start/Finish: 8-19-99 / 8-25-99
Boring Location: See Exploration Location Plan
GS Elev.: 230.02m Datum: NGVD

	Auger/ Casing	Sampler
Type:	HW	SS
I.D. (mm):	102	35
Hammer Wt.:	NA	63.5 kg
Hammer Fall:	NA	0.76 m
Rig Type:	CME 750 ATV	

GROUNDWATER READINGS

Date	Time	Depth	Casing	Stab
8-25-99	0700	1.22m	None	13 hrs.

Depth (feet)	Depth (meters)	Sample Info: No.	Rec. (m)	Depth (m)	Blows/ 0.15m	N Value	Sample Description & Classification	Stratum Desc.	Rmks.	Equipment Installed
		S-6	0.43	9.14-	15-21	43	Hard, light brown, Silty CLAY, trace fine to medium Sand with white Clay lenses and reddish brown Silt lenses. (A-7-5)			
				9.75	22-28					
35'	10.7	S-7	0.33	10.67-	12-17	38	Hard, light brown, SILT, trace fine to coarse Sand with white and gray Clay lenses and reddish brown Silt lenses. (A-7-5)			NO EQUIPMENT INSTALLED
				11.28	21-28					
40'	12.2	S-8	0.38	12.19-	16-21	53	Hard, light brown, SILT, little fine Sand with white Clay seams, gray Clay lenses, and reddish brown Silt lenses. (A-7-5)			
				12.80	32-41					
45'	13.7	S-9	0.28	13.72-	32-28	62	Hard, light brown, SILT, some fine to medium Sand with reddish brown Silt lenses and white Clay lenses. (A-7-5)	LACUSTRINE		
				14.33	34-47					
50'	15.2	S-10	0.18	15.24-	24-42	114	Hard, light brown and white, SILT and fine to medium Sand with white Clay lenses. (A-7-5)			
				15.85	72-47					
55'	16.8	S-11	0.41	16.76-	12-21	50	Hard, light brown and orange-gray, SILT, trace fine to medium Sand with white Clay seams, gray Clay lenses, and reddish brown Silt lenses. (A-7-5)			
				17.37	29-28					

REMARKS

Stratification lines represent approximate boundaries between soil types, transitions may be gradual. Water level readings have been made at times and under conditions stated. Fluctuations of groundwater may occur due to other factors than those present at the time measurements were made.

Boring No.: 8+615, 8m L

TVGA CONSULTANTS

STATE OF VERMONT
AGENCY OF TRANSPORTATION

Town Of BENNINGTON	Bridge No. BI2
Highway No. VT RTE 279	Log Sta. / Surv. Sta.
VT ROUTE 279 OVER FURNACE BROOK	
BORING LOGS (3 OF 4)	
Designed By J.J. MANUSE	Drawn By D.J. HENDERSON
Checked By B.J. CARLSON Date 04/07	Bridge Design Supervisor K.M. WOJTKOWSKI Date 04/07
PROJECT BENNINGTON	PROJECT NO. AC NH F019-1(53)
TVGA CAD Drawing No. FBBL03.dgn	Date 04/10/2007
Bridge Sheet No. BR508	Sheet 200 of 577

Metric

PARTIAL BORING LOG 99-8

GZA GeoEnvironmental, Inc. *Engineers and Scientists*

Bennington Bypass North
Bennington, Vermont

Boring No.: 8+670, 7m R
Page: 1 of 5
File No.: 15634
Check: TAD

Contractor: New Hampshire Boring
Foreman: J. Michaud
Logged by: S. Raymond
Date Start/Finish: 8-31-99 / 8-31-99
Boring Location: See Exploration Location Plan
GS Elev.: 245.54m **Datum:** NGVD

	Auger/ Casing	Sampler
Type:	PW/HW	SS
I.D. (mm):	127/102	35
Hammer Wt.:	136.1kg	63.5 kg
Hammer Fall:	0.61m	0.76 m
Rig Type:	CME 750 ATV	

GROUNDWATER READINGS

Date	Time	Depth	Casing	Stab
9-2-99	1705	4.82m	None	10 min

1.540 m
BOTTOM OF ABUT. 2 FOOTING EL 244.000 METERS

Depth (feet)	Depth (meters)	Sample Info: No.	Rec. (m)	Depth (m)	Blows/ 0.15m	N Value	Sample Description & Classification	Stratum Desc.	Rmks.
		S-1	0.36	0-0.61	8-10	22	FOREST MAT	FOREST MAT 0.09m	
					12-15		Medium dense, light brown, fine SAND, some Silt, trace Gravel, trace Organics. (A-2-4)		
5'	1.5	S-2	0.05	1.52-	7-22	42	Dense, gray and brown, GRAVEL, some fine to coarse Sand, little Silt. (A-1-b)	ABLATION TILL	
				2.13	20-11				
10'	3.0	S-3	0.05	3.05-	100/	100	Very dense, gray and brown, GRAVEL, fine to coarse SAND, trace Silt and trace white Clay. (A-1-b)		
				3.11	51mm		Advanced roller bit through cobble from 3.11 to 3.35 meters.		
15'	4.6	S-4	0.30	4.57-	6-12	23	Medium dense, grayish brown, fine to medium SAND, some Gravel, little Silt. (A-1-b)		
				5.18	11-18		Encountered nested cobbles and boulders from 4.88 to 5.79 meters.	6.10m	
20'	6.1	S-5	0.20	6.10-	14-10	23	Very stiff, brown, Clayey SILT, some Gravel, little fine to coarse Sand. (A-2-4)	LODGEMENT TILL	
				6.71	13-13				
25'	7.6	S-6	0.41	7.62-	6-8	24	Very stiff, brown, Clayey SILT, some Gravel, trace fine to coarse Sand. (A-2-4)		
				8.23	16-20				

Equipment Installed: PROTECTIVE CASING; CONCRETE SEAL .030m; FILTER SAND; 19mm SCH. 40 PVC CASING; 3.0m; BENTONITE SEAL; 4.6m; FILTER SAND; 6.10m; 19mm ID SCH. 40 PVC SCREEN (0.01" SLOT)

REMARKS

Stratification lines represent approximate boundaries between soil types, transitions may be gradual. Water level readings have been made at times and under conditions stated. Fluctuations of groundwater may occur due to other factors than those present at the time measurements were made.

Boring No.: 8+670, 7m R

BORING LOG 99-9

GZA GeoEnvironmental, Inc. *Engineers and Scientists*

Bennington Bypass North
Bennington, Vermont

Boring No.: 8+695, CL
Page: 1 of 1
File No.: 15634
Check: TAD

Contractor: New Hampshire Boring
Foreman: J. Michaud
Logged by: S. Raymond
Date Start/Finish: 9-8-99 / 9-9-99
Boring Location: See Exploration Location Plan
GS Elev.: 249.29m **Datum:** NGVD

	Auger/ Casing	Sampler
Type:	HW	SS
I.D. (mm):	102	35
Hammer Wt.:	136.2kg	63.5kg
Hammer Fall:	0.61m	0.76m
Rig Type:	Diedrich D-50 Bomb.	

GROUNDWATER READINGS

Date	Time	Depth	Casing	Stab
9-9-99	1215	6.55m	None	30 min.

5.290 m
BOTTOM OF ABUT. 2 FOOTING EL 244.000 METERS

Depth (feet)	Depth (meters)	Sample Info: No.	Rec. (m)	Depth (m)	Blows/ 0.15m	N Value	Sample Description & Classification	Stratum Desc.	Rmks.
		S-1	0.41	0-0.61	5-6	14	Forest Mat	FOREST MAT 0.21m	
					8-9		Medium dense, light brown, fine SAND and Silt, trace Gravel, trace Organics. (A-4) Nested cobbles located from 0.76 to 1.22 meters.		
5'	1.5	S-2	0.13	1.52-	34-	100	Very dense, light brown, SILT, some Gravel, little fine Sand. (A-2-4)		1
				1.74	100/				
					51mm		Advanced borehole through boulder from 2.44 to 2.74 meters using roller bit.		
10'	3.0						Advanced borehole through boulder from 3.05 to 3.51 meters using roller bit.	ABLATION TILL	
							Advanced borehole through boulder from 4.27 to 4.57 meters using roller bit.		
15'	4.6	S-3	0	4.57-	15-11	22	No recovery.		
				5.18	11-14			6.10m	
20'	6.1	S-4	0.08	6.10-	20-18	38	Dense, brown, SILT and Gravel, little fine to coarse Sand with light brown Silt lenses. (A-2-4)	LODGEMENT TILL	
				6.71	20-28				
25'	7.6	S-5	0.46	7.62-	20-18	35	Dense, brown, fine SAND and Silt, trace Gravel. (A-4)		
				8.23	17-15				
							Bottom of boring at 8.94 meters below ground surface. Roller bit refusal.	8.94m	

Equipment Installed: PROTECTIVE CASING; CONCRETE SEAL 0.30m; 19mm ID SCH. 40 PVC WELL CASING; FILTER SAND; 3.96m; BENTONITE SEAL; 5.18m; 19mm ID SCH. 40 PVC SCREEN (0.01" SLOT); FILTER SAND; 8.94m

REMARKS

1. Laboratory AASHTO classifications performed on S-2 and S-5.

Stratification lines represent approximate boundaries between soil types, transitions may be gradual. Water level readings have been made at times and under conditions stated. Fluctuations of groundwater may occur due to other factors than those present at the time measurements were made.

Boring No.: 8+695, CL

TVGA CONSULTANTS

STATE OF VERMONT
AGENCY OF TRANSPORTATION

Town Of BENNINGTON	Bridge No. BI2
Highway No. VT RTE 279	Log Sta. / Surv. Sta.
VT ROUTE 279 OVER FURNACE BROOK	
BORING LOGS (4 OF 4)	
Designed By J.J. MANUSE	Drawn By D.J. HENDERSON
Checked By B.J. CARLSON Date 04/07	Bridge Design Supervisor K.M. WOJTKOWSKI Date 04/07
PROJECT BENNINGTON	PROJECT NO. AC NH F019-1(53)
TVGA CAD Drawing No. FBBL04.dgn	Date 04/10/2007
Bridge Sheet No. BR509	Sheet 201 of 577

Metric

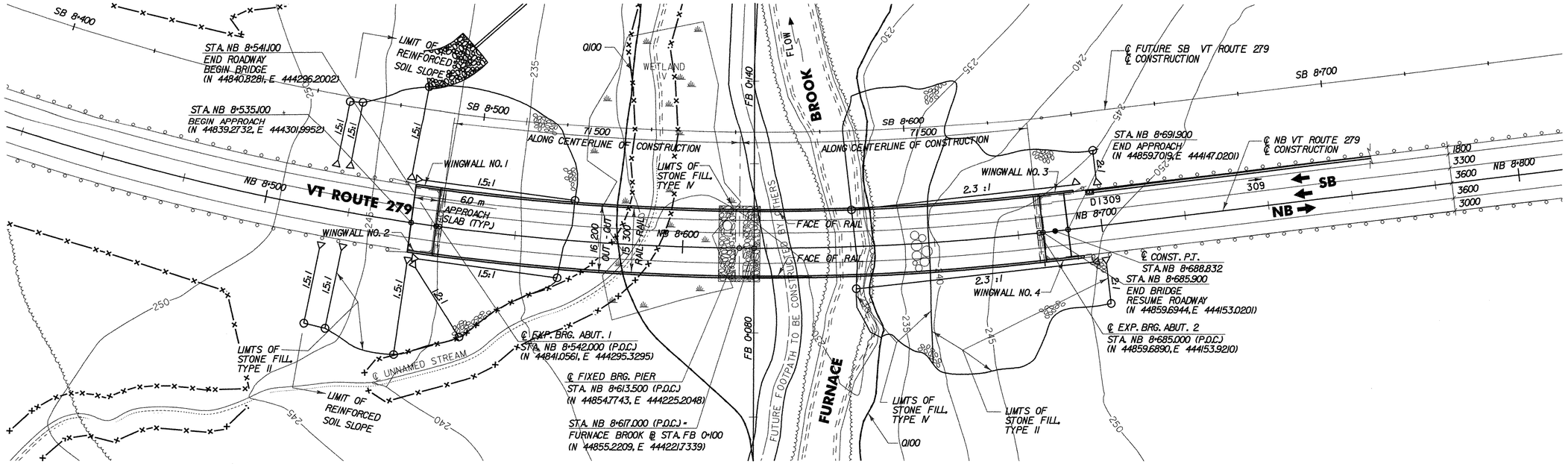

PLAN
SCALE 1:500

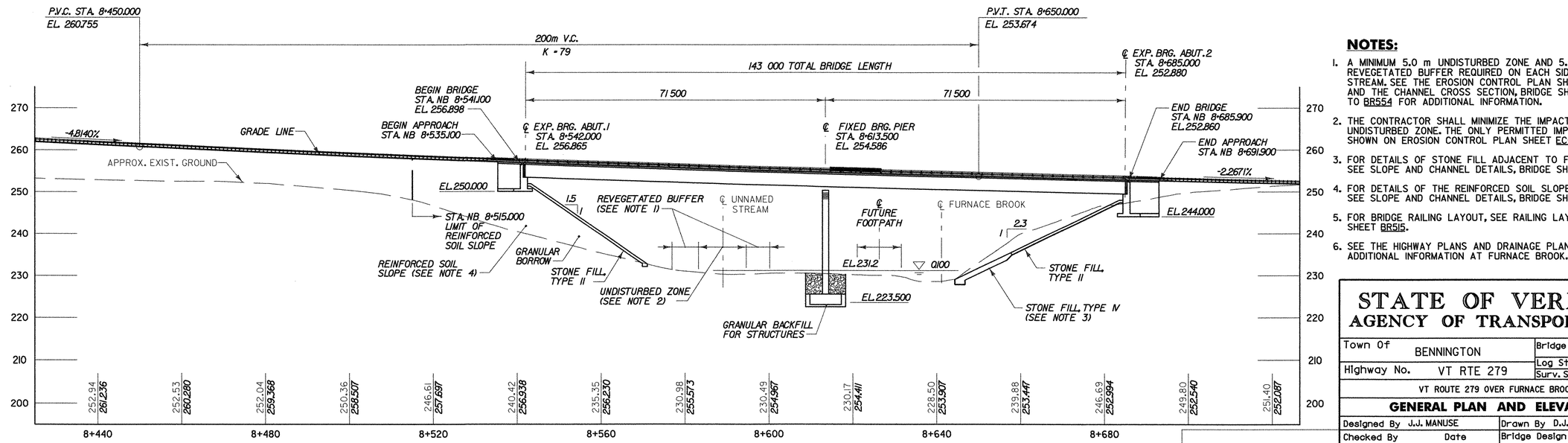

ELEVATION
SCALE 1:500

0 10 20 30 40 50m
SCALE 1:500

NOTES:

1. A MINIMUM 5.0 m UNDISTURBED ZONE AND 5.0 m REVEGETATED BUFFER REQUIRED ON EACH SIDE OF UNNAMED STREAM. SEE THE EROSION CONTROL PLAN SHEET EC-02, AND THE CHANNEL CROSS SECTION, BRIDGE SHEETS BR547 TO BR554 FOR ADDITIONAL INFORMATION.
2. THE CONTRACTOR SHALL MINIMIZE THE IMPACTS TO THE UNDISTURBED ZONE. THE ONLY PERMITTED IMPACTS ARE SHOWN ON EROSION CONTROL PLAN SHEET EC-02.
3. FOR DETAILS OF STONE FILL ADJACENT TO FURNACE BROOK, SEE SLOPE AND CHANNEL DETAILS, BRIDGE SHEET BR544.
4. FOR DETAILS OF THE REINFORCED SOIL SLOPE AT ABUTMENT 1, SEE SLOPE AND CHANNEL DETAILS, BRIDGE SHEET BR544.
5. FOR BRIDGE RAILING LAYOUT, SEE RAILING LAYOUT, BRIDGE SHEET BR515.
6. SEE THE HIGHWAY PLANS AND DRAINAGE PLANS FOR ADDITIONAL INFORMATION AT FURNACE BROOK.

STATE OF VERMONT
AGENCY OF TRANSPORTATION

Town Of BENNINGTON	Bridge No. BI2
Highway No. VT RTE 279	Log Sta. / Surv. Sta.

VT ROUTE 279 OVER FURNACE BROOK

GENERAL PLAN AND ELEVATION

Designed By J.J. MANUSE	Drawn By D.J. HENDERSON
Checked By B.J. CARLSON Date 04/07	Bridge Design Supervisor K.M. WOJTKOWSKI Date 04/07
PROJECT BENNINGTON	PROJECT NO. AC NH F019-1(53)
TVGA CAD Drawing No. FBGP.dgn	Date 04/10/2007
Bridge Sheet No. BR510	Sheet 202 of 577

TVGA CONSULTANTS

GENERAL NOTES:

1. ALL MATERIALS AND CONSTRUCTION SHALL CONFORM TO STATE OF VERMONT AGENCY OF TRANSPORTATION "STANDARD SPECIFICATIONS FOR CONSTRUCTION" (2006) AND ITS LATEST REVISIONS, AASHTO "STANDARD SPECIFICATIONS FOR HIGHWAY BRIDGES" (2002) AND ITS LATEST REVISIONS, AND AASHTO "GUIDE SPECIFICATIONS FOR HORIZONTALLY CURVED HIGHWAY BRIDGES" (2003) AND ITS LATEST REVISIONS.

2. DESIGN IS FOR MS-22.5 LOADING APPLIED IN ACCORDANCE WITH THE PROVISIONS OF AASHTO STANDARD SPECIFICATIONS.

3. ALL DIMENSIONS ARE HORIZONTAL OR VERTICAL AND ARE GIVEN AT 20° C, UNLESS SHOWN OTHERWISE.

4. ANY REFERENCE TO "LEFT" AND/OR "RIGHT" ON THE PLANS OR IN THE NOTES REFERS TO THE DIRECTION OF STATIONING AND NOT THE DIRECTION OF TRAFFIC.

5. ALL STRUCTURAL STEEL SHALL CONFORM TO AASHTO DESIGNATION M270M/M270, GRADE 345W AND M270M/M270, GRADE 485W, EXCEPT AS NOTED IN THE PLANS.

6. THE FOLLOWING TABLE OF DESIGN STRENGTHS APPLIES TO THESE PLANS FOR DESIGN PURPOSES:

   CONCRETE:
   - ITEM 501.33 - HIGH PERFORMANCE CLASS A; f'c = 30 MPa (DECK, EXPANSION JOINT BLOCKOUT, AND CURBS)
   - ITEM 501.34 - HIGH PERFORMANCE CLASS B; f'c = 25 MPa (PIERS, ABUTMENTS, AND WINGWALLS)
   - ITEM 900.608 - SPECIAL PROVISION HIGH PERFORMANCE CONCRETE, MASS POUR; f'c = 25 MPa (PIER FOOTING)

   NEW STRUCTURAL STEEL:
   - ITEM 506.56 - AASHTO M270M/M270, GR345W Fy = 345 MPa
   - ITEM 900.635 - SPECIAL PROVISION AASHTO M270M/M270, GR485W Fy = 485 MPa

   NEW REINFORCING STEEL:
   - ITEM 507.15 AND ITEM 507.17 - Fy = 420 MPa (GRADE 420)

7. EPOXY COATED REINFORCING STEEL SHALL BE PROVIDED AT THE FOLLOWING LOCATIONS:
   - BRIDGE DECK SLAB
   - APPROACH SLABS
   - ABUTMENT (WHERE SHOWN IN PLANS), BACKWALL, AND CURBS

8. ALL MAIN LOAD CARRYING MEMBERS INCLUDING WELDED PLATE GIRDERS AND CURVED GIRDER CROSS FRAME MEMBERS ARE SUBJECT TO THE CHARPY V-NOTCH TEST PER SECTION 714 OF THE SPECIFICATIONS.

9. ALL CONNECTIONS OF UNPAINTED MEMBERS SHALL BE MADE WITH 22 DIAMETER AASHTO M164M, TYPE 3 BOLTS IN 24 DIAMETER HOLES, EXCEPT AS NOTED IN THE PLANS. ALL CONNECTIONS OF PAINTED OR GALVANIZED MEMBERS SHALL BE MADE WITH AASHTO M164M TYPE I GALVANIZED BOLTS. BOLTS THAT HAVE BEEN FULLY TIGHTENED SHALL NOT BE RE-USED.

10. WHERE CONNECTIONS ARE NOT DETAILED ON THE PLANS, THEY SHALL BE DETAILED BY THE FABRICATOR AND SUBMITTED TO THE STRUCTURES ENGINEER FOR APPROVAL.

11. ALL WELDING AND DIMENSIONAL TOLERANCES OF WELDED MEMBERS SHALL CONFORM TO THE LATEST ANSI/AASHTO/AWS BRIDGE WELDING CODE AND ITS LATEST REVISIONS.

12. WHERE GALVANIZING HAS BEEN REMOVED BY ANY MEANS FROM BRIDGE COMPONENTS, INCLUDING DOWNSPOUTS AND ASSOCIATED HARDWARE, IT SHALL BE REPAIRED IN ACCORDANCE WITH SECTION 513 OF THE SPECIFICATIONS. COSTS FOR THIS WORK SHALL BE INCIDENTAL TO THE ITEM UNDER WHICH THE GALVANIZED COMPONENT IS PROVIDED.

13. ANY FORM BRACKET HOLES IN FASCIA GIRDER WEBS NOT OTHERWISE FILLED SHALL BE FILLED WITH BUTTON HEAD OR HEX HEAD, AASHTO M164M, TYPE 3 BOLTS, EXCEPT IN AREAS OF PAINTED STEEL, WHERE TYPE I GALVANIZED BOLTS SHALL BE USED.

14. THE CONTRACTOR SHALL PROVIDE FOR THE STABILITY OF STRUCTURAL STEEL DURING ALL PHASES OF ERECTION AND CONSTRUCTION AS SPECIFIED IN SECTION 506 OF 2006 STANDARD SPECIFICATIONS FOR CONSTRUCTION.

15. FASCIA OVERHANG BRACKET DESIGN SHALL BE THE RESPONSIBILITY OF THE CONTRACTOR BUT THE MAXIMUM SPACING OF THESE BRACKETS SHALL NOT EXCEED 1200.

16. ALL REINFORCING STEEL SHALL BE DETAILED AND FABRICATED USING PROCEDURES IN ACCORDANCE WITH APPLICABLE PUBLICATIONS OF THE CONCRETE REINFORCING STEEL INSTITUTE.

17. REINFORCEMENT PLACING TOLERANCES SHALL BE:
    SPACING +/- 25
    CLEARANCE +/- 6

18. MINIMUM COVER FOR REINFORCING STEEL (EXCEPT IN THE DECK) SHALL BE 50 IN BACK FACES OF SUBSTRUCTURES AGAINST EARTH, 100 IN PIER COLUMNS AND CAP BEAMS, AND 80 ELSEWHERE, UNLESS OTHERWISE SHOWN.

19. FLAME CUTTING OF EPOXY COATED REINFORCING STEEL SHALL NOT BE PERMITTED. ALL CUT ENDS OF EPOXY COATED REINFORCEMENT SHALL BE FIELD COATED WITH A TWO PART EPOXY APPROVED BY THE REBAR EPOXY MANUFACTURER.

20. CONCRETE FOR DECK, EXPANSION JOINT BLOCKOUT AND CURBS SHALL BE HIGH PERFORMANCE CLASS A AND WILL BE PAID UNDER ONE OF THE ALTERNATE BID ITEMS, ITEM 501.33, "CONCRETE, HIGH PERFORMANCE CLASS A (FPQ)" OR 501.33 "CONCRETE, HIGH PERFORMANCE CLASS A (SIPCMF) (FPQ)". ALL OTHER CONCRETE SHALL BE HIGH PERFORMANCE CLASS B AND WILL BE PAID FOR UNDER ITEM 501.34, "CONCRETE, HIGH PERFORMANCE CLASS B" UNLESS OTHERWISE NOTED. ALL EXPOSED EDGES OF CONCRETE IN THE SUBSTRUCTURE AND THE SUPERSTRUCTURE SHALL BE CHAMFERED 25 X 25, UNLESS OTHERWISE SHOWN.

21. ABUTMENT AND WINGWALL CONCRETE ABOVE THE ADJACENT BRIDGE SEAT ELEVATIONS SHALL NOT BE PLACED UNTIL GIRDERS HAVE BEEN ERECTED, BEAM PROFILES HAVE BEEN TAKEN, AND FINAL FINISH GRADE OF DECK IS APPROVED BY THE ENGINEER.

22. SURFACES OF BRIDGE SEATS UNDER BEARING DEVICES SHALL BE LEVEL. OTHER BRIDGE SEAT AREAS SHALL BE SLOPED 4%. ABUTMENT SEATS SHALL BE SLOPED FULL WIDTH TOWARD CENTER SPAN. THE ENTIRE BRIDGE SEAT SURFACE SHALL BE SMOOTH WITH FLOAT FINISH AS PER SUBSECTION 501.16.

23. IN ALL HORIZONTAL AND VERTICAL CONSTRUCTION JOINTS, SHEAR KEYS SHALL BE FORMED AS SHOWN IN THE TYPICAL BRIDGE DETAILS, BRIDGE SHEET BR513, AND THEY SHALL BE CONTINUOUS UP TO 75 FROM EACH END OF THE JOINT. THE UPWARD KEY SHALL BE PLACED INTEGRALLY WITH THE CONCRETE BELOW THE JOINT. ALL KEYS SHALL BE MONOLITHIC AND CONTINUOUS FOR THE FULL LENGTH OF THE JOINT. JOINTS AND SCORE MARKS SHALL BE CONSTRUCTED AS INDICATED ON THE PLANS OR AS DIRECTED BY THE RESIDENT ENGINEER.

24. POLYURETHANE JOINT SEALER SHALL BE USED IN CURB CONSTRUCTION JOINTS OR AT FIXED END CURB JOINTS AS DIRECTED BY THE ENGINEER, IN ACCORDANCE WITH THE CURB JOINT DETAILS SHOWN IN THE TYPICAL BRIDGE DETAILS, BRIDGE SHEET BR512.

25. ITEM 514.10, "WATER REPELLANT-SILANE" SHALL BE APPLIED TO ALL EXPOSED CONCRETE ON THE SUPERSTRUCTURE, EXCEPT THE BOTTOM OF THE DECK BETWEEN THE DRIP BEADS. IT SHALL ALSO BE APPLIED TO ALL EXPOSED SUBSTRUCTURES.

26. THE COST OF INSTALLING PVC WATERSTOPS, AS SHOWN IN THE PLANS, SHALL BE INCIDENTAL TO ITEM 501.34, "CONCRETE, HIGH PERFORMANCE, CLASS B". THE TYPE OF PVC WATERSTOP TO BE USED SHALL BE SUBMITTED BY THE CONTRACTOR TO THE ENGINEER FOR APPROVAL.

27. ALL FABRIC TROUGHS AND DOWNSPOUTS SHALL BE THOROUGHLY FLUSHED BY THE CONTRACTOR AFTER ALL PAVING IS COMPLETED. ALL COSTS ASSOCIATED WITH THIS WORK SHALL BE INCIDENTAL TO ITEM 490.30, "SUPERPAVE BITUMINOUS CONCRETE PAVEMENT". FOLLOWING PAVING, ANY BITUMINOUS CONCRETE PAVEMENT THAT IS LODGED IN THE EXPANSION JOINTS, OR THAT ENTERS DRAIN TROUGHS, HOPPERS OR DOWNSPOUTS, SHALL BE REMOVED BY THE CONTRACTOR AT NO COST TO THE STATE.

28. SNOW FENCE SHALL BE INSTALLED ON BRIDGE RAIL OVER ALL ROADWAYS AND FUTURE MULTI-USE TRAILS AS SHOWN ON BRIDGE SHEET BR543, AND PAID FOR UNDER ITEM 620.75, "SNOW BARRIER, GALVANIZED".

29. ITEM 404.65, "EMULSIFIED ASPHALT" HAS BEEN INCLUDED TO BE USED AS A TACK COAT BETWEEN LIFTS OF PAVEMENT AT AN APPLICATION RATE OF 0.70 L/m^2 OR AS DIRECTED BY THE ENGINEER.

30. PAYMENT FOR BACKFILL AROUND ABUTMENTS AND PIERS FOLLOWING PLACEMENT OF NEW CONCRETE SHALL BE MADE UNDER ITEM 204.30, "GRANULAR BACKFILL FOR STRUCTURES".

31. STONE FILL SHALL BE PLACED IN FRONT OF ABUTMENTS BEFORE SUPERSTRUCTURE STEEL IS PLACED.

32. LIMITS OF IN-STREAM CONSTRUCTION WILL BE AS SPECIFIED IN ALL APPLICABLE PERMITS.

33. DETAILS FOR ITEM 208.40, "COFFERDAM (ABUTMENT)" CAN BE FOUND ON SHEET EC-02B CONSTRUCTION IMPACTS PLAN.

NOTE: THE TRANSVERSE DECK BARS WERE DESIGNED 50mm SHORT. IN ORDER TO KEEP THE 610mm OVERLAP, THE DESIGNER APPROVED AN ADDITIONAL 25mm COVER AT EACH FASCIA IN THE CURB AREA. THIS RESULTED IN A MINIMUM COVER OF 105mm RATHER THAN THE 80mm AS SHOWN ON THE FASCIA DETAIL ON BR513.

VAOT Metric

TVGA CONSULTANTS

STATE OF VERMONT
AGENCY OF TRANSPORTATION

Town Of BENNINGTON	Bridge No. BI2
Highway No. VT RTE 279	Log Sta. / Surv. Sta.
VT ROUTE 279 OVER FURNACE BROOK	
GENERAL NOTES	
Designed By J.J. MANUSE	Drawn By D.J. HENDERSON
Checked By B.J. CARLSON Date 04/07	Bridge Design Supervisor K.M. WOJTKOWSKI Date 04/07
PROJECT BENNINGTON	PROJECT NO. AC NH F019-1(53)
TVGA CAD Drawing No. FBGenNotes.dgn	Date 04/10/2007
Bridge Sheet No. BR511	Sheet 203 of 577

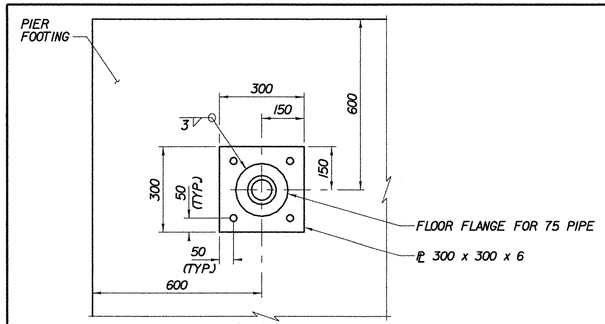

PLAN

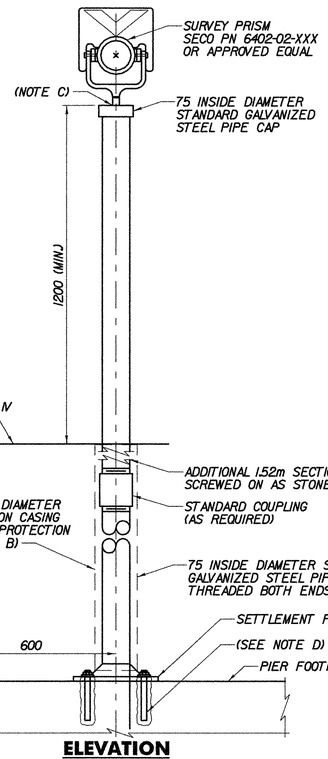

ELEVATION

NOTES:

A. A MODIFIED SETTLEMENT PLATFORM SHALL BE PROVIDED AT ALL FOUR CORNERS OF THE PIER FOOTING. ALL COSTS TO FURNISH AND INSTALL THE MODIFIED SETTLEMENT PLATFORM SHALL BE PAID FOR UNDER ITEM 900.620 SPECIAL PROVISION (MODIFIED SETTLEMENT PLATFORM).

B. THE CONTRACTOR SHALL PROTECT THE SETTLEMENT PLATFORM FROM DAMAGE WHILE PLACING THE TYPE IV STONE FILL AROUND THE PIER.

C. THE CONTRACTOR SHALL DESIGN THE CONNECTION DETAIL BETWEEN THE STANDARD PIPE CAP AND THE SURVEY PRISM. THE PROPOSED DETAIL SHALL BE SUBMITTED TO THE ENGINEER FOR APPROVAL.

D. DRILL AND GROUT BARS SHALL BE DRILLED AND EPOXY GROUTED 300 MINIMUM INTO THE CONCRETE. DRILL AND EPOXY GROUT SYSTEM SHALL BE:
- DAYTON SUPERIOR SURE-ANCHOR J-51 SYSTEM
- HILTI, INC. HIT HY-150 SYSTEM
- UNITEX PRO-POXY 300 FAST SYSTEM

OR EQUIVALENT APPROVED BY VAOT MATERIALS SECTION. ALL COSTS FOR DRILLING AND EPOXY GROUTING REINFORCING BARS SHALL BE PAID FOR UNDER ITEM 900.620 SPECIAL PROVISION (MODIFIED SETTLEMENT PLATFORM)

MODIFIED SETTLEMENT PLATFORM
NOT TO SCALE

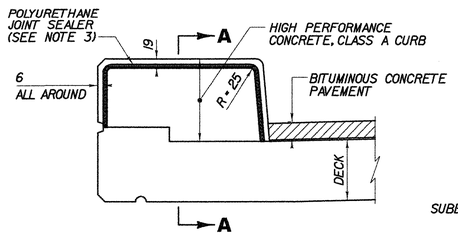

NOTE: DECK JOINT SHOWN
WINGWALL JOINT SIMILAR.

TYPICAL SECTION THROUGH CONCRETE CURB CONSTRUCTION JOINT

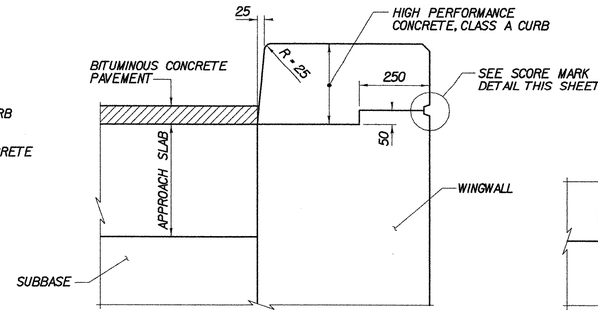

TYPICAL SECTION THROUGH CONCRETE CURB AT WINGWALL

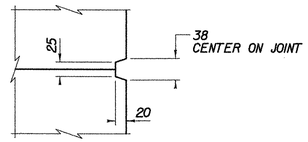

SCORE MARK DETAIL

NOTES:

1. CONSTRUCTION JOINTS THROUGH CONCRETE CURB SHALL BE SPACED MAXIMUM 4.50 m CENTER TO CENTER AND SHALL BE 560 MINIMUM FROM THE CENTER OF THE NEAREST BRIDGE RAIL POST. CONCRETE SHALL BE PLACED IN ALTERNATING SECTIONS WITH A MINIMUM OF 48 HOURS DELAY BETWEEN ADJACENT POURS.
2. LONGITUDINAL REINFORCING SHALL PASS THROUGH CONCRETE CURB CONSTRUCTION JOINTS.
3. POLYURETHANE JOINT SEALER, PER SUBSECTION 524.06(c) OF THE SPECIFICATIONS, COLOR TO MATCH CONCRETE. COST SHALL BE INCIDENTAL TO ITEM 501.33, "CONCRETE, HIGH PERFORMANCE CLASS A (FPQ)" OR ITEM 501.33 "CONCRETE, HIGH PERFORMANCE CLASS A (SIPCMF) (FPQ)."

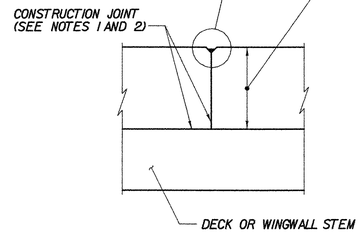

SECTION A-A

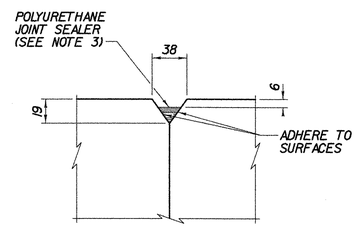

DETAIL "E"

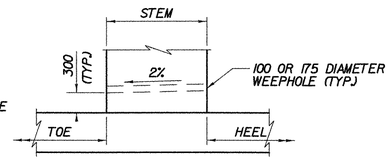

WEEPHOLE DETAIL

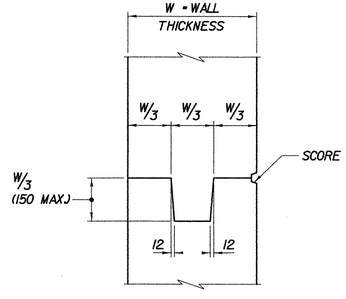

TYPICAL CONCRETE CONSTRUCTION JOINT

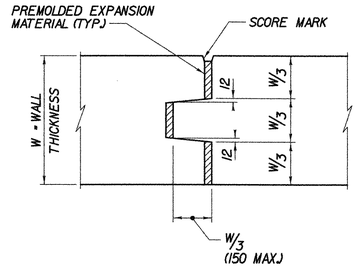

TYPICAL CONCRETE EXPANSION JOINT

CURB JOINT DETAILS
NOT TO SCALE

TVGA CONSULTANTS

STATE OF VERMONT
AGENCY OF TRANSPORTATION

Town Of BENNINGTON	Bridge No. BI2
Highway No. VT RTE 279	Log Sta. / Surv. Sta.
VT ROUTE 279 OVER FURNACE BROOK	
TYPICAL BRIDGE DETAILS	
Designed By J.J. MANUSE	Drawn By D.J. HENDERSON
Checked By B.J. CARLSON Date 04/07	Bridge Design Supervisor K.M. WOJTKOWSKI Date 04/07
PROJECT BENNINGTON	PROJECT NO. AC NH F019-1(53)
TVGA CAD Drawing No. FBBridgeDet.dgn	Date 04/10/2007
Bridge Sheet No. BR5I2	Sheet 204 of 577

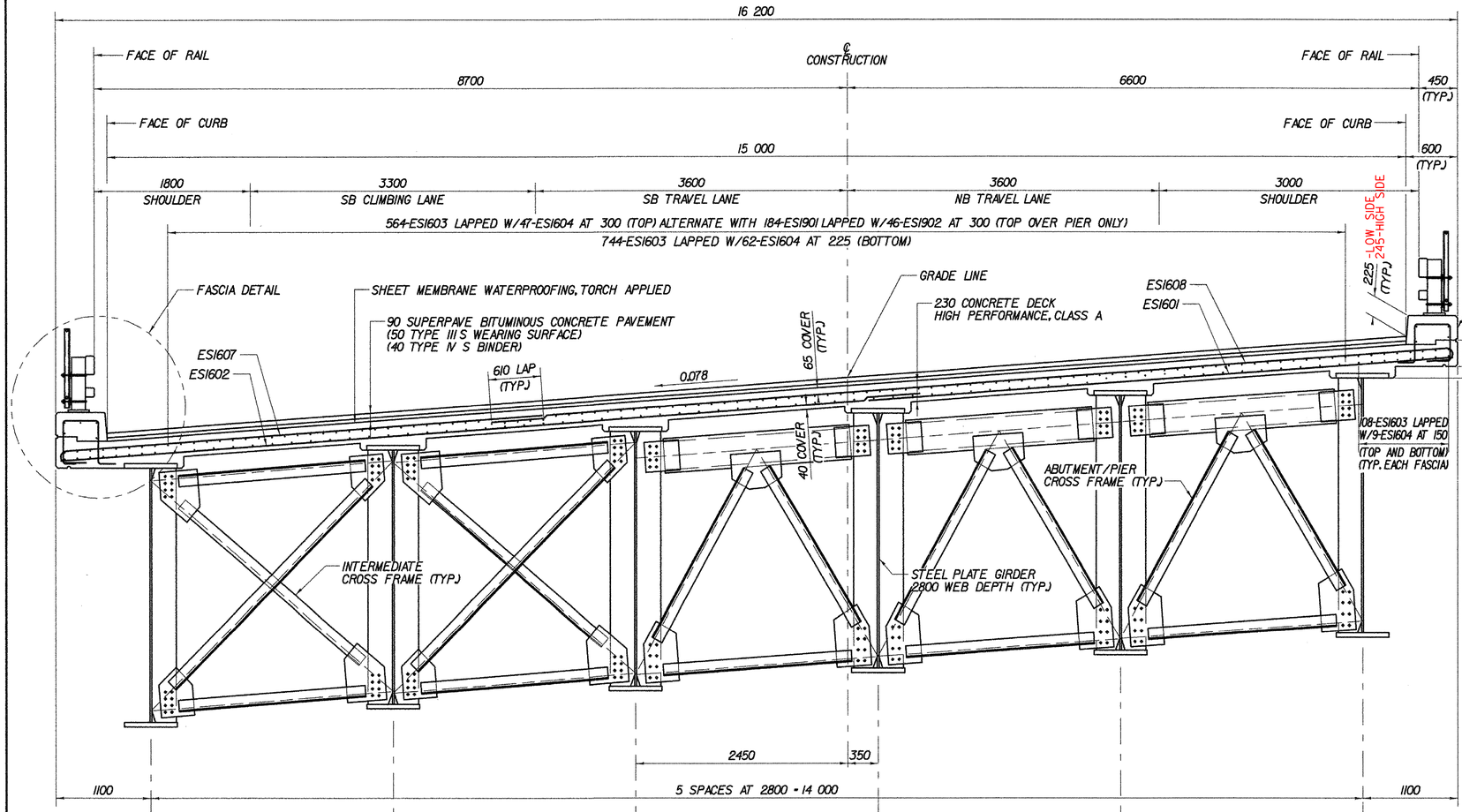

TRANSVERSE SECTION

SCALE: 1:30

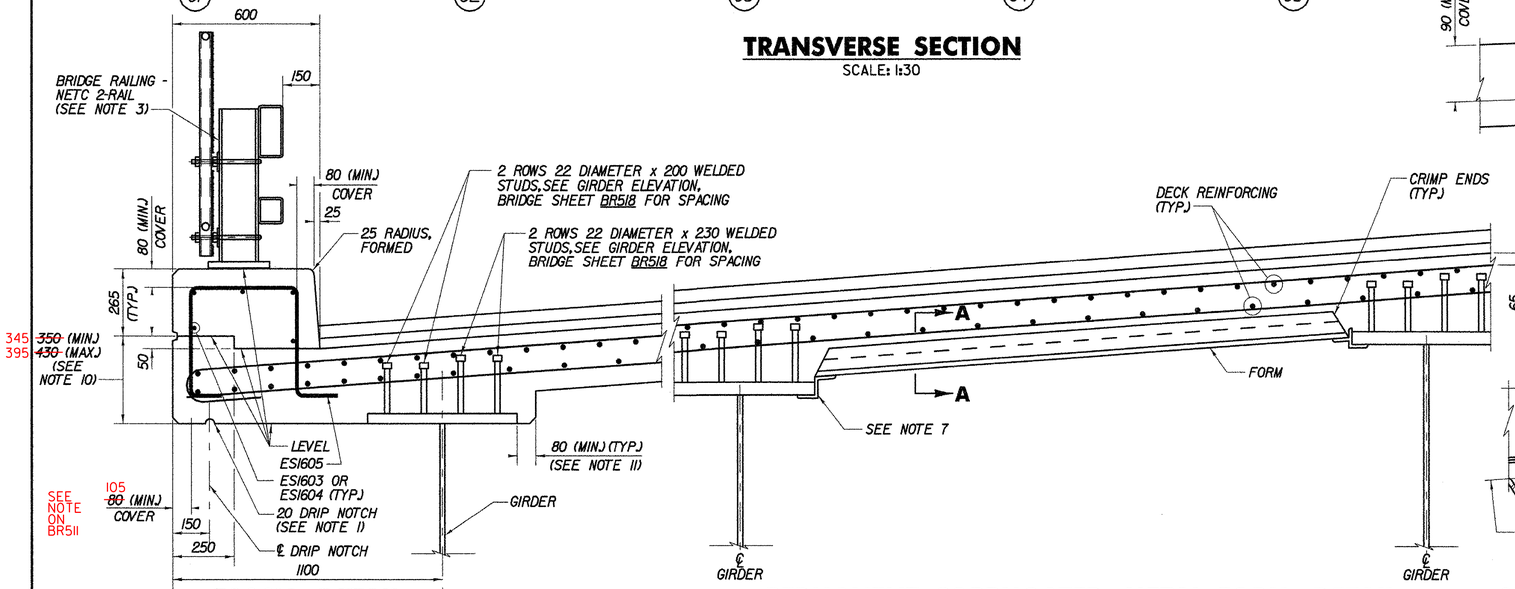

FASCIA DETAIL

LEFT FASCIA SHOWN, RIGHT FASCIA SIMILAR EXCEPT AS SHOWN IN TRANSVERSE SECTION
NOT TO SCALE

PERMANENT CORRUGATED METAL FORM DETAIL

NOT TO SCALE

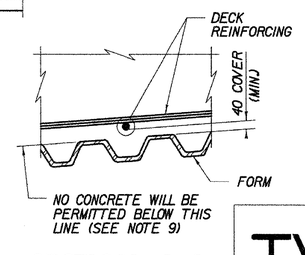

SECTION A-A

NOT TO SCALE

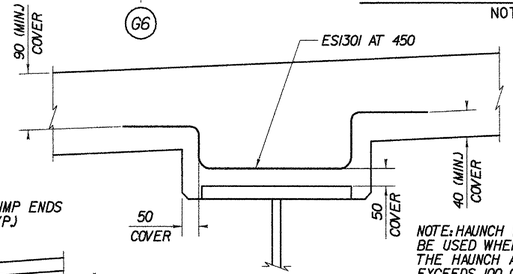

REINFORCED GIRDER HAUNCH DETAIL

NOTE: HAUNCH REINFORCEMENT TO BE USED WHEN THE DEPTH OF THE HAUNCH AT GIRDER CENTERLINE EXCEEDS 100 OR AS ORDERED BY THE ENGINEER.

NOT TO SCALE

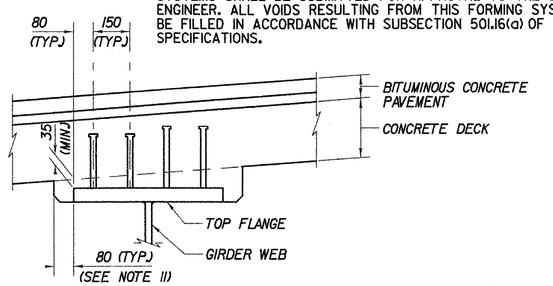

TYPICAL GIRDER HAUNCH AND SHEAR CONNECTOR DETAILS

NOT TO SCALE

0 0.6 1.2 1.8 2.4 3.0m

SCALE 1:30

NOTES:

1. DRIP NOTCH TO BE TERMINATED AT THE "DOWNHILL" ABUTMENT 1.5 m FROM THE END OF SLAB AT 45° TO THE FASCIA.
2. FOR DETAILS OF TRANSVERSE REINFORCEMENT SEE DECK REINFORCEMENT, BRIDGE SHEET BR514.
3. FOR DETAILS OF NETC BRIDGE RAIL AND APPROACH SECTION, SEE BRIDGE SHEETS BR540 THROUGH BR542.
4. FOR SNOW FENCE LOCATIONS AND DETAILS, SEE BRIDGE SHEETS BR515, AND BR543.
5. ALL DIMENSIONS ARE RADIAL AND CONCENTRIC WITH CENTERLINE OF CONSTRUCTION.
6. PAYMENT FOR PERMANENT CORRUGATED METAL FORMS SHALL BE INCIDENTAL TO ITEM 501.33; "CONCRETE, HIGH PERFORMANCE CLASS A (SIPCMF) (FPO)."
7. TACK WELDS SHALL BE ALLOWED IN THE COMPRESSION AREAS OF THE GIRDER TOP FLANGE ONLY, REFER TO GIRDER SCHEDULE TABLES BRIDGE SHEET BR518 FOR LOCATIONS OF GIRDER DEAD LOAD CONTRAFLEXURE POINTS AND GIRDER TOP FLANGE TENSION ZONES.
8. FORMS AND SUPPORT ANGLES SHALL CONFORM TO SUBSECTION 715.05 OF THE SPECIFICATIONS.
9. FILL FORM CORRUGATIONS WITH STYROFOAM OR OTHER LIGHTWEIGHT MATERIAL AS APPROVED BY THE ENGINEER PRIOR TO DECK PLACEMENT.
10. THE FINAL DEPTH OF THE FASCIA WILL BE DETERMINED BY THE FINAL TOP STEEL AND CONSTRUCTED GIRDER SEAT ELEVATIONS.
11. THE 80 HORIZONTAL SECTION MAY BE ELIMINATED FOR FORMING SYSTEMS DESIGNED FOR THE CONSTRUCTION OF VERTICAL HAUNCHES. SYSTEMS SHALL BE SUBMITTED FOR APPROVAL TO THE STRUCTURES ENGINEER. ALL VOIDS RESULTING FROM THIS FORMING SYSTEM SHALL BE FILLED IN ACCORDANCE WITH SUBSECTION 501.16(a) OF THE SPECIFICATIONS.

STATE OF VERMONT
AGENCY OF TRANSPORTATION

Town Of BENNINGTON	Bridge No. BI2
Highway No. VT RTE 279	Log Sta. / Surv. Sta.
VT ROUTE 279 OVER FURNACE BROOK	
TRANSVERSE SECTION	
Designed By J.J. MANUSE	Drawn By D.J. HENDERSON
Checked By B.J. CARLSON Date 04/07	Bridge Design Supervisor K.M. WOJTKOWSKI Date 04/07
PROJECT BENNINGTON	PROJECT NO. AC NH F019-1(53)
TVGA CAD Drawing No. FBTrans.dgn	Date 04/12/2007
Bridge Sheet No. BR513	Sheet 205 of 577

TVGA CONSULTANTS

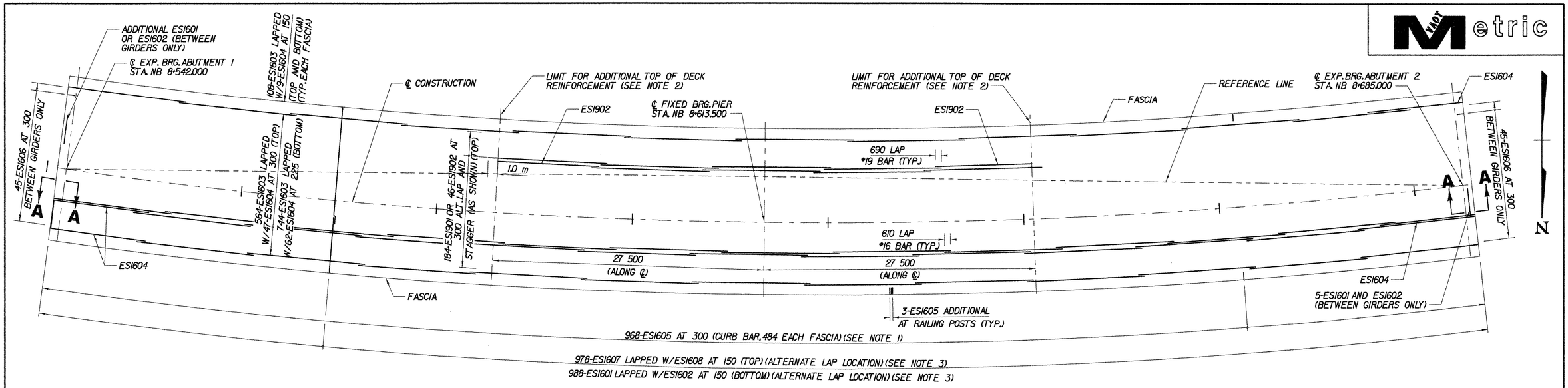

DECK REINFORCEMENT PLAN

SCALE 1:200

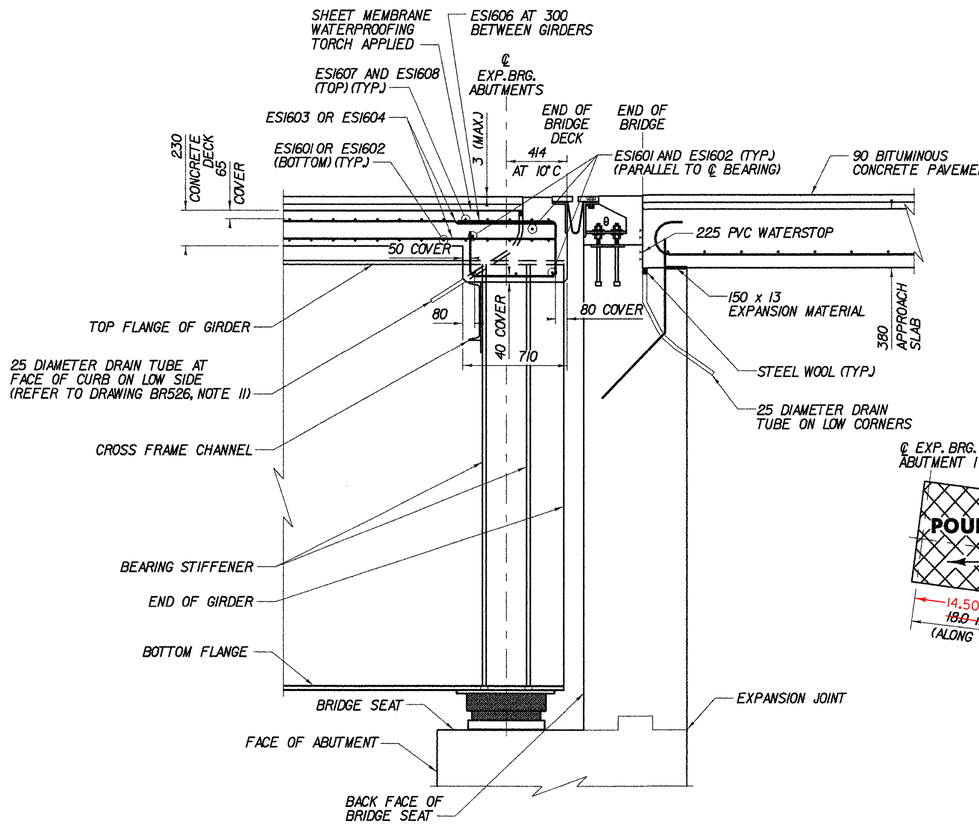

SECTION A–A

ABUTMENT REINFORCEMENT NOT SHOWN FOR CLARITY
SCALE 1:20

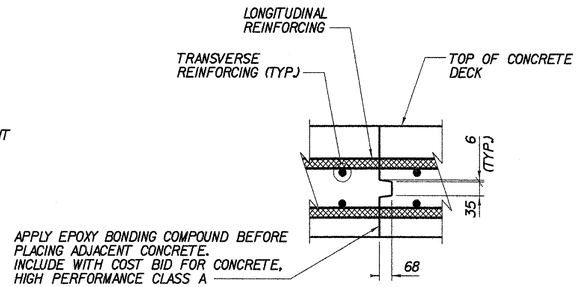

CONSTRUCTION JOINT DETAIL

NOT TO SCALE

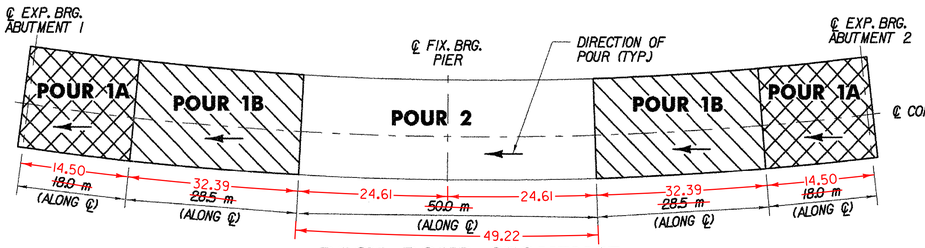

DECK POUR SEQUENCE

NOT TO SCALE

DECK SLAB PLACEMENT NOTES:

A. THERE SHALL BE A MINIMUM DELAY PERIOD OF 72 HOURS AFTER THE COMPLETION OF POUR 1A AND THE BEGINNING OF POUR 1B, AND 96 HOURS AFTER THE COMPLETION OF POUR 1B AND THE BEGINNING OF POUR 2. EACH CONCRETE DECK POUR SHALL BE PLACED CONTINUOUSLY WITHIN ONE EIGHT-HOUR WORKING DAY. THE CONTRACTOR MAY SUBMIT, IN WRITING, AN ALTERNATE POUR SEQUENCE TO THE ENGINEER FOR REVIEW.

B. THE DECK CONCRETE SHALL BE RETARDED SUFFICIENTLY TO REMAIN PLASTIC UNTIL EACH POUR IS COMPLETE. THE QUANTITY OF RETARDANT SHALL BE APPROVED BY THE ENGINEER PRIOR TO PLACEMENT. ANY DEVIATIONS FROM THIS PROCEDURE MUST BE APPROVED BY THE VAOT STRUCTURES ENGINEER IN WRITING BEFORE THE POUR BEGINS.

NOTES:

1. THE QUANTITY OF ESI605 BARS SHOWN DOES NOT INCLUDE THE THREE (3) ADDITIONAL BARS REQUIRED BELOW THE BRIDGE RAIL POSTS. FOR DETAILS OF THE REQUIRED STIRRUP SPACING, SEE NETC 2-RAIL SHEET BR540. FOR LOCATIONS OF THE BRIDGE RAIL POSTS, SEE RAILING LAYOUT, BRIDGE SHEET BR515.
2. ALTERNATE 1.0 m OVERHANG BEYOND REFERENCE LINE ON EACH SIDE OF THE PIER FOR ESI901 AND ESI902 BARS.
3. THE TRANSVERSE REINFORCING STEEL SHALL BE PLACED RADIAL TO CURVATURE.

0 0.4 0.8 1.2 1.6 2.0m
SCALE 1:20

0 4 8 12 16 20m
SCALE 1:200

STATE OF VERMONT
AGENCY OF TRANSPORTATION

Town Of BENNINGTON	Bridge No. BI2
Highway No. VT RTE 279	Log Sta. / Surv. Sta.
VT ROUTE 279 OVER FURNACE BROOK	
DECK REINFORCEMENT	
Designed By J.J. MANUSE	Drawn By D.J. HENDERSON
Checked By B.J. CARLSON Date 04/07	Bridge Design Supervisor K.M. WOJTKOWSKI Date 04/07
PROJECT BENNINGTON	PROJECT NO. AC NH F019-1(53)
TVGA CAD Drawing No. FBDeck.dgn	Date 04/12/2007
Bridge Sheet No. BR514	Sheet 206 of 577

TVGA CONSULTANTS

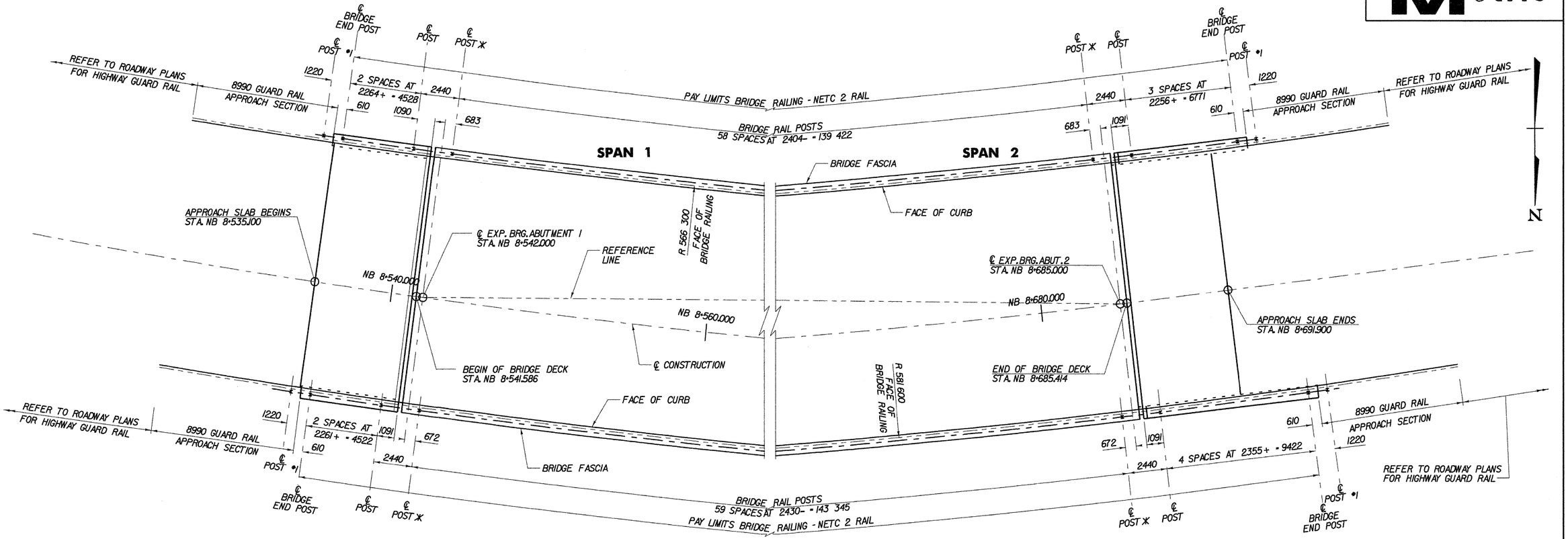

RAILING LAYOUT PLAN

SCALE 1:125

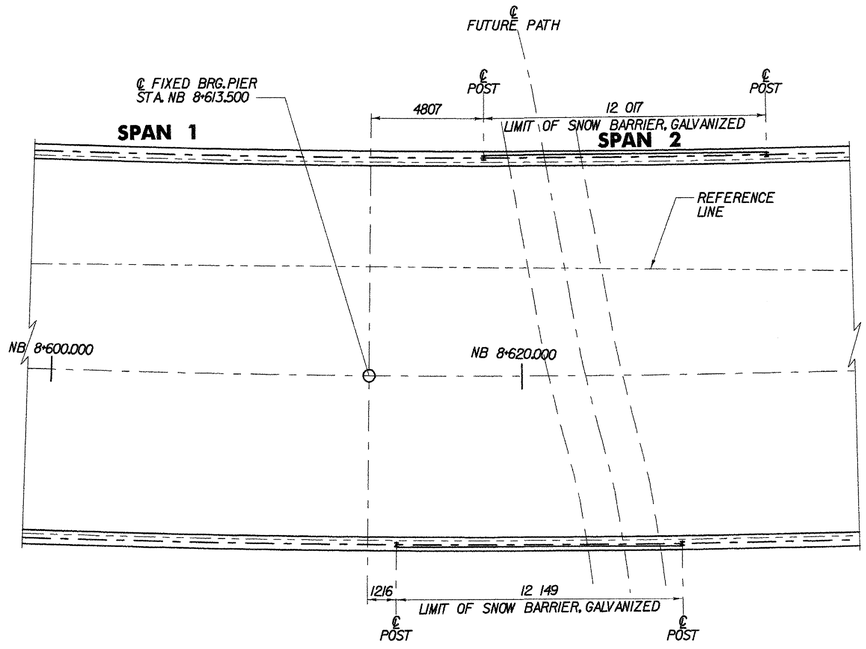

SNOW FENCE PLAN

SCALE 1:125

* RAIL EXPANSION JOINT OR SPLICE SHALL BE LOCATED 610 mm FROM CENTERLINE OF INDICATED POST, ON BRIDGE EXPANSION JOINT (ABUTMENT) SIDE OF POST.

0 2.5 5.0 7.5 10.0 12.5m

SCALE 1:125

SEE ALSO SHOP DRAWINGS

NOTES:

1. FOR NETC 2-RAIL BRIDGE RAILING DETAILS AND INFORMATION ABOUT THE NETC GUARD RAIL APPROACH SECTION, SEE SHEETS BR540 THROUGH BR543.
2. ITEM 616.28 "CAST-IN-PLACE CONCRETE CURB, TYPE B" SHALL BE PLACED ADJACENT TO EACH APPROACH SLAB QUADRANT. SEE GUARD RAIL APPROACH SECTION, NETC 2 RAIL, BRIDGE SHEETS BR541 AND BR542 FOR DETAILS.

TVGA CONSULTANTS

STATE OF VERMONT
AGENCY OF TRANSPORTATION

Town Of BENNINGTON	Bridge No. BI2
Highway No. VT RTE 279	Log Sta. / Surv. Sta.
VT ROUTE 279 OVER FURNACE BROOK	
RAILING LAYOUT	
Designed By J.T. DEPLANCHE	Drawn By D.S. URBINO
Checked By B.J. CARLSON Date 04/07	Bridge Design Supervisor K.M. WOJTKOWSKI Date 04/07
PROJECT BENNINGTON	PROJECT NO. AC NH F019-1(53)
TVGA CAD Drawing No. FBRail.dgn	Date 04/10/2007
Bridge Sheet No. BR515	Sheet 207 of 577

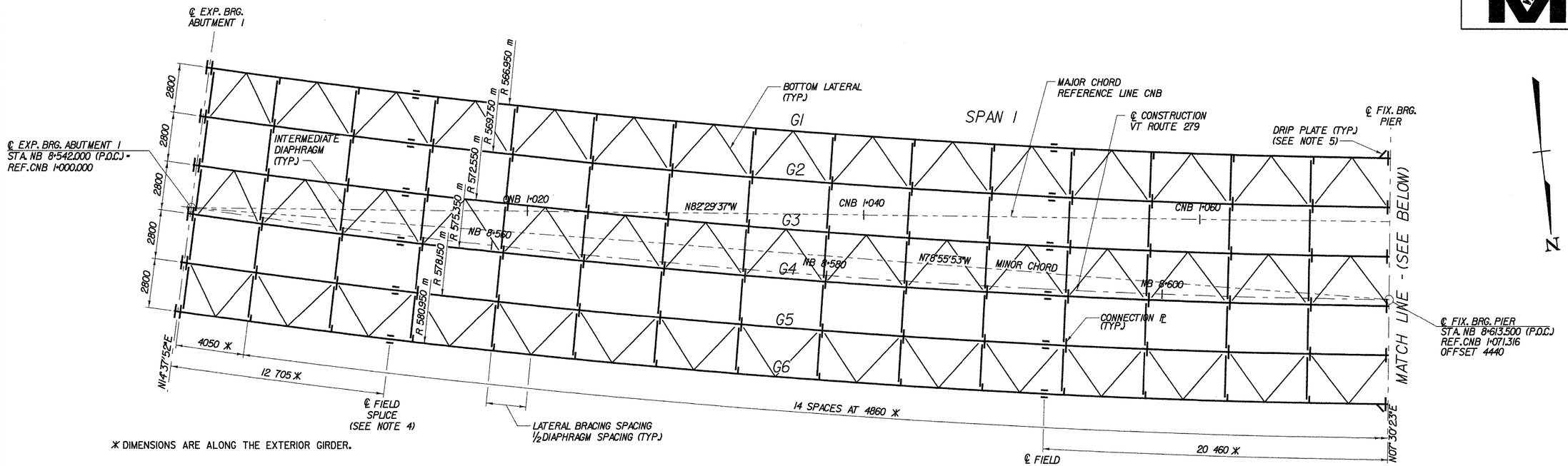

FRAMING PLAN

SCALE 1:125

SEE ALSO SHOP DRAWINGS

NOTES:

1. FOR ADDITIONAL HORIZONTAL AND VERTICAL CURVE DATA, SEE ROADWAY PLANS.
2. FOR LAYOUT DIAGRAM, SEE FRAMING PLAN (2 OF 2), BRIDGE SHEET BR517.
3. FOR PLATE GIRDER, DIAPHRAGM, AND BOTTOM LATERAL DETAILS, SEE STEEL DETAILS, BRIDGE SHEETS BR520 AND BR521.
4. FOR FIELD SPLICE DETAILS, SEE TYPICAL GIRDER SPLICE DETAILS, BRIDGE SHEET BR522.
5. FOR DRIP PLATE DETAILS, SEE STEEL DETAILS (1 OF 2), BRIDGE SHEET BR520.

TVGA CONSULTANTS

STATE OF VERMONT
AGENCY OF TRANSPORTATION

Town Of BENNINGTON	Bridge No. BI2
Highway No. VT RTE 279	Log Sta. / Surv. Sta.
VT ROUTE 279 OVER FURNACE BROOK	
FRAMING PLAN (1 OF 2)	
Designed By J.J. MANUSE	Drawn By D.S. URBINO
Checked By B.J. CARLSON Date 04/07	Bridge Design Supervisor K.M. WOJTKOWSKI Date 04/07
PROJECT BENNINGTON	PROJECT NO. AC NH F019-1(53)
TVGA CAD Drawing No. FBFrm.dgn	Date 04/10/2007
Bridge Sheet No. BR516	Sheet 208 of 577

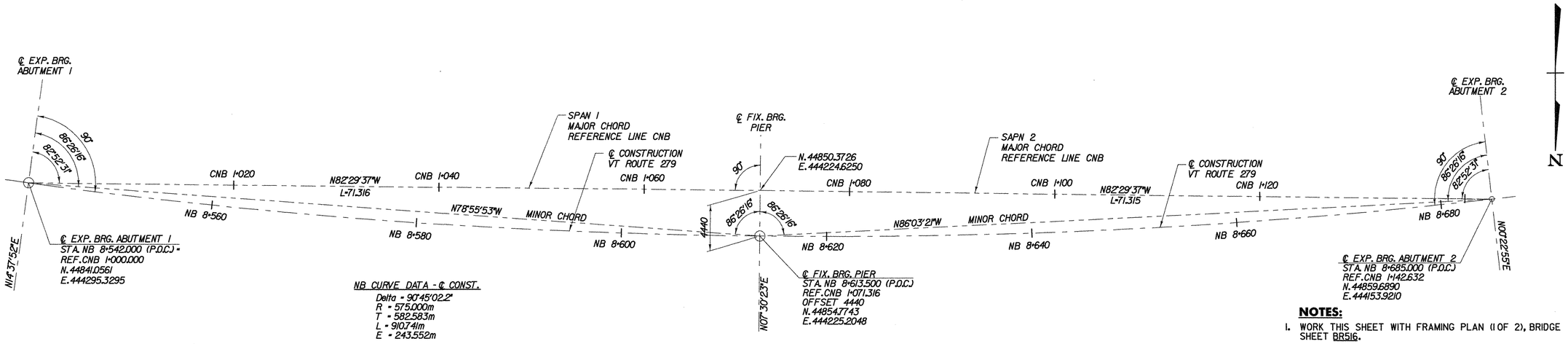

NOTES:

1. WORK THIS SHEET WITH FRAMING PLAN (1 OF 2), BRIDGE SHEET BR516.

LAYOUT DIAGRAM

SCALE 1:200

TVGA CONSULTANTS

STATE OF VERMONT AGENCY OF TRANSPORTATION	
Town Of BENNINGTON	Bridge No. B12
Highway No. VT RTE 279	Log Sta. Surv. Sta.
VT ROUTE 279 OVER FURNACE BROOK	
FRAMING PLAN (2 OF 2)	
Designed By J.J. MANUSE	Drawn By D.S. URBINO
Checked By B.J. CARLSON Date 04/07	Bridge Design Supervisor K.M. WOJTKOWSKI Date 04/07
PROJECT BENNINGTON	PROJECT NO. AC NH F019-1(53)
TVGA CAD Drawing No. FBFrm2.dgn	Date 04/11/2007
Bridge Sheet No. BR517	Sheet 209 of 577

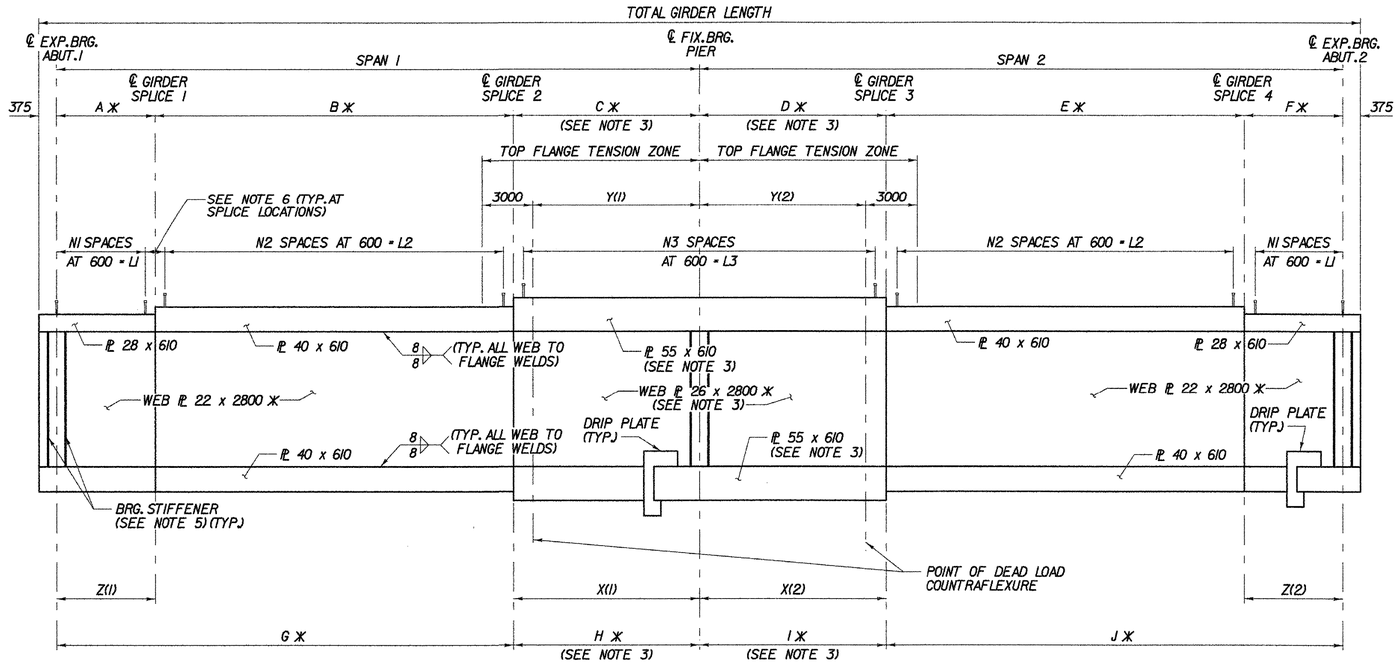

✱ MEMBERS INDICATED SHALL BE CHARPY V-NOTCH TESTED IN ACCORDANCE WITH SECTION 714.01 OF THE SPECIFICATIONS.

GIRDER ELEVATION

NOT TO SCALE

NOTES:

1. FOR FIELD SPLICE DETAILS, SEE TYPICAL GIRDER SPLICE DETAILS, BRIDGE SHEET BR522.
2. ALL STRUCTURAL STEEL WITHIN 5.60 m OF END OF THE GIRDER AT EXPANSION ENDS SHALL BE COATED WITH A PROTECTIVE PAINT SYSTEM, WITH THE FINAL COAT TO BE A DARK BROWN (COLOR CHIP #20059) TO BLEND WITH THE WEATHERING STEEL. AFTER THE FINAL COAT OF PAINT HAS CURED, A COAT OF GREASE RUSTPROOFING COMPOUND SHALL BE APPLIED TO ALL PAINTED SURFACES CONFORMING TO SECTION 513 OF THE SPECIFICATIONS. THE COST OF THE PAINT AND GREASE RUSTPROOFING SHALL BE PAID FOR UNDER ITEM 513.25, "STRUCTURAL PAINTING, SHOP APPLIED."
3. GIRDER FLANGES AND WEBS OVER PIER LOCATIONS SHALL BE AASHTO M270M/M270, GR485W STEEL.
4. UNLESS OTHERWISE NOTED, ALL STEEL IS AASHTO M270M/M270, GR345W.
5. FOR BEARING STIFFENER AND CONNECTION PLATE DETAILS, SEE STEEL DETAILS SHEET (1 OF 2), BRIDGE SHEET BR520.
6. NO STUDS SHALL BE INSTALLED ON OR WITHIN 75 OF GIRDER SPLICE PLATES.
7. STUD SPACING IS MEASURED FROM ABUTMENT OR PIER BEARING LOCATIONS TOWARD THE SPLICE LOCATIONS.
8. FOR DRIP PLATE DETAILS, SEE STEEL DETAILS SHEET (1 OF 2), BRIDGE SHEET BR520.
9. ALL AASHTO M270M/M270, GR345W STEEL WILL BE PAID UNDER ITEM 506.56 "STRUCTURAL STEEL, CURVED PLATE GIRDER (2800 WEB DEPTH)." ALL AASHTO M270M,M270, GR485W STEEL WILL BE PAID UNDER ITEM 900.635 "SPECIAL PROVISION (HIGH PERFORMANCE STEEL GRADE 485W)."

SHEAR STUD TABLE

GIRDER	STUD LOCATION 1 SPACES N1	STUD LOCATION 1 LENGTH (m) L1	STUD LOCATION 2 SPACES N2	STUD LOCATION 2 LENGTH (m) L2	STUD LOCATION 3 SPACES N3	STUD LOCATION 3 LENGTH (m) L3	TOTAL STUDS PER GIRDER
G1, G2, &G3	20	12.0	61	36.6	64	38.4	924
G4, G5, &G6	20	12.0	62	37.2	65	39.0	936

SPAN LENGTHS (m)

GIRDER	CURVE RADII	SPAN 1	SPAN 2	TOTAL
G1	566.950	70.499	70.499	141.748
G2	569.750	70.847	70.847	142.444
G3	572.550	71.195	71.195	143.141
G4	575.350	71.544	71.544	143.837
G5	578.150	71.892	71.892	144.534
G6	580.950	72.240	72.240	145.230

GIRDER SCHEDULE

FIELD SPLICE LOCATION TABLE (m)

GIRDER	X(1)	X(2)	Z(1)	Z(2)
G1	19.967	19.967	12.399	12.399
G2	20.065	20.065	12.460	12.460
G3	20.164	20.164	12.521	12.521
G4	20.263	20.263	12.583	12.583
G5	20.361	20.361	12.644	12.644
G6	20.460	20.460	12.705	12.705

GIRDER SCHEDULE

TOP FLANGE (m)

GIRDER	A	B	C	D	E	F
G1	12.399	38.133	19.967	19.967	38.133	12.399
G2	12.460	38.322	20.065	20.065	38.322	12.460
G3	12.521	38.510	20.164	20.164	38.510	12.521
G4	12.583	38.698	20.263	20.263	38.698	12.583
G5	12.644	38.887	20.361	20.361	38.887	12.644
G6	12.705	39.075	20.460	20.460	39.075	12.705

GIRDER SCHEDULE

BOTTOM FLANGE (m)

GIRDER	G	H	I	J
G1	50.532	19.967	19.967	50.532
G2	50.782	20.065	20.065	50.782
G3	51.031	20.164	20.164	51.031
G4	51.281	20.263	20.263	51.281
G5	51.531	20.361	20.361	51.531
G6	51.780	20.460	20.460	51.780

GIRDER SCHEDULE

POINT OF DEAD LOAD COUNTRAFLEXURE (m)

GIRDER	Y(1)	Y(2)
G1	19.069	19.071
G2	19.357	19.353
G3	19.545	19.545
G4	19.704	19.706
G5	19.942	19.938
G6	20.260	20.270

SEE ALSO SHOP DRAWINGS

TVGA CONSULTANTS

STATE OF VERMONT
AGENCY OF TRANSPORTATION

Town Of BENNINGTON	Bridge No. BI2
Highway No. VT RTE 279	Log Sta. / Surv. Sta.
VT ROUTE 279 OVER FURNACE BROOK	
GIRDER ELEVATION	
Designed By J.J. MANUSE	Drawn By D.J. HENDERSON
Checked By B.J. CARLSON Date 04/07	Bridge Design Supervisor K.M. WOJTKOWSKI Date 04/07
PROJECT BENNINGTON	PROJECT NO. AC NH F019-1(53)
TVGA CAD Drawing No. FBGrd.dgn	Date 04/10/2007
Bridge Sheet No. BR518	Sheet 210 of 577

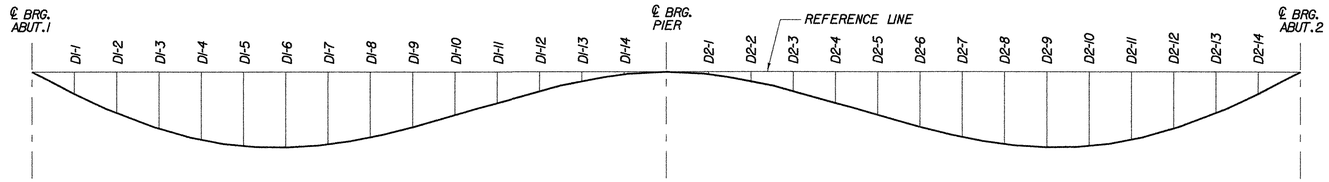

DEAD LOAD DEFLECTION DIAGRAM

NOT TO SCALE

DL DEFLECTION (mm)

LOCATION	℄ ABUT. 1	DI-1	DI-2	DI-3	DI-4	DI-5	DI-6	DI-7	DI-8	DI-9	DI-10	DI-11	DI-12	DI-13	DI-14	℄ PIER	D2-1	D2-2	D2-3	D2-4	D2-5	D2-6	D2-7	D2-8	D2-9	D2-10	D2-11	D2-12	D2-13	D2-14	℄ ABUT. 2
G1	0	32	66	95	118	132	140	137	129	112	91	69	44	22	7	0	7	21	44	69	91	112	129	137	140	132	118	95	66	32	0
G2	0	35	69	102	126	140	148	147	137	119	97	72	45	23	7	0	7	22	45	72	97	119	137	147	148	140	126	102	70	35	0
G3	0	37	74	108	132	149	156	155	144	125	102	75	47	23	7	0	7	23	47	75	101	125	144	155	156	149	132	108	74	37	0
G4	0	37	78	113	141	158	166	164	153	133	107	80	50	24	7	0	7	24	50	80	107	133	153	164	166	158	141	114	78	39	0
G5	0	40	83	120	149	167	176	173	161	140	113	83	53	26	9	0	7	26	53	83	112	140	160	172	176	167	149	120	83	41	0
G6	0	44	89	128	158	178	186	183	170	148	119	88	56	27	9	0	8	26	56	88	119	148	170	183	186	178	158	128	89	44	0

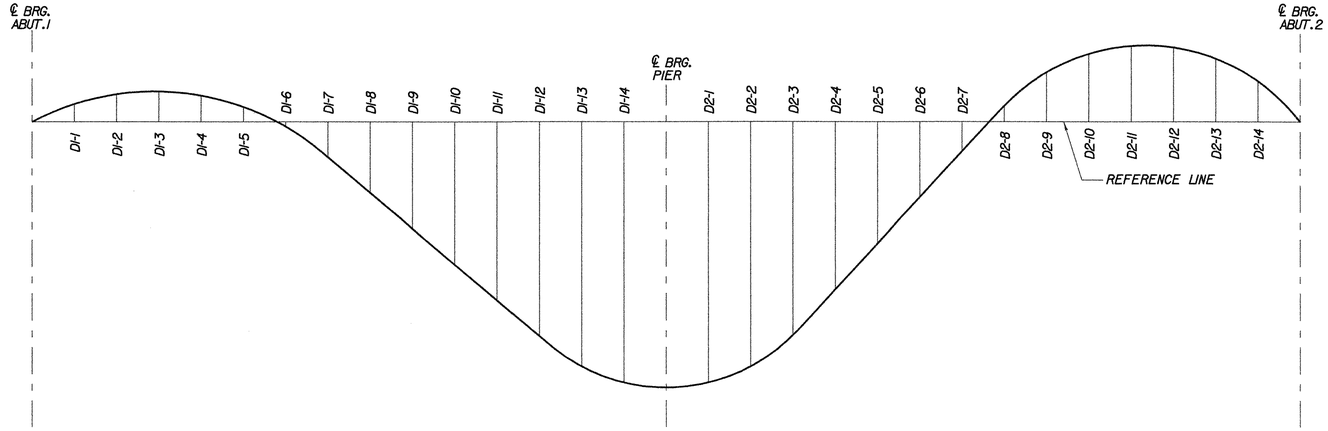

CAMBER DIAGRAM

NOT TO SCALE

TOTAL CAMBER (mm)

LOCATION	℄ ABUT. 1	DI-1	DI-2	DI-3	DI-4	DI-5	DI-6	DI-7	DI-8	DI-9	DI-10	DI-11	DI-12	DI-13	DI-14	℄ PIER	D2-1	D2-2	D2-3	D2-4	D2-5	D2-6	D2-7	D2-8	D2-9	D2-10	D2-11	D2-12	D2-13	D2-14	℄ ABUT. 2
G1	0	-2	-6	-11	-19	-33	-51	-76	-104	-137	-172	-204	-237	-264	-281	-286	-275	-254	-221	-183	-145	-106	-67	-34	-6	11	21	23	19	10	0
G2	0	1	-3	-4	-11	-25	-43	-66	-96	-130	-166	-201	-236	-263	-281	-286	-275	-253	-220	-180	-139	-99	-59	-24	2	19	29	30	23	13	0
G3	0	3	2	2	-5	-16	-35	-58	-89	-124	-161	-198	-234	-263	-281	-286	-275	-252	-218	-177	-135	-93	-52	-16	10	28	35	36	27	15	0
G4	0	3	6	7	4	-7	-25	-49	-80	-116	-156	-193	-231	-262	-281	-286	-275	-251	-215	-172	-129	-85	-43	-7	20	37	44	42	31	17	0
G5	0	6	11	14	12	2	-15	-40	-72	-109	-150	-190	-228	-260	-279	-286	-275	-249	-212	-169	-124	-78	-36	1	30	46	52	48	36	19	0
G6	0	10	17	22	21	13	-5	-30	-63	-101	-144	-185	-225	-259	-279	-286	-274	-249	-209	-164	-117	-70	-26	12	40	57	61	56	42	22	0

NOTES:

1. DEAD LOAD DEFLECTIONS AS SHOWN INCLUDE STEEL DEAD LOAD, CONCRETE DEAD LOAD, AND SUPERIMPOSED DEAD LOAD.
2. THE TOTAL CAMBER IS THE SUM OF THE SAG VERTICAL CURVE, STEEL DEAD LOAD, CONCRETE DEAD LOAD, AND SUPERIMPOSED DEAD LOAD.
3. RESIDUAL CAMBER NOT INCLUDED IN TOTAL CALCULATED CAMBER DUE TO THE SAG VERTICAL CURVE GEOMETRY OF THE FINISHED ROADWAY GRADE.
4. ALL DEFLECTION AND CAMBER OFFSETS ARE MEASURED VERTICALLY FROM THE TOP OF THE WEB TO A STRAIGHT REFERENCE LINE DRAWN FROM THE INTERSECTION OF THE TOP OF THE WEB AND CENTERLINE OF BEARINGS AT ABUTMENT #1 TO THE CORRESPONDING INTERSECTION AT ABUTMENT #2.
5. CAMBER AND DEFLECTION MEASUREMENTS ARE GIVEN AT THE DIAPHRAGM LOCATIONS. FOR DIAPHRAGM SPACING, SEE FRAMING PLAN (1 OF 2), BRIDGE SHEET BR516.

TVGA CONSULTANTS

STATE OF VERMONT
AGENCY OF TRANSPORTATION

Town Of BENNINGTON	Bridge No. BI2
Highway No. VT RTE 279	Log Sta. / Surv. Sta.
VT ROUTE 279 OVER FURNACE BROOK	
GIRDER TABLES	
Designed By J.J. MANUSE	Drawn By D.J. HENDERSON
Checked By B.J. CARLSON Date 04/07	Bridge Design Supervisor K.M. WOJTKOWSKI Date 04/07
PROJECT BENNINGTON	PROJECT NO. AC NH F019-1(53)
TVGA CAD Drawing No. FBGrd2.dgn	Date 04/10/2007
Bridge Sheet No. BR519	Sheet 211 of 577

Metric

NOTES:

1. TOP AND BOTTOM EDGES OF BEARING STIFFENERS SHALL BE CUT AT RIGHT ANGLES TO THE WEB.
2. WELDS SHALL BE TERMINATED 6 MINIMUM AND 13 MAXIMUM BEFORE THE EDGES OF THE GUSSET PLATES.

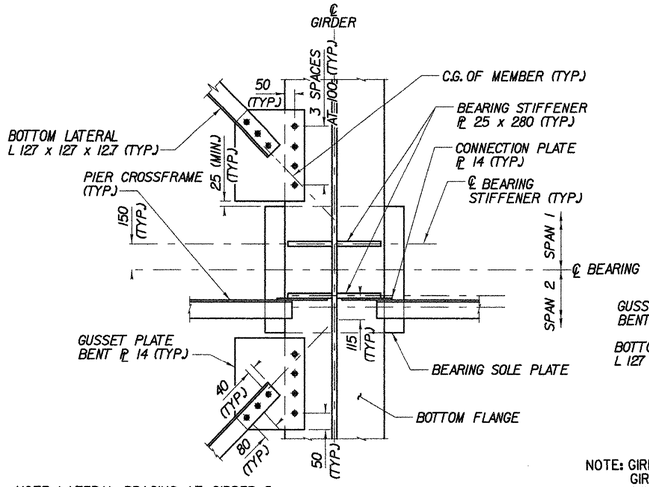

NOTE: LATERAL BRACING AT GIRDER 5 SHOWN. LATERAL BRACING AT GIRDERS 2 AND 4 CONNECTED OPPOSITE HAND.

PLAN AT PIER
NOT TO SCALE

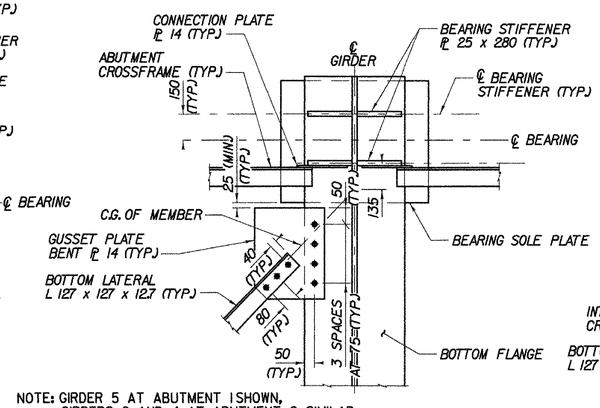

NOTE: GIRDER 5 AT ABUTMENT 1 SHOWN. GIRDERS 2 AND 4 AT ABUTMENT 2 SIMILAR. GIRDERS 2 AND 4 AT ABUTMENT 1, AND GIRDER 5 AT ABUTMENT 2 OPPOSITE HAND.

PLAN AT ABUTMENTS
NOT TO SCALE

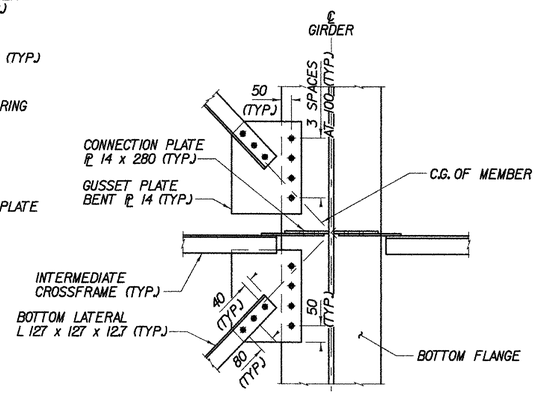

PLAN AT INTERMEDIATE CROSSFRAMES
NOT TO SCALE

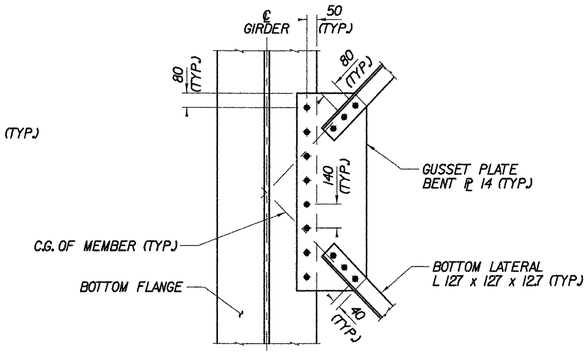

PLAN AT LATERAL BRACING CONNECTIONS BETWEEN CROSSFRAMES
NOT TO SCALE

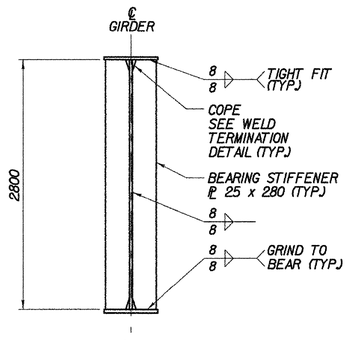

ABUTMENT BEARING STIFFENER
NOT TO SCALE

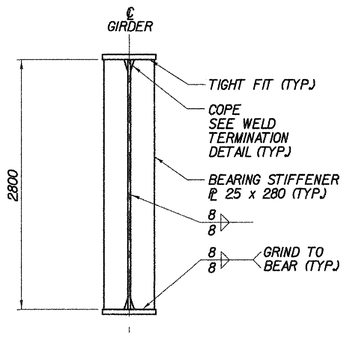

PIER BEARING STIFFENER
NOT TO SCALE

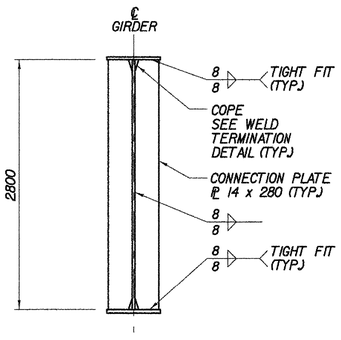

INTERMEDIATE CONNECTION PLATE
NOT TO SCALE

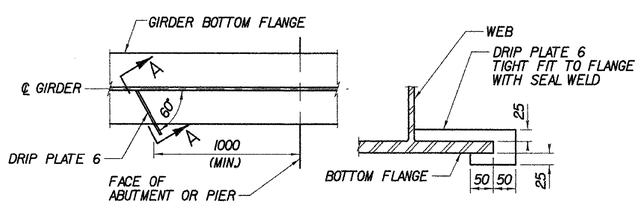

PLAN SECTION A-A

DRIP PLATE DETAIL
NOT TO SCALE

NOTE: DRIP PLATES SHALL BE PLACED ON OUTSIDE EDGE OF FASCIA GIRDER ON THE HIGH SIDE OF ALL PIERS AND LOW ABUTMENTS OR AS INDICATED ON PROJECT PLANS.

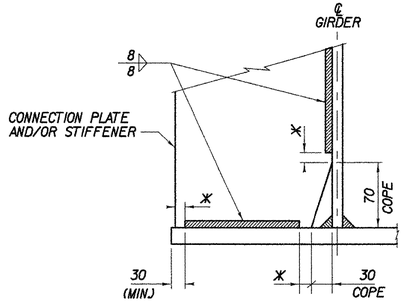

TYPICAL WELD TERMINATION AND COPING DETAIL
NOT TO SCALE

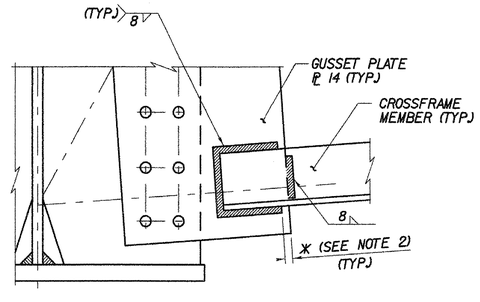

TYPICAL WELD AT CROSS FRAME / GUSSET PLATE
NOT TO SCALE

* NO WELD PLACED FOR 10 (MIN.) 20 (MAX.) (EXCEPT MUST MAINTAIN 30 (MIN.) FROM EDGE OF FLANGE)

SEE ALSO SHOP DRAWINGS

TVGA CONSULTANTS

STATE OF VERMONT
AGENCY OF TRANSPORTATION

Town Of BENNINGTON	Bridge No. BI2
Highway No. VT RTE 279	Log Sta. / Surv. Sta.
VT ROUTE 279 OVER FURNACE BROOK	
STEEL DETAILS (1 OF 2)	
Designed By J.J. MANUSE	Drawn By D.J. HENDERSON
Checked By B.J. CARLSON Date 04/07	Bridge Design Supervisor K.M. WOJTKOWSKI Date 04/07
PROJECT BENNINGTON	PROJECT NO. AC NH F019-1(53)
TVGA CAD Drawing No. FBSteelDet2.dgn	Date 04/10/2007
Bridge Sheet No. BR520	Sheet 212 of 577

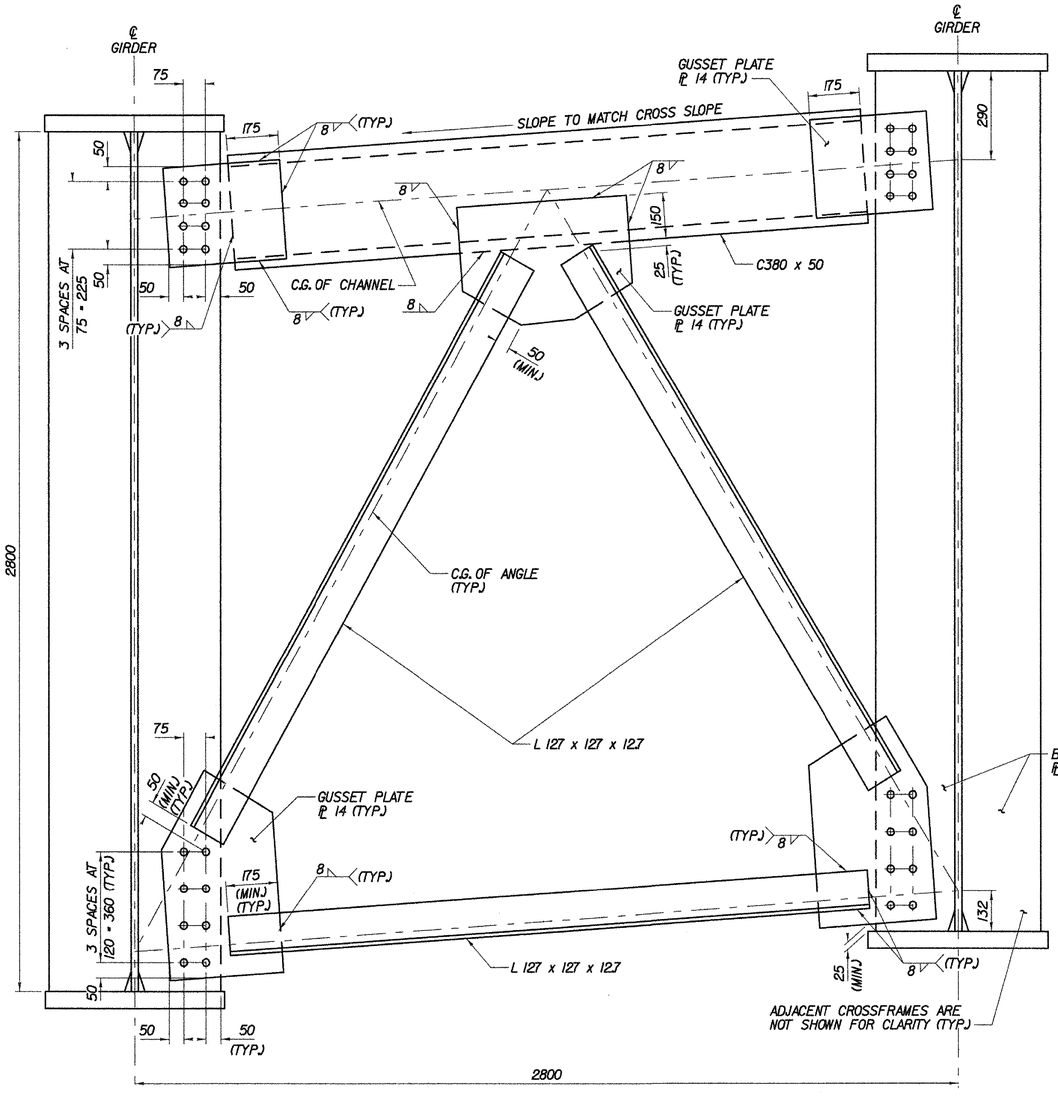

PIER / ABUTMENT CROSS FRAME

SCALE 1:10

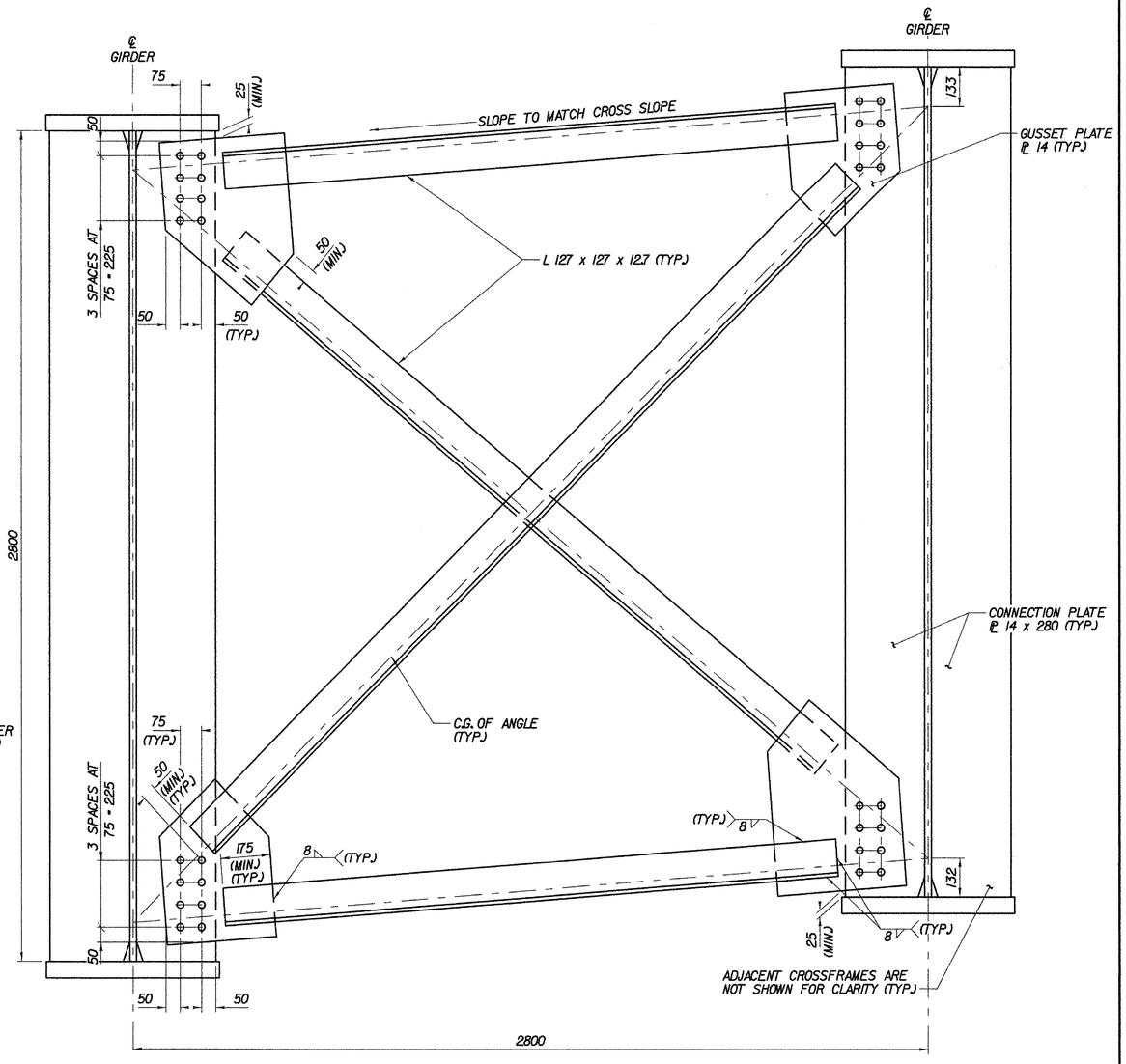

INTERMEDIATE CROSS FRAME

SCALE 1:10

0 0.2 0.4 0.6 0.8 1.0m

SCALE 1:10

SEE ALSO SHOP DRAWINGS

NOTES:

1. THE CONTRACTOR MAY PLACE CROSS FRAMES ON EITHER SIDE OF THE BEARING STIFFENERS OR CONNECTION PLATES AS NECESSARY TO CORRECT ALIGNMENT PROVIDED THERE WILL BE NO INTERFERENCE WITH OTHER STRUCTURAL DETAILS.
2. ALL CONNECTIONS SHALL BE MADE USING 22 DIAMETER AASHTO M164M BOLTS. ALL HOLES IN THE CONNECTION PLATES SHALL BE 24 DIAMETER.
3. BOTTOM LATERAL BRACING NOT SHOWN FOR CLARITY.
4. ALL CROSS FRAME MEMBERS INCLUDING GUSSET PLATES REQUIRE CHARPY V-NOTCH TESTING IN ACCORDANCE WITH SECTION 714.01 OF THE SPECIFICATIONS.

TVGA CONSULTANTS

STATE OF VERMONT
AGENCY OF TRANSPORTATION

Town Of BENNINGTON	Bridge No. BI2
Highway No. VT RTE 279	Log Sta. / Surv. Sta.
VT ROUTE 279 OVER FURNACE BROOK	
STEEL DETAILS (SHEET 2 OF 2)	
Designed By J.J. MANUSE	Drawn By D.J. HENDERSON
Checked By B.J. CARLSON Date 04/07	Bridge Design Supervisor K.M. WOJTKOWSKI Date 04/07
PROJECT BENNINGTON	PROJECT NO. AC NH F019-1(53)
TVGA CAD Drawing No. FBSteelDet.dgn	Date 04/10/2007
Bridge Sheet No. BR521	Sheet 213 of 577

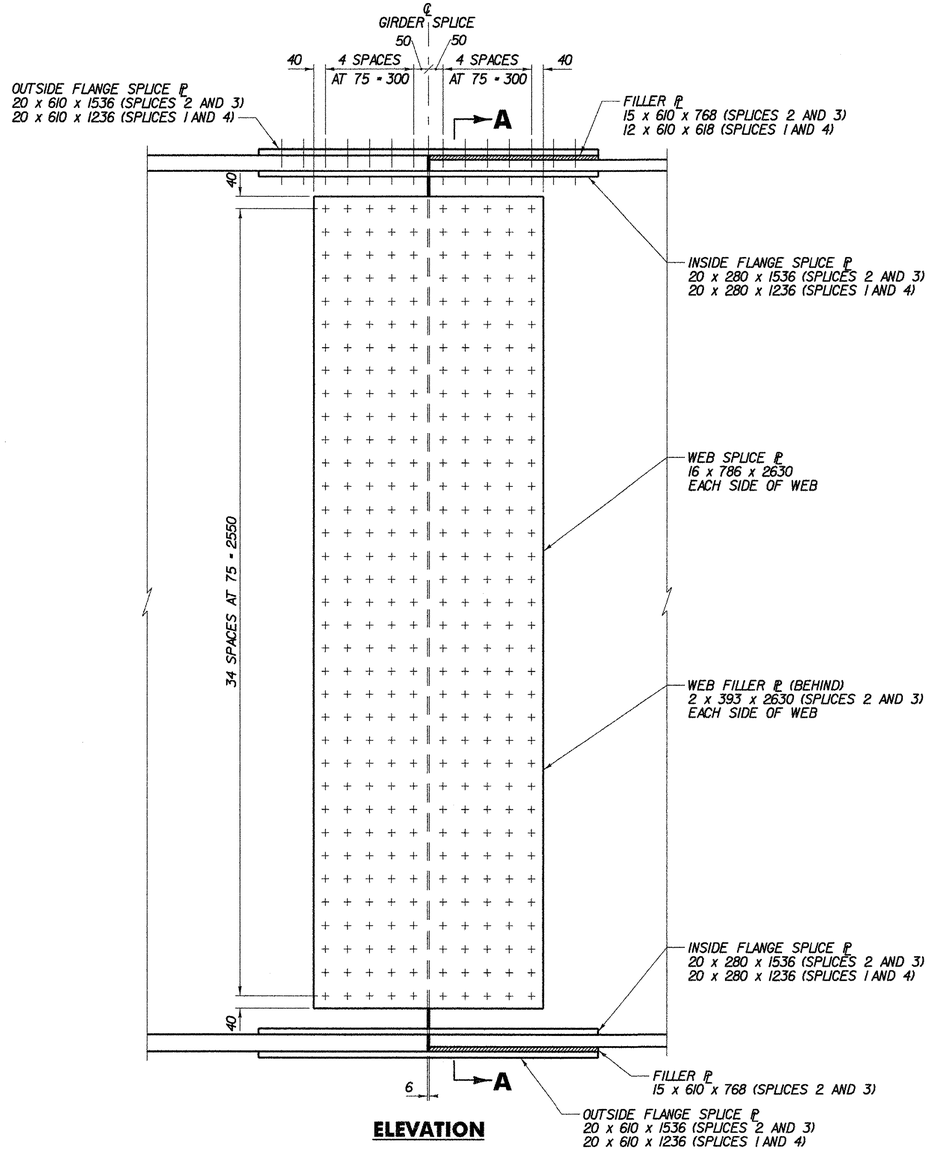

ELEVATION

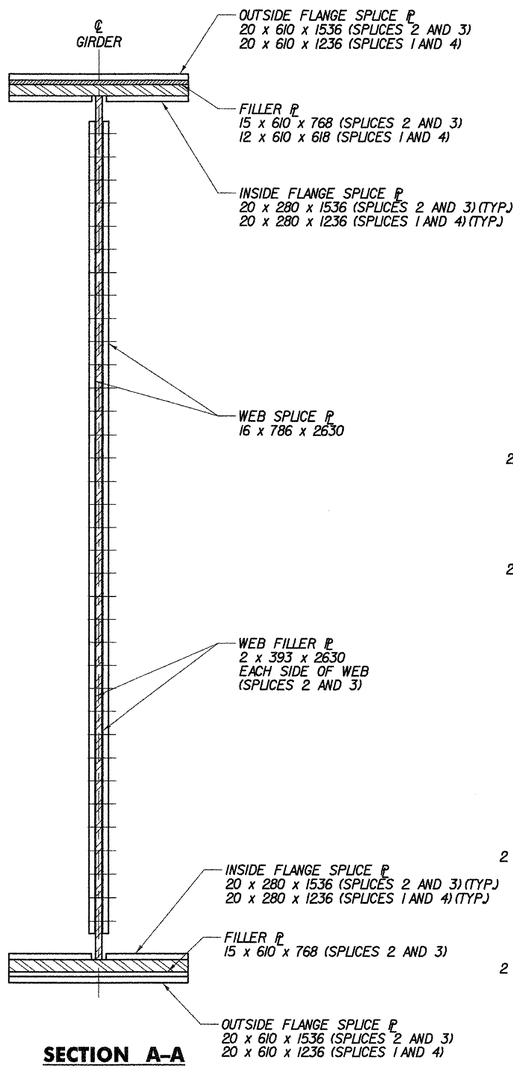

SECTION A-A

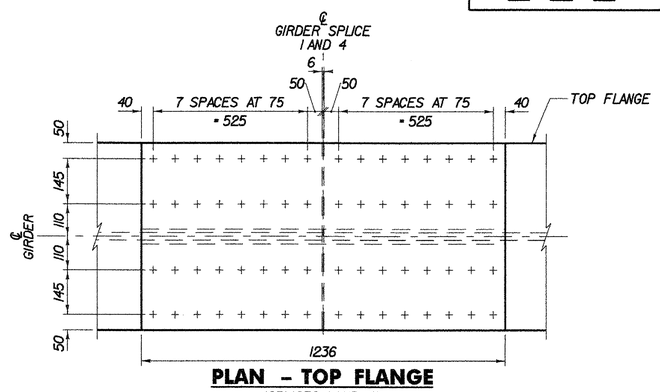

PLAN - TOP FLANGE
(SPLICES 1 AND 4)

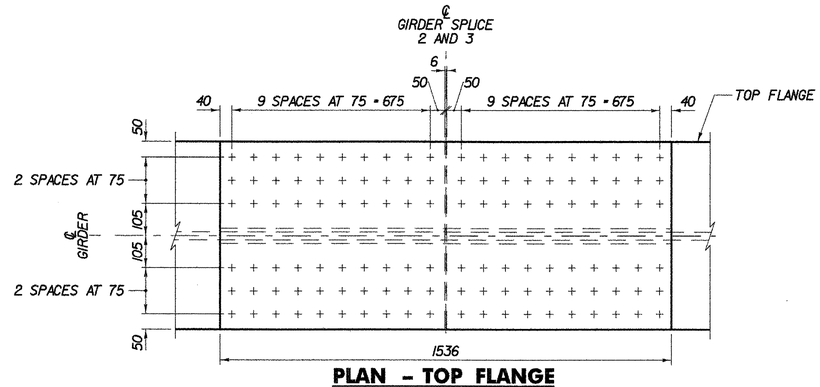

PLAN - TOP FLANGE
(SPLICES 2 AND 3)

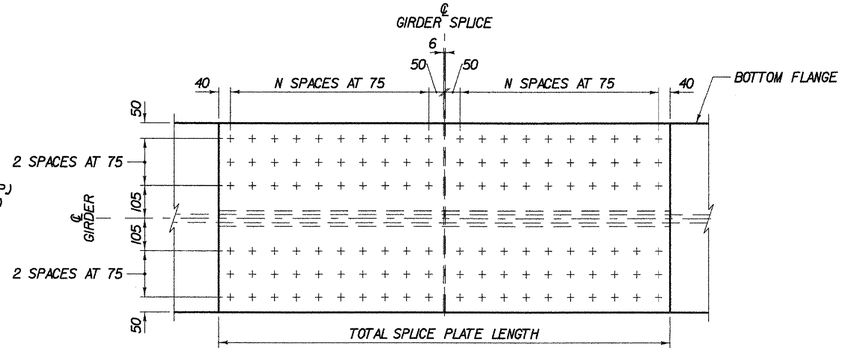

PLAN - BOTTOM FLANGE

NOTES:

1. BOLTS SHALL BE 22 DIAMETER AASHTO M164M TYPE 3 HIGH STRENGTH BOLTS IN 24 DIAMETER HOLES. NUTS AND WASHERS SHALL ALSO CONFORM TO AASHTO M164M. BOLT LENGTHS SHALL BE SUCH THAT THE BOLT THREADS ARE EXCLUDED FROM THE SHEAR PLANE.
2. ALL FIELD SPLICE CONNECTIONS SHALL BE "SLIP CRITICAL" WITH A CLASS B SURFACE (BLAST CLEAN SURFACE) FOR THE CONTACT SURFACES OF BOLTED PARTS.
3. STEEL FOR SPLICE AND FILLER PLATES SHALL BE AASHTO M270M/M270.
4. HOLES FOR FIELD SPLICES SHALL BE DRILLED IN THE SHOP WHILE GIRDERS ARE ASSEMBLED TO FIT BEARING ELEVATIONS.
5. ALL FLANGE AND WEB SPLICE PLATES SHALL BE CHARPY V-NOTCH TESTED IN ACCORDANCE WITH SECTION 714.01 OF THE SPECIFICATIONS.

FIELD SPLICE DETAILS

NOT TO SCALE

BOTTOM FLANGE SPLICE PLATE TABLE

SPLICE LOCATION	NUMBER OF BOLT SPACES -N-	TOTAL SPLICE PLATE LENGTH
1 AND 4	7	1236
2 AND 3	9	1536

SEE ALSO SHOP DRAWINGS

TVGA CONSULTANTS

STATE OF VERMONT
AGENCY OF TRANSPORTATION

Town Of BENNINGTON	Bridge No. BI2
Highway No. VT RTE 279	Log Sta. / Surv. Sta.
VT ROUTE 279 OVER FURNACE BROOK	
SPLICE DETAILS	
Designed By J.J. MANUSE	Drawn By D.S. URBINO
Checked By B.J. CARLSON Date 04/07	Bridge Design Supervisor K.M. WOJTKOWSKI Date 04/07
PROJECT BENNINGTON	PROJECT NO. AC NH F019-1(53)
TVGA CAD Drawing No. FBSpliceDet.dgn	Date 04/10/2007
Bridge Sheet No. BR522	Sheet 214 of 577

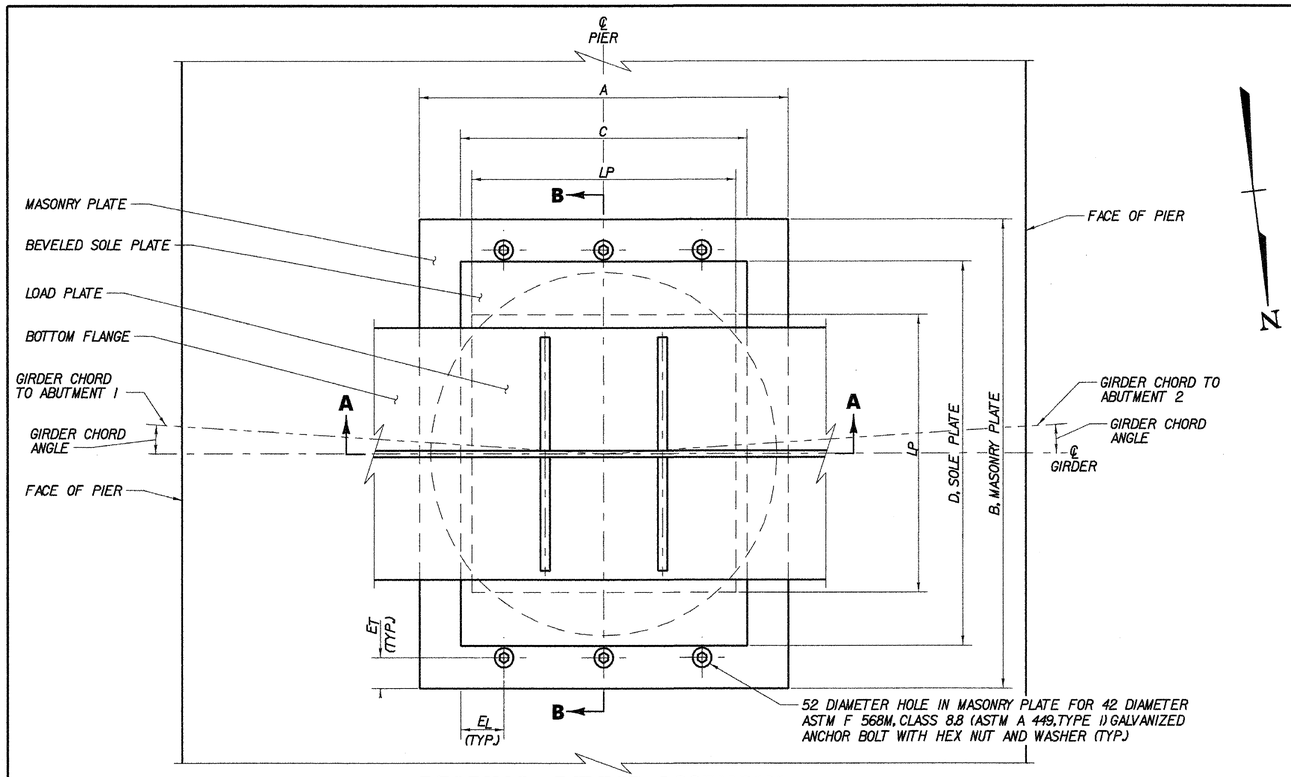

BEARING DEVICE ASSEMBLY, HIGH LOAD MULTI-ROTATIONAL (FIXED)

NOT TO SCALE

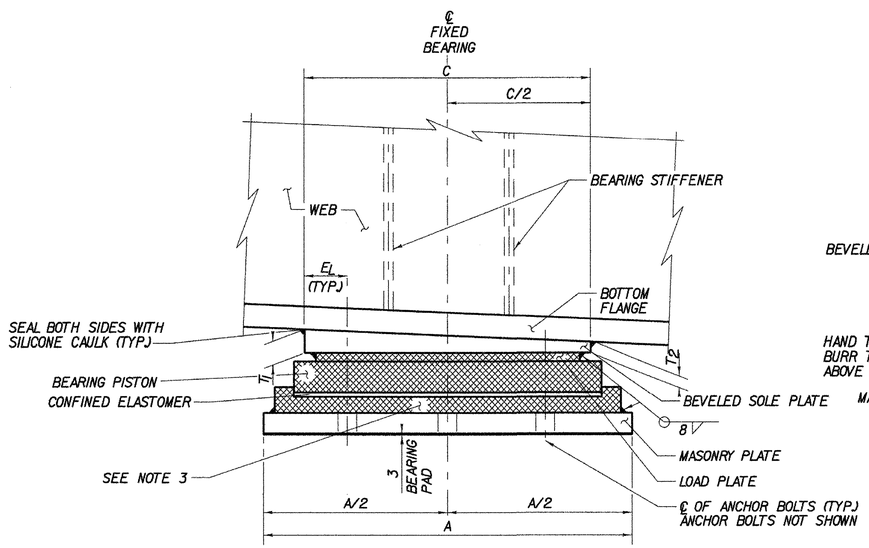

SECTION A–A

NOT TO SCALE

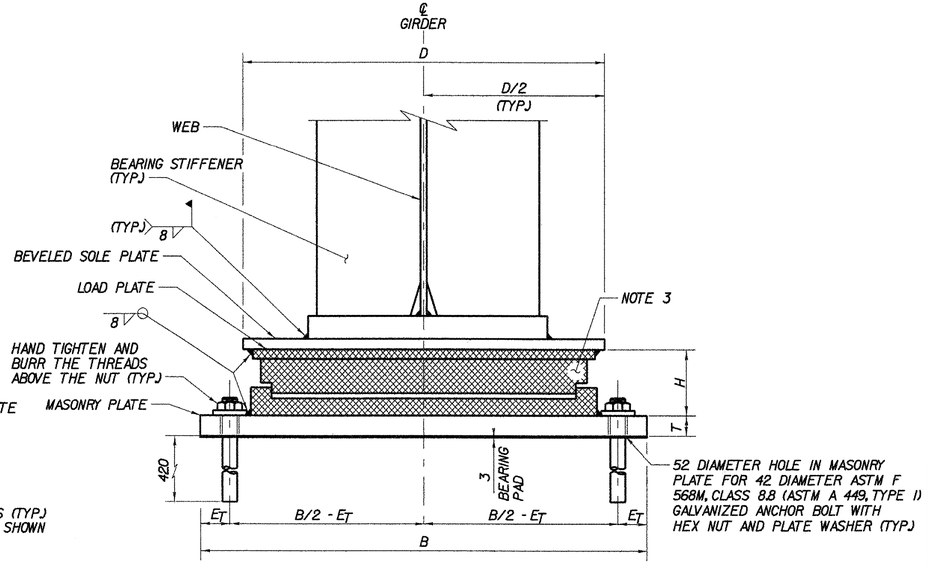

SECTION B–B

NOT TO SCALE

FIXED BEARING GEOMETRY

BRIDGE NO.	SUB-STRUCTURE NO.	LOCATION	QTY. REQUIRED	MAX. VERT. LOAD (KN)	MAX. HORZ. LOAD (KN)	DL+SDL (KN)	LL WITH I (KN)	ONE WAY TRANSVERSE MOVEMENT	ROTATION CAPACITY (RADIANS)	MASONRY PL			SOLE PL					BRG.	ANCHOR BOLTS		
										A	B	T	C	D	T_1	T_2	H	DIA.	E_T	E_L
VT279 NB	PIER	G1, G2, G5, G6	4	4893	930	3404	1107	5	0.012	800	1100	65	620	900	42	25	139	42	75	110
VT279 NB	PIER	G3, G4	2	4893	930	3404	1107	---	0.012	800	1100	65	620	900	42	25	139	42	75	110

NOTES:

1. BEARINGS SHALL CONFORM TO APPLICABLE SUBSECTIONS OF THE STANDARD SPECIFICATIONS SECTIONS 531 AND 731.
2. BEARINGS SHALL BE PAID FOR UNDER ITEM 531.15 - BEARING DEVICE ASSEMBLY, HIGH LOAD MULTI-ROTATIONAL.
3. THE CROSS-HATCHED COMPONENTS OF THE BEARING ARE SHOWN FOR REPRESENTATIVE PURPOSES ONLY. THE ACTUAL CONFIGURATION OF THE COMPONENTS WILL BE DEPENDENT UPON THE SPECIFIC BEARING, CONFORMING TO THE ITEM'S SPECIFICATION.
4. FOR ANCHOR BOLT LAYOUT AND GIRDER CHORD ANGLES, SEE PIER AND ABUTMENT MASONRY DRAWINGS, BRIDGE SHEETS BR530 THROUGH BR537.
5. THE BEARING DEVICES SUPPLIED SHALL BE CAPABLE OF TRANSMITTING THE LOADS AND MOVEMENT SHOWN ON THESE PLANS.
6. THE DIMENSION "H" IN THE BEARING TABLE REPRESENTS THE ASSUMED TOTAL HEIGHT OF BEARING MECHANISM BETWEEN THE SOLE PLATE AND MASONRY PLATE USED BY THE DESIGNER TO ESTABLISH THE BRIDGE SEAT AND PIER ELEVATIONS. IF AN ALTERNATE BEARING CONFIGURATION IS USED, BRIDGE SEAT AND PIER ELEVATIONS SHALL BE ADJUSTED ACCORDINGLY, AS APPROVED BY THE ENGINEER.
7. ALL STEEL FOR THE SOLE AND BASE PLATES SHALL CONFORM TO AASHTO M 270M/M 270, GRADE 250.
8. ANCHOR BOLTS, NUTS, AND WASHERS SHALL CONFORM TO SUBSECTION 714.08 OF THE SPECIFICATIONS.

SEE ALSO SHOP DRAWINGS

TVGA CONSULTANTS

STATE OF VERMONT
AGENCY OF TRANSPORTATION

Town Of BENNINGTON	Bridge No. BI2
Highway No. VT RTE 279	Log Sta. / Surv. Sta.
VT ROUTE 279 OVER FURNACE BROOK	
FIXED BEARING DETAILS	
Designed By M.D. BOWER	Drawn By D.J. HENDERSON
Checked By B.J. CARLSON Date 04/07	Bridge Design Supervisor K.M. WOJTKOWSKI Date 04/07
PROJECT BENNINGTON	PROJECT NO. AC NH F019-1(53)
TVGA CAD Drawing No. FBFIxBrg.dgn	Date 04/16/2007
Bridge Sheet No. BR523	Sheet 215 of 577

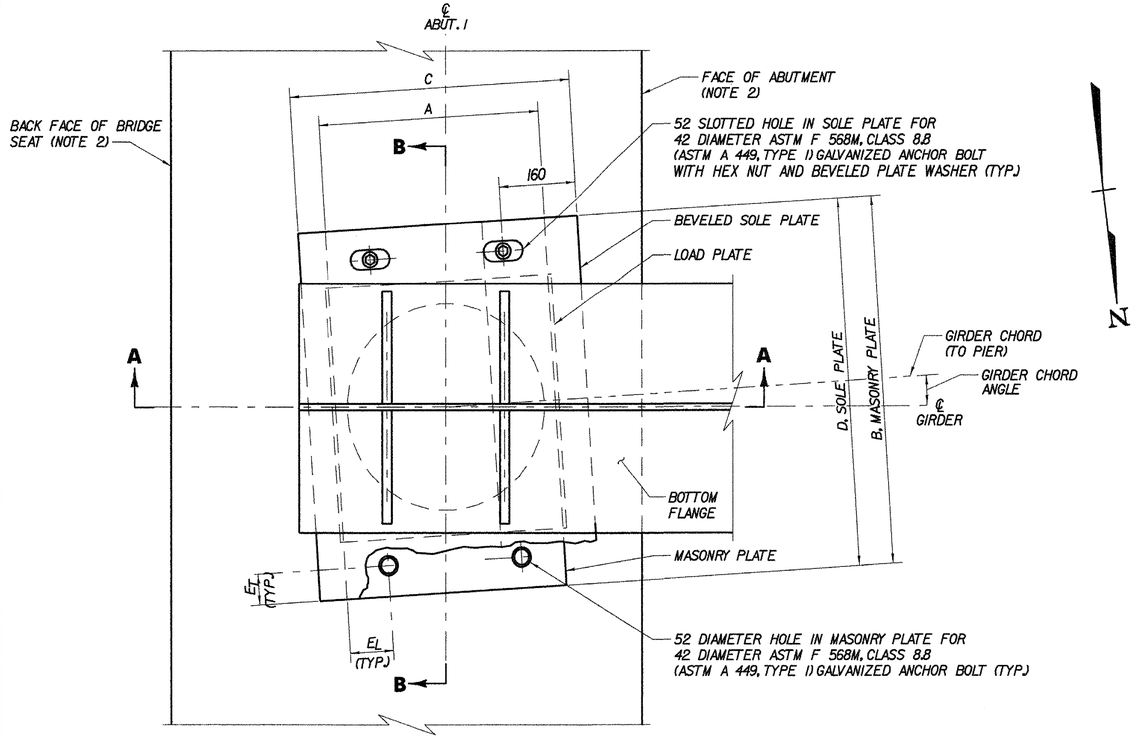

BEARING DEVICE ASSEMBLY, HIGH LOAD MULTI-ROTATIONAL (EXPANSION)

NOT TO SCALE

NOTES:

1. REFER TO SHEET BR523 FOR BEARING NOTES.
2. 'M' IS THE DISTANCE FROM THE CENTERLINE OF BEARINGS TO THE FRONT EDGE OF THE SOLE PLATE WITH BEAM AND DIAPHRAGM LOADS ON THE BEARINGS. 'N' IS THE DISTANCE FROM THE CENTERLINE OF BEARINGS TO THE FRONT EDGE OF THE SOLE PLATE WITH ALL DEAD AND SUPERIMPOSED DEAD LOADS ON THE BEARINGS.
3. ABUTMENT 1 SHOWN, ABUTMENT 2 IS SIMILAR.

LEGEND

- ○ FIXED
- □ FIXED WITH TRANSVERSE MOVEMENT
- ▷ GUIDED EXPANSION

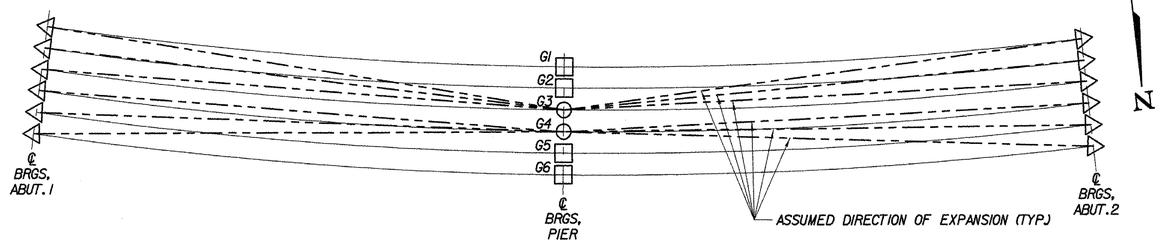

BEARING ORIENTATION

NOT TO SCALE

SEE ALSO SHOP DRAWINGS

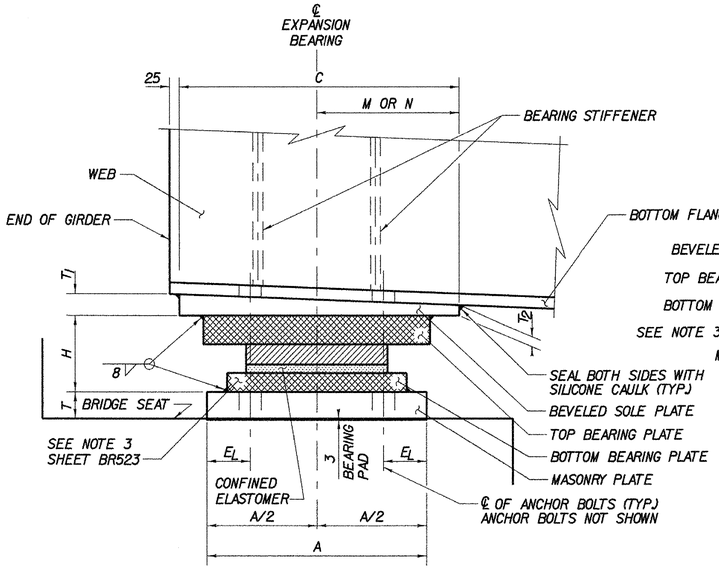

SECTION A-A

NOT TO SCALE

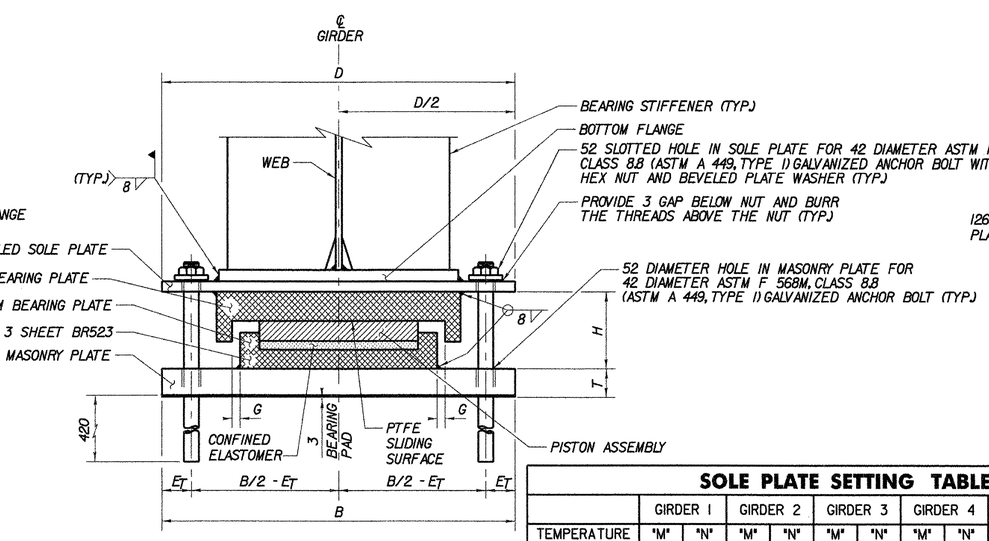

SECTION B-B

NOT TO SCALE

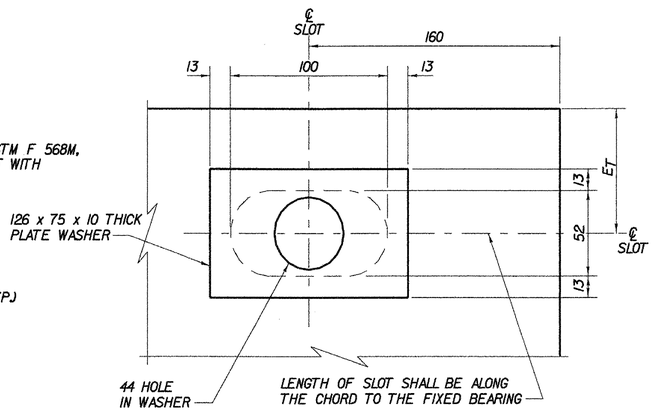

SLOTTED HOLE DETAIL

NOT TO SCALE

SOLE PLATE SETTING TABLE

	GIRDER 1		GIRDER 2		GIRDER 3		GIRDER 4		GIRDER 5		GIRDER 6	
TEMPERATURE	'M'	'N'	'M'	'N'	'M'	'N'	'M'	'N'	'M'	'N'	'M'	'N'
-30° C	358	341	358	341	359	342	360	342	362	342	363	342
-20° C	349	333	350	333	351	333	352	333	253	334	354	334
-10° C	341	325	342	325	343	325	344	325	345	325	346	325
0° C	333	317	334	317	334	317	335	317	336	317	338	317
10° C	325	308	325	308	326	308	327	308	328	308	329	308
20° C	316	300	317	300	318	300	319	300	320	300	321	300
30° C	308	292	309	292	309	292	310	292	311	292	312	292
40° C	300	284	300	383	301	283	302	283	303	283	304	283

EXPANSION BEARING GEOMETRY

BRIDGE NO.	SUB-STRUCTURE NO.	LOCATION	QTY. REQUIRED	MAX. VERT. LOAD (KN)	MAX. HORZ. LOAD (KN)	DL+SDL (KN)	LL WITH I (KN)	ONE WAY LONG MOVEMENT	GUIDE CLEARANCE, G	ROTATION CAPACITY (RADIANS)	MASONRY PL			SOLE PL				BRG.	ANCHOR BOLTS		
											A	B	T	C	D	T_1	T_2	H	DIA.	E_T	E_L
VT279 NB	ABUT. 1	ALL	6	1557	296	978	530	46	5	0.013	500	900	70	600	900	47	25	162	42	75	110
VT279 NB	ABUT. 2	ALL	6	1557	296	978	530	46	5	0.013	500	900	70	600	900	39	25	162	42	75	110

TVGA CONSULTANTS

STATE OF VERMONT
AGENCY OF TRANSPORTATION

Town Of BENNINGTON	Bridge No. BI2
Highway No. VT RTE 279	Log Sta. / Surv. Sta.
VT ROUTE 279 OVER FURNACE BROOK	

EXPANSION BEARING DETAILS

Designed By M.D. BOWER	Drawn By D.J. HENDERSON
Checked By B.J. CARLSON Date 04/07	Bridge Design Supervisor K.M. WOJTKOWSKI Date 04/07
PROJECT BENNINGTON	PROJECT NO. AC NH F019-1(53)
TVGA CAD Drawing No. FBExpBrg.dgn	Date 04/16/2007
Bridge Sheet No. BR524	Sheet 216 of 577

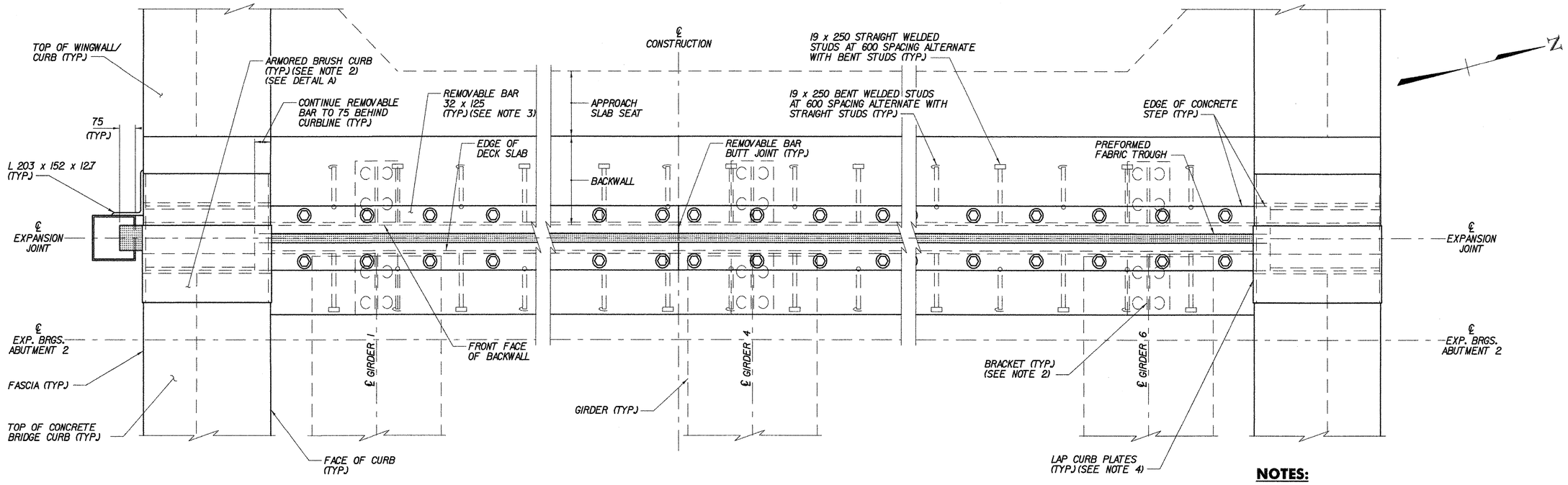

EXPANSION JOINT PLAN

ABUTMENT 2 SHOWN, ABUTMENT 1 SIMILAR
ITEM 516.11 BRIDGE EXPANSION JOINT, VERMONT
SCALE 1:10

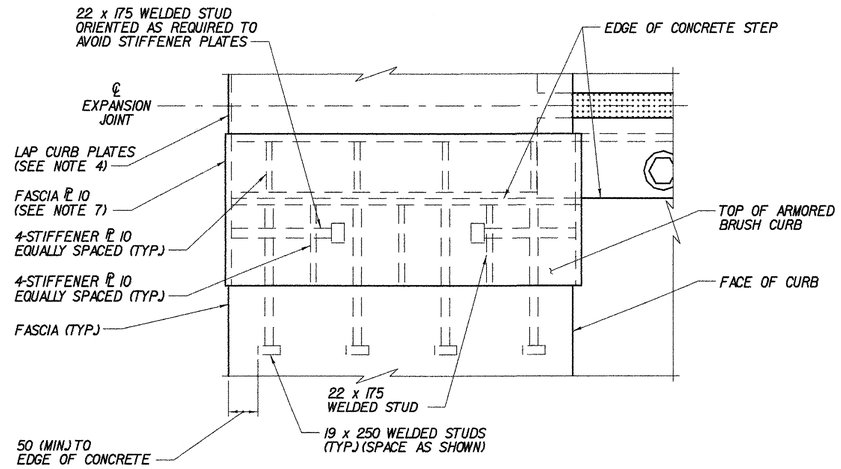

DETAIL A

(ONE QUADRANT OF ARMORED BRUSH CURB SHOWN – ALL OTHER QUADRANTS SIMILAR)
SCALE 1:5
NOTE: HOPPER NOT SHOWN FOR CLARITY

EXPANSION JOINT LOCATION	HOPPER LOCATION	DIRECTION OF CURB PLATE LAP
ABUT. 1	LEFT	REVERSE AS SHOWN
ABUT. 2	LEFT	AS SHOWN

NOTES:

1. TOP AND FACE OF BRUSH CURB ARE ATTACHED BY BOLTS AND ARE REMOVABLE TO ALLOW CLEANING AND/OR REPLACEMENT OF FABRIC TROUGH.
2. FOR TYPICAL SECTIONS OF EXPANSION JOINT AND ARMORED BRUSH CURB, SEE EXPANSION JOINT DETAILS, BRIDGE SHEETS BR526 AND BR527.
3. BARS IN ROADWAY ARE REMOVABLE TO ALLOW CLEANING AND/OR REPLACEMENT OF FABRIC TROUGH.
4. LAP CURB PLATES IN DIRECTION OF TRAFFIC. SEE TABLE FOR DIRECTION OF LAP AT EACH EXPANSION JOINT LOCATION.
5. WHERE HOPPER IS NOT REQUIRED, PREFORMED FABRIC DRAIN TROUGH SHALL BE TERMINATED 50 INSIDE THE FASCIA.
6. FOR TEMPERATURE ADJUSTMENT TABLE, SEE EXPANSION JOINT DETAILS (2 OF 2), BRIDGE SHEET BR527.
7. FOR VIEW OF FASCIA PLATES, AND LOCATIONS OF WELDED STUDS ON FASCIA PLATES, SEE DOWNSPOUT DETAILS, BRIDGE SHEET BR528.

0 0.1 0.2 0.3 0.4 0.5m
SCALE 1:5

0 0.2 0.4 0.6 0.8 1.0m
SCALE 1:10

SEE ALSO SHOP DRAWINGS

TVGA CONSULTANTS

STATE OF VERMONT
AGENCY OF TRANSPORTATION

Town Of BENNINGTON	Bridge No. BI2
Highway No. VT RTE 279	Log Sta. / Surv. Sta.
VT ROUTE 279 OVER FURNACE BROOK	
EXPANSION JOINT PLAN	
Designed By J.J. MANUSE	Drawn By D.J. HENDERSON
Checked By B.J. CARLSON Date 04/07	Bridge Design Supervisor K.M. WOJTKOWSKI Date 04/07
PROJECT BENNINGTON	PROJECT NO. AC NH F019-1(53)
TVGA CAD Drawing No. FBJtPlan.dgn	Date 04/12/2007
Bridge Sheet No. BR525	Sheet 217 of 577

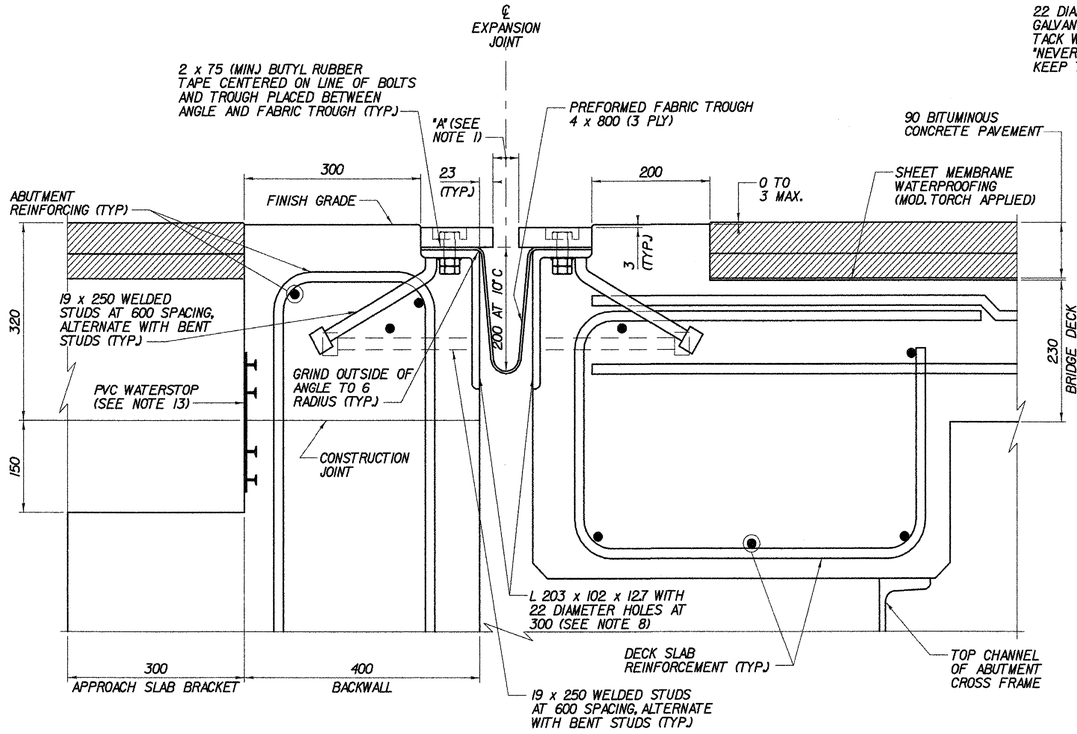

TYPICAL SECTION BETWEEN GIRDERS

(NORMAL TO ℄ BEARING)

SCALE 1:5

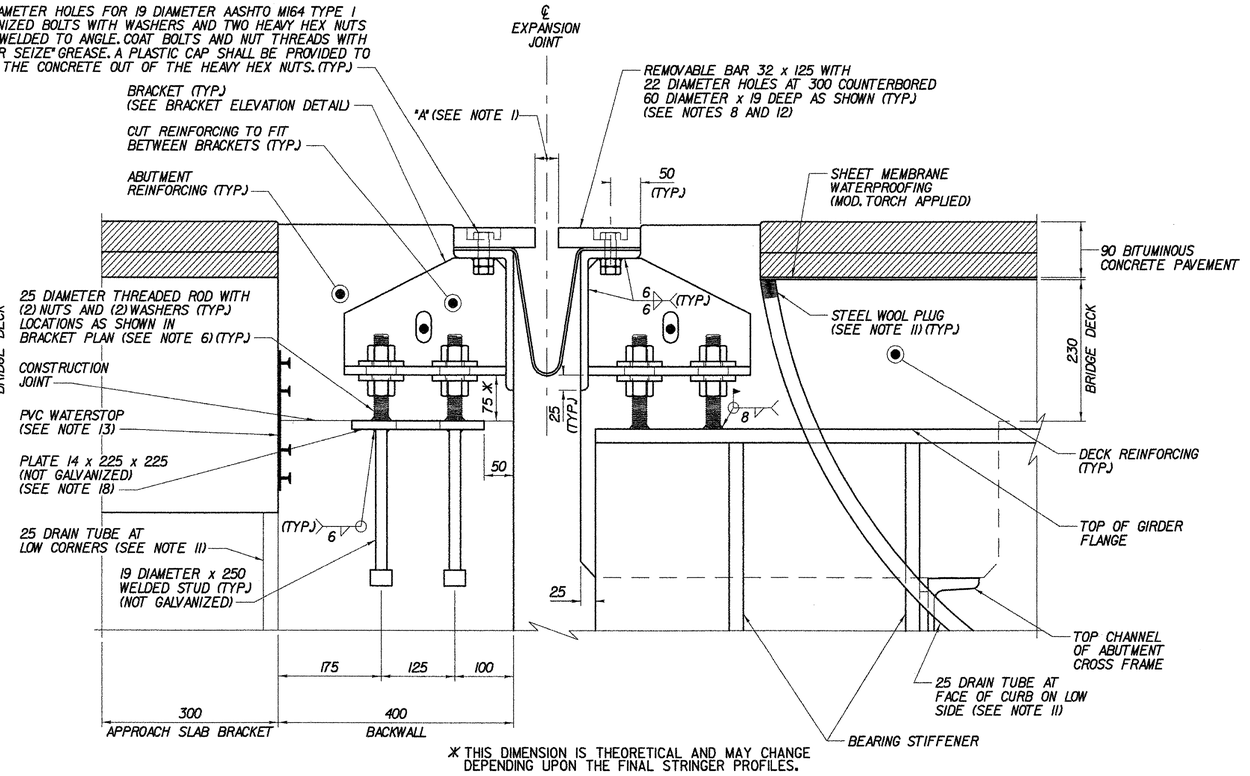

* THIS DIMENSION IS THEORETICAL AND MAY CHANGE DEPENDING UPON THE FINAL STRINGER PROFILES.

TYPICAL SECTION AT GIRDERS

(NORMAL TO ℄ BEARING)

SCALE 1:5

NOTES:

1. FOR "A" DIMENSIONS, SEE EXPANSION JOINT DETAILS (2 OF 2), BRIDGE SHEET BR527.
2. DETAILS ON THIS SHEET ARE FOR ITEM 516.11, "BRIDGE EXPANSION JOINT, VERMONT".
3. PREFORMED FABRIC TROUGH SHALL BE FURNISHED IN TWO PIECES, WITH A MINIMUM OVERLAP OF 600. TROUGH MATERIAL SHALL CONFORM TO SUBSECTION 707.07 OF THE SPECIFICATIONS.
4. BUTYL RUBBER TAPE SHALL CONFORM TO AASHTO SPECIFICATION M-198, TYPE B.
5. THE FINAL FINISH OF THE EXPANSION DEVICE SHALL BE COVERED DURING THE PLACING OF BRIDGE DECK CONCRETE.
6. STEEL EXPANSION JOINT PLATES SHALL BE AASHTO M270M/M270 GRADE 345. ALL OTHER STEEL COMPONENTS SHALL BE AASHTO M270M/M270 GRADE 250 UNLESS OTHERWISE NOTED. BOLTS, NUTS, AND WASHERS SHALL CONFORM TO AASHTO M164 TYPE I. THREADED RODS SHALL CONFORM TO ASTM F568M CLASS 4.6, GRADE C. THE NUTS AND WASHERS FOR THE THREADED RODS SHALL BE AASHTO M291M. ALL STEEL COMPONENTS SHALL BE GALVANIZED OR METALIZED PER SUBSECTION 516.02 OF THE SPECIFICATIONS, UNLESS OTHERWISE NOTED.
7. PAYMENT FOR ITEM 516.11, "BRIDGE EXPANSION JOINT, VERMONT" SHALL INCLUDE THE FABRICATION AND ERECTION OF THE COMPLETE JOINT ASSEMBLY INCLUDING ALL STEEL PLATES, BRACKETS, ANGLES, WELDED STUDS OR RODS, PREFORMED FABRIC DRAIN TROUGH MATERIAL AND PLASTIC DRAIN TUBES, BUTYL RUBBER TAPE AND ANY OTHER MISCELLANEOUS MATERIAL NECESSARY TO INSTALL JOINT.
8. THE 32 x 125 BARS AND 203 x 102 x 12.7 ANGLES ON EACH SIDE OF JOINT, SHALL BE PROVIDED IN TWO PIECES. A BUTT JOINT IS REQUIRED AS SHOWN ON THE EXPANSION JOINT PLAN ON BRIDGE SHEET BR525.
9. COAT CONCRETE CONTACT SURFACES WITH EPOXY BONDING COMPOUND. ACCEPTABLE EPOXY BONDING COMPOUNDS SHALL BE THOSE INCLUDED ON THE APPROVED PRODUCTS LIST ON FILE WITH THE AGENCY'S MATERIALS AND RESEARCH SECTION. PAYMENT SHALL BE INCLUDED IN THE UNIT PRICE BID FOR ITEM 516.11, "BRIDGE EXPANSION JOINT, VERMONT".
10. A DRIP BEAD OF 6 x 175 STRIP OF PREFORMED MATERIAL SHALL BE CEMENTED TO THE BOTTOM OF THE FABRIC TROUGH USING AN ADHESIVE APPROVED BY THE MANUFACTURER. THE DRIP BEAD SHALL BE APPLIED 25 FROM THE DOWNSPOUT END OF THE TROUGH.
11. A 25 DIAMETER PLASTIC DRAIN TUBE SHALL BE INSTALLED AS SHOWN AT THE FACE OF CURB. THE UPPER END IS TO BE PLUGGED WITH STEEL WOOL AND THE LOWER END IS TO EXTEND BELOW THE BOTTOM OF THE ADJACENT GIRDER. DRAIN TUBE IS ALSO REQUIRED WHERE U-TYPE WINGWALLS ARE ADJACENT TO APPROACH SLABS. TUBING SHALL CONFORM TO STANDARD SPECIFICATION 740.01 INCIDENTAL TO CONCRETE HIGH PERFORMANCE CLASS B. THE DRAIN TUBES SHALL BE FASTENED TO THE GIRDERS USING A METHOD APPROVED BY THE ENGINEER.
12. FILL COUNTERBORED HOLES WITH HOT POURED JOINT SEALER AFTER BOLT INSTALLATION. COSTS FOR THE WORK SHALL BE INCIDENTAL TO ITEM 516.11.
13. PAYMENT FOR WATERSTOP SHALL BE INCIDENTAL TO ITEM 501.34, "CONCRETE, HIGH PERFORMANCE CLASS B".
14. FABRIC TROUGHS SHALL BE INSTALLED SO THAT MINIMUM SLOPE IS 1.0% FOR POSITIVE DRAINAGE.
15. FABRIC TROUGH SHALL BE THOROUGHLY CLEANED AND FLUSHED AFTER PAVING OPERATION.
16. EXPANSION JOINTS SHALL BE SHOP ASSEMBLED AND SHIPPED AS ONE UNIT. SHIPPED IN 2 PIECES AS PER APPROVED SHOP DRAWINGS
17. WORK THIS SHEET WITH TYPICAL BEGIN AND END OF DECK SLAB REINFORCEMENT DETAIL, BRIDGE SHEET BR514.
18. FOR BRACKET AND PLATE DETAILS, SEE TYPE "H" EXPANSION JOINT DETAILS (2 OF 2), BRIDGE SHEET BR527.

SEE ALSO SHOP DRAWINGS

0 0.1 0.2 0.3 0.4 0.5m

SCALE 1:5

TVGA CONSULTANTS

STATE OF VERMONT
AGENCY OF TRANSPORTATION

Town Of BENNINGTON	Bridge No. BI2
Highway No. VT RTE 279	Log Sta. / Surv. Sta.
VT ROUTE 279 OVER FURNACE BROOK	
EXPANSION JOINT DETAILS (1 OF 2)	
Designed By J.J. MANUSE	Drawn By D.J. HENDERSON
Checked By B.J. CARLSON Date 04/07	Bridge Design Supervisor K.M. WOJTKOWSKI Date 04/07
PROJECT BENNINGTON	PROJECT NO. AC NH F019-1(53)
TVGA CAD Drawing No. FBEngJtl.dgn	Date 04/11/2007
Bridge Sheet No. BR526	Sheet 218 of 577

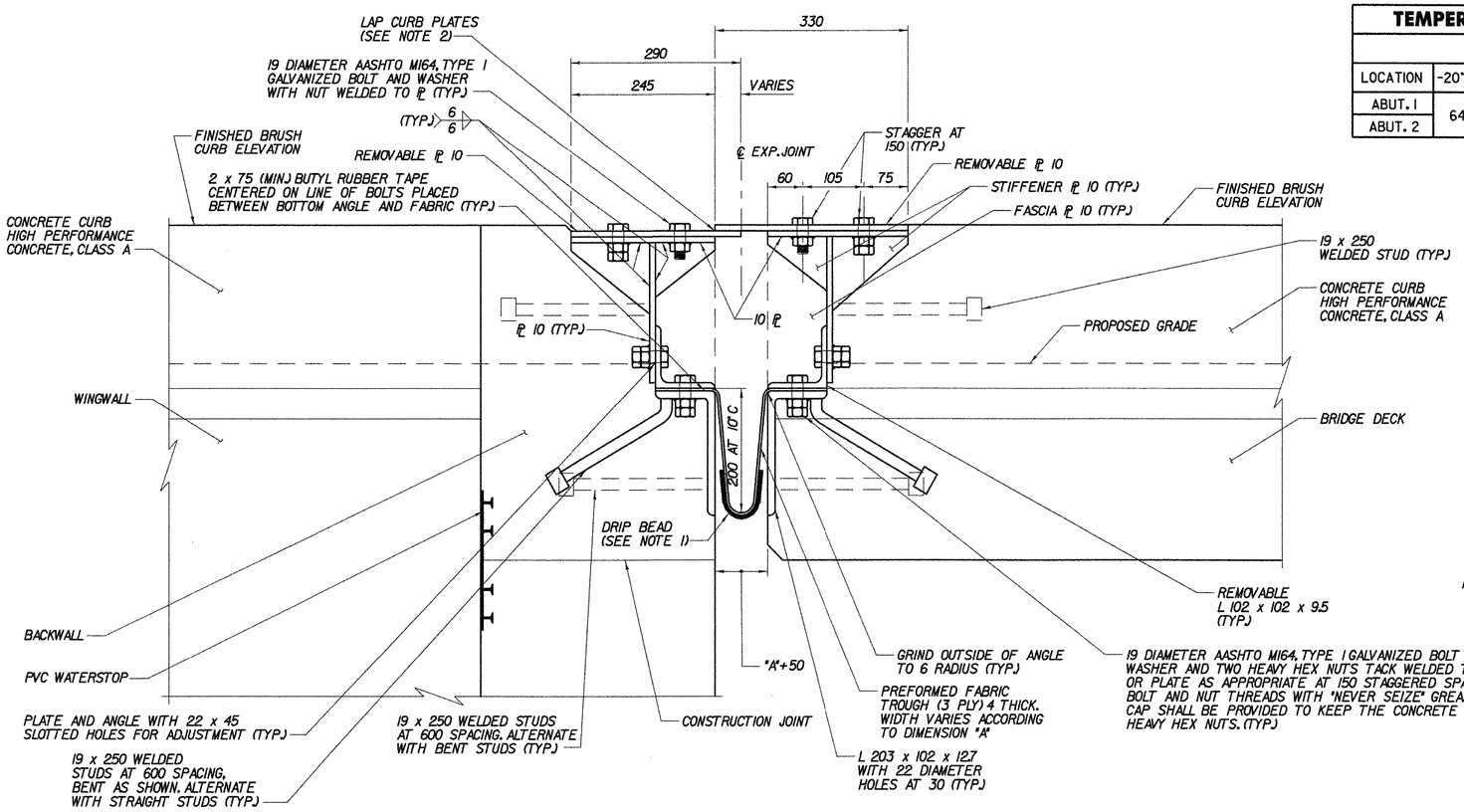

TYPICAL SECTION AT ARMORED BRUSH CURB

(NORMAL TO ℄ BEARING)

SCALE 1:5

TEMPERATURE ADJUSTMENT TABLE							
	"A" DIMENSION						
LOCATION	-20° C	-10° C	0° C	10° C	20° C	30° C	40° C
ABUT. 1	64	56	47	39	30	22	14
ABUT. 2							

NOTES:

1. A DRIP BEAD OF 6 x 75 STRIP OF PREFORMED MATERIAL SHALL BE CEMENTED TO THE BOTTOM OF THE FABRIC TROUGH USING AN ADHESIVE APPROVED BY THE MANUFACTURER. THE DRIP BEAD SHALL BE APPLIED 25 FROM THE DOWNSPOUT END OF THE TROUGH.
2. LAP CURB PLATES IN DIRECTION OF TRAFFIC. FOR DIRECTION OF LAP AT EACH EXPANSION JOINT LOCATION, SEE TABLE ON TYPICAL EXPANSION JOINT PLAN, BRIDGE SHEET BR525.

LONGITUDINAL SECTION THROUGH ARMORED BRUSH CURB

NOT TO SCALE

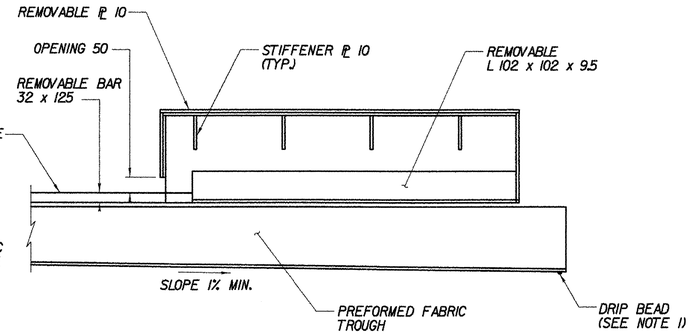

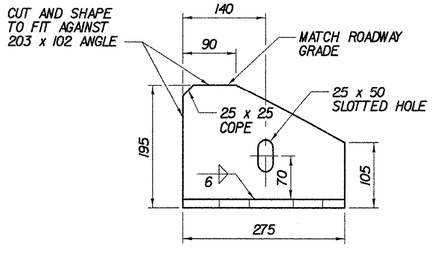

BRACKET ELEVATION

SCALE 1:5

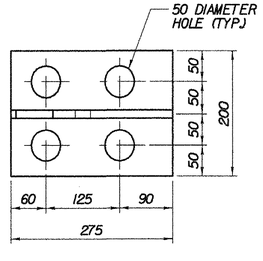

NOTE: ALL PLATES 14 THICK

SUPPORT BRACKET PLAN

SCALE 1:5

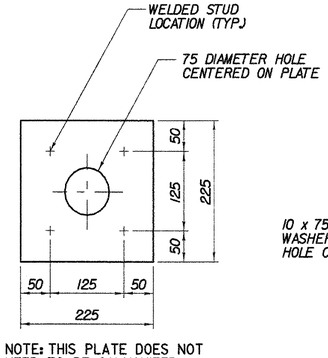

NOTE: THIS PLATE DOES NOT NEED TO BE GALVANIZED

PLATE PLAN

SCALE 1:5

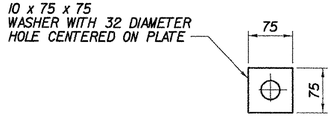

WASHER FOR BRACKET

SCALE 1:5

SEE ALSO SHOP DRAWINGS

0 0.1 0.2 0.3 0.4 0.5m

SCALE 1:5

STATE OF VERMONT
AGENCY OF TRANSPORTATION

Town Of BENNINGTON	Bridge No. BI2
Highway No. VT RTE 279	Log Sta. / Surv. Sta.
VT ROUTE 279 OVER FURNACE BROOK	
EXPANSION JOINT DETAILS (2 OF 2)	
Designed By J.J. MANUSE	Drawn By D.J. HENDERSON
Checked By B.J. CARLSON Date 04/07	Bridge Design Supervisor K.M. WOJTKOWSKI Date 04/07
PROJECT BENNINGTON	PROJECT NO. AC NH F019-1(53)
TVGA CAD Drawing No. FBFlngJt2.dgn	Date 04/11/2007
Bridge Sheet No. BR527	Sheet 219 of 577

TVGA CONSULTANTS

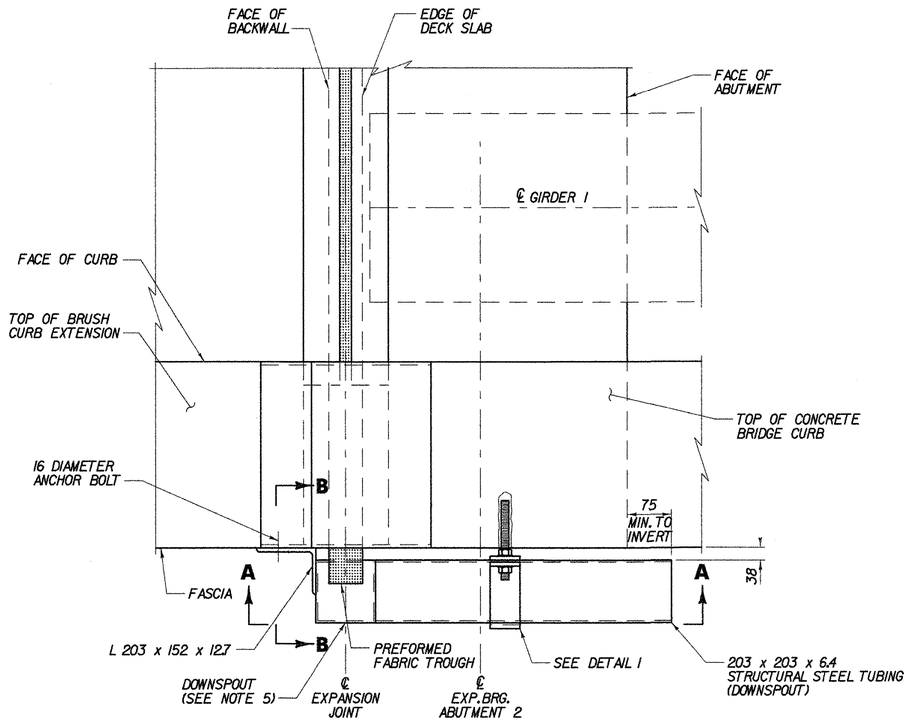

DOWNSPOUT PLAN
NOT TO SCALE

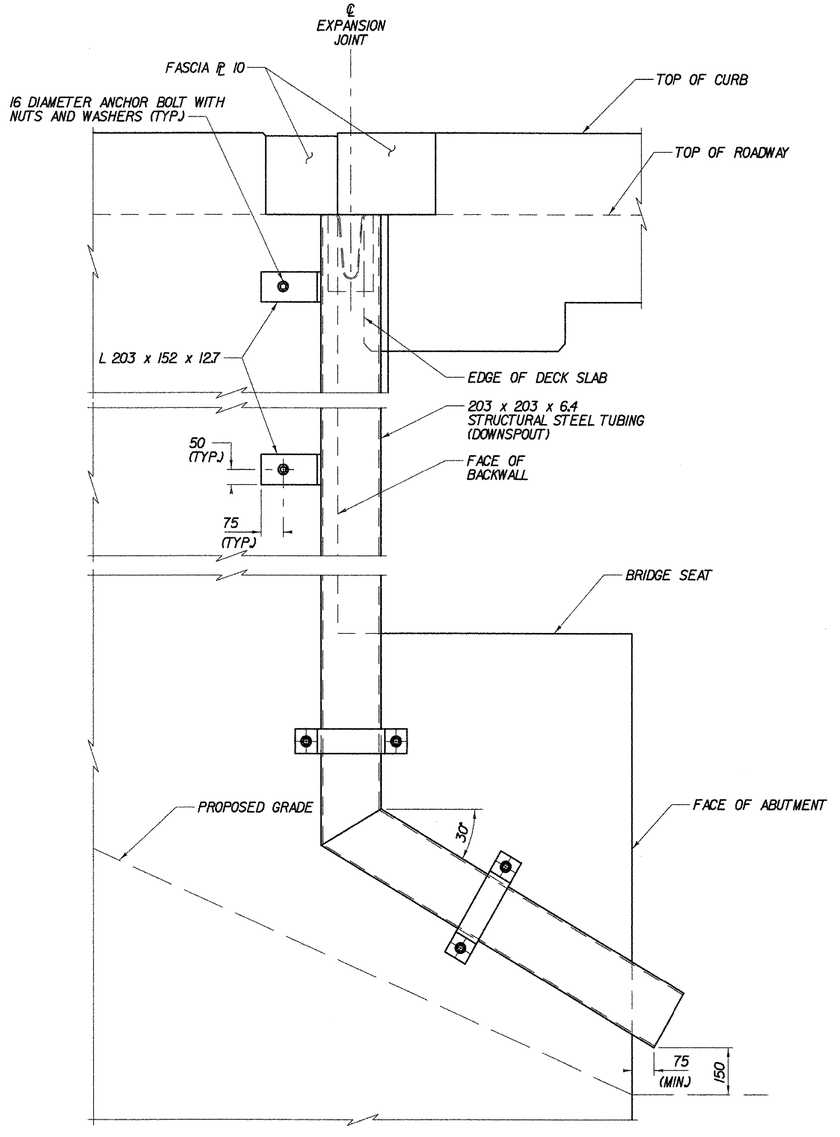

SECTION A-A
NOT TO SCALE

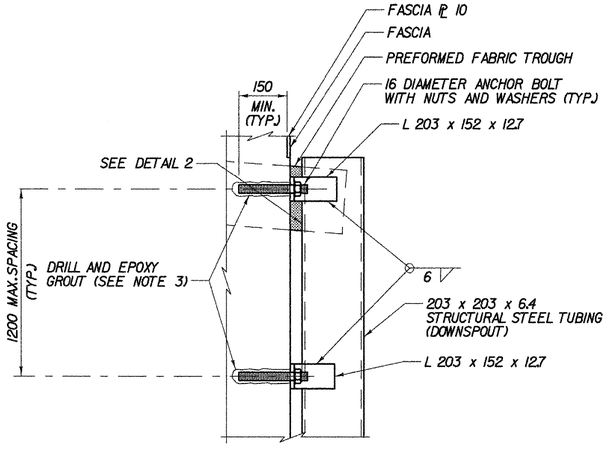

SECTION B-B
NOT TO SCALE

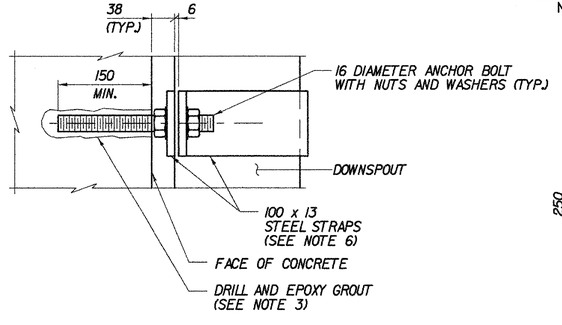

DETAIL 1
NOT TO SCALE

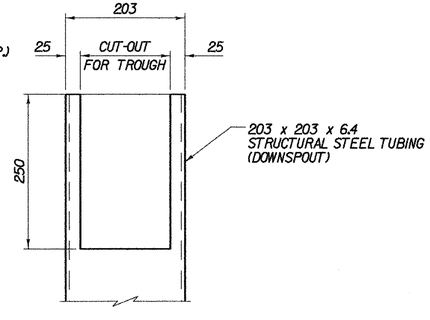

DETAIL 2
NOT TO SCALE

NOTES:

1. HOLLOW STRUCTURAL STEEL TUBING (DOWNSPOUT) SHALL CONFORM TO ASTM A500 OR A501 STEEL. ALL BARS AND PLATES SHALL CONFORM TO AASHTO M270M/M270 GRADE 250. ALL STEEL SHALL BE GALVANIZED OR METALIZED IN ACCORDANCE WITH SECTION 506.15 OF THE SPECIFICATIONS.
2. ALL DOWNSPOUT WORK SHALL BE PAID FOR UNDER ITEM 506.60, "STRUCTURAL STEEL".
3. ANCHOR BOLTS, NUTS AND WASHERS SHALL CONFORM TO SUBSECTION 714.08 OF THE SPECIFICATIONS, AND BE GALVANIZED IN ACCORDANCE WITH SUBSECTION 506.15. ANCHOR BOLTS SHALL BE DRILLED AND EPOXY GROUTED 150 MINIMUM INTO THE CONCRETE. DRILL AND EPOXY GROUT SYSTEM SHALL BE:
   - DAYTON SUPERIOR SURE-ANCHOR J-51 SYSTEM
   - HILTI, INC. HIT HY-150 SYSTEM
   - UNITEX PRO-POXY 300 FAST SYSTEM

   OR EQUIVALENT APPROVED BY VAOT MATERIALS SECTION. ALL COSTS FOR DRILLING AND EPOXY GROUTING ANCHOR BOLTS SHALL BE INCIDENTAL TO ITEM 506.60, "STRUCTURAL STEEL".
4. THE ANCHOR BOLTS SHALL BE ASTM F568M CLASS 4.6.
5. THE DOWNSPOUTS SHALL BE PLACED AS SHOWN ON THIS SHEET. THIS WILL REQUIRE THAT THE DOWNSPOUT BE LOCATED AS FAR AS POSSIBLE UP UNDER THE TROUGH. THE TROUGH SHOULD BE ENCLOSED AS MUCH AS POSSIBLE BY THE DOWNSPOUT BUT SHOULD NOT BE BENT OR BUCKLED TO RESTRICT THE FLOW OF WATER.
6. STRAPS SHALL NOT BE BENT IN THE FIELD.

SEE ALSO SHOP DRAWINGS

STATE OF VERMONT
AGENCY OF TRANSPORTATION

Town Of BENNINGTON	Bridge No. BI2
Highway No. VT RTE 279	Log Sta. / Surv. Sta.
VT ROUTE 279 OVER FURNACE BROOK	
DOWNSPOUT DETAILS	
Designed By J.J. MANUSE	Drawn By D.J. HENDERSON
Checked By B.J. CARLSON Date 04/07	Bridge Design Supervisor K.M. WOJTKOWSKI Date 04/07
PROJECT BENNINGTON	PROJECT NO. AC NH F019-1(53)
TVGA CAD Drawing No. FBDwnSpout.dgn	Date 04/10/2007
Bridge Sheet No. BR528	Sheet 220 of 577

TVGA CONSULTANTS

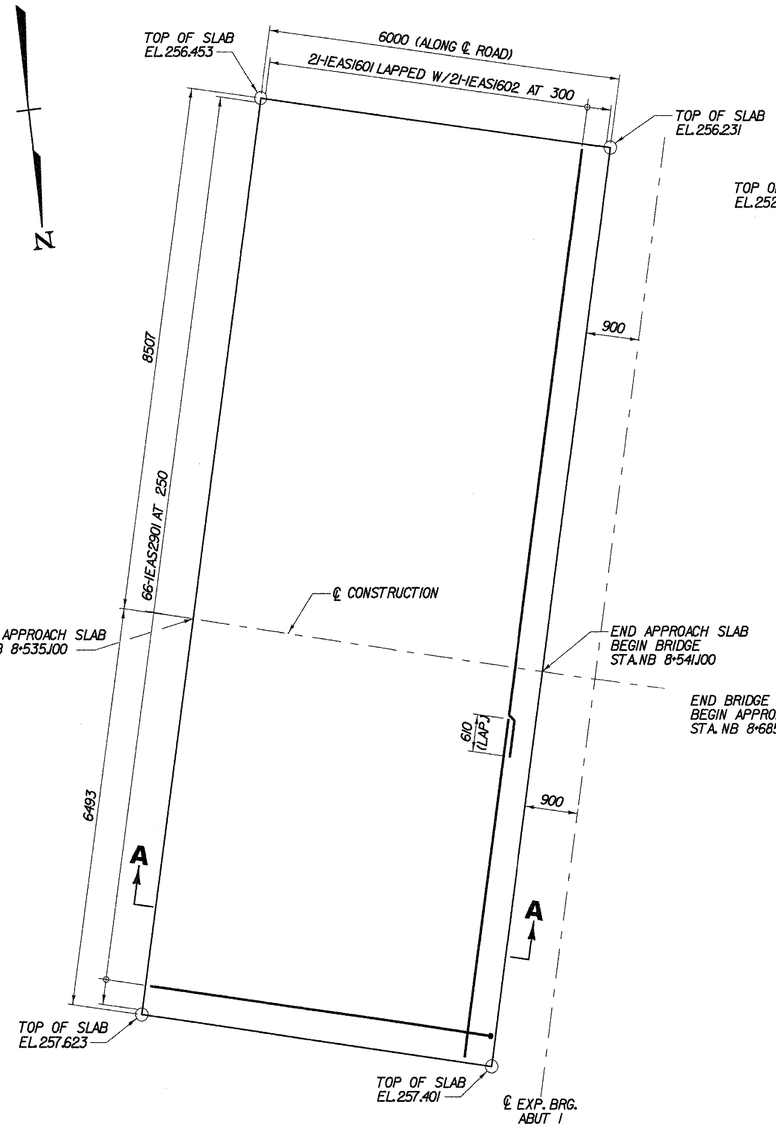

BRIDGE BEGIN APPROACH SLAB

SCALE 1:50

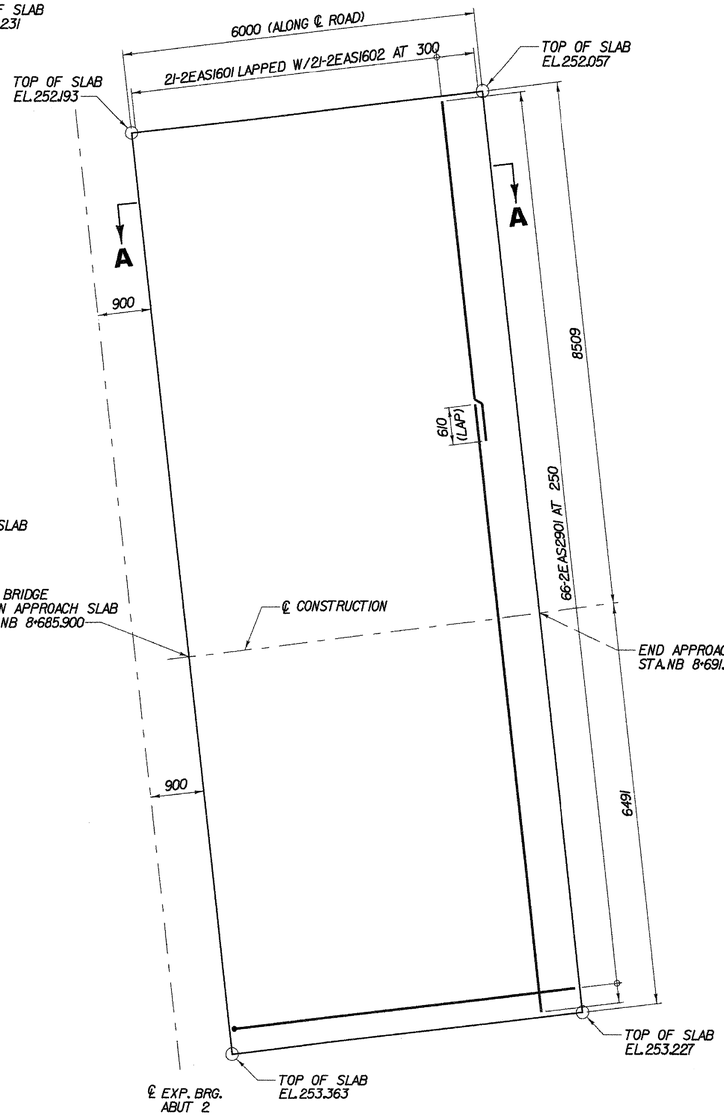

END BRIDGE APPROACH SLAB

SCALE 1:50

NOTES:

1. TIP HOOK END OF BAR AS REQUIRED TO ACHIEVE MINIMUM COVER.
2. FOR DETAILS OF APPROACH SLAB PAVEMENT AND TRANSITION TO EXISTING PAVEMENT, SEE ROADWAY PLANS.
3. FOR LIMIT OF EXCAVATION AND BACKFILL, SEE DETAILS ON PRELIMINARY INFORMATION SHEET BR501 AND THE HIGHWAY PLANS.

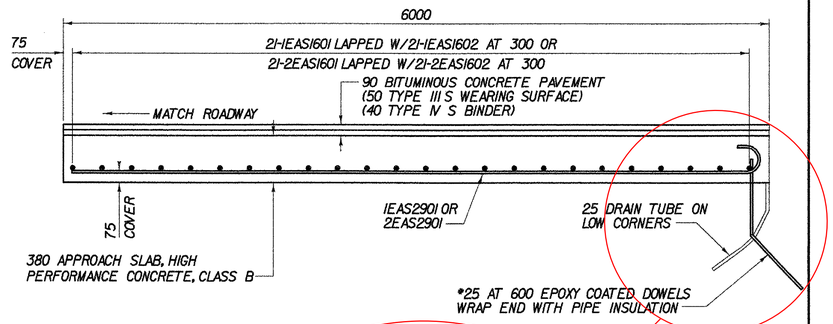

SECTION A-A

NOT TO SCALE

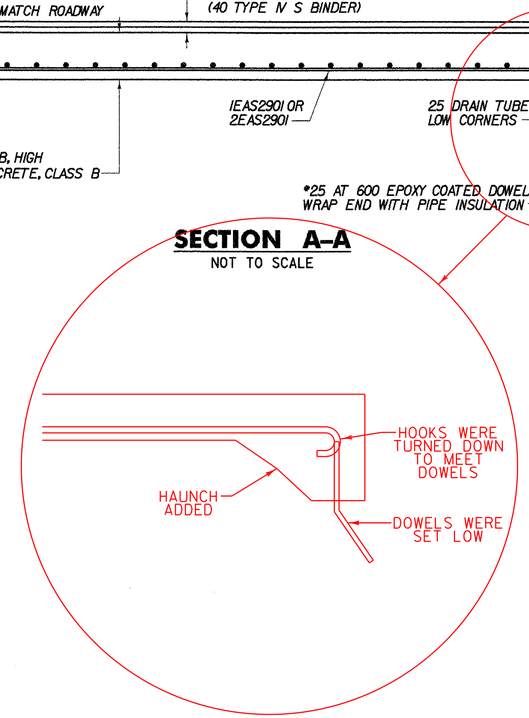

0 1 2 3 4 5m

SCALE 1:50

STATE OF VERMONT
AGENCY OF TRANSPORTATION

Town Of BENNINGTON	Bridge No. B12
Highway No. VT RTE 279	Log Sta. / Surv. Sta.
VT ROUTE 279 OVER FURNACE BROOK	

APPROACH SLAB LAYOUT AND DETAILS

Designed By J.J. MANUSE	Drawn By D.J. HENDERSON
Checked By B.J. CARLSON Date 04/07	Bridge Design Supervisor K.M. WOJTKOWSKI Date 04/07
PROJECT BENNINGTON	PROJECT NO. AC NH F019-1(53)
TVGA CAD Drawing No. FBAppSlab.dgn	Date 04/10/2007
Bridge Sheet No. BR529	Sheet 221 of 577

TVGA CONSULTANTS

VAOT Metric

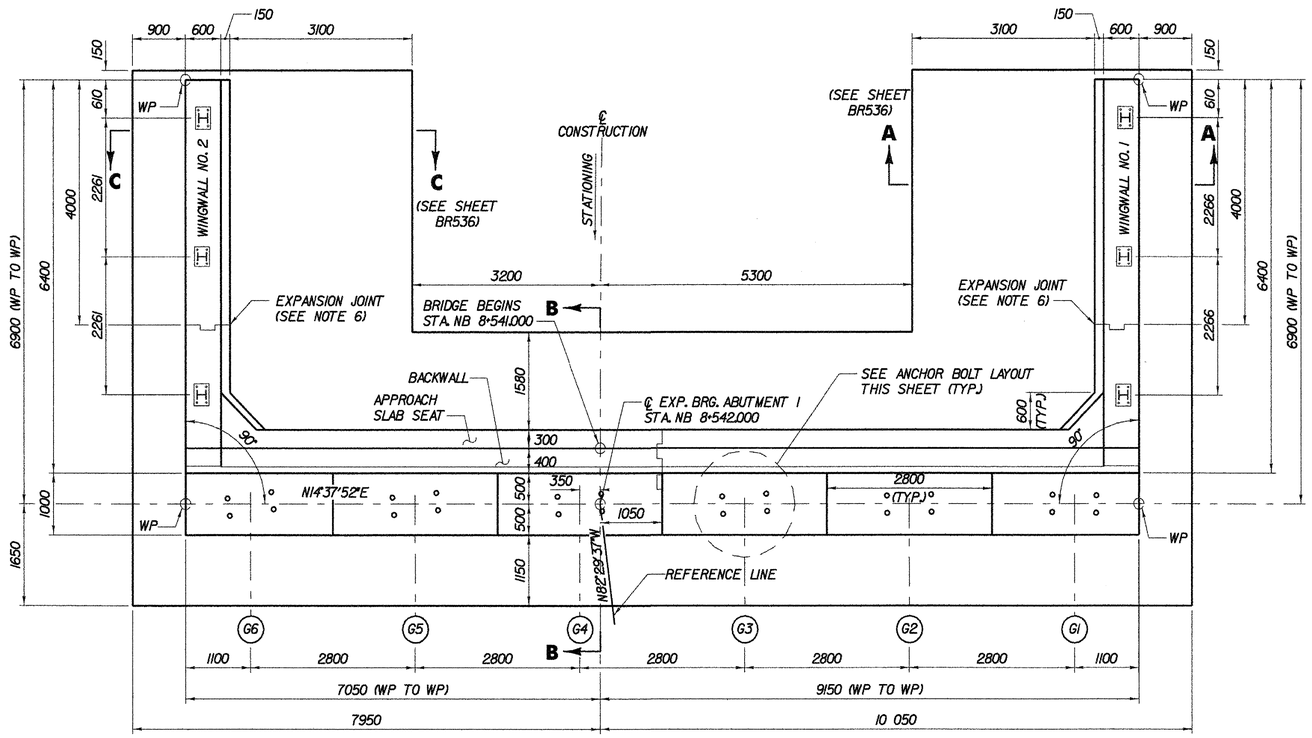

PLAN
SCALE 1:50

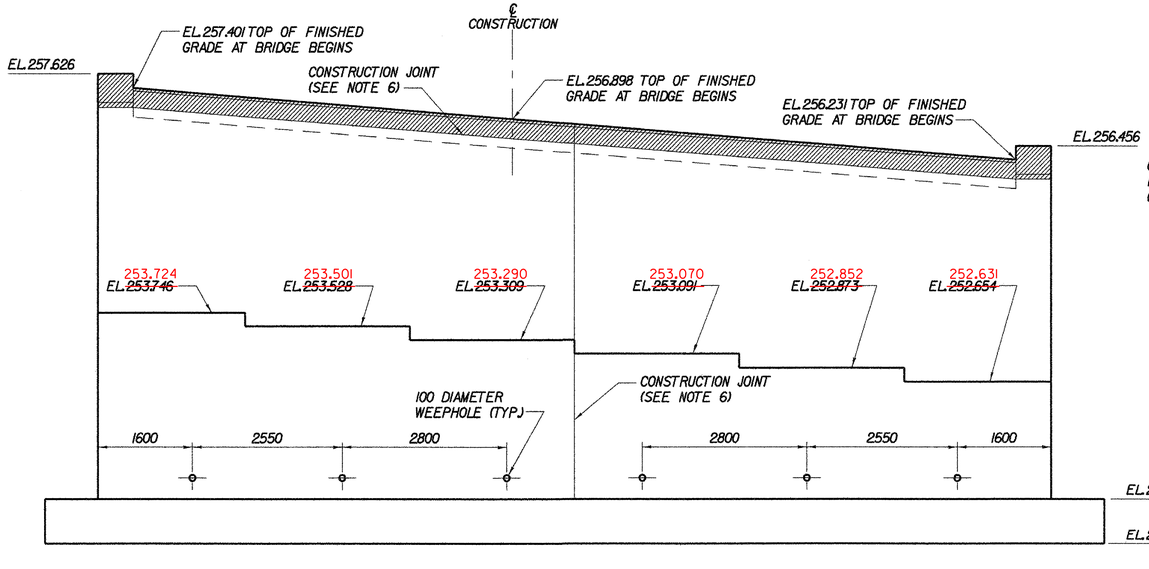

ELEVATION
SCALE 1:50

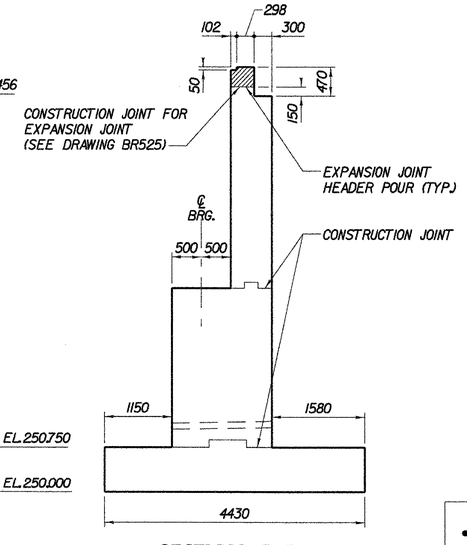

SECTION B–B
SCALE 1:50

NOTES:

1. ABUTMENT SEAT ELEVATIONS MAY HAVE TO BE ADJUSTED TO ACCOMMODATE THE ACTUAL BEARINGS FURNISHED. IT IS THE RESPONSIBILITY OF THE CONTRACTOR TO COORDINATE ANY CHANGES IN THE BEARINGS WHICH MAY AFFECT THE ABUTMENT SEAT ELEVATIONS OR DIMENSIONS.
2. NO CONCRETE SHALL BE PLACED ABOVE THE WINGWALL HORIZONTAL CONSTRUCTION JOINT UNTIL THE BEAM PROFILES HAVE BEEN TAKEN AND FINAL FINISHED GRADE OF THE DECK IS APPROVED BY THE ENGINEER.
3. LONGITUDINAL AND TRANSVERSE BRIDGE SEAT REINFORCING SPACING SHALL BE MODIFIED AS NECESSARY TO ASSURE THAT THERE WILL BE NO CONFLICT WITH THE BEARING DEVICE ANCHOR BOLTS.
4. FOR DIMENSIONS USED IN DETERMINING THE THEORETICAL BRIDGE SEAT ELEVATIONS, SEE EXPANSION BEARING DETAILS, BRIDGE SHEET BR524.
5. FOR ADDITIONAL LAYOUT INFORMATION, SEE FRAMING PLAN (2 OF 2), BRIDGE SHEET BR517.
6. FOR THE TYPICAL CONCRETE CONSTRUCTION JOINT AND EXPANSION JOINT DETAILS, SEE TYPICAL BRIDGE DETAILS, BRIDGE SHEET BR512.

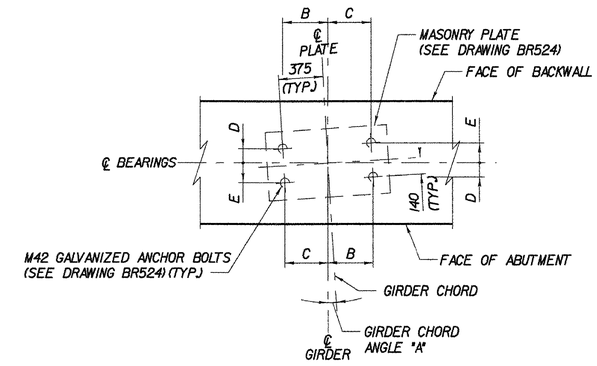

ANCHOR BOLT LAYOUT
NOT TO SCALE

ANCHOR BOLT TABLE

LOCATION	GIRDER CHORD ANGLE "A"	OFFSET B	OFFSET C	OFFSET D	OFFSET E
G1	-0°57'05"	373	377	146	134
G2	1°18'27"	378	372	131	149
G3	3°33'45"	383	366	116	163
G4	3°33'45"	383	366	116	163
G5	5°47'43"	387	359	101	177
G6	8°00'39"	391	352	86	191

0 1 2 3 4 5m
SCALE 1:50

STATE OF VERMONT
AGENCY OF TRANSPORTATION

Town Of BENNINGTON	Bridge No. BI2
Highway No. VT RTE 279	Log Sta. / Surv. Sta.
VT ROUTE 279 OVER FURNACE BROOK	
ABUTMENT 1 MASONRY	
Designed By M.D. BOWER	Drawn By D.J. HENDERSON
Checked By B.J. CARLSON Date 04/07	Bridge Design Supervisor K.M. WOJTKOWSKI Date 04/07
PROJECT BENNINGTON	PROJECT NO. AC NH F019-1(53)
TVGA CAD Drawing No. FBAbutlConc.dgn	Date 04/12/2007
Bridge Sheet No. BR530	Sheet 222 of 577

TVGA CONSULTANTS

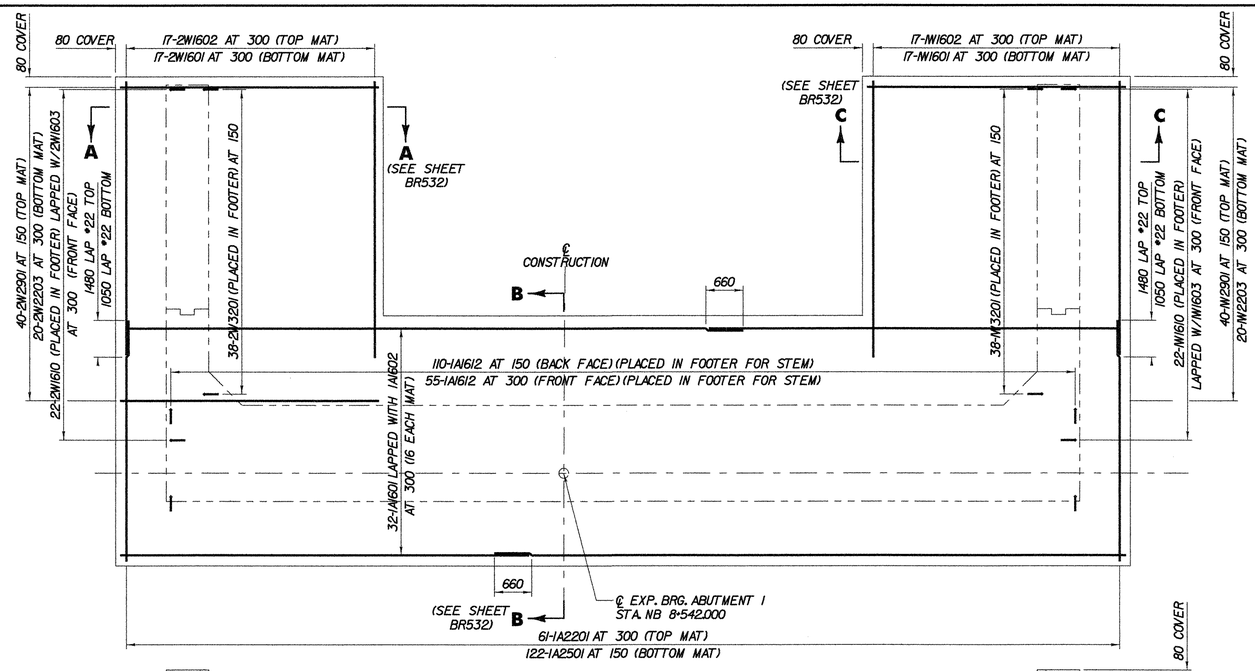

LEGEND:

E.F. EACH FACE
▲ CUT TO FIT IN FIELD

TVGA CONSULTANTS

STATE OF VERMONT
AGENCY OF TRANSPORTATION

Town Of BENNINGTON	Bridge No. BI2
Highway No. VT RTE 279	Log Sta. / Surv. Sta.
VT ROUTE 279 OVER FURNACE BROOK	

ABUTMENT 1 REINFORCEMENT PLANS

Designed By M.D. BOWER	Drawn By D.S. URBINO
Checked By B.J. CARLSON Date 04/07	Bridge Design Supervisor K.M. WOJTKOWSKI Date 04/07
PROJECT BENNINGTON	PROJECT NO. AC NH F019-1(53)
TVGA CAD Drawing No. FBAbutIRebar1.dgn	Date 04/16/2007
Bridge Sheet No. BR531	Sheet 223 of 577

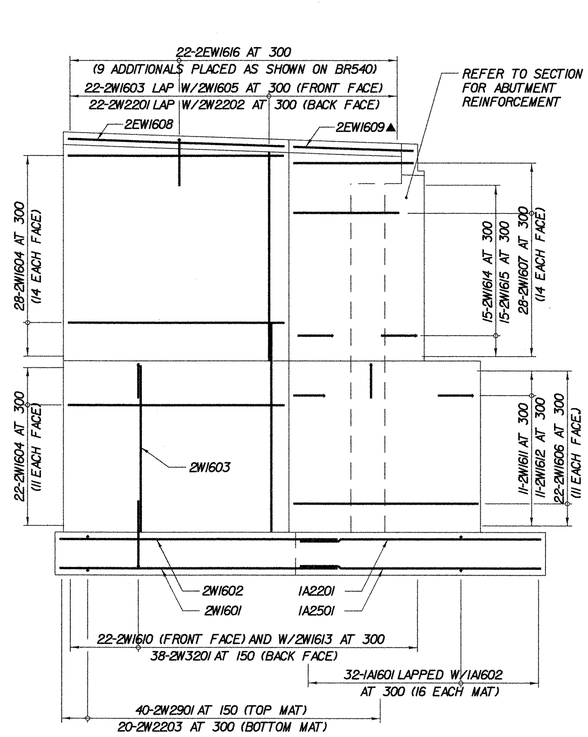

WINGWALL NO. 2 ELEVATION
SCALE 1:50

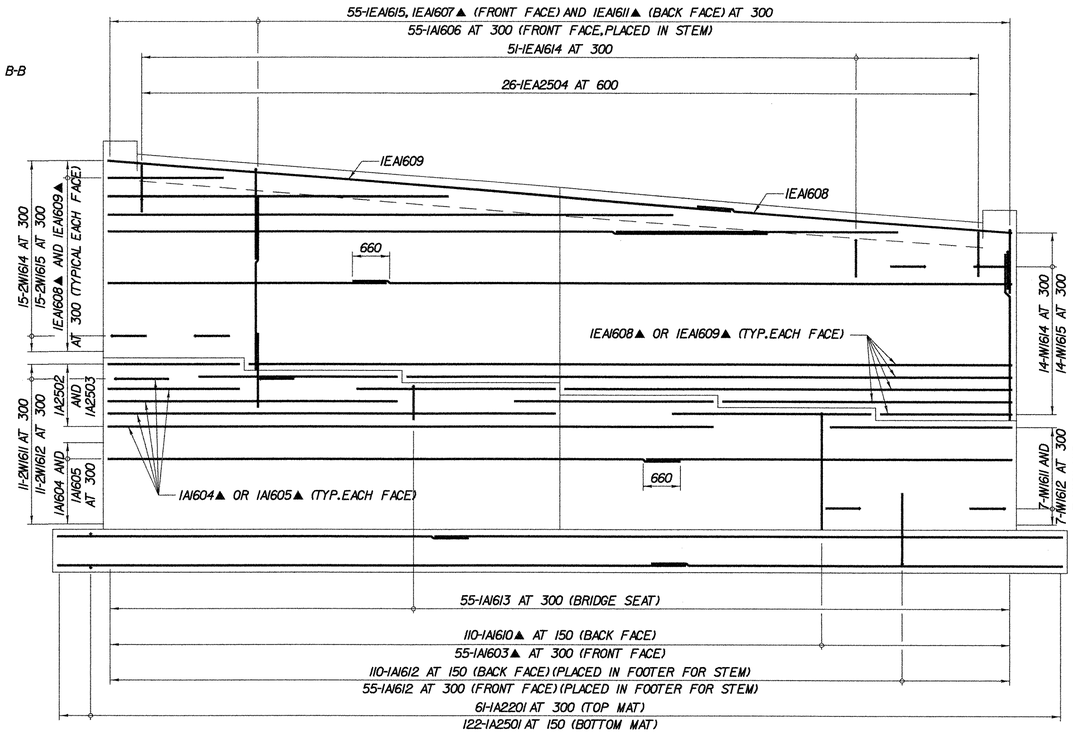

ELEVATION
SCALE 1:50

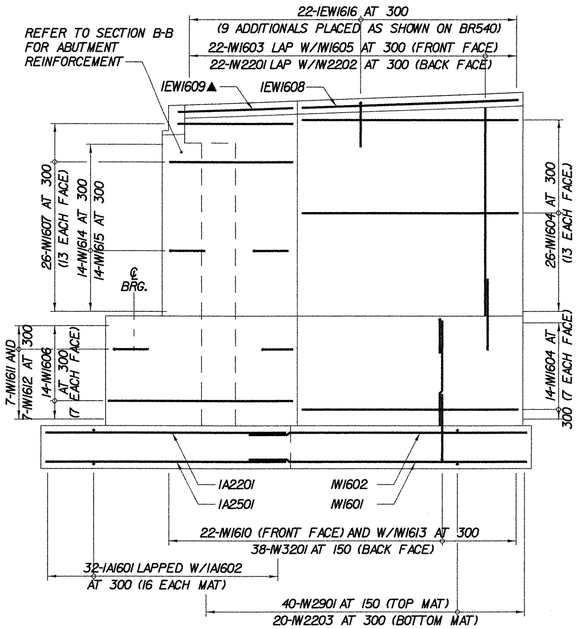

WINGWALL NO. 1 ELEVATION
SCALE 1:50

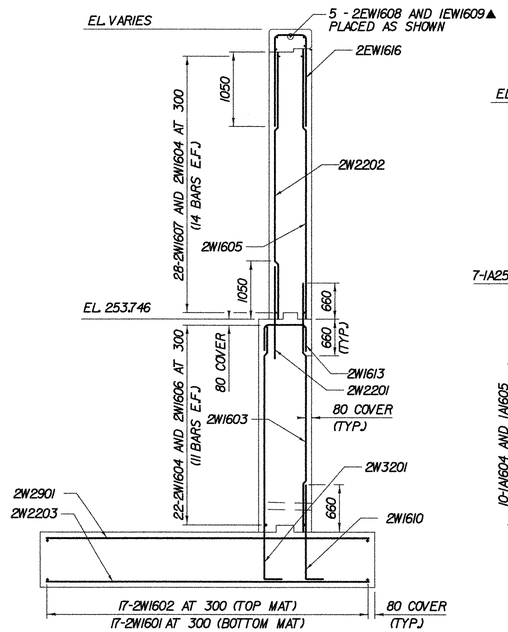

SECTION A-A
(WINGWALL 2)
SCALE 1:40

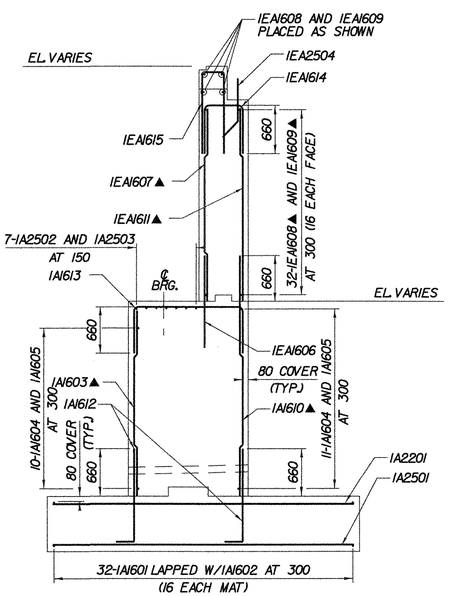

SECTION B-B
(ABUTMENT 1)
SCALE 1:40

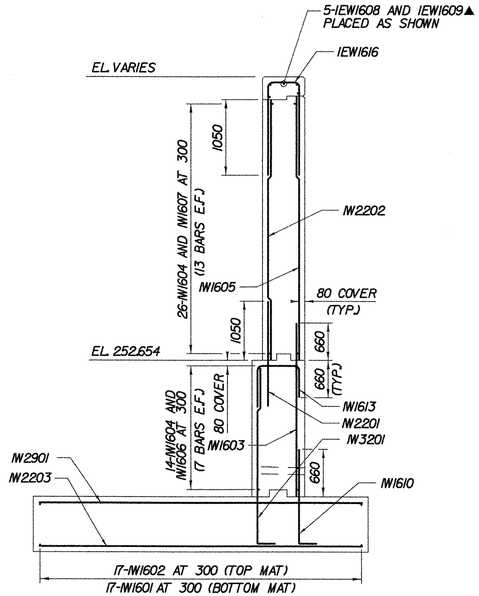

SECTION C-C
(WINGWALL 1)
SCALE 1:40

0 0.8 1.6 2.4 3.2 4.0m
SCALE 1:40

0 1.0 2.0 3.0 4.0 5.0m
SCALE 1:50

LEGEND:
E.F. EACH FACE
▲ CUT TO FIT IN FIELD

TVGA CONSULTANTS

STATE OF VERMONT
AGENCY OF TRANSPORTATION

Town Of BENNINGTON	Bridge No. BI2
Highway No. VT RTE 279	Log Sta. / Surv. Sta.
VT ROUTE 279 OVER FURNACE BROOK	

ABUTMENT 1 REINFORCEMENT DETAILS

Designed By M.D. BOWER	Drawn By D.S. URBINO
Checked By B.J. CARLSON Date 04/07	Bridge Design Supervisor K.M. WOJTKOWSKI Date 04/07
PROJECT BENNINGTON	PROJECT NO. AC NH F019-1(53)
TVGA CAD Drawing No. FBAbutIRebar2.dgn	Date 04/16/2007
Bridge Sheet No. BR532	Sheet 224 of 577

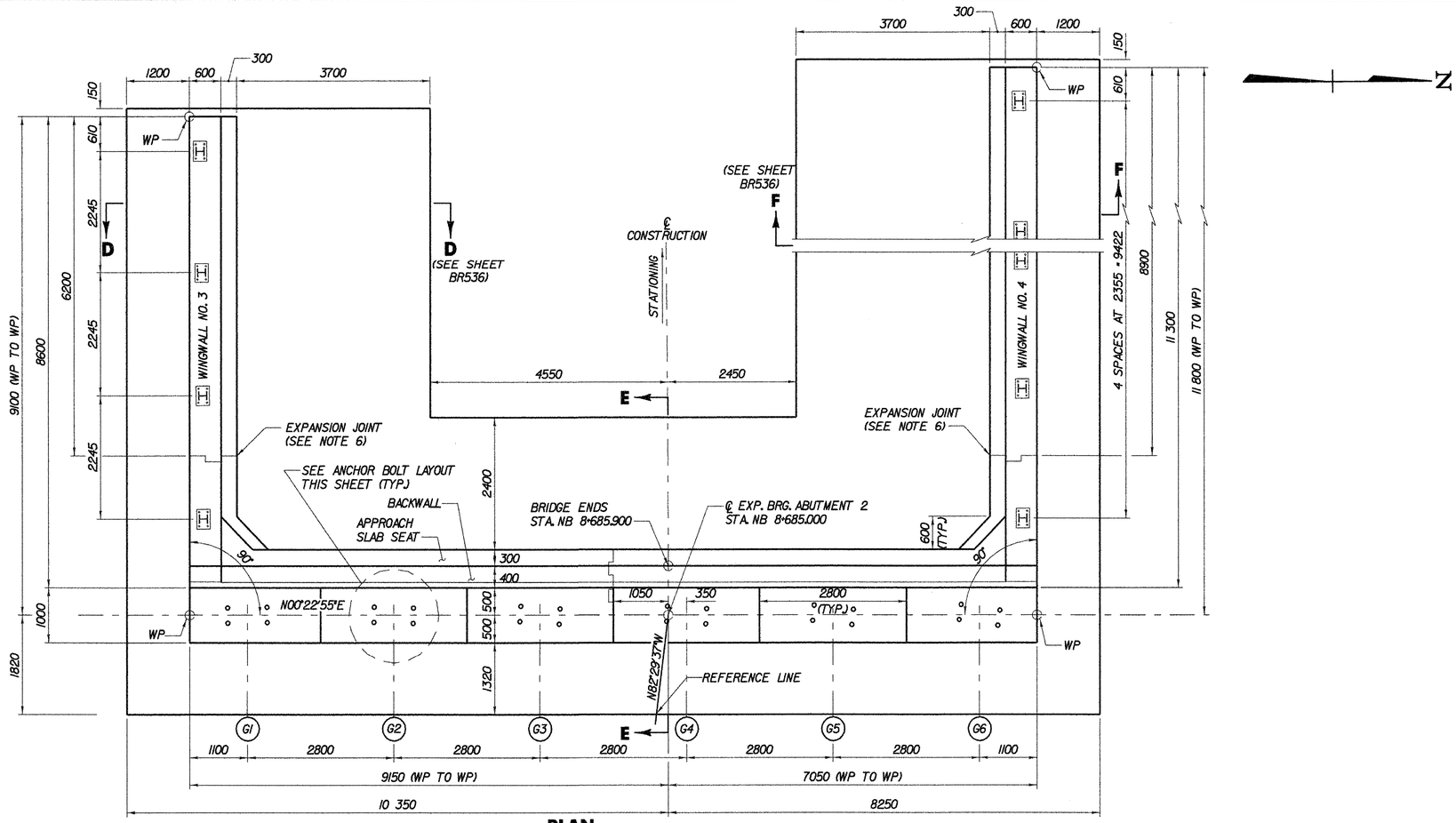

PLAN
SCALE 1:50

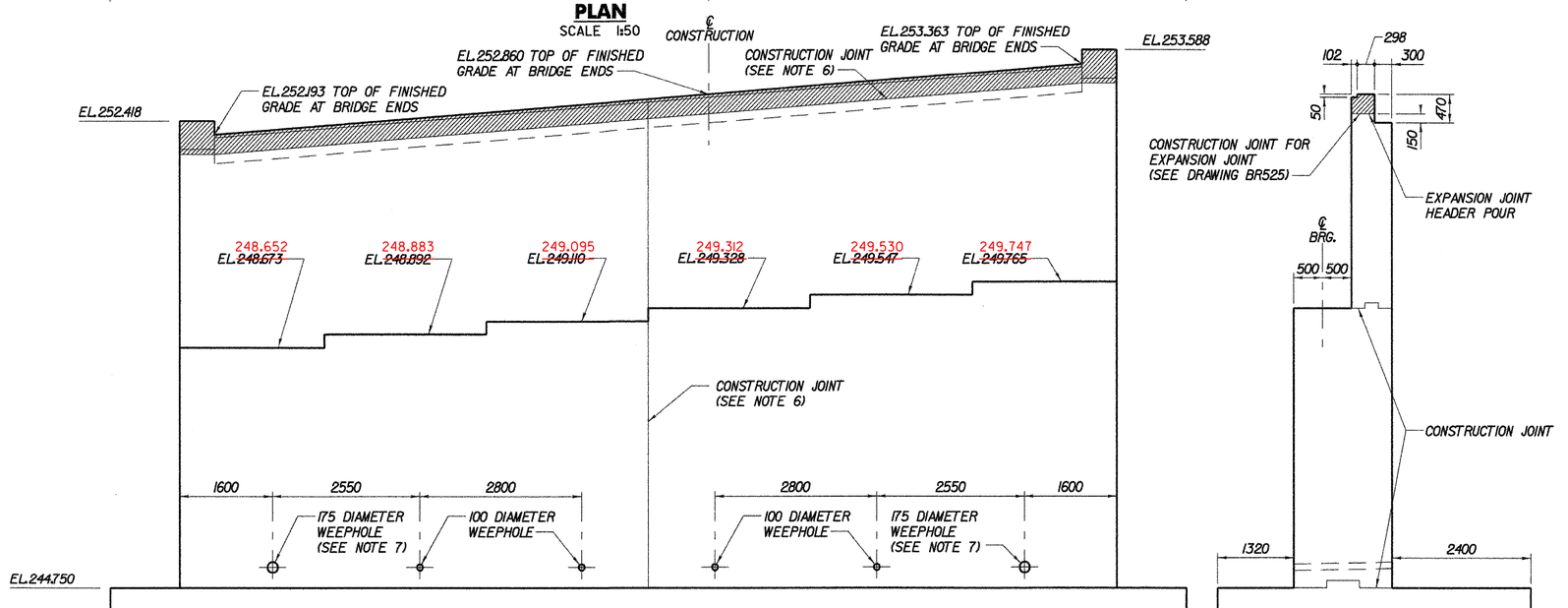

ELEVATION
SCALE 1:50

SECTION E-E
SCALE 1:50

NOTES:

1. ABUTMENT SEAT ELEVATIONS MAY HAVE TO BE ADJUSTED TO ACCOMMODATE THE ACTUAL BEARINGS FURNISHED. IT IS THE RESPONSIBILITY OF THE CONTRACTOR TO COORDINATE ANY CHANGES IN THE BEARINGS WHICH MAY AFFECT THE ABUTMENT SEAT ELEVATIONS OR DIMENSIONS.
2. NO CONCRETE SHALL BE PLACED ABOVE THE WINGWALL HORIZONTAL CONSTRUCTION JOINT UNTIL THE BEAM PROFILES HAVE BEEN TAKEN AND FINAL FINISHED GRADE OF THE DECK IS APPROVED BY THE ENGINEER.
3. LONGITUDINAL AND TRANSVERSE BRIDGE SEAT REINFORCING SPACING SHALL BE MODIFIED AS NECESSARY TO ASSURE THAT THERE WILL BE NO CONFLICT WITH THE BEARING DEVICE ANCHOR BOLTS.
4. FOR DIMENSIONS USED IN DETERMINING THE THEORETICAL BRIDGE SEAT ELEVATIONS, SEE EXPANSION BEARING DETAILS, BRIDGE SHEET BR524.
5. FOR ADDITIONAL LAYOUT INFORMATION, SEE FRAMING PLAN (2 OF 2), BRIDGE SHEET BR517.
6. FOR THE TYPICAL CONCRETE CONSTRUCTION JOINT AND EXPANSION JOINT DETAILS, SEE TYPICAL BRIDGE DETAILS, SHEET BR512.
7. THE CONTRACTOR SHALL OUTLET THE 150 DIAMETER UNDERDRAIN THROUGH THE 175 DIAMETER WEEP. AFTER INSTALLATION OF THE UNDERDRAIN THE ANNULAR SPACE BETWEEN THE UNDERDRAIN AND THE WEEP SHALL BE FILLED WITH TYPE IV MORTAR CONFORMING TO SECTION 707.03 OF THE SPECIFICATIONS.

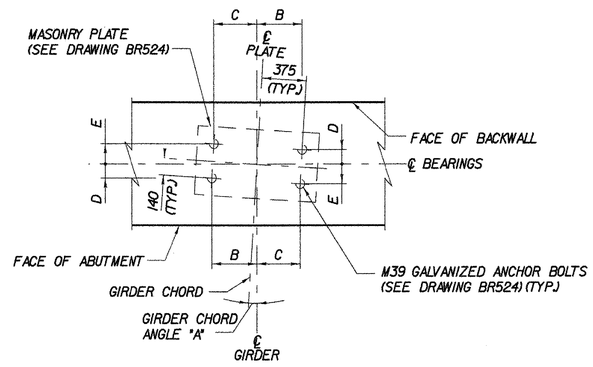

ANCHOR BOLT LAYOUT
NOT TO SCALE

ANCHOR BOLT TABLE

LOCATION	GIRDER CHORD ANGLE "A"	OFFSET B	OFFSET C	OFFSET D	OFFSET E
G1	-0° 57' 05"	373	377	146	134
G2	1° 18' 27"	378	372	131	149
G3	3° 33' 45"	383	366	116	163
G4	3° 33' 45"	383	366	116	163
G5	5° 47' 43"	387	359	101	177
G6	8° 00' 39"	391	352	86	191

0 1 2 3 4 5m

SCALE 1:50

STATE OF VERMONT
AGENCY OF TRANSPORTATION

Town Of BENNINGTON	Bridge No. BI2
Highway No. VT RTE 279	Log Sta. / Surv. Sta.
VT ROUTE 279 OVER FURNACE BROOK	
ABUTMENT 2 MASONRY	
Designed By M.D. BOWER	Drawn By D.J. HENDERSON
Checked By B.J. CARLSON Date 04/07	Bridge Design Supervisor K.M. WOJTKOWSKI Date 04/07
PROJECT BENNINGTON	PROJECT NO. AC NH F019-1(53)
TVGA CAD Drawing No. FBAbut2Conc.dgn	Date 04/12/2007
Bridge Sheet No. BR533	Sheet 225 of 577

TVGA CONSULTANTS

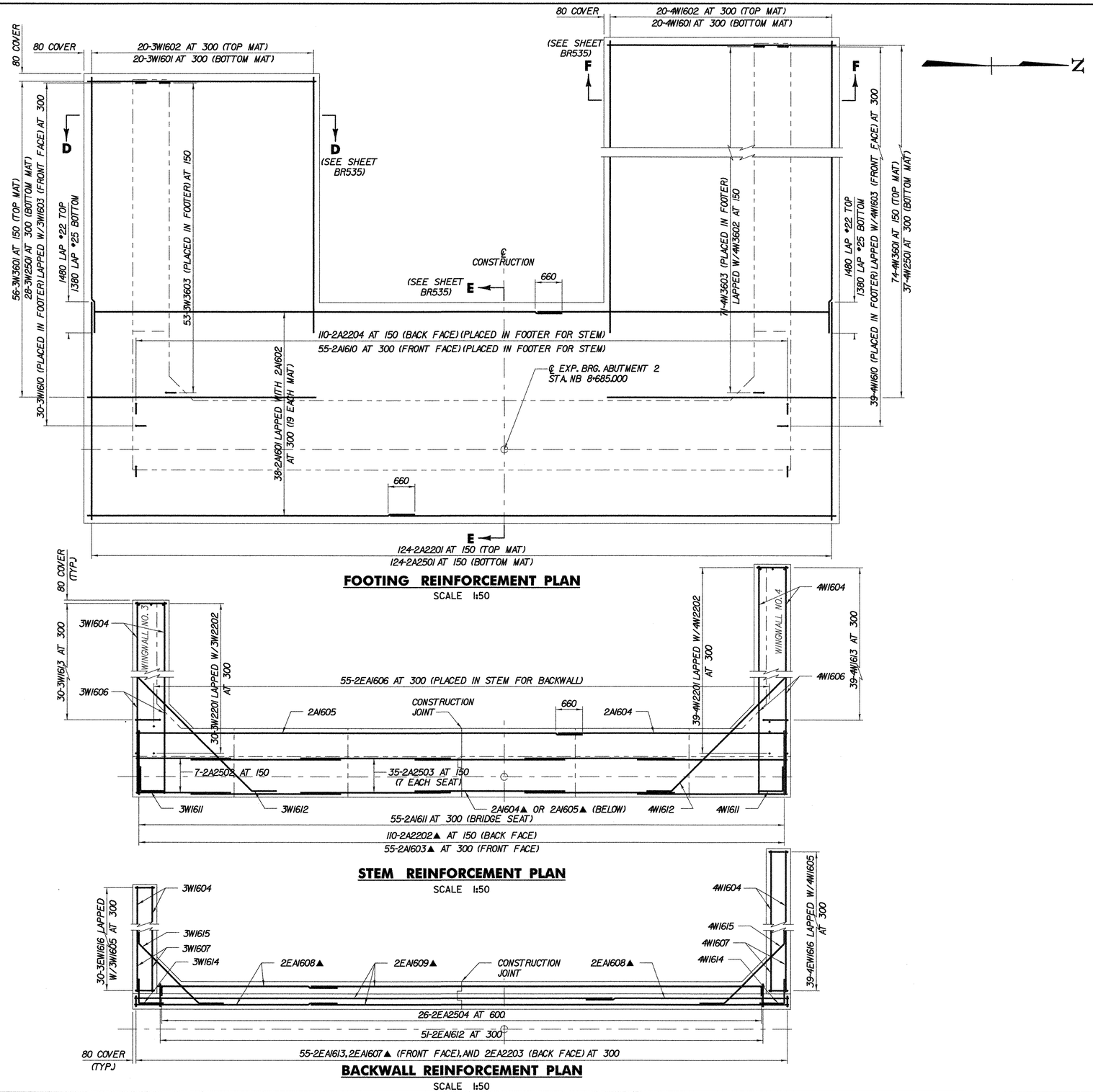

Metric

0 1 2 3 4 5m

SCALE 1:50

LEGEND:

E.F. EACH FACE
▲ CUT TO FIT IN FIELD

TVGA CONSULTANTS

STATE OF VERMONT
AGENCY OF TRANSPORTATION

Town Of BENNINGTON	Bridge No. BI2
Highway No. VT RTE 279	Log Sta. / Surv. Sta.
VT ROUTE 279 OVER FURNACE BROOK	

ABUTMENT 2 REINFORCEMENT PLANS

Designed By M.D. BOWER	Drawn By D.S. URBINO
Checked By B.J. CARLSON Date 04/07	Bridge Design Supervisor K.M. WOJTKOWSKI Date 04/07
PROJECT BENNINGTON	PROJECT NO. AC NH F019-1(53)
TVGA CAD Drawing No. FBAbut2Rebar1.dgn	Date 04/16/2007
Bridge Sheet No. BR534	Sheet 226 of 577

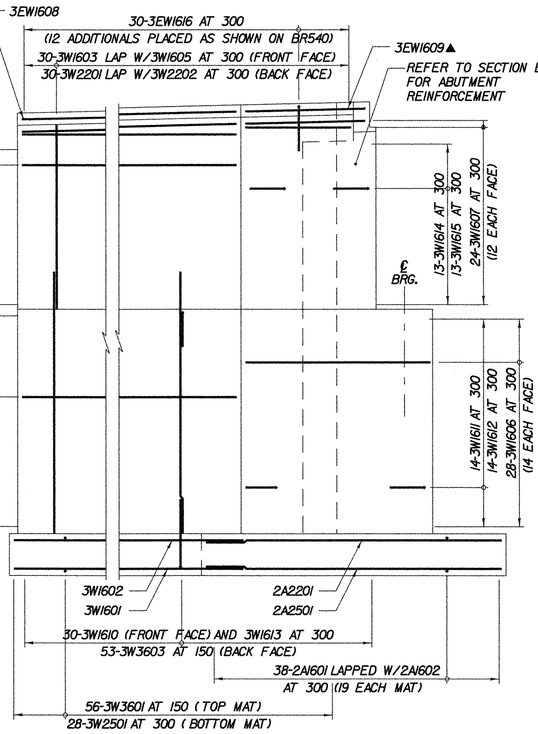

WINGWALL NO. 3 ELEVATION

SCALE 1:50

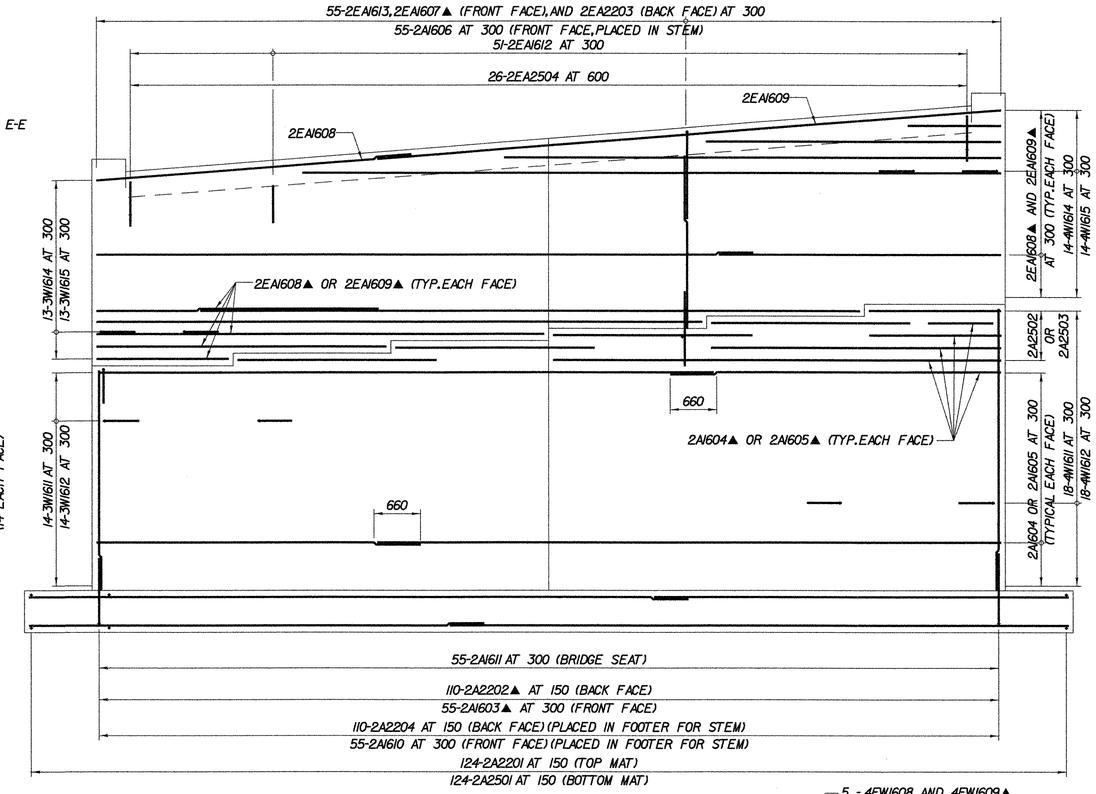

ELEVATION

SCALE 1:50

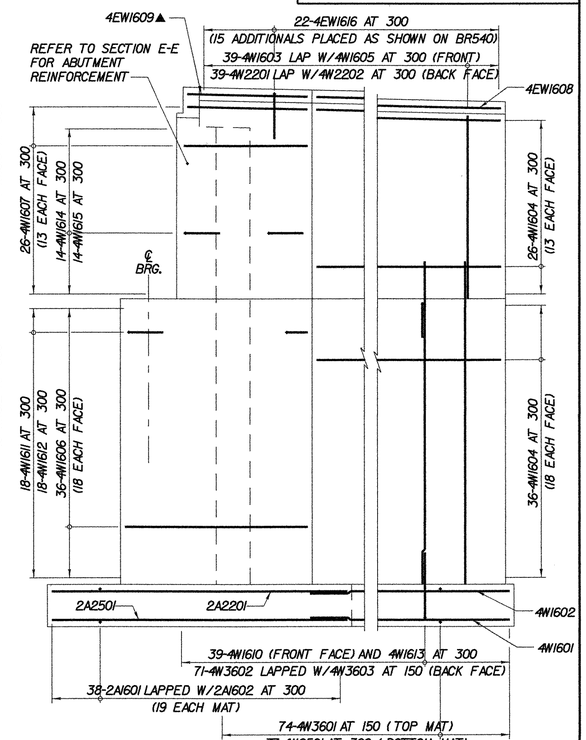

WINGWALL NO. 4 ELEVATION

SCALE 1:50

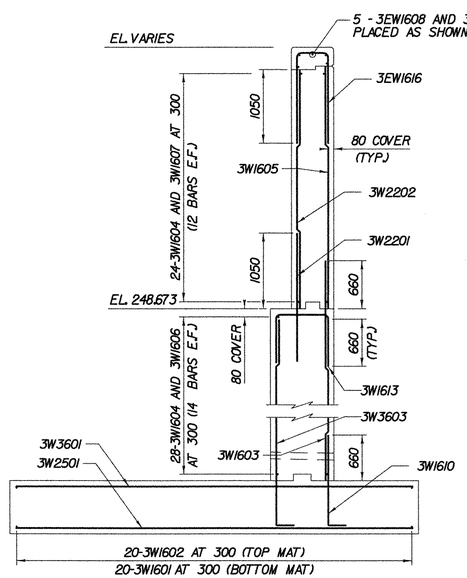

SECTION D–D

(WINGWALL 3)

SCALE 1:40

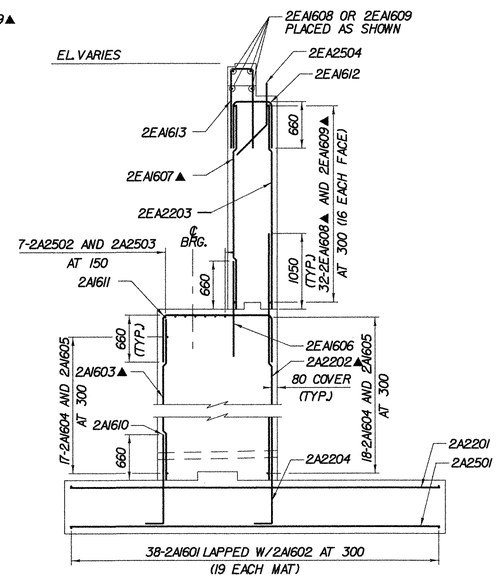

SECTION E–E

(ABUTMENT 2)

SCALE 1:40

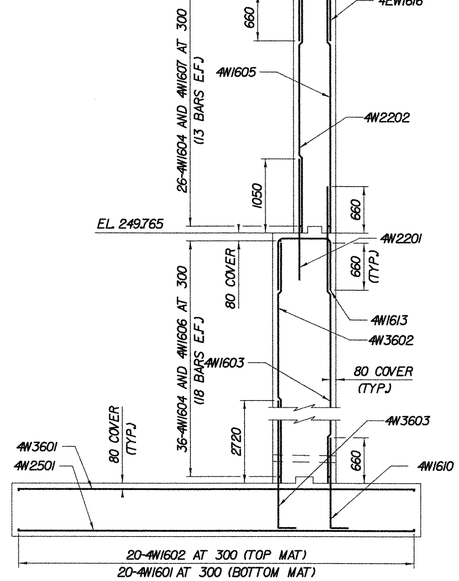

SECTION F–F

(WINGWALL 4)

SCALE 1:40

0 0.8 1.6 2.4 3.2 4.0m

SCALE 1:40

0 1 2 3 4 5m

SCALE 1:50

LEGEND:

E.F. EACH FACE
▲ CUT TO FIT IN FIELD

TVGA CONSULTANTS

STATE OF VERMONT
AGENCY OF TRANSPORTATION

Town Of BENNINGTON	Bridge No. BI2
Highway No. VT RTE 279	Log Sta. / Surv. Sta.
VT ROUTE 279 OVER FURNACE BROOK	

ABUTMENT 2 REINFORCEMENT DETAILS

Designed By M.D. BOWER	Drawn By D.S. URBINO
Checked By B.J. CARLSON Date 04/07	Bridge Design Supervisor K.M. WOJTKOWSKI Date 04/07
PROJECT BENNINGTON	PROJECT NO. AC NH F019-1(53)
TVGA CAD Drawing No. FBAbut2Rebar2.dgn	Date 04/12/2007
Bridge Sheet No. BR535	Sheet 227 of 577

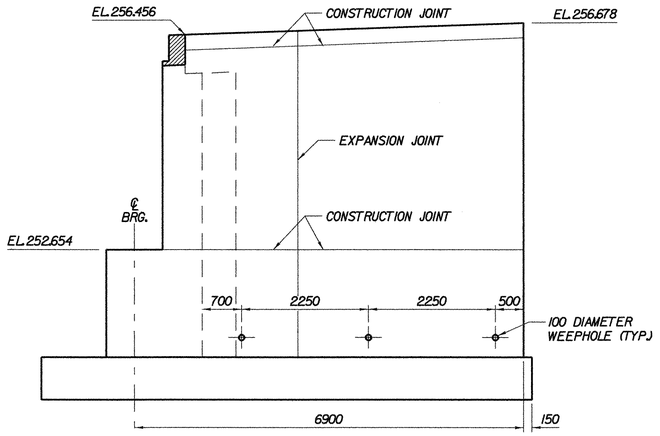

WINGWALL NO. 1 ELEVATION
SCALE 1:50

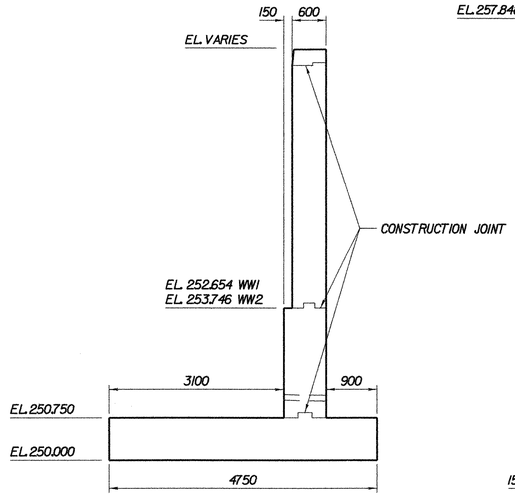

SECTION A–A
(WINGWALL 1 SHOWN, SECTION C-C, WINGWALL 2 SIMILAR)
SCALE 1:50

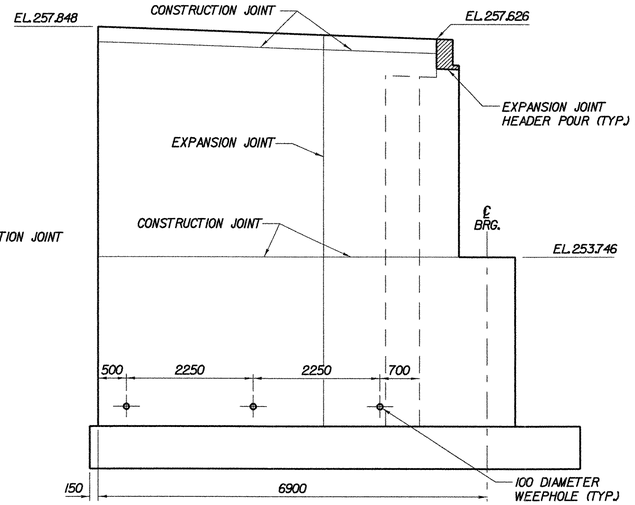

WINGWALL NO. 2 ELEVATION
SCALE 1:50

NOTES:

1. ABUTMENT SEAT ELEVATIONS MAY HAVE TO BE ADJUSTED TO ACCOMMODATE THE ACTUAL BEARINGS FURNISHED. IT IS THE RESPONSIBILITY OF THE CONTRACTOR TO COORDINATE ANY CHANGES IN THE BEARINGS WHICH MAY AFFECT THE ABUTMENT SEAT ELEVATIONS OR DIMENSIONS.
2. NO CONCRETE SHALL BE PLACED ABOVE THE WINGWALL HORIZONTAL CONSTRUCTION JOINT UNTIL THE BEAM PROFILES HAVE BEEN TAKEN AND FINAL FINISHED GRADE OF THE DECK IS APPROVED BY THE ENGINEER.

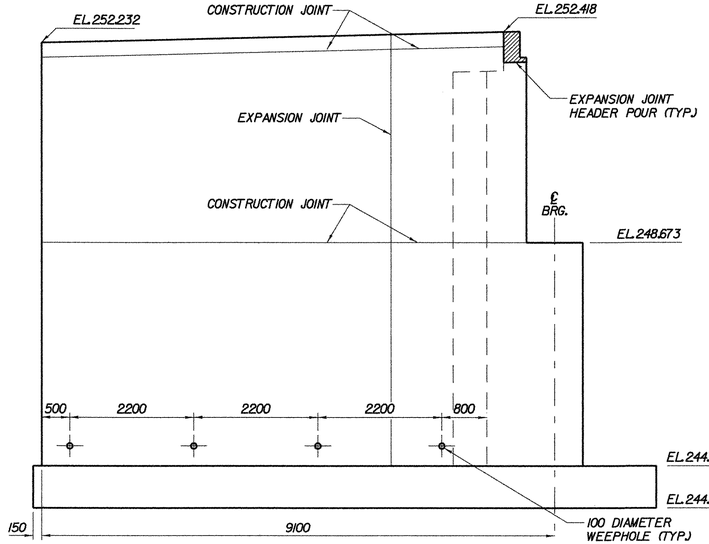

WINGWALL NO. 3 ELEVATION
SCALE 1:50

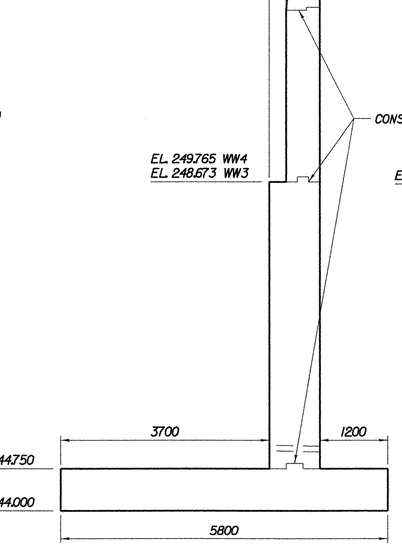

SECTION F–F
(WINGWALL 4 SHOWN, SECTION D-D, WINGWALL 3 SIMILAR)
SCALE 1:50

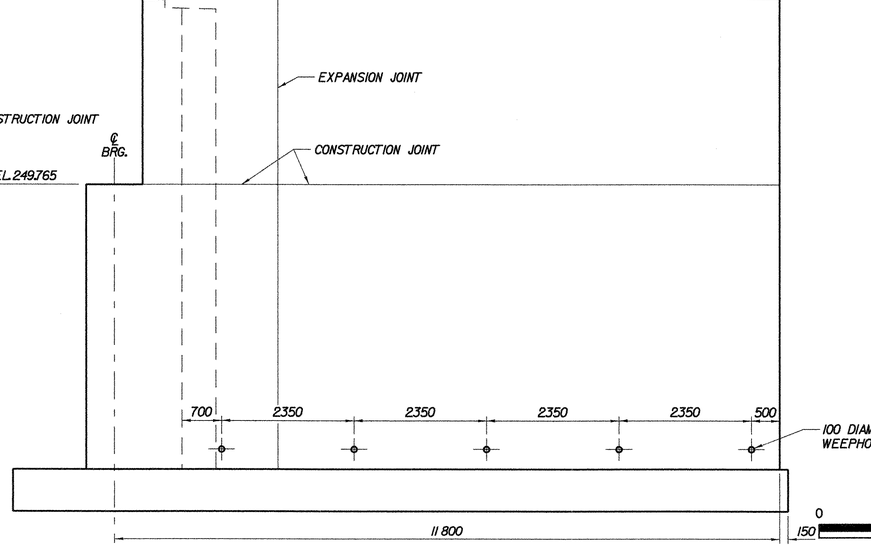

WINGWALL NO. 4 ELEVATION
SCALE 1:50

0 1 2 3 4 5m
SCALE 1:50

STATE OF VERMONT
AGENCY OF TRANSPORTATION

Town Of BENNINGTON	Bridge No. BI2
Highway No. VT RTE 279	Log Sta. / Surv. Sta.
VT ROUTE 279 OVER FURNACE BROOK	
WINGWALL MASONRY	
Designed By M.D. BOWER	Drawn By D.J. HENDERSON
Checked By B.J. CARLSON Date 04/07	Bridge Design Supervisor K.M. WOJTKOWSKI Date 04/07
PROJECT BENNINGTON	PROJECT NO. AC NH F019-1(53)
TVGA CAD Drawing No. FBWW.dgn	Date 04/11/2007
Bridge Sheet No. BR536	Sheet 228 of 577

TVGA CONSULTANTS

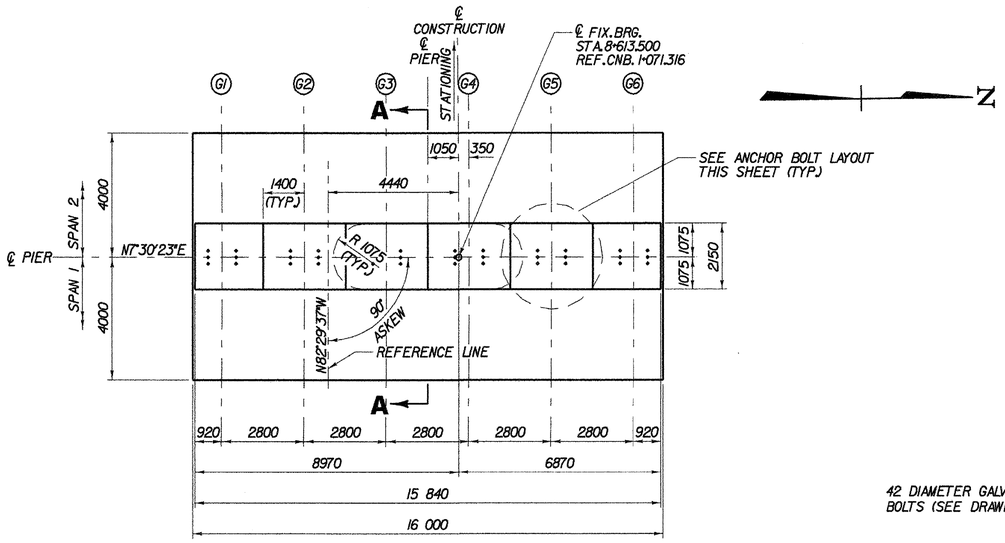

PLAN
SCALE 1:100

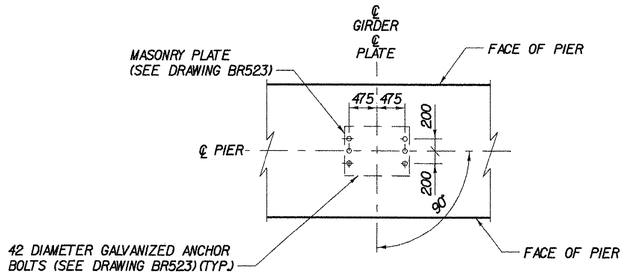

ANCHOR BOLT LAYOUT
SCALE 1:50

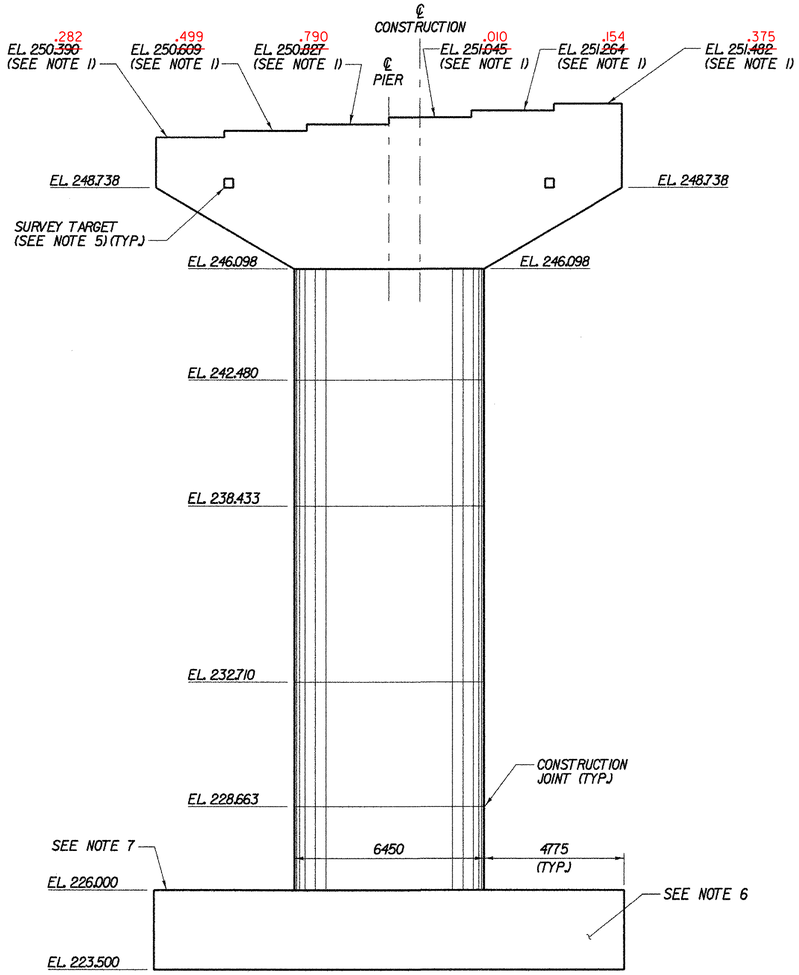

ELEVATION
SCALE 1:100

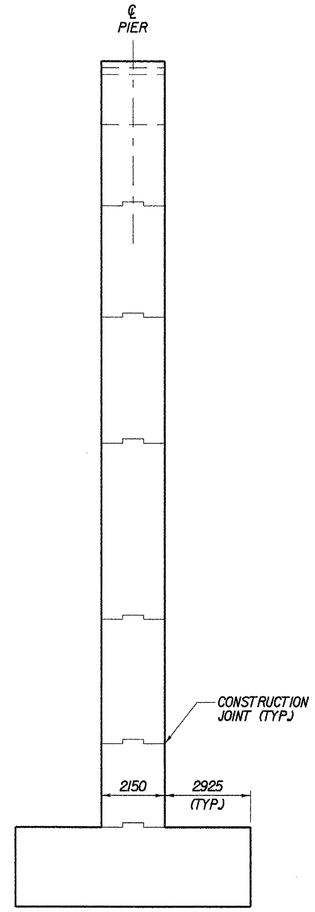

SECTION A–A
SCALE 1:100

NOTES:

1. PIER CAP ELEVATIONS MAY HAVE TO BE ADJUSTED TO ACCOMMODATE THE ACTUAL BEARINGS FURNISHED. IT IS THE RESPONSIBILITY OF THE CONTRACTOR TO COORDINATE ANY CHANGES IN THE BEARINGS WHICH MAY AFFECT THE PIER CAP ELEVATIONS OR DIMENSIONS.
2. FOR DIMENSIONS USED FOR DETERMINING THE THEORETICAL PIER CAP ELEVATIONS, SEE FIXED BEARING DETAILS, BRIDGE SHEET BR523.
3. LONGITUDINAL AND TRANSVERSE PIER CAP REINFORCING SPACING SHALL BE MODIFIED AS NECESSARY TO ASSURE THAT THERE WILL BE NO CONFLICT WITH THE BEARING DEVICE ANCHOR BOLTS.
4. FOR THE TYPICAL CONCRETE CONSTRUCTION JOINT DETAILS, SEE TYPICAL BRIDGE DETAILS, BRIDGE SHEET BR512.
5. SURVEY TARGETS SHALL BE ATTACHED TO THE PIER CAP AS SHOWN OR AS DIRECTED BY THE RESIDENT ENGINEER. THE TARGETS ARE INTENDED FOR SETTLEMENT MONITORING AND SHALL BE AS SPECIFIED UNDER ITEM 900.620 OF THE SPECIAL PROVISIONS. THE SURVEY TARGETS SHALL REMAIN ATTACHED TO THE PIER AS A PERMANENT INSTALLATION.
6. THE FOOTING SHALL BE CONSTRUCTED USING A MODIFIED HIGH PERFORMANCE CLASS B CONCRETE MIX. THE MODIFIED CONCRETE MIX PROPERTIES SHALL BE AS SPECIFIED IN ITEM 900.608, "SPECIAL PROVISION (HIGH PERFORMANCE CONCRETE, MASS POUR)."
7. MODIFIED SETTLEMENT PLATFORMS SHALL BE INSTALLED ON THE CORNERS OF THE PIER FOOTING. FOR THE DETAILS OF THE MODIFIED SETTLEMENT PLATFORM, SEE TYPICAL BRIDGE DETAILS, BRIDGE SHEET BR512.

0 1 2 3 4 5m
SCALE 1:50

0 2 4 6 8 10m
SCALE 1:100

STATE OF VERMONT
AGENCY OF TRANSPORTATION

Town Of BENNINGTON	Bridge No. BI2
Highway No. VT RTE 279	Log Sta. / Surv. Sta.
VT ROUTE 279 OVER FURNACE BROOK	
PIER MASONRY	
Designed By M.D. BOWER	Drawn By D.J. HENDERSON
Checked By J.T. DEPLANCHE Date 04/07	Bridge Design Supervisor K.M. WOJTKOWSKI Date 04/07
PROJECT BENNINGTON	PROJECT NO. AC NH F019-1(53)
TVGA CAD Drawing No. FBPierCono.dgn	Date 04/12/2007
Bridge Sheet No. BR537	Sheet 229 of 577

TVGA CONSULTANTS

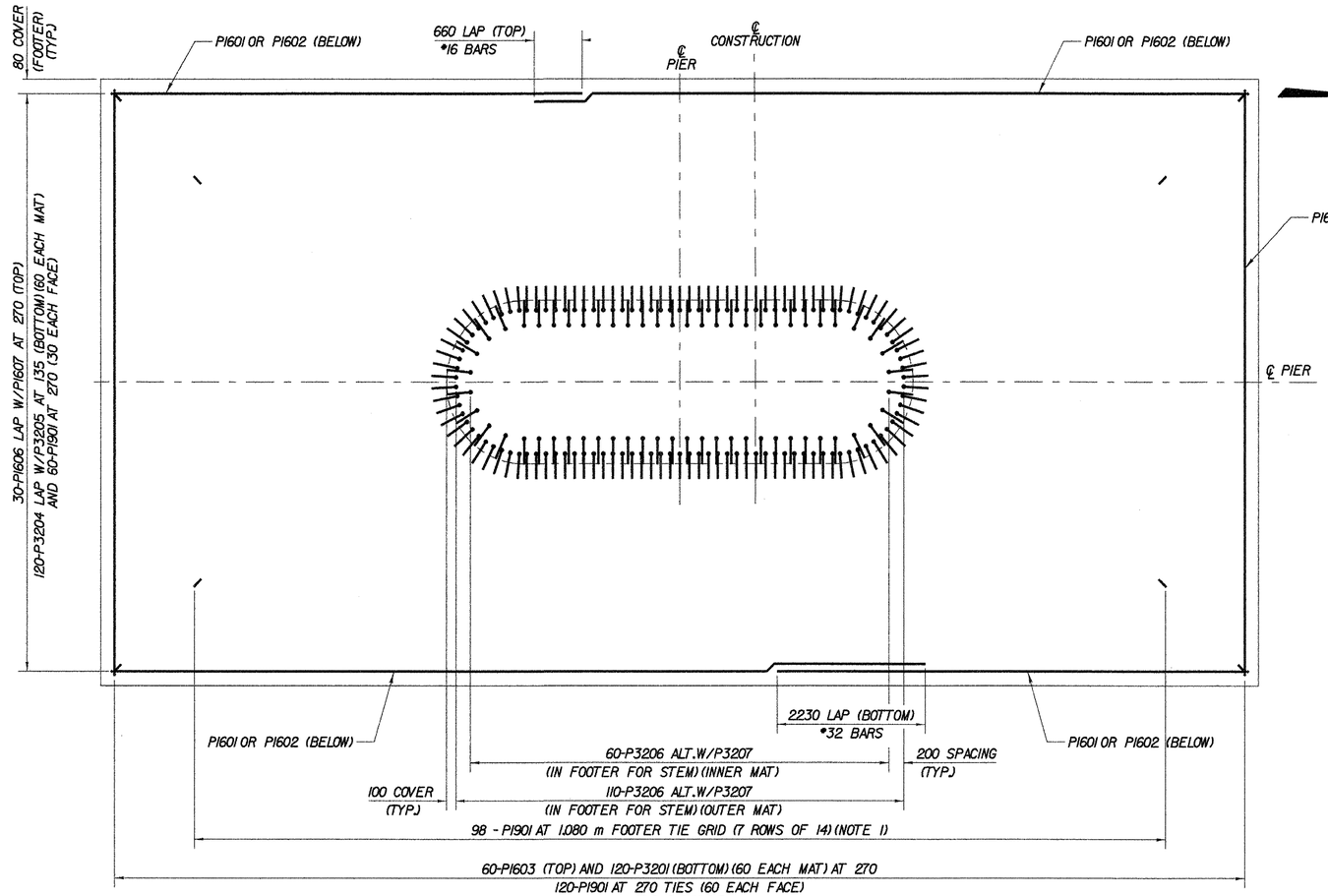

FOOTING

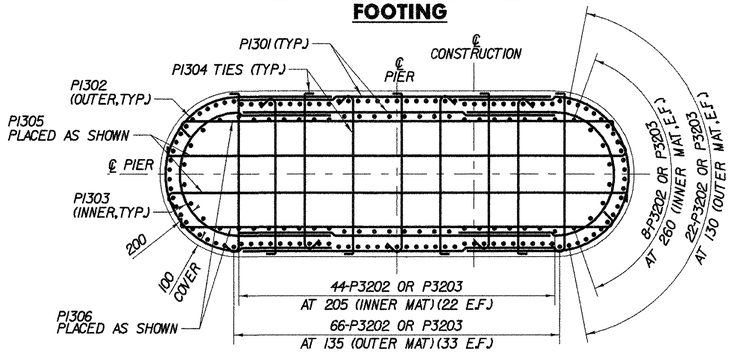

COLUMN

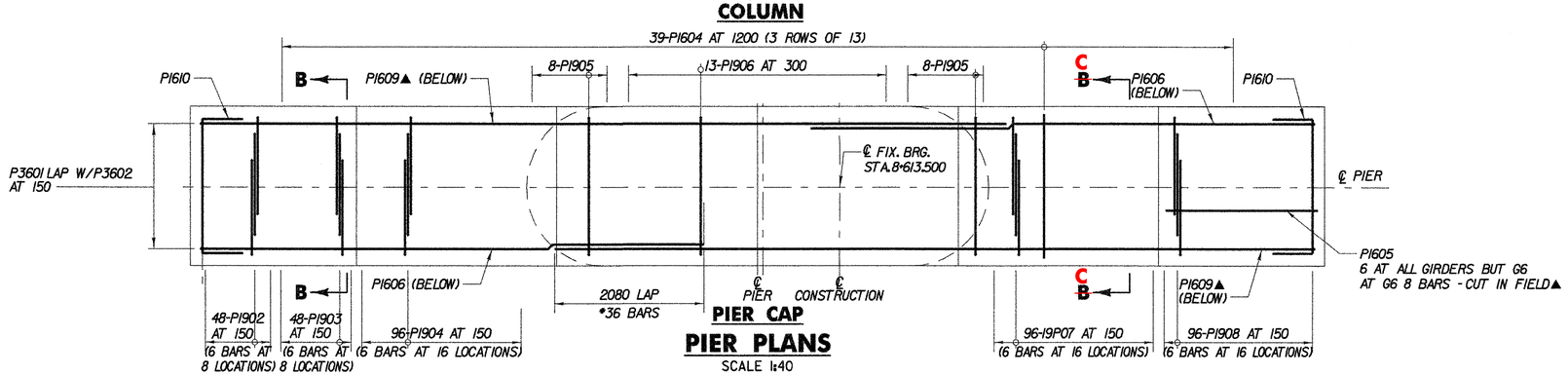

PIER CAP

PIER PLANS

SCALE 1:40

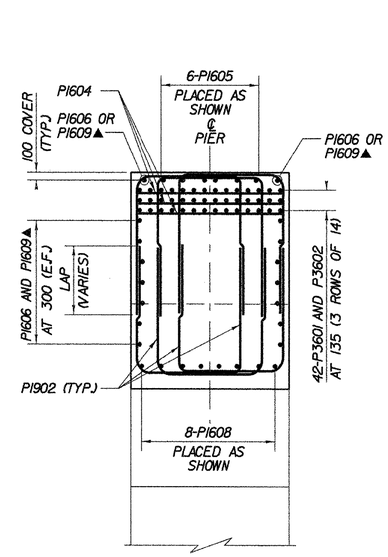

SECTION B–B

SCALE 1:40

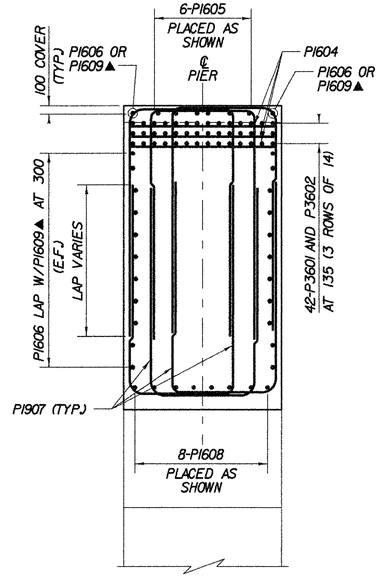

SECTION C–C

SCALE 1:40

NOTES:

1. FOOTING TIE BARS, P1901, MAY BE ELIMINATED WITHIN THE COLUMN REINFORCEMENT.
   ALL P1901 TIE BARS WERE INSTALLED

LEGEND:

E.F. EACH FACE
▲ CUT TO FIT IN FIELD

0 0.8 1.6 2.4 3.2 4.0m

SCALE 1:40

TVGA CONSULTANTS

STATE OF VERMONT
AGENCY OF TRANSPORTATION

Town Of BENNINGTON	Bridge No. BI2
Highway No. VT RTE 279	Log Sta. / Surv. Sta.
VT ROUTE 279 OVER FURNACE BROOK	
PIER REINFORCEMENT (1 OF 2)	
Designed By M.D. BOWER	Drawn By D.J. HENDERSON
Checked By B.J. CARLSON Date 04/07	Bridge Design Supervisor K.M. WOJTKOWSKI Date 04/07
PROJECT BENNINGTON	PROJECT NO. AC NH F019-1(53)
TVGA CAD Drawing No. FBPierReb.dgn	Date 04/16/2007
Bridge Sheet No. BR538	Sheet 230 of 577

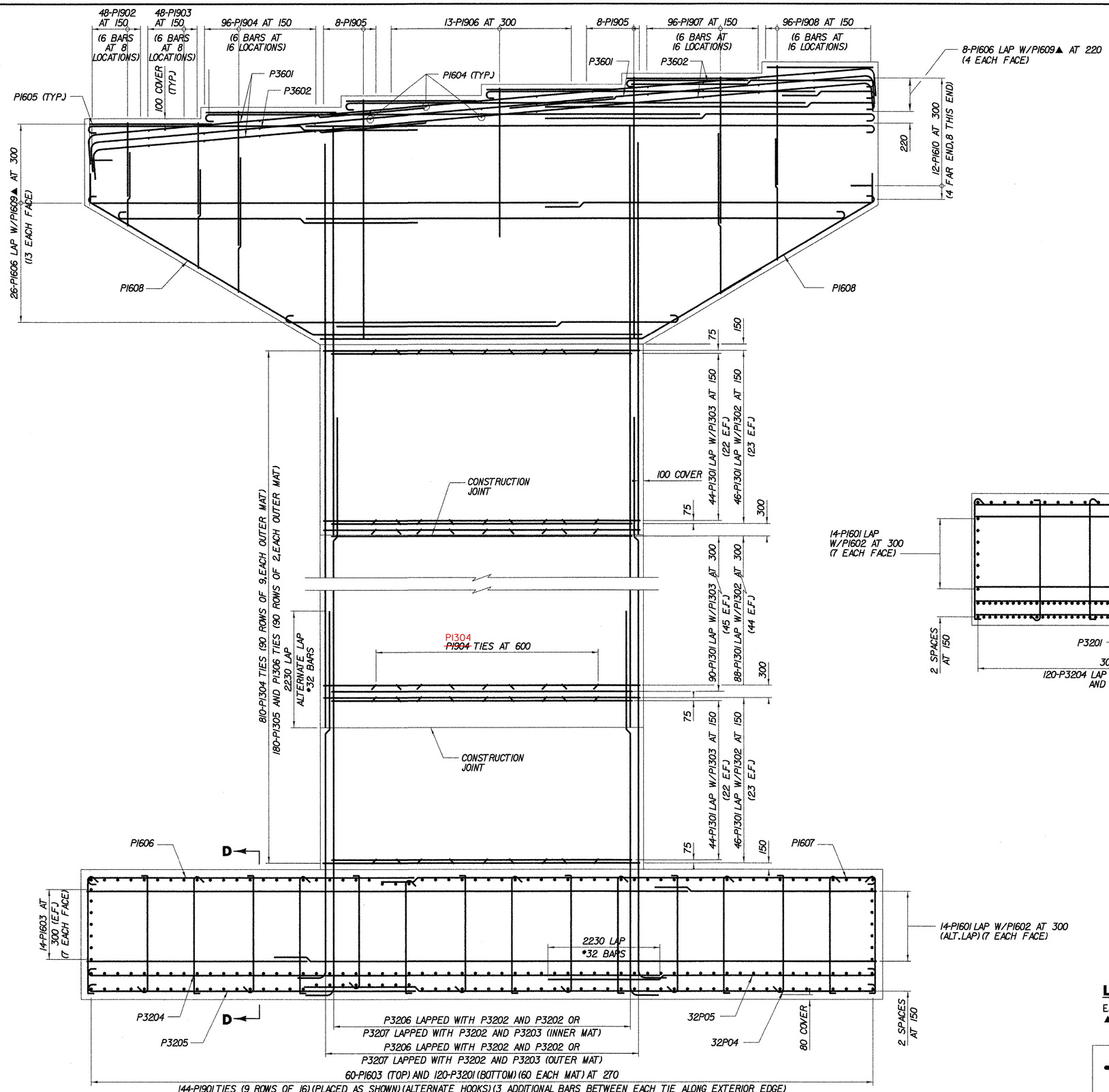

REINFORCEMENT ELEVATION

SCALE 1:40

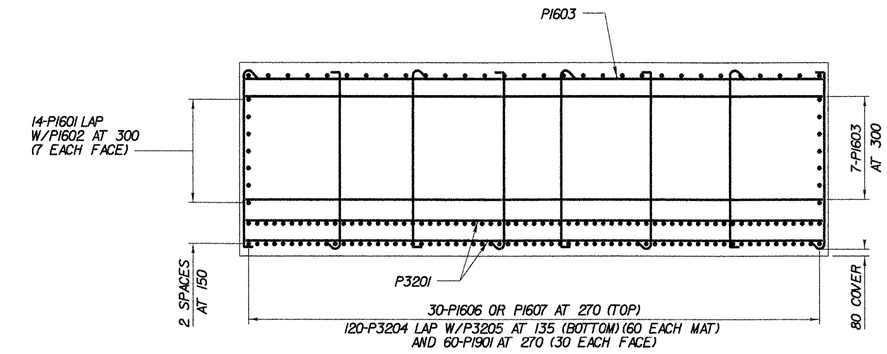

SECTION D-D

SCALE 1:40

0 0.8 1.6 2.4 3.2 4.0m

SCALE 1:40

LEGEND:

E.F. EACH FACE
▲ CUT TO FIT IN FIELD

TVGA CONSULTANTS

STATE OF VERMONT
AGENCY OF TRANSPORTATION

Town Of BENNINGTON	Bridge No. B12
Highway No. VT RTE 279	Log Sta. / Surv. Sta.
VT ROUTE 279 OVER FURNACE BROOK	
PIER REINFORCEMENT (2 OF 2)	
Designed By M.D. BOWER	Drawn By D.J. HENDERSON
Checked By B.J. CARLSON Date 04/07	Bridge Design Supervisor K.M. WOJTKOWSKI Date 04/07
PROJECT BENNINGTON	PROJECT NO. AC NH F019-1(53)
TVGA CAD Drawing No. FBPierReb2.dgn	Date 04/16/2007
Bridge Sheet No. BR539	Sheet 231 of 577

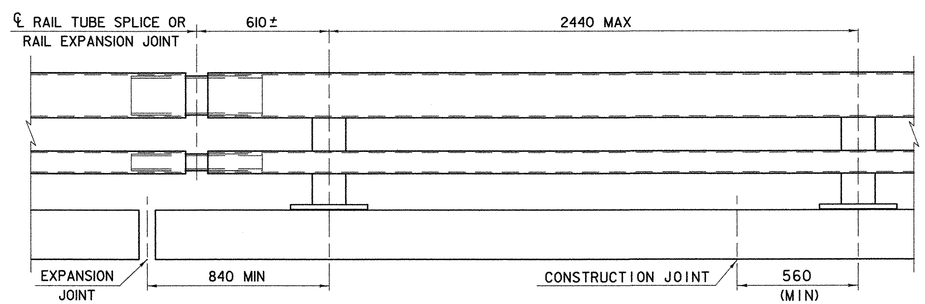

BRIDGE RAILING ELEVATION

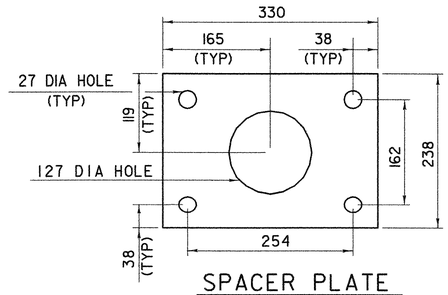

SPACER PLATE

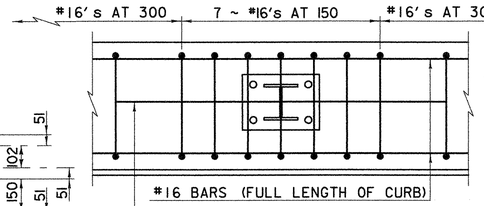

CURB REINFORCING PLAN

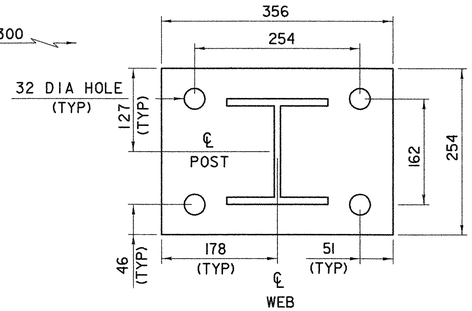

POST AND BASE PLATE

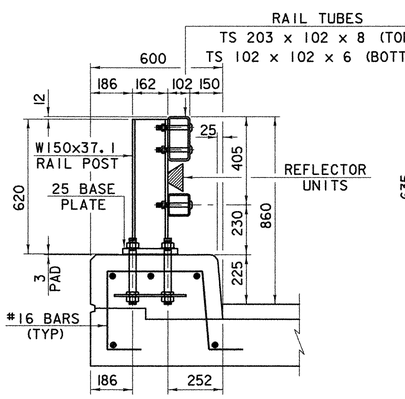

TYPICAL SECTION

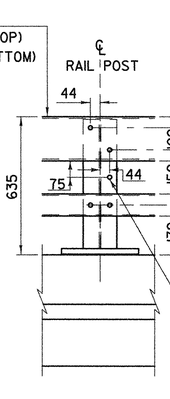

ELEVATION

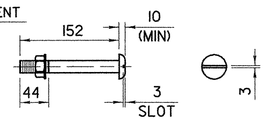

M20 DIA M164M (TYPE 1)
ROUND HEAD BOLT

(WITH WASHER AND PREVAILING TORQUE TYPE LOCK NUT)
(SEE NOTE #9)
ONLY FULL DIAMETER BODY BOLTS WILL BE ALLOWED.

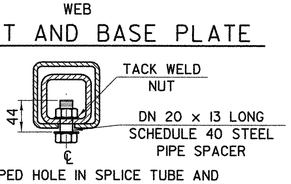

16 DIA TAPPED HOLE IN SPLICE TUBE AND
29 x 'C' SLOT IN RAIL TUBE FOR M16
BOLT AND PLAIN HARDENED WASHER

EXPANSION JOINT SECTION

FOR DETAILS NOT SHOWN
SEE "RAIL TUBE SPLICE SECTION"

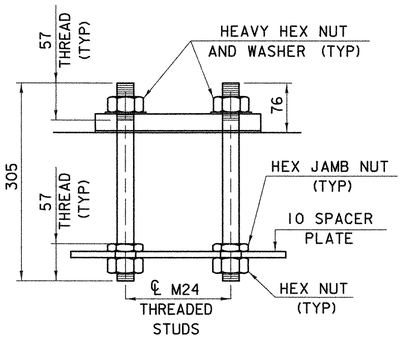

RAIL POST ANCHORAGE

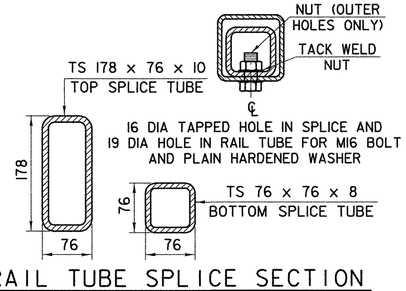

RAIL TUBE SPLICE SECTION

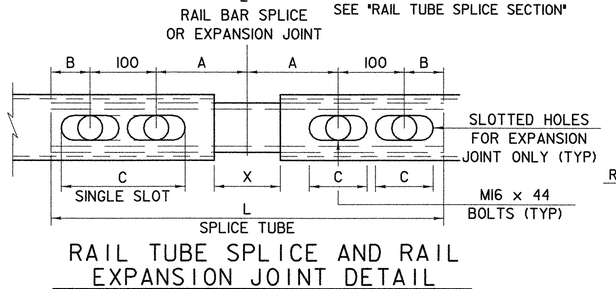

RAIL TUBE SPLICE AND RAIL
EXPANSION JOINT DETAIL

(BOTTOM VIEW)

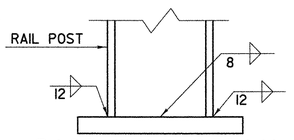

BASE WELD DETAIL

NOTES

1. ALL WORK AND MATERIALS SHALL CONFORM TO THE PROVISIONS OF SECTION 525, "RAILINGS OF THE STANDARD SPECIFICATION FOR CONSTRUCTION."
2. TUBING AND POSTS SHALL MEET THE REQUIREMENTS OF SECTION 732, "RAILING MATERIALS OF THE STANDARD SPECIFICATIONS FOR CONSTRUCTION," EXCEPT THAT THE DROP-WEIGHT TEAR TEST IN SECTION 732 SHALL NOT APPLY TO THE STRUCTURAL TUBING IN THIS STANDARD.
3. ALL EXPOSED CUT OR SHEARED EDGES SHALL BE ROUNDED TO A 2mm RADIUS AND BE FREE OF BURRS.
4. RAIL POSTS SHALL BE SET NORMAL TO GRADE.
5. SECTIONS OF RAIL TUBE SHALL BE ATTACHED TO A MINIMUM OF TWO (2) RAIL POSTS AND PREFERABLY TO AT LEAST FOUR (4) POSTS.
6. RAIL TUBE EXPANSION JOINTS SHALL BE PROVIDED IN ANY RAIL BAY SPANNING A SUPERSTRUCTURE EXPANSION JOINT. EXPANSION JOINT WIDTH SHALL BE "X" AT 7°C AND WILL BE ADJUSTED IN THE FIELD BY THE ENGINEER FOR OTHER TEMPERATURES.
7. ALL PARTS SHALL BE GALVANIZED AFTER FABRICATION IN ACCORDANCE WITH AASHTO M111, EXCEPT THAT HARDWARE SHALL MEET THE REQUIREMENTS OF AASHTO M232M.
8. RAIL POSTS ANCHORING NUTS SHALL BE TIGHTENED TO A SNUG FIT AND GIVEN AN ADDITIONAL ONE-EIGHTH TURN.
9. RAIL TUBES SHALL BE ATTACHED USING M20 FULL DIAMETER BODY AASHTO M164 (TYPE 1) ROUND HEAD BOLTS INSERTED THROUGH THE FACE OF THE TUBE. HOLES IN POSTS SHALL BE 2mm LARGER THAN THE BOLT SIZE.
10. HOLES IN RAILS FOR RAIL TUBE ATTACHMENT MAY BE FIELD-DRILLED. HOLES SHALL BE COATED WITH AN APPROVED ZINC-RICH PAINT PRIOR TO ERECTION.
11. IF THERE IS A CONFLICT BETWEEN THESE STANDARD DETAILS AND THE DESIGN, THE REQUIREMENTS OF THE DESIGN DRAWINGS SHALL BE FOLLOWED.
12. ANY BENDING OF RAIL SHALL BE BY SHOP PROCEDURE ONLY.
13. THE FABRICATOR SHALL SUBMIT SHOP DRAWINGS INCLUDING WELDING PROCEDURES TO THE STRUCTURES SECTION FOR APPROVAL IN ACCORDANCE WITH THE PROVISION OF 506.04, SHOP DRAWINGS. ALL WELDING SHALL CONFORM WITH SECTION 506.10.
14. RAIL POST AND BASE PLATES SHALL BE TESTED FOR IMPACT PROPERTIES IN ACCORDANCE WITH ASTM A370 CHARPY IMPACT TESTING USING TYPE A SPECIMENS.

MATERIALS

RAIL TUBES.....ASTM A500, GRADE B OR ASTM A501
RAIL POSTS AND BASE PLATE.....ASTM A709/A709M, GRADE 345
ALL OTHER SHAPES AND PLATES.....ASTM A709/A709M, GRADE 250
ANCHOR STUDS.....ASTM F568M CLASS 8.8
ALL OTHER BOLTS (UNLESS NOTED).....AASHTO M164M, TYPE 1

NUTS FOR AASHTO M164M (ASTM A325M) BOLTS AND ANCHOR STUDS SHALL COMPLY WITH AASHTO M291M (ASTM A563M).

WASHERS SHALL COMPLY WITH AASHTO M293M (ASTM F436M) SPECIFICATIONS.

3mm PAD SHALL COMPLY WITH STANDARD SPECIFICATION SUBSECTION 731.01 OR 731.02.

SPLICE TABLE					
T	A	B	C	L	X
NA	100	50	--	510	20
EXPANSION JOINT TABLE					
<100	100	50	65	510	65
>100 <165	140	60	90	605	105
>165 <230	165	85	230*	705	130
>230 <330	215	110	280*	860	180

T = TOTAL MOVEMENT BETWEEN BRIDGE EXPANSION JOINTS. SEE NOTE 6
* = SINGLE SLOT

VERMONT AGENCY OF TRANSPORTATION

DETAIL BR1M

BRIDGE RAILING - N.E.T.C. 2 RAIL

Town Of BENNINGTON		Bridge No. BI2	
Highway No. VT RTE 279		Log Sta. / Surv. Sta.	
VT ROUTE 279 OVER FURNACE BROOK			
BRIDGE RAILING - NETC 2 RAIL			
Designed By VAOT		Drawn By VAOT	
Checked By VAOT	Date	Bridge Design Supervisor VAOT	Date
PROJECT BENNINGTON		PROJECT NO. AC NH F019-1(53)	
TVGA CAD Drawing No. FBAppGR.dgn		Date 04/10/2007	
Bridge Sheet No. BR540		Sheet 232 of 577	

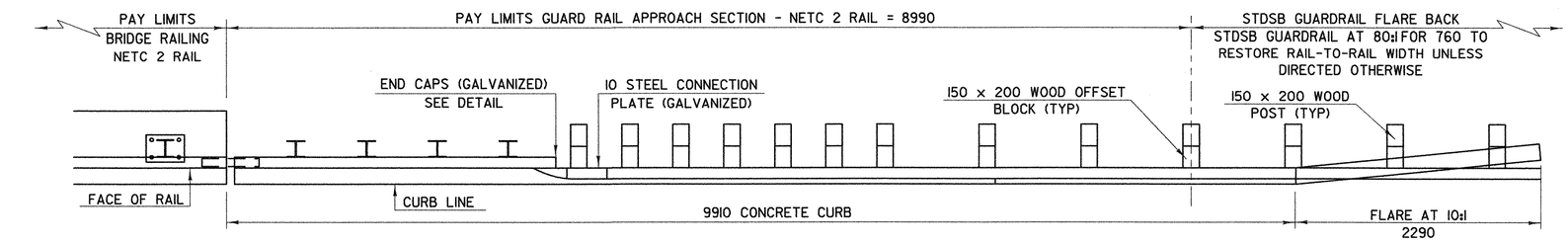

RAILING TRANSITION PLAN

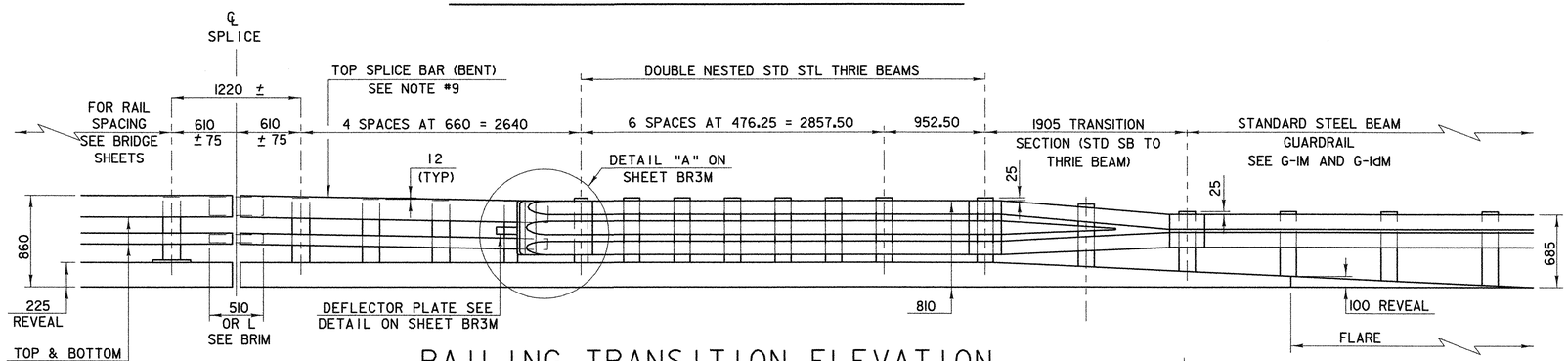

RAILING TRANSITION ELEVATION

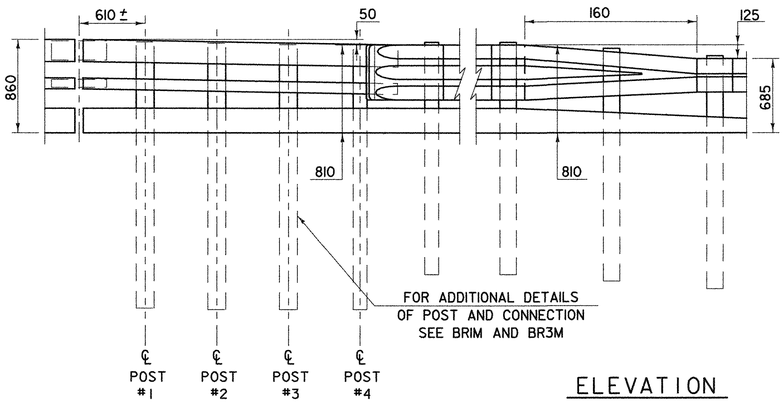

ELEVATION

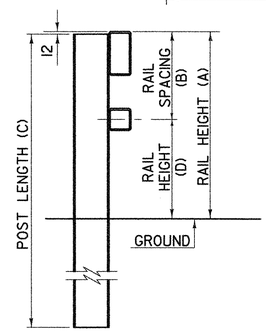

TYPICAL SECTION

POST NUMBER	RAIL HEIGHT (A)	RAIL SPACING (B)	POST LENGTH (C)	RAIL HEIGHT (D)
1	850	400	2440	450
2	840	395	2440	445
3	825	385	2440	440
4	810	375	2440	435

NOTES

1. REFER TO SHEET BRIM FOR ADDITIONAL DETAILS, NOTES AND MATERIAL SPECIFICATIONS.
2. PAYMENT FOR GUARD RAIL APPROACH SECTION - NETC 2 RAIL SHALL INCLUDE THE TERMINAL CONNECTOR, THE CONNECTION PLATE, THE DEFLECTOR PLATE, RAIL, POSTS, BLOCKS AND ATTACHMENT HARDWARE.
3. THE REFLECTORIZED ALUMINUM DELINEATION IS TO BE ERECTED EVERY 9m (OR CLOSEST POST) WITH A M16 BOLT. DELINEATORS SHALL MEET SPECIFICATION REQUIREMENTS FOR ASTM B209 ALLOY 5052-H32.
4. REFLECTIVE MATERIAL SHALL MEET REQUIREMENTS OF SUBSECTION 750.08 AND SHALL BE OF ENCAPSULATED LENS SILVER OR AMBER. AMBER IS TO BE INSTALLED ON THE DRIVER'S LEFT AND SILVER ON THEIR RIGHT.
5. ON BRIDGES WITH A SIDEWALK, DELINEATORS ARE NOT TO BE INSTALLED ON THE SIDEWALK SIDE OF THE BRIDGE (I.E. DELINEATORS INSTALLED ONLY ON THE CURB SIDE AND ON THE APPROACH ON THE CURB SIDE). PAYMENT SHALL BE SUBSIDIARY TO ALL OTHER ITEMS.
6. ALL APPROACH RAIL SPLICES SHALL BE LAPPED IN THE DIRECTION OF TRAFFIC FLOW.
7. ALL BRIDGE APPROACH RAIL MATERIALS, DIMENSION SIZES AND NOTES SHALL BE THE SAME AS THOSE OF THE BRIDGE RAIL, UNLESS OTHERWISE NOTED.
8. APPROACH RAIL BOLTS SHALL BE ASTM F568M, CLASS 4.6 AND NUTS SHALL BE AASHTO M291M (ASTM A563M GRADE A OR BETTER) (GALVANIZED). STEEL WASHERS SHALL BE ASTM F844M.
9. WELD TOP SPLICE BAR TO FIT BEND. USE COMPLETE PENETRATION WELD (B-U2).
10. THE CONCRETE CURB WILL BE PAID FOR AS ITEM 616.28, "CAST-IN-PLACE CONCRETE CURB, TYPE B."

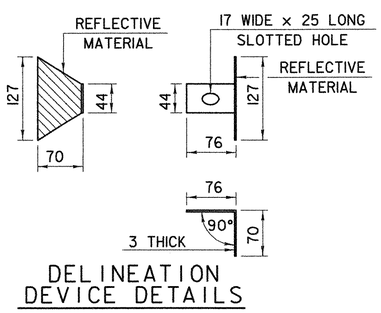

DELINEATION DEVICE DETAILS

VERMONT AGENCY OF TRANSPORTATION

DETAIL BR2M

BRIDGE RAIL - NETC 2 RAIL - THRIE BEAM APPROACH RAIL

Town Of BENNINGTON	Bridge No. BI2
Highway No. VT RTE 279	Log Sta. / Surv. Sta.
VT ROUTE 279 OVER FURNACE BROOK	
BRIDGE RAILING - NETC 2 RAIL - THRIE BEAM RAIL	
Designed By VAOT	Drawn By VAOT
Checked By VAOT Date	Bridge Design Supervisor VAOT Date
PROJECT BENNINGTON	PROJECT NO. AC NH F019-1(53)
TVGA CAD Drawing No. FBAppGR2.dgn	Date 04/10/2007
Bridge Sheet No. BR541	Sheet 233 of 577

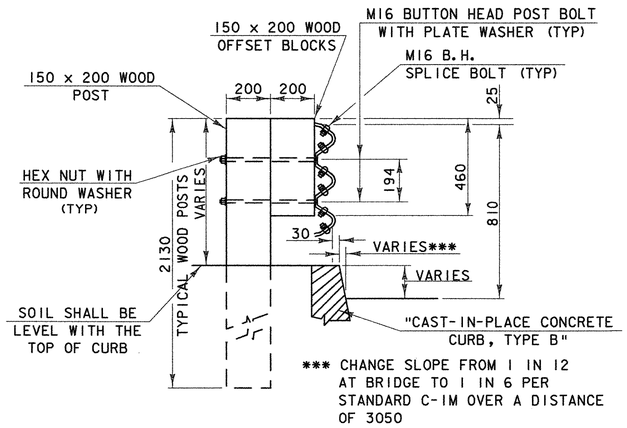

WOOD POST-RAIL ASSEMBLY

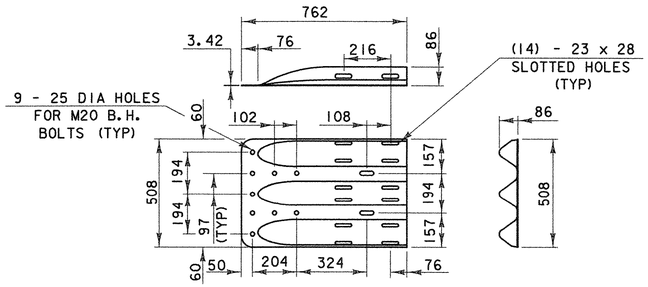

THRIE-BEAM TERMINAL CONNECTOR (HM-TF-13/RE-67)

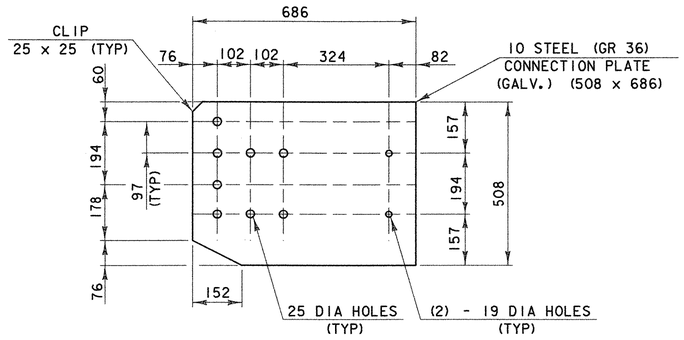

CONNECTION PLATE

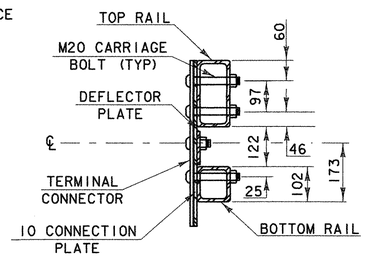

SECTION C-C (CONNECTION PLATE)

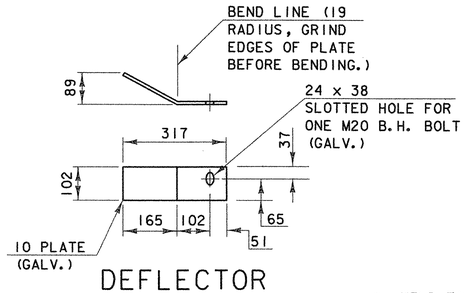

DEFLECTOR PLATE DETAIL

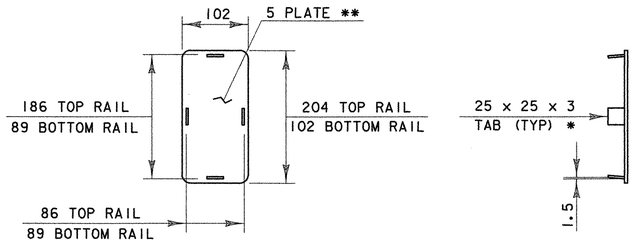

* WELD TABS TO END CAP PLATE IN TAPERED POSITION SO CAP CAN BE JAMMED INTO END OF RAIL TUBE.
** ROUND CORNERS 12 RADIUS (TYP)

END CAP DETAIL

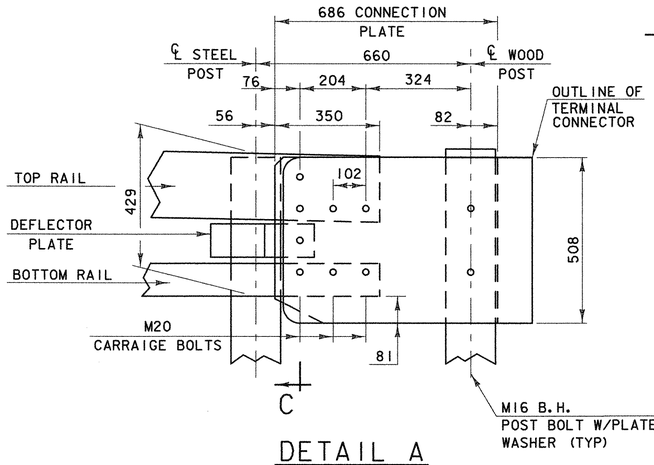

DETAIL A

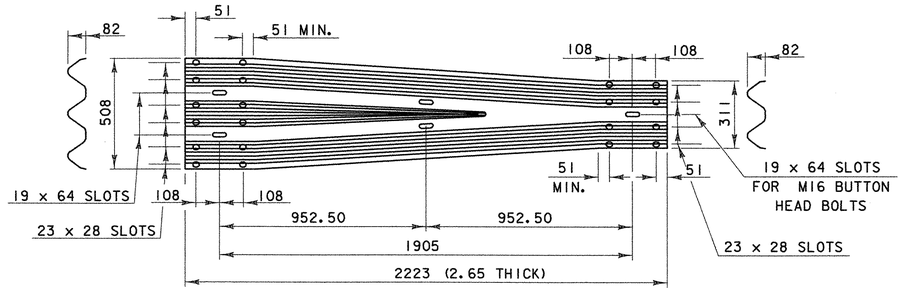

THRIE-BEAM TO STD SB TRANSITION SECTION (HM-TF-13/RE-69)

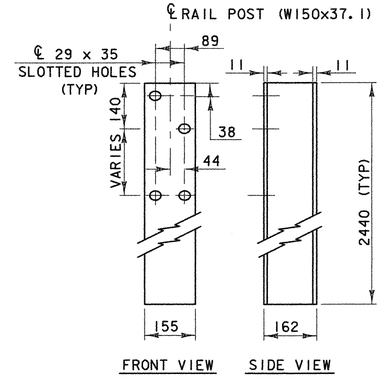

RAIL POST

DETAIL BR3M

BRIDGE RAILING - NETC 2 RAIL - THRIE BEAM APPROACH RAIL

Town Of BENNINGTON	Bridge No. BI2
Highway No. VT RTE 279	Log Sta. / Surv. Sta.
VT ROUTE 279 OVER FURNACE BROOK	
BRIDGE RAILING - NETC 2 RAIL - THRIE BEAM RAIL	
Designed By VAOT	Drawn By VAOT
Checked By VAOT Date	Bridge Design Supervisor VAOT Date
PROJECT BENNINGTON	PROJECT NO. AC NH F019-1(53)
TVGA CAD Drawing No. FBAppGR3.dgn	Date 04/10/2007
Bridge Sheet No. BR542	Sheet 234 of 577

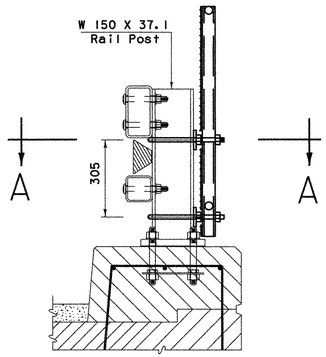

TYPICAL SECTION

NOTE: FOR DIMENSIONS SEE SHEETS BRIM & BR2M.

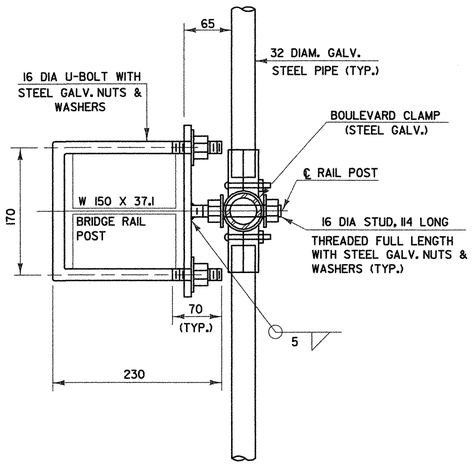

SECTION A-A

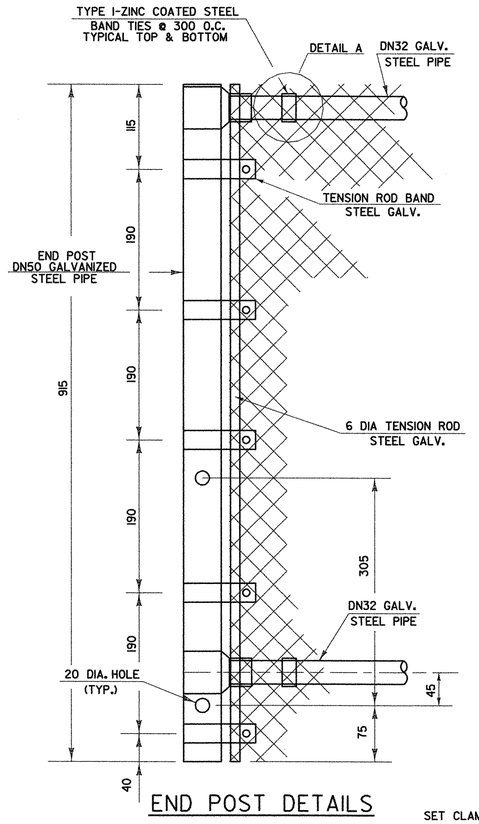

END POST DETAILS

NOTES

1. THREADS OF STUDS AND U-BOLTS TO BE M16 x 2.
2. ALL CONNECTION PLATES TO BE GALVANIZED AFTER FABRICATION.
3. DN 32 PIPE LENGTH SHALL BE FIELD CUT TO FIT POST SPACING.
4. CHAIN LINK FABRIC TO BE KNUCKLED TOP AND BOTTOM.
5. ALL BOLTS, THREADED STUDS AND WASHERS SHALL CONFORM TO THE SPECIFICATIONS FOR AASHTO M164M, TYPE 1. NUTS SHALL CONFORM TO AASHTO M291M.
6. ALL STEEL PLATES SHALL CONFORM TO THE SPECIFICATION FOR AASHTO M270/M270M, GRADE 250.
7. ALL GALVANIZING SHALL CONFORM TO THE REQUIREMENTS OF AASHTO M-181 WITH HARDWARE AND FITTINGS CONFORMING TO THE REQUIREMENTS OF AASHTO M-111 OR AASHTO M-232 WHICHEVER IS APPLICABLE. ALL BOLTS, NUTS AND WASHERS SHALL BE EITHER HOT-DIP GALVANIZED IN ACCORDANCE WITH THE ABOVE AASHTO REQUIREMENTS OR MECHANICALLY GALVANIZED USING A MECHANICALLY DEPOSITED PROCESS CONFORMING TO THE REQUIREMENTS OF AASHTO M-298, CLASS 110.
8. GALVANIZED CHAIN-LINK FABRIC SHALL BE TYPE I (ZINC) CLASS D AS SPECIFIED IN AASHTO M181.
9. SNOW BARRIER SHALL BEGIN AT THE BRIDGE RAIL POST WHICH WILL PROVIDE A MINIMUM DISTANCE OF 6m (AS SHOWN) OR AS DIRECTED BY THE ENGINEER.
10. ALL DN (I.E. DIAMETER NOMINAL) REFERENCES TO GALVANIZED STEEL PIPE SHALL REFER TO THE NOMINAL PIPE SIZE.
11. ALL POSTS, RAILS AND HARDWARE SHALL BE ZINC COATED AND CONFORM TO THE REQUIREMENTS OF AASHTO M181, GRADE 1 OR GRADE 2.

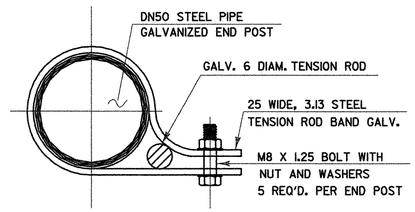

TENSION ROD BAND

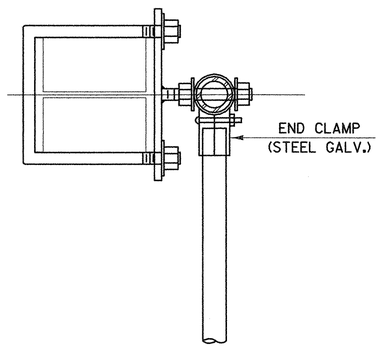

PLAN VIEW AT END POST

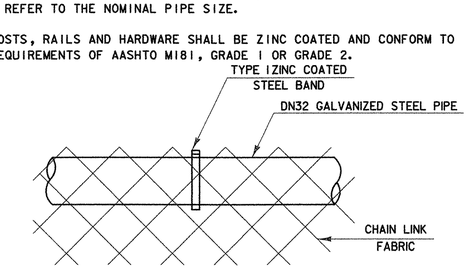

DETAIL A

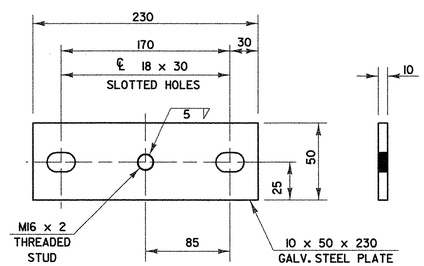

PLATE DETAILS

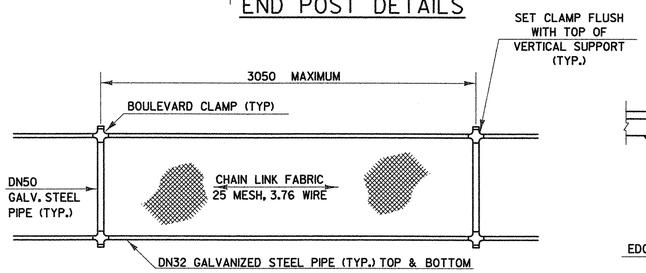

ELEVATION SNOW BARRIER

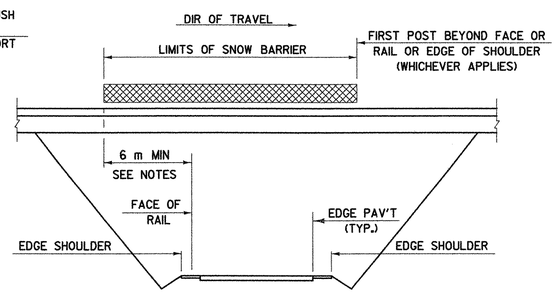

SCHEMATIC SNOW BARRIER LIMITS

NOTE: ALL DIMENSIONS ARE IN MILLIMETERS (mm) EXCEPT WHERE NOTED.

VERMONT AGENCY OF TRANSPORTATION

DETAIL BR4M

SNOW FENCE FOR BRIDGE RAILING - N.E.T.C.2 RAIL

Town Of BENNINGTON	Bridge No. BI2
Highway No. VT RTE 279	Log Sta. / Surv. Sta.
VT ROUTE 279 OVER FURNACE BROOK	
SNOW FENCE FOR BRIDGE RAILING - NETC 2 RAIL	
Designed By VAOT	Drawn By VAOT
Checked By VAOT Date	Bridge Design Supervisor VAOT Date
PROJECT BENNINGTON	PROJECT NO. AC NH F019-1(53)
TVGA CAD Drawing No. FBAppGR4.dgn	Date 04/10/2007
Bridge Sheet No. BR543	Sheet 235 of 577

Metric

GEOGRID REINFORCEMENT LENGTH	
ELEVATION	LENGTH (m)
233.5 TO 236.5	34
237.5 TO 240.5	23
241.5 TO 245.5	14.5
246.5 TO 249.5	10

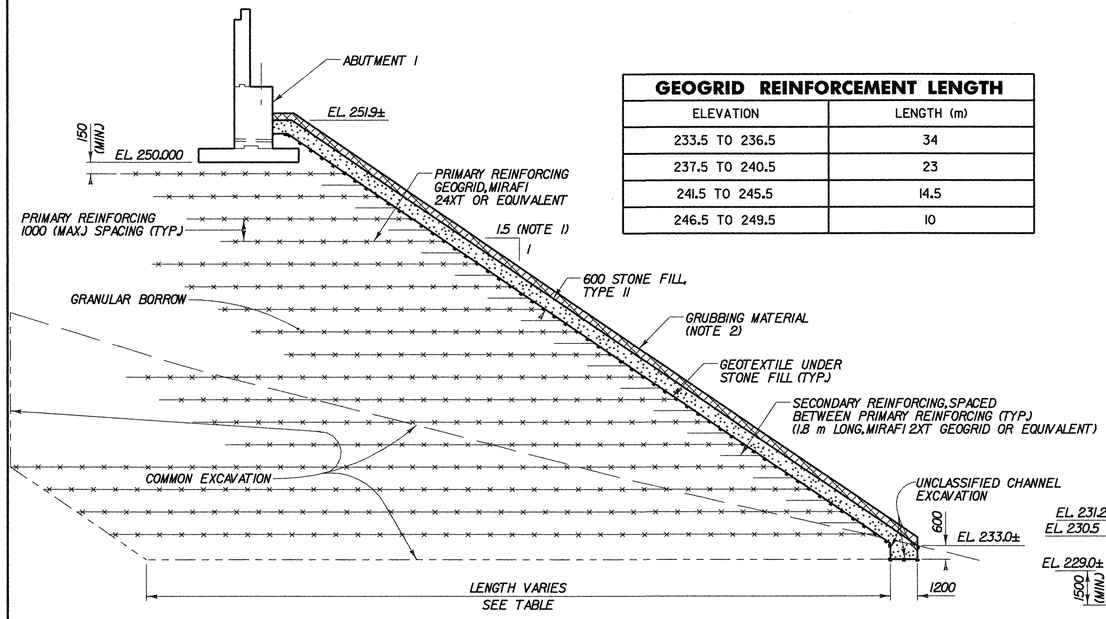

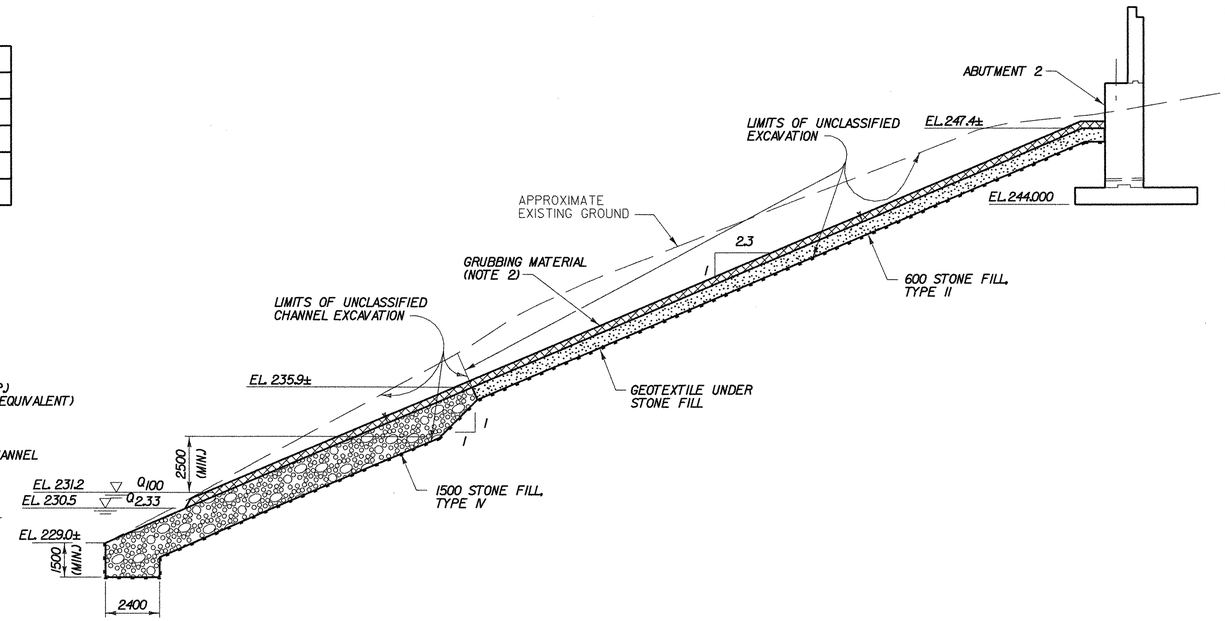

ABUTMENT #1 REINFORCED SOIL SLOPE TYPICAL SECTION
SCALE 1:125

ABUTMENT #2 STONE FILL TYPICAL SECTION
SCALE 1:125

REINFORCED SOIL SLOPE GENERAL CONSTRUCTION NOTES:

1. HANDLING AND STORAGE

   UPON DELIVERY TO THE SITE, ALL GEOGRID MATERIALS SHALL BE INSPECTED TO ENSURE PROPER MATERIAL STRENGTHS. A PRODUCT CERTIFICATION SHALL BE PROVIDED WITH EACH SHIPMENT STATING THAT THE MATERIAL CONFORMS TO PRODUCT SPECIFICATIONS PUBLISHED BY THE SUPPLIER. SEE SPECIAL PROVISION SECTION 900.675 REINFORCED SOIL SLOPE FOR MORE INFORMATION.

2. GEOGRID PLACEMENT

   PRIOR TO PLACING THE REINFORCEMENT, THE EXCAVATION SHALL BE CLEANED OF ALL EXCESS MATERIAL AND THE FOUNDATION BASE PROOFROLLED. THE GEOGRID STRIPS MUST BE PLACED PERPENDICULAR TO THE SLOPE FACE. THE GEOGRID STRIPS MUST EXTEND BACK FROM THE SLOPE FACE TO THE DISTANCE SPECIFIED ON THE REINFORCED SOIL SLOPE TYPICAL SECTION. AFTER BEING ROLLED OUT, THE GEOGRID SHALL BE TENSIONED BY HAND UNTIL TAUT, FREE OF WRINKLES, AND LYING FLAT. ADJACENT GEOGRID STRIPS SHALL BE BUTTED TOGETHER SIDE-BY-SIDE WITHOUT OVERLAP. INDIVIDUAL LAYERS OF GEOGRID SHALL BE PLACED LEVEL AND TERMINATED AS THEY 'DAY LIGHT' TO THE PROPOSED GRADES.

3. FILL PLACEMENT AND COMPACTION

   FILL CAN BE PLACED AND SPREAD DIRECTLY UPON THE GEOGRIDS. EXTREME CARE SHOULD BE TAKEN TO PREVENT WRINKLES AND/OR SLIPPAGE OF GEOGRID DURING FILL PLACEMENT AND SPREADING. WHEN PRACTICAL, FILL IS TO BE PLACED IN THE DIRECTION IN WHICH THE GEOGRID WAS LAID OUT, TO AVOID TENSIONING. HOWEVER, IF FILL MUST BE PLACED TRANSVERSE TO THE ROLL LENGTH, SLIGHT (100) OVERLAPS BETWEEN ROLL WIDTHS WITH THE TOP PIECE OF GEOGRID BEING THE FIRST TO RECEIVE FILL, WILL PREVENT PERMANENT FOLDING OF REINFORCEMENT. RUBBER-TIRED EQUIPMENT IS ALLOWED TO PASS OVER BARE GEOGRID AT SLOW SPEEDS (LESS THAN 10 KPH) AND WITHOUT SUDDEN BRAKING. TRACK EQUIPMENT SHOULD NEVER BE ALLOWED ONTO BARE REINFORCEMENT. THERE MUST BE A MINIMUM OF 150 OF FILL ON TOP OF THE GEOGRID BEFORE TRACK EQUIPMENT CAN BE OPERATED. EACH FILL LIFT SHALL BE COMPACTED TO 95% OF AASHTO T-99.

4. LIMITS OF GEOGRID REINFORCEMENT

   THE PURPOSE OF THE GEOGRID IS TO REINFORCE THE NEW EMBANKMENT FILLS. THE PROPOSED EMBANKMENTS SHALL BE REINFORCED TO THE LIMITS ABOVE AND SHOWN IN THE SECTIONS OR AS APPROVED BY THE ENGINEER.

5. PAYMENT

   FOR ROADWAY AND EMBANKMENT, PRIMARY GEOGRID WITH UNIAXIAL T AL= 156.6 KN/M SHALL BE MADE UNDER THE ITEM 900.675 'SPECIAL PROVISION (REINFORCED SOIL SLOPE).'

REINFORCED SOIL SLOPE MATERIAL NOTES:

1. THE GEOGRID USED IN THE REINFORCED SOIL SLOPE SHALL BE COMPOSED OF HIGH-TENACITY POLYESTER, HIGH-DENSITY POLYETHYLENE, OR HIGH-DENSITY POLYPROPYLENE. ALL GEOGRID REINFORCEMENT SHALL HAVE UNIAXIAL DESIGN STRENGTH WITH THE PRIMARY AXIS PLACED PERPENDICULAR TO THE FACE OF THE REINFORCED SOIL SLOPE.

2. THE GEOGRID SHALL BE RESISTANT TO ULTRAVIOLET DEGRADATION, INERT TO BIOLOGICAL DEGRADATION, AND RESISTANT TO NATURALLY ENCOUNTERED CHEMICALS.

3. THE ROADWAY AND EMBANKMENT GEOGRID SHALL BE APPROVED BY THE ENGINEER PRIOR TO PLACEMENT AND SHALL MEET THE FOLLOWING REQUIREMENTS:

PROPERTY	REQUIREMENT	TEST METHOD
LONG TERM STRENGTH AT 10% STRAIN	156.6 kN/M (MIN.) PRIMARY REINFORCEMENT 11.1 kN/M (MIN.) SECONDARY REINFORCEMENT	GRI-GG4
PULLOUT RESISTANCE FACTOR (F*)	0.42 (MIN.)	ASTM D6706

   THE TOTAL LONG TERM ALLOWABLE TENSILE STRENGTH (T AL) SHALL BE DETERMINED BY USING THE FOLLOWING FORMULA:

$$T\ AL = \frac{T\ ULT}{RFDU \times RFCD \times RFCR}$$

   WHERE T ULT = THE ULTIMATE (OR YIELD) TENSILE STRENGTH FROM TENSILE STRENGTH TESTS, TESTED IN ACCORDANCE WITH ASTM D6637 AND BASED ON THE MINIMUM AVERAGE ROLL VALUE (MARV) FOR THE PRODUCT.

   RFDU = THE DURABILITY REDUCTION FACTOR - PRODUCT OF THE PARTIAL SAFETY FACTORS FOR THE BIOLOGICAL AND CHEMICAL DEGRADATION OF THE GEOSYNTHETIC AND THE JOINT SEAM STRENGTH OF THE GEOGRID. (1.1 MIN.)

   RFCD = THE CONSTRUCTION DAMAGE REDUCTION FACTOR AS DETERMINED IN ACCORDANCE WITH ASTM D 5818 (MINIMUM VALUE = 1.1)

   RFCR = THE CREEP REDUCTION FACTOR AS DETERMINED IN ACCORDANCE WITH ASTM D 5262; BASED ON A 100-YEAR DESIGN LIFE.

   REDUCTION FACTORS ARE TO BE PROVIDED BY THE MANUFACTURER AS A DIRECT RESULT OF TESTS PERFORMED IN ACCORDANCE WITH EACH TEST'S CORRESPONDING SPECIFICATION.

4. GRANULAR BORROW SHALL BE USED AS THE EMBANKMENT BACKFILL MATERIAL.

5. THE GEOGRID SHALL BE PLACED AROUND DRAINAGE ELEMENTS AND ANY OTHER UTILITY COMPONENTS IN A MANNER THAT WILL MINIMIZE WRINKLING. A MINIMUM NUMBER OF GEOGRID ELEMENTS SHALL BE CUT TO LOCATE THE DRAINAGE ELEMENTS. EXCAVATION IN PREVIOUSLY BACKFILLED REINFORCED ZONES TO PLACE DRAINAGE ELEMENTS WILL NOT BE PERMITTED.

6. THE LENGTH OF THE GEOGRID AS SPECIFIED SHALL BE MEASURED FROM THE BACK FACE OF THE STONE FILL.

NOTES:

1. THE REINFORCED SOIL SLOPE VARIES FROM 1.5:1 TO 1.2:1. SEE THE GENERAL PLAN AND ELEVATION, BRIDGE SHEET BR510 FOR MORE INFORMATION.
2. GRUBBING MATERIAL SHALL NOT BE PLACED ON THE STONE FILL UNDER THE FURNACE BROOK STRUCTURE.

0 2.5 5.0 7.5 10.0 12.5m

SCALE 1:125

TVGA CONSULTANTS

STATE OF VERMONT
AGENCY OF TRANSPORTATION

Town Of BENNINGTON	Bridge No. BI2
Highway No. VT RTE 279	Log Sta. Surv. Sta.
VT ROUTE 279 OVER FURNACE BROOK	
SLOPE AND CHANNEL DETAILS	
Designed By J.J. MANUSE	Drawn By D.J. HENDERSON
Checked By Date B.J. CARLSON 04/07	Bridge Design Supervisor K.M. WOJTKOWSKI Date 04/07
PROJECT BENNINGTON	PROJECT NO. AC NH F019-1(53)
TVGA CAD Drawing No. FBChanDet.dgn	Date 04/10/2007
Bridge Sheet No. BR544	Sheet 236 of 577

FURNACE BROOK

	ITEM	NO. OF PIECES	SIZE	LENGTH	MARK	TYPE	A	B	C	D	E	F	G	H	J	K	R	O
	1	**APPROACH SLAB 1**																
	2	21	16	5367	1EAS1601	STR.												
*	3	22	16	11 343	1EAS1602	STR.												
	4																	
*	5	67	19	11 647	1EAS1901	1	380	5900							300			
	6																	
	7	**APPROACH SLAB 2**																
*	8	22	16	5367	2EAS1601	STR.												
	9	21	16	11 343	2EAS1602	STR.												
	10																	
*	11	67	19	11 647	2EAS1901	1	380	5900							300			
	12																	
	13	**SUPERSTRUCTURE DECK**																
*	14	989	16	6750	ES1601	STR.												
*	15	989	16	9900	ES1602	STR.												
△	16	1982	16	12 000	ES1603	STR.												
	17	165	16	9733	ES1604	STR.												
	18																	
*	19	185	19	12 000	ES1901	STR.												
	20	46	19	10 760	ES1902	STR.												
	21																	
	22	1938	13	1395	ES1301	N8		230	100	655	180	230						
	23																	
	24	1325	16	1895	ES1605	S5	250	490	415	490			250					
	25	90	16	1914	ES1606	T2		610	362	580	362							
	26	978	16	5680	ES1607	1	180	5500							130			
*	27	979	16	11 410	ES1608	1	180	11 230							130			
	28																	
	29	**ABUTMENT 1**																
*	30	33	16	7300	1A1601	STR.												
	31	32	16	11 200	1A1602	STR.												
▲	32	55	16	2916	1A1603	STR.												
▲	33	21	16	5000	1A1604	STR.												
▲	34	21	16	11 700	1A1605	STR.												
	35																	
	36	55	16	1320	1EA1606	STR.												
* ▲	37	56	16	3105	1EA1607	STR.												
▲	38	36	16	5000	1EA1608	STR.												
▲	39	36	16	11 700	1EA1609	STR.												
	40																	
* ▲	41	111	16	3656	1A1610	STR.												
	42																	
▲	43	55	16	3105	1EA1611	STR.												
	44																	
*	45	62	22	4270	1A2201	STR.												
	46																	
	47	122	25	4270	1A2501	STR.												
*	48	8	25	2340	1A2502	STR.												
	49	35	25	3700	1A2503	STR.												
	50																	
	51	165	16	1580	1A1612	17		250	1330									
	52	55	16	2860	1A1613	17		660	1540	660								
	53																	
	54	51	16	1860	1EA1614	17		660	540	660								
	55	55	16	2500	1EA1615	17		1130	240	1130								
	56																	
	57	26	25	1200	1EA2504	12			600	600				424		424		1024
	58																	
	59	**ABUTMENT 2**																
*	60	39	16	7300	2A1601	STR.												
	61	38	16	11 800	2A1602	STR.												
▲	62	55	16	4935	2A1603	STR.												
▲	63	35	16	5000	2A1604	STR.												
▲	64	35	16	11 700	2A1605	STR.												
	65																	
	66	55	16	1320	2EA1606	STR.												
* ▲	67	56	16	3048	2EA1607	STR.												
▲	68	36	16	5000	2EA1608	STR.												
▲	69	36	16	11 700	2EA1609	STR.												
	70																	
	71	124	22	5260	2A2201	STR.												
* ▲	72	111	22	6065	2A2202	STR.												
	73																	
* ▲	74	56	22	3048	2EA2203	STR.												
	75																	
*	76	125	25	5260	2A2501	STR.												
	77	7	25	2340	2A2502	STR.												
	78	35	25	3700	2A2503	STR.												
	79																	
	80	55	16	1580	2A1610	17		250	1330									
	81	55	16	2860	2A1611	17		660	1540	660								
	82	51	16	1860	2EA1612	17		660	540	660								
	83	55	16	2500	2EA1613	17		1130	240	1130								
	84																	
	85	110	22	2100	2A2204	17		380	1720									
	86																	
	87	26	25	1200	2EA2504	12			600	600				424		424		1024
	88																	
	89																	
	90																	

	ITEM	NO. OF PIECES	SIZE	LENGTH	MARK	TYPE	A	B	C	D	E	F	G	H	J	K	R	O
	91	**WINGWALL 1**																
*	92	18	16	5320	1W1601	STR.												
	93	17	16	5750	1W1602	STR.												
	94	22	16	2564	1W1603	STR.												
	95	40	16	3840	1W1604	STR.												
	96	22	16	3480	1W1605	STR.												
	97	14	16	3240	1W1606	STR.												
	98	26	16	2240	1W1607	STR.												
	99																	
	100	5	16	3840	1EW1608	STR.												
	101	5	16	2240	1EW1609	STR.												
	102																	
	103	22	22	2100	1W2201	STR.												
	104	22	22	3722	1W2202	STR.												
	105	20	22	4590	1W2203	STR.												
	106																	
	107	40	29	4590	1W2901	STR.												
	108																	
	109	22	16	1580	1W1610	17		250	1330									
	110	7	16	1320	1W1611	17		660	660									
	111	7	16	5473	1W1612	3			660	4153	660				467		467		5087
	112	22	16	1910	1W1613	17		660	590	660								
	113	14	16	1320	1W1614	17		660	660									
	114	14	16	3847	1W1615	3			660	2527	660				467		467		3460
	115																	
	116	31	16	3468	1EW1616	17		1510	440	1514								
	117																	
*	118	39	32	3044	1W3201	17		550	2494									
	119																	
	120	**WINGWALL 2**																
	121	17	16	5320	2W1601	STR.												
*	122	18	16	5750	2W1602	STR.												
	123	22	16	3656	2W1603	STR.												
	124	50	16	3840	2W1604	STR.												
	125	22	16	3615	2W1605	STR.												
	126	22	16	3240	2W1606	STR.												
	127	28	16	2240	2W1607	STR.												
	128																	
	129	5	16	3840	2EW1608	STR.												
	130	5	16	2240	2EW1609	STR.												
	131																	
	132	22	22	2100	2W2201	STR.												
	133	22	22	3800	2W2202	STR.												
	134	20	22	4590	2W2203	STR.												
*	135	41	29	4590	2W2901	STR.												
	136																	
	137	22	16	1580	2W1610	17		250	1330									
	138	11	16	1320	2W1611	17		660	660									
	139	11	16	5473	2W1612	3			660	4153	660				467		467		5087
	140	22	16	1910	2W1613	17		660	590	660								
	141	15	16	1320	2W1614	17		660	660									
	142	15	16	3847	2W1615	3			660	2527	660				467		467		3460
	143																	
	144	31	16	3354	2EW1616	17		1460	440	1457								
	145																	
	146	38	32	4136	2W3201	17		550	3586									
	147																	
	148	**WINGWALL 3**																
	149	20	16	7030	3W1601	STR.												
	150	20	16	7130	3W1602	STR.												
*	151	31	16	4583	3W1603	STR.												
	152	52	16	6040	3W1604	STR.												
	153	30	16	3294	3W1605	STR.												
	154	28	16	3240	3W1606	STR.												
	155	24	16	2240	3W1607	STR.												
	156																	
	157	5	16	6040	3EW1608	STR.												
▲	158	5	16	2240	3EW1609	STR.												
	159																	
	160	30	22	2100	3W2201	STR.												
	161	30	22	3164	3W2202	STR.												
	162																	
	163	28	25	5640	3W2501	STR.												
	164																	
*	165	57	36	5640	3W3601	STR.												
	166																	
	167	30	16	1580	3W1610	17		250	1330									
	168	14	16	1320	3W1611	17		660	660									
	169	14	16	5685	3W1612	3			660	4365	660				467		467		5299
	170	30	16	2060	3W1613	17		660	740	660								
	171	13	16	1320	3W1614	17		660	660									
	172	13	16	3847	3W1615	3			660	2527	660				467		467		3460
	173																	
	174	42	16	3542	3EW1616	17		1550	440	1551								
	175																	
	176	53	36	5161	3W3603	17		600	4561									
	177																	
	178																	
	179																	
	180																	

Metric

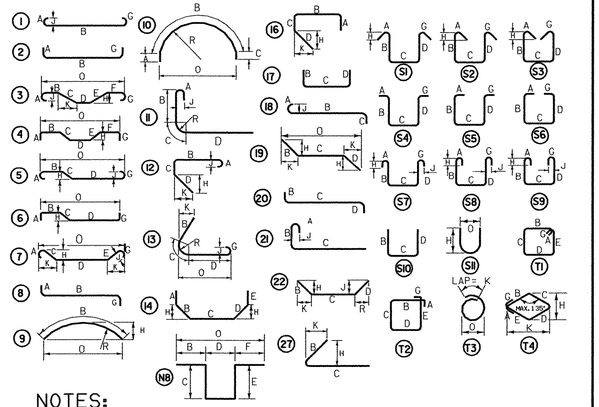

NOTES:

1. UNLESS OTHERWISE DESIGNATED, ALL BAR REINFORCEMENT FOR CONCRETE IN SIZES UP TO AND INCLUDING 57M SHALL CONFORM TO THE REQUIREMENTS OF THE "SPECIFICATIONS FOR DEFORMED BILLET-STEEL BARS FOR CONCRETE REINFORCEMENT", AASHTO M 31M(ASTM A 615-SI). ALL BARS SHALL BE GRADE 420 UNLESS OTHERWISE DESIGNATED.
2. FOR TYPICAL BENDING DETAILS, RECOMMENDED PIN DIAMETER "D" OF BENDS AND HOOKS, AND OTHER STANDARD PRACTICE, SEE CURRENT CONCRETE REINFORCING STEEL INSTITUTE "MANUAL OF STANDARD PRACTICE".
3. BARS WHICH REQUIRE MORE ACCURATE BENDING THAN STANDARD PRACTICES SHOULD HAVE LIMITS INDICATED.
4. ALL DIMENSIONS ARE OUT TO OUT OF BAR EXCEPT "A" AND "G" ON STANDARD 180 DEGREE AND 135 DEGREE HOOKS.
5. "J" DIMENSION ON 180 DEGREE HOOKS TO BE SHOWN ONLY WHEN NECESSARY TO MAINTAIN CLEARANCES.
6. "H" DIMENSION ON STIRRUPS TO BE SHOWN ONLY WHEN NECESSARY TO MAINTAIN CLEARANCES.
7. WHERE SLOPE DIFFERS FROM 45 DEGREES, DIMENSIONS "H" AND "K" MUST BE SHOWN.

LEGEND

▲ DENOTES BARS TO BE CUT IN THE FIELD.

✳ DENOTES ONE EXTRA BAR ADDED FOR TESTING PURPOSES.

△ DENOTES TWO EXTRA BARS ADDED FOR TESTING PURPOSES.

"E" IN PREFIX DENOTES EPOXY COATED REINFORCING STEEL.

ASTM STANDARD REINFORCING BARS

BAR SIZE DESIGNATION	NOMINAL MASS (Kg/m)	NOMINAL DIMENSIONS ROUND SECTION: DIAMETER (mm)	CROSS SECTIONAL AREA (mm)	PERIMETER (mm)
10	0.560	9.5	71	29.84
13	0.994	12.7	129	39.90
16	1.552	15.9	199	49.95
19	2.235	19.1	284	60.00
22	3.042	22.2	387	69.74
25	3.973	25.4	510	79.80
29	5.060	28.7	645	90.16
32	6.404	32.3	819	101.47
36	7.907	35.8	1006	112.47
43	11.380	43.0	1452	135.09
57	20.240	57.3	2581	180.01

STATE OF VERMONT
AGENCY OF TRANSPORTATION

Town Of BENNINGTON	Bridge No. BI2
Highway No. VT RTE 279	Log Sta. / Surv. Sta.
VT ROUTE 279 OVER FURNACE BROOK	

REINFORCING STEEL SCHEDULE (1 OF 2)

Designed By M.D. BOWER	Drawn By D.J. HENDERSON
Checked By Date B.J. CARLSON 04/07	Bridge Design Supervisor K.M. WOJTKOWSKI Date 04/07
PROJECT BENNINGTON	PROJECT NO. AC NH F019-1(53)
TVGA CAD Drawing No. FBSteelSch.dgn	Date 04/16/2007
Bridge Sheet No. BR545	Sheet 237 of 577

TVGA CONSULTANTS

FURNACE BROOK

	ITEM	NO. OF PIECES	SIZE	LENGTH	MARK	TYPE	A	B	C	D	E	F	G	H	J	K	R	O
	1	WINGWALL 4																
	2	20	16	9730	4W1601	STR.												
	3	20	16	9830	4W1602	STR.												
	4	39	16	5675	4W1603	STR.												
	5	62	16	8740	4W1604	STR.												
*	6	40	16	3231	4W1605	STR.												
	7	36	16	3240	4W1606	STR.												
	8	26	16	2240	4W1607	STR.												
	9																	
	10	5	16	8740	4EW1608	STR.												
▲	11	5	16	2240	4EW1609	STR.												
	12																	
	13	39	22	2100	4W2201	STR.												
	14	39	22	3181	4W2202	STR.												
	15																	
	16	37	25	5640	4W2501	STR.												
	17																	
	18	74	36	5640	4W3601	STR.												
	19	71	36	4935	4W3602	STR.												
	20																	
	21	39	16	1580	4W1610	17		250	1330									
	22	18	16	1320	4W1611	17		660	660									
	23	18	16	5685	4W1612	3			660	4365	660			467		467		5299
	24	39	16	2060	4W1613	17		660	740	660								
	25	14	16	1320	4W1614	17		660	660									
	26	14	16	3847	4W1615	3			660	2527	660			467		467		3460
	27																	
	28	54	16	3664	4EW1616	17		1610	440	1612								
	29																	
	30	71	36	3990	4W3603	17		600	3390									
	31																	
	32	PIER																
*	33	359	13	4300	P1301	STR.												
	34																	
	35	14	16	5000	P1601	STR.												
	36	14	16	11 500	P1602	STR.												
*	37	75	16	7840	P1603	STR.												
	38	39	16	1950	P1604	STR.												
	39	38	16	2700	P1605	STR.												
	40																	
	41	120	32	7840	P3201	STR.												
△	42	257	32	12 000	P3202	STR.												
	43	85	32	7720	P3203	STR.												
	44																	
	45	180	13	4283	P1302	N3			610	3063	610						975	
	46	178	13	3655	P1303	N3			610	2435	610						775	
	47	810	13	2455	P1304	T9	210	1950					300	115				
	48	180	13	6299	P1305	T9	210	5794					300	115				
	49	180	13	6621	P1306	T9	210	6116					300	115				
	50																	
	51	64	16	6675	P1606	1	180	6500							130			
	52	30	16	10 175	P1607	1	180	10 000							130			
	53	16	16	12 296	P1608	14	660	5386	6250					2640		4695		10 945
▲	54	34	16	9975	P1609	1	180	9800							130			
	55	12	16	3270	P1610	17		660	1950	660								
	56																	
*	57	275	19	2845	P1901	T9	210	2340					300	115				
	58	48	19	4264	P1902	S1		1439	1386	1439								
	59	48	19	4942	P1903	S1		1778	1386	1778								
	60	96	19	6496	P1904	S1		2555	1386	2555								
▲	61	16	19	12 000	P1905	S1		5025	1950	5025								
	62	13	19	6552	P1906	S1		2583	~~1386~~	2583	1950							
	63	96	19	7152	P1907	S1		2883	1386	2883								
	64	96	19	6034	P1908	S1		2324	1386	2324								
	65																	
*	66	121	32	11 425	P3204	1	430	11 000							335			
	67	120	32	7495	P3205	1	430	7070							335			
*	68	86	32	12 000	P3206	2	560	11 440										
	69	85	32	7730	P3207	2	560	7170										
	70																	
*	71	43	36	7850	P3601	2	600	7250										
	72	42	36	11 070	P3602	2	600	10 470										
	73																	
	74																	
	75																	
	76																	
	77																	
	78																	
	79																	
	80																	
	81																	
	82																	
	83																	
	84																	
	85																	
	86																	
	87																	
	88																	
	89																	
	90																	

ITEM	NO. OF PIECES	SIZE	LENGTH	MARK	TYPE	A	B	C	D	E	F	G	H	J	K	R	O
91																	
92																	
93																	
94																	
95																	
96																	
97																	
98																	
99																	
100																	
101																	
102																	
103																	
104																	
105																	
106																	
107																	
108																	
109																	
110																	
111																	
112																	
113																	
114																	
115																	
116																	
117																	
118																	
119																	
120																	
121																	
122																	
123																	
124																	
125																	
126																	
127																	
128																	
129																	
130																	
131																	
132																	
133																	
134																	
135																	
136																	
137																	
138																	
139																	
140																	
141																	
142																	
143																	
144																	
145																	
146																	
147																	
148																	
149																	
150																	
151																	
152																	
153																	
154																	
155																	
156																	
157																	
158																	
159																	
160																	
161																	
162																	
163																	
164																	
165																	
166																	
167																	
168																	
169																	
170																	
171																	
172																	
173																	
174																	
175																	
176																	
177																	
178																	
179																	
180																	

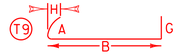

VTrans Metric

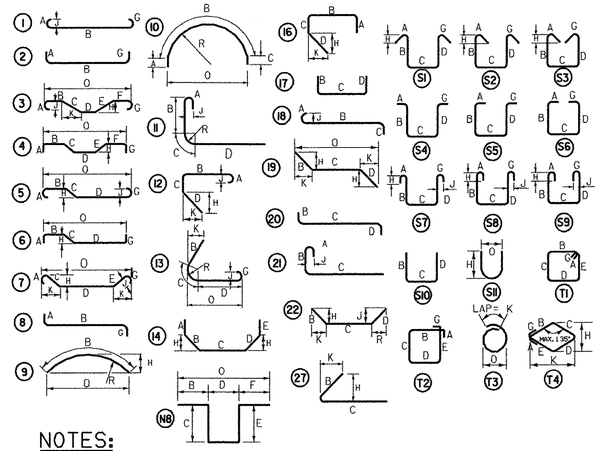

NOTES:

1. UNLESS OTHERWISE DESIGNATED, ALL BAR REINFORCEMENT FOR CONCRETE IN SIZES UP TO AND INCLUDING 57M SHALL CONFORM TO THE REQUIREMENTS OF THE "SPECIFICATIONS FOR DEFORMED BILLET-STEEL BARS FOR CONCRETE REINFORCEMENT", AASHTO M 31M(ASTM A 615-SI). ALL BARS SHALL BE GRADE 60, UNLESS OTHERWISE DESIGNATED.
2. FOR TYPICAL BENDING DETAILS, RECOMMENDED PIN DIAMETER "D" OF BENDS AND HOOKS, AND OTHER STANDARD PRACTICE, SEE CURRENT CONCRETE REINFORCING STEEL INSTITUTE "MANUAL OF STANDARD PRACTICE".
3. BARS WHICH REQUIRE MORE ACCURATE BENDING THAN STANDARD PRACTICES SHOULD HAVE LIMITS INDICATED.
4. ALL DIMENSIONS ARE OUT TO OUT OF BAR EXCEPT "A" AND "G" ON STANDARD 180 DEGREE AND 135 DEGREE HOOKS.
5. "J" DIMENSION ON 180 DEGREE HOOKS TO BE SHOWN ONLY WHEN NECESSARY TO MAINTAIN CLEARANCES.
6. "H" DIMENSION ON STIRRUPS TO BE SHOWN ONLY WHEN NECESSARY TO MAINTAIN CLEARANCES.
7. WHERE SLOPE DIFFERS FROM 45 DEGREES, DIMENSIONS "H" AND "K" MUST BE SHOWN.

LEGEND

▲ DENOTES BARS TO BE CUT IN THE FIELD.

✳ DENOTES ONE EXTRA BAR ADDED FOR TESTING PURPOSES.

△ DENOTES TWO EXTRA BARS ADDED FOR TESTING PURPOSES.

"E" IN PREFIX DENOTES EPOXY COATED REINFORCING STEEL.

ASTM STANDARD REINFORCING BARS

BAR SIZE DESIGNATION	NOMINAL MASS (Kg/m)	NOMINAL DIMENSIONS ROUND SECTION		
		DIAMETER (mm)	CROSS SECTIONAL AREA (mm)	PERIMETER (mm)
10	0.560	9.5	71	29.84
13	0.994	12.7	129	39.90
16	1.552	15.9	199	49.95
19	2.235	19.1	284	60.00
22	3.042	22.2	387	69.74
25	3.973	25.4	510	79.80
29	5.060	28.7	645	90.16
32	6.404	32.3	819	101.47
36	7.907	35.8	1006	112.47
43	11.380	43.0	1452	135.09
57	20.240	57.3	2581	180.01

STATE OF VERMONT
AGENCY OF TRANSPORTATION

Town Of BENNINGTON	Bridge No. BI2
Highway No. VT RTE 279	Log Sta. / Surv. Sta.
VT ROUTE 279 OVER FURNACE BROOK	

REINFORCING STEEL SCHEDULE (2 OF 2)

Designed By M.D. BOWER	Drawn By D.J. HENDERSON
Checked By B.J. CARLSON Date 04/07	Bridge Design Supervisor K.M. WOJTKOWSKI Date 04/07
PROJECT BENNINGTON	PROJECT NO. AC NH F019-1(53)
TVGA CAD Drawing No. FBSteelSch2.dgn	Date 04/16/2007
Bridge Sheet No. BR546	Sheet 238 of 577

TVGA CONSULTANTS

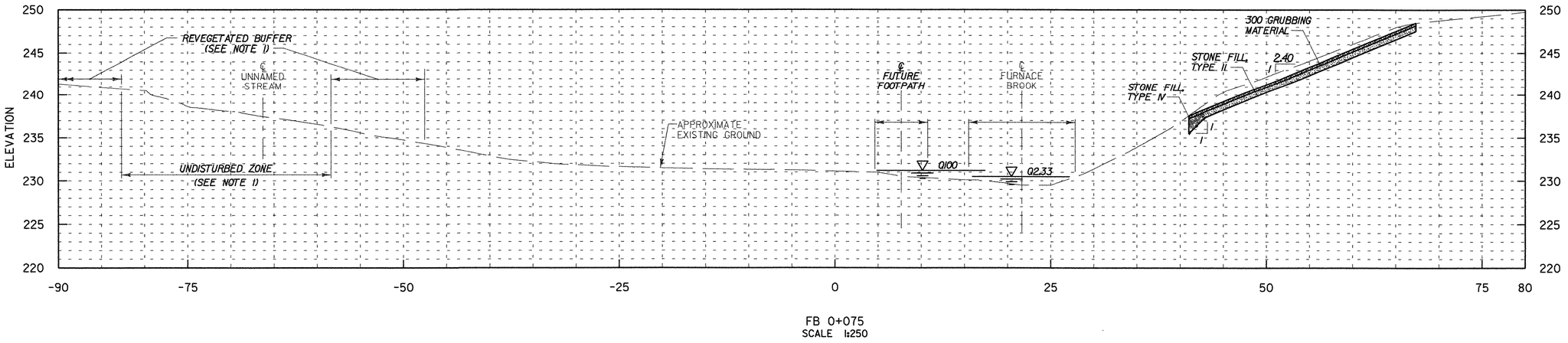

FB 0+075
SCALE 1:250

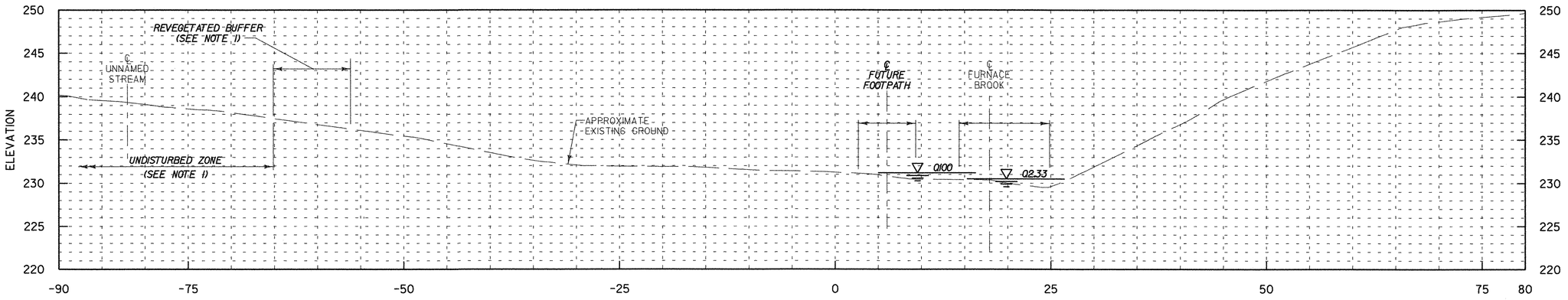

FB 0+070
SCALE 1:250

0 5 10 15 20 25m

SCALE 1: 250

NOTES:

1. A MINIMUM 5.0 m UNDISTURBED ZONE AND 5.0 m REVEGETATED BUFFER REQUIRED ON EACH SIDE OF UNNAMED STREAM.
2. CROSS SECTIONS ARE TAKEN PERPENDICULAR TO THE FURNACE BROOK CENTERLINE AND THE EMBANKMENT. SLOPE CALLOUT MAY NOT BE PERPENDICULAR TO THE EMBANKMENT.

TVGA CONSULTANTS

STATE OF VERMONT
AGENCY OF TRANSPORTATION

Town Of BENNINGTON	Bridge No. BI2
Highway No. VT RTE 279	Log Sta. / Surv. Sta.
VT ROUTE 279 OVER FURNACE BROOK	
CHANNEL CROSS SECTIONS (1 OF 8)	
Designed By J.J. MANUSE	Drawn By D.W.SHAFFER
Checked By B.J. CARLSON Date 04/07	Bridge Design Supervisor K.M. WOJTKOWSKI Date 04/07
PROJECT BENNINGTON	PROJECT NO. AC NH F019-1(53)
TVGA CAD Drawing No. FBXSect.dgn	Date 04/10/2007
Bridge Sheet No. BR547	Sheet 239 of 577

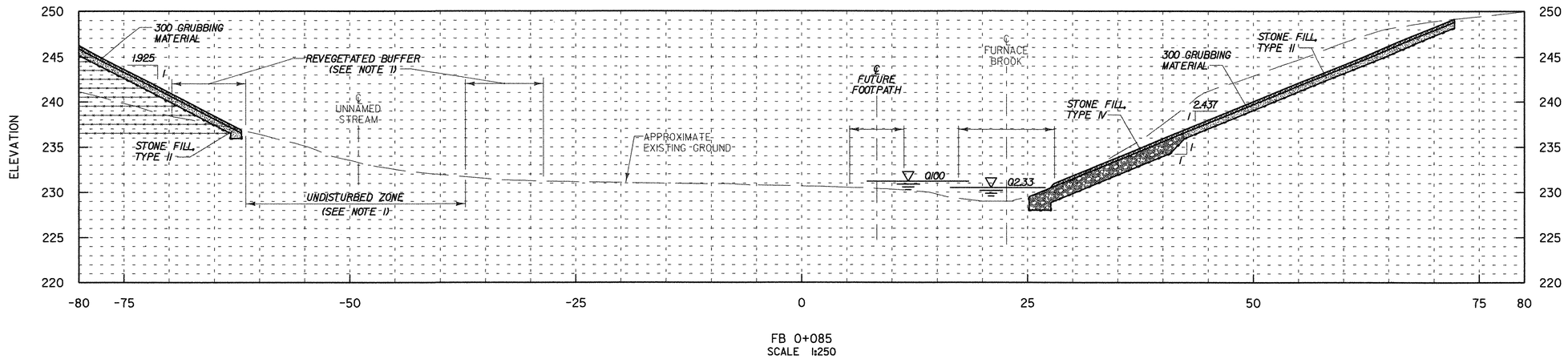

FB 0+085
SCALE 1:250

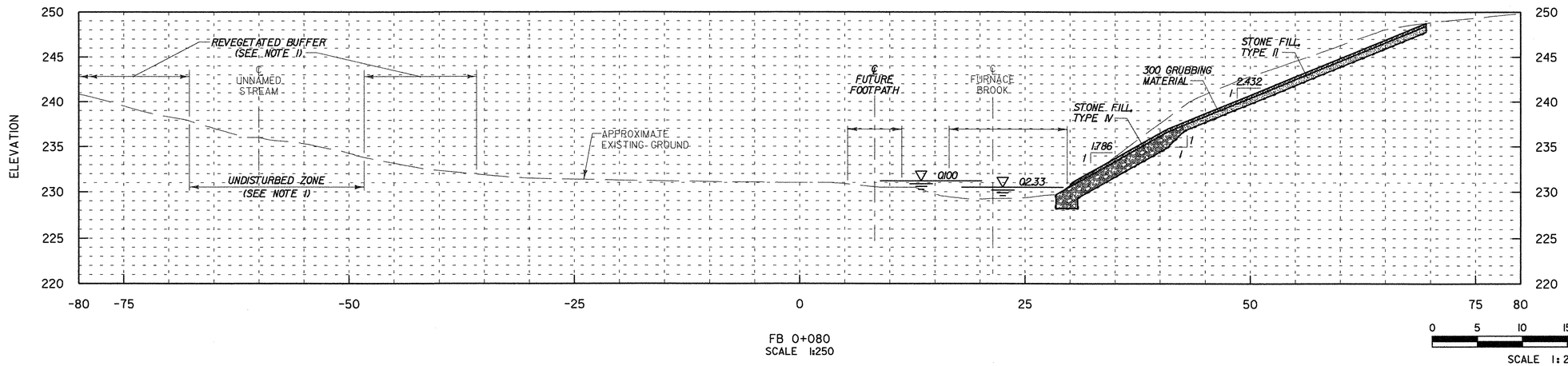

FB 0+080
SCALE 1:250

0 5 10 15 20 25m

SCALE 1: 250

NOTES:

1. A MINIMUM 5.0 m UNDISTURBED ZONE AND 5.0 m REVEGETATED BUFFER REQUIRED ON EACH SIDE OF UNNAMED STREAM.
2. CROSS SECTIONS ARE TAKEN PERPENDICULAR TO THE FURNACE BROOK CENTERLINE AND THE EMBANKMENT. SLOPE CALLOUT MAY NOT BE PERPENDICULAR TO THE EMBANKMENT.

TVGA CONSULTANTS

STATE OF VERMONT
AGENCY OF TRANSPORTATION

Town Of BENNINGTON	Bridge No. BI2
Highway No. VT RTE 279	Log Sta. / Surv. Sta.
VT ROUTE 279 OVER FURNACE BROOK	

CHANNEL CROSS SECTIONS (2 OF 8)

Designed By J.J. MANUSE	Drawn By D.W.SHAFFER
Checked By B.J. CARLSON Date 04/07	Bridge Design Supervisor K.M. WOJTKOWSKI Date 04/07
PROJECT BENNINGTON	PROJECT NO. AC NH F019-1(53)
TVGA CAD Drawing No. FBXSect.dgn	Date 04/10/2007
Bridge Sheet No. BR548	Sheet 240 of 577

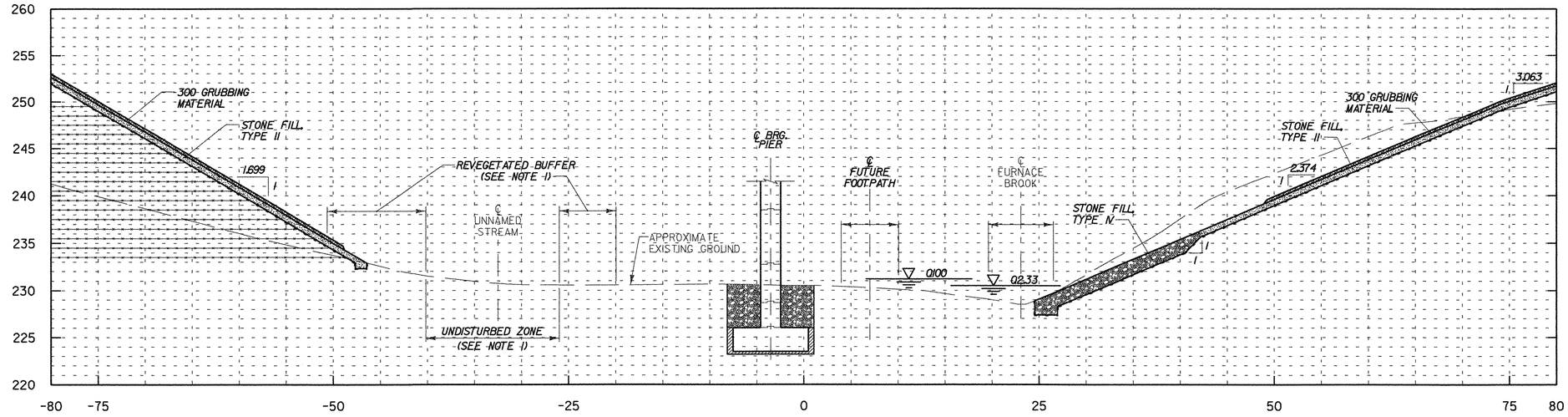

FB 0+095
SCALE 1:250

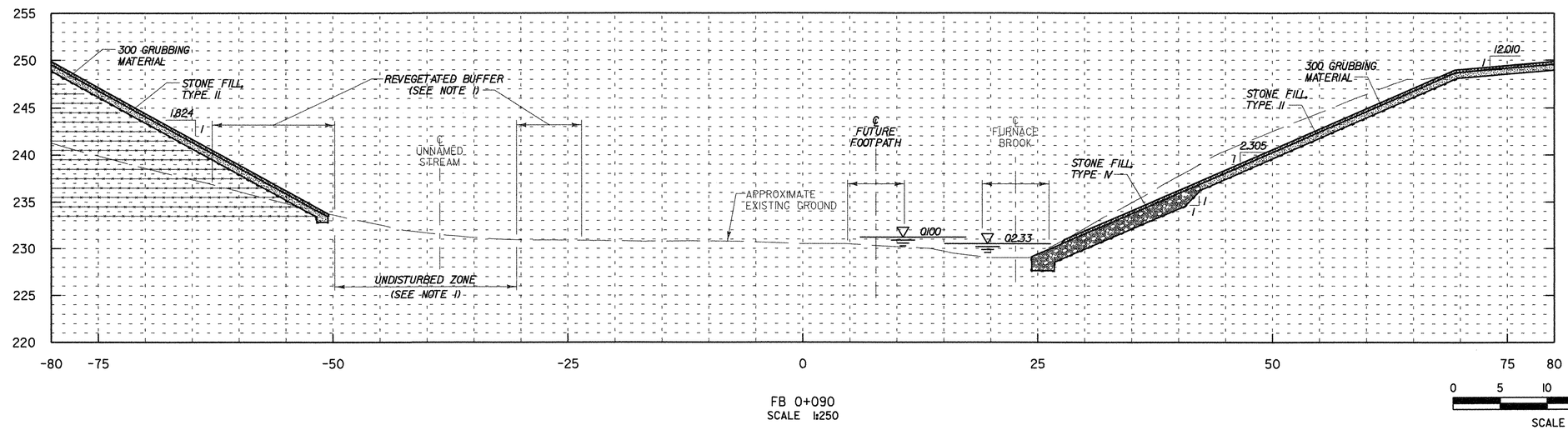

FB 0+090
SCALE 1:250

0 5 10 15 20 25m

SCALE 1: 250

NOTES:

1. A MINIMUM 5.0 m UNDISTURBED ZONE AND 5.0 m REVEGETATED BUFFER REQUIRED ON EACH SIDE OF UNNAMED STREAM.
2. CROSS SECTIONS ARE TAKEN PERPENDICULAR TO THE FURNACE BROOK CENTERLINE AND THE EMBANKMENT. SLOPE CALLOUT MAY NOT BE PERPENDICULAR TO THE EMBANKMENT.
3. GRUBBING MATERIAL SHALL NOT BE PLACED ON THE STONE FILL UNDER THE FURNACE BROOK STRUCTURE.

TVGA CONSULTANTS

STATE OF VERMONT
AGENCY OF TRANSPORTATION

Town Of BENNINGTON	Bridge No. BI2
Highway No. VT RTE 279	Log Sta. / Surv. Sta.
VT ROUTE 279 OVER FURNACE BROOK	

CHANNEL CROSS SECTIONS (3 OF 8)

Designed By J.J. MANUSE	Drawn By D.W.SHAFFER
Checked By B.J. CARLSON Date 04/07	Bridge Design Supervisor K.M. WOJTKOWSKI Date 04/07
PROJECT BENNINGTON	PROJECT NO. NH F019-1(5)
TVGA CAD Drawing No. FBXSect.dgn	Date 04/10/2007
Bridge Sheet No. BR549	Sheet 241 of 577

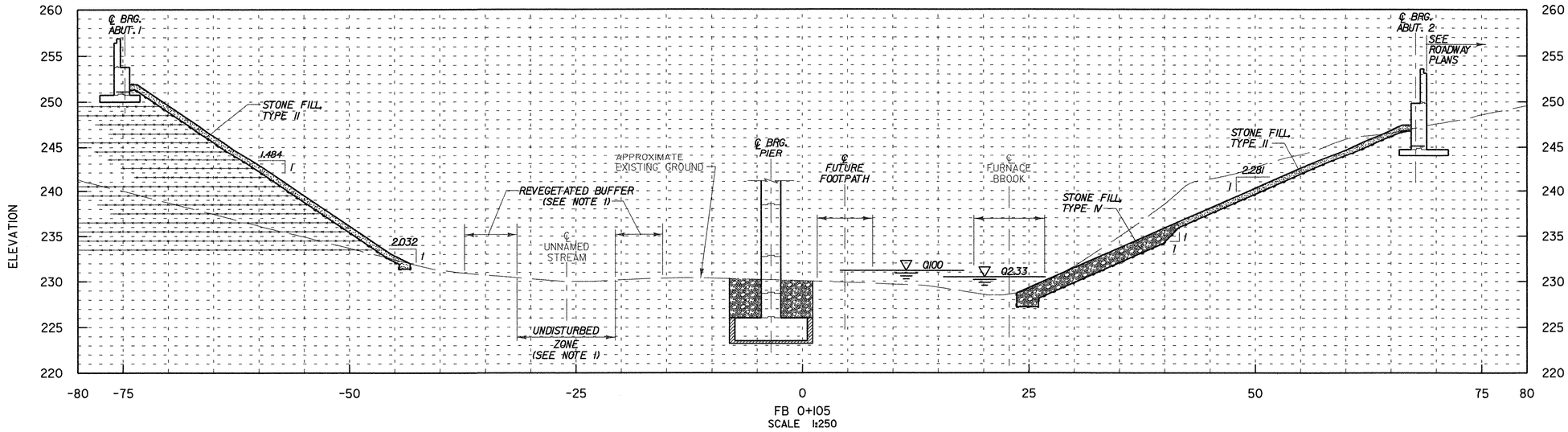

FB 0+105
SCALE 1:250

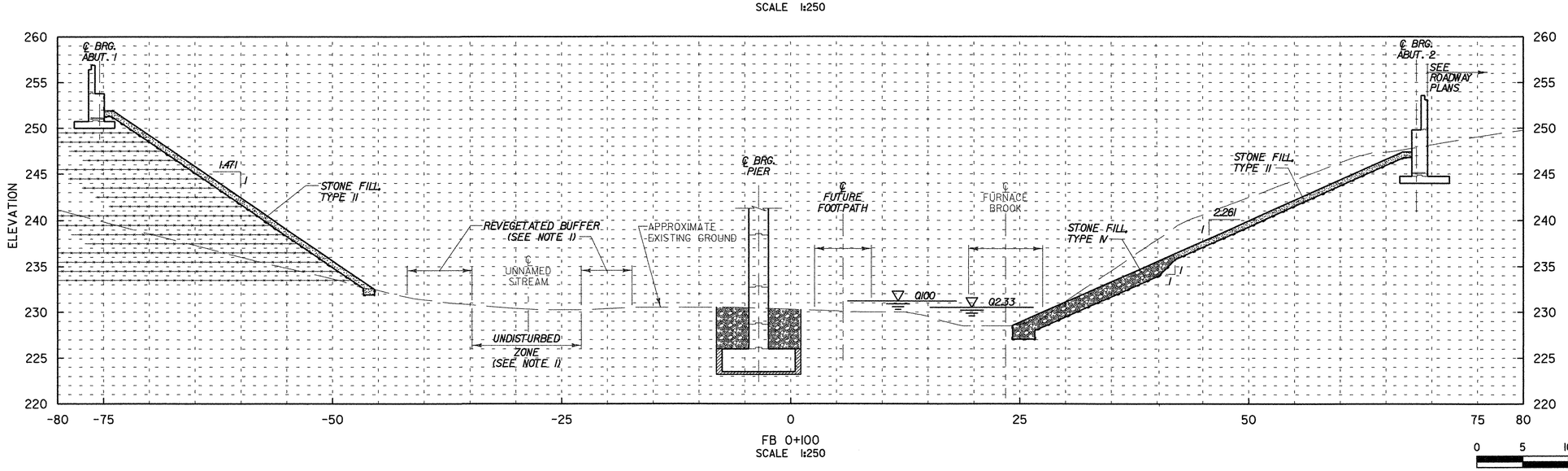

FB 0+100
SCALE 1:250

0 5 10 15 20 25m

SCALE 1: 250

NOTES:

1. A MINIMUM 5.0 m UNDISTURBED ZONE AND 5.0 m REVEGETATED BUFFER REQUIRED ON EACH SIDE OF UNNAMED STREAM.
2. CROSS SECTIONS ARE TAKEN PERPENDICULAR TO THE FURNACE BROOK CENTERLINE AND THE EMBANKMENT. SLOPE CALLOUT MAY NOT BE PERPENDICULAR TO THE EMBANKMENT.
3. GRUBBING MATERIAL SHALL NOT BE PLACED ON THE STONE FILL UNDER THE FURNACE BROOK STRUCTURE.

TVGA CONSULTANTS

STATE OF VERMONT
AGENCY OF TRANSPORTATION

Town Of BENNINGTON	Bridge No. BI2
Highway No. VT RTE 279	Log Sta. / Surv. Sta.
VT ROUTE 279 OVER FURNACE BROOK	
CHANNEL CROSS SECTIONS (4 OF 8)	
Designed By J.J. MANUSE	Drawn By D.W.SHAFFER
Checked By B.J. CARLSON Date 04/07	Bridge Design Supervisor K.M. WOJTKOWSKI Date 04/07
PROJECT BENNINGTON	PROJECT NO. AC NH F019-1(53)
TVGA CAD Drawing No. FBXSect.dgn	Date 04/10/2007
Bridge Sheet No. BR550	Sheet 242 of 577

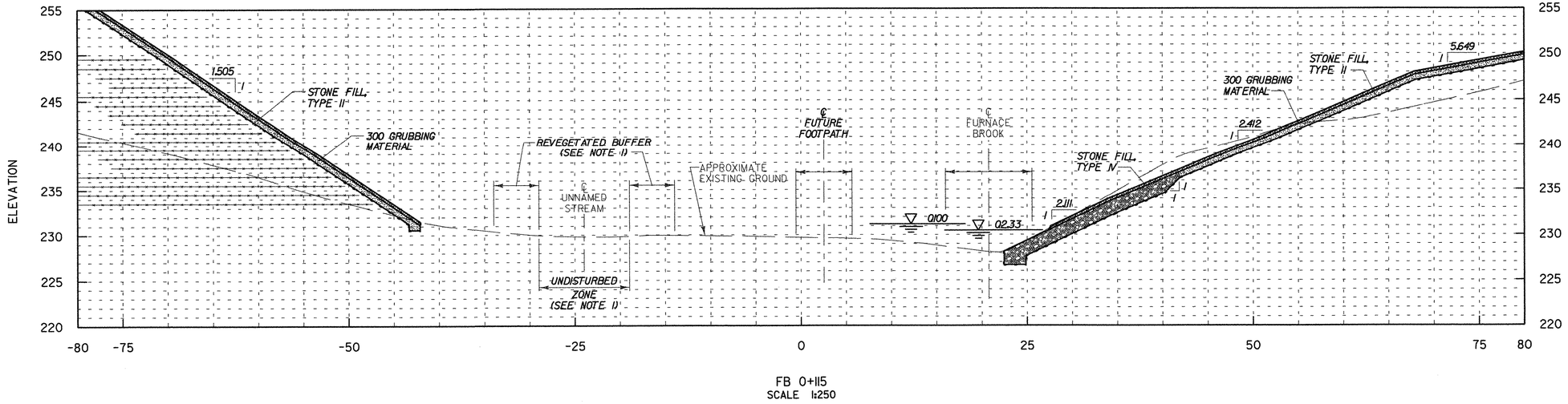

FB 0+115
SCALE 1:250

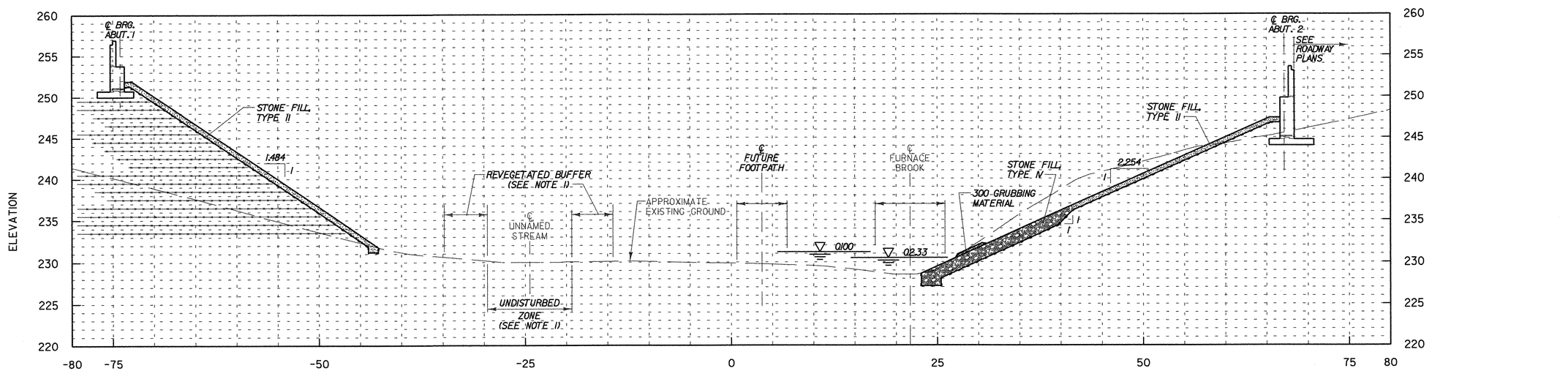

FB 0+110
SCALE 1:250

0 5 10 15 20 25m

SCALE 1: 250

NOTES:

1. A MINIMUM 5.0 m UNDISTURBED ZONE AND 5.0 m REVEGETATED BUFFER REQUIRED ON EACH SIDE OF UNNAMED STREAM.
2. CROSS SECTIONS ARE TAKEN PERPENDICULAR TO THE FURNACE BROOK CENTERLINE AND THE EMBANKMENT. SLOPE CALLOUT MAY NOT BE PERPENDICULAR TO THE EMBANKMENT.
3. GRUBBING MATERIAL SHALL NOT BE PLACED ON THE STONE FILL UNDER THE FURNACE BROOK STRUCTURE.

TVGA CONSULTANTS

STATE OF VERMONT
AGENCY OF TRANSPORTATION

Town Of BENNINGTON	Bridge No. BI2
Highway No. VT RTE 279	Log Sta. / Surv. Sta.
VT ROUTE 279 OVER FURNACE BROOK	
CHANNEL CROSS SECTIONS (5 OF 8)	
Designed By J.J. MANUSE	Drawn By D.W.SHAFFER
Checked By B.J. CARLSON Date 04/07	Bridge Design Supervisor K.M. WOJTKOWSKI Date 04/07
PROJECT BENNINGTON	PROJECT NO. AC NH F019-1(53)
TVGA CAD Drawing No. FBXSect.dgn	Date 04/10/2007
Bridge Sheet No. BR551	Sheet 243 of 577

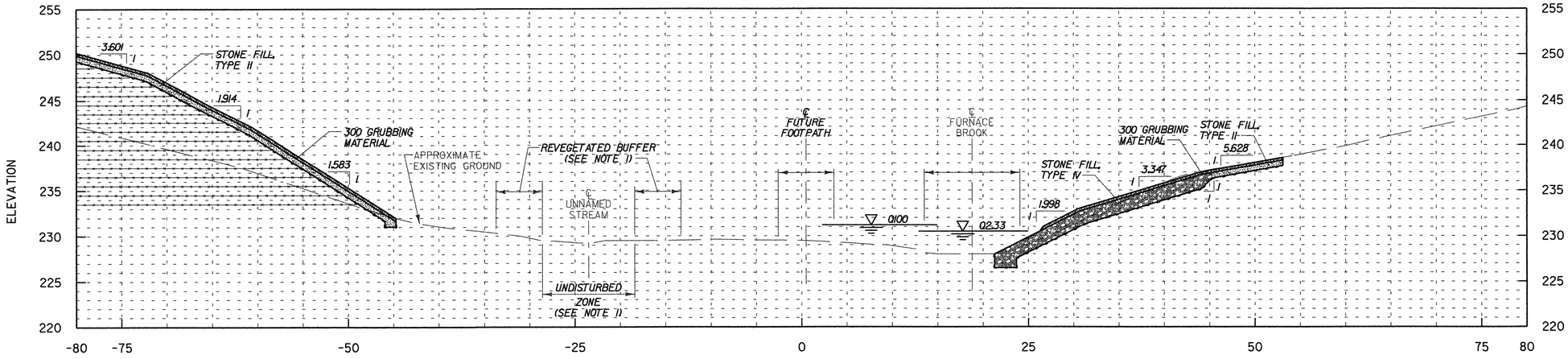

FB 0+125
SCALE 1:250

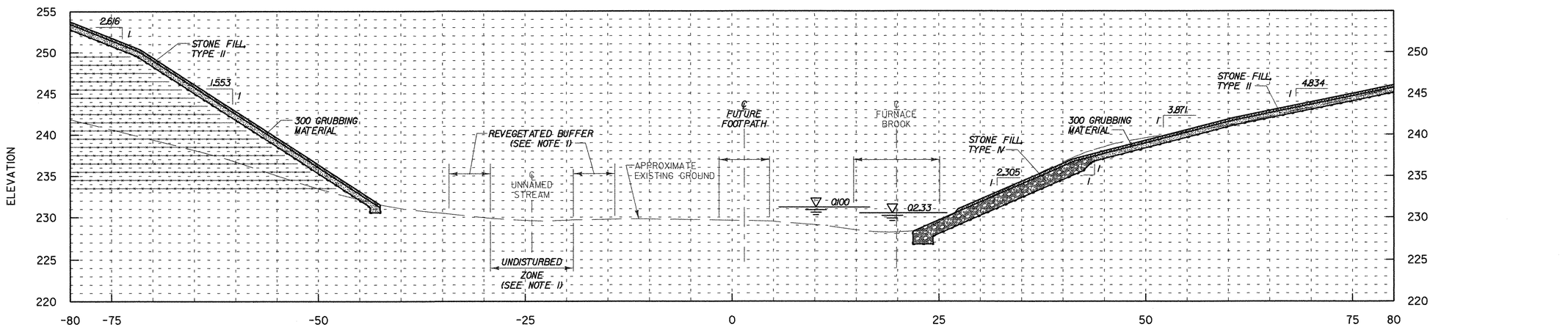

FB 0+120
SCALE 1:250

0 5 10 15 20 25m

SCALE 1: 250

NOTES:

1. A MINIMUM 5.0 m UNDISTURBED ZONE AND 5.0 m REVEGETATED BUFFER REQUIRED ON EACH SIDE OF UNNAMED STREAM.
2. CROSS SECTIONS ARE TAKEN PERPENDICULAR TO THE FURNACE BROOK CENTERLINE AND THE EMBANKMENT. SLOPE CALLOUT MAY NOT BE PERPENDICULAR TO THE EMBANKMENT.

TVGA CONSULTANTS

STATE OF VERMONT
AGENCY OF TRANSPORTATION

Town Of BENNINGTON	Bridge No. BI2
Highway No. VT RTE 279	Log Sta. / Surv. Sta.
VT ROUTE 279 OVER FURNACE BROOK	
CHANNEL CROSS SECTIONS (6 OF 8)	
Designed By J.J. MANUSE	Drawn By D.W.SHAFFER
Checked By B.J. CARLSON Date 04/07	Bridge Design Supervisor K.M. WOJTKOWSKI Date 04/07
PROJECT BENNINGTON	PROJECT NO. AC NH F019-1(53)
TVGA CAD Drawing No. FBXSect.dgn	Date 04/10/2007
Bridge Sheet No. BR552	Sheet 244 of 577

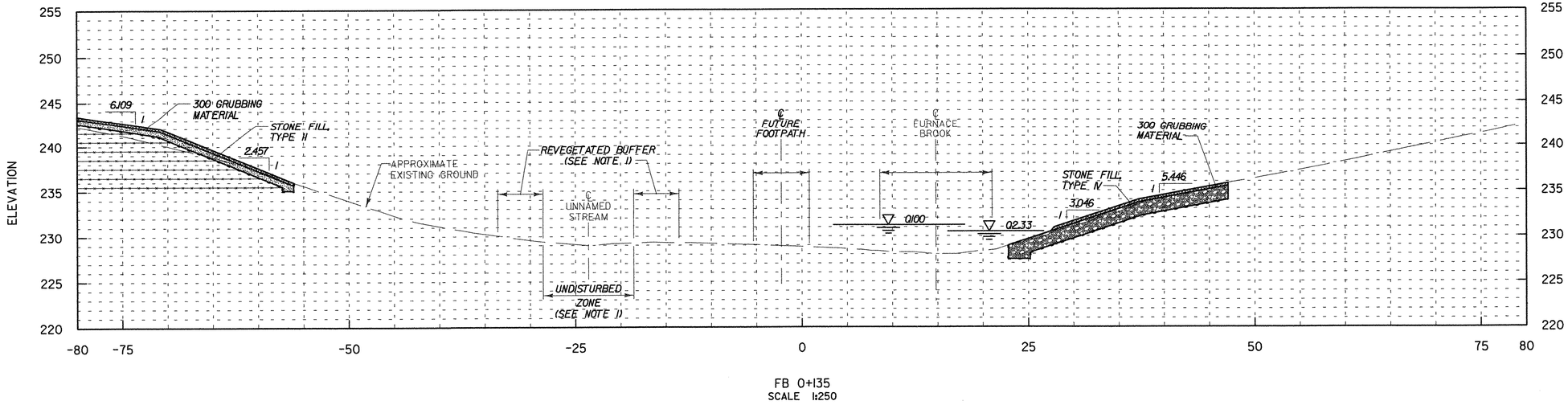

FB 0+135
SCALE 1:250

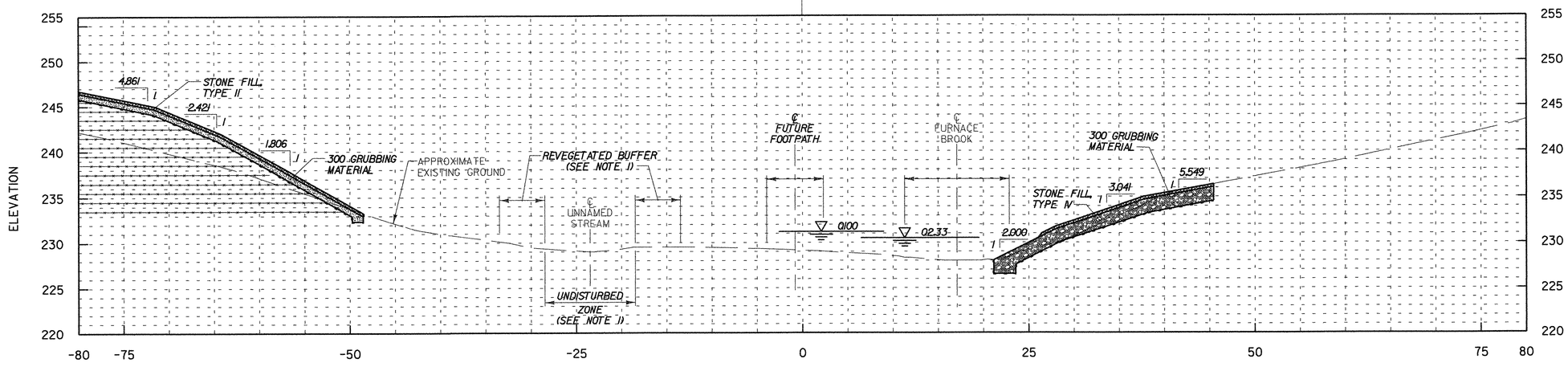

FB 0+130
SCALE 1:250

0 5 10 15 20 25m

SCALE 1: 250

NOTES:

1. A MINIMUM 5.0 m UNDISTURBED ZONE AND 5.0 m REVEGETATED BUFFER REQUIRED ON EACH SIDE OF UNNAMED STREAM.
2. CROSS SECTIONS ARE TAKEN PERPENDICULAR TO THE FURNACE BROOK CENTERLINE AND THE EMBANKMENT. SLOPE CALLOUT MAY NOT BE PERPENDICULAR TO THE EMBANKMENT.

TVGA CONSULTANTS

STATE OF VERMONT
AGENCY OF TRANSPORTATION

Town Of BENNINGTON	Bridge No. BI2
Highway No. VT RTE 279	Log Sta. / Surv. Sta.
VT ROUTE 279 OVER FURNACE BROOK	
CHANNEL CROSS SECTIONS (7 OF 8)	
Designed By J.J. MANUSE	Drawn By D.W.SHAFFER
Checked By B.J. CARLSON Date 04/07	Bridge Design Supervisor K.M. WOJTKOWSKI Date 04/07
PROJECT BENNINGTON	PROJECT NO. AC NH F019-1(53)
TVGA CAD Drawing No. FBXSect.dgn	Date 04/10/2007
Bridge Sheet No. BR553	Sheet 245 of 577

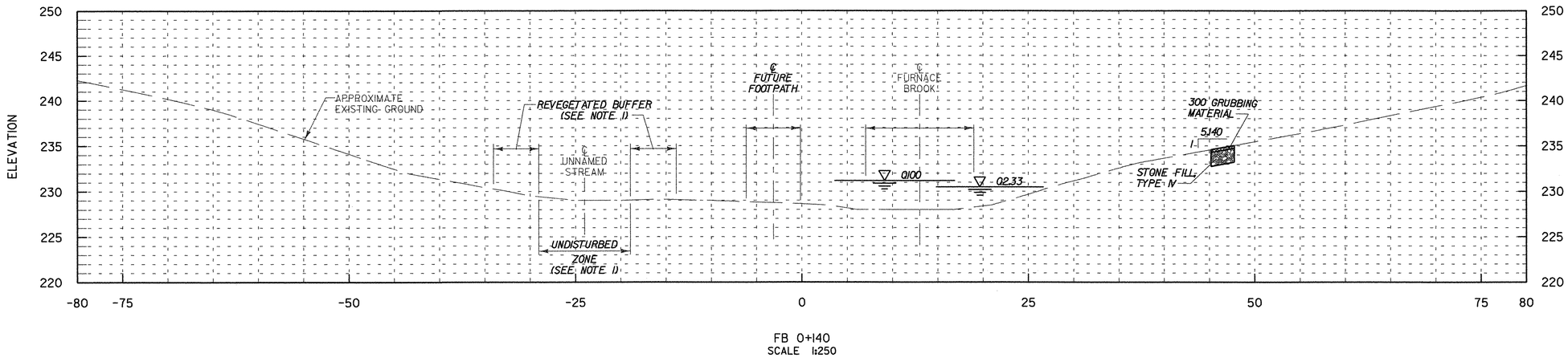

FB 0+140
SCALE 1:250

NOTES:

1. A MINIMUM 5.0 m UNDISTURBED ZONE AND 5.0 m REVEGETATED BUFFER REQUIRED ON EACH SIDE OF UNNAMED STREAM.
2. CROSS SECTIONS ARE TAKEN PERPENDICULAR TO THE FURNACE BROOK CENTERLINE AND THE EMBANKMENT. SLOPE CALLOUT MAY NOT BE PERPENDICULAR TO THE EMBANKMENT.

0 5 10 15 20 25m

SCALE 1:250

STATE OF VERMONT
AGENCY OF TRANSPORTATION

Town Of BENNINGTON	Bridge No. BI2
Highway No. VT RTE 279	Log Sta. / Surv. Sta.
VT ROUTE 279 OVER FURNACE BROOK	
CHANNEL CROSS SECTIONS (8 OF 8)	
Designed By J.J. MANUSE	Drawn By D.W.SHAFFER
Checked By B.J. CARLSON Date 04/07	Bridge Design Supervisor K.M. WOJTKOWSKI Date 04/07
PROJECT BENNINGTON	PROJECT NO. AC NH F019-1(53)
TVGA CAD Drawing No. FBXSect.dgn	Date 04/10/2007
Bridge Sheet No. BR554	Sheet 246 of 577

TVGA CONSULTANTS

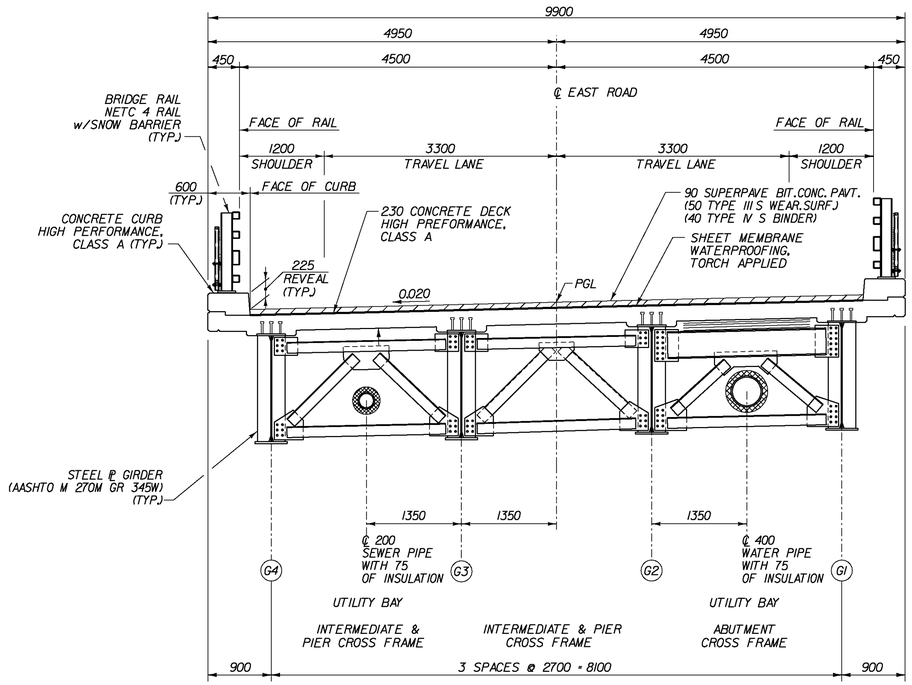

NOTE: ALL DIMENSIONS ARE RADIAL AND CONCENTRIC WITH ℄ EAST ROAD.

TYPICAL BRIDGE SECTION - VEHICLE

SCALE 1:40

EAST ROAD - ESTIMATED TRAFFIC DATA

2010 ADT : 4550

2030 ADT : 6100

% T : 3%

% D : 50%

DESIGN SPEED : 50kPH (35 MPH)

INDEX OF SHEETS

BR600	PRELIMINARY INFORMATION SHEET	BR630	FRAMING PLAN (S.U.P.)
BR601	TYPICAL EARTHWORK SECTIONS	BR631	CROSSFRAME DETAILS (S.U.P.)
BR602	QUANTITY SHEET	BR632	BEARING DETAILS (S.U.P.)
BR603-604	BORING INFO SHEETS	BR633	PIER BEARING DETAILS (S.U.P.)
BR605-613	BORING LOGS	BR634	EXPANSION JOINT PLAN (S.U.P.)
BR614	PLAN AND ELEVATION	BR635	ABUTMENT 1 PLAN AND ELEVATION
BR615	VT ROUTE 279 PROFILES	BR636	ABUTMENT 1 WINGWALL DETAILS
BR616	GENERAL NOTES	BR637	ABUTMENT 1 FOOTING
BR617	TYPICAL BRIDGE SECTION	BR638	ABUTMENT 2 PLAN AND ELEVATION
BR618	DECK PLAN	BR639	ABUTMENT 2 WINGWALL DETAILS
BR619	FRAMING PLAN	BR640	ABUTMENT 2 FOOTING
BR620	SPLICE DETAILS	BR641	PIER DETAILS
BR621	CROSSFRAME DETAILS	BR642	PIER DETAILS (S.U.P.)
BR622	MISCELLANEOUS DETAILS	BR643	RAILING PLAN
BR623	ABUTMENT BEARING DETAILS	BR644	BRIDGE RAILING - NETC 4 RAIL
BR624	PIER BEARING DETAILS	BR645	APPROACH RAILING
BR625	EXPANSION JOINT PLAN	BR646	DETAILS - NETC 4 RAIL
BR626	EXPANSION JOINT DETAILS	BR647	SNOW FENCE - NETC 4 RAIL
BR627	DOWNSPOUT DETAILS	BR648	PROTECTIVE SCREENING DETAILS
BR628	APPROACH SLAB DETAILS	BR649	REINFORCING STEEL SCHEDULE I
BR629	TYPICAL SECTION (S.U.P)	BR650	REINFORCING STEEL SCHEDULE II

NOTE:

ALL DIMENSIONS ON SHEETS BR600 TO BR650 ARE IN MILLIMETERS (mm) UNLESS OTHERWISE NOTED.

V:\1953\active\19530002\transportation\structure\Design\ER\ER-PlSht.dgn

FINAL HYDRAULICS REPORT

VAOT Metric

HYDROLOGIC DATA

DRAINAGE AREA=

CHARACTER OF TERRAIN:

CHARACTER & TYPE OF STREAM:

NATURE OF STREAMBED:

Q2.33= cms Q50= cms

Q10= cms Q100= cms

Q25= cms Q500= cms

DATE OF FLOOD OF RECORD:

WATER SURFACE ELEV.: ESTIMATED DISCHARGE:

NATURAL STREAM VELOCITY @ Q50 = mps

ICE CONDITIONS: DEBRIS:

DOES THE STREAM REACH MAXIMUM HIGHWATER ELEVATION RAPIDLY?

IS ORDINARY BASE RAPID?

IS STAGE AFFECTED BY UPSTREAM OR DOWNSTREAM CONDITIONS?

IF YES, DESCRIBE.

WATERSHED STORAGE ___ HEADWATERS ___ UNIFORM THROUGHOUT WATERSHED ___ IMMEDIATELY ABOVE SITE ___

EXISTING STRUCTURE

STRUCTURE TYPE: N/A YEAR BUILT: N/A

CLEAR SPAN (NORMAL TO STREAM): N/A

VERTICAL CLEARANCE ABOVE STREAMBED: N/A

WATERWAY OF FULL OPENING: N/A

DISPOSITION OF STRUCTURE: N/A

TYPE OF MATERIAL UNDER SUBSTRUCTURE: N/A

WATER SURFACE ELEV. @ Q2.33= VELOCITY= mps

Q10= " = mps

Q25= " = mps

Q50= " = mps

Q100= " = mps

LONG TERM STREAM BED CHANGES: N/A

IS THE ROADWAY OVERTOPPED BELOW THE Q100? N/A FREQUENCY: N/A

RELIEF ELEVATION: N/A DISCHARGE OVER ROAD @ Q100: N/A

UPSTREAM STRUCTURE: TOWN: N/A DISTANCE:

HIGHWAY NO.: STRUCTURE NO.:

STRUCTURE TYPE:

CLEAR SPAN: CLEAR HEIGHT:

YEAR BUILT: FULL WATERWAY:

DOWNSTREAM STRUCTURE: TOWN: N/A DISTANCE:

HIGHWAY NO.: STRUCTURE NO.:

STRUCTURE TYPE:

CLEAR SPAN: CLEAR HEIGHT:

YEAR BUILT: FULL WATERWAY:

PROPOSED STRUCTURE

STRUCTURE TYPE: Two span continuous curved plate girder bridge

CLEAR SPAN (NORMAL TO STREAM): N/A

VERTICAL CLEARANCE ABOVE STREAMBED: N/A

WATERWAY OF FULL OPENING: N/A

WATER SURFACE ELEV. @ Q2.33= VELOCITY= mps

Q10= " = mps

Q25= " = mps

Q50= " = mps

Q100= " = mps

IS THE ROADWAY OVERTOPPED BELOW THE Q100? N/A FREQUENCY: N/A

RELIEF ELEVATION: N/A DISCHARGE OVER ROAD @ Q100: N/A

AVERAGE LOW ELEVATION OF SUPERSTRUCTURE:

VERTICAL CLEARANCE @ Q 100 = m

SCOUR: Channel = N/A

REQUIRED CHANNEL PROTECTION: N/A

PERMIT INFORMATION

AVERAGE DAILY FLOW: N/A

ORDINARY LOW WATER: cms ELEV.:

ORDINARY HIGH WATER: cms ELEV.:

TEMPORARY BRIDGE REQUIREMENTS

STRUCTURE TYPE: N/A

CLEAR SPAN (NORMAL TO STREAM): N/A

VERTICAL CLEARANCE ABOVE STREAMBED: N/A

WATERWAY OF FULL OPENING: N/A

DESIGN CRITERIA:

1. DESIGN LIVE LOAD AASHTO MS-22.5 (Vehicle); M-9 or 4.07 kPa Live Load (Shared Use Path)
2. DESIGN SPAN 38.900 m + 32.900 m = 71.800 m (Vehicle); 38.758 m + 33.052 m = 71.810 m (Shared Use Path)
3. ALLOWABLE LOAD FOR SPREAD FOOTINGS ON SOIL 383 kPa (Abut.1, Pier (Vehicle), Pier (Shared Use Path) & Abut.2) ON LEDGE N/A
4. ALLOWABLE LOAD FOR PILING N/A TYPE N/A ESTIMATED LENGTH N/A
5. STRUCTURAL STEEL AASHTO GRADE AASHTO M 270M, GRADE 345W
6. REINFORCING STEEL GRADE 420
7. CONCRETE, HIGH PERFORMANCE CLASS A f'_c : 30 MPa
   CONCRETE, HIGH PERFORMANCE CLASS B f'_c : 25 MPa
8. DESIGN METHOD LOAD FACTOR DESIGN (LFD)

TRAFFIC MAINTENANCE:

1. IS TRAFFIC TO BE MAINTAINED? YES IF YES, ON EXISTING STRUCTURE NO OR ON TEMPORARY BRIDGE TEMPORARY DETOUR
2. TEMPORARY BRIDGE REQUIREMENTS: ONE OR TWO WAY N/A TRAFFIC CONTROL SIGNALS REQUIRED N/A
   MINIMUM CLEAR SPAN (NORMAL TO STREAM): N/A VERTICAL CLEARANCE ABOVE STREAMBED: N/A
   WATERWAY AT FULL OPENING: N/A
   ARE SIDEWALKS REQUIRED? N/A IF SO, ON WHAT SIDE? N/A

LOAD FACTOR LOAD RATING (LFD) (METRIC TONS)

LOADING LEVELS (LOAD FACTOR)	TRUCK						
	M	MS	3S2	6 AXLE	3A.STR.	4A.STR.	5A.SEMI
INVENTORY A=2.17 B=1.00	39	44					
POSTED A=1.55 B=1.40	55	61	68		58	59	67
OPERATING A=1.30 B=1.67		73	82	91	69	70	

STRENGTH RF = $\frac{\phi M_N - 1.3\,M_{DL}}{A \times M_{LL+I}}$ SERVICEABILITY RF = $B\left[\frac{.95\,F_y S_{LL+I} - M_{DL}\frac{S_{LL+I}}{S_{DL}} - M_{SDL}\frac{S_{LL+I}}{S_{SDL}}}{1.67\,M_{LL+I}}\right]$

SHARED USE PATH LOAD RATING (LFD)

LOADING LEVELS (LOAD FACTOR)	M-TRUCK	PEDESTRIAN
	TONS	kPa
INVENTORY A=2.17 B=1.00	16	5.16
POSTED A=1.55 B=1.40	23	
OPERATING A=1.30 B=1.67	28	

* INDICATES RATING CONTROLLED BY SERVICEABILITY

STRENGTH RF = $\frac{\phi M_N - 1.3\,M_{DL}}{A \times M_{LL+I}}$ SERVICEABILITY RF = $B\left[\frac{.95\,F_y S_{LL+I} - M_{DL}\frac{S_{LL+I}}{S_{DL}} - M_{SDL}\frac{S_{LL+I}}{S_{SDL}}}{1.67\,M_{LL+I}}\right]$

Stantec

STATE OF VERMONT
AGENCY OF TRANSPORTATION

Town Of BENNINGTON	Bridge No. BII
Highway No. TH 5	Log Sta. / Surv. Sta.

EAST ROAD OVER VT ROUTE 279

PRELIMINARY INFORMATION SHEET

Designed By G. BOGUE	Drawn By J. SOTER
Checked By M. CHENETTE Date 11/04	Bridge Design Supervisor G. BOGUE Date 03/07
PROJECT BENNINGTON	PROJECT NO. AC NH 019-1(53)
Dgn.: ...\Design\ER\ER-PlSht.dgn	Plot Date: 5/25/2011
Bridge Sheet No. BR600	Sheet 247 of 577

Metric

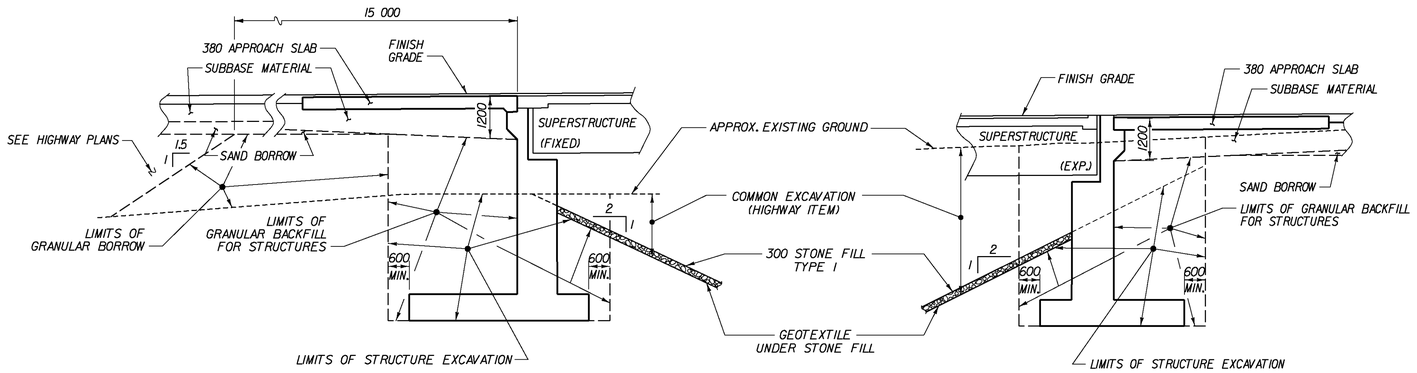

TYPICAL ABUTMENT 1 SECTION
NOT TO SCALE

TYPICAL ABUTMENT 2 SECTION
NOT TO SCALE

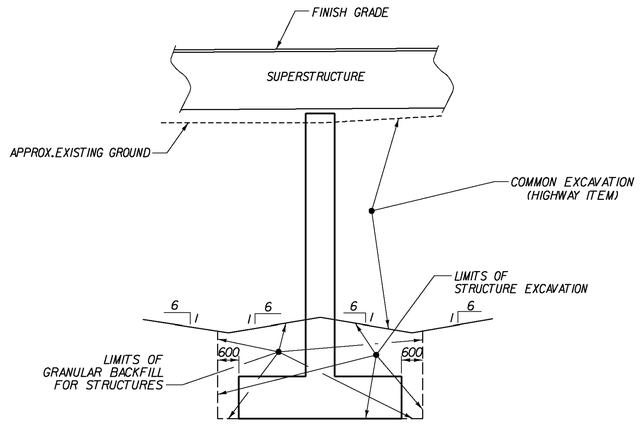

TYPICAL PIER SECTION
NOT TO SCALE

STATE OF VERMONT
AGENCY OF TRANSPORTATION

Town Of BENNINGTON	Bridge No. BII
Highway No. TH 5	Log Sta. / Surv. Sta.

EAST ROAD OVER VT ROUTE 279

TYPICAL EARTHWORK SECTIONS

Designed By G. BOGUE	Drawn By J. SOTER
Checked By S. BURBANK Date 10/06	Bridge Design Supervisor G. BOGUE Date 03/07
PROJECT BENNINGTON	PROJECT NO. AC NH 019-1(53)
Dgn.: ...\Design\ER\ER-AbutTyp.dgn	Plot Date: 5/25/2011
Bridge Sheet No. BR601	Sheet 248 of 577

Stantec

V:\1953\active\195310002\transportation\structural\Design\ER\ER-AbutTyp.dgn

STATE OF VERMONT
AGENCY OF TRANSPORTATION

QUANTITY SHEET

Metric

SUMMARY OF ESTIMATED QUANTITIES

UTILITIES	ABUT. No. 1	PIER	ABUT. No. 2	APP. SLAB No. 1	APP. SLAB No. 2	DECK	PIER S.U.P.	DECK S.U.P.	BRIDGE QUANTITY	ROUND	GRAND TOTAL	FINAL	UNIT	ITEMS	ITEM NUMBER
	1170		70						1240		1240		CM	GRANULAR BORROW	203.32
	467	127	715				77		1386		1386		CM	STRUCTURE EXCAVATION	204.25
	530	95	465				60		1150		1150		CM	GRANULAR BACKFILL FOR STRUCTURES	204.30
				11	11	137			159		159		T	SUPERPAVE BITUMINOUS CONCRETE PAVEMENT (PG 64-28)	490.30
														BEGIN ALTERNATE BID ITEMS	
	3		5			220		83	311		311		CM	CONCRETE, HIGH PERFORMANCE CLASS A (FPQ) NOT USED	501.33
	3		5			220		83	311		311		CM	CONCRETE, HIGH PERFORMANCE CLASS A (SIPCMF)(FPQ) USED	501.33
														END ALTERNATE BID ITEMS	
	223	94	210	21	20		54		622		622		CM	CONCRETE, HIGH PERFORMANCE CLASS B	501.34
								40750	40750		40750		KG	STRUCTURAL STEEL, PLATE GIRDER	506.55
						117787			117787		117787		KG	STRUCTURAL STEEL, CURVED PLATE GIRDER	506.56
			190						190		190		KG	STRUCTURAL STEEL	506.60
	11126	2821	10025				1420		25392		25392		KG	REINFORCING STEEL	507.15
	692	5501	834	1429	1411	29719	3747	9098	52431		52431		KG	EPOXY COATED REINFORCING STEEL	507.17
						1			1		1		LS	SHEAR CONNECTORS (2244 - 22 x 180)	508.15
								1	1		1		LS	SHEAR CONNECTORS (756 - 22 x 125)	508.15
						1			1		1		LS	STRUCTURAL PAINTING, SHOP APPLIED (7 METRIC TONS)	513.25
						1			1		1		LS	SURFACE PREPARATION, SHOP (7 METRIC TONS)	513.40
	35	35	35			70	25	135	335		335		L	WATER REPELLENT, SILANE	514.10
	10								10		10		M	BRIDGE EXPANSION JOINT, ASPHALTIC PLUG	516.10
			10						10		10		M	BRIDGE EXPANSION JOINT, VERMONT	516.11
						635			635		635		SM	SHEET MEMBRANE WATERPROOFING, TORCH APPLIED	519.20
	4								4		4		M	JOINT SEALER, HOT POURED	524.11
	1		1			162			164		164		M	BRIDGE RAILING, GALVANIZED NETC 4 RAIL	525.34
	6		2						8		8		EACH	BEARING DEVICE ASSEMBLY, PREFORMED FABRIC PAD	531.10
		4	4				2		10		10		EACH	BEARING DEVICE ASSEMBLY, POT	531.12
	29		38						67		67		CM	STONE FILL, TYPE I	613.10
						92			92		92		M	SNOW BARRIER, GALVANIZED	620.75
	2		2						4		4		EACH	GUARDRAIL APPROACH SECTION, GALVANIZED NETC 4 RAIL	621.73
	94		124						218		218		SM	GEOTEXTILE UNDER STONE FILL	649.31
	2		2						4		4		EACH	SPECIAL PROVISION (GUARDRAIL APPROACH SECTION, GALVANIZED 3 RAIL)	900.620
								165	165		165		M	SPECIAL PROVISION (PROTECTIVE SCREENING)	900.640
			4						4		4		M	SPECIAL PROVISION (BRIDGE EXPANSION JOINT, SLIDING PLATE)	900.640
								163			163		M	SPECIAL PROVISION (BRIDGE RAILING, GALVANIZED 3 RAIL)	900.640
1									1		1		LS	SPECIAL PROVISON (SEWER MAIN ON BRIDGE) (200 MM)	900.645
1									1		1		LS	SPECIAL PROVISON (WATER MAIN ON BRIDGE) (400 MM)	900.645

DETAILED SUMMARY OF QUANTITIES

QUANTITIES	UNIT	ITEMS

PROJECT NAME: **EAST ROAD OVER VT ROUTE 279**
PROJECT NUMBER: **AC NH 019-1(53)**

FILE NAME: **ER-QntySht.dgn**
PROJECT LEADER: **M. CHENETTE**
DESIGNED BY: **S. BURBANK**
QUANTITY SHEET #1

PLOT DATE: **5/21/2007**
DRAWN BY: **S. BURBANK**
CHECKED BY: **J. SOTER**

Bridge Sheet No. BR602

SOIL CLASSIFICATION

AASHTO	
A1	Gravel and Sand
A3	Fine Sand
A2	Silty or Clayey Gravel and Sand
A4	Silty Soil - Low Compressibility
A5	Silty Soil - Highly Compressible
A6	Clayey Soil - Low Compressibility
A7	Clayey Soil - Highly Compressible

ROCK QUALITY DESIGNATION

R.Q.D. (%)	ROCK DESCRIPTION
<25	Very Poor
25 to 50	Poor
51 to 75	Fair
76 to 90	Good
>90	Excellent

SHEAR STRENGTH

UNDRAINED SHEAR STRENGTH IN kPa	CONSISTENCY
<12	Very Soft
12-24	Soft
24-48	Med. Stiff
48-96	Stiff
96-192	Very Stiff
>192	Hard

CORRELATION GUIDE OF "N" TO DENSITY/CONSISTENCY

DENSITY (GRANULAR SOILS) N	DESCRIPTIVE TERM	CONSISTENCY (COHESIVE SOILS) N	DESCRIPTIVE TERM
<5	Very Loose	<2	Very Soft
5-10	Loose	2-4	Soft
11-24	Med. Dense	5-8	Med. Stiff
25-50	Dense	9-15	Stiff
>50	Very Dense	16-30	Very Stiff
		31-60	Hard
		>60	Very Hard

COMMONLY USED SYMBOLS

▼	Water Elevation
⊕	Standard Penetration Boring
⊕	Auger Boring
⊙	Rod Sounding
S	Sample
N	Standard Penetration Test Blow Count Per 300 mm For: 50.8 mm O.D. Sampler 35.0 mm I.D. Sampler Hammer Weight Of 63.5 kg. Hammer Fall Of 762 mm
VS	Field Vane Shear Test
US	Undisturbed Soil Sample
B	Blast
DC	Diamond Core
MD	Mud Drill
WA	Wash Ahead
HSA	Hollow Stem Auger
AX	Core Size 30.1mm
BX	Core Size 42.0 mm
NX	Core Size 54.7 mm
M	Double Tube Core Barrel Used
LL	Liquid Limit
PL	Plastic Limit
PI	Plasticity Index
NP	Non Plastic
w	Moisture Content (Dry Wgt. Basis)
D	Dry
M	Moist
MTW	Moist To Wet
W	Wet
Sat	Saturated
Bo	Boulder
Gr	Gravel
Sa	Sand
Si	Silt
Cl	Clay
HP	Hardpan
Le	Ledge
NLTD	No Ledge To Depth
CNPF	Can Not Penetrate Further
TLOB	To Ledge Or Boulder
NR	No Recovery
Rec.	Recovery
%Rec.	Percent Recovery
RQD	Rock Quality Designation
CBR	California Bearing Ratio
<	Less Than
>	Greater Than
R	Refusal (N > 100)

COLOR			
blk	Black	pnk	Pink
bl	Blue	pu	Purple
brn	Brown	rd	Red
dk	Dark	tn	Tan
gry	Gray	wh	White
gn	Green	yel	Yellow
lt	Light	mltc	Multicolored
or	Orange		

DEFINITIONS (AASHTO)

BEDROCK (LEDGE) - Rock in its native location of indefinite thickness.

BOULDER - A rock fragment with an average dimension > 304.8 mm.

COBBLE - Rock fragments with an average dimension between 76.2 and 304.8 mm.

GRAVEL - Rounded particles of rock < 76.2 mm and > 2 mm (#10 sieve).

SAND - Particles of rock < 2 mm (#10 sieve) and > 75 μm (#200 sieve).

SILT - Soil < 75 μm (#200 sieve), non or slightly plastic and exhibits no strength when air-dried.

CLAY - Fine grained soil, exhibits plasticity when moist and considerable strength when air-dried.

VARVED - Alternate layers of silt and clay.

HARDPAN - Extremely dense soil, cemented layer, not softened when wet.

MUCK - Soft organic soil (containing > 10% organic material.

MOISTURE CONTENT - Weight of water divided by dry weight of soil.

FLOWING SAND - Granular soil so saturated (loose) that it flows into drill casing during extraction of wash rod.

STRIKE - Angle from magnetic north to line of intersection of bed with a horizontal plane.

DIP - Inclination of bed with a horizontal plane.

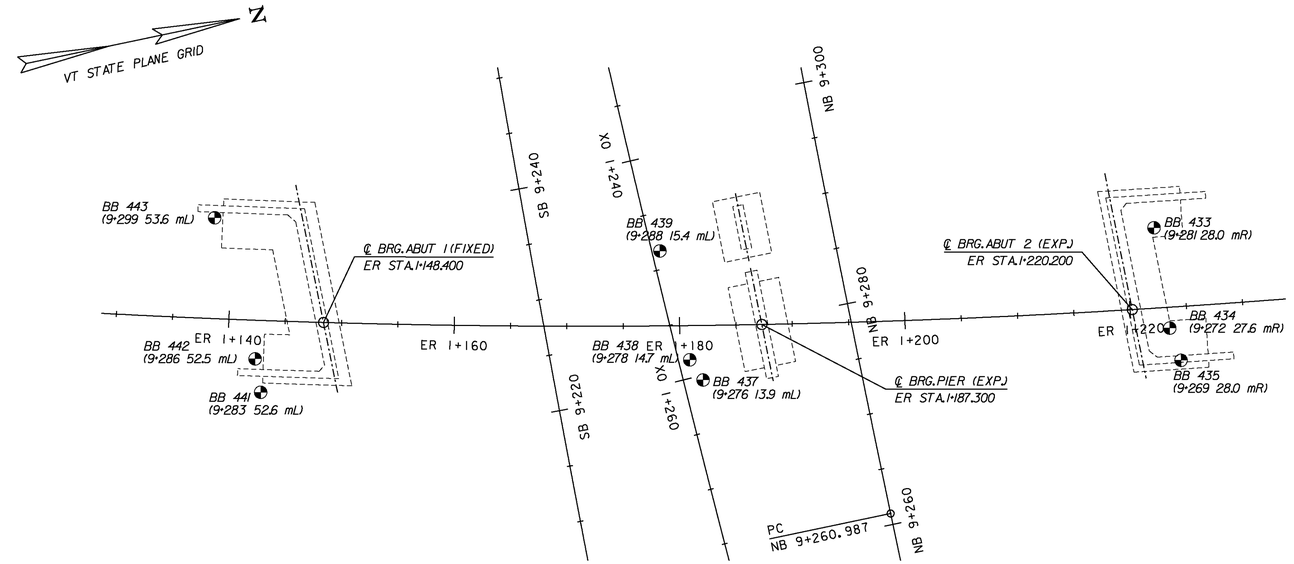

PLAN

0 10 20

SCALE 1:250

BORING CHART

BORING NO.	STATION (N.B.RTE. 7)	OFFSET (m)	GROUND ELEV.
BB 433	9+281	28.0 R	243.0
BB 434	9+272	27.6 R	243.2
BB 435	9+269	28.0 R	243.2
BB 437	9+276	13.9 L	241.3
BB 438	9+278	14.7 L	241.3
BB 439	9+288	15.4 L	239.2
BB 441	9+283	52.6 L	240.3
BB 442	9+286	52.5 L	240.3
BB 443	9+299	53.6 L	238.9

NOTES:

1. PARTIAL BORING LOGS ARE ONLY SHOWN TO APPROXIMATELY 10 METERS BELOW BOTTOM OF PROPOSED FOOTING. THE FULL DEPTH BORING LOGS ARE AVAILABLE TO THE CONTRACTOR AT THE VTRANS OFFICE OF CONTRACT ADMINISTRATION IN MONTPELIER, VT.
2. IF THERE IS A CONFLICT IN THE INFORMATION ON THE BORING LOGS SHOWN ON BRIDGE SHEETS BR104 THROUGH BR112, THE INFORMATION ON BORING INFORMATION SHEET (2 OF 2) BRIDGE SHEET BR103, SUPERCEDES THE GENERAL NOTES ON THIS SHEET.

LEGEND

⊕ BRIDGE BORINGS

GENERAL NOTES

1. The subsurface explorations shown here were made between 11/7/94 and 2/27/95 by GZA.
2. Soil and rock classifications, properties and descriptions are based on engineering interpretation from available subsurface information by the Agency and may not necessarily reflect actual variations in subsurface conditions that may be encountered between individual boring or sample locations.
3. Observed water levels and/or conditions indicated are as recorded at the time of exploration and may vary according to the prevailing rainfall, methods of exploration and other factors.
4. Engineering judgement was exercised in preparing the subsurface information presented herein. Analysis and interpretation of subsurface data was performed and interpreted for Agency design and estimating purposes. Presentation of the information in the Contract is intended to provide the Contractor access to the same data available to the Agency. The subsurface information is presented in good faith and is not intended as a substitute for personal investigation, independent interpretation, independent analysis or judgement by the Contractor.
5. Pictorial structure details shown on the boring plan layout or soils profile are for illustrative purposes only and may not accurately portray final contract details.
6. Terminology used on boring logs to describe the hardness, degree of weathering, and spacing of fractures, joints and other discontinuities in the bedrock is defined in the AASHTO Manual on Subsurface Investigations, 1988.
7. U.S. Customary units and terms used on the original boring logs are being retained, with metric additions as necessary.

Stantec

STATE OF VERMONT
AGENCY OF TRANSPORTATION

Town Of BENNINGTON	Bridge No. BII
Highway No. TH 5	Log Sta. / Surv. Sta.

EAST ROAD OVER VT ROUTE 279

BORING INFO SHEET (1 OF 2)

Designed By S. BURBANK	Drawn By A. THIBAULT
Checked By M. CHENETTE Date 11/04	Bridge Design Supervisor G. BOGUE Date 03/07
PROJECT BENNINGTON	PROJECT NO. AC NH 019-1(53)
Dgn.: ...\Design\ER\ER-BorPln.dgn	Plot Date: 5/25/2011
Bridge Sheet No. BR603	Sheet 250 of 577

V:\1953\active\195300021\transportation\structural\Design\ER\ER-BorPln.dgn

GZA GeoEnvironmental, Inc.
Engineers and Scientists

Bennington Bypass North
Bennington, Vermont

Boring No.: ____
Page: ____ of ____
File No.: 15634
Check: ____

Contractor: New Hampshire Boring
Foreman: ____
Logged by: ____
Date Start/Finish: ____
Boring Location: See Exploration Location Plan
GS Elev.: ____ Datum: NGVD

	Auger/ Casing	Sampler
Type:		
I.D. (mm):		
Hammer Wt.:		
Hammer Fall:		
Rig Type:		

GROUNDWATER READINGS

Date	Time	Depth	Casing	Stab

Sample Information										
Depth (feet)	Depth (meters)	No.	Rec. (m)	Depth (m)	Blows/ 0.15m	N Value	Sample Description & Classification	Stratum Desc.		Equipment Installed
1.	2.	3.	4.	5.	6.	7.	8.	9.	10.	11.

1. Numbers in this column are the depth in feet below ground surface.
2. Number in this column are the depth in meters below ground surface.
3. The sample number and type are designated in this column.
   e.g., S-1
   S = Sample type (S = Split Spoon Sample)
   1 = Sample number
4. The values shown are the length of the soil sample recovered, in meters.
5. The numbers in this column designate the depth, in meters, from the ground surface of the sample identified in column 3.
6. Numbers in this column report the number of blows required to drive a split spoon sampler (35 mm inside diameter) 0.15 meters with a 63.5 kg hammer free-falling 0.76 m.
7. The Standard Penetration Test N-value, which is the sum of the blows recorded over the second and third 0.15 meter interval (column 6), is recorded in this column for soil samples.
8. Description of soil samples include:
   - the relative density or consistency;
   - color;
   - a listing of the Major or Minor soil components based on particle size distribution and plasticity;
   - other pertinent characteristics; and
   - AASHTO classifications based on visual perception.

   For example:
   - Medium dense, brown, fine to medium SAND, trace Silt, stratified.

   A solid line indicates a boundary between geologic deposits.

   A dashed line indicates a gradation change within a geologic deposit.
9. Geologic deposit (e.g., Lacustrine).
10. Pertinent observations made while advancing the test boring are identified in this column opposite the depth the observation was made. The observation is explained at the bottom of the page under "Notes" next to the appropriate number.
11. Equipment installed within the borehole and graphically presented in this column. If no equipment was installed, this column is blank.

i:/jobs/15634/15634.44/decrip2

BORING LOG LEGEND

DESCRIPTION OF SOIL SAMPLES

1. Density or Consistency:

The density or consistency listed is determined from the Standard Penetration Test N-Value according to the following table:

Density of Granular Soils	SPT N-Value		Consistency of Cohesive Soils
Very Loose	0-4	0-2	Very Soft
Loose	4-10	2-4	Soft
Medium Dense	10-30	4-8	Medium
Dense	30-50	8-15	Stiff
Very Dense	50+	15-30	Very Stiff
		30+	Hard

WOR - indicates weight of rods
WOH - indicates weight of hammer

2. Color: Visual perception.
3. Soil Components:

3. I Description: The components of a soil sample are described by visually estimating the percentage of each component by weight of the total sample.

a. Major Component: The major soil component (>50 Percent) is written with upper case letters for granular soil (e.g., SAND, GRAVEL) and a combination of the upper and lower case letters for fine grained soil (e.g., Silty CLAY, Clayey SILT).

b. Minor Component: The minor soil components (<50 Percent) are written with the first letter of each soil type in upper case, and the remaining letters in the lower case (e.g., Gravel, Silt). The minor components are identified and prefaced in the description based on the following percentages:

Description	Percentage
and	35-50
some	20-35
little	10-20
trace	0-10

c. Note: The actual percentage of gravel soils may differ from that measured when sampling with a standard split spoon sampler and/or auger type sampler because of the relatively small sampler diameter. Also, it is not possible to identify the presence of boulders and cobbles using a standard split spoon sampler and/or auger type sampler.

d. Fill: Fill is a material placed by other than natural processes. It is described by its major component(s) and additional significant components are listed.

3.2 Definitions:

a. Granular Soil: A granular soil sample is defined by the following particle sizes as referenced to a standard sieve.

Material		Standard Sieve Upper	Limit Lower
GRAVEL	-coarse	3 inch	3/4 inch
	-fine	3/4 inch	No. 4
SAND	-coarse	No. 4	No. 10
	-medium	No. 10	No. 40
	-fine	No. 40	No. 200

The Gravel/Sand portions of a granular soil are further divided based on the following visually estimated proportions:

Gravel/Sand	Proportion
fine to coarse	>10% all fractions
coarse	<10% fine and medium
medium to coarse	<10% fine
medium	<10% fine and coarse
fine to medium	<10% coarse
fine	<10% medium to coarse

b. Cohesive: A cohesive soil is classified by visually estimating the degree of plasticity based upon the minimum diameter thread which a sample can be rolled with the finger in the palm of the hand.

Material	Degree of Plasticity	Smallest Diameter Thread (inches)
SILT	Non-plastic	None
Clayey SILT	Slight	1/4
SILT and CLAY	Low	1/8
CLAY and SILT	Medium	1/16
Silty CLAY	High	1/32
CLAY	Very High	1/64

BORING LOG LEGEND

c. Organic Soils: An organic soil sample is classified by observation of the sample structure.

Material	Description
Topsoil	• Typically well-graded fine granular soil with organic matter.
Fibrous Peat	• Can see vegetative structure • Spongy, water squeezes out
Fine Grained Peat	• Little vegetative matter • Spongy
Organic Silt	• H_2S odor • Shell fragments • Often contains Sand

4. Other Pertinent Characteristics:

Soil Structure: Produced by deposition of sediments.

Stratified	-	Random soil deposits of varying components or color
Varved	-	Alternating soil deposits of varying thickness (i.e., clays or silts)
Stratum	-	Soil deposit >12 inches thick
Layer	-	Soil deposit 3 inches to 12 inches thick
Seam	-	*Soil deposit 1/8 inch to 3* inches thick
Parting/Lens	-	Soil deposit <1/8 inch thick

\\gza\gza\jobs\15634\15834.44\descript.doc

BORING LOG LEGEND

STATE OF VERMONT
AGENCY OF TRANSPORTATION

Town Of BENNINGTON	Bridge No. BII
Highway No. TH 5	Log Sta. / Surv. Sta.
EAST ROAD OVER VT ROUTE 279	
BORING INFO SHEET (2 OF 2)	
Designed By S. BURBANK	Drawn By A. THIBAULT
Checked By M. CHENETTE Date 11/04	Bridge Design Supervisor G. BOGUE Date 03/07
PROJECT BENNINGTON	PROJECT NO. AC NH 019-1(53)
Dgn.: ...\Design\ER\ER-BorLgn.dgn	Plot Date: 5/25/2011
Bridge Sheet No. BR604	Sheet 251 of 577

Stantec

V:\1953\active\195300002\transportation\structural\Design\ER\ER-BorLgn.dgn

BORING LOG
BB 433

GZA GEOENVIRONMENTAL OF NEW YORK
3699 WEST HENRIETTA RD., ROCHESTER, NEW YORK
ENGINEERS AND SCIENTISTS

PROJECT: U.S. Route 7 Bennington Bypass; Bennington, Vermont; FILE NO.: 13417
SHEET 1 of 3
ROADWAY Rt. 7 Bypass
STATION 9 + 281
OFFSET 28 M Rt

CONTRACTOR Capital Environmental Drilling Services
DRILLER Mark Voisine
GZA REPRESENTATIVE TRS — CHECKED BY VRK

BORING TYPE BB, East Rd, (Park St. Ext.) Bridge, N. Abut
GROUND SURFACE ELEVATION 243.0 M — DATUM NVGD
START DATE 11/14/94 — END DATE 11/14/94

TYPE OF DRILL RIG Mobile Drill B-53
CASING SIZE AND TYPE 4¼ inch I.D. Hollow Stem Augers
OVERBURDEN SAMPLING METHOD 2 inch O.D. x 24 inch long split spoon
ROCK DRILLING METHOD

WATER LEVEL DATA

DATE	TIME	WATER	CASING	REMARKS
11/14/94	1730	2'	25'	unstabilized
11/14/94	1745	2'	0'	unstabilized

DEPTH (M)	DEPTH (FT)	SAMPLE BLOWS / 6"	SAMPLE NO.	SAMPLE DEPTH (FT)	SAMPLE N-VALUE /ROD(%)	SAMPLE REC (%)	SAMPLE DESCRIPTION	EQUIPMENT INSTALLATION LOG	STRATUM DESCRIPTION	NOTES
										1.
0.3	1									
0.6	2								STONE WALL AND FILL	
0.9	3									
1.2	4								4 ft.	
1.5	5	18	S-1	5-7	55	50	Very dense, brown, fine to coarse SAND, little fine to coarse Gravel, little Silt & Clay, moist.			
1.8	6	29							WEATHERED GLACIAL TILL	
2.1	7	26								
2.4	8	19								
2.7	9									
3.0	10	4	S-2	10-12	28	50	Very dense, brown, fine to coarse SAND, and Silt & Clay, little fine to coarse Gravel, moist.			
3.4	11	10								
3.7	12	18								
4.0	13	20							13.5 ft.	
4.3	14								GLACIAL TILL	

LEGEND
S - Split Spoon Soil Sample
U - Undisturbed Soil Sample
C - Rock Core Sample

NOTES: 1. 0-3 ft. hand excavated through stone wall, 3 in. to 16 in. stones and organic type soil.

GENERAL NOTES: 1) STRATIFICATION LINES REPRESENT APPROXIMATE BOUNDARY BETWEEN SOIL TYPES, TRANSITIONS MAY BE GRADUAL.
2) WATER LEVEL READINGS HAVE BEEN MADE AT TIMES AND UNDER CONDITIONS STATED, FLUCTUATIONS OF GROUNDWATER MAY OCCUR DUE TO OTHER FACTORS THAN THOSE PRESENT AT THE TIME MEASUREMENTS WERE MADE.

GZA — BORING No. 9+281

BOTTOM OF ABUT.2 FOOTING EL.237.50 m

BORING LOG (CONT'D.)
BB 433

GZA GEOENVIRONMENTAL OF NEW YORK
3699 WEST HENRIETTA RD., ROCHESTER, NEW YORK
ENGINEERS AND SCIENTISTS

PROJECT: U.S. Route 7 Bennington Bypass; Bennington, Vermont; FILE NO.: 13417
SHEET 2 of 3
ROADWAY Rt. 7 Bypass
STATION 9 + 281
OFFSET 28 MR

DEPTH (M)	DEPTH (FT)	SAMPLE BLOWS / 6"	SAMPLE NO.	SAMPLE DEPTH (FT)	SAMPLE N-VALUE /ROD(%)	SAMPLE REC (%)	SAMPLE DESCRIPTION	EQUIPMENT INSTALLATION LOG	STRATUM DESCRIPTION	NOTES
4.6	15	26	S-3	15-17	81	70	Very dense, brown, fine to coarse SAND, some Silt & Clay, little fine to coarse Gravel, moist.			
4.9	16	39								
5.2	17	42								
5.5	18	55								
5.8	19									
6.1	20	27	S-4	20-22	98	75	Hard, yellow-brown, SILT & CLAY, some fine to coarse Sand, trace fine Gravel, moist.		GLACIAL TILL	2.
6.4	21	43								
6.7	22	55								
7.0	23	64								
7.3	24									
7.6	25	52/0"	S-5	25-25	100+	0	No recovery, split spoon bouncing on rock.			3.
7.9	26	83	S-6	25.5-26.2	100+	100	Very dense, brown, fine to coarse Gravel, little fine to coarse Sand, trace clayey Silt, moist.			
8.2	27	100/2"								
8.5	28									
8.8	29									
9.1	30	93	S-7	30-30.7	100+	100	Very dense, brown, fine to coarse SAND, some fine to coarse Gravel, some clayey Silt, moist.			
9.4	31	100/2"								
9.7	32									
10.0	33	89	S-8	33-34.4	100+	100	Hard, brown, SILT & CLAY and fine to coarse SAND, little fine Gravel.			4.

LEGEND
S - Split Spoon Soil Sample
U - Undisturbed Soil Sample
C - Rock Core Sample

NOTES: 2. Water used to help augers cut through soil.
3. Roller bit through boulder, 25.0 ft. to 25.5 ft.
4. Roller bit to 30.0, hole collapse, spin 3 in. casing to 30 ft.

GENERAL NOTES: 1) STRATIFICATION LINES REPRESENT APPROXIMATE BOUNDARY BETWEEN SOIL TYPES, TRANSITIONS MAY BE GRADUAL.
2) WATER LEVEL READINGS HAVE BEEN MADE AT TIMES AND UNDER CONDITIONS STATED, FLUCTUATIONS OF GROUNDWATER MAY OCCUR DUE TO OTHER FACTORS THAN THOSE PRESENT AT THE TIME MEASUREMENTS WERE MADE.

GZA — BORING No. 9+281

BORING LOG (CONT'D.)
BB 433

GZA GEOENVIRONMENTAL OF NEW YORK
3699 WEST HENRIETTA RD., ROCHESTER, NEW YORK
ENGINEERS AND SCIENTISTS

PROJECT: U.S. Route 7 Bennington Bypass; Bennington, Vermont; FILE NO.: 13417
SHEET 3 of 3
ROADWAY Rt. 7 Bypass
STATION 9 + 281
OFFSET 28 MR

DEPTH (M)	DEPTH (FT)	SAMPLE BLOWS / 6"	SAMPLE NO.	SAMPLE DEPTH (FT)	SAMPLE N-VALUE /ROD(%)	SAMPLE REC (%)	SAMPLE DESCRIPTION	EQUIPMENT INSTALLATION LOG	STRATUM DESCRIPTION	NOTES
10.3	34	163								
		200/5"					Bottom of hole at 34.4 ft.			
10.6	35									
10.9	36									
11.2	37									
11.5	38									
11.8	39									
12.1	40									
12.4	41									
12.7	42									
13.0	43									
13.3	44									
13.6	45									
13.9	46									
14.2	47									
14.5	48									
14.8	49									
15.1	50									
15.4	51									
15.7	52									

LEGEND
S - Split Spoon Soil Sample
U - Undisturbed Soil Sample
C - Rock Core Sample

NOTES:

GENERAL NOTES: 1) STRATIFICATION LINES REPRESENT APPROXIMATE BOUNDARY BETWEEN SOIL TYPES, TRANSITIONS MAY BE GRADUAL.
2) WATER LEVEL READINGS HAVE BEEN MADE AT TIMES AND UNDER CONDITIONS STATED, FLUCTUATIONS OF GROUNDWATER MAY OCCUR DUE TO OTHER FACTORS THAN THOSE PRESENT AT THE TIME MEASUREMENTS WERE MADE.

GZA — BORING No. 9+281

NOTE:
ENGLISH AND METRIC UNITS THAT WERE USED ON THE ORIGINAL BORING LOGS HAVE BEEN RETAINED.

STATE OF VERMONT
AGENCY OF TRANSPORTATION

Town Of BENNINGTON	Bridge No. BII
Highway No. TH 5	Log Sta. / Surv. Sta.
EAST ROAD OVER VT ROUTE 279	
BORING LOGS (1 OF 9)	
Designed By S. BURBANK	Drawn By A. THIBAULT
Checked By M. CHENETTE — Date 11/04	Bridge Design Supervisor G. BOGUE — Date 03/07
PROJECT BENNINGTON	PROJECT NO. AC NH 019-1(53)
Dgn.: ...\Design\ER\ER-Borel.dgn	Plot Date: 5/25/2011
Bridge Sheet No. BR605	Sheet 252 of 577

Stantec

V:\953\active\95300002\transportation\structural\Design\ER\ER-Borel.dgn

PARTIAL BORING LOG
BB 434

GZA GEOENVIRONMENTAL OF NEW YORK
3699 WEST HENRIETTA RD., ROCHESTER, NEW YORK
ENGINEERS AND SCIENTISTS

PROJECT
U.S. Route 7 Bennington Bypass
Bennington, Vermont
FILE NO.: 13417

SHEET 1 of 5
ROADWAY Rt. 7 Bypass
STATION 9+272
OFFSET 27.6 MR

CONTRACTOR Capital Environmental Drilling Services
DRILLER Steve Clavette
GZA REPRESENTATIVE MJS CHECKED BY VRK

BORING TYPE BB, East Rd. (Park St. Ext)Bridge, N Abutmnt
GROUND SURFACE ELEVATION 243.2 DATUM NVGD
START DATE 02/13/95 END DATE 02/17/95

TYPE OF DRILL RIG Mobile Drill B-53
CASING SIZE AND TYPE 4 inch I.D. Flush Joint Casing
OVERBURDEN SAMPLING METHOD 2 inch O.D. x 24 inch long split spoon
ROCK DRILLING METHOD

WATER LEVEL DATA

DATE	TIME	WATER	CASING	REMARKS
02/17/95	0720	11.1'	40'	stabilized 11 hrs.

DEPTH (M)	DEPTH (FT)	SAMPLE BLOWS / 6"	SAMPLE NO.	SAMPLE DEPTH (FT)	SAMPLE N-VALUE /RQD(%)	SAMPLE REC (%)	SAMPLE DESCRIPTION	CASING DEPTH FT.	CASING BLOWS FT.	STRATUM DESCRIPTION	NOTES
										ASPHALT PAVEMENT 0.7 ft.	1.
0.3	1	100/3"	S-1	1-1.25	100+	65	Very dense, gray, fine to coarse GRAVEL, little fine to coarse Sand, damp. FILL.			GRANULAR FILL 2.3 ft.	2.
0.6	2										
0.9	3										
1.2	4										
1.5	5	17	S-2	5-7	18	50	Medium dense, brown, fine to coarse SAND, little fine to coarse Gravel, little Silt & Clay, moist.			WEATHERED GLACIAL TILL	
1.8	6	10									
2.1	7	8									
2.4	8	6								8.5 ft.	
2.7	9										
3.0	10	14	S-3	10-12	52	70	Very dense, brown, fine to coarse SAND and fine Gravel, little Silt & Clay, moist.			GLACIAL TILL	
3.4	11	26									
3.7	12	26									
4.0	13	29									
4.3	14	50	S-4	14-16	89	60	Hard, yellow-brown, SILT & CLAY and fine to coarse Sand, trace fine Gravel, moist.				

LEGEND
S - Split Spoon Soil Sample
U - Undisturbed Soil Sample
C - Rock Core Sample

NOTES: 1. Pavement 0 to .7 ft. (measured).
2. Fill .7 to 2.3 ft. (measured). Drillers augered to 10 ft., then pulled augers and used flush joint casing.

GENERAL NOTES: 1) STRATIFICATION LINES REPRESENT APPROXIMATE BOUNDARY BETWEEN SOIL TYPES, TRANSITIONS MAY BE GRADUAL.
2) WATER LEVEL READINGS HAVE BEEN MADE AT TIMES AND UNDER CONDITIONS STATED. FLUCTUATIONS OF GROUNDWATER MAY OCCUR DUE TO OTHER FACTORS THAN THOSE PRESENT AT THE TIME MEASUREMENTS WERE MADE.

GZA

BORING No. 9+272

PARTIAL BORING LOG (CONT'D.)
BB 434

GZA GEOENVIRONMENTAL OF NEW YORK
3699 WEST HENRIETTA RD., ROCHESTER, NEW YORK
ENGINEERS AND SCIENTISTS

PROJECT
U.S. Route 7 Bennington Bypass
Bennington, Vermont
FILE NO.: 13417

SHEET 2 of 5
ROADWAY Rt. 7 Bypass
STATION 9+272
OFFSET 27.6 MR

BOTTOM OF ABUT.2 FOOTING EL.237.50 m

DEPTH (M)	DEPTH (FT)	SAMPLE BLOWS / 6"	SAMPLE NO.	SAMPLE DEPTH (FT)	SAMPLE N-VALUE /RQD(%)	SAMPLE REC (%)	SAMPLE DESCRIPTION	CASING DEPTH FT.	CASING BLOWS FT.	STRATUM DESCRIPTION	NOTES
4.6	15	39									
4.9	16	50									
5.2	17	46									
5.5	18										
5.8	19	54	S-5	19-20.4	100+	90	Hard, yellowish-brown, SILT & CLAY and fine to coarse Sand, trace fine Gravel, moist.			GLACIAL TILL	
6.1	20	75									
6.4	21	100/5"									
6.7	22										
7.0	23										
7.3	24	53	S-6	24-26	71	85	Very dense, orange-brown, fine to coarse GRAVEL, some fine to coarse Sand, little Clay & Silt, moist.				
7.6	25	37									
7.9	26	34									
8.2	27	25									
8.5	28										
8.8	29	29	S-7	29-31	71	0	No recovery.				3.
9.1	30	30									
9.4	31	41									
9.7	32	136									
10.0	33										

LEGEND
S - Split Spoon Soil Sample
U - Undisturbed Soil Sample
C - Rock Core Sample

NOTES: 3. Driller noted "cobbley" drilling from 27 to 33 ft.

GENERAL NOTES: 1) STRATIFICATION LINES REPRESENT APPROXIMATE BOUNDARY BETWEEN SOIL TYPES, TRANSITIONS MAY BE GRADUAL.
2) WATER LEVEL READINGS HAVE BEEN MADE AT TIMES AND UNDER CONDITIONS STATED, FLUCTUATIONS OF GROUNDWATER MAY OCCUR DUE TO OTHER FACTORS THAN THOSE PRESENT AT THE TIME MEASUREMENTS WERE MADE.

GZA

BORING No. 9+272

PARTIAL BORING LOG (CONT'D.)
BB 434

GZA GEOENVIRONMENTAL OF NEW YORK
3699 WEST HENRIETTA RD., ROCHESTER, NEW YORK
ENGINEERS AND SCIENTISTS

PROJECT
U.S. Route 7 Bennington Bypass
Bennington, Vermont
FILE NO.: 13417

SHEET 3 of 5
ROADWAY Rt. 7 Bypass
STATION 9+272
OFFSET 27.6 MR

DEPTH (M)	DEPTH (FT)	SAMPLE BLOWS / 6"	SAMPLE NO.	SAMPLE DEPTH (FT)	SAMPLE N-VALUE /RQD(%)	SAMPLE REC (%)	SAMPLE DESCRIPTION	CASING DEPTH FT.	CASING BLOWS FT.	STRATUM DESCRIPTION	NOTES
10.3	34										
		10	S-8	34-35.3	100+	50	Very dense, orange-brown, fine to coarse SAND, some Silt & Clay, trace fine Gravel.			GLACIAL TILL	
10.6	35	59									
		100/4"									
10.9	36										
11.2	37										
11.5	38										
11.8	39										
		14	S-9	39-40.75	100+	40	Very dense, orange-brown, fine to coarse SAND and Silt & Clay, moist.				
12.1	40	37									
12.4	41	103									
		100/3"									
12.7	42										
13.0	43										
13.3	44										
		78	S-10	44-44.9	100+	75	Very dense, orange-brown, fine to coarse SAND, and Silt & Clay, trace fine Gravel, moist.				
13.6	45	120/5"									
13.9	46										
14.2	47										
14.5	48										
14.8	49										
		146	S-11	49-49.8	100+	50	Very dense, orange-brown, fine to coarse SAND, some Silt & Clay, trace fine Gravel, moist.				
15.1	50	200/4"									
15.4	51										
15.7	52										

LEGEND
S - Split Spoon Soil Sample
U - Undisturbed Soil Sample
C - Rock Core Sample

NOTES:

GENERAL NOTES: 1) STRATIFICATION LINES REPRESENT APPROXIMATE BOUNDARY BETWEEN SOIL TYPES, TRANSITIONS MAY BE GRADUAL.
2) WATER LEVEL READINGS HAVE BEEN MADE AT TIMES AND UNDER CONDITIONS STATED, FLUCTUATIONS OF GROUNDWATER MAY OCCUR DUE TO OTHER FACTORS THAN THOSE PRESENT AT THE TIME MEASUREMENTS WERE MADE.

GZA

BORING No. 9+272

NOTE:

ENGLISH AND METRIC UNITS THAT WERE USED ON THE ORIGINAL BORING LOGS HAVE BEEN RETAINED.

STATE OF VERMONT
AGENCY OF TRANSPORTATION

Town Of BENNINGTON	Bridge No. BII
Highway No. TH 5	Log Sta. / Surv. Sta.
EAST ROAD OVER VT ROUTE 279	
BORING LOGS (2 OF 9)	
Designed By S. BURBANK	Drawn By A. THIBAULT
Checked By M. CHENETTE Date 11/04	Bridge Design Supervisor G. BOGUE Date 03/07
PROJECT BENNINGTON	PROJECT NO. AC NH 019-1(53)
Dgn.: ...\Design\ER\ER-Bore2.dgn	Plot Date: 5/25/2011
Bridge Sheet No. BR606	Sheet 253 of 577

Stantec

V:\1953\active\195300002\transportation\structural\Design\ER\ER-Bore2.dgn

BORING LOG
BB 435

GZA GEOENVIRONMENTAL OF NEW YORK
3699 WEST HENRIETTA RD., ROCHESTER, NEW YORK
ENGINEERS AND SCIENTISTS

PROJECT: U.S. Route 7 Bennington Bypass, Bennington, Vermont, FILE NO.: 13417
SHEET 1 of 3
ROADWAY Rt. 7 Bypass
STATION 9 + 269
OFFSET 28 MR

CONTRACTOR Capital Environmental Drilling Services
DRILLER Mark Voisine
GZA REPRESENTATIVE TRS/MJS CHECKED BY VRK

BORING TYPE BB.East Rd. (Park St. Ext.) Bridge, N. Abut.
GROUND SURFACE ELEVATION 263.2 DATUM NVGD
START DATE 11/07/94 END DATE 11/08/94

TYPE OF DRILL RIG Mobile Drill B-53
CASING SIZE AND TYPE 4 inch I.D. Flush Joint Casing
OVERBURDEN SAMPLING METHOD 2 inch O.D. x 24 inch long split spoon
ROCK DRILLING METHOD

WATER LEVEL DATA				
DATE	TIME	WATER	CASING	REMARKS
11/08/94	0700	10.5'	34'	Stabilized 14 hours
11/08/94	1050	13.3	None	Upon completion

DEPTH (M)	DEPTH (FT)	SAMPLE BLOWS / 6"	NO.	DEPTH (FT)	N-VALUE /RQD(%)	REC (%)	SAMPLE DESCRIPTION	CASING DEPTH FT.	CASING BLOWS FT.	STRATUM DESCRIPTION	NOTES
		4	S-1	0-2	14	50					
		6								GRANULAR FILL	
0.3	1	8					Medium dense, tan, fine to medium SAND, trace fine to coarse Gravel, trace Silt, moist	1 - 8			
		8								2 ft.	
0.6	2							2 - 15			
0.9	3							3 - 15			
1.2	4	4	S-2	4-6	9	30		4 - 15			
		4					Loose, tan, fine to coarse SAND, little Silt & Clay, trace fine Gravel, wet.				
1.5	5	5						5 - 4		WEATHERED GLACIAL TILL	
		7									
1.8	6							6 - 8			
2.1	7							7 - 12			
										8 ft.	
2.4	8							8 - 10			
2.7	9	48	S-3	9-11	90	5	Very dense, tan, fine SAND, little Silt, wet.	9 - 35			
		44									
3.0	10	46						10 - 35			
		38									
3.4	11	16	S-4	11-13	50	70	Dense, light brown, fine to coarse SAND, little clayey Silt, trace fine to coarse Gravel, wet	11 - 57			
		22									
3.7	12	28						12 - 26		GLACIAL TILL	
		30									
4.0	13							13 - 45			
4.3	14	73	S-5	14-14.8	100+	50	See sheet 2	14 - 80			

LEGEND
S - Split Spoon Soil Sample
U - Undisturbed Soil Sample
C - Rock Core Sample

NOTES:

GENERAL NOTES: 1) STRATIFICATION LINES REPRESENT APPROXIMATE BOUNDARY BETWEEN SOIL TYPES. TRANSITIONS MAY BE GRADUAL.
2) WATER LEVEL READINGS HAVE BEEN MADE AT TIMES AND UNDER CONDITIONS STATED, FLUCTUATIONS OF GROUNDWATER MAY OCCUR DUE TO OTHER FACTORS THAN THOSE PRESENT AT THE TIME MEASUREMENTS WERE MADE.

GZA BORING No. 9+269

BOTTOM OF ABUT.2 FOOTING EL.237.50 m

BORING LOG (CONT'D.)
BB 435

GZA GEOENVIRONMENTAL OF NEW YORK
3699 WEST HENRIETTA RD., ROCHESTER, NEW YORK
ENGINEERS AND SCIENTISTS

PROJECT: U.S. Route 7 Bennington Bypass, Bennington, Vermont, FILE NO.: 13417
SHEET 2 of 3
ROADWAY Rt. 7 Bypass
STATION 9 + 269
OFFSET 28 MR

DEPTH (M)	DEPTH (FT)	SAMPLE BLOWS / 6"	NO.	DEPTH (FT)	N-VALUE /RQD(%)	REC (%)	SAMPLE DESCRIPTION	CASING DEPTH FT.	CASING BLOWS FT.	STRATUM DESCRIPTION	NOTES
		100/2"									
4.6	15						Hard, yellow-brown, SILT & CLAY and fine to coarse Sand, trace fine Gravel, moist.	15 - 63			
4.9	16							16 - 102		GLACIAL TILL	
5.2	17							17 - NR			
5.5	18							18 - 129			
5.8	19	55	S-6	19-20.5	100+	95	Very dense, brown, fine to coarse SAND, some Silt & Clay, trace fine Gravel, moist.	19 - 183			
		107									
6.1	20	200/5						20 - 111			
								20.5 -200/6"			1.
6.4	21							21 - 98/6"			
6.7	22							22 - 199			
7.0	23							23 - 357			
7.3	24	56	S-7	24-24.6	100+	100	Very dense, brown, fine to coarse SAND, some Silt & Clay, little fine to coarse Gravel, moist.	24 - 369/6"			
7.6	25	100/0"						25 - 423			2.
7.9	26							26 - 587			3.
8.2	27										
8.5	28										
8.8	29	81	S-8	29-29.8	100+	100	Hard, yellow-brown, SILT & CLAY and fine to coarse Sand, trace fine Gravel, moist.				
		100/2"									
9.1	30										
9.4	31										
9.7	32										
10.0	33										

LEGEND
S - Split Spoon Soil Sample
U - Undisturbed Soil Sample
C - Rock Core Sample

NOTES: 1. Tri-cone ahead of casing at 20.5', white stone chips noted in flushing water, tri-coned through boulder.
2. Tri-cone through boulder at 24.5 to 25.0 ft.
3. Telescope 3" I.D. flush joint casing past the 4", due to the 4" casing crimping.

GENERAL NOTES: 1) STRATIFICATION LINES REPRESENT APPROXIMATE BOUNDARY BETWEEN SOIL TYPES. TRANSITIONS MAY BE GRADUAL.
2) WATER LEVEL READINGS HAVE BEEN MADE AT TIMES AND UNDER CONDITIONS STATED, FLUCTUATIONS OF GROUNDWATER MAY OCCUR DUE TO OTHER FACTORS THAN THOSE PRESENT AT THE TIME MEASUREMENTS WERE MADE.

GZA BORING No. 9+269

BORING LOG (CONT'D.)
BB 435

GZA GEOENVIRONMENTAL OF NEW YORK
3699 WEST HENRIETTA RD., ROCHESTER, NEW YORK
ENGINEERS AND SCIENTISTS

PROJECT: U.S. Route 7 Bennington Bypass, Bennington, Vermont, FILE NO.: 13417
SHEET 3 of 3
ROADWAY Rt. 7 Bypass
STATION 9 + 269
OFFSET 28 MR

DEPTH (M)	DEPTH (FT)	SAMPLE BLOWS / 6"	NO.	DEPTH (FT)	N-VALUE /RQD(%)	REC (%)	SAMPLE DESCRIPTION	CASING DEPTH FT.	CASING BLOWS FT.	STRATUM DESCRIPTION	NOTES
											4.
10.3	34	20	S-9	34-36	17	20	Medium dense, brown, fine to coarse GRAVEL, some fine to coarse Sand, some Silt & Clay, wet.				
		6									
10.6	35	11								GLACIAL TILL	
		38									
10.9	36	37	S-10	36-38	100+	60	Hard, yellow-brown, SILT & CLAY and fine to coarse Sand, trace fine Gravel, moist.				
		59									
11.2	37	82									
		114									
11.5	38										
11.8	39	147	S-11	39-40.3	100+	35	Very dense, brown, fine to coarse SAND, some Silt & Clay, moist.				
		117									
12.1	40	100/3"									
12.4	41										
12.7	42										
13.0	43										
13.3	44	100/2"	S-12	44-44.2	100+	0	No recovery.				
							Bottom of boring at 44.2'.				
13.6	45										
13.9	46										
14.2	47										
14.5	48										
14.8	49										
15.1	50										
15.4	51										
15.7	52										

LEGEND
S - Split Spoon Soil Sample
U - Undisturbed Soil Sample
C - Rock Core Sample

NOTES: 4. All 3" Casing removed at 34', last two sections were bent. Drive shoe was chewed up. One section of 4" casing removed and new 3" casing reinstalled. Rods have some resistance when lowered through casing.

GENERAL NOTES: 1) STRATIFICATION LINES REPRESENT APPROXIMATE BOUNDARY BETWEEN SOIL TYPES. TRANSITIONS MAY BE GRADUAL.
2) WATER LEVEL READINGS HAVE BEEN MADE AT TIMES AND UNDER CONDITIONS STATED, FLUCTUATIONS OF GROUNDWATER MAY OCCUR DUE TO OTHER FACTORS THAN THOSE PRESENT AT THE TIME MEASUREMENTS WERE MADE.

GZA BORING No. 9+269

NOTE:

ENGLISH AND METRIC UNITS THAT WERE USED ON THE ORIGINAL BORING LOGS HAVE BEEN RETAINED.

STATE OF VERMONT
AGENCY OF TRANSPORTATION

Town Of BENNINGTON	Bridge No. BII
Highway No. TH 5	Log Sta. / Surv. Sta.
EAST ROAD OVER VT ROUTE 279	
BORING LOGS (3 OF 9)	
Designed By S. BURBANK	Drawn By A. THIBAULT
Checked By M. CHENETTE Date 11/04	Bridge Design Supervisor G. BOGUE Date 03/07
PROJECT BENNINGTON	PROJECT NO. AC NH 019-1(53)
Dgn.: ...\Design\ER\ER-Bore3.dgn	Plot Date: 5/25/2011
Bridge Sheet No. BR607	Sheet 254 of 577

Stantec

V:\1953\active\195300022\transportation\structural\Design\ER\ER-Bore3.dgn

VAOT Metric

BORING LOG
BB 437

GZA GEOENVIRONMENTAL OF NEW YORK
3699 WEST HENRIETTA RD., ROCHESTER, NEW YORK
ENGINEERS AND SCIENTISTS

PROJECT: U.S. Route 7 Bennington Bypass, Bennington, Vermont, FILE NO.: 13417 — 1
SHEET 1 of 3
ROADWAY Rt. 7 Bypass
STATION 9 + 276
OFFSET 13.9 ML

CONTRACTOR Capital Environmental Drilling Services
DRILLER Mark Voisine
GZA REPRESENTATIVE JRS/MJS CHECKED BY VRK

BORING TYPE BB, East Rd. (Park St. Ext.) Bridge, Center
GROUND SURFACE ELEVATION 241.3 M DATUM NVGD Pier
START DATE 11/08/94 END DATE 11/08/94

TYPE OF DRILL RIG Mobile Drill B-53
CASING SIZE AND TYPE 4 inch I.D. Flush Joint Casing
OVERBURDEN SAMPLING METHOD 2 inch O.D. x 24 inch Long split spoon
ROCK DRILLING METHOD

WATER LEVEL DATA

DATE	TIME	WATER	CASING	REMARKS
11/08/94	1620	10.0'	18.3'	After completion

DEPTH (M)	DEPTH (FT)	SAMPLE BLOWS / 6"	SAMPLE NO.	SAMPLE DEPTH (FT)	SAMPLE N-VALUE /RQD(%)	SAMPLE REC (%)	SAMPLE DESCRIPTION	CASING DEPTH FT.	CASING BLOWS FT.	STRATUM DESCRIPTION	NOTES
		1	S-1	0-2	13	60	Medium dense, black, fine to coarse SAND, little fine Gravel, little Silt, moist. FILL.				
0.3	1	6					Medium dense, tan, fine to coarse SAND, little fine gravel, trace Silt, moist. FILL.	1 - 4		GRANULAR FILL	
		7									
0.6	2	15						2 - 13			
0.9	3							3 - 15		3'	
1.2	4	3	S-2	4-6	4	15	Very loose, brown, fine to coarse SAND, and Silt & Clay, little fine Gravel, wet.	4 - 14			
1.5	5	2						5 - not recorded			
		2									
1.8	6	4						6 - not recorded			
		2	S-3	6-8	17	45	Medium dense, brown, fine to coarse GRAVEL, some fine to coarse Sand, some Silt and Clay, wet.				
2.1	7	8						7 - 12		WEATHERED GLACIAL TILL	
		9									
2.4	8	10						8 - 22			
2.7	9							9 - 18			
		8	S-4	9-11	7	50	Loose, brown, fine to coarse SAND, some Silt & Clay, trace fine Gravel, wet.				
3.0	10	2						10 - 6			
		5									
3.4	11	9						11 - 8			
3.7	12							12 - 16		12.5'	
4.0	13							13 - 46		GLACIAL TILL	
4.3	14	25	S-5	14-16	63	50		14 - 43			

LEGEND
S - Split Spoon Soil Sample
U - Undisturbed Soil Sample
C - Rock Core Sample

NOTES:

GENERAL NOTES: 1) STRATIFICATION LINES REPRESENT APPROXIMATE BOUNDARY BETWEEN SOIL TYPES, TRANSITIONS MAY BE GRADUAL.
2) WATER LEVEL READINGS HAVE BEEN MADE AT TIMES AND UNDER CONDITIONS STATED, FLUCTUATIONS OF GROUNDWATER MAY OCCUR DUE TO OTHER FACTORS THAN THOSE PRESENT AT THE TIME MEASUREMENTS WERE MADE.

GZA — BORING No. 9+276

BOTTOM OF PIER FOOTING EL.233.00 m

BORING LOG (CONT'D.)
BB 437

GZA GEOENVIRONMENTAL OF NEW YORK
3699 WEST HENRIETTA RD., ROCHESTER, NEW YORK
ENGINEERS AND SCIENTISTS

PROJECT: U.S. Route 7 Bennington Bypass, Bennington, Vermont, FILE NO.: 13417
SHEET 2 of 3
ROADWAY Rt. 7 Bypass
STATION 9 + 276
OFFSET 13.9 ML

DEPTH (M)	DEPTH (FT)	SAMPLE BLOWS / 6"	SAMPLE NO.	SAMPLE DEPTH (FT)	SAMPLE N-VALUE /RQD(%)	SAMPLE REC (%)	SAMPLE DESCRIPTION	EQUIPMENT INSTALLATION LOG	STRATUM DESCRIPTION	NOTES
4.6	15	38					Hard, yellowish-brown, SILT & CLAY and fine to coarse Sand, trace fine Gravel.		GLACIAL TILL	
		25								
4.9	16	18								
5.2	17									
5.5	18									
5.8	19	18	S-6	19-20.2	100+	60	Hard, yellowish-brown, SILT & CLAY and fine to coarse Sand, trace fine Gravel.			1.
6.1	20	102								
		100/2"								
6.4	21									
6.7	22									
7.0	23									
7.3	24	52	S-7	24-26	100+	75	Hard, yellowish-brown, SILT & CLAY and fine to coarse Sand, trace fine Gravel.			
7.6	25	86								
		104								
7.9	26	151								
8.2	27									
8.5	28									
8.8	29	40	S-8	29-31	100+	90	Hard, Yellowish-brown, SILT & CLAY and fine to coarse Sand, trace fine Gravel.			
9.1	30	51								
		59								
9.4	31	116								
9.7	32									
10.0	33									

LEGEND
S - Split Spoon Soil Sample
U - Undisturbed Soil Sample
C - Rock Core Sample

NOTES: 1. Change to spinning 3" casing at 19'.

GENERAL NOTES: 1) STRATIFICATION LINES REPRESENT APPROXIMATE BOUNDARY BETWEEN SOIL TYPES, TRANSITIONS MAY BE GRADUAL.
2) WATER LEVEL READINGS HAVE BEEN MADE AT TIMES AND UNDER CONDITIONS STATED, FLUCTUATIONS OF GROUNDWATER MAY OCCUR DUE TO OTHER FACTORS THAN THOSE PRESENT AT THE TIME MEASUREMENTS WERE MADE.

GZA — BORING No. 9+276

BORING LOG (CONT'D.)
BB 437

GZA GEOENVIRONMENTAL OF NEW YORK
3699 WEST HENRIETTA RD., ROCHESTER, NEW YORK
ENGINEERS AND SCIENTISTS

PROJECT: U.S. Route 7 Bennington Bypass, Bennington, Vermont, FILE NO.: 13417
SHEET 3 of 3
ROADWAY Rt. 7 Bypass
STATION 9 + 276
OFFSET 13.9 ML

DEPTH (M)	DEPTH (FT)	SAMPLE BLOWS / 6"	SAMPLE NO.	SAMPLE DEPTH (FT)	SAMPLE N-VALUE /RQD(%)	SAMPLE REC (%)	SAMPLE DESCRIPTION	EQUIPMENT INSTALLATION LOG	STRATUM DESCRIPTION	NOTES
10.3	34	71	S-9	33-35	100+	90	Very dense, brown, fine to coarse SAND, little fine to coarse Gravel, little Silt, moist.		GLACIAL TILL	
		128								
10.6	35	170								
							Bottom of boring at 35 ft.			
10.9	36									
11.2	37									
11.5	38									
11.8	39									
12.1	40									
12.4	41									
12.7	42									
13.0	43									
13.3	44									
13.6	45									
13.9	46									
14.2	47									
14.5	48									
14.8	49									
15.1	50									
15.4	51									
15.7	52									

LEGEND
S - Split Spoon Soil Sample
U - Undisturbed Soil Sample
C - Rock Core Sample

NOTES:

GENERAL NOTES: 1) STRATIFICATION LINES REPRESENT APPROXIMATE BOUNDARY BETWEEN SOIL TYPES, TRANSITIONS MAY BE GRADUAL.
2) WATER LEVEL READINGS HAVE BEEN MADE AT TIMES AND UNDER CONDITIONS STATED, FLUCTUATIONS OF GROUNDWATER MAY OCCUR DUE TO OTHER FACTORS THAN THOSE PRESENT AT THE TIME MEASUREMENTS WERE MADE.

GZA — BORING No. 9+276

NOTE:

ENGLISH AND METRIC UNITS THAT WERE USED ON THE ORIGINAL BORING LOGS HAVE BEEN RETAINED.

STATE OF VERMONT
AGENCY OF TRANSPORTATION

Town Of BENNINGTON	Bridge No. BII
Highway No. TH 5	Log Sta. / Surv. Sta.

EAST ROAD OVER VT ROUTE 279

BORING LOGS (4 OF 9)

Designed By S. BURBANK	Drawn By A. THIBAULT
Checked By M. CHENETTE Date 11/04	Bridge Design Supervisor G. BOGUE Date 03/07
PROJECT BENNINGTON	PROJECT NO. AC NH 019-1(53)
Dgn.: ...\Design\ER\ER-Bore4.dgn	Plot Date: 5/25/2011
Bridge Sheet No. BR608	Sheet 255 of 577

Stantec

V:\1953\active\195300002\transportation\structural\Design\ER\ER-Bore4.dgn

PARTIAL BORING LOG
BB 438

GZA GEOENVIRONMENTAL OF NEW YORK
3699 WEST HENRIETTA RD., ROCHESTER, NEW YORK
ENGINEERS AND SCIENTISTS

PROJECT
U.S. Route 7 Bennington Bypass
Bennington, Vermont
FILE NO.: 13417

SHEET 1 of 5
ROADWAY Rt. 7 Bypass
STATION 9 + 278
OFFSET 14.7 ML

CONTRACTOR Capital Environmental Drilling Services
DRILLER Steve Clavette
GZA REPRESENTATIVE MJS CHECKED BY VRK

BORING TYPE BB, East Rd. (Park St. Ext.)Bridge, Center
GROUND SURFACE ELEVATION 261.5 M DATUM NVGD Pier
START DATE 2/8/95 END DATE 2/10/95

TYPE OF DRILL RIG Mobile Drill B-53
CASING SIZE AND TYPE 4 inch I.D. Flush Joint Casing
OVERBURDEN SAMPLING METHOD 2 inch O.D. x 24 inch long split spoon
ROCK DRILLING METHOD

WATER LEVEL DATA

DATE	TIME	WATER	CASING	REMARKS
02/09/95	0755	11.2'	40'	15 hrs. stabilized
02/10/95	1145	9.7'	0'	After casing pulled

DEPTH (M)	DEPTH (FT)	SAMPLE BLOWS / 6"	SAMPLE NO.	SAMPLE DEPTH (FT)	SAMPLE N-VALUE /RQD(%)	SAMPLE REC (%)	SAMPLE DESCRIPTION	EQUIPMENT INSTALLATION LOG	STRATUM DESCRIPTION	NOTES
							Asphalt Concrete		ASPHALT PAVEMENT 0.6 ft.	1.
0.3	1						Fine to coarse GRAVEL and fine to coarse Sand. FILL.		GRANULAR FILL 2.2 ft.	
0.6	2									2.
0.9	3									
1.2	4	3	S-1	4-6	8	35	Loose, brown, fine to coarse SAND, some fine to coarse Gravel, little Silt & Clay, moist.		WEATHERED GLACIAL TILL	
1.5	5	3								
1.8	6	5								
2.1	7	6								
2.4	8									
2.7	9	35	S-2	9-11	24	0	No recovery.			3.
3.0	10	17								
3.4	11	7								
3.7	12	9	S-3	11-13	45	30	Dense, brown, fine to coarse SAND, some fine to coarse Gravel, trace Silt & Clay, moist.			
4.0	13	31								
		31							13.5 ft.	
4.3	14	14							GLACIAL TILL	
		14								
		38	S-4	14-16	65	60	Very dense, brown, fine to coarse SAND, some Silt & Clay, trace fine Gravel, moist.			

LEGEND
S - Split Spoon Soil Sample
U - Undisturbed Soil Sample
C - Rock Core Sample

NOTES: 1. Pavement 0 - .6 ft. (measured).
2. Fill .6 - 2.2 ft. (measured).
3. Driller believes he drove a cobble with spoon (piece stuck in spoon, S-2).

GENERAL NOTES: 1) STRATIFICATION LINES REPRESENT APPROXIMATE BOUNDARY BETWEEN SOIL TYPES, TRANSITIONS MAY BE GRADUAL.
2) WATER LEVEL READINGS HAVE BEEN MADE AT TIMES AND UNDER CONDITIONS STATED, FLUCTUATIONS OF GROUNDWATER MAY OCCUR DUE TO OTHER FACTORS THAN THOSE PRESENT AT THE TIME MEASUREMENTS WERE MADE.

GZA BORING No. 9+278

BOTTOM OF PIER FOOTING EL.233.00 m

PARTIAL BORING LOG (CONT'D.)
BB 438

GZA GEOENVIRONMENTAL OF NEW YORK
3699 WEST HENRIETTA RD., ROCHESTER, NEW YORK
ENGINEERS AND SCIENTISTS

PROJECT
U.S. Route 7 Bennington Bypass
Bennington, Vermont
FILE NO.: 13417

SHEET 2 of 5
ROADWAY Rt. 7 Bypass
STATION 9 + 278
OFFSET 14.7 ML

DEPTH (M)	DEPTH (FT)	SAMPLE BLOWS / 6"	SAMPLE NO.	SAMPLE DEPTH (FT)	SAMPLE N-VALUE /RQD(%)	SAMPLE REC (%)	SAMPLE DESCRIPTION	EQUIPMENT INSTALLATION LOG	STRATUM DESCRIPTION	NOTES
4.6	15	27							GLACIAL TILL	
4.9	16	38								
5.2	17	34								
5.5	18									
5.8	19	27	S-5	19-21	41	40	Hard, yellowish-brown, SILT & CLAY and fine to coarse Sand, trace fine Gravel, moist.			
6.1	20	23								
6.4	21	18								
6.7	22	49								
7.0	23									
7.3	24	27	S-6	24-26	96	65	Hard, yellowish-brown, SILT & CLAY and fine to coarse Sand, trace fine Gravel, moist.			
7.6	25	43								
7.9	26	53								
8.2	27	67								4.
8.5	28									
8.8	29									
9.1	30									
9.4	31	51	S-7	30.5-32.5	100+	50	Hard, yellowish-brown, SILT & CLAY and fine to coarse Sand, trace fine Gravel, moist.			
9.7	32	92								
10.0	33	81								
		111								

LEGEND
S - Split Spoon Soil Sample
U - Undisturbed Soil Sample
C - Rock Core Sample

NOTES: 4. Boulder at 29-30.2 ft.

GENERAL NOTES: 1) STRATIFICATION LINES REPRESENT APPROXIMATE BOUNDARY BETWEEN SOIL TYPES, TRANSITIONS MAY BE GRADUAL.
2) WATER LEVEL READINGS HAVE BEEN MADE AT TIMES AND UNDER CONDITIONS STATED, FLUCTUATIONS OF GROUNDWATER MAY OCCUR DUE TO OTHER FACTORS THAN THOSE PRESENT AT THE TIME MEASUREMENTS WERE MADE.

GZA BORING No. 9+278

PARTIAL BORING LOG (CONT'D.)
BB 438

GZA GEOENVIRONMENTAL OF NEW YORK
3699 WEST HENRIETTA RD., ROCHESTER, NEW YORK
ENGINEERS AND SCIENTISTS

PROJECT
U.S. Route 7 Bennington Bypass
Bennington, Vermont
FILE NO.: 13417

SHEET 3 of 5
ROADWAY Rt. 7 Bypass
STATION 9 + 278
OFFSET 14.7 ML

DEPTH (M)	DEPTH (FT)	SAMPLE BLOWS / 6"	SAMPLE NO.	SAMPLE DEPTH (FT)	SAMPLE N-VALUE /RQD(%)	SAMPLE REC (%)	SAMPLE DESCRIPTION	EQUIPMENT INSTALLATION LOG	STRATUM DESCRIPTION	NOTES
10.3	34									5.
10.6	35	57	S-8	34.5-35.8	100+	40	Hard, yellow-brown, SILT & CLAY and fine Sand, trace fine Gravel, moist.			6.
10.9	36	101								
11.2	37	200/4"								
11.5	38									
11.8	39	200/4"	S-9	39-39.3	100+	100	Hard, yellow-brown, SILT & CLAY and fine Sand, trace fine Gravel, moist.			
12.1	40								GLACIAL TILL	
12.4	41									
12.7	42									
13.0	43									
13.3	44	107	S-10	44-44.8	100+	75	Very dense, yellow-brown, fine to coarse SAND and fine to coarse Gravel, little Silt & Clay, moist.			7.
13.6	45	100/3"								8.
13.9	46									
14.2	47									
14.5	48									
14.8	49	108	S-11	49-51	100+	80	Very dense, orange-brown, fine to coarse SAND, some fine to coarse Gravel, some Silt & Clay, moist.			
15.1	50	172								
15.4	51	107								
15.7	52	116								

LEGEND
S - Split Spoon Soil Sample
U - Undisturbed Soil Sample
C - Rock Core Sample

NOTES: 5. Boulder at 33.5 to 34.5 ft.
6. Telescoped 3-in. casing at 34 ft.
7. Large stone stuck in end of spoon, S-10.
8. Driller noted cobbles from 44 to 49 ft.

GENERAL NOTES: 1) STRATIFICATION LINES REPRESENT APPROXIMATE BOUNDARY BETWEEN SOIL TYPES, TRANSITIONS MAY BE GRADUAL.
2) WATER LEVEL READINGS HAVE BEEN MADE AT TIMES AND UNDER CONDITIONS STATED, FLUCTUATIONS OF GROUNDWATER MAY OCCUR DUE TO OTHER FACTORS THAN THOSE PRESENT AT THE TIME MEASUREMENTS WERE MADE.

GZA BORING No. 9+278

NOTE:
ENGLISH AND METRIC UNITS THAT WERE USED ON THE ORIGINAL BORING LOGS HAVE BEEN RETAINED.

STATE OF VERMONT
AGENCY OF TRANSPORTATION

Town Of BENNINGTON	Bridge No. BII
Highway No. TH 5	Log Sta. / Surv. Sta.
EAST ROAD OVER VT ROUTE 279	
BORING LOGS (5 OF 9)	
Designed By S. BURBANK	Drawn By A. THIBAULT
Checked By M. CHENETTE Date 11/04	Bridge Design Supervisor G. BOGUE Date 03/07
PROJECT BENNINGTON	PROJECT NO. AC NH 019-1(53)
Dgn.: ...\Design\ER\ER-Bore5.dgn	Plot Date: 5/25/2011
Bridge Sheet No. BR609	Sheet 256 of 577

Stantec

V:\1953\active\195300002\transportation\structural\Design\ER\ER-Bore5.dgn

BORING LOG
BB 439

GZA GEOENVIRONMENTAL OF NEW YORK
3699 WEST HENRIETTA RD., ROCHESTER, NEW YORK
ENGINEERS AND SCIENTISTS

PROJECT
U.S. Route 7 Bennington Bypass
Bennington, Vermont
FILE NO.: 13417

SHEET 1 of 2
ROADWAY Rt. 7 Bypass
STATION 9 + 288
OFFSET 15.4 ML

CONTRACTOR Capital Environmental Drilling Services
DRILLER Steve Clavette
GZA REPRESENTATIVE TRS/MJS CHECKED BY VRK

BORING TYPE BB. East Rd. (Park St. Ext.) Bridge, Center
GROUND SURFACE ELEVATION 239.2 M DATUM NVGD Pier
START DATE 11/11/94 END DATE 11/14/94

TYPE OF DRILL RIG Mobile Drill B-53
CASING SIZE AND TYPE 4¼ inch I.D. Hollow Stem Augers
OVERBURDEN SAMPLING METHOD 2 inch O.D. x 24 inch long split spoon
ROCK DRILLING METHOD

WATER LEVEL DATA				
DATE	TIME	WATER	CASING	REMARKS
11/14/94	1030	6.5'	24'	stabilized 3 days

DEPTH (M)	DEPTH (FT)	SAMPLE BLOWS / 6"	NO.	DEPTH (FT)	N-VALUE /RQD(%)	REC (%)	SAMPLE DESCRIPTION	EQUIPMENT INSTALLATION LOG	STRATUM DESCRIPTION	NOTES
		5	S-1	0-2	19	55	Medium dense, brown, fine to coarse SAND, some fine to coarse Gravel, trace clayey Silt, moist.			1.
0.3	1	9								
		10								
0.6	2	12								
									WEATHERED GLACIAL TILL	
0.9	3									
1.2	4	9	S-2	4-6	25	25	Medium dense, brown, fine to coarse SAND, and fine to coarse Gravel, little Silt & Clay, moist.			2.
1.5	5	8								
		17								
1.8	6	20								
2.1	7									
2.4	8									
2.7	9	9	S-3	9-11	10	40	Loose to medium dense, brown, fine to coarse SAND, some Clay & Silt, little fine to coarse Gravel, moist.			
		7								
3.0	10	3								
		5								
3.4	11									
3.7	12									
4.0	13									
4.3	14	2	S-4	14-16	13	50				

LEGEND
S - Split Spoon Soil Sample
U - Undisturbed Soil Sample
C - Rock Core Sample

NOTES:
1. Removed 2 ft. of stone wall to get to boring.
2. Large piece of gravel at top of sample.

GENERAL NOTES: 1) STRATIFICATION LINES REPRESENT APPROXIMATE BOUNDARY BETWEEN SOIL TYPES, TRANSITIONS MAY BE GRADUAL.
2) WATER LEVEL READINGS HAVE BEEN MADE AT TIMES AND UNDER CONDITIONS STATED, FLUCTUATIONS OF GROUNDWATER MAY OCCUR DUE TO OTHER FACTORS THAN THOSE PRESENT AT THE TIME MEASUREMENTS WERE MADE.

GZA

BORING No. 9+288

BORING LOG (CONT'D.)
BB 439

GZA GEOENVIRONMENTAL OF NEW YORK
3699 WEST HENRIETTA RD., ROCHESTER, NEW YORK
ENGINEERS AND SCIENTISTS

PROJECT
U.S. Route 7 Bennington Bypass
Bennington, Vermont
FILE NO.: 13417

SHEET 2 of 2
ROADWAY Rt. 7 Bypass
STATION 9 + 288
OFFSET 15.4 ML

BOTTOM OF PIER FOOTING EL.233.00 m

DEPTH (M)	DEPTH (FT)	SAMPLE BLOWS / 6"	NO.	DEPTH (FT)	N-VALUE /RQD(%)	REC (%)	SAMPLE DESCRIPTION	EQUIPMENT INSTALLATION LOG	STRATUM DESCRIPTION	NOTES
4.6	15	2					Medium dense, brown, fine to coarse SAND, some Silty Clay, trace fine Gravel, wet.			
		11								
4.9	16	6							WEATHERED GLACIAL TILL	
5.2	17								17.5 FT.	
5.5	18									
5.8	19	35	S-5	19-21	100+	35	Hard, yellowish-brown, SILT & CLAY and fine to coarse Sand, trace fine Gravel, moist.		GLACIAL TILL	
6.1	20	57								
		61								
6.4	21	45								
6.7	22									
7.0	23									
7.3	24	29	S-6	24-25.8	100+	65	Hard, yellowish-brown, SILT & CLAY and fine to coarse Sand, trace fine Gravel, moist.			3.
7.6	25	52								
		78								
7.9	26	200/4"								
8.2	27									
8.5	28									
8.8	29	45	S-7	29-30.3	100+	60	Hard, yellowish-brown, SILT & CLAY and fine to coarse Sand, trace fine Gravel, moist.			
9.1	30	74								
		100/8"								
9.4	31									
9.7	32									
10.0	33	100/0"	S-8	33.0	100+	0	No recovery			
							Bottom of boring at 33 ft.			

LEGEND
S - Split Spoon Soil Sample
U - Undisturbed Soil Sample
C - Rock Core Sample

NOTES: 3. S-6 through S-8 are from driller's notes, GZA was not present 11/11/94. Casing left in place over weekend. Casing removed on 11/14/94.

GENERAL NOTES: 1) STRATIFICATION LINES REPRESENT APPROXIMATE BOUNDARY BETWEEN SOIL TYPES, TRANSITIONS MAY BE GRADUAL.
2) WATER LEVEL READINGS HAVE BEEN MADE AT TIMES AND UNDER CONDITIONS STATED, FLUCTUATIONS OF GROUNDWATER MAY OCCUR DUE TO OTHER FACTORS THAN THOSE PRESENT AT THE TIME MEASUREMENTS WERE MADE.

GZA

BORING No. 9+288

NOTE:

ENGLISH AND METRIC UNITS THAT WERE USED ON THE ORIGINAL BORING LOGS HAVE BEEN RETAINED.

STATE OF VERMONT
AGENCY OF TRANSPORTATION

Town Of BENNINGTON	Bridge No. BII
Highway No. TH 5	Log Sta. / Surv. Sta.
EAST ROAD OVER VT ROUTE 279	
BORING LOGS (6 OF 9)	
Designed By S. BURBANK	Drawn By A. THIBAULT
Checked By M. CHENETTE Date 11/04	Bridge Design Supervisor G. BOGUE Date 03/07
PROJECT BENNINGTON	PROJECT NO. AC NH 019-1(53)
Dgn.: ...\Design\ER\ER-Bore6.dgn	Plot Date: 5/25/2011
Bridge Sheet No. BR610	Sheet 257 of 577

Stantec

V:\1953\active\195310002\transportation\structural\Design\ER\ER-Bore6.dgn

PARTIAL BORING LOG
BB 441

GZA GEOENVIRONMENTAL OF NEW YORK
3699 WEST HENRIETTA RD., ROCHESTER, NEW YORK
ENGINEERS AND SCIENTISTS

PROJECT: U.S. Route 7 Bennington Bypass, Bennington, Vermont, FILE NO.: 13417

SHEET 1 of 5
ROADWAY Rt. 7 Bypass
STATION 9 + 283
OFFSET 52.6 ML

CONTRACTOR Capital Environmental Drilling Services
DRILLER Steve Clavette
GZA REPRESENTATIVE TRS/MJS CHECKED BY VRK

BORING TYPE BB East Rd. (Park St. Ext.) Bridge, S. Abut.
GROUND SURFACE ELEVATION 240.3 DATUM NVGD
START DATE 11/09/94 END DATE 11/10/94

TYPE OF DRILL RIG Mobile Drill B-53
CASING SIZE AND TYPE 4 inch I.D. Flush Joint Casing
OVERBURDEN SAMPLING METHOD 2 inch O.D. x 24 inch long split spoon
ROCK DRILLING METHOD

WATER LEVEL DATA

DATE	TIME	WATER	CASING	REMARKS
11/10/94	1400	8'	None	Upon Completion

DEPTH (M)	DEPTH (FT)	SAMPLE BLOWS / 6"	NO.	DEPTH (FT)	N-VALUE /RQD(%)	REC (%)	SAMPLE DESCRIPTION	EQUIPMENT INSTALLATION LOG	STRATUM DESCRIPTION	NOTES
		10	S-1T	0-2	22	60	Medium dense, brown, fine to coarse SAND, some fine to coarse Gravel, trace Silt, moist. FILL.			1.
0.3	1	11								
		11	S-1B				Medium dense, tan, fine to medium SAND, little Silt, moist. FILL.		GRANULAR FILL	
0.6	2	12								
0.9	3								3 ft.	
1.2	4	7	S-2	4-6	10	25	Loose, tan, fine to coarse SAND, some fine to coarse Gravel, little Silt, moist.			
1.5	5	5								
		5							WEATHERED GLACIAL TILL	
1.8	6	5								
2.1	7									
2.4	8									
2.7	9	20	S-3	9-11	15	25	Medium dense, tan, fine to coarse SAND, some fine to coarse Gravel, little clayey Silt, moist.			
		7								
3.0	10	8								
		9								
3.4	11									
3.7	12									
4.0	13								13 ft.	
4.3	14	20	S-4	14-16	55	45	See sheet 2.		GLACIAL TILL	

BOTTOM OF ABUT. I FOOTING EL. 236.500 m

LEGEND
S - Split Spoon Soil Sample
U - Undisturbed Soil Sample
C - Rock Core Sample

NOTES: 1. Spinning 4" casing beginning at ground surface.

GENERAL NOTES: 1) STRATIFICATION LINES REPRESENT APPROXIMATE BOUNDARY BETWEEN SOIL TYPES, TRANSITIONS MAY BE GRADUAL.
2) WATER LEVEL READINGS HAVE BEEN MADE AT TIMES AND UNDER CONDITIONS STATED, FLUCTUATIONS OF GROUNDWATER MAY OCCUR DUE TO OTHER FACTORS THAN THOSE PRESENT AT THE TIME MEASUREMENTS WERE MADE.

GZA — BORING No. 9+283

PARTIAL BORING LOG (CONT'D.)
BB 441

GZA GEOENVIRONMENTAL OF NEW YORK
3699 WEST HENRIETTA RD., ROCHESTER, NEW YORK
ENGINEERS AND SCIENTISTS

PROJECT: U.S. Route 7 Bennington Bypass, Bennington, Vermont, FILE NO.: 13417

SHEET 2 of 5
ROADWAY Rt. 7 Bypass
STATION 9 + 283
OFFSET 52.6 ML

DEPTH (M)	DEPTH (FT)	SAMPLE BLOWS / 6"	NO.	DEPTH (FT)	N-VALUE /RQD(%)	REC (%)	SAMPLE DESCRIPTION	EQUIPMENT INSTALLATION LOG	STRATUM DESCRIPTION	NOTES
		23								
4.6	15	32					Very dense, tan, fine to coarse SAND, some fine to coarse Gravel, little clayey Silt, moist.			
		55								
4.9	16									
5.2	17									
5.5	18									
5.8	19	33	S-5T	19-21	68	50	Very dense, tan, fine to coarse GRAVEL, some fine to coarse Sand, moist.			
		33								
6.1	20	35	S-5B				Very dense, brown, fine to coarse SAND, little Silt, moist.			
		39								
6.4	21									
6.7	22									
7.0	23									
7.3	24	61	S-6	24-26	100+	65	Hard, yellowish-brown, SILT & CLAY, some fine to coarse Sand, little fine Gravel, moist.		GLACIAL TILL	
7.6	25	102								
		98								
7.9	26	68								
8.2	27									
8.5	28									
8.8	29	38	S-7	29-31	100+	75	Hard, yellowish-brown, SILT & CLAY, some fine to coarse Sand, little fine Gravel, moist.			
		99								
9.1	30	78								
		69								
9.4	31									
9.7	32									
10.0	33									

LEGEND
S - Split Spoon Soil Sample
U - Undisturbed Soil Sample
C - Rock Core Sample

NOTES:

GENERAL NOTES: 1) STRATIFICATION LINES REPRESENT APPROXIMATE BOUNDARY BETWEEN SOIL TYPES, TRANSITIONS MAY BE GRADUAL.
2) WATER LEVEL READINGS HAVE BEEN MADE AT TIMES AND UNDER CONDITIONS STATED, FLUCTUATIONS OF GROUNDWATER MAY OCCUR DUE TO OTHER FACTORS THAN THOSE PRESENT AT THE TIME MEASUREMENTS WERE MADE.

GZA — BORING No. 9+283

PARTIAL BORING LOG (CONT'D.)
BB 441

GZA GEOENVIRONMENTAL OF NEW YORK
3699 WEST HENRIETTA RD., ROCHESTER, NEW YORK
ENGINEERS AND SCIENTISTS

PROJECT: U.S. Route 7 Bennington Bypass, Bennington, Vermont, FILE NO.: 13417

SHEET 3 of 5
ROADWAY Rt. 7 Bypass
STATION 9 + 283
OFFSET 52.6 ML

DEPTH (M)	DEPTH (FT)	SAMPLE BLOWS / 6"	NO.	DEPTH (FT)	N-VALUE /RQD(%)	REC (%)	SAMPLE DESCRIPTION	EQUIPMENT INSTALLATION LOG	STRATUM DESCRIPTION	NOTES
10.3	34	81	S-8	34.2-35.1	100+	85	Hard, yellowish-brown, SILT & CLAY and fine to coarse Sand, trace fine Gravel, moist.		GLACIAL TILL	2.
		200/5"								
10.6	35									
10.9	36									
11.2	37									
11.5	38									
11.8	39	71	S-9	39-40.25	100+	60	Hard, yellowish-brown, SILT & CLAY and fine to coarse Sand, trace fine Gravel, moist.			
		132								
12.1	40	100/3"								
12.4	41									
12.7	42									
13.0	43									
13.3	44	141	S-10	44-44.7	100+	75	Hard, yellowish-brown, SILT & CLAY and fine to coarse Sand, trace fine Gravel, moist.			3.
		100/2"								
13.6	45									
13.9	46									
14.2	47									
14.5	48									
14.8	49	64	S-11	49-49.7	100+	50	Hard, yellowish-brown, SILT & CLAY and fine to coarse Sand, trace fine Gravel, moist.			4.
		100/2"								
15.1	50									
15.4	51									
15.7	52									

LEGEND
S - Split Spoon Soil Sample
U - Undisturbed Soil Sample
C - Rock Core Sample

NOTES: 2. Boulder at 33.75 ft., roller bit thru to 34.25ft., S-8 34.25 - 35.15.
3. Boulder at 46.0 ft. roller bit thru to 47.5'.
4. 4" casing stops at 49 ft.

GENERAL NOTES: 1) STRATIFICATION LINES REPRESENT APPROXIMATE BOUNDARY BETWEEN SOIL TYPES, TRANSITIONS MAY BE GRADUAL.
2) WATER LEVEL READINGS HAVE BEEN MADE AT TIMES AND UNDER CONDITIONS STATED, FLUCTUATIONS OF GROUNDWATER MAY OCCUR DUE TO OTHER FACTORS THAN THOSE PRESENT AT THE TIME MEASUREMENTS WERE MADE.

GZA — BORING No. 9+283

NOTE:

ENGLISH AND METRIC UNITS THAT WERE USED ON THE ORIGINAL BORING LOGS HAVE BEEN RETAINED.

STATE OF VERMONT
AGENCY OF TRANSPORTATION

Town Of BENNINGTON	Bridge No. BII
Highway No. TH 5	Log Sta. / Surv. Sta.
EAST ROAD OVER VT ROUTE 279	
BORING LOGS (7 OF 9)	
Designed By S. BURBANK	Drawn By A. THIBAULT
Checked By M. CHENETTE Date 11/04	Bridge Design Supervisor G. BOGUE Date 03/07
PROJECT BENNINGTON	PROJECT NO. AC NH 019-1(53)
Dgn.: ...\Design\ER\ER-Bore7.dgn	Plot Date: 5/25/2011
Bridge Sheet No. BR6II	Sheet 258 of 577

Stantec

V:\1953\active\195300021\transportation\structure\Design\ER\ER-Bore7.dgn

BORING LOG
BB 442

GZA GEOENVIRONMENTAL OF NEW YORK
3699 WEST HENRIETTA RD., ROCHESTER, NEW YORK
ENGINEERS AND SCIENTISTS

PROJECT 6
U.S. Route 7 Bennington Bypass
Bennington, Vermont
FILE NO.: 13417

SHEET 1 of 2
ROADWAY Rt. 7 Bypass
STATION 9 + 286
OFFSET 52.5 Mt.

CONTRACTOR Capital Environmental Drilling Services
DRILLER Steve Travette
GZA REPRESENTATIVE Smith CHECKED BY

BORING TYPE BB, East Rd. Bridge, (Park St. Ext.) S. Abut
GROUND SURFACE ELEVATION 240.5 DATUM NVGD
START DATE 2/8/95 END DATE 2/8/95

TYPE OF DRILL RIG Mobile Drill B-53
CASING SIZE AND TYPE 4¼ inch I.D. Hollow Stem Augers
OVERBURDEN SAMPLING METHOD 2 inch O.D. x 24 inch Long split spoon
ROCK DRILLING METHOD

WATER LEVEL DATA

DATE	TIME	WATER	CASING	REMARKS
2/8/95	1210	13.1'	0'	After augers pulled

DEPTH (M)	DEPTH (FT)	SAMPLE BLOWS / 6"	SAMPLE NO.	SAMPLE DEPTH (FT)	SAMPLE N-VALUE /RQD(%)	SAMPLE REC (%)	SAMPLE DESCRIPTION	EQUIPMENT INSTALLATION LOG	STRATUM DESCRIPTION	NOTES
									ASPHALT PAVEMENT 0.6 ft.	1.
0.3	1	100/3"	S-1	1-1.25	100+	100	Very dense, gray, fine to coarse GRAVEL and fine to coarse Sand, trace clayey Silt, damp. (FILL)		GRANULAR FILL 2.5 ft.	2.
0.6	2									
0.9	3									
1.2	4									
1.5	5	6	S-2	5-7	10	60	Loose to medium dense, tan, fine to coarse SAND, some fine to coarse Gravel, little Silt & Clay, moist.		WEATHERED GLACIAL TILL	
1.8	6	6								
2.1	7	4								
2.4	8	5								
2.7	9									
3.0	10	6	S-3	10-12	59	30	Very dense, brown, fine to coarse SAND, some fine to coarse Gravel, little Silt & Clay, moist.			
3.4	11	34								
3.7	12	25								
4.0	13	11							13.5 ft.	3.
4.3	14								GLACIAL TILL	

BOTTOM OF ABUT. I FOOTING EL. 236.500 m

LEGEND
S - Split Spoon Soil Sample
U - Undisturbed Soil Sample
C - Rock Core Sample

NOTES:
1. Asphalt pavement 0 - .6 ft.
2. Fill .6 - 2.5 ft.
3. Increased resistance to augering at 13 ft.

GENERAL NOTES: 1) STRATIFICATION LINES REPRESENT APPROXIMATE BOUNDARY BETWEEN SOIL TYPES, TRANSITIONS MAY BE GRADUAL.
2) WATER LEVEL READINGS HAVE BEEN MADE AT TIMES AND UNDER CONDITIONS STATED, FLUCTUATIONS OF GROUNDWATER MAY OCCUR DUE TO OTHER FACTORS THAN THOSE PRESENT AT THE TIME MEASUREMENTS WERE MADE.

GZA

BORING No. 9+286

BORING LOG (CONT'D.)
BB 442

GZA GEOENVIRONMENTAL OF NEW YORK
3699 WEST HENRIETTA RD., ROCHESTER, NEW YORK
ENGINEERS AND SCIENTISTS

PROJECT
U.S. Route 7 Bennington Bypass
Bennington, Vermont
FILE NO.: 13417

SHEET 2 of 2
ROADWAY Rt. 7 Bypass
STATION 9 + 286
OFFSET 52.5 Mt.

DEPTH (M)	DEPTH (FT)	SAMPLE BLOWS / 6"	SAMPLE NO.	SAMPLE DEPTH (FT)	SAMPLE N-VALUE /RQD(%)	SAMPLE REC (%)	SAMPLE DESCRIPTION	EQUIPMENT INSTALLATION LOG	STRATUM DESCRIPTION	NOTES
4.6	15	26	S-4	15-17	86	75	Hard, yellowish-brown, SILT & CLAY and fine to coarse Sand, trace fine Gravel, moist.			
4.9	16	35								
5.2	17	51							GLACIAL TILL	
5.5	18	58								
5.8	19									
6.1	20	WR	S-5	20-22	45	55	Hard, yellowish-brown, SILT & CLAY and fine to coarse Sand, trace fine Gravel, moist.			
6.4	21	13								
6.7	22	32								
7.0	23	35								
7.3	24									
7.6	25	44	S-6	25-27	100+	100	Hard, yellowish-brown, SILT & CLAY and fine to coarse Sand, trace fine Gravel, moist.		TILL	
7.9	26	53								
8.2	27	51								
8.5	28	55								
8.8	29									
9.1	30	54	S-7	30-32	100+	85	Very dense, orange-brown and gray, fine to coarse SAND, some fine to coarse Gravel, some Silt & Clay, moist.			
9.4	31	107								
9.7	32	99								
10.0	33	101								
		100/3"	S-8	33-33.25	100+	0	No recovery.			4.

LEGEND
S - Split Spoon Soil Sample
U - Undisturbed Soil Sample
C - Rock Core Sample

NOTES: 4. Bottom of boring at 33.25 ft.

GENERAL NOTES: 1) STRATIFICATION LINES REPRESENT APPROXIMATE BOUNDARY BETWEEN SOIL TYPES, TRANSITIONS MAY BE GRADUAL.
2) WATER LEVEL READINGS HAVE BEEN MADE AT TIMES AND UNDER CONDITIONS STATED, FLUCTUATIONS OF GROUNDWATER MAY OCCUR DUE TO OTHER FACTORS THAN THOSE PRESENT AT THE TIME MEASUREMENTS WERE MADE.

GZA

BORING No. 9+286

NOTE:

ENGLISH AND METRIC UNITS THAT WERE USED ON THE ORIGINAL BORING LOGS HAVE BEEN RETAINED.

STATE OF VERMONT
AGENCY OF TRANSPORTATION

Town Of BENNINGTON	Bridge No. BII
Highway No. TH 5	Log Sta. / Surv. Sta.
EAST ROAD OVER VT ROUTE 279	
BORING LOGS (8 OF 9)	
Designed By S. BURBANK	Drawn By A. THIBAULT
Checked By M. CHENETTE Date 11/04	Bridge Design Supervisor G. BOGUE Date 03/07
PROJECT BENNINGTON	PROJECT NO. AC NH 019-1(53)
Dgn.: ...\Design\ER\ER-Bore8.dgn	Plot Date: 5/25/2011
Bridge Sheet No. BR612	Sheet 259 of 577

Stantec

V:\1953\active\195300021\transportation\structural\Design\ER\ER-Bore8.dgn

BORING LOG
BB 443

GZA GEOENVIRONMENTAL OF NEW YORK
3699 WEST HENRIETTA RD., ROCHESTER, NEW YORK
ENGINEERS AND SCIENTISTS

PROJECT
U.S. Route 7 Bennington Bypass
Bennington, Vermont
FILE NO.: 13417

SHEET 1 of 2
ROADWAY Rt. 7 Bypass
STATION 9 + 299
OFFSET 53.6 ML

CONTRACTOR Capital Environmental Drilling Services
DRILLER Mark Voisine
GZA REPRESENTATIVE Haberlin CHECKED BY

BORING TYPE BB, East Rd. (Park St. Ext.) Bridge, S. Abut
GROUND SURFACE ELEVATION 238.9 DATUM NVGD
START DATE 02/27/95 END DATE 02/27/95

TYPE OF DRILL RIG Davey Kent-50 Bombardier
CASING SIZE AND TYPE 4¼ inch I.D. Hollow Stem Augers
OVERBURDEN SAMPLING METHOD 2 inch O.D. x 24 inch long split spoon
ROCK DRILLING METHOD

WATER LEVEL DATA

DATE	TIME	WATER	CASING	REMARKS
02/27/95	1300	3.5'	0	60 min. stabilized

DEPTH (M)	DEPTH (FT)	SAMPLE BLOWS / 6"	SAMPLE NO.	SAMPLE DEPTH (FT)	SAMPLE N-VALUE /RQD(%)	SAMPLE REC (%)	SAMPLE DESCRIPTION	EQUIPMENT INSTALLATION LOG	STRATUM DESCRIPTION	NOTES
		14	S-1	0-2	5	50	Medium stiff, dark brown, SILT & CLAY, little fine Sand, trace organics, moist.			
0.3	1	2							TOPSOIL	
		3							1.5 ft.	
0.6	2	5								
0.9	3									
1.2	4									
1.5	5	12	S-2	5-7	37	50	Dense, light brown, fine SAND, little fine to coarse Gravel, little Silt & Clay, moist.			
1.8	6	18								
		19								
2.1	7	12							WEATHERED GLACIAL TILL	
2.4	8									
2.7	9									
3.0	10	10	S-3T	10-12	40	65	Top 10 in.: Dense light brown, fine SAND and Silt, trace fine Gravel, moist.			
3.4	11	21							11 ft.	
		19					Bottom 5 in.: Very stiff, light brown, SILT & CLAY, some medium Sand, trace fine Gravel, moist.			
3.7	12	21	S-3B							
4.0	13									
4.3	14								GLACIAL TILL	

BOTTOM OF ABUT.I FOOTING EL.236.500 m

LEGEND
S - Split Spoon Soil Sample
U - Undisturbed Soil Sample
C - Rock Core Sample

NOTES: Boring moved from 9+292, 53 ML to avoid power lines.

GENERAL NOTES: 1) STRATIFICATION LINES REPRESENT APPROXIMATE BOUNDARY BETWEEN SOIL TYPES, TRANSITIONS MAY BE GRADUAL.
2) WATER LEVEL READINGS HAVE BEEN MADE AT TIMES AND UNDER CONDITIONS STATED, FLUCTUATIONS OF GROUNDWATER MAY OCCUR DUE TO OTHER FACTORS THAN THOSE PRESENT AT THE TIME MEASUREMENTS WERE MADE.

GZA BORING No. 9+299

BORING LOG (CONT'D.)
BB 443

GZA GEOENVIRONMENTAL OF NEW YORK
3699 WEST HENRIETTA RD., ROCHESTER, NEW YORK
ENGINEERS AND SCIENTISTS

PROJECT
U.S. Route 7 Bennington Bypass
Bennington, Vermont
FILE NO.: 13417

SHEET 2 of 2
ROADWAY Rt. 7 Bypass
STATION 9 + 299
OFFSET 53.6 ML

DEPTH (M)	DEPTH (FT)	SAMPLE BLOWS / 6"	SAMPLE NO.	SAMPLE DEPTH (FT)	SAMPLE N-VALUE /RQD(%)	SAMPLE REC (%)	SAMPLE DESCRIPTION	CASING DEPTH FT.	CASING BLOWS FT.	STRATUM DESCRIPTION	NOTES
4.6	15										
		WOR	S-4T	15-17	100+	80	Top 5 in.: Very dense, yellow-brown, coarse SAND, some fine Gravel, little Silt, wet.				
4.9	16	9									
		107	S-4B				Bottom 14 in.: Very dense, orange brown, fine to medium SAND, some Silt, trace fine Gravel, moist.			GLACIAL TILL	
5.2	17	75									
5.5	18										
5.8	19										
6.1	20	100/0"									1.
							Bottom of boring at 20 ft.				
6.4	21										
6.7	22										
7.0	23										
7.3	24										
7.6	25										
7.9	26										
8.2	27										
8.5	28										
8.8	29										
9.1	30										
9.4	31										
9.7	32										
10.0	33										

LEGEND
S - Split Spoon Soil Sample
U - Undisturbed Soil Sample
C - Rock Core Sample

NOTES: 1. Auger and split spoon refusal at 20 ft.

GENERAL NOTES: 1) STRATIFICATION LINES REPRESENT APPROXIMATE BOUNDARY BETWEEN SOIL TYPES, TRANSITIONS MAY BE GRADUAL.
2) WATER LEVEL READINGS HAVE BEEN MADE AT TIMES AND UNDER CONDITIONS STATED, FLUCTUATIONS OF GROUNDWATER MAY OCCUR DUE TO OTHER FACTORS THAN THOSE PRESENT AT THE TIME MEASUREMENTS WERE MADE.

GZA BORING No. 9+299

NOTE:

ENGLISH AND METRIC UNITS THAT WERE USED ON THE ORIGINAL BORING LOGS HAVE BEEN RETAINED.

STATE OF VERMONT
AGENCY OF TRANSPORTATION

Town Of BENNINGTON	Bridge No. BII
Highway No. TH 5	Log Sta. / Surv. Sta.

EAST ROAD OVER VT ROUTE 279

BORING LOGS (9 OF 9)

Designed By S. BURBANK	Drawn By A. THIBAULT
Checked By M. CHENETTE Date 11/04	Bridge Design Supervisor G. BOGUE Date 03/07
PROJECT BENNINGTON	PROJECT NO. AC NH 019-1(53)
Dgn.: ...\Design\ER\ER-Bore9.dgn	Plot Date: 5/25/2011
Bridge Sheet No. BR613	Sheet 260 of 577

Stantec

V:\1953\active\195300002\transportation\structural\Design\ER\ER-Bore9.dgn

VAOT Metric

CURVE SB8
PI STA. SB 9+322.75
Delta 7°15'00.0" RT.
R 2500.000 m
T 158.382 m
L 316.342 m
E 5.012 m

CURVE XO1
PI STA. XO 1+160.040
Delta 11°27'34.5" LT.
R 1595.000 m
T 160.040 m
L 319.012 m
E 8.009 m

CURVE NB8
PI STA. NB 9+411.767
Delta 7°15'00.0" RT.
R 2380.000 m
T 150.780 m
L 301.157 m
E 4.771 m

CURVE ER1
PI STA. ER 1+121.710
Delta 16°42'48.2" LT.
R 800.000 m
T 117.516 m
L 233.363 m
E 8.585 m

GRATE ELEV=234.625

ELEV @ BOTTOM OF SWALE 235.75'

ELEV @ BOTTOM OF SWALE=236.17

SEE NOTE ON SHEET 292 ABOUT CHANGE TO GURAD RAIL POSTS NEAR DI 326

CROSSOVER STA. XO 1+255.049
= EAST ROAD STA. ER 1+179.136

VT ROUTE 279 N.B. STA. NB 9+278.312
= EAST ROAD STA. ER 1+195.229

VT ROUTE 279 S.B. STA. SB 9+227.629
= EAST ROAD STA. ER 1+167.952

FUTURE SB PGL

SHARED USE PATH

SHARED USE PATH (S.U.P.) BRIDGE

SLOPE TO DRAIN

LIMITS OF STONE FILL TYPE I

CB 330A

CB 330

CB 330B

DI 326

DI 327

DI 328

DI 329

DI 392

WW1

WW2

WW3

WW4

BEGIN BRIDGE
STA. ER 1+147.733
F.G.EL.= 243.786

℄ BRG. ABUT. 1 (FIXED)
STA. ER 1+148.400
F.G.EL.= 243.791

79°30'02" TO MAJOR CHORD (TYP.)

℄ BRG. ABUT. 2 (EXP.)
STA. ER 1+220.200
F.G.EL.= 244.222

END BRIDGE
STA. ER 1+220.957
F.G.EL.= 244.227

℄ BRG. PIER (EXP.)
STA. ER 1+187.300
F.G.EL.= 244.025

℄ EAST RD.

ER 1+120

ER 1+140

ER 1+150

ER 1+200

ER 1+220

ER 1+240

REINFORCED CONCRETE APPROACH SLAB (TYP.)

POINT OF MINIMUM VERTICAL CLEARANCE XO

POINT OF MIN. VERT. CLR. NB

FACE OF RAIL

EXIST. EDGE OF PAVEMENT

TOP OF SLOPE (TYP.)

TOE OF SLOPE (TYP.)

SB 9+220

XO PGL

NB PGL

NB PC STA. NB 9+260.987

10m CLR. ZONE (TYP.)

VARIES 4800 TO 3600

3600 3600 1800 2400

1800 3600 3600 2400

9000 x 9300

1200 3300 3300 1200

2.1%

1.2%

* - RADIAL DIMENSION

PLAN

0 4 8 12 16 20 m

SCALE 1:200

NOTE: XO REFERS TO CROSS-OVER

LEGEND

- PS — PROPOSED SEWER
- PW — PROPOSED WATER
- AERIAL E&T — PROPOSED OVERHEAD ELECTRIC & TELEPHONE
- AERIAL E&T — EXISTING OVERHEAD ELECTRIC & TELEPHONE

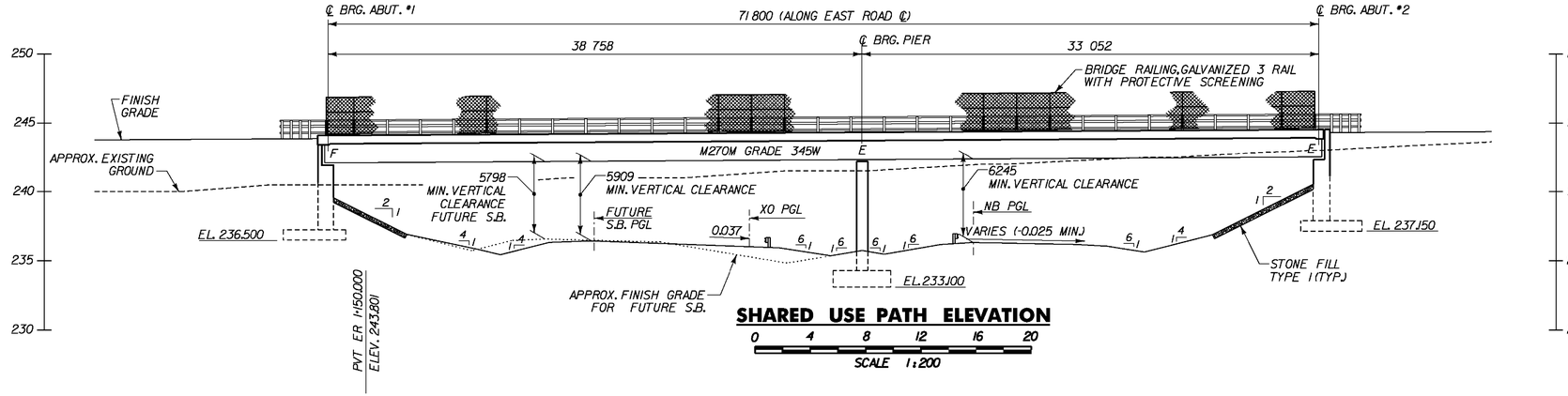

SHARED USE PATH ELEVATION

0 4 8 12 16 20

SCALE 1:200

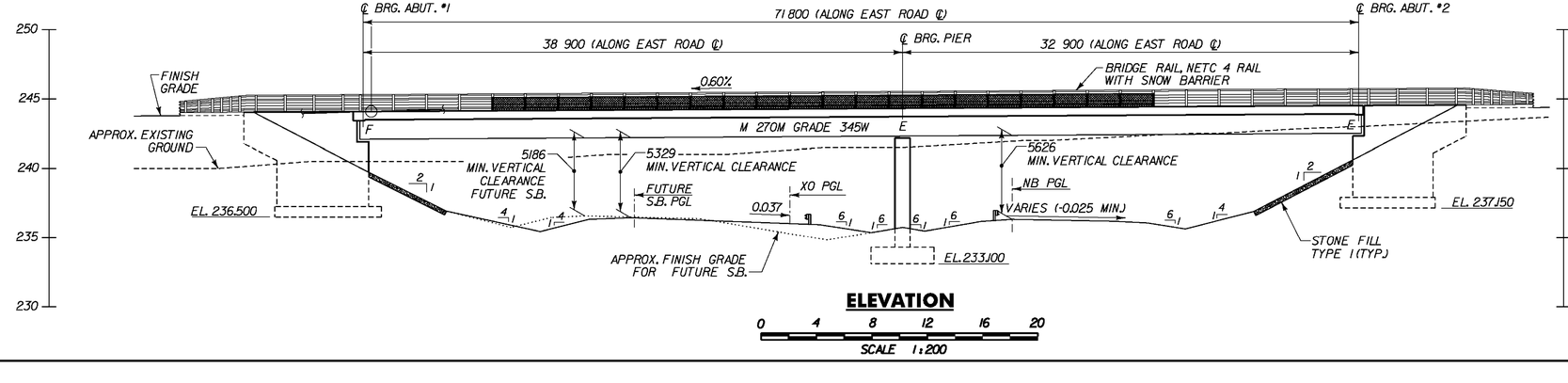

ELEVATION

0 4 8 12 16 20

SCALE 1:200

NOTES:

1. SEE SHEET BR643 FOR PAY LIMITS OF BRIDGE RAIL AND RAIL POST LAYOUT.
2. REFER TO ROADWAY PLANS FOR TIE DATA.

STATE OF VERMONT
AGENCY OF TRANSPORTATION

Town Of BENNINGTON	Bridge No. BII
Highway No. TH 5	Log Sta. / Surv. Sta.
EAST ROAD OVER VT ROUTE 279	
PLAN AND ELEVATION	
Designed By T. KNIGHT	Drawn By T. KNIGHT
Checked By M. CHENETTE Date 11/04	Bridge Design Supervisor G. BOGUE Date 03/07
PROJECT BENNINGTON	PROJECT NO. AC NH 019-1(53)
Dgn.: ...\Design\ER\ER-Plan.dgn	Plot Date: 5/25/2011
Bridge Sheet No. BR614	Sheet 261 of 577

Stantec

W:\1953\active\195360002\transportation\structural\Design\ER\ER-Plan.dgn

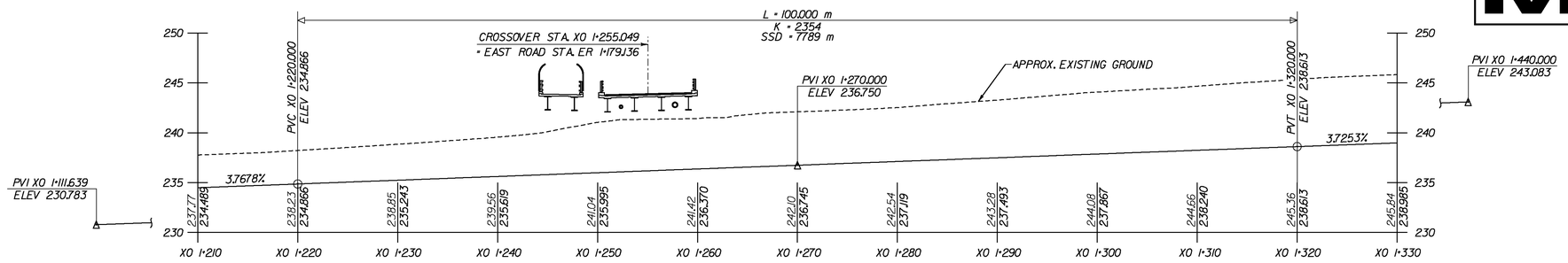

CROSSOVER PROFILE (XO)

0 10 20 m

SCALE 1:250

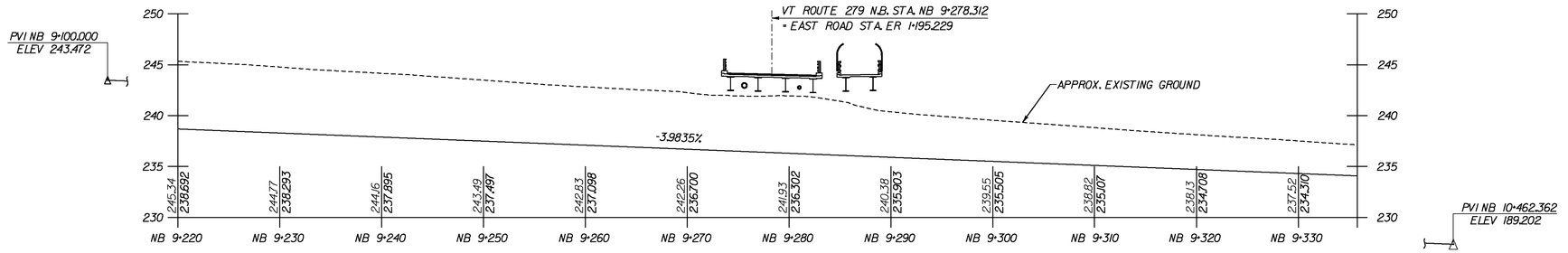

VT ROUTE 279 N.B. PROFILE

0 10 20 m

SCALE 1:250

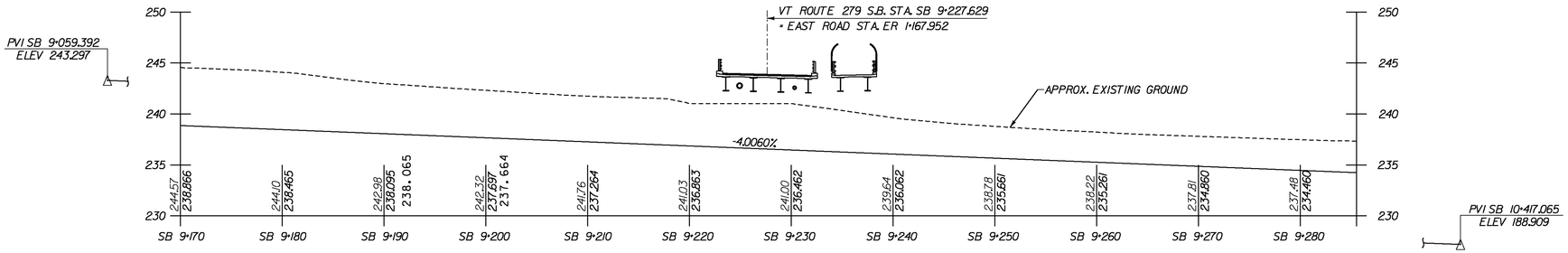

FUTURE VT ROUTE 279 S.B. PROFILE

0 10 20 m

SCALE 1:250

STATE OF VERMONT
AGENCY OF TRANSPORTATION

Town Of BENNINGTON	Bridge No. BII
Highway No. TH 5	Log Sta. / Surv. Sta.
EAST ROAD OVER VT ROUTE 279	
VT ROUTE 279 PROFILES	
Designed By S. BURBANK	Drawn By S. BURBANK
Checked By M. CHENETTE Date 11/04	Bridge Design Supervisor G. BOGUE Date 03/07
PROJECT BENNINGTON	PROJECT NO. AC NH 019-1(53)
Dgn.: ...\Design\ER\ER-279Prof.dgn	Plot Date: 5/25/2011
Bridge Sheet No. BR615	Sheet 262 of 577

Stantec

V:\1953\active\195300021\transportation\structural\Design\ER\ER-279Prof.dgn

GENERAL NOTES

GENERAL

1. ALL MATERIALS AND CONSTRUCTION SHALL CONFORM TO STATE OF VERMONT, AGENCY OF TRANSPORTATION STANDARD SPECIFICATIONS FOR CONSTRUCTION 2006, AND ITS LATEST REVISIONS, AND THE AASHTO STANDARD SPECIFICATIONS FOR HIGHWAY BRIDGES, DATED 2006, AND ITS LATEST REVISIONS.

2. ACCESS TO ALL EXISTING SIDE ROADS, DRIVES, AND PARKING AREAS SHALL BE MAINTAINED AT ALL TIMES DURING CONSTRUCTION.

3. ALL DIMENSIONS SHOWN IN THE PLANS ARE HORIZONTAL OR VERTICAL AT 20 DEGREES CELSIUS, UNLESS NOTED OTHERWISE.

EARTHWORK AND RELATED ITEMS

4. THE STONE FILL, TYPE I UNDER THE BRIDGES SHALL BE PLACED BEFORE THE GIRDERS FOR EITHER BRIDGE ARE SET.

5. THE HEIGHT OF FILL BEHIND ABUTMENTS WILL BE LIMITED TO THE BRIDGE SEAT ELEVATION UNTIL THE DECK HAS BEEN POURED AND THE CURING PERIOD IS FINISHED.

CONCRETE AND REINFORCING STEEL

6. CONCRETE FOR THE DECK, EXPANSION JOINT BLOCKOUT AND CURBS SHALL BE HIGH PERFORMANCE CLASS A AND WILL BE PAID FOR UNDER ONE OF THE ALTERNATE BID ITEMS, ITEM 501.33, CONCRETE, HIGH PERFORMANCE CLASS A (FPO) OR 501.33 CONCRETE, HIGH PERFORMANCE CLASS A (SIP,CMF) (FPO). ALL OTHER CONCRETE SHALL BE HIGH PERFORMANCE CLASS B AND WILL BE PAID FOR UNDER ITEM 501.34, CONCRETE, HIGH PERFORMANCE CLASS B UNLESS OTHERWISE NOTED.

7. SURFACES OF BRIDGE SEATS UNDER BEARING DEVICES SHALL BE LEVEL. OTHER BRIDGE SEAT AREAS SHALL BE SLOPED 40mm PER METER. THE ABUTMENT SEATS SHALL BE SLOPED FULL WIDTH TOWARD MIDSPAN. THE ENTIRE BRIDGE SEAT SURFACE SHALL BE GIVEN A MAGNESIUM FLOAT FINISH.

8. NO CONCRETE SHALL BE PLACED IN THE ABUTMENTS OR WINGWALLS ABOVE THE ADJACENT BEAM SEAT ELEVATIONS UNTIL THE BEAMS HAVE BEEN PROFILED AND THE FINISHED GRADE OF THE DECK HAS BEEN DETERMINED BY THE ENGINEER.

9. THE CURB POUR SEQUENCE SHALL FOLLOW THE ORDER OF THE DECK POUR SEQUENCE. THE ENTIRE DECK SHALL BE POURED PRIOR TO THE CURB. SEE BRIDGE SHEET BR618 FOR DECK POUR SEQUENCE.

10. JOINTS AND SCORE MARKS IN CONCRETE SHALL BE CONSTRUCTED AS INDICATED ON THE PLANS OR AS DIRECTED BY THE ENGINEER.

11. ALL EXPOSED EDGES OF CONCRETE SHALL BE CHAMFERED 25mm.

12. ITEM 514J0 WATER REPELLENT, SILANE SHALL BE APPLIED TO ALL EXPOSED CONCRETE SURFACES EXCEPT THE UNDERSIDE OF DECK BETWEEN DRIP BEADS.

13. ALL REINFORCING STEEL SHALL BE DETAILED AND FABRICATED USING PROCEDURES AND TOLERANCES IN ACCORDANCE WITH AND APPLICABLE PUBLICATIONS OF THE CONCRETE REINFORCING STEEL INSTITUTE.

14. MINIMUM COVER FOR REINFORCING STEEL IN THE ABUTMENTS AND WINGWALLS SHALL BE 50mm ALONG WALL FACES AGAINST EARTH, AND 75mm ELSEWHERE, UNLESS DETAILED OTHERWISE. MINIMUM COVER FOR REINFORCING STEEL IN THE PIER SHALL BE 100mm, UNLESS DETAILED OTHERWISE.

15. ALL REINFORCING STEEL IN THE CONCRETE DECK, PIER STEM, EXPANSION JOINT BLOCKOUT, APPROACH SLABS, BACKWALLS, WINGWALL CURBS AND BRIDGE CURB SHALL BE EPOXY COATED AND PAID FOR UNDER ITEM 507.17, EPOXY COATED REINFORCING STEEL. WHEN EPOXY COATED REINFORCING STEEL IS TO BE CUT, THE UNCOATED ENDS SHALL BE REPAIRED WITH MATERIALS AND PROCEDURES APPROVED BY THE COATING MANUFACTURER. FLAME CUTTING OF EPOXY COATED REINFORCING STEEL WILL NOT BE PERMITTED.

16. REINFORCING PLACEMENT TOLERANCES SHALL BE:
    SPACING +/- 25mm
    CLEARANCE +/- 6mm

17. POLYURETHANE JOINT SEALER SHALL BE USED IN CURB CONSTRUCTION JOINTS OR AT FIXED END CURB JOINTS AS DIRECTED BY THE ENGINEER, IN ACCORDANCE WITH THE CURB JOINT DETAILS SHOWN IN THE TYPICAL BRIDGE DETAILS, BRIDGE SHEET BR617.

18. THE COST OF INSTALLING PVC WATERSTOPS, AS SHOWN IN THE PLANS, SHALL BE INCIDENTAL TO ITEM 501.34 CONCRETE, HIGH PERFORMANCE CLASS B. THE TYPE OF PVC WATERSTOP TO BE USED SHALL BE SUBMITTED BY THE CONTRACTOR TO THE ENGINEER FOR APPROVAL.

STRUCTURAL STEEL

19. ALL STRUCTURAL STEEL PAID FOR UNDER ITEM 506.55, STRUCTURAL STEEL, PLATE GIRDER AND 506.56 STRUCTURAL STEEL, CURVED PLATE GIRDER SHALL CONFORM TO AASHTO M 270M/M270 GRADE 345W UNLESS OTHERWISE NOTED.

20. THE CHARPY V-NOTCH TEST IS REQUIRED ONLY FOR THOSE MEMBERS DESIGNATED AS SUCH ON THE PLANS AND AS SPECIFIED IN SUBSECTION 714.01 OF THE STANDARD SPECIFICATIONS.

21. AFTER THE SUPERSTRUCTURE STEEL HAS BEEN ERECTED, ELEVATIONS SHALL BE TAKEN ALONG THE TOP OF EACH GIRDER UNDER THE DIRECTION OF THE ENGINEER. THESE ELEVATIONS SHALL BE USED IN DETERMINING FINAL GRADE.

22. ALL FIELD CONNECTIONS IN UNPAINTED AREAS SHALL BE MADE USING 22mm DIAMETER BOLTS, CONFORMING TO AASHTO M 164M TYPE 3. IN PAINTED AREAS USE 22mm DIAMETER BOLTS CONFORMING TO AASHTO M 164M TYPE I GALVANIZED. HOLES SHALL BE 24mm DIAMETER, UNLESS OTHERWISE NOTED. CONNECTIONS NOT DESIGNED SHALL BE DETAILED BY THE FABRICATOR AND SUBMITTED TO THE ENGINEER FOR APPROVAL. BOLTS THAT HAVE BEEN FULLY TIGHTENED SHALL NOT BE REUSED.

23. FASCIA OVERHANG BRACKETS OR SIMILAR FALSE WORK SHALL BE SPACED AT A MAXIMUM OF 1200mm. THE DESIGN OF THE FALSE WORK SHALL BE THE RESPONSIBILITY OF THE CONTRACTOR.

24. ANY HOLES IN THE FASCIA BEAMS NOT OTHERWISE FILLED SHALL BE FITTED WITH BUTTON HEAD OR HEX HEAD BOLTS CONFORMING TO AASHTO M 164M TYPE 3 (UNPAINTED AREA) OR TYPE I GALVANIZED (PAINTED AREA). THE BOLTS SHALL BE TIGHTENED IN ACCORDANCE WITH SUBSECTION 506J9 OF THE STANDARD SPECIFICATIONS.

25. WHERE GALVANIZING HAS BEEN REMOVED BY ANY MEANS FROM BRIDGE COMPONENTS INCLUDING DOWNSPOUTS AND ASSOCIATED HARDWARE, IT SHALL BE REPAIRED IN ACCORDANCE WITH SECTION 513 OF THE SPECIFICATIONS. COSTS FOR THIS WORK SHALL BE INCIDENTAL TO THE ITEM UNDER WHICH THE GALVANIZED COMPONENT IS PROVIDED.

26. STEEL CHANNELS AND CONNECTION ANGLES FOR UTILITY SUPPORTS WILL BE PAID FOR UNDER ITEM 506.56, STRUCTURAL STEEL, CURVED PLATE GIRDER. INUSLATED WATER AND SEWER LINES, PIPE ROLLERS, HANGER RODS, NUTS AND WASHERS TO BE PAID FOR UNDER UTILITY ITEMS. SEE UTILITY PLANS U-02, U-03, AND U-06.

TRAFFIC CONTROL

27. SEE HIGHWAY SHEETS FOR TEMPORARY DETOUR

ASPHALTIC PLUG BRIDGE JOINT INSTALLATION NOTES

28. THE JOINT SHALL BE LOCATED CENTRALLY OVER THE DECK EXPANSION GAP OR FIXED JOINT MARKED OUT TO THE MANUFACTURER'S RECOMMENDED WIDTH.

29. THE JOINT SHALL BE EXCAVATED AS SHOWN ON THE PLANS BY USE OF SAWS AND PNEUMATIC HAMMER OR A HAMMER AND A CHISEL.

30. THE JOINT AREA SHALL BE BLAST CLEANED OF DEBRIS AND ASPHALT. THE JOINT AREA SHALL BE THOROUGHLY DRIED USING HOT COMPRESSED AIR PRIOR TO APPLYING BINDER MATERIAL.

31. SPALLED AND DEFECTIVE CONCRETE SHALL BE REPAIRED WITH AN APPROVED MATERIAL AS AGREED UPON BY THE ENGINEER.

32. PROPERLY SIZED HEAT RESISTANT BACKER ROD SHALL BE PLACED IN THE MOVEMENT GAP ALLOWING FOR 25mm (1 INCH) +/- OF BINDER ABOVE THE ROD.

    THE BINDER MATERIAL SHALL BE HEATED AND PLACED AS RECOMMENDED BY THE MANUFACTURER.

33. PLACE 6mm (1/4 INCH) THICK BY 200mm (8 INCH) WIDE SECTIONS OF STEEL PLATE OVER THE CENTER OF THE MOVEMENT GAP. SECURE PLATES FROM MOVING BY INSERTING LOCATING PINS THROUGH THE PRESTAMPED HOLES INTO BACKER ROD AND COVER WITH HOT BINDER.

    A. THE STEEL PLATES MAY BE OMITTED WHERE THE APPROACH SLAB IS COVERED WITH A STONE BASE OR BITUMINOUS PAVEMENT AND VERTICAL MOVEMENT OF THE PLATES MIGHT OCCUR.

34. THE BINDER MATERIAL AND AGGREGATE SHALL BE HEATED AND MIXED AS RECOMMENDED BY THE MANUFACTURER.

35. THE INSTALLATION OF MATERIAL, COMPACTION, AND TOPCOATING SHALL BE AS RECOMMENDED BY THE MANUFACTURER.

36. IMMEDIATELY AFTER TOPCOATING, AN ANTI-SKID MATERIAL SHALL BE CAST OVER THE JOINT TO REDUCE THE RISK OF TRACKING.

37. JOINT SHALL BE PROTECTED FROM TRAFFIC UNTIL THE MATERIAL HAS COOLED TO 52°C +/- (125°F).

38. BINDER MATERIAL SHALL BE APPLIED ONLY WHEN THE FOLLOWING CONDITIONS PREVAIL:

    A. THE AMBIENT AIR TEMPERATURE IS AT LEAST 10°C (50°F) AND RISING

    B. THE ROAD SURFACE IS SUFFICIENTLY DRY.

    C. WEATHER CONDITIONS OR OTHER CONDITIONS ARE FAVORABLE AND ARE EXPECTED TO REMAIN SO FOR THE PERFORMANCE OF SATISFACTORY WORK.

V:\1953\active\19530002\transportation\structural\Design\ER\ER-Notes.dgn

STATE OF VERMONT
AGENCY OF TRANSPORTATION

Town Of BENNINGTON	Bridge No. BII
Highway No. TH 5	Log Sta. / Surv. Sta.
EAST ROAD OVER VT ROUTE 279	
GENERAL NOTES	
Designed By S. BURBANK	Drawn By J. SOTER
Checked By S. BURBANK Date 02/06	Bridge Design Supervisor G. BOGUE Date 03/07
PROJECT BENNINGTON	PROJECT NO. AC NH 019-1(53)
Dgn.: ...\Design\ER\ER-Notes.dgn	Plot Date: 5/25/2011
Bridge Sheet No. BR616	Sheet 263 of 577

Stantec

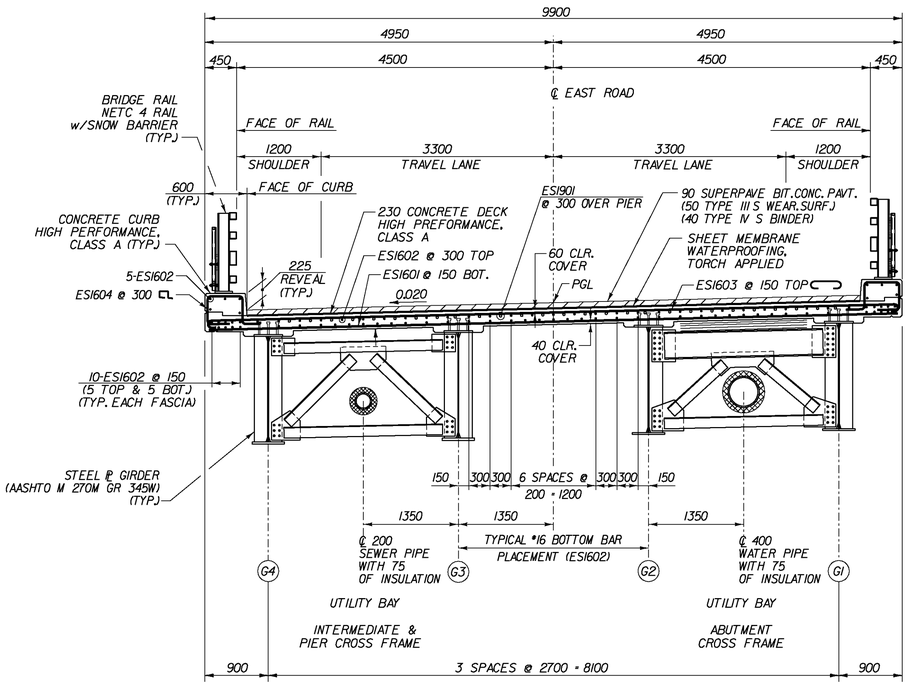

NOTE: ALL DIMENSIONS ARE RADIAL AND CONCENTRIC WITH ℄ EAST ROAD.

TYPICAL BRIDGE SECTION – VEHICLE

SCALE 1:40

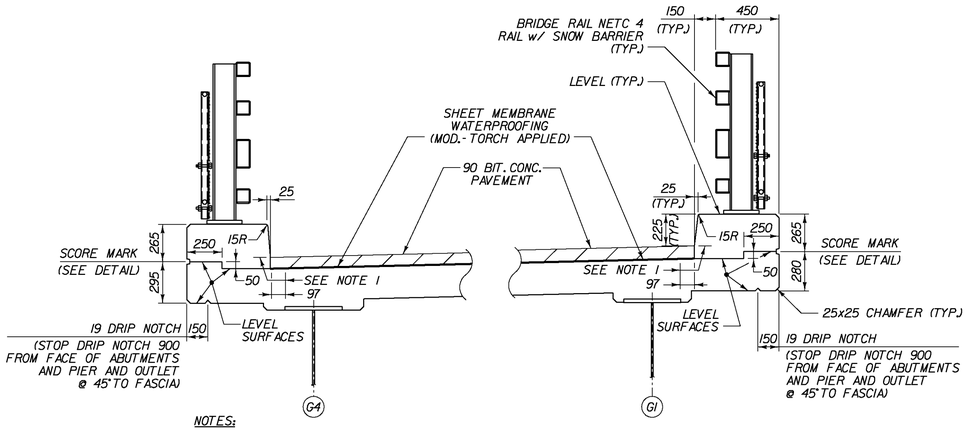

NOTES:

1. INDICATES AREA ALONG THE DECK AND UP THE FACE OF THE CURB FOR PLACEMENT OF 2 COATS OF POLYURETHANE MEMBRANE.
2. POLYURETHANE MEMBRANE AND BLAST CLEANING SHALL BE INCLUDED IN THE UNIT PRICE BID FOR SHEET MEMBRANE WATERPROOFING,TORCH APPLIED.
3. SHEET MEMBRANE WATERPROOFING,TORCH APPLIED SHALL EXTEND TO THE FACE OF THE CURB AS SHOWN.
4. BLAST CLEAN 900 FROM THE FACE OF THE CURB AND 75 UP THE CURB FACE PRIOR TO PLACING MEMBRANE.
5. ALL CONCRETE IN THE CURB SHALL BE CONCRETE,HIGH PERFORMANCE CLASS A.

TYPICAL CURB SECTION

SCALE 1:20

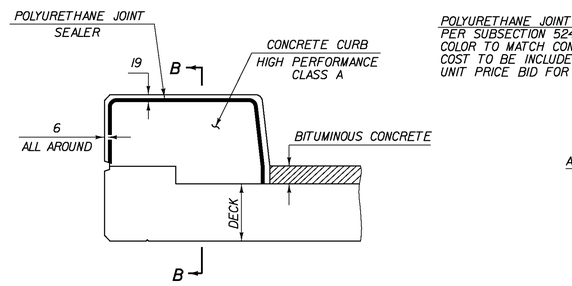

TYPICAL SECTION THROUGH CONCRETE CURB CONSTRUCTION JOINT

NOT TO SCALE

NOTES:

1. CONSTRUCTION JOINTS THROUGH CONCRETE CURBS SHALL BE SPACED MAXIMUM 4500 CENTER TO CENTER AND SHALL BE 450 MINIMUM FROM THE CENTER OF THE NEAREST BRIDGE RAIL POST. CONCRETE SHALL BE PLACED IN ALTERNATING SECTIONS WITH A MINIMUM OF 48 HOURS DELAY BETWEEN ADJACENT POURS.
2. LONGITUDINAL REINFORCING SHALL PASS THROUGH CONCRETE CURB CONSTRUCTION JOINTS.
3. PLACE SECTIONS OF CURB WITHIN THE POSITIVE MOMENT REGION (POUR 1 & POUR 2) PRIOR TO PLACING SECTIONS OF CURB WITHIN THE NEGATIVE MOMENT REGION (POUR 3). REFER TO DECK POUR SEQUENCE ON BRIDGE SHT.BR618.

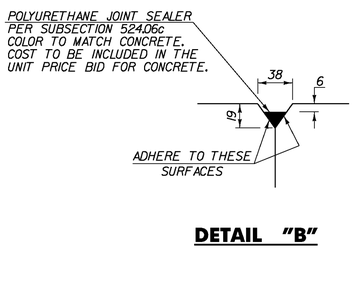

DETAIL "B"

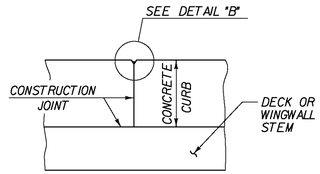

SECTION B – B

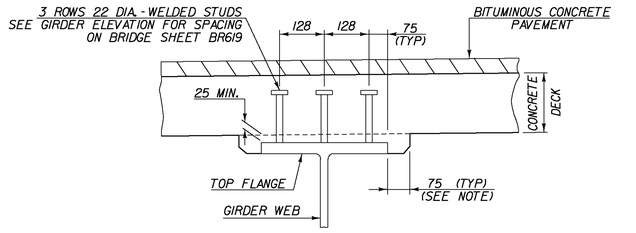

NOTE: THE 75 HORIZONTAL SECTION MAY BE ELIMINATED FOR FORMING SYSTEMS DESIGNED FOR THE CONSTRUCTION OF VERTICAL HAUNCHES. SYSTEMS SHALL BE SUBMITTED FOR APPROVAL TO THE STRUCTURES ENGINEER. ANY VOIDS RESULTING FROM THIS FORMING SYSTEM SHALL BE FILLED WITH MORTAR,TYPE IV OR AN EQUIVALENT PRODUCT FROM THE APPROVED PRODUCTS LIST.

HAUNCH AND SHEAR CONNECTOR DETAILS

NOT TO SCALE

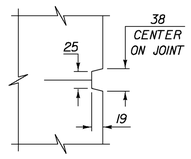

SCORE MARK DETAIL

NOT TO SCALE

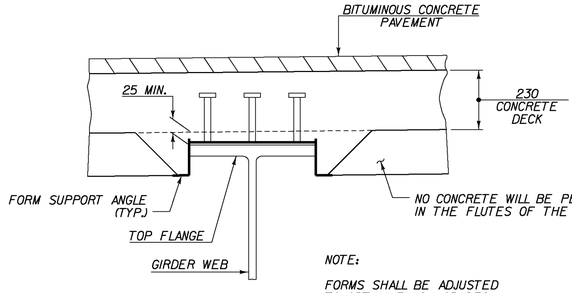

NOTE:

FORMS SHALL BE ADJUSTED TO OBTAIN FINISH GRADES REQUIRED ON PLANS.

ALTERNATE HAUNCH DETAIL (STAY-IN-PLACE FORMS)

NOT TO SCALE

STATE OF VERMONT
AGENCY OF TRANSPORTATION

Town Of BENNINGTON	Bridge No. BII
Highway No. TH 5	Log Sta. / Surv. Sta.

EAST ROAD OVER VT ROUTE 279

TYPICAL BRIDGE SECTION

Designed By T. KNIGHT	Drawn By J. SOTER
Checked By S. BURBANK Date 03/06	Bridge Design Supervisor G. BOGUE Date 03/07
PROJECT BENNINGTON	PROJECT NO. AC NH 019-1(53)
Dgn.: ...\Design\ER\ER-TypSec.dgn	Plot Date: 5/25/2011
Bridge Sheet No. BR617	Sheet 264 of 577

Stantec

V:\953\active\95300002\transportation\structural\Design\ER\ER-TypSec.dgn

VAOT Metric

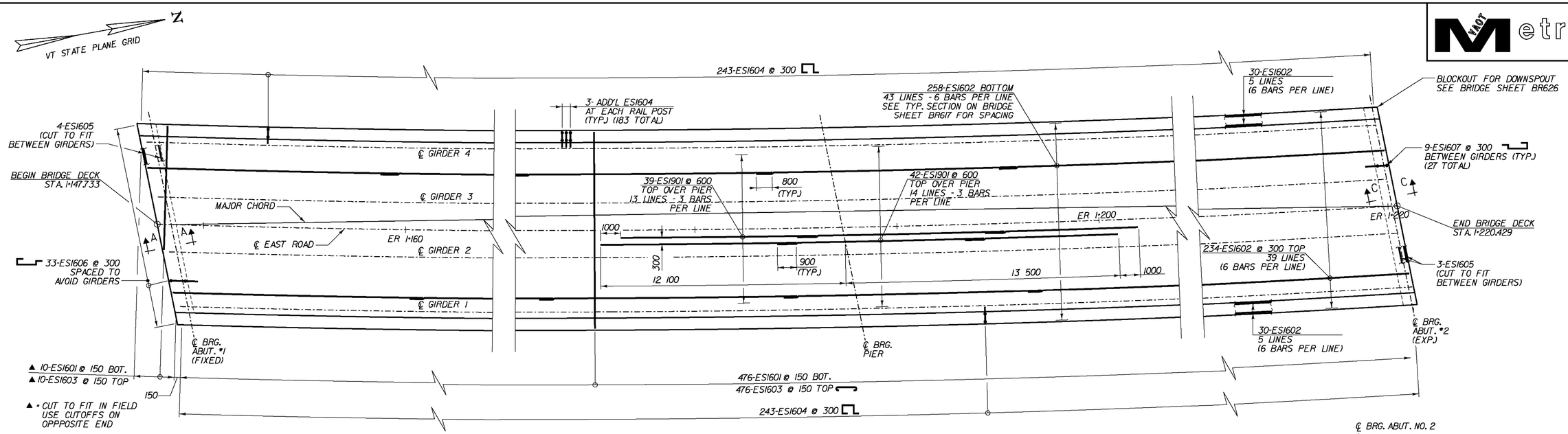

DECK REINFORCING PLAN

0 1 2 4 6 8 10

SCALE = 1:100

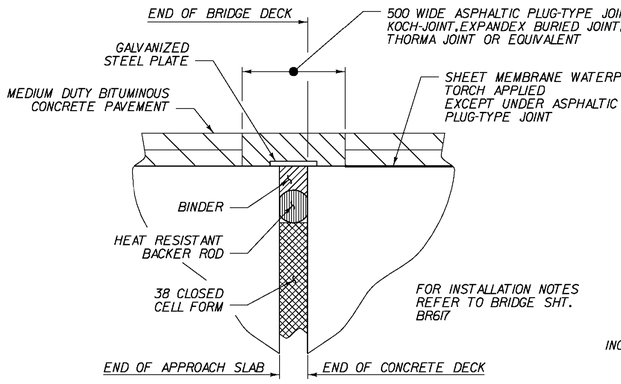

DETAIL "B"

NOT TO SCALE

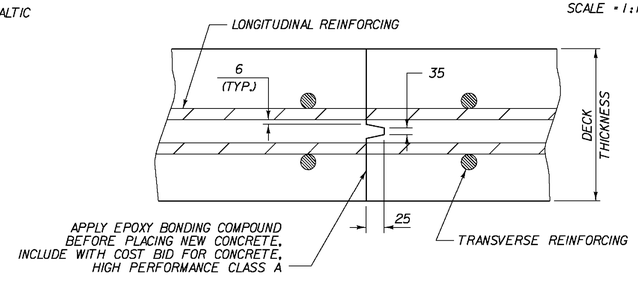

TRANSVERSE BRIDGE SLAB CONSTRUCTION JOINT DETAILS

NOT TO SCALE

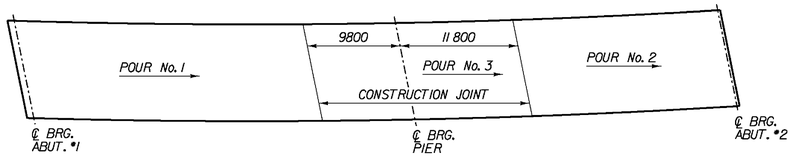

NOTES:

1. THE ARROWS INDICATE THE DIRECTION OF THE CONCRETE PLACEMENT.
2. THE CONCRETE SHALL BE DEPOSITED PARALLEL TO THE CENTERLINE OF BEARING SO AS TO LOAD THE GIRDERS EQUALLY.
3. TRANSVERSE BRIDGE SLAB CONSTRUCTION JOINTS, AS SHOWN ON THIS SHEET, SHALL BE USED BETWEEN ADJACENT DECK POURS.
4. IF APPROVED BY THE ENGINEER, POURS NO. 1 AND NO. 2 MAY BE POURED THE SAME DAY PROVIDED THAT THE MAXIMUM TIME SPAN OF THE POURS IS EIGHT HOURS. THE INDICATED POURING SEQUENCE SHALL BE FOLLOWED AND A RETARDING ADMIXTURE USED SO THAT THE DECK CONCRETE WILL NOT SET UP UNTIL ALL THE CONCRETE HAS BEEN POURED. THE RETARDING ADMIXTURE SHALL BE INCIDENTAL TO ITEM 501.33, "CONCRETE, HIGH PERFORMANCE CLASS A".
5. A NINETY-SIX (96) HOUR DELAY BETWEEN THE COMPLETION OF ONE DAY'S POUR AND THE BEGINNING OF ANY OTHER POUR SHALL BE OBSERVED.
6. THE CONTRACTOR MAY SUBMIT, IN WRITING, AN ALTERNATE POUR SEQUENCE TO THE ENGINEER FOR REVIEW.

DECK POUR SEQUENCE

NOT TO SCALE

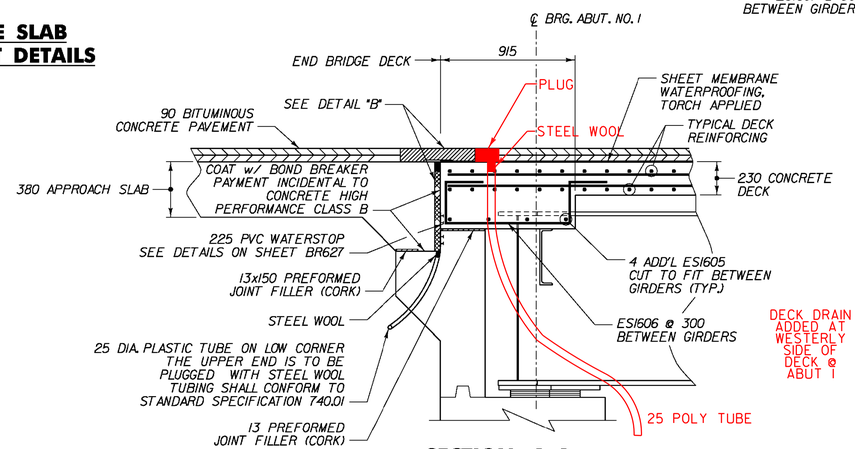

SECTION A–A

SCALE 1:20

NOTE: ABUTMENT AND APPROACH SLAB REINFORCEMENT NOT SHOWN FOR CLARITY.

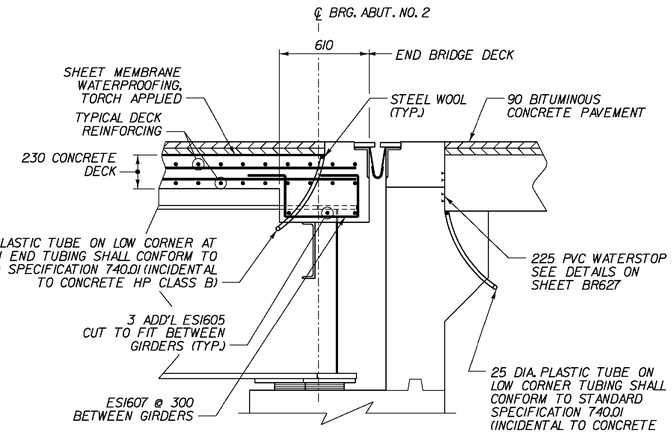

SECTION C–C

SCALE 1:20

NOTE:

ABUTMENT AND APPROACH SLAB REINFORCEMENT NOT SHOWN FOR CLARITY.

STATE OF VERMONT
AGENCY OF TRANSPORTATION

Town Of BENNINGTON	Bridge No. BII
Highway No. TH 5	Log Sta. / Surv. Sta.

EAST ROAD OVER VT ROUTE 279

DECK PLAN

Designed By T. KNIGHT	Drawn By J. SOTER
Checked By T. KNIGHT Date 11/06	Bridge Design Supervisor G. BOGUE Date 03/07
PROJECT BENNINGTON	PROJECT NO. AC NH 019-1(53)
Dgn.: ...\Design\ER\ER-Deck.dgn	Plot Date: 5/25/2011
Bridge Sheet No. BR618	Sheet 265 of 577

Stantec

V:\1853\active\185360002\transportation\structural\Design\ER\ER-Deck.dgn

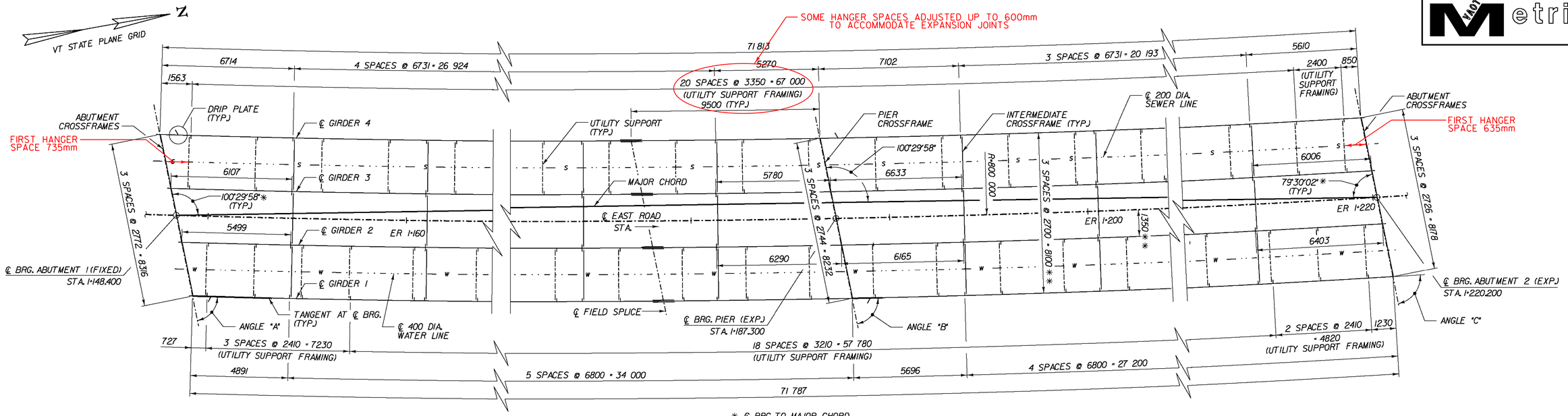

* ℄ BRG. TO MAJOR CHORD

** RADIAL

FRAMING PLAN

0 1 2 4 6 8 10

SCALE = 1:100

LENGTH OF MAJOR CHORD:

℄ BRG. ABUTMENT 1 TO ℄ PIER = 38 900

℄ PIER TO ℄ BRG. ABUTMENT 2 = 32 900

GIRDER ANGLE TABLE

GIRDER NO.	ANGLE "A"	ANGLE "B"	ANGLE "C"
4	76°51'42"	79°39'45"	82°01'52"
3	76°54'25"	79°41'52"	82°03'30"
2	76°57'07"	79°43'59"	82°05'06"
1	76°59'47"	79°46'04"	82°06'43"

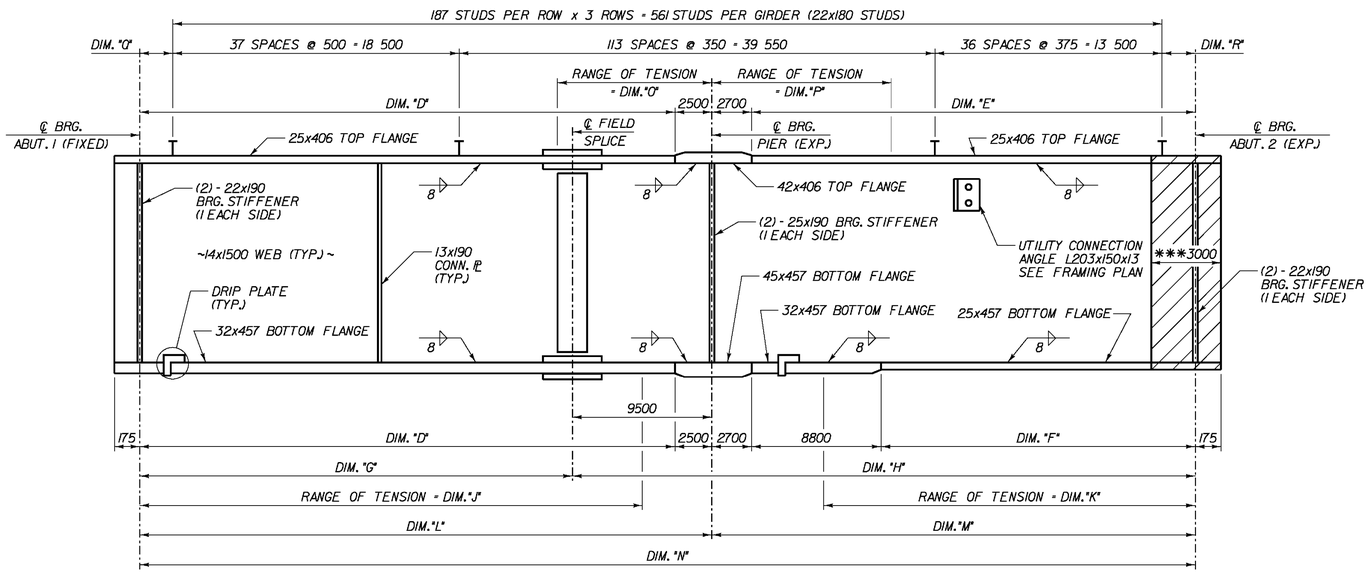

GIRDER ELEVATION

NOT TO SCALE

*** - THE EXPANSION END OF THE GIRDERS SHALL BE PAINTED AND GREASED IN ACCORDANCE WITH SECTION 513.06 (d) OF THE SUPPLEMENTAL SPECIFICATIONS

GIRDER DIMENSION TABLE

GIRDER NO.	RADIUS	DIM. "D"	DIM. "E"	DIM. "F"	DIM. "G"	DIM. "H"	DIM. "J"	DIM. "K"	DIM. "L"	DIM. "M"	DIM. "N"	DIM. "O"	DIM. "P"	DIM. "Q"	DIM. "R"
4	795.950	36 408	30 205	21 405	29 408	42 405	32 600	26 000	38 908	32 905	71 813	10 200	12 200	108	155
3	798.650	36 403	30 201	21 401	29 403	42 401	32 500	25 600	38 903	32 901	71 804	9700	11 500	103	151
2	801.350	36 397	30 199	21 399	29 397	42 399	32 500	25 600	38 897	32 899	71 796	9600	11 700	97	149
1	804.050	36 391	30 196	21 396	29 391	42 396	32 500	25 700	38 891	32 896	71 787	10 200	12 600	91	146

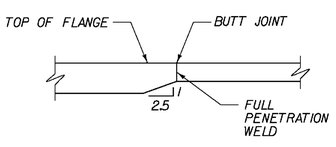

NOTE: TOP FLANGE SIMILAR

FLANGE THICKNESS TRANSISTION DETAIL

NOT TO SCALE

NOTES:

1. GIRDER DIMENSIONS ARE ALONG ℄ OF GIRDER.
2. FOR CAMBER AND DEAD LOAD DEFLECTION DIAGRAMS, SEE SHEET BR620.
3. THE INTERMEDIATE CROSS FRAMES AND UTILITY SUPPORT FRAMES ARE PLACED ALONG LINES THAT ARE RADIAL TO THE CURVE.
4. THE INTERMEDIATE CROSSFRAMES' AND UTILITY SUPPORT FRAMES' SPACING NOT SHOWN ALONG GIRDERS 2 AND 3 ARE PROPORTIONAL TO THE SPACINGS GIVEN ALONG GIRDER 1 AND 4.
5. FOR CROSS FRAME DETAILS, SEE SHEET BR621.
6. FOR UTILITY SUPPORT FRAME DETAILS, SEE SHEET BR621.
7. THE ENDS OF GIRDERS SHALL BE VERTICAL UNDER DEAD LOAD.
8. THE BEARING STIFFENERS SHALL BE VERTICAL IN THE FINAL POSITION.
9. FOR DRIP PLATE DETAILS, SEE SHEET BR622.
10. FOR ADDITIONAL WELD LOCATION DETAILS SEE SHEET BR622.
11. CHARPY V-NOTCH TESTING IS REQUIRED FOR ALL FLANGE PLATES, WEB PLATES, CONNECTION PLATES, BEARING STIFFENERS, SPLICE PLATES AND CROSS FRAME MEMBERS.

STATE OF VERMONT
AGENCY OF TRANSPORTATION

Town Of BENNINGTON	Bridge No. BII
Highway No. TH 5	Log Sta. / Surv. Sta.
EAST ROAD OVER VT ROUTE 279	
FRAMING PLAN	
Designed By M. CHENETTE	Drawn By J. SOTER
Checked By S. BURBANK Date 03/06	Bridge Design Supervisor G. BOGUE Date 03/07
PROJECT BENNINGTON	PROJECT NO. AC NH 019-1(53)
Dgn.: ...\Design\ER\ER-Fra.dgn	Plot Date: 5/25/2011
Bridge Sheet No. BR619	Sheet 266 of 577

Stantec

V:\1953\active\195300021\transportation\structural\Design\ER\ER-Fra.dgn

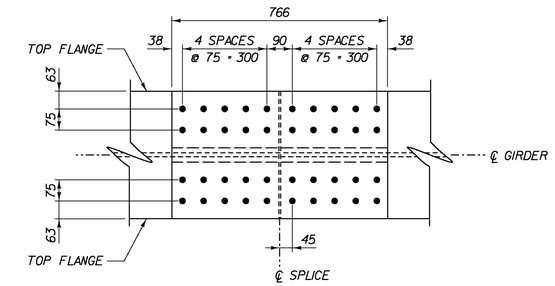

TOP FLANGE PLAN

SCALE 1:10

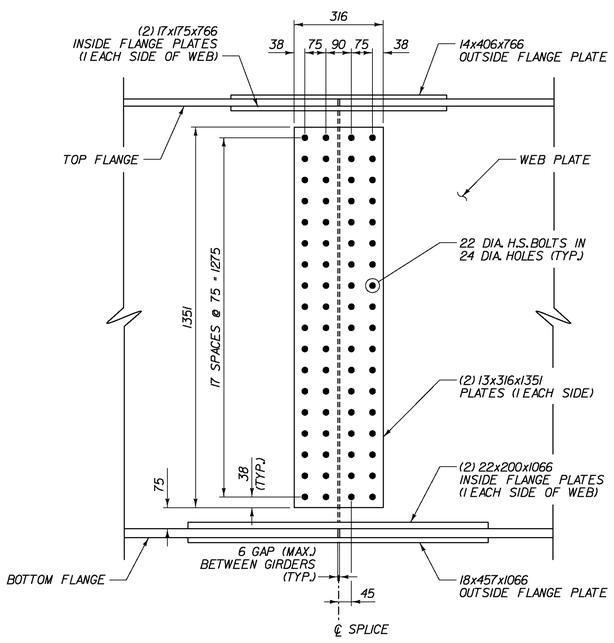

WEB ELEVATION

SCALE 1:10

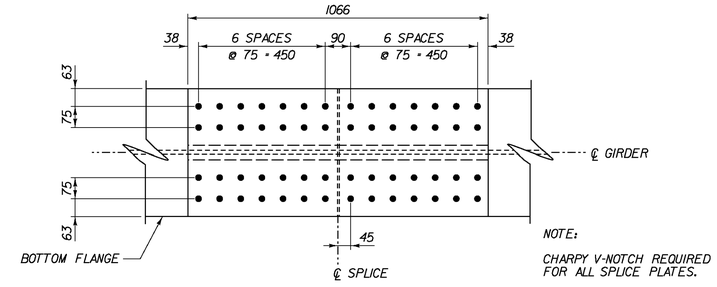

BOTTOM FLANGE PLAN

SCALE 1:10

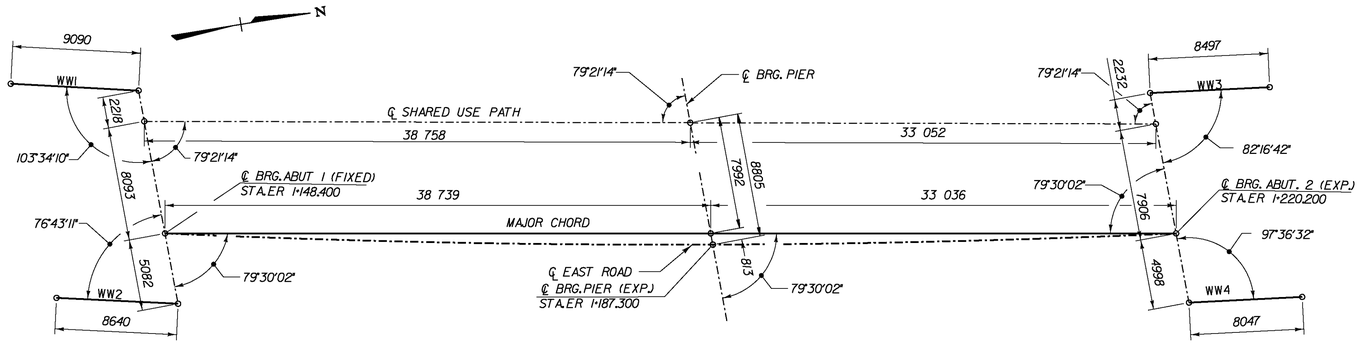

BRIDGE LAYOUT

0 4 8 12 16 20 m

SCALE 1:200

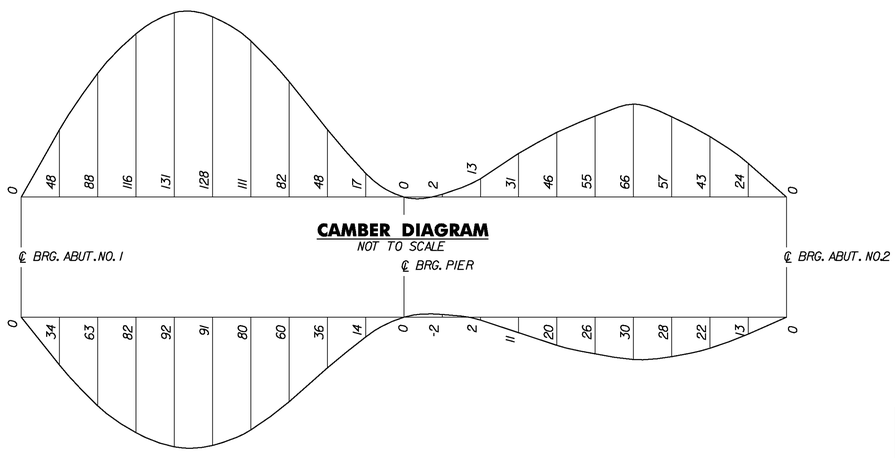

CAMBER DIAGRAM

NOT TO SCALE

DEAD LOAD DEFLECTION DIAGRAM

NOT TO SCALE

NOTES:

1. CAMBER AND DEAD LOAD MEASUREMENTS ARE GIVEN IN MILLIMETERS AT SPAN TENTH POINTS.
2. DEAD LOAD DEFLECTIONS SHOWN ARE FOR ALL DEAD LOADS AND SUPERIMPOSED DEAD LOADS INCLUDING BEAM AND DIAPHRAGM WEIGHTS. DESIGN DEAD LOAD DEFLECTIONS SHOWN ARE BASED ON GIRDER 2. ACTUAL DEAD LOAD DEFLECTIONS FOR OTHER GIRDERS VARY SLIGHTLY.

STATE OF VERMONT
AGENCY OF TRANSPORTATION

Town Of BENNINGTON	Bridge No. BII
Highway No. TH 5	Log Sta. / Surv. Sta.

EAST ROAD OVER VT ROUTE 279

SPLICE DETAILS

Designed By G. BOGUE	Drawn By J. SOTER
Checked By G. BOGUE Date 04/06	Bridge Design Supervisor G. BOGUE Date 03/07
PROJECT BENNINGTON	PROJECT NO. AC NH 019-1(53)
Dgn.: ...\Design\ER\ER-Splice.dgn	Plot Date: 5/25/2011
Bridge Sheet No. BR620	Sheet 267 of 577

Stantec

V:\1953\active\195300021\transportation\structural\Design\ER\ER-Splice.dgn

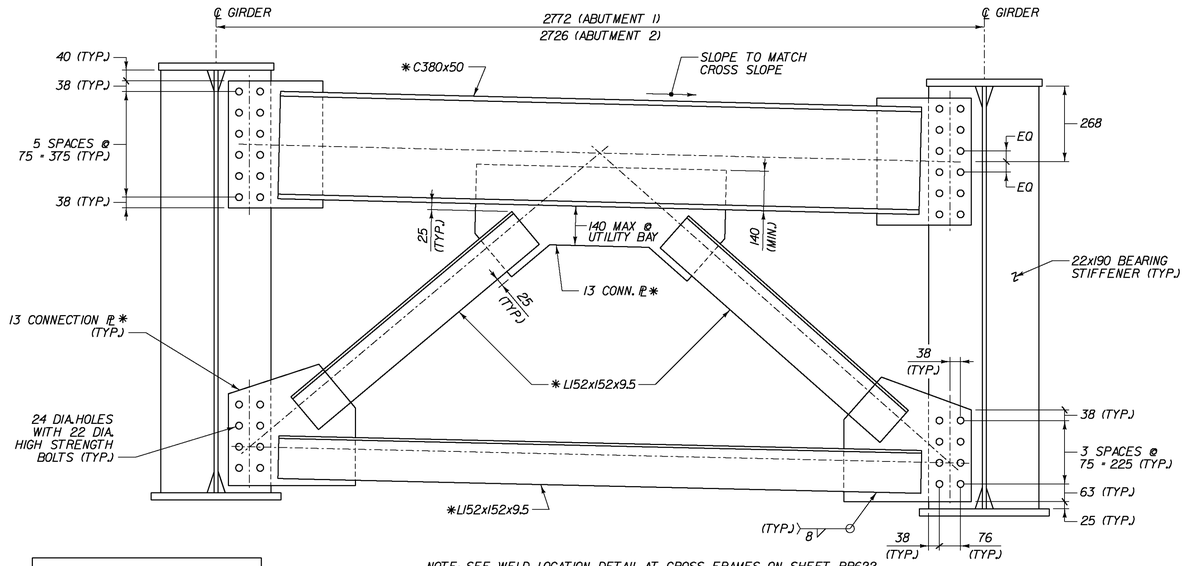

NOTE: SEE WELD LOCATION DETAIL AT CROSS FRAMES ON SHEET BR622.

ABUTMENT CROSSFRAME

SCALE 1:10

*CHARPY V-NOTCH TESTING REQUIRED

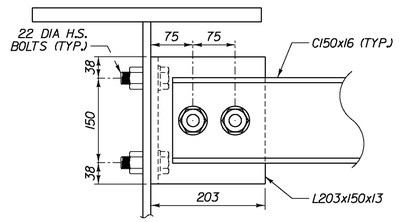

UTILITY CONNECTION ANGLE DETAIL

SCALE 1:5

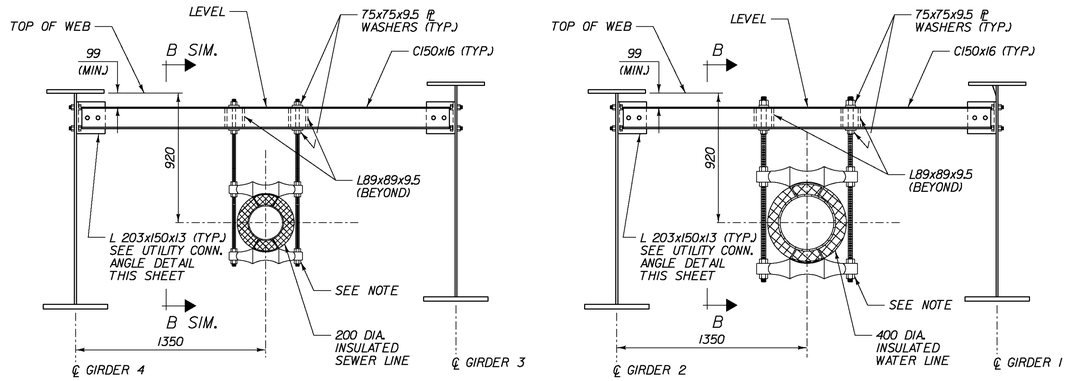

UTILITY SUPPORT DETAILS

SCALE 1:20

NOTE:

INSULATED WATER AND SEWER LINES, INCLUDING PIPE ROLLERS, HANGER RODS, NUTS AND WASHERS, TO BE PAID FOR UNDER UTILITY ITEMS (SEE UTILITY PLANS U-02, U-03 AND U-06). STEEL SUPPORTS TO BE PAID FOR UNDER ITEM 506.56 STRUCTURAL STEEL, CURVED PLATE GIRDER (EAST ROAD).

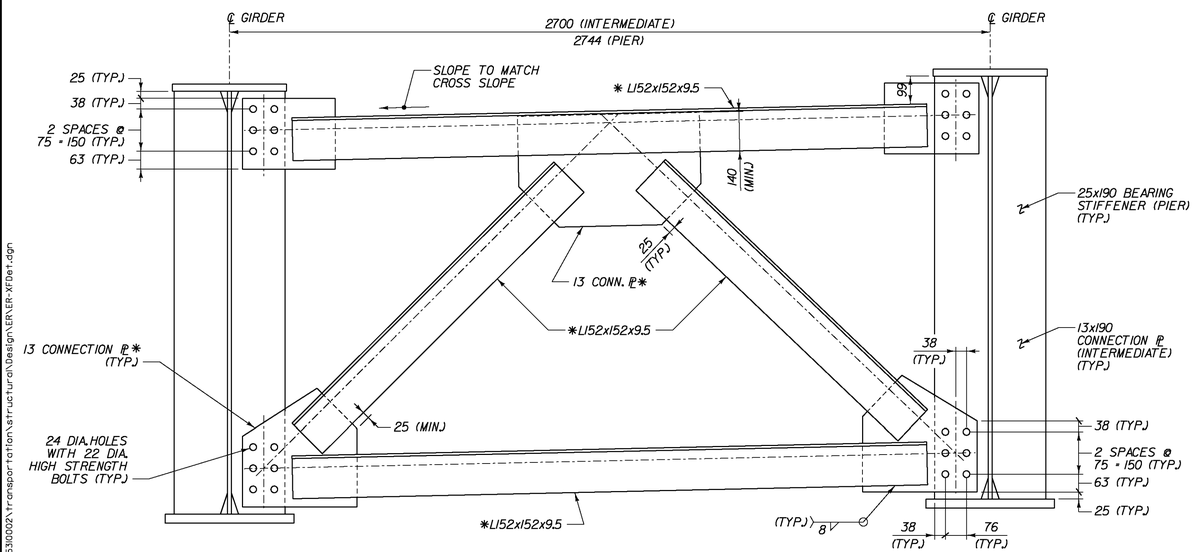

NOTE: SEE WELL LOCATION DETAIL AT CROSS FRAMES ON SHEET BR622.

INTERMEDIATE AND PIER CROSSFRAME

SCALE 1:10

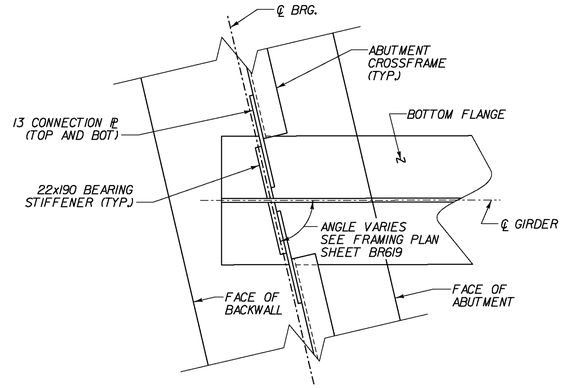

NOTE: PIER AND ABUTMENT 2 SIMILAR

ABUTMENT 1 CROSSFRAME CONNECTION

SCALE: 1:10

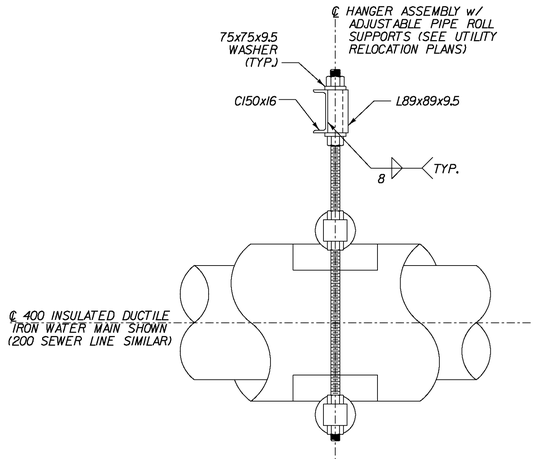

SECTION B–B

SCALE 1:10

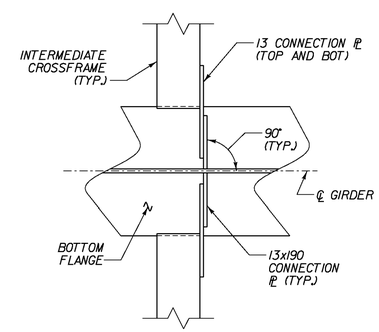

INTERMEDIATE CROSSFRAME CONNECTION

SCALE 1:10

STATE OF VERMONT
AGENCY OF TRANSPORTATION

Town Of BENNINGTON	Bridge No. BII
Highway No. TH 5	Log Sta. / Surv. Sta.
EAST ROAD OVER VT ROUTE 279	
CROSSFRAME DETAILS	
Designed By G. BOGUE	Drawn By S. BURBANK
Checked By G. BOGUE Date 03/06	Bridge Design Supervisor G. BOGUE Date 03/07
PROJECT BENNINGTON	PROJECT NO. AC NH 019-1(53)
Dgn.: ...\Design\ER\ER-XFDet.dgn	Plot Date: 5/25/2011
Bridge Sheet No. BR621	Sheet 268 of 577

Stantec

V:\1953\active\195300021\transportation\structural\Design\ER\ER-XFDet.dgn

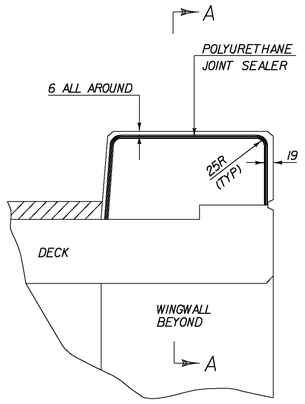

TYPICAL SECTION THROUGH CURB JOINT AT FIXED END OF BRIDGE

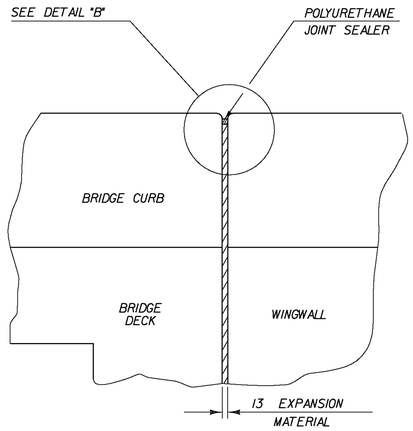

SECTION A – A

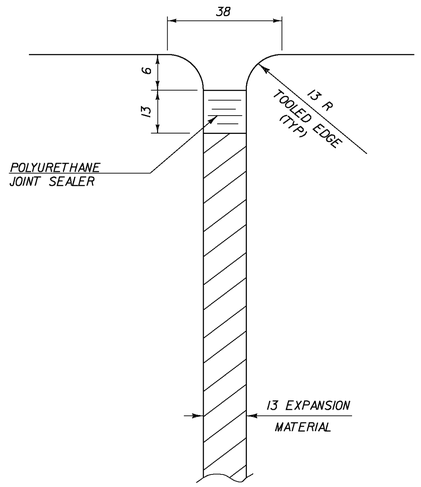

DETAIL "B"

FOR DETAILS OF POLYURETHANE JOINT SEALER SEE SUBSECTION 524.06

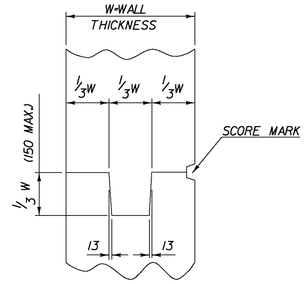

TYPICAL CONCRETE CONSTRUCTION JOINT

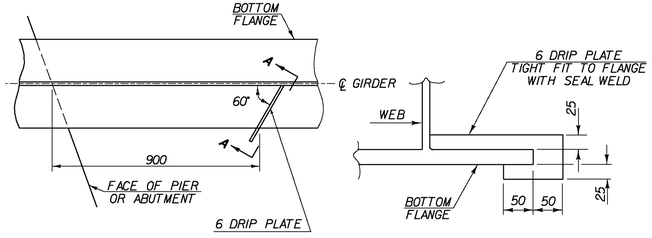

PLAN DRIP PLATE **SECTION A–A**

NOTE: DRIP PLATES SHALL BE PLACED ON OUTSIDE EDGE OF FASCIA GIRDERS ON THE HIGH SIDE OF ALL PIERS AND ABUTMENTS OR AS INDICATED ON PROJECT PLANS.

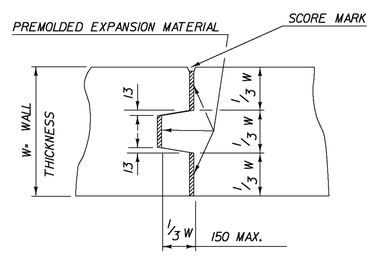

TYPICAL CONCRETE EXPANSION JOINT

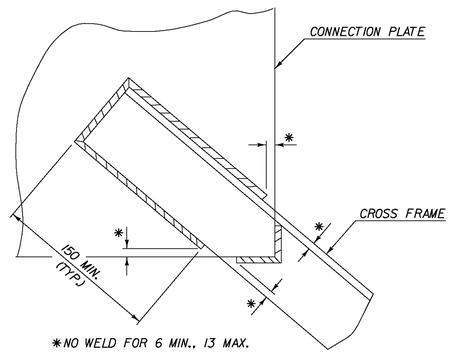

*NO WELD FOR 6 MIN., 13 MAX.

WELD LOCATION DETAIL AT CROSS FRAMES

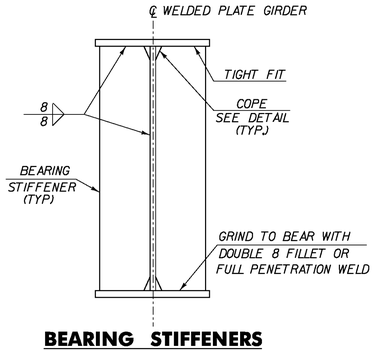

BEARING STIFFENERS FOR WELDED PLATE GIRDERS

NOT TO SCALE

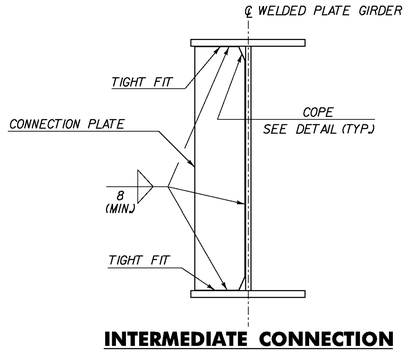

INTERMEDIATE CONNECTION PLATES FOR WELDED PLATE GIRDERS

NOT TO SCALE

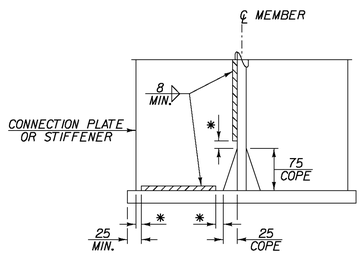

WELD TERMINATION AND COPING DETAIL FOR STEEL MEMBERS

* NO WELD FOR 10 MIN., 22 MAX. (EXCEPT MUST MAINTAIN 25 MIN. FROM EDGE OF FLANGE)

STATE OF VERMONT AGENCY OF TRANSPORTATION	
Town Of BENNINGTON	Bridge No. BII
Highway No. TH 5	Log Sta. / Surv. Sta.
EAST ROAD OVER VT ROUTE 279	
MISCELLANEOUS DETAILS	
Designed By S. BURBANK	Drawn By J. SOTER
Checked By S. BURBANK Date 03/06	Bridge Design Supervisor G. BOGUE Date 03/07
PROJECT BENNINGTON	PROJECT NO. AC NH 019-1(53)
Dgn.: ...\Design\ER\ER-MiscD.dgn	Plot Date: 5/25/2011
Bridge Sheet No. BR622	Sheet 269 of 577

Stantec

V:\9531\active\95310002\transportation\structural\Design\ER\ER-MiscD.dgn

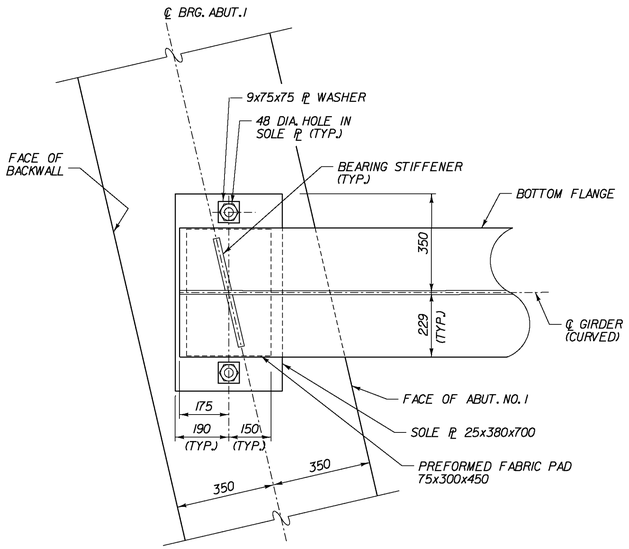

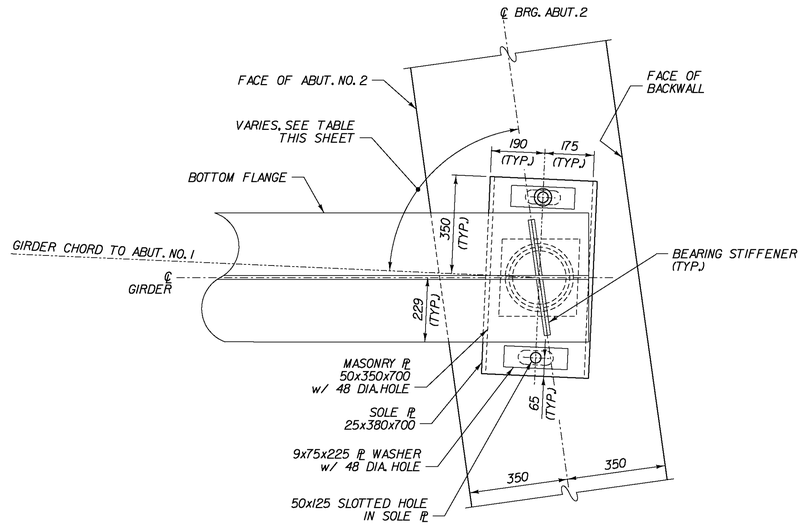

PLAN

0 0.5 1

SCALE = 1:10

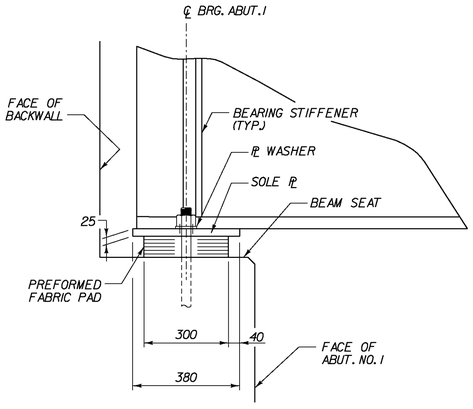

SIDE ELEVATION

0 0.5 1

SCALE = 1:10

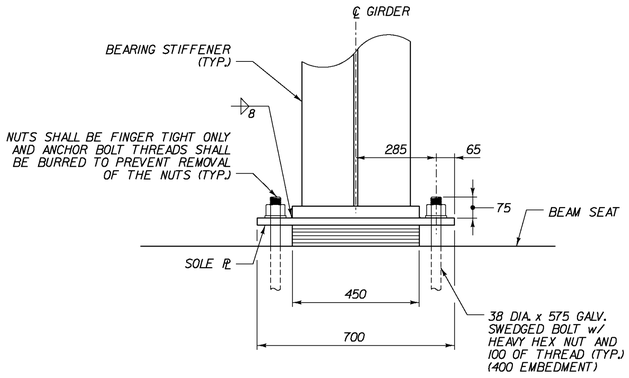

FRONT ELEVATION

0 0.5 1

SCALE = 1:10

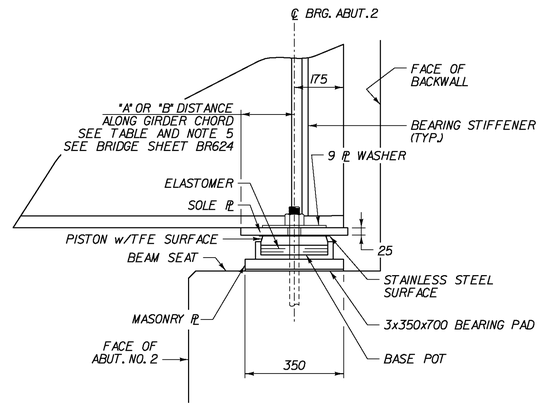

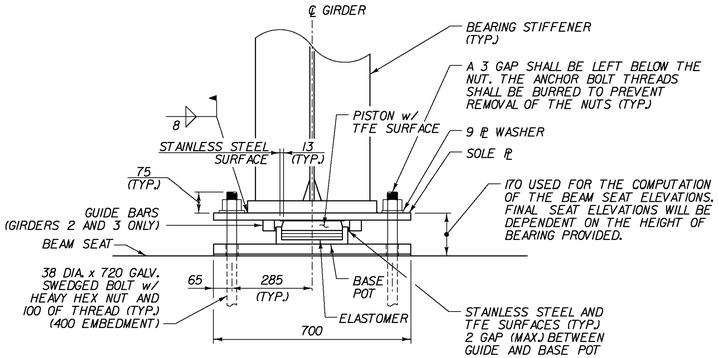

ABUTMENT 2 TEMPERATURE SETTING TABLE

TEMP.	"A" DIST.	"B" DIST.
-20°C	215	224
-10°C	207	216
-0°C	198	207
10°C	190	199
20°C	182	191
30°C	173	182
40°C	165	174

REFER TO NOTE 5 ON BRIDGE SHEET BR624

GIRDER CHORD ANGLE TABLE

LOCATION	ANGLE BETWEEN GIRDER CHORD AND ℄ BRG. FOR ABUT. NO. 2
GIRDER NO. 4	79°26'49"
GIRDER NO. 3	79°28'57"
GIRDER NO. 2	79°31'07"
GIRDER NO. 1	79°33'15"

STATE OF VERMONT
AGENCY OF TRANSPORTATION

Town Of BENNINGTON	Bridge No. BII
Highway No. TH 5	Log Sta. / Surv. Sta.
EAST ROAD OVER VT ROUTE 279	
ABUTMENT BEARING DETAILS	
Designed By G. BOGUE	Drawn By J. SOTER
Checked By T. KNIGHT Date 4/06	Bridge Design Supervisor G. BOGUE Date 03/07
PROJECT BENNINGTON	PROJECT NO. AC NH 019-1(53)
Dgn.: ...\Design\ER\ER-Brgsl.dgn	Plot Date: 5/25/2011
Bridge Sheet No. BR623	Sheet 270 of 577

Stantec

V:\1953\active\195300021\transportation\structural\Design\ER\ER-Brgsl.dgn

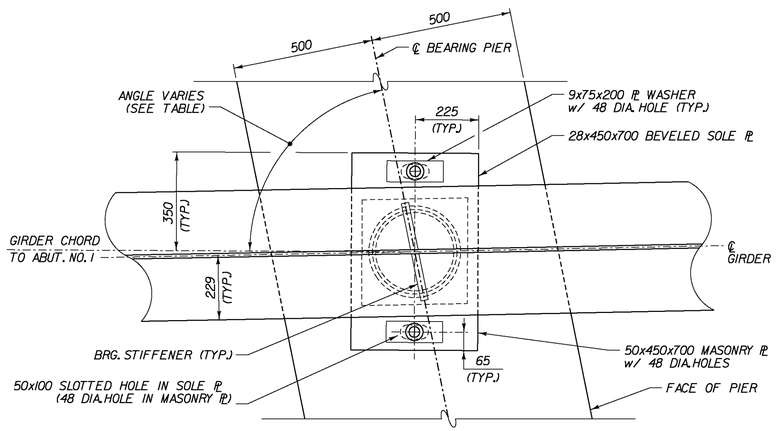

PLAN

0 0.5 1

SCALE = 1:10

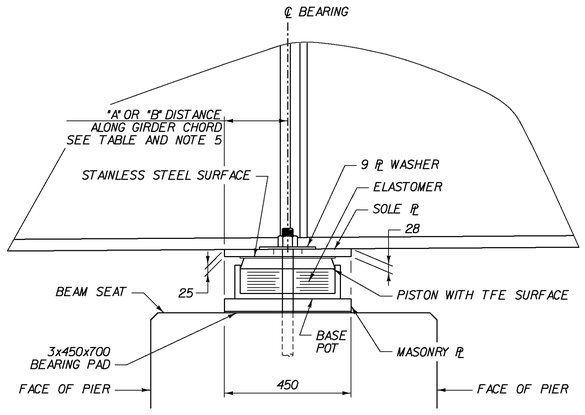

SIDE ELEVATION

0 0.5 1

SCALE = 1:10

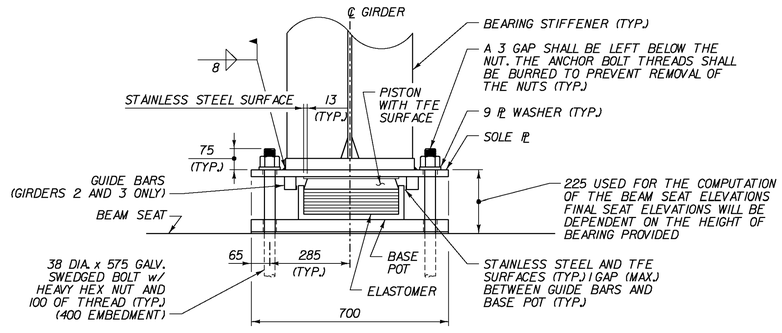

FRONT VIEW

0 0.5 1

SCALE = 1:10

BEARING NOTES:

1. BEARINGS SHALL CONFORM TO APPLICABLE SUBSECTIONS OF THE STANDARD SPECIFICATION SECTIONS 531 AND 731
2. BEARINGS SHALL BE PAID FOR UNDER ITEM 531.10 FOR PREFORMED FABRIC PADS AND ITEM 531.12 FOR POT BEARINGS.
3. SHOP DRAWINGS CONFORMING TO STANDARD SPECIFICATION SUBSECTION 531.03 SHALL BE SUBMITTED TO INCLUDE WELDING AND BONDING PROCEDURES.
4. THE CONCRETE SURFACE UNDER THE BEARING DEVICE SHALL BE LEVEL.
5. THE "B" DISTANCE IS LISTED FOR SETTING THE BEARING AFTER THE STRUCTURAL STEEL IS ERECTED AND BEFORE THE CONCRETE DECK IS POURED. THE "A" DISTANCE IS THE FINAL SETTING FOR THE BEARING PAD AFTER THE CONCRETE SLAB, CURB, SIDEWALK, PAVEMENT, AND BRIDGE RAIL ARE PLACED. THE DIFFERENCE IS THE THEORETICAL ELONGATION OF THE BOTTOM FLANGE DUE TO DEAD LOAD DEFLECTION. THE FINAL "B" DISTANCE, AS SHOWN IN THE TABLE, MUST BE ATTAINED WITHIN 3.
6. DESIGN CRITERIA:
   A. BASE PLATE TO CONCRETE DESIGN PRESSURE = 6895 kPa MAXIMUM.
   B. SEE TABLES BELOW FOR DESIGN LOADS.
7. ALL STEEL IN BEARING DEVICES (EXCEPT STAINLESS STEEL) SHALL BE AASHTO M 270M/M270, ASTM A 709/A 709M GRADE 345.
8. ANCHOR BOLTS SHALL HAVE A MINIMUM OF 400 EMBEDMENT INTO THE CONCRETE AND SHALL CONFORM TO STANDARD SPECIFICATION SUBSECTION 714.08. ANCHOR BOLTS SHALL CONFORM TO THE REQUIREMENTS OF ASTM F 568M CLASS 4.6.
9. ALL THE ANCHOR BOLTS, NUTS AND WASHERS SHALL BE GALVANIZED. ALL WASHERS SHALL BE 9 PLATE (MINIMUM). PAYMENT FOR ANCHOR BOLTS, NUTS AND WASHERS SHALL BE INCLUDED IN THE UNIT BID PRICE FOR THE APPROPRIATE 531 ITEM.
10. BEARING DEVICES SHALL BE GALVANIZED OR METALLIZED AS PER STANDARD SPECIFICATION SUBSECTIONS 531.04(b). AREAS OF DAMAGED GALVANIZING SHALL BE REPAIRED IN ACCORDANCE WITH SECTION 513. AREAS OF DAMAGED METALLIZING SHALL BE COATED WITH THE SAME SEALANT USED BY THE BEARING SUPPLIER. THE INSIDES OF THE POTS SHALL NOT BE GALVANIZED.

ABUTMENT NO. 1 BEARING DESIGN LOAD TABLE

LOCATION	DESCRIPTION	*VERTICAL LOAD CAPACITY kN	TRANSVERSE LOAD CAPACITY kN	LONGITUDINAL LOAD CAPACITY kN	**MOVEMENT CAPACITY (METERS)	ROTATION CAPACITY (RADIANS)
GIRDER NO. 4	FIXED BEARING	796	80	97	N/A	0.020
GIRDER NO. 3	FIXED BEARING	796	80	97	N/A	0.020
GIRDER NO. 2	FIXED BEARING	796	80	97	N/A	0.020
GIRDER NO. 1	FIXED BEARING	796	80	97	N/A	0.020

PIER BEARING DESIGN LOAD TABLE

LOCATION	DESCRIPTION	*VERTICAL LOAD CAPACITY kN	TRANSVERSE LOAD CAPACITY kN	LONGITUDINAL LOAD CAPACITY kN	**MOVEMENT CAPACITY (METERS)	ROTATION CAPACITY (RADIANS)
GIRDER NO. 4	NON-GUIDED EXP. BEARING	1850	N/A	N/A	0.038	0.016
GIRDER NO. 3	GUIDED EXP. BEARING (LONG.)	1850	370	N/A	0.038	0.016
GIRDER NO. 2	GUIDED EXP. BEARING (LONG.)	1850	370	N/A	0.038	0.016
GIRDER NO. 1	NON-GUIDED EXP. BEARING	1850	N/A	N/A	0.038	0.016

ABUTMENT NO. 2 BEARING DESIGN LOAD TABLE

LOCATION	DESCRIPTION	*VERTICAL LOAD CAPACITY kN	TRANSVERSE LOAD CAPACITY kN	LONGITUDINAL LOAD CAPACITY kN	**MOVEMENT CAPACITY (METERS)	ROTATION CAPACITY (RADIANS)
GIRDER NO. 4	NON-GUIDED EXP. BEARING	685	N/A	N/A	0.070	0.015
GIRDER NO. 3	GUIDED EXP. BEARING (LONG.)	685	137	N/A	0.070	0.015
GIRDER NO. 2	GUIDED EXP. BEARING (LONG.)	685	137	N/A	0.070	0.015
GIRDER NO. 1	NON-GUIDED EXP. BEARING	685	N/A	N/A	0.070	0.015

* DESIGN LOAD SHOWN IS THE MAXIMUM ACTUAL LOAD FOR ALL GIRDERS
** MOVEMENT IS IN THE DIRECTION OF GIRDER CHORD TO THE FIXED ABUTMENT

GIRDER CHORD ANGLE TABLE

LOCATION	ANGLE BETWEEN GIRDER CHORD AND ℄ BRG. PIER
GIRDER NO. 4	78°15'44"
GIRDER NO. 3	78°18'09"
GIRDER NO. 2	78°20'33"
GIRDER NO. 1	78°22'56"

PIER TEMPERATURE SETTING TABLE

TEMP.	"A" DIST.	"B" DIST.
-20°C	239	244
-10°C	234	239
0°C	230	235
10°C	225	230
20°C	220	225
30°C	216	221
40°C	211	216

SEE NOTE 5 THIS SHEET

VAOT Metric

STATE OF VERMONT
AGENCY OF TRANSPORTATION

Town Of BENNINGTON	Bridge No. BII
Highway No. TH 5	Log Sta. / Surv. Sta.
EAST ROAD OVER VT ROUTE 279	
PIER BEARING DETAILS	
Designed By G. BOGUE	Drawn By J. SOTER
Checked By T. KNIGHT Date 04/06	Bridge Design Supervisor G. BOGUE Date 03/07
PROJECT BENNINGTON	PROJECT NO. AC NH 019-1(53)
Dgn.: ...\Design\ER\ER-Brgs2.dgn	Plot Date: 5/25/2011
Bridge Sheet No. BR624	Sheet 271 of 577

Stantec

V:\1853\active\185300021\transportation\structural\Design\ER\ER-Brgs2.dgn

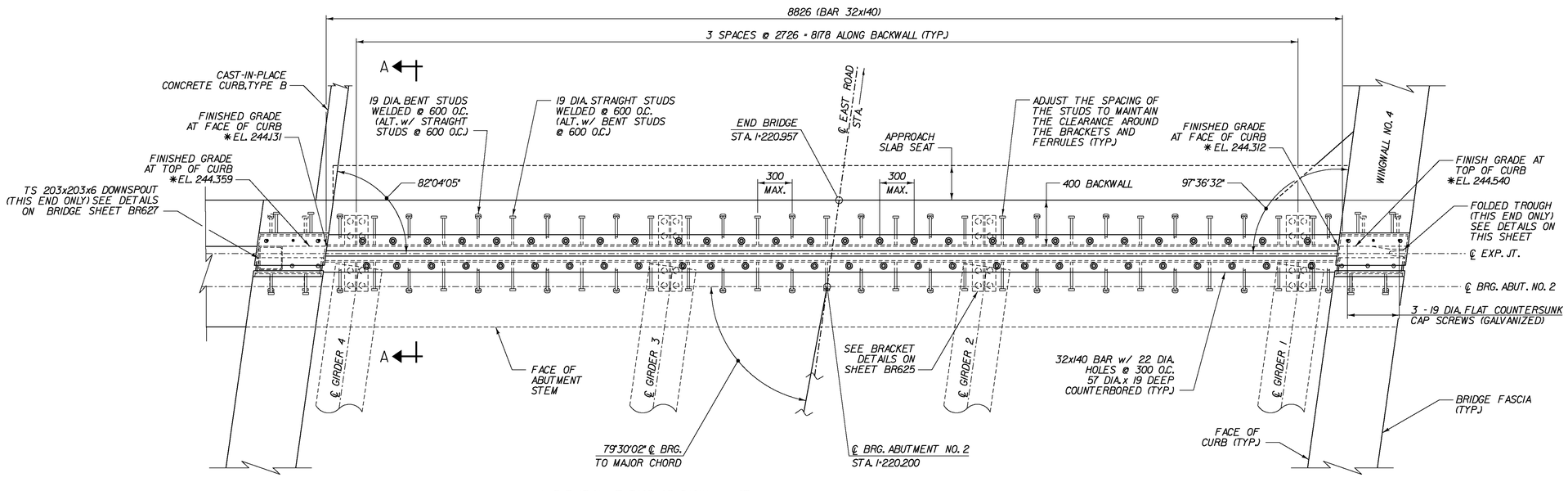

* ELEVATION AT FACE OF BACKWALL NOT TOP OF CURB PLATE OR 32x140 BAR

PLAN VIEW
SCALE 1:20

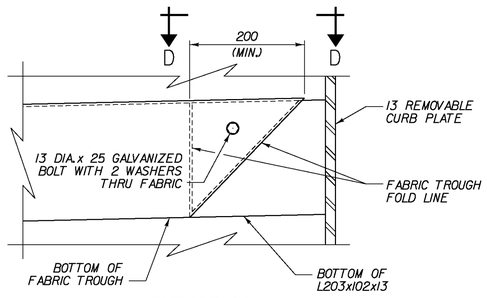

ELEVATION FOLDED TROUGH END DETAILS
NOT TO SCALE

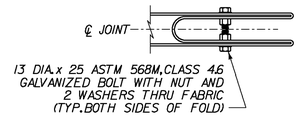

VIEW D–D
NOT TO SCALE

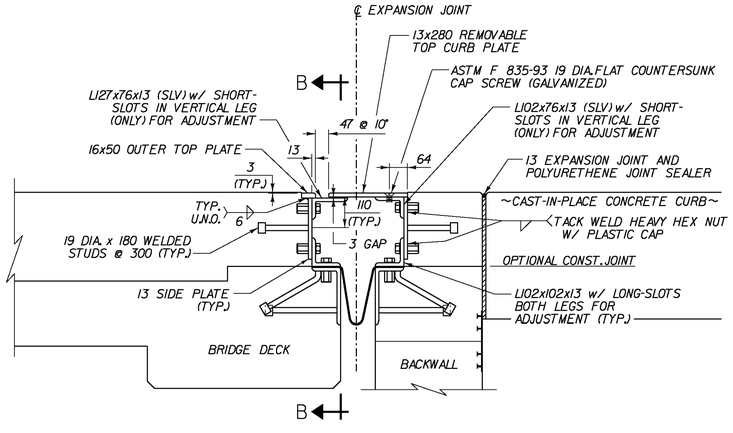

SECTION A–A
SCALE 1:10

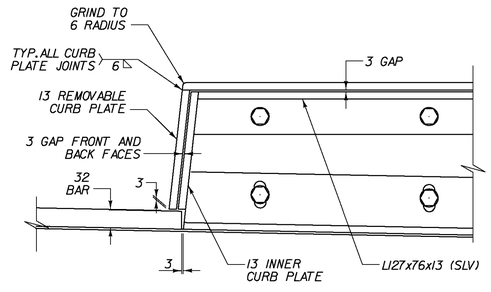

DETAIL C
SCALE 1:5

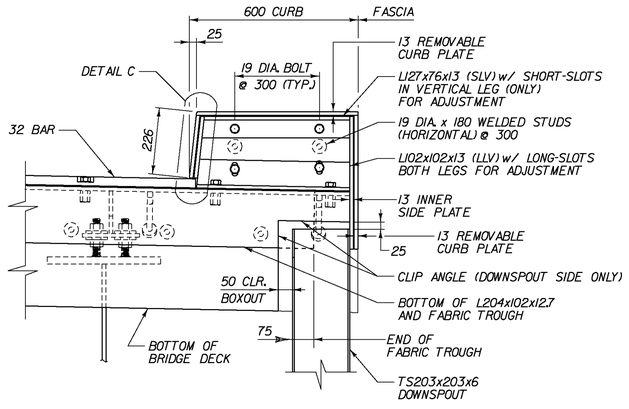

SECTION B–B
SCALE 1:10

STATE OF VERMONT
AGENCY OF TRANSPORTATION

Town Of BENNINGTON	Bridge No. BII
Highway No. TH 5	Log Sta. / Surv. Sta.
EAST ROAD OVER VT ROUTE 279	
EXPANSION JOINT PLAN	
Designed By S. BURBANK	Drawn By J. SOTER
Checked By S. BURBANK Date 04/06	Bridge Design Supervisor G. BOGUE Date 03/07
PROJECT BENNINGTON	PROJECT NO. AC NH 019-1(53)
Dgn.: ...\Design\ER\ER-ExpJtl.dgn	Plot Date: 5/25/2011
Bridge Sheet No. BR625	Sheet 272 of 577

Stantec

V:\1953\active\195300002\transportation\structural\Design\ER\ER-ExpJtl.dgn

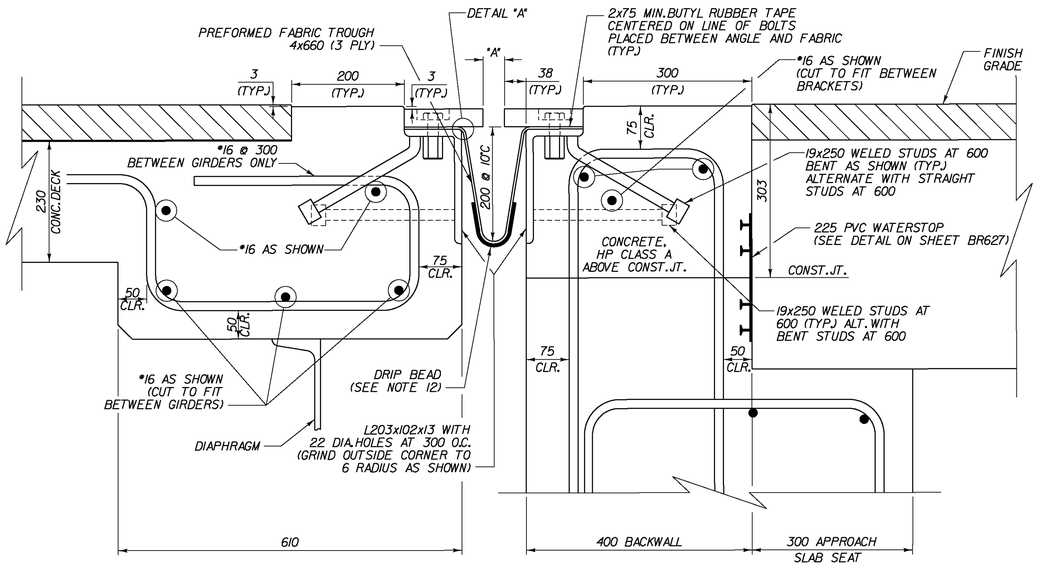

TYPICAL SECTION BETWEEN GIRDERS

(NORMAL TO ℄ BEARING)

1. DETAILS ON THIS SHEET AND THE EXPANSION JOINT PLAN SHEET ARE FOR ITEM 516J1 "BRIDGE EXPANSION JOINT, VERMONT".
2. PREFORMED FABRIC MATERIAL SHALL BE CONTINUOUS AND SHALL CONFORM TO SUBSECTION 707.07 OF STANDARD SPECIFICATIONS.
3. BUTYL RUBBER TAPE SHALL CONFORM TO AASHTO SPECIFICATION M-198, TYPE II.
4. THE FINAL FINISH OF THE EXPANSION DEVICE SHALL BE COVERED DURING THE PLACING OF BRIDGE DECK CONCRETE.
5. ALL STEEL COMPONENTS SHALL BE AASHTO M 270M GRADE 250 GALVANIZED OR METALIZED AS PER SUBSECTION 506J5(a) OR (b) OF THE STANDARD SPECIFICATIONS UNLESS OTHERWISE SPECIFIED. THREADED RODS SHALL CONFORM TO ASTM F 568M CLASS 4.6. THE NUTS FOR THE THREADED RODS SHALL BE AASHTO M 291M.
6. THE ITEM "BRIDGE EXPANSION JOINT, VERMONT" SHALL INCLUDE THE FABRICATION AND ERECTION OF THE COMPLETE JOINT ASSEMBLY INCLUDING ALL STEEL PLATES, BRACKETS, ANGLES, WELDED STUDS OR RODS, PREFORMED FABRIC DRAIN TROUGH MATERIAL AND PLASTIC DRAIN TUBES, BUTYL RUBBER TAPE AND AND ANY OTHER MISCELLANEOUS MATERIAL NECESSARY TO INSTALL JOINT.
7. THE 102x203x13 ANGLES SHALL BE FURNISHED AS ONE CONTINUOUS PIECE. THE 32x140 BARS EACH SIDE OF THE JOINT SHALL BE PROVIDED IN TWO EQUAL LENGTHS.
8. COAT CONCRETE CONTACT SURFACES WITH EPOXY BONDING COMPOUND; ACCEPTABLE EPOXY BONDING COMPOUNDS SHALL BE THOSE INCLUDED ON THE APPROVED PRODUCTS LIST ON FILE WITH THE AGENCY'S MATERIALS AND RESEARCH SECTION. PAYMENT SHALL BE INCLUDED IN THE UNIT PRICE BID FOR ITEM 516J1 "BRIDGE EXPANSION JOINT, VERMONT".
9. A 25 DIAMETER PLASTIC TUBE (CONFORMING TO STANDARD SPECIFICATION 740.01) SHALL BE INSTALLED AS SHOWN AT THE FACE OF THE CURB. THE UPPER END IS TO BE PLUGGED WITH STEEL WOOL AND THE LOWER END IS TO EXTEND BELOW THE BOTTOM OF THE ADJACENT BEAM. THE DRAIN TUBES SHALL BE FASTENED TO THE BEAMS USING A METHOD APPROVED BY THE ENGINEER.
10. FILL COUNTERBORED HOLES WITH HOT POURED JOINT SEALER AFTER BOLT INSTALLATION. PAYMENT FOR THE WORK SHALL BE INCIDENTAL TO ITEM 516J1.
11. PAYMENT FOR PVC WATERSTOP SHALL BE INCIDENTAL TO THE CONCRETE PAY ITEM.
12. A DRIP BEAD OF 6x178 STRIP OF PREFORMED MATERIAL SHALL BE CEMENTED TO THE BOTTOM OF THE FABRIC TROUGH USING AN ADHESIVE APPROVED BY THE MANUFACTURER. THE DRIP BEAD SHALL BE APPLIED 25 FROM THE DOWNSPOUT END OF THE TROUGH.
13. ALL FABRIC TROUGHS AND DOWNSPOUTS SHALL BE THOROUGHLY FLUSHED BY THE CONTRACTOR AFTER ALL PAVING IS COMPLETED. ALL COSTS ASSOCIATED WITH THIS WORK SHALL BE INCIDENTAL TO ITEM 490.30, "SUPERPAVE BITUMINOUS CONCRETE PAVEMENT". FOLLOWING PAVING, ANY BITUMINOUS CONCRETE PAVMENT THAT IS LODGED IN THE EXPANSION JOINTS, OR THAT ENTERS DRAIN TROUGHS, SCUPPERS, HOPPERS OR DOWNSPOUTS, SHALL BE REMOVED BY THE CONTRACTOR AT NO COST TO THE STATE.
14. THE EXPANSION JOINT SHALL BE SHOP ASSEMBLED AND SHIPPED AS ONE UNIT.

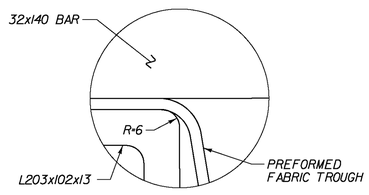

DETAIL "A"

NOT TO SCALE

TEMP	"A" DIST.
-20° C	72
-10° C	63
0° C	55
10° C	47
20° C	38
30° C	30
40° C	21

"A" IS THE SETTING BEFORE DEAD LOADS ARE IN PLACE.

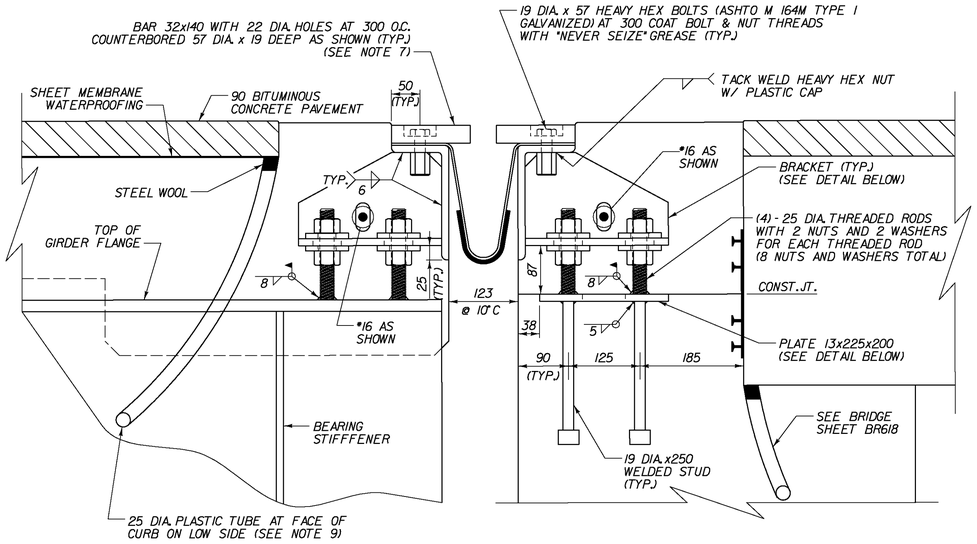

TYPICAL SECTION AT GIRDERS

(NORMAL TO ℄ BEARING)
SCALE 1:5

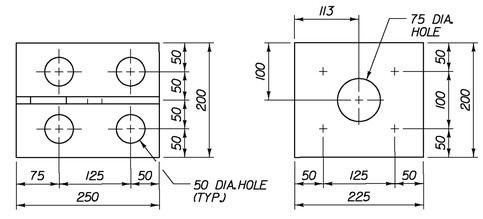

PLAN

PLATE PLAN

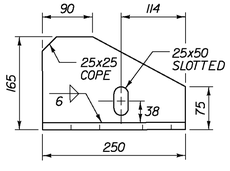

ELEVATION

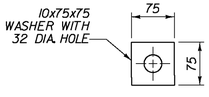

WASHER FOR BRACKET

NOTE: ALL PLATES SHALL BE 13 THICK U.N.O.

BRACKET DETAILS

SCALE 1:5

DAYTON/RICHMOND TYPE LF. 19 DIA. CLOSED FERRULE OR EQUIVALENT



NOTE: CLOSED THREADED FERRULE NUTS WITHOUT ANCHOR LOOPS MAY BE USED.

ANCHOR FERRULE DETAIL

NOT TO SCALE

STATE OF VERMONT
AGENCY OF TRANSPORTATION

Town Of BENNINGTON	Bridge No. BII
Highway No. TH 5	Log Sta. / Surv. Sta.
EAST ROAD OVER VT ROUTE 279	
EXPANSION JOINT DETAILS	
Designed By T. KNIGHT	Drawn By J. SOTER
Checked By S. BURBANK Date 01/06	Bridge Design Supervisor G. BOGUE Date 03/07
PROJECT BENNINGTON	PROJECT NO. AC NH 019-1(53)
Dgn.: ...\Design\ER\ER-ExpJt2.dgn	Plot Date: 5/25/2011
Bridge Sheet No. BR626	Sheet 273 of 577

Stantec

V:\1953\active\195300021\transportation\structural\Design\ER\ER-ExpJt2.dgn

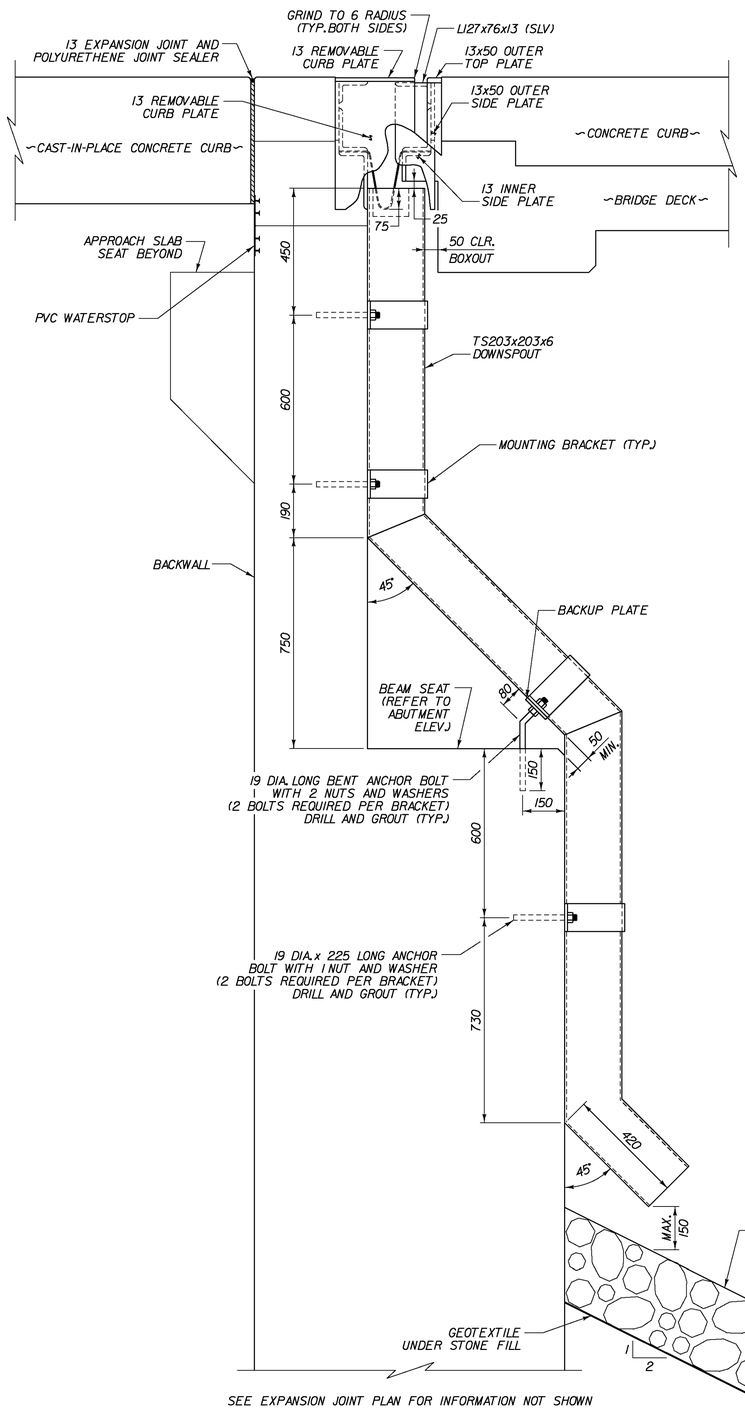

SEE EXPANSION JOINT PLAN FOR INFORMATION NOT SHOWN

DOWNSPOUT ELEVATION

SCALE 1:10

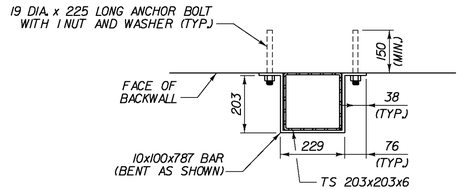

MOUNTING BRACKET DETAIL

SCALE 1:10

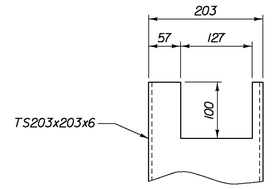

DOWNSPOUT CUTOUT FOR TROUGH

SCALE 1:5

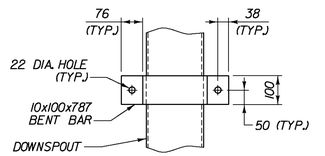

MOUNTING BRACKET ELEVATION

SCALE 1:10

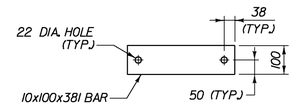

BACKUP PLATE DETAIL

SCALE 1:10



P. V. C. WATERSTOP FOR CONSTRUCTION JOINTS

NOT TO SCALE

NOTE:

THE COSTS FOR P.V.C. WATERSTOP SHALL BE INCLUDED IN THE UNIT PRICE BID CONCRETE. OTHER CONFIGURATIONS MAY BE USED UPON APPROVAL OF THE STRUCTURES ENGINEER.

DOWNSPOUT NOTES

1. HOLLOW STRUCTURAL STEEL TUBING SHALL CONFORM TO ASTM A500 GRADE B OR A501
2. ALL PLATES, BARS, AND ANGLES SHALL CONFORM TO AASHTO M 270M/M270 GRADE 250 AND SHALL BE GALVANIZED.
3. DOWNSPOUTS SHALL BE GALVANIZED IN ACCORDANCE WITH SECTION 506J6 PART (a) AFTER FABRICATION.
4. ALL BOLTS AND RELATED HARDWARE SHALL CONFORM TO SECTION 714.04 AND SHALL BE GALVANIZED IN ACCORDANCE WITH SECTION 506J5, PART (a).
5. WHERE THE GALVANIZING HAS BEEN REMOVED FROM THE DOWNSPOUT OR RELATED HARDWARE EITHER BY CUTTING, BURNING, WELDING, PLACING OR ANY OTHER MEANS, IT SHALL BE REPAIRED IN ACCORDANCE WITH SUPPLEMENTAL SPECIFICATION 513.
6. ALL MATERIALS AND INSTALLATION COSTS FOR THE DOWNSPOUTS, INCLUDING STEEL TUBING, MOUNTING BRACKETS, BACKUP PLATE, ANCHOR BOLTS, NUTS, WASHERS AND DRILLING AND GROUTING BOLTS SHALL BE PAID FOR UNDER ITEM 506.60, STRUCTURAL STEEL.

VAOT Metric

STATE OF VERMONT
AGENCY OF TRANSPORTATION

Town Of BENNINGTON	Bridge No. BII
Highway No. TH 5	Log Sta. / Surv. Sta.

EAST ROAD OVER VT ROUTE 279

DOWNSPOUT DETAILS

Designed By S. BURBANK	Drawn By S. BURBANK
Checked By G. BOGUE Date 04/06	Bridge Design Supervisor G. BOGUE Date 03/07
PROJECT BENNINGTON	PROJECT NO. AC NH 019-1(53)
Dgn.: ...\structural\Design\ER\ER-DS.dgn	Plot Date: 5/25/2011
Bridge Sheet No. BR627	Sheet 274 of 577

Stantec

V:\1853\active\185300021\transportation\structural\Design\ER\ER-DS.dgn

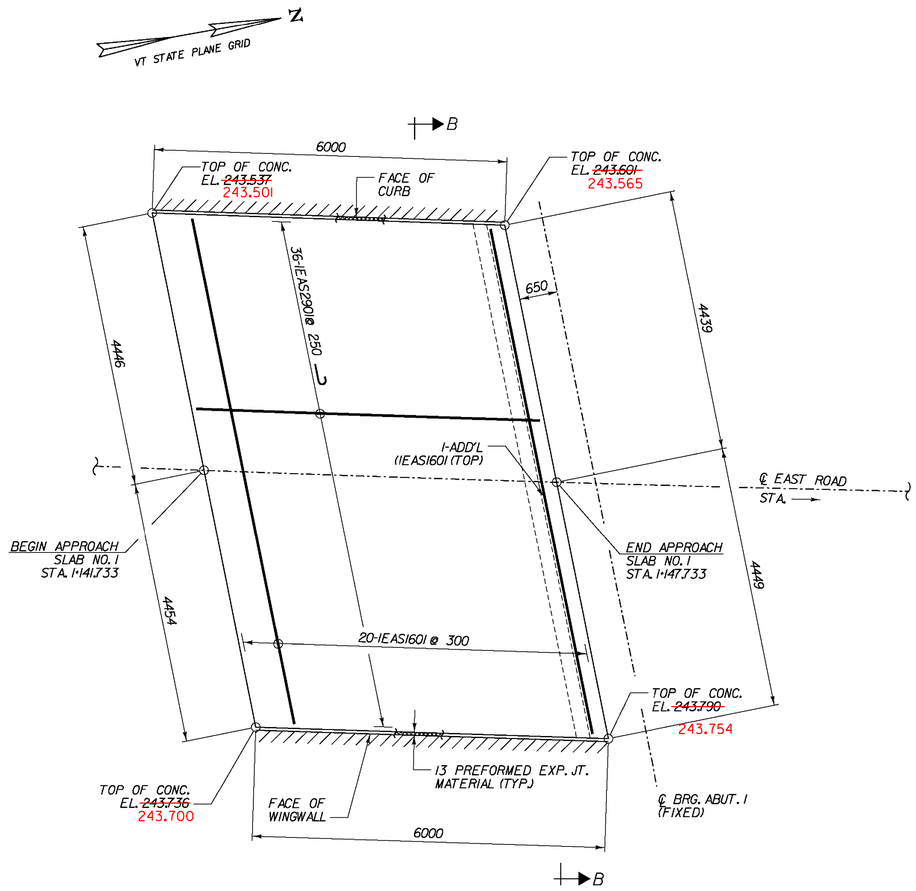

APPROACH SLAB 1

SCALE 1:50

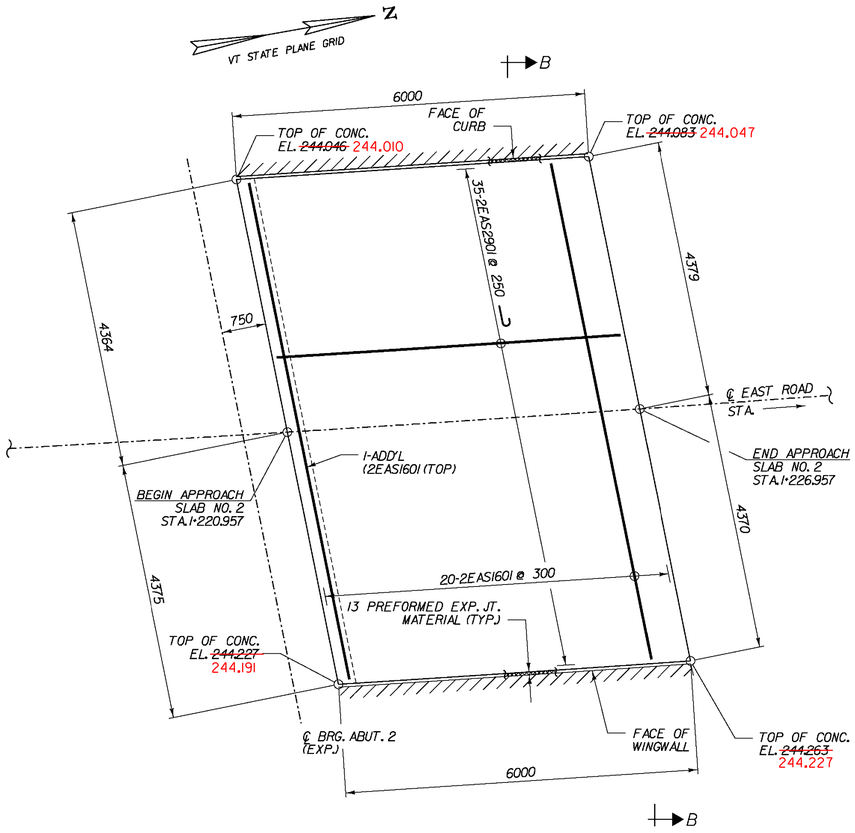

APPROACH SLAB 2

SCALE 1:50

NOTE:

NF = NEAR FACE
FF = FAR FACE
EF = EACH FACE
▲ = CUT TO FIT IN FIELD
75 CLR. UNLESS OTHERWISE SPECIFIED ON THE PLANS.

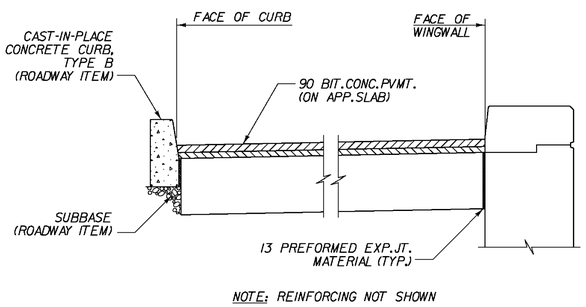

NOTE: REINFORCING NOT SHOWN

SECTION B–B

SCALE 1:20

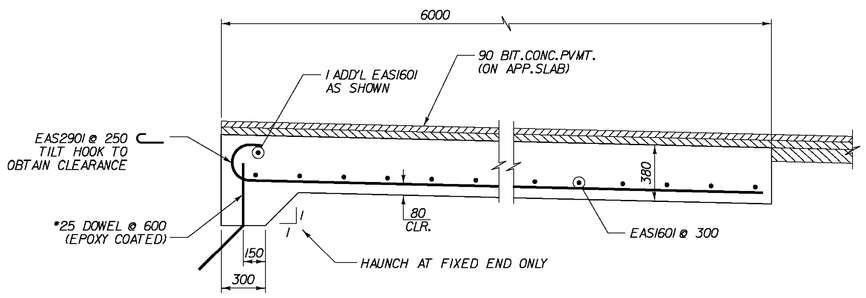

TYPICAL APPROACH SLAB SECTION

SCALE 1:20

STATE OF VERMONT
AGENCY OF TRANSPORTATION

Town Of BENNINGTON	Bridge No. BII
Highway No. TH 5	Log Sta. / Surv. Sta.
EAST ROAD OVER VT ROUTE 279	
APPROACH SLAB DETAILS	
Designed By T. KNIGHT	Drawn By J. SOTER
Checked By S. BURBANK Date 01/06	Bridge Design Supervisor G. BOGUE Date 03/07
PROJECT BENNINGTON	PROJECT NO. AC NH 019-1(53)
Dgn.: ...\Design\ER\ER-ApprSlb.dgn	Plot Date: 5/25/2011
Bridge Sheet No. BR628	Sheet 275 of 577

Stantec

V:\1853\active\185300021\transportation\structural\Design\ER\ER-ApprSlb.dgn

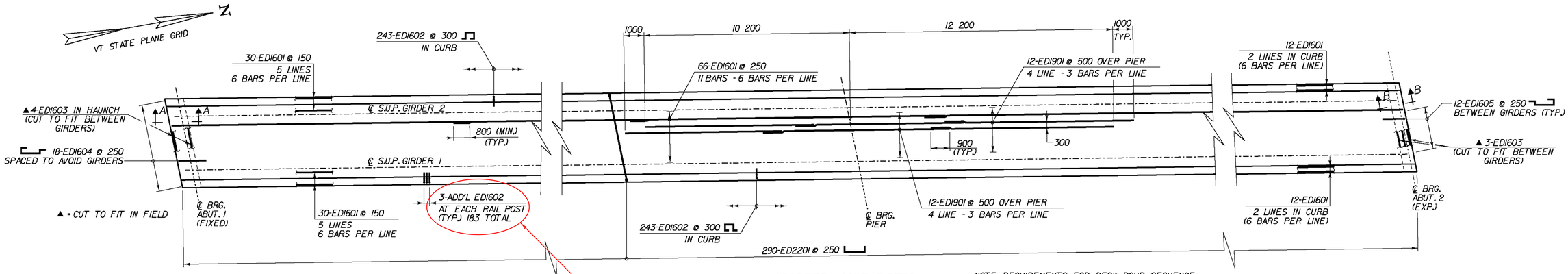

SHARED USE PATH DECK REINFORCING PLAN

0 1 2 4 6 8 10

SCALE = 1:100

NOTE: REQUIREMENTS FOR DECK POUR SEQUENCE ARE SIMILAR TO VEHICULAR BRIDGE, REFER TO BRIDGE SHEET BR618.

SEE ATTACHED SHEET FOR REVISED CURB REBAR DETAIL

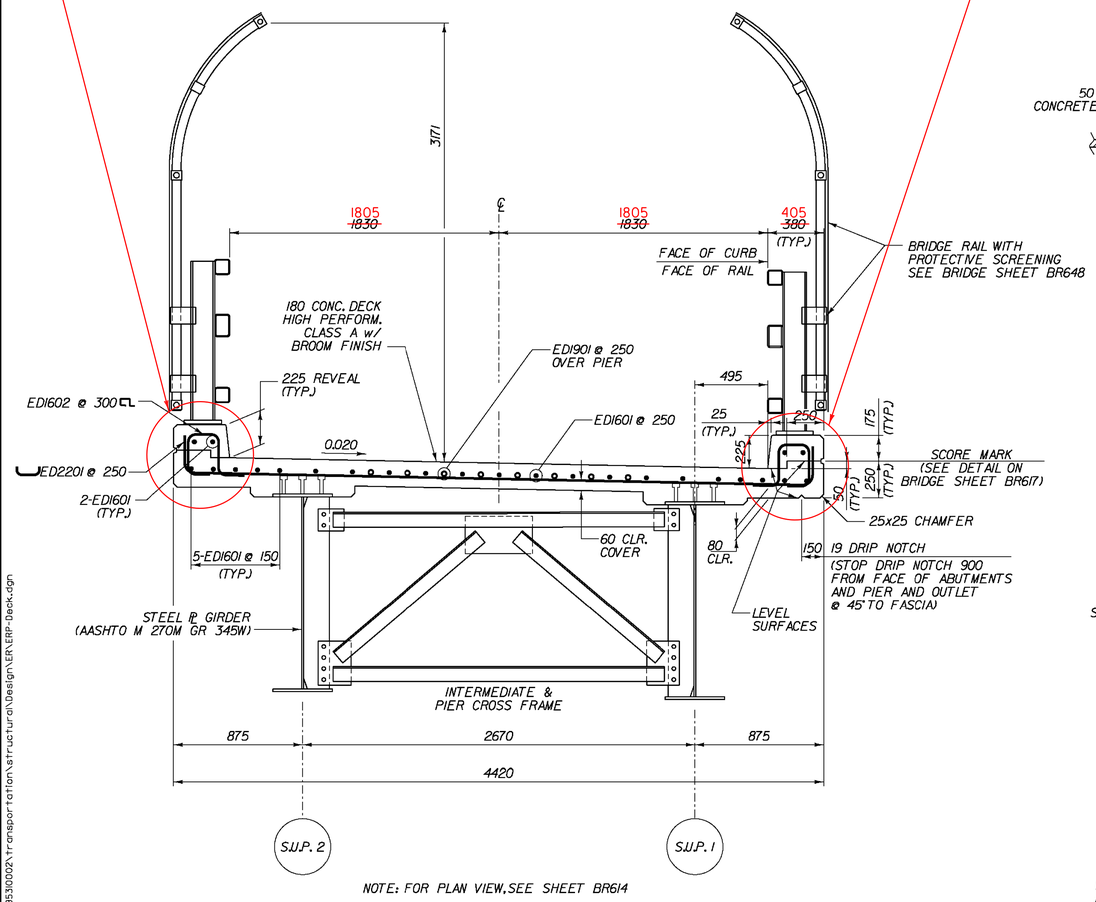

NOTE: FOR PLAN VIEW, SEE SHEET BR614

TYPICAL BRIDGE SECTION - SHARED USE PATH

SCALE 1:20

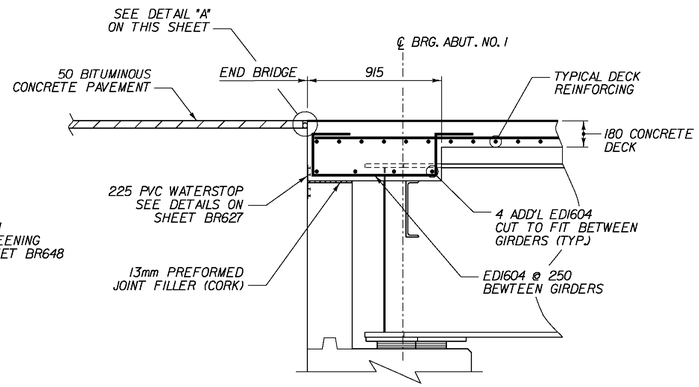

SECTION A-A

SCALE 1:20

NOTE: ABUTMENT REINFORCEMENT NOT SHOWN FOR CLARITY.

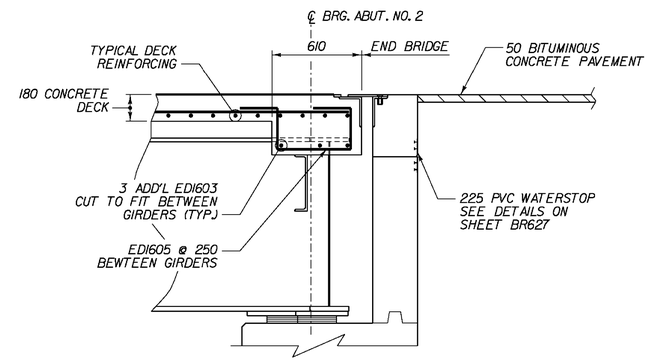

SECTION B-B

SCALE 1:20

NOTE:

ABUTMENT REINFORCEMENT NOT SHOWN FOR CLARITY.

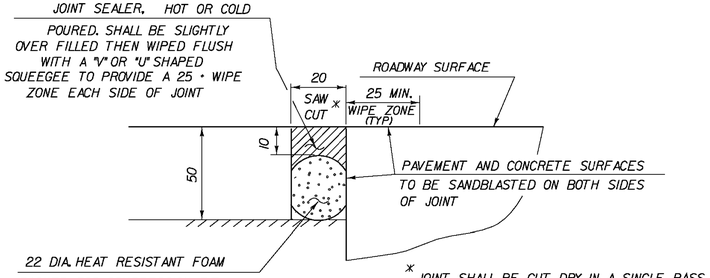

DETAIL "A"

NOT TO SCALE

STATE OF VERMONT
AGENCY OF TRANSPORTATION

Town Of BENNINGTON	Bridge No. BII
Highway No. TH 5	Log Sta. / Surv. Sta.

SHARED USE PATH OVER VT ROUTE 279

TYPICAL SECTION (S.U.P.)

Designed By T. KNIGHT	Drawn By J. SOTER
Checked By G. BOGUE Date 04/06	Bridge Design Supervisor G. BOGUE Date 03/07
PROJECT BENNINGTON	PROJECT NO. AC NH 019-1(53)
Dgn.: ...\Design\ER\ERP-Deck.dgn	Plot Date: 5/25/2011
Bridge Sheet No. BR629	Sheet 276 of 577

Stantec

V:\1953\active\195310002\transportation\structural\Design\ER\ERP-Deck.dgn

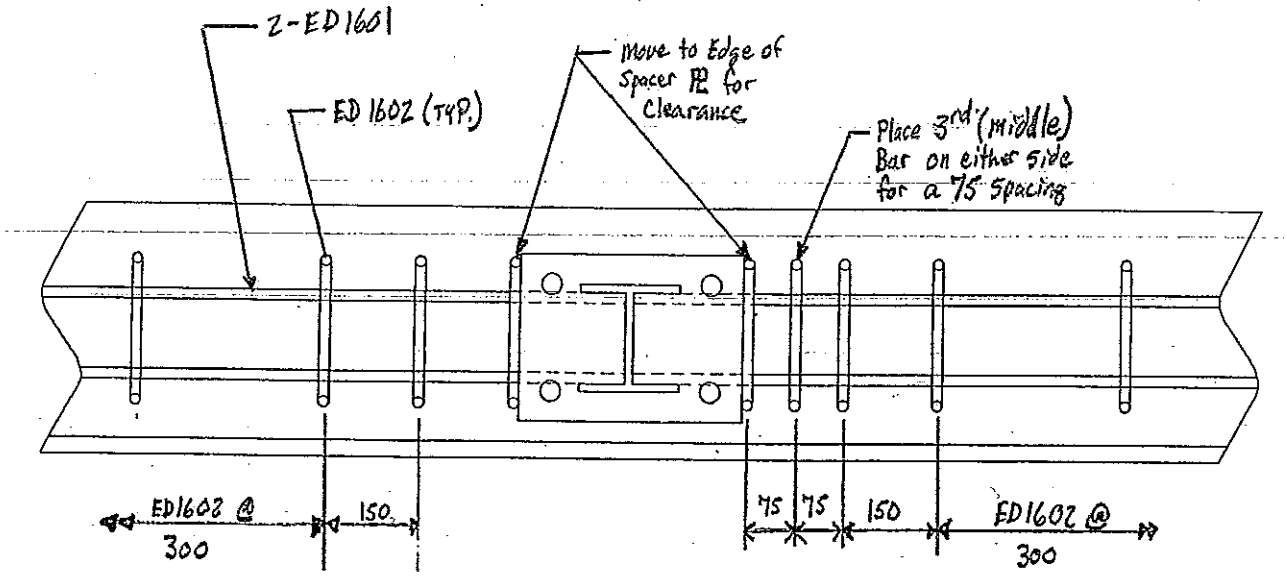

PLAN VIEW

NTS

Revised Curb Rebar Detail @ S.U.P. Bridge

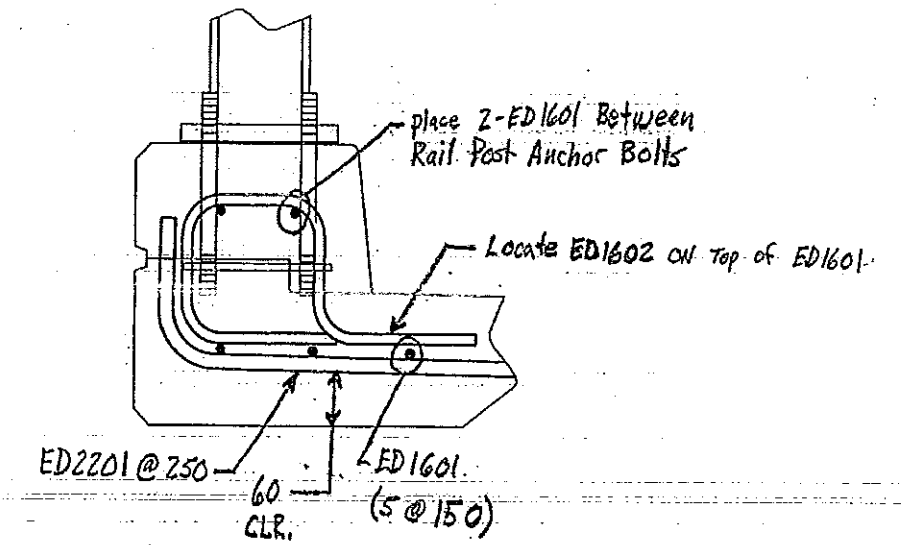

SECTION

NTS

We have located the ED1602 bar on top of the ED1601 bar which is in the deck. This reduces our top clear distance from 76 mm to 66 mm (See the Section). Because this is a pedestrian bridge we feel that this 10 mm difference is acceptable. We have also moved the two ED1601 bars that are in the curb so they are located between the rail post anchor bolts (See the Section). Finally, we have moved the three ED1602 bars that are in conflict with the rail post spacer plate. Two bars have been moved to the edge of the spacer plate and the third bar has been located between the next ED1602 spaced at 150 mm to create three bars with a 75 mm spacing (See the Plan View).

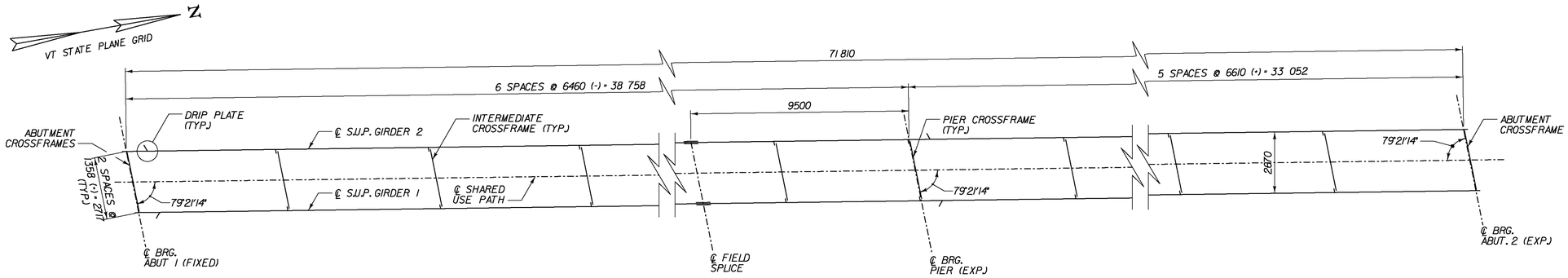

SPAN 1

SPAN 2

FRAMING PLAN

0 1 2 4 6 8 10

SCALE = 1:100

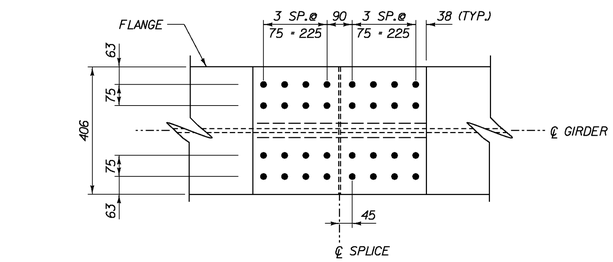

FLANGE PLAN

SCALE 1:10

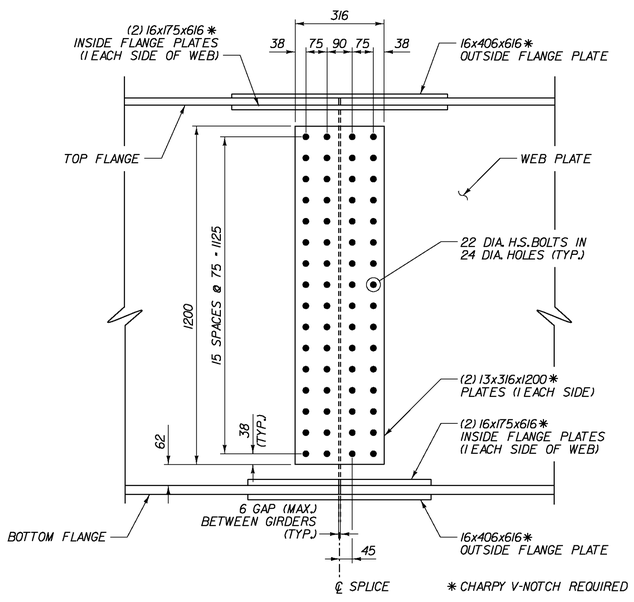

WEB ELEVATION

SCALE 1:10

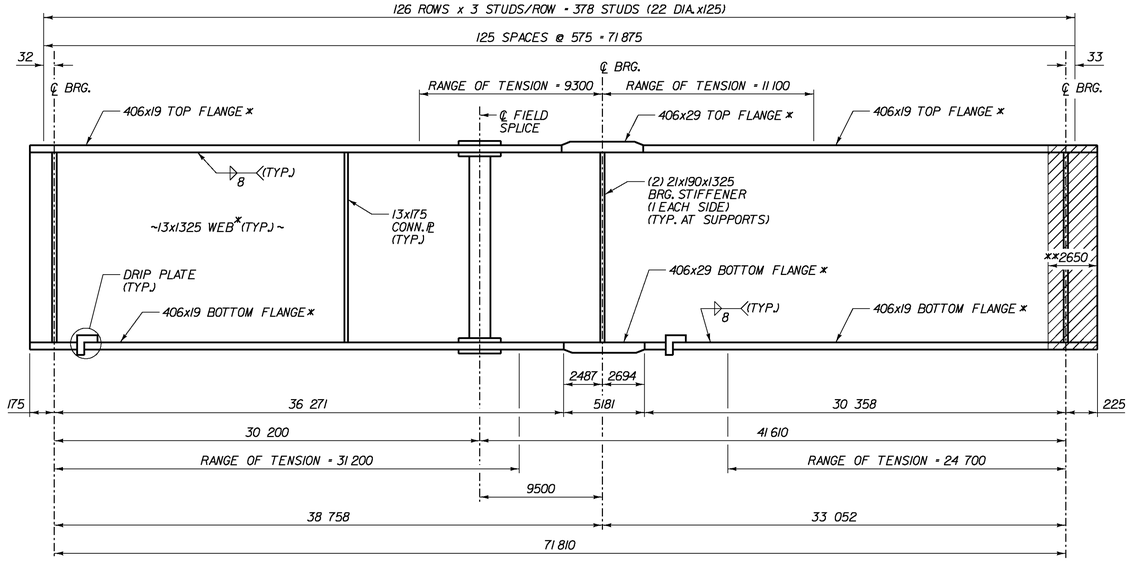

GIRDER ELEVATION

NOT TO SCALE

* CHARPY V-NOTCH REQUIRED

** THE EXPANSION ENDS OF THE GIRDERS SHALL BE PAINTED AND GREASED, IN ACCORDANCE WITH SECTION 513.06 (d) OF THE SUPPLEMENTAL SPECIFICATIONS

NOTES:

1. GIRDER DIMENSIONS ARE ALONG ℄ OF GIRDER.
2. FOR CAMBER AND DEAD LOAD DEFLECTION DIAGRAMS, SEE SHEET BR631.
3. FOR CROSS FRAME DETAILS, SEE SHEET BR631.
4. THE ENDS OF GIRDERS SHALL BE VERTICAL UNDER DEAD LOAD.
5. THE BEARING STIFFENERS SHALL BE VERTICAL IN THE FINAL POSITION.
6. FOR DRIP PLATE DETAILS, SEE SHEET BR622.
7. FOR FLANGE TRANSITION DETAIL, SEE SHEET BR619.

STATE OF VERMONT
AGENCY OF TRANSPORTATION

Town Of BENNINGTON	Bridge No. BII
Highway No. TH 5	Log Sta. / Surv. Sta.

SHARED USE PATH OVER VT ROUTE 279

FRAMING PLAN (S.U.P.)

Designed By T. KNIGHT	Drawn By J. SOTER
Checked By G. BOGUE Date 04/06	Bridge Design Supervisor G. BOGUE Date 03/07
PROJECT BENNINGTON	PROJECT NO. AC NH 019-1(53)
Dgn.: ...\Design\ER\ERP-Fra.dgn	Plot Date: 5/25/2011
Bridge Sheet No. BR630	Sheet 277 of 577

Stantec

V:\1953\active\195300021\transportation\structural\Design\ER\ERP-Fra.dgn

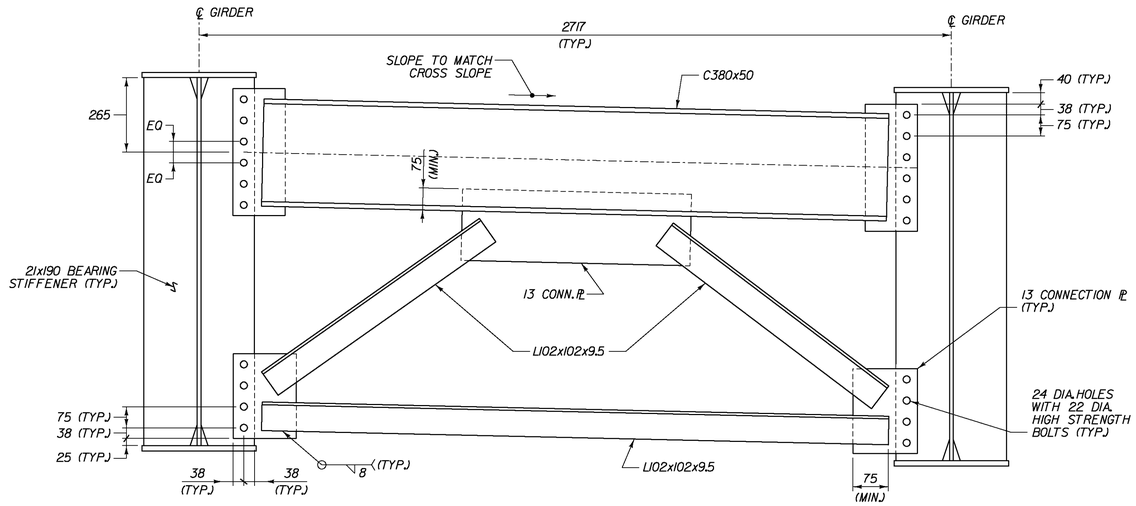

NOTE: SEE WELD LOCATION DETAIL AT CROSS FRAMES ON SHEET BR622.

ABUTMENT CROSSFRAME

SCALE 1:10

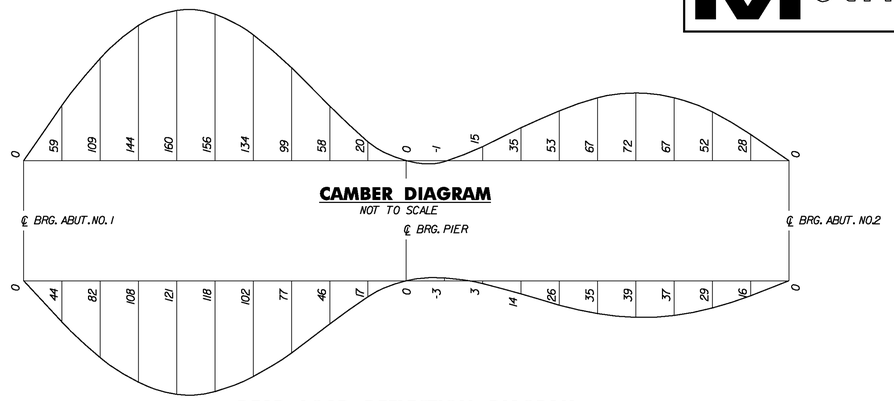

CAMBER DIAGRAM

NOT TO SCALE

DEAD LOAD DEFLECTION DIAGRAM

NOT TO SCALE

NOTES:

1. CAMBER AND DEAD LOAD MEASUREMENTS ARE GIVEN IN MILLIMETERS AT SPAN TENTH POINTS.
2. DEAD LOAD DEFLECTIONS SHOWN ARE FOR ALL DEAD LOADS AND SUPERIMPOSED DEAD LOADS INCLUDING BEAM AND DIAPHRAGM WEIGHTS.

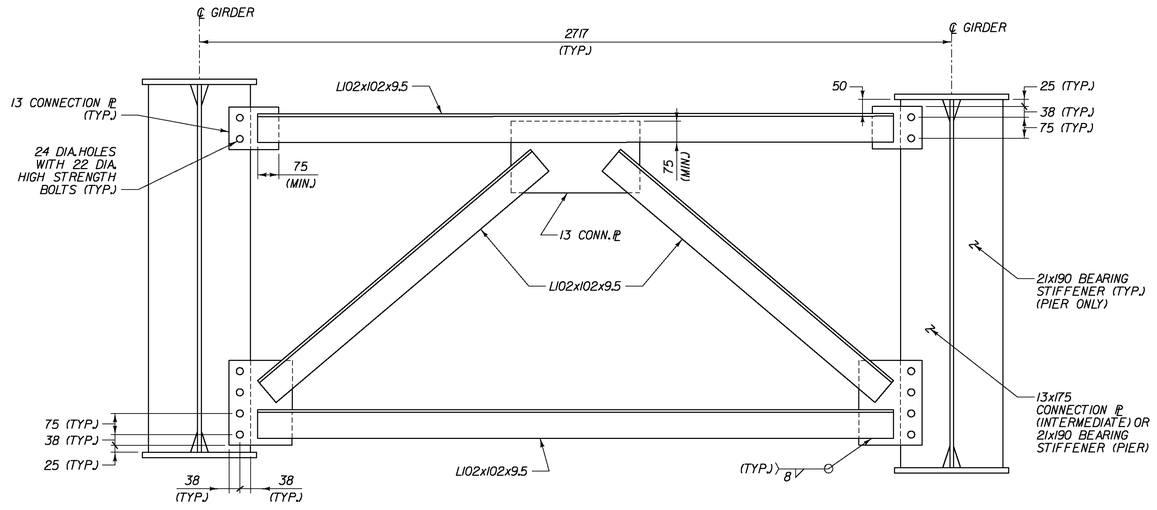

NOTE: SEE WELD LOCATION DETAIL AT CROSS FRAMES ON SHEET BR622.

INTERMEDIATE AND PIER CROSSFRAME

SCALE 1:10

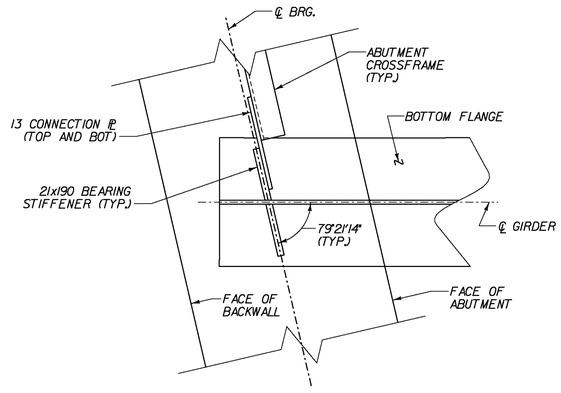

NOTE: PIER AND ABUTMENT 2 SIMILAR

ABUTMENT 1 CROSSFRAME CONNECTION

SCALE: 1:10

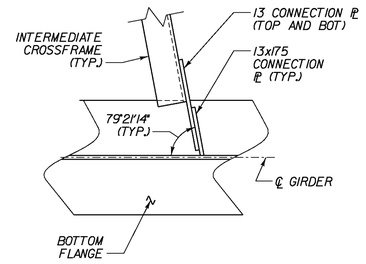

INTERMEDIATE CROSSFRAME CONNECTION

SCALE 1:10

STATE OF VERMONT
AGENCY OF TRANSPORTATION

Town Of BENNINGTON	Bridge No. BII
Highway No. TH 5	Log Sta. / Surv. Sta.

SHARED USE PATH OVER VT ROUTE 279

CROSSFRAME DETAILS (S.U.P.)

Designed By G. BOGUE	Drawn By J. SOTER
Checked By G. BOGUE Date 03/06	Bridge Design Supervisor G. BOGUE Date 03/07
PROJECT BENNINGTON	PROJECT NO. AC NH 019-1(53)
Dgn.: ...\Design\ER\ERP-XFDet.dgn	Plot Date: 5/25/2011
Bridge Sheet No. BR631	Sheet 278 of 577

Stantec

V:\1953\active\195310002\transportation\structural\Design\ER\ERP-XFDet.dgn

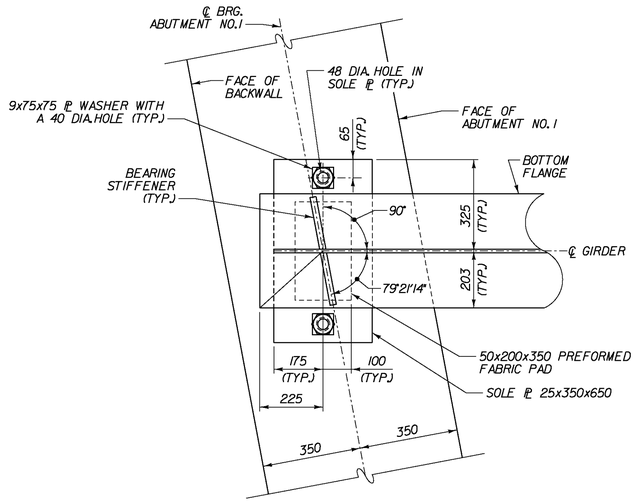

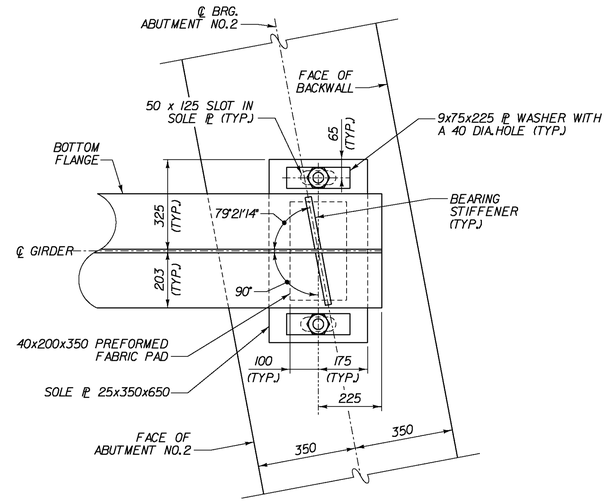

ABUTMENT 2 TEMPERATURE SETTING TABLE

TEMP.	"A" DIST.	"B" DIST.
-20° C	200	209
-10° C	192	201
0° C	183	192
10° C	175	184
20° C	167	176
30° C	159	168
40° C	150	159

SEE NOTE 5 ON SHEET BR633

PLAN

0 0.5 1

SCALE - 1:10

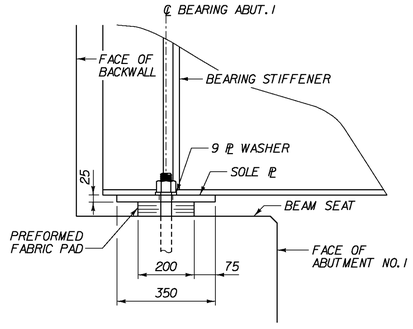

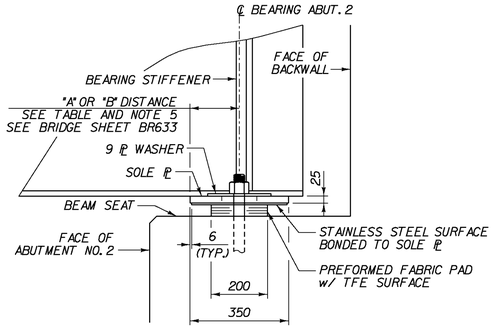

SIDE ELEVATION

0 0.5 1

SCALE - 1:10

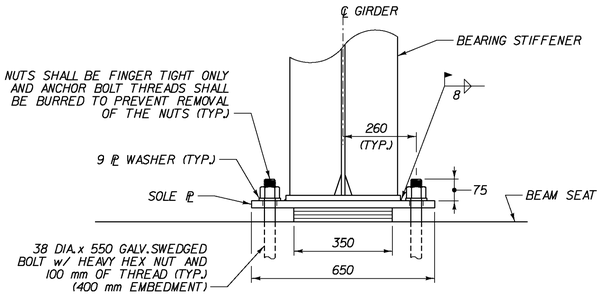

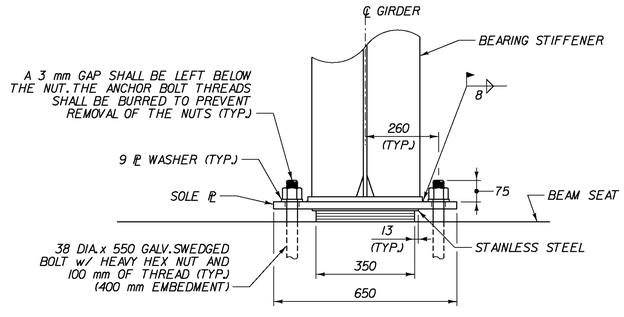

FRONT ELEVATION

0 0.5 1

SCALE - 1:10

SEE SHEET BR633 FOR BEARING NOTES

STATE OF VERMONT
AGENCY OF TRANSPORTATION

Town Of BENNINGTON	Bridge No. BII
Highway No. TH 5	Log Sta. / Surv. Sta.

SHARED USE PATH OVER VT ROUTE 279

BEARING DETAILS (S.U.P.)

Designed By T. KNIGHT	Drawn By S. BURBANK
Checked By T. KNIGHT Date 03/06	Bridge Design Supervisor G. BOGUE Date 03/07
PROJECT BENNINGTON	PROJECT NO. AC NH 019-1(53)
Dgn.: ...\Design\ER\ERP-Brgsl.dgn	Plot Date: 5/25/2011
Bridge Sheet No. BR632	Sheet 279 of 577

Stantec

V:\9531\active\95310002\transportation\structural\design\ER\ERP-Brgsl.dgn

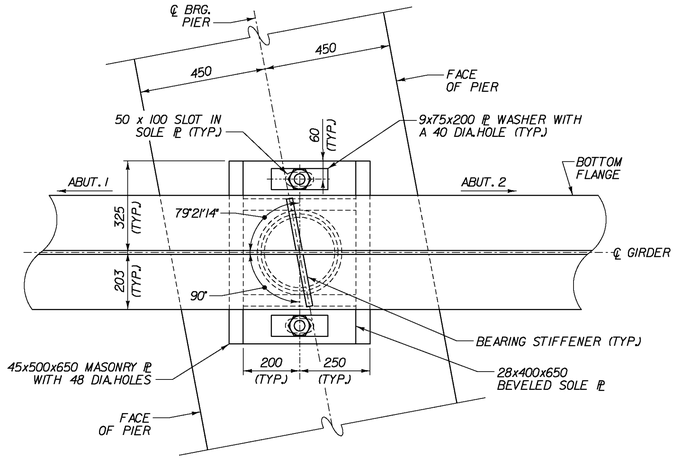

PLAN

0 0.5 1

SCALE = 1:10

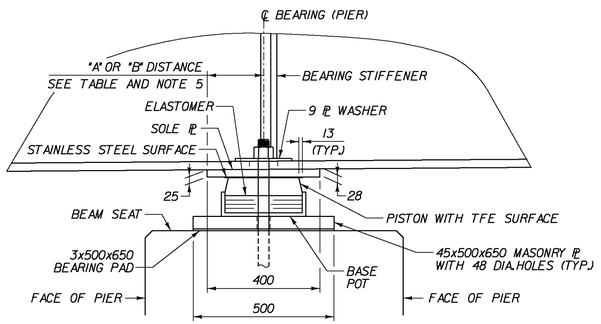

SIDE ELEVATION

0 0.5 1

SCALE = 1:10

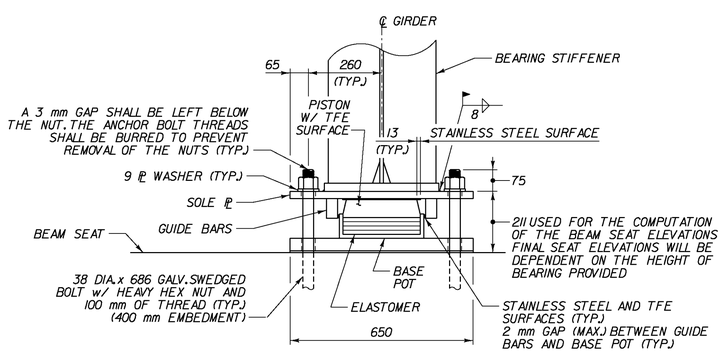

FRONT ELEVATION

0 0.5 1

SCALE = 1:10

BEARING NOTES:

1. BEARINGS SHALL CONFORM TO APPLICABLE SUBSECTIONS OF THE STANDARD SPECIFICATION SECTIONS 531 AND 731.
2. BEARINGS SHALL BE PAID FOR UNDER ITEM 531.10 FOR PREFORMED FABRIC PADS AND ITEM 531.12 FOR POT BEARINGS.
3. SHOP DRAWINGS CONFORMING TO STANDARD SPECIFICATION SUBSECTION 531.03 SHALL BE SUBMITTED TO INCLUDE WELDING AND BONDING PROCEDURES.
4. THE CONCRETE SURFACE UNDER THE BEARING DEVICE SHALL BE LEVEL.
5. THE "B" DISTANCE IS LISTED FOR SETTING THE BEARING AFTER THE STRUCTURAL STEEL IS ERECTED AND BEFORE THE CONCRETE DECK IS POURED. THE "A" DISTANCE IS THE FINAL SETTING FOR THE BEARING PAD AFTER THE CONCRETE SLAB, CURB, SIDEWALK, PAVEMENT, AND BRIDGE RAIL ARE PLACED. THE DIFFERENCE IS THE THEORETICAL ELONGATION OF THE BOTTOM FLANGE DUE TO DEAD LOAD DEFLECTION. THE FINAL "B" DISTANCE, AS SHOWN IN THE TABLE, MUST BE ATTAINED WITHIN 3.
6. DESIGN CRITERIA:
   A. BASE PLATE TO CONCRETE DESIGN PRESSURE = 6895 kPa MAXIMUM.
   B. SEE TABLES BELOW FOR DESIGN LOADS.
7. ALL STEEL IN BEARING DEVICES (EXCEPT STAINLESS STEEL) SHALL BE AASHTO M 270M/M 270, ASTM A709/A 709M GRADE 345.
8. ANCHOR BOLTS SHALL HAVE A MINIMUM OF 400 EMBEDMENT INTO THE CONCRETE AND SHALL CONFORM TO STANDARD SPECIFICATION SUBSECTION 714.08. ANCHOR BOLTS SHALL CONFORM TO THE REQUIREMENTS OF ASTM F568M, CLASS 4.6.
9. ALL THE ANCHOR BOLTS, NUTS AND WASHERS SHALL BE GALVANIZED. ALL WASHERS SHALL BE 9 PLATE (MINIMUM). PAYMENT FOR ANCHOR BOLTS, NUTS AND WASHERS SHALL BE INCLUDED IN THE UNIT BID PRICE FOR THE APPROPRIATE 531 ITEM.
10. BEARING DEVICES SHALL BE GALVANIZED OR METALLIZED AS PER STANDARD SPECIFICATION SUBSECTIONS 531.04(b). AREAS OF DAMAGED GALVANIZING SHALL BE REPAIRED IN ACCORDANCE WITH SECTION 513. AREAS OF DAMAGED METALLIZING SHALL BE COATED WITH THE SAME SEALANT USED BY THE BEARING SUPPLIER. THE INSIDES OF THE POTS SHALL NOT BE GALVANIZED.

ABUTMENT NO. 1 BEARING DESIGN LOAD TABLE

LOCATION	DESCRIPTION	VERTICAL LOAD CAPACITY kN	TRANSVERSE LOAD CAPACITY kN	LONGITUDINAL LOAD CAPACITY kN	MOVEMENT CAPACITY (METERS)	ROTATION CAPACITY (RADIANS)
S.U.P. GIRDER NO. 1	FIXED BEARING	400	40	61	N/A	0.020
S.U.P. GIRDER NO. 2	FIXED BEARING	400	40	61	N/A	0.020

PIER BEARING DESIGN LOAD TABLE

LOCATION	DESCRIPTION	VERTICAL LOAD CAPACITY kN	TRANSVERSE LOAD CAPACITY kN	LONGITUDINAL LOAD CAPACITY kN	MOVEMENT CAPACITY (METERS)	ROTATION CAPACITY (RADIANS)
S.U.P. GIRDER NO. 1	GUIDED EXP. BEARING (LONG.)	1140	114	N/A	0.040	0.015
S.U.P. GIRDER NO. 2	GUIDED EXP. BEARING (LONG.)	1140	114	N/A	0.040	0.015

ABUTMENT No. 2 BEARING DESIGN LOAD TABLE

LOCATION	DESCRIPTION	VERTICAL LOAD CAPACITY kN	TRANSVERSE LOAD CAPACITY kN	LONGITUDINAL LOAD CAPACITY kN	MOVEMENT CAPACITY (METERS)	ROTATION CAPACITY (RADIANS)
S.U.P. GIRDER NO. 1	EXP. BEARING	316	N/A	N/A	0.070	0.015
S.U.P. GIRDER NO. 2	EXP. BEARING	316	N/A	N/A	0.070	0.015

PIER TEMPERATURE SETTING TABLE

TEMP.	"A" DIST.	"B" DIST.
-20° C	264	269
-10° C	259	264
0° C	255	260
10° C	250	255
20° C	245	250
30° C	241	246
40° C	237	242

SEE NOTE 5 THIS SHEET

STATE OF VERMONT
AGENCY OF TRANSPORTATION

Town Of BENNINGTON	Bridge No. BII
Highway No. TH 5	Log Sta. / Surv. Sta.
SHARED USE PATH OVER VT ROUTE 279	
PIER BEARING DETAILS (S.U.P.)	
Designed By G. BOGUE	Drawn By S. BURBANK
Checked By T. KNIGHT Date 04/06	Bridge Design Supervisor G. BOGUE Date 03/07
PROJECT BENNINGTON	PROJECT NO. AC NH 019-1(53)
Dgn.: ...\Design\ER\ERP-Brgs2.dgn	Plot Date: 5/25/2011
Bridge Sheet No. BR633	Sheet 280 of 577

Stantec

V:\1853\active\85300021\transportation\structural\Design\ER\ERP-Brgs2.dgn

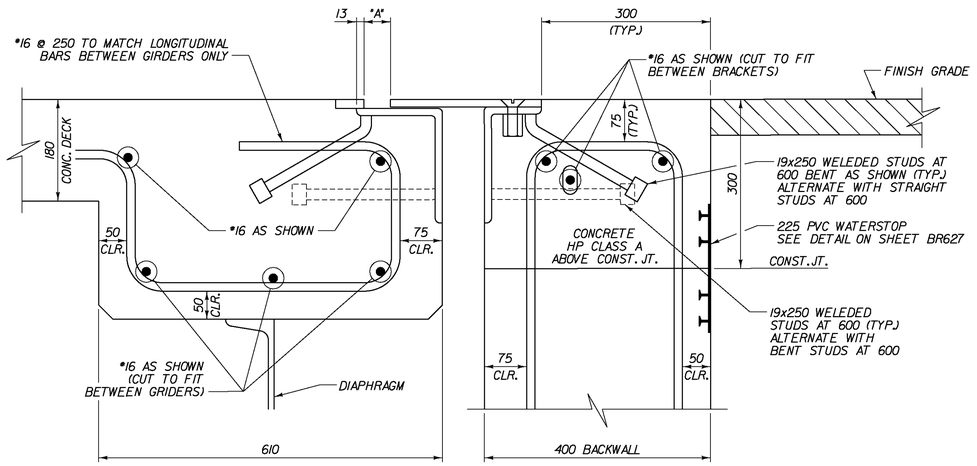

TYPICAL SECTION BETWEEN GIRDERS

(NORMAL TO ℄ BEARING)

SCALE 1:5

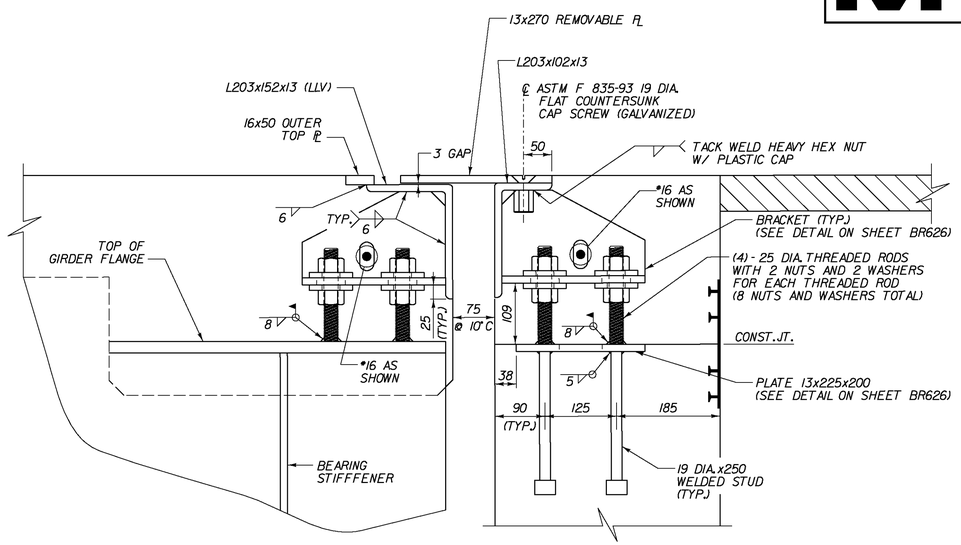

TYPICAL SECTION AT GIRDERS

(NORMAL TO ℄ BEARING)

SCALE 1:5

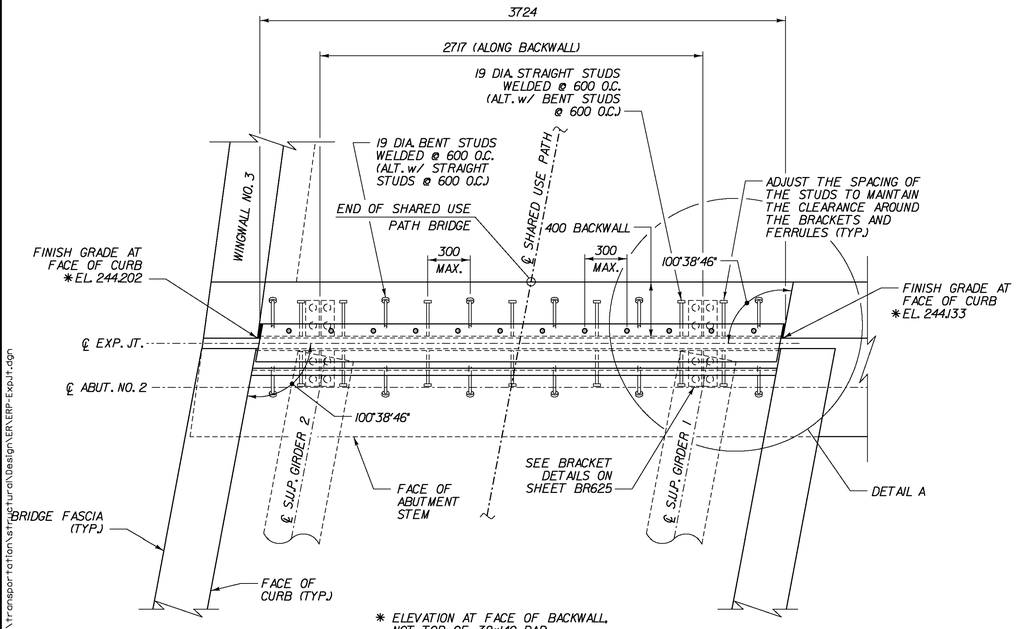

PLAN VIEW

SCALE 1:20

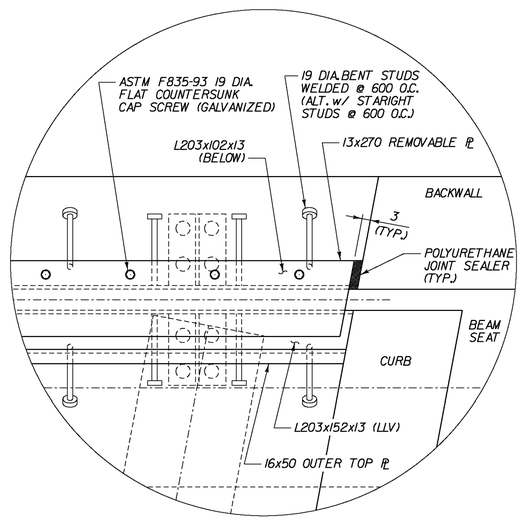

DETAIL A

NOT TO SCALE

1. EXPANSION JOINT AND DETAILS SHOWN ON THIS SHEET WILL BE PAID FOR AS ITEM 900.640 (BRIDGE EXPANSION JOINT, SLIDING PLATE).
2. THE FINAL FINISH OF THE EXPANSION DEVICE SHALL BE COVERED DURING THE PLACING OF BRIDGE DECK CONCRETE.
3. ALL STEEL COMPONENTS SHALL BE AASHTO M 270M GRADE 250 GALVANIZED OR METALIZED AS PER SUBSECTION 506.15(a) OR (b) OF THE STANDARD SPECIFICATIONS UNLESS OTHERWISE SPECIFIED. THREADED RODS SHALL CONFORM TO ASTM F 568M CLASS 4.6, GRADE C. THE NUTS FOR THE THREADED RODS SHALL BE AASHTO M 291M.
4. THE ITEM 900.640 SPECIAL PROVISION (BRIDGE EXPANSION JOINT, SLIDING PLATE) SHALL INCLUDE THE FABRICATION AND ERECTION OF THE COMPLETE JOINT ASSEMBLY INCLUDING ALL STEEL PLATES, BRACKETS, ANGLES, WELDED STUDS OR RODS AND ANY OTHER MISCELLANEOUS MATERIAL NECESSARY TO INSTALL JOINT.
5. THE 203x102x13 AND 203x152x13 AND THE 16x50 AND 13x270 STEEL PLATES ANGLES SHALL BE FURNISHED AS ONE CONTINUOUS PIECE.
6. COAT CONCRETE CONTACT SURFACES WITH EPOXY BONDING COMPOUND; ACCEPTABLE EPOXY BONDING COMPOUNDS SHALL BE THOSE INCLUDED ON THE APPROVED PRODUCTS LIST ON FILE WITH THE AGENCY'S MATERIALS AND RESEARCH SECTION. PAYMENT SHALL BE INCLUDED IN THE UNIT PRICE BID FOR ITEM 900.640 SPECIAL PROVISION (BRIDGE EXPANSION JOINT, SLIDING PLATE).
7. PAYMENT FOR PVC WATERSTOP SHALL BE INCIDENTAL TO THE CONCRETE PAY ITEM.
8. FOLLOWING PAVING, ANY BITUMINOUS CONCRETE PAVMENT THAT IS LODGED IN THE EXPANSION JOINT SHALL BE REMOVED BY THE CONTRACTOR AT NO COST TO THE STATE.
9. THE EXPANSION JOINT SHALL BE SHOP ASSEMBLED AND SHIPPED AS ONE UNIT.

TEMPERATURE SETTING TABLE

TEMP.	*A* DIST.
-20°C	59
-10°C	50
0°C	42
10°C	34
20°C	25
30°C	17
40°C	8

A IS THE SETTING BEFORE DEAD LOADS ARE IN PLACE

STATE OF VERMONT
AGENCY OF TRANSPORTATION

Town Of BENNINGTON	Bridge No. BII
Highway No. TH 5	Log Sta. / Surv. Sta.
SHARED USE PATH OVER VT ROUTE 279	
EXPANSION JOINT PLAN (S.U.P.)	
Designed By S. BURBANK	Drawn By J. SOTER
Checked By S. BURBANK Date 03/06	Bridge Design Supervisor G. BOGUE Date 03/07
PROJECT BENNINGTON	PROJECT NO. AC NH 019-1(53)
Dgn.: ...\Design\ER\ERP-ExpJt.dgn	Plot Date: 5/25/2011
Bridge Sheet No. BR634	Sheet 281 of 577

Stantec

V:\953\active\95310002\transportation\structural\Design\ER\ERP-ExpJt.dgn

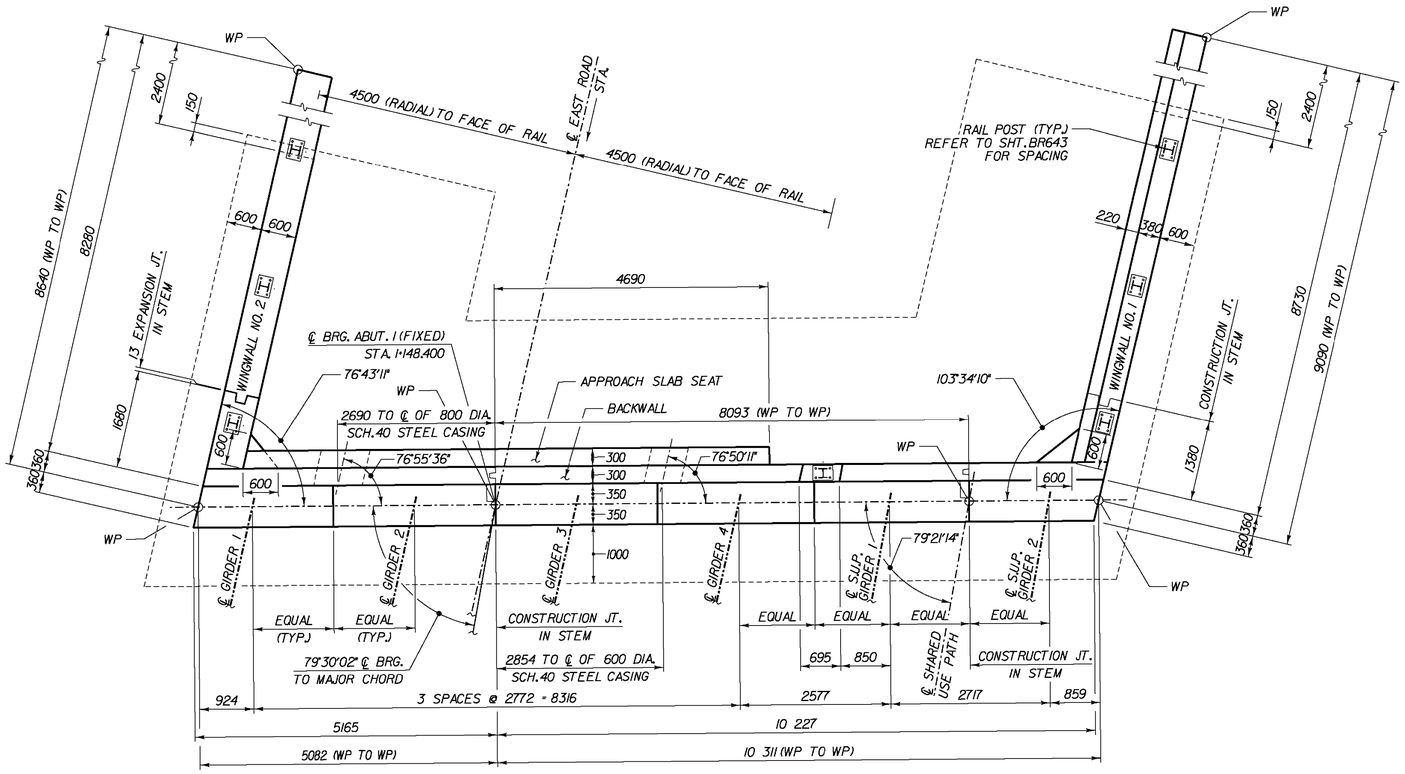

ABUTMENT 1 PLAN

SCALE 1:50

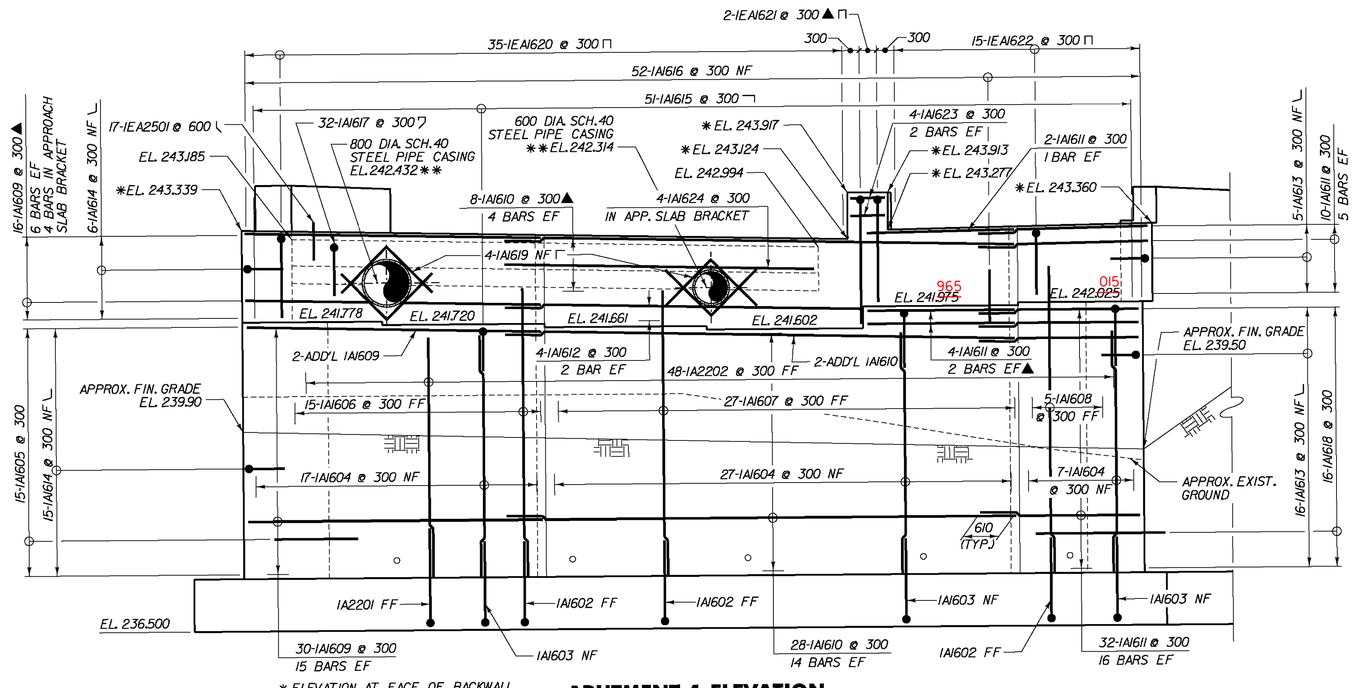

✱ ELEVATION AT FACE OF BACKWALL

✱✱ REFER TO UTILITY SHEET U-06 FOR DETAILS.

ABUTMENT 1 ELEVATION

SCALE 1:50

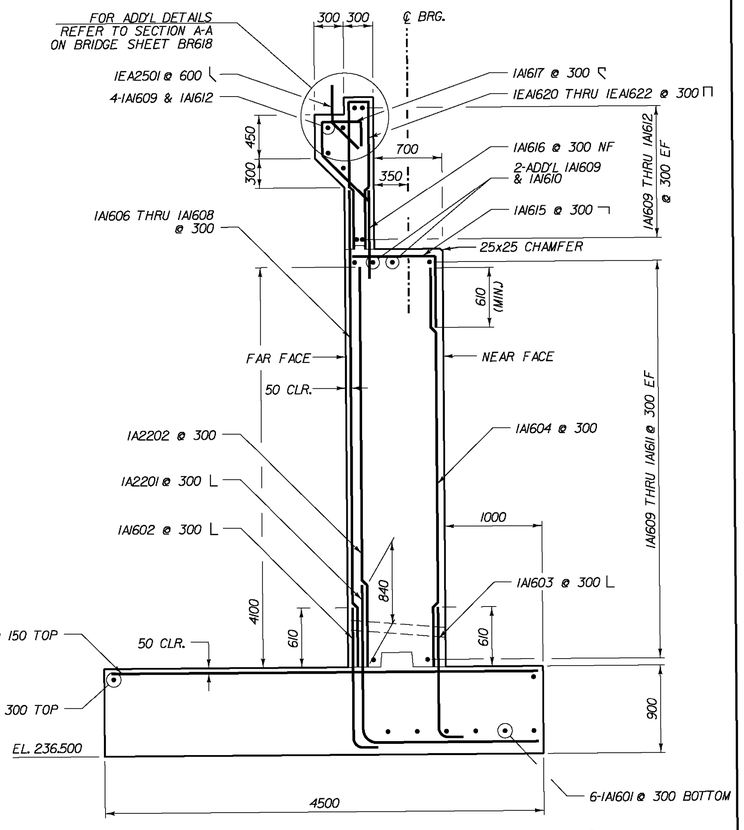

ABUTMENT 1 TYPICAL SECTION

SCALE 1:30

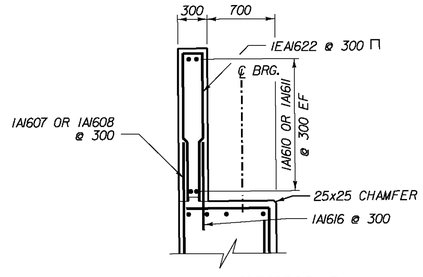

ABUTMENT BACKWALL AT SHARED USE PATH BRIDGE

SCALE 1:30

NOTE:

NF = NEAR FACE
FF = FAR FACE
EF = EACH FACE
▲ = CUT TO FIT IN FIELD
75 CLR. UNLESS OTHERWISE SPECIFIED ON THE PLANS.

STATE OF VERMONT
AGENCY OF TRANSPORTATION

Town Of BENNINGTON	Bridge No. BII
Highway No. TH 5	Log Sta. / Surv. Sta.

EAST ROAD OVER VT ROUTE 279

ABUTMENT 1 PLAN AND ELEVATION

Designed By G. BOGUE	Drawn By J. SOTER
Checked By S. BURBANK Date 03/06	Bridge Design Supervisor G. BOGUE Date 03/07
PROJECT BENNINGTON	PROJECT NO. AC NH 019-1(53)
Dgn.: ...\Design\ER\ER-Abut 1.dgn	Plot Date: 5/25/2011
Bridge Sheet No. BR635	Sheet 282 of 577

Stantec

V:\1953\active\195310002\transportation\structural\Design\ER\ER-Abut 1.dgn

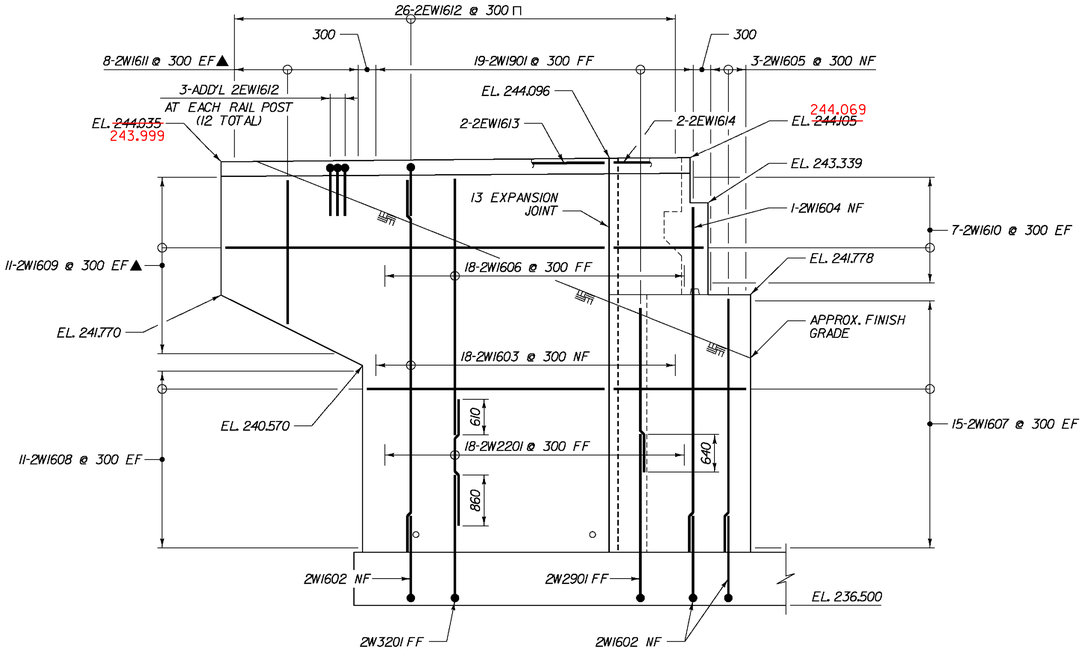

WINGWALL No. 2 ELEVATION

SCALE 1:50

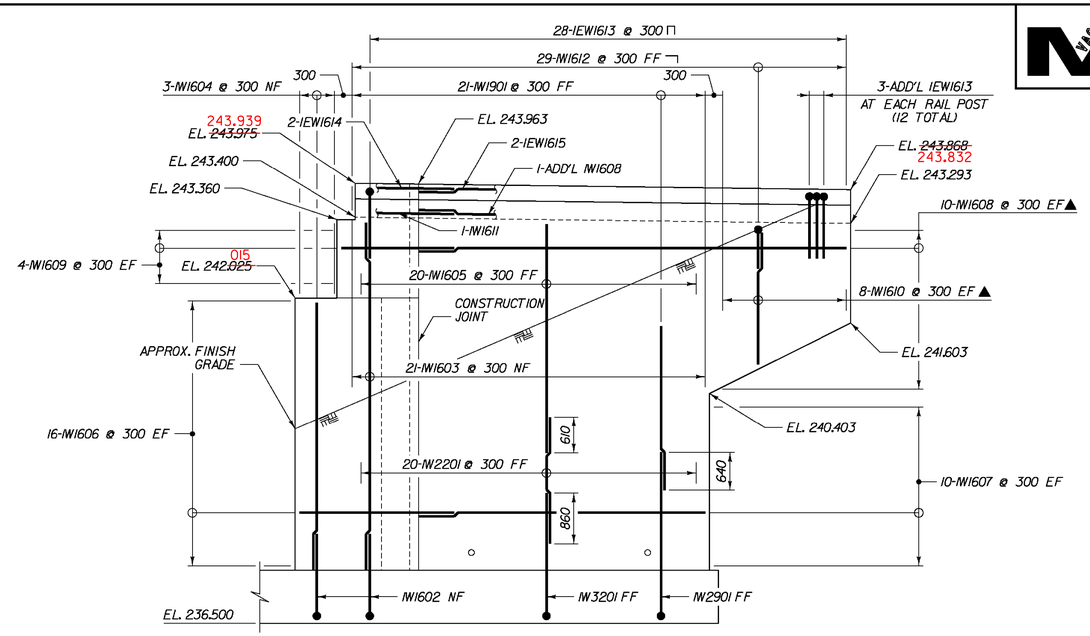

WINGWALL No. 1 ELEVATION

SCALE 1:50

WINGWALL NO. 2

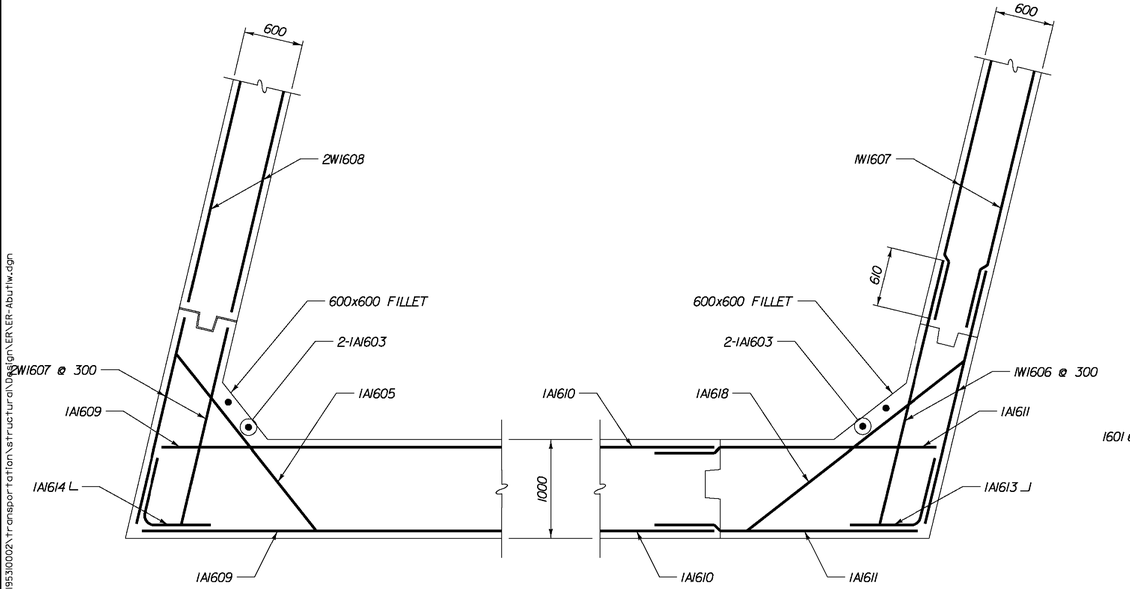

WINGWALL NO. 1

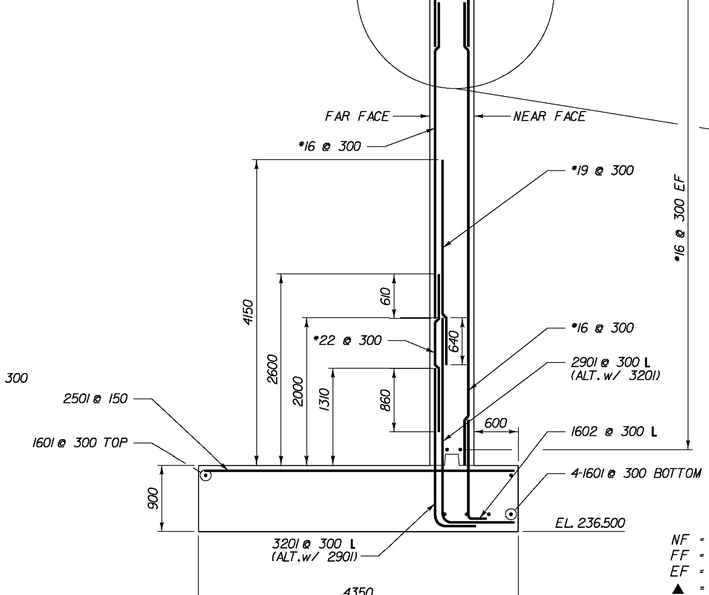

ABUTMENT 1 – CORNER REINFORCEMENT

(BELOW BEAM SEAT)

SCALE 1:30

TYPICAL WINGWALL SECTION

SCALE 1:40

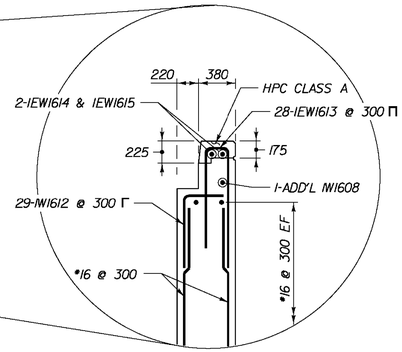

TOP OF WALL DETAIL AT WINGWALL 1

SCALE 1:30

NOTE:

NF = NEAR FACE
FF = FAR FACE
EF = EACH FACE
▲ = CUT TO FIT IN FIELD
75 CLR. UNLESS OTHERWISE SPECIFIED ON THE PLANS.

STATE OF VERMONT
AGENCY OF TRANSPORTATION

Town Of BENNINGTON	Bridge No. BII
Highway No. TH 5	Log Sta. / Surv. Sta.
EAST ROAD OVER VT ROUTE 279	
ABUTMENT 1 WINGWALL DETAILS	
Designed By S. BURBANK	Drawn By J. SOTER
Checked By S. BURBANK Date 03/06	Bridge Design Supervisor G. BOGUE Date 03/07
PROJECT BENNINGTON	PROJECT NO. AC NH 019-1(53)
Dgn.: ...\Design\ER\ER-Abutlw.dgn	Plot Date: 5/25/2011
Bridge Sheet No. BR636	Sheet 283 of 577

Stantec

V:\1953\active\195300002\transportation\structural\Design\ER\ER-Abutlw.dgn

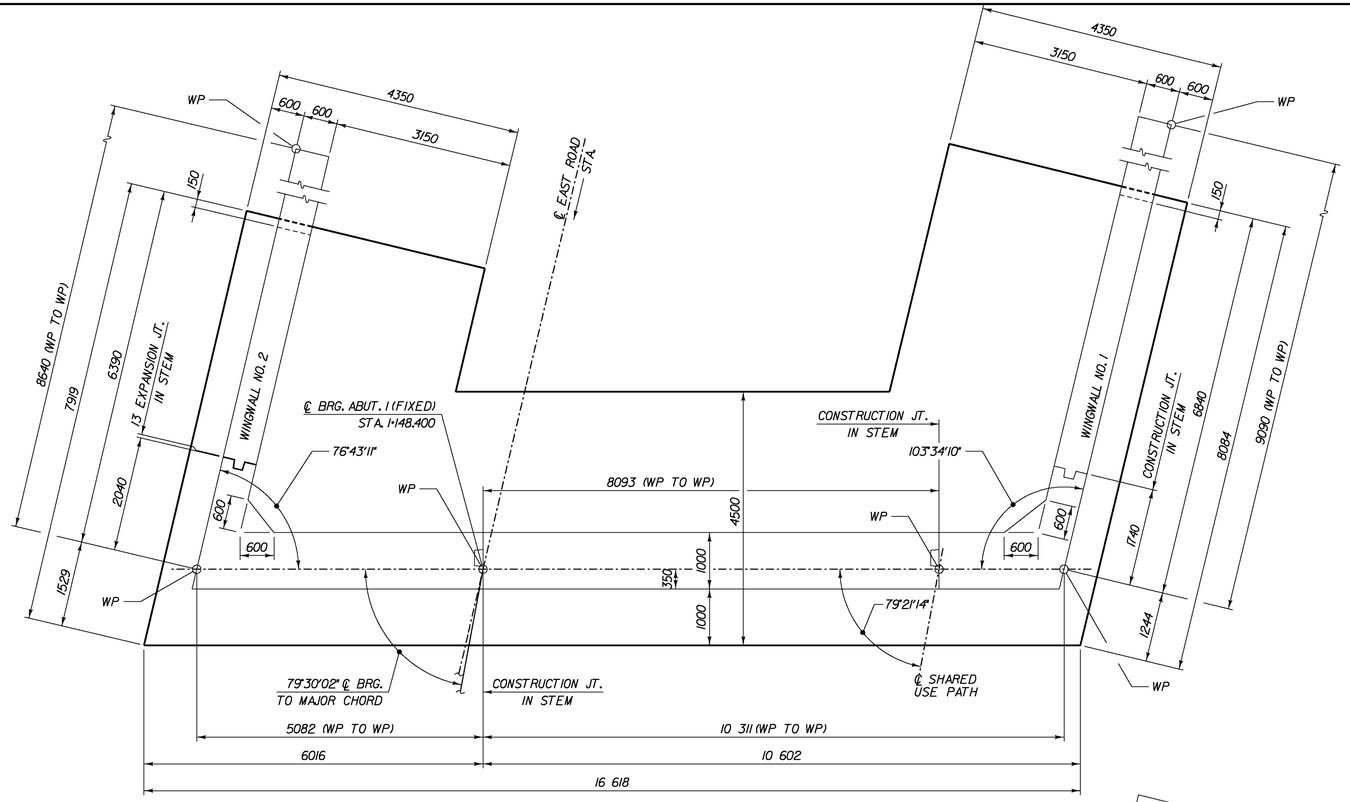

ABUTMENT 1 – FOOTING PLAN

SCALE 1:50

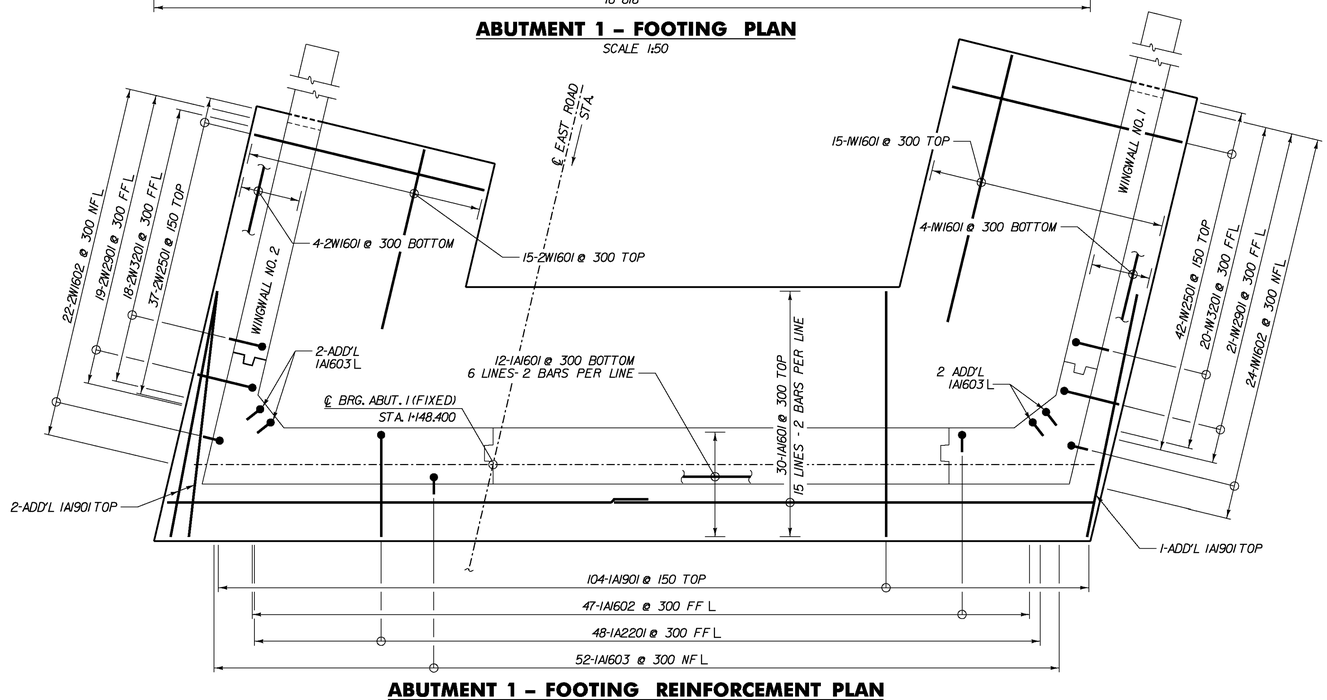

ABUTMENT 1 – FOOTING REINFORCEMENT PLAN

SCALE 1:50

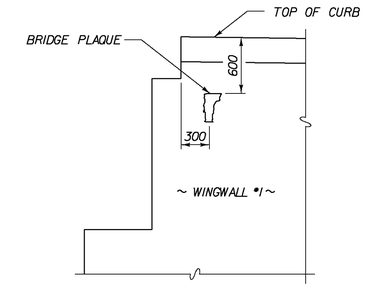

LOCATE BRIDGE PLAQUE

THE BRIDGE PLAQUE WILL BE SUPPLIED BY THE AGENCY OF TRANSPORTATION AND SHALL BE INSTALLED BY THE CONTRACTOR AT WINGWALL #1 ON THE LEFT SIDE AS SHOWN OR AS DIRECTED BY THE ENGINEER.

NOTE:

NF - NEAR FACE
FF - FAR FACE
EF - EACH FACE
▲ - CUT TO FIT IN FIELD
75 CLR. UNLESS OTHERWISE SPECIFIED ON THE PLANS.

STATE OF VERMONT
AGENCY OF TRANSPORTATION

Town Of BENNINGTON	Bridge No. BII
Highway No. TH 5	Log Sta. / Surv. Sta.
EAST ROAD OVER VT ROUTE 279	
ABUTMENT 1 FOOTING	
Designed By S. BURBANK	Drawn By J. SOTER
Checked By S. BURBANK Date 02/06	Bridge Design Supervisor G. BOGUE Date 03/07
PROJECT BENNINGTON	PROJECT NO. AC NH 019-1(53)
Dgn.: ...\Design\ER\ER-Abut 1Ftg.dgn	Plot Date: 5/25/2011
Bridge Sheet No. BR637	Sheet 284 of 577

Stantec

V:\1953\active\195300002\transportation\structural\Design\ER\ER-Abut 1Ftg.dgn

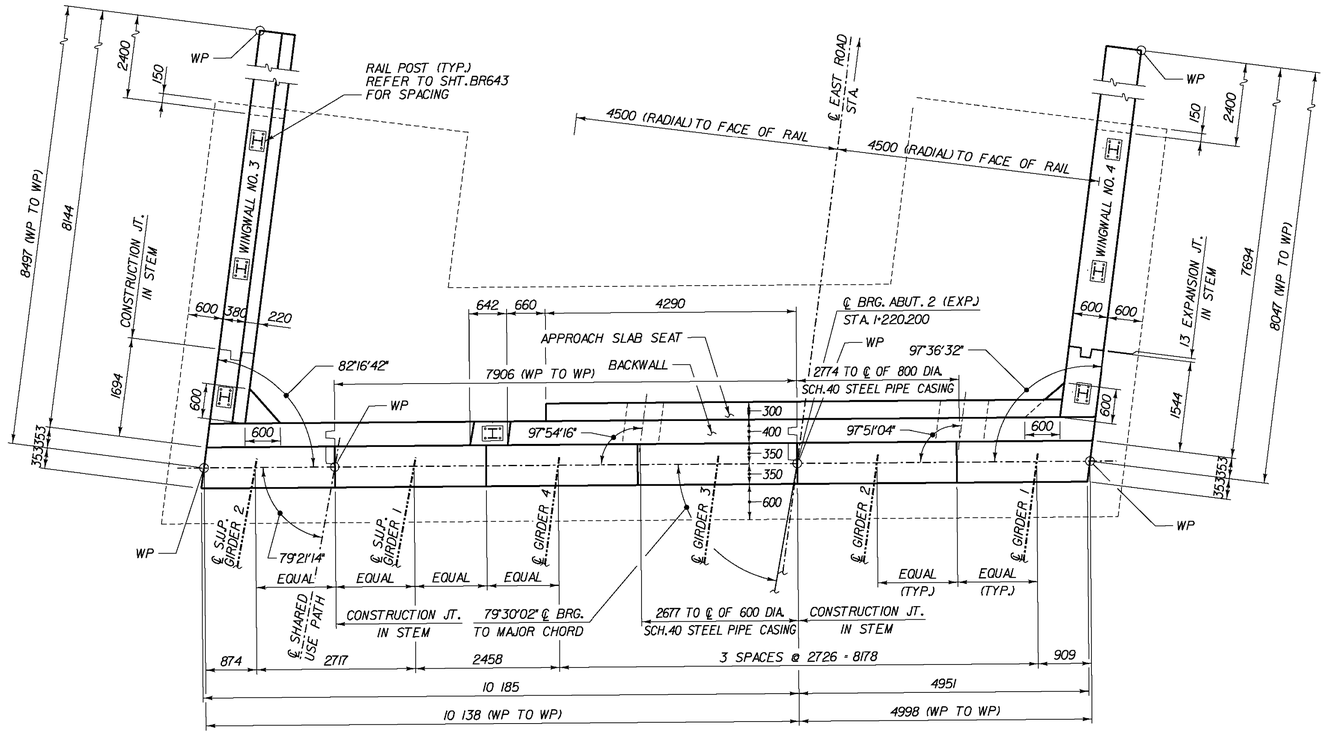

ABUTMENT 2 PLAN
SCALE 1:50

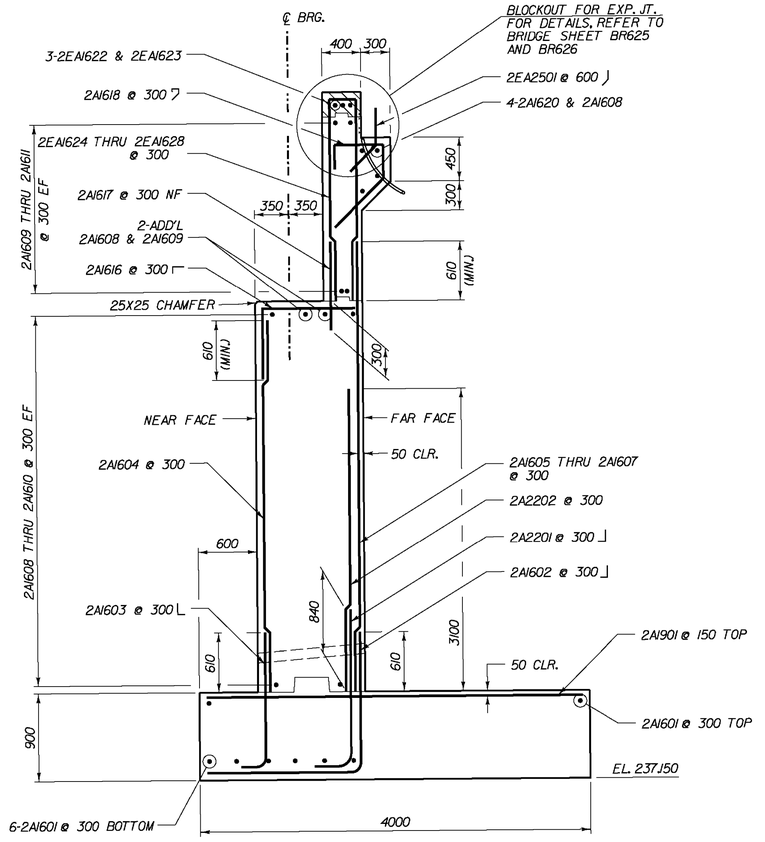

ABUTMENT 2 TYPICAL SECTION
SCALE 1:30

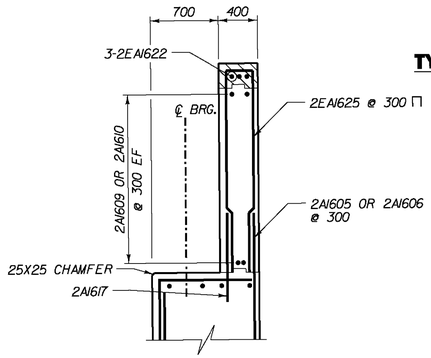

ABUTMENT BACKWALL AT SHARED USE PATH BRIDGE
SCALE 1:30

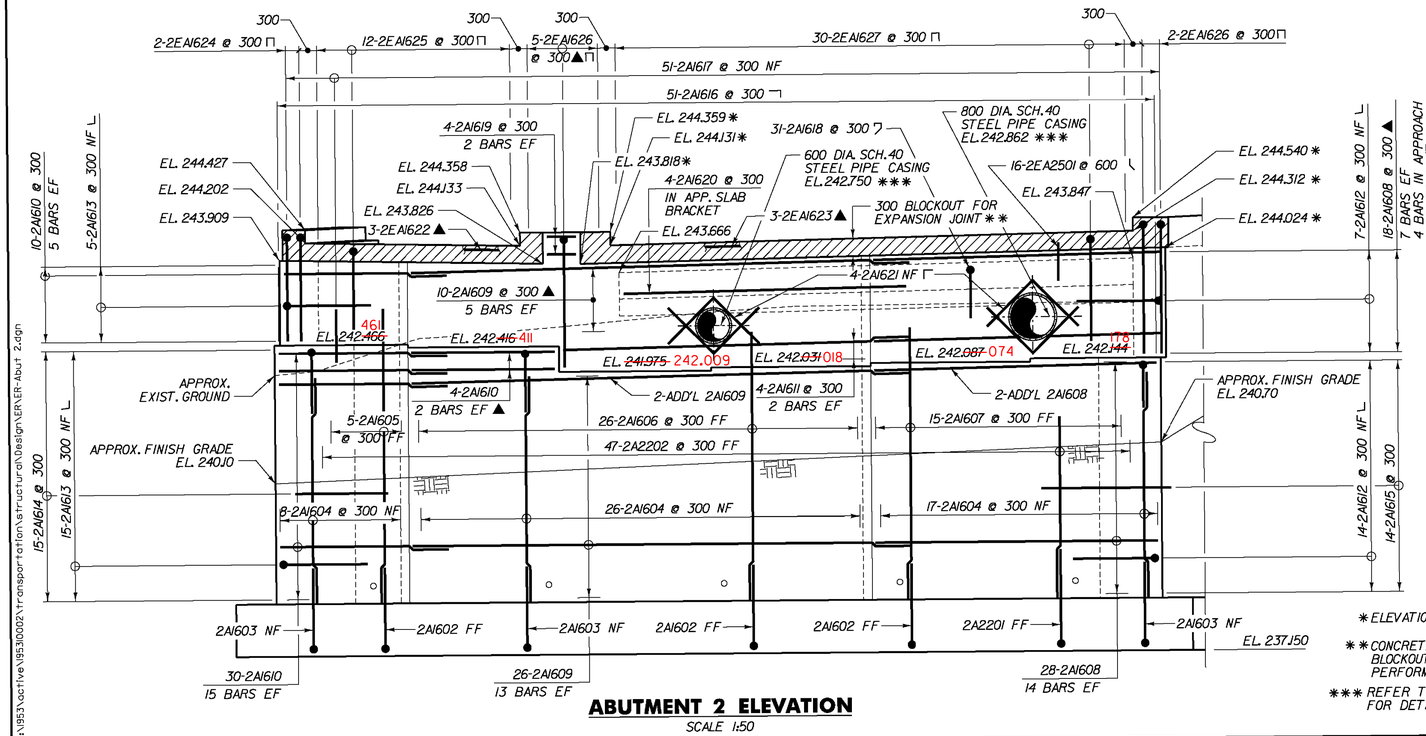

ABUTMENT 2 ELEVATION
SCALE 1:50

* ELEVATION AT FACE OF BACKWALL

** CONCRETE FOR EXPANSION JOINT BLOCKOUT SHALL BE HIGH PERFORMANCE CLASS A

*** REFER TO UTILITY SHEET U-06 FOR DETAILS.

NOTE:

NF = NEAR FACE
FF = FAR FACE
EF = EACH FACE
▲ = CUT TO FIT IN FIELD
75 CLR. UNLESS OTHERWISE SPECIFIED ON THE PLANS.

STATE OF VERMONT
AGENCY OF TRANSPORTATION

Town Of BENNINGTON	Bridge No. BII
Highway No. TH 5	Log Sta. / Surv. Sta.
EAST ROAD OVER VT ROUTE 279	
ABUTMENT 2 PLAN AND ELEVATION	
Designed By G. BOGUE	Drawn By J. SOTER
Checked By T. KNIGHT Date 10/06	Bridge Design Supervisor G. BOGUE Date 03/07
PROJECT BENNINGTON	PROJECT NO. AC NH 019-1(53)
Dgn.: ...\Design\ER\ER-Abut 2.dgn	Plot Date: 5/25/2011
Bridge Sheet No. BR638	Sheet 285 of 577

Stantec

M:\1953\active\195300002\transportation\structural\Design\ER\ER-Abut 2.dgn

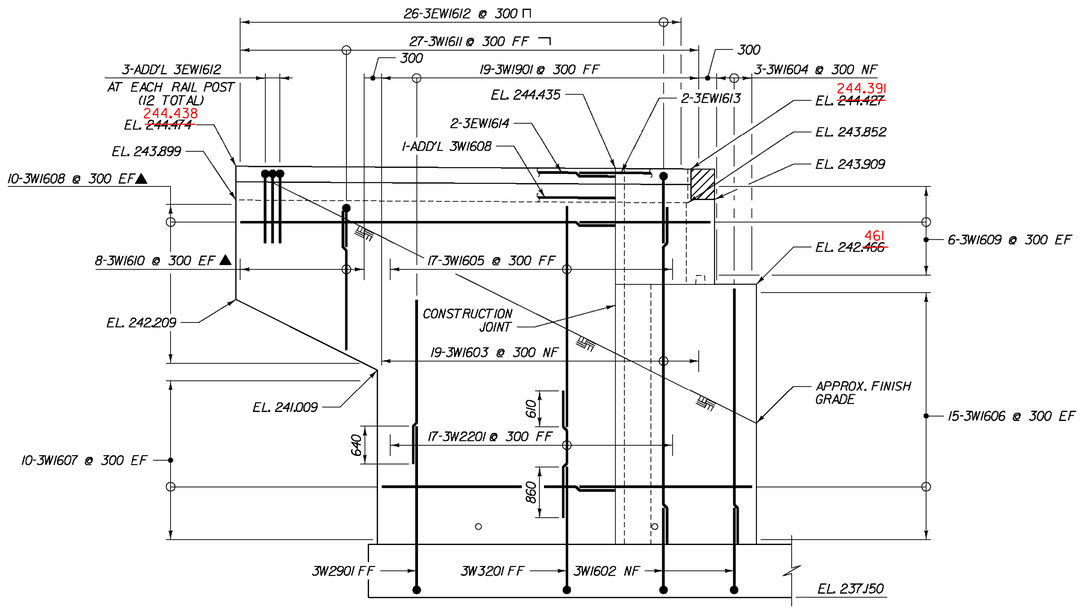

WINGWALL No. 3 ELEVATION

SCALE 1:50

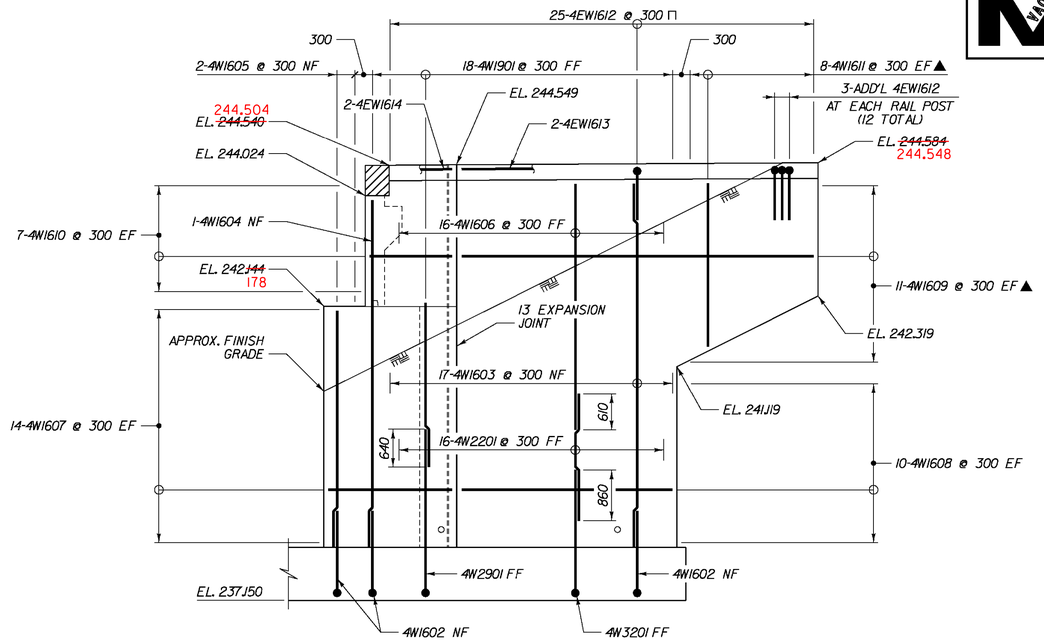

WINGWALL No. 4 ELEVATION

SCALE 1:50

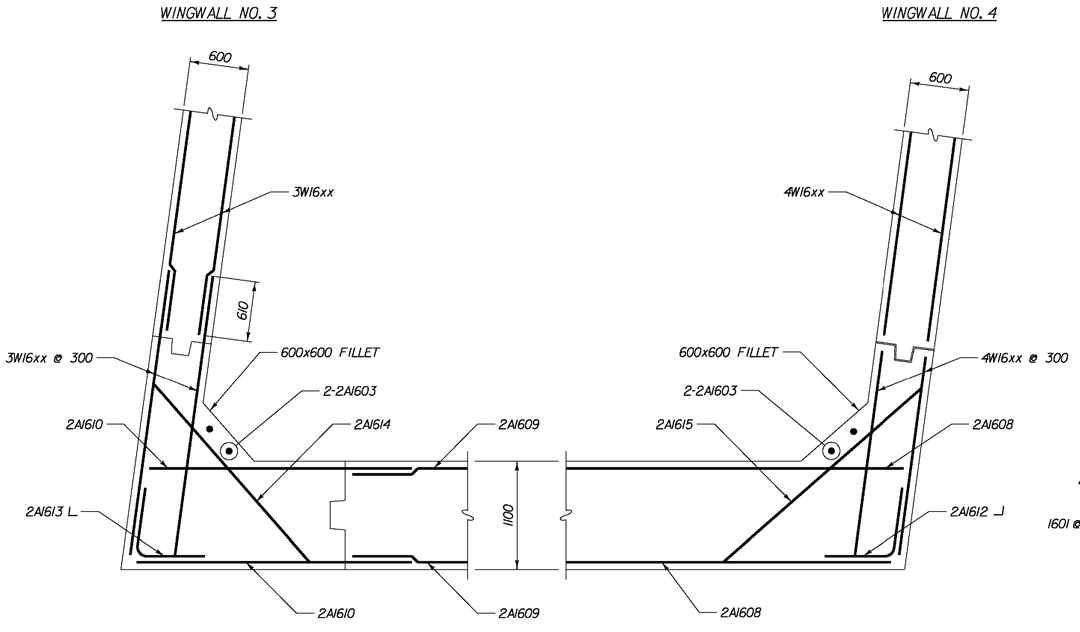

ABUTMENT 2 – CORNER REINFORCEMENT

(BELOW BEAM SEAT)

SCALE 1:30

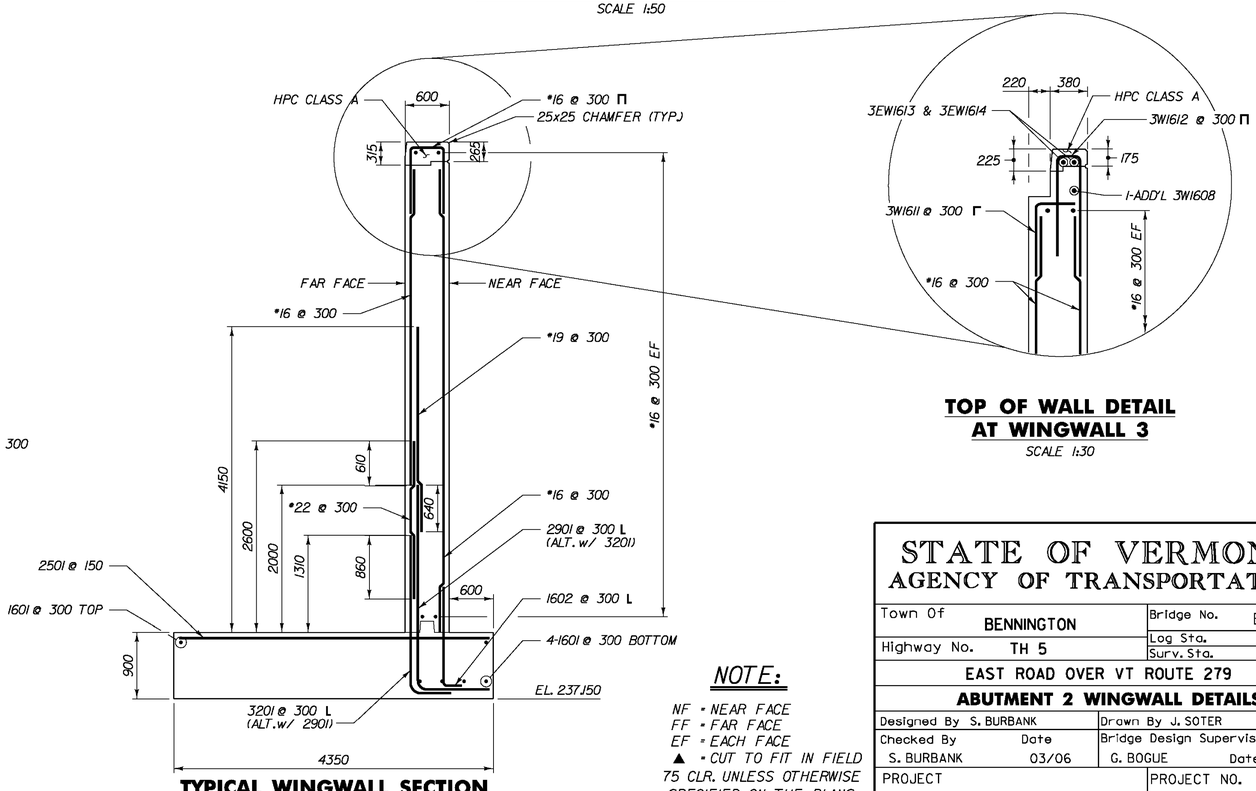

TYPICAL WINGWALL SECTION

SCALE 1:40

TOP OF WALL DETAIL AT WINGWALL 3

SCALE 1:30

NOTE:

NF = NEAR FACE
FF = FAR FACE
EF = EACH FACE
▲ = CUT TO FIT IN FIELD
75 CLR. UNLESS OTHERWISE SPECIFIED ON THE PLANS.

STATE OF VERMONT
AGENCY OF TRANSPORTATION

Town Of BENNINGTON	Bridge No. BII
Highway No. TH 5	Log Sta. / Surv. Sta.

EAST ROAD OVER VT ROUTE 279

ABUTMENT 2 WINGWALL DETAILS

Designed By S. BURBANK	Drawn By J. SOTER
Checked By S. BURBANK Date 03/06	Bridge Design Supervisor G. BOGUE Date 03/07
PROJECT BENNINGTON	PROJECT NO. AC NH 019-1(53)
Dgn.: ...\Design\ER\ER-Abut2w.dgn	Plot Date: 5/25/2011
Bridge Sheet No. BR639	Sheet 286 of 577

Stantec

V:\1853\active\185360002\transportation\structural\Design\ER\ER-Abut2w.dgn

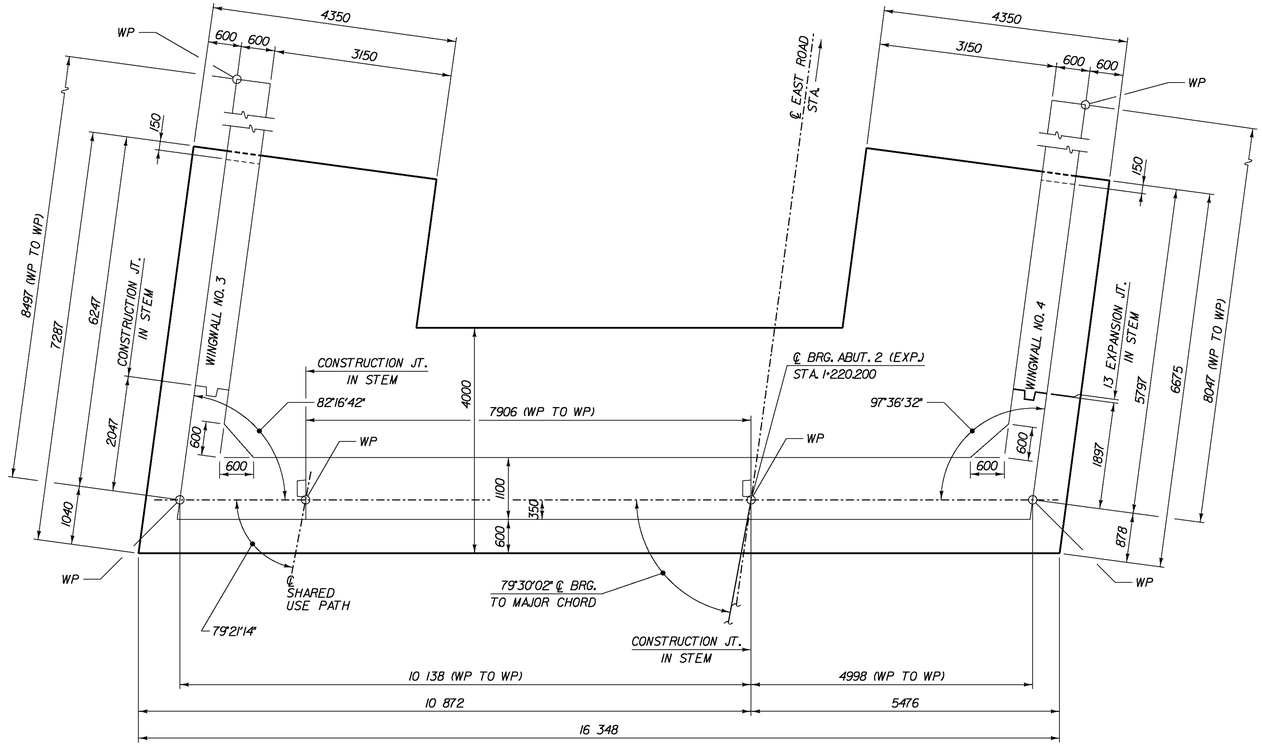

ABUTMENT 2 – FOOTING PLAN

SCALE 1:50

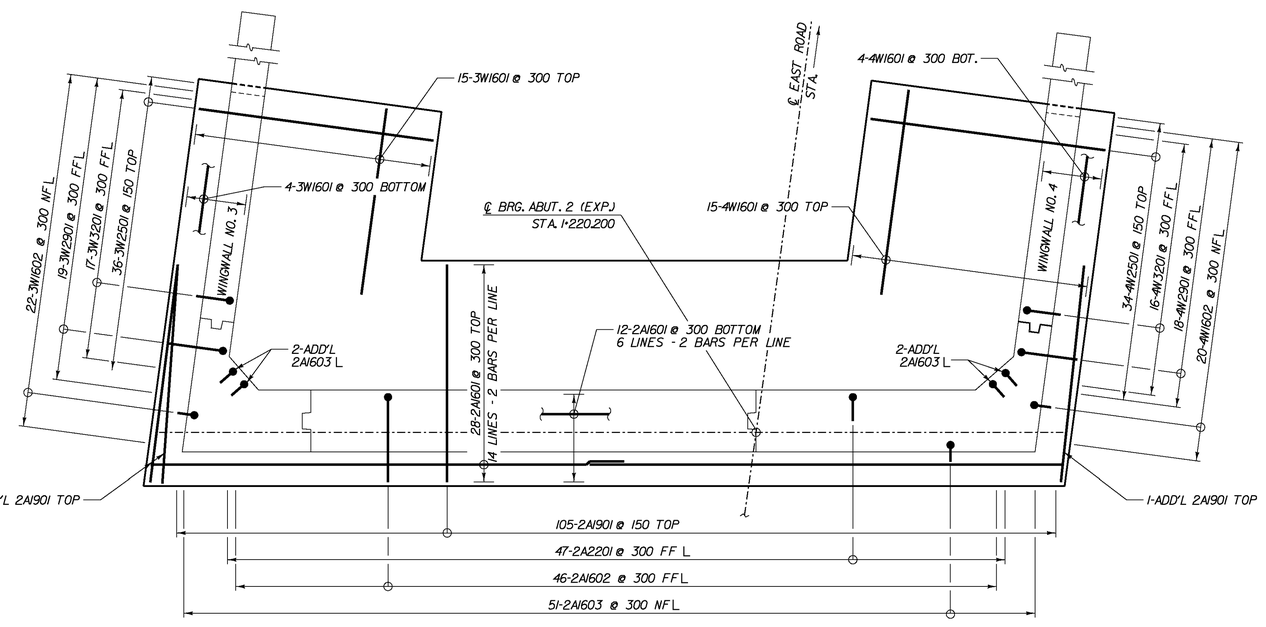

ABUTMENT 2 – FOOTING REINFORCEMENT PLAN

SCALE 1:50

NOTE:

NF - NEAR FACE
FF - FAR FACE
EF - EACH FACE
▲ - CUT TO FIT IN FIELD
75 CLR. UNLESS OTHERWISE SPECIFIED ON THE PLANS.

STATE OF VERMONT
AGENCY OF TRANSPORTATION

Town Of BENNINGTON	Bridge No. BII
Highway No. TH 5	Log Sta. / Surv. Sta.
EAST ROAD OVER VT ROUTE 279	
ABUTMENT 2 FOOTING	
Designed By S. BURBANK	Drawn By J. SOTER
Checked By S. BURBANK Date 02/06	Bridge Design Supervisor G. BOGUE Date 03/07
PROJECT BENNINGTON	PROJECT NO. AC NH 019-1(53)
Dgn.: ...\Design\ER\ER-Abut 2 Ftg.dgn	Plot Date: 5/25/2011
Bridge Sheet No. BR640	Sheet 287 of 577

Stantec

V:\1953\active\195300021\transportation\structural\Design\ER\ER-Abut 2 Ftg.dgn

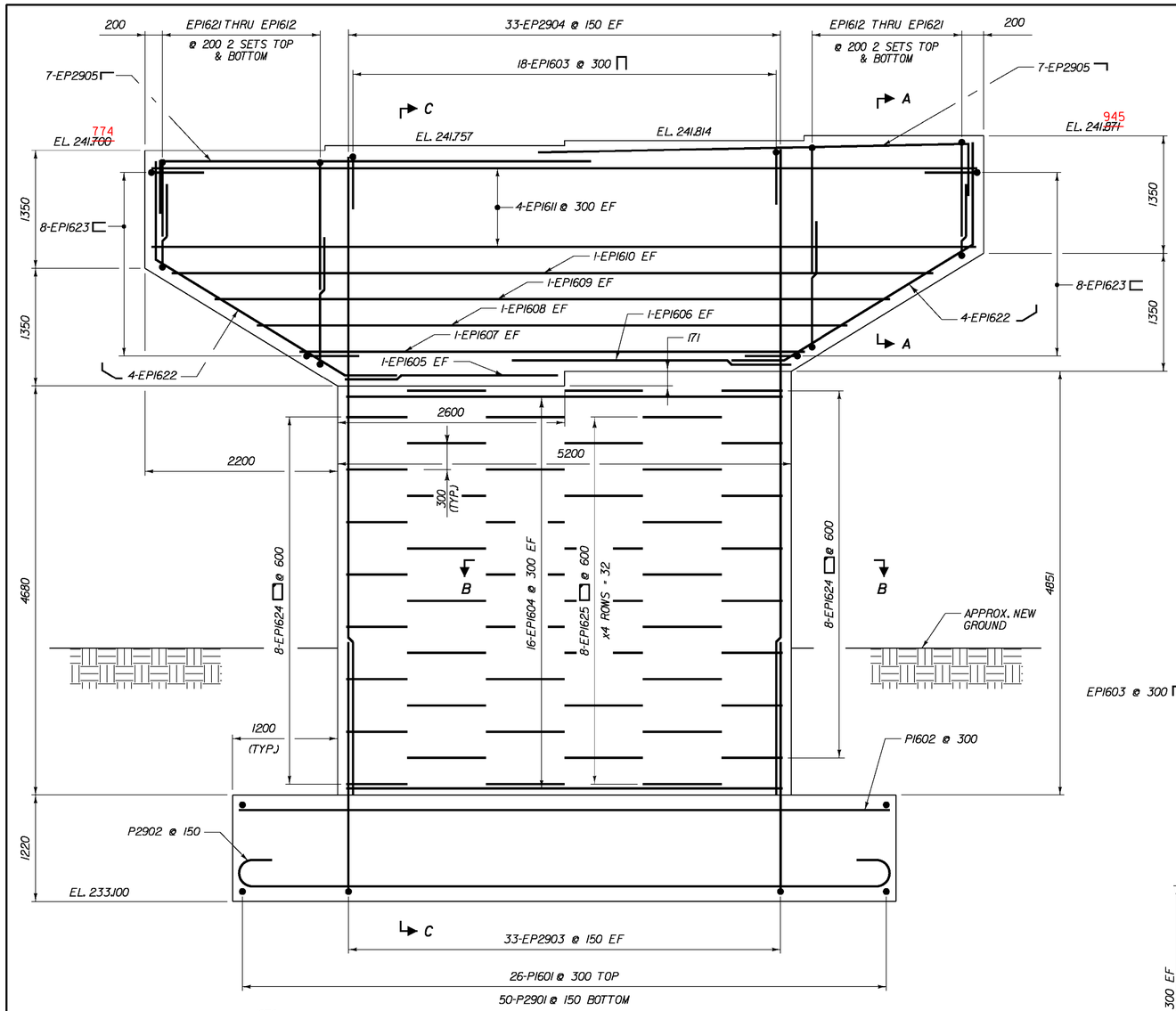

ELEVATION
SCALE 1:30

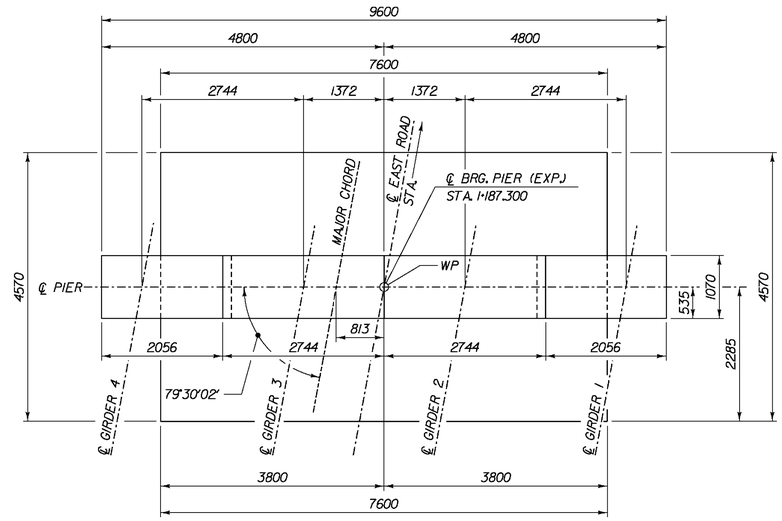

PIER PLAN
SCALE 1:50

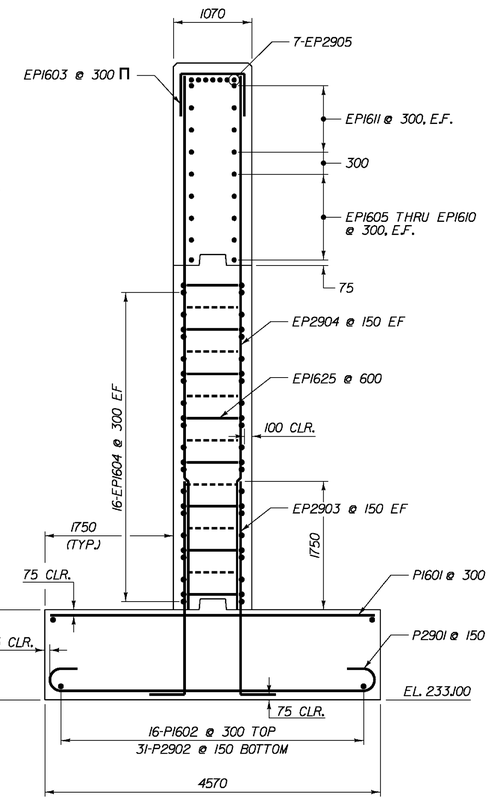

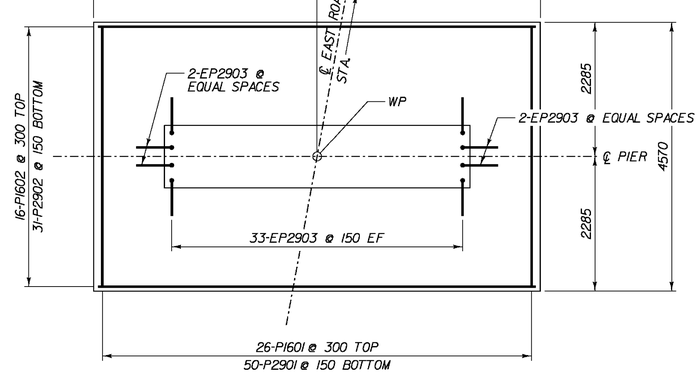

FOOTING REINFORCING PLAN
SCALE 1:50

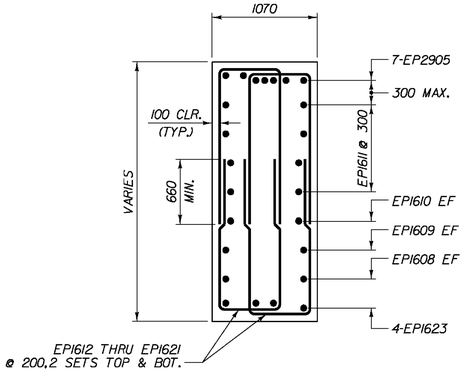

SECTION A–A
SCALE 1:30

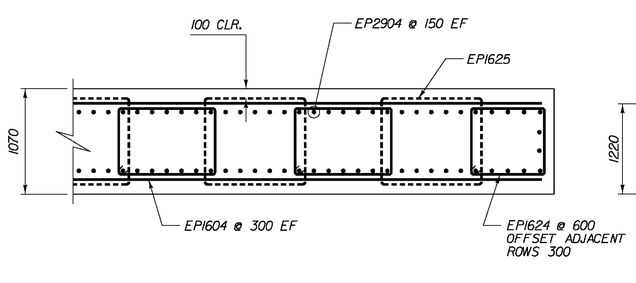

SECTION B–B
SCALE 1:30

SECTION C–C
SCALE 1:40

NOTE:

NF = NEAR FACE
FF = FAR FACE
EF = EACH FACE
▲ = CUT TO FIT IN FIELD
75 CLR. UNLESS OTHERWISE SPECIFIED ON THE PLANS.

STATE OF VERMONT
AGENCY OF TRANSPORTATION

Town Of BENNINGTON	Bridge No. BII
Highway No. TH 5	Log Sta. / Surv. Sta.
EAST ROAD OVER VT ROUTE 279	
PIER DETAILS	
Designed By M. CHENETTE	Drawn By J. SOTER
Checked By M. CHENETTE Date 01/07	Bridge Design Supervisor G. BOGUE Date 03/07
PROJECT BENNINGTON	PROJECT NO. AC NH 019-1(53)
Dgn.: ...\Design\ER\ER-Pier.dgn	Plot Date: 5/25/2011
Bridge Sheet No. BR641	Sheet 288 of 577

Stantec

V:\1953\active\195300021\transportation\structural\Design\ER\ER-Pier.dgn

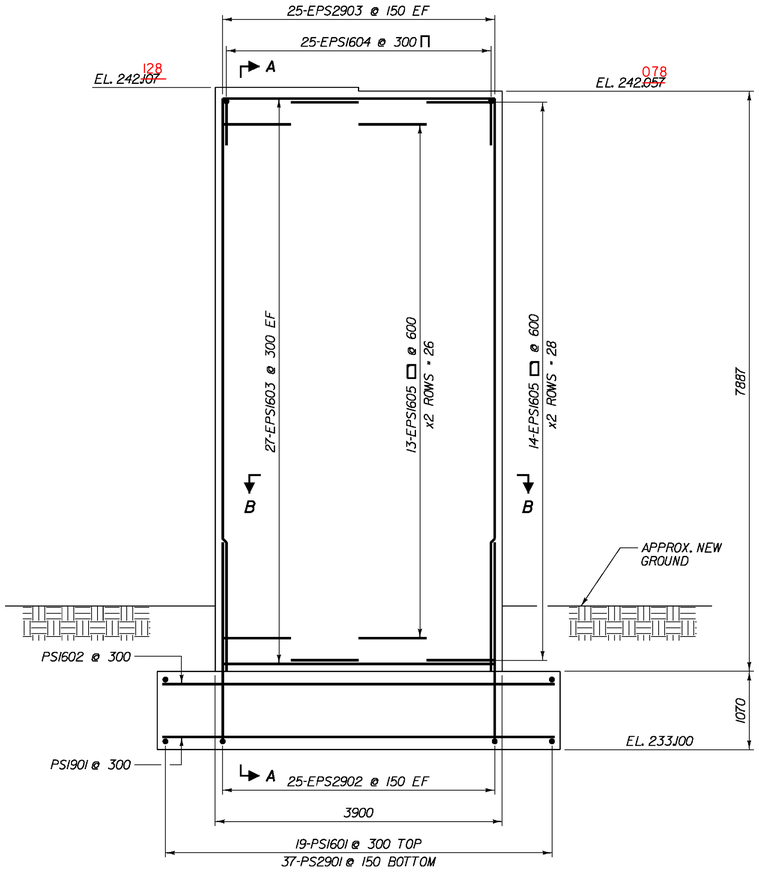

ELEVATION
SCALE 1:40

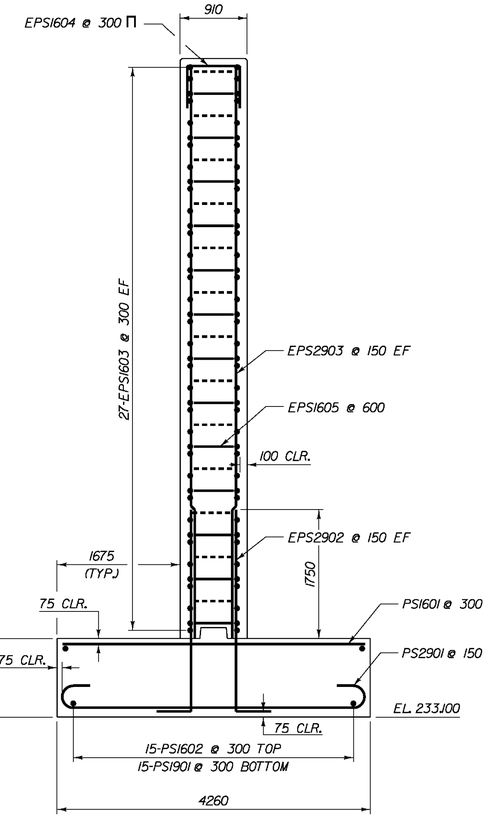

SECTION A–A
SCALE 1:40

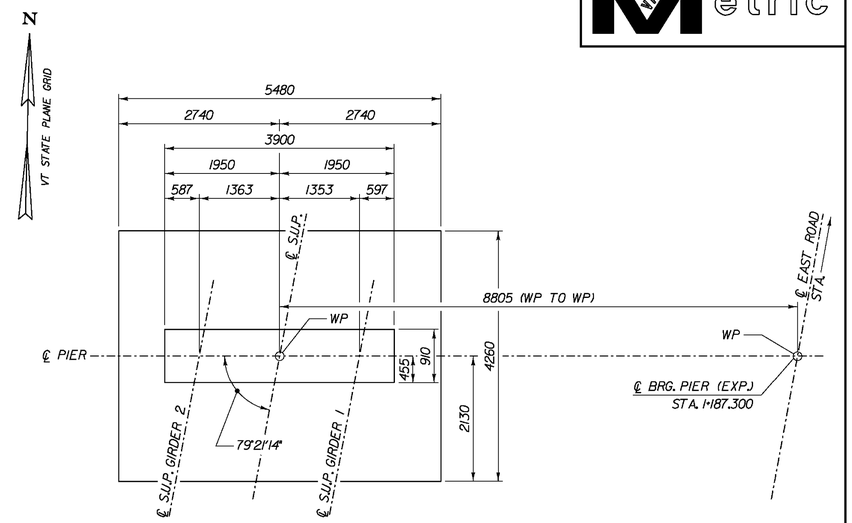

SHARED USE PATH PIER PLAN
SCALE 1:50

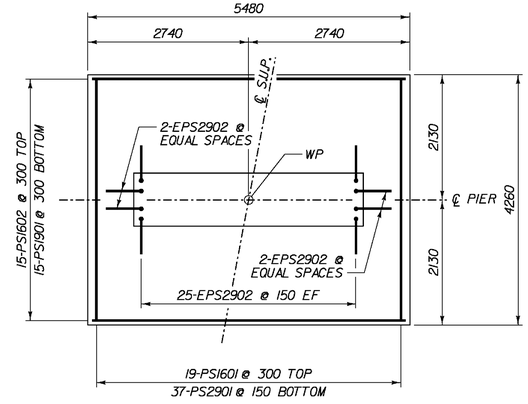

SHARED USE PATH FOOTING REINFORCING PLAN
SCALE 1:50

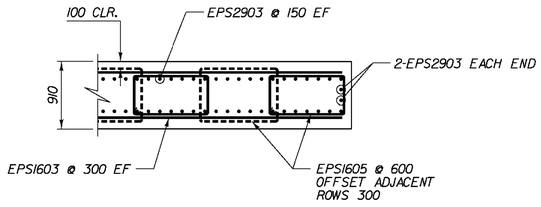

SECTION B–B
SCALE 1:40

NOTE:

NF = NEAR FACE
FF = FAR FACE
EF = EACH FACE
▲ = CUT TO FIT IN FIELD
75 CLR. UNLESS OTHERWISE SPECIFIED ON THE PLANS.

STATE OF VERMONT
AGENCY OF TRANSPORTATION

Town Of BENNINGTON	Bridge No. BII
Highway No. TH 5	Log Sta. / Surv. Sta.

SHARED USE PATH OVER VT ROUTE 279

PIER DETAILS (S.U.P.)

Designed By M. CHENETTE	Drawn By J. SOTER
Checked By M. CHENETTE Date 01/07	Bridge Design Supervisor G. BOGUE Date 03/07
PROJECT BENNINGTON	PROJECT NO. AC NH 019-1(53)
Dgn.: ...\Design\ER\ERP-Pier.dgn	Plot Date: 5/25/2011
Bridge Sheet No. BR642	Sheet 289 of 577

Stantec

V:\1953\active\195310002\transportation\structural\Design\ER\ERP-Pier.dgn

VAOT Metric

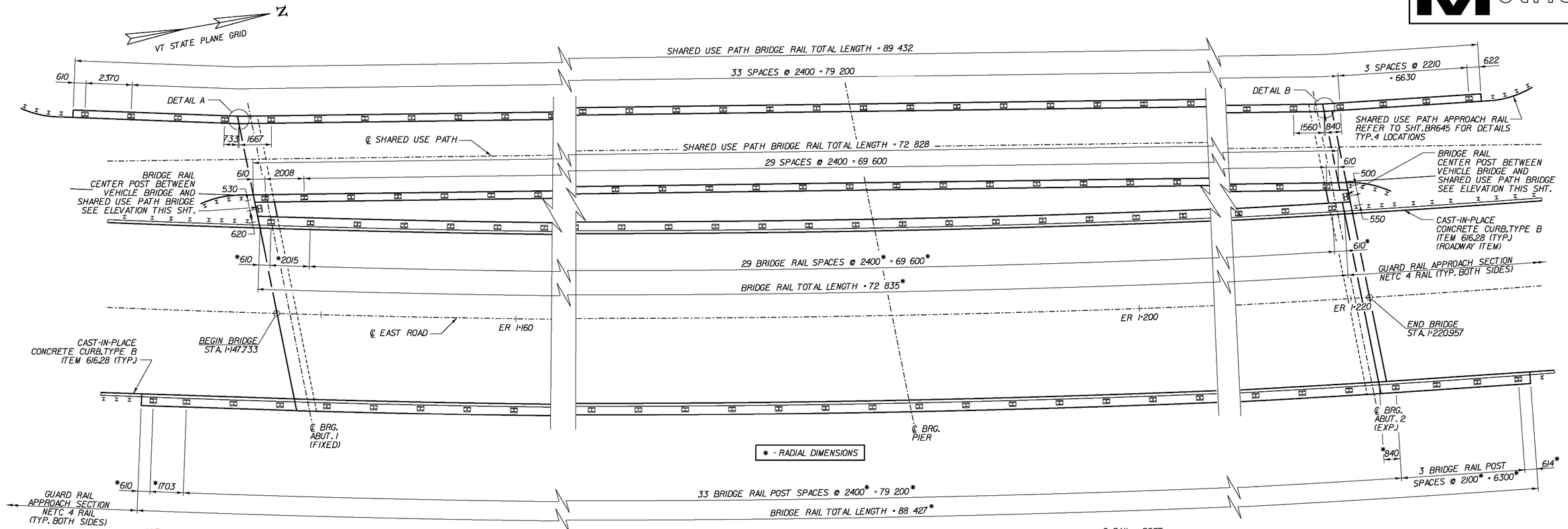

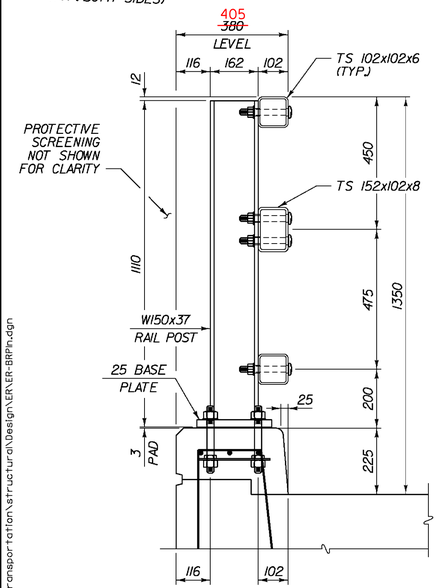

TYPICAL SECTION

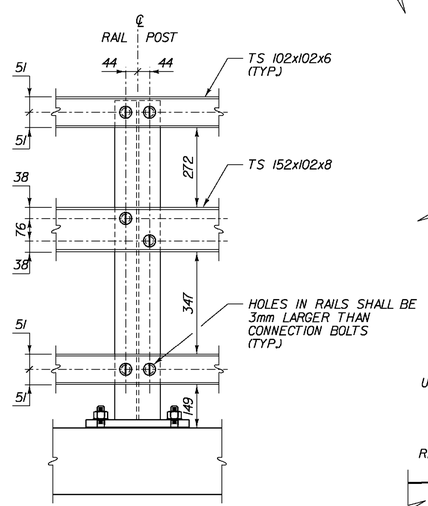

TYPICAL ELEVATION

NOTE: SEE BRIDGE SHEET BR644 FOR ADDITIONAL INFORMATION

BRIDGE RAIL SHARED USE PATH

SCALE 1:10

NOTE: ALL DIMENSIONS ARE ALONG FACE OF RAIL

RAILING PLAN

0 1 2 4 6 8 10

SCALE = 1:100

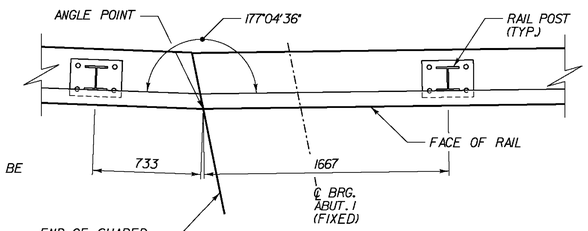

DETAIL A

SCALE 1:20

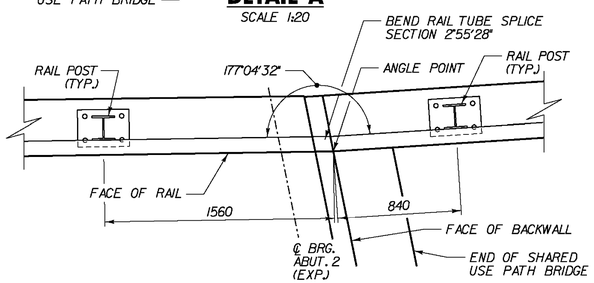

DETAIL B

SCALE 1:20

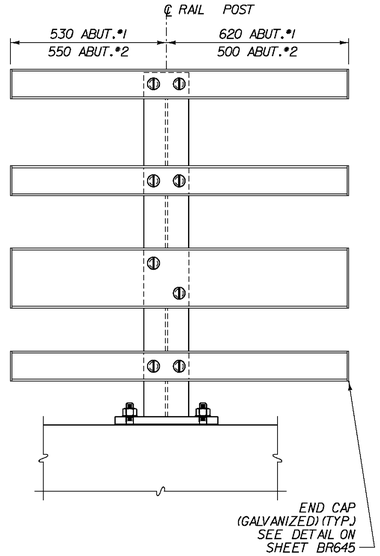

PAYMENT UNDER ITEM 62173
SEE BR644 FOR INFORMATION NOT SHOWN

TYPICAL ELEVATION BRIDGE RAIL BETWEEN VEHICLE BRIDGE AND SHARED USE PATH BRIDGE

SCALE 1:10

EAST RD & S.U.P.

STATE OF VERMONT
AGENCY OF TRANSPORTATION

Town Of BENNINGTON	Bridge No. BII
Highway No. TH 5	Log Sta.
	Surv. Sta.

EAST ROAD OVER VT ROUTE 279

RAILING PLAN

Designed By S. BURBANK	Drawn By J. SOTER
Checked By Date	Bridge Design Supervisor
S. BURBANK 03/06	G. BOGUE Date 03/07
PROJECT BENNINGTON	PROJECT NO. AC NH 019-1(53)
Dgn.: ...\Design\ER\ER-BRPln.dgn	Plot Date: 5/25/2011
Bridge Sheet No. BR643	Sheet 290 of 577

Stantec

V:\1953\active\195300002\transportation\structural\Design\ER\ER-BRPln.dgn

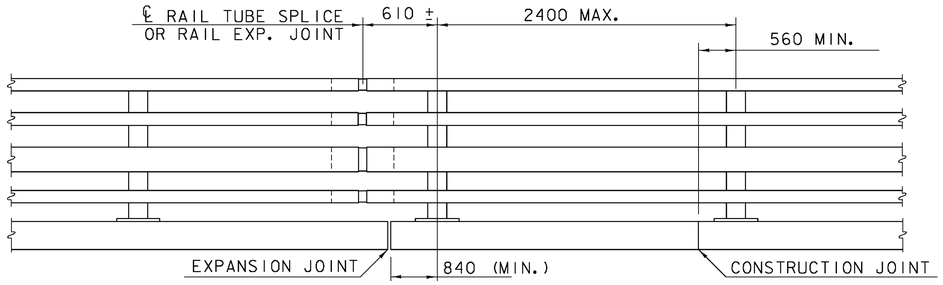

BRIDGE RAILING ELEVATION

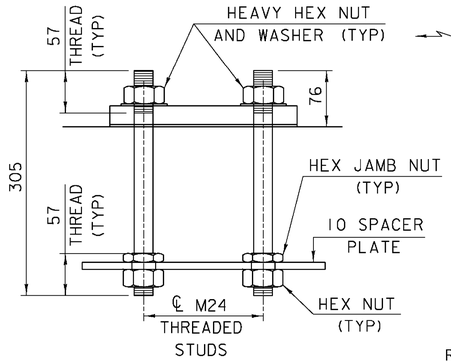

RAIL POST ANCHORAGE

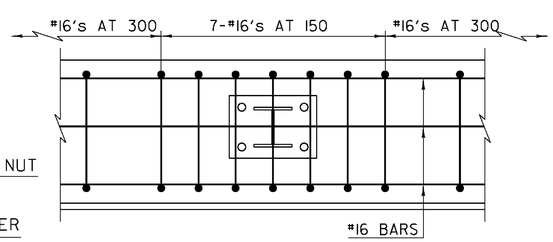

CURB REINFORCING PLAN •

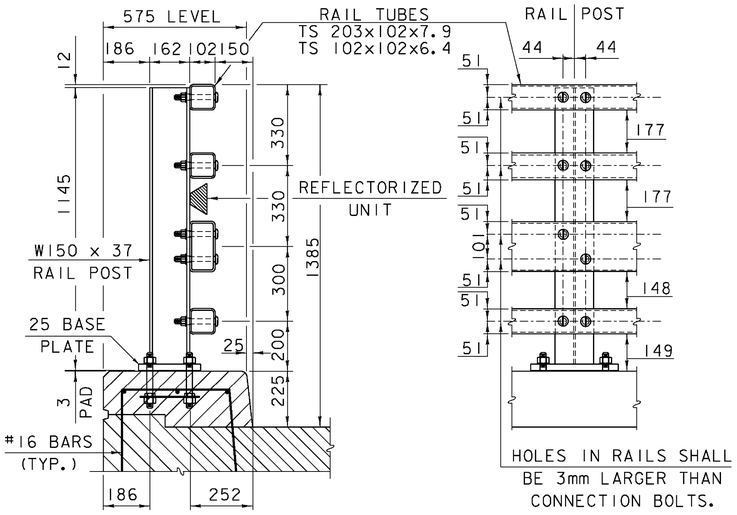

TYPICAL SECTION

ELEVATION

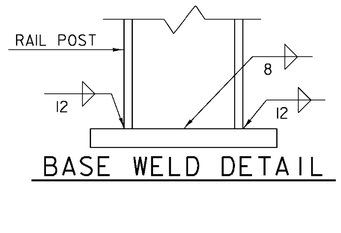

BASE WELD DETAIL

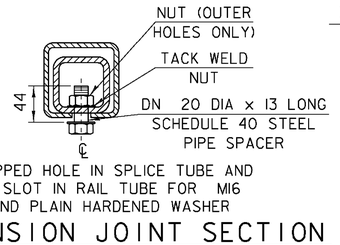

16 DIA TAPPED HOLE IN SPLICE TUBE AND
29 x 'C' SLOT IN RAIL TUBE FOR M16
BOLT AND PLAIN HARDENED WASHER

EXPANSION JOINT SECTION

FOR DETAILS NOT SHOWN,
SEE "RAIL TUBE SPLICE SECTION."

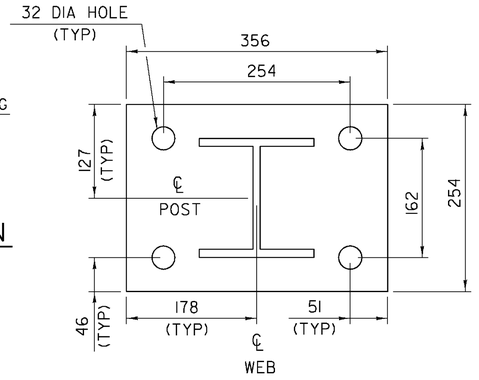

POST AND BASE PLATE

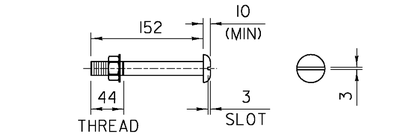

RAIL TUBE SPLICE AND RAIL EXPANSION JOINT DETAIL

(BOTTOM VIEW)

SPLICE TABLE					
T	A	B	C	L	X
N/A	102	50	--	510	20
EXPANSION JOINT TABLE					
70	140	60	90	600	102

T = TOTAL MOVEMENT BETWEEN BRIDGE
EXPANSION JOINTS. SEE NOTE 6.

M20 DIA. M 164M (TYPE 1) ROUND HEAD BOLT

(WITH WASHER AND PREVAILING TORQUE TYPE LOCK NUT)
(SEE NOTE #9)
ONLY FULL DIAMETER BODY BOLTS WILL BE ALLOWED.

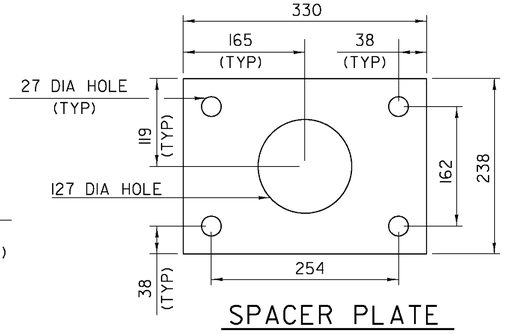

SPACER PLATE

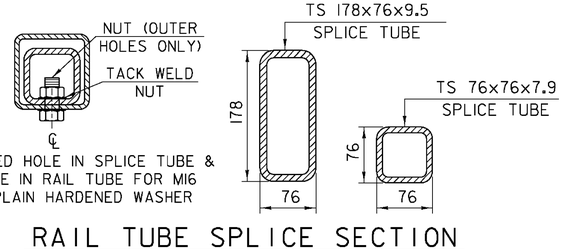

16 DIA TAPPED HOLE IN SPLICE TUBE &
19 DIA HOLE IN RAIL TUBE FOR M16
BOLT & PLAIN HARDENED WASHER

RAIL TUBE SPLICE SECTION

NOTES

1. ALL WORK AND MATERIALS SHALL CONFORM TO THE PROVISIONS OF SECTION 525 - RAILINGS OF THE STANDARD SPECIFICATION FOR CONSTRUCTION.
2. TUBING AND POSTS SHALL MEET THE REQUIREMENTS OF SECTION 732 - RAILING MATERIALS OF THE STANDARD SPECIFICATIONS FOR CONSTRUCTION EXCEPT THE DROP-WEIGHT TEAR TEST IN SECTION 732 SHALL NOT APPLY TO THE STRUCTURAL TUBING IN THIS STANDARD.
3. ALL EXPOSED CUT OR SHEARED EDGES SHALL BE ROUNDED TO A 2mm RADIUS AND BE FREE OF BURRS.
4. RAIL POSTS SHALL BE SET NORMAL TO GRADE.
5. SECTIONS OF RAIL TUBE SHALL BE ATTACHED TO A MINIMUM OF TWO (2) RAIL POSTS AND PREFERABLY TO AT LEAST FOUR (4) POSTS.
6. RAIL TUBE EXPANSION JOINTS SHALL BE PROVIDED IN ANY RAIL BAY SPANNING A SUPERSTRUCTURE EXPANSION JOINT. EXPANSION JOINT WIDTH SHALL BE "X" AT 10°C AND WILL BE ADJUSTED IN THE FIELD BY THE ENGINEER FOR OTHER TEMPERATURES.
7. ALL PARTS SHALL BE GALVANIZED AFTER FABRICATION IN ACCORDANCE WITH AASHTO M 111M, EXCEPT THAT HARDWARE SHALL MEET THE REQUIREMENTS OF AASHTO M 232M.
8. RAIL POSTS ANCHORING NUTS SHALL BE TIGHTENED TO A SNUG FIT AND GIVEN AN ADDITIONAL ONE-EIGHTH TURN.
9. RAIL TUBES SHALL BE ATTACHED USING M20 FULL DIAMETER BODY AASHTO M 164M (TYPE 1) ROUND HEAD BOLTS INSERTED THROUGH THE FACE OF THE TUBE. HOLES IN POSTS SHALL BE 2mm LARGER THAN THE BOLT SIZE.
10. HOLES IN RAILS FOR RAIL TUBE ATTACHMENT MAY BE FIELD-DRILLED. HOLES SHALL BE COATED WITH AN APPROVED ZINC-RICH PAINT PRIOR TO ERECTION.
11. ANY BENDING OF RAIL SHALL BE BY SHOP PROCEDURE ONLY.
12. THE FABRICATOR SHALL SUBMIT SHOP DRAWINGS INCLUDING WELDING PROCEDURES TO THE STRUCTURES SECTION FOR APPROVAL IN ACCORDANCE WITH THE PROVISION OF 506.04, DRAWINGS AND PROCEDURES. ALL WELDING SHALL CONFORM WITH SECTION 506.10.
13. RAIL POSTS AND BASE PLATES SHALL BE TESTED FOR IMPACT PROPERTIES IN ACCORDANCE WITH ASTM A370 CHARPY IMPACT TESTING USING A TYPE A SPECIMEN.

MATERIALS

RAIL TUBES.....ASTM A500, GRADE B OR ASTM A501
RAIL POSTS AND BASE PLATES.....ASTM A709/A709M, GRADE 345
ALL OTHER SHAPES AND PLATES.....ASTM A709/A709M, GRADE 250
ANCHOR STUDS.....ASTM F 568M, CLASS 8.8
ALL OTHER BOLTS (UNLESS NOTED).....AASHTO M 164M, TYPE 1

NUTS FOR AASHTO M 164M BOLTS AND FOR ANCHOR STUDS SHALL COMPLY WITH AASHTO M 291M (ASTM A563M).

WASHERS SHALL COMPLY WITH AASHTO M 293M (ASTM F436M) SPECIFICATIONS.

3 mm PAD SHALL COMPLY WITH STANDARD SPECIFICATION SUBSECTION 731.01 OR 731.02.

•SEE SHEET 276 FOR REVISED CURB REBAR DETAIL AT S.U.P. BRIDGE

STATE OF VERMONT
AGENCY OF TRANSPORTATION

Town Of BENNINGTON	Bridge No. BII
Highway No. TH 5	Log Sta. / Surv. Sta.
EAST ROAD OVER VT ROUTE 279	
BRIDGE RAILING - NETC 4 RAIL	
Designed By VTrans	Drawn By VTrans
Checked By S. BURBANK Date 03/06	Bridge Design Supervisor G. BOGUE Date 03/07
PROJECT BENNINGTON	PROJECT NO. AC NH 019-1(53)
Dgn.: ...\Design\ER\ER-BRail.dgn	Plot Date: 5/25/2011
Bridge Sheet No. BR644	Sheet 291 of 577

Stantec

W:\1953\active\195360002\transportation\structural\Design\ER\ER-BRail.dgn

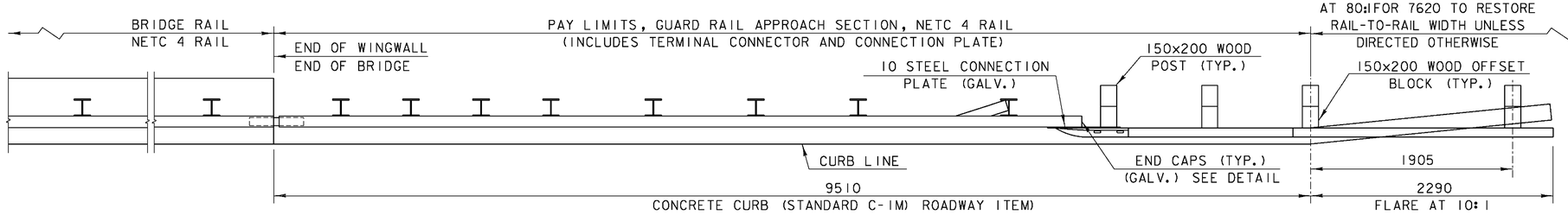

PLAN VIEW - APPROACH RAIL

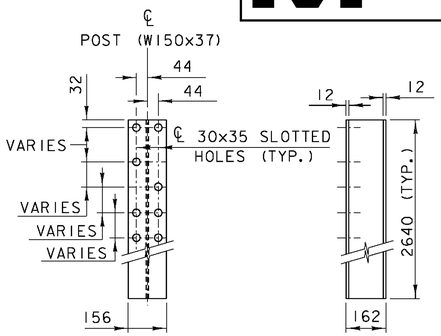

RAIL POST

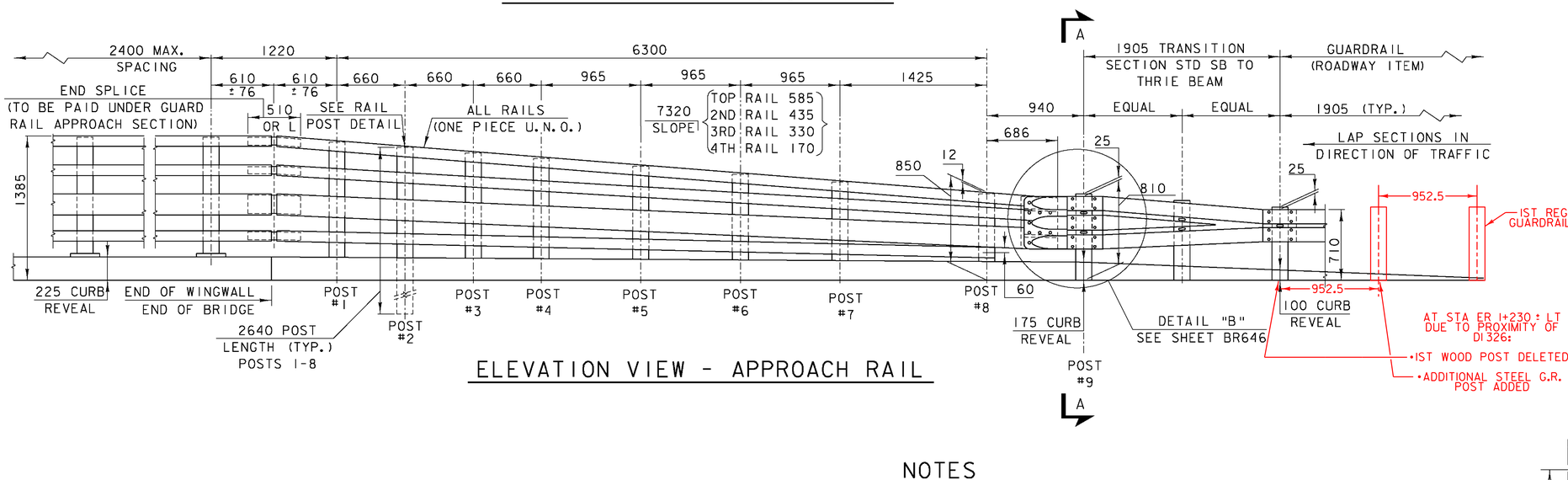

ELEVATION VIEW - APPROACH RAIL

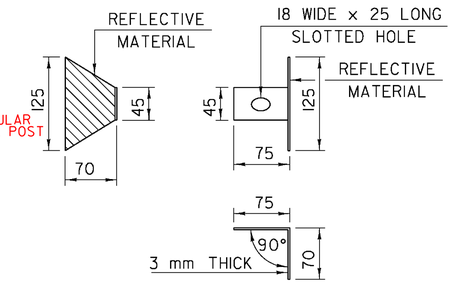

DELINEATION DEVICE DETAILS

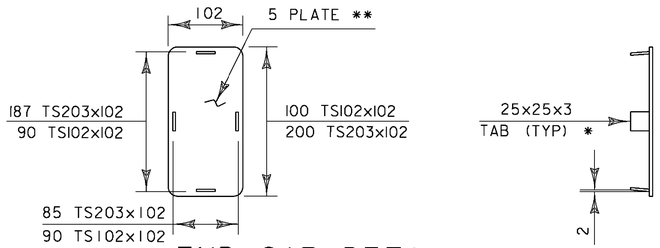

END CAP DETAIL

* WELD TABS TO END CAP PLATE IN TAPERED POSITION SO CAP CAN BE JAMMED INTO END OF RAIL TUBE.

** ROUND CORNERS 12 mm RADIUS (TYP)

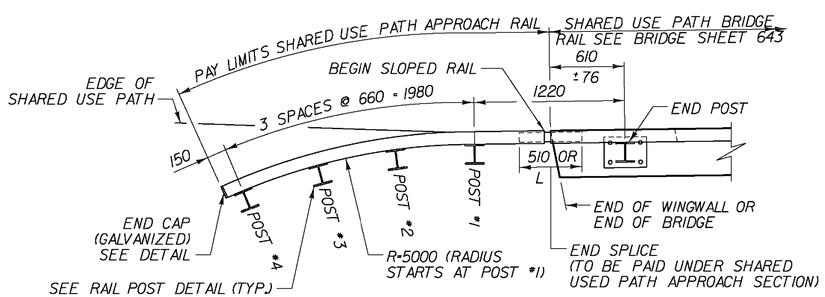

SLOPE RAILS, SAME AS VEHICULAR BRIDGE APPROACH RAIL
TOP RAIL: 585 VERT. TO 7320 HORZ.
2ND RAIL: 383 VERT. TO 7320 HORZ.
3RD RAIL: 170 VERT. TO 7320 HORZ.

PLAN VIEW - SHARED USE PATH APPROACH RAIL

PAYMENT FOR SHARED USE PATH APPROACH RAIL SHALL BE MADE UNDER ITEM 900.620 SPECIAL PROVISION (GUARD RAIL APPROACH SECTION, GALVANIZED 3 RAIL) AND SHALL INCLUDE ALL RAILS, POSTS, ATTACHEMENT HARDWARE AND END SPLICES.

NOTES

1. REFER TO BRIDGE SHEET BR644 FOR ADDITIONAL DETAILS, NOTES AND MATERIAL SPECIFICATIONS.
2. PAYMENT FOR GUARD RAIL APPROACH SECTION, NETC 4 RAIL SHALL INCLUDE THE TERMINAL CONNECTOR, THE CONNECTION PLATE, RAIL, POSTS, BLOCKS AND ATTACHMENT HARDWARE.
3. THE REFLECTORIZED ALUMINUM DELINEATION IS TO BE ERECTED EVERY 9100 (OR CLOSEST POST) WITH A 16 DIAMETER BOLT. DELINEATORS SHALL MEET SPECIFICATION REQUIREMENTS FOR ASTM B209 ALLOY 5052-H32.
4. REFLECTIVE MATERIAL SHALL MEET REQUIREMENTS OF SUBSECTION 750.08 AND SHALL BE OF ENCAPSULATED LENS SILVER. SILVER IS TO BE INSTALLED ON THE DRIVER'S RIGHT.
5. ALL APPROACH RAIL SPLICES SHALL BE LAPPED IN THE DIRECTION OF TRAFFIC FLOW.
6. ALL BRIDGE APPROACH RAIL MATERIALS, DIMENSION SIZES AND NOTES SHALL BE THE SAME AS THOSE OF THE BRIDGE RAIL, UNLESS OTHERWISE NOTED.
7. CARRIAGE BOLTS SHALL BE AASHTO M 164M AND NUTS SHALL BE AASHTO M291M (ASTM A 563M) OR BETTER (GALVANIZED).
8. WELD SPLICE BARS TO FIT BEND. USE COMPLETE PENETRATION WELD (B-U2).
9. THE CONCRETE CURB WILL BE PAID FOR AS ITEM 616.28, CAST-IN-PLACE CONCRETE CURB, TYPE B".
10. SEE BRIDGE SHEET BR646 FOR SECTION A-A.

STATE OF VERMONT
AGENCY OF TRANSPORTATION

Town Of BENNINGTON	Bridge No. BII
Highway No. TH 5	Log Sta. / Surv. Sta.
EAST ROAD OVER VT ROUTE 279	
APPROACH RAILING	
Designed By VTrans/DH	Drawn By VTrans/DH
Checked By S. BURBANK Date 03/06	Bridge Design Supervisor G. BOGUE Date 03/07
PROJECT BENNINGTON	PROJECT NO. AC NH 019-1(53)
Dgn.: ...\Design\ER\ER-BRAppr.dgn	Plot Date: 5/25/2011
Bridge Sheet No. BR645	Sheet 292 of 577

Stantec

V:\1853\active\185300021\transportation\structural\Design\ER\ER-BRAppr.dgn

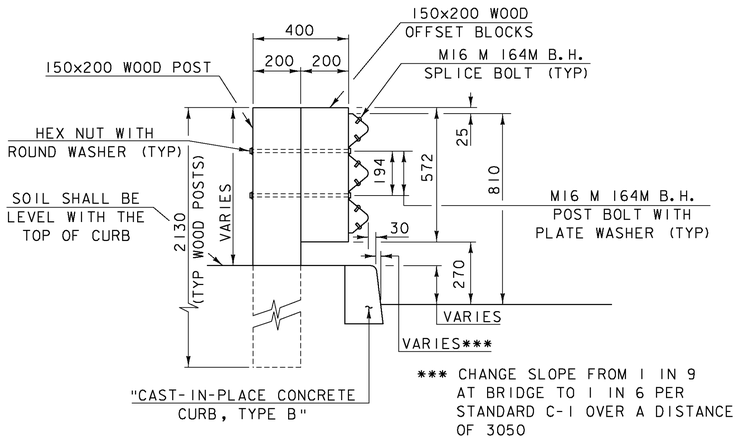

SECTION A-A (POST RAIL ASSEMBLY)

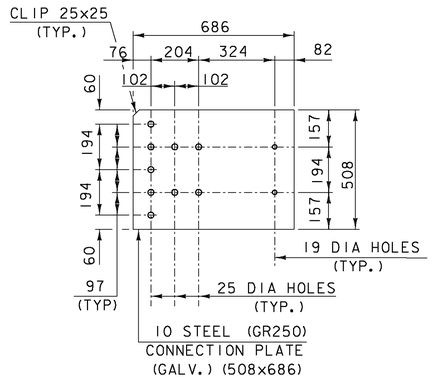

CONNECTION PLATE

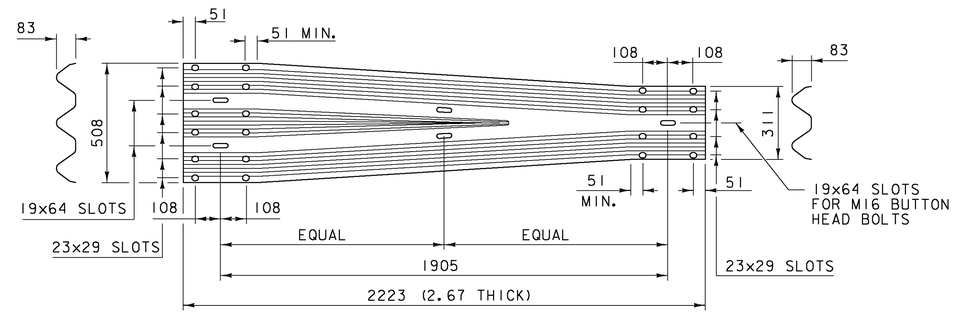

THRIE-BEAM TO STD SB
TRANSITION SECTION

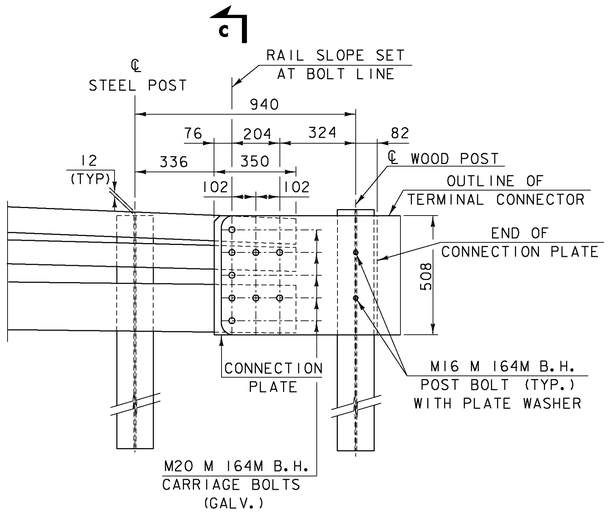

DETAIL B

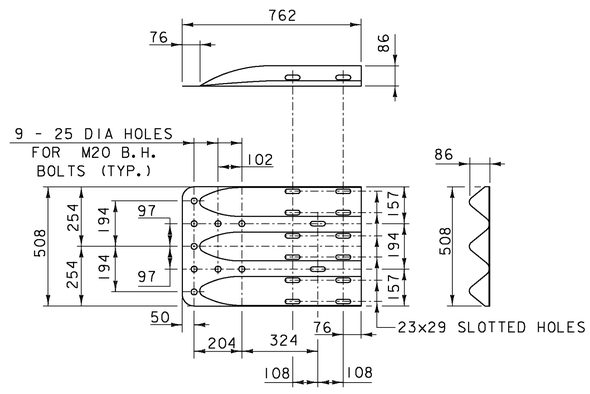

THRIE-BEAM TERMINAL CONNECTOR

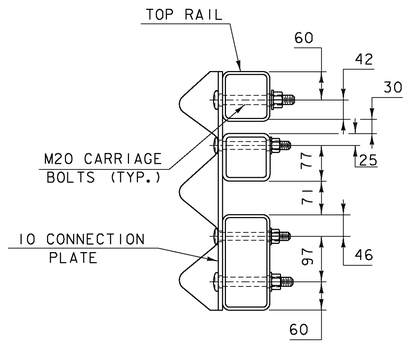

SECTION C-C
(CONNECTION PLATE)

STATE OF VERMONT
AGENCY OF TRANSPORTATION

Town Of BENNINGTON	Bridge No. BII
Highway No. TH 5	Log Sta. / Surv. Sta.
EAST ROAD OVER VT ROUTE 279	
DETAILS - NETC 4 RAIL	
Designed By VTrans	Drawn By VTrans
Checked By S. BURBANK Date 03/06	Bridge Design Supervisor G. BOGUE Date 03/07
PROJECT BENNINGTON	PROJECT NO. AC NH 019-1(53)
Dgn.: ...\Design\ER\ER-BRDets.dgn	Plot Date: 5/25/2011
Bridge Sheet No. BR646	Sheet 293 of 577

Stantec

V:\1953\active\195310002\transportation\structural\Design\ER\ER-BRDets.dgn

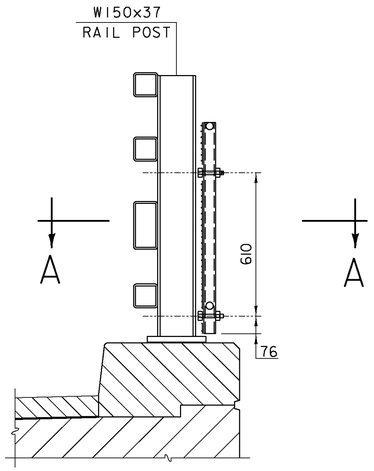

TYPICAL SECTION

NOTE: FOR DIMENSIONS SEE BRIDGE SHEETS 644 & 645

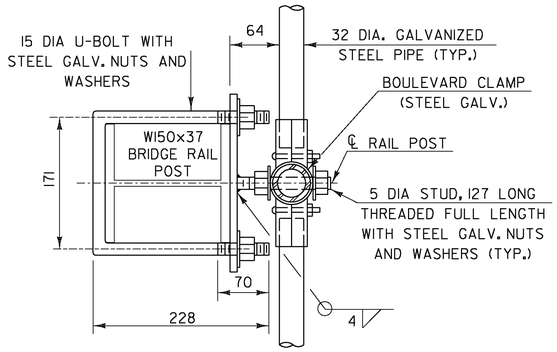

SECTION A-A

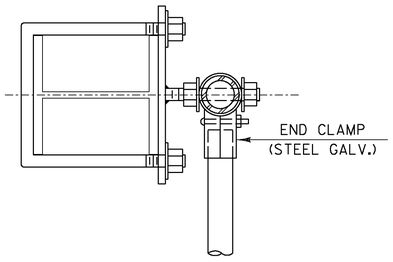

PLAN VIEW AT END POST

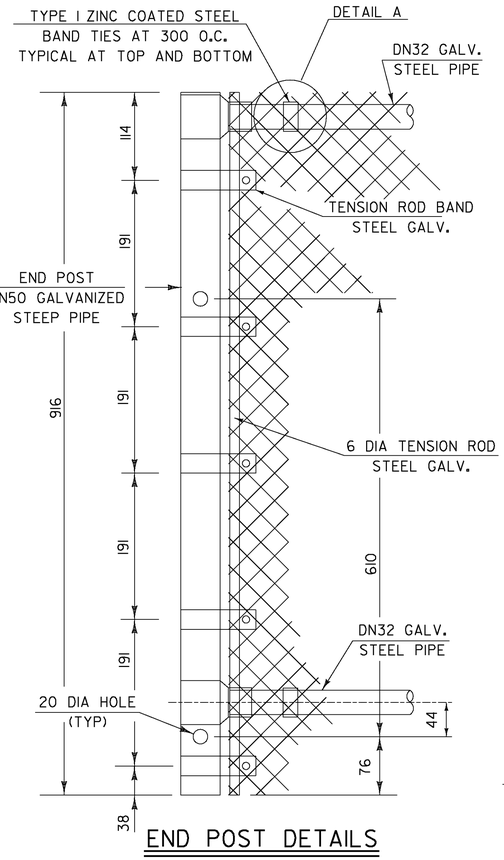

END POST DETAILS

NOTES

1. THREADS OF STUDS AND U-BOLTS TO BE M16 x 2.
2. ALL CONNECTION PLATES TO BE GALVANIZED AFTER FABRICATION.
3. DN32 PIPE LENGTH SHALL BE FIELD CUT TO FIT POST SPACING.
4. CHAIN LINK FABRIC TO BE KNUCKLED TOP AND BOTTOM.
5. ALL BOLTS, THREADED STUDS AND WASHERS SHALL CONFORM TO THE SPECIFICATIONS FOR ASTM F 568M CLASS 4.6. NUTS SHALL CONFORM TO AASHTO M 291M.
6. ALL STEEL PLATES SHALL CONFORM TO THE SPECIFICATION FOR AASHTO M 270M/M 270 GRADE 250.
7. ALL GALVANIZING SHALL CONFORM TO THE REQUIREMENTS OF AASHTO M 181 WITH HARDWARE AND FITTINGS CONFORMING TO THE REQUIREMENTS OF AASHTO M 111 OR AASHTO M 232 WHICHEVER IS APPLICABLE. ALL BOLTS, NUTS AND WASHERS SHALL BE EITHER HOT-DIP GALVANIZED IN ACCORDANCE WITH THE ABOVE AASHTO REQUIREMENTS OR MECHANICALLY GALVANIZED USING A MECHANICALLY DEPOSITED PROCESS CONFORMING TO THE REQUIREMENTS OF AASHTO M 298, CLASS 110.
8. GALVANIZED CHAIN-LINK FABRIC SHALL BE TYPE I (ZINC) CLASS D AS SPECIFIED IN AASHTO M 181.
9. SNOW BARRIER SHALL BEGIN AT THE BRIDGE RAIL POST WHICH WILL PROVIDE A MINIMUM DISTANCE OF 6m (AS SHOWN) OR AS DIRECTED BY THE ENGINEER.
10. ALL DN (I.E. DIAMETER NOMINAL) REFERENCES TO GALVANIZED STEEL PIPE SHALL REFER TO THE NOMINAL PIPE SIZE.
11. ALL POSTS, RAILS AND HARDWARE SHALL BE ZINC COATED AND CONFORM TO THE REQUIREMENTS OF AASHTO M 181, GRADE 1 OR GRADE 2.

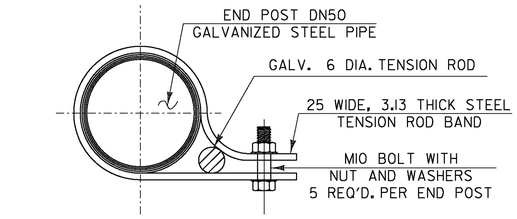

TENSION ROD BAND

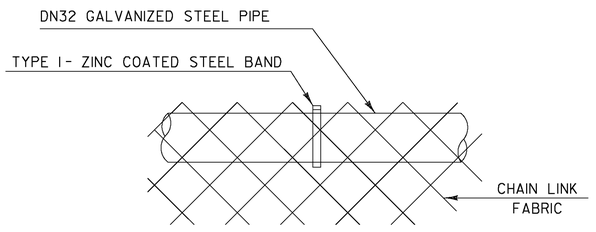

DETAIL A

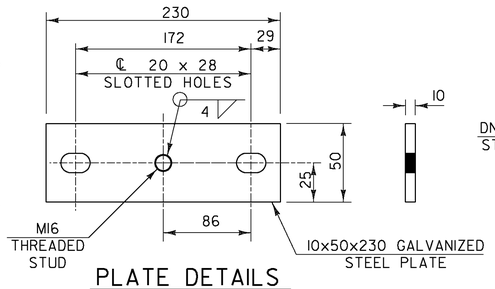

PLATE DETAILS

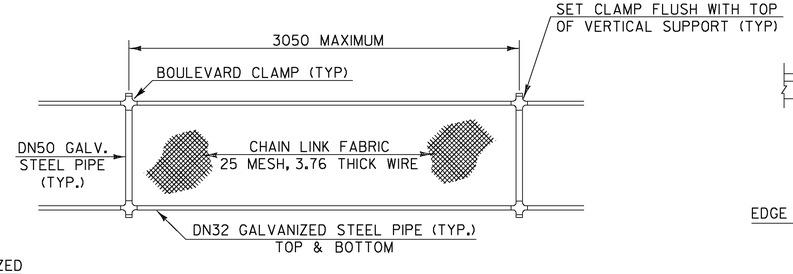

ELEVATION SNOW BARRIER

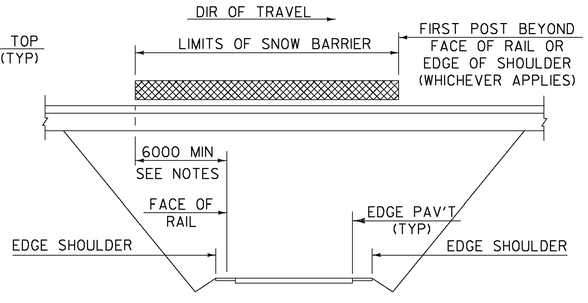

SCHEMATIC SNOW BARRIER LIMITS

STATE OF VERMONT
AGENCY OF TRANSPORTATION

Town Of BENNINGTON	Bridge No. BII
Highway No. TH 5	Log Sta. / Surv. Sta.
EAST ROAD OVER VT ROUTE 279	
SNOW FENCE - NETC 4 RAIL	
Designed By VTrans	Drawn By VTrans/DH
Checked By S. BURBANK Date 03/06	Bridge Design Supervisor G. BOGUE Date 03/07
PROJECT BENNINGTON	PROJECT NO. AC NH 019-1(53)
Dgn.: ...\Design\ER\ER-BRSnwF.dgn	Plot Date: 5/25/2011
Bridge Sheet No. BR647	Sheet 294 of 577

Stantec

V:\1953\active\195300002\transportation\structure\Design\ER\ER-BRSnwF.dgn

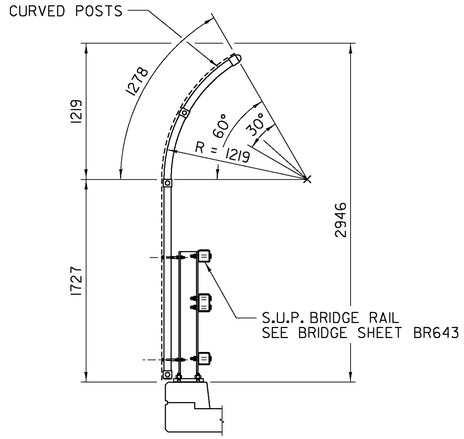

SECTION A-A

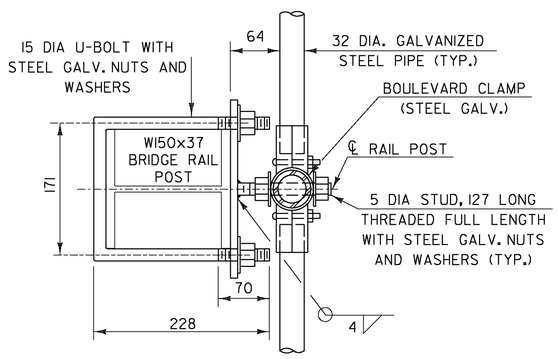

SECTION B-B

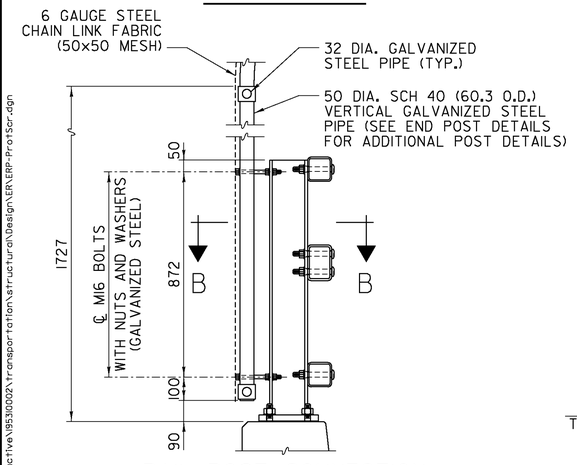

RAIL POST CONNECTION

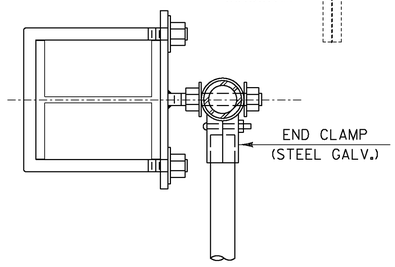

PLAN VIEW AT END POST

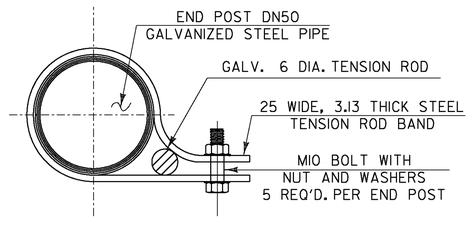

TENSION ROD BAND

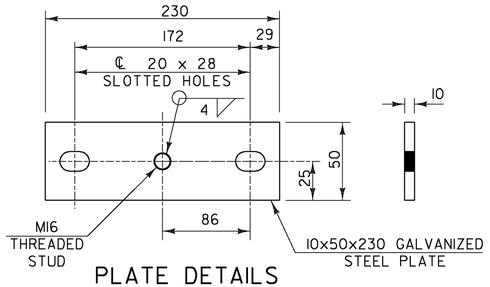

PLATE DETAILS

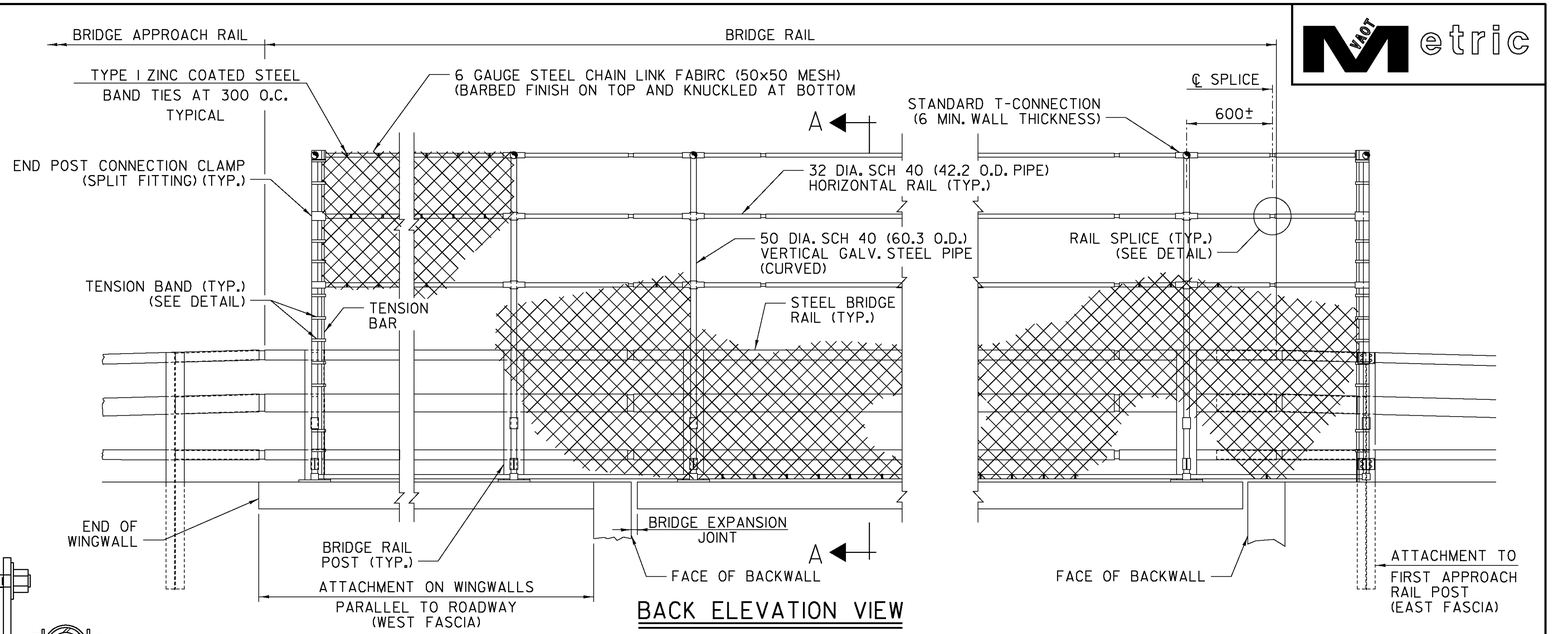

BACK ELEVATION VIEW

NOTES

1. SCREENING, POSTS, RAILS AND CONNECTIONS SHALL BE PAID UNDER ITEM 900.640 SPECIAL PROVISION (PROTECTIVE SCREENING)
2. PROVIDE A RAIL SPLICE AT THE BRIDGE DECK EXPANSION JOINT AND AT BRIDGE RAIL SPLICES.
3. SPACE SCREEN POSTS WITH BRIDGE RAIL POSTS. USE 9 GAUGE TIES AT 150 O.C. TO BOTTOM RAIL. SPACE TIES AT 300 O.C. TO ALL POSTS AND OTHER RAILS.

GENERAL NOTES

4. THREADS OF BOLTS TO BE M16 x 2-6g.
5. DN32 PIPE MAY BE FIELD CUT (SAWN) TO FIT POST SPACING AND EDGES SHALL BE TOUCHED UP WITH GALVANIZING.
6. ALL STEEL COMPONENTS AND CONNECTION PLATES SHALL BE GALVANIZED AFTER FABRICATION. ALL GALVANIZING SHALL CONFORM TO THE REQUIREMENTS OF AASHTO M 111M/M 111 WITH HARDWARE AND FITTINGS CONFORMING TO REQUIREMENTS OF AASHTO M 111M/M 111 OR AASHTO M 232M/M232 WHICHEVER IS APPLICABLE. ALL BOLTS, NUTS AND WASHERS SHALL BE EITHER HOT-DIP GALVANIZED IN ACCORDANCE WITH THE ABOVE AASHTO REQUIREMENTS OR MECHANICALLY GALVANIZED IN ACCORDANCE WITH AASHTO M 298, CLASS 110.
7. CHAIN LINKED FABRIC TO BE BARBED ON THE TOP AND KNUCKLED AT THE BOTTOM.
8. ALL BOLTS, NUTS AND WASHERS SHALL CONFORM TO THE SPECIFICATION FOR ASTM F 568M, CLASS 4.6.
9. ALL STEEL PLATES SHALL CONFORM TO THE SPECIFICATION FOR AASHTO M 270M/M 270.
10. GALVANIZED CHAIN-LINK FABRIC SHALL BE TYPE I (ZINC) CLASS D AS SPECIFIED IN AASHTO M 181.
11. ALL DN (I.E. DIAMETER NOMINAL) REFERENCES TO GALVANIZED STEEL PIPE SHALL REFER TO THE NOMINAL PIPE SIZE.

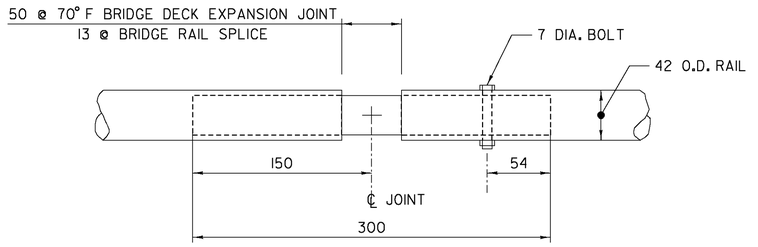

SCREEN RAIL SPLICE DETAIL

STATE OF VERMONT
AGENCY OF TRANSPORTATION

Town Of BENNINGTON	Bridge No. B11
Highway No. TH 5	Log Sta. / Surv. Sta.

SHARED USE PATH OVER VT ROUTE 279

PROTECTIVE SCREENING DETAILS (S.U.P.)

Designed By VTrans	Drawn By VTrans/DH
Checked By S. BURBANK Date 03/06	Bridge Design Supervisor G. BOGUE Date 03/07
PROJECT BENNINGTON	PROJECT NO. AC NH 019-1(53)
Dgn.: ...\Design\ER\ERP-ProtScr.dgn	Plot Date: 5/25/2011
Bridge Sheet No. BR648	Sheet 295 of 577

Stantec

V:\1953\active\195310022\transportation\structural\Design\ER\ERP-ProtScr.dgn

ITEM	NO. PIECES	SIZE	LENGTH	MARK	TYPE	A	B	C	D	E	F	G	H	J	K	R	O
1																	
2				**ABUTMENT 1**													
3	42	16	8560	1A1601	STR.												
4	47	16	1690	1A1602	17		250	1440									
5	56	16	1690	1A1603	17		250	1440									
6	51	16	4130	1A1604	STR.												
7	15	16	2480	1A1605	STR.												
8	15	16	4990	1A1606	STR.												
9	27	16	4870	1A1607	STR.												
10	5	16	5235	1A1608	STR.												
11	48	16	4850	1A1609	STR.												
12	38	16	8700	1A1610	STR.												
13▲	48	16	2900	1A1611	STR.												
14	4	16	5980	1A1612	STR.												
15	21	16	1400	1A1613	22		700	700					593		143		
16	21	16	1400	1A1614	27		700	700					681		161		
17	51	16	1855	1A1615	17			875	980								
18	52	16	975	1A1616	STR.												
19	32	16	1725	1A1617	16	250	475	325	675				475		475		
20	16	16	3100	1A1618	STR.												
21	4	16	2200	1A1619	20		1100	1100									
22	35	16	3075	1EA1620	17		1450	175	1450								
23▲	2	16	4655	1EA1621	17		2240	175	2240								
24	15	16	2635	1EA1622	17		1230	175	1230								
25	4	16	550	1A1623	STR.												
26	4	16	5250	1A1624	STR.												
27																	
28	107	19	4400	1A1901	STR.												
29																	
30✱	49	22	3565	1A2201	17		1900	1665									
31	48	22	4100	1A2202	STR.												
32																	
33	17	25	1220	1EA2501	22		610	610					431		431		
34																	
35				**ABUTMENT 2**													
36	40	16	8430	2A1601	STR.												
37	46	16	3020	2A1602	17		1580	1440									
38	55	16	1690	2A1603	17		250	1440									
39	51	16	3850	2A1604	STR.												
40	5	16	5030	2A1605	STR.												
41	26	16	4590	2A1606	STR.												
42	15	16	4725	2A1607	STR.												
43	48	16	4875	2A1608	STR.												
44	38	16	8570	2A1609	STR.												
45▲	44	16	2800	2A1610	STR.												
46	4	16	5850	2A1611	STR.												
47	21	16	1400	2A1612	22		700	700					694		93		
48	20	16	1400	2A1613	27		700	700					694		93		
49	15	16	2720	2A1614	STR.												
50	14	16	3090	2A1615	STR.												
51	51	16	2075	2A1616	17			975	1100								
52	51	16	1050	2A1617	STR.												
53	31	16	1960	2A1618	16	250	575	325	810				575		575		
54	4	16	490	2EA1619	STR.												
55	4	16	4825	2A1620	STR.												
56	4	16	2200	2A1621	20		1100	1100									
57▲	3	16	4350	2EA1622	STR.												
58▲	3	16	9800	2EA1623	STR.												
59	2	16	4010	2EA1624	17		1880	250	1880								
60	12	16	3530	2EA1625	17		1640	250	1640								
61▲	7	16	4870	2EA1626	17		2310	250	2310								
62	30	16	4410	2EA1627	17		2080	250	2080								
63																	
64	108	19	3900	2A1901	STR.												
65																	
66✱	48	22	2040	2A2201	17		375	1665									
67	47	22	3100	2A2202	STR.												
68																	
69	16	25	1220	2EA2501	22		610	610					431		431		
70																	
71				**WINGWALL 1**													
72	19	16	5100	1W1601	STR.												
73	24	16	1690	1W1602	17		250	1440									
74	21	16	5885	1W1603	STR.												
75	3	16	4550	1W1604	STR.												
76	20	16	3885	1W1605	STR.												
77	32	16	2635	1W1606	STR.												
78	20	16	4875	1W1607	STR.												
79▲	21	16	7275	1W1608	STR.												
80✱	9	16	1915	1W1609	STR.												
81▲	16	16	2770	1W1610	STR.												
82	1	16	1605	1W1611	STR.												
83	29	16	1290	1W1612	17		710	475									
84	40	16	2835	1EW1613	17		1290	255	1290								
85✱	3	16	1605	1EW1614	STR.												
86	2	16	7275	1EW1615	STR.												
87																	
88✱	22	19	2790	1W1901	STR.												
89																	
90✱	20	22	2150	1W2201	STR.												
91✱	43	25	4250	1W2501	STR.												
92✱	22	29	3930	1W2901	17		1100	2830									
93✱	21	32	2690	1W3201	17		550	2140									

ITEM	NO. PIECES	SIZE	LENGTH	MARK	TYPE	A	B	C	D	E	F	G	H	J	K	R	O
94																	
95				**WINGWALL 2**													
96	19	16	4000	2W1601	STR.												
97	22	16	1690	2W1602	17		250	1440									
98	18	16	6315	2W1603	STR.												
99	1	16	5865	2W1604	STR.												
100	3	16	4300	2W1605	STR.												
101	18	16	4400	2W1606	STR.												
102	30	16	2250	2W1607	STR.												
103	22	16	4125	2W1608	STR.												
104▲	22	16	6525	2W1609	STR.												
105	14	16	1530	2W1610	STR.												
106▲	16	16	3045	2W1611	STR.												
107	38	16	2115	2EW1612	17		820	475	820								
108✱	3	16	6525	2EW1613	STR.												
109	2	16	1220	2EW1614	STR.												
110																	
111✱	20	19	2790	2W1901	STR.												
112																	
113✱	19	22	2150	2W2201	STR.												
114																	
115✱	38	25	4250	2W2501	STR.												
116																	
117✱	20	29	3930	2W2901	17		1100	2830									
118																	
119✱	19	32	2690	2W3201	17		550	2140									
120																	
121				**WINGWALL 3**													
122	19	16	3850	3W1601	STR.												
123	22	16	1690	3W1602	17		250	1440									
124	19	16	5730	3W1603	STR.												
125	3	16	4340	3W1604	STR.												
126✱	18	16	3790	3W1605	STR.												
127	30	16	2935	3W1606	STR.												
128	20	16	4000	3W1607	STR.												
129▲	21	16	6400	3W1608	STR.												
130	12	16	2230	3W1609	STR.												
131▲	16	16	2610	3W1610	STR.												
132	27	16	1185	3W1611	17		710	475									
133	38	16	2835	3EW1612	17		1290	255	1290								
134✱	3	16	1825	3EW1613	STR.												
135	2	16	6400	3EW1614	STR.												
136																	
137✱	20	19	2790	3W1901	STR.												
138																	
139	17	22	2150	3W2201	STR.												
140																	
141✱	37	25	4250	3W2501	STR.												
142																	
143✱	20	29	3930	3W2901	17		1100	2830									
144																	
145✱	18	32	2690	3W3201	17		550	2140									
146																	
147				**WINGWALL 4**													
148✱	20	16	3770	4W1601	STR.												
149	20	16	1690	4W1602	17		250	1440									
150	17	16	6150	4W1603	STR.												
151	1	16	5900	4W1604	STR.												
152	2	16	4020	4W1605	STR.												
153	16	16	4185	4W1606	STR.												
154	28	16	2100	4W1607	STR.												
155	20	16	3700	4W1608	STR.												
156▲	22	16	6100	4W1609	STR.												
157	14	16	1395	4W1610	STR.												
158▲	16	16	2925	4W1611	STR.												
159	37	16	2325	4EW1612	17		925	475	925								
160	2	16	6100	4EW1613	STR.												
161△	4	16	990	4EW1614	STR.												
162																	
163✱	19	19	2790	4W1901	STR.												
164																	
165✱	17	22	2150	4W2201	STR.												
166																	
167✱	35	25	4250	4W2501	STR.												
168																	
169✱	19	29	3930	4W2901	17		1100	2830									
170																	
171✱	17	32	2690	4W3201	17		550	2140									
172																	
173				**SHARED USE PATH PIER**													
174△	21	16	4110	PS1601	STR.												
175	15	16	5330	PS1602	STR.												
176✱	55	16	3700	EPS1603	STR.												
177✱	26	16	2050	EPS1604	17		685	680	685								
178	54	16	3670	EPS1605	T1	150	975	710	975	710		150					
179																	
180△	17	19	5330	PS1901	STR.												
181																	
182△	39	29	4860	PS2901	1	375		4110				375		300			
183△	56	29	3220	EPS2902	17		475	2745									
184	54	29	7790	EPS2903	STR.												
185																	
186																	

NOTES

1. UNLESS OTHERWISE DESIGNATED, ALL BAR REINFORCEMENT FOR CONCRETE IN SIZES UP TO AND INCLUDING 55M SHALL CONFROM TO THE REQUIREMENT OF THE "SPECIFICATIONS FOR DEFORMED BILLET-STEEL BARS FOR CONCRETE REINFORCEMENT", AASHTO M 31M (ASTM A 615M-SI). ALL BARS SHALL BE GRADE 420, UNLESS OTHERWISE DESIGNATED.
2. FOR TYPICAL BENDING DETAILS, RECOMMENDED PIN DIAMETER "D" OF BENDS AND HOOKS, AND OTHER STANDARD PRACTICE, SEE CURRENT CONCRETE REINFORCING STEEL INSTITUTE "MANUAL OF STANDARD PRACTICE".
3. BARS WHICH REQUIRE MORE ACCURATE BENDING THAN STANDARD PRACTICES SHOULD HAVE LIMITS INDICATED.
4. ALL DIMENSIONS ARE OUT TO OUT OF BAR EXCEPT "A" AND "G" ON STANDARD 180 DEGREE AND 135 DEGREE HOOKS.
5. "J" DIMENSION ON 180 DEGREE HOOKS ARE TO BE SHOWN ONLY WHEN NECESSARY TO RESTRICT HOOK SIZE. OTHERWISE, STANDARD HOOKS ARE TO BE USED.
6. "H" DIMENSION ON STIRRUPS ARE TO BE SHOWN ONLY WHEN NECCESSARY TO MAINTAIN CLEARANCES.
7. WHERE SLOPE DIFFERS FROM 45 DEGREES, DIMENSIONS "H" AND "K" MUST BE SHOWN.
8. ▲ DENOTES BARS TO BE CUT IN FIELD.
9. ✱ DENOTES ONE EXTRA BAR ADDED FOR TESTING PURPOSES.
10. △ DENOTES TWO EXTRA BARS ADDED FOR TESTING PURPOSES.
11. "E" IN PREFIX DENOTES EPOXY COATED REINFORCING STEEL.

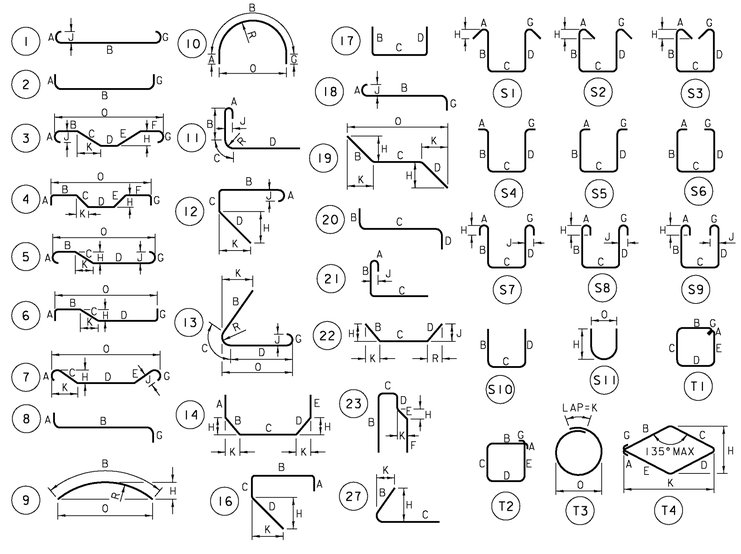

ASTM STANDARD REINFORCING BARS

BAR SIZE DESIGNATION	NOMINAL MASS kg/m	NOMINAL DIMENSIONS ROUND SECTION DIAMETER mm	CROSS SECTIONAL AREA mm²	PERIMETER mm
10	0.560	9.5	71	29.84
13	0.994	12.7	129	39.90
16	1.552	15.9	199	49.95
19	2.235	19.1	284	60.00
22	3.042	22.2	387	69.74
25	3.973	25.4	510	79.80
29	5.060	28.7	645	90.16
32	6.404	32.3	819	101.47
36	7.907	35.8	1006	112.47
43	11.380	43.0	1452	135.09
57	20.240	57.3	2581	180.01

Stantec

STATE OF VERMONT
AGENCY OF TRANSPORTATION

Town Of BENNINGTON	Bridge No. BII
Highway No. TH 5	Log Sta.
	Surv. Sta.

EAST ROAD OVER VT ROUTE 279

REINFORCING STEEL SCHEDULE I

Designed By T. KNIGHT	Drawn By J. SOTER
Checked By S. BURBANK Date 11/06	Bridge Design Supervisor G. BOGUE Date 03/07
PROJECT BENNINGTON	PROJECT NO. AC NH 019-1(53)
Dgn.: ...\Design\ER\ER-RebarSched 1.dgn	Plot Date: 5/25/2011
Bridge Sheet No. BR649	Sheet 296 of 577

ITEM	NO. PIECES	SIZE	LENGTH	MARK	TYPE	A	B	C	D	E	F	G	H	J	K	R	O
1																	
2		**VEHICULAR PIER**															
3 △	28	16	4370	P1601	STR.												
4	16	16	7400	P1602	STR.												
5	18	16	2240	EP1603	17		685	870	685								
6	32	16	5000	EP1604	STR.												
7	2	16	2425	EP1605	STR.												
8 ✳	3	16	3125	EP1606	STR.												
9 ✳	3	16	5760	EP1607	STR.												
10	2	16	6740	EP1608	STR.												
11	2	16	7720	EP1609	STR.												
12	2	16	8700	EP1610	STR.												
13	8	16	9400	EP1611	STR.												
14	8	16	2460	EP1612	S10		930	600	930								
15	8	16	2580	EP1613	S10		990	600	990								
16	8	16	2700	EP1614	S10		1050	600	1050								
17	8	16	2830	EP1615	S10		1115	600	1115								
18	8	16	2950	EP1616	S10		1175	600	1175								
19	8	16	3080	EP1617	S10		1240	600	1240								
20	8	16	3200	EP1618	S10		1300	600	1300								
21	8	16	3320	EP1619	S10		1360	600	1360								
22	8	16	3450	EP1620	S10		1425	600	1425								
23	8	16	3570	EP1621	S10		1485	600	1485								
24	8	16	4390	EP1622	22		600	2580	1210				314	1029	511	632	
25	16	16	2040	EP1623	17		600	840	600								
26	16	16	3390	EP1624	T1	150	675	870	675	870		150					
27	32	16	3990	EP1625	T1	150	975	870	975	870		150					
28																	
29 ✳	51	29	4370	P2901	STR.												
30 ✳	32	29	8150	P2902	1	375	7400					375					
31																	
32 ✳	71	29	3370	EP2903	17			2895	475								
33	70	29	7240	EP2904	STR.												
34 ✳	15	29	5475	EP2905	17			5000	475								
35																	
36		**SHARED USE PATH DECK**															
37	150	16	12 800	ED1601	STR.												
38	669	16	1180	ED1602	S5	250	225	230	225			250					
39 ▲✳	8	16	4345	ED1603	STR.												
40 ✳	19	16	1785	ED1604	S5	250	260	765	260			250					
41	12	16	1480	ED1605	S5	250	260	460	260			250					
42																	
43 △	26	19	8600	ED1901	STR.												
44																	
45 △	292	22	4795	ED2201	17		225	4345	225								
46																	
47		**VEHICULAR DECK**															
48 ▲✳	487	16	9750	ES1601	STR.												
49 ✳	553	16	12 800	ES1602	STR.												
50 ▲	486	16	10 100	ES1603	1	175	9750					175		130			
51	669	16	1645	ES1604	S5	250	360	425	360			250					
52 ▲	7	16	9845	ES1605	STR.												
53	33	16	1815	ES1606	S5	250	275	765	275			250					
54	27	16	1510	ES1607	S5	250	275	460	275			250					
55																	
56 △	83	19	9550	ES1901	STR.												
57																	
58		**APPROACH SLAB 1**															
59 △	23	16	8700	1EAS1601	STR.												
60																	
61	36	29	6215	1EAS2901	1	375	5840							300			
62																	
63		**APPROACH SLAB 2**															
64	21	16	8550	2EAS1601	STR.												
65																	
66 △	37	29	6215	2EAS2901	1	375	5840							300			
67																	
68																	
69																	
70																	
71																	
72																	
73																	
74																	
75																	
76																	
77																	
78																	
79																	
80																	
81																	
82																	
83																	
84																	
85																	
86																	
87																	
88																	
89																	
90																	
91																	
92																	
93																	
94																	
95																	
96																	
97																	
98																	
99																	
100																	
101																	
102																	
103																	
104																	
105																	
106																	
107																	
108																	
109																	
110																	
111																	
112																	
113																	
114																	
115																	
116																	
117																	
118																	
119																	
120																	
121																	
122																	
123																	
124																	
125																	
126																	
127																	
128																	
129																	
130																	
131																	
132																	
133																	
134																	
135																	
136																	
137																	
138																	
139																	
140																	
141																	
142																	
143																	
144																	
145																	
146																	
147																	
148																	
149																	
150																	
151																	
152																	
153																	
154																	
155																	
156																	
157																	
158																	
159																	
160																	
161																	
162																	
163																	
164																	
165																	
166																	
167																	
168																	
169																	
170																	
171																	
172																	
173																	
174																	
175																	
176																	
177																	
178																	
179																	
180																	
181																	
182																	
183																	
184																	
185																	
186																	

NOTES

1. UNLESS OTHERWISE DESIGNATED, ALL BAR REINFORCEMENT FOR CONCRETE IN SIZES UP TO AND INCLUDING 55M SHALL CONFROM TO THE REQUIREMENT OF THE "SPECIFICATIONS FOR DEFORMED BILLET-STEEL BARS FOR CONCRETE REINFORCEMENT", AASHTO M 31M (ASTM A 615M-S1). ALL BARS SHALL BE GRADE 420, UNLESS OTHERWISE DESIGNATED.
2. FOR TYPICAL BENDING DETAILS, RECOMMENDED PIN DIAMETER "D" OF BENDS AND HOOKS, AND OTHER STANDARD PRACTICE, SEE CURRENT CONCRETE REINFORCING STEEL INSTITUTE "MANUAL OF STANDARD PRACTICE".
3. BARS WHICH REQUIRE MORE ACCURATE BENDING THAN STANDARD PRACTICES SHOULD HAVE LIMITS INDICATED.
4. ALL DIMENSIONS ARE OUT TO OUT OF BAR EXCEPT "A" AND "G" ON STANDARD 180 DEGREE AND 135 DEGREE HOOKS.
5. "J" DIMENSION ON 180 DEGREE HOOKS ARE TO BE SHOWN ONLY WHEN NECESSARY TO RESTRICT HOOK SIZE. OTHERWISE, STANDARD HOOKS ARE TO BE USED.
6. "H" DIMENSION ON STIRRUPS ARE TO BE SHOWN ONLY WHEN NECCESSARY TO MAINTAIN CLEARANCES.
7. WHERE SLOPE DIFFERS FROM 45 DEGREES, DIMENSIONS "H" AND "K" MUST BE SHOWN.
8. ▲ DENOTES BARS TO BE CUT IN FIELD.
9. ✳ DENOTES ONE EXTRA BAR ADDED FOR TESTING PURPOSES.
10. △ DENOTES TWO EXTRA BARS ADDED FOR TESTING PURPOSES.
11. "E" IN PREFIX DENOTES EPOXY COATED REINFORCING STEEL.

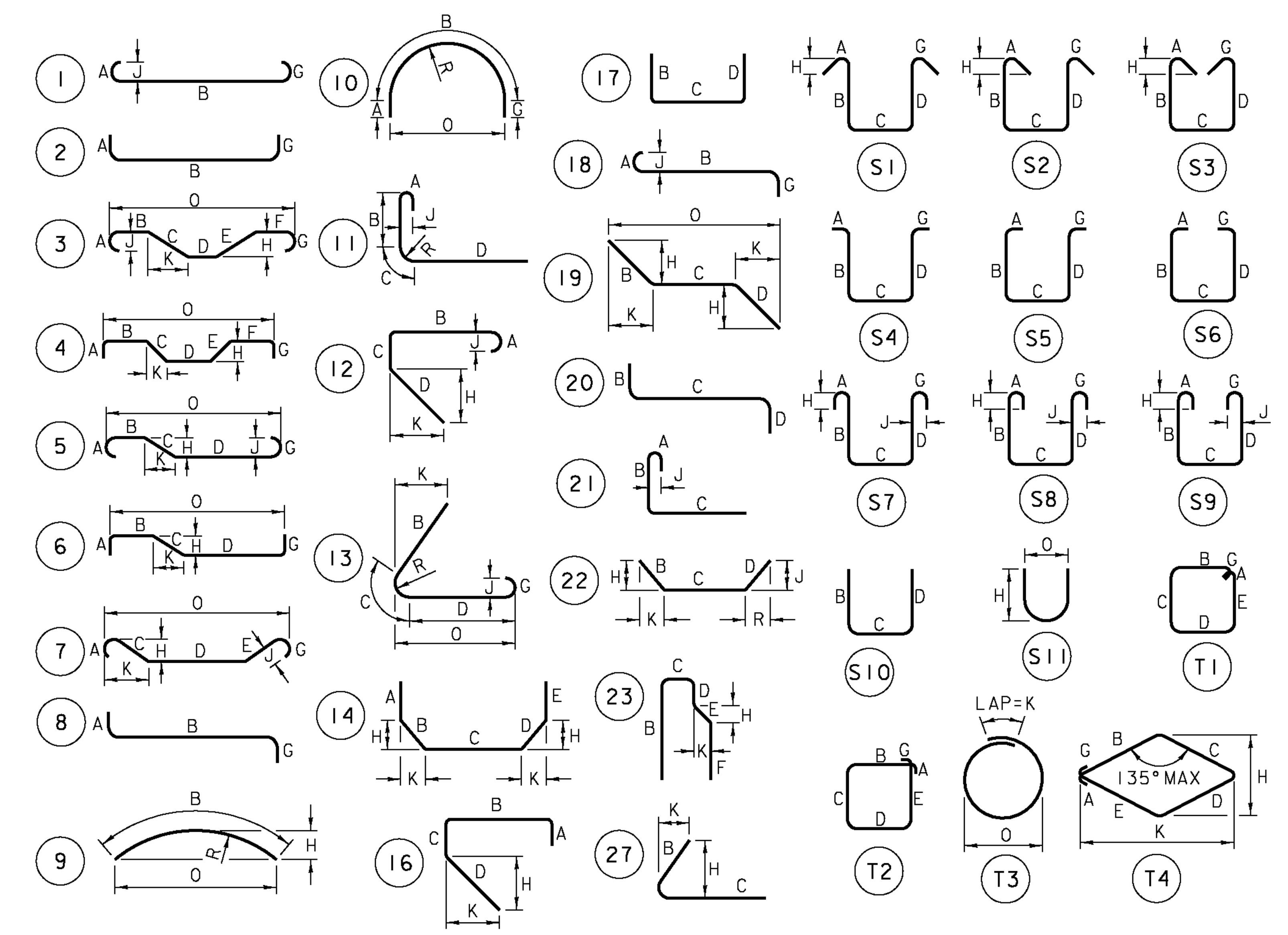

ASTM STANDARD REINFORCING BARS

BAR SIZE DESIGNATION	NOMINAL MASS kg/m	NOMINAL DIMENSIONS DIAMETER mm	CROSS SECTIONAL AREA mm²	ROUND SECTION PERIMETER mm
10	0.560	9.5	71	29.84
13	0.994	12.7	129	39.90
16	1.552	15.9	199	49.95
19	2.235	19.1	284	60.00
22	3.042	22.2	387	69.74
25	3.973	25.4	510	79.80
29	5.060	28.7	645	90.16
32	6.404	32.3	819	101.47
36	7.907	35.8	1006	112.47
43	11.380	43.0	1452	135.09
57	20.240	57.3	2581	180.01

Stantec

STATE OF VERMONT
AGENCY OF TRANSPORTATION

Town Of BENNINGTON | Bridge No. B11

Highway No. TH 5 | Log Sta. | Surv. Sta.

EAST ROAD OVER VT ROUTE 279

REINFORCING STEEL SCHEDULE II

Designed By T. KNIGHT | Drawn By J. SOTER

Checked By S. BURBANK Date 11/06 | Bridge Design Supervisor G. BOGUE Date 03/07

PROJECT BENNINGTON | PROJECT NO. AC NH 019-1(53)

Dgn.: ...\Design\ER\ER-RebarSched II.dgn Plot Date: 5/25/2011

Bridge Sheet No. BR650 Sheet 297 of 577

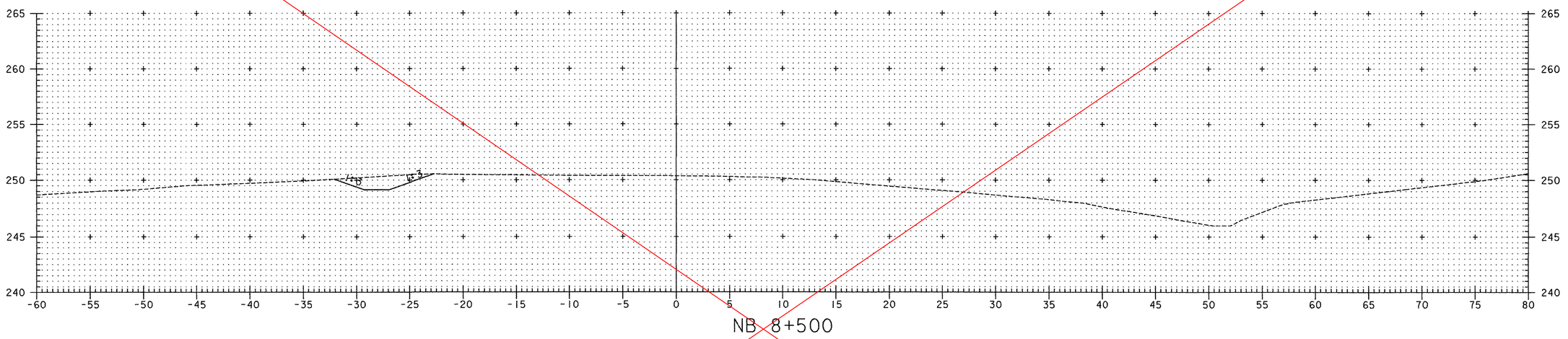

SUPERSEDED BY PRECEDING SHEET

NOTE:
ELEVATIONS SHOWN ARE FOR THE ULTIMATE FINISHED GRADE. THE TOP 50 PAVEMENT COURSE (TYPE IIIS) WILL BE CONSTRUCTED ON THE BRIDGE LIMITS. THIS CONTRACT INCLUDES FULL DEPTH PAVEMENT CONSTRUCTION ON BRIDGE LIMITS ONLY.

10 METERS
5
H 1:200 SCALE
V 1:200 SCALE
@ FULL SIZE
5 10 METERS

VERMONT AGENCY OF TRANSPORTATION

Stantec

PROJECT NAME: BENNINGTON
PROJECT NUMBER: AC NH 019-1(53)

FILE NAME: ...\plot_files\zd307c3xs_nb.ptf
DESIGN SUPERVISOR: GREG EDWARDS
DESIGNED BY: MARC FOISY
NB MAINLINE CROSS SECTIONS

PLOT DATE: 5/19/2007
DRAWN BY: STANTEC
CHECKED BY: GARY SANTY
SHEET 298 OF 577

V:\1953\active\195310002\transportation\drawing\contract_3\plot_files\zd307c3xs_nb.ptf

RECORD PLANS

REVISED
4-3-2009

Metric

RECEIVED
JUN 17 2009
G.P.I.

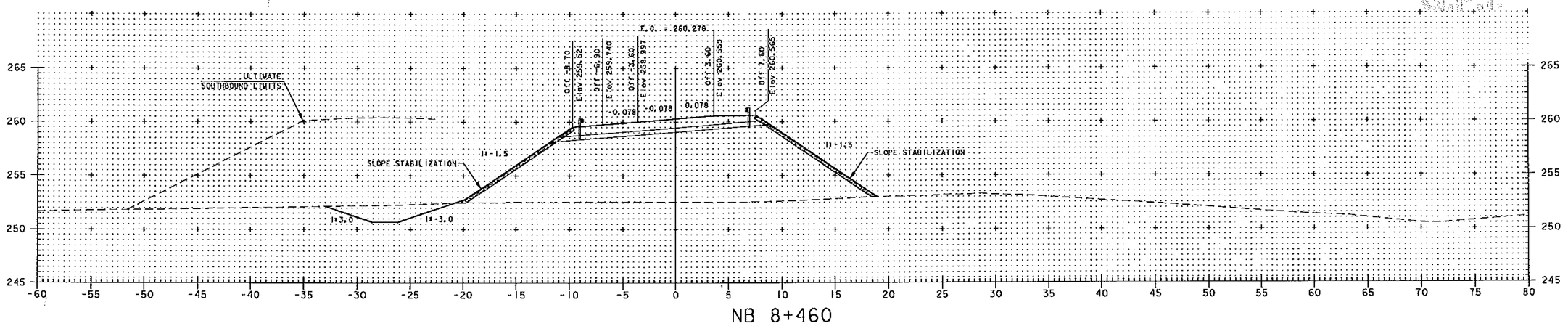

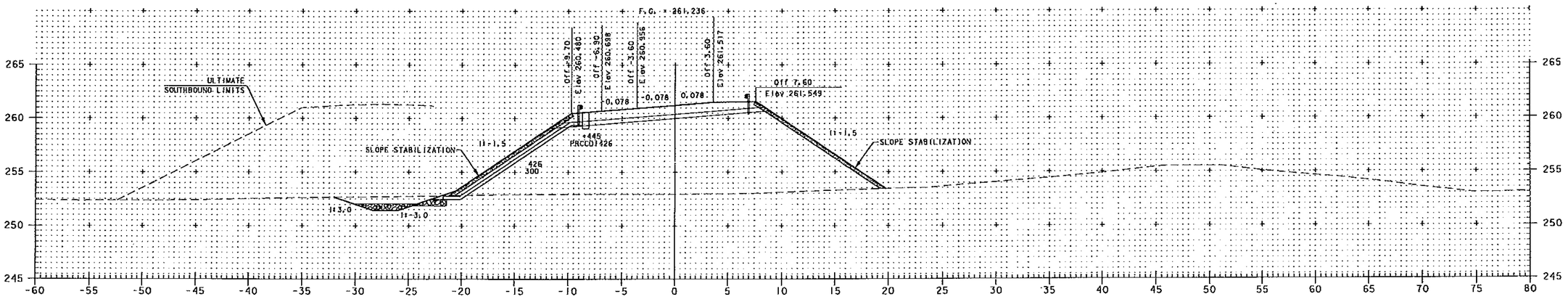

NOTE:
ELEVATIONS SHOWN ARE FOR THE ULTIMATE FINISHED GRADE. THE TOP 50 PAVEMENT COURSE (TYPE IIIS) WILL BE CONSTRUCTED ON THE BRIDGE LIMITS. THIS CONTRACT INCLUDES FULL DEPTH PAVEMENT CONSTRUCTION ON BRIDGE LIMITS ONLY.

10 METERS
5
H 1:200 SCALE
V 1:200 SCALE
@ FULL SIZE
5 10 METERS

VERMONT AGENCY OF TRANSPORTATION

Stantec

PROJECT NAME: BENNINGTON
PROJECT NUMBER: AC NH 019-1(53)

FILE NAME: ...\zd307c3.revised.ptf
DESIGN SUPERVISOR: GREG EDWARDS
DESIGNED BY: MARC FOISY
NB MAINLINE CROSS SECTIONS

PLOT DATE: 6/16/2009
DRAWN BY: STANTEC
CHECKED BY: GARY SANTY
SHEET OF 577

V:\1952\active\155310002\transportation\drawing\contract_3\VerticalRevision\zd307c3.revised.ptf

RECORD PLANS

REVISED
4-3-2009

VAOT Metric

RECEIVED
JUN 17 2009
G.F.

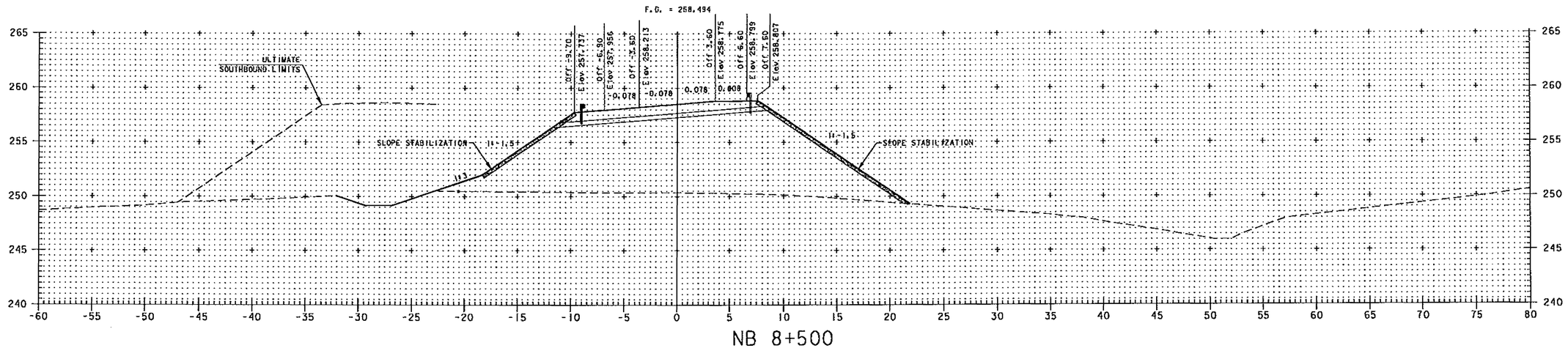

NB 8+500

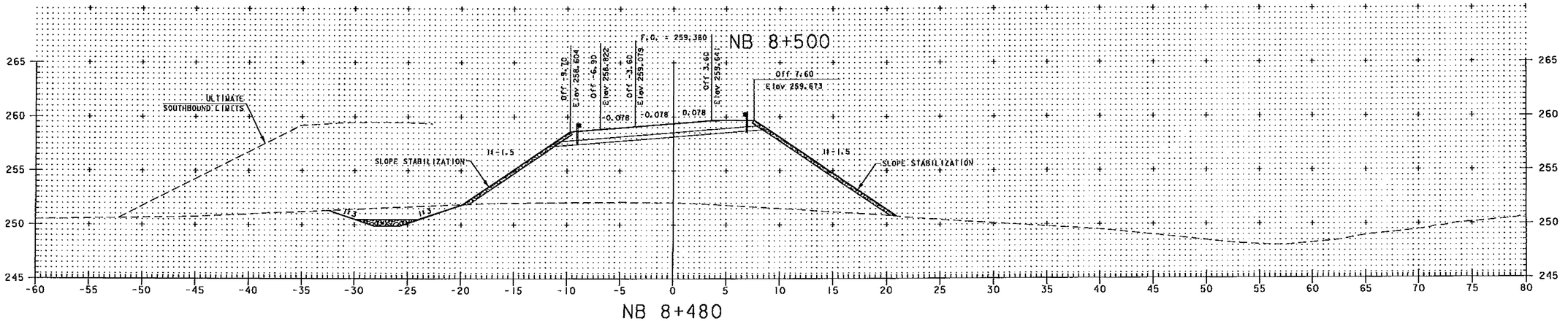

NB 8+480

NOTE:
ELEVATIONS SHOWN ARE FOR THE ULTIMATE FINISHED GRADE. THE TOP 50 PAVEMENT COURSE (TYPE IIIS) WILL BE CONSTRUCTED ON THE BRIDGE LIMITS. THIS CONTRACT INCLUDES FULL DEPTH PAVEMENT CONSTRUCTION ON BRIDGE LIMITS ONLY.

10 METERS
H 1:200 SCALE
V 1:200 SCALE
@ FULL SIZE
5 5 10 METERS

VERMONT AGENCY OF TRANSPORTATION

Stantec

PROJECT NAME: BENNINGTON
PROJECT NUMBER: AC NH 019-1(53)

FILE NAME: ...\zd307o3.revised.ptf
DESIGN SUPERVISOR: GREG EDWARDS
DESIGNED BY: MARC FOISY
NB MAINLINE CROSS SECTIONS

PLOT DATE: 6/16/2009
DRAWN BY: STANTEC
CHECKED BY: GARY SANTY
SHEET 298 OF 577

V:\1952\active\195300021\transportation\drawing\contract_3\Vertical Revision\zd307o3.revised.ptf

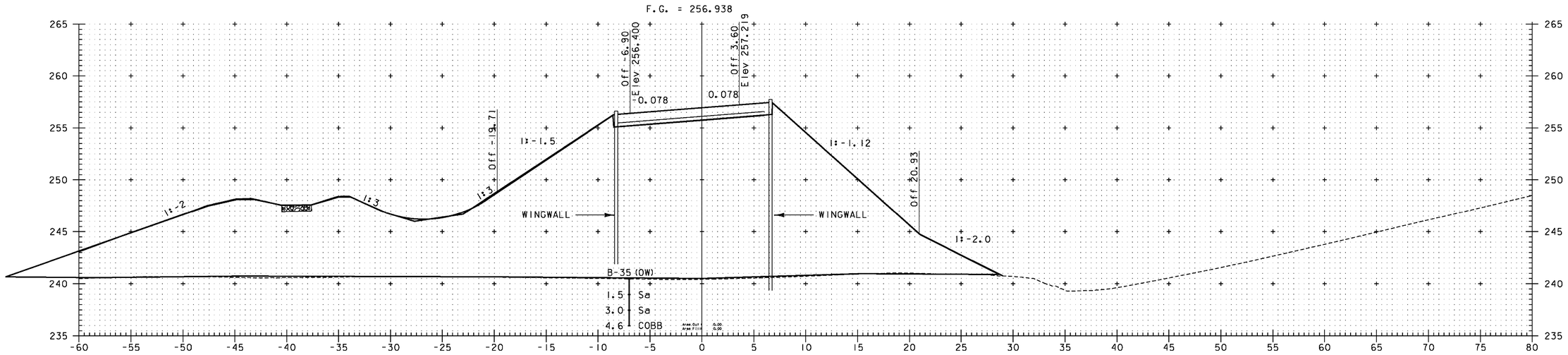

SUPERSEDED BY PRECEDING SHEET

10 METERS

H 1:200 SCALE
V 1:200 SCALE
@ FULL SIZE

5 10 METERS

VERMONT AGENCY OF TRANSPORTATION

Stantec

PROJECT NAME: BENNINGTON
PROJECT NUMBER: AC NH 019-1(53)

FILE NAME: ...\plot_files\zd307c3xs_nb.ptf
DESIGN SUPERVISOR: GREG EDWARDS
DESIGNED BY: MARC FOISY
NB MAINLINE CROSS SECTIONS

PLOT DATE: 5/16/2011
DRAWN BY: STANTEC
CHECKED BY: GARY SANTY
SHEET 299 OF 577

v:\19531\active\19531002\transportation\drawing\contract_3\plot_files\zd307c3xs_nb.ptf

RECORD PLANS

RECEIVED

JUN 17 2009

G.P.I.

REVISED 4-3-2009

VAOT Metric

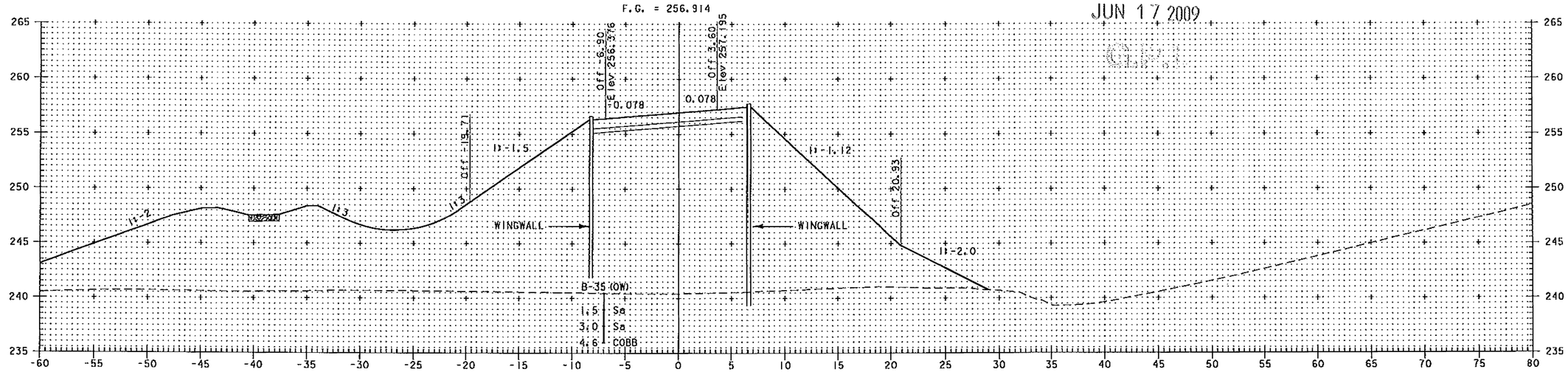

NOTE:
ELEVATIONS SHOWN ARE FOR THE ULTIMATE FINISHED GRADE. THE TOP 50 PAVEMENT COURSE (TYPE IIIS) WILL BE CONSTRUCTED ON THE BRIDGE LIMITS. THIS CONTRACT INCLUDES FULL DEPTH PAVEMENT CONSTRUCTION ON BRIDGE LIMITS ONLY.

10 METERS
5
H 1:200 SCALE
V 1:200 SCALE
@ FULL SIZE
5 10 METERS

VERMONT AGENCY OF TRANSPORTATION

Stantec

PROJECT NAME: BENNINGTON
PROJECT NUMBER: AC NH 019-1(53)

FILE NAME: ...\zd307c3.revised.ptf
DESIGN SUPERVISOR: GREG EDWARDS
DESIGNED BY: MARC FOISY
NB MAINLINE CROSS SECTIONS

PLOT DATE: 6/16/2009
DRAWN BY: STANTEC
CHECKED BY: GARY SANTY
SHEET 299 OF 577

V:\1953\active\195310002\transportation\drawing\contract_3\VerticalRevision\zd307c3.revised.ptf

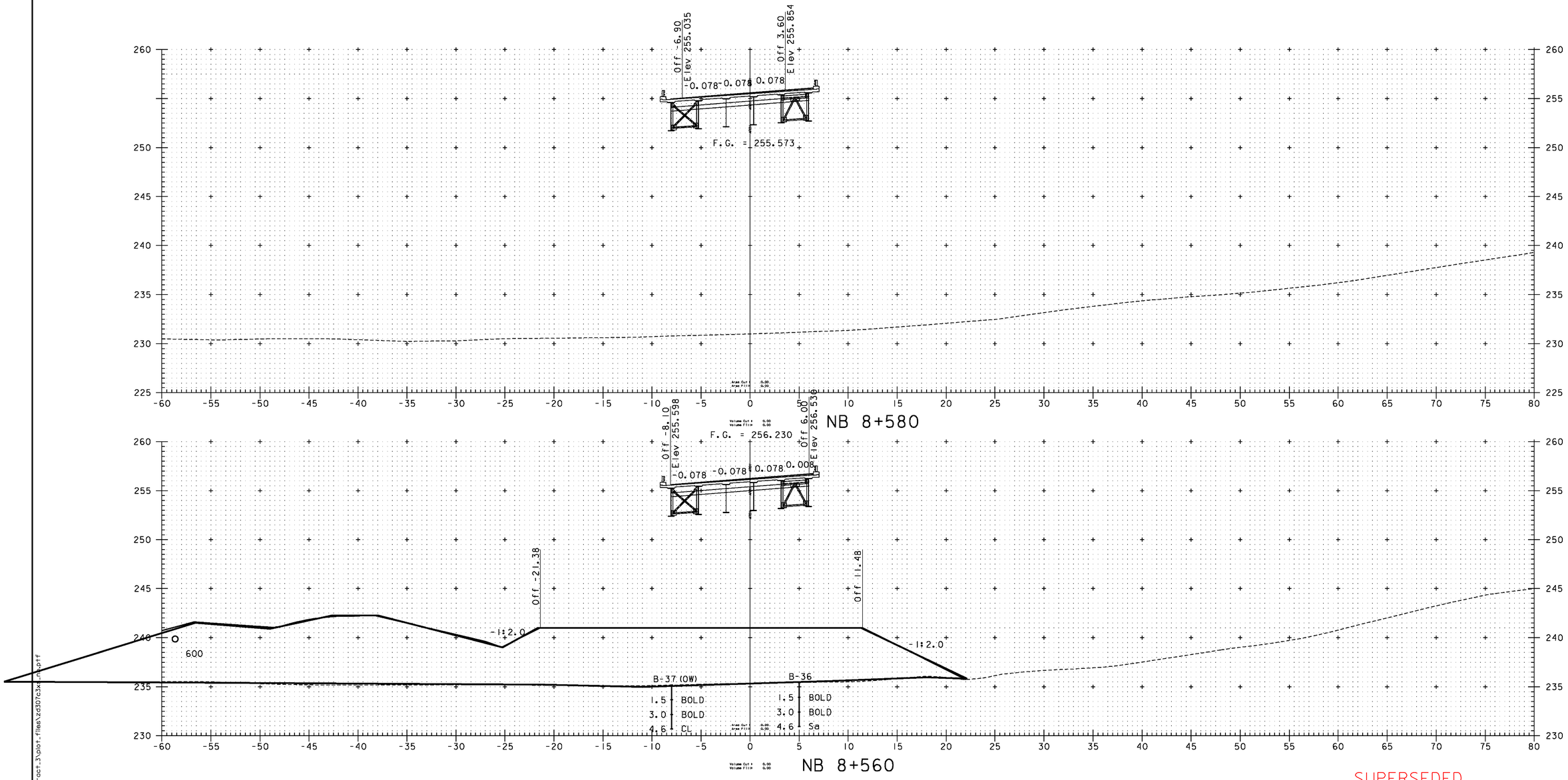

SUPERSEDED BY PRECEDING SHEETS

NOTE:
ElevATIONS SHOWN ARE FOR THE ULTIMATE FINISHED GRADE. THE TOP 50 PAVEMENT COURSE (TYPE IIIS) WILL BE CONSTRUCTED ON THE BRIDGE LIMITS. THIS CONTRACT INCLUDES FULL DEPTH PAVEMENT CONSTRUCTION ON BRIDGE LIMITS ONLY.

10 METERS
5
H 1:200 SCALE
V 1:200 SCALE
@ FULL SIZE
5 10 METERS

VERMONT AGENCY OF TRANSPORTATION

Stantec

PROJECT NAME: BENNINGTON
PROJECT NUMBER: AC NH 019-1(53)

FILE NAME: ...\plot_files\zd307c3xs_nb.ptf
DESIGN SUPERVISOR: GREG EDWARDS
DESIGNED BY: MARC FOISY
NB MAINLINE CROSS SECTIONS

PLOT DATE: 5/16/2011
DRAWN BY: STANTEC
CHECKED BY: GARY SANTY
SHEET 300 OF 577

v:\1853\active\185300002\transportation\drawing\contract_3\plot_files\zd307c3xs_nb.ptf

REVISED
4-3-2009

Metric

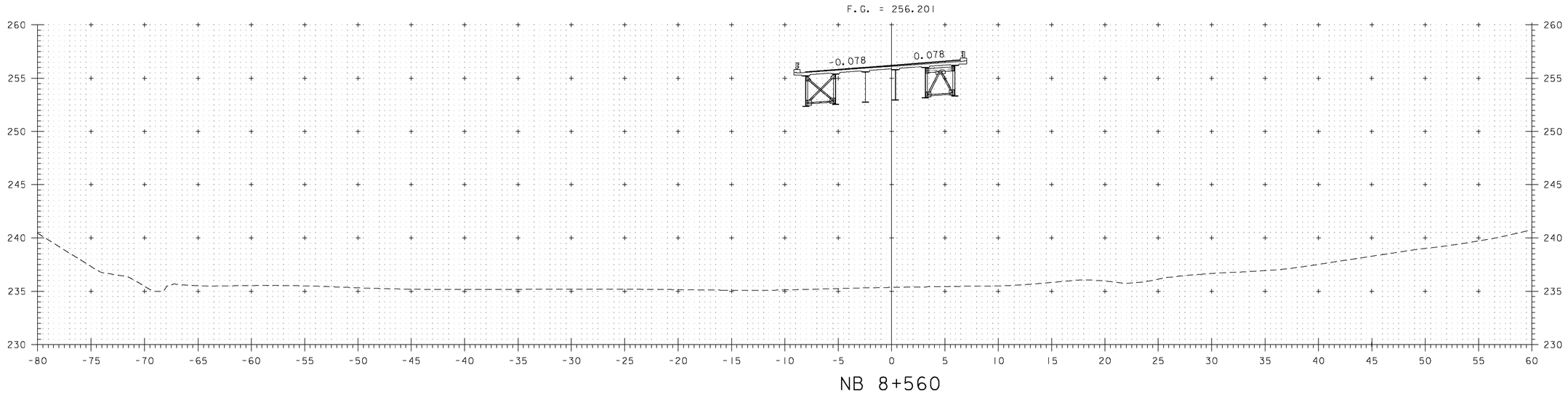

NB 8+560

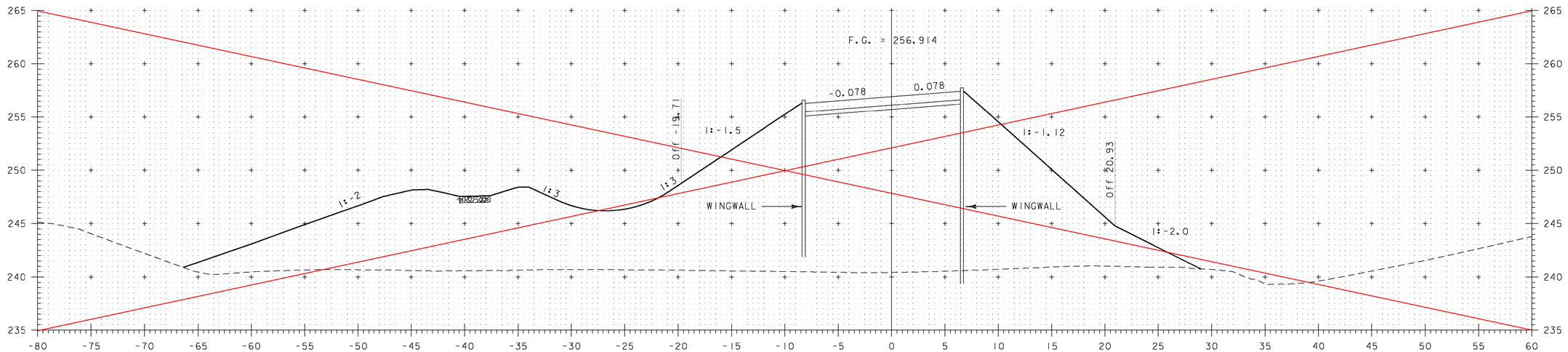

NB 8+540

NOTE:
ELEVATIONS SHOWN ARE FOR THE ULTIMATE FINISHED GRADE. THE TOP 50 PAVEMENT COURSE (TYPE IIIS) WILL BE CONSTRUCTED ON THE BRIDGE LIMITS. THIS CONTRACT INCLUDES FULL DEPTH PAVEMENT CONSTRUCTION ON BRIDGE LIMITS ONLY.

10 METERS
5
H 1:200 SCALE
V 1:200 SCALE
@ FULL SIZE
5 10 METERS

VERMONT AGENCY OF TRANSPORTATION

Stantec

PROJECT NAME: BENNINGTON
PROJECT NUMBER: AC NH 019-1(53)

FILE NAME: ...\zd307c3.revised.dgn
PLOT DATE: 4/10/2009
DESIGN SUPERVISOR: GREG EDWARDS
DRAWN BY: STANTEC
DESIGNED BY: MARC FOISY
CHECKED BY: GARY SANTY
NB MAINLINE CROSS SECTIONS 1
SHEET OF

V:\1853\active\19531002\transportation\drawing\contract_3\VertRealRevision\zd307c3revised.dgn

REVISED
4-3-2009

Metric

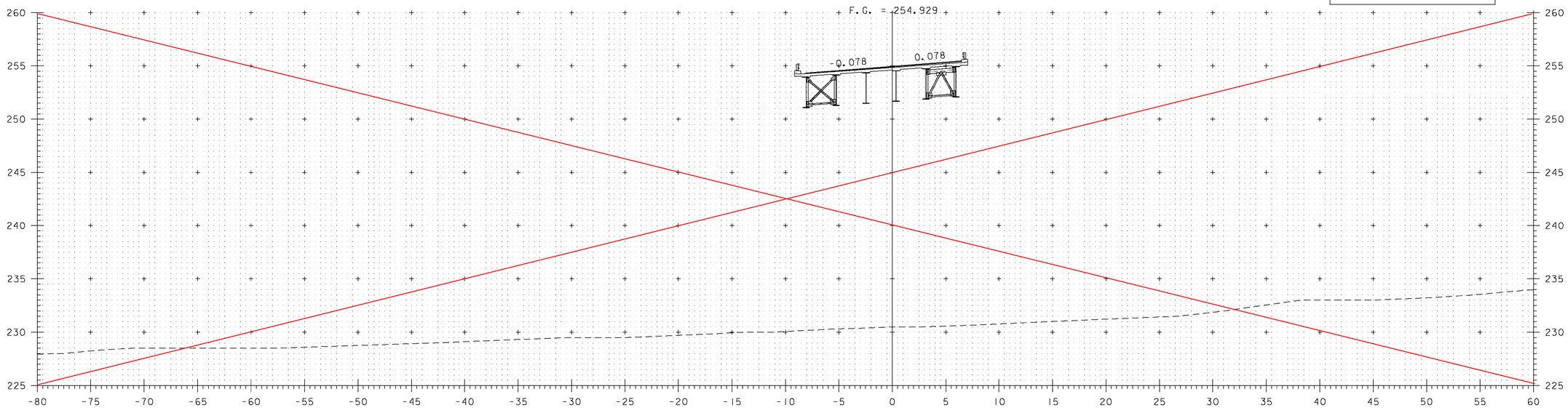

NB 8+600

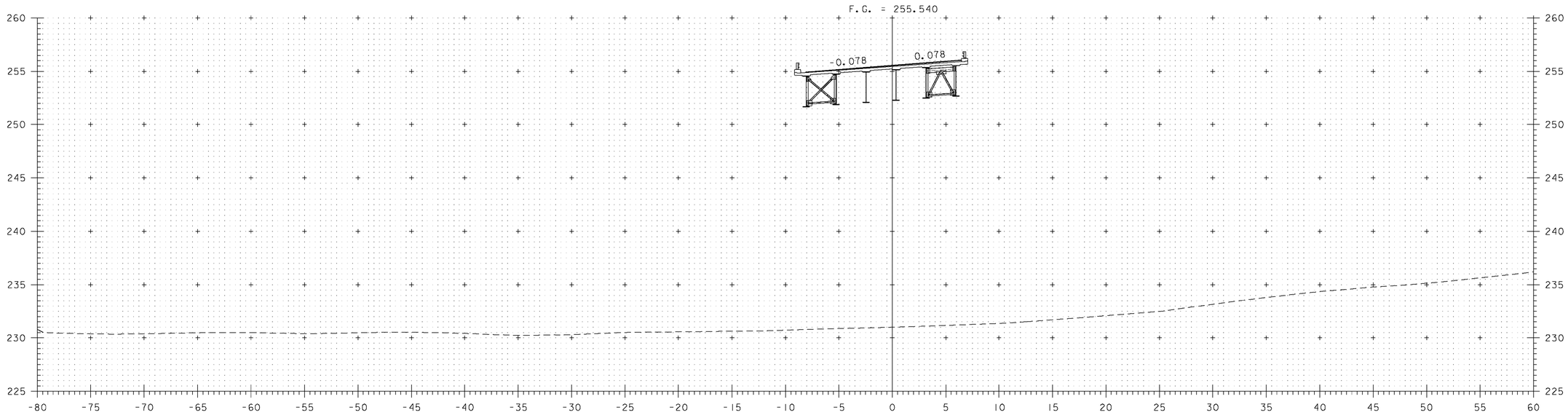

NB 8+580

NOTE:
ELEVATIONS SHOWN ARE FOR THE ULTIMATE FINISHED GRADE. THE TOP 50 PAVEMENT COURSE (TYPE IIIS) WILL BE CONSTRUCTED ON THE BRIDGE LIMITS. THIS CONTRACT INCLUDES FULL DEPTH PAVEMENT CONSTRUCTION ON BRIDGE LIMITS ONLY.

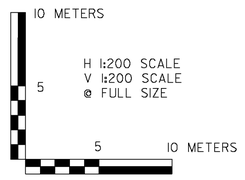

VERMONT AGENCY OF TRANSPORTATION

Stantec

PROJECT NAME: BENNINGTON
PROJECT NUMBER: AC NH 019-1(53)

FILE NAME: ...\zd307c3.revised.dgn
DESIGN SUPERVISOR: GREG EDWARDS
DESIGNED BY: MARC FOISY
NB MAINLINE CROSS SECTIONS 2

PLOT DATE: 4/10/2009
DRAWN BY: STANTEC
CHECKED BY: GARY SANTY
SHEET OF

V:\1953\active\195300002\transportation\drawing\contract 3\VertRevision\zd307c3r.revised.dgn

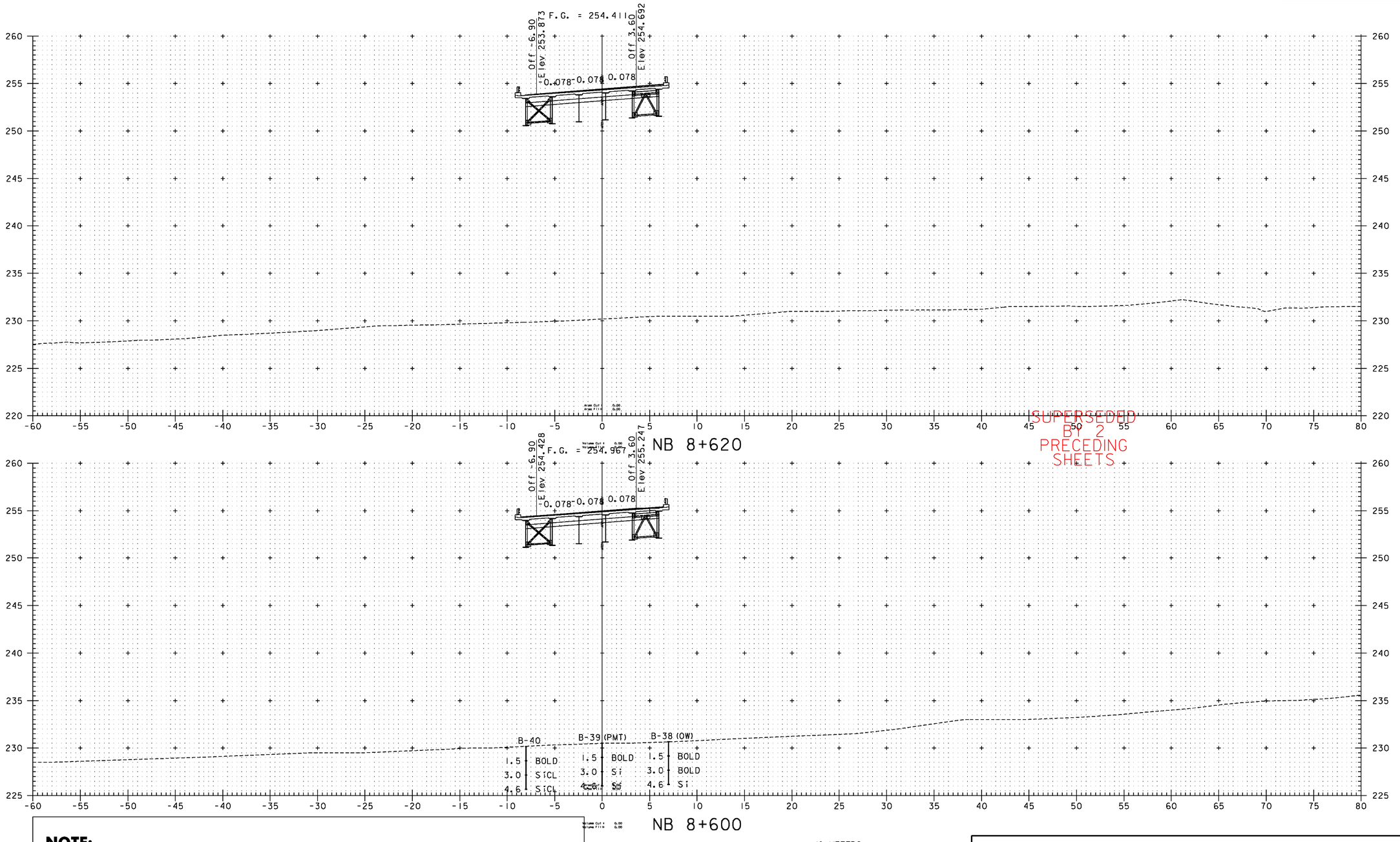

SUPERSEDED BY 2 PRECEDING SHEETS

NOTE:
ElevATIONS SHOWN ARE FOR THE ULTIMATE FINISHED GRADE. THE TOP 50 PAVEMENT COURSE (TYPE IIIS) WILL BE CONSTRUCTED ON THE BRIDGE LIMITS. THIS CONTRACT INCLUDES FULL DEPTH PAVEMENT CONSTRUCTION ON BRIDGE LIMITS ONLY.

10 METERS
5
H 1:200 SCALE
V 1:200 SCALE
@ FULL SIZE
5 10 METERS

VERMONT AGENCY OF TRANSPORTATION

Stantec

PROJECT NAME: BENNINGTON
PROJECT NUMBER: AC NH 019-1(53)

FILE NAME: ...\plot_files\zd307c3xs_nb.ptf
DESIGN SUPERVISOR: GREG EDWARDS
DESIGNED BY: MARC FOISY
NB MAINLINE CROSS SECTIONS

PLOT DATE: 5/16/2011
DRAWN BY: STANTEC
CHECKED BY: GARY SANTY
SHEET 301 OF 577

v:\1953\active\19530002\transportation\drawing\contract_3\plot_files\zd307c3xs_nb.ptf

REVISED
4-3-2009

Metric

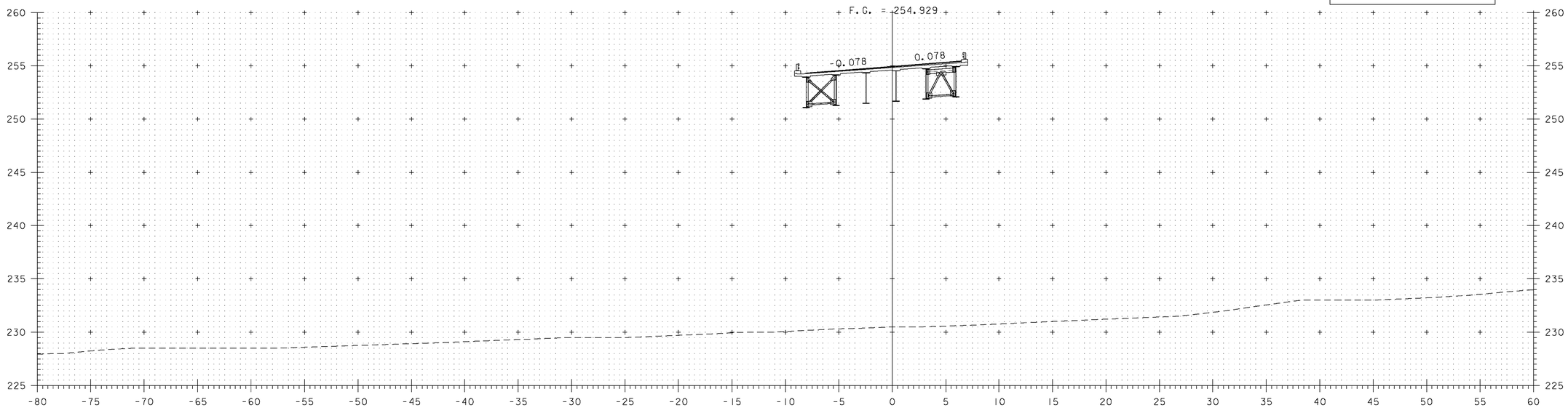

NB 8+600

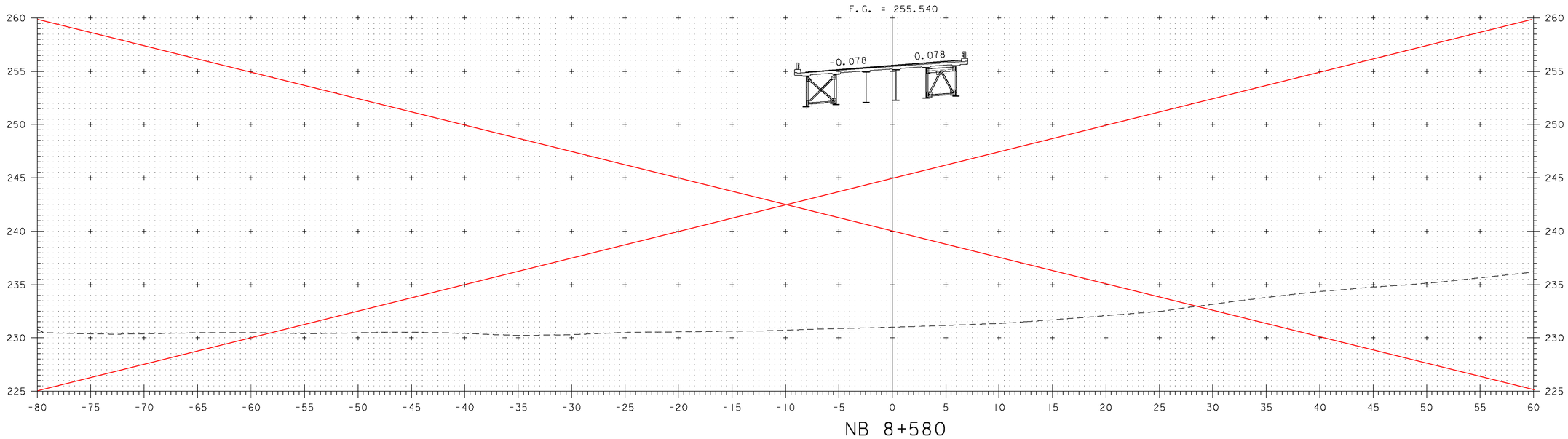

NB 8+580

NOTE:
ELEVATIONS SHOWN ARE FOR THE ULTIMATE FINISHED GRADE. THE TOP 50 PAVEMENT COURSE (TYPE IIIS) WILL BE CONSTRUCTED ON THE BRIDGE LIMITS. THIS CONTRACT INCLUDES FULL DEPTH PAVEMENT CONSTRUCTION ON BRIDGE LIMITS ONLY.

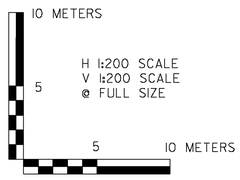

VERMONT AGENCY OF TRANSPORTATION

Stantec

PROJECT NAME: BENNINGTON
PROJECT NUMBER: AC NH 019-1(53)

FILE NAME: ...\zd307c3.revised.dgn
DESIGN SUPERVISOR: GREG EDWARDS
DESIGNED BY: MARC FOISY
NB MAINLINE CROSS SECTIONS 2

PLOT DATE: 4/10/2009
DRAWN BY: STANTEC
CHECKED BY: GARY SANTY
SHEET OF

V:\1953\active\195310002\transportation\drawing\contract_3\VerticalRevision\zd307c3.revised.dgn

REVISED
4-3-2009

Metric

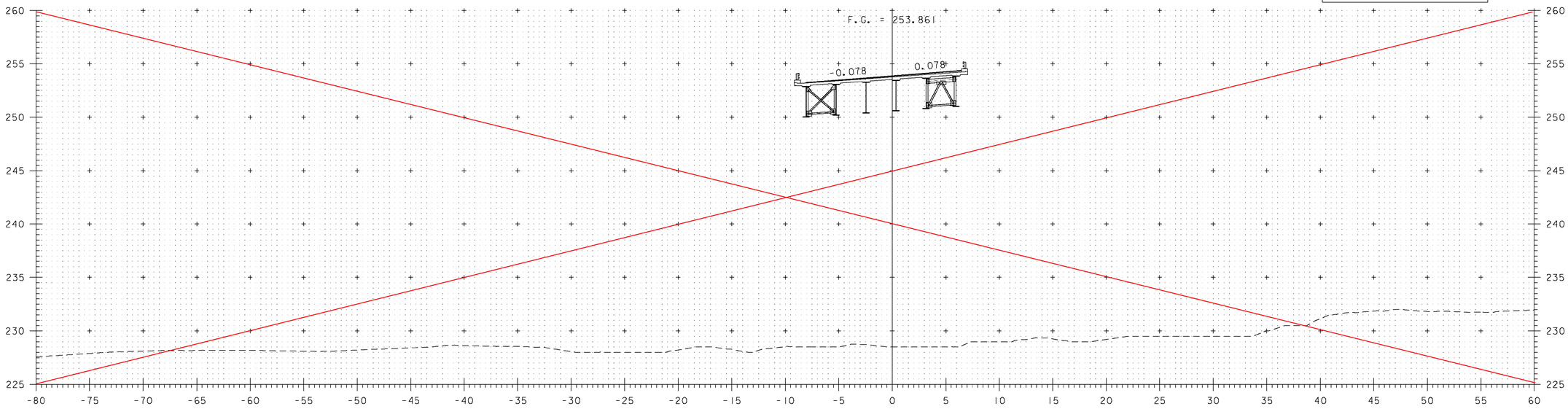

NB 8+640

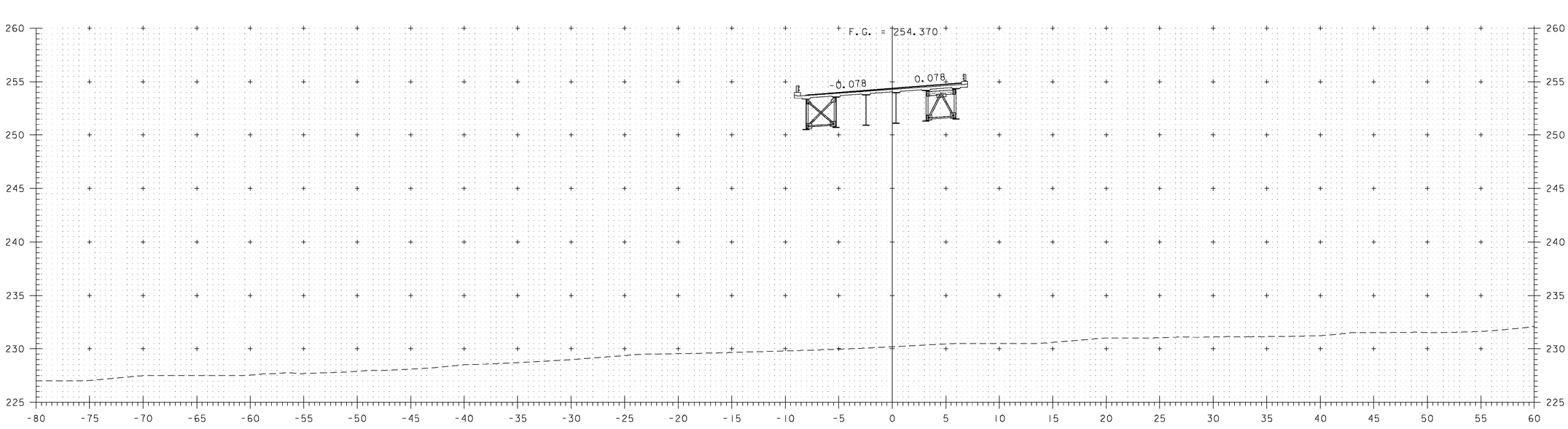

NB 8+620

NOTE:
ELEVATIONS SHOWN ARE FOR THE ULTIMATE FINISHED GRADE. THE TOP 50 PAVEMENT COURSE (TYPE IIIS) WILL BE CONSTRUCTED ON THE BRIDGE LIMITS. THIS CONTRACT INCLUDES FULL DEPTH PAVEMENT CONSTRUCTION ON BRIDGE LIMITS ONLY.

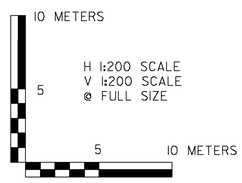

VERMONT AGENCY OF TRANSPORTATION

Stantec

PROJECT NAME: BENNINGTON
PROJECT NUMBER: AC NH 019-1(53)

FILE NAME: ...\zd307c3.revised.dgn
DESIGN SUPERVISOR: GREG EDWARDS
DESIGNED BY: MARC FOISY
NB MAINLINE CROSS SECTIONS 3

PLOT DATE: 4/10/2009
DRAWN BY: STANTEC
CHECKED BY: GARY SANTY
SHEET OF

V:\1953\active\19530002\1-transportation\drawing\contract 3\VertRevision\zd307c3.revised.dgn

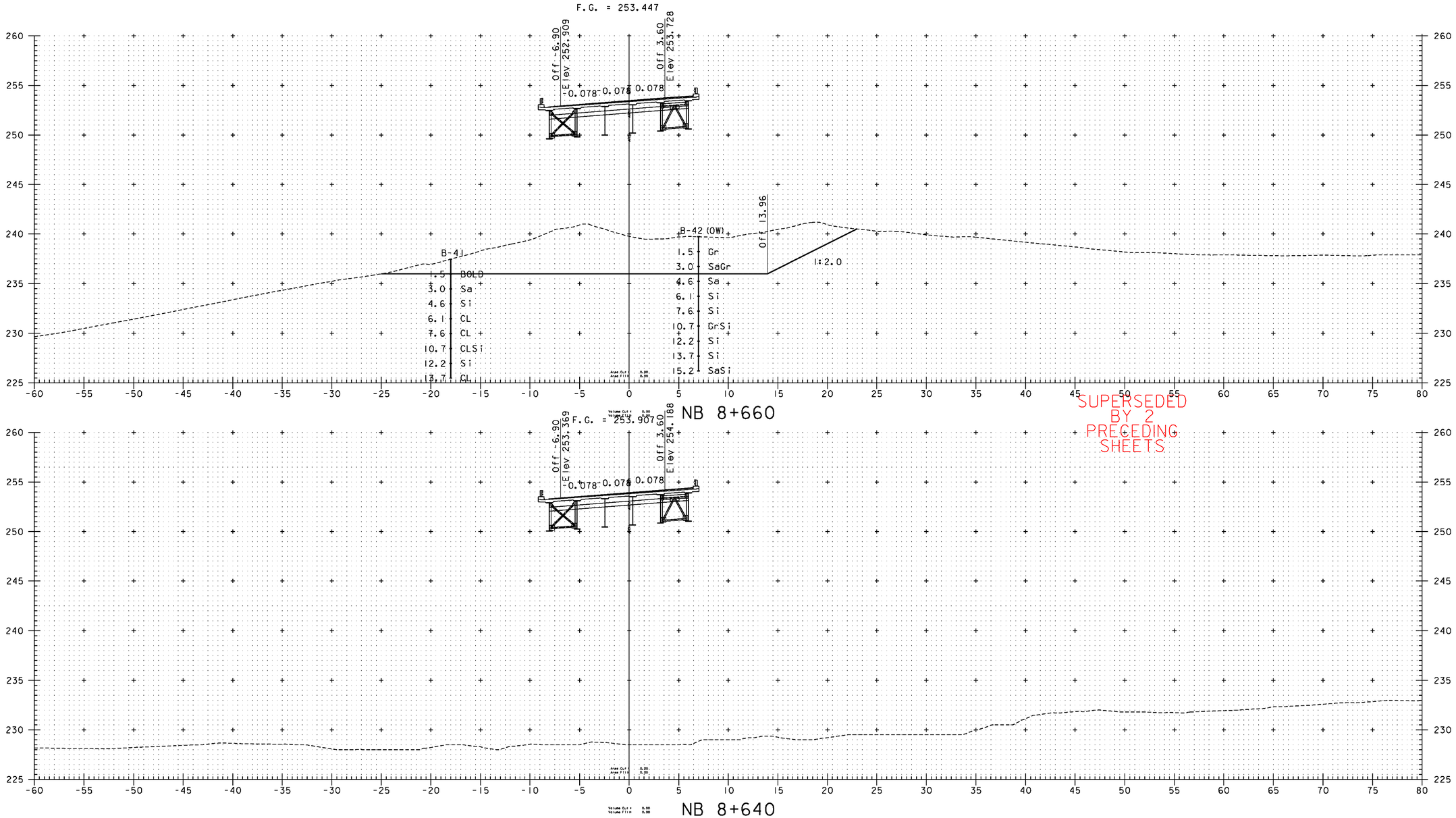

SUPERSEDED BY 2 PRECEDING SHEETS

NOTE:
ElevATIONS SHOWN ARE FOR THE ULTIMATE FINISHED GRADE. THE TOP 50 PAVEMENT COURSE (TYPE IIIS) WILL BE CONSTRUCTED ON THE BRIDGE LIMITS. THIS CONTRACT INCLUDES FULL DEPTH PAVEMENT CONSTRUCTION ON BRIDGE LIMITS ONLY.

10 METERS
5
H 1:200 SCALE
V 1:200 SCALE
@ FULL SIZE
5 10 METERS

VERMONT AGENCY OF TRANSPORTATION

Stantec

PROJECT NAME: BENNINGTON
PROJECT NUMBER: AC NH 019-1(53)

FILE NAME: ...\plot_files\zd307c3xs_nb.ptf
DESIGN SUPERVISOR: GREG EDWARDS
DESIGNED BY: MARC FOISY
NB MAINLINE CROSS SECTIONS

PLOT DATE: 5/16/2011
DRAWN BY: STANTEC
CHECKED BY: GARY SANTY
SHEET 302 OF 577

v:\1953\active\195300021\transportation\drawing\contract_3\plot_files\zd307c3xs_nb.ptf

REVISED
4-3-2009

Metric

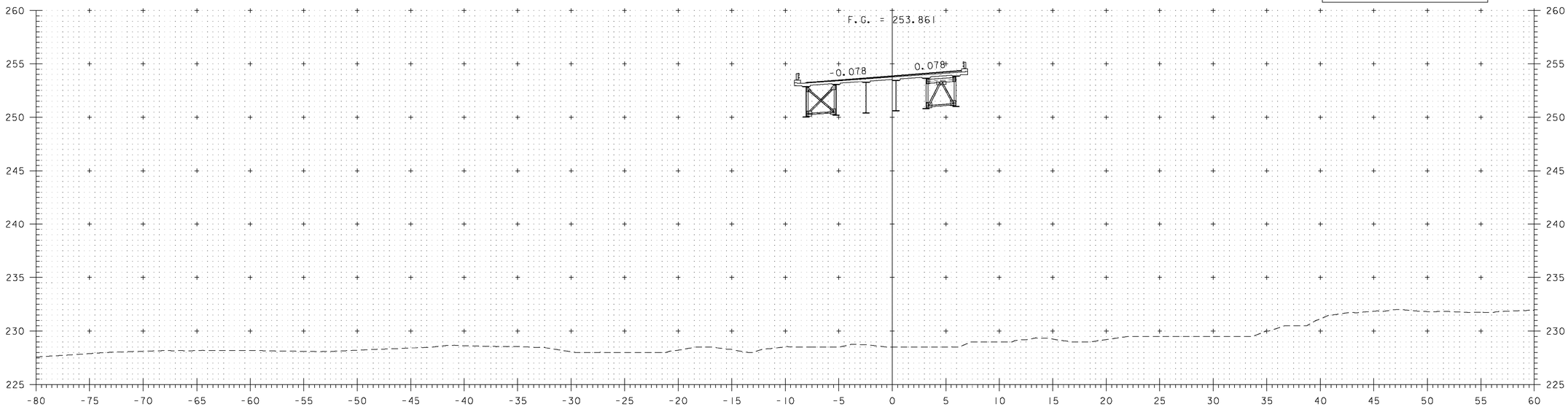

NB 8+640

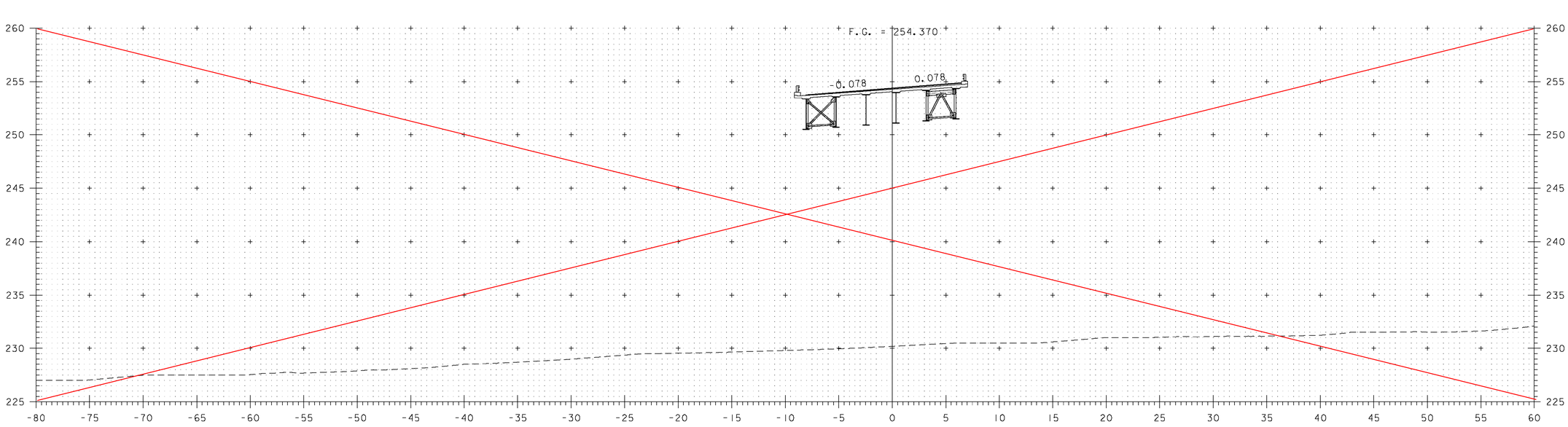

NB 8+620

NOTE:
ELEVATIONS SHOWN ARE FOR THE ULTIMATE FINISHED GRADE. THE TOP 50 PAVEMENT COURSE (TYPE IIIS) WILL BE CONSTRUCTED ON THE BRIDGE LIMITS. THIS CONTRACT INCLUDES FULL DEPTH PAVEMENT CONSTRUCTION ON BRIDGE LIMITS ONLY.

10 METERS
5
H 1:200 SCALE
V 1:200 SCALE
@ FULL SIZE
5 10 METERS

VERMONT AGENCY OF TRANSPORTATION

Stantec

PROJECT NAME: BENNINGTON
PROJECT NUMBER: AC NH 019-1(53)

FILE NAME: ...\zd307c3.revised.dgn
DESIGN SUPERVISOR: GREG EDWARDS
DESIGNED BY: MARC FOISY
NB MAINLINE CROSS SECTIONS 3

PLOT DATE: 4/10/2009
DRAWN BY: STANTEC
CHECKED BY: GARY SANTY
SHEET OF

V:\1953\active\195300002\transportation\drawing\contract 3\VertRevision\zd307c3revised.dgn

REVISED
4-3-2009

Metric

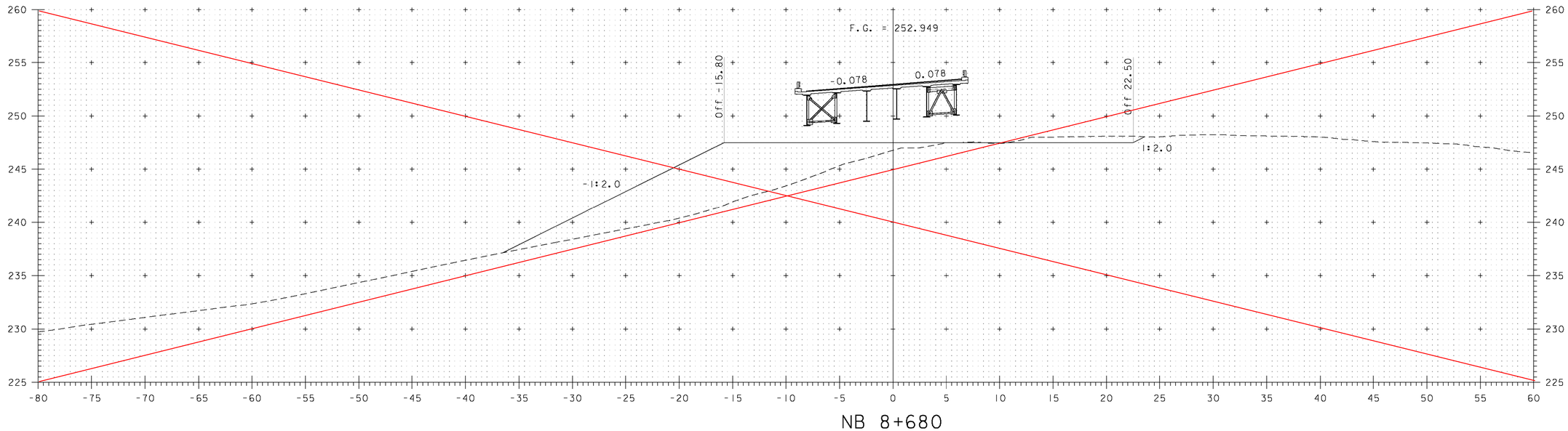

NB 8+680

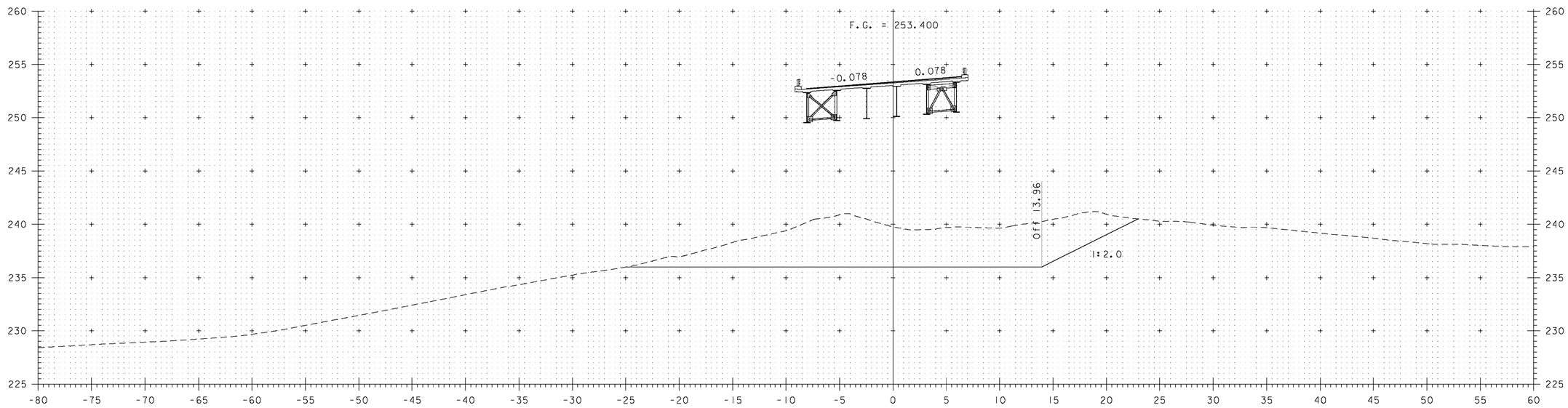

NB 8+660

NOTE:
ELEVATIONS SHOWN ARE FOR THE ULTIMATE FINISHED GRADE. THE TOP 50 PAVEMENT COURSE (TYPE IIIS) WILL BE CONSTRUCTED ON THE BRIDGE LIMITS. THIS CONTRACT INCLUDES FULL DEPTH PAVEMENT CONSTRUCTION ON BRIDGE LIMITS ONLY.

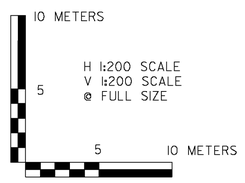

VERMONT AGENCY OF TRANSPORTATION

Stantec

PROJECT NAME: BENNINGTON
PROJECT NUMBER: AC NH 019-1(53)

FILE NAME: ...\zd307c3_revised.dgn
PLOT DATE: 4/10/2009
DESIGN SUPERVISOR: GREG EDWARDS
DRAWN BY: STANTEC
DESIGNED BY: MARC FOISY
CHECKED BY: GARY SANTY
NB MAINLINE CROSS SECTIONS 4
SHEET OF

V:\1853\active\19530002\transportation\drawing\contract_3\VertRevision\zd307c3_revised.dgn

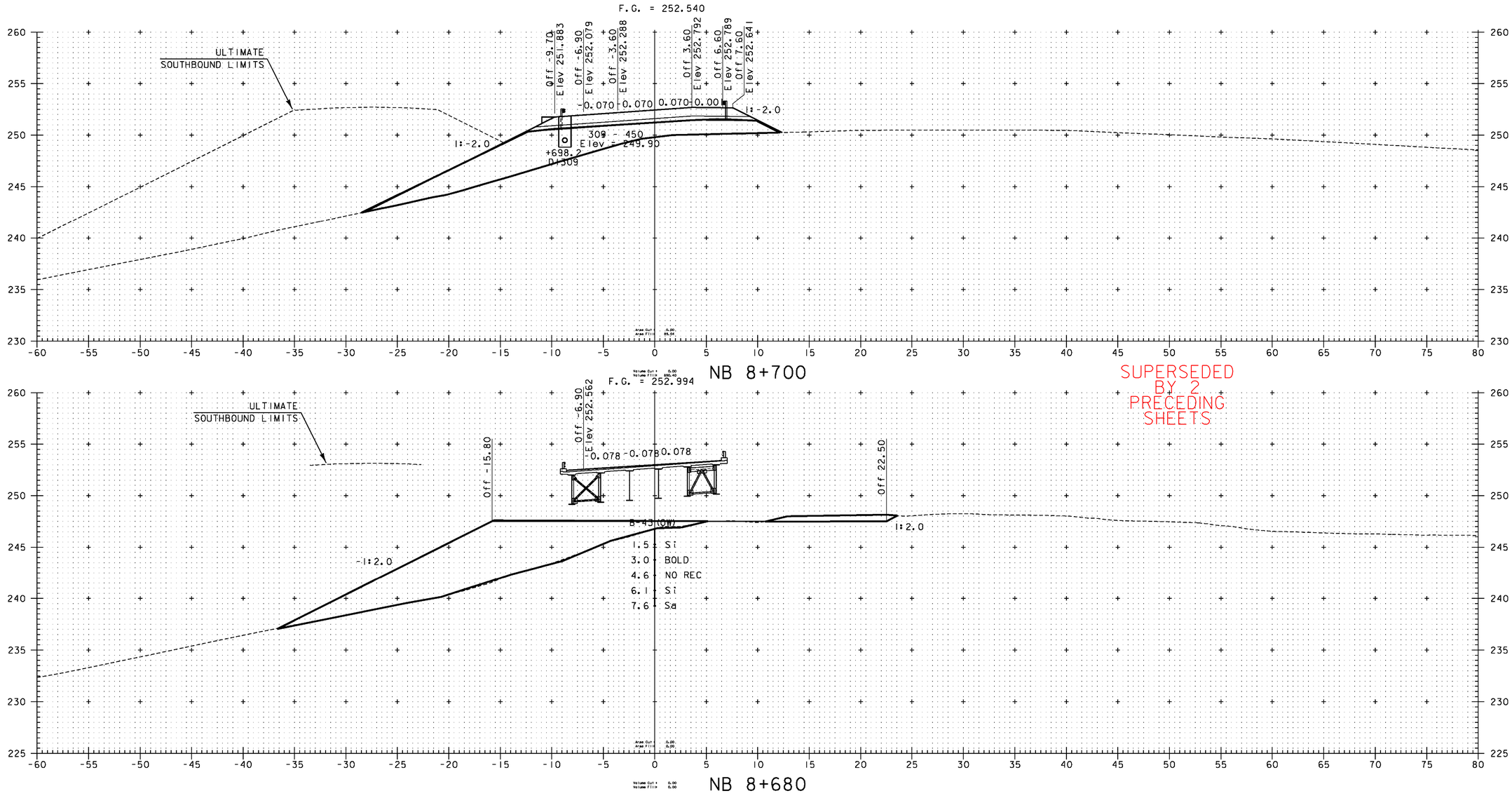

SUPERSEDED BY 2 PRECEDING SHEETS

NOTES:

1. STA. NB 8+680 F.G. ElevATION REPRESENTS THE ULTIMATE FINISHED GRADE. THE TOP 50 PAVEMENT COURSE (TYPE IIIS) WILL BE CONSTRUCTED ON BRIDGE LIMITS. THIS CONTRACT ONLY INCLUDES 100 OF TYPE IS AND 80 OF TYPE IIS SUPERPAVE BITUMINOUS CONCRETE PAVEMENT (ITEM 490.30). FOR THE ROADWAY LIMITS PLEASE REFER TO THE ROADWAY TYPICAL SECTIONS FOR DETAILS.

2. STA. NB 8+700 F.G. ElevATION REPRESENTS THE ULTIMATE FINISHED GRADE. THE TOP 50 PAVEMENT COURSE (TYPE IIIS) WILL NOT BE CONSTRUCTED AS PART OF THIS CONTRACT. THIS CONTRACT ONLY INCLUDES 100 OF TYPE IS AND 80 OF TYPE IIS SUPERPAVE BITUMINOUS CONCRETE PAVEMENT (ITEM 490.30). FOR THE ROADWAY LIMITS PLEASE REFER TO THE ROADWAY TYPICAL SECTIONS FOR DETAILS.

10 METERS
5
H 1:200 SCALE
V 1:200 SCALE
@ FULL SIZE
5 10 METERS

VERMONT AGENCY OF TRANSPORTATION

Stantec

PROJECT NAME: BENNINGTON
PROJECT NUMBER: AC NH 019-1(53)

FILE NAME: ...\plot_files\zd307c3xs_nb.ptf
DESIGN SUPERVISOR: GREG EDWARDS
DESIGNED BY: MARC FOISY
NB MAINLINE CROSS SECTIONS

PLOT DATE: 5/16/2011
DRAWN BY: STANTEC
CHECKED BY: GARY SANTY
SHEET 303 OF 577

v:\1953\active\19530002\transportation\drawing\contract_3\plot_files\zd307c3xs_nb.ptf

REVISED
4-3-2009

Metric

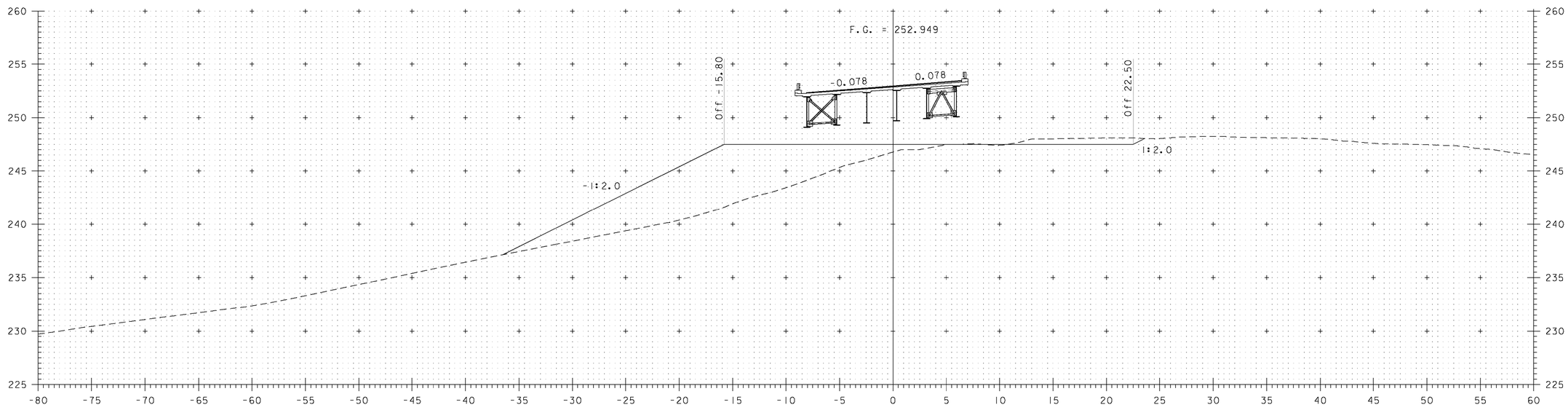

NB 8+680

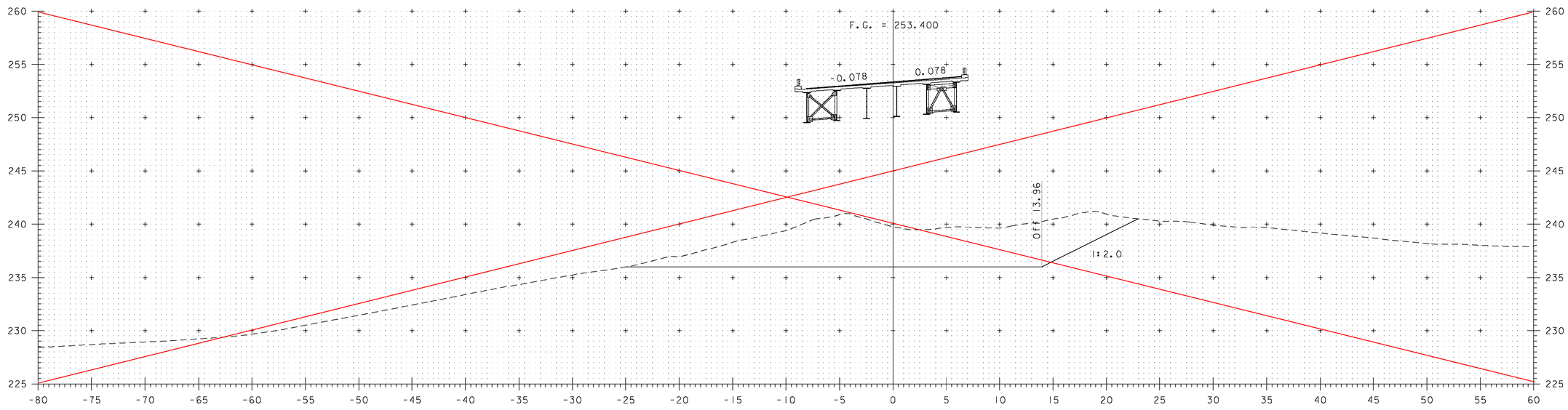

NB 8+660

NOTE:
ELEVATIONS SHOWN ARE FOR THE ULTIMATE FINISHED GRADE. THE TOP 50 PAVEMENT COURSE (TYPE IIIS) WILL BE CONSTRUCTED ON THE BRIDGE LIMITS. THIS CONTRACT INCLUDES FULL DEPTH PAVEMENT CONSTRUCTION ON BRIDGE LIMITS ONLY.

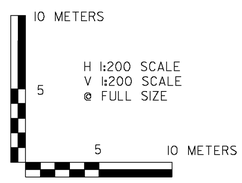

VERMONT AGENCY OF TRANSPORTATION

Stantec

PROJECT NAME: BENNINGTON
PROJECT NUMBER: AC NH 019-1(53)

FILE NAME: ...\zd307c3_revised.dgn
PLOT DATE: 4/10/2009
DESIGN SUPERVISOR: GREG EDWARDS
DRAWN BY: STANTEC
DESIGNED BY: MARC FOISY
CHECKED BY: GARY SANTY
NB MAINLINE CROSS SECTIONS 4
SHEET OF

V:\1853\active\19531002\transportation\drawing\contract_3\VertRealRevision\zd307c3_revised.dgn

REVISED
4-3-2009

Metric

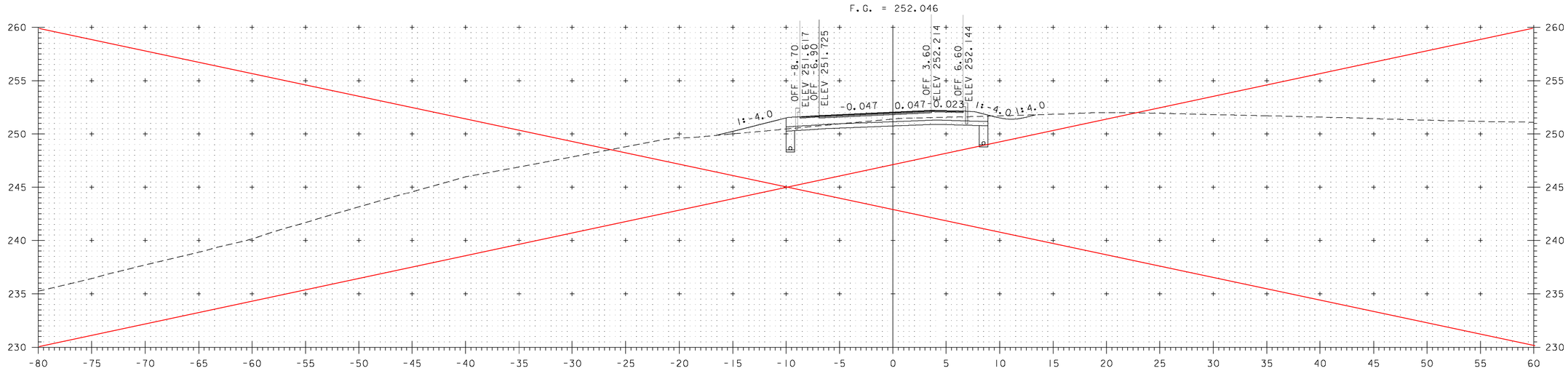

NB 8+720

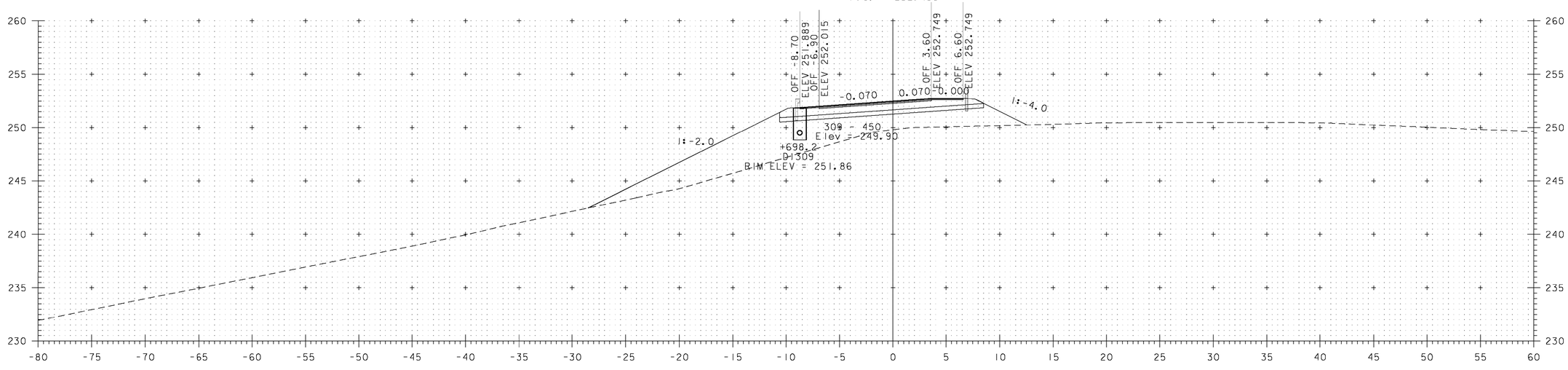

NB 8+700

NOTE:
ELEVATIONS SHOWN ARE FOR THE ULTIMATE FINISHED GRADE. THE TOP 50 PAVEMENT COURSE (TYPE IIIS) WILL BE CONSTRUCTED ON THE BRIDGE LIMITS. THIS CONTRACT INCLUDES FULL DEPTH PAVEMENT CONSTRUCTION ON BRIDGE LIMITS ONLY.

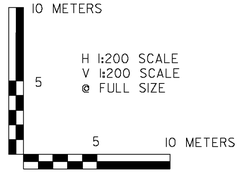

VERMONT AGENCY OF TRANSPORTATION

Stantec

PROJECT NAME: BENNINGTON
PROJECT NUMBER: AC NH 019-1(53)

FILE NAME: ...\zd307c3.revised.dgn
DESIGN SUPERVISOR: GREG EDWARDS
DESIGNED BY: MARC FOISY
NB MAINLINE CROSS SECTIONS 5

PLOT DATE: 4/10/2009
DRAWN BY: STANTEC
CHECKED BY: GARY SANTY
SHEET OF

V:\1953\active\195300021\transportation\drawing\contract_3\VerticalRevision\zd307c3.revised.dgn

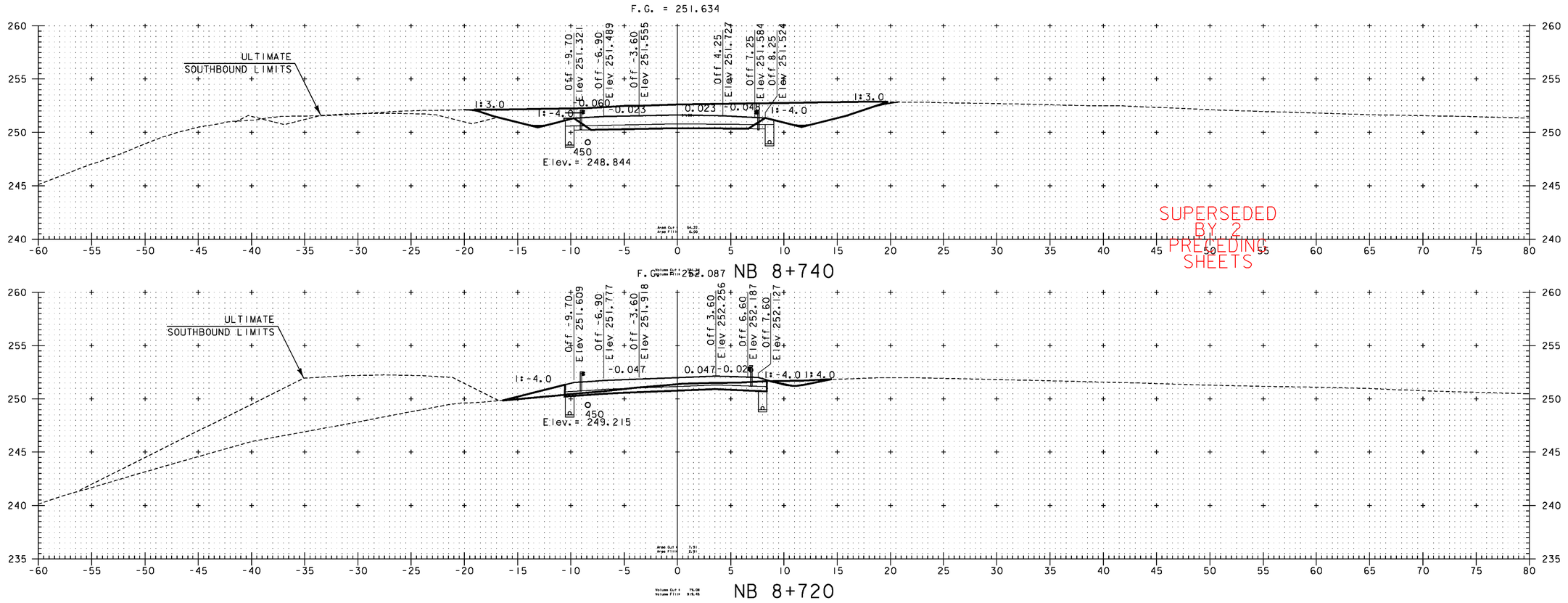

NOTE:
ElevATIONS SHOWN ARE FOR THE ULTIMATE FINISHED GRADE. THE TOP 50 PAVEMENT COURSE (TYPE IIIS) WILL NOT BE CONSTRUCTED AS PART OF THIS CONTRACT. THIS CONTRACT ONLY INCLUDES 100 OF TYPE IS AND 80 OF TYPE IIS SUPERPAVE BITUMINOUS CONCRETE PAVEMENT (ITEM 490.30). PLEASE REFER TO THE ROADWAY TYPICAL SECTIONS FOR DETAILS.

10 METERS
5
H 1:200 SCALE
V 1:200 SCALE
@ FULL SIZE
5 10 METERS

VERMONT AGENCY OF TRANSPORTATION

Stantec

PROJECT NAME: BENNINGTON
PROJECT NUMBER: AC NH 019-1(53)

FILE NAME: ...\plot_files\zd307c3xs_nb.ptf
DESIGN SUPERVISOR: GREG EDWARDS
DESIGNED BY: MARC FOISY
NB MAINLINE CROSS SECTIONS

PLOT DATE: 5/16/2011
DRAWN BY: STANTEC
CHECKED BY: GARY SANTY
SHEET 304 OF 577

v:\1953\active\19530002\transportation\drawing\contract_3\plot_files\zd307c3xs_nb.ptf

REVISED
4-3-2009

Metric

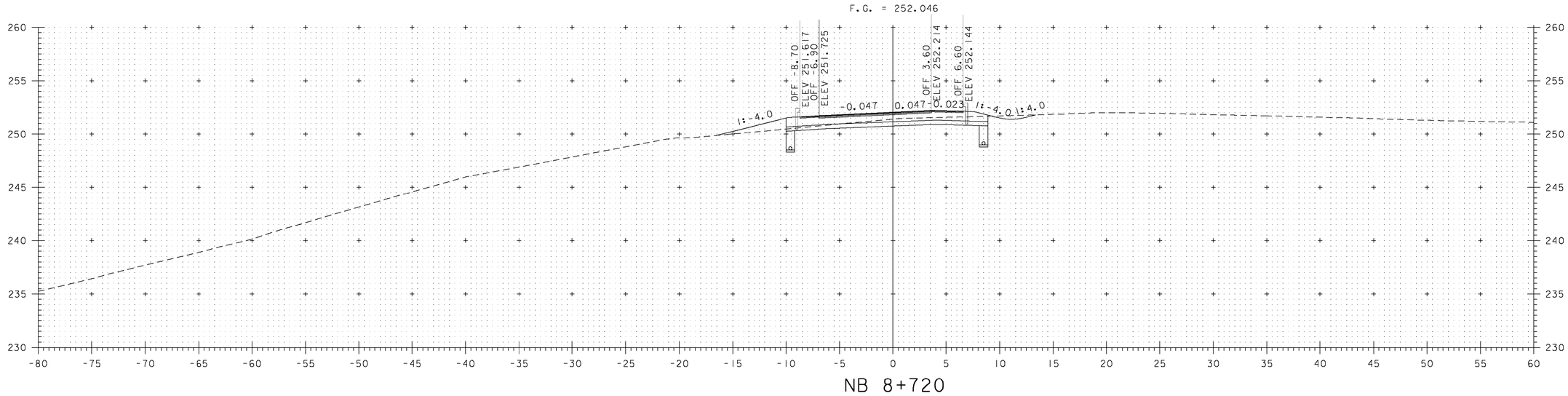

NB 8+720

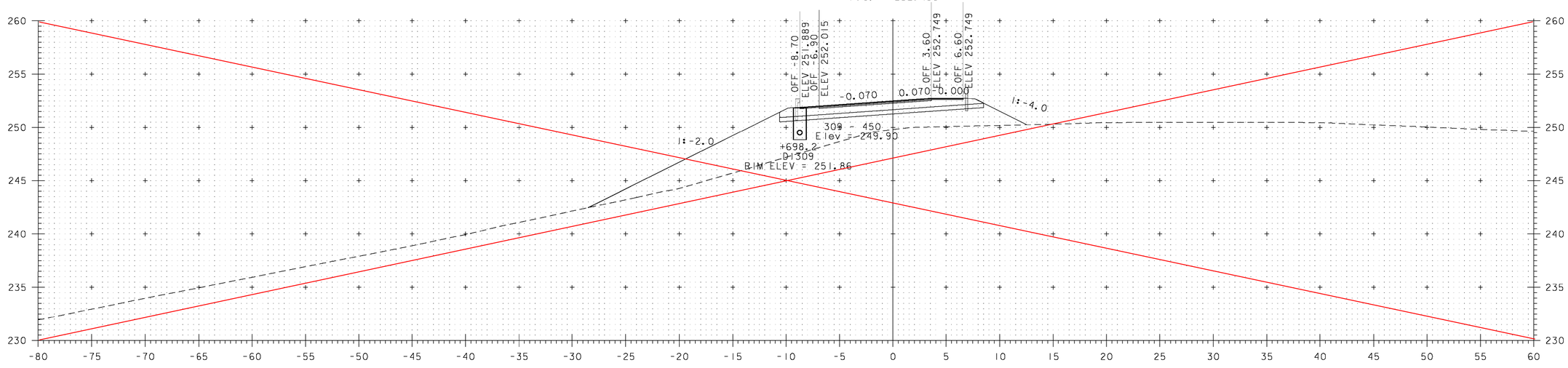

NB 8+700

NOTE:
ELEVATIONS SHOWN ARE FOR THE ULTIMATE FINISHED GRADE. THE TOP 50 PAVEMENT COURSE (TYPE IIIS) WILL BE CONSTRUCTED ON THE BRIDGE LIMITS. THIS CONTRACT INCLUDES FULL DEPTH PAVEMENT CONSTRUCTION ON BRIDGE LIMITS ONLY.

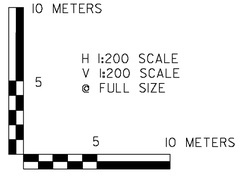

VERMONT AGENCY OF TRANSPORTATION

Stantec

PROJECT NAME: BENNINGTON
PROJECT NUMBER: AC NH 019-1(53)

FILE NAME: ...\zd307c3.revised.dgn
DESIGN SUPERVISOR: GREG EDWARDS
DESIGNED BY: MARC FOISY
NB MAINLINE CROSS SECTIONS 5

PLOT DATE: 4/10/2009
DRAWN BY: STANTEC
CHECKED BY: GARY SANTY
SHEET OF

V:\1953\active\195300021\transportation\drawing\contract_3\VerticalRevision\zd307c3.revised.dgn

REVISED
4-3-2009

Metric

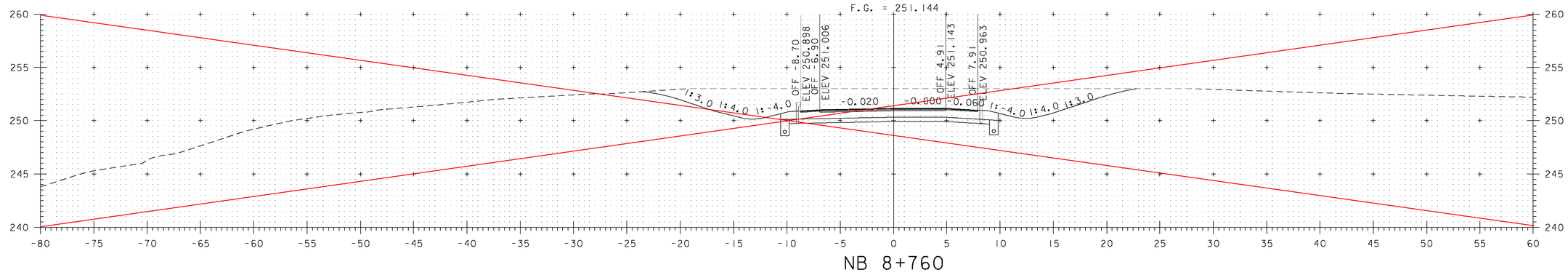

NB 8+760

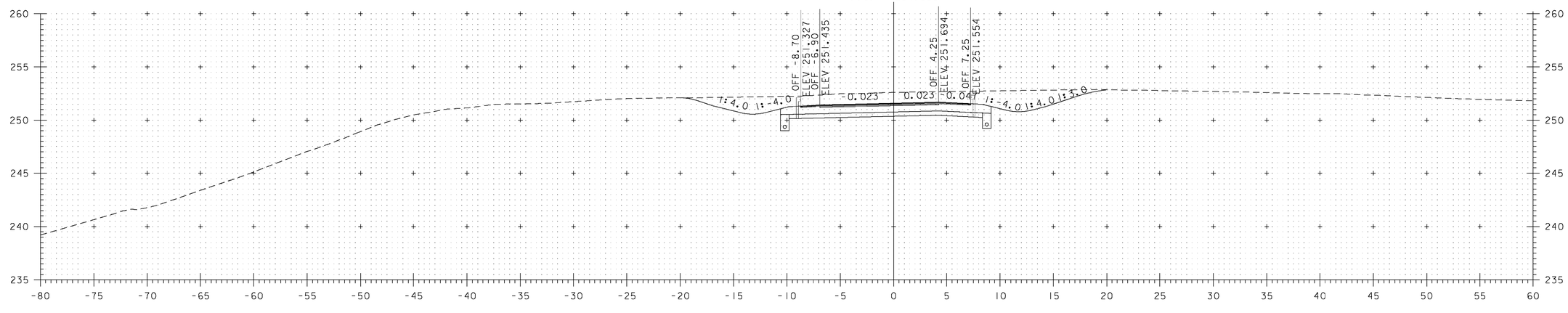

NB 8+740

NOTE:
ELEVATIONS SHOWN ARE FOR THE ULTIMATE FINISHED GRADE. THE TOP 50 PAVEMENT COURSE (TYPE IIIS) WILL BE CONSTRUCTED ON THE BRIDGE LIMITS. THIS CONTRACT INCLUDES FULL DEPTH PAVEMENT CONSTRUCTION ON BRIDGE LIMITS ONLY.

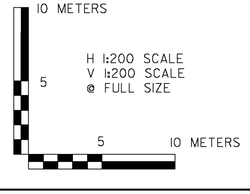

VERMONT AGENCY OF TRANSPORTATION

Stantec

PROJECT NAME: BENNINGTON
PROJECT NUMBER: AC NH 019-1(53)

FILE NAME: ...\zd307c3.revised.dgn
DESIGN SUPERVISOR: GREG EDWARDS
DESIGNED BY: MARC FOISY
NB MAINLINE CROSS SECTIONS 6

PLOT DATE: 4/10/2009
DRAWN BY: STANTEC
CHECKED BY: GARY SANTY
SHEET OF

V:\1953\active\19530002\transportation\drawing\contract 3\VerticalRevision\zd307c3revised.dgn

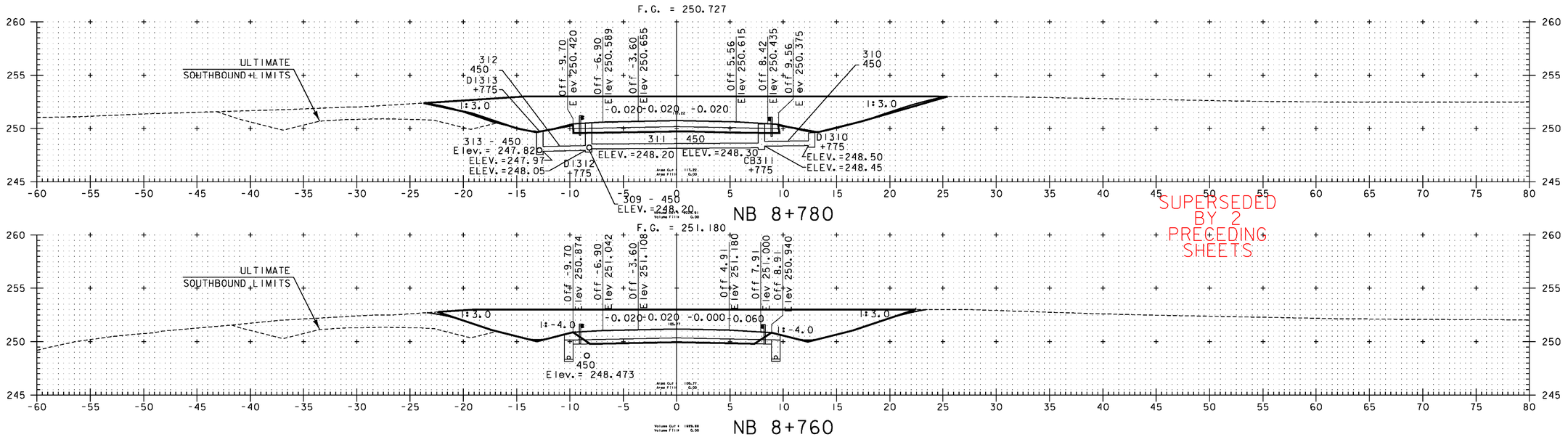

SUPERSEDED BY 2 PRECEDING SHEETS

NOTE:
ElevATIONS SHOWN ARE FOR THE ULTIMATE FINISHED GRADE. THE TOP 50 PAVEMENT COURSE (TYPE IIIS) WILL NOT BE CONSTRUCTED AS PART OF THIS CONTRACT. THIS CONTRACT ONLY INCLUDES 100 OF TYPE IS AND 80 OF TYPE IIS SUPERPAVE BITUMINOUS CONCRETE PAVEMENT (ITEM 490.30). PLEASE REFER TO THE ROADWAY TYPICAL SECTIONS FOR DETAILS.

10 METERS
5
H 1:200 SCALE
V 1:200 SCALE
@ FULL SIZE
5 10 METERS

VERMONT AGENCY OF TRANSPORTATION

Stantec

PROJECT NAME: BENNINGTON
PROJECT NUMBER: AC NH 019-1(53)

FILE NAME: ...\plot_files\zd307c3xs_nb.ptf
DESIGN SUPERVISOR: GREG EDWARDS
DESIGNED BY: MARC FOISY
NB MAINLINE CROSS SECTIONS

PLOT DATE: 5/16/2011
DRAWN BY: STANTEC
CHECKED BY: GARY SANTY
SHEET 305 OF 577

v:\1953\active\19530002\transportation\drawing\contract_3\plot_files\zd307c3xs_nb.ptf

REVISED
4-3-2009

Metric

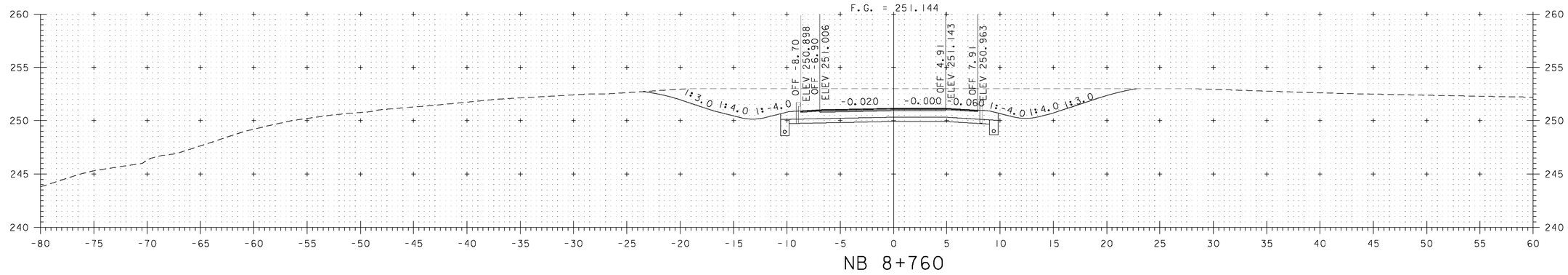

NB 8+760

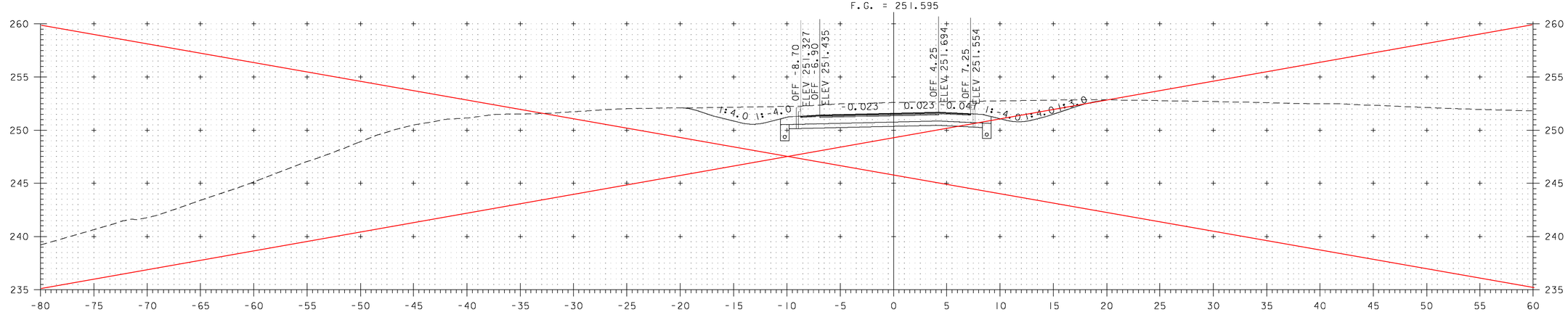

NB 8+740

NOTE:
ELEVATIONS SHOWN ARE FOR THE ULTIMATE FINISHED GRADE. THE TOP 50 PAVEMENT COURSE (TYPE IIIS) WILL BE CONSTRUCTED ON THE BRIDGE LIMITS. THIS CONTRACT INCLUDES FULL DEPTH PAVEMENT CONSTRUCTION ON BRIDGE LIMITS ONLY.

10 METERS
5
H 1:200 SCALE
V 1:200 SCALE
@ FULL SIZE
5 10 METERS

VERMONT AGENCY OF TRANSPORTATION

Stantec

PROJECT NAME: BENNINGTON
PROJECT NUMBER: AC NH 019-1(53)

FILE NAME: ...\zd307c3.revised.dgn
DESIGNED BY: MARC FOISY
DESIGN SUPERVISOR: GREG EDWARDS
NB MAINLINE CROSS SECTIONS 6
PLOT DATE: 4/10/2009
DRAWN BY: STANTEC
CHECKED BY: GARY SANTY
SHEET OF

V:\1953\active\19530002\transportation\drawing\contract 3\VerticalRevision\zd307c3revised.dgn

REVISED
4-3-2009

Metric

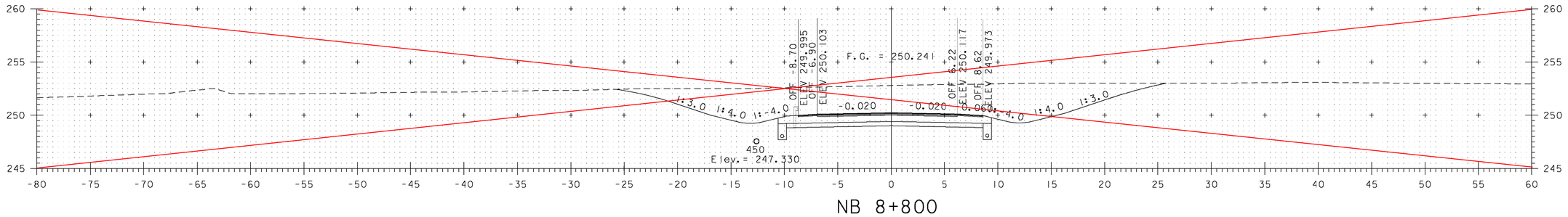

NB 8+800

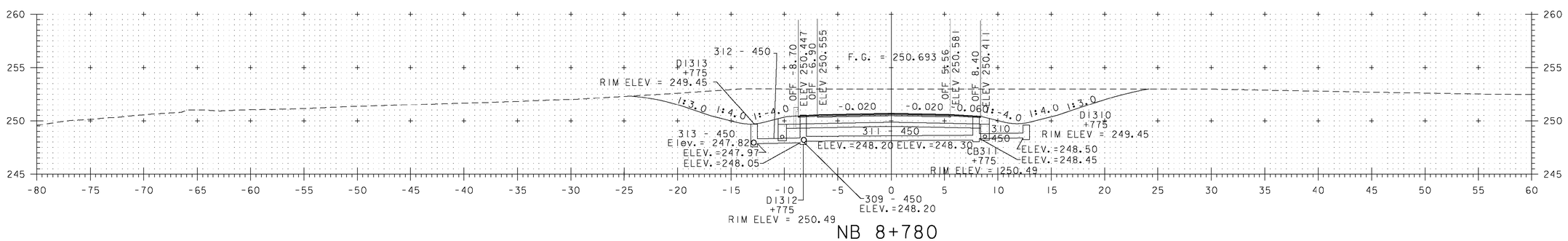

NB 8+780

NOTE:
ELEVATIONS SHOWN ARE FOR THE ULTIMATE FINISHED GRADE. THE TOP 50 PAVEMENT COURSE (TYPE IIIS) WILL BE CONSTRUCTED ON THE BRIDGE LIMITS. THIS CONTRACT INCLUDES FULL DEPTH PAVEMENT CONSTRUCTION ON BRIDGE LIMITS ONLY.

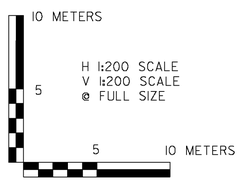

VERMONT AGENCY OF TRANSPORTATION

Stantec

PROJECT NAME: BENNINGTON
PROJECT NUMBER: AC NH 019-1(53)

FILE NAME: ...\zd307c3.revised.dgn
PLOT DATE: 4/10/2009
DESIGN SUPERVISOR: GREG EDWARDS
DRAWN BY: STANTEC
DESIGNED BY: MARC FOISY
CHECKED BY: GARY SANTY
NB MAINLINE CROSS SECTIONS 7
SHEET OF

V:\1853\active\19530002\transportation\drawing\contract_3\VerticalRevision\zd307c3.revised.dgn

Metric

F.G. = 249.820

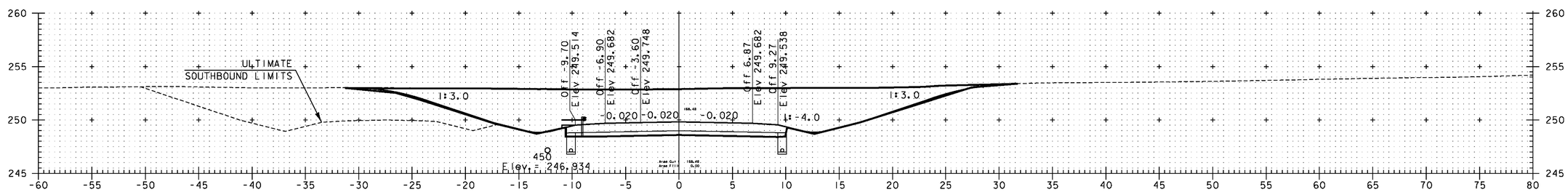

NB 8+820

F.G. = 250.273

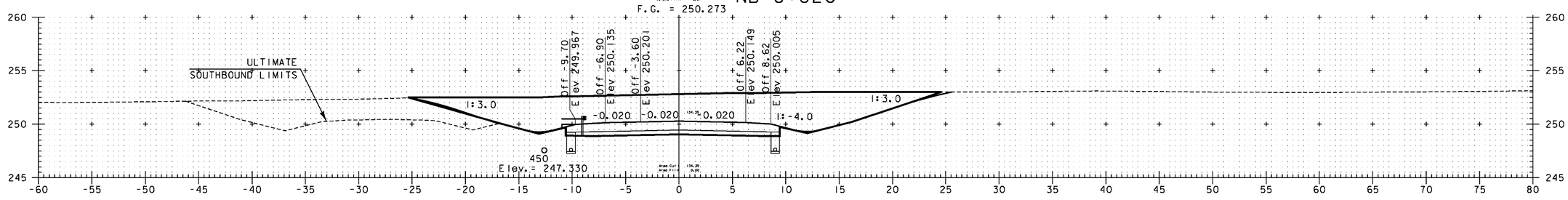

NB 8+800

SUPERSEDED BY PRECEDING SHEET

NOTE:
ElevATIONS SHOWN ARE FOR THE ULTIMATE FINISHED GRADE. THE TOP 50 PAVEMENT COURSE (TYPE IIIS) WILL NOT BE CONSTRUCTED AS PART OF THIS CONTRACT. THIS CONTRACT ONLY INCLUDES 100 OF TYPE IS AND 80 OF TYPE IIS SUPERPAVE BITUMINOUS CONCRETE PAVEMENT (ITEM 490.30). PLEASE REFER TO THE ROADWAY TYPICAL SECTIONS FOR DETAILS.

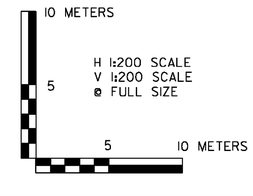

VERMONT AGENCY OF TRANSPORTATION

Stantec

PROJECT NAME: BENNINGTON
PROJECT NUMBER: AC NH 019-1(53)

FILE NAME: ...\plot_files\zd307c3xs_nb.ptf
DESIGN SUPERVISOR: GREG EDWARDS
DESIGNED BY: MARC FOISY
NB MAINLINE CROSS SECTIONS

PLOT DATE: 5/16/2011
DRAWN BY: STANTEC
CHECKED BY: GARY SANTY
SHEET 306 OF 577

v:\1953\active\195310002\transportation\drawing\contract_3\plot_files\zd307c3xs_nb.ptf

RECEIVED
JUN 17 2009
G.P.I.

Metric

RECORD PLANS

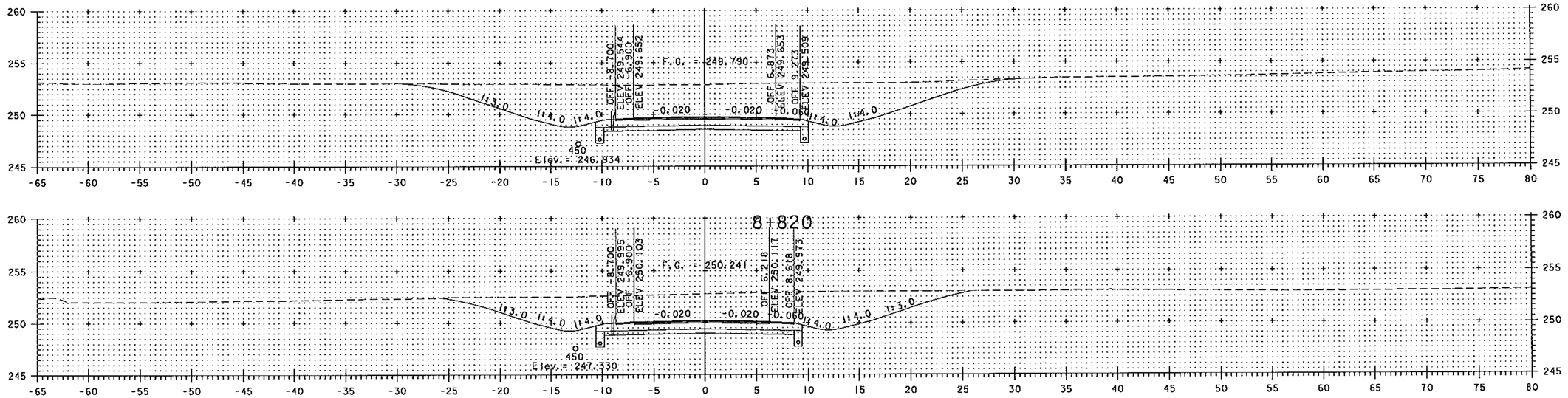

NOTE:
ELEVATIONS SHOWN ARE FOR THE ULTIMATE FINISHED GRADE. THE TOP 50 PAVEMENT COURSE (TYPE IIIS) WILL BE CONSTRUCTED ON THE BRIDGE LIMITS. THIS CONTRACT INCLUDES FULL DEPTH PAVEMENT CONSTRUCTION ON BRIDGE LIMITS ONLY.

10 METERS
5
H 1:200 SCALE
V 1:200 SCALE
@ FULL SIZE
5 10 METERS

VERMONT AGENCY OF TRANSPORTATION

Stantec

PROJECT NAME: BENNINGTON
PROJECT NUMBER: AC NH 019-1(53)

FILE NAME: ...\zd307c3.revised.ptf
DESIGN SUPERVISOR: GREG EDWARDS
DESIGNED BY: MARC FOISY
NB MAINLINE CROSS SECTIONS

PLOT DATE: 6/16/2009
DRAWN BY: STANTEC
CHECKED BY: GARY SANTY
SHEET 306 OF 577

V:\1953\active\195300002\transportation\drawing\contract_3\Vertical Revision\zd307c3.revised.ptf

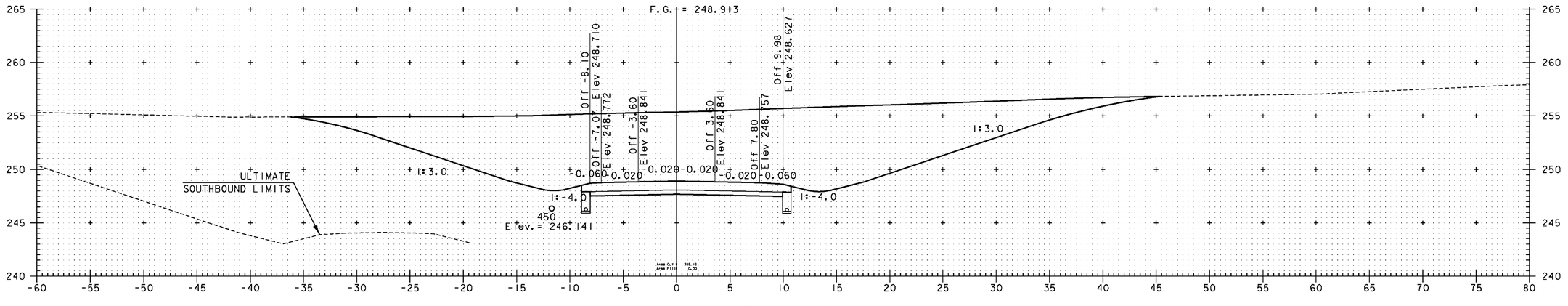

SUPERSEDED
BY
PRECEDING
SHEET

NOTE:
ElevATIONS SHOWN ARE FOR THE ULTIMATE FINISHED GRADE. THE TOP 50 PAVEMENT COURSE (TYPE IIIS) WILL NOT BE CONSTRUCTED AS PART OF THIS CONTRACT. THIS CONTRACT ONLY INCLUDES 100 OF TYPE IS AND 80 OF TYPE IIS SUPERPAVE BITUMINOUS CONCRETE PAVEMENT (ITEM 490.30). PLEASE REFER TO THE ROADWAY TYPICAL SECTIONS FOR DETAILS.

10 METERS
5
H 1:200 SCALE
V 1:200 SCALE
@ FULL SIZE
5 10 METERS

VERMONT AGENCY OF TRANSPORTATION

Stantec

PROJECT NAME: BENNINGTON
PROJECT NUMBER: AC NH 019-1(53)

FILE NAME: ...\plot_files\zd307c3xs_nb.ptf
DESIGN SUPERVISOR: GREG EDWARDS
DESIGNED BY: MARC FOISY
NB MAINLINE CROSS SECTIONS

PLOT DATE: 5/16/2011
DRAWN BY: STANTEC
CHECKED BY: GARY SANTY
SHEET 307 OF 577

v:\1953\active\19530002\transportation\drawing\contract_3\plot_files\zd307c3xs_nb.ptf

RECEIVED
JUN 17 2009
G.P.I.

VAOT Metric

RECORD PLANS

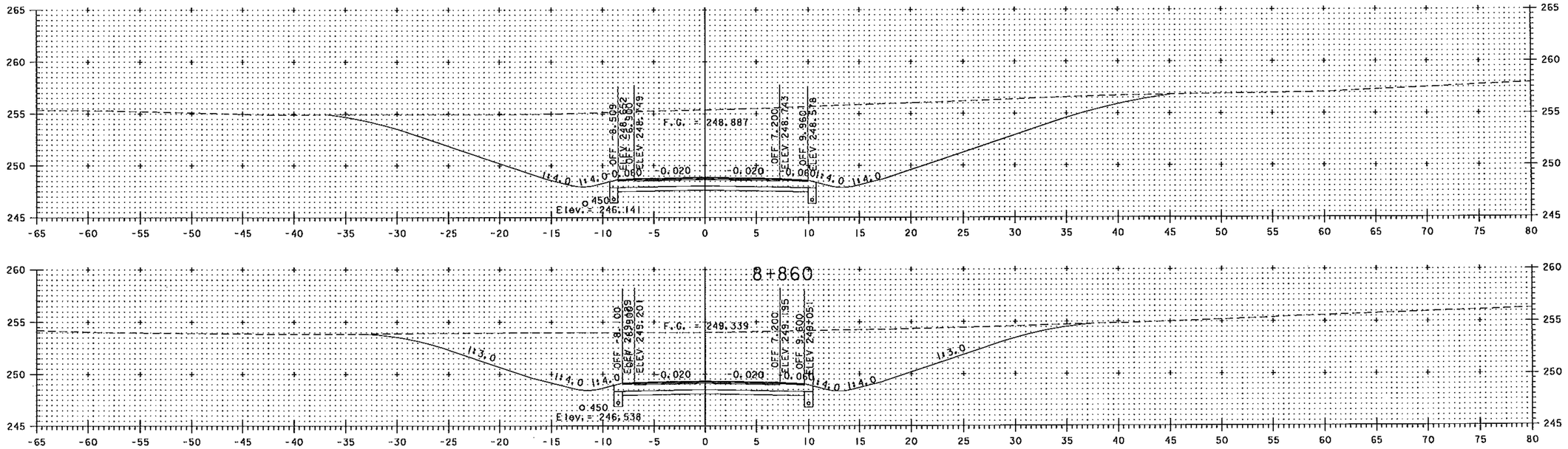

NOTE:
ELEVATIONS SHOWN ARE FOR THE ULTIMATE FINISHED GRADE. THE TOP 50 PAVEMENT COURSE (TYPE IIIS) WILL BE CONSTRUCTED ON THE BRIDGE LIMITS. THIS CONTRACT INCLUDES FULL DEPTH PAVEMENT CONSTRUCTION ON BRIDGE LIMITS ONLY.

10 METERS
H 1:200 SCALE
V 1:200 SCALE
@ FULL SIZE
5 10 METERS

VERMONT AGENCY OF TRANSPORTATION

Stantec

PROJECT NAME: BENNINGTON
PROJECT NUMBER: AC NH 019-1(53)

FILE NAME: ...\zd307c3.revised.ptf
DESIGN SUPERVISOR: GREG EDWARDS
DESIGNED BY: MARC FOISY
NB MAINLINE CROSS SECTIONS

PLOT DATE: 6/16/2009
DRAWN BY: STANTEC
CHECKED BY: GARY SANTY
SHEET 307 OF 577

V:\1952\active\52510002\transportation\drawing\contract_3\VertAlRevision\zd307c3.revised.ptf

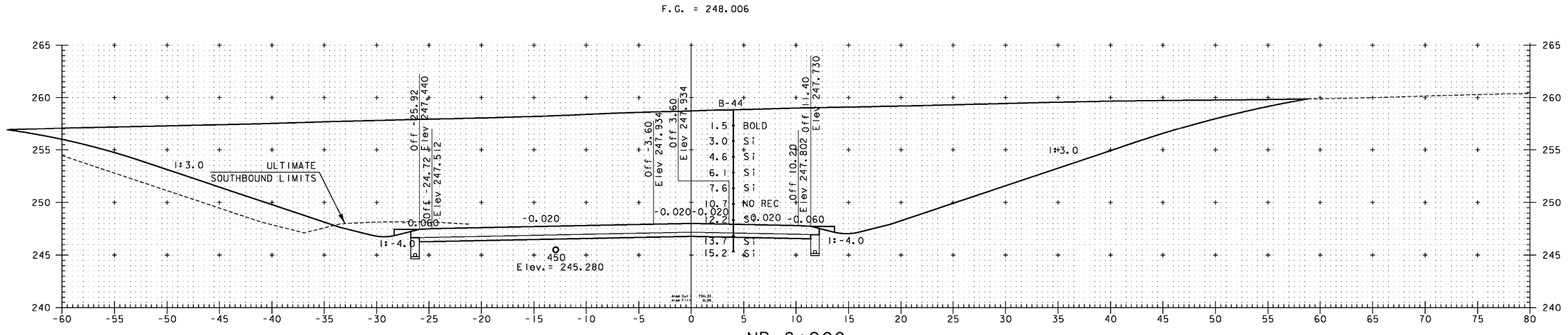

SUPERSEDED BY PRECEDING SHEET

NOTE:
ElevATIONS SHOWN ARE FOR THE ULTIMATE FINISHED GRADE. THE TOP 50 PAVEMENT COURSE (TYPE IIIS) WILL NOT BE CONSTRUCTED AS PART OF THIS CONTRACT. THIS CONTRACT ONLY INCLUDES 100 OF TYPE IS AND 80 OF TYPE IIS SUPERPAVE BITUMINOUS CONCRETE PAVEMENT (ITEM 490.30). PLEASE REFER TO THE ROADWAY TYPICAL SECTIONS FOR DETAILS.

10 METERS
5
5 10 METERS
H 1:200 SCALE
V 1:200 SCALE
@ FULL SIZE

VERMONT AGENCY OF TRANSPORTATION

Stantec

PROJECT NAME: BENNINGTON
PROJECT NUMBER: AC NH 019-1(53)

FILE NAME: ...\plot_files\zd307c3xs_nb.ptf
DESIGN SUPERVISOR: GREG EDWARDS
DESIGNED BY: MARC FOISY
NB MAINLINE CROSS SECTIONS

PLOT DATE: 5/16/2011
DRAWN BY: STANTEC
CHECKED BY: GARY SANTY
SHEET 308 OF 577

v:\1853\active\18530002\transportation\drawing\contract 3\plot_files\zd307c3xs_nb.ptf

Metric

RECEIVED
JUN 17 2009
G.P.I.

RECORD PLANS

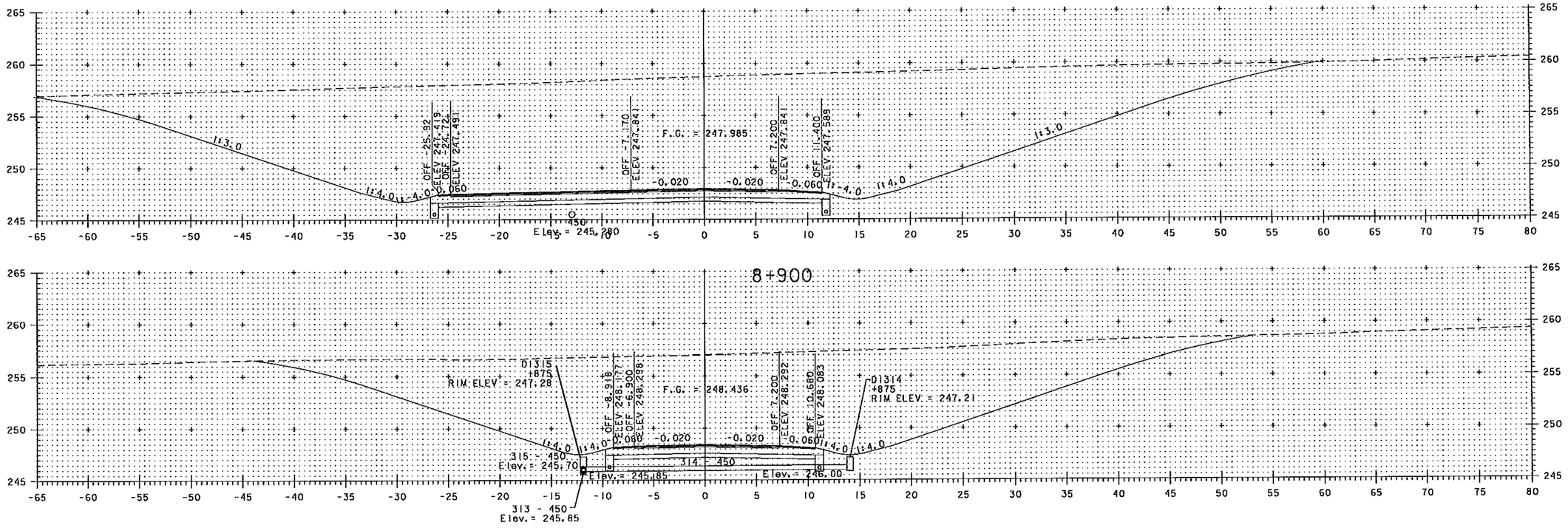

NOTE:
ELEVATIONS SHOWN ARE FOR THE ULTIMATE FINISHED GRADE. THE TOP 50 PAVEMENT COURSE (TYPE IIIS) WILL BE CONSTRUCTED ON THE BRIDGE LIMITS. THIS CONTRACT INCLUDES FULL DEPTH PAVEMENT CONSTRUCTION ON BRIDGE LIMITS ONLY.

10 METERS
H 1:200 SCALE
V 1:200 SCALE
FULL SIZE
5
5 10 METERS

VERMONT AGENCY OF TRANSPORTATION

Stantec

PROJECT NAME: BENNINGTON
PROJECT NUMBER: AC NH 019-1(53)

FILE NAME: ...\zd307c3.revised.ptf
DESIGN SUPERVISOR: GREG EDWARDS
DESIGNED BY: MARC FOISY
NB MAINLINE CROSS SECTIONS

PLOT DATE: 6/16/2009
DRAWN BY: STANTEC
CHECKED BY: GARY SANTY
SHEET 308 OF 577

V:\1953\active\195310002\transportation\drawing\contract_3\VerticalRevision\zd307c3_revised.ptf

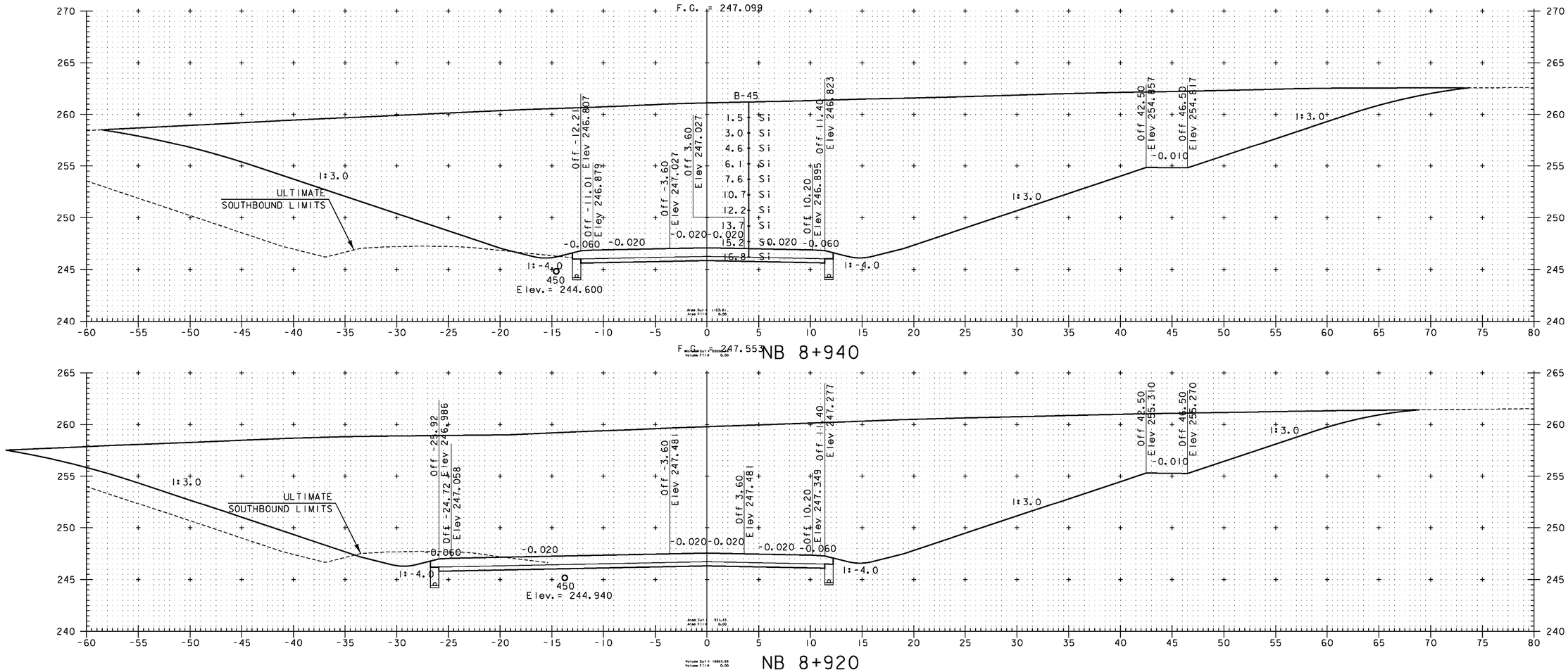

SUPERSEDED
BY
PRECEDING
SHEET

NOTE:
ElevATIONS SHOWN ARE FOR THE ULTIMATE FINISHED GRADE. THE TOP 50 PAVEMENT COURSE (TYPE IIIS) WILL NOT BE CONSTRUCTED AS PART OF THIS CONTRACT. THIS CONTRACT ONLY INCLUDES 100 OF TYPE IS AND 80 OF TYPE IIS SUPERPAVE BITUMINOUS CONCRETE PAVEMENT (ITEM 490.30). PLEASE REFER TO THE ROADWAY TYPICAL SECTIONS FOR DETAILS.

10 METERS
5
H 1:200 SCALE
V 1:200 SCALE
@ FULL SIZE
5 10 METERS

VERMONT AGENCY OF TRANSPORTATION

Stantec

PROJECT NAME: BENNINGTON
PROJECT NUMBER: AC NH 019-1(53)

FILE NAME: ...\plot_files\zd307c3xs_nb.ptf
DESIGN SUPERVISOR: GREG EDWARDS
DESIGNED BY: MARC FOISY
NB MAINLINE CROSS SECTIONS

PLOT DATE: 5/16/2011
DRAWN BY: STANTEC
CHECKED BY: GARY SANTY
SHEET 309 OF 577

v:\1853\active\18530002\transportation\drawing\contract_3\plot_files\zd307c3xs_nb.ptf

RECORD PLANS

RECEIVED
JUN 17 2009
G.P.L.

Metric

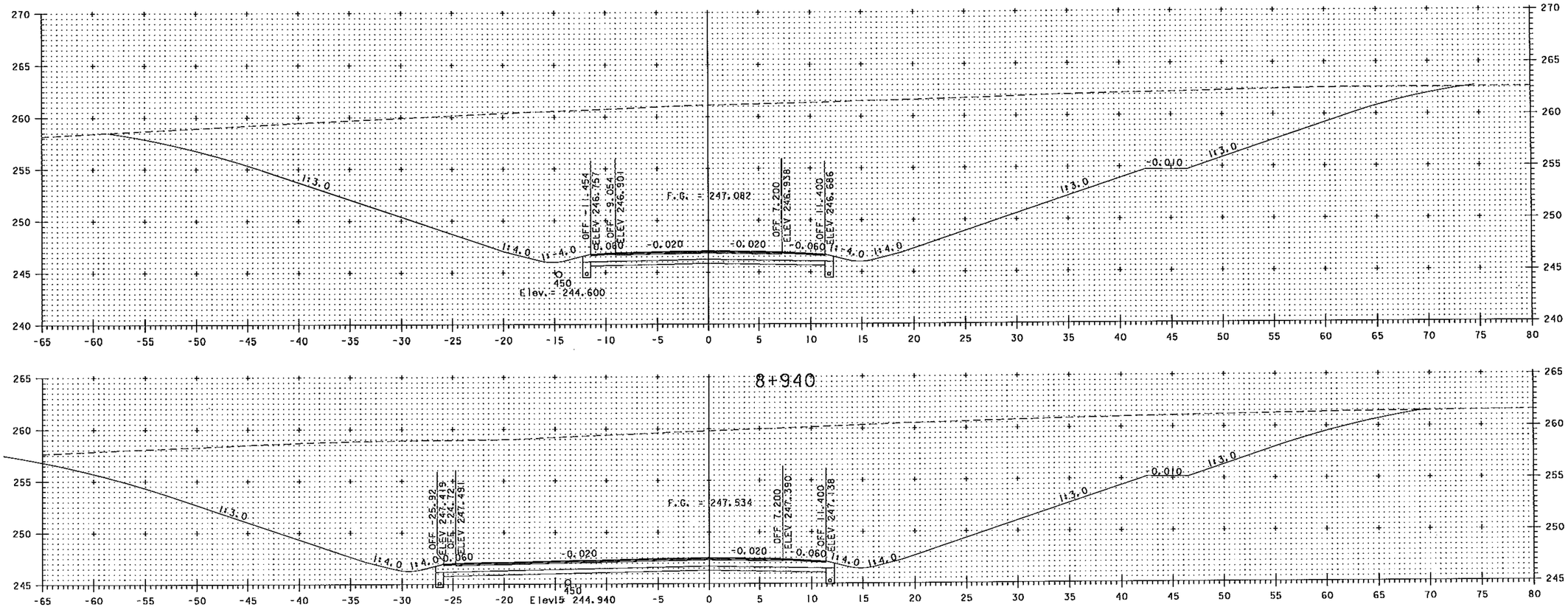

NOTE:
ELEVATIONS SHOWN ARE FOR THE ULTIMATE FINISHED GRADE. THE TOP 50 PAVEMENT COURSE (TYPE IIIS) WILL BE CONSTRUCTED ON THE BRIDGE LIMITS. THIS CONTRACT INCLUDES FULL DEPTH PAVEMENT CONSTRUCTION ON BRIDGE LIMITS ONLY.

10 METERS
5
H 1:200 SCALE
V 1:200 SCALE
@ FULL SIZE
5 10 METERS

VERMONT AGENCY OF TRANSPORTATION

Stantec

PROJECT NAME: BENNINGTON
PROJECT NUMBER: AC NH 019-1(53)

FILE NAME: ...\zd307c3,revised,ptf
DESIGN SUPERVISOR: GREG EDWARDS
DESIGNED BY: MARC FOISY
NB MAINLINE CROSS SECTIONS

PLOT DATE: 6/16/2009
DRAWN BY: STANTEC
CHECKED BY: GARY SANTY
SHEET 309 OF 577

V:\953\active\95310002\transportation\drawing\contract_3\Vertical Revision\zd307c3,revised.ptf

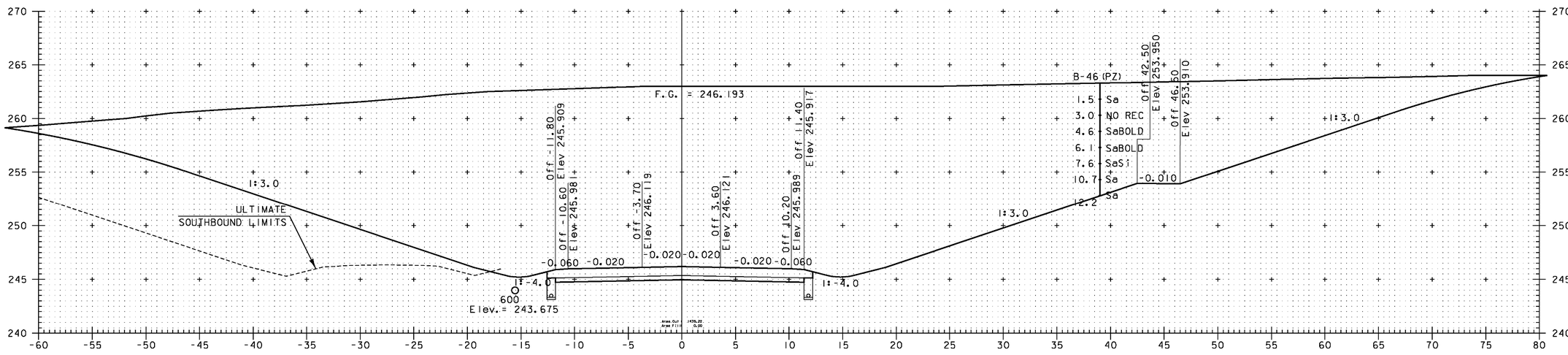

NB 8+958.000 =
XO 1+578.825

SUPERSEDED
BY
PRECEDING
SHEET

NOTE:
ElevATIONS SHOWN ARE FOR THE ULTIMATE FINISHED GRADE. THE TOP 50 PAVEMENT COURSE (TYPE IIIS) WILL NOT BE CONSTRUCTED AS PART OF THIS CONTRACT. THIS CONTRACT ONLY INCLUDES 100 OF TYPE IS AND 80 OF TYPE IIS SUPERPAVE BITUMINOUS CONCRETE PAVEMENT (ITEM 490.30). PLEASE REFER TO THE ROADWAY TYPICAL SECTIONS FOR DETAILS.

10 METERS
H 1:200 SCALE
V 1:200 SCALE
@ FULL SIZE
5
5 10 METERS

VERMONT AGENCY OF TRANSPORTATION

Stantec

PROJECT NAME: BENNINGTON
PROJECT NUMBER: AC NH 019-1(53)

FILE NAME: ...\plot_files\zd307c3xs_nb.ptf
DESIGN SUPERVISOR: GREG EDWARDS
DESIGNED BY: MARC FOISY
NB MAINLINE CROSS SECTIONS
PLOT DATE: 5/16/2011
DRAWN BY: STANTEC
CHECKED BY: GARY SANTY
SHEET 310 OF 577

v:\1353\active\13530002\transportation\drawing\contract 3\plot_files\zd307c3xs_nb.ptf

RECORD PLANS

JUN 17 2009

G.P.I.

Metric

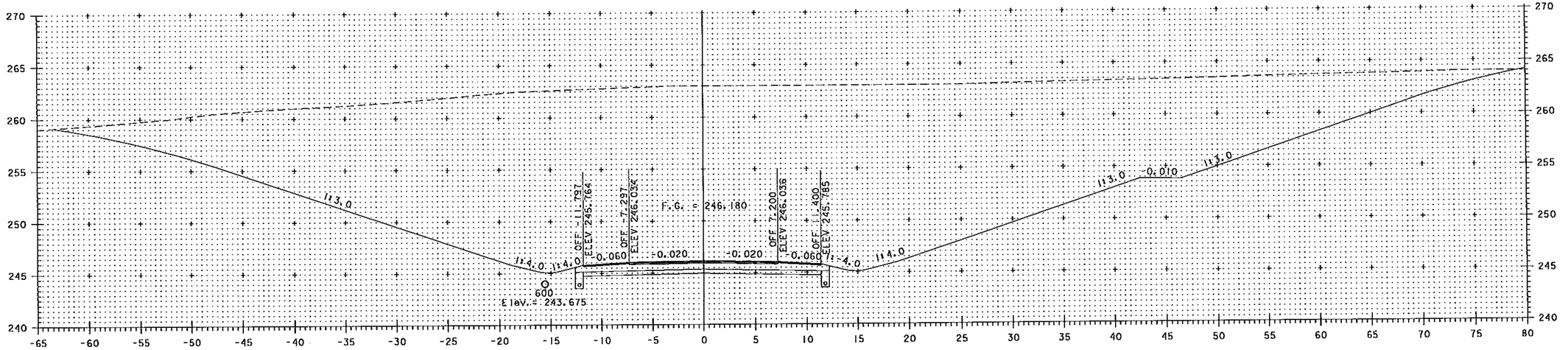

8+980

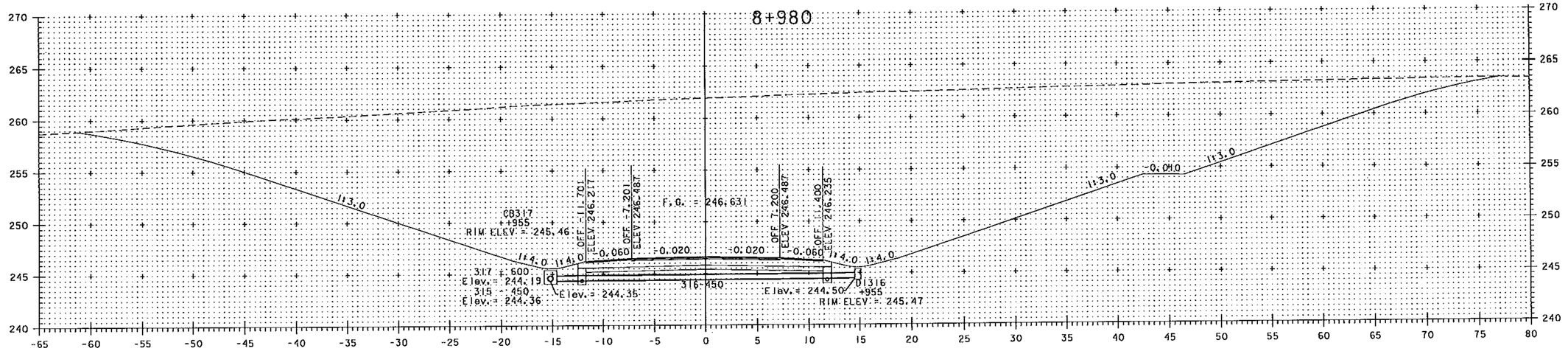

8+960

NOTE:
ELEVATIONS SHOWN ARE FOR THE ULTIMATE FINISHED GRADE. THE TOP 50 PAVEMENT COURSE (TYPE IIIS) WILL BE CONSTRUCTED ON THE BRIDGE LIMITS. THIS CONTRACT INCLUDES FULL DEPTH PAVEMENT CONSTRUCTION ON BRIDGE LIMITS ONLY.

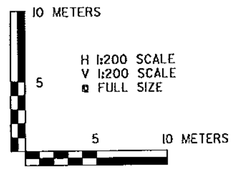

VERMONT AGENCY OF TRANSPORTATION

Stantec

PROJECT NAME: BENNINGTON
PROJECT NUMBER: AC NH 019-1(53)

FILE NAME: ...\zd307c3.revised.ptf
DESIGN SUPERVISOR: GREG EDWARDS
DESIGNED BY: MARC FOISY
NB MAINLINE CROSS SECTIONS

PLOT DATE: 6/16/2009
DRAWN BY: STANTEC
CHECKED BY: GARY SANTY
SHEET 310 OF 577

V:\9521\active\95310002\transportation\drawing\contract_3\Vertical\revision\zd307c3.revised.ptf

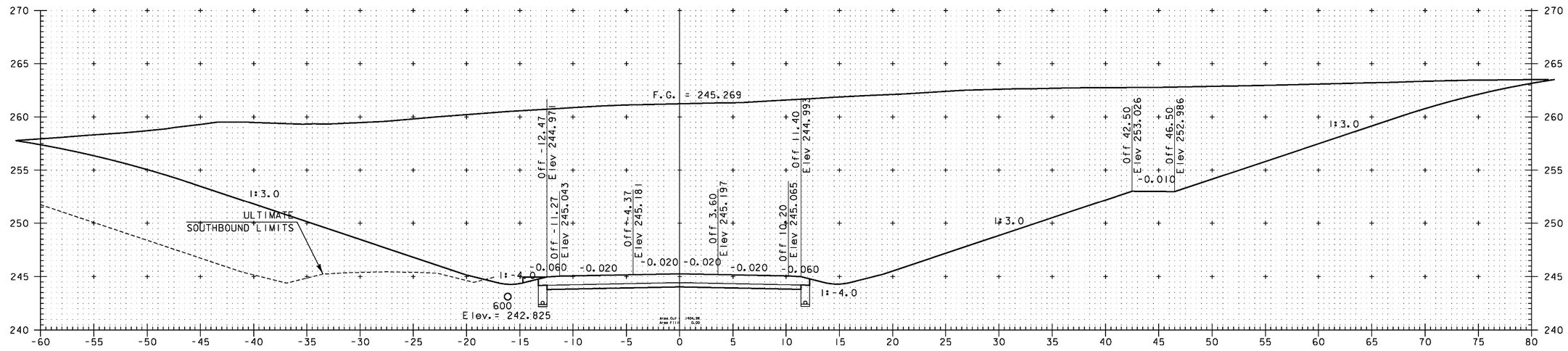

NB 9+020

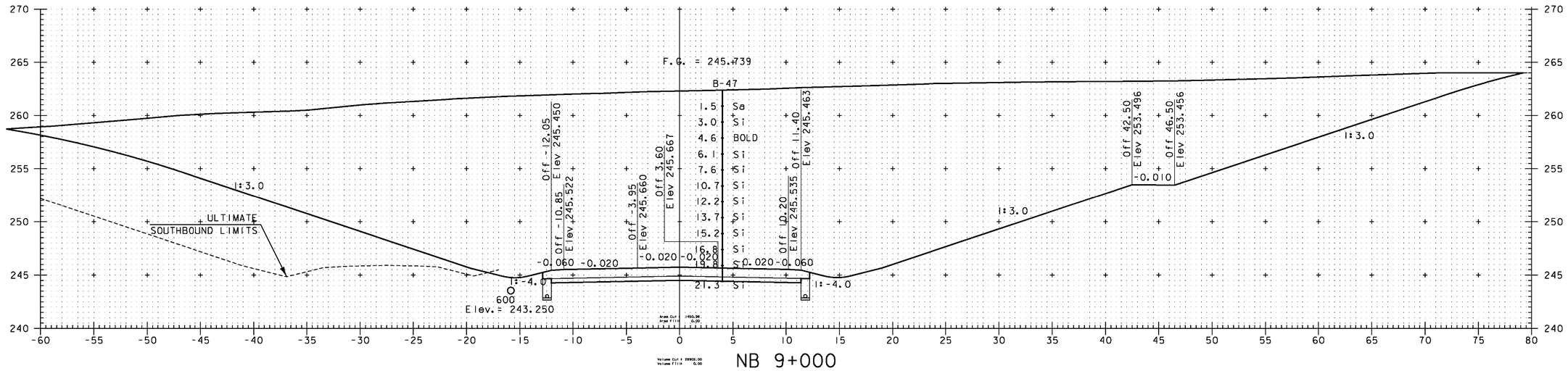

NB 9+000

SUPERSEDED
BY
PRECEDING
SHEET

NOTE:
ElevATIONS SHOWN ARE FOR THE ULTIMATE FINISHED GRADE. THE TOP 50 PAVEMENT COURSE (TYPE IIIS) WILL NOT BE CONSTRUCTED AS PART OF THIS CONTRACT. THIS CONTRACT ONLY INCLUDES 100 OF TYPE IS AND 80 OF TYPE IIS SUPERPAVE BITUMINOUS CONCRETE PAVEMENT (ITEM 490.30). PLEASE REFER TO THE ROADWAY TYPICAL SECTIONS FOR DETAILS.

10 METERS
H 1:200 SCALE
V 1:200 SCALE
@ FULL SIZE
5
5 10 METERS

VERMONT AGENCY OF TRANSPORTATION

Stantec

PROJECT NAME: BENNINGTON
PROJECT NUMBER: AC NH 019-1(53)

FILE NAME: ...\plot_files\zd307c3xs_nb.ptf
DESIGN SUPERVISOR: GREG EDWARDS
DESIGNED BY: MARC FOISY
NB MAINLINE CROSS SECTIONS

PLOT DATE: 5/16/2011
DRAWN BY: STANTEC
CHECKED BY: GARY SANTY
SHEET 311 OF 577

v:\1953\active\19530002\transportation\drawing\contract_3\plot_files\zd307c3xs_nb.ptf

RECEIVED
JUN 17 2009
G.P.I.

RECORD PLANS

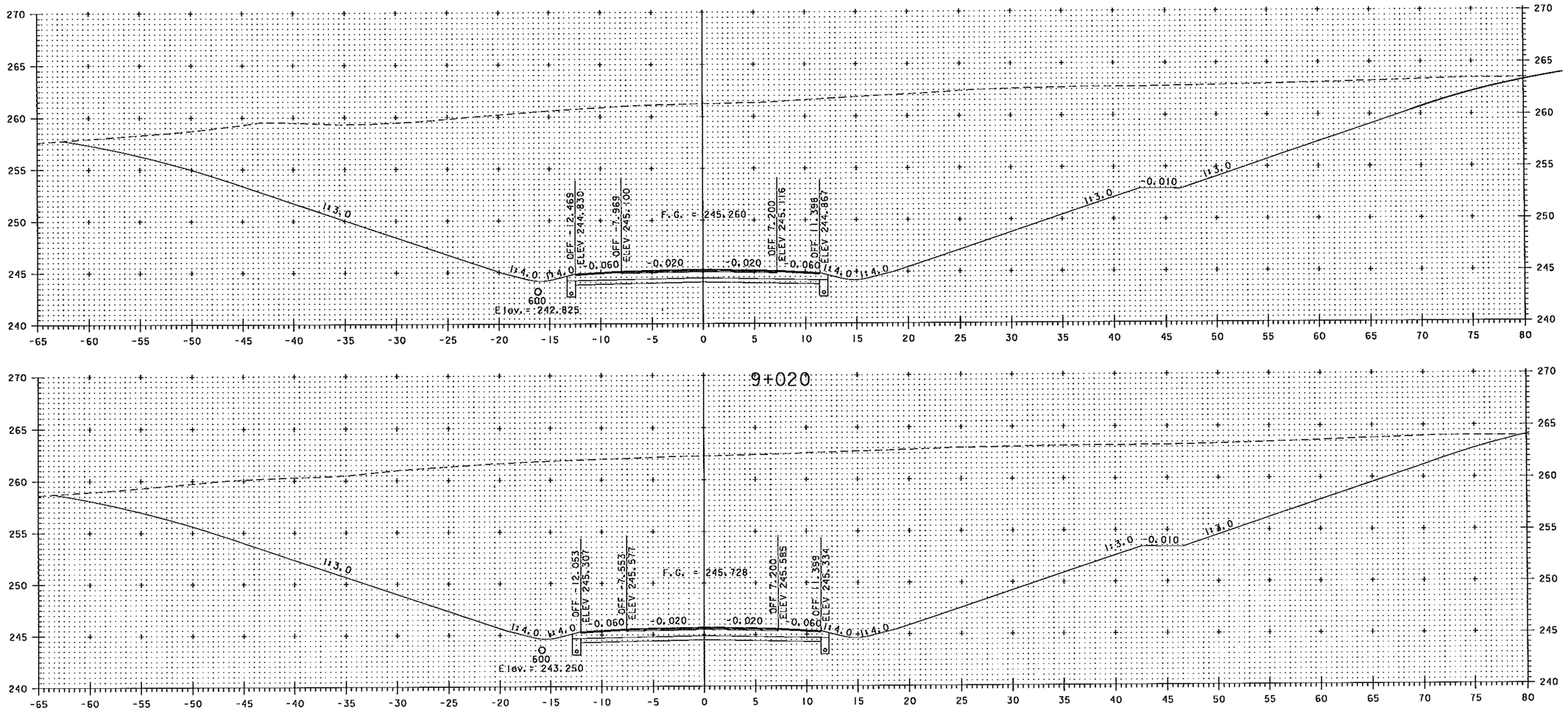

NOTE:
ELEVATIONS SHOWN ARE FOR THE ULTIMATE FINISHED GRADE. THE TOP 50 PAVEMENT COURSE (TYPE IIIS) WILL BE CONSTRUCTED ON THE BRIDGE LIMITS. THIS CONTRACT INCLUDES FULL DEPTH PAVEMENT CONSTRUCTION ON BRIDGE LIMITS ONLY.

10 METERS
5
H 1:200 SCALE
V 1:200 SCALE
@ FULL SIZE
5 10 METERS

VERMONT AGENCY OF TRANSPORTATION

Stantec

PROJECT NAME: BENNINGTON
PROJECT NUMBER: AC NH 019-1(53)

FILE NAME: ...\zd307c3_revised.ptf
DESIGN SUPERVISOR: GREG EDWARDS
DESIGNED BY: MARC FOISY
NB MAINLINE CROSS SECTIONS

PLOT DATE: 6/16/2009
DRAWN BY: STANTEC
CHECKED BY: GARY SANTY
SHEET 311 OF 577

V:\1953\active\195310002\transportation\drawing\contract_3\VerticalRevision\zd307c3_revised.ptf

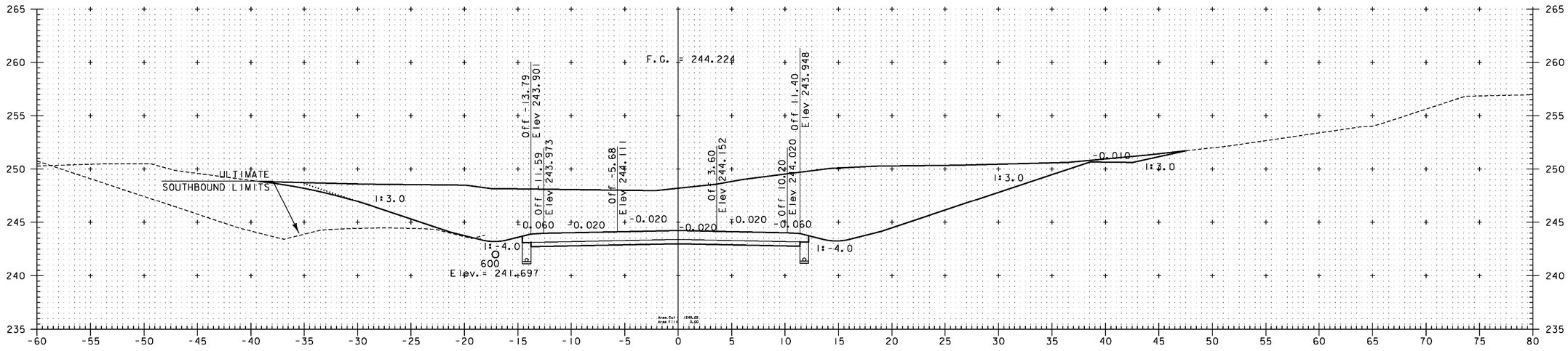

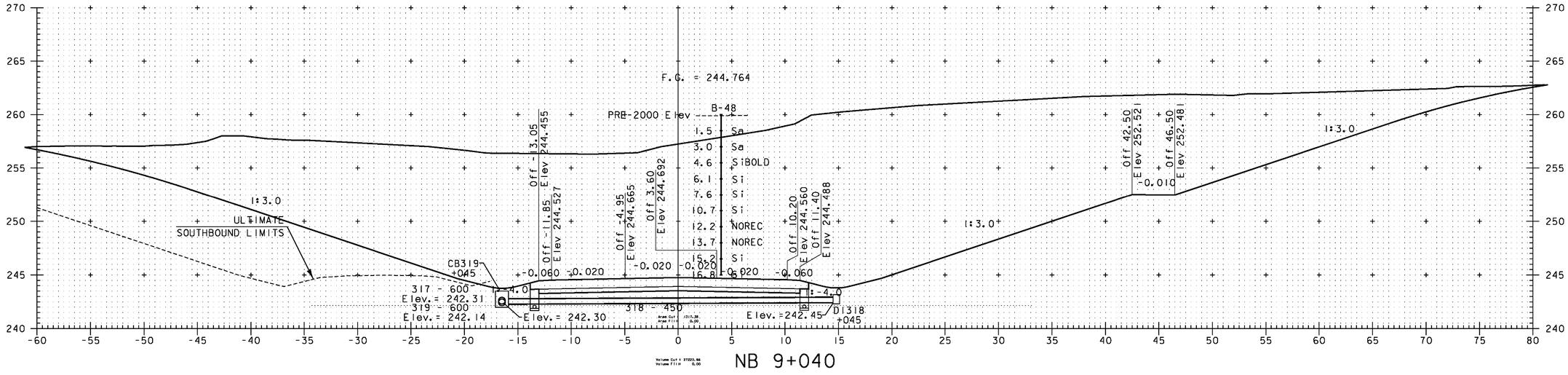

SUPERSEDED
BY
PRECEDING
SHEET

NOTE:
ElevATIONS SHOWN ARE FOR THE ULTIMATE FINISHED GRADE. THE TOP 50 PAVEMENT COURSE (TYPE IIIS) WILL NOT BE CONSTRUCTED AS PART OF THIS CONTRACT. THIS CONTRACT ONLY INCLUDES 100 OF TYPE IS AND 80 OF TYPE IIS SUPERPAVE BITUMINOUS CONCRETE PAVEMENT (ITEM 490.30). PLEASE REFER TO THE ROADWAY TYPICAL SECTIONS FOR DETAILS.

10 METERS
H 1:200 SCALE
V 1:200 SCALE
@ FULL SIZE
5 5 10 METERS

VERMONT AGENCY OF TRANSPORTATION

Stantec

PROJECT NAME: BENNINGTON
PROJECT NUMBER: AC NH 019-1(53)

FILE NAME: ...\plot_files\zd307c3xs_nb.ptf
DESIGN SUPERVISOR: GREG EDWARDS
DESIGNED BY: MARC FOISY
NB MAINLINE CROSS SECTIONS
PLOT DATE: 5/16/2011
DRAWN BY: STANTEC
CHECKED BY: GARY SANTY
SHEET 312 OF 577

v:\1853\active\18530002\transportation\drawing\contract_3\plot_files\zd307c3xs_nb.ptf

RECEIVED
JUN 17 2009
G.P.I.

Metric

RECORD PLANS

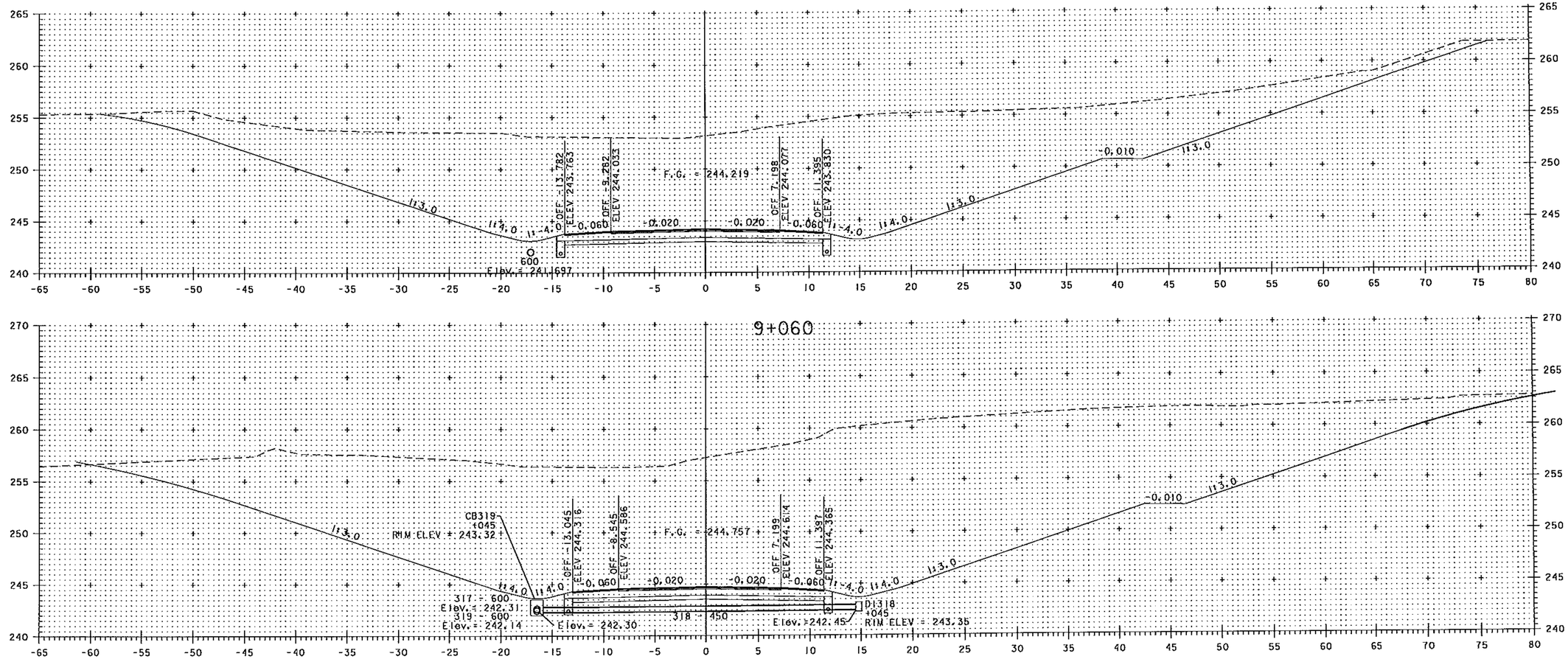

NOTE:
ELEVATIONS SHOWN ARE FOR THE ULTIMATE FINISHED GRADE. THE TOP 50 PAVEMENT COURSE (TYPE IIIS) WILL BE CONSTRUCTED ON THE BRIDGE LIMITS. THIS CONTRACT INCLUDES FULL DEPTH PAVEMENT CONSTRUCTION ON BRIDGE LIMITS ONLY.

10 METERS
5
H 1:200 SCALE
V 1:200 SCALE
FULL SIZE
5 10 METERS

VERMONT AGENCY OF TRANSPORTATION

Stantec

PROJECT NAME: BENNINGTON
PROJECT NUMBER: AC NH 019-1(53)

FILE NAME: ...\zd307c3_revised.ptf
DESIGN SUPERVISOR: GREG EDWARDS
DESIGNED BY: MARC FOISY
NB MAINLINE CROSS SECTIONS

PLOT DATE: 6/16/2009
DRAWN BY: STANTEC
CHECKED BY: GARY SANTY
SHEET 312 OF 577

V:\1952\active\93300021\transportation\drawing\contract_3\VerticalRevision\zd307c3_revised.ptf

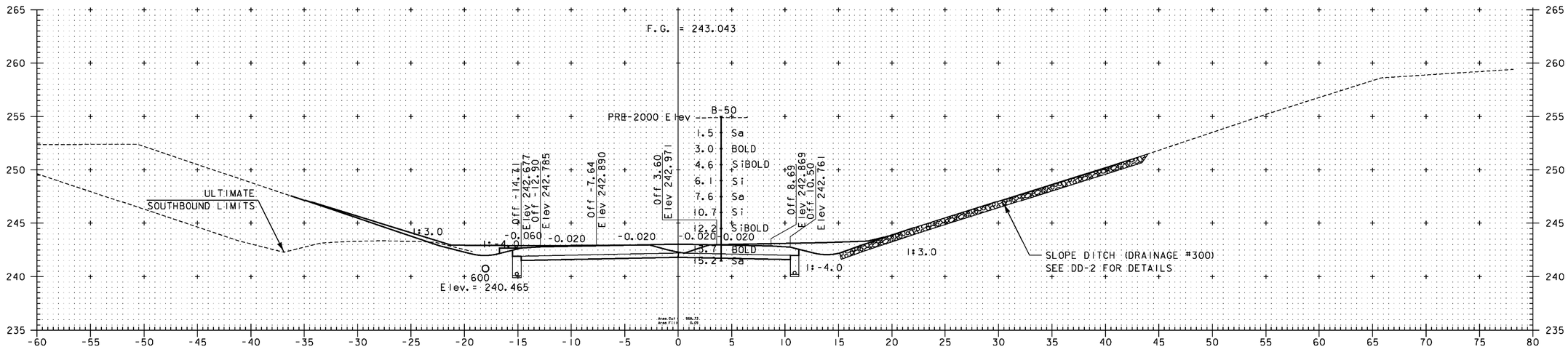

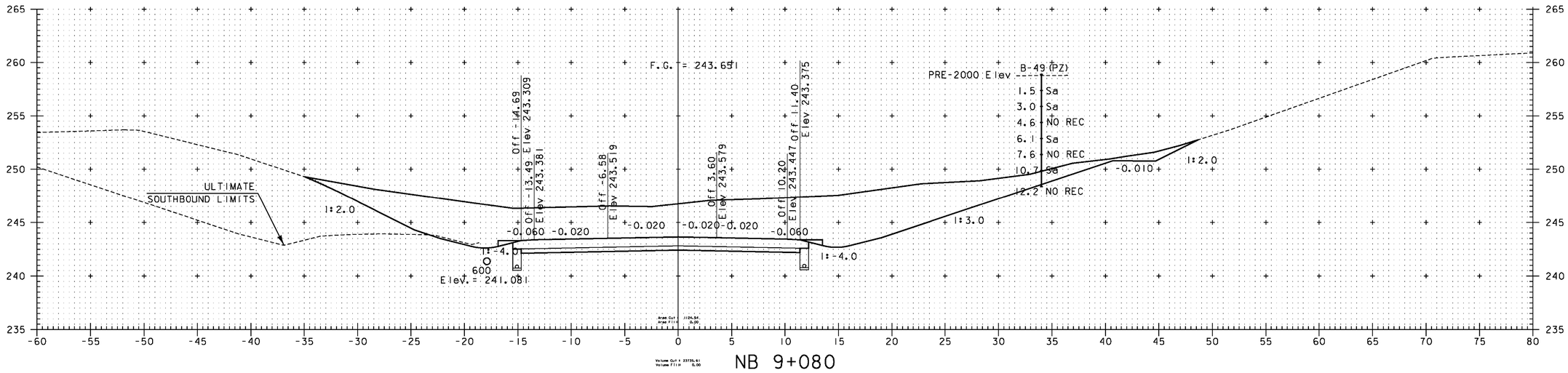

SUPERSEDED
BY
PRECEDING
SHEET

NOTE:
ElevATIONS SHOWN ARE FOR THE ULTIMATE FINISHED GRADE. THE TOP 50 PAVEMENT COURSE (TYPE IIIS) WILL NOT BE CONSTRUCTED AS PART OF THIS CONTRACT. THIS CONTRACT ONLY INCLUDES 100 OF TYPE IS AND 80 OF TYPE IIS SUPERPAVE BITUMINOUS CONCRETE PAVEMENT (ITEM 490.30). PLEASE REFER TO THE ROADWAY TYPICAL SECTIONS FOR DETAILS.

10 METERS
5
H 1:200 SCALE
V 1:200 SCALE
@ FULL SIZE
5 10 METERS

VERMONT AGENCY OF TRANSPORTATION

Stantec

PROJECT NAME: BENNINGTON
PROJECT NUMBER: AC NH 019-1(53)

FILE NAME: ...\plot_files\zd307c3xs_nb.ptf
DESIGN SUPERVISOR: GREG EDWARDS
DESIGNED BY: MARC FOISY
NB MAINLINE CROSS SECTIONS

PLOT DATE: 5/16/2011
DRAWN BY: STANTEC
CHECKED BY: GARY SANTY
SHEET 313 OF 577

v:\1953\active\19530002\transportation\drawing\contract_3\plot_files\zd307c3xs_nb.ptf

RECEIVED
JUN 17 2009
G.P.I.

Metric

RECORD PLANS

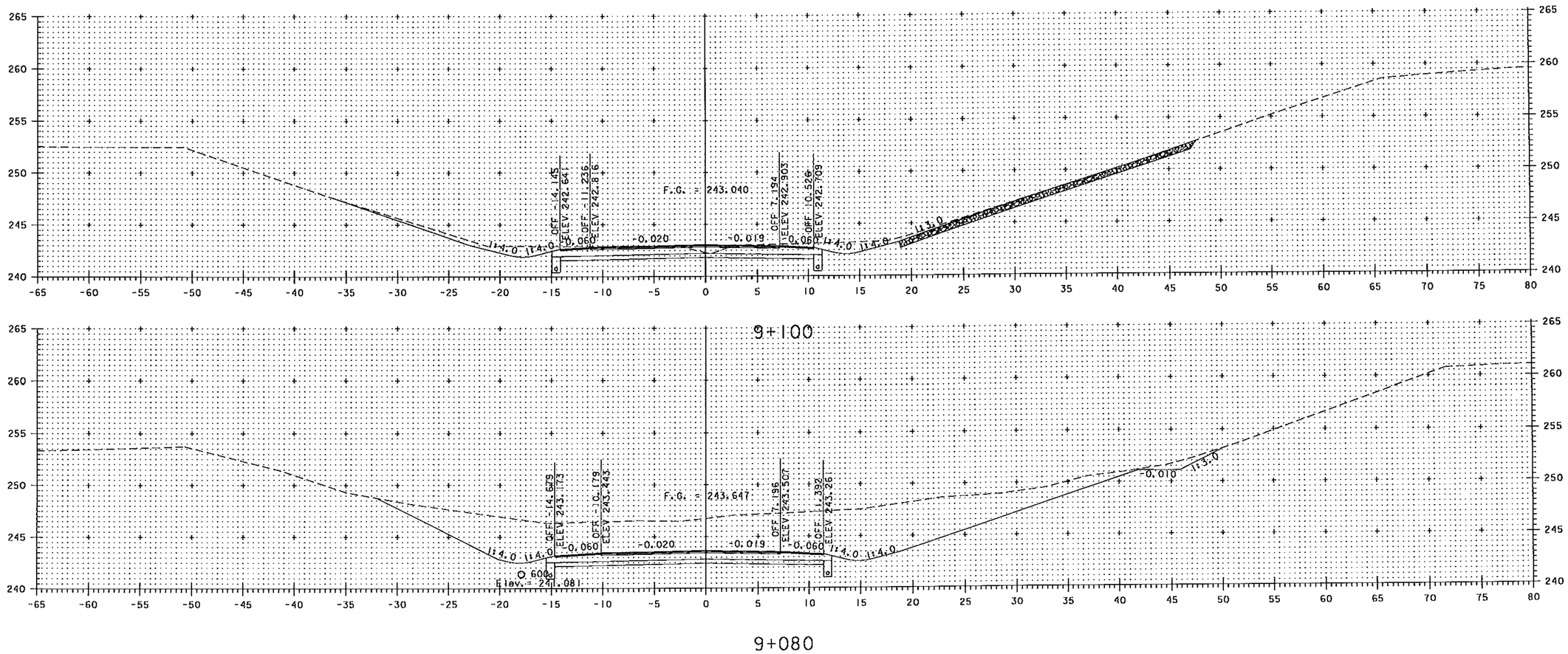

NOTE:
ELEVATIONS SHOWN ARE FOR THE ULTIMATE FINISHED GRADE. THE TOP 50 PAVEMENT COURSE (TYPE IIIS) WILL BE CONSTRUCTED ON THE BRIDGE LIMITS. THIS CONTRACT INCLUDES FULL DEPTH PAVEMENT CONSTRUCTION ON BRIDGE LIMITS ONLY.

10 METERS
H 1:200 SCALE
V 1:200 SCALE
FULL SIZE
5
5 10 METERS

VERMONT AGENCY OF TRANSPORTATION

Stantec

PROJECT NAME: BENNINGTON
PROJECT NUMBER: AC NH 019-1(53)

FILE NAME: ...\zd307c3.revised.ptf
DESIGN SUPERVISOR: GREG EDWARDS
DESIGNED BY: MARC FOISY
NB MAINLINE CROSS SECTIONS

PLOT DATE: 6/16/2009
DRAWN BY: STANTEC
CHECKED BY: GARY SANTY
SHEET 313 OF 577

V:\1953\active\195310002\transportation\drawing\contract_3\VerticalRevision\zd307c3.revised.ptf

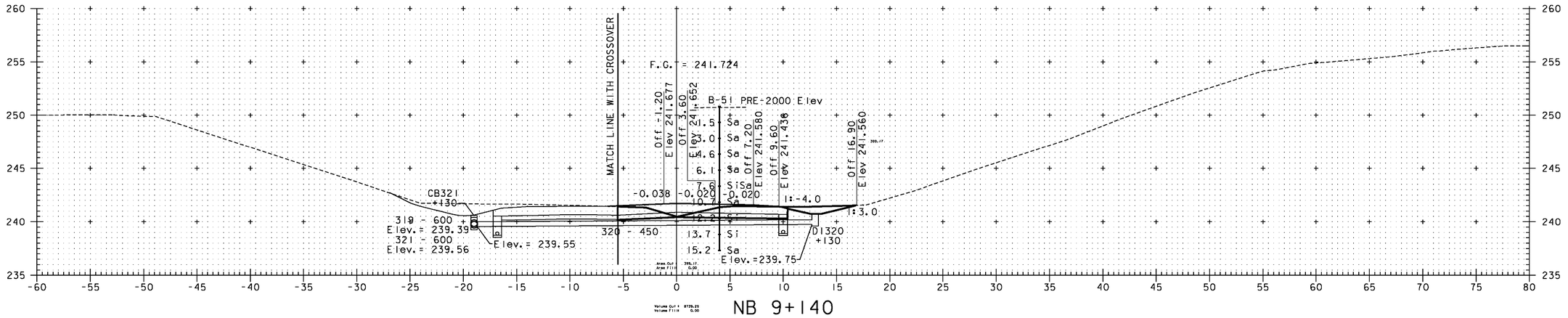

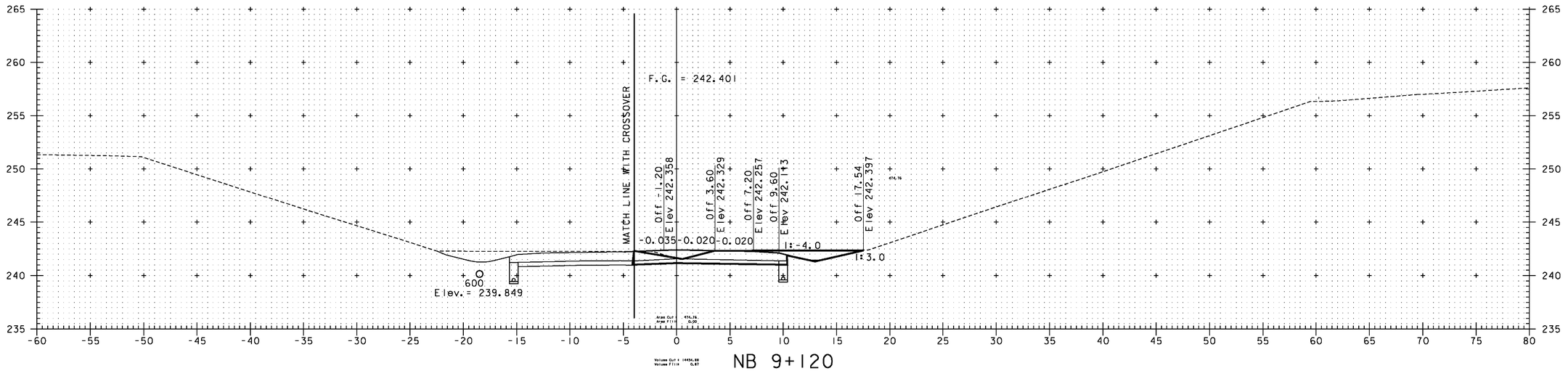

NB 9+120.000 =
XO 1+417.052, 5.243m LT.

SUPERSEDED
BY
PRECEDING
SHEET

NOTE:
ElevATIONS SHOWN ARE FOR THE ULTIMATE FINISHED GRADE. THE TOP 50 PAVEMENT COURSE (TYPE IIIS) WILL NOT BE CONSTRUCTED AS PART OF THIS CONTRACT. THIS CONTRACT ONLY INCLUDES 100 OF TYPE IS AND 80 OF TYPE IIS SUPERPAVE BITUMINOUS CONCRETE PAVEMENT (ITEM 490.30). PLEASE REFER TO THE ROADWAY TYPICAL SECTIONS FOR DETAILS.

10 METERS
H 1:200 SCALE
V 1:200 SCALE
@ FULL SIZE
5
5 10 METERS

VERMONT AGENCY OF TRANSPORTATION

Stantec

PROJECT NAME: BENNINGTON
PROJECT NUMBER: AC NH 019-1(53)

FILE NAME: ...\plot_files\zd307c3xs_nb.ptf
DESIGN SUPERVISOR: GREG EDWARDS
DESIGNED BY: MARC FOISY
NB MAINLINE CROSS SECTIONS

PLOT DATE: 5/16/2011
DRAWN BY: STANTEC
CHECKED BY: GARY SANTY
SHEET 314 OF 577

v:\1953\active\195300021\transportation\drawing\contract_3\plot_files\zd307c3xs_nb.ptf

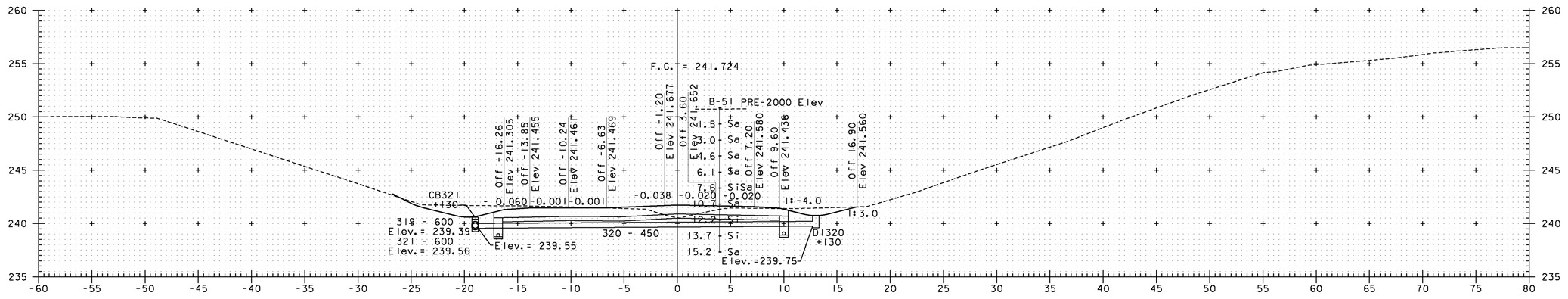

NB 9+140

NB 9+140.000 = XO 1+396.664, 6.63m LT.

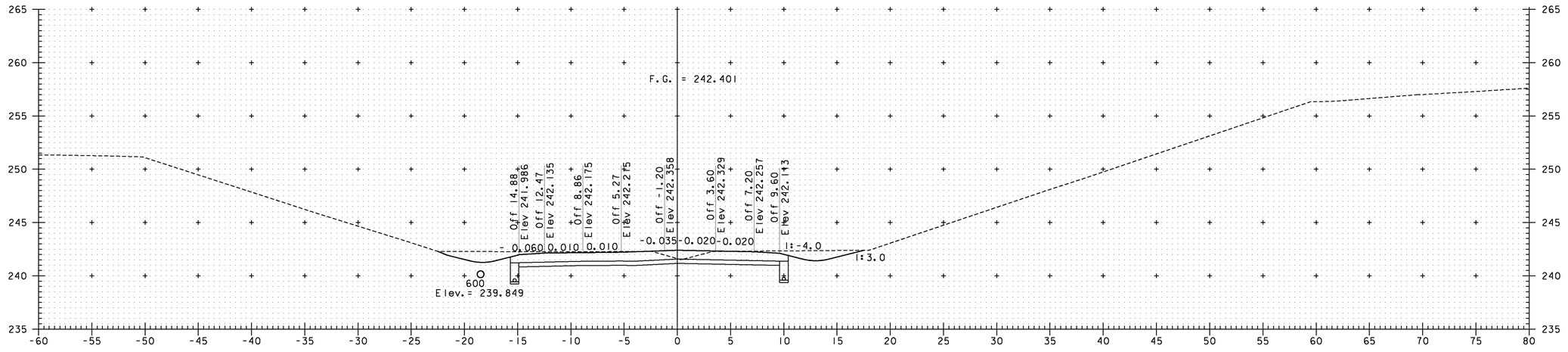

NB 9+120

NB 9+120.000 = XO 1+417.052, 5.7m LT.

NOTE:
ELEVATIONS SHOWN ARE FOR THE ULTIMATE FINISHED GRADE. THE TOP 50 PAVEMENT COURSE (TYPE IIIS) WILL NOT BE CONSTRUCTED AS PART OF THIS CONTRACT. THIS CONTRACT ONLY INCLUDES 100 OF TYPE IS AND 80 OF TYPE IIS SUPERPAVE BITUMINOUS CONCRETE PAVEMENT (ITEM 490.30). PLEASE REFER TO THE ROADWAY TYPICAL SECTIONS FOR DETAILS.

10 METERS
5
H 1:200 SCALE
V 1:200 SCALE
@ FULL SIZE
5 10 METERS

NOTE:
ALL OFFSETS ARE FROM NORTHBOUND ALIGNMENT
SECTIONS CUT PERPINDICULAR TO NORTHBOUND ALIGNMENT
THERFORE THE CROSSOVER IS SKEWED

VERMONT AGENCY OF TRANSPORTATION

Stantec

PROJECT NAME: BENNINGTON
PROJECT NUMBER: AC NH 019-1(53)

FILE NAME: ...\plot_files\zd307c3xs_nbxo.ptf
PLOT DATE: 11/11/2011
DESIGN SUPERVISOR: GREG EDWARDS
DRAWN BY: STANTEC
DESIGNED BY: MARC FOISY
CHECKED BY: GARY SANTY
NB MAINLINE CROSS SECTIONS
SHEET 314 OF 577

V:\1953\active\195300021\transportation\drawing\contract_3\plot_files\zd307c3xs_nbxo.ptf

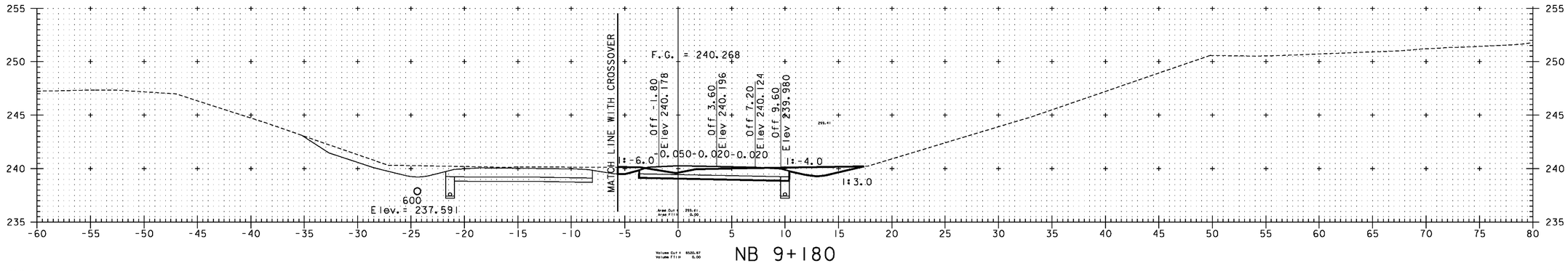

NB 9+180

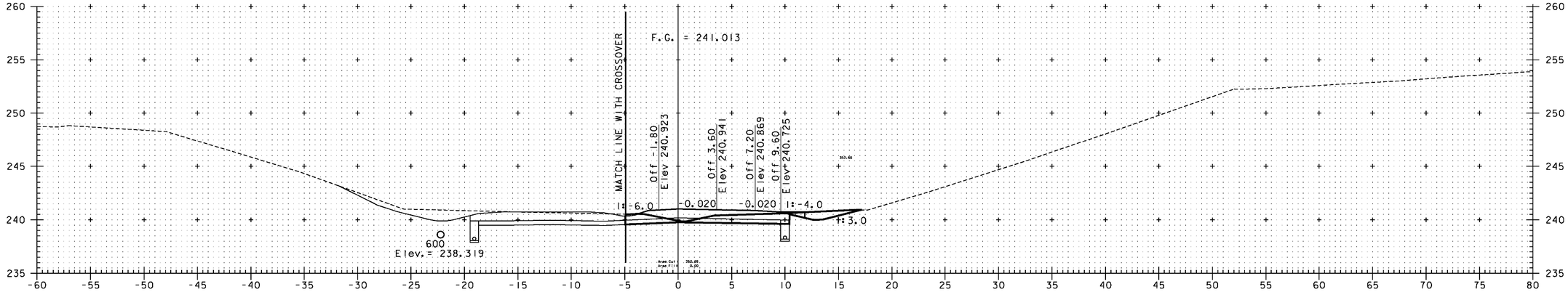

NB 9+160

SUPERSEDED BY PRECEDING SHEET

NOTE:
ElevATIONS SHOWN ARE FOR THE ULTIMATE FINISHED GRADE. THE TOP 50 PAVEMENT COURSE (TYPE IIIS) WILL NOT BE CONSTRUCTED AS PART OF THIS CONTRACT. THIS CONTRACT ONLY INCLUDES 100 OF TYPE IS AND 80 OF TYPE IIS SUPERPAVE BITUMINOUS CONCRETE PAVEMENT (ITEM 490.30). PLEASE REFER TO THE ROADWAY TYPICAL SECTIONS FOR DETAILS.

10 METERS
H 1:200 SCALE
V 1:200 SCALE
@ FULL SIZE
5
5 10 METERS

VERMONT AGENCY OF TRANSPORTATION

Stantec

PROJECT NAME: BENNINGTON
PROJECT NUMBER: AC NH 019-1(53)

FILE NAME: ...\plot_files\zd307c3xs_nb.ptf
DESIGN SUPERVISOR: GREG EDWARDS
DESIGNED BY: MARC FOISY
NB MAINLINE CROSS SECTIONS

PLOT DATE: 5/16/2011
DRAWN BY: STANTEC
CHECKED BY: GARY SANTY
SHEET 315 OF 577

v:\1853\active\185300021\transportation\drawing\contract 3\plot_files\zd307c3xs_nb.ptf

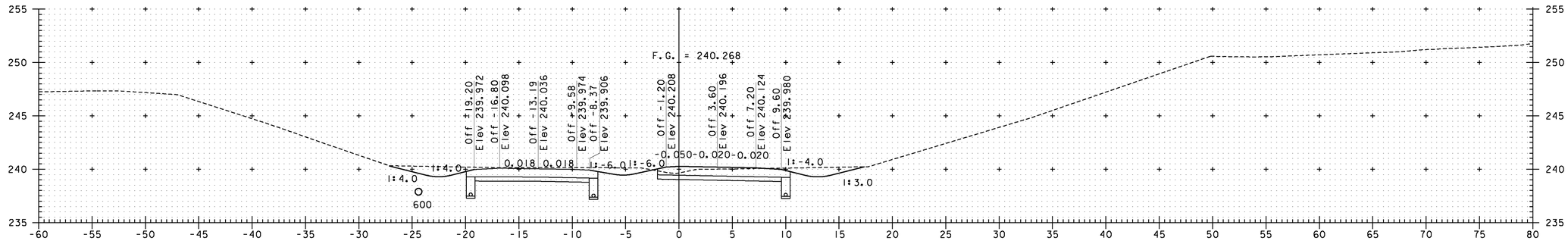

NB 9+180

NB 9+180.000 = XO 1+356.556, 9.58m LT.

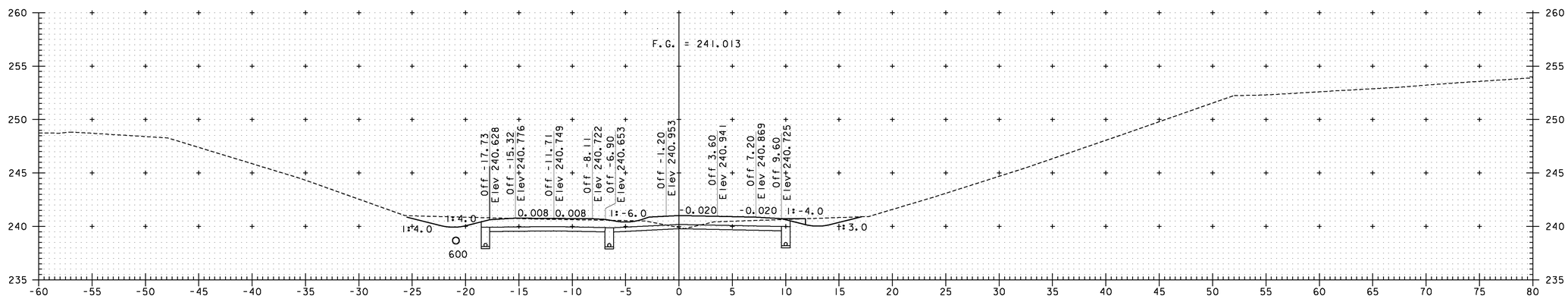

NB 9+160

NB 9+160.000 = XO 1+376.610, 8.11m LT.

NOTE:
ELEVATIONS SHOWN ARE FOR THE ULTIMATE FINISHED GRADE. THE TOP 50 PAVEMENT COURSE (TYPE IIIS) WILL NOT BE CONSTRUCTED AS PART OF THIS CONTRACT. THIS CONTRACT ONLY INCLUDES 100 OF TYPE IS AND 80 OF TYPE IIS SUPERPAVE BITUMINOUS CONCRETE PAVEMENT (ITEM 490.30). PLEASE REFER TO THE ROADWAY TYPICAL SECTIONS FOR DETAILS.

10 METERS
H 1:200 SCALE
V 1:200 SCALE
@ FULL SIZE
5
5 10 METERS

NOTE:
ALL OFFSETS ARE FROM NORTHBOUND ALIGNMENT SECTIONS CUT PERPINDICULAR TO NORTHBOUND ALIGNMENT THERFORE THE CROSSOVER IS SKEWED

VERMONT AGENCY OF TRANSPORTATION

Stantec

PROJECT NAME: BENNINGTON
PROJECT NUMBER: AC NH 019-1(53)

FILE NAME: ...\plot_files\zd307c3xs_nbxo.ptf PLOT DATE: 11/11/2011
DESIGN SUPERVISOR: GREG EDWARDS DRAWN BY: STANTEC
DESIGNED BY: MARC FOISY CHECKED BY: GARY SANTY
NB MAINLINE CROSS SECTIONS SHEET 315 OF 577

I:\VB53\active\VB530002\transportation\drawing\contract_3\plot_files\zd307c3xs_nbxo.ptf

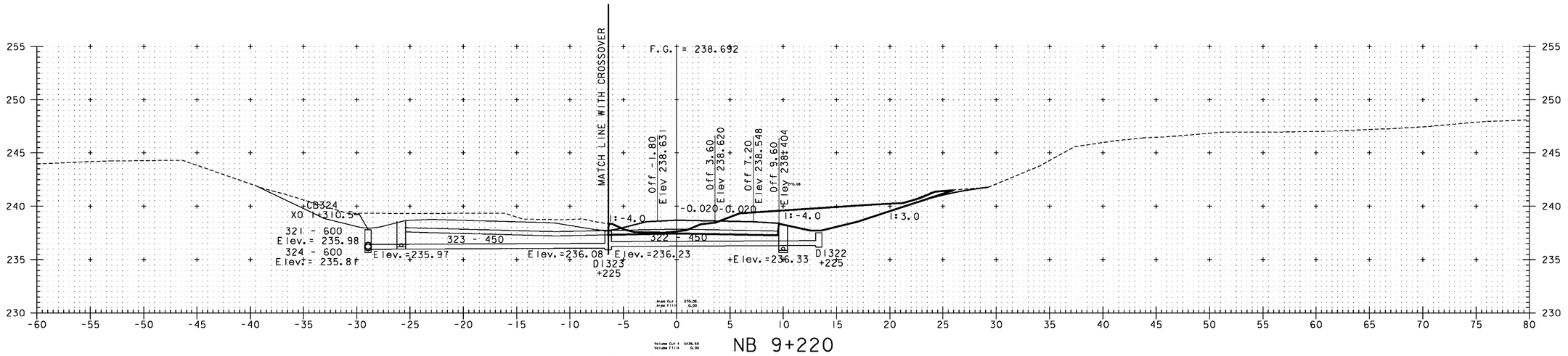

SUPERSEDED
BY
PRECEDING
SHEET

NOTE:
ElevATIONS SHOWN ARE FOR THE ULTIMATE FINISHED GRADE. THE TOP 50 PAVEMENT COURSE (TYPE IIIS) WILL NOT BE CONSTRUCTED AS PART OF THIS CONTRACT. THIS CONTRACT ONLY INCLUDES 100 OF TYPE IS AND 80 OF TYPE IIS SUPERPAVE BITUMINOUS CONCRETE PAVEMENT (ITEM 490.30). PLEASE REFER TO THE ROADWAY TYPICAL SECTIONS FOR DETAILS.

10 METERS
5
H 1:200 SCALE
V 1:200 SCALE
@ FULL SIZE
5 10 METERS

VERMONT AGENCY OF TRANSPORTATION

Stantec

PROJECT NAME: BENNINGTON
PROJECT NUMBER: AC NH 019-1(53)

FILE NAME: ...\plot_files\zd307c3xs_nb.ptf
PLOT DATE: 5/16/2011
DESIGN SUPERVISOR: GREG EDWARDS
DRAWN BY: STANTEC
DESIGNED BY: MARC FOISY
CHECKED BY: GARY SANTY
NB MAINLINE CROSS SECTIONS
SHEET 316 OF 577

v:\1953\active\19530002\transportation\drawing\contract_3\plot_files\zd307c3xs_nb.ptf

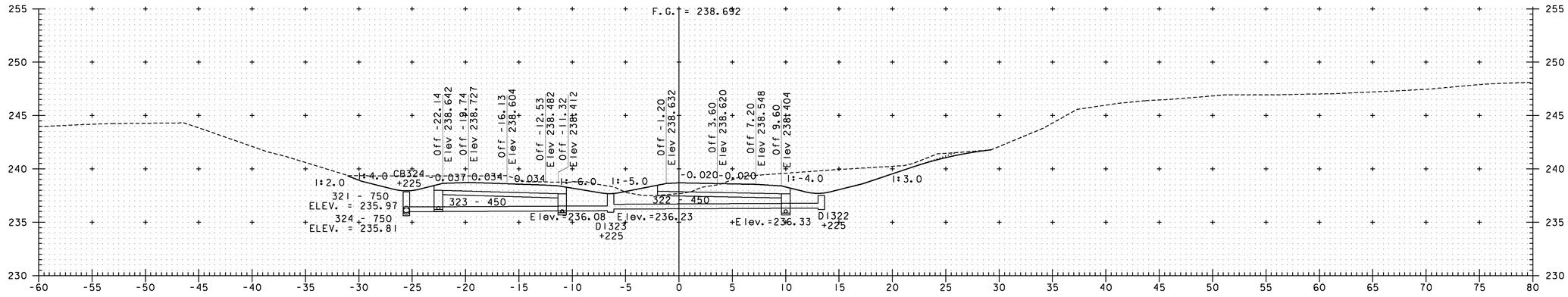

NB 9+220

NB 9+220.000 = XO 1+316.448, 12.53m LT.

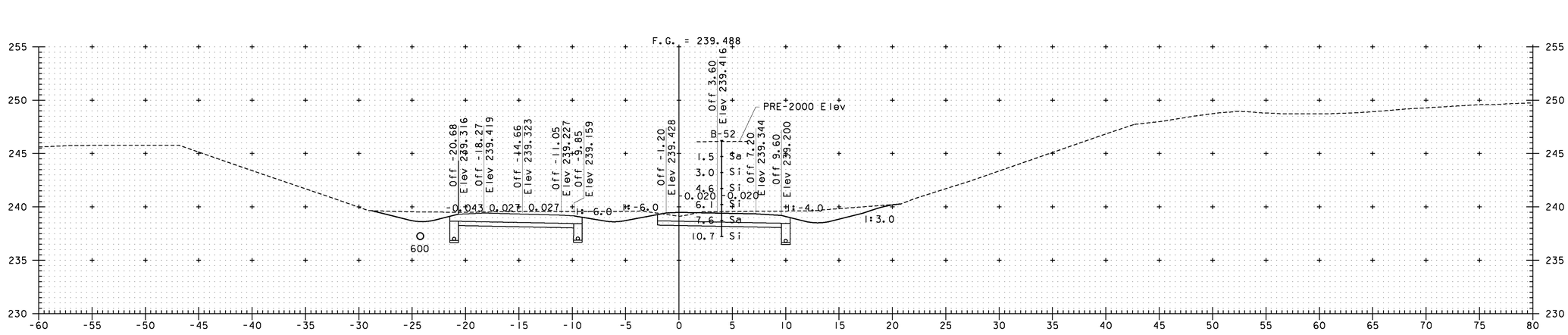

NB 9+200

NB 9+200.000 = XO 1+336.502, 11.05m LT.

NOTE:
ELEVATIONS SHOWN ARE FOR THE ULTIMATE FINISHED GRADE. THE TOP 50 PAVEMENT COURSE (TYPE IIIS) WILL NOT BE CONSTRUCTED AS PART OF THIS CONTRACT. THIS CONTRACT ONLY INCLUDES 100 OF TYPE IS AND 80 OF TYPE IIS SUPERPAVE BITUMINOUS CONCRETE PAVEMENT (ITEM 490.30). PLEASE REFER TO THE ROADWAY TYPICAL SECTIONS FOR DETAILS.

10 METERS
H 1:200 SCALE
V 1:200 SCALE
@ FULL SIZE
5
5 10 METERS

NOTE:
ALL OFFSETS ARE FROM NORTHBOUND ALIGNMENT SECTIONS CUT PERPINDICULAR TO NORTHBOUND ALIGNMENT THERFORE THE CROSSOVER IS SKEWED

VERMONT AGENCY OF TRANSPORTATION

Stantec

PROJECT NAME: BENNINGTON
PROJECT NUMBER: AC NH 019-1(53)

FILE NAME: ...\plot_files\zd307c3xs_nbxo.ptf
PLOT DATE: 11/11/2011
DESIGN SUPERVISOR: GREG EDWARDS
DRAWN BY: STANTEC
DESIGNED BY: MARC FOISY
CHECKED BY: GARY SANTY
NB MAINLINE CROSS SECTIONS
SHEET 316 OF 577

I:\953\active\953D0021\transportation\drawing\contract_3\plot_files\zd307c3xs_nbxo.ptf

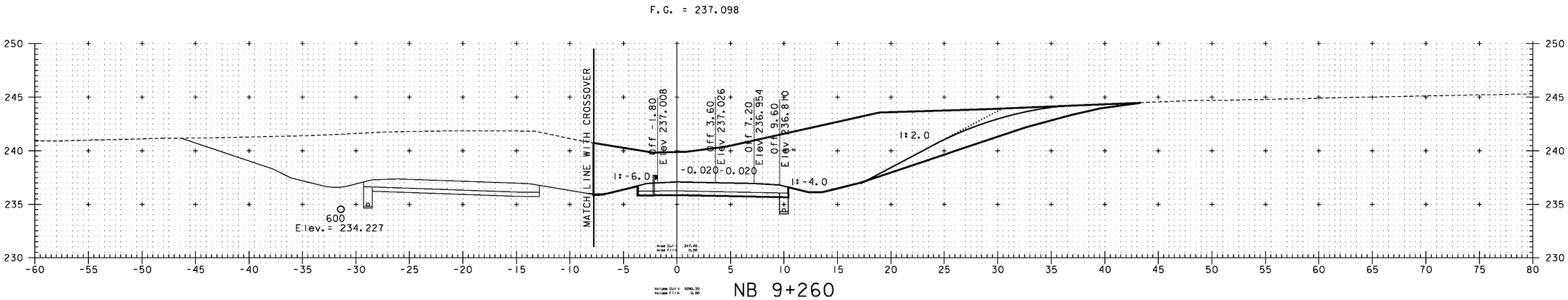

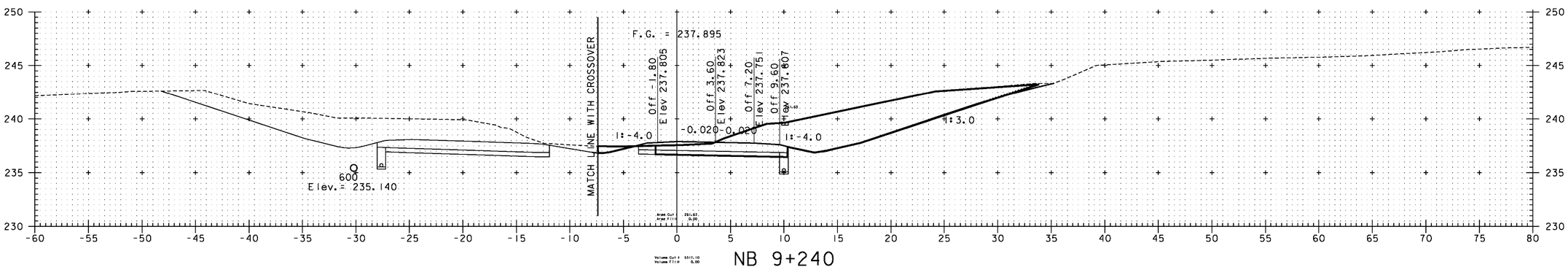

SUPERSEDED BY PRECEDING SHEET

NOTE:
ElevATIONS SHOWN ARE FOR THE ULTIMATE FINISHED GRADE. THE TOP 50 PAVEMENT COURSE (TYPE IIIS) WILL NOT BE CONSTRUCTED AS PART OF THIS CONTRACT. THIS CONTRACT ONLY INCLUDES 100 OF TYPE IS AND 80 OF TYPE IIS SUPERPAVE BITUMINOUS CONCRETE PAVEMENT (ITEM 490.30). PLEASE REFER TO THE ROADWAY TYPICAL SECTIONS FOR DETAILS.

10 METERS
5
H 1:200 SCALE
V 1:200 SCALE
@ FULL SIZE
5 10 METERS

VERMONT AGENCY OF TRANSPORTATION

Stantec

PROJECT NAME: BENNINGTON
PROJECT NUMBER: AC NH 019-1(53)

FILE NAME: ...\plot_files\zd307c3xs_nb.ptf
DESIGN SUPERVISOR: GREG EDWARDS
DESIGNED BY: MARC FOISY
NB MAINLINE CROSS SECTIONS

PLOT DATE: 5/16/2011
DRAWN BY: STANTEC
CHECKED BY: GARY SANTY
SHEET 317 OF 577

v:\1953\active\195310002\transportation\drawing\contract_3\plot_files\zd307c3xs_nb.ptf

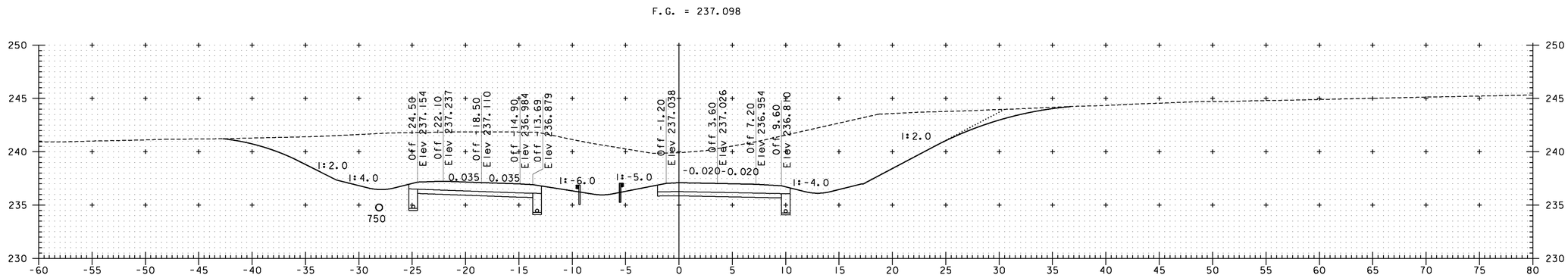

NB 9+260

NB 9+260.000 = XO 1+276.376, 14.90m LT.

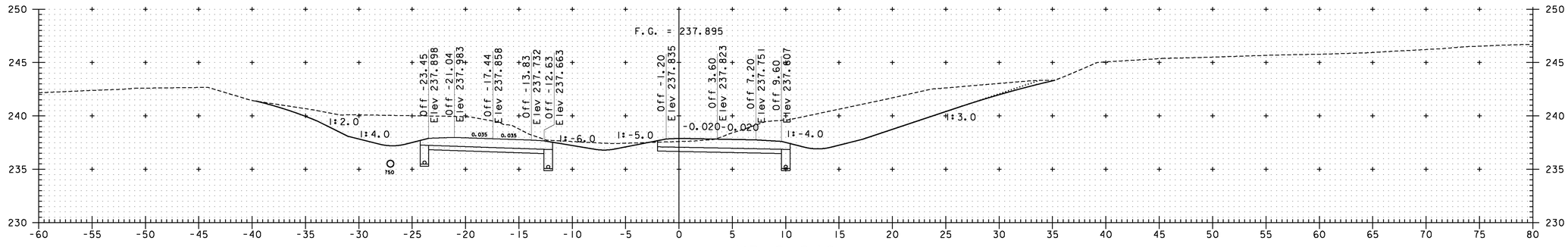

NB 9+240

NB 9+240.000 = XO 1+296.404, 13.83m LT.

NOTE:
ALL OFFSETS ARE FROM NORTHBOUND ALIGNMENT SECTIONS CUT PERPINDICULAR TO NORTHBOUND ALIGNMENT THERFORE THE CROSSOVER IS SKEWED

NOTE:
ELEVATIONS SHOWN ARE FOR THE ULTIMATE FINISHED GRADE. THE TOP 50 PAVEMENT COURSE (TYPE IIIS) WILL NOT BE CONSTRUCTED AS PART OF THIS CONTRACT. THIS CONTRACT ONLY INCLUDES 100 OF TYPE IS AND 80 OF TYPE IIS SUPERPAVE BITUMINOUS CONCRETE PAVEMENT (ITEM 490.30). PLEASE REFER TO THE ROADWAY TYPICAL SECTIONS FOR DETAILS.

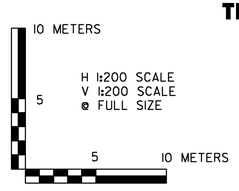

VERMONT AGENCY OF TRANSPORTATION

Stantec

PROJECT NAME: BENNINGTON
PROJECT NUMBER: AC NH 019-1(53)

FILE NAME: ...\plot_files\zd307c3xs_nbxo.ptf
PLOT DATE: 11/11/2011
DESIGN SUPERVISOR: GREG EDWARDS
DRAWN BY: STANTEC
DESIGNED BY: MARC FOISY
CHECKED BY: GARY SANTY
NB MAINLINE CROSS SECTIONS
SHEET 317 OF 577

V:\1953\active\195310002\transportation\drawing\contract_3\plot_files\zd307c3xs_nbxo.ptf

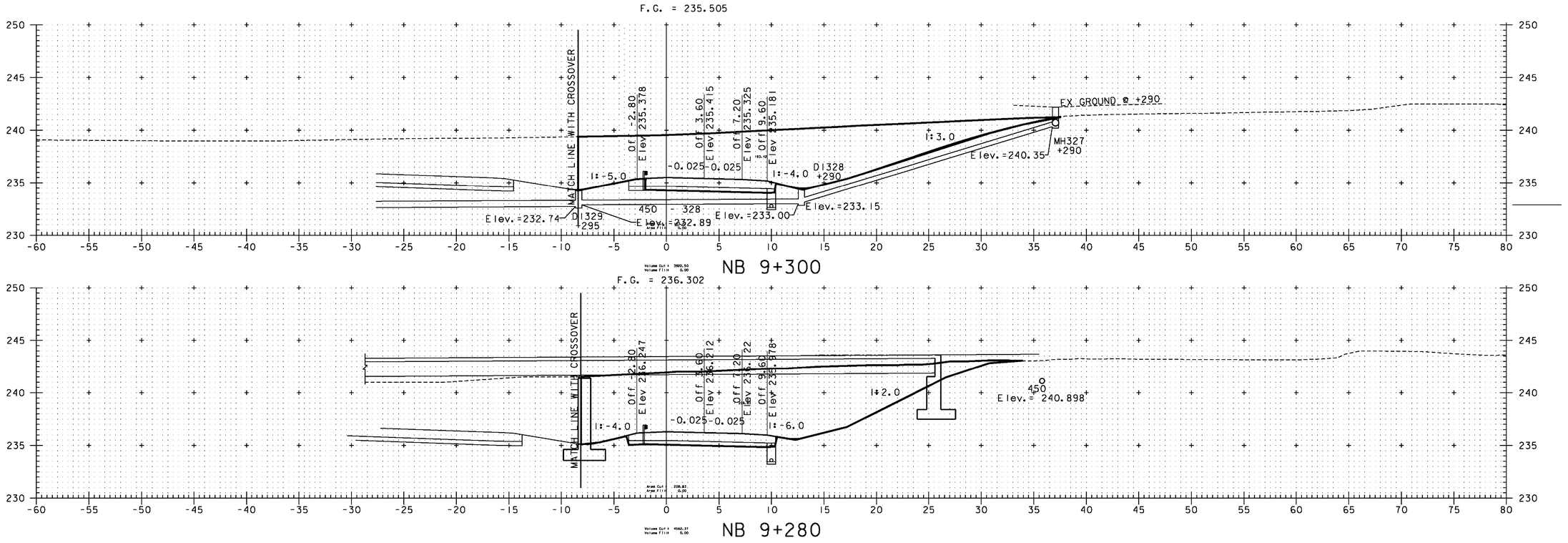

POC NB 9+278.312 =
POC ER 1+195.229

SUPERSEDED
BY
PRECEDING
SHEET

NOTE:
ElevATIONS SHOWN ARE FOR THE ULTIMATE FINISHED GRADE. THE TOP 50 PAVEMENT COURSE (TYPE IIIS) WILL NOT BE CONSTRUCTED AS PART OF THIS CONTRACT. THIS CONTRACT ONLY INCLUDES 100 OF TYPE IS AND 80 OF TYPE IIS SUPERPAVE BITUMINOUS CONCRETE PAVEMENT (ITEM 490.30). PLEASE REFER TO THE ROADWAY TYPICAL SECTIONS FOR DETAILS.

10 METERS
H 1:200 SCALE
V 1:200 SCALE
@ FULL SIZE
5
5 10 METERS

VERMONT AGENCY OF TRANSPORTATION

Stantec

PROJECT NAME: BENNINGTON
PROJECT NUMBER: AC NH 019-1(53)

FILE NAME: ...\plot_files\zd307c3xs_nb.ptf
DESIGN SUPERVISOR: GREG EDWARDS
DESIGNED BY: MARC FOISY
NB MAINLINE CROSS SECTIONS
PLOT DATE: 5/16/2011
DRAWN BY: STANTEC
CHECKED BY: GARY SANTY
SHEET 318 OF 577

V:\1953\active\953100021\transportation\drawing\contract_3\plot_files\zd307c3xs_nb.ptf

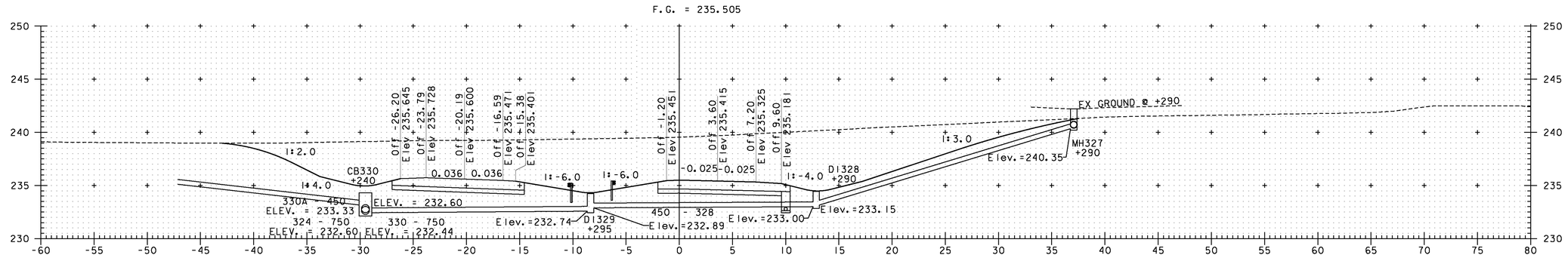

NB 9+300

NB 9+300.000 = XO 1+236.087, 16.59m LT.

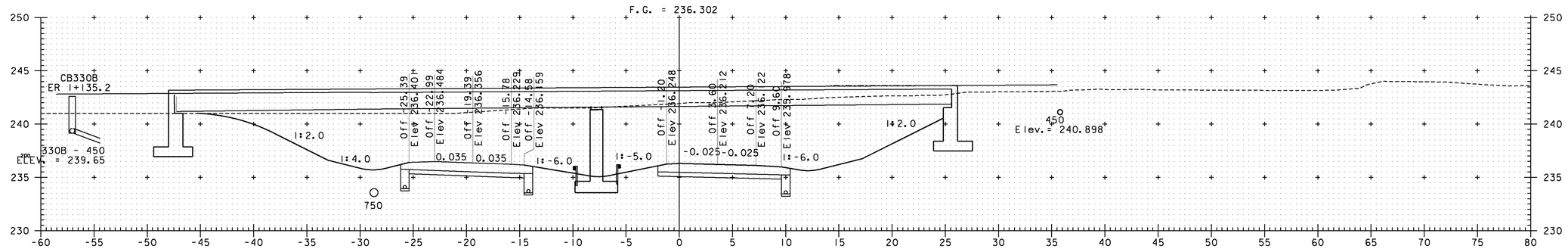

NB 9+280

NB 9+280.000 = XO 1+256.239, 15.78m LT.

POC NB 9+278.312 =
POC ER 1+195.229

NOTE:
ELEVATIONS SHOWN ARE FOR THE ULTIMATE FINISHED GRADE. THE TOP 50 PAVEMENT COURSE (TYPE IIIS) WILL NOT BE CONSTRUCTED AS PART OF THIS CONTRACT. THIS CONTRACT ONLY INCLUDES 100 OF TYPE IS AND 80 OF TYPE IIS SUPERPAVE BITUMINOUS CONCRETE PAVEMENT (ITEM 490.30). PLEASE REFER TO THE ROADWAY TYPICAL SECTIONS FOR DETAILS.

10 METERS
H 1:200 SCALE
V 1:200 SCALE
@ FULL SIZE
5
5 10 METERS

NOTE:
ALL OFFSETS ARE FROM NORTHBOUND ALIGNMENT SECTIONS CUT PERPINDICULAR TO NORTHBOUND ALIGNMENT THERFORE THE CROSSOVER IS SKEWED

VERMONT AGENCY OF TRANSPORTATION

Stantec

PROJECT NAME: BENNINGTON
PROJECT NUMBER: AC NH 019-1(53)

FILE NAME: ...\plot_files\zd307c3xs_nbxo.ptf
PLOT DATE: 11/11/2011
DESIGN SUPERVISOR: GREG EDWARDS
DRAWN BY: STANTEC
DESIGNED BY: MARC FOISY
CHECKED BY: GARY SANTY
NB MAINLINE CROSS SECTIONS
SHEET 318 OF 577

I:\953\active\953D0021\transportation\drawing\contract_3\plot_files\zd307c3xs_nbxo.ptf

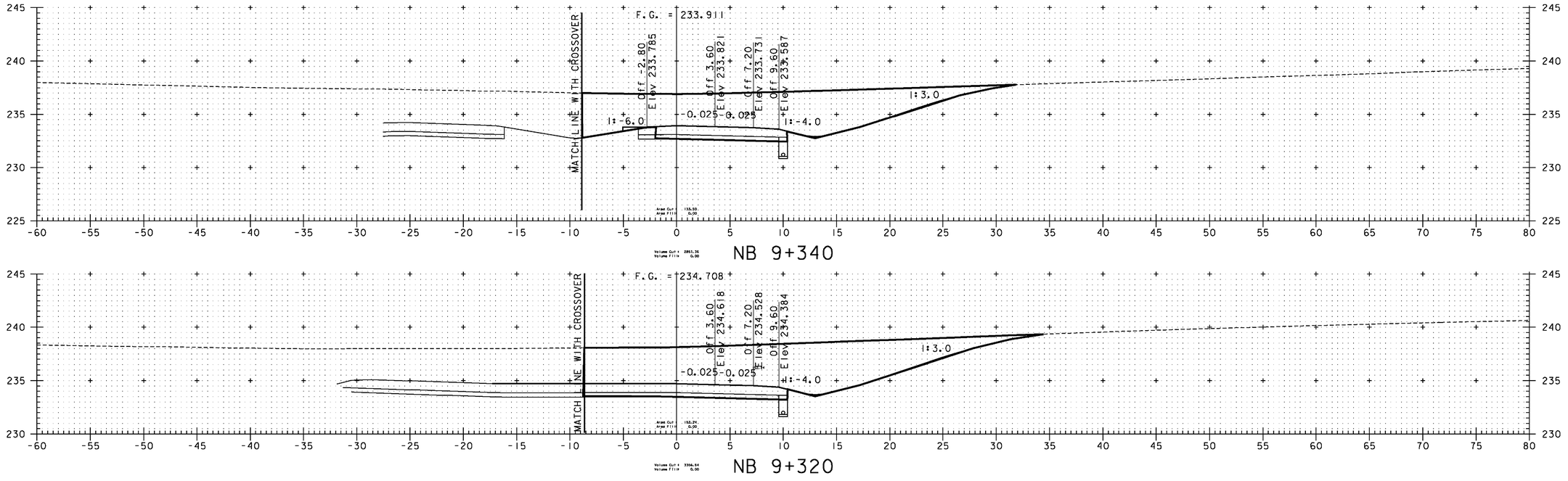

SUPERSEDED BY PRECEDING SHEET

NOTE:
ElevATIONS SHOWN ARE FOR THE ULTIMATE FINISHED GRADE. THE TOP 50 PAVEMENT COURSE (TYPE IIIS) WILL NOT BE CONSTRUCTED AS PART OF THIS CONTRACT. THIS CONTRACT ONLY INCLUDES 100 OF TYPE IS AND 80 OF TYPE IIS SUPERPAVE BITUMINOUS CONCRETE PAVEMENT (ITEM 490.30). PLEASE REFER TO THE ROADWAY TYPICAL SECTIONS FOR DETAILS.

10 METERS
5
H 1:200 SCALE
V 1:200 SCALE
@ FULL SIZE
5 10 METERS

VERMONT AGENCY OF TRANSPORTATION

Stantec

PROJECT NAME: BENNINGTON
PROJECT NUMBER: AC NH 019-1(53)

FILE NAME: ...\plot_files\zd307c3xs_nb.ptf
DESIGN SUPERVISOR: GREG EDWARDS
DESIGNED BY: MARC FOISY
NB MAINLINE CROSS SECTIONS

PLOT DATE: 5/16/2011
DRAWN BY: STANTEC
CHECKED BY: GARY SANTY
SHEET 319 OF 577

v:\1953\active\19530002\transportation\drawing\contract_3\plot_files\zd307c3xs_nb.ptf

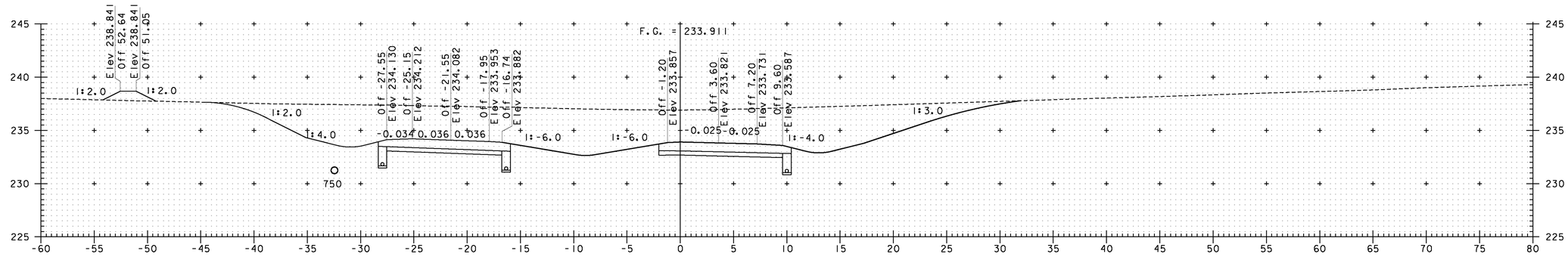

NB 9+340

NB 9+340.000 = XO 1+195.774, 17.95m LT.

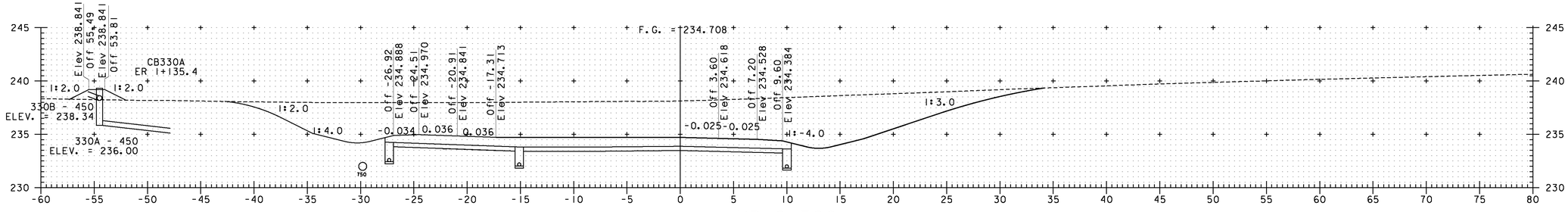

NB 9+320

NB 9+320.000 = XO 1+215.932, 17.31m LT.

NOTE:
ELEVATIONS SHOWN ARE FOR THE ULTIMATE FINISHED GRADE. THE TOP 50 PAVEMENT COURSE (TYPE IIIS) WILL NOT BE CONSTRUCTED AS PART OF THIS CONTRACT. THIS CONTRACT ONLY INCLUDES 100 OF TYPE IS AND 80 OF TYPE IIS SUPERPAVE BITUMINOUS CONCRETE PAVEMENT (ITEM 490.30). PLEASE REFER TO THE ROADWAY TYPICAL SECTIONS FOR DETAILS.

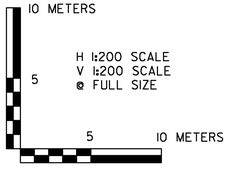

NOTE:
ALL OFFSETS ARE FROM NORTHBOUND ALIGNMENT SECTIONS CUT PERPINDICULAR TO NORTHBOUND ALIGNMENT THERFORE THE CROSSOVER IS SKEWED

VERMONT AGENCY OF TRANSPORTATION

Stantec

PROJECT NAME: BENNINGTON
PROJECT NUMBER: AC NH 019-1(53)

FILE NAME: ...\plot_files\zd307c3xs_nbxo.ptf PLOT DATE: 11/11/2011
DESIGN SUPERVISOR: GREG EDWARDS DRAWN BY: STANTEC
DESIGNED BY: MARC FOISY CHECKED BY: GARY SANTY
NB MAINLINE CROSS SECTIONS SHEET 319 OF 577

I:\953\active\953D002\transportation\drawing\contract_3\plot_files\zd307c3xs_nbxo.ptf

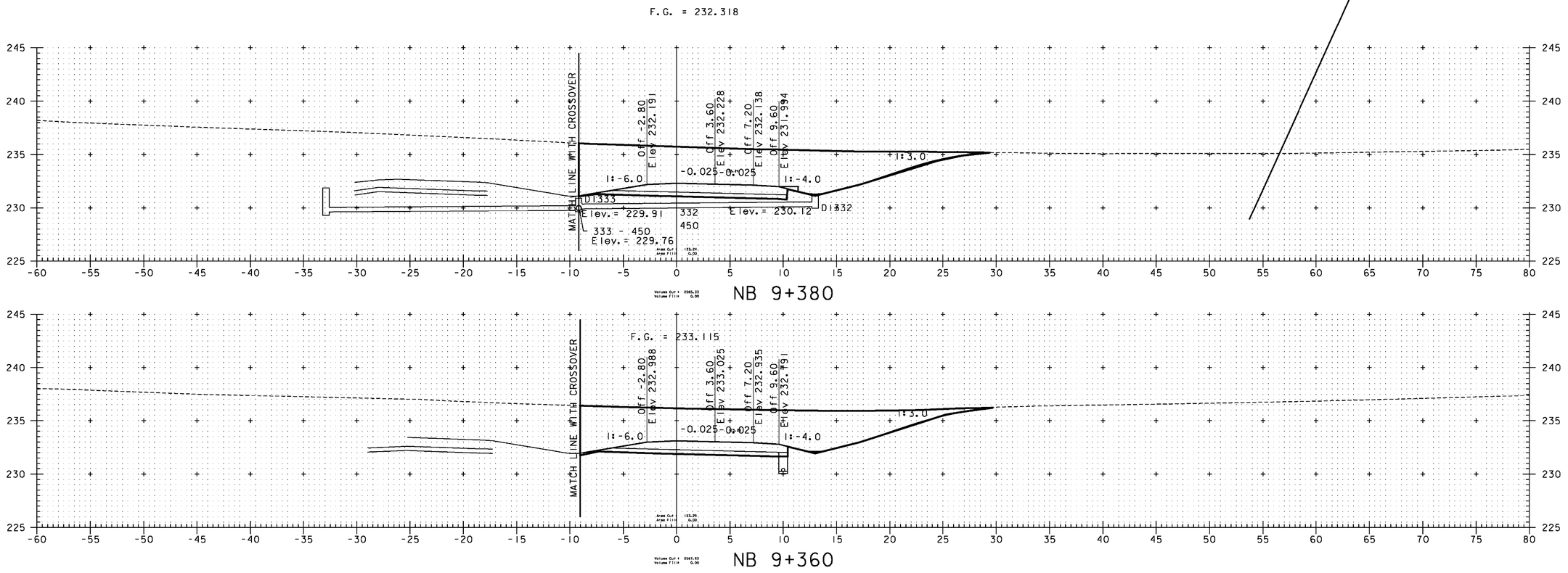

SUPERSEDED
BY
PRECEDING
SHEET

NOTE:
ElevATIONS SHOWN ARE FOR THE ULTIMATE FINISHED GRADE. THE TOP 50 PAVEMENT COURSE (TYPE IIIS) WILL NOT BE CONSTRUCTED AS PART OF THIS CONTRACT. THIS CONTRACT ONLY INCLUDES 100 OF TYPE IS AND 80 OF TYPE IIS SUPERPAVE BITUMINOUS CONCRETE PAVEMENT (ITEM 490.30). PLEASE REFER TO THE ROADWAY TYPICAL SECTIONS FOR DETAILS.

10 METERS
5
H 1:200 SCALE
V 1:200 SCALE
@ FULL SIZE
5 10 METERS

VERMONT AGENCY OF TRANSPORTATION

Stantec

PROJECT NAME: BENNINGTON
PROJECT NUMBER: AC NH 019-1(53)

FILE NAME: ...\plot_files\zd307c3xs_nb.ptf
PLOT DATE: 5/16/2011
DESIGN SUPERVISOR: GREG EDWARDS
DRAWN BY: STANTEC
DESIGNED BY: MARC FOISY
CHECKED BY: GARY SANTY
NB MAINLINE CROSS SECTIONS
SHEET 320 OF 577

v:\1953\active\953002\transportation\drawing\contract_3\plot_files\zd307c3xs_nb.ptf

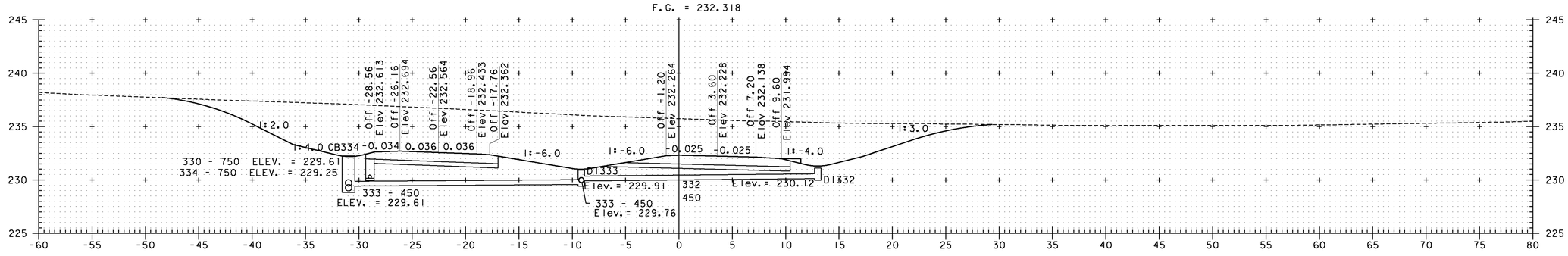

NB 9+380

NB 9+380.000 = XO 1+155.452, 18.96m LT.

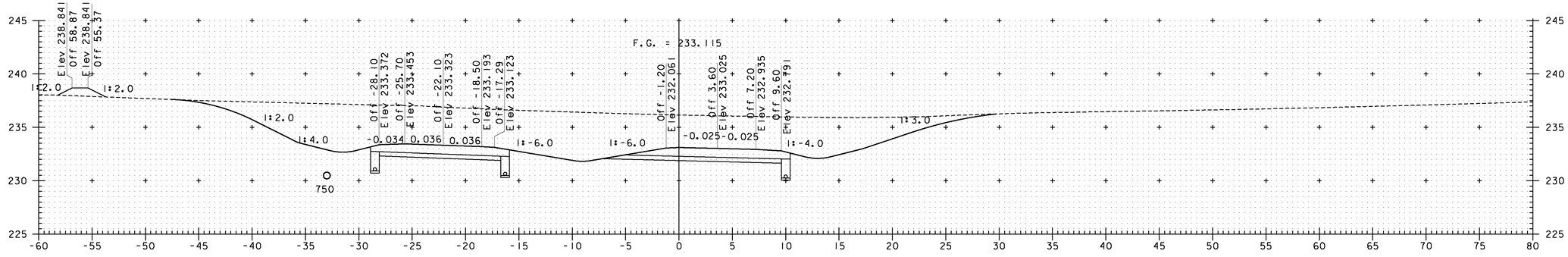

NB 9+360

NB 9+360.000 = XO 1+175.614, 18.50m LT.

NOTE:
ELEVATIONS SHOWN ARE FOR THE ULTIMATE FINISHED GRADE. THE TOP 50 PAVEMENT COURSE (TYPE IIIS) WILL NOT BE CONSTRUCTED AS PART OF THIS CONTRACT. THIS CONTRACT ONLY INCLUDES 100 OF TYPE IS AND 80 OF TYPE IIS SUPERPAVE BITUMINOUS CONCRETE PAVEMENT (ITEM 490.30). PLEASE REFER TO THE ROADWAY TYPICAL SECTIONS FOR DETAILS.

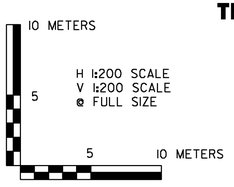

NOTE:
ALL OFFSETS ARE FROM NORTHBOUND ALIGNMENT SECTIONS CUT PERPINDICULAR TO NORTHBOUND ALIGNMENT THERFORE THE CROSSOVER IS SKEWED

VERMONT AGENCY OF TRANSPORTATION

Stantec

PROJECT NAME: BENNINGTON
PROJECT NUMBER: AC NH 019-1(53)

FILE NAME: ...\plot_files\zd307c3xs_nbxo.ptf PLOT DATE: 11/11/2011
DESIGN SUPERVISOR: GREG EDWARDS DRAWN BY: STANTEC
DESIGNED BY: MARC FOISY CHECKED BY: GARY SANTY
NB MAINLINE CROSS SECTIONS SHEET 320 OF 577

I:\953\active\95300021\transportation\drawing\contract_3\plot_files\zd307c3xs_nbxo.ptf

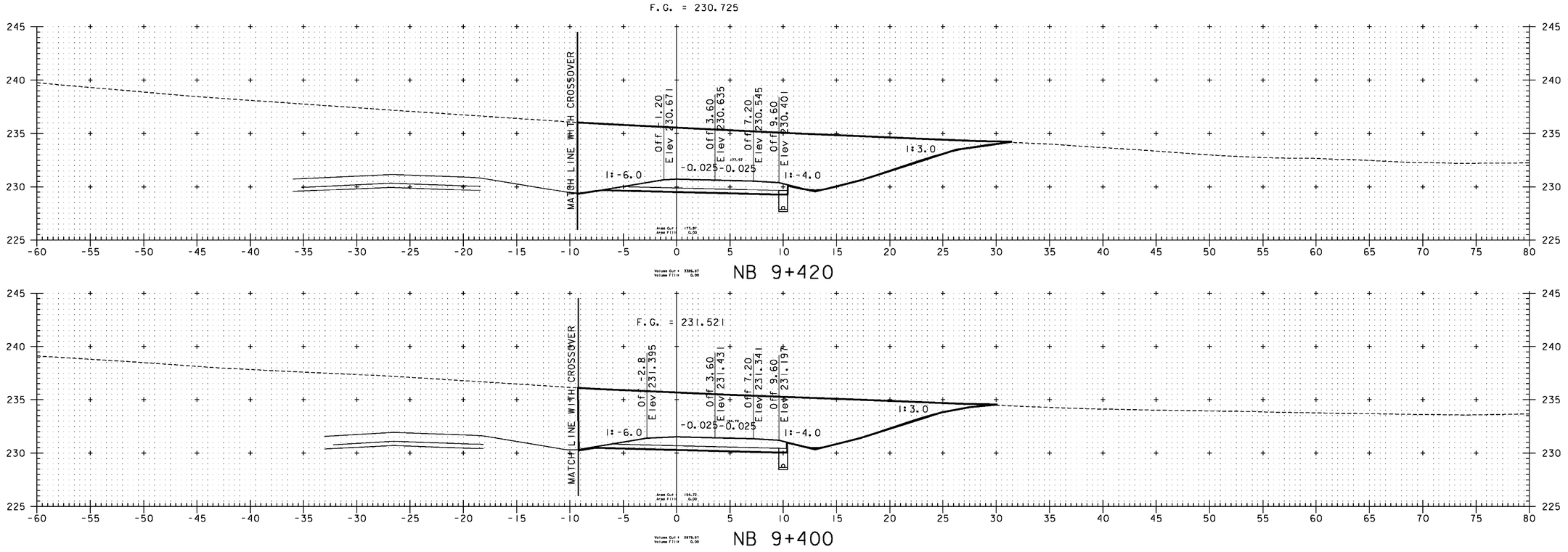

SUPERSEDED BY PRECEDING SHEET

NOTE:
ElevATIONS SHOWN ARE FOR THE ULTIMATE FINISHED GRADE. THE TOP 50 PAVEMENT COURSE (TYPE IIIS) WILL NOT BE CONSTRUCTED AS PART OF THIS CONTRACT. THIS CONTRACT ONLY INCLUDES 100 OF TYPE IS AND 80 OF TYPE IIS SUPERPAVE BITUMINOUS CONCRETE PAVEMENT (ITEM 490.30). PLEASE REFER TO THE ROADWAY TYPICAL SECTIONS FOR DETAILS.

10 METERS
5
H 1:200 SCALE
V 1:200 SCALE
@ FULL SIZE
5 10 METERS

VERMONT AGENCY OF TRANSPORTATION

Stantec

PROJECT NAME: BENNINGTON
PROJECT NUMBER: AC NH 019-1(53)

FILE NAME: ...\plot_files\zd307c3xs_nb.ptf
PLOT DATE: 5/16/2011
DESIGN SUPERVISOR: GREG EDWARDS
DRAWN BY: STANTEC
DESIGNED BY: MARC FOISY
CHECKED BY: GARY SANTY
NB MAINLINE CROSS SECTIONS
SHEET 321 OF 577

v:\1953\active\953100021\transportation\drawing\contract_3\plot_files\zd307c3xs_nb.ptf

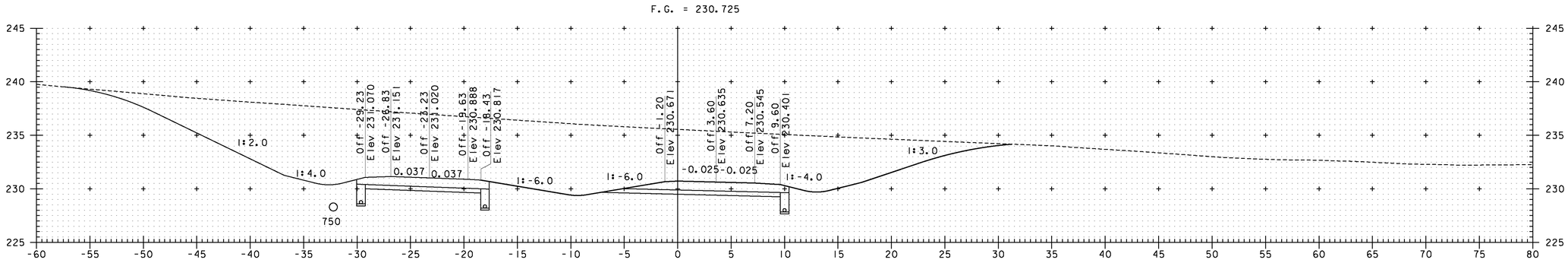

NB 9+420

NB 9+420.000 = XO 1+115.122, 19.63m LT.

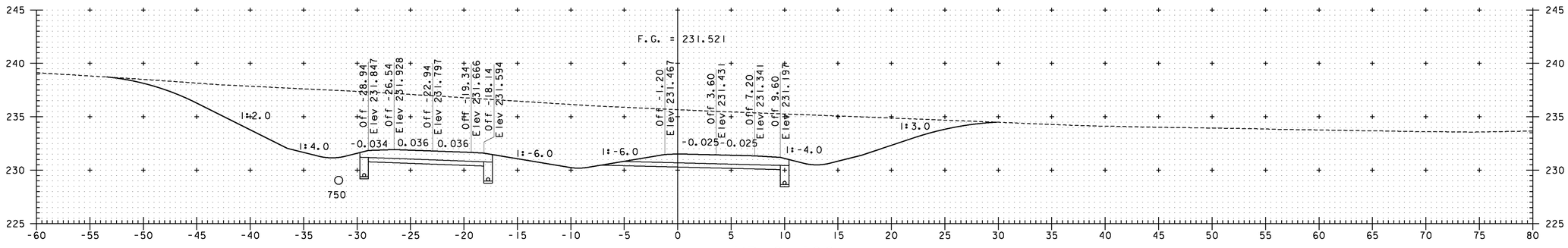

NB 9+400

NB 9+400.000 = XO 1+135.288, 19.34m LT.

NOTE:
ELEVATIONS SHOWN ARE FOR THE ULTIMATE FINISHED GRADE. THE TOP 50 PAVEMENT COURSE (TYPE IIIS) WILL NOT BE CONSTRUCTED AS PART OF THIS CONTRACT. THIS CONTRACT ONLY INCLUDES 100 OF TYPE IS AND 80 OF TYPE IIS SUPERPAVE BITUMINOUS CONCRETE PAVEMENT (ITEM 490.30). PLEASE REFER TO THE ROADWAY TYPICAL SECTIONS FOR DETAILS.

10 METERS
H 1:200 SCALE
V 1:200 SCALE
@ FULL SIZE
5
5
10 METERS

NOTE:
ALL OFFSETS ARE FROM NORTHBOUND ALIGNMENT
SECTIONS CUT PERPINDICULAR TO NORTHBOUND ALIGNMENT
THERFORE THE CROSSOVER IS SKEWED

VERMONT AGENCY OF TRANSPORTATION

Stantec

PROJECT NAME: BENNINGTON
PROJECT NUMBER: AC NH 019-1(53)

FILE NAME: ...\plot_files\zd307c3xs_nbxo.ptf
PLOT DATE: 11/11/2011
DESIGN SUPERVISOR: GREG EDWARDS
DRAWN BY: STANTEC
DESIGNED BY: MARC FOISY
CHECKED BY: GARY SANTY
NB MAINLINE CROSS SECTIONS
SHEET 321 OF 577

I:\VB53\active\VB530002\transportation\drawing\contract_3\plot_files\zd307c3xs_nbxo.ptf

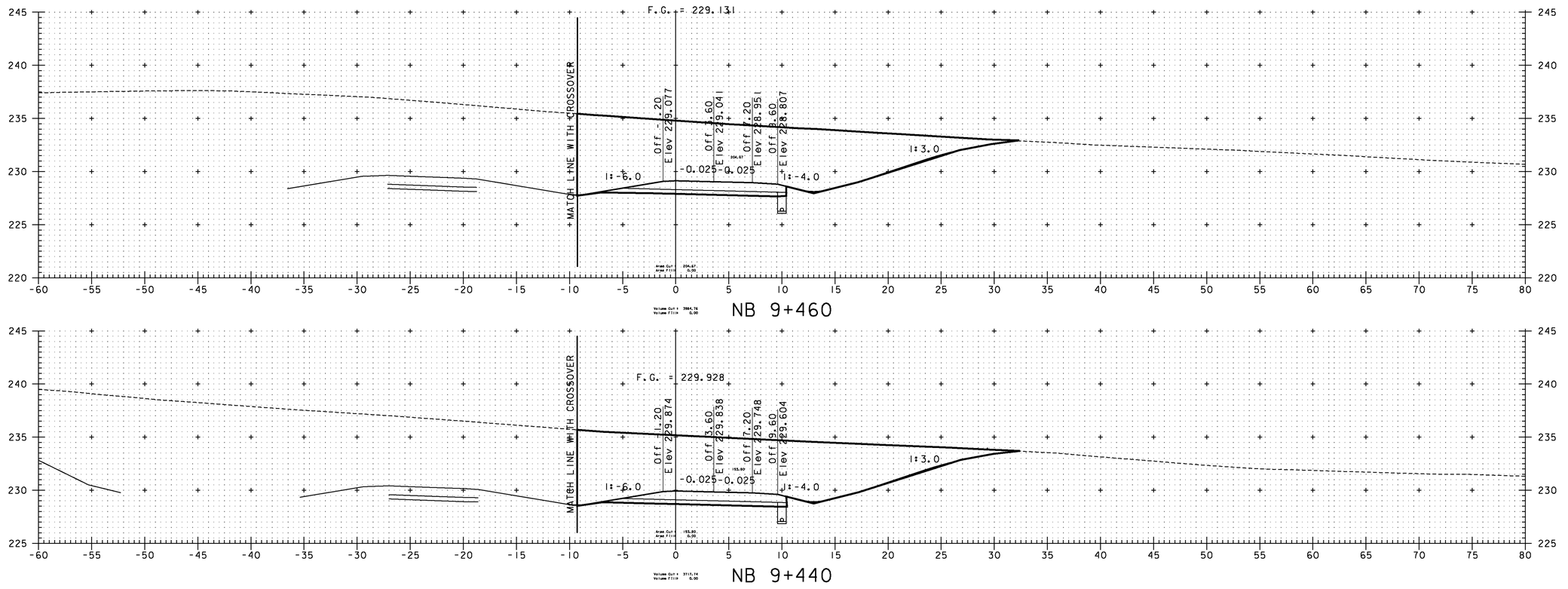

NOTE:
ElevATIONS SHOWN ARE FOR THE ULTIMATE FINISHED GRADE. THE TOP 50 PAVEMENT COURSE (TYPE IIIS) WILL NOT BE CONSTRUCTED AS PART OF THIS CONTRACT. THIS CONTRACT ONLY INCLUDES 100 OF TYPE IS AND 80 OF TYPE IIS SUPERPAVE BITUMINOUS CONCRETE PAVEMENT (ITEM 490.30). PLEASE REFER TO THE ROADWAY TYPICAL SECTIONS FOR DETAILS.

10 METERS
H 1:200 SCALE
V 1:200 SCALE
@ FULL SIZE
5
5 10 METERS

VERMONT AGENCY OF TRANSPORTATION

Stantec

PROJECT NAME: BENNINGTON
PROJECT NUMBER: AC NH 019-1(53)

FILE NAME: ...\plot_files\zd307c3xs_nb.ptf
DESIGN SUPERVISOR: GREG EDWARDS
DESIGNED BY: MARC FOISY
NB MAINLINE CROSS SECTIONS

PLOT DATE: 5/16/2011
DRAWN BY: STANTEC
CHECKED BY: GARY SANTY
SHEET 322 OF 577

v:\1953\active\195300021\transportation\drawing\contract_3\plot_files\zd307c3xs_nb.ptf

F.G. = 228.335

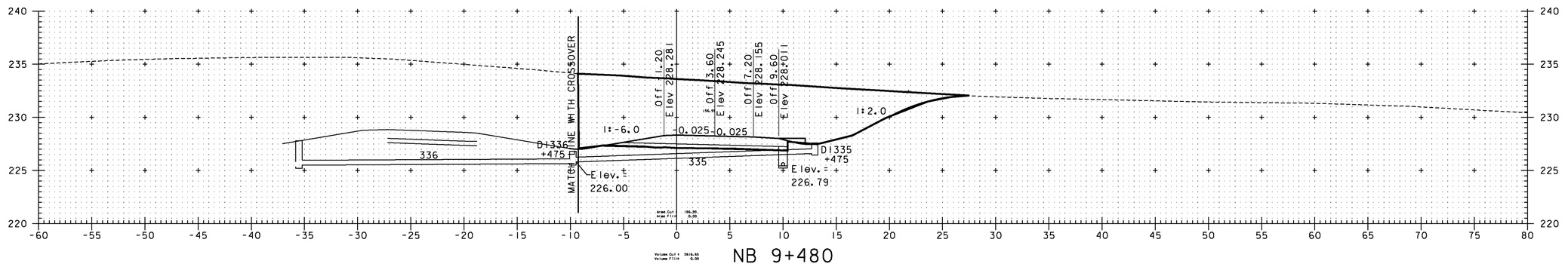

NB 9+480

NOTE:
ElevATIONS SHOWN ARE FOR THE ULTIMATE FINISHED GRADE. THE TOP 50 PAVEMENT COURSE (TYPE IIIS) WILL NOT BE CONSTRUCTED AS PART OF THIS CONTRACT. THIS CONTRACT ONLY INCLUDES 100 OF TYPE IS AND 80 OF TYPE IIS SUPERPAVE BITUMINOUS CONCRETE PAVEMENT (ITEM 490.30). PLEASE REFER TO THE ROADWAY TYPICAL SECTIONS FOR DETAILS.

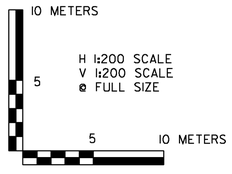

VERMONT AGENCY OF TRANSPORTATION

Stantec

PROJECT NAME: BENNINGTON
PROJECT NUMBER: AC NH 019-1(53)

FILE NAME: ...\plot_files\zd307c3xs_nb.ptf
DESIGN SUPERVISOR: GREG EDWARDS
DESIGNED BY: MARC FOISY
NB MAINLINE CROSS SECTIONS

PLOT DATE: 5/16/2011
DRAWN BY: STANTEC
CHECKED BY: GARY SANTY
SHEET 323 OF 577

v:\953\active\95530002\transportation\drawing\contract_3\plot_files\zd307c3xs_nb.ptf

Metric

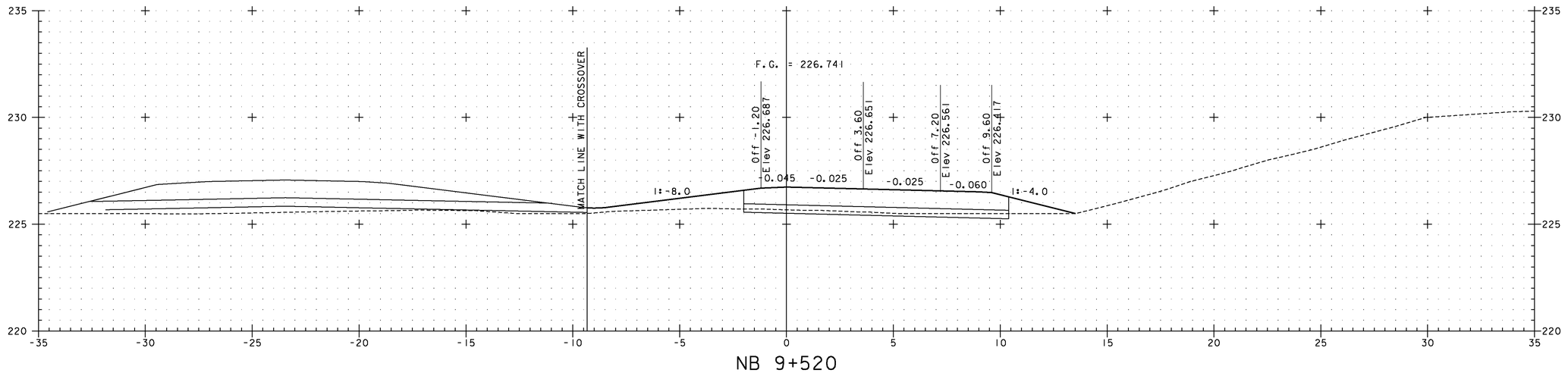

NB 9+520

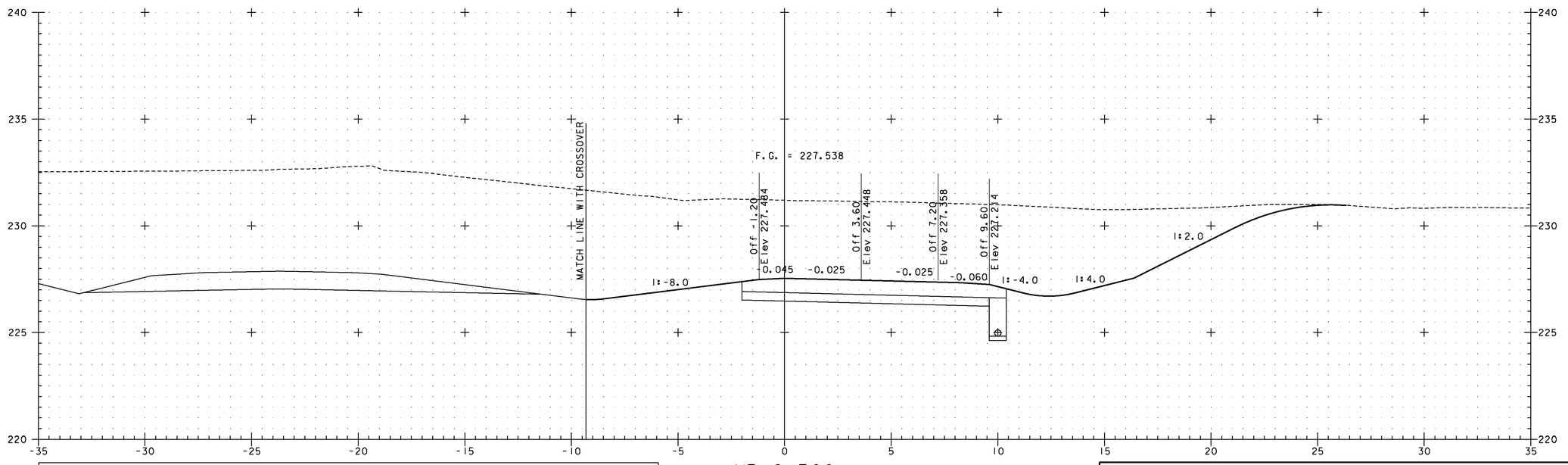

NB 9+500

NOTE:
ELEVATIONS SHOWN ARE FOR THE ULTIMATE FINISHED GRADE. THE TOP 50 PAVEMENT COURSE (TYPE IIIS) WILL NOT BE CONSTRUCTED AS PART OF THIS CONTRACT. THIS CONTRACT ONLY INCLUDES 100 OF TYPE IS AND 80 OF TYPE IIS SUPERPAVE BITUMINOUS CONCRETE PAVEMENT (ITEM 490.30). PLEASE REFER TO THE ROADWAY TYPICAL SECTIONS FOR DETAILS.

5 METERS
2.5
H 1:100 SCALE
V 1:100 SCALE
@ FULL SIZE
2.5 5 METERS

VERMONT AGENCY OF TRANSPORTATION

Stantec

PROJECT NAME: BENNINGTON
PROJECT NUMBER: AC NH 019-1(53)

FILE NAME: ...\plot_files\zd307c3xs_nb.ptf
DESIGN SUPERVISOR: GREG EDWARDS
DESIGNED BY: MARC FOISY
NB MAINLINE CROSS SECTIONS

PLOT DATE: 5/16/2011
DRAWN BY: STANTEC
CHECKED BY: GARY SANTY
SHEET 324 OF 577

v:\953\active\95300002\transportation\drawing\contract_3\plot_files\zd307c3xs_nb.ptf

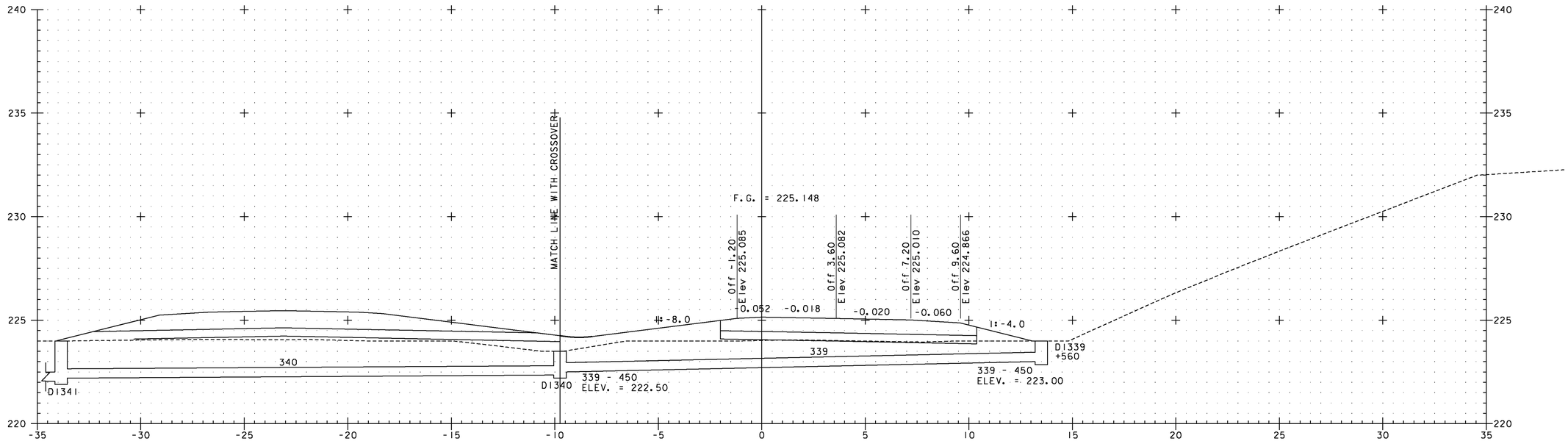

NB 9+560

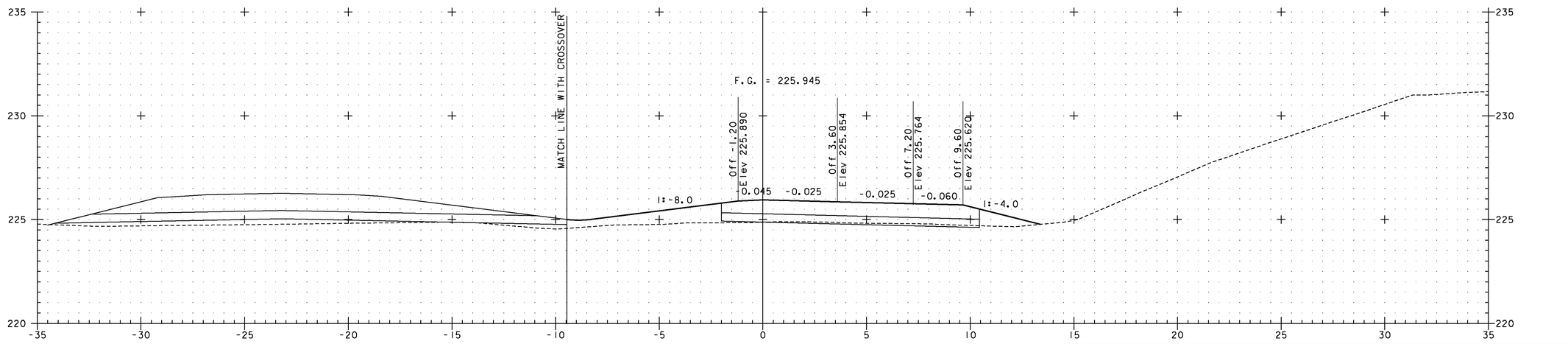

NB 9+540

NOTE:
ELEVATIONS SHOWN ARE FOR THE ULTIMATE FINISHED GRADE. THE TOP 50 PAVEMENT COURSE (TYPE IIIS) WILL NOT BE CONSTRUCTED AS PART OF THIS CONTRACT. THIS CONTRACT ONLY INCLUDES 100 OF TYPE IS AND 80 OF TYPE IIS SUPERPAVE BITUMINOUS CONCRETE PAVEMENT (ITEM 490.30). PLEASE REFER TO THE ROADWAY TYPICAL SECTIONS FOR DETAILS.

5 METERS
2.5
H 1:100 SCALE
V 1:100 SCALE
@ FULL SIZE
2.5
5 METERS

VERMONT AGENCY OF TRANSPORTATION

Stantec

PROJECT NAME: BENNINGTON
PROJECT NUMBER: AC NH 019-1(53)

FILE NAME: ...\plot_files\zd307c3xs_nb.ptf
DESIGN SUPERVISOR: GREG EDWARDS
DESIGNED BY: MARC FOISY
NB MAINLINE CROSS SECTIONS

PLOT DATE: 5/16/2011
DRAWN BY: STANTEC
CHECKED BY: GARY SANTY
SHEET 325 OF 577

v:\953\active\95300002\transportation\drawing\contract_3\plot_files\zd307c3xs_nb.ptf

Metric

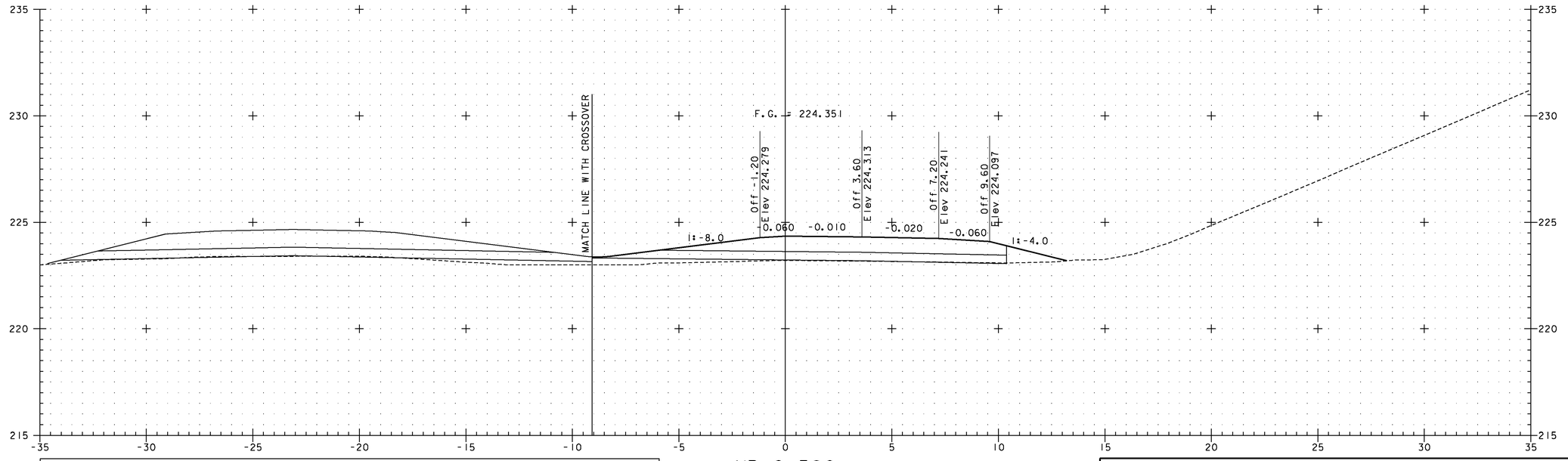

NB 9+580

NOTE:
ELEVATIONS SHOWN ARE FOR THE ULTIMATE FINISHED GRADE. THE TOP 50 PAVEMENT COURSE (TYPE IIIS) WILL NOT BE CONSTRUCTED AS PART OF THIS CONTRACT. THIS CONTRACT ONLY INCLUDES 100 OF TYPE IS AND 80 OF TYPE IIS SUPERPAVE BITUMINOUS CONCRETE PAVEMENT (ITEM 490.30). PLEASE REFER TO THE ROADWAY TYPICAL SECTIONS FOR DETAILS.

5 METERS
2.5
H 1:100 SCALE
V 1:100 SCALE
@ FULL SIZE
2.5 5 METERS

VERMONT AGENCY OF TRANSPORTATION

Stantec

PROJECT NAME: BENNINGTON
PROJECT NUMBER: AC NH 019-1(53)

FILE NAME: ...\plot_files\zd307c3xs_nb.ptf
DESIGN SUPERVISOR: GREG EDWARDS
DESIGNED BY: MARC FOISY
NB MAINLINE CROSS SECTIONS

PLOT DATE: 5/16/2011
DRAWN BY: STANTEC
CHECKED BY: GARY SANTY
SHEET 326 OF 577

v:\953\active\95530002\transportation\drawing\contract_3\plot_files\zd307c3xs_nb.ptf

Metric

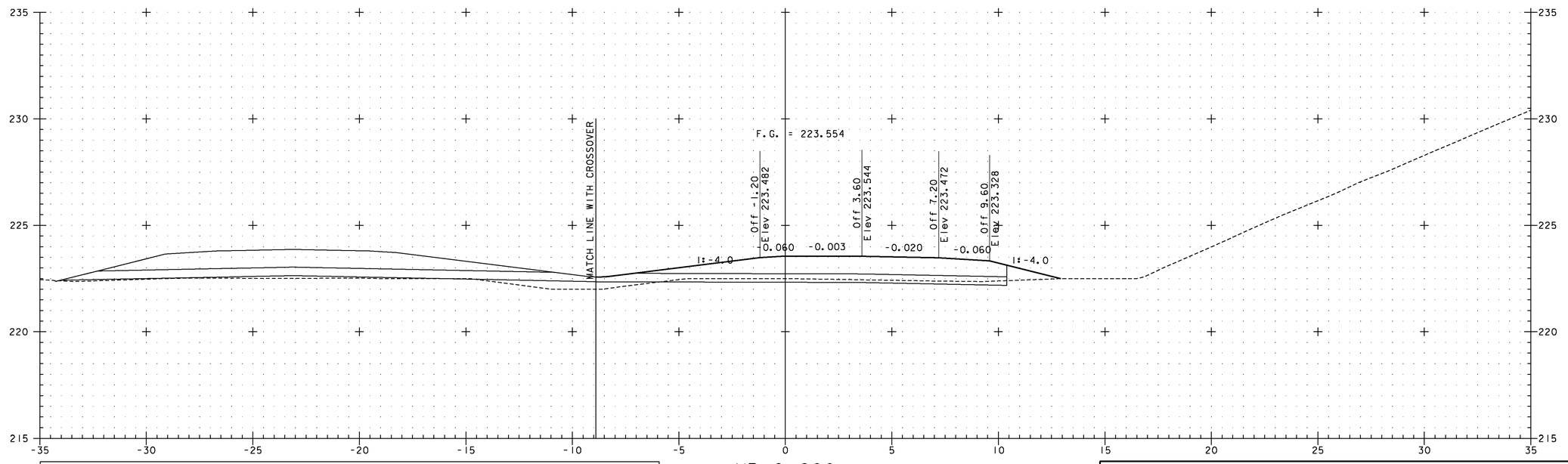

NB 9+600

NOTE:
ELEVATIONS SHOWN ARE FOR THE ULTIMATE FINISHED GRADE. THE TOP 50 PAVEMENT COURSE (TYPE IIIS) WILL NOT BE CONSTRUCTED AS PART OF THIS CONTRACT. THIS CONTRACT ONLY INCLUDES 100 OF TYPE IS AND 80 OF TYPE IIS SUPERPAVE BITUMINOUS CONCRETE PAVEMENT (ITEM 490.30). PLEASE REFER TO THE ROADWAY TYPICAL SECTIONS FOR DETAILS.

5 METERS
H 1:100 SCALE
V 1:100 SCALE
@ FULL SIZE
2.5
2.5 5 METERS

VERMONT AGENCY OF TRANSPORTATION

Stantec

PROJECT NAME: BENNINGTON
PROJECT NUMBER: AC NH 019-1(53)

FILE NAME: ...\plot_files\zd307c3xs_nb.ptf
DESIGN SUPERVISOR: GREG EDWARDS
DESIGNED BY: MARC FOISY
NB MAINLINE CROSS SECTIONS

PLOT DATE: 5/16/2011
DRAWN BY: STANTEC
CHECKED BY: GARY SANTY
SHEET 327 OF 577

v:\953\active\95530002\transportation\drawing\contract_3\plot_files\zd307c3xs_nb.ptf

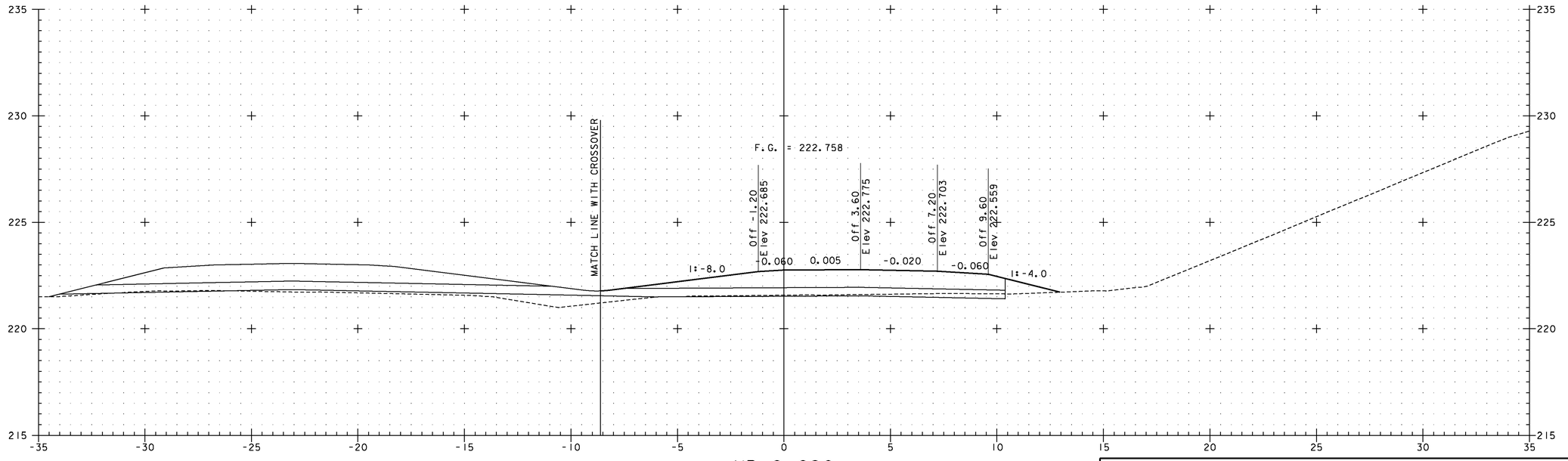

NB 9+620

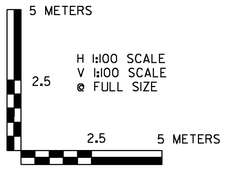

VERMONT AGENCY OF TRANSPORTATION

Stantec

PROJECT NAME: BENNINGTON
PROJECT NUMBER: AC NH 019-1(53)

FILE NAME: ...\plot_files\zd307c3xs_nb.ptf
DESIGN SUPERVISOR: GREG EDWARDS
DESIGNED BY: MARC FOISY
NB MAINLINE CROSS SECTIONS

PLOT DATE: 5/16/2011
DRAWN BY: STANTEC
CHECKED BY: GARY SANTY
SHEET 328 OF 577

v:\1953\active\195310002\transportation\drawing\contract_3\plot_files\zd307c3xs_nb.ptf

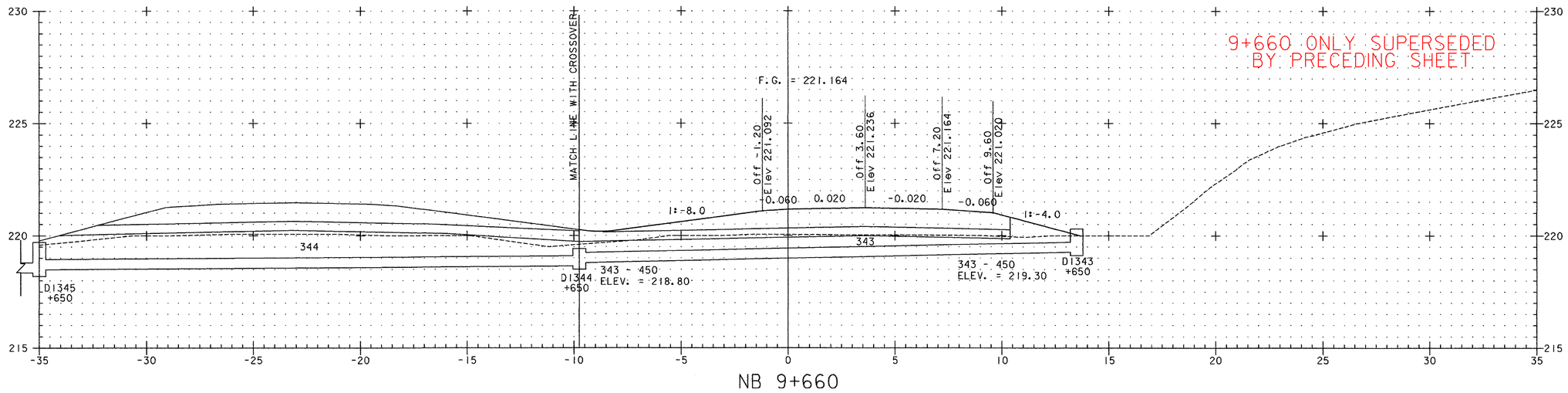

NB 9+660

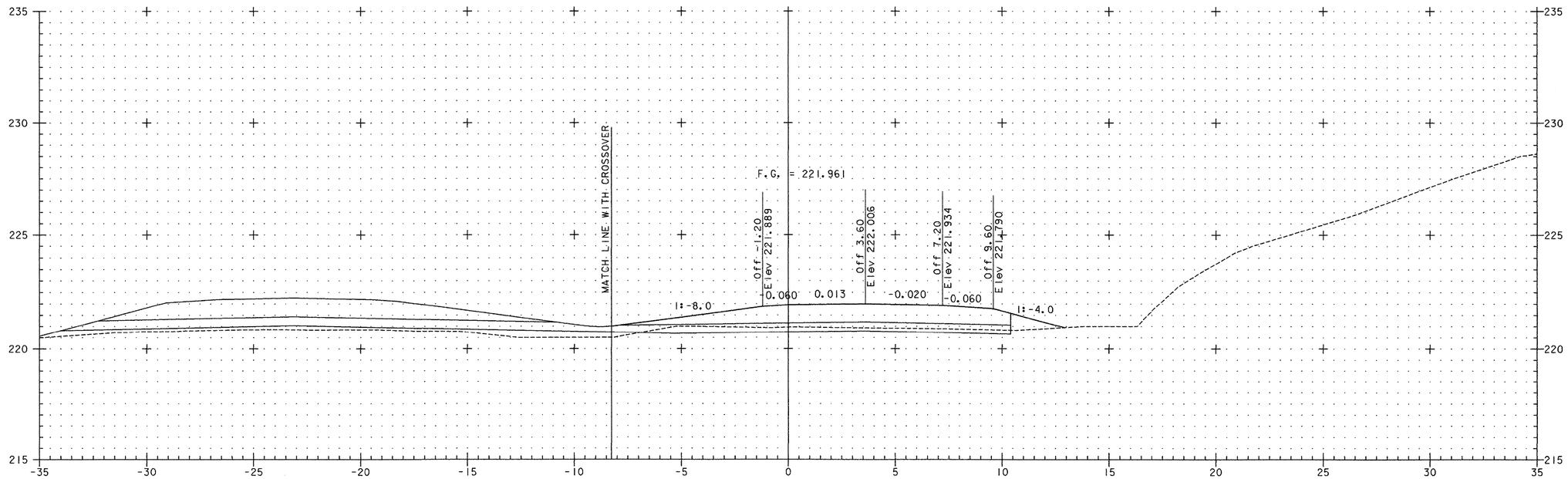

NB 9+640

5 METERS
H 1:100 SCALE
V 1:100 SCALE
@ FULL SIZE
2.5
2.5
5 METERS

VERMONT AGENCY OF TRANSPORTATION

Stantec

PROJECT NAME: BENNINGTON
PROJECT NUMBER: AC NH 019-1(53)

FILE NAME: ...\plot_files\zd307c3xs_nb.ptf
DESIGN SUPERVISOR: GREG EDWARDS
DESIGNED BY: MARC FOISY
NB MAINLINE CROSS SECTIONS

PLOT DATE: 5/19/2007
DRAWN BY: STANTEC
CHECKED BY: GARY SANTY
SHEET 329 OF 577

v:\1953\active\195310002\transportation\drawing\contract_3\plot_files\zd307c3xs_nb.ptf

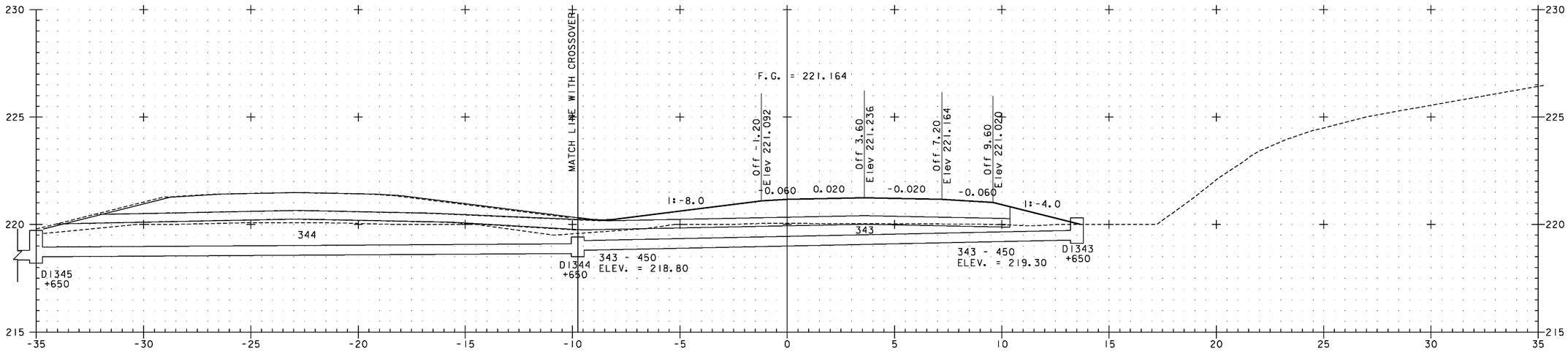

NB 9+660

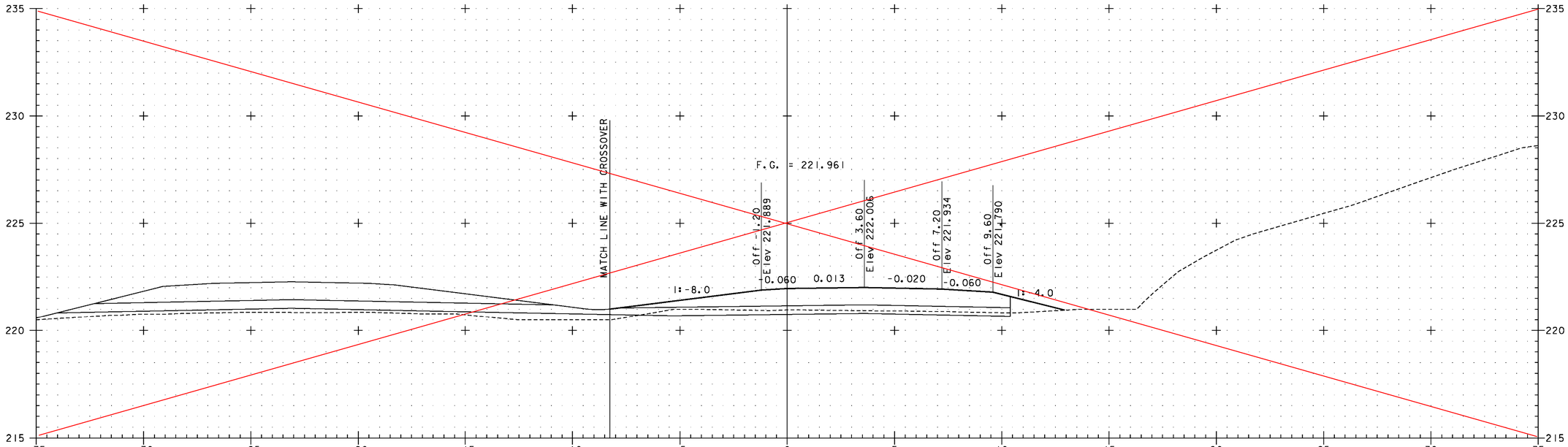

NB 9+640

5 METERS

H 1:100 SCALE
V 1:100 SCALE
@ FULL SIZE

2.5 2.5 5 METERS

VERMONT AGENCY OF TRANSPORTATION

Stantec

PROJECT NAME: BENNINGTON
PROJECT NUMBER: AC NH 019-1(53)

FILE NAME: ...\plot_files\zd307c3xs_nb.ptf
PLOT DATE: 5/16/2011
DESIGN SUPERVISOR: GREG EDWARDS
DRAWN BY: STANTEC
DESIGNED BY: MARC FOISY
CHECKED BY: GARY SANTY

NB MAINLINE CROSS SECTIONS

SHEET 329 OF 577

v:\1953\active\19530002\transportation\drawing\contract_3\plot_files\zd307c3xs_nb.ptf

Metric

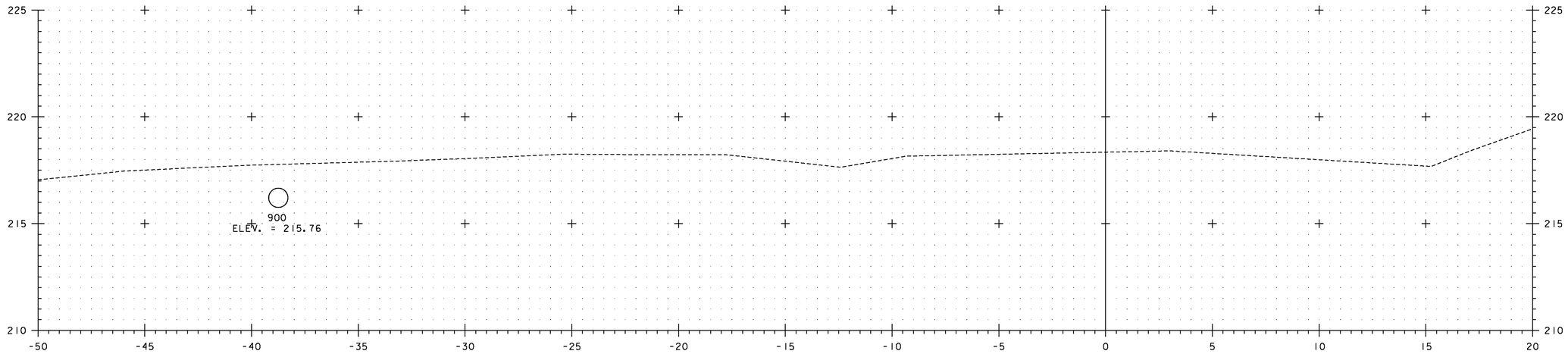

NB 9+700

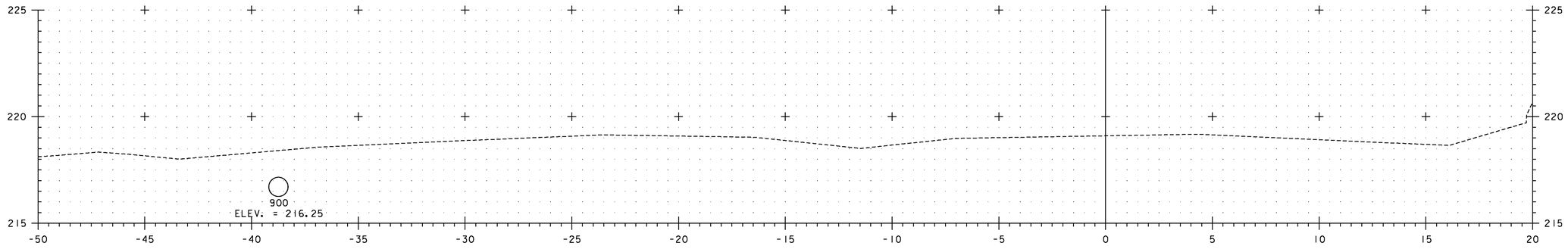

NB 9+680

5 METERS
2.5
H 1:100 SCALE
V 1:100 SCALE
@ FULL SIZE
2.5 5 METERS

VERMONT AGENCY OF TRANSPORTATION

Stantec

PROJECT NAME: BENNINGTON
PROJECT NUMBER: AC NH 019-1(53)

FILE NAME: ...\plot_files\zd307c3xs_nb.ptf
DESIGN SUPERVISOR: GREG EDWARDS
DESIGNED BY: MARC FOISY
NB MAINLINE CROSS SECTIONS

PLOT DATE: 5/16/2011
DRAWN BY: STANTEC
CHECKED BY: GARY SANTY
SHEET 330 OF 577

v:\1853\active\185300021\transportation\drawing\contract_3\plot_files\zd307c3xs_nb.ptf

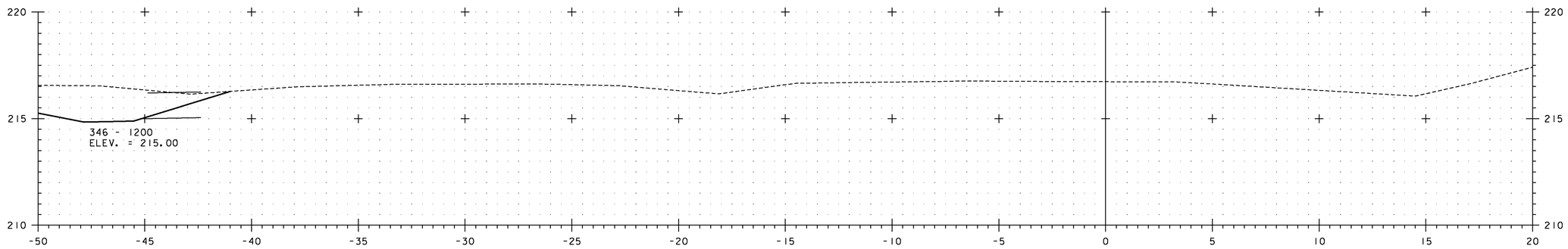

NB 9+740

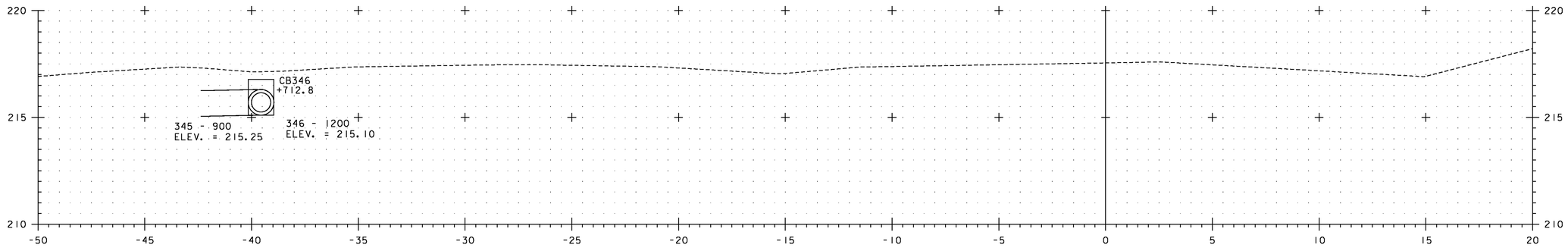

NB 9+720

5 METERS

2.5

H 1:100 SCALE
V 1:100 SCALE
@ FULL SIZE

2.5 5 METERS

VERMONT AGENCY OF TRANSPORTATION

Stantec

PROJECT NAME: BENNINGTON
PROJECT NUMBER: AC NH 019-1(53)

FILE NAME: ...\plot_files\zd307c3xs_nb.ptf
DESIGN SUPERVISOR: GREG EDWARDS
DESIGNED BY: MARC FOISY
NB MAINLINE CROSS SECTIONS

PLOT DATE: 5/16/2011
DRAWN BY: STANTEC
CHECKED BY: GARY SANTY
SHEET 331 OF 577

v:\1953\active\19530002\transportation\drawing\contract_3\plot_files\zd307c3xs_nb.ptf

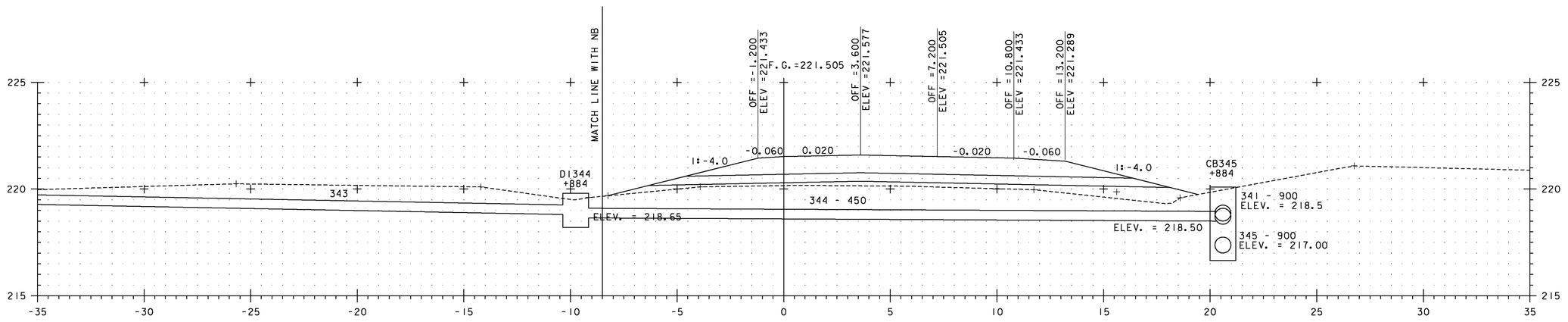

XO 0+880

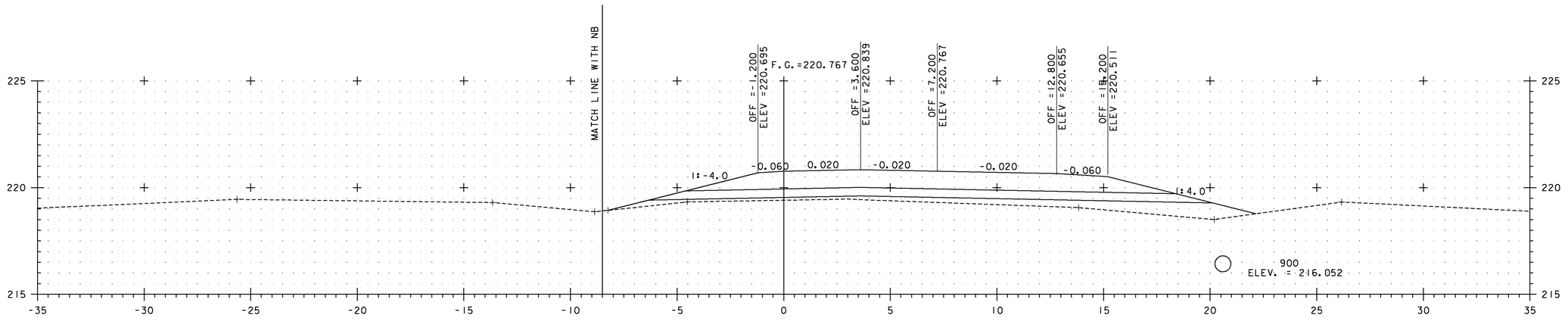

XO 0+861

NOTE:
ELEVATIONS SHOWN ARE FOR THE ULTIMATE FINISHED GRADE. THE TOP 50 PAVEMENT COURSE (TYPE IIIS) WILL NOT BE CONSTRUCTED AS PART OF THIS CONTRACT. THIS CONTRACT ONLY INCLUDES 100 OF TYPE IS AND 80 OF TYPE IIS SUPERPAVE BITUMINOUS CONCRETE PAVEMENT (ITEM 490.30). PLEASE REFER TO THE ROADWAY TYPICAL SECTIONS FOR DETAILS.

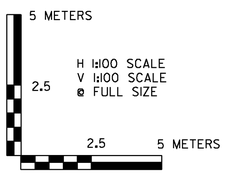

VERMONT AGENCY OF TRANSPORTATION

Stantec

PROJECT NAME: BENNINGTON
PROJECT NUMBER: AC NH 019-1(53)

FILE NAME: ...\plot_files\zd307c3xs_xo.ptf
DESIGN SUPERVISOR: GREG EDWARDS
DESIGNED BY: MARC FOISY
CROSSOVER CROSS SECTIONS

PLOT DATE: 5/16/2011
DRAWN BY: STANTEC
CHECKED BY: GARY SANTY
SHEET 332 OF 577

v:\953\active\95300002\transportation\drawing\contract_3\plot_files\zd307c3xs_xo.ptf

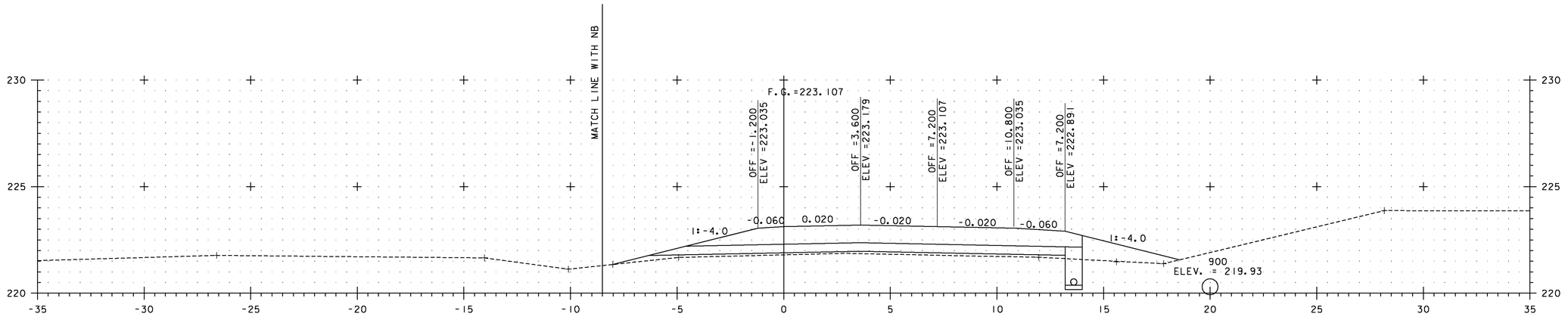

XO 0+920

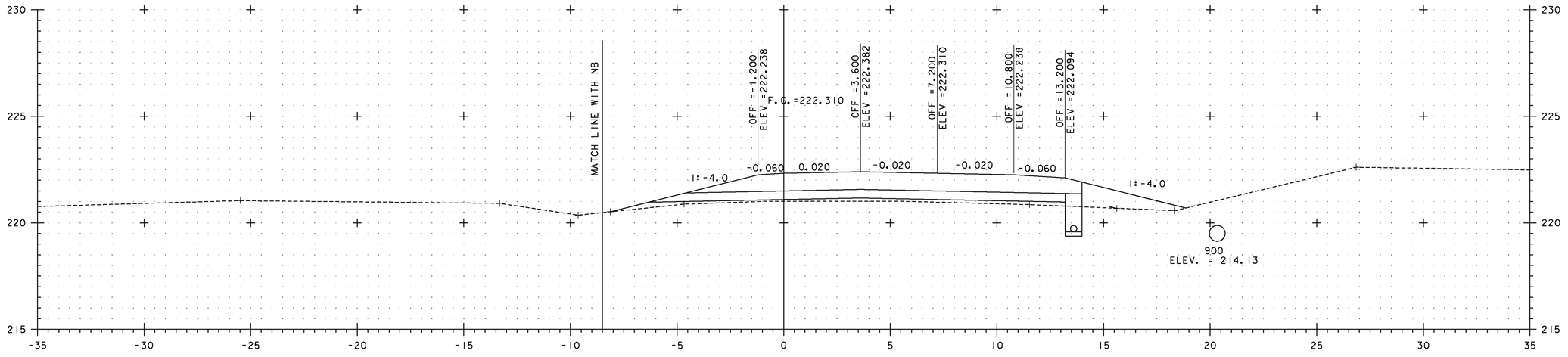

XO 0+900

NOTE:
ELEVATIONS SHOWN ARE FOR THE ULTIMATE FINISHED GRADE. THE TOP 50 PAVEMENT COURSE (TYPE IIIS) WILL NOT BE CONSTRUCTED AS PART OF THIS CONTRACT. THIS CONTRACT ONLY INCLUDES 100 OF TYPE IS AND 80 OF TYPE IIS SUPERPAVE BITUMINOUS CONCRETE PAVEMENT (ITEM 490.30). PLEASE REFER TO THE ROADWAY TYPICAL SECTIONS FOR DETAILS.

5 METERS
2.5
H 1:100 SCALE
V 1:100 SCALE
@ FULL SIZE
2.5 5 METERS

VERMONT AGENCY OF TRANSPORTATION

Stantec

PROJECT NAME: BENNINGTON
PROJECT NUMBER: AC NH 019-1(53)

FILE NAME: ...\plot_files\zd307c3xs_xo.ptf
DESIGN SUPERVISOR: GREG EDWARDS
DESIGNED BY: MARC FOISY
CROSSOVER CROSS SECTIONS

PLOT DATE: 5/16/2011
DRAWN BY: STANTEC
CHECKED BY: GARY SANTY
SHEET 333 OF 577

v:\953\active\95530002\transportation\drawing\contract_3\plot_files\zd307c3xs_xo.ptf

Metric

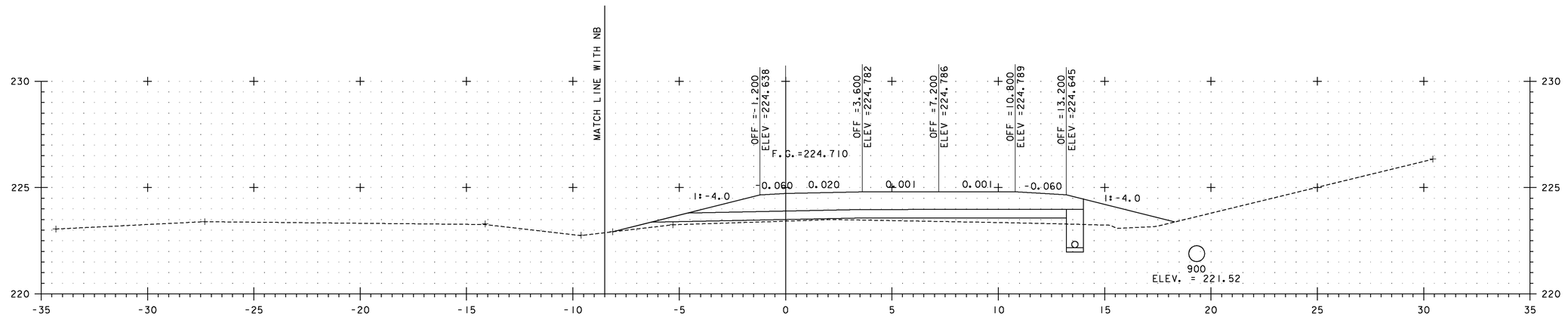

XO 0+960

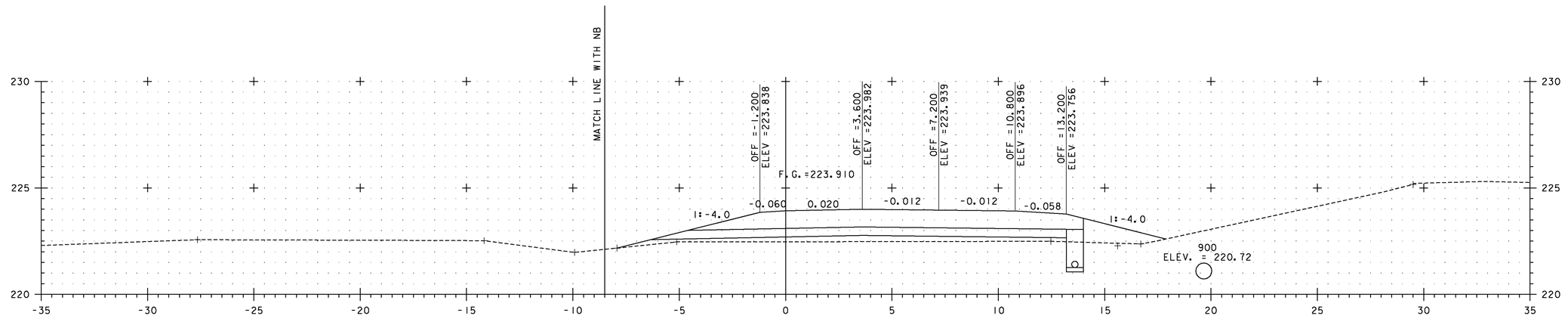

XO 0+940

NOTE:
ELEVATIONS SHOWN ARE FOR THE ULTIMATE FINISHED GRADE. THE TOP 50 PAVEMENT COURSE (TYPE IIIS) WILL NOT BE CONSTRUCTED AS PART OF THIS CONTRACT. THIS CONTRACT ONLY INCLUDES 100 OF TYPE IS AND 80 OF TYPE IIS SUPERPAVE BITUMINOUS CONCRETE PAVEMENT (ITEM 490.30). PLEASE REFER TO THE ROADWAY TYPICAL SECTIONS FOR DETAILS.

5 METERS
2.5
H 1:100 SCALE
V 1:100 SCALE
@ FULL SIZE
2.5 5 METERS

VERMONT AGENCY OF TRANSPORTATION

Stantec

PROJECT NAME: BENNINGTON
PROJECT NUMBER: AC NH 019-1(53)

FILE NAME: ...\plot_files\zd307c3xs_xo.ptf
DESIGN SUPERVISOR: GREG EDWARDS
DESIGNED BY: MARC FOISY
CROSSOVER CROSS SECTIONS

PLOT DATE: 5/16/2011
DRAWN BY: STANTEC
CHECKED BY: GARY SANTY
SHEET 334 OF 577

v:\1953\active\195300021\transportation\drawing\contract_3\plot_files\zd307c3xs_xo.ptf

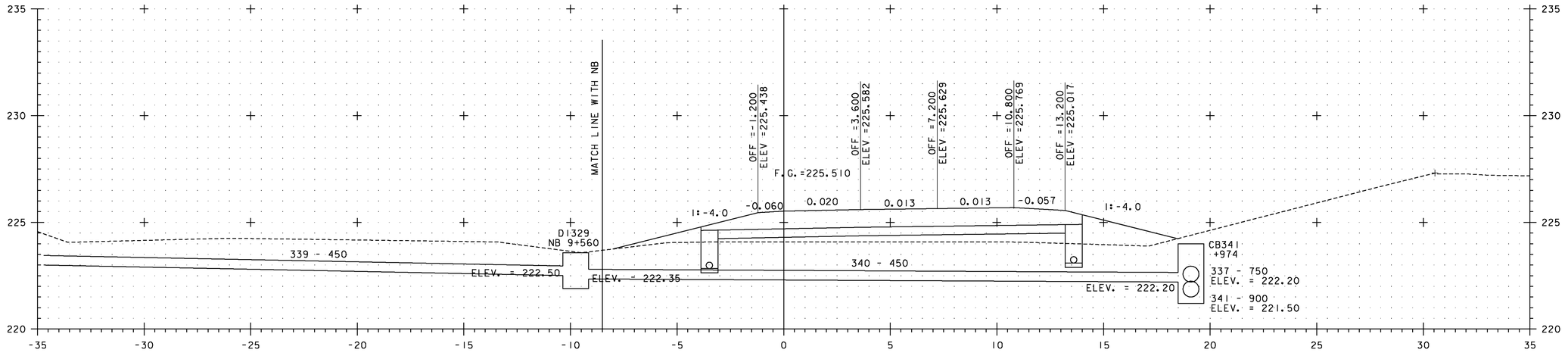

XO 0+980

NOTE:
ELEVATIONS SHOWN ARE FOR THE ULTIMATE FINISHED GRADE. THE TOP 50 PAVEMENT COURSE (TYPE IIIS) WILL NOT BE CONSTRUCTED AS PART OF THIS CONTRACT. THIS CONTRACT ONLY INCLUDES 100 OF TYPE IS AND 80 OF TYPE IIS SUPERPAVE BITUMINOUS CONCRETE PAVEMENT (ITEM 490.30). PLEASE REFER TO THE ROADWAY TYPICAL SECTIONS FOR DETAILS.

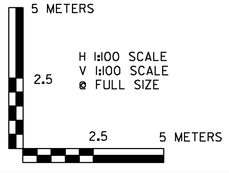

VERMONT AGENCY OF TRANSPORTATION

Stantec

PROJECT NAME: BENNINGTON
PROJECT NUMBER: AC NH 019-1(53)

FILE NAME: ...\plot_files\zd307c3xs_xo.ptf
DESIGN SUPERVISOR: GREG EDWARDS
DESIGNED BY: MARC FOISY
CROSSOVER CROSS SECTIONS

PLOT DATE: 5/16/2011
DRAWN BY: STANTEC
CHECKED BY: GARY SANTY
SHEET 335 OF 577

v:\1953\active\195300021\transportation\drawing\contract_3\plot_files\zd307c3xs_xo.ptf

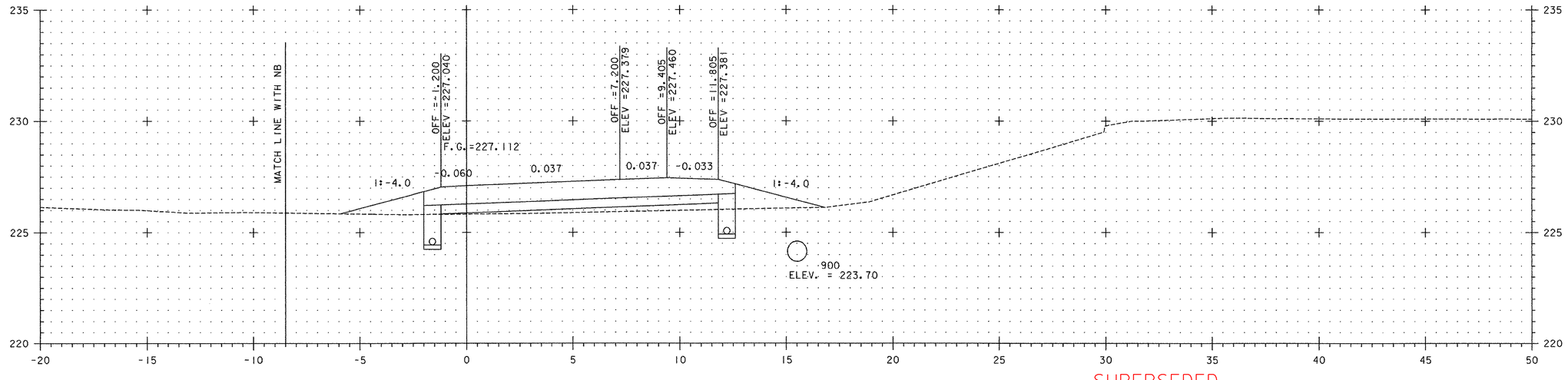

XO 1+020

SUPERSEDED BY PRECEDING SHEET

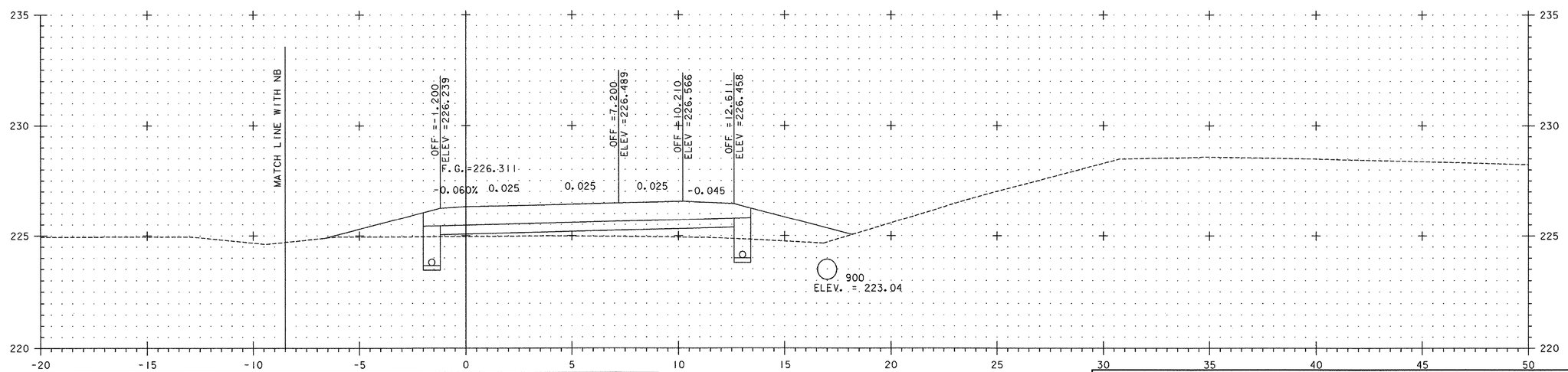

XO 1+000

NOTE:
ELEVATIONS SHOWN ARE FOR THE ULTIMATE FINISHED GRADE. THE TOP 50 PAVEMENT COURSE (TYPE IIIS) WILL NOT BE CONSTRUCTED AS PART OF THIS CONTRACT. THIS CONTRACT ONLY INCLUDES 100 OF TYPE IS AND 80 OF TYPE IIS SUPERPAVE BITUMINOUS CONCRETE PAVEMENT (ITEM 490.30). PLEASE REFER TO THE ROADWAY TYPICAL SECTIONS FOR DETAILS.

5 METERS
2.5
H 1:100 SCALE
V 1:100 SCALE
@ FULL SIZE
2.5 5 METERS

VERMONT AGENCY OF TRANSPORTATION

Stantec

PROJECT NAME: BENNINGTON
PROJECT NUMBER: AC NH 019-1(53)

FILE NAME: ...\plot_files\zd307c3xs_xo.ptf
DESIGN SUPERVISOR: GREG EDWARDS
DESIGNED BY: MARC FOISY
CROSSOVER CROSS SECTIONS

PLOT DATE: 5/19/2007
DRAWN BY: STANTEC
CHECKED BY: GARY SANTY
SHEET 336 OF 577

v:\1853\active\185300021\transportation\drawing\contract_3\plot_files\zd307c3xs_xo.ptf

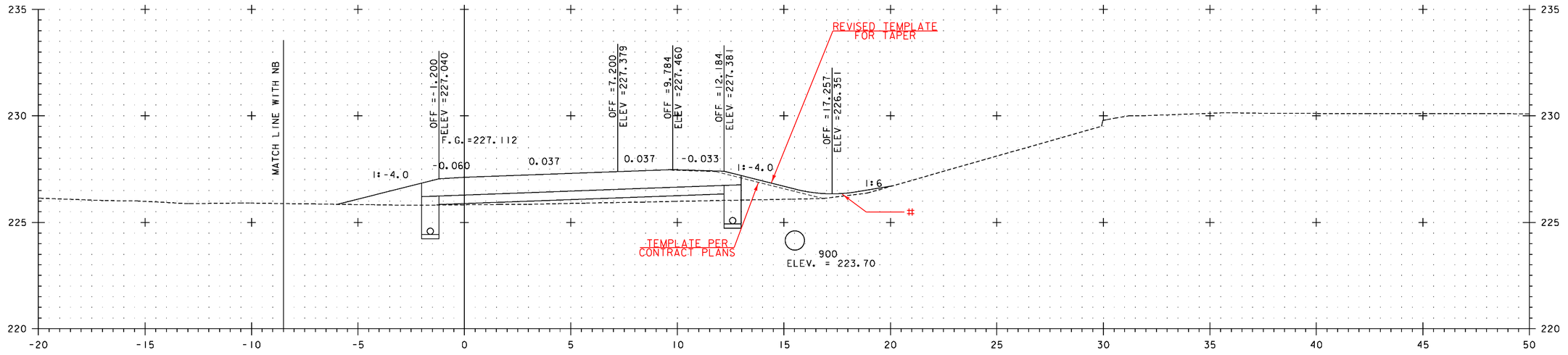

XO 1+020

#ROUNDING SHOWN TO SOFTEN DITCH LINE SLOPE

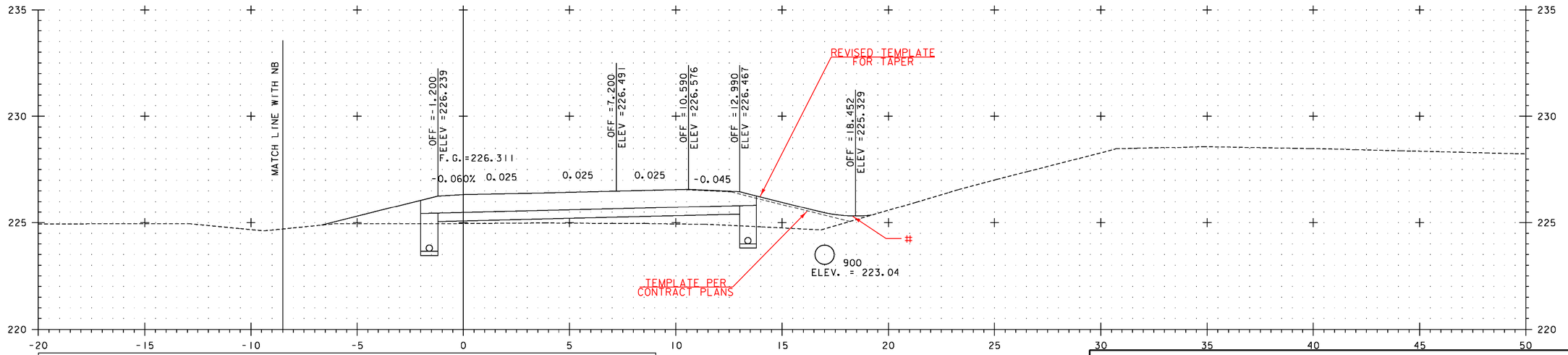

XO 1+000

NOTE:
ELEVATIONS SHOWN ARE FOR THE ULTIMATE FINISHED GRADE. THE TOP 50 PAVEMENT COURSE (TYPE IIIS) WILL NOT BE CONSTRUCTED AS PART OF THIS CONTRACT. THIS CONTRACT ONLY INCLUDES 100 OF TYPE IS AND 80 OF TYPE IIS SUPERPAVE BITUMINOUS CONCRETE PAVEMENT (ITEM 490.30). PLEASE REFER TO THE ROADWAY TYPICAL SECTIONS FOR DETAILS.

5 METERS
2.5
2.5 5 METERS
H 1:100 SCALE
V 1:100 SCALE
@ FULL SIZE

VERMONT AGENCY OF TRANSPORTATION

Stantec

PROJECT NAME: BENNINGTON
PROJECT NUMBER: AC NH 019-1(53)

FILE NAME: ...\plot_files\zd307c3xs_xo.ptf
DESIGN SUPERVISOR: GREG EDWARDS
DESIGNED BY: MARC FOISY
CROSSOVER CROSS SECTIONS

PLOT DATE: 5/16/2011
DRAWN BY: STANTEC
CHECKED BY: GARY SANTY
SHEET 336 OF 577

v:\1953\active\195300021\transportation\drawing\contract_3\plot_files\zd307c3xs_xo.ptf

Metric

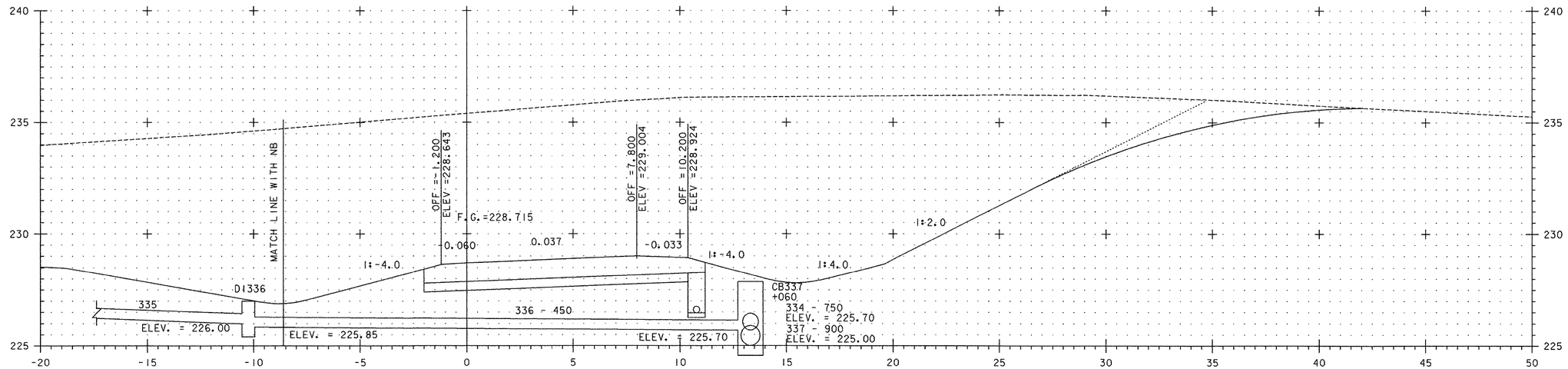

X0 1+060

SUPERSEDED BY PRECEDING SHEET

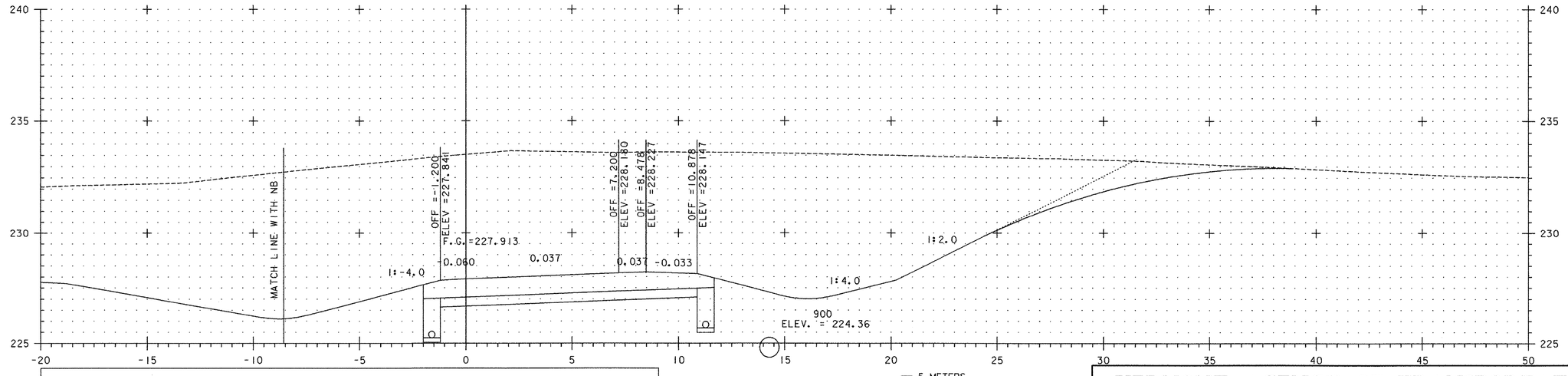

X0 1+040

NOTE:
ELEVATIONS SHOWN ARE FOR THE ULTIMATE FINISHED GRADE. THE TOP 50 PAVEMENT COURSE (TYPE IIIS) WILL NOT BE CONSTRUCTED AS PART OF THIS CONTRACT. THIS CONTRACT ONLY INCLUDES 100 OF TYPE IS AND 80 OF TYPE IIS SUPERPAVE BITUMINOUS CONCRETE PAVEMENT (ITEM 490.30). PLEASE REFER TO THE ROADWAY TYPICAL SECTIONS FOR DETAILS.

5 METERS
2.5
H 1:100 SCALE
V 1:100 SCALE
@ FULL SIZE
2.5 5 METERS

VERMONT AGENCY OF TRANSPORTATION

Stantec

PROJECT NAME: BENNINGTON
PROJECT NUMBER: AC NH 019-1(53)

FILE NAME: ...\plot_files\zd307c3xs_xo.ptf
DESIGN SUPERVISOR: GREG EDWARDS
DESIGNED BY: MARC FOISY
CROSSOVER CROSS SECTIONS

PLOT DATE: 5/19/2007
DRAWN BY: STANTEC
CHECKED BY: GARY SANTY
SHEET 337 OF 577

V:\1953\active\195310002\Transportation\drawing\contract_3\plot_files\zd307c3xs_xo.ptf

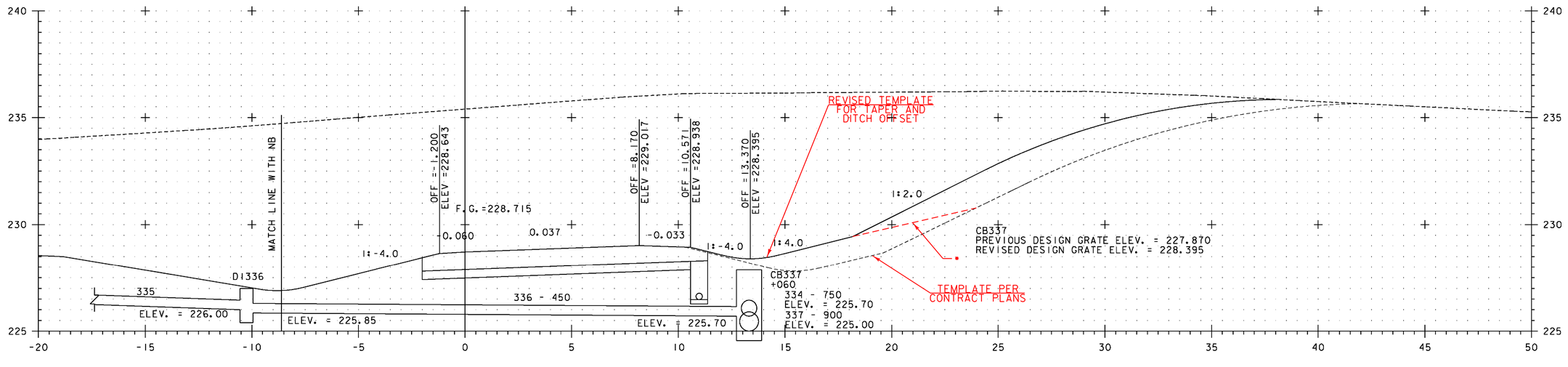

XO 1+060

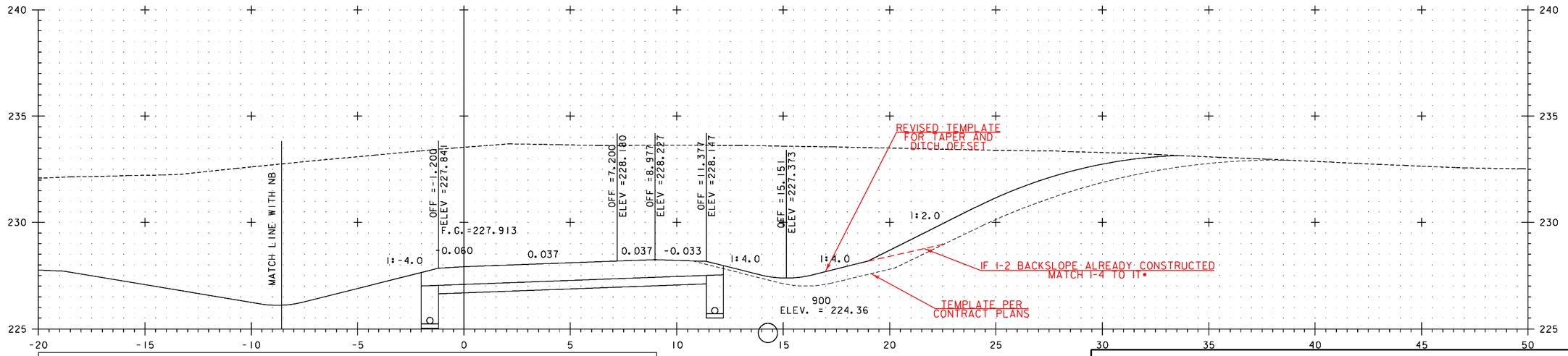

XO 1+040

NOTE:
ELEVATIONS SHOWN ARE FOR THE ULTIMATE FINISHED GRADE. THE TOP 50 PAVEMENT COURSE (TYPE IIIS) WILL NOT BE CONSTRUCTED AS PART OF THIS CONTRACT. THIS CONTRACT ONLY INCLUDES 100 OF TYPE IS AND 80 OF TYPE IIS SUPERPAVE BITUMINOUS CONCRETE PAVEMENT (ITEM 490.30). PLEASE REFER TO THE ROADWAY TYPICAL SECTIONS FOR DETAILS.

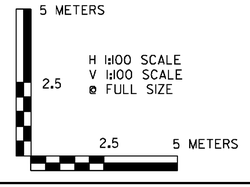

VERMONT AGENCY OF TRANSPORTATION

Stantec

PROJECT NAME: BENNINGTON
PROJECT NUMBER: AC NH 019-1(53)

FILE NAME: ...\plot_files\zd307c3xs_xo.ptf
DESIGN SUPERVISOR: GREG EDWARDS
DESIGNED BY: MARC FOISY
CROSSOVER CROSS SECTIONS

PLOT DATE: 5/16/2011
DRAWN BY: STANTEC
CHECKED BY: GARY SANTY
SHEET 337 OF 577

v:\1853\active\185300021\transportation\drawing\contract_3\plot_files\zd307c3xs_xo.ptf

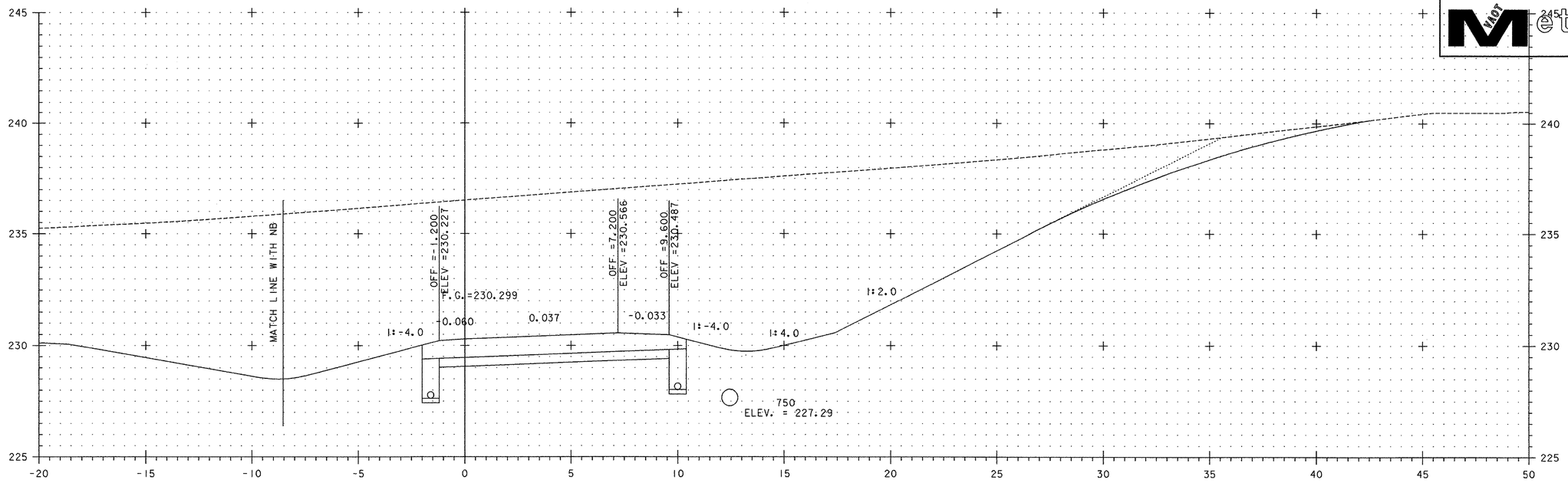

XO 1+100

SUPERSEDED BY PRECEDING SHEET

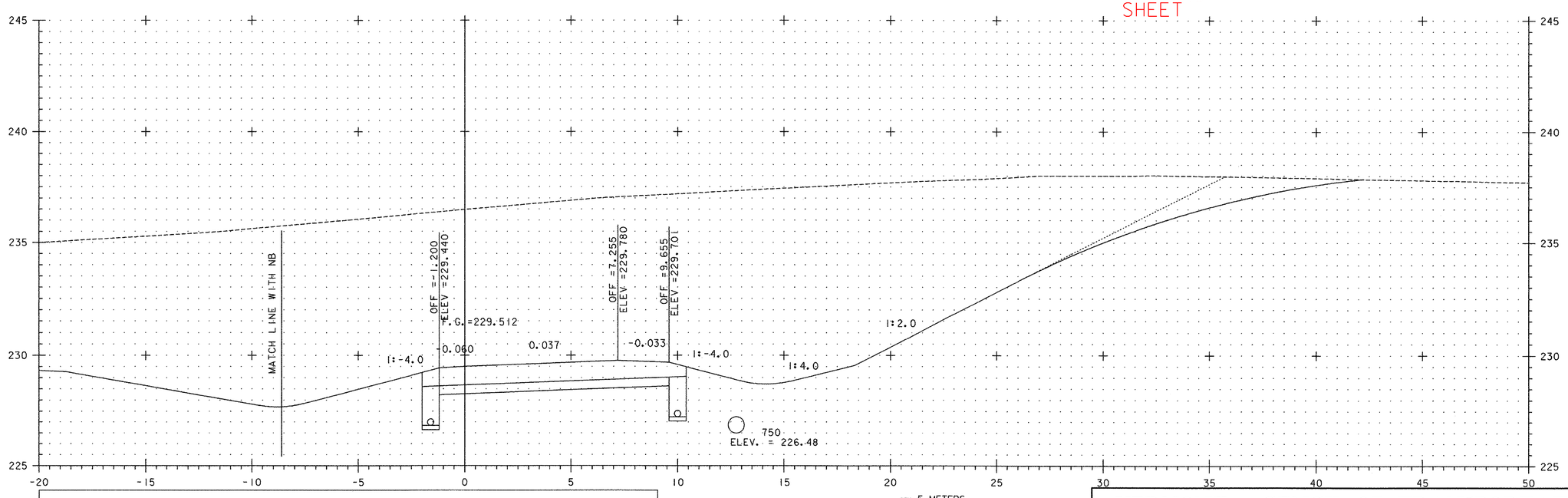

XO 1+080

NOTE:
ELEVATIONS SHOWN ARE FOR THE ULTIMATE FINISHED GRADE. THE TOP 50 PAVEMENT COURSE (TYPE IIIS) WILL NOT BE CONSTRUCTED AS PART OF THIS CONTRACT. THIS CONTRACT ONLY INCLUDES 100 OF TYPE IS AND 80 OF TYPE IIS SUPERPAVE BITUMINOUS CONCRETE PAVEMENT (ITEM 490.30). PLEASE REFER TO THE ROADWAY TYPICAL SECTIONS FOR DETAILS.

5 METERS
2.5
H 1:100 SCALE
V 1:100 SCALE
@ FULL SIZE
2.5 5 METERS

VERMONT AGENCY OF TRANSPORTATION

Stantec

PROJECT NAME: BENNINGTON
PROJECT NUMBER: AC NH 019-1(53)

FILE NAME: ...\plot_files\zd307c3xs_xo.ptf
DESIGN SUPERVISOR: GREG EDWARDS
DESIGNED BY: MARC FOISY
CROSSOVER CROSS SECTIONS

PLOT DATE: 5/22/2007
DRAWN BY: STANTEC
CHECKED BY: GARY SANTY
SHEET 338 OF 577

V:\1953\active\953002\transportation\drawing\contract_3\plot_files\zd307c3xs_xo.ptf

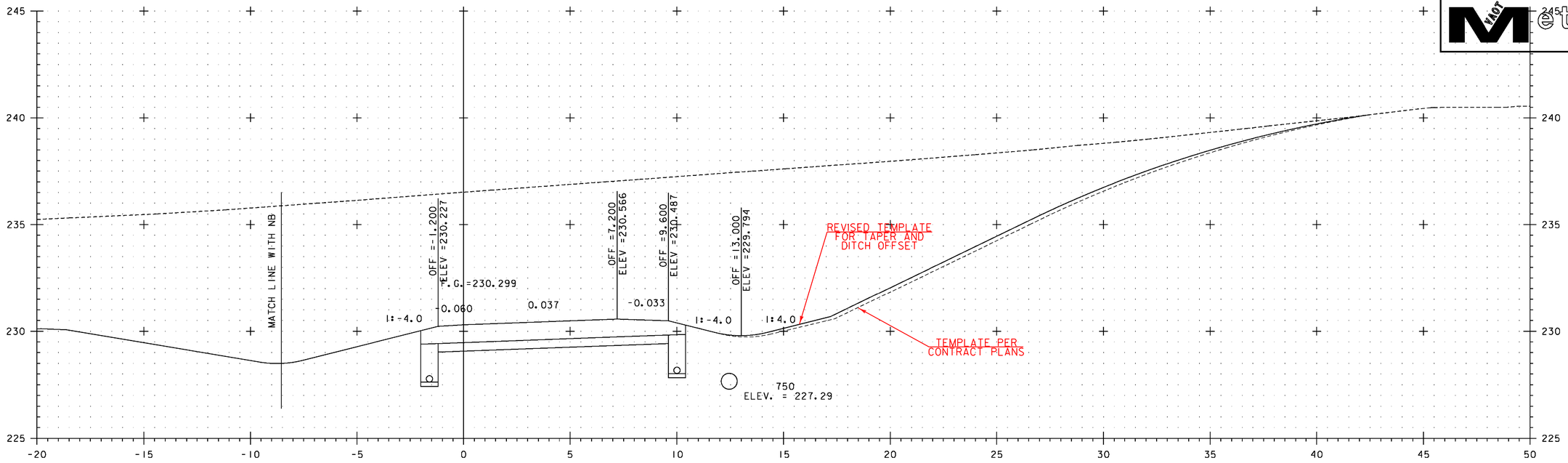

XO 1+100

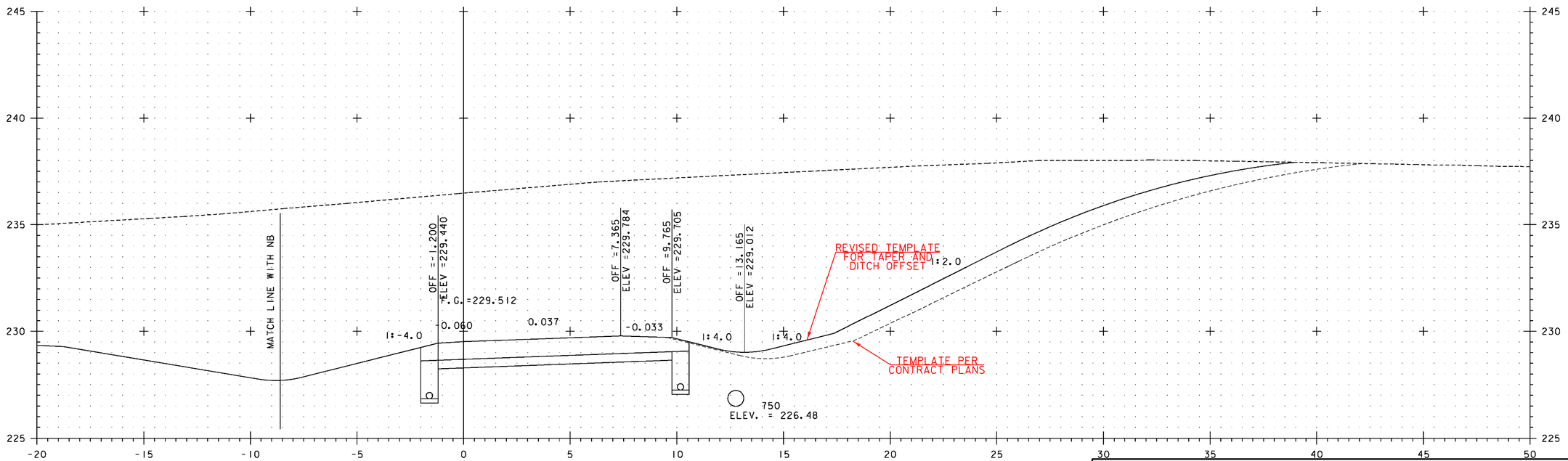

XO 1+080

NOTE:
ELEVATIONS SHOWN ARE FOR THE ULTIMATE FINISHED GRADE. THE TOP 50 PAVEMENT COURSE (TYPE IIIS) WILL NOT BE CONSTRUCTED AS PART OF THIS CONTRACT. THIS CONTRACT ONLY INCLUDES 100 OF TYPE IS AND 80 OF TYPE IIS SUPERPAVE BITUMINOUS CONCRETE PAVEMENT (ITEM 490.30). PLEASE REFER TO THE ROADWAY TYPICAL SECTIONS FOR DETAILS.

5 METERS
H 1:100 SCALE
V 1:100 SCALE
@ FULL SIZE
2.5
2.5
5 METERS

VERMONT AGENCY OF TRANSPORTATION

Stantec

PROJECT NAME: BENNINGTON
PROJECT NUMBER: AC NH 019-1(53)

FILE NAME: ...\plot_files\zd307c3xs_xo.ptf
DESIGN SUPERVISOR: GREG EDWARDS
DESIGNED BY: MARC FOISY
CROSSOVER CROSS SECTIONS

PLOT DATE: 5/16/2011
DRAWN BY: STANTEC
CHECKED BY: GARY SANTY
SHEET 338 OF 577

v:\9533\active\95300002\transportation\drawing\contract_3\plot_files\zd307c3xs_xo.ptf

VAOT Metric

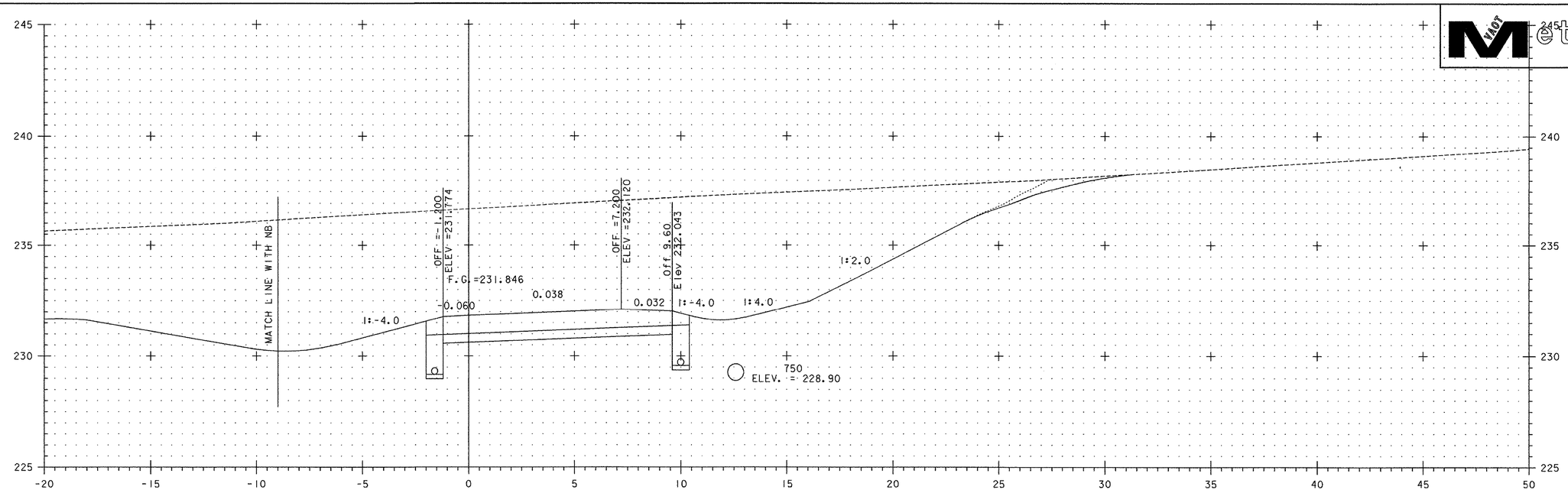

XO 1+140

SUPERSEDED BY PRECEDING SHEET

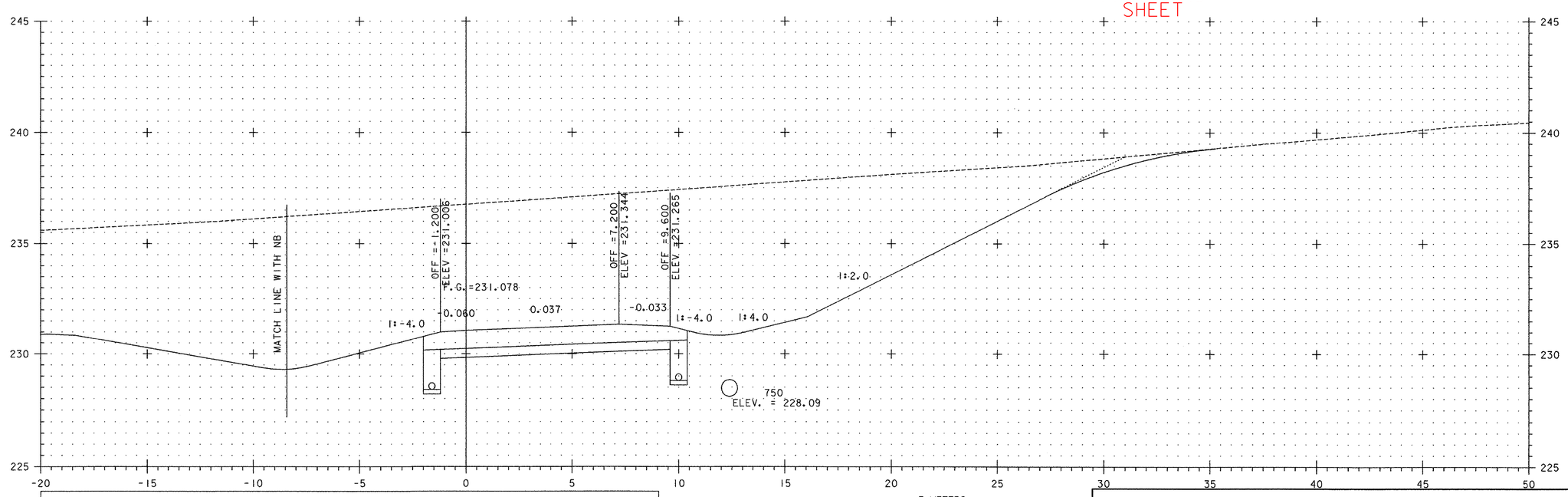

XO 1+120

NOTE:
ELEVATIONS SHOWN ARE FOR THE ULTIMATE FINISHED GRADE. THE TOP 50 PAVEMENT COURSE (TYPE IIIS) WILL NOT BE CONSTRUCTED AS PART OF THIS CONTRACT. THIS CONTRACT ONLY INCLUDES 100 OF TYPE IS AND 80 OF TYPE IIS SUPERPAVE BITUMINOUS CONCRETE PAVEMENT (ITEM 490.30). PLEASE REFER TO THE ROADWAY TYPICAL SECTIONS FOR DETAILS.

5 METERS
2.5
H 1:100 SCALE
V 1:100 SCALE
@ FULL SIZE
2.5 5 METERS

VERMONT AGENCY OF TRANSPORTATION

Stantec

PROJECT NAME: BENNINGTON
PROJECT NUMBER: AC NH 019-1(53)

FILE NAME: ...\plot_files\zd307c3xs_xo.ptf
DESIGN SUPERVISOR: GREG EDWARDS
DESIGNED BY: MARC FOISY
CROSSOVER CROSS SECTIONS

PLOT DATE: 5/22/2007
DRAWN BY: STANTEC
CHECKED BY: GARY SANTY
SHEET 339 OF 577

V:\1953\active\053002\transportation\drawing\contract_3\plot_files\zd307c3xs_xo.ptf

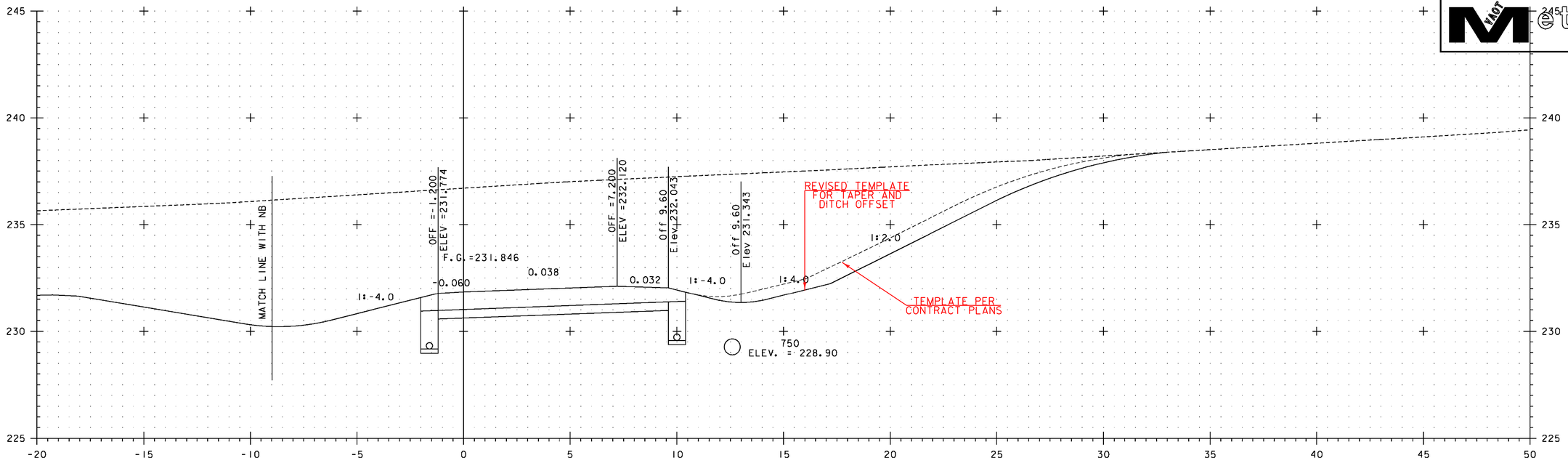

XO 1+140

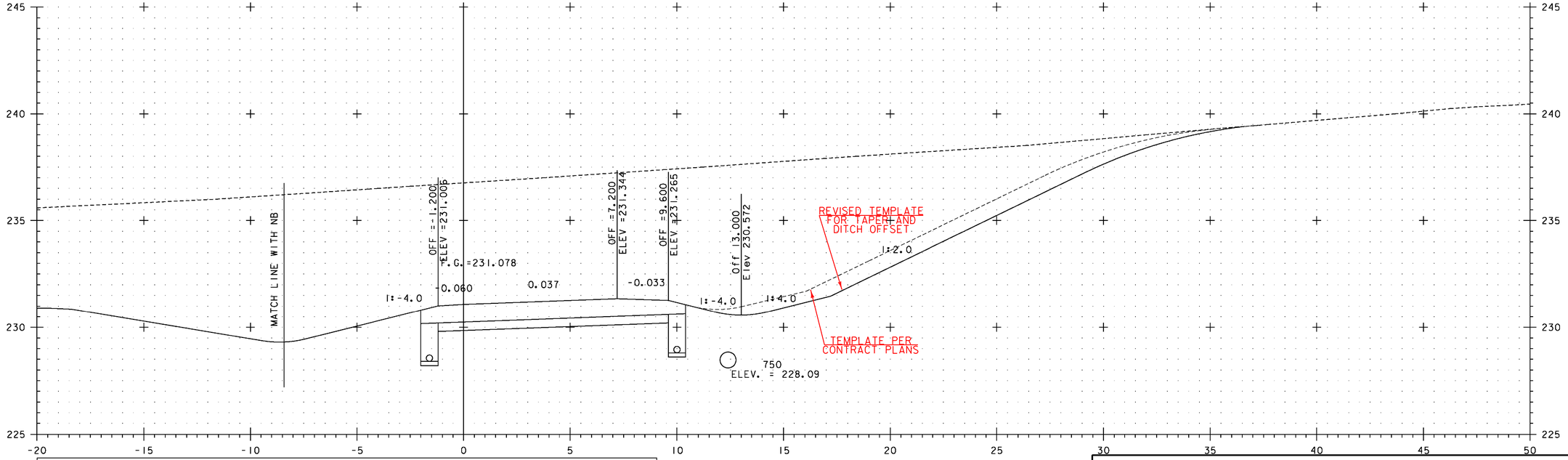

XO 1+120

NOTE:
ELEVATIONS SHOWN ARE FOR THE ULTIMATE FINISHED GRADE. THE TOP 50 PAVEMENT COURSE (TYPE IIIS) WILL NOT BE CONSTRUCTED AS PART OF THIS CONTRACT. THIS CONTRACT ONLY INCLUDES 100 OF TYPE IS AND 80 OF TYPE IIS SUPERPAVE BITUMINOUS CONCRETE PAVEMENT (ITEM 490.30). PLEASE REFER TO THE ROADWAY TYPICAL SECTIONS FOR DETAILS.

5 METERS
H 1:100 SCALE
V 1:100 SCALE
@ FULL SIZE
2.5
2.5 5 METERS

VERMONT AGENCY OF TRANSPORTATION

Stantec

PROJECT NAME: BENNINGTON
PROJECT NUMBER: AC NH 019-1(53)

FILE NAME: ...\plot_files\zd307c3xs_xo.ptf
DESIGN SUPERVISOR: GREG EDWARDS
DESIGNED BY: MARC FOISY
CROSSOVER CROSS SECTIONS

PLOT DATE: 5/16/2011
DRAWN BY: STANTEC
CHECKED BY: GARY SANTY
SHEET 339 OF 577

v:\9533\active\95300021\transportation\drawing\contract_3\plot_files\zd307c3xs_xo.ptf

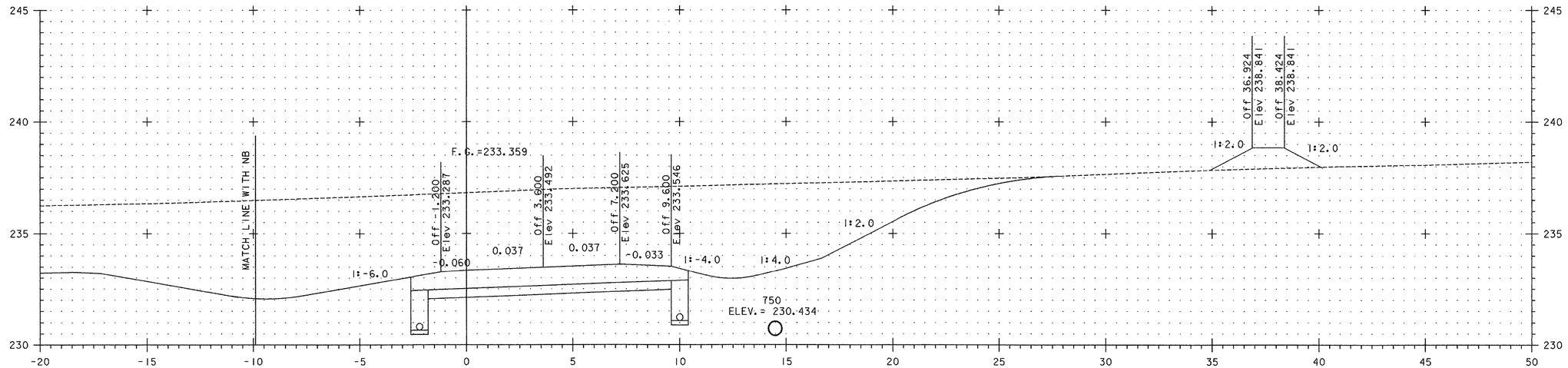

X0 1+180

SUPERSEDED BY PRECEDING SHEET

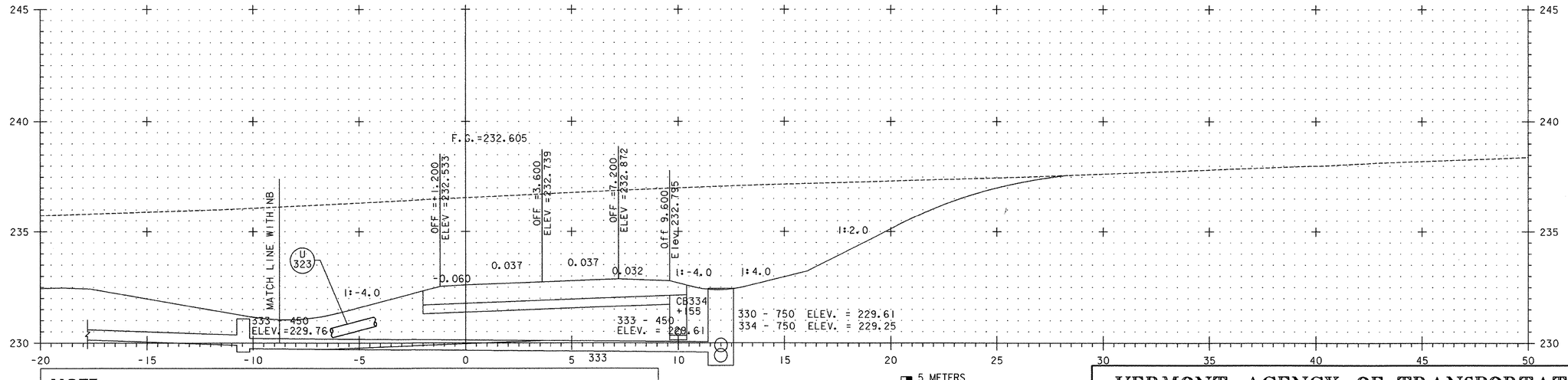

X0 1+160

NOTE:
ELEVATIONS SHOWN ARE FOR THE ULTIMATE FINISHED GRADE. THE TOP 50 PAVEMENT COURSE (TYPE IIIS) WILL NOT BE CONSTRUCTED AS PART OF THIS CONTRACT. THIS CONTRACT ONLY INCLUDES 100 OF TYPE IS AND 80 OF TYPE IIS SUPERPAVE BITUMINOUS CONCRETE PAVEMENT (ITEM 490.30). PLEASE REFER TO THE ROADWAY TYPICAL SECTIONS FOR DETAILS.

5 METERS
H 1:100 SCALE
V 1:100 SCALE
@ FULL SIZE
2.5
2.5 5 METERS

VERMONT AGENCY OF TRANSPORTATION

Stantec

PROJECT NAME: BENNINGTON
PROJECT NUMBER: AC NH 019-1(53)

FILE NAME: ...\plot_files\zd307c3xs_xo.ptf
DESIGN SUPERVISOR: GREG EDWARDS
DESIGNED BY: MARC FOISY
CROSSOVER CROSS SECTIONS

PLOT DATE: 5/19/2007
DRAWN BY: STANTEC
CHECKED BY: GARY SANTY
SHEET 340 OF 577

v:\953\active\953100002\transportation\drawing\contract_3\plot_files\zd307c3xs_xo.ptf

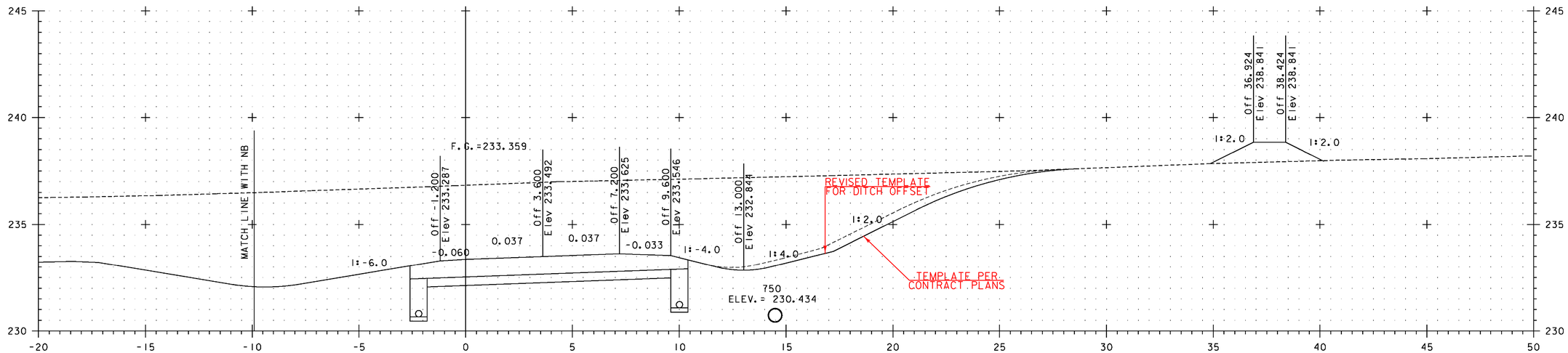

XO 1+180

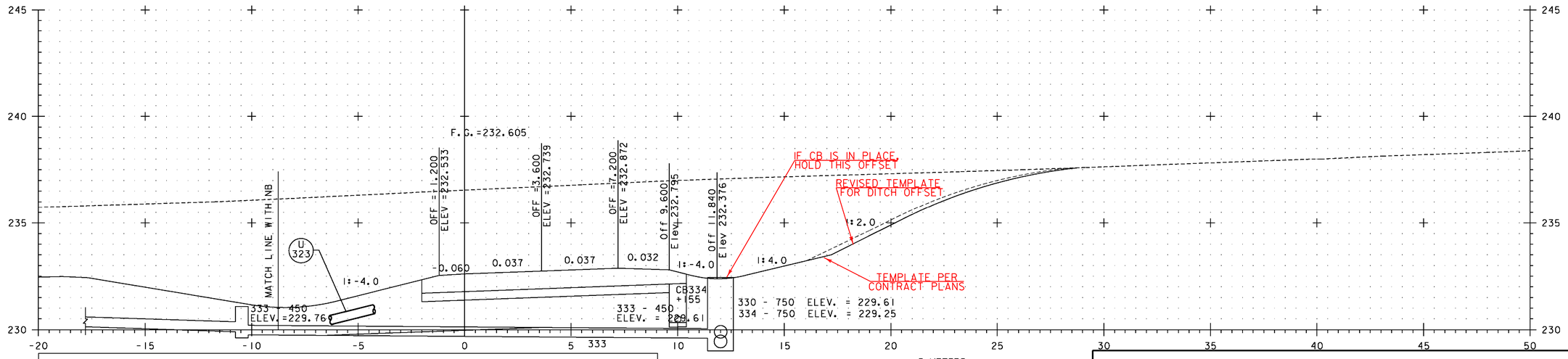

XO 1+160

NOTE:
ELEVATIONS SHOWN ARE FOR THE ULTIMATE FINISHED GRADE. THE TOP 50 PAVEMENT COURSE (TYPE IIIS) WILL NOT BE CONSTRUCTED AS PART OF THIS CONTRACT. THIS CONTRACT ONLY INCLUDES 100 OF TYPE IS AND 80 OF TYPE IIS SUPERPAVE BITUMINOUS CONCRETE PAVEMENT (ITEM 490.30). PLEASE REFER TO THE ROADWAY TYPICAL SECTIONS FOR DETAILS.

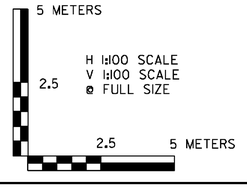

VERMONT AGENCY OF TRANSPORTATION

Stantec

PROJECT NAME: BENNINGTON
PROJECT NUMBER: AC NH 019-1(53)

FILE NAME: ...\plot_files\zd307c3xs_xo.ptf
DESIGN SUPERVISOR: GREG EDWARDS
DESIGNED BY: MARC FOISY
CROSSOVER CROSS SECTIONS

PLOT DATE: 5/16/2011
DRAWN BY: STANTEC
CHECKED BY: GARY SANTY
SHEET 340 OF 577

v:\1853\active\18530002\transportation\drawing\contract_3\plot_files\zd307c3xs_xo.ptf

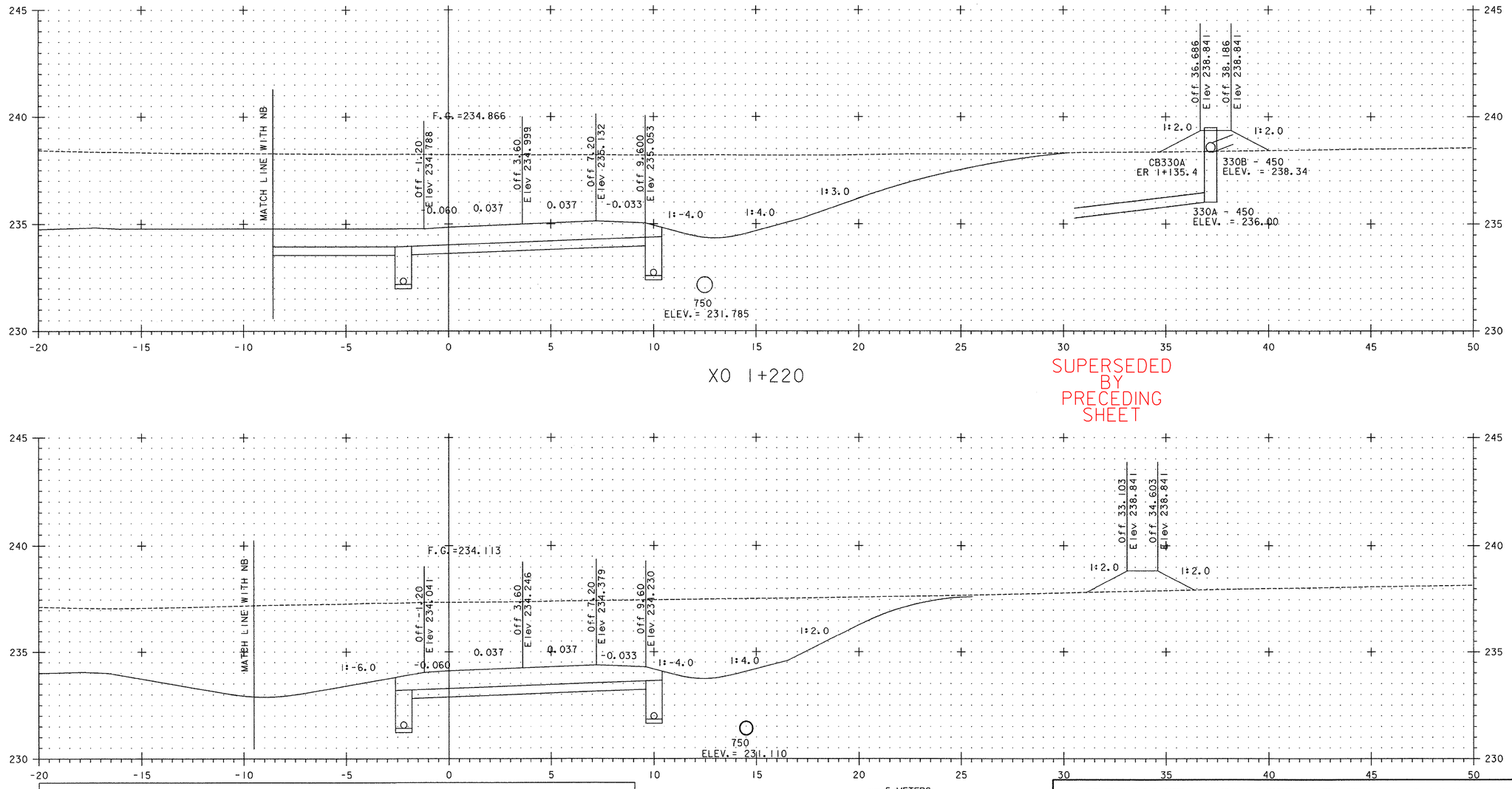

XO 1+220

SUPERSEDED BY PRECEDING SHEET

XO 1+200

NOTE:
ELEVATIONS SHOWN ARE FOR THE ULTIMATE FINISHED GRADE. THE TOP 50 PAVEMENT COURSE (TYPE IIIS) WILL NOT BE CONSTRUCTED AS PART OF THIS CONTRACT. THIS CONTRACT ONLY INCLUDES 100 OF TYPE IS AND 80 OF TYPE IIS SUPERPAVE BITUMINOUS CONCRETE PAVEMENT (ITEM 490.30). PLEASE REFER TO THE ROADWAY TYPICAL SECTIONS FOR DETAILS.

5 METERS
H 1:100 SCALE
V 1:100 SCALE
@ FULL SIZE
2.5
2.5
5 METERS

VERMONT AGENCY OF TRANSPORTATION

Stantec

PROJECT NAME: BENNINGTON
PROJECT NUMBER: AC NH 019-1(53)

FILE NAME: ...\plot_files\zd307c3xs_xo.ptf
DESIGN SUPERVISOR: GREG EDWARDS
DESIGNED BY: MARC FOISY
CROSSOVER CROSS SECTIONS

PLOT DATE: 5/19/2007
DRAWN BY: STANTEC
CHECKED BY: GARY SANTY
SHEET 341 OF 577

v:\1853\active\185300021\transportation\drawing\contract_3\plot_files\zd307c3xs_xo.ptf

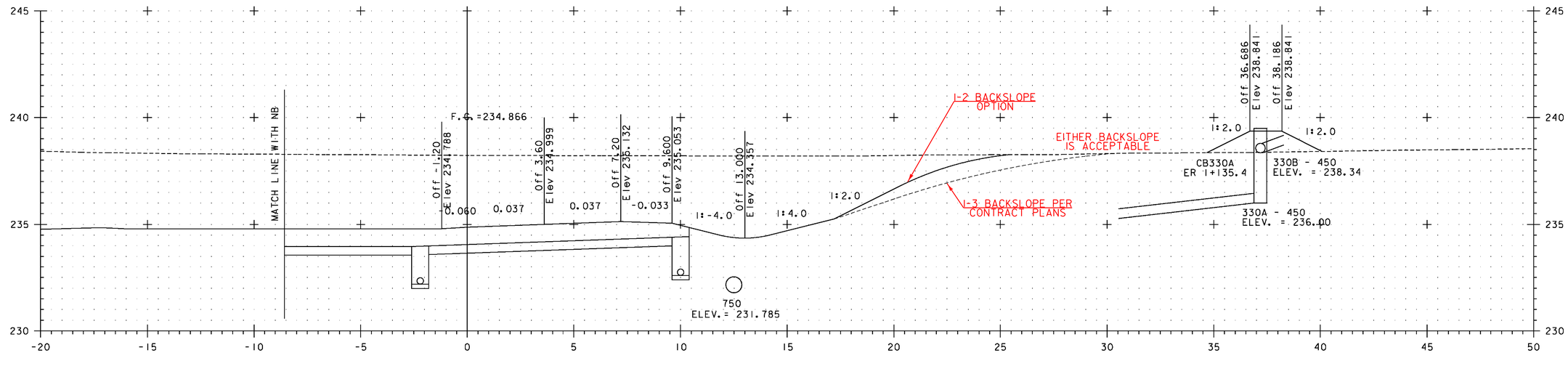

XO 1+220

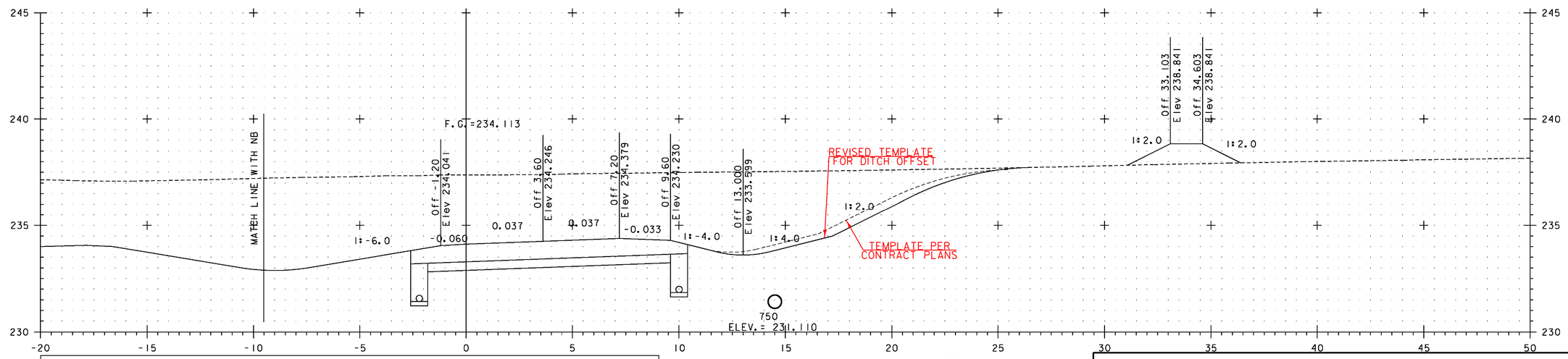

XO 1+200

NOTE:
ELEVATIONS SHOWN ARE FOR THE ULTIMATE FINISHED GRADE. THE TOP 50 PAVEMENT COURSE (TYPE IIIS) WILL NOT BE CONSTRUCTED AS PART OF THIS CONTRACT. THIS CONTRACT ONLY INCLUDES 100 OF TYPE IS AND 80 OF TYPE IIS SUPERPAVE BITUMINOUS CONCRETE PAVEMENT (ITEM 490.30). PLEASE REFER TO THE ROADWAY TYPICAL SECTIONS FOR DETAILS.

5 METERS
2.5
H 1:100 SCALE
V 1:100 SCALE
@ FULL SIZE
2.5
5 METERS

VERMONT AGENCY OF TRANSPORTATION

Stantec

PROJECT NAME: BENNINGTON
PROJECT NUMBER: AC NH 019-1(53)

FILE NAME: ...\plot_files\zd307c3xs_xo.ptf
DESIGN SUPERVISOR: GREG EDWARDS
DESIGNED BY: MARC FOISY
CROSSOVER CROSS SECTIONS

PLOT DATE: 5/16/2011
DRAWN BY: STANTEC
CHECKED BY: GARY SANTY
SHEET 341 OF 577

v:\1853\active\18530002\transportation\drawing\contract_3\plot_files\zd307c3xs_xo.ptf

Metric

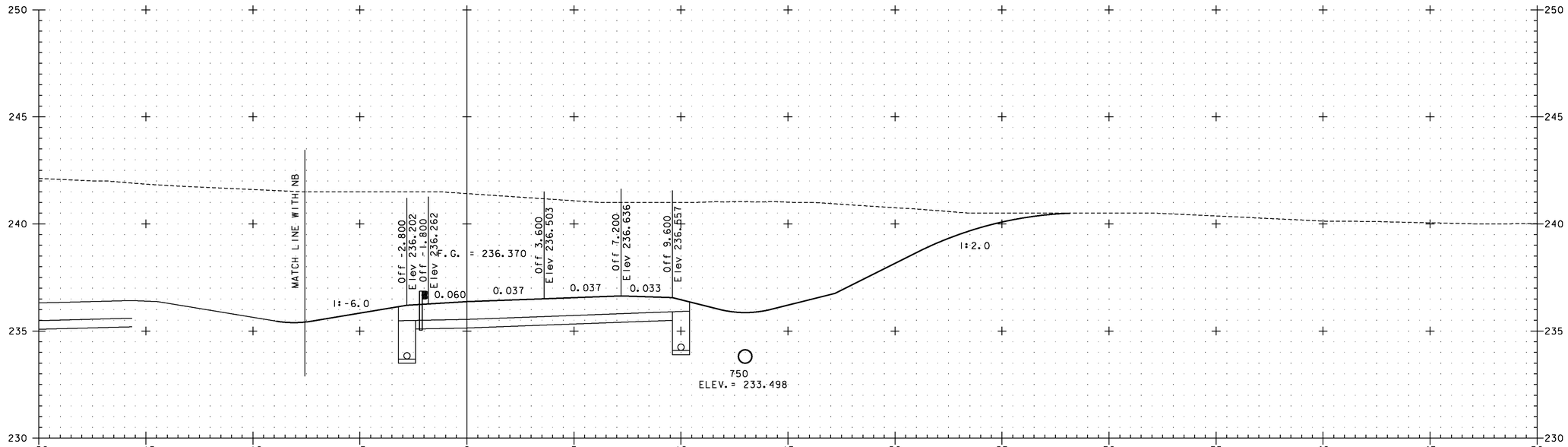

XO 1+260

POC XO 1+255.049 =
POC ER 1+179.136

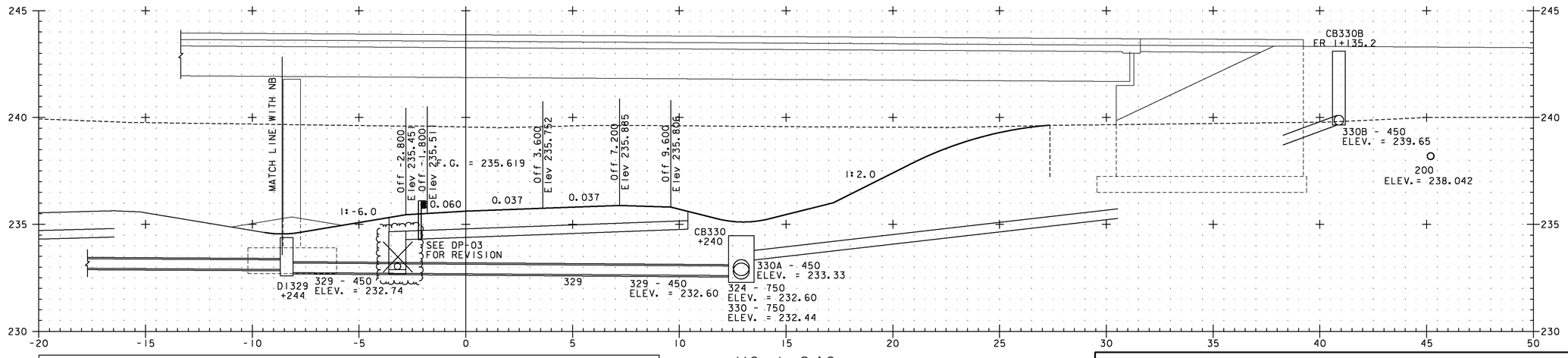

XO 1+240

NOTE:
ELEVATIONS SHOWN ARE FOR THE ULTIMATE FINISHED GRADE. THE TOP 50 PAVEMENT COURSE (TYPE IIIS) WILL NOT BE CONSTRUCTED AS PART OF THIS CONTRACT. THIS CONTRACT ONLY INCLUDES 100 OF TYPE IS AND 80 OF TYPE IIS SUPERPAVE BITUMINOUS CONCRETE PAVEMENT (ITEM 490.30). PLEASE REFER TO THE ROADWAY TYPICAL SECTIONS FOR DETAILS.

5 METERS
H 1:100 SCALE
V 1:100 SCALE
@ FULL SIZE
2.5
2.5 5 METERS

VERMONT AGENCY OF TRANSPORTATION

Stantec

PROJECT NAME: BENNINGTON
PROJECT NUMBER: AC NH 019-1(53)

FILE NAME: ...\plot_files\zd307c3xs_xo.ptf
DESIGN SUPERVISOR: GREG EDWARDS
DESIGNED BY: MARC FOISY
CROSSOVER CROSS SECTIONS
PLOT DATE: 5/16/2011
DRAWN BY: STANTEC
CHECKED BY: GARY SANTY
SHEET 342 OF 577

v:\1953\active\195310002\transportation\drawing\contract_3\plot_files\zd307c3xs_xo.ptf

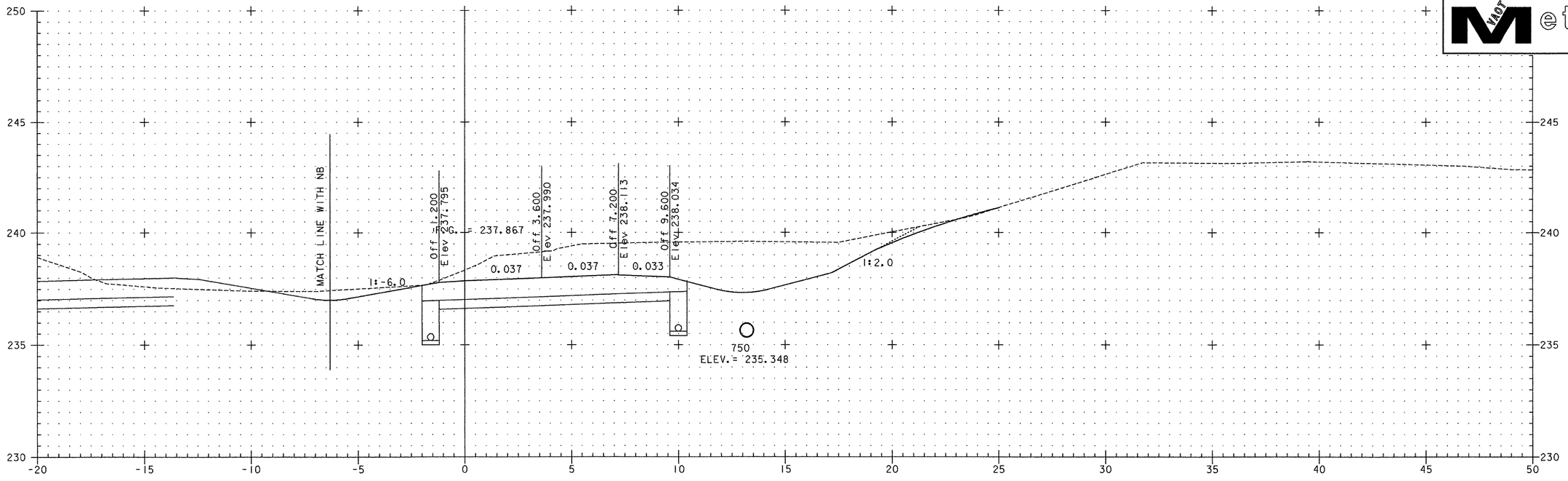

XO 1+300

SUPERSEDED BY PRECEDING SHEET

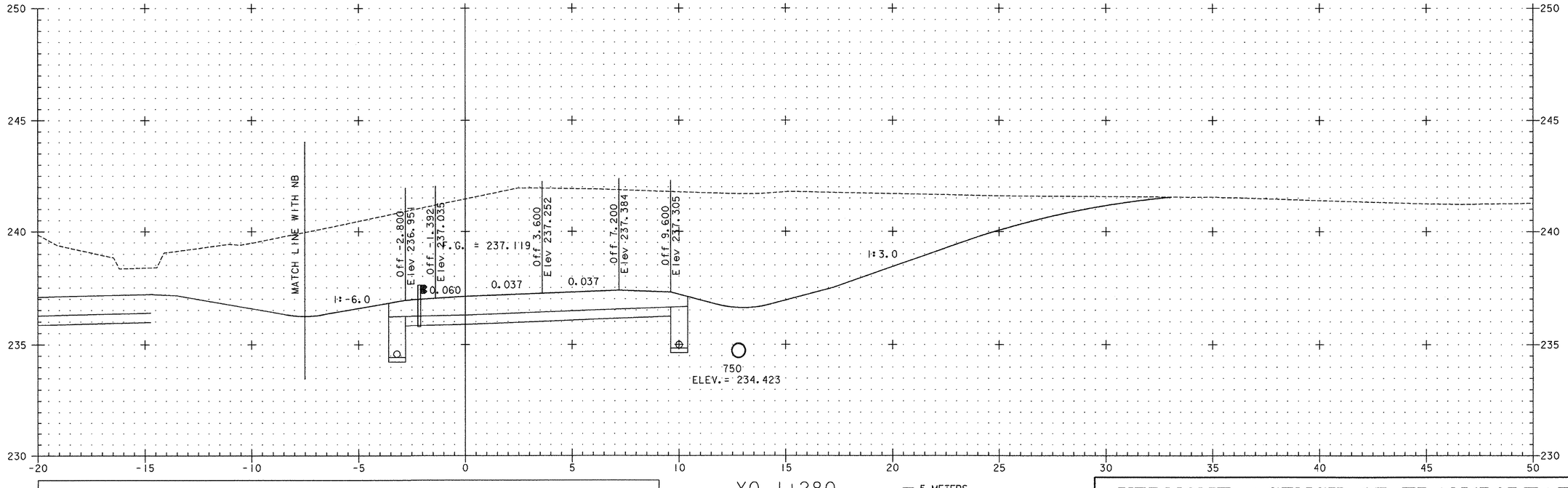

XO 1+280

NOTE:
ELEVATIONS SHOWN ARE FOR THE ULTIMATE FINISHED GRADE. THE TOP 50 PAVEMENT COURSE (TYPE IIIS) WILL NOT BE CONSTRUCTED AS PART OF THIS CONTRACT. THIS CONTRACT ONLY INCLUDES 100 OF TYPE IS AND 80 OF TYPE IIS SUPERPAVE BITUMINOUS CONCRETE PAVEMENT (ITEM 490.30). PLEASE REFER TO THE ROADWAY TYPICAL SECTIONS FOR DETAILS.

5 METERS
2.5
H 1:100 SCALE
V 1:100 SCALE
@ FULL SIZE
2.5 5 METERS

VERMONT AGENCY OF TRANSPORTATION

Stantec

PROJECT NAME: BENNINGTON
PROJECT NUMBER: AC NH 019-1(53)

FILE NAME: ...\plot_files\zd307c3xs_xo.ptf
DESIGN SUPERVISOR: GREG EDWARDS
DESIGNED BY: MARC FOISY
CROSSOVER CROSS SECTIONS

PLOT DATE: 5/19/2007
DRAWN BY: STANTEC
CHECKED BY: GARY SANTY
SHEET 343 OF 577

v:\1853\active\185300021\transportation\drawing\contract_3\plot_files\zd307c3xs_xo.ptf

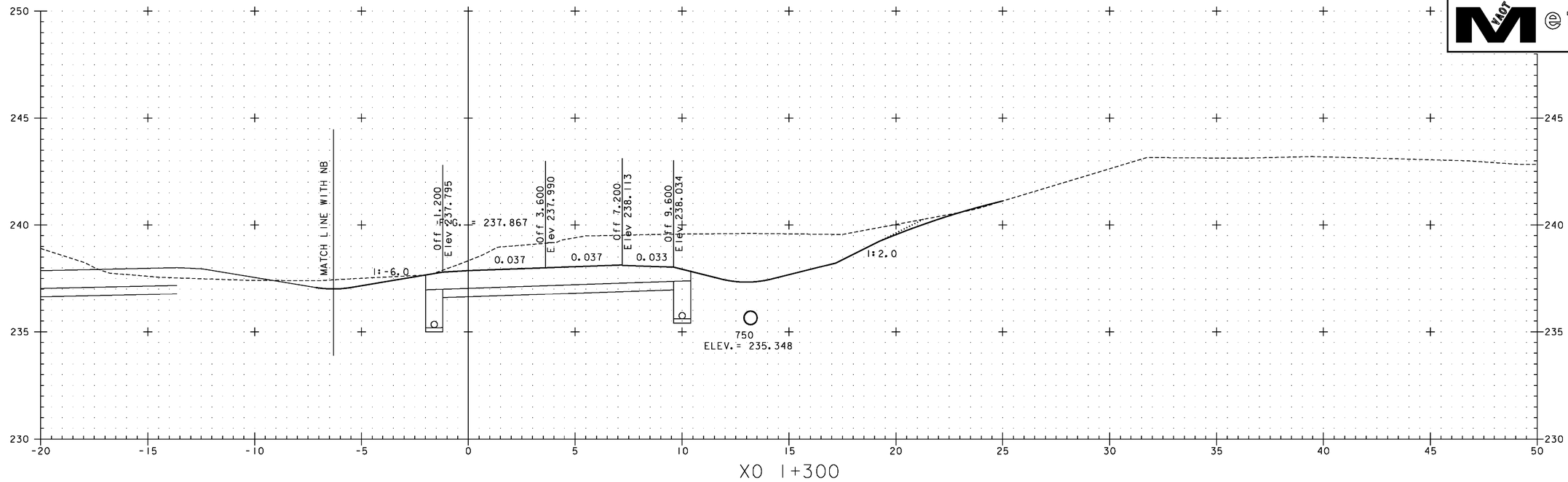

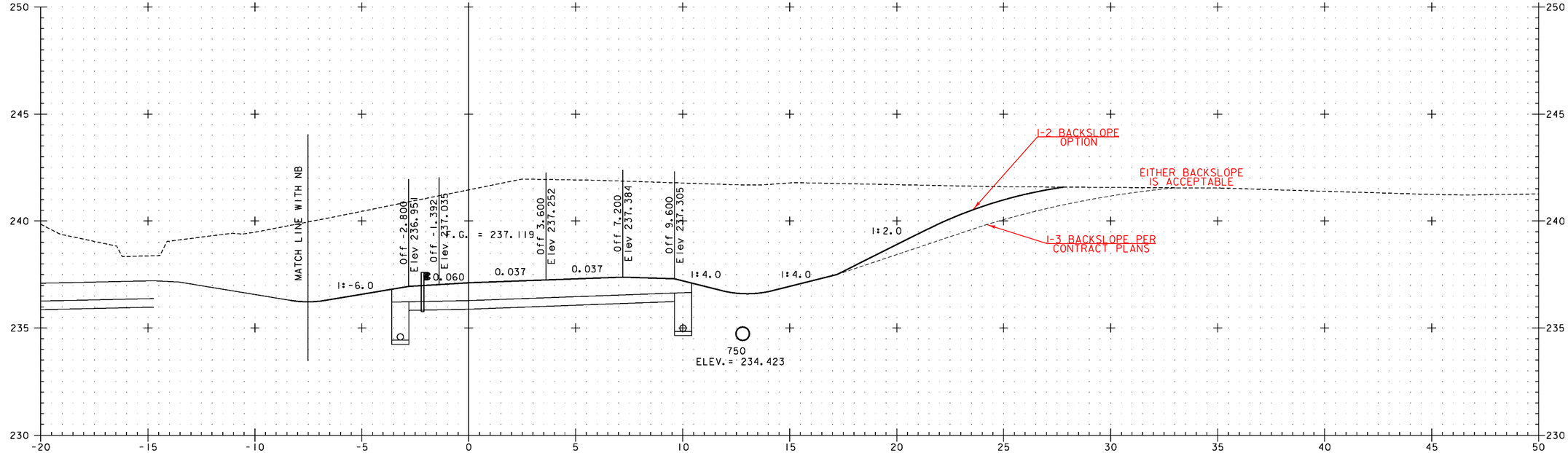

NOTE:
ELEVATIONS SHOWN ARE FOR THE ULTIMATE FINISHED GRADE. THE TOP 50 PAVEMENT COURSE (TYPE IIIS) WILL NOT BE CONSTRUCTED AS PART OF THIS CONTRACT. THIS CONTRACT ONLY INCLUDES 100 OF TYPE IS AND 80 OF TYPE IIS SUPERPAVE BITUMINOUS CONCRETE PAVEMENT (ITEM 490.30). PLEASE REFER TO THE ROADWAY TYPICAL SECTIONS FOR DETAILS.

5 METERS
H 1:100 SCALE
V 1:100 SCALE
@ FULL SIZE
2.5 2.5 5 METERS

VERMONT AGENCY OF TRANSPORTATION

Stantec

PROJECT NAME: BENNINGTON
PROJECT NUMBER: AC NH 019-1(53)

FILE NAME: ...\plot_files\zd307c3xs_xo.ptf
DESIGN SUPERVISOR: GREG EDWARDS
DESIGNED BY: MARC FOISY
CROSSOVER CROSS SECTIONS

PLOT DATE: 5/16/2011
DRAWN BY: STANTEC
CHECKED BY: GARY SANTY
SHEET 343 OF 577

v:\9533\active\95300002\transportation\drawing\contract_3\plot_files\zd307c3xs_xo.ptf

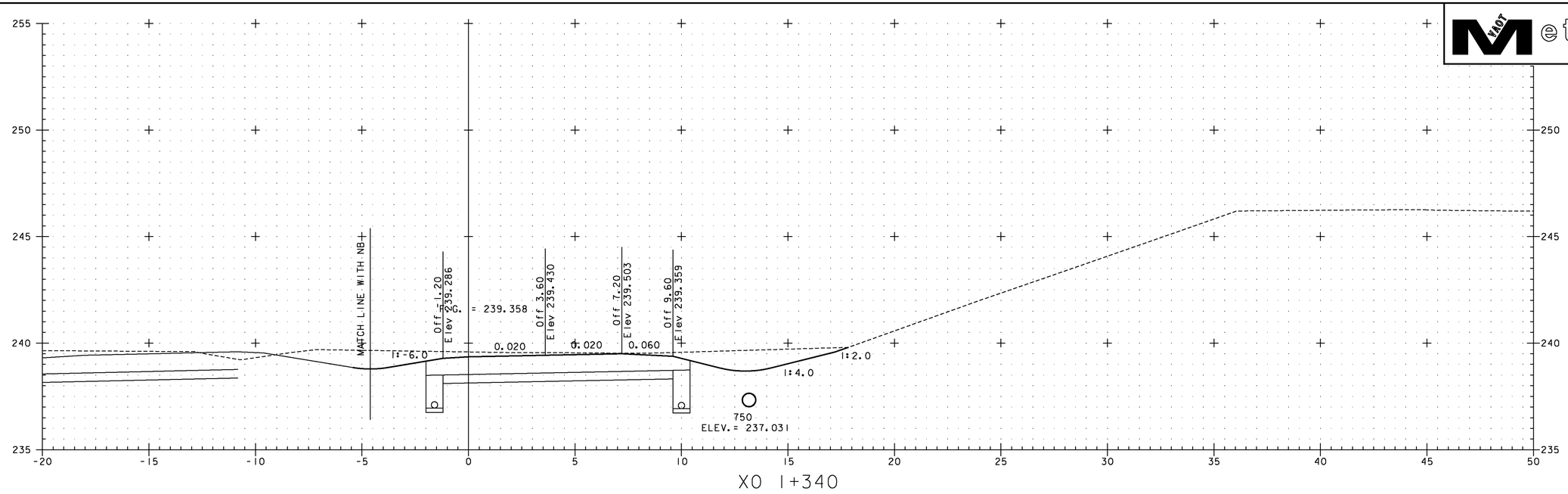

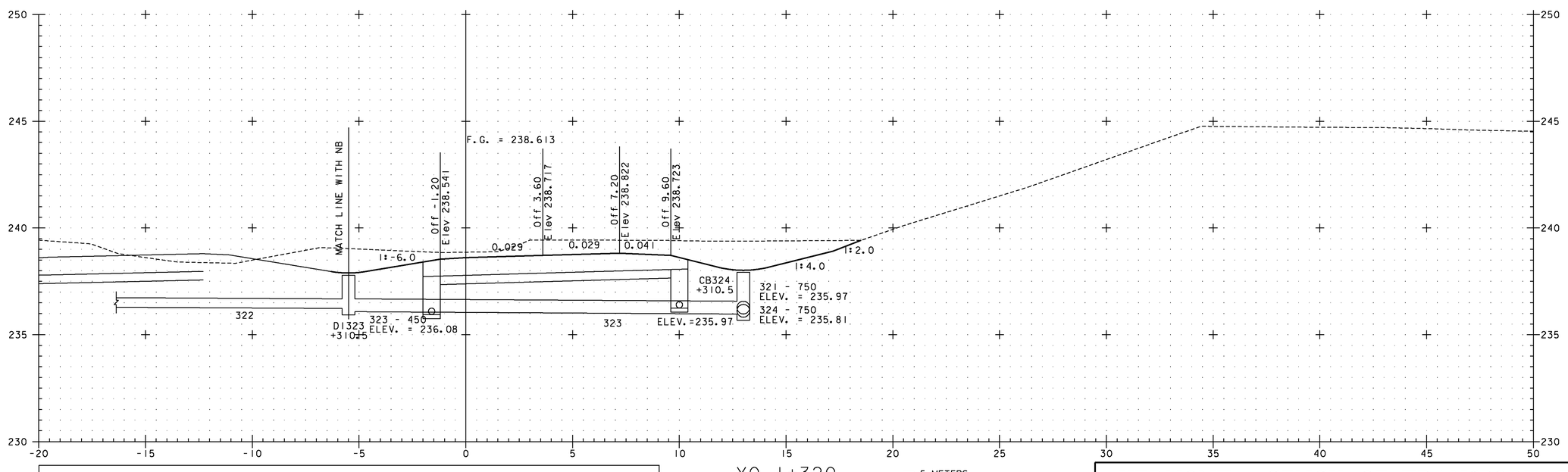

NOTE:
ELEVATIONS SHOWN ARE FOR THE ULTIMATE FINISHED GRADE. THE TOP 50 PAVEMENT COURSE (TYPE IIIS) WILL NOT BE CONSTRUCTED AS PART OF THIS CONTRACT. THIS CONTRACT ONLY INCLUDES 100 OF TYPE IS AND 80 OF TYPE IIS SUPERPAVE BITUMINOUS CONCRETE PAVEMENT (ITEM 490.30). PLEASE REFER TO THE ROADWAY TYPICAL SECTIONS FOR DETAILS.

5 METERS
2.5
H 1:100 SCALE
V 1:100 SCALE
@ FULL SIZE
2.5 5 METERS

VERMONT AGENCY OF TRANSPORTATION

Stantec

PROJECT NAME: BENNINGTON
PROJECT NUMBER: AC NH 019-1(53)

FILE NAME: ...\plot_files\zd307c3xs_xo.ptf
DESIGN SUPERVISOR: GREG EDWARDS
DESIGNED BY: MARC FOISY
CROSSOVER CROSS SECTIONS

PLOT DATE: 5/16/2011
DRAWN BY: STANTEC
CHECKED BY: GARY SANTY
SHEET 344 OF 577

v:\953\active\95300002\transportation\drawing\contract_3\plot_files\zd307c3xs_xo.ptf

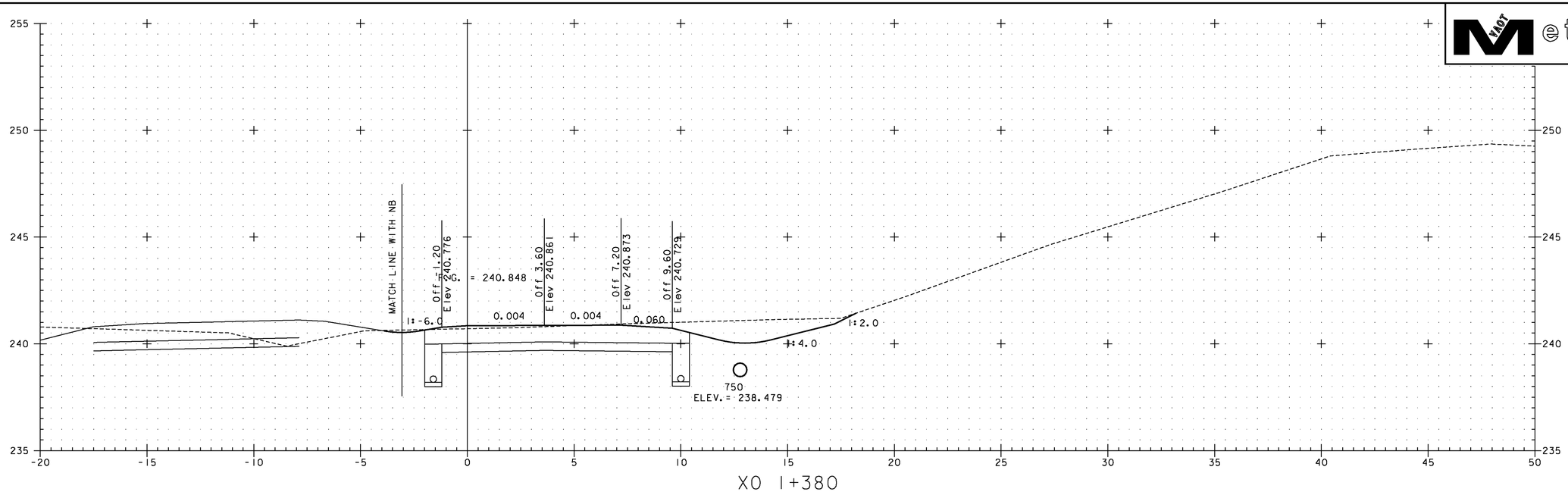

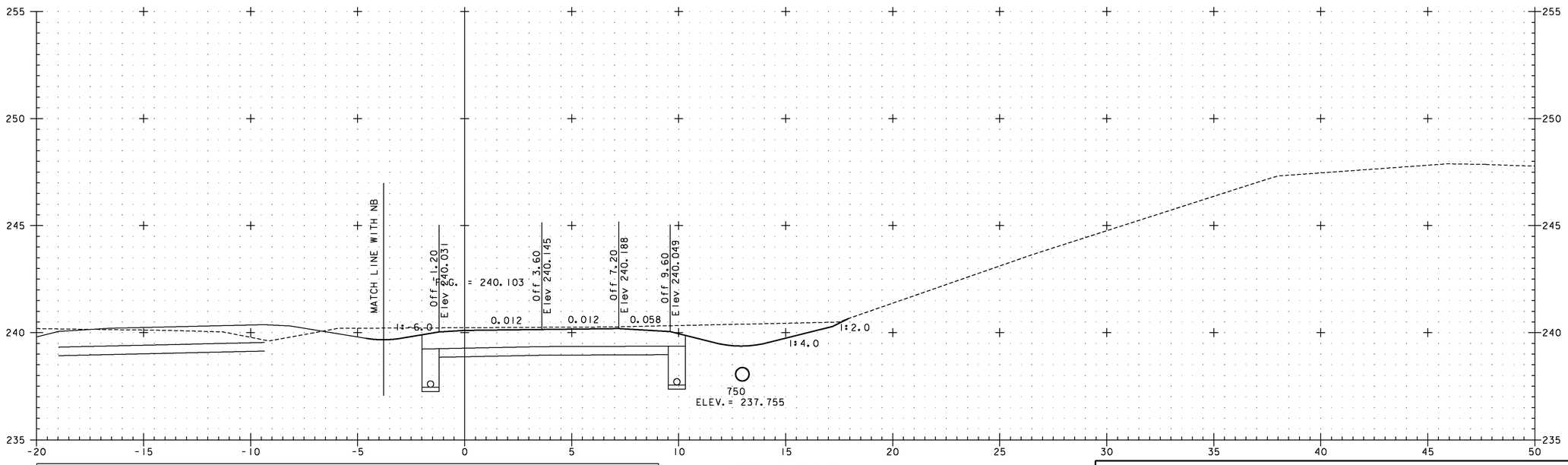

NOTE:
ELEVATIONS SHOWN ARE FOR THE ULTIMATE FINISHED GRADE. THE TOP 50 PAVEMENT COURSE (TYPE IIIS) WILL NOT BE CONSTRUCTED AS PART OF THIS CONTRACT. THIS CONTRACT ONLY INCLUDES 100 OF TYPE IS AND 80 OF TYPE IIS SUPERPAVE BITUMINOUS CONCRETE PAVEMENT (ITEM 490.30). PLEASE REFER TO THE ROADWAY TYPICAL SECTIONS FOR DETAILS.

5 METERS
2.5
H 1:100 SCALE
V 1:100 SCALE
@ FULL SIZE
2.5 5 METERS

VERMONT AGENCY OF TRANSPORTATION

Stantec

PROJECT NAME: BENNINGTON
PROJECT NUMBER: AC NH 019-1(53)

FILE NAME: ...\plot_files\zd307c3xs_xo.ptf
DESIGN SUPERVISOR: GREG EDWARDS
DESIGNED BY: MARC FOISY
CROSSOVER CROSS SECTIONS

PLOT DATE: 5/16/2011
DRAWN BY: STANTEC
CHECKED BY: GARY SANTY
SHEET 345 OF 577

v:\953\active\95530002\transportation\drawing\contract_3\plot_files\zd307c3xs_xo.ptf

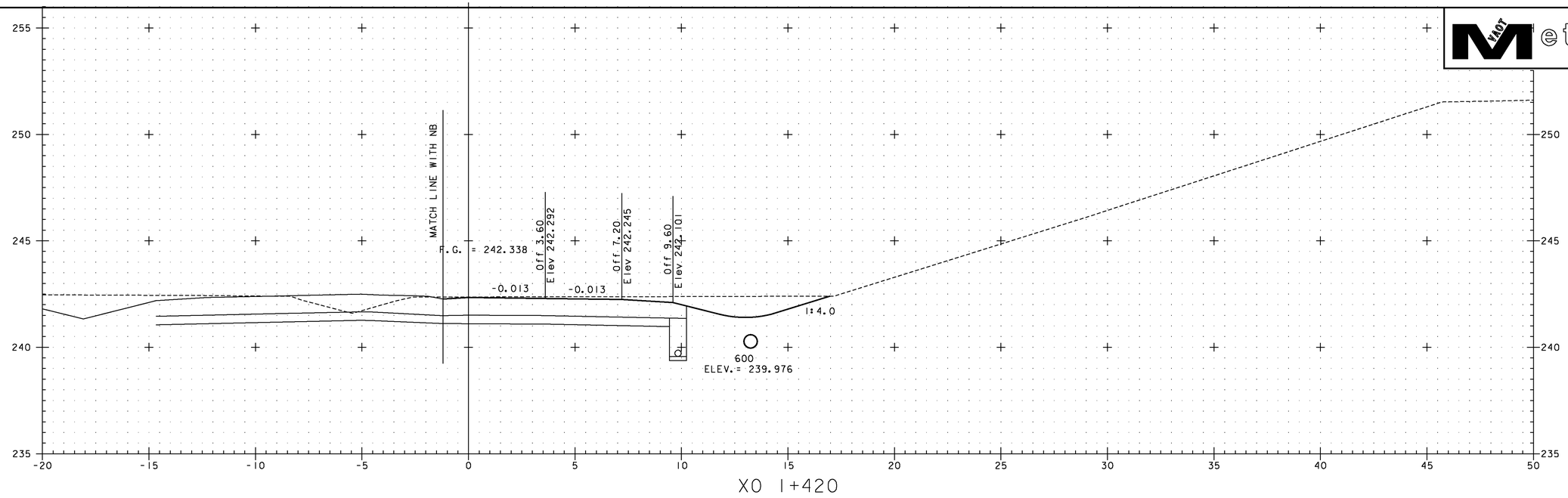

X0 1+420

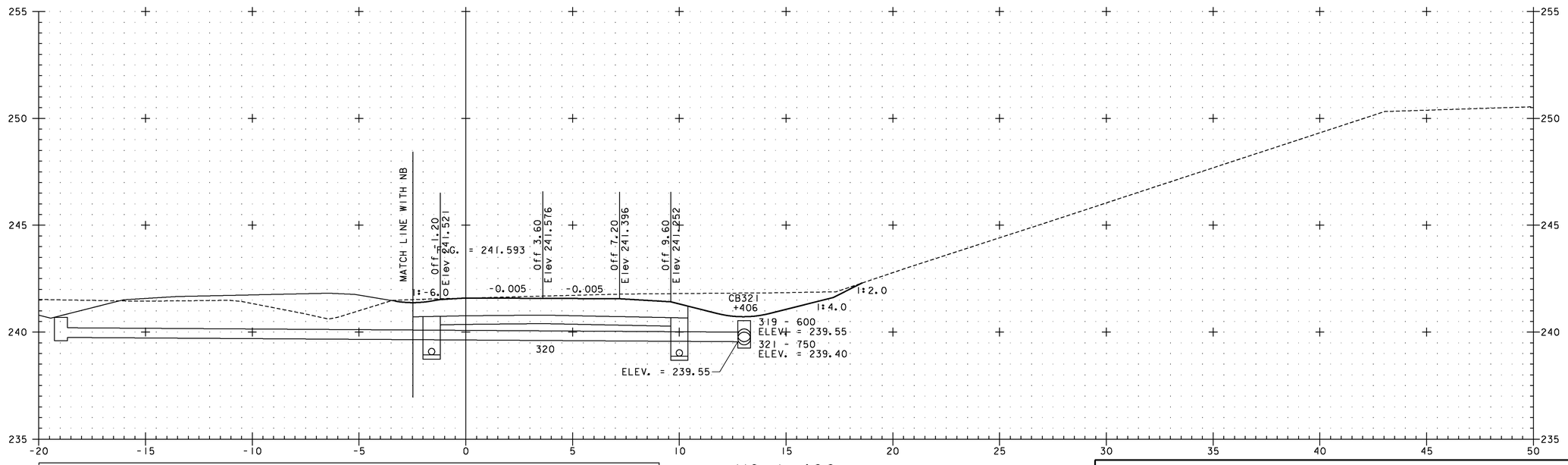

X0 1+400

NOTE:
ELEVATIONS SHOWN ARE FOR THE ULTIMATE FINISHED GRADE. THE TOP 50 PAVEMENT COURSE (TYPE IIIS) WILL NOT BE CONSTRUCTED AS PART OF THIS CONTRACT. THIS CONTRACT ONLY INCLUDES 100 OF TYPE IS AND 80 OF TYPE IIS SUPERPAVE BITUMINOUS CONCRETE PAVEMENT (ITEM 490.30). PLEASE REFER TO THE ROADWAY TYPICAL SECTIONS FOR DETAILS.

5 METERS
2.5
H 1:100 SCALE
V 1:100 SCALE
@ FULL SIZE
2.5 5 METERS

VERMONT AGENCY OF TRANSPORTATION

Stantec

PROJECT NAME: BENNINGTON
PROJECT NUMBER: AC NH 019-1(53)

FILE NAME: ...\plot_files\zd307c3xs_xo.ptf
DESIGN SUPERVISOR: GREG EDWARDS
DESIGNED BY: MARC FOISY
CROSSOVER CROSS SECTIONS

PLOT DATE: 5/16/2011
DRAWN BY: STANTEC
CHECKED BY: GARY SANTY
SHEET 346 OF 577

v:\953\active\95330002\transportation\drawing\contract_3\plot_files\zd307c3xs_xo.ptf

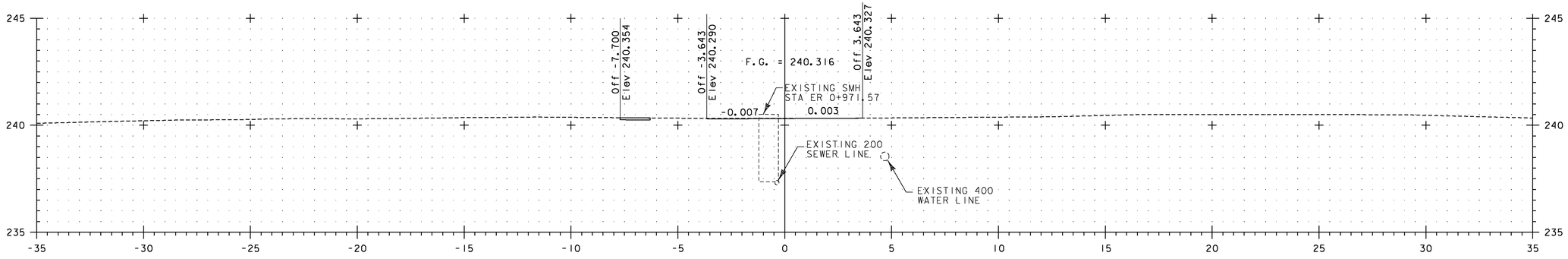

ER 0+960

5 METERS

2.5

H 1:100 SCALE
V 1:100 SCALE
@ FULL SIZE

2.5 5 METERS

Stantec

VERMONT AGENCY OF TRANSPORTATION

PROJECT NAME: BENNINGTON
PROJECT NUMBER: AC NH 019-1(53)

FILE NAME: ...\plot_files\zd307c3xs_east.ptf
PLOT DATE: 5/16/2011
DESIGN SUPERVISOR: GREG EDWARDS
DRAWN BY: STANTEC
DESIGNED BY: MARC FOISY
CHECKED BY: GARY SANTY
EAST ROAD CROSS SECTIONS
SHEET 347 OF 577

V:\1953\active\195310002\transportation\drawing\contract_3\plot_files\zd307c3xs_east.ptf

Metric

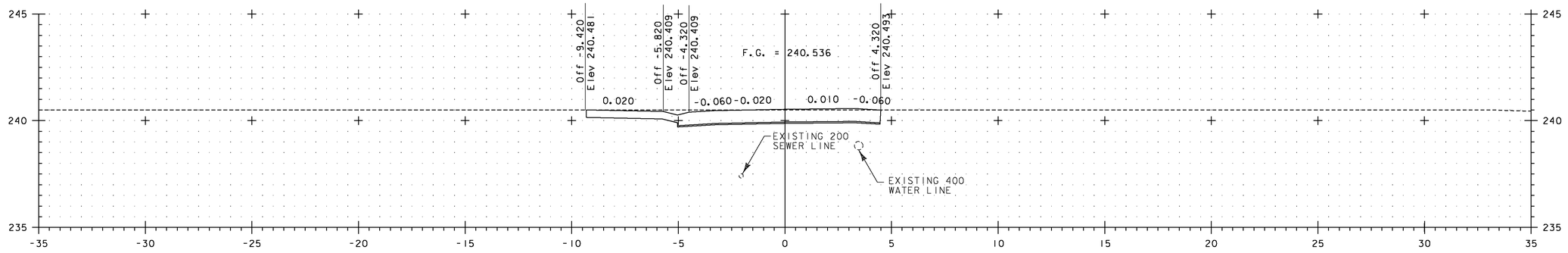

ER 0+980

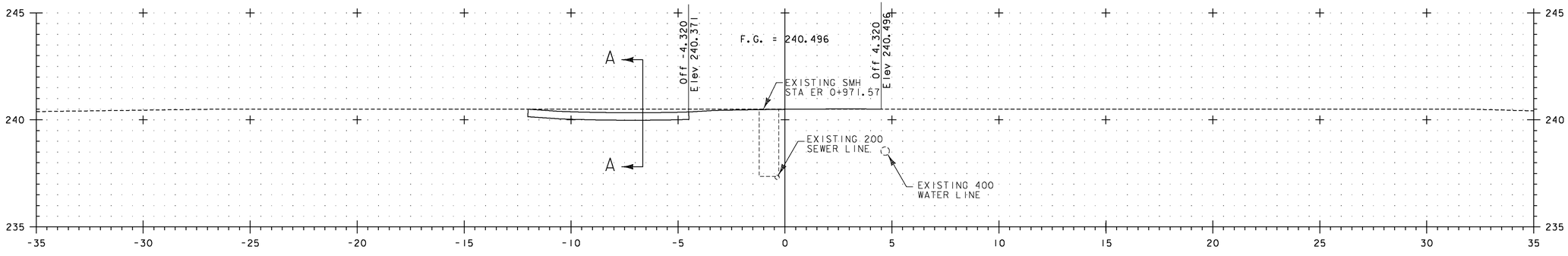

ER 0+972

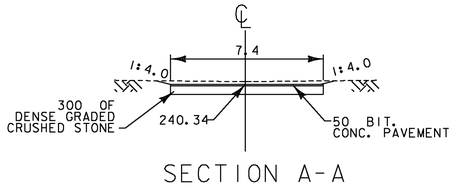

SECTION A-A

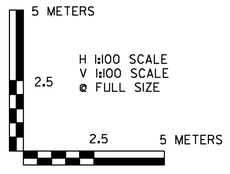

VERMONT AGENCY OF TRANSPORTATION

Stantec

PROJECT NAME: BENNINGTON
PROJECT NUMBER: AC NH 019-1(53)

FILE NAME: ...\plot_files\zd307c3xs_east.ptf
PLOT DATE: 5/16/2011
DESIGN SUPERVISOR: GREG EDWARDS
DRAWN BY: STANTEC
DESIGNED BY: MARC FOISY
CHECKED BY: GARY SANTY

EAST ROAD CROSS SECTIONS

v:\953\active\95530002\transportation\drawing\contract_3\plot_files\zd307c3xs_east.ptf

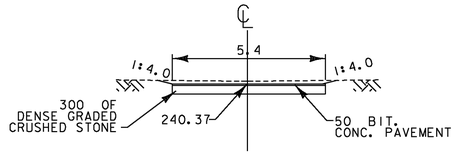

SECTION A-A

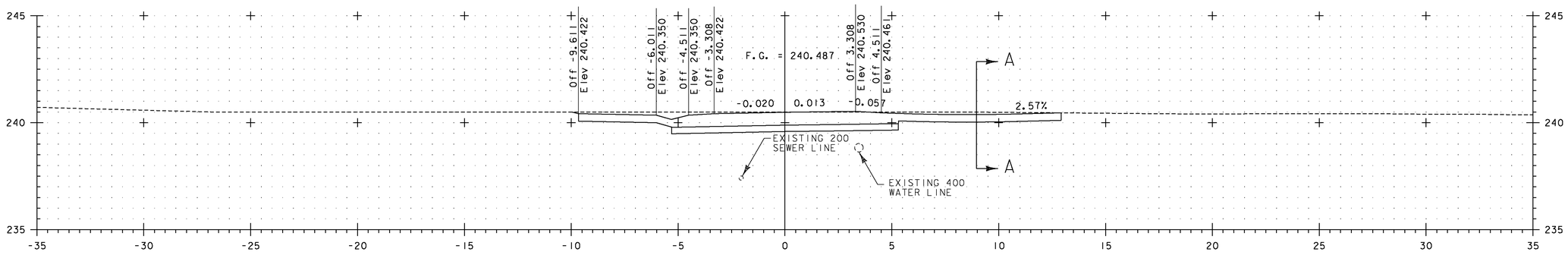

ER 0+993

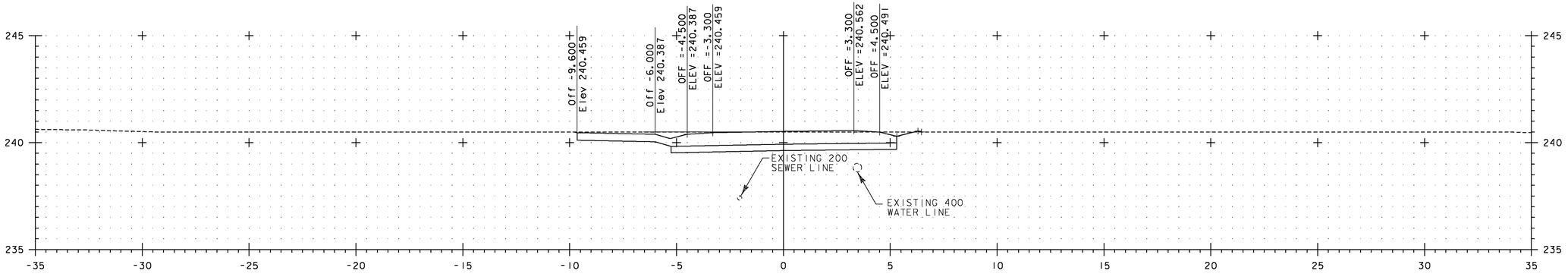

ER 0+985

5 METERS
2.5
2.5 5 METERS
H 1:100 SCALE
V 1:100 SCALE
@ FULL SIZE

VERMONT AGENCY OF TRANSPORTATION

Stantec

PROJECT NAME: BENNINGTON
PROJECT NUMBER: AC NH 019-1(53)

FILE NAME: ...\plot_files\zd307c3xs_east.ptf
PLOT DATE: 5/16/2011
DESIGN SUPERVISOR: GREG EDWARDS
DRAWN BY: STANTEC
DESIGNED BY: MARC FOISY
CHECKED BY: GARY SANTY
EAST ROAD CROSS SECTIONS
SHEET 349 OF 577

v:\953\active\95530002\transportation\drawing\contract_3\plot_files\zd307c3xs_east.ptf

Metric

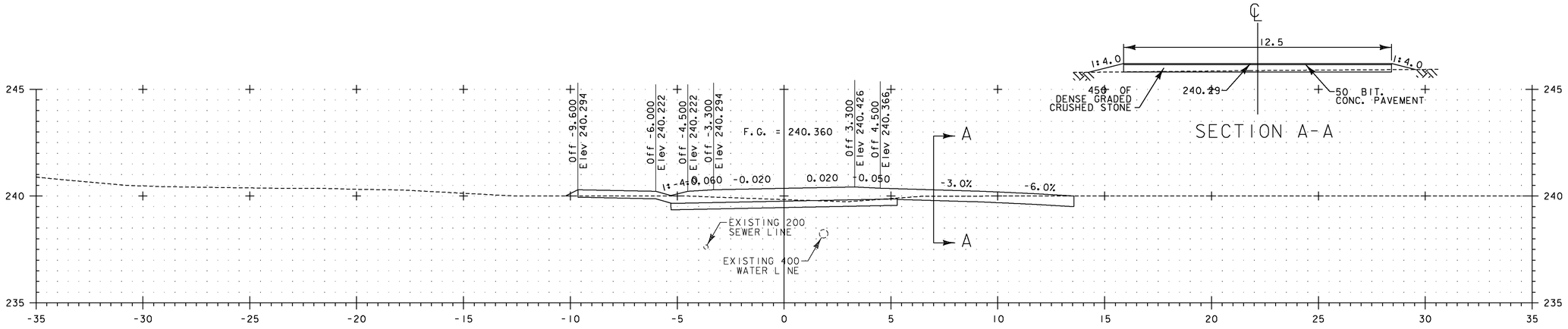

ER 1+020

SECTION A-A

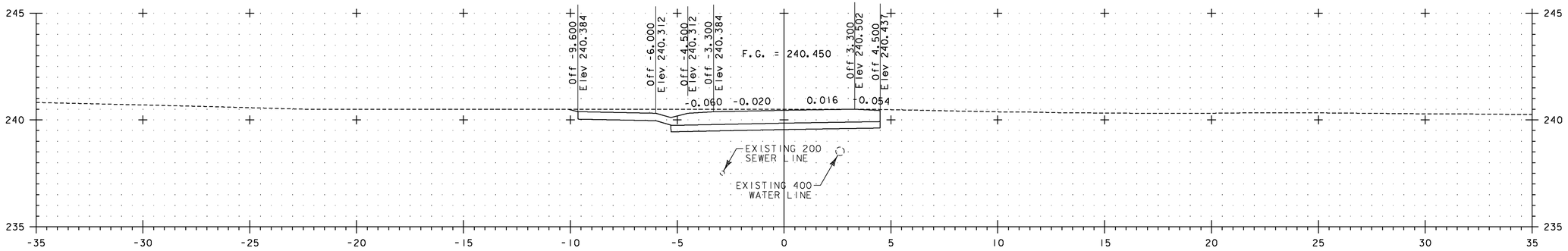

ER 1+000

5 METERS
2.5
H 1:100 SCALE
V 1:100 SCALE
@ FULL SIZE
2.5
5 METERS

VERMONT AGENCY OF TRANSPORTATION

Stantec

PROJECT NAME: BENNINGTON
PROJECT NUMBER: AC NH 019-1(53)

FILE NAME: ...\plot_files\zd307c3xs_east.ptf
PLOT DATE: 5/16/2011
DESIGN SUPERVISOR: GREG EDWARDS
DRAWN BY: STANTEC
DESIGNED BY: MARC FOISY
CHECKED BY: GARY SANTY
EAST ROAD CROSS SECTIONS
SHEET 350 OF 577

v:\1953\active\953000\transportation\drawing\contract_3\plot_files\zd307c3xs_east.ptf

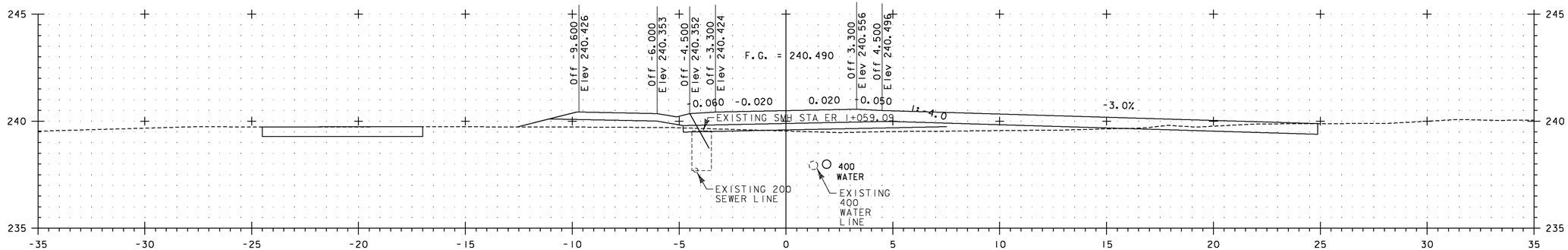

ER 1+040

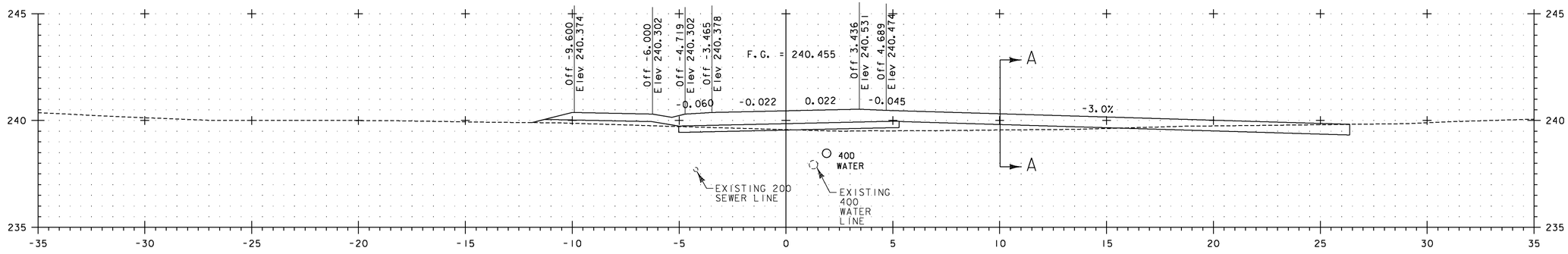

ER 1+037
(SKEWED 107°)

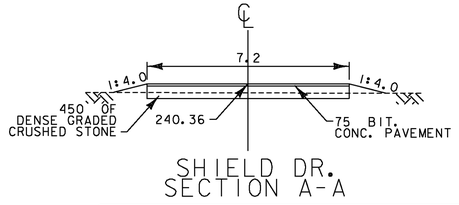

SHIELD DR.
SECTION A-A

5 METERS
2.5
H 1:100 SCALE
V 1:100 SCALE
@ FULL SIZE
2.5
5 METERS

VERMONT AGENCY OF TRANSPORTATION

Stantec

PROJECT NAME: BENNINGTON
PROJECT NUMBER: AC NH 019-1(53)

FILE NAME: ...\plot_files\zd307c3xs_east.ptf
PLOT DATE: 5/16/2011
DESIGN SUPERVISOR: GREG EDWARDS
DRAWN BY: STANTEC
DESIGNED BY: MARC FOISY
CHECKED BY: GARY SANTY
EAST ROAD CROSS SECTIONS
SHEET 351 OF 577

v:\1953\active\19531002\transportation\drawing\contract_3\plot_files\zd307c3xs_east.ptf

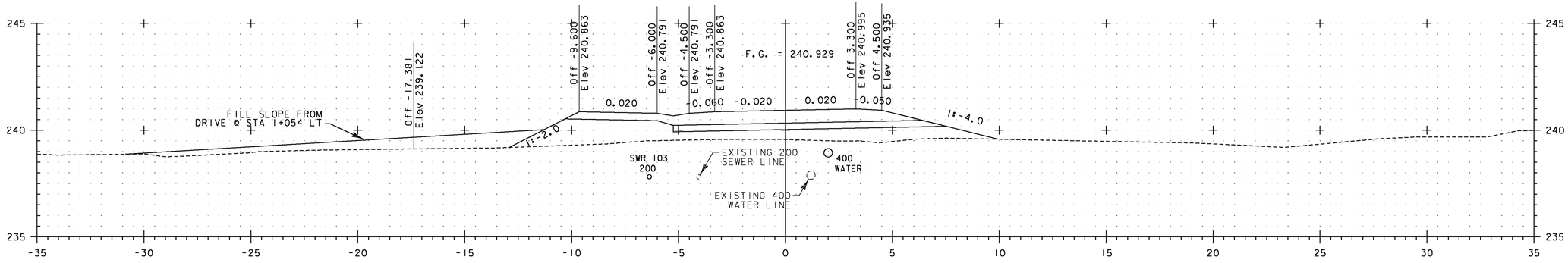

ER 1+060

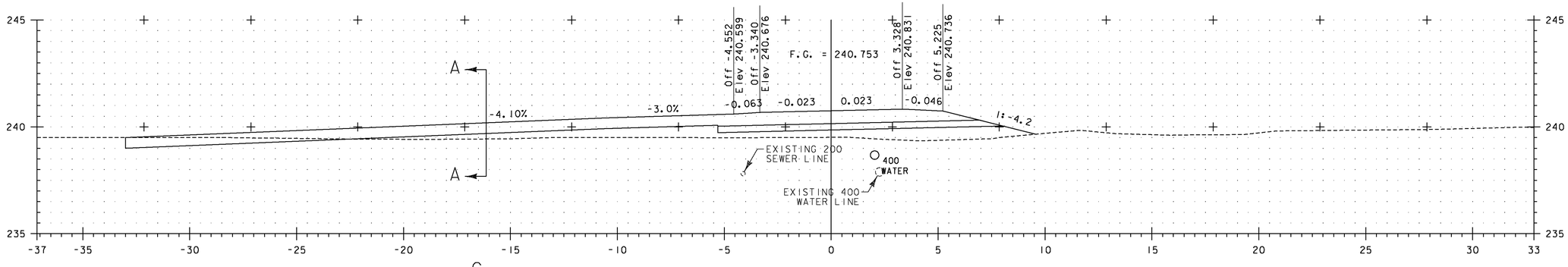

ER 1+054
(SKEWED 98°)

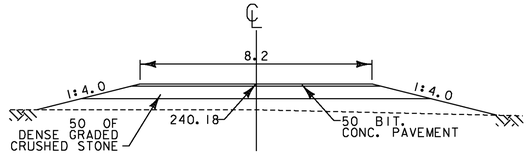

SECTION A-A

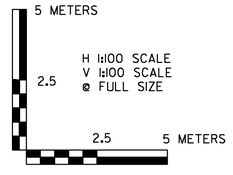

v:\1353\active\135310002\transportation\drawing\contract_3\plot_files\zd307c3xs_east.ptf

VERMONT AGENCY OF TRANSPORTATION

Stantec

PROJECT NAME: BENNINGTON
PROJECT NUMBER: AC NH 019-1(53)

FILE NAME: ...\plot_files\zd307c3xs_east.ptf
PLOT DATE: 5/16/2011
DESIGN SUPERVISOR: GREG EDWARDS
DRAWN BY: STANTEC
DESIGNED BY: MARC FOISY
CHECKED BY: GARY SANTY
EAST ROAD CROSS SECTIONS
SHEET 352 OF 577

Metric

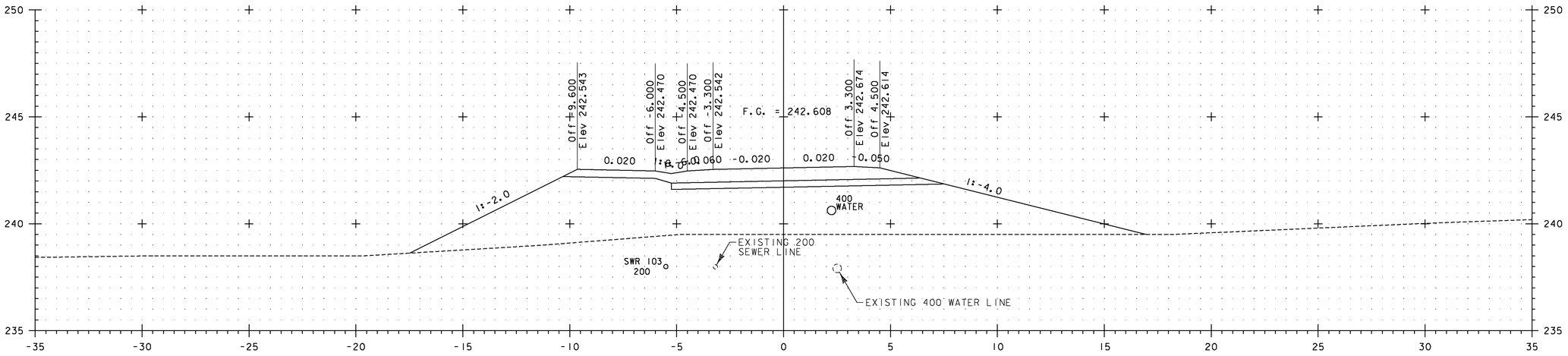

ER 1+100

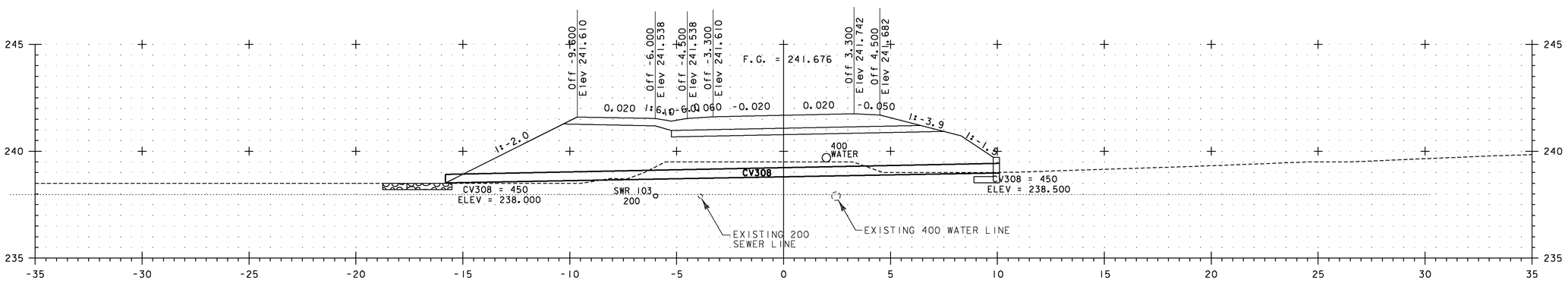

ER 1+080

5 METERS
2.5
H 1:100 SCALE
V 1:100 SCALE
@ FULL SIZE
2.5
5 METERS

VERMONT AGENCY OF TRANSPORTATION

Stantec

PROJECT NAME: BENNINGTON
PROJECT NUMBER: AC NH 019-1(53)

FILE NAME: ...\plot_files\zd307c3xs_east.ptf
PLOT DATE: 5/16/2011
DESIGN SUPERVISOR: GREG EDWARDS
DRAWN BY: STANTEC
DESIGNED BY: MARC FOISY
CHECKED BY: GARY SANTY
EAST ROAD CROSS SECTIONS
SHEET 353 OF 577

v:\1953\active\19530002\transportation\drawing\contract_3\plot_files\zd307c3xs_east.ptf

Metric

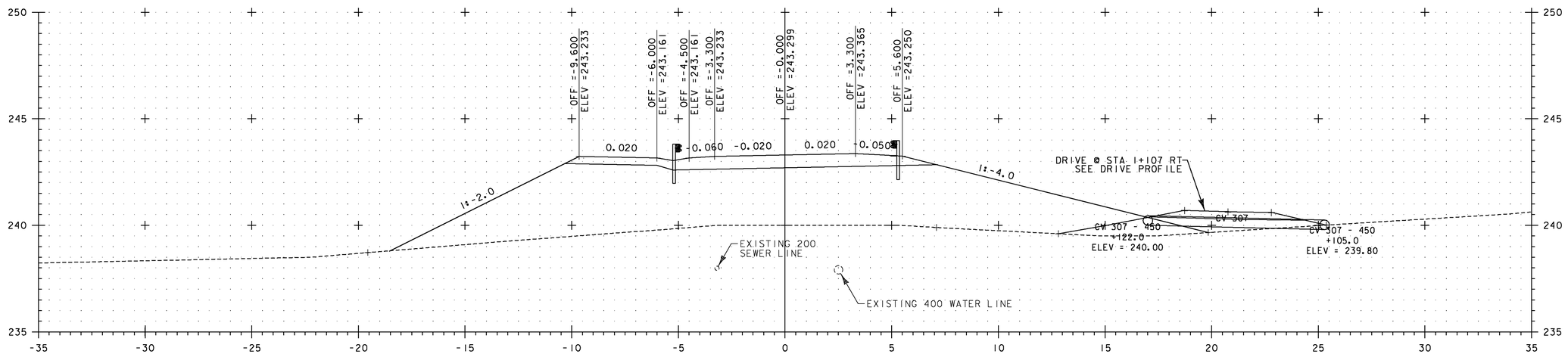

ER 1+120

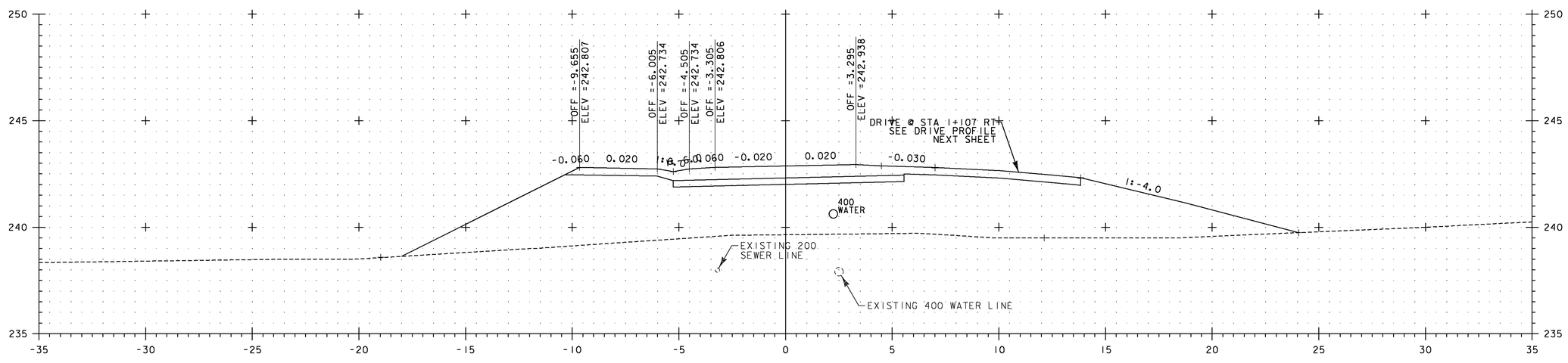

ER 1+107

5 METERS
2.5
H 1:100 SCALE
V 1:100 SCALE
@ FULL SIZE
2.5
5 METERS

VERMONT AGENCY OF TRANSPORTATION

Stantec

PROJECT NAME: BENNINGTON
PROJECT NUMBER: AC NH 019-1(53)

FILE NAME: ...\plot_files\zd307c3xs_east.ptf
PLOT DATE: 5/16/2011
DESIGN SUPERVISOR: GREG EDWARDS
DRAWN BY: STANTEC
DESIGNED BY: MARC FOISY
CHECKED BY: GARY SANTY
EAST ROAD CROSS SECTIONS
SHEET 354 OF 577

v:\953\active\95530002\transportation\drawing\contract_3\plot_files\zd307c3xs_east.ptf

Metric

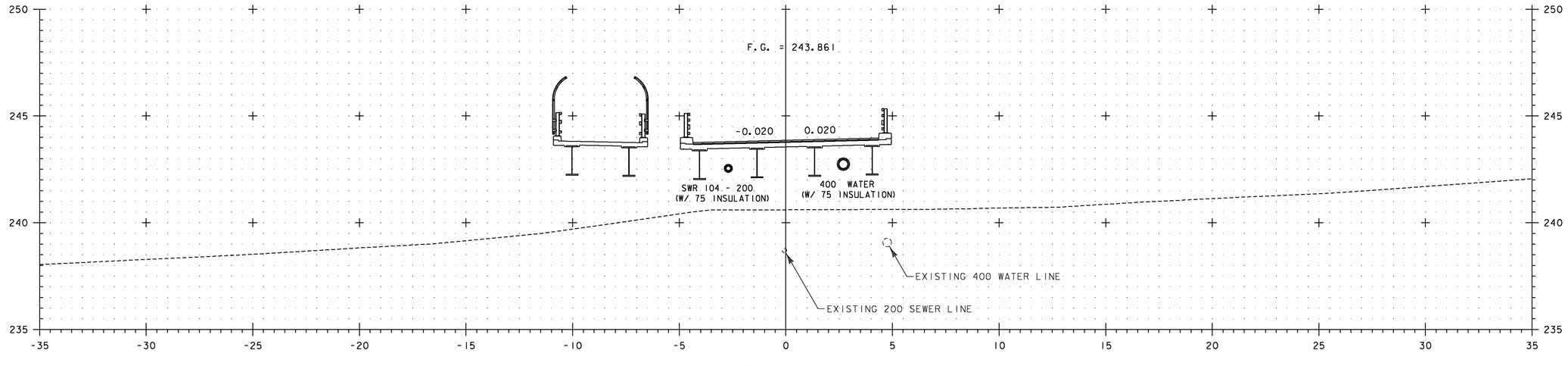

ER 1+160

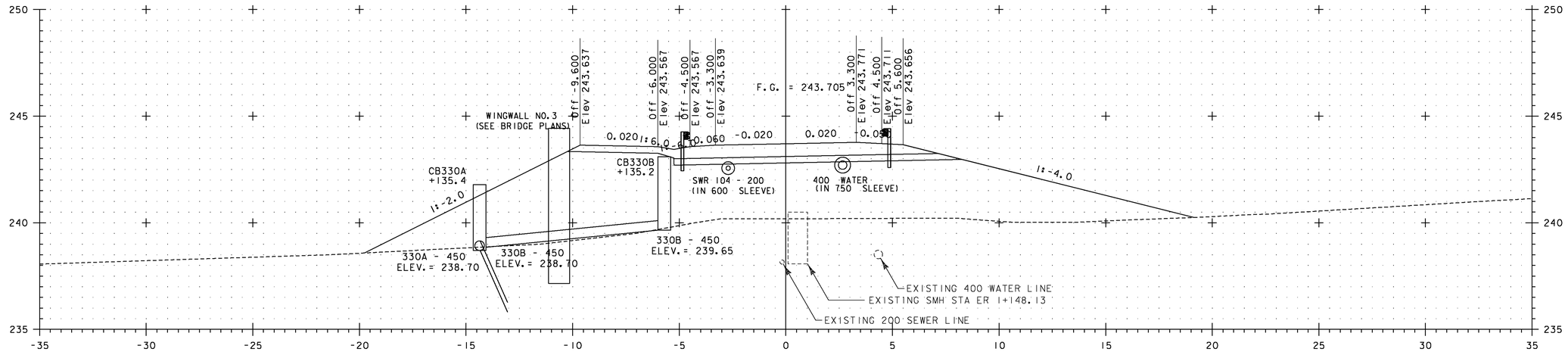

ER 1+140

5 METERS
2.5
2.5 5 METERS

H 1:100 SCALE
V 1:100 SCALE
@ FULL SIZE

VERMONT AGENCY OF TRANSPORTATION

Stantec

PROJECT NAME: BENNINGTON
PROJECT NUMBER: AC NH 019-1(53)

FILE NAME: ...\plot_files\zd307c3xs_east.ptf
PLOT DATE: 5/16/2011
DESIGN SUPERVISOR: GREG EDWARDS
DRAWN BY: STANTEC
DESIGNED BY: MARC FOISY
CHECKED BY: GARY SANTY
EAST ROAD CROSS SECTIONS
SHEET 355 OF 577

v:\1953\active\19530002\transportation\drawing\contract_3\plot_files\zd307c3xs_east.ptf

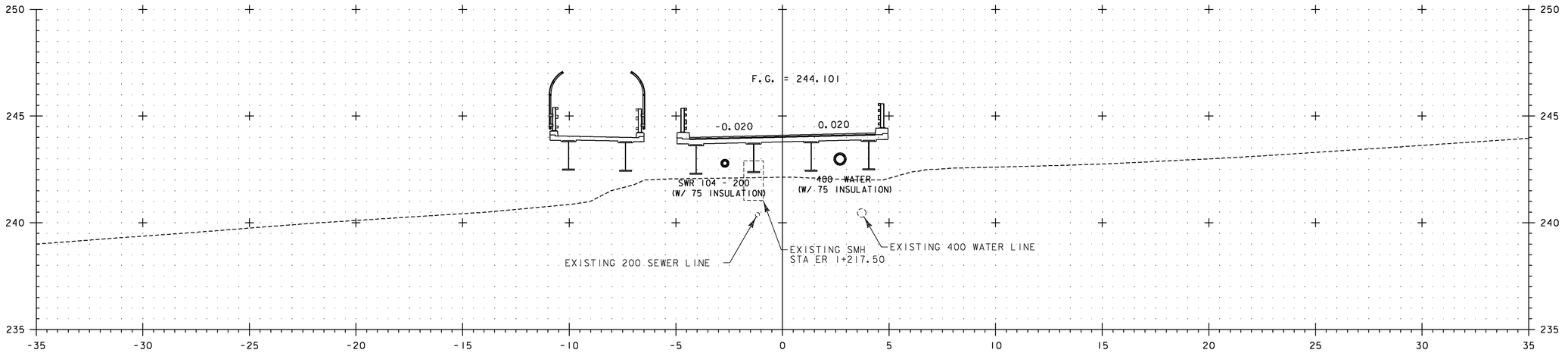

ER 1+200

ER 1+195.229 =
NB 9+278.312

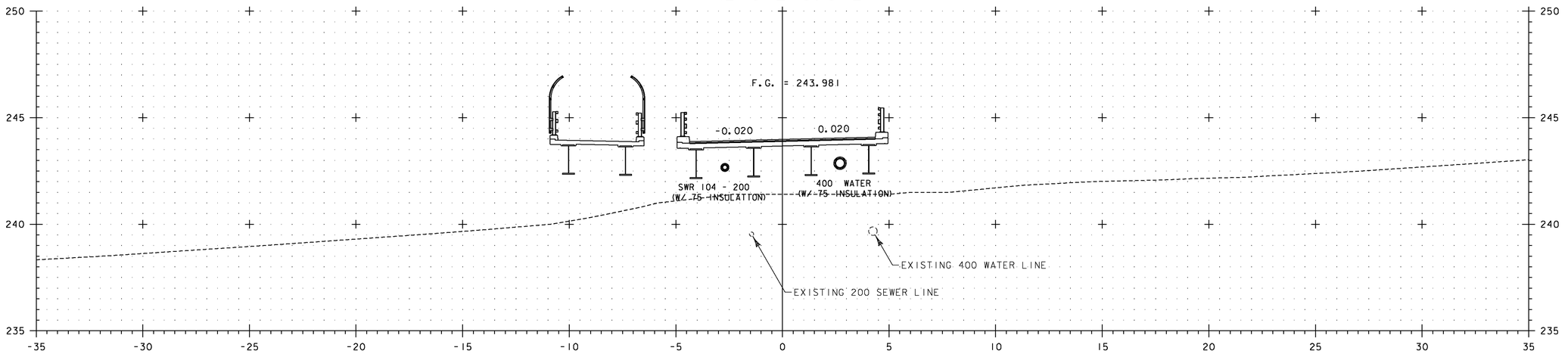

ER 1+180

ER 1+179.136 =
XO 1+255.049

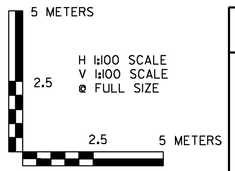

VERMONT AGENCY OF TRANSPORTATION

Stantec

PROJECT NAME: BENNINGTON
PROJECT NUMBER: AC NH 019-1(53)

FILE NAME: ...\plot_files\zd307c3xs_east.ptf
PLOT DATE: 5/16/2011
DESIGN SUPERVISOR: GREG EDWARDS
DRAWN BY: STANTEC
DESIGNED BY: MARC FOISY
CHECKED BY: GARY SANTY
EAST ROAD CROSS SECTIONS
SHEET 356 OF 577

v:\953\active\95300021\transportation\drawing\contract_3\plot_files\zd307c3xs_east.ptf

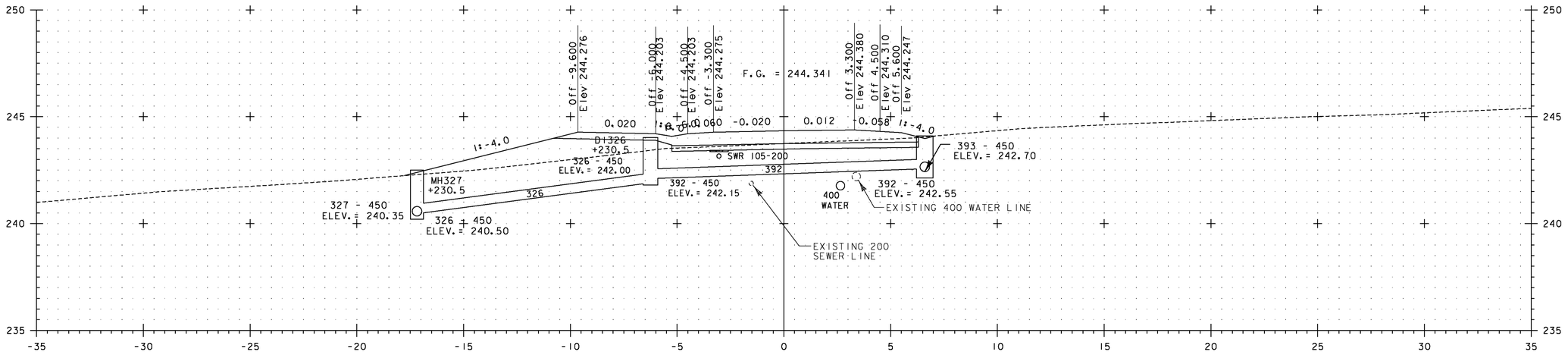

ER 1+240

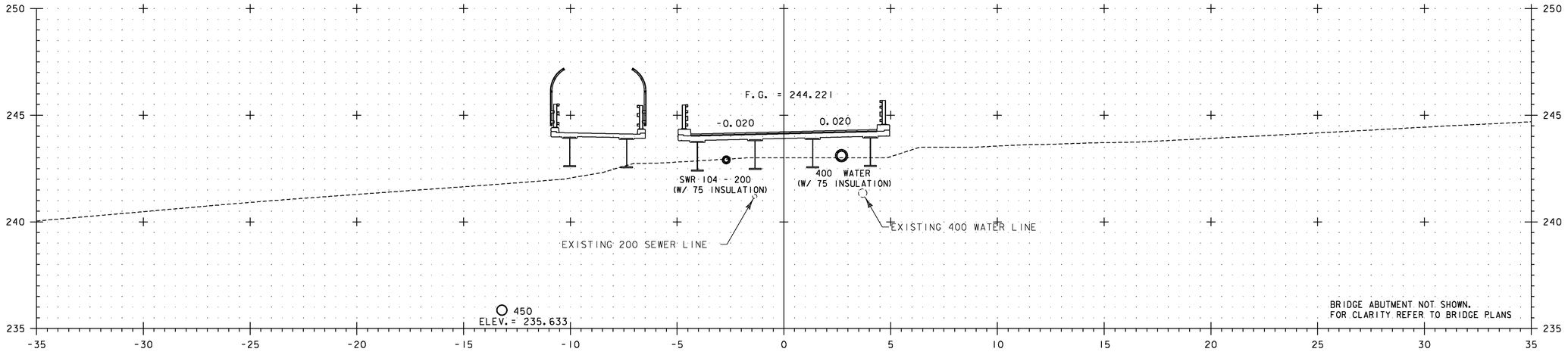

ER 1+220

5 METERS
2.5
H 1:100 SCALE
V 1:100 SCALE
@ FULL SIZE
2.5 5 METERS

VERMONT AGENCY OF TRANSPORTATION

Stantec

PROJECT NAME: BENNINGTON
PROJECT NUMBER: AC NH 019-1(53)

FILE NAME: ...\plot_files\zd307c3xs_east.ptf
PLOT DATE: 5/16/2011
DESIGN SUPERVISOR: GREG EDWARDS
DRAWN BY: STANTEC
DESIGNED BY: MARC FOISY
CHECKED BY: GARY SANTY
EAST ROAD CROSS SECTIONS
SHEET 357 OF 577

v:\1953\active\195310002\transportation\drawing\contract_3\plot_files\zd307c3xs_east.ptf

Metric

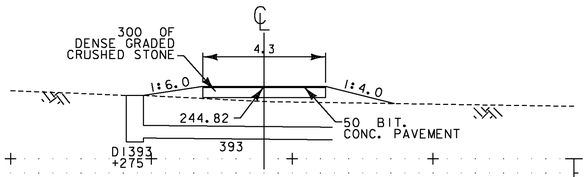

SECTION A-A

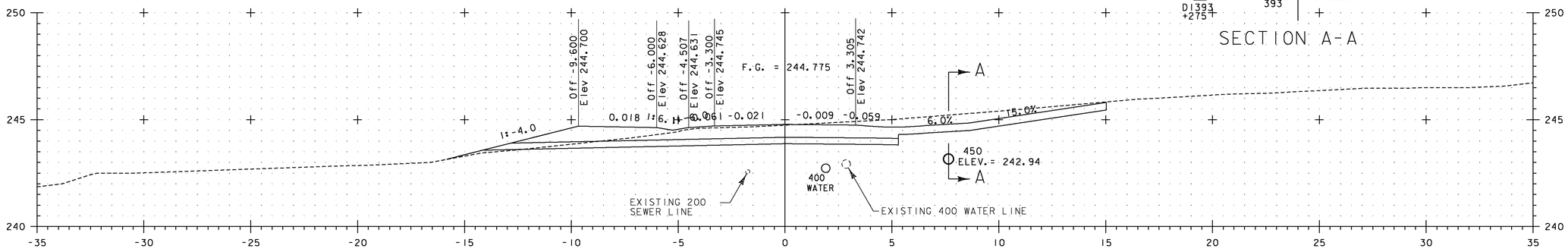

ER 1+271

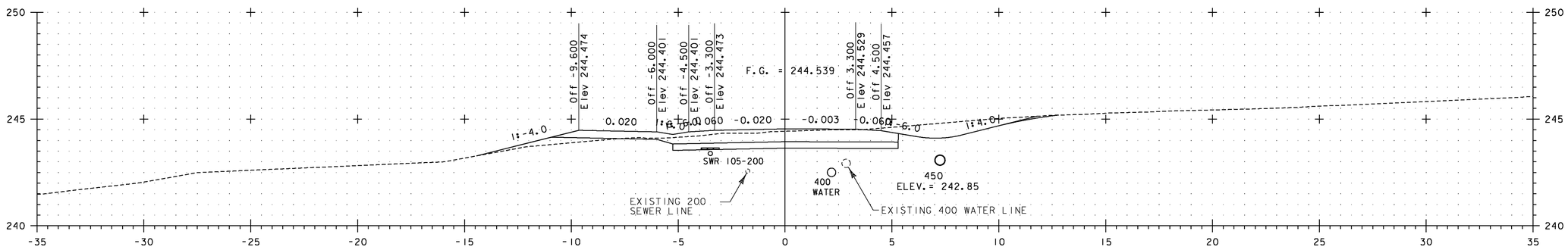

ER 1+260

5 METERS
H 1:100 SCALE
V 1:100 SCALE
@ FULL SIZE
2.5
2.5
5 METERS

VERMONT AGENCY OF TRANSPORTATION

Stantec

PROJECT NAME: BENNINGTON
PROJECT NUMBER: AC NH 019-1(53)

FILE NAME: ...\plot_files\zd307c3xs_east.ptf
PLOT DATE: 5/16/2011
DESIGN SUPERVISOR: GREG EDWARDS
DRAWN BY: STANTEC
DESIGNED BY: MARC FOISY
CHECKED BY: GARY SANTY
EAST ROAD CROSS SECTIONS
SHEET 358 OF 577

v:\953\active\95300002\transportation\drawing\contract_3\plot_files\zd307c3xs_east.ptf

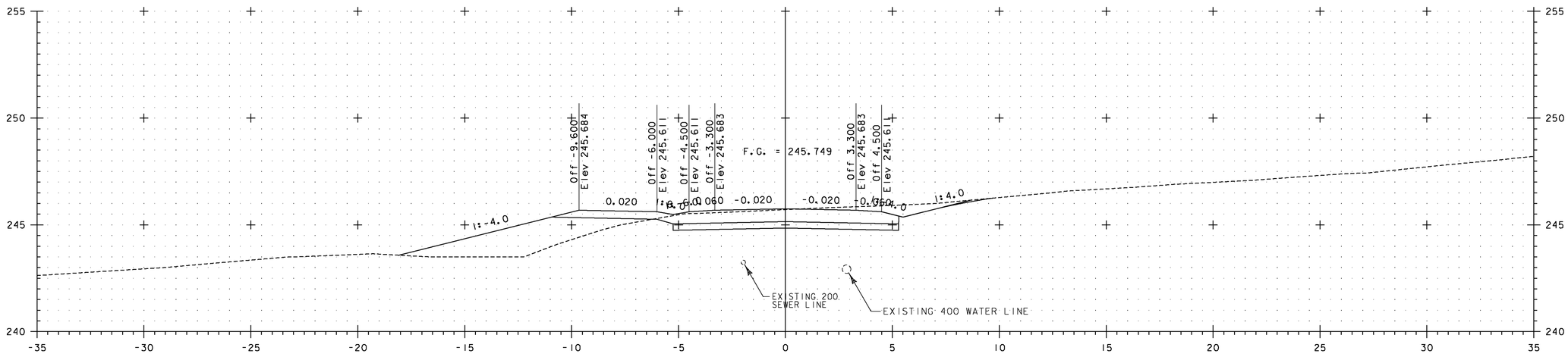

ER 1+300

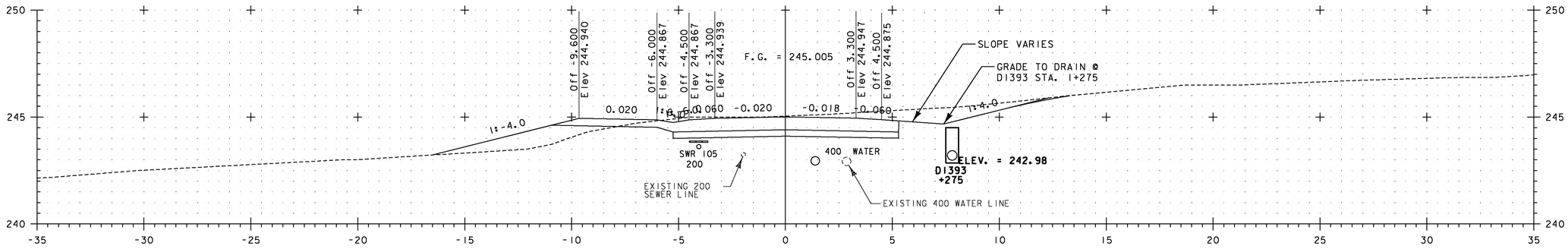

ER 1+280

5 METERS

H 1:100 SCALE
V 1:100 SCALE
@ FULL SIZE

2.5 2.5 5 METERS

VERMONT AGENCY OF TRANSPORTATION

Stantec

PROJECT NAME: BENNINGTON
PROJECT NUMBER: AC NH 019-1(53)

FILE NAME: ...\plot_files\zd307c3xs_east.ptf
PLOT DATE: 5/16/2011
DESIGN SUPERVISOR: GREG EDWARDS
DRAWN BY: STANTEC
DESIGNED BY: MARC FOISY
CHECKED BY: GARY SANTY

EAST ROAD CROSS SECTIONS

v:\1953\active\195310002\transportation\drawing\contract_3\plot_files\zd307c3xs_east.ptf

Metric

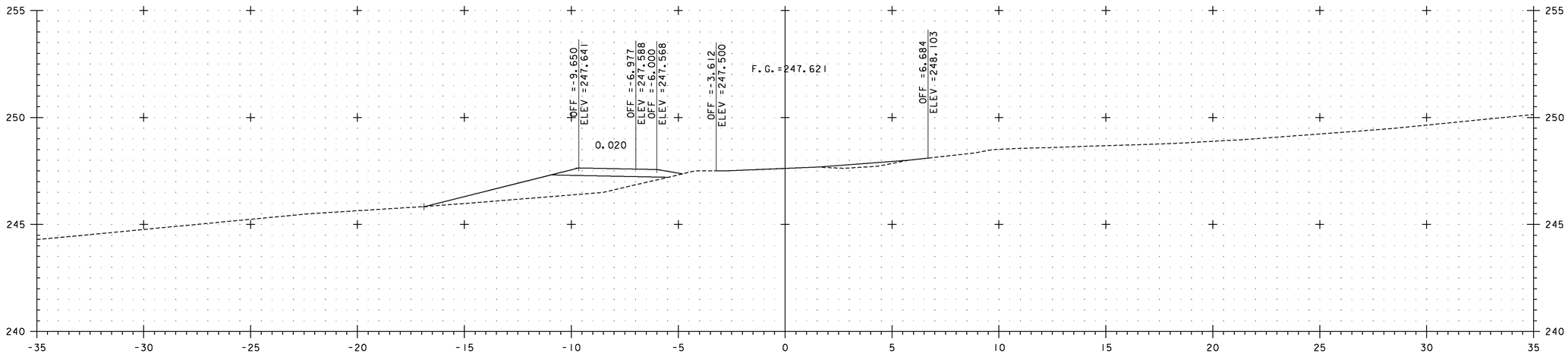

ER 1+337

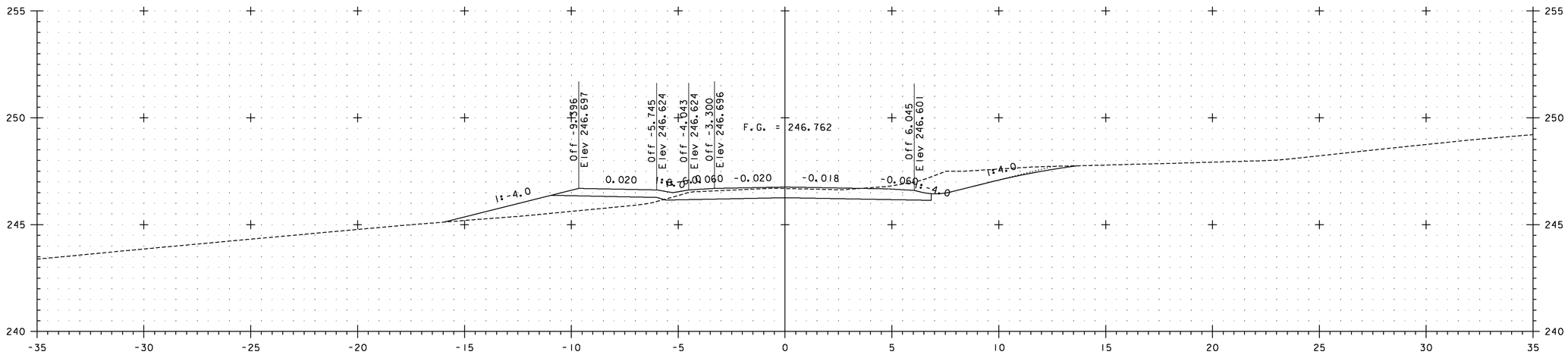

ER 1+320

5 METERS
2.5
H 1:100 SCALE
V 1:100 SCALE
@ FULL SIZE
2.5
5 METERS

VERMONT AGENCY OF TRANSPORTATION

Stantec

PROJECT NAME: BENNINGTON
PROJECT NUMBER: AC NH 019-1(53)

FILE NAME: ...\plot_files\zd307c3xs_east.ptf
PLOT DATE: 5/16/2011
DESIGN SUPERVISOR: GREG EDWARDS
DRAWN BY: STANTEC
DESIGNED BY: MARC FOISY
CHECKED BY: GARY SANTY
EAST ROAD CROSS SECTIONS
SHEET 360 OF 577

v:\953\active\95530002\transportation\drawing\contract_3\plot_files\zd307c3xs_east.ptf

Metric

EAST ROAD 1+107 DRIVE

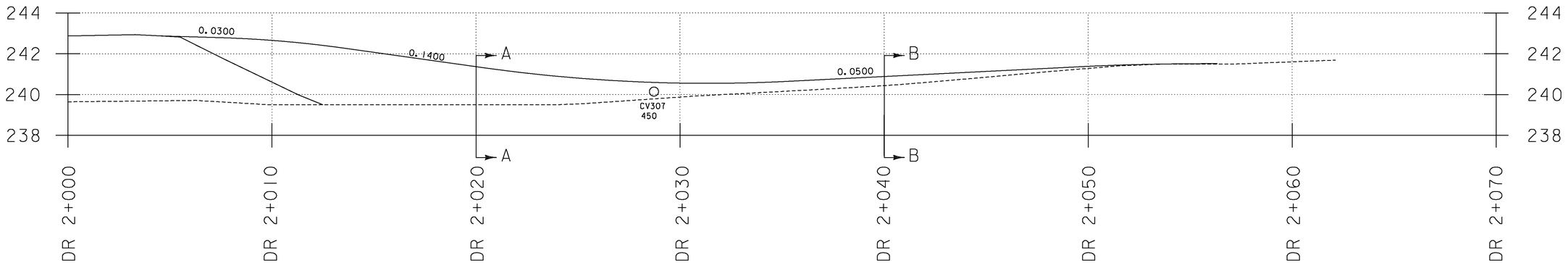

PROFILE

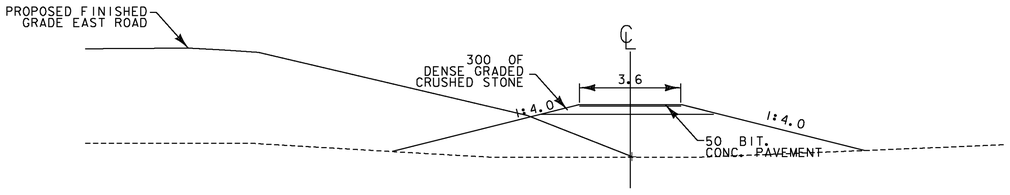

SECTION A-A

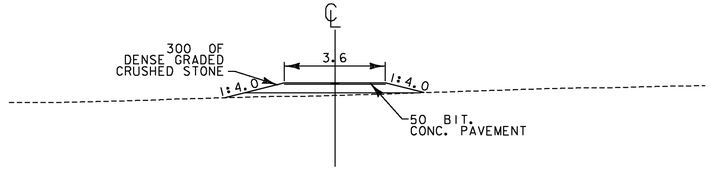

SECTION B-B

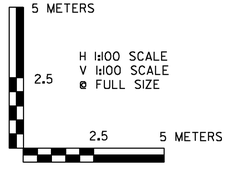

VERMONT AGENCY OF TRANSPORTATION

Stantec

PROJECT NAME: BENNINGTON
PROJECT NUMBER: AC NH 019-1(53)

FILE NAME: ...\plot_files\zd307c3xs_east.ptf
PLOT DATE: 5/16/2011
DESIGN SUPERVISOR: GREG EDWARDS
DRAWN BY: STANTEC
DESIGNED BY: MARC FOISY
CHECKED BY: GARY SANTY
EAST ROAD 1+107 DRIVE
SHEET 361 OF 577

v:\1953\active\195300021\transportation\drawing\contract_3\plot_files\zd307c3xs_east.ptf

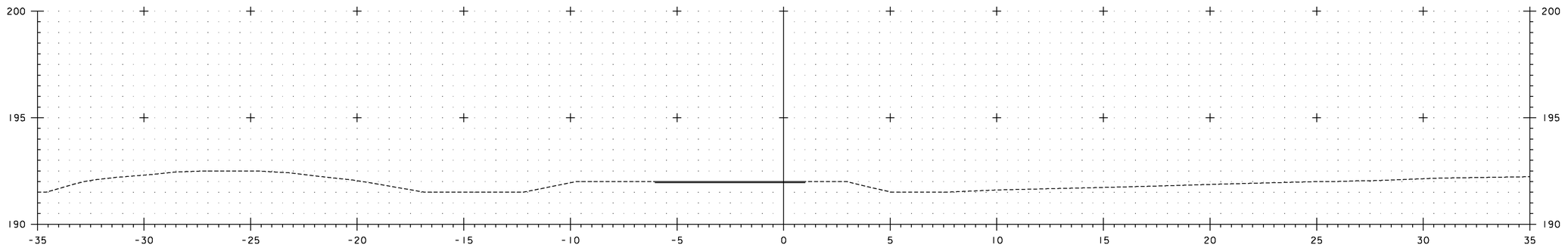

G 1+300

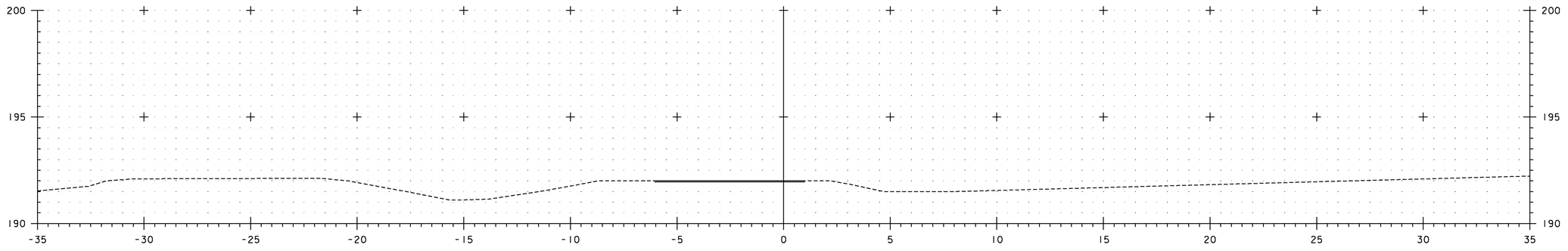

G 1+295

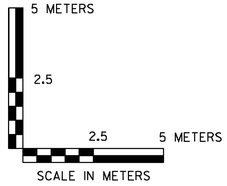

VERMONT AGENCY OF TRANSPORTATION

Stantec

PROJECT NAME: BENNINGTON
PROJECT NUMBER: AC NH 019-1(53)

FILE NAME: ...\zd307c3xs_ramp_g.ptf
DESIGN SUPERVISOR: GREG EDWARDS
DESIGNED BY: MARC FOISY
RAMP G CROSS SECTIONS

PLOT DATE: 5/16/2011
DRAWN BY: STANTEC
CHECKED BY: GARY SANTY
SHEET 362 OF 577

v:\195\active\19530002\transportation\drawing\contract_3\plot_files\zd307c3xs_ramp_g.ptf

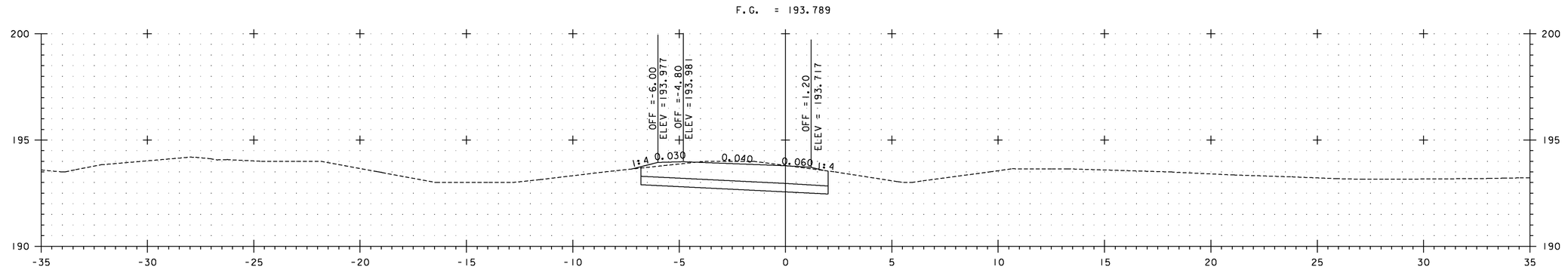

G 1+340

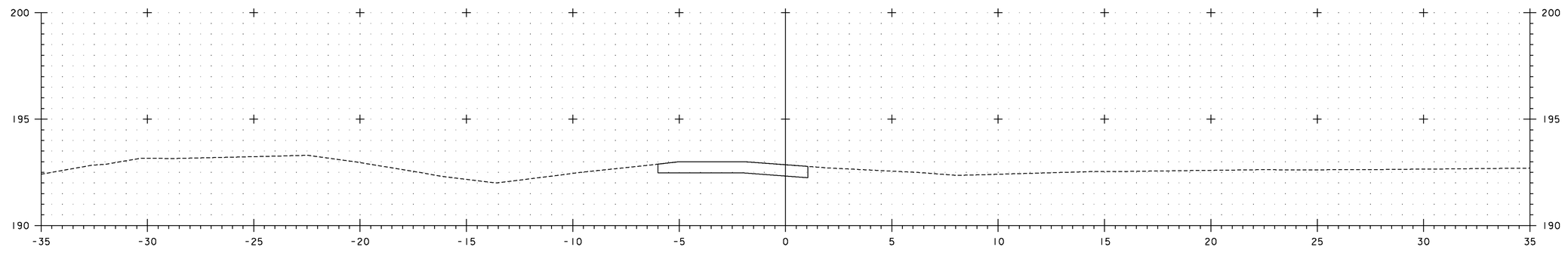

G 1+320

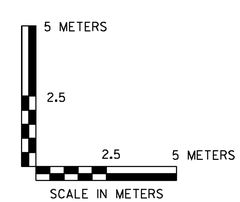

VERMONT AGENCY OF TRANSPORTATION

Stantec

PROJECT NAME: BENNINGTON
PROJECT NUMBER: AC NH 019-1(53)

FILE NAME: ...\zd307c3xs_ramp_g.ptf
DESIGN SUPERVISOR: GREG EDWARDS
DESIGNED BY: MARC FOISY
RAMP G CROSS SECTIONS

PLOT DATE: 5/16/2011
DRAWN BY: STANTEC
CHECKED BY: GARY SANTY
SHEET 363 OF 577

v:\1953\active\195310002\transportation\drawing\contract_3\plot_files\zd307c3xs_ramp_g.ptf

VAOT Metric

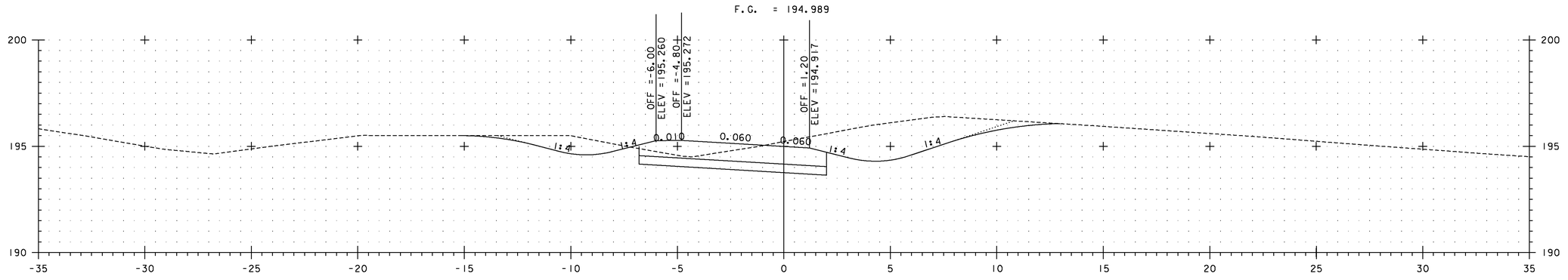

G 1+380

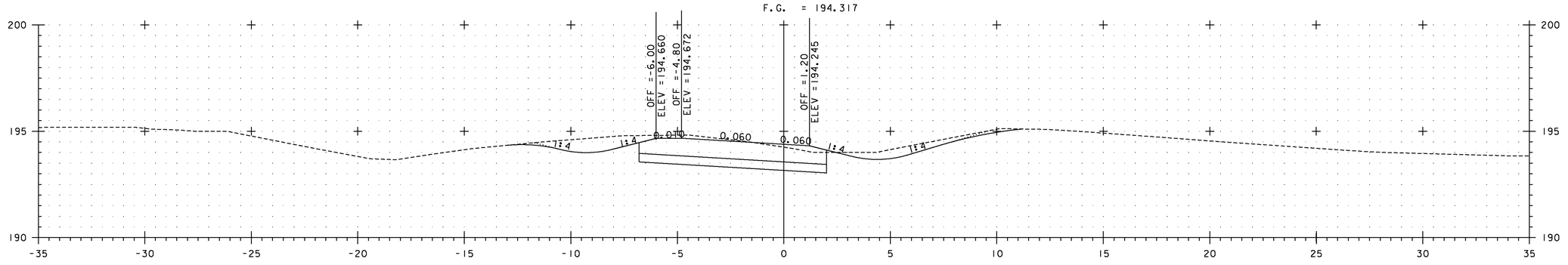

G 1+360

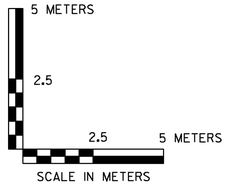

VERMONT AGENCY OF TRANSPORTATION

Stantec

PROJECT NAME: BENNINGTON
PROJECT NUMBER: AC NH 019-1(53)

FILE NAME: ...\zd307c3xs_ramp_g.ptf
DESIGN SUPERVISOR: GREG EDWARDS
DESIGNED BY: MARC FOISY
RAMP G CROSS SECTIONS

PLOT DATE: 5/16/2011
DRAWN BY: STANTEC
CHECKED BY: GARY SANTY
SHEET 364 OF 577

v:\193\active\19530002\transportation\drawing\contract_3\plot_files\zd307c3xs_ramp_g.ptf

Metric

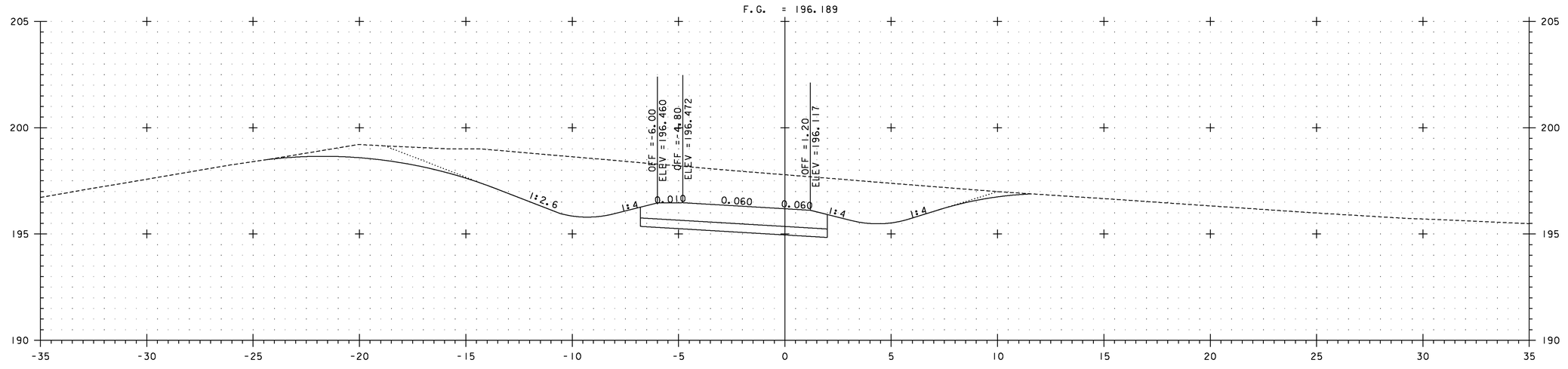

G 1+420

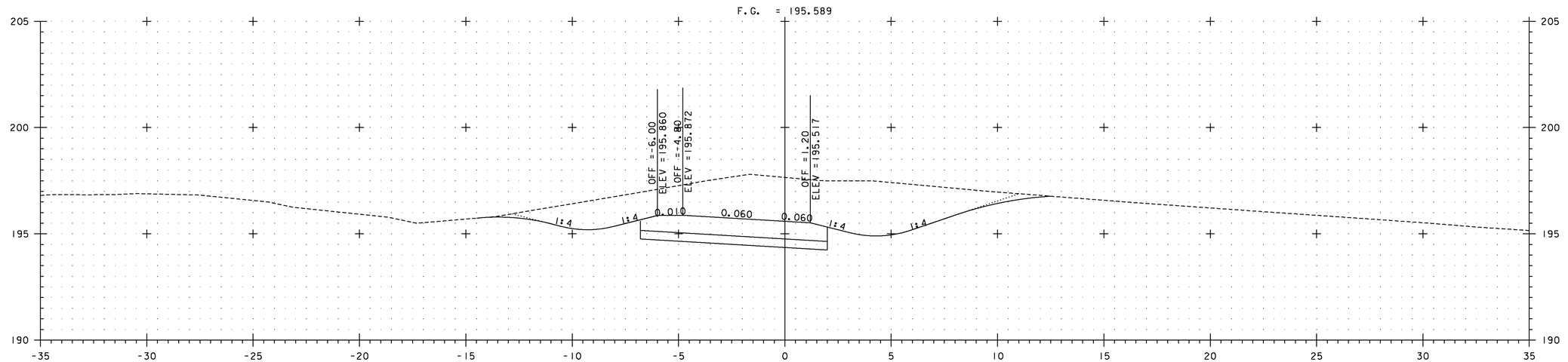

G 1+400

5 METERS
2.5
2.5 5 METERS
SCALE IN METERS

VERMONT AGENCY OF TRANSPORTATION

Stantec

PROJECT NAME: BENNINGTON
PROJECT NUMBER: AC NH 019-1(53)

FILE NAME: ...\zd307c3xs_ramp_g.ptf
DESIGN SUPERVISOR: GREG EDWARDS
DESIGNED BY: MARC FOISY
RAMP G CROSS SECTIONS

PLOT DATE: 5/16/2011
DRAWN BY: STANTEC
CHECKED BY: GARY SANTY
SHEET 365 OF 577

v:\1953\active\195310002\transportation\drawing\contract_3\plot_files\zd307c3xs_ramp_g.ptf

Metric

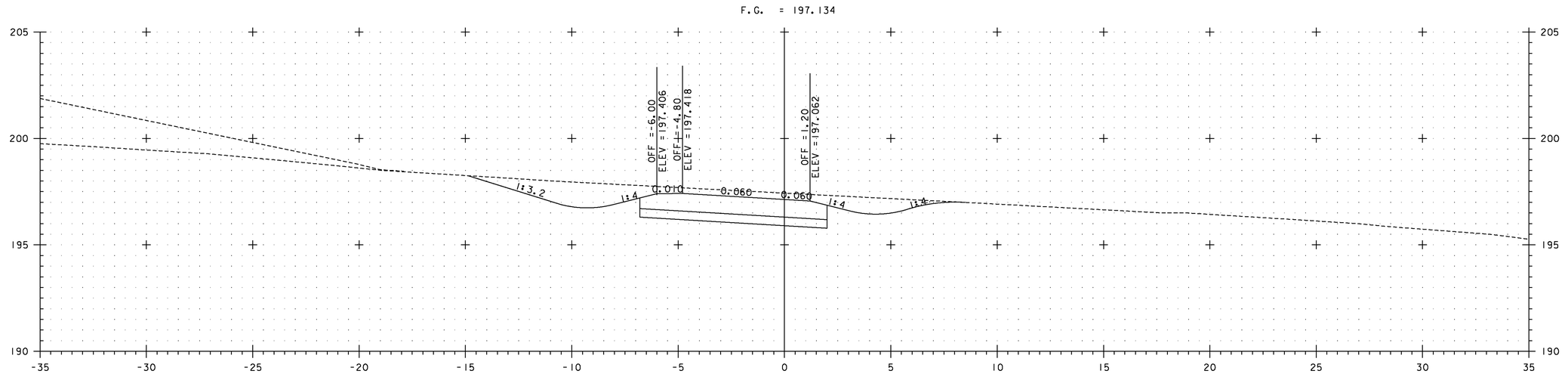

G 1+460

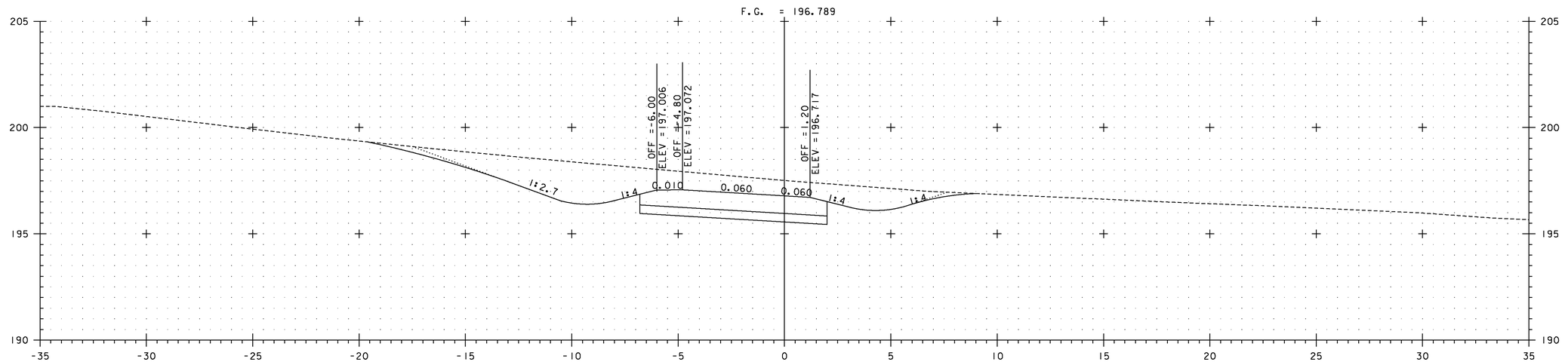

G 1+440

5 METERS
2.5
2.5 5 METERS
SCALE IN METERS

VERMONT AGENCY OF TRANSPORTATION

Stantec

PROJECT NAME: BENNINGTON
PROJECT NUMBER: AC NH 019-1(53)

FILE NAME: ...\zd307c3xs_ramp_g.ptf
DESIGN SUPERVISOR: GREG EDWARDS
DESIGNED BY: MARC FOISY
RAMP G CROSS SECTIONS

PLOT DATE: 5/16/2011
DRAWN BY: STANTEC
CHECKED BY: GARY SANTY
SHEET 366 OF 577

v:\1953\active\953002\transportation\drawing\contract_3\plot_files\zd307c3xs_ramp_g.ptf

Metric

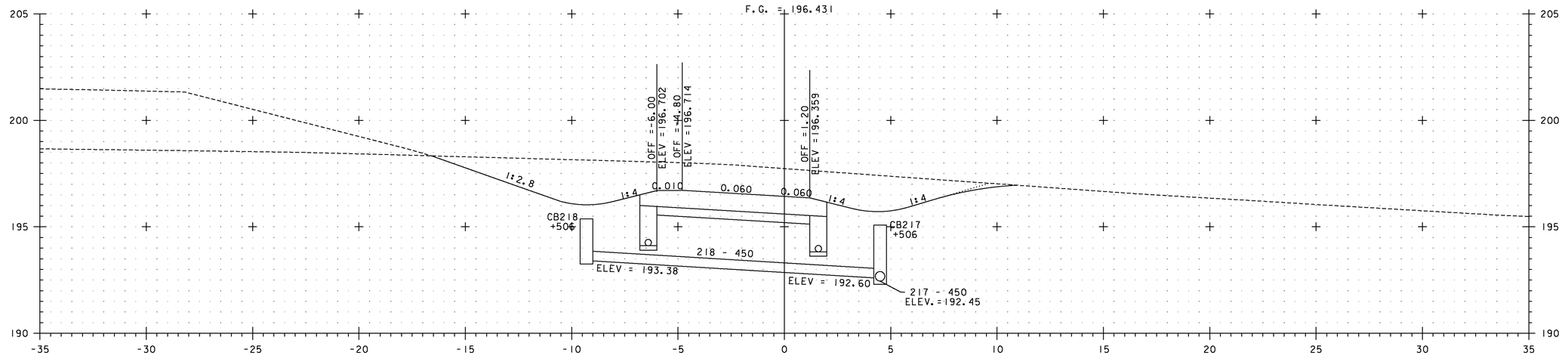

G 1+500

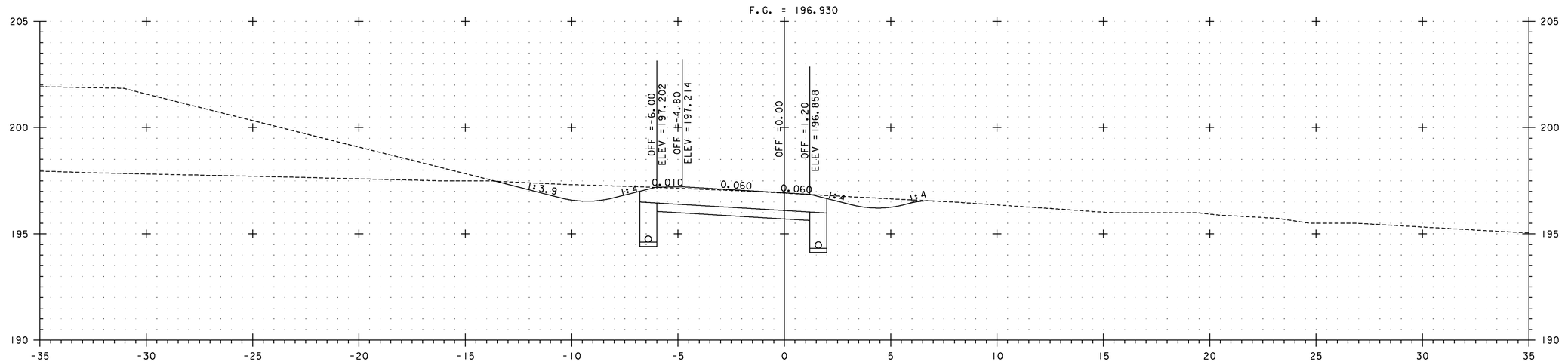

G 1+480

5 METERS
2.5
2.5
5 METERS
SCALE IN METERS

VERMONT AGENCY OF TRANSPORTATION

Stantec

PROJECT NAME: BENNINGTON
PROJECT NUMBER: AC NH 019-1(53)

FILE NAME: ...\zd307c3xs_ramp_g.ptf
DESIGN SUPERVISOR: GREG EDWARDS
DESIGNED BY: MARC FOISY
RAMP G CROSS SECTIONS

PLOT DATE: 5/16/2011
DRAWN BY: STANTEC
CHECKED BY: GARY SANTY
SHEET 367 OF 577

v:\1953\active\953002\transportation\drawing\contract_3\plot_files\zd307c3xs_ramp_g.ptf

Metric

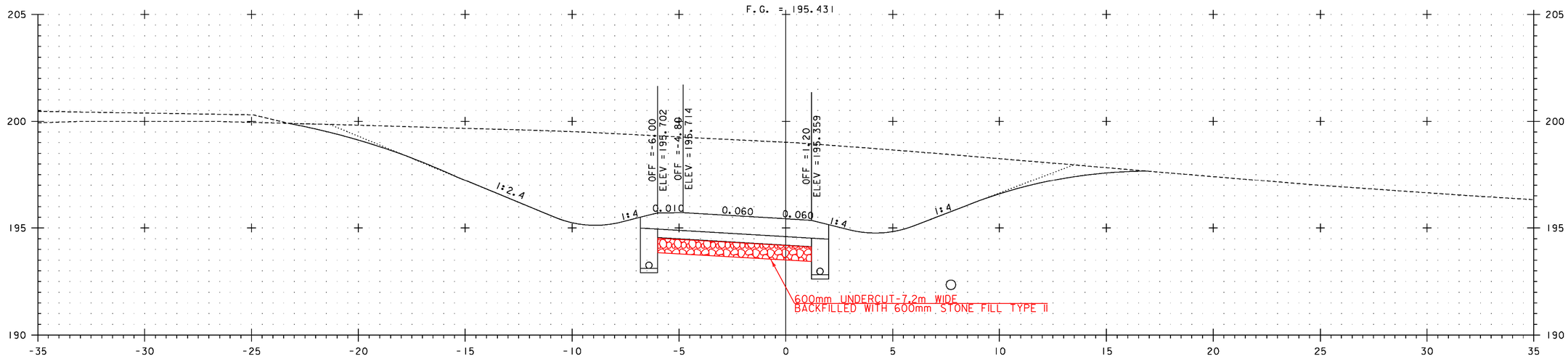

G 1+540 UNDERCUT AND TYPE II STONE FILL BEGINS AT G 1+530

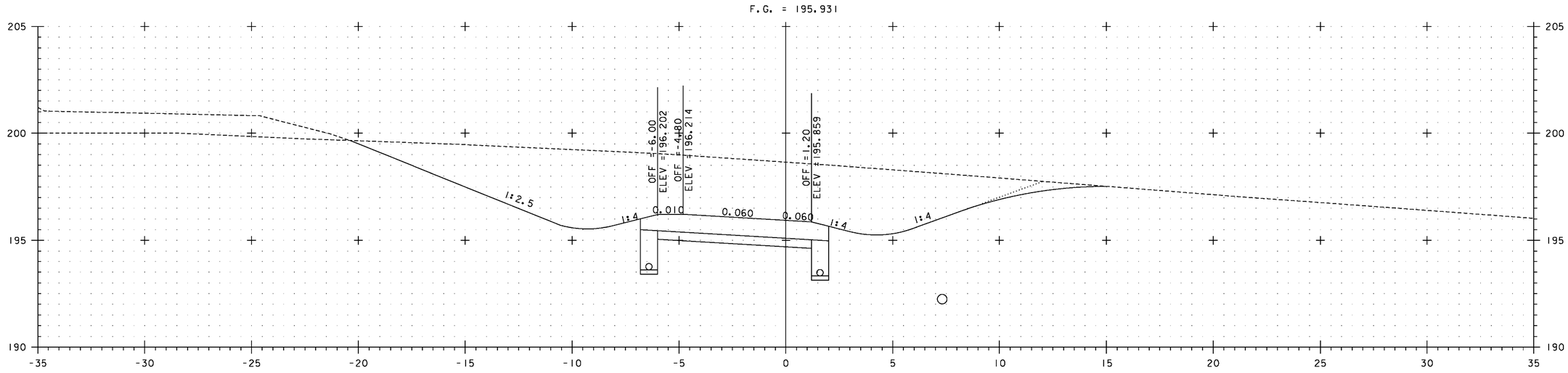

G 1+520

5 METERS
2.5
2.5 5 METERS
SCALE IN METERS

VERMONT AGENCY OF TRANSPORTATION

Stantec

PROJECT NAME: BENNINGTON
PROJECT NUMBER: AC NH 019-1(53)

FILE NAME: ...\zd307c3xs_ramp_g.ptf
DESIGN SUPERVISOR: GREG EDWARDS
DESIGNED BY: MARC FOISY
RAMP G CROSS SECTIONS

PLOT DATE: 5/16/2011
DRAWN BY: STANTEC
CHECKED BY: GARY SANTY
SHEET 368 OF 577

v:\1953\active\195310002\transportation\drawing\contract_3\plot_files\zd307c3xs_ramp_g.ptf

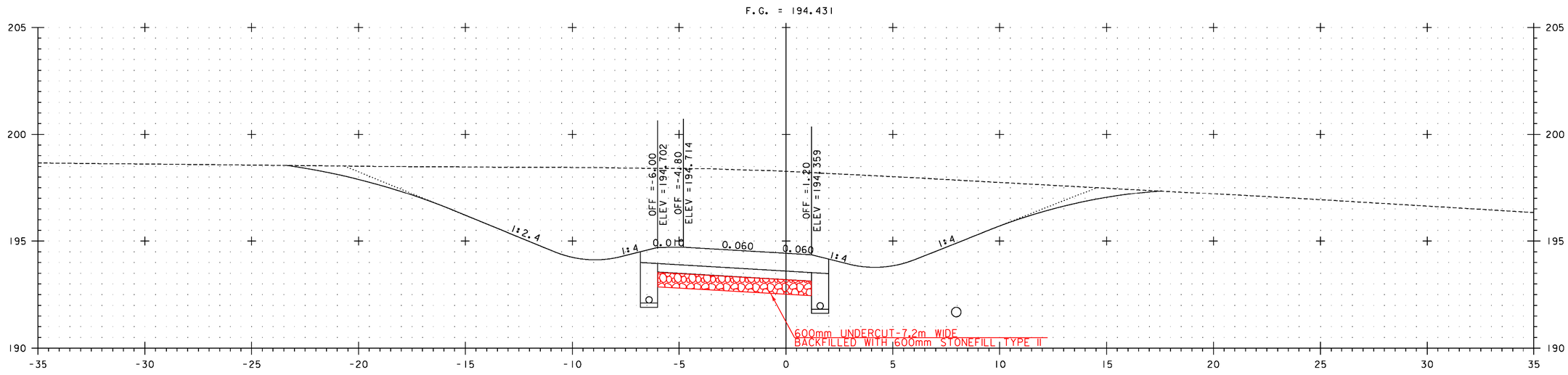

G 1+580

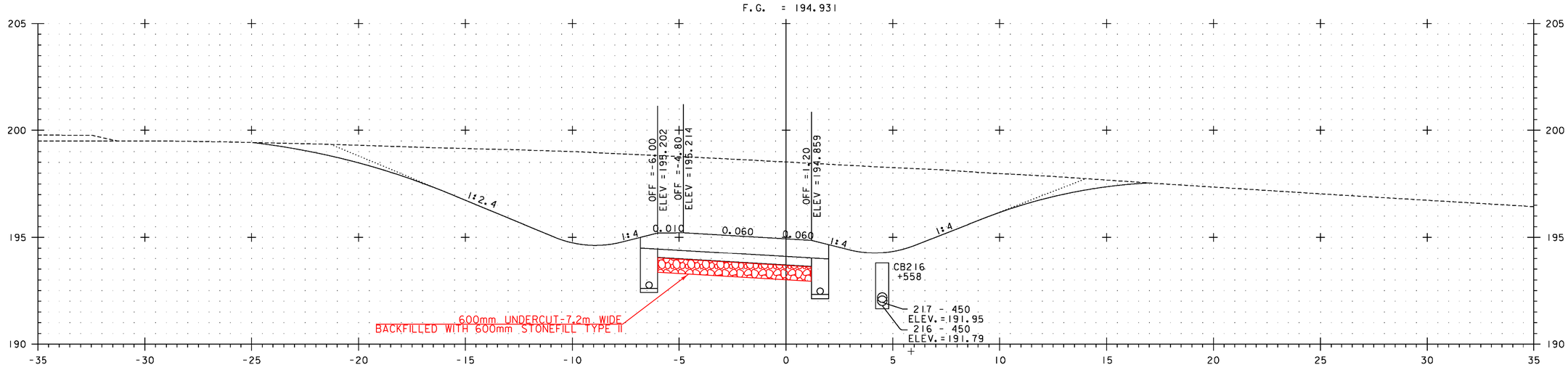

G 1+560

5 METERS
2.5
2.5
5 METERS
SCALE IN METERS

VERMONT AGENCY OF TRANSPORTATION

Stantec

PROJECT NAME: BENNINGTON
PROJECT NUMBER: AC NH 019-1(53)

FILE NAME: ...\zd307c3xs_ramp_g.ptf
DESIGN SUPERVISOR: GREG EDWARDS
DESIGNED BY: MARC FOISY
RAMP G CROSS SECTIONS

PLOT DATE: 5/16/2011
DRAWN BY: STANTEC
CHECKED BY: GARY SANTY
SHEET 369 OF 577

v:\1953\active\195310002\transportation\drawing\contract_3\plot_files\zd307c3xs_ramp_g.ptf

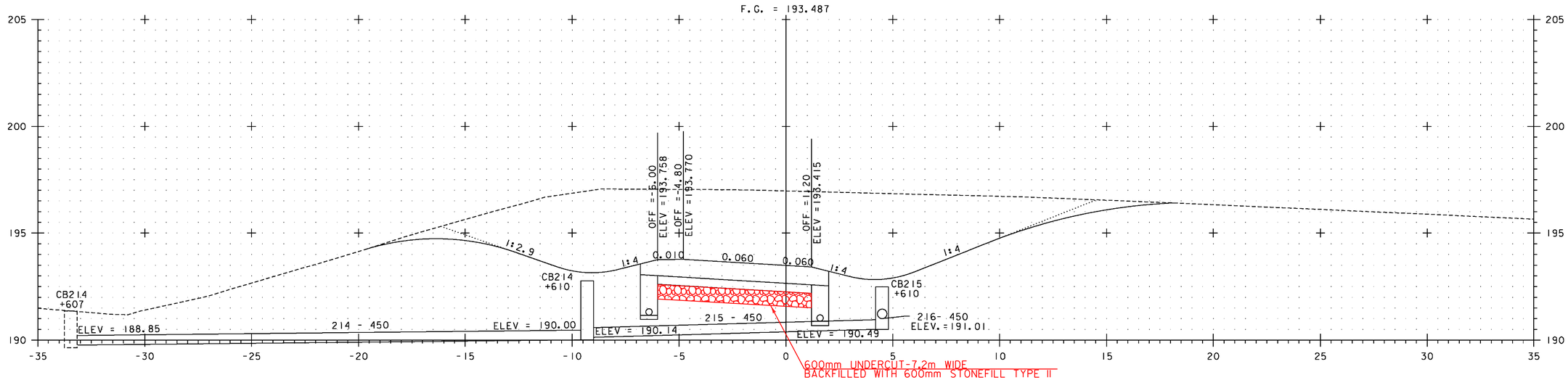

G 1+620

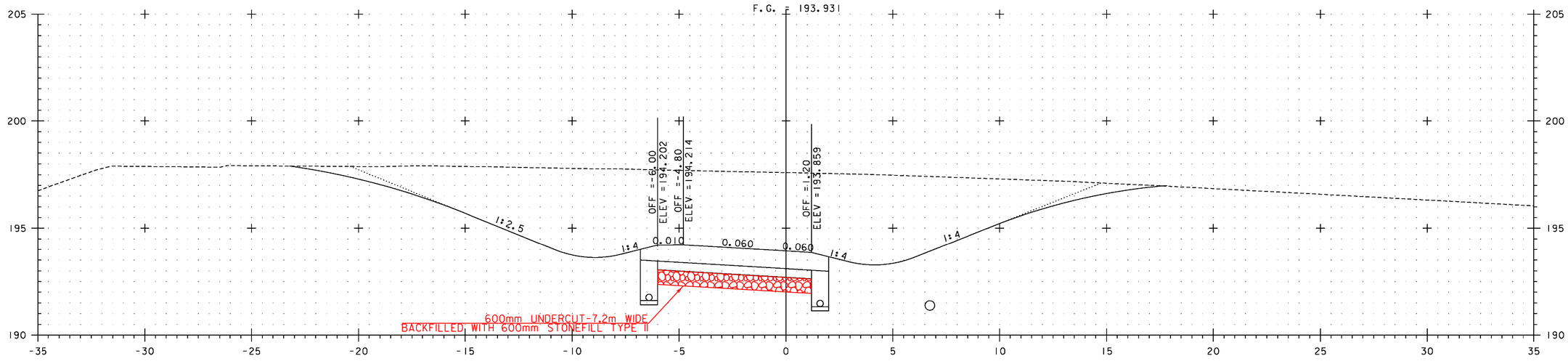

G 1+600

5 METERS
2.5
2.5
5 METERS
SCALE IN METERS

VERMONT AGENCY OF TRANSPORTATION

Stantec

PROJECT NAME: BENNINGTON
PROJECT NUMBER: AC NH 019-1(53)

FILE NAME: ...\zd307c3xs_ramp_g.ptf
DESIGN SUPERVISOR: GREG EDWARDS
DESIGNED BY: MARC FOISY
RAMP G CROSS SECTIONS

PLOT DATE: 5/16/2011
DRAWN BY: STANTEC
CHECKED BY: GARY SANTY
SHEET 370 OF 577

v:\1953\active\195310002\transportation\drawing\contract_3\plot_files\zd307c3xs_ramp_g.ptf

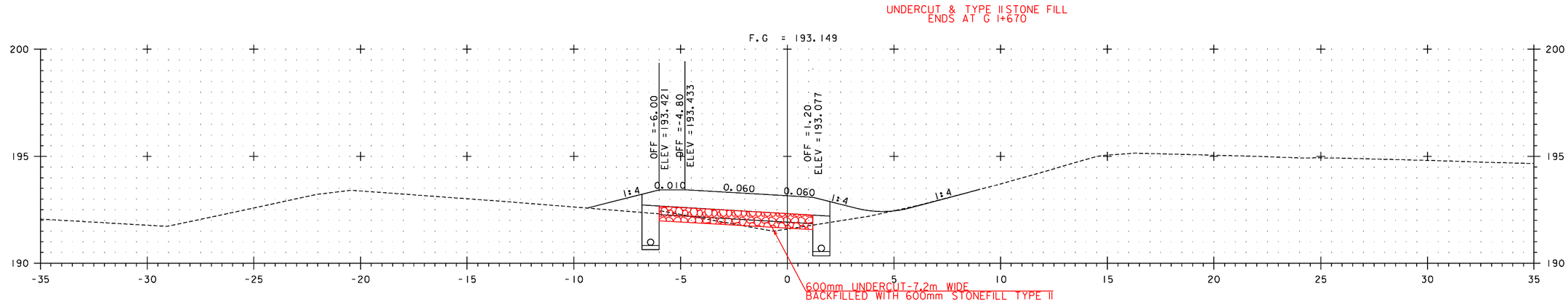

G 1+660

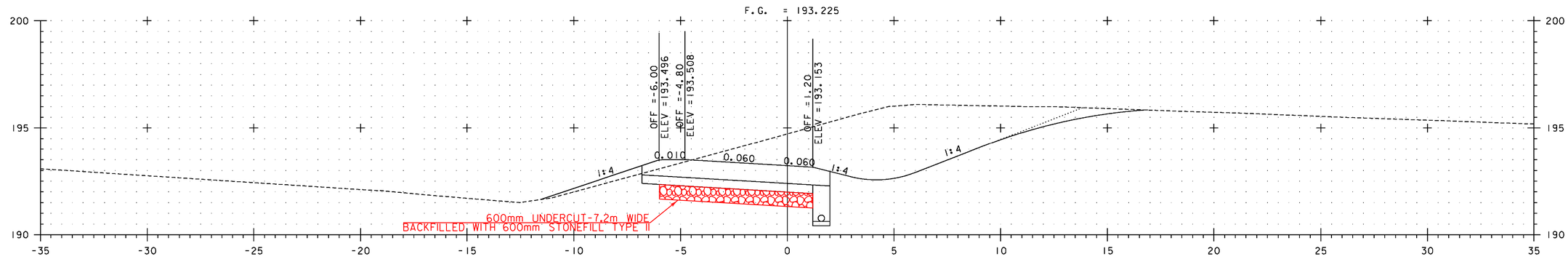

G 1+640

5 METERS
2.5
2.5 5 METERS
SCALE IN METERS

VERMONT AGENCY OF TRANSPORTATION

Stantec

PROJECT NAME: BENNINGTON
PROJECT NUMBER: AC NH 019-1(53)

FILE NAME: ...\zd307c3xs_ramp_g.ptf
DESIGN SUPERVISOR: GREG EDWARDS
DESIGNED BY: MARC FOISY
RAMP G CROSS SECTIONS

PLOT DATE: 5/16/2011
DRAWN BY: STANTEC
CHECKED BY: GARY SANTY
SHEET 371 OF 577

v:\1953\active\195310002\transportation\drawing\contract_3\plot_files\zd307c3xs_ramp_g.ptf

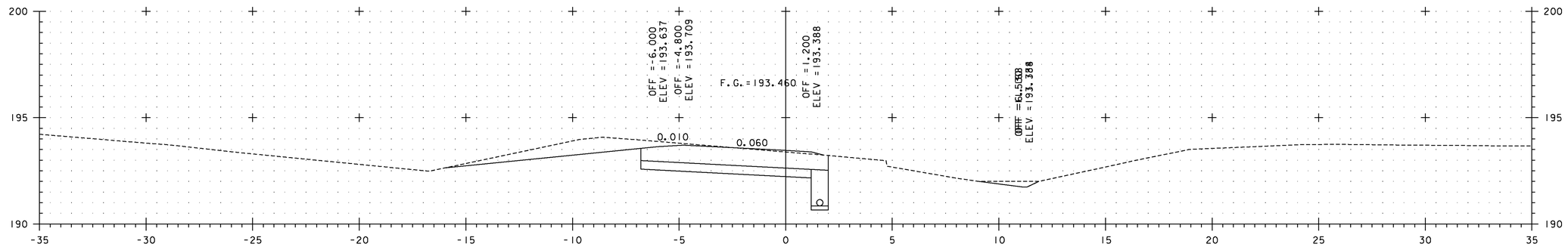

G 1+700

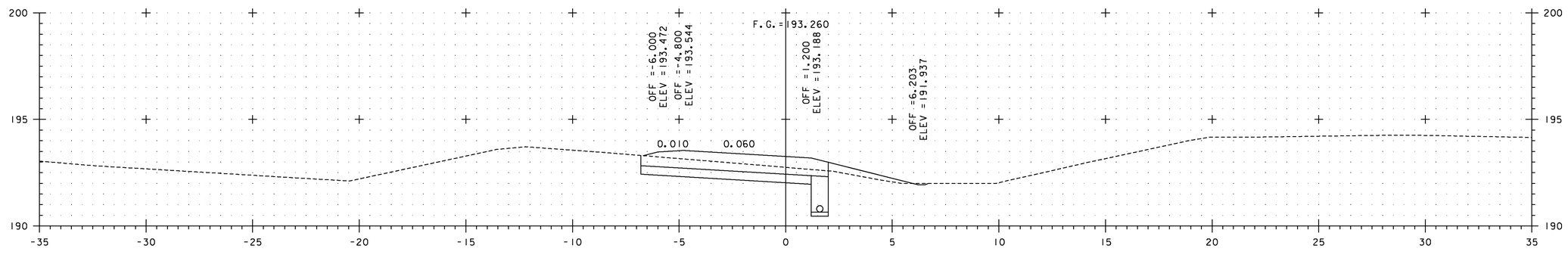

G 1+680

v:\953\active\95330002\transportation\drawing\contract_3\plot_files\zd307c3xs_ramp_g.ptf

VERMONT AGENCY OF TRANSPORTATION

Stantec

PROJECT NAME: BENNINGTON
PROJECT NUMBER: AC NH 019-1(53)

FILE NAME: ...\zd307c3xs_ramp_g.ptf
DESIGN SUPERVISOR: GREG EDWARDS
DESIGNED BY: MARC FOISY
RAMP G CROSS SECTIONS

PLOT DATE: 5/16/2011
DRAWN BY: STANTEC
CHECKED BY: GARY SANTY
SHEET 372 OF 577

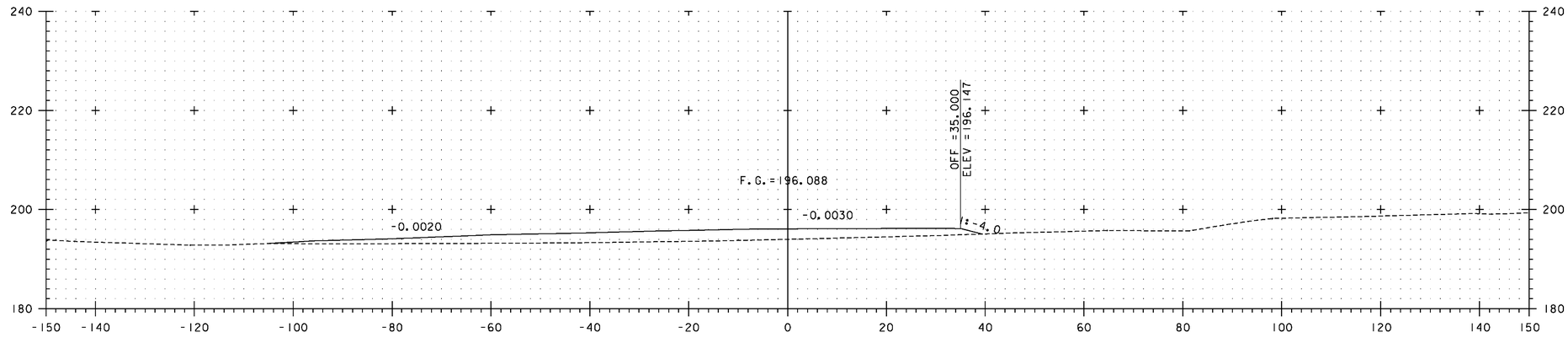

SI 1+020

EMBANKMENTS AT THE SYSTEMS INTERCHANGE, AS INDICATED ON PLAN SHEETS 373 THROUGH 383, WERE NOT CONSTRUCTED AS INDICATED ON THESE SHEETS. DURING THE COURSE OF THE CONTRACT, EXCESS MATERIAL WAS PLACED IN THESE AREAS ABOVE THE GRADES INDICATED. BY CHANGE OF DESIGN #20 AND WRITTEN ORDER #97, APPROXIMATELY HALF OF THE EXCESS MATERIAL WAS REMOVED AND PLACED IN ANOTHER AREA AS APPROVED. THE STATE AND THE CONTRACTOR AGREED THAT THE OTHER HALF (APPROX) OF THE EXCESS MATERIAL WOULD BE REMOVED UNDER CONTRACT 54.
ALSO SEE BOX 3 OF 15 OF THE CONTRACT RECORDS-IN A BINDER LABELED MISCELLANEOUS COMPUTATIONS-FOR SOME PERTINENT CROSS SECTIONS.

30 METERS
15
H 1:500 SCALE
V 1:500 SCALE
@ FULL SIZE
15 30 METERS

VERMONT AGENCY OF TRANSPORTATION

Stantec

PROJECT NAME: BENNINGTON
PROJECT NUMBER: AC NH 019-1(53)

FILE NAME: ...\zd307c3xs_si_fill.ptf
DESIGN SUPERVISOR: GREG EDWARDS
DESIGNED BY: MARC FOISY
WC WASTE SITE - 3

PLOT DATE: 5/16/2011
DRAWN BY: STANTEC
CHECKED BY: GARY SANTY
SHEET 373 OF 577

v:\1953\active\19530002\transportation\drawing\contract_3\plot_files\zd307c3xs_si_fill.ptf

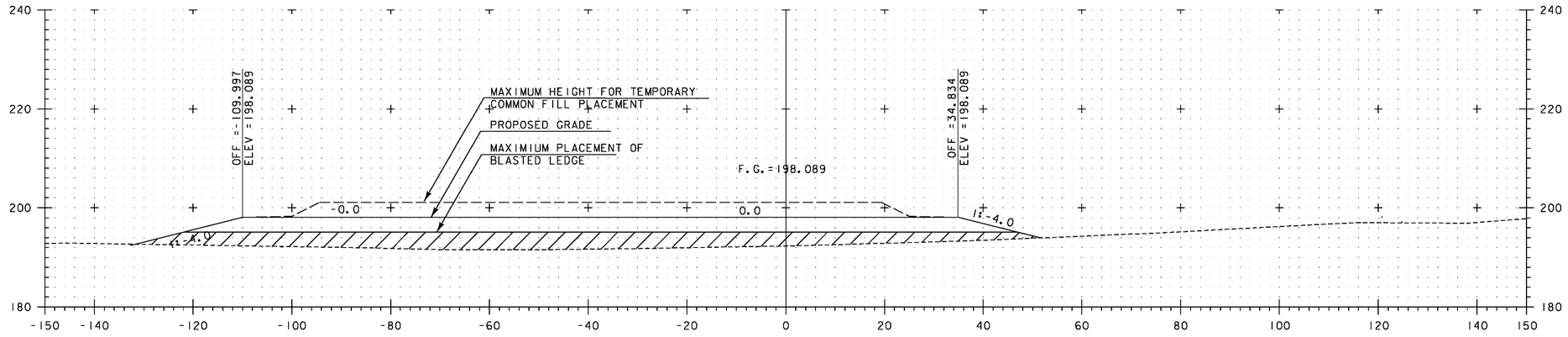

SI 1+060

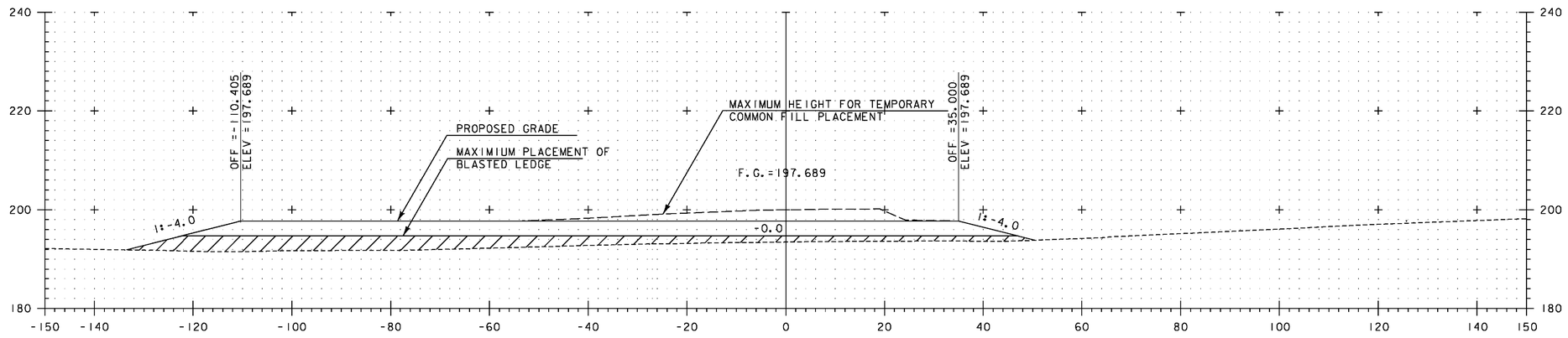

SI 1+040

SEE NOTE
ON
SHEET 373

30 METERS

H 1:500 SCALE
V 1:500 SCALE
@ FULL SIZE

15 15 30 METERS

VERMONT AGENCY OF TRANSPORTATION

Stantec

PROJECT NAME: BENNINGTON
PROJECT NUMBER: AC NH 019-1(53)

FILE NAME: ...\zd307c3xs_si_fill.ptf
DESIGN SUPERVISOR: GREG EDWARDS
DESIGNED BY: MARC FOISY
WC WASTE SITE - 4

PLOT DATE: 5/16/2011
DRAWN BY: STANTEC
CHECKED BY: GARY SANTY
SHEET 374 OF 577

v:\0953\active\95300021\transportation\drawing\contract_3\plot_files\zd307c3xs_si_fill.ptf

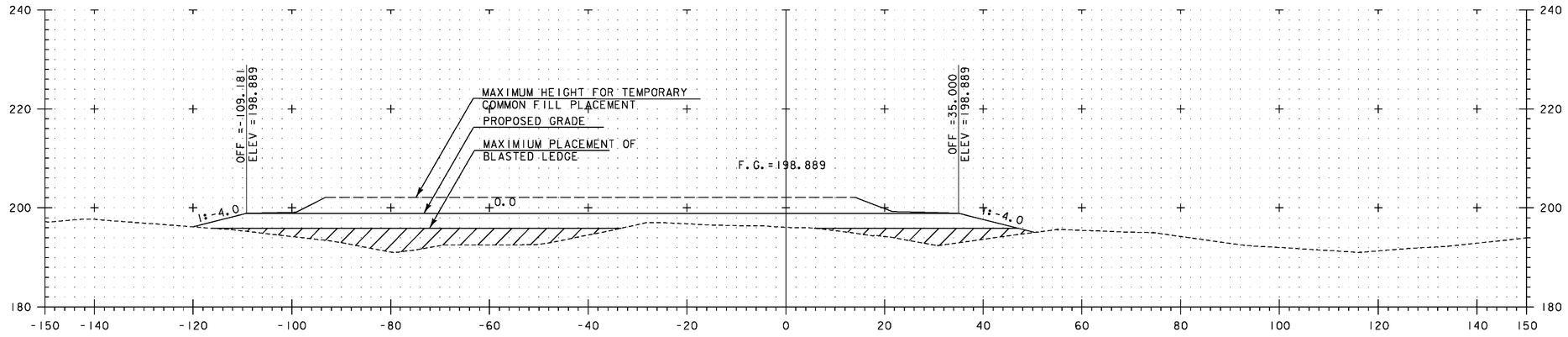

SI 1+100

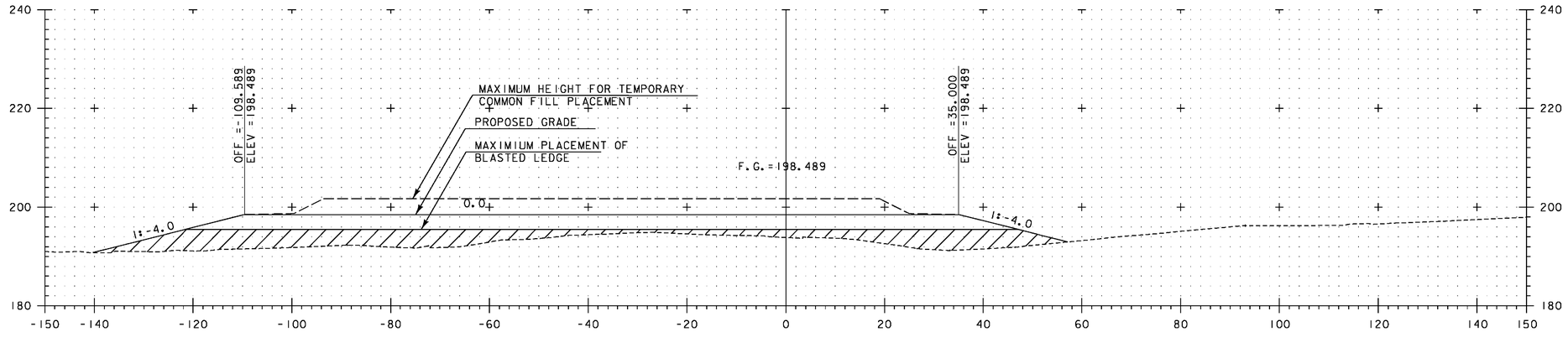

SI 1+080

SEE NOTE ON SHEET 373

30 METERS
15
H 1:500 SCALE
V 1:500 SCALE
@ FULL SIZE
15 30 METERS

VERMONT AGENCY OF TRANSPORTATION

Stantec

PROJECT NAME: BENNINGTON
PROJECT NUMBER: AC NH 019-1(53)

FILE NAME: ...\zd307c3xs_si_fill.ptf
DESIGN SUPERVISOR: GREG EDWARDS
DESIGNED BY: MARC FOISY
WC WASTE SITE - 5

PLOT DATE: 5/16/2011
DRAWN BY: STANTEC
CHECKED BY: GARY SANTY
SHEET 375 OF 577

v:\0953\active\95300021\transportation\drawing\contract_3\plot_files\zd307c3xs_si_fill.ptf

Metric

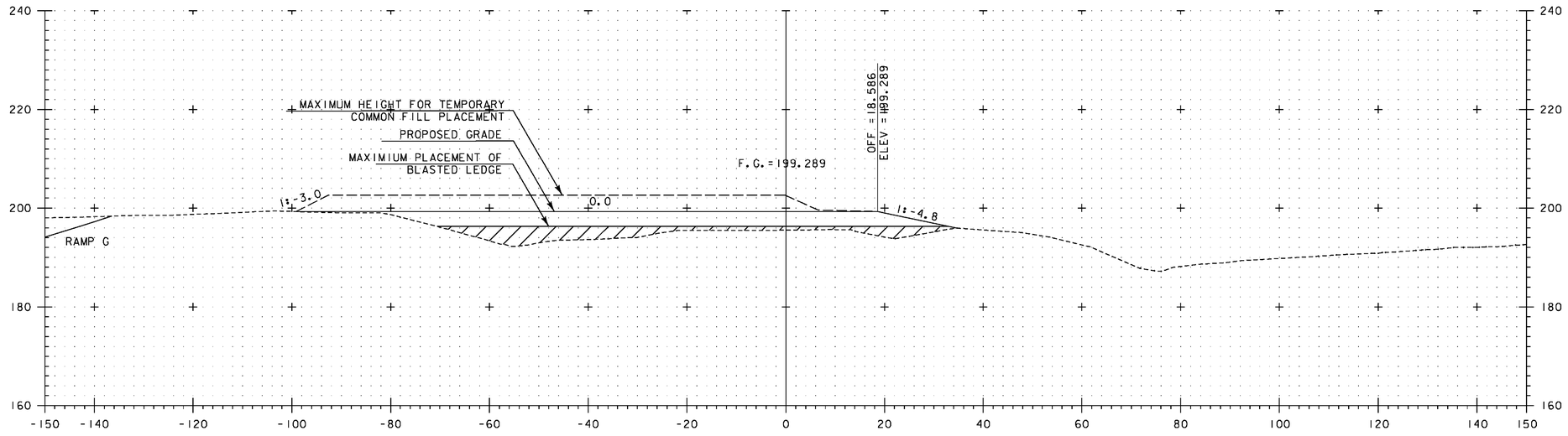

SEE NOTE ON SHEET 373

S1 1+120

30 METERS

15

H 1:500 SCALE
V 1:500 SCALE
@ FULL SIZE

15 30 METERS

VERMONT AGENCY OF TRANSPORTATION

Stantec

PROJECT NAME: BENNINGTON
PROJECT NUMBER: AC NH 019-1(53)

FILE NAME: ...\zd307c3xs_s1_fill.ptf
DESIGN SUPERVISOR: GREG EDWARDS
DESIGNED BY: MARC FOISY
WC WASTE SITE - 6

PLOT DATE: 5/16/2011
DRAWN BY: STANTEC
CHECKED BY: GARY SANTY
SHEET 376 OF 577

v:\9953\active\995310002\transportation\drawing\contract_3\plot_files\zd307c3xs_s1_fill.ptf

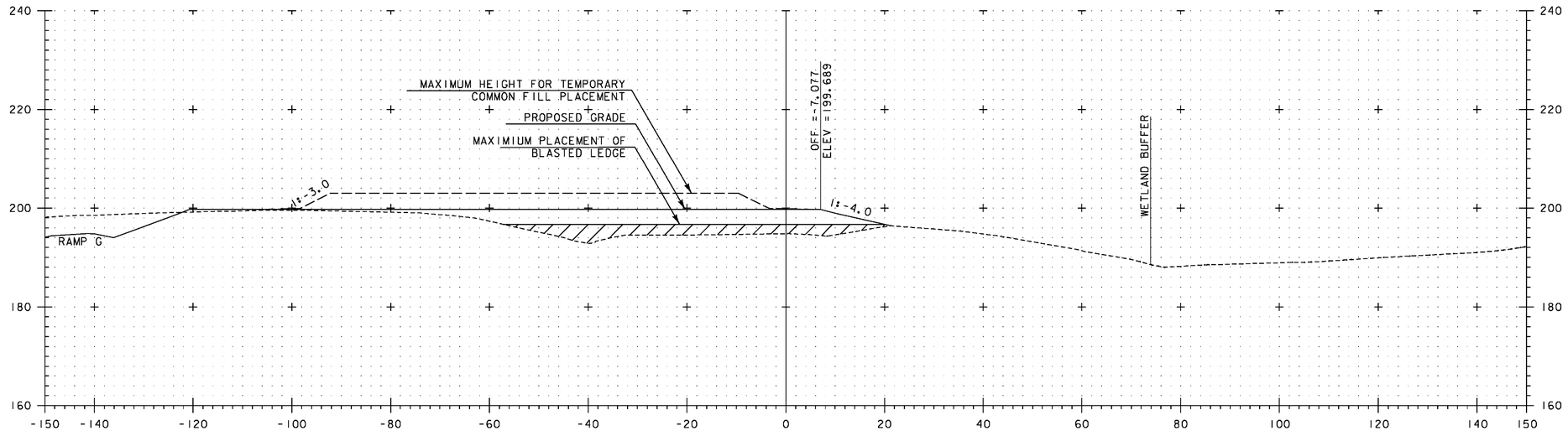

SEE NOTE ON SHEET 373

SI 1+140

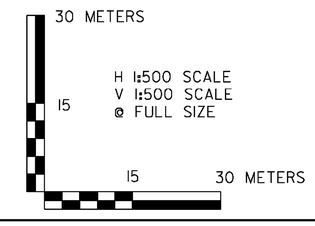

VERMONT AGENCY OF TRANSPORTATION

Stantec

PROJECT NAME: BENNINGTON
PROJECT NUMBER: AC NH 019-1(53)

FILE NAME: ...\zd307c3xs_si_fill.ptf
DESIGN SUPERVISOR: GREG EDWARDS
DESIGNED BY: MARC FOISY
WC WASTE SITE - 7

PLOT DATE: 5/16/2011
DRAWN BY: STANTEC
CHECKED BY: GARY SANTY
SHEET 377 OF 577

v:\1953\active\195310002\transportation\drawing\contract_3\plot_files\zd307c3xs_si_fill.ptf

Metric

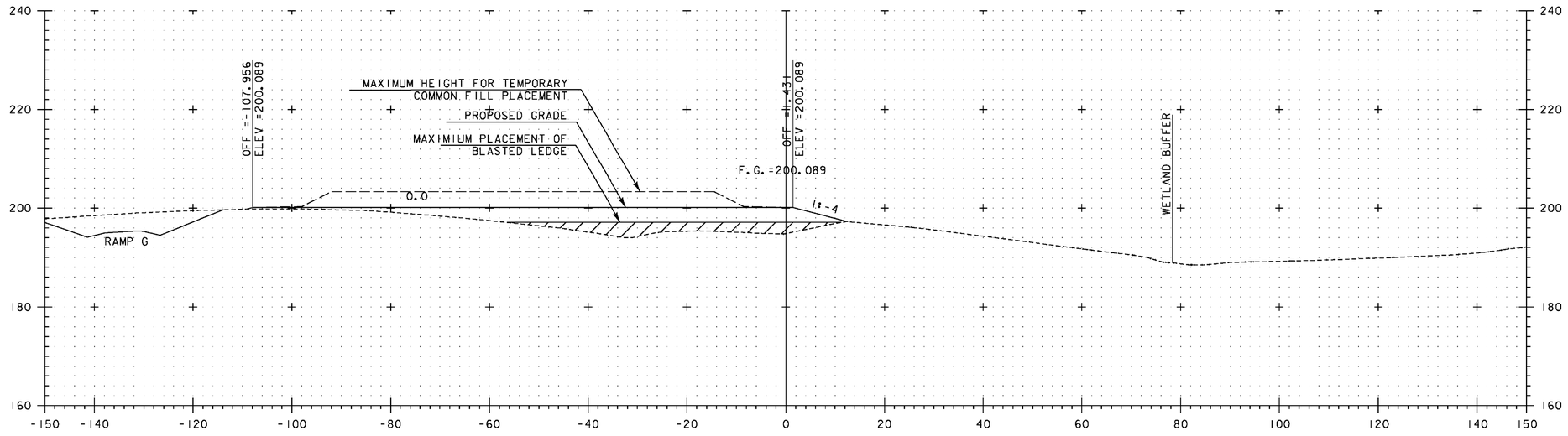

SEE NOTE ON SHEET 373

S1 1+160

30 METERS

15

H 1:500 SCALE
V 1:500 SCALE
@ FULL SIZE

15 30 METERS

VERMONT AGENCY OF TRANSPORTATION

Stantec

PROJECT NAME: BENNINGTON
PROJECT NUMBER: AC NH 019-1(53)

FILE NAME: ...\zd307c3xs_s1_fill.ptf
DESIGN SUPERVISOR: GREG EDWARDS
DESIGNED BY: MARC FOISY
WC WASTE SITE - 8

PLOT DATE: 5/16/2011
DRAWN BY: STANTEC
CHECKED BY: GARY SANTY
SHEET 378 OF 577

v:\9953\active\995310002\transportation\drawing\contract_3\plot_files\zd307c3xs_s1_fill.ptf

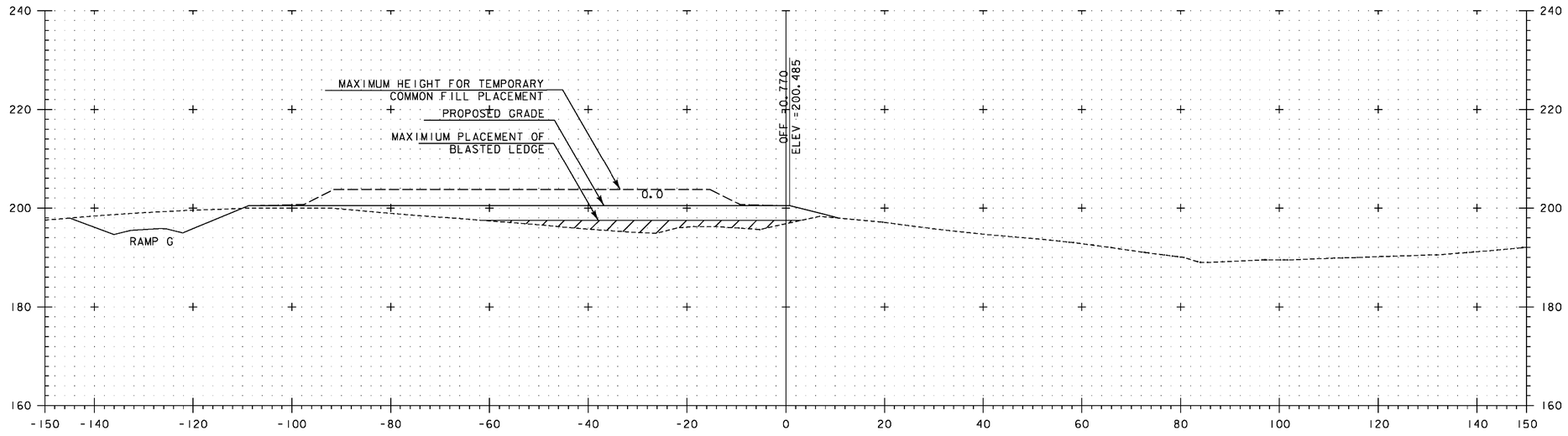

SEE NOTE ON SHEET 373

SI 1+180

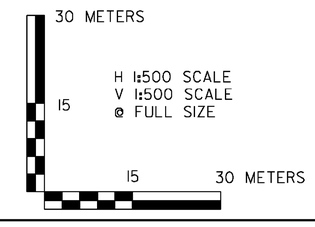

VERMONT AGENCY OF TRANSPORTATION

Stantec

PROJECT NAME: BENNINGTON
PROJECT NUMBER: AC NH 019-1(53)

FILE NAME: ...\zd307c3xs_si_fill.ptf
DESIGN SUPERVISOR: GREG EDWARDS
DESIGNED BY: MARC FOISY
WC WASTE SITE - 9

PLOT DATE: 5/16/2011
DRAWN BY: STANTEC
CHECKED BY: GARY SANTY
SHEET 379 OF 577

v:\1953\active\195310002\transportation\drawing\contract_3\plot_files\zd307c3xs_si_fill.ptf

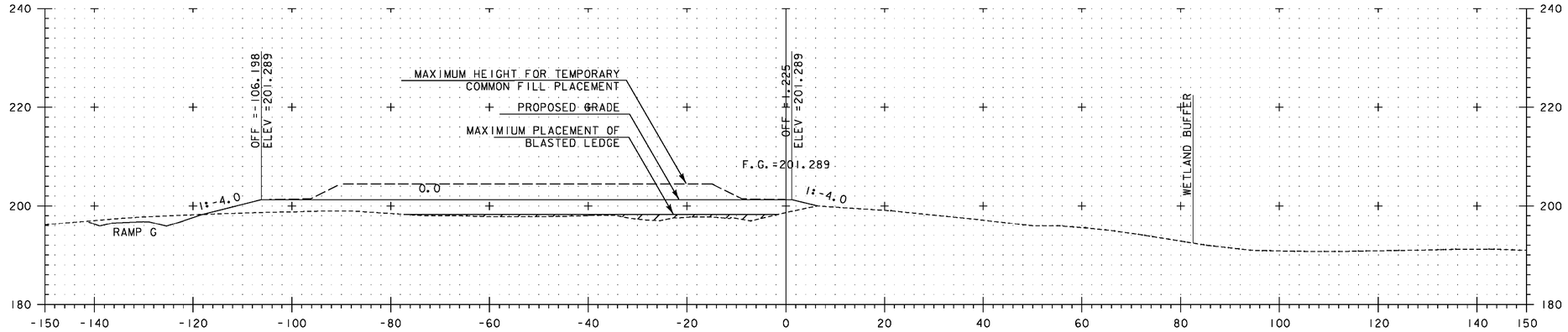

SI 1+220

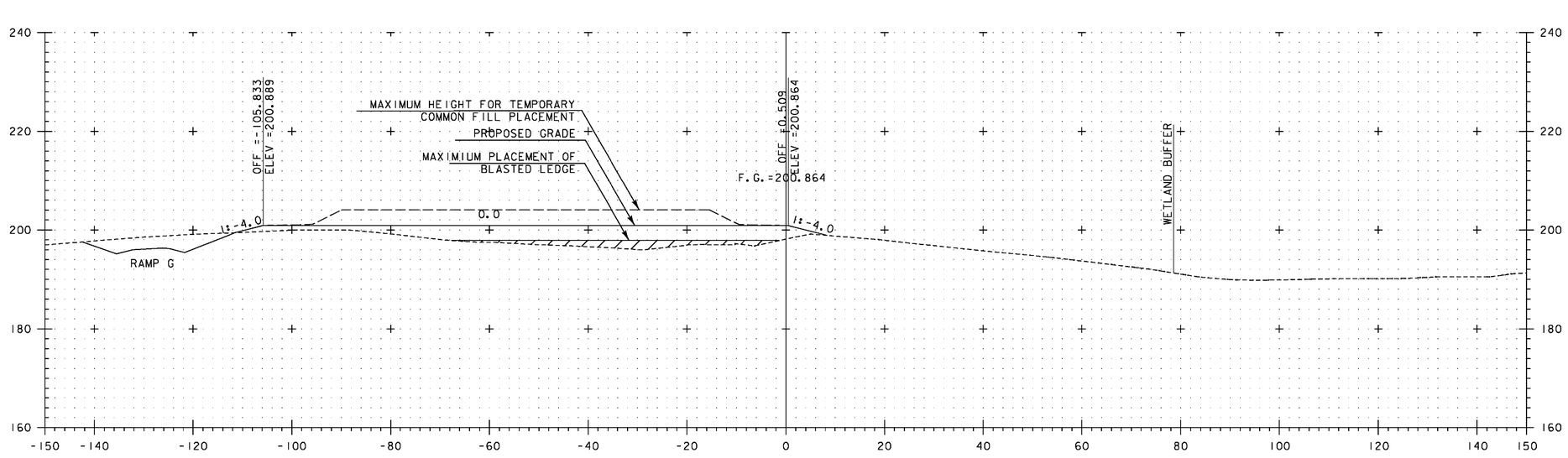

SI 1+200

SEE NOTE ON SHEET 373

30 METERS
15
H 1:500 SCALE
V 1:500 SCALE
@ FULL SIZE
15 30 METERS

VERMONT AGENCY OF TRANSPORTATION

Stantec

PROJECT NAME: BENNINGTON
PROJECT NUMBER: AC NH 019-1(53)

FILE NAME: ...\zd307c3xs_sl_fill.ptf
DESIGN SUPERVISOR: GREG EDWARDS
DESIGNED BY: MARC FOISY
WC WASTE SITE - 10

PLOT DATE: 5/16/2011
DRAWN BY: STANTEC
CHECKED BY: GARY SANTY
SHEET 380 OF 577

V:\9531\active\95310002\transportation\drawing\contract_3\plot_files\zd307c3xs_sl_fill.ptf

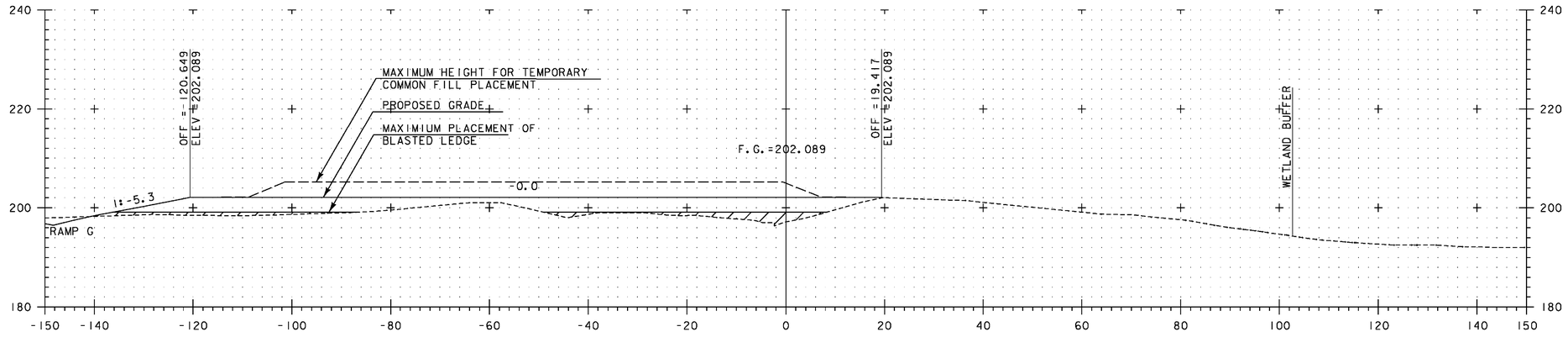

SI 1+260

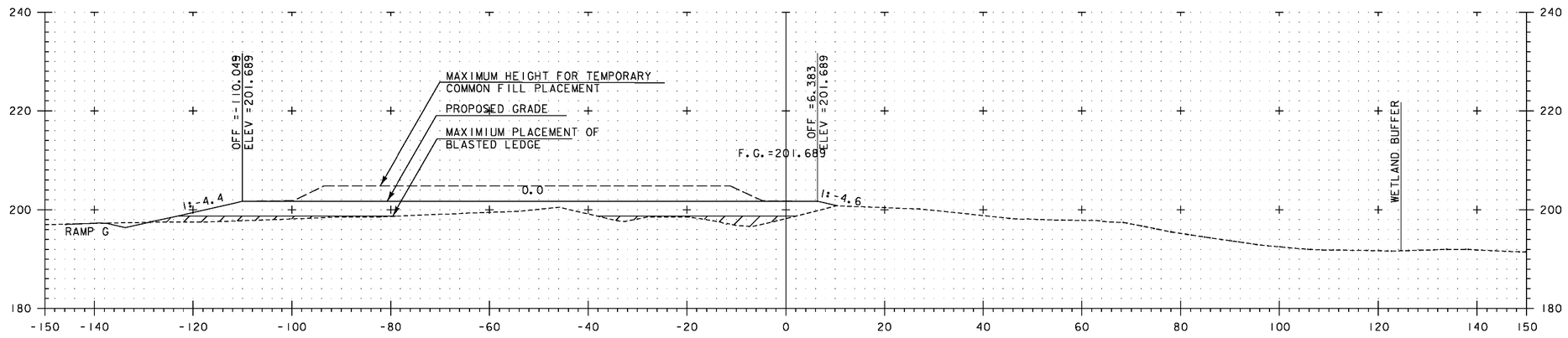

SI 1+240

SEE NOTE ON SHEET 373

30 METERS

15

H 1:500 SCALE
V 1:500 SCALE
@ FULL SIZE

15 30 METERS

VERMONT AGENCY OF TRANSPORTATION

Stantec

PROJECT NAME: BENNINGTON
PROJECT NUMBER: AC NH 019-1(53)

FILE NAME: ...\zd307c3xs_si_fill.ptf
DESIGN SUPERVISOR: GREG EDWARDS
DESIGNED BY: MARC FOISY
WC WASTE SITE – 11

PLOT DATE: 5/16/2011
DRAWN BY: STANTEC
CHECKED BY: GARY SANTY
SHEET 381 OF 577

vv\9553\active\95300021\transportation\drawing\contract_3\plot_files\zd307c3xs_si_fill.ptf

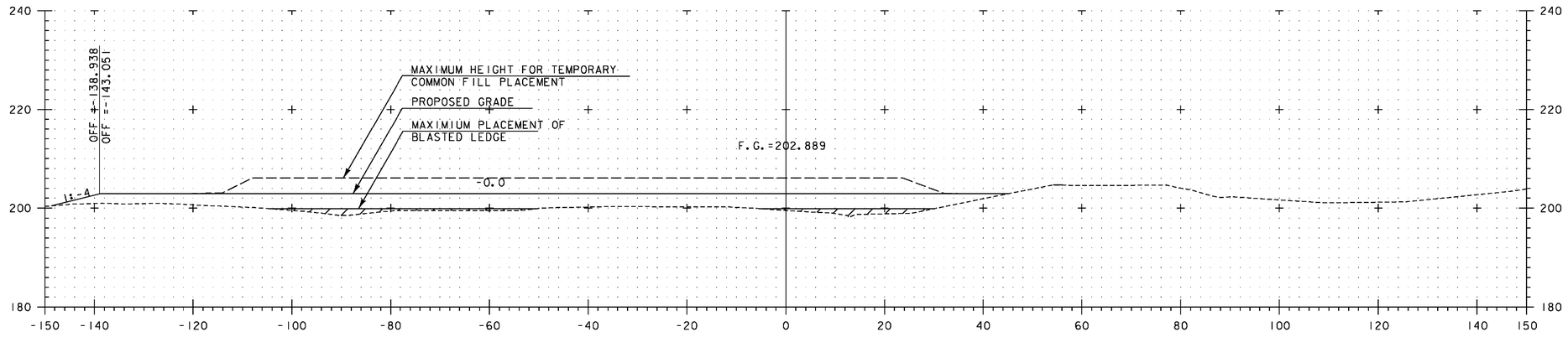

SI 1+300

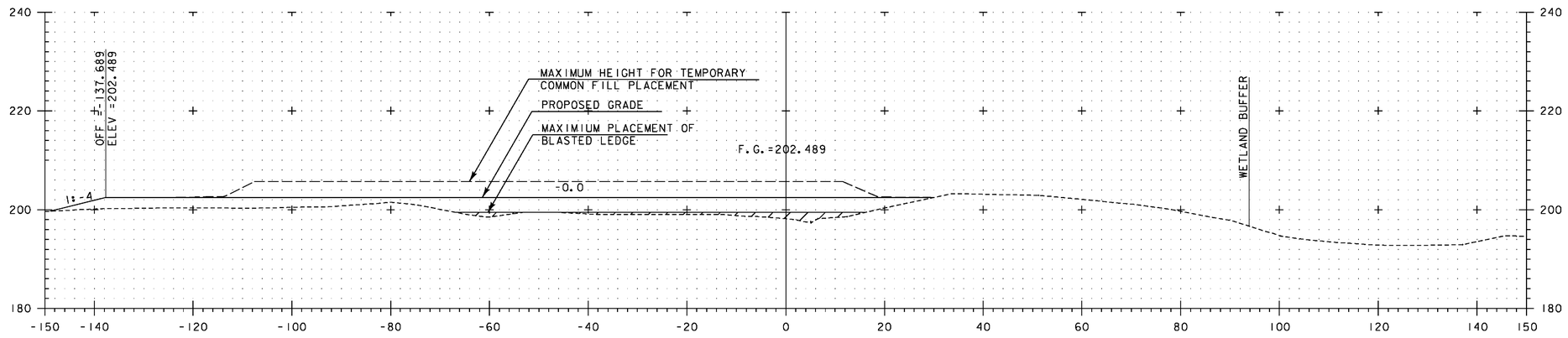

SI 1+280

SEE NOTE ON SHEET 373

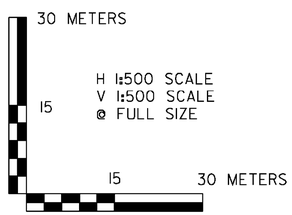

VERMONT AGENCY OF TRANSPORTATION

Stantec

PROJECT NAME: BENNINGTON
PROJECT NUMBER: AC NH 019-1(53)

FILE NAME: ...\zd307c3xs_si_fill.ptf
DESIGN SUPERVISOR: GREG EDWARDS
DESIGNED BY: MARC FOISY
WC WASTE SITE - 12

PLOT DATE: 5/16/2011
DRAWN BY: STANTEC
CHECKED BY: GARY SANTY
SHEET 382 OF 577

v:\1953\active\195310002\transportation\drawing\contract_3\plot_files\zd307c3xs_si_fill.ptf

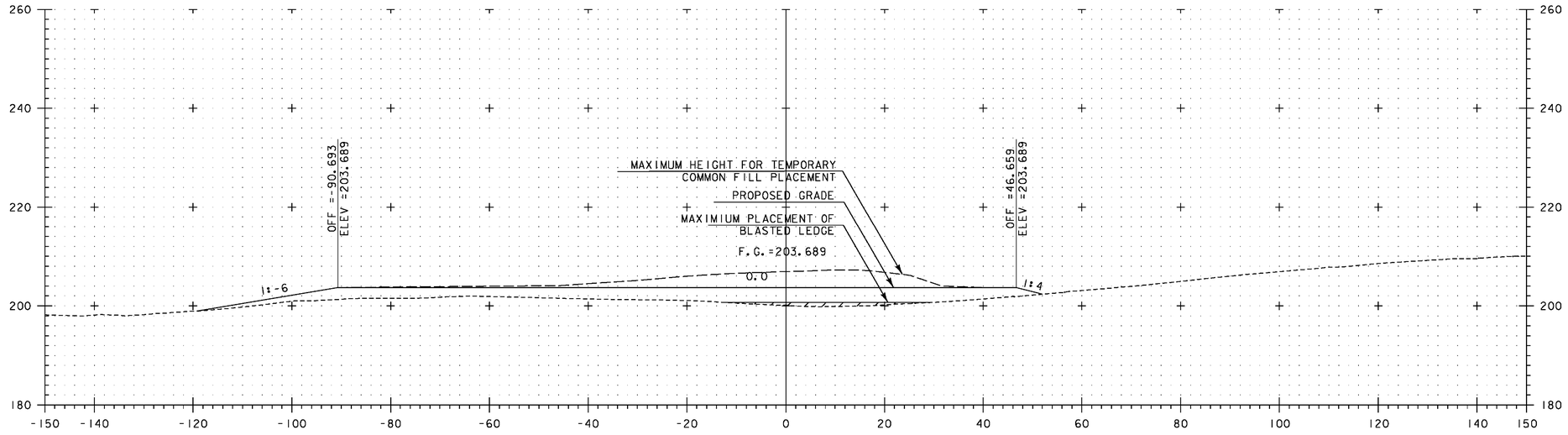

SI 1+340

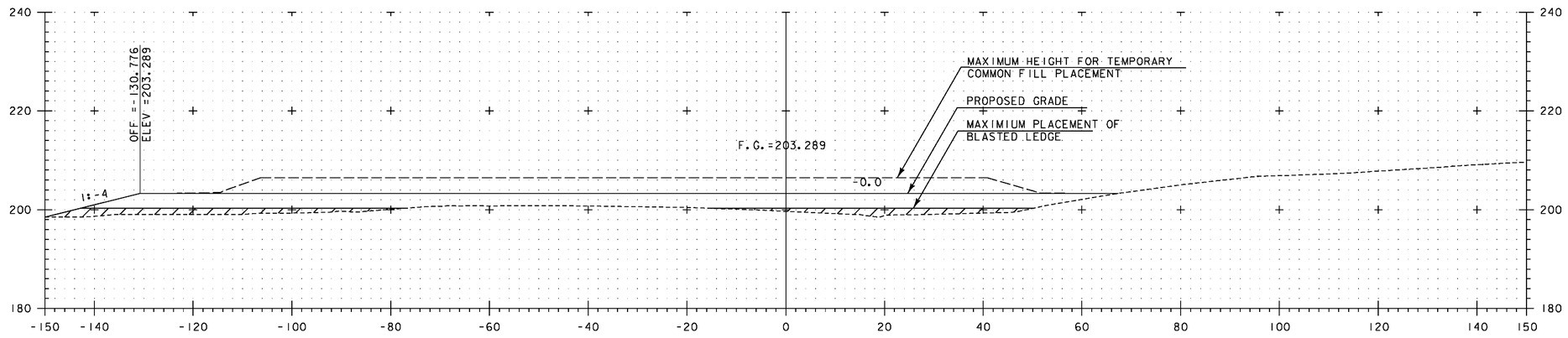

SI 1+320

SEE NOTE ON SHEET 373

30 METERS

15

H 1:500 SCALE
V 1:500 SCALE
@ FULL SIZE

15 30 METERS

VERMONT AGENCY OF TRANSPORTATION

Stantec

PROJECT NAME: BENNINGTON
PROJECT NUMBER: AC NH 019-1(53)

FILE NAME: ...\zd307c3xs_si_fill.ptf
DESIGN SUPERVISOR: GREG EDWARDS
DESIGNED BY: MARC FOISY
WC WASTE SITE – 13

PLOT DATE: 5/16/2011
DRAWN BY: STANTEC
CHECKED BY: GARY SANTY
SHEET 383 OF 577

v:\0953\active\953000021\transportation\drawing\contract_3\plot_files\zd307c3xs_si_fill.ptf

Metric

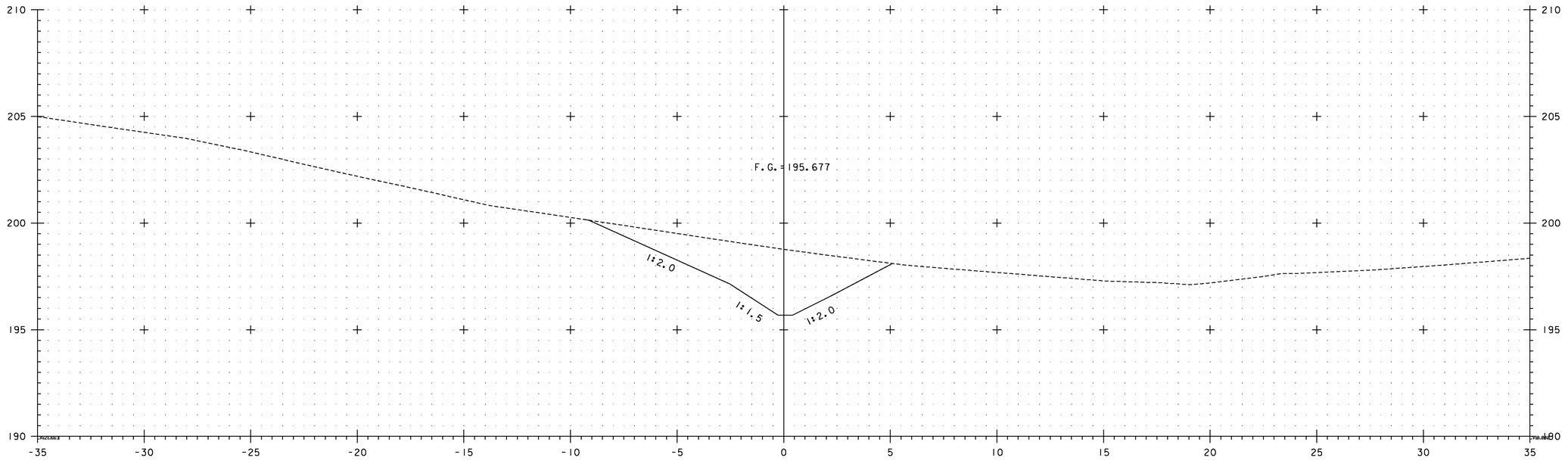

SW 3+000

5 METERS
2.5
H 1:100 SCALE
V 1:100 SCALE
@ FULL SIZE
2.5
5 METERS
SCALE IN METERS

VERMONT AGENCY OF TRANSPORTATION

Stantec

PROJECT NAME: BENNINGTON
PROJECT NUMBER: AC NH 019-1(53)

FILE NAME: ...\plot_files\zd307c3xs_sw.ptf
DESIGN SUPERVISOR: GREG EDWARDS
DESIGNED BY: MARC FOISY
SWALE 3 CROSS SECTIONS

PLOT DATE: 5/16/2011
DRAWN BY: STANTEC
CHECKED BY: GARY SANTY
SHEET 384 OF 577

v:\1853\active\185300021\transportation\drawing\contract_3\plot_files\zd307c3xs_sw.ptf

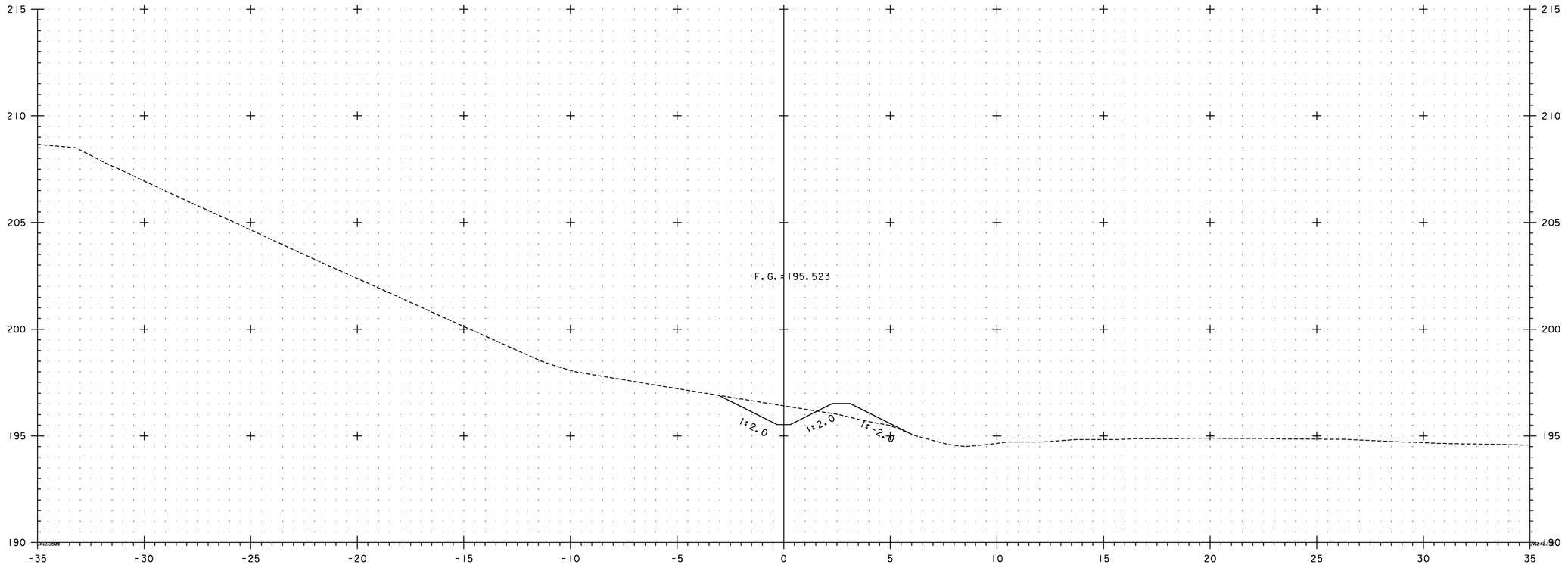

SW 3+020

5 METERS

H 1:100 SCALE
V 1:100 SCALE
@ FULL SIZE

2.5 2.5 5 METERS

SCALE IN METERS

VERMONT AGENCY OF TRANSPORTATION

Stantec

PROJECT NAME: BENNINGTON
PROJECT NUMBER: AC NH 019-1(53)

FILE NAME: ...\plot_files\zd307c3xs_sw.ptf
DESIGN SUPERVISOR: GREG EDWARDS
DESIGNED BY: MARC FOISY
SWALE 3 CROSS SECTIONS

PLOT DATE: 5/16/2011
DRAWN BY: STANTEC
CHECKED BY: GARY SANTY
SHEET 385 OF 577

v:\1953\active\195310002\transportation\drawing\contract_3\plot_files\zd307c3xs_sw.ptf

Metric

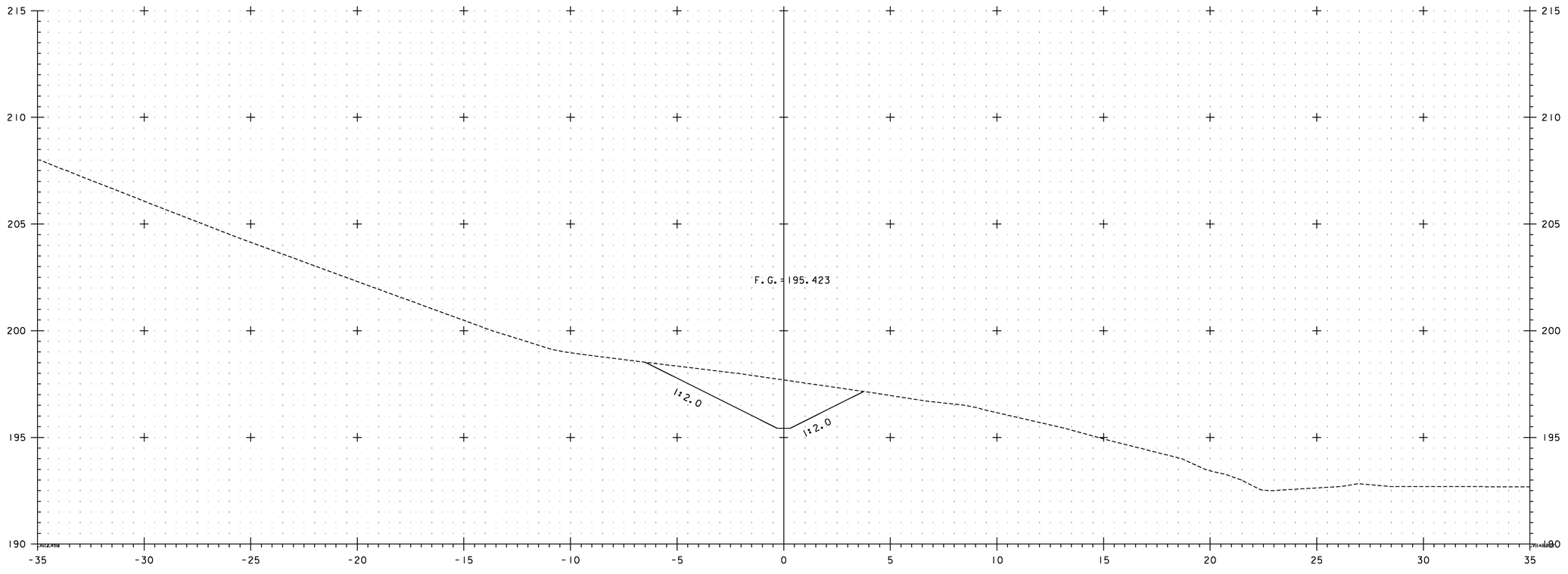

SW 3+040

5 METERS
2.5
H 1:100 SCALE
V 1:100 SCALE
@ FULL SIZE
2.5 5 METERS
SCALE IN METERS

VERMONT AGENCY OF TRANSPORTATION

Stantec

PROJECT NAME: BENNINGTON
PROJECT NUMBER: AC NH 019-1(53)

FILE NAME: ...\plot_files\zd307c3xs_sw.ptf
DESIGN SUPERVISOR: GREG EDWARDS
DESIGNED BY: MARC FOISY
SWALE 3 CROSS SECTIONS

PLOT DATE: 5/16/2011
DRAWN BY: STANTEC
CHECKED BY: GARY SANTY
SHEET 386 OF 577

v:\1953\active\195310002\transportation\drawing\contract_3\plot_files\zd307c3xs_sw.ptf

Metric

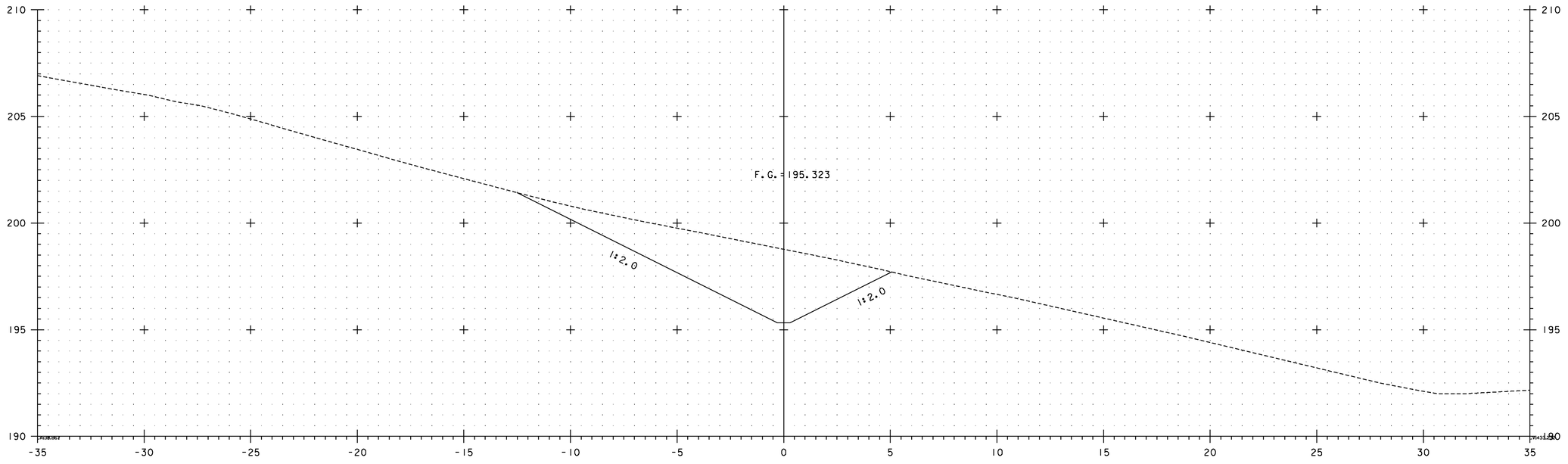

SW 3+060

5 METERS
2.5
H 1:100 SCALE
V 1:100 SCALE
@ FULL SIZE
2.5
5 METERS
SCALE IN METERS

VERMONT AGENCY OF TRANSPORTATION

Stantec

PROJECT NAME: BENNINGTON
PROJECT NUMBER: AC NH 019-1(53)

FILE NAME: ...\plot_files\zd307c3xs_sw.ptf
DESIGN SUPERVISOR: GREG EDWARDS
DESIGNED BY: MARC FOISY
SWALE 3 CROSS SECTIONS

PLOT DATE: 5/16/2011
DRAWN BY: STANTEC
CHECKED BY: GARY SANTY
SHEET 387 OF 577

v:\1853\active\185300021\transportation\drawing\contract_3\plot_files\zd307c3xs_sw.ptf

Metric

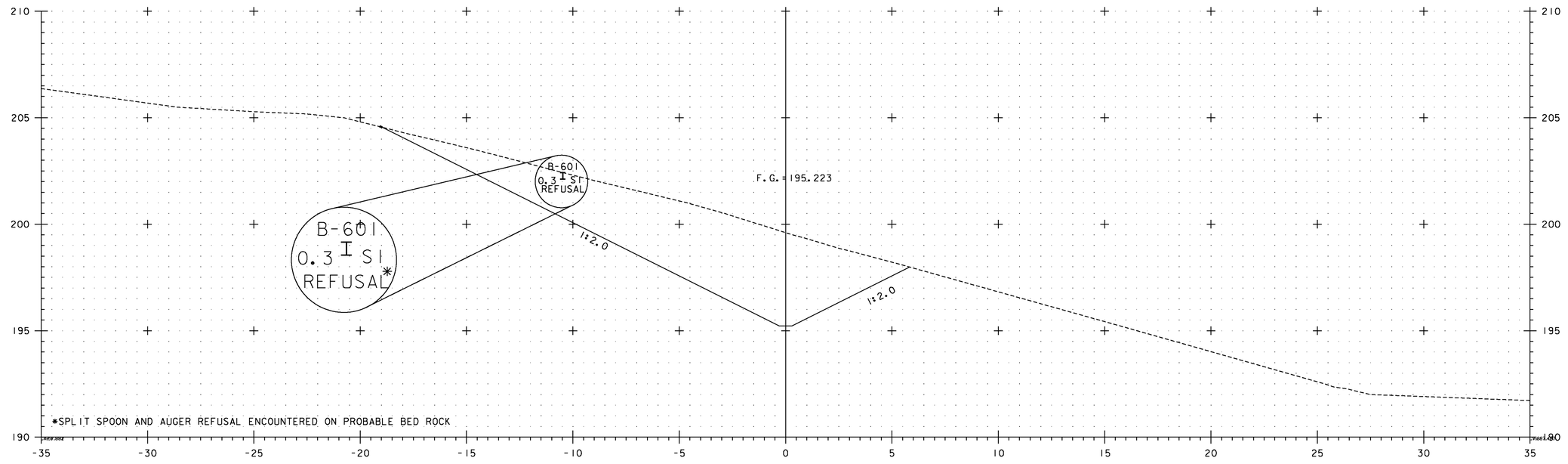

SW 3+080

5 METERS
2.5
H 1:100 SCALE
V 1:100 SCALE
@ FULL SIZE
2.5 5 METERS
SCALE IN METERS

VERMONT AGENCY OF TRANSPORTATION

Stantec

PROJECT NAME: BENNINGTON
PROJECT NUMBER: AC NH 019-1(53)

FILE NAME: ...\plot_files\zd307c3xs_sw.ptf
DESIGN SUPERVISOR: GREG EDWARDS
DESIGNED BY: MARC FOISY
SWALE 3 CROSS SECTIONS

PLOT DATE: 5/16/2011
DRAWN BY: STANTEC
CHECKED BY: GARY SANTY
SHEET 388 OF 577

v:\853\active\85300002\transportation\drawing\contract_3\plot_files\zd307c3xs_sw.ptf

Metric

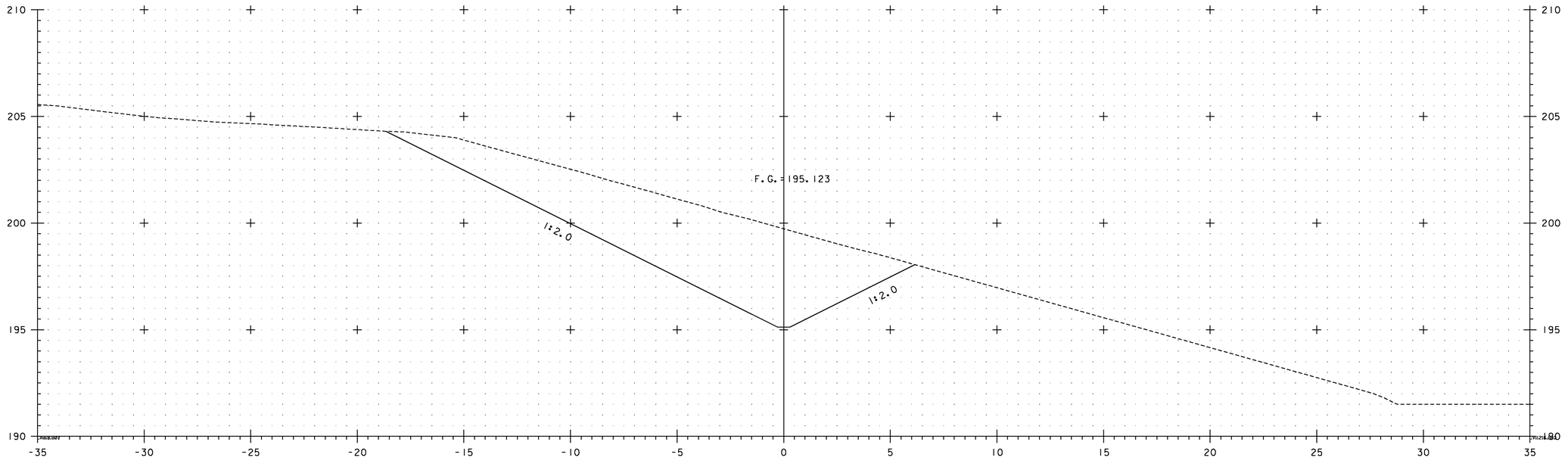

SW 3+100

5 METERS
2.5
H 1:100 SCALE
V 1:100 SCALE
@ FULL SIZE
2.5
5 METERS
SCALE IN METERS

VERMONT AGENCY OF TRANSPORTATION

Stantec

PROJECT NAME: BENNINGTON
PROJECT NUMBER: AC NH 019-1(53)

FILE NAME: ...\plot_files\zd307c3xs_sw.ptf
DESIGN SUPERVISOR: GREG EDWARDS
DESIGNED BY: MARC FOISY
SWALE 3 CROSS SECTIONS

PLOT DATE: 5/16/2011
DRAWN BY: STANTEC
CHECKED BY: GARY SANTY
SHEET 389 OF 577

v:\1853\active\185300021\transportation\drawing\contract_3\plot_files\zd307c3xs_sw.ptf

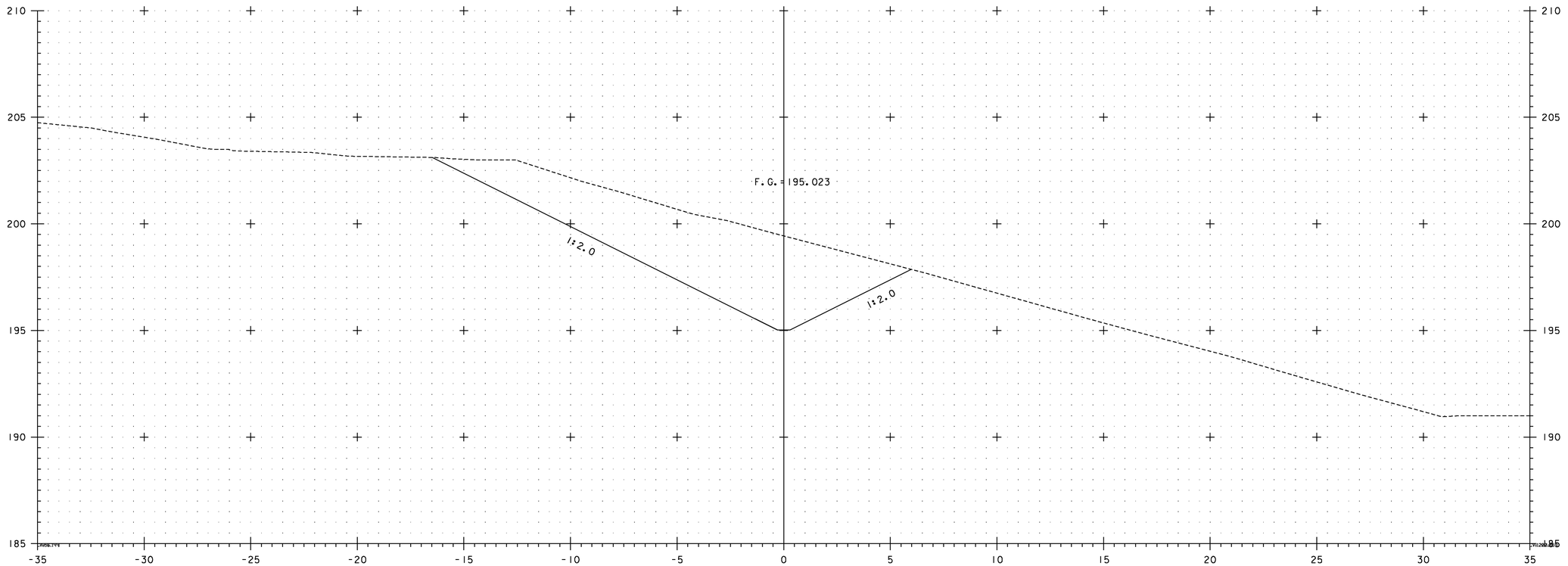

SW 3+120

5 METERS
2.5
H 1:100 SCALE
V 1:100 SCALE
@ FULL SIZE
2.5
5 METERS
SCALE IN METERS

VERMONT AGENCY OF TRANSPORTATION

Stantec

PROJECT NAME: BENNINGTON
PROJECT NUMBER: AC NH 019-1(53)

FILE NAME: ...\plot_files\zd307c3xs_sw.ptf
DESIGN SUPERVISOR: GREG EDWARDS
DESIGNED BY: MARC FOISY
SWALE 3 CROSS SECTIONS

PLOT DATE: 5/16/2011
DRAWN BY: STANTEC
CHECKED BY: GARY SANTY
SHEET 390 OF 577

v:\1953\active\195300021\transportation\drawing\contract_3\plot_files\zd307c3xs_sw.ptf

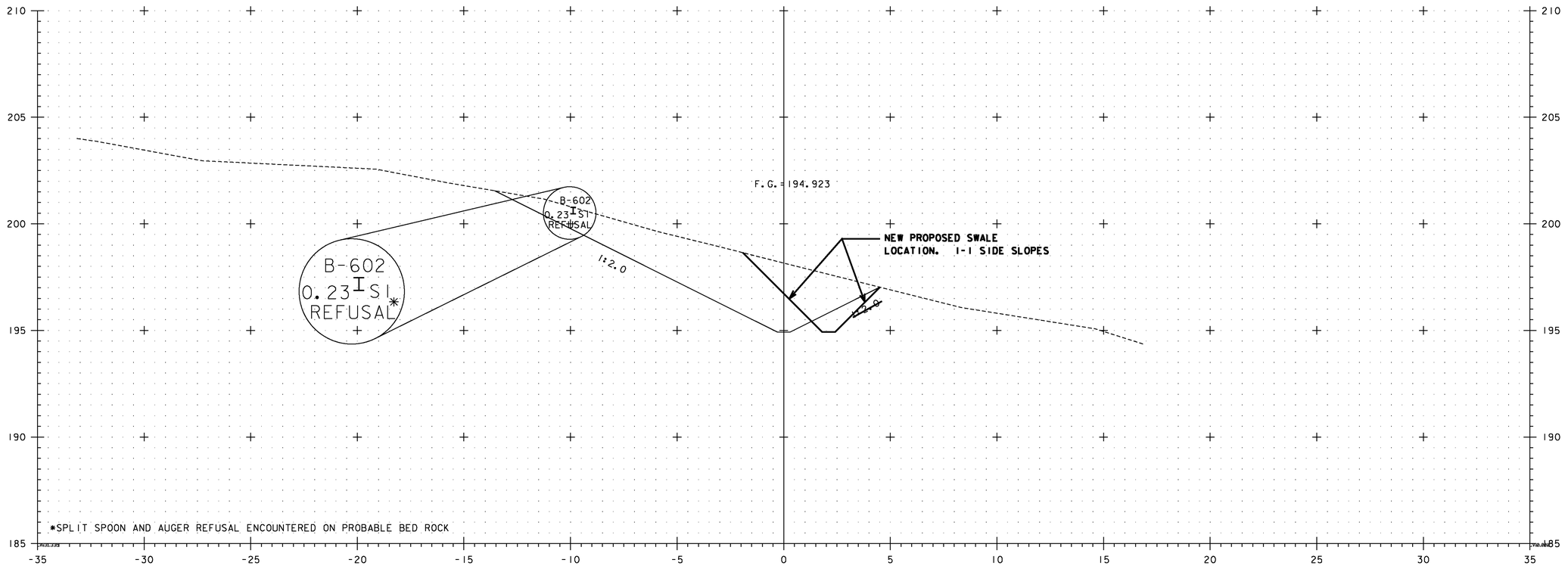

SW 3+140

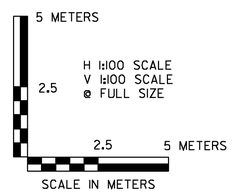

VERMONT AGENCY OF TRANSPORTATION

Stantec

PROJECT NAME: BENNINGTON
PROJECT NUMBER: AC NH 019-1(53)

FILE NAME: ...\plot_files\zd307c3xs_sw.ptf
DESIGN SUPERVISOR: GREG EDWARDS
DESIGNED BY: MARC FOISY
SWALE 3 CROSS SECTIONS

PLOT DATE: 5/16/2011
DRAWN BY: STANTEC
CHECKED BY: GARY SANTY
SHEET 391 OF 577

v:\1953\active\195310002\transportation\drawing\contract_3\plot_files\zd307c3xs_sw.ptf

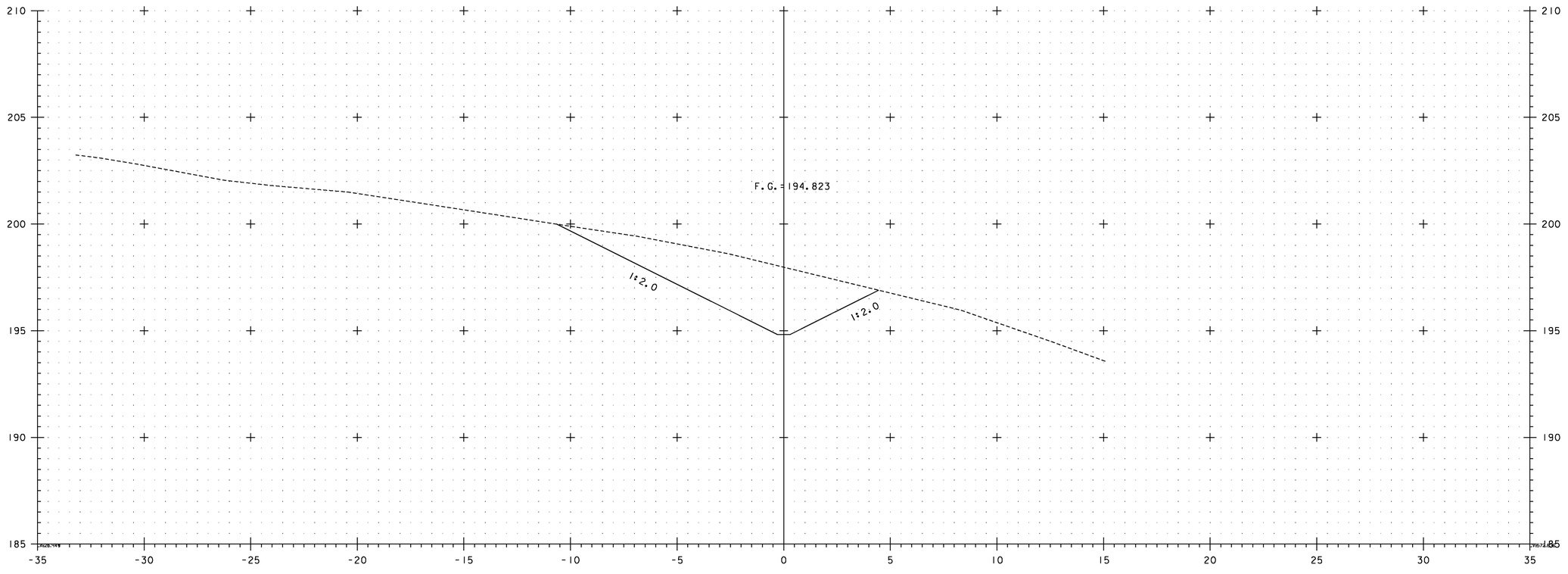

SW 3+160

5 METERS

2.5

H 1:100 SCALE
V 1:100 SCALE
@ FULL SIZE

2.5 5 METERS

SCALE IN METERS

VERMONT AGENCY OF TRANSPORTATION

Stantec

PROJECT NAME: BENNINGTON
PROJECT NUMBER: AC NH 019-1(53)

FILE NAME: ...\plot_files\zd307c3xs_sw.ptf
DESIGN SUPERVISOR: GREG EDWARDS
DESIGNED BY: MARC FOISY
SWALE 3 CROSS SECTIONS

PLOT DATE: 5/16/2011
DRAWN BY: STANTEC
CHECKED BY: GARY SANTY
SHEET 392 OF 577

v:\1953\active\195310002\transportation\drawing\contract_3\plot_files\zd307c3xs_sw.ptf

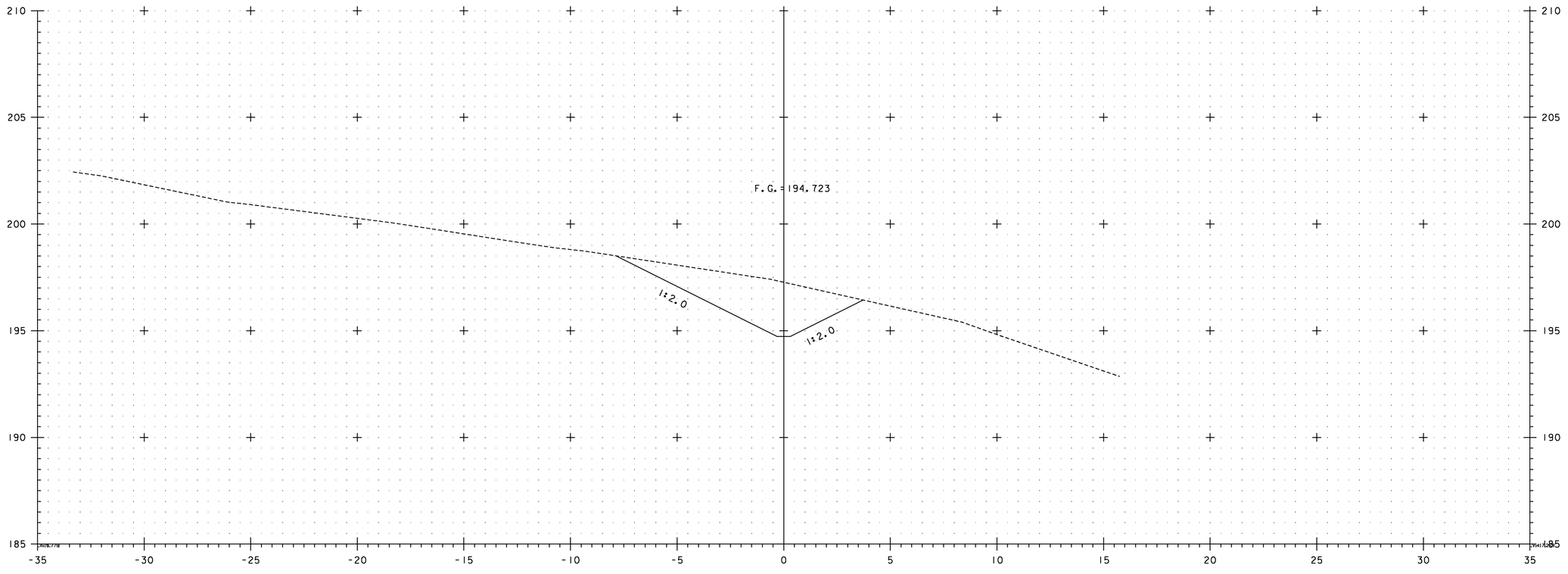

SW 3+180

5 METERS

H 1:100 SCALE
V 1:100 SCALE
@ FULL SIZE

2.5 2.5 5 METERS

SCALE IN METERS

VERMONT AGENCY OF TRANSPORTATION

Stantec

PROJECT NAME: BENNINGTON
PROJECT NUMBER: AC NH 019-1(53)

FILE NAME: ...\plot_files\zd307c3xs_sw.ptf
DESIGN SUPERVISOR: GREG EDWARDS
DESIGNED BY: MARC FOISY
SWALE 3 CROSS SECTIONS

PLOT DATE: 5/16/2011
DRAWN BY: STANTEC
CHECKED BY: GARY SANTY
SHEET 393 OF 577

v:\1953\active\195310002\transportation\drawing\contract_3\plot_files\zd307c3xs_sw.ptf

Metric

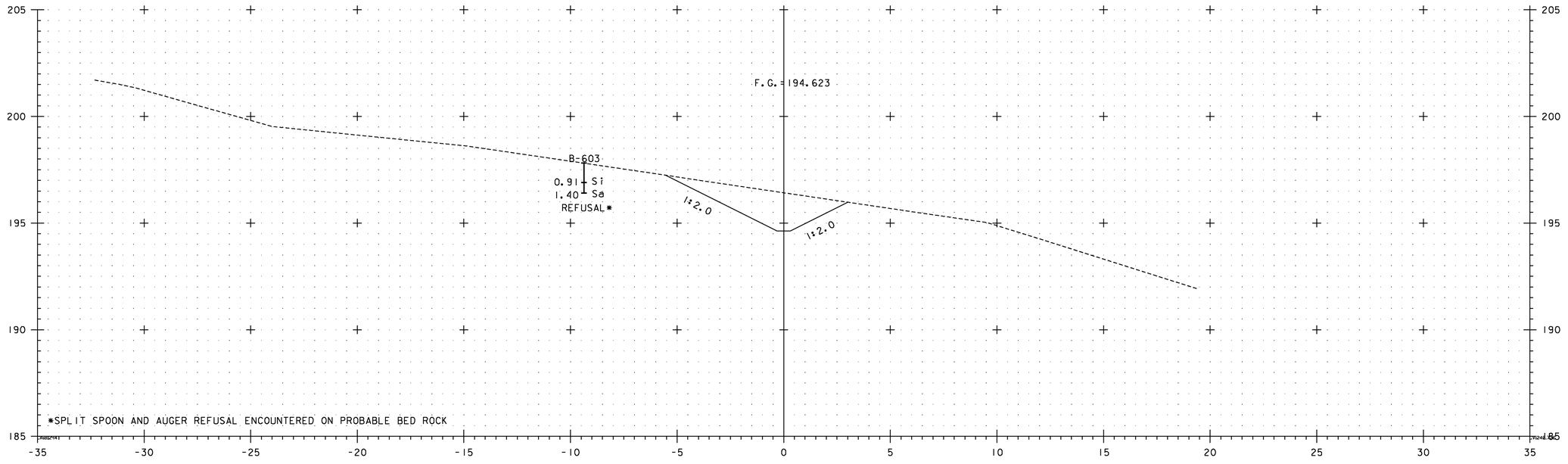

SW 3+200

5 METERS
2.5
H 1:100 SCALE
V 1:100 SCALE
@ FULL SIZE
2.5 5 METERS
SCALE IN METERS

VERMONT AGENCY OF TRANSPORTATION

Stantec

PROJECT NAME: BENNINGTON
PROJECT NUMBER: AC NH 019-1(53)

FILE NAME: ...\plot_files\zd307c3xs_sw.ptf
DESIGN SUPERVISOR: GREG EDWARDS
DESIGNED BY: MARC FOISY
SWALE 3 CROSS SECTIONS

PLOT DATE: 5/16/2011
DRAWN BY: STANTEC
CHECKED BY: GARY SANTY
SHEET 394 OF 577

v:\853\active\853002\transportation\drawing\contract_3\plot_files\zd307c3xs_sw.ptf

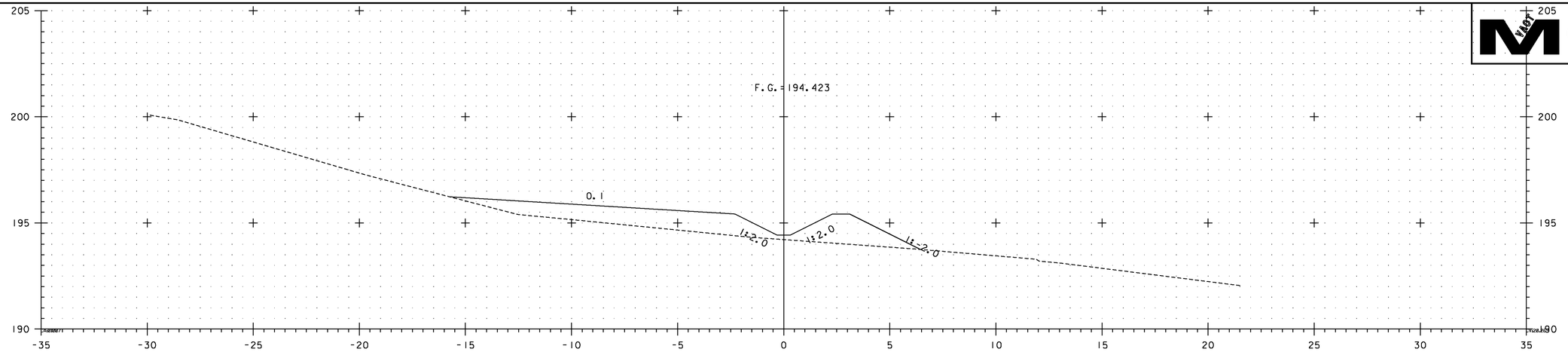

SW 3+240

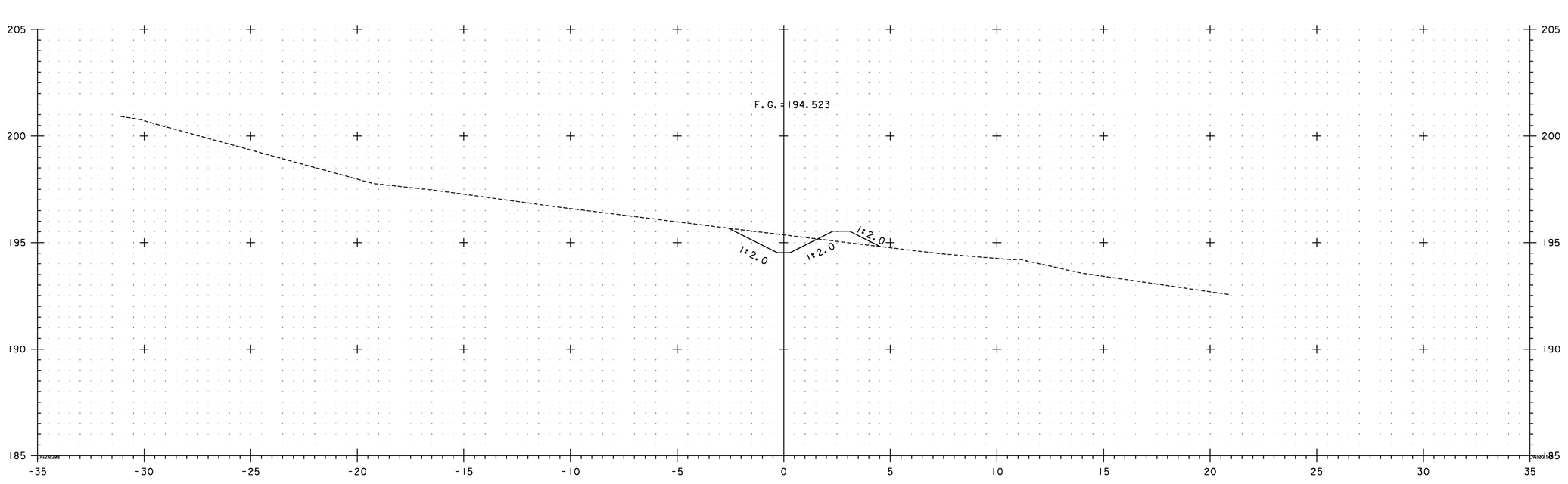

SW 3+220

5 METERS
2.5
H 1:100 SCALE
V 1:100 SCALE
@ FULL SIZE
2.5
5 METERS
SCALE IN METERS

VERMONT AGENCY OF TRANSPORTATION

PROJECT NAME: BENNINGTON
PROJECT NUMBER: AC NH 019-1(53)

FILE NAME: ...\plot_files\zd307c3xs_sw.ptf
DESIGN SUPERVISOR: GREG EDWARDS
DESIGNED BY: MARC FOISY
SWALE 3 CROSS SECTIONS

PLOT DATE: 5/16/2011
DRAWN BY: STANTEC
CHECKED BY: GARY SANTY
SHEET 395 OF 577

Stantec

v:\1853\active\185300021\transportation\drawing\contract_3\plot_files\zd307c3xs_sw.ptf

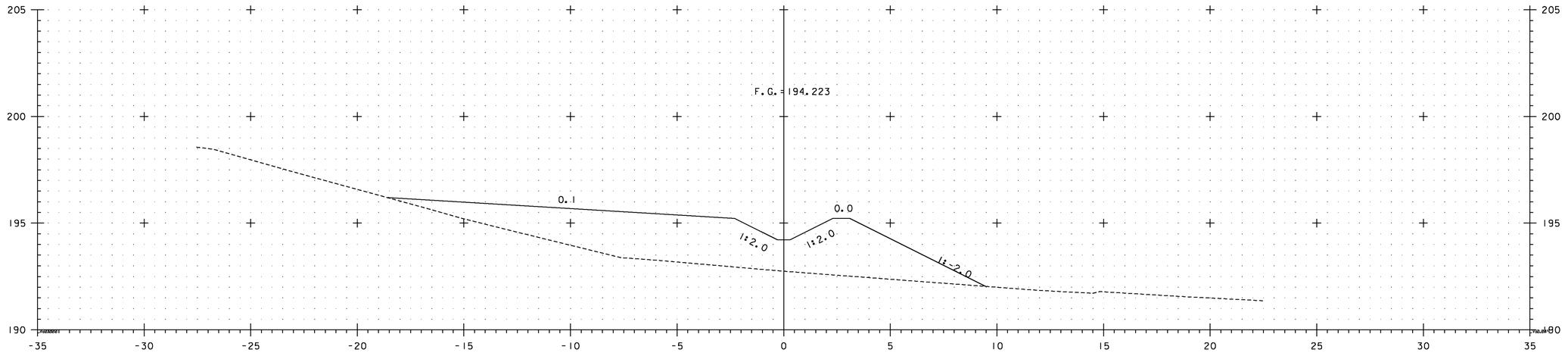

SW 3+280

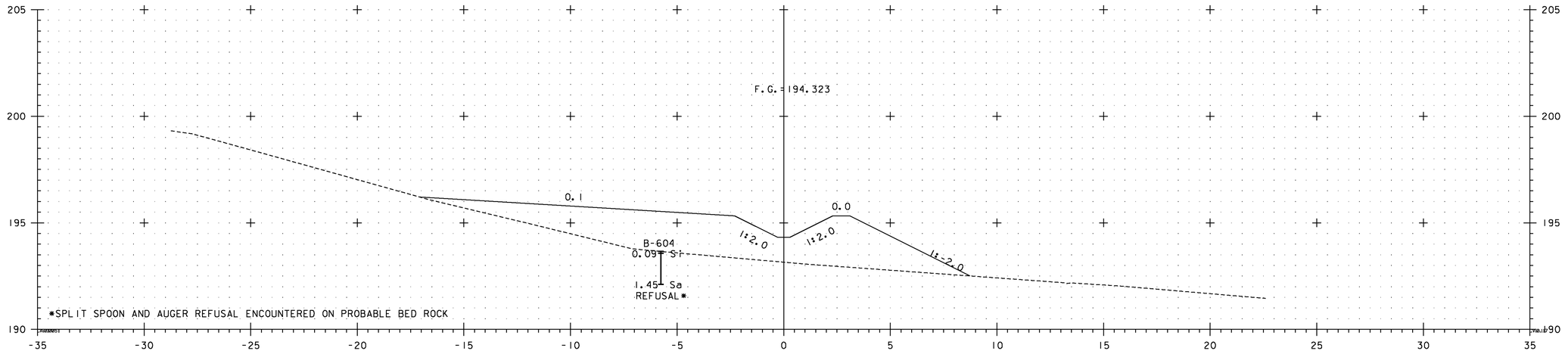

SW 3+260

5 METERS
2.5
H 1:100 SCALE
V 1:100 SCALE
@ FULL SIZE
2.5 5 METERS
SCALE IN METERS

VERMONT AGENCY OF TRANSPORTATION

PROJECT NAME: BENNINGTON
PROJECT NUMBER: AC NH 019-1(53)

FILE NAME: ...\plot_files\zd307c3xs_sw.ptf
PLOT DATE: 5/16/2011
DESIGN SUPERVISOR: GREG EDWARDS
DRAWN BY: STANTEC
DESIGNED BY: MARC FOISY
CHECKED BY: GARY SANTY
SWALE 3 CROSS SECTIONS
SHEET 396 OF 577

v:\953\active\95300002\transportation\drawing\contract_3\plot_files\zd307c3xs_sw.ptf

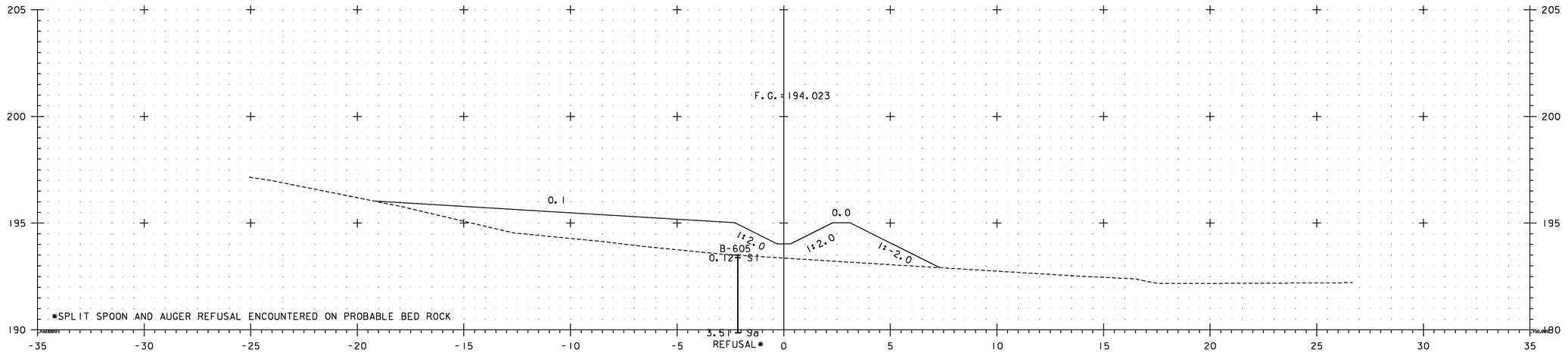

SW 3+320

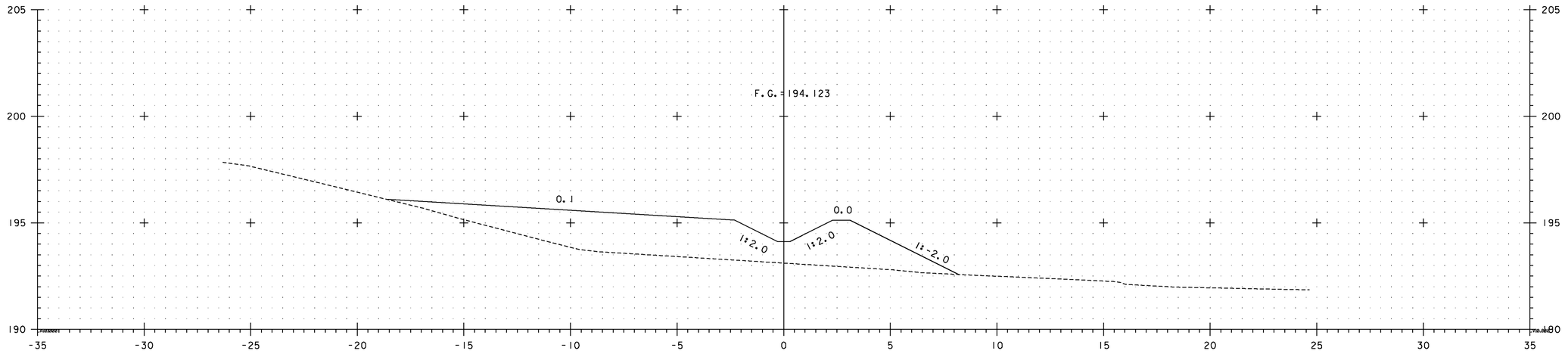

SW 3+300

5 METERS

H 1:100 SCALE
V 1:100 SCALE
@ FULL SIZE

2.5 2.5 5 METERS

SCALE IN METERS

VERMONT AGENCY OF TRANSPORTATION

Stantec

PROJECT NAME: BENNINGTON
PROJECT NUMBER: AC NH 019-1(53)

FILE NAME: ...\plot_files\zd307c3xs_sw.ptf
DESIGN SUPERVISOR: GREG EDWARDS
DESIGNED BY: MARC FOISY
SWALE 3 CROSS SECTIONS

PLOT DATE: 5/16/2011
DRAWN BY: STANTEC
CHECKED BY: GARY SANTY
SHEET 397 OF 577

v:\193\active\19530002\transportation\drawing\contract_3\plot_files\zd307c3xs_sw.ptf

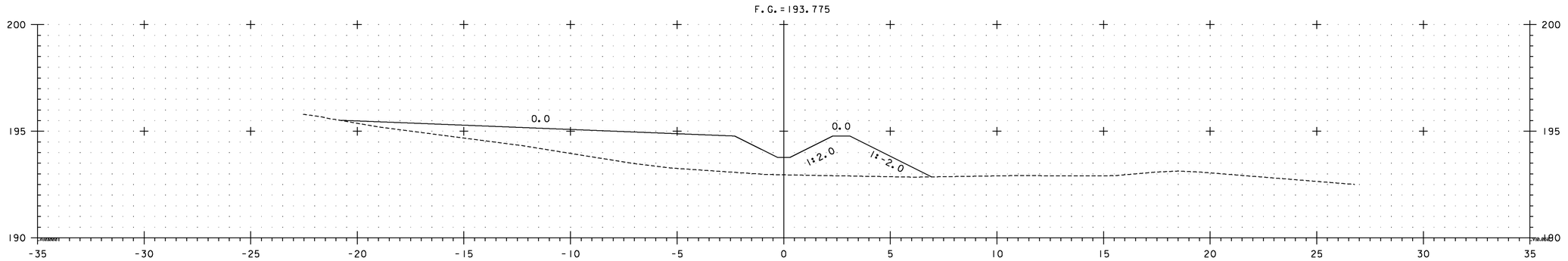

SW 3+360

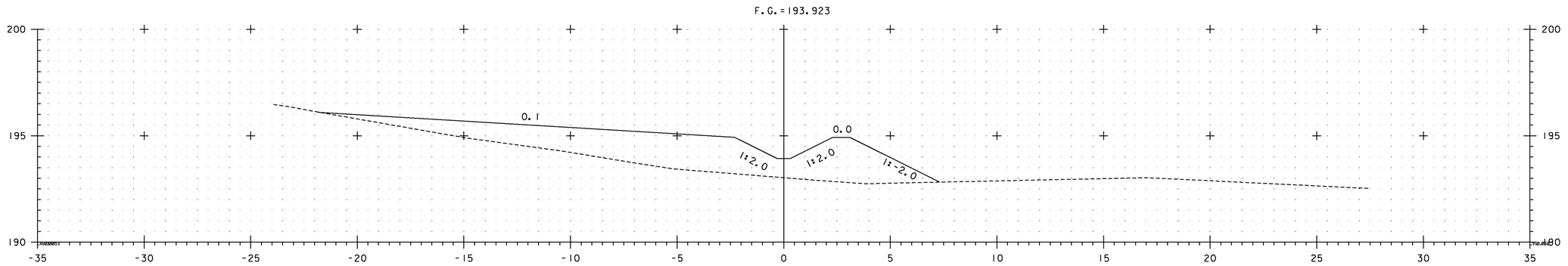

SW 3+340

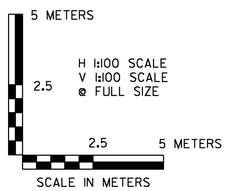

VERMONT AGENCY OF TRANSPORTATION

Stantec

PROJECT NAME: BENNINGTON
PROJECT NUMBER: AC NH 019-1(53)

FILE NAME: ...\plot_files\zd307c3xs_sw.ptf
DESIGN SUPERVISOR: GREG EDWARDS
DESIGNED BY: MARC FOISY
SWALE 3 CROSS SECTIONS

PLOT DATE: 5/16/2011
DRAWN BY: STANTEC
CHECKED BY: GARY SANTY
SHEET 398 OF 577

v:\193\active\195300021\transportation\drawing\contract_3\plot_files\zd307c3xs_sw.ptf

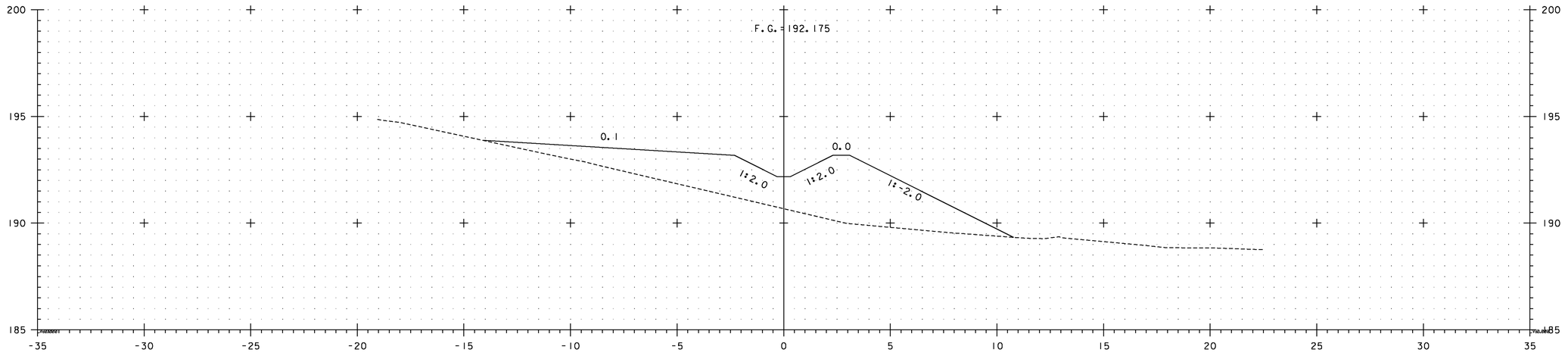

SW 3+400

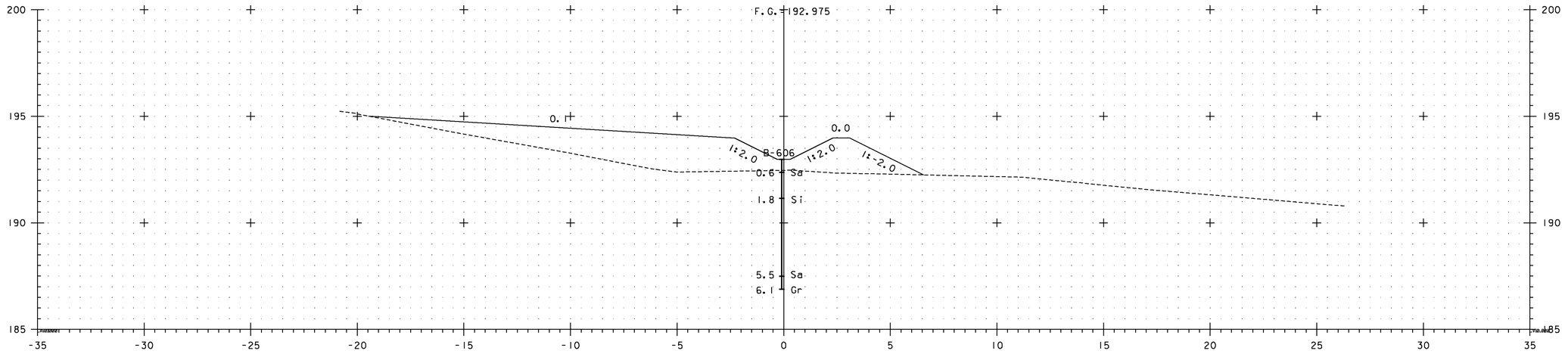

SW 3+380

5 METERS

H 1:100 SCALE
V 1:100 SCALE
@ FULL SIZE

2.5 2.5 5 METERS

SCALE IN METERS

VERMONT AGENCY OF TRANSPORTATION

Stantec

PROJECT NAME: BENNINGTON
PROJECT NUMBER: AC NH 019-1(53)

FILE NAME: ...\plot_files\zd307c3xs_sw.ptf
DESIGN SUPERVISOR: GREG EDWARDS
DESIGNED BY: MARC FOISY
SWALE 3 CROSS SECTIONS

PLOT DATE: 5/16/2011
DRAWN BY: STANTEC
CHECKED BY: GARY SANTY
SHEET 399 OF 577

v:\953\active\95330002\transportation\drawing\contract_3\plot_files\zd307c3xs_sw.ptf

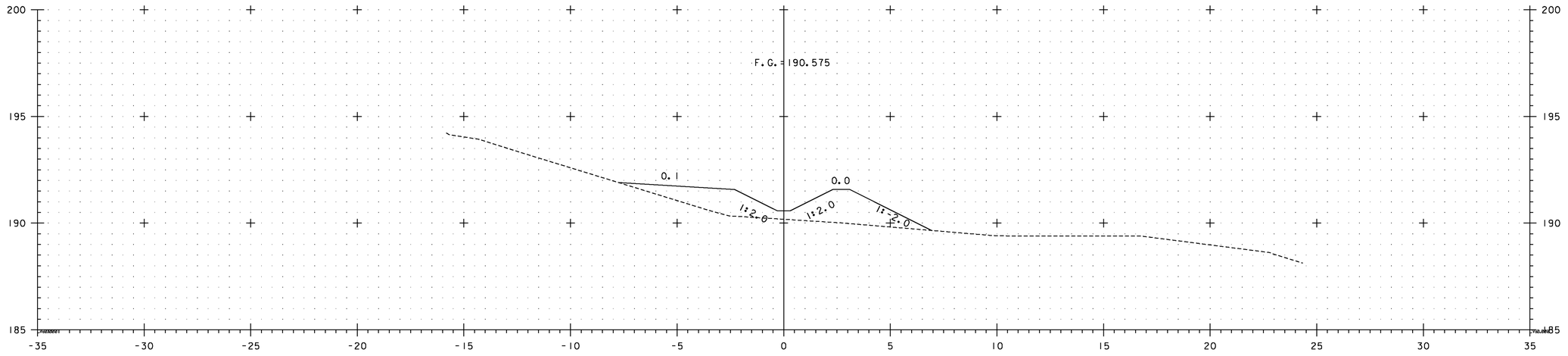

SW 3+440

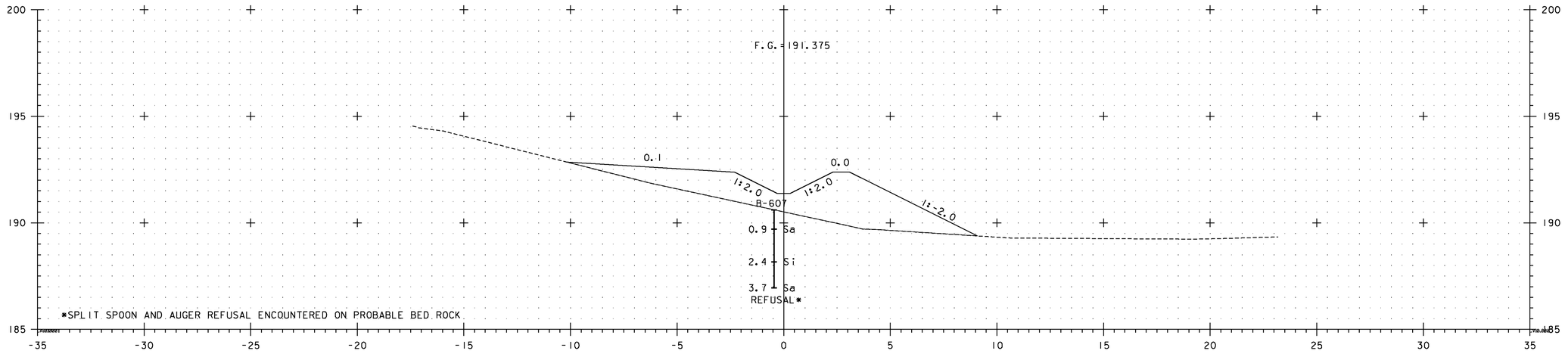

SW 3+420

5 METERS
H 1:100 SCALE
V 1:100 SCALE
@ FULL SIZE
2.5
2.5 5 METERS
SCALE IN METERS

VERMONT AGENCY OF TRANSPORTATION

Stantec

PROJECT NAME: BENNINGTON
PROJECT NUMBER: AC NH 019-1(53)

FILE NAME: ...\plot_files\zd307c3xs_sw.ptf
DESIGN SUPERVISOR: GREG EDWARDS
DESIGNED BY: MARC FOISY
SWALE 3 CROSS SECTIONS

PLOT DATE: 5/16/2011
DRAWN BY: STANTEC
CHECKED BY: GARY SANTY
SHEET 400 OF 577

v:\953\active\95330002\transportation\drawing\contract_3\plot_files\zd307c3xs_sw.ptf

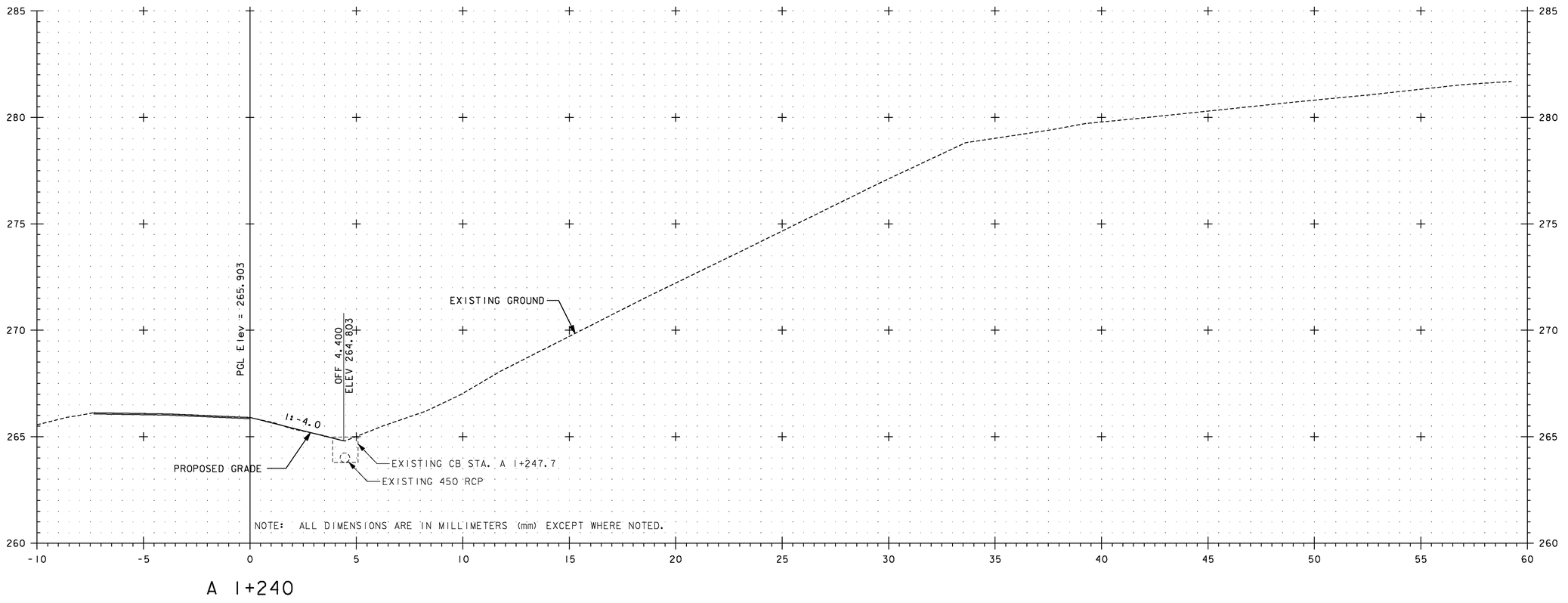

A I+240

5 METERS
2.5
H I:100 SCALE
V I:100 SCALE
@ FULL SIZE
2.5 5 METERS
SCALE IN METERS

VERMONT AGENCY OF TRANSPORTATION

Stantec

PROJECT NAME: BENNINGTON
PROJECT NUMBER: AC NH 019-1(53)

FILE NAME: ...\zd307c3xs_ramp_a.ptf
DESIGN SUPERVISOR: GREG EDWARDS
DESIGNED BY: MARC FOISY
RAMP A CROSS SECTIONS

PLOT DATE: 5/16/2011
DRAWN BY: STANTEC
CHECKED BY: GARY SANTY
SHEET 401 OF 577

v:\953\active\95530002\transportation\drawing\contract_3\plot_files\zd307c3xs_ramp_a.ptf

Metric

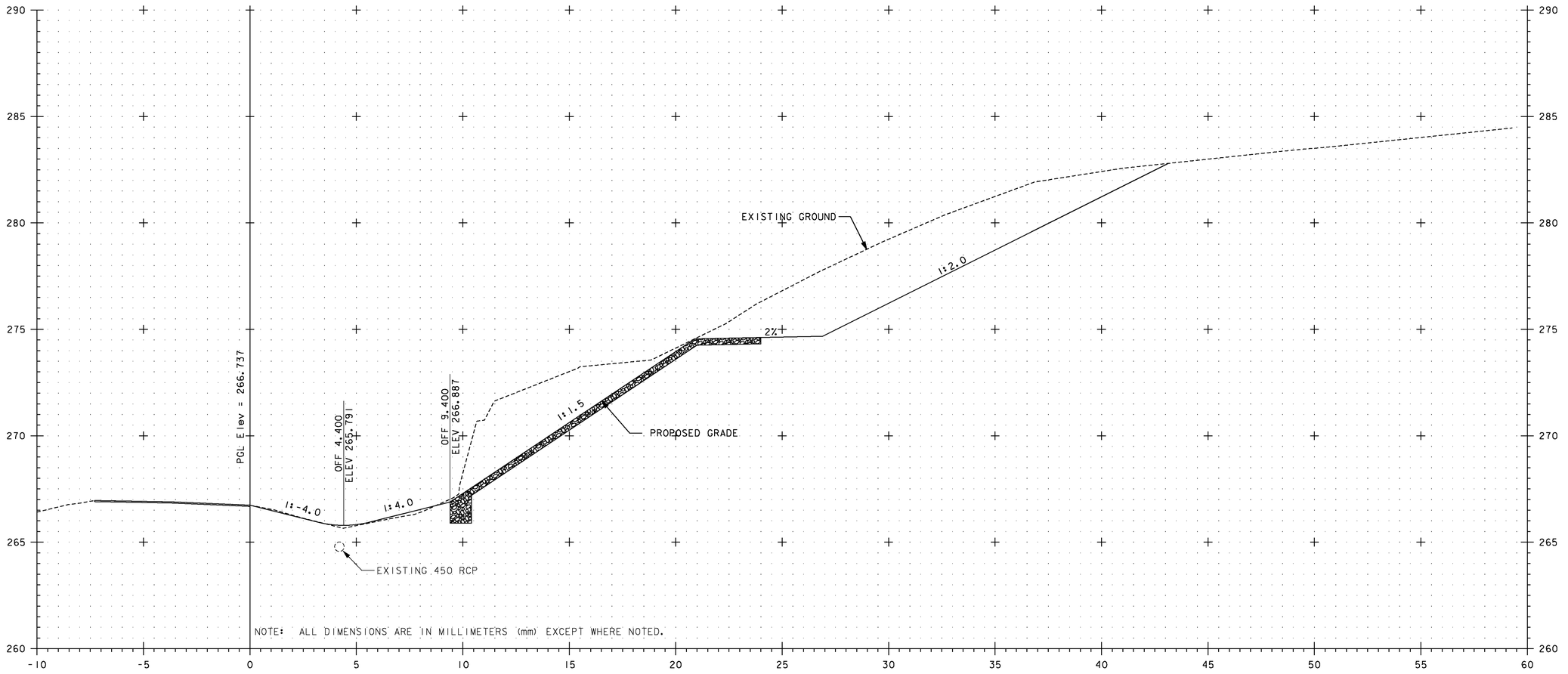

A 1+260

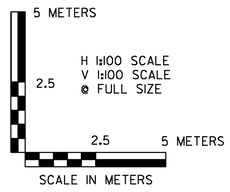

VERMONT AGENCY OF TRANSPORTATION

Stantec

PROJECT NAME: BENNINGTON
PROJECT NUMBER: AC NH 019-1(53)

FILE NAME: ...\zd307c3xs_ramp_a.ptf
DESIGN SUPERVISOR: GREG EDWARDS
DESIGNED BY: MARC FOISY
RAMP A CROSS SECTIONS

PLOT DATE: 5/16/2011
DRAWN BY: STANTEC
CHECKED BY: GARY SANTY
SHEET 402 OF 577

v:\1953\active\195300021\transportation\drawing\contract_3\plot_files\zd307c3xs_ramp_a.ptf

Metric

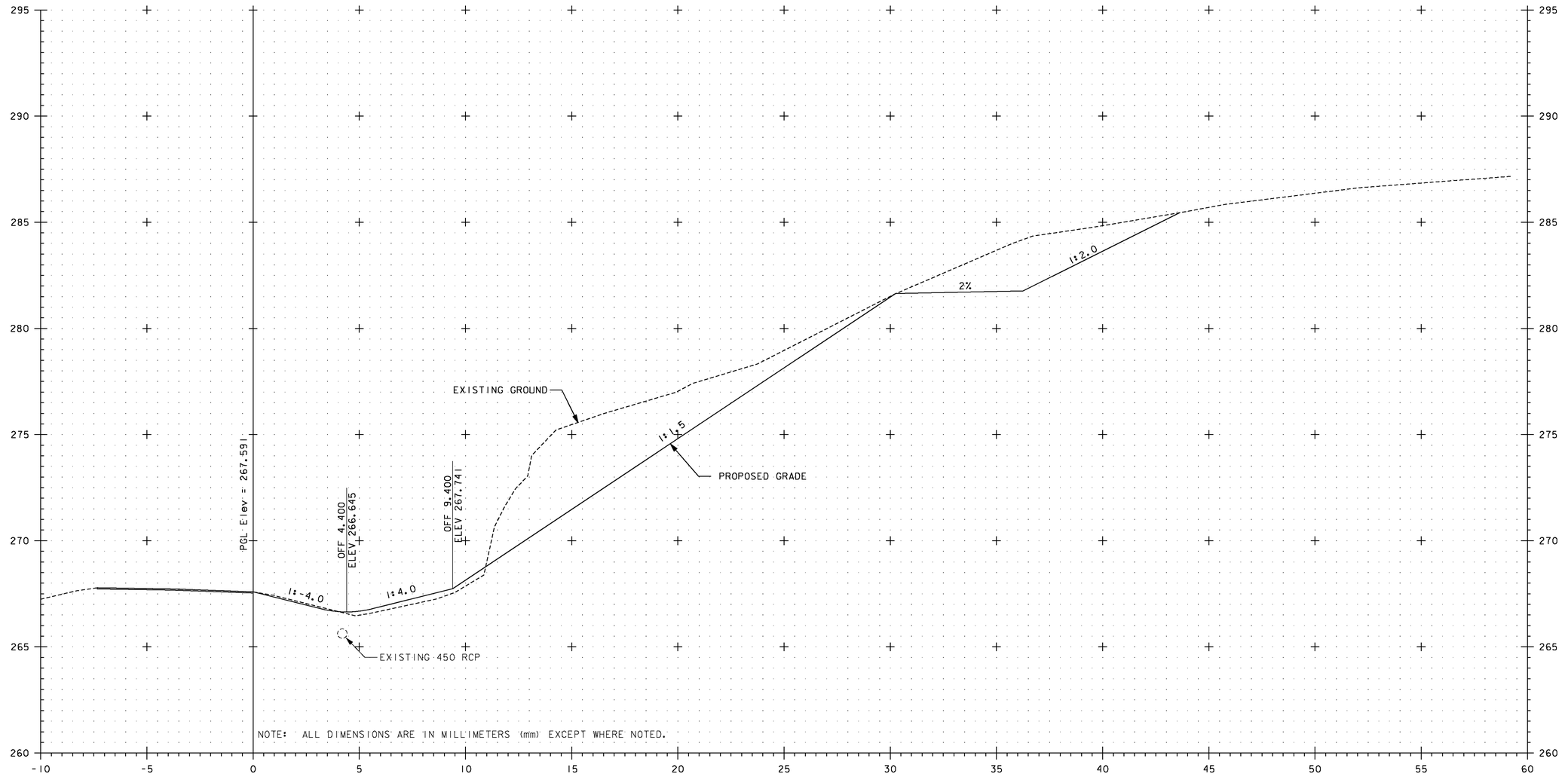

A 1+280

5 METERS

H 1:100 SCALE
V 1:100 SCALE
@ FULL SIZE

2.5 2.5 5 METERS

SCALE IN METERS

VERMONT AGENCY OF TRANSPORTATION

Stantec

PROJECT NAME: BENNINGTON
PROJECT NUMBER: AC NH 019-1(53)

FILE NAME: ...\zd307c3xs_ramp_a.ptf
DESIGN SUPERVISOR: GREG EDWARDS
DESIGNED BY: MARC FOISY
RAMP A CROSS SECTIONS

PLOT DATE: 5/16/2011
DRAWN BY: STANTEC
CHECKED BY: GARY SANTY
SHEET 403 OF 577

v:\1953\active\195310002\transportation\drawing\contract_3\plot_files\zd307c3xs_ramp_a.ptf

Metric

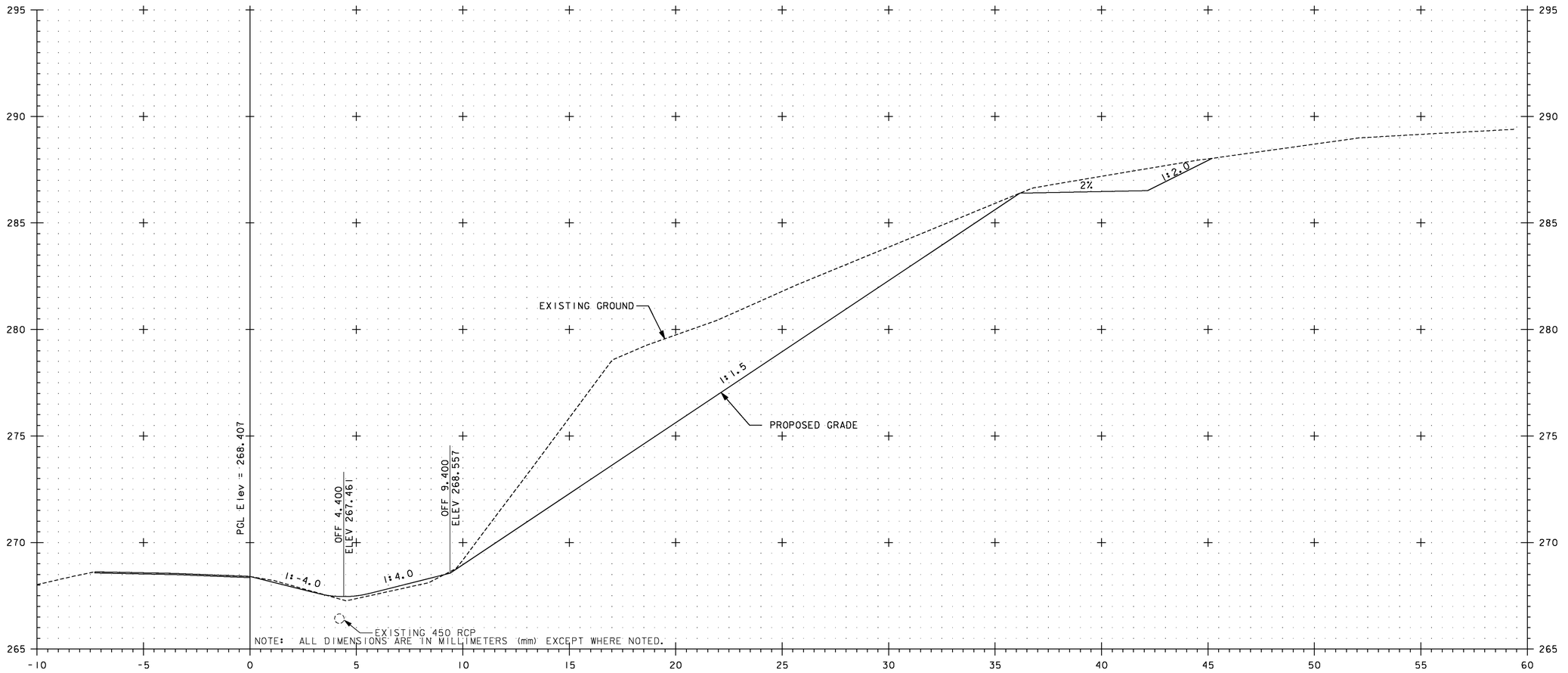

A 1+300

5 METERS
2.5
H 1:100 SCALE
V 1:100 SCALE
@ FULL SIZE
2.5 5 METERS
SCALE IN METERS

VERMONT AGENCY OF TRANSPORTATION

Stantec

PROJECT NAME: BENNINGTON
PROJECT NUMBER: AC NH 019-1(53)

FILE NAME: ...\zd307c3xs_ramp_a.ptf
DESIGN SUPERVISOR: GREG EDWARDS
DESIGNED BY: MARC FOISY
RAMP A CROSS SECTIONS

PLOT DATE: 5/16/2011
DRAWN BY: STANTEC
CHECKED BY: GARY SANTY
SHEET 404 OF 577

v:\1953\active\195300021\transportation\drawing\contract_3\plot_files\zd307c3xs_ramp_a.ptf

Metric

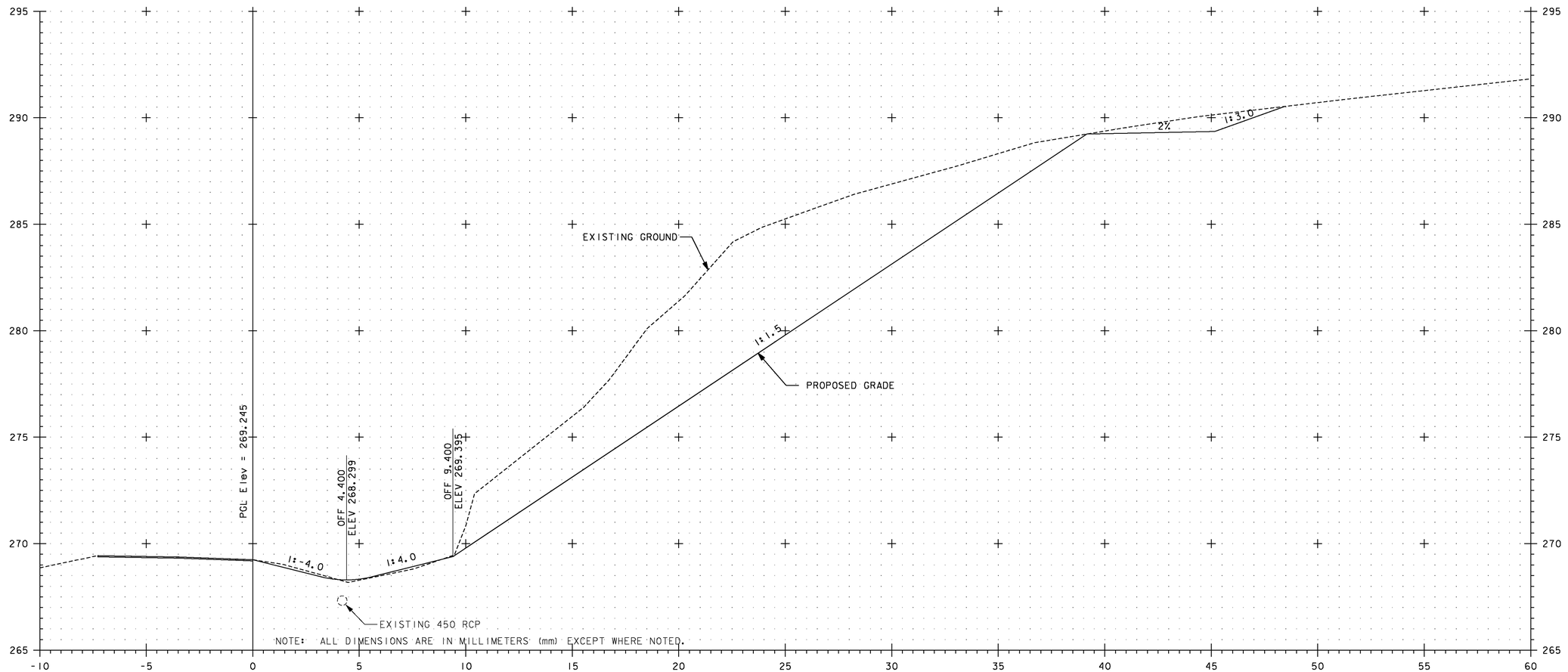

A 1+320

5 METERS
2.5
H 1:100 SCALE
V 1:100 SCALE
@ FULL SIZE
2.5 5 METERS
SCALE IN METERS

VERMONT AGENCY OF TRANSPORTATION

Stantec

PROJECT NAME: BENNINGTON
PROJECT NUMBER: AC NH 019-1(53)

FILE NAME: ...\zd307c3xs_ramp_a.ptf
DESIGN SUPERVISOR: GREG EDWARDS
DESIGNED BY: MARC FOISY
RAMP A CROSS SECTIONS

PLOT DATE: 5/16/2011
DRAWN BY: STANTEC
CHECKED BY: GARY SANTY
SHEET 405 OF 577

v:\1953\active\195310002\transportation\drawing\contract_3\plot_files\zd307c3xs_ramp_a.ptf

Metric

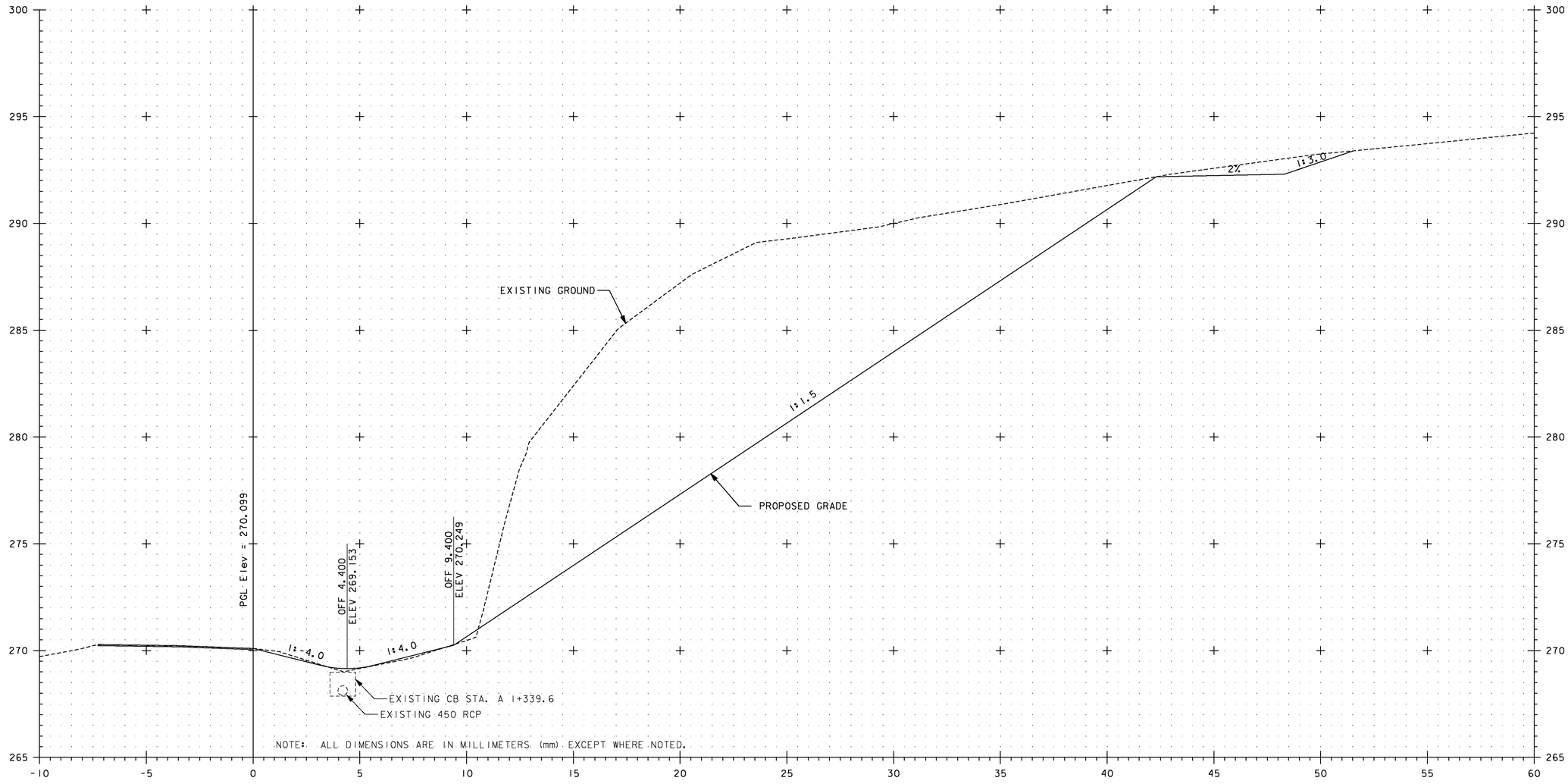

A 1+340

5 METERS
2.5
H 1:100 SCALE
V 1:100 SCALE
@ FULL SIZE
2.5 5 METERS
SCALE IN METERS

VERMONT AGENCY OF TRANSPORTATION

Stantec

PROJECT NAME: BENNINGTON
PROJECT NUMBER: AC NH 019-1(53)

FILE NAME: ...\zd307c3xs_ramp_a.ptf
DESIGN SUPERVISOR: GREG EDWARDS
DESIGNED BY: MARC FOISY
RAMP A CROSS SECTIONS

PLOT DATE: 5/16/2011
DRAWN BY: STANTEC
CHECKED BY: GARY SANTY
SHEET 406 OF 577

v:\1953\active\195300021\transportation\drawing\contract_3\plot_files\zd307c3xs_ramp_a.ptf

Metric

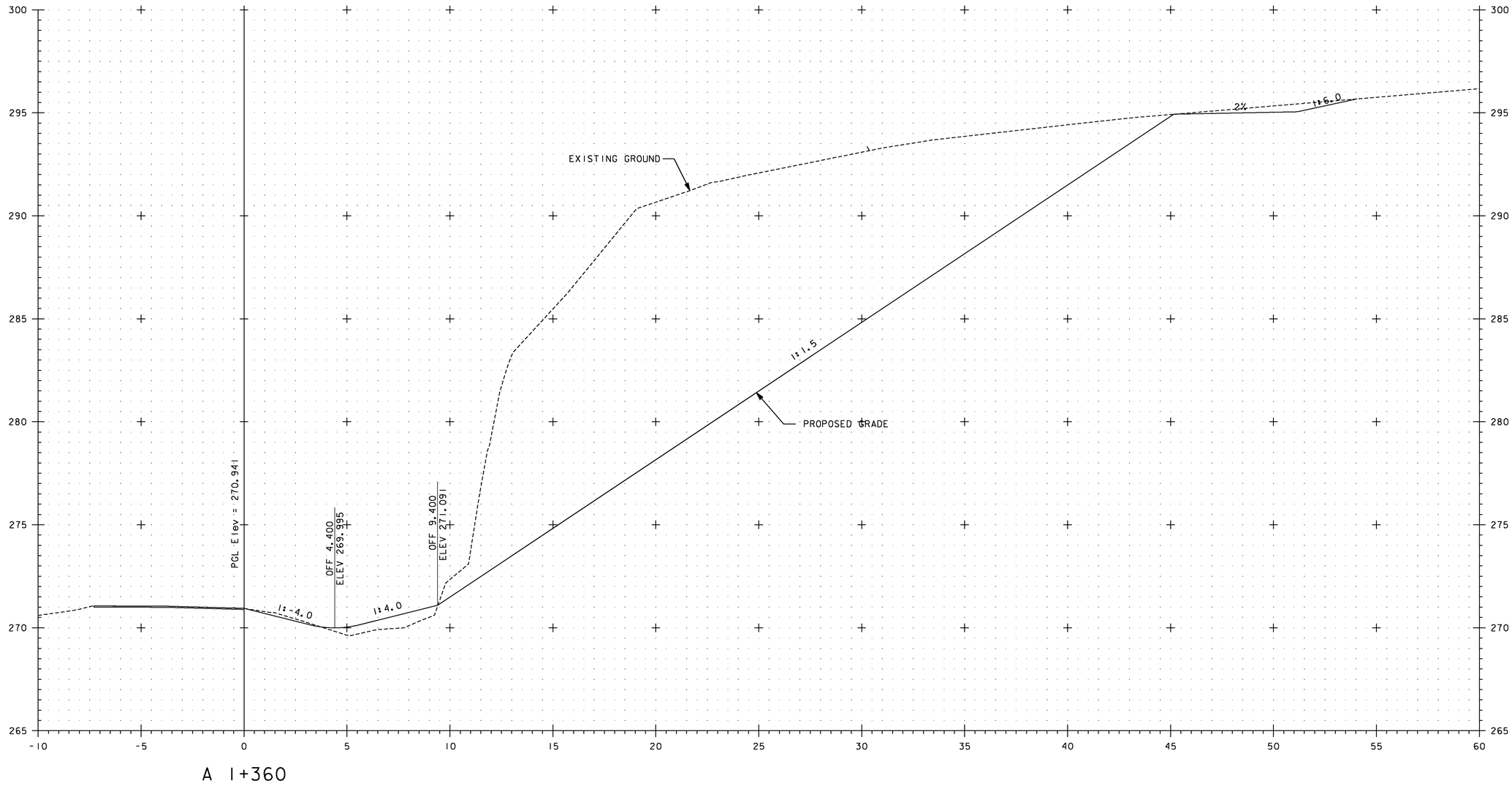

A 1+360

5 METERS
2.5
H 1:100 SCALE
V 1:100 SCALE
@ FULL SIZE
2.5 5 METERS
SCALE IN METERS

VERMONT AGENCY OF TRANSPORTATION

Stantec

PROJECT NAME: BENNINGTON
PROJECT NUMBER: AC NH 019-1(53)

FILE NAME: ...\zd307c3xs_ramp_a.ptf
DESIGN SUPERVISOR: GREG EDWARDS
DESIGNED BY: MARC FOISY
RAMP A CROSS SECTIONS

PLOT DATE: 5/16/2011
DRAWN BY: STANTEC
CHECKED BY: GARY SANTY
SHEET 407 OF 577

v:\953\active\95530002\transportation\drawing\contract_3\plot_files\zd307c3xs_ramp_a.ptf

Metric

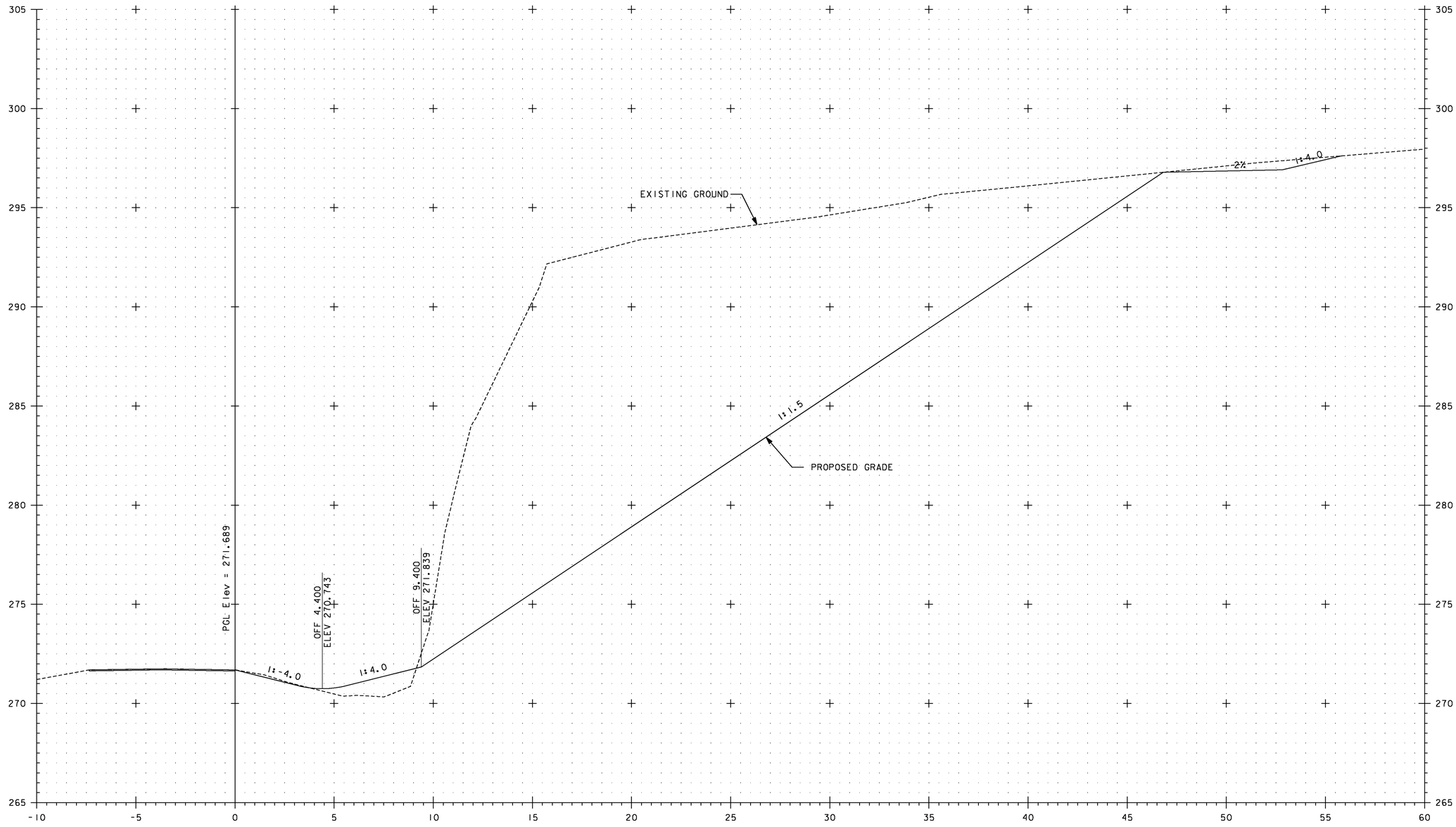

A 1+380

5 METERS
2.5
H 1:100 SCALE
V 1:100 SCALE
@ FULL SIZE
2.5
5 METERS
SCALE IN METERS

VERMONT AGENCY OF TRANSPORTATION

Stantec

PROJECT NAME: BENNINGTON
PROJECT NUMBER: AC NH 019-1(53)

FILE NAME: ...\zd307c3xs_ramp_a.ptf
DESIGN SUPERVISOR: GREG EDWARDS
DESIGNED BY: MARC FOISY
RAMP A CROSS SECTIONS

PLOT DATE: 5/16/2011
DRAWN BY: STANTEC
CHECKED BY: GARY SANTY
SHEET 408 OF 577

v:\1953\active\195310002\transportation\drawing\contract_3\plot_files\zd307c3xs_ramp_a.ptf

Metric

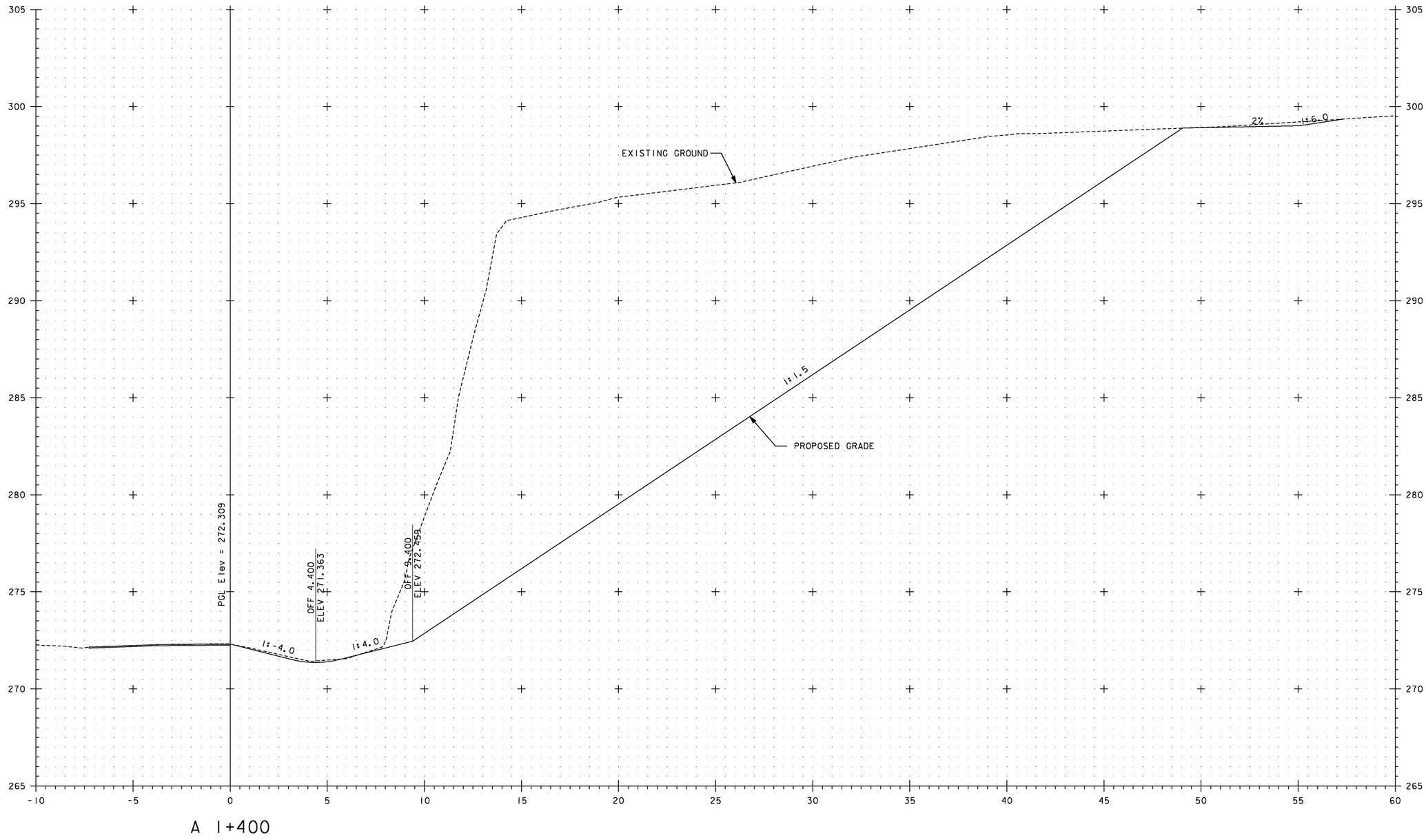

A 1+400

5 METERS
2.5
H 1:100 SCALE
V 1:100 SCALE
@ FULL SIZE
2.5 5 METERS
SCALE IN METERS

VERMONT AGENCY OF TRANSPORTATION

Stantec

PROJECT NAME: BENNINGTON
PROJECT NUMBER: AC NH 019-1(53)

FILE NAME: ...\zd307c3xs_ramp_a.ptf
DESIGN SUPERVISOR: GREG EDWARDS
DESIGNED BY: MARC FOISY
RAMP A CROSS SECTIONS

PLOT DATE: 5/16/2011
DRAWN BY: STANTEC
CHECKED BY: GARY SANTY
SHEET 409 OF 577

v:\1853\active\185300021\transportation\drawing\contract_3\plot_files\zd307c3xs_ramp_a.ptf

Metric

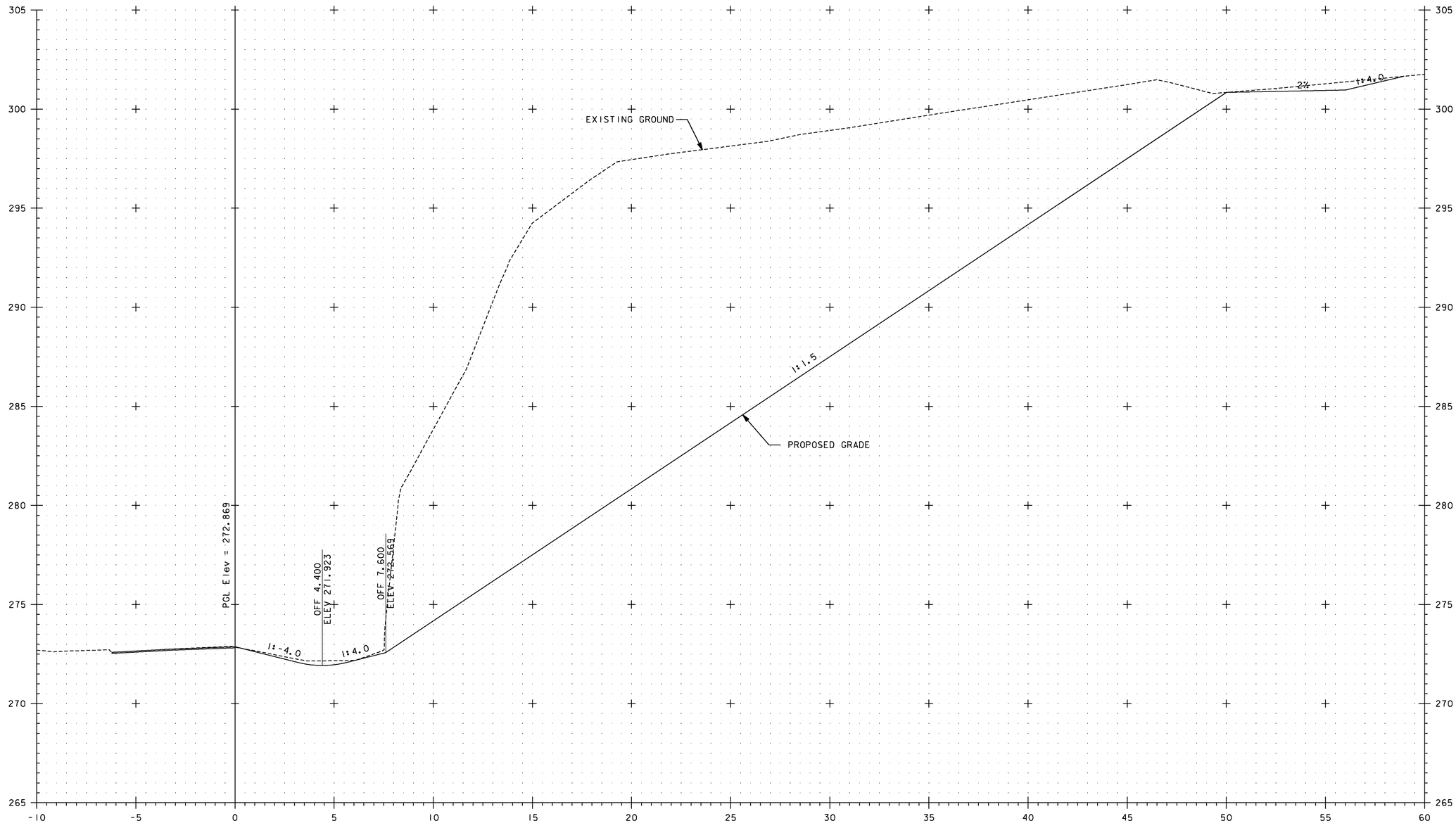

A 1+420

5 METERS
2.5
H 1:100 SCALE
V 1:100 SCALE
@ FULL SIZE
2.5 5 METERS
SCALE IN METERS

VERMONT AGENCY OF TRANSPORTATION

Stantec

PROJECT NAME: BENNINGTON
PROJECT NUMBER: AC NH 019-1(53)

FILE NAME: ...\zd307c3xs_ramp_a.ptf
DESIGN SUPERVISOR: GREG EDWARDS
DESIGNED BY: MARC FOISY
RAMP A CROSS SECTIONS

PLOT DATE: 5/16/2011
DRAWN BY: STANTEC
CHECKED BY: GARY SANTY
SHEET 410 OF 577

v:\1953\active\195300021\transportation\drawing\contract_3\plot_files\zd307c3xs_ramp_a.ptf

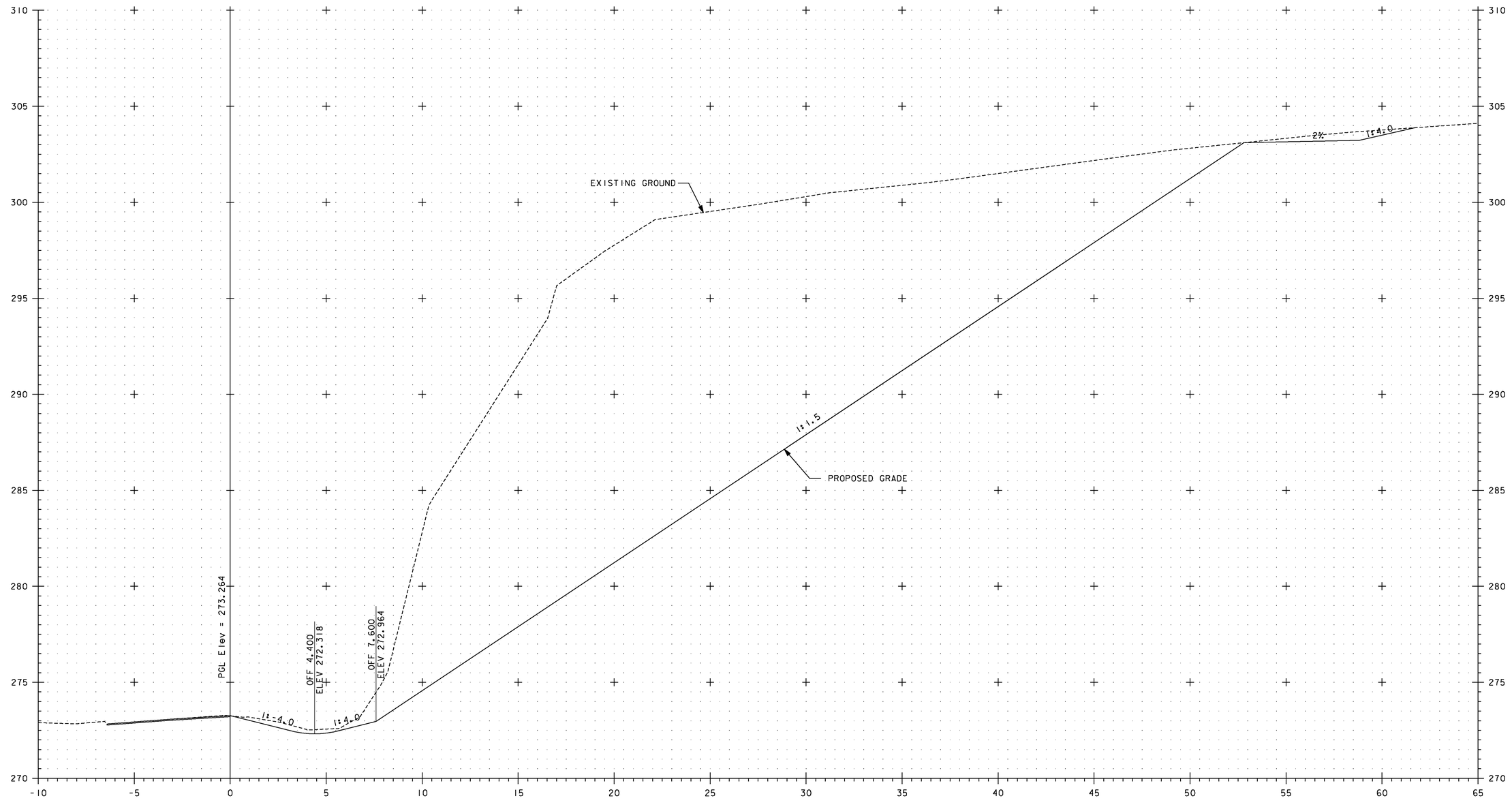

A 1+440

5 METERS
2.5
H 1:100 SCALE
V 1:100 SCALE
@ FULL SIZE
2.5
5 METERS
SCALE IN METERS

VERMONT AGENCY OF TRANSPORTATION

Stantec

PROJECT NAME: BENNINGTON
PROJECT NUMBER: AC NH 019-1(53)

FILE NAME: ...\zd307c3xs_ramp_a.ptf
DESIGN SUPERVISOR: GREG EDWARDS
DESIGNED BY: MARC FOISY
RAMP A CROSS SECTIONS

PLOT DATE: 5/16/2011
DRAWN BY: STANTEC
CHECKED BY: GARY SANTY
SHEET 411 OF 577

v:\1953\active\195310002\transportation\drawing\contract_3\plot_files\zd307c3xs_ramp_a.ptf

VAOT Metric

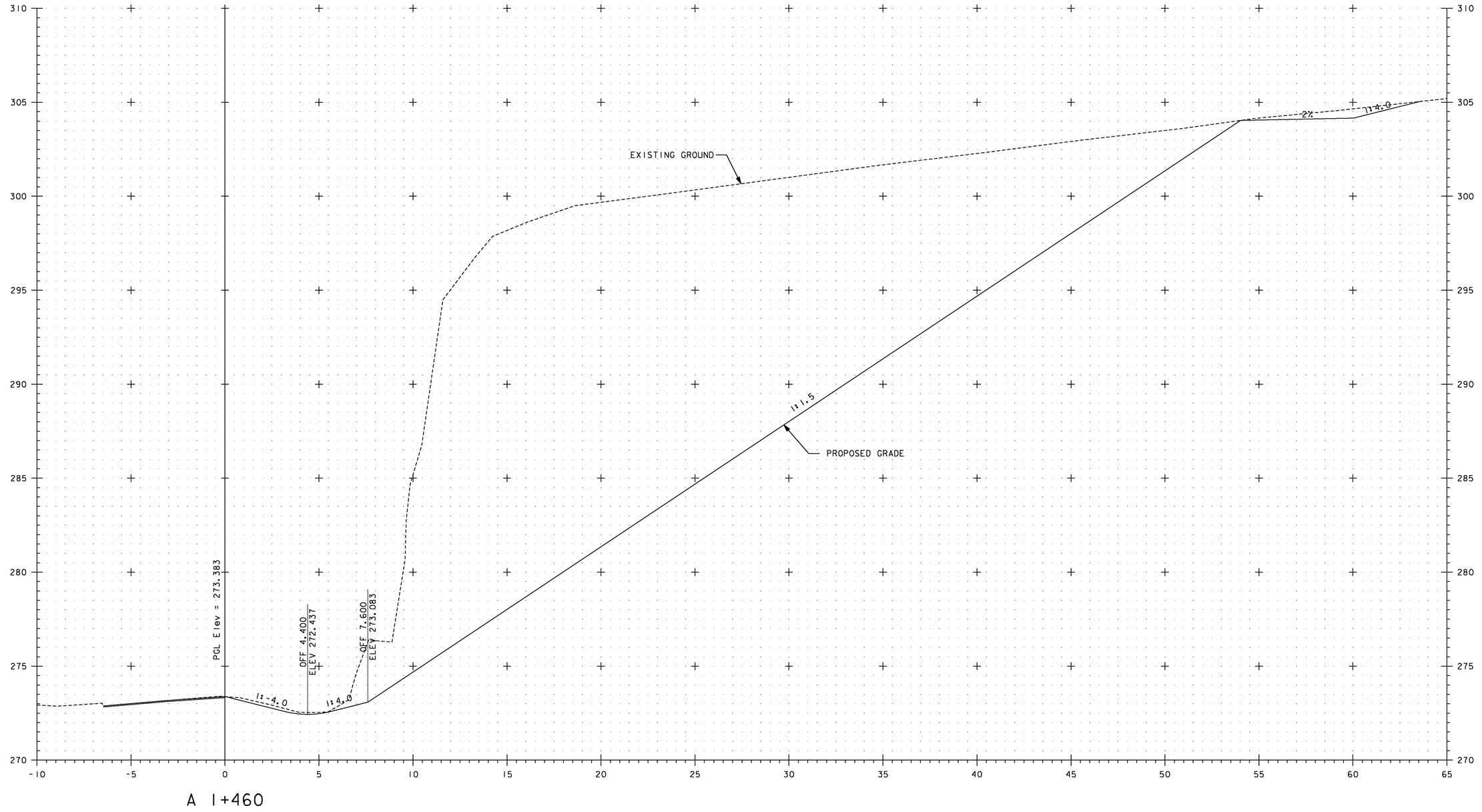

A 1+460

5 METERS
H 1:100 SCALE
V 1:100 SCALE
@ FULL SIZE
2.5
2.5
5 METERS
SCALE IN METERS

VERMONT AGENCY OF TRANSPORTATION

Stantec

PROJECT NAME: BENNINGTON
PROJECT NUMBER: AC NH 019-1(53)

FILE NAME: ...\zd307c3xs_ramp_a.ptf
DESIGN SUPERVISOR: GREG EDWARDS
DESIGNED BY: MARC FOISY
RAMP A CROSS SECTIONS

PLOT DATE: 5/16/2011
DRAWN BY: STANTEC
CHECKED BY: GARY SANTY
SHEET 412 OF 577

v:\1953\active\195300002\transportation\drawing\contract_3\plot_files\zd307c3xs_ramp_a.ptf

Metric

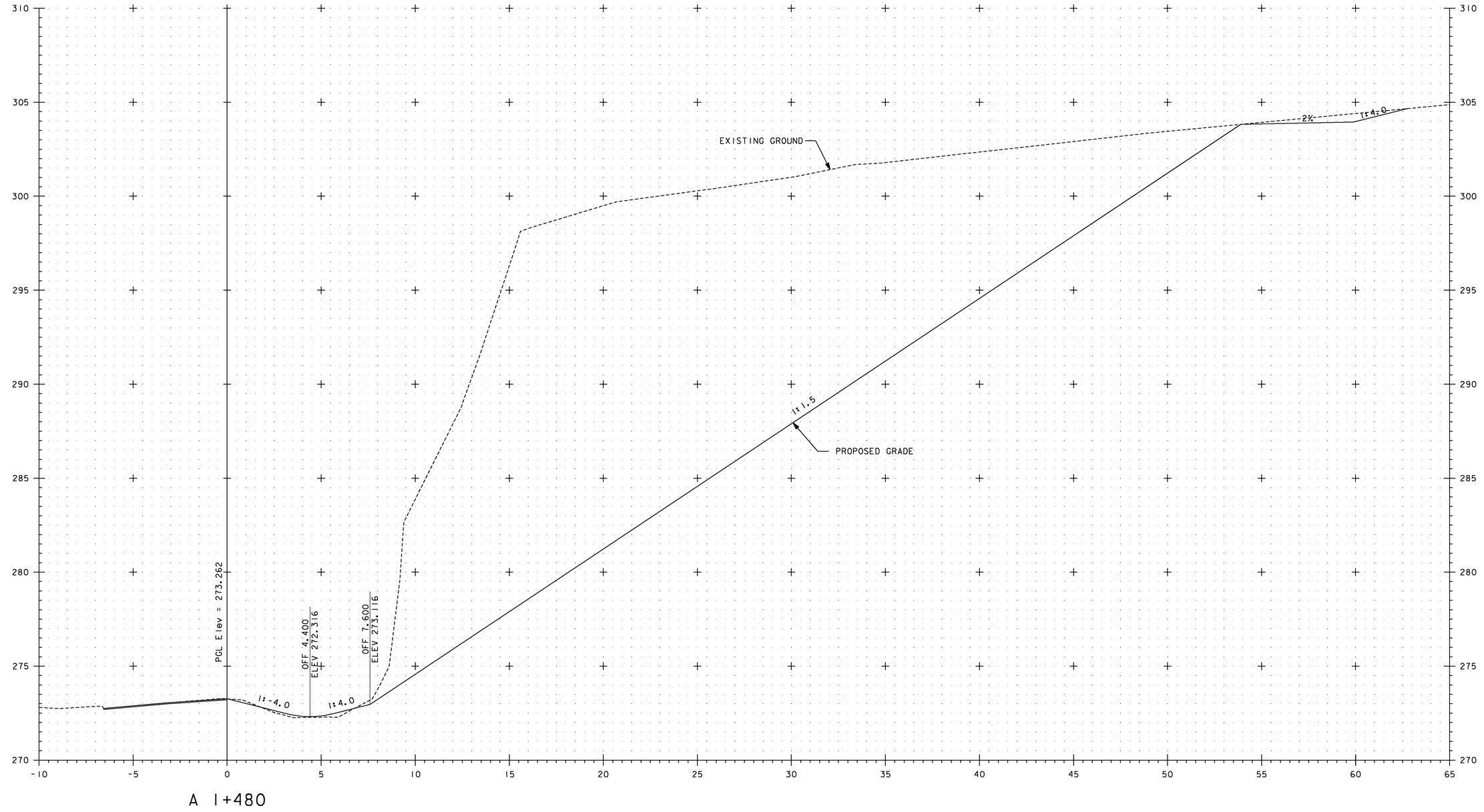

A 1+480

5 METERS
2.5
H 1:100 SCALE
V 1:100 SCALE
@ FULL SIZE
2.5 5 METERS
SCALE IN METERS

VERMONT AGENCY OF TRANSPORTATION

Stantec

PROJECT NAME: BENNINGTON
PROJECT NUMBER: AC NH 019-1(53)

FILE NAME: ...\zd307c3xs_ramp_a.ptf
DESIGN SUPERVISOR: GREG EDWARDS
DESIGNED BY: MARC FOISY
RAMP A CROSS SECTIONS

PLOT DATE: 5/16/2011
DRAWN BY: STANTEC
CHECKED BY: GARY SANTY
SHEET 413 OF 577

v:\1853\active\185300021\transportation\drawing\contract_3\plot_files\zd307c3xs_ramp_a.ptf

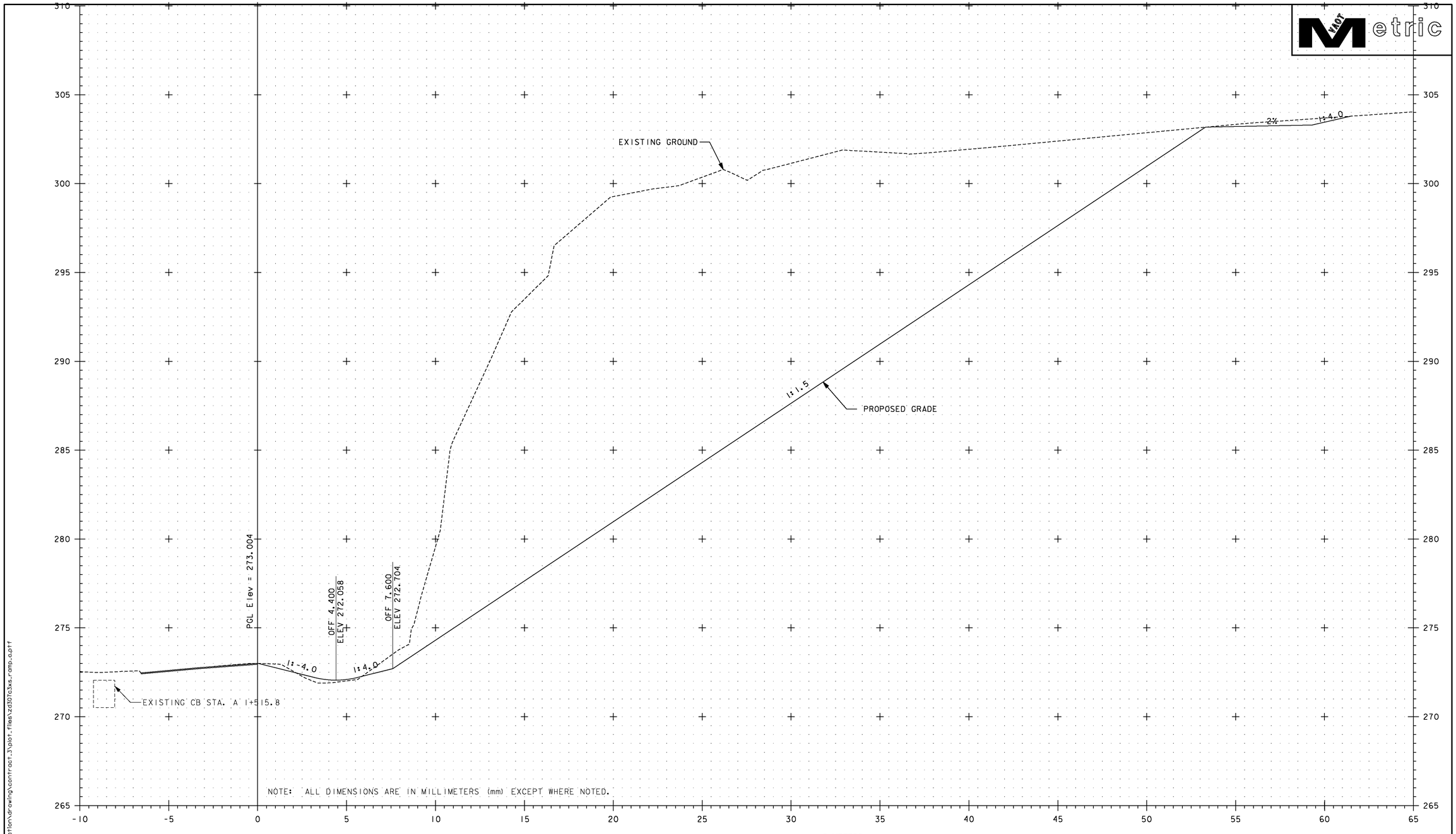

A 1+500

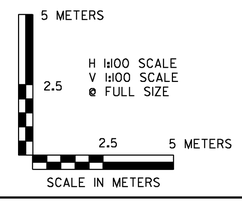

VERMONT AGENCY OF TRANSPORTATION

Stantec

PROJECT NAME: BENNINGTON
PROJECT NUMBER: AC NH 019-1(53)

FILE NAME: ...\zd307c3xs_ramp_a.ptf
DESIGN SUPERVISOR: GREG EDWARDS
DESIGNED BY: MARC FOISY
RAMP A CROSS SECTIONS

PLOT DATE: 5/16/2011
DRAWN BY: STANTEC
CHECKED BY: GARY SANTY
SHEET 414 OF 577

v:\1953\active\195310002\transportation\drawing\contract_3\plot_files\zd307c3xs_ramp_a.ptf

VAOT Metric

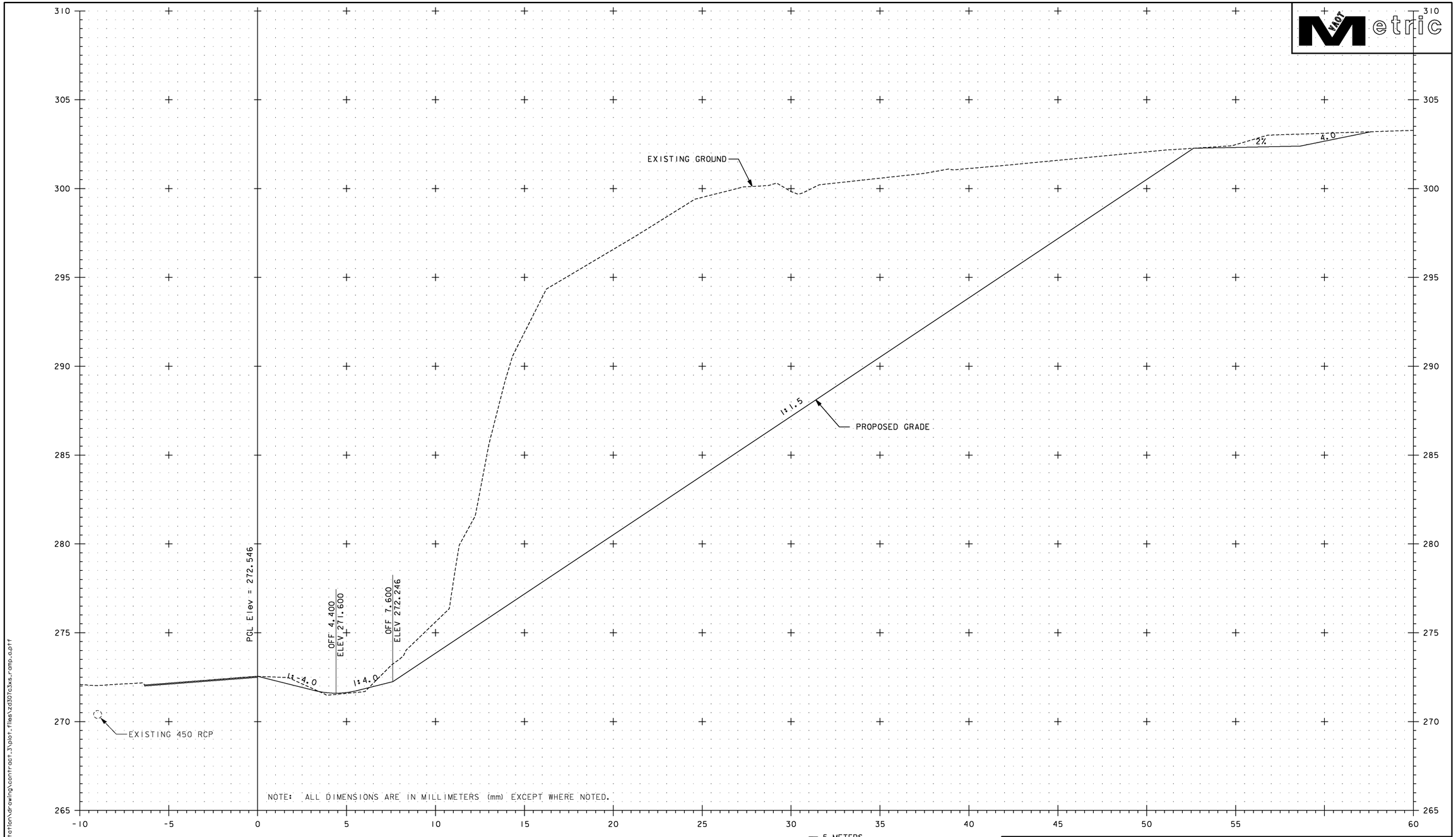

A 1+520

5 METERS
2.5
H 1:100 SCALE
V 1:100 SCALE
@ FULL SIZE
2.5
5 METERS
SCALE IN METERS

VERMONT AGENCY OF TRANSPORTATION

Stantec

PROJECT NAME: BENNINGTON
PROJECT NUMBER: AC NH 019-1(53)

FILE NAME: ...\zd307c3xs_ramp_a.ptf
DESIGN SUPERVISOR: GREG EDWARDS
DESIGNED BY: MARC FOISY
RAMP A CROSS SECTIONS

PLOT DATE: 5/16/2011
DRAWN BY: STANTEC
CHECKED BY: GARY SANTY
SHEET 415 OF 577

v:\1953\active\195310002\transportation\drawing\contract_3\plot_files\zd307c3xs_ramp_a.ptf

Metric

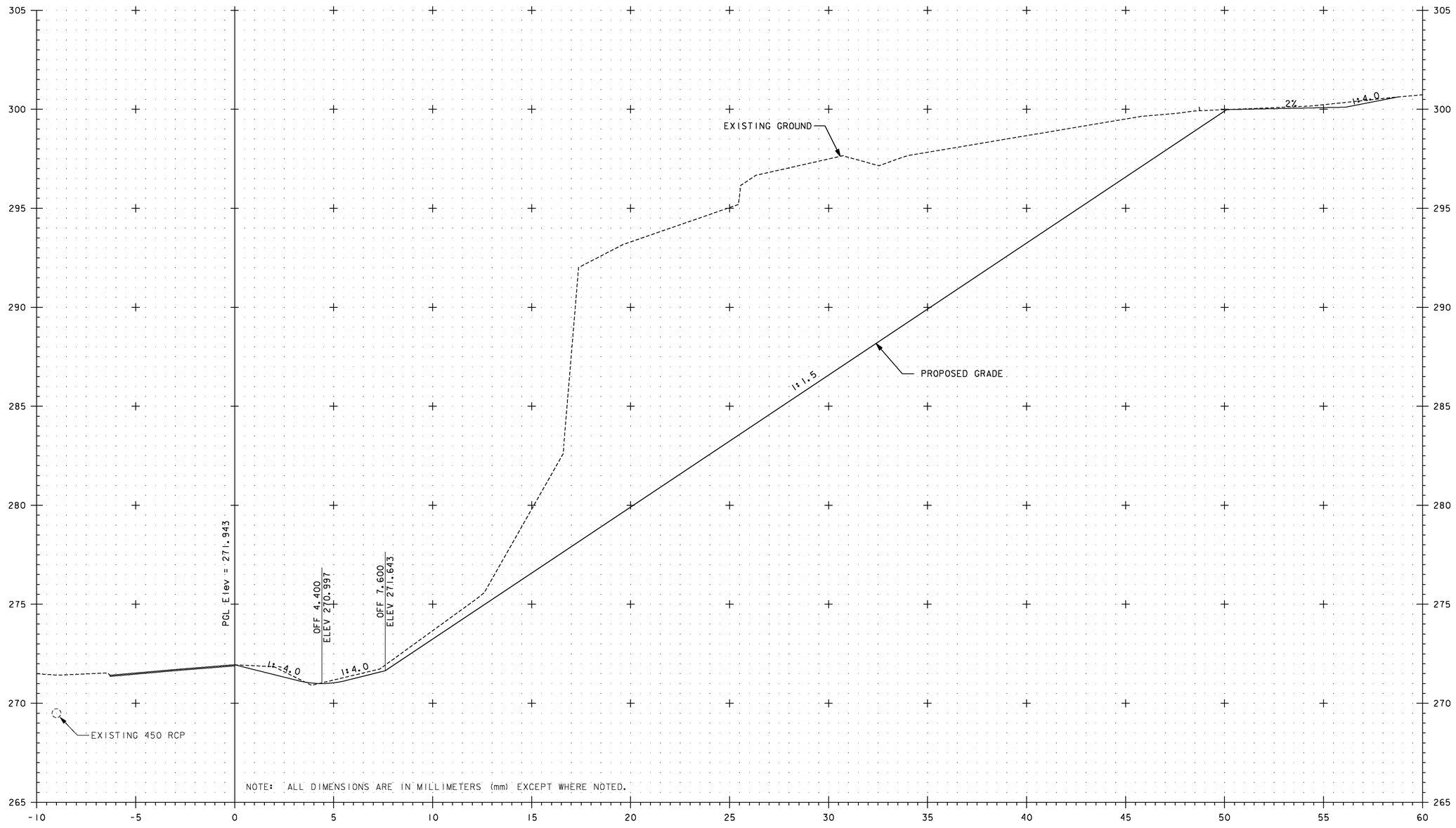

A 1+540

5 METERS
2.5
H 1:100 SCALE
V 1:100 SCALE
@ FULL SIZE
2.5 5 METERS
SCALE IN METERS

VERMONT AGENCY OF TRANSPORTATION

Stantec

PROJECT NAME: BENNINGTON
PROJECT NUMBER: AC NH 019-1(53)

FILE NAME: ...\zd307c3xs_ramp_a.ptf
DESIGN SUPERVISOR: GREG EDWARDS
DESIGNED BY: MARC FOISY
RAMP A CROSS SECTIONS

PLOT DATE: 5/16/2011
DRAWN BY: STANTEC
CHECKED BY: GARY SANTY
SHEET 416 OF 577

v:\1953\active\195300021\transportation\drawing\contract_3\plot_files\zd307c3xs_ramp_a.ptf

Metric

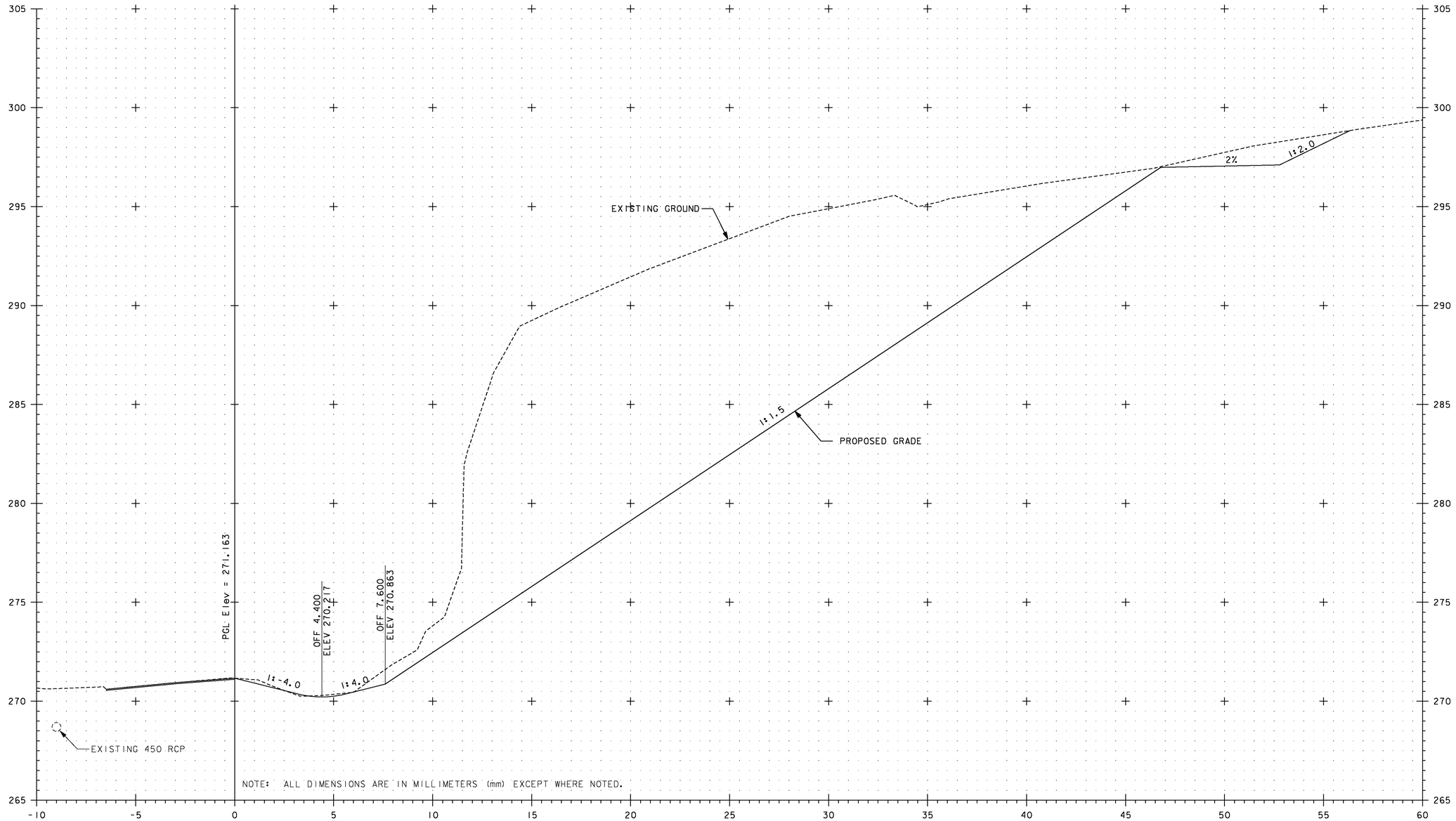

A 1+560

5 METERS
H 1:100 SCALE
V 1:100 SCALE
@ FULL SIZE
2.5
2.5
5 METERS
SCALE IN METERS

VERMONT AGENCY OF TRANSPORTATION

Stantec

PROJECT NAME: BENNINGTON
PROJECT NUMBER: AC NH 019-1(53)

FILE NAME: ...\zd307c3xs_ramp_a.ptf
DESIGN SUPERVISOR: GREG EDWARDS
DESIGNED BY: MARC FOISY
RAMP A CROSS SECTIONS

PLOT DATE: 5/16/2011
DRAWN BY: STANTEC
CHECKED BY: GARY SANTY
SHEET 417 OF 577

v:\1953\active\195310002\transportation\drawing\contract_3\plot_files\zd307c3xs_ramp_a.ptf

VAOT Metric

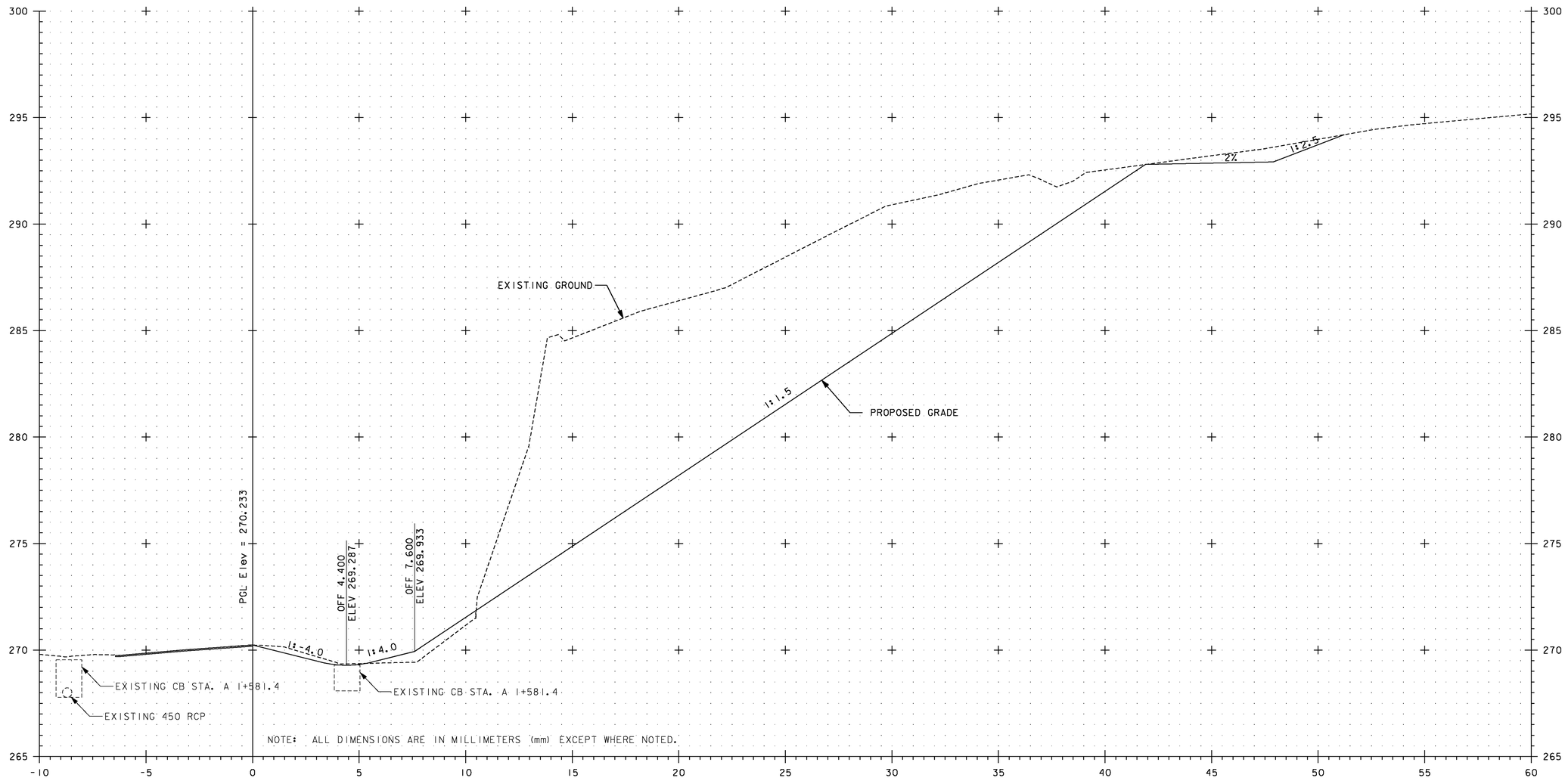

A 1+580

5 METERS
2.5
H 1:100 SCALE
V 1:100 SCALE
@ FULL SIZE
2.5 5 METERS
SCALE IN METERS

VERMONT AGENCY OF TRANSPORTATION

Stantec

PROJECT NAME: BENNINGTON
PROJECT NUMBER: AC NH 019-1(53)

FILE NAME: ...\zd307c3xs_ramp_a.ptf
DESIGN SUPERVISOR: GREG EDWARDS
DESIGNED BY: MARC FOISY
RAMP A CROSS SECTIONS

PLOT DATE: 5/16/2011
DRAWN BY: STANTEC
CHECKED BY: GARY SANTY
SHEET 418 OF 577

v:\1953\active\195300002\transportation\drawing\contract_3\plot_files\zd307c3xs_ramp_a.ptf

VAOT Metric

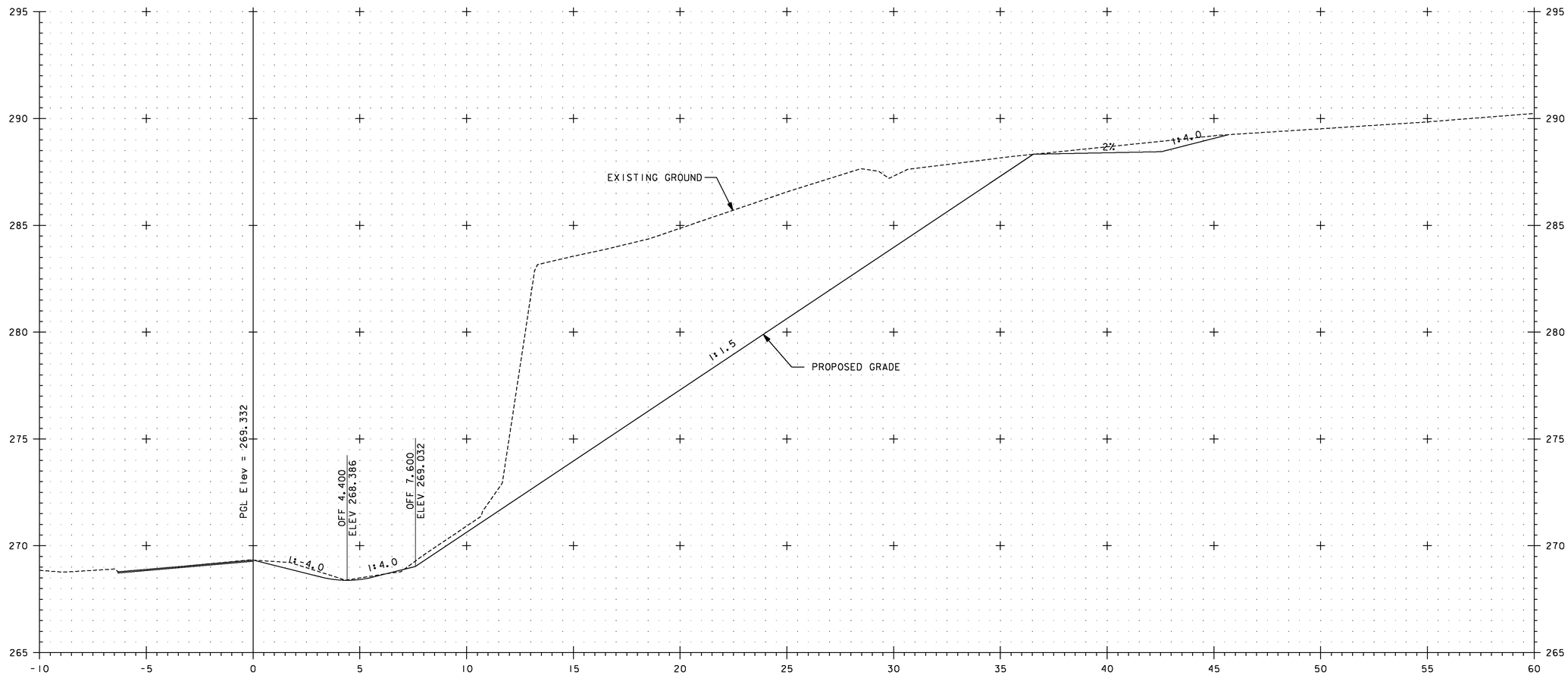

A 1+600

5 METERS
2.5
H 1:100 SCALE
V 1:100 SCALE
@ FULL SIZE
2.5 5 METERS
SCALE IN METERS

VERMONT AGENCY OF TRANSPORTATION

Stantec

PROJECT NAME: BENNINGTON
PROJECT NUMBER: AC NH 019-1(53)

FILE NAME: ...\zd307c3xs_ramp_a.ptf
DESIGN SUPERVISOR: GREG EDWARDS
DESIGNED BY: MARC FOISY
RAMP A CROSS SECTIONS

PLOT DATE: 5/16/2011
DRAWN BY: STANTEC
CHECKED BY: GARY SANTY
SHEET 419 OF 577

v:\1953\active\195310002\transportation\drawing\contract_3\plot_files\zd307c3xs_ramp_a.ptf

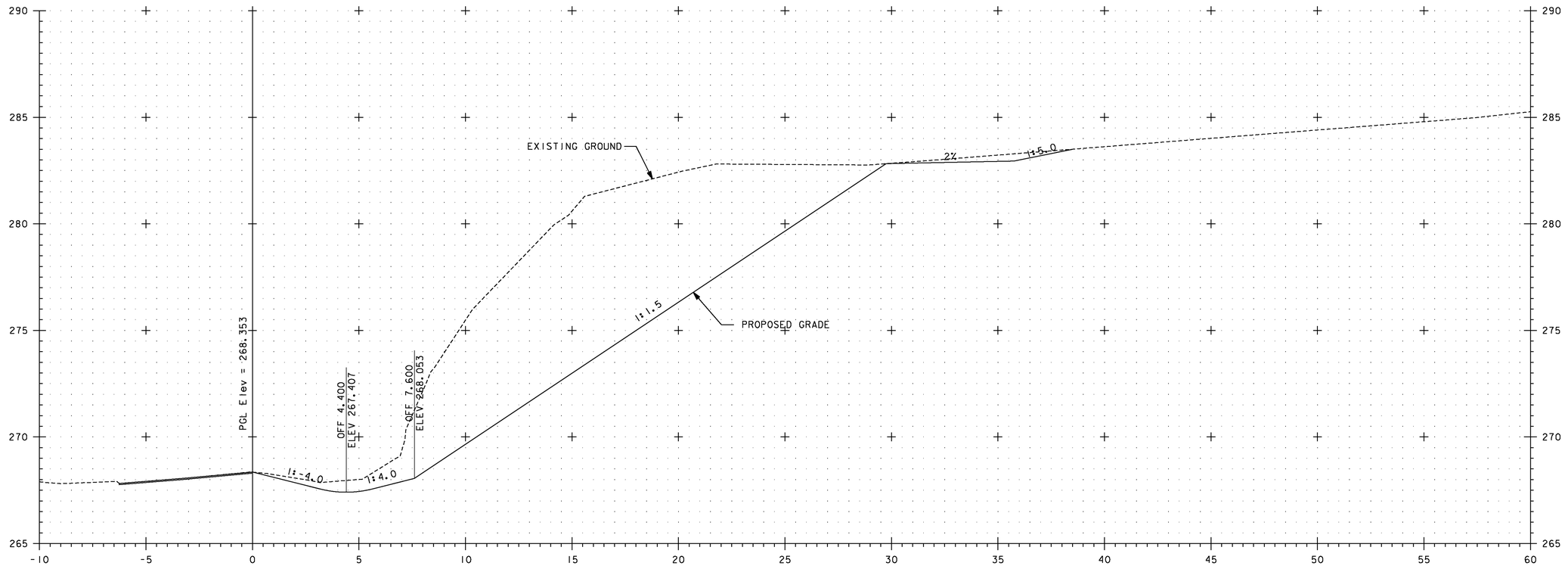

A 1+620

5 METERS
2.5
H 1:100 SCALE
V 1:100 SCALE
@ FULL SIZE
2.5 5 METERS
SCALE IN METERS

VERMONT AGENCY OF TRANSPORTATION

PROJECT NAME: BENNINGTON
PROJECT NUMBER: AC NH 019-1(53)

FILE NAME: ...\zd307c3xs_ramp_a.ptf
DESIGN SUPERVISOR: GREG EDWARDS
DESIGNED BY: MARC FOISY
RAMP A CROSS SECTIONS

PLOT DATE: 5/16/2011
DRAWN BY: STANTEC
CHECKED BY: GARY SANTY
SHEET 420 OF 577

Stantec

v:\1953\active\195310002\transportation\drawing\contract_3\plot_files\zd307c3xs_ramp_a.ptf

Metric

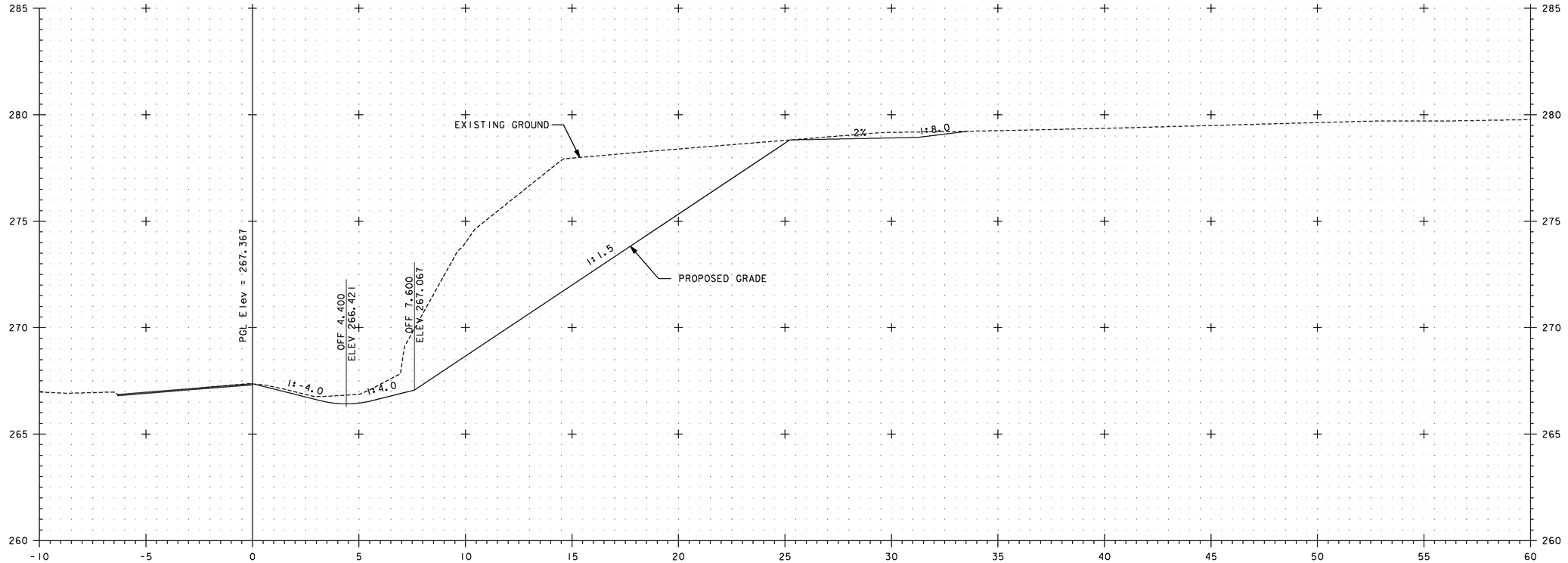

A 1+640

5 METERS
2.5
H 1:100 SCALE
V 1:100 SCALE
@ FULL SIZE
2.5
5 METERS
SCALE IN METERS

VERMONT AGENCY OF TRANSPORTATION

Stantec

PROJECT NAME: BENNINGTON
PROJECT NUMBER: AC NH 019-1(53)

FILE NAME: ...\zd307c3xs_ramp_a.ptf
DESIGN SUPERVISOR: GREG EDWARDS
DESIGNED BY: MARC FOISY
RAMP A CROSS SECTIONS

PLOT DATE: 5/16/2011
DRAWN BY: STANTEC
CHECKED BY: GARY SANTY
SHEET 421 OF 577

v:\1953\active\19530002\transportation\drawing\contract_3\plot_files\zd307c3xs_ramp_a.ptf

Metric

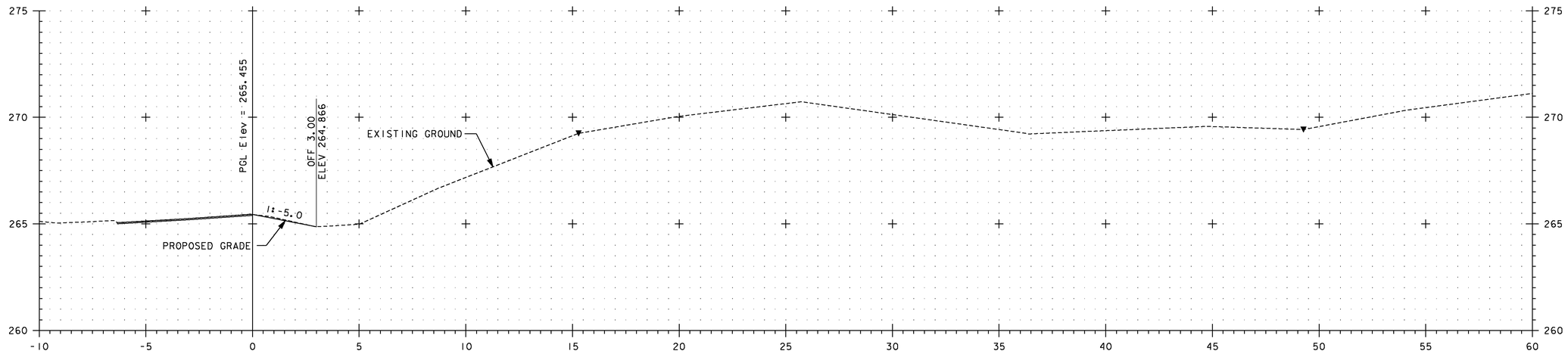

A 1+680

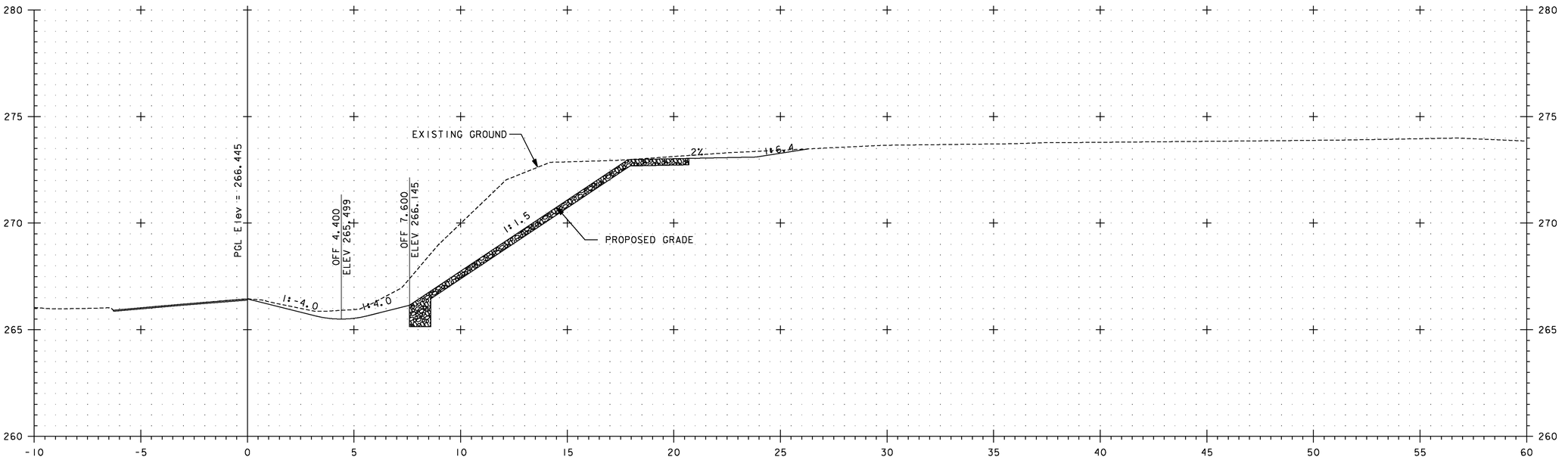

A 1+660

5 METERS
2.5
H 1:100 SCALE
V 1:100 SCALE
@ FULL SIZE
2.5 5 METERS
SCALE IN METERS

VERMONT AGENCY OF TRANSPORTATION

Stantec

PROJECT NAME: BENNINGTON
PROJECT NUMBER: AC NH 019-1(53)

FILE NAME: ...\zd307c3xs_ramp_a.ptf
DESIGN SUPERVISOR: GREG EDWARDS
DESIGNED BY: MARC FOISY
RAMP A CROSS SECTIONS

PLOT DATE: 5/16/2011
DRAWN BY: STANTEC
CHECKED BY: GARY SANTY
SHEET 422 OF 577

v:\1953\active\195300021\transportation\drawing\contract_3\plot_files\zd307c3xs_ramp_a.ptf

Metric

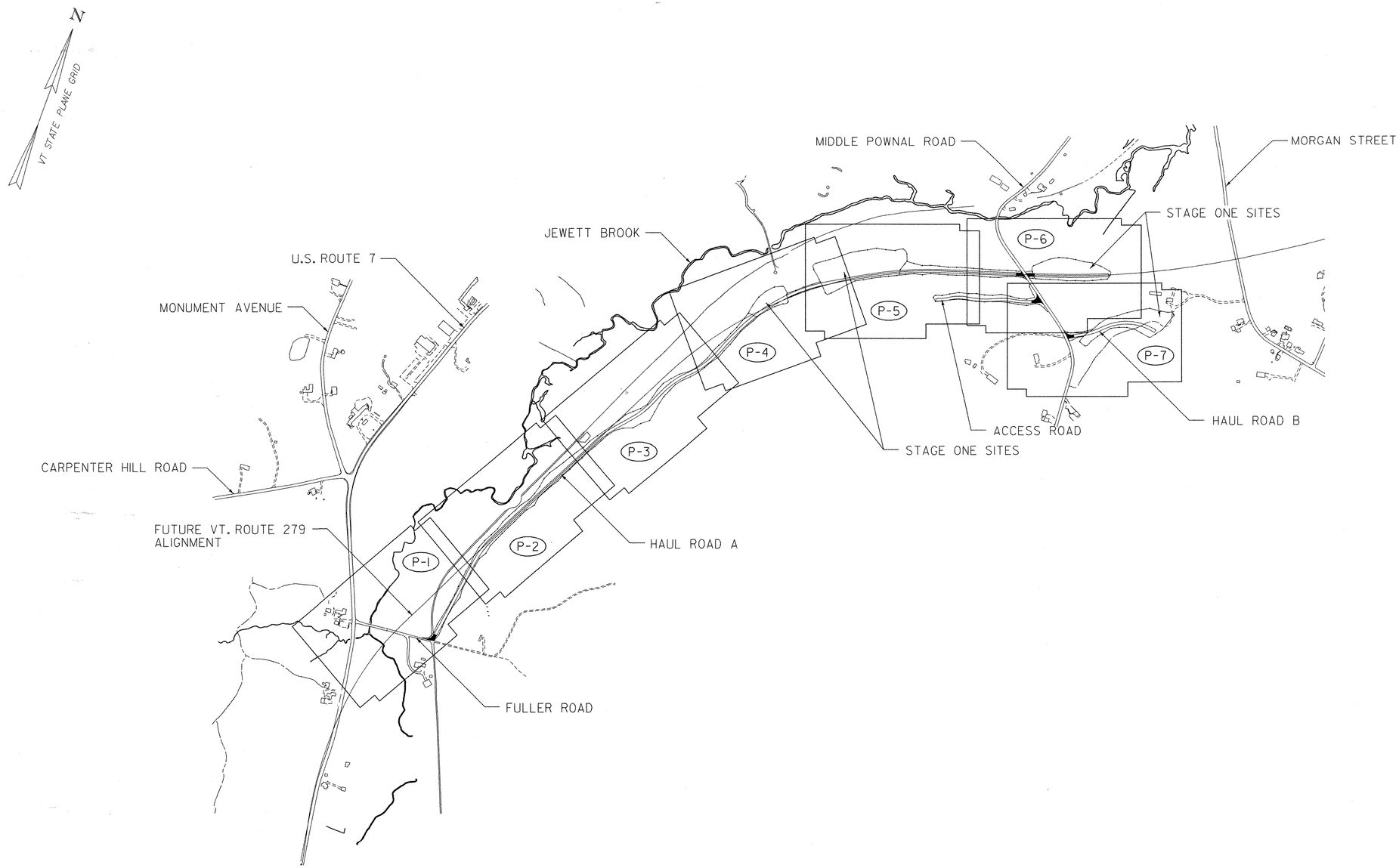

STAGE ONE SITE LAYOUT PLAN

DATUM
VERTICAL NAVD 88
HORIZONTAL NAD 83 (1992)

100 0 100 m
1: 5000
@ FULL SIZE

STATE OF VERMONT DALE E. GOZALKOWSKI No. 7227 REGISTERED PROFESSIONAL ENGINEER

PLANS PREPARED BY
Dale E Gozalkowski

VERMONT AGENCY OF TRANSPORTATION

CHA © 2007
CLOUGH HARBOUR & ASSOCIATES LLP
III Winners Circle, PO Box 5269, Albany, NY 12205
www.cloughharbour.com

PROJECT NAME: BENNINGTON
PROJECT NUMBER: AC NH 019-1(53)

FILE NAME: ZD048KEY01.DGN
PROJECT LEADER: D.E.G.
DESIGNED BY: J.S.P.
PLOT DATE: 5/18/2007
DRAWN BY: J.S.P.
CHECKED BY: D.E.G.
SITE LAYOUT PLAN SLP-1
SHEET 423 OF 577

FILE NAME =U:\9819\mstn\03\clough\Stage One Sites\zd048key01.dgn
DATE/TIME =5/18/2007
USER =3076

TYPICAL SECTIONS - HAUL ROADS

Metric

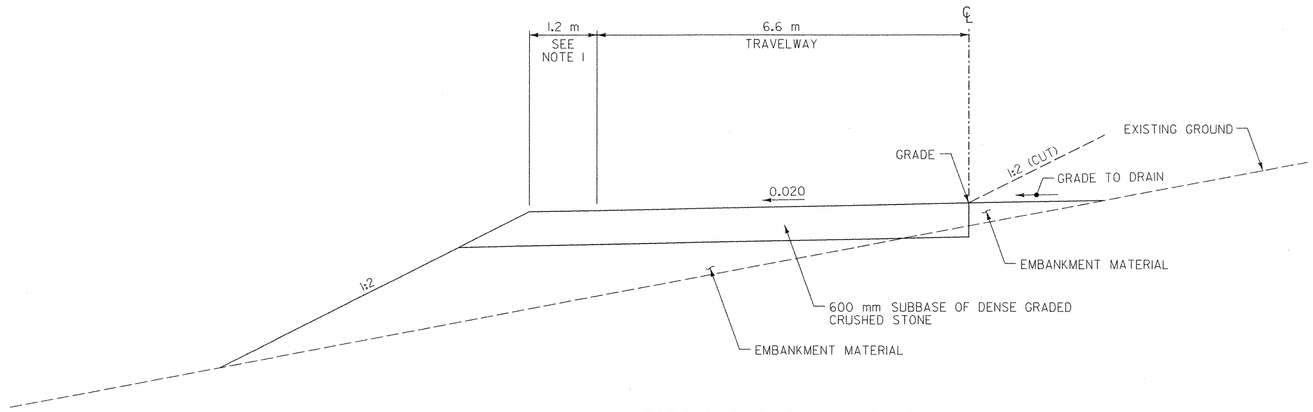

HAUL ROAD A & B
TYPICAL SECTION

NOTES:

1. SHOULDER AREA IS PROVIDED FOR PLACEMENT OF DELINEATION DEVICES INCLUDING PLASTIC DRUMS AND TEMPORARY TRAFFIC BARRIER IN LOCATIONS DEEMED NECESSARY BY THE CONTRACTOR OR AS DIRECTED BY THE RESIDENT ENGINEER.
2. THE CONTRACTOR SHALL STABLIZE ALL SIDE SLOPE AS SHOWN IN THE EROSION PREVENTION AND SEDIMENT CONTROL PLANS.
3. THE CONTRACTOR SHALL SEED THE SLOPES OF THE HAUL ROADS AND PAYMENT WILL BE INCLUDED UNDER ITEM 651.15 SEED.

NOT TO SCALE
ALL DIMENSIONS ARE IN MILLIMETERS EXCEPT WHERE OTHERWISE NOTED

DATUM
VERTICAL NAVD 88
HORIZONTAL NAD 83 (1992)

VERMONT AGENCY OF TRANSPORTATION

CLOUGH HARBOUR & ASSOCIATES LLP
111 Winners Circle, PO Box 5269, Albany, NY 12205
www.cloughharbour.com

PROJECT NAME: BENNINGTON
PROJECT NUMBER: AC NH 019-1(53)

FILE NAME: ZD048TYP.DGN
PROJECT LEADER: D.E.G.
DESIGNED BY: J.S.P.
TYPICAL SECTION TS-1

PLOT DATE: 5/18/2007
DRAWN BY: J.S.P.
CHECKED BY: D.E.G.
SHEET 424 OF 577

FILE NAME =U:\9819\mstn\03\clough\Stage One Sites\zd048typ_haul.dgn
DATE/TIME =5/18/2007
USER =3076

TYPICAL SECTIONS - STAGE ONE SITES & ACCESS ROAD

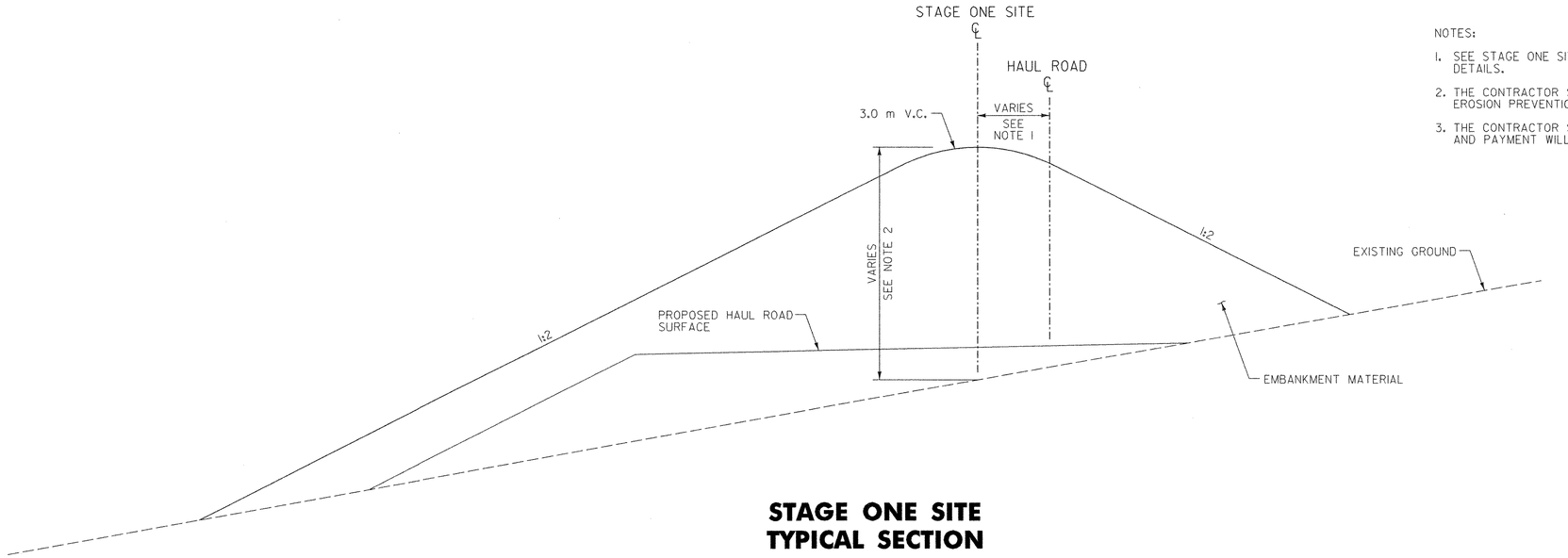

STAGE ONE SITE
TYPICAL SECTION

NOTES:

1. SEE STAGE ONE SITE DETAILS AND CROSS SECTIONS FOR ADDITIONAL DETAILS.
2. THE CONTRACTOR SHALL STABILIZE ALL SIDE SLOPE AS SHOWN IN THE EROSION PREVENTION AND SEDIMENT CONTROL PLANS.
3. THE CONTRACTOR SHALL SEED THE SLOPES OF THE STAGE ONE SITES AND PAYMENT WILL BE INCLUDED UNDER ITEM 651.15 SEED.

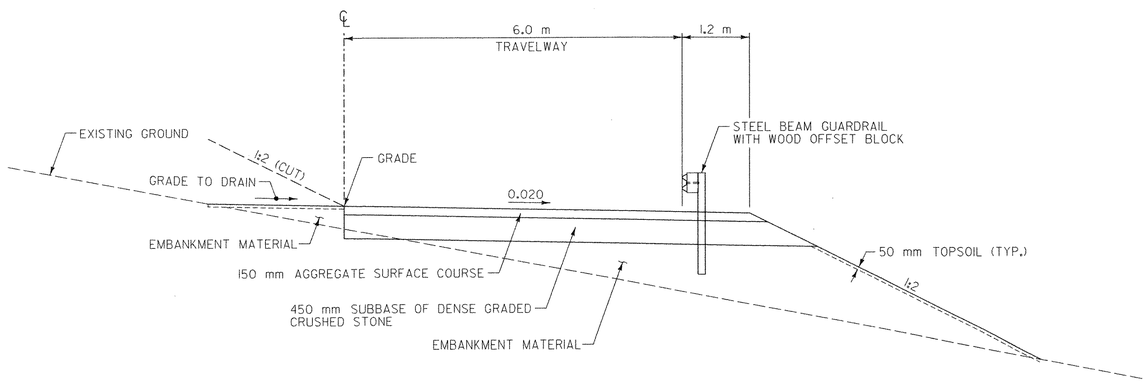

ACCESS ROAD
TYPICAL SECTION

SEEDING FORMULA
RURAL AREAS

% MASS	kg/ha	NAME	PUR %	GERM %
37.5	26.0	CREEPING RED FESCUE	98	85
37.5	26.0	TALL FESCUE	95	90
5.0	4.0	RED TOP	95	90
15.0	10.0	BIRDSFOOT TREFOIL	98	85
5.0	4.0	ANNUAL RYE GRASS	95	85
100.0	70.0			

SEEDING NOTES

SEED MIXTURE: SHALL NOT HAVE A WEED CONTENT EXCEEDING 0.40% BY MASS AND SHALL BE FREE OF ALL NOXIOUS SEED.

SEED: TO BE APPLIED PER SEEDING FORMULAS OR AS DIRECTED BY THE CONTRACTOR'S ON-SITE PLAN COORDINATOR.

FERTILIZER: FORMULA 10-20-10, TO BE USED WITH SEED, APPLIED AT THE RATE OF 560 kg/ha (HYDRO SEEDERS MAY USE 19-19-19 FORMULA).

AGRICULTURAL LIMESTONE: TO BE APPLIED AT THE RATE OF 4.5 TONS/ha OR AS DIRECTED BY THE CONTRACTOR'S ON-SITE PLAN COORDINATOR.

HAY MULCH: TO BE PLACED ON EARTH SLOPES AT THE RATE OF 4.5 TONS/ha OR AS DIRECTED BY THE CONTRACTOR'S ON-SITE PLAN COORDINATOR.

TOPSOIL: TO BE USED WITH SEED AS INDICATED ON THE PLANS OR AS DIRECTED BY THE CONTRACTOR'S ON-SITE PLAN COORDINATOR.

NOT TO SCALE
ALL DIMENSIONS ARE IN MILLIMETERS EXCEPT WHERE OTHERWISE NOTED

DATUM
VERTICAL NAVD 88
HORIZONTAL NAD 83 (1992)

VERMONT AGENCY OF TRANSPORTATION

CLOUGH HARBOUR & ASSOCIATES LLP
III Winners Circle, PO Box 5269, Albany, NY 12205
www.cloughharbour.com

PROJECT NAME: BENNINGTON
PROJECT NUMBER: AC NH 019-1(53)

FILE NAME: ZD048TYP.DGN
PROJECT LEADER: D.E.G.
DESIGNED BY: J.S.P.
TYPICAL SECTION TS-2

PLOT DATE: 5/18/2007
DRAWN BY: J.S.P.
CHECKED BY: D.E.G.
SHEET 425 OF 577

FILE NAME =U:\9819\mstn\03\clough\Stage One Sites\zd048typ_haul.dgn
DATE/TIME =5/18/2007
USER =3076

TYPICAL SECTIONS - MISCELLANEOUS DETAILS

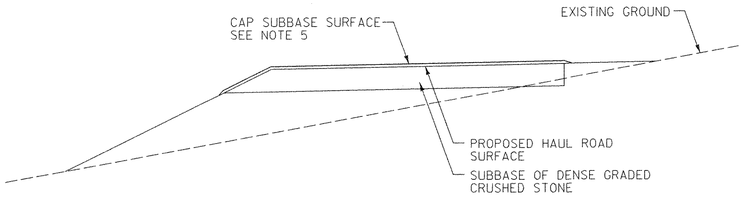

HAUL ROAD A & B POST-CONSTRUCTION DETAIL

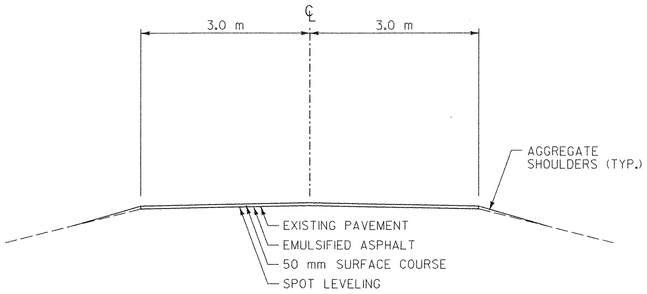

MIDDLE POWNAL ROAD OVERLAY DETAIL

NOTES:

1. THE SURFACE COURSE SHALL BE TYPE IIIS SUPERPAVE BITUMINOUS CONCRETE PAVEMENT (PG 64-28). THE LEVELING COURSE SHALL BE TYPE IVS SUPERPAVE BITUMINOUS CONCRETE PAVEMENT (PG 64-28) OR AS DIRECTED BY THE RESIDENT ENGINEER.
2. EMULSIFIED ASPHALT SHALL BE APPLIED ON ALL EXISTING PAVEMENT SURFACES AND BETWEEN ALL COURSES OF PAVEMENT AT THE RATE OF 0.12 L/m² OR AS DIRECTED BY THE RESIDENT ENGINEER.
3. SUPERPAVE BITUMINOUS CONCRETE PAVEMENT TOLERANCE = ±5 mm (TOTAL PAVEMENT THICKNESS EXCLUDING LEVELING).
4. SPOT LEVELING HAS BEEN ESTIMATED AT 25% OF THE ENTIRE AREA OF PAVEMENT AND SHALL BE PERFORMED AS DIRECTED BY THE RESIDENT ENGINEER.
5. UPON COMPLETION OF STAGE ONE SITE CONSTRUCTION, THE CONTRACTOR SHALL CAP THE EXPOSED HAUL ROAD SURFACE WITH 50 mm TOPSOIL AND SEED.

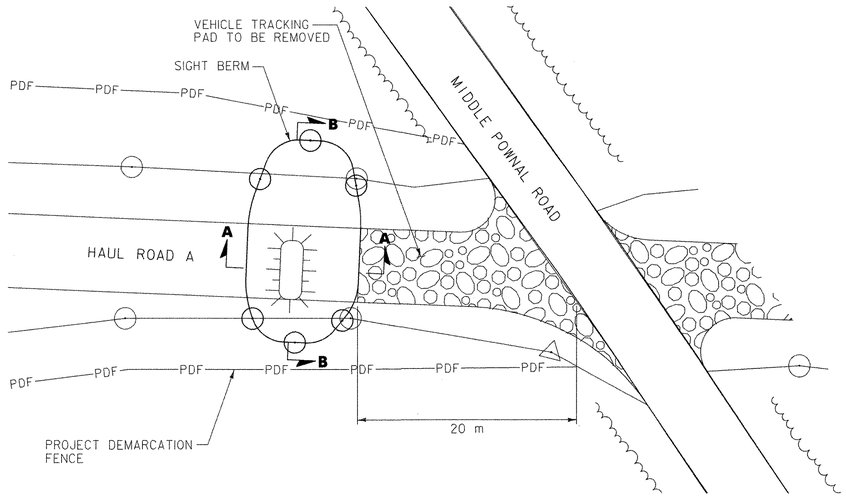

SIGHT BERM DETAIL

NOTES:

1. THE CONTRACTOR SHALL CONSTRUCT A SIGHT BERM AS SHOWN OR AS DIRECTED BY THE RESIDENT ENGINEER UPON COMPLETION OF STAGE ONE SITES CONSTRUCTION TO DISCOURAGE PUBLIC USE OF THE HAUL ROAD.
2. THE CONTRACTOR SHALL SEED THE SIGHT BERM AND PAYMENT WILL BE INCLUDED UNDER ITEM 651.15 SEED.

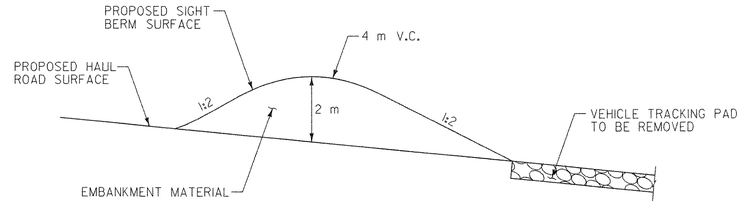

SECTION A–A

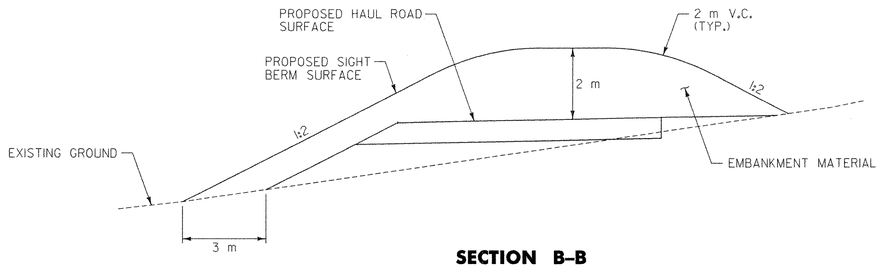

SECTION B–B

NOT TO SCALE
ALL DIMENSIONS ARE IN MILLIMETERS EXCEPT WHERE OTHERWISE NOTED

DATUM
VERTICAL NAVD 88
HORIZONTAL NAD 83 (1992)

VERMONT AGENCY OF TRANSPORTATION

CLOUGH HARBOUR & ASSOCIATES LLP
III Winners Circle, PO Box 5269, Albany, NY 12205
www.cloughharbour.com

PROJECT NAME: BENNINGTON
PROJECT NUMBER: AC NH 019-1(53)

FILE NAME: ZD048TYP.DGN
PROJECT LEADER: D.E.G.
DESIGNED BY: J.S.P.
TYPICAL SECTION TS-3

PLOT DATE: 5/18/2007
DRAWN BY: J.S.P.
CHECKED BY: D.E.G.
SHEET 426 OF 577

FILE NAME =U:\9819\mstn\03\clough\Stage One Sites\zd0048typ_haul.dgn
DATE/TIME =5/18/2007
USER =3076

STATE OF VERMONT
AGENCY OF TRANSPORTATION

EARTHWORKS

VAOT Metric

STATION km + m	DIST m	TOTAL EXCAVATION EARTH AND ROCK AREA m²	TOTAL EXCAVATION EARTH AND ROCK VOLUME m³	ROCK EXCAVATION AREA m²	ROCK EXCAVATION VOLUME m³	EMBANKMENT AREA m²	EMBANKMENT VOLUME m³	AREA m²	VOLUME m³
HAUL ROAD A									
HR1+343		8				0		C	629
	17		179				0	FAC	1.00
HR1+360		13				0		F	0
	20		260				0	FAC	1.15
HR1+380		13				0		EXC	629
	20		190				0		
HR1+400		6				0			
	20		80				10		
HR1+420		2				1			
	20		50				10		
HR1+440		3				0			
	20		50				10		
HR1+460		2				1			
	20		30				10		
HR1+480		1				0			
	20		20				20	C	400
HR1+500		1				2		FAC	1.00
	20		20				30	F	480
HR1+520		1				1		FAC	1.15
	20		80				10	EXF	152
HR1+540		7				0			
	20		70				40		
HR1+560		0				4			
	20		0				130		
HR1+580		0				9			
	20		0				210		
HR1+600		0				12			
	20		0				180		
HR1+620		0				6			
	20		0				110		
HR1+640		0				5			
	20		0				180		
HR1+660		0				13			
	20		0				150		
HR1+680		0				12			
	20		0				270	C	60
HR1+700		0				15		FAC	1.00
	20		0				270	F	1820
HR1+720		0				12		FAC	1.15
	20		0				200	EXF	2033
HR1+740		0				8			
	20		10				120		
HR1+760		1				4			
	20		30				130		
HR1+780		2				9			
	20		20				210		
HR1+800		0				12			
SUBTOTAL			1089				2300		

STATION km + m	DIST m	TOTAL EXCAVATION EARTH AND ROCK AREA m²	TOTAL EXCAVATION EARTH AND ROCK VOLUME m³	ROCK EXCAVATION AREA m²	ROCK EXCAVATION VOLUME m³	EMBANKMENT AREA m²	EMBANKMENT VOLUME m³	AREA m²	VOLUME m³
HAUL ROAD A									
HR1+800		0				12			
	20		0				410		
HR1+820		0				29			
	20		0				560		
HR1+840		0				27			
	20		0				580		
HR1+860		0				31			
	20		10				550		
HR1+880		1				24			
	20		10				410	C	40
HR1+900		0				17		FAC	1.00
	20		10				240	F	3240
HR1+920		1				7		FAC	1.15
	20		10				180	EXF	3686
HR1+940		0				11			
	20		0				160		
HR1+960		0				5			
	20		0				70		
HR1+980		0				2			
	20		0				80		
HR2+000		0				6			
	20		30				170		
HR2+020		3				11			
	20		170				240		
HR2+040		14				13			
	20		400				190		
HR2+060		26				6			
	20		620				60		
HR2+080		36				0			
	20		650				0	C	3310
HR2+100		29				0		FAC	1.00
	20		530				0	F	1030
HR2+120		24				0		FAC	1.15
	20		390				30	EXC	2126
HR2+140		15				3			
	20		240				110		
HR2+160		9				8			
	20		140				140		
HR2+180		5				6			
	20		140				90		
HR2+200		9				3			
	20		240				30		
HR2+220		15				0			
	20		290				0		
HR2+240		14				0			
	20		200				0		
HR2+260		6				0			
	20		100				10		
HR2+280		4				1			
	20		40				120		
HR2+300		0				11			
	20		0				200		
HR2+320		0				9			
	20		0				190		
HR2+340		0				10			
SUBTOTAL			3350				4270		

STATION km + m	DIST m	TOTAL EXCAVATION EARTH AND ROCK AREA m²	TOTAL EXCAVATION EARTH AND ROCK VOLUME m³	ROCK EXCAVATION AREA m²	ROCK EXCAVATION VOLUME m³	EMBANKMENT AREA m²	EMBANKMENT VOLUME m³	AREA m²	VOLUME m³
HAUL ROAD A									
HR2+340		0				10		C	870
	20		0				180	FAC	1.00
HR2+360		0				8		F	1050
	20		0				120	FAC	1.15
HR2+380		0				4		EXF	338
	20		0				200		
HR2+400		0				16			
	20		0				450		
HR2+420		0				29			
	20		0				590		
HR2+440		0				30			
	20		0				490		
HR2+460		0				19			
	20		10				250		
HR2+480		1				6			
	20		20				110		
HR2+500		1				5			
	20		10				60	C	180
HR2+520		0				1		FAC	1.00
	20		30				10	F	2010
HR2+540		3				0		FAC	1.15
	20		50				10	EXF	2132
HR2+560		2				1			
	20		40				20		
HR2+580		2				1			
	20		20				20		
HR2+600		0				1			
	20		20				20		
HR2+620		2				1			
	20		20				150		
HR2+640		0				14			
	20		0				420		
HR2+660		0				28			
	20		0				500		
HR2+680		0				22			
	20		0				400		
HR2+700		0				18			
	20		0				380	C	40
HR2+720		0				20		FAC	1.00
	20		0				460	F	5670
HR2+740		0				26		FAC	1.15
	20		0				730	EXF	6481
HR2+760		0				47			
	20		0				1130		
HR2+780		0				66			
	20		0				1480		
HR2+800		0				83			
SUBTOTAL			1090				8730		

STATION km + m	DIST m	TOTAL EXCAVATION EARTH AND ROCK AREA m²	TOTAL EXCAVATION EARTH AND ROCK VOLUME m³	ROCK EXCAVATION AREA m²	ROCK EXCAVATION VOLUME m³	EMBANKMENT AREA m²	EMBANKMENT VOLUME m³	AREA m²	VOLUME m³
HAUL ROAD A									
HR2+800		0				83			
	20		0				1110		
HR2+820		0				28			
	20		0				440		
HR2+840		0				16			
	20		0				270		
HR2+860		0				11			
	20		0				230		
HR2+880		0				12		C	0
	20		0				220	FAC	1.00
HR2+900		0				10		F	3190
	20		0				220	FAC	1.15
HR2+920		0				12		EXF	3669
	20		0				220		
HR2+940		0				10			
	20		0				170		
HR2+960		0				7			
	20		0				160		
HR2+980		0				9			
	20		0				150		
HR3+000		0				6			
	20		0				100		
HR3+020		0				4			
	20		0				80		
HR3+040		0				4			
	20		10				70		
HR3+060		1				3			
	20		40				30		
HR3+080		3				0			
			-				-		
HR3+088		2				2		C	62
	12		12				72	FAC	1.00
HR3+100		0				10		F	1312
	20		0				180	FAC	1.15
HR3+120		0				8		EXF	1447
	20		0				160		
HR3+140		0				8			
	20		0				190		
HR3+160		0				11			
	20		0				210		
HR3+180		0				10			
	20		0				220		
HR3+200		0				12			
SUBTOTAL			62				4502		

FILE NAME =U:\9819\mstn\03\clough\Stage One Sites\zd048ew.dgn
DATE/TIME =5/18/2007
USER =3076

VERMONT AGENCY OF TRANSPORTATION

CLOUGH HARBOUR & ASSOCIATES LLP
© 2007
111 Winners Circle, PO Box 5269, Albany, NY 12205
www.cloughharbour.com

PROJECT NAME: BENNINGTON
PROJECT NUMBER: AC NH 019-1(53)

FILE NAME: ZD048EW.DGN
PROJECT LEADER: D.E.G.
DESIGNED BY: J.S.P.
EARTHWORK SHEET EW-1

PLOT DATE: 5/18/2007
DRAWN BY: J.S.P.
CHECKED BY: D.E.G.
SHEET 427 OF 577

STATE OF VERMONT
AGENCY OF TRANSPORTATION

EARTHWORKS

VAOT Metric

STATION km + m	DIST m	TOTAL EXCAVATION EARTH AND ROCK AREA m²	TOTAL EXCAVATION EARTH AND ROCK VOLUME m³	ROCK EXCAVATION AREA m²	ROCK EXCAVATION VOLUME m³	EMBANKMENT AREA m²	EMBANKMENT VOLUME m³	AREA m²	VOLUME m³
HAUL ROAD A									
HR3+200		0				12			
	20		0				250		
HR3+220		0				13			
	20		0				260	C	20
HR3+240		0				13		FAC	1.00
	20		10				250	F	880
HR3+260		0				12		FAC	1.15
	20		10				120	EXF	992
HR3+280		0				0			
HAUL ROAD B									
HRBI+278		4				0			
	2		4				5		
HRBI+280		0				5			
	20		0				160		
HRBI+300		0				6		C	4
	20		0				100	FAC	1.00
HRBI+320		0				4		F	455
	20		0				60	FAC	1.15
HRBI+340		0				2		EXF	519
	20		0				30		
HRBI+360		0				1			
	20		0				40		
HRBI+380		0				3			
	20		0				60		
HRBI+400		0				3			
	20		0				80		
HRBI+420		0				5			
	20		0				170		
HRBI+440		0				12		C	0
	20		0				340	FAC	1.00
HRBI+460		0				22		F	1310
	20		0				470	FAC	1.15
HRBI+480		0				25		EXF	1507
	20		0				250		
HRBI+500		0				0			
SUBTOTAL			24				2645		

STATION km + m	DIST m	TOTAL EXCAVATION EARTH AND ROCK AREA m²	TOTAL EXCAVATION EARTH AND ROCK VOLUME m³	ROCK EXCAVATION AREA m²	ROCK EXCAVATION VOLUME m³	EMBANKMENT AREA m²	EMBANKMENT VOLUME m³	AREA m²	VOLUME m³
STAGE ONE SITE									
HR2+422		0				0			
	18		0				558		
HR2+440		0				62		C	0
	20		0				1870	FAC	1.00
HR2+460		0				125		F	10458
	20		0				2690	FAC	1.15
HR2+480		0				144		EXF	12027
	20		0				3390		
HR2+500		0				195			
	20		0				1950		
HR2+520		0				0			
STAGE ONE SITE									
HR2+592		0				0			
	8		0				352		
HR2+600		0				88			
	20		0				5850		
HR2+620		0				497			
	20		0				10440		
HR2+640		0				547			
	20		0				10690		
HR2+660		0				522			
	20		0				10260	C	0
HR2+680		0				504		FAC	1.00
	20		0				9930	F	88976
HR2+700		0				489		FAC	1.15
	20		0				9630	EXF	102322
HR2+720		0				474			
	20		0				9710		
HR2+740		0				497			
	20		0				9460		
HR2+760		0				449			
	20		0				8000		
HR2+780		0				351			
	20		0				4390		
HR2+800		0				88			
	6		0				264		
HR2+806		0				0			
SUBTOTAL			0				99434		

STATION km + m	DIST m	TOTAL EXCAVATION EARTH AND ROCK AREA m²	TOTAL EXCAVATION EARTH AND ROCK VOLUME m³	ROCK EXCAVATION AREA m²	ROCK EXCAVATION VOLUME m³	EMBANKMENT AREA m²	EMBANKMENT VOLUME m³	AREA m²	VOLUME m³
STAGE ONE SITE									
HR3+097		0				0			
	3		0				26		
HR3+100		0				17			
	20		0				1690		
HR3+120		0				152			
	20		0				3810		
HR3+140		0				229			
	20		0				5220		
HR3+160		0				293		C	0
	20		0				5990	FAC	1.00
HR3+180		0				306		F	35056
	20		0				5830	FAC	1.15
HR3+200		0				277		EXF	40314
	20		0				4960		
HR3+220		0				219			
	20		0				3920		
HR3+240		0				173			
	20		0				2610		
HR3+260		0				88			
	20		0				980		
HR3+280		0				10			
	4		0				20		
HR3+284		0				0			
STAGE ONE SITE									
HRBI+304		0				0			
	16		0				560		
HRBI+320		0				70			
	20		0				1180		
HRBI+340		0				48			
	20		0				1100		
HRBI+360		0				62			
	20		0				1240		
HRBI+380		0				62		C	0
	20		0				1400	FAC	1.00
HRBI+400		0				78		F	28584
	20		0				1900	FAC	1.15
HRBI+420		0				112		EXF	32872
	20		0				3500		
HRBI+440		0				238			
	20		0				5990		
HRBI+460		0				361			
	20		0				6990		
HRBI+480		0				338			
	20		0				4220		
HRBI+500		0				84			
	12		0				504		
HRBI+512		0				0			
SUBTOTAL			0				63640		

STATION km + m	DIST m	TOTAL EXCAVATION EARTH AND ROCK AREA m²	TOTAL EXCAVATION EARTH AND ROCK VOLUME m³	ROCK EXCAVATION AREA m²	ROCK EXCAVATION VOLUME m³	EMBANKMENT AREA m²	EMBANKMENT VOLUME m³	AREA m²	VOLUME m³
ACCESS ROAD									
ARI+003		1				0			
	17		60				0		
ARI+020		6				0			
	20		170				0		
ARI+040		11				0			
	20		190				10		
ARI+060		8				1			
	20		120				30		
ARI+080		4				2		C	698
	20		40				110	FAC	1.00
ARI+100		0				9		F	1625
	20		10				170	FAC	1.15
ARI+120		1				8		EXF	1171
	20		10				190		
ARI+140		0				11			
	20		10				270		
ARI+160		1				16			
	20		20				240		
ARI+180		1				8			
	20		20				160		
ARI+200		1				8			
	20		20				160		
ARI+220		1				8			
	20		20				150		
ARI+240		1				7			
	15		8				135		
ARI+255		0				11			
ROADSIDE DITCH (MIDDLE POWNAL ROAD)									
MPI+389		0				0			
	11		11				0		
MPI+400		2				0			
	9		27				0	C	187
MPI+409		4				0		FAC	1.00
	11		22				0	F	0
MPI+420		0				0		FAC	1.15
	19		48				0	EXC	187
MPI+439		5				0			
	1		5				0		
MPI+440		5				0			
	20		70				0		
MPI+460		2				0			
	4		4				0		
MPI+464		0				0			
SUBTOTAL			885				1625		

VERMONT AGENCY OF TRANSPORTATION

CLOUGH HARBOUR & ASSOCIATES LLP
III Winners Circle, PO Box 5269, Albany, NY 12205
www.cloughharbour.com

PROJECT NAME: BENNINGTON
PROJECT NUMBER: AC NH 019-1(53)

FILE NAME: ZD048EW.DGN
PROJECT LEADER: D.E.G.
DESIGNED BY: J.S.P.
EARTHWORK SHEET EW-2

PLOT DATE: 5/18/2007
DRAWN BY: J.S.P.
CHECKED BY: D.E.G.
SHEET 428 OF 577

FILE NAME =U:\9819\mstn\03\clough\Stage One Sites\zd048ew.dgn
DATE/TIME =5/18/2007
USER =3076

STATE OF VERMONT
AGENCY OF TRANSPORTATION

EARTHWORKS

VAOT Metric

SUMMARY AND BALANCES

STATION TO STATION km + m		TOTAL EXC. EARTH+ROCK m^3	ROCK EXCAVATION m^3	EMBANKMENT m^3	EXCESSES CUT	EXCESSES FILL	ACCUMULATIVE EXCESSES CUT	ACCUMULATIVE EXCESSES FILL
HAUL ROAD A								
HR1+343	HR1+400	629		0	629		629	
HR1+400	HR1+600	400		480		152	477	
HR1+600	HR1+800	60		1820		2033		1556
HR1+800	HR2+000	40		3240		3686		5242
HR2+000	HR2+200	3310		1030	2126			3116
HR2+200	HR2+400	870		1050		338		3454
HR2+400	HR2+600	180		2010		2132		5586
HR2+600	HR2+800	40		5670		6481		12067
HR2+800	HR3+000	0		3190		3669		15736
HR3+000	HR3+200	62		1312		1447		17183
HR3+200	HR3+280	20		880		992		18175
HAUL ROAD B								
HRB1+278	HRB1+400	4		455		519		18694
HRB1+400	HRB1+500	0		1310		1507		20201
STAGE ONE SITES								
HR2+422	HR2+520	0		10458		12027		32228
HR2+592	HR2+806	0		88976		102322		134550
HR3+097	HR3+284	0		35056		40314		174864
HRB1+304	HRB1+512	0		28584		32872		207736
ACCESS ROAD								
AR1+003	AR1+255	698		1625		1171		208907
ROADSIDE DITCH								
MP1+389	MP1+464	187		0	187			208720
TRENCH EXCAVATION		35		0	35			208685

SUMMARY AND BALANCES

STATION TO STATION km + m		TOTAL EXC. EARTH+ROCK m^3	ROCK EXCAVATION m^3	EMBANKMENT m^3	EXCESSES CUT	EXCESSES FILL	ACCUMULATIVE EXCESSES CUT	ACCUMULATIVE EXCESSES FILL

SUMMARY BY COLUMNS

SHEET NO.	COL NO.	EXCAVATION TOTAL m^3	EXCAVATION ROCK m^3	FILL m^3
EW-1	1	1089		2300
EW-1	2	3350		4270
EW-1	3	1090		8730
EW-1	4	62		4502
EW-2	1	24		2645
EW-2	2	0		99434
EW-2	3	0		63640
EW-2	4	885		1625
TOTALS		6500		187146

REMARKS

EARTH AND ROCK EXCAVATION	6500 m^3
SOLID ROCK EXCAVATION	0 m^3
EARTH EXCAVATION	6500 m^3
PLANIMETERED FILL	187146 m^3
SOLID ROCK FACTOR	1.30
LESS FACTORED SOLID ROCK	187146 m^3
LESS DISPLACEMENT OF ANY LARGE STRUCTURES	0
NET PLANIMETERED FILL	187146 m^3
FACTOR	1.15
PLANIMETERED FILL INCLUDING FACTOR	215218 m^3
MATERIALS AVAILABLE FOR FILLS	
ROADWAY/DRAINAGE/EROSION CONTROL EXCAVATION	6500 m^3
CHANNEL EXCAVATION (x 0.30)	0
TRENCH EXCAVATION (FROM DRAINAGE SHEET)	35
MUCK EXCAVATION	0
STRUCTURE EXCAVATION (x 0.30)	0
TOTAL MATERIAL AVAILABLE FOR FILL	6535 m^3
TOTAL FILL INCLUDING FACTOR	215218 m^3
TOTAL MATERIAL FOR FILL	6535 m^3
EARTH BORROW SUBTOTAL	208683 m^3

VERMONT AGENCY OF TRANSPORTATION

CLOUGH HARBOUR & ASSOCIATES LLP
III Winners Circle, PO Box 5269, Albany, NY 12205
www.cloughharbour.com

© 2007

PROJECT NAME: BENNINGTON
PROJECT NUMBER: AC NH 019-1(53)

FILE NAME: ZD048EW.DGN
PROJECT LEADER: D.E.G.
DESIGNED BY: J.S.P.
PLOT DATE: 5/18/2007
DRAWN BY: J.S.P.
CHECKED BY: D.E.G.

EARTHWORK SHEET EW-3

FILE NAME =U:\9819\mstn\03\clough\Stage One Sites\zd048ew.dgn
DATE/TIME =5/18/2007
USER =3076

HORIZONTAL CONTROL TABLE

HCL POINT	COORDINATES NORTH	COORDINATES EAST	HCL STATION	DESCRIPTION
HAUL ROAD A				
BEGIN HAUL ROAD A	39131.270	442752.358	HR1+339.611	
P.C. CURVE A-1	39338.008	442783.488	HR1+548.679	
P.I. CURVE A-1	39369.833	442788.280	HR1+580.863 BK.= HR1+580.316 AHD.	
P.T. CURVE A-1	39398.547	442802.815	HR1+612.499	
P.C. CURVE A-2	39699.586	442955.186	HR1+949.903	
P.I. CURVE A-2	39721.508	442966.282	HR1+974.474 BK.= HR1+974.228 AHD.	
P.T. CURVE A-2	39740.093	442982.355	HR1+998.799	
P.C. CURVE A-3	39779.433	443016.377	HR2+050.810	
P.I. CURVE A-3	39803.831	443037.477	HR2+083.067 BK.= HR2+082.515 AHD.	
P.T. CURVE A-3	39833.625	443049.836	HR2+114.772	
P.C. CURVE A-4	39855.024	443058.714	HR2+137.939	
P.I. CURVE A-4	39893.907	443074.844	HR2+180.035 BK.= HR2+178.825 AHD.	
P.R.C. CURVE A-4/A-5	39922.990	443105.279	HR2+220.921	
P.I. CURVE A-5	39951.746	443135.373	HR2+262.545 BK.= HR2+261.373 AHD.	
P.T. CURVE A-5	39990.120	443151.496	HR2+302.997	
P.C. CURVE A-6	40044.131	443174.189	HR2+361.581	
P.I. CURVE A-6	40168.605	443226.486	HR2+496.595 BK.= HR2+486.990 AHD.	
P.T. CURVE A-6	40235.923	443343.521	HR2+622.003	
P.C. CURVE A-7	40274.545	443410.665	HR2+699.462	
P.I. CURVE A-7	40322.865	443494.672	HR2+796.375 BK.= HR2+795.624 AHD.	
P.T. CURVE A-7	40352.115	443587.064	HR2+892.537	
P.C. CURVE A-8	40417.159	443792.527	HR3+108.049	
P.I. CURVE A-8	40461.295	443931.941	HR3+254.283 BK.= HR3+253.766 AHD.	
P.T. CURVE A-8 END HAUL ROAD A	40525.206	444063.470	HR3+400.000	
HAUL ROAD B				
BEGIN HAUL ROAD B	40305.698	443908.334	HRB1+274.722	
P.C. CURVE B-1	40322.803	443938.911	HRB1+309.757	
P.I. CURVE B-1	40336.524	443963.436	HRB1+337.860 BK.= HRB1+337.494 AHD.	
P.R.C. CURVE B-1/B-2	40356.473	443983.231	HRB1+365.598	
P.I. CURVE B-2	40399.952	444026.375	HRB1+426.850 BK.= HRB1+417.840 AHD.	
P.T. CURVE B-2	40391.204	444086.999	HRB1+479.092	
END HAUL ROAD B	40376.793	444186.873	HRB1+580.000	
MIDDLE POWNAL ROAD				
BEGIN MIDDLE POWNAL ROAD	40106.266	443955.176	MP1+100.000	
P.C. CURVE MP-1	40227.747	443947.179	MP1+221.744	
P.I. CURVE MP-1	40265.134	443944.718	MP1+259.212 BK.= MP1+256.500 AHD.	
P.C.C. CURVE MP-1/MP-2	40293.246	443919.947	MP1+293.968	
P.I. CURVE MP-2	40318.898	443897.343	MP1+328.159 BK.= MP1+327.866 AHD.	
P.T. CURVE MP-2	40338.806	443869.545	MP1+362.057	
P.I.	40413.950	443764.624	MP1+491.111	ANGLE POINT
P.C. CURVE MP-3	40458.414	443698.683	MP1+570.642	
P.I. CURVE MP-3	40471.067	443679.918	MP1+593.274 BK.= MP1+592.523 AHD.	
P.C.C. CURVE MP-3/MP-4	40490.566	443668.431	MP1+615.155	
P.I. CURVE MP-4	40525.990	443647.561	MP1+656.270 BK.= MP1+647.580 AHD.	
P.T. CURVE MP-4	40560.338	443670.155	MP1+688.695	
END MIDDLE POWNAL ROAD	40569.826	443676.397	MP1+710.000	

HORIZONTAL CONTROL TABLE

HCL POINT	COORDINATES NORTH	COORDINATES EAST	HCL STATION	DESCRIPTION
FULLER ROAD (EXISTING)				
BEGIN FULLER ROAD	39111.951	442560.381	F1+000.000	
P.I. 1	39120.156	442638.824	F1+078.871	ANGLE POINT
P.I. 2	39124.797	442694.206	F1+134.447	ANGLE POINT
END FULLER ROAD	39132.049	442759.357	F1+200.000	
U.S. ROUTE 7 & VT. ROUTE 279 (MAINLINE PROPOSED UNDER AC NH 019-1(53)				
BEGIN U.S. ROUTE 7	38605.877	442626.592	0+775.000	
P.C. CURVE N.B. 1	38630.349	442621.478	0+800.000	
P.I. CURVE N.B. 1	38780.181	442590.170	0+953.068 BK.= 0+950.460 AHD.	
P.C.C. CURVE N.B. 1/N.B. 2	38932.264	442607.508	1+103.528	
P.I. CURVE N.B. 2	39046.349	442620.513	1+218.352 BK.= 1+215.934 AHD.	
P.T. CURVE N.B. 2	39148.797	442672.368	1+330.758	
STOP U.S. ROUTE 7= BEGIN VT. ROUTE 279	39183.643	442690.005	U.S. ROUTE 7 1+369.813= VT. ROUTE 279 1+369.813	
P.C. CURVE N.B. 3	39303.950	443054.591	2+177.133	
P.I. CURVE N.B. 3	40241.392	443225.388	2+555.338 BK.= 2+515.006 AHD.	
P.T. CURVE N.B. 3	40355.540	443585.956	2+893.211	
P.C. CURVE N.B. 4	40420.591	443791.441	3+108.747	
P.I. CURVE N.B. 4	40500.108	444042.615	3+372.208 BK.= 3+369.192 AHD.	
P.T. CURVE N.B. 4	40641.958	444264.630	3+632.653	
P.C. CURVE N.B. 5	40864.549	444613.014	4+046.075	
P.I. CURVE N.B. 5	41054.901	444910.941	4+399.621 BK.= 4+382.081 AHD.	
P.C.C. CURVE N.B. 5/N.B. 6	41372.009	445067.265	4+735.627	
P.I. CURVE N.B. 6	42266.885	445508.412	5+733.331 BK.= 5+575.341 AHD.	
P.T. CURVE N.B. 6	43138.085	445022.179	6+573.045	
END VT. ROUTE 279	43510.905	444814.102	7+000.000	
ACCESS ROAD				
BEGIN ACCESS ROAD	40367.887	443828.941	AR1+000.000	
P.C. CURVE AR-1	40362.614	443817.847	AR1+012.283	
P.I. CURVE AR-1	40347.979	443787.055	AR1+046.376 BK.= AR1+045.958 AHD.	
P.R.C. CURVE AR-1/2	40342.123	443753.469	AR1+080.051	
P.I. CURVE AR-2	40339.718	443739.674	AR1+094.055 BK.= AR1+093.873 AHD.	
P.R.C. CURVE AR-2/3	40333.615	443727.069	AR1+107.877	
P.I. CURVE AR-3	40317.448	443693.676	AR1+144.978 BK.= AR1+144.441 AHD.	
P.R.C. CURVE AR-3/4	40311.676	443657.027	AR1+181.542	
P.I. CURVE AR-4	40308.385	443636.136	AR1+202.691 BK.= AR1+202.077 AHD.	
P.R.C. CURVE AR-4/5	40296.919	443618.366	AR1+223.226	
P.I. CURVE AR-5	40291.529	443610.015	AR1+233.164 BK.= AR1+233.100 AHD.	
P.T. CURVE AR-5	40287.891	443600.767	AR1+243.038	
END ACCESS ROAD	40274.353	443566.372	AR1+280.000	

DATUM
VERTICAL NAVD 88
HORIZONTAL NAD 83 (1992)

VERMONT AGENCY OF TRANSPORTATION

CLOUGH HARBOUR & ASSOCIATES LLP
11 Winners Circle, PO Box 5269, Albany, NY 12205
www.cloughharbour.com

PROJECT NAME: BENNINGTON
PROJECT NUMBER: AC NH 019-1(53)

FILE NAME: ZD048HC1.DGN
PROJECT LEADER: D.E.G.
DESIGNED BY: J.S.P.
HORIZONTAL CONTROL TABLE HC-1

PLOT DATE: 5/21/2007
DRAWN BY: J.S.P.
CHECKED BY: D.E.G.
SHEET 430 OF 577

FILE NAME =U:\9819\mstn\03\clough\Stage One Sites\zd048hct.dgn
DATE/TIME =5/21/2007
USER =1459

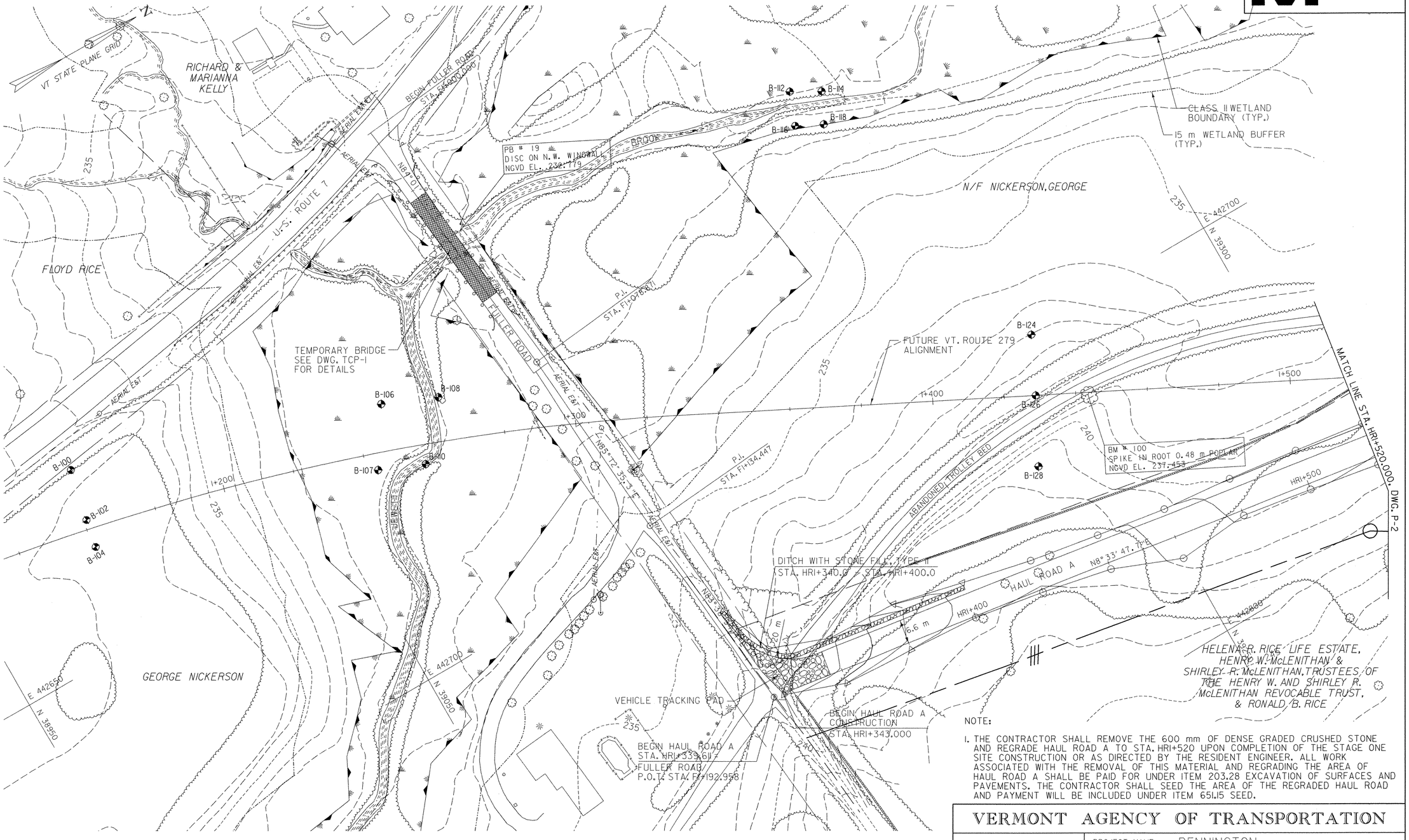

Metric

NOTE:

1. THE CONTRACTOR SHALL REMOVE THE 600 mm OF DENSE GRADED CRUSHED STONE AND REGRADE HAUL ROAD A TO STA. HRI+520 UPON COMPLETION OF THE STAGE ONE SITE CONSTRUCTION OR AS DIRECTED BY THE RESIDENT ENGINEER. ALL WORK ASSOCIATED WITH THE REMOVAL OF THIS MATERIAL AND REGRADING THE AREA OF HAUL ROAD A SHALL BE PAID FOR UNDER ITEM 203.28 EXCAVATION OF SURFACES AND PAVEMENTS. THE CONTRACTOR SHALL SEED THE AREA OF THE REGRADED HAUL ROAD AND PAYMENT WILL BE INCLUDED UNDER ITEM 651.15 SEED.

DATUM
VERTICAL NAVD 88
HORIZONTAL NAD 83 (1992)

613.11 STONE FILL, TYPE II
STA. HRI+340.0 - STA. HRI+400.0 LT (50 m³)

649.31 GEOTEXTILE UNDER STONE FILL
STA. HRI+340.0 - STA. HRI+400.0 LT (170 m²)

10 0 10 m
1: 500
@ FULL SIZE

VERMONT AGENCY OF TRANSPORTATION

CLOUGH HARBOUR & ASSOCIATES LLP © 2007
111 Winners Circle, PO Box 5269, Albany, NY 12205
www.cloughharbour.com

PROJECT NAME: BENNINGTON
PROJECT NUMBER: AC NH 019-1(53)

FILE NAME: ZD048PL01.DGN
PROJECT LEADER: D.E.G.
DESIGNED BY: J.S.P.
PLAN P-1

PLOT DATE: 5/18/2007
DRAWN BY: J.S.P.
CHECKED BY: D.E.G.
SHEET 431 OF 577

FILE NAME =U:\9819\mstn\03\clough\Stage One Sites\zd048pl01.dgn
DATE/TIME =5/18/2007
USER =3076

Metric

CURVE A-1

P.C. = STA. HRI+548.679

P.T. = STA. HRI+612.499

Δ= 18° 16' 59.3" RT.
R= 200.000 m
T= 32.184 m
L= 63.820 m
E= 2.573 m

e_{max} = N/A

VT STATE PLANE GRID N

E 442700 N 39450

E 442800 N 39650

HELENA R. RICE LIFE ESTATE, HENRY W. McLENITHAN & SHIRLEY R. McLENITHAN, TRUSTEES OF THE HENRY W. AND SHIRLEY R. McLENITHAN REVOCABLE TRUST, & RONALD B. RICE

W/F MERRITT, MATTHEW J. III & MORIARTY, FRANCIS X.

HELENA R. RICE LIFE ESTATE, HENRY W. McLENITHAN & SHIRLEY R. McLENITHAN, TRUSTEES OF THE HENRY W. AND SHIRLEY R. McLENITHAN REVOCABLE TRUST, & RONALD B. RICE

CLASS II WETLAND BOUNDARY (TYP.)

15 m WETLAND BUFFER (TYP.)

BM # 101
SPIKE IN ROOT 250 mm ELM
NAVD 88 EL. 235.569

BM # 102
SPIKE IN TREE 300 mm CHERRY
NAVD 88 EL. 234.770

BROOK

FUTURE VT. ROUTE 279 ALIGNMENT

P.C. STA. HRI+548.679

P.T. STA. HRI+612.499

ABANDONED TROLLEY BED

ALLIUM CANADENSE

B-130

B-132

B-134

B-136

B-138

B-140

HAUL ROAD A

CURVE A-1

N18° 33' 47.7"E

N26° 50' 47.0"E

6.6 m

I+600 HRI+600

I+700 HRI+700

I+800 HRI+800

235

240

245

250

255

260

DENSE TREES

E 442850 N 39100

E 442950 N 38600

PAGE, MARK O. & SUSAN J.

MATCH LINE STA. HRI+520.000 DWG. P-1

MATCH LINE STA. HRI+900.000 DWG. P-3

DATUM
VERTICAL NAVD 88
HORIZONTAL NAD 83 (1992)

10 0 10 m
1: 500
@ FULL SIZE

VERMONT AGENCY OF TRANSPORTATION

CLOUGH HARBOUR & ASSOCIATES LLP
111 Winners Circle, PO Box 5269, Albany, NY 12205
www.cloughharbour.com

PROJECT NAME: BENNINGTON
PROJECT NUMBER: AC NH 019-1(53)

FILE NAME: ZD048PL02.DGN
PROJECT LEADER: D.E.G.
DESIGNED BY: J.S.P.
PLAN P-2

PLOT DATE: 5/18/2007
DRAWN BY: J.S.P.
CHECKED BY: D.E.G.
SHEET 432 OF 577

FILE NAME =U:\9819\mstn\03\clough\Stage One Sites\zd048pl02.dgn
DATE/TIME =5/18/2007
USER =3076

CURVE A-2	CURVE A-3	CURVE A-4	CURVE A-5
P.C. = STA. HR1+949.903	P.C. = STA. HR2+050.810	P.C. = STA. HR2+137.939	P.R.C. = STA. HR2+220.921
P.T. = STA. HR1+998.799	P.T. = STA. HR2+114.772	P.R.C. = STA. HR2+220.921	P.T. = STA. HR2+302.997
Δ= 14° 00' 27.8" RT.	Δ= 18° 19' 26.0" LT.	Δ=23° 46' 20.8" RT.	Δ=23° 30' 46.6" LT.
R= 200.000 m	R= 200.000 m	R= 200.000 m	R=200.000 m
T= 24.571 m	T= 32.257 m	T= 42.096 m	T= 41.624 m
L= 48.896 m	L= 63.962 m	L= 82.982 m	L= 82.076 m
E= 1.504 m	E= 2.585 m	E= 4.382 m	E= 4.285 m
e_{max}=N/A	e_{max}=N/A	e_{max}=N/A	e_{max}=N/A

VT STATE PLANE GRID

BM # 103
SPIKE IN ROOT 500 mm POPLAR
NAVD 88 EL. 232.478

BM # 104
SPIKE IN ROOT 300 mm POPLAR
NAVD 88 EL. 232.448

BM # 105
SPIKE IN TREE 160 mm CHERRY
NAVD 88 EL. 236.879

HELENA R. RICE LIFE ESTATE,
HENRY W. McLENITHAN &
SHIRLEY R. McLENITHAN, TRUSTEES OF
THE HENRY W. AND SHIRLEY R.
McLENITHAN REVOCABLE TRUST,
& RONALD B. RICE

CVPS EASEMENT

ABANDONED TROLLEY BED

CLASS II WETLAND BOUNDARY (TYP.)

15 m WETLAND BUFFER (TYP.)

FUTURE VT. ROUTE 279 ALIGNMENT

B-146

B-148

B-150

B-142

B-144

DENSE TREES

HAUL ROAD A

CURVE A-2 — CURVE A-3 — CURVE A-4 — CURVE A-5

N26° 50' 47.0" E

N40° 51' 14.8" E

N22° 31' 48.8" E

N46° 18' 09.6" E

N22° 47' 23.0" E

6.6 m

P.C. STA. HR1+949.903 BK.= 974.474 AHD.

P.T. STA. HR1+998.799 BK.= 974.238 AHD.

P.C. STA. HR2+050.810 BK.= 973.928 AHD.

P.T. STA. HR2+114.772 BK.= 973.928 AHD.

P.C. STA. HR2+137.939 BK.= 973.928 AHD.

P.T. STA. HR2+180.035 BK.= 973.928 AHD.

P.R.C. STA. HR2+220.921 BK.= 973.928 AHD.

P.T. STA. HR2+302.997 BK.= 973.928 AHD.

P.T. STA. HR2+262.549 BK.= 261.373 AHD.

MATCH LINE STA. HR1+900.000, DWG. P-2

MATCH LINE STA. HR2+280.000, DWG. P-4

N/F ECKNER, JOCHEN K. & BISCHOFF, BARBARA

HELENA R. RICE LIFE ESTATE,
HENRY W. McLENITHAN &
SHIRLEY R. McLENITHAN, TRUSTEES OF
THE HENRY W. AND SHIRLEY R.
McLENITHAN REVOCABLE TRUST.

NEW ENGLAND
TROPICAL CONSERVATORY, INC.
JOINED BY
VERMONT LAND TRUST, INC. &
VERMONT HOUSING AND CONSERVATION BOARD

DATUM
VERTICAL NAVD 88
HORIZONTAL NAD 83 (1992)

10 0 10 m
1: 500
@ FULL SIZE

CLOUGH HARBOUR & ASSOCIATES LLP
III Winners Circle, PO Box 5269, Albany, NY 12205
www.cloughharbour.com

VERMONT AGENCY OF TRANSPORTATION

PROJECT NAME: BENNINGTON
PROJECT NUMBER: AC NH 019-1(53)

FILE NAME: ZD048PL03.DGN
PROJECT LEADER: D.E.G.
DESIGNED BY: J.S.P.
PLAN P-3

PLOT DATE: 5/18/2007
DRAWN BY: J.S.P.
CHECKED BY: D.E.G.
SHEET 433 OF 577

FILE NAME =U:\9819\mstn\03\clough\Stage One Sites\zd048pl03.dgn
DATE/TIME =5/18/2007
USER =3076

CURVE A-5
P.R.C. = STA. HR2+220.921
P.T. = STA. HR2+302.997
Δ=23° 30′ 46.6" LT.
R=200.000 m
T=41.624 m
L=82.076 m
E=4.285 m
e_{max}=N/A

CURVE A-6
P.C. = STA. HR2+361.581
P.T. = STA. HR2+622.003
Δ=37° 18′ 09.8" RT.
R=400.000 m
T=135.014 m
L=260.422 m
E=22.172 m
e_{max}=N/A

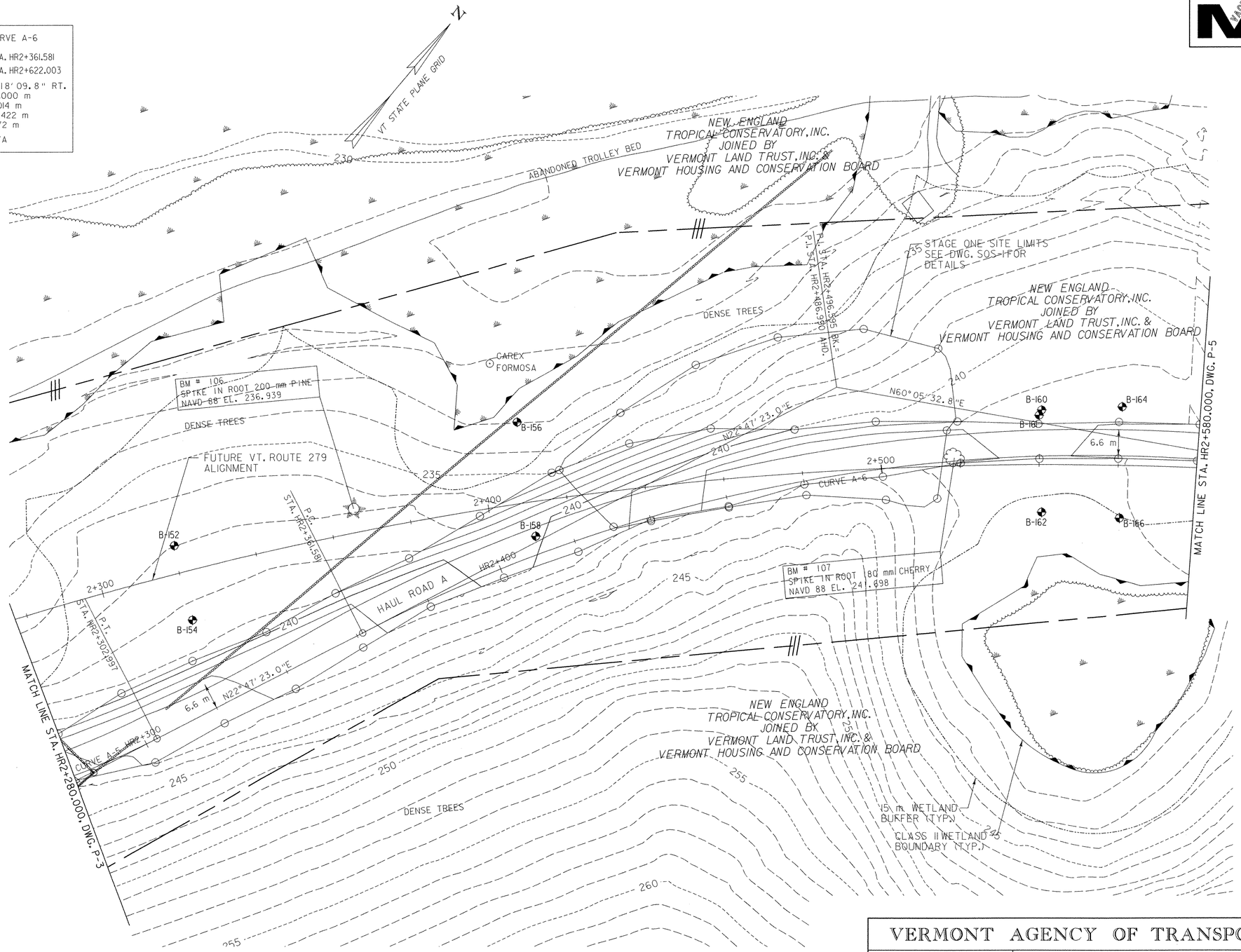

DATUM	
VERTICAL	NAVD 88
HORIZONTAL	NAD 83 (1992)

10 0 10 m
1: 500
Ø FULL SIZE

VERMONT AGENCY OF TRANSPORTATION

CLOUGH HARBOUR & ASSOCIATES LLP
© 2007
III Winners Circle, PO Box 5269, Albany, NY 12205
www.cloughharbour.com

PROJECT NAME: BENNINGTON
PROJECT NUMBER: AC NH 019-1(53)

FILE NAME: ZD048PL04.DGN	PLOT DATE: 5/18/2007
PROJECT LEADER: D.E.G.	DRAWN BY: J.S.P.
DESIGNED BY: J.S.P.	CHECKED BY: D.E.G.
PLAN P-4	SHEET 434 OF 577

FILE NAME =U:\9819\mstn\03\clough\Stage One Sites\zd048pl04.dgn
DATE/TIME =5/18/2007
USER =3076

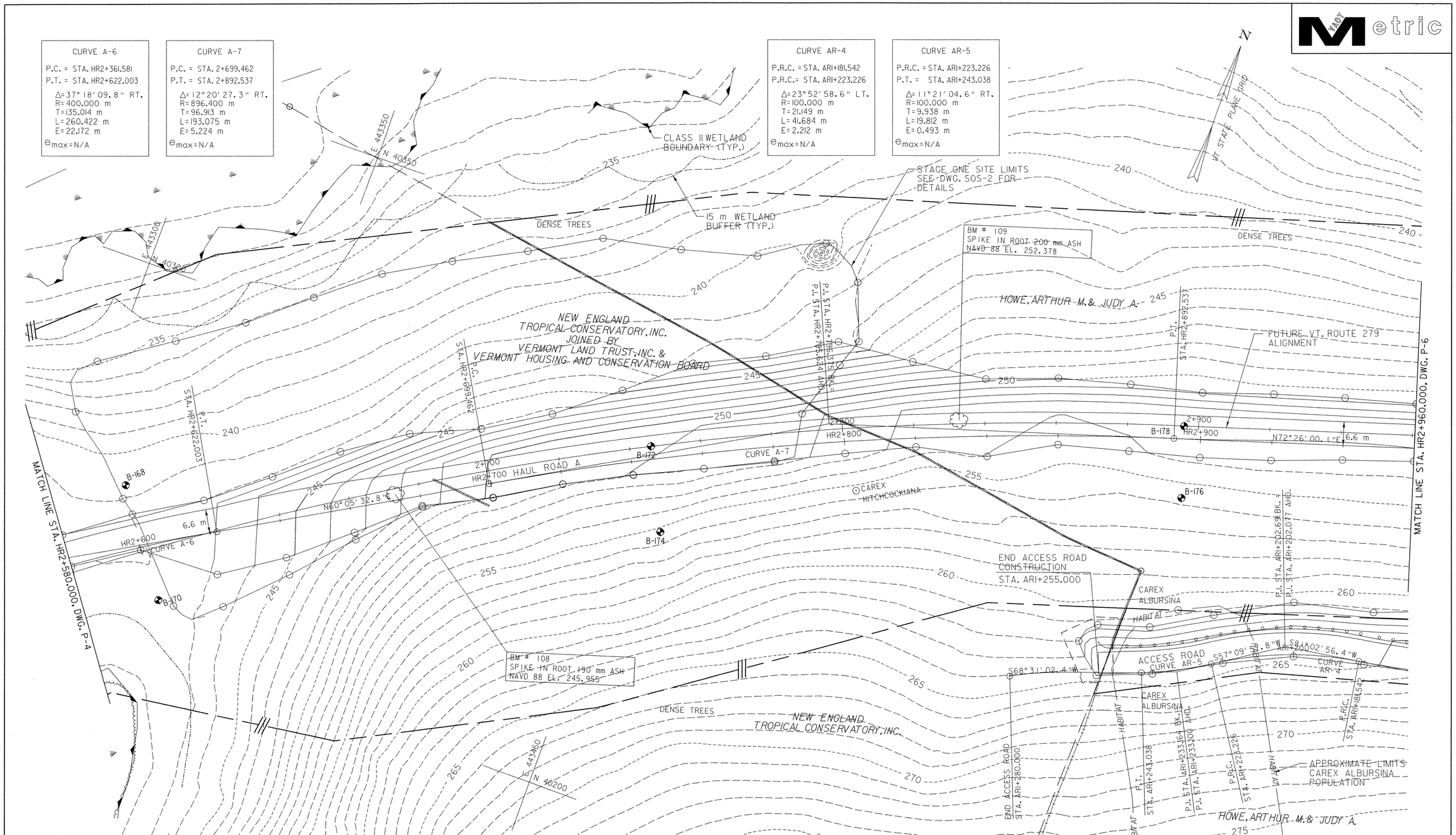

621.20 STEEL BEAM GUARDRAIL, GALVANIZED
STA. AR1+168.0 - STA. AR1+255.0 RT (87.0 m)

621.60 ANCHOR FOR STEEL BEAM RAIL
STA. AR1+252.3 RT (1 EA)

10 0 10 m
1:500
@ FULL SIZE

DATUM	
VERTICAL	NAVD 88
HORIZONTAL	NAD 83 (1992)

VERMONT AGENCY OF TRANSPORTATION

CHA
CLOUGH HARBOUR & ASSOCIATES LLP
III Winners Circle, PO Box 5269, Albany, NY 12205
www.cloughharbour.com

PROJECT NAME: BENNINGTON
PROJECT NUMBER: AC NH 019-1(53)

FILE NAME: ZD048PL05.DGN
PROJECT LEADER: D.E.G.
DESIGNED BY: J.S.P.
PLAN P-5

PLOT DATE: 5/18/2007
DRAWN BY: J.S.P.
CHECKED BY: D.E.G.
SHEET 435 OF 577

FILE NAME =U:\9819\mstn\03\clough\Stage One Sites\zd048pl05.dgn
DATE/TIME =5/18/2007
USER =3076

Metric

CURVE AR-1	CURVE AR-2	CURVE AR-3	CURVE A-8	CURVE MP-3	CURVE MP-4
P.C. = STA. AR1+012.283	P.R.C. = STA. AR1+080.051	P.R.C. = STA. AR1+107.877	P.C. = STA. 3+108.049	P.C. = STA. MP1+570.642	P.C.C.= STA. MP1+615.155
P.R.C. = STA. AR1+080.051	P.R.C. = STA. AR1+107.877	P.R.C. = STA. AR1+181.542	P.T. = STA. 3+400.000	P.C.C.= STA. MP1+615.155	P.T. = STA. MP1+688.695
Δ= 15°31'52.4" RT.	Δ= 15°56'36.0" LT.	Δ= 16°52'57.6" RT.	Δ= 8°20'55.5" LT.	Δ= 25°30'15.5" RT.	Δ= 63°50'30.2" RT.
R= 250.000 m	R= 100.000 m	R= 250.000 m	R= 2003.600 m	R= 100.000 m	R= 66.000 m
T= 34.093 m	T= 14.004 m	T= 37.101 m	T= 146.234 m	T= 22.632 m	T= 41.115 m
L= 67.768 m	L= 27.826 m	L= 73.665 m	L= 291.951 m	L= 44.513 m	L= 73.540 m
E= 2.314 m	E= 0.976 m	E= 2.738 m	E= 5.329 m	E= 2.529 m	E= 11.759 m
e_{max} = N/A	e_{max} = N/A	e_{max} = N/A	e_{max} = N/A	e_{max} = N/A	e_{max} = N/A

N

VT STATE PLANE GRID

E 445700
N 40500
E 443950
N 40550
E 444000
N 40450
E 443750
N 40300

O'NEILL, PHILIP J.
JONES, HELEN M. & GAIL M.
HOWE, ARTHUR M. & JUDY A.

P.C.C. STA. MP1+615.155
CURVE MP-4
N30°30'15.5"W
MP1+600
CURVE MP-3
P.I. STA. MP1+593.274 BK. =
P.I. STA. MP1+592.523 AHD.
P.C. STA. MP1+570.642
N56°30'31.1"W
R=20 m
P.I. STA. MP1+491.111
P.C. STA/HR3+080.849
END PAVING & STRIPING STA. MP1+540.900
STAGE ONE SITE LIMITS SEE DWG. SOS-3 FOR DETAILS
RESUME HAUL ROAD A STA. RR3+088.200
15 m WETLAND BUFFER (TYP.)
CLASS II WETLAND BOUNDARY (TYP.)
FUTURE VT. ROUTE 279 ALIGNMENT
N64°05'04.6"E
END HAUL ROAD A CONSTRUCTION STA. HR3+280.000
P.I. STA. HR3+254.283 BK. =
P.I. STA. HR3+253.766 AHD.
MATCH LINE STA. HR2+960.000, DWG. P-5
MATCH LINE STA. MP1+380.000, DWG. P-7

VEHICLE TRACKING PAD
B-184
B-188
B-180
B-185
B-190
B-196
B-200
B-182
6.6 m
HAUL ROAD A
N72°26'00.1"E
3+000 HR3+000
3+200 HR3+200
3+300 HR3+300
STOP HAUL ROAD A STA. HR3+080.700
HAUL ROAD A P.O.T. STA. HR3+084.494=
MIDDLE POWNAL ROAD P.O.T. STA. MP1+484.412
DITCH WITH STONE FILL, TYPE II STA. MP1+439.0 - STA. MP1+464.0
BM # 110 SPIKE IN ROOT 470 mm PINE NGVD EL. 252.761
BM # 111 SPIKE IN ROOT 280 mm PINE NAVD 88 EL. 235.908
P.I. STA. AR1+094.055 BK. =
P.I. STA. AR1+093.873 AHD.
R=11 m
N42°23'03.6"W
BEGIN ACCESS ROAD CONSTRUCTION STA. AR1+003.300
BEGIN ACCESS ROAD STA. AR1+000.000=
MIDDLE POWNAL ROAD P.O.T. STA. MP1+412.000
DITCH WITH STONE FILL, TYPE II STA. MP1+389.0 - STA. MP1+409.0
DENSE TREES
CURVE A-8
CURVE AR-3
S81°02'56.4"W
6.0 m
S64°09'58.8"W
AR1+100
CURVE AR-2
S80°06'34.8"W
ACCESS ROAD CURVE AR-1
S64°34'42.4"W
P.I. STA. AR1+134.978 BK. =
P.I. STA. AR1+134.447 AHD.
P.R.C. STA. AR1+101.787
P.R.C. STA. AR1+080.051
P.R.C. STA. AR1+002.283
P.I. STA. AR1+048.376 BK. =
P.I. STA. AR1+045.958 AHD.
NEW 375 mm x 30 m PIPE (CPEP, CREPISLI, RCP CLIMOR CSP) W/END SECTIONS STA. MP1+409.0 - STA. MP1+439.0 LT
MP1+400

NOTES:

1. VEHICLE TRACKING PADS SHALL BE REMOVED UPON COMPLETION OF STAGE ONE SITE CONSTRUCTION. THE DISTURBED AREAS SHALL BE REGRADED TO THE EXISTING CONDITION AND STABILIZED WITH PERMANENT SEEDING AS DIRECTED BY THE ON-SITE PLAN COORDINATOR FOR EROSION PREVENTION AND SEDIMENT CONTROL MEASURES. PAYMENT FOR THIS WORK WILL BE INCIDENTAL TO ITEM 653.35 VEHICLE TRACKING PAD.
2. THE CONTRACTOR SHALL CONSTRUCT A SIGHT BERM NEAR THE HAUL ROAD A APPROACH TO MIDDLE POWNAL ROAD AS SHOWN ON TS-3 UPON COMPLETION OF STAGE ONE SITE CONSTRUCTION. PAYMENT FOR THIS WORK WILL BE INCIDENTAL TO ITEM 203.15 COMMON EXCAVATION.

613.11 STONE FILL, TYPE II
STA. MP1+389.0 - STA. MP1+409.0 LT (16 m³)
STA. MP1+439.0 - STA. MP1+464.0 LT (19 m³)

621.20 STEEL BEAM GUARDRAIL, GALVANIZED
STA. AR1+016.0 - STA. AR1+168.0 RT (157.4 m)

621.60 ANCHOR FOR STEEL BEAM RAIL
STA. AR1+016.0 RT (1 EA)

646.412 DURABLE 100 mm YELLOW LINE, THERMOPLASTIC
STA. MP1+380.0 - STA. MP1+540.0 DOUBLE SOLID C/L

649.31 GEOTEXTILE UNDER STONE FILL
STA. MP1+389.0 - STA. MP1+409.0 LT (50 m²)
STA. MP1+439.0 - STA. MP1+464.0 LT (60 m²)

DATUM
VERTICAL NAVD 88
HORIZONTAL NAD 83 (1992)

10 0 10 m
1:500
Ø FULL SIZE

VERMONT AGENCY OF TRANSPORTATION

CHA © 2007
CLOUGH HARBOUR & ASSOCIATES LLP
III Winners Circle, PO Box 5069, Albany, NY 12205
www.cloughharbour.com

PROJECT NAME: BENNINGTON
PROJECT NUMBER: AC NH 019-1(53)

FILE NAME: ZD048PL06.DGN
PROJECT LEADER: D.E.G.
DESIGNED BY: J.S.P.
PLAN P-6

PLOT DATE: 5/21/2007
DRAWN BY: J.S.P.
CHECKED BY: D.E.G.
SHEET 436 OF 577

FILE NAME =U:\9819\mstn\03\clough\Stage One Sites\zd048pl06.dgn
DATE/TIME =5/21/2007
USER =1459

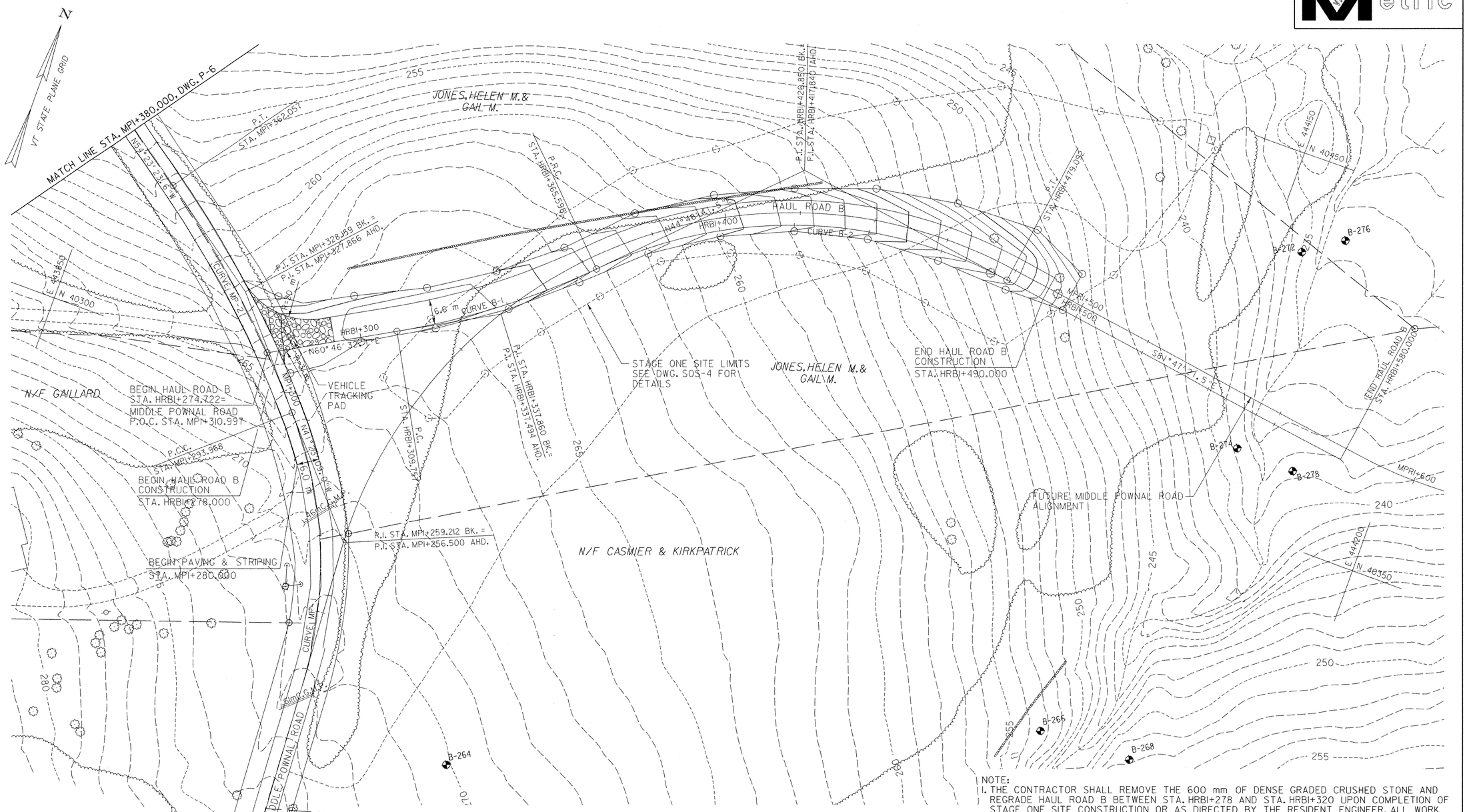

NOTE:
1. THE CONTRACTOR SHALL REMOVE THE 600 mm OF DENSE GRADED CRUSHED STONE AND REGRADE HAUL ROAD B BETWEEN STA. HRBI+278 AND STA. HRBI+320 UPON COMPLETION OF STAGE ONE SITE CONSTRUCTION OR AS DIRECTED BY THE RESIDENT ENGINEER. ALL WORK ASSOCIATED WITH THE REMOVAL OF THIS MATERIAL AND REGRADING THE AREA OF HAUL ROAD B SHALL BE PAID FOR UNDER ITEM 203.28 EXCAVATION OF SURFACES AND PAVEMENTS. THE CONTRACTOR SHALL SEED THE AREA OF THE REGRADED HAUL ROAD AND PAYMENT WILL BE INCLUDED UNDER ITEM 651.15 SEED.

10 0 10 m
1:500
@ FULL SIZE

CURVE MP-1	CURVE MP-2	CURVE B-1	CURVE B-2
P.C. = STA. MPI+221.744	P.C.C.= STA. MPI+293.968	P.C. = STA. HRBI+309.757	P.R.C. = STA. HRBI+365.598
P.C.C.= STA. MPI+293.968	P.T. = STA. MPI+362.057	P.R.C. = STA. HRBI+365.598	P.T. = STA. HRBI+479.092
Δ=37°37' 10.1" LT.	Δ=13°00' 14.6" LT.	Δ=15°59' 50.6" LT.	Δ=53°25' 56.9" RT.
R=110.000 m	R=300.000 m	R=200.000 m	R=121.700 m
T=37.468 m	T=34.191 m	T=28.104 m	T=61.252 m
L=72.224 m	L=68.089 m	L=55.841 m	L=113.494 m
E=6.206 m	E=1.942 m	E=1.965 m	E=14.545 m
e_{max}=N/A	e_{max}=N/A	e_{max}=N/A	e_{max}=N/A

DATUM	
VERTICAL	NAVD 88
HORIZONTAL	NAD 83 (1992)

646.412 DURABLE 100 mm YELLOW LINE, THERMOPLASTIC
STA. MPI+280.0 - STA. MPI+380.0 DOUBLE SOLID C/L

VERMONT AGENCY OF TRANSPORTATION

CHA
CLOUGH HARBOUR & ASSOCIATES LLP
III Winners Circle, PO Box 5269, Albany, NY 12205
www.cloughharbour.com

PROJECT NAME: BENNINGTON
PROJECT NUMBER: AC NH 019-1(53)

FILE NAME: ZD048PL07.DGN
PROJECT LEADER: D.E.G.
DESIGNED BY: J.S.P.
PLAN P-7

PLOT DATE: 5/21/2007
DRAWN BY: J.S.P.
CHECKED BY: D.E.G.
SHEET 437 OF 577

FILE NAME =U:\9819\mstn\03\clough\Stage One Sites\zd048pl07.dgn
DATE/TIME =5/21/2007
USER =1459

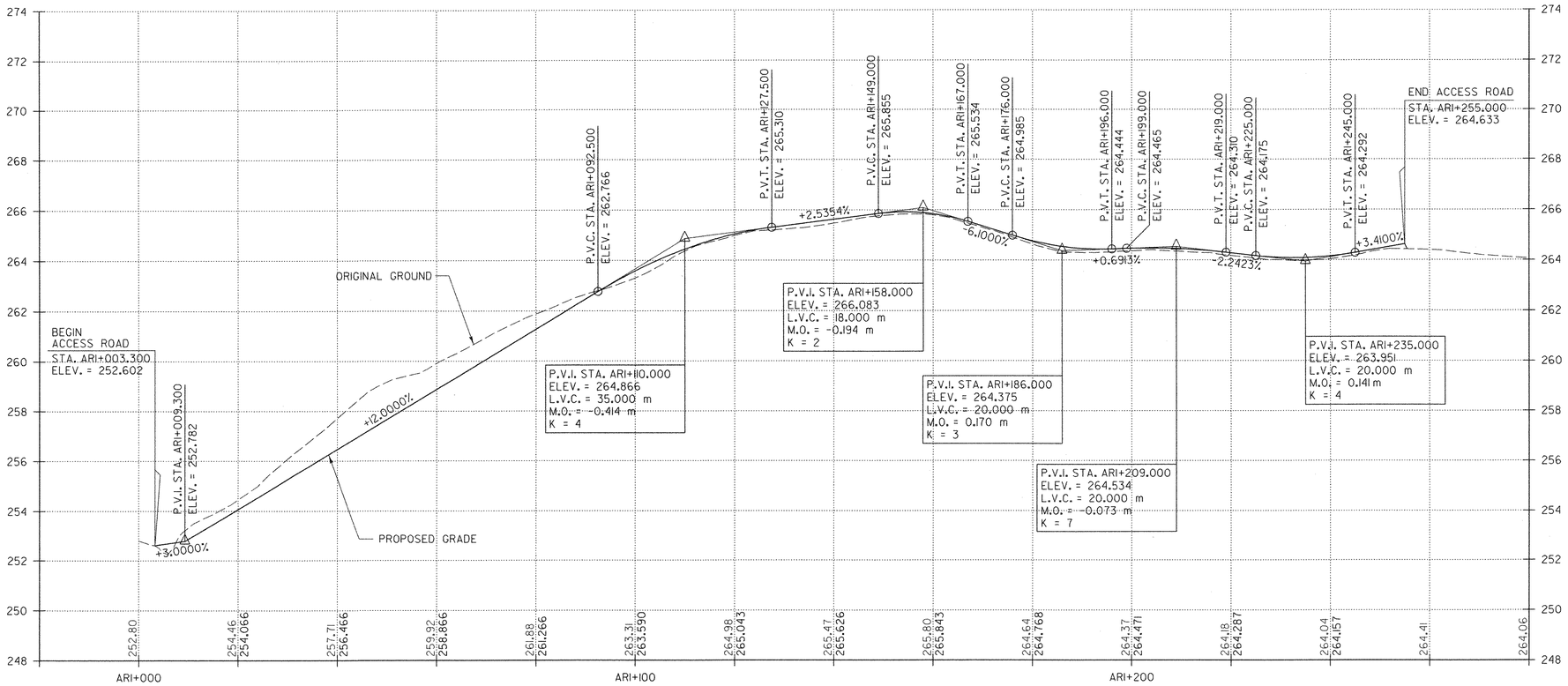

ACCESS ROAD

4 m
2
10 20 m
H 1:500
V 1:100
@ FULL SIZE

DATUM
VERTICAL NAVD 88
HORIZONTAL NAD 83 (1992)

VERMONT AGENCY OF TRANSPORTATION

CLOUGH HARBOUR & ASSOCIATES LLP
111 Winners Circle, PO Box 5269, Albany, NY 12205
www.cloughharbour.com

PROJECT NAME: BENNINGTON
PROJECT NUMBER: AC NH 019-1(53)

FILE NAME: ZD048PRO.DGN
PROJECT LEADER: D.E.G.
DESIGNED BY: J.S.P.
PROFILE PR-1

PLOT DATE: 5/18/2007
DRAWN BY: J.S.P.
CHECKED BY: D.E.G.
SHEET 438 OF 577

FILE NAME =U:\9819\mstn\03\clough\Stage One Sites\zd048pro_neto.dgn
DATE/TIME =5/18/2007
USER =3076

STAGE ONE SITE LAYOUT DETAILS				
	OFFSETS			APPROX.
STATION	LT SLOPE	CENTERLINE	RT SLOPE	C.L. ELEV.
HR2+440	27.5 m LT	5.7 m LT	1.0 m RT	244.5
HR2+460	34.5 m LT	7.2 m LT	2.7 m RT	247.1
HR2+480	37.2 m LT	7.9 m LT	3.6 m RT	248.9
HR2+500	35.9 m LT	6.9 m LT	7.9 m RT	249.8

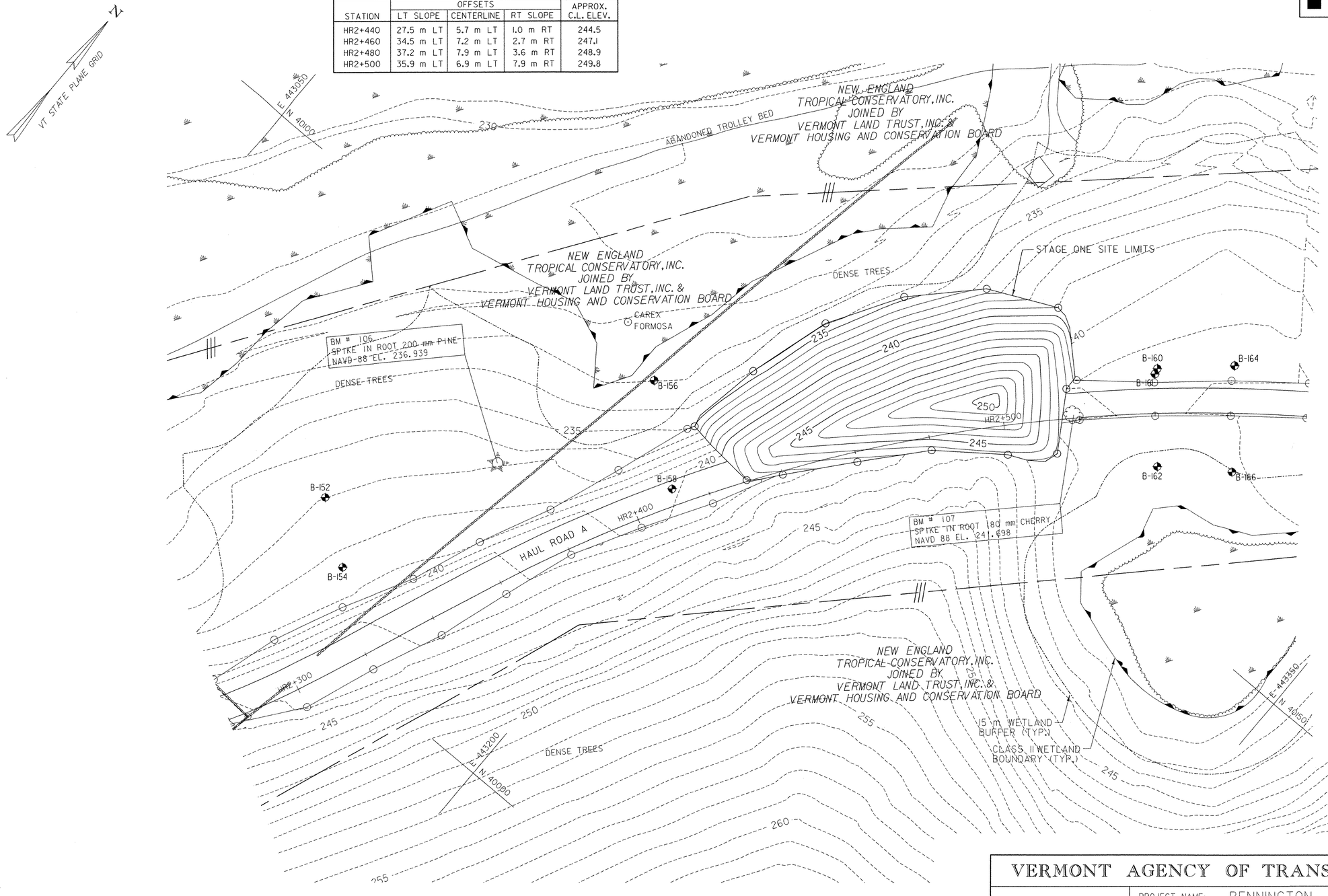

10 0 10 m
1: 500
@ FULL SIZE

DATUM
VERTICAL NAVD 88
HORIZONTAL NAD 83 (1992)

FILE NAME =U:\9819\mstn\03\clough\Stage One Sites\zd048sos01.dgn
DATE/TIME =5/18/2007
USER =3076

VERMONT AGENCY OF TRANSPORTATION

CLOUGH HARBOUR & ASSOCIATES LLP
111 Winners Circle, PO Box 5269, Albany, NY 12205
www.cloughharbour.com

PROJECT NAME: BENNINGTON
PROJECT NUMBER: AC NH 019-1(53)

FILE NAME: ZD048SOS01.DGN
PROJECT LEADER: D.E.G.
DESIGNED BY: J.S.P.
STAGE ONE SITE DETAILS SOS-1

PLOT DATE: 5/18/2007
DRAWN BY: J.S.P.
CHECKED BY: D.E.G.
SHEET 439 OF 577

Metric

STAGE ONE SITE LAYOUT DETAILS				
	OFFSETS			
STATION	LT SLOPE	CENTERLINE	RT SLOPE	APPROX. C.L. ELEV.
HR2+640	56.1 m LT	10.8 m LT	15.5 m RT	257.9
HR2+660	59.8 m LT	14.2 m LT	8.9 m RT	258.2
HR2+680	63.1 m LT	17.8 m LT	3.2 m RT	258.8
HR2+700	63.1 m LT	16.5 m LT	4.0 m RT	260.1
HR2+720	62.5 m LT	16.3 m LT	3.5 m RT	260.3
HR2+740	63.1 m LT	16.3 m LT	3.7 m RT	260.6
HR2+760	57.4 m LT	14.3 m LT	4.3 m RT	260.1

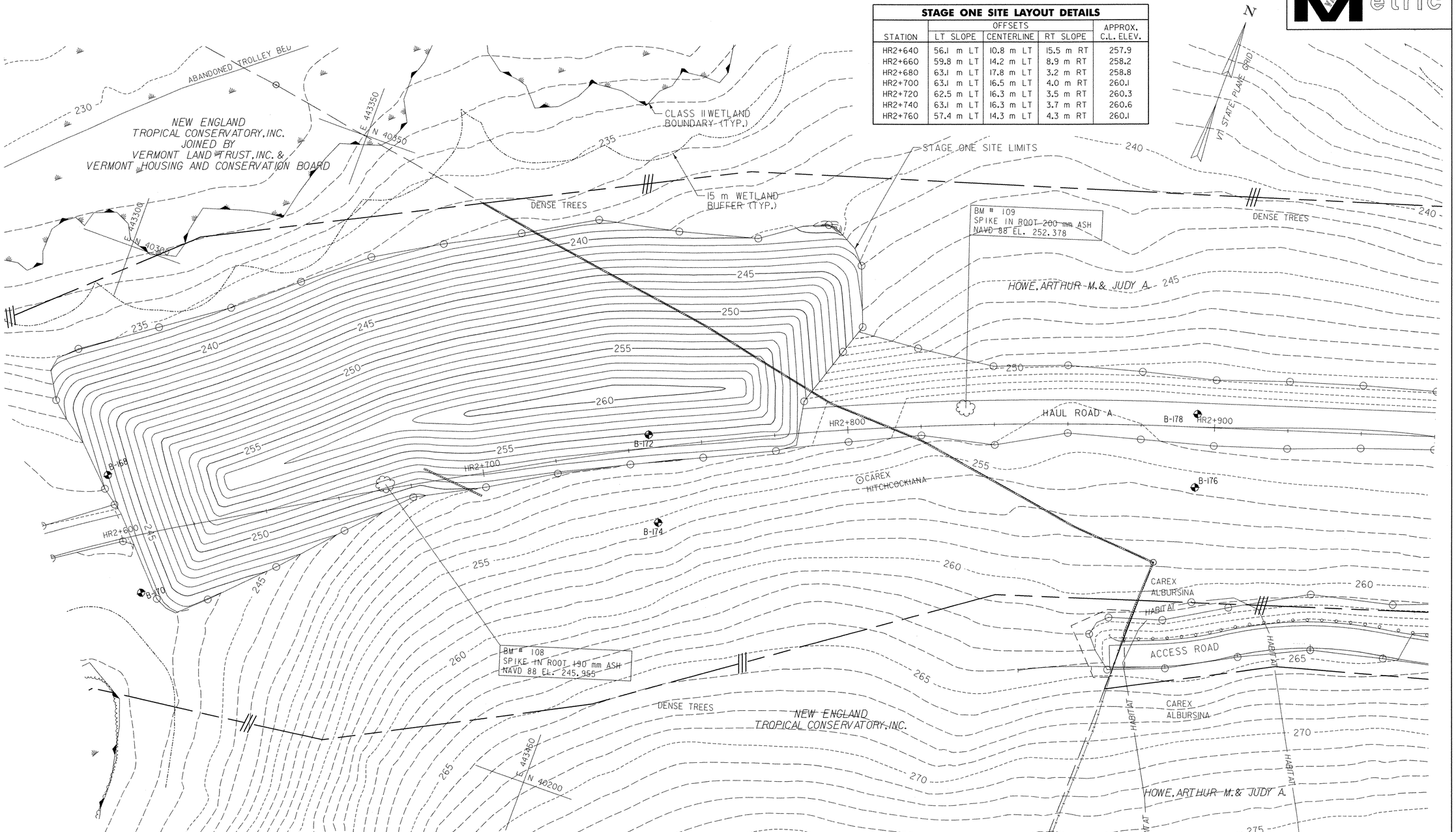

DATUM	
VERTICAL	NAVD 88
HORIZONTAL	NAD 83 (1992)

10 0 10 m
1:500
@ FULL SIZE

VERMONT AGENCY OF TRANSPORTATION

CHA
CLOUGH HARBOUR & ASSOCIATES LLP
III Winners Circle, PO Box 5269, Albany, NY 12205
www.cloughharbour.com

PROJECT NAME: BENNINGTON
PROJECT NUMBER: AC NH 019-1(53)

FILE NAME: ZD048SOS02.DGN
PROJECT LEADER: D.E.G.
DESIGNED BY: J.S.P.
STAGE ONE SITE DETAILS SOS-2

PLOT DATE: 5/18/2007
DRAWN BY: J.S.P.
CHECKED BY: D.E.G.
SHEET 440 OF 577

FILE NAME =U:\9819\mstn\03\clough\Stage One Sites\zd048sos02.dgn
DATE/TIME =5/18/2007
USER =3076

STAGE ONE SITE LAYOUT DETAILS

STATION	OFFSETS LT SLOPE	OFFSETS CENTERLINE	OFFSETS RT SLOPE	APPROX. C.L. ELEV.
HR3+120	33.5 m LT	8.2 m LT	5.5 m RT	249.7
HR3+140	41.5 m LT	11.1 m LT	5.6 m RT	249.6
HR3+160	45.5 m LT	12.4 m LT	6.0 m RT	249.1
HR3+180	44.2 m LT	9.9 m LT	7.8 m RT	247.9
HR3+200	40.9 m LT	8.8 m LT	7.5 m RT	246.4
HR3+220	35.7 m LT	6.4 m LT	8.3 m RT	244.7
HR3+240	32.7 m LT	7.2 m LT	7.7 m RT	243.2
HR3+260	24.4 m LT	3.5 m LT	6.2 m RT	241.2

MAP Metric

N

VT STATE PLANE GRID

E 443700 N 40500

E 445950 N 40550

E 444000 N 40450

E 443550 N 40300

O'NEILL, PHILIP J.

O'NEILL, PHILIP J.

HOWE, ARTHUR M. & JUDY A.

JONES, HELEN M. & GAIL M.

JONES, HELEN M. & GAIL M.

15 m WETLAND BUFFER (TYP.)

CLASS II WETLAND BOUNDARY (TYP.)

STAGE ONE SITE LIMITS

HAUL ROAD A

MIDDLE ROTHKAL ROAD

ACCESS ROAD

DENSE TREES

B-180 B-182 B-184 B-186 B-188 B-190 B-196 B-200

TP-108

HR3+000 HR3+100 HR3+200 HR3+300

AR+100

230 235 240 245 250 255 265

BM # 110
SPIKE IN ROOT 470 mm PINE
NGVD EL. 252.461

BM # 111
SPIKE IN ROOT 280 mm PINE
NAVD 88 EL. 235.908

DATUM
VERTICAL NAVD 88
HORIZONTAL NAD 83 (1992)

10 0 10 m
1: 500
@ FULL SIZE

FILE NAME =U:\9819\mstn\03\clough\Stage One Sites\zd048sos03.dgn
DATE/TIME =5/21/2007
USER =1459

VERMONT AGENCY OF TRANSPORTATION

CLOUGH HARBOUR & ASSOCIATES LLP
III Winners Circle, PO Box 5269, Albany, NY 12205
www.cloughharbour.com

PROJECT NAME: BENNINGTON
PROJECT NUMBER: AC NH 019-1(53)

FILE NAME: ZD048SOS03.DGN
PROJECT LEADER: D.E.G.
DESIGNED BY: J.S.P.
STAGE ONE SITE DETAILS SOS-3

PLOT DATE: 5/21/2007
DRAWN BY: J.S.P.
CHECKED BY: D.E.G.
SHEET 441 OF 577

Metric

STAGE ONE SITE LAYOUT DETAILS				
	OFFSETS			APPROX.
STATION	LT SLOPE	CENTERLINE	RT SLOPE	C.L. ELEV.
HRBI+320	1.6 m LT	9.9 m RT	23.4 m RT	270.4
HRBI+340	9.6 m LT	1.2 m RT	11.9 m RT	270.0
HRBI+360	16.2 m LT	4.5 m LT	7.5 m RT	269.0
HRBI+380	20.2 m LT	6.1m LT	5.0 m RT	266.9
HRBI+400	21.4 m LT	6.0 m LT	6.3 m RT	265.7
HRBI+420	26.8 m LT	6.5 m LT	7.9 m RT	264.9
HRBI+440	34.8 m LT	8.6 m LT	10.3 m RT	265.1
HRBI+460	46.1m LT	8.4 m LT	14.5 m RT	264.5

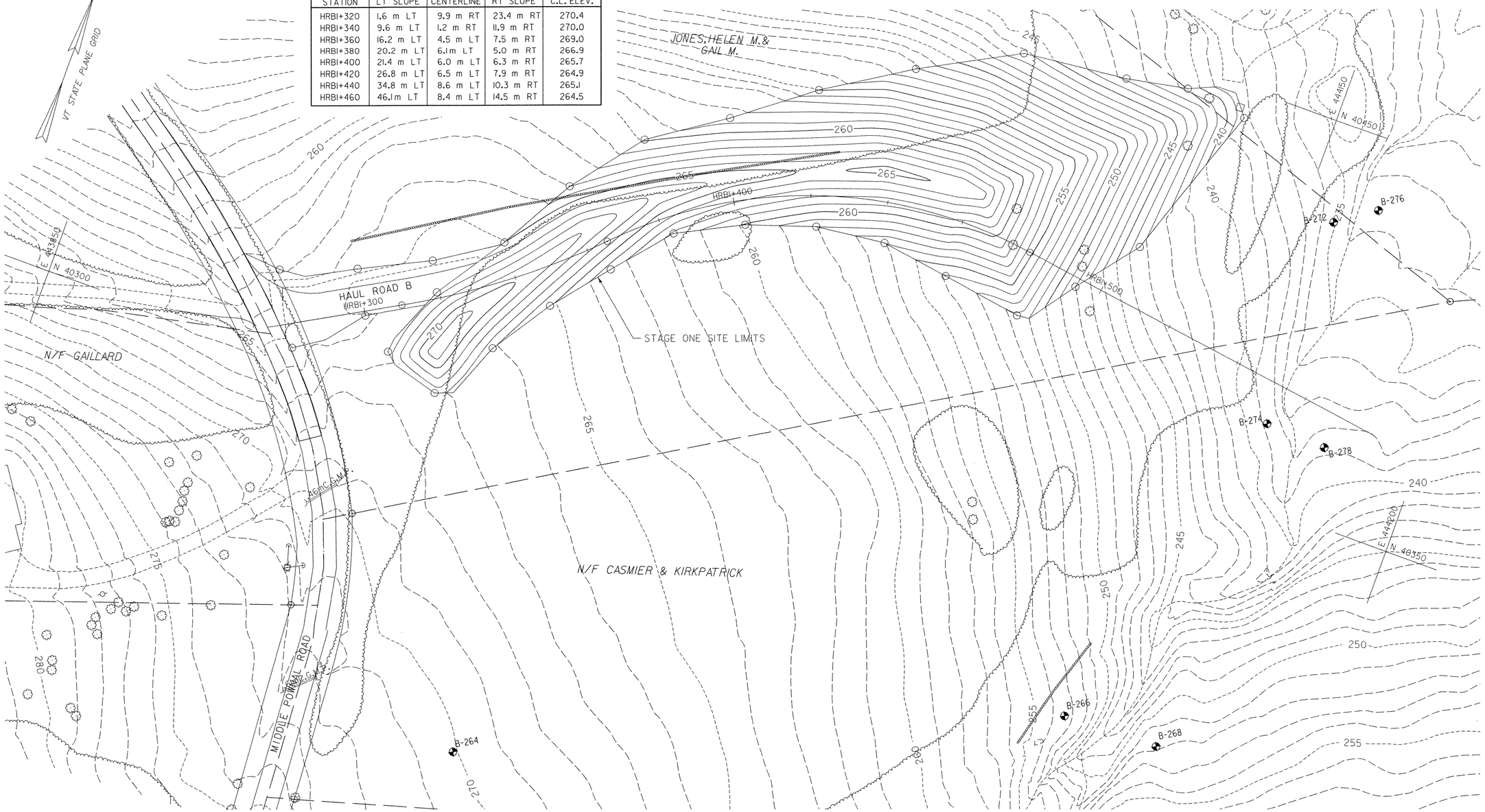

10 0 10 m
1: 500
@ FULL SIZE

DATUM	
VERTICAL	NAVD 88
HORIZONTAL	NAD 83 (1992)

FILE NAME =U:\9819\mstn\03\clough\Stage One Sites\zd048sos04.dgn
DATE/TIME =5/18/2007
USER =3076

VERMONT AGENCY OF TRANSPORTATION

CHA
CLOUGH HARBOUR & ASSOCIATES LLP
III Winners Circle, PO Box 5269, Albany, NY 12205
www.cloughharbour.com

PROJECT NAME: BENNINGTON
PROJECT NUMBER: AC NH 019-1(53)

FILE NAME: ZD048SOS04.DGN
PROJECT LEADER: D.E.G.
DESIGNED BY: J.S.P.
STAGE ONE SITE DETAILS SOS-4

PLOT DATE: 5/18/2007
DRAWN BY: J.S.P.
CHECKED BY: D.E.G.
SHEET 442 OF 577

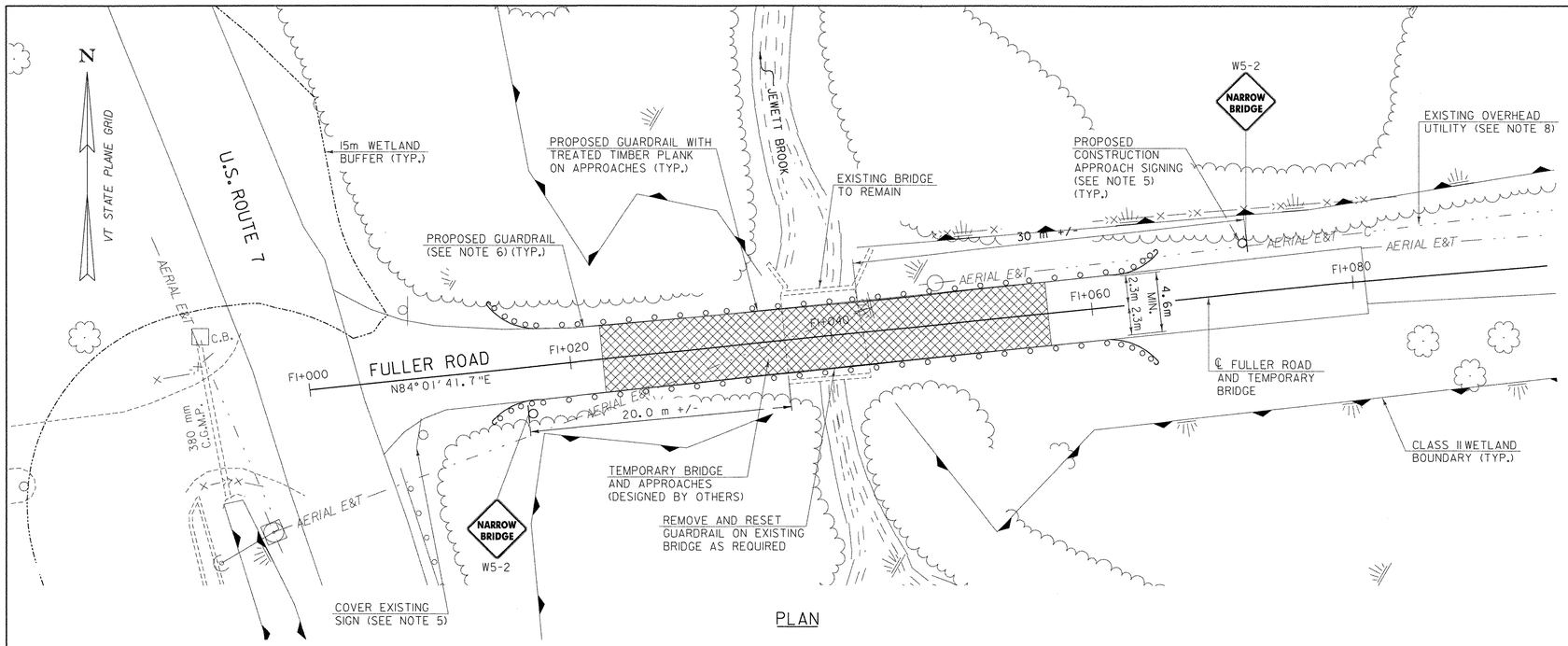

PLAN

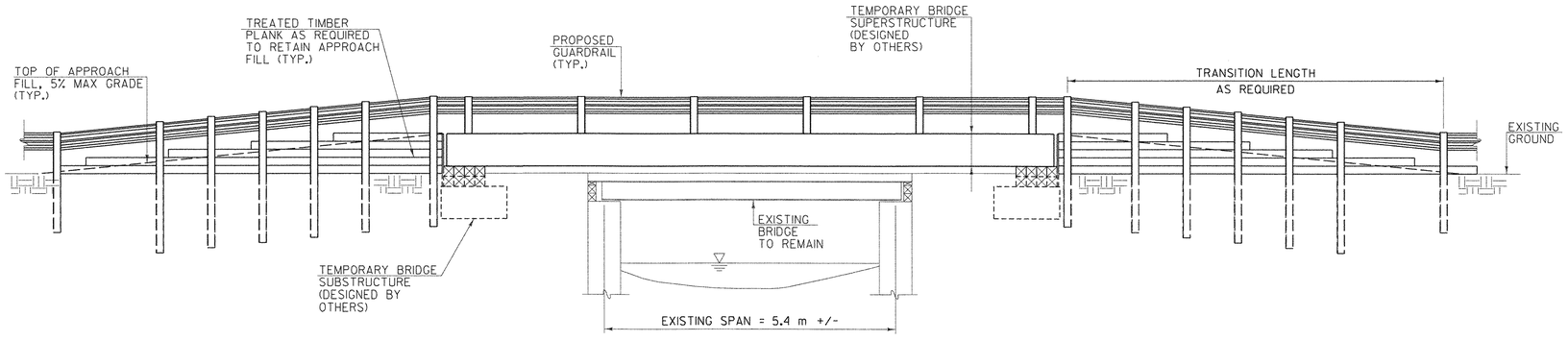

ELEVATION

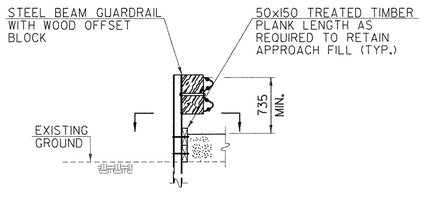

DETAIL

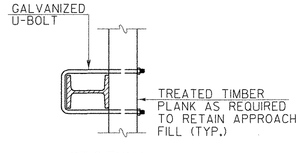

SECTION

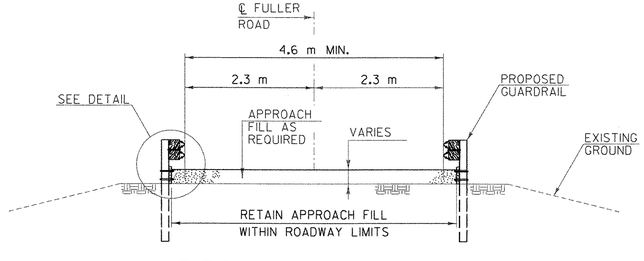

TYPICAL APPROACH SECTION

NOTES:

1. ALL WORK SHALL CONFORM TO STATE OF VERMONT AGENCY OF TRANSPORTATION "STANDARD SPECIFICATIONS FOR CONSTRUCTION" 2006, STATE OF VERMONT AGENCY OF TRANSPORTATION "STRUCTURES MANUAL" 2004, AASHTO "STANDARD SPECIFICATIONS FOR HIGHWAY BRIDGES" 17TH EDITION AND AASHTO "ROADSIDE DESIGN GUIDE" 2003 AND ALL LATEST REVISIONS.
2. ALL MATERIALS, LABOR AND INCIDENTALS INCLUDED IN AND RELATED TO THE DESIGN AND CONSTRUCTION OF THE FULLER ROAD TEMPORARY BRIDGE STRUCTURE AND APPROACHES SHALL BE PAID FOR AS ITEM 528.10 ONE-WAY TEMPORARY BRIDGE. THE BASIS OF PAYMENT SHALL BE LUMP SUM WITH PARTIAL PAYMENTS MADE IN ACCORDANCE STANDARD SPECIFICATION SECTION 528.10.
3. THE CONDITION OF THE FULLER ROAD TEMPORARY STRUCTURE AND APPROACHES SHALL BE CONTINUOUSLY MAINTAINED BY THE CONTRACTOR TO PROVIDE ADEQUATE STRUCTURAL OPERATING CONDITION AND ENSURE THE SAFETY OF THE GENERAL PUBLIC THROUGHOUT THE SERVICE LIFE OF THE STRUCTURE.
4. THE CONTRACTOR SHALL STAGE CONSTRUCTION OPERATIONS SUCH THAT ONE-WAY TRAFFIC WILL BE CONTINUOUSLY MAINTAINED THROUGHOUT THE INSTALLATION OF THE FULLER ROAD TEMPORARY STRUCTURE AND APPROACHES. DETAILING OF THE CONSTRUCTION SEQUENCING SHALL BE INCLUDED IN THE WORKING DRAWINGS.
5. THE EXISTING BRIDGE POSTING SHALL BE COVERED FOR THE SERVICE LIFE OF THE FULLER ROAD TEMPORARY STRUCTURE. THE POSTING SHALL BE UNCOVERED AFTER THE TEMPORARY STRUCTURE IS REMOVED AND THE EXISTING BRIDGE IS RETURNED TO SERVICE. ALL PROPOSED CONSTRUCTION SIGNING AND ALL MODIFICATIONS TO EXISTING SIGNING SHALL BE PAID FOR UNDER ITEM 641.10 TRAFFIC CONTROL.
6. ALL DESIGN AND CONSTRUCTION DETAILING OF PROPOSED GUARDRAIL SHALL CONFORM TO STANDARD SPECIFICATION SECTION 528.04C AND SHALL NOT BE PAID FOR DIRECTLY BUT INCLUDED UNDER ITEM 528.10 ONE-WAY TEMPORARY BRIDGE.
7. THE CONTRACTOR SHALL TAKE CARE NOT TO DAMAGE FULLER ROAD AND THE EXISTING FULLER ROAD BRIDGE DURING CONSTRUCTION OPERATIONS AND THROUGHOUT THE SERVICE LIFE OF THE PROJECT. ANY DAMAGE TO FULLER ROAD OR THE EXISTING FULLER ROAD BRIDGE RESULTING FROM CONSTRUCTION OPERATIONS OR NORMAL TRAFFIC FLOW SHALL BE REPAIRED AS DIRECTED BY THE RESIDENT ENGINEER AT THE EXPENSE OF THE CONTRACTOR.
8. THE CONTRACTOR SHALL MAINTAIN ALL MINIMUM CLEARANCES TO EXISTING UTILITIES IN ACCORDANCE WITH INDUSTRY STANDARDS. IF ANY UTILITY OWNER REQUIRES ADDITIONAL CLEARANCES ALL COORDINATION WITH THE OWNER SHALL BE THE RESPONSIBILITY OF THE CONTRACTOR AND SHALL NOT BE PAID FOR DIRECTLY BUT INCLUDED INDER ITEM 528.10 ONE-WAY TEMPORARY BRIDGE.
9. THE TEMPORARY SUPERSTRUCTURE SHALL BE DESIGNED TO CARRY AN HS-25 LIVE LOAD APPLIED IN ACCORDANCE WITH AASHTO "STANDARD SPECIFICATIONS FOR HIGHWAY BRIDGES" 17TH EDITION AND ALL LATEST REVISIONS.

NOT TO SCALE
ALL DIMENSIONS IN MILLIMETERS EXCEPT WHERE OTHERWISE NOTED

DATUM
VERTICAL NAVD 88
HORIZONTAL NAD 83 (1992)

VERMONT AGENCY OF TRANSPORTATION

CLOUGH HARBOUR & ASSOCIATES LLP
11 Winners Circle, PO Box 5269, Albany, NY 12205
www.cloughharbour.com

PROJECT NAME: BENNINGTON
PROJECT NUMBER: AC NH 019-1(53)
FILE NAME: ZD048TEMP.DGN
PROJECT LEADER: D.E.G.
DESIGNED BY: J.S.P.
DRAWN BY: J.S.P.
CHECKED BY: D.E.G.
PLOT DATE: 5/30/2007
TRAFFIC CONTROL PLAN TCP-1
SHEET 443 OF 577

FILE NAME =u:\9819\mstn\03\clough\Stage One Sites\zd048temp.dgn
DATE/TIME = 5/30/2007
USER =597

VAOT Metric

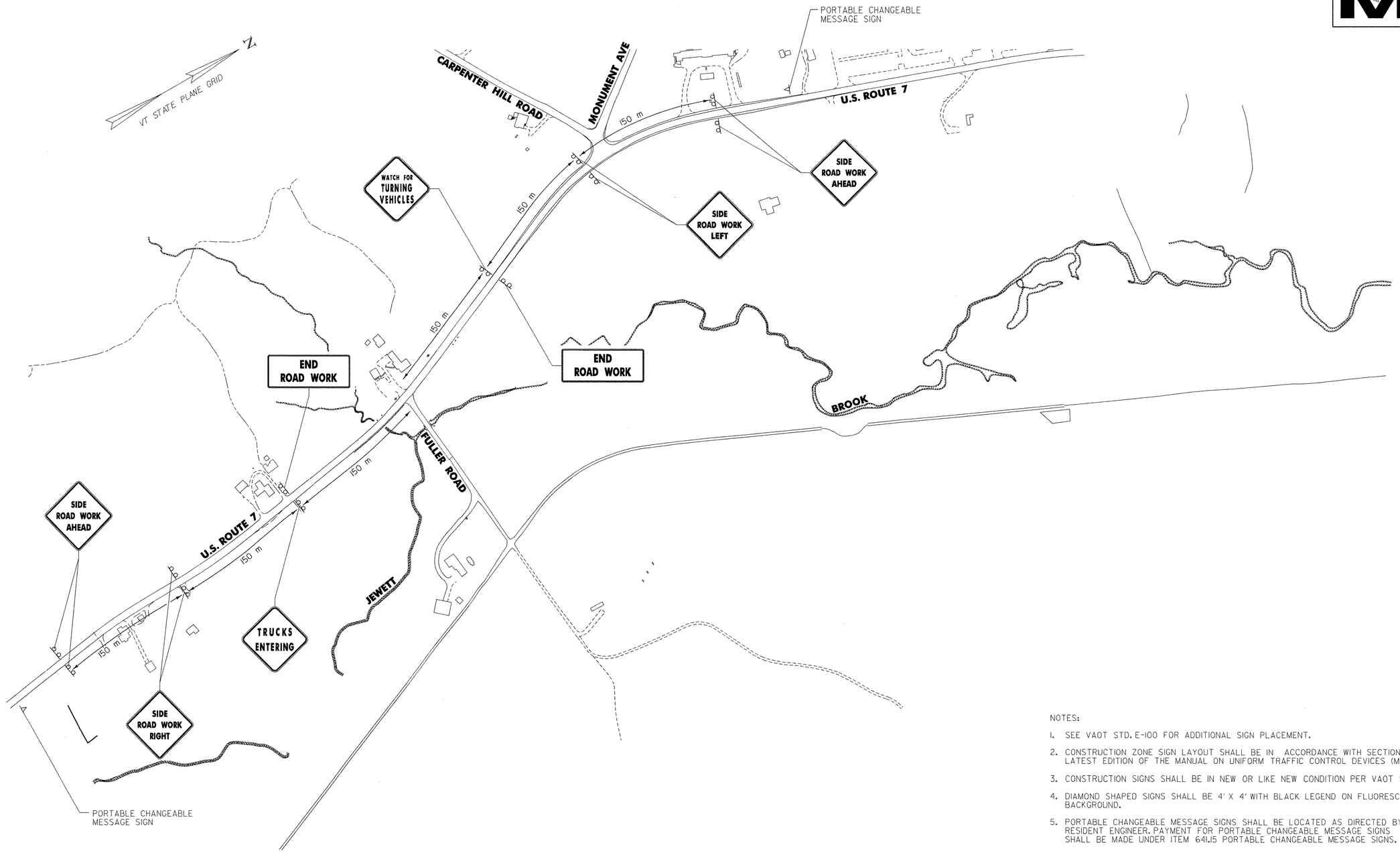

NOTES:

1. SEE VAOT STD. E-100 FOR ADDITIONAL SIGN PLACEMENT.
2. CONSTRUCTION ZONE SIGN LAYOUT SHALL BE IN ACCORDANCE WITH SECTION 6 OF THE LATEST EDITION OF THE MANUAL ON UNIFORM TRAFFIC CONTROL DEVICES (MUTCD).
3. CONSTRUCTION SIGNS SHALL BE IN NEW OR LIKE NEW CONDITION PER VAOT STANDARDS.
4. DIAMOND SHAPED SIGNS SHALL BE 4' X 4' WITH BLACK LEGEND ON FLUORESCENT ORANGE BACKGROUND.
5. PORTABLE CHANGEABLE MESSAGE SIGNS SHALL BE LOCATED AS DIRECTED BY THE RESIDENT ENGINEER. PAYMENT FOR PORTABLE CHANGEABLE MESSAGE SIGNS SHALL BE MADE UNDER ITEM 641.15 PORTABLE CHANGEABLE MESSAGE SIGNS.

DATUM	
VERTICAL	NAVD 88
HORIZONTAL	NAD 83 (1992)

40 0 40 m
1: 2000
@ FULL SIZE

VERMONT AGENCY OF TRANSPORTATION

CLOUGH HARBOUR & ASSOCIATES LLP
III Winners Circle, PO Box 5269, Albany, NY 12205
www.cloughharbour.com

PROJECT NAME: BENNINGTON
PROJECT NUMBER: AC NH 019-1(53)

FILE NAME: ZD048CAS01.DGN
PROJECT LEADER: D.E.G.
DESIGNED BY: J.S.P.
PLOT DATE: 5/18/2007
DRAWN BY: J.S.P.
CHECKED BY: D.E.G.

CONSTRUCTION APPROACH SIGNING CAS-1

FILE NAME =U:\9819\mstn\03\clough\Stage One Sites\zd048cas01.dgn
DATE/TIME =5/18/2007
USER =3076

VAOT Metric

JEWETT BROOK

HAUL ROAD A

ACCESS ROAD

MIDDLE POWNAL ROAD

HAUL ROAD B

MORGAN STREET

VT STATE PLANE GRID

ROAD WORK 500 FT

ROAD WORK 1000 FT

ROAD WORK AHEAD

150 m

150 m

150 m (MIN.)

END ROAD WORK

END ROAD WORK

ROAD WORK 1000 FT

150 m

150 m

ROAD WORK AHEAD

ROAD WORK 500 FT

150 m

DATUM

VERTICAL NAVD 88

HORIZONTAL NAD 83 (1992)

40 0 40 m

1:2000

@ FULL SIZE

VERMONT AGENCY OF TRANSPORTATION

CLOUGH HARBOUR & ASSOCIATES LLP
III Winners Circle, PO Box 5269, Albany, NY 12205
www.cloughharbour.com

PROJECT NAME: BENNINGTON

PROJECT NUMBER: AC NH 019-1(53)

FILE NAME: ZD048CAS02.DGN PLOT DATE: 5/18/2007

PROJECT LEADER: D.E.G. DRAWN BY: J.S.P.

DESIGNED BY: J.S.P. CHECKED BY: D.E.G.

CONSTRUCTION APPROACH SIGNING CAS-2 SHEET 445 OF 577

FILE NAME =U:\9819\mstn\03\clough\Stage One Sites\zd048cas02.dgn
DATE/TIME =5/18/2007
USER =3076

BENNINGTON AC NH 019-1(53) STAGE ONE SITES NARRATIVE

1. PROJECT DESCRIPTION

THIS PORTION OF THE BENNINGTON NH F019-1(5) VT. ROUTE 279 PROJECT CONSISTS OF THE PLACEMENT OF EXCESS EARTH MATERIAL CREATED FROM THE CONSTRUCTION OF THE PROPOSED VT. ROUTE 279 ALIGNMENT AND RELOCATING IT TO THE PROPOSED STAGE ONE SITES LOCATED IN THE SOUTHERN PART OF BENNINGTON. THE EXCESS MATERIAL WILL BE HAULED PRIMARILY OVER EXISTING ROUTES ON THE NATIONAL HIGHWAY SYSTEM WITHIN THE TOWN OF BENNINGTON TO AN ACCESS POINT OFF FULLER ROAD.

2. SITE INVENTORY AND ANALYSIS

A. SITE DRAINAGE CHARACTERISTICS:

THE PROPOSED STAGE ONE SITES ARE LOCATED WITHIN A PRIMARILY UNDISTURBED VALLEY KNOWN AS THE VERMONT VALLEY WHICH IS SITUATED BETWEEN MOUNT ANTHONY AND CARPENTER HILL TO THE WEST AND THE GREEN MOUNTAINS TO THE EAST. THIS AREA IS ALSO KNOWN AS THE WALLOOMSAC - HOOSIC RIVER DRAINAGE BASIN OF SOUTHWESTERN VERMONT. EXISTING SIDE SLOPES ALONG THE PROJECT CORRIDOR ARE PRIMARILY FLAT TO 25%. THE MAJORITY OF THE SURFACE RUNOFF ASSOCIATED WITH THIS WATERSHED IS CONVEYED BY OVERLAND FLOW TO THE JEWETT BROOK WHICH RUNS PARALLEL TO OUR PROJECT AREA. THE JEWETT BROOK IS A TRIBUTARY OF THE WALLOOMSAC RIVER THAT FLOWS FROM THE SOUTH ALONG U.S. ROUTE 7 TO ITS OUTFALL POINT IN SOUTH STREAM WHICH THEN OUTFALLS INTO THE WALLOOMSAC RIVER. THERE ARE ALSO SEVERAL CLASS II WETLANDS SITUATED ADJACENT TO THE PROJECT CORRIDOR THAT COLLECT OVERLAND RUNOFF WATERS AND DRAIN INTO JEWETT BROOK. ALL EROSION PREVENTION AND SEDIMENT CONTROL MEASURES HAVE BEEN DESIGNED TO MINIMIZE EROSION AND CONTROL SEDIMENT WITHIN THE PROJECT CORRIDOR BY SEPARATING AND TREATING ON-SITE RUNOFF WATERS PRIOR TO BE RELEASED INTO THE EXISTING WATERWAYS.

B. DRAINAGE, WATERWAYS, BODIES OF WATER:

LOCATED WITHIN THE PROJECT CORRIDOR IS JEWETT BROOK WHICH IS A TRIBUTARY OF THE WALLOOMSAC RIVER AND AN UNNAMED STREAM THAT FLOWS FROM THE WEST OFF CARPENTER HILL TO ITS OUTFALL POINT IN JEWETT BROOK. IN ADDITION, THERE ARE SEVERAL CLASS II WETLANDS LOCATED ALONG THE PROJECT CORRIDOR. ALL EROSION PREVENTION AND SEDIMENT CONTROL MEASURES HAVE BEEN DESIGNED TO MINIMIZE EROSION AND CONTROL SEDIMENT WITHIN THE PROJECT CORRIDOR BY FILTERING THE ON-SITE RUNOFF WATERS PRIOR TO ENTERING THE EXISTING WATERWAYS AND BODIES OF WATER.

C. TOPOGRAPHY:

THE PROPOSED PROJECT CORRIDOR IS LOCATED BETWEEN A GRAVEL ROAD KNOWN AS FULLER ROAD ON THE SOUTH AND A POINT JUST NORTH OF A PAVED ROAD KNOWN AS MIDDLE POWNAL ROAD AT THE NORTHERN LIMIT. THE EXISTING SITE TOPOGRAPHY ALONG THIS CORRIDOR PRIMARILY CONSISTS OF UNDISTURBED WOODED LANDS SITUATED ALONG ROLLING TERRAIN NEAR THE GREEN MOUNTAIN NATIONAL FOREST. THERE ARE NO BUILDINGS LOCATED WITHIN THE PROJECT CORRIDOR.

D. VEGETATION:

THE EXISTING VEGETATION LOCATED WITHIN THE PROJECT CORRIDOR MAINLY CONSISTS OF WOODED AREAS WITH SOME SCATTERED FIELDS AND WETLANDS.

E. SOILS:

THE MAJORITY OF THE SOILS LOCATED WITHIN THE PROPOSED STAGE ONE SITES HAVE BEEN PRIMARILY CLASSIFIED AS POTENTIALLY HIGHLY ERODIBLE AND HIGHLY ERODIBLE BY THE UNITED STATES DEPARTMENT OF AGRICULTURE'S NATIONAL RESOURCES CONSERVATION SERVICE (NRCS). THERE IS ALSO ONE ISOLATED AREA THAT CONTAINS SOILS CLASSIFIED AS NOT HIGHLY ERODIBLE BY THE NRCS. SEE DWGS. SM-1 & SM-2 FOR A MAP AND TABLE DEPICTING ALL OF THE NRCS MAPPED SOILS LOCATED ALONG THE PROJECT CORRIDOR. DUE TO THE AMOUNT OF EARTHWORK THAT WILL TAKE PLACE ALONG THE PROJECT CORRIDOR, TEMPORARY EROSION PREVENTION MEASURES WILL BE INSTALLED TO HELP STABILIZE ALL EXPOSED SLOPES UNTIL THEY CAN BE PERMANENTLY STABILIZED WITH A NATURAL VEGETATIVE COVER.

F. PROXIMITY TO NATURAL OR MAN-MADE WATER FEATURES:

THE PROJECT CORRIDOR IS LOCATED A MINIMUM OF 25 m EAST OF THE JEWETT BROOK WHICH IS A TRIBUTARY OF THE WALLOOMSAC RIVER. THERE ARE ALSO SEVERAL CLASS II WETLANDS LOCATED WITHIN THE PROJECT CORRIDOR. THE MINIMUM SEPARATION BETWEEN THE PROPOSED WORK AND THE CLASS II WETLAND IS 15 m. TEMPORARY EROSION PREVENTION AND SEDIMENT CONTROL MEASURES WILL BE INSTALLED TO HELP STABILIZE ALL EXPOSED SLOPES AND TO TRAP SEDIMENT FROM ON-SITE RUNOFF WATERS UNTIL ALL SLOPES HAVE BEEN COMPLETED AND CAN BE PERMANENTLY STABILIZED.

3. GRADING PLAN AND TIMETABLE

A. DESCRIPTION OF PROPOSED GRADING AND SEASONAL LIMITATIONS:

THIS PROJECT CONSISTS OF PLACING APPROXIMATELY 200,000 m^3 OF EARTHEN MATERIAL. ALL PROPOSED GRADING WITHIN THE PROJECT CORRIDOR SHALL BE PERFORMED AS SPECIFIED IN THE CONTRACT PLANS. IT IS ANTICIPATED THE WORK BEING PERFORMED SHALL BE COMPLETED WITHIN 3 YEARS AND ALL EARTH WORK SHALL BE PERFORMED BETWEEN MAY 1 AND OCTOBER 15 FOR ANY GIVEN CALENDAR YEAR DUE TO SLOPE STABILIZATION LIMITATIONS AND THERE SHALL BE NO NEED FOR WINTER CONSTRUCTION. IF WINTER CONSTRUCTION IS REQUIRED THE CONTRACTOR IS RESPONSIBLE TO OBTAIN A WINTER CONSTRUCTION PERMIT FROM THE VERMONT AGENCY OF NATIONAL RESOURCES.

B. TIMETABLE OF ALL MAJOR CONSTRUCTION OPERATIONS:

SEE DWG. ECN-3 FOR DETAILED DESCRIPTIONS OF THE VARIOUS PHASES OF CONSTRUCTION. ALL DISTURBED AREAS SHALL BE STABILIZED AS SOON AS PRACTICAL, BUT NO MORE THAN TWO DAYS AFTER CONSTRUCTION ACTIVITY HAS TEMPORARILY OR PERMANENTLY CEASED. ALL PERMANENT SLOPES THAT CAN NOT BE STABILIZED PRIOR TO SEPTEMBER 15 SHALL BE TEMPORARILY STABILIZED PRIOR TO OCTOBER 15 PER THE DETAILS SHOWN ON THE PLANS UNTIL THE FOLLOWING YEAR'S CONSTRUCTION SEASON.

DATUM

VERTICAL NAVD 88

HORIZONTAL NAD 83 (1992)

4. EROSION PREVENTION AND SEDIMENT CONTROL PLAN AND TIMETABLE

A. DESCRIPTION OF THE STRATEGIES OF THE EROSION PREVENTION AND SEDIMENT CONTROL PLAN AND WHY IT WILL BE EFFECTIVE IN PROTECTING WATER RESOURCES:

THE CONCEPT BEHIND THE EROSION PREVENTION AND SEDIMENT CONTROL PLAN IS TO MINIMIZE THE AMOUNT OF SOIL EROSION THAT OCCURS DURING THE VARIOUS PHASES OF CONSTRUCTION BY LIMITING THE AMOUNT OF DISTURBED SOIL THROUGH CONSTRUCTION SEQUENCING AND TREATING ALL ON-SITE SEDIMENT LADEN STORMWATER RUNOFF PRIOR TO RELEASING INTO THE EXISTING WATERWAYS. THE VARIOUS METHODS OF TEMPORARY EROSION PREVENTION AND SEDIMENT CONTROL MEASURES BEING EMPLOYED ON THIS PROJECT ARE SILT FENCE, EROSION MATTING AND CHECK DAMS. IN ADDITION TO THE TEMPORARY MEASURES ALL PERMANENT SLOPES SHALL BE STABILIZED WITH SEED AND MULCH PRIOR TO THE COMPLETION OF THE PROJECT WITHIN THE SEASONAL LIMITATIONS STATED IN SECTION 3. BY CORRECTLY INSTALLING ALL OF THE TEMPORARY EROSION PREVENTION AND SEDIMENT CONTROL MEASURES PER THIS PLAN DURING THE VARIOUS PHASES OF CONSTRUCTION, THE CONTRACTOR SHALL BE ABLE TO TREAT AND CONTROL ALL ON-SITE STORMWATER RUNOFF PRIOR TO RELEASING WATERS INTO THE EXISTING WATERWAYS.

B. DESCRIPTION OF SEEDING AND MULCHING PLAN:

ALL EXPOSED SLOPES SHALL BE SEEDED AND MULCHED AS SOON AS PRACTICAL BUT NO MORE THAN 48 HOURS AFTER CONSTRUCTION HAS PERMANENTLY CEASED IN THE GIVEN AREA(S). THE LIMITS OF SEEDING AND MULCHING SHALL BE TO THE TOP AND TOE OF ALL SLOPES AS DEPICTED IN THE PLANS. TO ENSURE STABILIZATION AND SEED GROWTH NO SEEDING SHALL TAKE PLACE BEFORE APRIL 15 OR AFTER SEPTEMBER 15 DURING ANY CONSTRUCTION SEASON UNLESS DIRECTED OTHERWISE BY THE CONTRACTOR'S ON-SITE PLAN COORDINATOR. SEE DWG. SM-2 FOR ALL SEED, FERTILIZER AND MULCH APPLICATION RATES. THE CONTRACTOR SHALL TEMPORARILY STABILIZE ALL SLOPES NO LATER THAN OCTOBER 15 WITH NON-VEGETATIVE PROTECTION MEASURES PRIOR TO SHUTTING DOWN FOR WINTER OR AS DIRECTED BY THE CONTRACTOR'S ON-SITE PLAN COORDINATOR.

C. DESCRIPTION OF TEMPORARY EROSION PREVENTION AND SEDIMENT CONTROL MEASURES:

BARRIER FENCE & PROJECT DEMARCATION FENCE (PDF) - INSTALLED ALONG THE PERIMETER OF THE ENTIRE PROJECT DURING THE DIFFERENT PHASES OF CONSTRUCTION TO KEEP THE CONTRACTOR'S WORKERS AND EQUIPMENT FROM ENTERING PROTECTED AREAS.

SILT FENCE - INSTALLED ALONG THE TOE AND AT INTERMEDIATE POINTS ALONG FILL SLOPES PER THE DETAILS ON DWG'S. ECD-3.

EROSION MATTING - INSTALLED ON SLOPES 1:3 OR GREATER PER THE DETAIL ON DWG. ECD-2.

CHECK DAMS - INSTALLED IN AREAS OF CONCENTRATED FLOW AT THE TOES OF SLOPE PER THE DETAILS ON DWG. ECD-4.

D. DESIGN CALCULATIONS FOR ALL TEMPORARY AND PERMANENT STRUCTURAL CONTROL MEASURES:

TEMPORARY EROSION PREVENTION AND SEDIMENT CONTROL MEASURE DESIGN CALCULATIONS

ALL TEMPORARY EROSION PREVENTION MEASURES SHOWN IN THE PLAN SHALL BE INSTALLED PER THE EROSION CONTROL DETAILS SHOWN ON DWG'S. ECD-1 THRU ECD-4.

PERMANENT EROSION PREVENTION AND SEDIMENT CONTROL MEASURE DESIGN CALCULATIONS

PERMANENT EROSION PREVENTION AND SEDIMENT CONTROL MEASURES SHALL BE LIMITED TO THE ESTABLISHMENT OF A VEGETATIVE COVER PER THE SEEDING FORMULA FOUND ON DWG. SM-2.

E. DESCRIPTION OF THE INSPECTION, MAINTENANCE, AND RECORDS PROGRAM FOR ALL CONTROL MEASURES:

THE CONTRACTOR SHALL DESIGNATE SOMEONE WHO WILL BE DIRECTLY RESPONSIBLE FOR THE INSPECTION, MAINTENANCE AND RECORD KEEPING FOR EROSION PREVENTION AND SEDIMENT CONTROL MEASURES PER ITEM 652.20 MONITORING EROSION PREVENTION AND SEDIMENT CONTROL PLAN. INSPECTION OF SOIL EROSION AND POLLUTION CONTROL MEASURES SHALL BE DONE ON A DAILY BASIS AND AFTER EVERY STORM GREAT ENOUGH TO CAUSE WATER TO LEAVE THE CONSTRUCTION SITE OR AS DIRECTED BY THE CONTRACTOR'S ON-SITE PLAN COORDINATOR THROUGHOUT THE DURATION OF THE CONTRACT. REPAIRS SHALL BE MADE AS NEEDED AND SEDIMENT SHALL BE REMOVED WHEN THE STORAGE VOLUME OF A SEDIMENT CONTROL MEASURE IS APPROACHING ONE HALF OF ITS INTENDED CAPACITY OR AS DIRECTED BY THE CONTRACTOR'S ON-SITE PLAN COORDINATOR. ALL EROSION PREVENTION AND SEDIMENT CONTROL DEVICES SHALL BE MAINTAINED PER ITEM 652.30 FIELD MAINTENANCE OF EROSION PREVENTION AND SEDIMENT CONTROL PLAN.

F. IDENTIFICATION, BASIC QUALIFICATIONS, AND CONTACT NUMBER FOR CONTRACTOR'S ON-SITE PLAN COORDINATOR:

THE REQUIRED INFORMATION FOR THE CONTRACTOR'S ON-SITE PLAN COORDINATOR FOR THIS PROJECT SHALL BE PROVIDED TO THE VERMONT AGENCY OF NATURAL RESOURCES PRIOR TO BEGINNING ANY CONSTRUCTION ACTIVITY.

VERMONT AGENCY OF TRANSPORTATION

CLOUGH HARBOUR & ASSOCIATES LLP
III Winners Circle, PO Box 5269, Albany, NY 12205
www.cloughharbour.com

PROJECT NAME: BENNINGTON
PROJECT NUMBER: AC NH 019-1(53)

FILE NAME: ZD048ECSD06.DGN
PROJECT LEADER: D.E.G.
DESIGNED BY: D.W.E.
PLOT DATE: 5/21/2007
DRAWN BY: C.A.K.
CHECKED BY: D.E.G.

GENERAL EROSION NARRATIVE ECN-1

SHEET 446 OF 577

FILE NAME =U:\9819\mstn\03\clough\EROSION\zd048escd06.dgn
DATE/TIME =5/21/2007
USER =1459

Metric

GENERAL NOTES FOR EROSION PREVENTION AND SEDIMENT CONTROL

1. THE EROSION PREVENTION & SEDIMENT CONTROL PLANS (EP&SCP) ARE MEANT AS A GUIDELINE FOR PREVENTING EROSION AND CONTROLLING SEDIMENT AS REQUIRED BY THE VAOT STANDARD SPECIFICATIONS FOR CONSTRUCTION DATED 2006 AND THE VERMONT AGENCY OF NATURAL RESOURCES (ANR) GENERAL PERMIT 3-9001(2003) FOR STORMWATER RUNOFF FROM LARGE CONSTRUCTION SITES. THE WORK OUTLINED IN THESE NOTES CONSISTS OF APPLYING MEASURES THROUGHOUT THE LIFE OF THE PROJECT TO MINIMIZE EROSION AND MINIMIZE THE SEDIMENTATION OF RIVERS, STREAMS AND/OR IMPOUNDMENTS SUCH AS LAKES AND RESERVOIRS. THE MEASURES CONSIST OF SLOPE STABILIZATION, STORMWATER CONTROLS AND OTHER MISCELLANEOUS POLLUTION PREVENTION CONTROLS.

2. THE CONTRACTOR SHALL AMEND THIS PLAN PRIOR TO IMPLEMENTING ANY CHANGES IN THE DESIGN, CONSTRUCTION, OPERATION OR OTHER PROCEDURE WHICH WOULD SIGNIFICANTLY INCREASE THE RISK OF EROSION AND THE DISCHARGE OF SEDIMENT TO WATERS OF THE STATE OR IF THE PLAN PROVES TO BE INEFFECTIVE IN PREVENTING EROSION AND CONTROLLING THE DISCHARGE OF SEDIMENT OR DOES NOT MEET THE MINIMUM REQUIREMENTS OF THE GENERAL PERMIT. CHANGES IN THE PROJECT SCHEDULE THAT SIGNIFICANTLY INCREASE THE LENGTH OF EXPOSURE OF SOILS; THAT SHIFT EARTHWORKS INTO THE WINTER SEASON; OR THAT REDUCE THE ISOLATION DISTANCE BETWEEN DISTURBANCE AREAS AND STATE WATERS ARE INCLUDED IN THIS CATEGORY. THE AMENDED PORTIONS OF THE PLAN SHALL BE FILED WITH THE VERMONT AGENCY OF NATURAL RESOURCES, THE USCOE, THE AGENCY'S RESIDENT ENGINEER AND THE AGENCY'S CONSTRUCTION ENVIRONMENTAL ENGINEER ALONG WITH AN EXPLANATION OF THE REASONS FOR THE CHANGES. IF BORROW OR SPOIL AREAS ARE TO BE USED THAT WERE NOT INCLUDED IN THE ORIGINAL PLAN, PLAN AMENDMENT IS REQUIRED BEFORE USE OF SUCH AREAS; THIS APPLIES EVEN IF THE AREAS ARE OFF SITE, EXCEPT FOR BORROW AREAS THAT ARE OPERATING UNDER A 10 V.S.A. CHAPER 151 ('ACT 250') PERMIT. THE VERMONT AGENCY OF NATURAL RESOURCES, THE USCOE, THE AGENCY'S RESIDENT ENGINEER AND THE AGENCY'S CONSTRUCTION ENVIRONMENTAL ENGINEER WILL MAKE A DETERMINATION AS TO WHETHER AUTHORIZATION UNDER THIS GENERAL PERMIT IS STILL APPROPRIATE OR IF INSTEAD AN INDIVIDUAL PERMIT WILL BE NECESSARY PURSUANT TO PART 1(F) OF THE GENERAL PERMIT. THE REQUIREMENT TO FILE THE AMENDED PLAN IS NOT INTENDED TO DELAY THE IMPLEMENTATION OF REASONABLE AND EFFECTIVE STEPS TO CONTROL EROSION DUE TO UNFORESEEN CIRCUMSTANCES, WHERE INACTION WOULD SIGNIFICANTLY DEGRADE WATER QUALITY.

3. COORDINATE THE INSTALLATION, USE AND REMOVAL OF EROSION PREVENTION AND SEDIMENT CONTROL MEASURES WITH CONSTRUCTION ACTIVITIES TO ASSURE ECOLOGICAL, EFFECTIVE AND CONTINUOUS EROSION PREVENTION AND SEDIMENT CONTROL. EMPLOY TEMPORARY STABILIZATION PRACTICES IN INCREMENTAL STAGES AS CONSTRUCTION PROCEEDS.

4. INSPECTION OF SOIL EROSION AND POLLUTION CONTROL MEASURES, SHALL BE DONE ON A DAILY BASIS AND AFTER EVERY STORM GREAT ENOUGH TO CAUSE WATER TO LEAVE THE CONSTRUCTION SITE OR AS DIRECTED BY THE CONTRACTOR'S ON-SITE PLAN COORDINATOR. REPAIRS SHALL BE MADE AS NEEDED AND SEDIMENT SHALL BE REMOVED WHEN THE STORAGE VOLUME OF A SEDIMENT CONTROL MEASURE IS APPROACHING ONE HALF OF ITS INTENDED CAPACITY OR AS DIRECTED BY THE CONTRACTOR'S ON-SITE PLAN COORDINATOR.

5. INSTALL ALL EROSION PREVENTION AND SEDIMENT CONTROL MEASURES AS SHOWN IN THE EP&SCP OR AS DIRECTED BY THE CONTRACTOR'S ON-SITE PLAN COORDINATOR. DO NOT MODIFY THE TYPE, SIZE, OR LOCATION OF ANY CONTROL OR PRACTICE WITHOUT APPROVAL FROM THE CONTRACTOR'S ON-SITE PLAN COORDINATOR.

6. PREVENTING INITIAL SOIL EROSION IS MUCH MORE EFFECTIVE THAN TRYING TO CONTROL ERODED SEDIMENT. THEREFORE, STABILIZE ALL DISTURBED AREAS AS SOON AS PRACTICAL, BUT NO MORE THAN 48 HOURS AFTER CONSTRUCTION ACTIVITY HAS TEMPORARILY OR PERMANENTLY CEASED EXCEPT FOR PERIMETER CONTROL MEASURES WHICH SHALL BE INSTALLED PRIOR TO THE START OF ANY CLEARING, GRUBBING OR GRADING ACTIVITY.

7. THE CONTRACTOR SHALL MONITOR THE WATER QUALITY OF THE JEWETT BROOK UPSTREAM AND DOWNSTREAM OF THE CONSTRUCTION AREA AFTER EVERY STORM EVENT GREAT ENOUGH TO CAUSE WATER TO LEAVE THE CONSTRUCTION SITE OR AS DIRECTED BY THE CONTRACTOR'S ON-SITE PLAN COORDINATOR. ALL CONSTRUCTION ACTIVITIES SHALL CEASE IF A DIFFERENCE IN TURBIDITY LEVELS OF 10 NTU'S (NEPHELOMETER TURBIDITY UNITS) IS MEASURED AS DIRECTED BY THE CONTRACTOR'S ON-SITE PLAN COORDINATOR. ALL EROSION PREVENTION AND SEDIMENT CONTROL MEASURES SHALL BE CHECKED FOR DAMAGE AND REPAIRED AS NECESSARY. IF ADDITIONAL EROSION PREVENTION & SEDIMENT CONTROL MEASURES ARE REQUIRED AS DIRECTED BY THE CONTRACTOR'S ON-SITE PLAN COORDINATOR THEY SHALL BE INSTALLED PER THIS PLAN AND SHALL BE PAID FOR UNDER THE APPROPRIATE ITEM(S). THE CONTRACTOR'S ON-SITE PLAN COORDINATOR SHALL NOTIFY THE VERMONT AGENCY OF NATURAL RESOURCES, THE USCOE, THE AGENCY'S RESIDENT ENGINEER AND THE AGENCY'S CONSTRUCTION ENVIRONMENTAL ENGINEER (IN WRITING WITHIN 7 DAYS) IN THE EVENT OF A WATER QUALITY STANDARDS VIOLATION.

GENERAL NOTES FOR EROSION PREVENTION AND SEDIMENT CONTROL

8. THE CONTRACTOR SHALL GRADE AND TRIM ALL SLOPES AS THE EXCAVATION PROGRESSES AND SEED ALL SLOPES AS DIRECTED BY THE CONTRACTOR'S ON-SITE PLAN COORDINATOR. NO SEEDING SHALL TAKE PLACE BEFORE APRIL 15 OR AFTER SEPTEMBER 15 DURING ANY CONSTRUCTION SEASON UNLESS DIRECTED OTHERWISE BY THE CONTRACTOR'S ON-SITE PLAN COORDINATOR. THE CONTRACTOR SHALL TEMPORARILY STABILIZE ALL SLOPES NO LATER THAN OCTOBER 15 WITH NON-VEGETATIVE PROTECTION MEASURES PRIOR TO SHUTTING DOWN FOR WINTER OR AS DIRECTED BY THE CONTRACTOR'S ON-SITE PLAN COORDINATOR. THE CONTRACTOR IS RESPONSIBLE TO OBTAIN A WINTER CONSTRUCTION PERMIT FROM THE VERMONT AGENCY OF NATIONAL RESOURCES IF THEY WISH TO PERFORM EARTHWORK BETWEEN OCTOBER 15 AND MAY 1 OF ANY GIVEN YEAR.

9. THE CONTRACTOR SHALL HAVE A HYDROSEEDER AND/OR A MULCHING MACHINE AVAILABLE ON THE PROJECT SITE OR AVAILABLE AT 48 HOURS NOTICE (MAXIMUM) UNTIL THE PERMANENT SEEDING IS COMPLETED. SLOPES WILL BE SEEDED AND MULCHED AS SOON AS PRACTICAL TO THE LIMIT OF SOIL DISTURBANCE.

10. SILT FENCE SHALL BE INSTALLED IN FILL AREAS PRIOR TO COMMENCING FILL OPERATIONS.

11. THE CONTRACTOR'S ON-SITE PLAN COORDINATOR FOR DURATION OF THE PROJECT SHALL BE DETERMINED PRIOR TO ANY CONSTRUCTION ACTIVITIES.

12. THE LIMIT OF SOIL DISTURBANCE TYPICALLY CORRESPONDS TO THE TOE OF SLOPE OR TOP OF CUT AS IT IS SHOWN ON THE CONTRACT PLANS.

13. CONSTRUCTION OPERATIONS SHALL BE CONDUCTED IN SUCH A MANNER AS TO PREVENT ANY DAMAGE TO THE WATERS OF THE UNITED STATES FROM POLLUTION BY DEBRIS, SEDIMENT, OR OTHER FOREIGN MATERIAL, OR FROM MANIPULATION OF EQUIPMENT AND/OR MATERIALS IN OR NEAR THE WATERS OF THE UNITED STATES. THE CONTRACTOR SHALL NOT RETURN DIRECTLY TO THE WATERS OF THE UNITED STATES ANY WATER WHICH HAS BEEN USED FOR WASH PURPOSES OR OTHER SIMILAR OPERATIONS WHICH WOULD CAUSE THIS WATER TO BECOME POLLUTED WITH SAND, SILT, CEMENT, OIL OR OTHER IMPURITIES. IF THE CONTRACTOR USES WATER FROM THE WATERS OF THE UNITED STATES, THE CONTRACTOR SHALL CONSTRUCT AN INTAKE OR TEMPORARY DAM TO PROTECT AND MAINTAIN STREAM WATER QUALITY.

14. DURING CONSTRUCTION, NO WET OR FRESH CONCRETE OR LEACHATE SHALL BE ALLOWED TO ESCAPE INTO THE WATERS OF THE UNITED STATES, NOR SHALL WASHING FROM CONCRETE TRUCKS, MIXERS OR OTHER DEVICES BE ALLOWED TO ENTER ANY WETLANDS OR WATERS OF THE UNITED STATES.

15. THE CONTRACTOR SHALL CONSTRUCT A VEHICLE TRACKING PAD WHEREVER CONSTRUCTION EQUIPMENT IS ANTICIPATED TO ENTER AND EXIT THE CONSTRUCTION AREAS AS SHOWN IN THE PLANS OR AS DIRECTED BY THE CONTRACTOR'S ON-SITE PLAN COORDINATOR.

16. DO NOT ALLOW CONSTRUCTION VEHICLES TO TRACK SEDIMENT OFFSITE OF THE PROJECT LIMITS.

17. DO NOT ALLOW ANY CONSTRUCTION EQUIPMENT TO ACCESS OR OPERATE ON THE OUTSIDE OF PERIMETER CONTROL MEASURES.

18. DO NOT ALLOW ANY CROSSING OF A FLOWING STREAM OR DISTURBANCE OF THE EXISTING STREAM BANK BY CONSTRUCTION EQUIPMENT EXCEPT AS AUTHORIZED BY THE CONTRACTOR'S ON-SITE PLAN COORDINATOR.

19. IN GENERAL, PRESERVE EXISTING VEGETATION, TREES, AND SHRUBS WHEN POSSIBLE AS DIRECTED BY THE CONTRACTOR'S ON-SITE PLAN COORDINATOR.

20. ADDITIONAL CONTROLS AND PROTECTION OF THE ENVIRONMENT NOT SHOWN ON THE PLANS MAY BE WARRANTED DURING CONSTRUCTION AND SHALL BE INCORPORATED INTO THE PROJECT AS REQUIRED OR AS DIRECTED BY THE CONTRACTOR'S ON-SITE PLAN COORDINATOR.

DATUM
VERTICAL NAVD 88
HORIZONTAL NAD 83 (1992)

FILE NAME =U:\9819\mstn\03\clough\EROSION\zd048escd06.dgn
DATE/TIME =5/21/2007
USER =1459

VERMONT AGENCY OF TRANSPORTATION

CLOUGH HARBOUR & ASSOCIATES LLP
III Winners Circle, PO Box 5269, Albany, NY 12205
www.cloughharbour.com

PROJECT NAME: BENNINGTON
PROJECT NUMBER: AC NH 019-1(53)

FILE NAME:ZD048ECSD06.DGN
PROJECT LEADER: D.E.G.
DESIGNED BY: D.W.E.
PLOT DATE: 5/21/2007
DRAWN BY: C.A.K.
CHECKED BY: D.E.G.

GENERAL EROSION NOTES ECN-2

CONSTRUCTION SEQUENCING

GENERAL NOTES

1. THE CONTRACTOR SHALL CONSTRUCT ALL STAGE ONE SITES EMBANKMENTS IN ACCORDANCE WITH SECTION 203 EXCAVATION AND EMBANKMENTS OF THE AGENCY'S STANDARD SPECIFICATIONS FOR CONSTRUCTION DATED 2006. ALL STAGE ONE SITES SHALL BE CONSTRUCTED IN LAYERS TO HELP MINIMIZE THE AMOUNT OF EXPOSED SOILS AND REDUCE THE LENGTH OF STEEP SLOPES. SILT FENCE WILL BE INSTALLED IN ACCORDANCE WITH THE MAXIMUM SLOPE LENGTH TABLES AND DETAILS ILLUSTRATED ON THE EROSION CONTROL DETAILS DRAWING ECD-3.

2. ALL MATERIALS DEEMED UNSUITABLE SUCH AS STUMPS SHALL BE DISPOSED OF WITHIN THE DESIGNATED STUMP DISPOSAL AREAS AS SHOWN IN THE EP&SCP OR AS DIRECTED BY THE CONTRACTOR'S ON-SITE PLAN COORDINATOR.

3. ALL SUITABLE TOPSOIL WILL BE TRANSPORTED TO THE DESIGNATED TOPSOIL STOCKPILE AREA AND STORED UNTIL IT IS NEEDED TO COVER THE HAUL ROAD AS DIRECTED BY THE CONTRACTOR'S ON-SITE PLAN COORDINATOR.

4. HAUL ROAD SIDE SLOPES AND ACCESS ROADS SHALL BE STABILIZED PRIOR TO CONSTRUCTING THE WASTE AREAS.

5. ALL WASTE AREA SIDE SLOPES SHALL BE STABILIZED AS SOON AS PRACTICAL AS DEPICTED IN THE PLANS OR AS DIRECTED BY THE CONTRACTOR'S ON-SITE PLAN COORDINATOR.

PHASE I

1. THE CONTRACTOR SHALL INSTALL ALL NECESSARY PERIMETER CONTROLS AS SHOWN ON THE EP&SCP PRIOR TO BEGINNING ANY WORK INCLUDING TREE CLEARING AND GRUBBING.

2. THE CONTRACTOR SHALL CLEAR TREES FROM WITHIN THE WORK LIMITS OF THE HAUL ROAD AND THE STAGE ONE SITES LOCATED BETWEEN FULLER ROAD AND MIDDLE POWNAL ROAD AND THE ACCESS ROAD AND BOTH STAGE ONE SITES WITH THEIR ACCESS ROADS LOCATED NORTH OF MIDDLE POWNAL ROAD.

3. THE CONTRACTOR SHALL CLEAR AND GRUB STUMPS AND GROUND VEGETATION WITHIN THE HAUL ROAD AND ACCESS ROAD, CONSTRUCT THE HAUL ROAD INCORPORATING A STABILIZED STONE FILL/SUBBASE DRIVING SURFACE INCLUDING ALL VEHICLE TRACKING PADS AS SHOWN IN THE EP&SCP. THE CONTRACTOR SHALL ALSO CONSTRUCT THE ACCESS ROAD AS SHOWN IN THE CONTRACT PLANS. THE CONTRACTOR SHALL INSTALL ALL TEMPORARY SEDIMENT CONTROL MEASURES AS REQUIRED AND SHOWN IN THE EP&SCP TO PROTECT THE AREAS WITHIN THE PHASE ICONSTRUCTION LIMITS AS WORK PROGRESS WITHIN THE PROJECT AREA.

4. THE CONTRACTOR SHALL CLEAR AND GRUB STUMPS AND GROUND VEGETATION WITHIN THE ACCESS ROAD AND STAGE ONE SITE LOCATED NORTH OF MIDDLE POWNAL ROAD ALONG THE PROPOSED MIDDLE POWNAL ROAD RELOCATION. THE CONTRACTOR SHALL CONSTRUCT THE ACCESS ROAD AND THE EMBANKMENT FOR THE STAGE ONE SITES LOCATED NORTH OF MIDDLE POWNAL ROAD ALONG THE PROPOSED MIDDLE POWNAL ROAD RELOCATION AS SHOWN IN THE EP&SCP. THE CONTRACTOR SHALL INSTALL ALL TEMPORARY SEDIMENT CONTROL MEASURES AS REQUIRED AND SHOWN IN THE EP&SCP TO PROTECT THE AREAS WITHIN THE PHASE I CONSTRUCTION LIMITS AS WORK PROGRESS WITHIN THE PROJECT AREA OR AS DIRECTED BY THE CONTRACTOR'S ON-SITE PLAN COORDINATOR.

5. THE CONTRACTOR SHALL CLEAR AND GRUB STUMPS AND GROUND VEGETATION WITHIN THE ACCESS ROAD AND STAGE ONE SITE LOCATED NORTH OF MIDDLE POWNAL ROAD BETWEEN APPROXIMATE STA. 3+100 AND 3+300 ON THE PROPOSED VT. ROUTE 279 ALIGNMENT. THE CONTRACTOR SHALL CONSTRUCT THE ACCESS ROAD AND THE EMBANKMENT FOR THE STAGE ONE SITE LOCATED BETWEEN APPROXIMATE STA. 3+100 AND 3+300 ON THE PROPOSED VT. ROUTE 279 ALIGNMENT AS SHOWN IN THE EP&SCP. THE CONTRACTOR SHALL INSTALL ALL TEMPORARY SEDIMENT CONTROL MEASURES AS REQUIRED AND SHOWN IN THE EP&SCP TO PROTECT THE AREAS WITHIN THE PHASE ICONSTRUCTION LIMITS AS WORK PROGRESS WITHIN THE PROJECT AREA OR AS DIRECTED BY THE CONTRACTOR'S ON-SITE PLAN COORDINATOR.

6. THE CONTRACTOR SHALL REMOVE ALL VEHICLE TRACKING PADS NORTH OF MIDDLE POWNAL ROAD. ALL EXPOSED SURFACES SHALL BE STABILIZED WITH A VEGETATIVE COVER AS SHOWN IN THE CONTRACT PLANS OR AS DIRECTED BY THE CONTRACTOR'S ON-SITE PLAN COORDINATOR.

7. THE CONTRACTOR SHALL REMOVE ALL UNNECESSARY TEMPORARY EROSION PREVENTION AND SEDIMENT CONTROL DEVICES INCLUDING PERIMETER CONTROLS UPON THE COMPLETION AND STABILIZATION OF THESE STAGE ONE SITES AND CONSTRUCTION ENTRANCES AS DIRECTED BY THE CONTRACTOR'S ON-SITE PLAN COORDINATOR.

8. THE CONTRACTOR SHALL TEMPORARILY STABILIZE ANY EXPOSED SIDE SLOPES THAT HAVE NOT BEEN PERMANENTLY STABILIZED PRIOR TO SHUTTING DOWN FOR WINTER AS DIRECTED BY THE CONTRACTOR'S ON-SITE PLAN COORDINATOR. THE CONTRACTOR SHALL OBTAIN A WINTER CONSTRUCTION PERMIT FROM THE VERMONT AGENCY OF NATURAL RESOURCES IF THEY WISH TO WORK BETWEEN OCTOBER 15 AND MAY 1 OF ANY GIVEN YEAR.

PHASE II

1. THE CONTRACTOR SHALL CLEAR AND GRUB STUMPS AND GROUND VEGETATION WITHIN THE ACCESS ROAD AND STAGE ONE SITE LOCATED NORTH OF MIDDLE POWNAL ROAD BETWEEN APPROXIMATE STA. 2+600 AND 2+800 ON THE PROPOSED VT. ROUTE 279 ALIGNMENT. THE CONTRACTOR SHALL CONSTRUCT THE ACCESS ROAD AND THE EMBANKMENT FOR THE STAGE ONE SITE LOCATED BETWEEN APPROXIMATE STA. 2+600 AND 2+800 ON THE PROPOSED VT. ROUTE 279 ALIGNMENT AS SHOWN IN THE EP&SCP. THE CONTRACTOR SHALL INSTALL ALL TEMPORARY SEDIMENT CONTROL MEASURES AS REQUIRED AND SHOWN IN THE EP&SCP TO PROTECT THE AREAS WITHIN THE PHASE II CONSTRUCTION LIMITS AS WORK PROGRESS WITHIN THE PROJECT AREA OR AS DIRECTED BY THE CONTRACTOR'S ON-SITE PLAN COORDINATOR.

2. THE CONTRACTOR SHALL CLEAR AND GRUB STUMPS AND GROUND VEGETATION WITHIN THE ACCESS ROAD AND STAGE ONE SITE LOCATED NORTH OF MIDDLE POWNAL ROAD BETWEEN APPROXIMATE STA. 2+420 AND 2+520 ON THE PROPOSED VT. ROUTE 279 ALIGNMENT. THE CONTRACTOR SHALL CONSTRUCT THE ACCESS ROAD AND THE EMBANKMENT FOR THE STAGE ONE SITE LOCATED BETWEEN APPROXIMATE STA. 2+420 AND 2+520 ON THE PROPOSED VT. ROUTE 279 ALIGNMENT AS SHOWN IN THE EP&SCP. THE CONTRACTOR SHALL INSTALL ALL TEMPORARY SEDIMENT CONTROL MEASURES AS REQUIRED AND SHOWN IN THE EP&SCP TO PROTECT THE AREAS WITHIN THE PHASE II CONSTRUCTION LIMITS AS WORK PROGRESS WITHIN THE PROJECT AREA OR AS DIRECTED BY THE CONTRACTOR'S ON-SITE PLAN COORDINATOR.

3. THE CONTRACTOR SHALL STABILIZE THE HAUL ROAD LOCATED BETWEEN THE PHASE II STAGE ONE SITES WITH A VEGETATIVE COVER AS SHOWN IN THE CONTRACT PLANS OR AS DIRECTED BY THE CONTRACTOR'S ON-SITE PLAN COORDINATOR.

PHASE II CONTINUED

4. THE CONTRACTOR SHALL REMOVE ALL UNNECESSARY TEMPORARY EROSION PREVENTION AND SEDIMENT CONTROL DEVICES INCLUDING PERIMETER CONTROLS UPON THE COMPLETION AND STABILIZATION OF THE STAGE ONE SITES AND HAUL ROAD AS DIRECTED BY THE CONTRACTOR'S ON-SITE PLAN COORDINATOR.

5. THE CONTRACTOR SHALL TEMPORARILY STABILIZE ANY EXPOSED SIDE SLOPES THAT HAVE NOT BEEN PERMANENTLY STABILIZED PRIOR TO SHUTTING DOWN FOR WINTER AS DIRECTED BY THE CONTRACTOR'S ON-SITE PLAN COORDINATOR. THE CONTRACTOR SHALL OBTAIN A WINTER CONSTRUCTION PERMIT FROM THE VERMONT AGENCY OF NATURAL RESOURCES IF THEY WISH TO PERFORM EARTHWORK BETWEEN OCTOBER 15 AND MAY 1 OF ANY GIVEN YEAR.

PHASE III

1. THE CONTRACTOR SHALL REMOVE AND REGRADE THE HAUL ROAD BACK TO EXISTING CONDITIONS OR BETTER FROM ITS BEGIN POINT AT FULLER ROAD TO STA. HR1+520.0 AS DIRECTED BY THE CONTRACTOR'S ON-SITE PLAN COORDINATOR. ANY EXCESS MATERIAL SHALL BE DISPOSED OF OFF SITE IN AN APPROVED AREA AS DIRECTED BY THE CONTRACTOR'S ON-SITE PLAN COORDINATOR.

2. THE CONTRACTOR SHALL REMOVE ALL REMAINING TEMPORARY EROSION PREVENTION AND SEDIMENT CONTROL DEVICES INCLUDING PERIMETER CONTROLS ONCE ALL AREAS HAVE BEEN PERMANENTLY STABILIZED AS DIRECTED BY THE CONTRACTOR'S ON-SITE PLAN COORDINATOR

3. THE CONTRACTOR SHALL REMOVE ALL REMAINING VEHICLE TRACKING PADS AND STABILIZE ALL REMAINING AREAS INCLUDING THE HAUL ROAD WITH A VEGETATIVE COVER AS SHOWN IN THE CONTRACT PLANS AS SOON AS ALL STAGE ONE SITES HAVE BEEN STABILIZED AND CONSTRUCTION HAS CEASED. ALL ACCESS POINTS SHALL BE LANDSCAPED PER THE CONTRACT PLANS OR AS DIRECTED BY THE CONTRACTOR'S ON-SITE PLAN COORDINATOR.

HAUL ROAD AND STAGE ONE SITE CONSTRUCTION ACTIVITY SUMMARY

THE FOLLOWING IS A DETAILED BREAKDOWN OF THE MAJOR CONSTRUCTION ACTIVITIES ASSOCIATED WITH THE NORTHERN SEGMENT STAGE ONE SITES LOCATED SOUTH OF VT. ROUTE 9. A DESCRIPTION OF EACH GENERAL ACTIVITY IS PROVIDED ALONG WITH THE APPROXIMATE AREA AND DURATION ASSOCIATED WITH EACH ACTIVITY. THE APPROXIMATE DURATIONS ARE BASED ON AN AVERAGE DAILY PRODUCTION RATE OF APPROXIMATELY 900 m^3. IT IS ASSUMED THAT EACH ACTIVITY WILL BE COMPLETED PRIOR TO BEGINNING EACH SUBSEQUENT ACTIVITY IN AN EFFORT TO MINIMIZE THE AREA OF DISTURBED EARTH AT ANY ONE TIME.

CONSTRUCTION SEASON 1 ACTIVITY	APPROXIMATE AREA (ha)	APPROXIMATE DURATION
CLEAR TREES FROM WITHIN WORK LIMITS IN THE FOLLOWING LOCATIONS: HAUL ROAD AND STAGE ONE SITES LOCATED BETWEEN FULLER ROAD AND MIDDLE POWNAL ROAD; ACCESS ROADS AND STAGE ONE SITES LOCATED NORTH OF MIDDLE POWNAL ROAD; AND THE ACCESS ROAD LOCATED SOUTH OF MIDDLE POWNAL ROAD.	5.4	3 WKS
CLEAR AND GRUB TREE STUMPS AND GROUND VEGETATION WITHIN HAUL ROAD WORK LIMITS AND ACCESS ROAD. CONSTRUCT HAUL ROAD WITH STABILIZED STONE FILL/SUBBASE DRIVING SURFACE AND VEHICLE TRACKING PADS. CONSTRUCT ACCESS ROAD PER THE CONTRACT PLANS. STABILIZE ALL SIDE SLOPES.	3.2	1.5 MOS
CLEAR AND GRUB TREE STUMPS AND GROUND VEGETATION WITHIN WORK LIMITS OF ACCESS ROAD AND STAGE ONE SITE LOCATED NORTH OF MIDDLE POWNAL ROAD ON THE PROPOSED MIDDLE POWNAL ROAD RELOCATION. CONSTRUCT EMBANKMENT STABILIZE STAGE ONE SITE SIDE SLOPES.	0.5	2 MOS
CLEAR AND GRUB TREE STUMPS AND GROUND VEGETATION WITHIN WORK LIMITS OF ACCESS ROAD AND STAGE ONE SITE LOCATED NORTH OF MIDDLE POWNAL ROAD BETWEEN APPROXIMATE STA. 3+100 AND 3+300 ON THE PROPOSED VT. ROUTE 279 ALIGNMENT. CONSTRUCT STAGE ONE SITE EMBANKMENT. STABILIZE STAGE ONE SITE SIDE SLOPES (USE NON-VEGETATIVE MEASURES FOR SLOPES COMPLETED AFTER SEPTEMBER 15). STABILIZE EXPOSED SURFACES WITH A VEGETATIVE COVER.	0.5	2.5 MOS
CONSTRUCTION SEASON 2 ACTIVITY		
CLEAR AND GRUB TREE STUMPS AND GROUND VEGETATION WITHIN WORK LIMITS OF STAGE ONE SITE LOCATED SOUTH OF MIDDLE POWNAL ROAD BETWEEN APPROXIMATE STA. 2+600 AND 2+800 ON THE PROPOSED VT. ROUTE 279 ALIGNMENT. CONSTRUCT STAGE ONE SITE EMBANKMENT. STABILIZE SIDE SLOPES (USE NON-VEGETATIVE MEASURES FOR SLOPES COMPLETED AFTER SEPTEMBER 15)	0.9	6 MOS
CONSTRUCTION SEASON 3 ACTIVITY		
CLEAR AND GRUB TREE STUMPS AND GROUND VEGETATION WITHIN WORK LIMITS OF STAGE ONE SITE LOCATED SOUTH OF MIDDLE POWNAL ROAD BETWEEN APPROXIMATE STA. 2+420 AND 2+520 ON THE PROPOSED VT. ROUTE 279 ALIGNMENT. CONSTRUCT STAGE ONE SITE EMBANKMENT. STABILIZE SIDE SLOPES.	0.2	1 MOS
REMOVE ALL REMAINING VEHICLE TRACKING PADS. STABILIZE ALL EXPOSED SLOPES AND ANY REMAINING PORTIONS OF THE HAUL ROAD WITH A VEGETATIVE COVER.	0.04	1 WK

DATUM
VERTICAL NAVD 88
HORIZONTAL NAD 83 (1992)

VERMONT AGENCY OF TRANSPORTATION

CLOUGH HARBOUR & ASSOCIATES LLP
III Winners Circle, PO Box 5269, Albany, NY 12205
www.cloughharbour.com

PROJECT NAME: BENNINGTON
PROJECT NUMBER: AC NH 019-1(53)

FILE NAME: ZD048ECSD06.DGN PLOT DATE: 5/21/2007
PROJECT LEADER: D.E.G. DRAWN BY: C.A.K.
DESIGNED BY: D.W.E. CHECKED BY: D.E.G.
CONSTRUCTION SEQUENCING NOTES ECN-3 SHEET 448 OF 577

FILE NAME =U:\9819\mstn\03\clough\EROSION\zd048escd06.dgn
DATE/TIME =5/21/2007
USER =1459

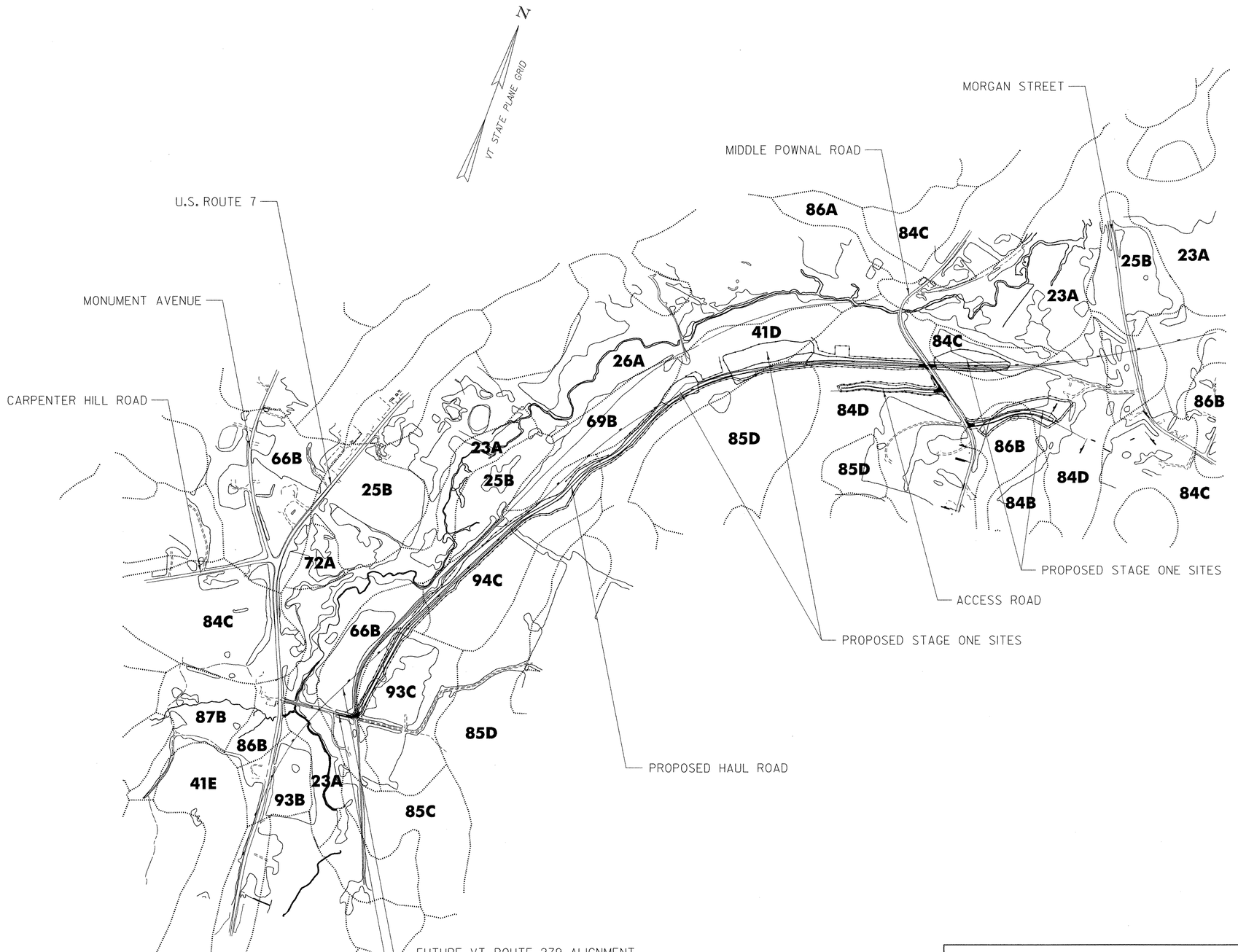

Metric

DATUM	
VERTICAL	NAVD 88
HORIZONTAL	NAD 83 (1992)

FILE NAME =U:\9819\mstn\03\clough\zd048soil02.dgn
DATE/TIME =5/21/2007
USER =1459

VERMONT AGENCY OF TRANSPORTATION

CHA
CLOUGH HARBOUR & ASSOCIATES LLP
III Winners Circle, PO Box 5269, Albany, NY 12205
www.cloughharbour.com

PROJECT NAME: BENNINGTON
PROJECT NUMBER: AC NH 019-1(53)

FILE NAME: ZD048SOIL02.DGN
PROJECT LEADER: D.E.G.
DESIGNED BY: D.W.E.
SOIL MAP SM-1

PLOT DATE: 5/21/2007
DRAWN BY: C.A.K.
CHECKED BY: D.E.G.
SHEET 449 OF 577

Metric

SOIL LEGEND

MAP UNIT TYPE	NAME	SLOPES (%)	"K" FACTOR	ERODIBILITY
23A	Adrian and Saco soils	0 - 2	-	NOT HIGHLY ERODIBLE
25B	Belgrade silt loam	0 - 8	0.49	POTENTIALLY HIGHLY ERODIBLE
41D	Galway-Farmington complex, very rocky	15 - 25	0.32	HIGHLY ERODIBLE
66B	Georgia loam	3 - 8	0.32	POTENTIALLY HIGHLY ERODIBLE
69B	Massena silt loam, very stony	3 - 8	0.20	POTENTIALLY HIGHLY ERODIBLE
84C	Nellis silt loam	8 - 15	0.32	HIGHLY ERODIBLE
84D	Nellis silt loam	15 - 25	0.32	HIGHLY ERODIBLE
85D	Nellis silt loam, very stony	15 - 25	0.24	HIGHLY ERODIBLE
86B	Amenia silt loam	3 - 8	0.32	POTENTIALLY HIGHLY ERODIBLE
93C	Pittsfield fine sandy loam	8 - 15	0.24	POTENTIALLY HIGHLY ERODIBLE
94C	Pittsfield fine sandy loam, very stony	8 - 15	0.20	POTENTIALLY HIGHLY ERODIBLE

NOTES:

1. TABLE ONLY LISTS THOSE SOILS DIRECTLY AFFECTED BY THE CONSTRUCTION OF THIS PROJECT.
2. MAP UNIT TYPE IS FROM THE SOIL SURVEY OF BENNINGTON COUNTY, VERMONT PREPARED BY THE UNITED STATES DEPARTMENT OF AGRICULTURE'S NATIONAL RESOURCES CONSERVATION SERVICE (NRCS).

SEEDING FORMULA
RURAL AREAS

% MASS.	kg/ha	NAME	PUR %	GERM %
37.5	26.0	CREEPING RED FESCUE	98	85
37.5	26.0	TALL FESCUE	95	90
5.0	4.0	RED TOP	95	90
15.0	10.0	BIRDSFOOT TREFOIL	98	85
5.0	4.0	ANNUAL RYE GRASS	95	85
100.0	70.0			

GENERAL NOTES

SEED MIXTURE: SHALL NOT HAVE A WEED CONTENT EXCEEDING 0.40% BY MASS AND SHALL BE FREE OF ALL NOXIOUS SEED.

SEED: TO BE APPLIED PER SEEDING FORMULAS OR AS DIRECTED BY THE CONTRACTOR'S ON-SITE PLAN COORDINATOR.

FERTILIZER: FORMULA 10-20-10, TO BE USED WITH SEED, APPLIED AT THE RATE OF 560 kg/ha (HYDRO SEEDERS MAY USE 19-19-19 FORMULA).

AGRICULTURAL LIMESTONE: TO BE APPLIED AT THE RATE OF 4.5 TONS/ha OR AS DIRECTED BY THE CONTRACTOR'S ON-SITE PLAN COORDINATOR.

HAY MULCH: TO BE PLACED ON EARTH SLOPES AT THE RATE OF 4.5 TONS/ha OR AS DIRECTED BY THE CONTRACTOR'S ON-SITE PLAN COORDINATOR.

TOPSOIL: TO BE USED WITH SEED AS INDICATED ON THE PLANS OR AS DIRECTED BY THE CONTRACTOR'S ON-SITE PLAN COORDINATOR.

DATUM
VERTICAL NAVD 88
HORIZONTAL NAD 83 (1992)

FILE NAME =U:\9819\mstn\03\clough\zd048soil01.dgn
DATE/TIME =5/21/2007
USER =1459

VERMONT AGENCY OF TRANSPORTATION

CLOUGH HARBOUR & ASSOCIATES LLP
III Winners Circle, PO Box 5269, Albany, NY 12205
www.cloughharbour.com

PROJECT NAME: BENNINGTON
PROJECT NUMBER: AC NH 019-1(53)

FILE NAME: ZD048SOIL01.DGN
PROJECT LEADER: D.E.G.
DESIGNED BY: D.W.E.
SOIL MAP KEY SM-2

PLOT DATE: 5/21/2007
DRAWN BY: C.A.K.
CHECKED BY: D.E.G.
SHEET 450 OF 577

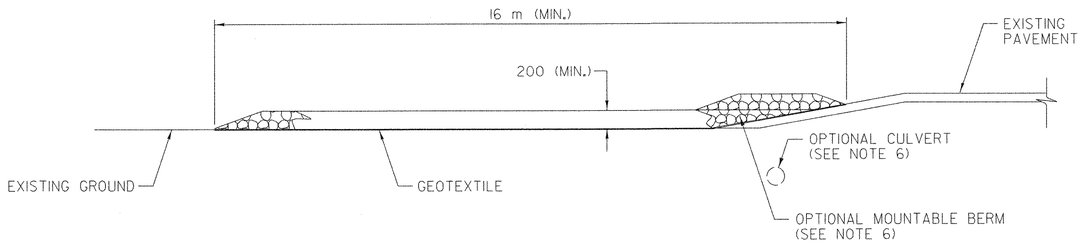

TYPICAL VEHICLE TRACKING PAD PROFILE

(CUT AND DITCH SECTIONS)

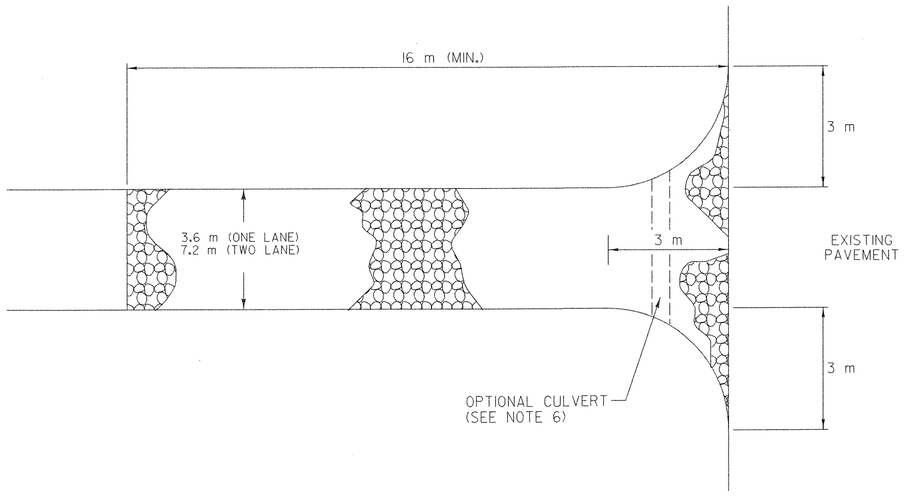

TYPICAL VEHICLE TRACKING PAD PLAN

(CUT/DITCH AND FILL SECTIONS)

DATUM
VERTICAL NAVD 88
HORIZONTAL NAD 83 (1992)

VEHICLE TRACKING PAD

APPLICATION NOTES:

A. THE PURPOSE OF A STABILIZED CONSTRUCTION ENTRANCE IS TO REDUCE OR ELIMINATE THE TRACKING OF SEDIMENT ONTO PUBLIC RIGHTS-OF-WAY OR STREETS.

GENERAL NOTES

1. STONE SIZE - USE CLEAN STONE OR GRADATIONS BETWEEN 50 mm AND 100 mm PER SECTION 704.17 OF THE 2006 VERMONT STANDARD SPECIFICATIONS FOR CONSTRUCTION.
2. LENGTH - 16 m (MIN.)
3. THICKNESS - 200 mm (MIN.)
4. WIDTH - 3.6 m (MIN.)
5. GEOTEXTILE UNDER STONE WILL BE PLACED OVER THE ENTIRE AREA PRIOR TO PLACING OF STONE.
6. ALL SURFACE WATER FLOWING OR DIVERTED TOWARD CONSTRUCTION ENTRANCES SHALL BE PIPED ACROSS THE ENTRANCE AS DIRECTED BY THE CONTRACTOR'S ON-SITE PLAN COORDINATOR. IF PIPING IS IMPRACTICAL, A MOUNTABLE BERM WITH 1:5 SLOPES WILL BE PERMITTED. PROPOSED DRAINAGE PIPES SHALL BE SIZED WITH SUFFICIENT CAPACITY TO CARRY DITCH FLOWS. ALTERNATIVE WAYS OF TRANSPORTING DITCH DRAINAGE ACROSS CONSTRUCTION ENTRANCES MAY BE PROPOSED BY THE CONTRACTOR FOR APPROVAL BY THE CONTRACTOR'S ON-SITE PLAN COORDINATOR.
7. WHEN WASHING OF VEHICLE IS NECESSARY, IT SHALL BE DONE ON AN AREA STABILIZED WITH STONE WHICH DRAINS INTO AN APPROVED SEDIMENT TRAPPING DEVICE.
8. MEASURES SHALL BE INSPECTED ON A DAILY BASIS AND AFTER EVERY STORM EVENT GREAT ENOUGH TO CAUSE WATER TO LEAVE THE CONSTRUCTION SITE OR AS DIRECTED BY THE CONTRACTOR'S ON-SITE PLAN COORDINATOR.
9. MAINTENANCE- THE ENTRANCE SHALL BE MAINTAINED IN A CONDITION WHICH WILL PREVENT TRACKING OR FLOWING OF SEDIMENT ONTO PUBLIC RIGHTS-OF-WAY. ALL SEDIMENT SPILLED, DROPPED, WASHED, OR TRACKED ONTO PUBLIC RIGHTS-OF-WAY MUST BE REMOVED IMMEDIATELY. PAYMENT FOR MAINTAINING STABILIZED CONSTRUCTION ENTRANCES SHALL BE MADE UNDER ITEM 652.30 FIELD MAINTENANCE OF EROSION PREVENTION & SEDIMENT CONTROL PLAN, UNLESS MAINTENANCE IS REQUIRED DUE TO POOR INSTALLATION PRACTICES.
10. AT THE TIME OF REMOVAL OF THE STABILIZED CONSTRUCTION ENTRANCE, THE DISTURBED AREA SHALL BE REPAIRED AND STABILIZED AS DIRECTED BY THE CONTRACTOR'S ON-SITE PLAN COORDINATOR.
11. PAYMENT OF THE STABILIZED CONSTRUCTION ENTRANCE SHALL BE MADE UNDER ITEM 653.35 VEHICLE TRACKING PAD.
12. PAYMENT FOR MONITORING STABILIZED CONSTRUCTION ENTRANCES SHALL BE MADE UNDER ITEM 652.20 MONITORING EROSION PREVENTION & SEDIMENT CONTROL PLAN.

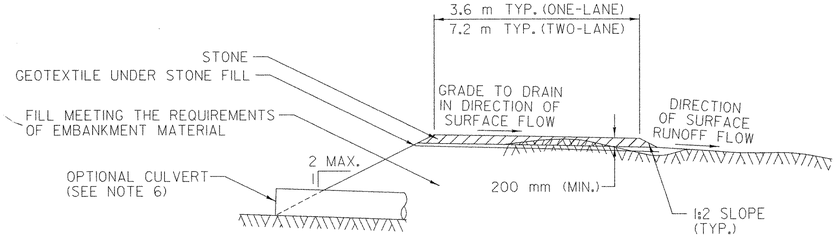

TYPICAL VEHICLE TRACKING PAD SECTION

NOTE: ALL DIMENSIONS ARE IN MILLIMETERS (mm) EXCEPT WHERE NOTED.

VERMONT AGENCY OF TRANSPORTATION

CLOUGH HARBOUR & ASSOCIATES LLP
III Winners Circle, PO Box 5269, Albany, NY 12205
www.cloughharbour.com

PROJECT NAME: BENNINGTON
PROJECT NUMBER: AC NH 019-1(53)

FILE NAME: ZD048escd02.DGN
PROJECT LEADER: D.E.G.
DESIGNED BY: D.W.E.
PLOT DATE: 5/21/2007
DRAWN BY: C.A.K.
CHECKED BY: D.E.G.

EROSION CONTROL DETAILS ECD-1

SHEET 451 OF 577

FILE NAME =U:\9819\mstn\03\clough\EROSION\zd048escd02.dgn
DATE/TIME =5/21/2007
USER =1459

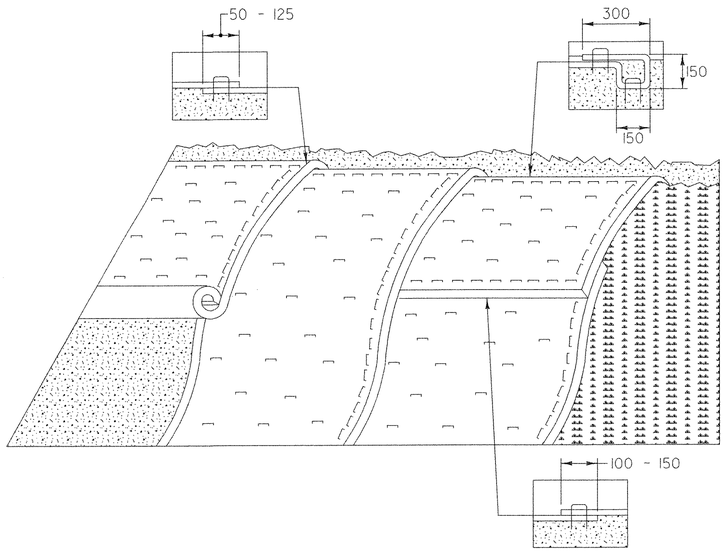

EROSION PREVENTION FOR SIDE SLOPES

APPLICATION NOTES:

A. THE PURPOSE OF MATTING ON SIDE SLOPES IS TO REDUCE EROSION AND AID THE ESTABLISHMENT OF VEGETATION

B. EROSION CONTROL MATTING SHALL BE USED FOR THE FOLLOWING REASONS:

* SIDE SLOPES > 3:1 (H:V)
* AREAS WHERE SEED AND MULCH WILL NOT STAY IN PLACE ALONE
* WHERE SEEDING IS OUTSIDE THE GROWING SEASON.

GENERAL NOTES:

1. GRADE AND SMOOTH THE SLOPE TO PROVIDE GOOD MATTING TO SOIL SURFACE CONTACT.
2. APPLY FERTILIZER, LIME, AND SEED PRIOR TO PLACING MATTING.
3. ANCHOR MATTING AS SHOWN, UTILIZING ANCHOR STAPLES. STAPLE PLACEMENT SHALL BE DETERMINED BY THE MANUFACTURER'S INSTALLATION INSTRUCTIONS.
4. UNROLL MATTING VERTICALLY DOWN SLOPE IN THE DIRECTION OF WATER FLOW.
5. OVERLAP UPPER MATTING OVER LOWER MATTING AS SHOWN.
6. OVERLAP ADJACENT MATTING AS SHOWN.
7. CUT EXCESS MATTING AT END OF SLOPE AND ANCHOR THE END.
8. EROSION PREVENTION MEASURES SHALL BE INSPECTED ON A DAILY BASIS AND AFTER EVERY STORM EVENT GREAT ENOUGH TO CAUSE WATER TO LEAVE THE CONSTRUCTION SITE OR AS DIRECTED BY THE CONTRACTOR'S ON-SITE PLAN COORDINATOR.
9. MATTING SHALL BE REPAIRED AND RESTAPLED AS NECESSARY TO ENSURE PROPER FUNCTION.
10. PAYMENT FOR INSTALLATION OF TEMPORARY EROSION MATTING SHALL BE MADE UNDER ITEM 653.20 TEMPORARY EROSION MATTING.
11. PAYMENT FOR MONITORING TEMPORARY EROSION MATTING SHALL BE MADE UNDER ITEM 652.20 MONITORING EROSION PREVENTION & SEDIMENT CONTROL PLAN.
12. PAYMENT FOR MAINTAINING TEMPORARY EROSION MATTING SHALL BE MADE UNDER ITEM 652.30 FIELD MAINTENANCE OF EROSION PREVENTION & SEDIMENT CONTROL PLAN UNLESS MAINTENANCE IS REQUIRED DUE TO POOR INSTALLATION PRACTICES.

NOTE: ALL DIMENSIONS ARE IN MILLIMETERS (mm) EXCEPT WHERE NOTED.

DATUM
VERTICAL NAVD 88
HORIZONTAL NAD 83 (1992)

VERMONT AGENCY OF TRANSPORTATION

CLOUGH HARBOUR & ASSOCIATES LLP
III Winners Circle, PO Box 5269, Albany, NY 12205
www.cloughharbour.com

PROJECT NAME: BENNINGTON
PROJECT NUMBER: AC NH 019-1(53)

FILE NAME: ZD048ESCD01.DGN
PROJECT LEADER: D.E.G.
DESIGNED BY: D.W.E.
EROSION CONTROL DETAILS ECD-2

PLOT DATE: 5/21/2007
DRAWN BY: C.A.K.
CHECKED BY: D.E.G.
SHEET 452 OF 577

FILE NAME =u:\9819\mstn\03\clough\EROSION\zd048ecsd01.dgn
DATE/TIME =5/21/2007
USER =1459

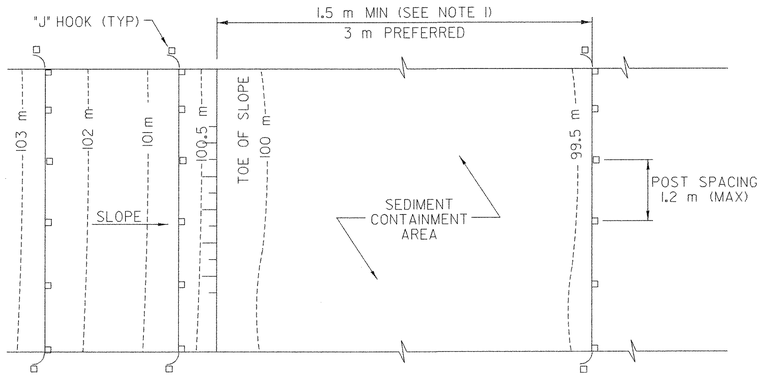

PLAN

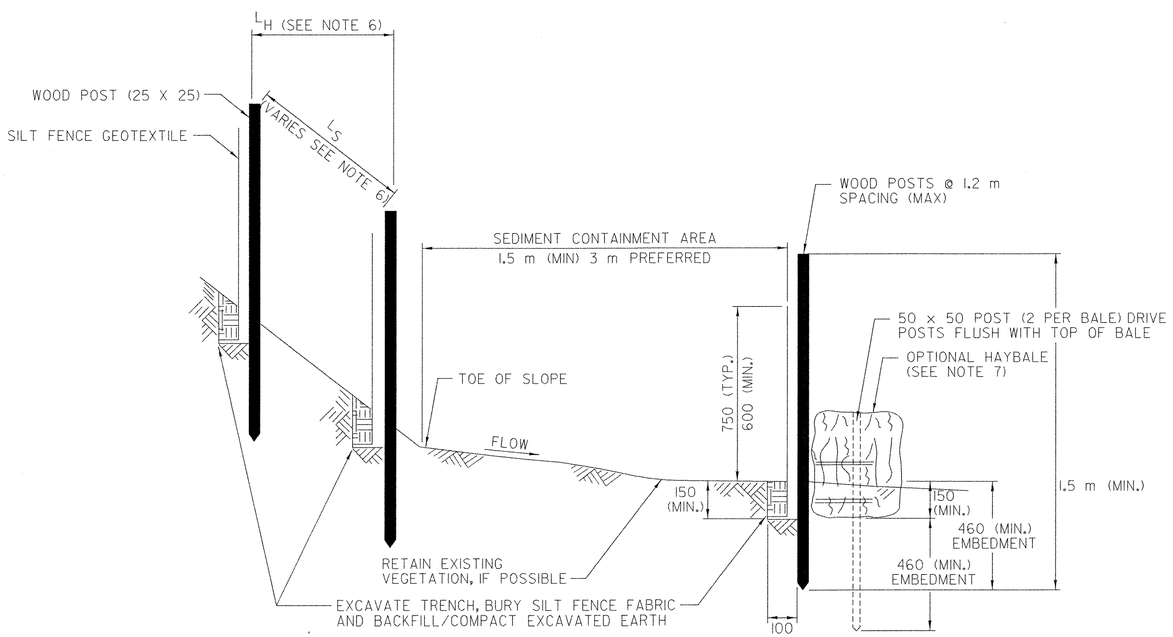

SECTION

SILT FENCE – TEMPORARY

N.T.S.

STANDARD SYMBOL

□ □ □ □

DATUM

VERTICAL NAVD 88

HORIZONTAL NAD 83 (1992)

APPLICATION NOTES:

A. THE PRIMARY PURPOSE OF SILT FENCE IS TO REDUCE RUNOFF VELOCITY AND TRAP SEDIMENT. VELOCITY IS REDUCED, WATER IS IMPOUNDED BEHIND THE MEASURE, AND SEDIMENT FALLS OUT OF SUSPENSION.

B. SILT FENCE SHALL BE INSTALLED ON A LINE OF EQUAL ELEVATION (CONTOUR). IT MAY BE INSTALLED AT INTERMEDIATE POINTS UP SLOPES AS WELL AS AT THE BOTTOM AS SHOWN IN THE DETAIL.

C. SILT FENCE SHALL NOT BE USED ACROSS CONCENTRATED FLOW.

GENERAL NOTES:

1. SILT FENCE SHALL GENERALLY BE PLACED A MINIMUM OF 1.5 m BEYOND TOE OF SLOPE (3 m PREFERRED) TO PROVIDE ADEQUATE AREA FOR SEDIMENT STORAGE AND FACILITATE MAINTENANCE OF THE SEDIMENT CONTAINMENT AREA.
2. ALL ENDS SHALL BE "J" HOOKED TO TRAP SEDIMENT.
3. IN AREAS WITH TWO SLOPES, SILT FENCE SHALL BE USED TO ERECT A DAM AND TRAP SEDIMENT AT THE BASE OF THE STEEPER SLOPE.
4. THE BOTTOM EDGE OF SILT FENCE SHALL BE BURIED A MINIMUM OF 150 mm BELOW GROUND, AND KEYED IN 100 mm. THE FENCE SHALL BE INSTALLED WITH THE POSTS ON THE DOWNSTREAM SIDE OF THE FABRIC.
5. MAXIMUM DRAINAGE AREA TRIBUTARY TO 30 m OF SILT FENCE SHALL BE 0.1 Ha.
6. THE FOLLOWING ARE MAXIMUM SLOPE LENGTHS FOR THESE MEASURES:

CONSTRUCTED SLOPE (H:V)	SLOPE LENGTH (L_S) m	HORIZONTAL LENGTH (L_H) m
2 : 1	15	13
3 : 1	25	24
4 : 1	40	39
5 : 1	60	60
> 5 : 1	80	80

7. HAY BALES MAY BE USED TO HELP SUPPORT SILT FENCE INSTALLATIONS ON STEEP EMBANKMENTS AS DIRECTED BY THE CONTRACTOR'S ON-SITE PLAN COORDINATOR. BALES SHALL BE REMOVED WHEN THEY HAVE SERVED THEIR USEFULNESS AND SURROUNDING AREAS ARE STABILIZED OR AS DIRECTED BY THE CONTRACTOR'S ON-SITE PLAN COORDINATOR. PAYMENT FOR HAY BALE INSTALLATIONS SHALL BE CONSIDERED INCIDENTAL TO ITEM 649.5I GEOTEXTILE FOR SILT FENCE.
8. MEASURES SHALL BE INSPECTED ON A DAILY BASIS AND AFTER EVERY STORM EVENT GREAT ENOUGH TO CAUSE WATER TO LEAVE THE CONSTRUCTION SITE OR AS DIRECTED BY THE CONTRACTOR'S ON-SITE PLAN COORDINATOR.
9. MEASURES SHALL BE CLEANED AND REPAIRED AS NEEDED. SEDIMENT SHALL BE REMOVED WHEN ACCUMULATION REACHES ONE-HALF OF THE MEASURE HEIGHT. SEDIMENT SHALL BE DISPOSED OF AS UNSUITABLE MATERIAL.
10. SILT FENCE SHALL BE REMOVED WHEN THE AREA HAS BEEN STABILIZED. AT TIME OF REMOVAL OF THE SILT FENCE, THE DISTURBED AREA SHALL BE REPAIRED AND STABILIZED AS DIRECTED BY THE CONTRACTOR'S ON-SITE PLAN COORDINATOR.
11. PAYMENT FOR INSTALLATION AND REMOVAL OF SILT FENCE SHALL BE MADE UNDER ITEM 649.5I GEOTEXTILE FOR SILT FENCE.
12. PAYMENT FOR MONITORING SILT FENCE SHALL BE MADE UNDER ITEM 652.20 MONITORING EROSION PREVENTION & SEDIMENT CONTROL PLAN.
13. PAYMENT FOR MAINTAINING SILT FENCE SHALL BE MADE UNDER ITEM 652.30 FIELD MAINTENANCE OF EROSION PREVENTION & SEDIMENT CONTROL PLAN UNLESS MAINTENANCE IS REQUIRED DUE TO POOR INSTALLATION PRACTICES.

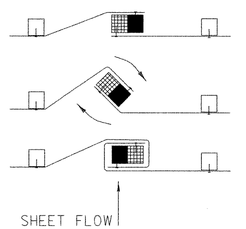

1. PLACE THE END POST OF ONE FENCE INSIDE THE END POST OF THE OTHER FENCE.
2. ROTATE BOTH POSTS AT LEAST 180 DEGREES IN A CLOCKWISE DIRECTION TO CREATE A TIGHT SEAL WITH THE FABRIC MATERIAL
3. DRIVE BOTH POSTS 460 mm INTO THE GROUND AND BURY THE FLAP IN THE TRENCH.

SPLICING DETAIL

N.T.S.

NOTE: ALL DIMENSIONS ARE IN MILLIMETERS (mm) EXCEPT WHERE NOTED.

VERMONT AGENCY OF TRANSPORTATION

CLOUGH HARBOUR & ASSOCIATES LLP
III Winners Circle, PO Box 5269, Albany, NY 12205
www.cloughharbour.com

PROJECT NAME: BENNINGTON
PROJECT NUMBER: AC NH 019-1(53)

FILE NAME: ZD048escd02.DGN
PROJECT LEADER: D.E.G.
DESIGNED BY: D.W.E.
EROSION CONTROL DETAILS ECD-3

PLOT DATE: 5/21/2007
DRAWN BY: C.A.K.
CHECKED BY: D.E.G.
SHEET 453 OF 577

FILE NAME =U:\9819\mstn\03-clough\EROSION\zd048escd02.dgn
DATE/TIME =5/21/2007
USER =1459

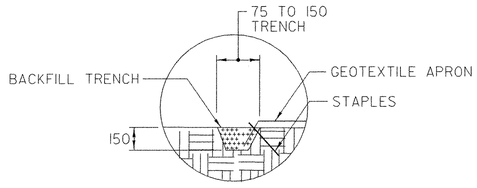

DETAIL A

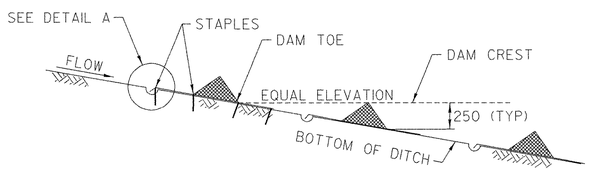

PROFILE

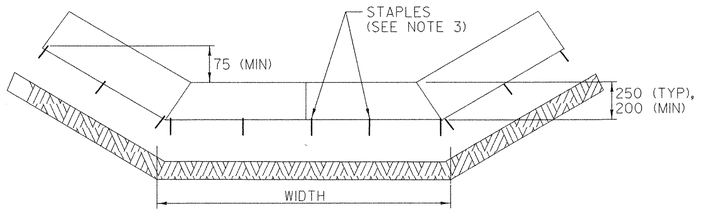

SECTION A–A

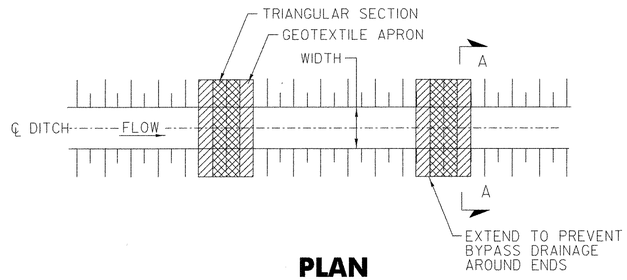

PLAN

PREFABRICATED CHECK DAM

N.T.S.

STANDARD SYMBOL



PREFABRICATED CHECK DAM PLACEMENT INTERVAL	
DITCH SLOPE	PLACEMENT INTERVAL**
1%	15 m
2%	12 m
3%	8 m
4%	6 m
5%	5 m

**BASED ON 250 mm TYPICAL HEIGHT

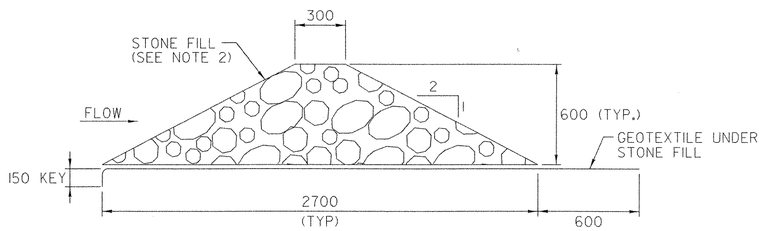

CROSS SECTION

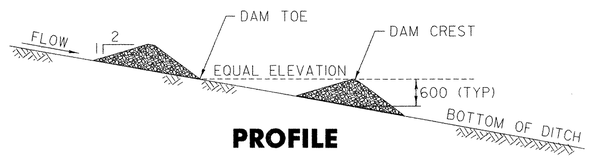

PROFILE

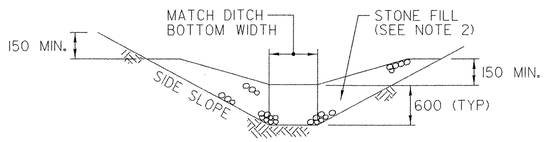

SECTION B–B

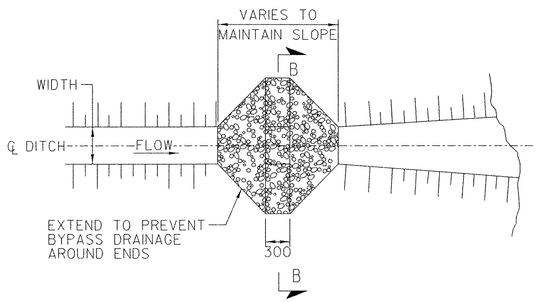

PLAN

TEMPORARY STONE CHECK DAM – TYPE I

N.T.S.

STANDARD SYMBOL



STONE CHECK DAM PLACEMENT INTERVAL	
DITCH SLOPE	PLACEMENT INTERVAL**
1%	60 m
2%	30 m
3%	20 m
4%	15 m
5%	12 m
6%	10 m
8%	7.5 m
10%	6 m

**BASED ON 600 mm TYPICAL HEIGHT

APPLICATION NOTES:

A. THE PRIMARY PURPOSE OF A CHECK DAM IS TO REDUCE EROSION IN A CHANNEL BY REDUCING FLOW VELOCITY.

B. CHECK DAMS WILL CAPTURE SEDIMENT THAT FALLS OUT OF SUSPENSION BEHIND THE CHECK DAM DUE TO DECREASED VELOCITY.

C. CHECK DAMS ARE NOT INTENDED TO FILTER SEDIMENT FROM TURBID WATER.

D. DETAILS SHOWN SHALL BE USED FOR TEMPORARY INSTALLATION ONLY.

E. PREFABRICATED DAMS ARE NOT TO BE USED ON SLOPES GREATER THAN 5% OR PER MANUFACTURER'S SPECIFICATIONS.

F. PREFABRICATED DAM SPECIFICATIONS SHALL BE PROVIDED TO THE ON-SITE PLAN COORDINATOR FOR APPROVAL PRIOR TO USE.

GENERAL NOTES:

1. GEOTEXTILE SHALL BE INSTALLED UNDER STONE FILL. IT SHALL BE KEYED IN ON THE UPHILL END AND SHALL EXTEND 600 mm BEYOND THE STONE ON THE DOWNHILL END.

2. CORE MATERIAL FOR THE STONE CHECK DAM SHALL MEET THE REQUIREMENTS OF SECTION 704.17 PER THE VAOT'S STANDARD SPECIFICATIONS FOR CONSTRUCTION DATED 2006.

3. THE UPHILL END OF THE APRON FOR THE PREFABRICATED CHECK DAM SHALL BE STAPLED AND BURIED AS SHOWN IN DETAIL "A" OR AS RECOMMENDED BY THE MANUFACTURER'S SPECIFICATIONS.

4. MEASURES SHALL BE INSPECTED ON A DAILY BASIS AND AFTER EVERY STORM EVENT GREAT ENOUGH TO CAUSE WATER TO LEAVE THE CONSTRUCTION SITE OR AS DIRECTED BY THE CONTRACTOR'S ON-SITE PLAN COORDINATOR.

5. MEASURES SHALL BE CLEANED AND REPAIRED AS NEEDED. SEDIMENT SHALL BE REMOVED WHEN ACCUMULATION REACHES ONE-HALF OF THE MEASURE HEIGHT. SEDIMENT SHALL BE DISPOSED OF AS UNSUITABLE MATERIAL.

6. AT TIME OF REMOVAL OF THE CHECK DAMS, THE DISTURBED AREA SHALL BE REPAIRED AND STABILIZED AS DIRECTED BY THE CONTRACTOR'S ON-SITE PLAN COORDINATOR.

7. PAYMENT FOR INSTALLATION AND REMOVAL OF CHECK DAMS SHALL BE MADE UNDER EITHER ITEM 653.25 TEMPORARY STONE CHECK DAM, TYPE I OR ITEM 653.30 PREFABRICATED CHECK DAM.

8. PAYMENT FOR MONITORING CHECK DAMS SHALL BE MADE UNDER ITEM 652.20 MONITORING EROSION PREVENTION & SEDIMENT CONTROL PLAN.

9. PAYMENT FOR MAINTAINING CHECK DAMS SHALL BE MADE UNDER ITEM 652.30 FIELD MAINTENANCE OF EROSION PREVENTION & SEDIMENT CONTROL PLAN UNLESS MAINTENANCE IS REQUIRED DUE TO POOR INSTALLATION PRACTICES.

NOTE: ALL DIMENSIONS ARE IN MILLIMETERS (mm) EXCEPT WHERE NOTED.

DATUM
VERTICAL NAVD 88
HORIZONTAL NAD 83 (1992)

VERMONT AGENCY OF TRANSPORTATION

CLOUGH HARBOUR & ASSOCIATES LLP
11 Winners Circle, PO Box 5269, Albany, NY 12205
www.cloughharbour.com

PROJECT NAME: BENNINGTON
PROJECT NUMBER: AC NH 019-1(53)

FILE NAME: ZD048CSD03.DGN
PROJECT LEADER: D.E.G.
DESIGNED BY: D.W.E.
PLOT DATE: 5/18/2007
DRAWN BY: C.A.K.
CHECKED BY: D.E.G.

EROSION CONTROL DETAILS ECD-4

SHEET 454 OF 577

FILE NAME =U:\9819\mstn\03\clough\EROSION\zd048escd03.dgn
DATE/TIME =5/18/2007
USER =3076

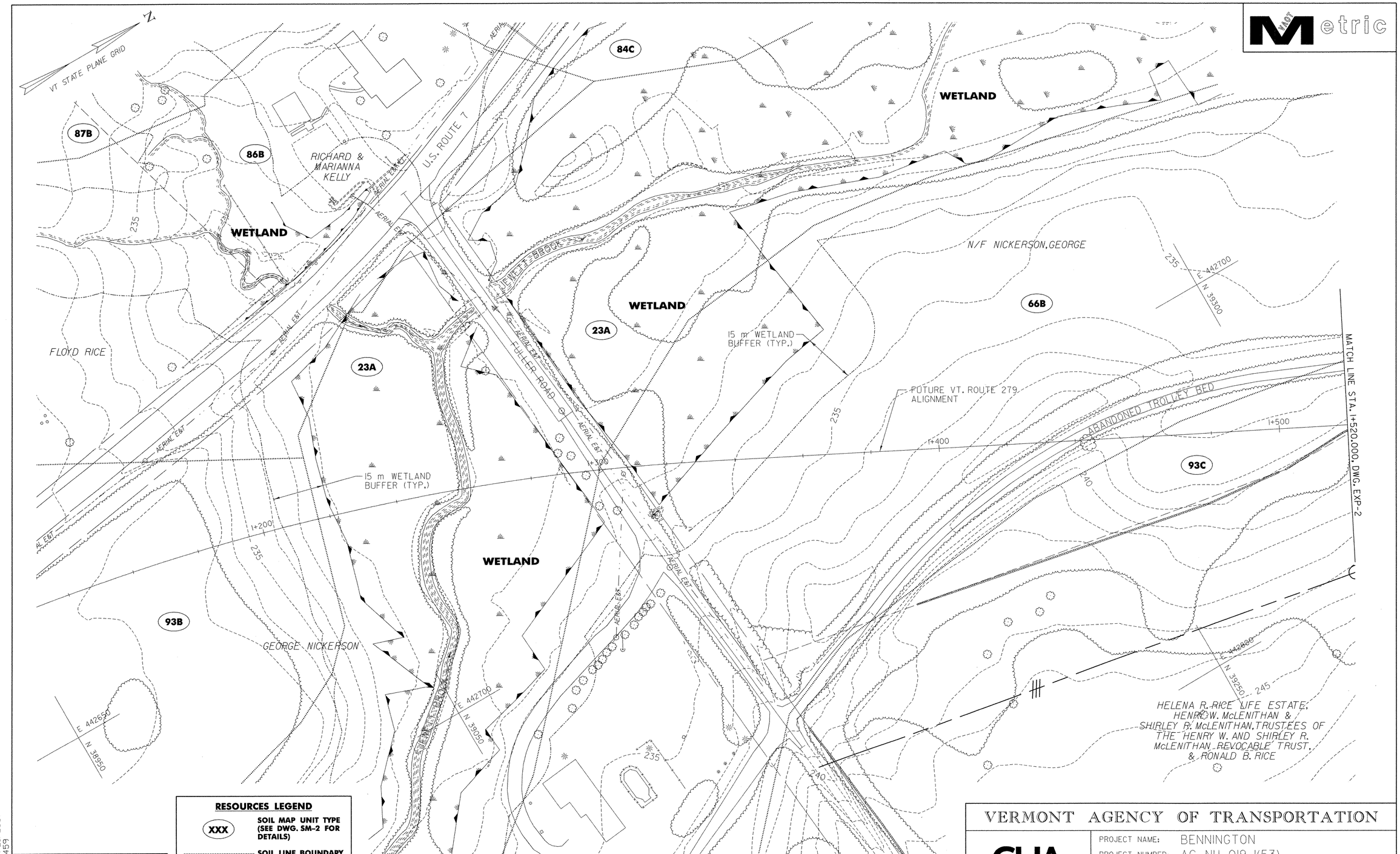

RESOURCES LEGEND

XXX	SOIL MAP UNIT TYPE (SEE DWG. SM-2 FOR DETAILS)
	SOIL LINE BOUNDARY
	WETLAND / RIPARIAN BOUNDARY
	WETLAND BUFFER / RIPARIAN BUFFER

DATUM

VERTICAL	NAVD 88
HORIZONTAL	NAD 83 (1992)

FILE NAME =U:\9819\mstn\03\clough\EROSION\zd048ex02.dgn
DATE/TIME =5/21/2007
USER =1459

VERMONT AGENCY OF TRANSPORTATION

CHA
CLOUGH HARBOUR & ASSOCIATES LLP
III Winners Circle, PO Box 5269, Albany, NY 12205
www.cloughharbour.com

PROJECT NAME: BENNINGTON
PROJECT NUMBER: AC NH 019-1(53)

FILE NAME: ZD048EX02.DGN
PROJECT LEADER: D.E.G.
DESIGNED BY: D.W.E.
EXISTING CONDITIONS PLAN EXP-1

PLOT DATE: 5/21/2007
DRAWN BY: C.A.K.
CHECKED BY: D.E.G.
SHEET 455 OF 577

VAOT Metric

N

VT STATE PLANE GRID

E 442800
N 39650

HELENA R. RICE LIFE ESTATE,
HENRY W. McLENITHAN &
SHIRLEY R. McLENITHAN, TRUSTEES OF
THE HENRY W. AND SHIRLEY R.
McLENITHAN REVOCABLE TRUST,
& RONALD B. RICE

WETLAND

26A

25B

23A

66B

15 m WETLAND BUFFER (TYP.)

N/F
MERRITT,
MATTHEW J., III
& MORIARTY,
FRANCIS X.

FUTURE VT. ROUTE 279
ALIGNMENT

GEORGE NICKERSON

ABANDONED TROLLEY BED

ALARM
CANADENSE

MATCH LINE STA. 1+520.000, DWG. EXP-1

MATCH LINE STA. 1+900.000, DWG. EXP-3

1+600
1+700
1+800

235
240
245
250
255

93C

94C

E 442890
N 39400

E 442950
N 39600

PAGE, MARK O. &
SUSAN J.

RESOURCES LEGEND

XXX	SOIL MAP UNIT TYPE (SEE DWG. SM-2 FOR DETAILS)
	SOIL LINE BOUNDARY
	WETLAND / RIPARIAN BOUNDARY
	WETLAND BUFFER / RIPARIAN BUFFER

DATUM
VERTICAL NAVD 88
HORIZONTAL NAD 83 (1992)

10 0 10 m
1: 500
@ FULL SIZE

VERMONT AGENCY OF TRANSPORTATION

CLOUGH HARBOUR & ASSOCIATES LLP
III Winners Circle, PO Box 5069, Albany, NY 12205
www.cloughharbour.com

PROJECT NAME: BENNINGTON
PROJECT NUMBER: AC NH 019-1(53)

FILE NAME: ZD048EX03.DGN
PROJECT LEADER: D.E.G.
DESIGNED BY: D.W.E.
EXISTING CONDITIONS PLAN EXP-2

PLOT DATE: 5/21/2007
DRAWN BY: C.A.K.
CHECKED BY: D.E.G.
SHEET 456 OF 577

FILE NAME = U:\9819\mstn\03clough\EROSION\zd048ex03.dgn
DATE/TIME = 5/21/2007
USER = 1459

VAOT Metric

N

VT STATE PLANE GRID

E 443900
N 39800

HELENA R. RICE LIFE ESTATE,
HENRY W. McLENITHAN &
SHIRLEY R. McLENITHAN, TRUSTEES OF
THE HENRY W. AND SHIRLEY R.
McLENITHAN REVOCABLE TRUST,
& RONALD B. RICE

25B

69B

NEW ENGLAND
TROPICAL CONSERVATORY, INC.
JOINED BY
VERMONT LAND TRUST, INC. &
VERMONT HOUSING AND
CONSERVATION BOARD

E 443050
N 39000

E CVPS EASEMENT

WETLAND

ABANDONED TROLLEY BED

15 m WETLAND
BUFFER (TYP.)

FUTURE VT. ROUTE 279
ALIGNMENT

MATCH LINE STA. 1+900.000, DWG. EXP-2

MATCH LINE STA. 2+280.000, DWG. EXP-4

1+900 2+000 2+100 2+200

235 240 245 250 255 260 265

94C

41D

85D

HELENA R. RICE LIFE ESTATE,
HENRY W. McLENITHAN &
SHIRLEY R. McLENITHAN, TRUSTEES OF
THE HENRY W. AND SHIRLEY R.
McLENITHAN REVOCABLE TRUST,
& RONALD B. RICE

N/F ECKNER, JOCHEN K. &
BISCHOFF, BARBARA

E 443050
N 39700

E 443350
N 39600

NEW ENGLAND
TROPICAL CONSERVATORY, INC.
JOINED BY
VERMONT LAND TRUST, INC. &
VERMONT HOUSING AND CONSERVATION BOARD

RESOURCES LEGEND

- XXX — SOIL MAP UNIT TYPE (SEE DWG. SM-2 FOR DETAILS)
- SOIL LINE BOUNDARY
- WETLAND / RIPARIAN BOUNDARY
- WETLAND BUFFER / RIPARIAN BUFFER

10 0 10 m
1: 500
@ FULL SIZE

DATUM
VERTICAL NAVD 88
HORIZONTAL NAD 83 (1992)

FILE NAME = U:\9819\ms-tn\03\clough\EROSION\zd048ex04.dgn
DATE/TIME = 5/21/2007
USER = 1459

VERMONT AGENCY OF TRANSPORTATION

CHA © 2007
CLOUGH HARBOUR & ASSOCIATES LLP
11 Winners Circle, PO Box 5269, Albany, NY 12205
www.cloughharbour.com

PROJECT NAME: BENNINGTON
PROJECT NUMBER: AC NH 019-1(53)

FILE NAME: ZD048EX04.DGN
PROJECT LEADER: D.E.G.
DESIGNED BY: D.W.E.
EXISTING CONDITIONS PLAN EXP-3

PLOT DATE: 5/21/2007
DRAWN BY: C.A.K.
CHECKED BY: D.E.G.
SHEET 457 OF 577

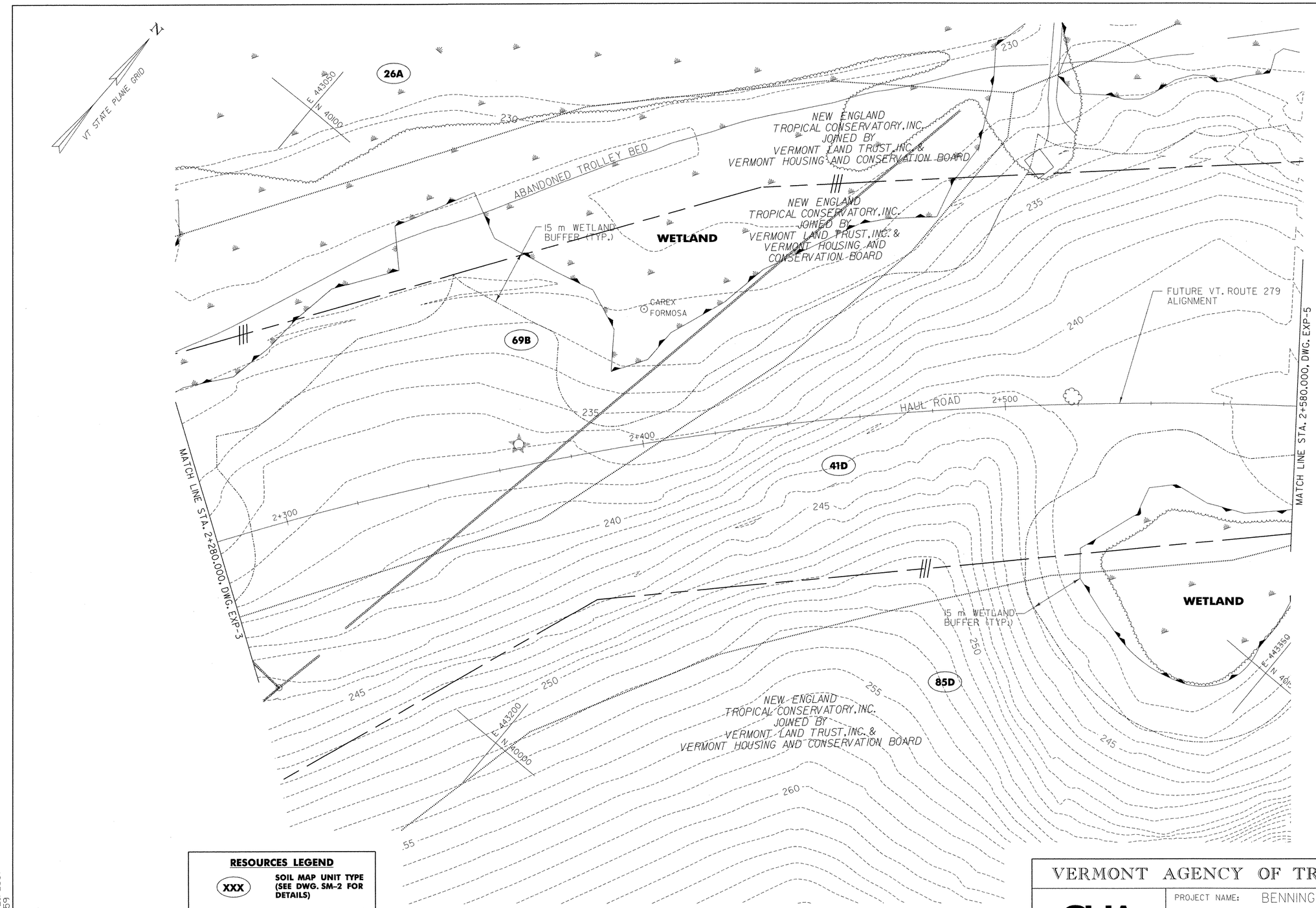

RESOURCES LEGEND

XXX	SOIL MAP UNIT TYPE (SEE DWG. SM-2 FOR DETAILS)
	SOIL LINE BOUNDARY
	WETLAND / RIPARIAN BOUNDARY
	WETLAND BUFFER / RIPARIAN BUFFER

10 0 10 m
1: 500
@ FULL SIZE

DATUM

VERTICAL	NAVD 88
HORIZONTAL	NAD 83 (1992)

FILE NAME =U:\9819\mstn\03\clough\EROSION\zd048ex05.dgn
DATE/TIME =5/21/2007
USER =1459

VERMONT AGENCY OF TRANSPORTATION

CHA
CLOUGH HARBOUR & ASSOCIATES LLP
III Winners Circle, PO Box 5269, Albany, NY 12205
www.cloughharbour.com

PROJECT NAME: BENNINGTON
PROJECT NUMBER: AC NH 019-1(53)

FILE NAME: ZD048EX05.DGN
PROJECT LEADER: D.E.G.
DESIGNED BY: D.W.E.
EXISTING CONDITIONS PLAN EXP-4

PLOT DATE: 5/21/2007
DRAWN BY: C.A.K.
CHECKED BY: D.E.G.
SHEET 458 OF 577

VAOT Metric

N

VT STATE PLANE GRID

ABANDONED TROLLEY BED

WETLAND

WETLAND

15 m WETLAND BUFFER (TYP.)

NEW ENGLAND TROPICAL CONSERVATORY, INC. JOINED BY VERMONT LAND TRUST, INC. & VERMONT HOUSING AND CONSERVATION BOARD

HOWE, ARTHUR M. & JUDY A.

HOWE, ARTHUR M. & JUDY A.

NEW ENGLAND TROPICAL CONSERVATORY, INC.

NEW ENGLAND TROPICAL CONSERVATORY, INC. JOINED BY VERMONT LAND TRUST, INC. & VERMONT HOUSING AND CONSERVATION BOARD

E 443300 N 40300

E 443350 N 40350

E 443500 N 40450

E 443450 N 40200

41D

85D

84D

CAREX HITCHCOCKIANA

CAREX ALBURSINA

HABITAT

FUTURE VT. ROUTE 279 ALIGNMENT

HAUL ROAD

2+600

2+700

2+800

2+900

235

240

245

250

255

260

265

270

275

MATCH LINE STA. 2+580.000, DWG. EXP-4

MATCH LINE STA. 2+960.000, DWG. EXP-6

10 0 10 m

1: 500 @ FULL SIZE

RESOURCES LEGEND

- XXX — SOIL MAP UNIT TYPE (SEE DWG. SM-2 FOR DETAILS)
- SOIL LINE BOUNDARY
- WETLAND / RIPARIAN BOUNDARY
- WETLAND BUFFER / RIPARIAN BUFFER

DATUM
VERTICAL NAVD 88
HORIZONTAL NAD 83 (1992)

FILE NAME =U:\9819\mstn\03\clough\EROSION\zd048ex06.dgn
DATE/TIME =5/21/2007
USER =1459

VERMONT AGENCY OF TRANSPORTATION

CLOUGH HARBOUR & ASSOCIATES LLP
11 Winners Circle, PO Box 5269, Albany, NY 12205
www.cloughharbour.com

PROJECT NAME: BENNINGTON
PROJECT NUMBER: AC NH 019-1(53)

FILE NAME: ZD048EX06.DGN
PROJECT LEADER: D.E.G.
DESIGNED BY: D.W.E.
PLOT DATE: 5/21/2007
DRAWN BY: C.A.K.
CHECKED BY: D.E.G.

EXISTING CONDITIONS PLAN EXP-5

SHEET 459 OF 577

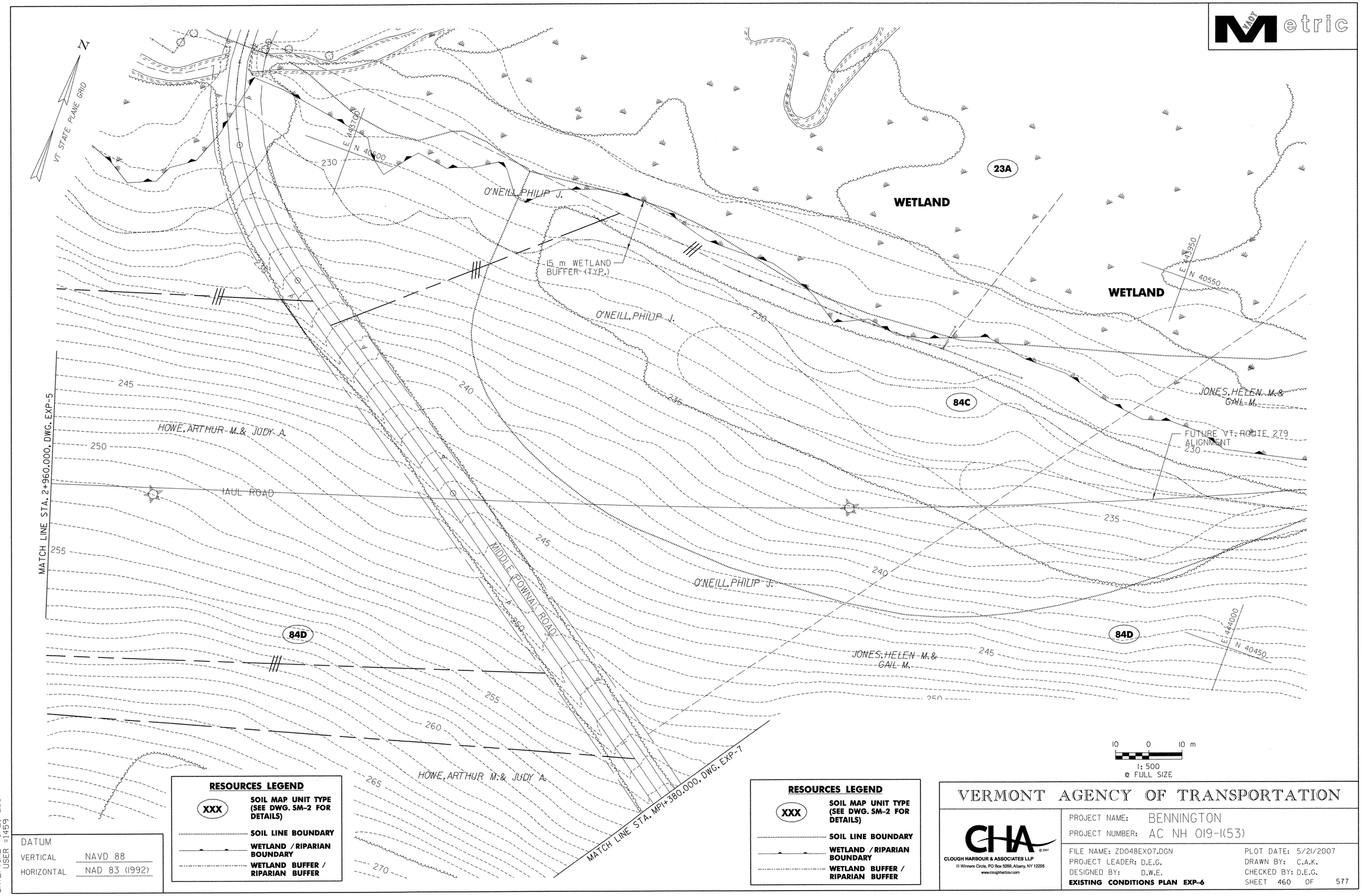

RESOURCES LEGEND

XXX	SOIL MAP UNIT TYPE (SEE DWG. SM-2 FOR DETAILS)
	SOIL LINE BOUNDARY
	WETLAND / RIPARIAN BOUNDARY
	WETLAND BUFFER / RIPARIAN BUFFER

RESOURCES LEGEND

XXX	SOIL MAP UNIT TYPE (SEE DWG. SM-2 FOR DETAILS)
	SOIL LINE BOUNDARY
	WETLAND / RIPARIAN BOUNDARY
	WETLAND BUFFER / RIPARIAN BUFFER

DATUM

VERTICAL	NAVD 88
HORIZONTAL	NAD 83 (1992)

FILE NAME =U:\9819\mstn\03\clough\EROSION\zd048ex07.dgn
DATE/TIME =5/21/2007
USER =1459

VERMONT AGENCY OF TRANSPORTATION

CHA
CLOUGH HARBOUR & ASSOCIATES LLP
III Winners Circle, PO Box 5269, Albany, NY 12205
www.cloughharbour.com

PROJECT NAME: BENNINGTON
PROJECT NUMBER: AC NH 019-1(53)

FILE NAME: ZD048EX07.DGN
PROJECT LEADER: D.E.G.
DESIGNED BY: D.W.E.
EXISTING CONDITIONS PLAN EXP-6

PLOT DATE: 5/21/2007
DRAWN BY: C.A.K.
CHECKED BY: D.E.G.
SHEET 460 OF 577

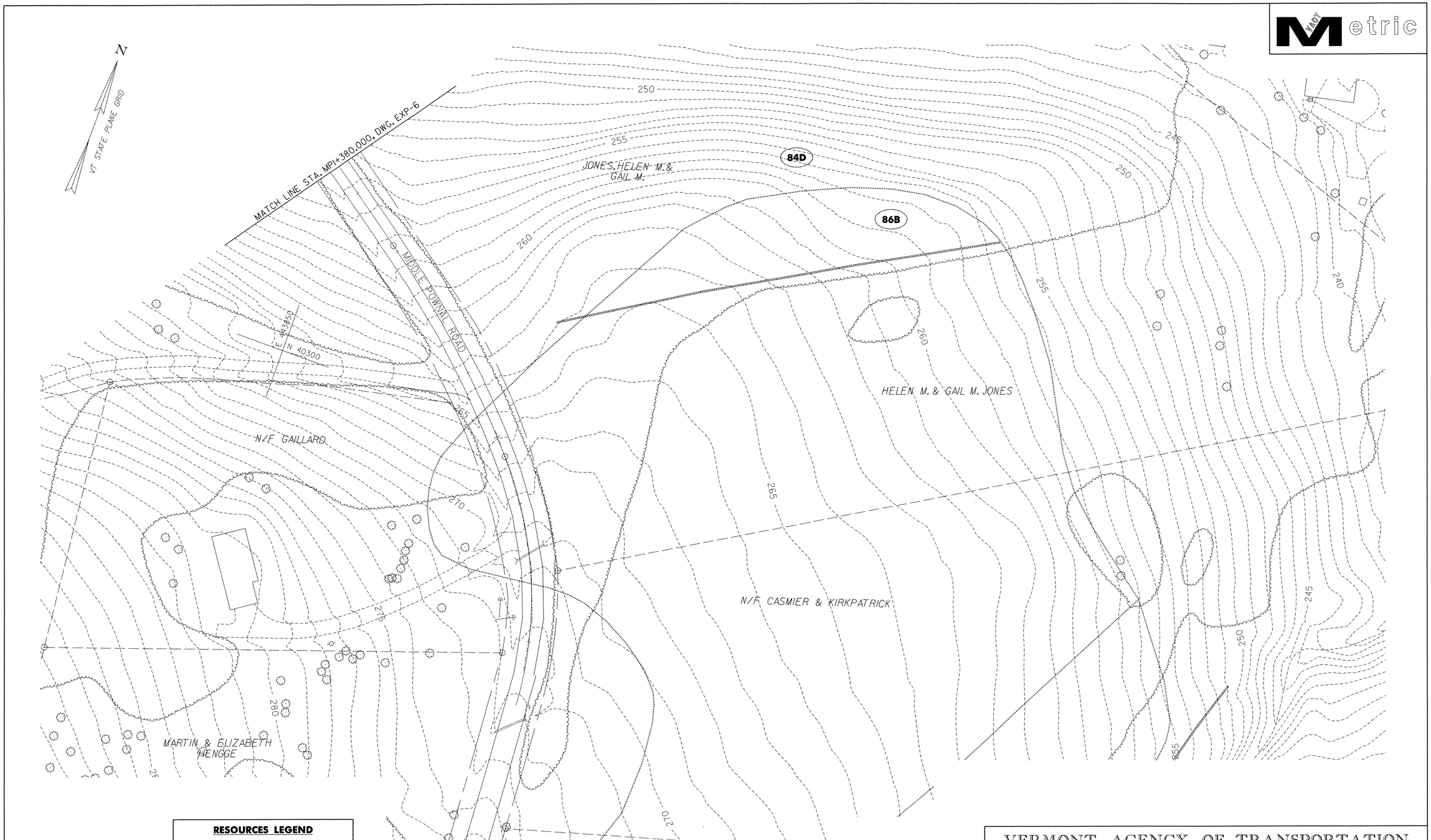

RESOURCES LEGEND

XXX	SOIL MAP UNIT TYPE (SEE DWG. SM-2 FOR DETAILS)
	SOIL LINE BOUNDARY
	WETLAND / RIPARIAN BOUNDARY
	WETLAND BUFFER / RIPARIAN BUFFER

DATUM

VERTICAL	NAVD 88
HORIZONTAL	NAD 83 (1992)

10 0 10 m

1: 500
@ FULL SIZE

VERMONT AGENCY OF TRANSPORTATION

CHA
CLOUGH HARBOUR & ASSOCIATES LLP
III Winners Circle, PO Box 5269, Albany, NY 12205
www.cloughharbour.com

PROJECT NAME: BENNINGTON
PROJECT NUMBER: AC NH 019-1(53)

FILE NAME: ZD048EX14.DGN
PROJECT LEADER: D.E.G.
DESIGNED BY: D.W.E.
EXISTING CONDITIONS PLAN EXP-7

PLOT DATE: 5/21/2007
DRAWN BY: C.A.K.
CHECKED BY: D.E.G.
SHEET 461 OF 577

FILE NAME =U:\9819\mstn\03\clough\EROSION\zd048ex14.dgn
DATE/TIME =5/21/2007
USER =1459

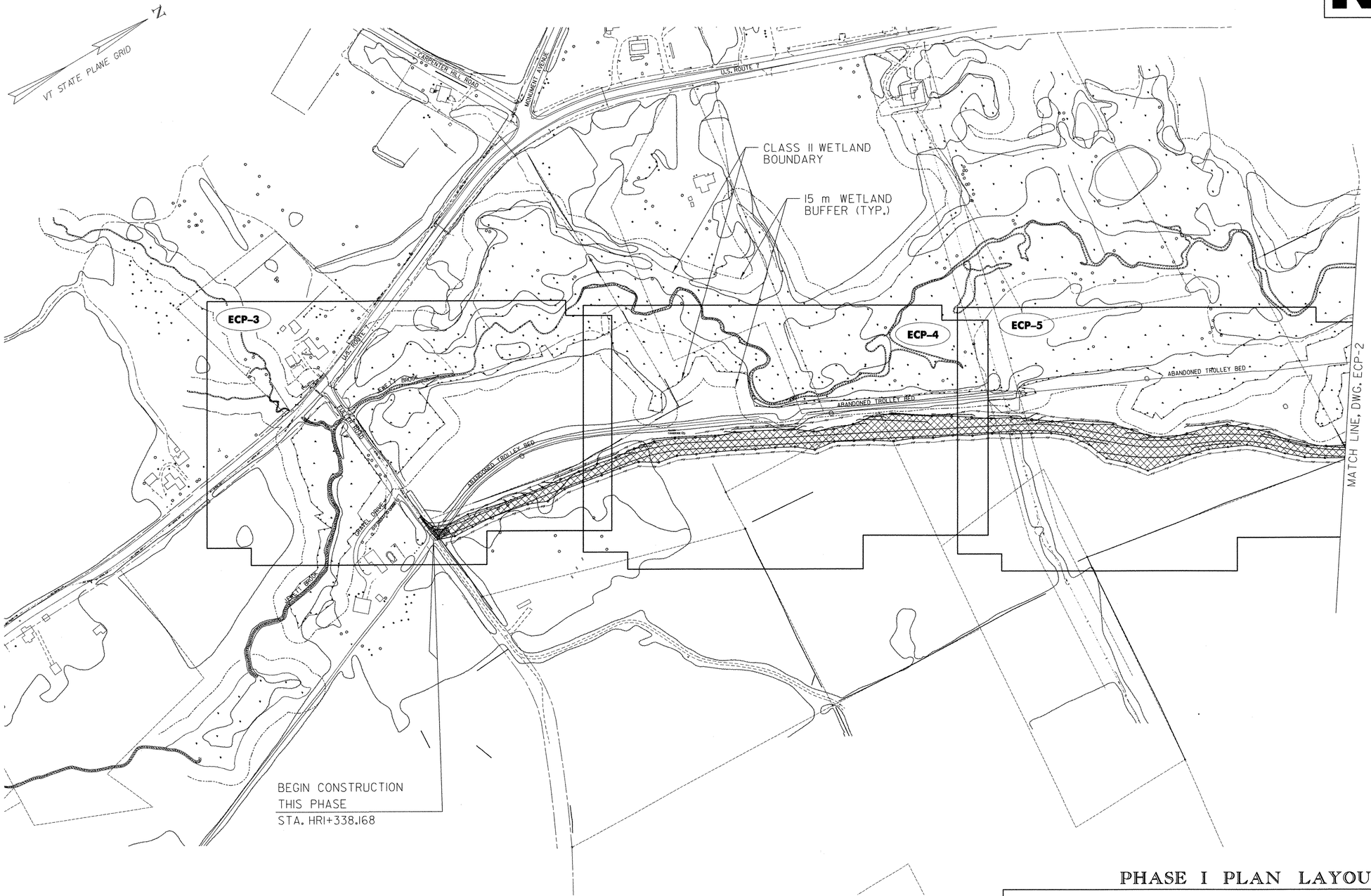

PHASE I PLAN LAYOUT

VERMONT AGENCY OF TRANSPORTATION

DATUM	
VERTICAL	NAVD 88
HORIZONTAL	NAD 83 (1992)

PROPOSED CONSTRUCTION THIS PHASE

40 0 40 m
1: 2000
@ FULL SIZE

CHA
CLOUGH HARBOUR & ASSOCIATES LLP
III Winners Circle, PO Box 5269, Albany, NY 12205
www.cloughharbour.com

PROJECT NAME: BENNINGTON
PROJECT NUMBER: AC NH 019-1(53)

FILE NAME: ZD048gpl.DGN
PROJECT LEADER: D.E.G.
DESIGNED BY: D.W.E.
EROSION CONTROL PLAN ECP-1

PLOT DATE: 5/21/2007
DRAWN BY: C.A.K.
CHECKED BY: D.E.G.
SHEET 462 OF 577

FILE NAME =U:\9819\mstn\03\clough\EROSION\zd048gpl.dgn
DATE/TIME =5/21/2007
USER =1459

VAOT Metric

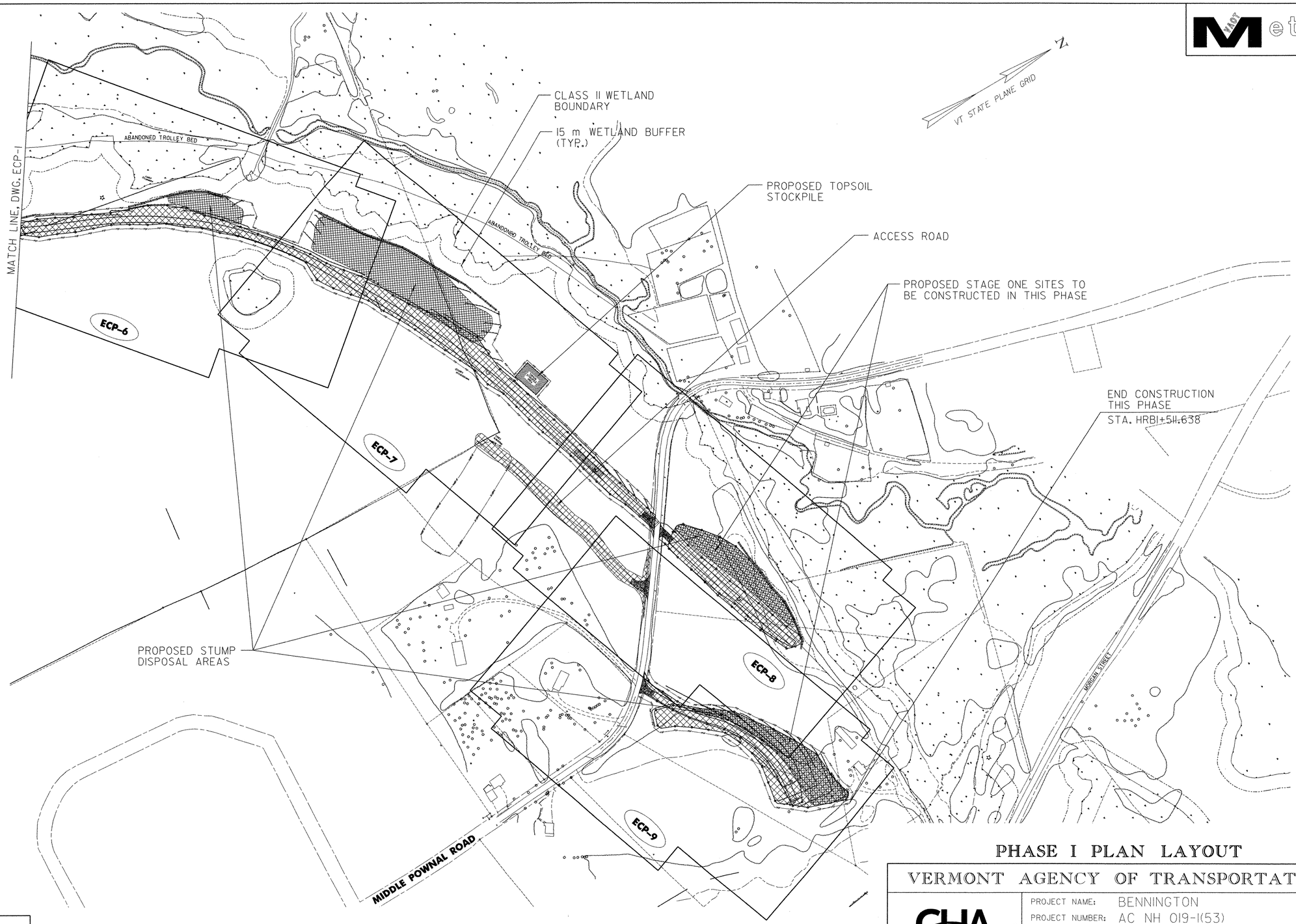

PROPOSED CONSTRUCTION THIS PHASE

40 0 40 m
1: 2000
@ FULL SIZE

PHASE I PLAN LAYOUT

VERMONT AGENCY OF TRANSPORTATION

DATUM
VERTICAL NAVD 88
HORIZONTAL NAD 83 (1992)

CLOUGH HARBOUR & ASSOCIATES LLP
III Winners Circle, PO Box 5269, Albany, NY 12205
www.cloughharbour.com

PROJECT NAME: BENNINGTON
PROJECT NUMBER: AC NH 019-1(53)

FILE NAME: ZD048gp2.DGN
PROJECT LEADER: D.E.G.
DESIGNED BY: D.W.E.
EROSION CONTROL PLAN ECP-2

PLOT DATE: 5/21/2007
DRAWN BY: C.A.K.
CHECKED BY: D.E.G.
SHEET 463 OF 577

FILE NAME =U:\9819\mstn\03\clough\EROSION\zd048gp2.dgn
DATE/TIME =5/21/2007
USER =1459

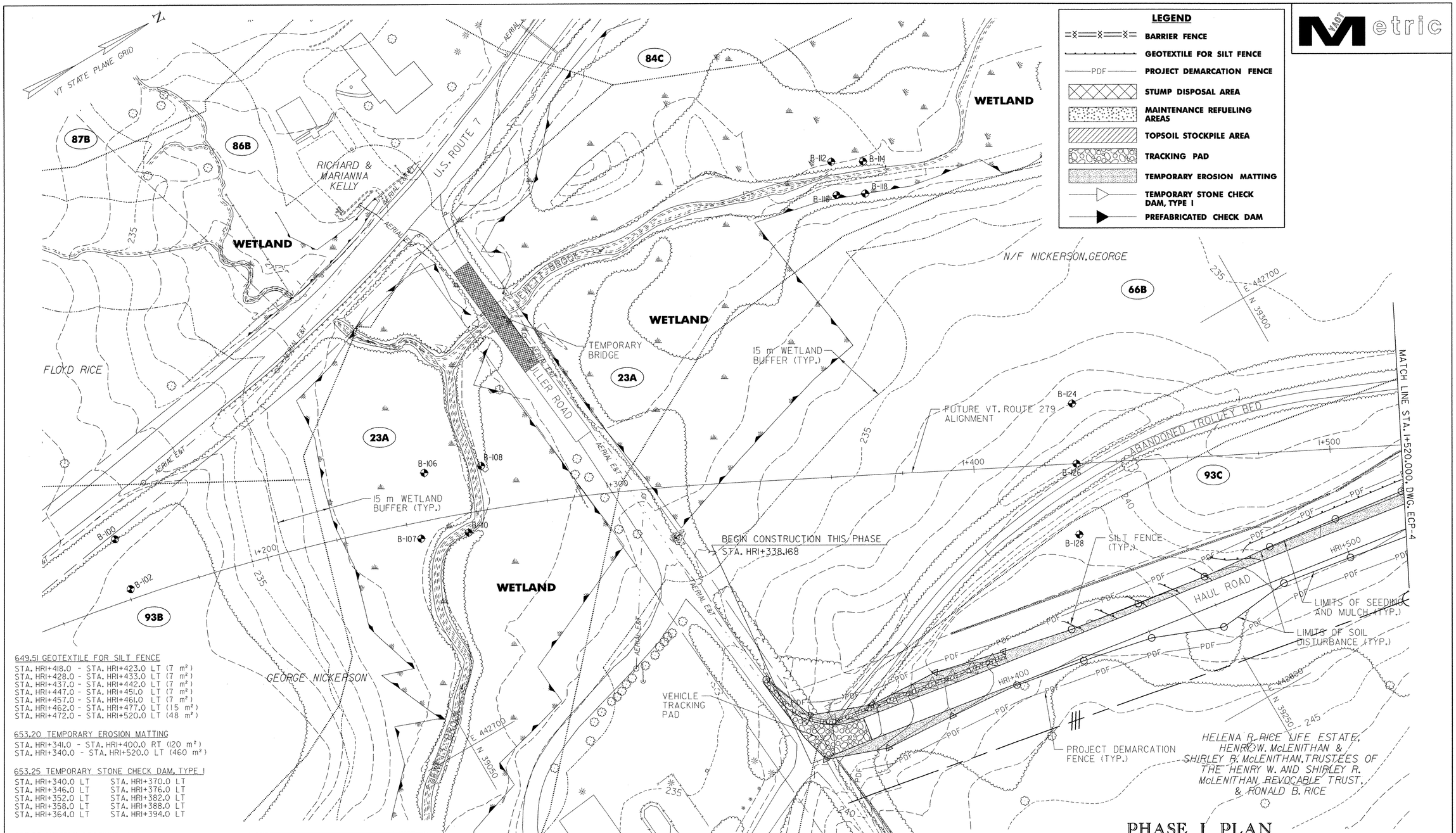

649.51 GEOTEXTILE FOR SILT FENCE

STA. HR1+418.0 - STA. HR1+423.0 LT (7 m²)
STA. HR1+428.0 - STA. HR1+433.0 LT (7 m²)
STA. HR1+437.0 - STA. HR1+442.0 LT (7 m²)
STA. HR1+447.0 - STA. HR1+451.0 LT (7 m²)
STA. HR1+457.0 - STA. HR1+461.0 LT (7 m²)
STA. HR1+462.0 - STA. HR1+477.0 LT (15 m²)
STA. HR1+472.0 - STA. HR1+520.0 LT (48 m²)

653.20 TEMPORARY EROSION MATTING

STA. HR1+341.0 - STA. HR1+400.0 RT (120 m²)
STA. HR1+340.0 - STA. HR1+520.0 LT (460 m²)

653.25 TEMPORARY STONE CHECK DAM, TYPE I

STA. HR1+340.0 LT	STA. HR1+370.0 LT
STA. HR1+346.0 LT	STA. HR1+376.0 LT
STA. HR1+352.0 LT	STA. HR1+382.0 LT
STA. HR1+358.0 LT	STA. HR1+388.0 LT
STA. HR1+364.0 LT	STA. HR1+394.0 LT

653.35 VEHICLE TRACKING PAD

STA. HR1+338.0 - STA. HR1+357.0 LT/RT (32 m³)

653.55 PROJECT DEMARCATION FENCE

STA. HR1+341.0 - STA. HR1+520.0 LT (179 m)
STA. HR1+345.0 - STA. HR1+520.0 RT (175 m)

RESOURCES LEGEND

XXX	SOIL MAP UNIT TYPE (SEE DWG. SM-2 FOR DETAILS)
	SOIL LINE BOUNDARY
	WETLAND / RIPARIAN BOUNDARY
	WETLAND BUFFER / RIPARIAN BUFFER

DATUM

VERTICAL	NAVD 88
HORIZONTAL	NAD 83 (1992)

PHASE I PLAN

VERMONT AGENCY OF TRANSPORTATION

CHA
CLOUGH HARBOUR & ASSOCIATES LLP
III Winners Circle, PO Box 5269, Albany, NY 12205
www.cloughharbour.com

PROJECT NAME: BENNINGTON
PROJECT NUMBER: AC NH 019-1(53)

FILE NAME: ZD048PL01.DGN
PROJECT LEADER: D.E.G.
DESIGNED BY: D.W.E.
EROSION CONTROL PLAN ECP-3

PLOT DATE: 5/21/2007
DRAWN BY: C.A.K.
CHECKED BY: D.E.G.
SHEET 464 OF 577

FILE NAME =U:\9819\mstn\03\clough\EROSION\zd048pl.01.dgn
DATE/TIME =5/21/2007
USER =1459

VAOT Metric

VT STATE PLANE GRID

LEGEND

- BARRIER FENCE
- GEOTEXTILE FOR SILT FENCE
- PDF — PROJECT DEMARCATION FENCE
- STUMP DISPOSAL AREA
- MAINTENANCE REFUELING AREAS
- TOPSOIL STOCKPILE AREA
- TRACKING PAD
- TEMPORARY EROSION MATTING
- TEMPORARY STONE CHECK DAM, TYPE I
- PREFABRICATED CHECK DAM

E 442200 N 39650

E 442800 N 39650

66B

26A

23A

25B

93C

94C

HELENA R. RICE LIFE ESTATE, HENRY W. McLENITHAN & SHIRLEY R. McLENITHAN, TRUSTEES OF THE HENRY W. AND SHIRLEY R. McLENITHAN REVOCABLE TRUST, & RONALD B. RICE

WETLAND

W/F MERRITT, MATTHEW J., III & MORIARTY, FRANCIS X.

15 m WETLAND BUFFER (TYP.)

FUTURE VT. ROUTE 279 ALIGNMENT

SILT FENCE (TYP.)

PROJECT DEMARCATION FENCE (TYP.)

BARRIER FENCE (TYP.)

JEWELL BROOK

GEORGE NICKERSON

ABANDONED TROLLEY BED

HAUL ROAD

ALLIUM CANADENSE

B-130

B-132

B-134

B-136

B-138

B-140

HRI+600

HRI+700

HRI+800

235

240

245

250

255

PAGE, MARK O. & SUSAN J.

LIMITS OF SOIL DISTURBANCE (TYP.)

LIMITS OF SEEDING AND MULCH (TYP.)

E 442840 N 39400

E 442960 N 38680

MATCH LINE STA. 1+520.000, DWG. ECP-3

MATCH LINE STA. 1+900.000, DWG. ECP-5

RESOURCES LEGEND

- XXX — SOIL MAP UNIT TYPE (SEE DWG. SM-2 FOR DETAILS)
- SOIL LINE BOUNDARY
- WETLAND / RIPARIAN BOUNDARY
- WETLAND BUFFER / RIPARIAN BUFFER

649.51 GEOTEXTILE FOR SILT FENCE

STA. HRI+520.0	STA. HRI+546.0 LT	(25 m²)
STA. HRI+541.0	STA. HRI+560.0 LT	(20 m²)
STA. HRI+551.0	STA. HRI+576.0 LT	(26 m²)
STA. HRI+566.0	STA. HRI+585.0 LT	(22 m²)
STA. HRI+580.0	STA. HRI+655.0 LT	(80 m²)
STA. HRI+650.0	STA. HRI+668.0 LT	(18 m²)
STA. HRI+655.0	STA. HRI+723.0 LT	(68 m²)
STA. HRI+711.0	STA. HRI+733.0 LT	(23 m²)
STA. HRI+723.0	STA. HRI+750.0 LT	(28 m²)
STA. HRI+742.0	STA. HRI+795.0 LT	(54 m²)
STA. HRI+783.0	STA. HRI+857.0 LT	(75 m²)
STA. HRI+790.0	STA. HRI+814.0 LT	(25 m²)
STA. HRI+803.0	STA. HRI+825.0 LT	(25 m²)
STA. HRI+816.0	STA. HRI+900.0 LT	(85 m²)
STA. HRI+893.0	STA. HRI+900.0 LT	(7 m²)

653.20 TEMPORARY EROSION MATTING

STA. HRI+520.0 - STA. HRI+900.0 LT (3210 m²)

653.50 BARRIER FENCE

STA. HRI+580.0 - STA. HRI+620.0 LT (40 m)
STA. HRI+780.0 - STA. HRI+860.0 LT (80 m)

653.55 PROJECT DEMARCATION FENCE

STA. HRI+520.0 - STA. HRI+900.0 RT (380 m)
STA. HRI+520.0 - STA. HRI+580.0 LT (60 m)
STA. HRI+620.0 - STA. HRI+780.0 LT (160 m)
STA. HRI+860.0 - STA. HRI+900.0 LT (40 m)

10 0 10 m

1: 500
Ø FULL SIZE

DATUM
VERTICAL NAVD 88
HORIZONTAL NAD 83 (1992)

PHASE I PLAN

VERMONT AGENCY OF TRANSPORTATION

CLOUGH HARBOUR & ASSOCIATES LLP
III Winners Circle, PO Box 5269, Albany, NY 12205
www.cloughharbour.com

PROJECT NAME: BENNINGTON
PROJECT NUMBER: AC NH 019-1(53)

FILE NAME: ZD048PL02.DGN
PROJECT LEADER: D.E.G.
DESIGNED BY: D.W.E.
EROSION CONTROL PLAN ECP-4

PLOT DATE: 5/21/2007
DRAWN BY: C.A.K.
CHECKED BY: D.E.G.
SHEET 465 OF 577

FILE NAME =U:\9819\mstn\03\clough\EROSION\zd048pl02.dgn
DATE/TIME =5/21/2007
USER =1459

LEGEND

- BARRIER FENCE
- GEOTEXTILE FOR SILT FENCE
- PDF — PROJECT DEMARCATION FENCE
- STUMP DISPOSAL AREA
- MAINTENANCE REFUELING AREAS
- TOPSOIL STOCKPILE AREA
- TRACKING PAD
- TEMPORARY EROSION MATTING
- TEMPORARY STONE CHECK DAM, TYPE I
- PREFABRICATED CHECK DAM

VAOT Metric

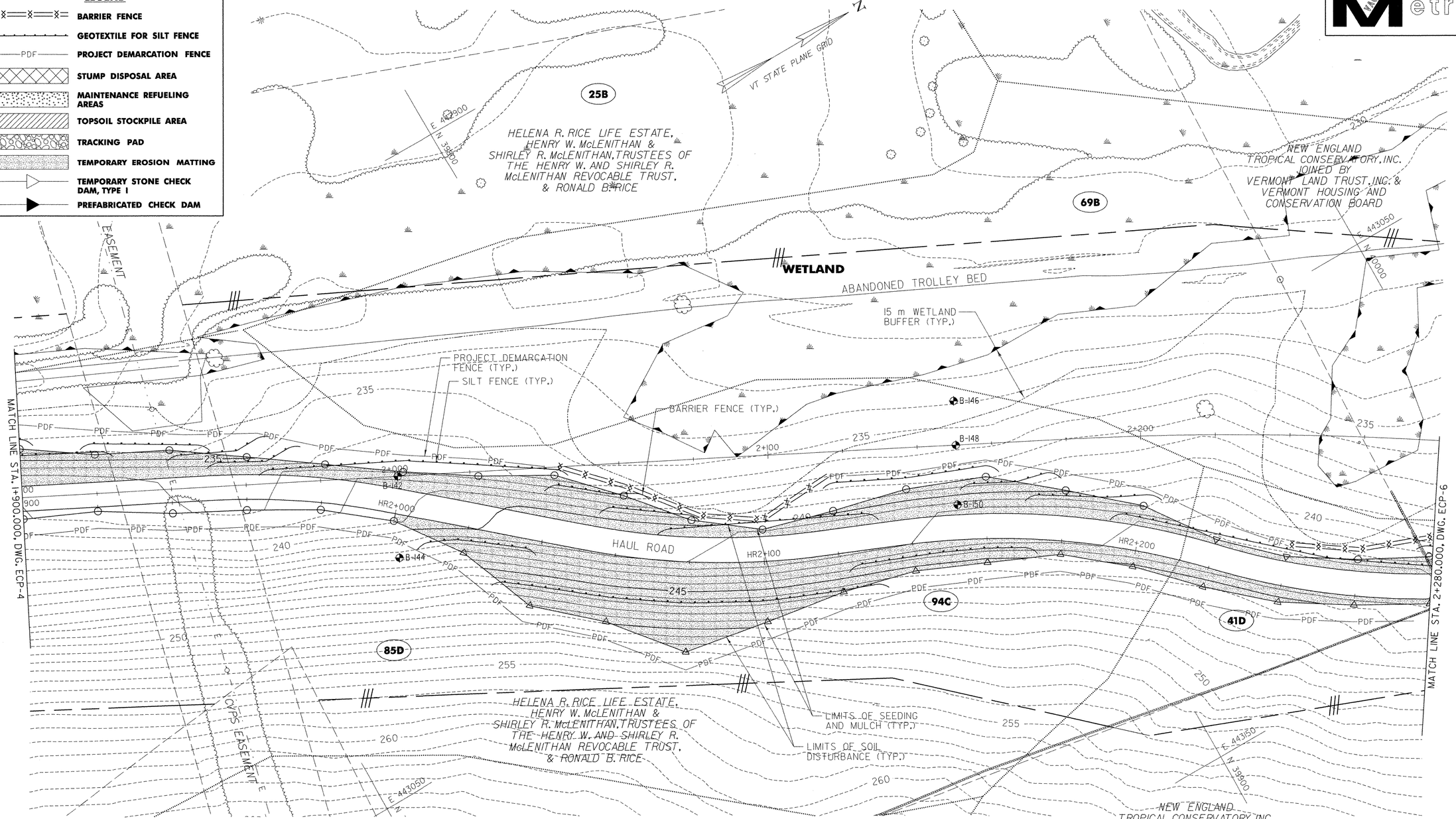

649.51 GEOTEXTILE FOR SILT FENCE

STA. HR1+900.0 - STA. HR1+904.0 LT (4 m²)
STA. HR1+900.0 - STA. HR1+925.0 LT (25 m²)
STA. HR1+916.0 - STA. HR1+950.0 LT (36 m²)
STA. HR1+940.0 - STA. HR1+966.0 LT (29 m²)
STA. HR1+950.0 - STA. HR1+974.0 LT (26 m²)
STA. HR1+963.0 - STA. HR2+044.0 LT (84 m²)
STA. HR2+010.0 - STA. HR2+035.0 RT (26 m²)
STA. HR2+029.0 - STA. HR2+132.0 RT (110 m²)
STA. HR2+038.0 - STA. HR2+066.0 LT (30 m²)
STA. HR2+053.0 - STA. HR2+082.0 LT (28 m²)
STA. HR2+070.0 - STA. HR2+132.0 LT (60 m²)
STA. HR2+118.0 - STA. HR2+164.0 LT (50 m²)
STA. HR2+125.0 - STA. HR2+170.0 RT (43 m²)
STA. HR2+155.0 - STA. HR2+180.0 LT (28 m²)
STA. HR2+170.0 - STA. HR2+205.0 LT (38 m²)
STA. HR2+193.0 - STA. HR2+280.0 LT (88 m²)
STA. HR2+275.0 - STA. HR2+280.0 LT (5 m²)

653.20 TEMPORARY EROSION MATTING

STA. HR1+900.0 - STA. HR2+280.0 LT (2200 m²)
STA. HR2+000.0 - STA. HR2+280.0 RT (2590 m²)

653.50 BARRIER FENCE

STA. HR2+040.0 - STA. HR2+120.0 LT (80 m)
STA. HR2+240.0 - STA. HR2+280.0 RT (40 m)

653.55 PROJECT DEMARCATION FENCE

STA. HR1+900.0 - STA. HR2+040.0 LT (148 m)
STA. HR1+900.0 - STA. HR2+280.0 RT (391 m)
STA. HR2+120.0 - STA. HR2+240.0 LT (120 m)

RESOURCES LEGEND

- XXX — SOIL MAP UNIT TYPE (SEE DWG. SM-2 FOR DETAILS)
- SOIL LINE BOUNDARY
- WETLAND / RIPARIAN BOUNDARY
- WETLAND BUFFER / RIPARIAN BUFFER

DATUM
VERTICAL NAVD 88
HORIZONTAL NAD 83 (1992)

10 0 10 m
1: 500
@ FULL SIZE

PHASE I PLAN

VERMONT AGENCY OF TRANSPORTATION

CLOUGH HARBOUR & ASSOCIATES LLP
11 Winners Circle, PO Box 5269, Albany, NY 12205
www.cloughharbour.com

PROJECT NAME: BENNINGTON
PROJECT NUMBER: AC NH 019-1(53)

FILE NAME: ZD048PL03.DGN
PROJECT LEADER: D.E.G.
DESIGNED BY: D.W.E.
EROSION CONTROL PLAN ECP-5

PLOT DATE: 5/21/2007
DRAWN BY: C.A.K.
CHECKED BY: D.E.G.
SHEET 466 OF 577

FILE NAME = U:\9819\mstn\03\clough\EROSION\zd048pl03.dgn
DATE/TIME = 5/21/2007
USER = 1459

VAOT Metric

LEGEND

- BARRIER FENCE
- GEOTEXTILE FOR SILT FENCE
- PDF — PROJECT DEMARCATION FENCE
- STUMP DISPOSAL AREA
- MAINTENANCE REFUELING AREAS
- TOPSOIL STOCKPILE AREA
- TRACKING PAD
- TEMPORARY EROSION MATTING
- TEMPORARY STONE CHECK DAM, TYPE I
- PREFABRICATED CHECK DAM

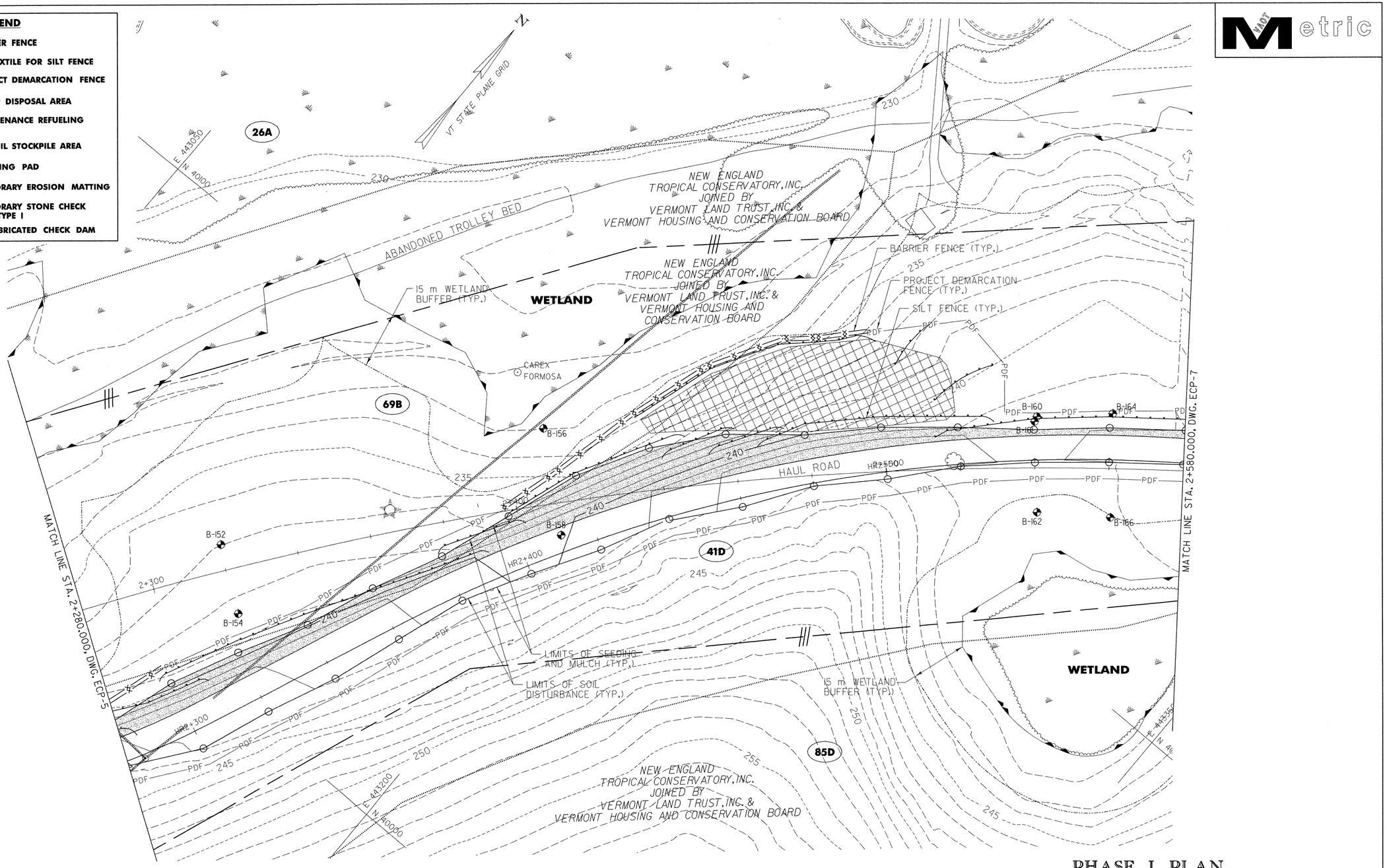

RESOURCES LEGEND

- XXX — SOIL MAP UNIT TYPE (SEE DWG. SM-2 FOR DETAILS)
- SOIL LINE BOUNDARY
- WETLAND / RIPARIAN BOUNDARY
- WETLAND BUFFER / RIPARIAN BUFFER

649.51 GEOTEXTILE FOR SILT FENCE

STA. HR2+280.0	STA. HR2+285.0	LT	(6 m²)
STA. HR2+280.0	STA. HR2+310.0	LT	(28 m²)
STA. HR2+297.0	STA. HR2+392.0	LT	(96 m²)
STA. HR2+379.0	STA. HR2+404.0	LT	(26 m²)
STA. HR2+397.0	STA. HR2+450.0	LT	(56 m²)
STA. HR2+435.0	STA. HR2+499.0	LT	(75 m²)
STA. HR2+438.0	STA. HR2+464.0	LT	(22 m²)
STA. HR2+455.0	STA. HR2+475.0	LT	(22 m²)
STA. HR2+467.0	STA. HR2+529.0	LT	(66 m²)
STA. HR2+500.0	STA. HR2+510.0	LT	(12 m²)
STA. HR2+515.0	STA. HR2+521.0	LT	(7 m²)
STA. HR2+514.0	STA. HR2+580.0	LT	(68 m²)

653.20 TEMPORARY EROSION MATTING

STA. HR2+280.0 - STA. HR2+580.0 LT (1920 m²)

653.50 BARRIER FENCE

STA. HR2+280.0 - STA. HR2+300.0 LT (20 m)
STA. HR2+400.0 - STA. HR2+500.0 LT (100 m)

653.55 PROJECT DEMARCATION FENCE

STA. HR2+280.0 - STA. HR2+580.0 RT (300 m)
STA. HR2+300.0 - STA. HR2+400.0 LT (100 m)
STA. HR2+500.0 - STA. HR2+580.0 LT (80 m)

10 0 10 m
1: 500
@ FULL SIZE

DATUM
VERTICAL NAVD 88
HORIZONTAL NAD 83 (1992)

PHASE I PLAN

VERMONT AGENCY OF TRANSPORTATION

CLOUGH HARBOUR & ASSOCIATES LLP
III Winners Circle, PO Box 5269, Albany, NY 12205
www.cloughharbour.com

PROJECT NAME: BENNINGTON
PROJECT NUMBER: AC NH 019-1(53)

FILE NAME: ZD048PL04.DGN
PROJECT LEADER: D.E.G.
DESIGNED BY: D.W.E.
PLOT DATE: 5/21/2007
DRAWN BY: C.A.K.
CHECKED BY: D.E.G.

EROSION CONTROL PLAN ECP-6

SHEET 467 OF 577

FILE NAME =U:\9819\ms tn\03\clough\EROSION\zd048pl04.dgn
DATE/TIME = 5/21/2007
USER =1459

VAOT Metric

LEGEND

- BARRIER FENCE
- GEOTEXTILE FOR SILT FENCE
- PDF — PROJECT DEMARCATION FENCE
- STUMP DISPOSAL AREA
- MAINTENANCE REFUELING AREAS
- TOPSOIL STOCKPILE AREA
- TRACKING PAD
- TEMPORARY EROSION MATTING
- TEMPORARY STONE CHECK DAM, TYPE I
- PREFABRICATED CHECK DAM

N

VT STATE PLANE GRID

ABANDONED TROLLEY BED

WETLAND

WETLAND

15 m WETLAND BUFFER (TYP.)

E 443350

N 40350

E 443300

N 40300

NEW ENGLAND TROPICAL CONSERVATORY, INC. JOINED BY VERMONT LAND TRUST, INC. & VERMONT HOUSING AND CONSERVATION BOARD

BARRIER FENCE (TYP.)

STUMP DISPOSAL AREA

SILT FENCE (TYP.)

PROJECT DEMARCATION FENCE (TYP.)

HOWE, ARTHUR M. & JUDY A.

TOPSOIL STOCKPILE AREA

41D

84D

85D

HAUL ROAD

B-168

B-170

B-172

B-174

B-176

B-178

HR2+600

HR2+700

HR2+800

HR2+900

2+600

2+700

2+800

2+900

CAREX HITCHCOCKIANA

CAREX ALBURSINA

HABITAT

END ACCESS ROAD STA. ARI+255.000

ACCESS ROAD

ARI+200

MATCH LINE STA. 2+580,000, DWG. ECP-6

MATCH LINE STA. 2+960,000, DWG. ECP-8

LIMITS OF SEEDING AND MULCH (TYP.)

LIMITS OF SOIL DISTURBANCE (TYP.)

235 240 245 250 255 260 265 270

PDF

649.51 GEOTEXTILE FOR SILT FENCE

STA. HR2+580.0 - STA. HR2+663.0 LT (86 m²)
STA. HR2+583.0 - STA. HR2+601.0 LT (20 m²)
STA. HR2+586.0 - STA. HR2+603.0 LT (20 m²)
STA. HR2+589.0 - STA. HR2+603.0 LT (20 m²)
STA. HR2+592.0 - STA. HR2+752.0 LT (175 m²)
STA. HR2+653.0 - STA. HR2+675.0 LT (23 m²)
STA. HR2+665.0 - STA. HR2+822.0 LT (160 m²)
STA. HR2+742.0 - STA. HR2+766.0 LT (26 m²)
STA. HR2+749.0 - STA. HR2+768.0 LT (22 m²)
STA. HR2+757.0 - STA. HR2+810.0 LT (56 m²)
STA. HR2+769.0 - STA. HR2+805.0 LT (41 m²)
STA. HR2+797.0 - STA. HR2+814.0 LT (20 m²)
STA. HR2+800.0 - STA. HR2+817.0 LT (20 m²)
STA. HR2+812.0 - STA. HR2+837.0 LT (27 m²)
STA. HR2+832.0 - STA. HR2+863.0 LT (32 m²)
STA. HR2+854.0 - STA. HR2+960.0 LT (110 m²)
STA. HR2+857.0 - STA. HR2+887.0 LT (100 m²)
STA. ARI+169.0 - STA. ARI+262.0 RT (95 m²)

653.20 TEMPORARY EROSION MATTING

STA. HR2+580.0 - STA. HR2+960.0 LT (3750 m²)
STA. ARI+169.0 - STA. ARI+260.0 RT (525 m²)
STA. ARI+169.0 - STA. ARI+255.0 LT (55 m²)

653.50 BARRIER FENCE

STA. HR2+585.0 - STA. HR2+800.0 LT (215 m)

653.55 PROJECT DEMARCATION FENCE

STA. HR2+580.0 - STA. HR2+585.0 LT (5 m)
STA. HR2+580.0 - STA. HR2+960.0 RT (383 m)
STA. HR2+800.0 - STA. HR2+960.0 LT (160 m)
STA. ARI+169.0 - STA. ARI+265.0 RT (115 m)
STA. ARI+169.0 - STA. ARI+260.0 LT (93 m)

RESOURCES LEGEND

- XXX — SOIL MAP UNIT TYPE (SEE DWG. SM-2 FOR DETAILS)
- SOIL LINE BOUNDARY
- WETLAND / RIPARIAN BOUNDARY
- WETLAND BUFFER / RIPARIAN BUFFER

DATUM
VERTICAL NAVD 88
HORIZONTAL NAD 83 (1992)

10 0 10 m
1: 500
@ FULL SIZE

PHASE I PLAN

VERMONT AGENCY OF TRANSPORTATION

CLOUGH HARBOUR & ASSOCIATES LLP ©2007
11 Winners Circle, PO Box 5269, Albany, NY 12205
www.cloughharbour.com

PROJECT NAME: BENNINGTON
PROJECT NUMBER: AC NH 019-1(53)

FILE NAME: ZD048PL05.DGN
PROJECT LEADER: D.E.G.
DESIGNED BY: D.W.E.
PLOT DATE: 5/21/2007
DRAWN BY: C.A.K.
CHECKED BY: D.E.G.

EROSION CONTROL PLAN ECP-7

SHEET 468 OF 577

FILE NAME =U:\9819\mstn\03\clough\EROSION\zd048pl05.dgn
DATE/TIME =5/21/2007
USER =1459

VAOT Metric

LEGEND

- BARRIER FENCE
- GEOTEXTILE FOR SILT FENCE
- PDF — PROJECT DEMARCATION FENCE
- STUMP DISPOSAL AREA
- MAINTENANCE REFUELING AREAS
- TOPSOIL STOCKPILE AREA
- TRACKING PAD
- TEMPORARY EROSION MATTING
- TEMPORARY STONE CHECK DAM, TYPE I
- PREFABRICATED CHECK DAM

N

VT STATE PLANE GRID

E 443750 N 40500

E 443950 N 40550

E 444000 N 40450

MATCH LINE STA. 2+960.000, DWG. ECP-7

MATCH LINE STA. 3+340.000, DWG. ECP-9

MATCH LINE STA. MP1+380.000, DWG. ECP-9

WETLAND

WETLAND

23A

84C

84D

84D

O'NEILL, PHILIP J.

O'NEILL, PHILIP J.

O'NEILL, PHILIP J.

HOWE, ARTHUR M. & JUDY A.

HOWE, ARTHUR M. & JUDY A.

JONES, HELEN M. & GAIL M.

JONES, HELEN M. & GAIL M.

15 m WETLAND BUFFER (TYP.)

PROJECT DEMARCATION FENCE (TYP.)

SILT FENCE (TYP.)

BARRIER FENCE (TYP.)

VEHICLE TRACKING PAD

VEHICLE TRACKING PAD

BEGIN ACCESS ROAD STA. ARI+000.000= MIDDLE POWNAL ROAD P.O.T. STA. MP1+412.000

FUTURE VT. ROUTE 279 ALIGNMENT

HAUL ROAD

ACCESS ROAD

MIDDLE POWNAL ROAD

LIMITS OF SEEDING AND MULCH (TYP.)

LIMITS OF SOIL DISTURBANCE (TYP.)

LIMITS OF STAGE ONE SITE CONSTRUCTION

LIMITS OF HAUL ROAD CONSTRUCTION

CURVE N.B. 4

CURVE N.B. 3

B-180

B-182

B-184

B-186

B-188

B-190

B-194

B-200

ARI+100

MP1+400

MP1+500

HR3+300

3+300

649.51 GEOTEXTILE FOR SILT FENCE

STA. HR2+960.0 - STA. HR3+006.0 LT (48 m²)
STA. HR3+005.0 - STA. HR3+035.0 LT (32 m²)
STA. HR3+033.0 - STA. HR3+053.0 LT (20 m²)
STA. HR3+054.0 - STA. HR3+070.0 LT (20 m²)
STA. HR3+095.0 - STA. HR3+109.0 LT (15 m²)
STA. HR3+100.0 - STA. HR3+250.0 LT & RT (325 m²)
STA. HR3+104.0 - STA. HR3+118.0 LT (15 m²)
STA. HR3+112.0 - STA. HR3+122.0 LT (12 m²)
STA. HR3+116.0 - STA. HR3+136.0 LT (20 m²)
STA. HR3+129.0 - STA. HR3+280.0 LT (155 m²)
STA. HR3+135.0 - STA. HR3+154.0 LT (20 m²)
STA. HR3+145.0 - STA. HR3+159.0 LT (15 m²)
STA. HR3+154.0 - STA. HR3+167.0 LT (14 m²)
STA. HR3+165.0 - STA. HR3+284.0 LT (125 m²)
STA. ARI+015.0 - STA. ARI+023.0 RT (8 m²)
STA. ARI+022.0 - STA. ARI+034.0 RT (13 m²)
STA. ARI+031.0 - STA. ARI+045.0 RT (14 m²)
STA. ARI+042.0 - STA. ARI+060.0 RT (18 m²)
STA. ARI+057.0 - STA. ARI+078.0 RT (22 m²)
STA. ARI+074.0 - STA. ARI+096.0 RT (22 m²)
STA. ARI+092.0 - STA. ARI+107.0 RT (18 m²)
STA. ARI+102.0 - STA. ARI+169.0 RT (38 m²)

653.20 TEMPORARY EROSION MATTING

STA. HR2+960.0 - STA. HR3+072.0 LT (540 m²)
STA. HR3+096.0 - STA. HR3+284.0 LT & RT (7500 m²)
STA. ARI+000.0 - STA. ARI+169.0 LT (440 m²)
STA. ARI+010.0 - STA. ARI+169.0 RT (1200 m²)

653.25 TEMPORARY STONE CHECK DAM, TYPE I

STA. HR3+114.0 RT	STA. HR3+234.0 RT
STA. HR3+124.0 RT	STA. HR3+244.0 RT
STA. HR3+134.0 RT	STA. HR3+254.0 RT
STA. HR3+144.0 RT	STA. HR3+264.0 RT
STA. HR3+154.0 RT	STA. HR3+274.0 RT
STA. HR3+164.0 RT	STA. MP1+394.0 RT
STA. HR3+174.0 RT	STA. MP1+400.0 RT
STA. HR3+184.0 RT	STA. MP1+406.0 RT
STA. HR3+194.0 RT	STA. MP1+440.0 RT
STA. HR3+204.0 RT	STA. MP1+446.0 RT
STA. HR3+214.0 RT	STA. MP1+452.0 RT
STA. HR3+224.0 RT	

653.50 BARRIER FENCE

STA. HR3+160.0 - STA. HR3+290.0 LT (130 m)

653.35 VEHICLE TRACKING PAD

STA. HR3+060.0 - STA. HR3+086.0 LT/RT (28 m³)
STA. HR3+081.0 - STA. HR3+103.0 LT/RT (80 m³)
STA. ARI+000.0 - STA. ARI+027.0 LT/RT (46 m³)

653.55 PROJECT DEMARCATION FENCE

STA. HR2+960.0 - STA. HR3+082.0 RT (124 m)
STA. HR2+960.0 - STA. HR3+067.0 LT (108 m)
STA. HR3+080.0 - STA. HR3+160.0 LT (80 m)
STA. HR3+090.0 - STA. HR3+287.0 RT (200 m)
STA. ARI+000.0 - STA. ARI+169.0 LT (175 m)
STA. ARI+010.0 - STA. ARI+169.0 RT (170 m)

RESOURCES LEGEND

- XXX — SOIL MAP UNIT TYPE (SEE DWG. SM-2 FOR DETAILS)
- SOIL LINE BOUNDARY
- WETLAND / RIPARIAN BOUNDARY
- WETLAND BUFFER / RIPARIAN BUFFER

10 0 10 m

1: 500 @ FULL SIZE

DATUM
VERTICAL NAVD 88
HORIZONTAL NAD 83 (1992)

PHASE I PLAN

VERMONT AGENCY OF TRANSPORTATION

CHA © 2007
CLOUGH HARBOUR & ASSOCIATES LLP
111 Winners Circle, PO Box 5269, Albany, NY 12205
www.cloughharbour.com

PROJECT NAME: BENNINGTON
PROJECT NUMBER: AC NH 019-1(53)

FILE NAME: ZD048PL06.DGN
PROJECT LEADER: D.E.G.
DESIGNED BY: D.W.E.
PLOT DATE: 5/21/2007
DRAWN BY: C.A.K.
CHECKED BY: D.E.G.

EROSION CONTROL PLAN ECP-8

SHEET 469 OF 577

FILE NAME =U:\9819\mstn\03\clough\EROSION\zd048pl06.dgn
DATE/TIME = 5/21/2007
USER =1459

LEGEND

- BARRIER FENCE
- GEOTEXTILE FOR SILT FENCE
- PDF — PROJECT DEMARCATION FENCE
- STUMP DISPOSAL AREA
- MAINTENANCE REFUELING AREAS
- TOPSOIL STOCKPILE AREA
- TRACKING PAD
- TEMPORARY EROSION MATTING
- TEMPORARY STONE CHECK DAM, TYPE I
- PREFABRICATED CHECK DAM

649.51 GEOTEXTILE FOR SILT FENCE

STA. HRBI+300.0 - STA. HRBI+348.0 LT & RT (75 m²)
STA. HRBI+346.0 - STA. HRBI+385.0 LT (40 m²)
STA. HRBI+358.0 - STA. HRBI+398.0 LT (40 m²)
STA. HRBI+388.0 - STA. HRBI+415.0 LT & RT (180 m²)
STA. HRBI+407.0 - STA. HRBI+443.0 LT (40 m²)
STA. HRBI+430.0 - STA. HRBI+485.0 LT & RT (75 m²)
STA. HRBI+440.0 - STA. HRBI+470.0 LT (30 m²)
STA. HRBI+448.0 - STA. HRBI+500.0 LT (95 m²)
STA. HRBI+461.0 - STA. HRBI+492.0 LT (38 m²)
STA. HRBI+485.0 - STA. HRBI+500.0 LT (17 m²)
STA. HRBI+492.0 - STA. HRBI+503.0 LT (12 m²)
STA. HRBI+492.0 - STA. HRBI+492.0 LT & RT (12 m²)
STA. HRBI+502.0 - STA. HRBI+509.0 LT (42 m²)
STA. HRBI+505.0 - STA. HRBI+510.0 LT (5 m²)

653.20 TEMPORARY EROSION MATTING

STA. HRBI+304.0 - STA. HRBI+512.0 LT & RT (8045 m²)

653.25 TEMPORARY STONE CHECK DAM, TYPE I

STA. HRBI+320.0 RT
STA. HRBI+328.0 RT
STA. HRBI+339.0 RT
STA. HRBI+350.0 RT
STA. HRBI+359.0 RT
STA. HRBI+368.0 RT
STA. HRBI+378.0 RT
STA. HRBI+389.0 RT
STA. HRBI+400.0 RT
STA. HRBI+409.0 RT
STA. HRBI+421.0 RT
STA. HRBI+431.0 RT
STA. HRBI+442.0 RT
STA. HRBI+451.0 RT
STA. HRBI+464.0 RT
STA. HRBI+473.0 RT
STA. HRBI+486.0 RT

653.35 VECHILE TRACKING PAD

STA. HRBI+275.0 - STA. HRBI+293.0 LT & RT (30 m³)

653.55 PROJECT DEMARCATION FENCE

STA. HRBI+278.0 - STA. HRBI+516.0 LT & RT (560 m)

VAOT Metric

N

VT STATE PLANE GRID

MATCH LINE STA. MPI+380.000, DWG. ECP-8

JONES, HELEN M. & GAIL M.

84D

86B

PROJECT DEMARCATION FENCE (TYP.)

SILT FENCE (TYP.)

VEHICLE TRACKING PAD

MIDDLE POWNAL ROAD

MPBI+400

HRBI+400

HRBI+300

E 443850
N 40300

E 444150
N 40450

E 444200
N 40350

B-276
B-272
B-274
B-278
B-264

END CONSTRUCTION THIS PHASE
STA. HRBI+511.635

HELEN M. & GAIL M. JONES

LIMITS OF SEEDING AND MULCH (TYP.)

LIMITS OF SOIL DISTURBANCE (TYP.)

LIMITS OF STAGE ONE SITE CONSTRUCTION

LIMITS OF HAUL ROAD CONSTRUCTION

FUTURE MIDDLE POWNAL ROAD ALIGNMENT

N/F GAILLARD

N/F CASMIER & KIRKPATRICK

255 260 265 270 275 280 245 250

RESOURCES LEGEND

- XXX — SOIL MAP UNIT TYPE (SEE DWG. SM-2 FOR DETAILS)
- SOIL LINE BOUNDARY
- WETLAND / RIPARIAN BOUNDARY
- WETLAND BUFFER / RIPARIAN BUFFER

DATUM
VERTICAL NAVD 88
HORIZONTAL NAD 83 (1992)

10 0 10 m
1: 500
@ FULL SIZE

PHASE I PLAN

VERMONT AGENCY OF TRANSPORTATION

CLOUGH HARBOUR & ASSOCIATES LLP
III Winners Circle, PO Box 5269, Albany, NY 12205
www.cloughharbour.com

PROJECT NAME: BENNINGTON
PROJECT NUMBER: AC NH 019-1(53)

FILE NAME: ZD048PL07.DGN
PROJECT LEADER: D.E.G.
DESIGNED BY: D.W.E.
EROSION CONTROL PLAN ECP-9

PLOT DATE: 5/21/2007
DRAWN BY: C.A.K.
CHECKED BY: D.E.G.
SHEET 470 OF 577

FILE NAME =U:\9819\mstn\03\clough\EROSION\zd048pl1.07.dgn
DATE/TIME =5/21/2007
USER =1459

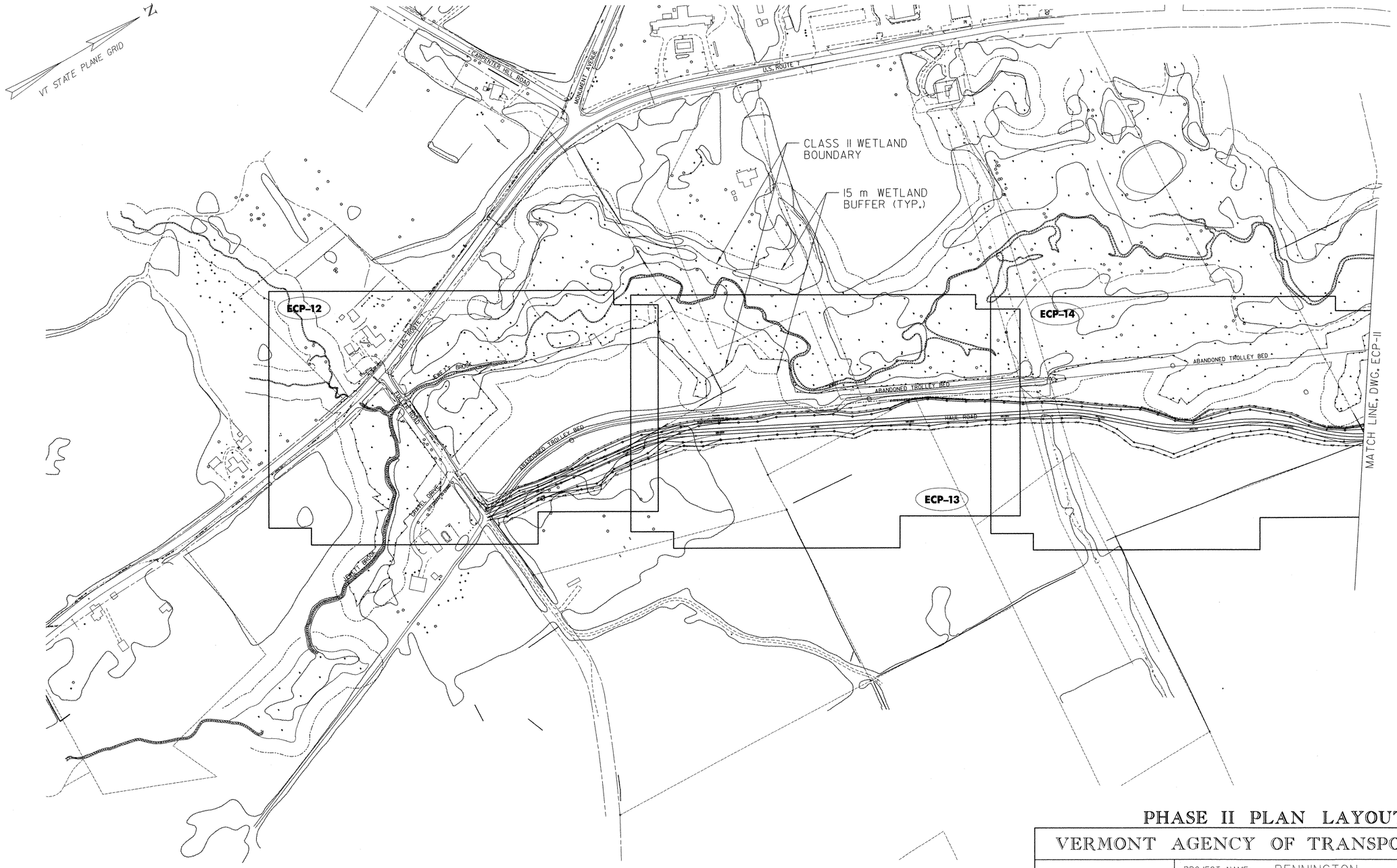

PHASE II PLAN LAYOUT

VERMONT AGENCY OF TRANSPORTATION

DATUM	
VERTICAL	NAVD 88
HORIZONTAL	NAD 83 (1992)

PROPOSED CONSTRUCTION THIS PHASE

40 0 40 m
1: 2000
@ FULL SIZE

CHA
CLOUGH HARBOUR & ASSOCIATES LLP
III Winners Circle, PO Box 5269, Albany, NY 12205
www.cloughharbour.com

PROJECT NAME: BENNINGTON
PROJECT NUMBER: AC NH 019-1(53)

FILE NAME: ZD048gp3.DGN
PROJECT LEADER: D.E.G.
DESIGNED BY: D.W.E.
EROSION CONTROL PLAN ECP-10

PLOT DATE: 5/21/2007
DRAWN BY: C.A.K.
CHECKED BY: D.E.G.
SHEET 471 OF 577

FILE NAME =U:\9819\mstn\03\clough\EROSION\zd048gp3.dgn
DATE/TIME =5/21/2007
USER =1459

Metric

PROPOSED STAGE ONE SITES TO BE CONSTRUCTED IN THIS PHASE

CLASS II WETLAND BOUNDARY

15 m WETLAND BUFFER (TYP.)

VT STATE PLANE GRID

MATCH LINE, DWG. ECP-10

ABANDONED TROLLEY BED

ABANDONED TROLLEY BED

ECP-15

ECP-16

BEGIN CONSTRUCTION THIS PHASE
STA. HR2+418.320

END CONSTRUCTION THIS PHASE
STA. HR2+800.000

ACCESS ROAD

MIDDLE POWNAL ROAD

MORGAN STREET

PHASE II PLAN LAYOUT

VERMONT AGENCY OF TRANSPORTATION

DATUM
VERTICAL NAVD 88
HORIZONTAL NAD 83 (1992)

PROPOSED CONSTRUCTION THIS PHASE

40 0 40 m
1: 2000
@ FULL SIZE

CLOUGH HARBOUR & ASSOCIATES LLP
III Winners Circle, PO Box 5269, Albany, NY 12205
www.cloughharbour.com

PROJECT NAME: BENNINGTON
PROJECT NUMBER: AC NH 019-1(53)

FILE NAME: ZD048gp4.DGN
PROJECT LEADER: D.E.G.
DESIGNED BY: D.W.E.
EROSION CONTROL PLAN ECP-11

PLOT DATE: 5/21/2007
DRAWN BY: C.A.K.
CHECKED BY: D.E.G.
SHEET 472 OF 577

FILE NAME =U:\9819\ms tn\03\clough\EROSION\zd048gp4.dgn
DATE/TIME =5/21/2007
USER =1459

VAOT Metric

LEGEND

- BARRIER FENCE
- GEOTEXTILE FOR SILT FENCE
- PDF — PROJECT DEMARCATION FENCE
- STUMP DISPOSAL AREA
- MAINTENANCE REFUELING AREAS
- TOPSOIL STOCKPILE AREA
- TRACKING PAD
- TEMPORARY EROSION MATTING
- TEMPORARY STONE CHECK DAM, TYPE I
- PREFABRICATED CHECK DAM

VT STATE PLANE GRID

U.S. ROUTE 7

AERIAL E&T

84C

86B

RICHARD & MARIANNA KELLY

WETLAND

B-112 B-114 B-116 B-118

N/F NICKERSON,GEORGE

66B

23A

FLOYD RICE

15 m WETLAND BUFFER (TYP.)

FUTURE VT. ROUTE 279 ALIGNMENT

ABANDONED TROLLEY BED

93C

B-106 B-108 B-107 B-110 B-100 B-102 B-104

HAUL ROAD

HRI+500 HRI+400

MATCH LINE STA. 1+520.000, DWG. ECP-13

93B

GEORGE NICKERSON

E 442650 N 38950

E 442700 N 39050

E 442700 N 39300

E 442800 N 39250

PROJECT DEMARCATION FENCE INSTALLED UNDER PHASE I (TYP.)

HAUL ROAD CONSTRUCTED UNDER PHASE I

HELENA R. RICE LIFE ESTATE, HENRY W. McLENITHAN & SHIRLEY R. McLENITHAN, TRUSTEES OF THE HENRY W. AND SHIRLEY R. McLENITHAN REVOCABLE TRUST. & RONALD B. RICE

RESOURCES LEGEND

- XXX — SOIL MAP UNIT TYPE (SEE DWG. SM-2 FOR DETAILS)
- SOIL LINE BOUNDARY
- WETLAND / RIPARIAN BOUNDARY
- WETLAND BUFFER / RIPARIAN BUFFER

DATUM

VERTICAL	NAVD 88
HORIZONTAL	NAD 83 (1992)

10 0 10 m

1: 500 @ FULL SIZE

PHASE II PLAN

VERMONT AGENCY OF TRANSPORTATION

CLOUGH HARBOUR & ASSOCIATES LLP
III Winners Circle, PO Box 5269, Albany, NY 12205
www.cloughharbour.com

PROJECT NAME:	BENNINGTON
PROJECT NUMBER:	AC NH 019-1(53)
FILE NAME: ZD048P2 01.DGN	PLOT DATE: 5/21/2007
PROJECT LEADER: D.E.G.	DRAWN BY: C.A.K.
DESIGNED BY: D.W.E.	CHECKED BY: D.E.G.
EROSION CONTROL PLAN ECP-12	SHEET 473 OF 577

FILE NAME =U:\9819\mstn\03\clough\EROSION\zd048p2_01.dgn
DATE/TIME =5/21/2007
USER =1459

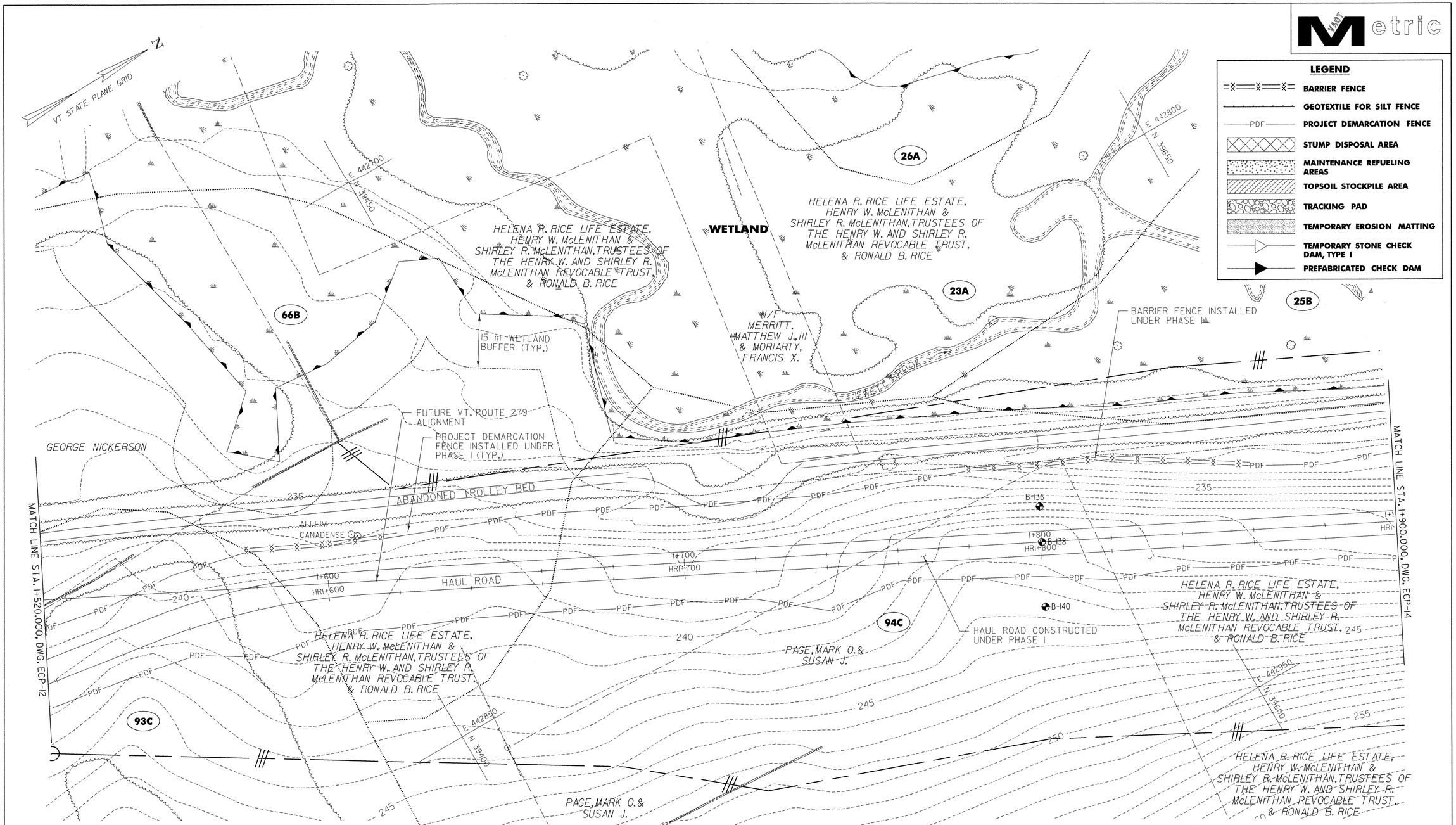

PHASE II PLAN

RESOURCES LEGEND

XXX	SOIL MAP UNIT TYPE (SEE DWG. SM-2 FOR DETAILS)
	SOIL LINE BOUNDARY
	WETLAND / RIPARIAN BOUNDARY
	WETLAND BUFFER / RIPARIAN BUFFER

DATUM	
VERTICAL	NAVD 88
HORIZONTAL	NAD 83 (1992)

10 0 10 m
1:500
@ FULL SIZE

VERMONT AGENCY OF TRANSPORTATION

CHA
CLOUGH HARBOUR & ASSOCIATES LLP
III Winners Circle, PO Box 5269, Albany, NY 12205
www.cloughharbour.com

PROJECT NAME: BENNINGTON
PROJECT NUMBER: AC NH 019-1(53)

FILE NAME: ZD048P2 02.DGN
PROJECT LEADER: D.E.G.
DESIGNED BY: D.W.E.
EROSION CONTROL PLAN ECP-13

PLOT DATE: 5/21/2007
DRAWN BY: C.A.K.
CHECKED BY: D.E.G.
SHEET 474 OF 577

FILE NAME =U:\9819\mstn\03\clough\EROSION\zd048p2_02.dgn
DATE/TIME =5/21/2007
USER =1459

LEGEND

- BARRIER FENCE
- GEOTEXTILE FOR SILT FENCE
- PDF — PROJECT DEMARCATION FENCE
- STUMP DISPOSAL AREA
- MAINTENANCE REFUELING AREAS
- TOPSOIL STOCKPILE AREA
- TRACKING PAD
- TEMPORARY EROSION MATTING
- TEMPORARY STONE CHECK DAM, TYPE I
- PREFABRICATED CHECK DAM

VAOT Metric

HELENA R. RICE LIFE ESTATE, HENRY W. McLENITHAN & SHIRLEY R. McLENITHAN, TRUSTEES OF THE HENRY W. AND SHIRLEY R. McLENITHAN REVOCABLE TRUST, & RONALD B. RICE

VT STATE PLANE GRID

E 442900 N 39800

25B

69B

NEW ENGLAND TROPICAL CONSERVATORY, INC. JOINED BY VERMONT LAND TRUST, INC. & VERMONT HOUSING AND CONSERVATION BOARD

E 443050 N 39900

WETLAND

ABANDONED TROLLEY BED

15 m WETLAND BUFFER (TYP.)

BARRIER FENCE INSTALLED UNDER PHASE I

PROJECT DEMARCATION FENCE INSTALLED UNDER PHASE I (TYP.)

FUTURE VT. ROUTE 279 ALIGNMENT

MATCH LINE STA. 1+900.000, DWG. ECP-13

2+000 B-142 HR2+000

2+100 HR2+100

2+200 HR2+200

B-144

HAUL ROAD

MATCH LINE STA. 2+280.000, DWG. ECP-15

94C

41D

HAUL ROAD CONSTRUCTED UNDER PHASE I

CPS EASEMENT

HELENA R. RICE LIFE ESTATE, HENRY W. McLENITHAN & SHIRLEY R. McLENITHAN, TRUSTEES OF THE HENRY W. AND SHIRLEY R. McLENITHAN REVOCABLE TRUST, & RONALD B. RICE

E 443050 N 39700

E 443350 N 39800

N/F ECKNER, JOCHEN K. & BISCHOFF, BARBARA

85D

NEW ENGLAND TROPICAL CONSERVATORY, INC. JOINED BY VERMONT LAND TRUST, INC. & VERMONT HOUSING AND CONSERVATION BOARD

RESOURCES LEGEND

- XXX — SOIL MAP UNIT TYPE (SEE DWG. SM-2 FOR DETAILS)
- SOIL LINE BOUNDARY
- WETLAND / RIPARIAN BOUNDARY
- WETLAND BUFFER / RIPARIAN BUFFER

DATUM
VERTICAL NAVD 88
HORIZONTAL NAD 83 (1992)

10 0 10 m
1: 500
@ FULL SIZE

PHASE II PLAN

VERMONT AGENCY OF TRANSPORTATION

CHA © 2007
CLOUGH HARBOUR & ASSOCIATES LLP
III Winners Circle, PO Box 5269, Albany, NY 12205
www.cloughharbour.com

PROJECT NAME: BENNINGTON
PROJECT NUMBER: AC NH 019-1(53)

FILE NAME: ZD048P2 03.DGN
PROJECT LEADER: D.E.G.
DESIGNED BY: D.W.E.
EROSION CONTROL PLAN ECP-14

PLOT DATE: 5/21/2007
DRAWN BY: C.A.K.
CHECKED BY: D.E.G.
SHEET 475 OF 577

FILE NAME =U:\9819\mstn\03\clough\EROSION\zd048p2_03.dgn
DATE/TIME =5/21/2007
USER =1459

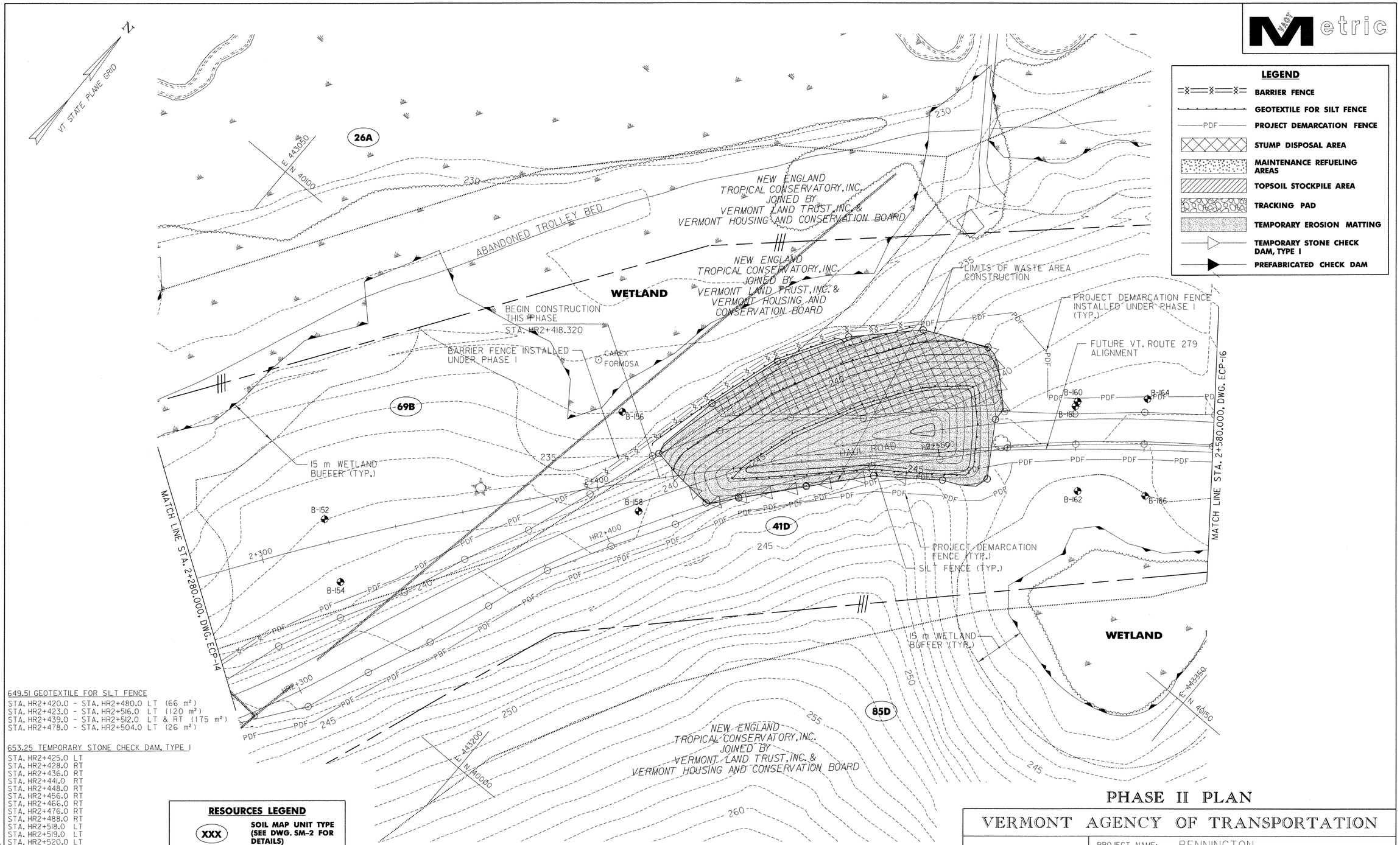

LEGEND

- BARRIER FENCE
- GEOTEXTILE FOR SILT FENCE
- PDF — PROJECT DEMARCATION FENCE
- STUMP DISPOSAL AREA
- MAINTENANCE REFUELING AREAS
- TOPSOIL STOCKPILE AREA
- TRACKING PAD
- TEMPORARY EROSION MATTING
- TEMPORARY STONE CHECK DAM, TYPE I
- PREFABRICATED CHECK DAM

649.51 GEOTEXTILE FOR SILT FENCE

STA. HR2+420.0 - STA. HR2+480.0 LT (66 m²)
STA. HR2+423.0 - STA. HR2+516.0 LT (120 m²)
STA. HR2+439.0 - STA. HR2+512.0 LT & RT (175 m²)
STA. HR2+478.0 - STA. HR2+504.0 LT (26 m²)

653.25 TEMPORARY STONE CHECK DAM, TYPE I

STA. HR2+425.0 LT
STA. HR2+428.0 RT
STA. HR2+436.0 RT
STA. HR2+441.0 RT
STA. HR2+448.0 RT
STA. HR2+456.0 RT
STA. HR2+466.0 RT
STA. HR2+476.0 RT
STA. HR2+488.0 RT
STA. HR2+518.0 LT
STA. HR2+519.0 LT
STA. HR2+520.0 LT
STA. HR2+520.0 LT

RESOURCES LEGEND

- XXX — SOIL MAP UNIT TYPE (SEE DWG. SM-2 FOR DETAILS)
- SOIL LINE BOUNDARY
- WETLAND / RIPARIAN BOUNDARY
- WETLAND BUFFER / RIPARIAN BUFFER

DATUM

VERTICAL	NAVD 88
HORIZONTAL	NAD 83 (1992)

653.20 TEMPORARY EROSION MATTING

STA. HR2+420.0 - STA. HR2+518.0 LT & RT (3583 m²)

653.55 PROJECT DEMARCATION FENCE

STA. HR2+438.0 - STA. HR2+522.0 RT (87 m)

10 0 10 m
1:500
@ FULL SIZE

PHASE II PLAN

VERMONT AGENCY OF TRANSPORTATION

CHA
CLOUGH HARBOUR & ASSOCIATES LLP
III Winners Circle, PO Box 5269, Albany, NY 12205
www.cloughharbour.com

PROJECT NAME: BENNINGTON
PROJECT NUMBER: AC NH 019-1(53)

FILE NAME: ZD048P2 04.DGN
PROJECT LEADER: D.E.G.
DESIGNED BY: D.W.E.
EROSION CONTROL PLAN ECP-15

PLOT DATE: 5/21/2007
DRAWN BY: C.A.K.
CHECKED BY: D.E.G.
SHEET 476 OF 577

FILE NAME =U:\9819\mstn\03\clough\EROSION\zd048p2_04.dgn
DATE/TIME =5/21/2007
USER =1459

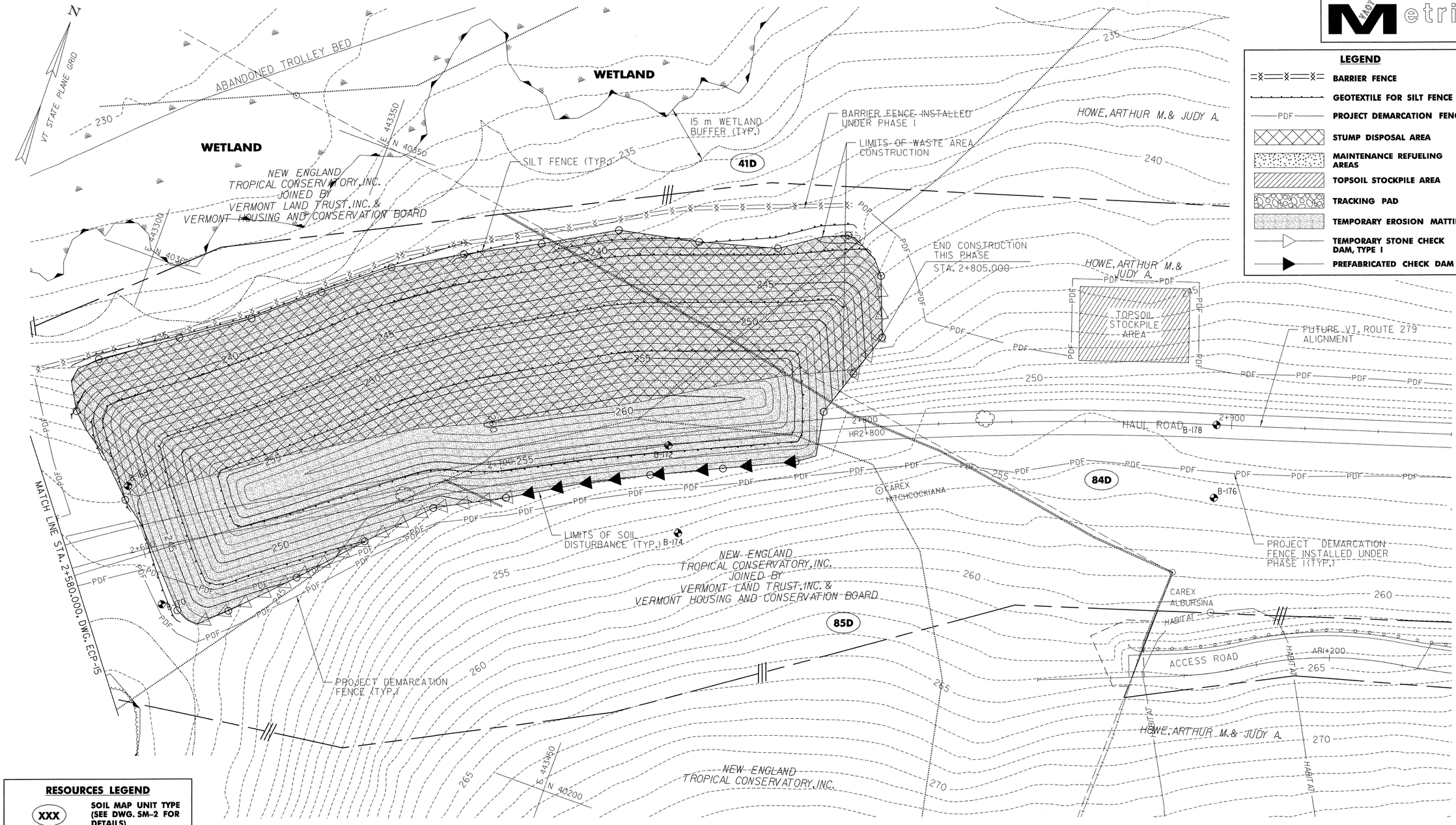

LEGEND

- BARRIER FENCE
- GEOTEXTILE FOR SILT FENCE
- PROJECT DEMARCATION FENCE
- STUMP DISPOSAL AREA
- MAINTENANCE REFUELING AREAS
- TOPSOIL STOCKPILE AREA
- TRACKING PAD
- TEMPORARY EROSION MATTING
- TEMPORARY STONE CHECK DAM, TYPE I
- PREFABRICATED CHECK DAM

RESOURCES LEGEND

- XXX — SOIL MAP UNIT TYPE (SEE DWG. SM-2 FOR DETAILS)
- SOIL LINE BOUNDARY
- WETLAND / RIPARIAN BOUNDARY
- WETLAND BUFFER / RIPARIAN BUFFER

DATUM

VERTICAL	NAVD 88
HORIZONTAL	NAD 83 (1992)

649.51 GEOTEXTILE FOR SILT FENCE

STA. HR2+590.0 - STA. HR2+599.0 LT (10 m²)
STA. HR2+596.0 - STA. HR2+597.0 LT (15 m²)
STA. HR2+596.0 - STA. HR2+702.0 LT (117 m²)
STA. HR2+600.0 - STA. HR2+807.0 LT (245 m²)
STA. HR2+601.0 - STA. HR2+605.0 LT & RT (36 m²)
STA. HR2+612.0 - STA. HR2+796.0 LT & RT (280 m²)
STA. HR2+626.0 - STA. HR2+783.0 LT & RT (361 m²)
STA. HR2+697.0 - STA. HR2+721.0 LT (32 m²)
STA. HR2+720.0 - STA. HR2+751.0 LT (36 m²)
STA. HR2+752.0 - STA. HR2+800.0 LT (50 m²)

653.20 TEMPORARY EROSION MATTING

STA. HR2+600.0 - STA. HR2+805.0 LT & RT (1381.5 m²)

653.25 TEMPORARY STONE CHECK DAM, TYPE I

STA. HR2+610.0 RT
STA. HR2+616.0 RT
STA. HR2+622.0 RT
STA. HR2+628.0 RT
STA. HR2+634.0 RT
STA. HR2+640.0 RT
STA. HR2+646.0 RT
STA. HR2+652.0 RT
STA. HR2+658.0 RT
STA. HR2+664.0 RT
STA. HR2+670.0 RT
STA. HR2+676.0 RT
STA. HR2+682.0 RT
STA. HR2+688.0 RT
STA. HR2+694.0 RT
STA. HR2+795.0 RT
STA. HR2+800.0 LT
STA. HR2+800.0 LT
STA. HR2+806.0 LT
STA. HR2+806.0 LT
STA. HR2+807.0 LT

653.30 PREFABRICATED CHECK DAM

STA. HR2+706.0 RT
STA. HR2+714.0 RT
STA. HR2+722.0 RT
STA. HR2+730.0 RT
STA. HR2+742.0 RT
STA. HR2+754.0 RT
STA. HR2+766.0 RT
STA. HR2+778.0 RT

653.55 PROJECT DEMARCATION FENCE

STA. HR2+598.0 - STA. HR2+800.0 RT (202 m)

10 0 10 m
1:500
@ FULL SIZE

PHASE II PLAN

VERMONT AGENCY OF TRANSPORTATION

CLOUGH HARBOUR & ASSOCIATES LLP
III Winners Circle, PO Box 5269, Albany, NY 12205
www.cloughharbour.com

PROJECT NAME: BENNINGTON
PROJECT NUMBER: AC NH 019-1(53)

FILE NAME: ZD048P2 05.DGN
PROJECT LEADER: D.E.G.
DESIGNED BY: D.W.E.
EROSION CONTROL PLAN ECP-16

PLOT DATE: 5/21/2007
DRAWN BY: C.A.K.
CHECKED BY: D.E.G.
SHEET 477 OF 577

FILE NAME =U:\9819\mstn\03\clough\EROSION\zd048p2_05.dgn
DATE/TIME =5/21/2007
USER =1459

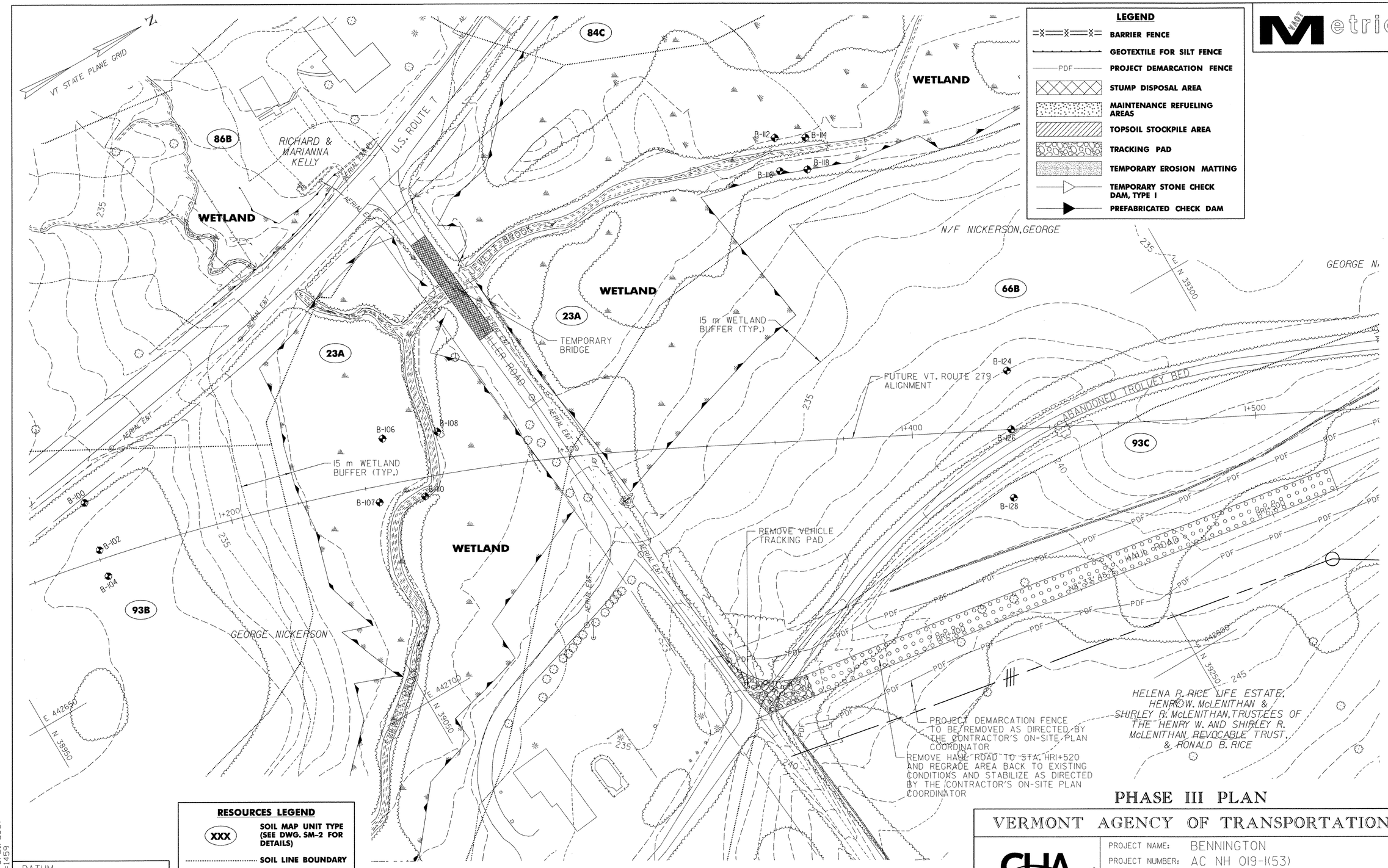

VAOT Metric

PHASE III PLAN

DATUM
VERTICAL NAVD 88
HORIZONTAL NAD 83 (1992)

VERMONT AGENCY OF TRANSPORTATION

CLOUGH HARBOUR & ASSOCIATES LLP
III Winners Circle, PO Box 5269, Albany, NY 12205
www.cloughharbour.com

PROJECT NAME: BENNINGTON
PROJECT NUMBER: AC NH 019-1(53)

FILE NAME: ZD048P3 01.DGN
PROJECT LEADER: D.E.G.
DESIGNED BY: D.W.E.
DRAWN BY: C.A.K.
CHECKED BY: D.E.G.
PLOT DATE: 5/21/2007
EROSION CONTROL PLAN ECP-17
SHEET 478 OF 577

FILE NAME =U:\9819\mstn\03\clough\EROSION\zd048p3_01.dgn
DATE/TIME =5/21/2007
USER =1459

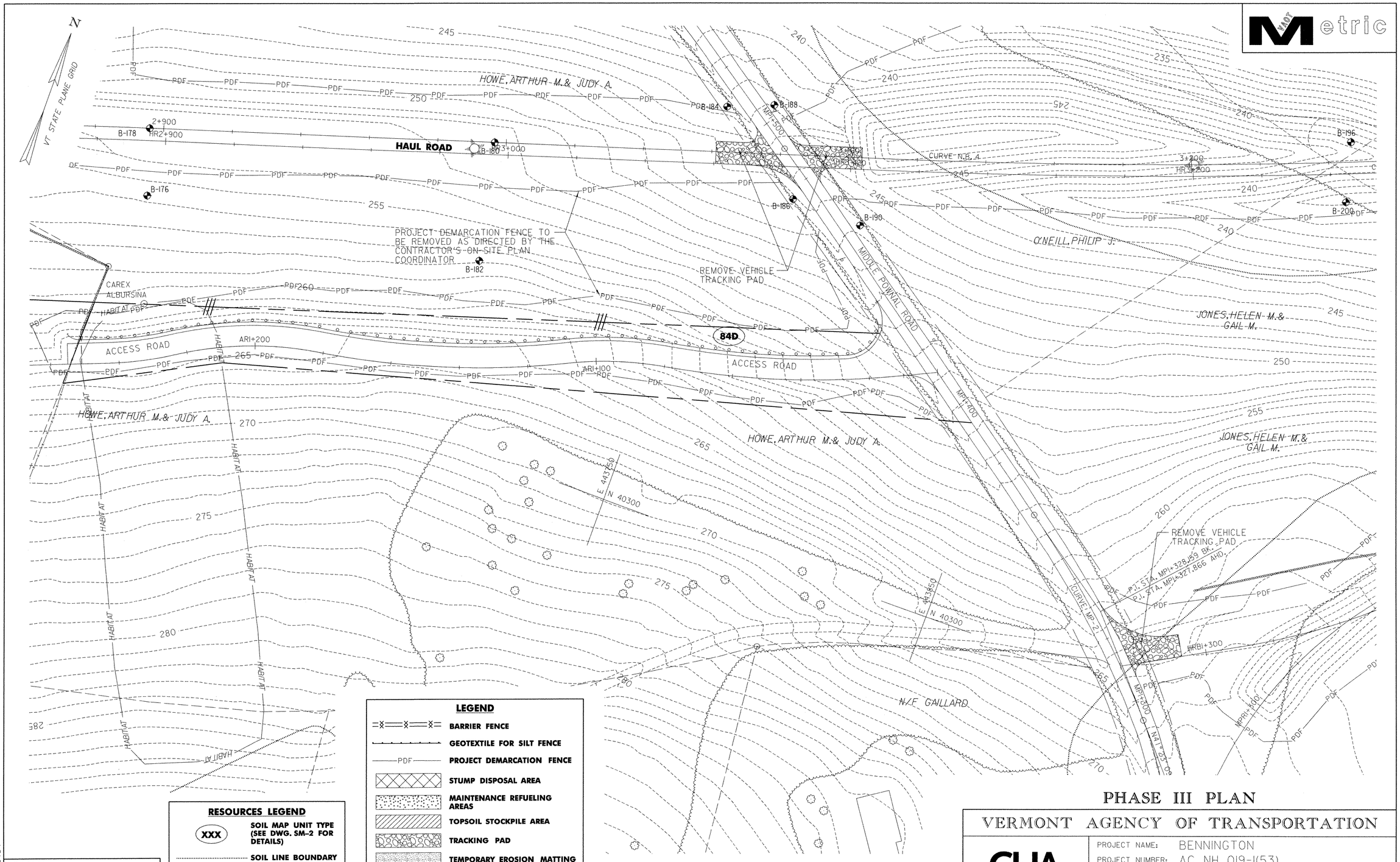

LEGEND

- BARRIER FENCE
- GEOTEXTILE FOR SILT FENCE
- PDF — PROJECT DEMARCATION FENCE
- STUMP DISPOSAL AREA
- MAINTENANCE REFUELING AREAS
- TOPSOIL STOCKPILE AREA
- TRACKING PAD
- TEMPORARY EROSION MATTING
- TEMPORARY STONE CHECK DAM, TYPE I
- PREFABRICATED CHECK DAM

RESOURCES LEGEND

- XXX — SOIL MAP UNIT TYPE (SEE DWG. SM-2 FOR DETAILS)
- SOIL LINE BOUNDARY
- WETLAND / RIPARIAN BOUNDARY
- WETLAND BUFFER / RIPARIAN BUFFER

DATUM	
VERTICAL	NAVD 88
HORIZONTAL	NAD 83 (1992)

10 0 10 m
1: 500
@ FULL SIZE

PHASE III PLAN

VERMONT AGENCY OF TRANSPORTATION

CHA
CLOUGH HARBOUR & ASSOCIATES LLP
III Winners Circle, PO Box 5269, Albany, NY 12205
www.cloughharbour.com

PROJECT NAME: BENNINGTON
PROJECT NUMBER: AC NH 019-1(53)

FILE NAME: ZD048P3 02.DGN
PROJECT LEADER: D.E.G.
DESIGNED BY: D.W.E.
EROSION CONTROL PLAN ECP-18

PLOT DATE: 5/21/2007
DRAWN BY: C.A.K.
CHECKED BY: D.E.G.
SHEET 479 OF 577

FILE NAME =U:\9819\mstn\03\clough\EROSION\zd048p3_02.dgn
DATE/TIME =5/21/2007
USER =1459

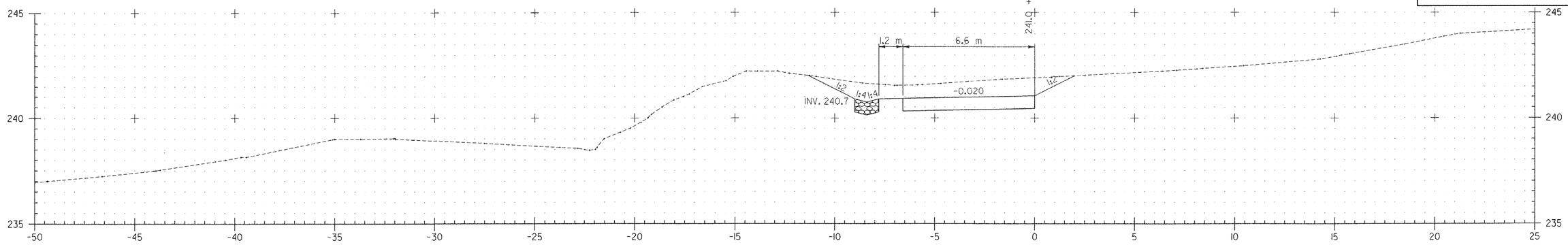

HRI+380
HAUL ROAD A

CUT (HAUL ROAD): 13
FILL (HAUL ROAD): 0

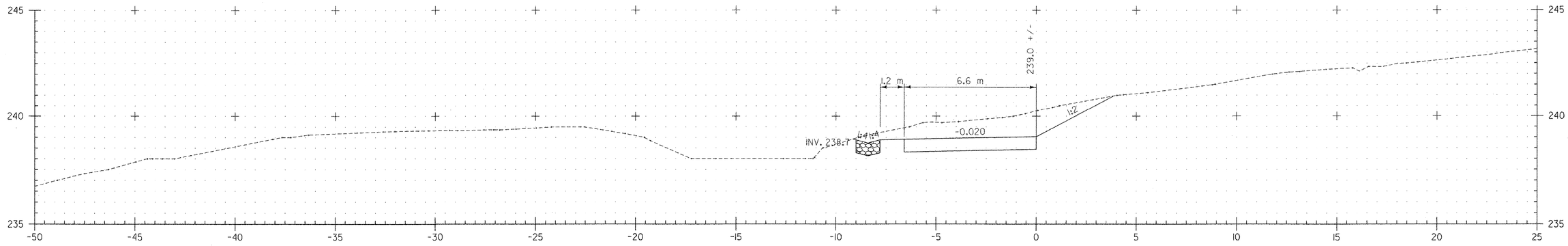

HRI+360
HAUL ROAD A

CUT (HAUL ROAD): 13
FILL (HAUL ROAD): 0

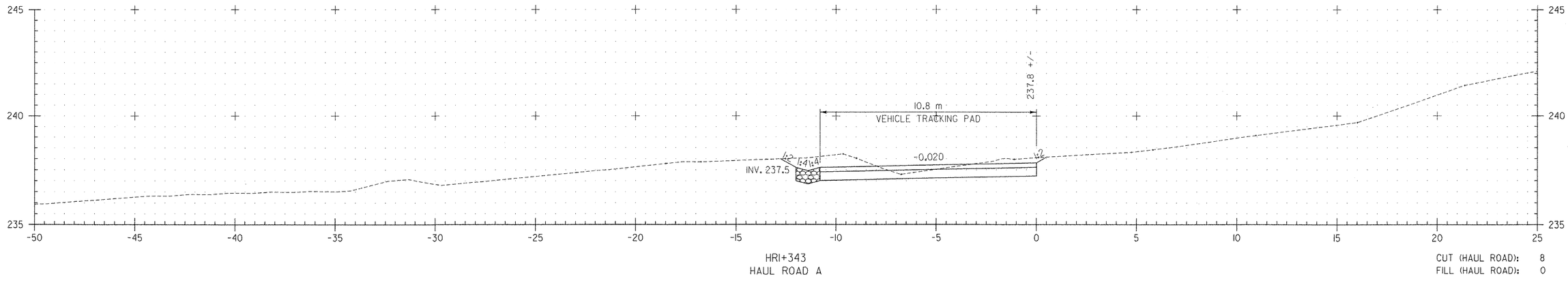

HRI+343
HAUL ROAD A

CUT (HAUL ROAD): 8
FILL (HAUL ROAD): 0

EMBANKMENTS AT THE STAGE I SITES, AS INDICATED ON PLAN SHEETS 480 THROUGH 558, WERE NOT CONSTRUCTED AS INDICATED ON THESE SHEETS.

BY CHANGE OF DESIGN #20 AND WRITTEN ORDER #97, THE STATE AND THE CONTRACTOR AGREED ON THE FINAL DISPOSITION OF THE STAGE I SITES.

FINAL CROSS SECTIONS FOR ALL THE STAGE I SITES ARE CONTAINED IN A BINDER THAT IS LOCATED IN BOX 3 OF 15 OF THE CONTRACT RECORDS.

2 0 2 m
1: 100
@ FULL SIZE

DATUM
VERTICAL NAVD 88
HORIZONTAL NAD 83 (1992)

VERMONT AGENCY OF TRANSPORTATION

CLOUGH HARBOUR & ASSOCIATES LLP
© 2007
III Winners Circle, PO Box 5269, Albany, NY 12205
www.cloughharbour.com

PROJECT NAME: BENNINGTON
PROJECT NUMBER: AC NH 019-1(53)

FILE NAME: ZD048XSC.DGN
PROJECT LEADER: D.E.G.
DESIGNED BY: J.S.P.
PLOT DATE: 5/18/2007
DRAWN BY: J.S.P.
CHECKED BY: D.E.G.

CROSS SECTIONS XSC-1

SHEET 480 OF 577

FILE NAME =u:\9819\mstn\03\clough\Stage One Sites\zd048xsc_f.dgn
DATE/TIME =5/18/2007
USER =597

Metric

SEE NOTE ON SHEET 480

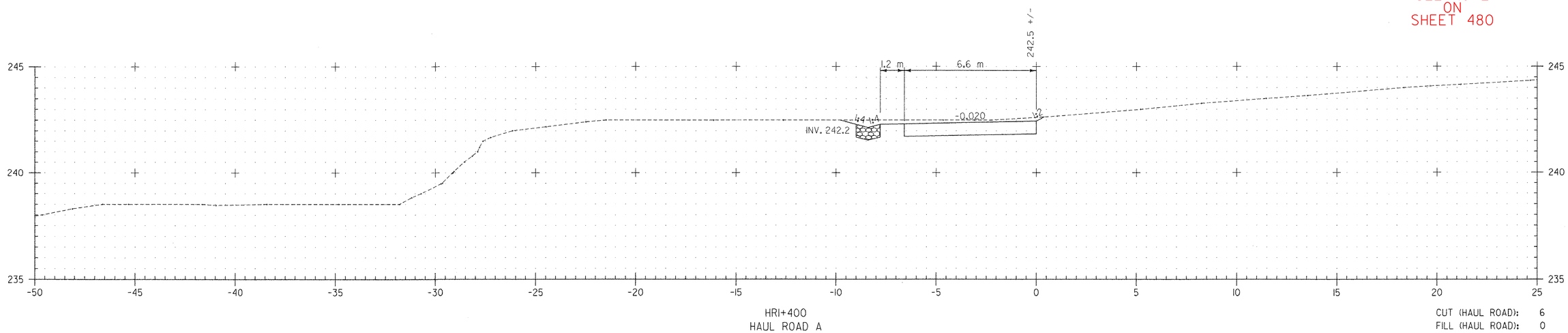

HRI+400
HAUL ROAD A

CUT (HAUL ROAD): 6
FILL (HAUL ROAD): 0

2 0 2 m
1: 100
@ FULL SIZE

DATUM
VERTICAL NAVD 88
HORIZONTAL NAD 83 (1992)

VERMONT AGENCY OF TRANSPORTATION

CLOUGH HARBOUR & ASSOCIATES LLP
III Winners Circle, PO Box 5269, Albany, NY 12205
www.cloughharbour.com

PROJECT NAME: BENNINGTON
PROJECT NUMBER: AC NH 019-1(53)

FILE NAME: ZD048XSC.DGN
PROJECT LEADER: D.E.G.
DESIGNED BY: J.S.P.
CROSS SECTIONS XSC-2

PLOT DATE: 5/18/2007
DRAWN BY: J.S.P.
CHECKED BY: D.E.G.
SHEET 481 OF 577

FILE NAME =u:\9819\mstn\03\clough\Stage One Sites\zd048xsc_f.dgn
DATE/TIME = 5/18/2007
USER = 597

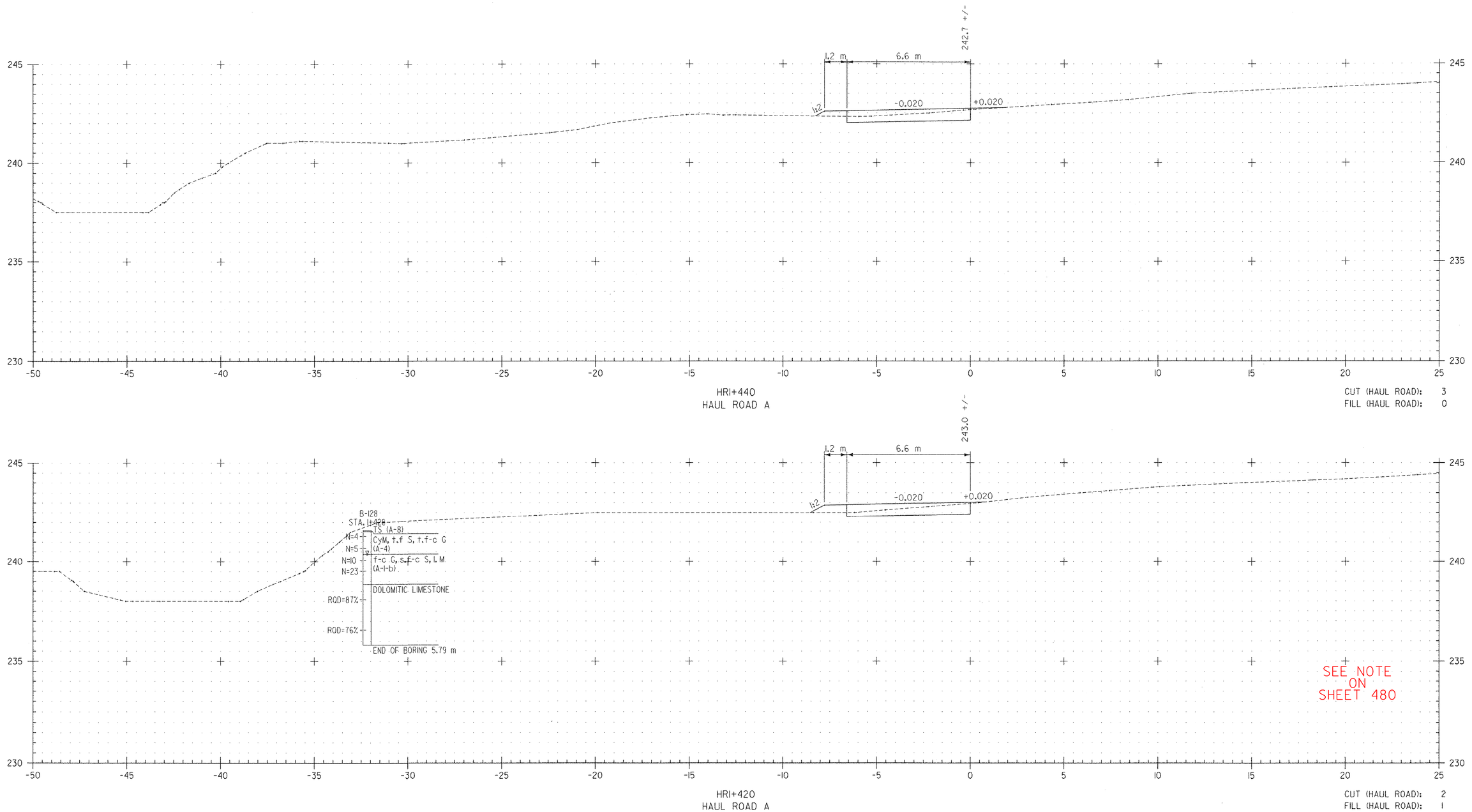

FILE NAME =u:\9819\mstn\03\clough\Stage One Sites\zd048xsc_f.dgn
DATE/TIME =5/18/2007
USER =597

DATUM
VERTICAL NAVD 88
HORIZONTAL NAD 83 (1992)

2 0 2 m
1: 100
@ FULL SIZE

VERMONT AGENCY OF TRANSPORTATION

CLOUGH HARBOUR & ASSOCIATES LLP
III Winners Circle, PO Box 5269, Albany, NY 12205
www.cloughharbour.com

PROJECT NAME: BENNINGTON
PROJECT NUMBER: AC NH 019-1(53)

FILE NAME: ZD048XSC.DGN
PROJECT LEADER: D.E.G.
DESIGNED BY: J.S.P.
CROSS SECTIONS XSC-3

PLOT DATE: 5/18/2007
DRAWN BY: J.S.P.
CHECKED BY: D.E.G.
SHEET 482 OF 577

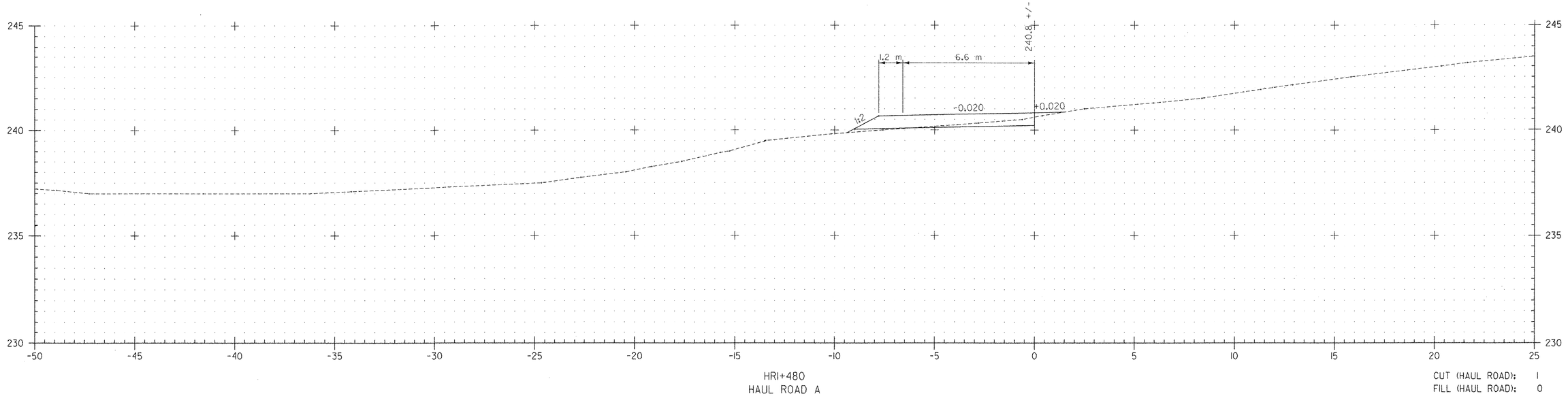

HRI+480
HAUL ROAD A

CUT (HAUL ROAD): 1
FILL (HAUL ROAD): 0

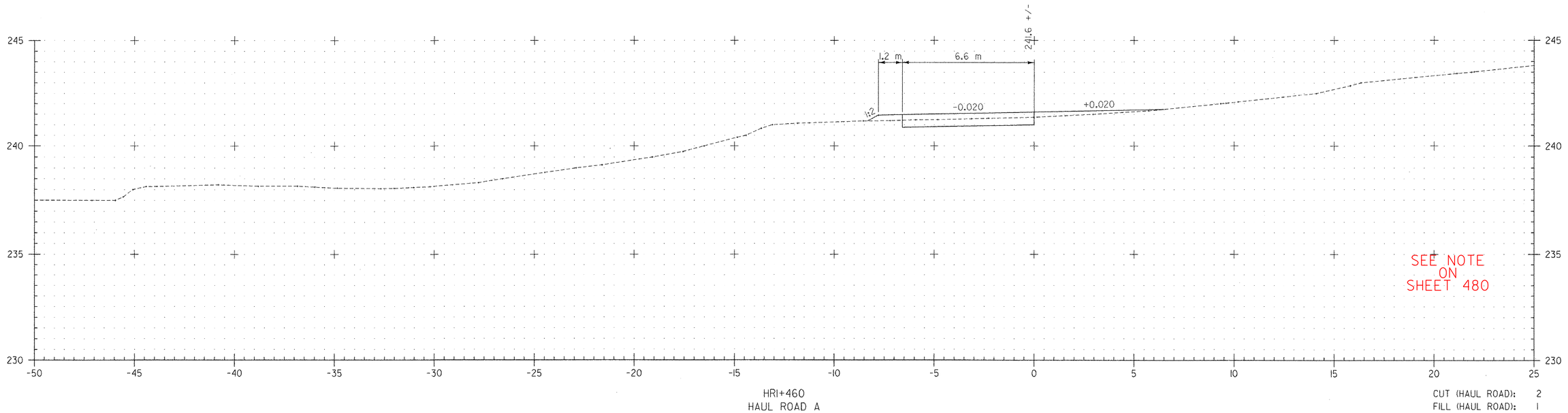

SEE NOTE ON SHEET 480

HRI+460
HAUL ROAD A

CUT (HAUL ROAD): 2
FILL (HAUL ROAD): 1

FILE NAME =$FILE$
DATE/TIME =$DATE$
USER =$NTUSER$

DATUM

VERTICAL	NAVD 88
HORIZONTAL	NAD 83 (1992)

2 0 2 m
1: 100
@ FULL SIZE

VERMONT AGENCY OF TRANSPORTATION

CHA
CLOUGH HARBOUR & ASSOCIATES LLP
III Winners Circle, PO Box 5269, Albany, NY 12205
www.cloughharbour.com

PROJECT NAME: BENNINGTON
PROJECT NUMBER: AC NH 019-1(53)

FILE NAME: ZD048XSC.DGN
PROJECT LEADER: D.E.G.
DESIGNED BY: J.S.P.
CROSS SECTIONS XSC-4

PLOT DATE: $DATE$
DRAWN BY: J.S.P.
CHECKED BY: D.E.G.
SHEET 483 OF 577

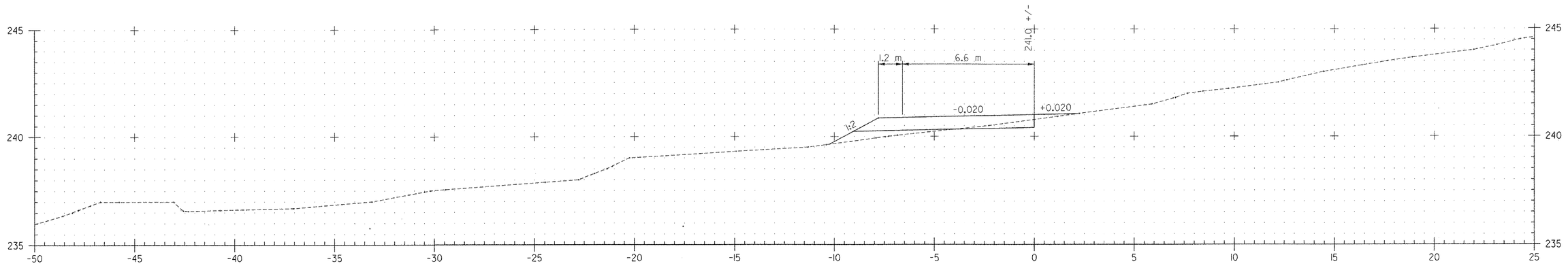

HRI+520
HAUL ROAD A

CUT (HAUL ROAD): 1
FILL (HAUL ROAD): 1

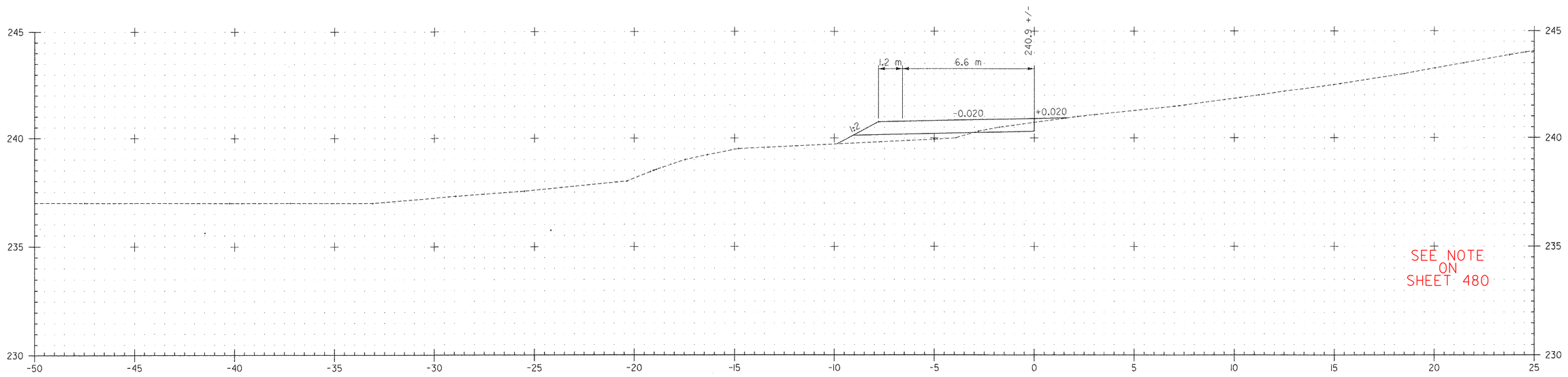

HRI+500
HAUL ROAD A

CUT (HAUL ROAD): 1
FILL (HAUL ROAD): 2

FILE NAME =$FILE$
DATE/TIME =$DATE$
USER =$NTUSER$

DATUM
VERTICAL NAVD 88
HORIZONTAL NAD 83 (1992)

2 0 2 m
1: 100
@ FULL SIZE

VERMONT AGENCY OF TRANSPORTATION

CLOUGH HARBOUR & ASSOCIATES LLP
III Winners Circle, PO Box 5269, Albany, NY 12205
www.cloughharbour.com

PROJECT NAME: BENNINGTON
PROJECT NUMBER: AC NH 019-1(53)

FILE NAME: ZD048XSC.DGN
PROJECT LEADER: D.E.G.
DESIGNED BY: J.S.P.
CROSS SECTIONS XSC-5

PLOT DATE: $DATE$
DRAWN BY: J.S.P.
CHECKED BY: D.E.G.
SHEET 484 OF 577

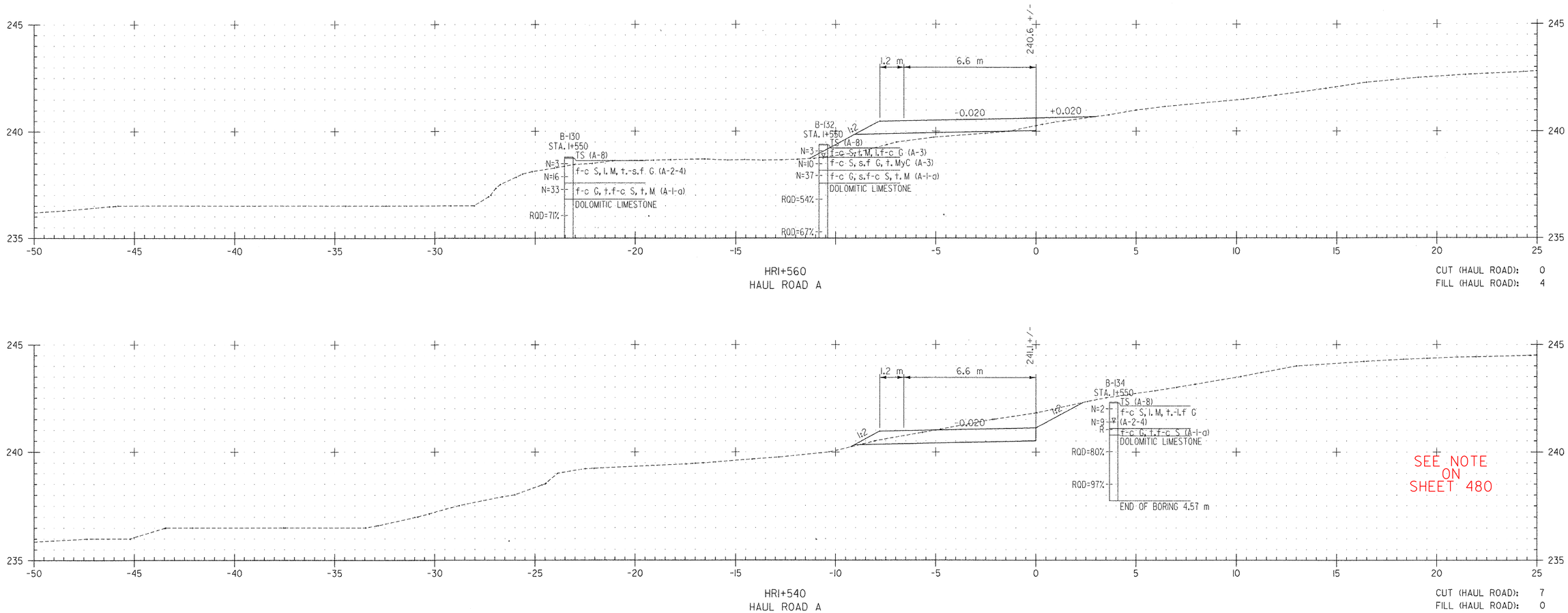

FILE NAME =$FILE$
DATE/TIME =$DATE$
USER =$NTUSER$

DATUM
VERTICAL NAVD 88
HORIZONTAL NAD 83 (1992)

2 0 2 m
1: 100
@ FULL SIZE

VERMONT AGENCY OF TRANSPORTATION

CLOUGH HARBOUR & ASSOCIATES LLP
III Winners Circle, PO Box 5269, Albany, NY 12205
www.cloughharbour.com

PROJECT NAME: BENNINGTON
PROJECT NUMBER: AC NH 019-1(53)

FILE NAME: ZD048XSC.DGN
PROJECT LEADER: D.E.G.
DESIGNED BY: J.S.P.
CROSS SECTIONS XSC-6

PLOT DATE: $DATE$
DRAWN BY: J.S.P.
CHECKED BY: D.E.G.
SHEET 485 OF 577

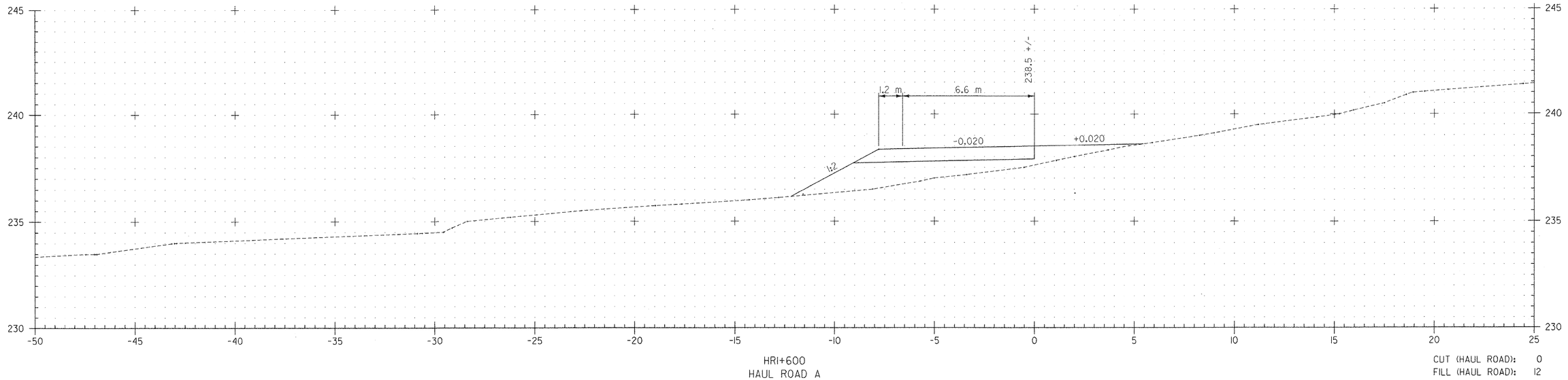

HRI+600
HAUL ROAD A

CUT (HAUL ROAD): 0
FILL (HAUL ROAD): 12

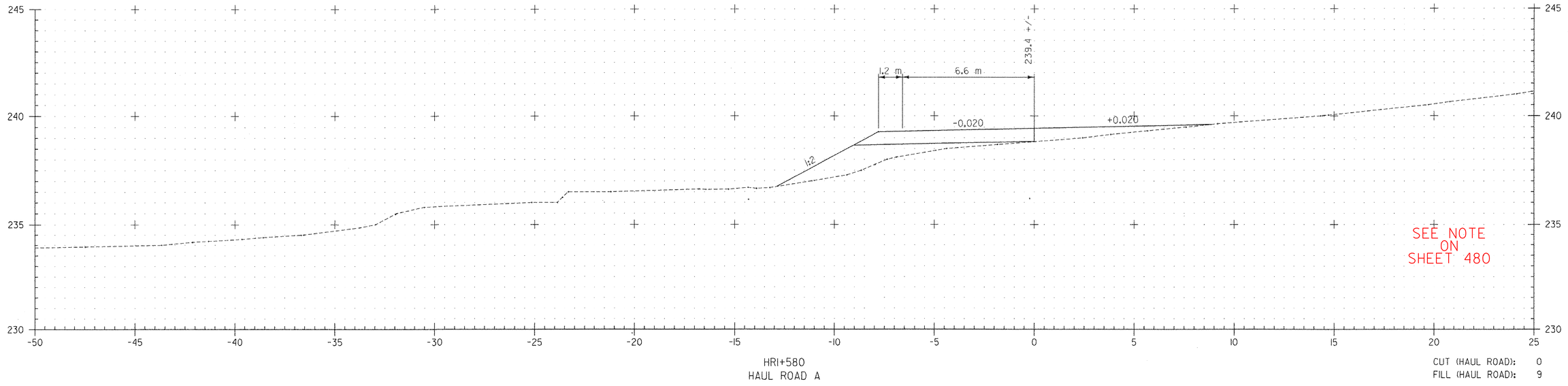

HRI+580
HAUL ROAD A

CUT (HAUL ROAD): 0
FILL (HAUL ROAD): 9

FILE NAME =$FILE$
DATE/TIME =$DATE$
USER =$NTUSER$

DATUM
VERTICAL NAVD 88
HORIZONTAL NAD 83 (1992)

2 0 2 m
1: 100
@ FULL SIZE

VERMONT AGENCY OF TRANSPORTATION

CLOUGH HARBOUR & ASSOCIATES LLP
III Winners Circle, PO Box 5269, Albany, NY 12205
www.cloughharbour.com

PROJECT NAME: BENNINGTON
PROJECT NUMBER: AC NH 019-1(53)

FILE NAME: ZD048XSC.DGN
PROJECT LEADER: D.E.G.
DESIGNED BY: J.S.P.
CROSS SECTIONS XSC-7

PLOT DATE: $DATE$
DRAWN BY: J.S.P.
CHECKED BY: D.E.G.
SHEET 486 OF 577

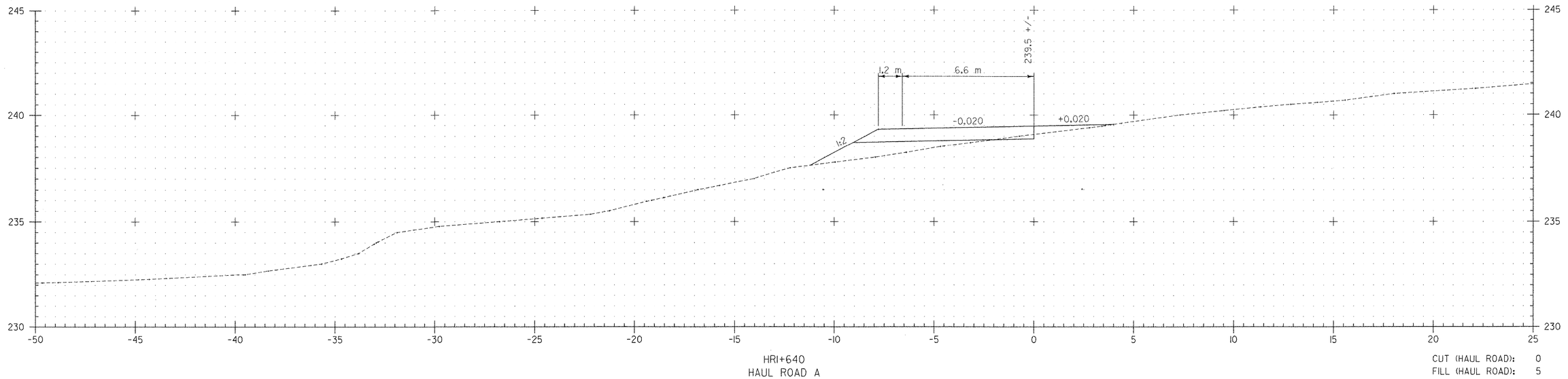

HRI+640
HAUL ROAD A

CUT (HAUL ROAD): 0
FILL (HAUL ROAD): 5

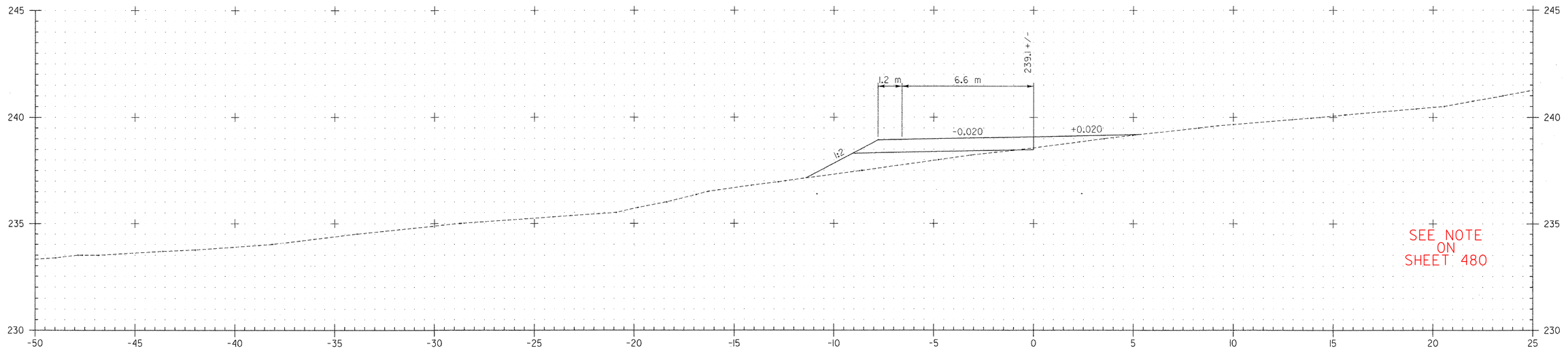

HRI+620
HAUL ROAD A

CUT (HAUL ROAD): 0
FILL (HAUL ROAD): 6

FILE NAME =$FILE$
DATE/TIME =$DATE$
USER =$NTUSER$

DATUM
VERTICAL NAVD 88
HORIZONTAL NAD 83 (1992)

2 0 2 m
1: 100
@ FULL SIZE

VERMONT AGENCY OF TRANSPORTATION

CLOUGH HARBOUR & ASSOCIATES LLP
III Winners Circle, PO Box 5269, Albany, NY 12205
www.cloughharbour.com

PROJECT NAME: BENNINGTON
PROJECT NUMBER: AC NH 019-1(53)

FILE NAME: ZD048XSC.DGN
PROJECT LEADER: D.E.G.
DESIGNED BY: J.S.P.
CROSS SECTIONS XSC-8

PLOT DATE: $DATE$
DRAWN BY: J.S.P.
CHECKED BY: D.E.G.
SHEET 487 OF 577

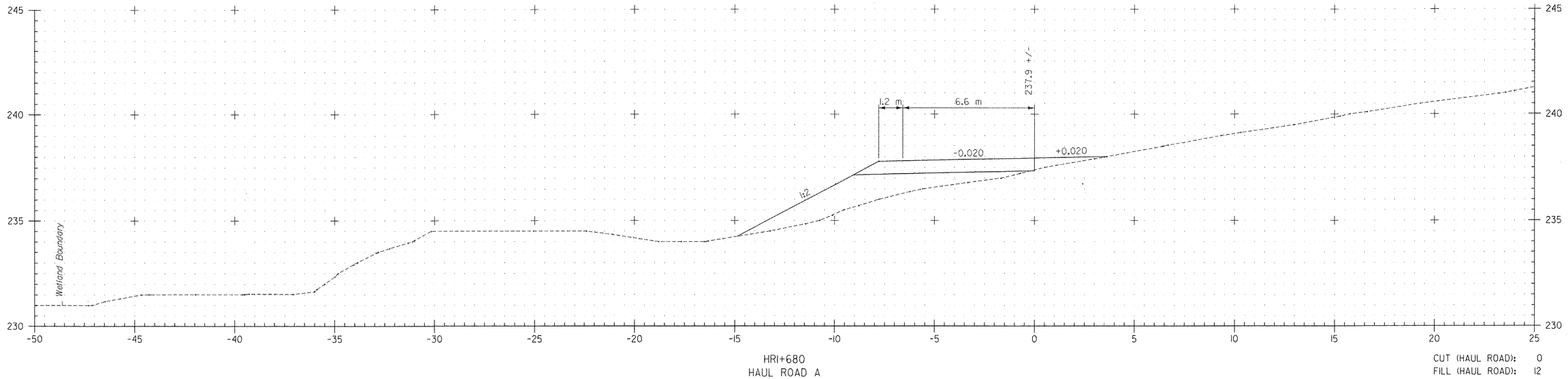

HRI+680
HAUL ROAD A

CUT (HAUL ROAD): 0
FILL (HAUL ROAD): 12

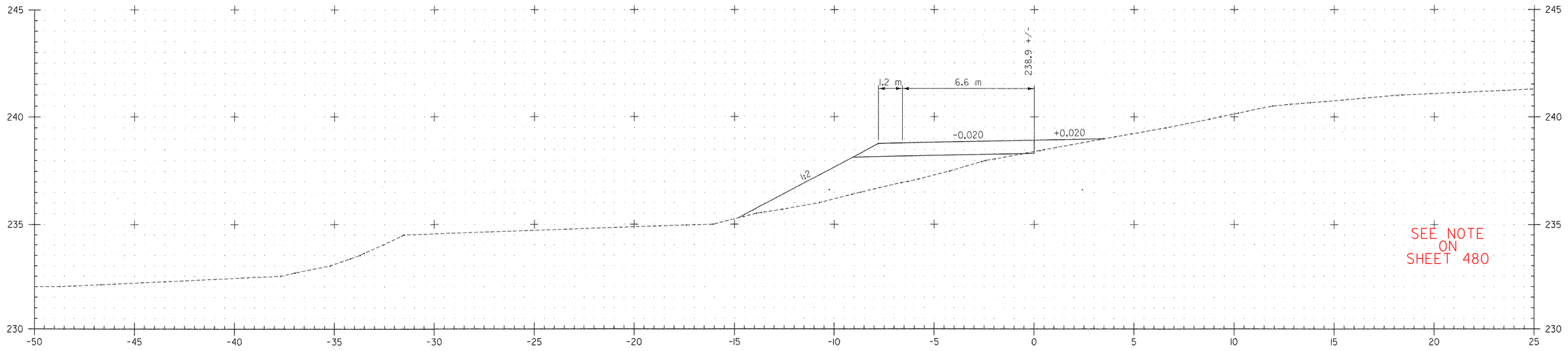

HRI+660
HAUL ROAD A

CUT (HAUL ROAD): 0
FILL (HAUL ROAD): 13

FILE NAME =$FILE$
DATE/TIME =$DATE$
USER =$NTUSER$

DATUM
VERTICAL NAVD 88
HORIZONTAL NAD 83 (1992)

2 0 2 m
1: 100
@ FULL SIZE

VERMONT AGENCY OF TRANSPORTATION

CLOUGH HARBOUR & ASSOCIATES LLP
© 2007
III Winners Circle, PO Box 5269, Albany, NY 12205
www.cloughharbour.com

PROJECT NAME: BENNINGTON
PROJECT NUMBER: AC NH 019-1(53)

FILE NAME: ZD048XSC.DGN
PROJECT LEADER: D.E.G.
DESIGNED BY: J.S.P.
CROSS SECTIONS XSC-9

PLOT DATE: $DATE$
DRAWN BY: J.S.P.
CHECKED BY: D.E.G.
SHEET 488 OF 577

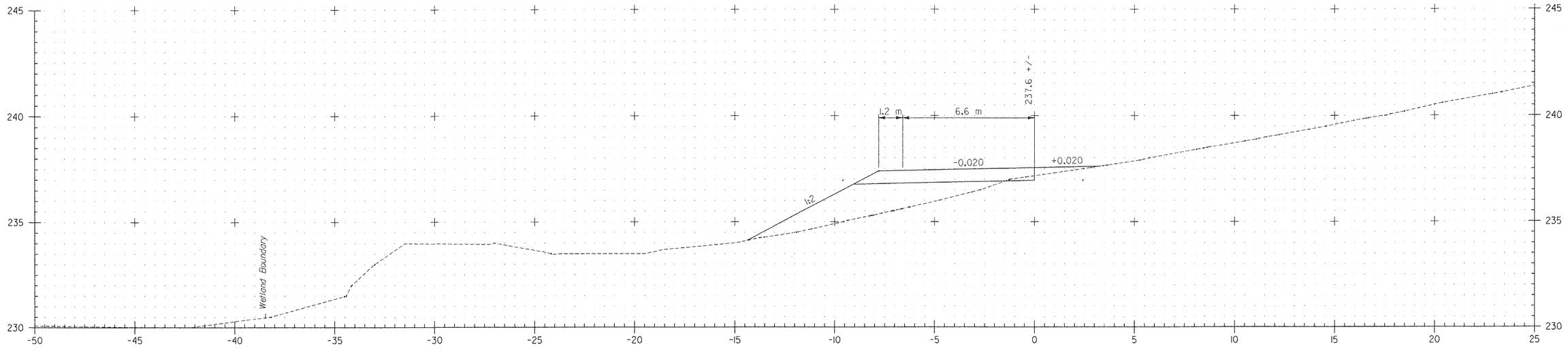

HRI+720
HAUL ROAD A

CUT (HAUL ROAD): 0
FILL (HAUL ROAD): 12

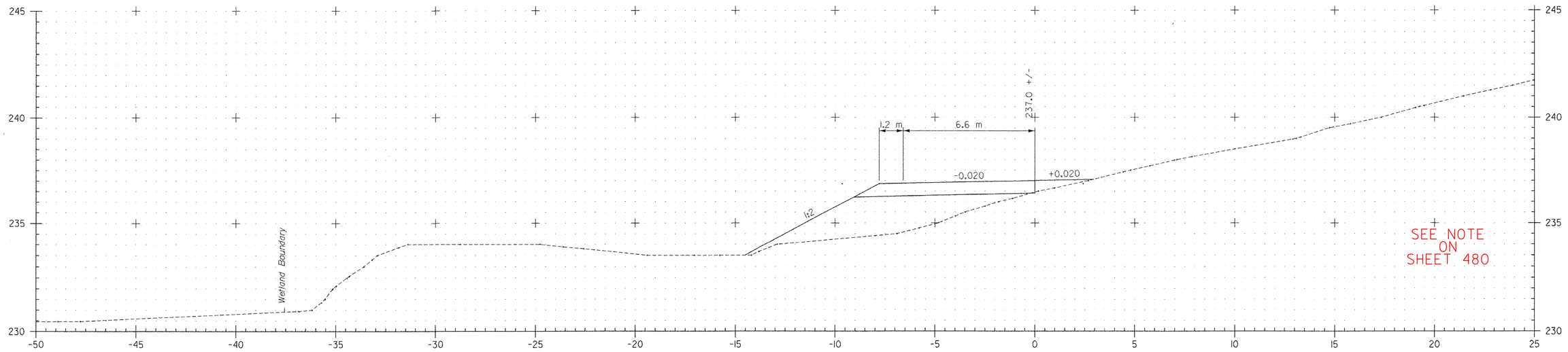

HRI+700
HAUL ROAD A

CUT (HAUL ROAD): 0
FILL (HAUL ROAD): 15

FILE NAME =$FILE$
DATE/TIME =$DATE$
USER =$NTUSER$

DATUM
VERTICAL NAVD 88
HORIZONTAL NAD 83 (1992)

2 0 2 m
1: 100
@ FULL SIZE

VERMONT AGENCY OF TRANSPORTATION

CLOUGH HARBOUR & ASSOCIATES LLP © 2007
III Winners Circle, PO Box 5269, Albany, NY 12205
www.cloughharbour.com

PROJECT NAME: BENNINGTON
PROJECT NUMBER: AC NH 019-1(53)

FILE NAME: ZD048XSC.DGN
PROJECT LEADER: D.E.G.
DESIGNED BY: J.S.P.
CROSS SECTIONS XSC-10

PLOT DATE: $DATE$
DRAWN BY: J.S.P.
CHECKED BY: D.E.G.
SHEET 489 OF 577

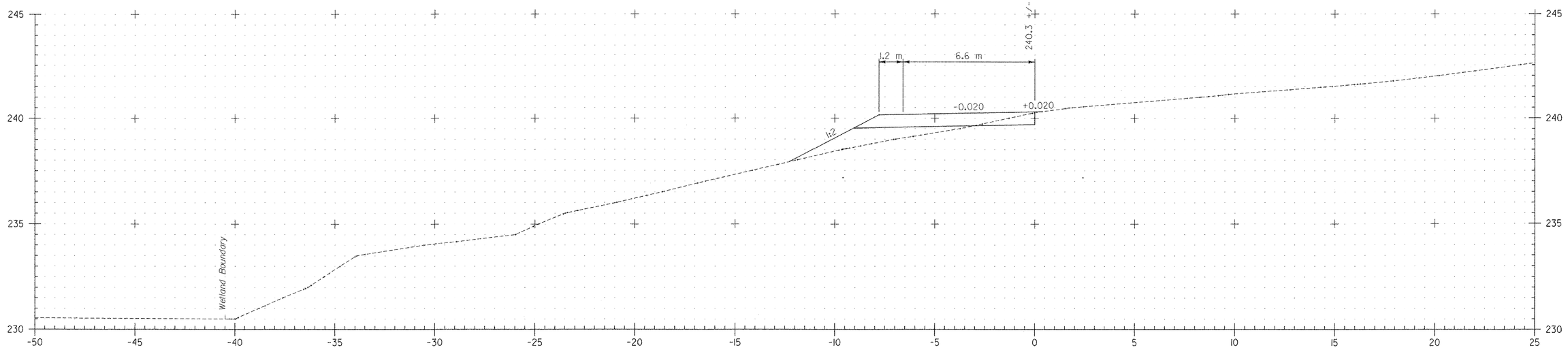

HRI+760
HAUL ROAD A

CUT (HAUL ROAD): 1
FILL (HAUL ROAD): 4

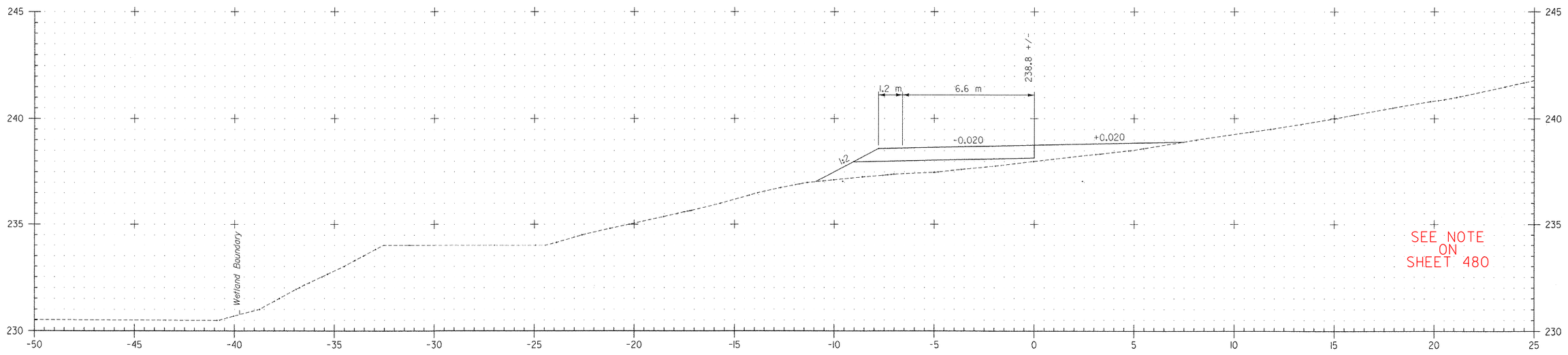

SEE NOTE ON SHEET 480

HRI+740
HAUL ROAD A

CUT (HAUL ROAD): 0
FILL (HAUL ROAD): 8

2 0 2 m
1: 100
@ FULL SIZE

DATUM
VERTICAL NAVD 88
HORIZONTAL NAD 83 (1992)

FILE NAME =$FILE$
DATE/TIME =$DATE$
USER =$NTUSER$

VERMONT AGENCY OF TRANSPORTATION

CLOUGH HARBOUR & ASSOCIATES LLP
© 2007
III Winners Circle, PO Box 5269, Albany, NY 12205
www.cloughharbour.com

PROJECT NAME: BENNINGTON
PROJECT NUMBER: AC NH 019-1(53)

FILE NAME: ZD048XSC.DGN
PROJECT LEADER: D.E.G.
DESIGNED BY: J.S.P.
CROSS SECTIONS XSC-11

PLOT DATE: $DATE$
DRAWN BY: J.S.P.
CHECKED BY: D.E.G.

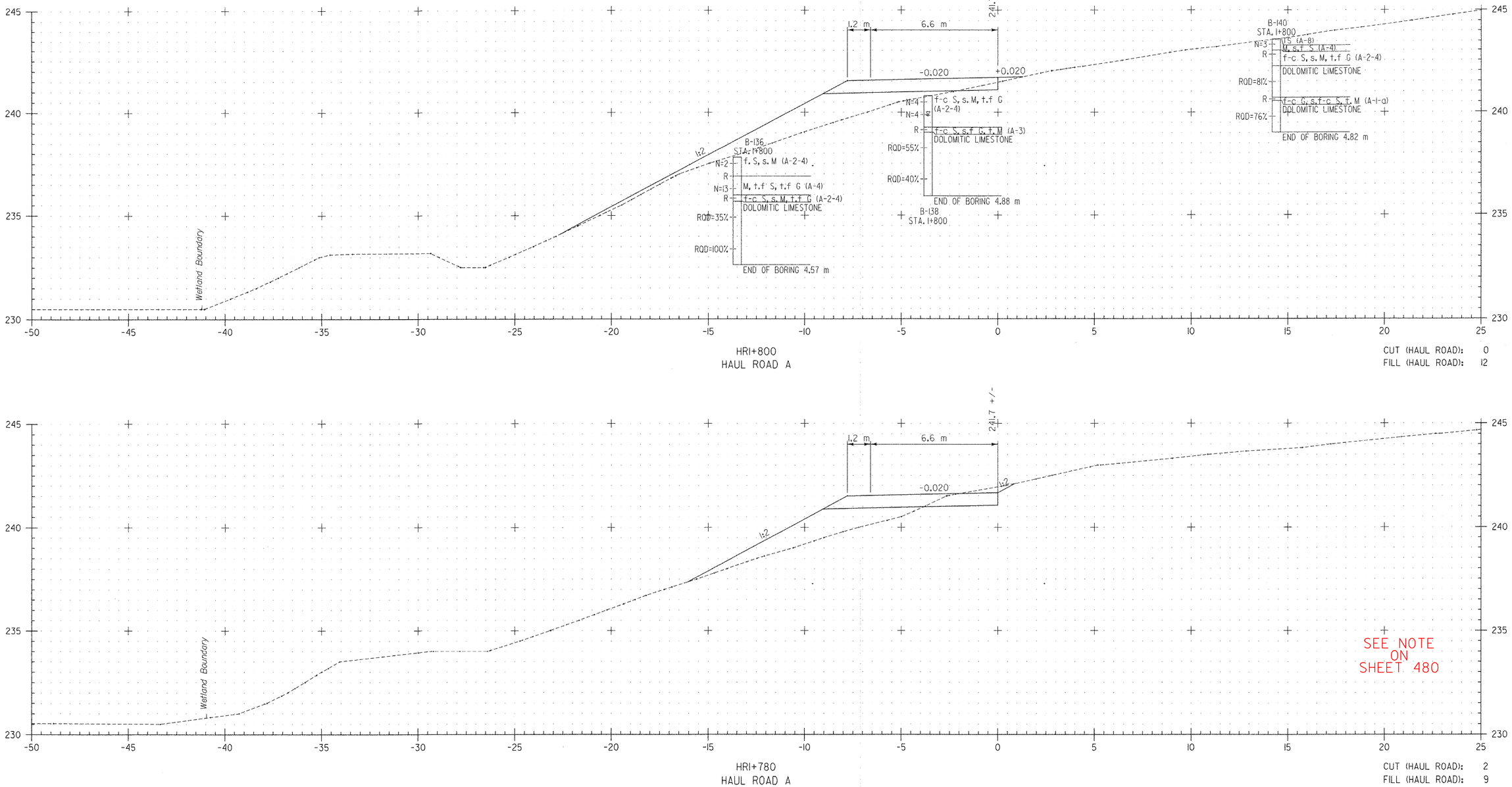

FILE NAME =$FILE$
DATE/TIME =$DATE$
USER =$NTUSER$

DATUM
VERTICAL NAVD 88
HORIZONTAL NAD 83 (1992)

2 0 2 m
1: 100
@ FULL SIZE

VERMONT AGENCY OF TRANSPORTATION

CLOUGH HARBOUR & ASSOCIATES LLP
III Winners Circle, PO Box 5269, Albany, NY 12205
www.cloughharbour.com

PROJECT NAME: BENNINGTON
PROJECT NUMBER: AC NH 019-1(53)

FILE NAME: ZD048XSC.DGN
PROJECT LEADER: D.E.G.
DESIGNED BY: J.S.P.
CROSS SECTIONS XSC-12

PLOT DATE: $DATE$
DRAWN BY: J.S.P.
CHECKED BY: D.E.G.
SHEET 491 OF 577

Metric

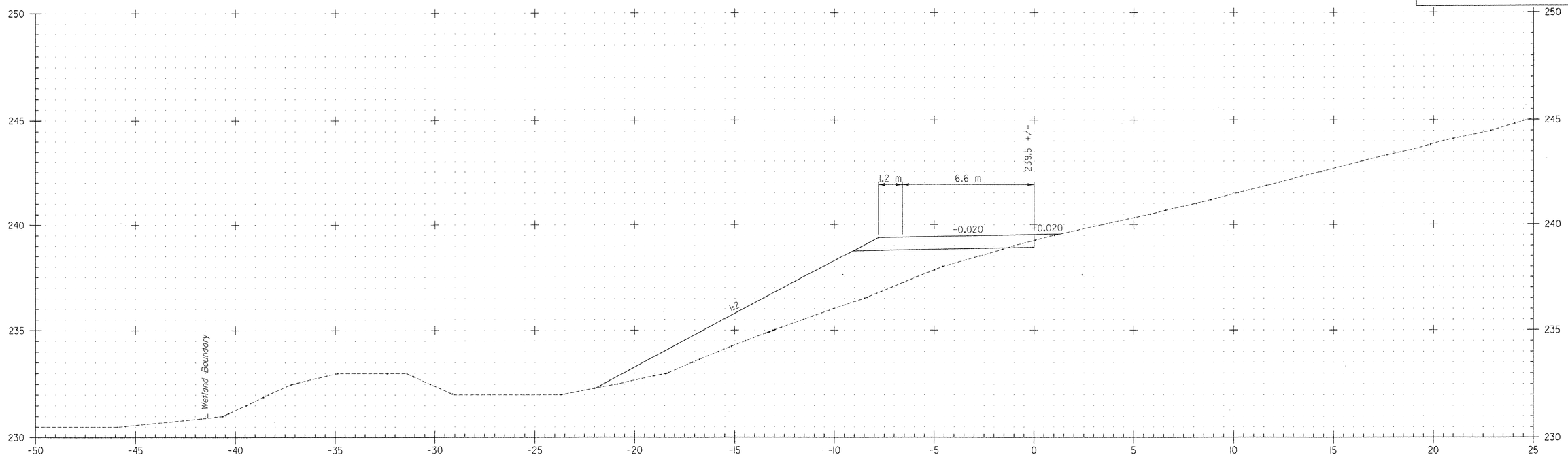

HRI+840
HAUL ROAD A

CUT (HAUL ROAD): 0
FILL (HAUL ROAD): 27

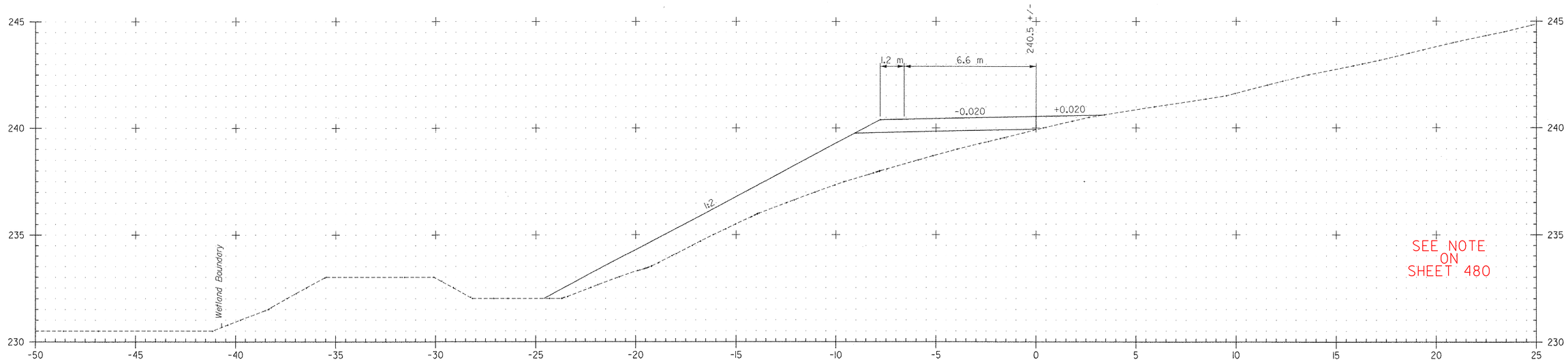

SEE NOTE ON SHEET 480

HRI+820
HAUL ROAD A

CUT (HAUL ROAD): 0
FILL (HAUL ROAD): 29

FILE NAME =$FILE$
DATE/TIME =$DATE$
USER =$NTUSER$

DATUM
VERTICAL NAVD 88
HORIZONTAL NAD 83 (1992)

2 0 2 m
1: 100
@ FULL SIZE

VERMONT AGENCY OF TRANSPORTATION

CLOUGH HARBOUR & ASSOCIATES LLP
© 2007
III Winners Circle, PO Box 5269, Albany, NY 12205
www.cloughharbour.com

PROJECT NAME: BENNINGTON
PROJECT NUMBER: AC NH 019-1(53)

FILE NAME: ZD048XSC.DGN
PROJECT LEADER: D.E.G.
DESIGNED BY: J.S.P.
PLOT DATE: $DATE$
DRAWN BY: J.S.P.
CHECKED BY: D.E.G.

CROSS SECTIONS XSC-13

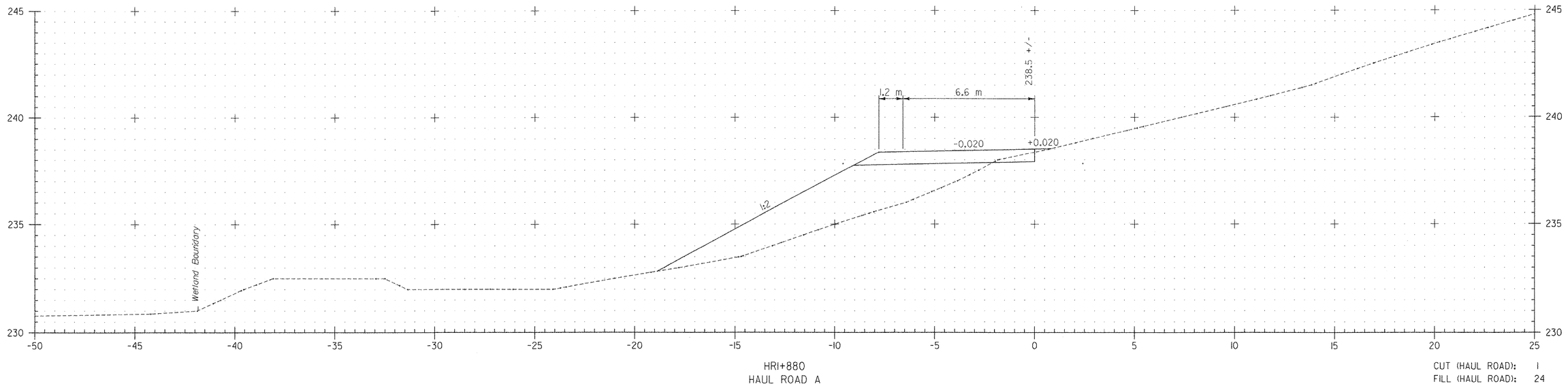

HRI+880
HAUL ROAD A

CUT (HAUL ROAD): 1
FILL (HAUL ROAD): 24

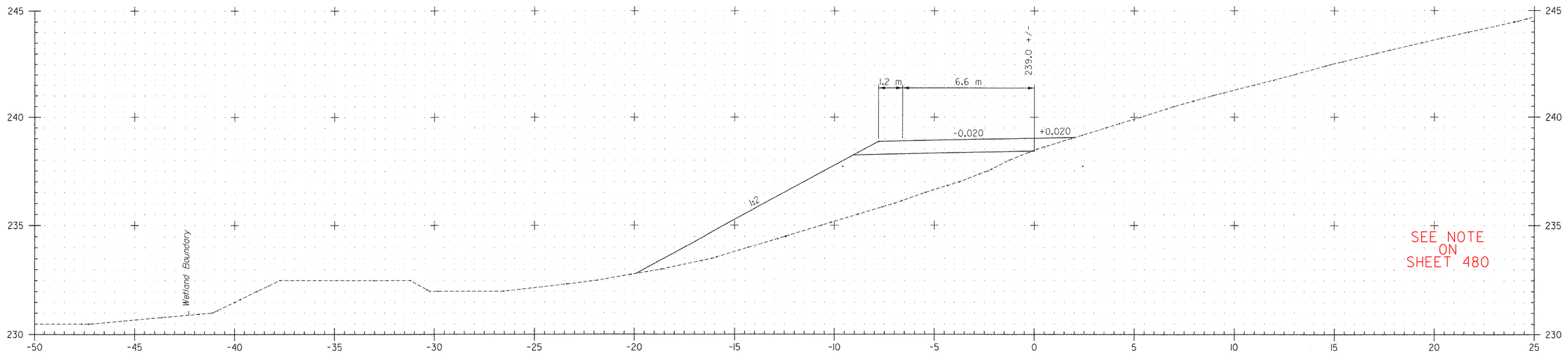

HRI+860
HAUL ROAD A

CUT (HAUL ROAD): 0
FILL (HAUL ROAD): 31

FILE NAME =$FILE$
DATE/TIME =$DATE$
USER =$NTUSER$

DATUM
VERTICAL NAVD 88
HORIZONTAL NAD 83 (1992)

2 0 2 m
1: 100
@ FULL SIZE

VERMONT AGENCY OF TRANSPORTATION

CLOUGH HARBOUR & ASSOCIATES LLP
III Winners Circle, PO Box 5269, Albany, NY 12205
www.cloughharbour.com

PROJECT NAME: BENNINGTON
PROJECT NUMBER: AC NH 019-1(53)

FILE NAME: ZD048XSC.DGN
PROJECT LEADER: D.E.G.
DESIGNED BY: J.S.P.
PLOT DATE: $DATE$
DRAWN BY: J.S.P.
CHECKED BY: D.E.G.

CROSS SECTIONS XSC-14

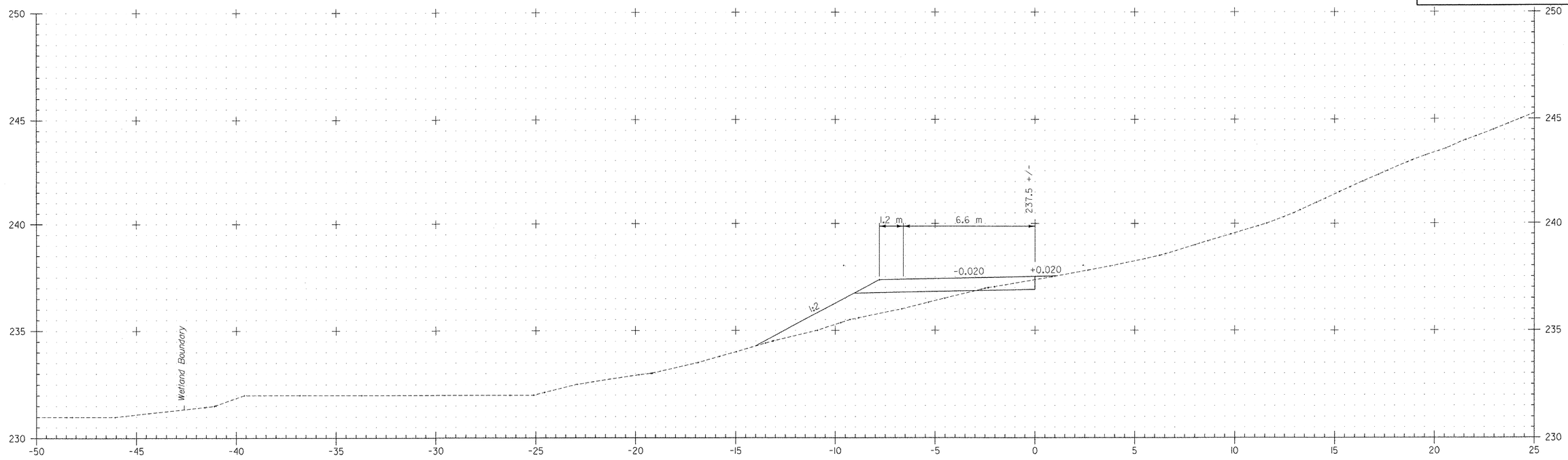

HRI+920
HAUL ROAD A

CUT (HAUL ROAD): 1
FILL (HAUL ROAD): 7

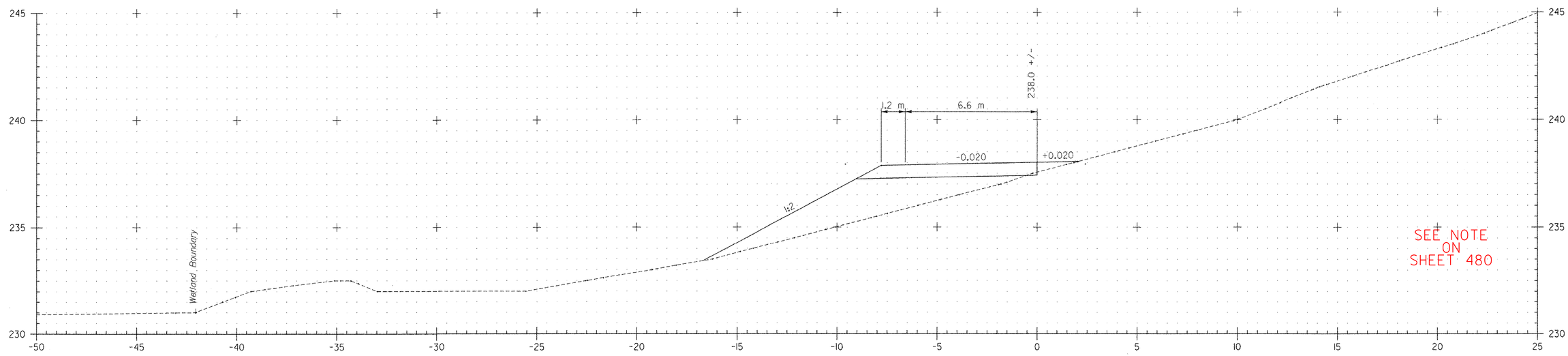

HRI+900
HAUL ROAD A

CUT (HAUL ROAD): 0
FILL (HAUL ROAD): 17

SEE NOTE ON SHEET 480

FILE NAME = $FILE$
DATE/TIME = $DATE$
USER = $NTUSER$

DATUM
VERTICAL NAVD 88
HORIZONTAL NAD 83 (1992)

2 0 2 m
1: 100
@ FULL SIZE

VERMONT AGENCY OF TRANSPORTATION

CLOUGH HARBOUR & ASSOCIATES LLP
III Winners Circle, PO Box 5269, Albany, NY 12205
www.cloughharbour.com

PROJECT NAME: BENNINGTON
PROJECT NUMBER: AC NH 019-1(53)

FILE NAME: ZD048XSC.DGN
PROJECT LEADER: D.E.G.
DESIGNED BY: J.S.P.
CROSS SECTIONS XSC-15

PLOT DATE: $DATE$
DRAWN BY: J.S.P.
CHECKED BY: D.E.G.
SHEET 494 OF 577

Metric

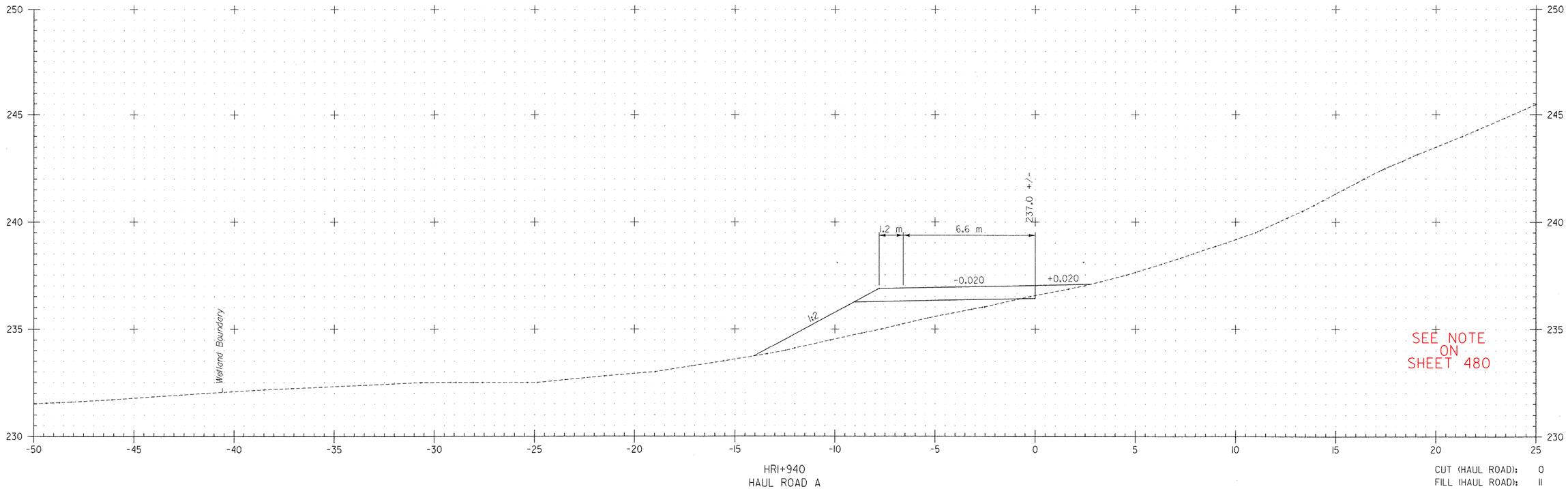

HRI+940
HAUL ROAD A

CUT (HAUL ROAD): 0
FILL (HAUL ROAD): 11

FILE NAME =$FILE$
DATE/TIME =$DATE$
USER =$NTUSER$

DATUM
VERTICAL NAVD 88
HORIZONTAL NAD 83 (1992)

2 0 2 m
1: 100
@ FULL SIZE

VERMONT AGENCY OF TRANSPORTATION

CLOUGH HARBOUR & ASSOCIATES LLP © 2007
111 Winners Circle, PO Box 5266, Albany, NY 12205
www.cloughharbour.com

PROJECT NAME: BENNINGTON
PROJECT NUMBER: AC NH 019-1(53)

FILE NAME: ZD048XSC.DGN
PROJECT LEADER: D.E.G.
DESIGNED BY: J.S.P.
CROSS SECTIONS XSC-16

PLOT DATE: $DATE$
DRAWN BY: J.S.P.
CHECKED BY: D.E.G.
SHEET 495 OF 577

Metric

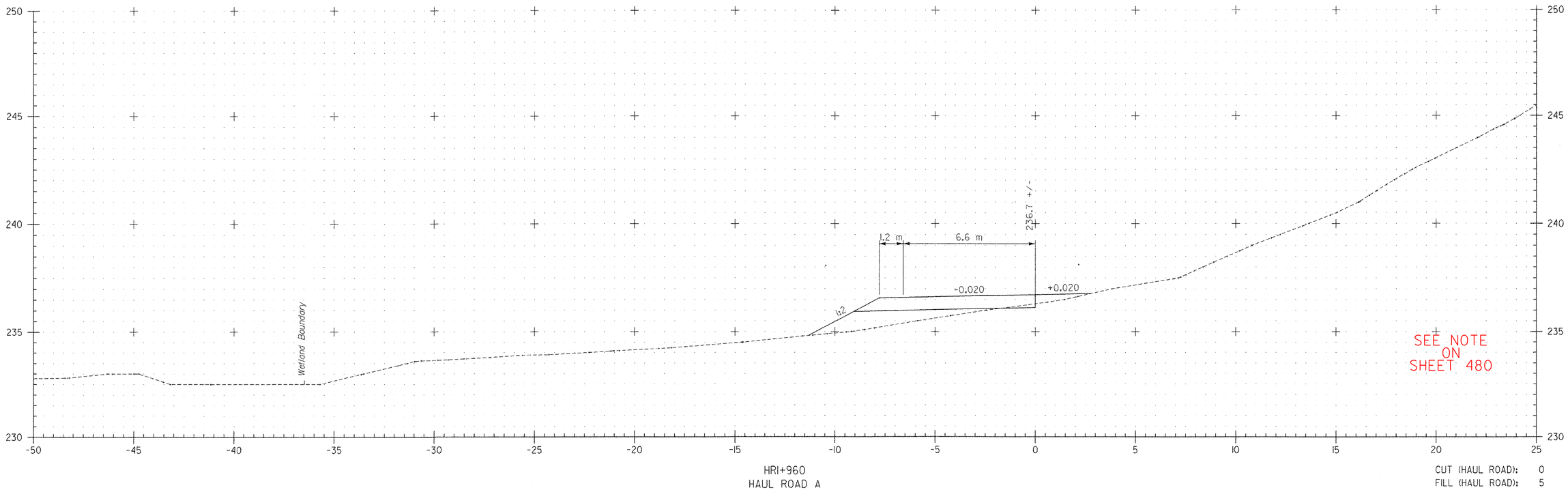

HRI+960
HAUL ROAD A

CUT (HAUL ROAD): 0
FILL (HAUL ROAD): 5

FILE NAME = $FILE$
DATE/TIME = $DATE$
USER = $NTUSER$

DATUM
VERTICAL NAVD 88
HORIZONTAL NAD 83 (1992)

2 0 2 m
1: 100
@ FULL SIZE

VERMONT AGENCY OF TRANSPORTATION

CLOUGH HARBOUR & ASSOCIATES LLP
III Winners Circle, PO Box 5269, Albany, NY 12205
www.cloughharbour.com

PROJECT NAME: BENNINGTON
PROJECT NUMBER: AC NH 019-1(53)

FILE NAME: ZD048XSC.DGN
PROJECT LEADER: D.E.G.
DESIGNED BY: J.S.P.
CROSS SECTIONS XSC-17

PLOT DATE: $DATE$
DRAWN BY: J.S.P.
CHECKED BY: D.E.G.
SHEET 496 OF 577

VAOT Metric

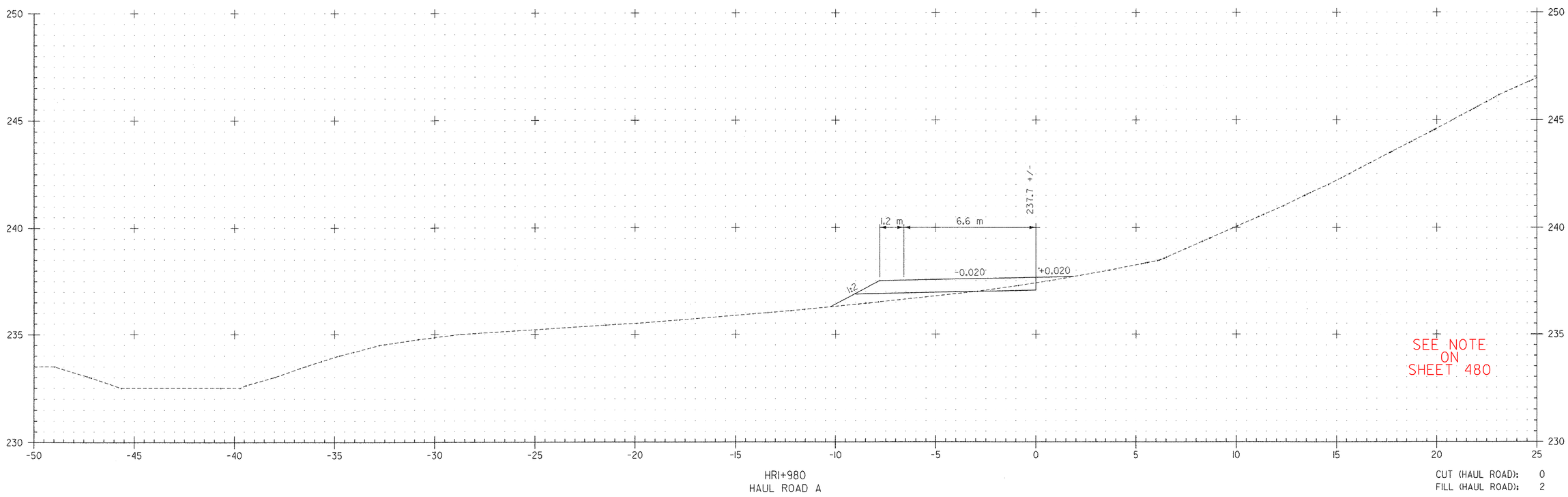

HRI+980
HAUL ROAD A

CUT (HAUL ROAD): 0
FILL (HAUL ROAD): 2

FILE NAME =$FILE$
DATE/TIME =$DATE$
USER =$NTUSER$

DATUM
VERTICAL NAVD 88
HORIZONTAL NAD 83 (1992)

2 0 2 m
1: 100
@ FULL SIZE

VERMONT AGENCY OF TRANSPORTATION

CLOUGH HARBOUR & ASSOCIATES LLP
© 2007
III Winners Circle, PO Box 5269, Albany, NY 12205
www.cloughharbour.com

PROJECT NAME: BENNINGTON
PROJECT NUMBER: AC NH 019-1(53)

FILE NAME: ZD048XSC.DGN
PROJECT LEADER: D.E.G.
DESIGNED BY: J.S.P.
PLOT DATE: $DATE$
DRAWN BY: J.S.P.
CHECKED BY: D.E.G.

CROSS SECTIONS XSC-18

Metric

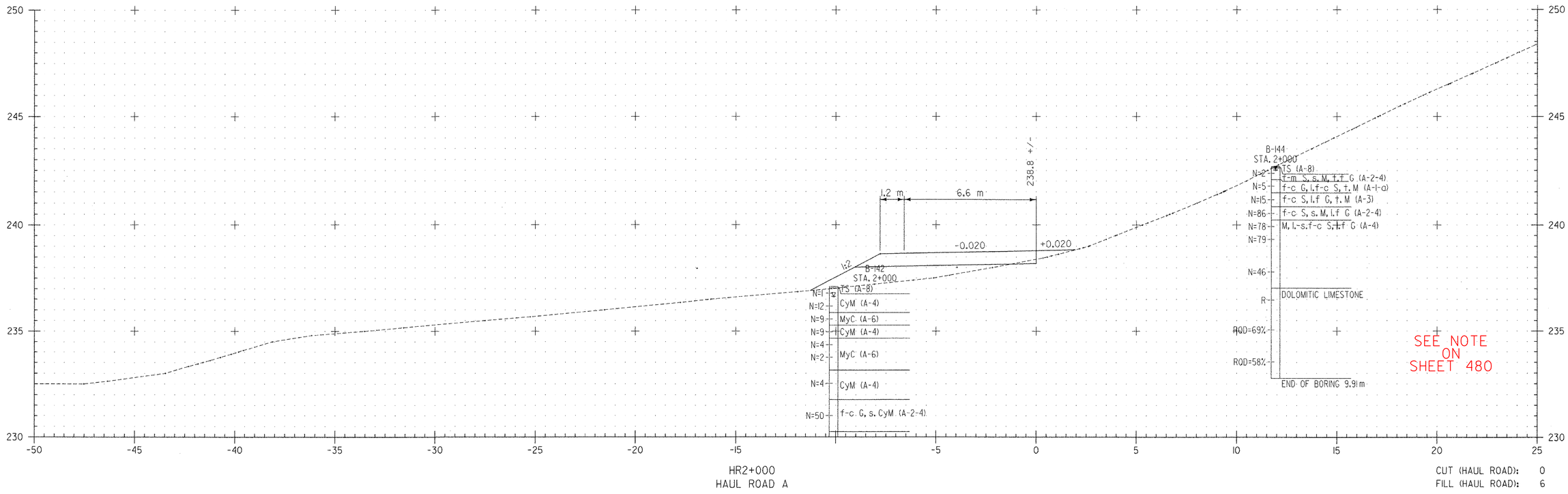

HR2+000
HAUL ROAD A

CUT (HAUL ROAD): 0
FILL (HAUL ROAD): 6

2 0 2 m
1: 100
@ FULL SIZE

FILE NAME =$FILE$
DATE/TIME =$DATE$
USER =$NTUSER$

DATUM
VERTICAL NAVD 88
HORIZONTAL NAD 83 (1992)

VERMONT AGENCY OF TRANSPORTATION

CLOUGH HARBOUR & ASSOCIATES LLP
III Winners Circle, PO Box 5269, Albany, NY 12205
www.cloughharbour.com

PROJECT NAME: BENNINGTON
PROJECT NUMBER: AC NH 019-1(53)

FILE NAME: ZD048XSC.DGN
PROJECT LEADER: D.E.G.
DESIGNED BY: J.S.P.
CROSS SECTIONS XSC-19

PLOT DATE: $DATE$
DRAWN BY: J.S.P.
CHECKED BY: D.E.G.
SHEET 498 OF 577

Metric

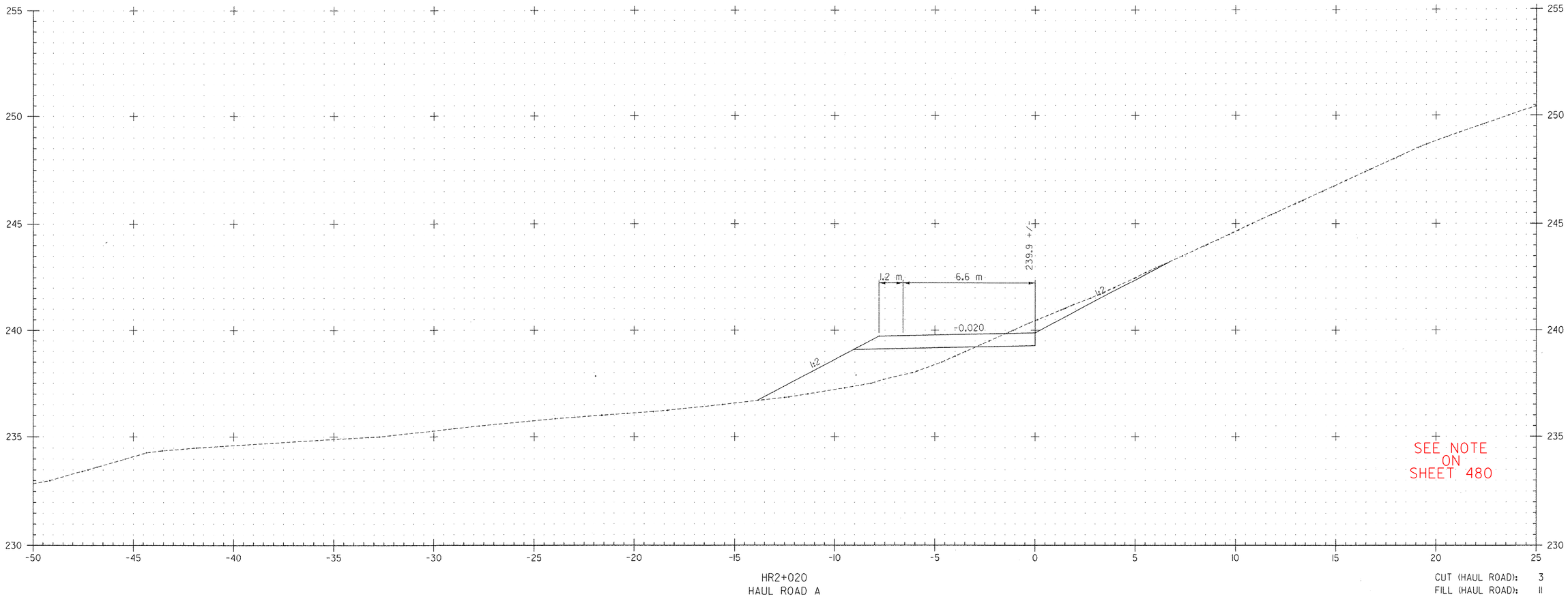

HR2+020
HAUL ROAD A

CUT (HAUL ROAD): 3
FILL (HAUL ROAD): II

2 0 2 m
1: 100
@ FULL SIZE

FILE NAME =$FILE$
DATE/TIME =$DATE$
USER =$NTUSER$

DATUM
VERTICAL NAVD 88
HORIZONTAL NAD 83 (1992)

VERMONT AGENCY OF TRANSPORTATION

CLOUGH HARBOUR & ASSOCIATES LLP
© 2007
III Winners Circle, PO Box 5269, Albany, NY 12205
www.cloughharbour.com

PROJECT NAME: BENNINGTON
PROJECT NUMBER: AC NH 019-1(53)

FILE NAME: ZD048XSC.DGN
PROJECT LEADER: D.E.G.
DESIGNED BY: J.S.P.
CROSS SECTIONS XSC-20

PLOT DATE: $DATE$
DRAWN BY: J.S.P.
CHECKED BY: D.E.G.
SHEET 499 OF 577

Metric

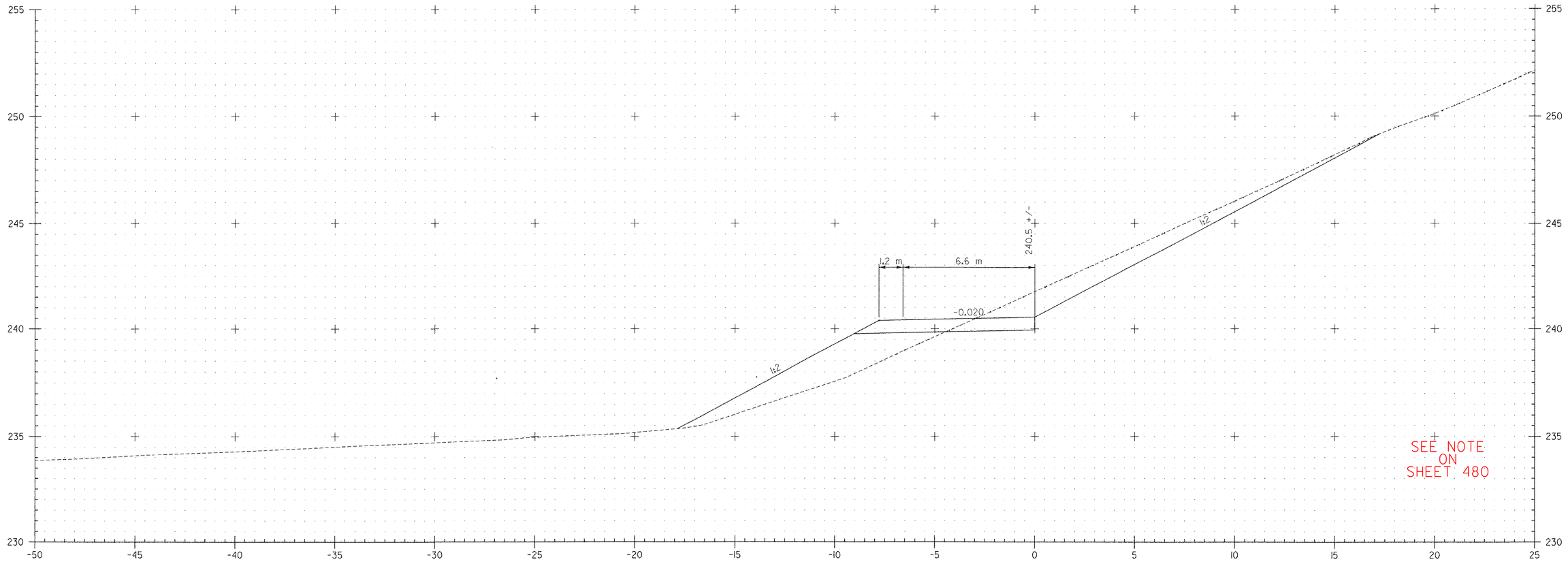

HR2+040
HAUL ROAD A

CUT (HAUL ROAD): 14
FILL (HAUL ROAD): 13

FILE NAME =$FILE$
DATE/TIME =$DATE$
USER =$NTUSER$

DATUM
VERTICAL NAVD 88
HORIZONTAL NAD 83 (1992)

2 0 2 m
1: 100
@ FULL SIZE

VERMONT AGENCY OF TRANSPORTATION

CLOUGH HARBOUR & ASSOCIATES LLP
III Winners Circle, PO Box 5269, Albany, NY 12205
www.cloughharbour.com

PROJECT NAME: BENNINGTON
PROJECT NUMBER: AC NH 019-1(53)

FILE NAME: ZD048XSC.DGN
PROJECT LEADER: D.E.G.
DESIGNED BY: J.S.P.
PLOT DATE: $DATE$
DRAWN BY: J.S.P.
CHECKED BY: D.E.G.

CROSS SECTIONS XSC-21

Metric

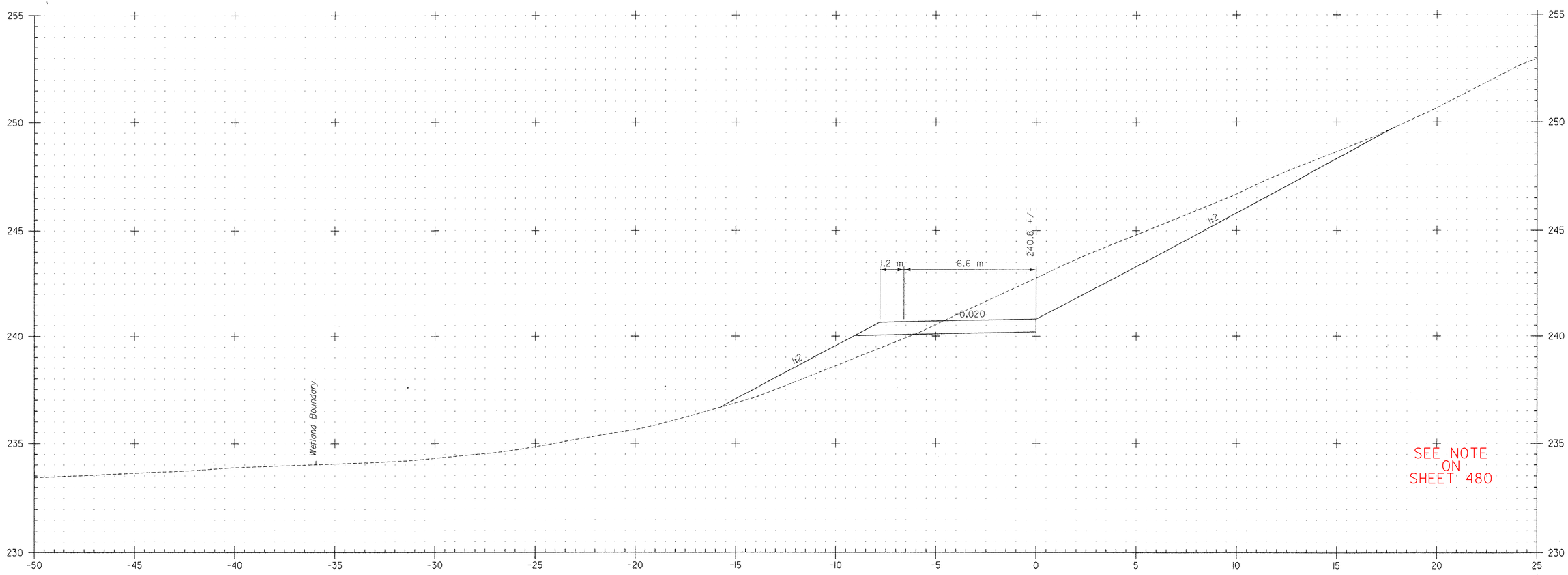

HR2+060
HAUL ROAD A

CUT (HAUL ROAD): 26
FILL (HAUL ROAD): 6

FILE NAME =$FILE$
DATE/TIME =$DATE$
USER =$NTUSER$

DATUM
VERTICAL NAVD 88
HORIZONTAL NAD 83 (1992)

2 0 2 m
1: 100
@ FULL SIZE

VERMONT AGENCY OF TRANSPORTATION

CLOUGH HARBOUR & ASSOCIATES LLP
© 2007
III Winners Circle, PO Box 5269, Albany, NY 12205
www.cloughharbour.com

PROJECT NAME: BENNINGTON
PROJECT NUMBER: AC NH 019-1(53)

FILE NAME: ZD048XSC.DGN
PROJECT LEADER: D.E.G.
DESIGNED BY: J.S.P.
CROSS SECTIONS XSC-22

PLOT DATE: $DATE$
DRAWN BY: J.S.P.
CHECKED BY: D.E.G.
SHEET 501 OF 577

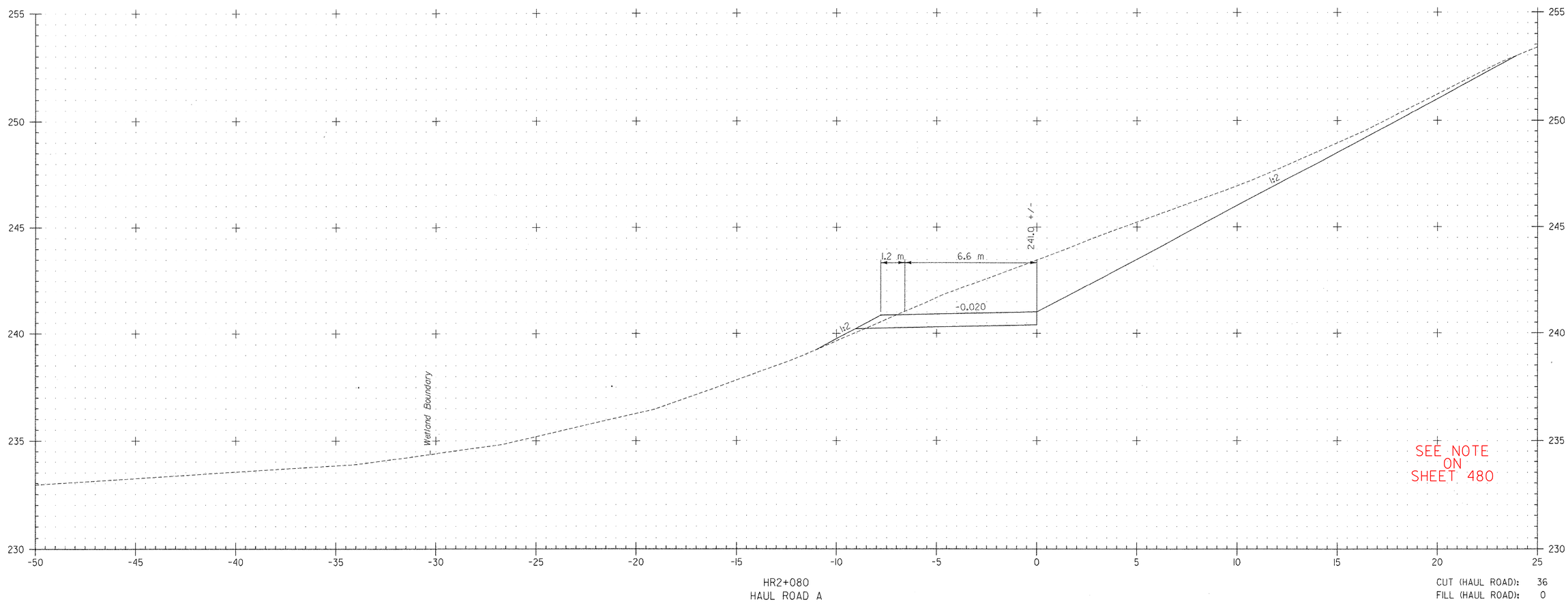

FILE NAME =$FILE$
DATE/TIME =$DATE$
USER =$NTUSER$

DATUM

VERTICAL	NAVD 88
HORIZONTAL	NAD 83 (1992)

2 0 2 m
1: 100
@ FULL SIZE

VERMONT AGENCY OF TRANSPORTATION

CHA
CLOUGH HARBOUR & ASSOCIATES LLP
III Winners Circle, PO Box 5269, Albany, NY 12205
www.cloughharbour.com

PROJECT NAME: BENNINGTON
PROJECT NUMBER: AC NH 019-1(53)

FILE NAME: ZD048XSC.DGN
PROJECT LEADER: D.E.G.
DESIGNED BY: J.S.P.
CROSS SECTIONS XSC-23

PLOT DATE: $DATE$
DRAWN BY: J.S.P.
CHECKED BY: D.E.G.
SHEET 502 OF 577

Metric

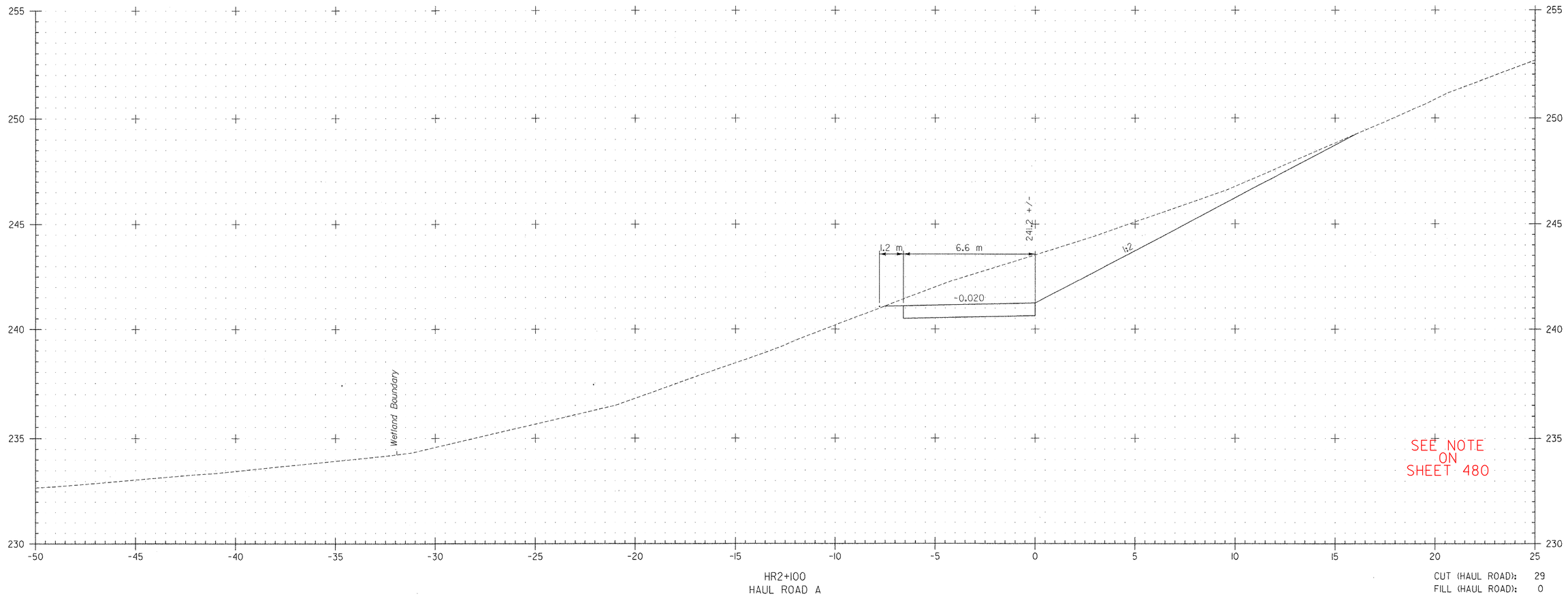

HR2+100
HAUL ROAD A

CUT (HAUL ROAD): 29
FILL (HAUL ROAD): 0

FILE NAME =$FILE$
DATE/TIME =$DATE$
USER =$NTUSER$

DATUM
VERTICAL NAVD 88
HORIZONTAL NAD 83 (1992)

2 0 2 m
1: 100
@ FULL SIZE

VERMONT AGENCY OF TRANSPORTATION

CLOUGH HARBOUR & ASSOCIATES LLP © 2007
111 Winners Circle, PO Box 5269, Albany, NY 12205
www.cloughharbour.com

PROJECT NAME: BENNINGTON
PROJECT NUMBER: AC NH 019-1(53)

FILE NAME: ZD048XSC.DGN
PROJECT LEADER: D.E.G.
DESIGNED BY: J.S.P.
PLOT DATE: $DATE$
DRAWN BY: J.S.P.
CHECKED BY: D.E.G.

CROSS SECTIONS XSC-24

SHEET 503 OF 577

Metric

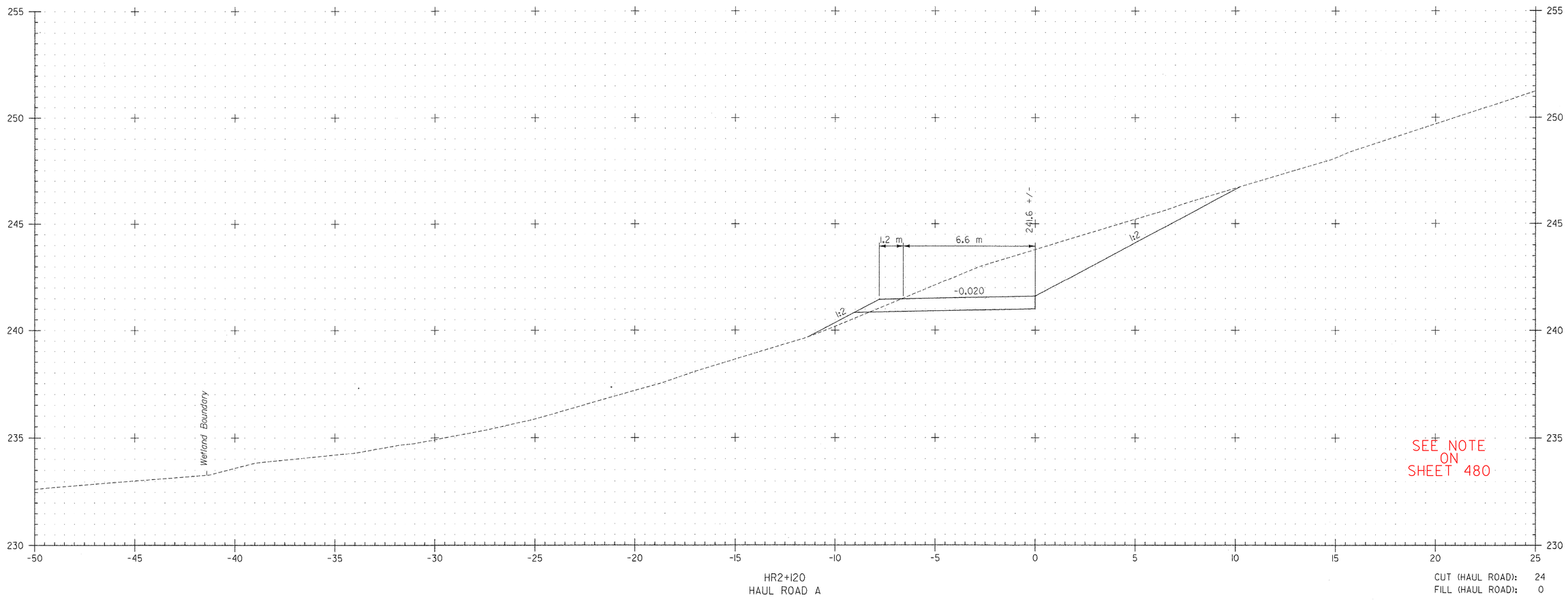

HR2+120
HAUL ROAD A

CUT (HAUL ROAD): 24
FILL (HAUL ROAD): 0

FILE NAME =$FILE$
DATE/TIME =$DATE$
USER =$NTUSER$

DATUM
VERTICAL NAVD 88
HORIZONTAL NAD 83 (1992)

2 0 2 m
1: 100
@ FULL SIZE

VERMONT AGENCY OF TRANSPORTATION

CLOUGH HARBOUR & ASSOCIATES LLP
© 2007
III Winners Circle, PO Box 5269, Albany, NY 12205
www.cloughharbour.com

PROJECT NAME: BENNINGTON
PROJECT NUMBER: AC NH 019-1(53)

FILE NAME: ZD048XSC.DGN
PROJECT LEADER: D.E.G.
DESIGNED BY: J.S.P.
CROSS SECTIONS XSC-25

PLOT DATE: $DATE$
DRAWN BY: J.S.P.
CHECKED BY: D.E.G.
SHEET 504 OF 577

Metric

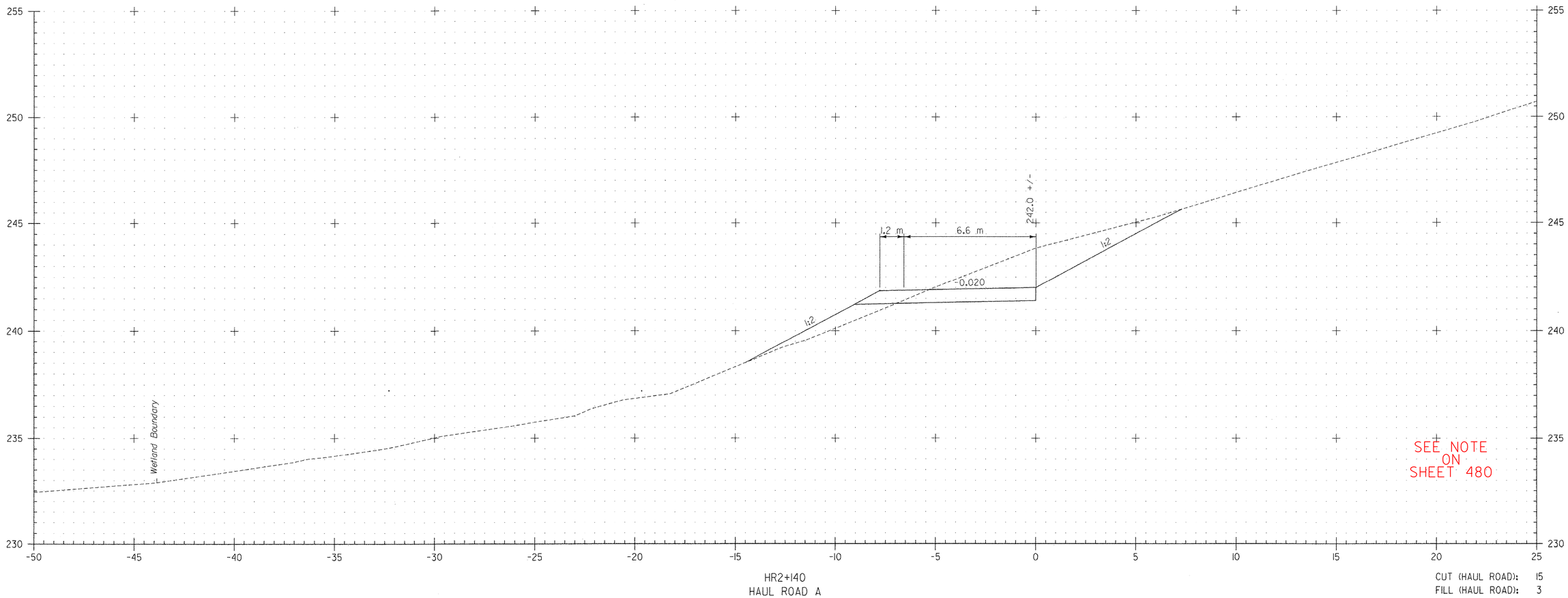

HR2+140
HAUL ROAD A

CUT (HAUL ROAD): 15
FILL (HAUL ROAD): 3

FILE NAME =$FILE$
DATE/TIME =$DATE$
USER =$NTUSER$

DATUM
VERTICAL NAVD 88
HORIZONTAL NAD 83 (1992)

2 0 2 m
1: 100
@ FULL SIZE

VERMONT AGENCY OF TRANSPORTATION

CHA ©2007
CLOUGH HARBOUR & ASSOCIATES LLP
III Winners Circle, PO Box 5269, Albany, NY 12205
www.cloughharbour.com

PROJECT NAME: BENNINGTON
PROJECT NUMBER: AC NH 019-1(53)

FILE NAME: ZD048XSC.DGN
PROJECT LEADER: D.E.G.
DESIGNED BY: J.S.P.
CROSS SECTIONS XSC-26

PLOT DATE: $DATE$
DRAWN BY: J.S.P.
CHECKED BY: D.E.G.
SHEET 505 OF 577

VAOT Metric

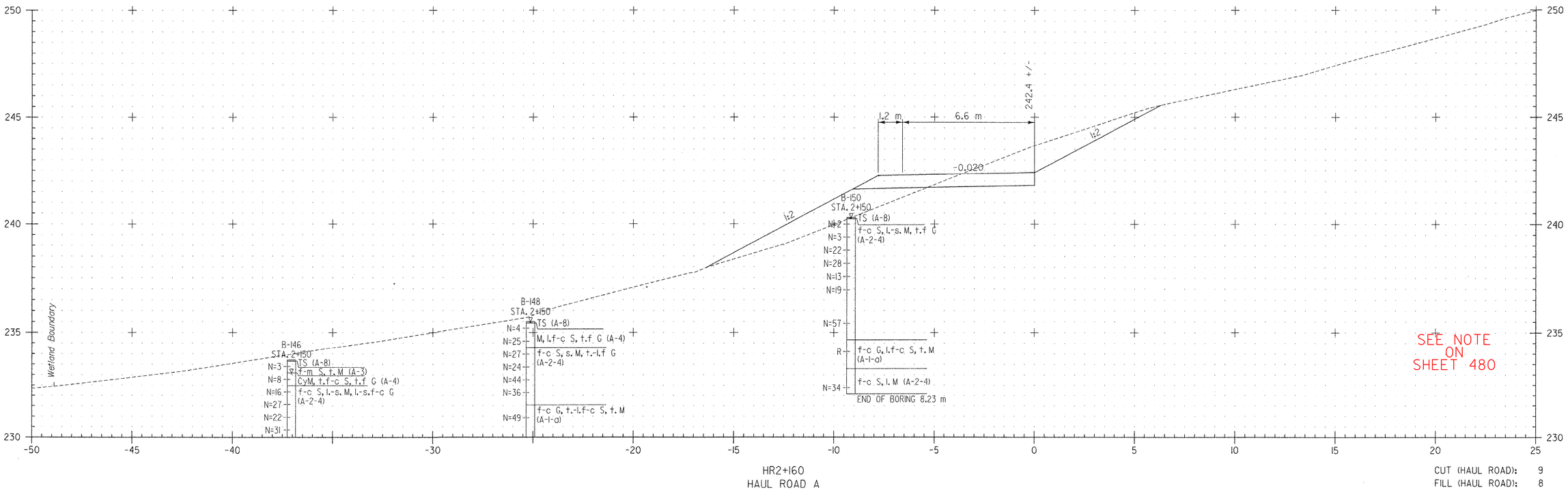

FILE NAME =$FILE$
DATE/TIME =$DATE$
USER =$NTUSER$

DATUM
VERTICAL NAVD 88
HORIZONTAL NAD 83 (1992)

2 0 2 m
1: 100
@ FULL SIZE

VERMONT AGENCY OF TRANSPORTATION

CLOUGH HARBOUR & ASSOCIATES LLP
III Winners Circle, PO Box 5269, Albany, NY 12206
www.cloughharbour.com

PROJECT NAME: BENNINGTON
PROJECT NUMBER: AC NH 019-1(53)

FILE NAME: ZD048XSC.DGN
PROJECT LEADER: D.E.G.
DESIGNED BY: J.S.P.
CROSS SECTIONS XSC-27

PLOT DATE: $DATE$
DRAWN BY: J.S.P.
CHECKED BY: D.E.G.
SHEET 506 OF 577

Metric

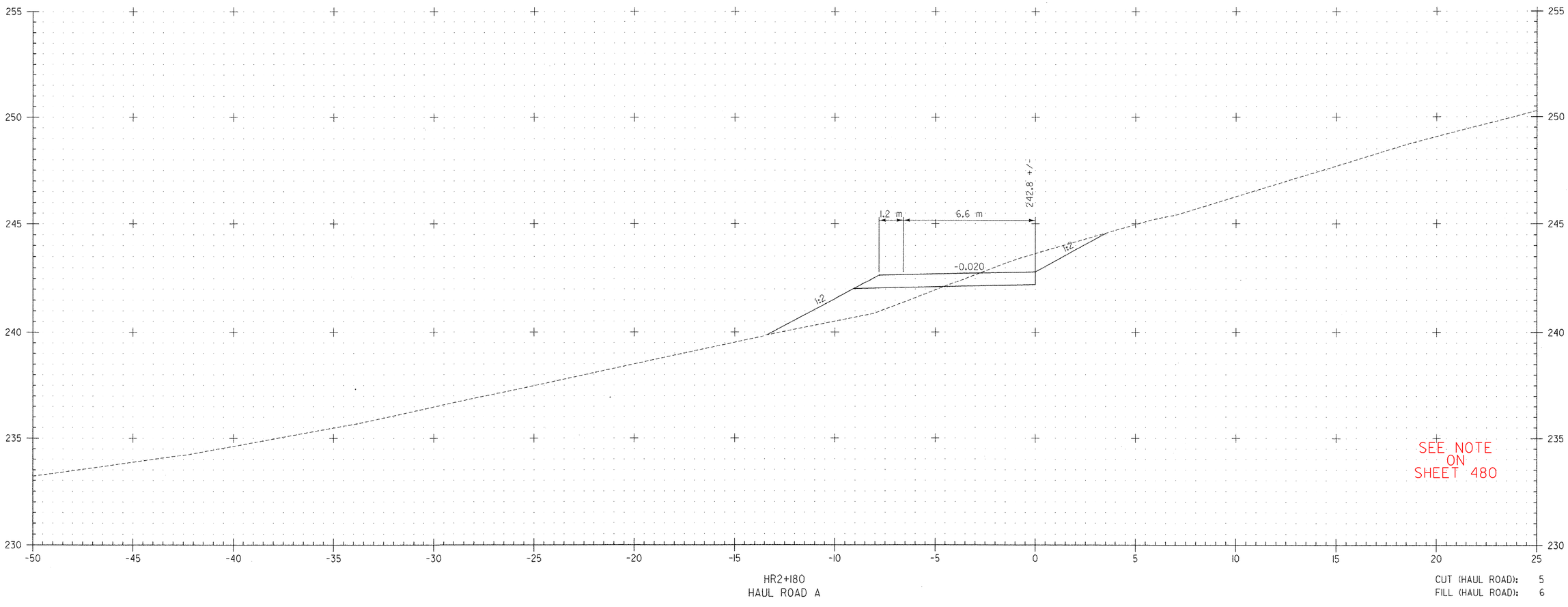

HR2+180
HAUL ROAD A

CUT (HAUL ROAD): 5
FILL (HAUL ROAD): 6

2 0 2 m
1: 100
@ FULL SIZE

FILE NAME =$FILE$
DATE/TIME =$DATE$
USER =$NTUSER$

DATUM
VERTICAL NAVD 88
HORIZONTAL NAD 83 (1992)

VERMONT AGENCY OF TRANSPORTATION

CLOUGH HARBOUR & ASSOCIATES LLP
© 2007
III Winners Circle, PO Box 5269, Albany, NY 12205
www.cloughharbour.com

PROJECT NAME: BENNINGTON
PROJECT NUMBER: AC NH 019-1(53)

FILE NAME: ZD048XSC.DGN
PROJECT LEADER: D.E.G.
DESIGNED BY: J.S.P.
PLOT DATE: $DATE$
DRAWN BY: J.S.P.
CHECKED BY: D.E.G.

CROSS SECTIONS XSC-28

Metric

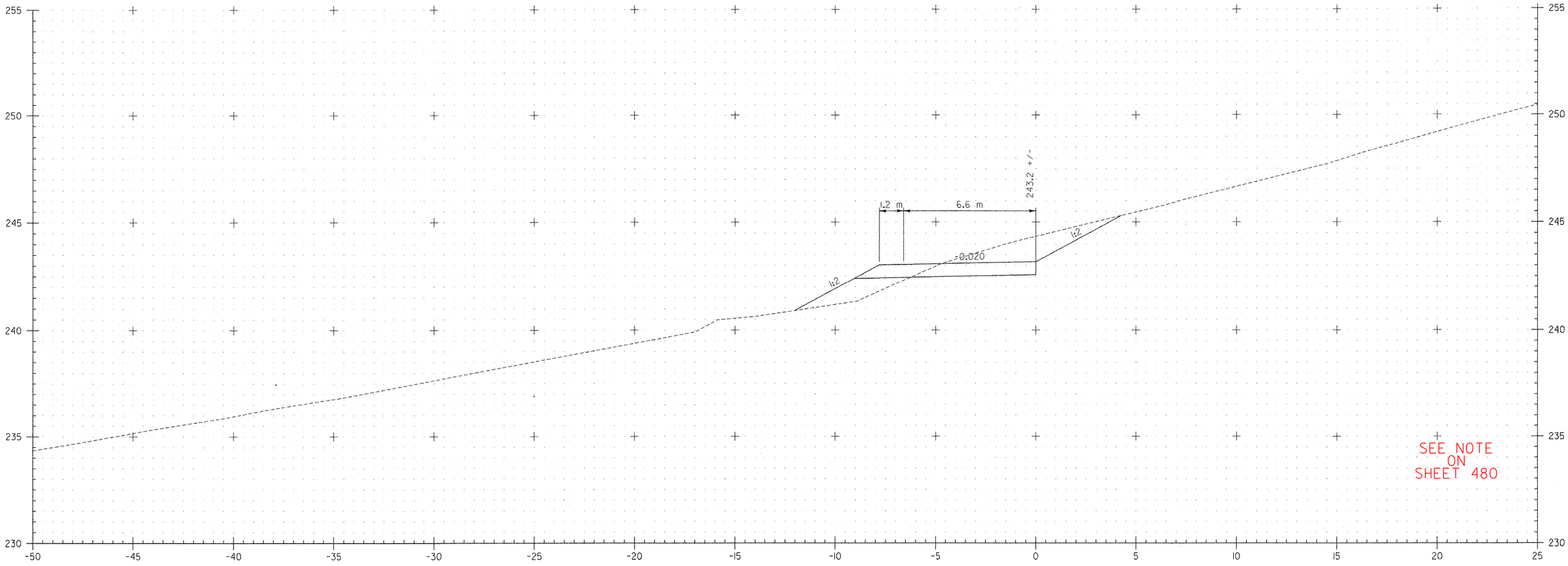

HR2+200
HAUL ROAD A

CUT (HAUL ROAD): 9
FILL (HAUL ROAD): 3

FILE NAME =$FILE$
DATE/TIME =$DATE$
USER =$NTUSER$

DATUM
VERTICAL NAVD 88
HORIZONTAL NAD 83 (1992)

2 0 2 m
1: 100
@ FULL SIZE

VERMONT AGENCY OF TRANSPORTATION

CLOUGH HARBOUR & ASSOCIATES LLP
© 2007
III Winners Circle, PO Box 5269, Albany, NY 12205
www.cloughharbour.com

PROJECT NAME: BENNINGTON
PROJECT NUMBER: AC NH 019-1(53)

FILE NAME: ZD048XSC.DGN
PROJECT LEADER: D.E.G.
DESIGNED BY: J.S.P.
CROSS SECTIONS XSC-29

PLOT DATE: $DATE$
DRAWN BY: J.S.P.
CHECKED BY: D.E.G.
SHEET 508 OF 577

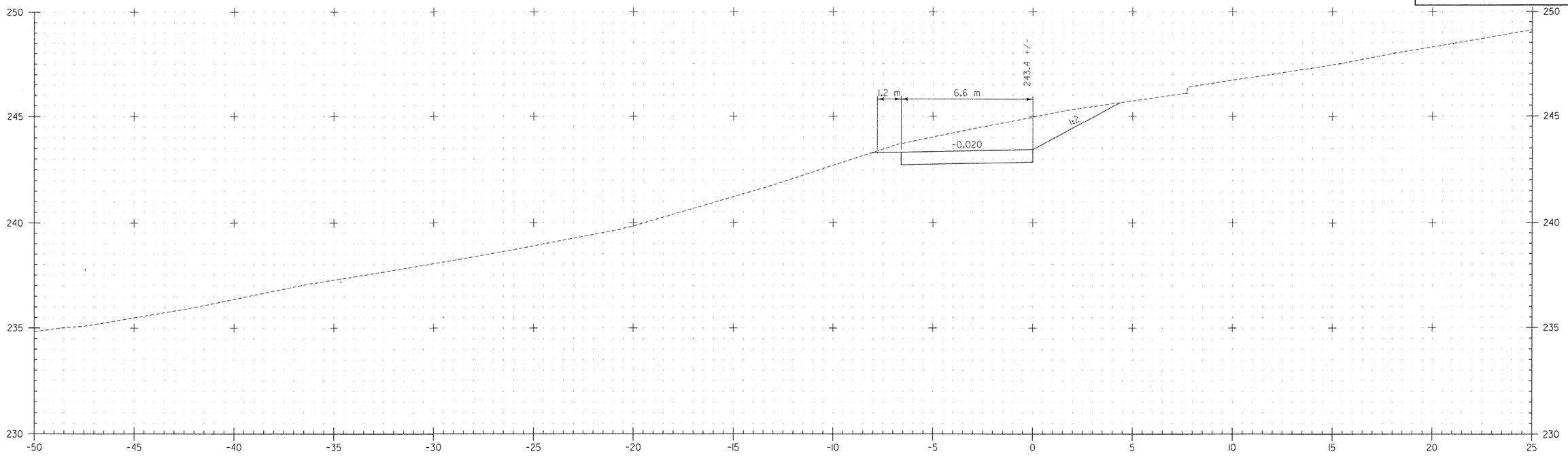

HR2+240
HAUL ROAD A

CUT (HAUL ROAD): 14
FILL (HAUL ROAD): 0

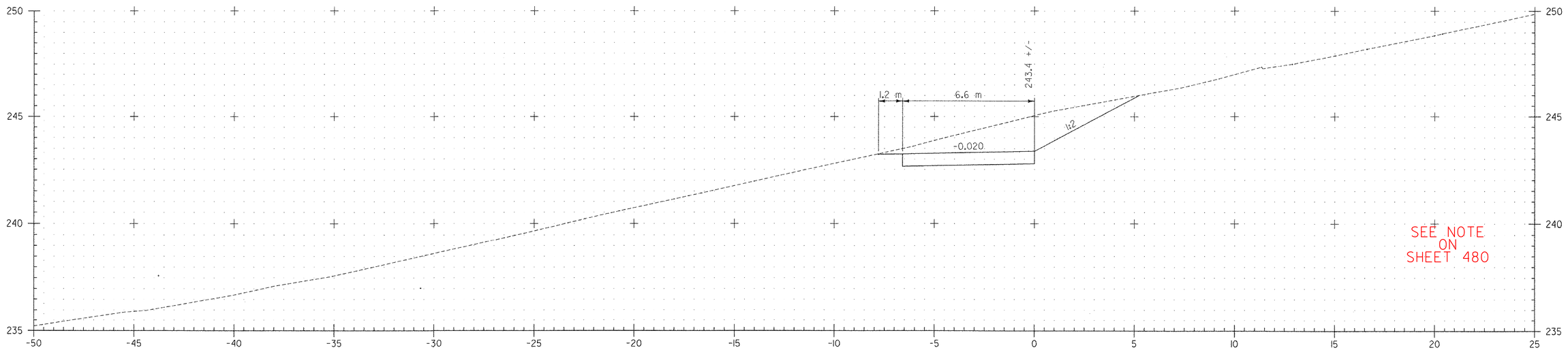

HR2+220
HAUL ROAD A

CUT (HAUL ROAD): 15
FILL (HAUL ROAD): 0

FILE NAME = $FILE$
DATE/TIME = $DATE$
USER = $NTUSER$

DATUM
VERTICAL NAVD 88
HORIZONTAL NAD 83 (1992)

2 0 2 m
1: 100
@ FULL SIZE

VERMONT AGENCY OF TRANSPORTATION

CLOUGH HARBOUR & ASSOCIATES LLP
III Winners Circle, PO Box 5269, Albany, NY 12205
www.cloughharbour.com

PROJECT NAME: BENNINGTON
PROJECT NUMBER: AC NH 019-1(53)

FILE NAME: ZD048XSC.DGN
PROJECT LEADER: D.E.G.
DESIGNED BY: J.S.P.
PLOT DATE: $DATE$
DRAWN BY: J.S.P.
CHECKED BY: D.E.G.

CROSS SECTIONS XSC-30

SHEET 509 OF 577

Metric

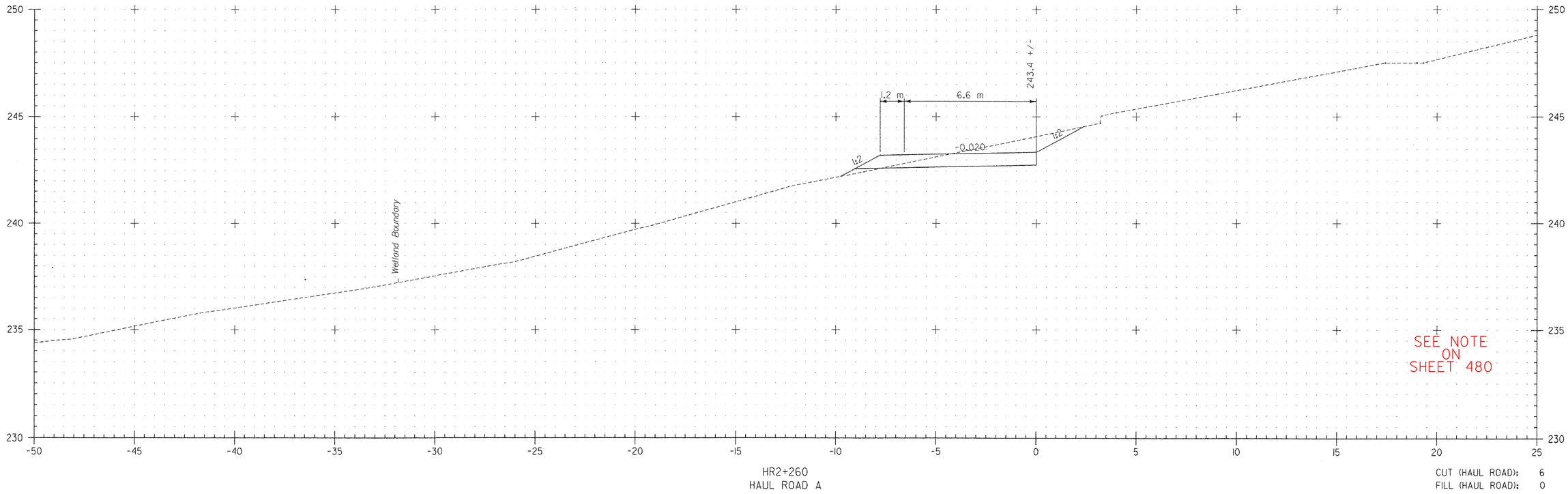

HR2+260
HAUL ROAD A

CUT (HAUL ROAD): 6
FILL (HAUL ROAD): 0

FILE NAME =$FILE$
DATE/TIME =$DATE$
USER =$NTUSER$

DATUM
VERTICAL NAVD 88
HORIZONTAL NAD 83 (1992)

2 0 2 m
1: 100
@ FULL SIZE

VERMONT AGENCY OF TRANSPORTATION

CLOUGH HARBOUR & ASSOCIATES LLP
© 2007
III Winners Circle, PO Box 5269, Albany, NY 12205
www.cloughharbour.com

PROJECT NAME: BENNINGTON
PROJECT NUMBER: AC NH 019-1(53)

FILE NAME: ZD048XSC.DGN
PROJECT LEADER: D.E.G.
DESIGNED BY: J.S.P.
CROSS SECTIONS XSC-31

PLOT DATE: $DATE$
DRAWN BY: J.S.P.
CHECKED BY: D.E.G.
SHEET 510 OF 577

Metric

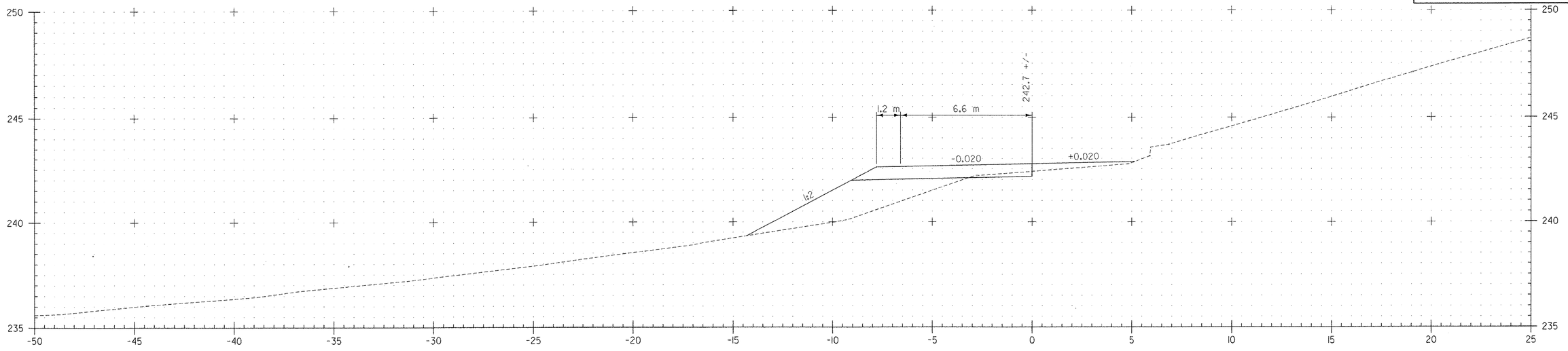

HR2+300
HAUL ROAD A

CUT (HAUL ROAD): 0
FILL (HAUL ROAD): II

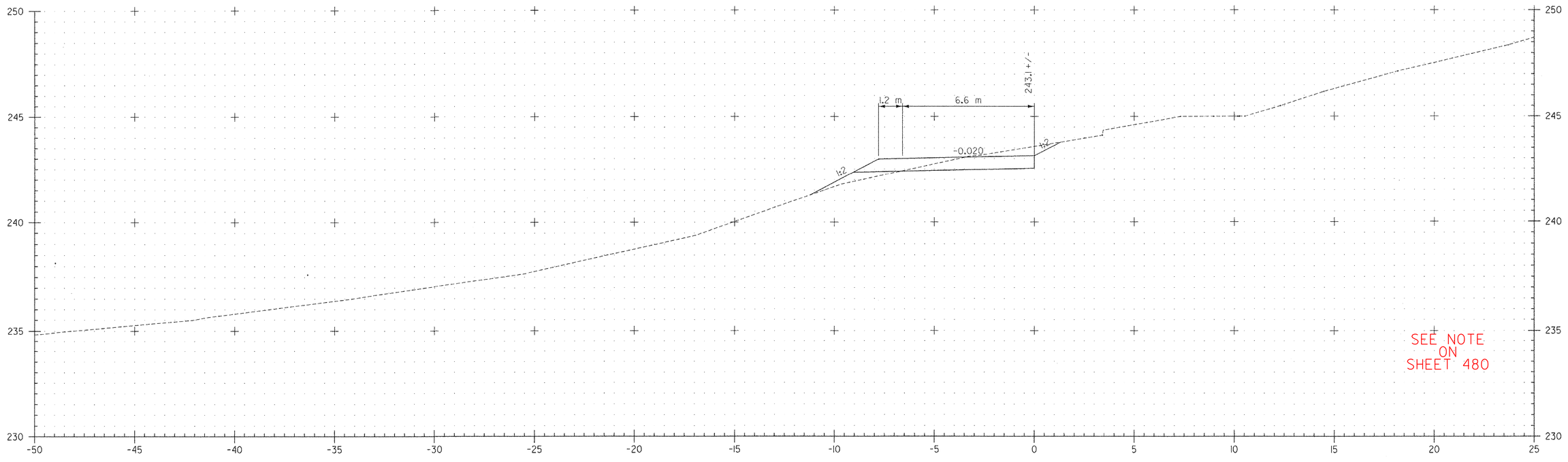

HR2+280
HAUL ROAD A

CUT (HAUL ROAD): 4
FILL (HAUL ROAD): 1

SEE NOTE ON SHEET 480

FILE NAME =$FILE$
DATE/TIME =$DATE$
USER =$NTUSER$

DATUM
VERTICAL NAVD 88
HORIZONTAL NAD 83 (1992)

2 0 2 m
1: 100
@ FULL SIZE

VERMONT AGENCY OF TRANSPORTATION

CLOUGH HARBOUR & ASSOCIATES LLP
© 2007
III Winners Circle, PO Box 5269, Albany, NY 12205
www.cloughharbour.com

PROJECT NAME: BENNINGTON
PROJECT NUMBER: AC NH 019-1(53)

FILE NAME: ZD048XSC.DGN
PROJECT LEADER: D.E.G.
DESIGNED BY: J.S.P.
PLOT DATE: $DATE$
DRAWN BY: J.S.P.
CHECKED BY: D.E.G.

CROSS SECTIONS XSC-32

SHEET 511 OF 577

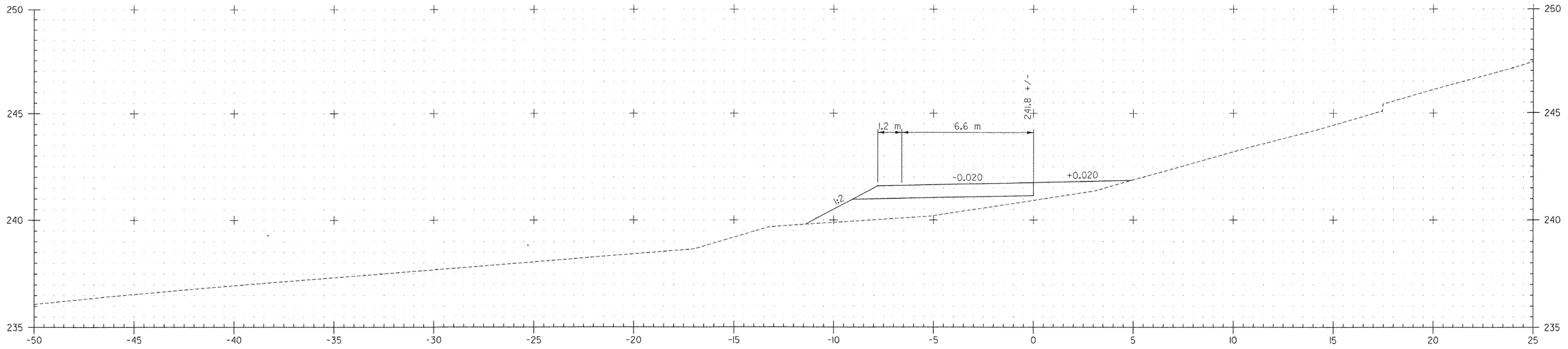

HR2+340
HAUL ROAD A

CUT (HAUL ROAD): 0
FILL (HAUL ROAD): 10

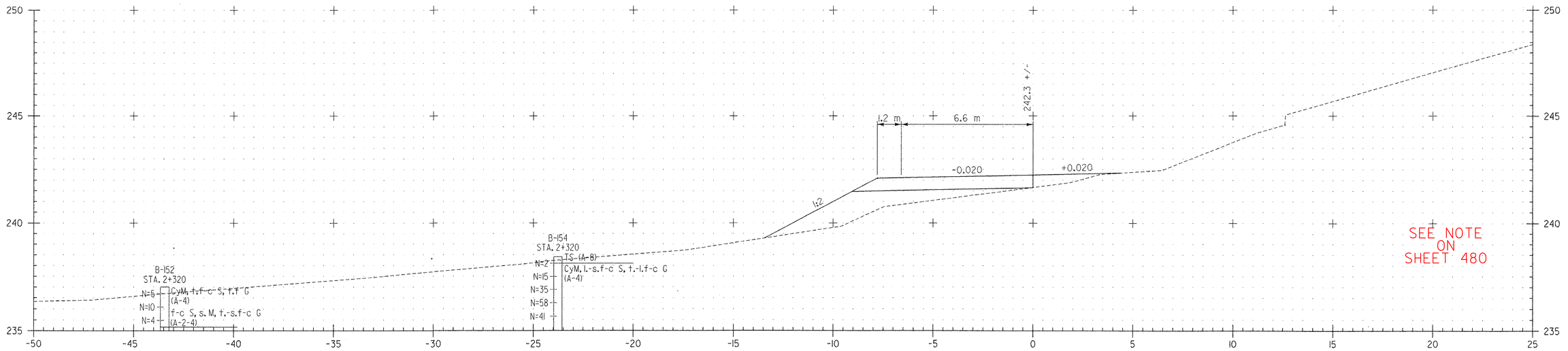

HR2+320
HAUL ROAD A

CUT (HAUL ROAD): 0
FILL (HAUL ROAD): 9

SEE NOTE ON SHEET 480

FILE NAME =$FILE$
DATE/TIME =$DATE$
USER =$NTUSER$

DATUM
VERTICAL NAVD 88
HORIZONTAL NAD 83 (1992)

2 0 2 m
1: 100
@ FULL SIZE

VERMONT AGENCY OF TRANSPORTATION

CLOUGH HARBOUR & ASSOCIATES LLP
© 2007
III Winners Circle, PO Box 5269, Albany, NY 12205
www.cloughharbour.com

PROJECT NAME: BENNINGTON
PROJECT NUMBER: AC NH 019-1(53)

FILE NAME: ZD048XSC.DGN
PROJECT LEADER: D.E.G.
DESIGNED BY: J.S.P.
CROSS SECTIONS XSC-33

PLOT DATE: $DATE$
DRAWN BY: J.S.P.
CHECKED BY: D.E.G.
SHEET 512 OF 577

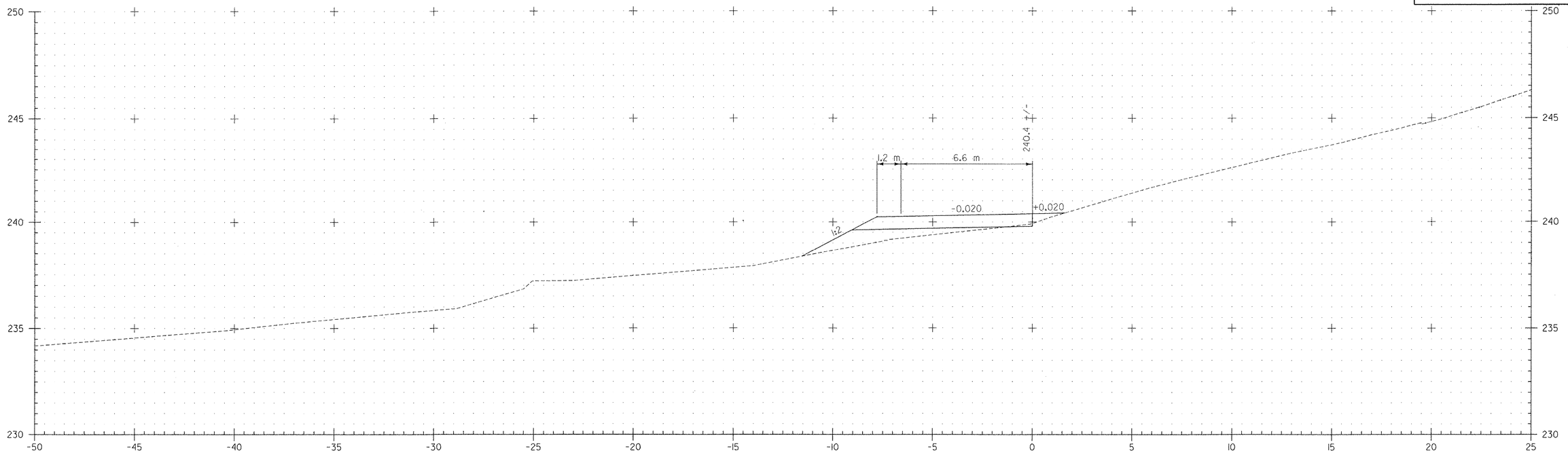

HR2+380
HAUL ROAD A

CUT (HAUL ROAD): 0
FILL (HAUL ROAD): 4

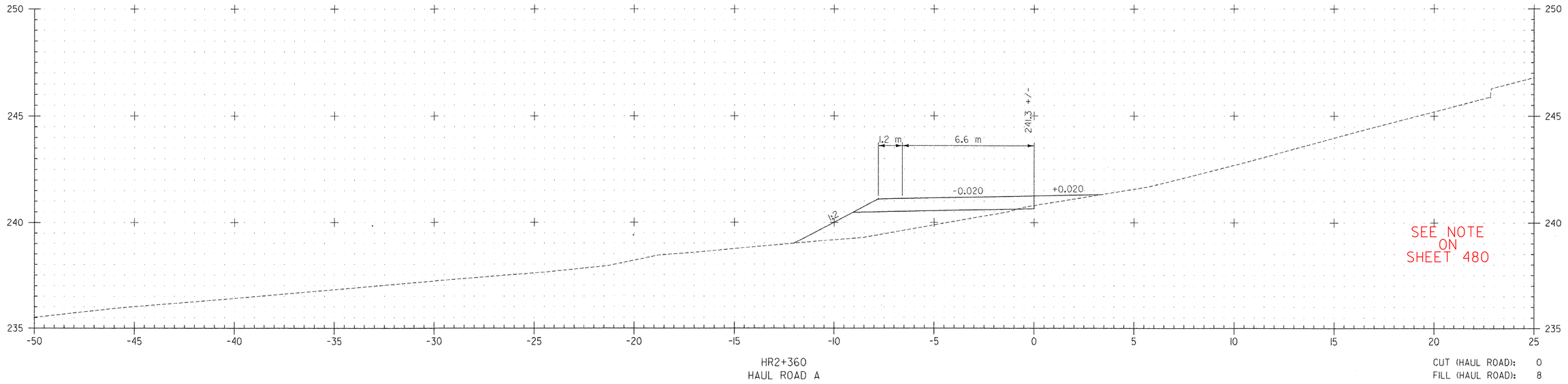

SEE NOTE ON SHEET 480

HR2+360
HAUL ROAD A

CUT (HAUL ROAD): 0
FILL (HAUL ROAD): 8

FILE NAME =$FILE$
DATE/TIME =$DATE$
USER =$NTUSER$

DATUM
VERTICAL NAVD 88
HORIZONTAL NAD 83 (1992)

2 0 2 m
1: 100
@ FULL SIZE

VERMONT AGENCY OF TRANSPORTATION

CLOUGH HARBOUR & ASSOCIATES LLP
111 Winners Circle, PO Box 5269, Albany, NY 12205
www.cloughharbour.com

PROJECT NAME: BENNINGTON
PROJECT NUMBER: AC NH 019-1(53)

FILE NAME: ZD048XSC.DGN
PROJECT LEADER: D.E.G.
DESIGNED BY: J.S.P.
CROSS SECTIONS XSC-34

PLOT DATE: $DATE$
DRAWN BY: J.S.P.
CHECKED BY: D.E.G.
SHEET 513 OF 577

VAOT Metric

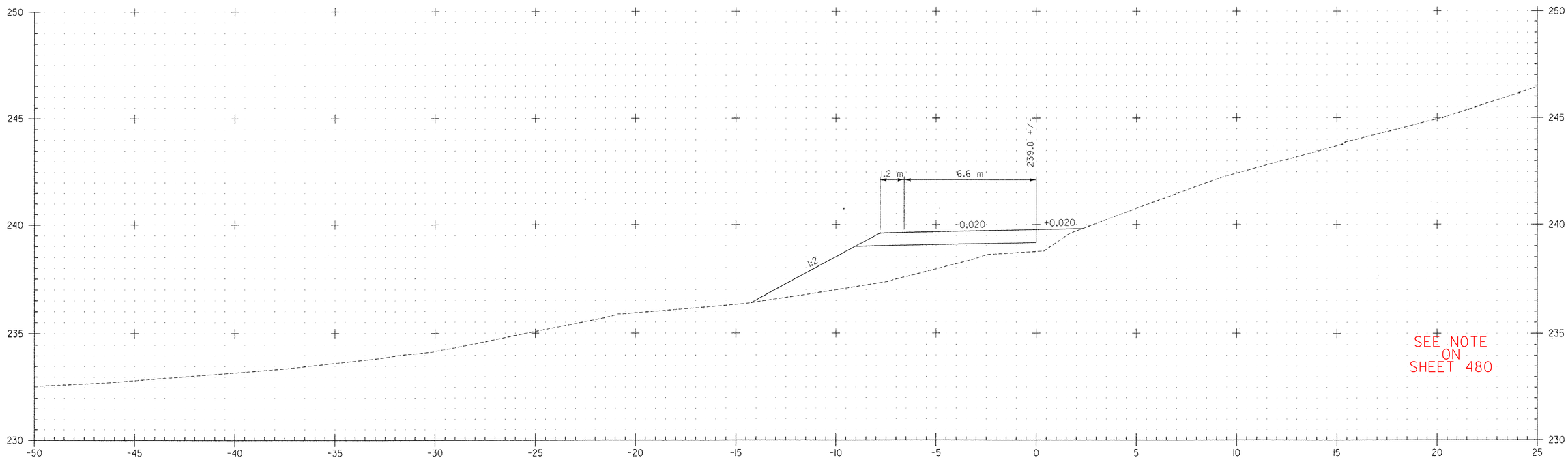

HR2+400
HAUL ROAD A

CUT (HAUL ROAD): 0
FILL (HAUL ROAD): 16

FILE NAME =$FILE$
DATE/TIME =$DATE$
USER =$NTUSER$

DATUM
VERTICAL NAVD 88
HORIZONTAL NAD 83 (1992)

2 0 2 m
1: 100
@ FULL SIZE

VERMONT AGENCY OF TRANSPORTATION

CLOUGH HARBOUR & ASSOCIATES LLP
III Winners Circle, PO Box 5269, Albany, NY 12205
www.cloughharbour.com

PROJECT NAME: BENNINGTON
PROJECT NUMBER: AC NH 019-1(53)

FILE NAME: ZD048XSC.DGN
PROJECT LEADER: D.E.G.
DESIGNED BY: J.S.P.
PLOT DATE: $DATE$
DRAWN BY: J.S.P.
CHECKED BY: D.E.G.

CROSS SECTIONS XSC-35

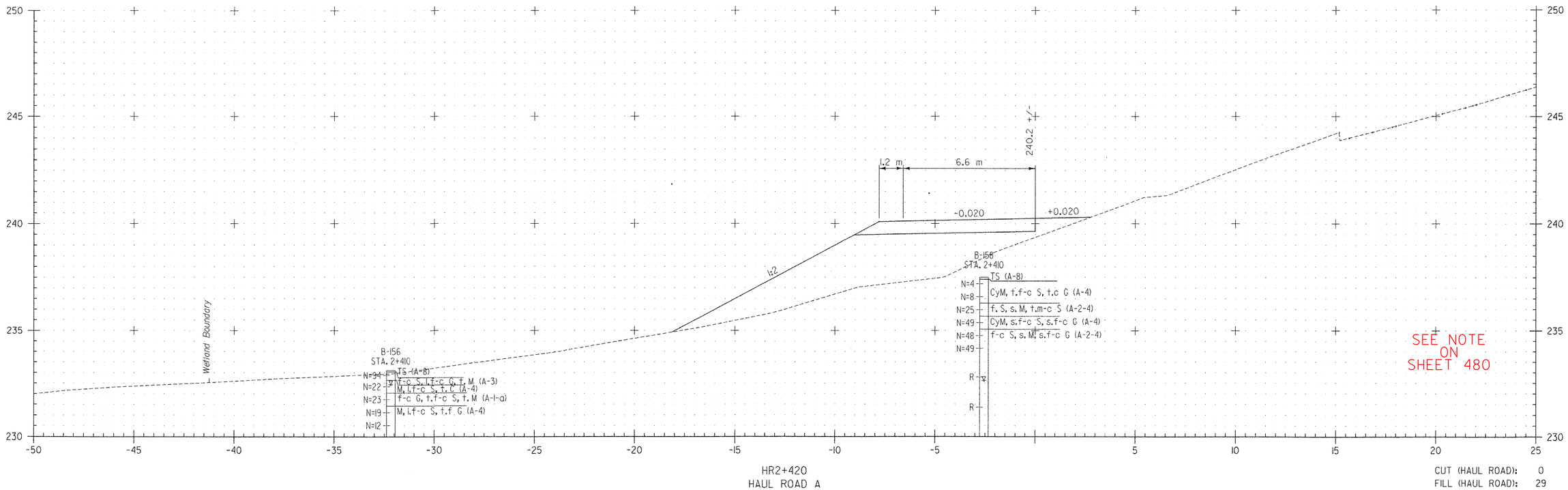

CUT (HAUL ROAD): 0
FILL (HAUL ROAD): 29

FILE NAME =$FILE$
DATE/TIME =$DATE$
USER =$NTUSER$

DATUM	
VERTICAL	NAVD 88
HORIZONTAL	NAD 83 (1992)

2 0 2 m
1: 100
@ FULL SIZE

VERMONT AGENCY OF TRANSPORTATION

CHA
CLOUGH HARBOUR & ASSOCIATES LLP
III Winners Circle, PO Box 5269, Albany, NY 12205
www.cloughharbour.com

PROJECT NAME: BENNINGTON
PROJECT NUMBER: AC NH 019-1(53)

FILE NAME: ZD048XSC.DGN
PROJECT LEADER: D.E.G.
DESIGNED BY: J.S.P.
CROSS SECTIONS XSC-36

PLOT DATE: $DATE$
DRAWN BY: J.S.P.
CHECKED BY: D.E.G.
SHEET 515 OF 577

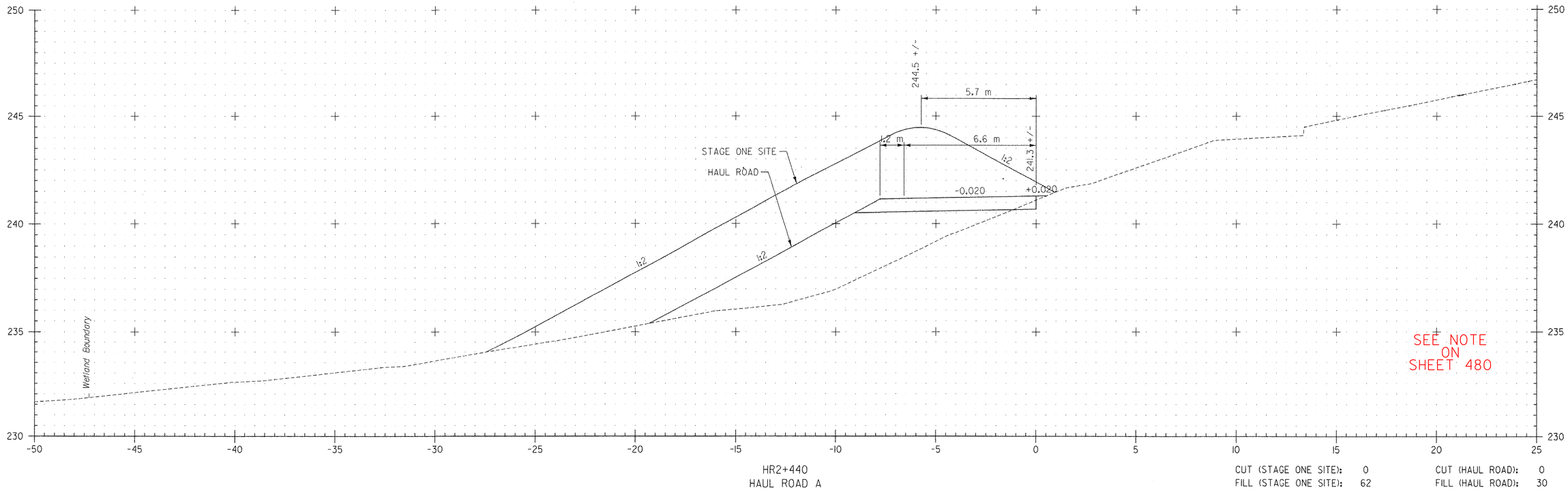

HR2+440
HAUL ROAD A

CUT (STAGE ONE SITE):	0	CUT (HAUL ROAD):	0
FILL (STAGE ONE SITE):	62	FILL (HAUL ROAD):	30

2 0 2 m
1: 100
@ FULL SIZE

DATUM
VERTICAL NAVD 88
HORIZONTAL NAD 83 (1992)

FILE NAME =$FILE$
DATE/TIME =$DATE$
USER =$NTUSER$

VERMONT AGENCY OF TRANSPORTATION

CLOUGH HARBOUR & ASSOCIATES LLP
III Winners Circle, PO Box 5269, Albany, NY 12205
www.cloughharbour.com

PROJECT NAME: BENNINGTON
PROJECT NUMBER: AC NH 019-1(53)

FILE NAME: ZD048XSC.DGN
PROJECT LEADER: D.E.G.
DESIGNED BY: J.S.P.
CROSS SECTIONS XSC-37

PLOT DATE: $DATE$
DRAWN BY: J.S.P.
CHECKED BY: D.E.G.
SHEET 516 OF 577

Metric

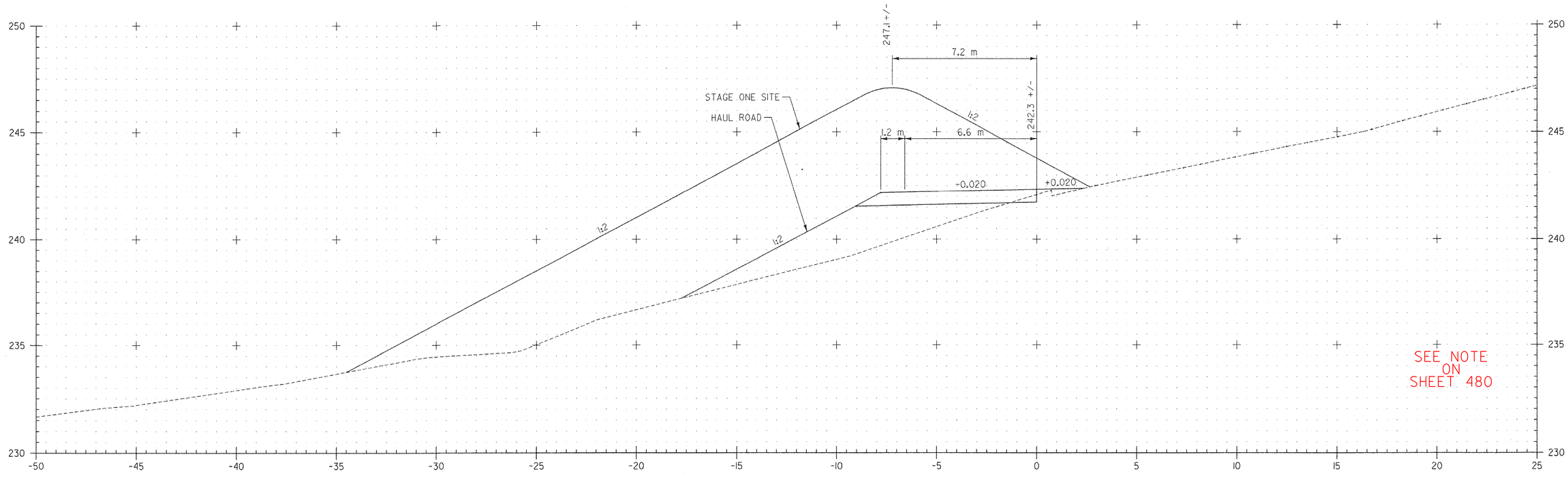

HR2+460
HAUL ROAD A

CUT (STAGE ONE SITE): 0
FILL (STAGE ONE SITE): 125
CUT (HAUL ROAD): 0
FILL (HAUL ROAD): 19

FILE NAME = $FILE$
DATE/TIME = $DATE$
USER = $NTUSER$

DATUM
VERTICAL NAVD 88
HORIZONTAL NAD 83 (1992)

2 0 2 m
1: 100
@ FULL SIZE

VERMONT AGENCY OF TRANSPORTATION

CLOUGH HARBOUR & ASSOCIATES LLP
III Winners Circle, PO Box 5266, Albany, NY 12205
www.cloughharbour.com

PROJECT NAME: BENNINGTON
PROJECT NUMBER: AC NH 019-1(53)

FILE NAME: ZD048XSC.DGN
PROJECT LEADER: D.E.G.
DESIGNED BY: J.S.P.
PLOT DATE: $DATE$
DRAWN BY: J.S.P.
CHECKED BY: D.E.G.

CROSS SECTIONS XSC-38

SHEET 517 OF 577

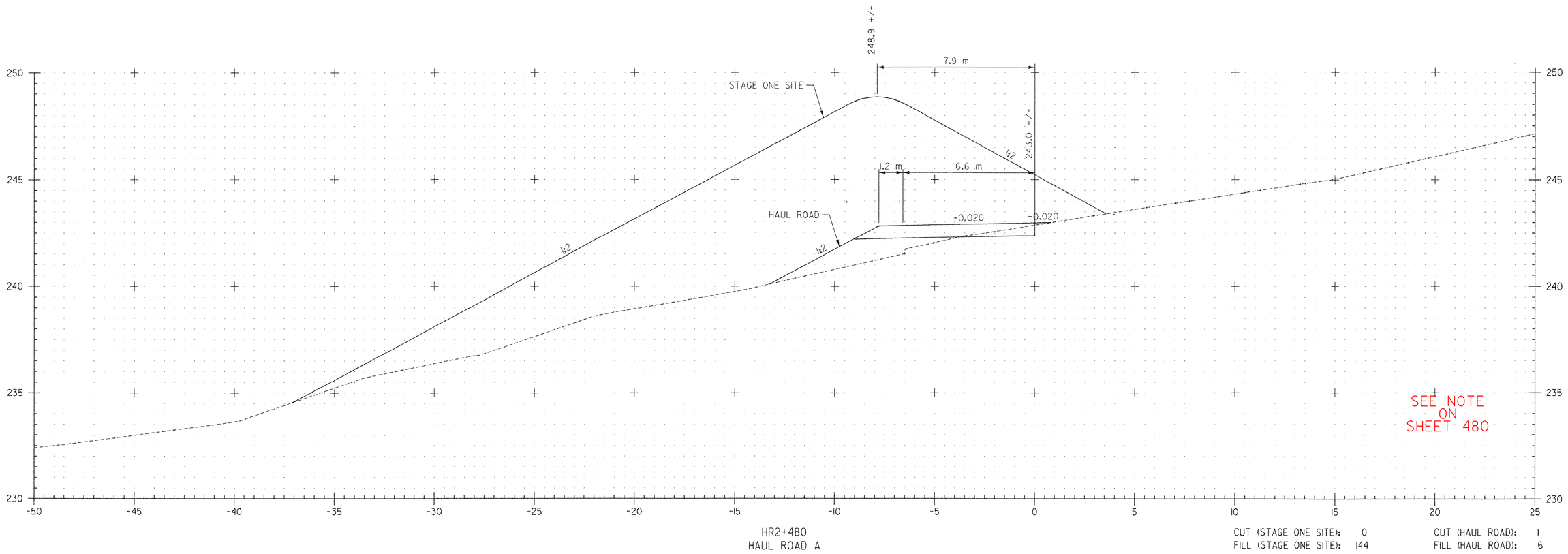

HR2+480
HAUL ROAD A

CUT (STAGE ONE SITE): 0
FILL (STAGE ONE SITE): 144

CUT (HAUL ROAD): 1
FILL (HAUL ROAD): 6

FILE NAME =$FILE$
DATE/TIME =$DATE$
USER =$NTUSER$

DATUM

VERTICAL	NAVD 88
HORIZONTAL	NAD 83 (1992)

2 0 2 m
1: 100
@ FULL SIZE

VERMONT AGENCY OF TRANSPORTATION

CHA
CLOUGH HARBOUR & ASSOCIATES LLP
III Winners Circle, PO Box 5269, Albany, NY 12205
www.cloughharbour.com

PROJECT NAME: BENNINGTON
PROJECT NUMBER: AC NH 019-1(53)

FILE NAME: ZD048XSC.DGN
PROJECT LEADER: D.E.G.
DESIGNED BY: J.S.P.
CROSS SECTIONS XSC-39

PLOT DATE: $DATE$
DRAWN BY: J.S.P.
CHECKED BY: D.E.G.
SHEET 518 OF 577

Metric

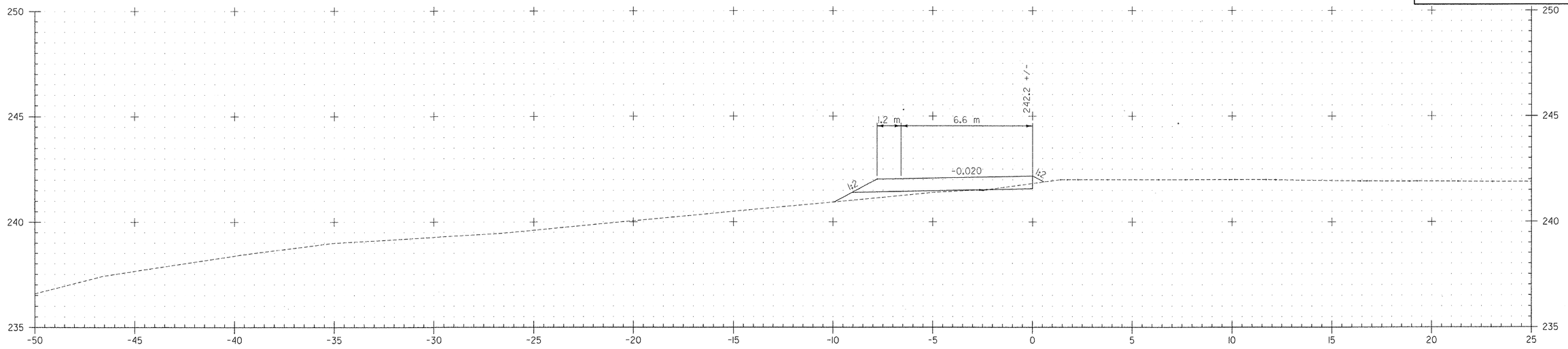

HR2+520
HAUL ROAD A

CUT (HAUL ROAD): 0
FILL (HAUL ROAD): 1

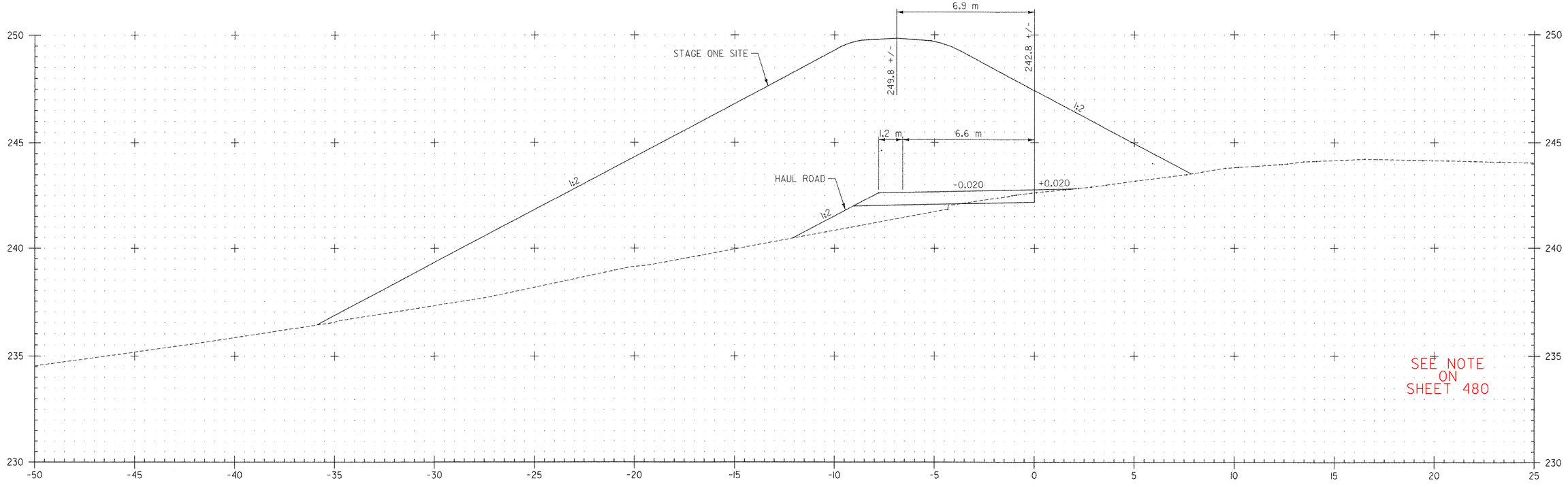

HR2+500
HAUL ROAD A

CUT (STAGE ONE SITE): 0
FILL (STAGE ONE SITE): 195
CUT (HAUL ROAD): 1
FILL (HAUL ROAD): 5

FILE NAME =$FILE$
DATE/TIME =$DATE$
USER =$NTUSER$

DATUM
VERTICAL NAVD 88
HORIZONTAL NAD 83 (1992)

2 0 2 m
1: 100
@ FULL SIZE

VERMONT AGENCY OF TRANSPORTATION

CLOUGH HARBOUR & ASSOCIATES LLP
© 2007
III Winners Circle, PO Box 5269, Albany, NY 12205
www.cloughharbour.com

PROJECT NAME: BENNINGTON
PROJECT NUMBER: AC NH 019-1(53)

FILE NAME: ZD048XSC.DGN
PROJECT LEADER: D.E.G.
DESIGNED BY: J.S.P.
PLOT DATE: $DATE$
DRAWN BY: J.S.P.
CHECKED BY: D.E.G.

CROSS SECTIONS XSC-40

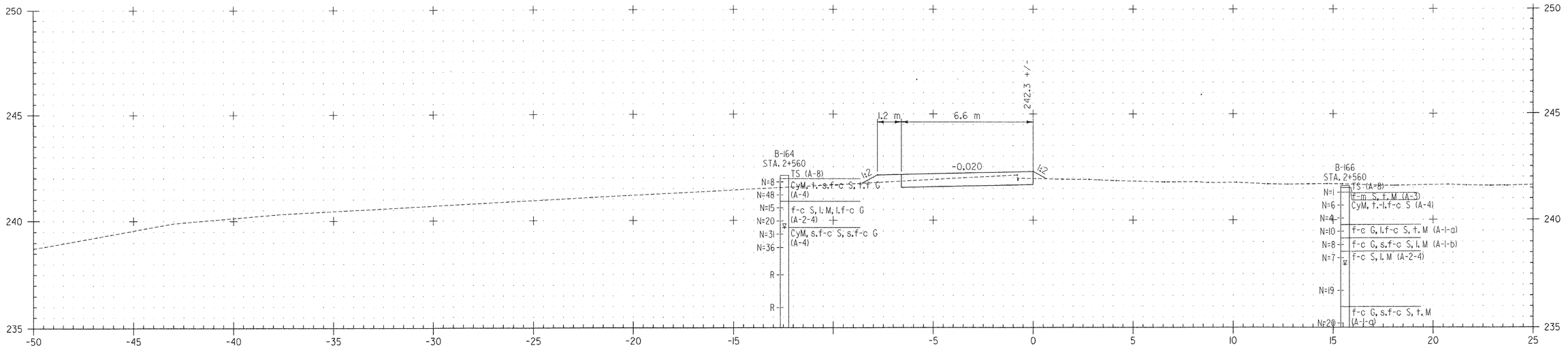

HR2+560
HAUL ROAD A

CUT (HAUL ROAD): 2
FILL (HAUL ROAD): 1

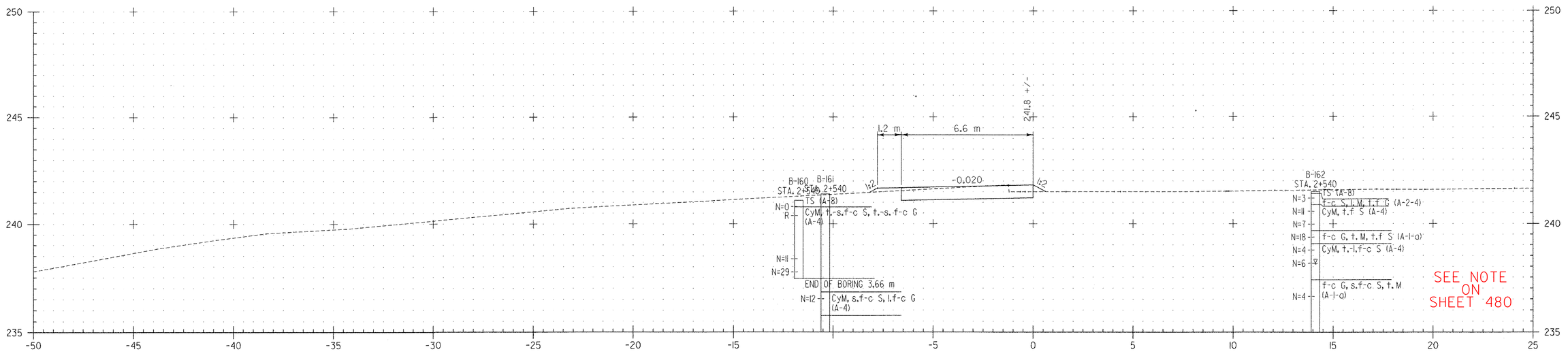

SEE NOTE ON SHEET 480

HR2+540
HAUL ROAD A

CUT (HAUL ROAD): 3
FILL (HAUL ROAD): 0

2 0 2 m
1: 100
@ FULL SIZE

FILE NAME = $FILE$
DATE/TIME = $DATE$
USER = $NTUSER$

DATUM
VERTICAL NAVD 88
HORIZONTAL NAD 83 (1992)

VERMONT AGENCY OF TRANSPORTATION

CLOUGH HARBOUR & ASSOCIATES LLP
III Winners Circle, PO Box 5269, Albany, NY 12205
www.cloughharbour.com

PROJECT NAME: BENNINGTON
PROJECT NUMBER: AC NH 019-1(53)

FILE NAME: ZD048XSC.DGN
PROJECT LEADER: D.E.G.
DESIGNED BY: J.S.P.
CROSS SECTIONS XSC-41

PLOT DATE: $DATE$
DRAWN BY: J.S.P.
CHECKED BY: D.E.G.
SHEET 520 OF 577

Metric

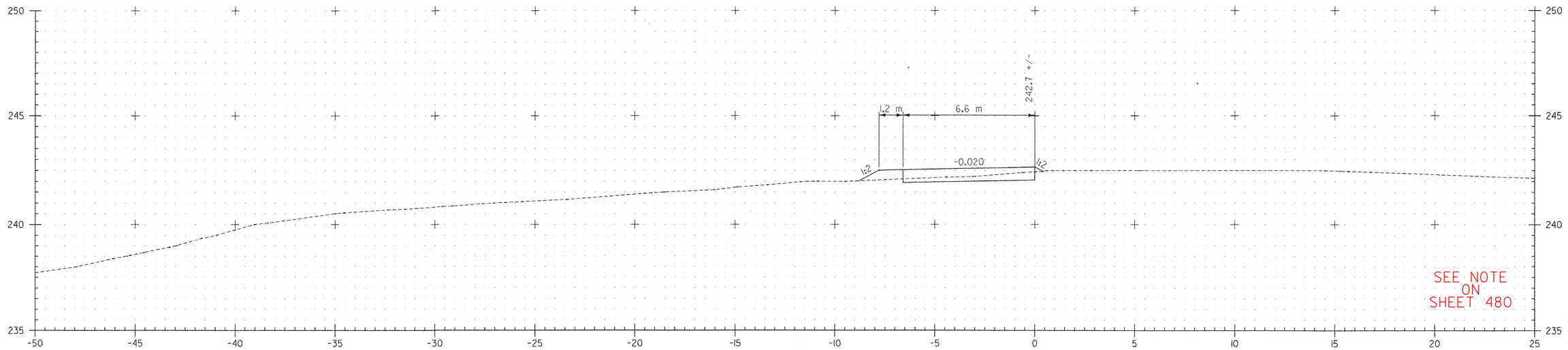

HR2+580
HAUL ROAD A

CUT (HAUL ROAD): 2
FILL (HAUL ROAD): 1

FILE NAME =$FILE$
DATE/TIME =$DATE$
USER =$NTUSER$

DATUM
VERTICAL NAVD 88
HORIZONTAL NAD 83 (1992)

2 0 2 m
1: 100
@ FULL SIZE

VERMONT AGENCY OF TRANSPORTATION

CLOUGH HARBOUR & ASSOCIATES LLP
III Winners Circle, PO Box 5269, Albany, NY 12205
www.cloughharbour.com

PROJECT NAME: BENNINGTON
PROJECT NUMBER: AC NH 019-1(53)

FILE NAME: ZD048XSC.DGN
PROJECT LEADER: D.E.G.
DESIGNED BY: J.S.P.
CROSS SECTIONS XSC-42

PLOT DATE: $DATE$
DRAWN BY: J.S.P.
CHECKED BY: D.E.G.
SHEET 521 OF 577

VAOT Metric

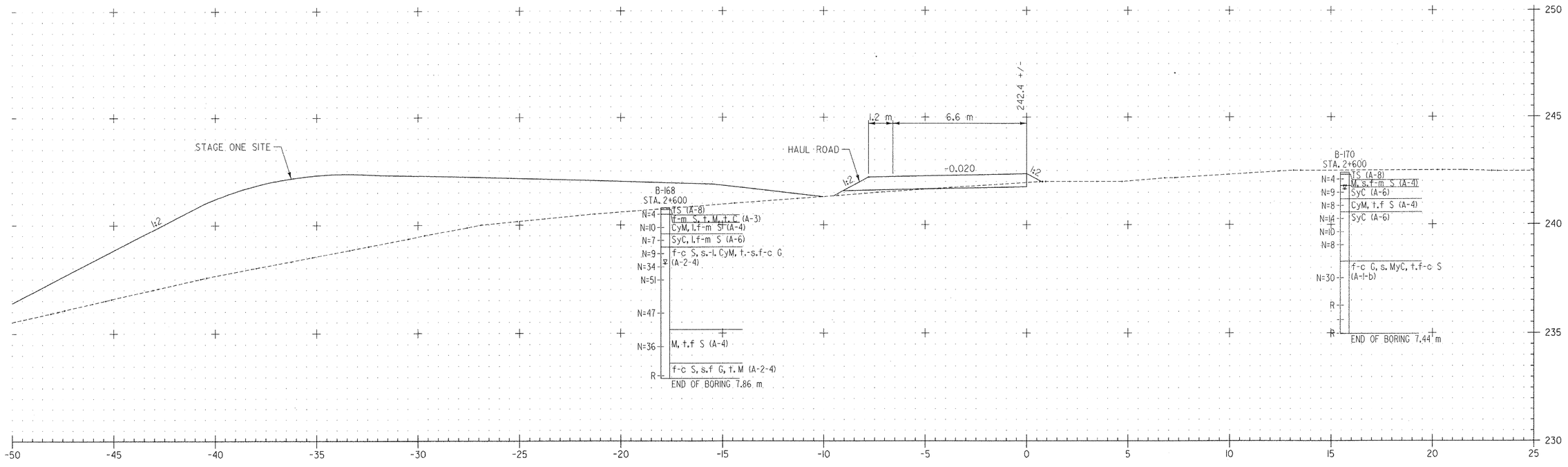

HR2+600
HAUL ROAD A

CUT (STAGE ONE SITE): 0
FILL (STAGE ONE SITE): 88
CUT (HAUL ROAD): 0
FILL (HAUL ROAD): 1

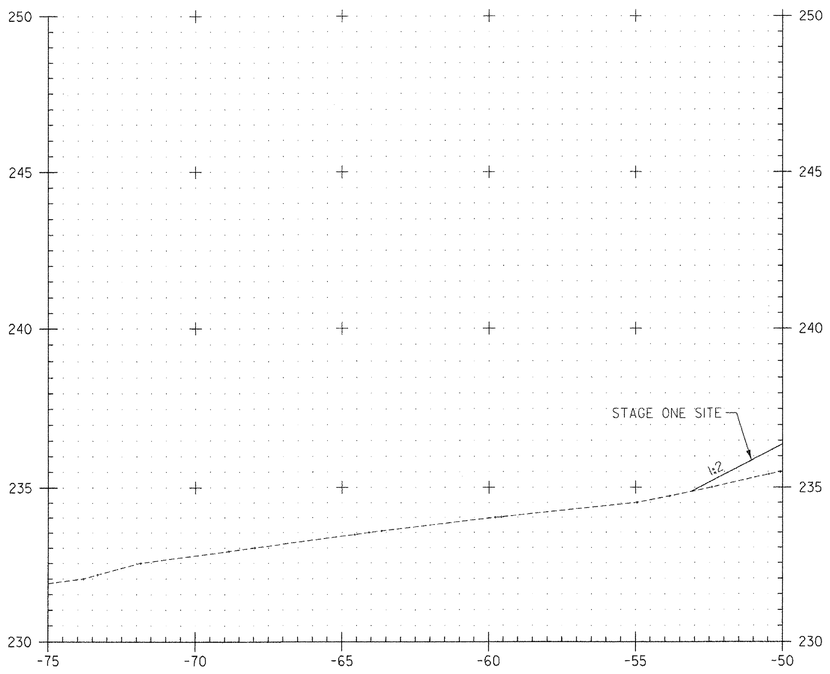

HR2+600
HAUL ROAD A

SEE NOTE ON SHEET 480

2 0 2 m
1: 100
@ FULL SIZE

FILE NAME =$FILE$
DATE/TIME =$DATE$
USER =$NTUSER$

DATUM
VERTICAL NAVD 88
HORIZONTAL NAD 83 (1992)

VERMONT AGENCY OF TRANSPORTATION

CLOUGH HARBOUR & ASSOCIATES LLP
III Winners Circle, PO Box 5269, Albany, NY 12205
www.cloughharbour.com

PROJECT NAME: BENNINGTON
PROJECT NUMBER: AC NH 019-1(53)

FILE NAME: ZD048XSC.DGN
PROJECT LEADER: D.E.G.
DESIGNED BY: J.S.P.
PLOT DATE: $DATE$
DRAWN BY: J.S.P.
CHECKED BY: D.E.G.

CROSS SECTIONS XSC-43

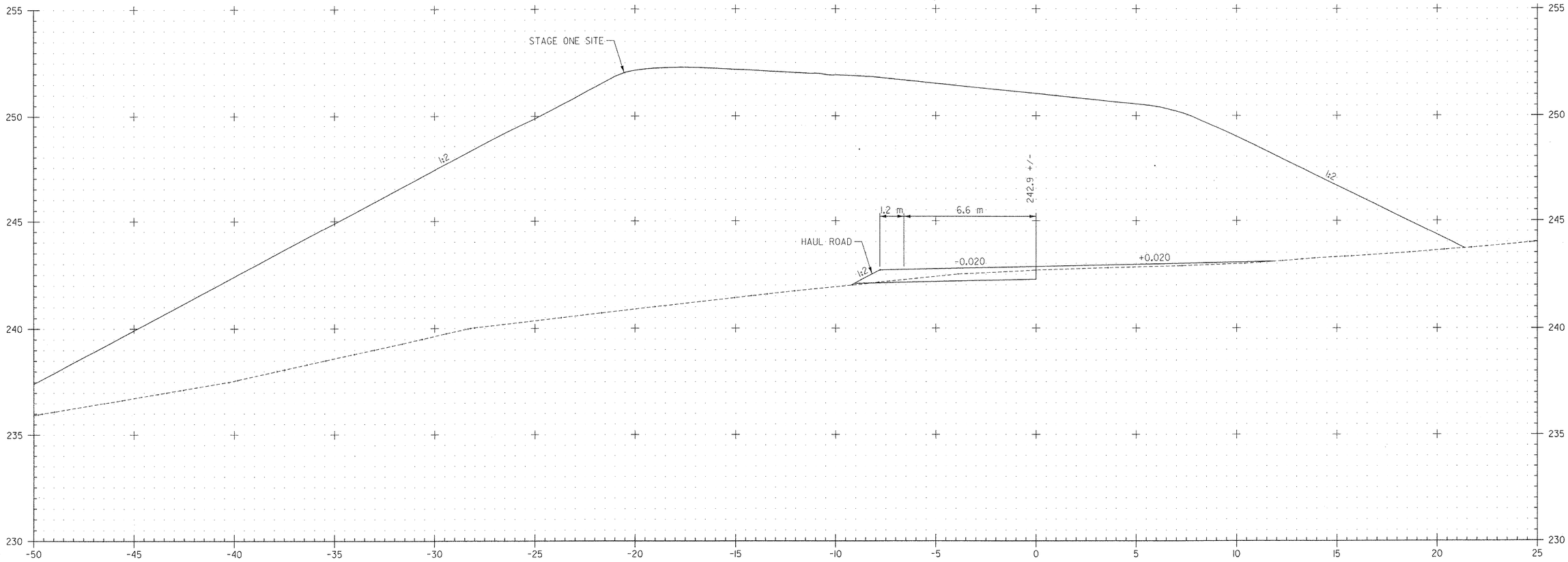

HR2+620
HAUL ROAD A

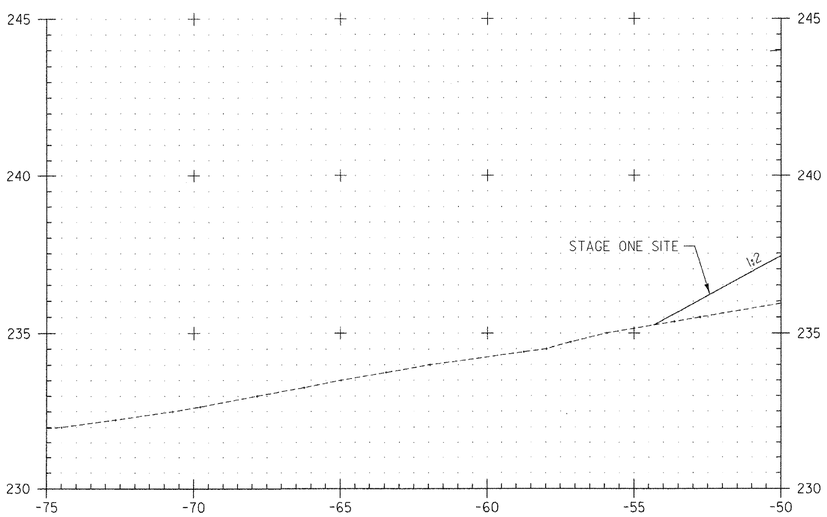

HR2+620
HAUL ROAD A

SEE NOTE
ON
SHEET 480

2 0 2 m
1: 100
@ FULL SIZE

FILE NAME =$FILE$
DATE/TIME =$DATE$
USER =$NTUSER$

DATUM
VERTICAL NAVD 88
HORIZONTAL NAD 83 (1992)

VERMONT AGENCY OF TRANSPORTATION

CLOUGH HARBOUR & ASSOCIATES LLP
III Winners Circle, PO Box 5269, Albany, NY 12205
www.cloughharbour.com

PROJECT NAME: BENNINGTON
PROJECT NUMBER: AC NH 019-1(53)

FILE NAME: ZD048XSC.DGN
PROJECT LEADER: D.E.G.
DESIGNED BY: J.S.P.
CROSS SECTIONS XSC-44

PLOT DATE: $DATE$
DRAWN BY: J.S.P.
CHECKED BY: D.E.G.
SHEET 523 OF 577

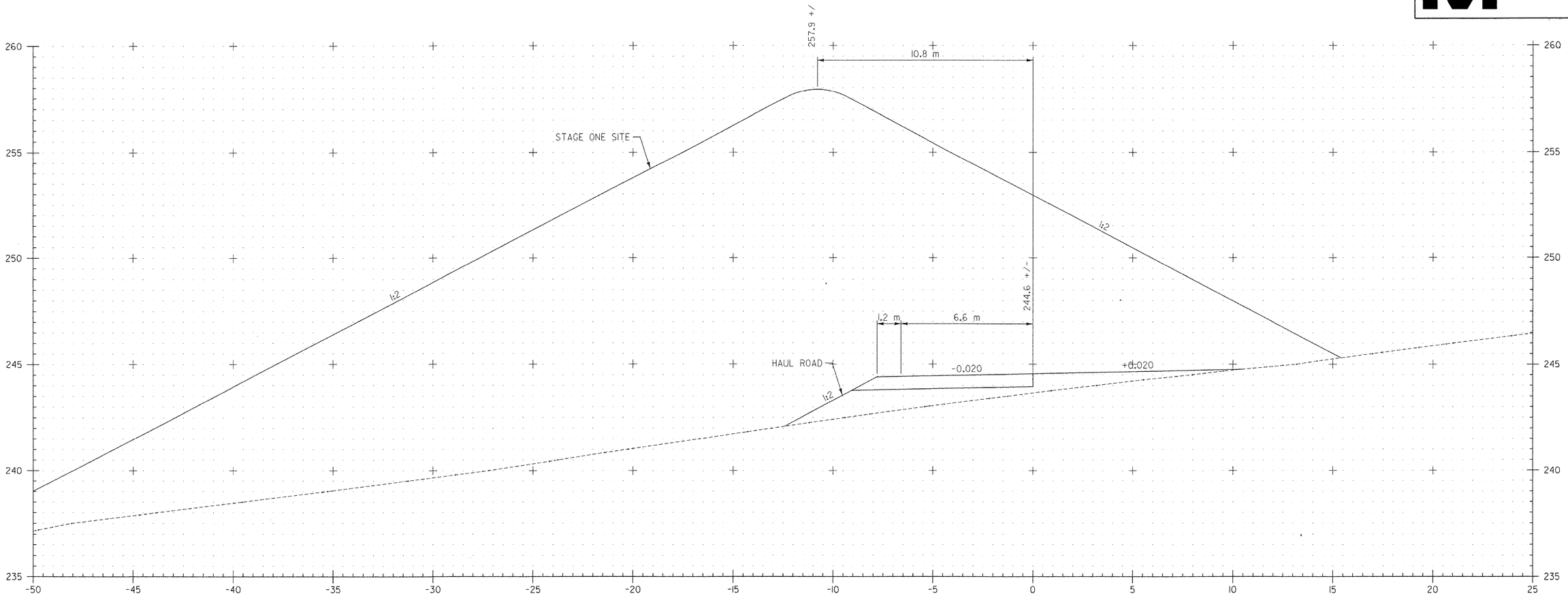

HR2+640
HAUL ROAD A

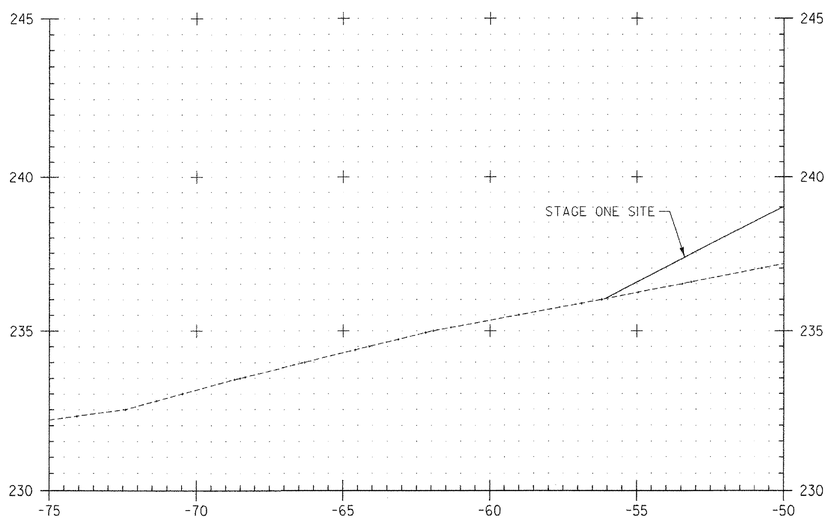

HR2+640
HAUL ROAD A

SEE NOTE
ON
SHEET 480

2 0 2 m
1: 100
@ FULL SIZE

FILE NAME = $FILE$
DATE/TIME = $DATE$
USER = $NTUSER$

DATUM
VERTICAL NAVD 88
HORIZONTAL NAD 83 (1992)

VERMONT AGENCY OF TRANSPORTATION

CLOUGH HARBOUR & ASSOCIATES LLP
III Winners Circle, PO Box 5269, Albany, NY 12205
www.cloughharbour.com

PROJECT NAME: BENNINGTON
PROJECT NUMBER: AC NH 019-1(53)

FILE NAME: ZD048XSC.DGN
PROJECT LEADER: D.E.G.
DESIGNED BY: J.S.P.
CROSS SECTIONS XSC-45

PLOT DATE: $DATE$
DRAWN BY: J.S.P.
CHECKED BY: D.E.G.
SHEET 524 OF 577

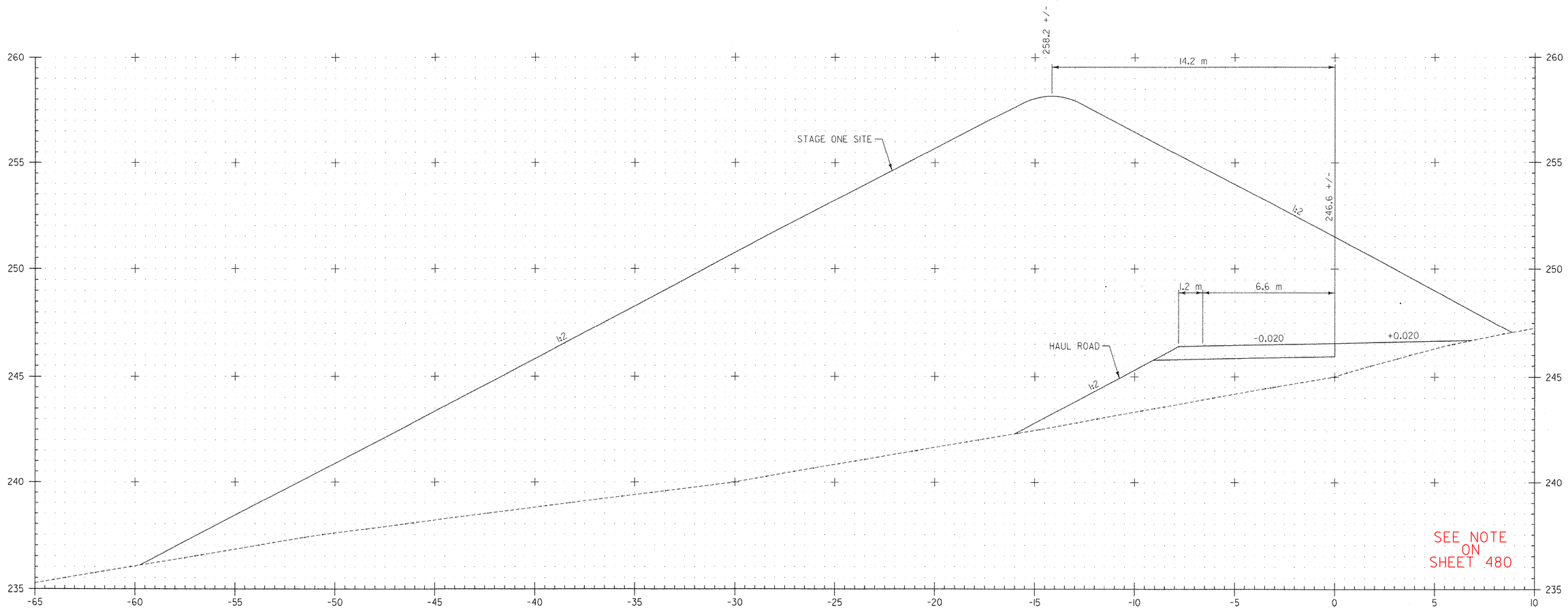

SEE NOTE ON SHEET 480

HR2+660
HAUL ROAD A

CUT (STAGE ONE SITE): 0
FILL (STAGE ONE SITE): 522

CUT (HAUL ROAD): 0
FILL (HAUL ROAD): 28

2 0 2 m
1: 100
@ FULL SIZE

FILE NAME =$FILE$
DATE/TIME =$DATE$
USER =$NTUSER$

DATUM
VERTICAL NAVD 88
HORIZONTAL NAD 83 (1992)

VERMONT AGENCY OF TRANSPORTATION

CLOUGH HARBOUR & ASSOCIATES LLP
III Winners Circle, PO Box 5269, Albany, NY 12205
www.cloughharbour.com

PROJECT NAME: BENNINGTON
PROJECT NUMBER: AC NH 019-1(53)

FILE NAME: ZD048XSC.DGN
PROJECT LEADER: D.E.G.
DESIGNED BY: J.S.P.
CROSS SECTIONS XSC-46

PLOT DATE: $DATE$
DRAWN BY: J.S.P.
CHECKED BY: D.E.G.
SHEET 525 OF 577

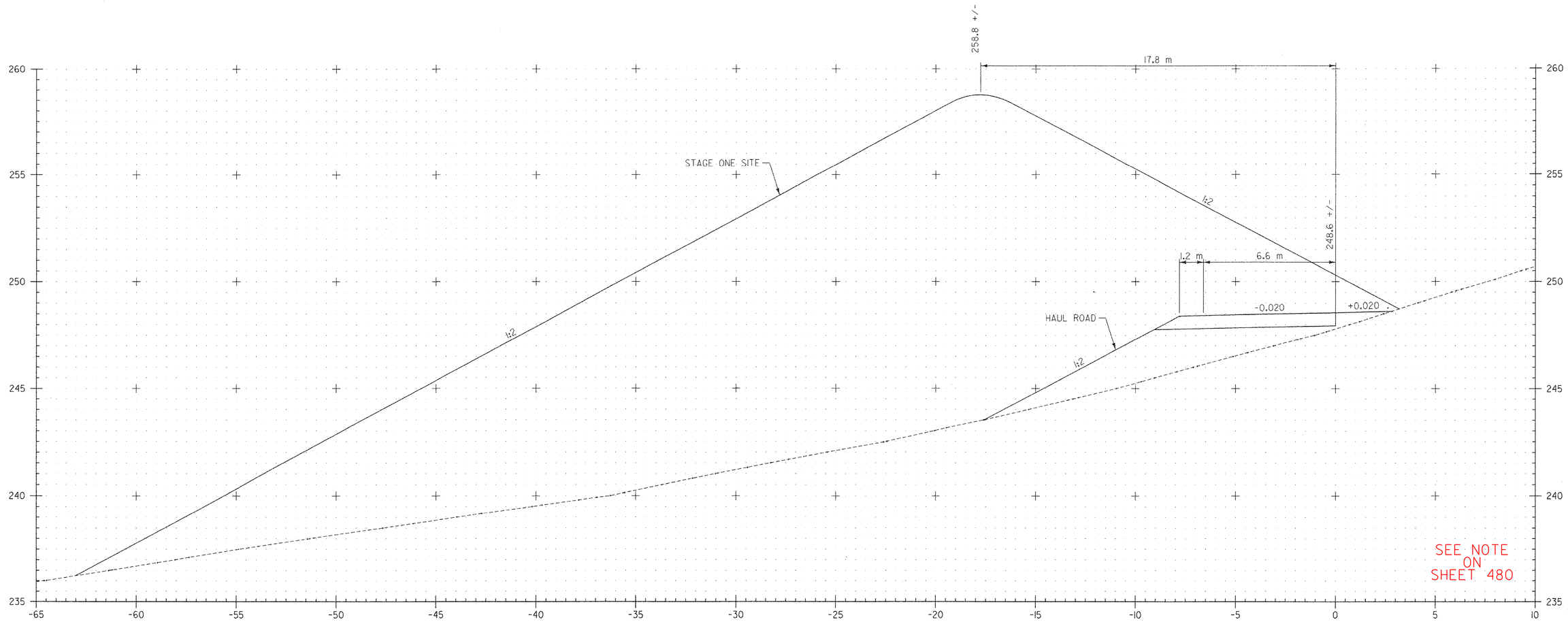

HR2+680
HAUL ROAD A

CUT (STAGE ONE SITE): 0
FILL (STAGE ONE SITE): 504

CUT (HAUL ROAD): 0
FILL (HAUL ROAD): 22

2 0 2 m
1: 100
@ FULL SIZE

DATUM

VERTICAL	NAVD 88
HORIZONTAL	NAD 83 (1992)

FILE NAME =$FILE$
DATE/TIME =$DATE$
USER =$NTUSER$

VERMONT AGENCY OF TRANSPORTATION

CHA
CLOUGH HARBOUR & ASSOCIATES LLP
III Winners Circle, PO Box 5269, Albany, NY 12205
www.cloughharbour.com

PROJECT NAME: BENNINGTON
PROJECT NUMBER: AC NH 019-1(53)

FILE NAME: ZD048XSC.DGN
PROJECT LEADER: D.E.G.
DESIGNED BY: J.S.P.
CROSS SECTIONS XSC-47

PLOT DATE: $DATE$
DRAWN BY: J.S.P.
CHECKED BY: D.E.G.
SHEET 526 OF 577

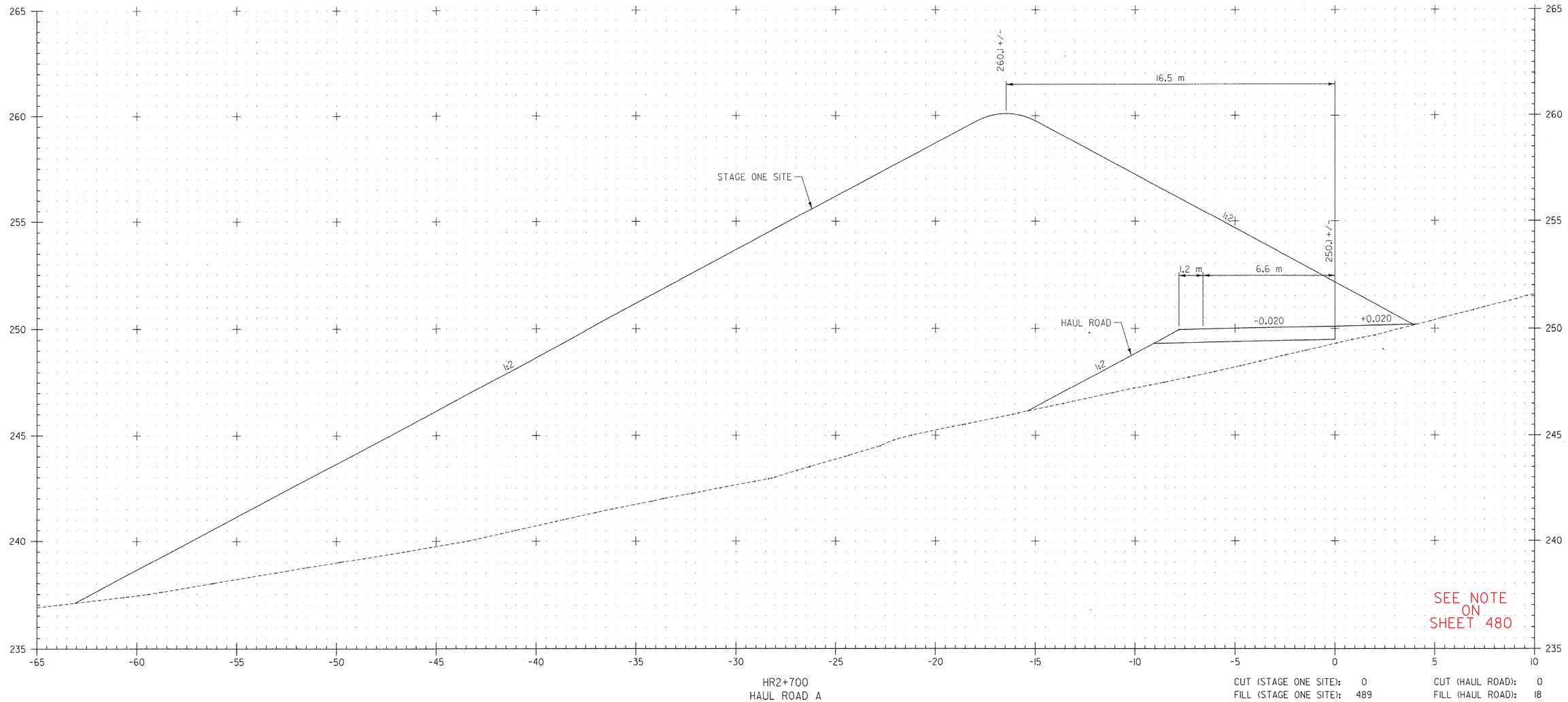

HR2+700
HAUL ROAD A

CUT (STAGE ONE SITE): 0
FILL (STAGE ONE SITE): 489
CUT (HAUL ROAD): 0
FILL (HAUL ROAD): 18

2 0 2 m
1: 100
@ FULL SIZE

DATUM
VERTICAL NAVD 88
HORIZONTAL NAD 83 (1992)

VERMONT AGENCY OF TRANSPORTATION

CLOUGH HARBOUR & ASSOCIATES LLP
III Winners Circle, PO Box 5269, Albany, NY 12205
www.cloughharbour.com

PROJECT NAME: BENNINGTON
PROJECT NUMBER: AC NH 019-1(53)

FILE NAME: ZD048XSC.DGN
PROJECT LEADER: D.E.G.
DESIGNED BY: J.S.P.
CROSS SECTIONS XSC-48

PLOT DATE: 5/18/2007
DRAWN BY: J.S.P.
CHECKED BY: D.E.G.
SHEET 527 OF 577

FILE NAME =U:\9819\mstn\03\clough\Stage One Sites\zd048xsc_f.dgn
DATE/TIME =5/18/2007
USER =1459

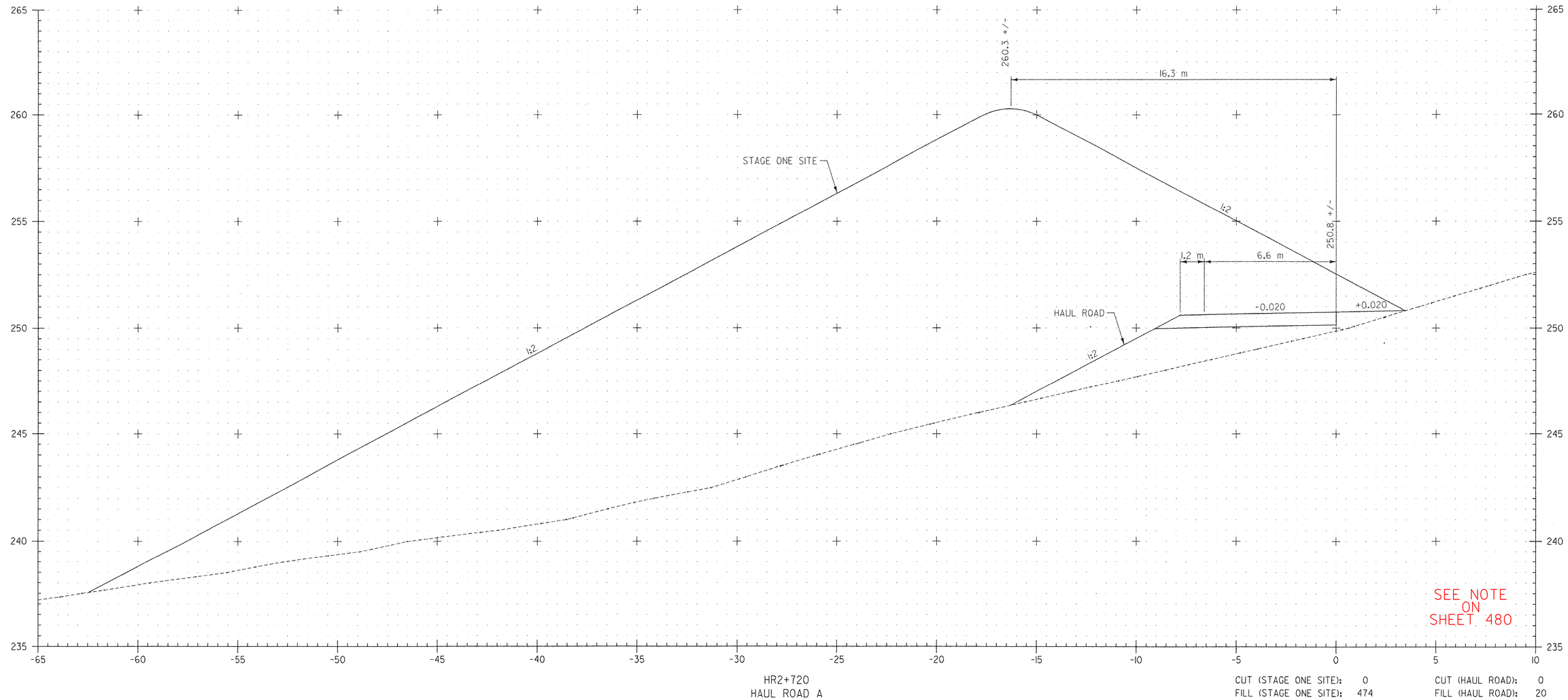

HR2+720
HAUL ROAD A

CUT (STAGE ONE SITE): 0
FILL (STAGE ONE SITE): 474

CUT (HAUL ROAD): 0
FILL (HAUL ROAD): 20

2 0 2 m
1: 100
@ FULL SIZE

DATUM
VERTICAL NAVD 88
HORIZONTAL NAD 83 (1992)

VERMONT AGENCY OF TRANSPORTATION

CHA
CLOUGH HARBOUR & ASSOCIATES LLP
III Winners Circle, PO Box 5269, Albany, NY 12205
www.cloughharbour.com

PROJECT NAME: BENNINGTON
PROJECT NUMBER: AC NH 019-1(53)

FILE NAME: ZD048XSC.DGN
PROJECT LEADER: D.E.G.
DESIGNED BY: J.S.P.
CROSS SECTIONS XSC-49

PLOT DATE: 5/18/2007
DRAWN BY: J.S.P.
CHECKED BY: D.E.G.
SHEET 528 OF 577

FILE NAME =U:\9819\mstn\03\clough\Stage One Sites\zd048xsc_f.dgn
DATE/TIME =5/18/2007
USER =1459

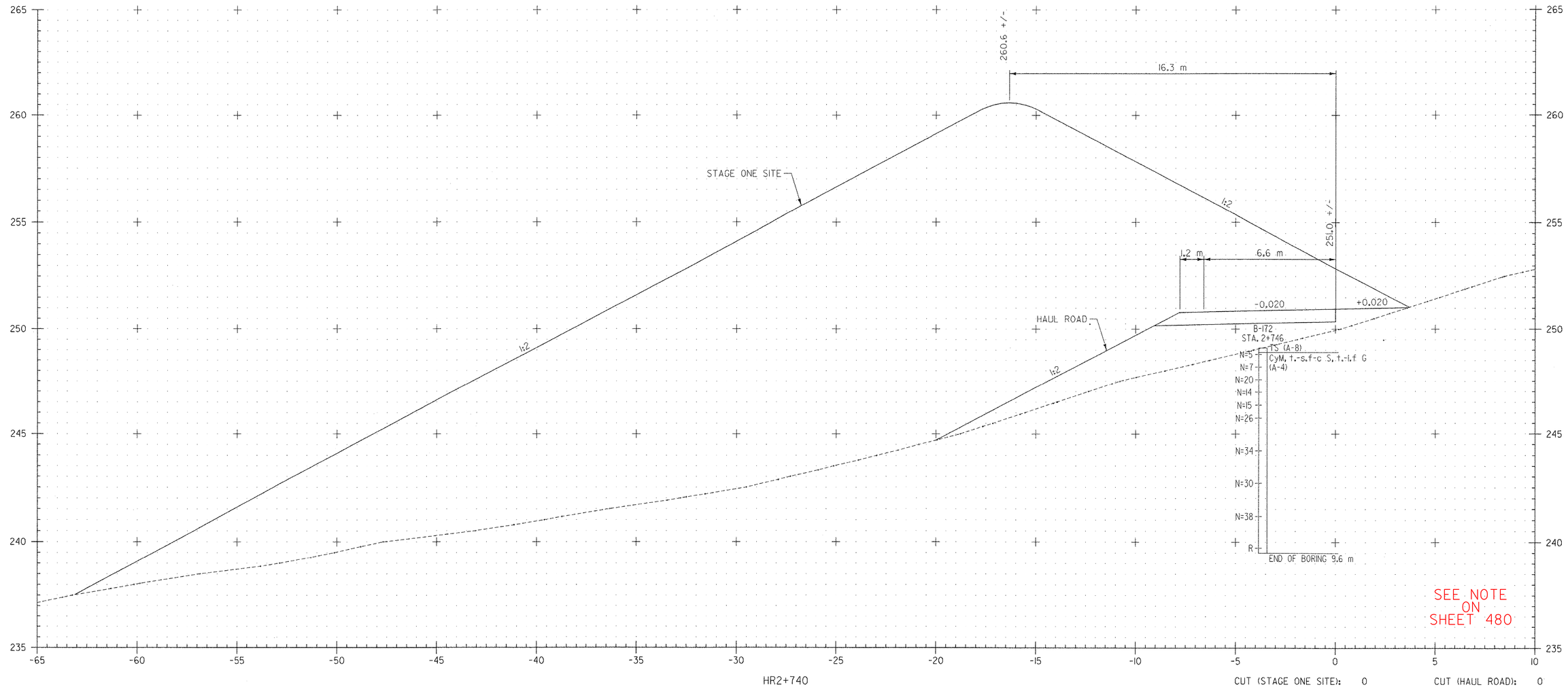

SEE NOTE ON SHEET 480

HR2+740
HAUL ROAD A

CUT (STAGE ONE SITE): 0
FILL (STAGE ONE SITE): 497
CUT (HAUL ROAD): 0
FILL (HAUL ROAD): 26

2 0 2 m
1: 100
@ FULL SIZE

DATUM
VERTICAL NAVD 88
HORIZONTAL NAD 83 (1992)

FILE NAME =U:\9819\mstn\03\clough\Stage One Sites\zd048xsc_f.dgn
DATE/TIME =5/18/2007
USER =1459

VERMONT AGENCY OF TRANSPORTATION

CLOUGH HARBOUR & ASSOCIATES LLP
III Winners Circle, PO Box 5269, Albany, NY 12205
www.cloughharbour.com

PROJECT NAME: BENNINGTON
PROJECT NUMBER: AC NH 019-1(53)

FILE NAME: ZD048XSC.DGN
PROJECT LEADER: D.E.G.
DESIGNED BY: J.S.P.
CROSS SECTIONS XSC-50

PLOT DATE: 5/18/2007
DRAWN BY: J.S.P.
CHECKED BY: D.E.G.
SHEET 529 OF 577

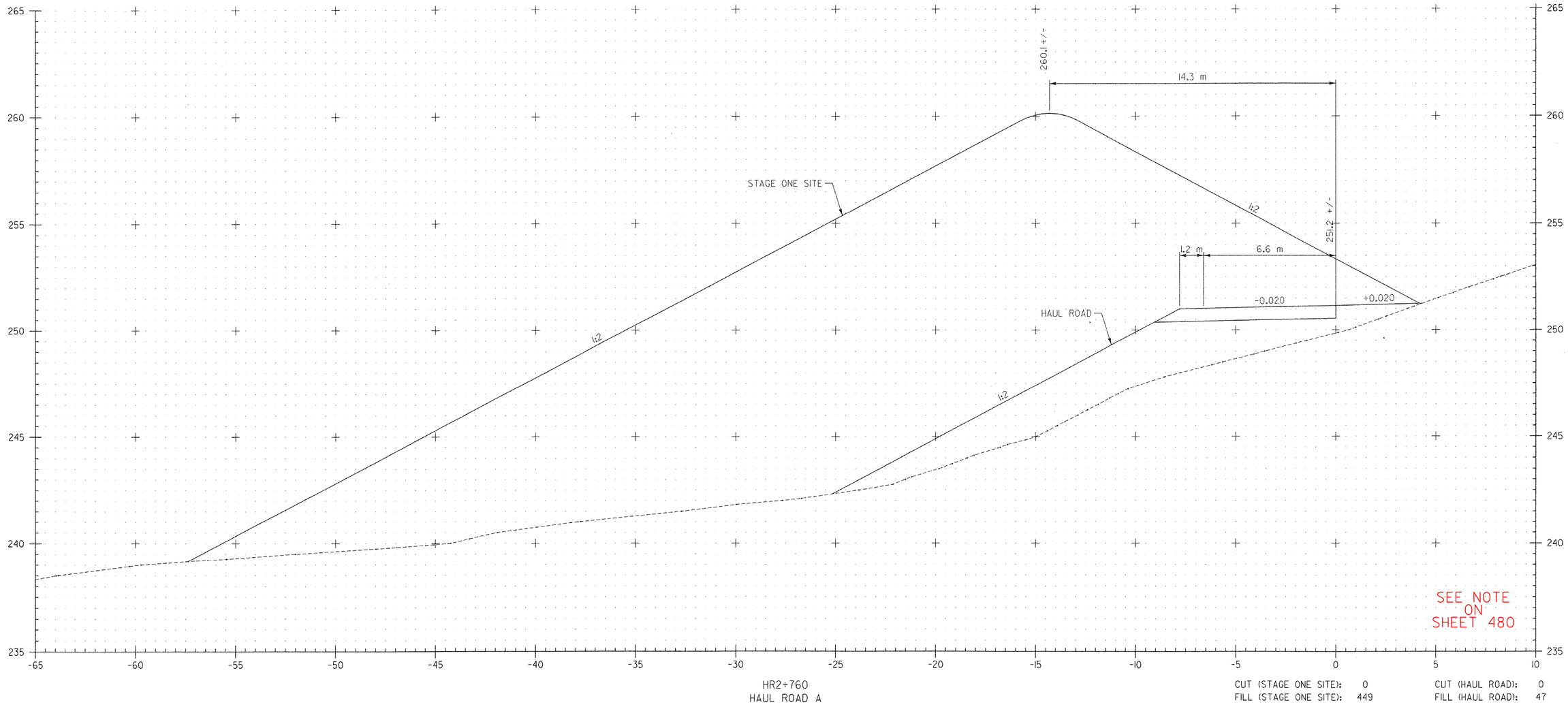

HR2+760
HAUL ROAD A

CUT (STAGE ONE SITE): 0
FILL (STAGE ONE SITE): 449
CUT (HAUL ROAD): 0
FILL (HAUL ROAD): 47

DATUM
VERTICAL NAVD 88
HORIZONTAL NAD 83 (1992)

2 0 2 m
1: 100
@ FULL SIZE

VERMONT AGENCY OF TRANSPORTATION

CLOUGH HARBOUR & ASSOCIATES LLP
III Winners Circle, PO Box 5269, Albany, NY 12205
www.cloughharbour.com

PROJECT NAME: BENNINGTON
PROJECT NUMBER: AC NH 019-1(53)

FILE NAME: ZD048XSC.DGN
PROJECT LEADER: D.E.G.
DESIGNED BY: J.S.P.
CROSS SECTIONS XSC-51

PLOT DATE: 5/18/2007
DRAWN BY: J.S.P.
CHECKED BY: D.E.G.
SHEET 530 OF 577

FILE NAME =U:\9819\mstn\03\clough\Stage One Sites\zd048xsc_f.dgn
DATE/TIME =5/18/2007
USER =1459

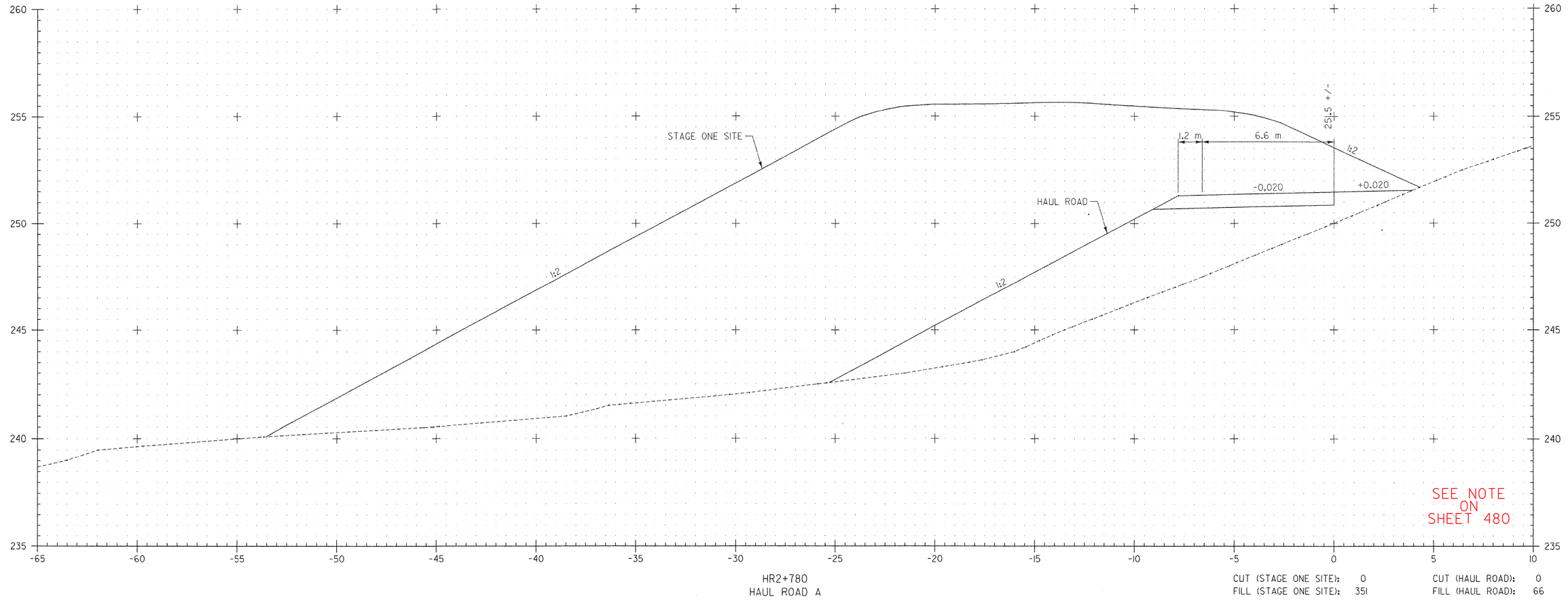

HR2+780
HAUL ROAD A

CUT (STAGE ONE SITE): 0
FILL (STAGE ONE SITE): 351

CUT (HAUL ROAD): 0
FILL (HAUL ROAD): 66

2 0 2 m
1: 100
@ FULL SIZE

DATUM
VERTICAL NAVD 88
HORIZONTAL NAD 83 (1992)

VERMONT AGENCY OF TRANSPORTATION

CLOUGH HARBOUR & ASSOCIATES LLP
III Winners Circle, PO Box 5269, Albany, NY 12205
www.cloughharbour.com

PROJECT NAME: BENNINGTON
PROJECT NUMBER: AC NH 019-1(53)

FILE NAME: ZD048XSC.DGN
PROJECT LEADER: D.E.G.
DESIGNED BY: J.S.P.
CROSS SECTIONS XSC-52

PLOT DATE: 5/18/2007
DRAWN BY: J.S.P.
CHECKED BY: D.E.G.
SHEET 531 OF 577

FILE NAME =U:\9819\mstn\03\clough\Stage One Sites\zd048xsc_f.dgn
DATE/TIME = 5/18/2007
USER =1459

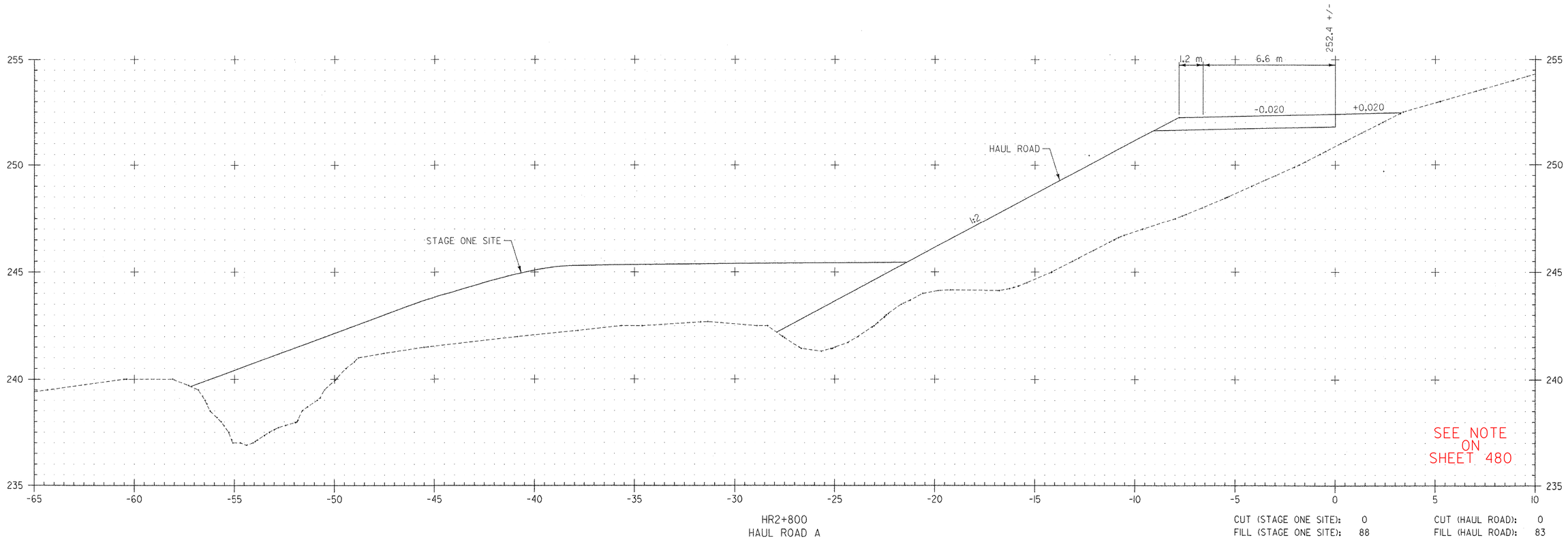

HR2+800
HAUL ROAD A

CUT (STAGE ONE SITE): 0
FILL (STAGE ONE SITE): 88
CUT (HAUL ROAD): 0
FILL (HAUL ROAD): 83

FILE NAME =U:\9819\mstn\03\clough\Stage One Sites\zd048xsc_f.dgn
DATE/TIME =5/18/2007
USER =1459

DATUM	
VERTICAL	NAVD 88
HORIZONTAL	NAD 83 (1992)

2 0 2 m
1: 100
@ FULL SIZE

VERMONT AGENCY OF TRANSPORTATION

CLOUGH HARBOUR & ASSOCIATES LLP
III Winners Circle, PO Box 5269, Albany, NY 12205
www.cloughharbour.com

PROJECT NAME: BENNINGTON
PROJECT NUMBER: AC NH 019-1(53)

FILE NAME: ZD048XSC.DGN
PROJECT LEADER: D.E.G.
DESIGNED BY: J.S.P.
CROSS SECTIONS XSC-53

PLOT DATE: 5/18/2007
DRAWN BY: J.S.P.
CHECKED BY: D.E.G.
SHEET 532 OF 577

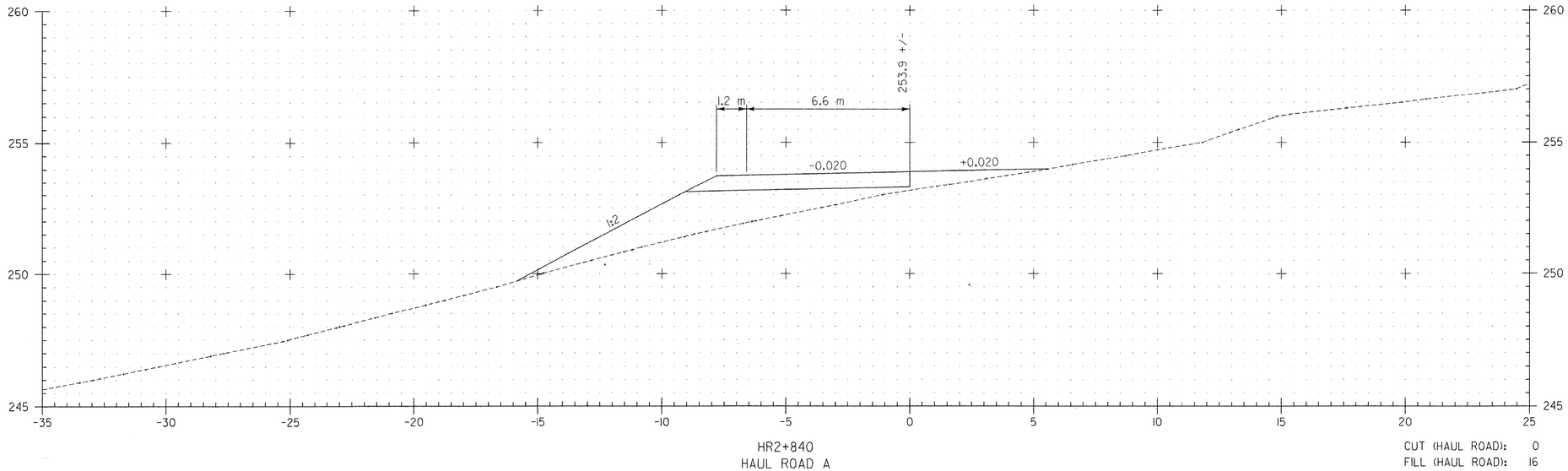

HR2+840
HAUL ROAD A

CUT (HAUL ROAD): 0
FILL (HAUL ROAD): 16

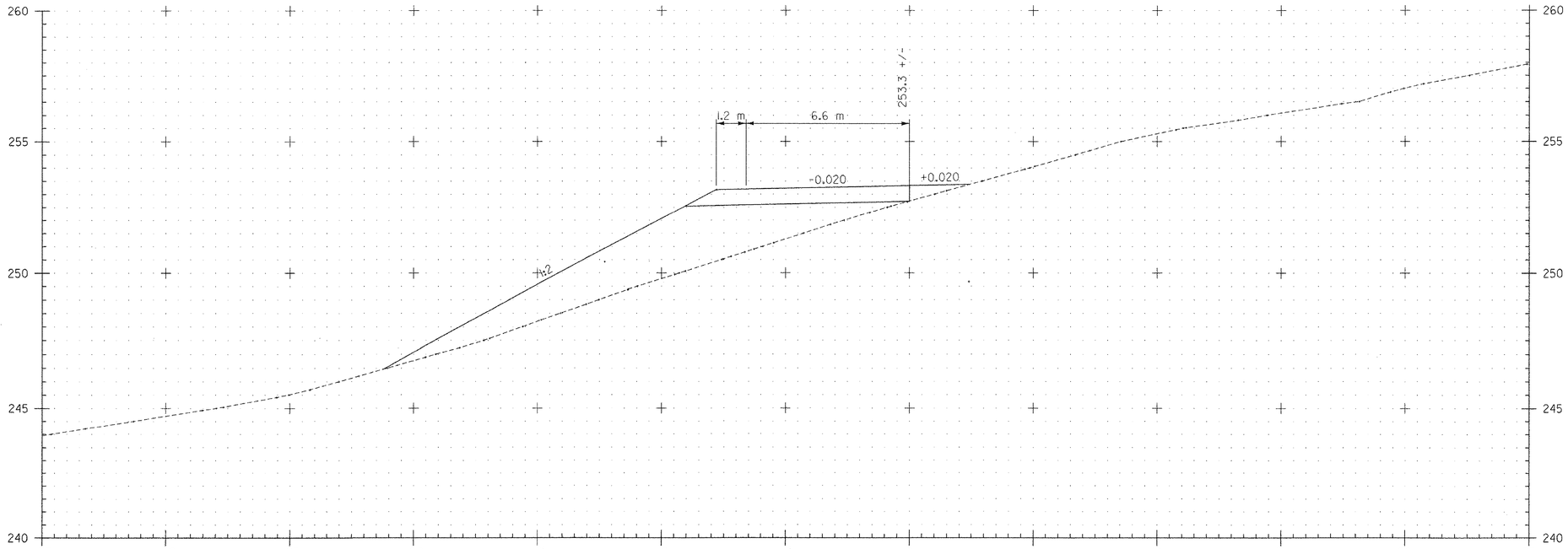

HR2+820
HAUL ROAD A

CUT (HAUL ROAD): 0
FILL (HAUL ROAD): 28

SEE NOTE ON SHEET 480

DATUM
VERTICAL NAVD 88
HORIZONTAL NAD 83 (1992)

2 0 2 m
1: 100
@ FULL SIZE

VERMONT AGENCY OF TRANSPORTATION

CLOUGH HARBOUR & ASSOCIATES LLP
© 2007
III Winners Circle, PO Box 5269, Albany, NY 12205
www.cloughharbour.com

PROJECT NAME: BENNINGTON
PROJECT NUMBER: AC NH 019-1(53)

FILE NAME: ZD048XSC.DGN
PROJECT LEADER: D.E.G.
DESIGNED BY: J.S.P.
CROSS SECTIONS XSC-54

PLOT DATE: 5/18/2007
DRAWN BY: J.S.P.
CHECKED BY: D.E.G.
SHEET 533 OF 577

FILE NAME =U:\9819\mstn\03\clough\Stage One Sites\zd048xsc_f.dgn
DATE/TIME =5/18/2007
USER =1459

Metric

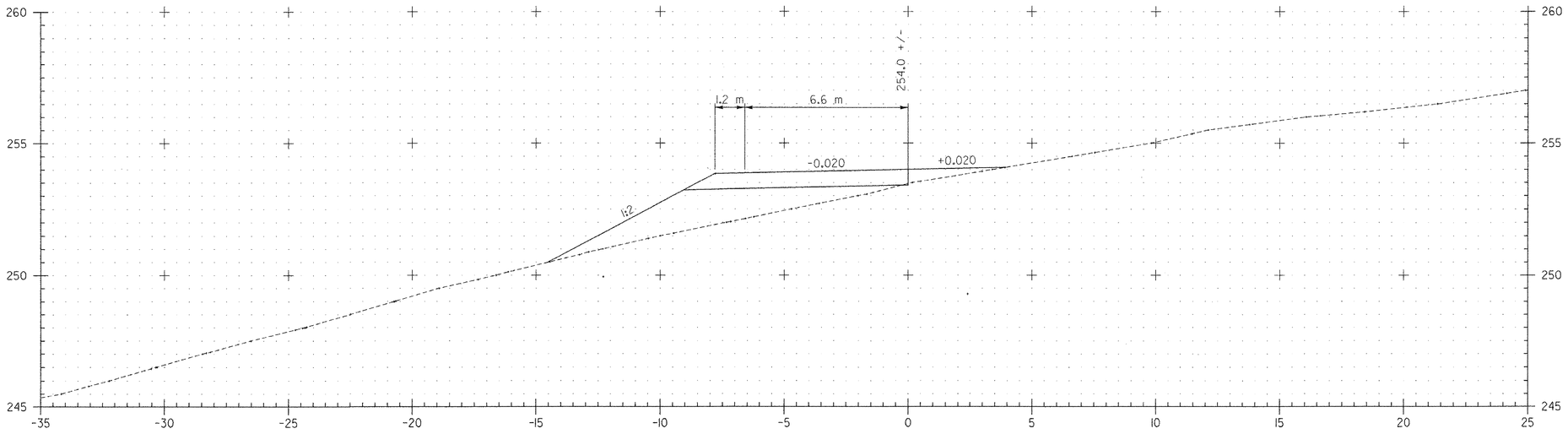

HR2+880
HAUL ROAD A

CUT (HAUL ROAD): 0
FILL (HAUL ROAD): 12

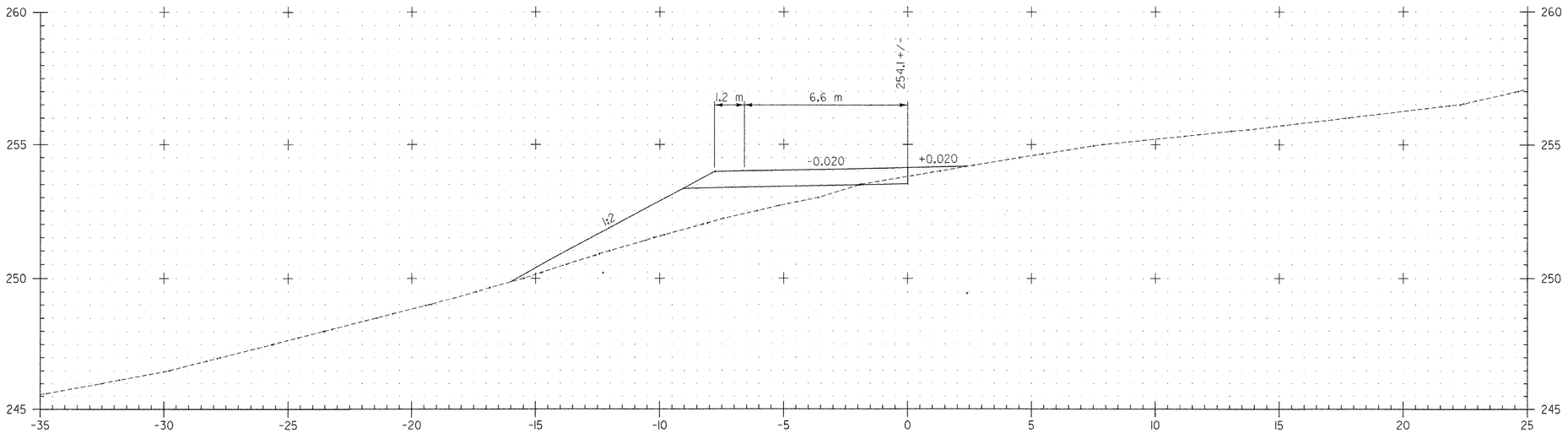

HR2+860
HAUL ROAD A

CUT (HAUL ROAD): 0
FILL (HAUL ROAD): 11

SEE NOTE ON SHEET 480

2 0 2 m
1: 100
@ FULL SIZE

DATUM
VERTICAL NAVD 88
HORIZONTAL NAD 83 (1992)

VERMONT AGENCY OF TRANSPORTATION

CLOUGH HARBOUR & ASSOCIATES LLP
III Winners Circle, PO Box 5269, Albany, NY 12205
www.cloughharbour.com

PROJECT NAME: BENNINGTON
PROJECT NUMBER: AC NH 019-1(53)

FILE NAME: ZD048XSC.DGN
PROJECT LEADER: D.E.G.
DESIGNED BY: J.S.P.
CROSS SECTIONS XSC-55

PLOT DATE: 5/18/2007
DRAWN BY: J.S.P.
CHECKED BY: D.E.G.
SHEET 534 OF 577

FILE NAME =U:\9819\mstn\03\clough\Stage One Sites\zd048xsc_f.dgn
DATE/TIME =5/18/2007
USER =1459

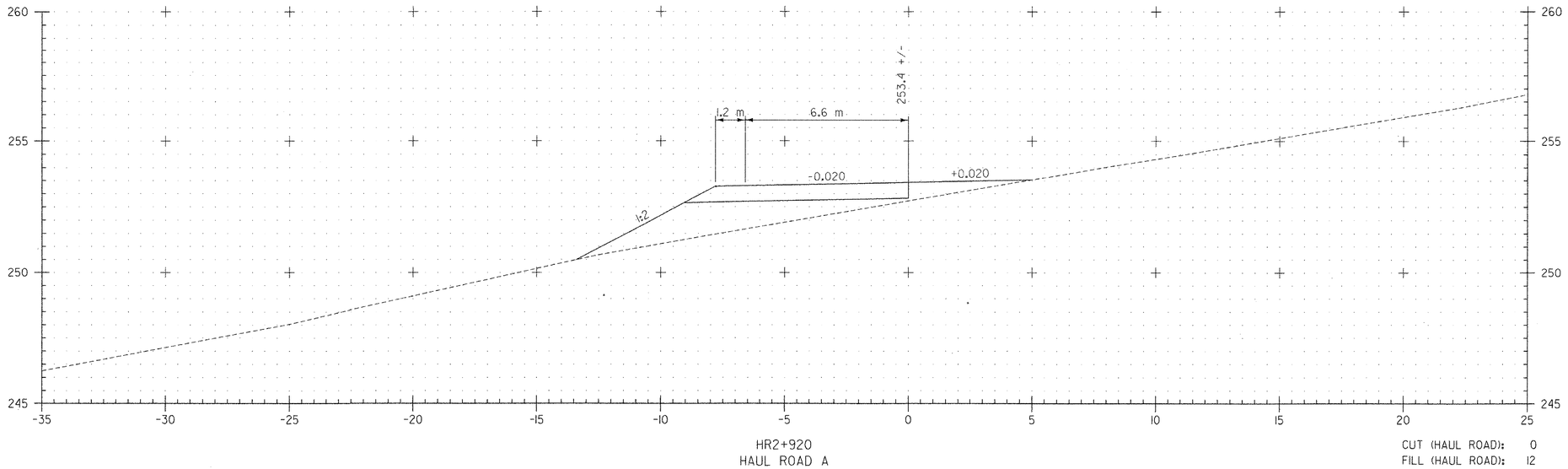

HR2+920
HAUL ROAD A

CUT (HAUL ROAD): 0
FILL (HAUL ROAD): 12

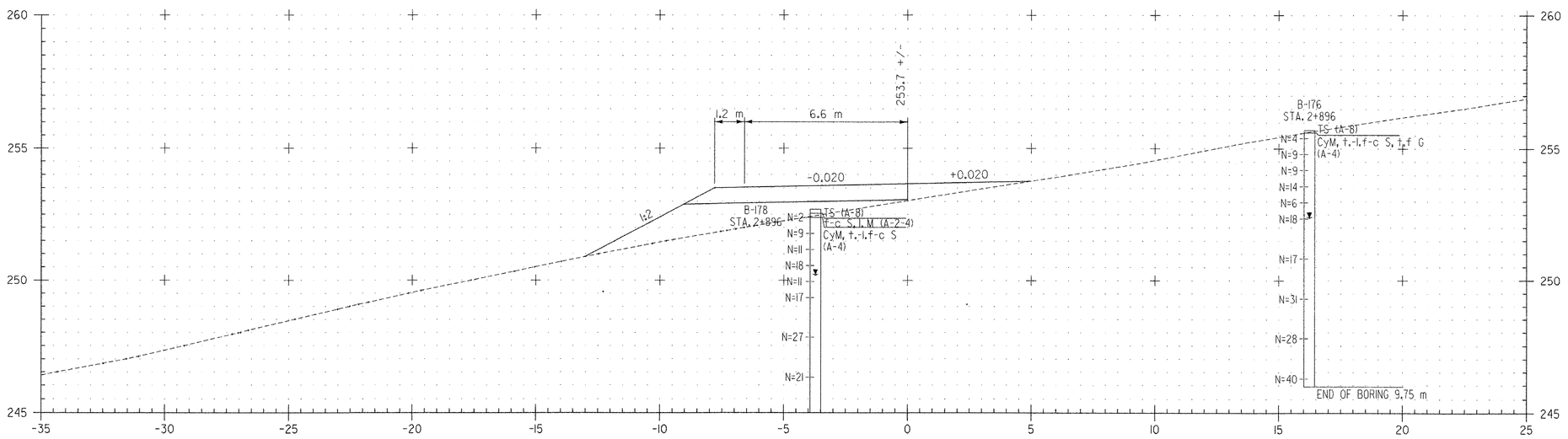

HR2+900
HAUL ROAD A

CUT (HAUL ROAD): 0
FILL (HAUL ROAD): 10

SEE NOTE ON SHEET 480

2 0 2 m
1: 100
@ FULL SIZE

DATUM
VERTICAL NAVD 88
HORIZONTAL NAD 83 (1992)

VERMONT AGENCY OF TRANSPORTATION

CLOUGH HARBOUR & ASSOCIATES LLP
III Winners Circle, PO Box 5269, Albany, NY 12205
www.cloughharbour.com

PROJECT NAME: BENNINGTON
PROJECT NUMBER: AC NH 019-1(53)

FILE NAME: ZD048XSC.DGN
PROJECT LEADER: D.E.G.
DESIGNED BY: J.S.P.
CROSS SECTIONS XSC-56

PLOT DATE: 5/18/2007
DRAWN BY: J.S.P.
CHECKED BY: D.E.G.
SHEET 535 OF 577

FILE NAME =u:\9819\mstn\03\clough\Stage One Sites\zd048xsc_f.dgn
DATE/TIME =5/18/2007
USER =1459

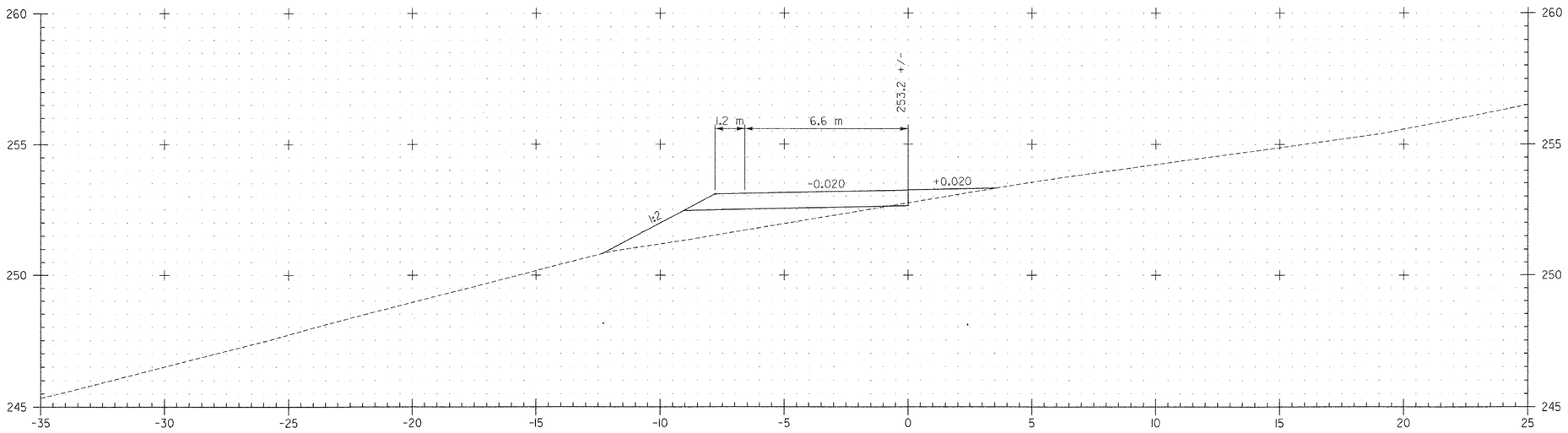

HR2+960
HAUL ROAD A

CUT (HAUL ROAD): 0
FILL (HAUL ROAD): 7

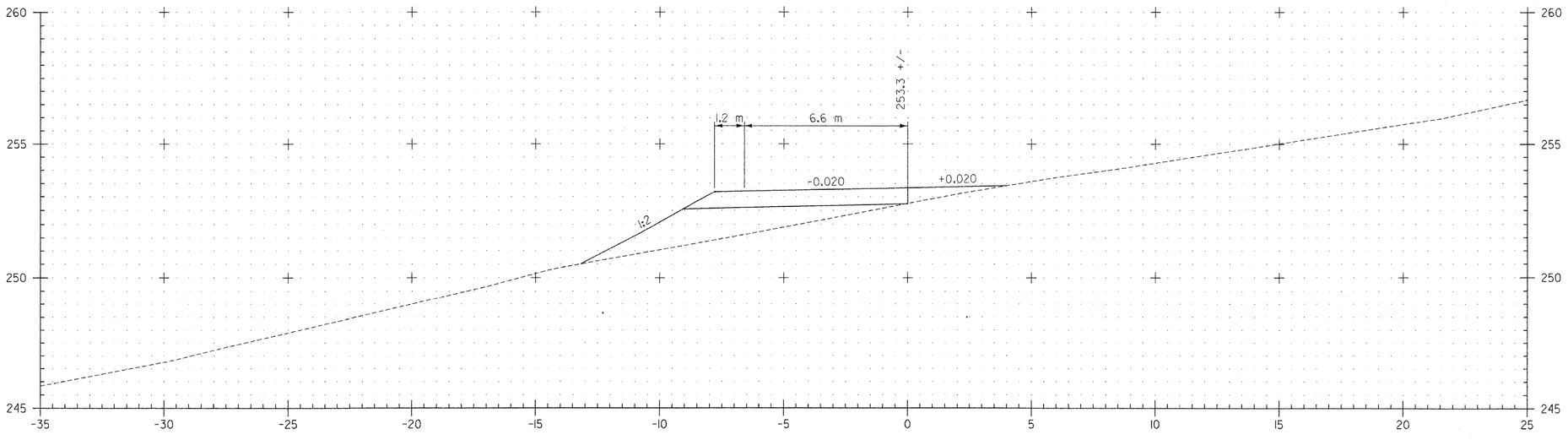

HR2+940
HAUL ROAD A

CUT (HAUL ROAD): 0
FILL (HAUL ROAD): 10

SEE NOTE ON SHEET 480

2 0 2 m
1: 100
@ FULL SIZE

DATUM	
VERTICAL	NAVD 88
HORIZONTAL	NAD 83 (1992)

FILE NAME =U:\9819\mstn\03\clough\Stage One Sites\zd048xsc_f.dgn
DATE/TIME =5/18/2007
USER =1459

VERMONT AGENCY OF TRANSPORTATION

CHA
CLOUGH HARBOUR & ASSOCIATES LLP
III Winners Circle, PO Box 5269, Albany, NY 12205
www.cloughharbour.com

PROJECT NAME: BENNINGTON
PROJECT NUMBER: AC NH 019-1(53)

FILE NAME: ZD048XSC.DGN
PROJECT LEADER: D.E.G.
DESIGNED BY: J.S.P.
CROSS SECTIONS XSC-57

PLOT DATE: 5/18/2007
DRAWN BY: J.S.P.
CHECKED BY: D.E.G.
SHEET 536 OF 577

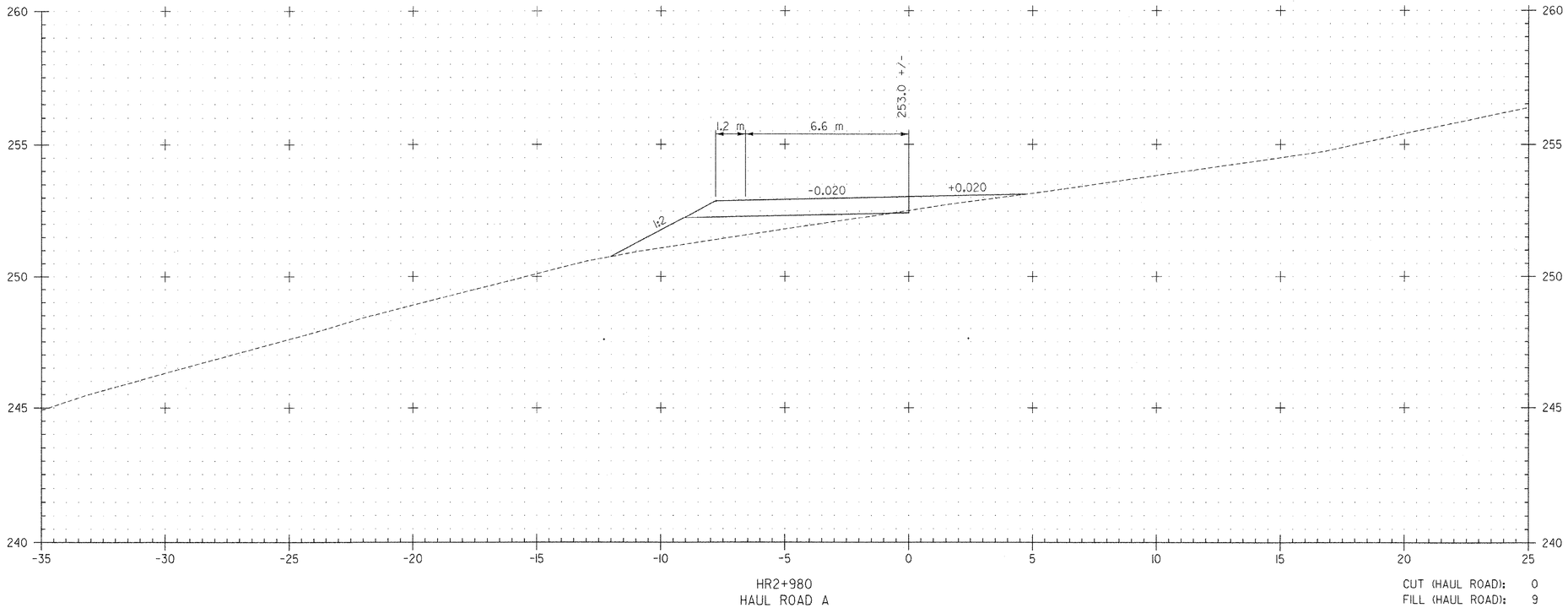

HR2+980
HAUL ROAD A

CUT (HAUL ROAD): 0
FILL (HAUL ROAD): 9

SEE NOTE ON SHEET 480

2 0 2 m
1: 100
@ FULL SIZE

DATUM
VERTICAL NAVD 88
HORIZONTAL NAD 83 (1992)

VERMONT AGENCY OF TRANSPORTATION

CLOUGH HARBOUR & ASSOCIATES LLP
© 2007
III Winners Circle, PO Box 5269, Albany, NY 12205
www.cloughharbour.com

PROJECT NAME: BENNINGTON
PROJECT NUMBER: AC NH 019-1(53)

FILE NAME: ZD048XSC.DGN
PROJECT LEADER: D.E.G.
DESIGNED BY: J.S.P.
CROSS SECTIONS XSC-58

PLOT DATE: 5/18/2007
DRAWN BY: J.S.P.
CHECKED BY: D.E.G.
SHEET 537 OF 577

FILE NAME =U:\9819\mstn\03\clough\Stage One Sites\zd048xsc_f.dgn
DATE/TIME =5/18/2007
USER =1459

Metric

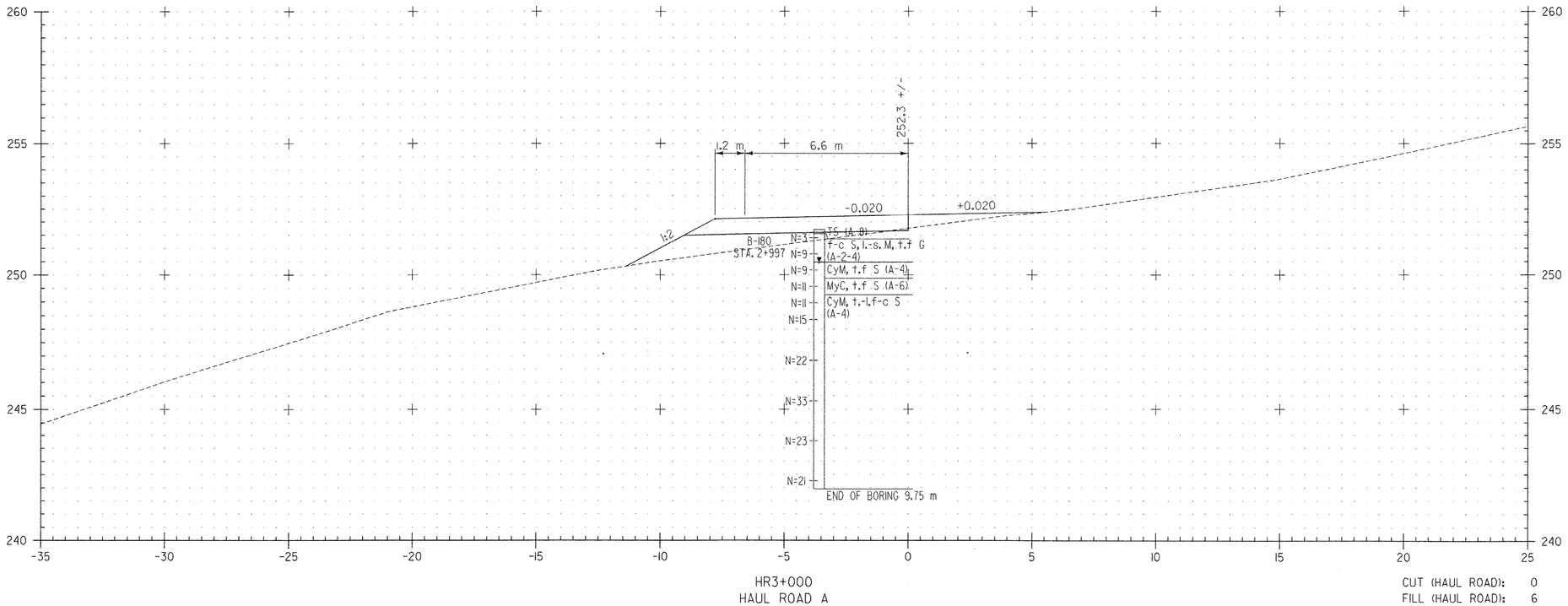

HR3+000
HAUL ROAD A

CUT (HAUL ROAD): 0
FILL (HAUL ROAD): 6

SEE NOTE ON SHEET 480

DATUM
VERTICAL NAVD 88
HORIZONTAL NAD 83 (1992)

2 0 2 m
1: 100
@ FULL SIZE

VERMONT AGENCY OF TRANSPORTATION

CLOUGH HARBOUR & ASSOCIATES LLP
© 2007
III Winners Circle, PO Box 5269, Albany, NY 12205
www.cloughharbour.com

PROJECT NAME: BENNINGTON
PROJECT NUMBER: AC NH 019-1(53)

FILE NAME: ZD048XSC.DGN
PROJECT LEADER: D.E.G.
DESIGNED BY: J.S.P.
CROSS SECTIONS XSC-59

PLOT DATE: 5/18/2007
DRAWN BY: J.S.P.
CHECKED BY: D.E.G.
SHEET 538 OF 577

FILE NAME =U:\9819\mstn\03\clough\Stage One Sites\zd048xsc_f.dgn
DATE/TIME =5/18/2007
USER =1459

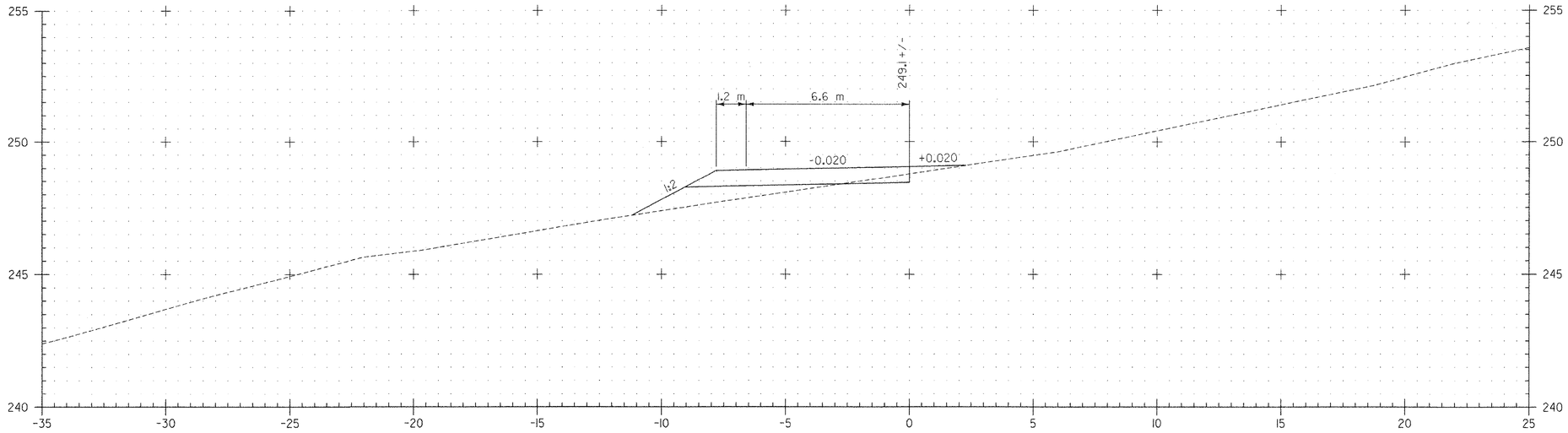

HR3+040
HAUL ROAD A

CUT (HAUL ROAD): 0
FILL (HAUL ROAD): 4

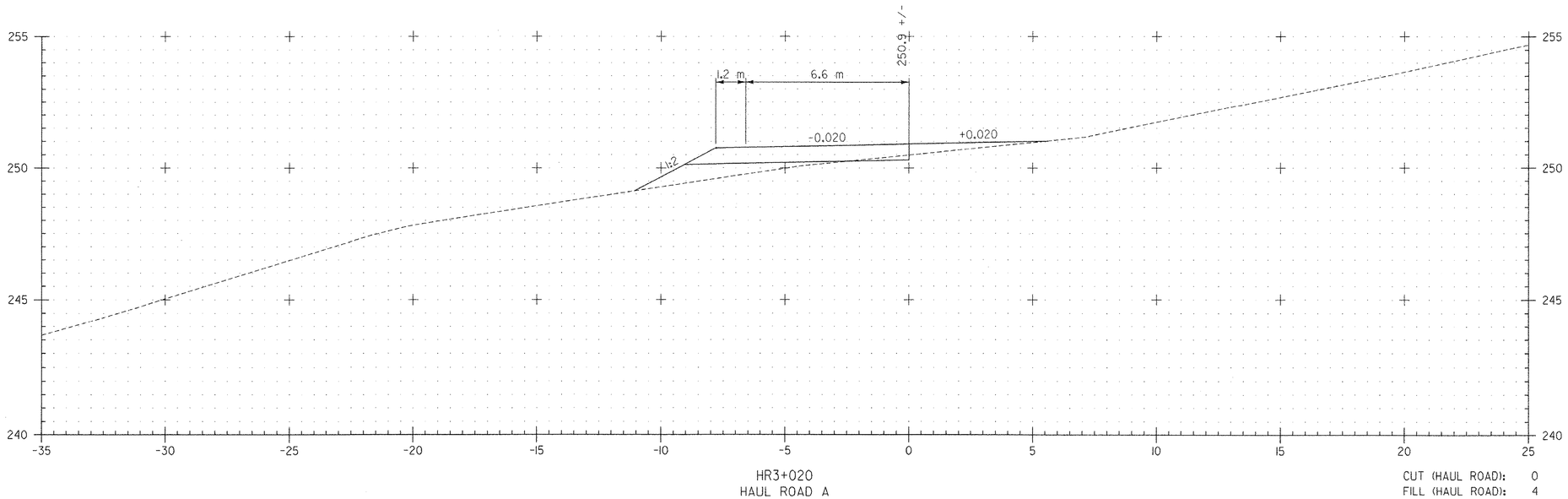

HR3+020
HAUL ROAD A

CUT (HAUL ROAD): 0
FILL (HAUL ROAD): 4

SEE NOTE ON SHEET 480

2 0 2 m
1: 100
@ FULL SIZE

DATUM
VERTICAL NAVD 88
HORIZONTAL NAD 83 (1992)

VERMONT AGENCY OF TRANSPORTATION

CLOUGH HARBOUR & ASSOCIATES LLP
III Winners Circle, PO Box 5269, Albany, NY 12205
www.cloughharbour.com

PROJECT NAME: BENNINGTON
PROJECT NUMBER: AC NH 019-1(53)

FILE NAME: ZD048XSC.DGN
PROJECT LEADER: D.E.G.
DESIGNED BY: J.S.P.
CROSS SECTIONS XSC-60

PLOT DATE: 5/18/2007
DRAWN BY: J.S.P.
CHECKED BY: D.E.G.
SHEET 539 OF 577

FILE NAME =U:\9819\mstn\03\clough\Stage One Sites\zd048xsc_f.dgn
DATE/TIME =5/18/2007
USER =1459

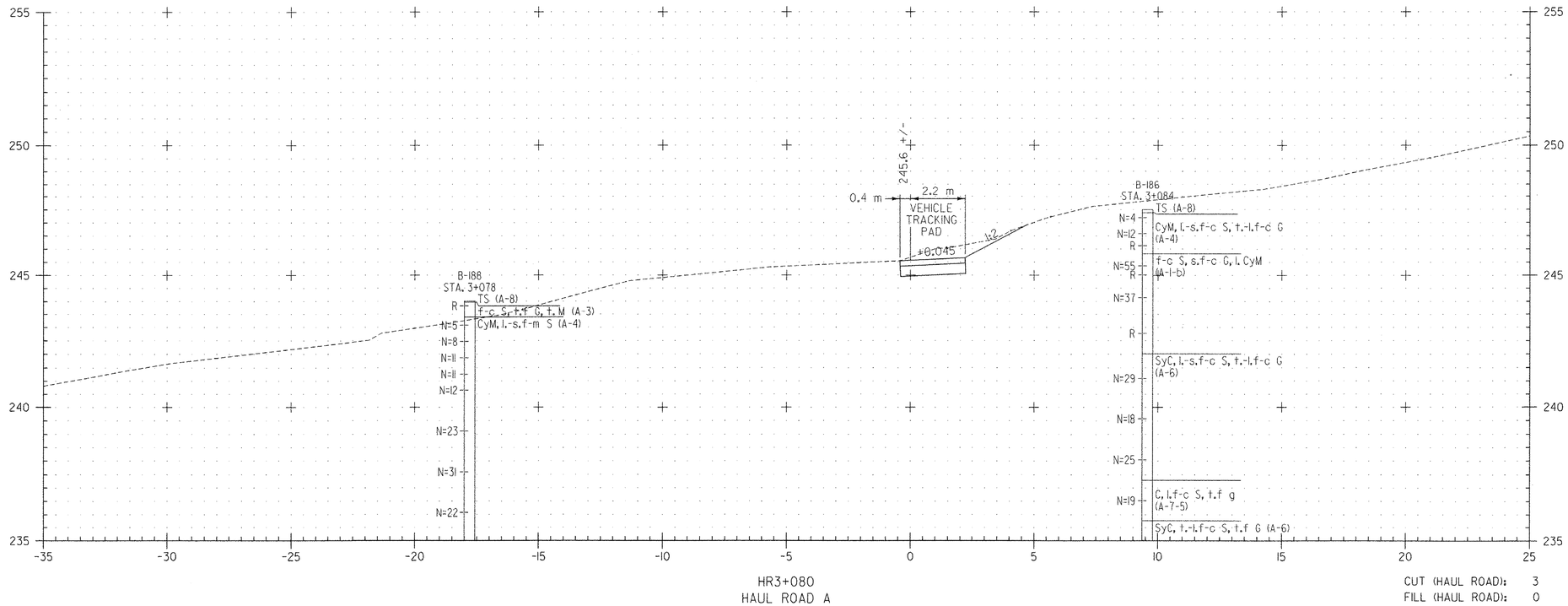

HR3+080
HAUL ROAD A

CUT (HAUL ROAD): 3
FILL (HAUL ROAD): 0

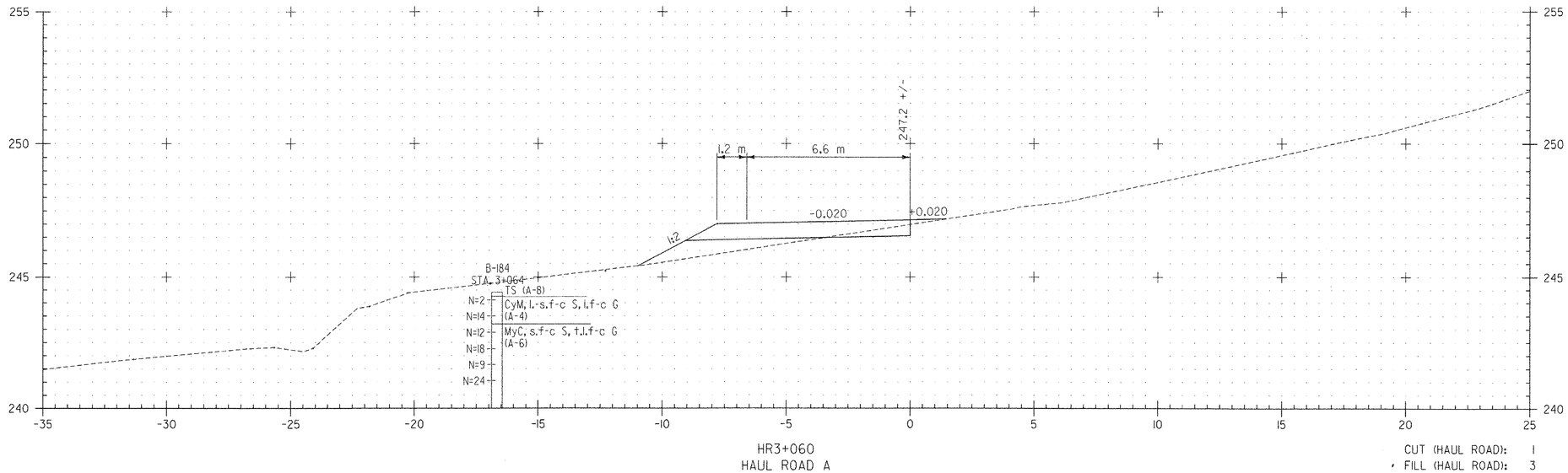

HR3+060
HAUL ROAD A

CUT (HAUL ROAD): 1
FILL (HAUL ROAD): 3

SEE NOTE ON SHEET 480

DATUM
VERTICAL NAVD 88
HORIZONTAL NAD 83 (1992)

2 0 2 m
1: 100
@ FULL SIZE

VERMONT AGENCY OF TRANSPORTATION

CLOUGH HARBOUR & ASSOCIATES LLP
III Winners Circle, PO Box 5269, Albany, NY 12205
www.cloughharbour.com

PROJECT NAME: BENNINGTON
PROJECT NUMBER: AC NH 019-1(53)

FILE NAME: ZD048XSC.DGN
PROJECT LEADER: D.E.G.
DESIGNED BY: J.S.P.
CROSS SECTIONS XSC-61

PLOT DATE: 5/18/2007
DRAWN BY: J.S.P.
CHECKED BY: D.E.G.
SHEET 540 OF 577

FILE NAME =U:\9819\mstn\03\clough\Stage One Sites\zd048xsc_f.dgn
DATE/TIME =5/18/2007
USER =1459

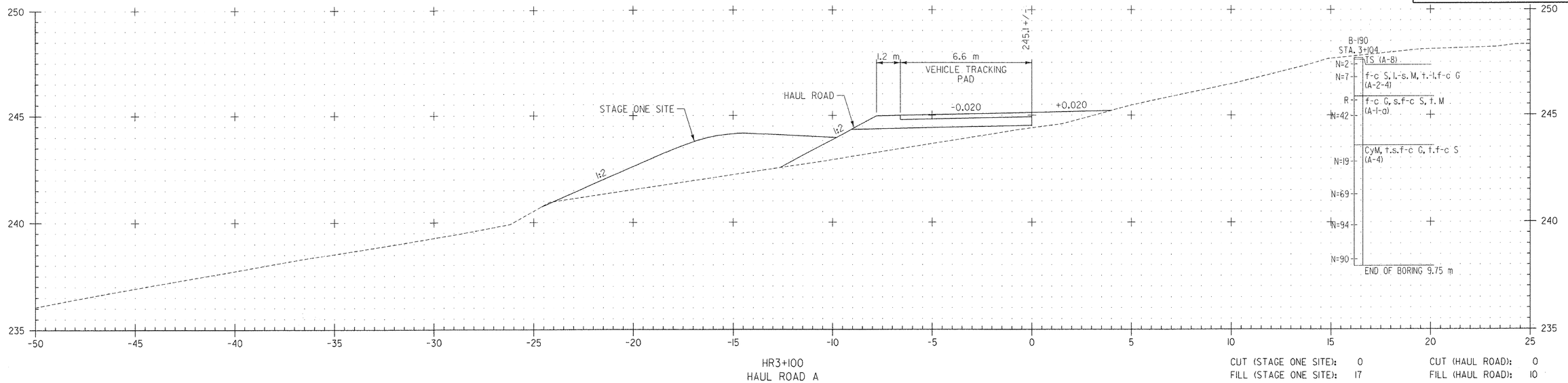

HR3+100
HAUL ROAD A

CUT (STAGE ONE SITE): 0
FILL (STAGE ONE SITE): 17
CUT (HAUL ROAD): 0
FILL (HAUL ROAD): 10

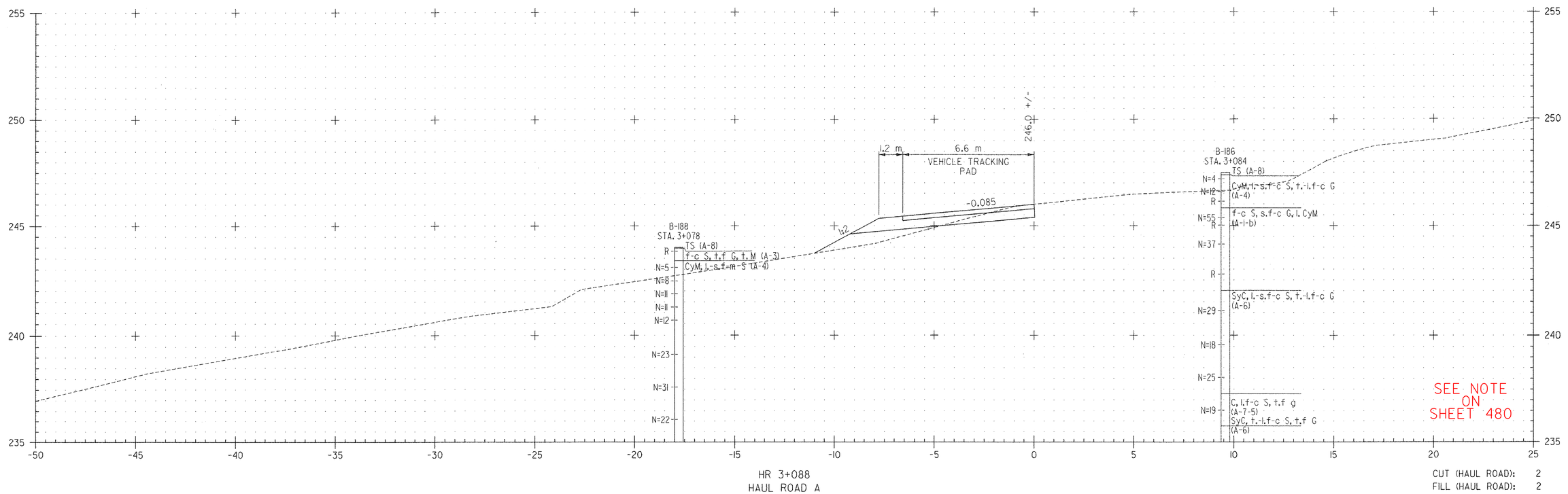

HR 3+088
HAUL ROAD A

CUT (HAUL ROAD): 2
FILL (HAUL ROAD): 2

DATUM
VERTICAL NAVD 88
HORIZONTAL NAD 83 (1992)

2 0 2 m
1: 100
@ FULL SIZE

FILE NAME =U:\9819\mstn\03\clough\Stage One Sites\zd048xsc_f.dgn
DATE/TIME =5/18/2007
USER =1459

VERMONT AGENCY OF TRANSPORTATION

CLOUGH HARBOUR & ASSOCIATES LLP
III Winners Circle, PO Box 5269, Albany, NY 12205
www.cloughharbour.com

PROJECT NAME: BENNINGTON
PROJECT NUMBER: AC NH 019-1(53)

FILE NAME: ZD048XSC.DGN
PROJECT LEADER: D.E.G.
DESIGNED BY: J.S.P.
CROSS SECTIONS XSC-62

PLOT DATE: 5/18/2007
DRAWN BY: J.S.P.
CHECKED BY: D.E.G.
SHEET 541 OF 577

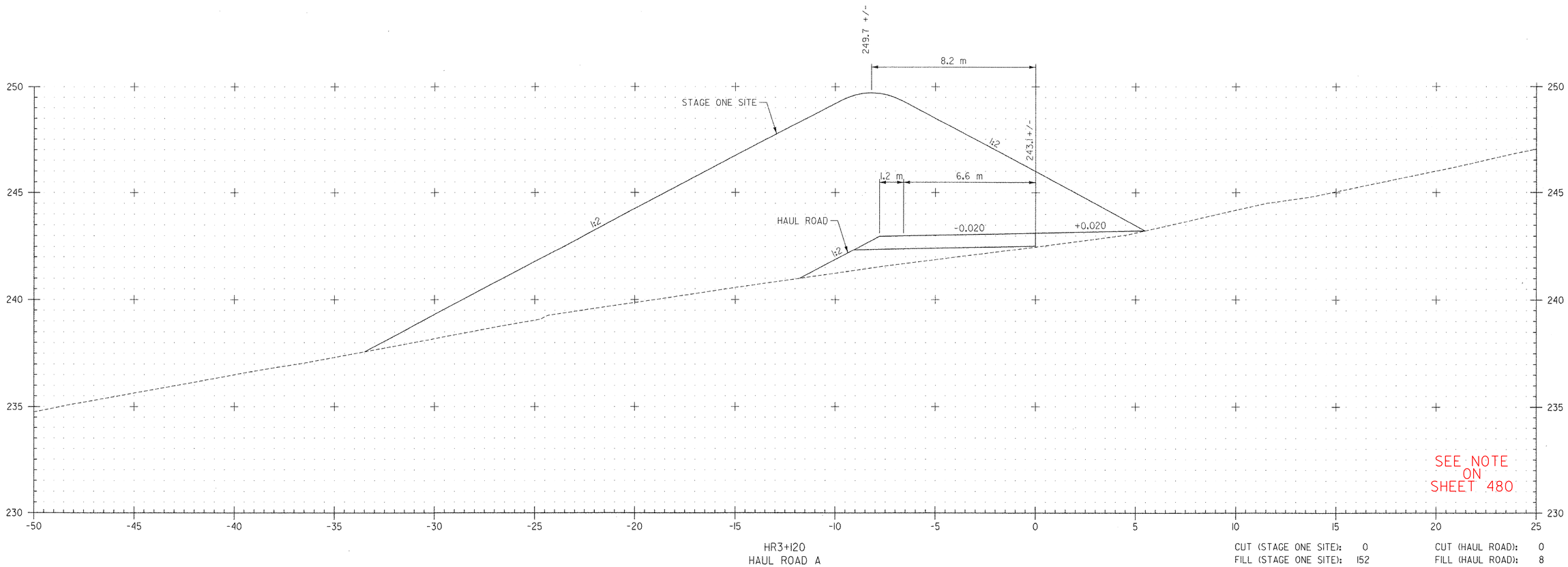

HR3+120
HAUL ROAD A

CUT (STAGE ONE SITE): 0
FILL (STAGE ONE SITE): 152
CUT (HAUL ROAD): 0
FILL (HAUL ROAD): 8

2 0 2 m
1: 100
@ FULL SIZE

DATUM
VERTICAL NAVD 88
HORIZONTAL NAD 83 (1992)

VERMONT AGENCY OF TRANSPORTATION

CLOUGH HARBOUR & ASSOCIATES LLP ©2007
III Winners Circle, PO Box 5269, Albany, NY 12205
www.cloughharbour.com

PROJECT NAME: BENNINGTON
PROJECT NUMBER: AC NH 019-1(53)

FILE NAME: ZD048XSC.DGN
PROJECT LEADER: D.E.G.
DESIGNED BY: J.S.P.
CROSS SECTIONS XSC-63

PLOT DATE: 5/18/2007
DRAWN BY: J.S.P.
CHECKED BY: D.E.G.
SHEET 542 OF 577

FILE NAME =U:\9819\mstn\03\clough\Stage One Sites\zd048xsc_f.dgn
DATE/TIME =5/18/2007
USER =1459

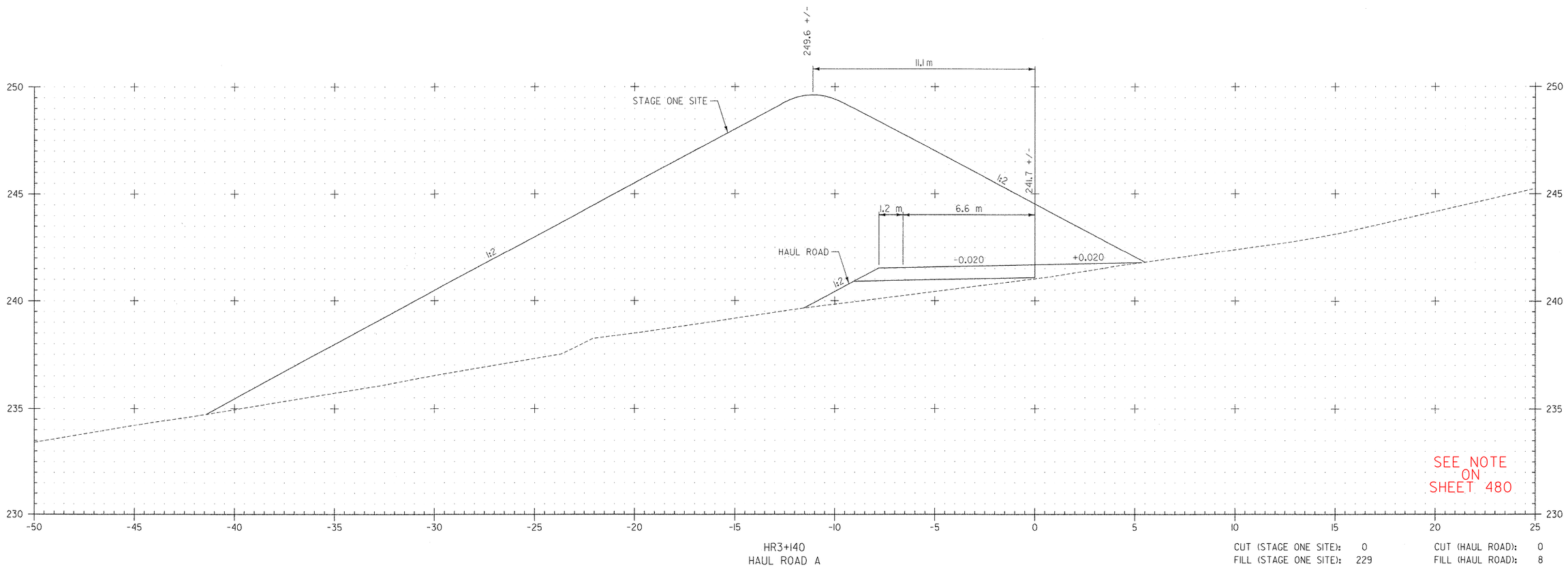

SEE NOTE ON SHEET 480

HR3+140
HAUL ROAD A

CUT (STAGE ONE SITE):	0	CUT (HAUL ROAD):	0
FILL (STAGE ONE SITE):	229	FILL (HAUL ROAD):	8

DATUM
VERTICAL NAVD 88
HORIZONTAL NAD 83 (1992)

2 0 2 m
1: 100
@ FULL SIZE

VERMONT AGENCY OF TRANSPORTATION

CLOUGH HARBOUR & ASSOCIATES LLP
III Winners Circle, PO Box 5269, Albany, NY 12205
www.cloughharbour.com

PROJECT NAME: BENNINGTON
PROJECT NUMBER: AC NH 019-1(53)

FILE NAME: ZD048XSC.DGN
PROJECT LEADER: D.E.G.
DESIGNED BY: J.S.P.
CROSS SECTIONS XSC-64

PLOT DATE: 5/18/2007
DRAWN BY: J.S.P.
CHECKED BY: D.E.G.
SHEET 543 OF 577

FILE NAME =U:\9819\mstn\03\clough\Stage One Sites\zd048xsc_f.dgn
DATE/TIME = 5/18/2007
USER =1459

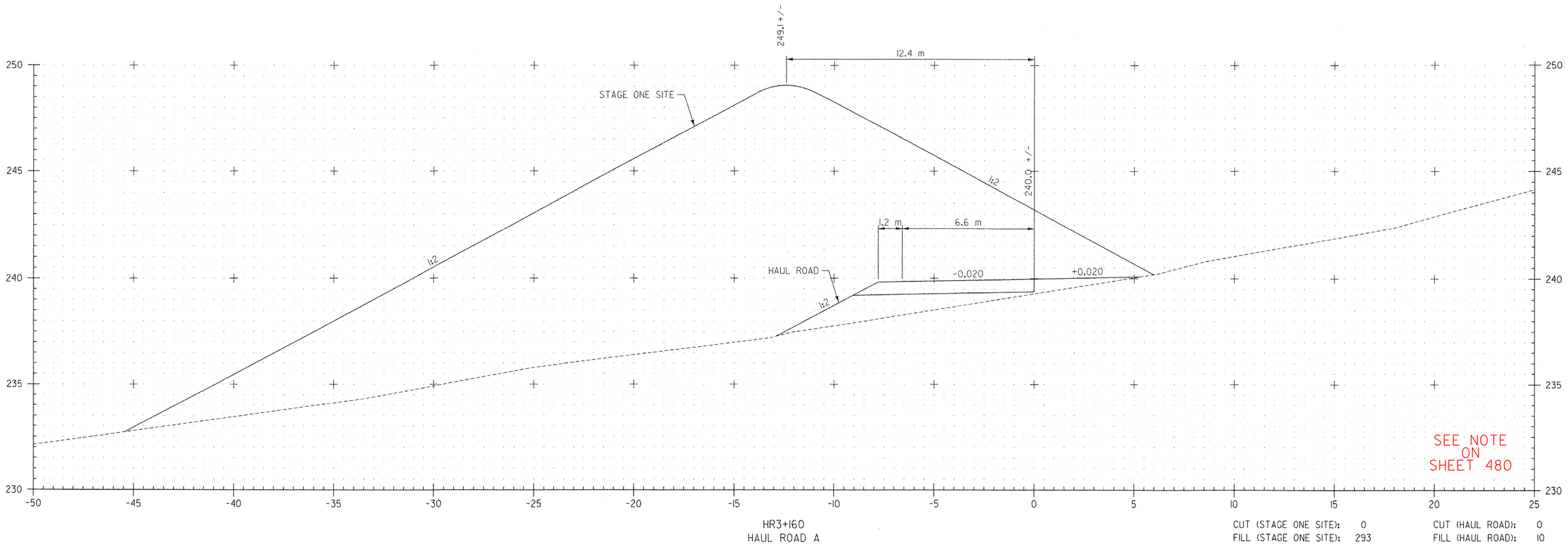

HR3+160
HAUL ROAD A

CUT (STAGE ONE SITE): 0
FILL (STAGE ONE SITE): 293

CUT (HAUL ROAD): 0
FILL (HAUL ROAD): 10

FILE NAME =U:\9819\mstn\03\clough\Stage One Sites\zd048xsc_f.dgn
DATE/TIME =5/18/2007
USER =1459

DATUM	
VERTICAL	NAVD 88
HORIZONTAL	NAD 83 (1992)

2 0 2 m
1: 100
@ FULL SIZE

VERMONT AGENCY OF TRANSPORTATION

CHA
CLOUGH HARBOUR & ASSOCIATES LLP
III Winners Circle, PO Box 5269, Albany, NY 12205
www.cloughharbour.com

PROJECT NAME: BENNINGTON
PROJECT NUMBER: AC NH 019-1(53)

FILE NAME: ZD048XSC.DGN
PROJECT LEADER: D.E.G.
DESIGNED BY: J.S.P.
CROSS SECTIONS XSC-65

PLOT DATE: 5/18/2007
DRAWN BY: J.S.P.
CHECKED BY: D.E.G.
SHEET 544 OF 577

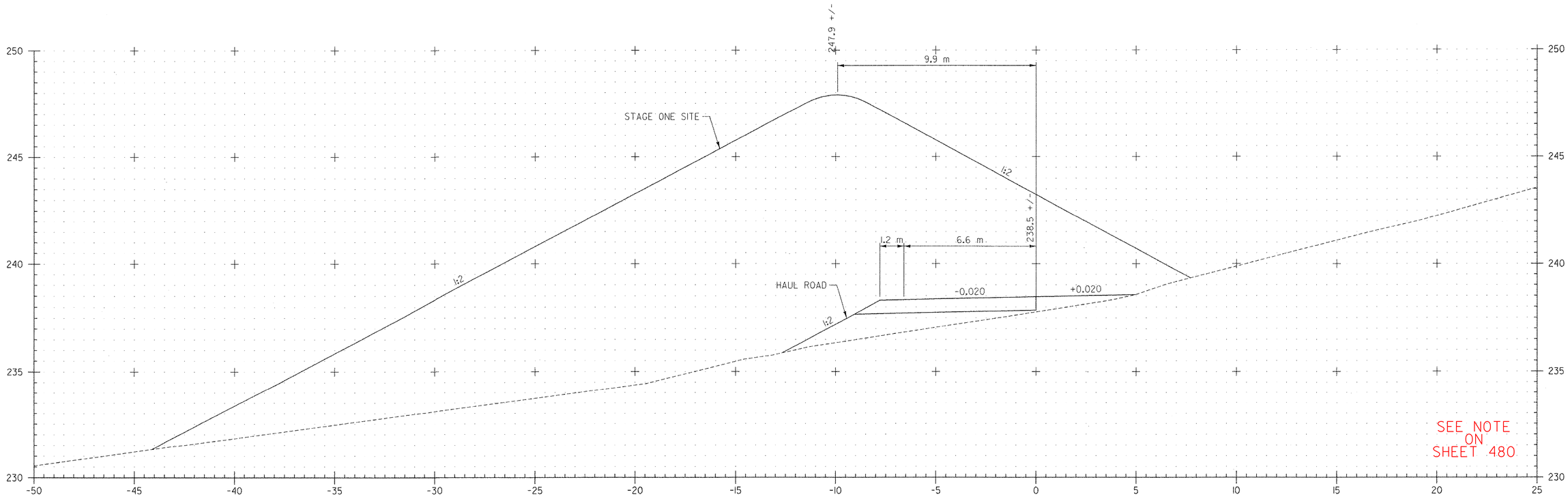

HR3+180
HAUL ROAD A

CUT (STAGE ONE SITE): 0
FILL (STAGE ONE SITE): 306
CUT (HAUL ROAD): 0
FILL (HAUL ROAD): 11

DATUM
VERTICAL NAVD 88
HORIZONTAL NAD 83 (1992)

2 0 2 m
1: 100
@ FULL SIZE

VERMONT AGENCY OF TRANSPORTATION

CLOUGH HARBOUR & ASSOCIATES LLP
III Winners Circle, PO Box 5269, Albany, NY 12205
www.cloughharbour.com

PROJECT NAME: BENNINGTON
PROJECT NUMBER: AC NH 019-1(53)

FILE NAME: ZD048XSC.DGN
PROJECT LEADER: D.E.G.
DESIGNED BY: J.S.P.
CROSS SECTIONS XSC-66

PLOT DATE: 5/18/2007
DRAWN BY: J.S.P.
CHECKED BY: D.E.G.
SHEET 545 OF 577

FILE NAME =U:\9819\mstn\03\clough\Stage One Sites\zd048xsc_f.dgn
DATE/TIME =5/18/2007
USER =1459

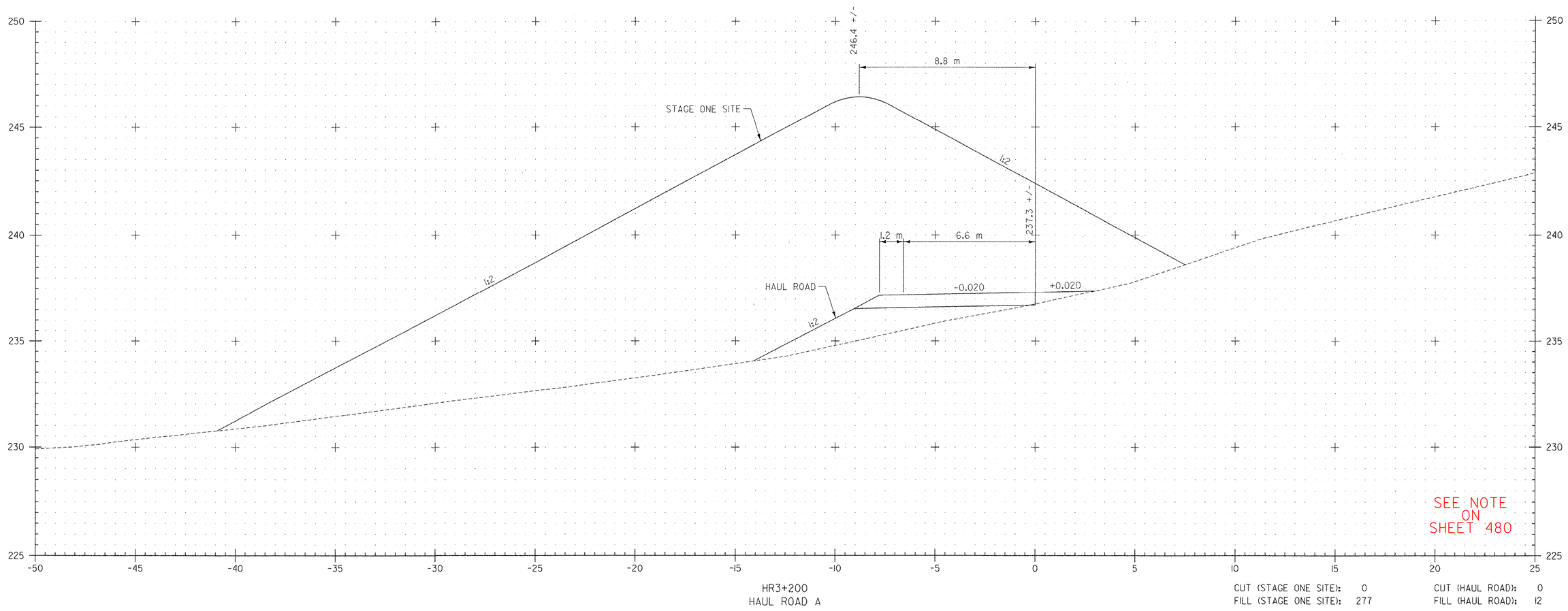

HR3+200
HAUL ROAD A

CUT (STAGE ONE SITE): 0
FILL (STAGE ONE SITE): 277
CUT (HAUL ROAD): 0
FILL (HAUL ROAD): 12

2 0 2 m
1: 100
@ FULL SIZE

DATUM
VERTICAL NAVD 88
HORIZONTAL NAD 83 (1992)

FILE NAME =U:\9819\mstn\03\clough\Stage One Sites\zd048xsc_f.dgn
DATE/TIME =5/18/2007
USER =1459

VERMONT AGENCY OF TRANSPORTATION

CLOUGH HARBOUR & ASSOCIATES LLP
© 2007
III Winners Circle, PO Box 5269, Albany, NY 12205
www.cloughharbour.com

PROJECT NAME: BENNINGTON
PROJECT NUMBER: AC NH 019-1(53)

FILE NAME: ZD048XSC.DGN
PROJECT LEADER: D.E.G.
DESIGNED BY: J.S.P.
PLOT DATE: 5/18/2007
DRAWN BY: J.S.P.
CHECKED BY: D.E.G.

CROSS SECTIONS XSC-67

SHEET 546 OF 577

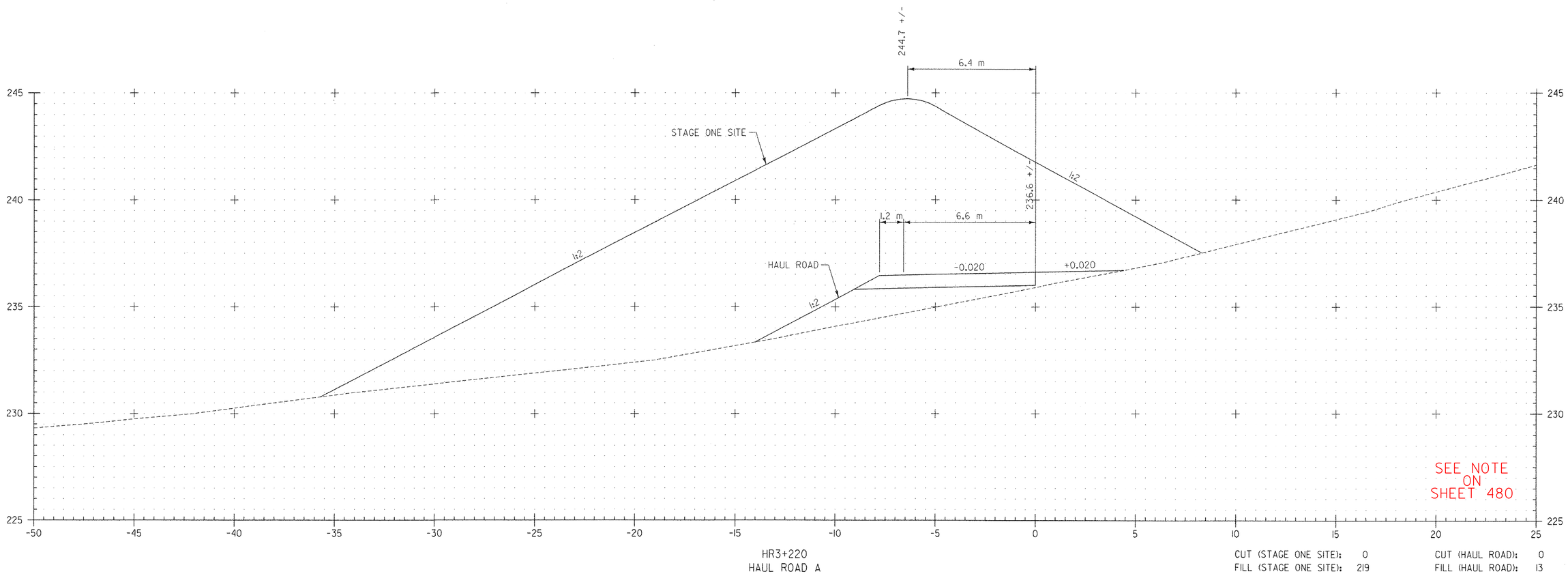

HR3+220
HAUL ROAD A

CUT (STAGE ONE SITE): 0
FILL (STAGE ONE SITE): 219
CUT (HAUL ROAD): 0
FILL (HAUL ROAD): 13

DATUM
VERTICAL NAVD 88
HORIZONTAL NAD 83 (1992)

2 0 2 m
1: 100
@ FULL SIZE

FILE NAME =U:\9819\mstn\03\clough\Stage One Sites\zd048xsc_f.dgn
DATE/TIME =5/18/2007
USER =1459

VERMONT AGENCY OF TRANSPORTATION

CLOUGH HARBOUR & ASSOCIATES LLP
III Winners Circle, PO Box 5269, Albany, NY 12205
www.cloughharbour.com

PROJECT NAME: BENNINGTON
PROJECT NUMBER: AC NH 019-1(53)

FILE NAME: ZD048XSC.DGN
PROJECT LEADER: D.E.G.
DESIGNED BY: J.S.P.
CROSS SECTIONS XSC-68

PLOT DATE: 5/18/2007
DRAWN BY: J.S.P.
CHECKED BY: D.E.G.
SHEET 547 OF 577

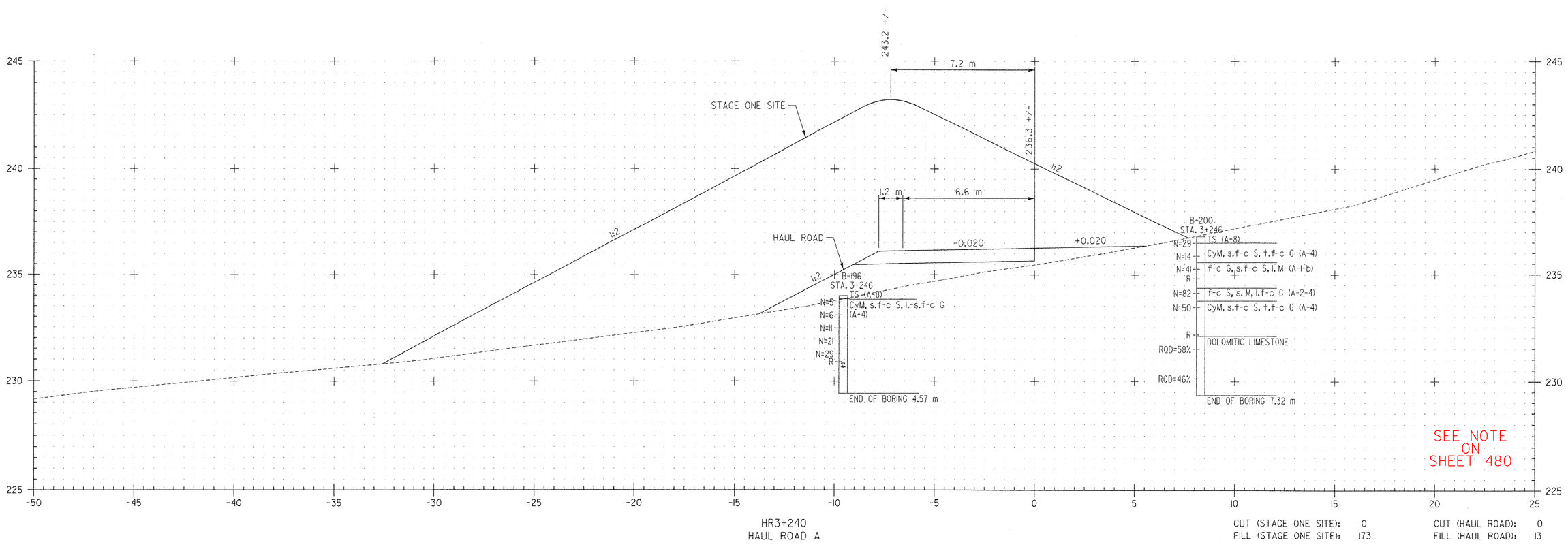

HR3+240
HAUL ROAD A

CUT (STAGE ONE SITE): 0
FILL (STAGE ONE SITE): 173

CUT (HAUL ROAD): 0
FILL (HAUL ROAD): 13

2 0 2 m
1: 100
@ FULL SIZE

DATUM

VERTICAL	NAVD 88
HORIZONTAL	NAD 83 (1992)

FILE NAME =U:\9819\mstn\03\clough\Stage One Sites\zd048xsc_f.dgn
DATE/TIME =5/18/2007
USER =1459

VERMONT AGENCY OF TRANSPORTATION

CHA
CLOUGH HARBOUR & ASSOCIATES LLP
III Winners Circle, PO Box 5269, Albany, NY 12205
www.cloughharbour.com

PROJECT NAME: BENNINGTON
PROJECT NUMBER: AC NH 019-1(53)

FILE NAME: ZD048XSC.DGN
PROJECT LEADER: D.E.G.
DESIGNED BY: J.S.P.
CROSS SECTIONS XSC-69

PLOT DATE: 5/18/2007
DRAWN BY: J.S.P.
CHECKED BY: D.E.G.
SHEET 548 OF 577

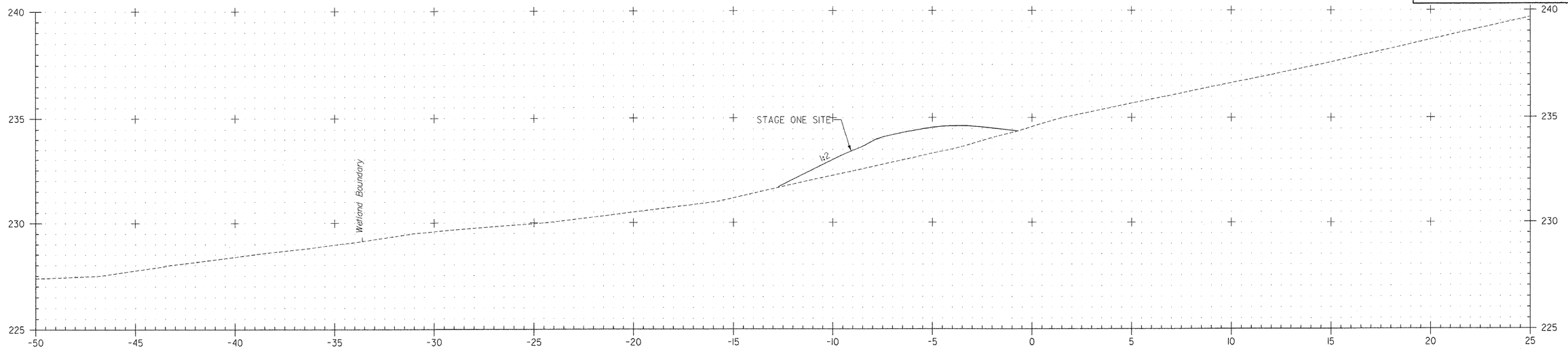

HR3+280
HAUL ROAD A

CUT (STAGE ONE SITE): 0
FILL (STAGE ONE SITE): 10
CUT (HAUL ROAD): 0
FILL (HAUL ROAD): 0

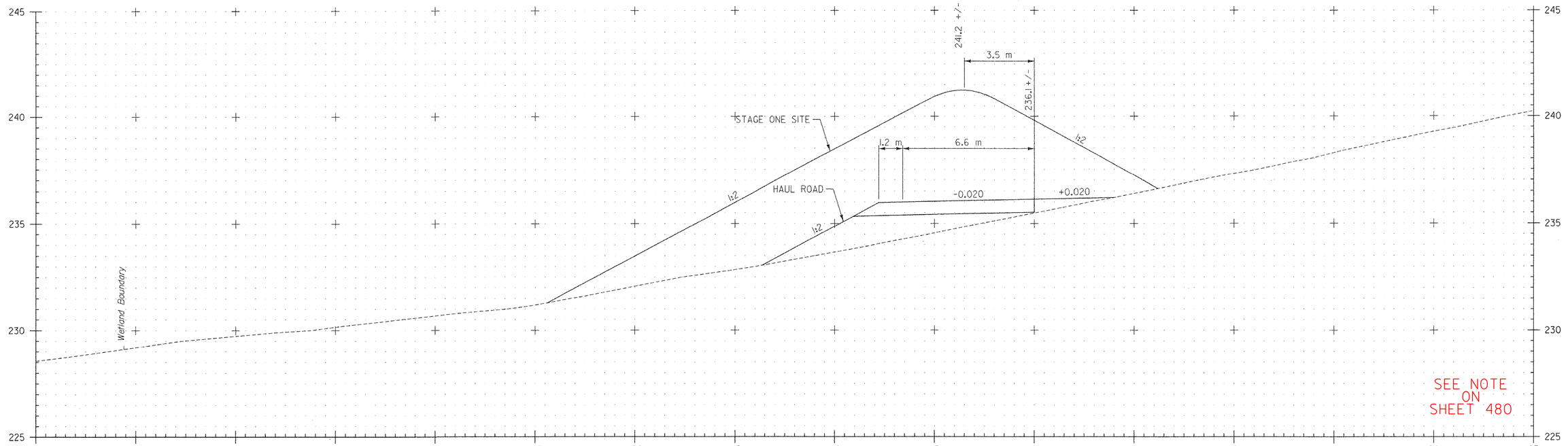

SEE NOTE ON SHEET 480

HR3+260
HAUL ROAD A

CUT (STAGE ONE SITE): 0
FILL (STAGE ONE SITE): 88
CUT (HAUL ROAD): 0
FILL (HAUL ROAD): 12

DATUM
VERTICAL NAVD 88
HORIZONTAL NAD 83 (1992)

2 0 2 m
1: 100
@ FULL SIZE

VERMONT AGENCY OF TRANSPORTATION

CLOUGH HARBOUR & ASSOCIATES LLP
111 Winners Circle, PO Box 5269, Albany, NY 12205
www.cloughharbour.com

PROJECT NAME: BENNINGTON
PROJECT NUMBER: AC NH 019-1(53)

FILE NAME: ZD048XSC.DGN
PROJECT LEADER: D.E.G.
DESIGNED BY: J.S.P.
PLOT DATE: 5/18/2007
DRAWN BY: J.S.P.
CHECKED BY: D.E.G.

CROSS SECTIONS XSC-70

SHEET 549 OF 577

FILE NAME =U:\9819\mstn\03\clough\Stage One Sites\zd048xsc_f.dgn
DATE/TIME =5/18/2007
USER =1459

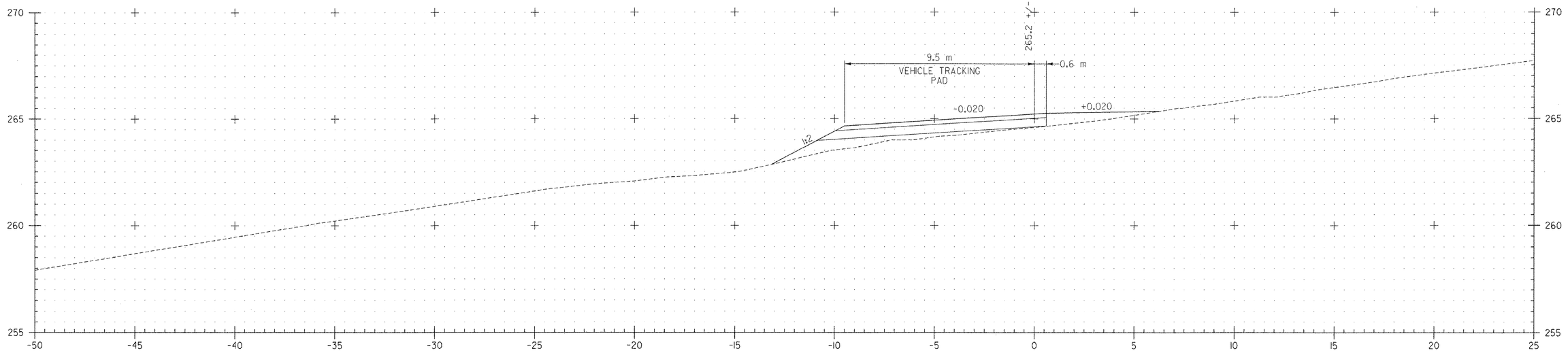

HRBI+280
HAUL ROAD B

CUT (HAUL ROAD): 0
FILL (HAUL ROAD): 5

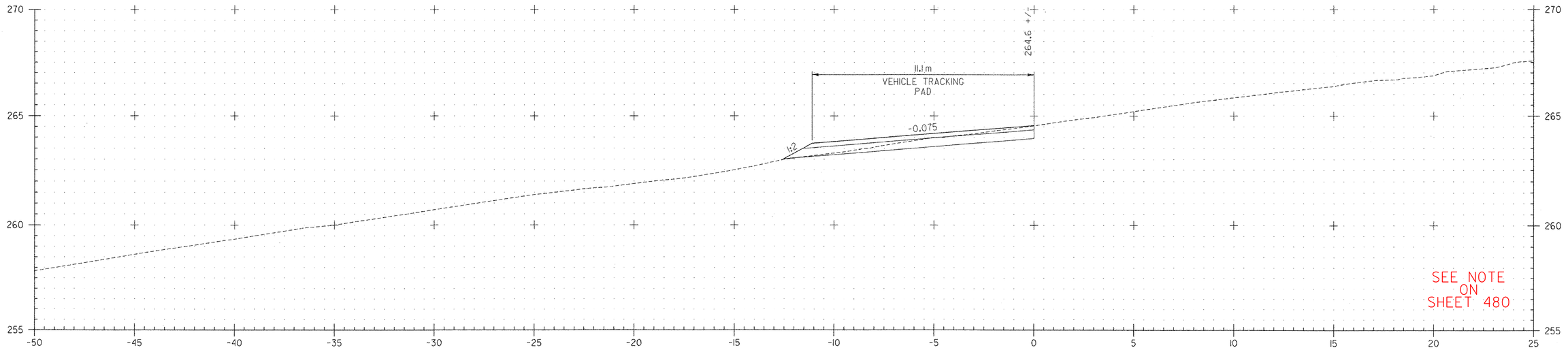

HRBI+278
HAUL ROAD B

CUT (HAUL ROAD): 4
FILL (HAUL ROAD): 0

SEE NOTE ON SHEET 480

DATUM
VERTICAL NAVD 88
HORIZONTAL NAD 83 (1992)

2 0 2 m
1: 100
@ FULL SIZE

VERMONT AGENCY OF TRANSPORTATION

CLOUGH HARBOUR & ASSOCIATES LLP
III Winners Circle, PO Box 5269, Albany, NY 12205
www.cloughharbour.com

PROJECT NAME: BENNINGTON
PROJECT NUMBER: AC NH 019-1(53)

FILE NAME: ZD048XSC.DGN
PROJECT LEADER: D.E.G.
DESIGNED BY: J.S.P.
CROSS SECTIONS XSC-71

PLOT DATE: 5/18/2007
DRAWN BY: J.S.P.
CHECKED BY: D.E.G.
SHEET 550 OF 577

FILE NAME =U:\9819\mstn\03\clough\Stage One Sites\zd048xsc_f.dgn
DATE/TIME = 5/18/2007
USER =1459

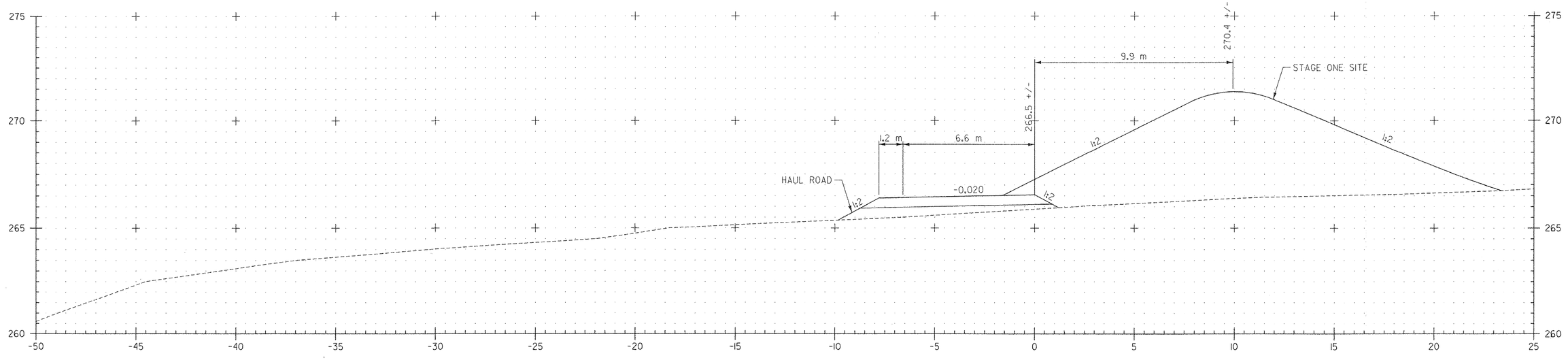

HRBI+320
HAUL ROAD B

CUT (STAGE ONE SITE): 0
FILL (STAGE ONE SITE): 70
CUT (HAUL ROAD): 0
FILL (HAUL ROAD): 4

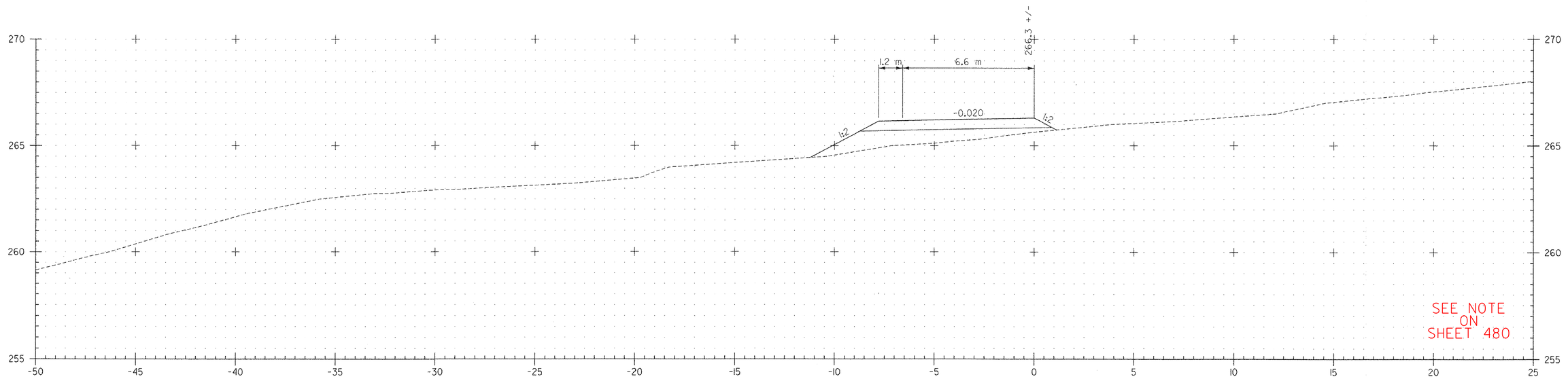

HRBI+300
HAUL ROAD B

CUT (HAUL ROAD): 0
FILL (HAUL ROAD): 6

DATUM
VERTICAL NAVD 88
HORIZONTAL NAD 83 (1992)

2 0 2 m
1: 100
@ FULL SIZE

VERMONT AGENCY OF TRANSPORTATION

CLOUGH HARBOUR & ASSOCIATES LLP
III Winners Circle, PO Box 5269, Albany, NY 12205
www.cloughharbour.com

PROJECT NAME: BENNINGTON
PROJECT NUMBER: AC NH 019-1(53)

FILE NAME: ZD048XSC.DGN
PROJECT LEADER: D.E.G.
DESIGNED BY: J.S.P.
CROSS SECTIONS XSC-72

PLOT DATE: 5/18/2007
DRAWN BY: J.S.P.
CHECKED BY: D.E.G.
SHEET 551 OF 577

FILE NAME =U:\9819\mstn\03\clough\Stage One Sites\zd048xsc_f.dgn
DATE/TIME =5/18/2007
USER =1459

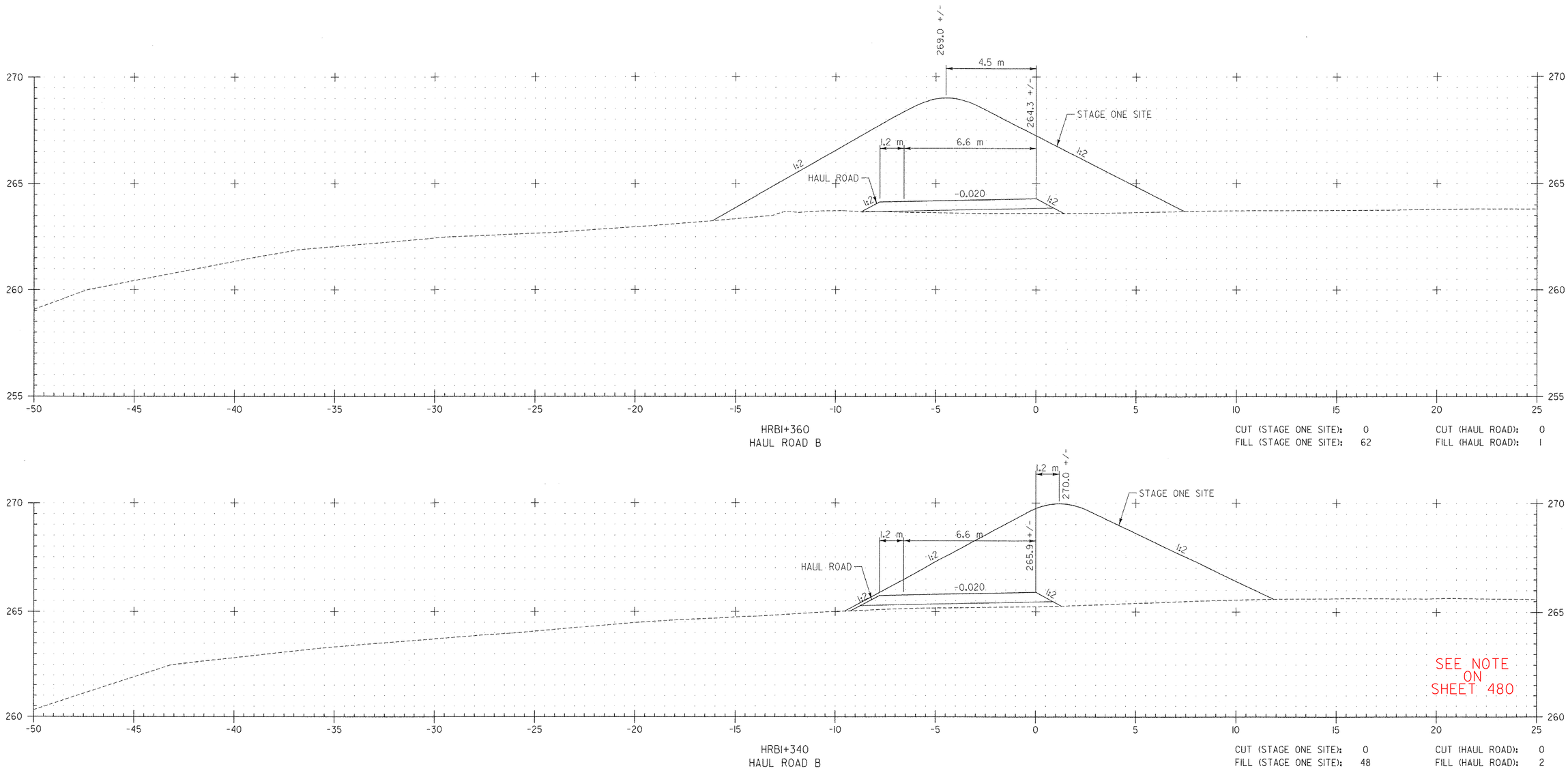

HRBI+360
HAUL ROAD B

CUT (STAGE ONE SITE): 0 CUT (HAUL ROAD): 0
FILL (STAGE ONE SITE): 62 FILL (HAUL ROAD): 1

SEE NOTE ON SHEET 480

HRBI+340
HAUL ROAD B

CUT (STAGE ONE SITE): 0 CUT (HAUL ROAD): 0
FILL (STAGE ONE SITE): 48 FILL (HAUL ROAD): 2

2 0 2 m
1: 100
@ FULL SIZE

DATUM
VERTICAL NAVD 88
HORIZONTAL NAD 83 (1992)

VERMONT AGENCY OF TRANSPORTATION

CLOUGH HARBOUR & ASSOCIATES LLP
III Winners Circle, PO Box 5269, Albany, NY 12205
www.cloughharbour.com

PROJECT NAME: BENNINGTON
PROJECT NUMBER: AC NH 019-1(53)

FILE NAME: ZD048XSC.DGN PLOT DATE: 5/18/2007
PROJECT LEADER: D.E.G. DRAWN BY: J.S.P.
DESIGNED BY: J.S.P. CHECKED BY: D.E.G.
CROSS SECTIONS XSC-73 SHEET 552 OF 577

FILE NAME =U:\9819\mstn\03\clough\Stage One Sites\zd048xsc_f.dgn
DATE/TIME =5/18/2007
USER =1459

Metric

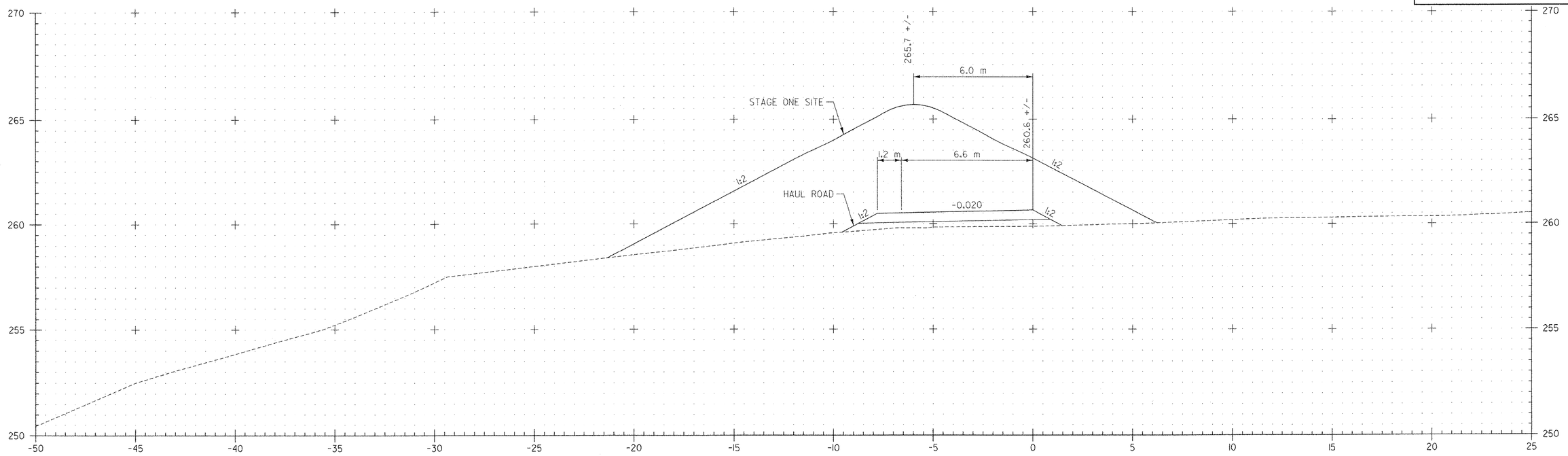

HRBI+400
HAUL ROAD B

CUT (STAGE ONE SITE): 0
FILL (STAGE ONE SITE): 78
CUT (HAUL ROAD): 0
FILL (HAUL ROAD): 3

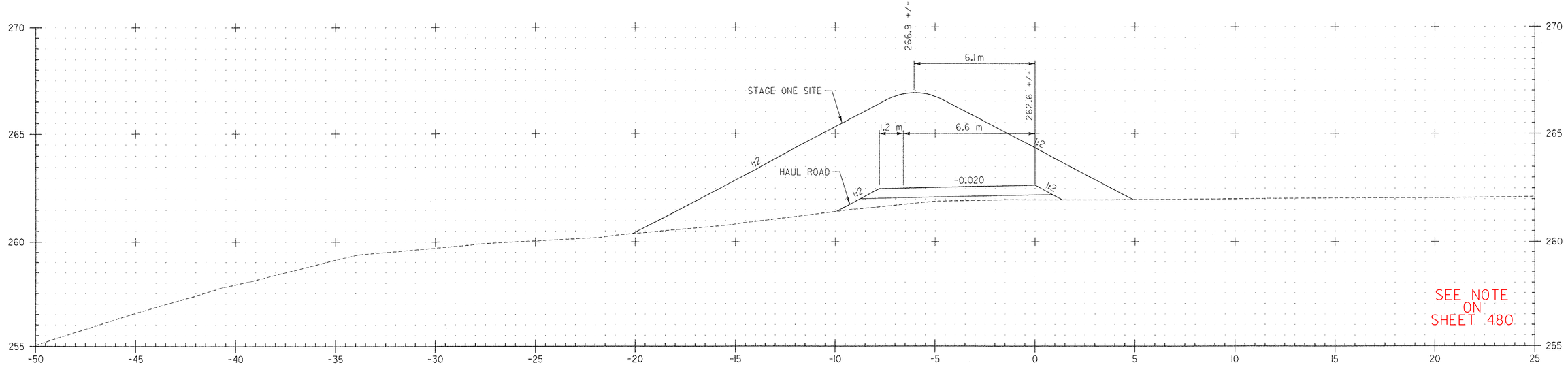

HRBI+380
HAUL ROAD B

CUT (STAGE ONE SITE): 0
FILL (STAGE ONE SITE): 62
CUT (HAUL ROAD): 0
FILL (HAUL ROAD): 3

SEE NOTE ON SHEET 480

2 0 2 m
1: 100
@ FULL SIZE

DATUM
VERTICAL NAVD 88
HORIZONTAL NAD 83 (1992)

VERMONT AGENCY OF TRANSPORTATION

CLOUGH HARBOUR & ASSOCIATES LLP
III Winners Circle, PO Box 5269, Albany, NY 12205
www.cloughharbour.com

PROJECT NAME: BENNINGTON
PROJECT NUMBER: AC NH 019-1(53)

FILE NAME: ZD048XSC.DGN
PROJECT LEADER: D.E.G.
DESIGNED BY: J.S.P.
CROSS SECTIONS XSC-74

PLOT DATE: 5/18/2007
DRAWN BY: J.S.P.
CHECKED BY: D.E.G.
SHEET 553 OF 577

FILE NAME =U:\9819\mstn\03\clough\Stage One Sites\zd048xsc_f.dgn
DATE/TIME =5/18/2007
USER =1459

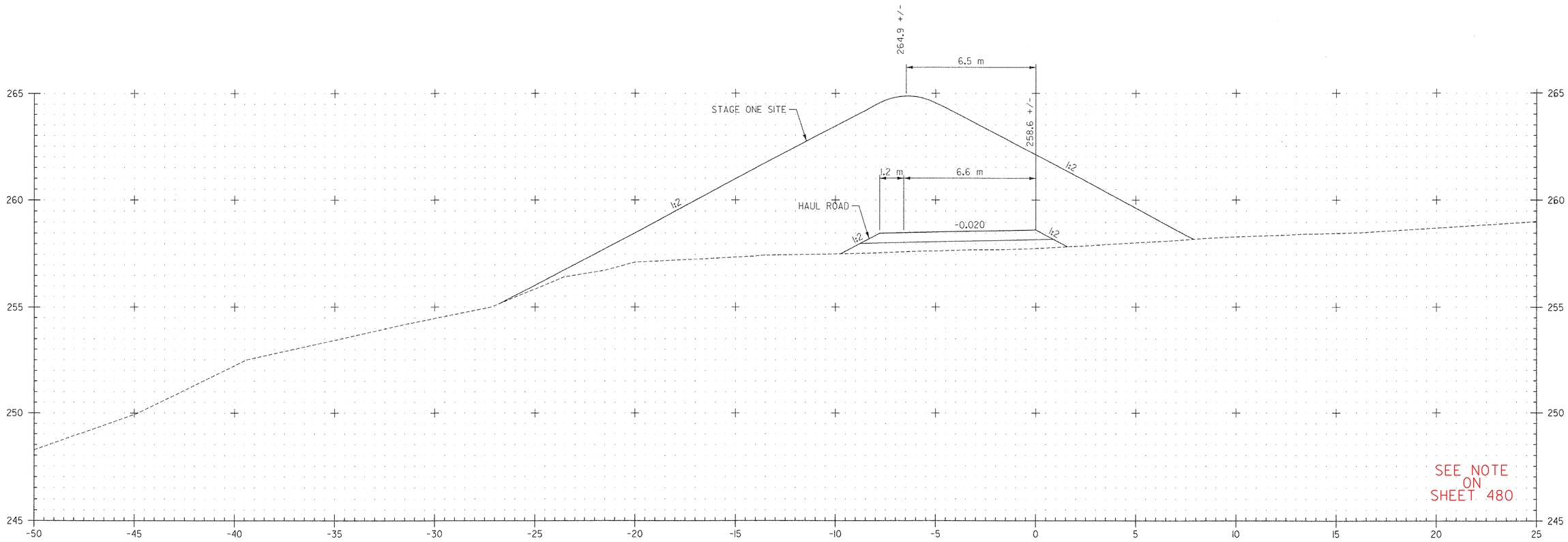

HRBI+420
HAUL ROAD B

CUT (STAGE ONE SITE):	0	CUT (HAUL ROAD):	0
FILL (STAGE ONE SITE):	112	FILL (HAUL ROAD):	5

DATUM
VERTICAL NAVD 88
HORIZONTAL NAD 83 (1992)

2 0 2 m
1: 100
@ FULL SIZE

VERMONT AGENCY OF TRANSPORTATION

CLOUGH HARBOUR & ASSOCIATES LLP
III Winners Circle, PO Box 5269, Albany, NY 12205
www.cloughharbour.com

PROJECT NAME: BENNINGTON
PROJECT NUMBER: AC NH 019-1(53)

FILE NAME: ZD048XSC.DGN
PROJECT LEADER: D.E.G.
DESIGNED BY: J.S.P.
CROSS SECTIONS XSC-75

PLOT DATE: 5/18/2007
DRAWN BY: J.S.P.
CHECKED BY: D.E.G.
SHEET 554 OF 577

FILE NAME =U:\9819\mstn\03\clough\Stage One Sites\zd048xsc_f.dgn
DATE/TIME =5/18/2007
USER =1459

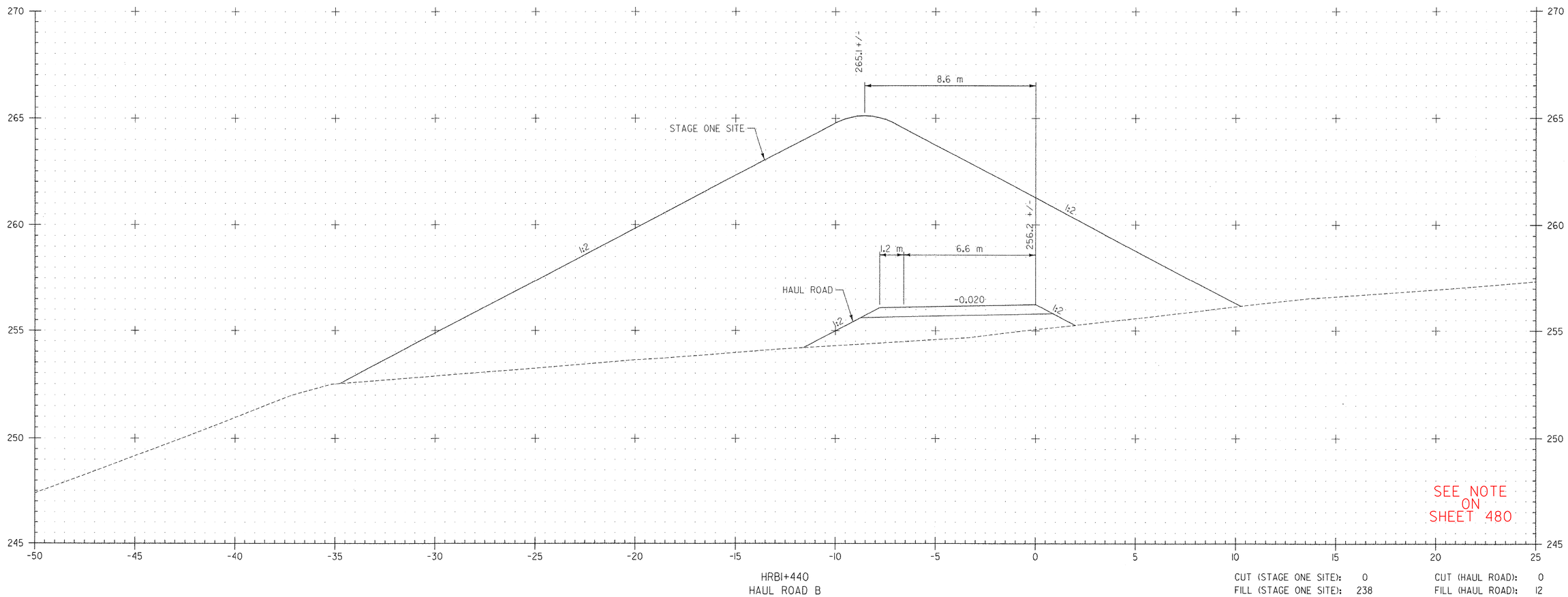

HRBI+440
HAUL ROAD B

CUT (STAGE ONE SITE): 0
FILL (STAGE ONE SITE): 238
CUT (HAUL ROAD): 0
FILL (HAUL ROAD): 12

DATUM
VERTICAL NAVD 88
HORIZONTAL NAD 83 (1992)

2 0 2 m
1: 100
@ FULL SIZE

VERMONT AGENCY OF TRANSPORTATION

CLOUGH HARBOUR & ASSOCIATES LLP
III Winners Circle, PO Box 5266, Albany, NY 12205
www.cloughharbour.com

PROJECT NAME: BENNINGTON
PROJECT NUMBER: AC NH 019-1(53)

FILE NAME: ZD048XSC.DGN
PROJECT LEADER: D.E.G.
DESIGNED BY: J.S.P.
PLOT DATE: 5/18/2007
DRAWN BY: J.S.P.
CHECKED BY: D.E.G.

CROSS SECTIONS XSC-76

SHEET 555 OF 577

FILE NAME =U:\9819\mstn\03\clough\Stage One Sites\zd048xsc_f.dgn
DATE/TIME =5/18/2007
USER =1459

Metric

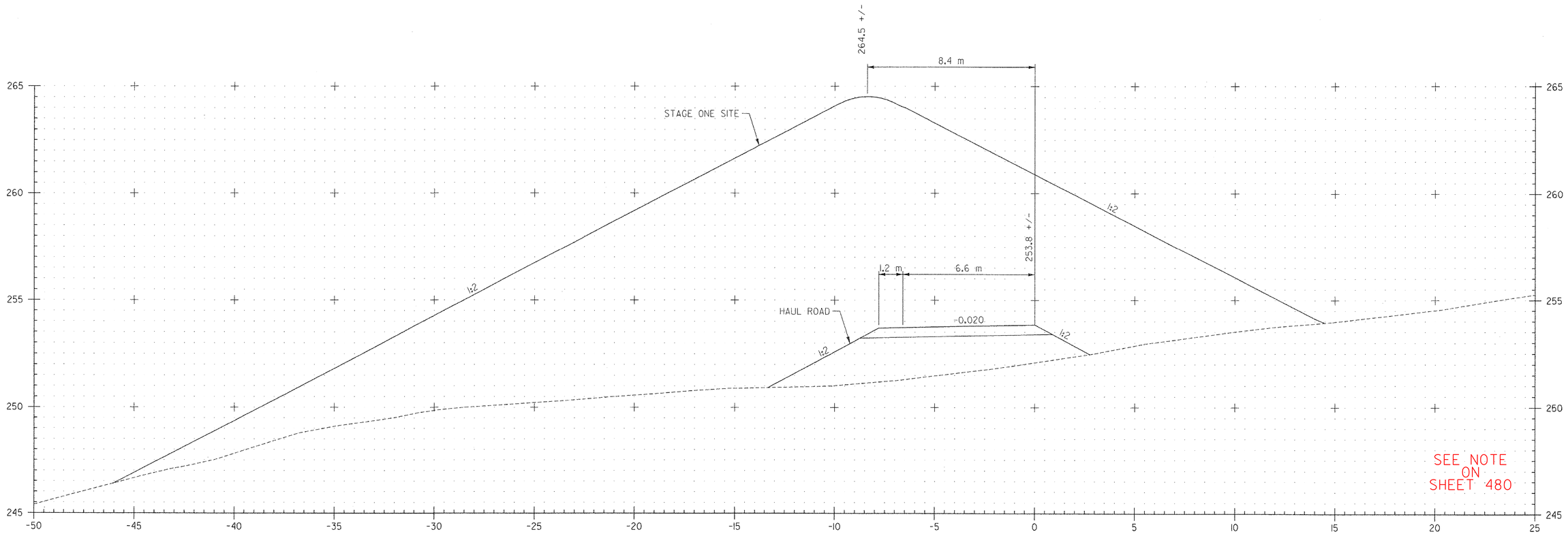

HRBI+460
HAUL ROAD B

CUT (STAGE ONE SITE): 0
FILL (STAGE ONE SITE): 361

CUT (HAUL ROAD): 0
FILL (HAUL ROAD): 22

DATUM
VERTICAL NAVD 88
HORIZONTAL NAD 83 (1992)

2 0 2 m
1: 100
@ FULL SIZE

VERMONT AGENCY OF TRANSPORTATION

CLOUGH HARBOUR & ASSOCIATES LLP
III Winners Circle, PO Box 5269, Albany, NY 12205
www.cloughharbour.com

PROJECT NAME: BENNINGTON
PROJECT NUMBER: AC NH 019-1(53)

FILE NAME: ZD048XSC.DGN
PROJECT LEADER: D.E.G.
DESIGNED BY: J.S.P.
CROSS SECTIONS XSC-77

PLOT DATE: 5/18/2007
DRAWN BY: J.S.P.
CHECKED BY: D.E.G.
SHEET 556 OF 577

FILE NAME =U:\9819\mstn\03\clough\Stage One Sites\zd048xsc_f.dgn
DATE/TIME =5/18/2007
USER =1459

VAOT Metric

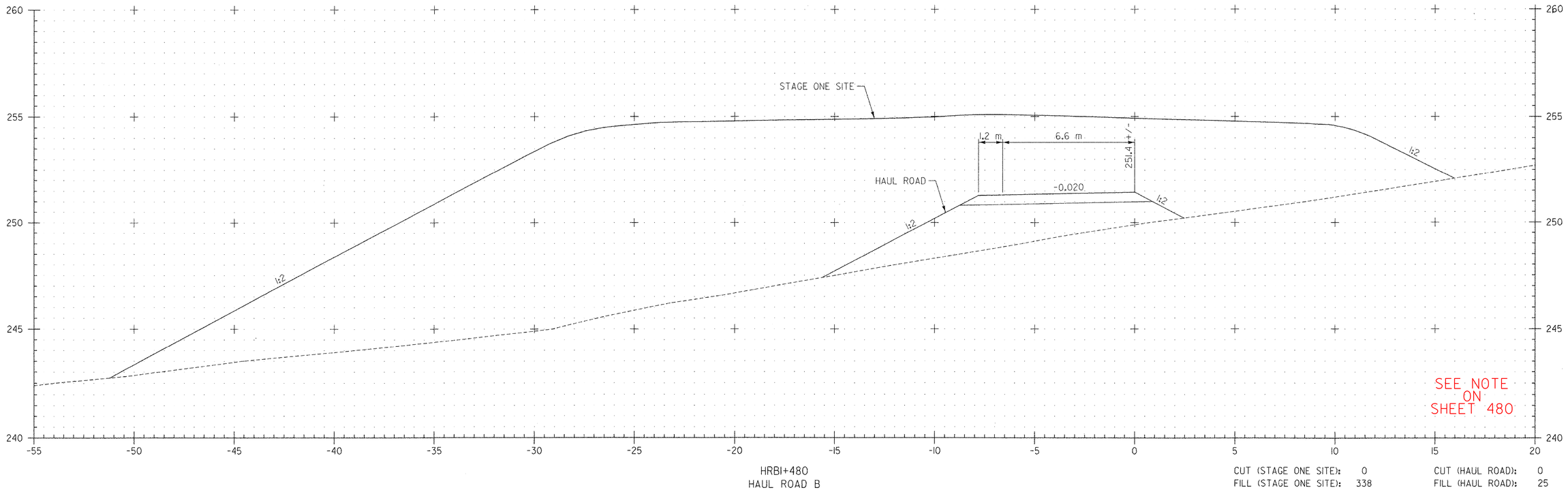

HRBI+480
HAUL ROAD B

CUT (STAGE ONE SITE): 0
FILL (STAGE ONE SITE): 338
CUT (HAUL ROAD): 0
FILL (HAUL ROAD): 25

DATUM
VERTICAL NAVD 88
HORIZONTAL NAD 83 (1992)

2 0 2 m
1: 100
@ FULL SIZE

VERMONT AGENCY OF TRANSPORTATION

CLOUGH HARBOUR & ASSOCIATES LLP
III Winners Circle, PO Box 5269, Albany, NY 12205
www.cloughharbour.com

PROJECT NAME: BENNINGTON
PROJECT NUMBER: AC NH 019-1(53)

FILE NAME: ZD048XSC.DGN
PROJECT LEADER: D.E.G.
DESIGNED BY: J.S.P.
CROSS SECTIONS XSC-78

PLOT DATE: 5/18/2007
DRAWN BY: J.S.P.
CHECKED BY: D.E.G.
SHEET 557 OF 577

FILE NAME =U:\9819\mstn\03\clough\Stage One Sites\zd048xsc_f.dgn
DATE/TIME =5/18/2007
USER =1459

Metric

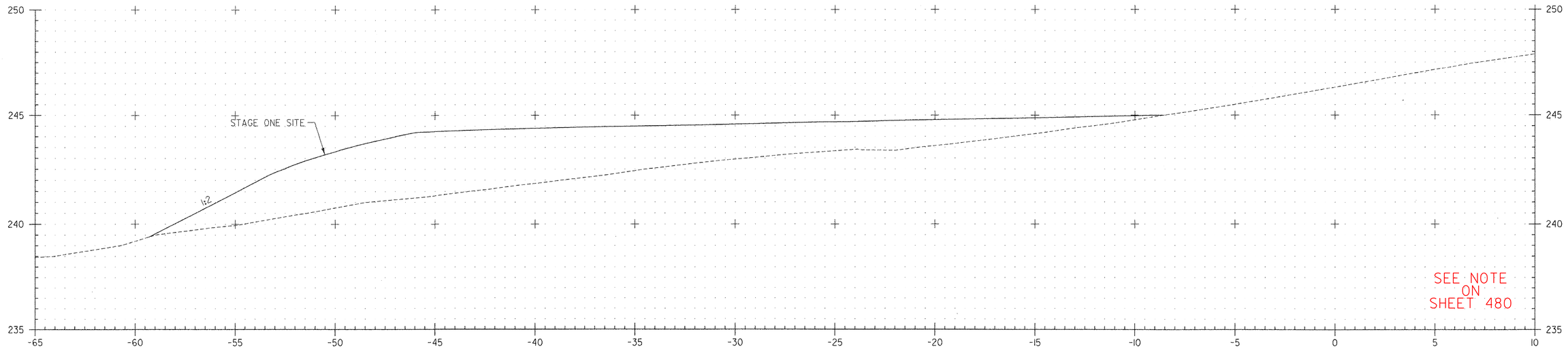

HRBI+500
HAUL ROAD B

CUT (STAGE ONE SITE): 0
FILL (STAGE ONE SITE): 84
CUT (HAUL ROAD): -
FILL (HAUL ROAD): -

DATUM
VERTICAL NAVD 88
HORIZONTAL NAD 83 (1992)

2 0 2 m
1: 100
@ FULL SIZE

VERMONT AGENCY OF TRANSPORTATION

CLOUGH HARBOUR & ASSOCIATES LLP
III Winners Circle, PO Box 5269, Albany, NY 12205
www.cloughharbour.com

PROJECT NAME: BENNINGTON
PROJECT NUMBER: AC NH 019-1(53)

FILE NAME: ZD048XSC.DGN
PROJECT LEADER: D.E.G.
DESIGNED BY: J.S.P.
CROSS SECTIONS XSC-79

PLOT DATE: 5/18/2007
DRAWN BY: J.S.P.
CHECKED BY: D.E.G.
SHEET 558 OF 577

FILE NAME =U:\9819\mstn\03\clough\Stage One Sites\zd048xsc_f.dgn
DATE/TIME = 5/18/2007
USER = 1459

Metric

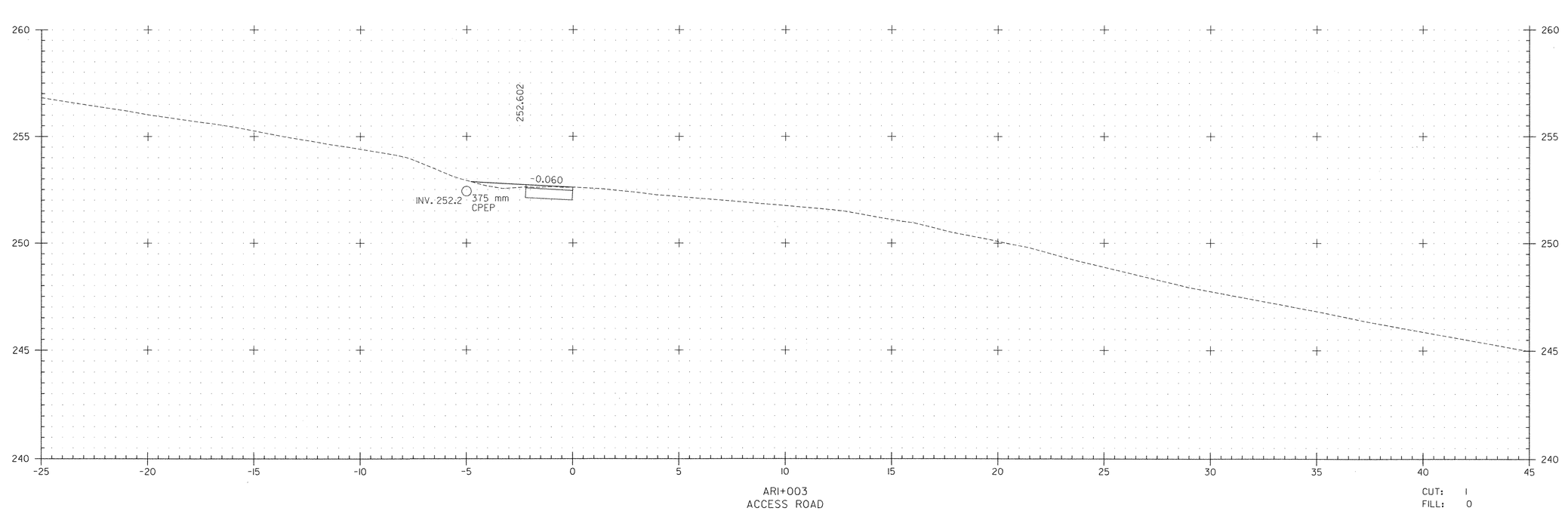

DATUM
VERTICAL NAVD 88
HORIZONTAL NAD 83 (1992)

2 0 2 m
1: 100
@ FULL SIZE

VERMONT AGENCY OF TRANSPORTATION

CLOUGH HARBOUR & ASSOCIATES LLP
III Winners Circle, PO Box 5269, Albany, NY 12205
www.cloughharbour.com

PROJECT NAME: BENNINGTON
PROJECT NUMBER: AC NH 019-1(53)

FILE NAME: ZD048XSC.DGN
PROJECT LEADER: D.E.G.
DESIGNED BY: J.S.P.
CROSS SECTIONS XSC-80

PLOT DATE: 5/18/2007
DRAWN BY: J.S.P.
CHECKED BY: D.E.G.
SHEET 559 OF 577

FILE NAME =U:\9819\mstn\03\clough\Stage One Sites\zd048xsc_f.dgn
DATE/TIME =5/18/2007
USER =1459

Metric

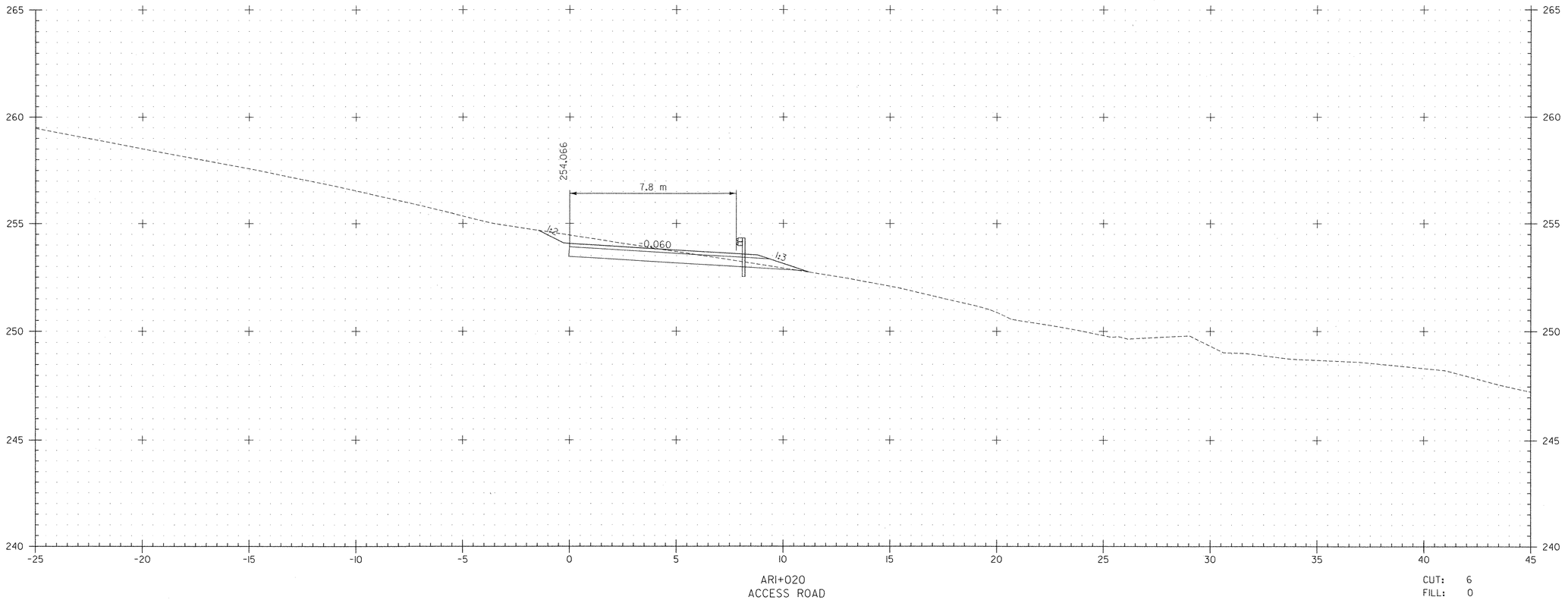

FILE NAME =U:\9819\mstn\03\clough\Stage One Sites\zd048xsc_f.dgn
DATE/TIME =5/18/2007
USER =1459

DATUM
VERTICAL NAVD 88
HORIZONTAL NAD 83 (1992)

2 0 2 m
1: 100
@ FULL SIZE

VERMONT AGENCY OF TRANSPORTATION

CLOUGH HARBOUR & ASSOCIATES LLP © 2007
ill Winners Circle, PO Box 5269, Albany, NY 12205
www.cloughharbour.com

PROJECT NAME: BENNINGTON
PROJECT NUMBER: AC NH 019-1(53)

FILE NAME: ZD048XSC.DGN
PROJECT LEADER: D.E.G.
DESIGNED BY: J.S.P.
CROSS SECTIONS XSC-81

PLOT DATE: 5/18/2007
DRAWN BY: J.S.P.
CHECKED BY: D.E.G.
SHEET 560 OF 577

Metric

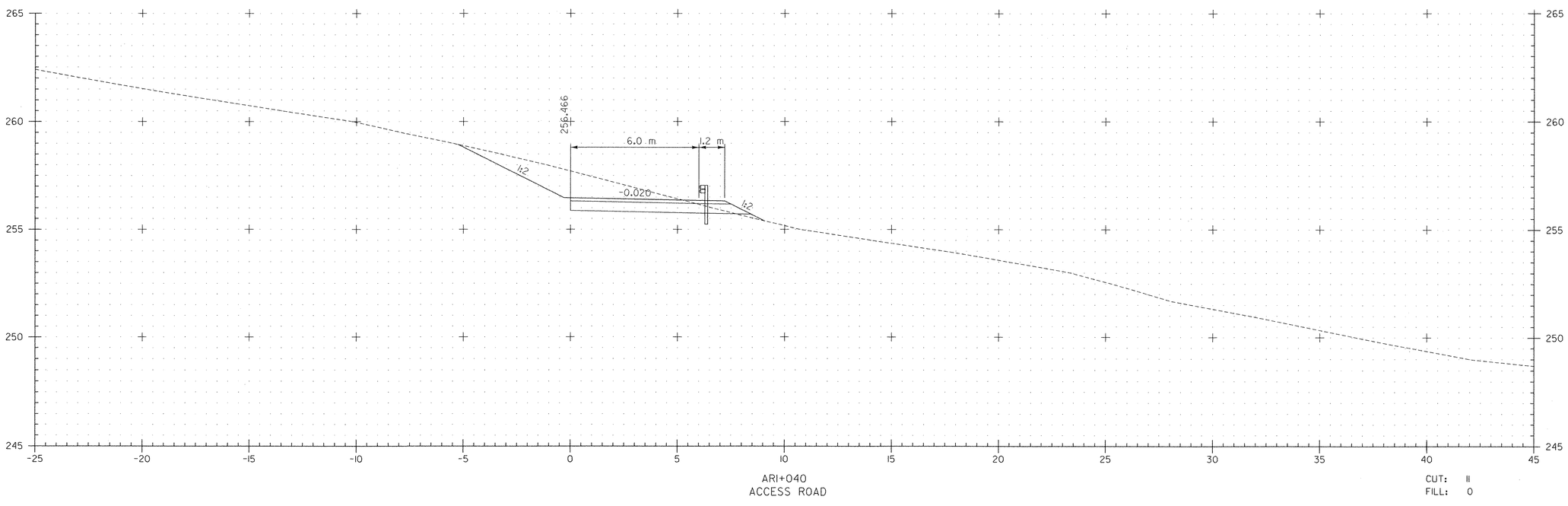

FILE NAME =U:\9819\mstn\03\clough\Stage One Sites\zd048xsc_f.dgn
DATE/TIME =5/18/2007
USER =1459

DATUM
VERTICAL NAVD 88
HORIZONTAL NAD 83 (1992)

2 0 2 m
1: 100
@ FULL SIZE

VERMONT AGENCY OF TRANSPORTATION

CLOUGH HARBOUR & ASSOCIATES LLP
III Winners Circle, PO Box 5269, Albany, NY 12205
www.cloughharbour.com

PROJECT NAME: BENNINGTON
PROJECT NUMBER: AC NH 019-1(53)

FILE NAME: ZD048XSC.DGN
PROJECT LEADER: D.E.G.
DESIGNED BY: J.S.P.
CROSS SECTIONS XSC-82

PLOT DATE: 5/18/2007
DRAWN BY: J.S.P.
CHECKED BY: D.E.G.
SHEET 561 OF 577

Metric

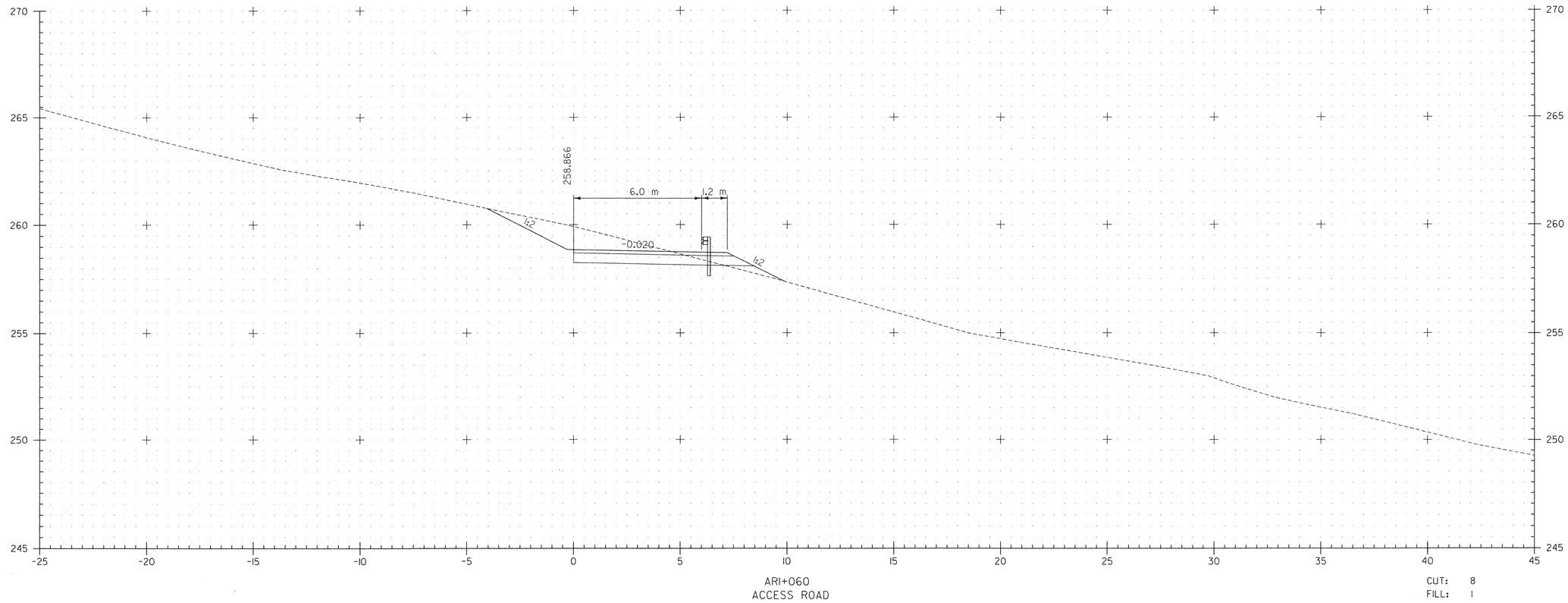

DATUM
VERTICAL NAVD 88
HORIZONTAL NAD 83 (1992)

2 0 2 m
1: 100
@ FULL SIZE

VERMONT AGENCY OF TRANSPORTATION

CLOUGH HARBOUR & ASSOCIATES LLP
© 2007
III Winners Circle, PO Box 5269, Albany, NY 12205
www.cloughharbour.com

PROJECT NAME: BENNINGTON
PROJECT NUMBER: AC NH 019-1(53)

FILE NAME: ZD048XSC.DGN
PROJECT LEADER: D.E.G.
DESIGNED BY: J.S.P.
CROSS SECTIONS XSC-83

PLOT DATE: 5/18/2007
DRAWN BY: J.S.P.
CHECKED BY: D.E.G.
SHEET 562 OF 577

FILE NAME =U:\9819\mstn\03\clough\Stage One Sites\zd048xsc_f.dgn
DATE/TIME =5/18/2007
USER =1453

Metric

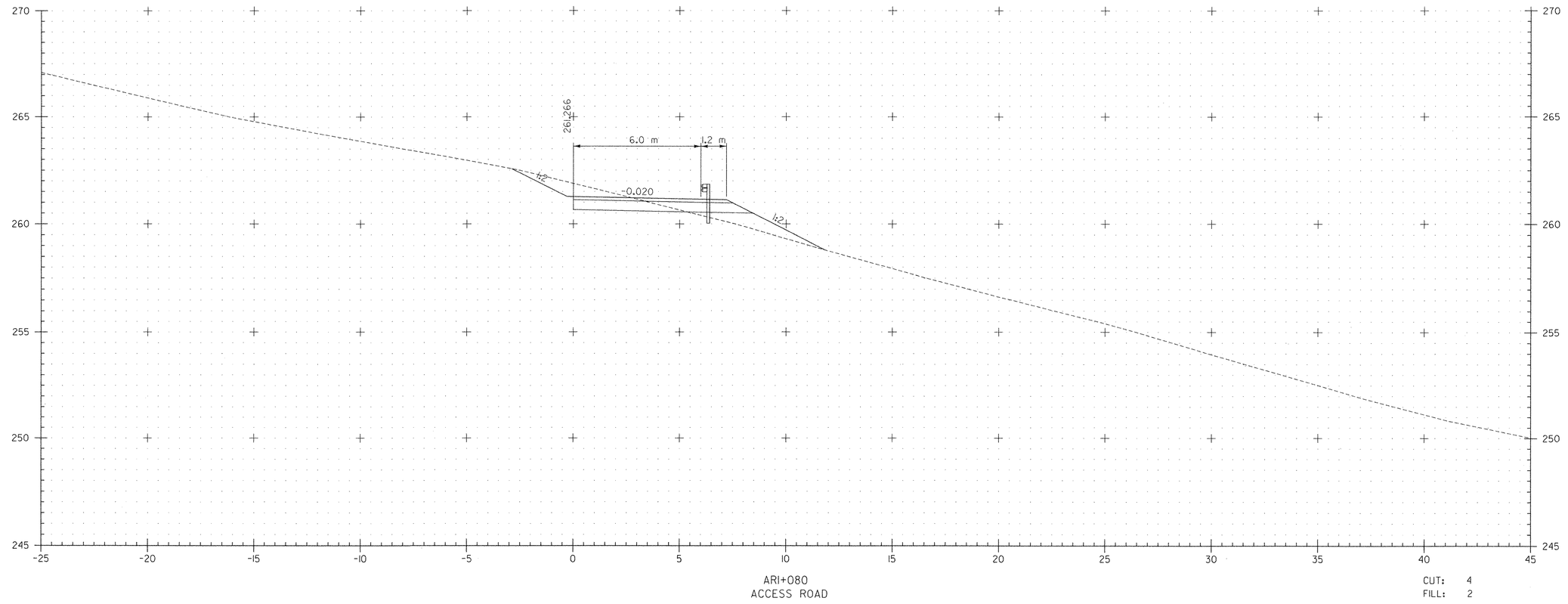

DATUM
VERTICAL NAVD 88
HORIZONTAL NAD 83 (1992)

2 0 2 m
1: 100
@ FULL SIZE

VERMONT AGENCY OF TRANSPORTATION

CLOUGH HARBOUR & ASSOCIATES LLP
III Winners Circle, PO Box 5269, Albany, NY 12205
www.cloughharbour.com

PROJECT NAME: BENNINGTON
PROJECT NUMBER: AC NH 019-1(53)

FILE NAME: ZD048XSC.DGN
PROJECT LEADER: D.E.G.
DESIGNED BY: J.S.P.
PLOT DATE: 5/18/2007
DRAWN BY: J.S.P.
CHECKED BY: D.E.G.

CROSS SECTIONS XSC-84
SHEET 563 OF 577

FILE NAME =U:\9819\mstn\03\clough\Stage One Sites\zd048xsc_f.dgn
DATE/TIME =5/18/2007
USER =1459

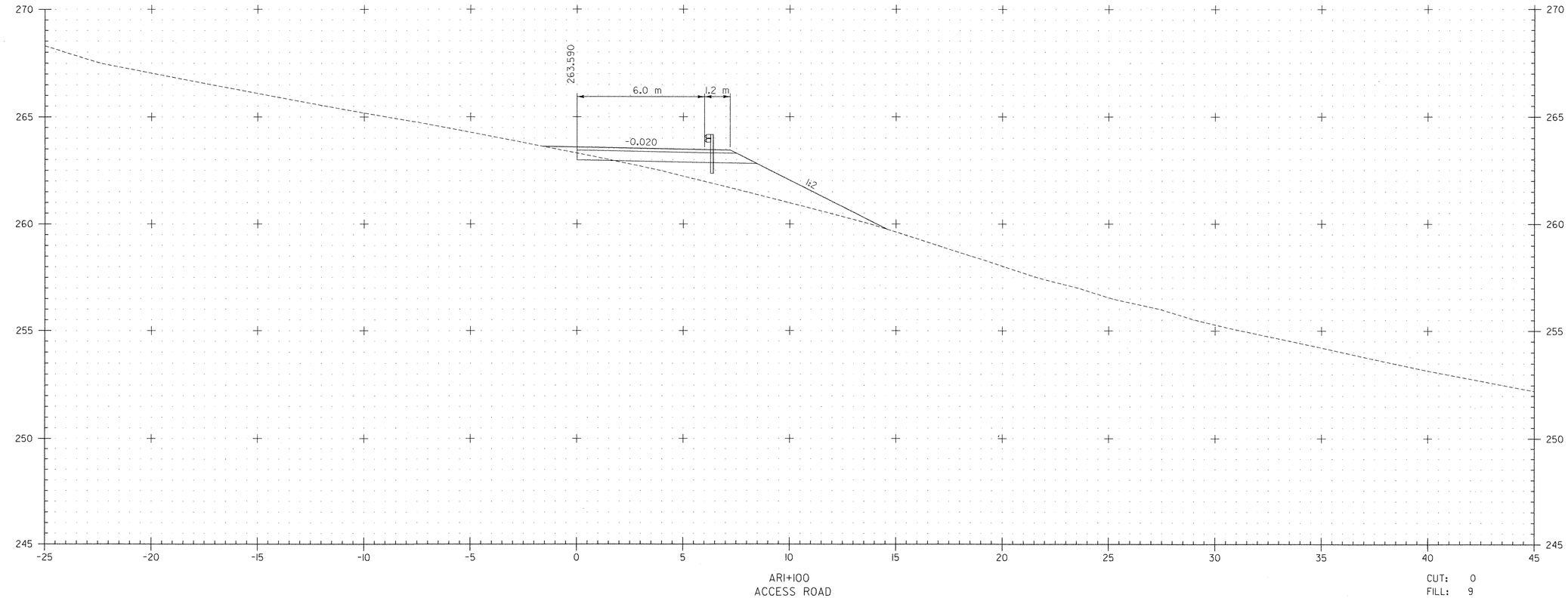

DATUM
VERTICAL NAVD 88
HORIZONTAL NAD 83 (1992)

2 0 2 m
1: 100
@ FULL SIZE

VERMONT AGENCY OF TRANSPORTATION

CLOUGH HARBOUR & ASSOCIATES LLP
III Winners Circle, PO Box 5269, Albany, NY 12205
www.cloughharbour.com

PROJECT NAME: BENNINGTON
PROJECT NUMBER: AC NH 019-1(53)

FILE NAME: ZD048XSC.DGN
PROJECT LEADER: D.E.G.
DESIGNED BY: J.S.P.
PLOT DATE: 5/18/2007
DRAWN BY: J.S.P.
CHECKED BY: D.E.G.
CROSS SECTIONS XSC-85
SHEET 564 OF 577

FILE NAME =u:\9819\mstn\03\clough\Stage One Sites\zd048xsc_f.dgn
DATE/TIME =5/18/2007
USER =1459

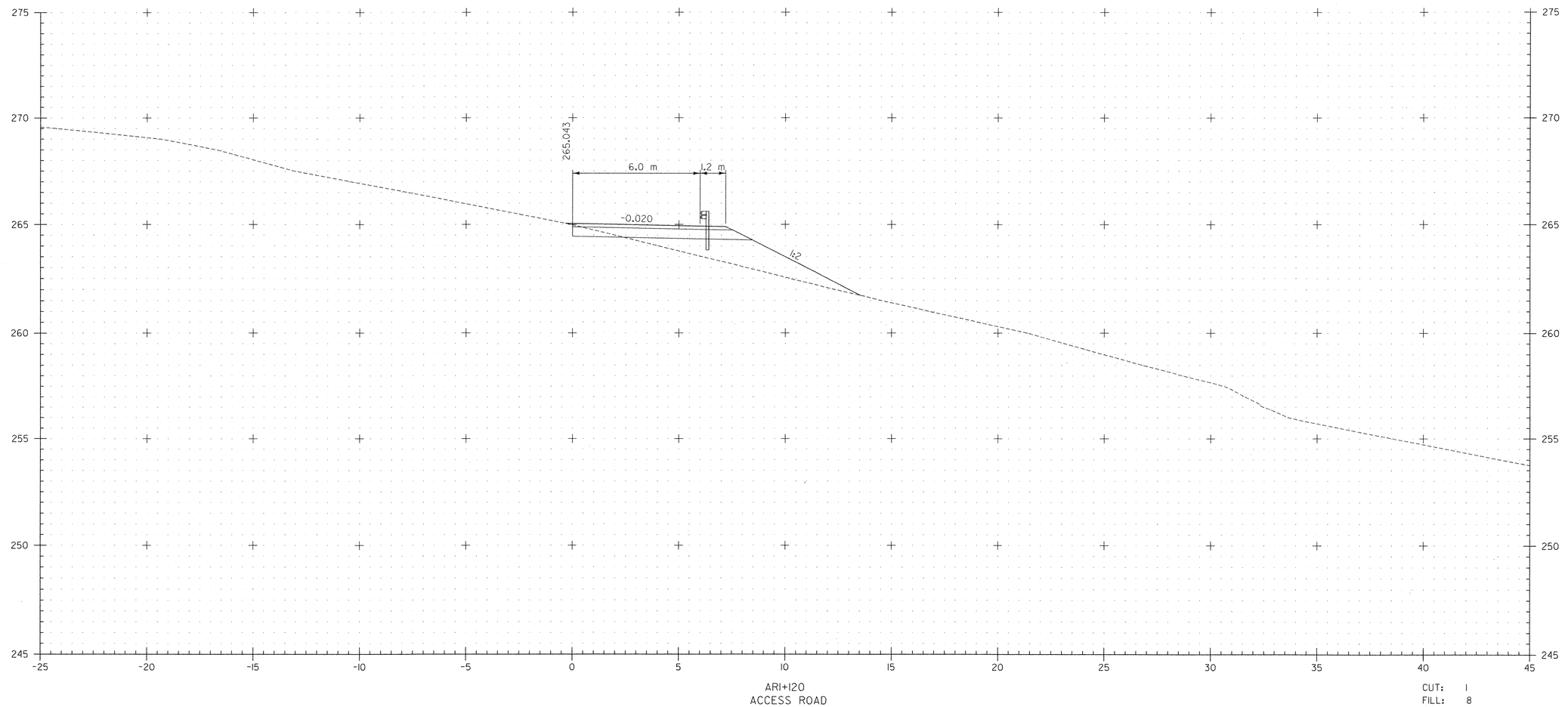

ARI+120
ACCESS ROAD

CUT: 1
FILL: 8

DATUM
VERTICAL NAVD 88
HORIZONTAL NAD 83 (1992)

2 0 2 m
1: 100
@ FULL SIZE

VERMONT AGENCY OF TRANSPORTATION

CLOUGH HARBOUR & ASSOCIATES LLP
III Winners Circle, PO Box 5269, Albany, NY 12205
www.cloughharbour.com

PROJECT NAME: BENNINGTON
PROJECT NUMBER: AC NH 019-1(53)

FILE NAME: ZD048XSC.DGN
PROJECT LEADER: D.E.G.
DESIGNED BY: J.S.P.
CROSS SECTIONS XSC-86

PLOT DATE: 5/18/2007
DRAWN BY: J.S.P.
CHECKED BY: D.E.G.
SHEET 565 OF 577

FILE NAME =U:\9819\mstn\03\clough\Stage One Sites\zd048xsc_f.dgn
DATE/TIME =5/18/2007
USER =1459

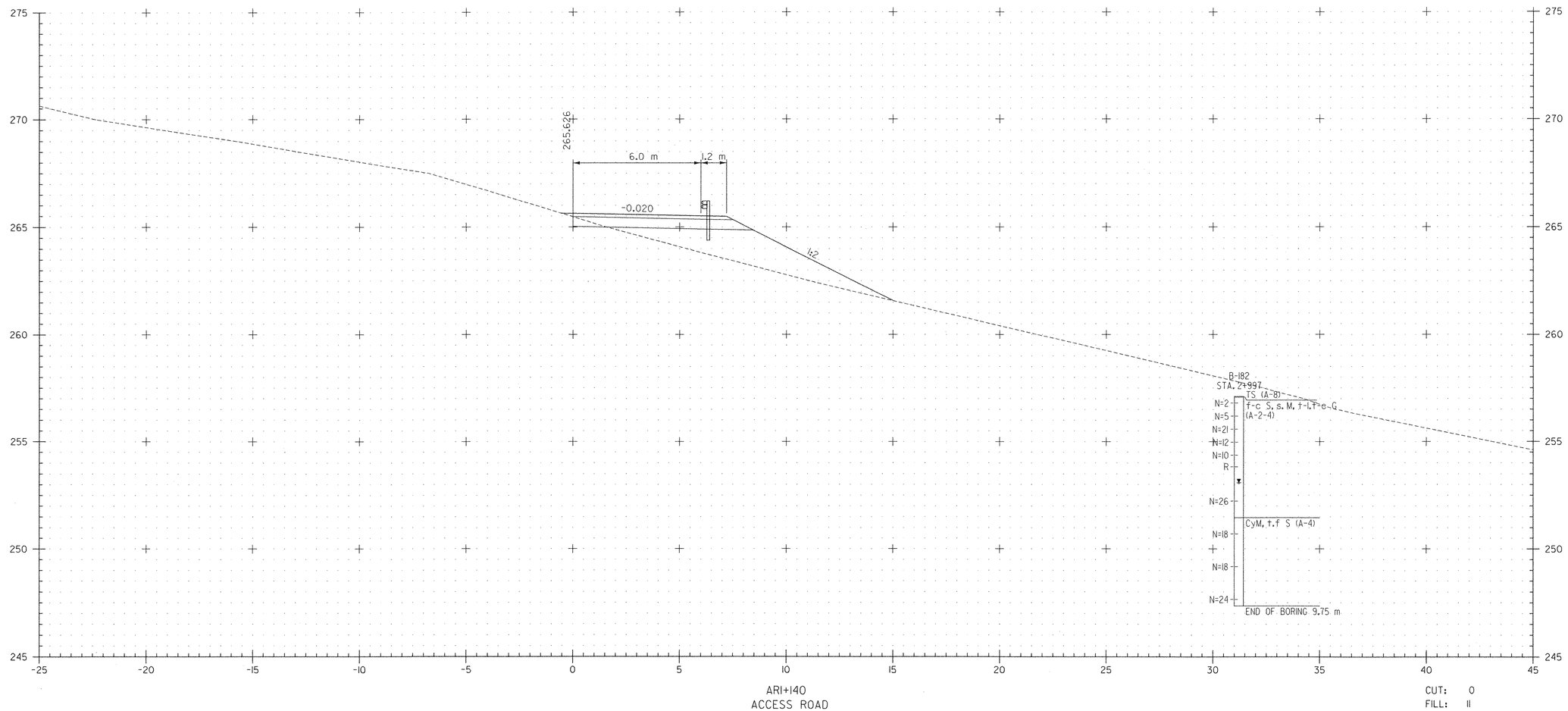

DATUM
VERTICAL NAVD 88
HORIZONTAL NAD 83 (1992)

2 0 2 m
1: 100
@ FULL SIZE

VERMONT AGENCY OF TRANSPORTATION

CLOUGH HARBOUR & ASSOCIATES LLP
III Winners Circle, PO Box 5269, Albany, NY 12205
www.cloughharbour.com

PROJECT NAME: BENNINGTON
PROJECT NUMBER: AC NH 019-1(53)

FILE NAME: ZD048XSC.DGN
PROJECT LEADER: D.E.G.
DESIGNED BY: J.S.P.
CROSS SECTIONS XSC-87

PLOT DATE: 5/18/2007
DRAWN BY: J.S.P.
CHECKED BY: D.E.G.
SHEET 566 OF 577

FILE NAME =U:\9819\mstn\03\clough\Stage One Sites\zd048xsc_f.dgn
DATE/TIME = 5/18/2007
USER =1459

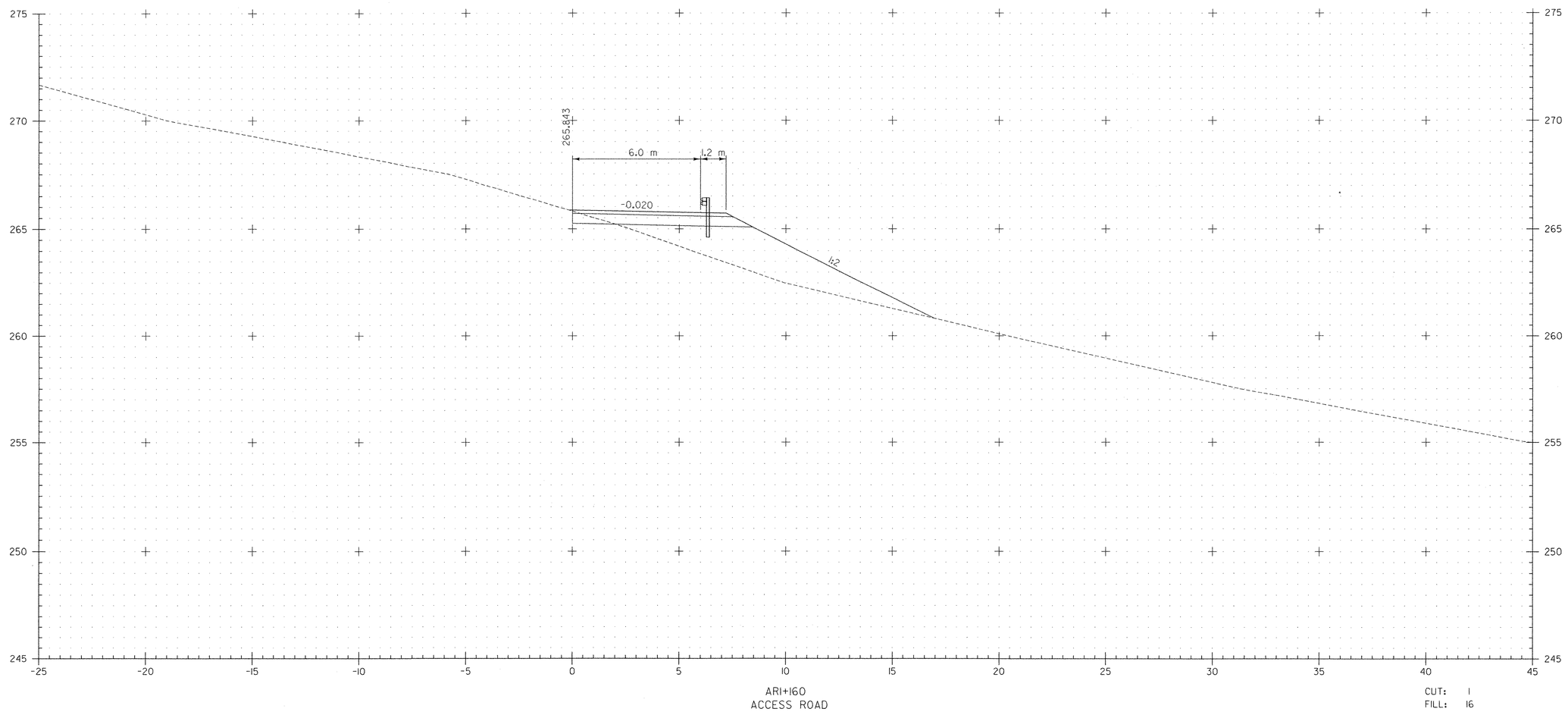

DATUM
VERTICAL NAVD 88
HORIZONTAL NAD 83 (1992)

2 0 2 m
1: 100
@ FULL SIZE

VERMONT AGENCY OF TRANSPORTATION

CLOUGH HARBOUR & ASSOCIATES LLP
III Winners Circle, PO Box 5269, Albany, NY 12205
www.cloughharbour.com

PROJECT NAME: BENNINGTON
PROJECT NUMBER: AC NH 019-1(53)

FILE NAME: ZD048XSC.DGN
PROJECT LEADER: D.E.G.
DESIGNED BY: J.S.P.
CROSS SECTIONS XSC-88

PLOT DATE: 5/18/2007
DRAWN BY: J.S.P.
CHECKED BY: D.E.G.
SHEET 567 OF 577

FILE NAME =U:\9818\mstn\03\clough\Stage One Sites\zd048xsc_f.dgn
DATE/TIME = 5/18/2007
USER =1459

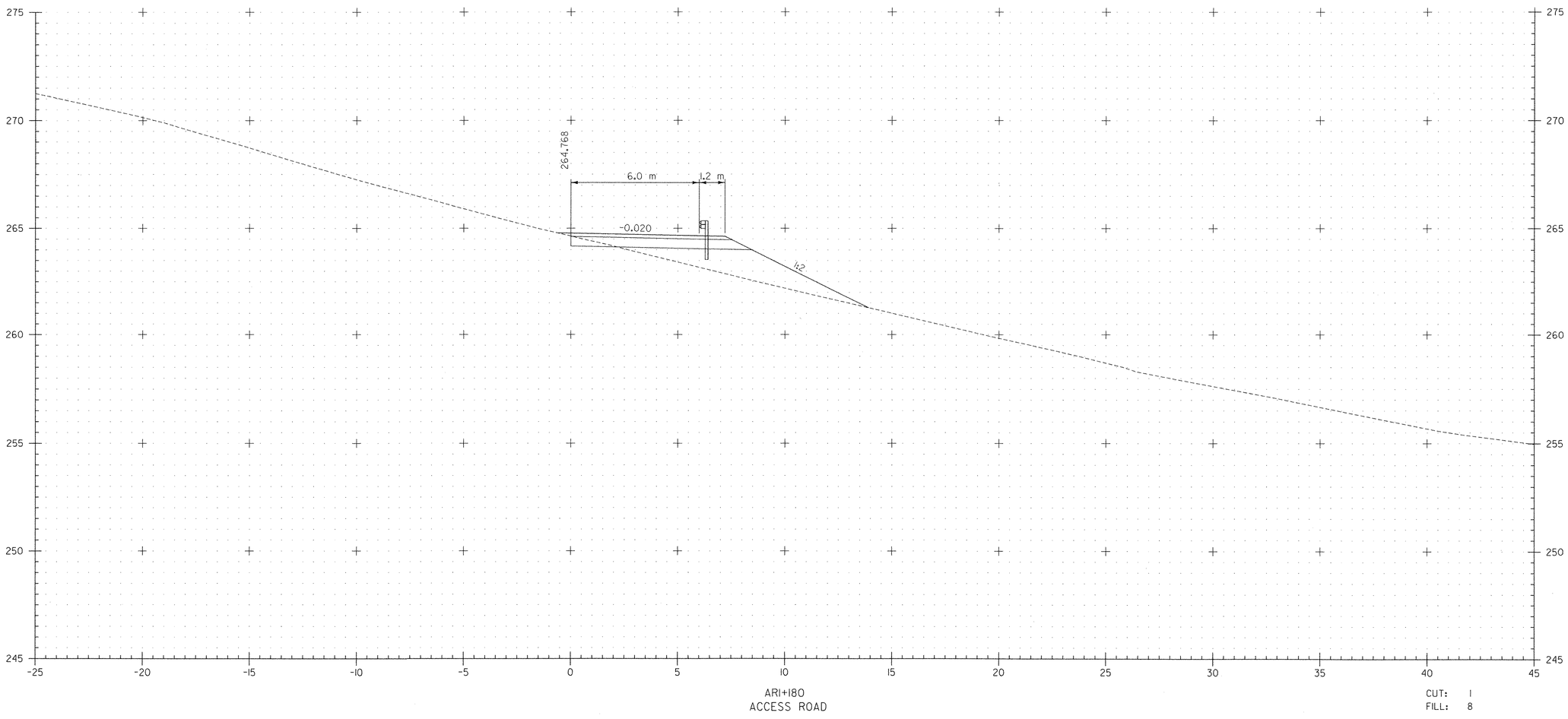

DATUM
VERTICAL NAVD 88
HORIZONTAL NAD 83 (1992)

2 0 2 m
1: 100
@ FULL SIZE

VERMONT AGENCY OF TRANSPORTATION

CLOUGH HARBOUR & ASSOCIATES LLP
III Winners Circle, PO Box 5269, Albany, NY 12205
www.cloughharbour.com

PROJECT NAME: BENNINGTON
PROJECT NUMBER: AC NH 019-1(53)

FILE NAME: ZD048XSC.DGN
PROJECT LEADER: D.E.G.
DESIGNED BY: J.S.P.
CROSS SECTIONS XSC-89

PLOT DATE: 5/18/2007
DRAWN BY: J.S.P.
CHECKED BY: D.E.G.
SHEET 568 OF 577

FILE NAME =U:\9819\mstn\03\clough\Stage One Sites\zd048xsc_f.dgn
DATE/TIME =5/18/2007
USER =1459

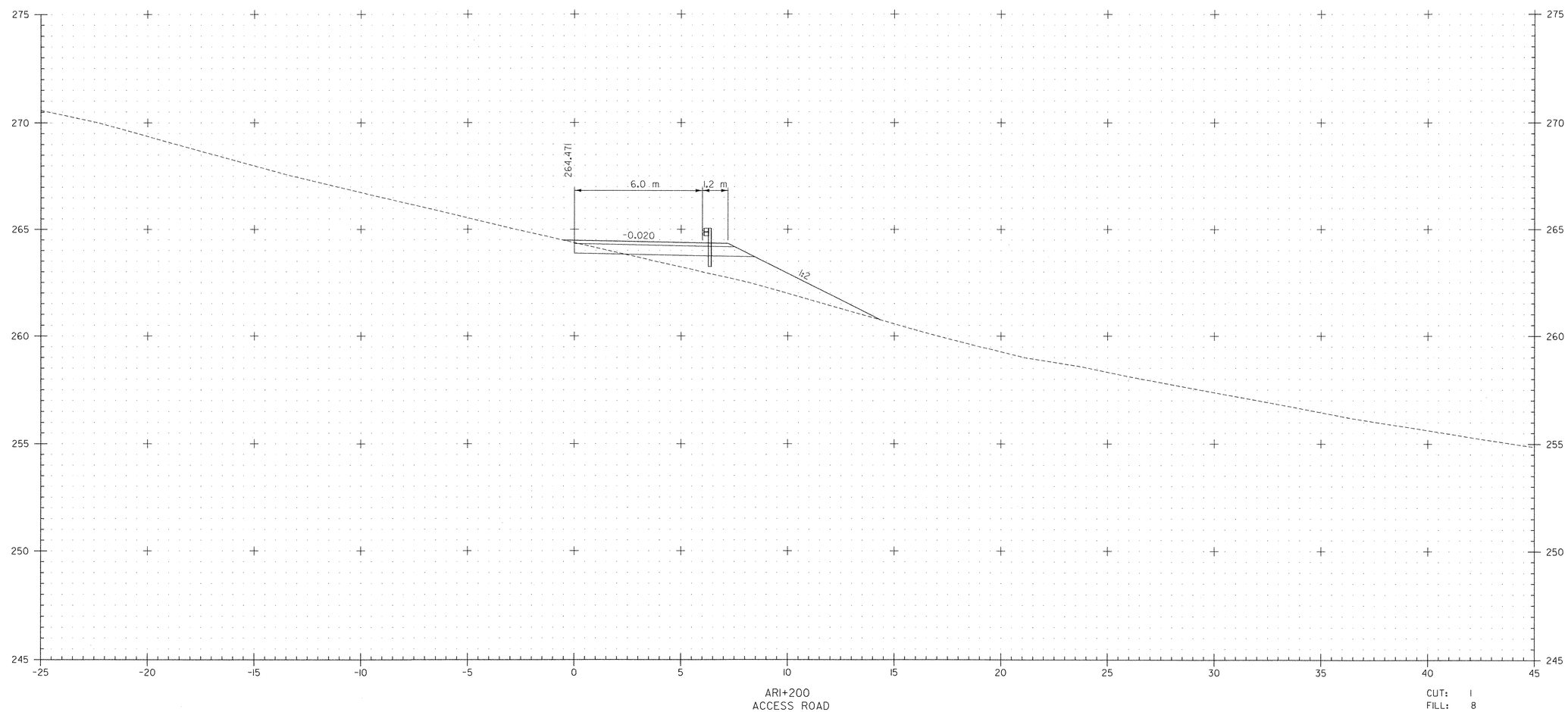

DATUM
VERTICAL NAVD 88
HORIZONTAL NAD 83 (1992)

2 0 2 m
1: 100
@ FULL SIZE

VERMONT AGENCY OF TRANSPORTATION

CLOUGH HARBOUR & ASSOCIATES LLP
III Winners Circle, PO Box 5269, Albany, NY 12205
www.cloughharbour.com

PROJECT NAME: BENNINGTON
PROJECT NUMBER: AC NH 019-1(53)

FILE NAME: ZD048XSC.DGN
PROJECT LEADER: D.E.G.
DESIGNED BY: J.S.P.
CROSS SECTIONS XSC-90

PLOT DATE: 5/18/2007
DRAWN BY: J.S.P.
CHECKED BY: D.E.G.
SHEET 569 OF 577

FILE NAME =U:\9819\mstn\03\clough\Stage One Sites\zd048xsc_f.dgn
DATE/TIME =5/18/2007
USER =1459

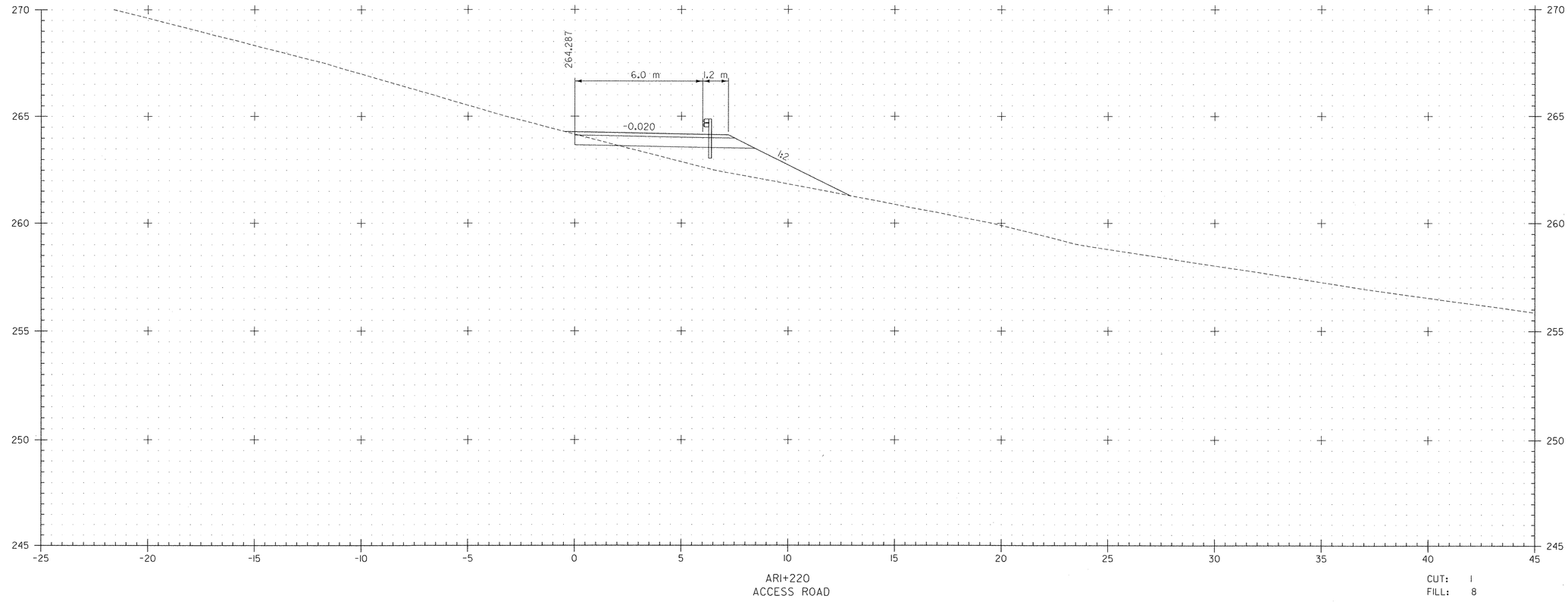

DATUM
VERTICAL NAVD 88
HORIZONTAL NAD 83 (1992)

2 0 2 m
1: 100
@ FULL SIZE

VERMONT AGENCY OF TRANSPORTATION

CLOUGH HARBOUR & ASSOCIATES LLP
111 Winners Circle, PO Box 5269, Albany, NY 12205
www.cloughharbour.com

PROJECT NAME: BENNINGTON
PROJECT NUMBER: AC NH 019-1(53)

FILE NAME: ZD048XSC.DGN
PROJECT LEADER: D.E.G.
DESIGNED BY: J.S.P.
CROSS SECTIONS XSC-91

PLOT DATE: 5/18/2007
DRAWN BY: J.S.P.
CHECKED BY: D.E.G.
SHEET 570 OF 577

FILE NAME =U:\9819\mstn\03\clough\Stage One Sites\zd048xsc_f.dgn
DATE/TIME =5/18/2007
USER =1459

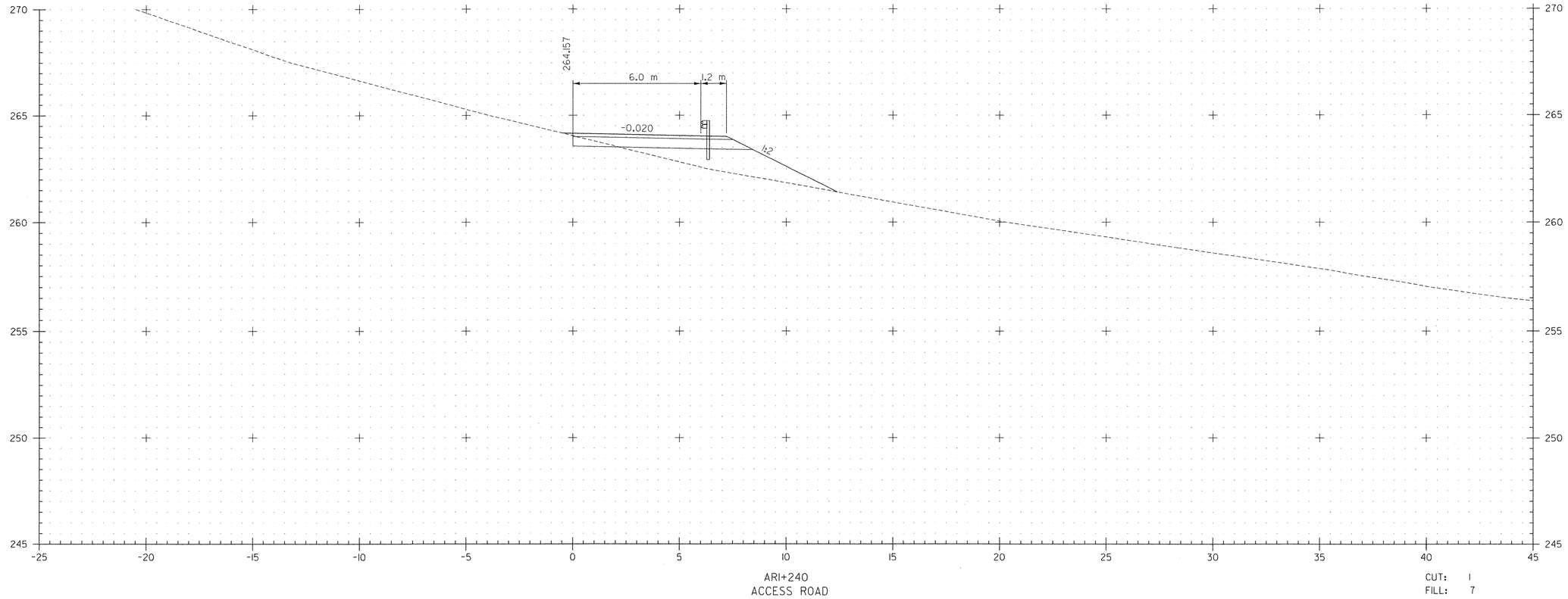

2 0 2 m
1: 100
@ FULL SIZE

DATUM
VERTICAL NAVD 88
HORIZONTAL NAD 83 (1992)

FILE NAME =U:\9819\mstr\03\clough\Stage One Sites\zd048xsc_f.dgn
DATE/TIME =5/18/2007
USER =1459

VERMONT AGENCY OF TRANSPORTATION

CLOUGH HARBOUR & ASSOCIATES LLP
III Winners Circle, PO Box 5289, Albany, NY 12205
www.cloughharbour.com

PROJECT NAME: BENNINGTON
PROJECT NUMBER: AC NH 019-1(53)

FILE NAME: ZD048XSC.DGN
PROJECT LEADER: D.E.G.
DESIGNED BY: J.S.P.
CROSS SECTIONS XSC-92

PLOT DATE: 5/18/2007
DRAWN BY: J.S.P.
CHECKED BY: D.E.G.
SHEET 571 OF 577

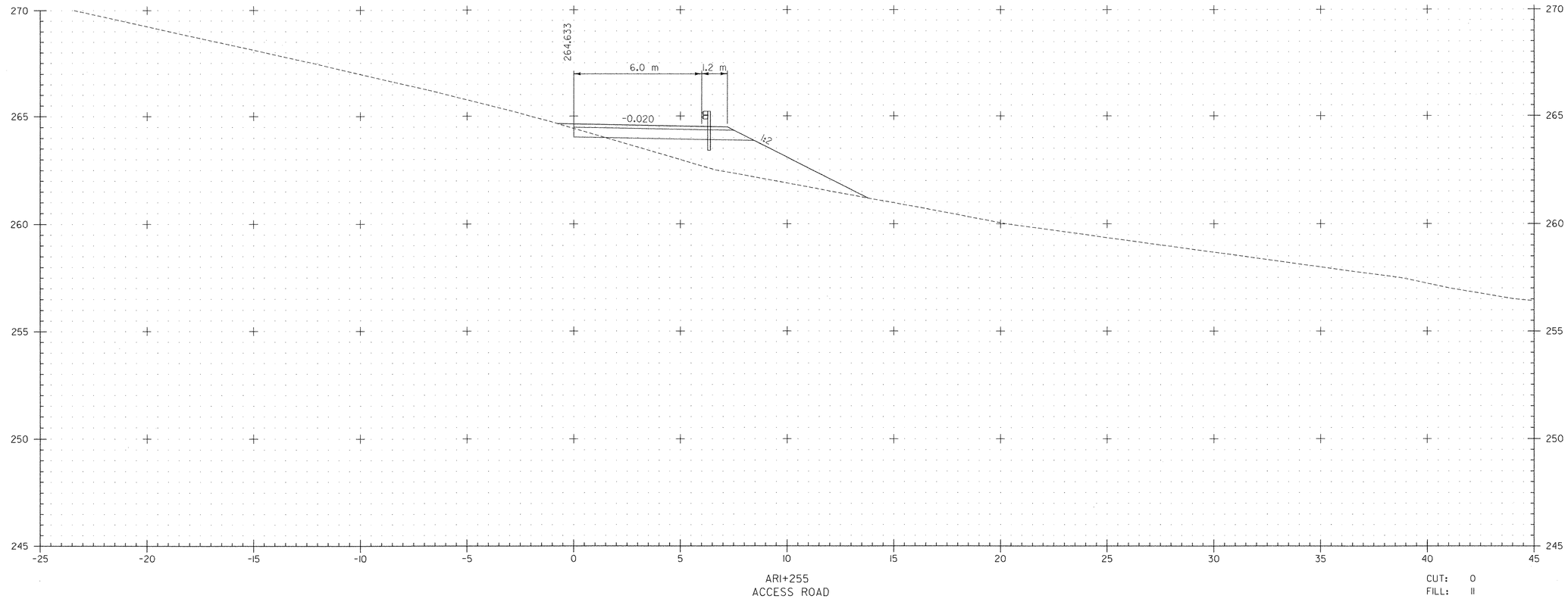

2 0 2 m
1: 100
@ FULL SIZE

DATUM
VERTICAL NAVD 88
HORIZONTAL NAD 83 (1992)

FILE NAME =U:\9819\mstn\03\clough\Stage One Sites\zd048xsc_f.dgn
DATE/TIME =5/18/2007
USER =1459

VERMONT AGENCY OF TRANSPORTATION

CLOUGH HARBOUR & ASSOCIATES LLP
© 2007
III Winners Circle, PO Box 5269, Albany, NY 12205
www.cloughharbour.com

PROJECT NAME: BENNINGTON
PROJECT NUMBER: AC NH 019-1(53)

FILE NAME: ZD048XSC.DGN
PROJECT LEADER: D.E.G.
DESIGNED BY: J.S.P.
CROSS SECTIONS XSC-93

PLOT DATE: 5/18/2007
DRAWN BY: J.S.P.
CHECKED BY: D.E.G.
SHEET 572 OF 577

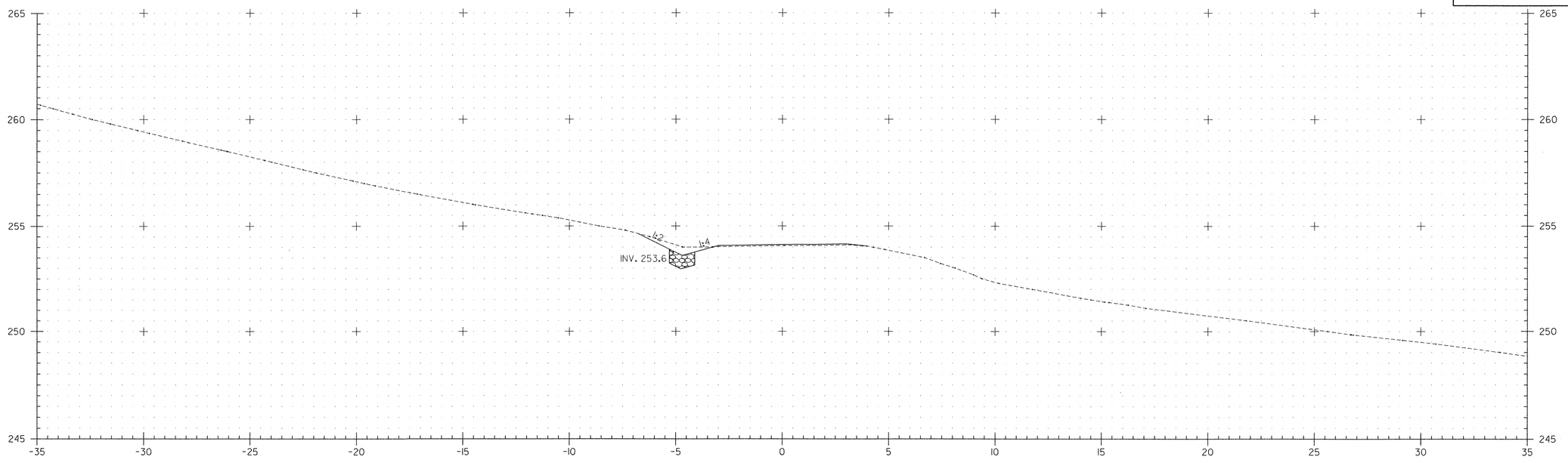

MP 1+400
MIDDLE POWNAL ROAD

CUT: 2
FILL: 0

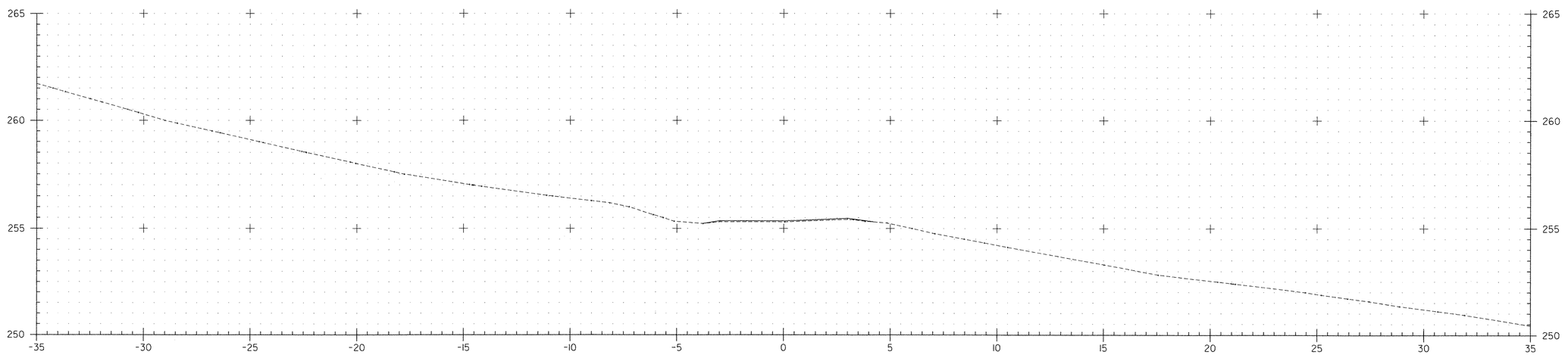

MP 1+389
MIDDLE POWNAL ROAD

CUT: 0
FILL: 0

DATUM
VERTICAL NAVD 88
HORIZONTAL NAD 83 (1992)

2 0 2 m
1: 100
@ FULL SIZE

VERMONT AGENCY OF TRANSPORTATION

CLOUGH HARBOUR & ASSOCIATES LLP © 2007
III Winners Circle, PO Box 5269, Albany, NY 12205
www.cloughharbour.com

PROJECT NAME: BENNINGTON
PROJECT NUMBER: AC NH 019-1(53)

FILE NAME: ZD048XSC.DGN
PROJECT LEADER: D.E.G.
DESIGNED BY: J.S.P.
CROSS SECTIONS XSC-94

PLOT DATE: 5/18/2007
DRAWN BY: J.S.P.
CHECKED BY: D.E.G.
SHEET 573 OF 577

FILE NAME =U:\9819\mstn\03\clough\Stage One Sites\zd048xsc_f.dgn
DATE/TIME =5/18/2007
USER =1459

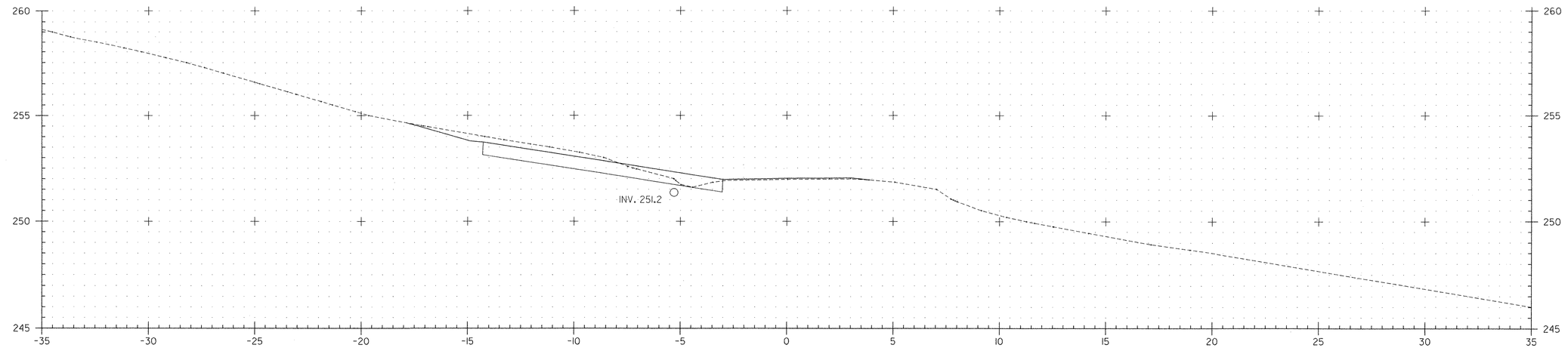

MP 1+420
MIDDLE POWNAL ROAD

CUT: 0
FILL: 0

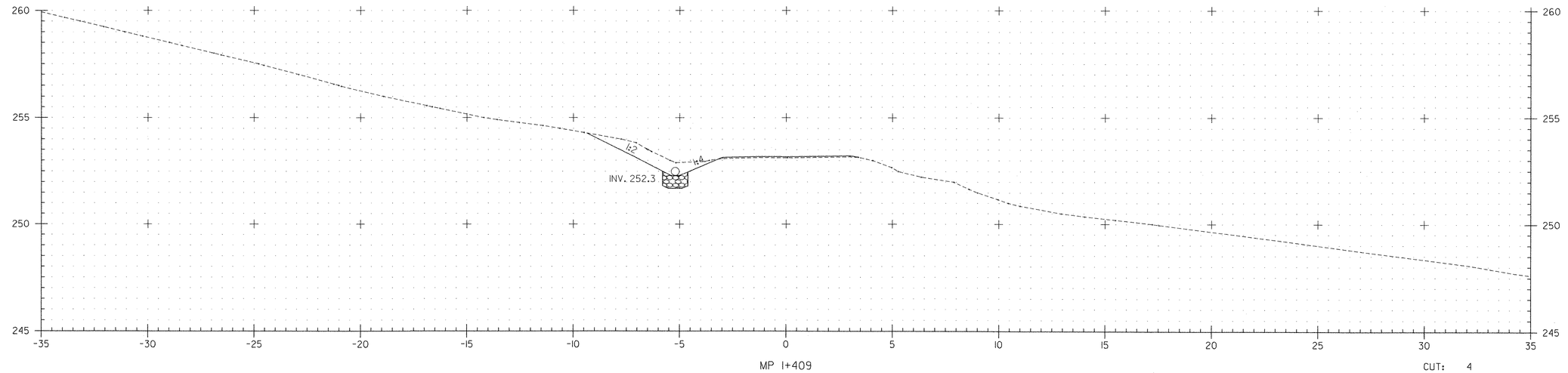

MP 1+409
MIDDLE POWNAL ROAD

CUT: 4
FILL: 0

DATUM
VERTICAL NAVD 88
HORIZONTAL NAD 83 (1992)

2 0 2 m
1: 100
@ FULL SIZE

VERMONT AGENCY OF TRANSPORTATION

CLOUGH HARBOUR & ASSOCIATES LLP
III Winners Circle, PO Box 5269, Albany, NY 12205
www.cloughharbour.com

PROJECT NAME: BENNINGTON
PROJECT NUMBER: AC NH 019-1(53)

FILE NAME: ZD048XSC.DGN
PROJECT LEADER: D.E.G.
DESIGNED BY: J.S.P.
CROSS SECTIONS XSC-95

PLOT DATE: 5/18/2007
DRAWN BY: J.S.P.
CHECKED BY: D.E.G.
SHEET 574 OF 577

FILE NAME =u:\9819\mstn\03\clough\Stage One Sites\zd048xsc_f.dgn
DATE/TIME =5/18/2007
USER =1459

Metric

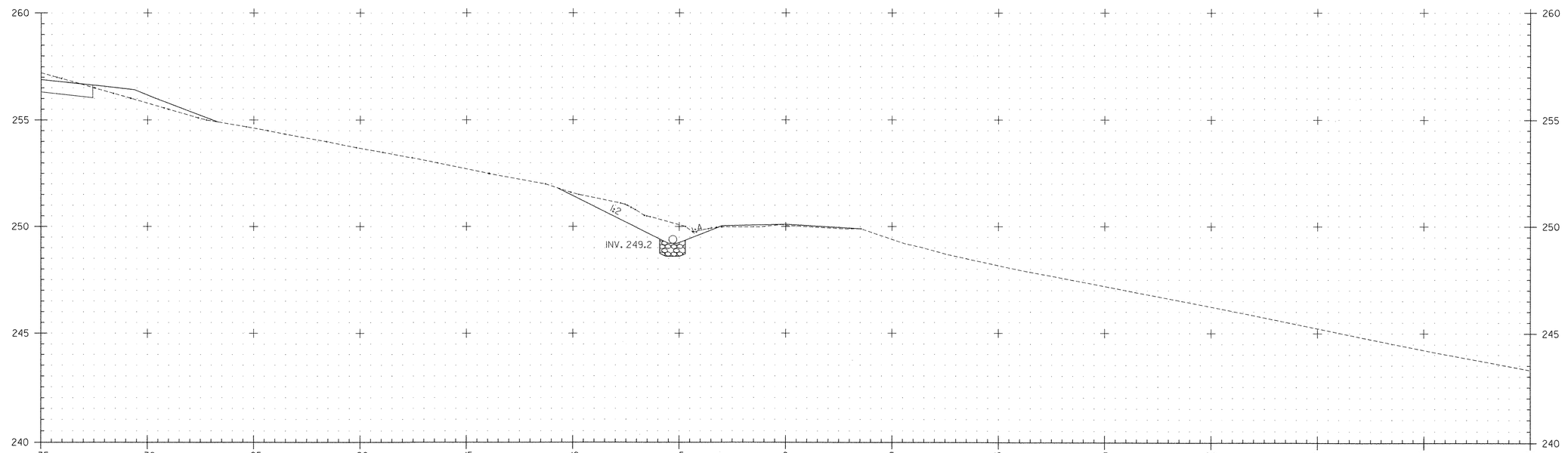

MP 1+439
MIDDLE POWNAL ROAD

CUT: 5
FILL: 0

FILE NAME =U:\9819\mstr\03\clough\Stage One Sites\zd048xsc_f.dgn
DATE/TIME =5/18/2007
USER =1459

DATUM
VERTICAL NAVD 88
HORIZONTAL NAD 83 (1992)

2 0 2 m
1: 100
@ FULL SIZE

VERMONT AGENCY OF TRANSPORTATION

CHA ©2007
CLOUGH HARBOUR & ASSOCIATES LLP
III Winners Circle, PO Box 5269, Albany, NY 12205
www.cloughharbour.com

PROJECT NAME: BENNINGTON
PROJECT NUMBER: AC NH 019-1(53)

FILE NAME: ZD048XSC.DGN
PROJECT LEADER: D.E.G.
DESIGNED BY: J.S.P.
CROSS SECTIONS XSC-96

PLOT DATE: 5/18/2007
DRAWN BY: J.S.P.
CHECKED BY: D.E.G.
SHEET 575 OF 577

Metric

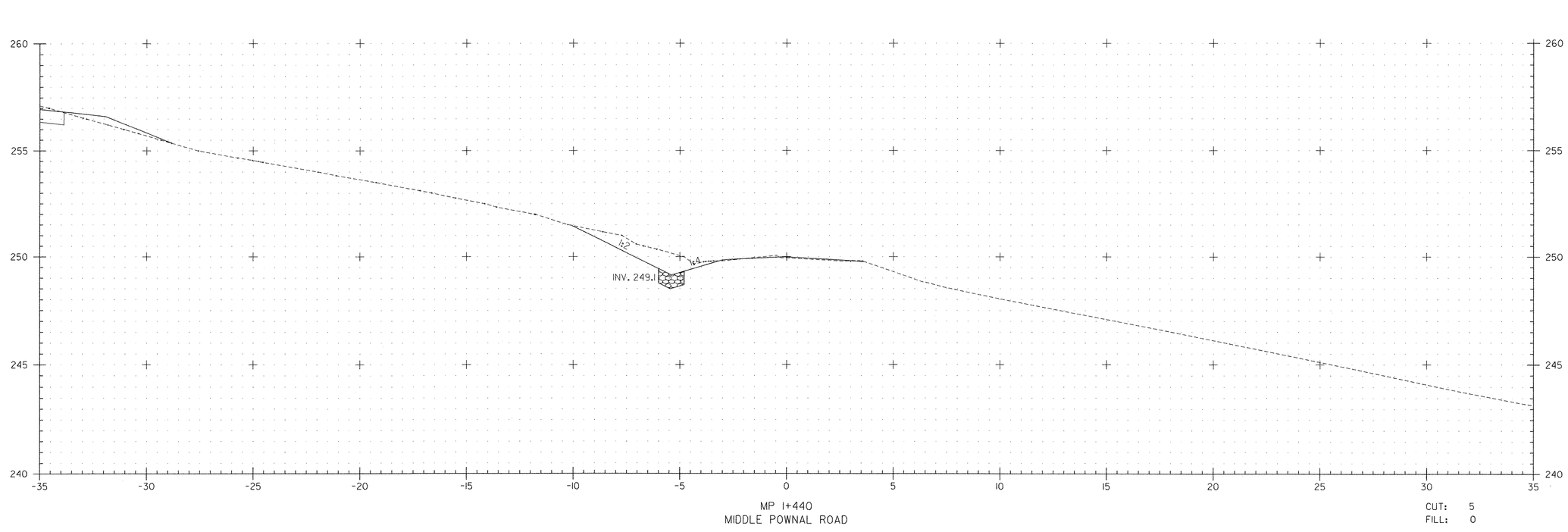

FILE NAME =U:\9819\mstn\03\clough\Stage One Sites\zd048xsc_f.dgn
DATE/TIME =5/18/2007
USER =1459

DATUM
VERTICAL NAVD 88
HORIZONTAL NAD 83 (1992)

2 0 2 m
1: 100
@ FULL SIZE

VERMONT AGENCY OF TRANSPORTATION

CLOUGH HARBOUR & ASSOCIATES LLP
III Winners Circle, PO Box 5269, Albany, NY 12205
www.cloughharbour.com

PROJECT NAME: BENNINGTON
PROJECT NUMBER: AC NH 019-1(53)

FILE NAME: ZD048XSC.DGN
PROJECT LEADER: D.E.G.
DESIGNED BY: J.S.P.
CROSS SECTIONS XSC-97

PLOT DATE: 5/18/2007
DRAWN BY: J.S.P.
CHECKED BY: D.E.G.
SHEET 576 OF 577

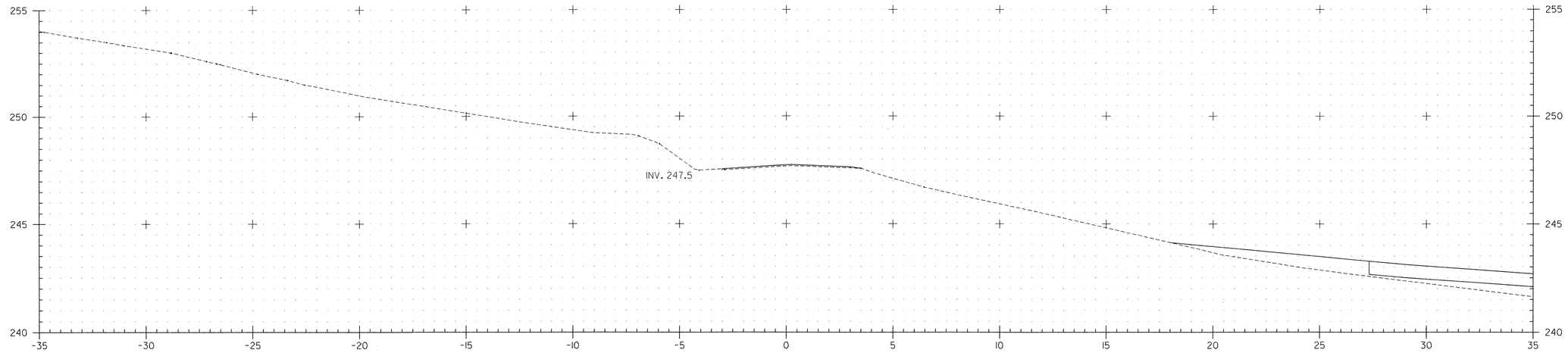

MP 1+464
MIDDLE POWNAL ROAD

CUT: 0
FILL: 0

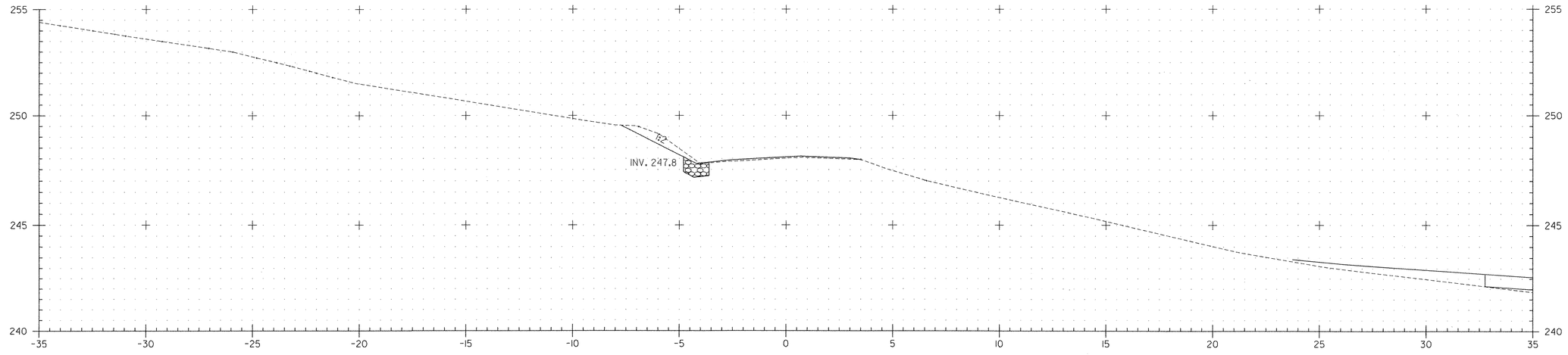

MP 1+460
MIDDLE POWNAL ROAD

CUT: 2
FILL: 0

DATUM
VERTICAL NAVD 88
HORIZONTAL NAD 83 (1992)

2 0 2 m
1: 100
@ FULL SIZE

VERMONT AGENCY OF TRANSPORTATION

CLOUGH HARBOUR & ASSOCIATES LLP
III Winners Circle, PO Box 5269, Albany, NY 12205
www.cloughharbour.com

PROJECT NAME: BENNINGTON
PROJECT NUMBER: AC NH 019-1(53)

FILE NAME: ZD048XSC.DGN
PROJECT LEADER: D.E.G.
DESIGNED BY: J.S.P.
CROSS SECTIONS XSC-98

PLOT DATE: 5/18/2007
DRAWN BY: J.S.P.
CHECKED BY: D.E.G.
SHEET 577 OF 577

FILE NAME =U:\9819\mstn\03\clough\Stage One Sites\zd048xsc_f.dgn
DATE/TIME =5/18/2007
USER =1459

POSITION OF WELDING

FILLER METAL SPECIFICATION AWS A.W.S. 5.1

FILLER METAL CLASSIFICATION E7018

ELECTRODE AND MANUFACTURER Lincoln - Jet LH-78

FLUX AND MANUFACTURER N/A

SHIELDING GAS N/A DEW POINT N/A FLOW RATE N/A

SINGLE OR MULTIPLE PASS Single

SINGLE OR MULTIPLE ARC Single Arc

WELDING CURRENT 165 AMP

POLARITY D.C. Positive

WELDING PROGRESSION Horizontal Flat

ROOT TREATMENT No Root Treatment

PREHEAT AND INTERPASS TEMPERATURE No Preheat Proceedures necessary/ weld above 20 F

POSTHEAT TREATMENT None

WELDING PROCEDURE

PASS NO.	ELECTRODE SIZE	WELDING PARAMETERS AMPERES	WELDING PARAMETERS VOLTS	TRAVEL SPEED	JOINT DETAIL
1	5/32	165	20 v.	15 inches per minute	single pass 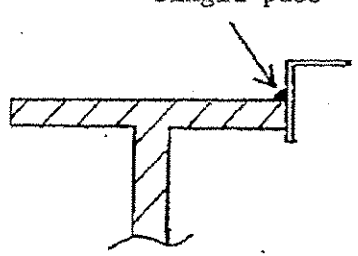 Sequence of weld passes shall be shown diagramtically

RECEIVED
CK'D BY ____ CK'D BY JWC
MAY 13 2008
RESUBMIT ____ APPROVED ✓
BY ____ DATE 5/13/08

This procedure may vary due to fabrication sequence, fit up, pass size, etc., within the limitations of variables given in section 8A

Procedure no. ____ Fabricator or Erector Northern Stud Welding, LLC

Revision no. ____ Authorized by Gary Bl[illegible]

Date JAN 2004

FIGURE 704 - SAMPLE WELDING PROCEDURE SPECIFICATION

RECEIVED
MAY 16 2008
G.P.I.

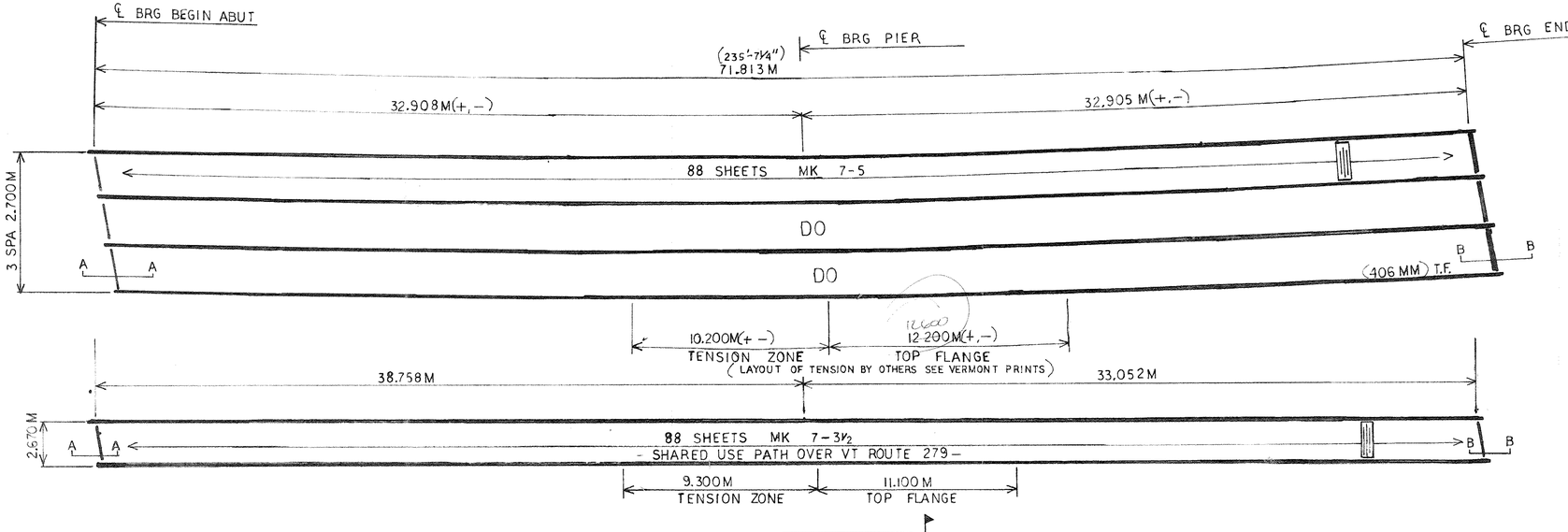

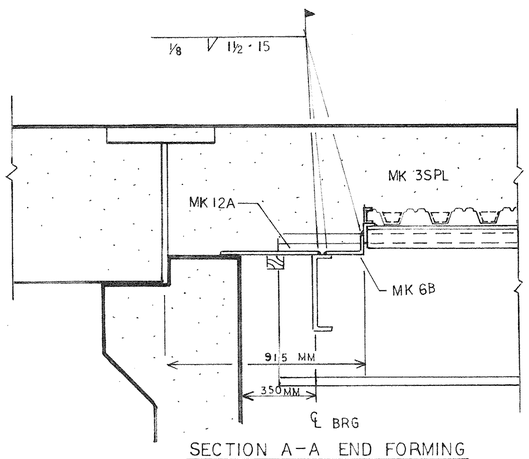

SECTION A-A END FORMING

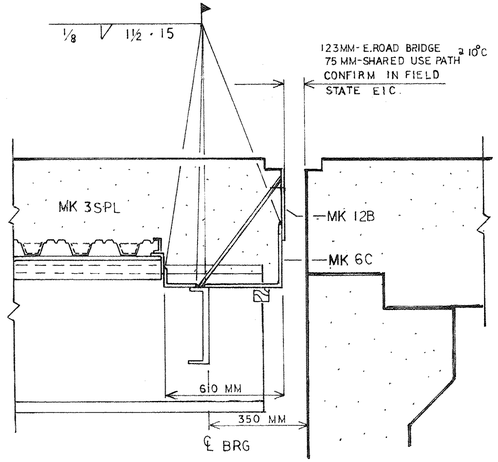

SECTION B-B END FORMING

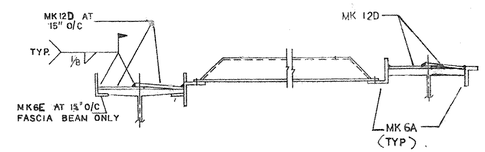

INFORMATION NOT SHOWN SIMILAR TO TYPICAL COMPRESSION SECTION

TYPICAL TENSION SECTION
NO WELDING TO TOP FLANGE

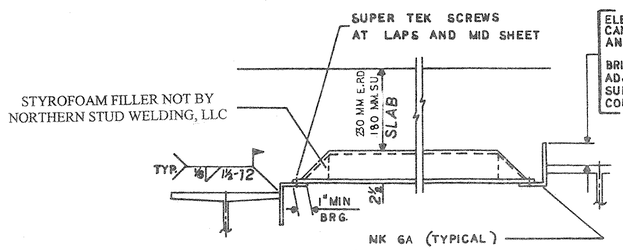

ELEVATION VARIES DUE TO CAMBER IRREGULARITIES AND SUPERELEVATION.

BRIDGFORM ERECTOR TO ADJUST TO PROPER ELEVATION SUPPLIED BY THE GENERAL CONTRACTOR

NOTE: BEAM ELEVATIONS DETERMINE PLACEMENT OF SUPPORT L's, "Γ" or "J" POSITION. "Γ" & "J" POSITION SHOWN FOR CLARITY.

TYPICAL COMPRESSION SECTION

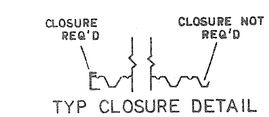

TYP CLOSURE DETAIL

NOTE:
▨ - TEMP. SUPPORTS MUST BE PLACED BY GEN CONTRACTOR

WARNING
EACH BRIDGFORM SHEET MUST BE FASTENED IMMEDIATELY UPON PLACEMENT TO AVOID HAZARD THAT CAN RESULT FROM LATERAL MOVEMENT OR SUDDEN UPLIFT.

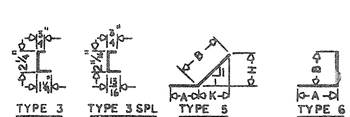

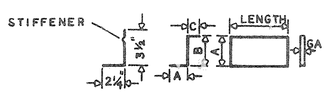

SHOP DRAWINGS ARE REVIEWED UNLESS NOTED OTHERWISE

NO EXCEPTION TAKEN

REVISE AS NOTED
RESUBMISSION NOT REQUIRED

REVISE AS NOTED
RESUBMISSION REQUIRED

REJECTED

DATE

SIGNATURE

Stantec

REVIEW BY STANTEC IS FOR THE SOLE PURPOSE OF ASCERTAINING GENERAL CONFORMITY WITH DESIGN. CONTRACTOR IS RESPONSIBLE FOR DIMENSIONS, FABRICATION AND CONSTRUCTION METHODS, COORDINATION OF SUB-TRADES, DETAIL DESIGN OF COMPONENTS, AND ERRORS OR OMISSIONS ON SHOP DRAWINGS.

STYROFOAM FILLER FOR STAY-IN-PLACE PANS
" STRONGWEB"

Wheeling Corrugated - 2 1/2" deep x 8" pitch
Four (4) pieces of foam required per pan
I've quantity & size of pans required see
Bridge form data - upper right hand corner
Length of foam is 5" less than pan size for end taper.

3 3/4" top W
2 3/8"H
2" Bot. W

4 ↳ 8" = 32"
2½" NOM.

PROPERTIES FOR 12" WIDTH

fs = 36,000 PSI

PITCH	I=NOM. OF INERT./IN	S=STRESS IN	GA.
8"	.623	.457	20
8"	.571	.420	21

This drawing and the information contained on it is the property of Northeastern Stud Welding Corporation. It is to be returned if so requested and it is not to be given to others without permission.

SU	ER	BRIDGEFORM ASTM A-653 GRADE E NESW# 1937-1					
QUAN	QUAN	MARK	LENGTH	PITCH	GA.	COATED THK.	UNCOATED THK.
X	266	7-5	7'-5"	8"	20	.039"	.036"
-88	X	7-3½	7'-3½	8"	21	.036"	.033"

STRONGWEB

(BY OTHER) STUD SHEAR CONNECTORS

SU	ER	ACCESSORIES ASTM A-653 GRADE A								
QUAN	QUAN	MARK	LENGTH	PITCH	GA.	A	B	C	H	K
50	147	6A	10'-0"		12	2"	3"			
1	3	6B	10'-0"		12	10"	3"			
1	3	6C	10'-0"		14	14"	6"			
2	4	6D	10'-0"		16	1"	4"			
1	3	12A	10'-0"		12	18"				
1	3	12B	10'-0"		12	6"				
10	25	12C	1'-7"		12	2"				
270	524	12D	0'-8¼"		3/16 BLK	2"				
134	150	6E	0'-2"		12	2"	3"			
528	1596	TEK 3	DECKING SCREWS							

GENERAL NOTES

DESIGN NOTES:

1. Bridge Form Sheets conform to ASTM A653, Grade E accessories conform to ASTM A653 Grade A. A653 is prior A446.
2. All galvanizing conforms to ASTM A924-G165. A924 is prior A525.
3. Reference Dwgs:

ERECTION NOTES:

1. Proper elevation of supports to be the responsibility of the bridge form erector from grades established by the general Contractor.
2. Lay bridge form sheets opposite to direction of pour to prevent leakage of side laps.
3. All sheets shall have a minimum bearing of one inch each end. Center sheets in bay.
4. Welding to be done by AWS Certified Welder.
5. All cutting of form sheets shall be done by saw. The cutting of support accessories shall be done with saw or burning with minimum damage to galvanized coating.
6. No welding to top flanges in tension zones. Iron straps will support forms.
7. Beams should be checked for amount of sweep before bridge form sheets are placed.

MISCLANIOUS NOTES:

1. Concrete shall not be dumped on these forms to a depth greater than 10" above the top of forms.
2. Any additional concrete required due to the use of these forms shall be at the contractor's expense.
3. Calcium chloride (or admixture containing salts) shall not be used in the concrete placed on these forms.
4. Store material on skids placed to eliminate any standing water.
5. Caulking/ taping, if required, will not be by Northern Stud Welding, LLC.
6. Painting of welds used to install Stay-in-Place Metal Forms will not be done by Northern Stud Welding, LLC.

DATE	DESCRIPTION	DATE	SENT FOR

NORTHERN STUD WELDING, LLC
2050 WESTERN AVE
GUILDERLAND, NY 12084

STRUCTURE	EAST ROAD BRIDGE OVER VT ROUTE 279 AND SHARED USE PATH
LOCATION	BENNINGTON, VT. RECEIVED MAY 16 2008
ENGINEER	STATE OF VERMONT
CUSTOMER	J A McDONALD, INC.
MADE BY G BLADEK DATE 3-27-2008 REV 4-28-08	CONTRACT NO. 1937
DRAWING COVERS STAY-IN-PLACE METAL FORMING PLACING PLAN	DRAWING NO. 1937-1

BY DATE 11-16-07

ENGINEERING AND MANUFACTURING STANDARD
PTFE FACING AND STEEL
OR PREFORMED FABRIC SUBSTRATE
SURFACE PREPARATION AND ADHESIVE PROCEDURE

The PTFE facing shall be prepared for bonding to a substrate material by chemically etching the face to be bonded using the sodium ammonia process.

The mating surface of the substrate shall be prepared for bonding using a three-step process as follows:

1. preliminary degrease using methyl ethyl ketone.
2. mechanically roughen to approx. 125 RMS and thoroughly brush and clean for final degreasing.
3. final degrease using methyl ethyl ketone

The PTFE and substrate mating surfaces shall be clean and dry with final degreasing performed within 30 minutes of bonding. Adhesive shall consist of a two-part epoxy adhesive system conforming to Military Specification MMM-A-134

The adhesive shall be applied to the full area of the contact surface in an even manner so as to establish a glue line not less than .002 inch nor more than .010 inch thick. Surfaces being bonded are to be assembled immediately with open assembly time not to exceed 20 minutes.

The PTFE material shall be greater in width and length than the substrate material by at least ½ inch when bonded. The PTFE shall be applied with contact starting at one edge and with contact progressing across entire bonded surface to eliminate air entrapment. The PTFE is to be in full contact with the steel or preformed fabric substrate. Curing of the bond shall be done under pressure of approx. 2-100 psi for 10-12 hours at approx. 70°F or other schedules as established by the manufacturer of the adhesive.

The PTFE shall be carefully trimmed to the same size as the substrate after bond curing and all bonds shall be visually inspected for bond retention.

MANUFACTURER: HARRIS WELCO
FLUX——INTERNAL
SHIELDING GAS————ARGON
SINGLE OR MULTIPLE PAS S SINGLE
SINGLE OR MULTIPLE ARC SINGLE
WELDING CURRENT———DC
POLARITY : REVERSE (EN)
WELDING PROGRESSION————————————————————————————
ROOT TREATMENT———CLEANED & PREPARED BRIGHT METAL
PREHEAT AND INTERPASS TEMPERATURE————SEE BELOW
POSTHEAT TEMPERATURE N/A
HEAT IMPUT MIN.————————MAX.——

CLASSIFICATION: A5.9 RESUBMIT_____ APPROVED V
TRADENAME: BY DATE 11-16-07

FLOW RATE 45 CFH

WELDING PROCEDURE

PASS NO.	ELECTRODE SIZE	WELDING CURRENT AMPERES	VOLTS	TRAVEL SPEED	JOINT DETAIL
ALL	3/32"	130--155	14-17	6.75--8.5	LAP JOINT
		16 GA THRU 10 GA BM THICKNESS			

PREHEAT TEMPS. ***PREHEAT UNTIL NO MOSITURE PRESENT

THICKNESS	TEMP.
UP TO 3/4"	100 DEG.
OVER 3/4" TO 1 1/2"	100 DEG.
OVER 1 1/2" TO 2 1/2"	100 DEG.
OVER 2 1/2"	100 DEG.

THIS PROCEURE MAY VARY DUE TO FABRICATION SEQUENCE, FIT-UP, PASS SIZE, ETC. WITHIN THE LIMITATION OF VARIABLES GIVEN IN SECTION 5.
SUPPORTING PQR: GTAW-WF-05
PROCEDURE NO. GTAW-WF

REVISION NO. 1

CONTRACTOR: COSMEC INC.
AUTHORIZED BY: DONALD VOSE
CWI#:01100651 Donald Vose

DATE:— 2/1/2005

AWS
QC 1
DONALD E VOSE
01100651
CWI

FILLER METAL SPECIFICATION AWS 5.20
MANUFACTURER: LINCOLN ELECTRIC
FLUX—— INTERNAL
SHIELDING GAS———— CO2
SINGLE OR MULTIPLE PAS S MULTIPLE
SINGLE OR MULTIPLE ARC SINGLE
WELDING CURRENT——— DC
POLARITY: REVERSE (EP)
WELDING PROGRESSION————————————————————————————
ROOT TREATMENT——— CLEANED & PREPARED BRIGHT METAL
PREHEAT AND INTERPASS TEMPERATURE———— SEE BELOW
POSTHEAT TEMPERATURE N/A
HEAT IMPUT MIN.———————— MAX.——

CLASSIFICATION: E71T
TRADENAME: E71T OUTERSHIELD

FLOW RATE. . . 45 CFH

WELDING PROCEDURE

PASS NO.	ELECTRODE SIZE	WELDING CURRENT AMPERES	VOLTS	TRAVEL SPEED	JOINT DETAIL
ALL	0.045	190-230	27-29	8-9	

PREHEAT TEMPS.

THICKNESS	TEMP.
UP TO 3/4"	50 DEG. F
OVER 3/4" TO 1 1/2"	70 DEG. F
OVER 1 1/2" TO 2 1/2"	150 DEG. F
OVER 2 1/2"	225 DEG. F
INTERPASS TEMP:	400 DEG. F

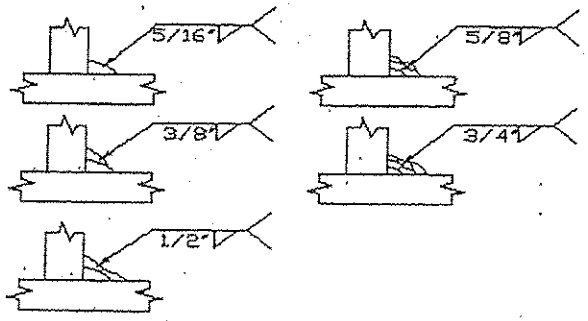

THIS PROCEURE MAY VARY DUE TO FABRICATION SEQUENCE, FIT-UP, PASS SIZE, ETC. WITHIN THE LIMITATION OF VARIABLES GIVEN IN SECTION 5.

PROCEDURE NO. FCAW-FILLET
SUPPORTING PQR:.FCAW-1.0-05
REVISION NO.

CONTRACTOR: COSMEC INC.
AUTHORIZED BY:DONALD VOSE

AWS QC 1 DONALD E VOSE 01100651 CWI

DATE:— 1/31/2005

VTRANS
RECEIVED
OK'D BY_____ OK'D BY JWC
OCT 16 2007
RESUBMIT_____ APPROVED ✓
BY DATE 11-16-07

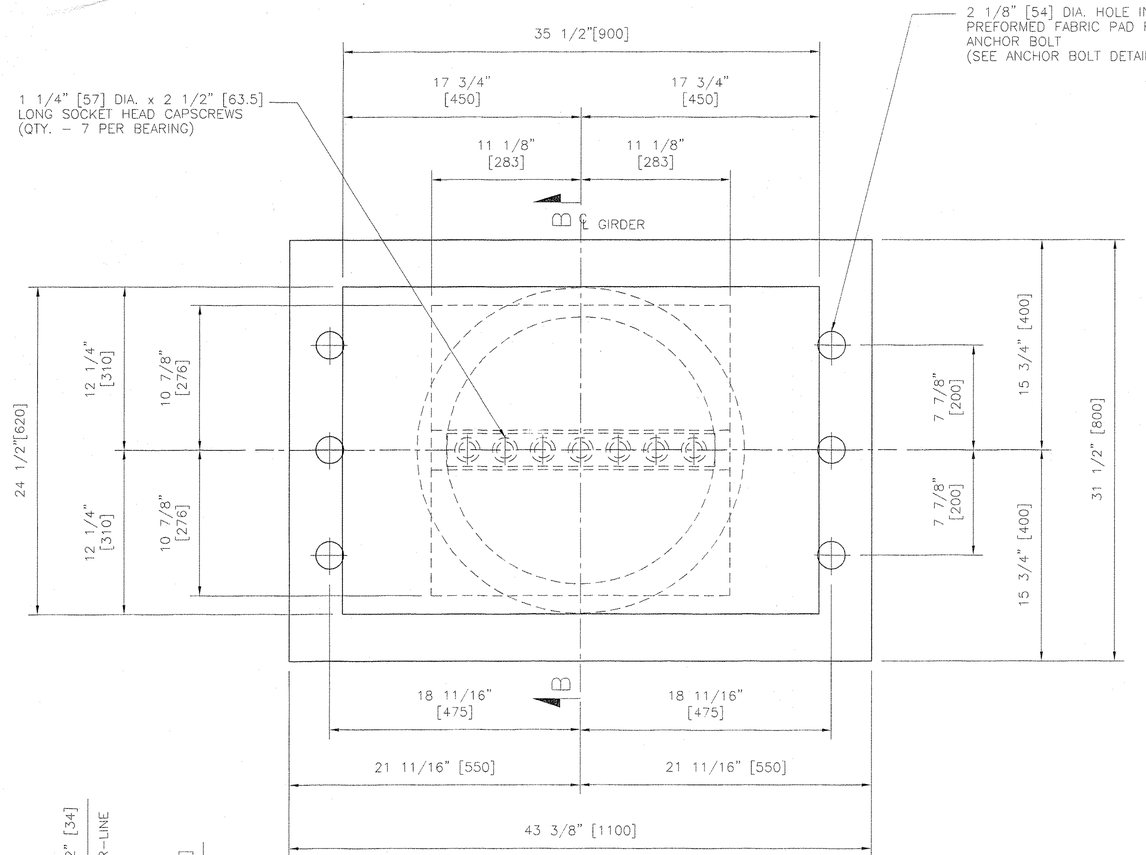

PLAN VIEW

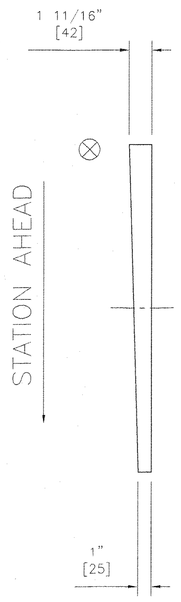

SIDE ELEVATION

SOLE PLATE ONLY

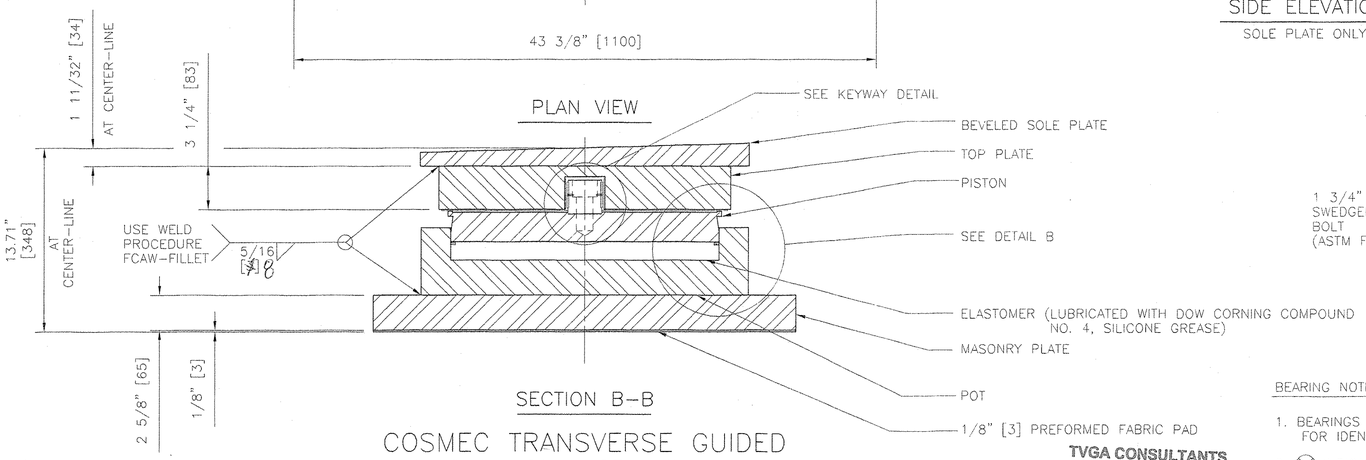

SECTION B–B

COSMEC TRANSVERSE GUIDED EXPANSION POT BEARING

LOCATION – PIER, GIRDERS 1, 2, 5 & 6
QUANTITY – 4
TOTAL VERTICAL CAPACITY – 1100 KIPS [4893kN]
TOTAL LONGITUDINAL CAPACITY – 210 KIPS [930kN]
TOTAL HORIZONTAL CAPACITY – 0 KIPS [0 kN]
LONGITUDINAL MOVEMENT CAPACITY – ± 1/16" [1.5]
TRANSVERSE MOVEMENT CAPACITY – ± 3/16" [5]
DESIGN ROTATION – 0.02 RADIANS 0.012 Radians per plan, but Ok

NOTE TO CONTRACTOR:

OVERALL HEIGHTS DIFFER FROM THOSE SHOWN ON THE CONTRACT PLANS. CONTRACTOR SHALL RECOMPUTE ALL BEARING SEAT ELEVATIONS TO ACCURATELY REFLECT THE HEIGHTS OF BEARINGS SUPPLIED.

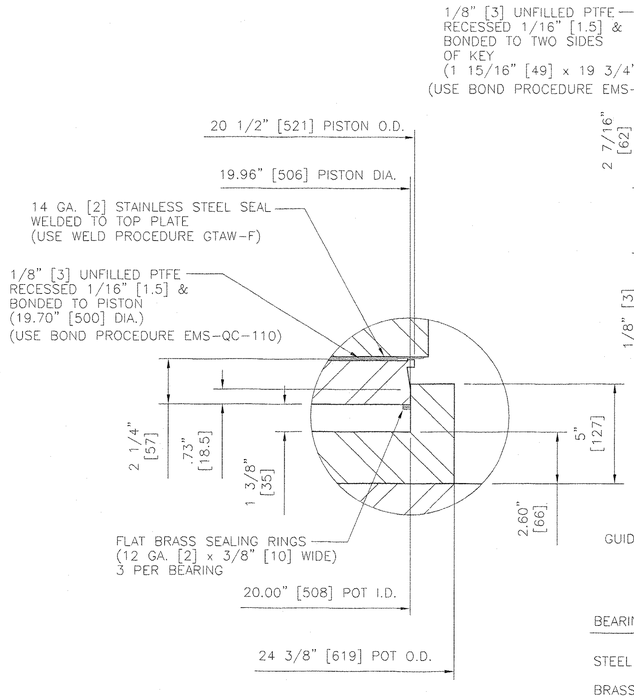

DETAIL B

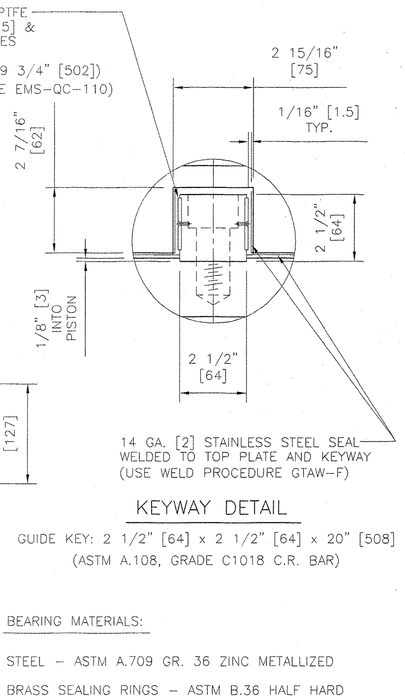

KEYWAY DETAIL

GUIDE KEY: 2 1/2" [64] x 2 1/2" [64] x 20" [508] (ASTM A.108, GRADE C1018 C.R. BAR)

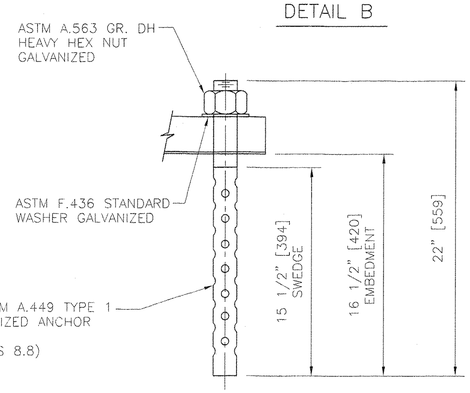

ANCHOR BOLT DETAIL

BEARING MATERIALS:

STEEL – ASTM A.709 GR. 36 ZINC METALLIZED
BRASS SEALING RINGS – ASTM B.36 HALF HARD
ELASTOMER – AASHTO 50 (±5) DUROMETER NEOPRENE
STAINLESS STEEL – ASTM A.240 TYPE 304, 10 RMS FINISH OR LESS
PTFE – ASTM D4894 VIRGIN UNFILLED
SOCKET HEAD CAPSCREWS – ASTM A.574
PREFORMED FABRIC PAD – AASHTO DIV. II, SPEC. 18.4.9.1
ANCHOR BOLTS AND HARDWARE – SEE ANCHOR BOLT DETAIL

METALLIZING NOTE:

ALL STEEL BEARING SURFACES SHALL BE ZINC METALLIZED AS PER SUBSECTION 531.04(b) AND 506.15(b). BEARINGS SHALL BE SEALED WITH AN APPROVED SEALER AS SPECIFIED IN STANDARD SPECIFICATION SUBSECTION 506.15(b). AREAS OF METALLIZING DAMAGED BY FIELD WELDING OR HANDLING SHALL BE PAINTED WITH AN APPROVED SEALANT.

BEARING NOTES:

1. BEARINGS SHALL BE SHIPPED AS COMPLETE UNITS AND SHALL BE MARKED FOR IDENTIFICATION WITH LOCATION.
2. ⊗ INDICATES THICK END OF BEVELED SOLE PLATE.
3. BEARINGS MUST NOT BE DISASSEMBLED FOR ANY REASON WITHOUT AUTHORIZATION OF COSMEC, INC. UNAUTHORIZED DISASSEMBLY MAY CAUSE MALFUNCTION OF BEARING UNIT.
4. LOCATION OF FABRICATION PLANT – 70 SOUTH STREET WALPOLE, MA 02081
5. COSMEC, INC REPRESENTATIVE: MR. MATT McANDREWS (508) 668-6600.

TVGA CONSULTANTS

☐ NO EXCEPTIONS TAKEN ☐ REJECTED
☒ FURNISH AS CORRECTED
☐ REVISE AND RESUBMIT

ENGINEER has reviewed Shop Drawings and Samples and other data which Contractor is required to submit, only for conformance with the information given in the Contract Documents and compatibility with the design concept of the completed Project as a functioning whole as indicated in the Contract Documents. Such reviews do not extend to means, methods, techniques, sequences or procedures of construction or to safety precautions and programs incident thereto. Contractor is responsible for dimensions to be confirmed and correlated at the job site; for information that pertains solely to the fabrication processes or to techniques of construction; and for coordination of the work of all trades.

BY:
DATE: 10/31/07

RECEIVED
NOV 01 2007
G.P.I.

REV.		BY	DATE	CK'D	DATE

STATE OF VERMONT
AGENCY OF TRANSPORTATION

VT RTE 279, BRIDGE NO. B12
OVER FURNACE BROOK
TOWN OF BENNINGTON
PROJECT NO. AC NH F019-1(53)

COSMEC, INC. — 70 SOUTH STREET WALPOLE, MA. 02081

SCALE: 3/16"=1"	DRAWN BY: MCM	CHECKED BY: MM
DATE:	DATE: 10/4/07	DATE: 10/8/07

COSMEC POT BEARINGS

CUSTOMER	S.O. NUMBER	DRAWING NUMBER	REV.
J. A. McDONALD, INC.	60775	5317	

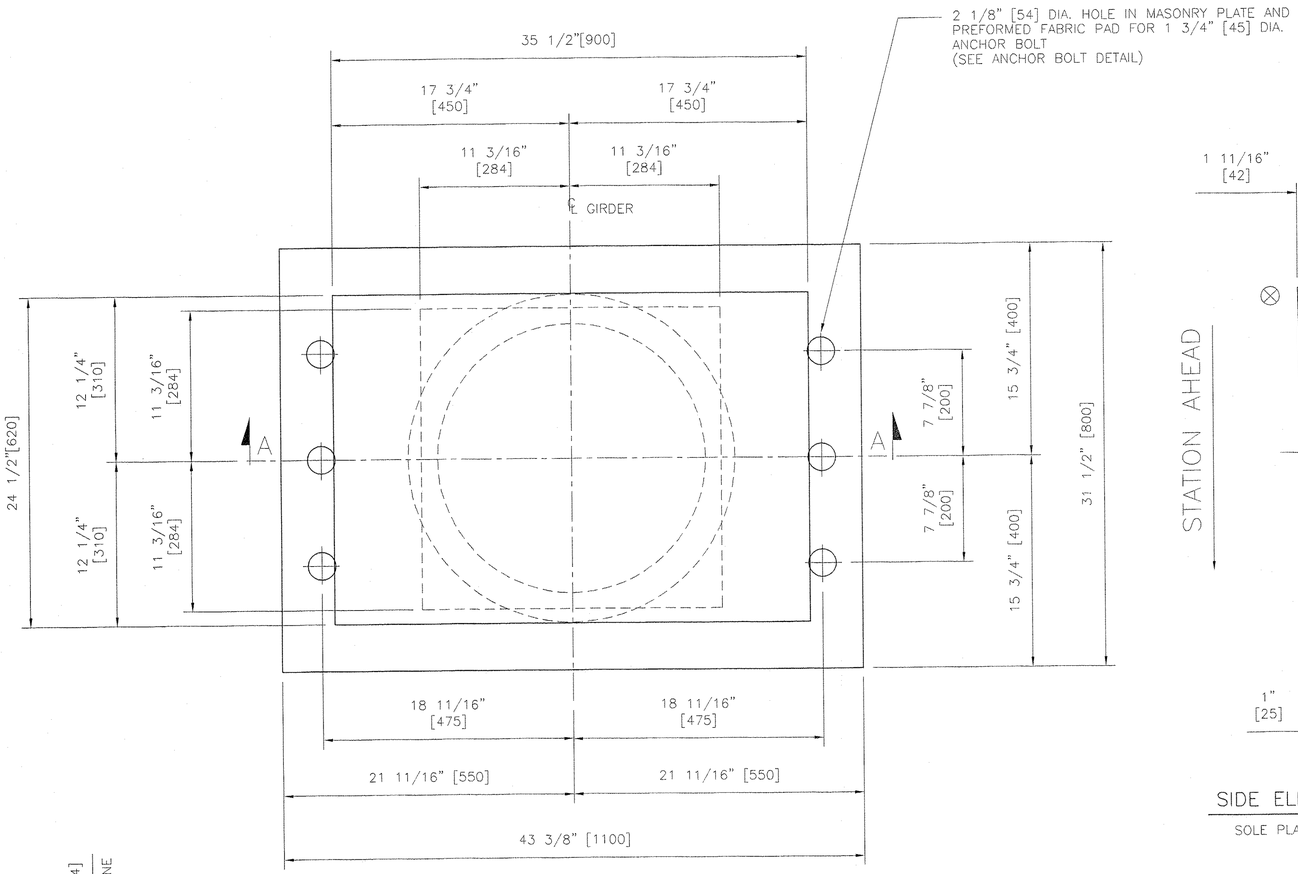

PLAN VIEW

SIDE ELEVATION

SOLE PLATE ONLY

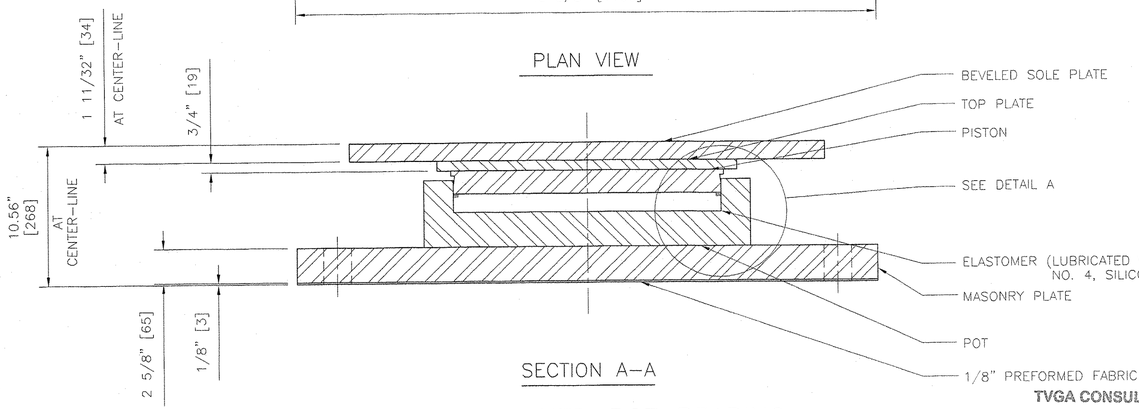

SECTION A–A

COSMEC FIXED POT BEARING

LOCATION – PIER, GIRDERS 3 & 4
QUANTITY – 2
TOTAL VERTICAL CAPACITY – 1100 KIPS [4893kN]
TOTAL HORIZONTAL CAPACITY – 210 KIPS [930kN]
MOVEMENT CAPACITY – 0
DESIGN ROTATION – 0.02 RADIANS
0.012 Radians per Playbook CK

NOTE TO CONTRACTOR:

OVERALL HEIGHTS DIFFER FROM THOSE SHOWN ON THE CONTRACT PLANS. CONTRACTOR SHALL RECOMPUTE ALL BEARING SEAT ELEVATIONS TO ACCURATELY REFLECT THE HEIGHTS OF BEARINGS SUPPLIED.

TVGA CONSULTANTS

☐ NO EXCEPTIONS TAKEN ☐ REJECTED
☐ FURNISH AS CORRECTED
☐ REVISE AND RESUBMIT

ENGINEER has reviewed Shop Drawings and Samples and other data which Contractor is required to submit, only for conformance with the information given in the Contract Documents and compatibility with the design concept of the completed Project as a functioning whole as indicated in the Contract Documents. Such reviews do not extend to means, methods, techniques, sequences or procedures of construction or to safety precautions and programs incident thereto. Contractor is responsible for dimensions to be confirmed and correlated at the job site; for information that pertains solely to the fabrication processes or to techniques of construction; and for coordination of the work of all trades.

BY: Bruce J. Cates
DATE: 10/31/07

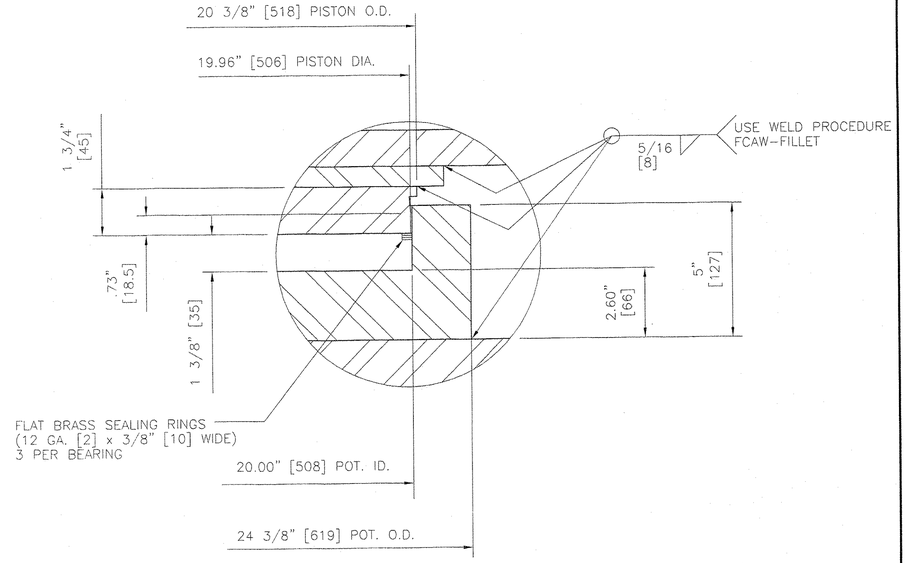

DETAIL A

BEARING MATERIALS:

STEEL – ASTM A.709 GR. 36 ZINC METALLIZED
BRASS SEALING RINGS – ASTM B.36 HALF HARD
ELASTOMER – AASHTO 50 (±5) DUROMETER NEOPRENE
PREFORMED FABRIC PAD – AASHTO DIV. II, SPEC. 18.4.9.1
ANCHOR BOLTS AND HARDWARE – SEE ANCHOR BOLT DETAIL

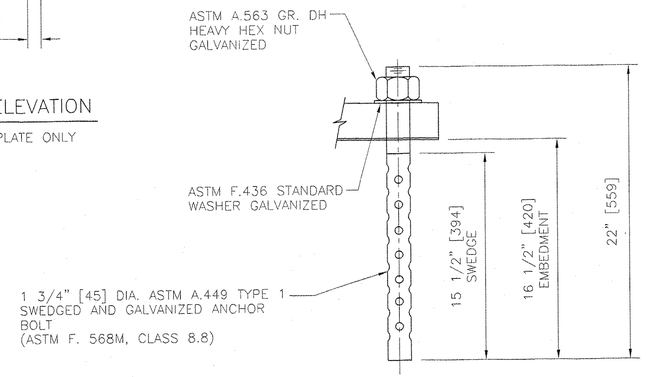

ANCHOR BOLT DETAIL

METAILLIZING NOTE:

ALL STEEL BEARING SURFACES SHALL BE ZINC METALLIZED AS PER SUBSECTION 531.04(b) AND 506.15(b). BEARINGS SHALL BE SEALED WITH AN APPROVED SEALER AS SPECIFIED IN STANDARD SPECIFICATION SUBSECTION 506.15(b). AREAS OF METALLIZING DAMAGED BY FIELD WELDING OR HANDLING SHALL BE PAINTED WITH AN APPROVED SEALANT.

BEARING NOTES:

1. BEARINGS SHALL BE SHIPPED AS COMPLETE UNITS AND SHALL BE MARKED FOR IDENTIFICATION WITH LOCATION.
2. ⊗ INDICATES THICK END OF BEVELED SOLE PLATE.
3. BEARINGS MUST NOT BE DISASSEMBLED FOR ANY REASON WITHOUT AUTHORIZATION OF COSMEC, INC. UNAUTHORIZED DISASSEMBLY MAY CAUSE MALFUNCTION OF BEARING UNIT.
4. LOCATION OF FABRICATION PLANT – 70 SOUTH STREET WALPOLE, MA 02081
5. COSMEC, INC REPRESENTATIVE: MR. MATT McANDREWS (508) 668-6600.

REV.		BY	DATE	CK'D	DATE

STATE OF VERMONT
AGENCY OF TRANSPORTATION

VT RTE 279, BRIDGE NO. B12
OVER FURNACE BROOK
TOWN OF BENNINGTON
PROJECT NO. AC NH F019-1(53)

COSMEC, INC. 70 SOUTH STREET WALPOLE, MA. 02081

SCALE: 3/16"=1"	DRAWN BY: MCM	CHECKED BY: MM
DATE:	DATE: 10/4/07	DATE: 10/8/07

COSMEC POT BEARINGS

CUSTOMER	S.O. NUMBER	DRAWING NUMBER	REV.
J. A. McDONALD, INC.	60775	5318	

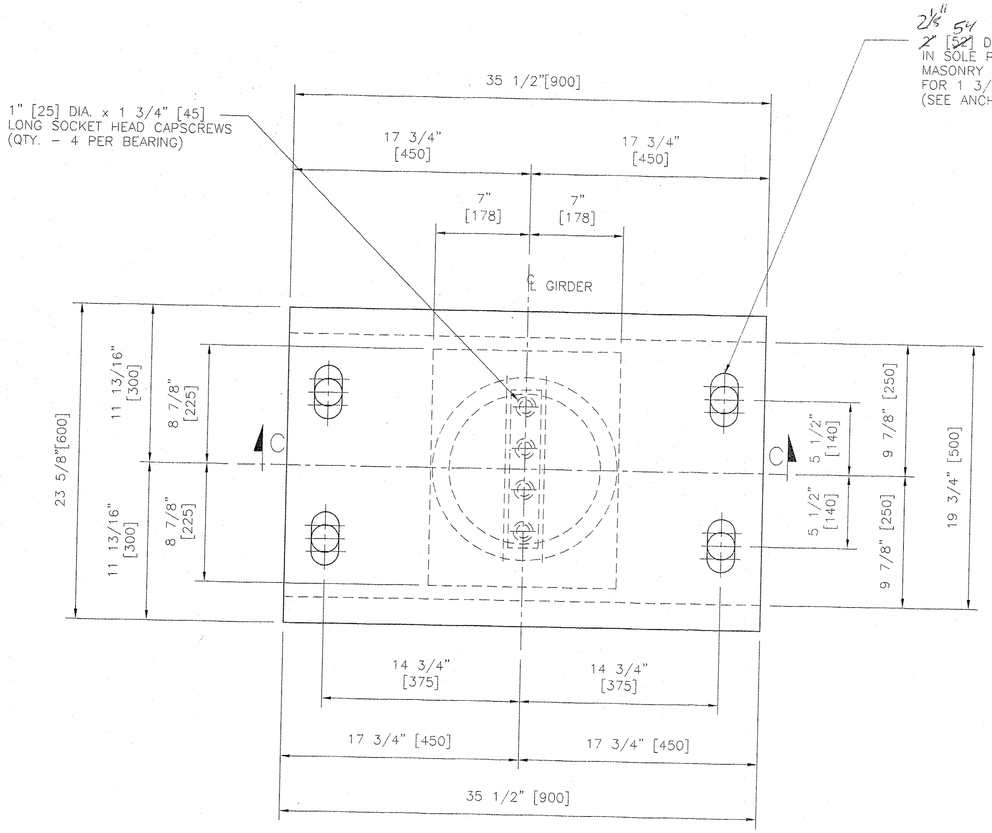

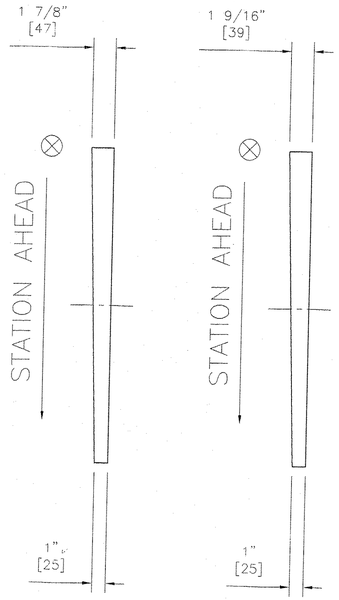

SIDE ELEVATION
SOLE PLATE ONLY
AT ABUT. 1

SIDE ELEVATION
SOLE PLATE ONLY
AT ABUT. 2

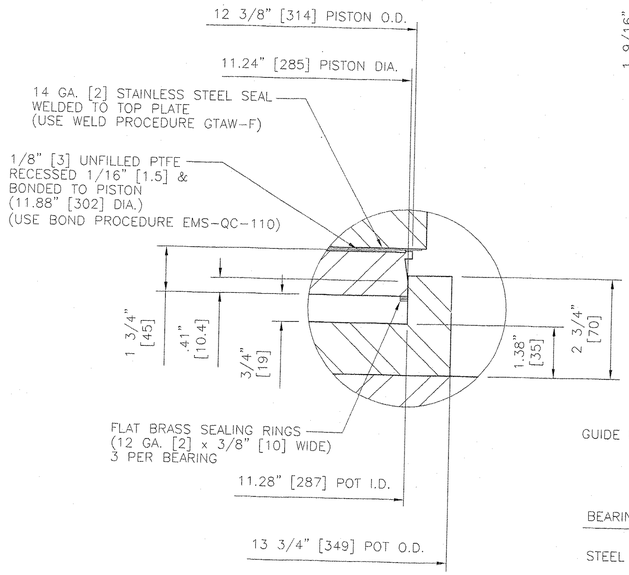

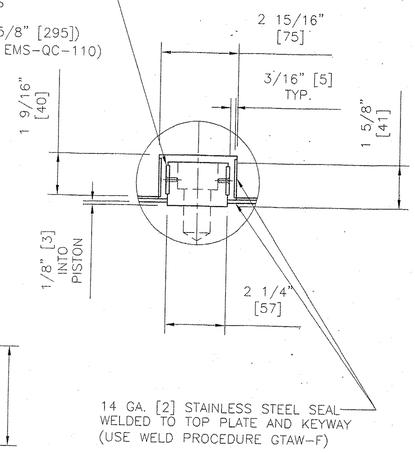

KEYWAY DETAIL

GUIDE KEY: 2 1/4" [57] x 1 5/8" [41] x 11 7/8" [302]
(ASTM A.108, GRADE C1018 C.R. BAR)

BEARING MATERIALS:

STEEL – ASTM A.709 GR. 36 ZINC METALLIZED

BRASS SEALING RINGS – ASTM B.36 HALF HARD

ELASTOMER – AASHTO 50 (±5) DUROMETER NEOPRENE

STAINLESS STEEL – ASTM A.240 TYPE 304, 10 RMS FINISH OR LESS

PTFE – ASTM D4894 VIRGIN UNFILLED

SOCKET HEAD CAPSCREWS – ASTM A.574

PREFORMED FABRIC PAD – AASHTO DIV. II. SPEC. 18.4.9.1

ANCHOR BOLTS AND HARDWARE – SEE ANCHOR BOLT DETAIL

METAILLIZING NOTE:

ALL STEEL BEARING SURFACES SHALL BE ZINC METALLIZED AS PER SUBSECTION 531.04(b) AND 506.15(b). BEARINGS SHALL BE SEALED WITH AN APPROVED SEALER AS SPECIFIED IN STANDARD SPECIFICATION SUBSECTION 506.15(b). AREAS OF METALLIZING DAMAGED BY FIELD WELDING OR HANDLING SHALL BE PAINTED WITH AN APPROVED SEALANT.

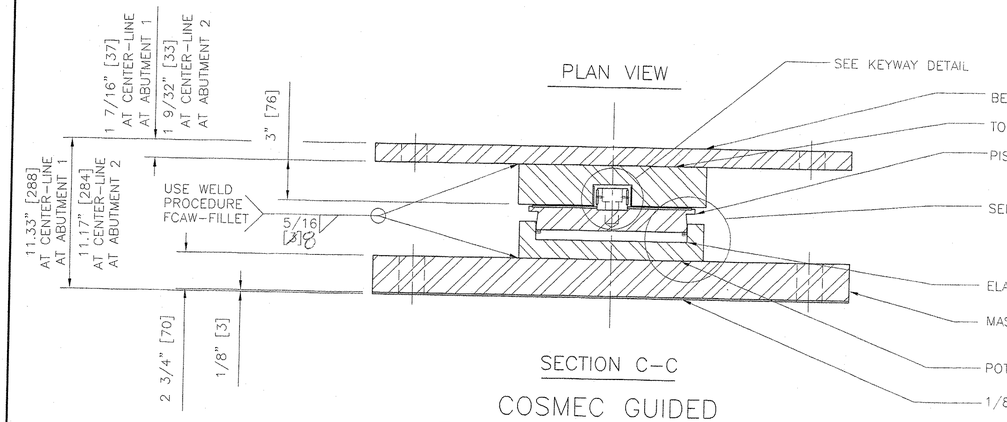

PLAN VIEW

SECTION C–C

NOTE TO CONTRACTOR:

OVERALL HEIGHTS DIFFER FROM THOSE SHOWN ON THE CONTRACT PLANS. CONTRACTOR SHALL RECOMPUTE ALL BEARING SEAT ELEVATIONS TO ACCURATELY REFLECT THE HEIGHTS OF BEARINGS SUPPLIED.

COSMEC GUIDED EXPANSION POT BEARING

LOCATION – ABUTMENTS 1 & 2, GIRDERS 1 THRU 6
QUANTITY – 12
TOTAL VERTICAL CAPACITY – 350 KIPS [1557kN]
TOTAL HORIZONTAL CAPACITY – 67 KIPS [296 kN]
LONGITUDINAL MOVEMENT CAPACITY – ± 1 13/16" [46]
TRANSVERSE MOVEMENT CAPACITY – ± 3/16" [5]
DESIGN ROTATION – 0.02 RADIANS 0.013 per plan, but ok

TVGA CONSULTANTS

☐ NO EXCEPTIONS TAKEN ☐ REJECTED
☑ FURNISH AS CORRECTED
☐ REVISE AND RESUBMIT

ENGINEER has reviewed Shop Drawings and Samples and other data which Contractor is required to submit, only for conformance with the information given in the Contract Documents and compatibility with the design concept of the completed Project as a functioning whole as indicated in the Contract Documents. Such review does not extend to means, methods, techniques, sequences or procedures of construction or to safety precautions and programs incident thereto. Contractor is responsible for dimensions to be confirmed and correlated at the job site; for information that pertains solely to the fabrication processes or to techniques of construction; and for coordination of the work of all trades.

BY: [signature] 10/31/07
DATE:

BEARING NOTES:

1. BEARINGS SHALL BE SHIPPED AS COMPLETE UNITS AND SHALL BE MARKED FOR IDENTIFICATION WITH LOCATION.
2. ⊗ INDICATES THICK END OF BEVELED SOLE PLATE.
3. BEARINGS MUST NOT BE DISASSEMBLED FOR ANY REASON WITHOUT AUTHORIZATION OF COSMEC, INC. UNAUTHORIZED DISASSEMBLY MAY CAUSE MALFUNCTION OF BEARING UNIT.
4. LOCATION OF FABRICATION PLANT – 70 SOUTH STREET WALPOLE, MA 02081
5. COSMEC, INC REPRESENTATIVE: MR. MATT McANDREWS (508) 668-6600.
6. FOR SOLE PLATE SETTING DUE TO TEMPERATURE SEE CONTRACT DRAWING SHEET 216 OF 577.

DETAIL C

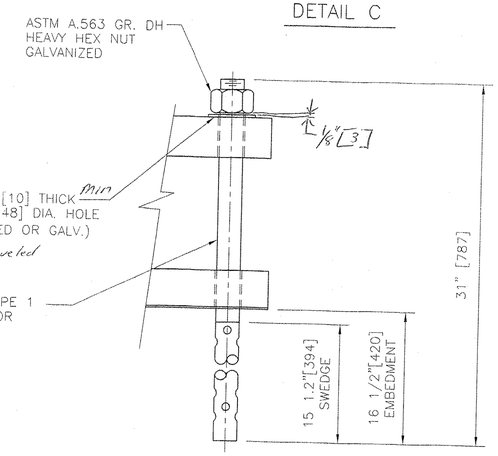

ANCHOR BOLT DETAIL

STATE OF VERMONT
AGENCY OF TRANSPORTATION

VT RTE 279, BRIDGE NO. B12
OVER FURNACE BROOK
TOWN OF BENNINGTON
PROJECT NO. AC NH F019-1(53)

COSMEC, INC. — 70 SOUTH STREET WALPOLE, MA. 02081

SCALE: 3/16"=1"	DRAWN BY: MCM	CHECKED BY: MM
DATE:	DATE: 10/4/07	DATE: 10/8/07

COSMEC POT BEARINGS

CUSTOMER	S.O. NUMBER	DRAWING NUMBER	REV.
J. A. McDONALD, INC.	60775	5319	

REV.		BY	DATE	CK'D	DATE

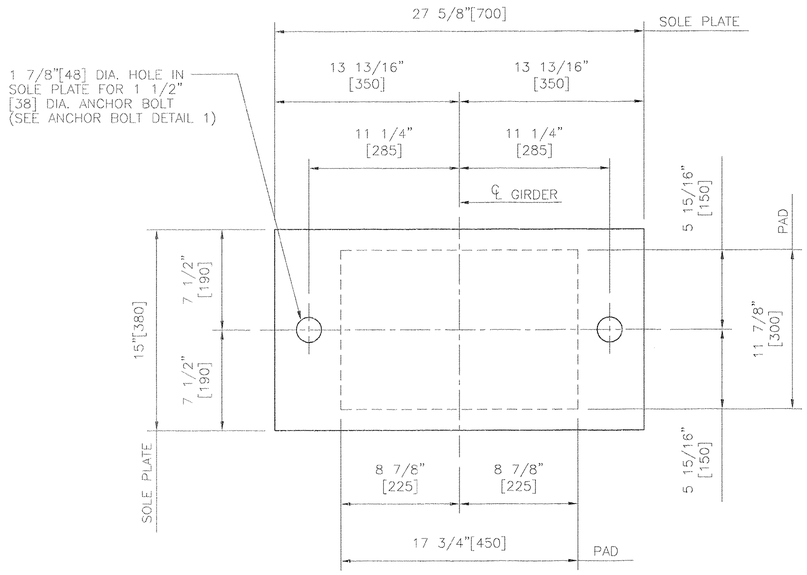

PLAN VIEW

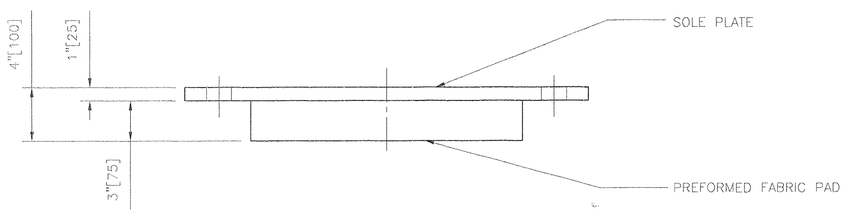

FRONT ELEVATION

COSMEC FIXED PREFORMED FABRIC PAD BEARING AT ABUTMENT 1

QUANTITY – 4
TOTAL VERTICAL CAPACITY – 179 KIPS[796kN]
TOTAL TRANSVERSE CAPACITY – 18 KIPS[80kN]
TOTAL LONGITUDINAL CAPACITY – 21.8 KIPS[97kN]
ROTATION CAPACITY – 0.02 RADIANS

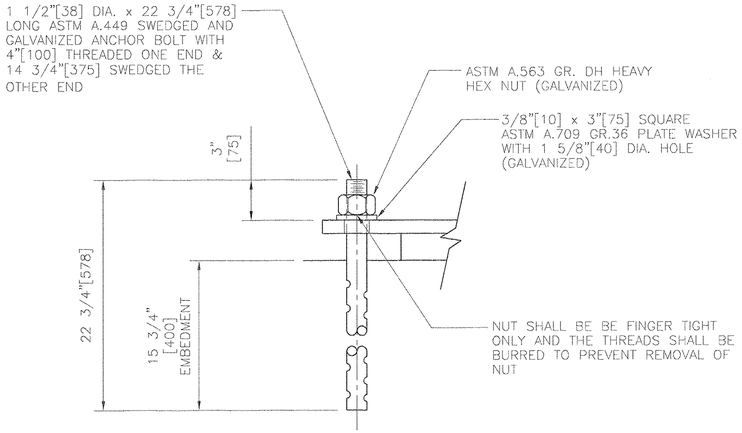

ANCHOR BOLT DETAIL 1

BEARING NOTES:

1. ANCHOR BOLTS AND ASSOCIATED HARDWARE SHALL BE GALVANIZED IN ACCORDANCE WITH ASTM A153 OR A123 AS APPLICABLE.
2. COSMEC, INC. REPRESENTATIVE: MR. MATT McANDREWS (508)668-6600
3. ALL EDGES OF STEEL PLATES SHALL HAVE A 1/16"[1.6] MINIMUM RADIUS OR EQUIVALENT FLAT EDGE.
4. ALL BEARING DEVICES SHALL BE ZINC METALLIZED AS PER SUBSECTION 531.04(b) AND 506.15(b). BEARINGS SHALL BE SEALED WITH AN APPROVED SEALER AS SPECIFIED IN STANDARD SPECIFICATION SUBSECTION 506.15(b). AREAS OF METALLIZING DAMAGED BY FIELD WELDING OR HANDLING SHALL BE PAINTED WITH AN APPROVED SEALANT. A MINIMUM THICKNESS OF 6 MILS SHALL BE APPLIED TO ALL EXTERIOR STEEL SURFACES.

BEARING MATERIALS:

STEEL – ASTM A.709 GR.345 (GR.50) AND SHALL BE ZINC METALLIZED

△1 PREFORMED FABRIC PAD – VTRANS STANDARD SPECIFICATION FOR CONSTRUCTION (2006), SECTION 731.01

ANCHOR BOLTS AND HARDWARE – SEE ANCHRO BOLT DETAIL

SHOP DRAWINGS ARE REVIEWED UNLESS NOTED OTHERWISE
NO EXCEPTION TAKEN ✓
REVISE AS NOTED
RESUBMISSION NOT REQUIRED
REVISE AS NOTED
RESUBMISSION REQUIRED
REJECTED
Stantec
DATE 2/28/08
SIGNATURE TEK
REVIEW BY STANTEC IS FOR THE SOLE PURPOSE OF ASCERTAINING GENERAL CONFORMITY WITH DESIGN. CONTRACTOR IS RESPONSIBLE FOR DIMENSIONS, FABRICATION AND CONSTRUCTION METHODS, COORDINATION OF SUB-TRADES, DETAIL DESIGN OF COMPONENTS, AND ERRORS OR OMISSIONS ON SHOP DRAWINGS.

RECEIVED MAR 03 2008 G.P.

STATE OF VERMONT
AGENCY OF TRANSPORTATION

EAST ROAD OVER
VT ROUTE 279
TOWN OF BENNINGTON
BRIDGE NO. B11
PROJECT NO. AC NH 019-1(53)

COSMEC, INC. 70 SOUTH STREET WALPOLE, MA. 02081

SCALE: 3/16"=1"	DRAWN BY: MCM	CHECKED BY: MM
	DATE: 1/7/08	DATE: 1/9/08

COSMEC BEARINGS

REV.		BY	DATE	CK'D	DATE
△1	REVISED PREFORMED PAD MATERIAL SPECIFICATION	MCM	2/14/08	MCM	2/14/08

CUSTOMER	S.O. NUMBER	DRAWING NUMBER	REV.
J. A. McDONALD, INC.	60775	5238	1

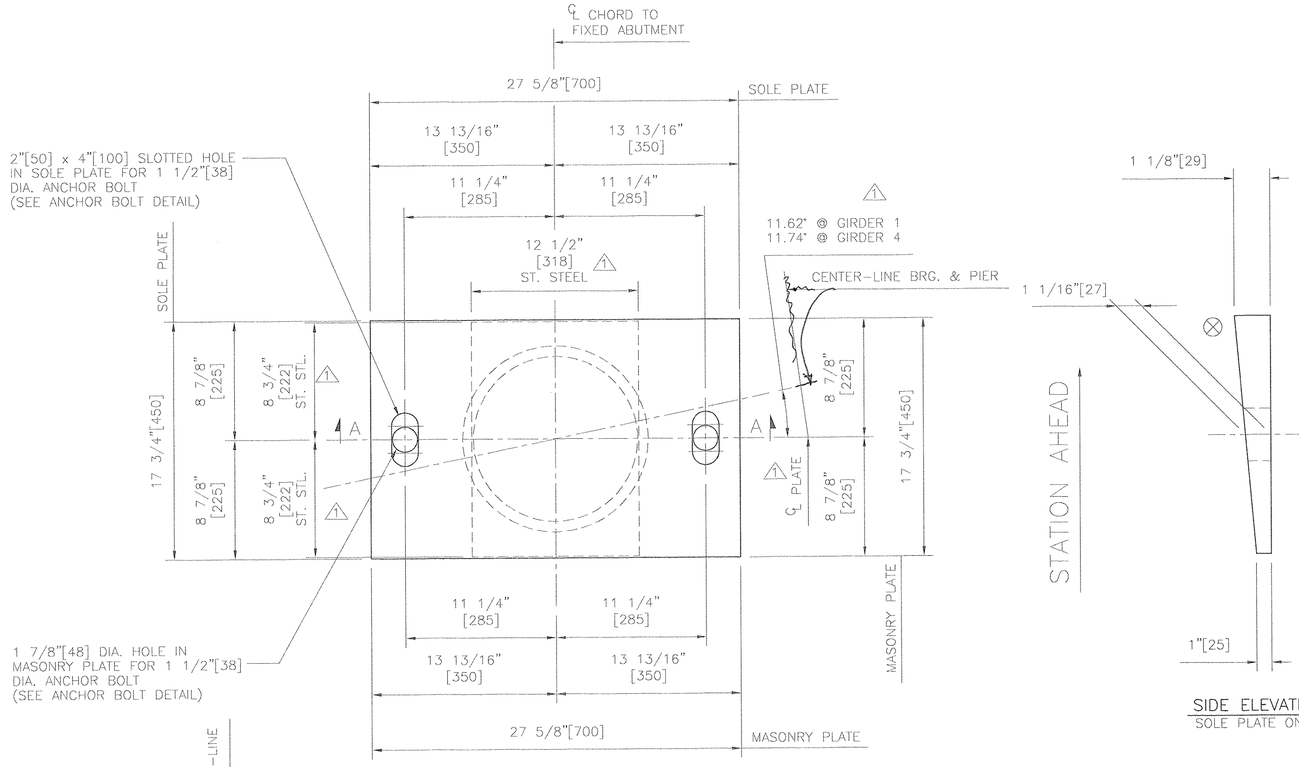

PLAN VIEW ⚠1

SIDE ELEVATION
SOLE PLATE ONLY

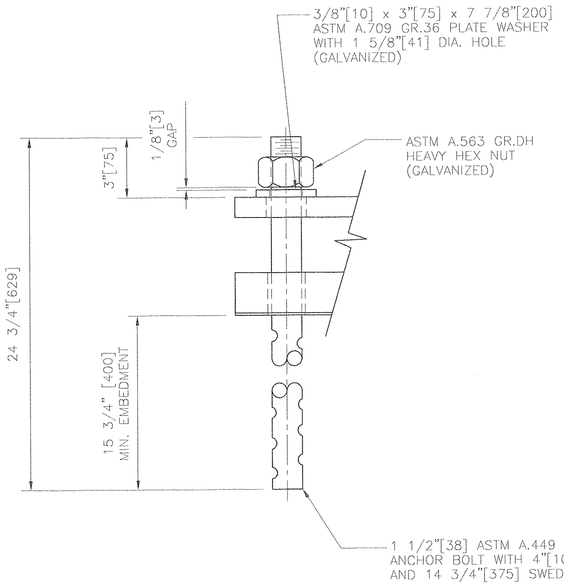

ANCHOR BOLT DETAIL

BEARING NOTES:

1. ALL BEARINGS SHALL BE MARKED FOR IDENTIFICATION WITH LOCATION AND SHALL BE WRAPPED FOR PROTECTION DURING SHIPPING AND STORAGE.
2. ANCHOR BOLTS AND HARDWARE SHALL BE GALVANIZED IN ACCORDANCE WITH ASTM A.153 OR A.123 AS APPLICABLE.
3. PROTECT PTFE AND STAINLESS STEEL SURFACES AT ALL TIMES FROM DIRT, WELD SPATTER AND ANY FOREIGN MATTER. AVOID DIRECT SUNLIGHT TO PTFE SURFACES AS THIS WILL CAUSE DAMAGE.
4. BEARINGS MUST NOT BE DISMANTLED AT ANY TIME WITHOUT EXPRESS WRITTEN AUTHORIZATION FROM COSMEC, INC.. UNAUTHORIZED DISASSEMBLY MAY CAUSE MALFUNCTION OF UNIT.
5. ALL BEARINGS DEVICES SHALL BE ZINC METALLIZED AS PER SUBSECTION 531.04(b) AND 506.15(b). BEARINGS SHALL BE SEALED WITH AN APPROVED SEALER AS SPECIFIED IN STANDARD SPECIFICATION SUBSECTION 506.15(B). AREAS OF METALLIZING DAMAGED BY FIELD WELDING OR HANDLING SHALL BE PAINTED WITH AN APPROVED SEALANT, 6 MILS MIN. TO EXTERIOR SURFACES.
6. COSMEC, INC. REPRESENTATIVE: MR. MATT McANDREWS (508-668-6600)
6. ⊗ INDICATES THICK END OF BEVELED SOLE PLATE.

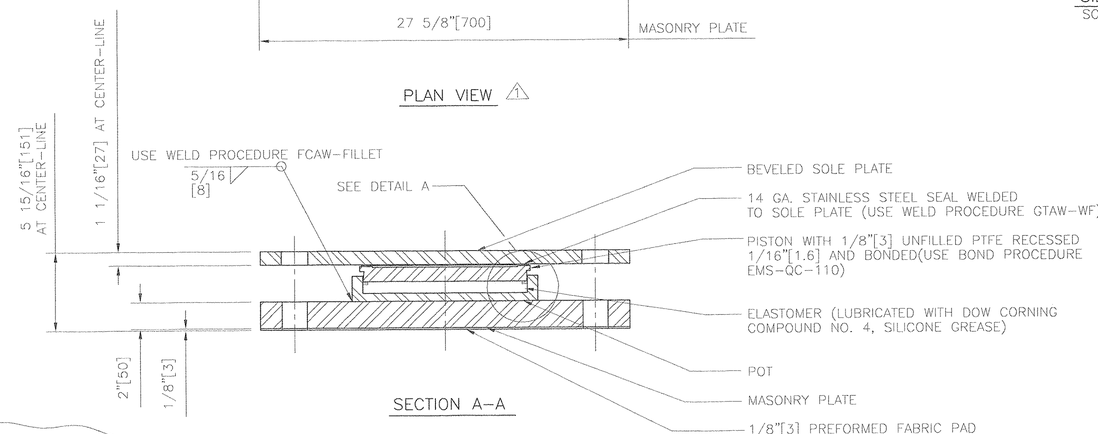

SECTION A-A

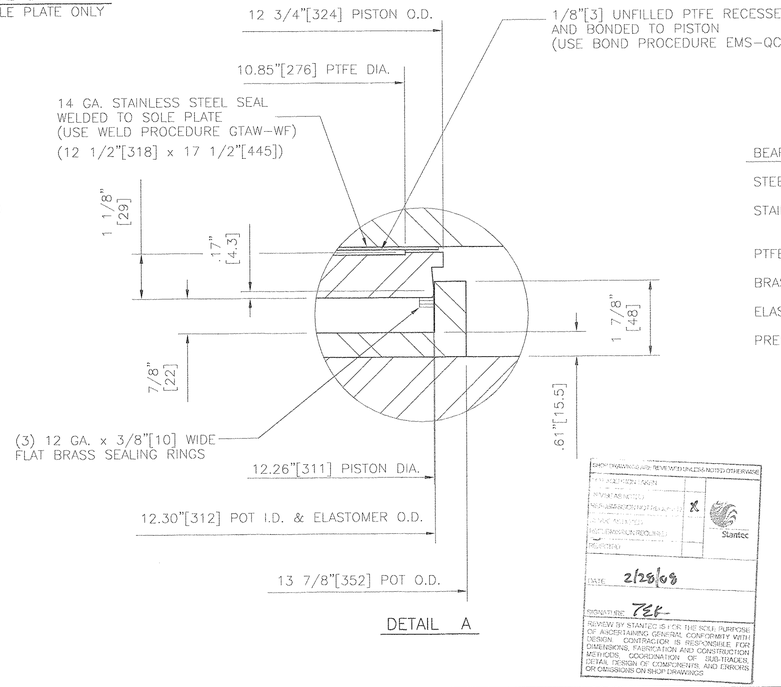

DETAIL A

BEARING MATERIALS:

STEEL - ASTM A.709 GR.345 (GR.50) ZINC METALLIZED

STAINLESS STEEL - ASTM A.240 TYPE 304, #8 MIRROR FINISH

PTFE - ASTM D.4894 VIRGIN UNFILLED

BRASS RINGS - ASTM B.36 HALF HARD

ELASTOMER - AASHTO 50 ±5 DUROMETER NEOPRENE

PREFORMED FABRIC PAD - AASHTO SPEC. 18.4.9.1 DI

RECEIVED MAR 03 2008 GPD

NOTE TO CONTRACTOR:

OVER ALL BEARING HEIGHTS DIFFER FROM THOSE SHOWN ON THE CONTRACT PLANS. CONTRACTOR SHALL RECOMPUTE ALL BEARING SEAT ELEVATIONS TO ACCURATELY REFLECT THE HEIGHTS OF BEARINGS SUPPLIED.

COSMEC NON-GUIDED EXPANSION POT BEARING

LOCATION - PIER, GIRDERS 1 AND 4
QUANTITY - 2
TOTAL VERTICAL CAPACITY - 416 KIPS[1850kN]
TOTAL HORIZONTAL CAPACITY - 0 KIPS[0kN]
TOTAL LONGITUDINAL MOVEMENT - ±1.22"[±31mm]
TOTAL TRANSVERSE MOVEMENT - ±1/4"[±6mm]
ROTATION CAPACITY - 0.016 RADIANS

SHOP DRAWINGS ARE REVIEWED UNLESS NOTED OTHERWISE
FABRICATION BEGIN
MATERIALS
PRE-ASSEMBLY SHOP PAINTING
FACT. CORROSION PROTECTION
SHIPMENT
DATE 2/29/08
REVIEW BY: TEF
REVIEW BY STANTEC IS FOR THE SOLE PURPOSE OF ASCERTAINING GENERAL CONFORMITY WITH DESIGN. CONTRACTOR IS RESPONSIBLE FOR DIMENSIONS, FABRICATION AND CONSTRUCTION METHODS, COORDINATION OF SUB-TRADES, DETAIL DESIGN OF COMPONENTS, AND ERRORS OR OMISSIONS ON SHOP DRAWINGS
Stantec

REV.		BY	DATE	CK'D	DATE
⚠1	MADE SLOTS PARALLEL TO GIRDER CENTER-LINE & SHOWED LIMITS OF ST. STL. & AS NOTED PER APPROVERS COMMENTS	MCM	2/14/08	MCM	2/14/08

STATE OF VERMONT
AGENCY OF TRANSPORTATION

EAST ROAD OVER
VT ROUTE 279
TOWN OF BENNINGTON
BRIDGE NO. B11
PROJECT NO. AC NH 019-1(53)

COSMEC, INC.
70 SOUTH STREET
WALPOLE, MA. 02081

SCALE: 3/16"=1"	DRAWN BY: MCM	CHECKED BY: MM
DATE:	DATE: 1/7/08	DATE: 1/9/08

COSMEC POT BEARINGS

CUSTOMER	S.O. NUMBER	DRAWING NUMBER	REV.
J. A. McDONALD, INC.	60775	5239	1

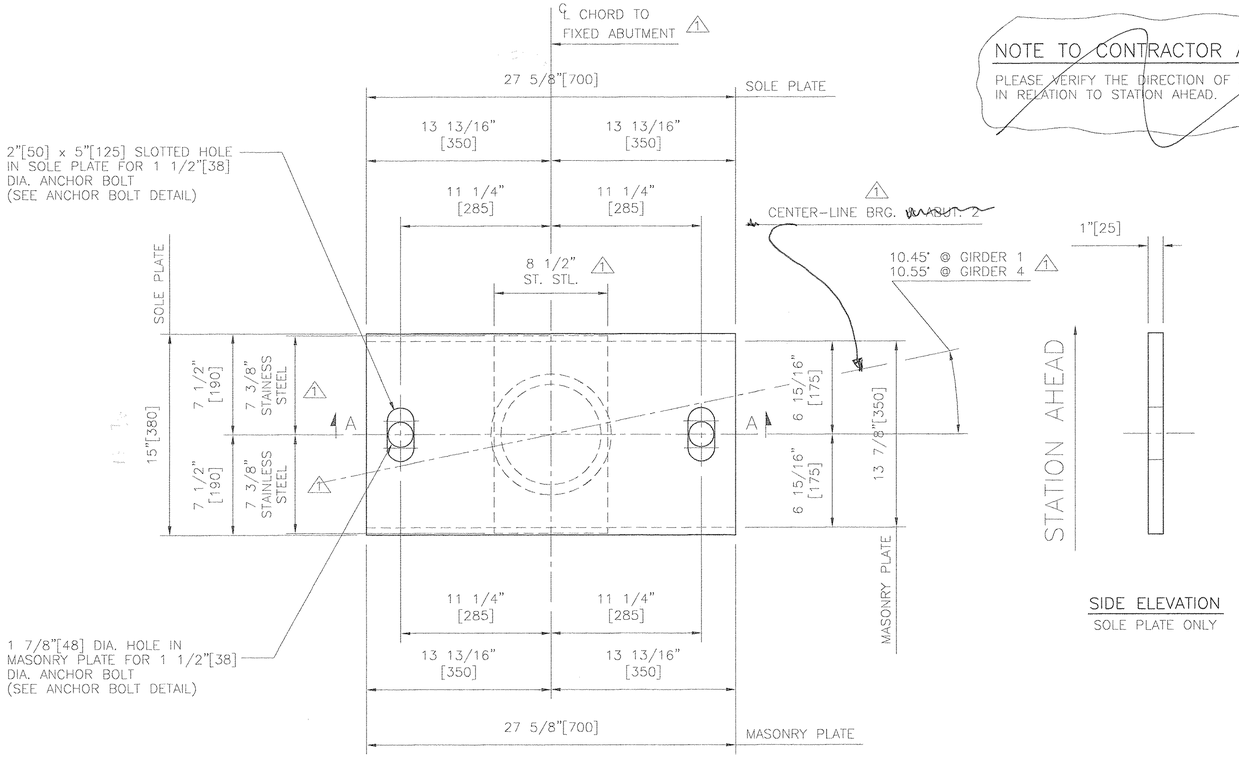

PLAN VIEW 1

SIDE ELEVATION
SOLE PLATE ONLY

NOTE TO CONTRACTOR AND APPROVER

PLEASE VERIFY THE DIRECTION OF SKEWED SLOTS IN RELATION TO STATION AHEAD.

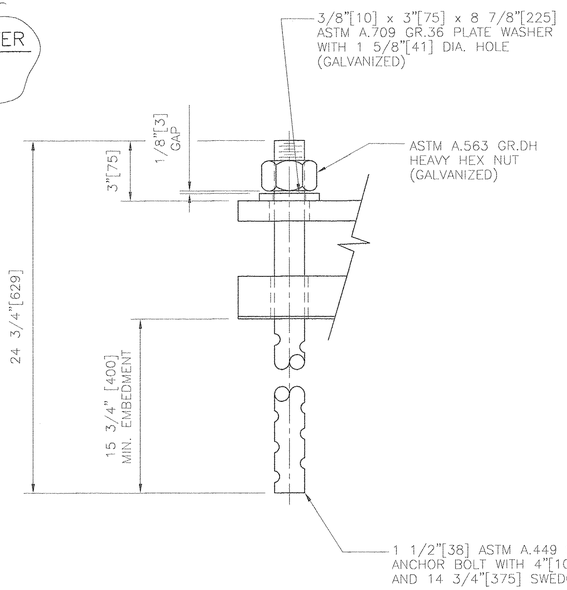

ANCHOR BOLT DETAIL

BEARING NOTES:

1. ALL BEARINGS SHALL BE MARKED FOR IDENTIFICATION WITH LOCATION AND SHALL BE WRAPPED FOR PROTECTION DURING SHIPPING AND STORAGE.
2. ANCHOR BOLTS AND HARDWARE SHALL BE GALVANIZED IN ACCORDANCE WITH ASTM A.153 OR A.123 AS APPLICABLE.
3. PROTECT PTFE AND STAINLESS STEEL SURFACES AT ALL TIMES FROM DIRT, WELD SPATTER AND ANY FOREIGN MATTER. AVOID DIRECT SUNLIGHT TO PTFE SURFACES AS THIS WILL CAUSE DAMAGE.
4. BEARINGS MUST NOT BE DISMANTLED AT ANY TIME WITHOUT EXPRESS WRITTEN AUTHORIZATION FROM COSMEC, INC.. UNAUTHORIZED DISASSEMBLY MAY CAUSE MALFUNCTION OF UNIT.
5. ALL BEARINGS DEVICES SHALL BE ZINC METALLIZED AS PER SUBSECTION 531.04(b) AND 506.15(b). BEARINGS SHALL BE SEALED WITH AN APPROVED SEALER AS SPECIFIED IN STANDARD SPECIFICATION SUBSECTION 506.15(B) AREAS OF METALLIZING DAMAGED BY FIELD WELDING OR HANDLING SHALL BE PAINTED WITH AN APPROVED SEALANT.
6. COSMEC, INC. REPRESENTATIVE: MR. MATT McANDREWS (508-668-6600)
6. ⊗ INDICATES THICK END OF BEVELED SOLE PLATE.

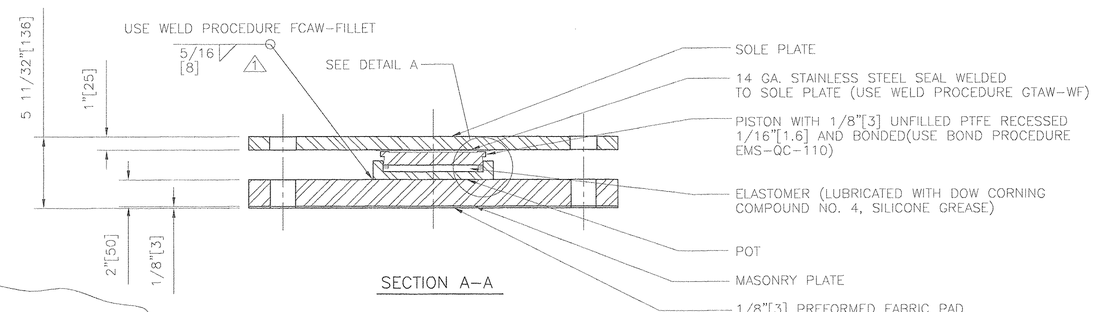

SECTION A-A

NOTE TO CONTRACTOR:

OVER ALL BEARING HEIGHTS DIFFER FROM THOSE SHOWN ON THE CONTRACT PLANS. CONTRACTOR SHALL RECOMPUTE ALL BEARING SEAT ELEVATIONS TO ACCURATELY REFLECT THE HEIGHTS OF BEARINGS SUPPLIED.

COSMEC NON-GUIDED EXPANSION POT BEARING

LOCATION - ABUTMENT 2, GIRDERS 1 AND 4
QUANTITY - 2
TOTAL VERTICAL CAPACITY - 154 KIPS[685kN]
TOTAL HORIZONTAL CAPACITY - 0 KIPS[0kN]
TOTAL LONGITUDINAL MOVEMENT - ±1.71"[±43.5mm]
TOTAL TRANSVERSE MOVEMENT - ±1/4"[±6mm]
ROTATION CAPACITY - 0.015 RADIANS

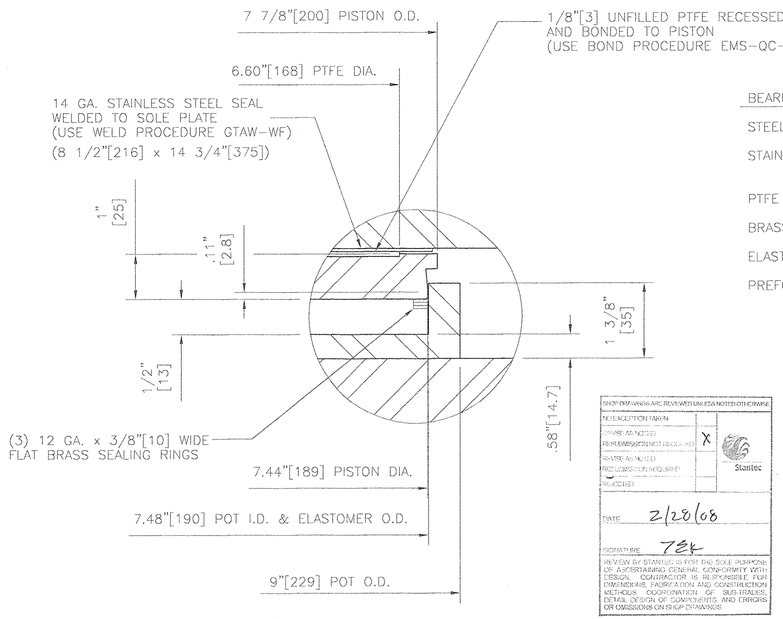

DETAIL A

BEARING MATERIALS:

STEEL - ASTM A.709 GR.345 (GR.50) ZINC METALLIZED
STAINLESS STEEL - ASTM A.240 TYPE 304, #8 MIRROR FINISH
PTFE - ASTM D.4894 VIRGIN UNFILLED
BRASS RINGS - ASTM B.36 HALF HARD
ELASTOMER - AASHTO 50 ±5 DUROMETER NEOPRENE
PREFORMED FABRIC PAD - AASHTO SPEC. 18.4.9.1 DIV. II

RECEIVED
MAR 03 2008
G.P.

SHOP DRAWINGS ARE REVIEWED UNLESS NOTED OTHERWISE
NO EXCEPTION TAKEN
MAKE AS NOTED
RESUBMISSION IS REQUIRED
REJECTED
PROJECTED
X
Stantec
DATE: 2/28/08
SIGNATURE: TEK
REVIEW BY STANTEC IS FOR THE SOLE PURPOSE OF ASCERTAINING GENERAL CONFORMITY WITH DESIGN. CONTRACTOR IS RESPONSIBLE FOR DIMENSIONS, FABRICATION AND CONSTRUCTION METHODS, COORDINATION OF SUB-TRADES, DETAILS, DESIGN OF COMPONENTS, AND ERRORS OR OMISSIONS ON SHOP DRAWINGS.

STATE OF VERMONT
AGENCY OF TRANSPORTATION

EAST ROAD OVER
VT ROUTE 279
TOWN OF BENNINGTON
BRIDGE NO. B11
PROJECT NO. AC NH 019-1(53)

COSMEC, INC. 70 SOUTH STREET WALPOLE, MA. 02081

SCALE: 3/16"=1"	DRAWN BY: MCM	CHECKED BY: MM
DATE:	DATE: 1/7/08	DATE: 1/9/08

COSMEC POT BEARINGS

CUSTOMER	S.O. NUMBER	DRAWING NUMBER	REV.
J. A. McDONALD, INC.	60775	5240	1

REV.		BY	DATE	CK'D	DATE
1	MADE KEYWAY PARALLEL TO GIRDER CENTER-LINE & SHOWED LIMITS OF ST. STL. & AS NOTED PER APPROVERS COMMENTS	MCM	2/14/08	MCM	2/14/08

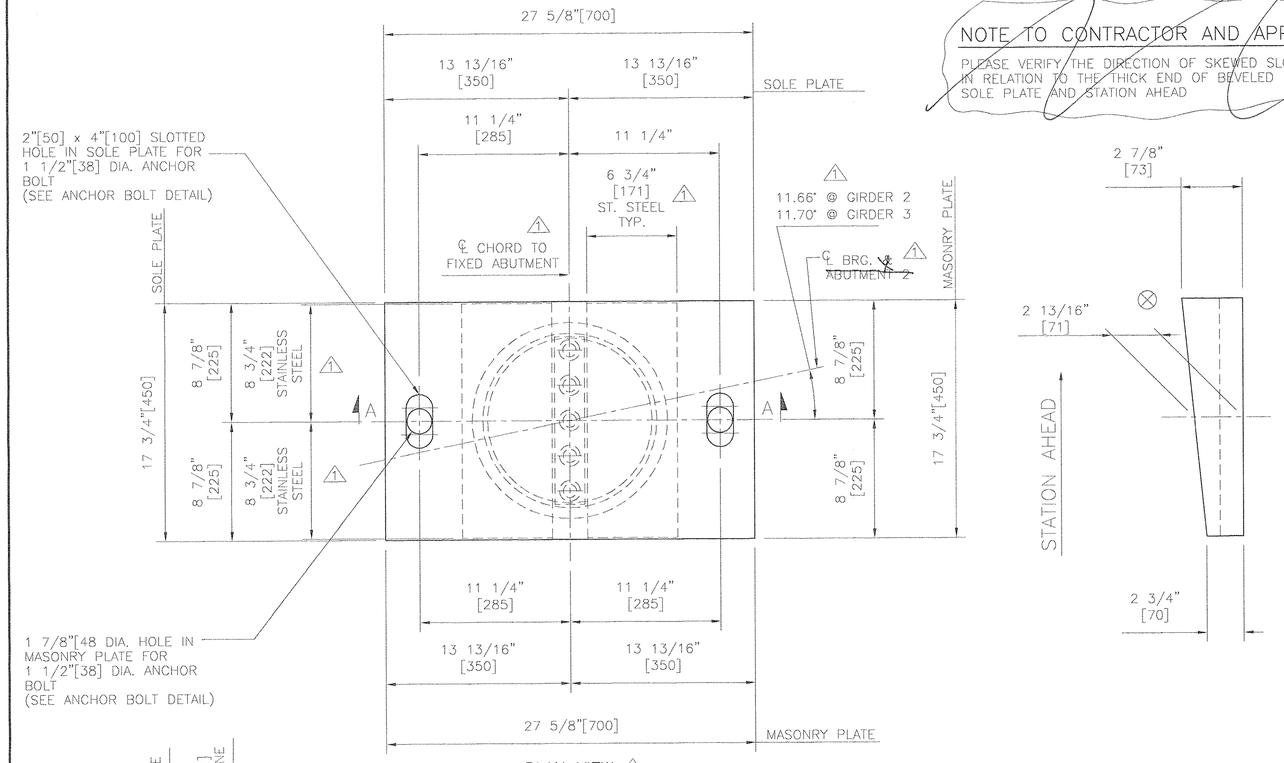

PLAN VIEW ⚠1

NOTE TO CONTRACTOR AND APPROVER

PLEASE VERIFY THE DIRECTION OF SKEWED SLOTS IN RELATION TO THE THICK END OF BEVELED SOLE PLATE AND STATION AHEAD

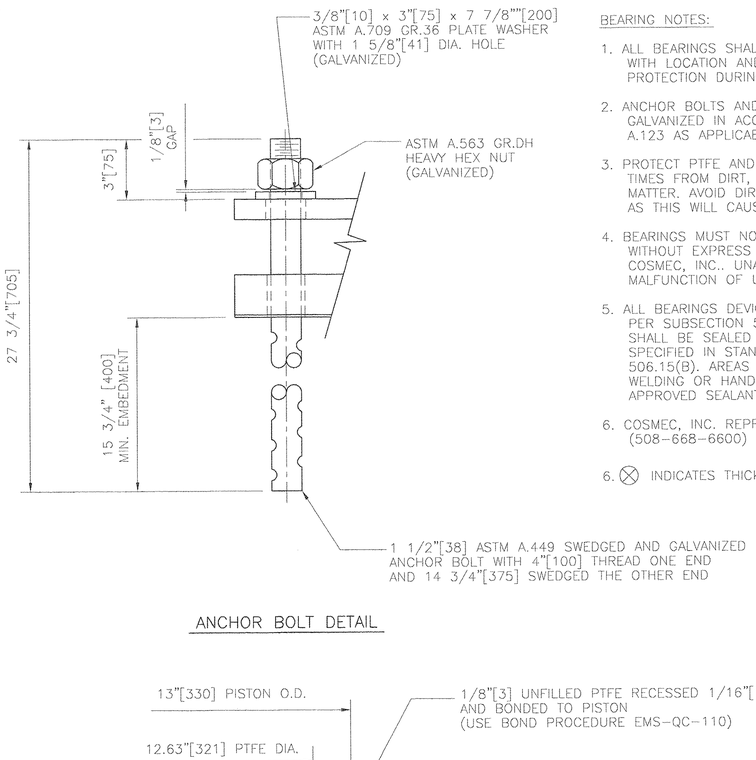

ANCHOR BOLT DETAIL

BEARING NOTES:

1. ALL BEARINGS SHALL BE MARKED FOR IDENTIFICATION WITH LOCATION AND SHALL BE WRAPPED FOR PROTECTION DURING SHIPPING AND STORAGE.
2. ANCHOR BOLTS AND HARDWARE SHALL BE GALVANIZED IN ACCORDANCE WITH ASTM A.153 OR A.123 AS APPLICABLE.
3. PROTECT PTFE AND STAINLESS STEEL SURFACES AT ALL TIMES FROM DIRT, WELD SPATTER AND ANY FOREIGN MATTER. AVOID DIRECT SUNLIGHT TO PTFE SURFACES AS THIS WILL CAUSE DAMAGE.
4. BEARINGS MUST NOT BE DISMANTLED AT ANY TIME WITHOUT EXPRESS WRITTEN AUTHORIZATION FROM COSMEC, INC.. UNAUTHORIZED DISASSEMBLY MAY CAUSE MALFUNCTION OF UNIT.
5. ALL BEARINGS DEVICES SHALL BE ZINC METALLIZED AS PER SUBSECTION 531.04(b) AND 506.15(b). BEARINGS SHALL BE SEALED WITH AN APPROVED SEALER AS SPECIFIED IN STANDARD SPECIFICATION SUBSECTION 506.15(B). AREAS OF METALLIZING DAMAGED BY FIELD WELDING OR HANDLING SHALL BE PAINTED WITH AN APPROVED SEALANT. 6 MILS MIN. EXTERIOR SURFACES.
6. COSMEC, INC. REPRESENTATIVE: MR. MATT McANDREWS (508-668-6600)
6. ⊗ INDICATES THICK END OF BEVELED SOLE PLATE.

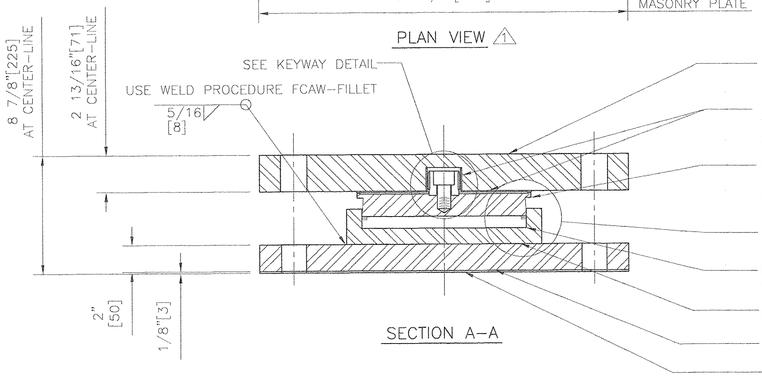

SECTION A-A

COSMEC GUIDED EXPANSION POT BEARING

LOCATION - PIER, GIRDERS 2 AND 3
QUANTITY - 2
TOTAL VERTICAL CAPACITY - 416 KIPS[1850kN]
TOTAL HORIZONTAL CAPACITY - 83.2 KIPS[370kN]
TOTAL LONGITUDINAL MOVEMENT - ±1.22"[±31mm]
TOTAL TRANSVERSE MOVEMENT - ±1/16"[±1.5mm]
ROTATION CAPACITY - 0.016 RADIANS

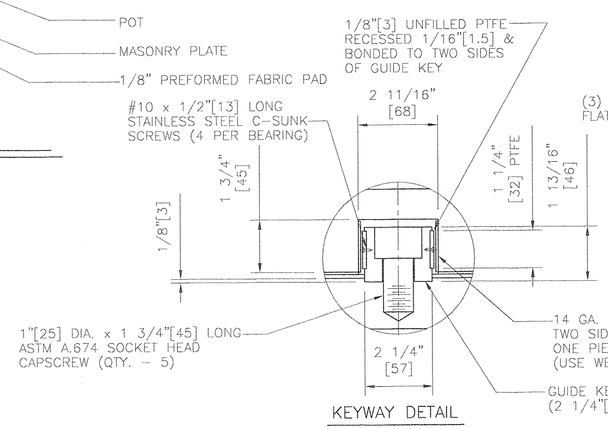

KEYWAY DETAIL

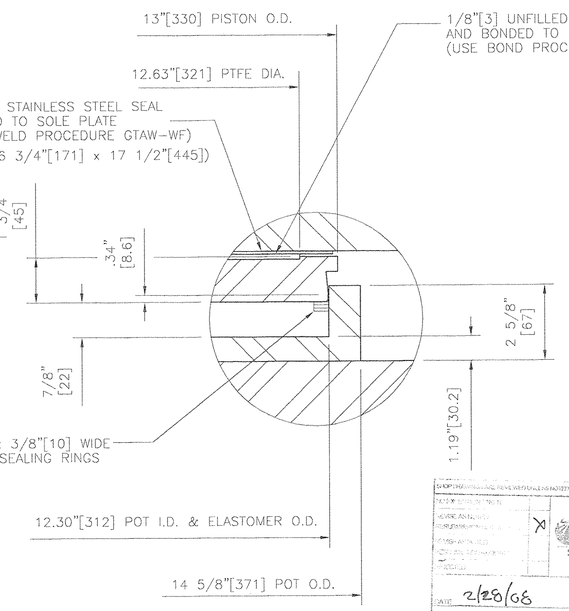

DETAIL A

BEARING MATERIALS:

STEEL - ASTM A.709 GR.345 (GR.50) ZINC METALLIZED
STAINLESS STEEL - ASTM A.240 TYPE 304, #8 MIRROR FINISH
PTFE - ASTM D.4894 VIRGIN UNFILLED
BRASS RINGS - ASTM B.36 HALF HARD
ELASTOMER - AASHTO 50 ±5 DUROMETER NEOPRENE
PREFORMED FABRIC PAD - AASHTO SPEC. 18.4.9.1 DIV. II
SOCKET HEAD CAPSCREWS - ASTM A.574
ANCHOR BOLT & HARDWARE - SEE DETAIL

RECEIVED
MAR 03 2008
G.P.I.

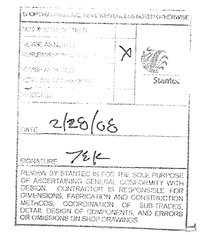

STATE OF VERMONT
AGENCY OF TRANSPORTATION

EAST ROAD OVER
VT ROUTE 279
TOWN OF BENNINGTON
BRIDGE NO. B11
PROJECT NO. AC NH 019-1(53)

REV.		BY	DATE	CK'D	DATE
⚠1	MADE KEYWAY PARALLEL TO GIRDER CENTER-LINE & SHOWED LIMITS OF ST. STL. & AS NOTED PER APPROVERS COMMENTS	MCM	2/14/08	MCM	2/14/08

COSMEC, INC. — 70 SOUTH STREET WALPOLE, MA. 02081

SCALE: 3/16"=1"	DRAWN BY: MCM	CHECKED BY: MM
DATE:	DATE: 1/7/08	DATE: 1/9/08

COSMEC POT BEARINGS

CUSTOMER	S.O. NUMBER	DRAWING NUMBER	REV.
J. A. McDONALD, INC.	60775	5241	1

NOTE TO CONTRACTOR AND APPROVER

PLEASE VERIFY THE DIRECTION OF SKEWED SLOTS IN RELATION TO STATION AHEAD

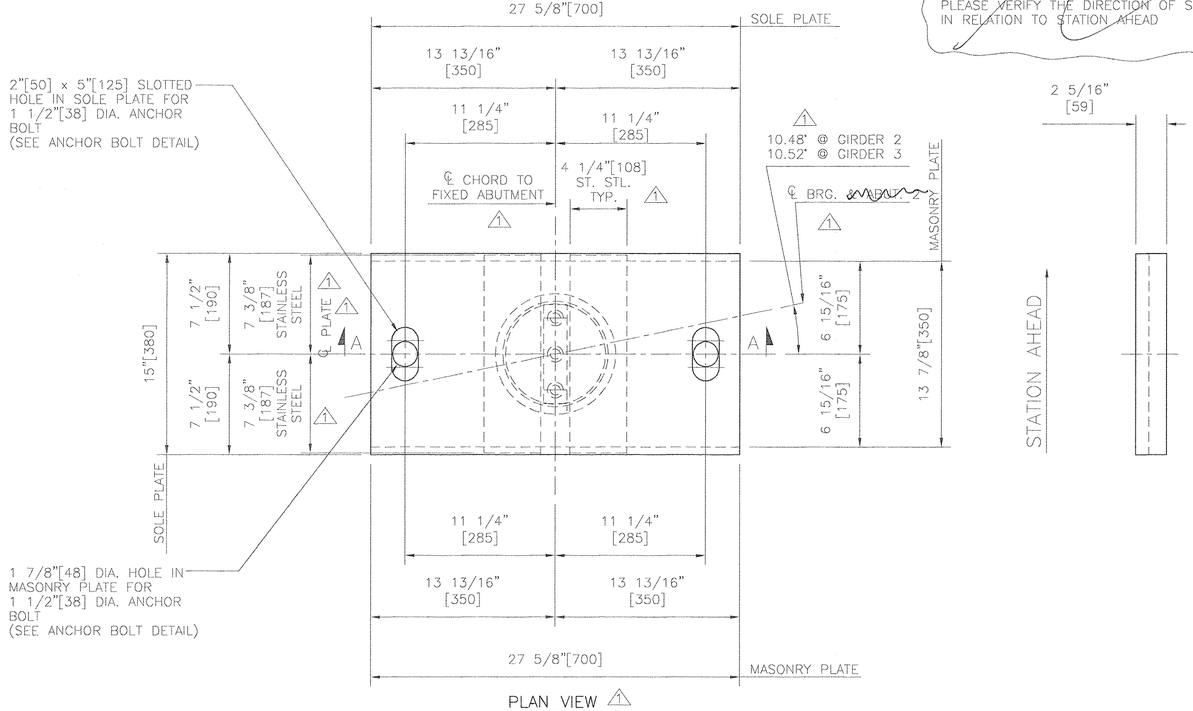

PLAN VIEW

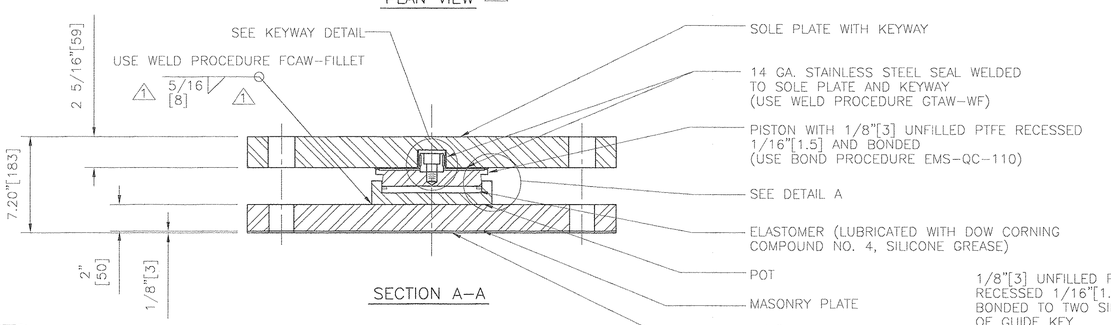

SECTION A-A

NOTE TO CONTRACTOR:

OVER ALL BEARING HEIGHTS DIFFER FROM THOSE SHOWN ON THE CONTRACT PLANS. CONTRACTOR SHALL RECOMPUTE ALL BEARING SEAT ELEVATIONS TO ACCURATELY REFLECT THE HEIGHTS OF BEARINGS SUPPLIED.

COSMEC GUIDED EXPANSION POT BEARING

LOCATION – ABUTMENT 2, GIRDERS 2 AND 3
QUANTITY – 2
TOTAL VERTICAL CAPACITY – 154 KIPS[685kN]
TOTAL HORIZONTAL CAPACITY – 31 KIPS[137kN]
TOTAL LONGITUDINAL MOVEMENT – ±1.71"[±43.5mm]
TOTAL TRANSVERSE MOVEMENT – ±1/16"[±1.5mm]
ROTATION CAPACITY – 0.015 RADIANS

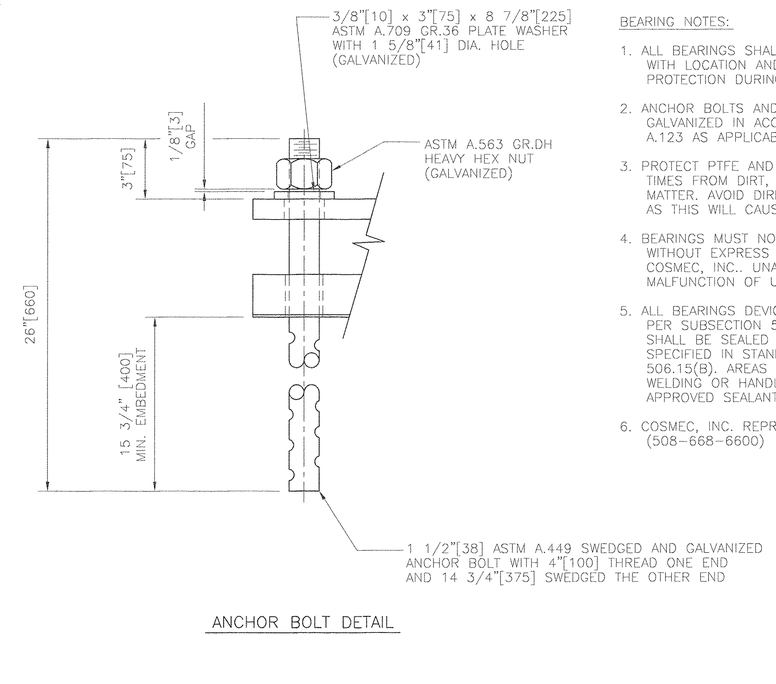

ANCHOR BOLT DETAIL

BEARING NOTES:

1. ALL BEARINGS SHALL BE MARKED FOR IDENTIFICATION WITH LOCATION AND SHALL BE WRAPPED FOR PROTECTION DURING SHIPPING AND STORAGE.
2. ANCHOR BOLTS AND HARDWARE SHALL BE GALVANIZED IN ACCORDANCE WITH ASTM A.153 OR A.123 AS APPLICABLE.
3. PROTECT PTFE AND STAINLESS STEEL SURFACES AT ALL TIMES FROM DIRT, WELD SPATTER AND ANY FOREIGN MATTER. AVOID DIRECT SUNLIGHT TO PTFE SURFACES AS THIS WILL CAUSE DAMAGE.
4. BEARINGS MUST NOT BE DISMANTLED AT ANY TIME WITHOUT EXPRESS WRITTEN AUTHORIZATION FROM COSMEC, INC.. UNAUTHORIZED DISASSEMBLY MAY CAUSE MALFUNCTION OF UNIT.
5. ALL BEARINGS DEVICES SHALL BE ZINC METALLIZED AS PER SUBSECTION 531.04(b) AND 506.15(b). BEARINGS SHALL BE SEALED WITH AN APPROVED SEALER AS SPECIFIED IN STANDARD SPECIFICATION SUBSECTION 506.15(B). AREAS OF METALLIZING DAMAGED BY FIELD WELDING OR HANDLING SHALL BE PAINTED WITH AN APPROVED SEALANT. 6 MILS. MIN. EXTERIOR SURFACES.
6. COSMEC, INC. REPRESENTATIVE: MR. MATT McANDREWS (508-668-6600)

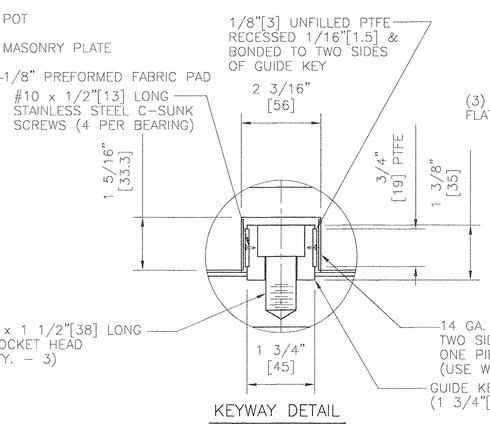

KEYWAY DETAIL

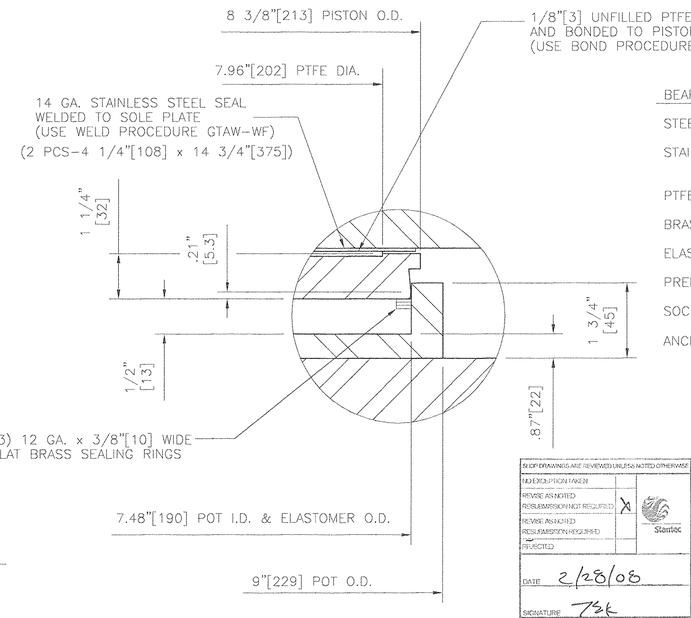

DETAIL A

BEARING MATERIALS:

STEEL – ASTM A.709 GR.345 (GR.50) ZINC METALLIZED
STAINLESS STEEL – ASTM A.240 TYPE 304, #8 MIRROR FINISH
PTFE – ASTM D.4894 VIRGIN UNFILLED
BRASS RINGS – ASTM B.36 HALF HARD
ELASTOMER – AASHTO 50 ±5 DUROMETER NEOPRENE
PREFORMED FABRIC PAD – AASHTO SPEC. 18.4.9.1 DIV. II
SOCKET HEAD CAPSCREWS – ASTM A.574

RECEIVED
MAR 03 2008
G.P.I.

ANCHOR BOLT & HARDWARE – SEE DETAIL

SHOP DRAWINGS ARE REVIEWED UNLESS NOTED OTHERWISE
NO EXCEPTION TAKEN
REVISE AS NOTED RESUBMISSION NOT REQUIRED
REVISE AS NOTED RESUBMISSION REQUIRED
REJECTED
Stantec
DATE 2/28/08
SIGNATURE TSK
REVIEW BY STANTEC IS FOR THE SOLE PURPOSE OF ASCERTAINING GENERAL CONFORMITY WITH DESIGN. CONTRACTOR IS RESPONSIBLE FOR DIMENSIONS, FABRICATION AND CONSTRUCTION METHODS, COORDINATION OF SUB-TRADES, DETAIL DESIGN OF COMPONENTS AND ERRORS OR OMISSIONS ON SHOP DRAWINGS.

STATE OF VERMONT
AGENCY OF TRANSPORTATION

EAST ROAD OVER
VT ROUTE 279
TOWN OF BENNINGTON
BRIDGE NO. B11
PROJECT NO. AC NH 019-1(53)

COSMEC, INC.
70 SOUTH STREET
WALPOLE, MA. 02081

SCALE: 3/16"=1"	DRAWN BY: MCM	CHECKED BY: MM
DATE:	DATE: 1/7/08	DATE: 1/9/08

COSMEC POT BEARINGS

CUSTOMER	S.O. NUMBER	DRAWING NUMBER	REV.
J. A. McDONALD, INC.	60775	5242	1

REV.	DESCRIPTION	BY	DATE	CK'D	DATE
1	MADE KEYWAY PARALLEL TO GIRDER CENTER-LINE & SHOWED LIMITS OF ST. STL. & AS NOTED PER APPROVERS COMMENTS	MCM	2/14/08	MCM	2/14/08

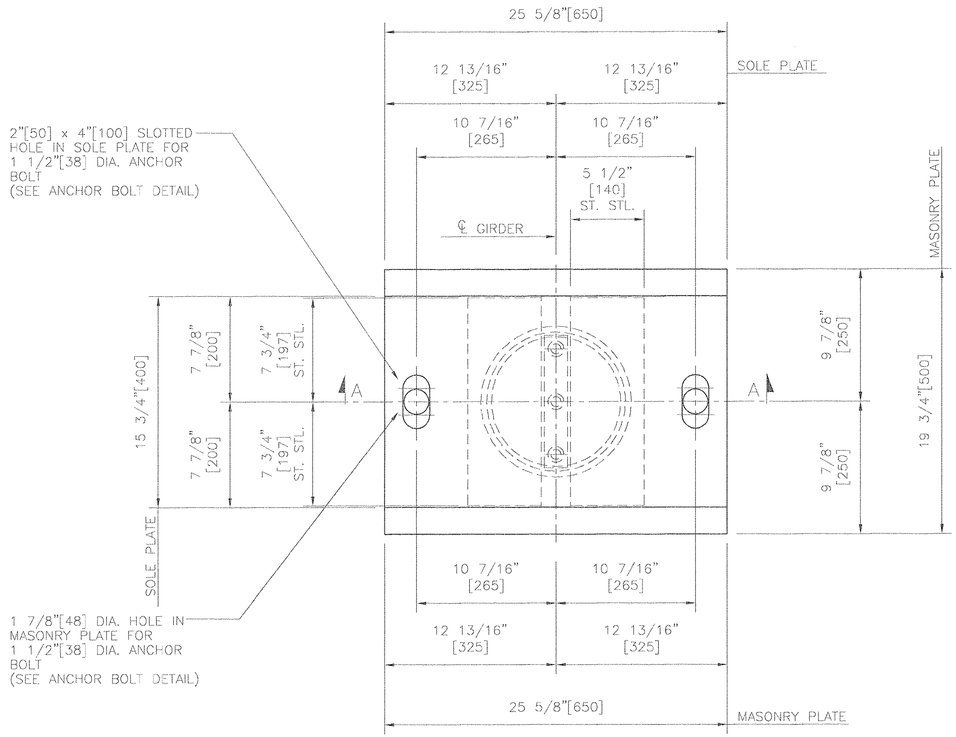

PLAN VIEW

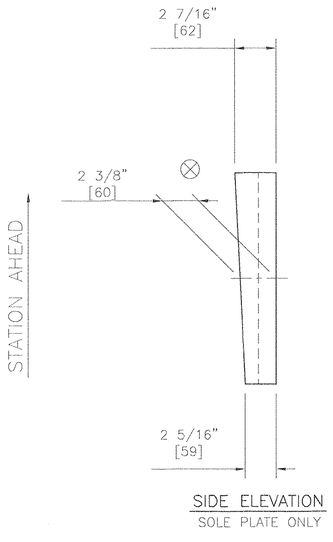

SIDE ELEVATION
SOLE PLATE ONLY

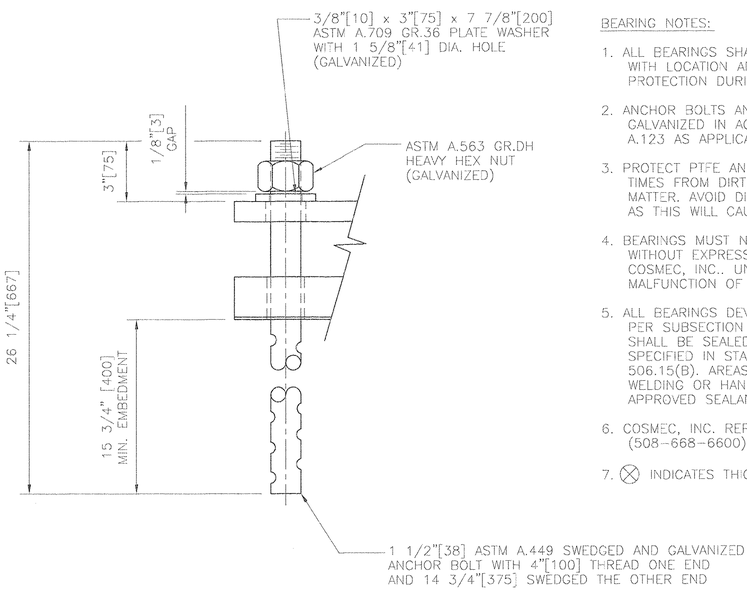

ANCHOR BOLT DETAIL

BEARING NOTES:

1. ALL BEARINGS SHALL BE MARKED FOR IDENTIFICATION WITH LOCATION AND SHALL BE WRAPPED FOR PROTECTION DURING SHIPPING AND STORAGE.
2. ANCHOR BOLTS AND HARDWARE SHALL BE GALVANIZED IN ACCORDANCE WITH ASTM A.153 OR A.123 AS APPLICABLE.
3. PROTECT PTFE AND STAINLESS STEEL SURFACES AT ALL TIMES FROM DIRT, WELD SPATTER AND ANY FOREIGN MATTER. AVOID DIRECT SUNLIGHT TO PTFE SURFACES AS THIS WILL CAUSE DAMAGE.
4. BEARINGS MUST NOT BE DISMANTLED AT ANY TIME WITHOUT EXPRESS WRITTEN AUTHORIZATION FROM COSMEC, INC.. UNAUTHORIZED DISASSEMBLY MAY CAUSE MALFUNCTION OF UNIT.
5. ALL BEARINGS DEVICES SHALL BE ZINC METALLIZED AS PER SUBSECTION 531.04(b) AND 506.15(b). BEARINGS SHALL BE SEALED WITH AN APPROVED SEALER AS SPECIFIED IN STANDARD SPECIFICATION SUBSECTION 506.15(B). AREAS OF METALLIZING DAMAGED BY FIELD WELDING OR HANDLING SHALL BE PAINTED WITH AN APPROVED SEALANT. 6 MILS. MIN. EXTERIOR SURFACES.
6. COSMEC, INC. REPRESENTATIVE: MR. MATT McANDREWS (508-668-6600)
7. ⊗ INDICATES THICK END OF BEVELED SOLE PLATE.

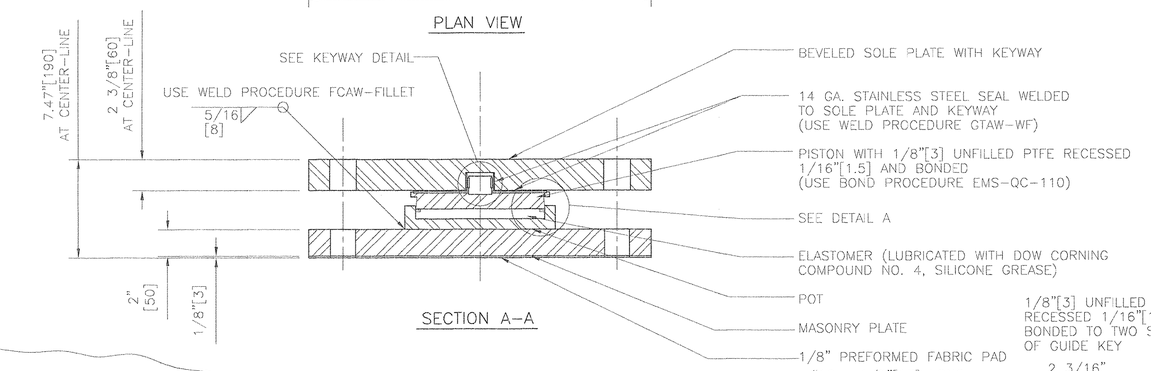

SECTION A-A

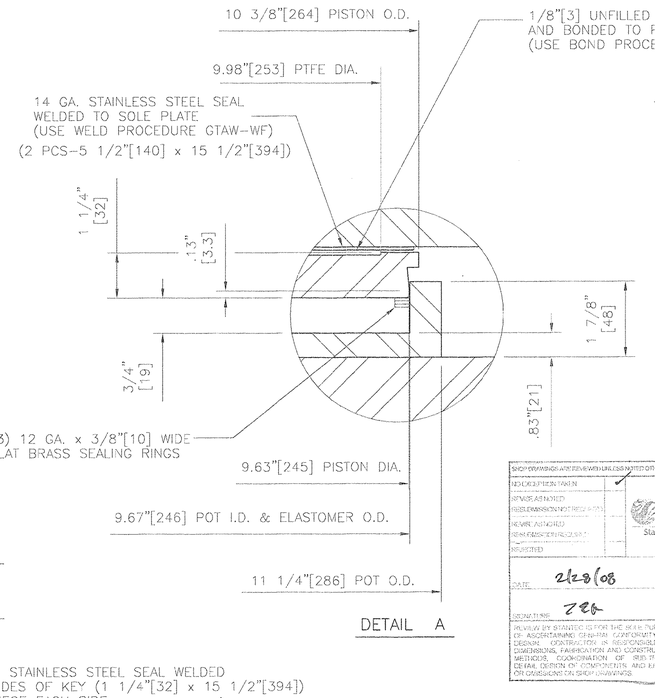

DETAIL A

BEARING MATERIALS:

- STEEL - ASTM A.709 GR.345 (GR.50) ZINC METALLIZED
- STAINLESS STEEL - ASTM A.240 TYPE 304, #8 MIRROR FINISH
- PTFE - ASTM D.4894 VIRGIN UNFILLED
- BRASS RINGS - ASTM B.36 HALF HARD
- ELASTOMER - AASHTO 50 ±5 DUROMETER NEOPRENE
- PREFORMED FABRIC PAD - AASHTO SPEC. 18.4.9.1 DIV. II
- SOCKET HEAD CAPSCREWS - ASTM A.574
- ANCHOR BOLT & HARDWARE - SEE DETAIL

NOTE TO CONTRACTOR:

OVER ALL BEARING HEIGHTS DIFFER FROM THOSE SHOWN ON THE CONTRACT PLANS. CONTRACTOR SHALL RECOMPUTE ALL BEARING SEAT ELEVATIONS TO ACCURATELY REFLECT THE HEIGHTS OF BEARINGS SUPPLIED.

COSMEC GUIDED EXPANSION POT BEARING

LOCATION - PIER, GIRDERS 1 AND 2
QUANTITY - 2
TOTAL VERTICAL CAPACITY - 257 KIPS[1140kN]
TOTAL HORIZONTAL CAPACITY - 25.7 KIPS[114kN]
TOTAL LONGITUDINAL MOVEMENT - ±1.22"[±31mm]
TOTAL TRANSVERSE MOVEMENT - ±1/16"[±1.5mm]
ROTATION CAPACITY - 0.015 RADIANS

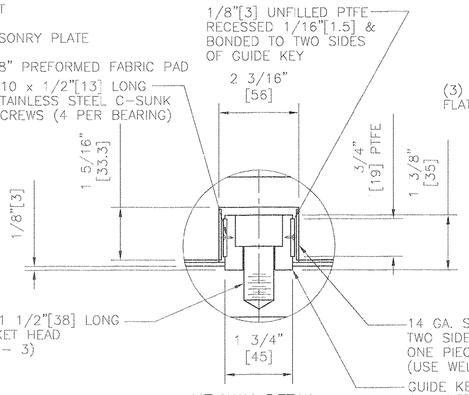

KEYWAY DETAIL

SHOP DRAWINGS ARE REVIEWED WITH UNLESS NOTED OTHERWISE
NO EXCEPTION TAKEN
AS NOTED
RESUBMISSION NOT REQUIRED
AS NOTED
REJECTED
Stantec
DATE: 2/28/08
SIGNATURE: ZEB
REVIEW BY STANTEC IS FOR THE SOLE PURPOSE OF ASCERTAINING GENERAL CONFORMITY WITH DESIGN. CONTRACTOR IS RESPONSIBLE FOR DIMENSIONS, FABRICATION AND CONSTRUCTION METHODS, COORDINATION OF SHOP DRAWINGS, DETAIL DESIGN OF COMPONENTS, AND CHANGES OR OMISSIONS ON SHOP DRAWINGS.

REV.		BY	DATE	CK'D	DATE
1	MADE KEYWAY PARALLEL TO GIRDER CENTER-LINE & SHOWED LIMITS OF ST. STL. & AS NOTED PER APPROVERS COMMENTS	MCM	2/14/08	MCM	2/14/08

STATE OF VERMONT
AGENCY OF TRANSPORTATION

SHARED USE PATH OVER
VT ROUTE 279
TOWN OF BENNINGTON
BRIDGE NO. B11
PROJECT NO. AC NH 019-1(53)

COSMEC, INC. 70 SOUTH STREET WALPOLE, MA. 02081

SCALE: 3/16"=1"	DRAWN BY: MCM	CHECKED BY: MM
DATE:	DATE: 1/7/08	DATE: 1/10/08

COSMEC POT BEARINGS

CUSTOMER	S.O. NUMBER	DRAWING NUMBER	REV.
J. A. McDONALD, INC.	60775	5327	1

RECEIVED MAR 03 2008

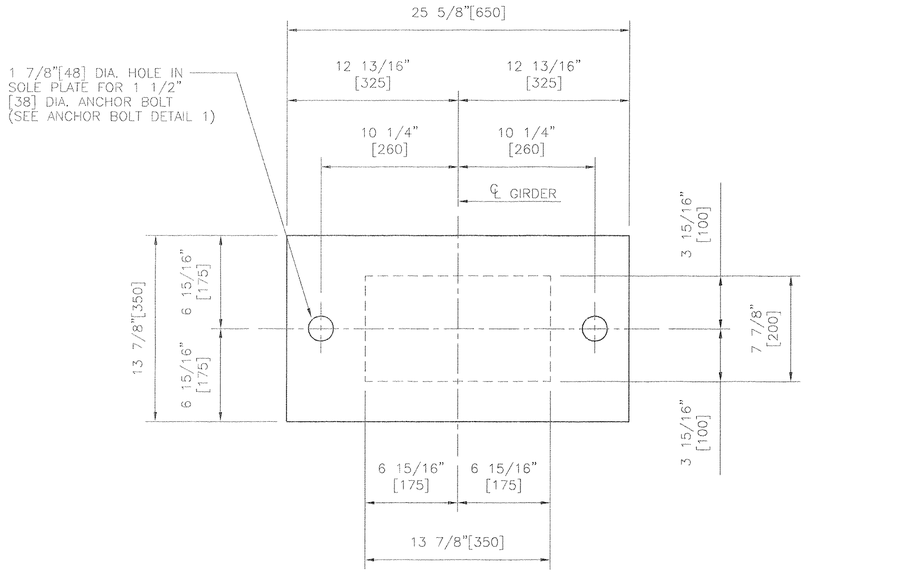

PLAN VIEW

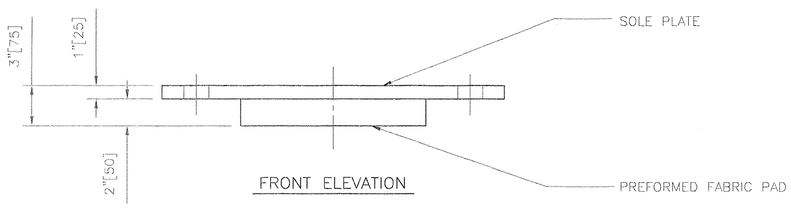

FRONT ELEVATION

COSMEC FIXED PREFORMED FABRIC PAD BEARING AT ABUTMENT 1

QUANTITY – 2
TOTAL VERTICAL CAPACITY – 90 KIPS[400kN]
TOTAL TRANSVERSE CAPACITY – 9 KIPS[40kN]
TOTAL LONGITUDINAL CAPACITY – 13.7 KIPS[61kN]
ROTATION CAPACITY – 0.02 RADIANS

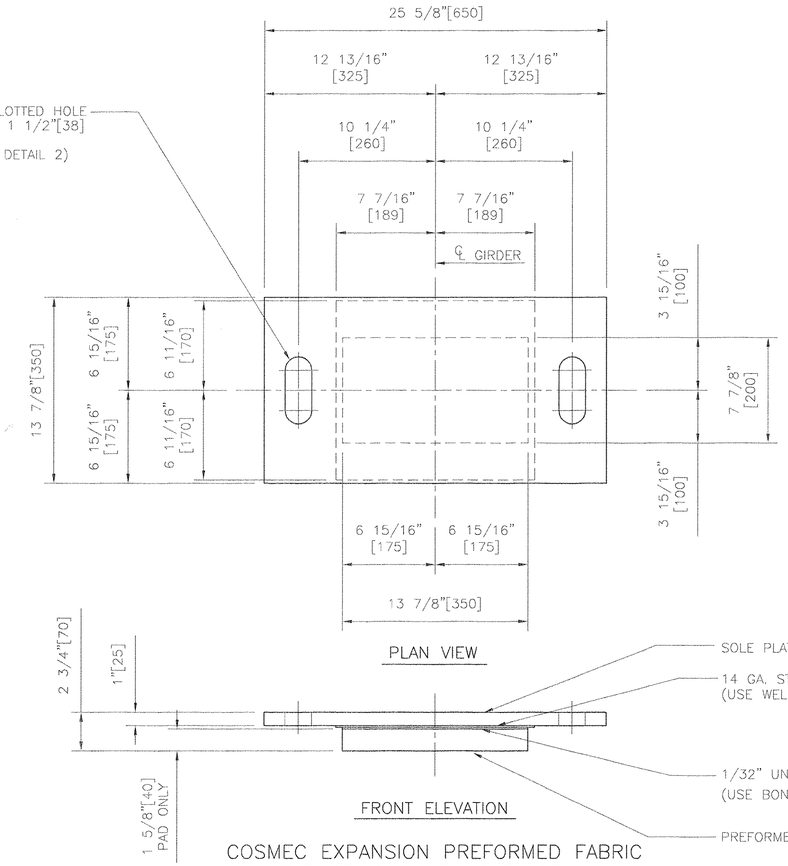

PLAN VIEW

FRONT ELEVATION

COSMEC EXPANSION PREFORMED FABRIC PAD BEARING AT ABUTMENT 2

QUANTITY – 2
TOTAL VERTICAL CAPACITY – 71 KIPS[316kN]
TOTAL TRANSVERSE CAPACITY – N/A
TOTAL LONGITUDINAL CAPACITY – N/A
ROTATION CAPACITY – 0.02 RADIANS

BEARING NOTES:

1. ANCHOR BOLTS AND ASSOCIATED HARDWARE SHALL BE GALVANIZED IN ACCORDANCE WITH ASTM A153 OR A123 AS APPLICABLE.
2. COSMEC, INC. REPRESENTATIVE: MR. MATT McANDREWS (508)668–6600
3. ALL EDGES OF STEEL PLATES SHALL HAVE A 1/16"[1.6] MINIMUM RADIUS.
4. ALL BEARING DEVICES SHALL BE ZINC METALLIZED AS PER SUBSECTION 531.04(b) AND 506.15(b). BEARINGS SHALL BE SEALED WITH AN APPROVED SEALER AS SPECIFIED IN STANDARD SPECIFICATION SUBSECTION 506.15(b). AREAS OF METALLIZING DAMAGED BY FIELD WELDING OR HANDLING SHALL BE PAINTED WITH AN APPROVED SEALANT. 6 MILS. MIN. EXTERIOR SURFACES.
5. BEARINGS SHALL BE MARKED FOR IDENTIFICATION WITH LOCATION AND SHALL BE WRAPPED FOR PROTECTION DURING TRANSIT AND STORAGE.

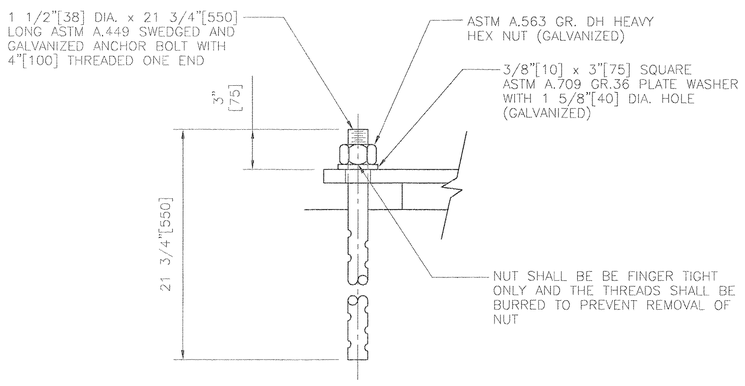

ANCHOR BOLT DETAIL 1

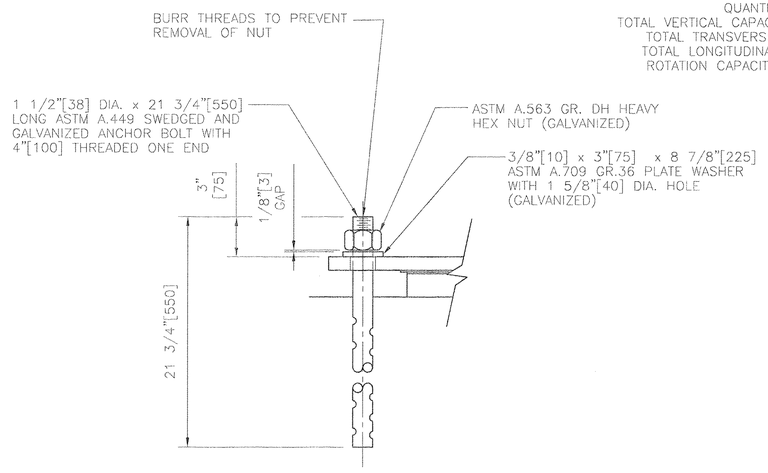

ANCHOR BOLT DETAIL 2

BEARING MATERIALS:

STEEL – ASTM A.709 GR.345 (GR.50) AND SHALL BE ZINC METALLIZED

STAINLESS STEEL – ASTM A.240 TYPE 304 WITH A #8 MIRROR FINISH

PTFE – ASTM D.4894 VIRGIN UNFILLED

⚠1 PREFORMED FABRIC PAD – VTRANS STANDARD SPECIFICATION FOR CONSTRUCTION, SECTION 731.01

ANCHOR BOLTS AND HARDWARE – SEE DETAILS

RIGHT DRAWINGS ARE RESERVED UNLESS NOTED OTHERWISE
NO EXCEPTION TAKEN
MAKE CORRECTIONS NOTED
REVISE AS NOTED
RESUBMISSION NOT REQUIRED
REVISE AS NOTED
RESUBMISSION REQUIRED
REJECTED
Stantec
DATE 2/28/08
SIGNATURE
REVIEW BY STANTEC IS FOR THE SOLE PURPOSE OF ASCERTAINING GENERAL CONFORMITY WITH DESIGN. CONTRACTOR IS RESPONSIBLE FOR DIMENSIONS, FABRICATION AND CONSTRUCTION METHODS, COORDINATION OF SUB-TRADES, DETAIL DESIGN OF COMPONENTS, AND ERRORS OR OMISSIONS ON SHOP DRAWINGS

RECEIVED
MAR 03 2008
GPA

STATE OF VERMONT
AGENCY OF TRANSPORTATION

SHARED USE PATH OVER
VT ROUTE 279
TOWN OF BENNINGTON
BRIDGE NO. 11
PROJECT NO. AC NH 019–1(53)

COSMEC, INC.
70 SOUTH STREET
WALPOLE, MA. 02081

SCALE: 3/16"=1"	DRAWN BY: MCM	CHECKED BY: MM
DATE:	DATE: 1/7/08	DATE: 1/10/08

COSMEC BEARINGS

REV.		BY	DATE	CK'D	DATE
⚠1	REVISED PREFORMED PAD MATERIAL SPECIFICATION	MCM	2/14/08	MCM	2/14/08

CUSTOMER	S.O. NUMBER	DRAWING NUMBER	REV.
J. A. McDONALD, INC.	60775	5328	1

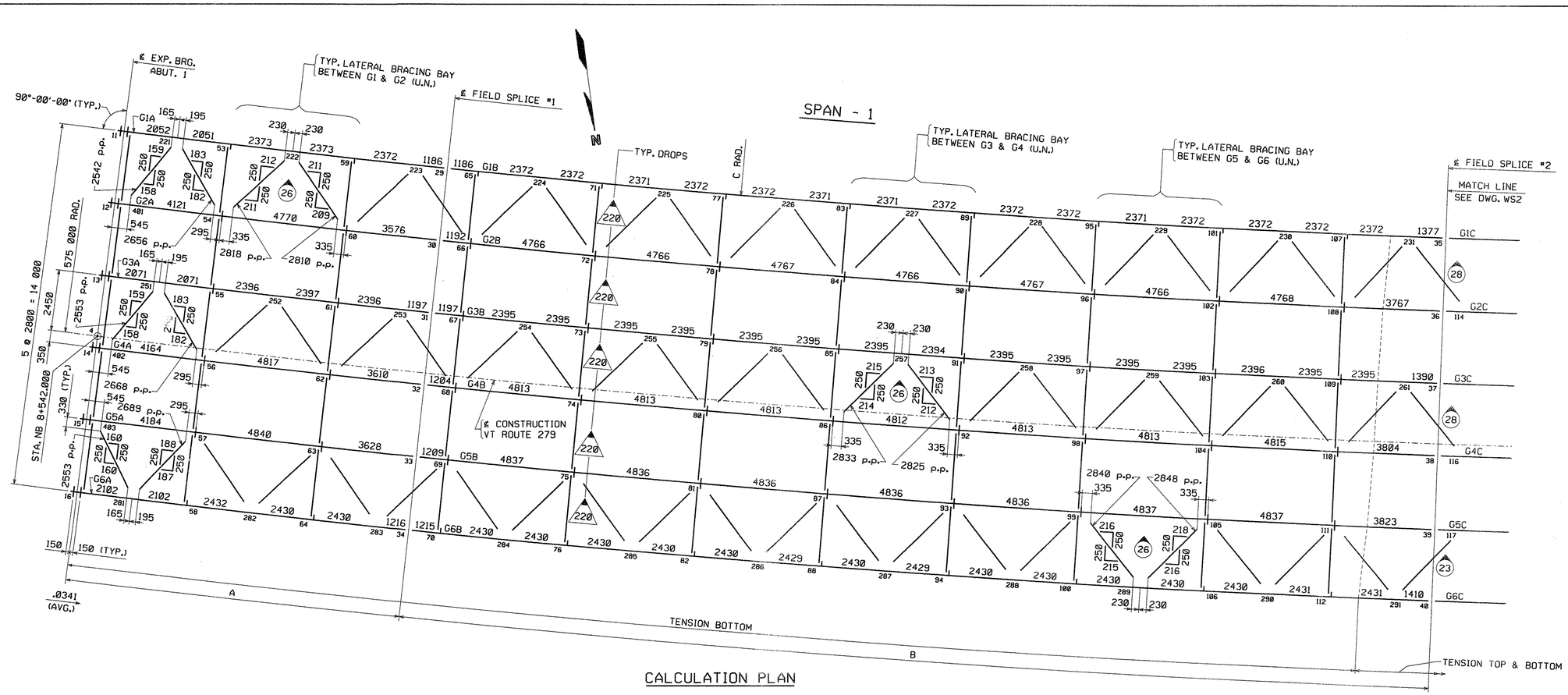

CALCULATION PLAN

LINE	A	B	C
G1	12 407	38 139	566 950
G2	12 467	38 325	569 750
G3	12 528	38 512	572 550
G4	12 591	38 700	575 350
G5	12 652	38 887	578 150
G6	12 712	39 075	580 950

NOTES:

DIMENSIONS ON PLAN ALONG GIRDERS ARE GIVEN TO THE CHORD AT THE BOTTOM OF WEB IN FULLY CAMBERED POSITION. ALL OTHER DIMENSIONS ARE GIVEN HORIZONTALLY.
DIMENSIONS PLACED ON THE GIRDER LINES REPRESENT CROSSFRAME SPACING.
FIGURES GIVEN THUS: .0341 ARE THE GRADES OF THE GIRDERS AT THE BEARINGS IN FINAL POSITION; ARROW POINTS DOWNGRADE.
ALL STIFFENER AND CONNECTION PLATE SPACINGS ARE GIVEN TO ℄ PLATE.
ENDS OF GIRDERS AND ALL BEARING STIFFENERS TO BE VERTICAL IN FINAL POSITION.
ALL STEEL TO BE AASHTO M270M GRADE 345W (U.N.).
'C' GIRDER WEB AND FLANGE PLATES TO BE AASHTO M270M GRADE HPS485W.
ALL FIELD CONNECTIONS IN UNPAINTED AREAS TO BE MADE WITH ⅞"ø H.S. (AASHTO M164 TYPE 3) BOLTS IN 15/16"ø HOLES (U.N.).
ALL FIELD CONNECTIONS IN PAINTED AREAS TO BE MADE WITH ⅞"ø H.S. (AASHTO M164 TYPE 1, GALV.) BOLTS IN 15/16"ø HOLES (U.N.).
FIGURES GIVEN THUS: 220 ARE THE DIFFERENCES IN ELEVATIONS OF GIRDERS (IN THE PLANE OF THE CROSSFRAME IN ERECTED POSITION) AT CROSSFRAMES; ARROW POINTS TOWARD LOW GIRDER.
FIGURES GIVEN THUS: 26 ARE THE BEVELS FOR LATERAL BRACING; ARROW POINTS TOWARD LOW END.
FOR TYPICAL DETAIL LAYOUTS, SEE DRAWINGS PREFIXED 'TD'.
ALL STATIONS ARE GIVEN IN METERS.

NOTE
THE PURPOSE OF THIS DRAWING IS TO COORDINATE GEOMETRIC CONTROL INFORMATION. THIS DRAWING IS SUBMITTED FOR INFORMATION ONLY AND IS NOT INTENDED FOR SHOP FABRICATION. THIS DRAWING IS FOR REFERENCE ONLY, APPROVAL IS NOT REQUIRED.

TVGA CONSULTANTS

☒ NO EXCEPTIONS TAKEN ☐ REJECTED
☐ FURNISH AS CORRECTED
☐ REVISE AND RESUBMIT
ENGINEER has reviewed Shop Drawings and Samples and other data which Contractor is required to submit, only for conformance with the information given in the Contract Documents and compatibility with the design concept of the completed Project as a functioning whole as indicated in the Contract Documents. Such review does not extend to means, methods, techniques, sequences or procedures of construction or to safety precautions and programs incident thereto. Contractor is responsible for dimensions to be confirmed and correlated at the job site, for information that pertains solely to the fabrication processes or to techniques of construction, and for coordination of the work of all trades.
BY: [signature]
DATE: 1/15/08

NO.	REVISION	BY	CHK'D	DATE
△				
△				
△				

HOLES
BOLTS
COATING
CODE(S)
SCALE N.T.S.

HIGH STEEL STRUCTURES INC.
An Affiliate of High Industries Inc.
An ISO 9001:2000 Certified Company
Lancaster Facility: 1915 Old Philadelphia Pike, Lancaster, PA 17605-0008, Phone (717) 299-5211
Williamsport Facility: 3501 W. 4th Street, Williamsport, PA 17701, Phone (570) 326-1051
www.Highsteel.com

WORKSHEET - CALCULATION PLAN
VT ROUTE 279 OVER FURNACE BROOK
VT ROUTE 279 STA. 8+542.000 TO STA. 8+685.000
TOWN OF BENNINGTON VERMONT, BRIDGE 812
STATE OF VERMONT
AGENCY OF TRANSPORTATION
AC NH F019-1(53) — FED. AID PROJ. NO.
GENERAL CONTRACTOR: J.A. McDONALD, INC. — HSSI PROJ. MGR: DEB KUPRES
SHPMT 3 — DRAWING MANAGER: BRITIGAN (IH) — MADE BY: WBW — CHK'D. BY: CS — DATE: 11-14-07
STATE VT — HSSI PROJECT NUMBER: S-1070147 — HSSI STRUCT. ID: A — DRAWING NUMBER: WS1 OF WS3

METRIC
Scale = 0.012000 of full size.
SHIPMENT 01 PM&ENG 28052817 PRO 28052818 SHIP&ERECT: 28052819
BY: MKrendel
PLOTTED: 11/30/2007 12:43:30 PM

1070147A X1 12/3/07 12/3/07Approval TO:J.A. McDonald, Inc.

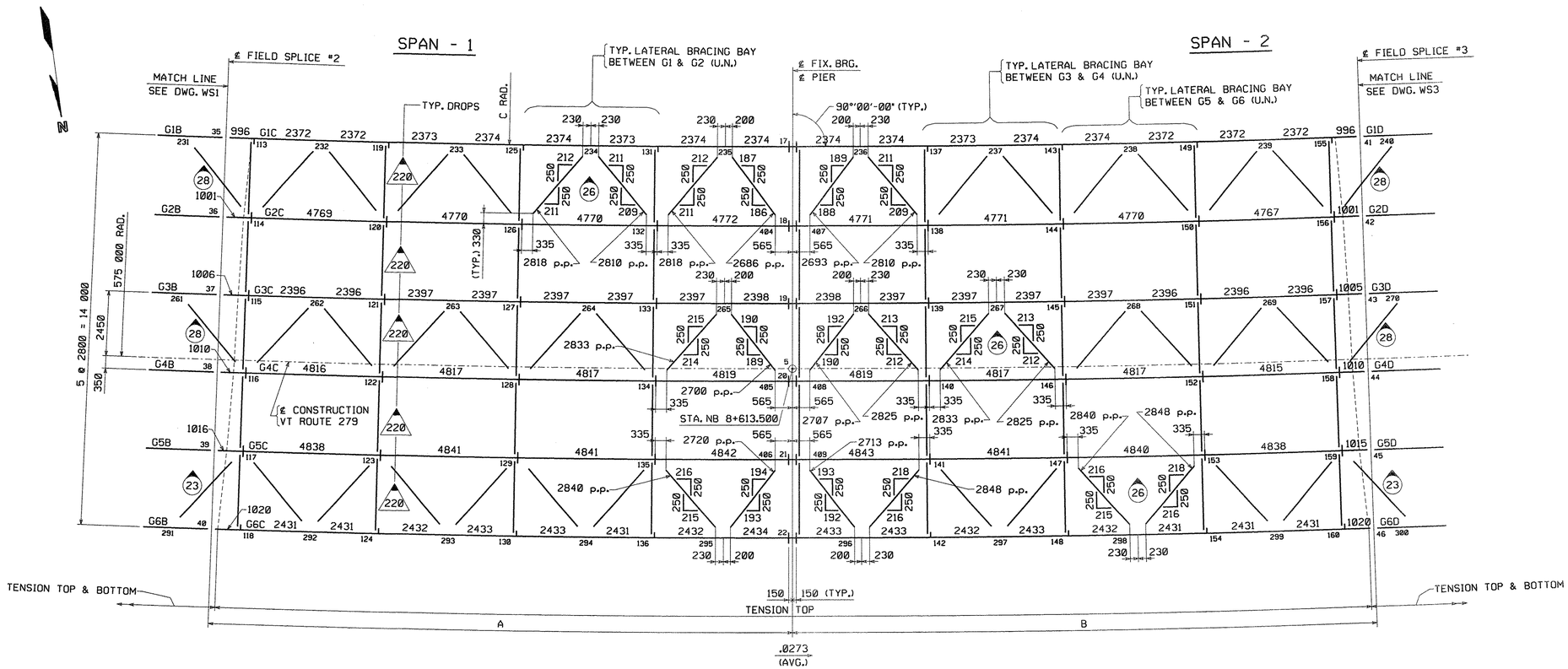

CALCULATION PLAN

TVGA CONSULTANTS

☒ NO EXCEPTIONS TAKEN ☐ REJECTED
☐ FURNISH AS CORRECTED
☐ REVISE AND RESUBMIT

ENGINEER has reviewed Shop Drawings and Samples and other data which Contractor is required to submit, only for conformance with the information given in the Contract Documents and compatibility with the design concept of the completed Project as a functioning whole as indicated in the Contract Documents. Such reviews do not extend to means, methods, techniques, sequences or procedures of construction or to safety precautions and programs incident thereto. Contractor is responsible for dimensions to be confirmed and correlated at the job site; for information that pertains solely to the fabrication processes or to techniques of construction; and for coordination of the work of all trades.

BY: [signature]
DATE: 1/8/08

NOTES:

FOR NOTES, SEE DRAWING WS1.
WORK THIS DRAWING WITH DRAWINGS WS1 & WS3.

LINE	A	B	C
G1	19 982	19 981	566 950
G2	20 082	20 080	569 750
G3	20 181	20 179	572 550
G4	20 279	20 278	575 350
G5	20 378	20 377	578 150
G6	20 477	20 476	580 950

NOTE
THE PURPOSE OF THIS DRAWING IS TO COORDINATE GEOMETRIC CONTROL INFORMATION. THIS DRAWING IS SUBMITTED FOR INFORMATION ONLY AND IS NOT INTENDED FOR SHOP FABRICATION. THIS DRAWING IS FOR REFERENCE ONLY, APPROVAL IS NOT REQUIRED.

NO.	REVISION	BY	CHK'D	DATE
△				
△				
△				

HOLES
BOLTS
COATING
CODE(S)
SCALE N.T.S.

HIGH STEEL STRUCTURES INC.
An ISO 9001:2000 Certified Company — An Affiliate of High Industries Inc.
Lancaster Facility: 1915 Old Philadelphia Pike, Lancaster, PA 17605-0008, Phone (717) 299-5211
Williamsport Facility: 3501 W. 4th Street, Williamsport, PA 17701, Phone (570) 326-9051
www.highsteel.com

WORKSHEET - CALCULATION PLAN
VT ROUTE 279 OVER FURNACE BROOK
VT ROUTE 279 STA. 8+542.000 TO STA. 8+685.000
TOWN OF BENNINGTON VERMONT, BRIDGE B12
STATE OF VERMONT
AGENCY OF TRANSPORTATION

	AC NH F019-1(53)	FED. AID PROJ. NO.	
GENERAL CONTRACTOR	J.A. McDONALD, INC.	HSSI PROJ. MGR	DEB KUPRES
SHPMT 3	DRAWING MANAGER BRITIGAN (IH)	MADE BY WBW	CHK'D. BY CS	DATE 11-14-07
STATE VT	HSSI PROJECT NUMBER S-1070147	HSSI STRUCT. ID A	DRAWING NUMBER WS2 OF WS3

METRIC
Scale = 0.012000 of full size.
SHIPMENT 01 PM&ENG: 5002817 PRD: 5002818 SHIP&ERECT: 5002819
BY: MKreidel
PLOTTED: 11/30/2007 12:43:32 PM

1070147A X1 12/3/07 12/3/07Approval TO:J.A. McDonald, Inc.

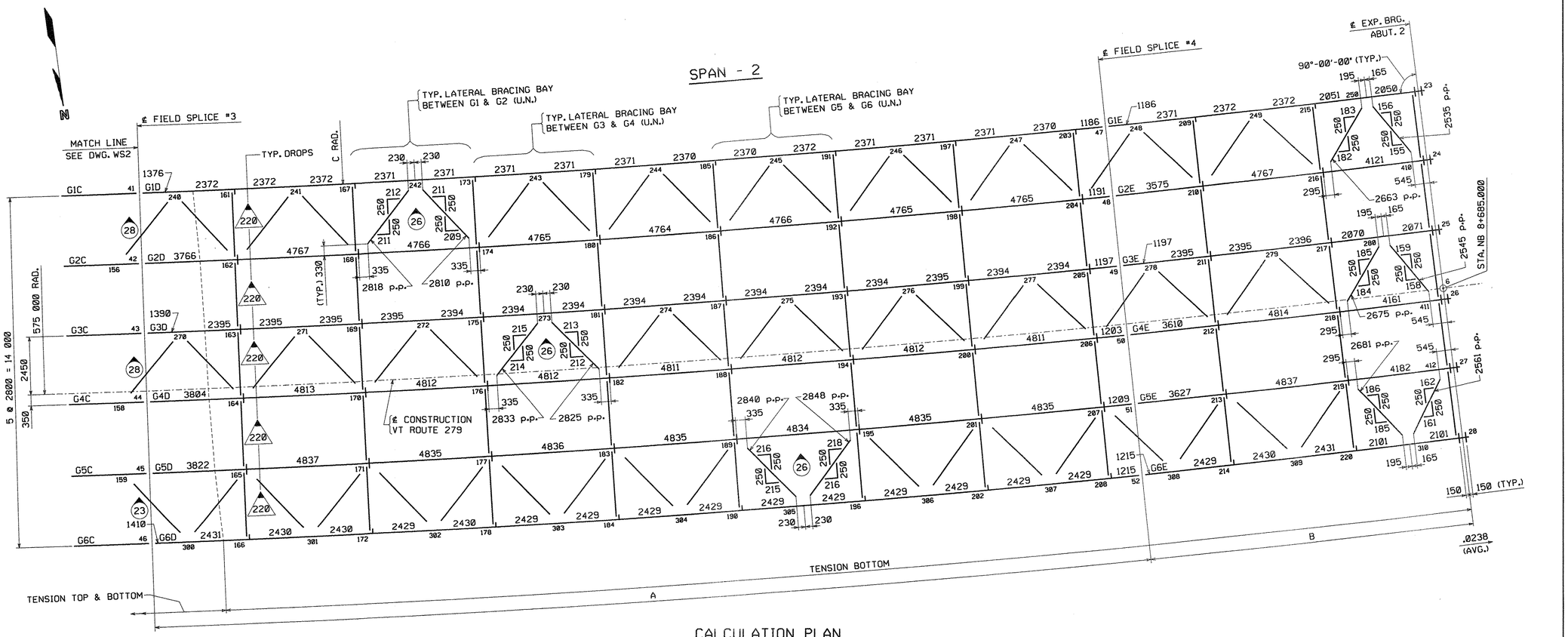

CALCULATION PLAN

TVGA CONSULTANTS

☒ NO EXCEPTIONS TAKEN ☐ REJECTED
☐ FURNISH AS CORRECTED
☐ REVISE AND RESUBMIT

ENGINEER has reviewed Shop Drawings and Samples and other data which Contractor is required to submit, only for conformance with the information given in the Contract Documents and compatibility with the design concept of the completed Project as a functioning whole as indicated in the Contract Documents. Such reviews do not extend to means, methods, techniques, sequences or procedures of construction or to safety precautions and programs incident thereto. Contractor is responsible for dimensions to be confirmed and correlated at the job site; for information that pertains solely to the fabrication processes or to techniques of construction; and for coordination of the work of all trades.

BY: [signature]
DATE: 1/8/08

NOTES:
FOR NOTES, SEE DRAWING WS1.
WORK THIS DRAWING WITH DRAWINGS WS1 & WS2.

LINE	A	B	C
G1	38 128	12 402	566 950
G2	38 315	12 463	569 750
G3	38 502	12 524	572 550
G4	38 690	12 585	575 350
G5	38 878	12 646	578 150
G6	39 065	12 707	580 950

NOTE
THE PURPOSE OF THIS DRAWING IS TO COORDINATE GEOMETRIC CONTROL INFORMATION. THIS DRAWING IS SUBMITTED FOR INFORMATION ONLY AND IS NOT INTENDED FOR SHOP FABRICATION. THIS DRAWING IS FOR REFERENCE ONLY, APPROVAL IS NOT REQUIRED.

NO.	REVISION	BY	CHK'D	DATE
△				
△				
△				

HOLES
BOLTS
COATING
CODE(S)
SCALE N.T.S.

HIGH STEEL STRUCTURES INC.
An ISO 9001:2000 Certified Company
An Affiliate of High Industries Inc.
Lancaster Facility: 1915 Old Philadelphia Pike, Lancaster, PA 17605-0008, Phone (717) 299-5211
Williamsport Facility: 3501 W. 4th Street, Williamsport, PA 17701, Phone (570) 326-9051
www.highsteel.com

WORKSHEET - CALCULATION PLAN
VT ROUTE 279 OVER FURNACE BROOK
VT ROUTE 279 STA. 8+542.000 TO STA. 8+685.000
TOWN OF BENNINGTON VERMONT, BRIDGE B12
STATE OF VERMONT
AGENCY OF TRANSPORTATION

	AC NH F019-1(53)	FED. AID PROJ. NO.	
GENERAL CONTRACTOR	J.A. McDONALD, INC.	HSSI PROJ. MGR	DEB KUPRES
SHPMT 3	DRAWING MANAGER BRITIGAN (IH)	MADE BY WBW	CHK'D. BY CS	DATE 11-14-07
STATE VT	HSSI PROJECT NUMBER S-1070147	HSSI STRUCT. ID A	DRAWING NUMBER WS3 OF WS3

METRIC
Scale = 0.012000 of full size.
SHIPMENT 01 PM&ENG: 50002817 PRD: 50002818 SHIP&ERECT.: 50002819
BY: MKreidel
PLOTTED: 11/30/2007 12:43:34 PM
60

1070147A X1 12/3/07 12/3/07Approval TO:J.A. McDonald, Inc.

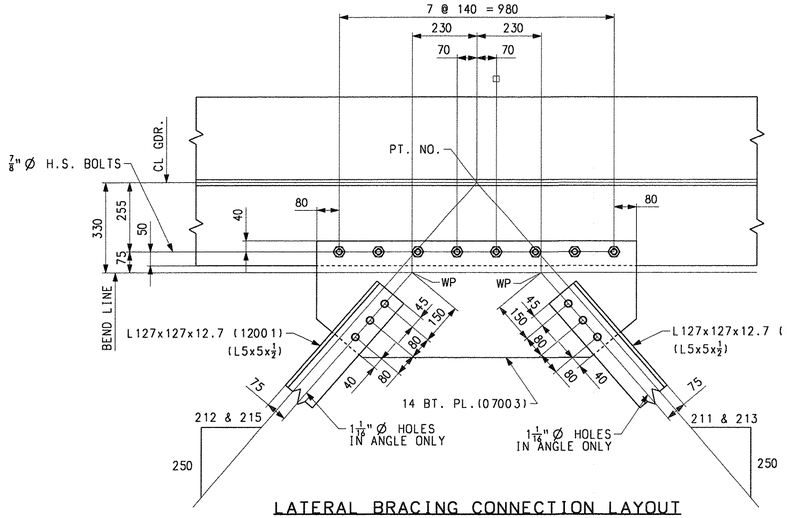

LATERAL BRACING CONNECTION LAYOUT

(TYP. ALONG G1 & G3 (U.N.))

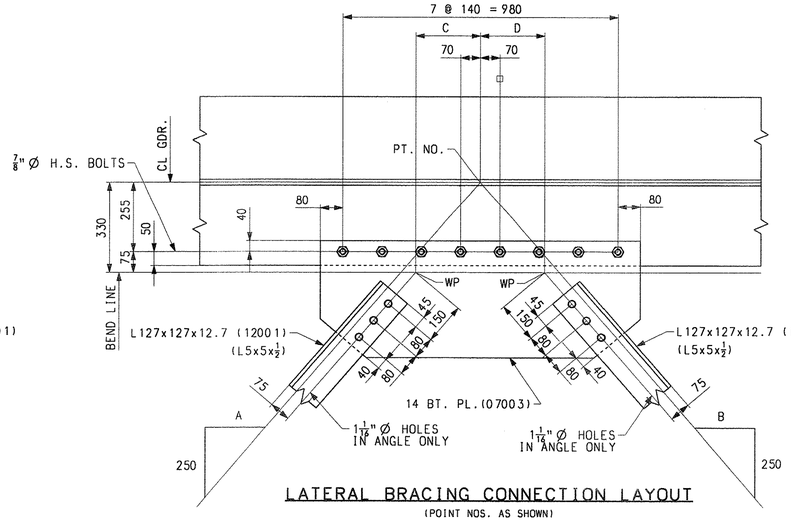

LATERAL BRACING CONNECTION LAYOUT

(POINT NOS. AS SHOWN)

POINT NOS.	A	B	C	D
221 & 251	159	183	165	195
235	212	187	230	200
265	215	190	230	200
236	189	211	200	230
266	192	213	200	230
250	183	156	195	165
280	185	159	195	165

TVGA CONSULTANTS

☒ NO EXCEPTIONS TAKEN ☐ REJECTED
☐ FURNISH AS CORRECTED
☐ REVISE AND RESUBMIT

ENGINEER has reviewed Shop Drawings and Samples and other data which Contractor is required to submit, only for conformance with the information given in the Contract Documents and compatibility with the design concept of the completed Project as a functioning whole as indicated in the Contract Documents. Such reviews do not extend to means, methods, techniques, sequences or procedures of construction or to safety precautions and programs incident thereto. Contractor is responsible for dimensions to be confirmed and correlated at the job site, for information that pertains solely to the fabrication processes or to techniques of construction; and for coordination of the work of all trades.

BY: _____
DATE: 1/8/08

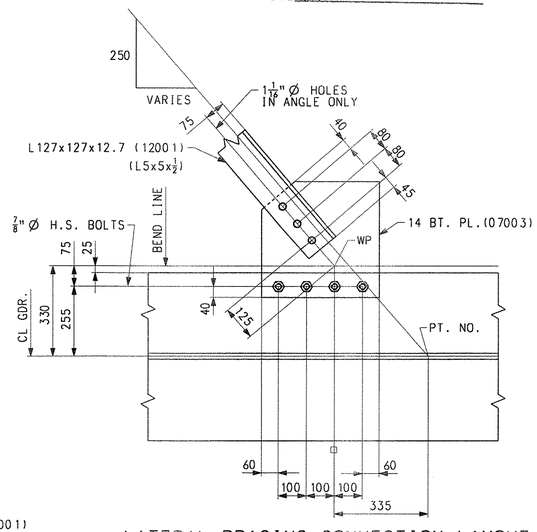

LATERAL BRACING CONNECTION LAYOUT AT CROSSFRAMES

(TYP. ALONG G2,G4 & G5 (U.N.))
(PT.60 EASTSIDE, AS SHOWN, OTHER LOCATIONS SIMILAR)

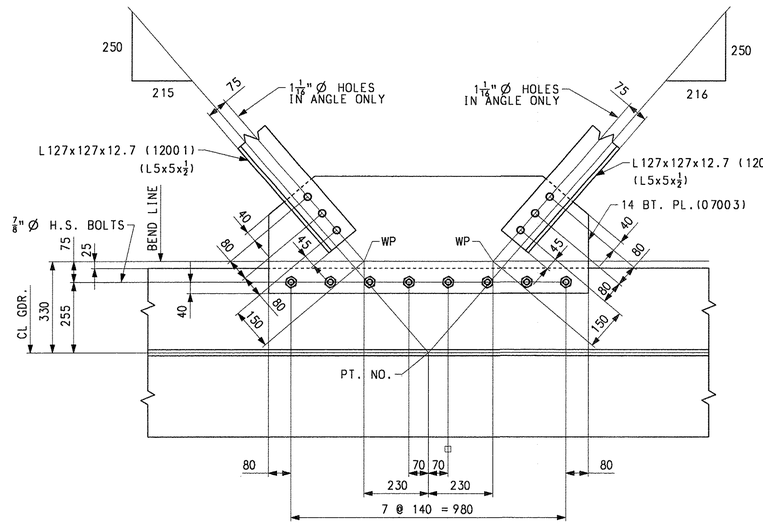

LATERAL BRACING CONNECTION LAYOUT

(TYP. ALONG G6 (U.N.))

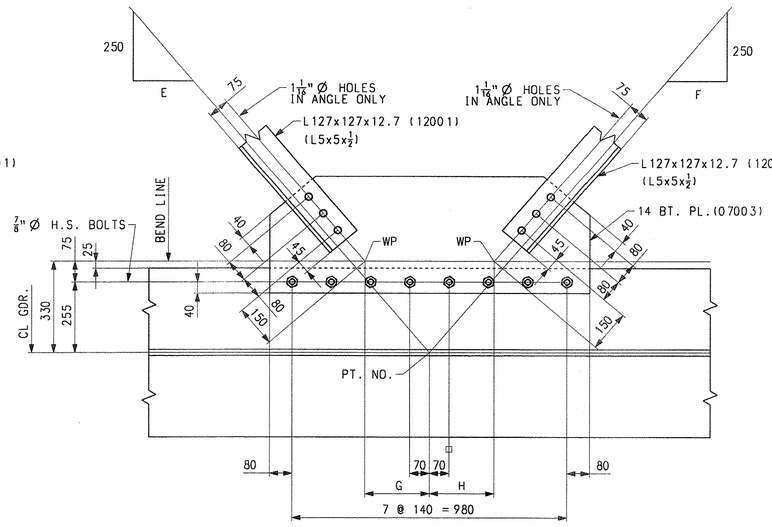

LATERAL BRACING CONNECTION LAYOUT

(POINT NOS. AS SHOWN)

POINT NOS.	E	F	G	H
281	160	187	165	195
295	215	193	230	200
296	192	216	200	230
310	185	161	195	165

NOTES:

FOR NOTES, SEE DRAWING WS1.
WORK THIS DRAWING WITH WS1 THRU WS3.

NOTE
THE PURPOSE OF THIS DRAWING IS TO COORDINATE GEOMETRIC CONTROL INFORMATION. THIS DRAWING IS SUBMITTED FOR INFORMATION ONLY AND IS NOT INTENDED FOR SHOP FABRICATION. THIS DRAWING IS FOR REFERENCE ONLY. APPROVAL IS NOT REQUIRED.

NO.	REVISION	BY	CHK'D	DATE
△				
△				
△				

HOLES: 15/16" Ø (U.N.)
BOLTS: AS NOTED
COATING: NONE
CODE(S):
SCALE: N.T.S.

HIGH STEEL STRUCTURES INC.
An ISO 9001:2000 Certified Company
An Affiliate of High Industries Inc.
1915 Old Philadelphia Pike
Lancaster, PA 17605-0068
Phone (717) 299-5211
www.highsteel.com

TYPICAL DETAILS - LATERAL BRACING DETAILS
VT ROUTE 279 OVER FURNACE BROOK
VT ROUTE 279 STA. 8+542.000 TO STA. 8+685.000
TOWN OF BENNINGTON VERMONT, BRIDGE B12
STATE OF VERMONT
AGENCY OF TRANSPORTATION

STATE CONT. OR REF. NO.	AC NH F019-1(53)	FED. AID PROJ. NO.	
GENERAL CONTRACTOR	J.A. McDONALD, INC.	HSSI PROJ. MGR	DEB KUPRES
SHPMT 3	DRAWING MANAGER: BRITIGAN (IH)	MADE BY: KLW	CHK'D. BY: WBW	DATE: 11/1/07
STATE VT	HSSI PROJECT NUMBER: S-1070147	HSSI STRUCT. ID: A	DRAWING NUMBER: TD1 OF TD4

SHIPMENT 1 PM&ENG: 50028L7 PRO: 50028J8 SHIP&ERECT: 50028J9
PLOTTED: 11/30/07 12:47:53 BY: MKreidel

1070147A X1 12/3/07 12/3/07Approval TO:J.A. McDonald, Inc.

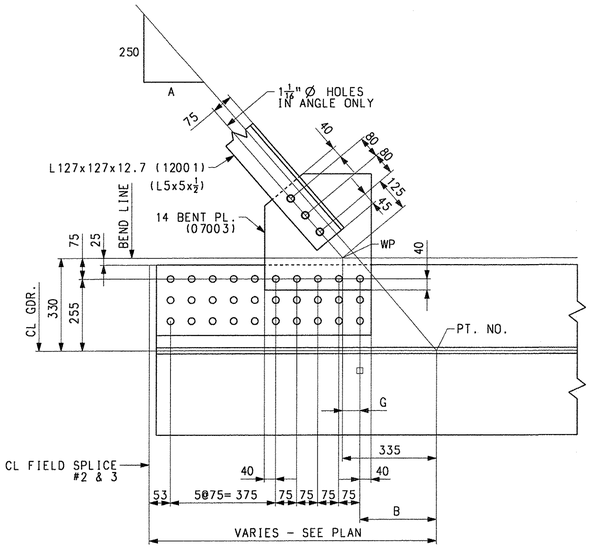

LATERAL BRACING CONNECTION LAYOUT

(POINTS 114 & 116 AS SHOWN)
(OTHER POINT NOS. SIMILAR)

POINT NOS.	A	B	G
EASTSIDE 114	209	273	62
EASTSIDE 116	212	282	53
EASTSIDE 117	218	288	47
WESTSIDE 156	211	273	62
WESTSIDE 158	214	282	53
WESTSIDE 159	216	287	48

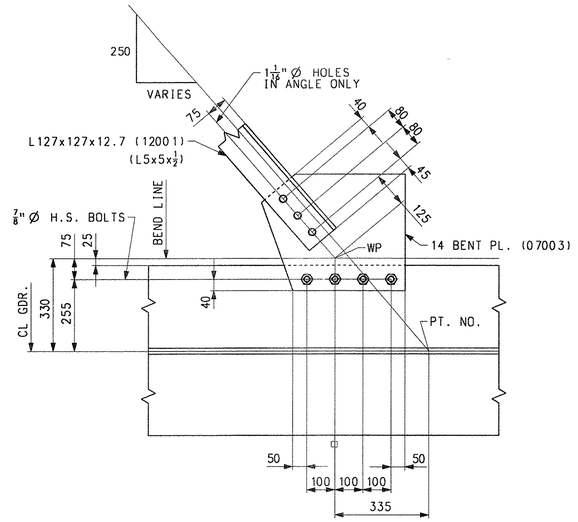

LATERAL BRACING CONNECTION LAYOUT

(EASTSIDE OF POINTS 66 & 68 AS SHOWN)
(EASTSIDE OF POINT NO. 69 & WESTSIDE OF POINT NOS. 204, 206 & 207 SIMILAR)

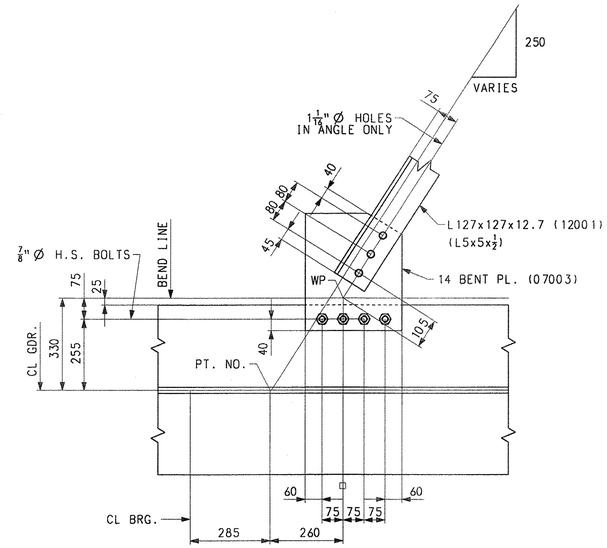

LATERAL BRACING CONNECTION LAYOUT

(POINTS 401 & 402 AS SHOWN)
(POINT NOS. 403, 410, 411 & 412 SIMILAR)

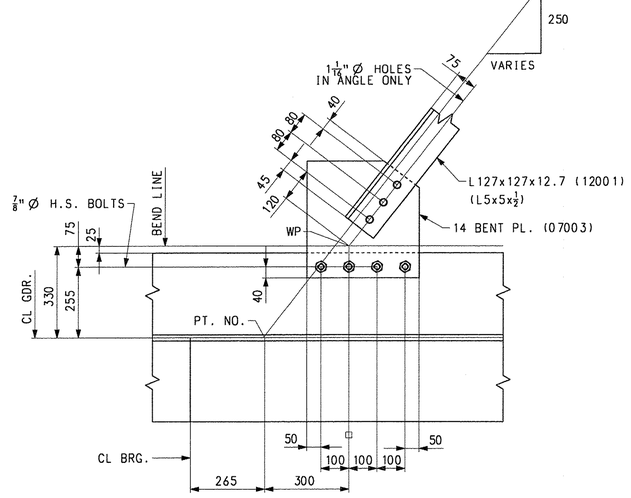

LATERAL BRACING CONNECTION LAYOUT

(POINTS 407 & 408 AS SHOWN)
(POINT NOS. 404, 405, 406 & 409 SIMILAR)

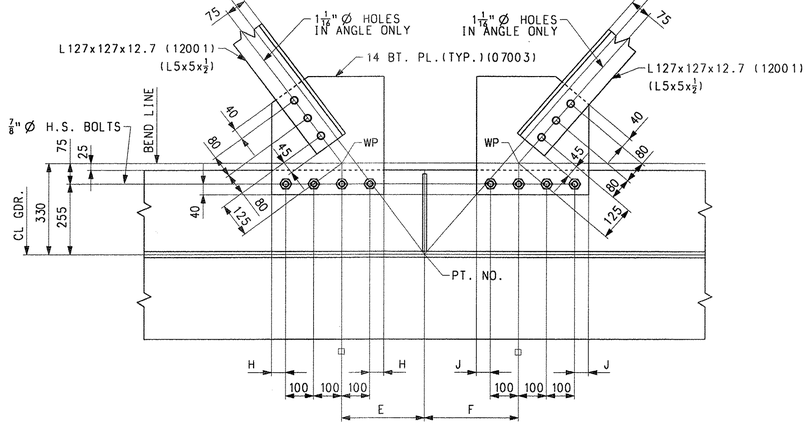

LATERAL BRACING CONNECTION LAYOUT

(POINTS 54, 56, 216 & 218 AS SHOWN)
(OTHER POINT NOS. SIMILAR)

POINT NOS.	C	D	E	F	H	J
54	182	211	295	335	50	60
56	182	214	295	335	50	60
57	188	216	295	335	50	60
216	209	182	335	295	60	50
218	212	184	335	295	60	50
219	218	186	335	295	60	50

NOTES:

FOR NOTES, SEE DRAWING WS1.
WORK THIS DRAWING WITH WS1 THRU WS3.

NOTE
THE PURPOSE OF THIS DRAWING IS TO COORDINATE GEOMETRIC CONTROL INFORMATION. THIS DRAWING IS SUBMITTED FOR INFORMATION ONLY AND IS NOT INTENDED FOR SHOP FABRICATION. THIS DRAWING IS FOR REFERENCE ONLY. APPROVAL IS NOT REQUIRED.

TVGA CONSULTANTS

☒ NO EXCEPTIONS TAKEN ☐ REJECTED
☐ FURNISH AS CORRECTED
☐ REVISE AND RESUBMIT

ENGINEER has reviewed Shop Drawings and Samples and other data which Contractor is required to submit, only for conformance with the information given in the Contract Documents and compatibility with the design concept of the completed Project as a functioning whole as indicated in the Contract Documents. Such reviews do not extend to means, methods, techniques, sequences or procedures of construction or to safety precautions and programs incident thereto. Contractor is responsible for dimensions to be confirmed and correlated at the job site; for information that pertains solely to the fabrication processes or to techniques of construction; and for coordination of the work of all trades.

BY: _____
DATE: 11/8/07

NO.	REVISION	BY	CHK'D	DATE

HOLES: 15/16" Ø (U.N.)
BOLTS: AS NOTED
COATING: NONE
CODE(S):
SCALE: N.T.S.

HIGH STEEL STRUCTURES INC.
An ISO 9001:2000 Certified Company
An Affiliate of High Industries Inc.
1915 Old Philadelphia Pike
Lancaster, PA 17605-0008
Phone (717) 299-5211
www.highsteel.com

TYPICAL DETAILS - LATERAL BRACING LAYOUTS
VT ROUTE 279 OVER FURNACE BROOK
VT ROUTE 279 STA. 8+542.000 TO STA. 8+685.000
TOWN OF BENNINGTON VERMONT, BRIDGE B12
STATE OF VERMONT
AGENCY OF TRANSPORTATION

STATE CONT. OR REF. NO.	AC NH F019-1(53)	FED. AID PROJ. NO.	
GENERAL CONTRACTOR	J.A. McDONALD, INC.	HSSI PROJ. MGR	DEB KUPRES

SHPMT	3	DRAWING MANAGER	BRITIGAN (IH)	MADE BY	KLW	CHK'D. BY	WBW	DATE	11/1/07
STATE	VT	HSSI PROJECT NUMBER	S-1070147	HSSI STRUCT. ID	A	DRAWING NUMBER	TD2 OF TD4		

SHIPMENT 1 PWAENG: 5002B1Z PRO: 5002B1B SHIPAERECT: 5002B19
PLOTTED: 11/30/07 12:48:14 BY: MKreidel

1070147A X1 12/3/07 12/3/07Approval TO:J.A. McDonald, Inc.

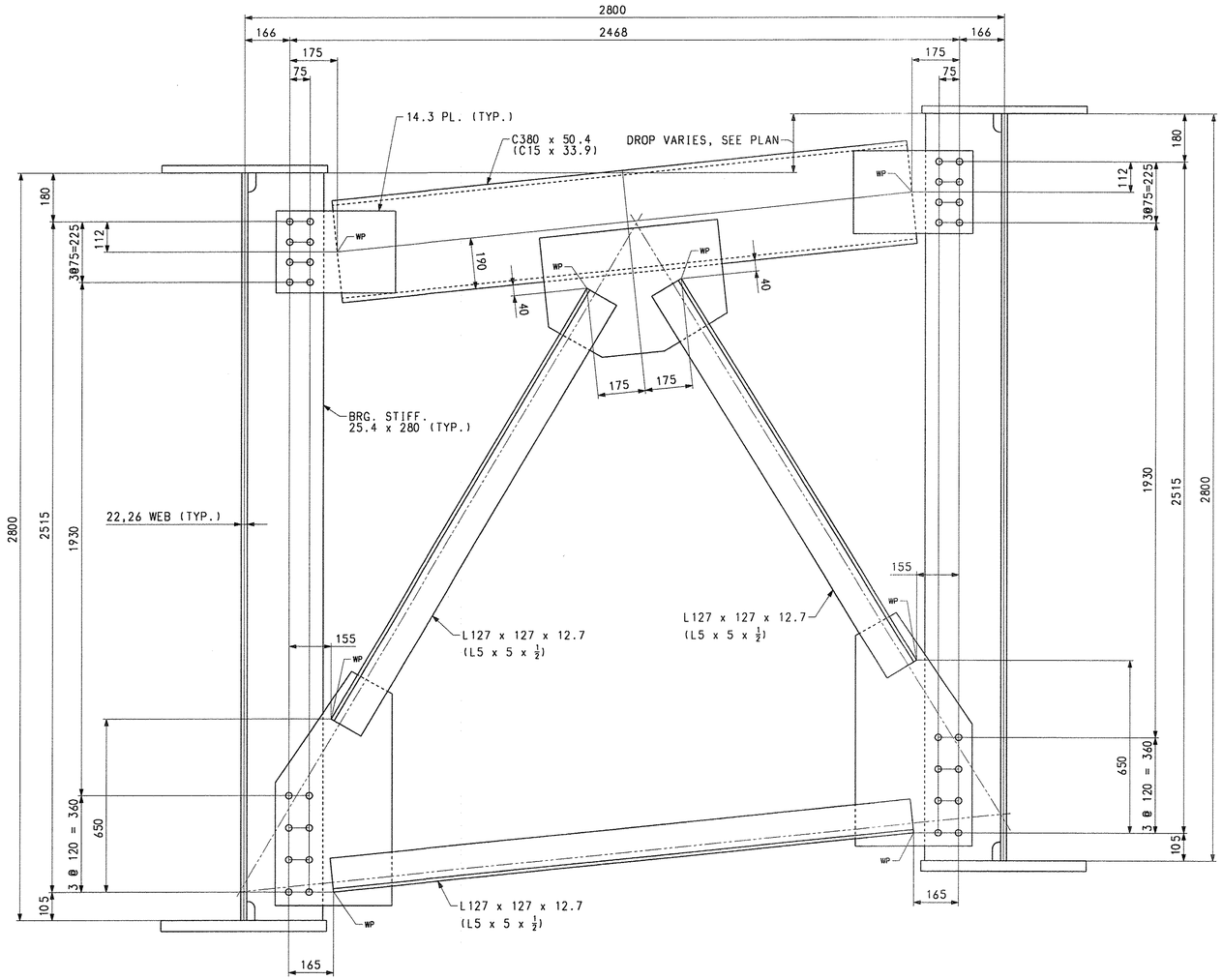

TYP. END & PIER CROSSFRAME LAYOUT

(LOOKING TOWARDS ABUT. FROM CENTER OF SPAN @ END CROSSFRAMES)
(LOOKING BACKSTATIONS @ PIER CROSSFRAMES)

TVGA CONSULTANTS

☒ NO EXCEPTIONS TAKEN ☐ REJECTED
☐ FURNISH AS CORRECTED
☐ REVISE AND RESUBMIT

ENGINEER has reviewed Shop Drawings and Samples and other data which Contractor is required to submit, only for conformance with the information given in the Contract Documents and compatibility with the design concept of the completed Project as a functioning whole as indicated in the Contract Documents. Such reviews do not extend to means, methods, techniques, sequences or procedures of construction or to safety precautions and programs incident thereto. Contractor is responsible for dimensions to be confirmed and correlated at the job site; for information that pertains solely to the fabrication processes or to techniques of construction; and for coordination of the work of all trades.

BY: _____
DATE: 12/3/07

NOTES:
FOR NOTES, SEE DRAWING WS1.
WORK THIS DRAWING WITH WS1.

NOTE
THE PURPOSE OF THIS DRAWING IS TO COORDINATE GEOMETRIC CONTROL INFORMATION. THIS DRAWING IS SUBMITTED FOR INFORMATION ONLY AND IS NOT INTENDED FOR SHOP FABRICATION. THIS DRAWING IS FOR REFERENCE ONLY. APPROVAL IS NOT REQUIRED.

NO.	REVISION	BY	CHK'D	DATE
△				
△				
△				

HOLES: 15/16" Ø
BOLTS: NONE
COATING: SEE DWG. GN1
CODE(S):
SCALE: N.T.S.

HIGH STEEL STRUCTURES INC.
An ISO 9001:2000 Certified Company — An Affiliate of High Industries Inc.
1915 Old Philadelphia Pike
Lancaster, PA 17605-0008
Phone (717) 299-5211
www.highsteel.com

TYPICAL DETAILS – CROSSFRAME LAYOUTS
VT ROUTE 279 OVER FURNACE BROOK
VT ROUTE 279 STA. 8+542.000 TO STA. 8+685.000
TOWN OF BENNINGTON VERMONT, BRIDGE B12
STATE OF VERMONT
AGENCY OF TRANSPORTATION

STATE CONT. OR REF. NO.	AC NH F019-1(53)	FED. AID PROJ. NO.	
GENERAL CONTRACTOR	J.A. McDONALD, INC.	HSSI PROJ. MGR	DEB KUPRES
SHPMT 3	DRAWING MANAGER: BRITIGAN (IH)	MADE BY: ERS	CHK'D. BY: CS	DATE: 11-14-07
STATE VT	HSSI PROJECT NUMBER: S-1070147	HSSI STRUCT. ID: A	DRAWING NUMBER: TD3 OF TD4

SHIPMENT 1 PM&ENG: 50028L2 PRD: 50028J8 SHIP&ERECT: 50028J9
PLOTTED: 11/30/07 12:48:32 BY: MKreidel

1070147A X1 12/3/07 12/3/07Approval TO:J.A. McDonald, Inc.

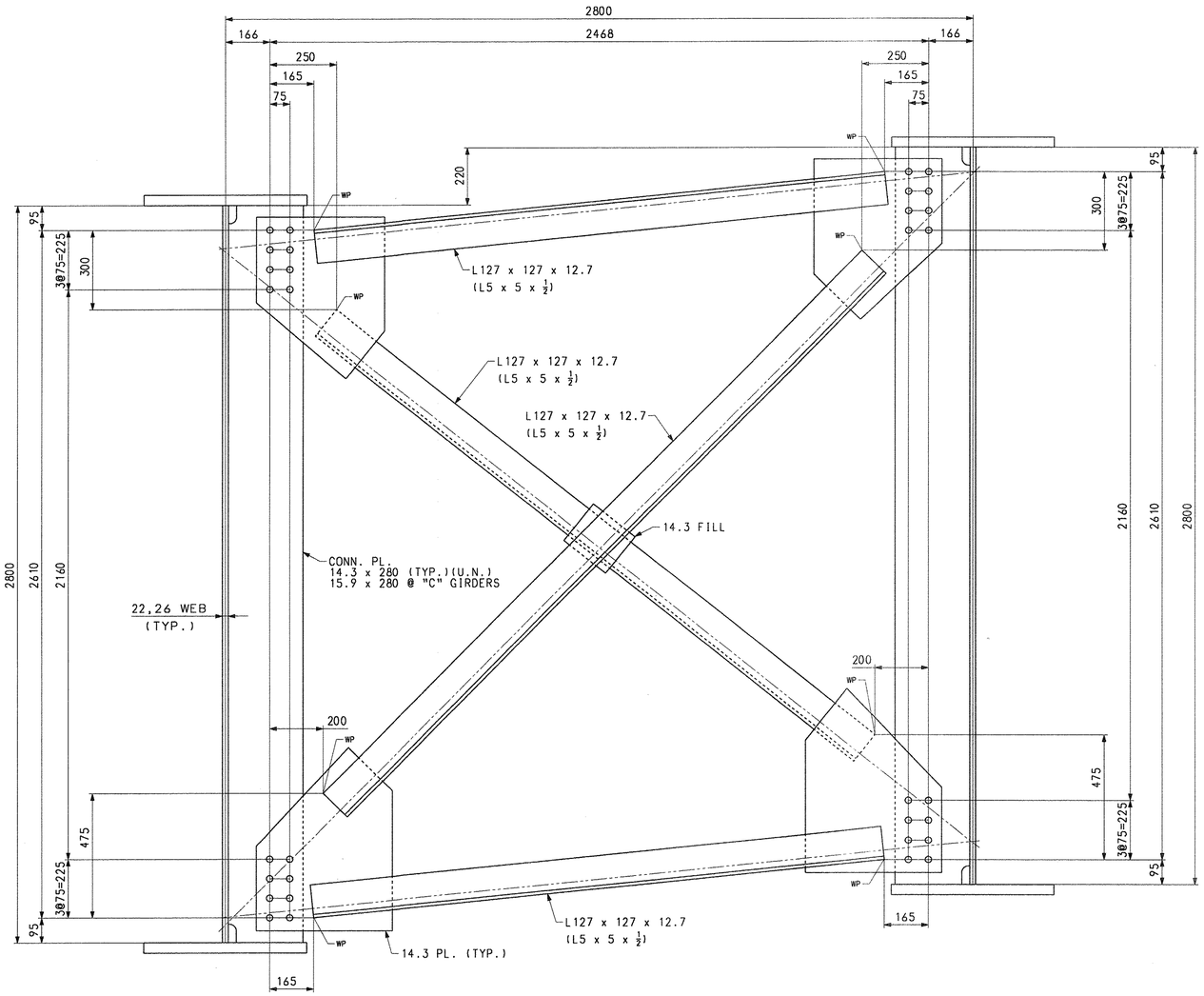

TYP. INT. CROSSFRAME LAYOUT

(LOOKING STATIONS AHEAD)

TVGA CONSULTANTS

☒ NO EXCEPTIONS TAKEN ☐ REJECTED
☐ FURNISH AS CORRECTED
☐ REVISE AND RESUBMIT

ENGINEER has reviewed Shop Drawings and Samples and other data which Contractor is required to submit, only for conformance with the information given in the Contract Documents and compatibility with the design concept of the completed Project as a functioning whole as indicated in the Contract Documents. Such reviews do not extend to means, methods, techniques, sequences or procedures of construction or to safety precautions and programs incident thereto. Contractor is responsible for dimensions to be confirmed and correlated at the job site; for information that pertains solely to the fabrication processes or to techniques of construction; and for coordination of the work of all trades.

BY: VTGS
DATE:

NOTES:

FOR NOTES, SEE DRAWING WS1.
WORK THIS DRAWING WITH WS1.

NOTE
THE PURPOSE OF THIS DRAWING IS TO COORDINATE GEOMETRIC CONTROL INFORMATION. THIS DRAWING IS SUBMITTED FOR INFORMATION ONLY AND IS NOT INTENDED FOR SHOP FABRICATION. THIS DRAWING IS FOR REFERENCE ONLY. APPROVAL IS NOT REQUIRED.

NO.	REVISION	BY	CHK'D	DATE
△				
△				
△				

HOLES: 15/16" Ø
BOLTS: NONE
COATING: NONE
CODE(S):
SCALE: N.T.S.

HIGH STEEL STRUCTURES INC.
1915 Old Philadelphia Pike
Lancaster, PA 17605-0008
Phone (717) 299-5211
www.highsteel.com
An ISO 9001:2000 Certified Company
An Affiliate of High Industries Inc.

TYPICAL DETAILS - CROSSFRAME LAYOUTS
VT ROUTE 279 OVER FURNACE BROOK
VT ROUTE 279 STA. 8+542.000 TO STA. 8+685.000
TOWN OF BENNINGTON VERMONT, BRIDGE B12
STATE OF VERMONT
AGENCY OF TRANSPORTATION

STATE CONT. OR REF. NO.	AC NH F019-1(53)	FED. AID PROJ. NO.	
GENERAL CONTRACTOR	J.A. McDONALD, INC.	HSSI PROJ. MGR	DEB KUPRES
SHPMT 3	DRAWING MANAGER: BRITIGAN (IH)	MADE BY: ERS	CHK'D. BY: CS	DATE: 11-14-07
STATE VT	HSSI PROJECT NUMBER: S-1070147	STRUCT. ID: A	DRAWING NUMBER: TD4 OF TD4

SHIPMENT 1 PM&ENG: 5002B1Z PRO: 5002B1B SHIP&ERECT: 5002B19
PLOTTED: 11/30/07 12:48:41 BY: MKreidel

1070147A X1 12/3/07 12/3/07Approval TO:J.A. McDonald, Inc.

METRIC

SHIPPING PIECES		
SHIPPING PIECE MARK	WEIGHT EA (KG)	DWG NO.
G1A	11,406	1
G2A	11,561	2
G3A	11,679	3
G4A	11,658	4
G5A	11,707	5
G6A	11,652	6
G1B	36,425	7
G2B	37,197	8
G3B	37,455	9
G4B	37,523	10
G5B	37,685	11
G6B	37,241	12
G1C	45,714	13
G2C	46,592	14
G3C	46,929	15
G4C	47,024	16
G5C	47,240	17
G6C	46,798	18
G1D	36,421	19
G2D	37,195	20
G3D	37,451	21
G4D	37,520	22
G5D	37,683	23
G6D	37,239	24
G1E	11,335	25
G2E	11,488	26
G3E	11,608	27
G4E	11,587	28
G5E	11,636	29
G6E	11,582	30
CF1	380	31
CF2	380	32
CF3	380	32
CF4	335	33
CF5	335	33
LB1	65	34
LB2	65	34
LB3	65	34
LB4	65	34
LB5	64	34
LB6	64	34
LB7	64	34
LB8	64	34
LB9	64	34
LB10	64	34
LB11	64	34
LB12	64	34
LB13	62	34
LB14	61	34
LB15	61	34
LB16	61	34
LB17	61	34
LB18	61	34
LB19	61	34
LB20	61	34
LB21	60	34
LB22	60	34
LB23	60	34
LB24	60	34
LB25	58	34
LB26	58	34
LB27	58	34
LB28	58	34
LB29	58	34

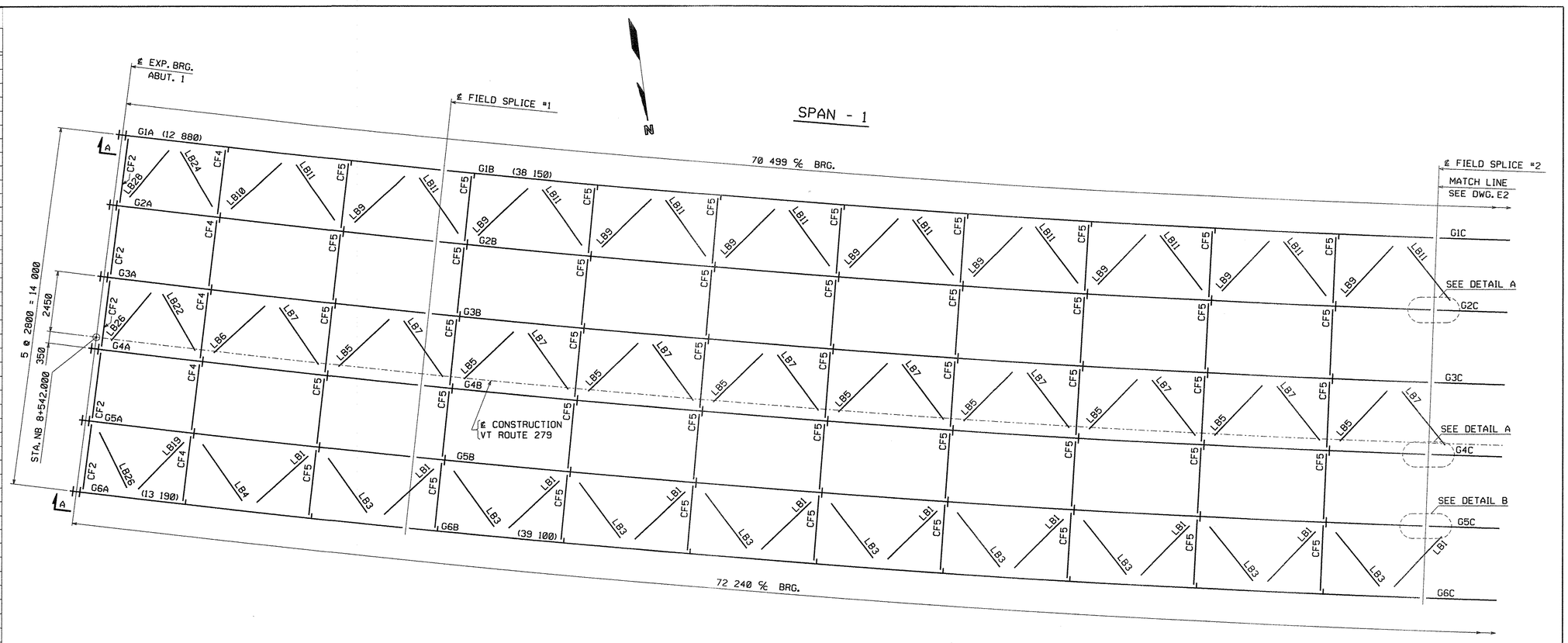

ERECTION FRAMING PLAN

CONTRACTOR NOTE:
ELEVATIONS ARE GIVEN TO BOTTOM OF STEEL - DO NOT POUR TO FINAL ELEVATIONS WITHOUT VERIFICATION OF BEARING HEIGHTS AND BRIDGE SEATS.

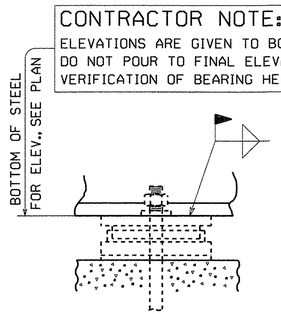

SECTION A

ELEVATIONS	
LINE	ABUT. 1
G1	252.925
G2	253.144
G3	253.362
G4	253.580
G5	253.799
G6	254.017

NOTES:

NO CREDIT WILL BE ALLOWED FOR WORK PERFORMED BY OTHERS IN REPLACING OR CORRECTING MATERIALS OR WORKMANSHIP COVERED BY THIS DRAWING UNLESS EXPRESSLY AUTHORIZED BY HIGH STEEL STRUCTURES, INC.

HIGH STEEL STRUCTURES, INC. DOES NOT SUPPLY STUD SHEER CONNECTORS, EXPANSION DAM MATERIAL, ROD HANGERS OR HARDWARE AT UTILITIES, SCUPPERS OR ANY OTHER BRIDGE DRAINAGE, BEARINGS, BEARING PADS OR ANCHOR BOLTS.

NOTICE TO ERECTOR & CONTRACTOR: THIS STRUCTURAL STEEL IS BEING DELIVERED WITH THE FINAL FINISH COAT APPLIED. USE EXTREME CARE AND APPROPRIATE EQUIPMENT FOR HANDLING DURING ERECTION AND SUBSEQUENT FIELD OPERATIONS. HIGH STEEL STRUCTURES, INC. WILL NOT BE RESPONSIBLE FOR ANY TOUCH-UP REQUIRED DUE TO YOUR FAILURE TO PROPERLY PROTECT FINISH PAINT.

ERECTOR NOTE: ELEVATIONS, CAMBER CHECKS AND HORIZONTAL ALIGNMENT OF FIELD SPLICES MUST BE COMPLETED PRIOR TO FINAL BOLTING. HIGH STEEL STRUCTURES IS TO BE NOTIFIED AND CONSULTED, PRIOR TO FINAL BOLTING, IF SPLICE LOCATIONS ARE NOT WITHIN ACCEPTABLE TOLERANCE. BOTH VERTICAL & HORIZONTAL CORRECTION OF ANY UNACCEPTABLE SPLICES AFTER FINAL BOLTING WILL BE AT NO COST TO HIGH STEEL STRUCTURES.

NOTICE: WEIGHTS OF MEMBERS LISTED ON THESE DRAWINGS ARE ESTIMATED WEIGHTS AND ACTUAL WEIGHTS WILL VARY. HIGH STEEL STRUCTURES, INC. WILL NOT BE RESPONSIBLE FOR ANY ERECTION PROCEDURES, SHIPPING PROCEDURES, ETC. DEVELOPED USING ESTIMATED WEIGHTS AS SHOWN.

ALL DIMENSIONS ARE GIVEN HORIZONTALLY (U.N.).

ALL ELEVATIONS AND STATIONS ARE GIVEN IN METERS.

DIMENSIONS GIVEN THUS: (12 880) ARE THE SHIPPING LENGTHS OUT TO OUT OF FASCIA GIRDERS.

ERECTOR NOTE: ALL BOLTS MUST BE LOCATED IN ACCORDANCE WITH THE LIST OF FIELD CONNECTIONS. HIGH STEEL STRUCTURES WILL NOT BE RESPONSIBLE FOR FURNISHING ADDITIONAL BOLTS OR FOR ANY OTHER RELATED COSTS OR DAMAGES RESULTING FROM IMPROPER LOCATION OF BOLTS.

ALL FIELD BOLTS THRU WEB OF FASCIA GIRDERS ARE TO HAVE HEADS ON OUTSIDE OF WEB.

ALL FIELD BOLTS THRU BOTTOM FLANGE ARE TO HAVE HEADS UP.

(RCT) INDICATES ROTATIONAL CAPACITY TESTED BOLTS. DO NOT MIX NUTS, BOLTS AND WASHERS FROM DIFFERENT CONTAINERS UNLESS ALL NUTS, BOLTS AND WASHERS HAVE THE SAME LOT NUMBER.

SEE DRAWING E2 FOR LIST OF FIELD CONNECTIONS AND FIELD BOLT SUMMARY.

WORK THIS DRAWING WITH DRAWINGS E2, E3 AND E4.

TVGA CONSULTANTS

☒ NO EXCEPTIONS TAKEN ☐ REJECTED
☐ FURNISH AS CORRECTED
☐ REVISE AND RESUBMIT

ENGINEER has reviewed Shop Drawings and Samples and other data which Contractor is required to submit, only for conformance with the information given in the Contract Documents and compatibility with the design concept of the completed Project as a functioning whole as indicated in the Contract Documents. Such reviews do not extend to means, methods, techniques, sequences or procedures of construction or to safety precautions and programs incident thereto. Contractor is responsible for dimensions to be confirmed and correlated at the job site; for information that pertains solely to the fabrication processes or to techniques of construction; and for coordination of the work of all trades.

BY: _____
DATE: 1/8/08

NO.	REVISION	BY	CHK'D	DATE
△				
△				
△				

HIGH STEEL STRUCTURES, INC. — An ISO 9001:2000 Certified Company — An Affiliate of High Industries Inc.

Lancaster Facility: 185 Old Philadelphia Pike, Lancaster, PA 17605-0008, Phone (717) 299-5211
Williamsport Facility: 3501 W. 4th Street, Williamsport, PA 17701, Phone (570) 326-9061
www.highsteel.com

HOLES	
BOLTS	
COATING	
CODE(S)	
SCALE N.T.S.	

ERECTION FRAMING PLAN
VT ROUTE 279 OVER FURNACE BROOK
VT ROUTE 279 STA. 8+542.000 TO STA. 8+685.000
TOWN OF BENNINGTON VERMONT, BRIDGE B12
STATE OF VERMONT
AGENCY OF TRANSPORTATION

	AC NH F019-1(53)	FED. AID PROJ. NO.	
GENERAL CONTRACTOR	J.A. McDONALD, INC.	HSSI PROJ. MGR	DEB KUPRES

SHPMT	3	DRAWING MANAGER	BRITIGAN (IH)	MADE BY	MAF	CHK'D BY	CS	DATE	11-28-07
STATE	VT	HSSI PROJECT NUMBER	S-1070147	HSSI STRUCT. ID	A	DRAWING NUMBER	E1 OF E5		

PLOTTED: 11/30/2007 12:27:59 PM
BY: MKrandel
SHIPMENT 01
PM&ENG: 5982817 PROD: 5982818 SHIP&ERECT: 5982819

1070147A X1 12/3/07 12/3/07Approval TO:J.A. McDonald, Inc.

METRIC

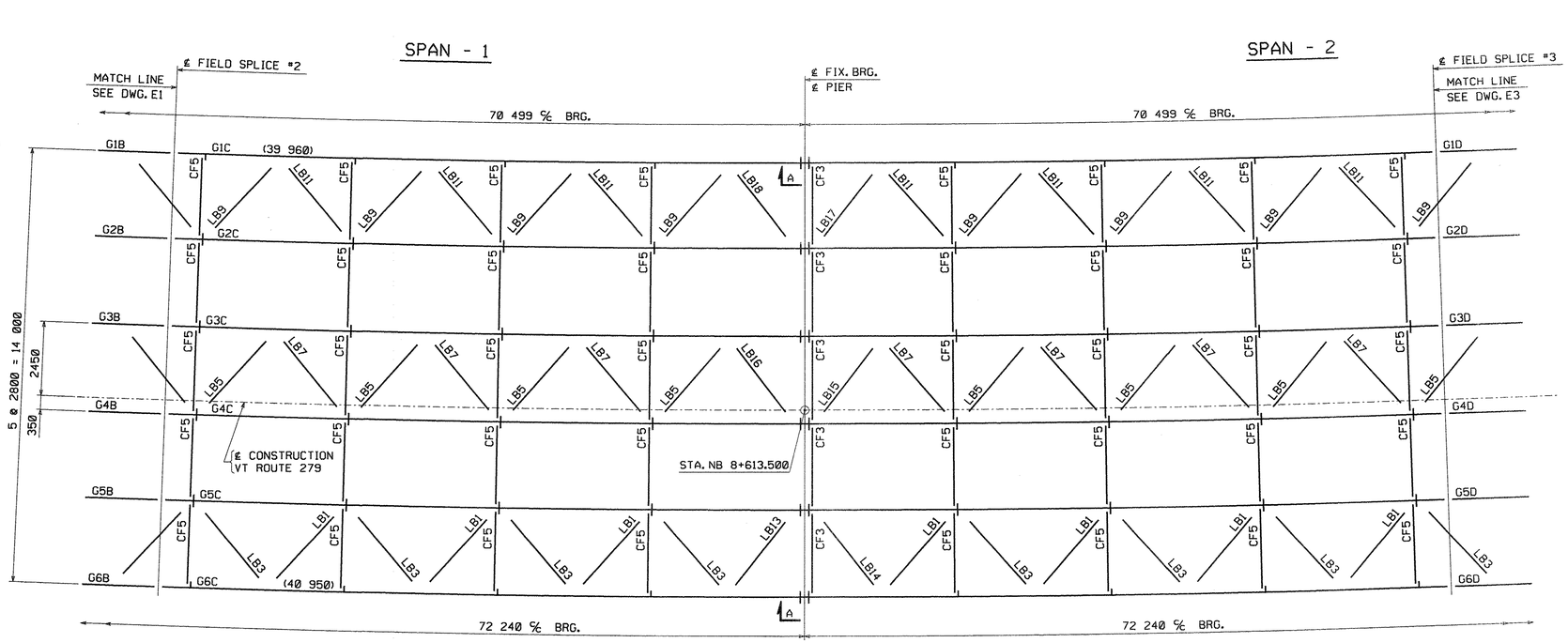

ERECTION FRAMING PLAN

FIELD BOLT SUMMARY - SHIP. #3

(2% ADDITIONAL BOLTS ADDED + 3 EA. FOR TESTING)

AASHTO M164 TYPE 1 (RCT); W/HVY HEX HD; GALV. TO AASHTO M298 CLASS 50		
329	-	7/8"ø HIGH STRENGTH BOLTS x 0'-3
421	-	7/8"ø HIGH STRENGTH BOLTS x 0'-2 1/2
AASHTO M164 TYPE 3 (RCT); W/HVY HEX HD		
35	-	7/8"ø HIGH STRENGTH BOLTS x 0'-6
2,910	-	7/8"ø HIGH STRENGTH BOLTS x 0'-5 1/4
1,961	-	7/8"ø HIGH STRENGTH BOLTS x 0'-4 1/2
8,571	-	7/8"ø HIGH STRENGTH BOLTS x 0'-3 1/2
166	-	7/8"ø HIGH STRENGTH BOLTS x 0'-3
5,256	-	7/8"ø HIGH STRENGTH BOLTS x 0'-2 1/2
AASHTO M291 GRADE DH (RCT); HVY HEX; GALV. TO AASHTO M298 CLASS 50		
750	-	NUTS FOR 7/8"ø BOLT
AASHTO M291 GRADE DH3 (RCT); HVY HEX		
18,899	-	NUTS FOR 7/8"ø BOLT
AASHTO M293 (RCT); ROUND & FLAT; GALV. TO AASHTO M298 CLASS 50		
842	-	STD WASHERS FOR 7/8"ø BOLT
AASHTO M293 WEATHERING (RCT); ROUND & FLAT		
19,939	-	STD WASHERS FOR 7/8"ø BOLT

LIST OF FIELD CONNECTIONS

ONE WASHER PER BOLT UNLESS NOTED OTHERWISE

LINE	ACTUAL NUMBER REQ'D	BOLT DIAM.	BOLT LENGTH	BOLTS PER CONN.	NO. OF CONN	GRIP	THICKNESS OF PIECES JOINED					PIECES CONNECTED AND REMARKS
1	4200	7/8	3 1/2	350	12	53.8	15.9	22.0	15.9			WEB SPL @FS1 G1-G6; FS4 G1-G6
2	4200	7/8	3 1/2	350	12	57.7	15.9	26.0	15.9			WEB SPL @FS2 G1-G6; FS3 G1-G6
3	768	7/8	4 1/2	64	12	81.3	20.6	40.0	20.6			TOP FLG SPL @FS1 G1-G6; FS4 G1-G6
4	1440	7/8	5 1/4	120	12	96.3	20.6	55.0	20.6			TOP FLG SPL @FS2 G1-G6; FS3 G1-G6
5	1152	7/8	4 1/2	96	12	81.3	20.6	40.0	20.6			BOT FLG SPL @FS1 G1-G6; FS4 G1-G6
6	1410	7/8	5 1/4	120	12	96.3	20.6	55.0	20.6			BOT FLG SPL @FS2 G1-G6; FS3 G1-G6
7	30	7/8	6	5	6	115.5	14.3	20.6	55.0	20.6	5.0	SPLICE PL. W/ LAT. BRACING BT. GUSSET PL. (2 WASHERS REQ'D)
8	990	7/8	2 1/2	3	330	32.0	12.7	14.3	5.0			LAT. BRACING TO BT. GUSS. PL. (2 WASHERS REQ'D)
9	160	7/8	3	16	10	39.7	25.4	14.3				PIER BRG STIFF. TO GUSS. PL.
10	2880	7/8	2 1/2	16	180	28.6	14.3	14.3				INT. STIFF. TO GUSS. PL.
11	1280	7/8	2 1/2	16	80	30.2	15.9	14.3				INT. STIFF. TO GUSS. PL. "C" GDRS

LIST OF FIELD CONNECTIONS

ONE WASHER PER BOLT UNLESS NOTED OTHERWISE

LINE	ACTUAL NUMBER REQ'D	BOLT DIAM.	BOLT LENGTH	BOLTS PER CONN.	NO. OF CONN	GRIP	THICKNESS OF PIECES JOINED					PIECES CONNECTED AND REMARKS
1	90	7/8	2 1/2	3	30	32.0	12.7	14.3	5.0			LAT. BRACING TO BT. GUSS. PL. (2 WASHERS REQ'D) (TYPE 1)
2	320	7/8	3	16	20	39.7	25.4	14.3				END BRG STIFF. TO GUSS. PL. (TYPE 1)
3	320	7/8	2 1/2	16	20	28.6	14.3	14.3				INT. STIFF. TO GUSS. PL. (TYPE 1)

CONTRACTOR NOTE:

ELEVATIONS ARE GIVEN TO BOTTOM OF STEEL - DO NOT POUR TO FINAL ELEVATIONS WITHOUT VERIFICATION OF BEARING HEIGHTS AND BRIDGE SEATS.

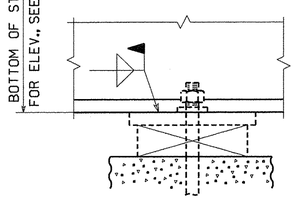

SECTION A

ELEVATIONS	
LINE	PIER
G1	250.630
G2	250.849
G3	251.067
G4	251.285
G5	251.504
G6	251.722

NOTES:

WORK THIS DRAWING WITH DRAWINGS E1, E3 AND E4.

TVGA CONSULTANTS

☒ NO EXCEPTIONS TAKEN ☐ REJECTED
☐ FURNISH AS CORRECTED
☐ REVISE AND RESUBMIT

ENGINEER has reviewed Shop Drawings and Samples and other data which Contractor is required to submit, only for conformance with the information given in the Contract Documents and compatibility with the design concept of the completed Project as a functioning whole as indicated in the Contract Documents. Such reviews do not extend to means, methods, techniques, sequences or procedures of construction or to safety precautions and programs incident thereto. Contractor is responsible for dimensions to be confirmed and correlated at the job site; for information that pertains solely to the fabrication processes or to techniques of construction; and for coordination of the work of all trades.

BY: _____
DATE: 11/7/08

NO.	REVISION	BY	CHK'D	DATE

HOLES
BOLTS
COATING
CODE(S)
SCALE N.T.S.

HIGH STEEL STRUCTURES INC.
An ISO 9001:2000 Certified Company
An Affiliate of High Industries Inc.
Lancaster Facility: 915 Old Philadelphia Pike, Lancaster, PA 17605-0008, Phone (717) 293-5281
Williamsport Facility: 3501 W. 4th Street, Williamsport, PA 17701, Phone (570) 326-9051
www.highsteel.com

ERECTION FRAMING PLAN
VT ROUTE 279 OVER FURNACE BROOK
VT ROUTE 279 STA. 8+542.000 TO STA. 8+685.000
TOWN OF BENNINGTON VERMONT, BRIDGE B12
STATE OF VERMONT
AGENCY OF TRANSPORTATION

	AC NH F019-1(53)	FED. AID PROJ. NO.	
GENERAL CONTRACTOR	J.A. McDONALD, INC.	HSSI PROJ. MGR	DEB KUPRES

SHPMT	3	DRAWING MANAGER	BRITIGAN (IH)	MADE BY	MAF	CHK'D. BY	CS	DATE	11-28-07
STATE	VT	HSSI PROJECT NUMBER	S-1070147	HSSI STRUCT. ID	A	DRAWING NUMBER	E2 OF E5		

1070147A X1 12/3/07 12/3/07Approval TO:J.A. McDonald, Inc.

PLOTTED: 11/30/2007 12:42:56 PM
BY: MKreudel
SHIPMENT 01 PM&ENG: 5082817 PRD: 5082818 SHIP&ERECT.: 5082819

METRIC

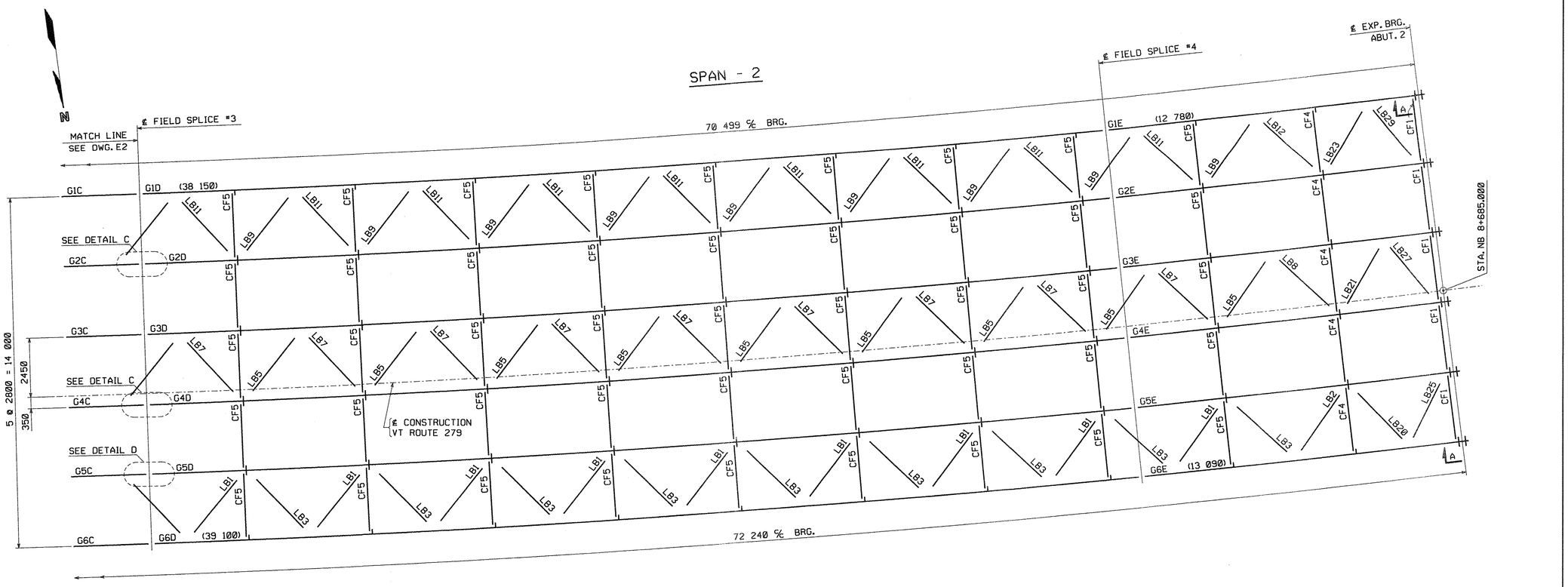

ERECTION FRAMING PLAN

CONTRACTOR NOTE:
ELEVATIONS ARE GIVEN TO BOTTOM OF STEEL - DO NOT POUR TO FINAL ELEVATIONS WITHOUT VERIFICATION OF BEARING HEIGHTS AND BRIDGE SEATS.

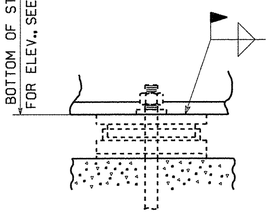

SECTION A

ELEVATIONS	
LINE	ABUT 2
G1	248.940
G2	249.159
G3	249.377
G4	249.595
G5	249.814
G6	250.032

NOTES:
WORK THIS DRAWING WITH DRAWINGS E1, E2 AND E4

TVGA CONSULTANTS

☒ NO EXCEPTIONS TAKEN ☐ REJECTED
☐ FURNISH AS CORRECTED
☐ REVISE AND RESUBMIT
ENGINEER has reviewed Shop Drawings and Samples and other data which Contractor is required to submit, only for conformance with the information given in the Contract Documents and compatibility with the design concept of the completed Project as a functioning whole as indicated in the Contract Documents. Such reviews do not extend to means, methods, techniques, sequences or procedures of construction or to safety precautions and programs incident thereto. Contractor is responsible for dimensions to be confirmed and correlated at the job site; for information that pertains solely to the fabrication processes or to techniques of construction; and for coordination of the work of all trades.

BY:
DATE: 12/10/07

NO.	REVISION	BY	CHK'D	DATE
△				
△				
△				

HOLES
BOLTS
COATING
CODE(S)
SCALE N.T.S.

HIGH STEEL STRUCTURES INC.
An ISO 9001:2000 Certified Company
An Affiliate of High Industries Inc.
Lancaster Facility
1915 Old Philadelphia Pike
Lancaster, PA 17605-0008
Phone (717) 299-5211
Williamsport Facility
350 I W. 4th Street
Williamsport, PA 17701
Phone (570) 326-9051
www.highsteel.com

ERECTION FRAMING PLAN
VT ROUTE 279 OVER FURNACE BROOK
VT ROUTE 279 STA. 8+542.000 TO STA. 8+685.000
TOWN OF BENNINGTON VERMONT, BRIDGE B12
STATE OF VERMONT
AGENCY OF TRANSPORTATION

	AC NH F019-1(53)	FED. AID PROJ. NO.			
GENERAL CONTRACTOR	J.A. McDONALD, INC.	HSSI PROJ. MGR	DEB KUPRES		
SHPMT 3	DRAWING MANAGER: BRITIGAN (IH)	MADE BY: MAF	CHK'D. BY: CS	DATE: 11-28-07	
STATE VT	HSSI PROJECT NUMBER: S-1070147	HSSI STRUCT. ID: A	DRAWING NUMBER: E3 OF E5		

1070147A X1 12/3/07 12/3/07Approval TO:J.A. McDonald, Inc.

PLOTTED: 11/30/2007 12:43:08 PM BY: MKreidel SHIPMENT 01 PM&ENG. 5002817 PRDs 5002818 SHP&ERECT.: 5002819

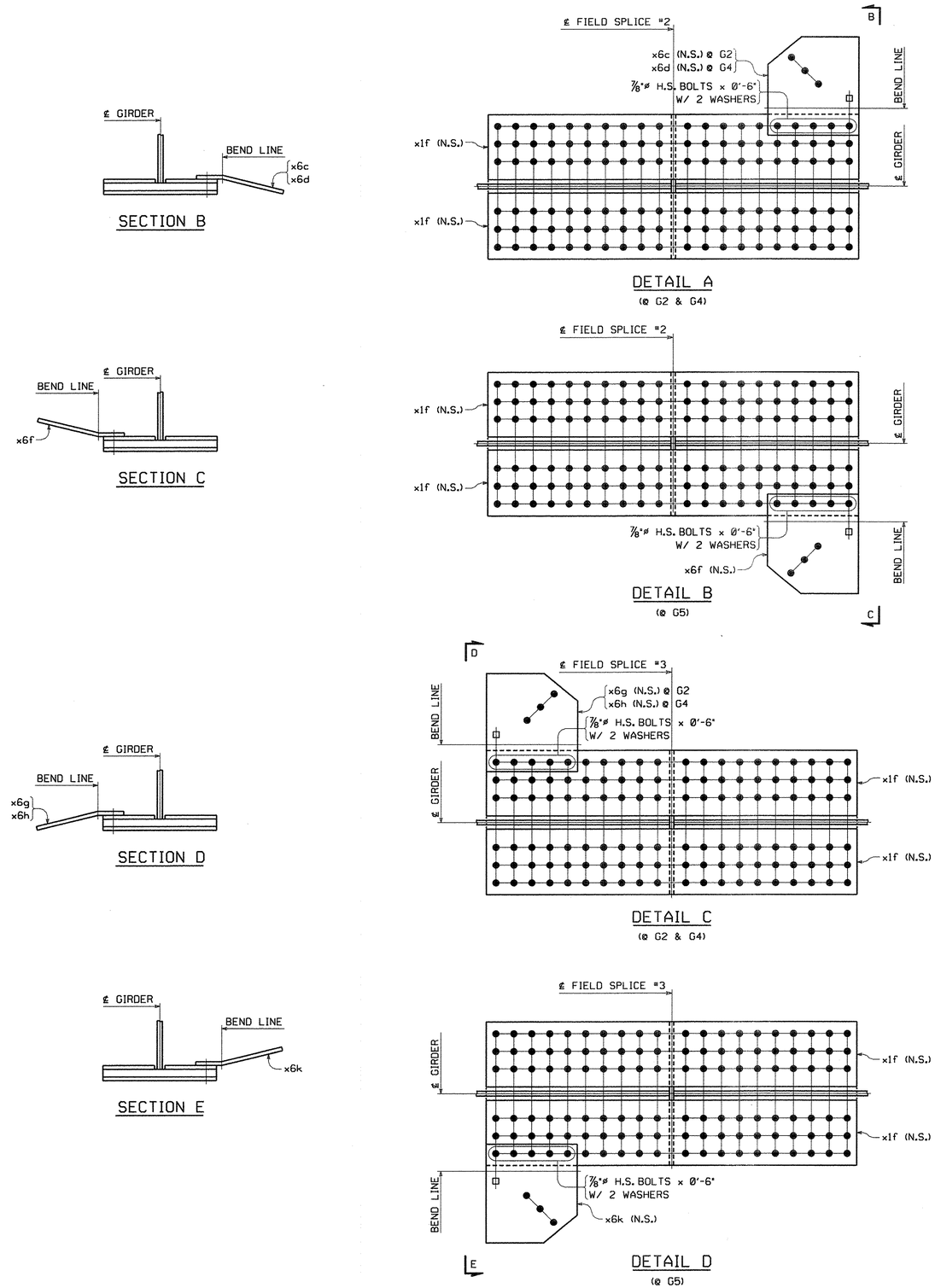

TVGA CONSULTANTS

☒ NO EXCEPTIONS TAKEN ☐ REJECTED
☐ FURNISH AS CORRECTED
☐ REVISE AND RESUBMIT

ENGINEER has reviewed Shop Drawings and Samples and other data which Contractor is required to submit, only for conformance with the information given in the Contract Documents and compatibility with the design concept of the completed Project as a functioning whole as indicated in the Contract Documents. Such reviews do not extend to means, methods, techniques, sequences or procedures of construction or to safety precautions and programs incident thereto. Contractor is responsible for dimensions to be confirmed and correlated at the job site; for information that pertains solely to the fabrication processes or to techniques of construction; and for coordination of the work of all trades.

BY: [signature]
DATE: 1/8/08

NO.	REVISION	BY	CHK'D	DATE
△				
△				
△				

HOLES
BOLTS
COATING
CODE(S)
SCALE N.T.S.

HIGH STEEL STRUCTURES INC.
An ISO 9001:2000 Certified Company
An Affiliate of High Industries Inc.
Lancaster Facility: 1915 Old Philadelphia Pike, Lancaster, PA 17605-0008, Phone (717) 299-5211
Williamsport Facility: 3501 W. 4th Street, Williamsport, PA 17701, Phone (570) 326-9051
www.Highsteel.com

ERECTION PLAN ~ DETAILS
VT ROUTE 279 OVER FURNACE BROOK
VT ROUTE 279 STA. 8+542.000 TO STA. 8+685.000
TOWN OF BENNINGTON VERMONT, BRIDGE B12
STATE OF VERMONT
AGENCY OF TRANSPORTATION

	AC NH F019-1(53)	FED. AID PROJ. NO.	
GENERAL CONTRACTOR	J.A. McDONALD, INC.	HSSI PROJ. MGR	DEB KUPRES

SHPMT	3	DRAWING MANAGER	BRITIGAN (IH)	MADE BY	MAF	CHK'D. BY	CS	DATE	11-29-07
STATE	VT	HSSI PROJECT NUMBER	S-1070147	HSSI STRUCT. ID	A	DRAWING NUMBER	E4 OF E5		

METRIC
SHIPMENT 01 PM&ENG: 5002817 PRD: 5002818 SHIP&ERECT.: 5002819
BY: MKrendel
PLOTTED: 11/30/2007 12:43:10 PM
60

1070147A X1 12/3/07 12/3/07Approval TO:J.A. McDonald, Inc.

METRIC

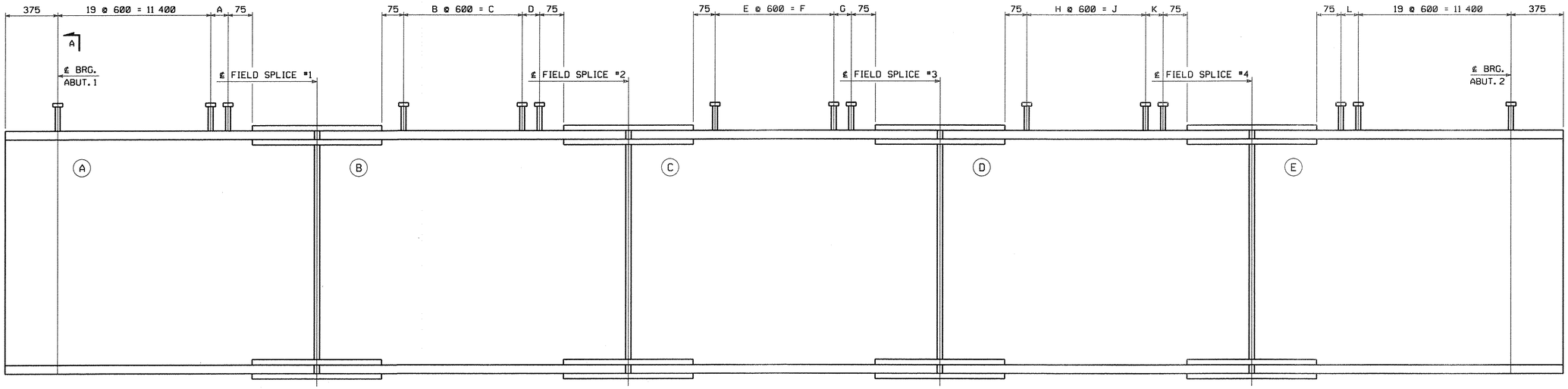

SHEAR STUD CONNECTION LOCATION LAYOUT

FOR NOTES, SEE DRAWING E1.
WORK THIS DRAWING WITH DRAWINGS E1 THRU E3.

(A) INDICATES SUFFIX MARK OF SHIPPING PIECE.

MARK	A	B	C	D	E	F	G	H	J	K	L
G1	414	60	36 000	619	63	37 800	435	60	36 000	616	245
G2	475	61	36 600	209	63	37 800	631	61	36 600	207	308
G3	534	61	36 600	398	64	38 400	228	61	36 600	395	369
G4	594	61	36 600	586	64	38 400	424	61	36 600	585	431
G5	656	62	37 200	176	64	38 400	620	62	37 200	175	491
G6	718	62	37 200	365	65	39 000	215	62	37 200	364	553

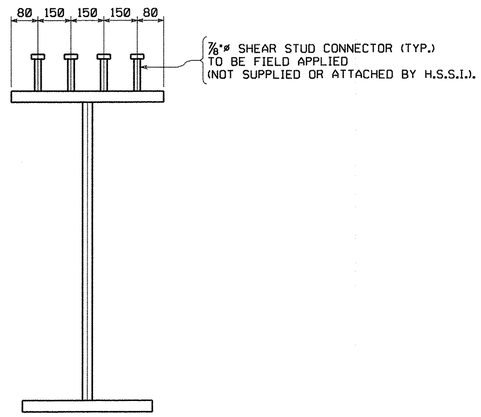

SECTION A

TVGA CONSULTANTS

☒ NO EXCEPTIONS TAKEN ☐ REJECTED
☐ FURNISH AS CORRECTED
☐ REVISE AND RESUBMIT

ENGINEER has reviewed Shop Drawings and Samples and other data which Contractor is required to submit, only for conformance with the information given in the Contract Documents and compatibility with the design concept of the completed Project as a functioning whole as indicated in the Contract Documents. Such reviews do not extend to means, methods, techniques, sequences or procedures of construction or to safety precautions and programs incident thereto. Contractor is responsible for dimensions to be confirmed and correlated at the job site; for information that pertains solely to the fabrication processes or to techniques of construction; and for coordination of the work of all trades.

BY:
DATE: 12/7/07

NO.	REVISION	BY	CHK'D	DATE

HOLES
BOLTS
COATING
CODE(S)
SCALE N.T.S.

HIGH STEEL STRUCTURES INC.
An Affiliate of High Industries Inc.
An ISO 9002:2000 Certified Company
Lancaster Facility
995 Old Philadelphia Pike
Lancaster, PA 17605-0008
Phone (717) 299-5211
Williamsport Facility
3501 W. 4th Street
Williamsport, PA 17701
Phone (570) 326-9051
www.Highsteel.com

ERECTION PLAN ~ STUD LAYOUTS
VT ROUTE 279 OVER FURNACE BROOK
VT ROUTE 279 STA. 8+542.000 TO STA. 8+685.000
TOWN OF BENNINGTON VERMONT, BRIDGE B12
STATE OF VERMONT
AGENCY OF TRANSPORTATION

	AC NH F019-1(53)	FED. AID PROJ. NO.	
GENERAL CONTRACTOR	J.A. McDONALD, INC.	HSSI PROJ. MGR	DEB KUPRES
SHPMT 3	DRAWING MANAGER: BRITIGAN (IH)	MADE BY: MAF	CHK'D. BY: CS	DATE: 11-29-07
STATE VT	HSSI PROJECT NUMBER: S-1070147	HSSI STRUCT. ©: A	DRAWING NUMBER: E5 OF E5

PLOTTED: 11/30/2007 12:43:11 PM
BY: MKreidel
SHIPMENT 01
PW&ENG: 58002817 PRD: 58002818 SHIP&PRECT.: 58002819

1070147A X1 12/3/07 12/3/07Approval TO:J.A. McDonald, Inc.

METRIC

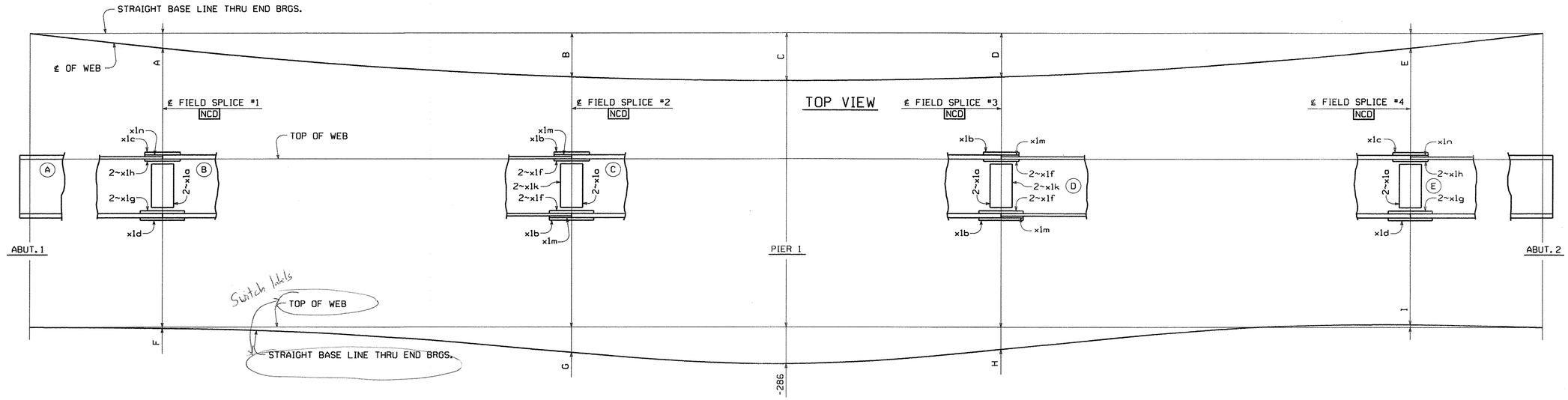

LINE ASSEMBLY DIAGRAM

GDR. LINE	A	B	C	D	E	F	G	H	I
G1	-1413	-4030	-4379	-4025	-1397	-10	-197	-174	22
G2	-1420	-4050	-4400	-4045	-1404	-5	-193	-170	28
G3	-1427	-4070	-4422	-4065	-1411	1	-190	-167	33
G4	-1434	-4090	-4444	-4085	-1418	6	-184	-162	39
G5	-1441	-4110	-4465	-4105	-1425	12	-181	-158	44
G6	-1448	-4130	-4487	-4125	-1432	20	-176	-153	52

NOTES:

MATCH MARKING OF SPLICE PLATES IS NOT REQUIRED.
FOR GIRDER MARKS, SEE THE ERECTION FRAMING PLAN DRAWINGS.
HOLES MARKED NCD ARE TO BE DRILLED FULL SIZE USING A CNC MACHINING CENTER OR DRILLED FULL SIZE USING DRILL TEMPLATES.
(A) INDICATES SUFFIX MARK OF SHIPPING PIECE.
FIELD SPLICE PLATES TO BE SHIPPED WITH THE (B)(D) GIRDERS.
MINIMUM ONE LINE SET-UP AS REQUIRED BY SHOP INSPECTOR (TYPICALLY FIRST GIRDER LINE FABRICATED WITH SPLICE PLATES ATTACHED AND PINED).
NEGATIVE CAMBER ORDINATES INDICATE THAT TOP OF WEB IS BELOW BASE LINE.

TVGA CONSULTANTS

☐ NO EXCEPTIONS TAKEN ☐ REJECTED
☒ FURNISH AS CORRECTED
☐ REVISE AND RESUBMIT

ENGINEER has reviewed Shop Drawings and Samples and other data which Contractor is required to submit, only for conformance with the information given in the Contract Documents and compatibility with the design concept of the completed Project as a functioning whole as indicated in the Contract Documents. Such reviews do not extend to means, methods, techniques, sequences or procedures of construction or to safety precautions and programs incident thereto. Contractor is responsible for dimensions to be confirmed and correlated at the job site; for information that pertains solely to the fabrication processes or to techniques of construction; and for coordination of the work of all trades.

BY: _____
DATE: 12/6/07

NO.	REVISION	BY	CHK'D	DATE
△				
△				
△				

HOLES: NONE
BOLTS: NONE
COATING: NONE
CODE(S): 30
SCALE: N.T.S.

HIGH STEEL STRUCTURES INC.
An ISO 9001:2000 Certified Company
An Affiliate of High Industries Inc.
Lancaster Facility: 195 Old Philadelphia Pike, Lancaster, PA 17605-0008, Phone (717) 299-5211
Willamsport Facility: 3501 W. 4th Street, Willamsport, PA 17701, Phone (570) 326-9051
www.highsteel.com

SHOP ASSEMBLY DIAGRAM
VT ROUTE 279 OVER FURNACE BROOK
VT ROUTE 279 STA. 8+542.000 TO STA. 8+685.000
TOWN OF BENNINGTON VERMONT, BRIDGE B12
STATE OF VERMONT
AGENCY OF TRANSPORTATION

	AC NH F019-1(53)	FED. AID PROJ. NO.	
GENERAL CONTRACTOR	J.A. McDONALD, INC.	HSSI PROJ. MGR	DEB KUPRES
SHPMT 3	DRAWING MANAGER: BRITIGAN (IH)	MADE BY: ERS	CHK'D. BY: CS	DATE: 11-15-07
STATE VT	HSSI PROJECT NUMBER: S-1070147	HSSI STRUCT. ID: A	DRAWING NUMBER: SA1 OF SA1

PLOTTED: 11/30/2007 12:43:23 PM BY: MKreadel SHIPMENT 01 PM&ENG: 5802817 PROD: 5802818 SHIP&ERECT.: 5802819

1070147A X1 12/3/07 12/3/07Approval TO:J.A. McDonald, Inc.

METRIC

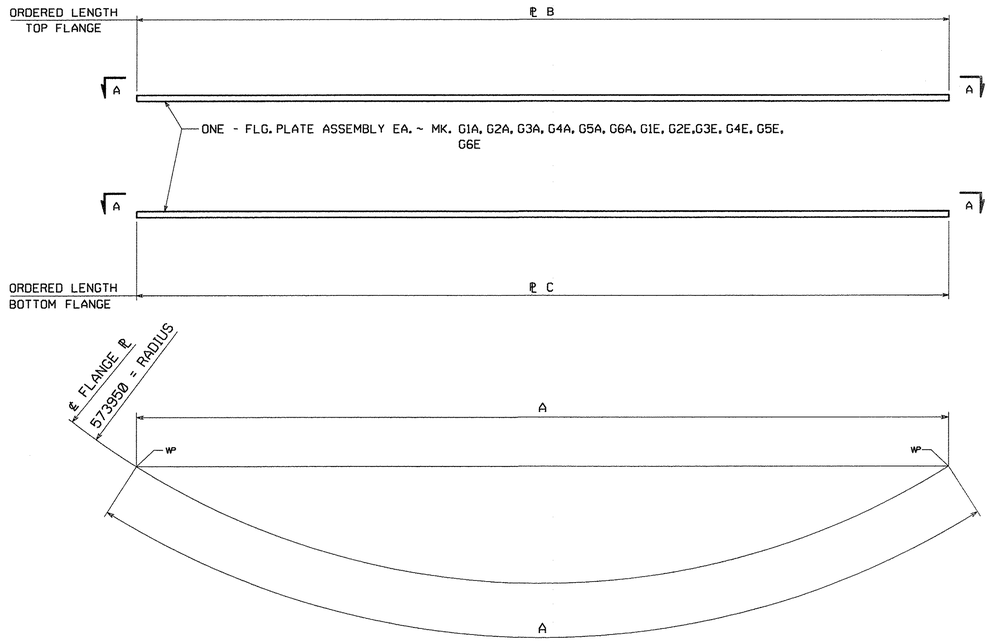

VIEW A-A

MARK	FLANGE	A	B	C
G1A	TOP	12 879	28 x 610 x 12 940 (04007)	--
G2A	TOP	12 940	28 x 610 x 13 000 (04007)	--
G3A	TOP	12 999	28 x 610 x 13 060 (04007)	--
G4A	TOP	13 059	28 x 610 x 13 100 (04007)	--
G5A	TOP	13 121	28 x 610 x 13 160 (04007)	--
G6A	TOP	13 183	28 x 610 x 13 220 (04007)	--
G1A	BOTTOM	12 779	--	40 x 610 x 12 880 (04005)
G2A	BOTTOM	12 839	--	40 x 610 x 12 880 (04005)
G3A	BOTTOM	12 900	--	40 x 610 x 12 940 (04005)
G4A	BOTTOM	12 963	--	40 x 610 x 13 000 (04005)
G5A	BOTTOM	13 024	--	40 x 610 x 13 060 (04005)
G6A	BOTTOM	13 084	--	40 x 610 x 13 120 (04005)
G1E	TOP	17 710	28 x 610 x 12 800 (04007)	--
G2E	TOP	12 773	28 x 610 x 12 800 (04007)	--
G3E	TOP	12 834	28 x 610 x 12 940 (04007)	--
G4E	TOP	12 896	28 x 610 x 12 940 (04007)	--
G5E	TOP	12 956	28 x 610 x 13 000 (04007)	--
G6E	TOP	13 018	28 x 610 x 13 060 (04007)	--
G1E	BOTTOM	12 774	--	40 x 610 x 12 880 (04005)
G2E	BOTTOM	12 835	--	40 x 610 x 12 880 (04005)
G3E	BOTTOM	12 896	--	40 x 610 x 12 940 (04005)
G4E	BOTTOM	12 957	--	40 x 610 x 13 000 (04005)
G5E	BOTTOM	13 018	--	40 x 610 x 13 060 (04005)
G6E	BOTTOM	13 079	--	40 x 610 x 13 120 (04005)

17 710

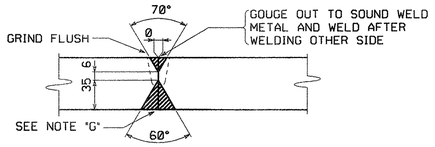

TYPICAL FLANGE PLATE SPLICE
FOR FLANGE PLATES THICKER THAN 50 mm (B-U3c-S)

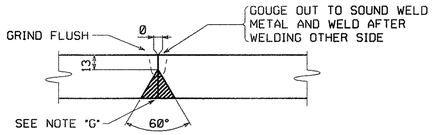

TYPICAL FLANGE PLATE SPLICE
FOR FLANGE PLATES 50 mm THICK AND UNDER (B-L2c-S)

NOTE "G"

ALL SPLICES MAY HAVE A MAXIMUM REINFORCEMENT OF 3 mm. GRIND SMOOTH AT SPLICES THAT ARE TO BE TESTED AND ALL BOTTOM FLANGE SPLICES.

TVGA CONSULTANTS

☐ NO EXCEPTIONS TAKEN ☐ REJECTED
☒ FURNISH AS CORRECTED
☐ REVISE AND RESUBMIT

ENGINEER has reviewed Shop Drawings and Samples and other data which Contractor is required to submit, only for conformance with the information given in the Contract Documents and compatibility with the design concept of the completed Project as a functioning whole as indicated in the Contract Documents. Such reviews do not extend to means, methods, techniques, sequences or procedures of construction or to safety precautions and programs incident thereto. Contractor is responsible for dimensions to be confirmed and correlated at the job site; for information that pertains solely to the fabrication processes or to techniques of construction; and for coordination of the work of all trades.

BY: Ald
DATE: 11/8/08

NOTES:

FOR GENERAL SHOP NOTES, SEE DRAWING GN1.
ALL FLANGE PLATES REQUIRE CHARPY V-NOTCH TEST.
DIMENSIONS SHOWN THUS: [14 210] ARE THE ACTUAL DIMENSIONS THAT WILL APPEAR ON THE GIRDER DETAIL DRAWINGS.
THE LETTERS "t" & "c" AT FLANGE SPLICES INDICATE TENSION AND COMPRESSION SPLICES RESPECTIVELY.
ALL SPLICES MARKED "t" TO BE RADIOGRAPHICALLY TESTED 100%.
ALL SPLICES MARKED "c" TO BE RADIOGRAPHICALLY TESTED 25%.

NO.	REVISION	BY	CHK'D	DATE
△				
△				
△				

HOLES
BOLTS
COATING
CODE(S) 30
SCALE N.T.S.

HIGH STEEL STRUCTURES INC.
An Affiliate of High Industries Inc.
An ISO 9001:2000 Certified Company
Lancaster Facility
915 Old Philadelphia Pike
Lancaster, PA 17605-0008
Phone (717) 299-5211
Williamsport Facility
3501 W. 4th. Street
Williamsport, PA 17701
Phone (570) 326-9051
www.Highsteel.com

FLANGE SPLICE DETAILS
VT ROUTE 279 OVER FURNACE BROOK
VT ROUTE 279 STA. 8+542.000 TO STA. 8+685.000
TOWN OF BENNINGTON VERMONT, BRIDGE B12
STATE OF VERMONT
AGENCY OF TRANSPORTATION

	AC NH F019-1(53)	FED. AID PROJ. NO.	
GENERAL CONTRACTOR	J.A. McDONALD, INC.	HSSI PROJ. MGR	DEB KUPRES

SHPMT	3	DRAWING MANAGER	BRITIGAN (IH)	MADE BY	MAF	CHK'D. BY	CS	DATE	11-15-07
STATE	VT	HSSI PROJECT NUMBER	S-1070147	HSSI STRUCT. ID	A	DRAWING NUMBER	FS1 OF FS2		

1070147A X1 12/3/07 12/3/07Approval TO:J.A. McDonald, Inc.

PLOTTED: 11/28/2007 12:43:13 PM
BY: MKreidel
SHIPMENT 01 PM&ENG: 5082812 PROD: 5082818 SHIP&ERECT.: 5082813

METRIC

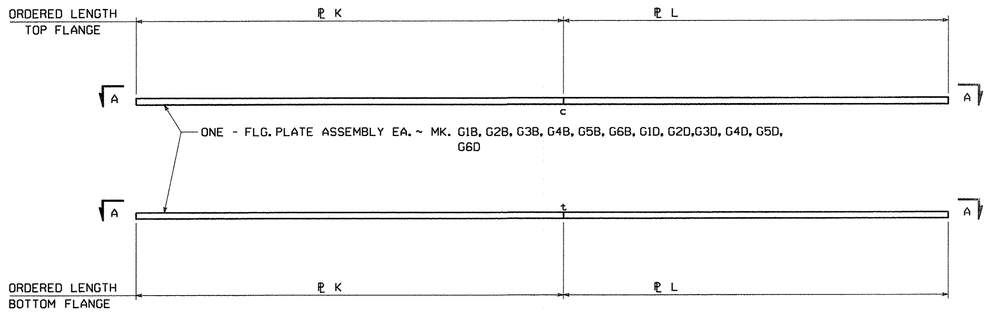

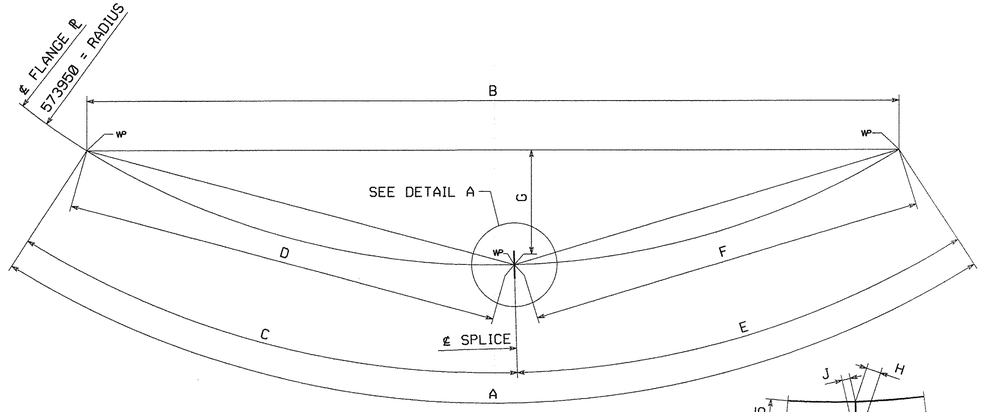

VIEW A-A

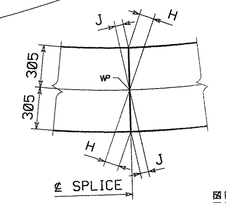

DETAIL A

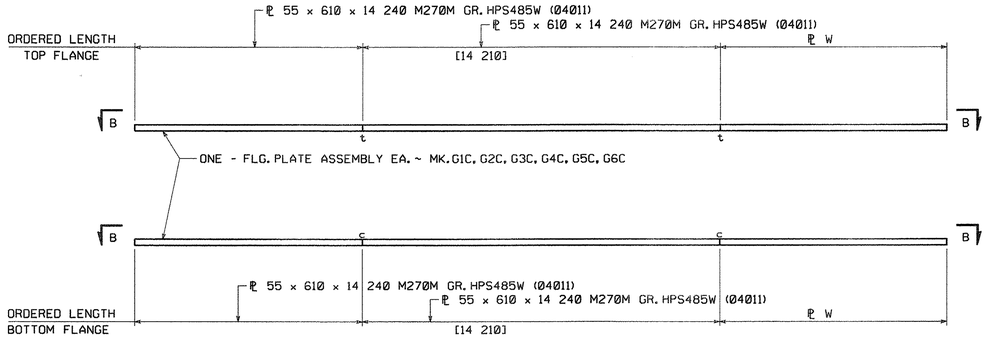

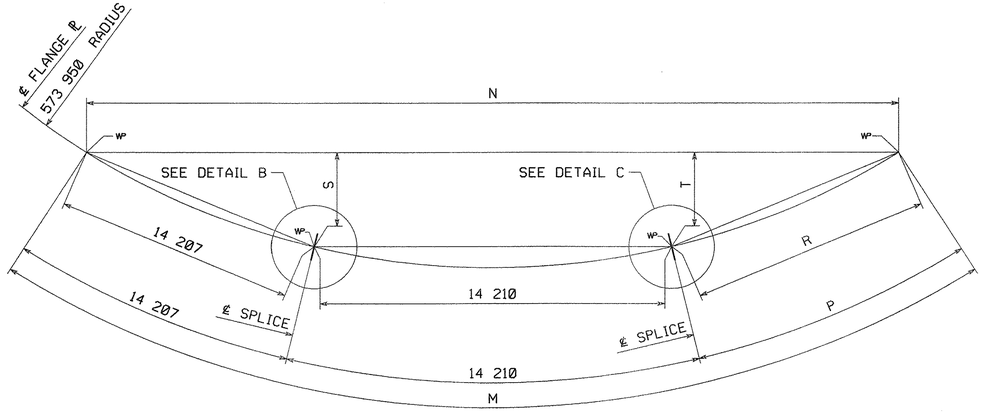

VIEW B-B

MARK	FLANGE	M	N	P	R	S	T	W
G1C	TOP	39 916	39 908	11 499	11 498	318	285	55 x 610 x 11 580 M270M GR. HPS485W (04010)
G2C	TOP	40 112	40 104	11 695	11 694	321	289	55 x 610 x 11 780 M270M GR. HPS485W (04010)
G3C	TOP	40 309	40 300	11 892	11 892	323	294	55 x 610 x 11 980 M270M GR. HPS485W (04010)
G4C	TOP	40 505	40 496	12 088	12 088	325	299	55 x 610 x 12 180 M270M GR. HPS485W (04009)
G5C	TOP	40 701	40 692	12 284	12 284	328	304	55 x 610 x 12 360 M270M GR. HPS485W (04009)
G6C	TOP	40 896	40 887	12 479	12 479	330	309	55 x 610 x 12 560 M270M GR. HPS485W (04009)
G1C	BOTTOM	39 958	39 950	11 541	11 540	319	286	55 x 610 x 11 580 M270M GR. HPS485W (04010)
G2C	BOTTOM	40 157	40 148	11 740	11 739	321	291	55 x 610 x 11 780 M270M GR. HPS485W (04010)
G3C	BOTTOM	40 355	40 346	11 938	11 938	324	295	55 x 610 x 11 980 M270M GR. HPS485W (04010)
G4C	BOTTOM	40 552	40 543	12 135	12 135	326	300	55 x 610 x 12 180 M270M GR. HPS485W (04009)
G5C	BOTTOM	40 750	40 741	12 333	12 333	328	305	55 x 610 x 12 360 M270M GR. HPS485W (04009)
G6C	BOTTOM	40 948	40 939	12 531	12 531	331	310	55 x 610 x 12 560 M270M GR. HPS485W (04009)

TVGA CONSULTANTS

☒ NO EXCEPTIONS TAKEN ☐ REJECTED
☐ FURNISH AS CORRECTED
☐ REVISE AND RESUBMIT

ENGINEER has reviewed Shop Drawings and Samples and other data which Contractor is required to submit, only for conformance with the information given in the Contract Documents and compatibility with the design concept of the completed Project as a functioning whole as indicated in the Contract Documents. Such reviews do not extend to means, methods, techniques, sequences or procedures of construction or to safety precautions and programs incident thereto. Contractor is responsible for dimensions to be confirmed and correlated at the job site; for information that pertains solely to the fabrication processes or to techniques of construction; and for coordination of the work of all trades.

BY:
DATE: 11/8/08

MARK	FLANGE	A	B	C	D	E	F	G	H	J	K	L
G1B	TOP	38 149	38 142	21 247	21 246	16 902	16 901	313	6	4	40 x 610 x 21 280 (04003)	40 x 610 x 16 940 (04002)
G2B	TOP	38 339	38 332	21 247	21 246	17 092	17 091	316	6	5	40 x 610 x 21 280 (04003)	40 x 610 x 17 140 (04002)
G3B	TOP	38 528	38 521	21 247	21 246	17 281	17 280	320	6	5	40 x 610 x 21 280 (04003)	40 x 610 x 17 320 (04002)
G4B	TOP	38 716	38 709	21 247	21 246	17 469	17 468	323	6	5	40 x 610 x 21 280 (04003)	40 x 610 x 17 500 (04001)
G5B	TOP	38 906	38 899	21 247	21 246	17 659	17 658	327	6	5	40 x 610 x 21 280 (04003)	40 x 610 x 17 700 (04001)
G6B	TOP	39 095	39 088	21 247	21 246	17 848	17 847	330	6	5	40 x 610 x 21 280 (04003)	40 x 610 x 17 880 (04001)
G1B	BOTTOM	38 133	38 126	21 247	21 246	16 886	16 885	313	6	4	40 x 610 x 21 280 (04003)	40 x 610 x 16 940 (04002)
G2B	BOTTOM	38 319	38 312	21 247	21 246	17 072	17 071	316	6	5	40 x 610 x 21 280 (04003)	40 x 610 x 17 140 (04002)
G3B	BOTTOM	38 506	38 499	21 247	21 246	17 259	17 258	319	6	5	40 x 610 x 21 280 (04003)	40 x 610 x 17 320 (04002)
G4B	BOTTOM	38 694	38 687	21 247	21 246	17 447	17 446	323	6	5	40 x 610 x 21 280 (04003)	40 x 610 x 17 500 (04001)
G5B	BOTTOM	38 881	38 874	21 247	21 246	17 634	17 633	326	6	5	40 x 610 x 21 280 (04003)	40 x 610 x 17 700 (04001)
G6B	BOTTOM	39 069	39 062	21 247	21 246	17 822	17 821	330	6	5	40 x 610 x 21 280 (04003)	40 x 610 x 17 880 (04001)
G1D	TOP	38 146	38 139	16 899	16 898	21 247	21 246	313	4	6	40 x 610 x 16 940 (04002)	40 x 610 x 21 280 (04003)
G2D	TOP	38 337	38 330	17 090	17 089	21 247	21 246	316	5	6	40 x 610 x 17 140 (04002)	40 x 610 x 21 280 (04003)
G3D	TOP	38 525	38 518	17 278	17 277	21 247	21 246	320	5	6	40 x 610 x 17 320 (04002)	40 x 610 x 21 280 (04003)
G4D	TOP	38 715	38 708	17 468	17 467	21 247	21 246	323	5	6	40 x 610 x 17 500 (04001)	40 x 610 x 21 280 (04003)
G5D	TOP	38 905	38 898	17 658	17 657	21 247	21 246	327	5	6	40 x 610 x 17 700 (04001)	40 x 610 x 21 280 (04003)
G6D	TOP	39 094	39 087	17 847	17 846	21 247	21 246	330	5	6	40 x 610 x 17 880 (04001)	40 x 610 x 21 280 (04003)
G1D	BOTTOM	38 122	38 115	16 875	16 874	21 247	21 246	312	4	6	40 x 610 x 16 940 (04002)	40 x 610 x 21 280 (04003)
G2D	BOTTOM	38 309	38 302	17 062	17 061	21 247	21 246	316	5	6	40 x 610 x 17 140 (04002)	40 x 610 x 21 280 (04003)
G3D	BOTTOM	38 496	38 489	17 249	17 248	21 247	21 246	319	5	6	40 x 610 x 17 320 (04002)	40 x 610 x 21 280 (04003)
G4D	BOTTOM	38 684	38 677	17 437	17 436	21 247	21 246	323	5	6	40 x 610 x 17 500 (04001)	40 x 610 x 21 280 (04003)
G5D	BOTTOM	38 872	38 865	17 625	17 624	21 247	21 246	326	5	6	40 x 610 x 17 700 (04001)	40 x 610 x 21 280 (04003)
G6D	BOTTOM	39 059	39 052	17 812	17 811	21 247	21 246	330	5	6	40 x 610 x 17 880 (04001)	40 x 610 x 21 280 (04003)

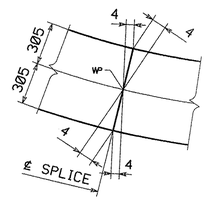

DETAIL B

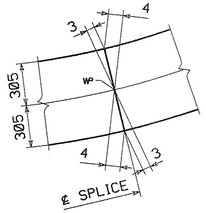

DETAIL C

NOTES:

FOR WELDING DETAILS, SEE DWG. FS1.
FOR OTHER NOTES, SEE DWG. FS1.

NO.	REVISION	BY	CHK'D	DATE

HOLES
BOLTS
COATING
CODE(S) 30
SCALE N.T.S.

HIGH STEEL STRUCTURES INC.
An ISO 9001:2000 Certified Company
An Affiliate of High Industries Inc.
Lancaster Facility
915 Old Philadelphia Pike
Lancaster, PA 17605-0008
Phone (717) 299-5211
Williamsport Facility
3501 W. 4th Street
Williamsport, Pa 17701
Phone (570) 326-9051
www.highsteel.com

FLANGE SPLICE DETAILS
VT ROUTE 279 OVER FURNACE BROOK
VT ROUTE 279 STA. 8+542.000 TO STA. 8+685.000
TOWN OF BENNINGTON VERMONT, BRIDGE B12
STATE OF VERMONT
AGENCY OF TRANSPORTATION

	AC NH F019-1(53)	FED. AID PROJ. NO.	
GENERAL CONTRACTOR	J.A. McDONALD, INC.	HSSI PROJ. MGR	DEB KUPRES
SHPMT 3	DRAWING MANAGER BRITIGAN (IH)	MADE BY MAF	CHK'D. BY CS	DATE 11-15-07
STATE VT	HSSI PROJECT NUMBER S-1070147	HSSI STRUCT. ID A	DRAWING NUMBER FS2 OF FS2

PLOTTED: 11/30/2007 12:43:15 PM BY: MKreidel SHIPMENT 01 PM&ENG: 5802817 PRD: 5802818 SHP&RECT.: 5802819

1070147A X1 12/3/07 12/3/07Approval TO:J.A. McDonald, Inc.

METRIC

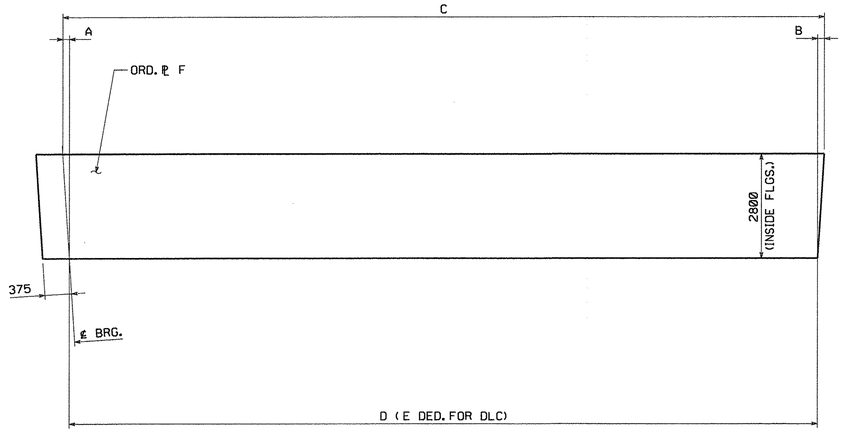

MARK	A	B	C	D	E	F
G1A	99	1	12 504	12 404	0	22 x 2840 x 12 960 (03011)
G2A	101	0	12 565	12 464	1	22 x 2860 x 13 120 (03001)
G3A	99	0	12 624	12 525	1	22 x 2860 x 13 120 (03001)
G5A	96	1	12 746	12 649	0	22 x 2840 x 13 180 (03005)
G6A	97	2	12 808	12 709	1	22 x 2840 x 13 240 (03005)

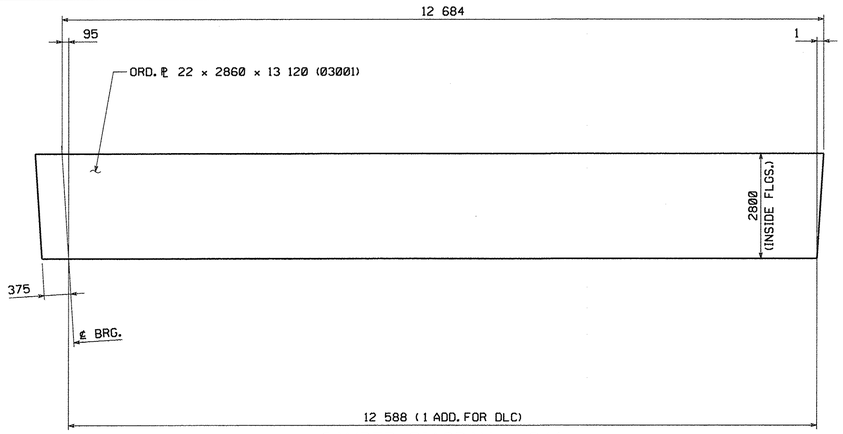

CAMBER DIAGRAM - G4A

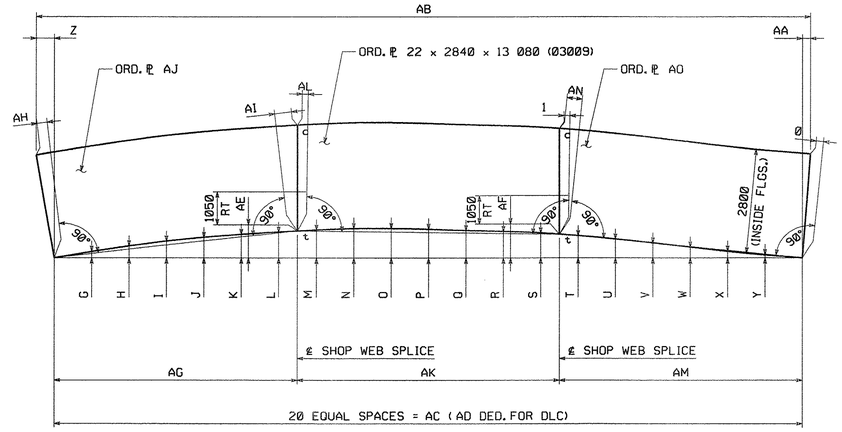

MARK	G	H	I	J	K	L	M	N	O	P	Q	R	S	T	U	V	W	X	Y	Z	AA	AB	AC	AD	AE	AF	AG	AH	AI
G1B	7	13	19	24	28	31	33	35	35	34	33	31	29	26	22	17	12	7	3	10	6	38 149	38 133	15	33	27	13 016	3	7
G2B	9	16	22	27	31	34	36	38	39	39	38	36	33	29	25	20	15	10	5	13	7	38 339	38 319	17	36	31	13 015	5	8
G3B	9	16	22	28	34	38	40	41	42	42	42	39	36	32	27	22	17	11	5	14	8	38 528	38 506	18	39	34	13 015	6	8
G4B	9	18	26	33	38	42	45	46	47	47	46	43	40	36	31	25	18	11	5	14	8	38 716	38 694	18	44	38	13 015	5	9
G5B	10	20	28	35	41	45	49	51	52	51	50	47	44	39	34	28	21	13	7	16	9	38 906	38 881	19	48	42	13 014	6	10
G6B	11	21	30	38	45	50	53	55	55	55	53	51	47	42	36	30	22	14	7	16	10	39 095	39 069	20	52	45	13 014	5	11

MARK	AJ	AK	AL	AM	AN	AO
G1B	22 x 2840 x 13 080 (03009)	13 019	1	12 098	6	22 x 2860 x 12 160 (03004)
G2B	22 x 2840 x 13 080 (03009)	13 018	1	12 286	7	22 x 2860 x 12 360 (03003)
G3B	22 x 2840 x 13 080 (03009)	13 018	2	12 474	7	22 x 2840 x 12 540 (03012)
G4B	22 x 2840 x 13 080 (03009)	13 018	2	12 662	8	22 x 2860 x 12 720 (03002)
G5B	22 x 2840 x 13 100 (03008)	13 017	2	12 849	9	22 x 2840 x 12 960 (03011)
G6B	22 x 2840 x 13 100 (03008)	13 017	2	13 037	9	22 x 2860 x 13 120 (03001)

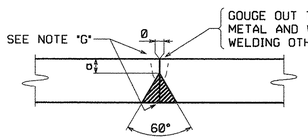

WEB THK.	a
22	7
26	10

TYPICAL WEB PLATE SPLICE
FOR WEB PLATES 13 mm TO 50 mm THICK (B-L2c-S)

NOTE "G"

ALL WELDS MAY HAVE A MAXIMUM REINFORCEMENT OF 3 mm. GRIND THE WELDS SMOOTH IN THE AREAS TO BE TESTED AND FOR THE FULL DEPTH OF WEB ON G1B, G1C, G1D (F.S.) AND G6B, G6C, G6D (N.S.).

TVGA CONSULTANTS

☒ NO EXCEPTIONS TAKEN ☐ REJECTED
☐ FURNISH AS CORRECTED
☐ REVISE AND RESUBMIT

ENGINEER has reviewed Shop Drawings and Samples and other data which Contractor is required to submit, only for conformance with the information given in the Contract Documents and compatibility with the design concept of the completed Project as a functioning whole as indicated in the Contract Documents. Such reviews do not extend to means, methods, techniques, sequences or procedures of construction or to safety precautions and programs incident thereto. Contractor is responsible for dimensions to be confirmed and correlated at the job site; for information that pertains solely to the fabrication processes or to techniques of construction and for coordination of the work of all trades.

BY: _____
DATE: 1/31/08

NOTES:

FOR GENERAL SHOP NOTES, SEE DRAWING GN1.
ALL WEB PLATES REQUIRE CHARPY V-NOTCH TEST.
NEGATIVE CAMBER ORDINATES INDICATE CURVE IS BELOW BASELINE.
THE LETTERS "t" & "c" AT WEB SPLICES INDICATE TENSION AND COMPRESSION EDGES AT SPLICES.
RT INDICATES RADIOGRAPHIC TESTING FOR 1Ø6 OF THE WEB DEPTH AT TENSION EDGE PLUS 25% OF THE REMAINDER.

NO.	REVISION	BY	CHK'D	DATE
△				
△				
△				

HOLES
BOLTS
COATING
CODE(S) 30
SCALE N.T.S.

HIGH STEEL STRUCTURES INC.
An Affiliate of High Industries Inc.
An ISO 9001:2000 Certified Company
Lancaster Facility
715 Old Philadelphia Pike
Lancaster, PA 17605-0008
Phone (717) 299-5211
Williamsport Facility
3501 W. 4th Street
Williamsport, PA 17701
Phone (570) 326-9061
www.highsteel.com

WEB CAMBER DIAGRAMS
VT ROUTE 279 OVER FURNACE BROOK
VT ROUTE 279 STA. 8+542.000 TO STA. 8+685.000
TOWN OF BENNINGTON VERMONT, BRIDGE B12
STATE OF VERMONT
AGENCY OF TRANSPORTATION

	AC NH F019-1(53)	FED. AID PROJ. NO.	
GENERAL CONTRACTOR	J.A. McDONALD, INC.	HSSI PROJ. MGR	DEB KUPRES
SHPMT 3	DRAWING MANAGER: BRITIGAN (IH)	MADE BY: KMA	CHK'D BY: SJA	DATE: 9/13/07
STATE VT	HSSI PROJECT NUMBER: S-1070147	HSSI STRUCT. ID: A	DRAWING NUMBER: WC1 OF WC3

PLOTTED: 11/30/2007 12:43:25 PM
BY: MKreidel
SHIPMENT 01 PM&ENG.59002817 PRD.59002818 SHIP&ERECT.59002819
60

1070147A X1 12/3/07 12/3/07Approval TO:J.A. McDonald, Inc.

METRIC

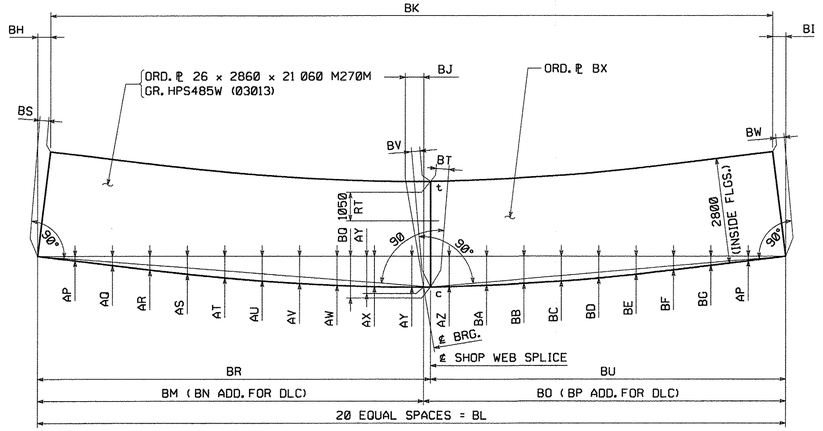

MARK	AP	AQ	AR	AS	AT	AU	AV	AW	AX	AY	AZ	BA	BB	BC	BD	BE	BF	BG	BH	BI	BJ	BK	BL	BM	BN	BO	BP	BQ
G1C	-15	-31	-45	-59	-71	-81	-90	-96	-100	-102	-100	-95	-89	-82	-72	-59	-45	-31	21	21	78	39 915	39 957	19 979	7	19 978	7	-101
G2C	-16	-33	-48	-62	-74	-84	-93	-100	-104	-106	-104	-99	-93	-85	-74	-62	-48	-33	22	23	77	40 111	40 156	20 079	8	20 077	8	-105
G3C	-17	-34	-50	-64	-77	-88	-97	-103	-107	-109	-107	-103	-96	-87	-77	-64	-49	-34	23	23	77	40 308	40 354	20 178	8	20 176	8	-108
G4C	-17	-35	-52	-67	-81	-93	-102	-109	-113	-114	-112	-108	-101	-92	-81	-67	-52	-35	23	24	76	40 504	40 551	20 276	8	20 275	8	-114
G5C	-18	-36	-52	-68	-82	-94	-103	-110	-115	-118	-116	-111	-104	-94	-82	-68	-52	-35	24	25	75	40 700	40 749	20 375	8	20 374	9	-117
G6C	-19	-37	-55	-71	-87	-99	-108	-116	-121	-123	-121	-116	-109	-99	-87	-72	-55	-37	26	26	75	40 895	40 947	20 474	9	20 473	9	-122

MARK	BR	BS	BT	BU	BV	BW	BX
G1C	21 003	8	13	18 954	15	6	26 x 2860 x 19 020 M270M GR. HPS485W (03018)
G2C	21 005	8	14	19 151	15	8	26 x 2860 x 19 400 M270M GR. HPS485W (03017)
G3C	21 005	9	14	19 349	16	7	26 x 2860 x 19 400 M270M GR. HPS485W (03017)
G4C	21 004	8	15	19 547	16	8	26 x 2860 x 19 600 M270M GR. HPS485W (03016)
G5C	21 005	8	16	19 744	16	8	26 x 2860 x 19 800 M270M GR. HPS485W (03015)
G6C	21 005	10	16	19 942	18	9	26 x 2860 x 20 000 M270M GR. HPS485W (03014)

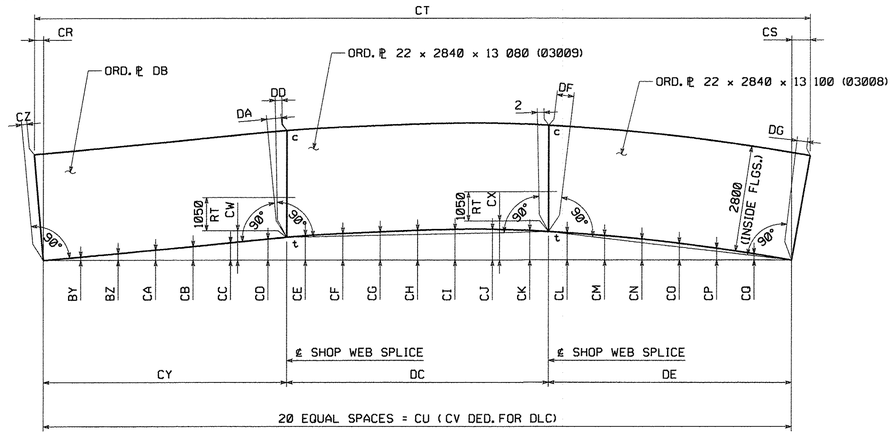

MARK	BY	BZ	CA	CB	CC	CD	CE	CF	CG	CH	CI	CJ	CK	CL	CM	CN	CO	CP	CQ	CR	CS	CT	CU	CV	CW	CX	CY	CZ	DA
G1D	6	11	17	23	30	36	41	45	48	50	52	52	50	46	42	36	29	20	11	8	16	38 146	38 122	15	38	49	12 085	1	9
G2D	7	13	20	26	33	39	45	50	53	55	56	55	53	49	44	38	31	22	12	10	18	38 337	38 309	17	42	52	12 273	0	10
G3D	7	14	21	28	35	42	48	53	57	59	59	59	57	53	48	40	32	23	13	10	19	38 525	38 496	18	45	56	12 461	0	10
G4D	7	15	23	31	39	46	52	57	60	63	64	63	61	57	51	44	35	25	14	11	20	38 715	38 684	19	49	60	12 649	0	11

MARK	DB	DC	DD	DE	DF	DG
G1D	22 x 2860 x 12 160 (03004)	13 020	3	13 017	11	5
G2D	22 x 2840 x 12 540 (03012)	13 019	3	13 016	11	7
G3D	22 x 2840 x 12 540 (03012)	13 019	2	13 016	12	7
G4D	22 x 2860 x 12 720 (03002)	13 019	2	13 016	13	7

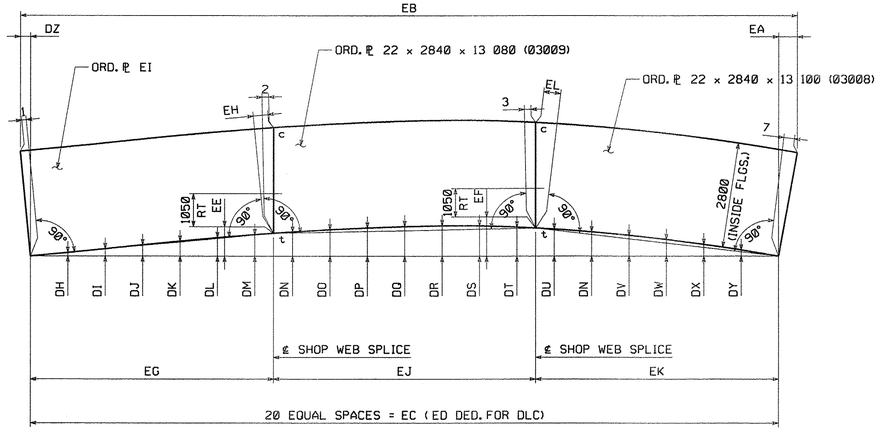

MARK	DH	DI	DJ	DK	DL	DM	DN	DO	DP	DQ	DR	DS	DT	DU	DV	DW	DX	DY	DZ	EA	EB	EC	ED	EE	EF	EG	EH
G5D	8	17	25	34	42	49	55	60	64	67	69	69	66	61	47	38	27	14	12	21	38 905	38 872	19	52	64	12 837	11
G6D	9	18	27	36	44	52	59	64	69	71	73	72	70	65	50	39	28	15	13	22	39 094	39 059	20	57	68	13 025	12

MARK	EI	EJ	EK	EL
G5D	22 x 2840 x 12 960 (03011)	13 019	13 016	13
G6D	22 x 2840 x 13 100 (03008)	13 018	13 015	14

TVGA CONSULTANTS

☒ NO EXCEPTIONS TAKEN ☐ REJECTED
☐ FURNISH AS CORRECTED
☐ REVISE AND RESUBMIT

ENGINEER has reviewed Shop Drawings and Samples and other data which Contractor is required to submit, only for conformance with the information given in the Contract Documents and compatibility with the design concept of the completed Project as a functioning whole as indicated in the Contract Documents. Such reviews do not extend to means, methods, techniques, sequences or procedures of construction or to safety precautions and programs incident thereto. Contractor is responsible for dimensions to be confirmed and correlated at the job site; for information that pertains solely to the fabrication processes or to techniques of construction; and for coordination of the work of all trades.

BY: _____
DATE: 9/26/07

NOTES:

FOR WELDING AND OTHER NOTES, SEE DWG. WC1.

NO.	REVISION	BY	CHK'D	DATE
△				
△				
△				

HOLES
BOLTS
COATING
CODE(S) 30
SCALE N.T.S.

HIGH STEEL STRUCTURES INC.
An ISO 9001:2000 Certified Company
An Affiliate of High Industries Inc.
Lancaster Facility, 915 Old Philadelphia Pike, Lancaster, PA 17605-0008, Phone (717) 299-5211
Williamsport Facility, 3501 W. 4th Street, Williamsport, PA 17701, Phone (570) 326-9051
www.highsteel.com

WEB CAMBER DIAGRAMS
VT ROUTE 279 OVER FURNACE BROOK
VT ROUTE 279 STA. 8+542.000 TO STA. 8+685.000
TOWN OF BENNINGTON VERMONT, BRIDGE B12
STATE OF VERMONT
AGENCY OF TRANSPORTATION

AC NH F019-1(53) — FED. AID PROJ. NO.
GENERAL CONTRACTOR: J.A. McDONALD, INC. — HSSI PROJ. MGR: DEB KUPRES
SHPMT: 3 — DRAWING MANAGER: BRITIGAN (IH) — MADE BY: KMA — CHK'D BY: SJA — DATE: 9/13/07
STATE: VT — HSSI PROJECT NUMBER: S-1070147 — HSSI STRUCT. ID: A — DRAWING NUMBER: WC2 OF WC3

1070147A X1 12/3/07 12/3/07Approval TO:J.A. McDonald, Inc.

PLOTTED: 11/30/2007 12:43:27 PM
BY: MKreidel
SHIPMENT 01
P&ENG: 5802812 PRO: 5802818 SHIP&ERECT: 5802818

METRIC

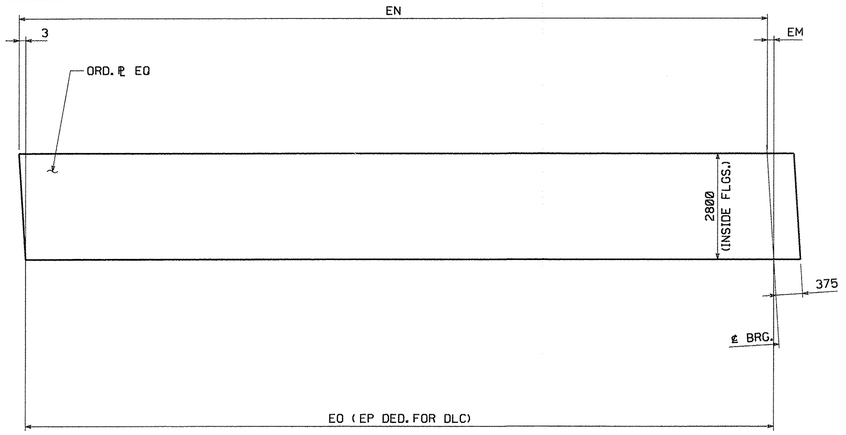

MARK	EM	EN	EQ	EP	EQ
G1E	67	12 335	12 399	0	22 x 2840 x 12 960 (03011)
G2E	65	12 398	12 460	1	22 x 2840 x 12 960 (03011)
G3E	65	12 459	12 521	1	22 x 2840 x 12 960 (03011)
G4E	64	12 521	12 582	1	22 x 2840 x 13 020 (03009)
G5E	65	12 581	12 643	1	22 x 2840 x 13 080 (03009)

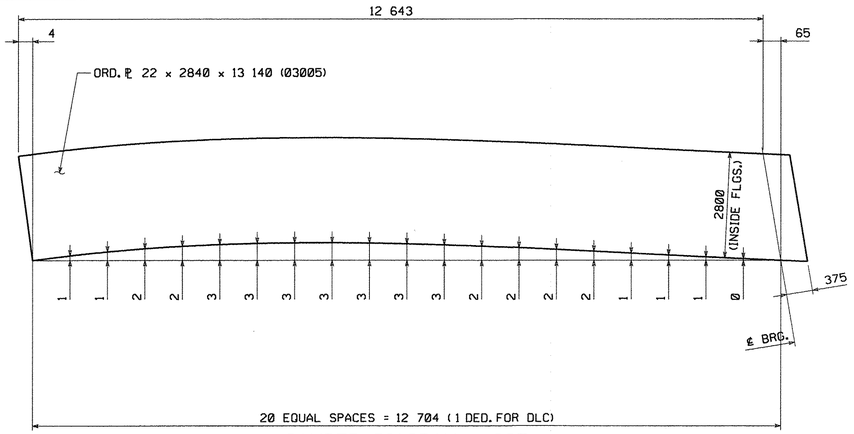

CAMBER DIAGRAM - G6E

TVGA CONSULTANTS

☒ NO EXCEPTIONS TAKEN ☐ REJECTED
☐ FURNISH AS CORRECTED
☐ REVISE AND RESUBMIT

ENGINEER has reviewed Shop Drawings and Samples and other data which Contractor is required to submit, only for conformance with the information given in the Contract Documents and compatibility with the design concept of the completed Project as a functioning whole as indicated in the Contract Documents. Such reviews do not extend to means, methods, techniques, sequences or procedures of construction or to safety precautions and programs incident thereto. Contractor is responsible for dimensions to be confirmed and correlated at the job site; for information that pertains solely to the fabrication processes or to techniques of construction; and for coordination of the work of all trades.

BY: _____
DATE: 12/8

NOTES:
FOR WELDING DETAILS AND OTHER NOTES, SEE DWG. WC1.

NO.	REVISION	BY	CHK'D	DATE
△				
△				
△				

HOLES
BOLTS
COATING
CODE(S) 30
SCALE N.T.S.

HIGH STEEL STRUCTURES INC.
An Affiliate of High Industries Inc.
An ISO 9001:2000 Certified Company
Lancaster Facility: 915 Old Philadelphia Pike, Lancaster, PA 17605-0008, Phone (717) 299-5201
Williamsport Facility: 3501 W. 4th Street, Williamsport, PA 17701, Phone (570) 326-9051
www.highsteel.com

WEB CAMBER DIAGRAMS
VT ROUTE 279 OVER FURNACE BROOK
VT ROUTE 279 STA. 8+542.000 TO STA. 8+685.000
TOWN OF BENNINGTON VERMONT, BRIDGE B12
STATE OF VERMONT
AGENCY OF TRANSPORTATION

	AC NH F019-1(53)	FED. AID PROJ. NO.	
GENERAL CONTRACTOR	J.A. McDONALD, INC.	HSSI PROJ. MGR	DEB KUPRES
SHPMT 3	DRAWING MANAGER: BRITIGAN (IH)	MADE BY: KMA	CHK'D. BY: SJA	DATE: 9/13/07
STATE VT	HSSI PROJECT NUMBER: S-1070147	HSSI STRUCT. ID: A	DRAWING NUMBER: WC3 OF WC3

PLOTTED: 11/30/2007 12:43:28 PM
BY: MKreidel
SHIPMENT 01 PM&ENG: 5082817 PROD: 5082818 SHIP&ERECT.: 5082819

1070147A X1 12/3/07 12/3/07Approval TO:J.A. McDonald, Inc.

METRIC

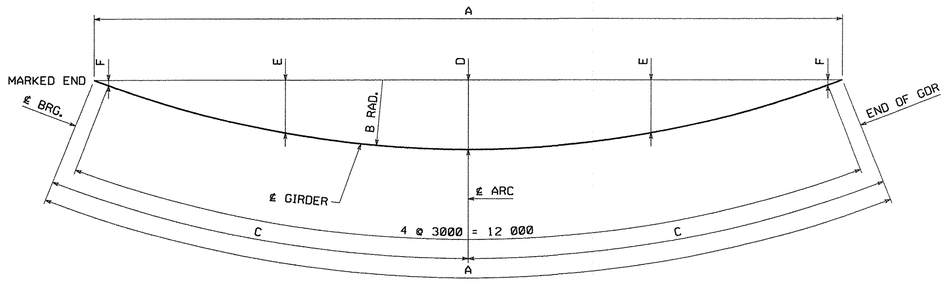

MARK	A	B	C	D	E	F
G1A	12 504	566 950	6252	34	27	3
G2A	12 565	569 750	6283	35	27	3
G3A	12 624	572 550	6312	35	27	3
G4A	12 684	575 350	6342	35	27	4
G5A	12 746	578 150	6373	35	27	4
G6A	12 808	580 950	6404	35	28	4

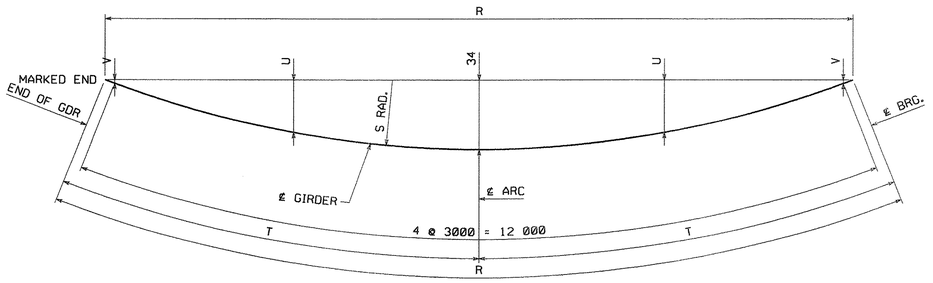

MARK	R	S	T	U	V
G1E	12 335	566 950	6168	26	2
G2E	12 398	569 750	6199	26	2
G3E	12 459	572 550	6230	26	2
G4E	12 521	575 350	6261	26	3
G5E	12 581	578 150	6291	26	3
G6E	12 643	580 950	6322	27	3

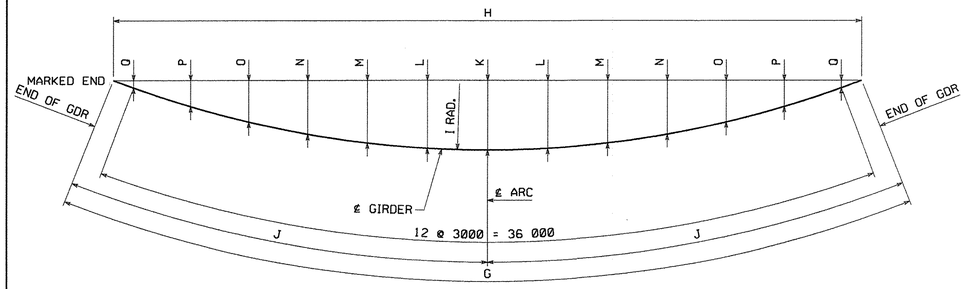

MARK	G	H	I	J	K	L	M	N	O	P	Q
G1B	38 149	38 142	566 950	19 075	321	313	289	249	194	122	35
G2B	38 339	38 332	569 750	19 170	322	315	291	251	196	125	38
G3B	38 528	38 521	572 550	19 264	324	316	293	253	198	128	41
G4B	38 716	38 709	575 350	19 358	326	318	294	255	200	130	44
G5B	38 906	38 899	578 150	19 453	327	319	296	257	203	133	47
G6B	39 095	39 088	580 950	19 548	329	321	298	259	205	135	50
G1C	39 915	39 907	566 950	19 958	351	343	319	280	224	153	66
G2C	40 111	40 103	569 750	20 056	353	345	321	282	227	156	69
G3C	40 308	40 300	572 550	20 154	355	347	323	284	229	158	72
G4C	40 504	40 496	575 350	20 252	356	349	325	286	231	161	75
G5C	40 700	40 692	578 150	20 350	358	350	327	288	234	164	78
G6C	40 895	40 887	580 950	20 448	360	352	329	290	236	166	81
G1D	38 146	38 139	566 950	19 073	321	313	289	249	194	122	35
G2D	38 337	38 330	569 750	19 169	322	315	291	251	196	125	38
G3D	38 525	38 518	572 550	19 263	324	316	293	253	198	128	41
G4D	38 715	38 708	575 350	19 358	326	318	294	255	200	130	44
G5D	38 905	38 898	578 150	19 453	327	319	296	257	203	133	47
G6D	39 094	39 087	580 950	19 547	329	321	298	259	205	135	50

TVGA CONSULTANTS

☒ NO EXCEPTIONS TAKEN ☐ REJECTED
☐ FURNISH AS CORRECTED
☐ REVISE AND RESUBMIT

ENGINEER has reviewed Shop Drawings and Samples and other data which Contractor is required to submit, only for conformance with the information given in the Contract Documents and compatibility with the design concept of the completed Project as a functioning whole as indicated in the Contract Documents. Such reviews do not extend to means, methods, techniques, sequences or procedures of construction or to safety precautions and programs incident thereto. Contractor is responsible for dimensions to be confirmed and correlated at the job site; for information that pertains solely to the fabrication processes or to techniques of construction, and for coordination of the work of all trades.

BY: _____
DATE: 12/3/07

NOTES:

ALL DIMENSIONS APPLY AT THE TOP OF WEB PLATE OF THE GIRDERS.

NO.	REVISION	BY	CHK'D	DATE

HOLES
BOLTS
COATING
CODE(S): 30
SCALE: N.T.S.

HIGH STEEL STRUCTURES INC.
An ISO 9001:2000 Certified Company
An Affiliate of High Industries Inc.

Lancaster Facility
915 Old Philadelphia Pike
Lancaster, PA 17605-0008
Phone (717) 299-5211

Williamsport Facility
3501 W. 4th Street
Williamsport, PA 17701
Phone (570) 326-9051

www.highsteel.com

HORIZONTAL CURVE DIAGRAMS
VT ROUTE 279 OVER FURNACE BROOK
VT ROUTE 279 STA. 8+542.000 TO STA. 8+685.000
TOWN OF BENNINGTON VERMONT, BRIDGE B12
STATE OF VERMONT
AGENCY OF TRANSPORTATION

	AC NH F019-1(53)	FED. AID PROJ. NO.	
GENERAL CONTRACTOR	J.A. McDONALD, INC.	HSSI PROJ. MGR	DEB KUPRES
SHPMT 3	DRAWING MANAGER: BRITIGAN (IH)	MADE BY: KMA	CHK'D. BY: SJA	DATE: 9/13/07
STATE VT	HSSI PROJECT NUMBER: S-1070147	HSSI STRUCT. ID: A	DRAWING NUMBER: HC1 OF HC1

1070147A X1 12/3/07 12/3/07Approval TO:J.A. McDonald, Inc.

SHIPMENT 01 PM&ENG: 5282817 PRD: 5282818 SHIP&RECT.#: 5282819
BY: MKreidel
PLOTTED: 11/30/2007 12:43:21 PM

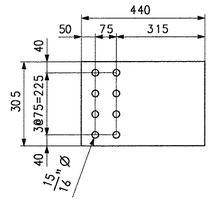

GUSSET PLATE - MK. m1a

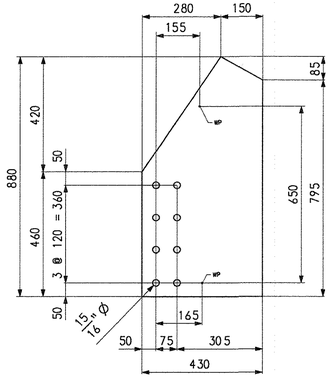

GUSSET PLATE - MK. m1b

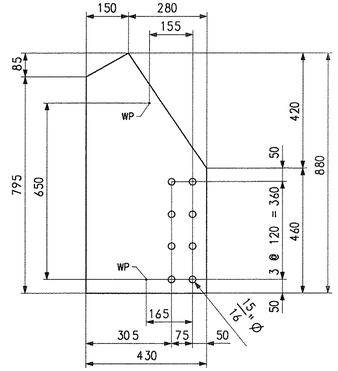

GUSSET PLATE - MK. m1c

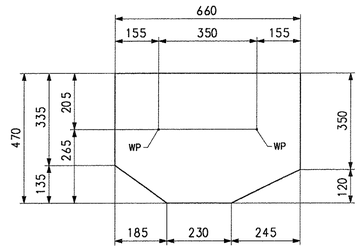

GUSSET PLATE - MK. m1d

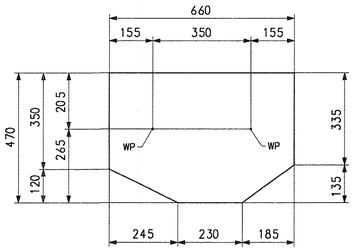

GUSSET PLATE - MK. m1f

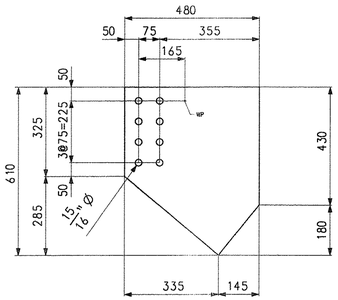

GUSSET PLATE - MK. m1g

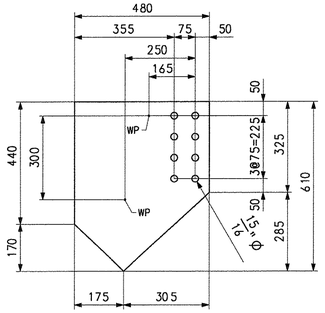

GUSSET PLATE - MK. m1h

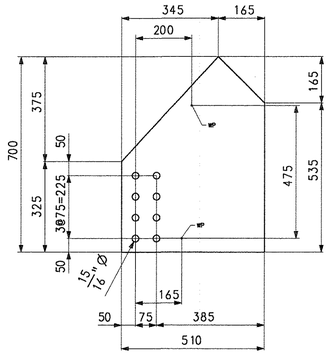

GUSSET PLATE - MK. m1k

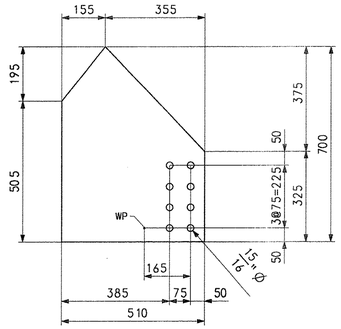

GUSSET PLATE - MK. m1m

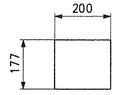

FILL PLATE - MK. m1n

BILL OF MATERIAL

QTY	MARK	COMM.	DESCRIPTION	LENGTH	SPEC	GRADE	TEST	REMARKS	ITEM	GROSS WEIGHT EA.	DEDUCTED WEIGHT EA.	NET WEIGHT EA.
30	m1a	PL	14.3 x 305	440	M270M	345W	T		11003	15.06	0.00	15.06
15	m1b	PL	14.3 x 430	880	M270M	345W	T		11003	42.47	0.00	42.47
15	m1c	PL	14.3 x 430	880	M270M	345W	T		11003	42.47	0.00	42.47
5	m1d	PL	14.3 x 470	660	M270M	345W	T		11003	34.82	0.00	34.82
10	m1f	PL	14.3 x 470	660	M270M	345W	T		11003	34.82	0.00	34.82
140	m1g	PL	14.3 x 480	610	M270M	345W	T		11003	32.86	0.00	32.86
140	m1h	PL	14.3 x 480	610	M270M	345W	T		11003	32.86	0.00	32.86
140	m1k	PL	14.3 x 510	700	M270M	345W	T		11003	40.07	0.00	40.07
140	m1m	PL	14.3 x 510	700	M270M	345W	T		11003	40.07	0.00	40.07
140	m1n	PL	14.3 x 177	200	M270M	345W	T	FILL	11003	3.97	0.00	3.97

TVGA CONSULTANTS

☒ NO EXCEPTIONS TAKEN ☐ REJECTED
☐ FURNISH AS CORRECTED
☐ REVISE AND RESUBMIT

ENGINEER has reviewed Shop Drawings and Samples and other data which Contractor is required to submit, only for conformance with the information given in the Contract Documents and compatibility with the design concept of the completed Project as a functioning whole as indicated in the Contract Documents. Such review do not extend to means, methods, techniques, sequences or procedures of construction or to safety precautions and programs incident thereto. Contractor is responsible for dimensions to be confirmed and correlated at the job site; for information that pertains solely to the fabrication processes or to techniques of construction; and for coordination of the work of all trades.

BY: _____
DATE: 12/3/07

NOTE:
ALL MATERIAL ON THIS DRAWING TO BE CORNER GROUND.
FOR GENERAL SHOP NOTES, SEE DRAWING GN1.

NO.	REVISION	BY	CHK'D	DATE

HIGH STEEL STRUCTURES INC.
An AISC Certified Company
An ISO 9001:2000 Certified Company
An Affiliate of High Industries Inc.
1915 Old Philadelphia Pike
Lancaster, PA 17605-0008
Phone (717) 299-5211
www.highsteel.com

HOLES	15/16" Ø
BOLTS	NONE
COATING	NONE
CODE(S)	63
SCALE	N.T.S.
	CROSSFRAME JOB STANDARDS
	VT ROUTE 279 OVER FURNACE BROOK
	VT ROUTE 279 STA. 8+542.000 TO STA. 8+685.000
	TOWN OF BENNINGTON VERMONT, BRIDGE B12
	STATE OF VERMONT
	AGENCY OF TRANSPORTATION
STATE CONT. OR REF. NO.	AC NH F019-1(53)
FED. AID PROJ. NO.	
GENERAL CONTRACTOR	J.A. McDONALD, INC.
HSSI PROJ. MGR	DEB KUPRES
SHPMT 3	DRAWING MANAGER: BRITIGAN (IH)
MADE BY	ERS
CHK'D. BY	CS
DATE	11-14-07
STATE VT	HSSI PROJECT NUMBER: S-1070147
HSSI STRUCT. ID	A
DRAWING NUMBER	M1 OF M1

SHIPMENT 1 PM&ENG: 50028117 PRD: 50028118 SHIP&REDIRECT: 50028119
PLOTTED: 11/30/07 12:47:27 BY: MKreidel

1070147A X1 12/3/07 12/3/07Approval TO:J.A. McDonald, Inc.

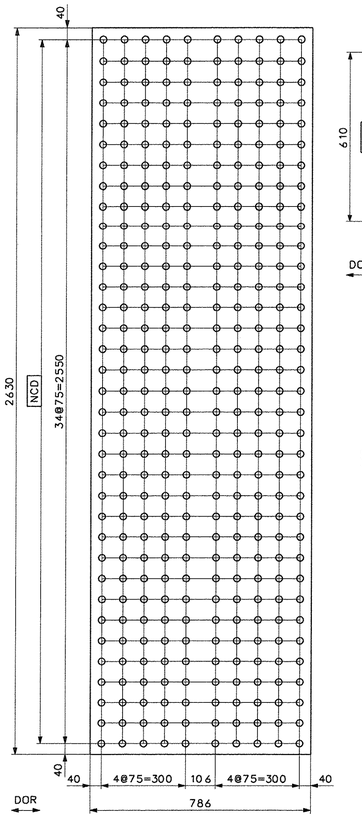

WEB SPLICE PLATE – MK. x1a

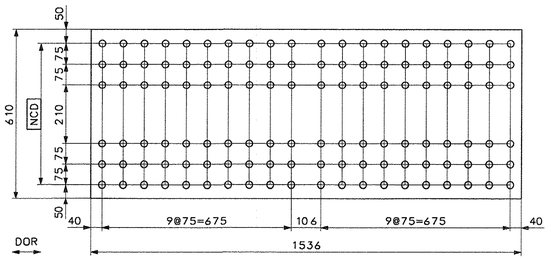

FLANGE SPLICE PLATE – MK. x1b

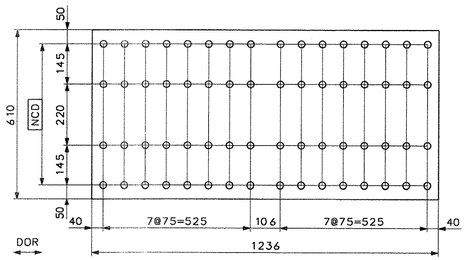

FLANGE SPLICE PLATE – MK. x1c

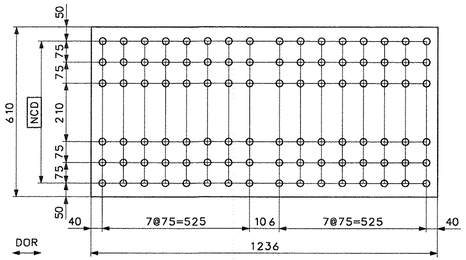

FLANGE SPLICE PLATE – MK. x1d

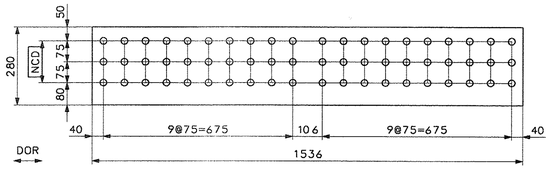

FLANGE SPLICE PLATE – MK. x1f

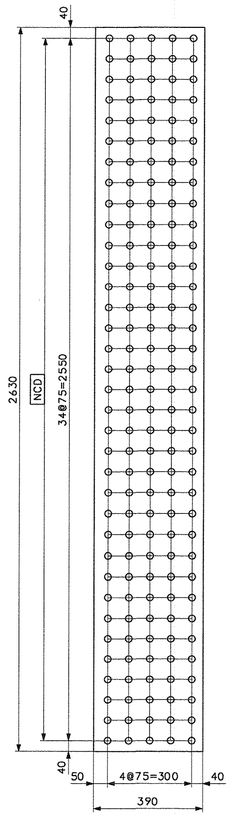

WEB FILL PLATE – MK. x1k

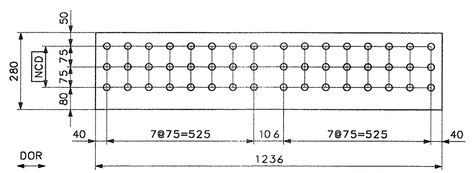

FLANGE SPLICE PLATE – MK. x1g

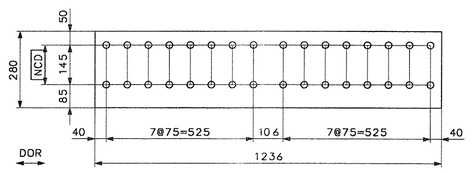

FLANGE SPLICE PLATE – MK. x1h

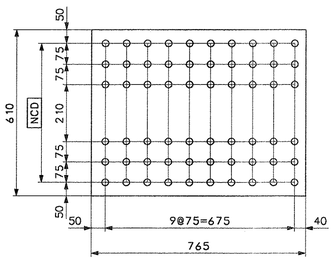

FLANGE FILL PLATE – MK. x1m

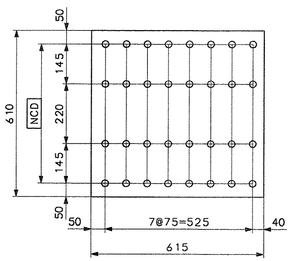

FLANGE FILL PLATE – MK. x1n

BILL OF MATERIAL

QTY	MARK	COMM.	DESCRIPTION				LENGTH	SPEC	GRADE	TEST	REMARKS	ITEM	GROSS WEIGHT EA.	DEDUCTED WEIGHT EA.	NET WEIGHT EA.
48	x1a	PL	15.9	x	2630		786	M270M	345W	T		06001	257.98	0.00	257.98
24	x1b	PL	20.6	x	610		1536	M270M	345W	T		06002	151.50	0.00	151.50
12	x1c	PL	20.6	x	610		1236	M270M	345W	T		06002	121.91	0.00	121.91
12	x1d	PL	20.6	x	610		1236	M270M	345W	T		06002	121.91	0.00	121.91
48	x1f	PL	20.6	x	280		1536	M270M	345W	T		06003	69.54	0.00	69.54
24	x1g	PL	20.6	x	280		1236	M270M	345W	T		06003	55.96	0.00	55.96
24	x1h	PL	20.6	x	280		1236	M270M	345W	T		06003	55.96	0.00	55.96
24	x1k	SHT	16GA.	x	390		2630	A606 Type 4			FILL	06004	16.10	0.00	16.10
24	x1m	PL	15.9	x	610		765	M270M	345W		FILL	06005	58.24	0.00	58.24
12	x1n	PL	12.7	x	610		615	M270M	345W		FILL	06006	37.40	0.00	37.40

TVGA CONSULTANTS

☒ NO EXCEPTIONS TAKEN ☐ REJECTED
☐ FURNISH AS CORRECTED
☐ REVISE AND RESUBMIT

ENGINEER has reviewed Shop Drawings and Samples and other data which Contractor is required to submit, only for conformance with the information given in the Contract Documents and compatibility with the design concept of the completed Project as a functioning whole as indicated in the Contract Documents. Such reviews do not extend to means, methods, techniques, sequences or procedures of construction or to safety precautions and programs incident thereto. Contractor is responsible for dimensions to be confirmed and correlated at the job site; for information that pertains solely to the fabrication processes or to techniques of construction; and for coordination of the work of all trades.

BY: _____
DATE: 12/8/07

NOTE:

FOR GENERAL SHOP NOTES, SEE DRAWING GN1.

NO.	REVISION	BY	CHK'D	DATE
△				
△				
△				

HOLES 15/16" Ø
BOLTS NONE
COATING NONE
CODE(S) 30
SCALE N.T.S.

HIGH STEEL STRUCTURES INC.
An ISO 9001:2000 Certified Company
An Affiliate of High Industries Inc.
1915 Old Philadelphia Pike
Lancaster, PA 17605-0008
Phone (717) 299-5211
www.highsteel.com

GIRDER JOB STANDARDS
VT ROUTE 279 OVER FURNACE BROOK
VT ROUTE 279 STA. 8+542.000 TO STA. 8+685.000
TOWN OF BENNINGTON VERMONT, BRIDGE B12
STATE OF VERMONT
AGENCY OF TRANSPORTATION

STATE CONT. OR REF. NO.	AC NH F019-1(53)	FED. AID PROJ. NO.	
GENERAL CONTRACTOR	J.A. McDONALD, INC.	HSSI PROJ. MGR	DEB KUPRES
SHIPMT 3	DRAWING MANAGER BRITIGAN (IH)	MADE BY ERS	CHK'D. BY CS	DATE 11-14-07
STATE VT	HSSI PROJECT NUMBER S-1070147	HSSI STRUCT. ID A	DRAWING NUMBER X1 OF X8

SHIPMENT 1 PMARENG: 5002817 PRD1: 5002818 SHIP&PERECT: 5002819

PLOTTED: 11/30/07 12:48:52 BY: MKreidel

1070147A X1 12/3/07 12/3/07Approval TO:J.A. McDonald, Inc.

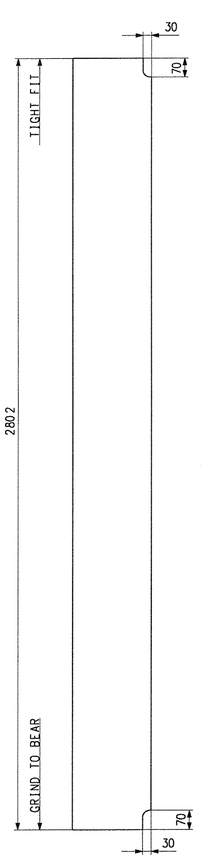

BRG. STIFF. MK. x2a(CG)

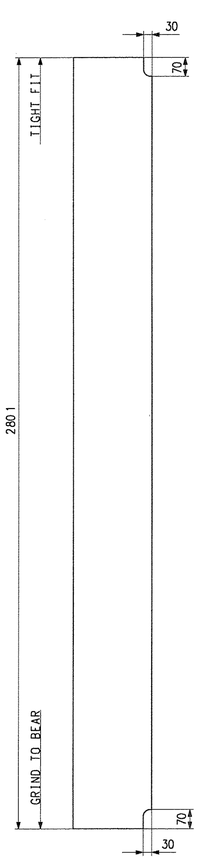

BRG. STIFF. MK. x2b(CG)

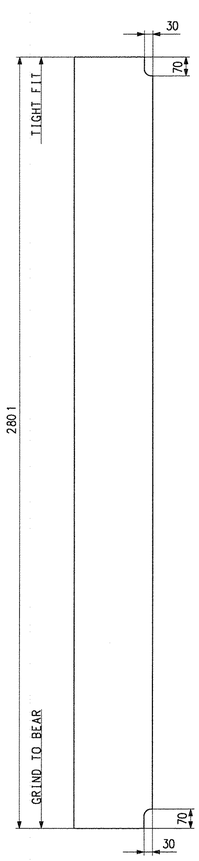

BRG. STIFF. MK. x2c

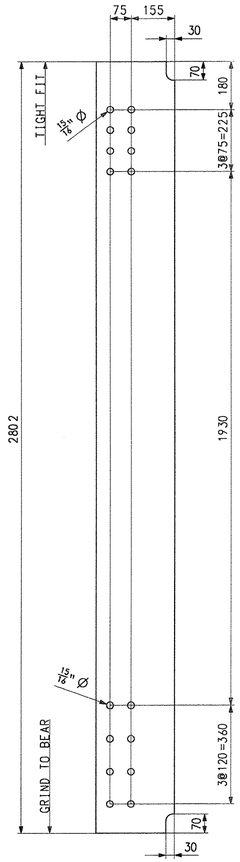

BRG. STIFF. MK. x2d(CG)

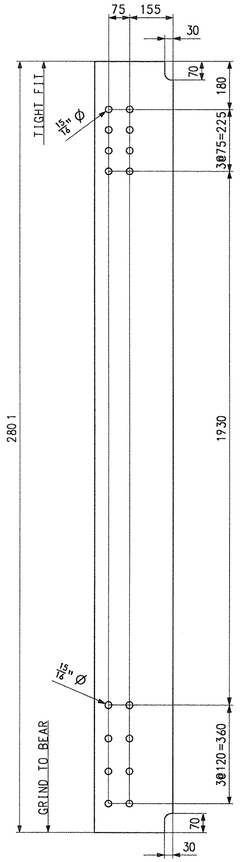

BRG. STIFF. MK. x2f(CG)

BILL OF MATERIAL

QTY	MARK	COMM.	DESCRIPTION	LENGTH	SPEC	GRADE	TEST	REMARKS	ITEM	GROSS WEIGHT EA.	DEDUCTED WEIGHT EA.	NET WEIGHT EA.
14	x2a	PL	25.4 x 280	2802	M270M	345W			07001	156.41	0.00	156.41
14	x2b	PL	25.4 x 280	2801	M270M	345W			07001	156.36	0.00	156.36
14	x2c	PL	25.4 x 280	2801	M270M	345W	T		07001	156.36	0.00	156.36
10	x2d	PL	25.4 x 280	2802	M270M	345W	T		07001	156.41	0.00	156.41
10	x2f	PL	25.4 x 280	2801	M270M	345W	T		07001	156.36	0.00	156.36

TVGA CONSULTANTS

☒ NO EXCEPTIONS TAKEN ☐ REJECTED
☐ FURNISH AS CORRECTED
☐ REVISE AND RESUBMIT

ENGINEER has reviewed Shop Drawings and Samples and other data which Contractor is required to submit, only for conformance with the information given in the Contract Documents and compatibility with the design concept of the completed Project as a functioning whole as indicated in the Contract Documents. Such review do not extend to means, methods, techniques, sequences or procedures of construction or to safety precautions and programs incident thereto. Contractor is responsible for dimensions to be confirmed and correlated at the job site; for information that pertains solely to the fabrication processes or to techniques of construction; and for coordination of the work of all trades.

BY: _____
DATE: _____

NOTE:
FOR GENERAL SHOP NOTES, SEE DRAWING GN1.

NO.	REVISION	BY	CHK'D	DATE
△				
△				
△				

HOLES: 15/16" Ø
BOLTS: NONE
COATING: NONE
CODE(S): 30
SCALE: N.T.S.

HIGH STEEL STRUCTURES INC.
An ISO 9001:2000 Certified Company
An Affiliate of High Industries Inc.
1915 Old Philadelphia Pike
Lancaster, PA 17605-0008
Phone (717) 299-5211
www.highsteel.com

GIRDER JOB STANDARDS
VT ROUTE 279 OVER FURNACE BROOK
VT ROUTE 279 STA. 8+542.000 TO STA. 8+685.000
TOWN OF BENNINGTON VERMONT, BRIDGE B12
STATE OF VERMONT
AGENCY OF TRANSPORTATION

STATE CONT. OR REF. NO.	AC NH F019-1(53)	FED. AID PROJ. NO.			
GENERAL CONTRACTOR	J.A. McDONALD, INC.	HSSI PROJ. MGR	DEB KUPRES		
SHPMT 3	DRAWING MANAGER: BRITIGAN (IH)	MADE BY: ERS	CHK'D. BY: CS	DATE: 11-15-07	
STATE VT	HSSI PROJECT NUMBER: S-1070147	HSSI STRUCT. ID: A	DRAWING NUMBER: X2 OF X8		

SHIPMENT 1 PMSENG: 50028127 PRD: 50028118 SHIPERECT: 50028119
PLOTTED: 11/30/07 12:49:11 BY: MKreidel

1070147A X1 12/3/07 12/3/07Approval TO:J.A. McDonald, Inc.

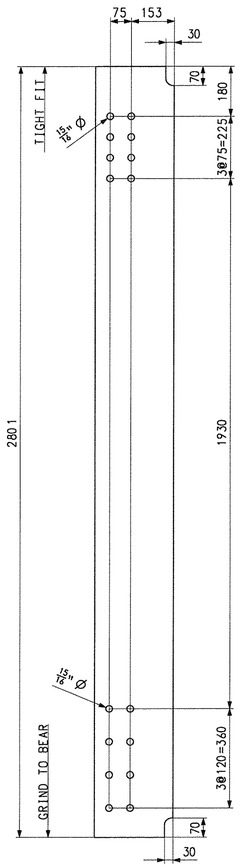

BRG. STIFF. MK. x3a(CG)

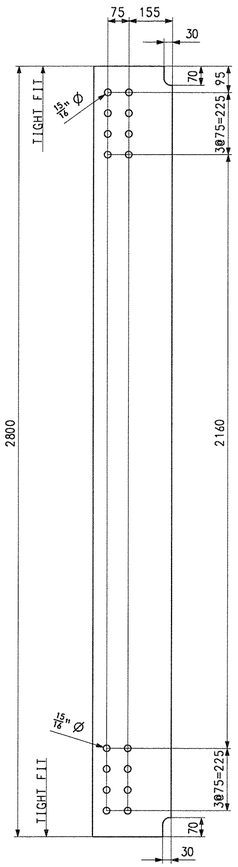

CONN. PL. MK. x3b(CG)

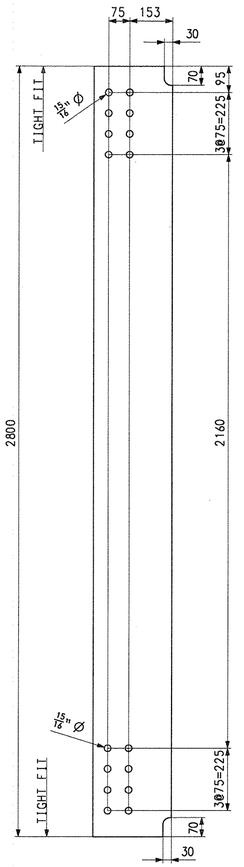

CONN. PL. MK. x3c(CG)

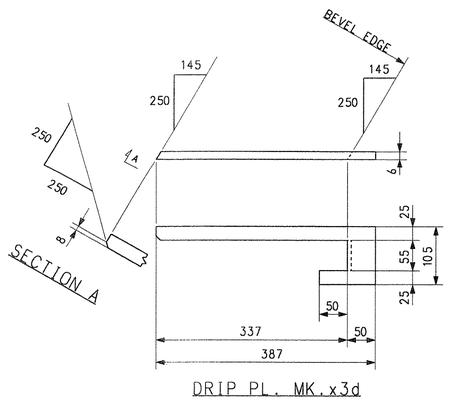

DRIP PL. MK.x3d

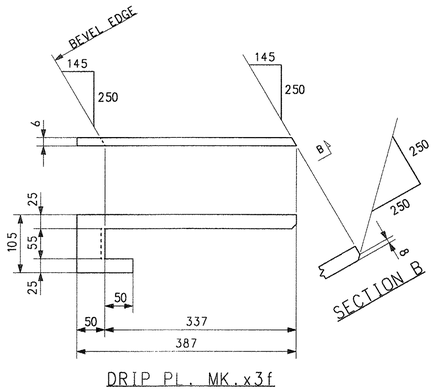

DRIP PL. MK.x3f

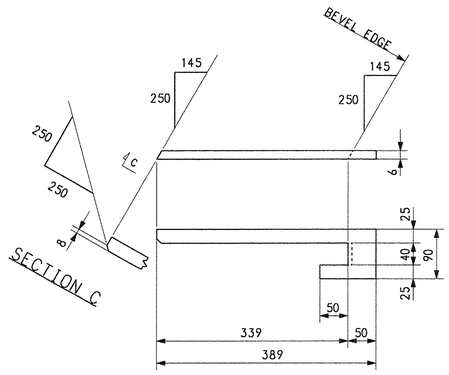

DRIP PL. MK.x3g(CG)

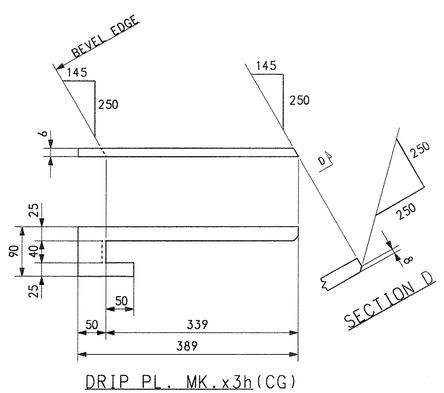

DRIP PL. MK.x3h(CG)

NOTE:
FOR GENERAL SHOP NOTES, SEE DRAWING GN1.

BILL OF MATERIAL

QTY	MARK	COMM.	DESCRIPTION			LENGTH	SPEC	GRADE	TEST	REMARKS	ITEM	GROSS WEIGHT EA.	DEDUCTED WEIGHT EA.	NET WEIGHT EA.
10	x3a	PL	25.4	x	280	2801	M270M	345W	T		07001	156.36	0.00	156.36
200	x3b	PL	14.3	x	280	2800	M270M	345W	T		07002	88.00	0.00	88.00
80	x3c	PL	15.9	x	280	2800	M270M	345W	T		07006	97.84	0.00	97.84
1	x3d	PL	6.4	x	105	387	M270M	345W			07004	2.04	0.00	2.04
1	x3f	PL	6.4	x	105	387	M270M	345W			07004	2.04	0.00	2.04
1	x3g	PL	6.4	x	90	389	M270M	345W			07005	1.76	0.00	1.76
1	x3h	PL	6.4	x	90	389	M270M	345W			07005	1.76	0.00	1.76

TVGA CONSULTANTS

☒ NO EXCEPTIONS TAKEN ☐ REJECTED
☐ FURNISH AS CORRECTED
☐ REVISE AND RESUBMIT

ENGINEER has reviewed Shop Drawings and Samples and other data which Contractor is required to submit, only for conformance with the information given in the Contract Documents and compatibility with the design concept of the completed Project as a functioning whole as indicated in the Contract Documents. Such reviews do not extend to means, methods, techniques, sequences or procedures of construction or to safety precautions and programs incident thereto. Contractor is responsible for dimensions to be confirmed and correlated at the job site; for information that pertains solely to the fabrication processes or to techniques of construction; and for coordination of the work of all trades.

BY:
DATE: 11/28/08

NO.	REVISION	BY	CHK'D	DATE
△				
△				
△				

HOLES: 15/16" Ø
BOLTS: NONE
COATING: NONE
CODE(S): 30
SCALE: N.T.S.

HIGH STEEL STRUCTURES INC.
An ISO 9001:2000 Certified Company
An Affiliate of High Industries Inc.
1915 Old Philadelphia Pike
Lancaster, PA 17605-0008
Phone (717) 299-5211
www.highsteel.com

GIRDER JOB STANDARDS
VT ROUTE 279 OVER FURNACE BROOK
VT ROUTE 279 STA. 8+542.000 TO STA. 8+685.000
TOWN OF BENNINGTON VERMONT, BRIDGE B12
STATE OF VERMONT
AGENCY OF TRANSPORTATION

STATE CONT. OR REF. NO.	AC NH F019-1(53)	FED. AID PROJ. NO.	
GENERAL CONTRACTOR	J.A. McDONALD, INC.	HSSI PROJ. MGR	DEB KUPRES
SHPMT 3	DRAWING MANAGER: BRITIGAN (IH)	MADE BY: ERS	CHK'D. BY: CS	DATE: 11-15-07
STATE VT	HSSI PROJECT NUMBER: S-1070147	STRUCT. ID: A	DRAWING NUMBER: X3 OF X8

SHIPMENT 1 PMKENG: 5002817 PROJ: 5002818 SHIP&ERECT: 5002819
PLOTTED: 11/30/07 12:49:23 BY: MKreidel

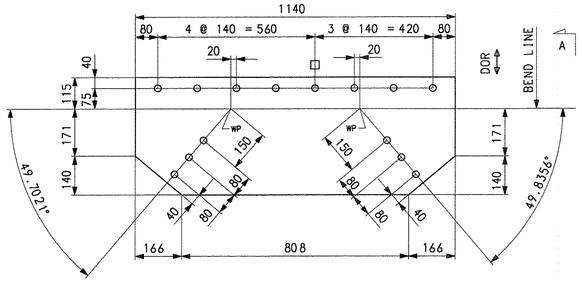

BT. GUSSET PLATE MK.x4a
(DEVELOPED)

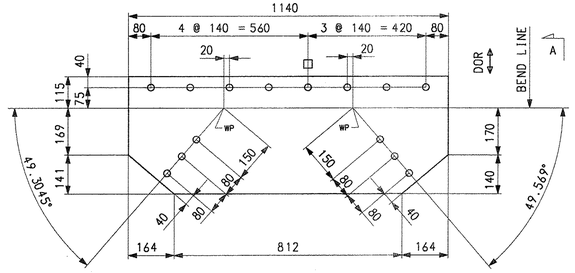

BT. GUSSET PLATE MK.x4b
(DEVELOPED)

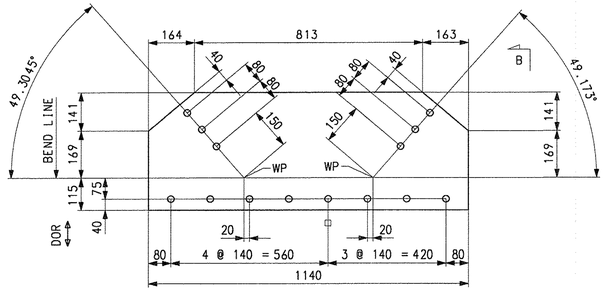

BENT GUSSET PLATE MK.x4c
(DEVELOPED)

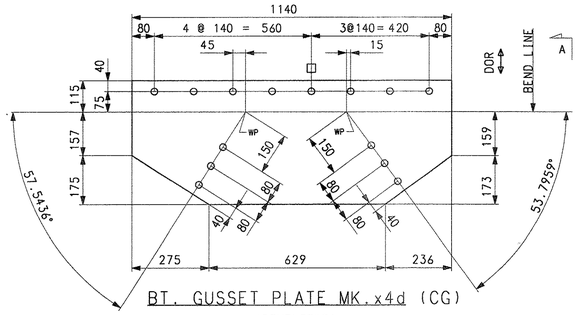

BT. GUSSET PLATE MK.x4d (CG)
(DEVELOPED)

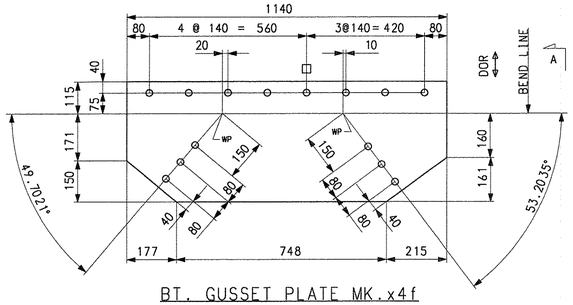

BT. GUSSET PLATE MK.x4f
(DEVELOPED)

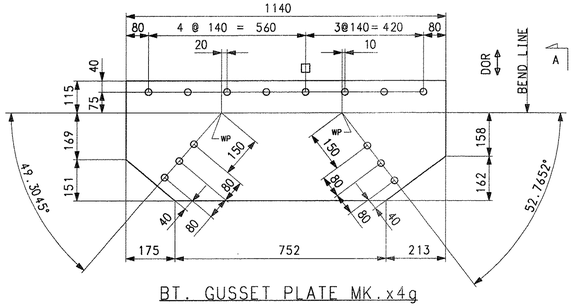

BT. GUSSET PLATE MK.x4g
(DEVELOPED)

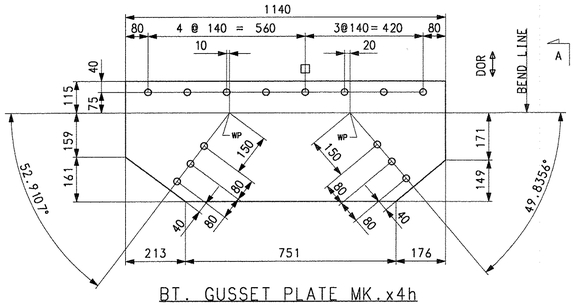

BT. GUSSET PLATE MK.x4h
(DEVELOPED)

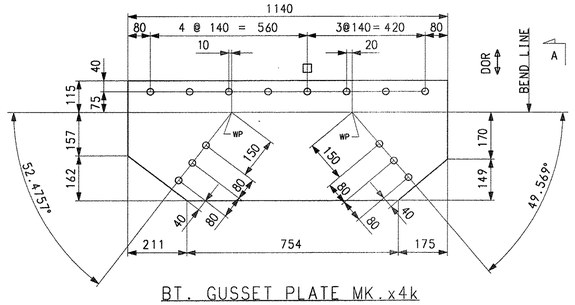

BT. GUSSET PLATE MK.x4k
(DEVELOPED)

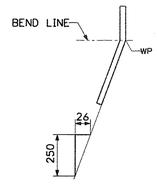

SECTION A

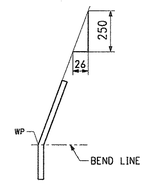

SECTION B

NOTE:

FOR GENERAL SHOP NOTES, SEE DRAWING GN1.

BILL OF MATERIAL

EST. ID	QTY	MARK	COMM.	DESCRIPTION	LENGTH	SPEC	GRADE	TEST	REMARKS	ITEM	GROSS WEIGHT EA.	DEDUCTED WEIGHT EA.	NET WEIGHT EA.
LB2	26	x4a	PL	14.3 x 1140	426	M270M	345W		BENT	07003	54.509	0	54.5089
LB2	26	x4b	PL	14.3 x 1140	425	M270M	345W		BENT	07003	54.381	0	54.381
LB2	26	x4c	PL	14.3 x 1140	425	M270M	345W		BENT	07003	54.381	0	54.381
LB2	2	x4d	PL	14.3 x 1140	447	M270M	345W		BENT	07003	57.196	0	57.196
LB2	1	x4f	PL	14.3 x 1140	436	M270M	345W		BENT	07003	55.788	0	55.7885
LB2	1	x4g	PL	14.3 x 1140	435	M270M	345W		BENT	07003	55.661	0	55.6605
LB2	1	x4h	PL	14.3 x 1140	435	M270M	345W		BENT	07003	55.661	0	55.6605
LB2	1	x4k	PL	14.3 x 1140	434	M270M	345W		BENT	07003	55.533	0	55.5326

TVGA CONSULTANTS

☒ NO EXCEPTIONS TAKEN ☐ REJECTED
☐ FURNISH AS CORRECTED
☐ REVISE AND RESUBMIT

ENGINEER has reviewed Shop Drawings and Samples and other data which Contractor is required to submit, only for conformance with the information given in the Contract Documents and compatibility with the design concept of the completed Project as a functioning whole as indicated in the Contract Documents. Such reviews do not extend to means, methods, techniques, sequences or procedures of construction or to safety precautions and programs incident thereto. Contractor is responsible for dimensions to be confirmed and correlated at the job site; for information that pertains solely to the fabrication processes or to techniques of construction; and for coordination of the work of all trades.

BY:
DATE: 12/3/07

NO.	REVISION	BY	CHK'D	DATE

HOLES 15/16" Ø
BOLTS NONE
COATING NONE
CODE(S) 30
SCALE N.T.S.

HIGH STEEL STRUCTURES INC.
1915 Old Philadelphia Pike
Lancaster, PA 17605-0008
Phone (717) 299-5211
www.highsteel.com
An ISO 9001:2000 Certified Company
An Affiliate of High Industries Inc.

GIRDER JOB STANDARDS
VT ROUTE 279 OVER FURNACE BROOK
VT ROUTE 279 STA. 8+542.000 TO STA. 8+685.000
TOWN OF BENNINGTON VERMONT, BRIDGE B12
STATE OF VERMONT
AGENCY OF TRANSPORTATION

STATE CONT. OR REF. NO.	AC NH F019-1(53)	FED. AID PROJ. NO.	
GENERAL CONTRACTOR	J.A. McDONALD, INC.	HSSI PROJ. MGR	DEB KUPRES
SHPMT 3 / DRAWING MANAGER	BRITIGAN (IH)	MADE BY KLW / CHK'D. BY CS	DATE 11/26/07
STATE VT / HSSI PROJECT NUMBER	S-1070147	HSSI STRUCT. ID A	DRAWING NUMBER X4 OF X8

1070147A X1 12/3/07 12/3/07Approval TO:J.A. McDonald, Inc.

SHIPMENT 1 PWAENG: 5002817Z PRD1: 5002818 SHIPAERECT: 5002819
PLOTTED: 11/30/07 13:28:45 BY: MKreidel

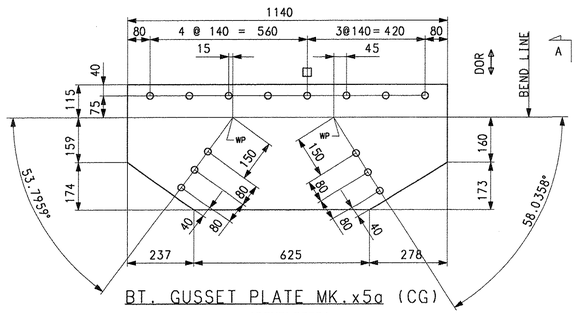

BT. GUSSET PLATE MK.x5a (CG)

(DEVELOPED)

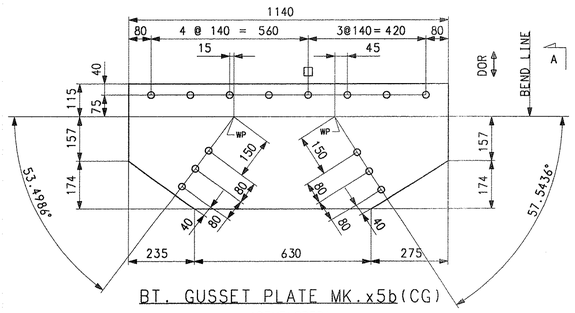

BT. GUSSET PLATE MK.x5b (CG)

(DEVELOPED)

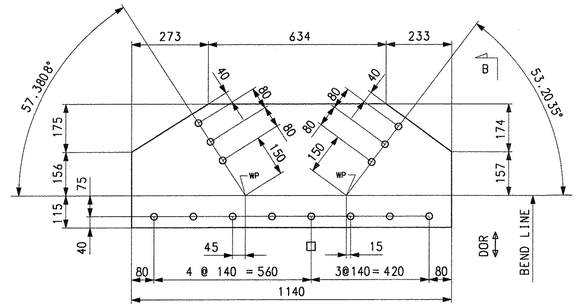

BENT GUSSET PLATE MK.x5c

(DEVELOPED)

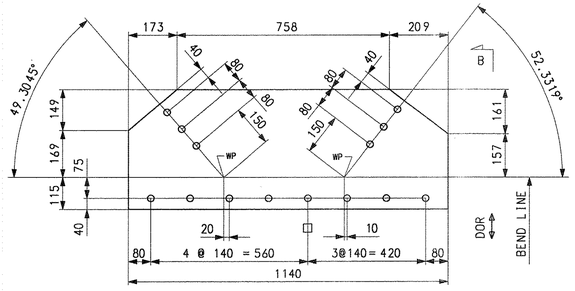

BENT GUSSET PLATE MK.x5d

(DEVELOPED)

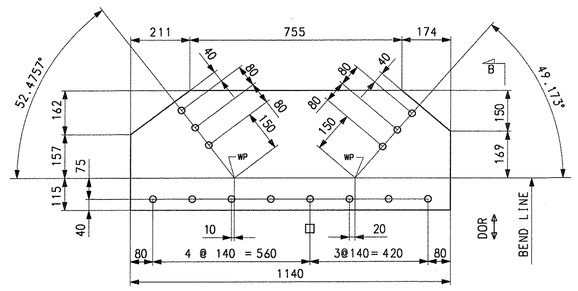

BENT GUSSET PLATE MK.x5f

(DEVELOPED)

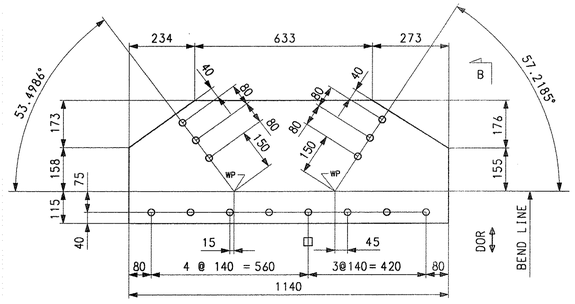

BENT GUSSET PLATE MK.x5g (CG)

(DEVELOPED)

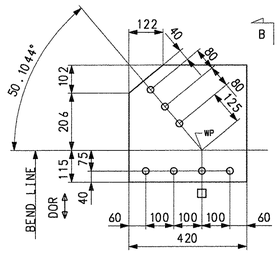

BENT GUSSET PLATE MK.x5h

(DEVELOPED)

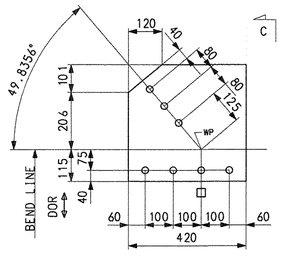

BENT GUSSET PLATE MK.x5k

(DEVELOPED)

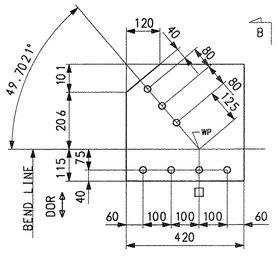

BENT GUSSET PLATE MK.x5m

(DEVELOPED)

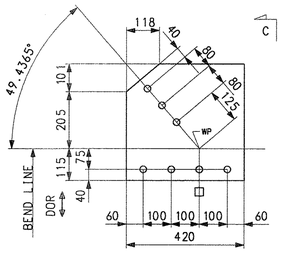

BENT GUSSET PLATE MK.x5n

(DEVELOPED)

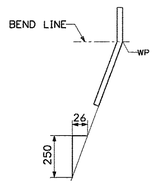

SECTION A

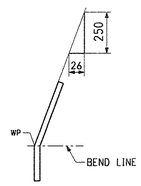

SECTION B

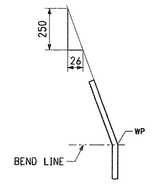

SECTION C

NOTE:

FOR GENERAL SHOP NOTES, SEE DRAWING GN1.

BILL OF MATERIAL

EST. ID	QTY	MARK	COMM.	DESCRIPTION	LENGTH	SPEC	GRADE	TEST	REMARKS	ITEM	GROSS WEIGHT EA.	DEDUCTED WEIGHT EA.	NET WEIGHT EA.
LB2	1	x5a	PL	14.3 x 1140	448	M270M	345W		BENT	07003	57.324	0	57.3239
LB2	1	x5b	PL	14.3 x 1140	446	M270M	345W		BENT	07003	57.088	0	57.088
LB2	1	x5c	PL	14.3 x 1140	446	M270M	345W		BENT	07003	57.088	0	57.088
LB2	1	x5d	PL	14.3 x 1140	433	M270M	345W		BENT	07003	55.405	0	55.4046
LB2	1	x5f	PL	14.3 x 1140	434	M270M	345W		BENT	07003	55.533	0	55.5326
LB2	1	x5g	PL	14.3 x 1140	446	M270M	345W		BENT	07003	57.088	0	57.088
LB2	24	x5h	PL	14.3 x 420	423	M270M	345W		BENT	07003	19.941	0	19.9408
LB2	24	x5k	PL	14.3 x 420	422	M270M	345W		BENT	07003	19.894	0	19.8937
LB2	24	x5m	PL	14.3 x 420	422	M270M	345W		BENT	07003	19.894	0	19.8937
LB2	24	x5n	PL	14.3 x 420	421	M270M	345W		BENT	07003	19.847	0	19.8465

TVGA CONSULTANTS

☒ NO EXCEPTIONS TAKEN ☐ REJECTED
☐ FURNISH AS CORRECTED
☐ REVISE AND RESUBMIT

ENGINEER has reviewed Shop Drawings and Samples and other data which Contractor is required to submit, only for conformance with the information given in the Contract Documents and compatibility with the design concept of the completed Project as a functioning whole as indicated in the Contract Documents. Such reviews do not extend to means, methods, techniques, sequences or procedures of construction or to safety precautions and programs incident thereto. Contractor is responsible for dimensions to be confirmed and correlated at the job site; for information that pertains solely to the fabrication processes or to techniques of construction; and for coordination of the work of all trades.

BY: _____
DATE: 12/3/07

NO.	REVISION	BY	CHK'D	DATE

HIGH STEEL STRUCTURES INC.
An ISO 9001:2000 Certified Company
An Affiliate of High Industries Inc.
1915 Old Philadelphia Pike
Lancaster, PA 17605-0008
Phone (717) 299-5211
www.highsteel.com

HOLES	15/16" Ø
BOLTS	NONE
COATING	NONE
CODE(S)	30
SCALE	N.T.S.

GIRDER JOB STANDARDS
VT ROUTE 279 OVER FURNACE BROOK
VT ROUTE 279 STA. 8+542.000 TO STA. 8+685.000
TOWN OF BENNINGTON VERMONT, BRIDGE B12
STATE OF VERMONT
AGENCY OF TRANSPORTATION

STATE CONT. OR REF. NO.	AC NH F019-1(53)	FED. AID PROJ. NO.	
GENERAL CONTRACTOR	J.A. McDONALD, INC.	HSSI PROJ. MGR.	DEB KUPRES
SHPMT 3	DRAWING MANAGER: BRITIGAN (IH)	MADE BY: KLW	CHK'D. BY: CS	DATE: 11/26/07
STATE VT	HSSI PROJECT NUMBER: S-1070147	HSSI STRUCT. ID: A	DRAWING NUMBER: X5 OF X8

SHIPMENT 1 PMMENG: 5002817 PRO: 5002819 SHIP&ERECT: 5002819

PLOTTED: 11/30/07 13:29:16 BY: MKreidel

1070147A X1 12/3/07 12/3/07Approval TO:J.A. McDonald, Inc.

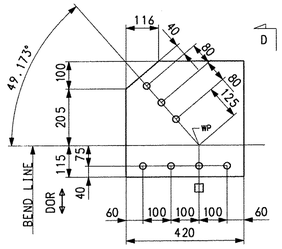

BENT GUSSET PLATE MK.x6a
(DEVELOPED)

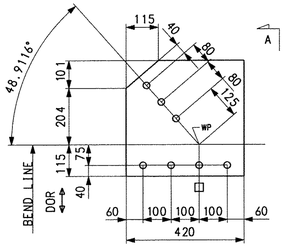

BENT GUSSET PLATE MK.x6b
(DEVELOPED)

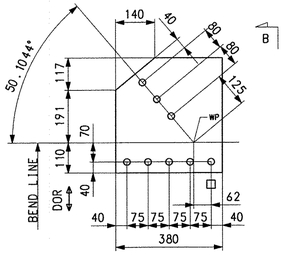

BENT GUSSET PLATE MK.x6c
(DEVELOPED)

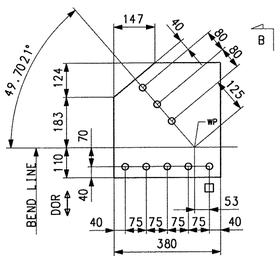

BENT GUSSET PLATE MK.x6d
(DEVELOPED)

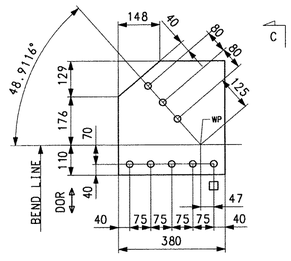

BENT GUSSET PLATE MK.x6f
(DEVELOPED)

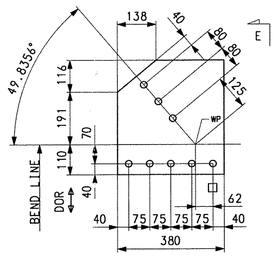

BENT GUSSET PLATE MK.x6g
(DEVELOPED)

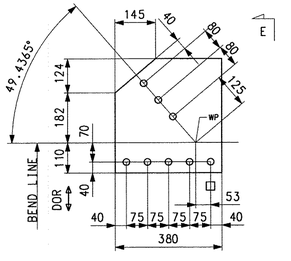

BENT GUSSET PLATE MK.x6h
(DEVELOPED)

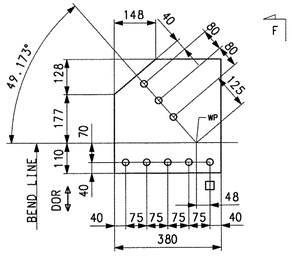

BENT GUSSET PLATE MK.x6k
(DEVELOPED)

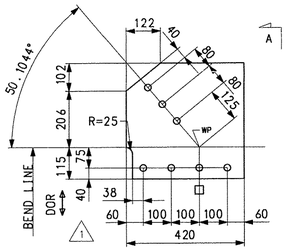

BENT GUSSET PLATE MK.x6m
(DEVELOPED)

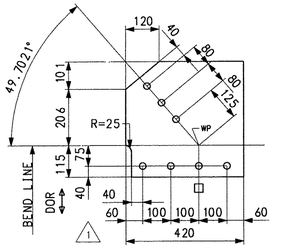

BENT GUSSET PLATE MK.x6n
(DEVELOPED)

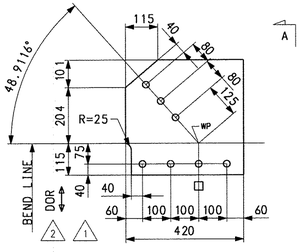

BENT GUSSET PLATE MK.x6p
(DEVELOPED)

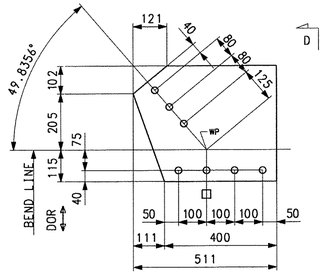

BENT GUSSET PLATE MK.x6s
(DEVELOPED)

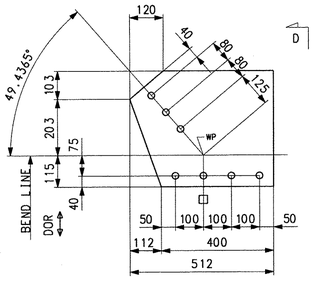

BENT GUSSET PLATE MK.x6t
(DEVELOPED)

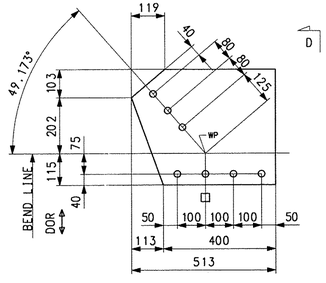

BENT GUSSET PLATE MK.x6w
(DEVELOPED)

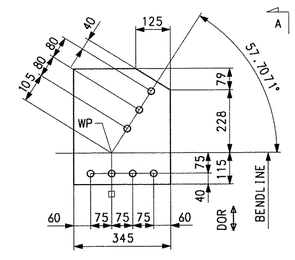

BENT GUSSET PLATE MK.x6y (CG)
(DEVELOPED)

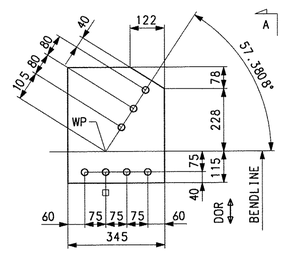

BENT GUSSET PLATE MK.x6aa(CG)
(DEVELOPED)

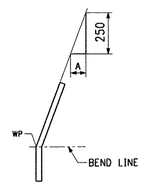

SECTIONS A,B & C

SECT.	A
A	26
B	28
C	23

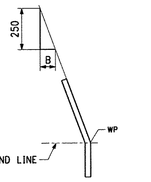

SECTIONS D,E & F

SECT.	B
D	26
E	28
F	23

NOTE:
FOR GENERAL SHOP NOTES, SEE DRAWING GN1.

BILL OF MATERIAL

EST. ID	QTY	MARK	COMM.	DESCRIPTION			LENGTH	SPEC	GRADE	TEST	REMARKS	ITEM	GROSS WEIGHT EA.	DEDUCTED WEIGHT EA.	NET WEIGHT EA.
LB2	24	x6a	PL	14.3	x	420	420	M270M	345W		BENT	07003	19.7994	0	19.799
LB2	24	x6b	PL	14.3	x	420	420	M270M	345W		BENT	07003	19.7994	0	19.799
LB2	1	x6c	PL	14.3	x	380	418	M270M	345W		BENT IB.T.S.I	07003	17.8284	0	17.828
LB2	1	x6d	PL	14.3	x	380	417	M270M	345W		BENT IB.T.S.I	07003	17.7858	0	17.786
LB2	1	x6f	PL	14.3	x	380	415	M270M	345W		BENT IB.T.S.I	07003	17.7005	0	17.7
LB2	1	x6g	PL	14.3	x	380	417	M270M	345W		BENT IB.T.S.I	07003	17.7858	0	17.786
LB2	1	x6h	PL	14.3	x	380	416	M270M	345W		BENT IB.T.S.I	07003	17.7431	0	17.743
LB2	1	x6k	PL	14.3	x	380	415	M270M	345W		BENT IB.T.S.I	07003	17.7005	0	17.7
LB2	1	x6m	PL	14.3	x	420	423	M270M	345W		BENT	07003	19.9408	0	19.941
LB2	1	x6n	PL	14.3	x	420	422	M270M	345W		BENT	07003	19.8937	0	19.894
LB2	1	x6p	PL	14.3	x	420	420	M270M	345W		BENT	07003	19.7994	0	19.799
LB2	1	x6s	PL	14.3	x	511	422	M270M	345W		BENT	07003	24.204	0	24.204
LB2	1	x6t	PL	14.3	x	512	421	M270M	345W		BENT	07003	24.1939	0	24.194
LB2	1	x6w	PL	14.3	x	513	420	M270M	345W		BENT	07003	24.1835	0	24.184
LB1	2	x6y	PL	14.3	x	345	422	M270M	345W		BENT	07003	16.3412	0	16.341
LB1	1	x6aa	PL	14.3	x	345	421	M270M	345W		BENT	07003	16.3025	0	16.303

TVGA CONSULTANTS

☒ NO EXCEPTIONS TAKEN ☐ REJECTED
☐ FURNISH AS CORRECTED
☐ REVISE AND RESUBMIT

ENGINEER has reviewed Shop Drawings and Samples and other data which Contractor is required to submit, only for conformance with the information given in the Contract Documents and compatibility with the design concept of the completed Project as a functioning whole as indicated in the Contract Documents. Such review does not extend to means, methods, techniques, sequences or procedures of construction or to safety precautions and programs incident thereto. Such review does not extend to any LEED certification or accreditation. Contractor is responsible for dimensions to be confirmed and correlated at the job site; for information that pertains solely to the fabrication processes or to techniques of construction; and for coordination of the work of all trades.

BY: [signature]
DATE: 7/16/08

NO.	REVISION	BY	CHK'D	DATE
3				
2	REVISED DIMENSIONING	SSL	MGK	7-3-08
1	REVISED BENT PLATES x6m, x6n & x6p	SSL	CS	5-29-08

HOLES: 15/16" Ø
BOLTS: NONE
COATING: NONE
CODE(S): 30
SCALE: N.T.S.

HIGH STEEL STRUCTURES INC.
1915 Old Philadelphia Pike
Lancaster, PA 17602-0008
Phone (717) 299-5211
www.highsteel.com
An ISO 9001:2000 Certified Company
An Affiliate of High Industries Inc.

GIRDER JOB STANDARDS
VT ROUTE 279 OVER FURNACE BROOK
VT ROUTE 279 STA. 8+542.000 TO STA. 8+685.000
TOWN OF BENNINGTON VERMONT, BRIDGE B12
STATE OF VERMONT
AGENCY OF TRANSPORTATION

STATE CONT. OR REF. NO.	AC NH F019-1(53)			FED. AID PROJ. NO.			
GENERAL CONTRACTOR	J.A. McDONALD, INC.			HSSI PROJ. MGR	DEB KUPRES		
SHPMT 3	DRAWING MANAGER	BRITIGAN (IH)	MADE BY	KLW	CHK'D. BY	CS	DATE 11/26/07
STATE VT	HSSI PROJECT NUMBER	S-1070147	HSSI STRUCT. ID	A	DRAWING NUMBER	X6	OF X8

RECEIVED
JUL 18 2008

1070147A X6 7/7/08 7/Resubmit For Approval TO:J.A. McDonald, Inc.

SHIPMENT 1 PMSENG: XXXXXXX PRD: XXXXXXX SHIPDIRECT: XXXXXXX
PLOTTED: 07/03/08 08:40:15 BY: Slaudeng

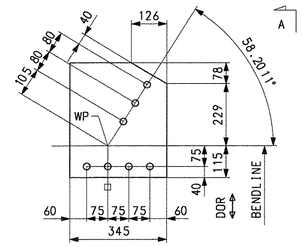

BENT GUSSET PLATE MK.x7a (CG)
(DEVELOPED)

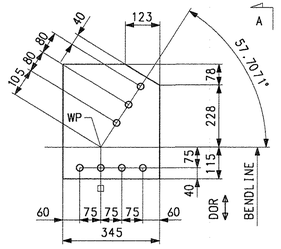

BENT GUSSET PLATE MK.x7b (CG)
(DEVELOPED)

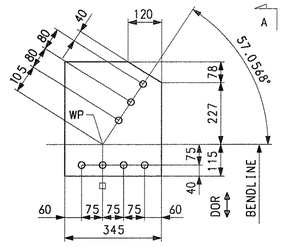

BENT GUSSET PLATE MK.x7c (CG)
(DEVELOPED)

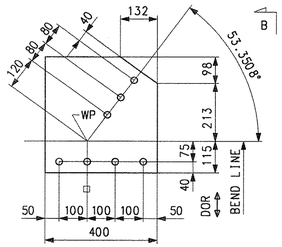

BENT GUSSET PLATE MK.x7d
(DEVELOPED)

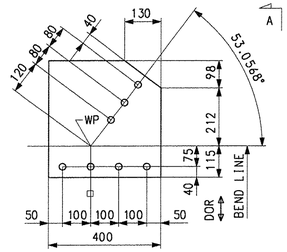

BENT GUSSET PLATE MK.x7f
(DEVELOPED)

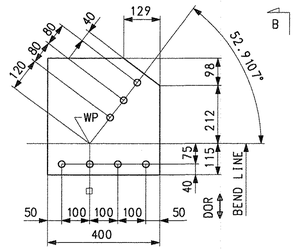

BENT GUSSET PLATE MK.x7g
(DEVELOPED)

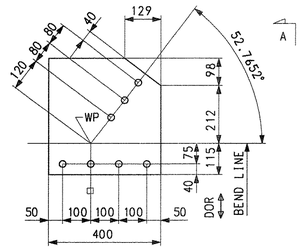

BENT GUSSET PLATE MK.x7h
(DEVELOPED)

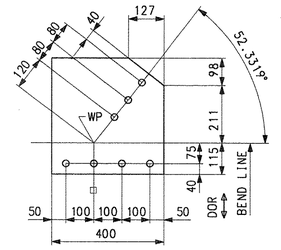

BENT GUSSET PLATE MK.x7k
(DEVELOPED)

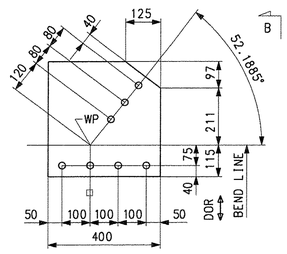

BENT GUSSET PLATE MK.x7m
(DEVELOPED)

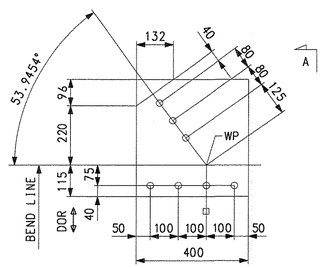

BENT GUSSET PLATE MK.x7n (CG)
(DEVELOPED)

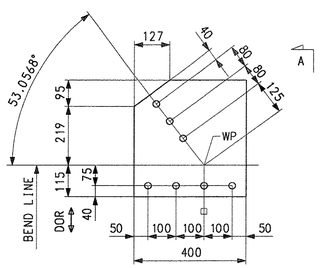

BENT GUSSET PLATE MK.x7p (CG)
(DEVELOPED)

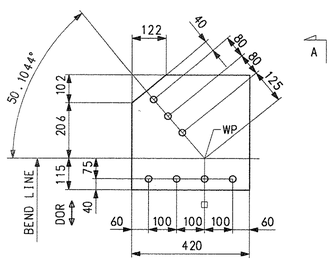

BENT GUSSET PLATE MK.x7s (CG)
(DEVELOPED)

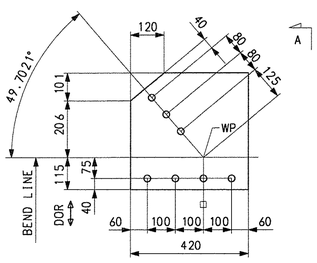

BENT GUSSET PLATE MK.x7t (CG)
(DEVELOPED)

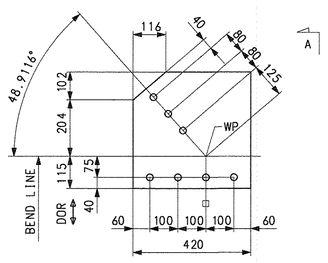

BENT GUSSET PLATE MK.x7w (CG)
(DEVELOPED)

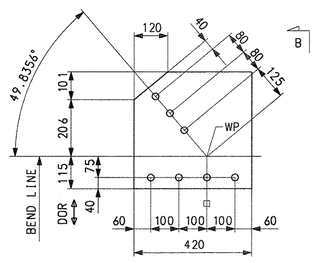

BENT GUSSET PLATE MK.x7y (CG)
(DEVELOPED)

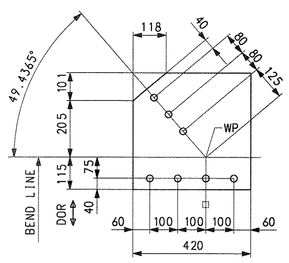

BENT GUSSET PLATE MK.x7aa (CG)
(DEVELOPED)

BILL OF MATERIAL

EST. ID	QTY	MARK	COMM.	DESCRIPTION	LENGTH	SPEC	GRADE	TEST	REMARKS	ITEM	WEIGHT EA. (KG)	DEDUCTED WEIGHT EA.	NET WEIGHT EA.
LB1	1	x7a	PL	14.3 x 345	422	M270M	345W		BENT	07003	16.3412	0	16.3412
LB1	1	x7b	PL	14.3 x 345	421	M270M	345W		BENT	07003	16.3025	0	16.3025
LB1	1	x7c	PL	14.3 x 345	420	M270M	345W		BENT	07003	16.2638	0	16.2638
LB1	1	x7d	PL	14.3 x 400	426	M270M	345W		BENT	07003	19.1259	0	19.1259
LB1	1	x7f	PL	14.3 x 400	425	M270M	345W		BENT	07003	19.081	0	19.081
LB1	1	x7g	PL	14.3 x 400	425	M270M	345W		BENT	07003	19.081	0	19.081
LB1	1	x7h	PL	14.3 x 400	425	M270M	345W		BENT	07003	19.081	0	19.081
LB1	1	x7k	PL	14.3 x 400	424	M270M	345W		BENT	07003	19.0361	0	19.0361
LB1	1	x7m	PL	14.3 x 400	423	M270M	345W		BENT	07003	18.9912	0	18.9912
LB2	2	x7n	PL	14.3 x 400	431	M270M	345W		BENT	07003	19.3504	0	19.3504
LB2	1	x7p	PL	14.3 x 400	429	M270M	345W		BENT	07003	19.2606	0	19.2606
LB2	1	x7s	PL	14.3 x 420	423	M270M	345W		BENT	07003	19.9408	0	19.9408
LB2	1	x7t	PL	14.3 x 420	422	M270M	345W		BENT	07003	19.8937	0	19.8937
LB2	1	x7w	PL	14.3 x 420	421	M270M	345W		BENT	07003	19.8465	0	19.8465
LB2	1	x7y	PL	14.3 x 420	422	M270M	345W		BENT	07003	19.8937	0	19.8937
LB2	1	x7aa	PL	14.3 x 420	421	M270M	345W		BENT	07003	19.8465	0	19.8465

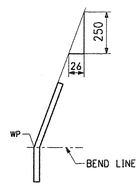

SECTION A

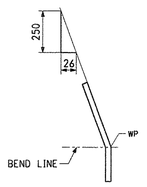

SECTION B

NOTE:

FOR GENERAL SHOP NOTES, SEE DRAWING GN1.

TVGA CONSULTANTS

☒ NO EXCEPTIONS TAKEN ☐ REJECTED
☐ FURNISH AS CORRECTED
☐ REVISE AND RESUBMIT

ENGINEER has reviewed Shop Drawings and Samples and other data which Contractor is required to submit, only for conformance with the information given in the Contract Documents and compatibility with the design concept of the completed Project as a functioning whole as indicated in the Contract Documents. Such reviews do not extend to means, methods, techniques, sequences or procedures of construction or to safety precautions and programs incident thereto. Contractor is responsible for dimensions to be confirmed and correlated at the job site; for information that pertains solely to the fabrication processes or to techniques of construction; and for coordination of the work of all trades.

BY:
DATE: 12/3/07

NO.	REVISION	BY	CHK'D	DATE
△				
△				
△				

HOLES: 15/16" Ø
BOLTS: NONE
COATING: NONE
CODE(S): 30
SCALE: N.T.S.

HIGH STEEL STRUCTURES INC.
1915 Old Philadelphia Pike
Lancaster, PA 17605-0008
Phone (717) 299-5211
www.highsteel.com
An ISO 9001:2000 Certified Company
An Affiliate of High Industries Inc.

GIRDER JOB STANDARDS
VT ROUTE 279 OVER FURNACE BROOK
VT ROUTE 279 STA. 8+542.000 TO STA. 8+685.000
TOWN OF BENNINGTON VERMONT, BRIDGE B12
STATE OF VERMONT
AGENCY OF TRANSPORTATION

STATE CONT. OR REF. NO.	AC NH F019-1(53)			FED. AID PROJ. NO.	
GENERAL CONTRACTOR	J.A. McDONALD, INC.			HSSI PROJ. MGR	DEB KUPRES
SHPMT 3	DRAWING MANAGER	BRITIGAN (IH)	MADE BY	KLW	CHK'D BY CS DATE 11/26/07
STATE VT	HSSI PROJECT NUMBER	S-1070147	HSSI STRUCT. ID	A	DRAWING NUMBER X7 OF X8

SHIPMENT 1 PM&ENG: XXXXXXX PRD: XXXXXXX SHIP&ERECT: XXXXXXX

PLOTTED: 11/30/07 12:53:01 BY: MKreidel

1070147A X1 12/3/07 12/3/07Approval TO:J.A. McDonald, Inc.

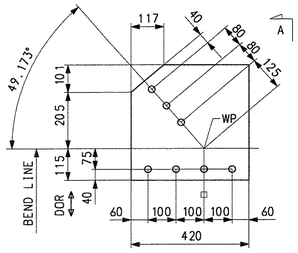

BENT GUSSET PLATE MK.x8a
(DEVELOPED)

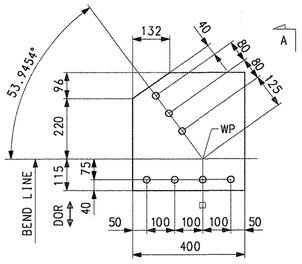

BENT GUSSET PLATE MK.x8b
(DEVELOPED)

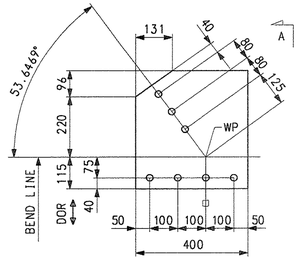

BENT GUSSET PLATE MK. x8c
(DEVELOPED)

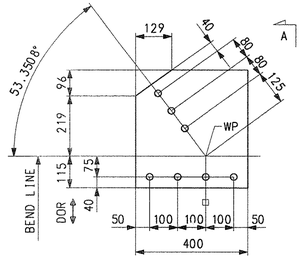

BENT GUSSET PLATE MK.x8d
(DEVELOPED)

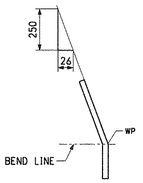

SECTION A

BILL OF MATERIAL

EST. ID	QTY	MARK	COMM.	DESCRIPTION	LENGTH	SPEC	GRADE	TEST	REMARKS	ITEM	GROSS WEIGHT EA.	DEDUCTED WEIGHT EA.	NET WEIGHT EA.
LB2	1	x8a	PL	14.3 x 420	421	M270M	345W		BENT	07003	19.847	0	19.8465
LB2	1	x8b	PL	14.3 x 400	431	M270M	345W		BENT	07003	19.35	0	19.3504
LB2	1	x8c	PL	14.3 x 400	431	M270M	345W		BENT	07003	19.35	0	19.3504
LB2	1	x8d	PL	14.3 x 400	430	M270M	345W		BENT	07003	19.306	0	19.3055

TVGA CONSULTANTS

☒ NO EXCEPTIONS TAKEN ☐ REJECTED
☐ FURNISH AS CORRECTED
☐ REVISE AND RESUBMIT

ENGINEER has reviewed Shop Drawings and Samples and other data which Contractor is required to submit, only for conformance with the information given in the Contract Documents and compatibility with the design concept of the completed Project as a functioning whole as indicated in the Contract Documents. Such reviews do not extend to means, methods, techniques, sequences or procedures of construction or to safety precautions and programs incident thereto. Contractor is responsible for dimensions to be confirmed and correlated at the job site; for information that pertains solely to the fabrication processes or to techniques of construction; and for coordination of the work of all trades.

BY:
DATE: 12/6/07

NOTE:
ALL MATERIAL ON THIS DRAWING TO BE CORNER GROUND.
FOR GENERAL SHOP NOTES, SEE DRAWING GN1.

NO.	REVISION	BY	CHK'D	DATE

HOLES: 15/16" Ø
BOLTS: NONE
COATING: NONE
CODE(S): 30
SCALE: N.T.S.

1915 Old Philadelphia Pike
Lancaster, PA 17602-0008
Phone (717) 299-5211
www.highsteel.com
An ISO 9001:2000 Certified Company
An Affiliate of High Industries Inc.

GIRDER JOB STANDARDS
VT ROUTE 279 OVER FURNACE BROOK
VT ROUTE 279 STA. 8+542.000 TO STA. 8+685.000
TOWN OF BENNINGTON VERMONT, BRIDGE B12
STATE OF VERMONT
AGENCY OF TRANSPORTATION

STATE CONT. OR REF. NO.	AC NH F019-1(53)	FED. AID PROJ. NO.	
GENERAL CONTRACTOR	J.A. McDONALD, INC.	HSSI PROJ. MGR	DEB KUPRES
SHPMT 3	DRAWING MANAGER: BRITIGAN (IH)	MADE BY: KLW	CHK'D. BY: CS DATE: 11/26/07
STATE VT	HSSI PROJECT NUMBER: S-1070147	HSSI STRUCT. ID: A	DRAWING NUMBER: X8 OF X8

SHIPMENT 1 PM&ENG: 5002B1Z PRO: 5002B1B SHIP&RECT: 5002B1B
PLOTTED: 11/30/07 12:50:42 BY: MKreidel

1070147A X1 12/3/07 12/3/07Approval TO:J.A. McDonald, Inc.

METRIC

GENERAL SHOP NOTES

SPECIFICATIONS:
ALL MATERIAL AND WORKMANSHIP TO BE IN ACCORDANCE WITH THE STATE OF VERMONT, AGENCY OF TRANSPORTATION, STANDARD SPECIFICATIONS FOR CONSTRUCTION DATED 2006, AND ITS LATEST REVISIONS.

MATERIAL:
UNLESS NOTED OTHERWISE, ALL STEEL TO BE AASHTO M270M GRADE 345W.
(T) INDICATES ZONE 2 CHARPY V-NOTCH TESTING REQUIRED.

IN UNPAINTED AREAS SHOP BOLTS TO BE HIGH STRENGTH AASHTO M164 TYPE 3 (FRICTION) (RCT) WITH HEAVY HEX HEAD AND AASHTO M291 GRADE DH3 HEAVY HEX NUT, WITH ONE AASHTO M293 WEATHERING WASHER PER BOLT.
IN PAINTED AREAS SHOP BOLTS TO BE HIGH STRENGTH AASHTO M164 TYPE 1 (FRICTION) (RCT) WITH HEAVY HEX HEAD AND AASHTO M291 GRADE DH HEAVY HEX NUT, WITH ONE AASHTO M293 WASHER PER BOLT, GALV. TO AASHTO M298, CLASS 50.
(RCT) INDICATES ROTATIONAL CAPACITY TESTED BOLTS. DO NOT MIX NUTS, BOLTS AND WASHERS FROM DIFFERENT CONTAINERS UNLESS ALL NUTS, BOLTS AND WASHERS HAVE THE SAME LOT NUMBER.

SHOP PROCEDURE:
ALL FLANGE AND WEB PLATE SPLICES TO BE MADE BEFORE FINAL FITTING AND WELDING INTO GIRDER.
CAMBER TOLERANCE: -0 mm TO +19 mm
ALL RE-ENTRANT CUTS TO HAVE 25 MIN. RADIUS.
℄ INDICATES SET LINE.

BEARING AREA, AS NOTED ON GIRDER DETAILS, INDICATES AREA THAT MUST BE FLAT AND TRUE TO RECEIVE SOLE PLATE.
USE LOW STRESS DIE STAMPS PLACED IN AN AREA NOT EXPOSED ON THE FINISHED STRUCTURE.

DOR INDICATES DIRECTION OF ROLLING.
(CG) INDICATES CORNER GRINDING.
CORNER GRINDING IS REQUIRED FOR ALL MAIN MEMBER FLANGE PLATES, FIELD SPLICE PLATES, CROSSFRAMES AND CONNECTION PLATES AS WELL AS SECONDARY MEMBERS IN PAINTED AREAS.

INSPECTION:
SHOP INSPECTION BY TO BE DETERMINED

WELDING:
ALL WELDING IS TO CONFORM TO AWS D1.5-02 & AASHTO GUIDE FOR HIGHWAY BRIDGE FABRICATION WITH HPS 70W (485W) STEEL.
WELDING METHODS, PROCEDURES, AND MATERIALS SHALL COMPLY WITH THE SPECIFIC PROCEDURE DESIGNATED IN THE WELD SYMBOL TAIL.
FOR WELDING STIFFENERS AND CONNECTION PLATES TO GIRDERS, SEE TYPICAL WELDING DETAIL.
IDENTIFICATION OF HOLE PLACEMENT:
FOR WELDING CROSSFRAMES, SEE SECONDARY MEMBER WELDING DETAIL.
UNLESS NOTED OTHERWISE, BOLT HOLES IN MATERIAL 16mm OR LESS IN THICKNESS MAY BE CNC (COMPUTER NUMERICALLY CONTROLLED) PUNCHED OR CNC DRILLED FULL SIZE UNASSEMBLED. ALL MATERIAL THICKER THAN 16mm IS TO BE DRILLED.

NON-DESTRUCTIVE TESTING:
FLANGE AND WEB PLATE SPLICES TO BE RADIOGRAPHICALLY TESTED, AS CALLED FOR ON DRAWINGS PREFIXED "FS" AND "WC", BY H.S.S.I.

MAGNETIC PARTICLE INSPECTION IS REQUIRED ON AT LEAST 300 mm OF EVERY 3000 mm LENGTH OF FILLET WELDS AND 300 mm OF SUCH WELDS LESS THAN 3000 mm IN LENGTH ON GIRDER WEB TO FLANGE, CONNECTION PLATES AND BEARING STIFFENERS TO WEB AND FLANGE AND CROSSFRAME WELDS. TESTING PER THE YOKE METHOD, USING DC. EXCEPT WELDS TO HPS 485W STEEL, SHALL BE TESTED BY THE YOKE TECHNIQUE MODIFIED TO TEST USING AC.

DT DRILLED TO TEMPLATE
SINGLE PLY CONNECTION DRILLED FULL SIZE USING TEMPLATE WITH HARDENED BUSHINGS WHILE UNASSEMBLED.

NCD NUMERICALLY CONTROLLED DRILLING
EACH PART IS DRILLED FULL SIZE USING A MACHINING CENTER, PORTABLE CNC DRILL OR DRILL LINE WHILE UNASSEMBLED.

CLEANING:
ALL STEEL TO BE BLAST CLEANED TO SSPC-SP10 (NEAR WHITE), (ASTM D2200 GRADE SA 2-1/2), AFTER FABRICATION.
BLAST CLEANING ANCHOR PROFILE TO BE FROM 38 TO 64 MICROMETERS DEEP IN PAINTED AREAS.

PAINTING:
ALL STEEL TO BE PAINTED (UNLESS NOTED) WITHIN 5600mm FROM THE END OF THE GIRDERS AT ABUTMENTS WITH A 3 COAT SYSTEM AS FOLLOWS:
PRIME COAT: CARBOZINC 859 (ORGANIC ZINC) WITH 75 TO 250 MICROMETERS D.F.T.
INTER. COAT: CARBOGUARD 888 (EPOXY) WITH 75 TO 200 MICROMETERS D.F.T.
FINISH COAT: CARBOTHANE 133 LH (POLYURETHANE) WITH 75 TO 150 MICROMETERS D.F.T.
FINISH COAT COLOR TO BE DARK BROWN, FEDERAL STANDARD 595, COLOR #20059.
PRIME COAT ONLY WITHIN 75 mm OF OPEN HOLES (150 MICROMETERS MAX. D.F.T.), UNLESS NOTED "P".
PRIME COAT TO BE APPLIED WITHIN 8 HOURS AFTER BLAST CLEANING.
STRIPE COAT ALL EDGES OF PLATES, ANGLES OR OTHER SHAPES WITH SHARP EDGES, BOLTS, AND NUTS PRIOR TO THE APPLICATION OF THE FULL PRIME COAT.
TOP FLANGE OF GIRDERS, AS SHOWN IN "TYPICAL PAINT SECTION", SHALL RECEIVE A LIGHT RUST PREVENTIVE COAT OF PRIMER IN PAINTED AREAS, NOT TO EXCEED 38 MICROMETERS D.F.T.
INTERMEDIATE AND FINISH COATS SHALL BE STAGGERED A MINIMUM OF 13 mm FROM THE FAYING SURFACES AND EACH OTHER.
PAINT MANUFACTURER: THE CARBOLINE CO. ST. LOUIS, MO.

MINIMUM COLD-BENDING RADII				
THICKNESS mm (t)	UP TO 19.1	OVER 19.1 TO 25.4, INCL.	OVER 25.4 TO 50.8, INCL.	OVER 50.8
ASTM A709M/ AASHTO M270M GRADE				
250	1.5t	1.5t	1.5t	2.0t
345	1.5t	1.5t	2.0t	2.5t
345W	1.5t	1.5t	2.0t	2.5t
HPS485W	1.5t	1.5t	2.5t	3.0t
690	1.75t	2.25t	4.5t	5.5t
690W	1.75t	2.25t	4.5t	5.5t

DRAWING REFERENCE:

FLANGE SPLICES	-PREFIXED "FS"
WEB CAMBERS	-PREFIXED "WC"
GIRDER JOB STANDARDS	-PREFIXED "X"
CROSSFRAME JOB STDS.	-PREFIXED "M"
SHOP ASSEMBLY	-PREFIXED "SA"
HORIZONTAL CURVE	-PREFIXED "HC"
WELDING PROCEDURE	-PREFIXED "WP"

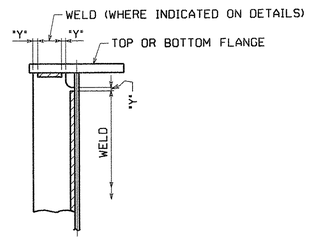

"Y" = 15±5

STIFFENER WELDING DETAIL
(WELDS MUST STOP 25 mm MIN. FROM EDGE OF FLANGE)

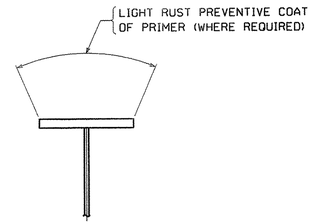

TYP. PAINT SECTION

ALL CROSSFRAME WELDS ARE TO BE TERMINATED FROM EDGE OF GUSSET PLATES, FILL PLATES OR ANGLES AS INDICATED.

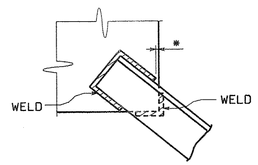

* = 6 MIN., 13 MAX. (TYP.)

SECONDARY MEMBER WELDING DETAIL

TVGA CONSULTANTS
☒ NO EXCEPTIONS TAKEN ☐ REJECTED
☐ FURNISH AS CORRECTED
☐ REVISE AND RESUBMIT
ENGINEER has reviewed Shop Drawings and Samples and other data which Contractor is required to submit, only for conformance with the information given in the Contract Documents and compatibility with the design concept of the completed Project as a functioning whole as indicated in the Contract Documents. Such reviews do not extend to means, methods, techniques, sequences or procedures of construction or to safety precautions and programs incident thereto. Contractor is responsible for dimensions to be confirmed and correlated at the job site; for information that pertains solely to the fabrication processes or to techniques of construction; and for coordination of the work of all trades.
BY:
DATE: 1/8/08

NO.	REVISION	BY	CHK'D	DATE

HOLES
BOLTS
COATING
CODE(S)
SCALE N.T.S.

HIGH STEEL STRUCTURES INC.
An ISO 9001:2000 Certified Company
An Affiliate of High Industries Inc.
Lancaster Facility
195 Old Philadelphia Pike
Lancaster, PA 17605-0008
Phone (717) 299-5211
Williamsport Facility
3501 E. 4th Street
Williamsport, PA 17701
Phone (570) 326-9051
www.Highsteel.com

GENERAL SHOP NOTES
VT ROUTE 279 OVER FURNACE BROOK
VT ROUTE 279 STA. 8+542.000 TO STA. 8+685.000
TOWN OF BENNINGTON VERMONT, BRIDGE B12
STATE OF VERMONT
AGENCY OF TRANSPORTATION

	AC NH F019-1(53)	FED. AID PROJ. NO.	
GENERAL CONTRACTOR	J.A. McDONALD, INC.	HSSI PROJ. MGR	DEB KUPRES
SHPMT 3	DRAWING MANAGER: BRITIGAN (IH)	MADE BY: Kma	CHK'D. BY: SJA	DATE: 9/13/07
STATE VT	HSSI PROJECT NUMBER: S-1070147	HSSI STRUCT. ID: A	DRAWING NUMBER: GN1 OF GN1

PLOTTED: 11/30/2007 12:43:17 PM
BY: MKreidel
SHIPMENT 01 PM&ENG: 5082817 PROD: 5082818 SHIP&ERECT.: 5082819

1070147A X1 12/3/07 12/3/07Approval TO:J.A. McDonald, Inc.

METRIC

FULL SIZE HOLE PROCEDURE

THE SPLICE CONNECTIONS WILL BE DRILLED FULL-SIZE, UNASSEMBLED USING STEEL TEMPLATES, WHICH WILL ELIMINATE THE REAMING OPERATION. THE GIRDER SPLICE CONNECTION TEMPLATES WILL BE PREPARED ON A CNC MACHINING CENTER. THE SPLICE MATERIAL WILL BE DRILLED TO FULL SIZE HOLES ON A CNC MACHINING CENTER. FIT-UP FIXTURES ALSO PREPARED ON A CNC MACHINING CENTER WILL BE USED TO ALIGN DRILLING TEMPLATES ON WEB AND FLANGES. BY DRILLING THE SPLICE CONNECTIONS IN THIS MANNER, THERE WILL BE NO REAMING REQUIRED.

THE PROCEDURE TO BE USED IS AS FOLLOWS:

A. SPLICE MATERIAL
THE SPLICE MATERIAL HOLES NOTED NCD ON X DRAWINGS WILL BE DRILLED FULL-SIZE ON A CNC MACHING CENTER.

B. DRILL TEMPLATES
WEB AND FLANGE DRILLING TEMPLATES, AND THE WEB TO FLANGE HOLE LOCATION JIGS WILL BE PRODUCED ON CNC MACHINING CENTERS ENSURING ACCURATE PLACEMENT OF HOLES.

Machining

C. WEB BURNING
THE WEBS WILL BE BURNED ON THE CNC BURNING MACHINE.

D. WEB DRILLING (SEE FIG. 1)
THE WEB SPLICE HOLES WILL BE DRILLED FULL-SIZE, USING THE DRILL TEMPLATE. THIS TEMPLATE WILL PIN OFF OF THE END AND THE BOTTOM OF THE WEB PLATE, WITH NO MANUAL LAYOUT NECESSARY. THE LOCATION OF THE FIRST HOLE IN THE PATTERN WILL BE VERIFIED.

1. PLACE THE TEMPLATE'S LOCATING PINS AGAINST THE REFERENCE EDGES (END AND BOTTOM OF WEB). CLAMP THE TEMPLATE SECURELY IN AT LEAST TWO LOCATIONS. (SEE FIG. 1)
2. DRILL THE (4) CORNER HOLES USING A FULL SIZE DRILL.
3. USE THE FULL SIZE PINS IN AT LEAST (2) OPPOSITE CORNER HOLES, INSURING THAT THE LOCATING PINS ARE STILL IN CONTACT WITH THE REFERENCE EDGES, AND BOLT OR CLAMP THE TEMPLATE TO PREVENT TEMPLATE MOVEMENT DURING THE DRILLING OPERATION.
4. DRILL THE REMAINING HOLES.

E. FLANGE DRILLING
1. FLANGE HOLES WILL BE DRILLED AFTER THE GIRDER IS ASSEMBLED AND WELDED.
   a. ALIGN THE WEB TO FLANGE DRILLING FIXTURE TO THE WEB AND SECURELY ATTACH THE FIXTURE WITH (2) SHOULDER BOLTS OR FULL SIZE PINS AND CLAMPS. (SEE FIG. 2)
   b. WELD FIXTURE ANGLE TO PLATE ONCE ALIGNED.
   c. DRILL 1 FULL SIZE HOLE IN FLANGE USING THE FIXTURE AS A GUIDE.
   d. REMOVE THE FLANGE DRILLING FIXTURE AND LOCATE THE FLANGE TEMPLATE USING THE PRE-DRILLED HOLES AND CENTER LINE ON TEMPLATE AND FLANGE. SECURELY HOLD THE OPPOSITE SIDE OF THE DRILL TEMPLATE IN PLACE WITH (1) SHOULDER BOLT OR FULL SIZE PIN & C-CLAMPS. (SEE FIG. 3)
   e. DRILL (2) ADDITIONAL FULL SIZE HOLES AT CORNERS OPPOSITE END OF TEMPLATES.
   f. SECURE TEMPLATE USING SHOULDER BOLTS OR FULL SIZE PINS AND C-CLAMPS THEN DRILL REMAINING HOLES.
   g. REPEAT PROCEDURE FOR OTHER FLANGE.
2. THE SPLICE PLATES NEED NOT BE MATCH MARKED SINCE THEY ARE ALL ALIKE AND WILL FIT ANY SPLICE UTILIZING THE TEMPLATE LOCATED AND DRILLED HOLES.

G. YARD
1. THE FIRST LINE OF GIRDERS SHALL BE SET IN THE YARD TO THE CORRECT ELEVATION AND CAMBER.
2. THE GIRDERS, WITH THE SPLICES ATTACHED, WILL BE PINNED TO ALIGN THE SPLICE. THE SPLICES ARE TO BE BOLTED TOGETHER, USING SUFFICIENT BOLTS TO SECURE THE UNITS. A NORMAL DIAMETER BOLT MUST BE ABLE TO FIT THROUGH EACH SPLICE CONNECTION.

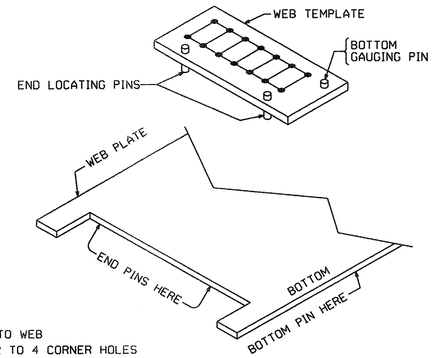

- CLAMP TO WEB
- DRILL 2 TO 4 CORNER HOLES
- SECURE WITH FULL SIZE PINS (TO KEEP TEMPLATE FROM MOVING)
- DRILL BALANCE OF HOLES

FIG. 1

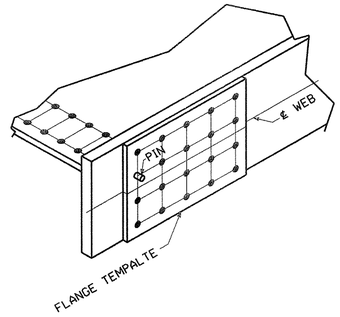

- PIN TEMPLATE TO FLANGES
- CHECK ALIGNMENT WITH ℄ WEB SCRIBE LINES

FIG. 3

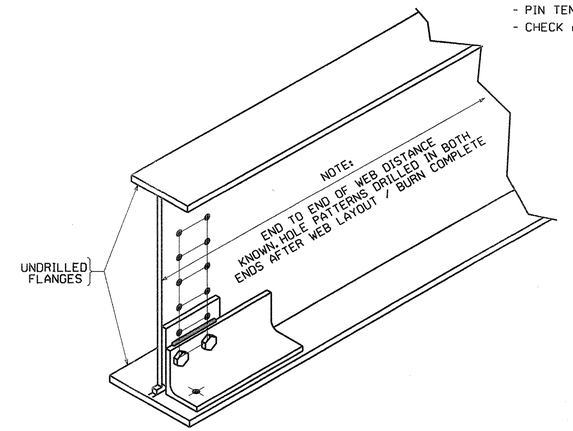

- SECURE FIXTURE TO WEB
- WELD FIXTURE
- DRILL HOLE INTO FLANGE
- REMOVE FIXTURE

FIG. 2

TVGA CONSULTANTS

☐ NO EXCEPTIONS TAKEN ☐ REJECTED
☒ FURNISH AS CORRECTED
☐ REVISE AND RESUBMIT

ENGINEER has reviewed Shop Drawings and Samples and other data which Contractor is required to submit, only for conformance with the information given in the Contract Documents and compatibility with the design concept of the completed Project as a functioning whole as indicated in the Contract Documents. Such reviews do not extend to means, methods, techniques, sequences or procedures of construction or to safety precautions and programs incident thereto. Contractor is responsible for dimensions to be confirmed and correlated at the job site; for information that pertains solely to the fabrication processes or to techniques of construction and for coordination of the work of all trades.

BY: _____
DATE: 12/7/07

NO.	REVISION	BY	CHK'D	DATE
△				
△				
△				

HOLES
BOLTS
COATING
CODE(S)
SCALE N.T.S.

HIGH STEEL STRUCTURES INC.
An ISO 9001:2000 Certified Company
An Affiliate of High Industries Inc.
Lancaster Facility: 915 Old Philadelphia Pike, Lancaster, PA 17605-6008, Phone (717) 299-5211
Williamsport Facility: 3501 W. 4th Street, Williamsport, PA 17701, Phone (570) 326-9051
www.highsteel.com

GENERAL SHOP NOTES
VT ROUTE 279 OVER FURNACE BROOK
VT ROUTE 279 STA. 8+542.000 TO STA. 8+685.000
TOWN OF BENNINGTON VERMONT, BRIDGE B12
STATE OF VERMONT
AGENCY OF TRANSPORTATION

	AC NH F019-1(53)	FED. AID PROJ. NO.	
GENERAL CONTRACTOR	J.A. McDONALD, INC.	HSSI PROJ. MGR	DEB KUPRES
SHPMT 3	DRAWING MANAGER: BRITIGAN (IH)	MADE BY: Kma	CHK'D. BY: SJA	DATE: 9/13/07
STATE VT	HSSI PROJECT NUMBER: S-1070147	HSSI STRUCT. ID: A	DRAWING NUMBER: GN2 OF GN2

1 2 3 4 5 6 7

SHIPMENT 01 PM&ENG: 5002817 PROJ: 5002818 SHIP&ERECT.: 5002819

BY: MKreidel

PLOTTED: 11/30/2007 12:43:19 PM

60

1070147A X1 12/3/07 12/3/07Approval TO:J.A. McDonald, Inc.

METRIC

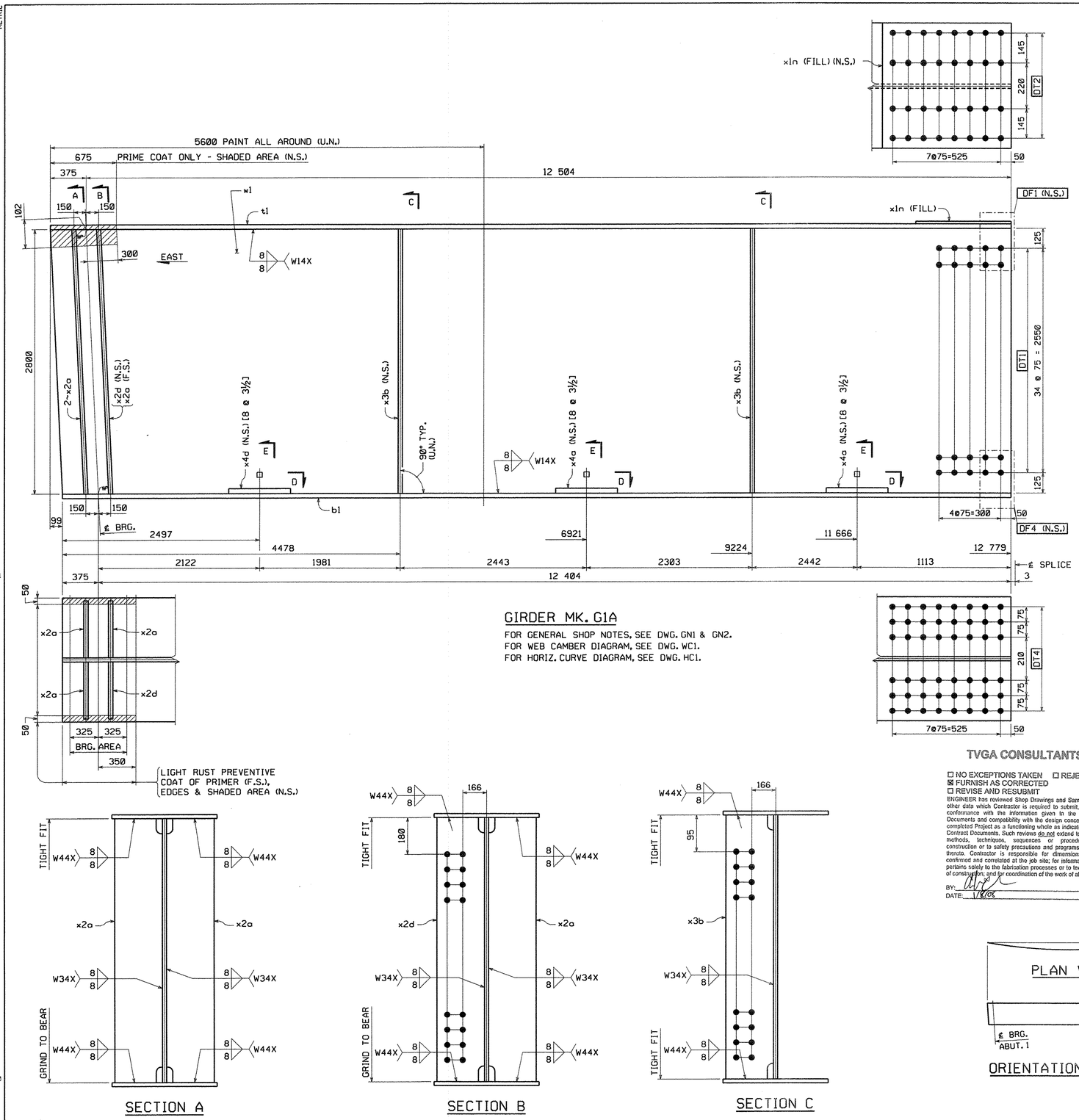

GIRDER MK. G1A

FOR GENERAL SHOP NOTES, SEE DWG. GN1 & GN2.
FOR WEB CAMBER DIAGRAM, SEE DWG. WC1.
FOR HORIZ. CURVE DIAGRAM, SEE DWG. HC1.

BILL OF MATERIAL

QTY EA.	MARK	COMM	DESCRIPTION	LENGTH	SPEC	GRADE	TEST	REMARKS	ITEM	GROSS WT EA.	DED WT	NET WEIGHT EA.	
1	G1A		GIRDER							11406.25	23.94	11382.32	
1	w1	PL	22 x 2800	12 879	M270M	345W	T		03011	6227.02	23.94	6,203.08	
1	t1	PL	28 x 610	12 879	M270M	345W	T		04007	1726.58	0.00	1,726.58	
1	b1	PL	40 x 610	12 779	M270M	345W	T		04005	2447.39	0.00	2,447.39	
1	x1n	PL	12.7 x 610	615	M270M	345W		FILL	06006	37.40	0.00	37.40	
3	x2a	PL	25.4 x 280	2 802	M270M	345W			07001	156.41	0.00	156.41	x3
1	x2d	PL	25.4 x 280	2 802	M270M	345W	T		07001	156.41	0.00	156.41	
2	x3b	PL	14.3 x 280	2 800	M270M	345W	T		07002	88.00	0.00	88.00	x2
2	x4a	PL	14.3 x 1140	426	M270M	345W		BENT	07003	54.51	0.00	54.51	x2
1	x4d	PL	14 2/8 x 1140	447	M270M	345W		BENT	07003	57.20	0.00	57.20	
8	140308-G	HS Bolt	7/8	0'-3 1/2	M164 Type 1			GALV.	17003	0.00	0.00	0.00	
16	140308	HS Bolt	7/8	0'-3 1/2	M164 Type 3				17002	0.00	0.00	0.00	
8	N14-G	Nut	7/8		M291	DH		GALV.	17005	0.00	0.00	0.00	
16	N14	Nut	7/8		M291	DH3			17004	0.00	0.00	0.00	
8	W14-G	Std Wash	7/8		M293			GALV.	17007	0.00	0.00	0.00	
16	W14	Std Wash	7/8		M293 Weathering				17006	0.00	0.00	0.00	

TOTAL WEIGHT THIS SHEET: 11 382.32 kgs
BID ITEM 0160 506.56

TVGA CONSULTANTS

☐ NO EXCEPTIONS TAKEN ☐ REJECTED
☒ FURNISH AS CORRECTED
☐ REVISE AND RESUBMIT

ENGINEER has reviewed Shop Drawings and Samples and other data which Contractor is required to submit, only for conformance with the information given in the Contract Documents and compatibility with the design concept of the completed Project as a functioning whole as indicated in the Contract Documents. Such review do not extend to means, methods, techniques, sequences or procedures of construction or to safety precautions and programs incident thereto. Contractor is responsible for dimensions to be confirmed and correlated at the job site; for information that pertains solely to the fabrication processes or to techniques of construction, and for coordination of the work of all trades.

BY:
DATE: 12/3/07

SHOP NOTE:

[8 @ 3½]
- [INDICATES LENGTH OF ⅞"ø H.S. BOLTS
- 8 INDICATES NUMBER OF ⅞"ø H.S. BOLTS

ORIENTATION DIAGRAM

NO.	REVISION	BY	CHK'D	DATE

HOLES: 15/16"ø
BOLTS: AS NOTED
COATING: SEE DWG. GN1
CODE(S): 30
SCALE: N.T.S.

HIGH STEEL STRUCTURES INC.
An Affiliate of High Industries Inc.
An ISO 9001:2000 Certified Company
Lancaster Facility: 995 Old Philadelphia Pike, Lancaster, PA 17605-0008, Phone (717) 299-5211
Williamsport Facility: 3501 W. 4th Street, Williamsport, PA 17701, Phone (570) 326-9051
www.highsteel.com

GIRDER G1A
VT ROUTE 279 OVER FURNACE BROOK
VT ROUTE 279 STA. 8+542.000 TO STA. 8+685.000
TOWN OF BENNINGTON VERMONT, BRIDGE B12
STATE OF VERMONT
AGENCY OF TRANSPORTATION

	AC NH F019-1(53)	FED. AID PROJ. NO.	
GENERAL CONTRACTOR	J.A. McDONALD, INC.	HSSI PROJ. MGR	DEB KUPRES
SHPMT 3	DRAWING MANAGER: BRITIGAN (IH)	MADE BY: MAF	CHK'D. BY: MGK	DATE: 11/21/07
STATE VT	HSSI PROJECT NUMBER: S-1070147	HSSI STRUCT. ID: A	DRAWING NUMBER: 1 OF 34

PLOTTED: 11/30/2007 12:25:36 PM
BY: MKreidel
SHIPMENT 01
PM&ENG: 5002817 PRO: 5002818 SHIP&REC'T.: 5002819

1070147A X1 12/3/07 12/3/07Approval TO:J.A. McDonald, Inc.

METRIC

TVGA CONSULTANTS

☒ NO EXCEPTIONS TAKEN ☐ REJECTED
☐ FURNISH AS CORRECTED
☐ REVISE AND RESUBMIT

ENGINEER has reviewed Shop Drawings and Samples and other data which Contractor is required to submit, only for conformance with the information given in the Contract Documents and compatibility with the design concept of the completed Project as a functioning whole as indicated in the Contract Documents. Such reviews do not extend to means, methods, techniques, sequences or procedures of construction or to safety precautions and programs incident thereto. Contractor is responsible for dimensions to be confirmed and correlated at the job site; for information that pertains solely to the fabrication processes or to techniques of construction; and for coordination of the work of all trades.

BY: _____
DATE: 11/26/07

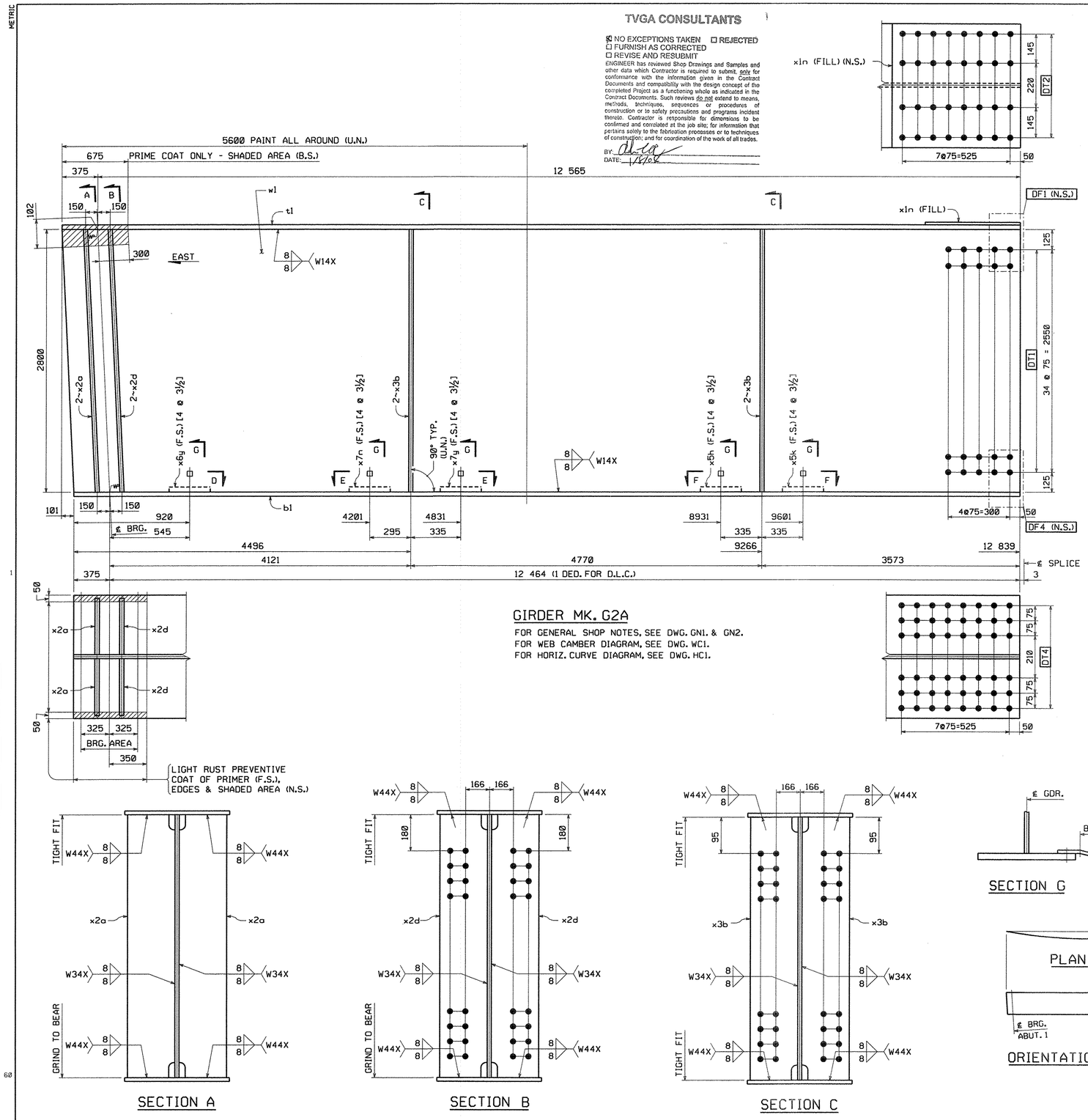

GIRDER MK. G2A

FOR GENERAL SHOP NOTES, SEE DWG. GN1. & GN2.
FOR WEB CAMBER DIAGRAM, SEE DWG. WC1.
FOR HORIZ. CURVE DIAGRAM, SEE DWG. HC1.

BILL OF MATERIAL

QTY EA.	MARK	COMM	DESCRIPTION	LENGTH	SPEC	GRADE	TEST	REMARKS	ITEM	GROSS WT EA.	DED WT	NET WEIGHT EA.
1	G2A		GIRDER							11560.62	24.42	11536.20
1	w1	PL	22 x 2800	12 940	M270M	345W	T		03001	6256.51	24.42	6,232.09
1	t1	PL	28 x 610	12 940	M270M	345W	T		04007	1734.76	0.00	1,734.76
1	b1	PL	40 x 610	12 839	M270M	345W	T		04005	2458.88	0.00	2,458.88
1	x1n	PL	12.7 x 610	615	M270M	345W		FILL	06006	37.40	0.00	37.40
2	x2a	PL	25.4 x 280	2 802	M270M	345W			07001	156.41	0.00	156.41
4	x3b	PL	14.3 x 280	2 800	M270M	345W	T		07002	88.00	0.00	88.00
2	x2d	PL	25.4 x 280	2 802	M270M	345W	T		07001	156.41	0.00	156.41
1	x5h	PL	14.3 x 420	423	M270M	345W		BENT	07003	19.94	0.00	19.94
1	x5k	PL	14.3 x 420	422	M270M	345W		BENT	07003	19.89	0.00	19.89
1	x6y	PL	14.3 x 345	422	M270M	345W		BENT	07003	16.34	0.00	16.34
1	x7n	PL	14.3 x 400	431	M270M	345W		BENT	07003	19.35	0.00	19.35
1	x7y	PL	14.3 x 420	422	M270M	345W		BENT	07003	19.89	0.00	19.89
12	140308-G	HS Bolt	7/8	0'-3 1/2	M164 Type 1			GALV.	17003	0.00	0.00	0.00
8	140308	HS Bolt	7/8	0'-3 1/2	M164 Type 3				17002	0.00	0.00	0.00
12	N14-G	Nut	7/8		M291	DH		GALV.	17005	0.00	0.00	0.00
8	N14	Nut	7/8		M291	DH3			17004	0.00	0.00	0.00
12	W14-G	Std Wash	7/8		M293			GALV.	17007	0.00	0.00	0.00
8	W14	Std Wash	7/8		M293 Weathering				17006	0.00	0.00	0.00
										TOTAL WEIGHT THIS SHEET: BID ITEM 0160 506.56		11 536.20 kgs

SECTION D

SECTION E-E & F-F

SECTION A

SECTION B

SECTION C

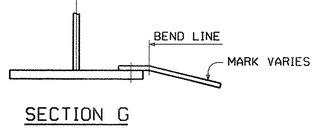

SECTION G

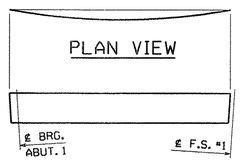

ORIENTATION DIAGRAM

SHOP NOTE:

[4 ø 3½]
- INDICATES LENGTH OF ⅞"ø H.S. BOLTS
- INDICATES NUMBER OF ⅞"ø H.S. BOLTS

NO.	REVISION	BY	CHK'D	DATE
△				
△				
△				

HOLES: 15/16"ø
BOLTS: AS NOTED
COATING: SEE DWG. GN1
CODE(S): 30
SCALE: N.T.S.

HIGH STEEL STRUCTURES INC.
Lancaster Facility: 1915 Old Philadelphia Pike, Lancaster, PA 17605-0008, Phone (717) 299-5211
Williamsport Facility: 3501 W. 4th Street, Williamsport, PA 17701, Phone (570) 326-9051
An ISO 9001:2000 Certified Company — An Affiliate of High Industries Inc. — www.highsteel.com

GIRDER G2A
VT ROUTE 279 OVER FURNACE BROOK
VT ROUTE 279 STA. 8+542.000 TO STA. 8+685.000
TOWN OF BENNINGTON VERMONT, BRIDGE B12
STATE OF VERMONT
AGENCY OF TRANSPORTATION
FED. AID PROJ. NO.: AC NH F019-1(53)
GENERAL CONTRACTOR: J.A. McDONALD, INC.
HSSI PROJ. MGR: DEB KUPRES
SHPMT 3 | DRAWING MANAGER: BRITIGAN (IH) | MADE BY: MAF | CHK'D. BY: MGK | DATE: 11/21/07
STATE VT | HSSI PROJECT NUMBER: S-1070147 | HSSI STRUCT. ID: A | DRAWING NUMBER: 2 OF 34

PLOTTED: 11/30/2007 12:28:16 PM
BY: MKreidel
SHIPMENT 01 PW&ENG.5882817 PRD.5882818 SHIP&RECT.5882819

1070147A X1 12/3/07 12/3/07Approval TO:J.A. McDonald, Inc.

METRIC

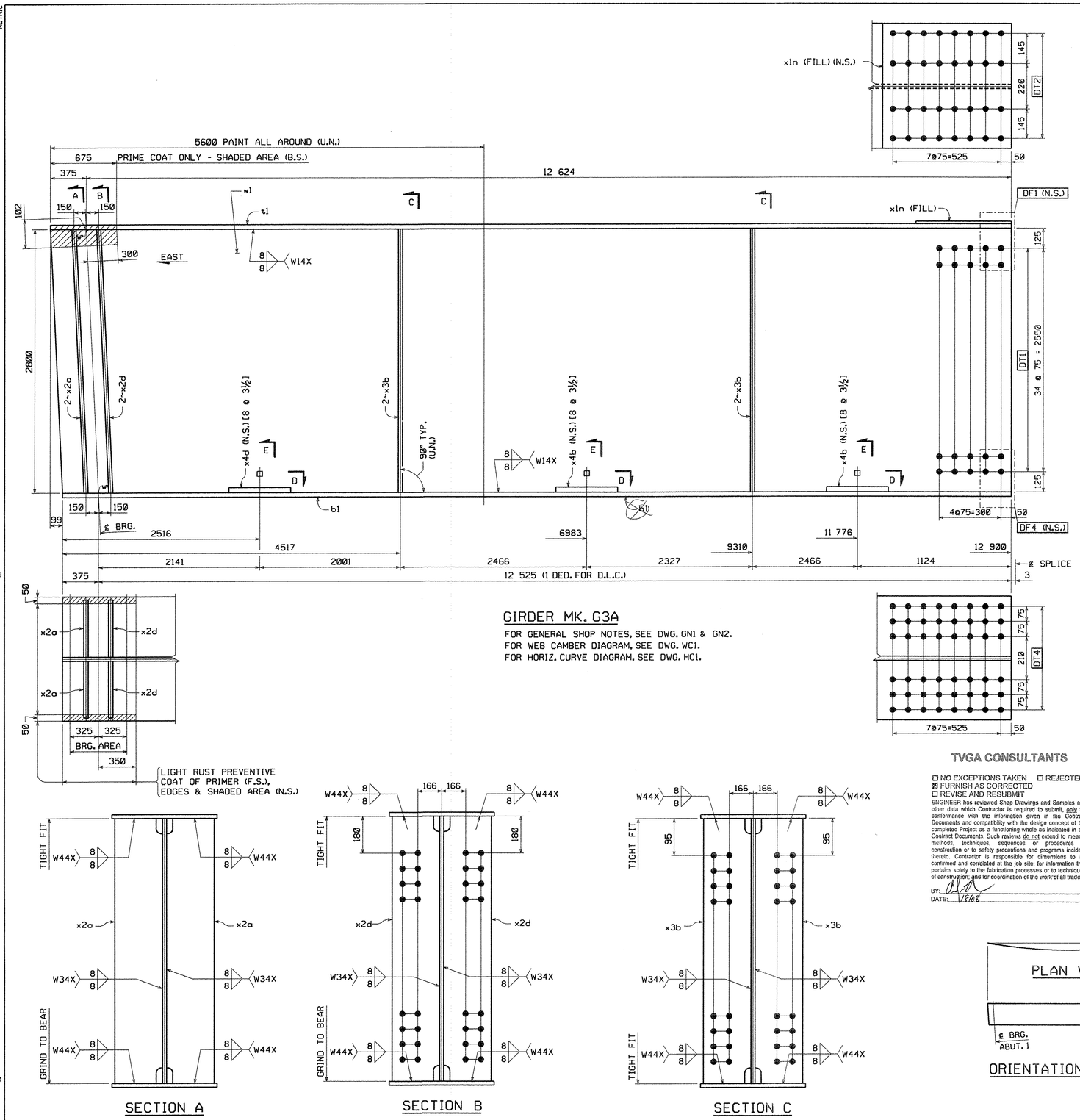

GIRDER MK. G3A

FOR GENERAL SHOP NOTES, SEE DWG. GN1 & GN2.
FOR WEB CAMBER DIAGRAM, SEE DWG. WC1.
FOR HORIZ. CURVE DIAGRAM, SEE DWG. HC1.

SECTION A

SECTION B

SECTION C

ORIENTATION DIAGRAM

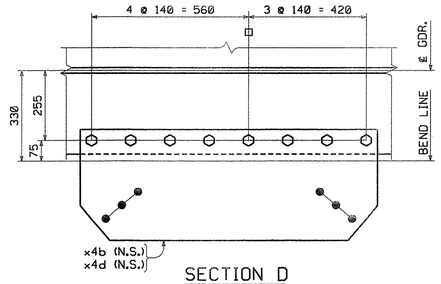

SECTION D

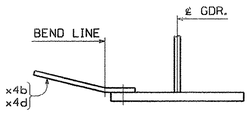

SECTION E

SHOP NOTE:

[8 @ 3½]
INDICATES LENGTH OF ⅞"ø H.S. BOLTS
INDICATES NUMBER OF ⅞"ø H.S. BOLTS

BILL OF MATERIAL

QTY EA	MARK	COMM	DESCRIPTION	LENGTH	SPEC	GRADE	TEST	REMARKS	ITEM	GROSS WT EA	DED WT	NET WEIGHT EA
1	G3A		GIRDER							11679.27	23.94	11655.34
1	w1	PL	22 x 2800	12 999	M270M	345W	T		03001	6285.04	23.94	6,261.10
1	t1	PL	28 x 610	12 999	M270M	345W	T		04007	1742.67	0.00	1,742.67
1	b1	PL	40 x 610	12 900	M270M	345W	T		04005	2470.57	0.00	2,470.57
1	x1n	PL	12.7 x 610	615	M270M	345W		FILL	06006	37.40	0.00	37.40
2	x2a	PL	25.4 x 280	2 802	M270M	345W			07001	156.41	0.00	156.41
2	x2d	PL	25.4 x 280	2 802	M270M	345W	T		07001	156.41	0.00	156.41
4	x3b	PL	14.3 x 280	2 800	M270M	345W	T		07002	88.00	0.00	88.00
2	x4b	PL	14.3 x 1140	425	M270M	345W		BENT	07003	54.38	0.00	54.38
1	x4d	PL	14.3 x 1140	447	M270M	345W		BENT	07003	57.20	0.00	57.20
8	140308-G	HS Bolt	7/8	0'-3 1/2	M164 Type 1			GALV.	17003	0.00	0.00	0.00
16	140308	HS Bolt	7/8	0'-3 1/2	M164 Type 3				17002	0.00	0.00	0.00
8	N14-G	Nut	7/8		M291	DH		GALV.	17005	0.00	0.00	0.00
16	N14	Nut	7/8		M291	DH3			17004	0.00	0.00	0.00
8	W14-G	Std Wash	7/8		M293			GALV.	17007	0.00	0.00	0.00
16	W14	Std Wash	7/8		M293 Weathering				17006	0.00	0.00	0.00

TOTAL WEIGHT THIS SHEET: BID ITEM 0160 506.56 — **11 655.34 kgs**

TVGA CONSULTANTS

☐ NO EXCEPTIONS TAKEN ☐ REJECTED
☒ FURNISH AS CORRECTED
☐ REVISE AND RESUBMIT

ENGINEER has reviewed Shop Drawings and Samples and other data which Contractor is required to submit, only for conformance with the information given in the Contract Documents and compatibility with the design concept of the completed Project as a functioning whole as indicated in the Contract Documents. Such reviews do not extend to means, methods, techniques, sequences or procedures of construction or to safety precautions and programs incident thereto. Contractor is responsible for dimensions to be confirmed and correlated at the job site; for information that pertains solely to the fabrication processes or to techniques of construction; and for coordination of the work of all trades.

BY:
DATE: 12/3/07

NO.	REVISION	BY	CHK'D	DATE
△				
△				
△				

HOLES: 15/16"ø
BOLTS: AS NOTED
COATING: SEE DWG. GN1
CODE(S): 30
SCALE: N.T.S.

HIGH STEEL STRUCTURES INC.
An Affiliate of High Industries Inc.
An ISO 9001:2000 Certified Company
Lancaster Facility: 195 Old Philadelphia Pike, Lancaster, PA 17605-0008, Phone (717) 299-5201
Williamsport Facility: 3501 W. 4th Street, Williamsport, PA 17701, Phone (570) 326-9051
www.highsteel.com

GIRDER G3A
VT ROUTE 279 OVER FURNACE BROOK
VT ROUTE 279 STA. 8+542.000 TO STA. 8+685.000
TOWN OF BENNINGTON VERMONT, BRIDGE B12
STATE OF VERMONT
AGENCY OF TRANSPORTATION

AC NH F019-1(53) — FED. AID PROJ. NO.
GENERAL CONTRACTOR: J.A. McDONALD, INC. — HSSI PROJ. MGR: DEB KUPRES
SHPMT: 3 — DRAWING MANAGER: BRITIGAN (IH) — MADE BY: MAF — CHK'D BY: MGK — DATE: 11/21/07
STATE: VT — HSSI PROJECT NUMBER: S-1070147 — HSSI STRUCT. ID: A — DRAWING NUMBER: 3 OF 34

PLOTTED: 11/30/2007 12:36:52 PM
BY: MKradel
SHIPMENT 01
PKAGING 58002817 PRD. 58002818 SHIPKERECT.: 58002819

1070147A X1 12/3/07 12/3/07Approval TO:J.A. McDonald, Inc.

METRIC

TVGA CONSULTANTS

☒ NO EXCEPTIONS TAKEN ☐ REJECTED
☐ FURNISH AS CORRECTED
☐ REVISE AND RESUBMIT

ENGINEER has reviewed Shop Drawings and Samples and other data which Contractor is required to submit, only for conformance with the information given in the Contract Documents and compatibility with the design concept of the completed Project as a functioning whole as indicated in the Contract Documents. Such reviews do not extend to means, methods, techniques, sequences or procedures of construction or to safety precautions and programs incident thereto. Contractor is responsible for dimensions to be confirmed and correlated at the job site; for information that pertains solely to the fabrication processes or to techniques of construction; and for coordination of the work of all trades.

BY: _____
DATE: 12/3/07

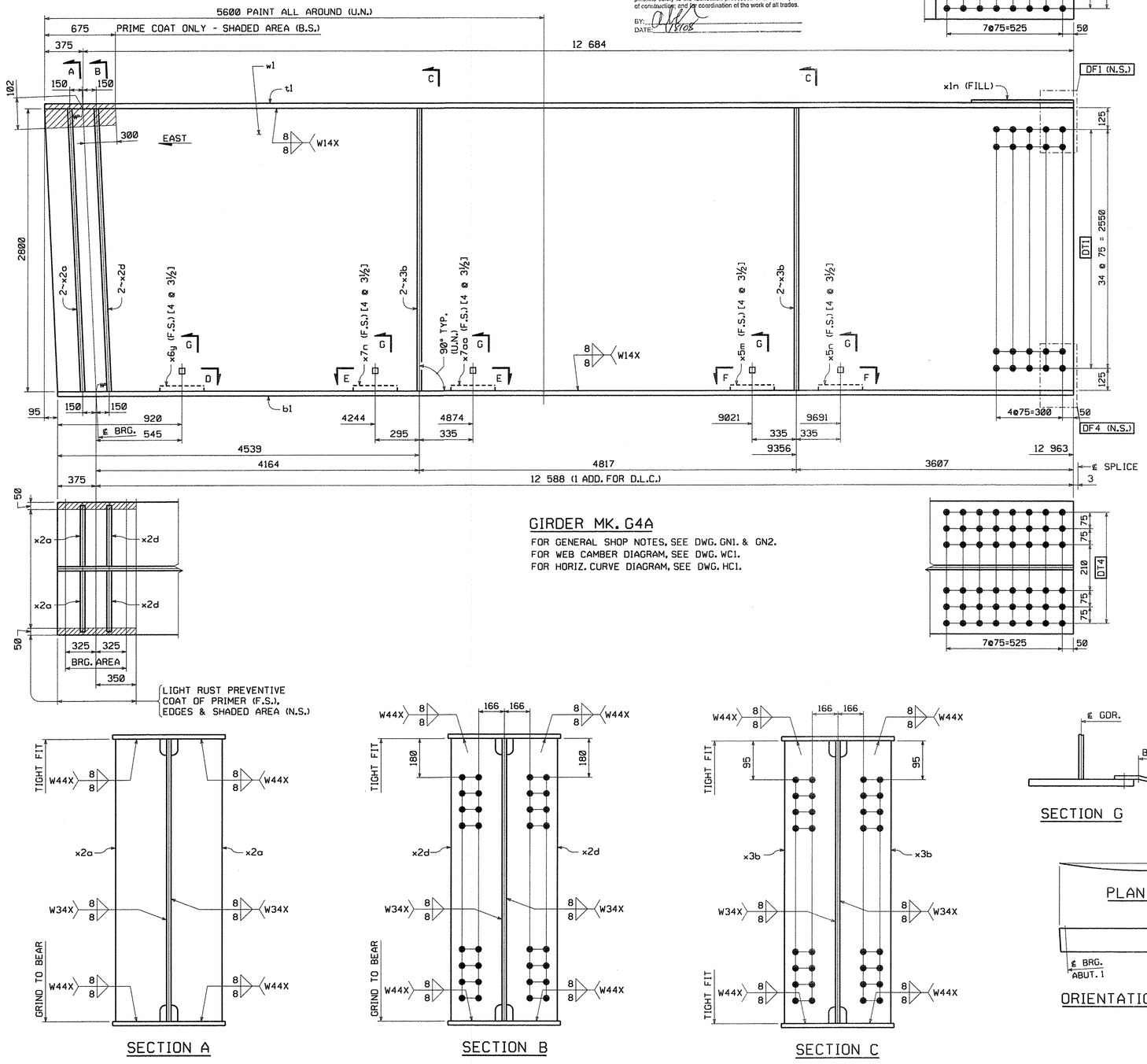

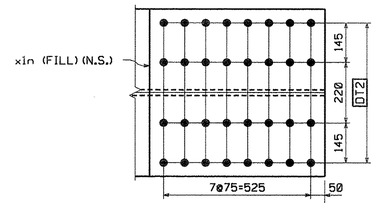

GIRDER MK. G4A

FOR GENERAL SHOP NOTES, SEE DWG. GN1. & GN2.
FOR WEB CAMBER DIAGRAM, SEE DWG. WC1.
FOR HORIZ. CURVE DIAGRAM, SEE DWG. HC1.

BILL OF MATERIAL

QTY EA.	MARK	COMM	DESCRIPTION	LENGTH	SPEC	GRADE	TEST	REMARKS	ITEM	GROSS WT EA.	DED WT	NET WEIGHT EA.
1	G4A		GIRDER							11657.71	22.97	11634.74
1	w1	PL	22 x 2800	13 059	M270M	345W	T		03001	6314.05	22.97	6,291.08
1	t1	PL	28 x 610	13 059	M270M	345W	T		04007	1750.71	0.00	1,750.71
1	b1	PL	40 x 610	12 963	M270M	345W	T		04005	2482.63	0.00	2,482.63
1	x1n	PL	12.7 x 610	615	M270M	345W		FILL	06006	37.40	0.00	37.40
2	x2a	PL	25.4 x 280	2 802	M270M	345W			07001	156.41	0.00	156.41
2	x2d	PL	25.4 x 280	2 802	M270M	345W	T		07001	156.41	0.00	156.41
4	x3b	PL	14.3 x 280	2 800	M270M	345W	T		07002	88.00	0.00	88.00
1	x5m	PL	14.3 x 420	422	M270M	345W		BENT	07003	19.89	0.00	19.89
1	x5n	PL	14.3 x 420	421	M270M	345W		BENT	07003	19.85	0.00	19.85
1	x6y	PL	14.3 x 345	422	M270M	345W		BENT	07003	16.34	0.00	16.34
1	x7aa	PL	14.3 x 420	421	M270M	345W		BENT	07003	19.85	0.00	19.85
1	x7n	PL	14.3 x 400	431	M270M	345W		BENT	07003	19.35	0.00	19.35
12	140308-G	HS Bolt	7/8	0'-3 1/2	M164 Type 1			GALV.	17003	0.00	0.00	0.00
8	140308	HS Bolt	7/8	0'-3 1/2	M164 Type 3				17002	0.00	0.00	0.00
12	N14-G	Nut	7/8		M291	DH		GALV.	17005	0.00	0.00	0.00
8	N14	Nut	7/8		M291	DH3			17004	0.00	0.00	0.00
12	W14-G	Std Wash	7/8		M293			GALV.	17007	0.00	0.00	0.00
8	W14	Std Wash	7/8		M293 Weathering				17006	0.00	0.00	0.00

TOTAL WEIGHT THIS SHEET: 11 634.74 kgs
BID ITEM 0160 506.56

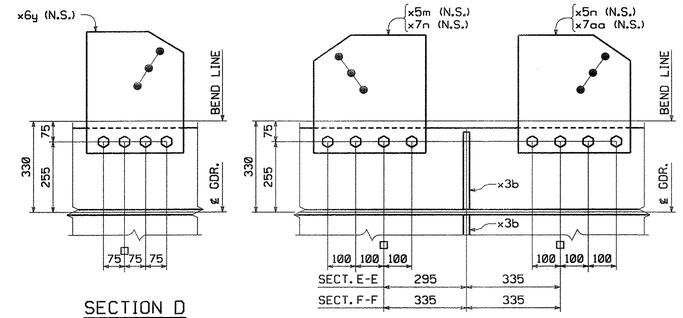

SECTION A

SECTION B

SECTION C

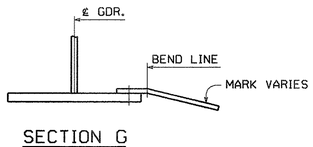

SECTION G

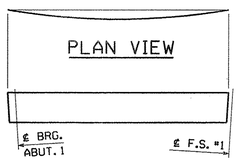

ORIENTATION DIAGRAM

SHOP NOTE:

[4 @ 3½]
- INDICATES LENGTH OF ⅞"ø H.S. BOLTS
- INDICATES NUMBER OF ⅞"ø H.S. BOLTS

NO.	REVISION	BY	CHK'D	DATE

HOLES: 15/16"ø
BOLTS: AS NOTED
COATING: SEE DWG. GN1
CODE(S): 30
SCALE: N.T.S.

HIGH STEEL STRUCTURES INC.
An Affiliate of High Industries Inc.
An ISO 9001:2000 Certified Company
Lancaster Facility: 1915 Old Philadelphia Pike, Lancaster, PA 17605-0008, Phone (717) 299-5291
Williamsport Facility: 3501 W. 4th Street, Williamsport, PA 17701, Phone (570) 326-9051
www.highsteel.com

GIRDER	G4A
VT ROUTE 279 OVER FURNACE BROOK	
VT ROUTE 279 STA. 8+542.000 TO STA. 8+685.000	
TOWN OF BENNINGTON VERMONT, BRIDGE B12	
STATE OF VERMONT	
AGENCY OF TRANSPORTATION	
AC NH F019-1(53)	FED. AID PROJ. NO.
GENERAL CONTRACTOR: J.A. McDONALD, INC.	HSSI PROJ. MGR: DEB KUPRES
SHPMT: 3	DRAWING MANAGER: BRITIGAN (IH)
MADE BY: MAF	CHK'D. BY: MGK
DATE: 11/21/07	
STATE: VT	HSSI PROJECT NUMBER: S-1070147
HSSI STRUCT. ID: A	DRAWING NUMBER: 4 OF 34

SHIPMENT 01 PM&ENG:5003817 PROJ:5003818 SHIP&RECT:5003819
BY: MKreidel
PLOTTED: 11/30/2007 12:31:46 PM

1070147A X1 12/3/07 12/3/07Approval TO:J.A. McDonald, Inc.

METRIC

TVGA CONSULTANTS

☒ NO EXCEPTIONS TAKEN ☐ REJECTED
☐ FURNISH AS CORRECTED
☐ REVISE AND RESUBMIT

ENGINEER has reviewed Shop Drawings and Samples and other data which Contractor is required to submit, only for conformance with the information given in the Contract Documents and compatibility with the design concept of the completed Project as a functioning whole as indicated in the Contract Documents. Such reviews do not extend to means, methods, techniques, sequences or procedures of construction or to safety precautions and programs incident thereto. Contractor is responsible for dimensions to be confirmed and correlated at the job site; for information that pertains solely to the fabrication processes or to techniques of construction; and for coordination of the work of all trades.

BY:
DATE: 11/8/07

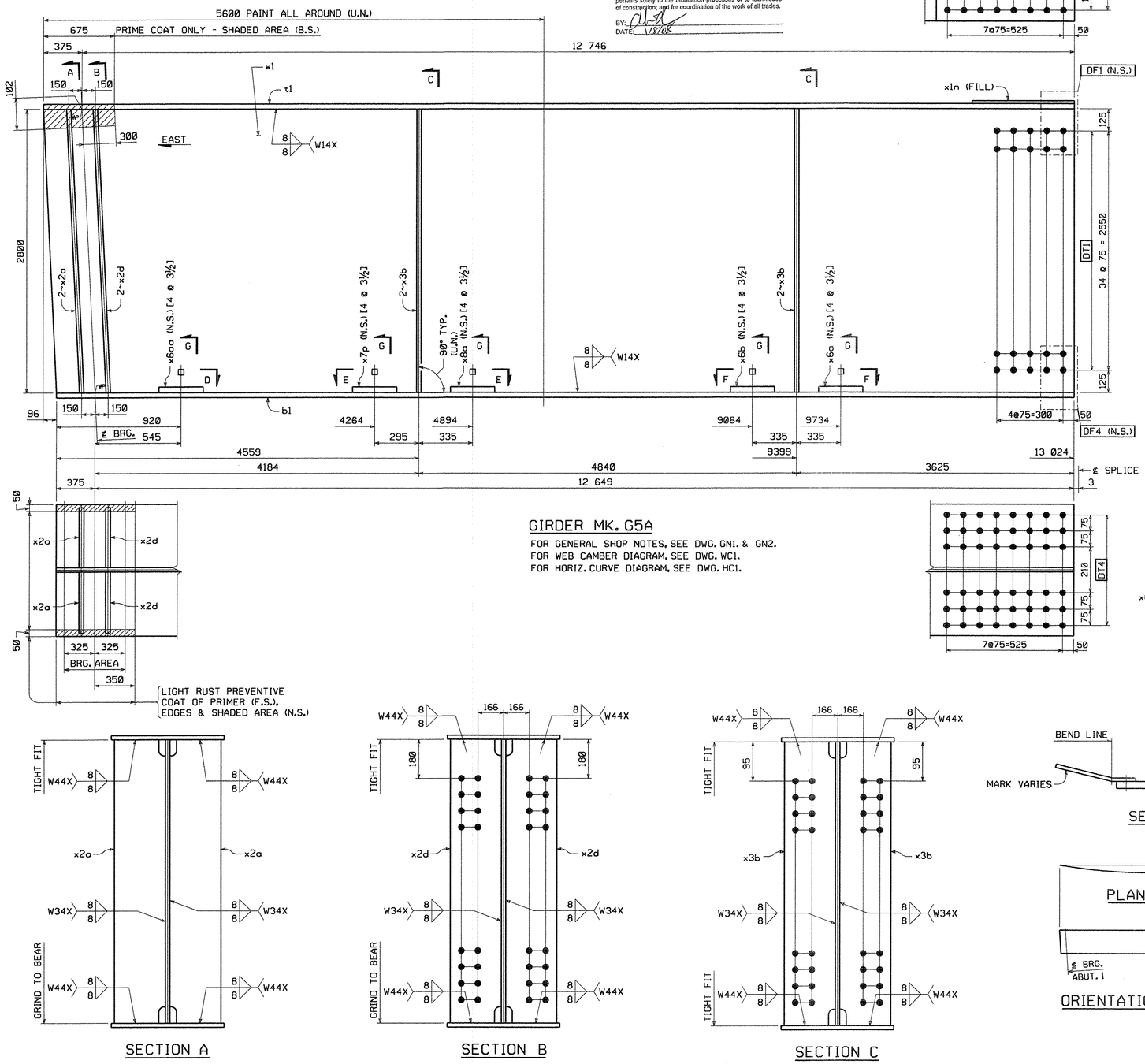

GIRDER MK. G5A

FOR GENERAL SHOP NOTES, SEE DWG. GN1. & GN2.
FOR WEB CAMBER DIAGRAM, SEE DWG. WC1.
FOR HORIZ. CURVE DIAGRAM, SEE DWG. HC1.

SECTION A

SECTION B

SECTION C

SECTION D

SECTION E-E & F-F

SECTION G

PLAN VIEW

℄ BRG. ABUT. 1

℄ F.S. #1

ORIENTATION DIAGRAM

BILL OF MATERIAL

QTY EA.	MARK	COMM	DESCRIPTION	LENGTH	SPEC	GRADE	TEST	REMARKS	ITEM	GROSS WT EA.	DED WT	NET WEIGHT EA.
1	G5A		GIRDER							11707.41	23.21	11684.20
1	w1	PL	22 x 2800	13 121	M270M	345W	T		03005	6344.02	23.21	6,320.81
1	t1	PL	28 x 610	13 121	M270M	345W	T		04007	1759.02	0.00	1,759.02
1	b1	PL	40 x 610	13 024	M270M	345W	T		04005	2494.32	0.00	2,494.32
1	x1n	PL	12.7 x 610	615	M270M	345W		FILL	06006	37.40	0.00	37.40
2	x2a	PL	25.4 x 280	2 802	M270M	345W			07001	156.41	0.00	156.41
4	x3b	PL	14.3 x 280	2 800	M270M	345W	T		07002	88.00	0.00	88.00
2	x2d	PL	25.4 x 280	2 802	M270M	345W	T		07001	156.41	0.00	156.41
1	x6a	PL	14.3 x 420	420	M270M	345W		BENT	07003	19.80	0.00	19.80
1	x6b	PL	14.3 x 420	420	M270M	345W		BENT	07003	19.80	0.00	19.80
1	x7p	PL	14.3 x 400	429	M270M	345W		BENT	07003	19.26	0.00	19.26
1	x8a	PL	14.3 x 420	421	M270M	345W		BENT	07003	19.85	0.00	19.85
1	x6aa	PL	14.3 x 345	421	M270M	345W		BENT	07003	16.30	0.00	16.30
12	140308-G	HS Bolt	7/8	0'-3 1/2	M164 Type 1			GALV.	17003	0.00	0.00	0.00
8	140308	HS Bolt	7/8	0'-3 1/2	M164 Type 3				17002	0.00	0.00	0.00
12	N14-G	Nut	7/8		M291	DH		GALV.	17005	0.00	0.00	0.00
8	N14	Nut	7/8		M291	DH3			17004	0.00	0.00	0.00
12	W14-G	Std Wash	7/8		M293			GALV.	17007	0.00	0.00	0.00
8	W14	Std Wash	7/8		M293 Weathering				17006	0.00	0.00	0.00

TOTAL WEIGHT THIS SHEET: 11 684.20 kgs
BID ITEM 0160 506.56

SHOP NOTE:

[4 @ 3½]
- INDICATES LENGTH OF ⅞"ø H.S. BOLTS
- INDICATES NUMBER OF ⅞"ø H.S. BOLTS

NO.	REVISION	BY	CHK'D	DATE

HOLES: 15/16"ø
BOLTS: AS NOTED
COATING: SEE DWG. GN1
CODE(S): 30
SCALE: N.T.S.
SHPMT: 3
STATE: VT

HIGH STEEL STRUCTURES INC.
An ISO 9001:2000 Certified Company
An Affiliate of High Industries Inc.
Lancaster Facility: 195 Old Philadelphia Pike, Lancaster, PA 17605-0008, Phone (717) 299-5211
Williamsport Facility: 3501 W. 4th Street, Williamsport, PA 17701, Phone (570) 326-9061
www.Highsteel.com

GIRDER G5A
VT ROUTE 279 OVER FURNACE BROOK
VT ROUTE 279 STA. 8+542.000 TO STA. 8+685.000
TOWN OF BENNINGTON VERMONT, BRIDGE B12
STATE OF VERMONT
AGENCY OF TRANSPORTATION
AC NH F019-1(53) — FED. AID PROJ. NO.
GENERAL CONTRACTOR: J.A. McDONALD, INC. — HSSI PROJ. MGR: DEB KUPRES
DRAWING MANAGER: BRITIGAN (IH) — MADE BY: MAF — CHK'D. BY: MGK — DATE: 11/21/07
HSSI PROJECT NUMBER: S-1070147 — HSSI STRUCT. ID: A — DRAWING NUMBER: 5 OF 34

PLOTTED: 11/30/2007 12:31:59 PM
BY: MKreidel
SHIPMENT 01 PM&ENG:5802817 PRD:5802818 SHP&RECT:5802819

1070147A X1 12/3/07 12/3/07Approval TO:J.A. McDonald, Inc.

METRIC

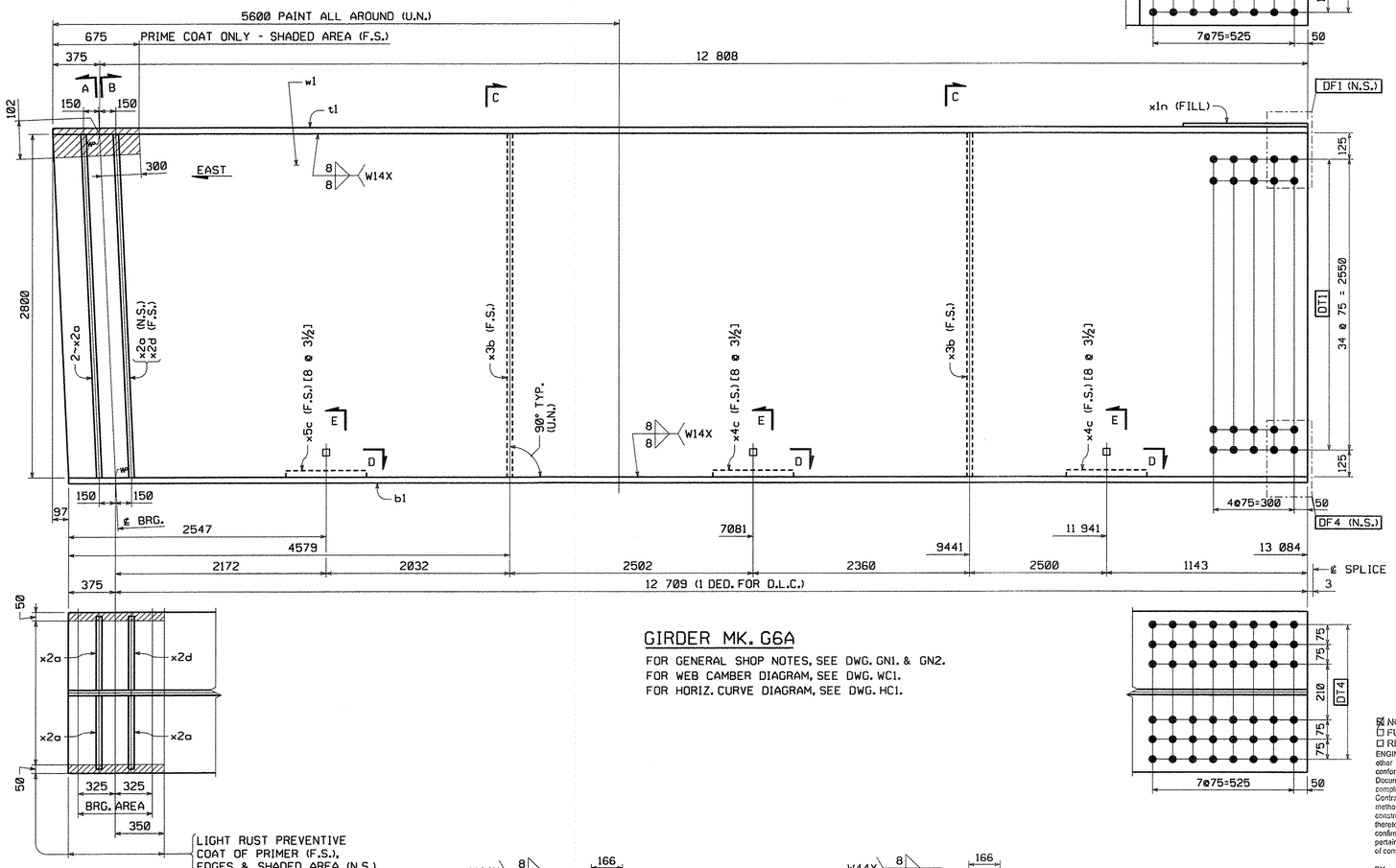

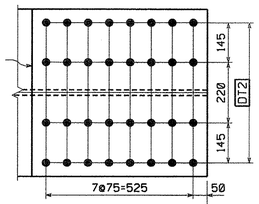

GIRDER MK. G6A

FOR GENERAL SHOP NOTES, SEE DWG. GN1. & GN2.
FOR WEB CAMBER DIAGRAM, SEE DWG. WC1.
FOR HORIZ. CURVE DIAGRAM, SEE DWG. HC1.

BILL OF MATERIAL

QTY EA.	MARK	COMM	DESCRIPTION	LENGTH	SPEC	GRADE	TEST	REMARKS	ITEM	GROSS WT EA.	DED WT	NET WEIGHT EA.
1	G6A		GIRDER							11652.02	23.45	11628.57
1	w1	PL	22 x 2800	13 183	M270M	345W	T		03005	6374.00	23.45	6,350.55
1	t1	PL	28 x 610	13 183	M270M	345W	T		04007	1767.34	0.00	1,767.34
1	b1	PL	40 x 610	13 084	M270M	345W	T		04005	2505.81	0.00	2,505.81
1	x1n	PL	12.7 x 610	615	M270M	345W		FILL	06006	37.40	0.00	37.40
3	x2a	PL	25.4 x 280	2 802	M270M	345W			07001	156.41	0.00	156.41
1	x2d	PL	25.4 x 280	2 802	M270M	345W	T		07001	156.41	0.00	156.41
2	x3b	PL	14.3 x 280	2 800	M270M	345W	T		07002	88.00	0.00	88.00
2	x4c	PL	14.3 x 1140	425	M270M	345W		BENT	07003	54.38	0.00	54.38
1	x5c	PL	14.3 x 1140	446	M270M	345W		BENT	07003	57.07	0.00	57.07
8	140308-G	HS Bolt	7/8	0'-3 1/2	M164 Type 1			GALV.	17003	0.00	0.00	0.00
16	140308	HS Bolt	7/8	0'-3 1/2	M164 Type 3				17002	0.00	0.00	0.00
8	N14-G	Nut	7/8		M291	DH		GALV.	17005	0.00	0.00	0.00
16	N14	Nut	7/8		M291	DH3			17004	0.00	0.00	0.00
8	W14-G	Std Wash	7/8		M293			GALV.	17007	0.00	0.00	0.00
16	W14	Std Wash	7/8		M293 Weathering				17006	0.00	0.00	0.00

TOTAL WEIGHT THIS SHEET: BID ITEM 0160 506.56 — **11 628.57 kgs**

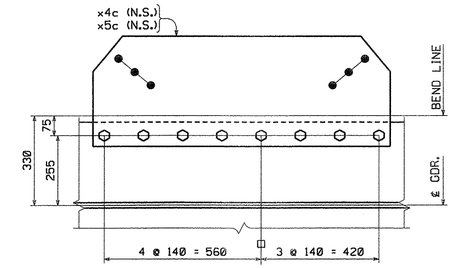

SECTION D

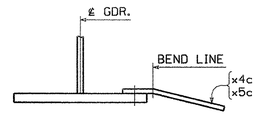

SECTION E

TVGA CONSULTANTS

☒ NO EXCEPTIONS TAKEN ☐ REJECTED
☐ FURNISH AS CORRECTED
☐ REVISE AND RESUBMIT

ENGINEER has reviewed Shop Drawings and Samples and other data which Contractor is required to submit, only for conformance with the information given in the Contract Documents and compatibility with the design concept of the completed Project as a functioning whole as indicated in the Contract Documents. Such reviews do not extend to means, methods, techniques, sequences or procedures of construction or to safety precautions and programs incident thereto. Contractor is responsible for dimensions to be confirmed and correlated at the job site; for information that pertains solely to the fabrication processes or to techniques of construction; and for coordination of the work of all trades.

BY:
DATE: 12/3/07

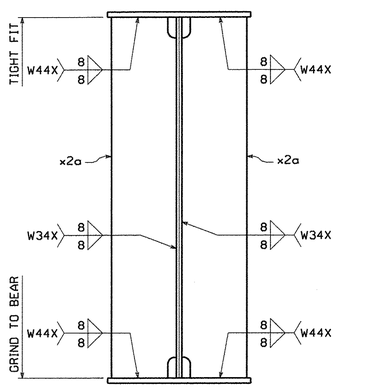

SECTION A

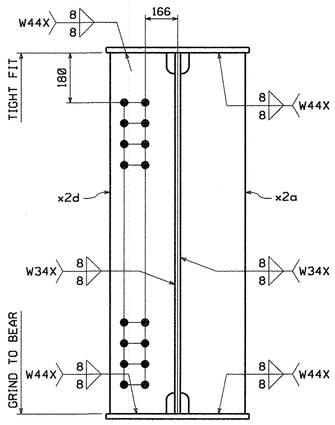

SECTION B

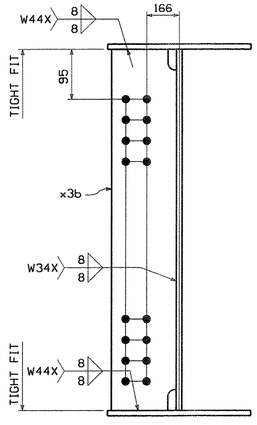

SECTION C

SHOP NOTE:

[8 @ 3½]
└ INDICATES LENGTH OF ⅞"ø H.S. BOLTS
└ INDICATES NUMBER OF ⅞"ø H.S. BOLTS

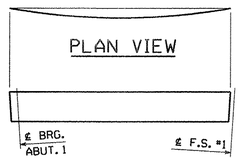

ORIENTATION DIAGRAM

NO.	REVISION	BY	CHK'D	DATE

HOLES 15/16"ø
BOLTS AS NOTED
COATING SEE DWG. GN1
CODE(S) 30
SCALE N.T.S.

HIGH STEEL STRUCTURES INC.
An ISO 9001:2000 Certified Company
An Affiliate of High Industries Inc.
Lancaster Facility
915 Old Philadelphia Pike
Lancaster, PA 17605-0008
Phone (717) 299-5291
Willamsport Facility
3501 W. 4th Street
Williamsport, PA 17701
Phone (570) 326-9051
www.highsteel.com

GIRDER G6A
VT ROUTE 279 OVER FURNACE BROOK
VT ROUTE 279 STA. 8+542.000 TO STA. 8+685.000
TOWN OF BENNINGTON VERMONT, BRIDGE B12
STATE OF VERMONT
AGENCY OF TRANSPORTATION

	AC NH F019-1(53)		FED. AID PROJ. NO.		
GENERAL CONTRACTOR	J.A. McDONALD, INC.		HSSI PROJ. MGR	DEB KUPRES	
SHPMT 3	DRAWING MANAGER	BRITIGAN (IH)	MADE BY	MAF	CHK'D. BY MGK DATE 11/21/07
STATE VT	HSSI PROJECT NUMBER	S-1070147	HSSI STRUCT. ID A	DRAWING NUMBER	6 OF 34

SHIPMENT 01 PM&ENG:5902817 PRG:5902818 SHPAERECT:5902819
BY: MKreidel
PLOTTED: 11/30/2007 12:32:13 PM

1070147A X1 12/3/07 12/3/07Approval TO:J.A. McDonald, Inc.

METRIC

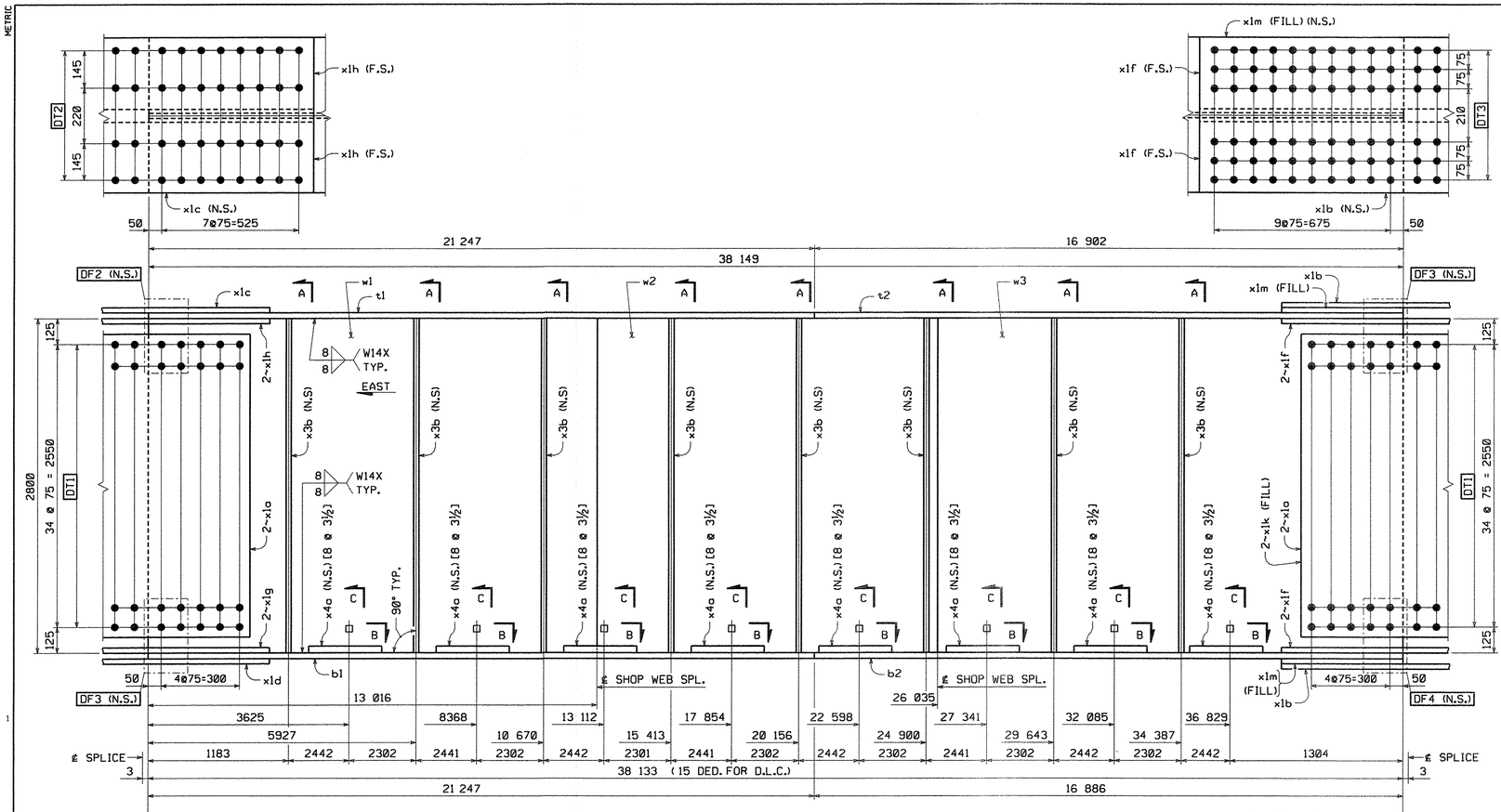

BILL OF MATERIAL

QTY EA.	MARK	COMM	DESCRIPTION	LENGTH	SPEC	GRADE	TEST	REMARKS	ITEM	GROS WT. EA	DED. WEIGHT	NET WT. EA
1	G1B		GIRDER							36424.82	3.93	36420.89
1	w1	PL	22 x 2800	13 026	M270M	345W	T		03009	6298.09	2.55	6295.54
1	w2	PL	22 x 2800	13 020	M270M	345W	T		03009	6295.19	0.00	6295.19
1	w3	PL	22 x 2800	12 105	M270M	345W	T		03004	5852.79	1.38	5851.41
1	t1	PL	40 x 610	21 247	M270M	345W	T		04003	4069.16	0.00	4069.16
1	t2	PL	40 x 610	16 902	M270M	345W	T		04002	3237.02	0.00	3237.02
1	b1	PL	40 x 610	21 247	M270M	345W	T		04003	4069.16	0.00	4069.16
1	b2	PL	40 x 610	16 886	M270M	345W	T		04002	3233.95	0.00	3233.95
4	x1a	S PL	15.9 x 2630	786	M270M	345W	T		06001	257.98	0.00	257.98 x4
2	x1b	S PL	20.6 x 610	1 536	M270M	345W	T		06002	151.50	0.00	151.50 x2
1	x1c	S PL	20.6 x 610	1 236	M270M	345W	T		06002	121.91	0.00	121.91
1	x1d	S PL	20.6 x 610	1 236	M270M	345W	T		06002	121.91	0.00	121.91
4	S x1f	S PL	20.6 x 280	1 536	M270M	345W	T		06003	69.54	0.00	69.54 x4
2	x1g	S PL	20.6 x 280	1 236	M270M	345W	T		06003	55.96	0.00	55.96 x2
2	x1h	S PL	20.6 x 280	1 236	M270M	345W	T		06003	55.96	0.00	55.96 x2
2	S x1k	S SHT	16GA x 390	2 630	A606 Type 4			FILL	06004	16.10	0.00	16.10 x2
2	S x1m	S PL	15.9 x 610	765	M270M	345W		FILL	06005	58.24	0.00	58.24 x2
8	x3b	PL	14.3 x 280	2 800	M270M	345W	T		07002	88.00	0.00	88.00 x8
8	x4a	PL	14.3 x 1140	426	M270M	345W		BENT	07003	54.51	0.00	54.51 x8
64	140308	HS Bolt	7/8	0-3 1/2	M164 Type 3				17002	0.00	0.00	0.00
64	N14	Nut	7/8		M291	DH3			17004	0.00	0.00	0.00
64	W14	Std Wash	7/8		M293 Weathering				17006	0.00	0.00	0.00

TOTAL WEIGHT THIS SHEET: **36 420.89 kgs**
BID ITEM 0160 506.56

GIRDER ~ MK. G1B

FOR GENERAL SHOP NOTES, SEE DWG. GN1 & GN2
FOR WEB CAMBER DIAGRAM, SEE DWG. WC1.
FOR HORIZ. CURVE DIAGRAM, SEE DWG. HC1.

TVGA CONSULTANTS

☒ NO EXCEPTIONS TAKEN ☐ REJECTED
☐ FURNISH AS CORRECTED
☐ REVISE AND RESUBMIT

ENGINEER has reviewed Shop Drawings and Samples and either data which Contractor is required to submit, only for conformance with the information given in the Contract Documents and compatibility with the design concept of the completed Project as a functioning whole as indicated in the Contract Documents. Such reviews do not extend to means, methods, techniques, sequences or procedures of construction or to safety precautions and programs incident thereto. Contractor is responsible for dimensions to be confirmed and correlated at the job site; for information that pertains solely to the fabrication processes or to techniques of construction; and for coordination of the work of all trades.

BY: _____
DATE: 12/6/07

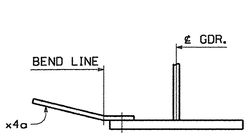

SECTION C

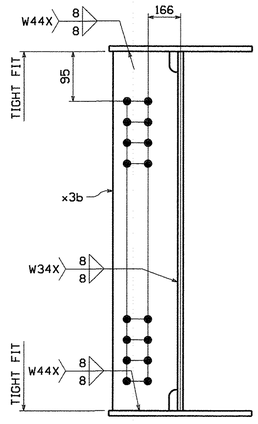

SECTION A

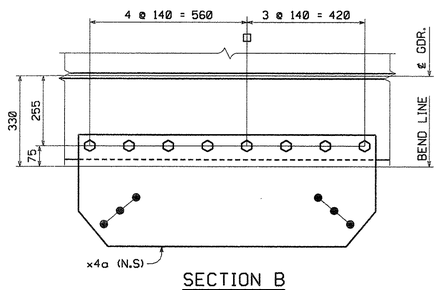

SECTION B

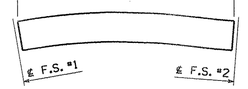

ORIENTATION DIAGRAM

SHOP NOTE:
[8 @ 3½]
INDICATES LENGTH OF ⅞"ø H.S. BOLTS
INDICATES NUMBER OF ⅞"ø H.S. BOLTS

NO.	REVISION	BY	CHK'D	DATE

HOLES: 15/16"ø
BOLTS: AS NOTED
COATING: NONE
CODE(S): 30
SCALE: N.T.S.

HIGH STEEL STRUCTURES INC. — An Affiliate of High Industries Inc. — An ISO 9001:2000 Certified Company

Lancaster Facility
195 Old Philadelphia Pike
Lancaster, PA 17605-0008
Phone (717) 299-5201

Williamsport Facility
3501 W. 4th Street
Williamsport, PA 17701
Phone (570) 326-9051
www.highsteel.com

GIRDER G1B
VT ROUTE 279 OVER FURNACE BROOK
VT ROUTE 279 STA. 8+542.000 TO STA. 8+685.000
TOWN OF BENNINGTON VERMONT, BRIDGE B12
STATE OF VERMONT
AGENCY OF TRANSPORTATION

	AC NH F019-1(53)	FED. AID PROJ. NO.	
GENERAL CONTRACTOR	J.A. McDONALD, INC.	HSSI PROJ. MGR	DEB KUPRES
SHPMT 3	DRAWING MANAGER: BRITIGAN (IH)	MADE BY: JAW	CHK'D. BY: MGK	DATE: 11/28/07
STATE VT	HSSI PROJECT NUMBER: S-1070147	HSSI STRUCT. ID: A	DRAWING NUMBER: 7 OF 34

PLOTTED: 11/30/2007 12:32:26 PM BY: MKreidel SHIPMENT 01 PM&ENG: 52802817 PRO: 52802818 SHIP&ERECT.: 52802819

1070147A X1 12/3/07 12/3/07Approval TO:J.A. McDonald, Inc.

METRIC

TVGA CONSULTANTS

☒ NO EXCEPTIONS TAKEN ☐ REJECTED
☐ FURNISH AS CORRECTED
☐ REVISE AND RESUBMIT

ENGINEER has reviewed Shop Drawings and Samples and other data which Contractor is required to submit, only for conformance with the information given in the Contract Documents and compatibility with the design concept of the completed Project as a functioning whole as indicated in the Contract Documents. Such review shall not extend to means, methods, techniques, sequences or procedures of construction or to safety precautions and programs incident thereto. Such review shall not extend to any LEED certification or accreditation. Contractor is responsible for dimensions to be confirmed and correlated at the job site, for information that pertains solely to the fabrication processes or to techniques of construction, and for coordination of the work of all trades.

BY: _____
DATE: 7/7/08

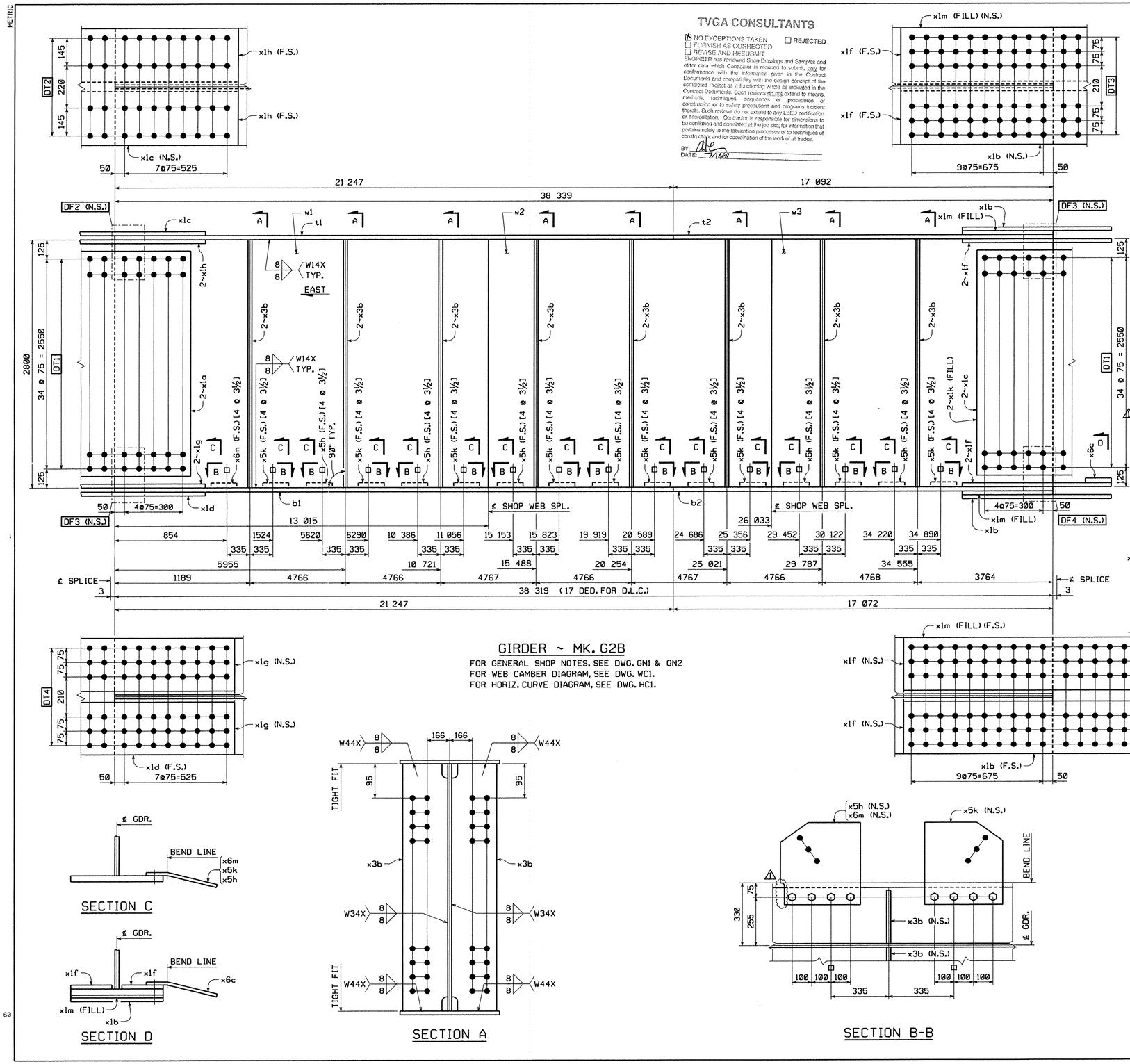

GIRDER ~ MK. G2B

FOR GENERAL SHOP NOTES, SEE DWG. GN1 & GN2
FOR WEB CAMBER DIAGRAM, SEE DWG. WC1.
FOR HORIZ. CURVE DIAGRAM, SEE DWG. HC1.

SECTION C

SECTION D

SECTION A

SECTION B-B



ORIENTATION DIAGRAM

SHOP NOTE:
[4 @ 3½]
└ INDICATES LENGTH OF ⅞"ø H.S. BOLTS
└ INDICATES NUMBER OF ⅞"ø H.S. BOLTS

BILL OF MATERIAL

QTY EA.	MARK	COMM	DESCRIPTION	LENGTH	SPEC	GRADE	TEST	REMARKS	ITEM	GROS WT. EA.	DED. WEIGHT	NET WT. EA.
1	G2B		GIRDER							37192.62	4.95	37187.66
1	w1	PL	22 x 2800	13 028	M270M	345W	T		03009	6299.06	3.19	6295.87
1	w2	PL	22 x 2800	13 019	M270M	345W	T		03009	6294.71	0.00	6294.71
1	w3	PL	22 x 2800	12 293	M270M	345W	T		03003	5943.68	1.77	5941.91
1	t1	PL	40 x 610	21 247	M270M	345W	T		04003	4069.16	0.00	4069.16
1	t2	PL	40 x 610	17 092	M270M	345W	T		04002	3273.41	0.00	3273.41
1	b1	PL	40 x 610	21 247	M270M	345W	T		04003	4069.16	0.00	4069.16
1	b2	PL	40 x 610	17 072	M270M	345W	T		04002	3269.58	0.00	3269.58
4	x1a	PL	15.9 x 2630	786	M270M	345W	T		06001	257.98	0.00	257.98
2	x1b	PL	20.6 x 610	1 536	M270M	345W	T		06002	151.50	0.00	151.50
1	x1c	PL	20.6 x 610	1 236	M270M	345W	T		06002	121.91	0.00	121.91
1	x1d	PL	20.6 x 610	1 236	M270M	345W	T		06002	121.91	0.00	121.91
4	x1f	PL	20.6 x 280	1 536	M270M	345W	T		06003	69.54	0.00	69.54
2	x1g	PL	20.6 x 280	1 236	M270M	345W	T		06003	55.96	0.00	55.96
2	x1h	PL	20.6 x 280	1 236	M270M	345W	T		06003	55.96	0.00	55.96
2	x1k	SHT	16GA x 360	2 630	A606 Type 4			FILL	06004	16.10	0.00	16.10
2	x1m	PL	15.9 x 610	765	M270M	345W		FILL	06005	58.24	0.00	58.24
16	x3b	PL	14.3 x 280	2 800	M270M	345W	T		07002	88.00	0.00	88.00
8	x5k	PL	14.3 x 420	422	M270M	345W		BENT	07003	19.89	0.00	19.89
7	x5h	PL	14.3 x 420	423	M270M	345W		BENT	07003	19.94	0.00	19.94
1	x6c	PL	14.3 x 380	418	M270M	345W		BENT (B.T.S.)	07003	17.83	0.00	17.83
1	x6m	PL	14.3 x 420	423	M270M	345W		BENT	07003	19.94	0.00	19.94
64	140308	HS Bolt	7/8	0-3 1/2	M164 Type 3				17002	0.00	0.00	0.00
64	N14	Nut	7/8		M291	DH3			17004	0.00	0.00	0.00
64	W14	Std Wash	7/8		M293 Weathering				17006	0.00	0.00	0.00

TOTAL WEIGHT THIS SHEET: 37 187.66 kgs
BID ITEM 0160 506.56

NO.	REVISION	BY	CHK'D	DATE
1	REVISED GUSSET PLATE x6m DUE TO FOULING OF SPLICE PLATE	MGK	CS	5/28/08

HOLES: 15/16"ø
BOLTS: AS NOTED
COATING: NONE
CODE(S): 30
SCALE: N.T.S.

HIGH STEEL STRUCTURES INC.
An Affiliate of High Industries Inc.
An ISO 9001:2000 Certified Company
Lancaster Facility: 915 Old Philadelphia Pike, Lancaster, PA 17602-2008, Phone (717) 299-5261
Williamsport Facility: 3501 W. 4th Street, Williamsport, PA 17701, Phone (570) 326-9051
www.highsteel.com

GIRDER G2B
VT ROUTE 279 OVER FURNACE BROOK
VT ROUTE 279 STA. 8+542.000 TO STA. 8+685.000
TOWN OF BENNINGTON VERMONT, BRIDGE B12
STATE OF VERMONT
AGENCY OF TRANSPORTATION

AC NH F019-1(53) — FED. AID PROJ. NO.
GENERAL CONTRACTOR: J.A. McDONALD, INC. — HSSI PROJ. MGR: DEB KUPRES
SHPMT: 3 — DRAWING MANAGER: BRITIGAN (IH) — MADE BY: JAM — CHK'D. BY: MGK — DATE: 11/28/07
STATE: VT — HSSI PROJECT NUMBER: S-1070147 — HSSI STRUCT. ID: A — DRAWING NUMBER: 8 OF 34

RECEIVED
JUL 18 2008

1070147A X6 7/7/08 7/Resubmit For Approval TO:J.A. McDonald, Inc.

G.P.I.

PLOTTED: 5/29/2008 10:08:01 AM
BY: MKreudel
SHIPMENT 01 PM&ENG: 5902817 PRO: 5902818 SHIP&ERECT.: 5902819

METRIC

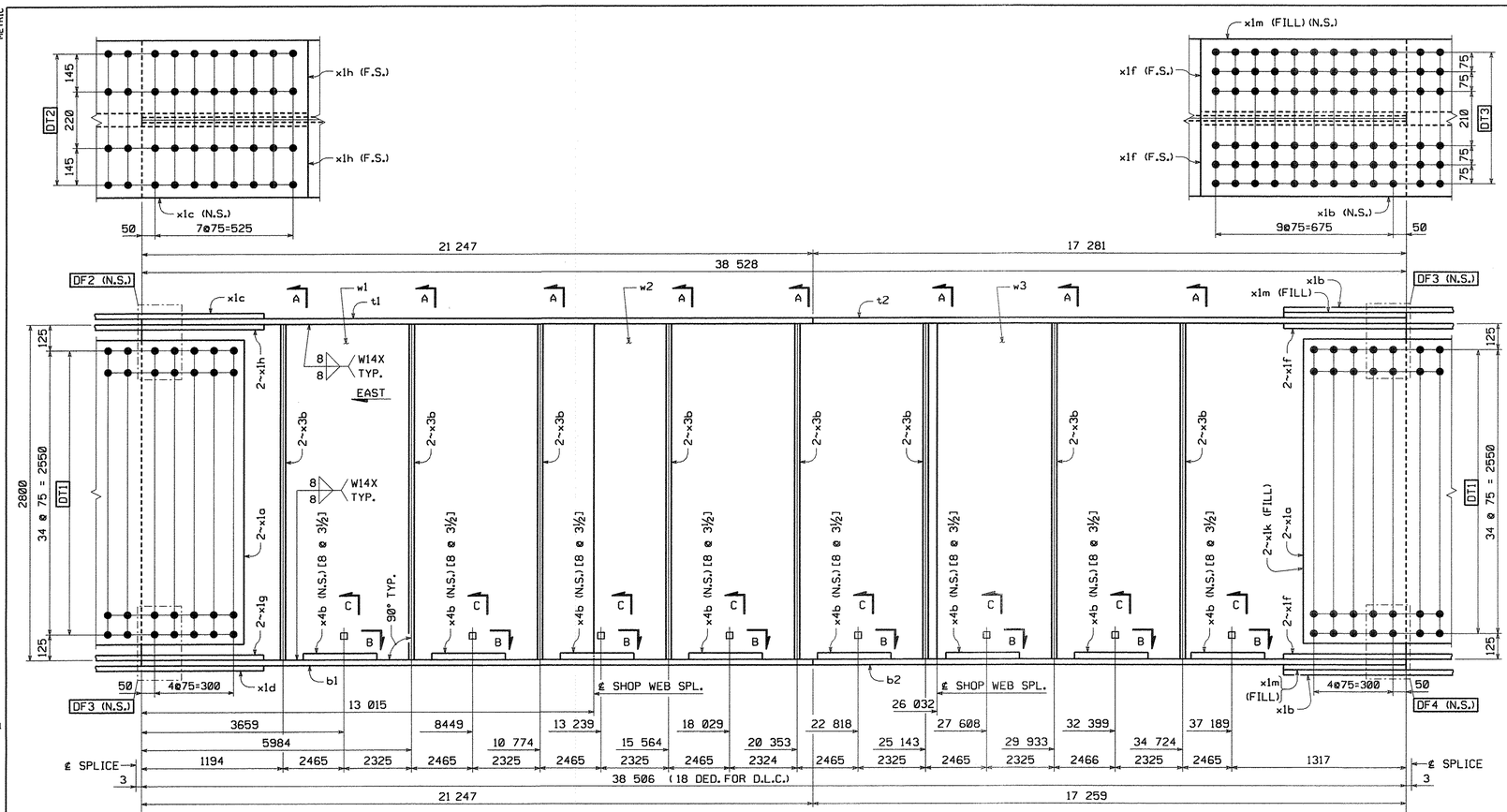

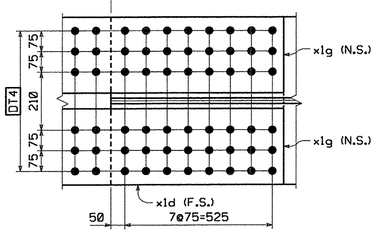

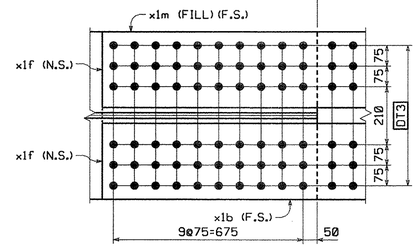

GIRDER ~ MK. G3B

FOR GENERAL SHOP NOTES, SEE DWG. GN1 & GN2
FOR WEB CAMBER DIAGRAM, SEE DWG. WC1.
FOR HORIZ. CURVE DIAGRAM, SEE DWG. HC1.

TVGA CONSULTANTS

☒ NO EXCEPTIONS TAKEN ☐ REJECTED
☐ FURNISH AS CORRECTED
☐ REVISE AND RESUBMIT

ENGINEER has reviewed Shop Drawings and Samples and other data which Contractor is required to submit, only for conformance with the information given in the Contract Documents and compatibility with the design concept of the completed Project as a functioning whole as indicated in the Contract Documents. Such reviews do not extend to means, methods, techniques, sequences or procedures of construction or to safety precautions and programs incident thereto. Contractor is responsible for dimensions to be confirmed and correlated at the job site; for information that pertains solely to the fabrication processes or to techniques of construction; and for coordination of the work of all trades.

BY:
DATE: 12/10/07

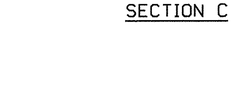

SECTION C

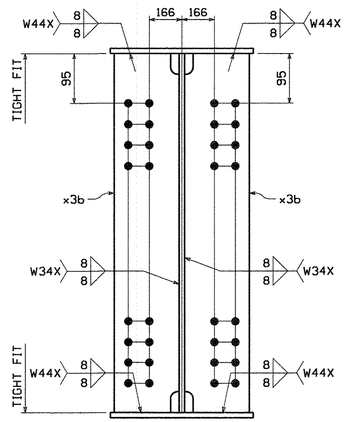

SECTION A

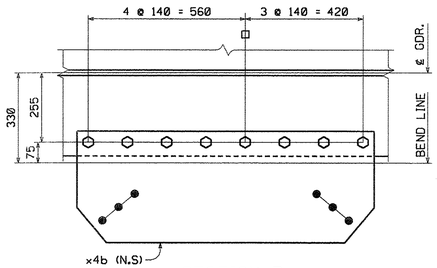

SECTION B

BILL OF MATERIAL

QTY EA.	MARK	COMM	DESCRIPTION	LENGTH	SPEC	GRADE	TEST	REMARKS	ITEM	GROS WT. EA.	DED. WEIGHT	NET WT. EA.
1	G3B		GIRDER							37454.56	5.29	37449.27
1	w1	PL	22 x 2800	13 029	M270M	345W	T		03009	6299.54	3.32	6296.22
1	w2	PL	22 x 2800	13 019	M270M	345W	T		03009	6294.71	0.00	6294.71
1	w3	PL	22 x 2800	12 481	M270M	345W	T		03012	6034.58	1.97	6032.61
1	t1	PL	40 x 610	21 247	M270M	345W	T		04003	4069.16	0.00	4069.16
1	t2	PL	40 x 610	17 281	M270M	345W	T		04002	3309.60	0.00	3309.60
1	b1	PL	40 x 610	21 247	M270M	345W	T		04003	4069.16	0.00	4069.16
1	b2	PL	40 x 610	17 259	M270M	345W	T		04002	3305.39	0.00	3305.39
4	x1a	PL	15.9 x 2630	786	M270M	345W	T		06001	257.98	0.00	257.98
2	x1b	PL	20.6 x 610	1 536	M270M	345W	T		06002	151.50	0.00	151.50
1	x1c	PL	20.6 x 610	1 236	M270M	345W	T		06002	121.91	0.00	121.91
1	x1d	PL	20.6 x 610	1 236	M270M	345W	T		06002	121.91	0.00	121.91
4	x1f	PL	20.6 x 280	1 536	M270M	345W	T		06003	69.54	0.00	69.54
2	x1g	PL	20.6 x 280	1 236	M270M	345W	T		06003	55.96	0.00	55.96
2	x1h	PL	20.6 x 280	1 236	M270M	345W	T		06003	55.96	0.00	55.96
2	x1k	SHT	16GA x 390	2 630	A606 Type 4			FILL	06004	16.10	0.00	16.10
2	x1m	PL	15.9 x 610	765	M270M	345W		FILL	06005	58.24	0.00	58.24
16	x3b	PL	14.3 x 280	2 800	M270M	345W	T		07002	88.00	0.00	88.00
8	x4b	PL	14.3 x 1140	425	M270M	345W		BENT	07003	54.38	0.00	54.38
64	140308	HS Bolt	7/8	0-3 1/2	M164 Type 3				17002	0.00	0.00	0.00
64	N14	Nut	7/8		M291	DH3			17004	0.00	0.00	0.00
64	W14	Std Wash	7/8		M293 Weathering				17006	0.00	0.00	0.00

TOTAL WEIGHT THIS SHEET: 37 449.27 kgs
BID ITEM 0160 506.56

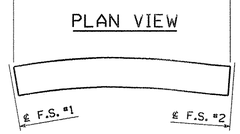

ORIENTATION DIAGRAM

SHOP NOTE:
[8 @ 3½]
└ INDICATES LENGTH OF ⅞"ø H.S. BOLTS
└ INDICATES NUMBER OF ⅞"ø H.S. BOLTS

NO.	REVISION	BY	CHK'D	DATE
△				
△				
△				

HOLES: 15/16"ø
BOLTS: AS NOTED
COATING: NONE
CODE(S): 30
SCALE: N.T.S.

HIGH STEEL STRUCTURES INC.
An ISO 9001:2000 Certified Company
An Affiliate of High Industries Inc.
Lancaster Facility: 915 Old Philadelphia Pike, Lancaster, PA 17605-0008, Phone (717) 299-5211
Williamsport Facility: 3501 W. 4th Street, Williamsport, PA 17701, Phone (570) 326-9051
www.highsteel.com

GIRDER G3B
VT ROUTE 279 OVER FURNACE BROOK
VT ROUTE 279 STA. 8+542.000 TO STA. 8+685.000
TOWN OF BENNINGTON VERMONT, BRIDGE B12
STATE OF VERMONT
AGENCY OF TRANSPORTATION

	AC NH F019-1(53)	FED. AID PROJ. NO.	
GENERAL CONTRACTOR	J.A. McDONALD, INC.	HSSI PROJ. MGR	DEB KUPRES
SHPMT 3	DRAWING MANAGER: BRITIGAN (IH)	MADE BY: JAW	CHK'D. BY: MGK	DATE: 11/28/07
STATE VT	HSSI PROJECT NUMBER: S-1070147	HSSI STRUCT. ID: A	DRAWING NUMBER: 9 OF 34

SHIPMENT 01 PM&ENG: 5802818Z PRD: 5802818 SHIP&ENG: 5802819
BY: MKreidel
PLOTTED: 11/30/2007 12:17:47 PM
60

1070147A X1 12/3/07 12/3/07Approval TO:J.A. McDonald, Inc.

METRIC

TVGA CONSULTANTS

☒ NO EXCEPTIONS TAKEN ☐ REJECTED
☐ FURNISH AS CORRECTED
☐ REVISE AND RESUBMIT

ENGINEER has reviewed Shop Drawings and Samples and other data which Contractor is required to submit, only for conformance with the information given in the Contract Documents and compatibility with the design concept of the completed Project as a functioning whole as indicated in the Contract Documents. Such reviews do not extend to means, methods, techniques, sequences or procedures of construction or to safety precautions and programs incident thereto. Such reviews do not extend to any LEED certification or accreditation. Contractor is responsible for dimensions to be confirmed and correlated at the job site; for information that pertains solely to the fabrication processes or to techniques of construction; and for coordination of the work of all trades.

BY: _____
DATE: 7/7/08

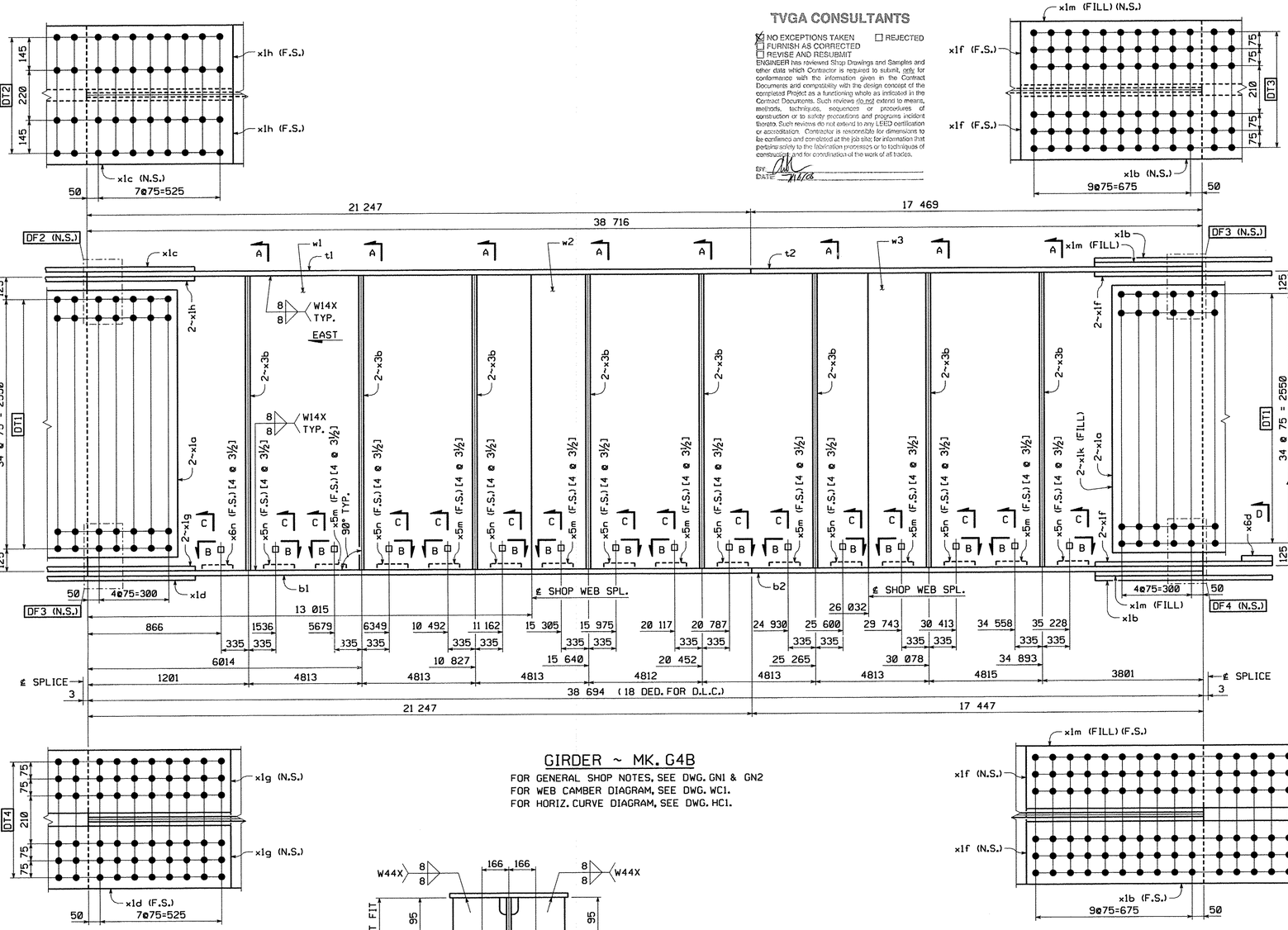

GIRDER ~ MK. G4B

FOR GENERAL SHOP NOTES, SEE DWG. GN1 & GN2
FOR WEB CAMBER DIAGRAM, SEE DWG. WC1.
FOR HORIZ. CURVE DIAGRAM, SEE DWG. HC1.

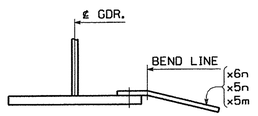

SECTION C

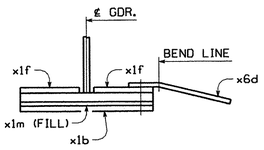

SECTION D

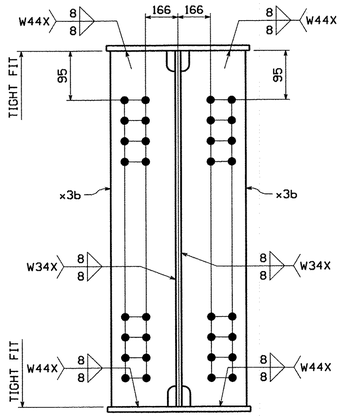

SECTION A

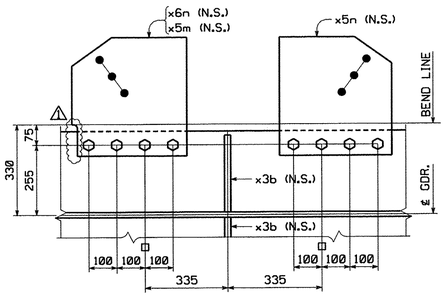

SECTION B-B

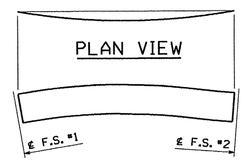

ORIENTATION DIAGRAM

SHOP NOTE:

[4 ø 3½]
INDICATES LENGTH OF ⅞"ø H.S. BOLTS
INDICATES NUMBER OF ⅞"ø H.S. BOLTS

BILL OF MATERIAL

QTY EA.	MARK	COMM	DESCRIPTION	LENGTH	SPEC	GRADE	TEST	REMARKS	ITEM	GROS WT. EA.	DED. WEIGHT	NET WT. EA.
1	G4B		GIRDER							37518.61	5.42	37513.19
1	w1	PL	22 x 2800	13 029	M270M	345W	T		03009	6299.54	3.41	6296.13
1	w2	PL	22 x 2800	13 019	M270M	345W	T		03009	6294.71	0.00	6294.71
1	w3	PL	22 x 2800	12 670	M270M	345W	T		03002	6125.96	2.01	6123.95
1	t1	PL	40 x 610	21 247	M270M	345W	T		04003	4069.16	0.00	4069.16
1	t2	PL	40 x 610	17 469	M270M	345W	T		04001	3345.61	0.00	3345.61
1	b1	PL	40 x 610	21 247	M270M	345W	T		04003	4069.16	0.00	4069.16
1	b2	PL	40 x 610	17 447	M270M	345W	T		04001	3341.39	0.00	3341.39
4	x1a	PL	15.9 x 2630	786	M270M	345W	T		06001	257.98	0.00	257.98
2	x1b	PL	20.6 x 610	1 536	M270M	345W	T		06002	151.50	0.00	151.50
1	x1c	PL	20.6 x 610	1 236	M270M	345W	T		06002	121.91	0.00	121.91
1	x1d	PL	20.6 x 610	1 236	M270M	345W	T		06002	121.91	0.00	121.91
4	x1f	PL	20.6 x 280	1 536	M270M	345W	T		06003	69.54	0.00	69.54
2	x1g	PL	20.6 x 280	1 236	M270M	345W	T		06003	55.96	0.00	55.96
2	x1h	PL	20.6 x 280	1 236	M270M	345W	T		06003	55.96	0.00	55.96
2	x1k	SHT	16GA x 390	2 630	A606 Type 4			FILL	06004	16.10	0.00	16.10
2	x1m	PL	15.9 x 610	765	M270M	345W		FILL	06005	58.24	0.00	58.24
16	x3b	PL	14.3 x 280	2 800	M270M	345W	T		07002	88.00	0.00	88.00
8	x5n	PL	14.3 x 420	421	M270M	345W		BENT	07003	19.85	0.00	19.85
7	x5m	PL	14.3 x 420	422	M270M	345W		BENT	07003	19.89	0.00	19.89
1	x6d	PL	14.3 x 380	417	M270M	345W		BENT (B.T.S.)	07003	17.79	0.00	17.79
1	x6n	PL	14.3 x 420	422	M270M	345W		BENT	07003	19.89	0.00	19.89
64	140308	HS Bolt	7/8		M164 Type 3				17002	0.00	0.00	0.00
64	N14	Nut	7/8		M291	DH3			17004	0.00	0.00	0.00
64	W14	Std Wash	7/8		M293 Weathering				17006	0.00	0.00	0.00
								TOTAL WEIGHT THIS SHEET:			BID ITEM 0160 506.56	37 513.19 kgs

NO.	REVISION	BY	CHK'D	DATE
1	REVISED GUSSET PLATE x6n DUE TO FOULING OF SPLICE PLATE	MGK	CS	5/28/08

HOLES: 15/16"ø
BOLTS: AS NOTED
COATING: NONE
CODE(S): 30
SCALE: N.T.S.

HIGH STEEL STRUCTURES INC.
An ISO 9001:2000 Certified Company
An Affiliate of High Industries Inc.
Lancaster Facility: 195 Old Philadelphia Pike, Lancaster, PA 17605-0008, Phone (717) 299-5211
Williamsport Facility: 3501 W. 4th Street, Williamsport, PA 17701, Phone (570) 326-9051
www.highsteel.com

GIRDER G4B
VT ROUTE 279 OVER FURNACE BROOK
VT ROUTE 279 STA. 8+542.000 TO STA. 8+685.000
TOWN OF BENNINGTON VERMONT, BRIDGE B12
STATE OF VERMONT
AGENCY OF TRANSPORTATION
AC NH F019-1(53) — FED. AID PROJ. NO.
GENERAL CONTRACTOR: J.A. McDONALD, INC. — HSSI PROJ. MGR: DEB KUPRES
SHPMT 3 — DRAWING MANAGER: BRITIGAN (IH) — MADE BY: JAW — CHK'D BY: MGK — DATE: 11/28/07
STATE VT — HSSI PROJECT NUMBER: S-1070147 — HSSI STRUCT. ID: A — DRAWING NUMBER: 10 OF 34

RECEIVED
JUL 18 2008
G.P.I.

1070147A X6 7/7/08 7/Resubmit For Approval TO:J.A. McDonald, Inc.

PLOTTED: 5/29/2008 10:05:46 AM
BY: MKreidel
SHIPMENT 01
PM&ENG: 59002817 PROD 59002818 SHP&REC'T: 59002819

METRIC

TVGA CONSULTANTS

☒ NO EXCEPTIONS TAKEN ☐ REJECTED
☐ FURNISH AS CORRECTED
☐ REVISE AND RESUBMIT

ENGINEER has reviewed Shop Drawings and Samples and does state which Contractor is required to submit, only for conformance with the information given in the Contract Documents and compatibility with the design concept of the complete structure as a functioning whole as indicated in the Contract Documents. Such review does not extend to means, methods, techniques, sequences or procedures of construction or to safety precautions and programs incident thereto. Such review does not extend to any USED certificates or acceptances. Contractor is responsible for dimensions to be confirmed and correlated at the job site, for information that pertains solely to the fabrication processes or to techniques of construction, and for coordination of the work of all trades.

BY:
DATE: 7/7/08

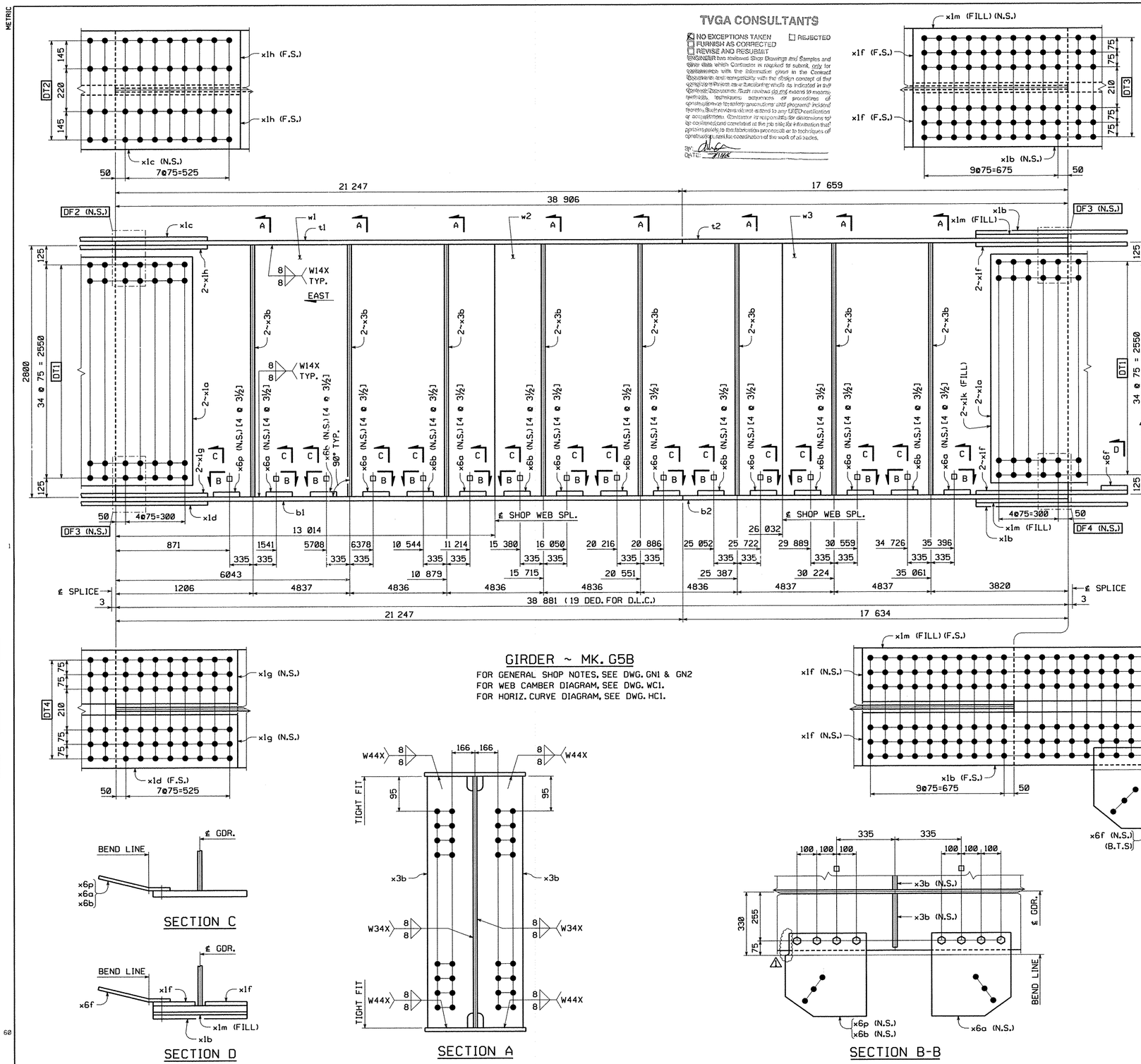

GIRDER ~ MK. G5B

FOR GENERAL SHOP NOTES, SEE DWG. GN1 & GN2
FOR WEB CAMBER DIAGRAM, SEE DWG. WC1.
FOR HORIZ. CURVE DIAGRAM, SEE DWG. HC1.

SECTION C

SECTION D

SECTION A

SECTION B-B

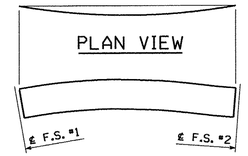

ORIENTATION DIAGRAM

SHOP NOTE:

[4 @ 3½]
- INDICATES LENGTH OF ⅞"ø H.S. BOLTS
- INDICATES NUMBER OF ⅞"ø H.S. BOLTS

BILL OF MATERIAL

QTY EA.	MARK	COMM	DESCRIPTION	LENGTH	SPEC	GRADE	TEST	REMARKS	ITEM	GROS WT. EA.	DED. WEIGHT	NET WT. EA.
1	G5B		GIRDER							37680.97	6.00	37674.98
1	w1	PL	22 x 2800	13 030	M270M	345W	T		03008	6300.02	3.72	6296.30
1	w2	PL	22 x 2800	13 019	M270M	345W	T		03009	6294.71	0.00	6294.71
1	w3	PL	22 x 2800	12 858	M270M	345W	T		03011	6216.86	2.28	6214.58
1	t1	PL	40 x 610	21 247	M270M	345W	T		04003	4069.16	0.00	4069.16
1	t2	PL	40 x 610	17 659	M270M	345W	T		04001	3382.00	0.00	3382.00
1	b1	PL	40 x 610	21 247	M270M	345W	T		04003	4069.16	0.00	4069.16
1	b2	PL	40 x 610	17 634	M270M	345W	T		04001	3377.21	0.00	3377.21
4	x1a	PL	15.9 x 2630	786	M270M	345W	T		06001	257.98	0.00	257.98
2	x1b	PL	20.6 x 610	1 536	M270M	345W	T		06002	151.50	0.00	151.50
1	x1c	PL	20.6 x 610	1 236	M270M	345W	T		06002	121.91	0.00	121.91
1	x1d	PL	20.6 x 610	1 236	M270M	345W	T		06002	121.91	0.00	121.91
4	x1f	PL	20.6 x 280	1 536	M270M	345W	T		06003	69.54	0.00	69.54
2	x1g	PL	20.6 x 280	1 236	M270M	345W	T		06003	55.96	0.00	55.96
2	x1h	PL	20.6 x 280	1 236	M270M	345W	T		06003	55.96	0.00	55.96
2	x1k	SHT	16GA x 390	2 630	A606 Type 4			FILL	06004	16.10	0.00	16.10
2	x1m	PL	15.9 x 610	765	M270M	345W		FILL	06005	58.24	0.00	58.24
16	x3b	PL	14.3 x 280	2 800	M270M	345W	T		07002	88.00	0.00	88.00
8	x6a	PL	14.3 x 420	420	M270M	345W		BENT	07003	19.80	0.00	19.80
7	x6b	PL	14.3 x 420	420	M270M	345W		BENT	07003	19.80	0.00	19.80
1	x6f	PL	14.3 x 380	415	M270M	345W		BENT (B.T.S.)	07003	17.70	0.00	17.70
1	x6p	PL	14.3 x 420	420	M270M	345W		BENT	07003	19.80	0.00	19.80
64	140308	HS Bolt	7/8	0-3 1/2	M164 Type 3				17002	0.00	0.00	0.00
64	N14	Nut	7/8		M291	DH3			17004	0.00	0.00	0.00
64	W14	Std Wash	7/8		M293 Weathering				17006	0.00	0.00	0.00
								TOTAL WEIGHT THIS SHEET:			BID ITEM 0160 506.56	37 674.98 kgs

NO.	REVISION	BY	CHK'D	DATE
1	REVISED GUSSET PLATE x6p DUE TO FOULING OF SPLICE PLATE	MGK	CS	5/28/08

HOLES: 15/16"ø
BOLTS: AS NOTED
COATING: NONE
CODE(S): 30
SCALE: N.T.S.

HIGH STEEL STRUCTURES INC.
An Affiliate of High Industries Inc.
An ISO 9001:2000 Certified Company
Lancaster Facility: 1915 Old Philadelphia Pike, Lancaster, PA 17605-0008, Phone (717) 299-5211
Williamsport Facility: 3501W. 4th Street, Williamsport, PA 17701, Phone (570) 326-9051
www.highsteel.com

GIRDER G5B
VT ROUTE 279 OVER FURNACE BROOK
VT ROUTE 279 STA. 8+542.000 TO STA. 8+685.000
TOWN OF BENNINGTON VERMONT, BRIDGE B12
STATE OF VERMONT
AGENCY OF TRANSPORTATION

	AC NH F019-1(53)	FED. AID PROJ. NO.	
GENERAL CONTRACTOR	J.A. McDONALD, INC.	HSSI PROJ. MGR	DEB KUPRES
SHPMT 3	DRAWING MANAGER: BRITIGAN (IH)	MADE BY: JMW	CHK'D. BY: MGK	DATE: 11/28/07
STATE VT	HSSI PROJECT NUMBER: S-1070147	HSSI STRUCT. ID: A	DRAWING NUMBER: 11 OF 34

RECEIVED
JUL 18 2008
G.P.I.

1070147A X6 7/7/08 7/Resubmit For Approval TO:J.A. McDonald, Inc.

PLOTTED: 5/29/2008 10:07:08 AM
BY: MKrandel
SHIPMENT #1 PM&ENG: 50802817 PRO: 50802818 SHIPASSEMBLY: 50802819

METRIC

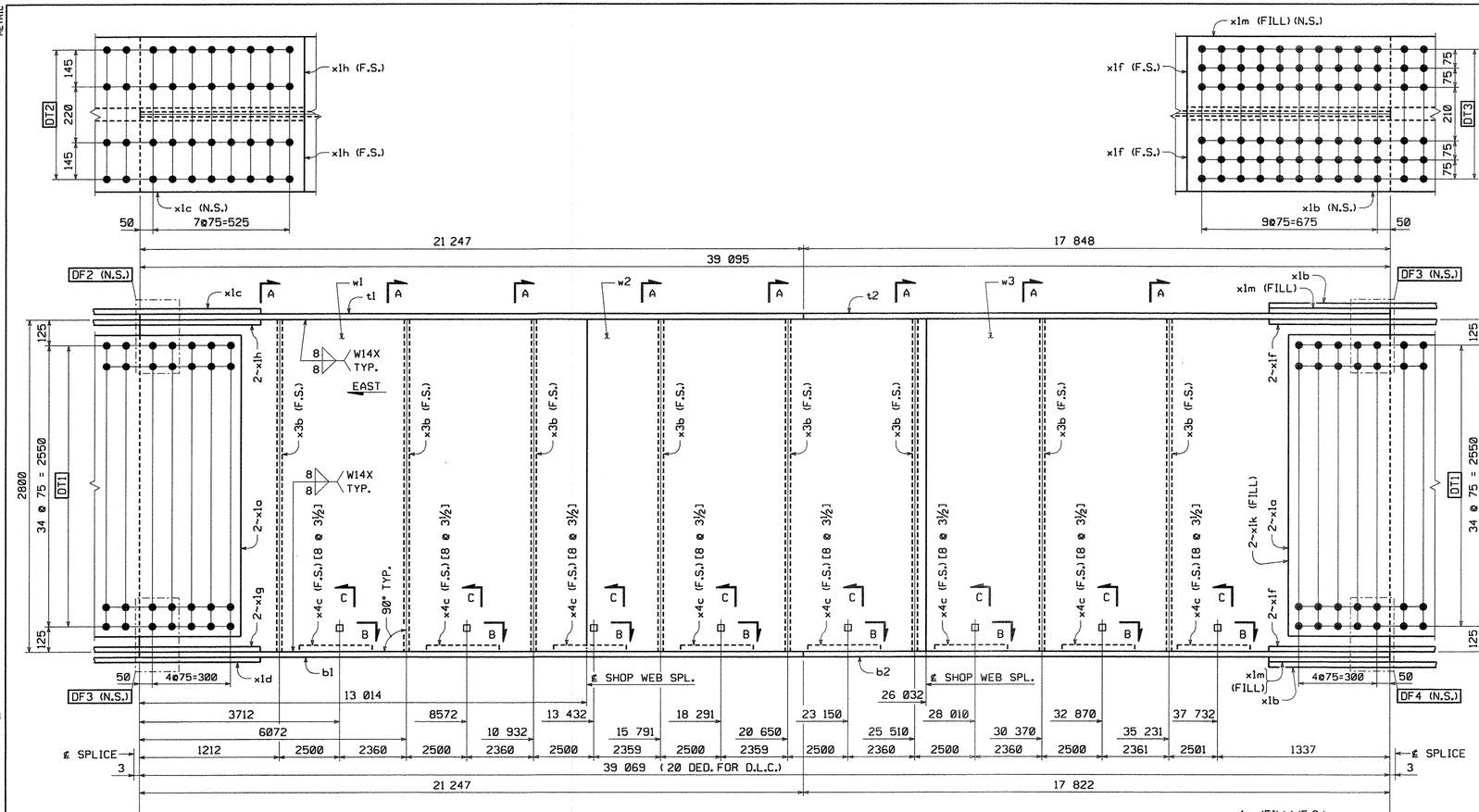

SHOP NOTE:
[8 @ 3½]
- 8 INDICATES NUMBER OF ⅞" ø H.S. BOLTS
- 3½ INDICATES LENGTH OF ⅞" ø H.S. BOLTS

BILL OF MATERIAL

QTY EA.	MARK	COMM	DESCRIPTION	LENGTH	SPEC	GRADE	TEST	REMARKS	ITEM	GROS WT. EA.	DED. WEIGHT	NET WT. EA.
1	G6B		GIRDER							37241.14	6.41	37234.73
1	w1	PL	22 x 2800	13 030	M270M	345W	T		03008	6300.02	4.02	6296.01
1	w2	PL	22 x 2800	13 019	M270M	345W	T		03009	6294.71	0.00	6294.71
1	w3	PL	22 x 2800	13 047	M270M	345W	T		03001	6308.24	2.39	6305.85
1	t1	PL	40 x 610	21 247	M270M	345W	T		04003	4069.16	0.00	4069.16
1	t2	PL	40 x 610	17 848	M270M	345W	T		04001	3418.19	0.00	3418.19
1	b1	PL	40 x 610	21 247	M270M	345W	T		04003	4069.16	0.00	4069.16
1	b2	PL	40 x 610	17 822	M270M	345W	T		04001	3413.21	0.00	3413.21
4	x1a	PL	15.9 x 2630	786	M270M	345W	T		06001	257.98	0.00	257.98
2	x1b	PL	20.6 x 610	1 536	M270M	345W	T		06002	151.50	0.00	151.50
1	x1c	PL	20.6 x 610	1 236	M270M	345W	T		06002	121.91	0.00	121.91
1	x1d	PL	20.6 x 610	1 236	M270M	345W	T		06002	121.91	0.00	121.91
4	x1f	PL	20.6 x 280	1 536	M270M	345W	T		06003	69.54	0.00	69.54
2	x1g	PL	20.6 x 280	1 236	M270M	345W	T		06003	55.96	0.00	55.96
2	x1h	PL	20.6 x 280	1 236	M270M	345W	T		06003	55.96	0.00	55.96
2	x1k	SHT	16GA x 390	2 630	A606 Type 4			FILL	06004	16.10	0.00	16.10
2	x1m	PL	15.9 x 610	765	M270M	345W		FILL	06005	58.24	0.00	58.24
8	x3b	PL	14.3 x 280	2 800	M270M	345W	T		07002	88.00	0.00	88.00
8	x4c	PL	14.3 x 1140	425	M270M	345W		BENT	07003	54.38	0.00	54.38
64	140308	HS Bolt	7/8	0-3 1/2	M164 Type 3				17002	0.00	0.00	0.00
64	N14	Nut	7/8		M291	DH3			17004	0.00	0.00	0.00
64	W14	Std Wash	7/8		M293 Weathering				17006	0.00	0.00	0.00

TOTAL WEIGHT THIS SHEET: 37 234.73 kgs
BID ITEM 0160 506.56

NO.	REVISION	BY	CHK'D	DATE
△				
△				
△				

HOLES: 15/16" ø
BOLTS: AS NOTED
COATING: NONE
CODE(S): 30
SCALE: N.T.S.

HIGH STEEL STRUCTURES INC. — An Affiliate of High Industries Inc. — An ISO 9001:2000 Certified Company
Lancaster Facility: 915 Old Philadelphia Pike, Lancaster, PA 17605-0008, Phone (717) 299-5211
Williamsport Facility: 3501 W. 4th Street, Williamsport, PA 17701, Phone (570) 326-9051, www.highsteel.com

	GIRDER G6B
	VT ROUTE 279 OVER FURNACE BROOK
	VT ROUTE 279 STA. 8+542.000 TO STA. 8+685.000
	TOWN OF BENNINGTON VERMONT, BRIDGE B12
	STATE OF VERMONT
	AGENCY OF TRANSPORTATION
	AC NH F019-1(53) — FED. AID PROJ. NO.
GENERAL CONTRACTOR	J.A. McDONALD, INC. — HSSI PROJ. MGR: DEB KUPRES
SHPMT 3	DRAWING MANAGER: BRITIGAN (IH) — MADE BY: JAW — CHK'D BY: MGK — DATE: 11/28/07
STATE VT	HSSI PROJECT NUMBER: S-1070147 — HSSI STRUCT. ID: A — DRAWING NUMBER: 12 OF 34

PLOTTED: 11/28/2007 12:26:18 PM
BY: MKreidel
SHIPMENT 01
PM&ENG: 5982817 PROJ: 5982818 SHIP&ERECT.: 5982819

1

1070147A X1 12/3/07 12/3/07Approval TO:J.A. McDonald, Inc.

METRIC

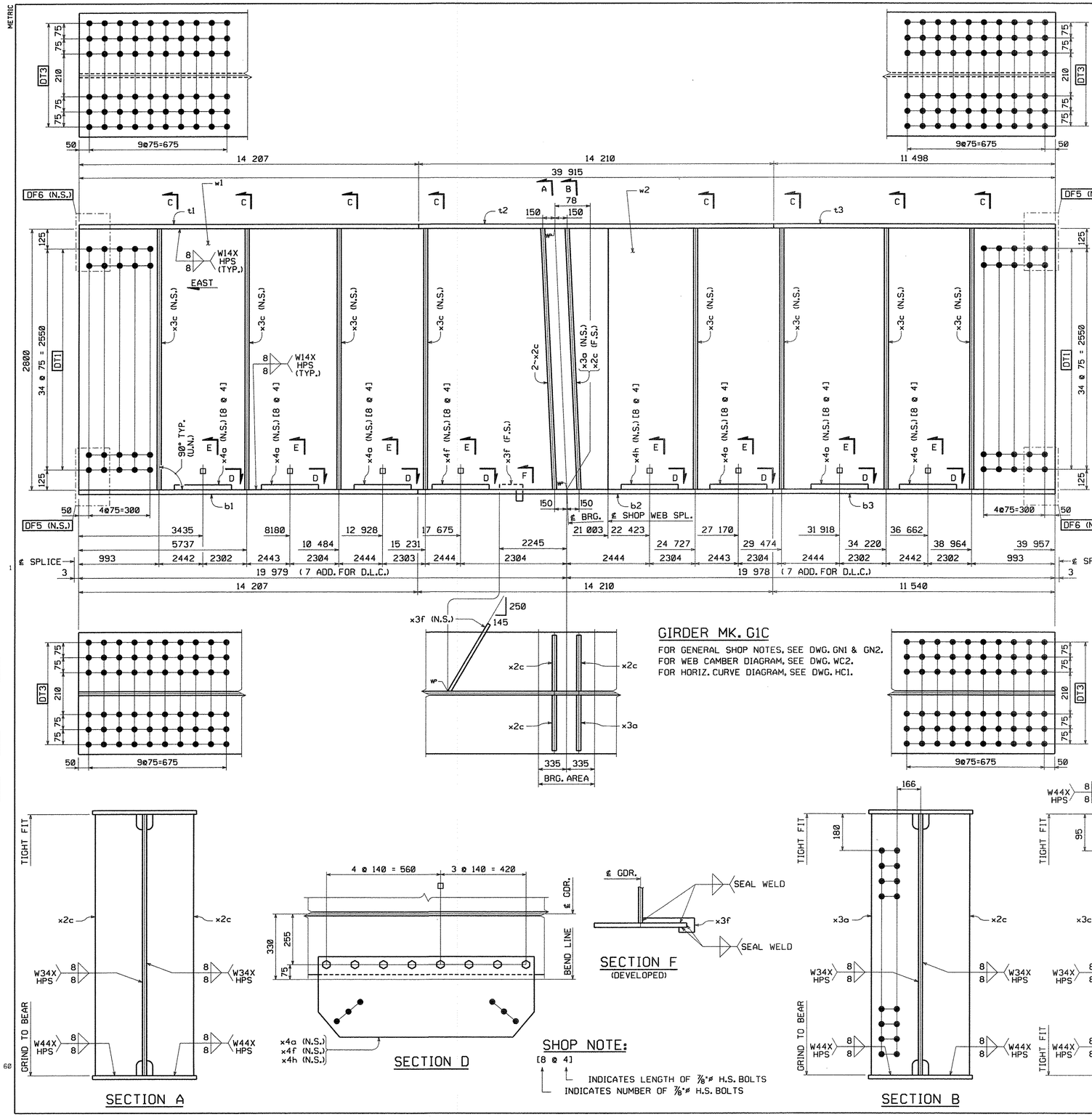

GIRDER MK. G1C

FOR GENERAL SHOP NOTES, SEE DWG. GN1 & GN2.
FOR WEB CAMBER DIAGRAM, SEE DWG. WC2.
FOR HORIZ. CURVE DIAGRAM, SEE DWG. HC1.

SECTION A

SECTION D

SECTION F
(DEVELOPED)

SHOP NOTE:
[8 @ 4]
INDICATES LENGTH OF ⅞"ø H.S. BOLTS
INDICATES NUMBER OF ⅞"ø H.S. BOLTS

SECTION B

SECTION C

BILL OF MATERIAL

QTY EA.	MARK	COMM	DESCRIPTION	LENGTH	SPEC	GRADE	TEST	REMARKS	ITEM	GROS WT. EA.	DED. WEIGHT	NET WT. EA.
1	G1C		GIRDER							45714.26	90.72	45623.54
1	w1	PL	26 x 2800	21 003	M270M	HPS485W	T		03013	12001.34	6.00	11995.34
1	w2	PL	26 x 2800	18 954	M270M	HPS485W	T		03018	10830.52	6.00	10824.52
1	t1	PL	55 x 610	14 207	M270M	HPS485W	T		04011	3741.21	0.00	3741.21
1	t2	PL	55 x 610	14 210	M270M	HPS485W	T		04011	3742.00	0.00	3742.00
1	t3	PL	55 x 610	11 499	M270M	HPS485W	T		04010	3028.10	0.00	3028.10
1	b1	PL	55 x 610	14 207	M270M	HPS485W	T		04011	3741.21	0.00	3741.21
1	b2	PL	55 x 610	14 210	M270M	HPS485W	T		04011	3742.00	0.00	3742.00
1	b3	PL	55 x 610	11 541	M270M	HPS485W	T		04010	3039.16	0.00	3039.16
3	x2c	PL	25.4 x 280	2 801	M270M	345W	T		07001	156.36	0.00	156.36
1	x3a	PL	25.4 x 280	2 801	M270M	345W	T		07001	156.36	0.00	156.36
8	x3c	PL	15.9 x 280	2 800	M270M	345W	T		07006	97.84	9.84	88.00
1	x3f	PL	6.4 x 105	387	M270M	345W			07004	2.04	0.00	2.04
6	x4a	PL	14.3 x 1140	426	M270M	345W		BENT	07003	54.51	0.00	54.51
1	x4f	PL	14.3 x 1140	436	M270M	345W		BENT	07003	55.79	0.00	55.79
1	x4h	PL	14.3 x 1140	435	M270M	345W		BENT	07003	55.66	0.00	55.66
64	140400	HS Bolt	7/8	0'-4	M164 Type 3				17001	0.00	0.00	0.00
64	N14	Nut	7/8		M291	DH3			17004	0.00	0.00	0.00
64	W14	Std Wash	7/8		M293 Weathering				17006	0.00	0.00	0.00

WEIGHT FOR BID ITEM: 0990 900.635	43 853.54 kgs
WEIGHT FOR BID ITEM: 0160 506.56	1 770.00 kgs
TOTAL WEIGHT THIS SHEET:	45 623.54 kgs

TVGA CONSULTANTS

☒ NO EXCEPTIONS TAKEN ☐ REJECTED
☐ FURNISH AS CORRECTED
☐ REVISE AND RESUBMIT

ENGINEER has reviewed Shop Drawings and Samples and other data which Contractor is required to submit, only for conformance with the information given in the Contract Documents and compatibility with the design concept of the completed Project as a functioning whole as indicated in the Contract Documents. Such reviews do not extend to means, methods, techniques, sequences or procedures of construction or to safety precautions and programs incident thereto. Contractor is responsible for dimensions to be confirmed and correlated at the job site; for information that pertains solely to the fabrication processes or to techniques of construction; and for coordination of the work of all trades.

BY:
DATE: 12/3/07

PLAN VIEW

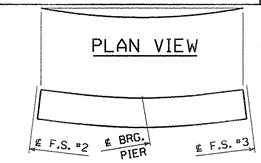

ORIENTATION DIAGRAM

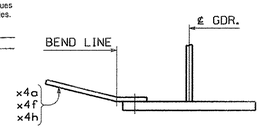

SECTION E

NO.	REVISION	BY	CHK'D	DATE
△				
△				
△				

HOLES 15/16"ø
BOLTS AS NOTED
COATING NONE
CODE(S) 30
SCALE N.T.S.

HIGH STEEL STRUCTURES INC.
An ISO 9001:2000 Certified Company
An Affiliate of High Industries Inc.
Lancaster Facility: 1915 Old Philadelphia Pike, Lancaster, PA 17602-2008, Phone (717) 299-5211
Williamsport Facility: 3501 W. 4th Street, Williamsport, PA 17701, Phone (570) 326-9051
www.Highsteel.com

	GIRDER G1C
	VT ROUTE 279 OVER FURNACE BROOK
	VT ROUTE 279 STA. 8+542.000 TO STA. 8+685.000
	TOWN OF BENNINGTON VERMONT, BRIDGE B12
	STATE OF VERMONT
	AGENCY OF TRANSPORTATION
	AC NH F019-1(53) — FED. AID PROJ. NO.
GENERAL CONTRACTOR	J.A. McDONALD, INC. — HSSI PROJ. MGR: DEB KUPRES
SHPMT 3 — DRAWING MANAGER	BRITIGAN (IH) — MADE BY: MAF — CHK'D BY: WBW — DATE: 11/26/07
STATE VT — HSSI PROJECT NUMBER	S-1070147 — HSSI STRUCT. ID: A — DRAWING NUMBER: 13 OF 34

1070147A X1 12/3/07 12/3/07Approval TO:J.A. McDonald, Inc.

PLOTTED: 11/30/2007 12:51:17 PM
BY: MKriesel
SHIPMENT 81 PM&ENG: 5282818 PRD: 5282818 SHIP&REC'T: 5282818

METRIC

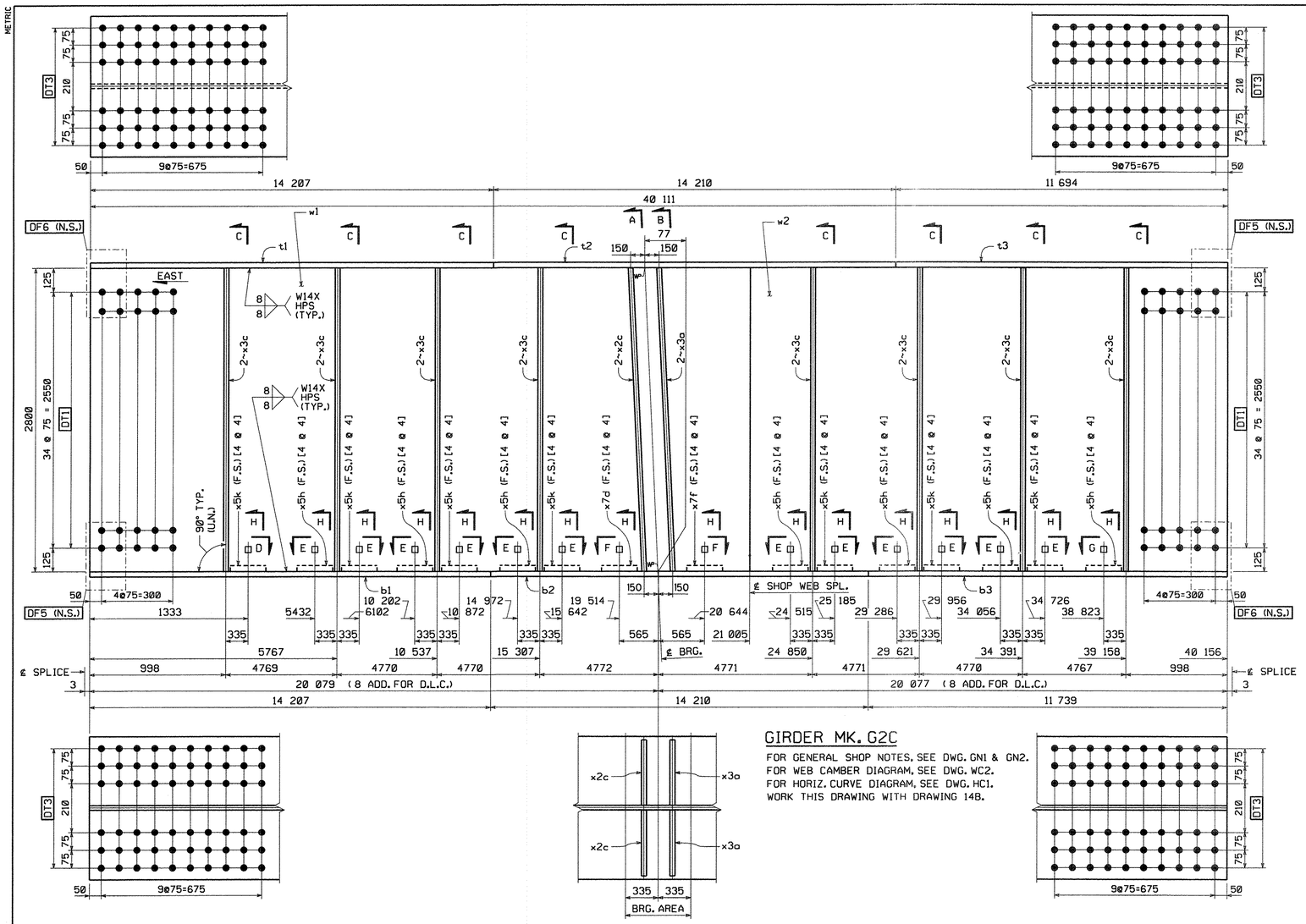

GIRDER MK. G2C

FOR GENERAL SHOP NOTES, SEE DWG. GN1 & GN2.
FOR WEB CAMBER DIAGRAM, SEE DWG. WC2.
FOR HORIZ. CURVE DIAGRAM, SEE DWG. HC1.
WORK THIS DRAWING WITH DRAWING 14B.

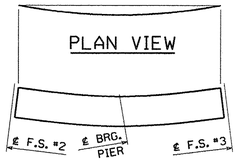

ORIENTATION DIAGRAM

SHOP NOTE:

[4 ø 4]
- 4 = INDICATES NUMBER OF ⅞"ø H.S. BOLTS
- 4 = INDICATES LENGTH OF ⅞"ø H.S. BOLTS

BILL OF MATERIAL

QTY EA.	MARK	COMM	DESCRIPTION	LENGTH	SPEC	GRADE	TEST	REMARKS	ITEM	GROSS WT. EA.	DED. WEIGHT	NET WT. EA.
1	G2C		GIRDER							46591.81	170.30	46421.51
1	w1	PL	26 x 2800	21 005	M270M	HPS485W	T		03013	12002.48	6.29	11996.19
1	w2	PL	26 x 2800	19 152	M270M	HPS485W	T		03017	10943.66	6.57	10937.09
1	t1	PL	55 x 610	14 207	M270M	HPS485W	T		04011	3741.21	0.00	3741.21
1	t2	PL	55 x 610	14 210	M270M	HPS485W	T		04011	3742.00	0.00	3742.00
1	t3	PL	55 x 610	11 695	M270M	HPS485W	T		04010	3079.71	0.00	3079.71
1	b1	PL	55 x 610	14 207	M270M	HPS485W	T		04011	3741.21	0.00	3741.21
1	b2	PL	55 x 610	14 210	M270M	HPS485W	T		04011	3742.00	0.00	3742.00
1	b3	PL	55 x 610	11 740	M270M	HPS485W	T		04010	3091.56	0.00	3091.56
2	x2c	PL	25.4 x 280	2 801	M270M	345W	T		07001	156.36	0.00	156.36
2	x3a	PL	25.4 x 280	2 801	M270M	345W	T		07001	156.36	0.00	156.36
16	x3c	PL	15.9 x 280	2 800	M270M	345W	T		07006	97.84	9.84	88.00
7	x5h	PL	14.3 x 420	423	M270M	345W		BENT	07003	19.94	0.00	19.94
7	x5k	PL	14.3 x 420	422	M270M	345W		BENT	07003	19.89	0.00	19.89
1	x7d	PL	14.3 x 400	426	M270M	345W		BENT	07003	19.13	0.00	19.13
1	x7f	PL	14.3 x 400	425	M270M	345W		BENT	07003	19.08	0.00	19.08
64	140400	HS Bolt	7/8	0'-4	M164 Type 3				17001	0.00	0.00	0.00
64	N14	Nut	7/8		M291	DH3			17004	0.00	0.00	0.00
64	W14	Std Wash	7/8		M293 Weathering				17006	0.00	0.00	0.00

WEIGHT FOR BID ITEM: 0990 900.635	44 070.97	kgs
WEIGHT FOR BID ITEM: 0160 506.56	2 350.54	kgs
TOTAL WEIGHT THIS SHEET:	46 421.51	kgs

TVGA CONSULTANTS

☒ NO EXCEPTIONS TAKEN ☐ REJECTED
☐ FURNISH AS CORRECTED
☐ REVISE AND RESUBMIT

ENGINEER has reviewed Shop Drawings and Samples and other data which Contractor is required to submit, only for conformance with the information given in the Contract Documents and compatibility with the design concept of the completed Project as a functioning whole as indicated in the Contract Documents. Such reviews do not extend to means, methods, techniques, sequences or procedures of construction or to safety precautions and programs incident thereto. Contractor is responsible for dimensions to be confirmed and correlated at the job site; for information that pertains solely to the fabrication processes or to techniques of construction; and for coordination of the work of all trades.

BY: _____
DATE: _____

NO.	REVISION	BY	CHK'D	DATE

HOLES 15/16"
BOLTS AS NOTED
COATING NONE
CODE(S) 30
SCALE N.T.S.

HIGH STEEL STRUCTURES INC.
An ISO 9001:2000 Certified Company
An Affiliate of High Industries Inc.
Lancaster Facility
1915 Old Philadelphia Pike
Lancaster, PA 17605-0008
Phone (717) 299-5211
Williamsport Facility
3501 W. 4th Street
Williamsport, PA 17701
Phone (570) 326-9051
www.highsteel.com

GIRDER G2C
VT ROUTE 279 OVER FURNACE BROOK
VT ROUTE 279 STA. 8+542.000 TO STA. 8+685.000
TOWN OF BENNINGTON VERMONT, BRIDGE B12
STATE OF VERMONT
AGENCY OF TRANSPORTATION

	AC NH F019-1(53)	FED. AID PROJ. NO.	
GENERAL CONTRACTOR	J.A. McDONALD, INC.	HSSI PROJ. MGR	DEB KUPRES
SHPMT 3	DRAWING MANAGER: BRITIGAN (IH)	MADE BY: MAF	CHK'D BY: WBW	DATE: 11/27/07
STATE VT	HSSI PROJECT NUMBER: S-1070147	HSSI STRUCT. ID: A	DRAWING NUMBER: 14AB OF 34	

1070147A X1 12/3/07 12/3/07Approval TO:J.A. McDonald, Inc.

PLOTTED: 11/30/2007 12:26:31 PM
BY: MKrendel
SHIPMENT 01 PM&ENG: 58002817 PROD: 58002818 SHIP&RECT.: 58002819

METRIC

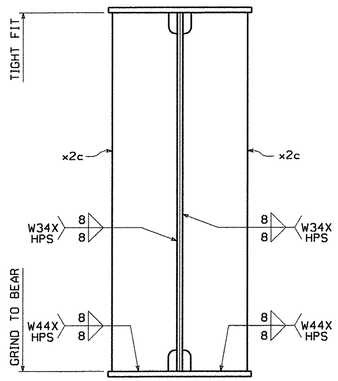

SECTION A

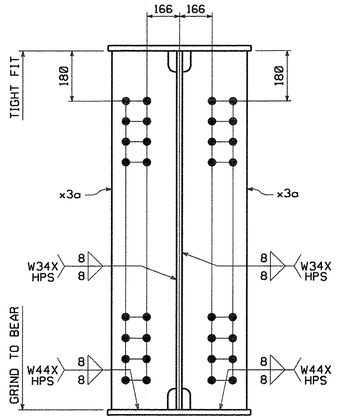

SECTION B

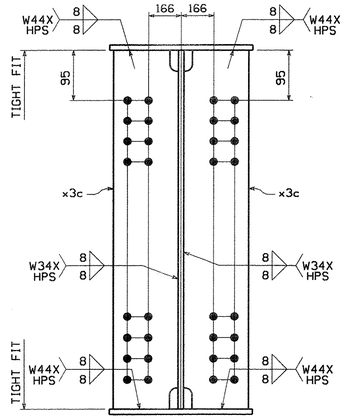

SECTION C

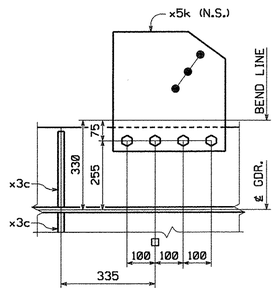

SECTION D

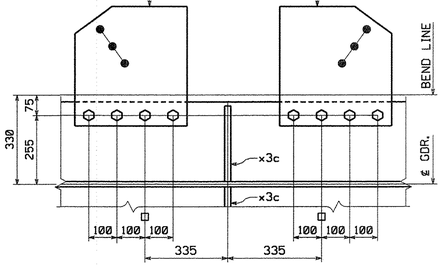

SECTION E-E

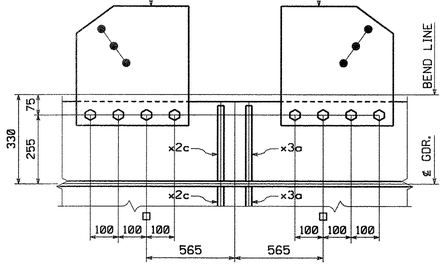

SECTION F-F

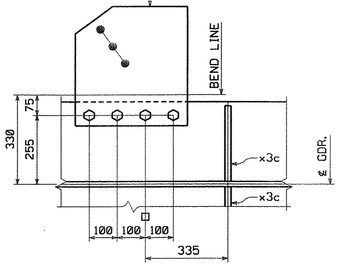

SECTION G

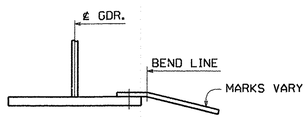

SECTION H

NOTES:

WORK THIS DRAWING WITH DRAWING 14AB.

TVGA CONSULTANTS

☒ NO EXCEPTIONS TAKEN ☐ REJECTED
☐ FURNISH AS CORRECTED
☐ REVISE AND RESUBMIT

ENGINEER has reviewed Shop Drawings and Samples and other data which Contractor is required to submit, only for conformance with the information given in the Contract Documents and compatibility with the design concept of the completed Project as a functioning whole as indicated in the Contract Documents. Such review do not extend to means, methods, techniques, sequences or procedures of construction or to safety precautions and programs incident thereto. Contractor is responsible for dimensions to be confirmed and correlated at the job site; for information that pertains solely to the fabrication processes or to techniques of construction; and for coordination of the work of all trades.

BY:
DATE:

NO.	REVISION	BY	CHK'D	DATE
△				
△				
△				

HOLES 15/16"
BOLTS AS NOTED
COATING NONE
CODE(S) 30
SCALE N.T.S.

HIGH STEEL STRUCTURES INC. — An Affiliate of High Industries Inc. — An ISO 9001:2000 Certified Company

Lancaster Facility
195 Old Philadelphia Pike
Lancaster, PA 17605-0008
Phone (717) 299-5211

Williamsport Facility
3501 W. 4th Street
Williamsport, PA 17701
Phone (570) 326-9051
www.highsteel.com

	GIRDER						G2C
	VT ROUTE 279 OVER FURNACE BROOK						
	VT ROUTE 279 STA. 8+542.000 TO STA. 8+685.000						
	TOWN OF BENNINGTON VERMONT, BRIDGE B12						
	STATE OF VERMONT						
	AGENCY OF TRANSPORTATION						
	AC NH F019-1(53)			FED. AID PROJ. NO.			
GENERAL CONTRACTOR	J.A. McDONALD, INC.			HSSI PROJ. MGR	DEB KUPRES		
SHPMT 3	DRAWING MANAGER	BRITIGAN (IH)	MADE BY	MAF	CHK'D. BY	WBW	DATE 11/27/07
STATE VT	HSSI PROJECT NUMBER	S-1070147	HSSI STRUCT. ID	A	DRAWING NUMBER	14B	OF 34

PLOTTED: 11/30/2007 12:06:38 PM BY: MKreidel SHIPMENT 01 PM&ENG: 5802817 PROJ: 5802818 SHIPRECT: 5902819

60

1070147A X1 12/3/07 12/3/07Approval TO:J.A. McDonald, Inc.

METRIC

TVGA CONSULTANTS

☒ NO EXCEPTIONS TAKEN ☐ REJECTED
☐ FURNISH AS CORRECTED
☐ REVISE AND RESUBMIT

ENGINEER has reviewed Shop Drawings and Samples and other data which Contractor is required to submit, only for conformance with the information given in the Contract Documents and compatibility with the design concept of the completed Project as a functioning whole as indicated in the Contract Documents. Such review do not extend to means, methods, techniques, sequences or procedures of construction or to safety precautions and programs incident thereto. Contractor is responsible for dimensions to be confirmed and correlated at the job site; for information that pertains solely to the fabrication processes or to techniques of construction, and/or coordination of the work of all trades.

BY:
DATE: 12/3/07

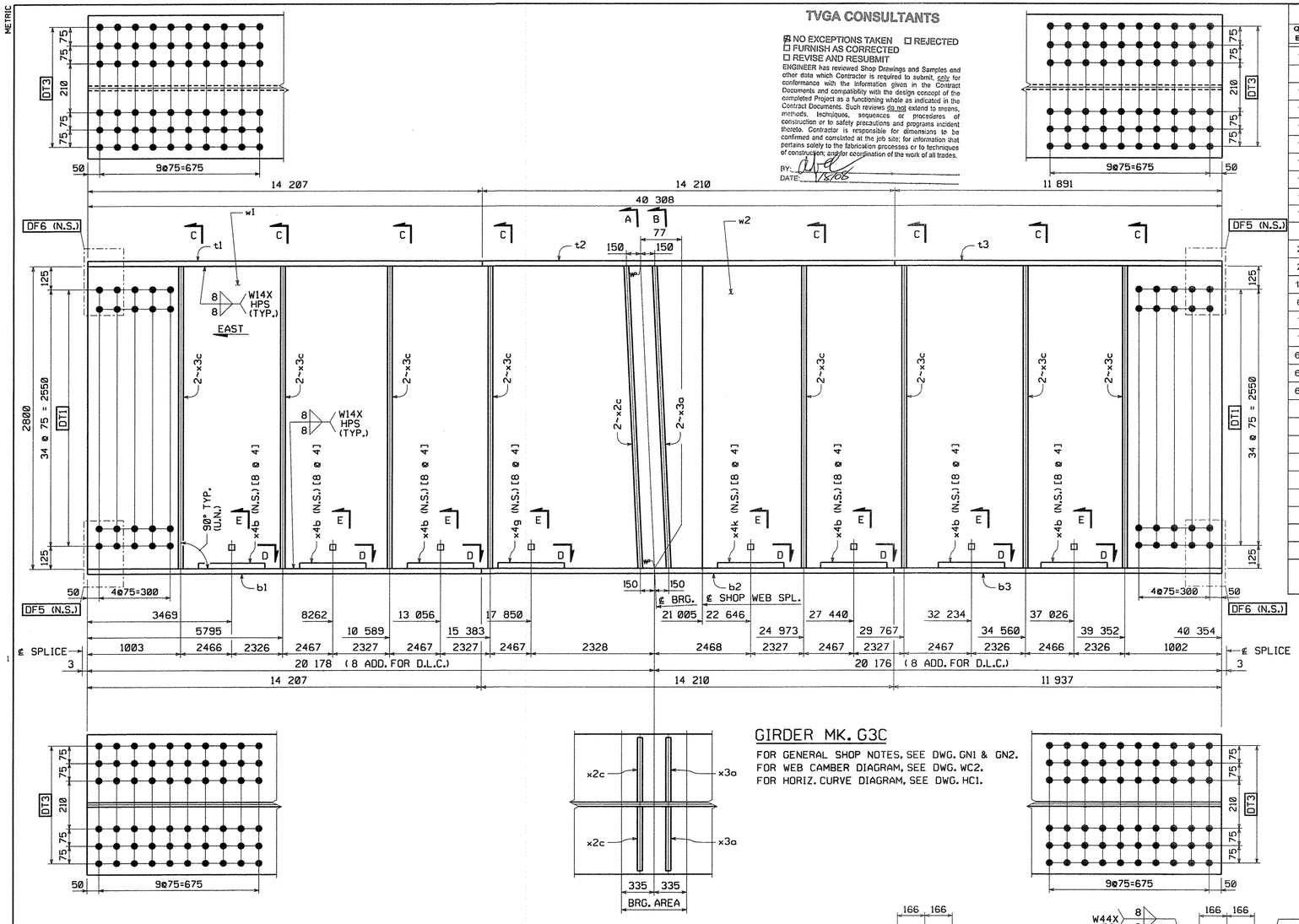

BILL OF MATERIAL

QTY EA.	MARK	COMM	DESCRIPTION	LENGTH	SPEC	GRADE	TEST	REMARKS	ITEM	GROS WT. EA.	DED. WEIGHT	NET WT. EA.
1	G3C		GIRDER							46928.82	170.58	46758.24
1	w1	PL	26 x 2800	21 005	M270M	HPS485W	T		03013	12002.48	6.57	11995.91
1	w2	PL	26 x 2800	19 349	M270M	HPS485W	T		03017	11056.23	6.57	11049.66
1	t1	PL	55 x 610	14 207	M270M	HPS485W	T		04011	3741.21	0.00	3741.21
1	t2	PL	55 x 610	14 210	M270M	HPS485W	T		04011	3742.00	0.00	3742.00
1	t3	PL	55 x 610	11 892	M270M	HPS485W	T		04010	3131.59	0.00	3131.59
1	b1	PL	55 x 610	14 207	M270M	HPS485W	T		04011	3741.21	0.00	3741.21
1	b2	PL	55 x 610	14 210	M270M	HPS485W	T		04011	3742.00	0.00	3742.00
1	b3	PL	55 x 610	11 938	M270M	HPS485W	T		04010	3143.70	0.00	3143.70
2	x2c	PL	25.4 x 280	2 801	M270M	345W	T		07001	156.36	0.00	156.36
2	x3a	PL	25.4 x 280	2 801	M270M	345W	T		07001	156.36	0.00	156.36
16	x3c	PL	15.9 x 280	2 800	M270M	345W	T		07006	97.84	9.84	88.00
6	x4b	PL	14.3 x 1140	425	M270M	345W		BENT	07003	54.38	0.00	54.38
1	x4g	PL	14.3 x 1140	435	M270M	345W		BENT	07003	55.66	0.00	55.66
1	x4k	PL	14.3 x 1140	434	M270M	345W		BENT	07003	55.53	0.00	55.53
64	140400	HS Bolt	7/8	0'-4	M164 Type 3				17001	0.00	0.00	0.00
64	N14	Nut	7/8		M291	DH3			17004	0.00	0.00	0.00
64	W14	Std Wash	7/8		M293 Weathering				17006	0.00	0.00	0.00

WEIGHT FOR BID ITEM: 0990 900.635	44 287.28 kgs
WEIGHT FOR BID ITEM: 0160 506.56	2 470.96 kgs
TOTAL WEIGHT THIS SHEET:	**46 758.24 kgs**

GIRDER MK. G3C

FOR GENERAL SHOP NOTES, SEE DWG. GN1 & GN2.
FOR WEB CAMBER DIAGRAM, SEE DWG. WC2.
FOR HORIZ. CURVE DIAGRAM, SEE DWG. HC1.



SECTION E

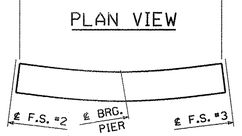

ORIENTATION DIAGRAM

SHOP NOTE:

[8 @ 4]
- 4 INDICATES LENGTH OF ⅞"ø H.S. BOLTS
- 8 INDICATES NUMBER OF ⅞"ø H.S. BOLTS

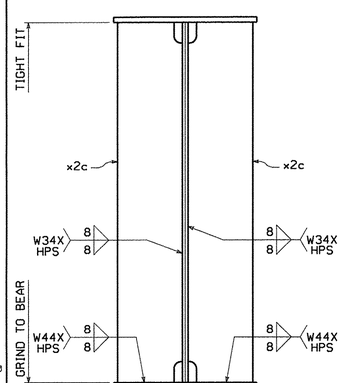

SECTION A

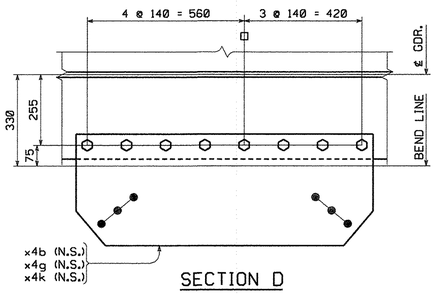

SECTION D

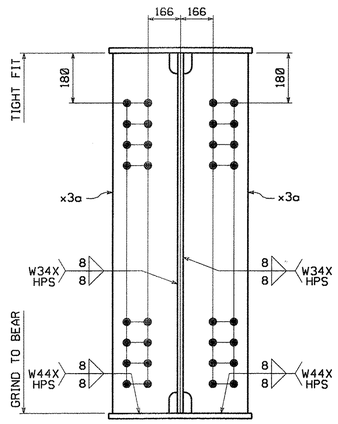

SECTION B

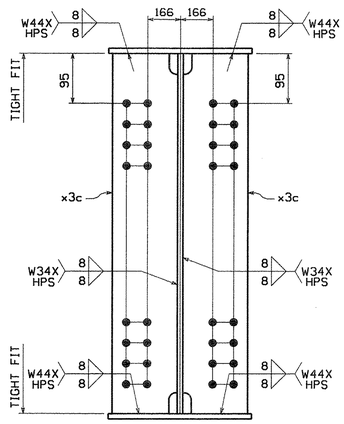

SECTION C

NO.	REVISION	BY	CHK'D	DATE

HIGH STEEL STRUCTURES INC.
An Affiliate of High Industries Inc.
An ISO 9001:2000 Certified Company

Lancaster Facility
195 Old Philadelphia Pike
Lancaster, PA 17605-0008
Phone (717) 299-5211

Williamsport Facility
3501 W. 4th Street
Williamsport, Pa 17701
Phone (570) 326-9051
www.highsteel.com

HOLES	13/16"
BOLTS	AS NOTED
COATING	NONE
CODE(S)	30
SCALE	N.T.S.
GIRDER	G3C
	VT ROUTE 279 OVER FURNACE BROOK
	VT ROUTE 279 STA. 8+542.000 TO STA. 8+685.000
	TOWN OF BENNINGTON VERMONT, BRIDGE B12
	STATE OF VERMONT
	AGENCY OF TRANSPORTATION
	AC NH F019-1(53) — FED. AID PROJ. NO.
GENERAL CONTRACTOR	J.A. McDONALD, INC. — HSSI PROJ. MGR: DEB KUPRES
SHPMT 3	DRAWING MANAGER: BRITIGAN (IH) — MADE BY: MAF — CHK'D. BY: WBW — DATE: 11/26/07
STATE VT	HSSI PROJECT NUMBER: S-1070147 — HSSI STRUCT. ID: A — DRAWING NUMBER: 15 OF 34

SHIPMENT 01 PM&ENG: 5802817 PRD: 5802818 SHP&RECT.: 5802819
BY: MK-reudel
PLOTTED: 11/30/2007 12:54:47 PM

1070147A X1 12/3/07 12/3/07Approval TO:J.A. McDonald, Inc.

METRIC

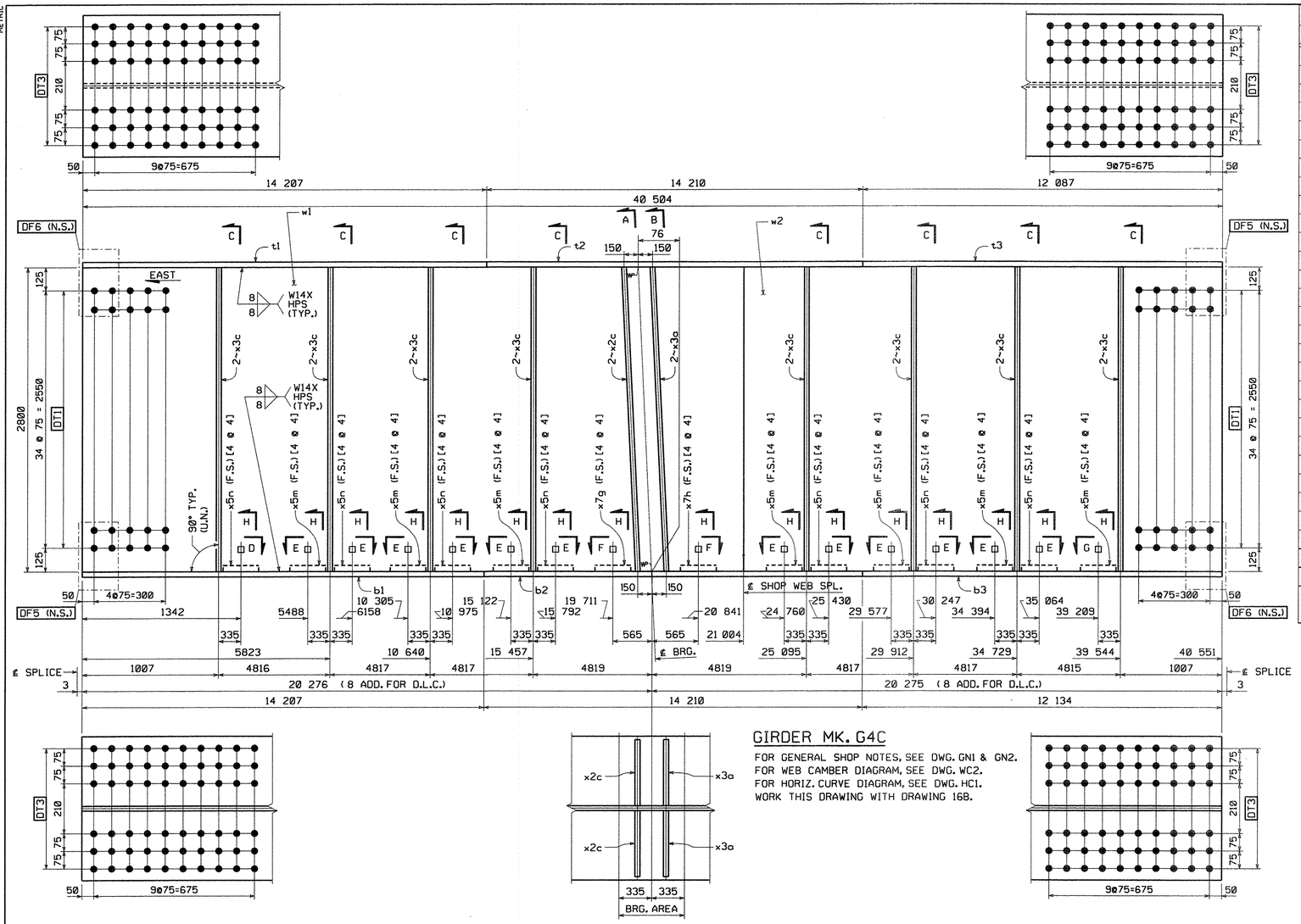

BILL OF MATERIAL

QTY EA.	MARK	COMM	DESCRIPTION	LENGTH	SPEC	GRADE	TEST	REMARKS	ITEM	GROS WT. EA.	DED. WEIGHT	NET WT. EA.
1	G4C		GIRDER							47024.32	170.87	46853.45
1	w1	PL	26 x 2800	21 005	M270M	HPS485W	T		03013	12002.48	6.57	11995.91
1	w2	PL	26 x 2800	19 547	M270M	HPS485W	T		03016	11169.37	6.86	11162.51
1	t1	PL	55 x 610	14 207	M270M	HPS485W	T		04011	3741.21	0.00	3741.21
1	t2	PL	55 x 610	14 210	M270M	HPS485W	T		04011	3742.00	0.00	3742.00
1	t3	PL	55 x 610	12 088	M270M	HPS485W	T		04009	3183.20	0.00	3183.20
1	b1	PL	55 x 610	14 207	M270M	HPS485W	T		04011	3741.21	0.00	3741.21
1	b2	PL	55 x 610	14 210	M270M	HPS485W	T		04011	3742.00	0.00	3742.00
1	b3	PL	55 x 610	12 135	M270M	HPS485W	T		04009	3195.58	0.00	3195.58
2	x2c	PL	25.4 x 280	2 801	M270M	345W	T		07001	156.36	0.00	156.36
2	x3a	PL	25.4 x 280	2 801	M270M	345W	T		07001	156.36	0.00	156.36
16	x3c	PL	15.9 x 280	2 800	M270M	345W	T		07006	97.84	9.84	88.00
7	x5m	PL	14.3 x 420	422	M270M	345W		BENT	07003	19.89	0.00	19.89
7	x5n	PL	14.3 x 420	421	M270M	345W		BENT	07003	19.85	0.00	19.85
1	x7g	PL	14.3 x 400	425	M270M	345W		BENT	07003	19.08	0.00	19.08
1	x7h	PL	14.3 x 400	425	M270M	345W		BENT	07003	19.08	0.00	19.08
64	140400	HS Bolt	7/8	0-4	M164 Type 3				17001	0.00	0.00	0.00
64	N14	Nut	7/8		M291	DH3			17004	0.00	0.00	0.00
64	W14	Std Wash	7/8		M293 Weathering				17006	0.00	0.00	0.00

WEIGHT FOR BID ITEM: 0990 900.635	44 503.62 kgs
WEIGHT FOR BID ITEM: 0160 506.56	2 349.83 kgs
TOTAL WEIGHT THIS SHEET:	46 853.45 kgs

SHOP NOTE:

[4 @ 4]
- 4 INDICATES LENGTH OF 7/8"ø H.S. BOLTS
- [4 INDICATES NUMBER OF 7/8"ø H.S. BOLTS

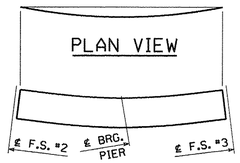

ORIENTATION DIAGRAM

TVGA CONSULTANTS

☒ NO EXCEPTIONS TAKEN ☐ REJECTED
☐ FURNISH AS CORRECTED
☐ REVISE AND RESUBMIT

ENGINEER has reviewed Shop Drawings and Samples and other data which Contractor is required to submit, only for conformance with the information given in the Contract Documents and compatibility with the design concept of the completed Project as a functioning whole as indicated in the Contract Documents. Such reviews do not extend to means, methods, techniques, sequences or procedures of construction or to safety precautions and programs incident thereto. Contractor is responsible for dimensions to be confirmed and correlated at the job site; for information that pertains solely to the fabrication processes or to techniques of construction; and for coordination of the work of all trades.

BY: _____
DATE: 11/30/07

NO.	REVISION	BY	CHK'D	DATE
△				
△				
△				

HOLES 15/16"

BOLTS AS NOTED

COATING NONE

CODE(S) 30

SCALE N.T.S.

HIGH STEEL STRUCTURES INC.
An ISO 9001:2000 Certified Company
An Affiliate of High Industries Inc.
Lancaster Facility
1915 Old Philadelphia Pike
Lancaster, PA 17605-0008
Phone (717) 299-5211
Williamsport Facility
3501 N. 4th Street
Williamsport, PA 17701
Phone (570) 326-9051
www.highsteel.com

	GIRDER G4C
	VT ROUTE 279 OVER FURNACE BROOK
	VT ROUTE 279 STA. 8+542.000 TO STA. 8+685.000
	TOWN OF BENNINGTON VERMONT, BRIDGE B12
	STATE OF VERMONT
	AGENCY OF TRANSPORTATION
	AC NH F019-1(53) — FED. AID PROJ. NO.
GENERAL CONTRACTOR	J.A. McDONALD, INC. — HSSI PROJ. MGR: DEB KUPRES

SHPMT	3	DRAWING MANAGER	BRITIGAN (IH)	MADE BY	MAF	CHK'D. BY	WBW	DATE	11/27/07
STATE	VT	HSSI PROJECT NUMBER	S-1070147	HSSI STRUCT. ID	A	DRAWING NUMBER	16AB OF 34		

PLOTTED: 11/30/2007 1:27:00 PM
BY: MK-randal
SHIPMENT 01
PM&ENG: 58028LZ PROD: 58028JB SHIP&ERECT.: 58028JB
60

1070147A X1 12/3/07 12/3/07Approval TO:J.A. McDonald, Inc.

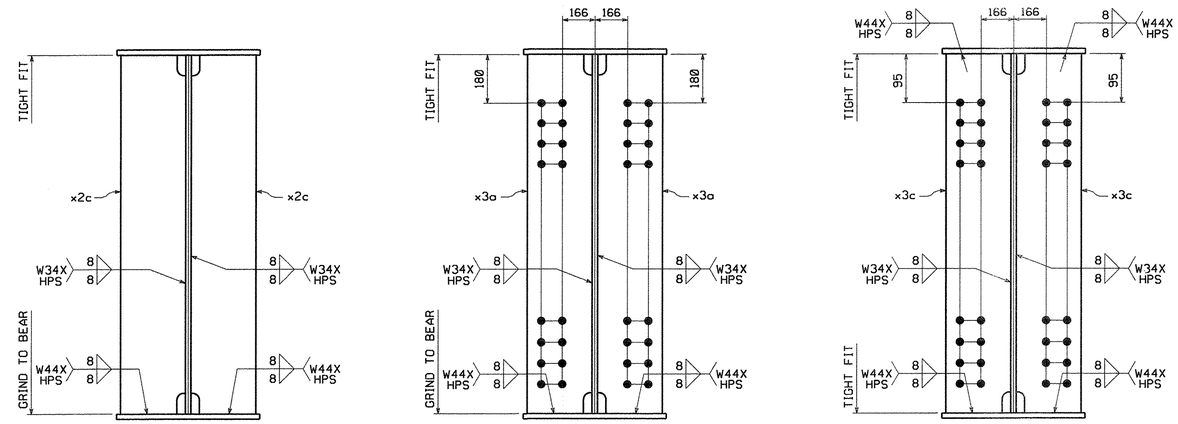

SECTION A

SECTION B

SECTION C

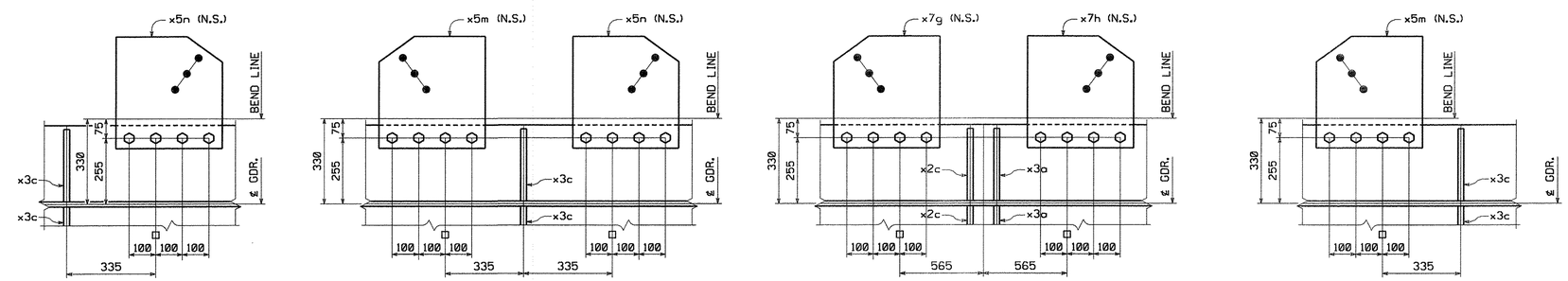

SECTION D

SECTION E-E

SECTION F-F

SECTION G

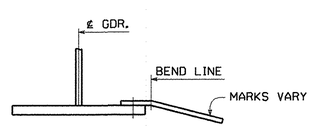

SECTION H

TVGA CONSULTANTS

☒ NO EXCEPTIONS TAKEN ☐ REJECTED
☐ FURNISH AS CORRECTED
☐ REVISE AND RESUBMIT

ENGINEER has reviewed Shop Drawings and Samples and other data which Contractor is required to submit, only for conformance with the information given in the Contract Documents and compatibility with the design concept of the completed Project as a functioning whole as indicated in the Contract Documents. Such reviews do not extend to means, methods, techniques, sequences or procedures of construction or to safety precautions and programs incident thereto. Contractor is responsible for dimensions to be confirmed and correlated at the job site; for information that pertains solely to the fabrication processes or to techniques of construction; and for coordination of the work of all trades.

BY: [signature]
DATE: 1/8/08

NOTES:
WORK THIS DRAWING WITH DRAWING 16AB.

NO.	REVISION	BY	CHK'D	DATE
△				
△				
△				

HOLES 15/16"
BOLTS AS NOTED
COATING NONE
CODE(S) 30
SCALE N.T.S.

HIGH STEEL STRUCTURES INC.
An ISO 9001:2000 Certified Company
An Affiliate of High Industries Inc.
Lancaster Facility: 1915 Old Philadelphia Pike, Lancaster, PA 17605-0008, Phone (717) 299-5211
Williamsport Facility: 3501 W. 4th Street, Williamsport, PA 17701, Phone (570) 326-9051
www.highsteel.com

GIRDER G4C
VT ROUTE 279 OVER FURNACE BROOK
VT ROUTE 279 STA. 8+542.000 TO STA. 8+685.000
TOWN OF BENNINGTON VERMONT, BRIDGE B12
STATE OF VERMONT
AGENCY OF TRANSPORTATION

	AC NH F019-1(53)	FED. AID PROJ. NO.	
GENERAL CONTRACTOR	J.A. McDONALD, INC.	HSSI PROJ. MGR	DEB KUPRES

SHPMT	3	DRAWING MANAGER	BRITIGAN (IH)	MADE BY	MAF	CHK'D. BY	WBW	DATE	11/27/07
STATE	VT	HSSI PROJECT NUMBER	S-1070147	HSSI STRUCT. ID	A	DRAWING NUMBER	16B OF 34		

METRIC

SHIPMENT 01 PM&ENG: 5002817 PRD: 5002818 SHIP&ERECT.: 5002819

BY: MKreidel

PLOTTED: 11/30/2007 1:27:08 PM

60

1070147A X1 12/3/07 12/3/07Approval TO:J.A. McDonald, Inc.

METRIC

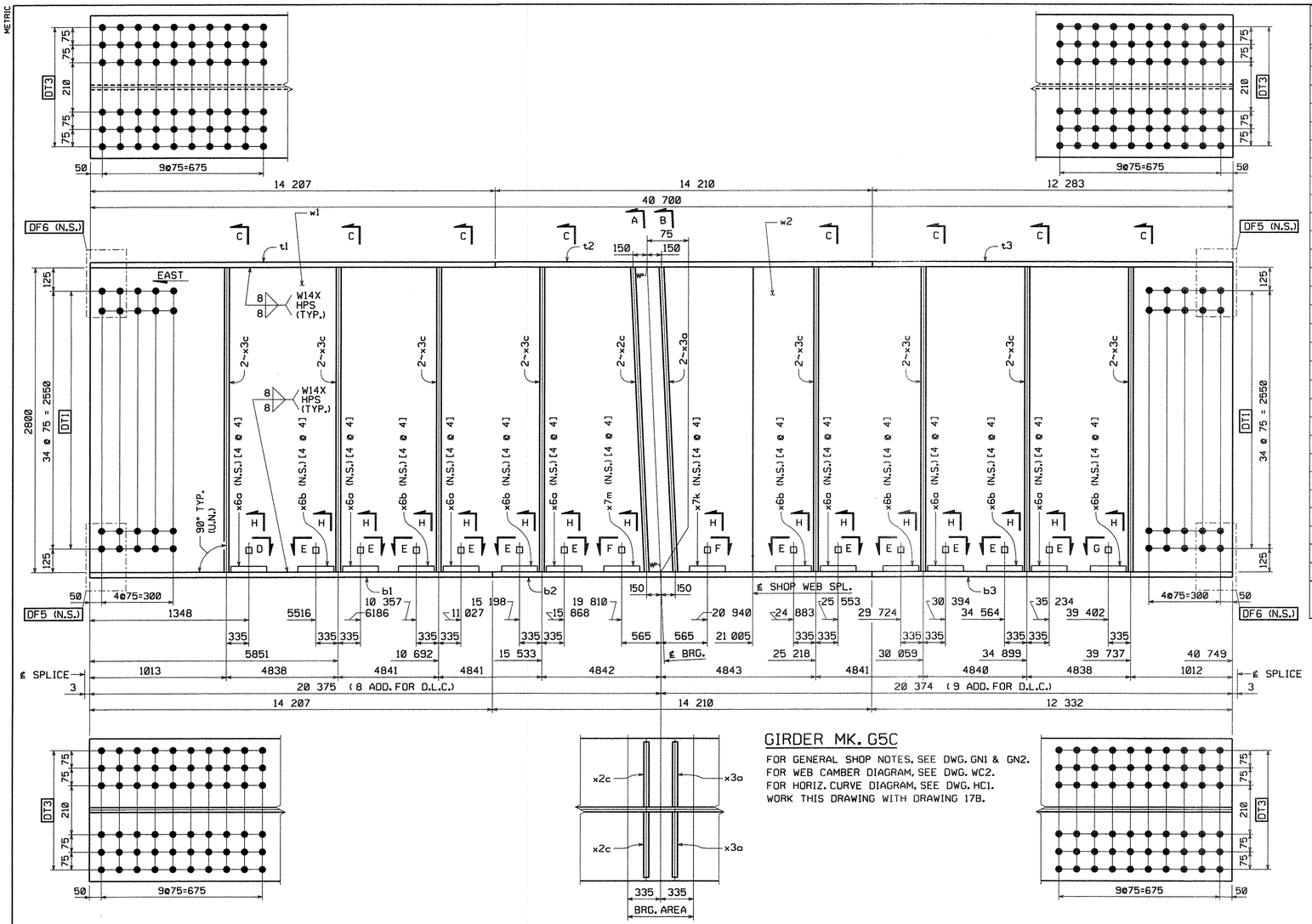

GIRDER MK. G5C

FOR GENERAL SHOP NOTES, SEE DWG. GN1 & GN2.
FOR WEB CAMBER DIAGRAM, SEE DWG. WC2.
FOR HORIZ. CURVE DIAGRAM, SEE DWG. HC1.
WORK THIS DRAWING WITH DRAWING 17B.

SHOP NOTE:

[4 @ 4]
- 4 INDICATES LENGTH OF 7/8"ø H.S. BOLTS
- [4 INDICATES NUMBER OF 7/8"ø H.S. BOLTS

BILL OF MATERIAL

QTY EA.	MARK	COMM	DESCRIPTION	LENGTH	SPEC	GRADE	TEST	REMARKS	ITEM	GROS WT. EA.	DED. WEIGHT	NET WT. EA.
1	G5C		GIRDER							47240.09	171.44	47068.65
1	w1	PL	26 x 2800	21 005	M270M	HPS485W	T		03013	12002.48	6.86	11995.62
1	w2	PL	26 x 2800	19 745	M270M	HPS485W	T		03015	11282.51	7.14	11275.37
1	t1	PL	55 x 610	14 207	M270M	HPS485W	T		04011	3741.21	0.00	3741.21
1	t2	PL	55 x 610	14 210	M270M	HPS485W	T		04011	3742.00	0.00	3742.00
1	t3	PL	55 x 610	12 284	M270M	HPS485W	T		04009	3234.81	0.00	3234.81
1	b1	PL	55 x 610	14 207	M270M	HPS485W	T		04011	3741.21	0.00	3741.21
1	b2	PL	55 x 610	14 210	M270M	HPS485W	T		04011	3742.00	0.00	3742.00
1	b3	PL	55 x 610	12 333	M270M	HPS485W	T		04009	3247.72	0.00	3247.72
2	x2c	PL	25.4 x 280	2 801	M270M	345W	T		07001	156.36	0.00	156.36
2	x3a	PL	25.4 x 280	2 801	M270M	345W	T		07001	156.36	0.00	156.36
16	x3c	PL	15.9 x 280	2 800	M270M	345W	T		07006	97.84	9.84	88.00
7	x6a	PL	14.3 x 420	420	M270M	345W		BENT	07003	19.80	0.00	19.80
7	x6b	PL	14.3 x 420	420	M270M	345W		BENT	07003	19.80	0.00	19.80
1	x7k	PL	14.3 x 400	424	M270M	345W		BENT	07003	19.04	0.00	19.04
1	x7m	PL	14.3 x 400	423	M270M	345W		BENT	07003	18.99	0.00	18.99
64	140400	HS Bolt	7/8	0'-4	M164 Type 3				17001	0.00	0.00	0.00
64	N14	Nut	7/8		M291	DH3			17004	0.00	0.00	0.00
64	W14	Std Wash	7/8		M293 Weathering				17006	0.00	0.00	0.00
										WEIGHT FOR BID ITEM: 0990 900.635		44 719.95 kgs
										WEIGHT FOR BID ITEM: 0160 506.56		2 348.70 kgs
										TOTAL WEIGHT THIS SHEET:		47 068.65 kgs

TVGA CONSULTANTS

☒ NO EXCEPTIONS TAKEN ☐ REJECTED
☐ FURNISH AS CORRECTED
☐ REVISE AND RESUBMIT

ENGINEER has reviewed Shop Drawings and Samples and other data which Contractor is required to submit, only for conformance with the information given in the Contract Documents and compatibility with the design concept of the completed Project as a functioning whole as indicated in the Contract Documents. Such reviews do not extend to means, methods, techniques, sequences or procedures of construction or to safety precautions and programs incident thereto. Contractor is responsible for dimensions to be confirmed and correlated at the job site; for information that pertains solely to the fabrication processes or to techniques of construction; and for coordination of the work of all trades.

BY:
DATE: 11/08

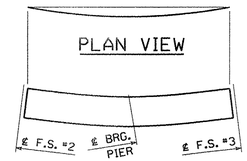

ORIENTATION DIAGRAM

NO.	REVISION	BY	CHK'D	DATE
△				
△				
△				

HOLES 15/16"
BOLTS AS NOTED
COATING NONE
CODE(S) 30
SCALE N.T.S.

HIGH STEEL STRUCTURES INC.
An ISO 9001:2000 Certified Company — An Affiliate of High Industries Inc.
Lancaster Facility: 1915 Old Philadelphia Pike, Lancaster, PA 17605-0008, Phone (717) 299-5211
Williamsport Facility: 350 N. 4th Street, Williamsport, PA 17701, Phone (570) 326-9051
www.Highsteel.com

GIRDER G5C
VT ROUTE 279 OVER FURNACE BROOK
VT ROUTE 279 STA. 8+542.000 TO STA. 8+685.000
TOWN OF BENNINGTON VERMONT, BRIDGE B12
STATE OF VERMONT
AGENCY OF TRANSPORTATION

	AC NH F019-1(53)	FED. AID PROJ. NO.	
GENERAL CONTRACTOR	J.A. McDONALD, INC.	HSSI PROJ. MGR	DEB KUPRES
SHPMT 3	DRAWING MANAGER BRITIGAN (IH)	MADE BY MAF	CHK'D. BY WBW	DATE 11/27/07
STATE VT	HSSI PROJECT NUMBER S-1070147	HSSI STRUCT. ID A	DRAWING NUMBER 17AB OF 34

SHIPMENT 01 PM&ENG 5002817 PROD 5002818 SHIP&ERECT. 5002819
BY: MKendel
PLOTTED: 11/30/2007 12:7:17 PM
60

1070147A X1 12/3/07 12/3/07Approval TO:J.A. McDonald, Inc.

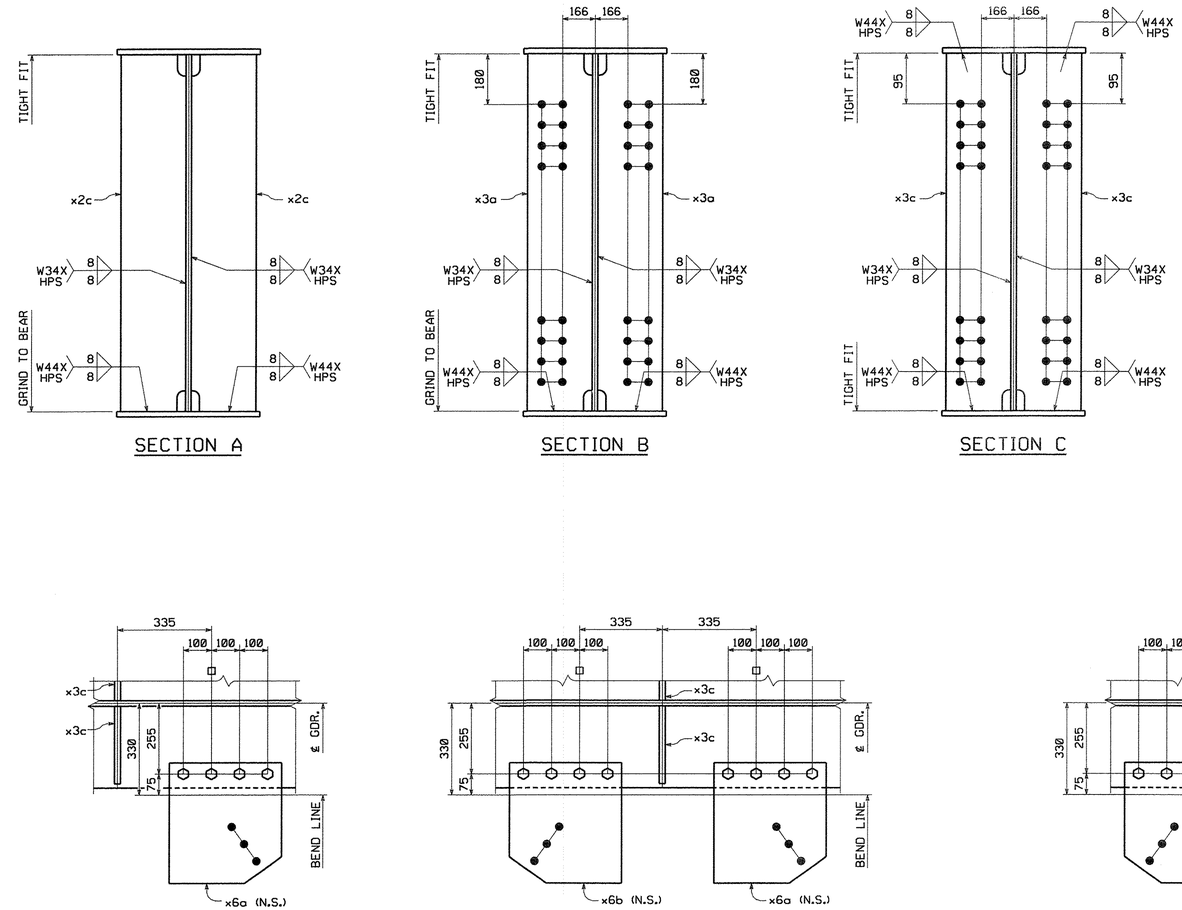

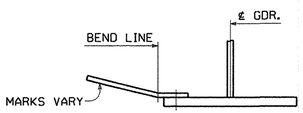

SECTION H

TVGA CONSULTANTS

☒ NO EXCEPTIONS TAKEN ☐ REJECTED
☐ FURNISH AS CORRECTED
☐ REVISE AND RESUBMIT

ENGINEER has reviewed Shop Drawings and Samples and other data which Contractor is required to submit, only for conformance with the information given in the Contract Documents and compatibility with the design concept of the completed Project as a functioning whole as indicated in the Contract Documents. Such reviews do not extend to means, methods, techniques, sequences or procedures of construction or to safety precautions and programs incident thereto. Contractor is responsible for dimensions to be confirmed and correlated at the job site; for information that pertains solely to the fabrication processes or to techniques of construction; and for coordination of the work of all trades.

BY: [signature]
DATE: 12/08

NOTES:
WORK THIS DRAWING WITH DRAWING 17AB.

NO.	REVISION	BY	CHK'D	DATE
△				
△				
△				

HOLES 15/16"
BOLTS AS NOTED
COATING NONE
CODE(S) 30
SCALE N.T.S.

HIGH STEEL STRUCTURES INC.
An ISO 9001:2000 Certified Company
An Affiliate of High Industries Inc.
Lancaster Facility: 1915 Old Philadelphia Pike, Lancaster, PA 17605-0008, Phone (717) 299-5211
Williamsport Facility: 3501 W. 4th Street, Williamsport, PA 17701, Phone (570) 326-9051
www.highsteel.com

GIRDER G5C
VT ROUTE 279 OVER FURNACE BROOK
VT ROUTE 279 STA. 8+542.000 TO STA. 8+685.000
TOWN OF BENNINGTON VERMONT, BRIDGE B12
STATE OF VERMONT
AGENCY OF TRANSPORTATION

	AC NH F019-1(53)	FED. AID PROJ. NO.	
GENERAL CONTRACTOR	J.A. McDONALD, INC.	HSSI PROJ. MGR	DEB KUPRES

SHPMT	3	DRAWING MANAGER	BRITIGAN (IH)	MADE BY	MAF	CHK'D. BY	WBW	DATE	11/27/07
STATE	VT	HSSI PROJECT NUMBER	S-1070147	HSSI STRUCT. ID	A	DRAWING NUMBER	17B OF 34		

METRIC
SHIPMENT 01 PM&ENG: 5002817 PRD: 5002818 SHIP&ERECT.: 5002819
BY: MKreidel
PLOTTED: 11/30/2007 1:27:24 PM
60

1070147A X1 12/3/07 12/3/07Approval TO:J.A. McDonald, Inc.

METRIC

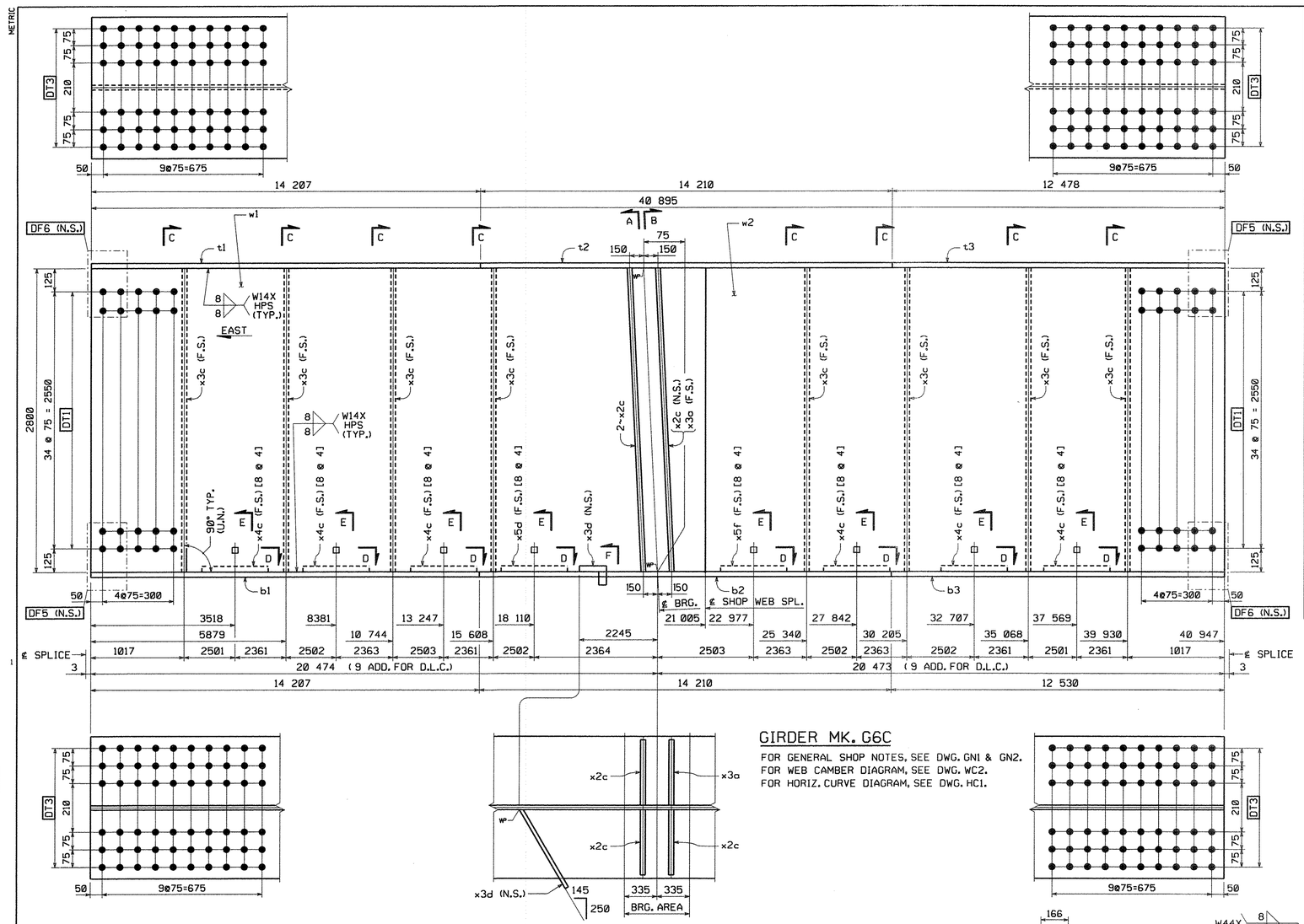

BILL OF MATERIAL

QTY EA.	MARK	COMM	DESCRIPTION	LENGTH	SPEC	GRADE	TEST	REMARKS	ITEM	GROS WT. EA.	DED. WEIGHT	NET WT. EA.
1	G6C		GIRDER							46798.02	93.58	46704.44
1	w1	PL	26 x 2800	21 006	M270M	HPS485W	T		03013	12003.06	7.43	11995.63
1	w2	PL	26 x 2800	19 942	M270M	HPS485W	T		03014	11395.07	7.43	11387.64
1	t1	PL	55 x 610	14 207	M270M	HPS485W	T		04011	3741.21	0.00	3741.21
1	t2	PL	55 x 610	14 210	M270M	HPS485W	T		04011	3742.00	0.00	3742.00
1	t3	PL	55 x 610	12 479	M270M	HPS485W	T		04009	3286.17	0.00	3286.17
1	b1	PL	55 x 610	14 207	M270M	HPS485W	T		04011	3741.21	0.00	3741.21
1	b2	PL	55 x 610	14 210	M270M	HPS485W	T		04011	3742.00	0.00	3742.00
1	b3	PL	55 x 610	12 531	M270M	HPS485W	T		04009	3299.86	0.00	3299.86
3	x2c	PL	25.4 x 280	2 801	M270M	345W	T		07001	156.36	0.00	156.36
1	x3a	PL	25.4 x 280	2 801	M270M	345W	T		07001	156.36	0.00	156.36
8	x3c	PL	15.9 x 280	2 800	M270M	345W	T		07006	97.84	9.84	88.00
1	x3d	PL	6.4 x 105	387	M270M	345W			07004	2.04	0.00	2.04
6	x4c	PL	14.3 x 1140	425	M270M	345W		BENT	07003	54.38	0.00	54.38
1	x5d	PL	14.3 x 1140	433	M270M	345W		BENT	07003	55.40	0.00	55.40
1	x5f	PL	14.3 x 1140	434	M270M	345W		BENT	07003	55.53	0.00	55.53
64	140400	HS Bolt	7/8	0'-4	M164 Type 3				17001	0.00	0.00	0.00
64	N14	Nut	7/8		M291	DH3			17004	0.00	0.00	0.00
64	W14	Std Wash	7/8		M293 Weathering				17006	0.00	0.00	0.00

WEIGHT FOR BID ITEM: 0990 900.635	44 935.72 kgs
WEIGHT FOR BID ITEM: 0160 506.56	1 768.72 kgs
TOTAL WEIGHT THIS SHEET:	**46 704.44 kgs**

TVGA CONSULTANTS

☒ NO EXCEPTIONS TAKEN ☐ REJECTED
☐ FURNISH AS CORRECTED
☐ REVISE AND RESUBMIT
ENGINEER has reviewed Shop Drawings and Samples and other data which Contractor is required to submit, only for conformance with the information given in the Contract Documents and compatibility with the design concept of the completed Project as a functioning whole as indicated in the Contract Documents. Such reviews do not extend to means, methods, techniques, sequences or procedures of construction or to safety precautions and programs incident thereto. Contractor is responsible for dimensions to be confirmed and correlated at the job site; for information that pertains solely to the fabrication processes or to techniques of construction, and for coordination of the work of all trades.

BY: _____
DATE: 12/3/07

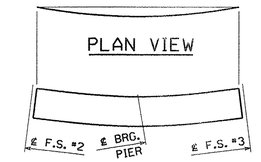

ORIENTATION DIAGRAM

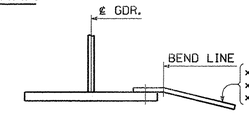

SECTION E

GIRDER MK. G6C

FOR GENERAL SHOP NOTES, SEE DWG. GN1 & GN2.
FOR WEB CAMBER DIAGRAM, SEE DWG. WC2.
FOR HORIZ. CURVE DIAGRAM, SEE DWG. HC1.

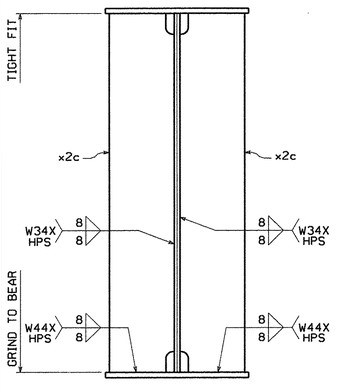

SECTION A

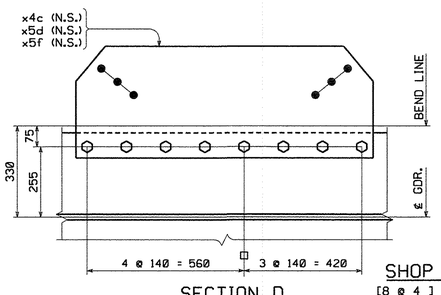

SECTION D

SHOP NOTE:
[8 ø 4]
INDICATES LENGTH OF ⅞"ø H.S. BOLTS
INDICATES NUMBER OF ⅞"ø H.S. BOLTS

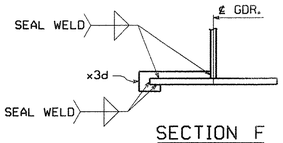

SECTION F
(DEVELOPED)

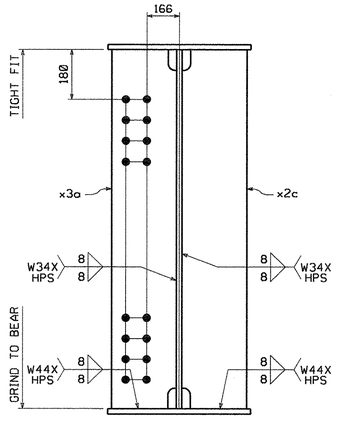

SECTION B

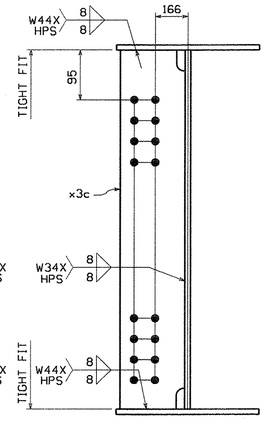

SECTION C

NO.	REVISION	BY	CHK'D	DATE

HOLES 15/16"
BOLTS AS NOTED
COATING NONE
CODE(S) 30
SCALE N.T.S.

HIGH STEEL STRUCTURES® INC.
An ISO 9001:2000 Certified Company
An Affiliate of High Industries Inc.
Lancaster Facility
1915 Old Philadelphia Pike
Lancaster, PA 17605-0008
Phone (717) 299-5211
Williamsport Facility
3501 N. 4th Street
Williamsport, PA 17701
Phone (570) 326-9051
www.highsteel.com

GIRDER G6C
VT ROUTE 279 OVER FURNACE BROOK
VT ROUTE 279 STA. 8+542.000 TO STA. 8+685.000
TOWN OF BENNINGTON VERMONT, BRIDGE B12
STATE OF VERMONT
AGENCY OF TRANSPORTATION

	AC NH F019-1(53)	FED. AID PROJ. NO.	
GENERAL CONTRACTOR	J.A. McDONALD, INC.	HSSI PROJ. MGR	DEB KUPRES
SHPMT 3	DRAWING MANAGER BRITIGAN (IH)	MADE BY MAF	CHK'D. BY WBW	DATE 11/27/07
STATE VT	HSSI PROJECT NUMBER S-1070147	HSSI STRUCT. ID A	DRAWING NUMBER 18 OF 34	

PLOTTED: 11/30/2007 12:27:33 PM
BY: MKreidel
SHIPMENT 01 PM&ENG: 5002817 PROJ: 5002818 SHIP&ERECT: 5002819

1070147A X1 12/3/07 12/3/07Approval TO:J.A. McDonald, Inc.

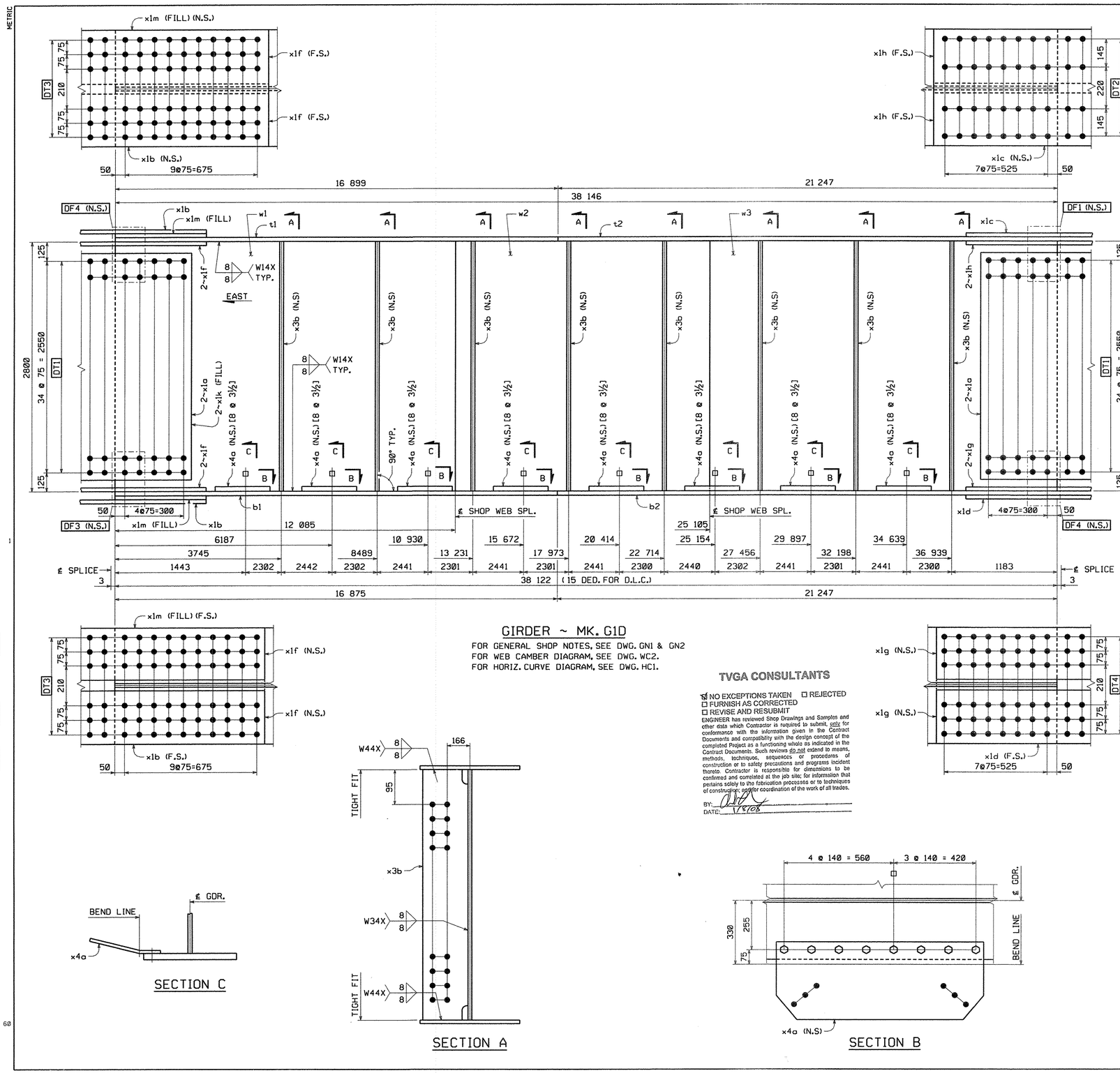

GIRDER ~ MK. G1D

FOR GENERAL SHOP NOTES, SEE DWG. GN1 & GN2
FOR WEB CAMBER DIAGRAM, SEE DWG. WC2.
FOR HORIZ. CURVE DIAGRAM, SEE DWG. HC1.

TVGA CONSULTANTS

☒ NO EXCEPTIONS TAKEN ☐ REJECTED
☐ FURNISH AS CORRECTED
☐ REVISE AND RESUBMIT

ENGINEER has reviewed Shop Drawings and Samples and other data which Contractor is required to submit, only for conformance with the information given in the Contract Documents and compatibility with the design concept of the completed Project as a functioning whole as indicated in the Contract Documents. Such reviews do not extend to means, methods, techniques, sequences or procedures of construction or to safety precautions and programs incident thereto. Contractor is responsible for dimensions to be confirmed and correlated at the job site; for information that pertains solely to the fabrication processes or to techniques of construction; and for coordination of the work of all trades.

BY: [signature] 11/27/07
DATE:

SECTION C

SECTION A

SECTION B

BILL OF MATERIAL

QTY EA.	MARK	COMM	DESCRIPTION	LENGTH	SPEC	GRADE	TEST	REMARKS	ITEM	GROS WT. EA.	DED. WEIGHT	NET WT. EA.
1	G1D		GIRDER							36421.17	5.98	36415.19
1	w1	PL	22 x 2800	12.094	M270M	345W	T		03004	5847.47	2.06	5845.41
1	w2	PL	22 x 2800	13.022	M270M	345W	T		03009	6296.16	0.00	6296.16
1	w3	PL	22 x 2800	13.033	M270M	345W	T		03008	6301.47	3.93	6297.55
1	t1	PL	40 x 610	16.899	M270M	345W	T		04002	3236.44	0.00	3236.44
1	t2	PL	40 x 610	21.247	M270M	345W	T		04003	4069.16	0.00	4069.16
1	b1	PL	40 x 610	16.875	M270M	345W	T		04002	3231.85	0.00	3231.85
1	b2	PL	40 x 610	21.247	M270M	345W	T		04003	4069.16	0.00	4069.16
4	x1a	PL	15.9 x 2630	786	M270M	345W	T		06001	257.98	0.00	257.98
2	x1b	PL	20.6 x 610	1.536	M270M	345W	T		06002	151.50	0.00	151.50
1	x1c	PL	20.6 x 610	1.236	M270M	345W	T		06002	121.91	0.00	121.91
1	x1d	PL	20.6 x 610	1.236	M270M	345W	T		06002	121.91	0.00	121.91
4	x1f	PL	20.6 x 280	1.536	M270M	345W	T		06003	69.54	0.00	69.54
2	x1g	PL	20.6 x 280	1.236	M270M	345W	T		06003	55.96	0.00	55.96
2	x1h	PL	20.6 x 280	1.236	M270M	345W	T		06003	55.96	0.00	55.96
2	x1k	SHT	16GA x 390	2.630	A606 Type 4			FILL	06004	16.10	0.00	16.10
2	x1m	PL	15.9 x 610	765	M270M	345W		FILL	06005	58.24	0.00	58.24
8	x3b	PL	14.3 x 280	2.800	M270M	345W	T		07002	88.00	0.00	88.00
8	x4a	PL	14.3 x 1140	426	M270M	345W		BENT	07003	54.51	0.00	54.51
64	140308	HS Bolt	7/8	0'-3 1/2	M164 Type 3				17002	0.00	0.00	0.00
64	N14	Nut	7/8		M291	DH3			17004	0.00	0.00	0.00
64	W14	Std Wash	7/8		M293 W/weathering				17006	0.00	0.00	0.00

TOTAL WEIGHT THIS SHEET: 36 415.19 kgs
BID ITEM 0160 506.56

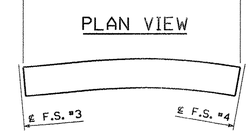

ORIENTATION DIAGRAM

SHOP NOTE:
[8 @ 3½]
└ INDICATES LENGTH OF ⅞"ø H.S. BOLTS
└ INDICATES NUMBER OF ⅞"ø H.S. BOLTS

NO.	REVISION	BY	CHK'D	DATE

HOLES: 15/16"ø
BOLTS: AS NOTED
COATING: NONE
CODE(S): 30
SCALE: N.T.S.

High Steel Structures, Inc. — An Affiliate of High Industries Inc. — In ISO 9001:2000 Certified Company
Lancaster Facility: 1915 Old Philadelphia Pike, Lancaster, PA 17602-0008, Phone (717) 299-5211
Williamsport Facility: 3501 W. 4th Street, Williamsport, PA 17701, Phone (570) 326-9051
www.Highsteel.com

GIRDER GID
VT ROUTE 279 OVER FURNACE BROOK
VT ROUTE 279 STA. 8+542.000 TO STA. 8+685.000
TOWN OF BENNINGTON VERMONT, BRIDGE B12
STATE OF VERMONT
AGENCY OF TRANSPORTATION
FED. AID PROJ. NO.: AC NH F019-1(53)
GENERAL CONTRACTOR: J.A. McDONALD, INC.
HSSI PROJ. MGR: DEB KUPRES
SHPMT: 3 | DRAWING MANAGER: BRITIGAN (IH) | MADE BY: JAW | CHK'D. BY: CS | DATE: 11/27/07
STATE: VT | HSSI PROJECT NUMBER: S-1070147 | HSSI STRUCT. ID: A | DRAWING NUMBER: 19 OF 34

PLOTTED: 11/30/2007 12:28:02 PM
BY: MKreidel
SHIPMENT 01 PM&ENG: 508238LZ PRD: 508238 SHIP&ERECT: 508238

1070147A X1 12/3/07 12/3/07Approval TO:J.A. McDonald, Inc.

METRIC

TVGA CONSULTANTS

☒ NO EXCEPTIONS TAKEN ☐ REJECTED
☐ FURNISH AS CORRECTED
☐ REVISE AND RESUBMIT

ENGINEER has reviewed Shop Drawings and Samples and other data which Contractor is required to submit, only for conformance with the information given in the Contract Documents and compatibility with the design concept of the completed Project as a functioning whole as indicated in the Contract Documents. Such review does not extend to means, methods, techniques, sequences or procedures of construction or to safety precautions and programs incident thereto. Contractor is responsible for dimensions to be confirmed and correlated at the job site; for information that pertains solely to the fabrication processes or to techniques of construction; and for coordination of the work of all trades.

BY: _____
DATE: 6/19/08

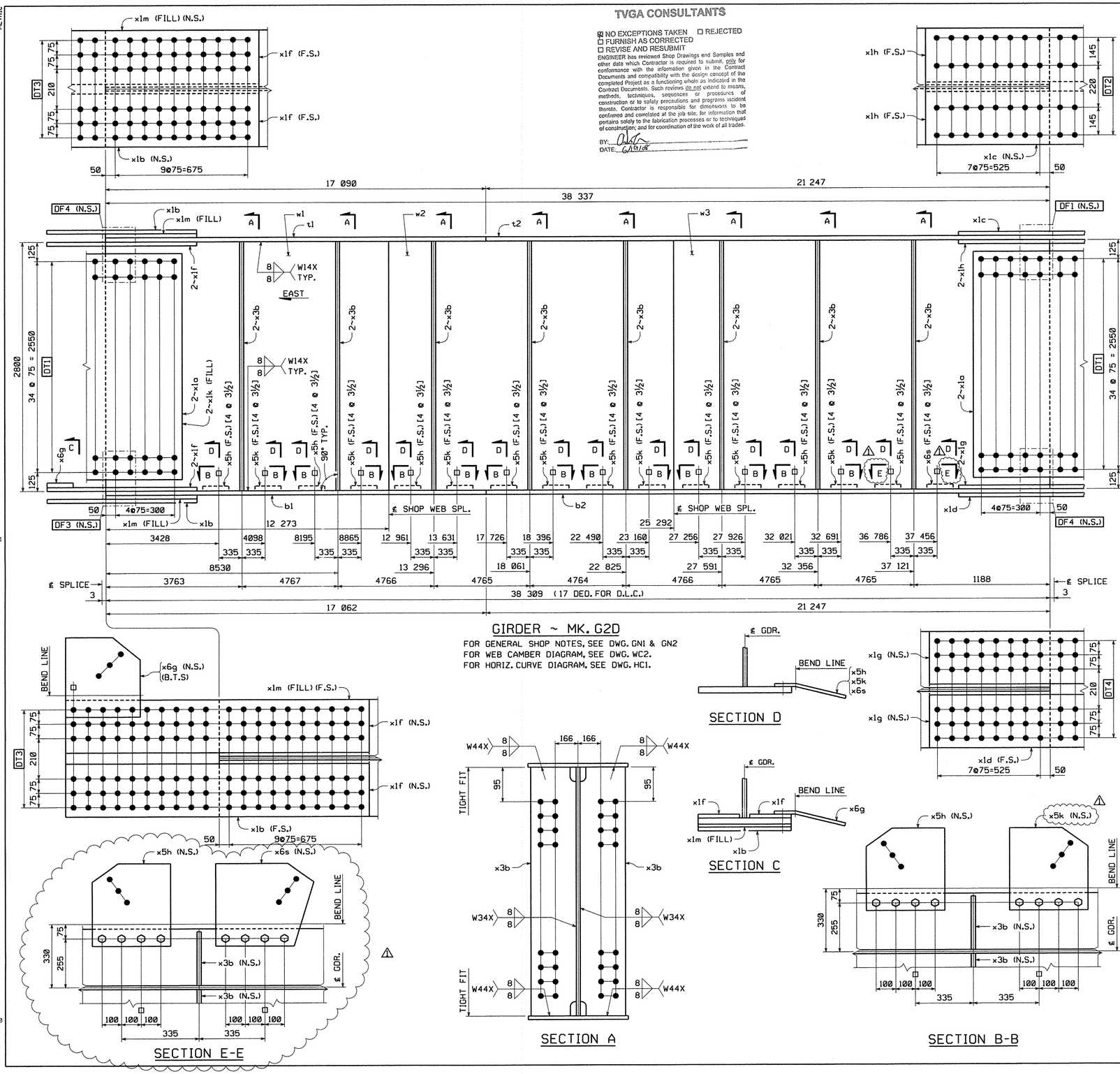

GIRDER ~ MK. G2D

FOR GENERAL SHOP NOTES, SEE DWG. GN1 & GN2
FOR WEB CAMBER DIAGRAM, SEE DWG. WC2.
FOR HORIZ. CURVE DIAGRAM, SEE DWG. HC1.

BILL OF MATERIAL

QTY EA	MARK	COMM	DESCRIPTION	LENGTH	SPEC	GRADE	TEST	REMARKS	ITEM	GROS WT. EA	DED. WEIGHT	NET WT. EA
1	G2D		GIRDER							37194.59	6.84	37187.75
1	w1	PL	22 x 2800	12 283	M270M	345W	T		03012	5938.85	2.44	5936.41
1	w2	PL	22 x 2800	13 022	M270M	345W	T		03009	6296.16	0.00	6296.16
1	w3	PL	22 x 2800	13 035	M270M	345W	T		03008	6302.44	4.40	6298.05
1	t1	PL	40 x 610	17 090	M270M	345W	T		04002	3273.02	0.00	3273.02
1	t2	PL	40 x 610	21 247	M270M	345W	T		04003	4069.16	0.00	4069.16
1	b1	PL	40 x 610	17 062	M270M	345W	T		04002	3267.66	0.00	3267.66
1	b2	PL	40 x 610	21 247	M270M	345W	T		04003	4069.16	0.00	4069.16
4	x1a	PL	15.9 x 2530	786	M270M	345W	T		06001	257.98	0.00	257.98
2	x1b	PL	20.6 x 610	1 536	M270M	345W	T		06002	151.50	0.00	151.50
1	x1c	PL	20.6 x 610	1 236	M270M	345W	T		06002	121.91	0.00	121.91
1	x1d	PL	20.6 x 610	1 236	M270M	345W	T		06002	121.91	0.00	121.91
4	x1f	PL	20.6 x 280	1 536	M270M	345W	T		06003	69.54	0.00	69.54
2	x1g	PL	20.6 x 280	1 236	M270M	345W	T		06003	55.96	0.00	55.96
2	x1h	PL	20.6 x 280	1 236	M270M	345W	T		06003	55.96	0.00	55.96
2	x1k	SHT	16GA x 390	2 630	A606 Type 4			FILL	06004	16.10	0.00	16.10
2	x1m	PL	15.9 x 610	765	M270M	345W		FILL	06005	58.24	0.00	58.24
16	x3b	PL	14.3 x 280	2 800	M270M	345W	T		07002	88.00	0.00	88.00
8	x5h	PL	14.3 x 420	423	M270M	345W		BENT	07003	19.94	0.00	19.94
7	x5k	PL	14.3 x 420	422	M270M	345W		BENT	07003	19.89	0.00	19.89
1	x6g	PL	14.3 x 380	417	M270M	345W		BENT (B.T.S.)	07003	17.79	0.00	17.79
1	x6s	PL	14.3 x 511	422	M270M	345W		BENT	07003	24.20	0.00	24.20
64	140308	HS Bolt	7/8		0'-3 1/2	M164 Type 3			17002	0.00	0.00	0.00
64	N14	Nut	7/8			M291	DH3		17004	0.00	0.00	0.00
64	W14	Std Wash	7/8			M293 Westhering			17006	0.00	0.00	0.00

TOTAL WEIGHT THIS SHEET: 37 187.75 kgs
BID ITEM 0160 506.56

PLAN VIEW

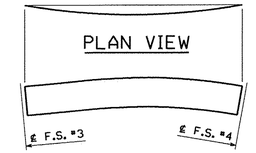

ORIENTATION DIAGRAM

SHOP NOTE:

[4 @ 3½]
- INDICATES LENGTH OF ⅞"ø H.S. BOLTS
- INDICATES NUMBER OF ⅞"ø H.S. BOLTS

NO.	REVISION	BY	CHK'D	DATE
1	ADDED SECT. E-E FOR GUSSET PLATE x6s	MGK	CS	5/28/08

HOLES: 15/16"ø
BOLTS: AS NOTED
COATING: NONE
CODE(S): 30
SCALE: N.T.S.

HIGH STEEL STRUCTURES INC.
Lancaster Facility: 1915 Old Philadelphia Pike, Lancaster, PA 17605-0008, Phone (717) 299-5211
Williamsport Facility: 3501 W. 4th Street, Williamsport, PA 17701, Phone (570) 326-9051
An ISO 9001:2000 Certified Company — An Affiliate of High Industries Inc. — www.Highsteel.com

GIRDER G2D
VT ROUTE 279 OVER FURNACE BROOK
VT ROUTE 279 STA. 8+542.000 TO STA. 8+685.000
TOWN OF BENNINGTON VERMONT, BRIDGE B12
STATE OF VERMONT
AGENCY OF TRANSPORTATION

		AC NH F019-1(53)		FED. AID PROJ. NO.	
	GENERAL CONTRACTOR	J.A. McDONALD, INC.		HSSI PROJ. MGR	DEB KUPRES
SHPMT 3	DRAWING MANAGER	BRITIGAN (IH)	MADE BY JAW	CHK'D. BY CS	DATE 11/27/07
STATE VT	HSSI PROJECT NUMBER	S-1070147	HSSI STRUCT. ID A	DRAWING NUMBER	20 OF 34

SHIPMENT 01 PM&ENG: 5/28/2008 PROD: 5/28/2008 SHOP&ERECT.: 5/28/2008
BY: MKrendel
PLOTTED: 5/29/2008 10:07:16 AM
60

1070147A X3 5/29/08 5/Resubmit For Approval TO:J.A. McDonald, Inc.

METRIC

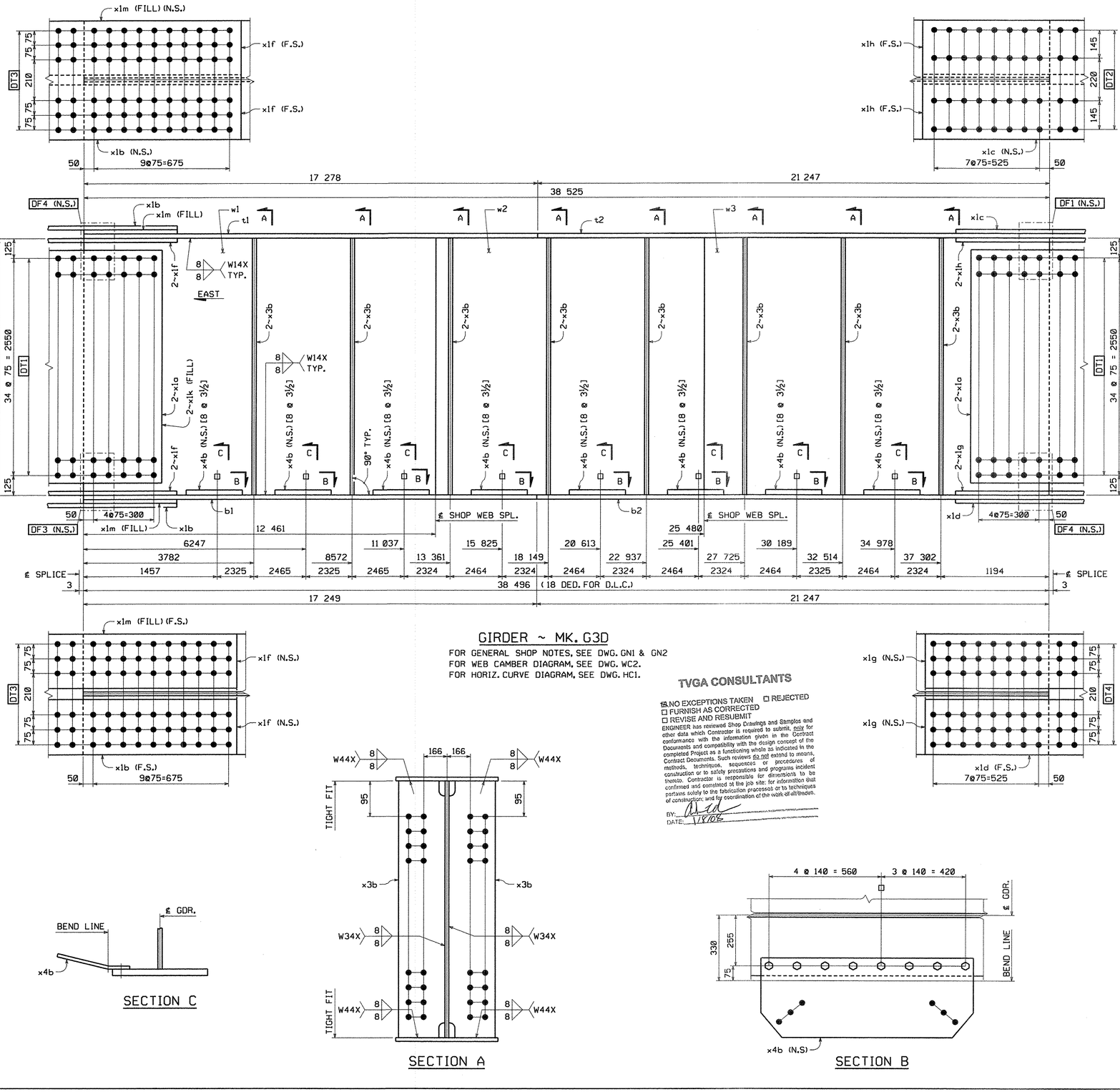

GIRDER ~ MK. G3D

FOR GENERAL SHOP NOTES, SEE DWG. GN1 & GN2
FOR WEB CAMBER DIAGRAM, SEE DWG. WC2.
FOR HORIZ. CURVE DIAGRAM, SEE DWG. HC1.

TVGA CONSULTANTS

☒ NO EXCEPTIONS TAKEN ☐ REJECTED
☐ FURNISH AS CORRECTED
☐ REVISE AND RESUBMIT

ENGINEER has reviewed Shop Drawings and Samples and other data which Contractor is required to submit, only for conformance with the information given in the Contract Documents and compatibility with the design concept of the completed Project as a functioning whole as indicated in the Contract Documents. Such review is not extend to means, methods, techniques, sequences or procedures of construction or to safety precautions and programs incident thereto. Contractor is responsible for dimensions to be confirmed and correlated at the job site; for information that pertains solely to the fabrication processes or to techniques of construction; and for coordination of the work of all trades.

BY:
DATE: 12/8/07

SECTION A

SECTION C

SECTION B

BILL OF MATERIAL

QTY EA.	MARK	COMM	DESCRIPTION	LENGTH	SPEC	GRADE	TEST	REMARKS	ITEM	GROS WT. EA	DED. WEIGHT	NET WT. EA
1	G3D		GIRDER							37451.10	7.21	37443.89
1	w1	PL	22 x 2800	12 471	M270M	345W	T		03012	6029.75	2.52	6027.22
1	w2	PL	22 x 2800	13 021	M270M	345W	T		03009	6295.67	0.00	6295.67
1	w3	PL	22 x 2800	13 035	M270M	345W	T		03008	6302.44	4.69	6297.75
1	t1	PL	40 x 610	17 278	M270M	345W	T		04002	3309.03	0.00	3309.03
1	t2	PL	40 x 610	21 247	M270M	345W	T		04003	4069.16	0.00	4069.16
1	b1	PL	40 x 610	17 249	M270M	345W	T		04002	3303.47	0.00	3303.47
1	b2	PL	40 x 610	21 247	M270M	345W	T		04003	4069.16	0.00	4069.16
4	x1a	PL	15.9 x 2630	786	M270M	345W	T		06001	257.98	0.00	257.98
2	x1b	PL	20.6 x 610	1 536	M270M	345W	T		06002	151.50	0.00	151.50
1	x1c	PL	20.6 x 610	1 236	M270M	345W	T		06002	121.91	0.00	121.91
1	x1d	PL	20.6 x 610	1 236	M270M	345W	T		06002	121.91	0.00	121.91
4	x1f	PL	20.6 x 280	1 536	M270M	345W	T		06003	69.54	0.00	69.54
2	x1g	PL	20.6 x 280	1 236	M270M	345W	T		06003	55.96	0.00	55.96
2	x1h	PL	20.6 x 280	1 236	M270M	345W	T		06003	55.96	0.00	55.96
2	x1k	SHT	16GA x 390	2 630	A606 Type 4			FILL	06004	16.10	0.00	16.10
2	x1m	PL	15.9 x 610	765	M270M	345W		FILL	06005	58.24	0.00	58.24
16	x3b	PL	14.3 x 280	2 800	M270M	345W	T		07002	88.00	0.00	88.00
8	x4b	PL	14.3 x 1140	425	M270M	345W		BENT	07003	54.38	0.00	54.38
64	140308	HS Bolt	7/8	0'-3 1/2	M164 Type 3				17002	0.00	0.00	0.00
64	N14	Nut	7/8		M291	DH3			17004	0.00	0.00	0.00
64	W14	Std Wash	7/8		M293 Weathering				17006	0.00	0.00	0.00

TOTAL WEIGHT THIS SHEET: 37 443.89 kgs
BID ITEM 0160 506.56



ORIENTATION DIAGRAM

SHOP NOTE:
[8 @ 3½]
└ INDICATES LENGTH OF ⅞"ø H.S. BOLTS
└ INDICATES NUMBER OF ⅞"ø H.S. BOLTS

NO.	REVISION	BY	CHK'D	DATE
△				
△				
△				

HIGH STEEL STRUCTURES INC.
An ISO 9001:2000 Certified Company
An Affiliate of High Industries Inc.
Lancaster Facility
1915 Old Philadelphia Pike
Lancaster, PA 17605-9008
Phone (717) 299-5211
Williamsport Facility
3501 W. 4th Street
Williamsport, PA 17701
Phone (570) 326-9051
www.Highsteel.com

HOLES	15/16"ø
BOLTS	AS NOTED
COATING	NONE
CODE(S)	30
SCALE	N.T.S.
	GIRDER G3D
	VT ROUTE 279 OVER FURNACE BROOK
	VT ROUTE 279 STA. 8+542.000 TO STA. 8+685.000
	TOWN OF BENNINGTON VERMONT, BRIDGE B12
	STATE OF VERMONT
	AGENCY OF TRANSPORTATION
	AC NH F019-1(53) — FED. AID PROJ. NO.
	GENERAL CONTRACTOR: J.A. McDONALD, INC. — HSSI PROJ. MGR: DEB KUPRES
SHPMT 3	DRAWING MANAGER: BRITIGAN (IH) — MADE BY: JAW — CHK'D. BY: CS — DATE: 11/27/07
STATE VT	HSSI PROJECT NUMBER: S-1070147 — HSSI STRUCT. ID: A — DRAWING NUMBER: 21 OF 34

PLOTTED: 11/30/2007 12:28:43 PM
BY: MKreidel
SHIPMENT 01
PM&ENG 2002817 PROJ 2002818 SHIP&ERECT: 2002819

1070147A X1 12/3/07 12/3/07Approval TO:J.A. McDonald, Inc.

METRIC

TVGA CONSULTANTS

☒ NO EXCEPTIONS TAKEN ☐ REJECTED
☐ FURNISH AS CORRECTED
☐ REVISE AND RESUBMIT

ENGINEER has reviewed Shop Drawings and Samples and other data which Contractor is required to submit, only for conformance with the information given in the Contract Documents and compatibility with the design concept of the completed Project as a functioning whole as indicated in the Contract Documents. Such review do not extend to means, methods, techniques, sequences or procedures of construction or to safety precautions and programs incident thereto. Contractor is responsible for dimensions to be confirmed and correlated at the job site; for information that pertains solely to the fabrication processes or to techniques of construction; and for coordination of the work of all trades.

BY: [signature]
DATE: 6/19/08

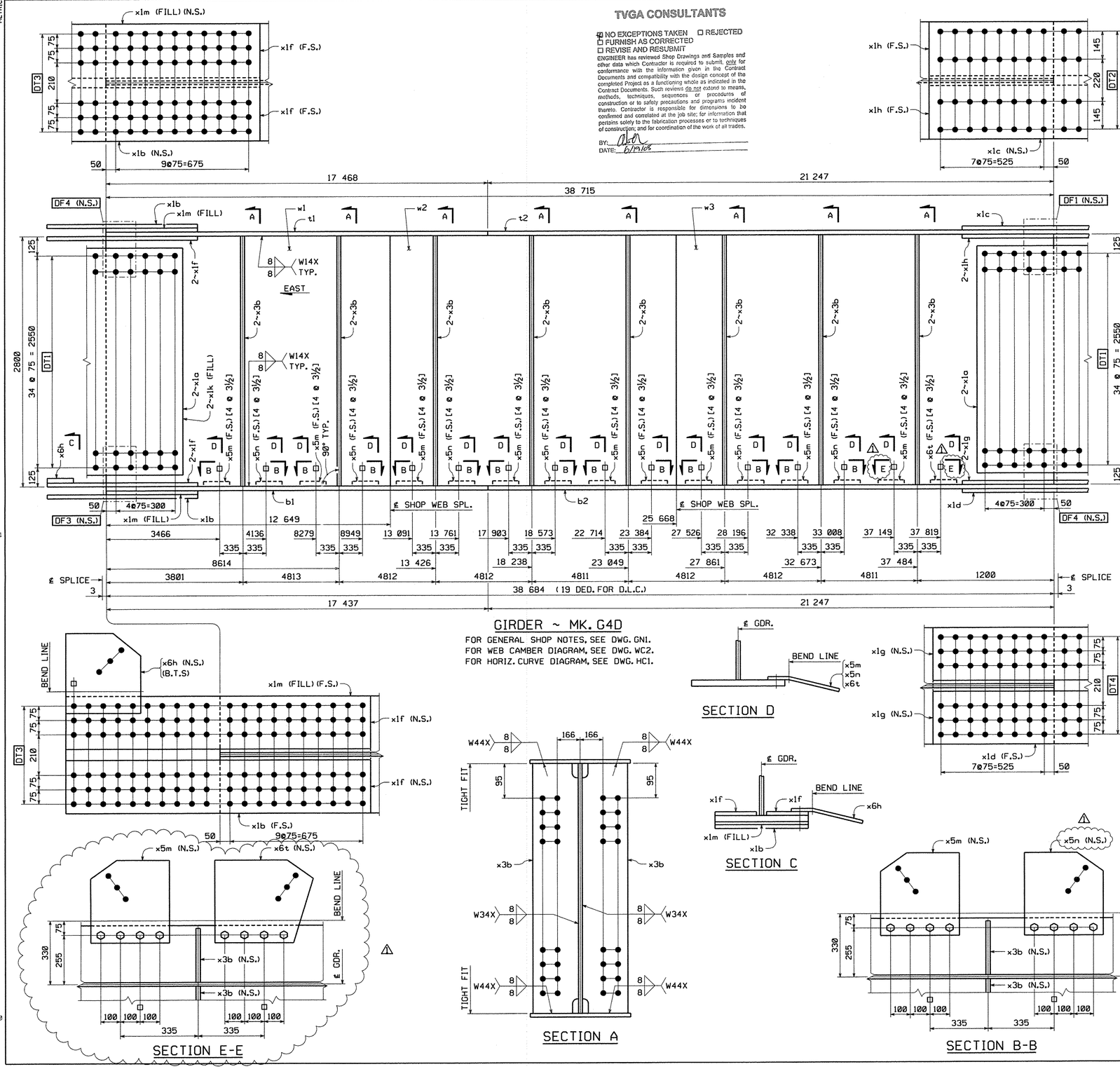

GIRDER ~ MK. G4D

FOR GENERAL SHOP NOTES, SEE DWG. GN1.
FOR WEB CAMBER DIAGRAM, SEE DWG. WC2.
FOR HORIZ. CURVE DIAGRAM, SEE DWG. HC1.

SECTION E-E

SECTION D

SECTION A

SECTION C

SECTION B-B

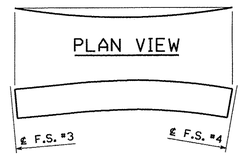

ORIENTATION DIAGRAM

SHOP NOTE:

[4 @ 3½]
- INDICATES LENGTH OF ⅞"ø H.S. BOLTS
- INDICATES NUMBER OF ⅞"ø H.S. BOLTS

BILL OF MATERIAL

QTY EA.	MARK	COMM	DESCRIPTION	LENGTH	SPEC	GRADE	TEST	REMARKS	ITEM	GROS WT. EA	DED. WEIGHT	NET WT. EA.
1	G4D		GIRDER							37520.32	7.63	37512.69
1	w1	PL	22 x 2800	12 660	M270M	345W	T		03002	6121.13	2.68	6118.45
1	w2	PL	22 x 2800	13 021	M270M	345W	T		03009	6295.67	0.00	6295.67
1	w3	PL	22 x 2800	13 036	M270M	345W	T		03008	6302.93	4.95	6297.97
1	t1	PL	40 x 610	17 468	M270M	345W	T		04001	3345.42	0.00	3345.42
1	t2	PL	40 x 610	21 247	M270M	345W	T		04003	4069.16	0.00	4069.16
1	b1	PL	40 x 610	17 437	M270M	345W	T		04001	3339.48	0.00	3339.48
1	b2	PL	40 x 610	21 247	M270M	345W	T		04003	4069.16	0.00	4069.16
4	x1a	PL	15.9 x 2630	786	M270M	345W	T		06001	257.98	0.00	257.98
2	x1b	PL	20.6 x 610	1 536	M270M	345W	T		06002	151.50	0.00	151.50
1	x1c	PL	20.6 x 610	1 236	M270M	345W	T		06002	121.91	0.00	121.91
1	x1d	PL	20.6 x 610	1 236	M270M	345W	T		06002	121.91	0.00	121.91
4	x1f	PL	20.6 x 280	1 536	M270M	345W	T		06003	69.54	0.00	69.54
2	x1g	PL	20.6 x 280	1 236	M270M	345W	T		06003	55.96	0.00	55.96
2	x1h	PL	20.6 x 280	1 236	M270M	345W	T		06003	55.96	0.00	55.96
2	x1k	SHT	16GA x 390	2 630	A606 Type 4			FILL	06004	16.10	0.00	16.10
2	x1m	PL	15.9 x 610	765	M270M	345W		FILL	06005	58.24	0.00	58.24
16	x3b	PL	14.3 x 280	2 800	M270M	345W	T		07002	88.00	0.00	88.00
8	x5m	PL	14.3 x 420	422	M270M	345W		BENT	07003	19.89	0.00	19.89
7	x5n	PL	14.3 x 420	421	M270M	345W		BENT	07003	19.85	0.00	19.85
1	x6h	PL	14.3 x 380	416	M270M	345W		BENT(B.T.S.)	07003	17.74	0.00	17.74
1	x6t	PL	14.3 x 512	421	M270M	345W		BENT	07003	24.19	0.00	24.19
64	140308	HS Bolt	7/8	0'-3 1/2	M164 Type 3				17002	0.00	0.00	0.00
64	N14	Nut	7/8		M291	DH3			17004	0.00	0.00	0.00
64	W14	Std Wash	7/8		M293 Weathering				17006	0.00	0.00	0.00

TOTAL WEIGHT THIS SHEET: 37 512.69 kgs
BID ITEM 0160 506.56

NO.	REVISION	BY	CHK'D	DATE
1	ADDED SECT. E-E FOR GUSSET PLATE x6t	MGK	CS	5/28/08

HIGH STEEL STRUCTURES INC.
An ISO 9001:2000 Certified Company
An Affiliate of High Industries Inc.
Lancaster Facility: 195 Old Philadelphia Pike, Lancaster, PA 17605-0008, Phone (717) 299-5211
Williamsport Facility: 3501 W. 4th Street, Williamsport, PA 17701, Phone (570) 326-9051
www.highsteel.com

HOLES	15/16"ø
BOLTS	AS NOTED
COATING	NONE
CODE(S)	30
SCALE	N.T.S.
	GIRDER G4D
	VT ROUTE 279 OVER FURNACE BROOK
	VT ROUTE 279 STA. 8+542.000 TO STA. 8+685.000
	TOWN OF BENNINGTON VERMONT, BRIDGE B12
	STATE OF VERMONT
	AGENCY OF TRANSPORTATION
	AC NH F019-1(53) — FED. AID PROJ. NO.
GENERAL CONTRACTOR	J.A. McDONALD, INC. — HSSI PROJ. MGR: DEB KUPRES

SHPMT	3	DRAWING MANAGER	BRITIGAN (IH)	MADE BY	JAW	CHK'D. BY	CS	DATE	11/27/07
STATE	VT	HSSI PROJECT NUMBER	S-1070147	HSSI STRUCT. ID	A	DRAWING NUMBER	22 OF 34		

SHIPMENT 01 PM&ENG: 5082817 PROD: 5082818 SHIP&RECT.: 5082819
BY: MKreidel
PLOTTED: 5/29/2008 10:07:30 AM

1070147A X3 5/29/08 5/Resubmit For Approval TO:J.A. McDonald, Inc.

METRIC

TVGA CONSULTANTS

☑ NO EXCEPTIONS TAKEN ☐ REJECTED
☐ FURNISH AS CORRECTED
☐ REVISE AND RESUBMIT

ENGINEER has reviewed Shop Drawings and Samples and other data which Contractor is required to submit, only for conformance with the information given in the Contract Documents and compatibility with the design concept of the completed Project as a functioning whole as indicated in the Contract Documents. Such review does not extend to means, methods, techniques, sequences or procedures of construction or to safety precautions and programs incident thereto. Contractor is responsible for dimensions to be confirmed and correlated at the job site, for information that pertains solely to the fabrication processes or to techniques of construction, and for coordination of the work of all trades.

BY:
DATE: 6/19/08

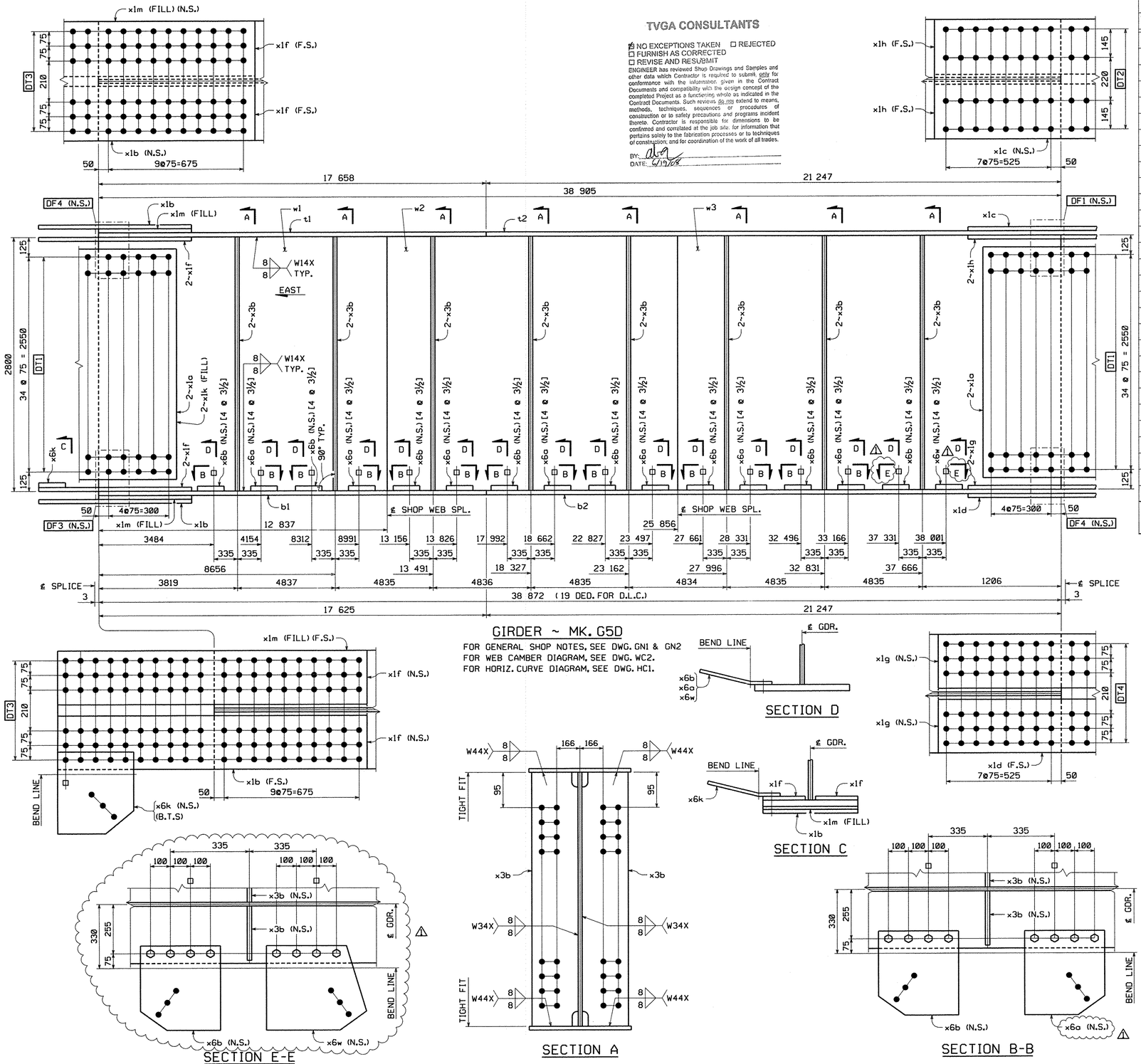

GIRDER ~ MK. G5D

FOR GENERAL SHOP NOTES, SEE DWG. GN1 & GN2
FOR WEB CAMBER DIAGRAM, SEE DWG. WC2.
FOR HORIZ. CURVE DIAGRAM, SEE DWG. HC1.

SECTION E-E

SECTION A

SECTION D

SECTION C

SECTION B-B

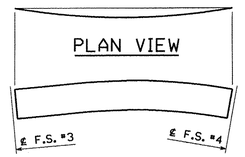

ORIENTATION DIAGRAM

SHOP NOTE:

[4 @ 3½]
- INDICATES LENGTH OF ⅞"ø H.S. BOLTS
- INDICATES NUMBER OF ⅞"ø H.S. BOLTS

BILL OF MATERIAL

QTY EA.	MARK	COMM	DESCRIPTION	LENGTH	SPEC	GRADE	TEST	REMARKS	ITEM	GROS WT. EA.	DED. WEIGHT	NET WT. EA.
1	G5D		GIRDER							37683.44	7.91	37675.53
1	w1	PL	22 x 2800	12 849	M270M	345W	T		03011	6212.51	2.83	6209.68
1	w2	PL	22 x 2800	13 021	M270M	345W	T		03009	6295.67	0.00	6295.67
1	w3	PL	22 x 2800	13 037	M270M	345W	T		03008	6303.41	5.09	6298.32
1	t1	PL	40 x 610	17 658	M270M	345W	T		04001	3381.80	0.00	3381.80
1	t2	PL	40 x 610	21 247	M270M	345W	T		04003	4069.16	0.00	4069.16
1	b1	PL	40 x 610	17 625	M270M	345W	T		04001	3375.48	0.00	3375.48
1	b2	PL	40 x 610	21 247	M270M	345W	T		04003	4069.16	0.00	4069.16
4	x1a	PL	15.9 x 2630	786	M270M	345W	T		06001	257.98	0.00	257.98
2	x1b	PL	20.6 x 610	1 536	M270M	345W	T		06002	151.50	0.00	151.50
1	x1c	PL	20.6 x 610	1 236	M270M	345W	T		06002	121.91	0.00	121.91
1	x1d	PL	20.6 x 610	1 236	M270M	345W	T		06002	121.91	0.00	121.91
4	x1f	PL	20.6 x 280	1 536	M270M	345W	T		06003	69.54	0.00	69.54
2	x1g	PL	20.6 x 280	1 236	M270M	345W	T		06003	55.96	0.00	55.96
2	x1h	PL	20.6 x 280	1 236	M270M	345W	T		06003	55.96	0.00	55.96
2	x1k	SHT	16GA x 390	2 630	A606 Type 4			FILL	06004	16.10	0.00	16.10
2	x1m	PL	15.9 x 610	765	M270M	345W		FILL	06005	58.24	0.00	58.24
16	x3b	PL	14.3 x 280	2 800	M270M	345W	T		07002	88.00	0.00	88.00
8	x6b	PL	14.3 x 420	420	M270M	345W		BENT	07003	19.80	0.00	19.80
7	x6a	PL	14.3 x 420	420	M270M	345W		BENT	07003	19.80	0.00	19.80
1	x6k	PL	14.3 x 380	415	M270M	345W		BENT (B.T.S.)	07003	17.70	0.00	17.70
1	x6w	PL	14.3 x 513	420	M270M	345W		BENT	07003	24.18	0.00	24.18
64	140308	HS Bolt	7/8	0-3 1/2	M164 Type 3				17002	0.00	0.00	0.00
64	N14	Nut	7/8		M291	DH3			17004	0.00	0.00	0.00
64	W14	Std Wash	7/8		M293 Weathering				17006	0.00	0.00	0.00
								TOTAL WEIGHT THIS SHEET: BID ITEM 0160 506.56				37 675.53 kgs

NO.	REVISION	BY	CHK'D	DATE
1	ADDED SECT. E-E FOR GUSSET PLATE x6w	MGK	CS	5/28/08

HOLES: 15/16"ø
BOLTS: AS NOTED
COATING: NONE
CODE(S): 30
SCALE: N.T.S.

HIGH STEEL STRUCTURES INC.
An ISO 9001:2000 Certified Company
An Affiliate of High Industries Inc.
Lancaster Facility: 1915 Old Philadelphia Pike, Lancaster, PA 17605-0008, Phone (717) 299-5211
Williamsport Facility: 3501 W. 4th Street, Williamsport, PA 17701, Phone (570) 326-9051
www.Highsteel.com

GIRDER G5D
VT ROUTE 279 OVER FURNACE BROOK
VT ROUTE 279 STA. 8+542.000 TO STA. 8+685.000
TOWN OF BENNINGTON VERMONT, BRIDGE B12
STATE OF VERMONT
AGENCY OF TRANSPORTATION

	AC NH F019-1(53)	FED. AID PROJ. NO.	
GENERAL CONTRACTOR	J.A. McDONALD, INC.	HSSI PROJ. MGR	DEB KUPRES

SHPMT	3	DRAWING MANAGER	BRITIGAN (IH)	MADE BY	JAW	CHK'D. BY	CS	DATE	11/27/07
STATE	VT	HSSI PROJECT NUMBER	S-1070147	HSSI STRUCT. ID	A	DRAWING NUMBER	23 OF 34		

PLOTTED: 5/29/2008 10:07:46 AM
BY: MKriedel
SHIPMENT 01
PM&ENG: 5802817 PRD: 5802818 SHPAERECT: 5802819

1070147A X3 5/29/08 5/Resubmit For Approval TO:J.A. McDonald, Inc.

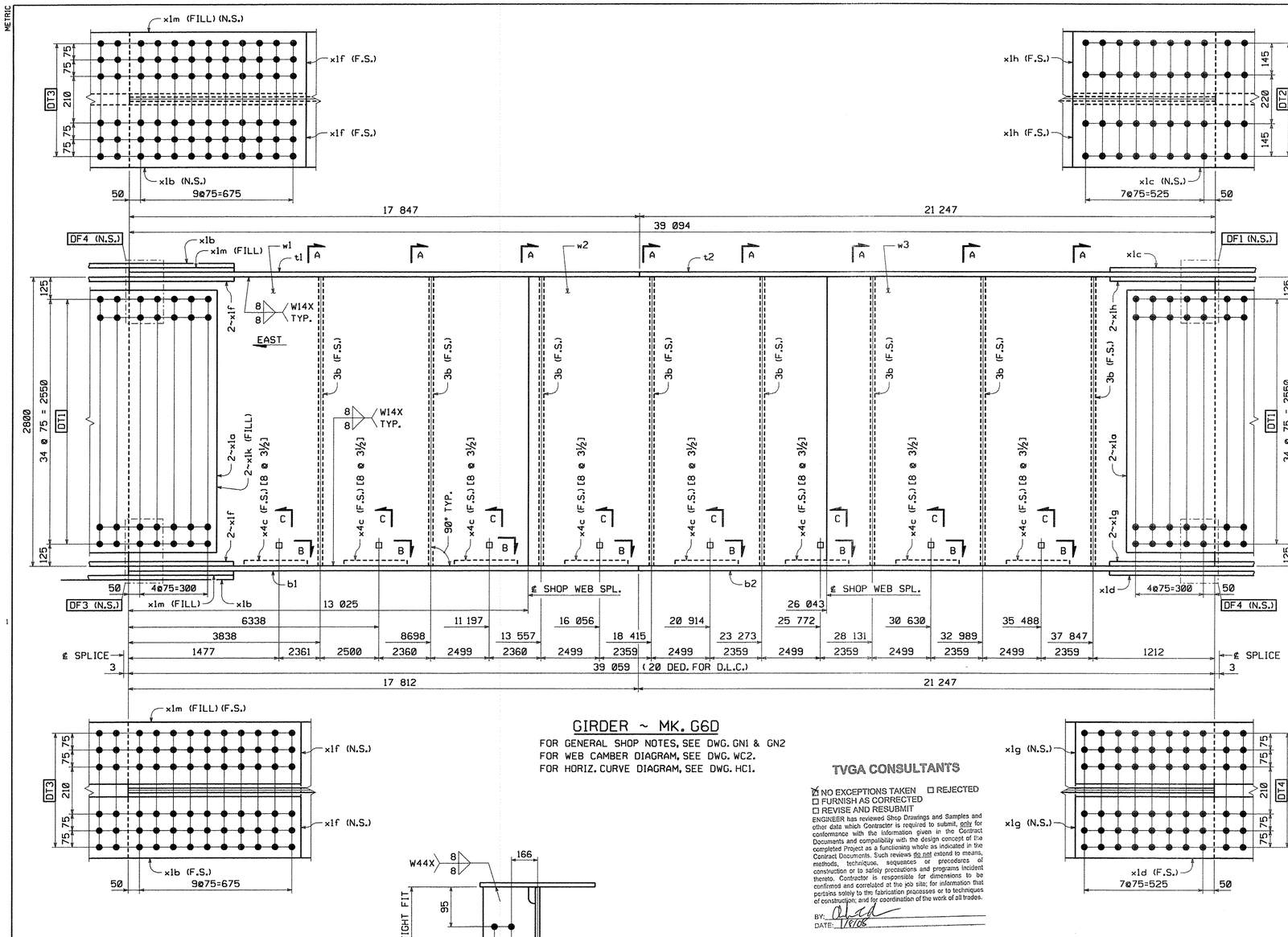

GIRDER ~ MK. G6D

FOR GENERAL SHOP NOTES, SEE DWG. GN1 & GN2
FOR WEB CAMBER DIAGRAM, SEE DWG. WC2.
FOR HORIZ. CURVE DIAGRAM, SEE DWG. HC1.

TVGA CONSULTANTS

☒ NO EXCEPTIONS TAKEN ☐ REJECTED
☐ FURNISH AS CORRECTED
☐ REVISE AND RESUBMIT

ENGINEER has reviewed Shop Drawings and Samples and other data which Contractor is required to submit, only for conformance with the information given in the Contract Documents and compatibility with the design concept of the completed Project as a functioning whole as indicated in the Contract Documents. Such reviews do not extend to means, methods, techniques, sequences or procedures of construction or to safety precautions and programs incident thereto. Contractor is responsible for dimensions to be confirmed and correlated at the job site; for information that pertains solely to the fabrication processes or to techniques of construction; and for coordination of the work of all trades.

BY: _____
DATE: 12/7/07

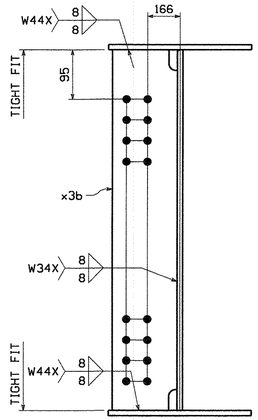

SECTION A

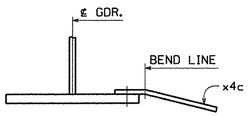

SECTION C

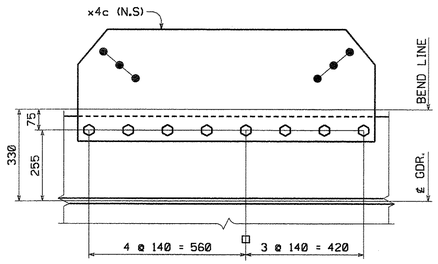

SECTION B

BILL OF MATERIAL

QTY EA.	MARK	COMM	DESCRIPTION	LENGTH	SPEC	GRADE	TEST	REMARKS	ITEM	GROS WT. EA	DED. WEIGHT	NET WT. EA
1	G6D		GIRDER							37239.03	8.42	37230.61
1	w1	PL	22 x 2800	13 038	M270M	345W	T		03006	6303.89	3.06	6300.83
1	w2	PL	22 x 2800	13 021	M270M	345W	T		03009	6295.67	0.00	6295.67
1	w3	PL	22 x 2800	13 037	M270M	345W	T		03008	6303.41	5.36	6298.05
1	t1	PL	40 x 610	17 847	M270M	345W	T		04001	3418.00	0.00	3418.00
1	t2	PL	40 x 610	21 247	M270M	345W	T		04003	4069.16	0.00	4069.16
1	b1	PL	40 x 610	17 812	M270M	345W	T		04001	3411.30	0.00	3411.30
1	b2	PL	40 x 610	21 247	M270M	345W	T		04003	4069.16	0.00	4069.16
4	x1a	PL	15.9 x 2630	786	M270M	345W	T		06001	257.98	0.00	257.98
2	x1b	PL	20.6 x 610	1 536	M270M	345W	T		06002	151.50	0.00	151.50
1	x1c	PL	20.6 x 610	1 236	M270M	345W	T		06002	121.91	0.00	121.91
1	x1d	PL	20.6 x 610	1 236	M270M	345W	T		06002	121.91	0.00	121.91
4	x1f	PL	20.6 x 280	1 536	M270M	345W	T		06003	69.54	0.00	69.54
2	x1g	PL	20.6 x 280	1 236	M270M	345W	T		06003	55.96	0.00	55.96
2	x1h	PL	20.6 x 280	1 236	M270M	345W	T		06003	55.96	0.00	55.96
2	x1k	SHT	16GA x 390	2 630	A606 Type 4			FILL	06004	16.10	0.00	16.10
2	x1m	PL	15.9 x 610	765	M270M	345W		FILL	06005	58.24	0.00	58.24
8	x3b	PL	14.3 x 280	2 800	M270M	345W	T		07002	88.00	0.00	88.00
8	x4c	PL	14.3 x 1140	425	M270M	345W		BENT	07003	54.38	0.00	54.38
64	140308	HS Bolt	7/8	0'-3 1/2	M164 Type 3				17002	0.00	0.00	0.00
64	N14	Nut	7/8		M291	DH3			17004	0.00	0.00	0.00
64	W14	Std Wash	7/8		M293 Weathering				17006	0.00	0.00	0.00

TOTAL WEIGHT THIS SHEET: 37 230.61 kgs
BID ITEM 0160 506.56

PLAN VIEW

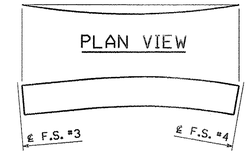

ORIENTATION DIAGRAM

SHOP NOTE:
[8 @ 3½]
INDICATES LENGTH OF ⅞"ø H.S. BOLTS
INDICATES NUMBER OF ⅞"ø H.S. BOLTS

NO.	REVISION	BY	CHK'D	DATE

HOLES: 15/16"ø
BOLTS: AS NOTED
COATING: NONE
CODE(S): 30
SCALE: N.T.S.

HIGH STEEL STRUCTURES INC.
An ISO 9001:2000 Certified Company
An Affiliate of High Industries Inc.
Lancaster Facility
1915 Old Philadelphia Pike
Lancaster, PA 17605-0008
Phone (717) 299-5211
Williamsport Facility
3501 W. 4th Street
Williamsport, PA 17701
Phone (570) 326-9051
www.highsteel.com

GIRDER G6D
VT ROUTE 279 OVER FURNACE BROOK
VT ROUTE 279 STA. 8+542.000 TO STA. 8+685.000
TOWN OF BENNINGTON VERMONT, BRIDGE B12
STATE OF VERMONT
AGENCY OF TRANSPORTATION
FED. AID PROJ. NO.: AC NH F019-1(53)
GENERAL CONTRACTOR: J.A. McDONALD, INC.
HSSI PROJ. MGR: DEB KUPRES

SHPMT	3	DRAWING MANAGER	BRITIGAN (IH)	MADE BY	JAH	CHK'D BY	CS	DATE	11/27/07
STATE	VT	HSSI PROJECT NUMBER	S-1070147	HSSI STRUCT. ID	A	DRAWING NUMBER	24 OF 34		

METRIC
SHIPMENT 01 PM&ENG: 50022817 PROD: 50022818 SHIP&ERECT.: 50022819
BY: MKravdel
PLOTTED: 11/30/2007 12:29:25 PM
60

1070147A X1 12/3/07 12/3/07Approval TO:J.A. McDonald, Inc.

METRIC

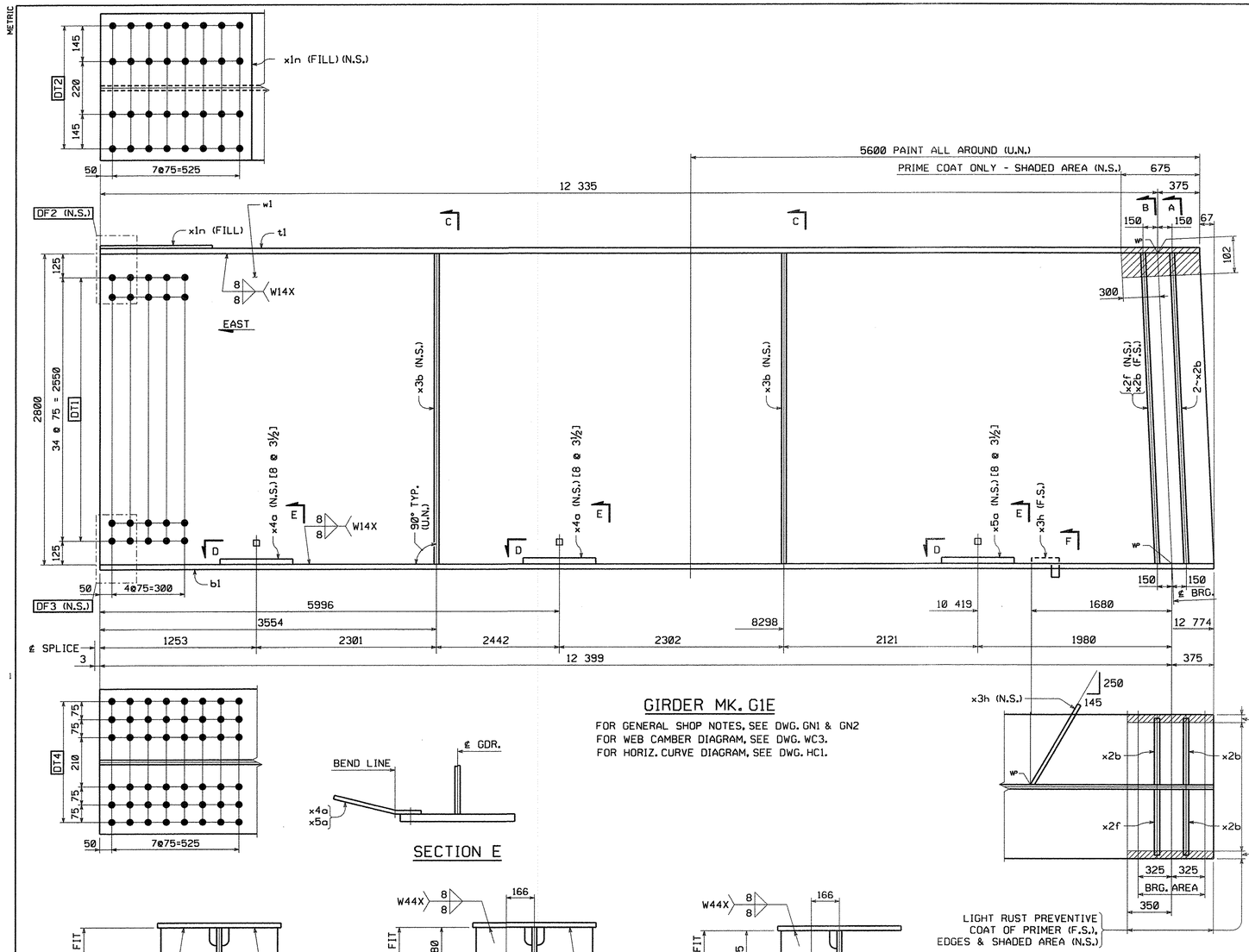

GIRDER MK. G1E

FOR GENERAL SHOP NOTES, SEE DWG. GN1 & GN2
FOR WEB CAMBER DIAGRAM, SEE DWG. WC3.
FOR HORIZ. CURVE DIAGRAM, SEE DWG. HC1.

SECTION E

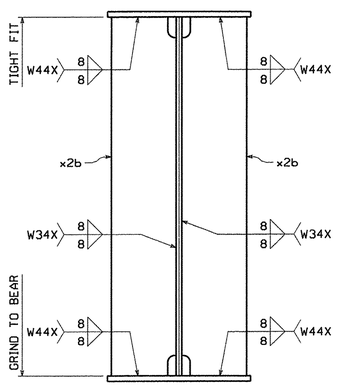

SECTION A

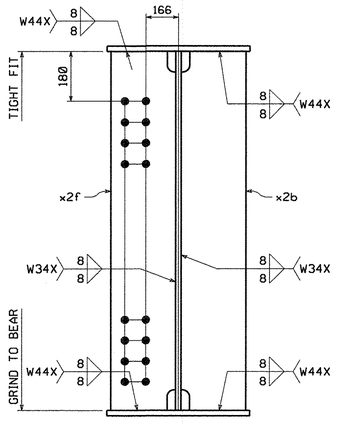

SECTION B

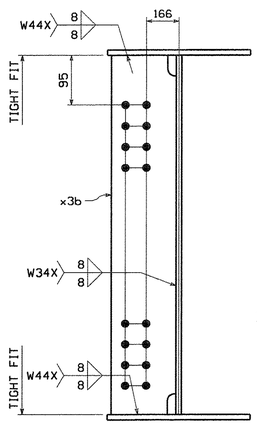

SECTION C

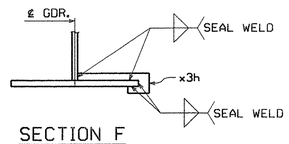

SECTION F
(DEVELOPED)

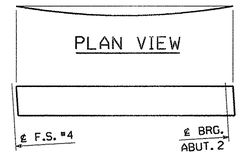

ORIENTATION DIAGRAM

TVGA CONSULTANTS

☒ NO EXCEPTIONS TAKEN ☐ REJECTED
☐ FURNISH AS CORRECTED
☐ REVISE AND RESUBMIT

ENGINEER has reviewed Shop Drawings and Samples and other data which Contractor is required to submit, only for conformance with the information given in the Contract Documents and compatibility with the design concept of the completed Project as a functioning whole as indicated in the Contract Documents. Such review does not extend to means, methods, techniques, sequences or procedures of construction or to safety precautions and programs incident thereto. Contractor is responsible for dimensions to be confirmed and correlated at the job site; for information that pertains solely to the fabrication processes or to techniques of construction; and for coordination of the work of all trades.

BY: _____
DATE: 11/8/07

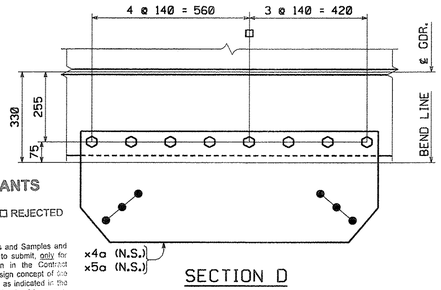

SECTION D

SHOP NOTE:
[8 @ 3½]
└ INDICATES LENGTH OF ⅞"ø H.S. BOLTS
└ INDICATES NUMBER OF ⅞"ø H.S. BOLTS

BILL OF MATERIAL

QTY EA.	MARK	COMM	DESCRIPTION	LENGTH	SPEC	GRADE	TEST	REMARKS	ITEM	GROS WT. EA.	DED. WEIGHT	NET WT. EA.
1	G1E		GIRDER							11334.99	16.93	11318.06
1	w1	PL	22 x 2800	12 777	M270M	345W	T		03011	6177.70	16.93	6160.77
1	t1	PL	28 x 610	12 710	M270M	345W	T		04007	1703.93	0.00	1703.93
1	b1	PL	40 x 610	12 774	M270M	345W	T		04005	2446.44	0.00	2446.44
1	x1n	PL	12.7 x 610	615	M270M	345W		FILL	06006	37.40	0.00	37.40
3	x2b	PL	25.4 x 280	2 801	M270M	345W			07001	156.36	0.00	156.36
1	x2f	PL	25.4 x 280	2 801	M270M	345W	T		07001	156.36	0.00	156.36
2	x3b	PL	14.3 x 280	2 800	M270M	345W	T		07002	88.00	0.00	88.00
1	x3h	PL	6.4 x 90	389	M270M	345W			07005	1.76	0.00	1.76
2	x4a	PL	14.3 x 1140	426	M270M	345W		BENT	07003	54.51	0.00	54.51
1	x5a	PL	14.3 x 1140	448	M270M	345W		BENT	07003	57.32	0.00	57.32
8	140308-G	HS Bolt	7/8	0'-3 1/2	M164 Type 1			GALV.	17003	0.00	0.00	0.00
16	140308	HS Bolt	7/8	0'-3 1/2	M164 Type 3				17002	0.00	0.00	0.00
8	N14-G	Nut	7/8		M291	DH		GALV.	17005	0.00	0.00	0.00
16	N14	Nut	7/8		M291	DH3			17004	0.00	0.00	0.00
8	W14-G	Std Wash	7/8		M293			GALV.	17007	0.00	0.00	0.00
16	W14	Std Wash	7/8		M293 Weathering				17006	0.00	0.00	0.00

TOTAL WEIGHT THIS SHEET: 11 318.06 kgs
BID ITEM 0160 506.56

NO.	REVISION	BY	CHK'D	DATE

HOLES: 15/16"ø
BOLTS: AS NOTED
COATING: SEE DWG. GN1
CODE(S): 30
SCALE: N.T.S.

HIGH STEEL STRUCTURES INC.
An ISO 9001:2000 Certified Company
An Affiliate of High Industries Inc.
Lancaster Facility: 195 Old Philadelphia Pike, Lancaster, PA 17605-0008, Phone (717) 299-5211
Williamsport Facility: 3501 W. 4th Street, Williamsport, PA 17701, Phone (570) 326-9061
www.highsteel.com

	GIRDER						GIE
	VT ROUTE 279 OVER FURNACE BROOK						
	VT ROUTE 279 STA. 8+542.000 TO STA. 8+685.000						
	TOWN OF BENNINGTON VERMONT, BRIDGE B12						
	STATE OF VERMONT						
	AGENCY OF TRANSPORTATION						
	AC NH F019-1(53)			FED. AID PROJ. NO.			
GENERAL CONTRACTOR	J.A. McDONALD, INC.			HSSI PROJ. MGR	DEB KUPRES		
SHPMT 3	DRAWING MANAGER	BRITIGAN (IH)	MADE BY	DRJ	CHK'D BY	MGK	DATE 11-26-07
STATE VT	HSSI PROJECT NUMBER	S-1070147	HSSI STRUCT. ID	A	DRAWING NUMBER	25 OF 34	

PLOTTED: 11/30/2007 12:25:38 PM
BY: MKreidel
SHIPMENT 01
PM&ENG: 52002817 PROJ: 52002818 SHIP&ERECT.: 52002819

1070147A X1 12/3/07 12/3/07Approval TO:J.A. McDonald, Inc.

METRIC

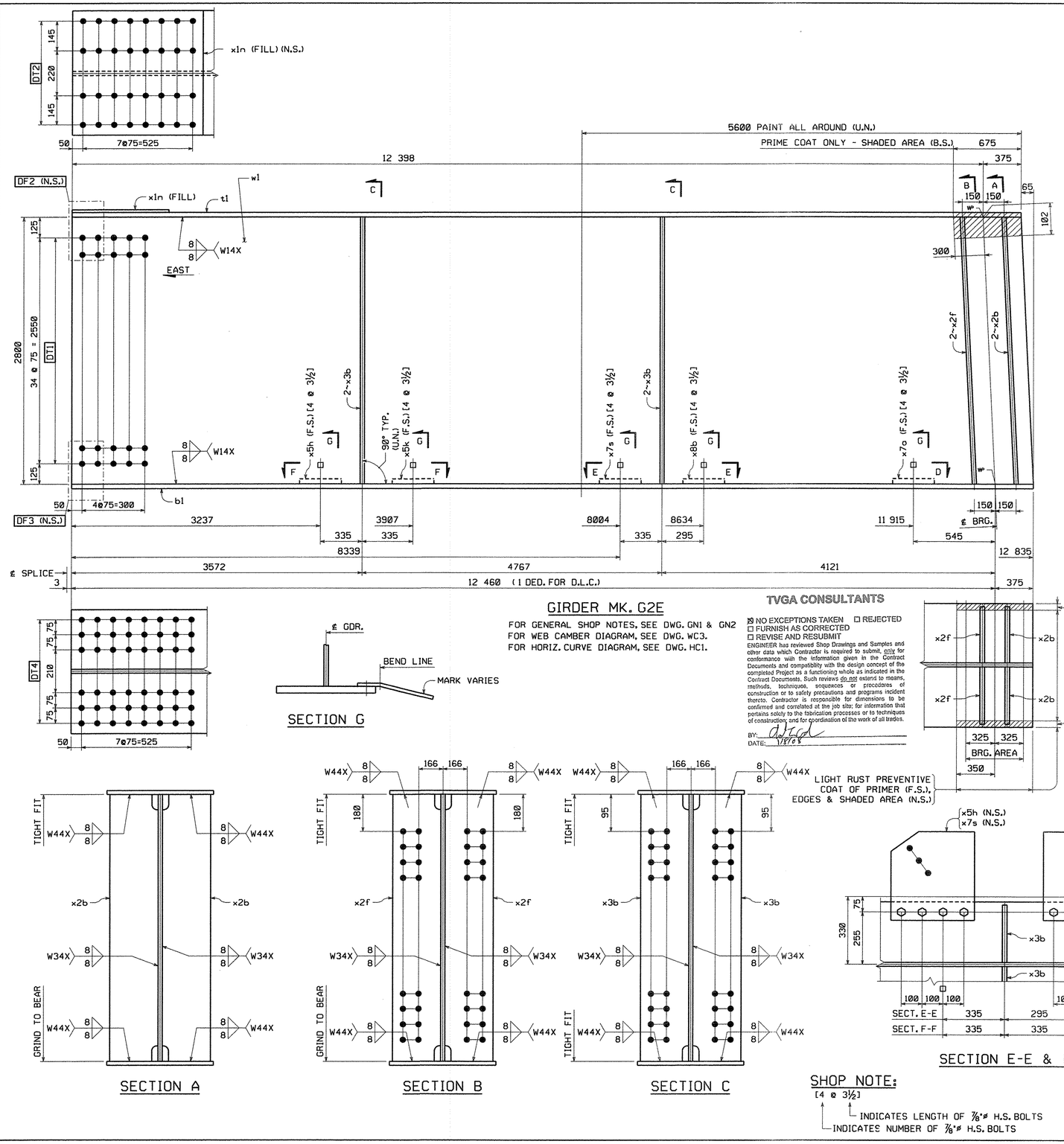

BILL OF MATERIAL

QTY EA.	MARK	COMM	DESCRIPTION	LENGTH	SPEC	GRADE	TEST	REMARKS	ITEM	GROS WT. EA	DED. WEIGHT	NET WT. EA
1	G2E		GIRDER							11487.97	16.44	11471.53
1	w1	PL	22 x 2800	12 838	M270M	345W	T		03011	6207.19	16.44	6190.75
1	t1	PL	28 x 610	12 773	M270M	345W	T		04007	1712.37	0.00	1712.37
1	b1	PL	40 x 610	12 835	M270M	345W	T		04005	2458.12	0.00	2458.12
1	x1n	PL	12.7 x 610	615	M270M	345W		FILL	06006	37.40	0.00	37.40
2	x2b	PL	25.4 x 280	2 801	M270M	345W			07001	156.36	0.00	156.36
2	x2f	PL	25.4 x 280	2 801	M270M	345W	T		07001	156.36	0.00	156.36
4	x3b	PL	14.3 x 280	2 800	M270M	345W	T		07002	88.00	0.00	88.00
1	x5h	PL	14.3 x 420	423	M270M	345W		BENT	07003	19.94	0.00	19.94
1	x5k	PL	14.3 x 420	422	M270M	345W		BENT	07003	19.89	0.00	19.89
1	x7a	PL	14.3 x 345	422	M270M	345W		BENT	07003	16.34	0.00	16.34
1	x7s	PL	14.3 x 420	423	M270M	345W		BENT	07003	19.94	0.00	19.94
1	x8b	PL	14.3 x 400	431	M270M	345W		BENT	07003	19.35	0.00	19.35
12	140308-G	HS Bolt	7/8	0'-3 1/2	M164 Type 1			GALV.	17003	0.00	0.00	0.00
8	140308	HS Bolt	7/8	0'-3 1/2	M164 Type 3				17002	0.00	0.00	0.00
12	N14-G	Nut	7/8		M291	DH		GALV.	17005	0.00	0.00	0.00
8	N14	Nut	7/8		M291	DH3			17004	0.00	0.00	0.00
12	W14-G	Std Wash	7/8		M293			GALV.	17007	0.00	0.00	0.00
8	W14	Std Wash	7/8		M293 Weathering				17006	0.00	0.00	0.00

TOTAL WEIGHT THIS SHEET: **11 471.53 kgs**
BID ITEM 0160 506.56

GIRDER MK. G2E

FOR GENERAL SHOP NOTES, SEE DWG. GN1 & GN2
FOR WEB CAMBER DIAGRAM, SEE DWG. WC3.
FOR HORIZ. CURVE DIAGRAM, SEE DWG. HC1.

TVGA CONSULTANTS

☒ NO EXCEPTIONS TAKEN ☐ REJECTED
☐ FURNISH AS CORRECTED
☐ REVISE AND RESUBMIT

ENGINEER has reviewed Shop Drawings and Samples and other data which Contractor is required to submit, only for conformance with the information given in the Contract Documents and compatibility with the design concept of the completed Project as a functioning whole as indicated in the Contract Documents. Such reviews do not extend to means, methods, techniques, sequences or procedures of construction or to safety precautions and programs incident thereto. Contractor is responsible for dimensions to be confirmed and correlated at the job site; for information that pertains solely to the fabrication processes or to techniques of construction and for coordination of the work of all trades.

BY:
DATE: 12/10/07

SECTION G

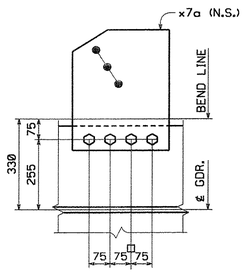

SECTION D

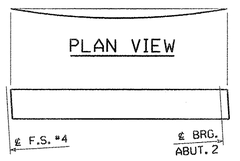

ORIENTATION DIAGRAM

SECTION A

SECTION B

SECTION C

LIGHT RUST PREVENTIVE COAT OF PRIMER (F.S.), EDGES & SHADED AREA (N.S.)

SECTION E-E & F-F

SHOP NOTE:

[4 @ 3½]
- 4 INDICATES NUMBER OF ⅞"ø H.S. BOLTS
- 3½ INDICATES LENGTH OF ⅞"ø H.S. BOLTS

NO.	REVISION	BY	CHK'D	DATE
△				
△				
△				

HOLES: 15/16"ø
BOLTS: AS NOTED
COATING: SEE DWG. GN1
CODE(S): 30
SCALE: N.T.S.

HIGH STEEL STRUCTURES INC.
An Affiliate of High Industries Inc.
An ISO 9001:2000 Certified Company
Lancaster Facility: 395 Old Philadelphia Pike, Lancaster, PA 17605-0008, Phone (717) 299-5211
Williamsport Facility: 3501 W. 4th Street, Williamsport, PA 17701, Phone (570) 326-9051
www.highsteel.com

GIRDER G2E
VT ROUTE 279 OVER FURNACE BROOK
VT ROUTE 279 STA. 8+542.000 TO STA. 8+685.000
TOWN OF BENNINGTON VERMONT, BRIDGE B12
STATE OF VERMONT
AGENCY OF TRANSPORTATION

AC NH F019-1(53) — FED. AID PROJ. NO.
GENERAL CONTRACTOR: J.A. McDONALD, INC. — HSSI PROJ. MGR: DEB KUPRES

SHPMT	3	DRAWING MANAGER	BRITIGAN (IH)	MADE BY	DRJ	CHK'D BY	MGK	DATE	11-26-07
STATE	VT	HSSI PROJECT NUMBER	S-1070147	HSSI STRUCT. ID	A	DRAWING NUMBER	26 OF 34		

PLOTTED: 11/30/2007 12:29:54 PM
BY: MKreidel
SHIPMENT 01
PM&ENG: 5802818 PRD: 5802818 SHIP&RECT: 5802818

1070147A X1 12/3/07 12/3/07Approval TO:J.A. McDonald, Inc.

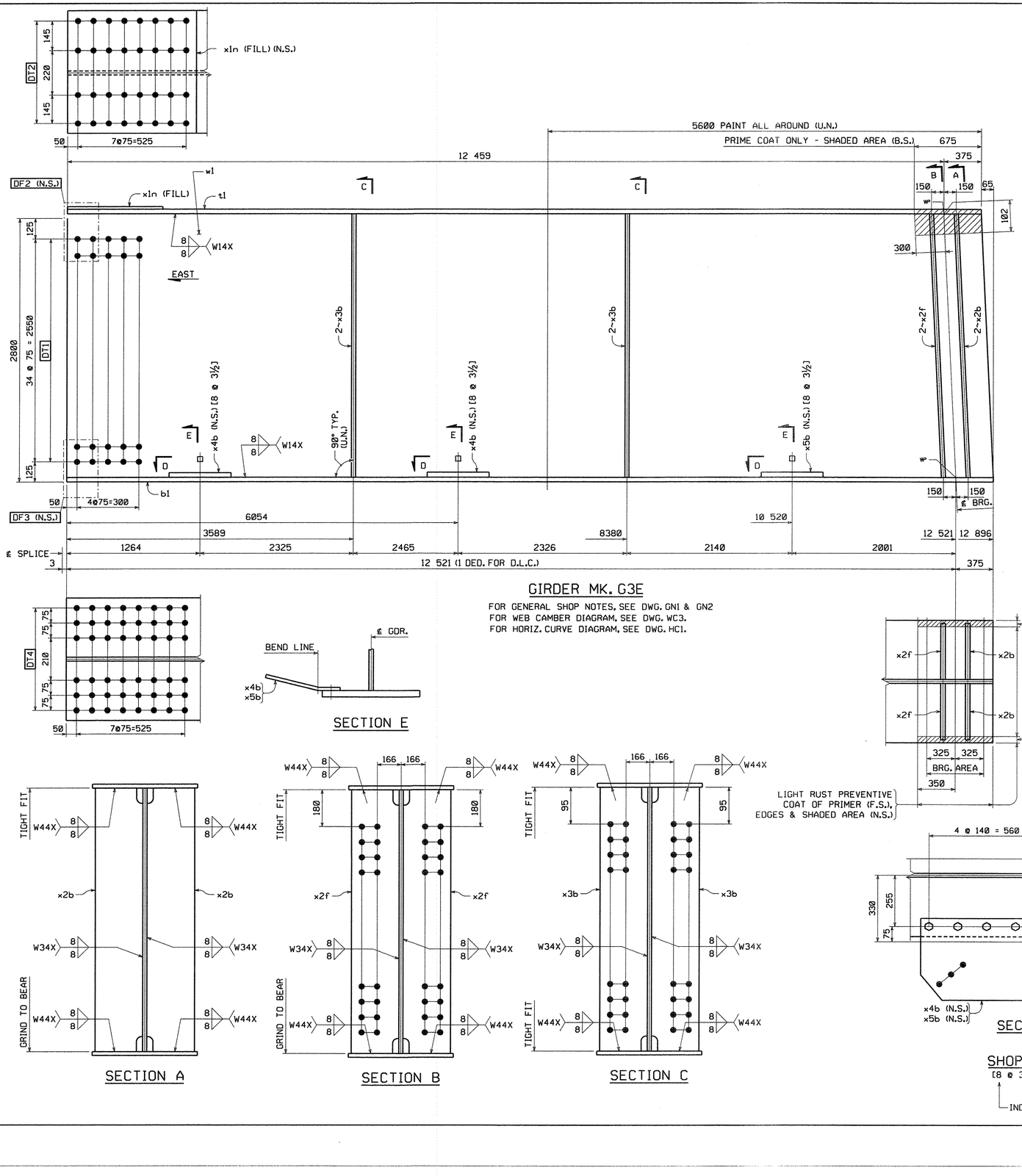

GIRDER MK. G3E

FOR GENERAL SHOP NOTES, SEE DWG. GN1 & GN2
FOR WEB CAMBER DIAGRAM, SEE DWG. WC3.
FOR HORIZ. CURVE DIAGRAM, SEE DWG. HC1.

BILL OF MATERIAL

QTY EA.	MARK	COMM	DESCRIPTION	LENGTH	SPEC	GRADE	TEST	REMARKS	ITEM	GROS WT. EA.	DED. WEIGHT	NET WT. EA.
1	G3E		GIRDER							11607.69	16.44	11591.25
1	w1	PL	22 x 2800	12 899	M270M	345W	T		03011	6236.69	16.44	6220.25
1	t1	PL	28 x 610	12 834	M270M	345W	T		04007	1720.55	0.00	1720.55
1	b1	PL	40 x 610	12 896	M270M	345W	T		04005	2469.80	0.00	2469.80
1	x1n	PL	12.7 x 610	615	M270M	345W		FILL	08006	37.40	0.00	37.40
2	x2b	PL	25.4 x 280	2 801	M270M	345W			07001	156.36	0.00	156.36
2	x2f	PL	25.4 x 280	2 801	M270M	345W	T		07001	156.36	0.00	156.36
4	x3b	PL	14.3 x 280	2 800	M270M	345W	T		07002	88.00	0.00	88.00
2	x4b	PL	14.3 x 1140	425	M270M	345W		BENT	07003	54.38	0.00	54.38
1	x5b	PL	14.3 x 1140	446	M270M	345W		BENT	07003	57.07	0.00	57.07
8	140308-G	HS Bolt	7/8	0'-3 1/2	M164 Type 1			GALV.	17003	0.00	0.00	0.00
16	140308	HS Bolt	7/8	0'-3 1/2	M164 Type 3				17002	0.00	0.00	0.00
8	N14-G	Nut	7/8		M291	DH		GALV.	17005	0.00	0.00	0.00
16	N14	Nut	7/8		M291	DH3			17004	0.00	0.00	0.00
8	W14-G	Std Wash	7/8		M293			GALV.	17007	0.00	0.00	0.00
16	W14	Std Wash	7/8		M293 Weathering				17006	0.00	0.00	0.00

TOTAL WEIGHT THIS SHEET: 11 591.25 kgs
BID ITEM 0160 506.56

SECTION E

SECTION A

SECTION B

SECTION C

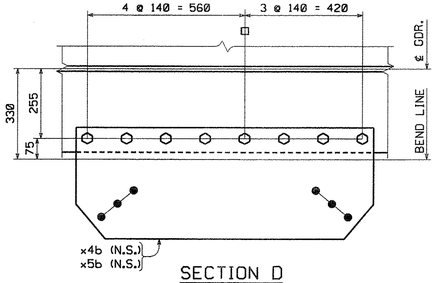

SECTION D

SHOP NOTE:
[8 @ 3½]
INDICATES LENGTH OF ⅞"ø H.S. BOLTS
INDICATES NUMBER OF ⅞"ø H.S. BOLTS

TVGA CONSULTANTS

☒ NO EXCEPTIONS TAKEN ☐ REJECTED
☐ FURNISH AS CORRECTED
☐ REVISE AND RESUBMIT

ENGINEER has reviewed Shop Drawings and Samples and other data which Contractor is required to submit, only for conformance with the information given in the Contract Documents and compatibility with the design concept of the completed Project as a functioning whole as indicated in the Contract Documents. Such review does not extend to means, methods, techniques, sequences or procedures of construction or to safety precautions and programs incident thereto. Contractor is responsible for dimensions to be confirmed and correlated at the job site; for information that pertains solely to the fabrication processes or to techniques of construction; and for coordination of the work of all trades.

BY: _____
DATE: 12/6/07

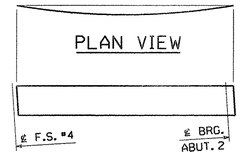

ORIENTATION DIAGRAM

NO.	REVISION	BY	CHK'D	DATE

HOLES 15/16"ø
BOLTS AS NOTED
COATING SEE DWG. GN1
CODE(S) 30
SCALE N.T.S.

HIGH STEEL STRUCTURES INC. — An Affiliate of High Industries Inc. — An ISO 9001:2000 Certified Company
Lancaster Facility: 915 Old Philadelphia Pike, Lancaster, PA 17605-0008, Phone (717) 299-5211
Williamsport Facility: 3501 W. 4th Street, Williamsport, PA 17701, Phone (570) 326-9051
www.highsteel.com

GIRDER G3E
VT ROUTE 279 OVER FURNACE BROOK
VT ROUTE 279 STA. 8+542.000 TO STA. 8+685.000
TOWN OF BENNINGTON VERMONT, BRIDGE B12
STATE OF VERMONT
AGENCY OF TRANSPORTATION
AC NH F019-1(53) — FED. AID PROJ. NO.
GENERAL CONTRACTOR: J.A. McDONALD, INC. — HSSI PROJ. MGR: DEB KUPRES

SHPMT	3	DRAWING MANAGER	BRITIGAN (IH)	MADE BY	DRJ	CHK'D. BY	MGK	DATE	11-26-07
STATE	VT	HSSI PROJECT NUMBER	S-1070147	HSSI STRUCT. ID	A	DRAWING NUMBER	27 OF 34		

METRIC
PLOTTED: 11/30/2007 12:30:09 PM
BY: MK-reidel
SHIPMENT 01
PM&ENG: 5902817 PRO: 5902818 SHPARECT#: 5902819

1070147A X1 12/3/07 12/3/07Approval TO:J.A. McDonald, Inc.

METRIC

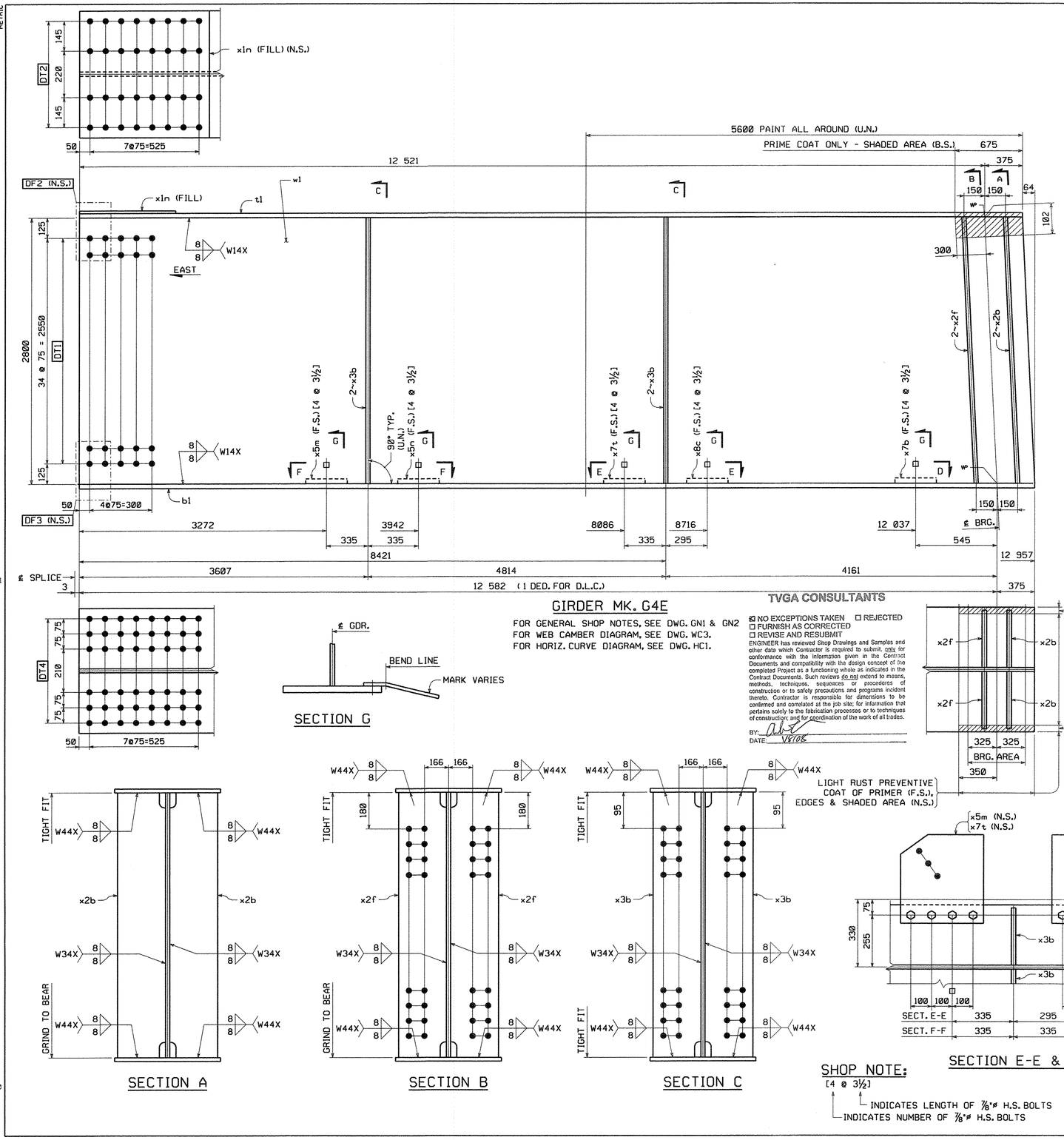

GIRDER MK. G4E

FOR GENERAL SHOP NOTES, SEE DWG. GN1 & GN2
FOR WEB CAMBER DIAGRAM, SEE DWG. WC3.
FOR HORIZ. CURVE DIAGRAM, SEE DWG. HC1.

TVGA CONSULTANTS

☒ NO EXCEPTIONS TAKEN ☐ REJECTED
☐ FURNISH AS CORRECTED
☐ REVISE AND RESUBMIT

ENGINEER has reviewed Shop Drawings and Samples and either data which Contractor is required to submit, only for conformance with the information given in the Contract Documents and compatibility with the design concept of the completed Project as a functioning whole as indicated in the Contract Documents. Such reviews do not extend to means, methods, techniques, sequences or procedures of construction or to safety precautions and programs incident thereto. Contractor is responsible for dimensions to be confirmed and correlated at the job site; for information that pertains solely to the fabrication processes or to techniques of construction; and for coordination of the work of all trades.

BY:
DATE: 12/3/07

SECTION G

LIGHT RUST PREVENTIVE COAT OF PRIMER (F.S.), EDGES & SHADED AREA (N.S.)

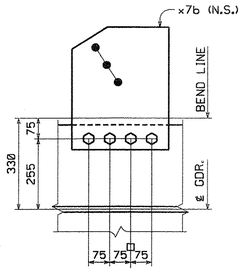

SECTION D

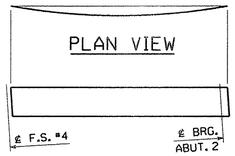

ORIENTATION DIAGRAM

SECTION A

SECTION B

SECTION C

SECTION E-E & F-F

SHOP NOTE:
[4 @ 3½]
└ INDICATES LENGTH OF ⅞"ø H.S. BOLTS
INDICATES NUMBER OF ⅞"ø H.S. BOLTS

BILL OF MATERIAL

QTY EA.	MARK	COMM	DESCRIPTION	LENGTH	SPEC	GRADE	TEST	REMARKS	ITEM	GROS WT. EA.	DED. WEIGHT	NET WT. EA.
1	G4E		GIRDER							11586.63	16.20	11570.43
1	w1	PL	22 x 2800	12 960	M270M	345W	T		03009	6266.18	16.20	6249.98
1	t1	PL	28 x 610	12 896	M270M	345W	T		04007	1728.86	0.00	1728.86
1	b1	PL	40 x 610	12 957	M270M	345W	T		04005	2481.48	0.00	2481.48
1	x1n	PL	12.7 x 610	615	M270M	345W		FILL	06006	37.40	0.00	37.40
2	x2b	PL	25.4 x 280	2 801	M270M	345W			07001	156.36	0.00	156.36
2	x2f	PL	25.4 x 280	2 801	M270M	345W	T		07001	156.36	0.00	156.36
4	x3b	PL	14.3 x 280	2 800	M270M	345W	T		07002	88.00	0.00	88.00
1	x5m	PL	14.3 x 420	422	M270M	345W		BENT	07003	19.89	0.00	19.89
1	x5n	PL	14.3 x 420	421	M270M	345W		BENT	07003	19.85	0.00	19.85
1	x7b	PL	14.3 x 345	421	M270M	345W		BENT	07003	16.30	0.00	16.30
1	x7t	PL	14.3 x 420	422	M270M	345W		BENT	07003	19.89	0.00	19.89
1	x8c	PL	14.3 x 400	431	M270M	345W		BENT	07003	19.35	0.00	19.35
12	140308-G	HS Bolt	7/8	0'-3 1/2	M164 Type 1			GALV.	17003	0.00	0.00	0.00
8	140308	HS Bolt	7/8	0'-3 1/2	M164 Type 3				17002	0.00	0.00	0.00
12	N14-G	Nut	7/8		M291	DH		GALV.	17005	0.00	0.00	0.00
8	N14	Nut	7/8		M291	DH3			17004	0.00	0.00	0.00
12	W14-G	Std Wash	7/8		M293			GALV.	17007	0.00	0.00	0.00
8	W14	Std Wash	7/8		M293 Weathering				17006	0.00	0.00	0.00

TOTAL WEIGHT THIS SHEET: **11 570.43 kgs**
BID ITEM 0160 506.56

NO.	REVISION	BY	CHK'D	DATE

HOLES 15/16"ø | BOLTS AS NOTED | COATING SEE DWG. GN1 | CODE(S) 30 | SCALE N.T.S.

HIGH STEEL STRUCTURES INC.
An ISO 9001:2000 Certified Company
An Affiliate of High Industries Inc.
Lancaster Facility: 915 Old Philadelphia Pike, Lancaster, PA 17605-0008, Phone (717) 299-5211
Williamsport Facility: 3501 W. 4th Street, Williamsport, PA 17701, Phone (570) 326-3051
www.Highsteel.com

GIRDER G4E
VT ROUTE 279 OVER FURNACE BROOK
VT ROUTE 279 STA. 8+542.000 TO STA. 8+685.000
TOWN OF BENNINGTON VERMONT, BRIDGE B12
STATE OF VERMONT
AGENCY OF TRANSPORTATION

	AC NH F019-1(53)	FED. AID PROJ. NO.	
GENERAL CONTRACTOR	J.A. McDONALD, INC.	HSSI PROJ. MGR	DEB KUPRES
SHPMT 3	DRAWING MANAGER BRITIGAN (IH)	MADE BY DRJ	CHK'D. BY MGK	DATE 11-26-07
STATE VT	HSSI PROJECT NUMBER S-1070147	HSSI STRUCT. ID A	DRAWING NUMBER 28 OF 34

PLOTTED: 11/30/2007 12:30:23 PM
BY: MKreidel
SHIPMENT 01
PM&ENG: 5902817 PRO: 5902818 SHIP&ERECT: 5902819

1070147A X1 12/3/07 12/3/07Approval TO:J.A. McDonald, Inc.

METRIC

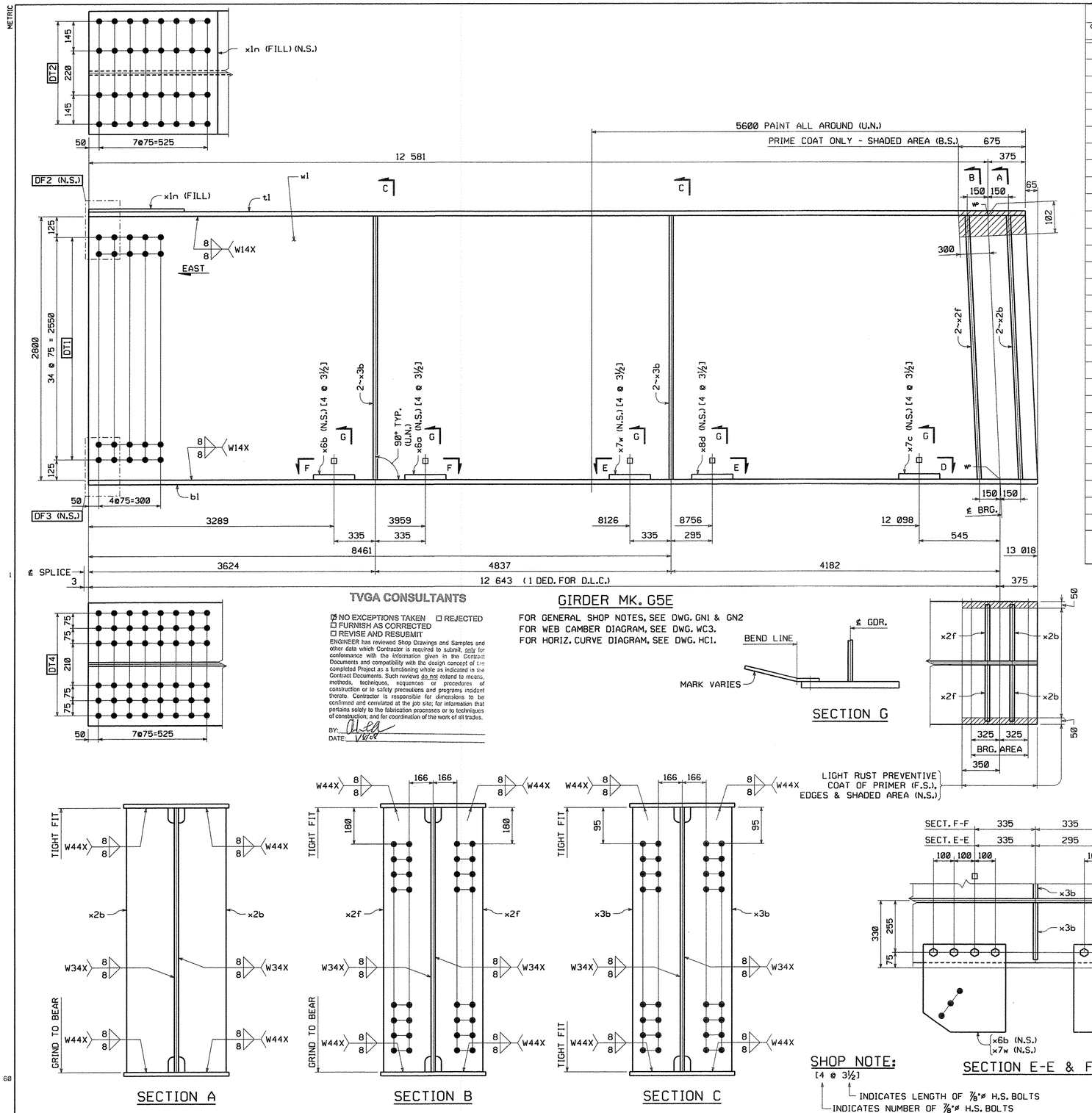

TVGA CONSULTANTS

☑ NO EXCEPTIONS TAKEN ☐ REJECTED
☐ FURNISH AS CORRECTED
☐ REVISE AND RESUBMIT

ENGINEER has reviewed Shop Drawings and Samples and other data which Contractor is required to submit, only for conformance with the information given in the Contract Documents and compatibility with the design concept of the completed Project as a functioning whole as indicated in the Contract Documents. Such reviews do not extend to means, methods, techniques, sequences or procedures of construction or to safety precautions and programs incident thereto. Contractor is responsible for dimensions to be confirmed and correlated at the job site; for information that pertains solely to the fabrication processes or to techniques of construction; and for coordination of the work of all trades.

BY: Alles
DATE: 12/3/07

GIRDER MK. G5E

FOR GENERAL SHOP NOTES, SEE DWG. GN1 & GN2
FOR WEB CAMBER DIAGRAM, SEE DWG. WC3.
FOR HORIZ. CURVE DIAGRAM, SEE DWG. HC1.

SECTION G

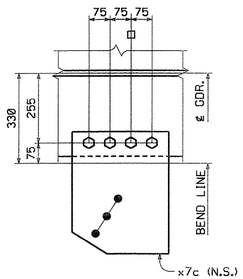

SECTION D

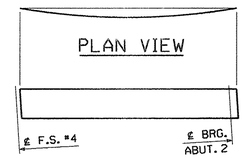

ORIENTATION DIAGRAM

SECTION A

SECTION B

SECTION C

SECTION E-E & F-F

SHOP NOTE:
[4 @ 3½]
INDICATES LENGTH OF ⅞"ø H.S. BOLTS
INDICATES NUMBER OF ⅞"ø H.S. BOLTS

BILL OF MATERIAL

QTY EA.	MARK	COMM	DESCRIPTION	LENGTH	SPEC	GRADE	TEST	REMARKS	ITEM	GROS WT. EA.	DED. WEIGHT	NET WT. EA.
1	G5E		GIRDER							11635.58	16.44	11619.14
1	w1	PL	22 x 2800	13 021	M270M	345W	T		03009	6295.67	16.44	6279.23
1	t1	PL	28 x 610	12 956	M270M	345W	T		04007	1736.90	0.00	1736.90
1	b1	PL	40 x 610	13 018	M270M	345W	T		04005	2493.17	0.00	2493.17
1	x1n	PL	12.7 x 610	615	M270M	345W		FILL	08006	37.40	0.00	37.40
2	x2b	PL	25.4 x 280	2 801	M270M	345W			07001	156.36	0.00	156.36
2	x2f	PL	25.4 x 280	2 801	M270M	345W	T		07001	156.36	0.00	156.36
4	x3b	PL	14.3 x 280	2 800	M270M	345W	T		07002	88.00	0.00	88.00
1	x6a	PL	14.3 x 420	420	M270M	345W		BENT	07003	19.80	0.00	19.80
1	x6b	PL	14.3 x 420	420	M270M	345W		BENT	07003	19.80	0.00	19.80
1	x7c	PL	14.3 x 345	420	M270M	345W		BENT	07003	16.26	0.00	16.26
1	x7w	PL	14.3 x 420	421	M270M	345W		BENT	07003	19.85	0.00	19.85
1	x8d	PL	14.3 x 400	430	M270M	345W		BENT	07003	19.31	0.00	19.31
12	140308-G	HS Bolt	7/8	0'-3 1/2	M164 Type 1			GALV.	17003	0.00	0.00	0.00
8	140308	HS Bolt	7/8	0'-3 1/2	M164 Type 3				17002	0.00	0.00	0.00
12	N14-G	Nut	7/8		M291	DH		GALV.	17005	0.00	0.00	0.00
8	N14	Nut	7/8		M291	DH3			17004	0.00	0.00	0.00
12	W14-G	Std Wash	7/8		M293			GALV.	17007	0.00	0.00	0.00
8	W14	Std Wash	7/8		M293 Weathering				17006	0.00	0.00	0.00

TOTAL WEIGHT THIS SHEET: 11 619.14 kgs
BID ITEM 0160 506.56

NO.	REVISION	BY	CHK'D	DATE
△				
△				
△				

HIGH STEEL STRUCTURES INC. — An Affiliate of High Industries Inc. — An ISO 9001:2000 Certified Company

Lancaster Facility
195 Old Philadelphia Pike
Lancaster, PA 17605-0008
Phone (717) 299-5211

Williamsport Facility
3501 W. 4th Street
Williamsport, PA 17701
Phone (570) 326-9051

www.Highsteel.com

HOLES	15/16"ø
BOLTS	AS NOTED
COATING	SEE DWG. GN1
CODE(S)	30
SCALE	N.T.S.
	GIRDER G5E
	VT ROUTE 279 OVER FURNACE BROOK
	VT ROUTE 279 STA. 8+542.000 TO STA. 8+685.000
	TOWN OF BENNINGTON VERMONT, BRIDGE B12
	STATE OF VERMONT
	AGENCY OF TRANSPORTATION
	AC NH F019-1(53) — FED. AID PROJ. NO.
GENERAL CONTRACTOR	J.A. McDONALD, INC. — HSSI PROJ. MGR: DEB KUPRES
SHPMT 3	DRAWING MANAGER: BRITIGAN (IH) — MADE BY: DRJ — CHK'D. BY: MGK — DATE: 11-26-07
STATE VT	HSSI PROJECT NUMBER: S-1070147 — HSSI STRUCT. ID: A — DRAWING NUMBER: 29 OF 34

1070147A X1 12/3/07 12/3/07Approval TO:J.A. McDonald, Inc.

PLOTTED: 11/20/2007 12:38:37 PM BY: MKreidel SHIPMENT 01 PM&ENG 5082818 SHIP&ERECT: 5082818 PRO: 5082818

METRIC

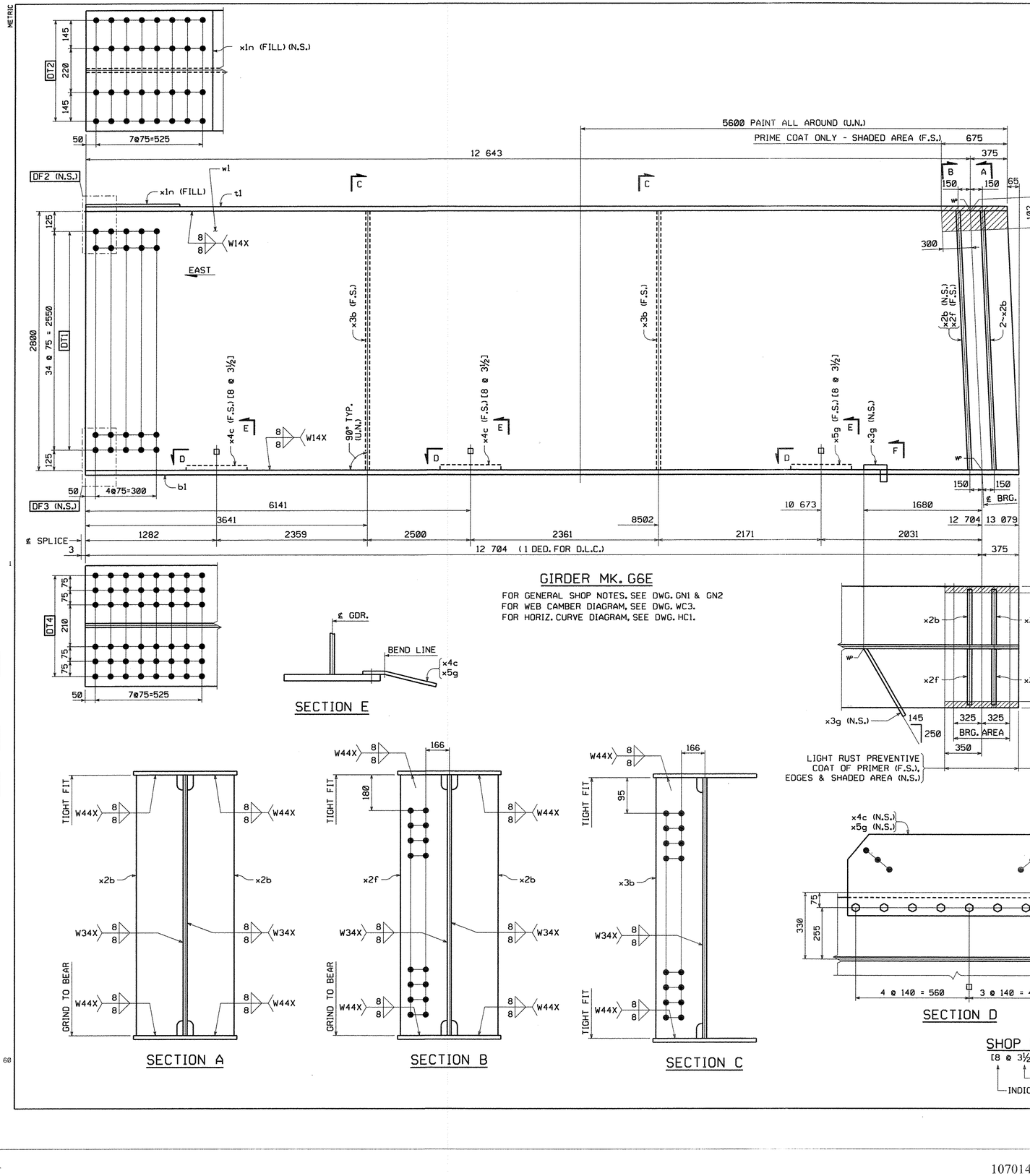

GIRDER MK. G6E

FOR GENERAL SHOP NOTES, SEE DWG. GN1 & GN2
FOR WEB CAMBER DIAGRAM, SEE DWG. WC3.
FOR HORIZ. CURVE DIAGRAM, SEE DWG. HC1.

SECTION E

SECTION A

SECTION B

SECTION C

SECTION D

SHOP NOTE:
[8 @ 3½]
INDICATES LENGTH OF ⅞"ø H.S. BOLTS
INDICATES NUMBER OF ⅞"ø H.S. BOLTS

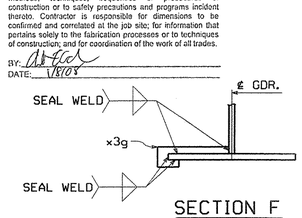

SECTION F
(DEVELOPED)

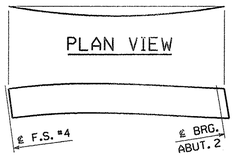

ORIENTATION DIAGRAM

BILL OF MATERIAL

QTY EA.	MARK	COMM	DESCRIPTION	LENGTH	SPEC	GRADE	TEST	REMARKS	ITEM	GROS WT. EA.	DED. WEIGHT	NET WT. EA.
1	G6E		GIRDER							11582.13	16.68	11565.45
1	w1	PL	22 x 2800	13 083	M270M	345W	T		03005	6325.65	16.68	6308.97
1	t1	PL	28 x 610	13 018	M270M	345W	T		04007	1745.22	0.00	1745.22
1	b1	PL	40 x 610	13 079	M270M	345W	T		04005	2504.85	0.00	2504.85
1	x1n	PL	12.7 x 610	615	M270M	345W		FILL	06006	37.40	0.00	37.40
3	x2b	PL	25.4 x 280	2 801	M270M	345W			07001	156.36	0.00	156.36
1	x2f	PL	25.4 x 280	2 801	M270M	345W	T		07001	156.36	0.00	156.36
2	x3b	PL	14.3 x 280	2 800	M270M	345W	T		07002	88.00	0.00	88.00
1	x3g	PL	6.4 x 90	389	M270M	345W			07005	1.76	0.00	1.76
2	x4c	PL	14.3 x 1140	425	M270M	345W		BENT	07003	54.38	0.00	54.38
1	x5g	PL	14.3 x 1140	446	M270M	345W		BENT	07003	57.07	0.00	57.07
8	140308-G	HS Bolt	7/8	0'-3 1/2	M164 Type 1			GALV.	17003	0.00	0.00	0.00
16	140308	HS Bolt	7/8	0'-3 1/2	M164 Type 3				17002	0.00	0.00	0.00
8	N14-G	Nut	7/8		M291	DH		GALV.	17005	0.00	0.00	0.00
16	N14	Nut	7/8		M291	DH3			17004	0.00	0.00	0.00
8	W14-G	Std Wash	7/8		M293			GALV.	17007	0.00	0.00	0.00
16	W14	Std Wash	7/8		M293 Weathering				17006	0.00	0.00	0.00

TOTAL WEIGHT THIS SHEET: 11 565.45 kgs
BID ITEM 0160 506.56

TVGA CONSULTANTS

☒ NO EXCEPTIONS TAKEN ☐ REJECTED
☐ FURNISH AS CORRECTED
☐ REVISE AND RESUBMIT

ENGINEER has reviewed Shop Drawings and Samples and other data which Contractor is required to submit, only for conformance with the information given in the Contract Documents and compatibility with the design concept of the completed Project as a functioning whole as indicated in the Contract Documents. Such reviews do not extend to means, methods, techniques, sequences or procedures of construction or to safety precautions and programs incident thereto. Contractor is responsible for dimensions to be confirmed and correlated at the job site; for information that pertains solely to the fabrication processes or to techniques of construction; and for coordination of the work of all trades.

BY:
DATE: 12/3/07

NO.	REVISION	BY	CHK'D	DATE

HOLES 15/16"ø
BOLTS AS NOTED
COATING SEE DWG. GN1
CODE(S) 30
SCALE N.T.S.

HIGH STEEL STRUCTURES INC.
An ISO 9001:2000 Certified Company
An Affiliate of High Industries Inc.
Lancaster Facility
195 Old Philadelphia Pike
Lancaster, PA 17605-0008
Phone (717) 299-5211
Williamsport Facility
3501 N. 4th Street
Williamsport, PA 17701
Phone (570) 326-9051
www.highsteel.com

	GIRDER G6E
	VT ROUTE 279 OVER FURNACE BROOK
	VT ROUTE 279 STA. 8+542.000 TO STA. 8+685.000
	TOWN OF BENNINGTON VERMONT, BRIDGE B12
	STATE OF VERMONT
	AGENCY OF TRANSPORTATION
	AC NH F019-1(53) — FED. AID PROJ. NO.
GENERAL CONTRACTOR	J.A. McDONALD, INC. — HSSI PROJ. MGR: DEB KUPRES
SHPMT 3	DRAWING MANAGER: BRITIGAN (IH) — MADE BY: DRJ — CHK'D. BY: MGK — DATE: 11-26-07
STATE VT	HSSI PROJECT NUMBER: S-1070147 — HSSI STRUCT. ID: A — DRAWING NUMBER: 30 OF 34

PLOTTED: 11/30/2007 12:31:06 PM
BY: MKrendel
SHIPMENT 01 PM&ENG 5002818Z PRO: 5002818 SHIPAERECT: 5002819

1070147A X1 12/3/07 12/3/07Approval TO:J.A. McDonald, Inc.

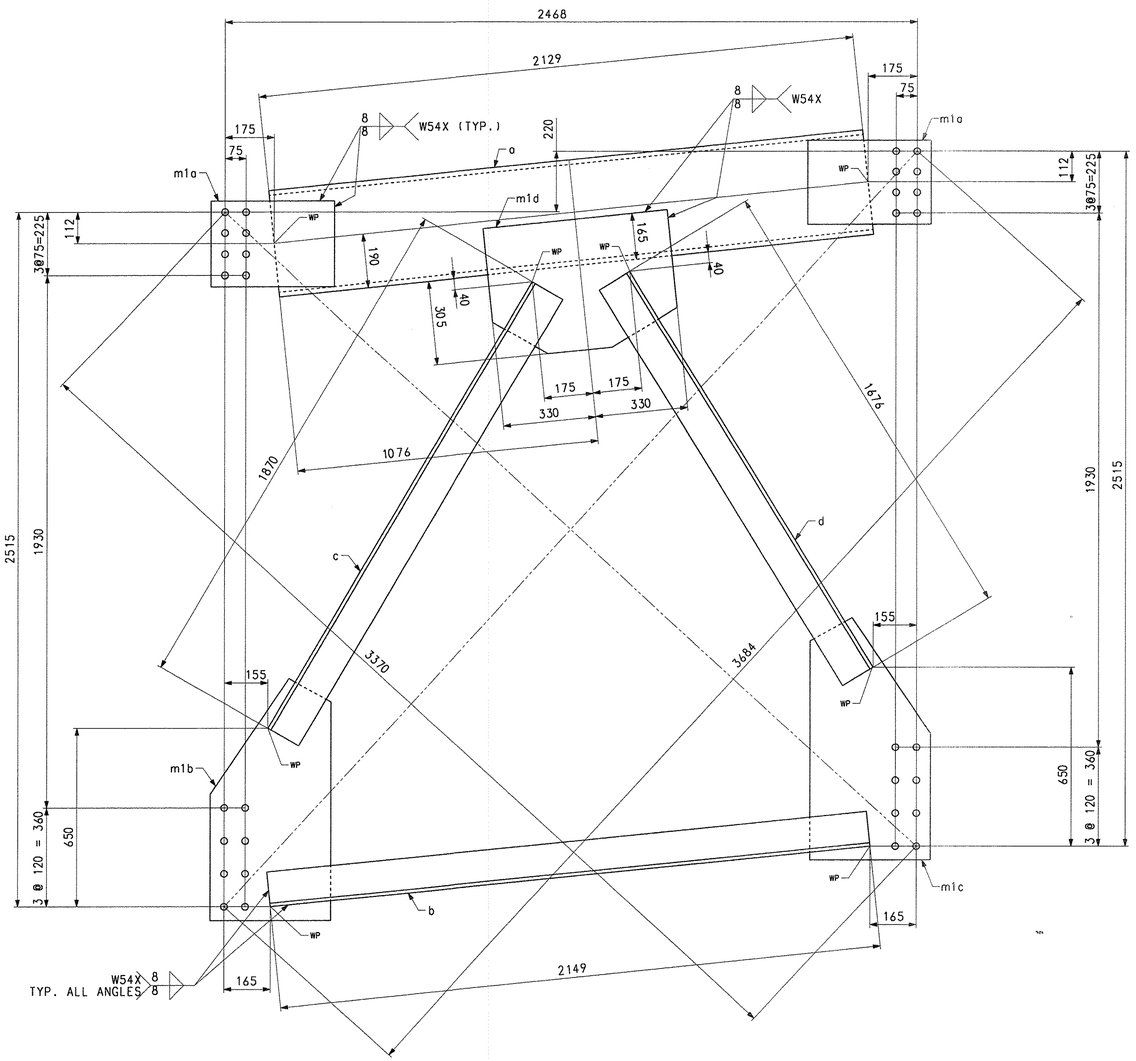

CROSSFRAME – MK. CF1 (PAINT)

BILL OF MATERIAL

QTY	MARK	COMM.	DESCRIPTION	LENGTH	SPEC	GRADE	TEST	REMARKS	ITEM	GROSS WEIGHT EA.	DEDUCTED WEIGHT EA.	NET WEIGHT EA.
5	CF1		CROSSFRAME							380.29	0	380.29
1	a	C	380 x 50.4	2129	M270M	345W	T	(C15 x 33.9)	11001	107.30	0	107.30
1	b	L	127 x 127 x 12.7	2149	M270M	345W	T	(L5 x 5 x 1/2)	11002	52.13	0	52.13
1	c	L	127 x 127 x 12.7	1870	M270M	345W	T	(L5 x 5 x 1/2)	11002	45.37	0	45.37
1	d	L	127 x 127 x 12.7	1676	M270M	345W	T	(L5 x 5 x 1/2)	11002	40.66	0	40.66
2	m1a	PL	14.3 x 305	440	M270M	345W	T		11003	15.06	0	15.06
1	m1b	PL	14.3 x 430	880	M270M	345W	T		11003	42.47	0	42.47
1	m1c	PL	14.3 x 430	880	M270M	345W	T		11003	42.47	0	42.47
1	m1d	PL	14.3 x 470	660	M270M	345W	T		11003	34.82	0	34.82
								TOTAL WEIGHT THIS SHEET:				1901.43 kgs

TVGA CONSULTANTS

☐ NO EXCEPTIONS TAKEN ☐ REJECTED
☑ FURNISH AS CORRECTED
☐ REVISE AND RESUBMIT

ENGINEER has reviewed Shop Drawings and Samples and other data which Contractor is required to submit, only for conformance with the information given in the Contract Documents and compatibility with the design concept of the completed Project as a functioning whole as indicated in the Contract Documents. Such reviews do not extend to means, methods, techniques, sequences or procedures of construction or to safety precautions and programs incident thereto. Contractor is responsible for dimensions to be confirmed and correlated at the job site; for information that pertains solely to the fabrication processes or to techniques of construction; and for coordination of the work of all trades.

BY: _____
DATE: 12/3/07

NOTE:
FOR GENERAL SHOP NOTES, SEE DRAWING GN1.

NO.	REVISION	BY	CHK'D	DATE

HOLES 15/16" Ø
BOLTS NONE
COATING SEE DWG. GN1
CODE(S) 63
SCALE N.T.S.

HIGH STEEL STRUCTURES INC.
1915 Old Philadelphia Pike
Lancaster, PA 17602-0008
Phone (717) 299-5211
www.highsteel.com
An ISO 9001:2000 Certified Company — An Affiliate of High Industries Inc.

CROSSFRAME CF1
VT ROUTE 279 OVER FURNACE BROOK
VT ROUTE 279 STA. 8+542.000 TO STA. 8+685.000
TOWN OF BENNINGTON VERMONT, BRIDGE B12
STATE OF VERMONT
AGENCY OF TRANSPORTATION

STATE CONT. OR REF. NO.	AC NH F019-1(53)	FED. AID PROJ. NO.			
GENERAL CONTRACTOR	J.A. McDONALD, INC.	HSSI PROJ. MGR	DEB KUPRES		
SHPMT 3	DRAWING MANAGER	BRITIGAN (IH)	MADE BY	ERS	CHK'D. BY	CS	DATE	11-14-07
STATE VT	HSSI PROJECT NUMBER	S-1070147	HSSI STRUCT. ID	A	DRAWING NUMBER	31 OF 34		

SHIPMENT 1 PMENG: 50028L2 PRD: 50028L8 SHIP&ERECT: 50028L9
PLOTTED: 11/30/07 12:51:39 BY: MKreidel

1070147A X1 12/3/07 12/3/07Approval TO:J.A. McDonald, Inc.

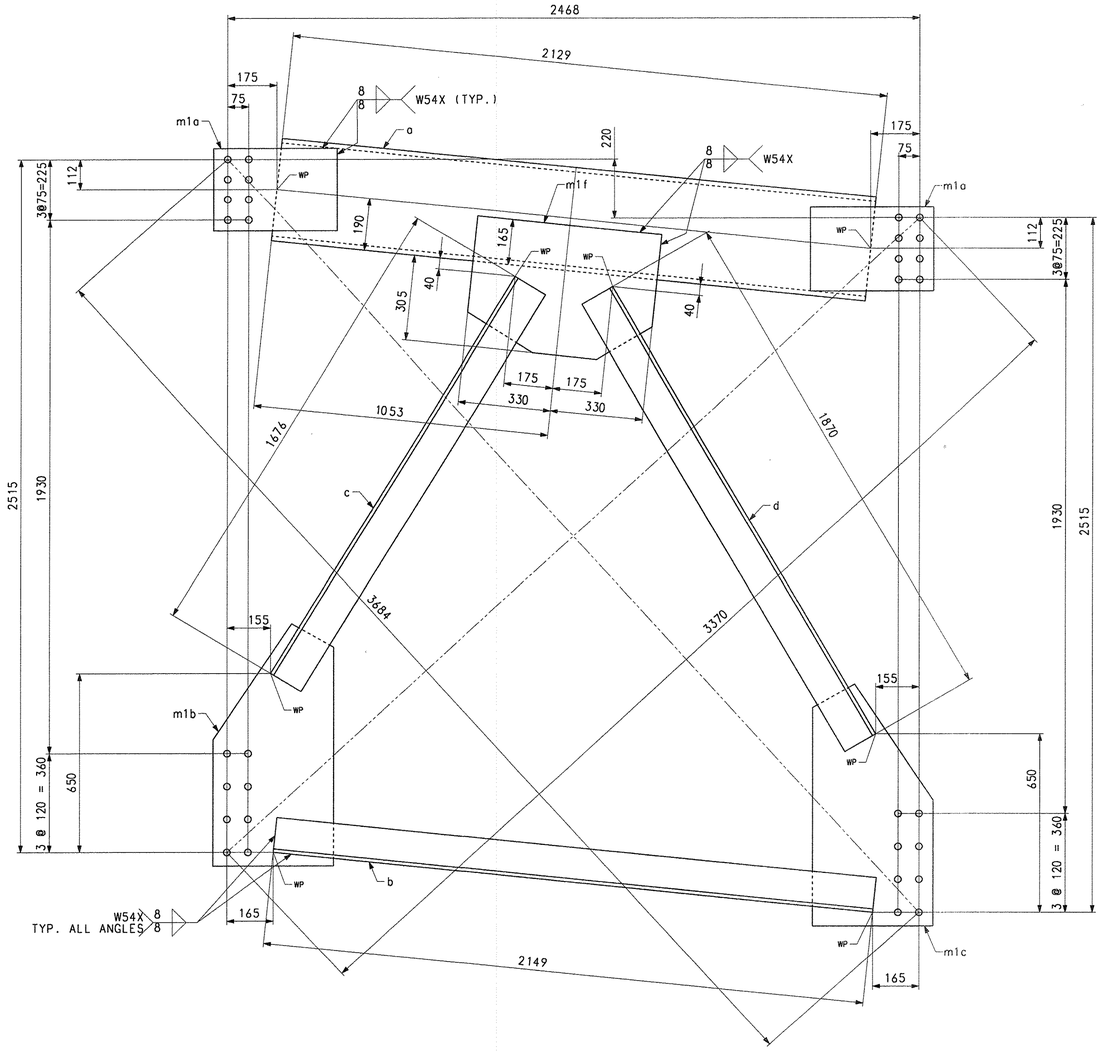

CROSSFRAME – MK. CF2 (PAINT)
CROSSFRAME – MK. CF3 (NO PAINT)

BILL OF MATERIAL

QTY	MARK	COMM.	DESCRIPTION	LENGTH	SPEC	GRADE	TEST	REMARKS	ITEM	GROSS WEIGHT EA.	DEDUCTED WEIGHT EA.	NET WEIGHT EA.
5	CF2		CROSSFRAME							380.29	0	380.29
1	a	C	380 x 50.4	2129	M270M	345W	T	(C15 x 33.9)	11001	107.30	0	107.30
1	b	L	127 x 127 x 12.7	2149	M270M	345W	T	(L5 x 5 x 1/2)	11002	52.13	0	52.13
1	c	L	127 x 127 x 12.7	1676	M270M	345W	T	(L5 x 5 x 1/2)	11002	40.66	0	40.66
1	d	L	127 x 127 x 12.7	1870	M270M	345W	T	(L5 x 5 x 1/2)	11002	45.37	0	45.37
2	m1a	PL	14.3 x 305	440	M270M	345W	T		11003	15.06	0	15.06
1	m1b	PL	14.3 x 430	880	M270M	345W	T		11003	42.47	0	42.47
1	m1c	PL	14.3 x 430	880	M270M	345W	T		11003	42.47	0	42.47
1	m1f	PL	14.3 x 470	660	M270M	345W	T		11003	34.82	0	34.82
5	CF3		CROSSFRAME							380.29	0	380.29
1	a	C	380 x 50.4	2129	M270M	345W	T	(C15 x 33.9)	11001	107.30	0	107.30
1	b	L	127 x 127 x 12.7	2149	M270M	345W	T	(L5 x 5 x 1/2)	11002	52.13	0	52.13
1	c	L	127 x 127 x 12.7	1676	M270M	345W	T	(L5 x 5 x 1/2)	11002	40.66	0	40.66
1	d	L	127 x 127 x 12.7	1870	M270M	345W	T	(L5 x 5 x 1/2)	11002	45.37	0	45.37
2	m1a	PL	14.3 x 305	440	M270M	345W	T		11003	15.06	0	15.06
1	m1b	PL	14.3 x 430	880	M270M	345W	T		11003	42.47	0	42.47
1	m1c	PL	14.3 x 430	880	M270M	345W	T		11003	42.47	0	42.47
1	m1f	PL	14.3 x 470	660	M270M	345W	T		11003	34.82	0	34.82
								TOTAL WEIGHT THIS SHEET:			3802.87	kgs

TVGA CONSULTANTS

☒ NO EXCEPTIONS TAKEN ☐ REJECTED
☐ FURNISH AS CORRECTED
☐ REVISE AND RESUBMIT

ENGINEER has reviewed Shop Drawings and Samples and other data which Contractor is required to submit, only for conformance with the information given in the Contract Documents and compatibility with the design concept of the completed Project as a functioning whole as indicated in the Contract Documents. Such reviews do not extend to means, methods, techniques, sequences or procedures of construction or to safety precautions and programs incident thereto. Contractor is responsible for dimensions to be confirmed and correlated at the job site; for information that pertains solely to the fabrication processes or to techniques of construction; and for coordination of the work of all trades.

BY: _____
DATE: 12/3/07

NOTE:
FOR GENERAL SHOP NOTES, SEE DRAWING GN1.

NO.	REVISION	BY	CHK'D	DATE
△				
△				
△				

HOLES 15/16" Ø
BOLTS NONE
COATING SEE DWG. GN1
CODE(S) 63
SCALE N.T.S.

HIGH STEEL STRUCTURES INC.
1915 Old Philadelphia Pike
Lancaster, PA 17605-0008
Phone (717) 299-5211
www.highsteel.com
An ISO 9001:2000 Certified Company
An Affiliate of High Industries Inc.

CROSSFRAMES CF2 & CF3
VT ROUTE 279 OVER FURNACE BROOK
VT ROUTE 279 STA. 8+542.000 TO STA. 8+685.000
TOWN OF BENNINGTON VERMONT, BRIDGE B12
STATE OF VERMONT
AGENCY OF TRANSPORTATION

STATE CONT. OR REF. NO.	AC NH F019-1(53)		FED. AID PROJ. NO.		
GENERAL CONTRACTOR	J.A. McDONALD, INC.		HSSI PROJ. MGR	DEB KUPRES	
SHPMT 3	DRAWING MANAGER	BRITIGAN (IH)	MADE BY	ERS	CHK'D. BY CS DATE 11-14-07
STATE VT	HSSI PROJECT NUMBER	S-1070147	HSSI STRUCT. ID	A	DRAWING NUMBER 32 OF 34

SHIPMENT 1 PMAENG: S0028117 PRD: S0028118 SHIPAEREC T: 5002818
PLOTTED: 11/30/07 12:51:49 BY: MKreidel

1070147A X1 12/3/07 12/3/07Approval TO:J.A. McDonald, Inc.

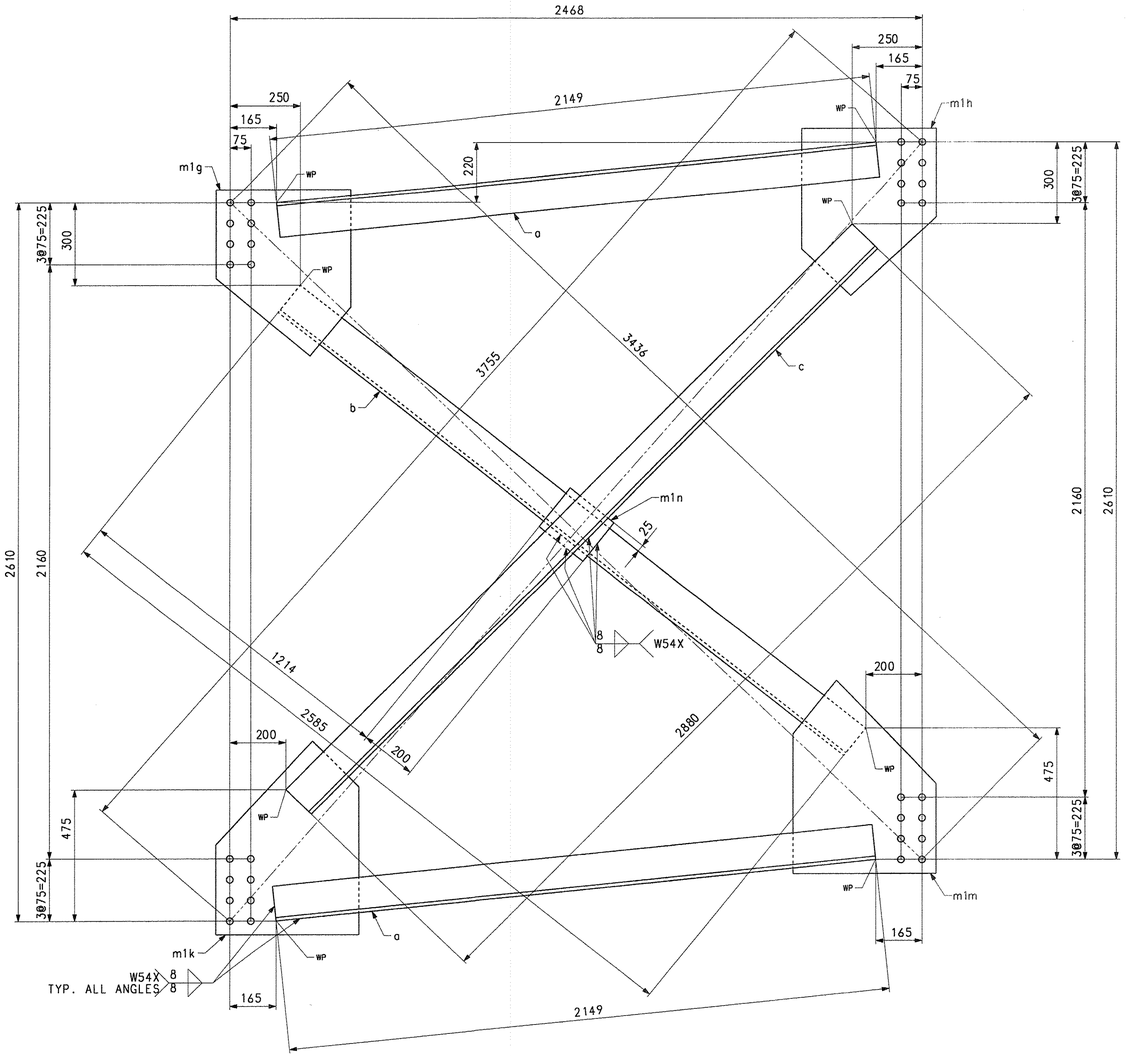

CROSSFRAME – MK. CF4 (PAINT)
CROSSFRAME – MK. CF5 (NO PAINT)

BILL OF MATERIAL

QTY	MARK	COMM.	DESCRIPTION	LENGTH	SPEC	GRADE	TEST	REMARKS	ITEM	GROSS WEIGHT EA.	DEDUCTED WEIGHT EA.	NET WEIGHT EA.
10	CF4		CROSSFRAME							334.56	0	334.56
2	a	L	127 x 127 x 12.7	2149	M270M	345W	T	(L5 x 5 x 1/2)	11002	52.13	0	52.13
1	b	L	127 x 127 x 12.7	2585	M270M	345W	T	(L5 x 5 x 1/2)	11002	62.71	0	62.71
1	c	L	127 x 127 x 12.7	2880	M270M	345W	T	(L5 x 5 x 1/2)	11002	69.87	0	69.87
1	m1g	PL	14.3 x 480	610	M270M	345W	T		11003	32.86	0	32.86
1	m1h	PL	14.3 x 480	610	M270M	345W	T		11003	32.86	0	32.86
1	m1k	PL	14.3 x 510	700	M270M	345W	T		11003	40.07	0	40.07
1	m1m	PL	14.3 x 510	700	M270M	345W	T		11003	40.07	0	40.07
1	m1n	PL	14.3 x 177	200	M270M	345W	T	FILL	11003	3.97	0	3.97
130	CF5		CROSSFRAME							334.56	0	334.56
2	a	L	127 x 127 x 12.7	2149	M270M	345W	T	(L5 x 5 x 1/2)	11002	52.13	0	52.13
1	b	L	127 x 127 x 12.7	2585	M270M	345W	T	(L5 x 5 x 1/2)	11002	62.71	0	62.71
1	c	L	127 x 127 x 12.7	2880	M270M	345W	T	(L5 x 5 x 1/2)	11002	69.87	0	69.87
1	m1g	PL	14.3 x 480	610	M270M	345W	T		11003	32.86	0	32.86
1	m1h	PL	14.3 x 480	610	M270M	345W	T		11003	32.86	0	32.86
1	m1k	PL	14.3 x 510	700	M270M	345W	T		11003	40.07	0	40.07
1	m1m	PL	14.3 x 510	700	M270M	345W	T		11003	40.07	0	40.07
1	m1n	PL	14.3 x 177	200	M270M	345W	T	FILL	11003	3.97	0	3.97
								TOTAL WEIGHT THIS SHEET:		46838.11		kgs

TVGA CONSULTANTS

☒ NO EXCEPTIONS TAKEN ☐ REJECTED
☐ FURNISH AS CORRECTED
☐ REVISE AND RESUBMIT

ENGINEER has reviewed Shop Drawings and Samples and other data which Contractor is required to submit, only for conformance with the information given in the Contract Documents and compatibility with the design concept of the completed Project as a functioning whole as indicated in the Contract Documents. Such review shall not extend to means, methods, techniques, sequences or procedures of construction or to safety precautions and programs incident thereto. Contractor is responsible for dimensions to be confirmed and correlated at the job site; for information that pertains solely to the fabrication processes or to techniques of construction, and for coordination of the work of all trades.

BY: _____
DATE: 12/6/07

NOTE:
FOR GENERAL SHOP NOTES, SEE DRAWING GN1.

NO.	REVISION	BY	CHK'D	DATE

HOLES: 15/16" Ø
BOLTS: NONE
COATING: SEE DWG. GN1
CODE(S): 63
SCALE: N.T.S.

HIGH STEEL STRUCTURES INC.
An ISO 9001:2000 Certified Company
An Affiliate of High Industries Inc.
1915 Old Philadelphia Pike
Lancaster, PA 17602-0008
Phone (717) 293-5211
www.highsteel.com

CROSSFRAMES CF4 & CF5
VT ROUTE 279 OVER FURNACE BROOK
VT ROUTE 279 STA. 8+542.000 TO STA. 8+685.000
TOWN OF BENNINGTON VERMONT, BRIDGE B12
STATE OF VERMONT
AGENCY OF TRANSPORTATION

STATE CONT. OR REF. NO.	AC NH F019-1(53)	FED. AID PROJ. NO.			
GENERAL CONTRACTOR	J.A. McDONALD, INC.	HSSI PROJ. MGR	DEB KUPRES		
SHPMT 3	DRAWING MANAGER	BRITIGAN (IH)	MADE BY	ERS	CHK'D. BY CS DATE 11-14-07
STATE VT	HSSI PROJECT NUMBER	S-1070147	HSSI STRUCT. ID	A	DRAWING NUMBER 33 OF 34

SHIPMENT 1 PM&ENG: 5002817 PRD: 5002818 SHIP&ERECT: 5002819
PLOTTED: 11/30/07 12:46:52 BY: MKreidel

1070147A X1 12/3/07 12/3/07Approval TO:J.A. McDonald, Inc.

METRIC

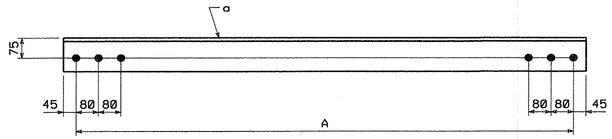

LATERAL BRACING

MARK	A	REMARKS
LB1	2573	NO PAINT
LB2	2573	PAINT
LB3	2565	NO PAINT
LB4	2565	PAINT
LB5	2558	NO PAINT
LB6	2558	PAINT
LB7	2550	NO PAINT
LB8	2550	PAINT
LB9	2543	NO PAINT
LB10	2543	PAINT
LB11	2535	NO PAINT
LB12	2535	PAINT
LB13	2450	NO PAINT
LB14	2443	NO PAINT
LB15	2437	NO PAINT
LB16	2430	NO PAINT
LB17	2423	NO PAINT
LB18	2416	NO PAINT
LB19	2414	PAINT
LB20	2408	PAINT
LB21	2400	PAINT
LB22	2393	PAINT
LB23	2388	PAINT
LB24	2381	PAINT
LB25	2306	PAINT
LB26	2298	PAINT
LB27	2290	PAINT
LB28	2287	PAINT
LB29	2280	PAINT

BILL OF MATERIAL

QTY EA.	MARK	COMM	DESCRIPTION	LENGTH	SPEC	GRADE	TEST	REMARKS	ITEM	GROSS WEIGHT EA.	DEDUCTED WEIGHT EA.	NET WEIGHT EA.
1	LB15		LATERAL BRACING							61.31	0.00	61.31
1	a	L	127 x 127 x 12.7	2527	M270M	345W		(L5x5x1/2)	12001			
1	LB16		LATERAL BRACING							61.14	0.00	61.14
1	a	L	127 x 127 x 12.7	2520	M270M	345W		(L5x5x1/2)	12001			
1	LB17		LATERAL BRACING							60.97	0.00	60.97
1	a	L	127 x 127 x 12.7	2513	M270M	345W		(L5x5x1/2)	12001			
1	LB18		LATERAL BRACING							60.80	0.00	60.80
1	a	L	127 x 127 x 12.7	2506	M270M	345W		(L5x5x1/2)	12001			
1	LB19		LATERAL BRACING							60.75	0.00	60.75
1	a	L	127 x 127 x 12.7	2504	M270M	345W		(L5x5x1/2)	12001			
1	LB20		LATERAL BRACING							60.55	0.00	60.55
1	a	L	127 x 127 x 12.7	2496	M270M	345W		(L5x5x1/2)	12001			
1	LB21		LATERAL BRACING							60.41	0.00	60.41
1	a	L	127 x 127 x 12.7	2490	M270M	345W		(L5x5x1/2)	12001			
1	LB22		LATERAL BRACING							60.24	0.00	60.24
1	a	L	127 x 127 x 12.7	2483	M270M	345W		(L5x5x1/2)	12001			
1	LB23		LATERAL BRACING							60.12	0.00	60.12
1	a	L	127 x 127 x 12.7	2478	M270M	345W		(L5x5x1/2)	12001			
1	LB24		LATERAL BRACING							59.95	0.00	59.95
1	a	L	127 x 127 x 12.7	2471	M270M	345W		(L5x5x1/2)	12001			
1	LB25		LATERAL BRACING							58.13	0.00	58.13
1	a	L	127 x 127 x 12.7	2396	M270M	345W		(L5x5x1/2)	12001			
2	LB26		LATERAL BRACING							57.93	0.00	57.93
1	a	L	127 x 127 x 12.7	2388	M270M	345W		(L5x5x1/2)	12001			
1	LB27		LATERAL BRACING							57.74	0.00	57.74
1	a	L	127 x 127 x 12.7	2380	M270M	345W		(L5x5x1/2)	12001			
1	LB28		LATERAL BRACING							57.67	0.00	57.67
1	a	L	127 x 127 x 12.7	2377	M270M	345W		(L5x5x1/2)	12001			
1	LB29		LATERAL BRACING							57.50	0.00	57.50
1	a	L	127 x 127 x 12.7	2370	M270M	345W		(L5x5x1/2)	12001			
			TOTAL WEIGHT THIS SHEET:							11 467.41 kgs		
			TOTAL WEIGHT FOR BID ITEM NO. 0160 506.56:							662 078.97 kgs		
			TOTAL WEIGHT FOR BID ITEM NO. 0990 900.635:							266 371.08 kgs		

BILL OF MATERIAL

QTY EA.	MARK	COMM	DESCRIPTION	LENGTH	SPEC	GRADE	TEST	REMARKS	ITEM	GROSS WEIGHT EA.	DEDUCTED WEIGHT EA.	NET WEIGHT EA.
26	LB1		LATERAL BRACING							64.60	0.00	64.60
1	a	L	127 x 127 x 12.7	2663	M270M	345W		(L5x5x1/2)	12001			
1	LB2		LATERAL BRACING							64.60	0.00	64.60
1	a	L	127 x 127 x 12.7	2663	M270M	345W		(L5x5x1/2)	12001			
26	LB3		LATERAL BRACING							64.41	0.00	64.41
1	a	L	127 x 127 x 12.7	2655	M270M	345W		(L5x5x1/2)	12001			
1	LB4		LATERAL BRACING							64.41	0.00	64.41
1	a	L	127 x 127 x 12.7	2655	M270M	345W		(L5x5x1/2)	12001			
26	LB5		LATERAL BRACING							64.24	0.00	64.24
1	a	L	127 x 127 x 12.7	2648	M270M	345W		(L5x5x1/2)	12001			
1	LB6		LATERAL BRACING							64.24	0.00	64.24
1	a	L	127 x 127 x 12.7	2648	M270M	345W		(L5x5x1/2)	12001			
26	LB7		LATERAL BRACING							64.05	0.00	64.05
1	a	L	127 x 127 x 12.7	2640	M270M	345W		(L5x5x1/2)	12001			
1	LB8		LATERAL BRACING							64.05		64.05
1	a	L	127 x 127 x 12.7	2640	M270M	345W		(L5x5x1/2)	12001			
26	LB9		LATERAL BRACING							63.88		63.88
1	a	L	127 x 127 x 12.7	2633	M270M	345W		(L5x5x1/2)	12001			
1	LB10		LATERAL BRACING							63.88	0.00	63.88
1	a	L	127 x 127 x 12.7	2633	M270M	345W		(L5x5x1/2)	12001			
26	LB11		LATERAL BRACING							63.68	0.00	63.68
1	a	L	127 x 127 x 12.7	2625	M270M	345W		(L5x5x1/2)	12001			
1	LB12		LATERAL BRACING							63.68	0.00	63.68
1	a	L	127 x 127 x 12.7	2625	M270M	345W		(L5x5x1/2)	12001			
1	LB13		LATERAL BRACING							61.62	0.00	61.62
1	a	L	127 x 127 x 12.7	2540	M270M	345W		(L5x5x1/2)	12001			
1	LB14		LATERAL BRACING							61.45	0.00	61.45
1	a	L	127 x 127 x 12.7	2533	M270M	345W		(L5x5x1/2)	12001			

TVGA CONSULTANTS

☒ NO EXCEPTIONS TAKEN ☐ REJECTED
☐ FURNISH AS CORRECTED
☐ REVISE AND RESUBMIT

ENGINEER has reviewed Shop Drawings and Samples and other data which Contractor is required to submit, only for conformance with the information given in the Contract Documents and compatibility with the design concept of the completed Project as a functioning whole as indicated in the Contract Documents. Such reviews do not extend to means, methods, techniques, sequences or procedures of construction or to safety precautions and programs incident thereto. Contractor is responsible for dimensions to be confirmed and correlated at the job site; for information that pertains solely to the fabrication processes or to techniques of construction; and for coordination of the work of all trades.

BY: _____
DATE: 1/18/08

RECEIVED
JAN 11 2008
G.P.J.

FOR GENERAL SHOP NOTES, SEE DRAWING GN1.

NO.	REVISION	BY	CHK'D	DATE
△				
△				
△				

HOLES: 1 1/16"ø
BOLTS: NONE
COATING: SEE DWG. GN1 (U.N.)
CODE(S): 64
SCALE: N.T.S.

HIGH STEEL STRUCTURES INC.
An Affiliate of High Industries Inc.
An ISO 9001:2000 Certified Company
Lancaster Facility: 715 Old Philadelphia Pike, Lancaster, PA. 17605-0008, Phone (717) 299-5211
Williamsport Facility: 3501 W. 4th Street, Williamsport, PA. 17701, Phone (570) 326-9051
www.Highsteel.com

LATERAL BRACING LB1 - LB29
VT ROUTE 279 OVER FURNACE BROOK
VT ROUTE 279 STA. 8+542.000 TO STA. 8+685.000
TOWN OF BENNINGTON VERMONT, BRIDGE B12
STATE OF VERMONT
AGENCY OF TRANSPORTATION

	AC NH F019-1(53)	FED. AID PROJ. NO.	
GENERAL CONTRACTOR	J.A. McDONALD, INC.	HSSI PROJ. MGR	DEB KUPRES
SHPMT 3	DRAWING MANAGER: BRITIGAN (IH)	MADE BY: WBW	CHK'D. BY: CS	DATE: 11-26-07
STATE VT	HSSI PROJECT NUMBER: S-1070147	HSSI STRUCT. ID: A	DRAWING NUMBER: 34 OF 34

PLOTTED: 11/30/2007 12:31:20 PM
BY: MKreidel
SHIPMENT 01
PM&ENG: 5802818 PROJ: 5802818 SHIP&RECT.: 5802818

1070147A X1 12/3/07 12/3/07Approval TO:J.A. McDonald, Inc.

METRIC
Scale = 0.012500 of full size.
SHIPMENT 01 PM&ENG 5982811 PROD 5982812 SHIP&ERECT 5982813
BY: MKravdel
PLOTTED: 10/1/2007 9:24:35 AM

SPAN - 1

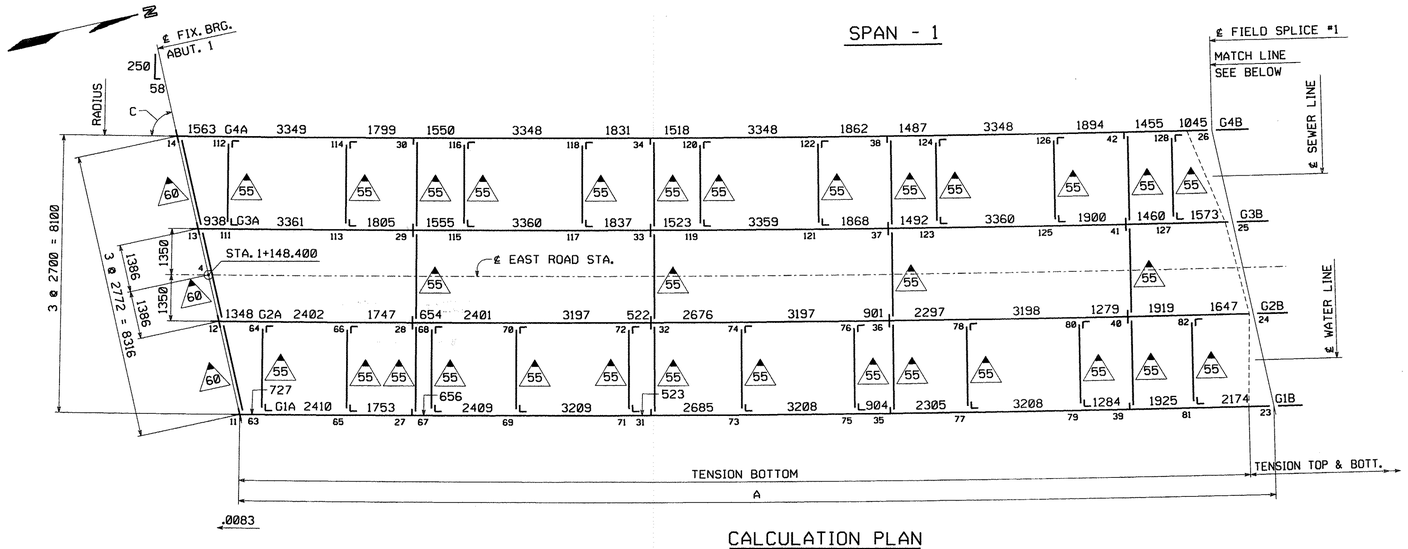

CALCULATION PLAN

SPAN - 2

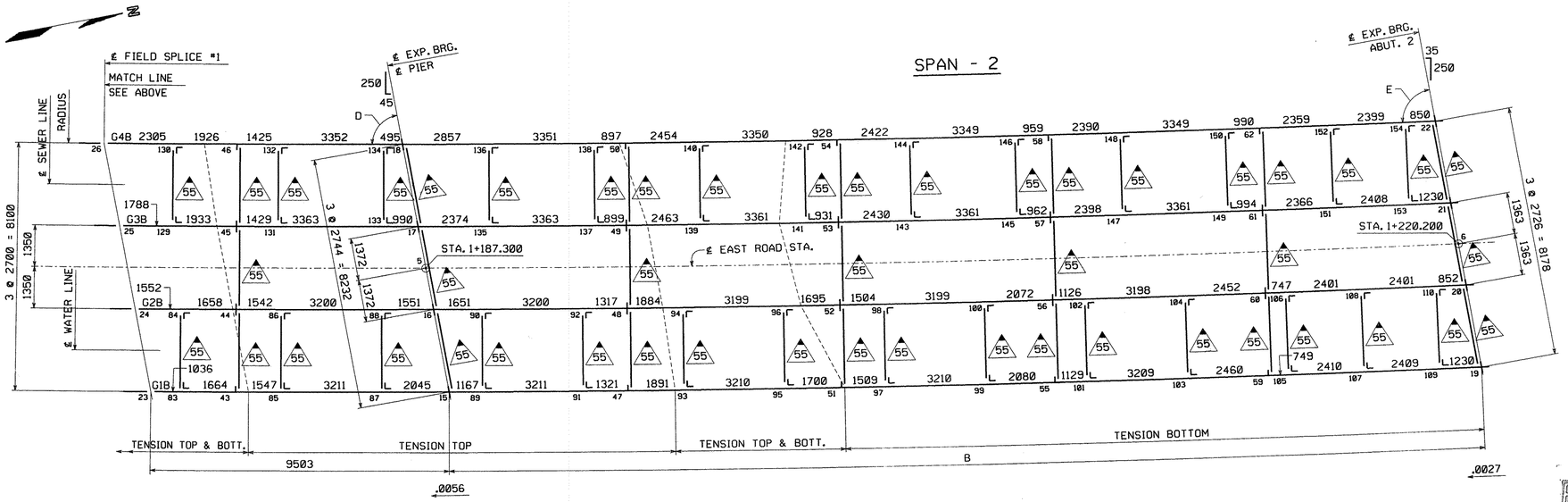

CALCULATION PLAN

LINE	RADIUS	A	B	C	D	E
G1	804.050'	29 380	32 895	76°-59'-47"	79°-46'-04"	82°-06'-43"
G2	801.350'	29 385	32 898	76°-57'-07"	79°-43'-59"	82°-05'-06"
G3	798.650'	29 391	32 901	76°-54'-25"	79°-41'-52"	82°-03'-30"
G4	795.950'	29 397	32 904	76°-51'-42"	79°-39'-45"	82°-01'-52"

NOTES:

DIMENSIONS ON PLAN ALONG GIRDERS ARE GIVEN TO THE CHORD AT THE BOTTOM OF WEB IN FULLY CAMBERED POSITION. ALL OTHER DIMENSIONS ARE GIVEN HORIZONTALLY.
DIMENSIONS PLACED ON THE GIRDER LINES REPRESENT CROSSFRAME OR UTILITY SUPPORT SPACING. DIMENSIONS FOR UTILITY SUPPORTS ARE GIVEN TO BACK OF ANGLE.
FIGURES GIVEN THUS: ◄.0083 ARE THE GRADES OF THE GIRDERS AT THE BEARINGS IN FINAL POSITION; ARROW POINTS DOWNGRADE.
ALL STIFFENER AND CONNECTION PLATE SPACINGS ARE GIVEN TO ℄ PLATE.
ENDS OF GIRDERS AND ALL BEARING STIFFENERS TO BE VERTICAL IN FINAL POSITION.
ALL STEEL TO BE AASHTO M270M GRADE 345W (U.N.).
ALL FIELD CONNECTIONS TO BE MADE WITH 7/8"ø H.S. (AASHTO M164 TYPE 3) BOLTS IN 15/16"ø HOLES (U.N.).
FIGURES GIVEN THUS: (60) ARE THE DIFFERENCES IN ELEVATIONS OF GIRDERS (IN THE PLANE OF THE CROSSFRAME IN ERECTED POSITION) AT CROSSFRAMES; ARROW POINTS TOWARD LOW GIRDER.
FOR TYPICAL DETAIL LAYOUTS, SEE DRAWINGS PREFIXED 'TD'.
ALL STATIONS ARE GIVEN IN METERS.

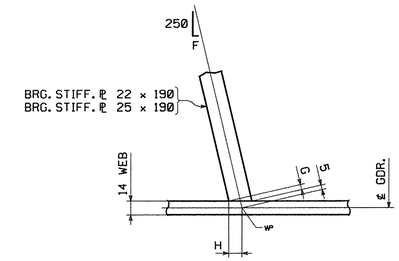

SKEWED BRG. STIFF. LAYOUT

F	G	H
58	5	13
45	5	14
35	3	12

SHOP DRAWINGS ARE REVIEWED UNLESS NOTED OTHERWISE
NO EXCEPTION TAKEN
REVISE AS NOTED
RESUBMISSION NOT REQUIRED
REVISE AS NOTED
RESUBMISSION REQUIRED
REJECTED
DATE 10/24/07
SIGNATURE Michael Chesnut
REVIEW BY STANTEC IS FOR THE SOLE PURPOSE OF ASCERTAINING GENERAL CONFORMITY WITH DESIGN. CONTRACTOR IS RESPONSIBLE FOR DIMENSIONS, FABRICATION AND CONSTRUCTION METHODS, COORDINATION OF SUB-TRADES, DETAIL DESIGN OF COMPONENTS, AND ERRORS OR OMISSIONS ON SHOP DRAWINGS.
Stantec

-see comments on Drawings E1 & E2

RECEIVED
OCT 26 2007
G.P.I.

NO.	REVISION	BY	CHK'D	DATE
△				
△				
△				

••NOTE••
THE PURPOSE OF THIS DRAWING IS TO COORDINATE GEOMETRIC CONTROL INFORMATION. THIS DRAWING IS SUBMITTED FOR INFORMATION ONLY AND IS NOT INTENDED FOR SHOP FABRICATION. THIS DRAWING IS FOR REFERENCE ONLY, APPROVAL IS NOT REQUIRED.

HIGH STEEL STRUCTURES INC.
An ISO 9001:2000 Certified Company
An Affiliate of High Industries Inc.
Lancaster Facility
1915 Old Philadelphia Pike
Lancaster, PA 17605-0008
Phone (717) 299-5211
Williamsport Facility
3501 W. 4th Street
Williamsport, PA 17701
Phone (570) 326-9051
www.highsteel.com

HOLES	
BOLTS	
COATING	
CODE(S)	
SCALE N.T.S.	
SHPMT	
STATE	VT

WORKSHEET - CALCULATION PLAN
EAST ROAD OVER VT ROUTE 279
EAST ROAD STA. 1+148.400 TO STA. 1+220.200
TOWN OF BENNINGTON VERMONT, BRIDGE B11
STATE OF VERMONT
AGENCY OF TRANSPORTATION

	AC NH 019-1(53)	FED. AID PROJ. NO.	
GENERAL CONTRACTOR	J.A. McDONALD, INC.	HSSI PROJ. MGR	DEB KUPRES
DRAWING MANAGER	BRITIGAN (IH)	MADE BY	MGK
CHK'D. BY	CS	DATE	9/13/07
HSSI PROJECT NUMBER	S-1070147	HSSI STRUCT. ID	B
DRAWING NUMBER	WS1 OF WS1		

1070147B X1 10/2/07 10/2/07Approval TO:J.A. McDonald, Inc.

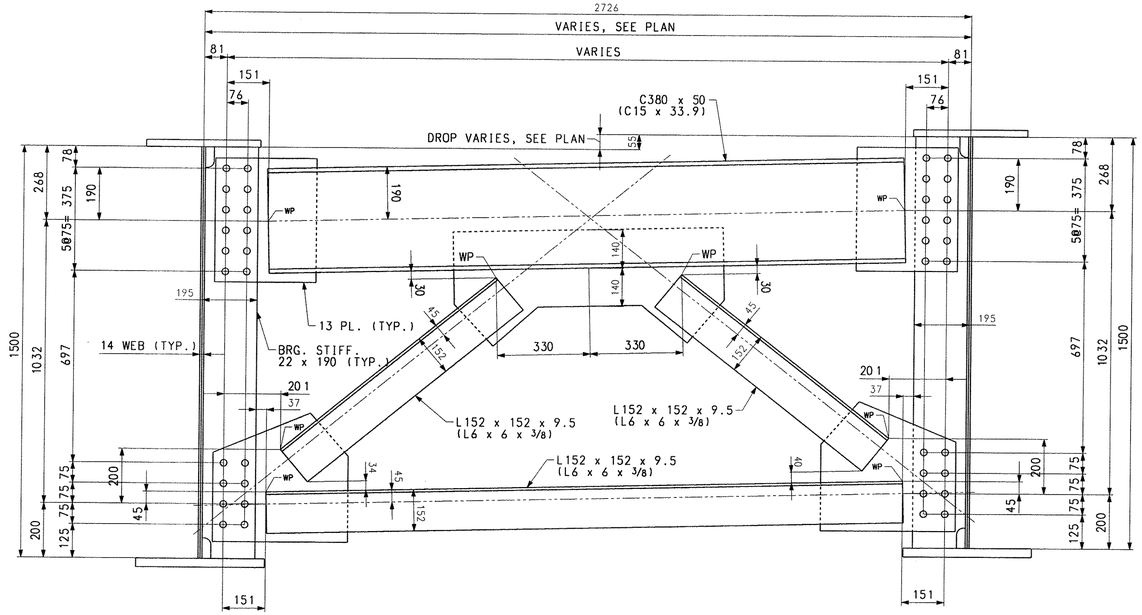

END CROSSFRAME LAYOUT @ UTILITY BAY

(LOOKING TOWARDS ABUT. FROM CENTER OF SPAN)

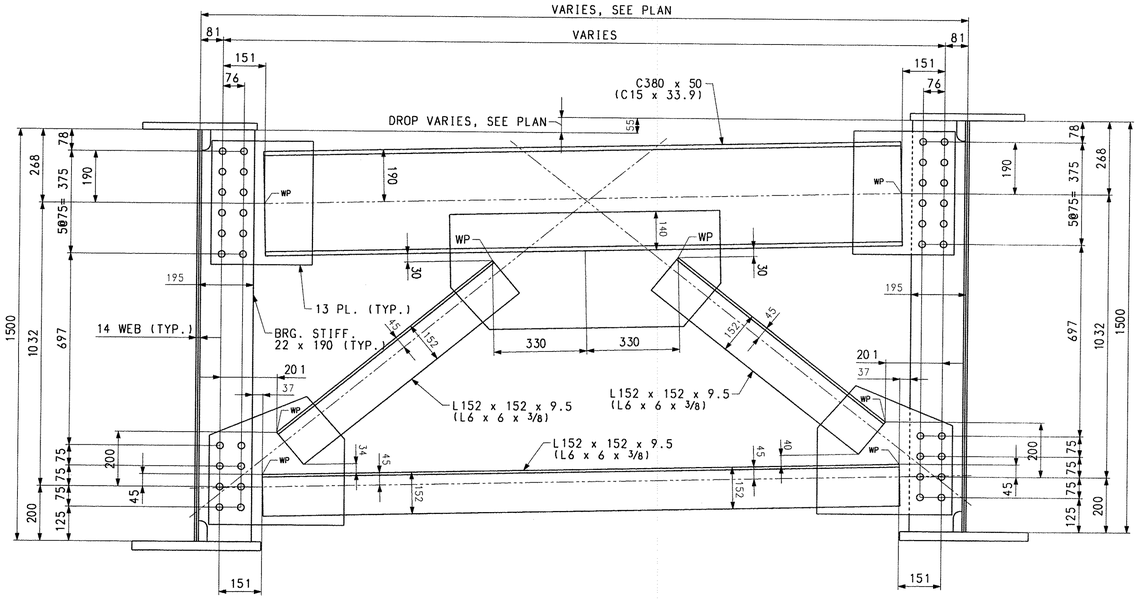

END CROSSFRAME LAYOUT

(LOOKING TOWARDS ABUT. FROM CENTER OF SPAN)

NOTES:

FOR NOTES, SEE DRAWING WS1.
WORK THIS DRAWING WITH WS1.

NOTE
THE PURPOSE OF THIS DRAWING IS TO COORDINATE GEOMETRIC CONTROL INFORMATION. THIS DRAWING IS SUBMITTED FOR INFORMATION ONLY AND IS NOT INTENDED FOR SHOP FABRICATION. THIS DRAWING IS FOR REFERENCE ONLY. APPROVAL IS NOT REQUIRED.

NO.	REVISION	BY	CHK'D	DATE

HOLES: 15/16" Ø

BOLTS: NONE

COATING: NONE

CODE(S):

SCALE: N.T.S.

HIGH STEEL STRUCTURES INC.
1915 Old Philadelphia Pike
Lancaster, PA 17605-0009
Phone (717) 299-5211
www.highsteel.com
An ISO 9001:2000 Certified Company
An Affiliate of High Industries Inc.

TYPICAL DETAIL – CROSSFRAME LAYOUTS
EAST ROAD OVER VT ROUTE 279
EAST ROAD STA. 1+148.400 TO STA. 1+220.200
TOWN OF BENNINGTON VERMONT, BRIDGE B11
STATE OF VERMONT
AGENCY OF TRANSPORTATION

		STATE CONT. OR REF. NO.	AC NH 019-1(53)		FED. AID PROJ. NO.				
		GENERAL CONTRACTOR	J.A. McDONALD, INC.		HSSI PROJ. MGR	DEB KUPRES			
SHPMT	1	DRAWING MANAGER	BRITIGAN (IH)		MADE BY	SSL	CHK'D. BY	CS	DATE 9-17-07
STATE	VT	HSSI PROJECT NUMBER	S-1070147	HSSI STRUCT. ID	B	DRAWING NUMBER	TD1 OF TD3		

SHIPMENT 1 PMENG: XXXXXXX PRD: XXXXXXX SHIP&ERECT: XXXXXXX

PLOTTED: 10/01/07 09:30:20 BY: MKreidel

1070147B X1 10/2/07 10/2/07Approval TO:J.A. McDonald, Inc.

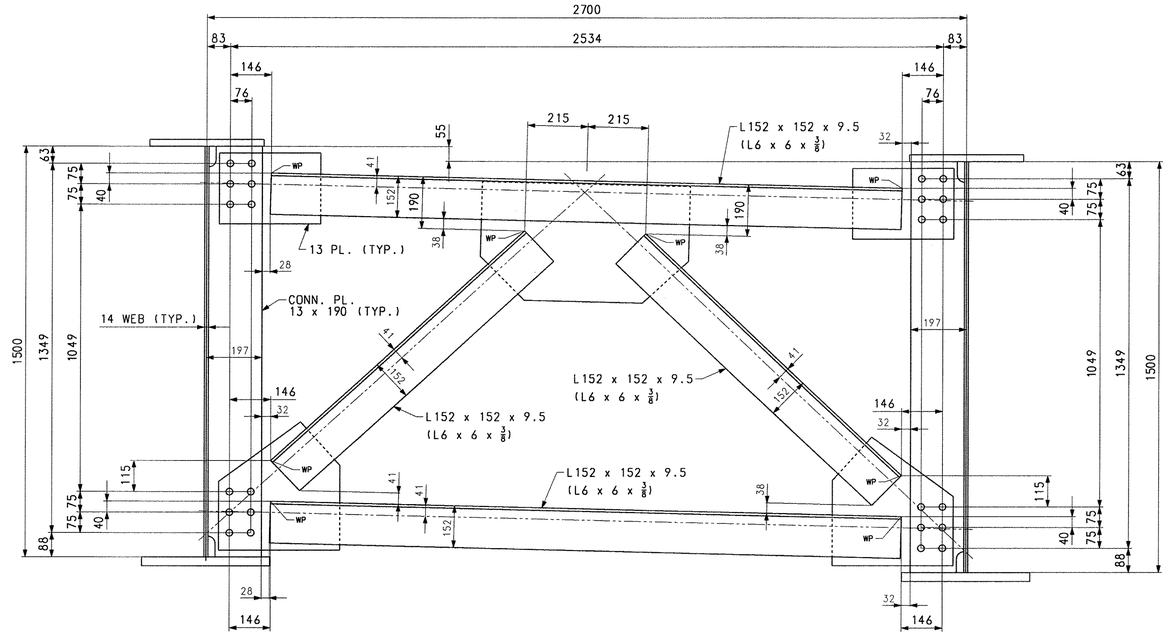

INTMEDIATE CROSSFRAME LAYOUT
(LOOKING BACKSTATIONS)

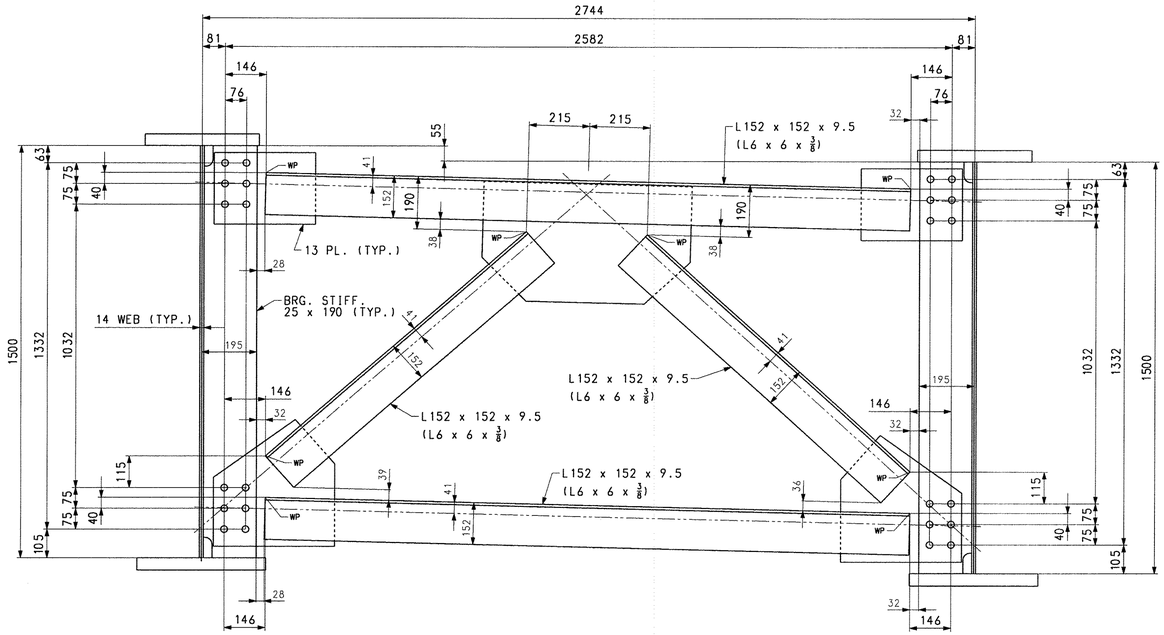

PIER CROSSFRAME LAYOUT
(LOOKING BACKSTATIONS)

NOTES:
FOR NOTES, SEE DRAWING WS1.
WORK THIS DRAWING WITH DRAWING WS1.

NOTE
THE PURPOSE OF THIS DRAWING IS TO COORDINATE GEOMETRIC CONTROL INFORMATION. THIS DRAWING IS SUBMITTED FOR INFORMATION ONLY AND IS NOT INTENDED FOR SHOP FABRICATION. THIS DRAWING IS FOR REFERENCE ONLY. APPROVAL IS NOT REQUIRED.

NO.	REVISION	BY	CHK'D	DATE

HOLES: 15/16" Ø
BOLTS: NONE
COATING: NONE
CODE(S):
SCALE: N.T.S.

HIGH STEEL STRUCTURES INC.
1915 Old Philadelphia Pike
Lancaster, PA 17605-0008
Phone 17171 299-5211
www.highsteel.com
An ISO 9001:2000 Certified Company
An Affiliate of High Industries Inc.

TYPICAL DETAILS - CROSSFRAME LAYOUTS
EAST ROAD OVER VT ROUTE 279
EAST ROAD STA. 1+148.400 TO STA. 1+220.200
TOWN OF BENNINGTON VERMONT, BRIDGE B11
STATE OF VERMONT
AGENCY OF TRANSPORTATION

STATE CONT. OR REF. NO.	AC NH 019-1(53)	FED. AID PROJ. NO.	
GENERAL CONTRACTOR	J.A. McDONALD, INC.	HSSI PROJ. MGR	DEB KUPRES

SHPMT	1	DRAWING MANAGER	BRITIGAN (IH)	MADE BY	WBW	CHK'D. BY	CS	DATE	9-17-07
STATE	VT	HSSI PROJECT NUMBER	S-1070147	STRUCT. ID	B	DRAWING NUMBER	TD2 OF TD3		

SHIPMENT 1 PM&ENG: XXXXXXX PRD: XXXXXXX SHIPAERECT: XXXXXXX
PLOTTED: 10/01/07 08:30:33 BY: MKreidel

1070147B X1 10/2/07 10/2/07Approval TO:J.A. McDonald, Inc.

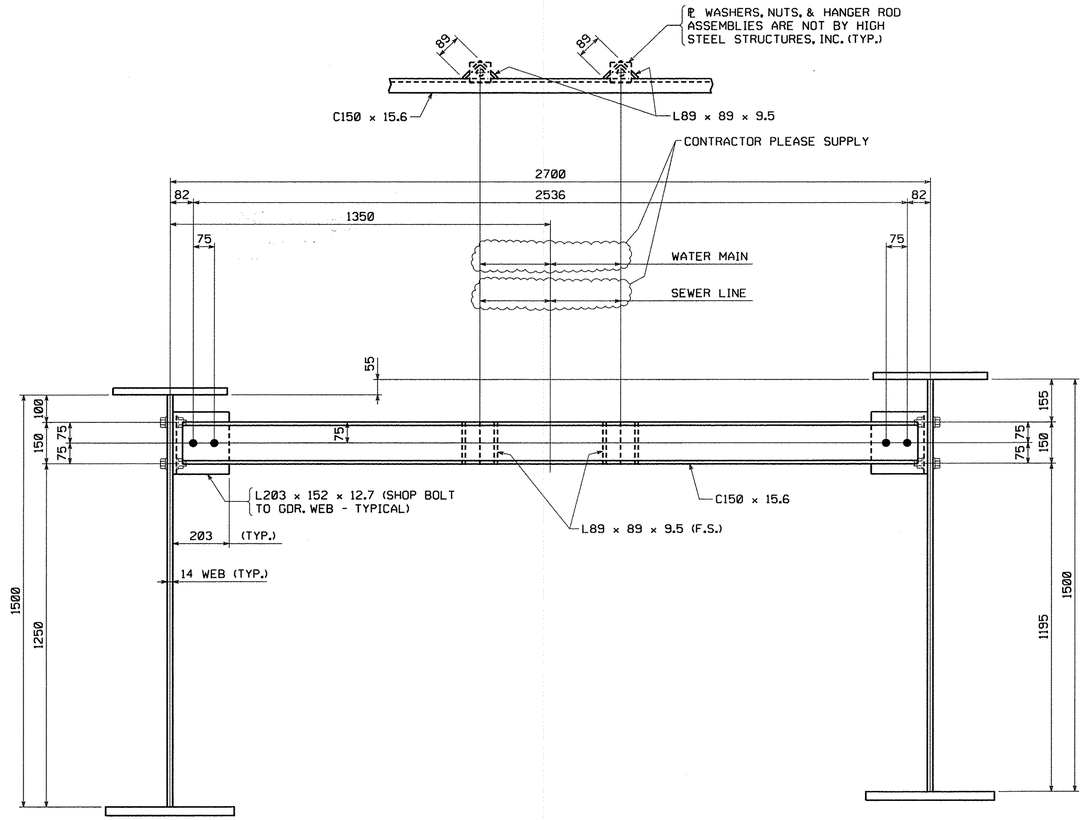

UTILITY SUPPORT LAYOUT
(LOOKING STATIONS AHEAD)

NOTES:
FOR NOTES, SEE DRAWING WS1.
WORK THIS DRAWING WITH DRAWING WS1.

••NOTE••
THE PURPOSE OF THIS DRAWING IS TO COORDINATE GEOMETRIC CONTROL INFORMATION. THIS DRAWING IS SUBMITTED FOR INFORMATION ONLY AND IS NOT INTENDED FOR SHOP FABRICATION. THIS DRAWING IS FOR REFERENCE ONLY, APPROVAL IS NOT REQUIRED.

NO.	REVISION	BY	CHK'D	DATE
△				
△				
△				

HOLES
BOLTS
COATING
CODE(S)
SCALE N.T.S.

HIGH STEEL STRUCTURES INC.
An ISO 9001:2000 Certified Company
An Affiliate of High Industries Inc.
Lancaster Facility
915 Old Philadelphia Pike
Lancaster, PA 17605-0008
Phone (717) 299-5211
Williamsport Facility
3501 W. 4th Street
Williamsport, PA 17701
Phone (570) 326-9051
www.highsteel.com

TYPICAL DETAILS - UTILITY SUPPORT LAYOUT
EAST ROAD OVER VT ROUTE 279
EAST ROAD STA. 1+148.400 TO STA. 1+220.200
TOWN OF BENNINGTON VERMONT, BRIDGE B11
STATE OF VERMONT
AGENCY OF TRANSPORTATION

	AC NH 019-1(53)	FED. AID PROJ. NO.	
GENERAL CONTRACTOR	J.A. McDONALD, INC.	HSSI PROJ. MGR	DEB KUPRES
SHPMT	DRAWING MANAGER: BRITIGAN (IH)	MADE BY: WBW	CHK'D. BY: CS	DATE: 9-18-07
STATE: VT	HSSI PROJECT NUMBER: S-1070147	HSSI STRUCT. ID: B	DRAWING NUMBER: TD3 OF TD3

METRIC
SHIPMENT 01 PM&ENG: 5082811 PRD: 5082812 SHIP&ERECT: 5082813
BY: MKreidel
PLOTTED: 10/1/2007 9:24:32 AM

1070147B X1 10/2/07 10/2/07Approval TO:J.A. McDonald, Inc.

METRIC

Scale = 0.012500 of full size.

PLOTTED: 10/1/2007 11:07:43 AM BY: MKreidel SHIPMENT 01 PM&ENG: 5082812 PRD: 5082812 SHIP&ERECT: 5082813

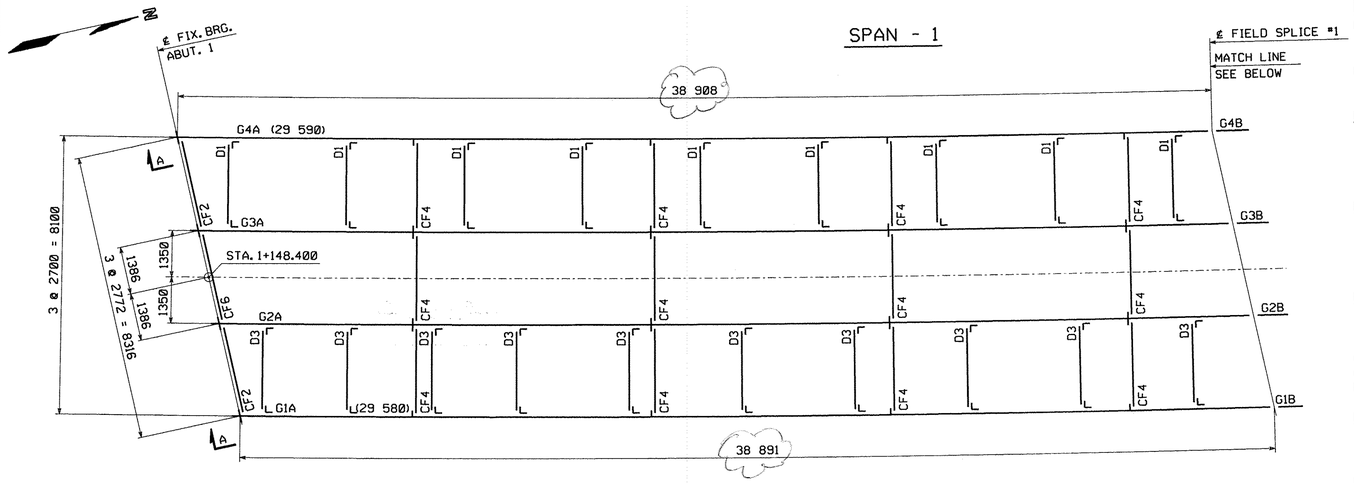

NOTES:

NO CREDIT WILL BE ALLOWED FOR WORK PERFORMED BY OTHERS IN REPLACING OR CORRECTING MATERIALS OR WORKMANSHIP COVERED BY THIS DRAWING UNLESS EXPRESSLY AUTHORIZED BY HIGH STEEL STRUCTURES, INC.

HIGH STEEL STRUCTURES, INC. DOES NOT SUPPLY STUD SHEER CONNECTORS, EXPANSION DAM MATERIAL, ROD HANGERS OR HARDWARE AT UTILITIES, SCUPPERS OR ANY OTHER BRIDGE DRAINAGE, BEARINGS, BEARING PADS OR ANCHOR BOLTS.

NOTICE TO ERECTOR & CONTRACTOR: THIS STRUCTURAL STEEL IS BEING DELIVERED WITH THE FINAL FINISH COAT APPLIED. USE EXTREME CARE AND APPROPRIATE EQUIPMENT FOR HANDLING DURING ERECTION AND SUBSEQUENT FIELD OPERATIONS. HIGH STEEL STRUCTURES, INC. WILL NOT BE RESPONSIBLE FOR ANY TOUCH-UP REQUIRED DUE TO YOUR FAILURE TO PROPERLY PROTECT FINISH PAINT.

ERECTOR NOTE: ELEVATIONS, CAMBER CHECKS AND HORIZONTAL ALIGNMENT OF FIELD SPLICES MUST BE COMPLETED PRIOR TO FINAL BOLTING. HIGH STEEL STRUCTURES IS TO BE NOTIFIED AND CONSULTED, PRIOR TO FINAL BOLTING, IF SPLICE LOCATIONS ARE NOT WITHIN ACCEPTABLE TOLERANCE. BOTH VERTICAL & HORIZONTAL CORRECTION OF ANY UNACCEPTABLE SPLICES AFTER FINAL BOLTING WILL BE AT NO COST TO HIGH STEEL STRUCTURES.

NOTICE: WEIGHTS OF MEMBERS LISTED ON THESE DRAWINGS ARE ESTIMATED WEIGHTS AND ACTUAL WEIGHTS WILL VARY. HIGH STEEL STRUCTURES, INC. WILL NOT BE RESPONSIBLE FOR ANY ERECTION PROCEDURES, SHIPPING PROCEDURES, ETC. DEVELOPED USING ESTIMATED WEIGHTS AS SHOWN.

ALL DIMENSIONS ARE GIVEN HORIZONTALLY (U.N.O.).

ALL ELEVATIONS AND STATIONS ARE GIVEN IN METERS.

DIMENSIONS GIVEN THUS: (29 580) ARE THE SHIPPING LENGTHS OUT TO OUT OF FASCIA GIRDERS.

ERECTOR NOTE: ALL BOLTS MUST BE LOCATED IN ACCORDANCE WITH THE LIST OF FIELD CONNECTIONS. HIGH STEEL STRUCTURES WILL NOT BE RESPONSIBLE FOR FURNISHING ADDITIONAL BOLTS OR FOR ANY OTHER RELATED COSTS OR DAMAGES RESULTING FROM IMPROPER LOCATION OF BOLTS.

ALL FIELD BOLTS THRU WEB OF FASCIA GIRDERS ARE TO HAVE HEADS ON OUTSIDE OF WEB.

ALL FIELD BOLTS THRU BOTTOM FLANGE ARE TO HAVE HEADS UP.

(RCT) INDICATES ROTATIONAL CAPACITY TESTED BOLTS. DO NOT MIX NUTS, BOLTS AND WASHERS FROM DIFFERENT CONTAINERS UNLESS ALL NUTS, BOLTS AND WASHERS HAVE THE SAME LOT NUMBER.

ANCHOR BOLTS AND NUTS MUST BE SET BEFORE CROSSFRAMES AT BEARINGS ARE ERECTED.

SHIPPING PIECES

SHIPPING PIECE MARK	WEIGHT EA. (KG)	DWG NO.
G1A	11,248	1
G2A	11,377	2
G3A	11,371	3
G4A	11,247	4
G1B	15,763	5
G2B	15,923	6
G3B	15,916	7
G4B	15,759	8
D1	45	12
D2	45	12
D3	45	12
D4	45	12
CF1	339	9
CF2	343	9
CF3	258	10
CF4	257	10
CF5	339	11
CF6	343	11

ERECTION FRAMING PLAN

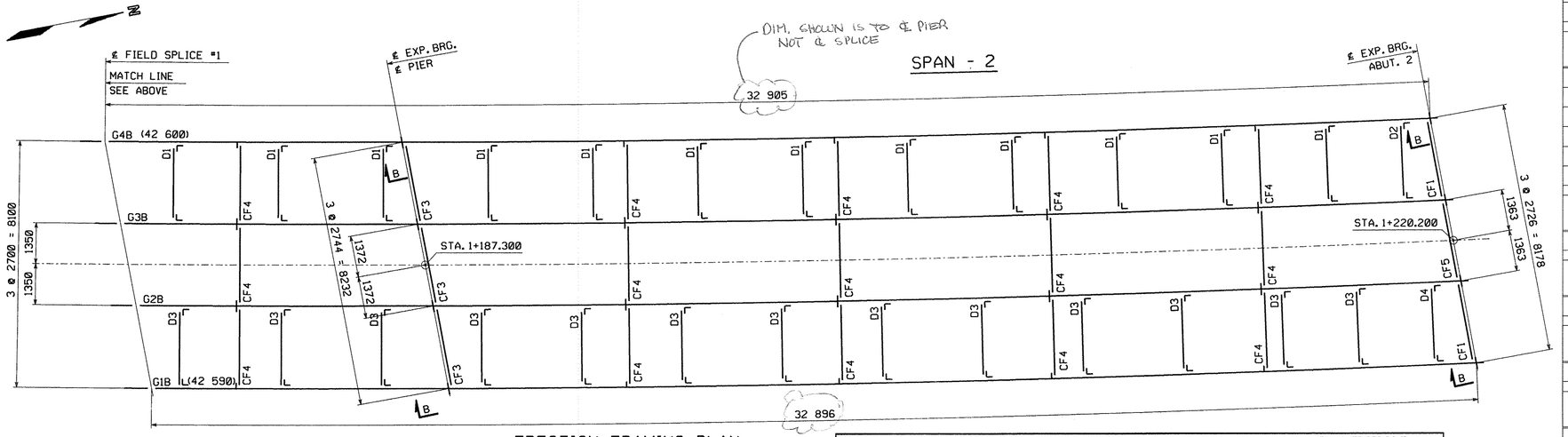

ERECTION FRAMING PLAN

CONTRACTOR NOTE:

ELEVATIONS ARE GIVEN TO BOTTOM OF STEEL - DO NOT POUR TO FINAL ELEVATIONS WITHOUT VERIFICATION OF BEARING HEIGHTS AND BRIDGE SEATS.

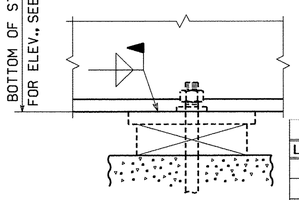

SECTION A

ELEVATIONS			
LINE	ABUT. 1	PIER	ABUT 2
G1	241.948	242.096	242.314
G2	241.890	242.039	242.257
G3	241.831	241.982	242.201
G4	241.772	241.925	242.145

CONTRACTOR NOTE:

ELEVATIONS ARE GIVEN TO BOTTOM OF STEEL - DO NOT POUR TO FINAL ELEVATIONS WITHOUT VERIFICATION OF BEARING HEIGHTS AND BRIDGE SEATS.

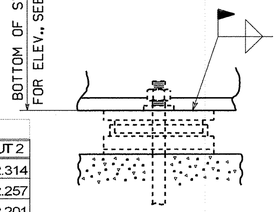

SECTION B

LIST OF FIELD CONNECTIONS

ONE WASHER PER BOLT UNLESS NOTED OTHERWISE

LINE	ACTUAL NUMBER REQ'D	BOLT DIAM.	BOLT LENGTH	BOLTS PER CONN.	NO. OF CONN.	GRIP	THICKNESS OF PIECES JOINED					PIECES CONNECTED AND REMARKS
1	288	7/8	3	72	4	42.6	14.3	14.0	14.3			WEB SPL. @ FS1 G1-G4
2	160	7/8	3 1/2	40	4	56.8	14.3	25.0	17.5			TOP FLG SPL. @ FS1 G1-G4
3	224	7/8	4 1/4	56	4	73.3	19.1	32.0	22.2			BOT FLG SPL. @ FS1 G1-G4
4	120	7/8	2 3/4	20	6	36.5	22.2	14.3				BRG. STIFF. TO GUSS. PL.
5	72	7/8	3	12	6	39.7	25.4	14.3				PIER BRG. STIFF. TO GUSS PL.
6	648	7/8	2 1/2	12	54	28.6	14.3	14.3				INTERMEDIATE CONN. PL. TO GUSS. PL.
7	176	7/8	2 1/4	2	88	20.7	8.0	12.7				UTILITY SUPPORT TO CLIP "L"

LIST OF FIELD CONNECTIONS

ONE WASHER PER BOLT UNLESS NOTED OTHERWISE

LINE	ACTUAL NUMBER REQ'D	BOLT DIAM.	BOLT LENGTH	BOLTS PER CONN.	NO. OF CONN.	GRIP	THICKNESS OF PIECES JOINED					PIECES CONNECTED AND REMARKS
1	120	7/8	2 3/4	20	6	36.5	22.2	14.3				BRG. STIFF. TO GUSS. PL. (TYPE 1)
2	8	7/8	2 1/4	2	4	20.7	8.0	12.7				UTILITY SUPPORT TO CLIP "L" (TYPE 1)

FIELD BOLT SUMMARY - SHIP. #1

(2% ADDITIONAL BOLTS ADDED + 3 EA. FOR TESTING)

AASHTO M164 TYPE 1 (RCT); W/HVY HEX HD	
125 -	7/8"ø HIGH STRENGTH BOLTS x 0'-2 3/4
13 -	7/8"ø HIGH STRENGTH BOLTS x 0'-2 1/4
AASHTO M164 TYPE 3 (RCT); W/HVY HEX HD	
231 -	7/8"ø HIGH STRENGTH BOLTS x 0'-4 1/4
166 -	7/8"ø HIGH STRENGTH BOLTS x 0'-3 1/2
370 -	7/8"ø HIGH STRENGTH BOLTS x 0'-3
125 -	7/8"ø HIGH STRENGTH BOLTS x 0'-2 3/4
664 -	7/8"ø HIGH STRENGTH BOLTS x 0'-2 1/2
183 -	7/8"ø HIGH STRENGTH BOLTS x 0'-2 1/4
AASHTO M291 GRADE DH (RCT); HVY HEX	
138 -	NUTS FOR 7/8"ø BOLT
AASHTO M291 GRADE DH3 (RCT); HVY HEX	
1,739 -	NUTS FOR 7/8"ø BOLT
AASHTO M293 (RCT); ROUND & FLAT	
138 -	STD WASHERS FOR 7/8"ø BOLT
AASHTO M293 WEATHERING (RCT); ROUND & FLAT	
1,739 -	STD WASHERS FOR 7/8"ø BOLT

NO.	REVISION	BY	CHK'D	DATE

HIGH STEEL STRUCTURES INC.
An ISO 9001:2000 Certified Company
An Affiliate of High Industries Inc.
Lancaster Facility: 915 Old Philadelphia Pike, Lancaster, PA 17605-0008, Phone (717) 299-5211
Williamsport Facility: 3501 W. 4th Street, Williamsport, PA 17701, Phone (570) 326-9051
www.highsteel.com

HOLES | BOLTS | COATING | CODE(S) | SCALE N.T.S.

ERECTION FRAMING PLAN
EAST ROAD OVER VT ROUTE 279
EAST ROAD STA. 1+148.400 TO STA. 1+220.200
TOWN OF BENNINGTON VERMONT, BRIDGE B11
STATE OF VERMONT
AGENCY OF TRANSPORTATION

	AC NH 019-1(53)	FED. AID PROJ. NO.	
GENERAL CONTRACTOR	J.A. McDONALD, INC.	HSSI PROJ. MGR	DEB KUPRES
SHPMT 1	DRAWING MANAGER BRITIGAN (IH)	MADE BY MAF	CHK'D. BY CS	DATE 9-27-07
STATE VT	HSSI PROJECT NUMBER S-1070147	HSSI STRUCT. ID B	DRAWING NUMBER E1 OF E2

1070147B X1 10/2/07 10/2/07Approval TO:J.A. McDonald, Inc.

METRIC

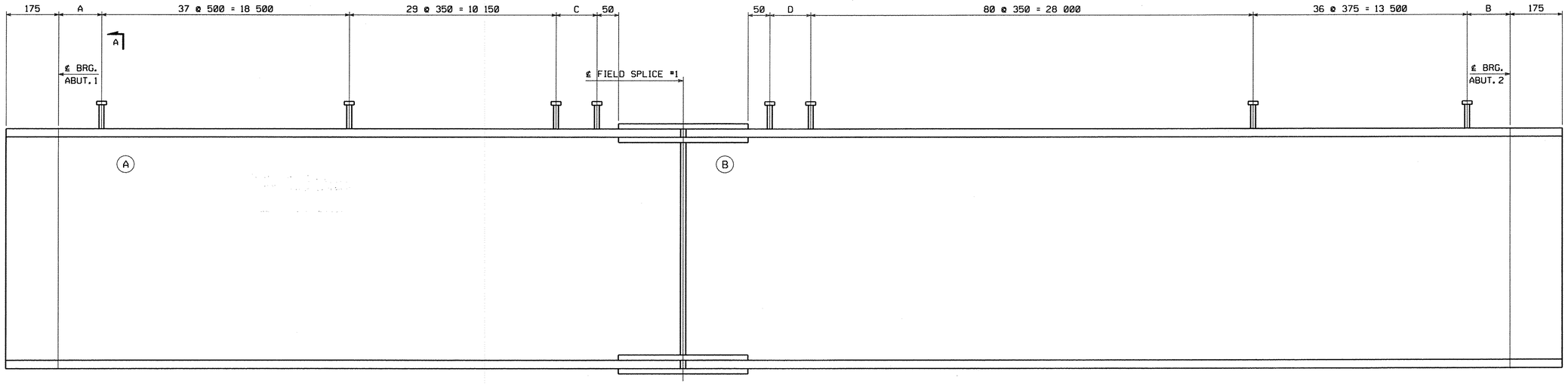

SHEAR STUD CONNECTION LOCATION LAYOUT

FOR NOTES, SEE DRAWING E1.
WORK THIS DRAWING WITH DRAWING E1.

(A) INDICATES SUFFIX MARK OF SHIPPING PIECE.

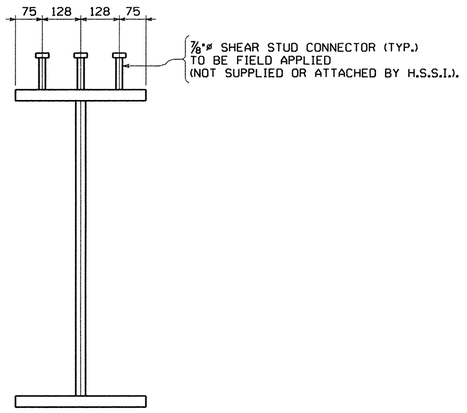

SECTION A

MARK	A	B	C	D
G1	108	155	207	308
G2	103	151	217	315
G3	97	149	229	320
G4	91	146	241	327

DO NOT MATCH DESIGN PLANS (GIRDERS ARE REVERSED), PLEASE VERIFY

NO.	REVISION	BY	CHK'D	DATE

HOLES
BOLTS
COATING
CODE(S)
SCALE N.T.S.

HIGH STEEL STRUCTURES INC.
An ISO 9001:2000 Certified Company
An Affiliate of High Industries Inc.
Lancaster Facility
1915 Old Philadelphia Pike
Lancaster, PA 17605-0008
Phone (717) 299-5211
Williamsport Facility
3501 W. 4th Street
Williamsport, PA 17701
Phone (570) 326-9051
www.Highsteel.com

ERECTION PLAN ~ STUD LAYOUTS
EAST ROAD OVER VT ROUTE 279
EAST ROAD STA. 1+148.400 TO STA. 1+220.200
TOWN OF BENNINGTON VERMONT, BRIDGE B11
STATE OF VERMONT
AGENCY OF TRANSPORTATION

	AC NH 019-1(53)	FED. AID PROJ. NO.	
GENERAL CONTRACTOR	J.A. McDONALD, INC.	HSSI PROJ. MGR	DEB KUPRES
SHPMT	DRAWING MANAGER: BRITIGAN (IH)	MADE BY: MAF	CHK'D. BY: CS	DATE: 9-25-07
STATE: VT	HSSI PROJECT NUMBER: S-1070147	HSSI STRUCT. ID: B	DRAWING NUMBER: E2 OF E2

SHIPMENT 01 PM&ENG: 5802811 PROD: 5802812 SHIP&ERECT.: 5802813
BY: MKreidel
PLOTTED: 10/1/2007 11:07:57 AM

1070147B X1 10/2/07 10/2/07Approval TO:J.A. McDonald, Inc.

METRIC

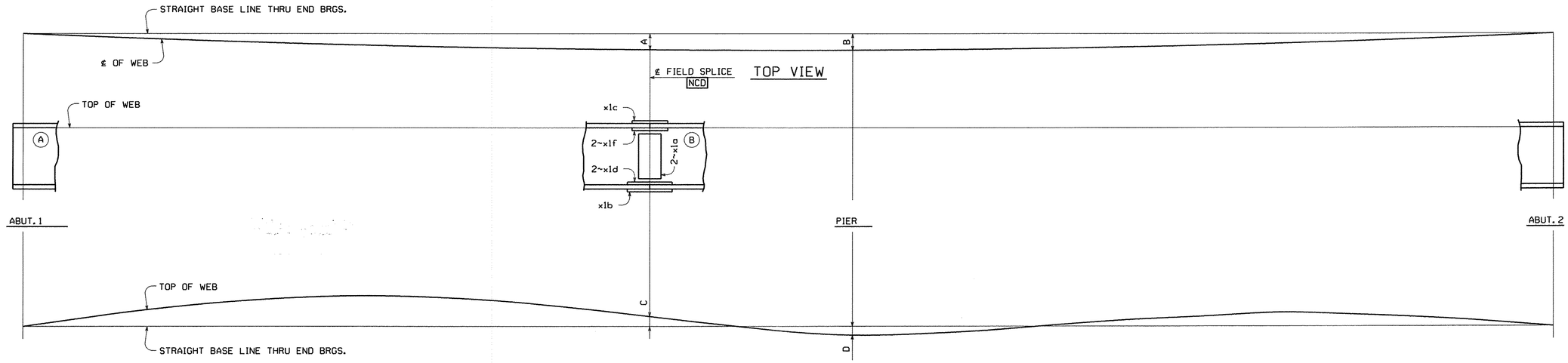

LINE ASSEMBLY DIAGRAM

GDR. LINE	A	B	C	D
G1	-775	-796	38	-33
G2	-778	-799	38	-33
G3	-781	-801	38	-33
G4	-783	-804	39	-32

NOTES:

MATCH MARKING OF SPLICE PLATES IS NOT REQUIRED.
FOR GIRDER MARKS, SEE THE ERECTION FRAMING PLAN DRAWINGS.
HOLES MARKED NCD ARE TO BE DRILLED FULL SIZE USING A CNC MACHINING CENTER OR DRILLED FUOLL SIZE USING DRILL TEMPLATES.
(A) INDICATES SUFFIX MARK OF SHIPPING PIECE.
FIELD SPLICE PLATES TO BE SHIPPED WITH THE (A) GIRDERS.
MINIMUM ONE LINE SET-UP AS REQUIRED BY SHOP INSPECTOR (TYPICALLY FIRST GIRDER LINE FABRICATED WITH SPLICE PLATES ATTACHED AND PINED).
NEGATIVE CAMBER ORDINATES INDICATE THAT TOP OF WEB IS BELOW BASE LINE.

NO.	REVISION	BY	CHK'D	DATE
△				
△				
△				

HOLES: NONE
BOLTS: NONE
COATING: NONE
CODE(S): 30
SCALE: N.T.S.

HIGH STEEL STRUCTURES INC.
An ISO 9001:2000 Certified Company
An Affiliate of High Industries Inc.
Lancaster Facility: 1915 Old Philadelphia Pike, Lancaster, PA 17605-0008, Phone (717) 299-5211
Williamsport Facility: 3501 W. 4th Street, Williamsport, PA 17701, Phone (570) 326-9051
www.highsteel.com

SHOP ASSEMBLY DIAGRAM
EAST ROAD OVER VT ROUTE 279
EAST ROAD STA. 1+148.400 TO STA. 1+220.200
TOWN OF BENNINGTON VERMONT, BRIDGE B11
STATE OF VERMONT
AGENCY OF TRANSPORTATION

	AC NH 019-1(53)	FED. AID PROJ. NO.	
GENERAL CONTRACTOR	J.A. McDONALD, INC.	HSSI PROJ. MGR	DEB KUPRES

SHPMT		DRAWING MANAGER	BRITIGAN (IH)	MADE BY	SSL	CHK'D. BY	CG	DATE	9-18-07
STATE	VT	HSSI PROJECT NUMBER	S-1070147	HSSI STRUCT. ID	B	DRAWING NUMBER	SA1 OF SA1		

PLOTTED: 10/1/2007 9:24:30 AM
BY: MKreidel
SHIPMENT 01
PM&ENG: 5002811 PROD: 5002812 SHIP&ERECT.: 5002813

1070147B X1 10/2/07 10/2/07Approval TO:J.A. McDonald, Inc.

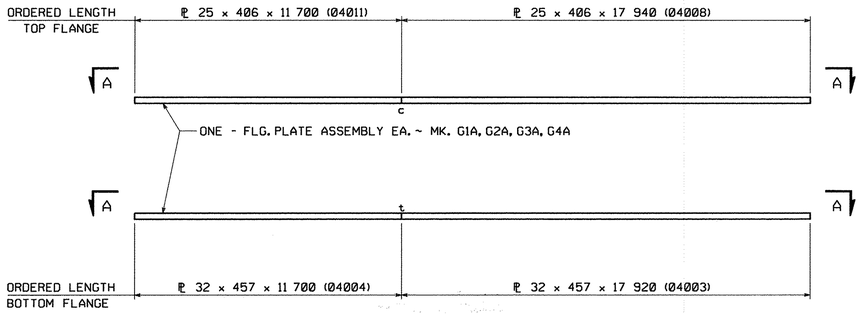

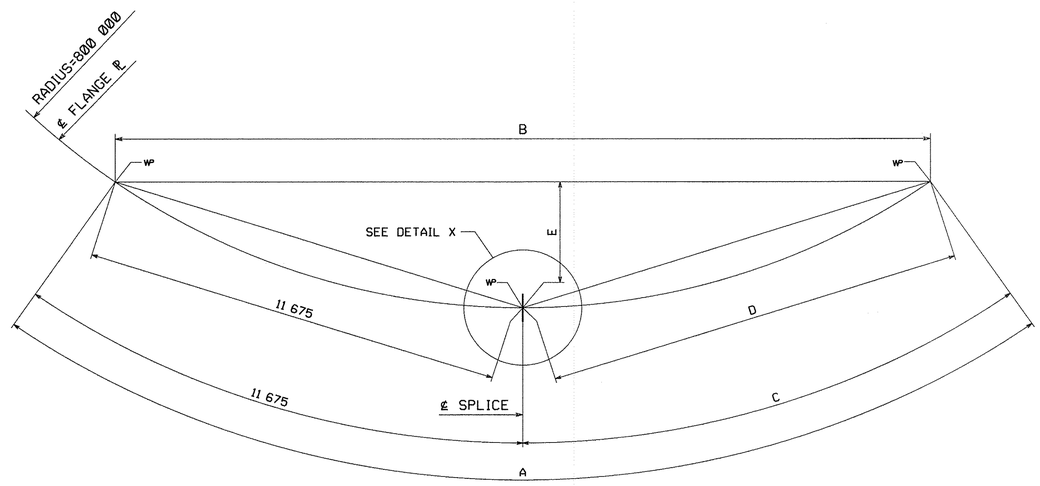

VIEW A-A

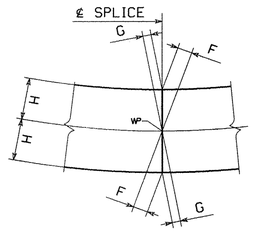

DETAIL X

MARK	FLANGE	A	B	C	D	E	F	G	H
G1A	TOP	29 573	29 571	17 898	17 897	131	1	2	203
G2A	TOP	29 578	29 576	17 903	17 902	131	1	2	203
G3A	TOP	29 584	29 582	17 909	17 908	131	1	2	203
G4A	TOP	29 590	29 588	17 915	17 914	131	1	2	203
G1A	BOTTOM	29 553	29 551	17 878	17 877	130	2	3	228.5
G2A	BOTTOM	29 558	29 556	17 883	17 882	130	2	3	228.5
G3A	BOTTOM	29 564	29 562	17 889	17 888	131	2	3	228.5
G4A	BOTTOM	29 570	29 568	17 895	17 894	131	2	3	228.5

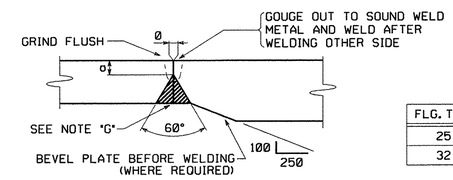

FLG. THK.	a
25	7
32	10

TYPICAL FLANGE PLATE SPLICE

FOR FLANGE PLATES 50 mm THICK AND UNDER (B-L2c-S)

NOTE "G"

ALL SPLICES MAY HAVE A MAXIMUM REINFORCEMENT OF 3 mm. GRIND SMOOTH AT SPLICES THAT ARE TO BE TESTED AND ALL BOTTOM FLANGE SPLICES.

NOTES:

FOR GENERAL SHOP NOTES, SEE DRAWING GN1.
ALL FLANGE PLATES REQUIRE CHARPY V-NOTCH TEST.
DIMENSIONS SHOWN THUS: [5200] ARE THE ACTUAL DIMENSIONS THAT WILL APPEAR ON THE GIRDER DETAIL DRAWINGS.
THE LETTERS "t" & "c" AT FLANGE SPLICES INDICATE TENSION AND COMPRESSION SPLICES RESPECTIVELY.
ALL SPLICES MARKED "t" TO BE RADIOGRAPHICALLY TESTED 100%.
ALL SPLICES MARKED "c" TO BE RADIOGRAPHICALLY TESTED 25%.

NO.	REVISION	BY	CHK'D	DATE
△				
△				
△				

HOLES

BOLTS

COATING

CODE(S) 30

SCALE N.T.S.

HIGH STEEL STRUCTURES INC.
An ISO 9001:2000 Certified Company
An Affiliate of High Industries Inc.
Lancaster Facility
1915 Old Philadelphia Pike
Lancaster, PA 17605-0008
Phone (717) 299-5211
Williamsport Facility
3501 W. 4th Street
Williamsport, PA 17701
Phone (570) 326-9051
www.highsteel.com

FLANGE SPLICE DETAILS
EAST ROAD OVER VT ROUTE 279
EAST ROAD STA. 1+148.400 TO STA. 1+220.200
TOWN OF BENNINGTON VERMONT, BRIDGE B11
STATE OF VERMONT
AGENCY OF TRANSPORTATION

	AC NH 019-1(53)	FED. AID PROJ. NO.			
GENERAL CONTRACTOR	J.A. McDONALD, INC.	HSSI PROJ. MGR	DEB KUPRES		
SHPMT 1	DRAWING MANAGER BRITIGAN (IH)	MADE BY MAF	CHK'D. BY CS	DATE 9-13-07	
STATE VT	HSSI PROJECT NUMBER S-1070147	HSSI STRUCT. ID B	DRAWING NUMBER FS1 OF FS2		

METRIC

SHIPMENT 01 PM&ENG: 5002811 PRO: 5002812 SHIP&ERECT.: 5002813

BY: MKreidel

PLOTTED: 10/1/2007 9:24:21 AM

60

1070147B X1 10/2/07 10/2/07Approval TO:J.A. McDonald, Inc.

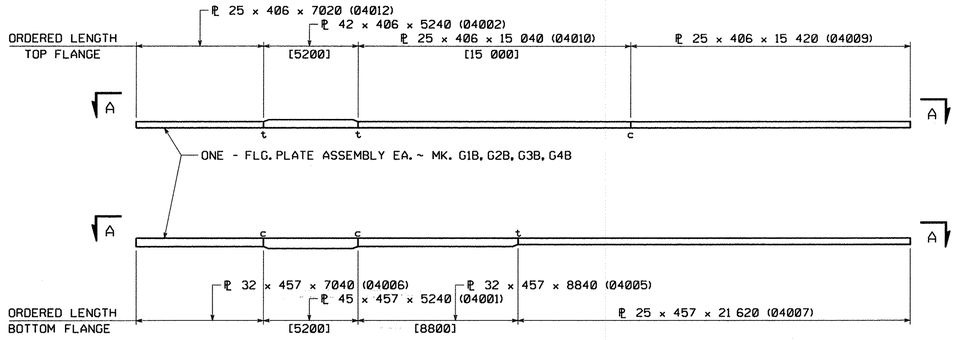

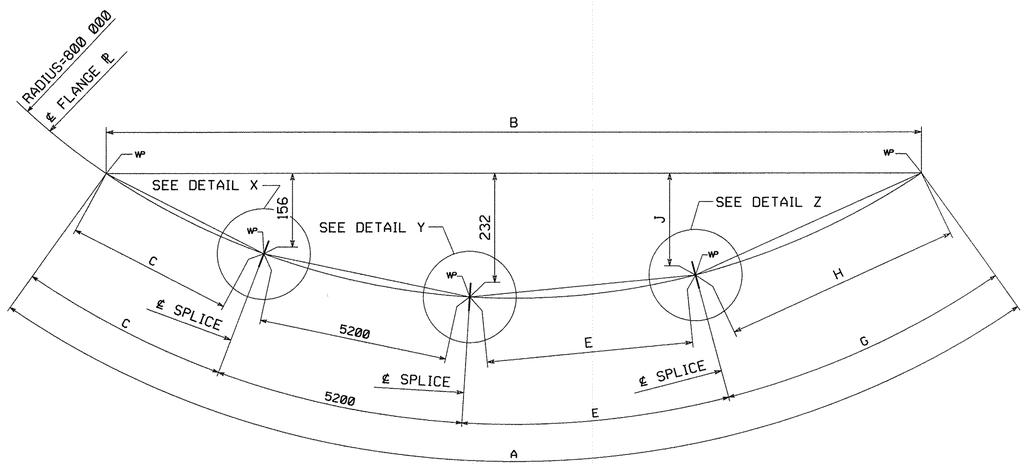

VIEW A-A

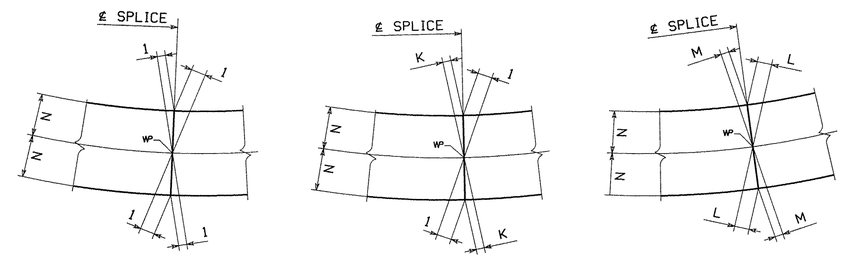

DETAIL X

DETAIL Y

DETAIL Z

MARK	FLANGE	A	B	C	E	G	H	J	K	L	M	N
G1B	TOP	42 571	42 566	6996	15 000	15 375	15 374	261	2	2	2	203
G2B	TOP	42 574	42 569	6996	15 000	15 378	15 377	261	2	2	2	203
G3B	TOP	42 577	42 572	6996	15 000	15 381	15 380	261	2	2	2	203
G4B	TOP	42 581	42 576	6997	15 000	15 384	15 383	261	2	2	2	203
G1B	BOTTOM	42 571	42 566	7000	8800	21 571	21 570	283	1	1	3	228.5
G2B	BOTTOM	42 574	42 569	7000	8800	21 574	21 573	283	1	1	3	228.5
G3B	BOTTOM	42 577	42 572	7000	8800	21 577	21 576	283	1	1	3	228.5
G4B	BOTTOM	42 580	42 575	7000	8800	21 580	21 579	283	1	1	3	228.5

NOTES:

FOR WELDING DETAILS, SEE DWG. FS1.
FOR OTHER NOTES, SEE DWG. FS1.

NO.	REVISION	BY	CHK'D	DATE
△				
△				
△				

HOLES

BOLTS

COATING

CODE(S) 30

SCALE N.T.S.

HIGH STEEL STRUCTURES INC.
An ISO 9001:2000 Certified Company
An Affiliate of High Industries Inc.
Lancaster Facility
1915 Old Philadelphia Pike
Lancaster, PA 17605-0008
Phone (717) 299-5211
Williamsport Facility
3501 W. 4th Street
Williamsport, PA 17701
Phone (570) 326-9051
www.highsteel.com

FLANGE SPLICE DETAILS
EAST ROAD OVER VT ROUTE 279
EAST ROAD STA. 1+148.400 TO STA. 1+220.200
TOWN OF BENNINGTON VERMONT, BRIDGE B11
STATE OF VERMONT
AGENCY OF TRANSPORTATION

	AC NH 019-1(53)	FED. AID PROJ. NO.	
GENERAL CONTRACTOR	J.A. McDONALD, INC.	HSSI PROJ. MGR	DEB KUPRES

SHPMT	1	DRAWING MANAGER	BRITIGAN (IH)	MADE BY	MAF	CHK'D. BY	CS	DATE	9-13-07
STATE	VT	HSSI PROJECT NUMBER	S-1070147	HSSI STRUCT. ID	B	DRAWING NUMBER	FS2 OF FS2		

METRIC

SHIPMENT 01 PM&ENG: 5002811 PRD: 5002812 SHIP&ERECT.: 5002813

BY: MK-eidel

PLOTTED: 10/1/2007 9:24:23 AM

60

1070147B X1 10/2/07 10/2/07Approval TO:J.A. McDonald, Inc.

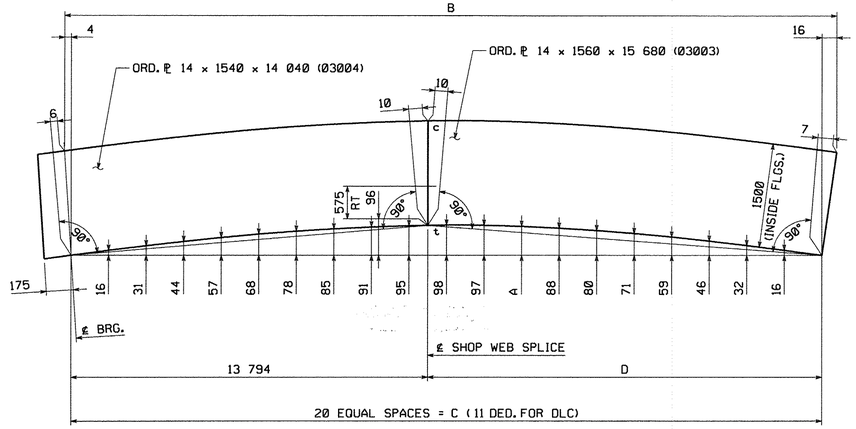

MARK	A	B	C	D
G1A	93	29 397	29 377	15 583
G2A	93	29 402	29 382	15 588
G3A	94	29 408	29 388	15 594
G4A	94	29 414	29 394	15 600

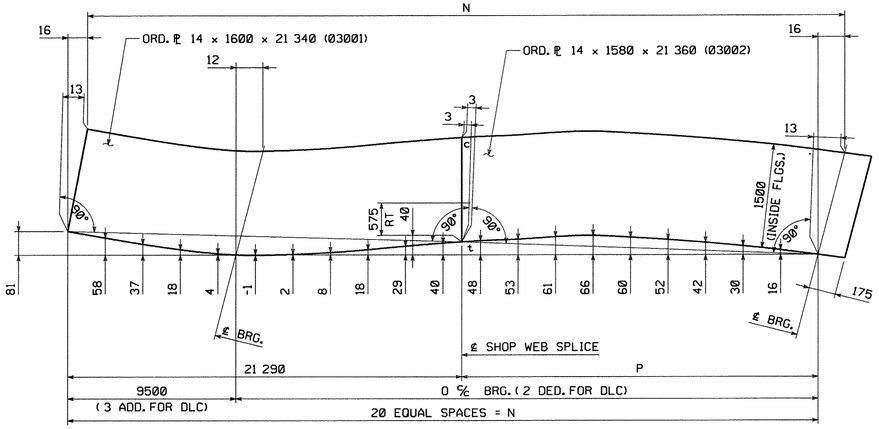

MARK	N	O	P
G2B	42 398	32 898	21 108
G3B	42 401	32 901	21 111

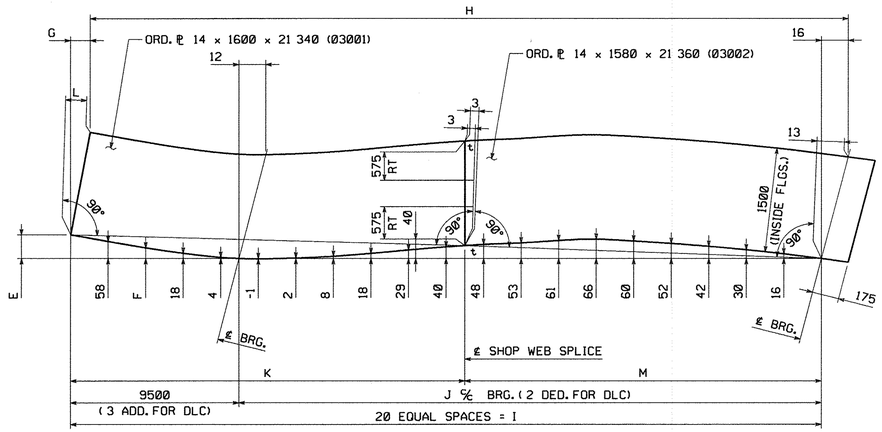

MARK	E	F	G	H	I	J	K	L	M
G1B	81	37	16	42 395	42 395	32 895	21 289	13	21 106
G4B	80	36	15	42 405	42 404	32 904	21 290	12	21 114

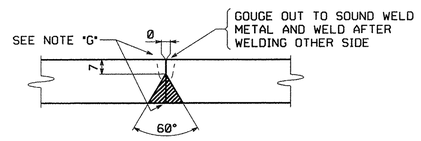

TYPICAL WEB PLATE SPLICE

FOR WEB PLATES 13 mm TO 50 mm THICK (B-L2c-S)

NOTE "G"

ALL WELDS MAY HAVE A MAXIMUM REINFORCEMENT OF 3 mm. GRIND THE WELDS SMOOTH IN THE AREAS TO BE TESTED AND FOR THE FULL DEPTH OF WEB ON G4A, G4B (F.S.) AND G1A, G1B (N.S.).

NOTES:

FOR GENERAL SHOP NOTES, SEE DRAWING GN1.
ALL WEB PLATES REQUIRE CHARPY V-NOTCH TEST.
NEGATIVE CAMBER ORDINATES INDICATE CURVE IS BELOW BASELINE.
THE LETTERS 't' & 'c' AT WEB SPLICES INDICATE TENSION AND COMPRESSION EDGES AT SPLICES.
RT INDICATES RADIOGRAPHIC TESTING FOR 1/6 OF THE WEB DEPTH AT TENSION EDGE PLUS 25% OF THE REMAINDER.

NO.	REVISION	BY	CHK'D	DATE
△				
△				
△				

HOLES
BOLTS
COATING
CODE(S) 30
SCALE N.T.S.

HIGH STEEL STRUCTURES INC.
An ISO 9001:2000 Certified Company
An Affiliate of High Industries Inc.
Lancaster Facility
1915 Old Philadelphia Pike
Lancaster, PA 17605-0008
Phone (717) 299-5251
Williamsport Facility
3500 W. 4th. Street
Williamsport, PA 17701
Phone (570) 326-9051
www.highsteel.com

WEB CAMBER DIAGRAMS
EAST ROAD OVER VT ROUTE 279
EAST ROAD STA. 1+148.400 TO STA. 1+220.200
TOWN OF BENNINGTON VERMONT, BRIDGE B11
STATE OF VERMONT
AGENCY OF TRANSPORTATION

	AC NH 019-1(53)	FED. AID PROJ. NO.	
GENERAL CONTRACTOR	J.A. McDONALD, INC.	HSSI PROJ. MGR	DEB KUPRES

SHPMT	1	DRAWING MANAGER	BRITIGAN (IH)	MADE BY	KMA	CHK'D. BY	SJA	DATE	8/24/07
STATE	VT	HSSI PROJECT NUMBER	S-1070147	HSSI STRUCT. ID	B	DRAWING NUMBER	WC1 OF WC1		

METRIC
PLOTTED: 10/1/2007 9:24:34 AM
BY: MKrendel
SHIPMENT 01
PM&ENG: 5082811 PRO: 5082812 SHP&REC'T: 5082813

1070147B X1 10/2/07 10/2/07Approval TO:J.A. McDonald, Inc.

METRIC

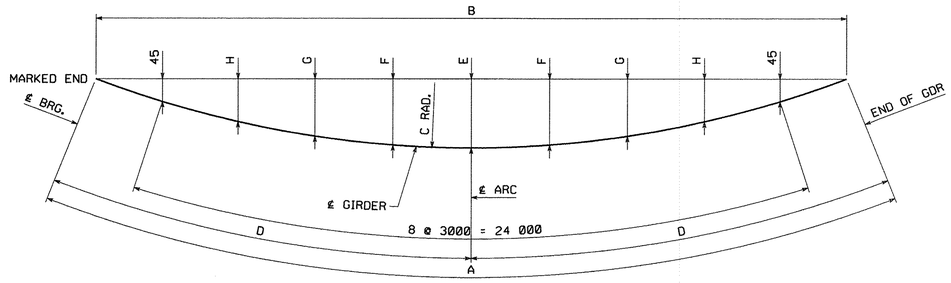

MARK	A	B	C	D	E	F	G	H
G1A	29 397	29 395	804 050	14 699	134	129	112	84
G2A	29 402	29 400	801 350	14 701	135	129	112	84
G3A	29 408	29 406	798 650	14 704	135	130	113	85
G4A	29 414	29 412	795 950	14 707	136	130	113	85

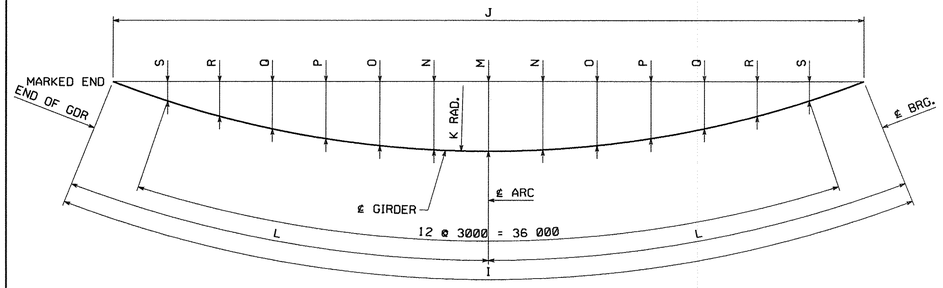

MARK	I	J	K	L	M	N	O	P	Q	R	S
G1B	42 395	42 390	804 050	21 198	279	274	257	229	190	139	78
G2B	42 398	42 393	801 350	21 199	280	275	258	230	191	140	78
G3B	42 401	42 396	798 650	21 201	281	276	259	231	191	141	79
G4B	42 405	42 400	795 950	21 203	282	277	260	231	192	141	79

NOTES:

ALL DIMENSIONS APPLY AT THE TOP OF WEB PLATE OF THE GIRDERS.

NO.	REVISION	BY	CHK'D	DATE
△				
△				
△				

HOLES

BOLTS

COATING

CODE(S) 30

SCALE N.T.S.

HIGH STEEL STRUCTURES INC.
An ISO 9001:2000 Certified Company
An Affiliate of High Industries Inc.

Lancaster Facility
1915 Old Philadelphia Pike
Lancaster, PA 17605-0008
Phone (717) 299-5211

Williamsport Facility
3501 W. 4th Street
Williamsport, PA 17701
Phone (570) 326-9051

www.Highsteel.com

HORIZONTAL CURVE DIAGRAMS
EAST ROAD OVER VT ROUTE 279
EAST ROAD STA. 1+148.400 TO STA. 1+220.200
TOWN OF BENNINGTON VERMONT, BRIDGE B11
STATE OF VERMONT
AGENCY OF TRANSPORTATION

	AC NH 019-1(53)	FED. AID PROJ. NO.	
GENERAL CONTRACTOR	J.A. McDONALD, INC.	HSSI PROJ. MGR	DEB KUPRES
SHPMT 1	DRAWING MANAGER: BRITIGAN (IH)	MADE BY: KMA	CHK'D. BY: SJA	DATE: 8/24/07
STATE VT	HSSI PROJECT NUMBER: S-1070147	HSSI STRUCT. ID: B	DRAWING NUMBER: HC1 OF HC1

PLOTTED: 10/1/2007 9:24:29 AM
BY: MKreidel
SHIPMENT 01
PM&ENG: 50023811 PRD: 50023812 SHIP&ERECT.: 50023813

1070147B X1 10/2/07 10/2/07Approval TO:J.A. McDonald, Inc.

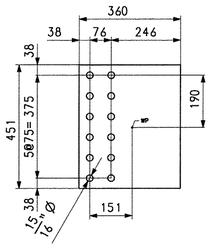

GUSSET PLATE - MK. m1a
(CG)

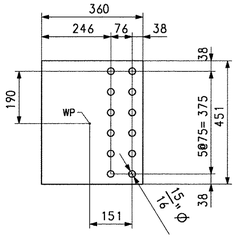

GUSSET PLATE - MK. m1b
(CG)

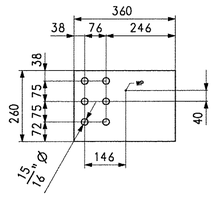

GUSSET PLATE - MK. m1g
(CG)

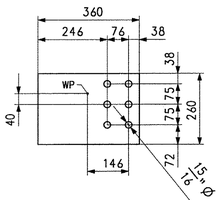

GUSSET PLATE - MK. m1h
(CG)

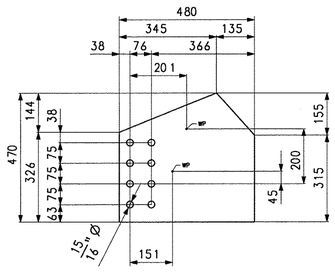

GUSSET PLATE - MK. m1c
(CG)

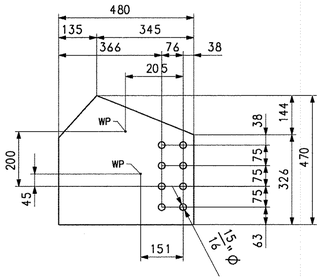

GUSSET PLATE - MK. m1d
(CG)

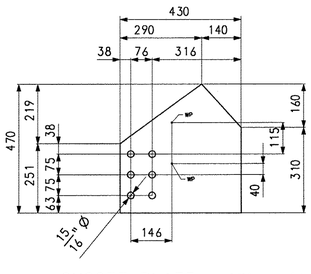

GUSSET PLATE - MK. m1k
(CG)

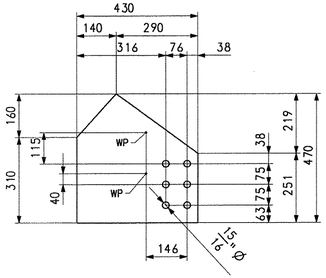

GUSSET PLATE - MK. m1m
(CG)

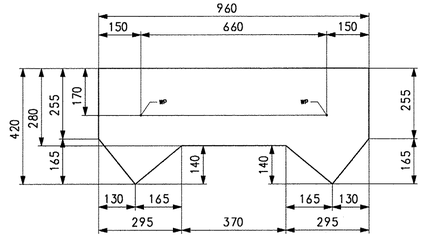

GUSSET PL. - MK. m1f
(CG)

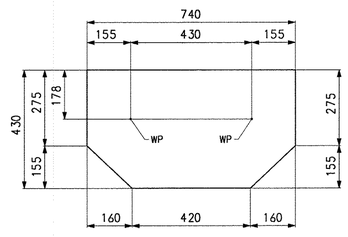

GUSSET PLATE - MK. m1n
(CG)

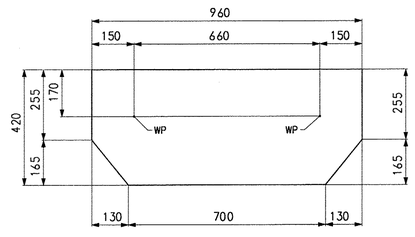

GUSSET PLATE - MK. m1t
(CG)

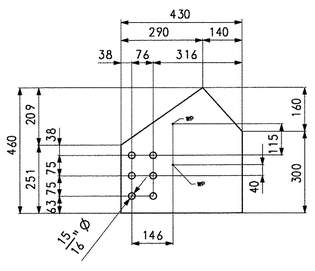

GUSSET PLATE - MK. m1p
(CG)

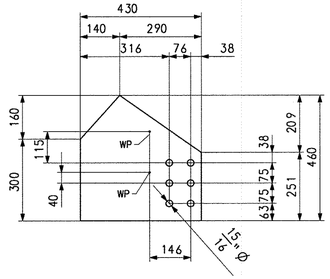

GUSSET PLATE - MK. m1s
(CG)

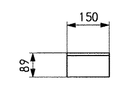

ANGLE - MK. m1aa

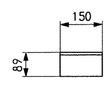

ANGLE - MK. m1ab
(CG)

NOTE: FOR SHOP NOTES, SEE GN1.

BILL OF MATERIAL

QTY	MARK	COMMODITY	DESCRIPTION						LENGTH	SPEC	GRADE	TEST	REMARKS	ITEM	GROSS WEIGHT EA.	DEDUCTED WEIGHT EA.	NET WEIGHT EA.
6	m1a	PL	14.3	×	360				451	M270M	345W	T		11003	18.21	0.00	18.21
6	m1b	PL	14.3	×	360				451	M270M	345W	T		11003	18.21	0.00	18.21
6	m1c	PL	14.3	×	470				480	M270M	345W	T		11003	25.30	0.00	25.30
6	m1d	PL	14.3	×	470				480	M270M	345W	T		11003	25.30	0.00	25.30
4	m1f	PL	14.3	×	420				960	M270M	345W	T		11003	45.26	0.00	45.26
30	m1g	PL	14.3	×	260				360	M270M	345W	T		11003	10.50	0.00	10.50
30	m1h	PL	14.3	×	260				360	M270M	345W	T		11003	10.50	0.00	10.50
27	m1k	PL	14.3	×	430				470	M270M	345W	T		11003	22.66	0.00	22.66
27	m1m	PL	14.3	×	430				470	M270M	345W	T		11003	22.66	0.00	22.66
30	m1n	PL	14.3	×	430				740	M270M	345W	T		11003	35.68	0.00	35.68
3	m1p	PL	14.3	×	430				460	M270M	345W	T		11003	22.18	0.00	22.18
3	m1s	PL	14.3	×	430				460	M270M	345W	T		11003	22.18	0.00	22.18
2	m1t	PL	14.3	×	420				960	M270M	345W	T		11003	45.26	0.00	45.26
88	m1aa	L	89	×	89	×	9.5		150	M270M	345W			11004	1.90	0.00	1.90
4	m1ab	L	89	×	89	×	9.5		150	M270M	345W			11004	1.90	0.00	1.90

NO.	REVISION	BY	CHK'D	DATE

HOLES: 15/16" Ø
BOLTS: NONE
COATING: NONE
CODE(S): 63
SCALE: N.T.S.

HIGH STEEL STRUCTURES INC.
1915 Old Philadelphia Pike
Lancaster, PA 17602-2008
Phone (717) 299-5211
www.highsteel.com
An ISO 9001:2000 Certified Company
An Affiliate of High Industries Inc.

CROSSFRAME JOB STANDARDS
EAST ROAD OVER VT ROUTE 279
EAST ROAD STA. 1+148.400 TO STA. 1+220.200
TOWN OF BENNINGTON VERMONT, BRIDGE B11
STATE OF VERMONT
AGENCY OF TRANSPORTATION

STATE CONT. OR REF. NO.	AC NH 019-1(53)			FED. AID PROJ. NO.			
GENERAL CONTRACTOR	J.A. McDONALD, INC.			HSSI PROJ. MGR	DEB KUPRES		
SHPMT 1	DRAWING MANAGER	BRITIGAN (IH)	MADE BY	SSL	CHK'D. BY	CS	DATE 9-18-07
STATE VT	HSSI PROJECT NUMBER	S-1070147	HSSI STRUCT. ID	B	DRAWING NUMBER	M1 OF M1	

SHIPMENT 1 PM&ENG: XXXXXXX PRD: XXXXXXX SHIP&ERECT: XXXXXXX
PLOTTED: 10/01/07 09:29:56 BY: MKreidel

1070147B X1 10/2/07 10/2/07Approval TO:J.A. McDonald, Inc.

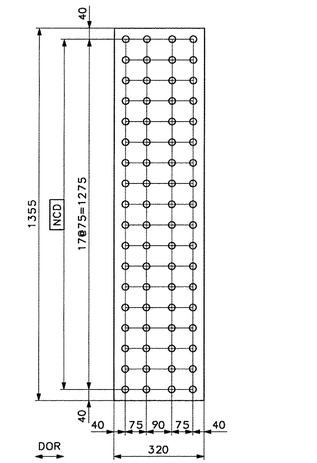

WEB SPLICE PLATE – MK. x1a

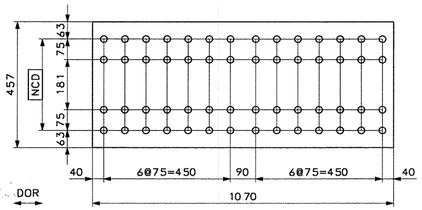

FLANGE SPLICE PLATE – MK. x1b

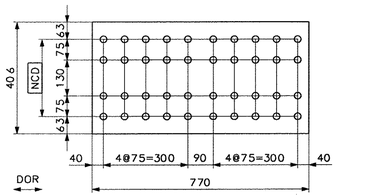

FLANGE SPLICE PLATE – MK. x1c

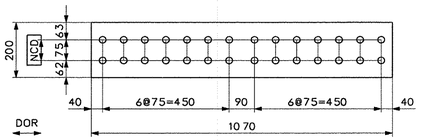

FLANGE SPLICE PLATE – MK. x1d

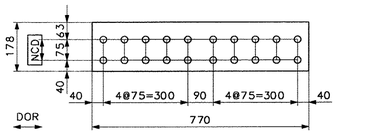

FLANGE SPLICE PLATE – MK. x1f

BILL OF MATERIAL

QTY	MARK	COMMODITY	DESCRIPTION			LENGTH	SPEC	GRADE	TEST	REMARKS	ITEM	GROSS WEIGHT EA.	DEDUCTED WEIGHT EA.	NET WEIGHT EA.
8	x1a	PL	14.3	x	1355	320	M270M	345W	T		06001	48.67		48.67
4	x1b	PL	19.1	x	457	1070	M270M	345W	T		06002	73.31		73.31
4	x1c	PL	14.3	x	406	770	M270M	345W	T		06003	35.09		35.09
8	x1d	PL	22.2	x	200	1070	M270M	345W	T		06004	37.29		37.29
8	x1f	PL	17.5	x	178	770	M270M	345W	T		06005	18.83		18.83

NO.	REVISION	BY	CHK'D	DATE
△				
△				
△				

HOLES: 15/16" Ø
BOLTS: NONE
COATING: NONE
CODE(S): 30
SCALE: N.T.S.

HIGH STEEL STRUCTURES INC.
An ISO 9001:2000 Certified Company
An Affiliate of High Industries Inc.
1915 Old Philadelphia Pike
Lancaster, PA 17605-0008
Phone (717) 299-5211
www.highsteel.com

GIRDER JOB STANDARDS
EAST ROAD OVER VT ROUTE 279
EAST ROAD STA. 1+148.400 TO STA. 1+220.200
TOWN OF BENNINGTON VERMONT, BRIDGE B11
STATE OF VERMONT
AGENCY OF TRANSPORTATION

		STATE CONT. OR REF. NO.	AC NH 019-1153)	FED. AID PROJ. NO.					
		GENERAL CONTRACTOR	J.A. McDONALD, INC	HSSI PROJ. MGR	DEB KUPRES				
SHPMT	1	DRAWING MANAGER	BRITIGAN (IH)	MADE BY	MAF	CHK'D. BY	CS	DATE	9-13-07
STATE	VT	HSSI PROJECT NUMBER	S-1070147	HSSI STRUCT. ID	B	DRAWING NUMBER	X1 OF X2		

SHIPMENT 1 PM&ENG: XXXXXXX PRO: XXXXXXX SHIPA&RECT: XXXXXXX

PLOTTED: 10/01/07 09:30:45 BY: MKreidel

1070147B X1 10/2/07 10/2/07Approval TO:J.A. McDonald, Inc.

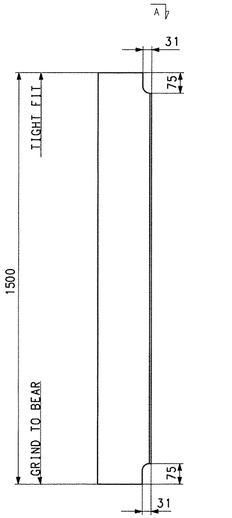

BRG. STIFF. MK. x2a

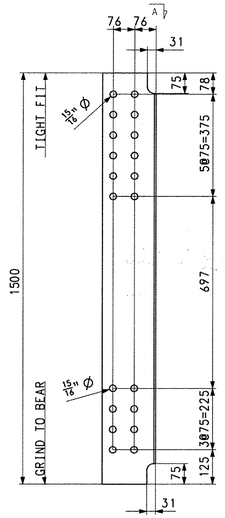

BRG. STIFF. MK. x2b

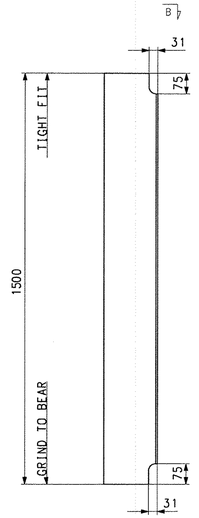

BRG. STIFF. MK. x2c
(CG)

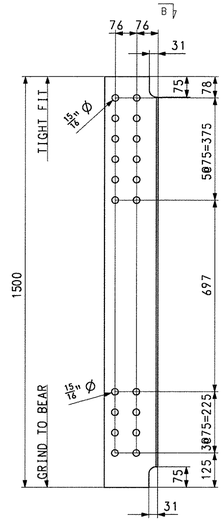

BRG. STIFF. MK. x2d
(CG)

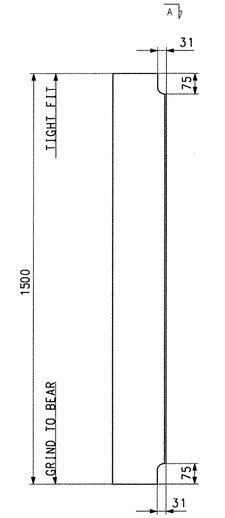

BRG. STIFF. MK. x2f

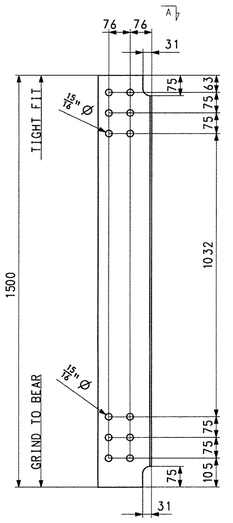

BRG. STIFF. MK. x2g

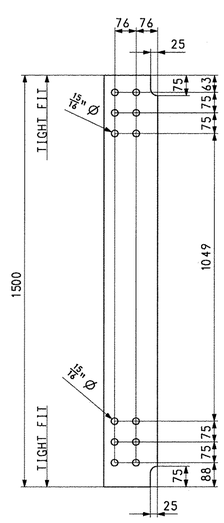

CONN. PLATE. MK. x2h

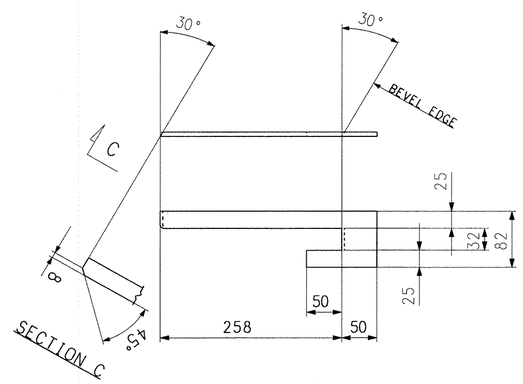

DRIP PLATE - MK. x2k

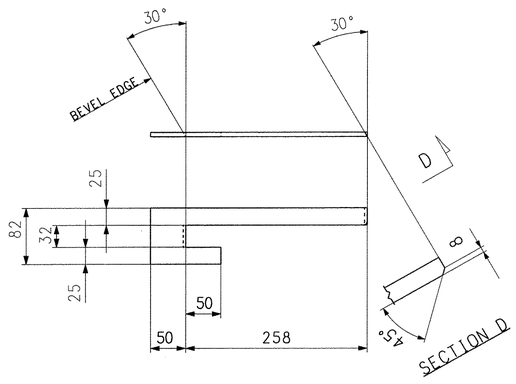

DRIP PLATE - MK. x2m



SECTION A



SECTION B

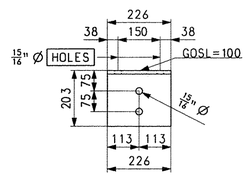

CONN. ANGLE - MK. x2n
(CG)

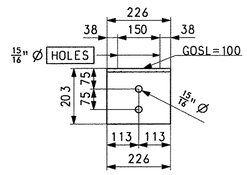

CONN. ANGLE - MK. x2p

BILL OF MATERIAL

EST. ID	QTY	MARK	COMMODITY	DESCRIPTION					LENGTH	SPEC	GRADE	TEST	REMARKS	ITEM	GROSS WEIGHT EA.	DEDUCTED WEIGHT EA.	NET WEIGHT EA.
BST1	2	x2a	PL	22.2	x	190			1500	M270M	345W	T		07001	49.72		49.72
BST2	6	x2b	PL	22.2	x	190			1500	M270M	345W	T		07001	49.66		49.66
BST1	2	x2c	PL	22.2	x	190			1500	M270M	345W	T		07001	49.72		49.72
BST2	6	x2d	PL	22.2	x	190			1500	M270M	345W	T		07001	49.72		49.72
BST3	2	x2f	PL	25.4	x	190			1500	M270M	345W	T		07002	56.82		56.82
BST4	6	x2g	PL	25.4	x	190			1500	M270M	345W	T		07002	56.82		56.82
CST1	54	x2h	PL	14.3	x	190			1500	M270M	345W	T		07003	31.96		31.96
DRIP1	2	x2k	PL	6.4	x	82			308	M270M	345W			07004	1.27		1.27
DRIP1	2	x2m	PL	6.4	x	82			308	M270M	345W			07004	1.27		1.27
CONSH50	4	x2n	L	203	x	152	x	12.7	226	M270M	345W			07005	7.80		7.80
CONSH51	88	x2p	L	203	x	152	x	12.7	226	M270M	345W			07005	7.80		7.80

NO.	REVISION	BY	CHK'D	DATE

HIGH STEEL STRUCTURES INC.
An Affiliate of High Industries Inc.
An ISO 9001:2000 Certified Company
1915 Old Philadelphia Pike
Lancaster, PA 17605-0008
Phone (717) 299-5211
www.highsteel.com

HOLES	15/16" Ø
BOLTS	NONE
COATING	NONE
CODE(S)	30
SCALE	N.T.S.

GIRDER JOB STANDARDS
EAST ROAD OVER VT ROUTE 279
EAST ROAD STA. 1+148.400 TO STA. 1+220.200
TOWN OF BENNINGTON VERMONT, BRIDGE B11
STATE OF VERMONT
AGENCY OF TRANSPORTATION

		STATE CONT. OR REF. NO.	AC NH 019-1(53)	FED. AID PROJ. NO.				
		GENERAL CONTRACTOR	J.A. McDONALD, INC	HSSI PROJ. MGR	DEB KUPRES			
SHPMT	1	DRAWING MANAGER	BRITIGAN (IH)	MADE BY	MAF	CHK'D. BY	CS	DATE 9-18-07
STATE	VT	HSSI PROJECT NUMBER	S-1070147	HSSI STRUCT. ID	B	DRAWING NUMBER	X2 OF X2	

SHIPMENT 1 PM@ENG: XXXXXXX PRD: XXXXXXX SHIP&ERECT: XXXXXXX

PLOTTED: 10/01/07 09:30:58 BY: MKreidel

1070147B X1 10/2/07 10/2/07Approval TO:J.A. McDonald, Inc.

METRIC

GENERAL SHOP NOTES

SPECIFICATIONS:
ALL MATERIAL AND WORKMANSHIP TO BE IN ACCORDANCE WITH THE STATE OF VERMONT, AGENCY OF TRANSPORTATION, STANDARD SPECIFICATIONS FOR CONSTRUCTION DATED 2006, AND ITS LATEST REVISIONS.

MATERIAL:
UNLESS NOTED OTHERWISE, ALL STEEL TO BE AASHTO M270M GRADE 345W.
(T) INDICATES ZONE 2 CHARPY V-NOTCH TESTING REQUIRED.

IN UNPAINTED AREAS SHOP BOLTS TO BE HIGH STRENGTH AASHTO M164 TYPE 3 (FRICTION) (RCT) WITH HEAVY HEX HEAD AND AASHTO M291 GRADE DH3 HEAVY HEX NUT, WITH ONE AASHTO M293 WEATHERING WASHER PER BOLT.
IN PAINTED AREAS SHOP BOLTS TO BE HIGH STRENGTH AASHTO M164 TYPE 1 (FRICTION) (RCT) WITH HEAVY HEX HEAD AND AASHTO M291 GRADE DH HEAVY HEX NUT, WITH ONE AASHTO M293 WASHER PER BOLT, GALV. TO AASHTO M298, CLASS 50.
(RCT) INDICATES ROTATIONAL CAPACITY TESTED BOLTS. DO NOT MIX NUTS, BOLTS AND WASHERS FROM DIFFERENT CONTAINERS UNLESS ALL NUTS, BOLTS AND WASHERS HAVE THE SAME LOT NUMBER.

SHOP PROCEDURE:
ALL FLANGE AND WEB PLATE SPLICES TO BE MADE BEFORE FINAL FITTING AND WELDING INTO GIRDER.
CAMBER TOLERANCE: -0 mm TO +19 mm
ALL RE-ENTRANT CUTS TO HAVE 25 MIN. RADIUS.

BEARING AREA, AS NOTED ON GIRDER DETAILS, INDICATES AREA THAT MUST BE FLAT AND TRUE TO RECEIVE SOLE PLATE.
USE LOW STRESS DIE STAMPS PLACED IN AN AREA NOT EXPOSED ON THE FINISHED STRUCTURE.

DOR INDICATES DIRECTION OF ROLLING.
(CG) INDICATES CORNER GRINDING.
CORNER GRINDING IS REQUIRED FOR ALL MAIN MEMBER FLANGE PLATES, FIELD SPLICE PLATES, CROSSFRAMES AND CONNECTION PLATES AS WELL AS SECONDARY MEMBERS IN PAINTED AREAS.

INSPECTION:
SHOP INSPECTION BY TO BE DETERMINED

WELDING:
ALL WELDING IS TO CONFORM TO AWS D1.5-02.
WELDING METHODS, PROCEDURES, AND MATERIALS SHALL COMPLY WITH THE SPECIFIC PROCEDURE DESIGNATED IN THE WELD SYMBOL TAIL.
FOR WELDING STIFFENERS AND CONNECTION PLATES TO GIRDERS, SEE TYPICAL WELDING DETAIL.
FOR WELDING CROSSFRAMES, SEE SECONDARY MEMBER WELDING DETAIL.
IDENTIFICATION OF HOLE PLACEMENT:
UNLESS NOTED OTHERWISE, BOLT HOLES IN MATERIAL 16mm OR LESS IN THICKNESS MAY BE CNC (COMPUTER NUMERICALLY CONTROLLED) PUNCHED OR CNC DRILLED FULL SIZE UNASSEMBLED. ALL MATERIAL THICKER THAN 16mm IS TO BE DRILLED.

NON-DESTRUCTIVE TESTING:
FLANGE AND WEB PLATE SPLICES TO BE RADIOGRAPHICALLY TESTED, AS CALLED FOR ON DRAWINGS PREFIXED "FS" AND "WC", BY H.S.S.I.

MAGNETIC PARTICLE INSPECTION IS REQUIRED ON AT LEAST 300 mm OF EVERY 3000 mm LENGTH OF FILLET WELDS AND 300 mm OF SUCH WELDS LESS THAN 3000 mm IN LENGTH ON GIRDER WEB TO FLANGE, CONNECTION PLATES AND BEARING STIFFENERS TO WEB AND FLANGE AND CROSSFRAME WELDS. TESTING PER THE YOKE METHOD, USING DC.

DT DRILLED TO TEMPLATE
SINGLE PLY CONNECTION DRILLED FULL SIZE USING TEMPLATE WITH HARDENED BUSHINGS WHILE UNASSEMBLED.

NCD NUMERICALLY CONTROLLED DRILLING
EACH PART IS DRILLED FULL SIZE USING A MACHINING CENTER, PORTABLE CNC DRILL OR DRILL LINE WHILE UNASSEMBLED.

CLEANING:
ALL STEEL TO BE BLAST CLEANED TO SSPC-SP10 (NEAR WHITE), (ASTM D2200 GRADE SA 2-1/2), AFTER FABRICATION.
BLAST CLEANING ANCHOR PROFILE TO BE FROM 38 TO 64 MICROMETERS DEEP IN PAINTED AREAS.

PAINTING:
ALL STEEL TO BE PAINTED (UNLESS NOTED) WITHIN 3000mm FROM THE END OF THE GIRDERS AT ABUTMENT 2 WITH A 3 COAT SYSTEM AS FOLLOWS:
PRIME COAT: CARBOZINC 859 (ORGANIC ZINC) WITH 75 TO 250 MICROMETERS D.F.T.
INTER. COAT: CARBOGUARD 888 (EPOXY) WITH 75 TO 200 MICROMETERS D.F.T.
FINISH COAT: CARBOTHANE 133 LH (POLYURETHANE) WITH 75 TO 150 MICROMETERS D.F.T.
FINISH COAT COLOR TO BE DARK BROWN, FEDERAL STANDARD 595, COLOR #20059.
PRIME COAT ONLY WITHIN 75 mm OF OPEN HOLES (150 MICROMETERS MAX. D.F.T.), UNLESS NOTED "P".
PRIME COAT TO BE APPLIED WITHIN 8 HOURS AFTER BLAST CLEANING.
STRIPE COAT ALL EDGES OF PLATES, ANGLES OR OTHER SHAPES WITH SHARP EDGES, BOLTS, AND NUTS PRIOR TO THE APPLICATION OF THE FULL PRIME COAT.
TOP FLANGE OF GIRDERS, AS SHOWN IN "TYPICAL PAINT SECTION", SHALL RECEIVE A LIGHT RUST PREVENTIVE COAT OF PRIMER IN PAINTED AREAS, NOT TO EXCEED 38 MICROMETERS D.F.T.
INTERMEDIATE AND FINISH COATS SHALL BE STAGGERED A MINIMUM OF 13 mm FROM THE FAYING SURFACES AND EACH OTHER.
PAINT MANUFACTURER: THE CARBOLINE CO. ST. LOUIS, MO.

DRAWING REFERENCE:

FLANGE SPLICES	-PREFIXED "FS"
WEB CAMBERS	-PREFIXED "WC"
GIRDER JOB STANDARDS	-PREFIXED "X"
CROSSFRAME JOB STDS.	-PREFIXED "M"
SHOP ASSEMBLY	-PREFIXED "SA"
HORIZONTAL CURVE	-PREFIXED "HC"
WELDING PROCEDURE	-PREFIXED "WP"

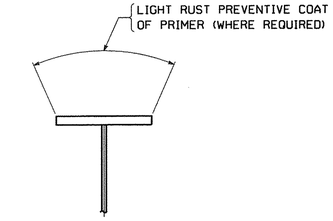

TYP. PAINT SECTION

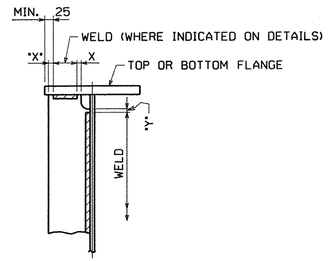

"X" = 5±3
"Y" = 15±5

STIFFENER WELDING DETAIL
(WELDS MUST STOP 25 mm MIN. FROM EDGE OF FLANGE)

ALL CROSSFRAME WELDS ARE TO BE TERMINATED FROM EDGE OF GUSSET PLATES, FILL PLATES OR ANGLES AS INDICATED.

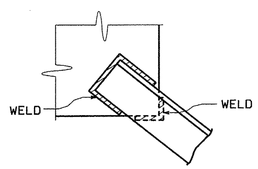

SECONDARY MEMBER WELDING DETAIL

NO.	REVISION	BY	CHK'D	DATE

HOLES
BOLTS
COATING
CODE(S)
SCALE N.T.S.

HIGH STEEL STRUCTURES INC.
An AFFiliate of High Industries Inc.
An ISO 9001:2000 Certified Company

Lancaster Facility
695 Old Philadelphia Pike
Lancaster, PA 17601-0008
Phone (717) 299-5211

Williamsport Facility
3501 W. 4th Street
Williamsport, PA 17701
Phone (570) 326-9051
www.highsteel.com

GENERAL SHOP NOTES
EAST ROAD OVER VT ROUTE 279
EAST ROAD STA. 1+148.400 TO STA. 1+220.200
TOWN OF BENNINGTON VERMONT, BRIDGE B11
STATE OF VERMONT
AGENCY OF TRANSPORTATION

	AC NH 019-1(53)	FED. AID PROJ. NO.	
GENERAL CONTRACTOR	J.A. McDONALD, INC.	HSSI PROJ. MGR	DEB KUPRES
SHPMT 1	DRAWING MANAGER: BRITIGAN (IH)	MADE BY: KMA	CHK'D. BY: SJA	DATE: 8/24/07
STATE VT	HSSI PROJECT NUMBER: S-1070147	HSSI STRUCT. ID: B	DRAWING NUMBER: GN1 OF GN2

PLOTTED: 10/1/2007 9:24:24 AM
BY: MK-reidel
SHIPMENT 01 PM&ENG: 5002811 PRD: 5002812 SHIP&ERECT.: 5002813

1070147B X1 10/2/07 10/2/07Approval TO:J.A. McDonald, Inc.

METRIC

FULL SIZE HOLE PROCEDURE

THE SPLICE CONNECTIONS WILL BE DRILLED FULL-SIZE, UNASSEMBLED USING STEEL TEMPLATES, WHICH WILL ELIMINATE THE REAMING OPERATION. THE GIRDER SPLICE CONNECTION TEMPLATES WILL BE PREPARED ON A CNC MACHINING CENTER. THE SPLICE MATERIAL WILL BE DRILLED TO FULL SIZE HOLES ON A CNC MACHINING CENTER. FIT-UP FIXTURES ALSO PREPARED ON A CNC MACHINING CENTER WILL BE USED TO ALIGN DRILLING TEMPLATES ON WEB AND FLANGES. BY DRILLING THE SPLICE CONNECTIONS IN THIS MANNER, THERE WILL BE NO REAMING REQUIRED.

THE PROCEDURE TO BE USED IS AS FOLLOWS:

A. SPLICE MATERIAL
THE SPLICE MATERIAL HOLES NOTED NCD ON X DRAWINGS WILL BE DRILLED FULL-SIZE ON A CNC MACHING CENTER.

B. DRILL TEMPLATES
WEB AND FLANGE DRILLING TEMPLATES, AND THE WEB TO FLANGE HOLE LOCATION JIGS WILL BE PRODUCED ON CNC MACHINING CENTERS ENSURING ACCURATE PLACEMENT OF HOLES.

C. WEB BURNING
THE WEBS WILL BE BURNED ON THE CNC BURNING MACHINE.

D. WEB DRILLING (SEE FIG. 1)
THE WEB SPLICE HOLES WILL BE DRILLED FULL-SIZE, USING THE DRILL TEMPLATE. THIS TEMPLATE WILL PIN OFF OF THE END AND THE BOTTOM OF THE WEB PLATE, WITH NO MANUAL LAYOUT NECESSARY. THE LOCATION OF THE FIRST HOLE IN THE PATTERN WILL BE VERIFIED.

1. PLACE THE TEMPLATE'S LOCATING PINS AGAINST THE REFERENCE EDGES (END AND BOTTOM OF WEB). CLAMP THE TEMPLATE SECURELY IN AT LEAST TWO LOCATIONS. (SEE FIG. 1)
2. DRILL THE (4) CORNER HOLES USING A FULL SIZE DRILL.
3. USE THE FULL SIZE PINS IN AT LEAST (2) OPPOSITE CORNER HOLES, INSURING THAT THE LOCATING PINS ARE STILL IN CONTACT WITH THE REFERENCE EDGES, AND BOLT OR CLAMP THE TEMPLATE TO PREVENT TEMPLATE MOVEMENT DURING THE DRILLING OPERATION.
4. DRILL THE REMAINING HOLES.

E. FLANGE DRILLING
1. FLANGE HOLES WILL BE DRILLED AFTER THE GIRDER IS ASSEMBLED AND WELDED.
   a. ALIGN THE WEB TO FLANGE DRILLING FIXTURE TO THE WEB AND SECURELY ATTACH THE FIXTURE WITH (2) SHOULDER BOLTS OR FULL SIZE PINS AND CLAMPS. (SEE FIG. 2)
   b. WELD FIXTURE ANGLE TO PLATE ONCE ALIGNED.
   c. DRILL 1 FULL SIZE HOLE IN FLANGE USING THE FIXTURE AS A GUIDE.
   d. REMOVE THE FLANGE DRILLING FIXTURE AND LOCATE THE FLANGE TEMPLATE USING THE PRE-DRILLED HOLES AND CENTER LINE ON TEMPLATE AND FLANGE. SECURELY HOLD THE OPPOSITE SIDE OF THE DRILL TEMPLATE IN PLACE WITH (1) SHOULDER BOLT OR FULL SIZE PIN & C-CLAMPS. (SEE FIG. 3)
   e. DRILL (2) ADDITIONAL FULL SIZE HOLES AT CORNERS OPPOSITE END OF TEMPLATES.
   f. SECURE TEMPLATE USING SHOULDER BOLTS OR FULL SIZE PINS AND C-CLAMPS THEN DRILL REMAINING HOLES.
   g. REPEAT PROCEDURE FOR OTHER FLANGE.
2. THE SPLICE PLATES NEED NOT BE MATCH MARKED SINCE THEY ARE ALL ALIKE AND WILL FIT ANY SPLICE UTILIZING THE TEMPLATE LOCATED AND DRILLED HOLES.

G. YARD
1. THE FIRST LINE OF GIRDERS SHALL BE SET IN THE YARD TO THE CORRECT ELEVATION AND CAMBER.
2. THE GIRDERS, WITH THE SPLICES ATTACHED, WILL BE PINNED TO ALIGN THE SPLICE. THE SPLICES ARE TO BE BOLTED TOGETHER, USING SUFFICIENT BOLTS TO SECURE THE UNITS. A NORMAL DIAMETER BOLT MUST BE ABLE TO FIT THROUGH EACH SPLICE CONNECTION.

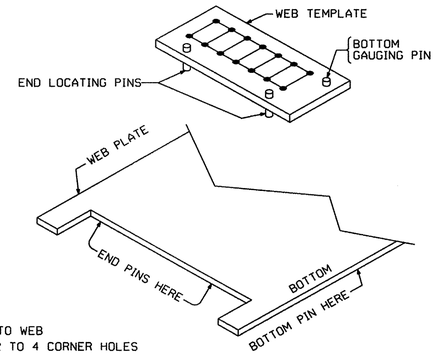

- CLAMP TO WEB
- DRILL 2 TO 4 CORNER HOLES
- SECURE WITH FULL SIZE PINS (TO KEEP TEMPLATE FROM MOVING)
- DRILL BALANCE OF HOLES

FIG. 1

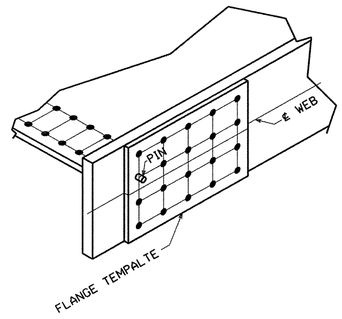

- PIN TEMPLATE TO FLANGES
- CHECK ALIGNMENT WITH ℄ WEB SCRIBE LINES

FIG. 3

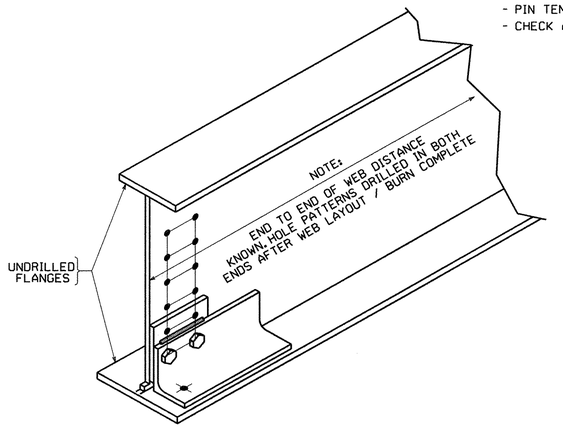

- SECURE FIXTURE TO WEB
- WELD FIXTURE
- DRILL HOLE INTO FLANGE
- REMOVE FIXTURE

FIG. 2

NO.	REVISION	BY	CHK'D	DATE

HOLES
BOLTS
COATING
CODE(S)
SCALE N.T.S.

HIGH STEEL STRUCTURES INC.
An ISO 9001:2000 Certified Company
An Affiliate of High Industries Inc.
Lancaster Facility: 195 Old Philadelphia Pike, Lancaster, PA 17605-0008, Phone (717) 299-5211
Williamsport Facility: 3501 W. 4th. Street, Williamsport, PA 17701, Phone (570) 326-9251
www.highsteel.com

GENERAL SHOP NOTES
EAST ROAD OVER VT ROUTE 279
EAST ROAD STA. 1+148.400 TO STA. 1+220.200
TOWN OF BENNINGTON VERMONT, BRIDGE B11
STATE OF VERMONT
AGENCY OF TRANSPORTATION

	AC NH 019-1(53)	FED. AID PROJ. NO.	
GENERAL CONTRACTOR	J.A. McDONALD, INC.	HSSI PROJ. MGR	DEB KUPRES

SHPMT	1	DRAWING MANAGER	BRITIGAN (IH)	MADE BY	SSL	CHK'D. BY	MGK	DATE	9/11/07
STATE	VT	HSSI PROJECT NUMBER	S-1070147	HSSI STRUCT. ID	B	DRAWING NUMBER	GN2 OF GN2		

1070147B X1 10/2/07 10/2/07Approval TO:J.A. McDonald, Inc.

PLOTTED: 10/1/2007 9:24:27 AM
BY: MKreidel
SHIPMENT 01 PM&ENG: 59002811 PRD: 59002812 SHIP&RECT.: 59002813

METRIC

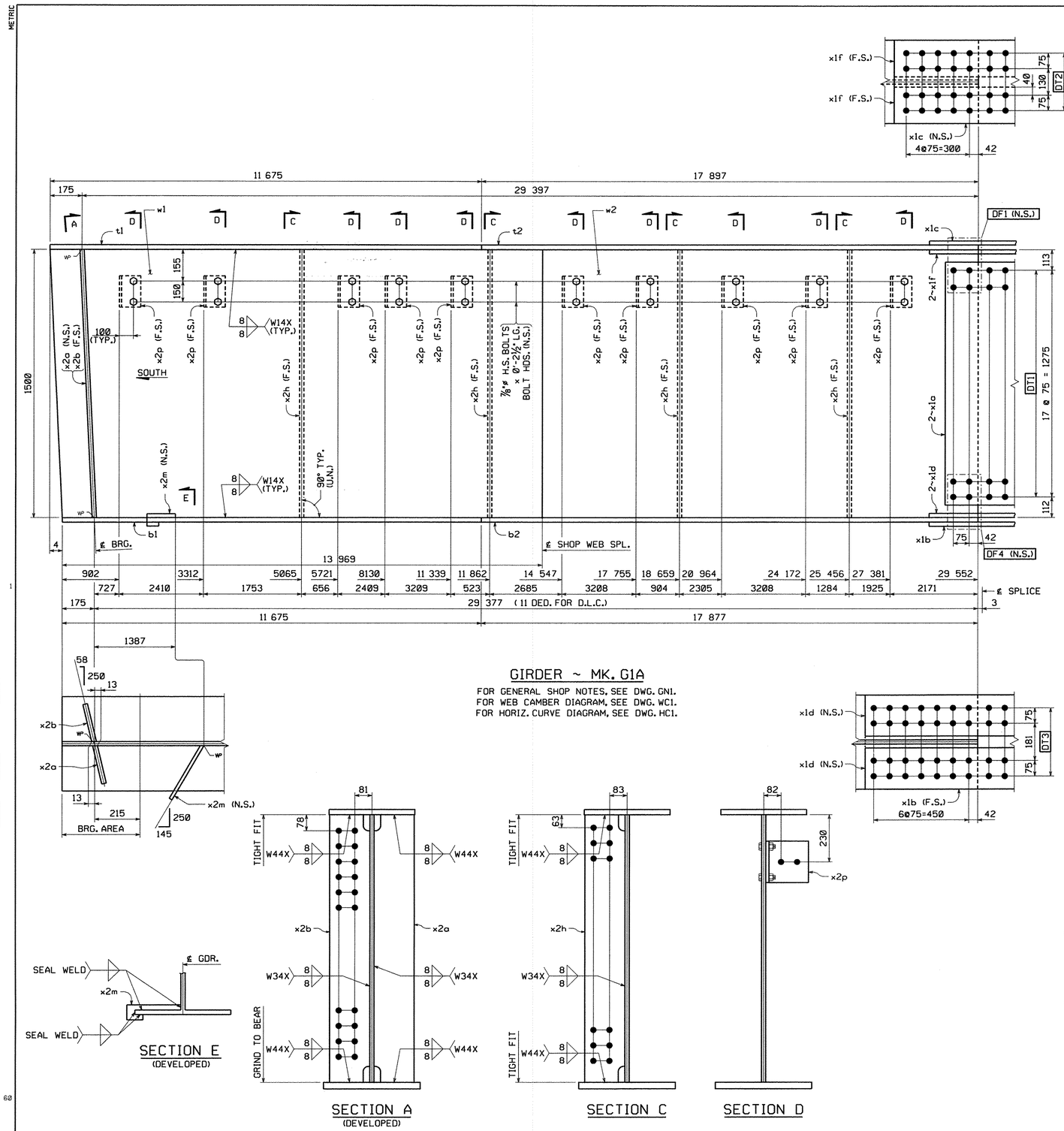

GIRDER ~ MK. G1A

FOR GENERAL SHOP NOTES, SEE DWG. GN1.
FOR WEB CAMBER DIAGRAM, SEE DWG. WC1.
FOR HORIZ. CURVE DIAGRAM, SEE DWG. HC1.

PLAN VIEW

℄ BRG. ABUT. 1 — ℄ F.S. #1

ORIENTATION DIAGRAM

BILL OF MATERIAL

QTY EA.	MARK	COMM	DESCRIPTION	LENGTH	SPEC	GRADE	TEST	REMARKS	ITEM	GROS WT. EA.	DED. WEIGHT	NET WT. EA.
1	G1A		GIRDER							11 248.24	1.65	11 246.60
1	w1	PL	14 x 1500	13 980	M270M	345W	T		03004	2304.32	0.33	2303.99
1	w2	PL	14 x 1500	15 599	M270M	345W	T		03003	2571.18	1.32	2569.87
1	t1	PL	25 x 406	11 675	M270M	345W	T		04011	930.12	0.00	930.12
1	t2	PL	25 x 406	17 898	M270M	345W	T		04008	1425.90	0.00	1425.90
1	b1	PL	32 x 457	11 675	M270M	345W	T		04004	1340.11	0.00	1340.11
1	b2	PL	32 x 457	17 878	M270M	345W	T		04003	2052.12	0.00	2052.12
2	x1a	PL	14.3 x 1355	320	M270M	345W	T		06001	48.67	0.00	48.67
1	x1b	PL	19.1 x 457	1 070	M270M	345W	T		06002	73.31	0.00	73.31
1	x1c	PL	14.3 x 406	770	M270M	345W	T		06003	35.09	0.00	35.09
2	x1d	PL	22.2 x 200	1 070	M270M	345W	T		06004	37.29	0.00	37.29
2	x1f	PL	17.5 x 178	770	M270M	345W	T		06005	18.83	0.00	18.83
1	x2a	PL	22.2 x 190	1 500	M270M	345W	T		07001	49.72	0.00	49.72
1	x2b	PL	22.2 x 190	1 500	M270M	345W	T		07001	49.66	0.00	49.66
4	x2h	PL	14.3 x 190	1 500	M270M	345W	T		07003	31.96	0.00	31.96
1	x2m	PL	6.4 x 82	308	M270M	345W			07004	1.27	0.00	1.27
10	x2p	L	203 x 152 x 12.7	226	M270M	345W			07005	7.80	0.00	7.80
20	140208	HS Bolt	7/8	2 1/2	M164 Type 3 (RCT)				17002	0.00	0.00	0.00
20	W14	Std Wash	7/8		M293 Weathering (RCT)				17006	0.00	0.00	0.00
20	N14	Nut	7/8		M291 (RCT)	DH3			17004	0.00	0.00	0.00
										TOTAL WEIGHT THIS SHEET:		11 246.60 kgs

NO.	REVISION	BY	CHK'D	DATE

HIGH STEEL STRUCTURES INC.
An Affiliate of High Industries Inc.
An ISO 9001:2000 Certified Company
Lancaster Facility
1915 Old Philadelphia Pike
Lancaster, PA 17605-0008
Phone (717) 299-5211
Williamsport Facility
3501 W. 4th Street
Williamsport, PA 17701
Phone (570) 326-9051
www.highsteel.com

HOLES	15/16" ø
BOLTS	AS NOTED
COATING	NONE
CODE(S)	30
SCALE	N.T.S.
GIRDER	G1A
EAST ROAD OVER VT ROUTE 279	
EAST ROAD STA. 1+148.400 TO STA. 1+220.200	
TOWN OF BENNINGTON VERMONT, BRIDGE B11	
STATE OF VERMONT	
AGENCY OF TRANSPORTATION	
FED. AID PROJ. NO.	AC NH 019-1(53)
GENERAL CONTRACTOR	J.A. McDONALD, INC.
HSSI PROJ. MGR	DEB KUPRES
SHPMT 1	DRAWING MANAGER: BRITIGAN (IH) — MADE BY: DRJ — CHK'D. BY: CS — DATE: 9-26-07
STATE VT	HSSI PROJECT NUMBER: S-1070147 — HSSI STRUCT. ID: B — DRAWING NUMBER: 1 OF 12

SHIPMENT 01 PM&ENG: 5802811 PROD: 5802812 SHIPAERECT: 5802813
BY: MKreidel
PLOTTED: 10/1/2007 9:22:53 AM

1070147B X1 10/2/07 10/2/07Approval TO:J.A. McDonald, Inc.

METRIC

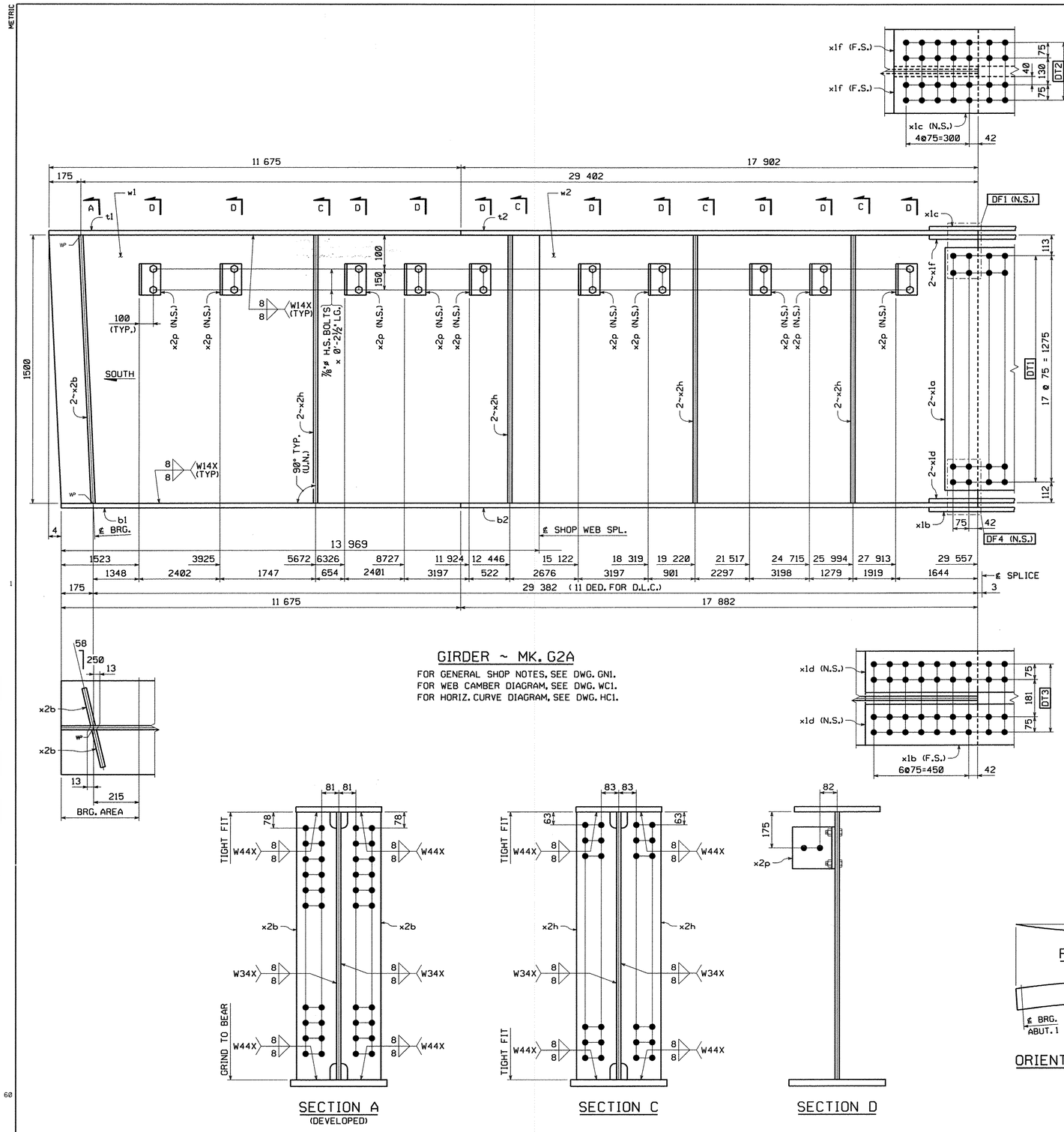

GIRDER ~ MK. G2A

FOR GENERAL SHOP NOTES, SEE DWG. GN1.
FOR WEB CAMBER DIAGRAM, SEE DWG. WC1.
FOR HORIZ. CURVE DIAGRAM, SEE DWG. HC1.

SECTION A
(DEVELOPED)

SECTION C

SECTION D

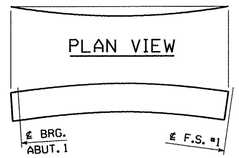

ORIENTATION DIAGRAM

BILL OF MATERIAL

QTY EA.	MARK	COMM	DESCRIPTION	LENGTH	SPEC	GRADE	TEST	REMARKS	ITEM	GROS WT. EA.	DED. WEIGHT	NET WT. EA.
1	G2A		GIRDER							11 376.72	1.65	11 375.08
1	w1	PL	14 x 1500	13 980	M270M	345W	T		03004	2304.32	0.33	2303.99
1	w2	PL	14 x 1500	15 605	M270M	345W	T		03003	2572.17	1.32	2570.85
1	t1	PL	25 x 406	11 675	M270M	345W	T		04011	930.12	0.00	930.12
1	t2	PL	25 x 406	17 903	M270M	345W	T		04008	1426.29	0.00	1426.29
1	b1	PL	32 x 457	11 675	M270M	345W	T		04004	1340.11	0.00	1340.11
1	b2	PL	32 x 457	17 883	M270M	345W	T		04003	2052.69	0.00	2052.69
2	x1a	PL	14.3 x 1355	320	M270M	345W	T		06001	48.67	0.00	48.67
1	x1b	PL	19.1 x 457	1 070	M270M	345W	T		06002	73.31	0.00	73.31
1	x1c	PL	14.3 x 406	770	M270M	345W	T		06003	35.09	0.00	35.09
2	x1d	PL	22.2 x 200	1 070	M270M	345W	T		06004	37.29	0.00	37.29
2	x1f	PL	17.5 x 178	770	M270M	345W	T		06005	18.83	0.00	18.83
2	x2b	PL	22.2 x 190	1 500	M270M	345W	T		07001	49.66	0.00	49.66
8	x2h	PL	14.3 x 190	1 500	M270M	345W	T		07003	31.96	0.00	31.96
10	x2p	L	203 x 152 x 12.7	226	M270M	345W			07005	7.80	0.00	7.80
20	140208	HS Bolt	7/8	2 1/2	M164 Type 3 (RCT)				17002	0.00	0.00	0.00
20	W14	Std Wash	7/8		M293 Weathering (RCT)				17006	0.00	0.00	0.00
20	N14	Nut	7/8		M291 (RCT)	DH3			17004	0.00	0.00	0.00
					TOTAL WEIGHT THIS SHEET:							11 375.08 kgs

NO.	REVISION	BY	CHK'D	DATE

HIGH STEEL STRUCTURES INC.
An Affiliate of High Industries Inc.
An ISO 9001:2000 Certified Company
Lancaster Facility
1915 Old Philadelphia Pike
Lancaster, PA 17605-0008
Phone (717) 299-5211
Williamsport Facility
3501 W. 4th Street
Williamsport, PA 17701
Phone (570) 326-9051
www.Highsteel.com

HOLES	15/16"ø
BOLTS	AS NOTED
COATING	NONE
CODE(S)	30
SCALE	N.T.S.

GIRDER G2A
EAST ROAD OVER VT ROUTE 279
EAST ROAD STA. 1+148.400 TO STA. 1+220.200
TOWN OF BENNINGTON VERMONT, BRIDGE B11
STATE OF VERMONT
AGENCY OF TRANSPORTATION

		AC NH 019-1(53)		FED. AID PROJ. NO.			
		GENERAL CONTRACTOR	J.A. McDONALD, INC.		HSSI PROJ. MGR	DEB KUPRES	
SHPMT	1	DRAWING MANAGER	BRITIGAN (IH)	MADE BY	DRJ	CHK'D. BY	CS	DATE	9-26-07
STATE	VT	HSSI PROJECT NUMBER	S-1070147	HSSI STRUCT. ID	B	DRAWING NUMBER	2 OF 12		

PLOTTED: 10/1/2007 9:23:11 AM
BY: MKreudel
SHIPMENT 01 PM&ENG: 50802811 PRD: 50802812 SHIPAERECT: 50802813

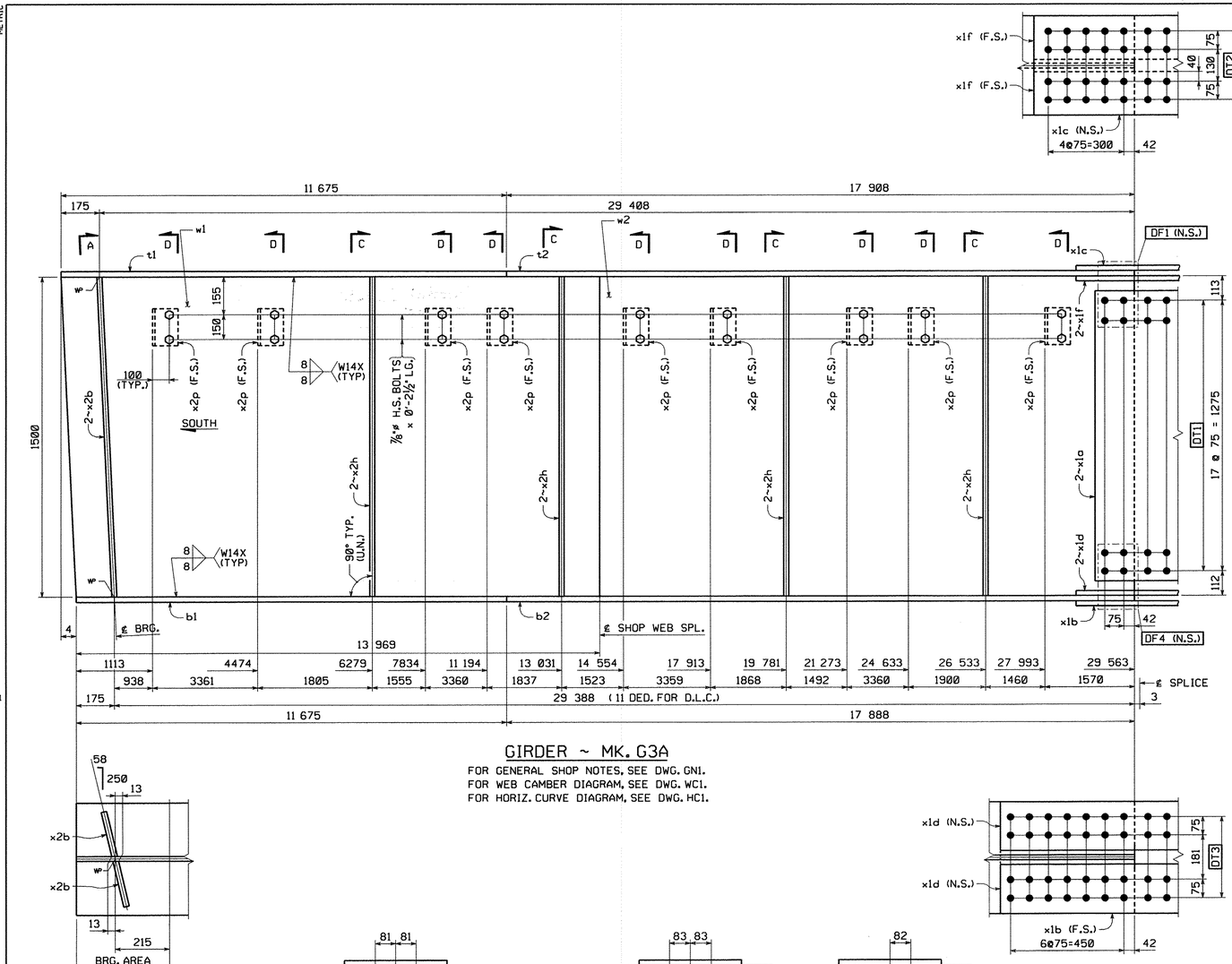

GIRDER ~ MK. G3A

FOR GENERAL SHOP NOTES, SEE DWG. GN1.
FOR WEB CAMBER DIAGRAM, SEE DWG. WC1.
FOR HORIZ. CURVE DIAGRAM, SEE DWG. HC1.

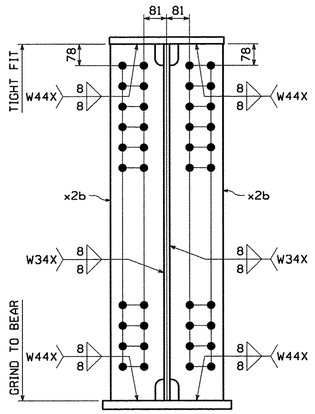

SECTION A
(DEVELOPED)

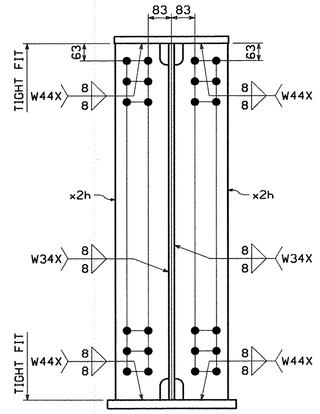

SECTION C

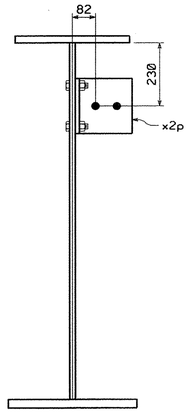

SECTION D

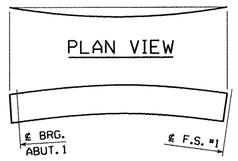

ORIENTATION DIAGRAM

BILL OF MATERIAL

QTY EA.	MARK	COMM	DESCRIPTION	LENGTH	SPEC	GRADE	TEST	REMARKS	ITEM	GROS WT. EA	DED. WEIGHT	NET WT. EA
1	G3A		GIRDER							11 370.91	1.65	11 369.26
1	w1	PL	14 x 1500	13 980	M270M	345W	T		03004	2304.32	0.33	2303.99
1	w2	PL	14 x 1500	15 610	M270M	345W	T		03003	2573.00	1.32	2571.68
1	t1	PL	25 x 406	11 675	M270M	345W	T		04011	930.12	0.00	930.12
1	t2	PL	25 x 406	17 909	M270M	345W	T		04008	1426.77	0.00	1426.77
1	b1	PL	32 x 457	11 675	M270M	345W	T		04004	1340.11	0.00	1340.11
1	b2	PL	32 x 457	17 889	M270M	345W	T		04003	2053.38	0.00	2053.38
2	x1a	PL	14.3 x 1355	320	M270M	345W	T		06001	48.67	0.00	48.67
1	x1b	PL	19.1 x 457	1 070	M270M	345W	T		06002	73.31	0.00	73.31
1	x1c	PL	14.3 x 406	770	M270M	345W	T		06003	35.09	0.00	35.09
2	x1d	PL	22.2 x 200	1 070	M270M	345W	T		06004	37.29	0.00	37.29
2	x1f	PL	17.5 x 178	770	M270M	345W	T		06005	18.83	0.00	18.83
2	x2b	PL	22.2 x 190	1 500	M270M	345W	T		07001	49.66	0.00	49.66
8	x2h	PL	14.3 x 190	1 500	M270M	345W	T		07003	0.00	0.00	0.00
9	x2p	L	203 x 152 x 12.7	226	M270M	345W			07005	0.00	0.00	0.00
18	140206	HS Bolt	7/8	2 1/2	M164 Type 3 (RCT)				17002	0.00	0.00	0.00
18	W14	Std Wash	7/8		M293 Weathering (RCT)				17006	0.00	0.00	0.00
18	N14	Nut	7/8		M291 (RCT)	DH3			17004	0.00	0.00	0.00
								TOTAL WEIGHT THIS SHEET:				11 369.26 kgs

NO.	REVISION	BY	CHK'D	DATE
△				
△				
△				

HOLES 15/16"ø
BOLTS AS NOTED
COATING NONE
CODE(S) 30
SCALE N.T.S.

HIGH STEEL STRUCTURES INC.
An ISO 9001:2000 Certified Company
An Affiliate of High Industries Inc.
Lancaster Facility
915 Old Philadelphia Pike
Lancaster, PA 17605-0008
Phone (717) 299-5211
Williamsport Facility
3501 W. 4th Street
Williamsport, PA 17701
Phone (570) 326-9051
www.highsteel.com

GIRDER G3A
EAST ROAD OVER VT ROUTE 279
EAST ROAD STA. 1+148.400 TO STA. 1+220.200
TOWN OF BENNINGTON VERMONT, BRIDGE B11
STATE OF VERMONT
AGENCY OF TRANSPORTATION
FED. AID PROJ. NO.: AC NH 019-1(53)
GENERAL CONTRACTOR: J.A. McDONALD, INC.
HSSI PROJ. MGR: DEB KUPRES

SHPMT	1	DRAWING MANAGER	BRITIGAN (IH)	MADE BY	DRJ	CHK'D BY	CS	DATE	9-26-07
STATE	VT	HSSI PROJECT NUMBER	S-1070147	HSSI STRUCT. ID	B	DRAWING NUMBER	3 OF 12		

METRIC
PLOTTED: 10/1/2007 9:23:21 AM BY: MKreidel
SHIPMENT 01 PM&ENG: 50022811 PRD: 50022812 SHIP&ERECT: 50022813

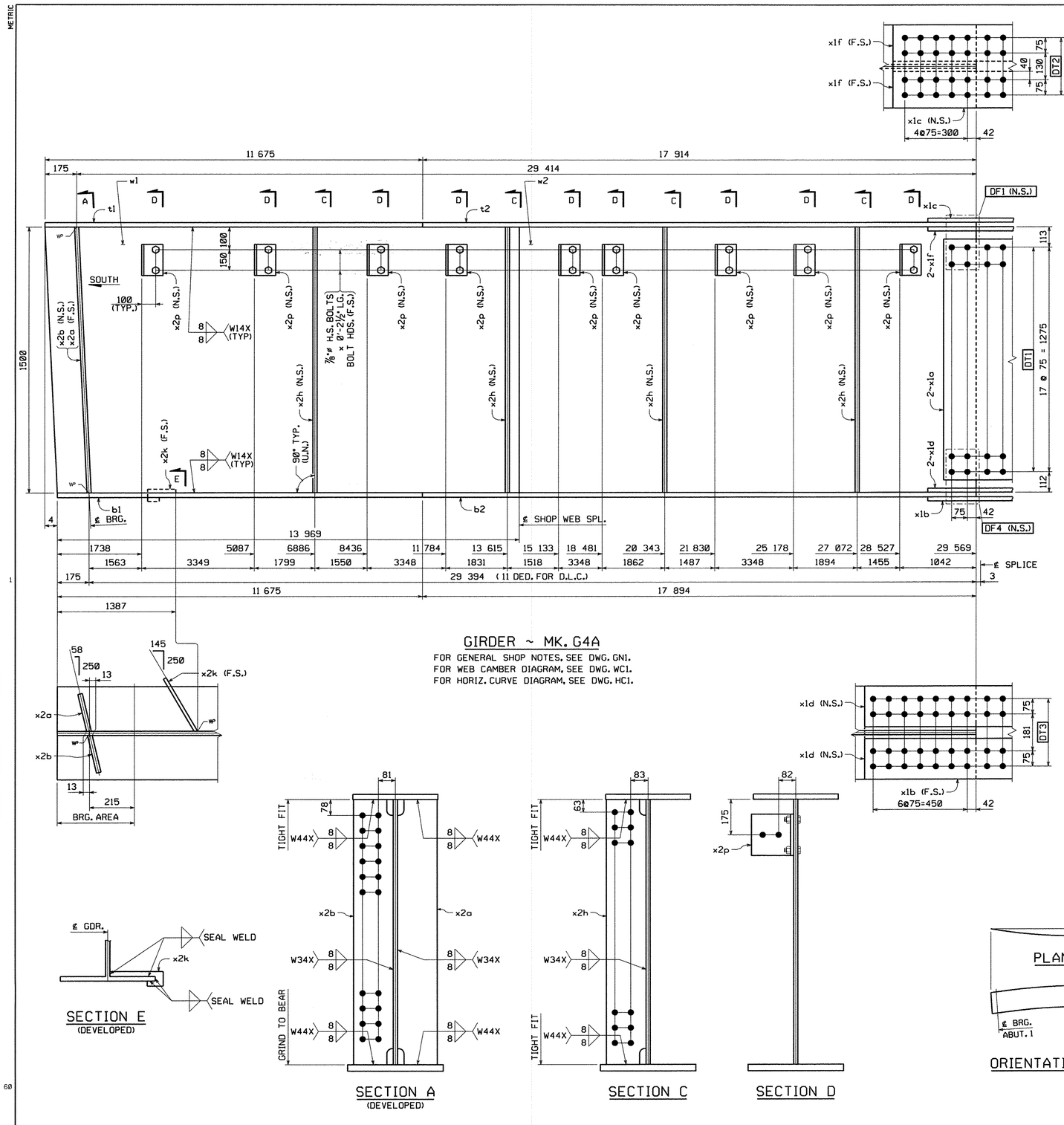

GIRDER ~ MK. G4A

FOR GENERAL SHOP NOTES, SEE DWG. GN1.
FOR WEB CAMBER DIAGRAM, SEE DWG. WC1.
FOR HORIZ. CURVE DIAGRAM, SEE DWG. HC1.

SECTION E
(DEVELOPED)

SECTION A
(DEVELOPED)

SECTION C

SECTION D

PLAN VIEW
℄ BRG. ABUT. 1
℄ F.S. #1

ORIENTATION DIAGRAM

BILL OF MATERIAL

QTY EA.	MARK	COMM	DESCRIPTION	LENGTH	SPEC	GRADE	TEST	REMARKS	ITEM	GROS WT. EA.	DED. WEIGHT	NET WT. EA.
1	G4A		GIRDER							11 246.55	1.65	11 244.90
1	w1	PL	14 x 1500	13 980	M270M	345WW	T		03004	2304.32	0.33	2303.99
1	w2	PL	14 x 1500	15 616	M270M	345WW	T		03003	2573.99	1.32	2572.67
1	t1	PL	25 x 406	11 675	M270M	345WW	T		04011	930.12	0.00	930.12
1	t2	PL	25 x 406	17 915	M270M	345WW	T		04008	1427.25	0.00	1427.25
1	b1	PL	32 x 457	11 675	M270M	345WW	T		04004	1340.11	0.00	1340.11
1	b2	PL	32 x 457	17 895	M270M	345WW	T		04003	2054.07	0.00	2054.07
2	x1a	PL	14.3 x 1355	320	M270M	345WW	T		06001	48.67	0.00	48.67
1	x1b	PL	19.1 x 457	1 070	M270M	345WW	T		06002	73.31	0.00	73.31
1	x1c	PL	14.3 x 406	770	M270M	345WW	T		06003	35.09	0.00	35.09
2	x1d	PL	22.2 x 200	1 070	M270M	345WW	T		06004	37.29	0.00	37.29
2	x1f	PL	17.5 x 178	770	M270M	345WW	T		06005	18.83	0.00	18.83
1	x2a	PL	22.2 x 190	1 500	M270M	345WW	T		07001	49.72	0.00	49.72
1	x2b	PL	22.2 x 190	1 500	M270M	345WW	T		07001	49.66	0.00	49.66
4	x2h	PL	14.3 x 190	1 500	M270M	345WW	T		07003	31.96	0.00	31.96
1	x2k	PL	6.4 x 82	308	M270M	345WW			07004	1.27	0.00	1.27
9	x2p	L	203 x 152 x 12.7	226	M270M	345WW			07005	7.80	0.00	7.80
18	140208	HS Bolt	7/8	2 1/2	M164 Type 3 (RCT)				17002	0.00	0.00	0.00
18	W14	Std Wash	7/8		M293 Weathering (RCT)				17006	0.00	0.00	0.00
18	N14	Nut	7/8		M291 (RCT)	DH3			17004	0.00	0.00	0.00

TOTAL WEIGHT THIS SHEET: 11 244.90 kgs

NO.	REVISION	BY	CHK'D	DATE

HOLES: 15/16"ø
BOLTS: AS NOTED
COATING: NONE
CODE(S): 30
SCALE: N.T.S.

HIGH STEEL STRUCTURES INC.
An ISO 9002:2000 Certified Company
An Affiliate of High Industries Inc.
Lancaster Facility
915 Old Philadelphia Pike
Lancaster, PA 17602-2508
Phone (717) 299-5211
Williamsport Facility
3501 W. 4th Street
Williamsport, PA 17701
Phone (570) 326-9051
www.Highsteel.com

GIRDER G4A
EAST ROAD OVER VT ROUTE 279
EAST ROAD STA. 1+148.400 TO STA. 1+220.200
TOWN OF BENNINGTON VERMONT, BRIDGE B11
STATE OF VERMONT
AGENCY OF TRANSPORTATION

	AC NH 019-1(53)	FED. AID PROJ. NO.	
GENERAL CONTRACTOR	J.A. McDONALD, INC.	HSSI PROJ. MGR	DEB KUPRES
SHPMT 1	DRAWING MANAGER: BRITIGAN (IH)	MADE BY: DRJ	CHK'D. BY: CS	DATE: 9-26-07
STATE VT	HSSI PROJECT NUMBER: S-1070147	HSSI STRUCT. ID: B	DRAWING NUMBER: 4 OF 12

METRIC
PLOTTED: 10/1/2007 9:23:32 AM
BY: MK-riedel
SHIPMENT 01
PM&ENG: 5802B1L PROD: 5802B12 SHIPxERECT.: 5802B13

1070147B X1 10/2/07 10/2/07Approval TO:J.A. McDonald, Inc.

METRIC

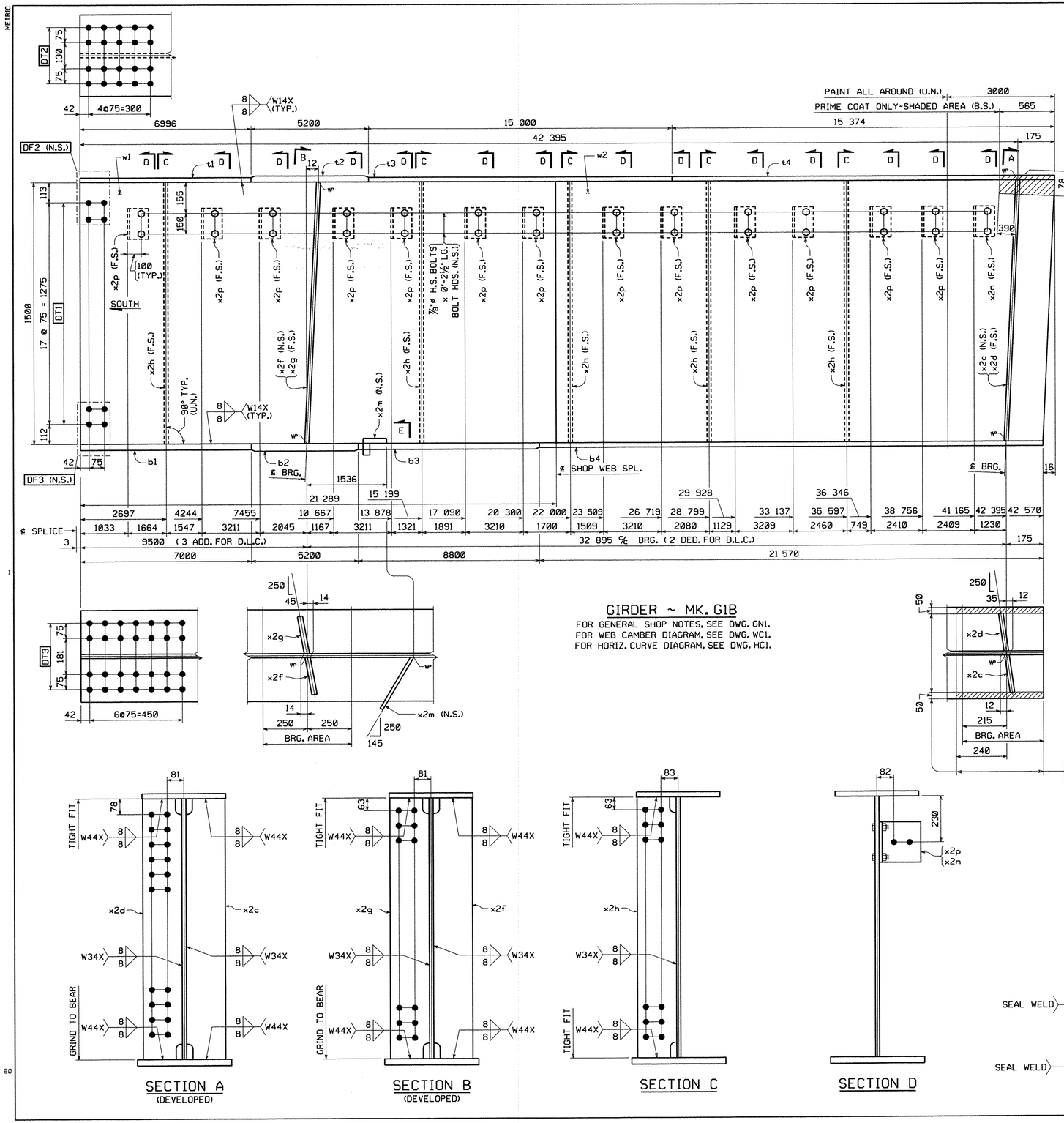

GIRDER ~ MK. G1B

FOR GENERAL SHOP NOTES, SEE DWG. GN1.
FOR WEB CAMBER DIAGRAM, SEE DWG. WC1.
FOR HORIZ. CURVE DIAGRAM, SEE DWG. HC1.

SECTION A (DEVELOPED)

SECTION B (DEVELOPED)

SECTION C

SECTION D

SECTION E (DEVELOPED)

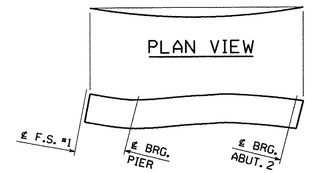

ORIENTATION DIAGRAM

BILL OF MATERIAL

QTY EA.	MARK	COMM	DESCRIPTION	LENGTH	SPEC	GRADE	TEST	REMARKS	ITEM	GROSS WT. EA.	DED. WEIGHT	NET WT. EA.
1	G1B		GIRDER							15 763.44	2.64	15 760.80
1	w1	PL	14 x 1500	21 289	M270M	345W	T		03001	3509.07	1.32	3507.75
1	w2	PL	14 x 1500	21 297	M270M	345W	T		03002	3510.39	1.32	3509.07
1	t1	PL	25 x 406	6 996	M270M	345W	T		04012	557.36	0.00	557.36
1	t2	PL	42 x 406	5 200	M270M	345W	T		04002	695.98	0.00	695.98
1	t3	PL	25 x 406	15 000	M270M	345W	T		04010	1195.02	0.00	1195.02
1	t4	PL	25 x 406	15 375	M270M	345W	T		04009	1224.89	0.00	1224.89
1	b1	PL	32 x 457	7 000	M270M	345W	T		04006	803.49	0.00	803.49
1	b2	PL	45 x 457	5 200	M270M	345W	T		04001	839.36	0.00	839.36
1	b3	PL	32 x 457	8 800	M270M	345W	T		04005	1010.10	0.00	1010.10
1	b4	PL	25 x 457	21 571	M270M	345W	T		04007	1934.39	0.00	1934.39
1	x2c	PL	22.2 x 190	1 500	M270M	345W	T		07001	49.72	0.00	49.72
1	x2d	PL	22.2 x 190	1 500	M270M	345W	T		07001	49.72	0.00	49.72
1	x2f	PL	25.4 x 190	1 500	M270M	345W	T		07002	56.82	0.00	56.82
1	x2g	PL	25.4 x 190	1 500	M270M	345W	T		07002	56.82	0.00	56.82
5	x2h	PL	14.3 x 190	1 500	M270M	345W	T		07003	31.96	0.00	31.96
1	x2m	PL	6.4 x 82	308	M270M	345W			07004	1.27	0.00	1.27
1	x2n	L	203 x 152 x 12.7	226	M270M	345W			07005	7.80	0.00	7.80
13	x2p	L	203 x 152 x 12.7	226	M270M	345W			07005	7.80	0.00	7.80
26	140208	HS Bolt	7/8	2 1/2	M164 Type 3 (RCT)				17002	0.00	0.00	0.00
2	140208-G	HS Bolt	7/8	2 1/2	M164 Type 1 (RCT)			Mech. Galv.	17001	0.00	0.00	0.00
26	W14	Std Wash	7/8		M293 Weathering (RCT)				17006	0.00	0.00	0.00
2	W14-G	Std Wash	7/8		M293 (RCT)			Mech. Galv.	17005	0.00	0.00	0.00
26	N14	Nut	7/8		M291 (RCT)	DH3			17004	0.00	0.00	0.00
2	N14-G	Nut	7/8		M291 (RCT)	DH		Mech. Galv.	17003	0.00	0.00	0.00
								TOTAL WEIGHT THIS SHEET:				15 760.80 kgs

NO.	REVISION	BY	CHK'D	DATE

HIGH STEEL STRUCTURES INC.
An Affiliate of High Industries Inc.
An ISO 9001:2000 Certified Company
Lancaster Facility: 915 Old Philadelphia Pike, Lancaster, PA 17605-0008, Phone (717) 299-5211
Williamsport Facility: 3501 W. 4th Street, Williamsport, PA 17701, Phone (570) 326-9051
www.highsteel.com

HOLES	15/16"ø
BOLTS	AS NOTED
COATING	SEE DWG. GN1
CODE(S)	30
SCALE	N.T.S.
	GIRDER G1B
	EAST ROAD OVER VT ROUTE 279
	EAST ROAD STA. 1+148.400 TO STA. 1+220.200
	TOWN OF BENNINGTON VERMONT, BRIDGE B11
	STATE OF VERMONT
	AGENCY OF TRANSPORTATION
	AC NH 019-1(53) — FED. AID PROJ. NO.
GENERAL CONTRACTOR	J.A. McDONALD, INC. — HSSI PROJ. MGR: DEB KUPRES
SHPMT 1	DRAWING MANAGER: BRITIGAN (IH) — MADE BY: JAW — CHK'D. BY: CS — DATE: 9-27-07
STATE VT	HSSI PROJECT NUMBER: S-1070147 — HSSI STRUCT. ID: B — DRAWING NUMBER: 5 OF 12

PLOTTED: 10/1/2007 9:23:42 AM BY: MKreidel
SHIPMENT 01 PM&ENG: 5082811 PROD: 5082312 SHIP&RELEASE: 5082313

1070147B X1 10/2/07 10/2/07Approval TO:J.A. McDonald, Inc.

METRIC

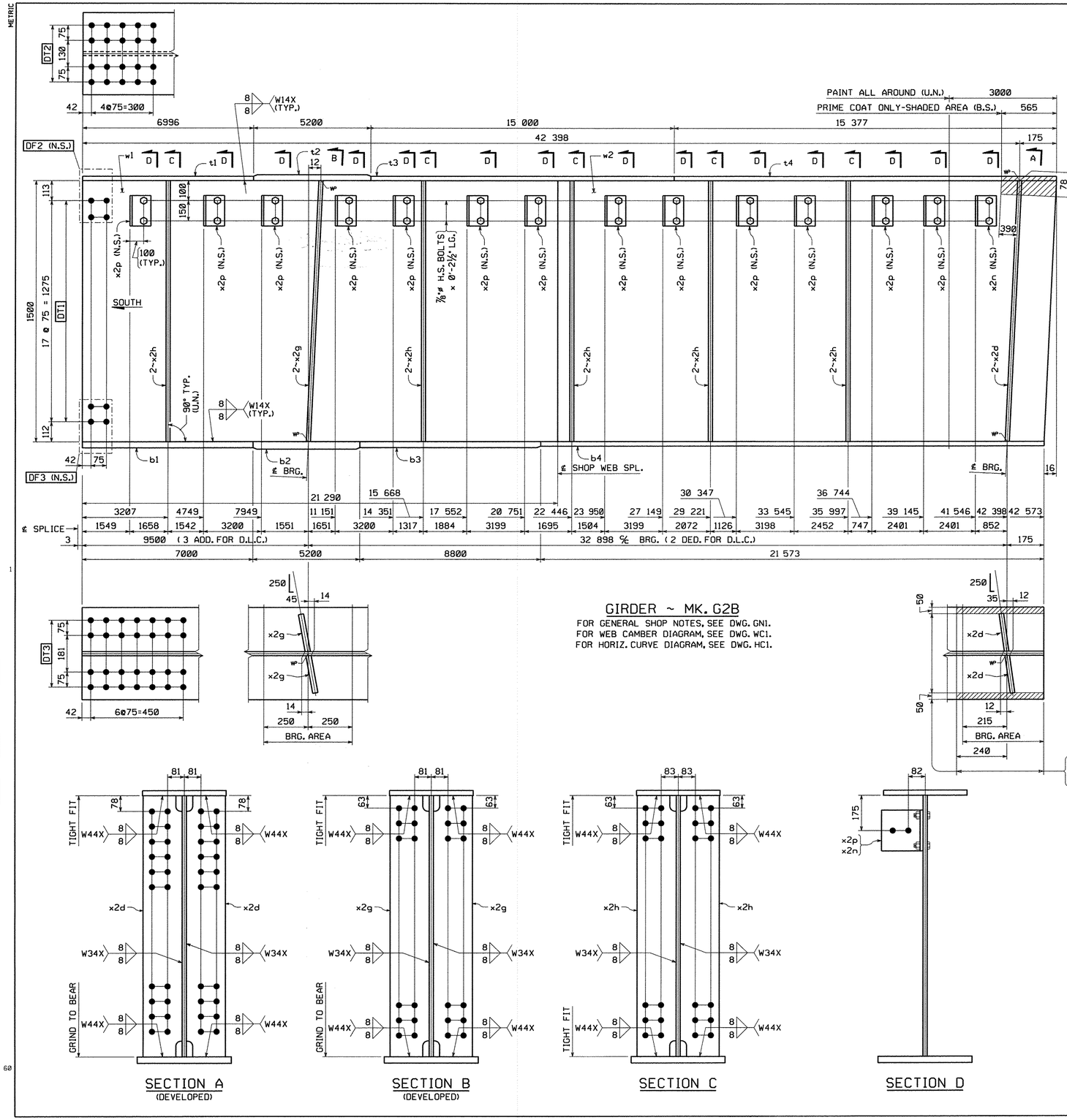

GIRDER ~ MK. G2B

FOR GENERAL SHOP NOTES, SEE DWG. GN1.
FOR WEB CAMBER DIAGRAM, SEE DWG. WC1.
FOR HORIZ. CURVE DIAGRAM, SEE DWG. HC1.

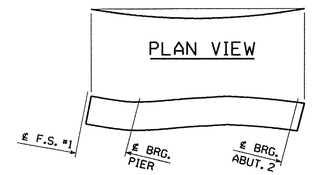

ORIENTATION DIAGRAM

SECTION A
(DEVELOPED)

SECTION B
(DEVELOPED)

SECTION C

SECTION D

BILL OF MATERIAL

QTY EA.	MARK	COMM	DESCRIPTION	LENGTH	SPEC	GRADE	TEST	REMARKS	ITEM	GROS WT. EA.	DED. WEIGHT	NET WT. EA.
1	G2B		GIRDER							15 923.14	2.64	15 920.51
1	w1	PL	14 x 1500	21 290	M270M	345W	T		03001	3509.23	1.32	3507.91
1	w2	PL	14 x 1500	21 300	M270M	345W	T		03002	3510.88	1.32	3509.56
1	t1	PL	25 x 406	6 996	M270M	345W	T		04012	557.36	0.00	557.36
1	t2	PL	42 x 406	5 200	M270M	345W	T		04002	695.98	0.00	695.98
1	t3	PL	25 x 406	15 000	M270M	345W	T		04010	1195.02	0.00	1195.02
1	t4	PL	25 x 406	15 378	M270M	345W	T		04009	1225.13	0.00	1225.13
1	b1	PL	32 x 457	7 000	M270M	345W	T		04006	803.49	0.00	803.49
1	b2	PL	45 x 457	5 200	M270M	345W	T		04001	839.36	0.00	839.36
1	b3	PL	32 x 457	8 800	M270M	345W	T		04005	1010.10	0.00	1010.10
1	b4	PL	25 x 457	21 574	M270M	345W	T		04007	1934.66	0.00	1934.66
2	x2d	PL	22.2 x 190	1 500	M270M	345W	T		07001	49.72	0.00	49.72
2	x2g	PL	25.4 x 190	1 500	M270M	345W	T		07002	56.82	0.00	56.82
10	x2h	PL	14.3 x 190	1 500	M270M	345W	T		07003	31.96	0.00	31.96
1	x2n	L	203 x 152 x 12.7	226	M270M	345W			07005	7.80	0.00	7.80
13	x2p	L	203 x 152 x 12.7	226	M270M	345W			07005	7.80	0.00	7.80
26	140208	HS Bolt	7/8	2 1/2	M164 Type 3 (RCT)				17002	0.00	0.00	0.00
2	140208-G	HS Bolt	7/8	2 1/2	M164 Type 1 (RCT)			Mech. Galv.	17001	0.00	0.00	0.00
26	W14	Std Wash	7/8		M293 Weathering (RCT)				17006	0.00	0.00	0.00
2	W14-G	Std Wash	7/8		M293 (RCT)			Mech. Galv.	17005	0.00	0.00	0.00
26	N14	Nut	7/8		M291 (RCT)	DH3			17004	0.00	0.00	0.00
2	N14-G	Nut	7/8		M291 (RCT)	DH		Mech. Galv.	17003	0.00	0.00	0.00
					TOTAL WEIGHT THIS SHEET:					15 920.51 kgs		

NO.	REVISION	BY	CHK'D	DATE

HOLES 15/16"ø
BOLTS AS NOTED
COATING SEE DWG. GN1
CODE(S) 30
SCALE N.T.S.

HIGH STEEL STRUCTURES INC.
An Affiliate of High Industries Inc.
An ISO 9001:2000 Certified Company
Lancaster Facility
1915 Old Philadelphia Pike
Lancaster, PA 17602-0008
Phone (717) 299-5211
Williamsport Facility
3501 W. 4th. Street
Williamsport, PA 17701
Phone (570) 326-9051
www.Highsteel.com

GIRDER G2B
EAST ROAD OVER VT ROUTE 279
EAST ROAD STA. 1+148.400 TO STA. 1+220.200
TOWN OF BENNINGTON VERMONT, BRIDGE B11
STATE OF VERMONT
AGENCY OF TRANSPORTATION

AC NH 019-1(53) — FED. AID PROJ. NO.
GENERAL CONTRACTOR: J.A. McDONALD, INC. — HSSI PROJ. MGR: DEB KUPRES

SHPMT	1	DRAWING MANAGER	BRITIGAN (IH)	MADE BY	JAW	CHK'D. BY	CS	DATE	9-27-07
STATE	VT	HSSI PROJECT NUMBER	S-1070147	HSSI STRUCT. ID	B	DRAWING NUMBER	6 OF 12		

PLOTTED: 10/1/2007 9:23:54 AM BY: MKreutzel
SHIPMENT 81 PM&ENG: 5802811 PRD: 5802812 SHP&ERECT.: 5802813

1070147B X1 10/2/07 10/2/07Approval TO:J.A. McDonald, Inc.

METRIC

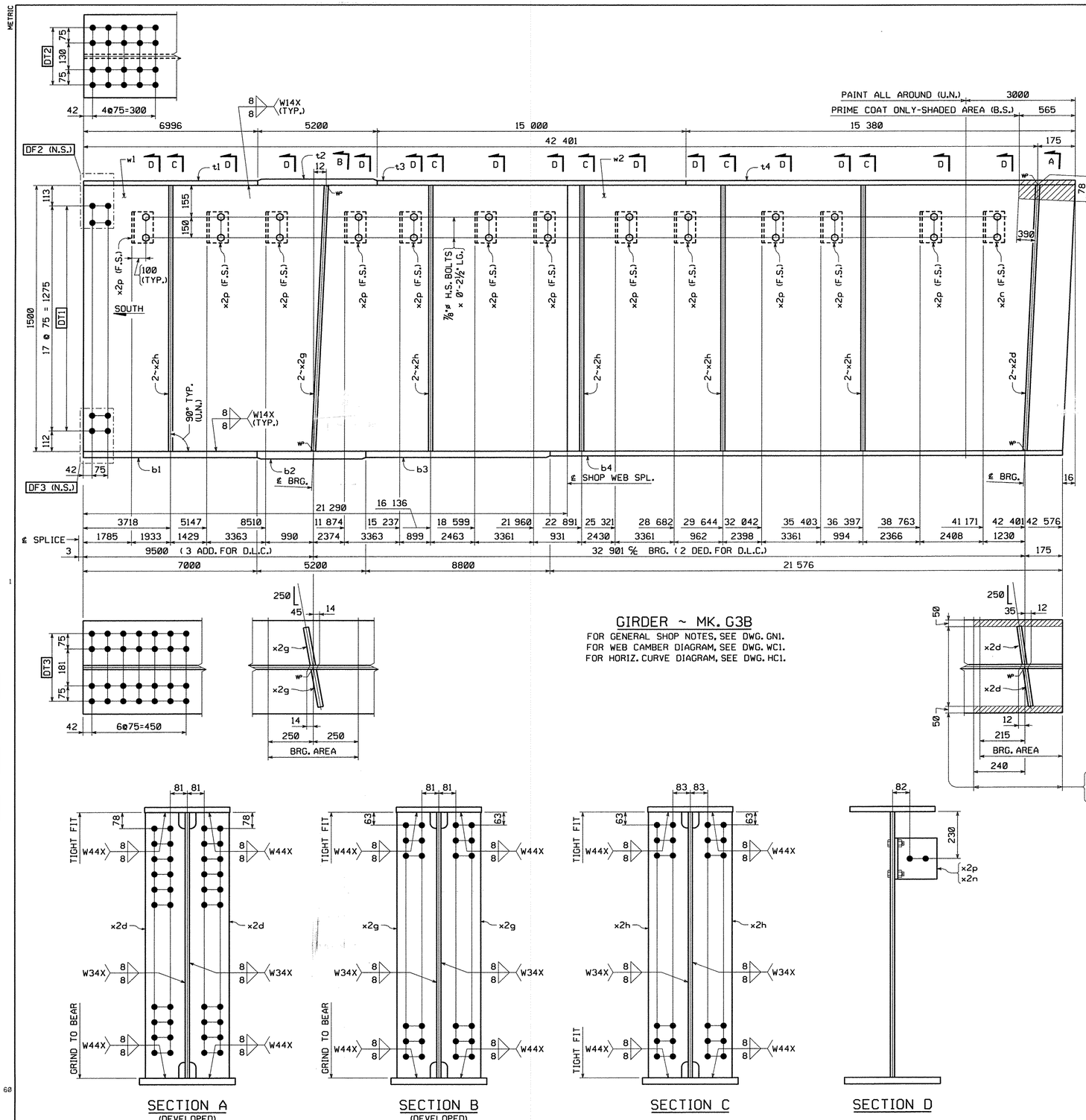

GIRDER ~ MK. G3B

FOR GENERAL SHOP NOTES, SEE DWG. GN1.
FOR WEB CAMBER DIAGRAM, SEE DWG. WC1.
FOR HORIZ. CURVE DIAGRAM, SEE DWG. HC1.

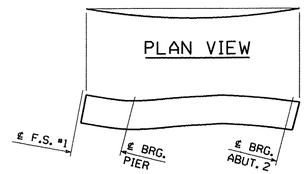

ORIENTATION DIAGRAM

SECTION A
(DEVELOPED)

SECTION B
(DEVELOPED)

SECTION C

SECTION D

BILL OF MATERIAL

QTY EA.	MARK	COMM	DESCRIPTION	LENGTH	SPEC	GRADE	TEST	REMARKS	ITEM	GROS WT. EA.	DED. WEIGHT	NET WT. EA.
1	G3B		GIRDER							15 916.34	2.64	15 913.71
1	w1	PL	14 x 1500	21 290	M270M	345W	T		03001	3509.23	1.32	3507.91
1	w2	PL	14 x 1500	21 303	M270M	345W	T		03002	3511.37	1.32	3510.06
1	t1	PL	25 x 406	6 996	M270M	345W	T		04012	557.36	0.00	557.36
1	t2	PL	42 x 406	5 200	M270M	345W	T		04002	695.98	0.00	695.98
1	t3	PL	25 x 406	15 000	M270M	345W	T		04010	1195.02	0.00	1195.02
1	t4	PL	25 x 406	15 381	M270M	345W	T		04009	1225.37	0.00	1225.37
1	b1	PL	32 x 457	7 000	M270M	345W	T		04006	803.49	0.00	803.49
1	b2	PL	45 x 457	5 200	M270M	345W	T		04001	839.36	0.00	839.36
1	b3	PL	32 x 457	8 800	M270M	345W	T		04005	1010.10	0.00	1010.10
1	b4	PL	25 x 457	21 577	M270M	345W	T		04007	1934.93	0.00	1934.93
2	x2d	PL	22.2 x 190	1 500	M270M	345W	T		07001	49.72	0.00	49.72
2	x2g	PL	25.4 x 190	1 500	M270M	345W	T		07002	56.82	0.00	56.82
10	x2h	PL	14.3 x 190	1 500	M270M	345W	T		07003	31.96	0.00	31.96
1	x2n	L	203 x 152 x 12.7	226	M270M	345W			07005	85.00	0.00	85.00
12	x2p	L	203 x 152 x 12.7	226	M270M	345W			07005	7.80	0.00	7.80
26	140208	HS Bolt	7/8	2 1/2	M164 Type 3 (RCT)				17002	0.00	0.00	0.00
2	140208-G	HS Bolt	7/8	2 1/2	M164 Type 1 (RCT)			Mech. Galv.	17001	0.00	0.00	0.00
26	W14	Std Wash	7/8		M293 Weathering (RCT)				17006	0.00	0.00	0.00
2	W14-G	Std Wash	7/8		M293 (RCT)			Mech. Galv.	17005	0.00	0.00	0.00
26	N14	Nut	7/8		M291 (RCT)	DH3			17004	0.00	0.00	0.00
2	N14-G	Nut	7/8		M291 (RCT)	DH		Mech. Galv.	17003	0.00	0.00	0.00
										TOTAL WEIGHT THIS SHEET:		15 913.71 kgs

NO.	REVISION	BY	CHK'D	DATE

HOLES: 15/16"ø
BOLTS: AS NOTED
COATING: SEE DWG. GN1
CODE(S): 30
SCALE: N.T.S.

HIGH STEEL STRUCTURES INC.
An ISO 9001:2000 Certified Company
An Affiliate of High Industries Inc.
Lancaster Facility: 1915 Old Philadelphia Pike, Lancaster, PA 17602-0008, Phone (717) 299-5211
Williamsport Facility: 3501 W. 4th Street, Williamsport, PA 17701, Phone (570) 326-9051
www.Highsteel.com

GIRDER			G3B
EAST ROAD OVER VT ROUTE 279			
EAST ROAD STA. 1+148.400 TO STA. 1+220.200			
TOWN OF BENNINGTON VERMONT, BRIDGE B11			
STATE OF VERMONT			
AGENCY OF TRANSPORTATION			
AC NH 019-1(53)	FED. AID PROJ. NO.		
GENERAL CONTRACTOR: J.A. McDONALD, INC.	HSSI PROJ. MGR: DEB KUPRES		
SHPMT 1	DRAWING MANAGER: BRITIGAN (IH)	MADE BY: JAW	CHK'D. BY: CS	DATE: 9-27-07
STATE VT	HSSI PROJECT NUMBER: S-1070147	HSSI STRUCT. ID: B	DRAWING NUMBER: 7 OF 12	

PLOTTED: 10/1/2007 9:24:03 AM
BY: MKrandel
SHIPMENT 01
PM&ENG: 5082811 PRD: 5082812 SHIP&ERECT: 5082813

1070147B X1 10/2/07 10/2/07Approval TO:J.A. McDonald, Inc.

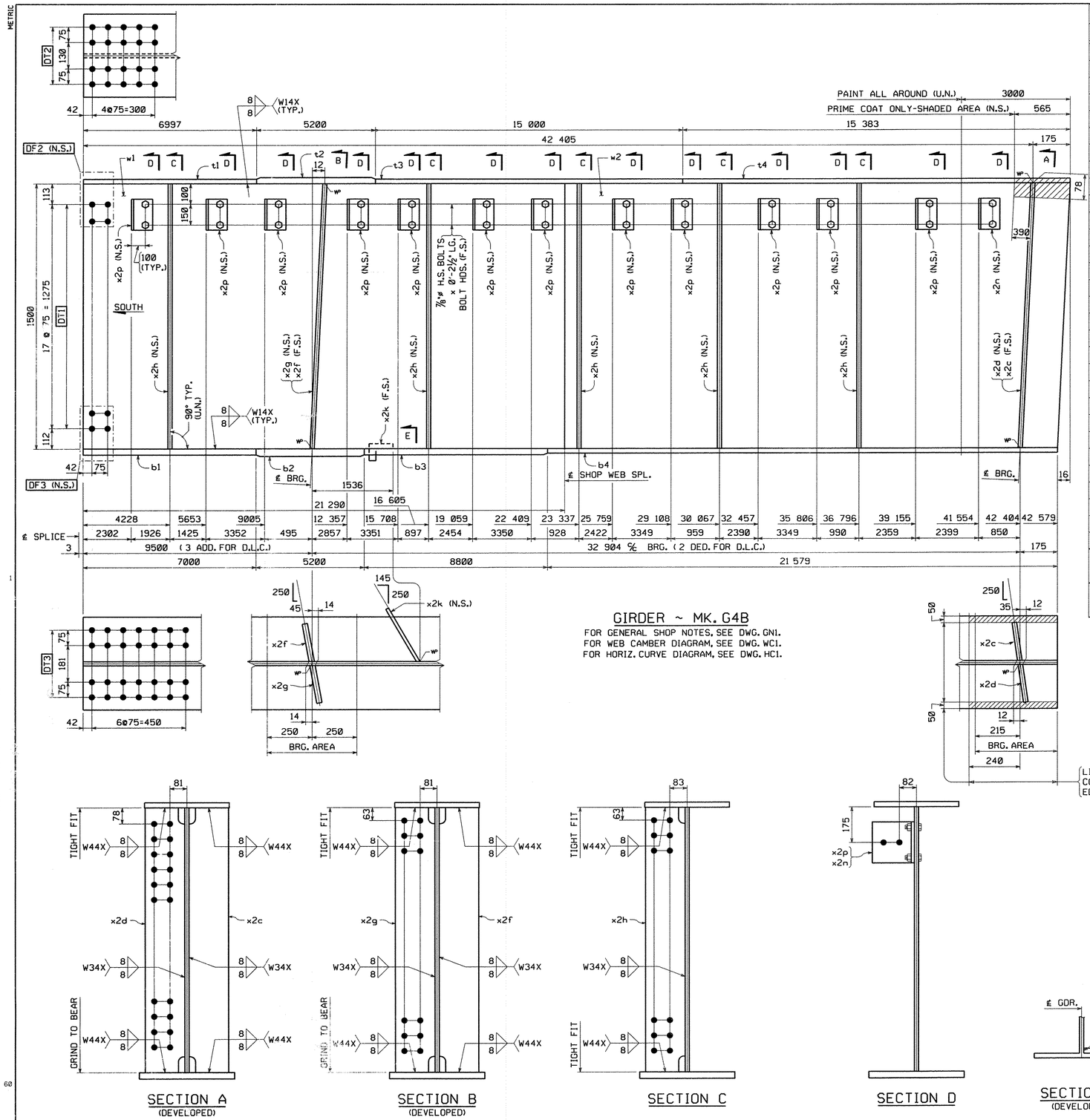

GIRDER ~ MK. G4B

FOR GENERAL SHOP NOTES, SEE DWG. GN1.
FOR WEB CAMBER DIAGRAM, SEE DWG. WC1.
FOR HORIZ. CURVE DIAGRAM, SEE DWG. HC1.

SECTION A (DEVELOPED)

SECTION B (DEVELOPED)

SECTION C

SECTION D

SECTION E (DEVELOPED)

BILL OF MATERIAL

QTY EA.	MARK	COMM	DESCRIPTION	LENGTH	SPEC	GRADE	TEST	REMARKS	ITEM	GROS WT. EA.	DED. WEIGHT	NET WT. EA.
1	G4B		GIRDER							15 758.89	2.64	15 756.25
1	w1	PL	14 x 1500	21 290	M270M	345W	T		03001	3509.23	1.32	3507.91
1	w2	PL	14 x 1500	21 306	M270M	345W	T		03002	3511.87	1.32	3510.55
1	t1	PL	25 x 406	6 997	M270M	345W	T		04012	557.44	0.00	557.44
1	t2	PL	42 x 406	5 200	M270M	345W	T		04002	695.98	0.00	695.98
1	t3	PL	25 x 406	15 000	M270M	345W	T		04010	1195.02	0.00	1195.02
1	t4	PL	25 x 406	15 384	M270M	345W	T		04009	1225.61	0.00	1225.61
1	b1	PL	32 x 457	7 000	M270M	345W	T		04006	803.49	0.00	803.49
1	b2	PL	45 x 457	5 200	M270M	345W	T		04001	839.36	0.00	839.36
1	b3	PL	32 x 457	8 800	M270M	345W	T		04005	1010.10	0.00	1010.10
1	b4	PL	25 x 457	21 580	M270M	345W	T		04007	1935.20	0.00	1935.20
1	x2c	PL	22.2 x 190	1 500	M270M	345W	T		07001	49.72	0.00	49.72
1	x2d	PL	22.2 x 190	1 500	M270M	345W	T		07001	49.72	0.00	49.72
1	x2f	PL	25.4 x 190	1 500	M270M	345W	T		07002	56.82	0.00	56.82
1	x2g	PL	25.4 x 190	1 500	M270M	345W	T		07002	56.82	0.00	56.82
5	x2h	PL	14.3 x 190	1 500	M270M	345W	T		07003	31.96	0.00	31.96
1	x2k	PL	6.4 x 82	308	M270M	345W			07004	1.27	0.00	1.27
1	x2n	L	203 x 152 x 12.7	226	M270M	345W			07005	7.80	0.00	7.80
12	x2p	L	203 x 152 x 12.7	226	M270M	345W			07005	7.80	0.00	7.80
24	140208	HS Bolt	7/8	2 1/2	M164 Type 3 (RCT)				17002	0.00	0.00	0.00
2	140208-G	HS Bolt	7/8	2 1/2	M164 Type 1 (RCT)			Mech. Galv.	17001	0.00	0.00	0.00
24	W14	Std Wash	7/8		M293 Weathering (RCT)				17006	0.00	0.00	0.00
2	W14-G	Std Wash	7/8		M293 (RCT)			Mech. Galv.	17005	0.00	0.00	0.00
24	N14	Nut	7/8		M291 (RCT)	DH3			17004	0.00	0.00	0.00
2	N14-G	Nut	7/8		M291 (RCT)	DH		Mech. Galv.	17003	0.00	0.00	0.00

TOTAL WEIGHT THIS SHEET: 15 756.25 kgs

TOTAL WEIGHT FOR BID ITEM No. 0155 506.56: 108 587.10 kgs

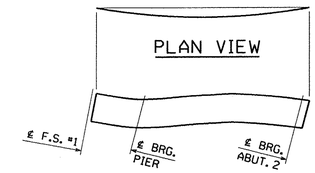

ORIENTATION DIAGRAM

NO.	REVISION	BY	CHK'D	DATE

HOLES 15/16"ø
BOLTS AS NOTED
COATING SEE DWG. GN1
CODE(S) 30
SCALE N.T.S.

HIGH STEEL STRUCTURES INC.
An Affiliate of High Industries Inc.
An ISO 9001:2000 Certified Company
Lancaster Facility: 195 Old Philadelphia Pike, Lancaster, PA 17602-1008, Phone (717) 299-5211
Williamsport Facility: 3501 N. 4th Street, Williamsport, PA 17701, Phone (570) 326-9051
www.highsteel.com

GIRDER G4B
EAST ROAD OVER VT ROUTE 279
EAST ROAD STA. 1+148.400 TO STA. 1+220.200
TOWN OF BENNINGTON VERMONT, BRIDGE B11
STATE OF VERMONT
AGENCY OF TRANSPORTATION
AC NH 019-1(53) | FED. AID PROJ. NO.
GENERAL CONTRACTOR: J.A. McDONALD, INC. | HSSI PROJ. MGR: DEB KUPRES
SHPMT 1 | DRAWING MANAGER: BRITIGAN (IH) | MADE BY: JAW | CHK'D. BY: CS | DATE: 9-27-07
STATE VT | HSSI PROJECT NUMBER: S-1070147 | HSSI STRUCT. ID: B | DRAWING NUMBER: 8 OF 12

1070147B X1 10/2/07 10/2/07Approval TO:J.A. McDonald, Inc.

METRIC
PLOTTED: 10/1/2007 9:24:13 AM
BY: MKreidel
SHIPMENT 01
PM&ENG: 30028111 PRO: 30028112 SHIP&RECT.#: 30028113

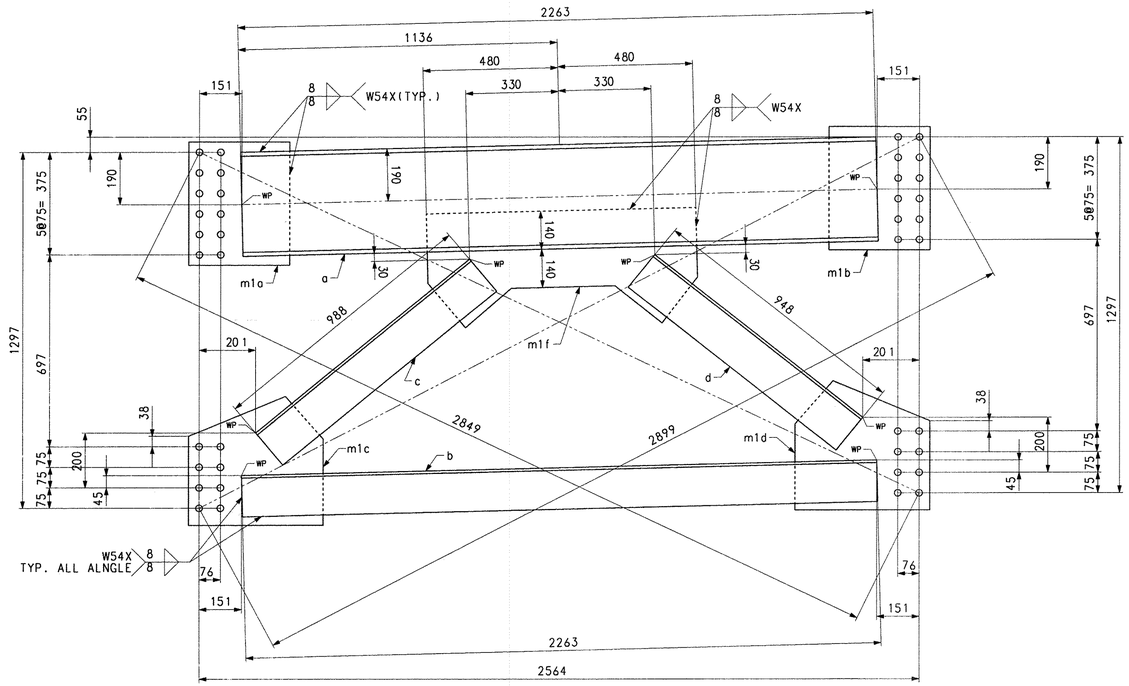

CROSSFRAME - MK. CF1

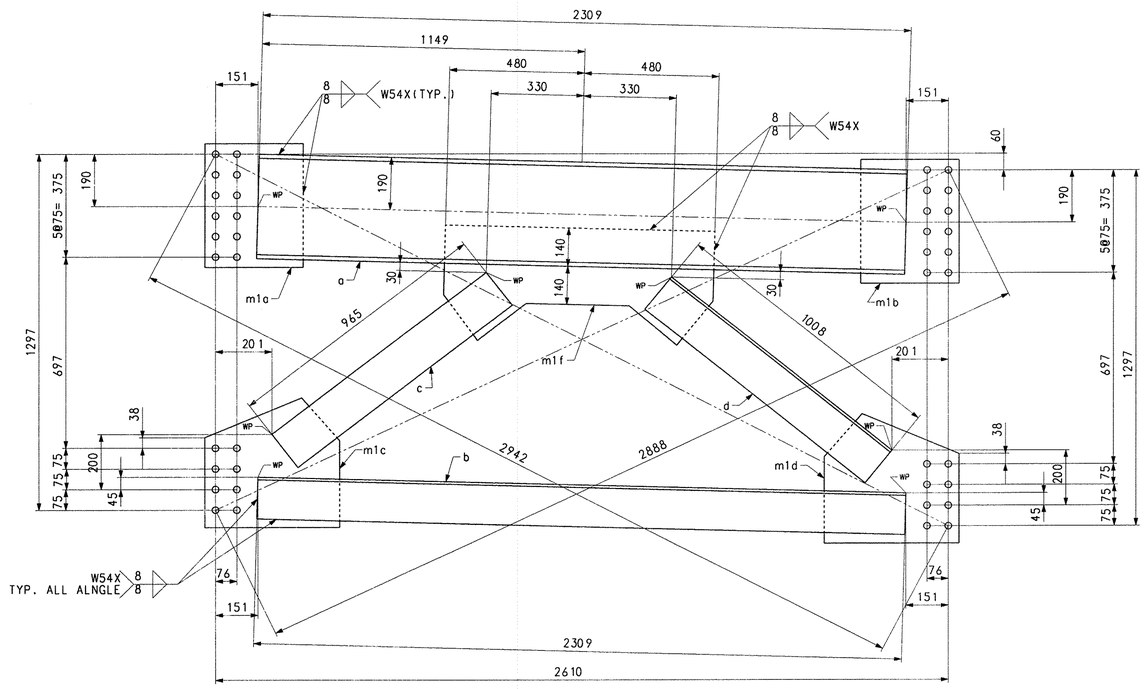

CROSSFRAME - MK. CF2
(NO PAINT)

BILL OF MATERIAL

QTY	MARK	COMMODITY	DESCRIPTION					LENGTH	SPEC	GRADE	TEST	REMARKS	ITEM	GROSS WEIGHT EA.	DEDUCTED WEIGHT EA.	NET WEIGHT EA.
2	CF1	CROSSFRAME												338.51		338.51
1	a	C	380	x	50			2263	M270M	345W	T	(C15 x33.9)	11001	113.15		113.15
1	b	L	152	x	152	x	9.5	2263	M270M	345W	T	(L6 x6x3/8)	11002	50.17		50.17
1	c	L	152	x	152	x	9.5	988	M270M	345W	T	(L6 x6x3/8)	11002	21.90		21.90
1	d	L	152	x	152	x	9.5	948	M270M	345W	T	(L6 x6x3/8)	11002	21.02		21.02
1	m1a	PL	14.3	x	360			451	M270M	345W	T		11003	18.21		18.21
1	m1b	PL	14.3	x	360			451	M270M	345W	T		11003	18.21		18.21
1	m1c	PL	14.3	x	470			480	M270M	345W	T		11003	25.30		25.30
1	m1d	PL	14.3	x	470			480	M270M	345W	T		11003	25.30		25.30
1	m1f	PL	14.3	x	420			960	M270M	345W	T		11003	45.26		45.26
2	CF2	CROSSFRAME												342.65		342.65
1	a	C	380	x	50			2309	M270M	345W	T	(C15 x33.9)	11001	115.45		115.45
1	b	L	152	x	152	x	9.5	2309	M270M	345W	T	(L6 x6x3/8)	11002	51.19		51.19
1	c	L	152	x	152	x	9.5	965	M270M	345W	T	(L6 x6x3/8)	11002	21.39		21.39
1	d	L	152	x	152	x	9.5	1008	M270M	345W	T	(L6 x6x3/8)	11002	22.35		22.35
1	m1a	PL	14.3	x	360			451	M270M	345W	T		11003	18.21		18.21
1	m1b	PL	14.3	x	360			451	M270M	345W	T		11003	18.21		18.21
1	m1c	PL	14.3	x	470			480	M270M	345W	T		11003	25.30		25.30
1	m1d	PL	14.3	x	470			480	M270M	345W	T		11003	25.30		25.30
1	m1f	PL	14.3	x	420			960	M270M	345W	T		11003	45.26		45.26
												TOTAL WEIGHT THIS SHEET:		1362.3		kgs

NO.	REVISION	BY	CHK'D	DATE

HOLES: 13/16" Ø
BOLTS: NONE
COATING: SEE GN1
CODE(S): 63
SCALE: N.T.S.

HIGH STEEL STRUCTURES INC.
1915 Old Philadelphia Pike
Lancaster, PA 17602-0068
Phone (717) 299-5211
www.highsteel.com
An ISO 9001:2000 Certified Company
An Affiliate of High Industries Inc.

CROSSFRAMES — CF1 & CF2
EAST ROAD OVER VT ROUTE 279
EAST ROAD STA. 1+148.400 TO STA. 1+220.200
TOWN OF BENNINGTON VERMONT, BRIDGE B11
STATE OF VERMONT
AGENCY OF TRANSPORTATION

SHIPMT	1	STATE CONT. OR REF. NO.	AC NH 019-1(53)		FED. AID PROJ. NO.		
STATE	VT	GENERAL CONTRACTOR	J.A. McDONALD, INC.		HSSI PROJ. MGR	DEB KUPRES	
		DRAWING MANAGER	BRITIGAN (IH)	MADE BY	SSL	CHK'D. BY	CS	DATE	9-18-07
		HSSI PROJECT NUMBER	S-1070147	HSSI STRUCT. ID	B	DRAWING NUMBER	9 OF 12		

SHIPMENT 1 PWAENG: XXXXXXX PRD: XXXXXXX SHIPMAERECT: XXXXXXX
PLOTTED: 10/01/07 09:29:14 BY: MKreidel

1070147B X1 10/2/07 10/2/07Approval TO:J.A. McDonald, Inc.

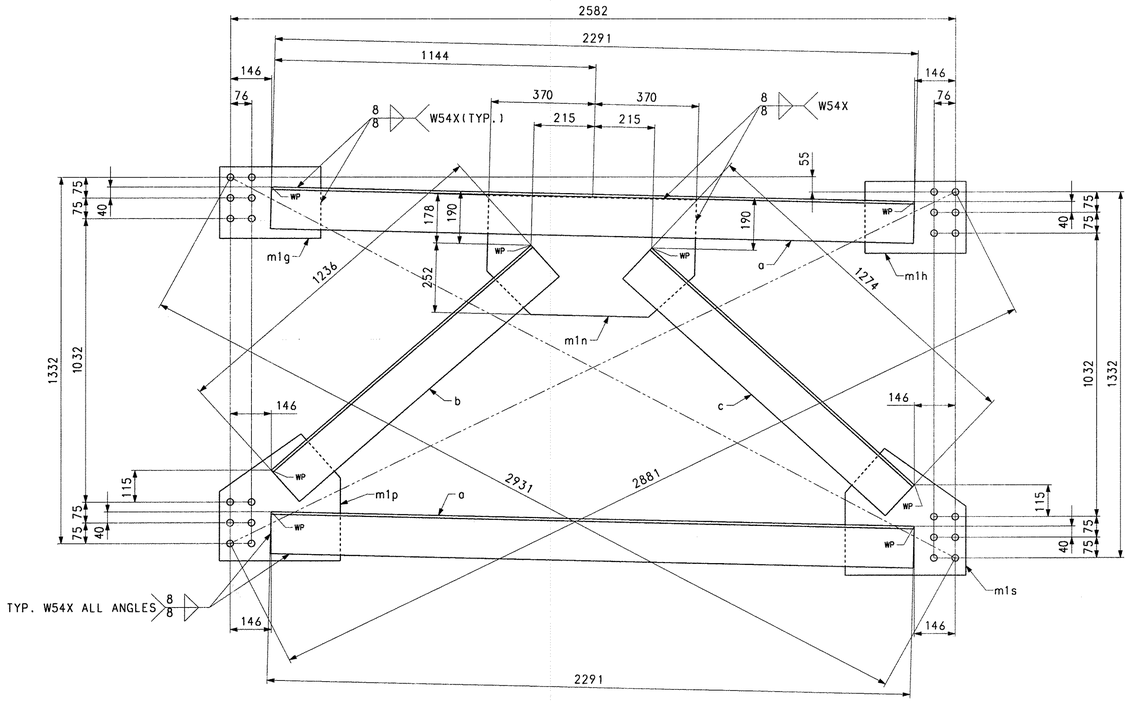

CROSSFRAME - MK. CF3

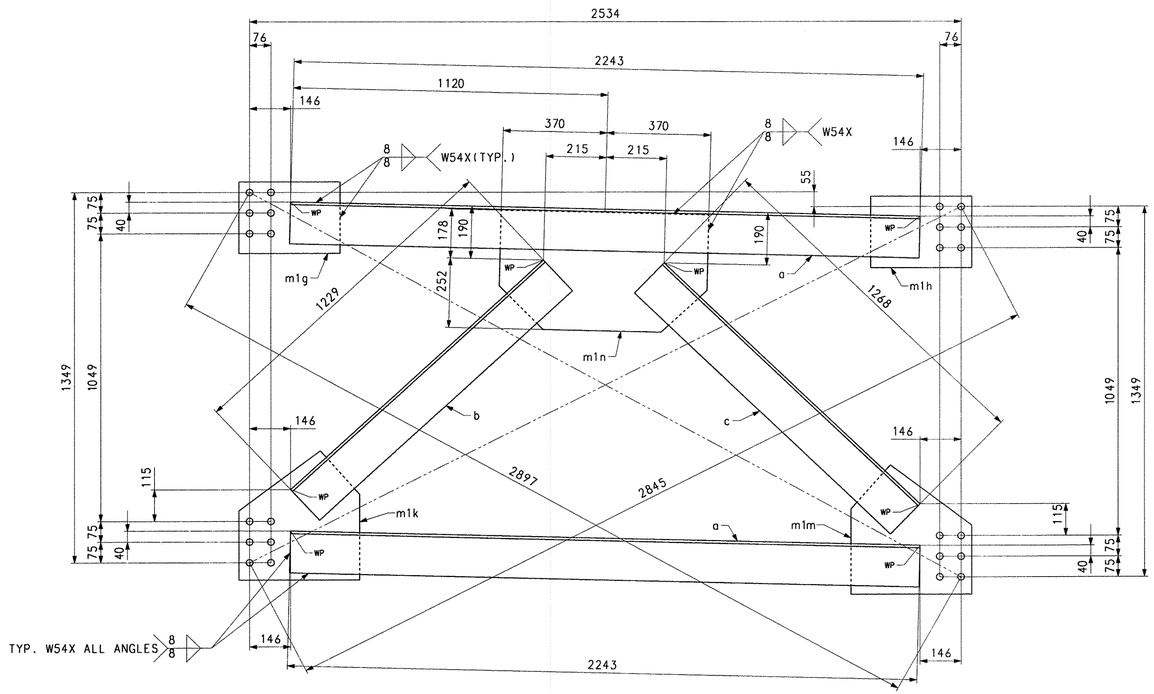

CROSSFRAME - MK. CF4

BILL OF MATERIAL

QTY	MARK	COMMODITY	DESCRIPTION						LENGTH	SPEC	GRADE	TEST	REMARKS	ITEM	GROSS WEIGHT EA.	DEDUCTED WEIGHT EA.	NET WEIGHT EA.
3	CF3	CROSSFRAME													258.27		258.27
2	a	L	152	x	152	x	9.5		2291	M270M	345W	T	(L6x6x3/8)	11002	50.79	0	50.79
1	b	L	152	x	152	x	9.5		1236	M270M	345W	T	(L6x6x3/8)	11002	27.40	0	27.40
1	c	L	152	x	152	x	9.5		1274	M270M	345W	T	(L6x6x3/8)	11002	28.24	0	28.24
1	m1g	PL	14.3	x	260				360	M270M	345W	T		11003	10.50	0	10.50
1	m1h	PL	14.3	x	260				360	M270M	345W	T		11003	10.50	0	10.50
1	m1n	PL	14.3	x	430				740	M270M	345W	T		11003	35.68	0	35.68
1	m1p	PL	14.3	x	430				460	M270M	345W	T		11003	22.18	0	22.18
1	m1s	PL	14.3	x	430				460	M270M	345W	T		11003	22.18	0	22.18
27	CF4	CROSSFRAME													256.82		256.82
2	a	L	152	x	152	x	9.5		2243	M270M	345W	T	(L6x6x3/8)	11002	49.73	0	49.73
1	b	L	152	x	152	x	9.5		1229	M270M	345W	T	(L6x6x3/8)	11002	27.25	0	27.25
1	c	L	152	x	152	x	9.5		1288	M270M	345W	T	(L6x6x3/8)	11002	28.11	0	28.11
1	m1g	PL	14.3	x	260				360	M270M	345W	T		11003	10.50	0	10.50
1	m1h	PL	14.3	x	260				360	M270M	345W	T		11003	10.50	0	10.50
1	m1k	PL	14.3	x	430				470	M270M	345W	T		11003	22.66	0	22.66
1	m1m	PL	14.3	x	430				470	M270M	345W	T		11003	22.66	0	22.66
1	m1n	PL	14.3	x	430				740	M270M	345W	T		11003	35.68	0	35.68
TOTAL WEIGHT THIS SHEET:															7708.92		kgs

NO.	REVISION	BY	CHK'D	DATE

HOLES: 15/16" Ø
BOLTS: NONE
COATING: NONE
CODE(S): 63
SCALE: N.T.S.

HIGH STEEL STRUCTURES INC.
An Affiliate of High Industries Inc.
An ISO 9001:2000 Certified Company
1915 Old Philadelphia Pike
Lancaster, PA 17605-0008
Phone (717) 299-5211
www.highsteel.com

CROSSFRAMES CF3 & CF4
EAST ROAD OVER VT ROUTE 279
EAST ROAD STA. 1+148.400 TO STA. 1+220.200
TOWN OF BENNINGTON VERMONT, BRIDGE B11
STATE OF VERMONT
AGENCY OF TRANSPORTATION

STATE CONT. OR REF. NO.	AC NH 019-1(53)	FED. AID PROJ. NO.	
GENERAL CONTRACTOR	J.A. McDONALD, INC.	HSSI PROJ. MGR	DEB KUPRES
SHPMT 1	DRAWING MANAGER: BRITIGAN (IH)	MADE BY: WBW	CHK'D. BY: CS	DATE: 9-18-07
STATE VT	HSSI PROJECT NUMBER: S-107014 7	STRUCT. ID: B	DRAWING NUMBER: 10 OF 12	

SHIPMENT 1 PM&ENG: XXXXXXX PRD: XXXXXXX SHIP&ERECT: XXXXXXX

PLOTTED: 10/01/07 09:31:59 BY: MKreidei

1070147B X1 10/2/07 10/2/07Approval TO:J.A. McDonald, Inc.

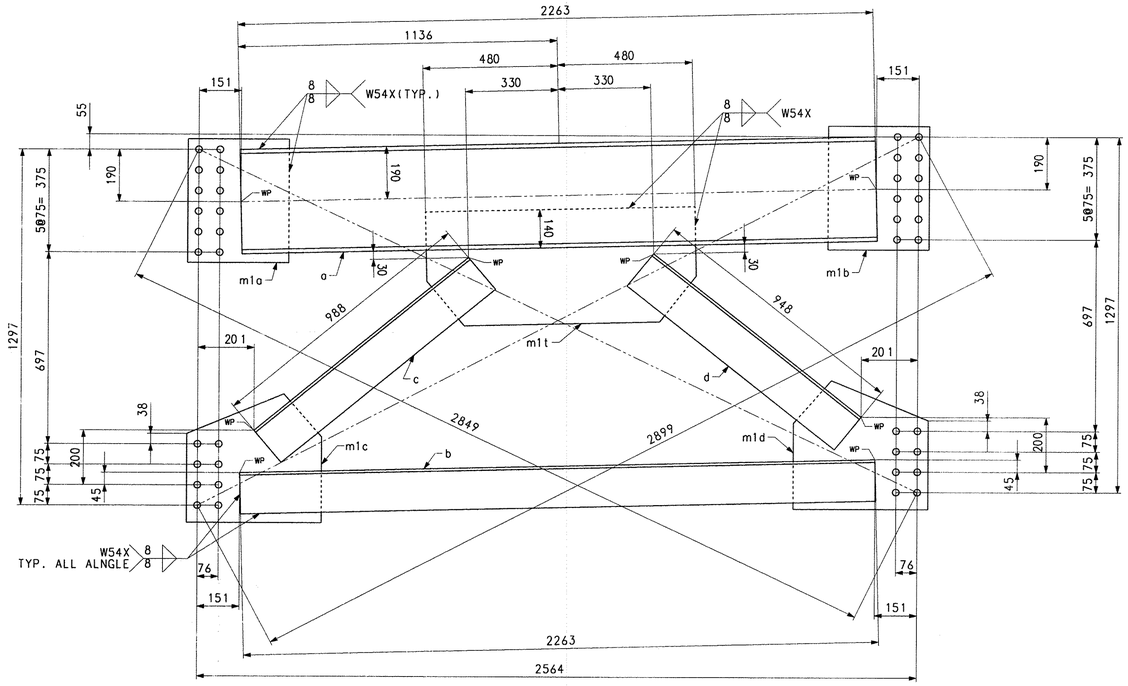

CROSSFRAME - MK. CF5

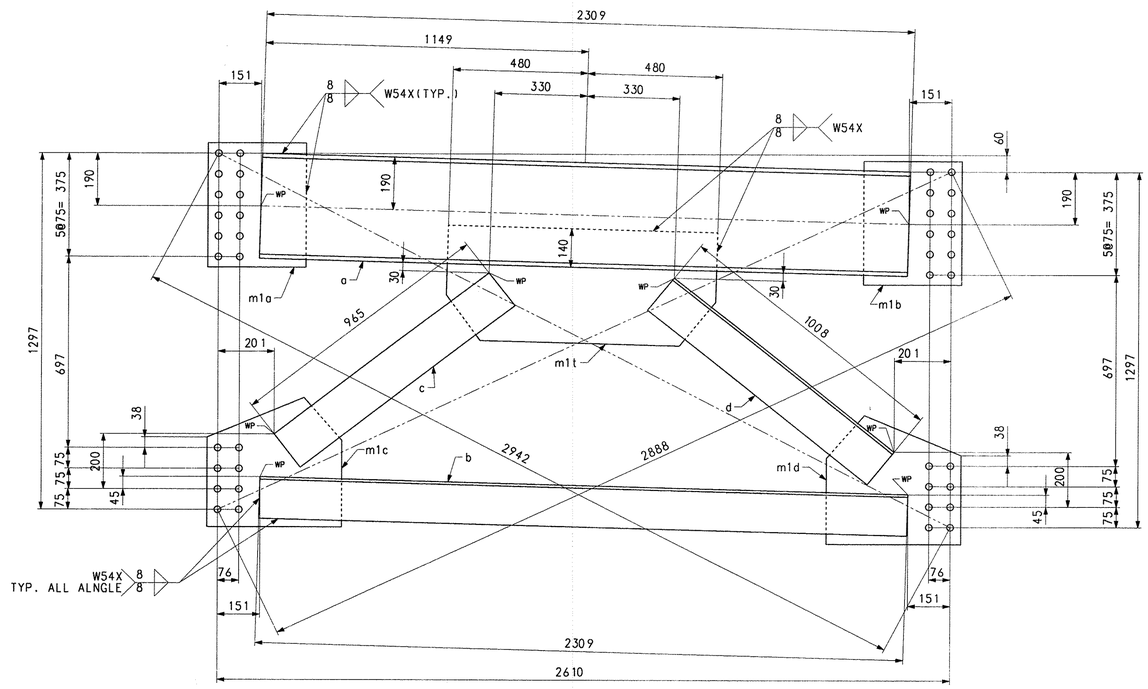

CROSSFRAME - MK. CF6
(NO PAINT)

BILL OF MATERIAL

QTY	MARK	COMMODITY	DESCRIPTION						LENGTH	SPEC	GRADE	TEST	REMARKS	ITEM	GROSS WEIGHT EA.	DEDUCTED WEIGHT EA.	NET WEIGHT EA.
1	CF5	CROSSFRAME													338.51		338.51
1	a	C	380	x	50				2263	M270M	345W	T	(C15 x33.9)	11001	113.15	0.00	113.15
1	b	L	152	x	152	x	9.5		2263	M270M	345W	T	(L6 x6x3/8)	11002	50.17	0.00	50.17
1	c	L	152	x	152	x	9.5		988	M270M	345W	T	(L6 x6x3/8)	11002	21.90	0.00	21.90
1	d	L	152	x	152	x	9.5		948	M270M	345W	T	(L6 x6x3/8)	11002	21.02	0.00	21.02
1	m1a	PL	14.3	x	360				451	M270M	345W	T		11003	18.21	0.00	18.21
1	m1b	PL	14.3	x	360				451	M270M	345W	T		11003	18.21	0.00	18.21
1	m1c	PL	14.3	x	470				480	M270M	345W	T		11003	25.30	0.00	25.30
1	m1d	PL	14.3	x	470				480	M270M	345W	T		11003	25.30	0.00	25.30
1	m1t	PL	14.3	x	420				960	M270M	345W	T		11003	45.26	0.00	45.26
1	CF6	CROSSFRAME													342.65		342.65
1	a	C	380	x	50				2309	M270M	345W	T	(C15 x33.9)	11001	115.45	0.00	115.45
1	b	L	152	x	152	x	9.5		2309	M270M	345W	T	(L6 x6x3/8)	11002	51.19	0.00	51.19
1	c	L	152	x	152	x	9.5		965	M270M	345W	T	(L6 x6x3/8)	11002	21.39	0.00	21.39
1	d	L	152	x	152	x	9.5		1008	M270M	345W	T	(L6 x6x3/8)	11002	22.35	0.00	22.35
1	m1a	PL	14.3	x	360				451	M270M	345W	T		11003	18.21	0.00	18.21
1	m1b	PL	14.3	x	360				451	M270M	345W	T		11003	18.21	0.00	18.21
1	m1c	PL	14.3	x	470				480	M270M	345W	T		11003	25.30	0.00	25.30
1	m1d	PL	14.3	x	470				480	M270M	345W	T		11003	25.30	0.00	25.30
1	m1t	PL	14.3	x	420				960	M270M	345W	T		11003	45.26	0.00	45.26
													TOTAL WEIGHT THIS SHEET:		681.16		kgs

NO.	REVISION	BY	CHK'D	DATE

HOLES: 13/16 Ø
BOLTS: NONE
COATING: SEE GN1
CODE(S): 63
SCALE: N.T.S.

HIGH STEEL STRUCTURES INC.
1915 Old Philadelphia Pike
Lancaster, PA 17605-0008
Phone (717) 299-5211
www.highsteel.com
An ISO 9001:2000 Certified Company
An Affiliate of High Industries Inc.

CROSSFRAMES — CF5 & CF6
EAST ROAD OVER VT ROUTE 279
EAST ROAD STA. 1+148.400 TO STA. 1+220.200
TOWN OF BENNINGTON VERMONT, BRIDGE B11
STATE OF VERMONT
AGENCY OF TRANSPORTATION

STATE CONT. OR REF. NO.	AC NH 019-1(53)	FED. AID PROJ. NO.	
GENERAL CONTRACTOR	J.A. McDONALD, INC.	HSSI PROJ. MGR	DEB KUPRES
SHPMT 1	DRAWING MANAGER: BRITIGAN (IH)	MADE BY: SSL	CHK'D. BY: CS	DATE: 9-18-07
STATE VT	HSSI PROJECT NUMBER: S-1070147	HSSI STRUCT. ID: B	DRAWING NUMBER: 11 OF 12

SHIPMENT 1 PWAENG: XXXXXXX PRD: XXXXXXX SHIPAEREC'T: XXXXXXX
PLOTTED: 10/01/07 09:28:55 BY: MKreidel

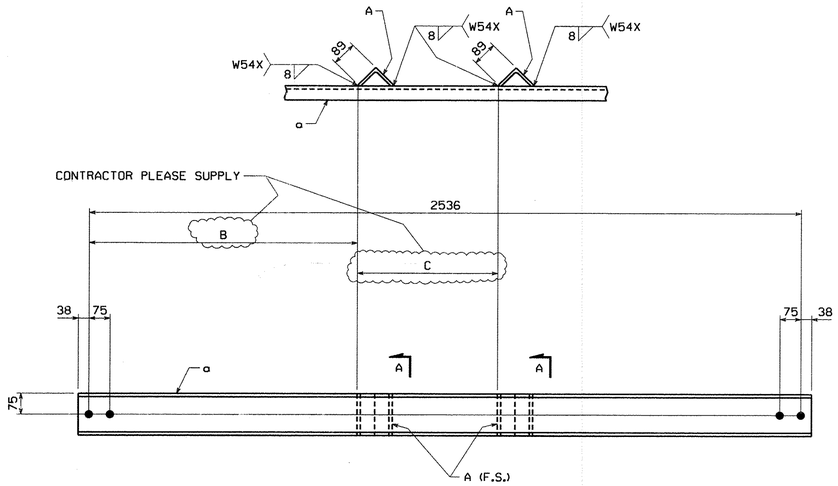

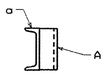

SECTION A

MARK	A	B	C	REMARKS
D1	m1aa	XXXX	XXXX	NO PAINT
D2	m1ab	XXXX	XXXX	PAINT
D3	m1aa	XXXX	XXXX	NO PAINT
D4	m1ab	XXXX	XXXX	PAINT

BILL OF MATERIAL

QTY EA.	MARK	COMM	DESCRIPTION	LENGTH	SPEC	GRADE	TEST	REMARKS	ITEM	GROS WEIGHT EA.	DEDUCTED WEIGHT	NET WEIGHT EA.
21	D1		DIAPHRAGM							44.55	0.00	44.55
1	a	C	150 x 15.6	2 612	M270M	345W			10001	40.75	0.00	40.75
2	m1aa	L	89 x 89 x 9.5	150	M270M	345W			11004	1.90	0.00	1.90
1	D2		DIAPHRAGM							44.55	0.00	44.55
1	a	C	150 x 15.6	2 612	M270M	345W			10001	40.75	0.00	40.75
2	m1ab	L	89 x 89 x 9.5	150	M270M	345W			11004	1.90	0.00	1.90
23	D3		DIAPHRAGM							44.55	0.00	44.55
1	a	C	150 x 15.6	2 612	M270M	345W			10001	40.75	0.00	40.75
2	m1aa	L	89 x 89 x 9.5	150	M270M	345W			11004	1.90	0.00	1.90
1	D4		DIAPHRAGM							44.55	0.00	44.55
1	a	C	150 x 15.6	2 612	M270M	345W			10001	40.75	0.00	40.75
2	m1ab	L	89 x 89 x 9.5	150	M270M	345W			11004	1.90	0.00	1.90

TOTAL WEIGHT THIS SHEET:	2049.08 kgs
TOTAL WEIGHT FOR BID ITEM NO. 0155 506.56:	120,388.59 kgs

NOTES:
FOR GENERAL SHOP NOTES, SEE DRAWING GN1.

NO.	REVISION	BY	CHK'D	DATE
△				
△				
△				

HOLES: 15/16"ø
BOLTS: NONE
COATING: SEE DWG. GN1
CODE(S): 56
SCALE: N.T.S.

HIGH STEEL STRUCTURES INC.
An ISO 9001:2000 Certified Company
An Affiliate of High Industries Inc.
Lancaster Facility: 1915 Old Philadelphia Pike, Lancaster, PA 17605-0008, Phone (717) 299-5211
Williamsport Facility: 3501 W. 4th Street, Williamsport, PA 17701, Phone (570) 326-9051
www.highsteel.com

DIAPHRAGMS D1 THRU D4
EAST ROAD OVER VT ROUTE 279
EAST ROAD STA. 1+148.400 TO STA. 1+220.200
TOWN OF BENNINGTON VERMONT, BRIDGE B11
STATE OF VERMONT
AGENCY OF TRANSPORTATION

	AC NH 019-1(53)	FED. AID PROJ. NO.	
GENERAL CONTRACTOR	J.A. McDONALD, INC.	HSSI PROJ. MGR	DEB KUPRES
SHPMT	DRAWING MANAGER: BRITIGAN (IH)	MADE BY: WBW	CHK'D. BY: CS
DATE: 9-19-07			
STATE: VT	HSSI PROJECT NUMBER: S-1070147	HSSI STRUCT. ID: B	DRAWING NUMBER: 12 OF 12

METRIC

SHIPMENT 01 PM&ENG: 5002811 PRD: 5002812 SHIP&ERECT.: 5002813

BY: MKreidel

PLOTTED: 10/1/2007 9:23:02 AM

60

1070147B X1 10/2/07 10/2/07Approval TO:J.A. McDonald, Inc.

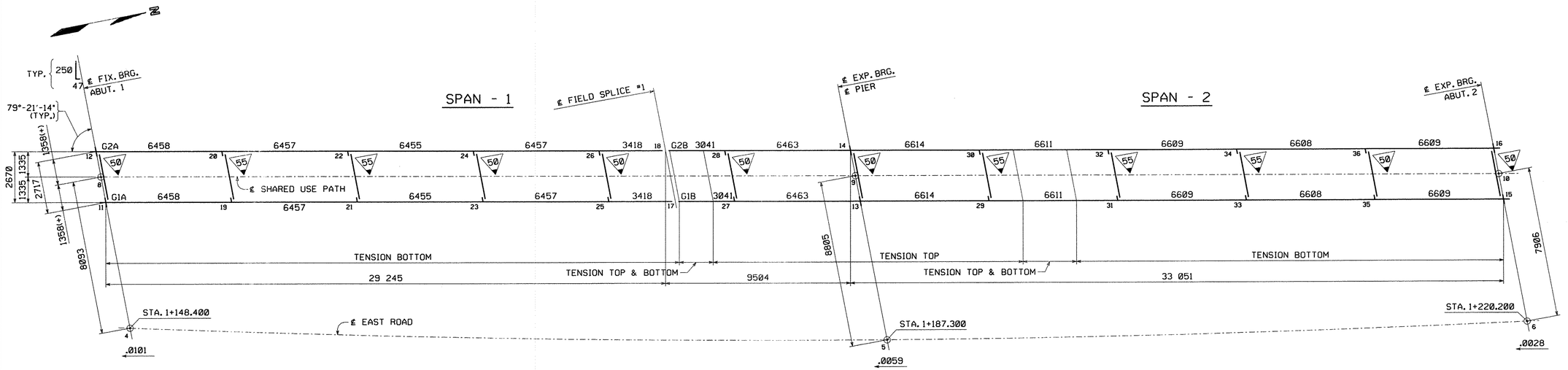

CALCULATION PLAN

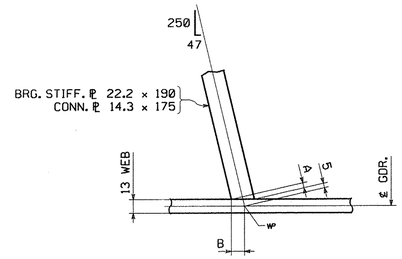

SKEWED BRG. STIFF. & CONN. ℙ LAYOUT

	A	B
BRG. STIFF.	4	13
CONN. ℙ	3	8

SHOP DRAWINGS ARE REVIEWED UNLESS NOTED OTHERWISE
NO EXCEPTION TAKEN
REVISE AS NOTED / RESUBMISSION NOT REQUIRED
REVISE AS NOTED / RESUBMISSION REQUIRED
REJECTED
Stantec
DATE 10/24/07
SIGNATURE Michael Chmelik
REVIEW BY STANTEC IS FOR THE SOLE PURPOSE OF ASCERTAINING GENERAL CONFORMITY WITH DESIGN. CONTRACTOR IS RESPONSIBLE FOR DIMENSIONS, FABRICATION AND CONSTRUCTION METHODS, COORDINATION OF SUB-TRADES, DETAIL DESIGN OF COMPONENTS, AND ERRORS OR OMISSIONS ON SHOP DRAWINGS.

– See comment on Drawing E1

NOTES:

DIMENSIONS ON PLAN ALONG GIRDERS ARE GIVEN TO THE CHORD AT THE BOTTOM OF WEB IN FULLY CAMBERED POSITION. ALL OTHER DIMENSIONS ARE GIVEN HORIZONTALLY.
DIMENSIONS PLACED ON THE GIRDER LINES REPRESENT CROSSFRAME SPACING.
FIGURES GIVEN THUS: ◂.0101 ARE THE GRADES OF THE GIRDERS AT THE BEARINGS IN FINAL POSITION; ARROW POINTS DOWNGRADE.
ALL STIFFENER AND CONNECTION PLATE SPACINGS ARE GIVEN TO ℄ PLATE.
ENDS OF GIRDERS AND ALL BEARING STIFFENERS TO BE VERTICAL IN FINAL POSITION.
ALL STEEL TO BE ASTM AASHTO M270M GRADE 345W (U.N.).
ALL FIELD CONNECTIONS TO BE MADE WITH ⅞"ø H.S. (AASHTO M164 TYPE 3) BOLTS IN 15/16"ø HOLES (U.N.).
FIGURES GIVEN THUS: △50 ARE THE DIFFERENCES IN ELEVATIONS OF GIRDERS (IN THE PLANE OF THE CROSSFRAME IN FINAL POSITION) AT CROSSFRAMES; ARROW POINTS TOWARD LOW GIRDER.
FOR TYPICAL DETAIL LAYOUTS, SEE DRAWINGS PREFIXED 'TD'.
ALL STATIONS ARE GIVEN IN METERS.

••NOTE••
THE PURPOSE OF THIS DRAWING IS TO COORDINATE GEOMETRIC CONTROL INFORMATION. THIS DRAWING IS SUBMITTED FOR INFORMATION ONLY AND IS NOT INTENDED FOR SHOP FABRICATION. THIS DRAWING IS FOR REFERENCE ONLY, APPROVAL IS NOT REQUIRED.

NO.	REVISION	BY	CHK'D	DATE
△				
△				
△				

HOLES
BOLTS
COATING
CODE(S)
SCALE N.T.S.

HIGH STEEL STRUCTURES INC.
An ISO 9001:2000 Certified Company
An Affiliate of High Industries Inc.
Lancaster Facility
1915 Old Philadelphia Pike
Lancaster, PA 17605-0008
Phone (717) 299-5211
Williamsport Facility
3501 W. 4th Street
Williamsport, PA 17701
Phone (570) 326-9051
www.highsteel.com

WORKSHEET - CALCULATION PLAN
SHARED USE PATH OVER VT ROUTE 279
SHARED USE PATH STA. 1+148.400 TO STA. 1+220.200
TOWN OF BENNINGTON VERMONT, BRIDGE B11
STATE OF VERMONT
AGENCY OF TRANSPORTATION

	AC NH 019-1(53)	FED. AID PROJ. NO.	
GENERAL CONTRACTOR	J.A. McDONALD, INC.	HSSI PROJ. MGR	DEB KUPRES
SHPMT 2	DRAWING MANAGER: BRITIGAN (IH)	MADE BY: ERS	CHK'D BY: CG	DATE: 9-25-07
STATE VT	HSSI PROJECT NUMBER: S-1070147	HSSI STRUCT. ID: C	DRAWING NUMBER: WS1 OF WS1

PLOTTED: 10/2/2007 2:42:47 PM
By: MKreidel
SHIPMENT 01
PM&ENG: 5/8/2014 PRO: 5/8/2015 SHIP&ERECT.: 5/8/2015
Scale = 0.009500 of full size.
1 2
60

1070147C X1 10/3/07 10/3/07Approval TO:J.A. McDonald, Inc.

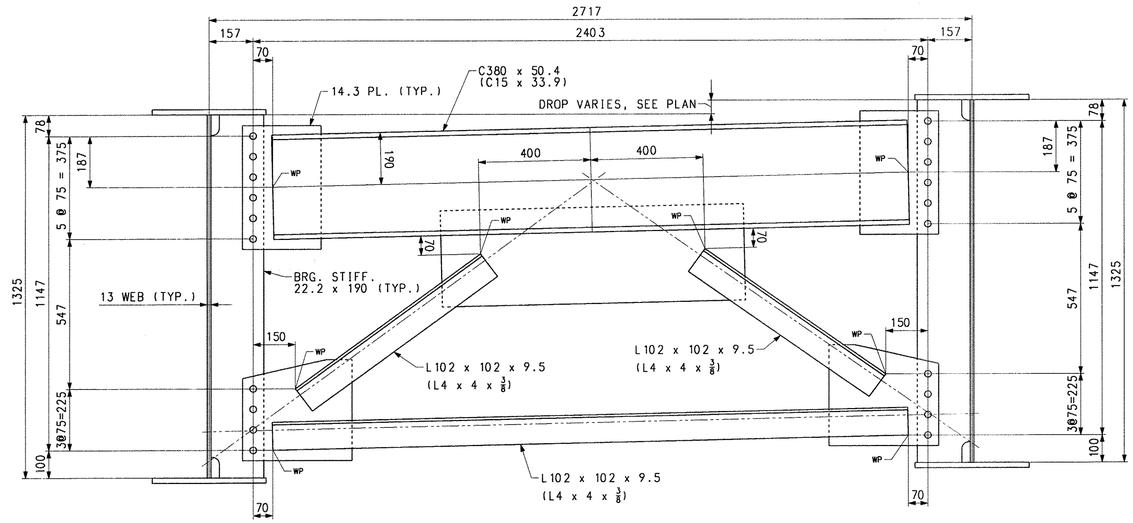

TYP. END CROSSFRAME LAYOUT

(LOOKING TOWARDS ABUT. FROM CENTER OF SPAN)

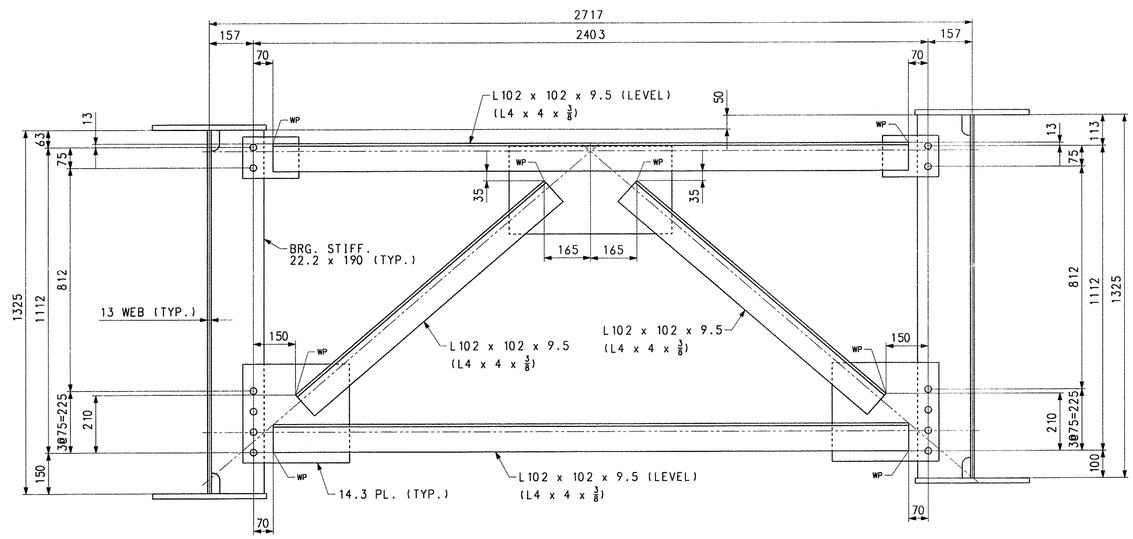

PIER CROSSFRAME LAYOUT

(LOOKING BACKSTATIONS)

NOTES:

FOR NOTES, SEE DRAWING WS1.
WORK THIS DRAWING WITH WS1.

NOTE
THE PURPOSE OF THIS DRAWING IS TO COORDINATE GEOMETRIC CONTROL INFORMATION. THIS DRAWING IS SUBMITTED FOR INFORMATION ONLY AND IS NOT INTENDED FOR SHOP FABRICATION. THIS DRAWING IS FOR REFERENCE ONLY. APPROVAL IS NOT REQUIRED.

NO.	REVISION	BY	CHK'D	DATE

HOLES: 15/16" Ø
BOLTS: NONE
COATING: NONE
CODE(S):
SCALE: N.T.S.

HIGH STEEL STRUCTURES INC.
1915 Old Philadelphia Pike
Lancaster, PA 17602-0008
Phone (717) 299-5211
www.highsteel.com
An ISO 9001:2000 Certified Company
An Affiliate of High Industries Inc.

TYPICAL DETAILS - CROSSFRAME LAYOUTS
SHARED USE PATH OVER VT ROUTE 279
SHARED USE PATH STA. 1+148.400 TO STA. 1+220.200
TOWN OF BENNINGTON VERMONT, BRIDGE B11
STATE OF VERMONT
AGENCY OF TRANSPORTATION

STATE CONT. OR REF. NO.	AC NH 019-1(53)	FED. AID PROJ. NO.	
GENERAL CONTRACTOR	J.A. McDONALD, INC.	HSSI PROJ. MGR	DEB KUPRES

SHPMT	2	DRAWING MANAGER	BRITIGAN (IH)	MADE BY	ERS	CHK'D. BY	CS	DATE	9-25-07
STATE	VT	HSSI PROJECT NUMBER	S-1070147	HSSI STRUCT. ID	C	DRAWING NUMBER	TD1 OF TD2		

SHIPMENT 1 PMAENG: 5002814 PRO: 5002815 SHIPAXERECT: 5002816
PLOTTED: 10/02/07 14:12:54 BY: MKreidel

1070147C X1 10/3/07 10/3/07Approval TO:J.A. McDonald, Inc.

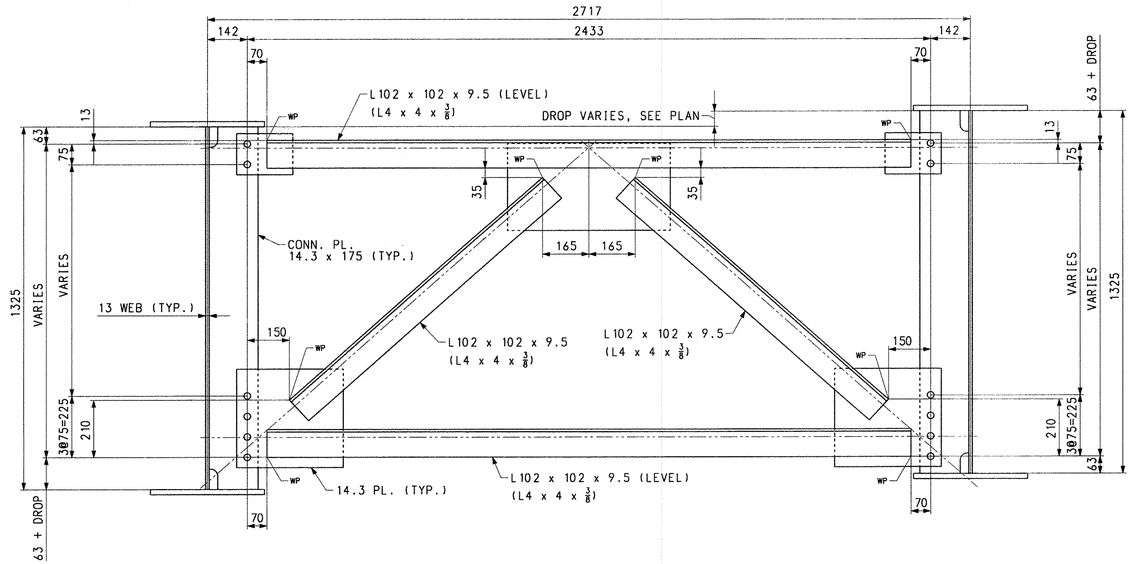

TYP. INT. CROSSFRAME LAYOUT

(LOOKING BACKSTATIONS)

NOTES:

FOR NOTES, SEE DRAWING WS1.
WORK THIS DRAWING WITH WS1.

NOTE
THE PURPOSE OF THIS DRAWING IS TO COORDINATE GEOMETRIC CONTROL INFORMATION. THIS DRAWING IS SUBMITTED FOR INFORMATION ONLY AND IS NOT INTENDED FOR SHOP FABRICATION. THIS DRAWING IS FOR REFERENCE ONLY. APPROVAL IS NOT REQUIRED.

NO.	REVISION	BY	CHK'D	DATE
△				
△				
△				

HOLES: 15/16" Ø
BOLTS: NONE
COATING: NONE
CODE(S):
SCALE: N.T.S.

HIGH STEEL STRUCTURES INC.
An ISO 9001:2000 Certified Company
An Affiliate of High Industries Inc.
1915 Old Philadelphia Pike
Lancaster, PA 17602-0008
Phone (717) 299-5211
www.highsteel.com

TYPICAL DETAILS - CROSSFRAME LAYOUTS
SHARED USE PATH OVER VT ROUTE 279
SHARED USE PATH STA. 1+148.400 TO STA. 1+220.200
TOWN OF BENNINGTON VERMONT, BRIDGE B11
STATE OF VERMONT
AGENCY OF TRANSPORTATION

		STATE CONT. OR REF. NO.	AC NH 019-1(53)		FED. AID PROJ. NO.				
		GENERAL CONTRACTOR	J.A. McDONALD, INC.		HSSI PROJ. MGR	DEB KUPRES			
SHPMT	2	DRAWING MANAGER	BRITIGAN (IH)	MADE BY	ERS	CHK'D. BY	CS	DATE	9-25-07
STATE	VT	HSSI PROJECT NUMBER	S-1070147	HSSI STRUCT. ID	C	DRAWING NUMBER	TD2 OF TD2		

SHIPMENT 1 PAKENG: 5002814 PRG: 5002815 SHIPAKRECT: 5002816
PLOTTED: 10/02/07 14:13:05 BY: MKreidel

1070147C X1 10/3/07 10/3/07Approval TO:J.A. McDonald, Inc.

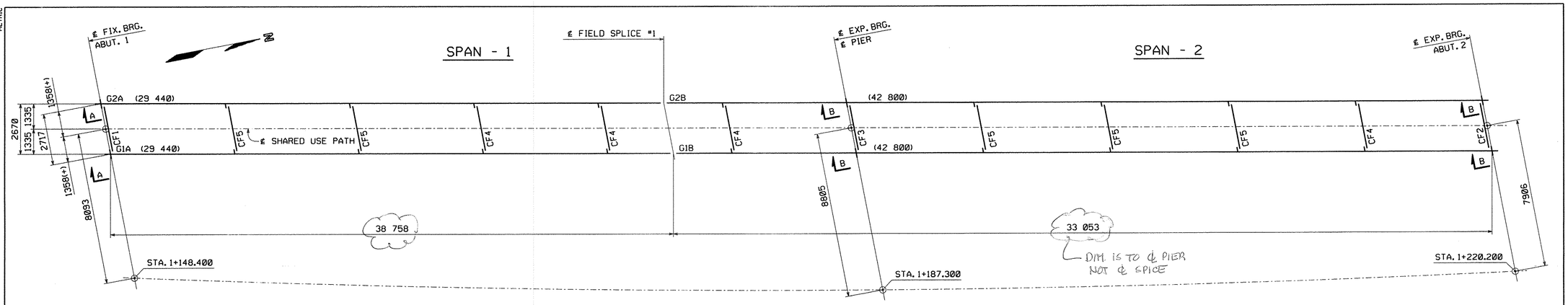

ERECTION FRAMING PLAN

WORK THIS DRAWING WITH DRAWINGS E2

LIST OF FIELD CONNECTIONS

ONE WASHER PER BOLT UNLESS NOTED OTHERWISE

LINE	ACTUAL NUMBER REQ'D	BOLT DIAM.	BOLT LENGTH	BOLTS PER CONN.	NO. OF CONN	GRIP	THICKNESS OF PIECES JOINED					PIECES CONNECTED AND REMARKS
1	128	7/8	3	64	2	41.6	14.3	13.0	14.3			WEB SPL @FS1 G1-G2
2	64	7/8	3 1/4	32	2	50.8	15.9	19.0	15.9			TOP FLG SPL @FS1 G1-G2
3	64	7/8	3 1/4	32	2	50.8	15.9	19.0	15.9			BOT FLG SPL @FS1 G1-G2
4	20	7/8	2 3/4	10	2	36.5	22.2	14.3				BRG. STIFF. TO GUSS. PL.
5	12	7/8	2 3/4	6	2	36.5	22.2	14.3				PIER BRG. STIFF. TO GUSS PL.
6	108	7/8	2 1/2	6	18	28.6	14.3	14.3				INTERMEDIATE CONN. PL. TO GUSS. PL.

LIST OF FIELD CONNECTIONS

ONE WASHER PER BOLT UNLESS NOTED OTHERWISE

LINE	ACTUAL NUMBER REQ'D	BOLT DIAM.	BOLT LENGTH	BOLTS PER CONN.	NO. OF CONN	GRIP	THICKNESS OF PIECES JOINED					PIECES CONNECTED AND REMARKS
1	20	7/8	2 3/4	10	2	36.5	22.2	14.3				BRG. STIFF. TO GUSS. PL. (TYPE 1)

FIELD BOLT SUMMARY - SHIP. #2

(2% ADDITIONAL BOLTS ADDED + 3 EA. FOR TESTING)

AASHTO M164 TYPE 1; W/HVY HEX HD (RCT)
25 - 7/8"ø HIGH STRENGTH BOLTS x 0'-2 3/4
AASHTO M164 TYPE 3; W/HVY HEX HD (RCT)
134 - 7/8"ø HIGH STRENGTH BOLTS x 0'-3 1/4
134 - 7/8"ø HIGH STRENGTH BOLTS x 0'-3
37 - 7/8"ø HIGH STRENGTH BOLTS x 0'-2 3/4
113 - 7/8"ø HIGH STRENGTH BOLTS x 0'-2 1/2
AASHTO M291 GRADE DH ; HVY HEX (RCT)
25 - NUTS FOR 7/8"ø BOLT
AASHTO M291 GRADE DH3 ; HVY HEX (RCT)
418 - NUTS FOR 7/8"ø BOLT
AASHTO M293; ROUND & FLAT (RCT)
25 - STD WASHERS FOR 7/8"ø BOLT
AASHTO M293 WEATHERING; ROUND & FLAT (RCT)
418 - STD WASHERS FOR 7/8"ø BOLT

SHIPPING PIECES

SHIPPING PIECE MARK	WEIGHT EA (KG)	DWG NO.
G1A	7,942	1
G2A	7,942	2
G1B	11,602	3
G2B	11,602	4
CF1	273	5
CF2	273	5
CF3	158	6
CF4	160	6
CF5	160	7

CONTRACTOR NOTE:
ELEVATIONS ARE GIVEN TO BOTTOM OF STEEL - DO NOT POUR TO FINAL ELEVATIONS WITHOUT VERIFICATION OF BEARING HEIGHTS AND BRIDGE SEATS.

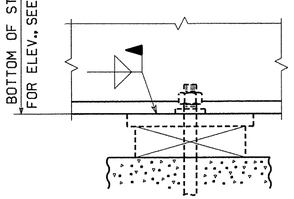

SECTION A

ELEVATIONS			
LINE	ABUT. 1	PIER	ABUT 2
G1	242.050	242.268	242.484
G2	242.100	242.318	242.534

CONTRACTOR NOTE:
ELEVATIONS ARE GIVEN TO BOTTOM OF STEEL - DO NOT POUR TO FINAL ELEVATIONS WITHOUT VERIFICATION OF BEARING HEIGHTS AND BRIDGE SEATS.

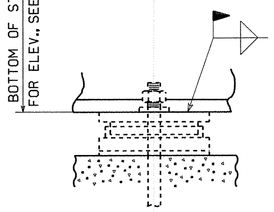

SECTION B

NOTES:

NO CREDIT WILL BE ALLOWED FOR WORK PERFORMED BY OTHERS IN REPLACING OR CORRECTING MATERIALS OR WORKMANSHIP COVERED BY THIS DRAWING UNLESS EXPRESSLY AUTHORIZED BY HIGH STEEL STRUCTURES, INC.

HIGH STEEL STRUCTURES, INC. DOES NOT SUPPLY STUD SHEER CONNECTORS, EXPANSION DAM MATERIAL, SCUPPERS OR ANY OTHER BRIDGE DRAINAGE, BEARINGS, BEARING PADS OR ANCHOR BOLTS.

NOTICE TO ERECTOR & CONTRACTOR: THIS STRUCTURAL STEEL IS BEING DELIVERED WITH THE FINAL FINISH COAT APPLIED. USE EXTREME CARE AND APPROPRIATE EQUIPMENT FOR HANDLING DURING ERECTION AND SUBSEQUENT FIELD OPERATIONS. HIGH STEEL STRUCTURES, INC. WILL NOT BE RESPONSIBLE FOR ANY TOUCH-UP REQUIRED DUE TO YOUR FAILURE TO PROPERLY PROTECT FINISH PAINT.

ERECTOR NOTE: ELEVATIONS, CAMBER CHECKS AND HORIZONTAL ALIGNMENT OF FIELD SPLICES MUST BE COMPLETED PRIOR TO FINAL BOLTING. HIGH STEEL STRUCTURES IS TO BE NOTIFIED AND CONSULTED, PRIOR TO FINAL BOLTING, IF SPLICE LOCATIONS ARE NOT WITHIN ACCEPTABLE TOLERANCE. BOTH VERTICAL & HORIZONTAL CORRECTION OF ANY UNACCEPTABLE SPLICES AFTER FINAL BOLTING WILL BE AT NO COST TO HIGH STEEL STRUCTURES.

NOTICE: WEIGHTS OF MEMBERS LISTED ON THESE DRAWINGS ARE ESTIMATED WEIGHTS AND ACTUAL WEIGHTS WILL VARY. HIGH STEEL STRUCTURES, INC. WILL NOT BE RESPONSIBLE FOR ANY ERECTION PROCEDURES, SHIPPING PROCEDURES, ETC. DEVELOPED USING ESTIMATED WEIGHTS AS SHOWN.

ALL DIMENSIONS ARE GIVEN HORIZONTALLY (U.N.).

ALL ELEVATIONS AND STATIONS ARE GIVEN IN METERS.

DIMENSIONS GIVEN THUS: (29 440) ARE THE SHIPPING LENGTHS OUT TO OUT OF FASCIA GIRDERS.

ERECTOR NOTE: ALL BOLTS MUST BE LOCATED IN ACCORDANCE WITH THE LIST OF FIELD CONNECTIONS. HIGH STEEL STRUCTURES WILL NOT BE RESPONSIBLE FOR FURNISHING ADDITIONAL BOLTS OR FOR ANY OTHER RELATED COSTS OR DAMAGES RESULTING FROM IMPROPER LOCATION OF BOLTS.

ALL FIELD BOLTS THRU WEB OF FASCIA GIRDERS ARE TO HAVE HEADS ON OUTSIDE OF WEB.

ALL FIELD BOLTS THRU BOTTOM FLANGE ARE TO HAVE HEADS UP.

(RCT) INDICATES ROTATIONAL CAPACITY TESTED BOLTS. DO NOT MIX NUTS, BOLTS AND WASHERS FROM DIFFERENT CONTAINERS UNLESS ALL NUTS, BOLTS AND WASHERS HAVE THE SAME LOT NUMBER.

ANCHOR BOLTS AND NUTS MUST BE SET BEFORE CROSSFRAMES AT BEARINGS ARE ERECTED.

NO.	REVISION	BY	CHK'D	DATE

HIGH STEEL STRUCTURES INC.
An ISO 9001:2000 Certified Company
An Affiliate of High Industries Inc.
Lancaster Facility: 1915 Old Philadelphia Pike, Lancaster, PA 17605-9008, Phone (717) 299-5211
Williamsport Facility: 3501 W. 4th Street, Williamsport, PA 17701, Phone (570) 326-9051
www.highsteel.com

HOLES	ERECTION FRAMING PLAN
BOLTS	SHARED USE PATH OVER VT ROUTE 279
COATING	SHARED USE PATH STA. 1+148.400 TO STA. 1+220.200
CODE(S)	TOWN OF BENNINGTON VERMONT, BRIDGE B11
	STATE OF VERMONT
SCALE N.T.S.	AGENCY OF TRANSPORTATION
	AC NH 019-1(53) — FED. AID PROJ. NO.
	GENERAL CONTRACTOR: J.A. McDONALD, INC. — HSSI PROJ. MGR: DEB KUPRES
SHPMT 2	DRAWING MANAGER: BRITIGAN (IH) — MADE BY: MAF — CHK'D. BY: CS — DATE: 9-25-07
STATE VT	HSSI PROJECT NUMBER: S-1070147 — HSSI STRUCT. ID: C — DRAWING NUMBER: E1 OF E2

METRIC

Scale = 0.009500 of full size.

SHIPMENT 01 PMAENG: 59802814 PRO: 59802815 SHPAERECT: 59802816

BY: MKreidel

PLOTTED: 10/2/2007 2:42:28 PM

60

1070147C X1 10/3/07 10/3/07Approval TO:J.A. McDonald, Inc.

METRIC

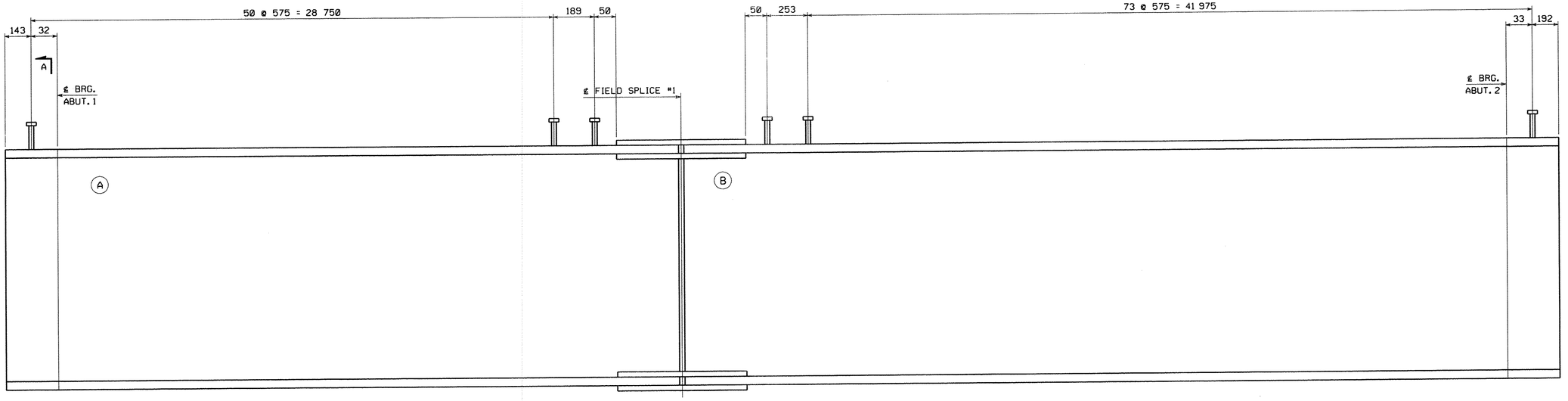

SHEAR STUD CONNECTION LOCATION LAYOUT

FOR NOTES, SEE DRAWING E1.
WORK THIS DRAWING WITH DRAWING E1.

(A) INDICATES SUFFIX MARK OF SHIPPING PIECE.

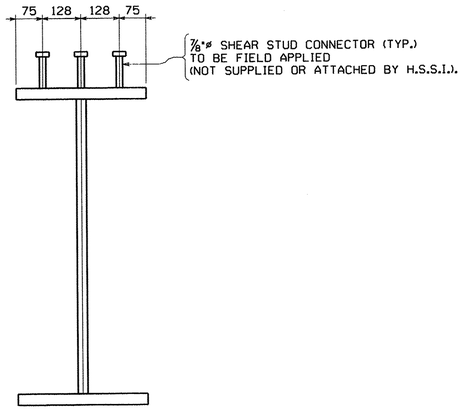

SECTION A

NO.	REVISION	BY	CHK'D	DATE
△				
△				
△				

HOLES

BOLTS

COATING

CODE(S)

SCALE
N.T.S.

HIGH STEEL STRUCTURES INC.
An ISO 9001:2000 Certified Company
An Affiliate of High Industries Inc.
Lancaster Facility
1915 Old Philadelphia Pike
Lancaster, PA 17605-0008
Phone (717) 299-5211
Williamsport Facility
3501 W. 4th Street
Williamsport, PA 17701
Phone (570) 326-9051
www.Highsteel.com

ERECTION PLAN ~ STUD LAYOUTS
SHARED USE PATH OVER VT ROUTE 279
SHARED USE PATH STA. 1+148.400 TO STA. 1+220.200
TOWN OF BENNINGTON VERMONT, BRIDGE B11
STATE OF VERMONT
AGENCY OF TRANSPORTATION

	AC NH 019-1(53)	FED. AID PROJ. NO.	
GENERAL CONTRACTOR	J.A. McDONALD, INC.	HSSI PROJ. MGR	DEB KUPRES
SHPMT 2	DRAWING MANAGER: BRITIGAN (IH)	MADE BY: MAF	CHK'D. BY: CS	DATE: 9-25-07
STATE VT	HSSI PROJECT NUMBER: S-1070147	HSSI STRUCT. ID: C	DRAWING NUMBER: E2 OF E2

PLOTTED: 10/2/2007 2:42:37 PM BY: MKreidel SHIPMENT 01 PM&ENG: 50022814 PRD: 50022815 SHIP&ERECT.: 50022816

1070147C X1 10/3/07 10/3/07Approval TO:J.A. McDonald, Inc.

METRIC

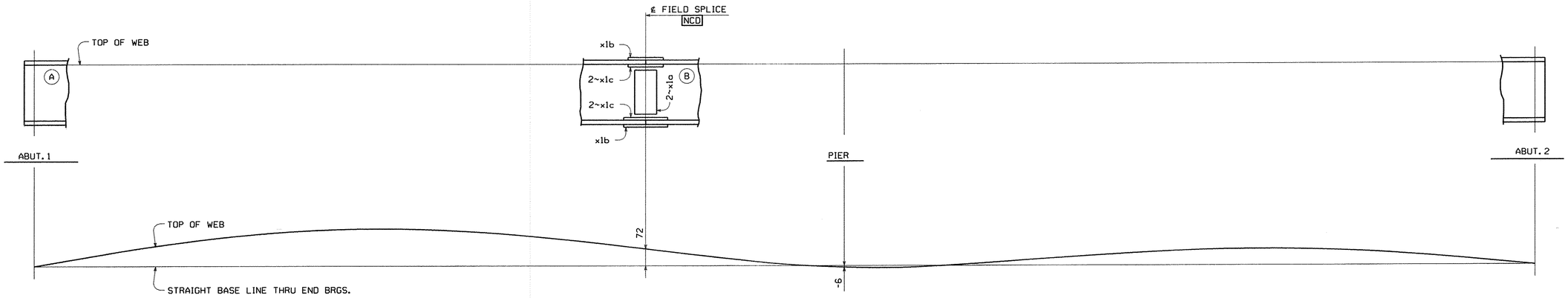

LINE ASSEMBLY DIAGRAM
(GIRDER LINES G1,G2)

NOTES:
MATCH MARKING OF SPLICE PLATES IS NOT REQUIRED.
FOR GIRDER MARKS, SEE THE ERECTION FRAMING PLAN DRAWINGS.
HOLES MARKED NCD ARE TO BE DRILLED FULL SIZE USING A CNC MACHINING CENTER OR DRILLED FUOLL SIZE USING DRILL TEMPLATES.
(A) INDICATES SUFFIX MARK OF SHIPPING PIECE.
FIELD SPLICE PLATES TO BE SHIPPED WITH THE (A) GIRDERS.
MINIMUM ONE LINE SET-UP AS REQUIRED BY SHOP INSPECTOR (TYPICALLY FIRST GIRDER LINE FABRICATED WITH SPLICE PLATES ATTACHED AND PINED).
NEGATIVE CAMBER ORDINATES INDICATE THAT TOP OF WEB IS BELOW BASE LINE.

NO.	REVISION	BY	CHK'D	DATE
1				
2				
3				

HOLES: NONE
BOLTS: NONE
COATING: NONE
CODE(S): 30
SCALE: N.T.S.

HIGH STEEL STRUCTURES INC.
An ISO 9001:2000 Certified Company
An Affiliate of High Industries Inc.
Lancaster Facility
1915 Old Philadelphia Pike
Lancaster, PA 17605-0008
Phone (717) 299-5211
Williamsport Facility
350 W. 4th Street
Williamsport, PA 17701
Phone (570) 326-9051
www.highsteel.com

SHOP ASSEMBLY DIAGRAM
SHARED USE PATH OVER VT ROUTE 279
SHARED USE PATH STA. 1+148.400 TO STA. 1+220.200
TOWN OF BENNINGTON VERMONT, BRIDGE B11
STATE OF VERMONT
AGENCY OF TRANSPORTATION

	AC NH 019-1(53)	FED. AID PROJ. NO.	
GENERAL CONTRACTOR	J.A. McDONALD, INC.	HSSI PROJ. MGR	DEB KUPRES
SHPMT 2	DRAWING MANAGER: BRITIGAN (IH)	MADE BY: SSJ.	CHK'D. BY: CS	DATE: 9-25-07
STATE VT	HSSI PROJECT NUMBER: S-1070147	HSSI STRUCT. ID: C	DRAWING NUMBER: SA1 OF SA1

PLOTTED: 10/2/2007 2:42:44 PM
BY: MKreidel
SHIPMENT 01
PM&ENG: 5982814 PRD: 5982815 SHIP&ERECT.: 5982816

1070147C X1 10/3/07 10/3/07Approval TO:J.A. McDonald, Inc.

METRIC

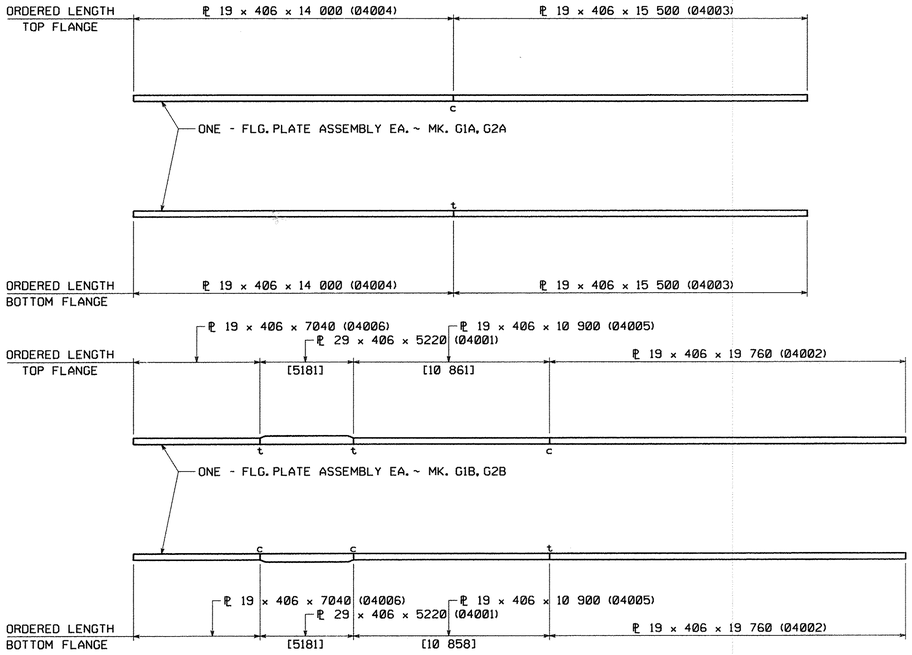

NOTE "G"

ALL SPLICES MAY HAVE A MAXIMUM REINFORCEMENT OF 3 mm. GRIND SMOOTH AT SPLICES THAT ARE TO BE TESTED AND ALL BOTTOM FLANGE SPLICES.

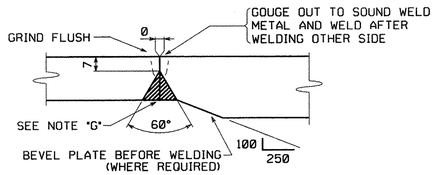

TYPICAL FLANGE PLATE SPLICE

FOR FLANGE PLATES 50 mm THICK AND UNDER (B-L2c-S)

NOTES:

FOR GENERAL SHOP NOTES, SEE DRAWING GN1.
ALL FLANGE PLATES REQUIRE CHARPY V-NOTCH TEST.
DIMENSIONS SHOWN THUS: [5181] ARE THE ACTUAL DIMENSIONS THAT WILL APPEAR ON THE GIRDER DETAIL DRAWINGS.
THE LETTERS 't' & 'c' AT FLANGE SPLICES INDICATE TENSION AND COMPRESSION SPLICES RESPECTIVELY.
ALL SPLICES MARKED 't' TO BE RADIOGRAPHICALLY TESTED 100%.
ALL SPLICES MARKED 'c' TO BE RADIOGRAPHICALLY TESTED 25%.

NO.	REVISION	BY	CHK'D	DATE
1				
2				
3				

HOLES
BOLTS
COATING
CODE(S) 30
SCALE N.T.S.

HIGH STEEL STRUCTURES INC.
An ISO 9001:2000 Certified Company
An Affiliate of High Industries Inc.
Lancaster Facility
1915 Old Philadelphia Pike
Lancaster, PA 17605-0008
Phone (717) 299-5211
Williamsport Facility
3501 W. 4th Street
Williamsport, PA 17701
Phone (570) 326-9061
www.Highsteel.com

FLANGE SPLICE DETAILS
SHARED USE PATH OVER VT ROUTE 279
SHARED USE PATH STA. 1+148.400 TO STA. 1+220.200
TOWN OF BENNINGTON VERMONT, BRIDGE B11
STATE OF VERMONT
AGENCY OF TRANSPORTATION

	AC NH 019-1(53)	FED. AID PROJ. NO.	
GENERAL CONTRACTOR	J.A. McDONALD, INC.	HSSI PROJ. MGR	DEB KUPRES
SHPMT 2	DRAWING MANAGER: BRITIGAN (IH)	MADE BY: KMA	CHK'D. BY: SJA	DATE: 8/24/07
STATE VT	HSSI PROJECT NUMBER: S-1070147	HSSI STRUCT. ID: C	DRAWING NUMBER: FS1 OF FS1

PLOTTED: 10/2/2007 2:42:38 PM
BY: MKrandel
SHIPMENT 01
PM&ENG: 50B2814 PRO: 50B2815 SHIP&ERECT.: 50B2816

1070147C X1 10/3/07 10/3/07Approval TO:J.A. McDonald, Inc.

METRIC

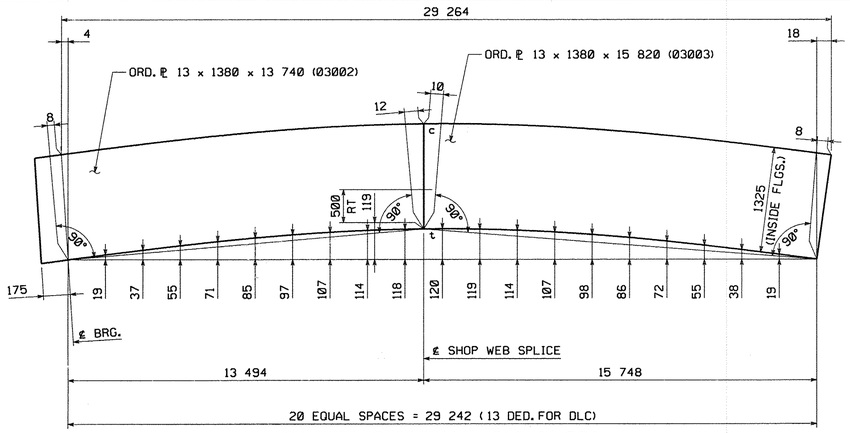

CAMBER DIAGRAM - G1A & G2A

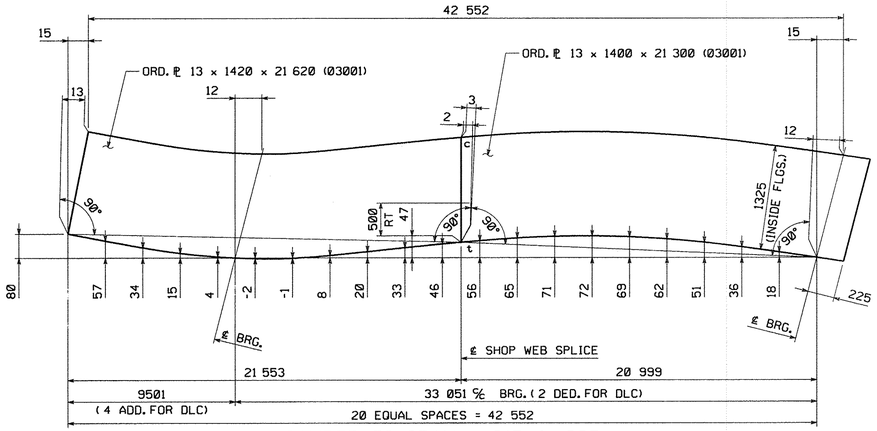

CAMBER DIAGRAM - G1B & G2B

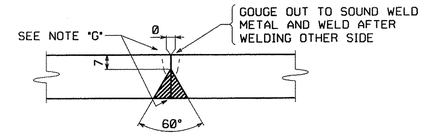

TYPICAL WEB PLATE SPLICE

FOR WEB PLATES 13 mm TO 50 mm THICK (B-L2c-S)

NOTE "G"

ALL WELDS MAY HAVE A MAXIMUM REINFORCEMENT OF 3 mm. GRIND THE WELDS SMOOTH IN THE AREAS TO BE TESTED AND FOR THE FULL DEPTH OF WEB ON G2A G2B (F.S.) AND G1A, G1B (N.S.).

NOTES:

FOR GENERAL SHOP NOTES, SEE DRAWING GN1.
ALL WEB PLATES REQUIRE CHARPY V-NOTCH TEST.
NEGATIVE CAMBER ORDINATES INDICATE CURVE IS BELOW BASELINE.
THE LETTERS 't' & 'c' AT WEB SPLICES INDICATE TENSION AND COMPRESSION EDGES AT SPLICES.
RT INDICATES RADIOGRAPHIC TESTING FOR 1/6 OF THE WEB DEPTH AT TENSION EDGE PLUS 25% OF THE REMAINDER.

NO.	REVISION	BY	CHK'D	DATE
△				
△				
△				

HOLES
BOLTS
COATING
CODE(S)
30
SCALE
N.T.S.

HIGH STEEL STRUCTURES INC. — An Affiliate of High Industries Inc. — An ISO 9001:2000 Certified Company

Lancaster Facility
915 Old Philadelphia Pike
Lancaster, PA 17605-0008
Phone (717) 299-5291

Williamsport Facility
3501 W. 4th Street
Williamsport, PA 17701
Phone (570) 326-9051

www.Highsteel.com

WEB CAMBER DIAGRAMS
SHARED USE PATH OVER VT ROUTE 279
SHARED USE PATH STA. 1+148.400 TO STA. 1+220.200
TOWN OF BENNINGTON VERMONT, BRIDGE B11
STATE OF VERMONT
AGENCY OF TRANSPORTATION

	AC NH Ø19-1(53)	FED. AID PROJ. NO.	
GENERAL CONTRACTOR	J.A. McDONALD, INC.	HSSI PROJ. MGR	DEB KUPRES

SHPMT	2	DRAWING MANAGER	BRITIGAN (IH)	MADE BY	KMA	CHK'D. BY	SJA	DATE	8/24/07
STATE	VT	HSSI PROJECT NUMBER	S-1070147	HSSI STRUCT. ID	C	DRAWING NUMBER	WC1 OF WC1		

SHIPMENT 01 PM&ENG.5802814 PROD.5802815 SHIP&ERECT.5802816
BY: MKrevdel
PLOTTED: 10/2/2007 2:42:45 PM

1070147C X1 10/3/07 10/3/07Approval TO:J.A. McDonald, Inc.

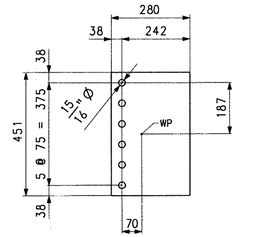

GUSSET PLATE - MK. m1a

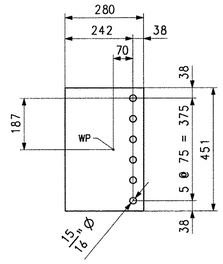

GUSSET PLATE - MK. m1b

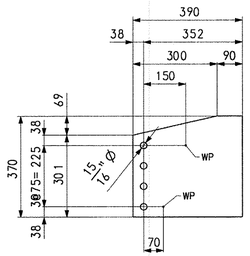

GUSSET PLATE - MK. m1c

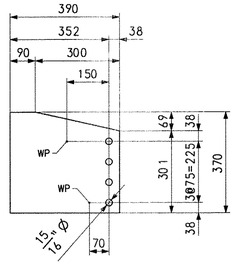

GUSSET PLATE - MK. m1d

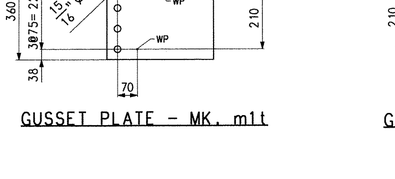

GUSSET PLATE - MK. m1f

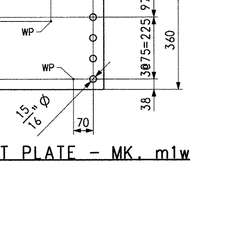

GUSSET PLATE - MK. m1g
(CG)

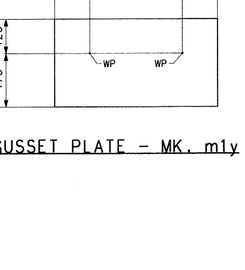

GUSSET PLATE - MK. m1h
(CG)

GUSSET PLATE - MK. m1k
(CG)

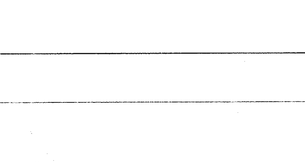

GUSSET PLATE - MK. m1m
(CG)

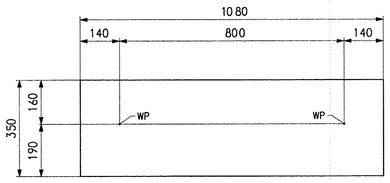

GUSSET PLATE - MK. m1n
(CG)

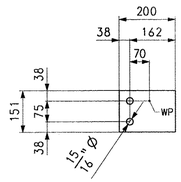

GUSSET PLATE - MK. m1p

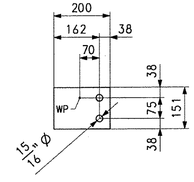

GUSSET PLATE - MK. m1s

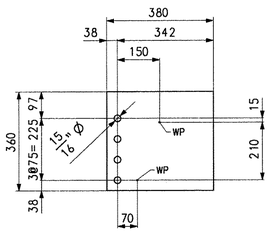

GUSSET PLATE - MK. m1t

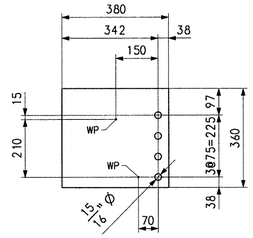

GUSSET PLATE - MK. m1w

GUSSET PLATE - MK. m1y

NOTES:
FOR GENERAL SHOP NOTES, SEE DRAWING GN1.

BILL OF MATERIAL

QTY	MARK	COMMODITY	DESCRIPTION	LENGTH	SPEC	GRADE	TEST	REMARKS	ITEM	GROSS WEIGHT EA.	DEDUCTED WEIGHT EA.	NET WEIGHT EA.
1	m1a	PL	14.3 x 280	451	M270M	345W			11003	14.16		14.16
1	m1b	PL	14.3 x 280	451	M270M	345W			11003	14.16		14.16
1	m1c	PL	14.3 x 370	390	M270M	345W			11003	16.18		16.18
1	m1d	PL	14.3 x 370	390	M270M	345W			11003	16.18		16.18
1	m1f	PL	14.3 x 350	1080	M270M	345W			11003	42.39		42.39
1	m1g	PL	14.3 x 280	451	M270M	345W			11003	14.16		14.16
1	m1h	PL	14.3 x 280	451	M270M	345W			11003	14.16		14.16
1	m1k	PL	14.3 x 370	390	M270M	345W			11003	16.18		16.18
1	m1m	PL	14.3 x 370	390	M270M	345W			11003	16.18		16.18
1	m1n	PL	14.3 x 350	1080	M270M	345W			11003	42.39		42.39
10	m1p	PL	14.3 x 151	200	M270M	345W			11003	3.39		3.39
10	m1s	PL	14.3 x 151	200	M270M	345W			11003	3.39		3.39
10	m1t	PL	14.3 x 360	380	M270M	345W			11003	15.34		15.34
10	m1w	PL	14.3 x 360	380	M270M	345W			11003	15.34		15.34
10	m1y	PL	14.3 x 320	580	M270M	345W			11003	20.81		20.81

NO.	REVISION	BY	CHK'D	DATE

HOLES: 15/16" Ø
BOLTS: NONE
COATING: NONE
CODE(S): 63
SCALE: N.T.S.

HIGH STEEL STRUCTURES INC.
1915 Old Philadelphia Pike
Lancaster, PA 17605-0098
Phone (717) 299-5211
www.highsteel.com
An ISO 9001:2000 Certified Company
An Affiliate of High Industries Inc.

CROSSFRAME JOB STANDARDS
SHARED USE PATH OVER VT ROUTE 279
SHARED USE PATH STA. 1+148.400 TO STA. 1+220.200
TOWN OF BENNINGTON VERMONT, BRIDGE B11
STATE OF VERMONT
AGENCY OF TRANSPORTATION

STATE CONT. OR REF. NO.	AC NH 019-1(53)	FED. AID PROJ. NO.	
GENERAL CONTRACTOR	J.A. McDONALD, INC.	HSSI PROJ. MGR	DEB KUPRES
SHIPMT 2	DRAWING MANAGER: BRITIGAN (IH)	MADE BY: WBW	CHK'D. BY: CS DATE: 9-25-07
STATE VT	HSSI PROJECT NUMBER: S-107014 7	HSSI STRUCT. ID: C	DRAWING NUMBER: M1 OF M1

SHIPMENT : PMAENG: 50028814 PRO: 50028815 SHIPMARK: 50028816
PLOTTED: 10/02/07 14:12:37 BY: MKreidel

1070147C X1 10/3/07 10/3/07Approval TO:J.A. McDonald, Inc.

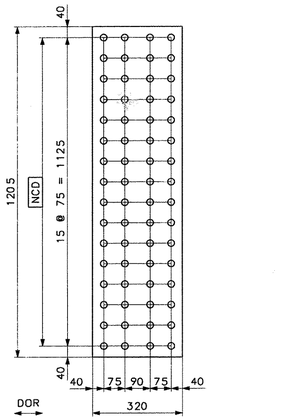

WEB SPLICE PLATE – MK. x1a

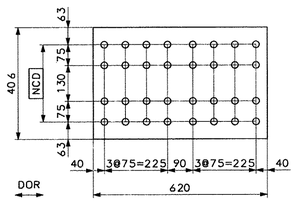

FLANGE SPLICE PLATE – MK. x1b

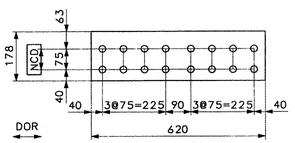

FLANGE SPLICE PLATE – MK. x1c

BILL OF MATERIAL

EST. ID	QTY	MARK	COMMODITY	DESCRIPTION			LENGTH	SPEC	GRADE	TEST	REMARKS	ITEM	GROSS WEIGHT EA.	DEDUCTED WEIGHT EA.	NET WEIGHT EA.
SPL3	4	x1a	PL	14.3	x	1205	320	M270M	345W	T		06001	43.24		43.24
SPL1	4	x1b	PL	15.9	x	406	620	M270M	345W	T		06002	31.37		31.37
SPL2	8	x1c	PL	15.9	x	178	620	M270M	345W	T		06003	13.77		13.77

NO.	REVISION	BY	CHK'D	DATE

HOLES: 15/16" Ø

BOLTS: NONE

COATING: NONE

CODE(S): 30

SCALE: N.T.S.

HIGH STEEL STRUCTURES INC.
1915 Old Philadelphia Pike
Lancaster, PA 17605-0008
Phone (717) 299-5211
www.highsteel.com
An ISO 9001:2000 Certified Company
An Affiliate of High Industries Inc.

GIRDER JOB STANDARDS

SHARED USE PATH OVER VT ROUTE 279

SHARED USE PATH STA. 1+148.400 TO STA. 1+220.200

TOWN OF BENNINGTON VERMONT, BRIDGE B11

STATE OF VERMONT

AGENCY OF TRANSPORTATION

STATE CONT. OR REF. NO.	AC NH 019-1(53)		FED. AID PROJ. NO.		
GENERAL CONTRACTOR	J.A. McDONALD, INC.		HSSI PROJ. MGR	DEB KUPRES	
SHPMT 2	DRAWING MANAGER	BRITIGAN (IH)	MADE BY	SSL	CHK'D. BY CS DATE 9-24-07
STATE VT	HSSI PROJECT NUMBER	S-107014 7	HSSI STRUCT. ID	C	DRAWING NUMBER X1 OF X2

SHIPMENT 1 PMAENG: 5002814 PRO: 5002815 SHIPAERECT: 5002816
PLOTTED: 10/02/07 14:13:14 BY: MKreidel

1070147C X1 10/3/07 10/3/07Approval TO:J.A. McDonald, Inc.

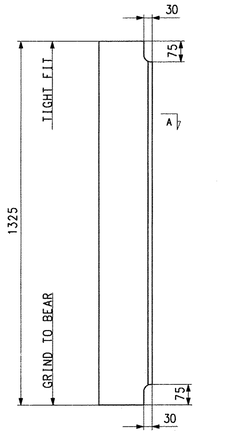

BRG. STIFF. MK. x2a

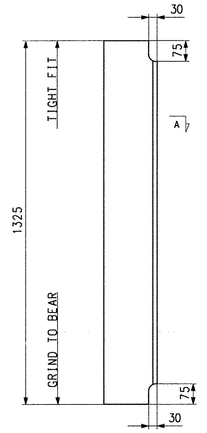

BRG. STIFF. MK. x2b(CG)

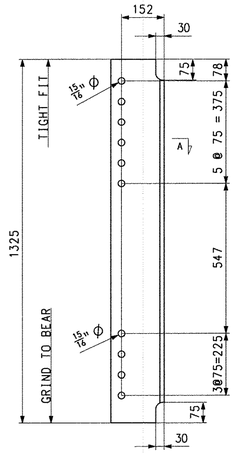

BRG. STIFF. MK. x2c

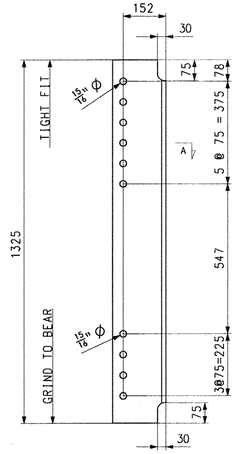

BRG. STIFF. MK. x2d(CG)

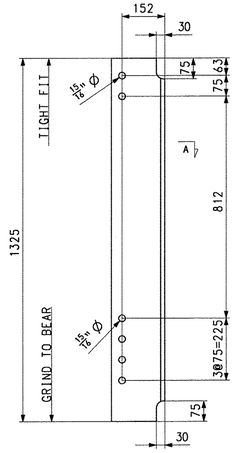

BRG. STIFF. MK. x2f

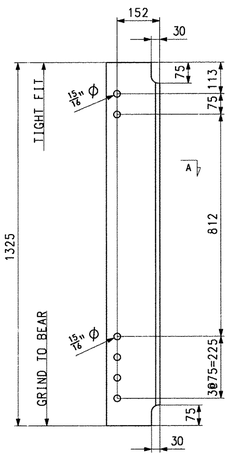

BRG. STIFF. MK. x2g

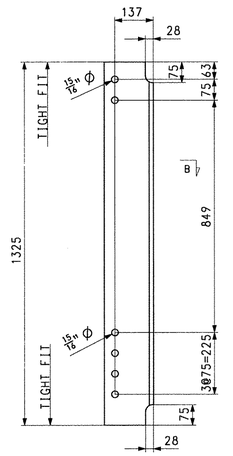

CONN. PLATE MK. x2h

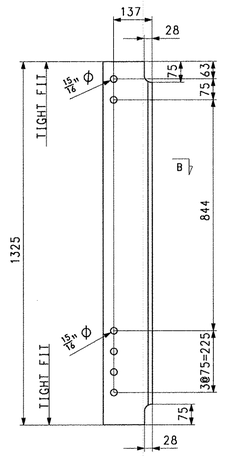

CONN. PLATE MK. x2k

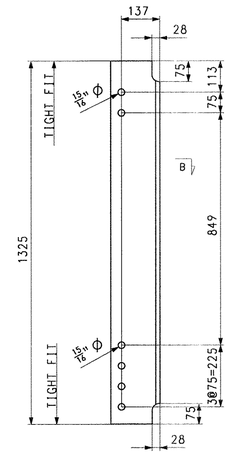

CONN. PLATE MK. x2m

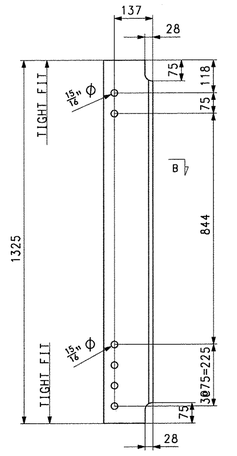

CONN. PLATE MK. x2n

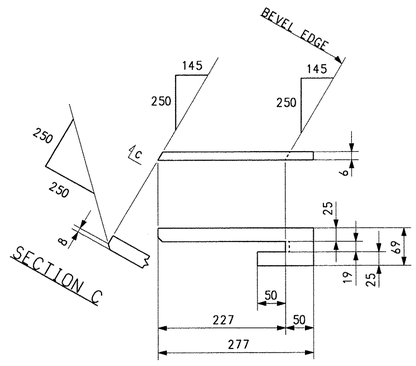

DRIP PL. MK.x2p

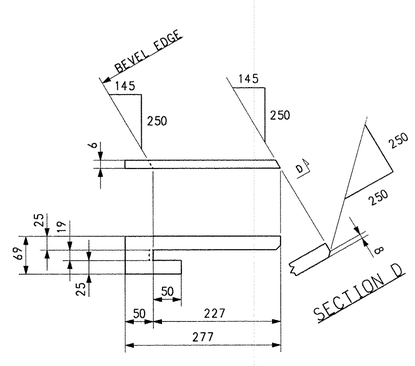

DRIP PL. MK.x2s

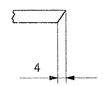

SECTION A



SECTION B

BILL OF MATERIAL

QTY	MARK	COMMODITY	DESCRIPTION			LENGTH	SPEC	GRADE	TEST	REMARKS	ITEM	GROSS WEIGHT EA.	DEDUCTED WEIGHT EA.	NET WEIGHT EA.
4	x2a	PL	22.2	x	190	1325	M270M	345W			70001	43.87	0	43.87
2	x2b	PL	22.2	x	190	1325	M270M	345W			70001	43.87	0	43.87
2	x2c	PL	22.2	x	190	1325	M270M	345W			70001	43.87	0	43.87
2	x2d	PL	22.2	x	190	1325	M270M	345W			70001	43.87	0	43.87
1	x2f	PL	22.2	x	190	1325	M270M	345W			70001	43.87	0	43.87
1	x2g	PL	22.2	x	190	1325	M270M	345W			70001	43.87	0	43.87
4	x2h	PL	14.3	x	175	1325	M270M	345W			70002	26.03	0	26.03
5	x2k	PL	14.3	x	175	1325	M270M	345W			70002	26.03	0	26.03
4	x2m	PL	14.3	x	175	1325	M270M	345W			70002	26.03	0	26.03
5	x2n	PL	14.3	x	175	1325	M270M	345W			70002	26.03	0	26.03
2	x2p	PL	6.4	x	69	277	M270M	345W			70003	0.96	0	0.96
2	x2s	PL	6.4	x	69	277	M270M	345W			70003	0.96	0	0.96

NO.	REVISION	BY	CHK'D	DATE

HOLES: 15/16" Ø
BOLTS: NONE
COATING: NONE
CODE(S): 30
SCALE: N.T.S.

HIGH STEEL STRUCTURES INC.
1915 Old Philadelphia Pike
Lancaster, PA 17605-0009
Phone (717) 299-5211
www.highsteel.com
An ISO 9001:2000 Certified Company
An Affiliate of High Industries Inc.

GIRDER JOB STANDARDS
SHARED USE PATH OVER VT ROUTE 279
SHARED USE PATH STA. 1+148.400 TO STA. 1+220.200
TOWN OF BENNINGTON VERMONT, BRIDGE B11
STATE OF VERMONT
AGENCY OF TRANSPORTATION

STATE CONT. OR REF. NO.	AC NH 019-1(53)	FED. AID PROJ. NO.	
GENERAL CONTRACTOR	J.A. McDONALD, INC.	HSSI PROJ. MGR.	DEB KUPRES

SHPMT	2	DRAWING MANAGER	BRITIGAN (IH)	MADE BY	ERS	CHK'D BY	CS	DATE	9-25-07
STATE	VT	HSSI PROJECT NUMBER	S-1070147	HSSI STRUCT. ID	C	DRAWING NUMBER	X2 OF X2		

1070147C X1 10/3/07 10/3/07Approval TO:J.A. McDonald, Inc.

SHIPMENT 1 PMAENG: 5002814 PRD: 5002815 SHIP&ERECT: 5002815
PLOTTED: 10/02/07 14:13:26 BY: MKreidel

METRIC

GENERAL SHOP NOTES

SPECIFICATIONS:
ALL MATERIAL AND WORKMANSHIP TO BE IN ACCORDANCE WITH THE STATE OF VERMONT, AGENCY OF TRANSPORTATION, STANDARD SPECIFICATIONS FOR CONSTRUCTION DATED 2006, AND ITS LATEST REVISIONS.

MATERIAL:
UNLESS NOTED OTHERWISE, ALL STEEL TO BE AASHTO M270M GRADE 345W.
(T) INDICATES ZONE 2 CHARPY V-NOTCH TESTING REQUIRED.

IN UNPAINTED AREAS SHOP BOLTS TO BE HIGH STRENGTH AASHTO M164 TYPE 3 (FRICTION) (RCT) WITH HEAVY HEX HEAD AND AASHTO M291 GRADE DH3 HEAVY HEX NUT, WITH ONE AASHTO M293 WEATHERING WASHER PER BOLT.
IN PAINTED AREAS SHOP BOLTS TO BE HIGH STRENGTH AASHTO M164 TYPE 1 (FRICTION) (RCT) WITH HEAVY HEX HEAD AND AASHTO M291 GRADE DH HEAVY HEX NUT, WITH ONE AASHTO M293 WASHER PER BOLT, GALV. TO AASHTO M298, CLASS 50.
(RCT) INDICATES ROTATIONAL CAPACITY TESTED BOLTS. DO NOT MIX NUTS, BOLTS AND WASHERS FROM DIFFERENT CONTAINERS UNLESS ALL NUTS, BOLTS AND WASHERS HAVE THE SAME LOT NUMBER.

SHOP PROCEDURE:
ALL FLANGE AND WEB PLATE SPLICES TO BE MADE BEFORE FINAL FITTING AND WELDING INTO GIRDER.
CAMBER TOLERANCE: -0 mm TO +19 mm
ALL RE-ENTRANT CUTS TO HAVE 25 MIN. RADIUS.

BEARING AREA, AS NOTED ON GIRDER DETAILS, INDICATES AREA THAT MUST BE FLAT AND TRUE TO RECEIVE SOLE PLATE.
USE LOW STRESS DIE STAMPS PLACED IN AN AREA NOT EXPOSED ON THE FINISHED STRUCTURE.

DOR INDICATES DIRECTION OF ROLLING.
(CG) INDICATES CORNER GRINDING.
CORNER GRINDING IS REQUIRED FOR ALL MAIN MEMBER FLANGE PLATES AND FIELD SPLICE PLATES, AS WELL AS SECONDARY MEMBERS IN PAINTED AREAS.

INSPECTION:
SHOP INSPECTION BY TO BE DETERMINED

WELDING:
ALL WELDING IS TO CONFORM TO AWS D1.5-02.
WELDING METHODS, PROCEDURES, AND MATERIALS SHALL COMPLY WITH THE SPECIFIC PROCEDURE DESIGNATED IN THE WELD SYMBOL TAIL.
FOR WELDING STIFFENERS AND CONNECTION PLATES TO GIRDERS, SEE TYPICAL WELDING DETAIL.
FOR WELDING CROSSFRAMES, SEE SECONDARY MEMBER WELDING DETAIL.
IDENTIFICATION OF HOLE PLACEMENT:
UNLESS NOTED OTHERWISE, BOLT HOLES IN MATERIAL 16mm OR LESS IN THICKNESS MAY BE CNC (COMPUTER NUMERICALLY CONTROLLED) PUNCHED OR CNC DRILLED FULL SIZE UNASSEMBLED. ALL MATERIAL THICKER THAN 16mm IS TO BE DRILLED.

NON-DESTRUCTIVE TESTING:
FLANGE AND WEB PLATE SPLICES TO BE RADIOGRAPHICALLY TESTED, AS CALLED FOR ON DRAWINGS PREFIXED "FS" AND "WC", BY H.S.S.I.

MAGNETIC PARTICLE INSPECTION IS REQUIRED ON AT LEAST 300 mm OF EVERY 3000 mm LENGTH OF FILLET WELDS AND 300 mm OF SUCH WELDS LESS THAN 3000 mm IN LENGTH ON GIRDER WEB TO FLANGE AND CONNECTION PLATES TO WEB AND FLANGE WELDS. TESTING PER THE YOKE METHOD, USING DC.

DT DRILLED TO TEMPLATE
SINGLE PLY CONNECTION DRILLED FULL SIZE USING TEMPLATE WITH HARDENED BUSHINGS WHILE UNASSEMBLED.

NCD NUMERICALLY CONTROLLED DRILLING
EACH PART IS DRILLED FULL SIZE USING A MACHINING CENTER, PORTABLE CNC DRILL OR DRILL LINE WHILE UNASSEMBLED.

CLEANING:
ALL STEEL TO BE BLAST CLEANED TO SSPC-SP10 (NEAR WHITE), (ASTM D2200 GRADE SA 2-1/2), AFTER FABRICATION.
BLAST CLEANING ANCHOR PROFILE TO BE FROM 38 TO 64 MICROMETERS DEEP IN PAINTED AREAS.

PAINTING:
ALL STEEL TO BE PAINTED (UNLESS NOTED) WITHIN 2650mm FROM THE END OF THE GIRDERS AT ABUTMENT 2 WITH A 3 COAT SYSTEM AS FOLLOWS:
PRIME COAT: CARBOZINC 859 (ORGANIC ZINC) WITH 75 TO 250 MICROMETERS D.F.T.
INTER. COAT: CARBOGUARD 888 (EPOXY) WITH 75 TO 200 MICROMETERS D.F.T.
FINISH COAT: CARBOTHANE 133 LH (POLYURETHANE) WITH 75 TO 150 MICROMETERS D.F.T.
FINISH COAT COLOR TO BE DARK BROWN, FEDERAL STANDARD 595, COLOR #20059.
PRIME COAT ONLY WITHIN 75 mm OF OPEN HOLES (150 MICROMETERS MAX. D.F.T.), UNLESS NOTED "P".
PRIME COAT TO BE APPLIED WITHIN 8 HOURS AFTER BLAST CLEANING.
STRIPE COAT ALL EDGES OF PLATES, ANGLES OR OTHER SHAPES WITH SHARP EDGES, BOLTS, AND NUTS PRIOR TO THE APPLICATION OF THE FULL PRIME COAT.
TOP FLANGE OF GIRDERS, AS SHOWN IN "TYPICAL PAINT SECTION", SHALL RECEIVE A LIGHT RUST PREVENTIVE COAT OF PRIMER IN PAINTED AREAS, NOT TO EXCEED 38 MICROMETERS D.F.T.
INTERMEDIATE AND FINISH COATS SHALL BE STAGGERED A MINIMUM OF 13 mm FROM THE FAYING SURFACES AND EACH OTHER.
PAINT MANUFACTURER: THE CARBOLINE CO. ST. LOUIS, MO.

DRAWING REFERENCE:

FLANGE SPLICES	-PREFIXED "FS"
WEB CAMBERS	-PREFIXED "WC"
GIRDER JOB STANDARDS	-PREFIXED "X"
CROSSFRAME JOB STDS.	-PREFIXED "M"
SHOP ASSEMBLY	-PREFIXED "SA"
WELDING PROCEDURE	-PREFIXED "WP"

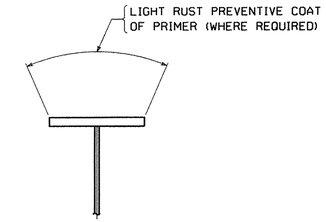

TYP. PAINT SECTION

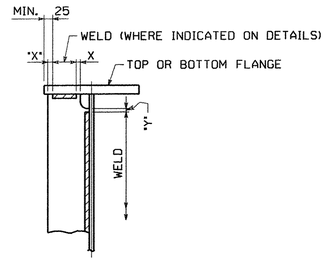

"X" = 5±3
"Y" = 15±5

STIFFENER WELDING DETAIL
(WELDS MUST STOP 25 mm MIN. FROM EDGE OF FLANGE)

ALL CROSSFRAME WELDS ARE TO BE TERMINATED FROM EDGE OF GUSSET PLATES, FILL PLATES OR ANGLES AS INDICATED.

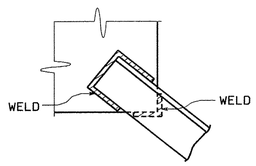

SECONDARY MEMBER WELDING DETAIL

NO.	REVISION	BY	CHK'D	DATE

HOLES
BOLTS
COATING
CODE(S)
SCALE N.T.S.

HIGH STEEL STRUCTURES INC.
An Affiliate of High Industries Inc.
An ISO 9001:2000 Certified Company
Lancaster Facility: 1915 Old Philadelphia Pike, Lancaster, PA 17605-0008, Phone (717) 299-5211
Williamsport Facility: 3501W. 4th Street, Williamsport, PA 17701, Phone (570) 326-9051
www.Highsteel.com

GENERAL SHOP NOTES
SHARED USE PATH OVER VT ROUTE 279
SHARED USE PATH STA. 1+148.400 TO STA. 1+220.200
TOWN OF BENNINGTON VERMONT, BRIDGE B11
STATE OF VERMONT
AGENCY OF TRANSPORTATION

	AC NH 019-1(53)	FED. AID PROJ. NO.	
GENERAL CONTRACTOR	J.A. McDONALD, INC.	HSSI PROJ. MGR	DEB KUPRES

SHPMT	2	DRAWING MANAGER	BRITIGAN (IH)	MADE BY	KMA	CHK'D. BY	SJA	DATE	8/24/07
STATE	VT	HSSI PROJECT NUMBER	S-1070147	HSSI STRUCT. ID	C	DRAWING NUMBER	GN1 OF GN1		

SHIPMENT 01 PM&ENG: 5002814 PROJ: 5002815 SHIP&ERECT.: 5002815
BY: MKrendel
PLOTTED: 10/2/2007 2:42:48 PM

1070147C X1 10/3/07 10/3/07Approval TO:J.A. McDonald, Inc.

METRIC

FULL SIZE HOLE PROCEDURE

THE SPLICE CONNECTIONS WILL BE DRILLED FULL-SIZE, UNASSEMBLED USING STEEL TEMPLATES, WHICH WILL ELIMINATE THE REAMING OPERATION. THE GIRDER SPLICE CONNECTION TEMPLATES WILL BE PREPARED ON A CNC MACHINING CENTER. THE SPLICE MATERIAL WILL BE DRILLED TO FULL SIZE HOLES ON A CNC MACHINING CENTER. FIT-UP FIXTURES ALSO PREPARED ON A CNC MACHINING CENTER WILL BE USED TO ALIGN DRILLING TEMPLATES ON WEB AND FLANGES. BY DRILLING THE SPLICE CONNECTIONS IN THIS MANNER, THERE WILL BE NO REAMING REQUIRED.

THE PROCEDURE TO BE USED IS AS FOLLOWS:

A. SPLICE MATERIAL
   THE SPLICE MATERIAL HOLES NOTED NCD ON X DRAWINGS WILL BE DRILLED FULL-SIZE ON A CNC MACHING CENTER.

B. DRILL TEMPLATES
   WEB AND FLANGE DRILLING TEMPLATES, AND THE WEB TO FLANGE HOLE LOCATION JIGS WILL BE PRODUCED ON CNC MACHINING CENTERS ENSURING ACCURATE PLACEMENT OF HOLES.

C. WEB BURNING
   THE WEBS WILL BE BURNED ON THE CNC BURNING MACHINE.

D. WEB DRILLING (SEE FIG. 1)
   THE WEB SPLICE HOLES WILL BE DRILLED FULL-SIZE, USING THE DRILL TEMPLATE. THIS TEMPLATE WILL PIN OFF OF THE END AND THE BOTTOM OF THE WEB PLATE, WITH NO MANUAL LAYOUT NECESSARY. THE LOCATION OF THE FIRST HOLE IN THE PATTERN WILL BE VERIFIED.

   1. PLACE THE TEMPLATE'S LOCATING PINS AGAINST THE REFERENCE EDGES (END AND BOTTOM OF WEB). CLAMP THE TEMPLATE SECURELY IN AT LEAST TWO LOCATIONS. (SEE FIG. 1)
   2. DRILL THE (4) CORNER HOLES USING A FULL SIZE DRILL.
   3. USE THE FULL SIZE PINS IN AT LEAST (2) OPPOSITE CORNER HOLES, INSURING THAT THE LOCATING PINS ARE STILL IN CONTACT WITH THE REFERENCE EDGES, AND BOLT OR CLAMP THE TEMPLATE TO PREVENT TEMPLATE MOVEMENT DURING THE DRILLING OPERATION.
   4. DRILL THE REMAINING HOLES.

E. FLANGE DRILLING
   1. FLANGE HOLES WILL BE DRILLED AFTER THE GIRDER IS ASSEMBLED AND WELDED.
      a. ALIGN THE WEB TO FLANGE DRILLING FIXTURE TO THE WEB AND SECURELY ATTACH THE FIXTURE WITH (2) SHOULDER BOLTS OR FULL SIZE PINS AND CLAMPS. (SEE FIG. 2)
      b. WELD FIXTURE ANGLE TO PLATE ONCE ALIGNED.
      c. DRILL 1 FULL SIZE HOLE IN FLANGE USING THE FIXTURE AS A GUIDE.
      d. REMOVE THE FLANGE DRILLING FIXTURE AND LOCATE THE FLANGE TEMPLATE USING THE PRE-DRILLED HOLES AND CENTER LINE ON TEMPLATE AND FLANGE. SECURELY HOLD THE OPPOSITE SIDE OF THE DRILL TEMPLATE IN PLACE WITH (1) SHOULDER BOLT OR FULL SIZE PIN & C-CLAMPS. (SEE FIG. 3)
      e. DRILL (2) ADDITIONAL FULL SIZE HOLES AT CORNERS OPPOSITE END OF TEMPLATES.
      f. SECURE TEMPLATE USING SHOULDER BOLTS OR FULL SIZE PINS AND C-CLAMPS THEN DRILL REMAINING HOLES.
      g. REPEAT PROCEDURE FOR OTHER FLANGE.
   2. THE SPLICE PLATES NEED NOT BE MATCH MARKED SINCE THEY ARE ALL ALIKE AND WILL FIT ANY SPLICE UTILIZING THE TEMPLATE LOCATED AND DRILLED HOLES.

G. YARD
   1. THE FIRST LINE OF GIRDERS SHALL BE SET IN THE YARD TO THE CORRECT ELEVATION AND CAMBER.
   2. THE GIRDERS, WITH THE SPLICES ATTACHED, WILL BE PINNED TO ALIGN THE SPLICE. THE SPLICES ARE TO BE BOLTED TOGETHER, USING SUFFICIENT BOLTS TO SECURE THE UNITS. A NORMAL DIAMETER BOLT MUST BE ABLE TO FIT THROUGH EACH SPLICE CONNECTION.

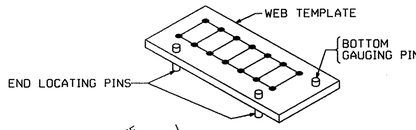

- CLAMP TO WEB
- DRILL 2 TO 4 CORNER HOLES
- SECURE WITH FULL SIZE PINS (TO KEEP TEMPLATE FROM MOVING)
- DRILL BALANCE OF HOLES

FIG. 1

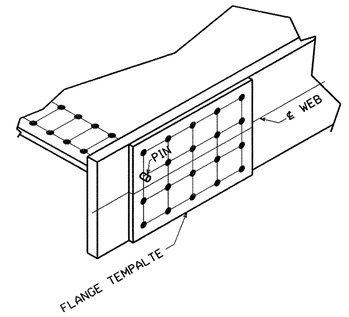

- PIN TEMPLATE TO FLANGES
- CHECK ALIGNMENT WITH ℄ WEB SCRIBE LINES

FIG. 3

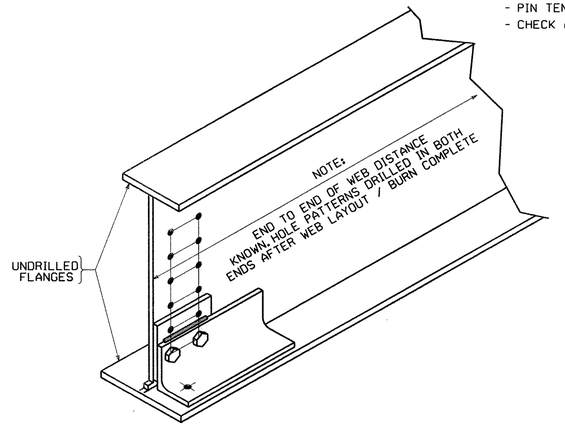

- SECURE FIXTURE TO WEB
- WELD FIXTURE
- DRILL HOLE INTO FLANGE
- REMOVE FIXTURE

FIG. 2

NO.	REVISION	BY	CHK'D	DATE

HOLES
BOLTS
COATING
CODE(S)
SCALE N.T.S.

HIGH STEEL STRUCTURES INC.
An ISO 9001:2000 Certified Company
An Affiliate of High Industries Inc.
Lancaster Facility: 915 Old Philadelphia Pike, Lancaster, PA 17605-0008, Phone (717) 299-5211
Williamsport Facility: 3501 W. 4th Street, Williamsport, PA 17701, Phone (570) 326-9051
www.highsteel.com

GENERAL SHOP NOTES
SHARED USE PATH OVER VT ROUTE 279
SHARED USE PATH STA. 1+148.400 TO STA. 1+220.200
TOWN OF BENNINGTON VERMONT, BRIDGE B11
STATE OF VERMONT
AGENCY OF TRANSPORTATION

	AC NH 019-1(53)	FED. AID PROJ. NO.	
GENERAL CONTRACTOR	J.A. McDONALD, INC.	HSSI PROJ. MGR	DEB KUPRES

SHPMT	2	DRAWING MANAGER	BRITIGAN (IH)	MADE BY	SSL	CHK'D BY	MGK	DATE	9/12/07
STATE	VT	HSSI PROJECT NUMBER	S-1070147	HSSI STRUCT. ID	C	DRAWING NUMBER	GN2 OF GN2		

1070147C X1 10/3/07 10/3/07Approval TO:J.A. McDonald, Inc.

PLOTTED: 10/2/2007 2:42:42 PM BY: MKvesdal SHIPMENT 01 PM&ENG: 5982814 PROD: 5982815 SHIP&ERECT: 5982816

METRIC

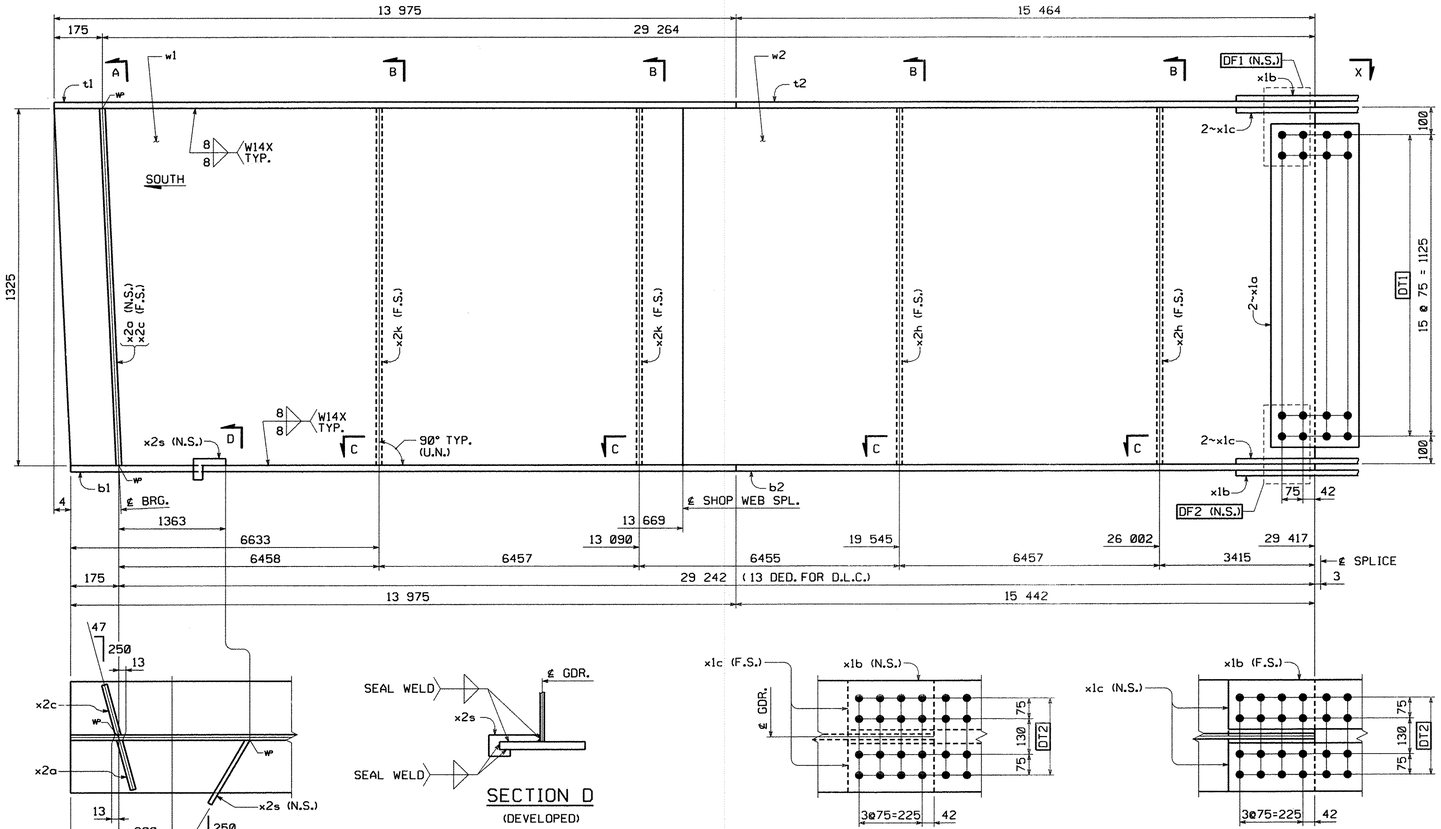

SECTION D
(DEVELOPED)

VIEW X

GIRDER ~ MK. G1A

FOR GENERAL SHOP NOTES, SEE DWG. GN1.
FOR WEB CAMBER DIAGRAM, SEE DWG. WC1.

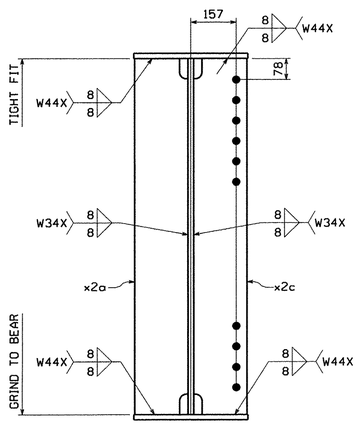

SECTION A
(DEVELOPED)

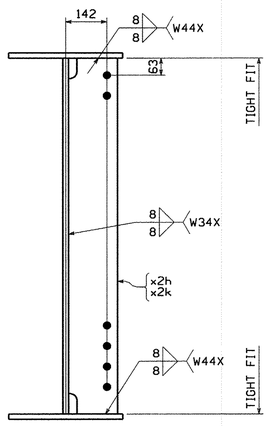

SECTION B
(DEVELOPED)

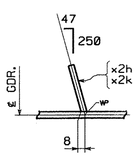

SECTION C

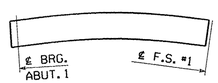

ORIENTATION DIAGRAM

BILL OF MATERIAL

QTY EA.	MARK	COMM	DESCRIPTION	LENGTH	SPEC	GRADE	TEST	REMARKS	ITEM	GROSS WEIGHT EA.	DEDUCTED WEIGHT	NET WEIGHT EA.
1	G1A		GIRDER							7942.18	0.27	7941.91
1	w1	PL	13 x 1325	13 681	M270M	345W	T		03002	1,849.67	0.27	1,849.40
1	w2	PL	13 x 1325	15 767	M270M	345W	T		03003	2,131.70	0.00	2,131.70
1	t1	PL	19 x 406	13 976	M270M	345W	T		04004	846.21	0.00	846.21
1	t2	PL	19 x 406	15 464	M270M	345W	T		04003	936.31	0.00	936.31
1	b1	PL	19 x 406	13 976	M270M	345W	T		04004	846.21	0.00	846.21
1	b2	PL	19 x 406	15 442	M270M	345W	T		04003	934.98	0.00	934.98
2	x1a	PL	14.3 x 1205	320	M270M	345W	T		06001	43.24	0.00	43.24
2	x1b	PL	15.9 x 406	620	M270M	345W	T		06002	31.37	0.00	31.37
4	x1c	PL	15.9 x 178	620	M270M	345W	T		06003	13.77	0.00	13.77
1	x2a	PL	22.2 x 190	1 325	M270M	345W			70001	43.87	0.00	43.87
1	x2c	PL	22.2 x 190	1 325	M270M	345W			70001	43.87	0.00	43.87
2	x2h	PL	14.3 x 175	1 325	M270M	345W			70002	26.03	0.00	26.03
2	x2k	PL	14.3 x 175	1 325	M270M	345W			70002	26.03	0.00	26.03
1	x2s	PL	6.4 x 69	277	M270M	345W			70003	0.96	0.00	0.96
								TOTAL WEIGHT THIS SHEET:		7,941.91	kgs.	

NO.	REVISION	BY	CHK'D	DATE

HOLES: 15 13/16"ø
BOLTS: NONE
COATING: NONE
CODE(S): 30
SCALE: N.T.S.

HIGH STEEL STRUCTURES INC.
An Affiliate of High Industries Inc.
An ISO 9001:2000 Certified Company
Lancaster Facility
1915 Old Philadelphia Pike
Lancaster, PA 17605-0008
Phone (717) 299-5211
Williamsport Facility
3501 W. 4th. Street
Williamsport, PA 17701
Phone (570) 326-9051
www.Highsteel.com

GIRDER G1A
SHARED USE PATH OVER VT ROUTE 279
SHARED USE PATH STA. 1+148.400 TO STA. 1+220.200
TOWN OF BENNINGTON VERMONT, BRIDGE B11
STATE OF VERMONT
AGENCY OF TRANSPORTATION

	AC NH 019-1(53)	FED. AID PROJ. NO.	
GENERAL CONTRACTOR	J.A. McDONALD, INC.	HSSI PROJ. MGR	DEB KUPRES
SHPMT 2	DRAWING MANAGER: BRITIGAN (IH)	MADE BY: ERS	CHK'D. BY: CS	DATE: 9-28-07
STATE VT	HSSI PROJECT NUMBER: S-1070147	HSSI STRUCT. ID: C	DRAWING NUMBER: 1 OF 7

1070147C X1 10/3/07 10/3/07Approval TO:J.A. McDonald, Inc.

PLOTTED: 10/2/2007 2:41:34 PM
BY: MKendel
SHIPMENT 01
PM&ENG: 5002814 PROJ: 5002815 SHIP&ERECT.: 5002816

METRIC

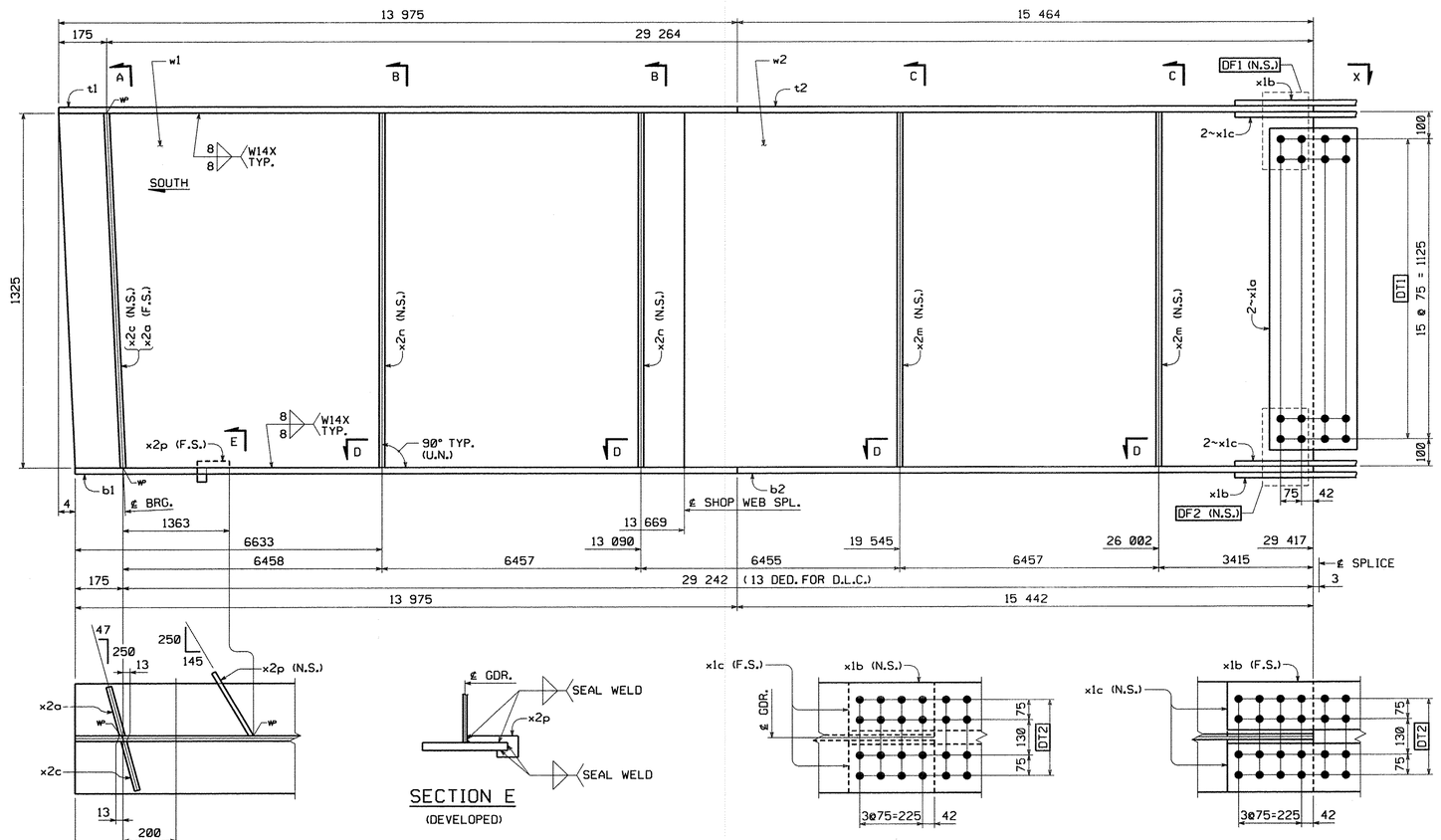

SECTION E
(DEVELOPED)

VIEW X

GIRDER ~ MK. G2A

FOR GENERAL SHOP NOTES, SEE DWG. GN1.
FOR WEB CAMBER DIAGRAM, SEE DWG. WC1.

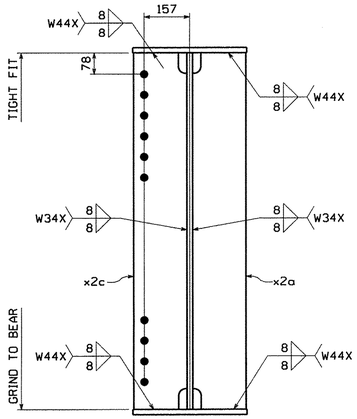

SECTION A
(DEVELOPED)

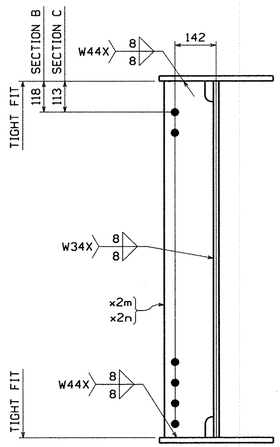

SECTIONS B & C
(DEVELOPED)

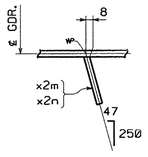

SECTION D

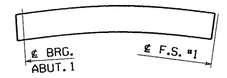

ORIENTATION DIAGRAM

BILL OF MATERIAL

QTY EA.	MARK	COMM	DESCRIPTION	LENGTH	SPEC	GRADE	TEST	REMARKS	ITEM	GROSS WEIGHT EA.	DEDUCTED WEIGHT	NET WEIGHT EA.
1	G2A		GIRDER							7942.18	0.27	7941.91
1	w1	PL	13 x 1325	13 681	M270M	345W	T		03002	1,849.67	0.27	1,849.40
1	w2	PL	13 x 1325	15 767	M270M	345W	T		03003	2,131.70	0.00	2,131.70
1	t1	PL	19 x 406	13 976	M270M	345W	T		04004	846.21	0.00	846.21
1	t2	PL	19 x 406	15 464	M270M	345W	T		04003	936.31	0.00	936.31
1	b1	PL	19 x 406	13 976	M270M	345W	T		04004	846.21	0.00	846.21
1	b2	PL	19 x 406	15 442	M270M	345W	T		04003	934.98	0.00	934.98
2	x1a	PL	14.3 x 1205	320	M270M	345W	T		06001	43.24	0.00	43.24
2	x1b	PL	15.9 x 406	620	M270M	345W	T		06002	31.37	0.00	31.37
4	x1c	PL	15.9 x 178	620	M270M	345W	T		06003	13.77	0.00	13.77
1	x2a	PL	22.2 x 190	1 325	M270M	345W			70001	43.87	0.00	43.87
1	x2c	PL	22.2 x 190	1 325	M270M	345W			70001	43.87	0.00	43.87
2	x2m	PL	14.3 x 175	1 325	M270M	345W			70002	26.03	0.00	26.03
2	x2n	PL	14.3 x 175	1 325	M270M	345W			70002	26.03	0.00	26.03
1	x2p	PL	6.4 x 69	277	M270M	345W			70003	0.96	0.00	0.96
								TOTAL WEIGHT THIS SHEET:			7,941.91	kgs.

NO.	REVISION	BY	CHK'D	DATE

HOLES: 15/16"ø
BOLTS: NONE
COATING: NONE
CODE(S): 30
SCALE: N.T.S.

HIGH STEEL STRUCTURES INC.
An ISO 9001:2000 Certified Company
An Affiliate of High Industries Inc.
Lancaster Facility
1915 Old Philadelphia Pike
Lancaster, PA 17602-2008
Phone (717) 299-5211
Williamsport Facility
3501 W. 4th Street
Williamsport, PA 17701
Phone (570) 326-9051
www.Highsteel.com

GIRDER G2A
SHARED USE PATH OVER VT ROUTE 279
SHARED USE PATH STA. 1+148.400 TO STA. 1+220.200
TOWN OF BENNINGTON VERMONT, BRIDGE B11
STATE OF VERMONT
AGENCY OF TRANSPORTATION

	AC NH 019-1(53)	FED. AID PROJ. NO.	
GENERAL CONTRACTOR	J.A. McDONALD, INC.	HSSI PROJ. MGR	DEB KUPRES

SHPMT	2	DRAWING MANAGER	BRITIGAN (IH)	MADE BY	ERS	CHK'D. BY	CS	DATE	9-28-07
STATE	VT	HSSI PROJECT NUMBER	S-1070147	HSSI STRUCT. ID	C	DRAWING NUMBER	2 OF 7		

PLOTTED: 10/2/2007 2:41:43 PM By: MK-redel SHIPMENT 01 PM&ENG: 50828141 PRD: 50828115 SHIP&ERECT.: 50828116

1070147C X1 10/3/07 10/3/07Approval TO:J.A. McDonald, Inc.

METRIC

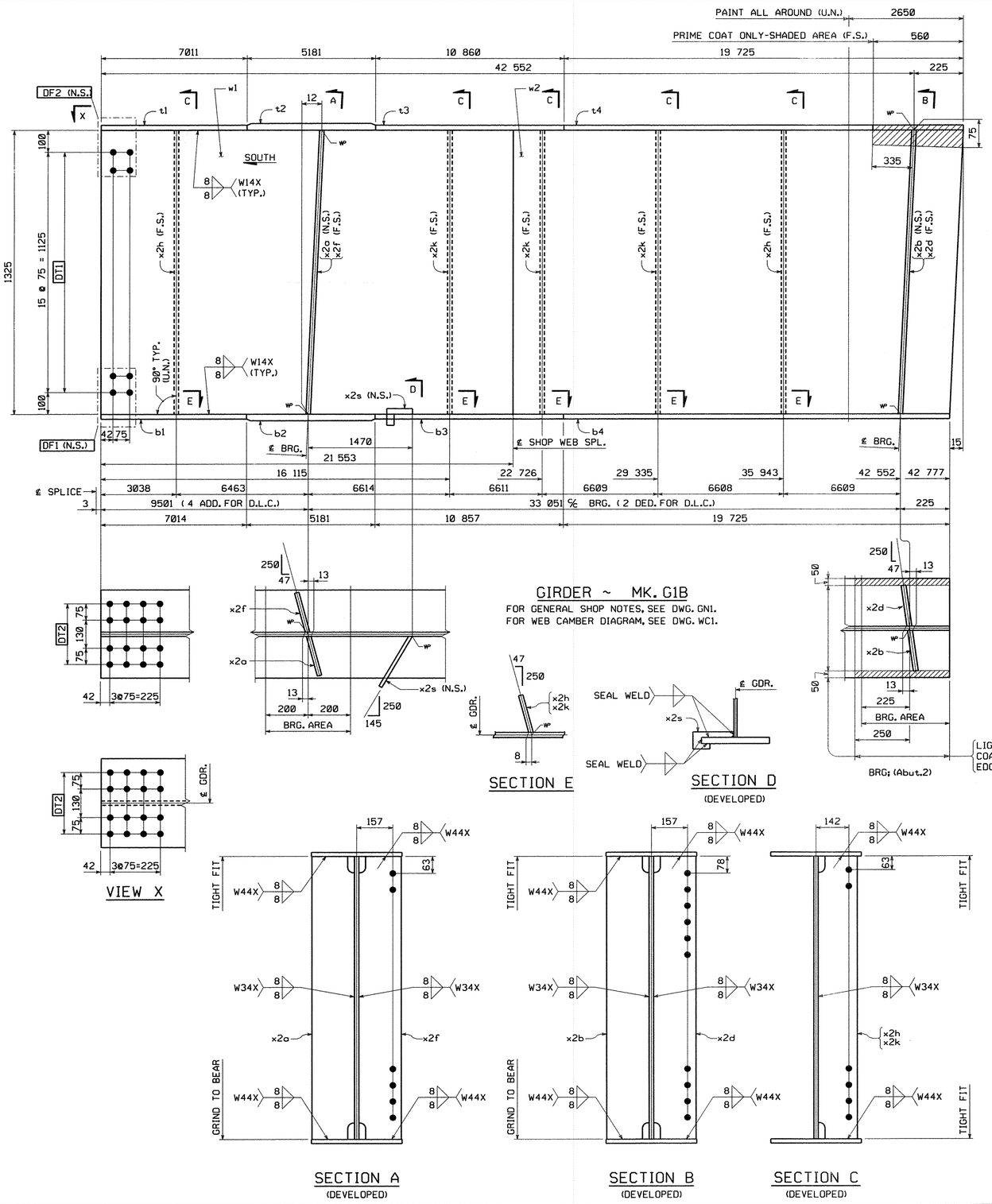

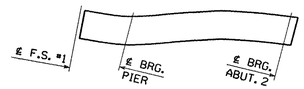

GIRDER ~ MK. G1B

FOR GENERAL SHOP NOTES, SEE DWG. GN1.
FOR WEB CAMBER DIAGRAM, SEE DWG. WC1.

SECTION E

SECTION D
(DEVELOPED)

VIEW X

SECTION A
(DEVELOPED)

SECTION B
(DEVELOPED)

SECTION C
(DEVELOPED)

ORIENTATION DIAGRAM
ORIENTATION DIAGRAM (B GIRDERS)

BILL OF MATERIAL

QTY EA.	MARK	COMM	DESCRIPTION	LENGTH	SPEC	GRADE	TEST	REMARKS	ITEM	GROSS WEIGHT EA.	DEDUCTED WEIGHT	NET WEIGHT EA.
1	G1B		GIRDER							11602.45	2.02	11600.43
1	w1	PL	13 x 1325	21 553	M270M	345W	T		03001	2,913.96	1.01	2,912.95
1	w2	PL	13 x 1325	21 239	M270M	345W	T		03001	2,871.51	1.01	2,870.50
1	t1	PL	19 x 406	7 011	M270M	345W	T		04006	424.50	0.00	424.50
1	t2	PL	29 x 406	5 181	M270M	345W	T		04001	478.80	0.00	478.80
1	t3	PL	19 x 406	10 861	M270M	345W	T		04005	657.61	0.00	657.61
1	t4	PL	19 x 406	19 725	M270M	345W	T		04002	1,194.30	0.00	1,194.30
1	b1	PL	19 x 406	7 014	M270M	345W	T		04006	424.68	0.00	424.68
1	b2	PL	29 x 406	5 181	M270M	345W	T		04001	478.80	0.00	478.80
1	b3	PL	19 x 406	10 858	M270M	345W	T		04005	657.43	0.00	657.43
1	b4	PL	19 x 406	19 725	M270M	345W	T		04002	1,194.30	0.00	1,194.30
1	x2a	PL	22.2 x 190	1 325	M270M	345W			70001	43.87	0.00	43.87
1	x2b	PL	22.2 x 190	1 325	M270M	345W			70001	43.87	0.00	43.87
1	x2d	PL	22.2 x 190	1 325	M270M	345W			70001	43.87	0.00	43.87
1	x2f	PL	22.2 x 190	1 325	M270M	345W			70001	43.87	0.00	43.87
2	x2h	PL	14.3 x 175	1 325	M270M	345W			70002	26.03	0.00	26.03
3	x2k	PL	14.3 x 175	1 325	M270M	345W			70002	26.03	0.00	26.03
1	x2s	PL	6.4 x 69	277	M270M	345W			70003	0.96	0.00	0.96
								TOTAL WEIGHT THIS SHEET:		11,600.43		kgs.

NO.	REVISION	BY	CHK'D	DATE

HOLES: 15/16"ø
BOLTS: NONE
COATING: SEE DWG. GN1
CODE(S): 30
SCALE: N.T.S.

HIGH STEEL STRUCTURES INC.
An ISO 9001:2000 Certified Company
An Affiliate of High Industries Inc.
Lancaster Facility: 1915 Old Philadelphia Pike, Lancaster, PA 17605-0008, Phone (717) 299-5211
Williamsport Facility: 3501 W. 4th Street, Williamsport, PA 17701, Phone (570) 326-9051
www.highsteel.com

GIRDER G1B
SHARED USE PATH OVER VT ROUTE 279
SHARED USE PATH STA. 1+148.400 TO STA. 1+220.200
TOWN OF BENNINGTON VERMONT, BRIDGE B11
STATE OF VERMONT
AGENCY OF TRANSPORTATION

	AC NH 019-1(53)	FED. AID PROJ. NO.	
GENERAL CONTRACTOR	J.A. McDONALD, INC.	HSSI PROJ. MGR	DEB KUPRES

SHPMT	2	DRAWING MANAGER	BRITIGAN (IH)	MADE BY	DRJ	CHK'D. BY	CS	DATE	10-1-07
STATE	VT	HSSI PROJECT NUMBER	S-1070147	HSSI STRUCT. ID	C	DRAWING NUMBER	3 OF 7		

PLOTTED: 10/2/2007 2:41:51 PM
BY: MKreidel
SHIPMENT 01
PM&ENG: 5802814 PRD: 5802815 SHIP&ERECT: 5802816

1070147C X1 10/3/07 10/3/07Approval TO:J.A. McDonald, Inc.

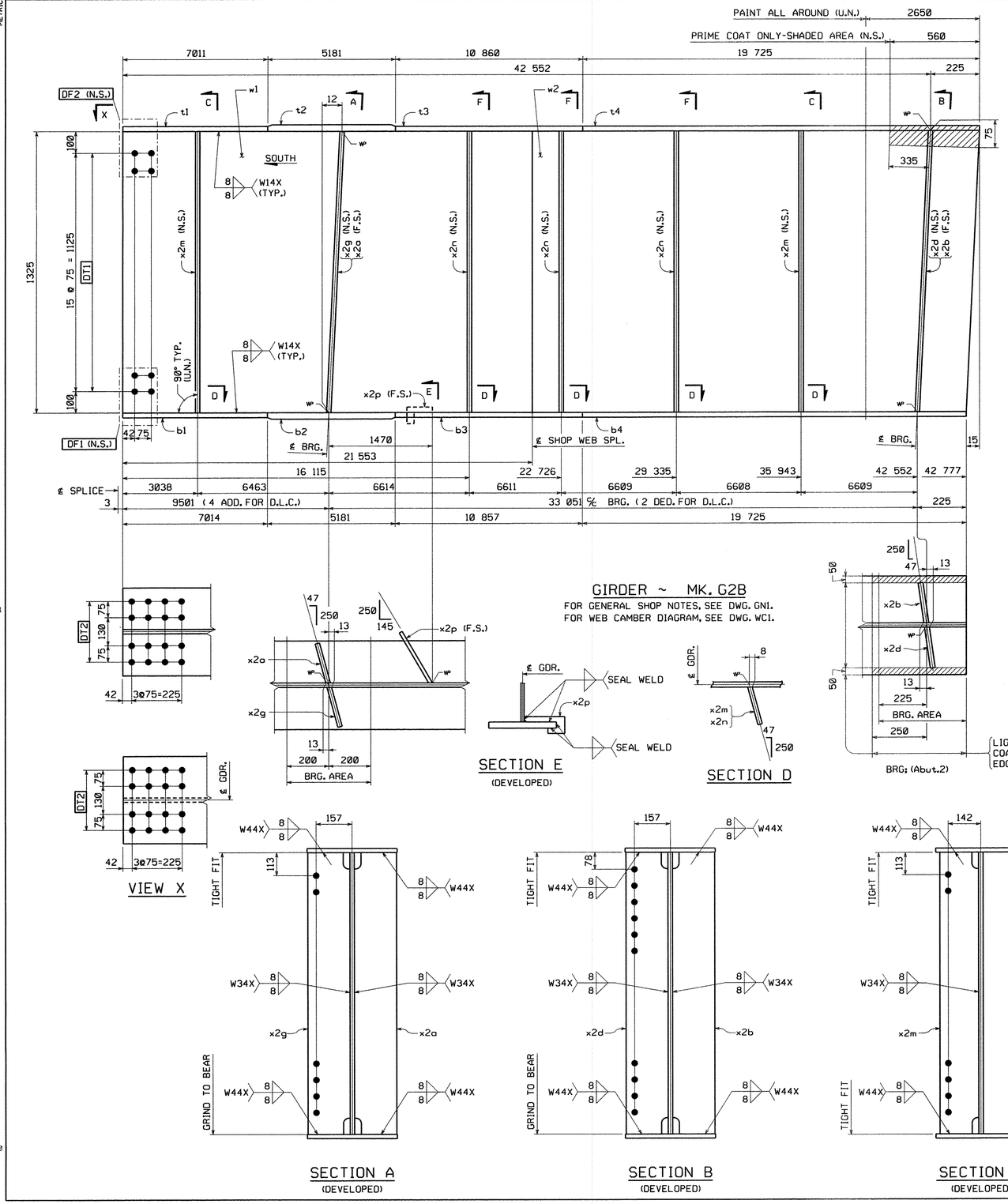

GIRDER ~ MK. G2B

FOR GENERAL SHOP NOTES, SEE DWG. GN1.
FOR WEB CAMBER DIAGRAM, SEE DWG. WC1.

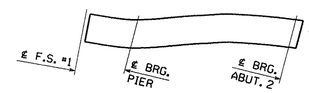

ORIENTATION DIAGRAM

ORIENTATION DIAGRAM (B GIRDERS)

BILL OF MATERIAL

QTY EA.	MARK	COMM	DESCRIPTION	LENGTH	SPEC	GRADE	TEST	REMARKS	ITEM	GROSS WEIGHT EA.	DEDUCTED WEIGHT	NET WEIGHT EA.
1	G2B		GIRDER							11602.45	2.02	11600.43
1	w1	PL	13 x 1325	21 553	M270M	345W	T		03001	2,913.96	1.01	2,912.95
1	w2	PL	13 x 1325	21 239	M270M	345W	T		03001	2,871.51	1.01	2,870.50
1	t1	PL	19 x 406	7 011	M270M	345W	T		04006	424.50	0.00	424.50
1	t2	PL	29 x 406	5 181	M270M	345W	T		04001	478.80	0.00	478.80
1	t3	PL	19 x 406	10 861	M270M	345W	T		04005	657.61	0.00	657.61
1	t4	PL	19 x 406	19 725	M270M	345W	T		04002	1,194.30	0.00	1,194.30
1	b1	PL	19 x 406	7 014	M270M	345W	T		04006	424.68	0.00	424.68
1	b2	PL	29 x 406	5 181	M270M	345W	T		04001	478.80	0.00	478.80
1	b3	PL	19 x 406	10 858	M270M	345W	T		04005	657.43	0.00	657.43
1	b4	PL	19 x 406	19 725	M270M	345W	T		04002	1,194.30	0.00	1,194.30
1	x2a	PL	22.2 x 190	1 325	M270M	345W			70001	43.87	0.00	43.87
1	x2b	PL	22.2 x 190	1 325	M270M	345W			70001	43.87	0.00	43.87
1	x2d	PL	22.2 x 190	1 325	M270M	345W			70001	43.87	0.00	43.87
1	x2g	PL	22.2 x 190	1 325	M270M	345W			70001	43.87	0.00	43.87
2	x2m	PL	14.3 x 175	1 325	M270M	345W			70002	26.03	0.00	26.03
3	x2n	PL	14.3 x 175	1 325	M270M	345W			70002	26.03	0.00	26.03
1	x2p	PL	6.4 x 69	277	M270M	345W			70003	0.96	0.00	0.96
								TOTAL WEIGHT THIS SHEET:		11,600.43		kgs.

NO.	REVISION	BY	CHK'D	DATE

HIGH STEEL STRUCTURES INC.
An ISO 9001:2000 Certified Company
An Affiliate of High Industries Inc.
Lancaster Facility: 1915 Old Philadelphia Pike, Lancaster, PA 17602-1008, Phone (717) 299-5211
Williamsport Facility: 3501 W. 4th Street, Williamsport, PA 17701, Phone (570) 326-9051
www.highsteel.com

HOLES	15/16"ø
BOLTS	NONE
COATING	SEE DWG. GN1
CODE(S)	30
SCALE	N.T.S.
STATE	VT
SHPMT	2

GIRDER G2B
SHARED USE PATH OVER VT ROUTE 279
SHARED USE PATH STA. 1+148.400 TO STA. 1+220.200
TOWN OF BENNINGTON VERMONT, BRIDGE B11
STATE OF VERMONT
AGENCY OF TRANSPORTATION

AC NH 019-1(53) — FED. AID PROJ. NO.
GENERAL CONTRACTOR: J.A. McDONALD, INC. — HSSI PROJ. MGR: DEB KUPRES
DRAWING MANAGER: BRITIGAN (IH) — MADE BY: DRJ — CHK'D. BY: CS — DATE: 10-1-07
HSSI PROJECT NUMBER: S-1070147 — HSSI STRUCT. ID: C — DRAWING NUMBER: 4 OF 7

METRIC
PLOTTED: 10/2/2007 2:41:59 PM
BY: MKreudel
SHIPMENT 01
PM&ENG: 5802814 PRO: 5802815 SHIP&RECT.: 5802816

1070147C X1 10/3/07 10/3/07Approval TO:J.A. McDonald, Inc.

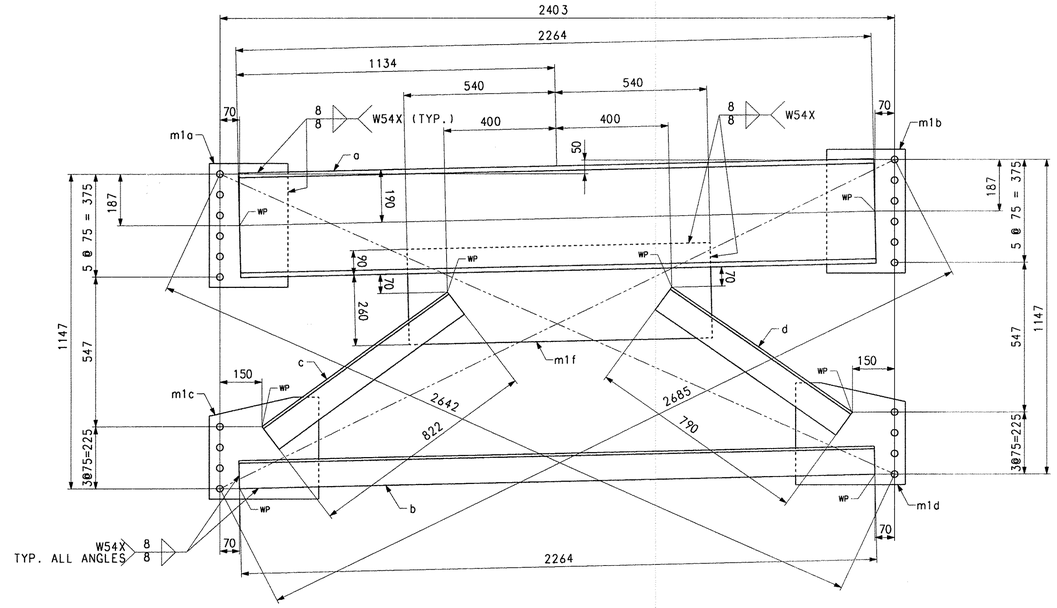

CROSSFRAME – MK. CF1
(NO PAINT)

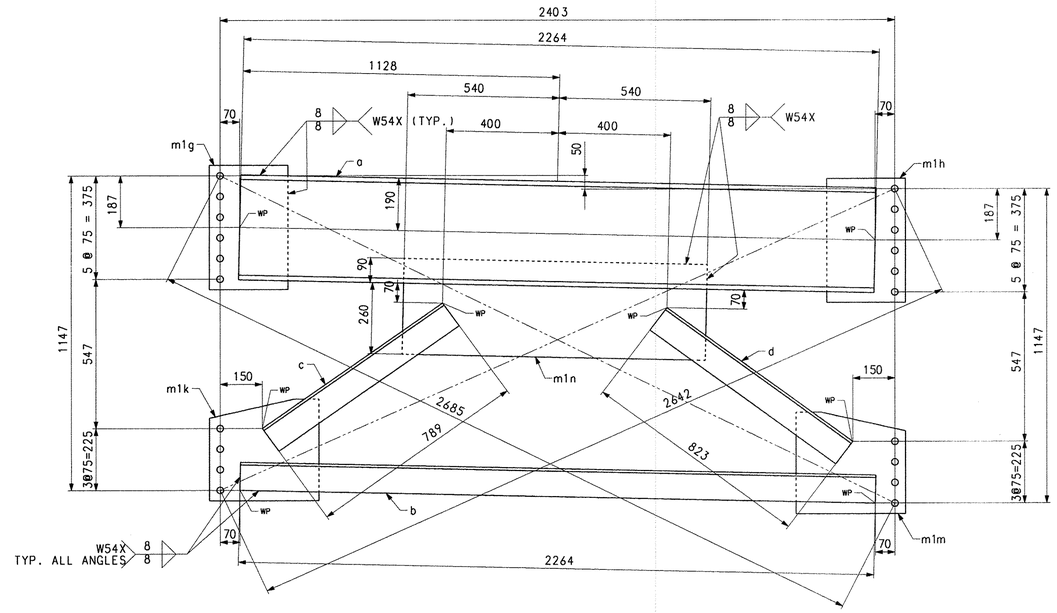

CROSSFRAME – MK. CF2

NOTES:
FOR GENERAL SHOP NOTES, SEE DRAWING GN1.

BILL OF MATERIAL

QTY	MARK	COMMODITY	DESCRIPTION					LENGTH	SPEC	GRADE	TEST	REMARKS	ITEM	GROSS WEIGHT EA.	DEDUCTED WEIGHT EA.	NET WEIGHT EA.
1	CF1	CROSSFRAME												273.23		273.23
1	a	C	380	×	50.4			2264	M270M	345W		(C15x33.9)	11001	114.11		114.11
1	b	L	102	×	102	×	9.5	2264	M270M	345W		(L4x4x3/8)	11002	32.74		32.74
1	c	L	102	×	102	×	9.5	822	M270M	345W		(L4x4x3/8)	11002	11.89		11.89
1	d	L	102	×	102	×	9.5	790	M270M	345W		(L4x4x3/8)	11002	11.42		11.42
1	m1a	PL	14.3	×	280			451	M270M	345W			11003	14.16		14.16
1	m1b	PL	14.3	×	280			451	M270M	345W			11003	14.16		14.16
1	m1c	PL	14.3	×	370			390	M270M	345W			11003	16.18		16.18
1	m1d	PL	14.3	×	370			390	M270M	345W			11003	16.18		16.18
1	m1f	PL	14.3	×	350			1080	M270M	345W			11003	42.39		42.39
1	CF2	CROSSFRAME												273.23		273.23
1	a	C	380	×	50.4			2264	M270M	345W		(C15x33.9)	11001	114.11		114.11
1	b	L	102	×	102	×	9.5	2264	M270M	345W		(L4x4x3/8)	11002	32.74		32.74
1	c	L	102	×	102	×	9.5	789	M270M	345W		(L4x4x3/8)	11002	11.41		11.41
1	d	L	102	×	102	×	9.5	823	M270M	345W		(L4x4x3/8)	11002	11.90		11.90
1	m1g	PL	14.3	×	280			451	M270M	345W			11003	14.16		14.16
1	m1h	PL	14.3	×	280			451	M270M	345W			11003	14.16		14.16
1	m1k	PL	14.3	×	370			390	M270M	345W			11003	16.18		16.18
1	m1m	PL	14.3	×	370			390	M270M	345W			11003	16.18		16.18
1	m1n	PL	14.3	×	350			1080	M270M	345W			11003	42.39		42.39
												TOTAL WEIGHT THIS SHEET:			546.46	kgs

NO.	REVISION	BY	CHK'D	DATE

HOLES: 15/16" Ø
BOLTS: NONE
COATING: SEE DWG. GN1 (U.N.)
CODE(S): 63
SCALE: N.T.S.

HIGH STEEL STRUCTURES INC.
1915 Old Philadelphia Pike
Lancaster, PA 17605-0008
Phone (717) 299-5211
www.highsteel.com
An ISO 9001:2000 Certified Company
An Affiliate of High Industries Inc.

CROSSFRAMES CF1 & CF2
SHARED USE PATH OVER VT ROUTE 279
SHARED USE PATH STA. 1+148.400 TO STA. 1+220.200
TOWN OF BENNINGTON VERMONT, BRIDGE B11
STATE OF VERMONT
AGENCY OF TRANSPORTATION

STATE CONT. OR REF. NO.	AC NH 019-1(53)	FED. AID PROJ. NO.			
GENERAL CONTRACTOR	J.A. McDONALD, INC.	HSSI PROJ. MGR	DEB KUPRES		
SHPMT 2	DRAWING MANAGER	BRITIGAN (IH)	MADE BY	WBW	CHK'D. BY	CS	DATE	9-25-07
STATE VT	HSSI PROJECT NUMBER	S-1070147	HSSI STRUCT. ID	C	DRAWING NUMBER	5 OF 7		

SHIPMENT 1 PW&ENG: 5002814 PRO: 5002815 SHIP&ERECT: 5002816
PLOTTED: 10/02/07 14:32:46 BY: MKreidel

1070147C X1 10/3/07 10/3/07Approval TO:J.A. McDonald, Inc.

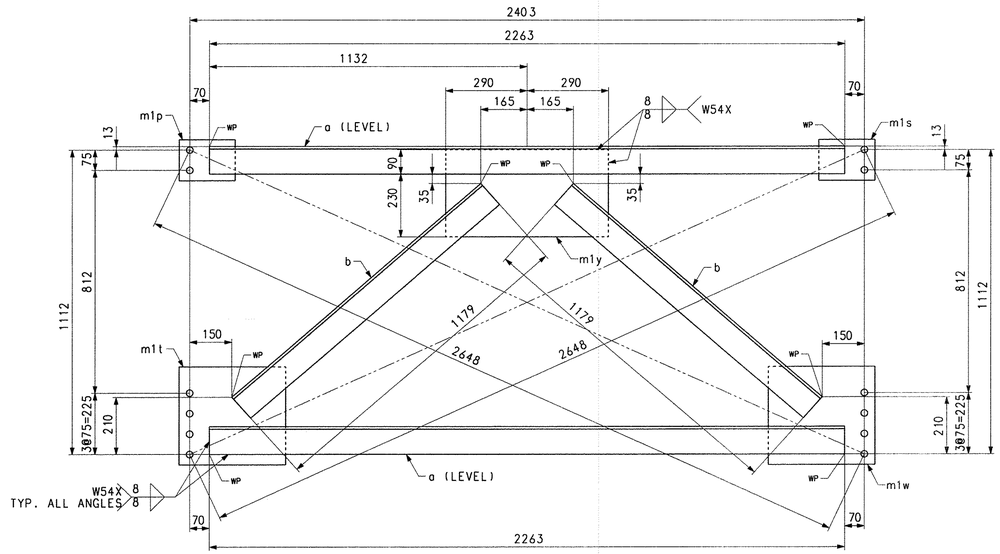

CROSSFRAME – MK. CF3

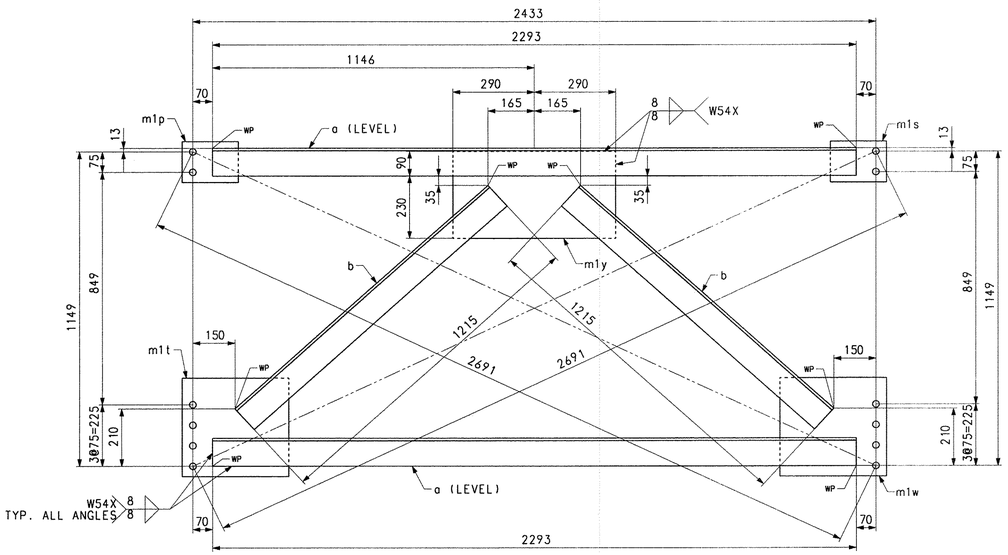

CROSSFRAME – MK. CF4

BILL OF MATERIAL

QTY	MARK	COMMODITY	DESCRIPTION						LENGTH	SPEC	GRADE	TEST	REMARKS	ITEM	GROSS WEIGHT EA.	DEDUCTED WEIGHT EA.	NET WEIGHT EA.
1	CF3		CROSSFRAME												157.81		157.81
2	a	L	102	x	102	x	9.5		2263	M270M	345W		(L4x4x3/8)	11002	32.72		32.72
2	b	L	102	x	102	x	9.5		1179	M270M	345W		(L4x4x3/8)	11002	17.05		17.05
1	m1p	PL	14.3	x	151				200	M270M	345W			11003	3.39		3.39
1	m1s	PL	14.3	x	151				200	M270M	345W			11003	3.39		3.39
1	m1t	PL	14.3	x	360				380	M270M	345W			11003	15.34		15.34
1	m1w	PL	14.3	x	360				380	M270M	345W			11003	15.34		15.34
1	m1y	PL	14.3	x	320				580	M270M	345W			11003	20.81		20.81
4	CF4		CROSSFRAME												159.72		159.72
2	a	L	102	x	102	x	9.5		2293	M270M	345W		(L4x4x3/8)	11002	33.16		33.16
2	b	L	102	x	102	x	9.5		1215	M270M	345W		(L4x4x3/8)	11002	17.57		17.57
1	m1p	PL	14.3	x	151				200	M270M	345W			11003	3.39		3.39
1	m1s	PL	14.3	x	151				200	M270M	345W			11003	3.39		3.39
1	m1t	PL	14.3	x	360				380	M270M	345W			11003	15.34		15.34
1	m1w	PL	14.3	x	360				380	M270M	345W			11003	15.34		15.34
1	m1y	PL	14.3	x	320				580	M270M	345W			11003	20.81		20.81
													TOTAL WEIGHT THIS SHEET:			796.70	kgs

NOTES:
FOR GENERAL SHOP NOTES, SEE DRAWING GN1.

NO.	REVISION	BY	CHK'D	DATE

HIGH STEEL STRUCTURES INC.
An ISO 9001:2000 Certified Company
An Affiliate of High Industries Inc.
1915 Old Philadelphia Pike
Lancaster, PA 17605-0008
Phone (717) 299-5211
www.highsteel.com

HOLES: 15/16" Ø
BOLTS: NONE
COATING: NONE
CODE(S): 63
SCALE: N.T.S.

CROSSFRAMES CF3 & CF4
SHARED USE PATH OVER VT ROUTE 279
SHARED USE PATH STA. 1+148.400 TO STA. 1+220.200
TOWN OF BENNINGTON VERMONT, BRIDGE B11
STATE OF VERMONT
AGENCY OF TRANSPORTATION

		STATE CONT. OR REF. NO.	AC NH 019-1(53)		FED. AID PROJ. NO.				
		GENERAL CONTRACTOR	J.A. McDONALD, INC.		HSSI PROJ. MGR	DEB KUPRES			
SHPMT	2	DRAWING MANAGER	BRITIGAN (IH)	MADE BY	WBW	CHK'D. BY	CS	DATE	9-25-07
STATE	VT	HSSI PROJECT NUMBER	S-1070147	HSSI STRUCT. ID	C	DRAWING NUMBER	6 OF 7		

SHIPMENT 1 PWAENG: 5002814 PRD: 5002815 SHIPXERECT: 5002816
PLOTTED: 10/02/07 14:11:59 BY: MKreidel

1070147C X1 10/3/07 10/3/07Approval TO:J.A. McDonald, Inc.

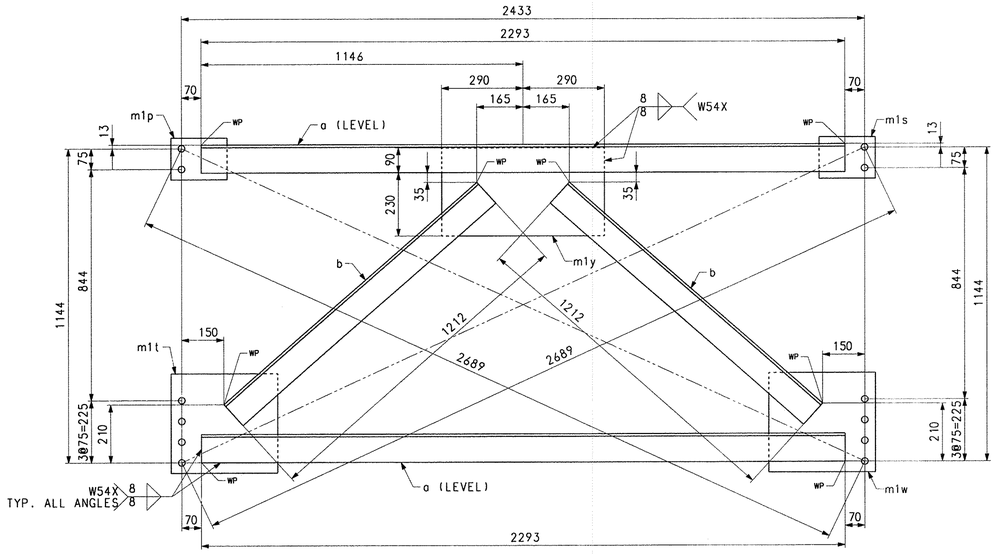

CROSSFRAME - MK. CF5

BILL OF MATERIAL

QTY	MARK	COMMODITY	DESCRIPTION	LENGTH	SPEC	GRADE	TEST	REMARKS	ITEM	GROSS WEIGHT EA.	DEDUCTED WEIGHT EA.	NET WEIGHT EA.
5	CF5		CROSSFRAME							159.63		159.63
2	a	L	102 x 102 x 9.5	2293	M270M	345W		(L4x4x3/8)	11002	33.16		33.16
2	b	L	102 x 102 x 9.5	1212	M270M	345W		(L4x4x3/8)	11002	17.53		17.53
1	m1p	PL	14.3 x 151	200	M270M	345W			11003	3.39		3.39
1	m1s	PL	14.3 x 151	200	M270M	345W			11003	3.39		3.39
1	m1t	PL	14.3 x 360	380	M270M	345W			11003	15.34		15.34
1	m1w	PL	14.3 x 360	380	M270M	345W			11003	15.34		15.34
1	m1y	PL	14.3 x 320	580	M270M	345W			11003	20.81		20.81
								TOTAL WEIGHT THIS SHEET:				798.17 kgs
								TOTAL WEIGHT FOR BID ITEM NO. 0150 506.55:				41226.01 kgs

NOTES:
FOR GENERAL SHOP NOTES, SEE DRAWING GN1.

NO.	REVISION	BY	CHK'D	DATE

HIGH STEEL STRUCTURES INC.
An ISO 9001:2000 Certified Company
An Affiliate of High Industries Inc.
1915 Old Philadelphia Pike
Lancaster, PA 17605-0008
Phone (717) 299-5211
www.highsteel.com

HOLES	15/16" Ø
BOLTS	NONE
COATING	NONE
CODE(S)	63
SCALE	N.T.S.

CROSSFRAMES CF5
SHARED USE PATH OVER VT ROUTE 279
SHARED USE PATH STA. 1+148.400 TO STA. 1+220.200
TOWN OF BENNINGTON VERMONT, BRIDGE B11
STATE OF VERMONT
AGENCY OF TRANSPORTATION

		STATE CONT. OR REF. NO.	AC NH 019-1(53)		FED. AID PROJ. NO.				
		GENERAL CONTRACTOR	J.A. McDONALD, INC.		HSSI PROJ. MGR	DEB KUPRES			
SHPMT	2	DRAWING MANAGER	BRITIGAN (IH)	MADE BY	WBW	CHK'D. BY	CS	DATE	9-25-07
STATE	VT	HSSI PROJECT NUMBER	S-1070147	HSSI STRUCT. ID	C	DRAWING NUMBER	7 OF 7		

SHIPMENT 1 PW&ENG: 5002814 PRD: 5002815 SHIPXREFECT: 5002816
PLOTTED: 10/02/07 14:12:11 BY: MKreidel

1070147C X1 10/3/07 10/3/07Approval TO:J.A. McDonald, Inc.

MANUAL OR MACHINE:	Semi-Automatic
POSITION OF WELDING:	Horizontal
FILLER METAL SPECIFICATION:	A5.18
FILLER METAL CLASSIFICATION:	ER70S-6
FILLER METAL MANUFACTURER:	Hobart
SHIELDING GAS: AR 92% C02 8%	**DEW POINT:** -60°F **FLOW RATE:** 35 CFH
SINGLE OR MULTIPLE PASS:	Single
SINGLE OR MULTIPLE ARC:	Single **ELECTRODE STICKOUT:** ¾ max
WELDING CURRENT:	DC+
POLARITY:	Reverse
WELDING PROGRESSION:	Forward (Stringer Bead)
ROOT TREATMENT:	Free of dirt, rust and oil
PREHEAT AND INTERPASS TEMP.	≤ ¾" = 50°F ≤ 1½" = 70°F ≤ 2½" = 150°F (Minimums)
POSTHEAT TREATMENT:	N/A

WELDING PROCEDURE

Weld Size	Electrode Size	Welding Current		Travel Speed "/Min	Joint Detail Square groove seal weld
		Amps	Volts		
All	1/16	247 – 302	27 - 31	9 – 11	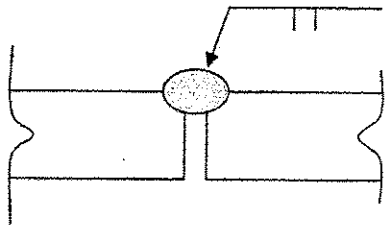 Material thickness and shape per approved drawings Seal weld on one side only

TRANS
RECEIVED
CK'D BY _____ OK'D BY JLC
MAR 27 2008
RESUBMIT _____ APPROVED ✓
BY DATE 4/22/08

THIS PROCEDURE MAY VARY DUE TO THE FABRICATION SEQUENCE, FIT-UP, PASS SIZE, ETC., WITHIN THE LIMITATIONS OF VARIABLES GIVEN IN TABLE 5.3 OF AWS D1.5-2002 BRIDGE WELDING CODE.

PROCEDURE NO: Seal Weld **MANUFACTURER:** Niagara Bridge and Rail

REVISION NO: 0 **AUTHORIZED BY:** Thomas F. Wright

WELDING PROCESS:	GMAW
MANUAL OR MACHINE:	Semi-Automatic
POSITION OF WELDING:	Horizontal
FILLER METAL SPECIFICATION:	A5.18
FILLER METAL CLASSIFICATION:	ER70S-6
FILLER METAL MANUFACTURER:	Hobart
SHIELDING GAS: AR 92% C02 8%	**DEW POINT:** -60°F **FLOW RATE:** 35 CFH
SINGLE OR MULTIPLE PASS:	Single
SINGLE OR MULTIPLE ARC:	Single **ELECTRODE STICKOUT:** 3/4
WELDING CURRENT:	DC+
POLARITY:	Reverse
WELDING PROGRESSION:	Forward (Stringer Bead)
ROOT TREATMENT:	N/A
PREHEAT AND INTERPASS TEMP.	≤ ¾" = 50°F ≤ 1½" = 70°F ≤ 2½" = 150°F (Minimums)
POSTHEAT TREATMENT:	N/A

WELDING PROCEDURE

Weld Size	Electrode Size	Welding Current		Travel Speed "/Min	Joint Detail Fillet
		Amps	Volts		
All	1/16	247 – 302	27 - 31	9 – 11	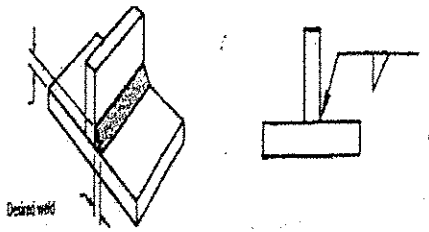

THIS PROCEDURE MAY VARY DUE TO THE FABRICATION SEQUENCE, FIT-UP, PASS SIZE, ETC., WITHIN THE LIMITATIONS OF VARIABLES GIVEN IN TABLE 5.3 OF AWS D1.5-2002 BRIDGE WELDING CODE.

PROCEDURE NO: GMAW 01 Fillet **MANUFACTURER:** Niagara Bridge and Rail

REVISION NO: 0 **AUTHORIZED BY:** Thomas F Wight

VTRANS
RECEIVED
OK'D BY _____ OK'D BY JWC
MAR 27 2008
RESUBMIT _____ APPROVED ✓
BY DATE 4/22/08

MANUAL OR MACHINE:	Semi-Automatic
POSITION OF WELDING:	Horizontal
FILLER METAL SPECIFICATION:	A5.18
FILLER METAL CLASSIFICATION:	ER70S-6
FILLER METAL MANUFACTURER:	Hobart
SHIELDING GAS: AR 92% C02 8%	**DEW POINT:** -60°F **FLOW RATE:** 35 CFH
SINGLE OR MULTIPLE PASS:	Single
SINGLE OR MULTIPLE ARC:	Single **ELECTRODE STICKOUT:** ¾ max
WELDING CURRENT:	DC+
POLARITY:	Reverse
WELDING PROGRESSION:	Forward (Stringer Bead)
ROOT TREATMENT:	Free of dirt, rust and oil
PREHEAT AND INTERPASS TEMP.	≤ ¾" = 50°F ≤ 1½" = 70°F ≤ 2½" = 150°F (Minimums)
POSTHEAT TREATMENT:	N/A

WELDING PROCEDURE

Weld Size	Electrode Size	Welding Current		Travel Speed "/Min	Joint Detail C-P2-GF
		Amps	Volts		
All	1/16	247 – 302	27 - 31	9 – 11	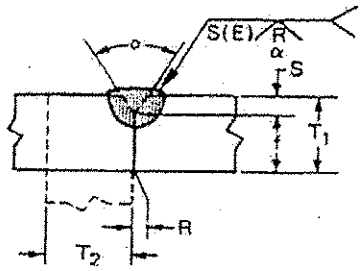

Bevel and weld size per approved drawings

TRANS
RECEIVED
MAR 27 2008

OK'D BY _____ OK'D BY JWC

RESUBMIT _____ APPROVED ✓

BY _____ DATE 4/22/08

THIS PROCEDURE MAY VARY DUE TO THE FABRICATION SEQUENCE, FIT-UP, PASS SIZE, ETC., WITHIN THE LIMITATIONS OF VARIABLES GIVEN IN TABLE 5.3 OF AWS D1.5-2002 BRIDGE WELDING CODE.

PROCEDURE NO: C-P2-GF **MANUFACTURER:** Niagara Bridge and Rail

REVISION NO: 0 **AUTHORIZED BY:** Thomas F. Wright

POSITION OF WELDING:	Down hand (Flat)
STUD METAL SPECIFICATION:	ASTM A-108
STUD METAL CLASSIFICATION:	Type A or B
STUD MANUFACTURE:	Tru-Weld
SHIELDING GAS: N/A	**DEW POINT:** _____ **FLOW RATE:** _____
FERRULE OR FLUX DESCRIPTION:	Ceramic part #F 009-694
SINGLE OR MULTIPLE ARC:	Single **ELECTRODE STICKOUT:** N/A
WELDING CURRENT:	DC
POLARITY:	Straight
ROOT TREATMENT:	Clean of oil, dirt, rust, rust pits, moisture and scale
PREHEAT AND INTERPASS TEMP.	40F min
POSTHEAT TREATMENT:	None
WELDING MACHINE:	Pro-Weld model ARC 1800
STUD WELDING GUN:	Nelson model # 751-347-000 1800amp

VT TRANS
RECEIVED
MAR 27 2008

CK'D BY _____ OK'D BY JWC

RESUBMIT _____ APPROVED ✓

BY _____ DATE 4/22/08

WELDING PROCEDURE

Stud Diameter	Weld Current (Amps)	Lift & Plunge		Weld Time (sec.)	Joint Detail (Stud weld)
		Lift	Plunge		
¾"	1600 ± 5%	.093"	.187"	.700 ± 5%	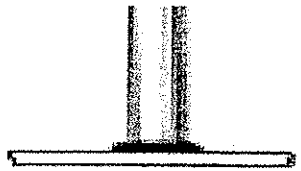

THIS PROCEDURE MAY VARY DUE TO THE FABRICATION SEQUENCE, FIT-UP, ETC., WITHIN THE LIMITATIONS OF VARIABLES GIVEN IN SECTION 7 OF AWS D1.5 BRIDGE WELDING CODE.

THIS PROCEDURE IS CONSIDERED PREQUALIFIED IN ACCORDANCE WITH AWS D1.5 SECTION 7.6.1 AND IS PERFORMED WITHIN THE STUD MANUFACTURES RECOMMENDATIONS.

PROCEDURE NO:	Carbon Stud weld	MANUFACTURER:	Niagara Bridge and Rail
REVISION NO:	0	AUTHORIZED BY:	Thomas F. Wright

MANUAL OR MACHINE:	Semi-Automatic
POSITION OF WELDING:	Flat & Horizontal
FILLER METAL SPECIFICATION:	A5.18
FILLER METAL CLASSIFICATION:	ER70S-6
FILLER METAL MANUFACTURER:	Hobart
SHIELDING GAS: AR 92% C02 8%	**DEW POINT:** -40°F **FLOW RATE:** 32 – 43 CFH
SINGLE OR MULTIPLE PASS:	Single or Multiple
SINGLE OR MULTIPLE ARC:	Single **ELECTRODE STICKOUT:** ¾ ± ¼"
WELDING CURRENT:	DC+
POLARITY:	Reverse
WELDING PROGRESSION:	Forward (Stringer Bead)
ROOT TREATMENT:	Free of dirt, rust and oil
PREHEAT AND INTERPASS TEMP.	≤ ¾" = 50°F ≤ 1½" = 70°F ≤ 2½" = 150°F (Minimum)
POSTHEAT TREATMENT:	N/A

WELDING PROCEDURE

Weld Size	Electrode Size	Welding Current		Travel Speed "/Min	Joint Detail TC-P4-GF
		Amps	Volts		
All	.045	247 - 302	27 - 31	9 - 11	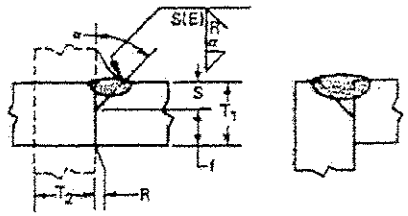
All	1/16	247 – 302	27 - 31	9 – 11	Dimensions per approved drawings

THIS PROCEDURE MAY VARY DUE TO THE FABRICATION SEQUENCE, FIT-UP, PASS SIZE, ETC., WITHIN THE LIMITATIONS OF VARIABLES GIVEN IN TABLE 5.3 OF AWS D1.5-2002 BRIDGE WELDING CODE.

PROCEDURE NO: GM - TC-P4-GF **MANUFACTURER:** Niagara Bridge and Rail

REVISION NO: 0 **AUTHORIZED BY:** Thomas F. Wright

TRANS
RECEIVED
CK'D BY _____ OK'D BY JWC
MAR 27 2008
RESUBMIT _____ APPROVED ✓
BY DATE 4/22/08

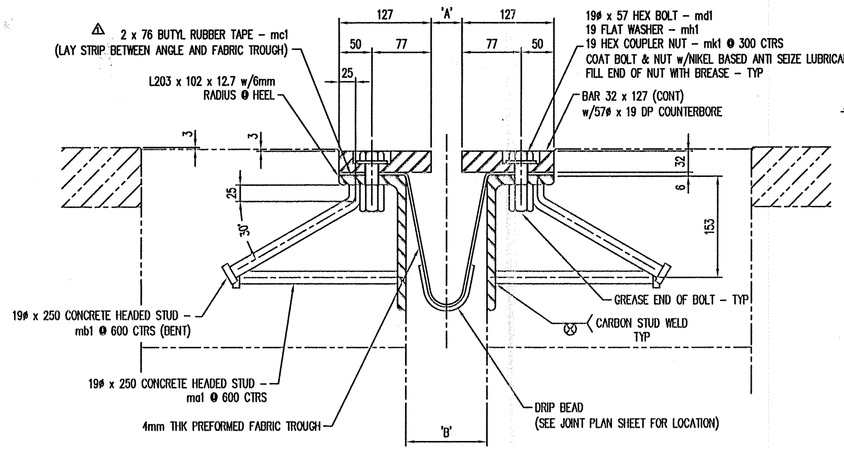

STANDARD SECTION VIEW: A–A

REFER TO JOINT PLAN SHEET
FOR DIMENSIONS 'A' and/or 'B'

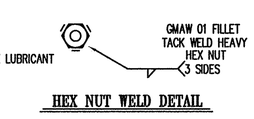

HEX NUT WELD DETAIL

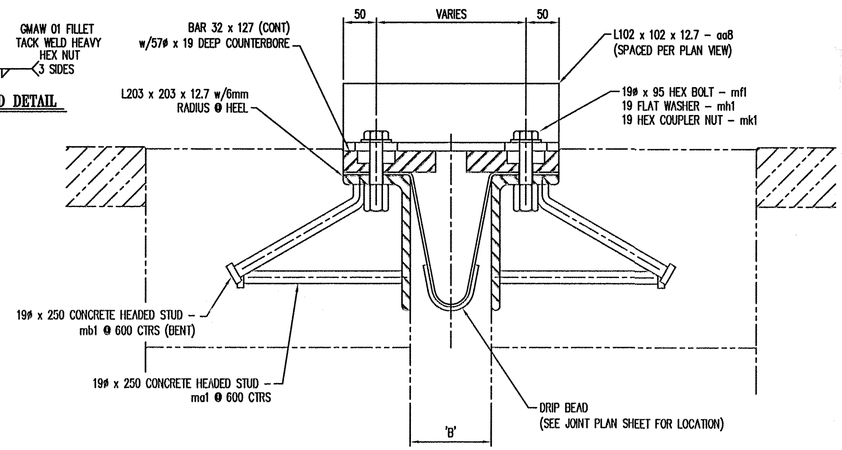

SHIPPING ANGLE SECTION: C–C

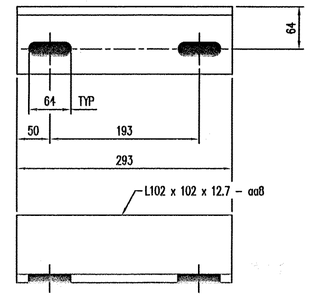

SHIPPING ANGLE DETAIL

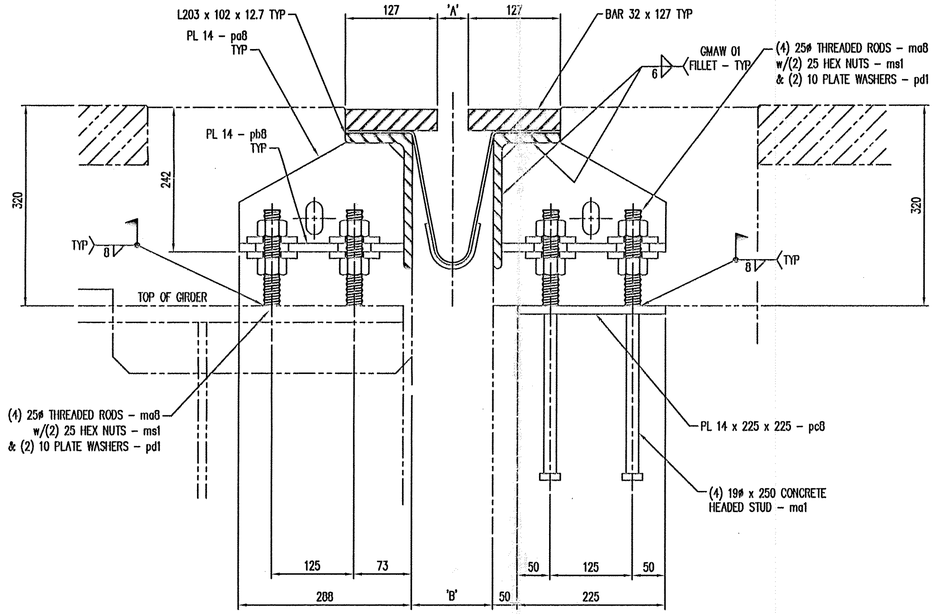

GIRDER SECTION VIEW: B–B

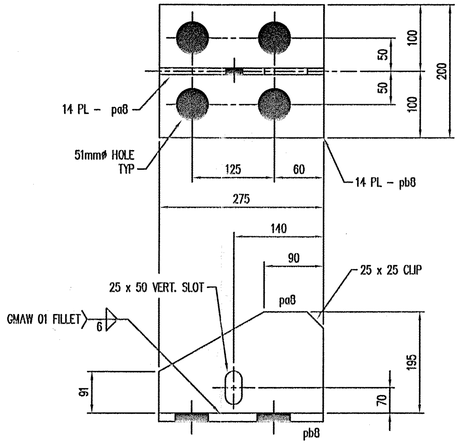

BRACKET DETAIL

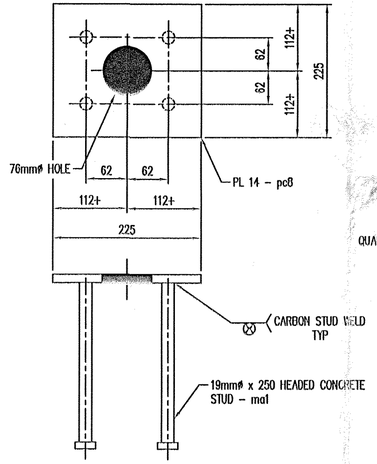

EMBED PLATE DETAIL

NOT GALVANIZED

BAR SHOP WELD SPLICE DETAIL

REQUIRED IF SHIPPING LENGTH EXCEEDS 6096 (20')

QUANTITIES OF SPLICES NOT TO EXCEED 1 PER 40' OF JOINT

TVGA CONSULTANTS

☐ NO EXCEPTIONS TAKEN ☐ REJECTED
☒ FURNISH AS CORRECTED
☐ REVISE AND RESUBMIT

ENGINEER has reviewed Shop Drawings and Samples and other data which Contractor is required to submit, only for conformance with the information given in the Contract Documents and compatibility with the design concept of the completed Project as a functioning whole as indicated in the Contract Documents. Such reviews do not extend to means, methods, techniques, sequences or procedures of construction or to safety precautions and programs incident thereto. Such reviews do not extend to any LEED certification or accreditation. Contractor is responsible for dimensions to be confirmed and correlated at the job site; for information that pertains solely to the fabrication processes or to techniques of construction; and for coordination of the work of all trades.

BY:
DATE:

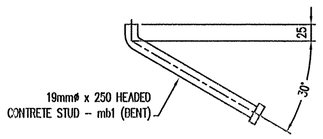

BENT STUD DETAIL

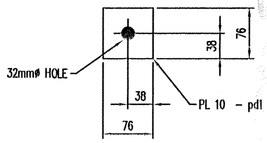

PLATE WASHER DETAIL

GENERAL NOTES:

1. ALL MATERIALS, CONSTRUCTION AND DESIGN SHALL CONFORM TO THE STATE OF VERMONT, AGENCY OF TRANSPORTATION STANDARD SPECIFICATION FOR CONSTRUCTION, DATED 2006, AND IT'S LATEST REVISIONS, AND THE AASHTO STANDARD SPECIFICATIONS FOR HIGHWAY NRIDGES, 17th EDITION DATED 2002, AND IT'S REVISIONS.
2. WELDING SHALL MEET THE REQUIREMENTS OF THE ANSI/AASHTO/AWS D1.5 BRIDGE WELDING CODE AS MODIFIED BY THE STANDARD SPECIFICATIONS.
3. HEADED CONCRETE STUDS SHALL BE ASTM A108 AND AUTOMATIC END WELDED WITH COMPLETE FUSION.
4. ANY TIGHTLY ADHERENT WELD SPLATTER NEED NOT BE REMOVED IN COATING AREAS TO BE CAST IN CONCRETE.
5. ALL STEEL COMPONENTS SHALL BE M270M (250) AND GALVANIZED OR METALIZED AS PER SUBSECTION 506.15 (a) & (b) (UON). PRIOR TO GALVANIZING OR METALIZING, ALL CORNERS AND EDGES OF STEEL PLATES, SHAPES, ETC., SHALL BE GROUND TO A 2mm +/– RADIUS.
6. PREFORMED FABRIC MATERIAL SHALL BE CONTINUOUS AND SHALL CONFORM TO SUBSECTION 707.07.
7. BUTYL RUBBER TAPE SHALL CONFORM TO AASHTO SPECIFICATION M-198, TYPE II.
8. FABRIC TROUGH SHALL BE THOROUGHLY CLEANED AND FLUSHED AFTER PAVING OPERATION.
9. THE EXPANSION JOINT SHALL BE SHOP ASSEMBLED AND SHIPPED AS 2 UNITS.
10. THE 203 x 102 x 12.7 ANGLES SHALL BE FURNISED AS 2 PIECES. THE 32 x 127 BARS ON EACH SIDE OF THE JOINT SHALL BE PROVIDED IN 2 EQUAL LENGTHS.

The joint shall be shipped partially assembled and spliced together on site

No.	Description	Date	By	Approved
⚠	ATTTOVAL CHANGES	7/15/09	JB	TFW

REVISIONS

Niagara Bridge and Rail
4817 Henry Avenue, Niagara Falls, N.Y. 14304
Phone: (716) 283-4710 Fax: (716) 283-5137

Project Information:
STATE: VERMONT
COUNTY: .
CITY / TOWNSHIP: BENNINGTON
LOCATION: VT ROUTE 279 OVER FURNACE BROOK
PROJECT NO.: AC NH 019-1(53)
OWNER: VT-AOT
CONTRACTOR: .

Drawn By:	Date:	Checked By:	Date:
JJB	5/01/09	TFW	5/06/09

Description: VERMONT – EXPANSION JOINT DETAIL STANDARD DETAILS
Sheet No.: 8 of 12
Scale: NONE
Drawing No.: 10063-01
Rev No.: 1

RECEIVED
OCT 22 2009
G.P.I.

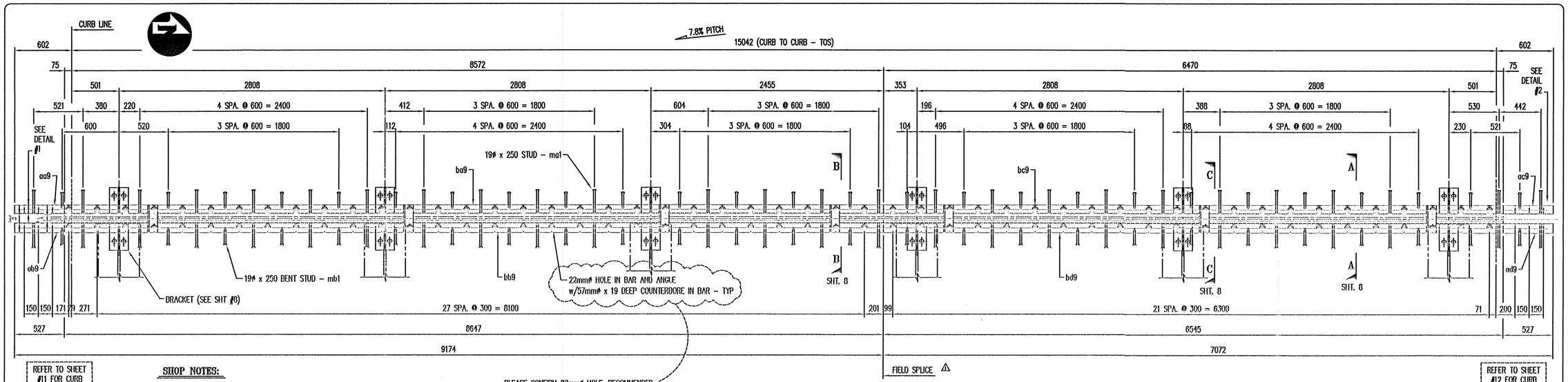

REFER TO SHEET #11 FOR CURB PLATE DETAIL

REFER TO SHEET #12 FOR CURB PLATE DETAIL

PLEASE CONFIRM 22mmø HOLE, RECOMMENDED SIZE IS 20.5mmø FOR A 19mmø BOLT

ONE - EXPANSION JOINT - 9EJ1

ABUTMENT #1

JOINT OPENING		
TEMP	'A'	'B'
-20° C.	64	114
-10° C.	56	106
0° C.	47	97
10° C.	39	89
20° C.	30	80
30° C.	22	72
40° C.	14	64

SHOP NOTES:

1. WORK THIS SHEET ALONG WITH STANDARD SHEET #8 AND CURB PLATE ASSEMBLY SHEETS.
2. COAT ALL BOLTS AND HEX COUPLER NUTS WITH NEVER SEIZE GREASE PRIOR TO ASSEMBLY.
3. WRENCH TIGHTEN BOLTS AFTER ASSEMBLY OF THE EXPANSION JOINT.
4. SEAL ALL ACCESSIBLE JOINTS PRIOR TO GALVANIZING.

CONTRACTOR NOTES:

1. ADJUST JOINT OPENING TO PROPER DIMENSION PRIOR TO FIELD WELDING OF THR'D RODS.
2. REMOVE SHIPPING ANGLES AND REPLACE WITH 19ø x 57 HEX BOLTS. REUSE EXISTING FLAT WASHERS. COAT BOLT TREADS WITH NEVER SEIZE PRIOR TO ASSEMBLY.
3. FILL ALL COUNTERBORED HOLES WITH HOT POURED JOINT SEALER AFTER THE BOLT INSTALLATION. WORK AND MATERIALS ARE TO BE DONE BY OTHERS.
4. TROUGH SHALL BE SHIPPED LOOSE AND FIELD INSTALLED BY OTHERS.

BILL OF MATERIALS

#	MARK No.	QTY	DESCRIPTION	MATERIAL	REMARKS	
1			ONE - EXPANSION JOINT - 9EJ1		HDG	
2	aa8	7	L102 x 102 x 12.7 x 293	A36		⚠
3						
4	ma1	52	19ø x 250 CONCRETE HEADED STUD	A108		
5	mb1	52	19ø x 250 CONCRETE HEADED STUD	A108	BENT	
6	mc1	2.5	2 x 76 BUTYL RUBBER TAPE (15.2M ROLL)	AASHTO M-198	#75305A15	⚠
7	md1	102	19ø x 57 HEX BOLT	A325	M/G	
8	mf1	14	19ø x 95 HEX BOLT	A325	M/G	⚠
9	mh1	114	19 FLAT WASHER	F436	M/G	
10	mk1	114	19 HEX COUPLER NUT	A563	M/G	
11	ma8	48	25ø x 152 THREADED ROD	A36	HDG	⚠
12	mn1	96	25 HEAVY HEX NUT	A563	HDG	
13	pa8	12	PL 14 x 195 x 275	M270M(250)		
14	pb8	12	PL 14 x 200 x 275	M270M(250)		
15	pc8	6	PL 14 x 225 x 225	M270M(250)		
16	pd1	96	PL 10 x 76 x 76	M270M(250)	HDG	
17	aa9	ONE	L203 x 102 x 12.7 x 9174	M270M(250)		⚠
18	ab9	ONE	L203 x 102 x 12.7 x 9174	M270M(250)		⚠
19	ac9	ONE	L203 x 102 x 12.7 x 7072	M270M(250)		⚠
20	ad9	ONE	L203 x 102 x 12.7 x 7072	M270M(250)		⚠
21	ba9	ONE	BAR 32 x 127 x 8647	M270M(250)		⚠
22	bb9	ONE	BAR 32 x 127 x 8647	M270M(250)		⚠
23	bc9	ONE	BAR 32 x 127 x 6545	M270M(250)		⚠
24	bd9	ONE	BAR 32 x 127 x 6545	M270M(250)		⚠
25	bf9	4	BAR 12.7 x 89 x 165	AASHTO M270		
26	ma9	ONE	3 PLY FABRIC TROUGH 4 x 800 x 16321	PER SPEC		⚠
27	mb2	ONE	3 PLY FABRIC DRIP 4 x 6 x 180	PER SPEC	CLASS 4.6 GALV	
28	mc2	2	12 x 25 HEX BOLT	A5694	M/G	
29	md2	2	12 HEX NUT	A563	M/G	
30	mf2	4	12 FLAT WASHER	F436	M/G	
31	mh2	ONE	ANTI SEIZE GREASE	-		
32	mb9	4	22ø x 50 HEX BOLT	A325	M/G	
33	mc9	4	22 HEX NUT	A563	M/G	
34	md9	4	22 FLAT WASHER	F436	M/G	

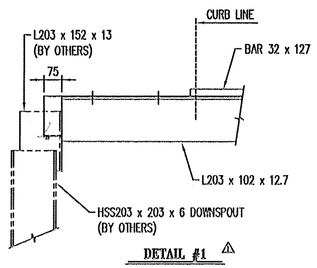

DETAIL #1 ⚠

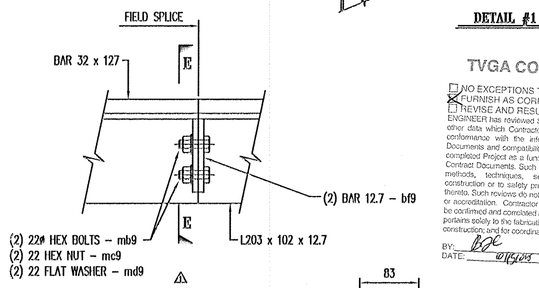

BOLTED FIELD SPLICE DETAIL ⚠

TVGA CONSULTANTS

☐ NO EXCEPTIONS TAKEN ☐ REJECTED
☒ FURNISH AS CORRECTED
☐ REVISE AND RESUBMIT

ENGINEER has reviewed Shop Drawings and Samples and other data which Contractor is required to submit, only for conformance with the information given in the Contract Documents and compatibility with the design concept of the completed Project as a functioning whole as indicated in the Contract Documents. Such review do not extend to means, methods, techniques, sequences or procedures of construction or to safety precautions and programs incident thereto. Such reviews do not extend to any LEED certification or accreditation. Contractor is responsible for dimensions to be confirmed and correlated at the job site; for information that pertains solely to the fabrication processes or to techniques of construction; and for coordination of the work of all trades.

BY: BJE
DATE: 10/15/08

This joint shall be shipped partially assembled and spliced together on site

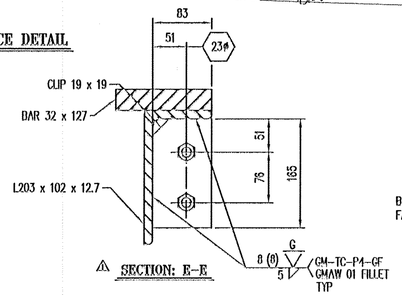

⚠ SECTION: E-E

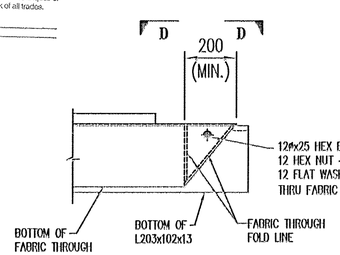

DETAIL #2

FOLDED THROUGH END DETAILS



BRACKET ATTACHMENT

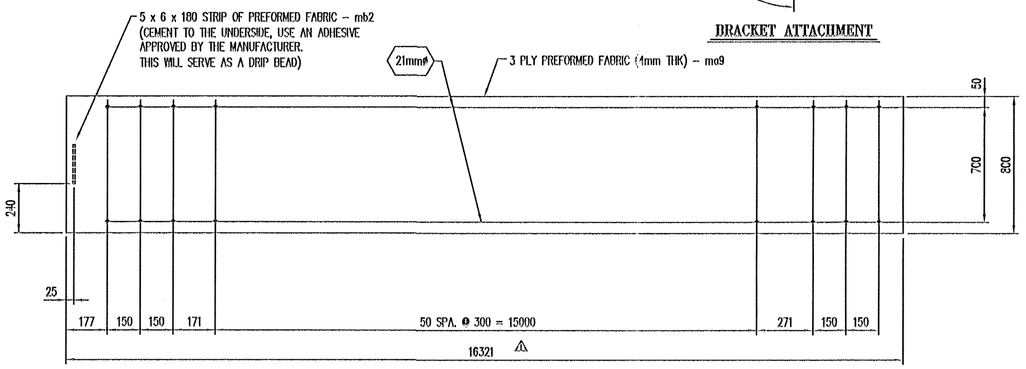

TROUGH DETAIL ⚠

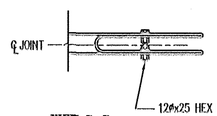

VIEW D-D

No.	Description	Date	By	Approved
⚠	ATTENTION CHANGES	7/15/08	JB	TFW

REVISIONS

Niagara Bridge and Rail
4017 Henry Avenue, Niagara Falls, N.Y. 14304
Phone: (716) 283-4710 Fax: (716) 283-5137

Project Information:
STATE: VERMONT
COUNTY: -
CITY / TOWNSHIP: BENNINGTON
LOCATION: VT ROUTE 279 OVER FURNACE BROOK
PROJECT NO.: AC NH 019-1(53)
OWNER: VT-AOT
CONTRACTOR: -

Drawn By:	Date:	Checked By:	Date:
JJB	5/01/08	TFW	5/06/08

Description: VERMONT - EXPANSION JOINT DETAIL ABUTMENT #1 JOINT DETAILS
Sheet No.: 9 of 12
Scale: NONE
Drawing No.: 10063-01
Rev No.: 1

RECEIVED
OCT 22 2008
G.P.I.

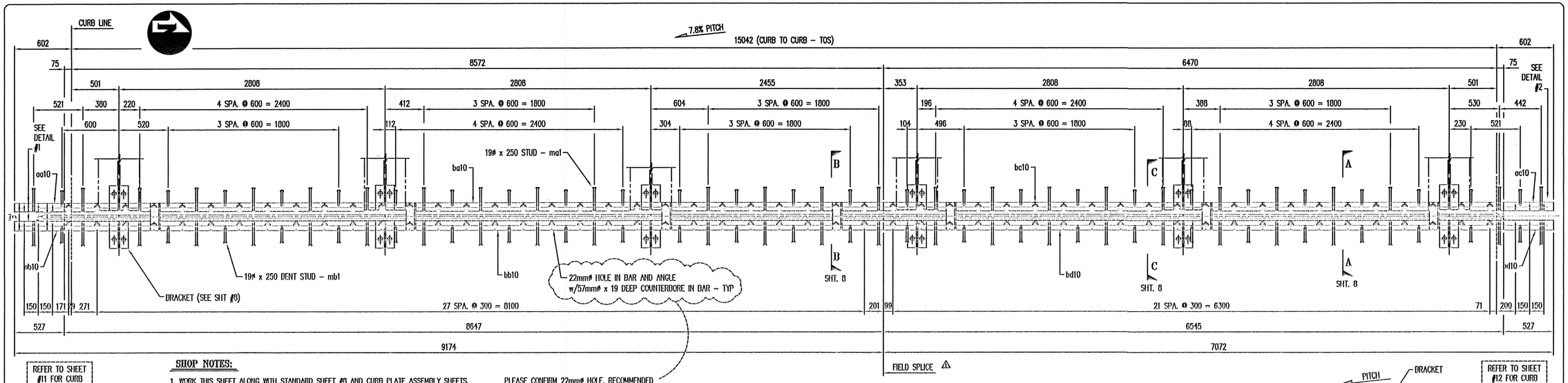

REFER TO SHEET #11 FOR CURB PLATE DETAIL

REFER TO SHEET #12 FOR CURB PLATE DETAIL

JOINT OPENING		
TEMP	'A'	'B'
-20° C.	64	114
-10° C.	56	106
0° C.	47	97
10° C.	39	89
20° C.	30	80
30° C.	22	72
40° C.	14	64

SHOP NOTES:

1. WORK THIS SHEET ALONG WITH STANDARD SHEET #8 AND CURB PLATE ASSEMBLY SHEETS.
2. COAT ALL BOLTS AND HEX COUPLER NUTS WITH NEVER SEIZE GREASE PRIOR TO ASSEMBLY.
3. WRENCH TIGHTEN BOLTS AFTER ASSEMBLY OF THE EXPANSION JOINT.
4. SEAL ALL ACCESSIBLE JOINTS PRIOR TO GALVANIZING.

CONTRACTOR NOTES:

1. ADJUST JOINT OPENING TO PROPER DIMENSION PRIOR TO FIELD WELDING OF THR'D RODS.
2. REMOVE SHIPPING ANGLES AND REPLACE WITH 19ø x 57 HEX BOLTS. REUSE EXISTING FLAT WASHERS. COAT BOLT TREADS WITH NEVER SEIZE PRIOR TO ASSEMBLY.
3. FILL ALL COUNTERBORED HOLES WITH HOT POURED JOINT SEALER AFTER THE BOLT INSTALLATION. WORK AND MATERIALS ARE TO BE DONE BY OTHERS.
4. TORUGH SHALL BE SHIPPED LOOSE AND FIELD INSTALLED BY OTHERS.

PLEASE CONFIRM 22mmø HOLE, RECOMMENDED SIZE IS 20.5mmø FOR A 19mmø BOLT

BILL OF MATERIALS

#	MARK No.	QTY	DESCRIPTION	MATERIAL	REMARKS	
1			ONE – EXPANSION JOINT – 10EJ1		HDG	
2	aa8	7	L102 x 102 x 12.7 x 293	A36		⚠
3						
4	ma1	52	19ø x 250 CONCRETE HEADED STUD	A108		
5	mb1	52	19ø x 250 CONCRETE HEADED STUD	A108	BENT	
6	mc1	2.5	2 x 76 BUTYL RUBBER TAPE (15.2M ROLL)	AASHTO M-198	#75305A15	⚠
7	md1	102	19ø x 57 HEX BOLT	A325	M/G	
8	mf1	14	19ø x 95 HEX BOLT	A325	M/G	⚠
9	mh1	114	19 FLAT WASHER	F436	M/G	
10	mk1	114	19 HEX COUPLER NUT	A563	M/G	
11	ma8	46	25ø x 762 THREADED ROD	A36	HDG	⚠
12	ma1	96	25 HEAVY HEX NUT	A563	HDG	
13	pa8	12	PL 14 x 195 x 275	M270M(250)		
14	pb8	12	PL 14 x 200 x 275	M270M(250)		
15	pc8	6	PL 14 x 225 x 225	M270M(250)		
16	pd1	96	PL 10 x 76 x 76	M270M(250)	HDG	
17	aa10	ONE	L203 x 102 x 12.7 x 9174	M270M(250)		⚠
18	ab10	ONE	L203 x 102 x 12.7 x 9174	M270M(250)		⚠
19	ac10	ONE	L203 x 102 x 12.7 x 7072	M270M(250)		⚠
20	ad10	ONE	L203 x 102 x 12.7 x 7072	M270M(250)		⚠
21	ba10	ONE	BAR 32 x 127 x 8647	M270M(250)		⚠
22	bb10	ONE	BAR 32 x 127 x 8647	M270M(250)		⚠
23	bc10	ONE	BAR 32 x 127 x 6545	M270M(250)		⚠
24	bd10	ONE	BAR 32 x 127 x 6545	M270M(250)		⚠
25	bf9	4	BAR 12.7 x 89 x 165	AASHTO M270		
26	ma10	ONE	3 PLY FABRIC TROUGH 4 x 800 x 16321	PER SPEC		⚠
27	mb2	ONE	3 PLY FABRIC DRIP 4 x 6 x 180	PER SPEC	CLASS 4.6 GALV	
28	mc2	2	12 x 25 HEX BOLT	A490M	M/G	
29	md2	2	12 HEX NUT	A563	M/G	
30	mf2	4	12 FLAT WASHER	F436	M/G	
31	mh2	ONE	ANTI SEIZE GREASE	–		
32	mb9	4	22ø x 50 HEX BOLT	A325	M/G	
33	mc9	4	22 HEX NUT	A563	M/G	
34	md9	4	22 FLAT WASHER	F436	M/G	

ONE – EXPANSION JOINT – 10EJ1

ABUTMENT #2

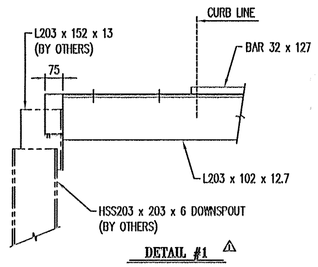

DETAIL #1 ⚠

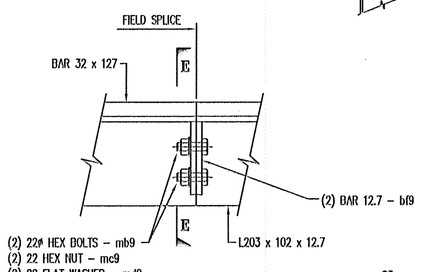

BOLTED FIELD SPLICE DETAIL ⚠

TVGA CONSULTANTS

☐ NO EXCEPTIONS TAKEN ☐ REJECTED
☑ FURNISH AS CORRECTED
☐ REVISE AND RESUBMIT

ENGINEER has reviewed Shop Drawings and Samples and other data which Contractor is required to submit, only for conformance with the information given in the Contract Documents and compatibility with the design concept of the completed Project as a functioning whole as indicated in the Contract Documents. Such reviews do not extend to means, methods, techniques, sequences or procedures of construction or to safety precautions and programs incident thereto. Such reviews do not extend to any LEED certification or accreditation. Contractor is responsible for dimensions to be confirmed and correlated at the job site; for information that pertains solely to the fabrication processes or to techniques of construction; and for coordination of the work of all trades.

BY: BK
DATE: 10/15/08

This joint shall be shipped partially assembled and spliced together on site.

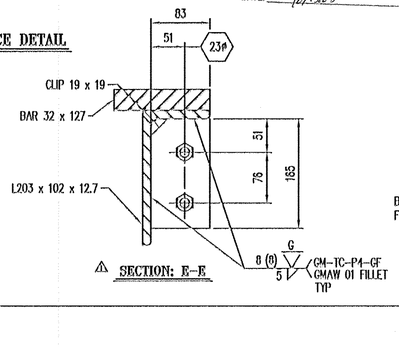

⚠ SECTION: E–E

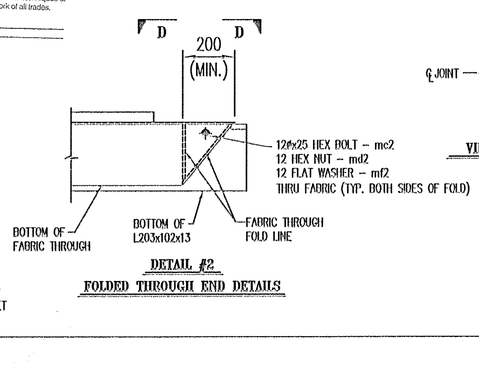

DETAIL #2
FOLDED THROUGH END DETAILS

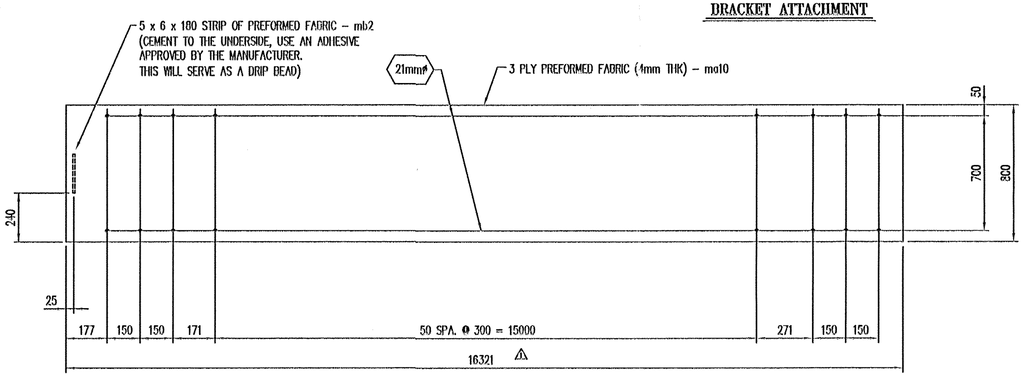

TROUGH DETAIL

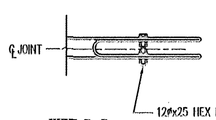

VIEW D–D

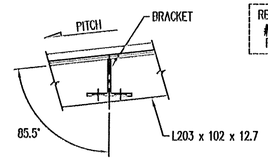

BRACKET ATTACHMENT

⚠	ATTOWN. CHANGES	7/15/08	JB	TFW	
No.	Description	Date	By	Approved	

REVISIONS

Niagara Bridge and Rail
4017 Henry Avenue, Niagara Falls, N.Y. 14304
Phone: (716) 283-4710 Fax: (716) 283-5137

Project Information:
STATE: VERMONT
COUNTY: .
CITY / TOWNSHIP: PENNINGTON
LOCATION: VT ROUTE 279 OVER FURNACE BROOK
PROJECT NO.: AC NH 019-1(53)
OWNER: VT-AOT
CONTRACTOR: .

Drawn By:	Date:	Checked By:	Date:
JJB	5/01/08	TFW	5/06/08

Description: VERMONT – EXPANSION JOINT DETAIL ABUTMENT #2 JOINT DETAILS

Sheet No.: 10 of 12 | Scale: NONE
Drawing No.: 10063-01 | Rev No.: 1

RECEIVED
OCT 2 2 2008
G.P.I.

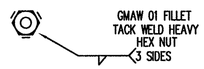

HEX NUT WELD DETAIL

TVGA CONSULTANTS

☐ NO EXCEPTIONS TAKEN ☐ REJECTED
☒ FURNISH AS CORRECTED
☐ REVISE AND RESUBMIT
ENGINEER has reviewed Shop Drawings and Samples and other data which Contractor is required to submit, only for conformance with the information given in the Contract Documents and compatibility with the design concept of the completed Project as a functioning whole as indicated in the Contract Documents. Such review do not extend to means, methods, techniques, sequences or procedures of construction or to safety precautions and programs incident thereto. Such reviews do not extend to any LEED certification or accreditation. Contractor is responsible for dimensions to be confirmed and correlated at the job site; for information that pertains solely to the fabrication processes or to techniques of construction; and for coordination of the work of all trades.

BY: BPC
DATE: 10/15/08

Dino Gervasio
Ext. 106
(716) 462-4000
(Cell)(716)-930-7405

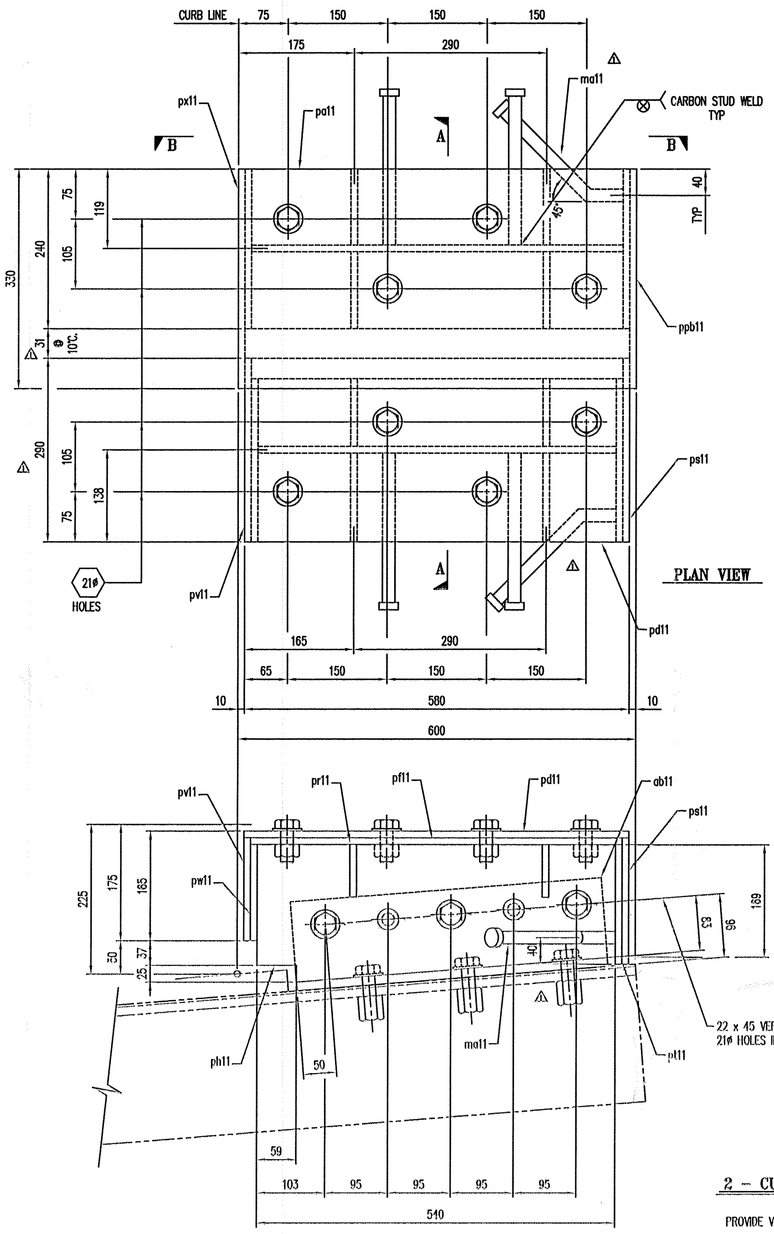

PLAN VIEW

ELEVATION VIEW

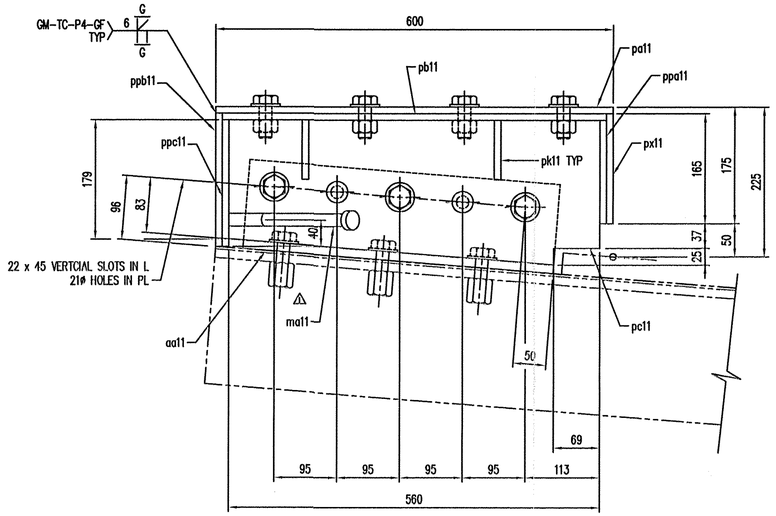

VIEW: B-B

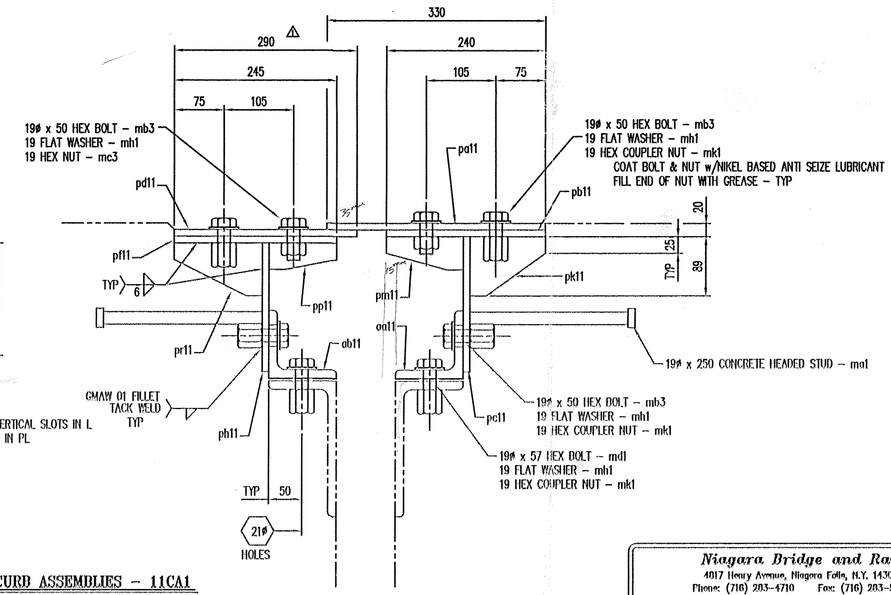

SECTION: A-A

2 – CURB ASSEMBLIES – 11CA1

HOP-DIPPED GALVANIZED
PROVIDE VENT HOLES FOR GALVANIZING PROCESS

This joint should be shipped partially assembled and spliced together on site

BILL OF MATERIALS

#	MARK No.	QTY	DESCRIPTION	MATERIAL	REMARKS
1			2 – CURB ASSEMBLIES – 11CA1		HDG
2					
3	ma1	8	19ø x 250 CONCRETE HEADED STUD	A108	
4	md1	12	19ø x 57 HEX BOLT	A325	M/G
5	mh1	40	19 FLAT WASHER	F436	M/G
6	mk1	32	19 HEX COUPLER NUT	A563	M/G
7	mb3	28	19 x 50 HEX BOLT	A325	M/G
8	mc3	8	19 HEX NUT	A563	M/G
9	ma11	4	19ø x 175 CONCRETE HEADED STUD	A108	BENT
10	pa11	2	PL 10 x 330 x 600	M270M(250)	
11	pb11	2	PL 10 x 240 x 600		
12	pc11	2	PL 10 x 217 x 560		
13	pd11	2	PL 10 x 290 x 560		
14	pf11	2	PL 10 x 245 x 560		
15	ph11	2	PL 10 x 207 x 540		
16	pk11	4	PL 10 x 89 x 114		
17	pm11	4	PL 10 x 50 x 116		
18	pp11	4	PL 10 x 40 x 102		
19	pr11	4	PL 10 x 79 x 133		
20	ps11	2	PL 10 x 190 x 290		
21	pt11	2	PL 10 x 190 x 245		
22	pv11	2	PL 10 x 155 x 290		
23	pw11	2	PL 10 x 145 x 245		
24	px11	2	PL 10 x 165 x 330		
25	ppa11	2	PL 10 x 155 x 240		
26	ppb11	2	PL 10 x 200 x 330		
27	ppc11	2	PL 10 x 190 x 240	M270M(250)	
28					
29	aa11	2	L102 x 102 x 9.5 x 470	M270M(250)	
30	ab11	2	L102 x 102 x 9.5 x 470	M270M(250)	
31					
32					
33					
34					

REFER TO SHEET #9 & 10 FOR BASE ANGLE HOLES
MATCH DRILL TO EXPANSION JOINT SUPPORT HOLES

No.	Description	Date	By	Approved
1	ADDOWN CHANGES	7/15/09	JB	TFW

REVISIONS

Niagara Bridge and Rail
4017 Hoag Avenue, Niagara Falls, N.Y. 14304
Phone: (716) 283-4710 Fax: (716) 283-5137

Project Information:
STATE: VERMONT
COUNTY: .
CITY / TOWNSHIP: BENNINGTON
LOCATION: VT ROUTE 279 OVER FURNACE BROOK
PROJECT NO.: AC NH 019-1(53)
OWNER: VT-AOT
CONTRACTOR: .

Drawn By:	Date:	Checked By:	Date:
JMB	5/01/08	TFW	5/06/08

Description: VERMONT – EXPANSION JOINT DETAIL ABUTMENT #1 & 2 CURB PLATE DETAILS

Sheet No.: 11 of 12 Scale: NONE
Drawing No.: 10063-01 Rev No.: 1

RECEIVED
OCT 22 2008
G.P.I.

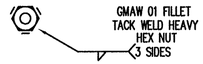

HEX NUT WELD DETAIL

TVGA CONSULTANTS

☐ NO EXCEPTIONS TAKEN ☐ REJECTED
☒ FURNISH AS CORRECTED
☐ REVISE AND RESUBMIT

ENGINEER has reviewed Shop Drawings and Samples and either data which Contractor is required to submit, only for conformance with the information given in the Contract Documents and compatibility with the design concept of the completed Project as a functioning whole as indicated in the Contract Documents. Such reviews do not extend to means, methods, techniques, sequences or procedures of construction or to safety precautions and programs incident thereto. Such reviews do not extend to any LEED certification or accreditation. Contractor is responsible for dimensions to be confirmed and correlated at the job site; for information that pertains solely to the fabrication processes or to techniques of construction; and for coordination of the work of all trades.

BY: BJC
DATE: 10/15/08

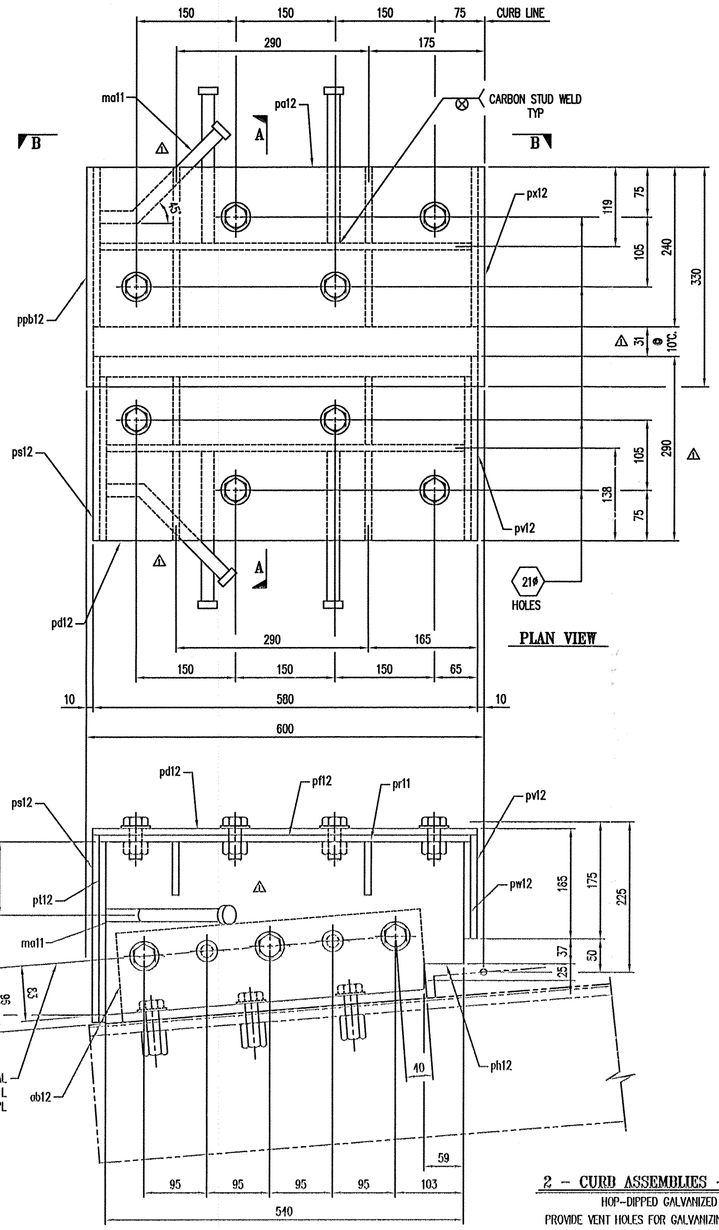

PLAN VIEW

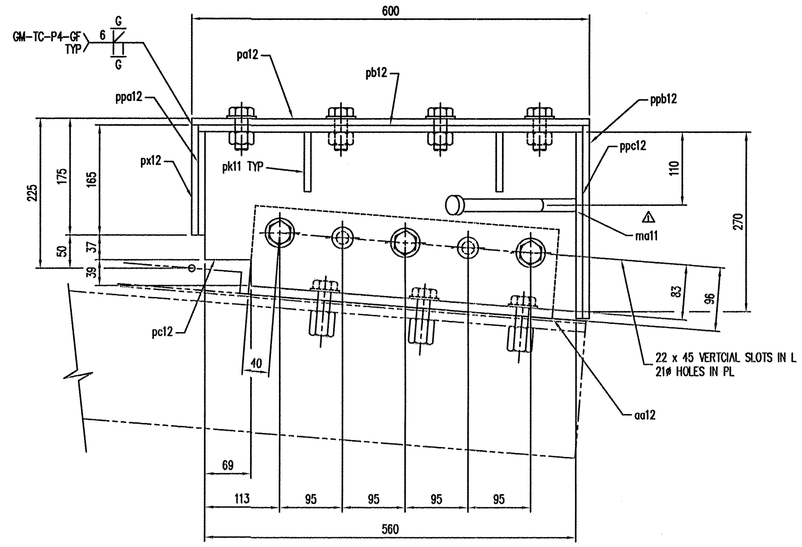

VIEW: B-B

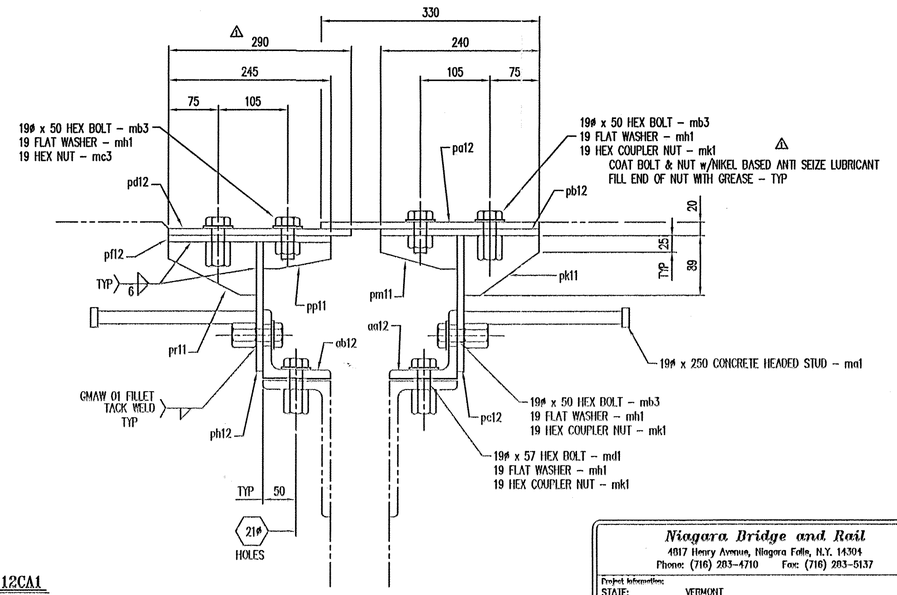

SECTION: A-A

ELEVATION VIEW

2 – CURB ASSEMBLIES – 12CA1
HOP-DIPPED GALVANIZED
PROVIDE VENT HOLES FOR GALVANIZING PROCESS

BILL OF MATERIALS

#	MARK No.	QTY	DESCRIPTION	MATERIAL	REMARKS
1			2 – CURB ASSEMBLIES – 12CA1		HDG
2					
3	ma1	8	19ø x 250 CONCRETE HEADED STUD	A108	
4	md1	12	19ø x 57 HEX BOLT	A325	M/G
5	mh1	40	19 FLAT WASHER	F436	M/G
6	mk1	32	19 HEX COUPLER NUT	A563	M/G
7	mb3	28	19 x 50 HEX BOLT	A325	M/G
8	mc3	8	19 HEX NUT	A563	M/G
9	ma11	4	19ø x 250 CONCRETE HEADED STUD	A108	BENT
10	pa12	2	PL 10 x 330 x 600	M270M(250)	
11	pb12	2	PL 10 x 240 x 600		
12	pc12	2	PL 10 x 270 x 560		
13	pd12	2	PL 10 x 290 x 600		
14	pf12	2	PL 10 x 245 x 560		
15	ph12	2	PL 10 x 259 x 540		
16	pk11	4	PL 10 x 89 x 114		
17	pm11	4	PL 10 x 50 x 116		
18	pp11	4	PL 10 x 40 x 102		
19	pr11	4	PL 10 x 79 x 133		
20	ps12	2	PL 10 x 200 x 290		
21	pt12	2	PL 10 x 245 x 270		
22	pv12	2	PL 10 x 155 x 290		
23	pw12	2	PL 10 x 145 x 245		
24	px12	2	PL 10 x 165 x 330		
25	ppa12	2	PL 10 x 155 x 240		
26	ppb12	2	PL 10 x 290 x 330		
27	ppc12	2	PL 10 x 240 x 200	M270M(250)	
28					
29	aa12	2	L102 x 102 x 9.5 x 470	M270M(250)	
30	ob12	2	L102 x 102 x 9.5 x 470	M270M(250)	
31					
32					
33					
34					

REFER TO SHEET #9 & 10 FOR BASE ANGLE HOLES
MATCH DRILL TO EXPANSION JOINT SUPPORT HOLES

This joint shall be shipped partially assembled and spliced together on site

No.	Description	Date	By	Approved
	REVISIONS			
1	ATTDOWN CHANGES	7/15/08	JB	TFW

Niagara Bridge and Rail
4017 Henry Avenue, Niagara Falls, N.Y. 14304
Phone: (716) 283-4710 Fax: (716) 283-5137

Project Information:
STATE: VERMONT
COUNTY: .
CITY / TOWNSHIP: BENNINGTON
LOCATION: VT ROUTE 279 OVER FURNACE BROOK
PROJECT NO.: AC NH 019-1(53)
OWNER: VT-AOT
CONTRACTOR: .

Drawn By:	Date:	Checked By:	Date:
JJB	5/01/08	TFW	5/06/08

Description: VERMONT – EXPANSION JOINT DETAIL ABUTMENT #1 & 2 CURB PLATE DETAILS
Sheet No.: 12 of 12
Scale: NONE
Drawing No.: 10063-01
Rev No.: 1

RECEIVED
OCT 22 2008
G.P.I.

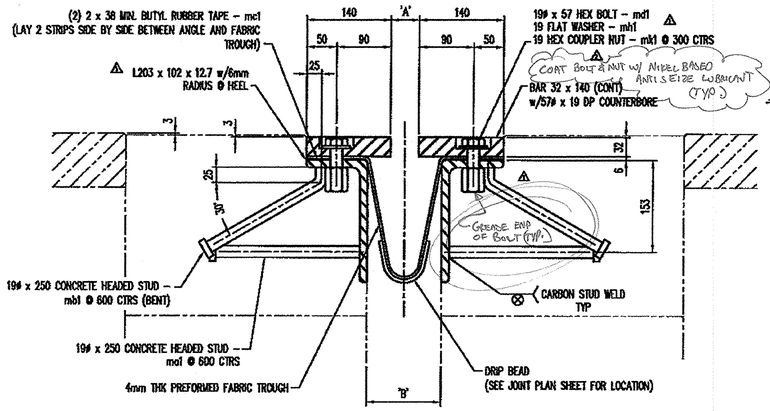

STANDARD SECTION VIEW: A-A

REFER TO JOINT PLAN SHEET FOR DIMENSIONS 'A' and/or 'B'



HEX NUT WELD DETAIL

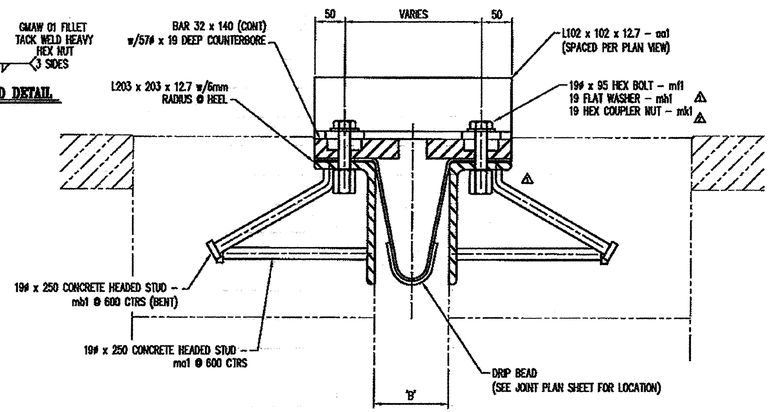

SHIPPING ANGLE SECTION: C-C

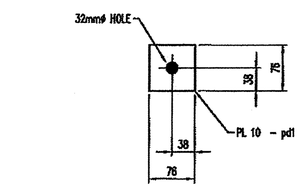

PLATE WASHER DETAIL

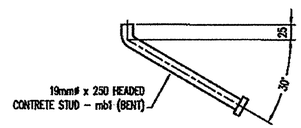

BENT STUD DETAIL

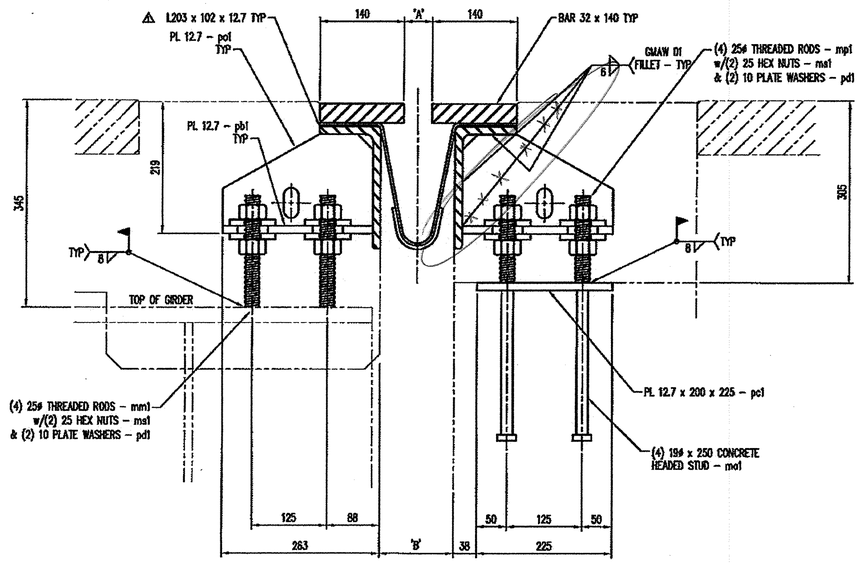

GIRDER SECTION VIEW: B-B

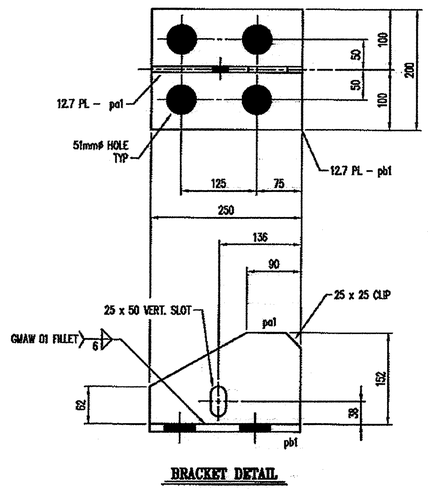

BRACKET DETAIL

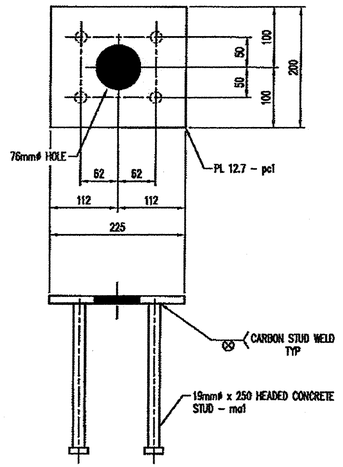

EMBED PLATE DETAIL

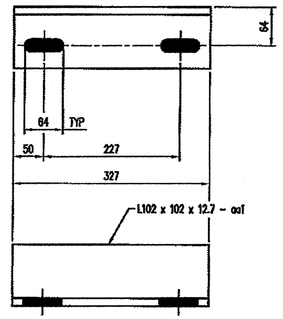

SHIPPING ANGLE DETAIL

GENERAL NOTES:

1. ALL MATERIALS, CONSTRUCTION AND DESIGN SHALL CONFORM TO THE STATE OF VERMONT, AGENCY OF TRANSPORTATION STANDARD SPECIFICATION FOR CONSTRUCTION, DATED 2006, AND IT'S LATEST REVISIONS, AND THE AASHTO STANDARD SPECIFICATIONS FOR HIGHWAY BRIDGES, 17th EDITION DATED 2002, AND IT'S REVISIONS.
2. WELDING SHALL MEET THE REQUIREMENTS OF THE ANSI/AASHTO/AWS D1.5 BRIDGE WELDING CODE AS MODIFIED BY THE STANDARD SPECIFICATIONS.
3. HEADED CONCRETE STUDS SHALL BE ASTM A108 AND AUTOMATIC END WELDED WITH COMPLETE FUSION.
4. ANY TIGHTLY ADHERENT WELD SPLATTER NEED NOT BE REMOVED IN COATING AREAS TO BE CAST IN CONCRETE.
5. ALL STEEL COMPONENTS SHALL BE M270M (250) AND GALVANIZED OR METALIZED AS PER SUBSECTION 506.15 (a) & (b) (UON). PRIOR TO GALVANIZING OR METALIZING, ALL CORNERS AND EDGES OF STEEL PLATES, SHAPES, ETC., SHALL BE GROUND TO A 2mm +/– RADIUS.
6. PREFORMED FABRIC MATERIAL SHALL BE CONTINUOUS AND SHALL CONFORM TO SUBSECTION 707.07.
7. BUTYL RUBBER TAPE SHALL CONFORM TO AASHTO SPECIFICATION M-198, TYPE B.
8. FABRIC TROUGH SHALL BE THOROUGHLY CLEANED AND FLUSHED AFTER PAVING OPERATION.
9. THE EXPANSION JOINT SHALL BE SHOP ASSEMBLED AND SHIPPED AS ONE UNIT.
10. THE 203 x 102 x 12.7 ANGLES SHALL BE FURNISED AS ONE CONTINUOUS PIECE. THE 32 x 140 BARS ON EACH SIDE OF THE JOINT SHALL BE PROVIDED IN 2 EQUAL LENGTHS.

GFGP DRAWINGS ARE REVIEWED UNLESS NOTED OTHERWISE

NO EXCEPTION TAKEN	
REVISE AS NOTED RESUBMISSION NOT REQUIRED	X
REVISE AS NOTED RESUBMISSION REQUIRED	
REJECTED	

Stantec

DATE 4/28/08

SIGNATURE TER

REVIEW BY STANTEC IS FOR THE SOLE PURPOSE OF ASCERTAINING GENERAL CONFORMITY WITH DESIGN. CONTRACTOR IS RESPONSIBLE FOR DIMENSIONS, FABRICATION AND CONSTRUCTION METHODS, COORDINATION OF SUB-TRADES, DETAIL DESIGN OF COMPONENTS, AND ERRORS OR OMISSIONS ON SHOP DRAWINGS.

No.	Description	Date	By	Approved
REVISIONS				
1	DELETE PLASTIC CAP	4/23/08	SB	
2	APPROVAL CHANGES	4/28/08	SB	

Niagara Bridge and Rail
4817 Henry Avenue, Niagara Falls, N.Y. 14304
Phone: (716) 283-4710 Fax: (716) 283-5137

Project Information:	
STATE:	VERMONT
COUNTY:	-
CITY / TOWNSHIP:	BENNINGTON
LOCATION:	EAST RD. OVER VT ROUTE 279
PROJECT NO.:	AC NH 019-1(53)
OWNER:	VT-AOT
CONTRACTOR:	-

Drawn By: AJB	Date: 3/17/08	Checked By: TFW	Date: 3/24/08
Descr/Desc: VERMONT – EXPANSION JOINT DETAIL STANDARD DETAILS		Sheet No.: 1 of TBD	Scale: NONE
		Drawing No.: 10063-01	Rev No.: –

RECEIVED
MAY 05 2008
G.P.I.

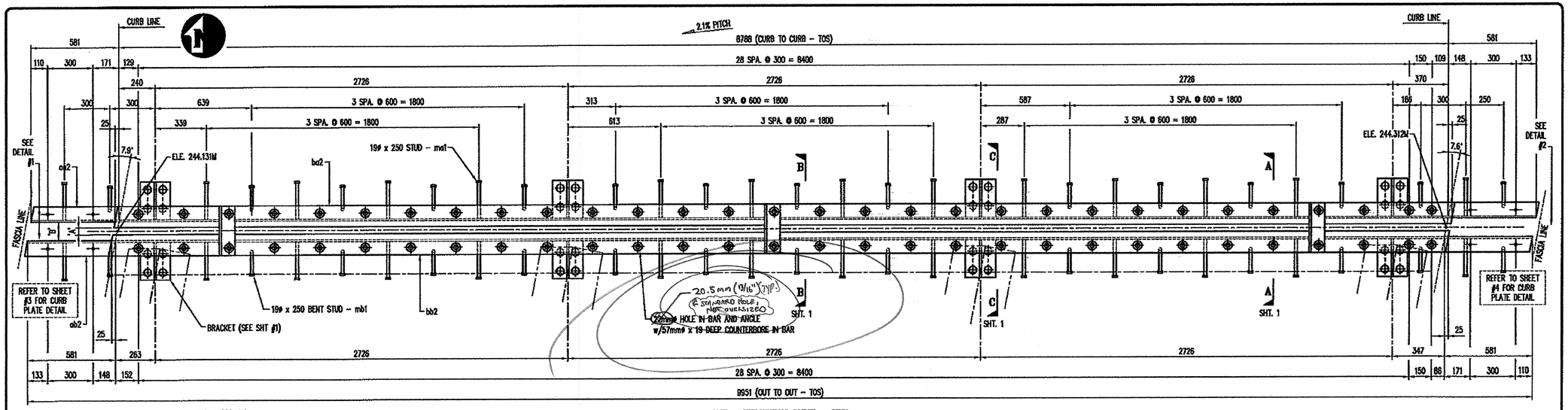

SHOP NOTES:

1. WORK THIS SHEET ALONG WITH STANDARD SHEET #1 AND CURB PLATE ASSEMBLY SHEETS.
2. COAT ALL BOLTS AND FERRULE INSERTS WITH NEVER SEIZE GREASE PRIOR TO ASSEMBLY.
3. WRENCH TIGHTEN BOLTS AFTER ASSEMBLY OF THE EXPANSION JOINT.
4. SEAL ALL ACCESSIBLE JOINTS PRIOR TO GALVANIZING.

CONTRACTOR NOTES:

1. ADJUST JOINT OPENING TO PROPER DIMENSION PRIOR TO FIELD WELDING OF THR'D RODS.
2. REMOVE SHIPPING ANGLES AND REPLACE WITH 19ø x 57 HEX BOLTS. REUSE EXISTING FLAT WASHERS. COAT BOLT TREADS WITH NEVER SEIZE PRIOR TO ASSEMBLY.
3. FILL ALL COUNTERBORED HOLES WITH HOT POURED JOINT SEALER AFTER THE BOLT INSTALLATION. WORK AND MATERIALS ARE TO BE DONE BY OTHERS.

JOINT OPENING		
TEMP	"A"	"B"
-20° C.	72	148
-10° C.	63	139
0° C.	55	131
10° C.	47	123
20° C.	38	114
30° C.	30	106
40° C.	21	97

ONE - EXPANSION JOINT - 2EJ1

ABUTMENT #2

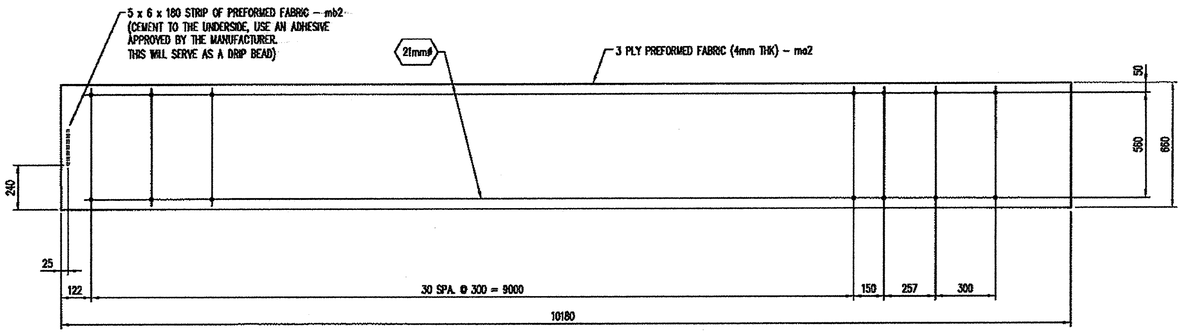

TROUGH DETAIL

BILL OF MATERIALS ⚠

#	MARK No.	QTY	DESCRIPTION	MATERIAL	REMARKS
1			ONE - EXPANSION JOINT - 2EJ1		HDG
2	ca1	3	L102 x 102 x 12.7 x 327	A36	
3					
4	ma1	44	19ø x 250 CONCRETE HEADED STUD	A108	
5	mb1	30	19ø x 250 CONCRETE HEADED STUD	A108	BENT
6	mc1	3	2 x 38 (MIN) BUTYL RUBBER TAPE (15.2M ROLL)	AASHTO M-198	#7538SA15
7	md1	60	19ø x 57 HEX BOLT	A325	M/G
8	mf1	6	19ø x 95 HEX BOLT	A325	M/G
9	mh1	6	19 FLAT WASHER	F436	M/G
10	mk1	60	19 HEX COUPLER NOTE	A563	M/G
11	mm1	32	25ø x 200 THREADED ROD	A36	HDG
12	mp1	32	25ø x 150 THREADED ROD	A36	HDG
13	ms1	64	25 HEAVY HEX NUT	A563	HDG
14					
15	pa1	8	PL 12.7 x 152 x 250	M270M(250)	
16	pb1	8	PL 12.7 x 200 x 250	M270M(250)	
17	pc1	4	PL 12.7 x 200 x 225	M270M(250)	
18	pd1	64	PL 10 x 76 x 76	M270M(250)	HDG
19					
20	ca2	ONE	L203 x 102 x 12.7 x 9970	M270M(250)	
21	cb2	ONE	L203 x 102 x 12.7 x 9970	M270M(250)	
22					
23	ba2	ONE	BAR 32 x 140 x 8864	M270M(250)	
24	bb2	ONE	BAR 32 x 140 x 8864	M270M(250)	
25					
26	ma2	ONE	3 PLY FABRIC TROUGH 4 x 660 x 10180	PER SPEC	
27	mb2	ONE	3 PLY FABRIC DRIP 4 x 6 x 180	PER SPEC	
28	mc2	2	12 x 25 HEX BOLT	A568M	CLASS 4.8 GALV
29	md2	2	12 HEX NUT	A563	M/G
30	mf2	4	12 FLAT WASHER	F436	M/G
31	mh2	ONE	ANTI SEIZE GREASE	--	

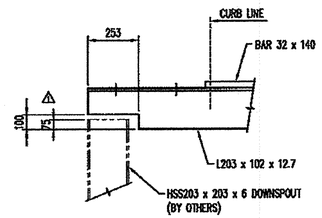

DETAIL #1

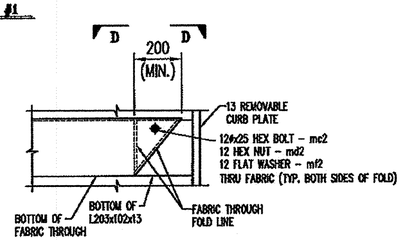

ELEVATION

FOLDED THROUGH END DETAILS

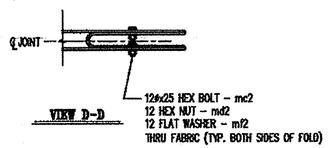

VIEW D-D

⚠	DELETE PLASTIC CAP	5/23/08	SB	
⚠	APPROVAL CHANGES	4/14/08	SB	
No.	Description	Date	By	Approved

REVISIONS

ALL DRAWINGS ARE REVIEWED UNLESS NOTED OTHERWISE

DESCRIPTION "A" ASSN	
REVISE AS NOTED	
RESUBMISSION NOT REQUIRED	X
REVISE AS NOTED	
RESUBMISSION REQUIRED	
REJECTED	

DATE 4/28/08

SIGNATURE T&K

REVIEW BY STANTEC IS FOR THE SOLE PURPOSE OF ASCERTAINING GENERAL CONFORMITY WITH DESIGN. CONTRACTOR IS RESPONSIBLE FOR DIMENSIONS, FABRICATION AND CONSTRUCTION METHODS, COORDINATION OF SUB-TRADES, DETAIL DESIGN OF COMPONENTS, AND ERRORS OR OMISSIONS ON SHOP DRAWINGS.

Niagara Bridge and Rail
4817 Henry Avenue, Niagara Falls, N.Y. 14304
Phone: (716) 283-4710 Fax: (716) 283-5137

Project Information:	
STATE:	VERMONT
COUNTY:	-
CITY / TOWNSHIP:	BENNINGTON
LOCATION:	EAST RD. OVER VT ROUTE 279
PROJECT NO.:	AC NH 019-1(53)
OWNER:	VT-AOT
CONTRACTOR:	-

Drawn By:	Date:	Checked By:	Date
JJB	3/17/08	TFW	3/24/08

Description: VERMONT - EXPANSION JOINT DETAIL ABUTMENT #2 JOINT DETAIL

Sheet No.: 2 of TBD | Scale: NONE

Drawing No.: 10063-01 | Rev No.: --

RECEIVED
MAY 05 2008
G.P.I.

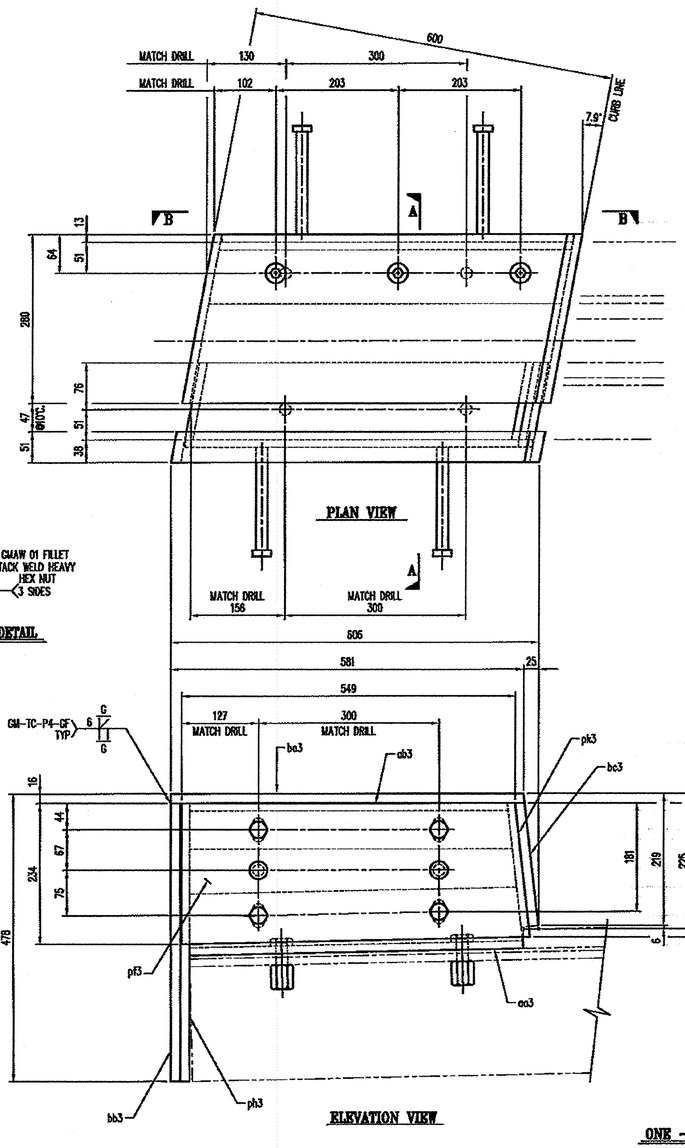

GWAW 01 FILLET TACK WELD HEAVY HEX NUT 3 SIDES

HEX NUT WELD DETAIL

ELEVATION VIEW

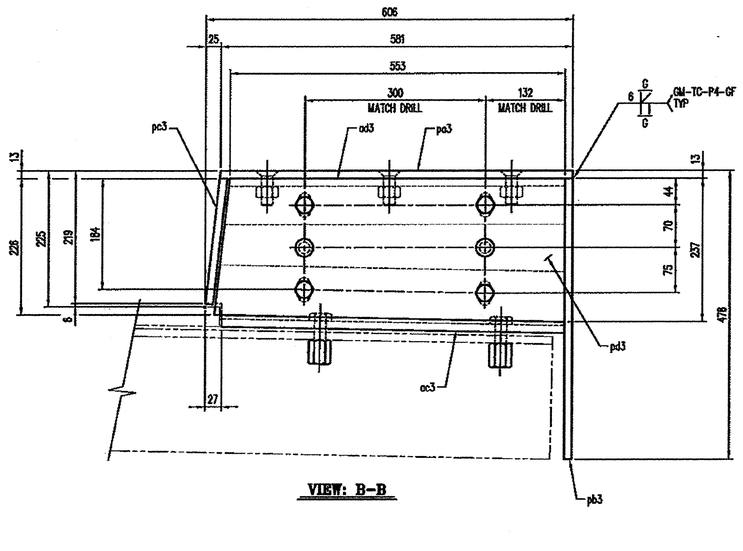

VIEW: B-B

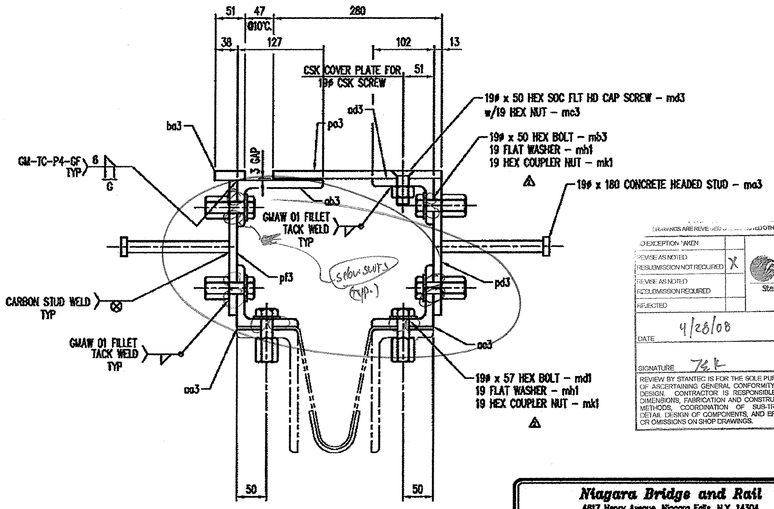

SECTION: A-A

ONE – CURB ASSEMBLY – SCA1
HOP-DIPPED GALVANIZED

REFER TO SHEET #6 FOR SUPPORT ANGLE DETAILS

BILL OF MATERIALS

#	MARK No.	QTY	DESCRIPTION	MATERIAL	REMARKS
1			ONE – CURB ASSEMBLY – SCA1		HDG
2					
3	md1	4	19ø x 57 HEX BOLT	A325	M/G
4	mh1	12	19 FLAT WASHER	F436	M/G
5	mk1	12	19 HEX COUPLER NUT	A563	M/G
6					
7					
8	ma3	4	19ø x 180 CONCRETE HEADED STUD	A108	
9	mb3	8	19 x 50 HEX BOLT	A325	M/G
10	mc3	3	19 HEX NUT	A563	M/G
11	md3	3	19ø x 50 HEX SOCKET FLAT HEAD CAP SCREW	FB35-93	M/G
12					
13					
14	pa3	ONE	PL 12.7 x 280 x 622	M270M(250)	
15	pb3	ONE	PL 12.7 x 284 x 465	M270M(250)	
16	pc3	ONE	PL 12.7 x 206 x 284	M270M(250)	
17	pd3	ONE	PL 12.7 x 237 x 578	M270M(250)	
18	pf3	ONE	PL 12.7 x 234 x 574	M270M(250)	
19	ph3	ONE	PL 12.7 x 104 x 462	M270M(250)	
20	pk3	ONE	PL 12.7 x 104 x 207	M270M(250)	
21					
22	aa3	ONE	L102 x 102 x 12.7 x 562	M270M(250)	
23	ab3	ONE	L127 x 76 x 12.7 x 538	M270M(250)	
24	ac3	ONE	L102 x 102 x 12.7 x 592	M270M(250)	
25	ad3	ONE	L127 x 76 x 12.7 x 590	M270M(250)	
26					
27	ba3	ONE	BAR 16 x 51 x 589	M270M(250)	
28	bb3	ONE	BAR 16 x 51 x 462	M270M(250)	
29	bc3	ONE	BAR 16 x 51 x 205	M270M(250)	
30					
31					

No.	Description	Date	By	Approved
1	ADDED PLASTIC CAP	4/23/08	SB	
2	APPROVAL CHANGES	4/24/08	SB	Approved

REVISIONS

Niagara Bridge and Rail
4617 Hervy Avenue, Niagara Falls, N.Y. 14304
Phone: (716) 283-4710 Fax: (716) 283-5137

Project Information:
STATE: VERMONT
COUNTY: -
CITY / TOWNSHIP: BENNINGTON
LOCATION: EAST RD. OVER VT ROUTE 279
PROJECT NO.: AC NH 019-1(53)
OWNER: VT-AOT
CONTRACTOR: -

Drawn By:	Date:	Checked By:	Date:
JJB	3/17/08	TFW	3/24/08

Description: VERMONT – EXPANSION JOINT DETAIL CURB PLATE DETAIL

Sheet No.: 3 of TBD
Scale: NONE
Drawing No.: 10063-01
Rev No.: –

DRAWINGS ARE REVIEWED AS NOTED OTHERWISE

DESCRIPTION / MARK	
REVISE AS NOTED	
RESUBMISSION NOT REQUIRED	X
REVISE AS NOTED	
RESUBMISSION REQUIRED	
REJECTED	

Stantec

DATE 4/28/08

SIGNATURE

REVIEW BY STANTEC IS FOR THE SOLE PURPOSE OF ASCERTAINING GENERAL CONFORMITY WITH DESIGN. CONTRACTOR IS RESPONSIBLE FOR DIMENSIONS, FABRICATION AND CONSTRUCTION METHODS, COORDINATION OF SUB-TRADES, DETAIL DESIGN OF COMPONENTS, AND ERRORS OR OMISSIONS ON SHOP DRAWINGS.

RECEIVED
MAY 05 2008
G.P.I.

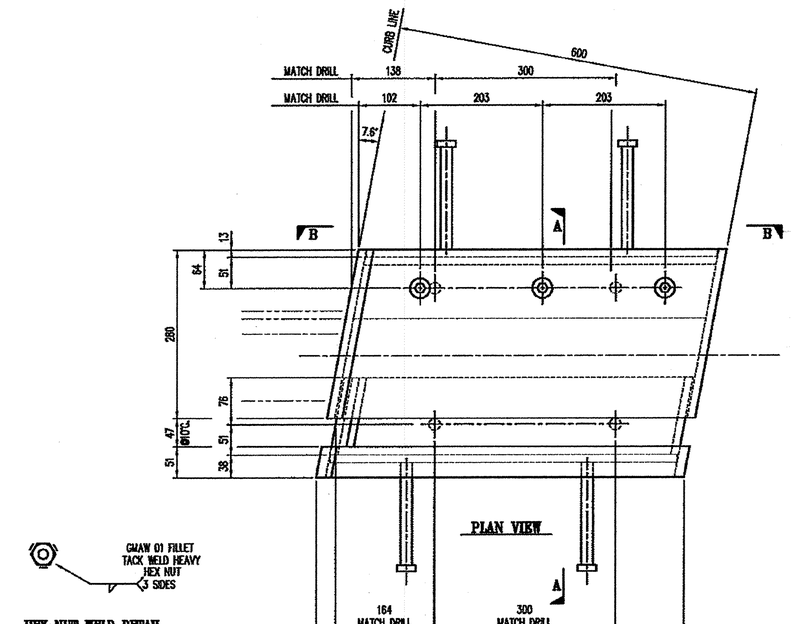

ELEVATION VIEW

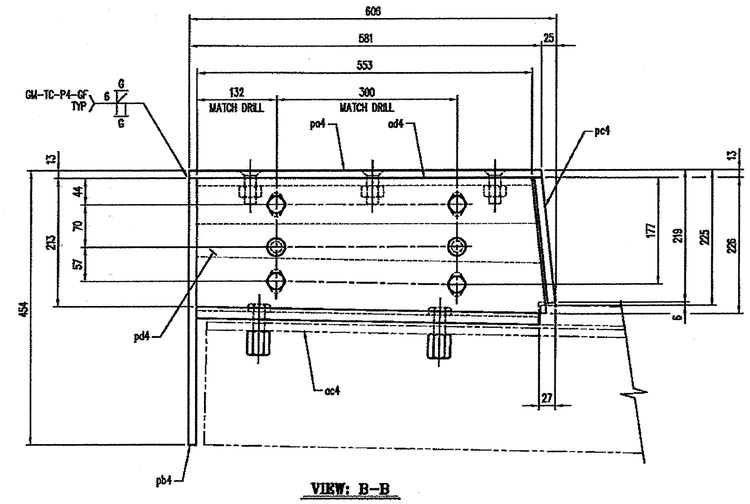

VIEW: B-B

HEX NUT WELD DETAIL

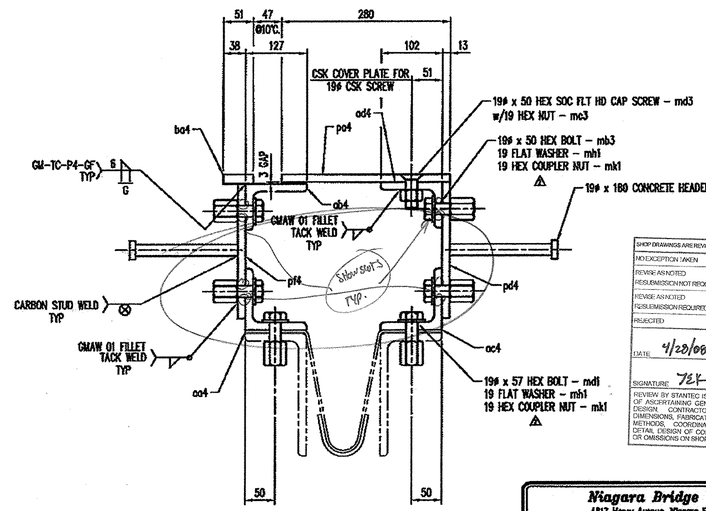

SECTION: A-A

SHOP DRAWINGS ARE REVIEWED UNLESS NOTED OTHERWISE
NOTICEPTION TAKEN
REVISE AS NOTED
RESUBMISSION NOT REQUIRED
X
REVISE AS NOTED
RESUBMISSION REQUIRED
REJECTED
Stantec
DATE 4/20/08
SIGNATURE YLK
REVIEW BY STANTEC IS FOR THE SOLE PURPOSE OF ASCERTAINING GENERAL CONFORMITY WITH DESIGN. CONTRACTOR IS RESPONSIBLE FOR DIMENSIONS, FABRICATION AND CONSTRUCTION METHODS, COORDINATION OF SUB-TRADES, DETAIL DESIGN OF COMPONENTS, AND ERRORS OR OMISSIONS ON SHOP DRAWINGS.

BILL OF MATERIALS ⚠

#	MARK No.	QTY	DESCRIPTION	MATERIAL	REMARKS
1			ONE – CURB ASSEMBLY – SCA1		HDG
2					
3	md1	4	19ø x 57 HEX BOLT	A325	M/G
4	mh1	12	19 FLAT WASHER	F436	M/G
5	mk1	12	19 HEX COUPLER NUT	A563	M/G
6					
7					
8	ma3	4	19ø x 180 CONCRETE HEADED STUD	A108	
9	mb3	6	19 x 50 HEX BOLT	A325	M/G
10	mc3	3	19 HEX NUT	A563	M/G
11	md3	3	19ø x 50 HEX SOCKET FLAT HEAD CAP SCREW	F835-93	M/G
12					
13	pa4	ONE	PL 12.7 x 280 x 621	A36	
14	pb4	ONE	PL 12.7 x 284 x 441	A36	
15	pc4	ONE	PL 12.7 x 208 x 284	A36	
16	pd4	ONE	PL 12.7 x 228 x 578	A36	
17	pf4	ONE	PL 12.7 x 223 x 574	A36	
18	ph4	ONE	PL 12.7 x 104 x 438	A36	
19	pk4	ONE	PL 12.7 x 104 x 207	A36	
20					
21	oa4	ONE	L102 x 102 x 12.7 x 562	A36	
22	ob4	ONE	L127 x 76 x 12.7 x 538	A36	
23	oc4	ONE	L102 x 102 x 12.7 x 592	A36	
24	od4	ONE	L127 x 76 x 12.7 x 590	A36	
25					
26	ba4	ONE	BAR 16 x 51 x 589	A36	
27	bb4	ONE	BAR 16 x 51 x 438	A36	
28	bc4	ONE	BAR 16 x 51 x 205	A36	
29					
30					
31					

ONE – CURB ASSEMBLY – 4CA1
HOP-DIPPED GALVANIZED

REFER TO SHEET #6 FOR SUPPORT ANGLE DETAILS

No.	Description	Date	By	Approved
⚠	DELETE PLASTIC CAP	4/23/08	SB	
⚠	APPROVAL CHANGES	4/16/08	SB	

REVISIONS

Niagara Bridge and Rail
4817 Henry Avenue, Niagara Falls, N.Y. 14304
Phone: (716) 283-4710 Fax: (716) 283-3137

Project Information:
STATE: VERMONT
COUNTY: .
CITY / TOWNSHIP: BENNINGTON
LOCATION: EAST RD. OVER VT ROUTE 279
PROJECT NO.: AC NH 019-1(53)
OWNER: VT-AOT
CONTRACTOR: .

Drawn By:	Date:	Checked By:	Date:
JJB	3/17/08	TFW	3/24/08

Description: VERMONT – EXPANSION JOINT DETAIL CURB PLATE DETAIL
Sheet No.: 4 of TBD
Scale: NONE
Drawing No.: 10063-01
Rev No.: –

RECEIVED
MAY 05 2008
G.P.I.

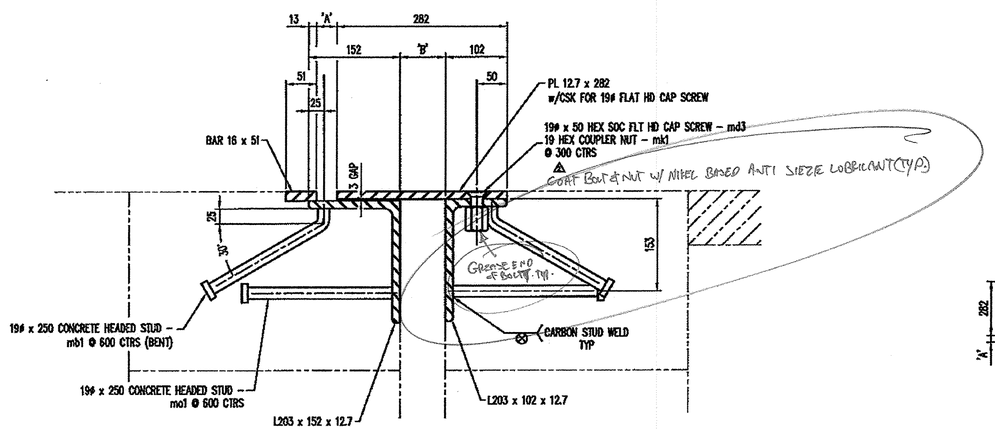

STANDARD SECTION VIEW: A–A

REFER TO JOINT OPENING TABLE FOR DIMENSIONS 'A' and/or 'B'

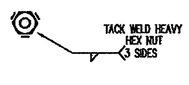

HEX NUT WELD DETAIL

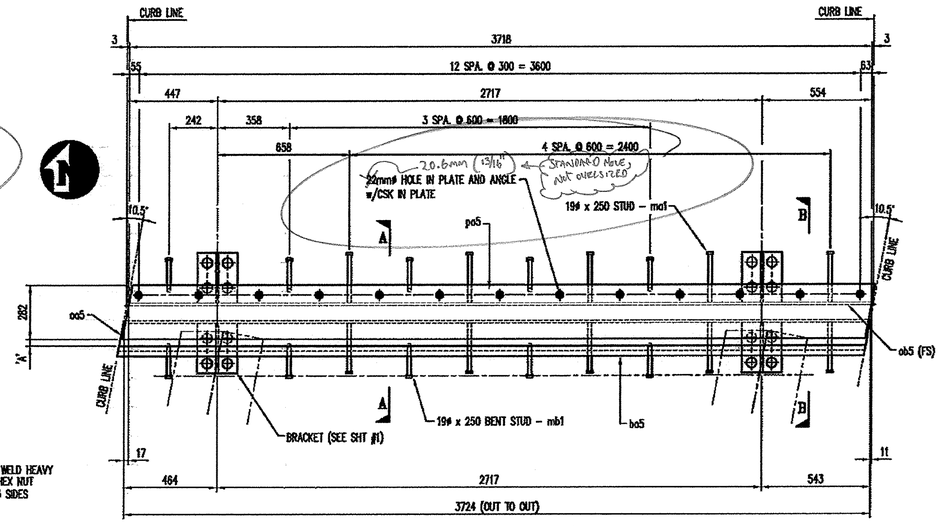

ONE – EXPANSION JOINT – 5EJ1
SHARED PATH @ ABUTMENT #2

JOINT OPENING		
TEMP	'A'	'B'
-20° C.	59	100
-10° C.	50	91
0° C.	42	83
10° C.	34	75
20° C.	25	66
30° C.	17	58
40° C.	8	49

SHOP NOTES:

1. WORK THIS SHEET ALONG WITH STANDARD SHEET #1 AND CURB PLATE ASSEMBLY SHEETS.
2. COATS ALL BOLTS AND FERRULE INSERTS WITH NEVER SEIZE GREASE PRIOR TO ASSEMBLY.
3. WRENCH TIGHTEN BOLTS AFTER ASSEMBLY OF THE EXPANSION JOINT.
4. SEAL ALL ACCESSIBLE JOINTS PRIOR TO GALVANIZING.

CONTRACTOR NOTES:

1. ADJUST JOINT OPENING TO PROPER DIMENSION PRIOR TO FIELD WELDING OF THR'D RODS.

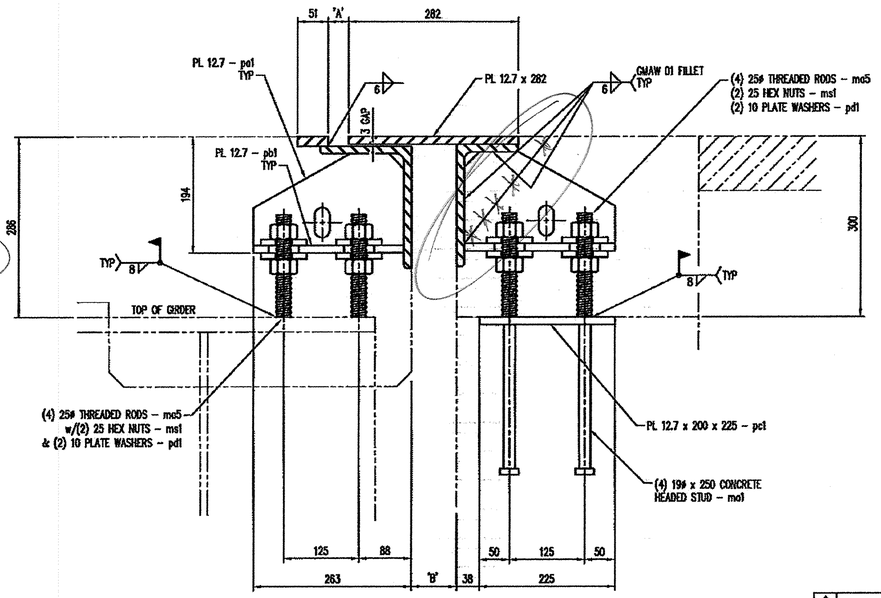

GIRDER SECTION VIEW: B–B

BILL OF MATERIALS

#	MARK No.	QTY	DESCRIPTION	MATERIAL	REMARKS
1			ONE – EXPANSION JOINT – 5EJ1		HDG
2					
3	ma1	18	19ø x 250 CONCRETE HEADED STUD	A108	
4	mb1	10	19ø x 250 CONCRETE HEADED STUD	A108	BENT
5	mk1	13	19ø HEX COUPLER NUT	ZP	F-42 ⚠
6	ms1	32	25 HEAVY HEX NUT	A563	HDG
7	mh2	ONE	ANTI SEIZE GREASE	–	
8	md3	13	19ø x 50 HEX SOCKET FLAT HEAD CAP SCREW	~~A325~~ 835-93	M/G ⚠
9	mc5	16	25ø x 180 THREADED ROD	A36	HDG
10					
11	pc1	4	PL 12.7 x 152 x 250	A36	
12	pb1	4	PL 12.7 x 200 x 250	A36	
13	pc1	2	PL 12.7 x 200 x 225	A36	
14	pd1	32	PL 10 x 76 x 76	A36	HDG
15	po5	ONE	PL 12.7 x 282 x 3768	A36	
16					
17	oo5	ONE	L203 x 152 x 12.7 x 3752	A36	
18	ob5	ONE	L203 x 102 x 12.7 x 3737	A36	
19					
20	ba5	ONE	BAR 16 x 50 x 3733	A36	
21					
22					
23					
24					
25					
26					
27					
28					
29					
30					
31					

SHOP DRAWINGS ARE REVIEWED UNLESS NOTED OTHERWISE
NO EXCEPTION TAKEN
REVISE AS NOTED / RESUBMISSION NOT REQUIRED — X
REVISE AS NOTED / RESUBMISSION REQUIRED
REJECTED
Stantec
DATE 4/28/08
SIGNATURE Jsk
REVIEW BY STANTEC IS FOR THE SOLE PURPOSE OF ASCERTAINING GENERAL CONFORMITY WITH DESIGN. CONTRACTOR IS RESPONSIBLE FOR DIMENSIONS, FABRICATION AND CONSTRUCTION METHODS, COORDINATION OF SUB-TRADES, DETAIL DESIGN OF COMPONENTS, AND ERRORS OR OMISSIONS ON SHOP DRAWINGS.

No.	Description	Date	By	Approved
⚠	BOLTS PLASTIC CAP	4/23/08	SB	
⚠	APPROVAL CHANGES	4/15/08	SB	

REVISIONS

Niagara Bridge and Rail
4817 Henry Avenue, Niagara Falls, N.Y. 14304
Phone: (716) 283-4710 Fax: (716) 283-5137

Project Information:
STATE: VERMONT
COUNTY: -
CITY / TOWNSHIP: BENNINGTON
LOCATION: EAST RD. OVER VT ROUTE 279
PROJECT NO.: AC-NH 019-1(33)
OWNER: VT-AOT
CONTRACTOR: -

Drawn By:	Date:	Checked By:	Date:
JJB	3/17/08	TPW	3/24/08

Description: VERMONT – EXPANSION JOINT DETAIL SHARED PATH @ ABUT. #2 JOINT DETAIL
Sheet No.: 5 of TBD
Scale: NONE
Drawing No.: 10063-01
Rev No.: –

RECEIVED
MAY 05 2008
G.P.I.

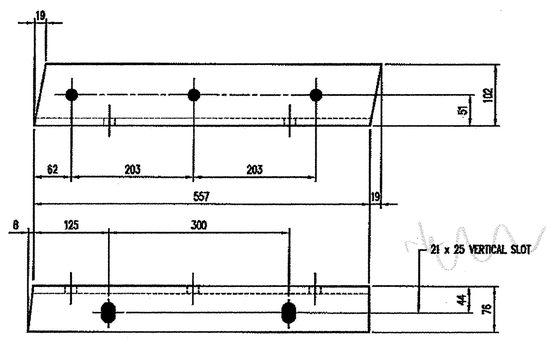

L102 x 76 x 12.7 – ad3

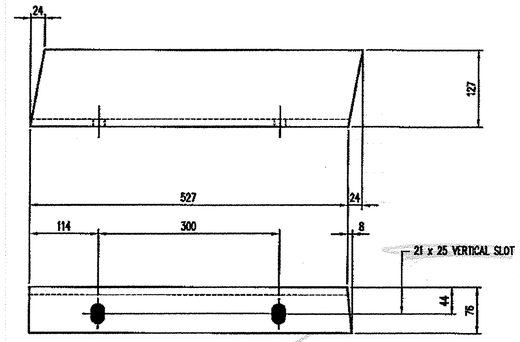

L127 x 76 x 12.7 – ab3

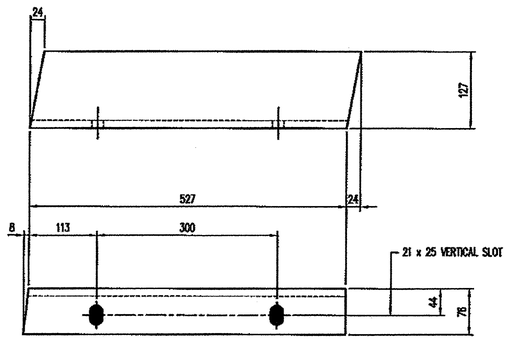

L127 x 76 x 12.7 – ab4

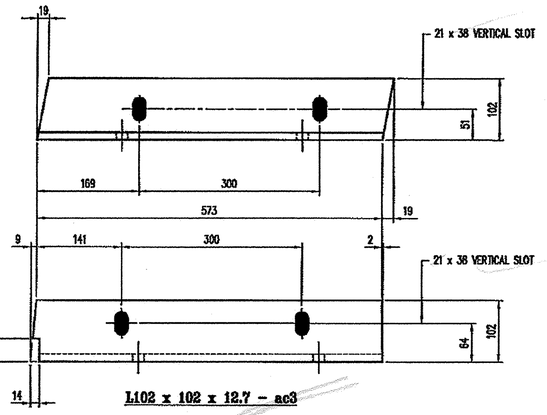

L102 x 102 x 12.7 – ac3

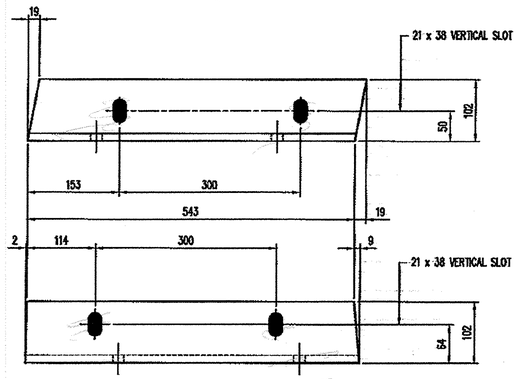

L102 x 102 x 12.7 – aa3

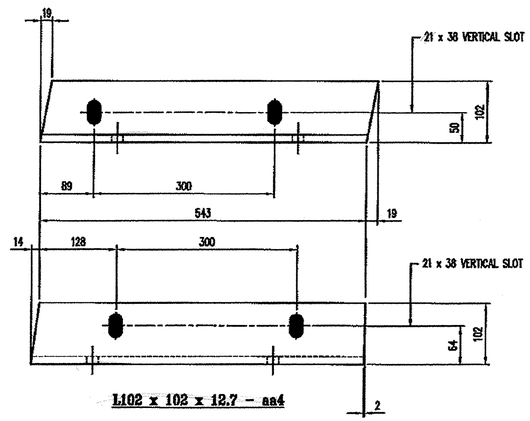

L102 x 102 x 12.7 – aa4

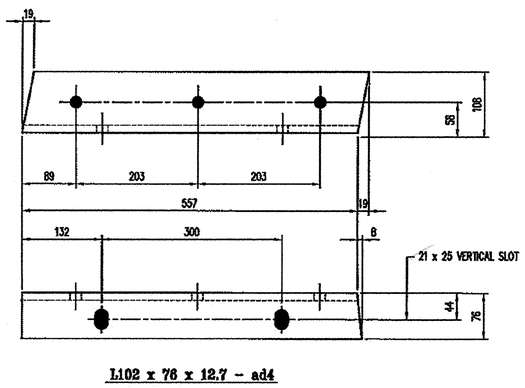

L102 x 76 x 12.7 – ad4

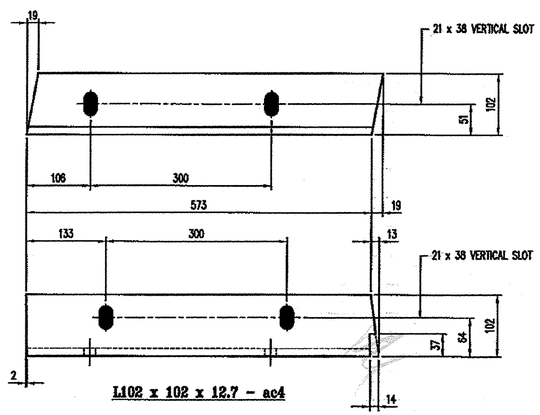

L102 x 102 x 12.7 – ac4

USE THESE ANGLE DETAILS IN ACCORDANCE WITH CURB ASSEMBLIES FOUND ON SHEETS 3 AND 4

SHOP DRAWINGS ARE REVIEWED UNLESS NOTED OTHERWISE

NO EXCEPTION TAKEN	X
REVISE AS NOTED RESUBMISSION NOT REQUIRED	
REVISE AS NOTED RESUBMISSION REQUIRED	
REJECTED	

Stantec

DATE 4/28/08

SIGNATURE

REVIEW BY STANTEC IS FOR THE SOLE PURPOSE OF ASCERTAINING GENERAL CONFORMITY WITH DESIGN. CONTRACTOR IS RESPONSIBLE FOR DIMENSIONS, FABRICATION AND CONSTRUCTION METHODS, COORDINATION OF SUB-TRADES, DETAIL DESIGN OF COMPONENTS, AND ERRORS OR OMISSIONS ON SHOP DRAWINGS.

No.	Description	Date	By	Approved
	REVISIONS			

Niagara Bridge and Rail
4817 Henry Avenue, Niagara Falls, N.Y. 14304
Phone: (716) 283-4710 Fax: (716) 283-5137

Project Information:	
STATE:	VERMONT
COUNTY:	.
CITY / TOWNSHIP:	BENNINGTON
LOCATION:	EAST RD. OVER VT ROUTE 279
PROJECT NO.:	AC NH 019-1(53)
OWNER:	VT-ADT
CONTRACTOR:	.

Drawn By:	Date	Checked By:	Date
JAB	4/24/08	TFW	4/25/08

Description:
VERMONT – EXPANSION JOINT DETAIL
CURB PLATE ANGLE DETAILS

Sheet No.: 6 of TBD
Scale: NONE
Drawing No.: 10063-01
Rev No.: –

RECEIVED
MAY 05 2008
G.P.I.

Electrode and manufacturer: Lincoln Electric Lincoln Weld L-50

G.P.I.

Flux and manufacturer: N/A

Shielding gas: 85% Argon / 15% CO2 Flow rate: 19-27 L / min

Single or multiple pass: Single

Single or multiple arc: Single

Welding current: DCEP

Polarity: Reverse - electrode positive

Welding progression: Stringers

Root treatment: clean base metal

Preheat and interpass temperature: Base Metal up to 3/4" (50ºF) ; over 3/4-1 1/2" (70ºF)

Postheat treatment: None

Electrode extension: 3/4" ± 1/4"

WELDING PROCEDURE

Weld size	Pass no.	Electrode size	Welding parameters Amperes	Welding parameters Volts	Travel speed	Joint detail
1/8"	1	0.045	300 A ± 30	29 V ± 2	28 ipm ± 2	TYPICAL ALL FILLET WELDS
3/16"	1	0.045	300 A ± 30	29 V ± 2	14 ipm ± 2	

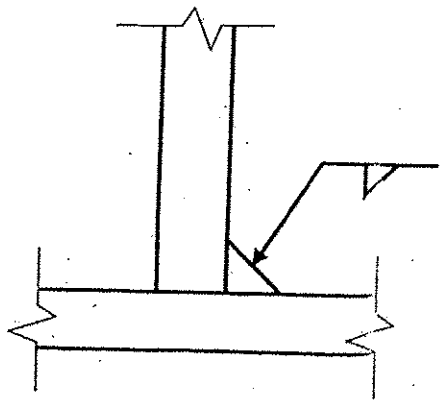

VTRANS
RECEIVED
FEB 26 2008

OK'D BY _____ OK'D BY JWK

RESUBMIT _____ APPROVED ✓

BY _____ DATE 3/2/08

This procedure may vary due to fabrication sequence, fit-up, pass size, etc. within the limitation of variables given in section 5 of latest edition AWS D1.1 / D1.5

WPS no. W-1615B

Revision no. 0

Supporting PQR no. Pre-qualified

Project Name Bennington, VT

Fabricator Highway Safety Corporation

Authorized by Paul Radice

Date 2/5/08

Project Number AC NH 019-1(53)

Electrode and manufacturer: Lincoln Electric Jet LH 78 MR

Flux and manufacturer: N/A

Shielding gas: N/A Flow rate: N/A

Single or multiple pass: Multiple

Single or multiple arc: Single

Welding current: AC

Polarity: N/A

Welding progression: Stringers

Root treatment: None

Preheat and interpass temperature: 50ºF (min)

Postheat treatment: None

Electrode extension: N/A

RECEIVED
APR 09 2008
G.P.I.

WELDING PROCEDURE

Weld size	Pass no.	Electrode size	Welding parameters Amperes	Welding parameters Volts	Travel speed	Joint detail
	ALL	5/32"	150 A to 220 A		VARIES	B-U2a

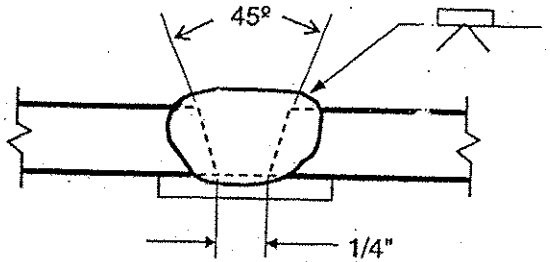

VTRANS
RECEIVED
FEB 26 2008

CK'D BY _____ OK'D BY JWC

RESUBMIT _____ APPROVED ✓

BY _____ DATE 3/21/08

This procedure may vary due to fabrication sequence, fit-up, pass size, etc. within the limitation of variables given in section 5 of latest edition AWS D1.1

2/5/08

PAUL RADICE
CWI
QC1
98070221
EXP. 7/31/10

WPS no. W-1615D

Revision no. 0

Supporting PQR no. Pre-Qualified

Project Name Bennington, VT

Fabricator Highway Safety Corporation

Authorized by Paul Radice

Date 2/5/08

Project Number AC NH 019-1(53)

Electrode and manufacturer: Lincoln Electric Lincoln Weld L-50

Flux and manufacturer: N/A

Shielding gas: 85% Argon / 15% CO2 — Flow rate: 19-27 L / min

Single or multiple pass: Single or Multiple

Single or multiple arc: Single

Welding current: DCEP

Polarity: Reverse - electrode positive

Welding progression: Stringers

Root treatment: clean base metal

Preheat and interpass temperature: base metal up to 3/4" (50ºF) ; over 3/4 thru 1-1/2" (150ºF) : over 1-1/2" thru 2-1/2" (225ºF)

Postheat treatment: None

Electrode extension: 3/4" ± 1/4"

RECEIVED
APR 09 2008
G.P.I.

WELDING PROCEDURE

Weld size	Pass no.	Electrode size	Welding parameters: Amperes	Welding parameters: Volts	Travel speed
5/16"	1	0.062"	275 A ± 25	25 V ± 2	8-10 ipm
7/16"	1 & 2	0.062"	↓	↓	8-10 ipm

Joint detail

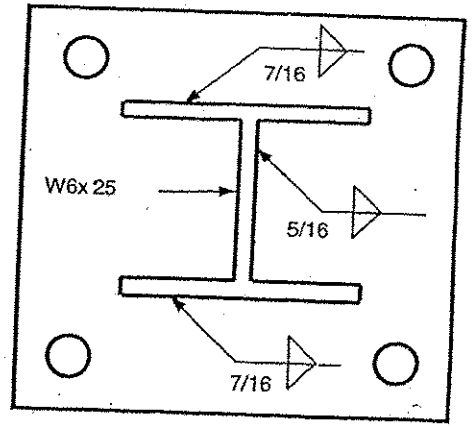

TRANS
RECEIVED
FEB 26 2008

CK'D BY ____ OK'D BY JWC

RESUBMIT ____ APPROVED ✓

BY ____ DATE 3/4/08

This procedure may vary due to fabrication sequence, fit-up, pass size, etc. within the limitation of variables given in section 5 of latest edition AWS D1.5

WPS no. W-1615A

Revision no. 0

Supporting PQR no. Pre-Qualified

Project Name Bennington, VT

Fabricator Highway Safety Corporation

Authorized by Paul Radice

Date 2/5/08

Project Number AC NH 019-1(53)

PAUL RADICE
CWI 98070227
EXP. 7/01/10

Electrode and manufacturer: Lincoln Electric Jet LH 78 MR

APR 0 9 2008

Flux and manufacturer: N/A

Shielding gas: N/A Flow rate: N/A

G.P.I.

Single or multiple pass: Multiple

Single or multiple arc: Single

Welding current: AC

Polarity: N/A

Welding progression: Stringers

Root treatment: clean base metal

Preheat and interpass temperature: 50ºF (min)

Postheat treatment: None

Electrode extension: N/A

WELDING PROCEDURE

Weld size	Pass no.	Electrode size	Welding parameters: Amperes	Welding parameters: Volts	Travel speed	Joint detail
	ALL	5/32"	150 A to 220 A		VARIES	B-Lla full penetration weld joint w/ permanent backing bar 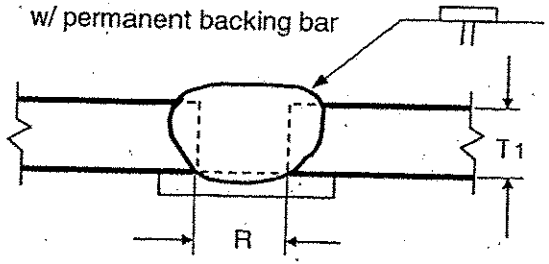 T 1 = 1/4" (max) R = T 1

VT TRANS
RECEIVED
FEB 2 6 2008

CK'D BY _____ OK'D BY JWC

RESUBMIT _____ APPROVED ✓

BY _____ DATE 3/4/08

This procedure may vary due to fabrication sequence, fit-up, pass size, etc. within the limitation of variables given in section 5 of latest edition AWS D1.1

WPS no. W-1615C

Revision no. 0

Supporting PQR no. Pre-Qualified

Project Name Bennington, VT

Fabricator Highway Safety Corporation

Authorized by Paul Radice

Date 2/5/08

Project Number AC NH 019-1(53)

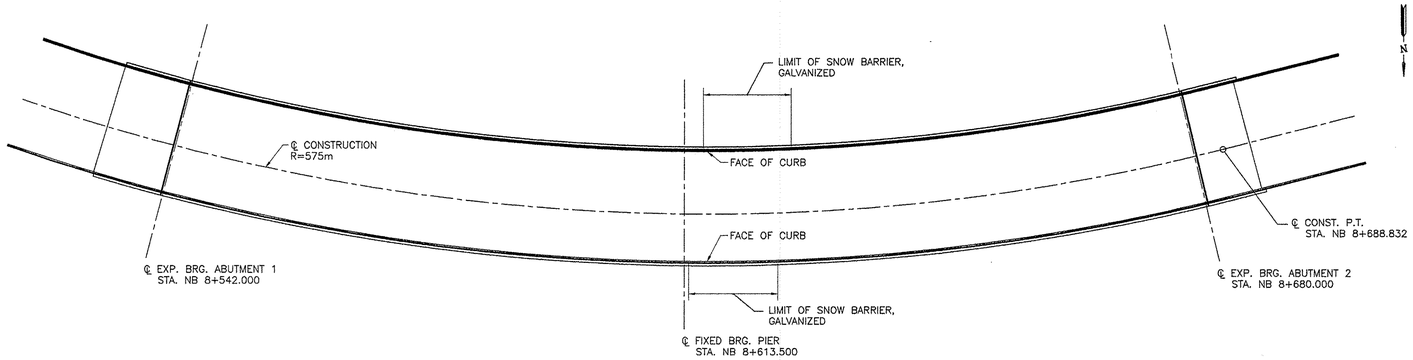

PLAN
NTS

BILL OF MATERIAL (SOUTH RAIL)					
Mark #	Qty.	Description	Size/Shape	length/qty. per unit	Material
	66	W150x37 POST W/BASEPLATE 617 OAL			
	66	POST UPRIGHT	W150 x 37	595	A709M Gr. 345
	66	POST BASE PLATE	254 x 25	356	A709M Gr. 345
	66	BEARING PAD	254 x 3	356	NEOPRENE
S1	1	TS 203 x 102 x 8 TOP RAIL		5.782m	A500 Gr. B
	1	TS 102 x 102 x 6 BOTTOM RAIL		5.782m	A500 Gr. B
S2	1	TS 203 x 102 x 8 TOP RAIL		5.886m	A500 Gr. B
	1	TS 102 x 102 x 6 BOTTOM RAIL		5.886m	A500 Gr. B
S3	18	TS 203 x 102 x 8 TOP RAIL		7.191m	A500 Gr. B
	18	TS 102 x 102 x 6 BOTTOM RAIL		7.191m	A500 Gr. B
S4	1	TS 203 x 102 x 8 TOP RAIL		7.204m	A500 Gr. B
	1	TS 102 x 102 x 6 BOTTOM RAIL		7.204m	A500 Gr. B
S5	1	TS 203 x 102 x 8 TOP RAIL		7.928m	A500 Gr. B
	1	TS 102 x 102 x 6 BOTTOM RAIL		7.928m	A500 Gr. B
	21	TS 178 x 76 x 10 SPLICE TUBE		510	A500 Gr. B
	21	TS 76 x 76 x 8 SPLICE TUBE		510	A500 Gr. B
	264	M20 ROUND HEAD BOLT		152	M164M
	264	M20 HEX NUT			A563 DH
	264	M20 WASHER			F436M
	168	M16 SPLICE BOLT		44	A325M
	168	M16 PLAIN HARDENED WASHER			F436M
	84	M16 NUT WELDED TO SPLICE TUBE			A563M
	16	DN 20 SCH. 40 PIPE SPACER		13	A53 Gr. B
*	264	M24 ANCHOR STUD, 305 LONG			F568M cl. 8.8
*	264	M24 WASHER			F436M
*	264	M24 JAMB NUT			A563 DH
*	528	M24 HEX NUT			A563 DH
*	66	SPACER PLATE	238 x 10	330	A709M Gr. 250

NOTE:
1. SOUTH BRIDGE RAILS TO BE SET ON 566.300m CONVEX RADIUS.
2. RAILS ARE PROVIDED STRAIGHT AND WILL FLEX UNDER OWN WEIGHT IN ACCESS OF REQUIRED RAIL CURVATURE DUE TO LARGE RADIUS.
3. ITEMS MARKED "*" ARE NOT SUPPLIED BY HIGHWAY SAFETY CORPORATION, AND THEY ARE SHOWN ONLY FOR REFERENCE. Indicate Supplier

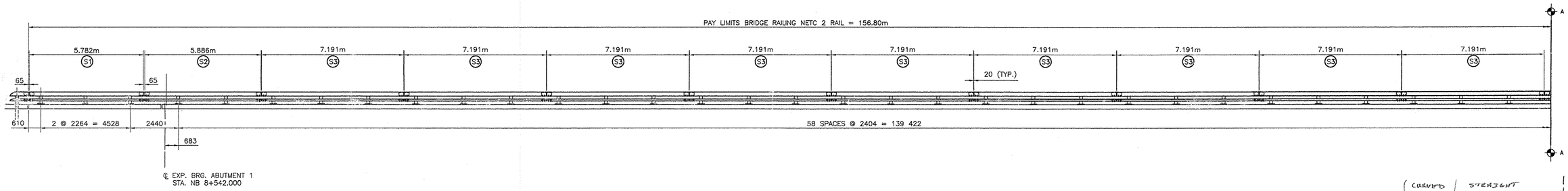

SOUTH RAIL ELEVATION
LOOKING SOUTH FROM ℄ OF ROAD

RECEIVED
APR 09 2008

Sheets 1, 2, 3 & 11 of 11 pgs

REVISIONS		
No.	Remarks	Date
0	Initial submittal	2/5/08

TVGA CONSULTANTS

☐ NO EXCEPTIONS TAKEN ☐ REJECTED
☑ FURNISH AS CORRECTED
☐ REVISE AND RESUBMIT

ENGINEER has reviewed Shop Drawings and Samples and other data which Contractor is required to submit, only for conformance with the information given in the Contract Documents and compatibility with the design concept of the completed Project as a functioning whole as indicated in the Contract Documents. Such reviews do not extend to means, methods, techniques, sequences or procedures of construction or to safety precautions and programs incident thereto. Contractor is responsible for dimensions to be confirmed and correlated at the job site; for information that pertains solely to the fabrication processes or to techniques of construction; and for coordination of the work of all trades.

BY: JM
DATE: 3/19/08

HIGHWAY SAFETY CORP.
GLASTONBURY, CT

ITEM 525.33 BRIDGE RAILING – NETC 2 RAIL
TOWN OF BENNINGTON
COUNTY OF BENNINGTON
PROJECT AC NH 019-1(53) BRIDGE B12
VT ROUTE 279 OVER FURNACE BROOK

GENERAL CONTRACTOR

SUB CONTRACTOR
F.R. LAFAYETTE, INC.

DRAWN	MHM
CHECKED	P Radice
DATE	12/30/07
SCALE	N.T.S.
HSC REFERENCE NO.	1615
SIZE	D
REVISION	0
SHEET NO.	1 of 11

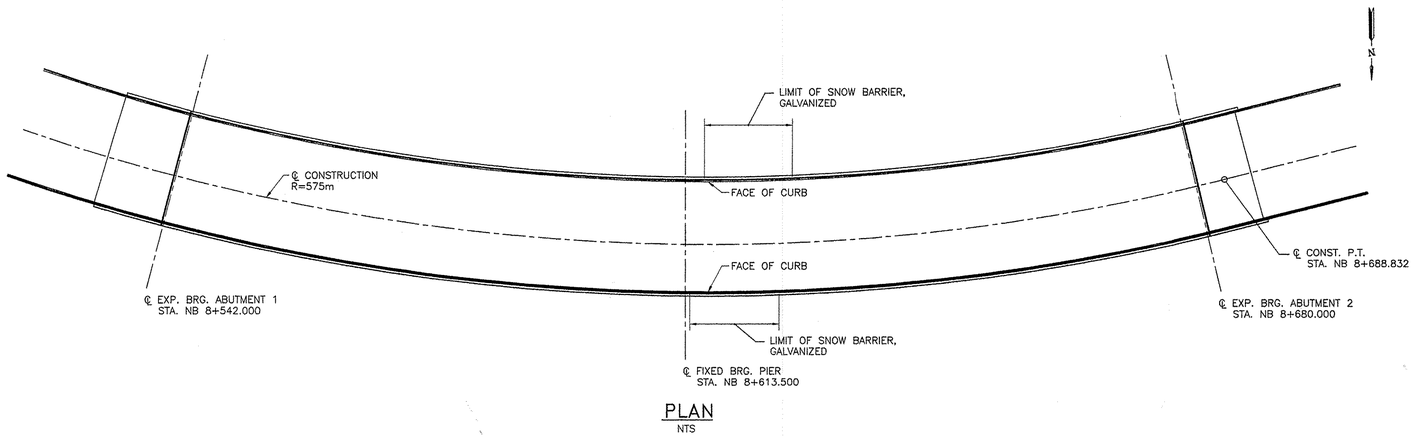

PLAN
NTS

BILL OF MATERIAL (NORTH RAIL)					
Mark #	Qty.	Description	Size/Shape	length/qty. per unit	Material
	68	W150x37 POST W/BASEPLATE 617 OAL			
	68	POST UPRIGHT	W150 x 37	595	A709M Gr. 345
	68	POST BASE PLATE	254 x 25	356	A709M Gr. 345
	68	BEARING PAD	254 x 3	356	NEOPRENE
N1	1	TS 203 x 102 x 8 TOP RAIL		3.530m	A500 Gr. B
	1	TS 102 x 102 x 6 BOTTOM RAIL		3.530m	A500 Gr. B
N2	1	TS 203 x 102 x 8 TOP RAIL		7.010m	A500 Gr. B
	1	TS 102 x 102 x 6 BOTTOM RAIL		7.010m	A500 Gr. B
N3	1	TS 203 x 102 x 8 TOP RAIL		7.274m	A500 Gr. B
	1	TS 102 x 102 x 6 BOTTOM RAIL		7.274m	A500 Gr. B
N4	18	TS 203 x 102 x 8 TOP RAIL		7.267m	A500 Gr. B
	18	TS 102 x 102 x 6 BOTTOM RAIL		7.267m	A500 Gr. B
N5	1	TS 203 x 102 x 8 TOP RAIL		7.245m	A500 Gr. B
	1	TS 102 x 102 x 6 BOTTOM RAIL		7.245m	A500 Gr. B
N6	1	TS 203 x 102 x 8 TOP RAIL		6.896m	A500 Gr. B
	1	TS 102 x 102 x 6 BOTTOM RAIL		6.896m	A500 Gr. B
	22	TS 178 x 76 x 10 SPLICE TUBE		510	A500 Gr. B
	22	TS 76 x 76 x 8 SPLICE TUBE		510	A500 Gr. B
	272	M20 ROUND HEAD BOLT		152	M164M
	272	M20 HEX NUT			A563 DH
	272	M20 WASHER			F436M
	176	M16 SPLICE BOLT		44	A325M
	176	M16 PLAIN HARDENED WASHER			F436M
	88	M16 NUT WELDED TO SPLICE TUBE			A563M
	16	DN 20 SCH. 40 PIPE SPACER		13	A709 Gr. 250
*	272	M24 ANCHOR STUD, 305 LONG			F568M cl. 8.8
*	272	M24 WASHER			F436M
*	272	M24 JAMB NUT			A563 DH
*	544	M24 HEX NUT			A563 DH
*	68	SPACER PLATE	238 x 10	330	A709 Gr. 250

NOTE:
1. NORTH BRIDGE RAILS TO BE SET ON 581.600m CONCAVE RADIUS.

2. RAILS ARE PROVIDED STRAIGHT AND WILL FLEX UNDER OWN WEIGHT IN EXCESS OF REQUIRED RAIL CURVATURE DUE TO LARGE RADIUS.

3. ITEMS MARKED "*" ARE NOT SUPPLIED BY HIGHWAY SAFETY CORPORATION, AND THEY ARE SHOWN ONLY FOR REFERENCE.

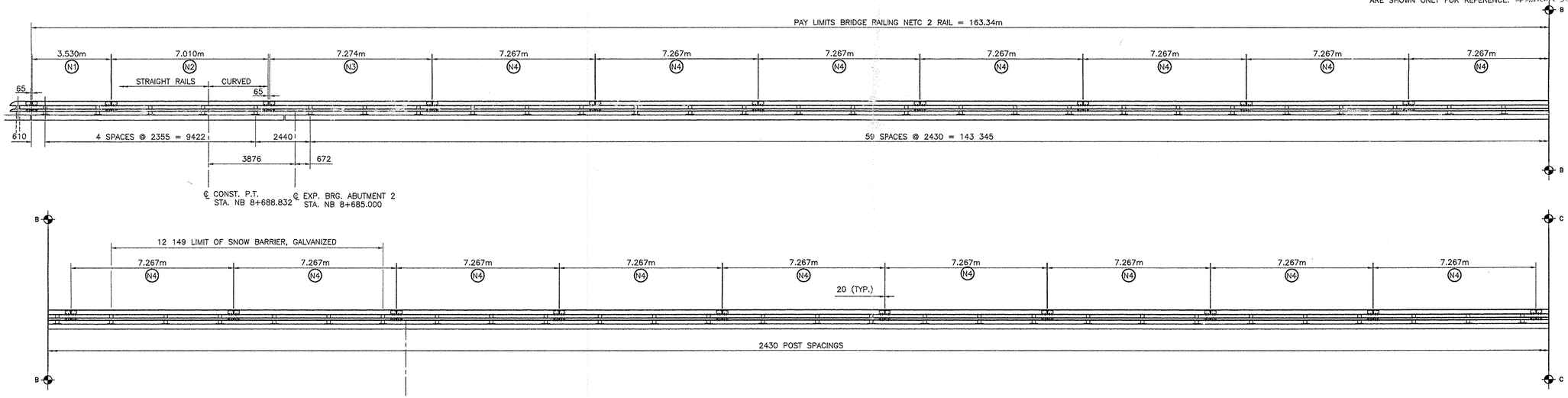

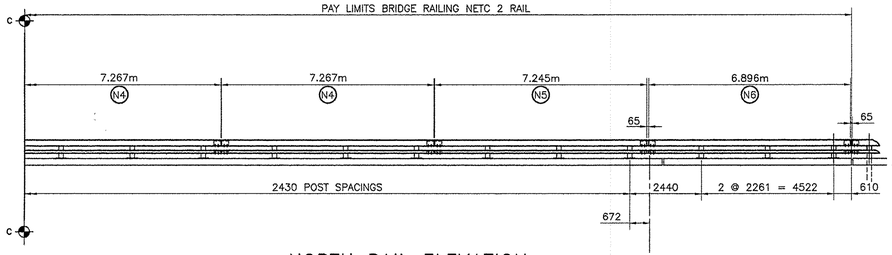

NORTH RAIL ELEVATION
LOOKING NORTH FROM ℄ OF ROAD

REVISIONS		
No.	Remarks	Date
0	Initial submittal	

TVGA CONSULTANTS

☐ NO EXCEPTIONS TAKEN ☐ REJECTED
☑ FURNISH AS CORRECTED
☐ REVISE AND RESUBMIT

ENGINEER has reviewed Shop Drawings and Samples and other data which Contractor is required to submit, only for conformance with the information given in the Contract Documents and compatibility with the design concept of the completed Project as a functioning whole as indicated in the Contract Documents. Such reviews do not extend to means, methods, techniques, sequences or procedures of construction or to safety precautions and programs incident thereto. Contractor is responsible for dimensions to be confirmed and correlated at the job site; for information that pertains solely to the fabrication processes or to techniques of construction; and for coordination of the work of all trades.

BY: [signature]
DATE: 3/13/08

HIGHWAY SAFETY CORP.
GLASTONBURY, CT

ITEM 525.33 BRIDGE RAILING – NETC 2 RAIL
TOWN OF BENNINGTON
COUNTY OF BENNINGTON
PROJECT AC NH 019-1(53) BRIDGE B12
VT ROUTE 279 OVER FURNACE BROOK

GENERAL CONTRACTOR

SUB CONTRACTOR
F.R. LAFAYETTE, INC.

DRAWN	MHM
CHECKED	P Radice
DATE	12/30/07
SCALE	N.T.S.
HSC REFERENCE NO.	1615
SIZE	D
REVISION	0
SHEET NO.	2 of 11

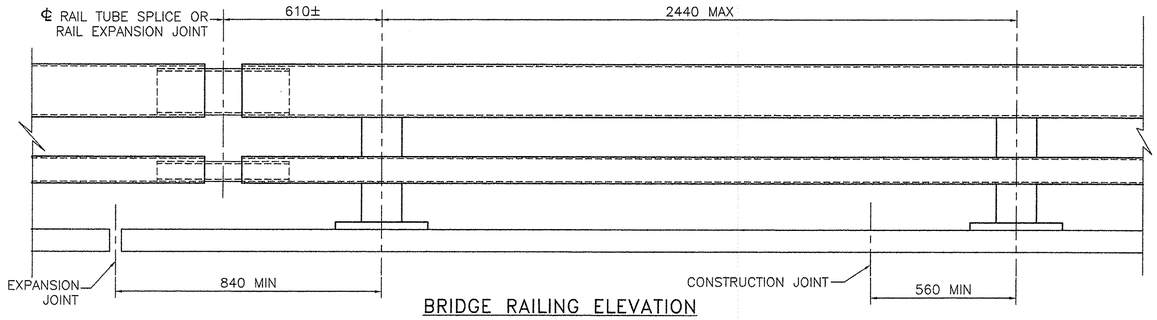

BRIDGE RAILING ELEVATION

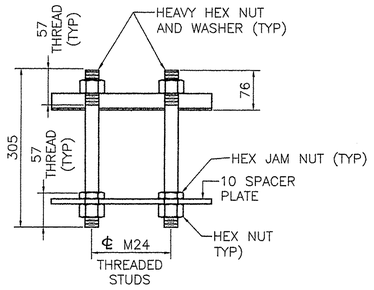

RAIL POST ANCHORAGE

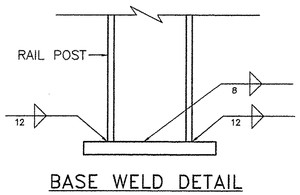

BASE WELD DETAIL

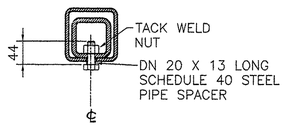

16 DIA TAPERED HOLE IN SPLICE TUBE AND
29 X 'C' SLOT IN RAIL TUBE FOR M16
BOLT AND PLAIN HARDENED WASHER

EXPANSION JOINT SECTION

FOR DETAILS NOT SHOWN,
SEE "RAIL TUBE SPLICE SECTION"

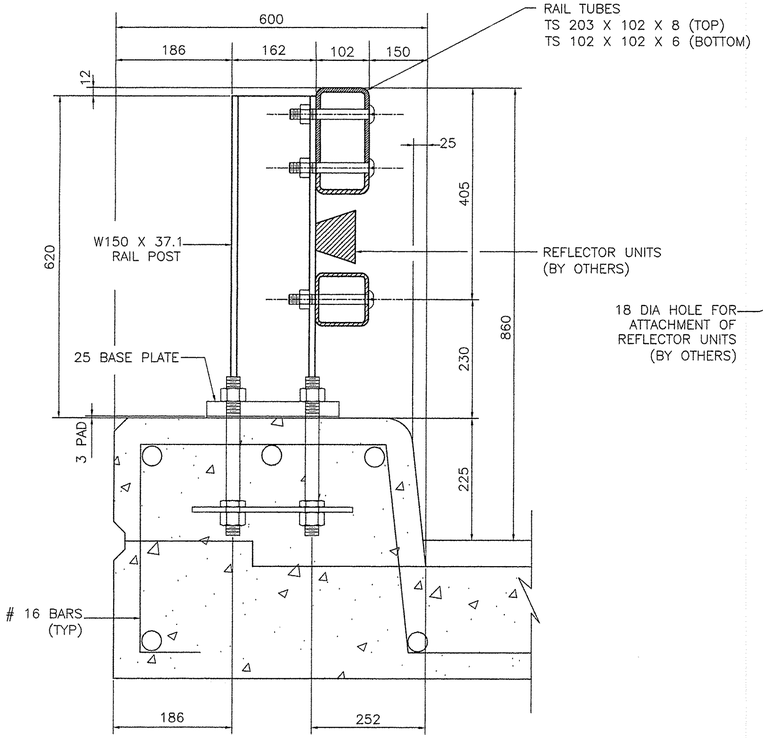

TYPICAL SECTION

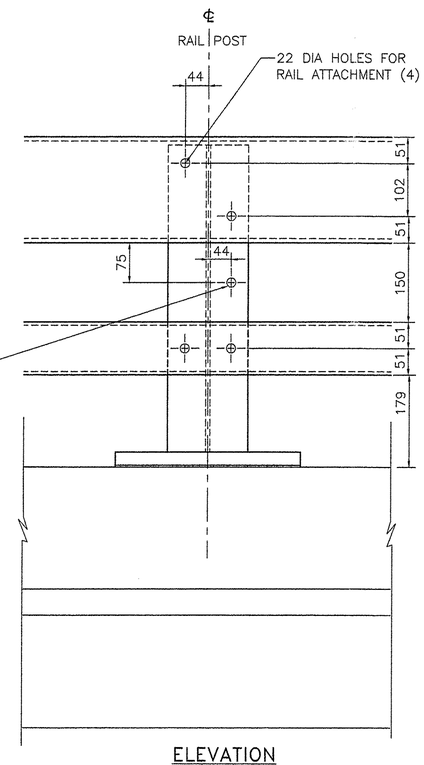

ELEVATION

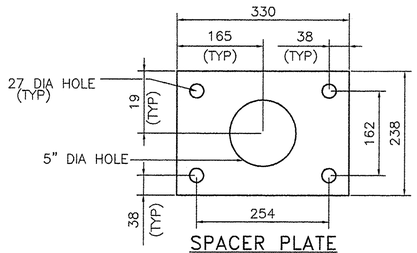

SPACER PLATE
330x10x238

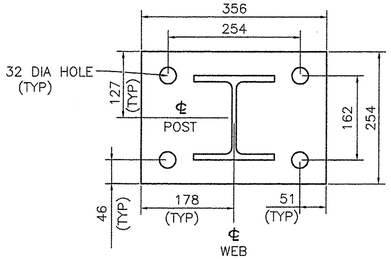

POST AND BASE PLATE
356x25x254

SPLICE TABLE					
T	A	B	C	L	X
NA	100	50	--	510	20
EXPANSION JOINT TABLE					
<100	100	50	65	510	65
>100 <165	140	60	90	605	105
>165 <230	165	85	230*	705	130
>230 <330	215	110	280*	860	180

T= TOTAL MOVEMENT BETWEEN BRIDGE EXPANSION JOINTS. SEE NOTE 6
*= SINGLE SLOT

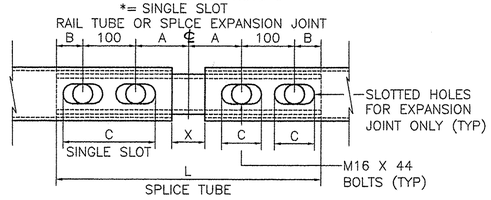

RAIL TUBE SPLICE AND RAIL
EXPANSION JOINT DETAIL

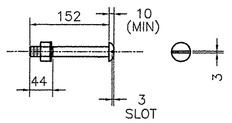

M20 DIA M164 (TYPE I)
ROUND HEAD BOLT

(WITH WASHER AND PREVAILING TORQUE TYPE LOCK NUT)
(SEE NOTE #9)
ONLY FULL DIAMETER BODY BOLTS WILL BE ALLOWED

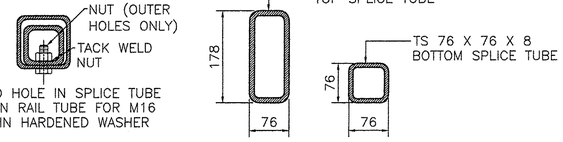

16 DIA TAPPED HOLE IN SPLICE TUBE
19 DIA HOLE IN RAIL TUBE FOR M16
BOLT AND PLAIN HARDENED WASHER

RAIL TUBE SPLICE SECTION

NOTES
1 ALL WORK AND MATERIALS SHALL CONFORM TO THE PROVISIONS OF SECTION 525 "RAILINGS OF THE STANDARD SPECIFICATION FOR CONSTRUCTION".

2 TUBING AND POSTS SHALL MEET THE REQUIREMENTS OF SECTION 732, "RAILING MATERIALS OF THE STANDARD SPECIFICATIONS FOR CONSTRUCTION" EXCEPT THE DROP WEIGHT TEAR TEST IN SECTION 732 SHALL NOT APPLY TO THE STRUCTURAL TUBING IN THIS STANDARD.

3 ALL EXPOSED CUT OR SHEARED EDGES SHALL BE ROUNDED TO A 2mm RADIUS AND BE FREE OF BURRS.

4 RAIL POSTS SHALL BE SET NORMAL To GRADE.

5 SECTIONS OF RAIL TUBE SHALL BE ATTACHED TO A MINIMUM OF TWO (2) RAIL POSTS AND PREFERABLY TO AT LEAST FOUR (4) POSTS.

6 RAIL TUBE EXPANSION JOINTS SHALL BE PROVIDED IN ANY RAIL BAY SPANNING A SUPERSTRUCTURE EXPANSION JOINT. EXPANSION JOINT WIDTH SHALL BE "X" AT 7°C AND WILL BE ADJUSTED IN THE FIELD BY THE ENGINEER FOR OTHER TEMPERATURES.

7 ALL PARTS SHALL BE GALVANIZED AFTER FABRICATION IN ACCORDANCE WITH AASHTO MIII, EXCEPT THAT HARDWARE SHALL MEET THE REQUIREMENTS OF AASHTO M232.

8 RAIL POSTS ANCHORING NUTS SHALL BE TIGHTENED TO A SNUG FIT AND GIVEN AN ADDITIONAL ONE-EIGHTH TURN.

9 RAIL TUBES SHALL BE ATTACHED USING M20 FULL DIAMETER BODY AASHTO M164 (TYPE 1) ROUND HEAD BOLTS INSERTED THROUGH THE FACE OF THE TUBE. HOLES IN POSTS SHALL BE 2mm LARGER THAN THE BOLT SIZE.

10 HOLES IN RAILS FOR RAIL TUBE ATTACHMENT MAY BE FIELD DRILLED. HOLES SHALL BE COATED WITH AN APPROVED ZINC RICH PAINT PRIOR TO ERECTION.

11 IF THERE IS A CONFLICT BETWEEN THESE STANDARD DETAILS AND THE DESIGN, THE REQUIREMENTS OF THE DESIGN DRAWING SHALL BE FOLLOWED.

12 ANY BENDING OF RAIL SHALL BE DONE BY SHOP PROCEDURE ONLY.

13 THE FABRICATOR SHALL SUBMIT SHOP DRAWINGS INCLUDING WELDING PROCEDURES TO THE STRUCTURES SECTION FOR APPROVAL IN ACCORDANCE WITH THE PROVISION OF 506.04, SHOP DRAWINGS. ALL WELDING SHALL CONFORM WITH SECTION 506.10.

14 RAIL POSTS AND BASE PLATES SHALL BE TESTED FOR IMPACT PROPERTIES IN ACCORDANCE WITH ASTM A-370 CHARPY IMPACT TESTING USING TYPE "A" SPECIMEN.

MATERIALS
RAIL TUBES.....ASTM A500, GRADE B OR ASTM A501
RAIL POSTS AND BASE PLATES.....ASTM A709/A709M, GRADE 345
ALL OTHER SHAPES AND PLATES.....ASTM A709/A709M, GRADE 250
ANCHOR STUDS.....ASTM F568M CLASS 8.8
ALL OTHER BOLTS (UNLESS NOTED).....AASHTO M164M, TYPE 1

NUTS FOR AASHTO M164M (ASTM A325M) BOLTS AND FOR ANCHOR STUDS SHALL COMPLY WITH AASHTO M291M (ASTM A563M)

WASHERS SHALL COMPLY WITH AASHTO M293M (ASTM F436M) SPECIFICATIONS

3mm PAD SHALL COMPLY WITH STANDARD SPECIFICATION SUBSECTION 731.01 OR 731.02

REVISIONS		
No.	Remarks	Date
0	Initial submittal	

TVGA CONSULTANTS

☑ NO EXCEPTIONS TAKEN ☐ REJECTED
☐ FURNISH AS CORRECTED
☐ REVISE AND RESUBMIT

ENGINEER has reviewed Shop Drawings and Samples and other data which Contractor is required to submit, only for conformance with the information given in the Contract Documents and compatibility with the design concept of the completed Project as a functioning whole as indicated in the Contract Documents. Such reviews do not extend to means, methods, techniques, sequences or procedures of construction or to safety precautions and programs incident thereto. Contractor is responsible for dimensions to be confirmed and correlated at the job site; for information that pertains solely to the fabrication processes or to techniques of construction; and for coordination of the work of all trades.

BY: JM
DATE: 5/13/08

HIGHWAY SAFETY CORP.
GLASTONBURY, CT

ITEM 525.33 BRIDGE RAILING - NETC 2 RAIL
TOWN OF BENNINGTON
COUNTY OF BENNINGTON
PROJECT AC NH 019-1(53) BRIDGE B12
VT ROUTE 279 OVER FURNACE BROOK

GENERAL CONTRACTOR

SUB CONTRACTOR F.R. LAFAYETTE, INC.

DRAWN MHM
CHECKED
DATE 11/30/07
SCALE 3/16=12
HSC REFERENCE NO. 1615
SIZE D REVISION 0
SHEET NO. 3 of 11

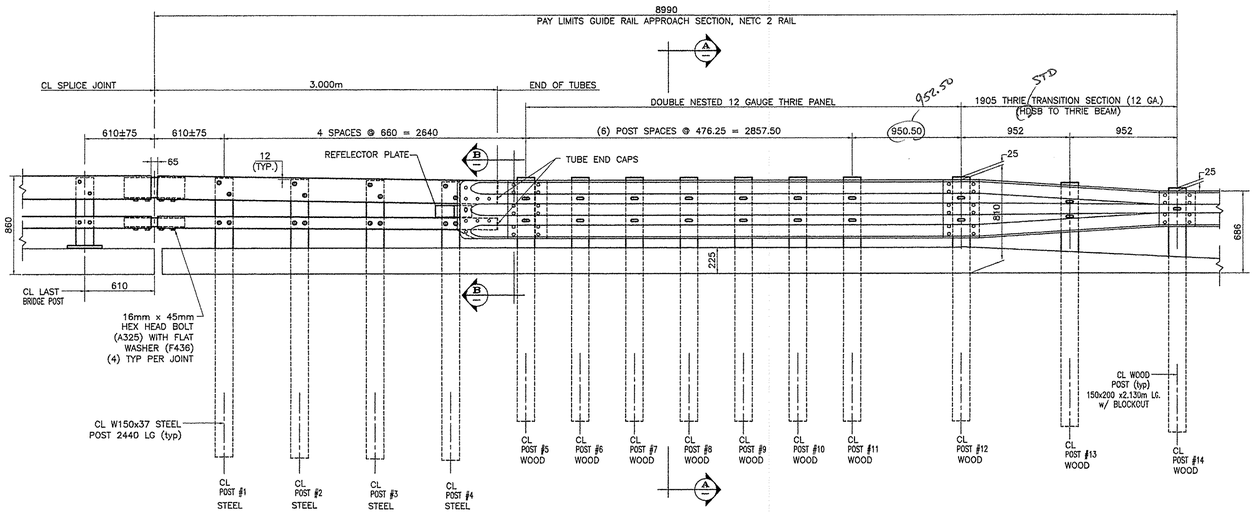

ELEVATION – APPROACH RAIL

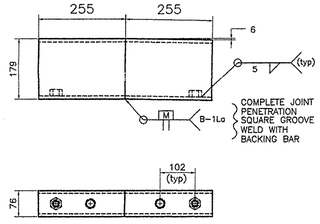

ANGLED SPLICE TUBE DETAIL

UPPER RAIL SPLICE SHOWN

LOWER RAIL DOES NOT REQUIRE BENT SPLICE
TUBE TO MATCH TUBE ANGLE – USE STRAIGHT SPLICE TUBE

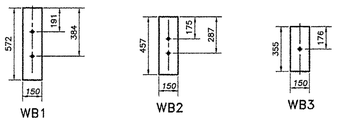

WOOD BLOCK DETAILS

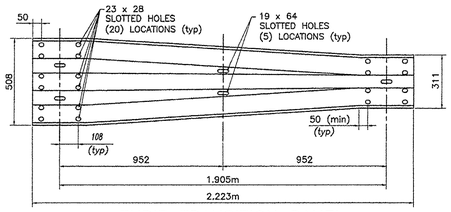

THRIE TRANSITION PANEL

12 GAUGE (AASHTO M180 A2)

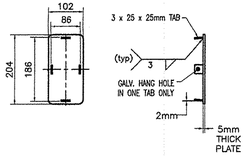

END CAP (204x102)

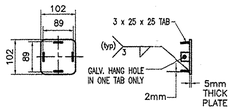

END CAP (102x102)

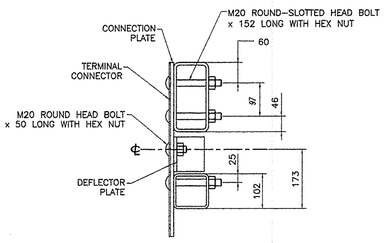

SECTION B–B

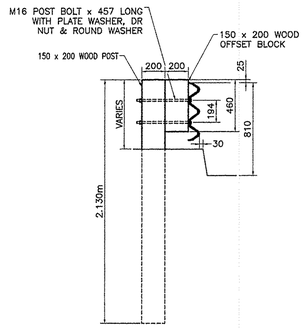

SECTION A–A

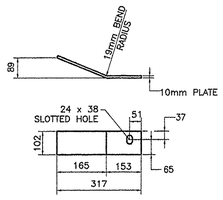

DEFLECTOR PLATE

10 x 102mm PLATE (A709 gr 36)

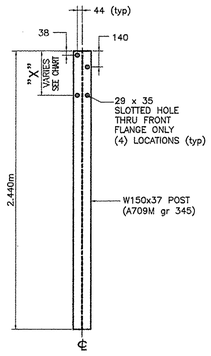

STEEL POST

STEEL POST CHART

No.	" X "
#1	388
#2	383
#3	373
#4	363

GENERAL ERECTION NOTES

1. PAYMENT FOR GUARDRAIL APPROACH SECTION – NETC 2 RAIL SHALL INCLUDE THE TERMINAL CONNECTOR, THE CONNECTION PLATE, THE DEFLECTOR PLATE, RAIL, POSTS, BLOCKS AND ATTACHMENT HARDWARE.
2. CARRIAGE BOLTS SHALL BE ASTM A307 AND NUTS SHALL BE ASTM A563 Gr. A OR BETTER (GALV.)
3. CUT & WELD TOP SPLICE BAR TO FIT BEND. USE COMPLETE PENETRATION WELD B–L1A WITH BACKING BAR.
4. REFLECTORIZED ALUMINUM DELINEATION IS TO BE ERECTED EVERY 9m. (OR CLOSEST POST) WITH 2 No. 8 x 19 SELF TAPPING SCREWS. DELINEATORS SHALL MEET SPECIFICATION REQUIREMENTS FOR ASTM B209 ALLOY 5052–H32.
5. REFLECTIVE MATERIAL SHALL MEET THE REQUIREMENTS OF SUBSECTION 750.08 AND SHALL BE ENCAPSULATED LENS SILVER OR AMBER. AMBER IS TO BE INSTALLED ON THE DRIVERS LEFT AND SLIVER ON THE RIGHT.
6. ALL WORK AND MATERIALS SHALL CONFORM TO THE PROVISIONS OF SECTION 525 – RAILINGS OF THE VERMONT STANDARD SPECIFICATIONS FOR CONSTRUCTION.
7. TUBING & POSTS SHALL MEET THE REQUIREMENTS OF SECTION 732 – RAILING MATERIALS OF THE STANDARD SPECIFICATIONS FOR CONSTRUCTION.
8. ALL EXPOSED CUT OR SHEARED EDGES SHALL BE GROUND TO A 2mm RADIUS & BE FREE OF BURRS.
9. RAIL POSTS SHALL BE SET NORMAL TO GRADE.
10. SECTIONS OF RAIL BAR SHALL BE ATTACHED TO A MINIMUM OF TWO (2) POSTS AND PREFERABLY TO AT LEAST FOUR (4) POSTS.
11. RAIL BAR EXPANSION JOINTS SHALL BE PROVIDED IN ANY RAIL BAY SPANNING A SUPERSTRUCTURE EXPANSION JOINT. EXPANSION JOINT WIDTH SHALL BE "X" AT 45º AND WILL BE ADJUSTED IN THE FIELD BY THE ENGINEER.
12. ALL PARTS SHALL BE GALVANIZED AFTER FABRICATION IN ACCORDANCE WITH AASHTO M111, EXCEPT THAT HARDWARE SHALL MEET THE REQUIREMENTS OF AASHTO M232.
13. RAIL BARS SHALL BE ATTACHED TO STEEL POSTS USING M20 FULL DIA. BODY HEAD BOLTS AASHTO M164 (TYPE 1) INSERTED THROUGH THE FACE OF THE BAR. HOLES IN POST SHALL BE 1/16" LARGER THAN THE BOLT SIZE.
14. HOLES IN RAILS FOR ATTACHMENT TO POSTS WILL BE FIELD DRILLED. HOLES SHALL BE COATED WITH AN APPROVED ZINC–RICH PAINT PRIOR TO ERECTION.
15. RADIUSED RAIL (IF REQUIRED) WILL BE SHOP CURVED. NO FIELD BENDING OF RAIL TUBES.
16. WELD TOP SPLICE BAR TO FIT BEND. USE COMPLETE PENETRATION WELD (B–U2).

BILL OF MATERIAL (ALL APPROACHES)

Mk.	Qty.	Description	Material
	16	STEEL POST W150x37 x 2.440m OAL	A709M gr 345
	40	WOOD POST 150x200 x 2.130m OAL	TIMBER
UR	4	RAIL (UPPER) TS 203x102x8mm x 2.794m	A500 gr B
LR	4	RAIL (LOWER) TS 102x102x6 x 2.794m	A500 gr B
	4	THRIE TRANSITION PANEL – 12 GA	M180 A2
	4	THRIE PANEL (12 GA)	M180 A2
	4	THRIE FLAT LIP TERMINAL CONNECTOR (10 GA)	M180 B2
	4	END CAP FOR 203 x 102 TUBE RAIL	A709M gr 250
	4	END CAP FOR 102 x 102 TUBE RAIL	A709M gr 250
	4	DEFLECTOR PLATE	A709M gr 250
	4	CONNECTION PLATE 10 x 508 x 686	A709M gr 250
WB1	32	WOOD OFFSET BLOCK 150x200 x 572 LONG	TIMBER
WB2	4	WOOD OFFSET BLOCK 150x200 x 457 LONG	TIMBER
WB3	4	WOOD OFFSET BLOCK 150x200 x 355 LONG	TIMBER
	76	M16 x 457 LONG POST BOLT w/ PLATE WASHER, DBL RECESSED NUT & ROUND WASHER	M164M
	96	M20 x 152 LONG ROUND–SLOTTED HEAD BOLT WITH ROUND WASHER & LOCK NUT	A325M
	4	M20 x 51 LONG ROUND HEAD BOLT WITH HEX NUT	M164M
	128	M16 x 32 SPLICE BOLT w/ DOUBLE RECESSED NUT	M164M
	4	UPPER RAIL SPLICE TUBE (ANGLED) – TS 178x76x10 510 OAL	A500 gr B
	4	LOWER RAIL SPLICE TUBE (STRAIGHT) – TS 76x76x8 510 OAL	A500 gr B
	32	M20 x 45 HEX HEAD BOLT w/ ROUND WASHER	A325M
	32	SPACER PIPE ØN 20 SCH 40 x 13 LONG	A709M gr 250

NOTE:
1. SOUTH~~WEST~~ BRIDGE APPROACH RAILS TO BE SET ON 566.300m CONVEX RADIUS.
2. NORTH~~EAST~~ BRIDGE APPROACH RAILS TO BE SET ON 581.600m CONCAVE RADIUS.
3. RAILS ARE PROVIDED STRAIGHT AND WILL FLEX UNDER OWN WEIGHT IN ACCESS OF REQUIRED RAIL CURVATURE DUE TO LARGE RADIUS.

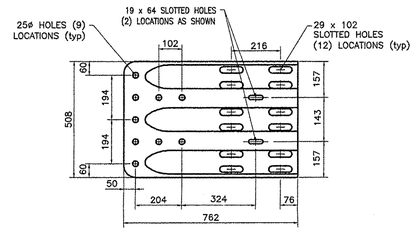

TERMINAL CONNECTOR

10 GAUGE (AASHTO M180 B2)

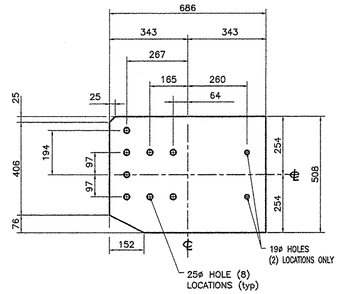

CONNECTION PLATE

10 x 508 x 686 (A709 gr 36)

REVISIONS		
No.	Remarks	Date
0	Initial submittal	

TVGA CONSULTANTS

☐ NO EXCEPTIONS TAKEN ☐ REJECTED
☒ FURNISH AS CORRECTED
☐ REVISE AND RESUBMIT

ENGINEER has reviewed Shop Drawings and Samples and other data which Contractor is required to submit, only for conformance with the information given in the Contract Documents and compatibility with the design concept of the completed Project as a functioning whole as indicated in the Contract Documents. Such reviews do not extend to means, methods, techniques, sequences or procedures of construction or to safety precautions and programs incident thereto. Contractor is responsible for dimensions to be confirmed and correlated at the job site; for information that pertains solely to the fabrication processes or to techniques of construction; and for coordination of the work of all trades.

BY: JWL
DATE: 3/3/08

HIGHWAY SAFETY CORP.
GLASTONBURY, CT

ITEM 621.72 BRIDGE APPROACH RAILING – NETC 2 RAIL
TOWN OF BENNINGTON
COUNTY OF BENNINGTON
PROJECT AC NH 019–1(53) BRIDGE B12
VT ROUTE 279 OVER FURNACE BROOK

GENERAL CONTRACTOR

SUB CONTRACTOR F.R. LAFAYETTE, INC.

DRAWN MHM
CHECKED S Rodier
DATE 12/30/07
SCALE NONE
HSC REFERENCE NO. 1615
SIZE D REVISION 0
SHEET NO. 4 of 11

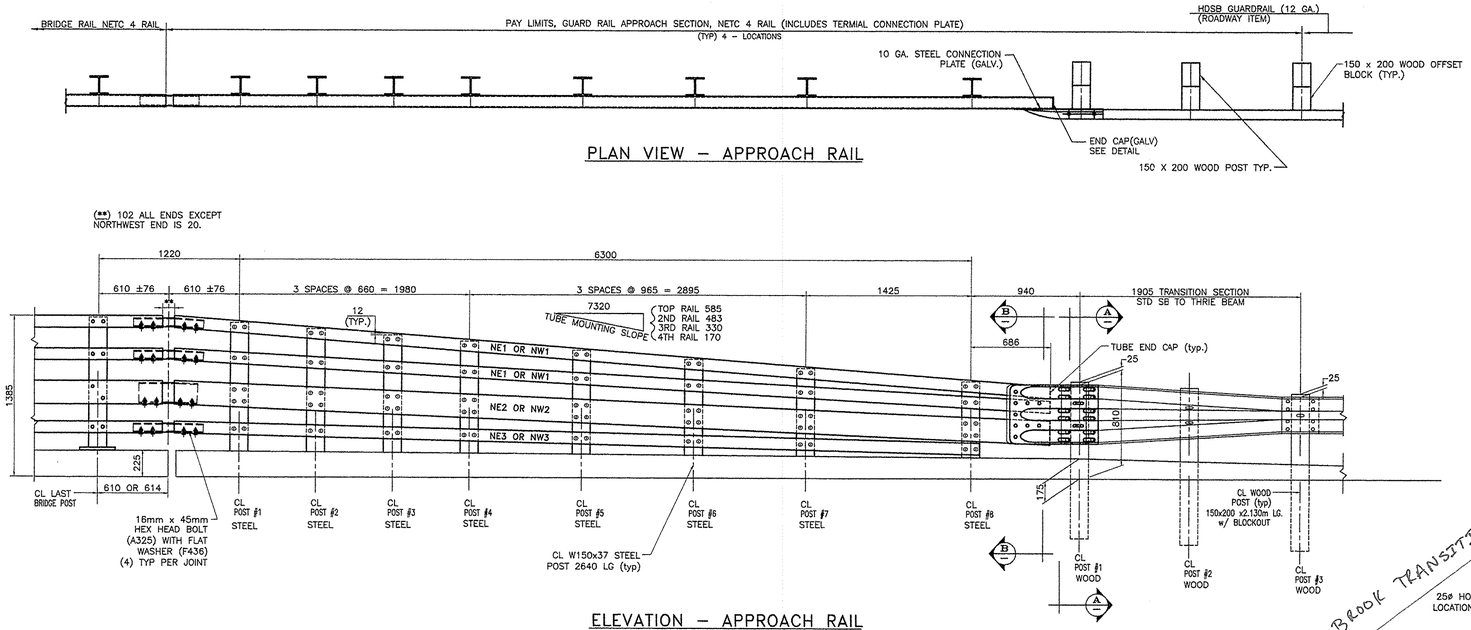

Mk.	Qty.	Description	Material
	24	STEEL POST W150x37 x 2.640m OAL	A709M gr 345
	9	WOOD POST 150x200 x 2.130m OAL	TIMBER
NE1	6	TS 102x102x6 x 77.569m	A500 gr B
NE2	3	RAIL TS 203x102x8mm x 7.569m	A500 gr B
NE3	3	TS 102x102x6 x 6.937m	A500 gr B
	3	THRIE TRANSITION PANEL – 12 GA	M180 A2
	3	TERMINAL CONNECTOR (10 GA)	M180 B2
	3	END CAP FOR 203 x 102 TUBE RAIL	A709M gr 250
	9	END CAP FOR 102 x 102 TUBE RAIL	A709M gr 250
	3	CONNECTION PLATE 10 x 508 x 686	A709M gr 250
	3	WOOD OFFSET BLOCK 150x200 x 572 LONG	TIMBER
	3	WOOD OFFSET BLOCK 150x200 x 457 LONG	TIMBER
	3	WOOD OFFSET BLOCK 150x200 x 355 LONG	TIMBER
	15	M16 x 457 LONG POST BOLT w/ PLATE WASHER, DBL RECESSED NUT & ROUND WASHER	M164M
	216	M20 x 152 LONG ROUND-SLOTTED HEAD BOLT WITH ROUND WASHER & LOCK NUT	A325M
	60	M16 x 32 SPLICE BOLT w/ DOUBLE RECESSED NUT	M164M
	3	SPLICE TUBE (ANGLED) – TS 178x76x10 600 OAL	A500 gr B
	9	SPLICE TUBE (ANGLED) – TS 76x76x8 600 OAL	A500 gr B
	48	M20 x 45 HEX HEAD BOLT w/ ROUND WASHER	A325M
	48	SPACER PIPE DN 20 SCH 40 x 13 LONG	A709M gr 250

BILL OF MATERIAL (3–APPROACHES)

Mk.	Qty.	Description	Material
	8	STEEL POST W150x37 x 2.640m OAL	A709M gr 345
	3	WOOD POST 150x200 x 2.130m OAL	TIMBER
NW1	2	TS 102x102x6 x 77.569m	A500 gr B
NW2	1	RAIL TS 203x102x8mm x 7.569m	A500 gr B
NW3	1	TS 102x102x6 x 6.937m	A500 gr B
	1	THRIE TRANSITION PANEL – 12 GA	M180 A2
	1	TERMINAL CONNECTOR (10 GA)	M180 B2
	1	END CAP FOR 203 x 102 TUBE RAIL	A709M gr 250
	3	END CAP FOR 102 x 102 TUBE RAIL	A709M gr 250
	1	CONNECTION PLATE 10 x 508 x 686	A709M gr 250
	1	WOOD OFFSET BLOCK 150x200 x 572 LONG	TIMBER
	1	WOOD OFFSET BLOCK 150x200 x 457 LONG	TIMBER
	1	WOOD OFFSET BLOCK 150x200 x 355 LONG	TIMBER
	5	M16 x 457 LONG POST BOLT w/ PLATE WASHER, DBL RECESSED NUT & ROUND WASHER	M164M
	72	M20 x 152 LONG ROUND-SLOTTED HEAD BOLT WITH ROUND WASHER & LOCK NUT	A325M
	20	M16 x 32 SPLICE BOLT w/ DOUBLE RECESSED NUT	M164M
	1	SPLICE TUBE (ANGLED) – TS 178x76x10 600 OAL	A500 gr B
	3	SPLICE TUBE (ANGLED) – TS 76x76x8 600 OAL	A500 gr B
	16	M20 x 45 HEX HEAD BOLT w/ ROUND WASHER	A325M
	16	SPACER PIPE DN 20 SCH 40 x 13 LONG	A709M gr 250

BILL OF MATERIAL (NORTHWEST APPROACHE ONLY)

No.	"X1"	"X2"	"X3"
#1	308	578	917
#2	292	556	882
#3	279	533	844
#4	266	508	810
#5	247	476	759
#6	228	441	708
#7	206	410	654
#8	178	358	886

STEEL POST CHART

NOTES:

1. PAYMENT FOR GUARD RAIL APPROACH SECTION, NETC 4 RAIL SHALL INCLUDE THE TERMINAL CONNECTOR, THE CONNECTION PLATE, RAIL, POSTS, BLOCKS AND ATTACHMENT HARDWARE.
2. ALL APPROACH RAIL SPLICES SHALL BE LAPPED IN THE DIRECTION OF TRAFFIC FLOW.
3. ALL APPROACH RAIL MATERIALS, DIMENSION SIZE AND NOTES SHALL BE THE SAME AS OF THOSE OF THE BRIDGE RAIL, UNLESS OTHERWISE NOTED.
4. ALL PARTS SHALL BE GALVANIZED AFTER FABRICATION IN ACCORDANCE WITH AASHTO M111, EXCEPT THAT HARDWARE SHALL MEET THE REQUIREMENTS OF AASHTO M232.
5. ALL EXPOSED CUT OR SHEARED EDGES SHALL BE GROUND TO A 2mm RADIUS AND BE FREE OF BURRS.
6. CARRIAGE BOLTS SHALL BE AASHTO M 164M AND NUTS SHALL BE AASHTO M29 IM (ASTM A 563M) OR BETTER (GALVANIZED).
7. HOLES IN RAILS FOR ATTACHMENT TO POSTS WILL BE FIELD DRILLED. HOLES SHALL BE COATED WITH AN APPROVED ZINC–RICH PAINT PRIOR TO ERECTION.
8. WELD SPLICE BARS TO FIT BEND. USE COMPLETE PENETRATION WELD (B–U2).
9. THE REFLECTORIZED ALUMINUM DELINEATION IS TO BE ERECTED EVERY 9100 (OR CLOSEST POST) WITH A 16 DIAMETER BOLT. DELINEATORS SHALL MEET SPECIFICATION REQUIREMENTS FOR ASTM B209 ALLOY 5052–H32.
10. REFLECTIVE MATERIAL SHALL MEET REQUIREMENTS OF SUBSECTION 750.08 AND SHALL BE OF ENCAPSULATED LENS SILVER. SILVER IS TO BE INSTALLED ON THE DRIVER'S RIGHT.

No.	Remarks	Date
0	Initial submittal	

REVISIONS

TVGA CONSULTANTS

☐ NO EXCEPTIONS TAKEN ☒ REJECTED
☐ FURNISH AS CORRECTED
☐ REVISE AND RESUBMIT

ENGINEER has reviewed Shop Drawings and Samples and other data which Contractor is required to submit, only for conformance with the information given in the Contract Documents and compatibility with the design concept of the completed Project as a functioning whole as indicated in the Contract Documents. Such review do not extend to means, methods, techniques, sequences or procedures of construction or to safety precautions and programs incident thereto. Contractor is responsible for dimensions to be confirmed and correlated at the job site; for information that pertains solely to the fabrication processes or to techniques of construction; and for coordination of the work of all trades.

BY: JWR
DATE: 3/13/08

HIGHWAY SAFETY CORP.
GLASTONBURY, CT

ITEM 621.73 BRIDGE APPROACH RAILING – NETC 4 RAIL
TOWN OF BENNINGTON
COUNTY OF BENNINGTON
PROJECT AC NH 019–1(53) BRIDGE B12
VT ROUTE 279 OVER FURNACE BROOK

GENERAL CONTRACTOR

SUB CONTRACTOR
F.R. LAFAYETTE, INC.

DRAWN	MHM
CHECKED	P Radice
DATE	12/30/07
SCALE	NONE
HSC REFERENCE NO.	1615
SIZE	D
REVISION	0
SHEET NO.	11 of 11

BILL OF MATERIAL (SOUTH RAIL)					
Mark #	Qty.	Description	Size/Shape	length/qty. per unit	Material
3P	38	W150x37 POST W/BASEPLATE 1110 OAL			
	38	POST UPRIGHT	W150 x 37	1085	A709M Gr. 345
	38	POST BASE PLATE	254 x 25	356	A709M Gr. 345
	38	BEARING PAD	254 x 3	356	NEOPRENE
P1	2	TS 102 x 102 x 6 TOP & BOTTOM RAILS		4.708m	A500 Gr. B
	1	TS 152 x 102 x 8 MIDDLE RAIL		4.708m	A500 Gr. B
P2	16	TS 102 x 102 x 6 TOP & BOTTOM RAILS		7.182m	A500 Gr. B
	8	TS 152 x 102 x 8 MIDDLE RAIL		7.182m	A500 Gr. B
P3	4	TS 102 x 102 x 6 TOP & BOTTOM RAILS		7.160m	A500 Gr. B
	2	TS 152 x 102 x 8 MIDDLE RAIL		7.160m	A500 Gr. B
P4	2	TS 102 x 102 x 6 TOP & BOTTOM RAILS		4.835m	A500 Gr. B
	1	TS 152 x 102 x 8 MIDDLE RAIL		4.835m	A500 Gr. B
P5	2	TS 102 x 102 x 6 TOP & BOTTOM RAILS		7.690m	A500 Gr. B
	1	TS 152 x 102 x 8 MIDDLE RAIL		7.690m	A500 Gr. B
	24	TS 76 x 76 x 8 SPLICE TUBE W/ WELDED NUTS		510	A500 Gr. B
	12	TS 127 x 76 x 8 SPLICE TUBE W/ WELDED NUTS		510	A500 Gr. B
	84	DN 20 SCH. 40 PIPE SPACER		13	A53 Gr. B
	144	M16 SPLICE HEX BOLT W/ HARDENED WASHER		44	A325M
	228	M20 ROUND HEAD BOLT		152	M164M
	228	M20 HEX NUT			A563 DH
	228	M20 WASHER			F436M

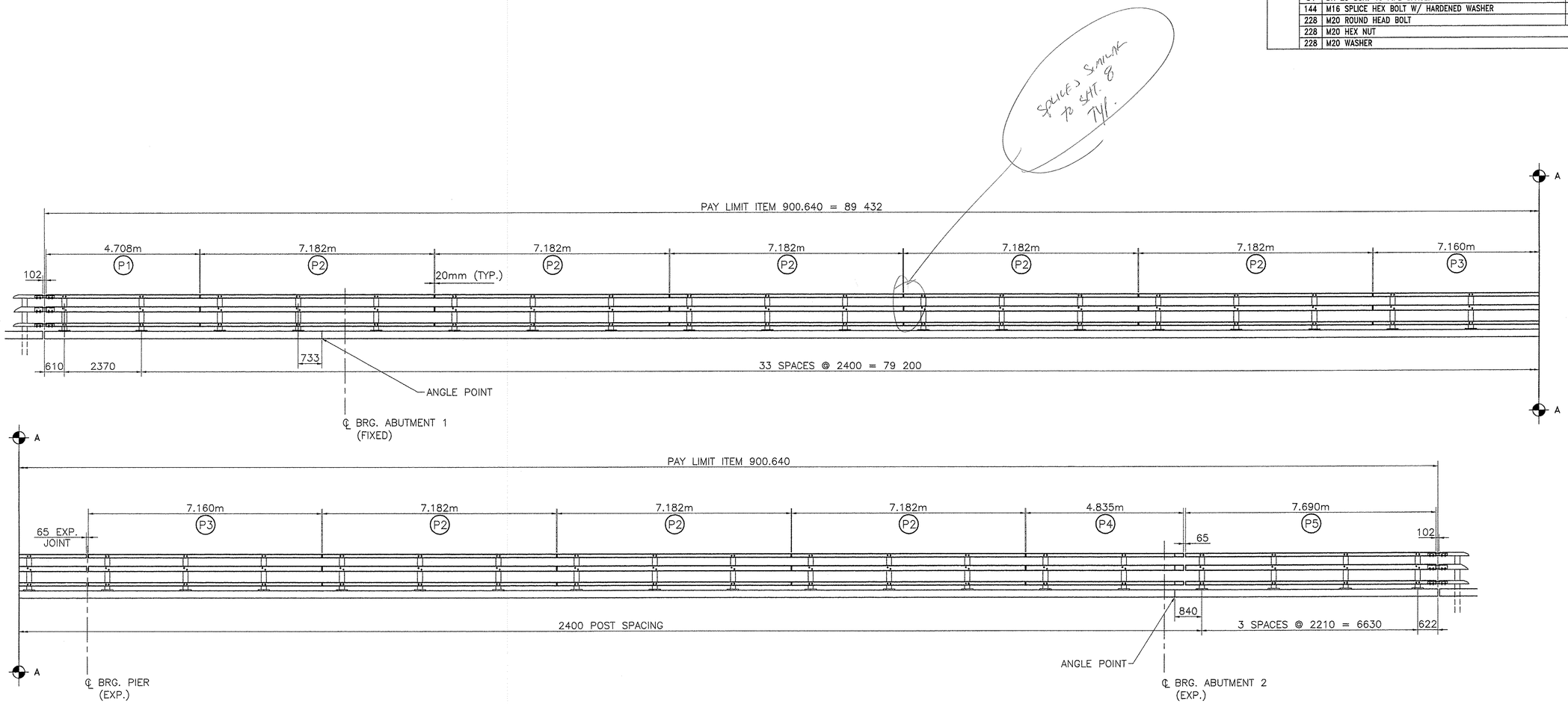

WEST RAIL ELEVATION
LOOKING WEST FROM ℄ OF ROAD
(SHARED USE PATH)

RECEIVED
JUN 27 2008
G.P.I.

REVISIONS		
No.	Remarks	Date
0	Initial submittal	2/15/08
1	Added tube splices	6/5/08

HIGHWAY SAFETY CORP.
GLASTONBURY, CT

ITEM 900.640 BRIDGE RAILING – 3 RAIL
TOWN OF BENNINGTON
COUNTY OF BENNINGTON
PROJECT AC NH 019-1(53) BRIDGE B11
EAST ROAD OVER VT ROUTE 279

GENERAL CONTRACTOR
SUB CONTRACTOR F.R. LAFAYETTE, INC.

DRAWN MHM
CHECKED P Radice
DATE 12/30/07
SCALE N.T.S.
HSC REFERENCE NO. 1615
SIZE D REVISION 1
SHEET NO. 5 of 11

BILL OF MATERIAL (SOUTH RAIL)					
Mark #	Qty.	Description	Size/Shape	length/qty. per unit	Material
3P	31	W150x37 POST W/BASEPLATE 1110 OAL			
	31	POST UPRIGHT	W150 x 37	592	A709M Gr. 345
	31	POST BASE PLATE	254 x 25	356	A709M Gr. 345
	31	BEARING PAD	254 x 3	356	NEOPRENE
P2	14	TS 102 x 102 x 6 TOP & BOTTOM RAILS		7.182m	A500 Gr. B
	7	TS 152 x 102 x 8 MIDDLE RAIL		7.182m	A500 Gr. B
P3	2	TS 102 x 102 x 6 TOP & BOTTOM RAILS		7.160m	A500 Gr. B
	1	TS 152 x 102 x 8 MIDDLE RAIL		7.160m	A500 Gr. B
P6	2	TS 102 x 102 x 6 TOP & BOTTOM RAILS		4.740m	A500 Gr. B
	1	TS 152 x 102 x 8 MIDDLE RAIL		4.740m	A500 Gr. B
P7	2	TS 102 x 102 x 6 TOP & BOTTOM RAILS		7.104m	A500 Gr. B
	1	TS 152 x 102 x 8 MIDDLE RAIL		7.104m	A500 Gr. B
P8	2	TS 102 x 102 x 6 TOP & BOTTOM RAILS		3.153m	A500 Gr. B
	1	TS 152 x 102 x 8 MIDDLE RAIL		3.153m	A500 Gr. B
	20	TS 76 x 76 x 8 SPLICE TUBE W/ WELDED NUTS		510	A500 Gr. B
	10	TS 127 x 76 x 8 SPLICE TUBE W/ WELDED NUTS		510	A500 Gr. B
	120	M16 SPLICE HEX BOLT W/ HARDENED WASHER		44	A325M
	66	DN 20 SCH. 40 PIPE SPACER		13	A53 Gr. B
	186	M20 ROUND HEAD BOLT		152	M164M
	186	M20 HEX NUT			A563 DH
	186	M20 WASHER			F436M

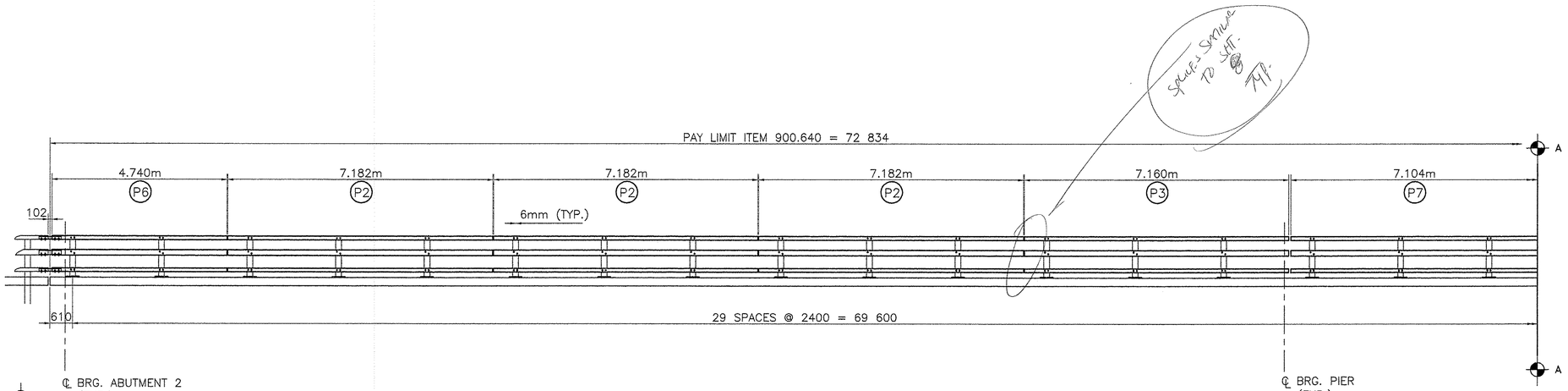

EAST RAIL ELEVATION
LOOKING EAST FROM ℄ OF ROAD
(SHARED USE PATH)

REVISIONS		
No.	Remarks	Date
0	Initial submittal	2/15/08
1	Added tube splices	6/5/08

RECEIVED
JUN 27 2008
G.P.I.

HIGHWAY SAFETY CORP.
GLASTONBURY, CT

ITEM 900.640 BRIDGE RAILING – 3 RAIL
TOWN OF BENNINGTON
COUNTY OF BENNINGTON
PROJECT AC NH 019-1(53) BRIDGE B11
EAST ROAD OVER VT ROUTE 279

GENERAL CONTRACTOR

SUB CONTRACTOR
F.R. LAFAYETTE, INC.

DRAWN MHM
CHECKED P Radice
DATE 12/30/07
SCALE N.T.S.
HSC REFERENCE NO. 1615
SIZE D
REVISION 1
SHEET NO. 6 of 11

BILL OF MATERIAL (4 APPROACHES)					
Mark #	Qty.	Description	Size/Shape	length/qty. per unit	Material
	16	W150x37 POST		2.640m	A709M Gr. 345 ⚠1
T1	4	SHOP CURVED TS 102 x 102 x 6 TOP RAIL		2.708m	A500 Gr. B
T2	4	SHOP CURVED TS 152 x 102 x 8 MIDDLE RAIL		2.703m	A500 Gr. B
T3	4	SHOP CURVED TS 102 x 102 x 6 BOTTOM RAIL		2.700m	A500 Gr. B
	4	TS 76 x 76 x 8 ANGLED SPLICE TUBE		600	A500 Gr. B
	4	TS 127 x 76 x 10 ANGLED SPLICE TUBE		600	A500 Gr. B
	4	TS 76 x 76 x 8 SPLICE TUBE		600	A500 Gr. B
	96	M20 ROUND HEAD BOLT		152	M164M
	96	M20 HEX NUT			A563 DH
	96	M20 WASHER			F436M
	48	M16 SPLICE BOLT		44	A325M
	48	M16 PLAIN HARDENED WASHER			F436M
	24	M16 NUT WELDED TO SPLICE TUBE			A563M
⚠2	2	END CAP FOR 102 x 102 TUBE RAIL			A709M Gr. 250
	1	END CAP FOR 152 x 102 TUBE RAIL			A709M Gr. 250
	48	DN 20 SCH. 40 PIPE SPACER		13	A53 Gr. B

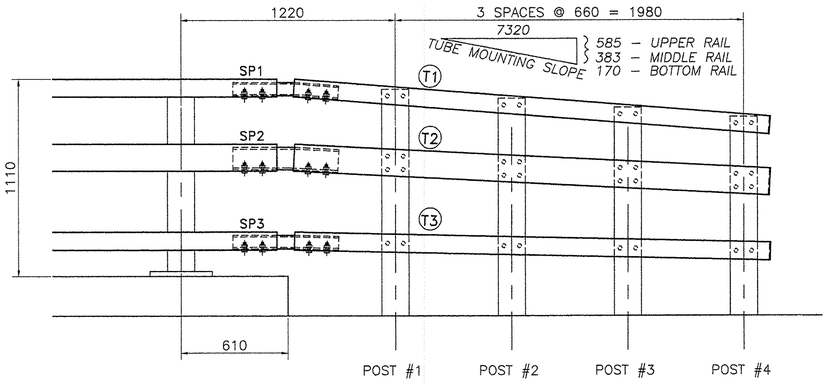

PLAN

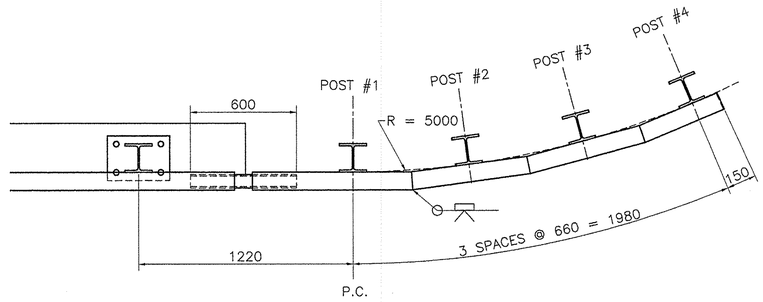

ELEVATION
4 LOCATIONS (TYP.)

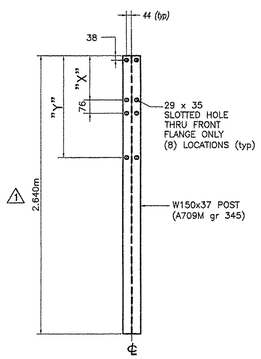

STEEL POST

STEEL POST CHART

No.	" X "	" Y "
#1	381	876
#2	362	838
#3	344	800
#4	325	763

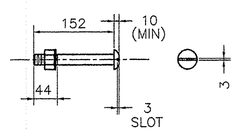

M20 DIA M164 (TYPE I)
ROUND HEAD BOLT
(WITH WASHER AND PREVAILING TORQUE TYPE LOCK NUT)
ONLY FULL DIAMETER BODY BOLTS WILL BE ALLOWED

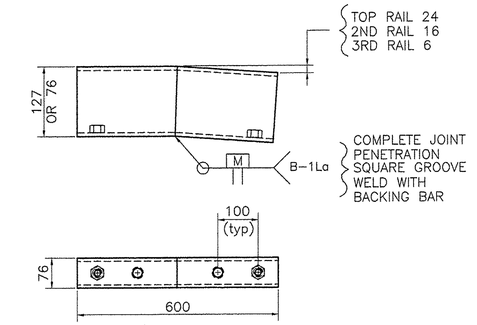

⚠2 ANGLED SPLICE TUBE DETAIL

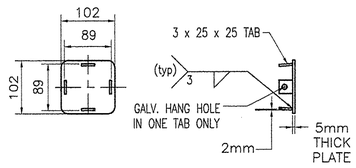

END CAP (102x102)

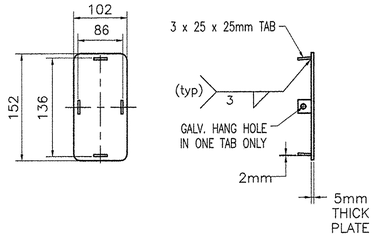

⚠2 END CAP (152x102)

REVISIONS		
No.	Remarks	Date
0	Initial submittal	2/15/08
1	Post Height	3/18/08
2	Added Details	6/5/08

RECEIVED
JUN 27 2008
G.P.I.

QUALITY CERTIFICATION AISC

HIGHWAY SAFETY CORP.
GLASTONBURY, CT

ITEM 900.620 BRIDGE APPROACH RAILING – 3 RAIL
TOWN OF BENNINGTON
COUNTY OF BENNINGTON
PROJECT AC NH 019-1(53) BRIDGE B11
EAST ROAD OVER VT ROUTE 279

GENERAL CONTRACTOR

SUB CONTRACTOR
F.R. LAFAYETTE, INC.

DRAWN	MHM
CHECKED	P Radice
DATE	12/30/07
SCALE	N.T.S.
HSC REFERENCE NO.	1615
SIZE	D
REVISION	⚠2
SHEET NO.	7 of 11

NOTE:
1. WEST BRIDGE RAILS TO BE SET ON 795.500m CONVEX RADIUS.

2. RAILS ARE PROVIDED STRAIGHT AND WILL FLEX UNDER OWN WEIGHT IN ACCESS OF REQUIRED RAIL CURVATURE DUE TO LARGE RADIUS.

BILL OF MATERIAL (WEST RAIL)

Mark #	Qty.	Description	Size/Shape	length/qty. per unit	Material
4P	31	W150x37 POST W/BASEPLATE 1145 OAL			
	31	POST UPRIGHT	W150 x 37	1120	A709M Gr. 345
	31	POST BASE PLATE	254 x 25	356	A709M Gr. 345
	31	BEARING PAD	254 x 3	356	NEOPRENE
A1	3	TS 102 x 102 x 6		1.140m	A500 Gr. B
	1	TS 203 x 102 x 8		1.140m	A500 Gr. B
A2	3	TS 102 x 102 x 6		4.394m	A500 Gr. B
	1	TS 203 x 102 x 8		4.394m	A500 Gr. B
A3	3	TS 102 x 102 x 6		6.000m	A500 Gr. B
	1	TS 203 x 102 x 8		6.000m	A500 Gr. B
A4	18	TS 102 x 102 x 6		7.181m	A500 Gr. B
	6	TS 203 x 102 x 8		7.181m	A500 Gr. B
A5	6	TS 102 x 102 x 6		7.141m	A500 Gr. B
	2	TS 203 x 102 x 8		7.141m	A500 Gr. B
A6	3	TS 102 x 102 x 6		4.740m	A500 Gr. B
	1	TS 203 x 102 x 8		4.740m	A500 Gr. B
A7	3	TS 102 x 102 x 6		1.040m	A500 Gr. B
	1	TS 203 x 102 x 8		1.040m	A500 Gr. B
	9	TS 178 x 76 x 10 FIXED SPLICE TUBE		510	A500 Gr. B
	1	TS 178 x 76 x 10 EXP. SPLICE TUBE		600	A500 Gr. B
	27	TS 76 x 76 x 10 FIXED SPLICE TUBE		510	A500 Gr. B
	3	TS 76 x 76 x 10 EXP. SPLICE TUBE		600	A500 Gr. B
	248	M20 ROUND HEAD BOLT		152	M164M
	248	M20 HEX NUT			A563 DH
	248	M20 WASHER			F436M
	160	M16 SPLICE BOLT		44	A325M
	160	M16 PLAIN HARDENED WASHER			F436M
	80	M16 NUT WELDED TO SPLICE TUBE			A563M
	16	DN 20 SCH. 40 PIPE SPACER		13	A53 Gr. B
	4	END CAP FOR 203 x 102 TUBE RAIL	102 x 5	203	A709M Gr. 250
	12	END CAP FOR 102 x 102 TUBE RAIL	102 x 5	102	A709M Gr. 250

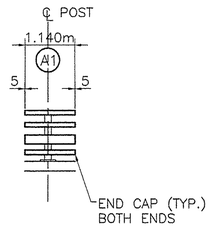

BRIDGE RAIL BETWEEN
VEHICLE BRIDGE AND
SHARED USED PATH BRIDGE

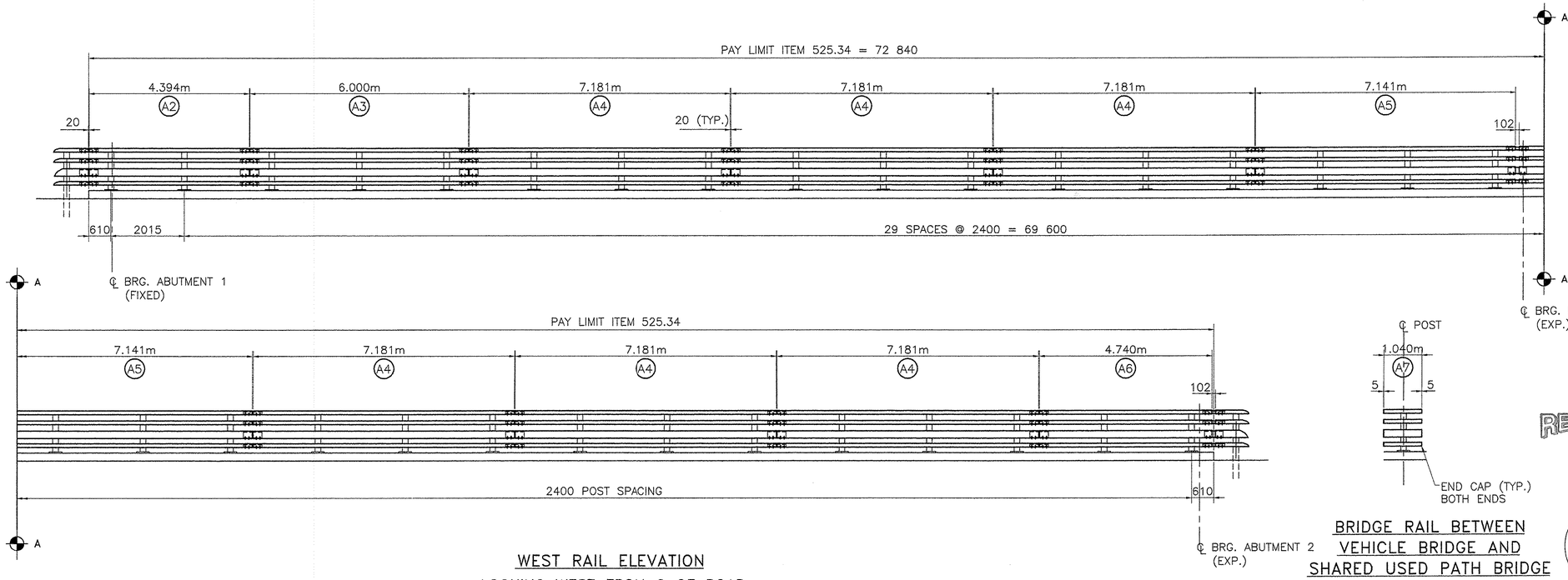

WEST RAIL ELEVATION
LOOKING WEST FROM ℄ OF ROAD

BRIDGE RAIL BETWEEN
VEHICLE BRIDGE AND
SHARED USED PATH BRIDGE

RECEIVED
JUN 27 2008
G.P.I.

REVISIONS		
No.	Remarks	Date
0	Initial submittal	

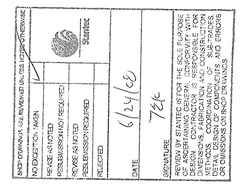

HIGHWAY SAFETY CORP.
GLASTONBURY, CT

ITEM 525.34 BRIDGE RAILING – 4 RAIL
TOWN OF BENNINGTON
COUNTY OF BENNINGTON
PROJECT AC NH 019-1(53) BRIDGE B11
EAST ROAD OVER VT ROUTE 279

GENERAL CONTRACTOR

SUB CONTRACTOR
F.R. LAFAYETTE, INC.

DRAWN	MHM
CHECKED	P Radice
DATE	12/30/07
SCALE	N.T.S.
HSC REFERENCE NO.	1615
SIZE	D
REVISION	0
SHEET NO.	8 of 11

NOTE:
1. EAST BRIDGE RAILS TO BE SET ON 804.500m COCAVE RADIUS.

2. RAILS ARE PROVIDED STRAIGHT AND WILL FLEX UNDER OWN WEIGHT IN ACCESS OF REQUIRED RAIL CURVATURE DUE TO LARGE RADIUS.

BILL OF MATERIAL (WEST RAIL)					
Mark #	Qty.	Description	Size/Shape	length/qty. per unit	Material
4P	38	W150x37 POST W/BASEPLATE 1145 OAL			
	38	POST UPRIGHT	W150 x 37	1120	A709M Gr. 345
	38	POST BASE PLATE	254 x 25	356	A709M Gr. 345
	38	BEARING PAD	254 x 3	356	NEOPRENE
A4	24	TS 102 x 102 x 6		7.181m	A500 Gr. B
	8	TS 203 x 102 x 8		7.181m	A500 Gr. B
A5	6	TS 102 x 102 x 6		7.141m	A500 Gr. B
	2	TS 203 x 102 x 8		7.141m	A500 Gr. B
A6	6	TS 102 x 102 x 6		4.740m	A500 Gr. B
	2	TS 203 x 102 x 8		4.740m	A500 Gr. B
B1	3	TS 102 x 102 x 6		7.460m	A500 Gr. B
	1	TS 203 x 102 x 8		7.460m	A500 Gr. B
B2	3	TS 102 x 102 x 6		4.083m	A500 Gr. B
	1	TS 203 x 102 x 8		4.083m	A500 Gr. B
	10	TS 178 x 76 x 10 FIXED SPLICE TUBE		510	A500 Gr. B
	2	TS 178 x 76 x 10 EXP. SPLICE TUBE		600	A500 Gr. B
	30	TS 76 x 76 x 10 FIXED SPLICE TUBE		510	A500 Gr. B
	6	TS 76 x 76 x 10 EXP. SPLICE TUBE		600	A500 Gr. B
	304	M20 ROUND HEAD BOLT		152	M164M
	304	M20 HEX NUT			A563 DH
	304	M20 WASHER			F436M
	192	M16 SPLICE BOLT		44	A325M
	192	M16 PLAIN HARDENED WASHER			F436M
	96	M16 NUT WELDED TO SPLICE TUBE			A563M
	32	DN 20 SCH. 40 PIPE SPACER		13	A53 Gr. B

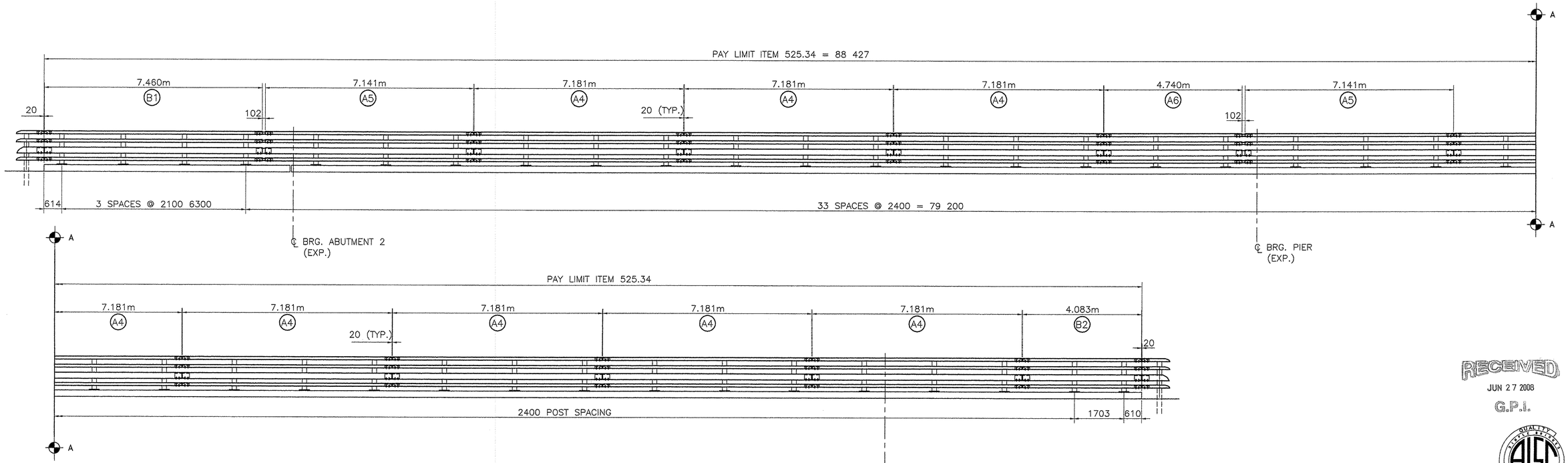

EAST RAIL ELEVATION
LOOKING EAST FROM ℄ OF ROAD

RECEIVED
JUN 27 2008
G.P.I.

REVISIONS		
No.	Remarks	Date
0	Initial submittal	

SHOP DRAWINGS ARE REQUIRED UNLESS NOTED OTHERWISE
NO EXCEPTIONS TAKEN
MAKE CORRECTIONS NOTED
REVISE AND RESUBMIT
REJECTED
RESUBMISSION REQUIRED
Stamp
DATE 6/24/08
SIGNATURE
REVIEW BY STANTEC IS FOR THE SOLE PURPOSE OF ASSESSING CONFORMITY WITH THE DESIGN CONCEPT AND COMPLIANCE WITH THE CONTRACT DOCUMENTS. IT DOES NOT EXTEND TO DESIGN CONTRACTOR'S RESPONSIBILITIES FOR CONSTRUCTION METHODS, COORDINATION OF THE WORK OF VARIOUS TRADES OR SAFETY PRECAUTIONS AND PROGRAMS. CONTRACTOR IS RESPONSIBLE FOR CONFIRMING AND CORRELATING ALL DATA RELATIVE TO THE WORK AND THE CONTRACT DOCUMENTS. STANTEC'S REVIEW DOES NOT INDICATE APPROVAL OF ANY DEVIATION FROM CONTRACT DOCUMENTS UNLESS STANTEC HAS GIVEN WRITTEN APPROVAL OF THE SPECIFIC DEVIATION. STANTEC'S REVIEW DOES NOT RELIEVE CONTRACTOR OF RESPONSIBILITY FOR ERRORS OR OMISSIONS ON SHOP DRAWINGS.

HIGHWAY SAFETY CORP.
GLASTONBURY, CT

ITEM 525.34 BRIDGE RAILING – 4 RAIL
TOWN OF BENNINGTON
COUNTY OF BENNINGTON
PROJECT AC NH 019-1(53) BRIDGE B11
EAST ROAD OVER VT ROUTE 279

GENERAL CONTRACTOR

SUB CONTRACTOR F.R. LAFAYETTE, INC.

DRAWN	MHM
CHECKED	P Radice
DATE	12/30/07
SCALE	N.T.S.
HSC REFERENCE NO.	1615
SIZE	D
REVISION	0
SHEET NO.	9 of 11

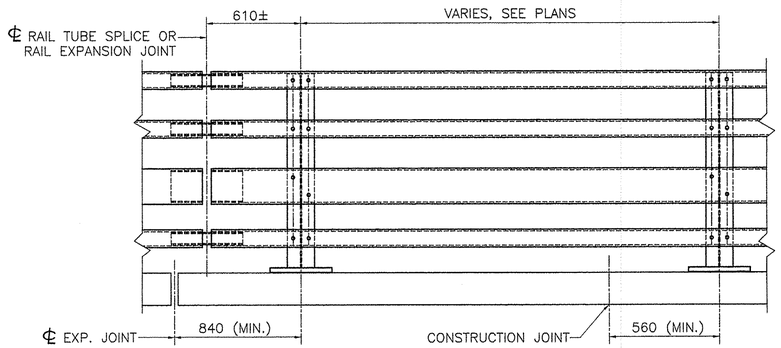

BRIDGE RAILING ELEVATION

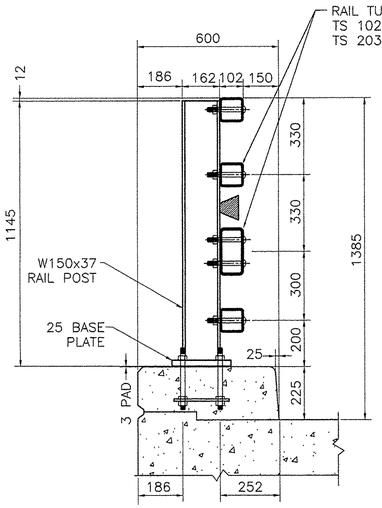

TYPICAL SECTION
4 RAIL POST (4P)

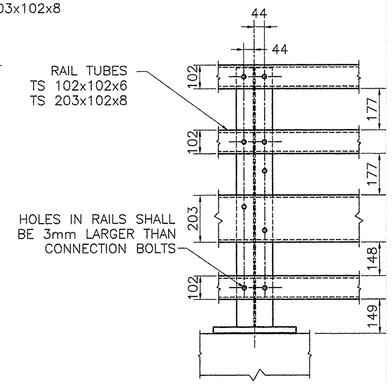

ELEVATION

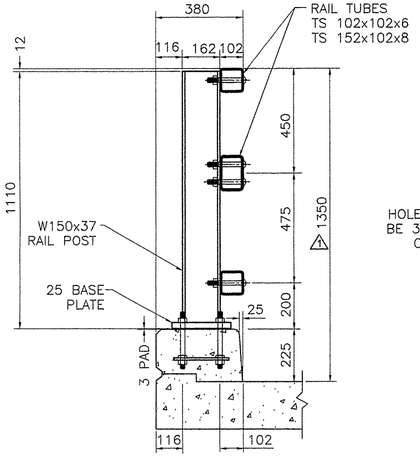

TYPICAL SECTION
3 RAIL POST (3P)

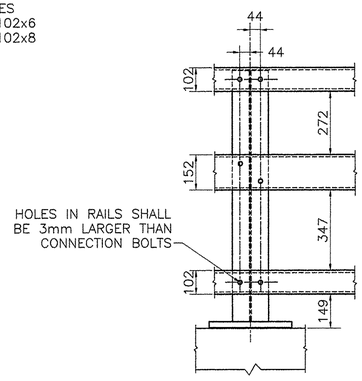

ELEVATION

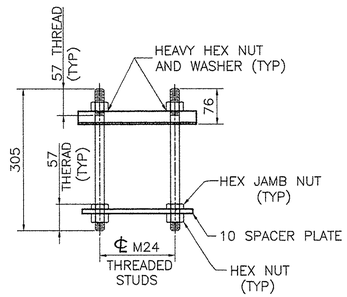

RAIL POST ANCHORAGE
(BY OTHERS)

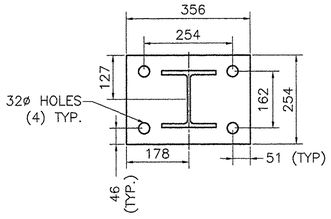

POST AND BASE PLATE

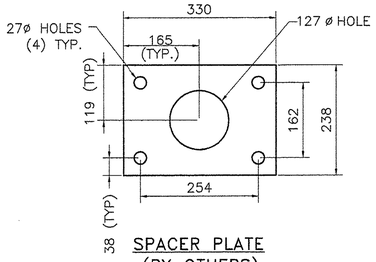

SPACER PLATE
(BY OTHERS)

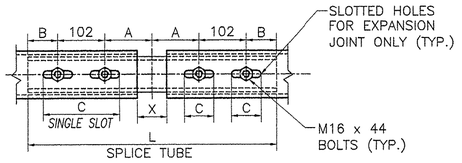

RAIL TUBE SPLICE AND RAIL
EXPANSION JOINT DETAIL

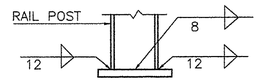

BASE WELD DETAIL

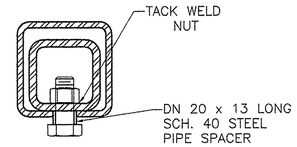

16ø TAPPED HOLE IN SPLICE TUBE
AND 29 x 'C' SLOT IN RAIL TUBE FOR
M16 BOLT AND PLAIN HARDENED WASHER

EXPANSION JOINT SECTION

FOR DETAILS NOT SHOWN,
SEE "RAIL TUBE SPLICE SECTION."

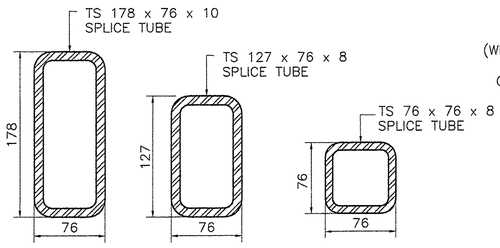

RAIL TUBE SPLICE SECTION

SPLICE TABLE					
T	A	B	C	L	X
N/A	102	50	---	510	20
EXPANSION JOINT TABLE					
70	140	60	90	600	102

T = TOTAL MOVEMENT BETWEEN BRIDGE
EXPANSION JOINTS. SEE NOTE 6

REVISIONS		
No.	Remarks	Date
0	Initial submittal	2/15/08
1	3-Rail cross section	3/18/08
2	Added Splice Tube	6/5/08

NOTES:

1. ALL RAILINGS AND MATERIALS SHALL CONFORM TO THE PROVISION OF SECTION 525, "RAILINGS OF THE STANDARD SPECIFICATION FOR CONSTRUCTION".

2. TUBING AND POSTS SHALL MEET THE REQUIREMENTS OF SECTION 732, "RAILING MATERIALS OR THE STANDARD SPECIFICATIONS FOR CONSTRUCTION," EXCEPT THAT THE DROP-WEIGHT TEAR TEST IN SECTION 732 SHALL NOT APPLY TO THE STRUCTURAL TUBING SHOWN ON THIS SHEET.

3. PRIOR TO GALVANIZING, ALL EXPOSED CUT OR SHEARED EDGES SHALL BE ROUNDED TO A 2mm RADIUS AND BE FREE OF BURRS.

4. RAIL POSTS SHALL BE SET NORMAL TO GRADE.

5. SECTIONS OF RAIL TUBE SHALL BE ATTACHED TO A MINIMUM OF TWO (2) RAIL POSTS AND PREFERABLY TO AT LEAST FOUR (4) POSTS.

6. RAIL TUBE EXPANSION JOINT SHALL BE PROVIDED IN ANY RAIL BAY SPANNING A SUPERSTRUCTURE EXPANSION JOINT. EXPANSION JOINT WIDTH SHALL BE "X" AT 7'C AND WILL BE ADJUSTED IN THE FIELD BY THE ENGINEER FOR OTHER TEMPERATURES.

7. ALL PARTS SHALL BE GALVANIZED AFTER FABRICATION IN ACCORDANCE WITH AASHTO M111M, EXCEPT HARDWARE, WHICH SHALL MEET THE REQUIREMENTS OF AASHTO M232M.

8. RAIL POST ANCHORING NUTS SHALL BE TIGHTENED TO A SNUG FIT AND GIVEN AN ADDITIONAL ONE-EIGHTH TURN.

9. RAIL TUBES SHALL BE ATTACHED USING M20 FULL DIAMETER BODY AASHTO M164M (TYPE 1) ROUND HEAD BOLT INSERTED THOUGH THE FACE OF THE TUBE. HOLES IN POSTS SHALL BE 2mm LARGER THAN THE BOLT SIZE.

10. HOLES IN RAILS FOR RAIL TUBE ATTACHMENT MAY BE FIELD-DRILLED. HOLES SHALL BE COATED WITH AN APPROVED ZINC-RICH PAINT PRIOR TO ERECTION.

11. IF THERE IS A CONFLICT BETWEEN THE DETAILS SHOWN ON THIS SHEET AND THE DESIGN, THE REQUIREMENTS OF THE DESIGN DRAWINGS SHALL BE FOLLOWED.

12. ANY BENDING OF RAIL SHALL BE BY SHOP PROCEDURE ONLY.

13. THE FABICATOR SHALL SUBMIT SHOP DRAWINGS, INCLUDING WELDING PROCEDURES TO THE STRUCTURES SECTION FOR APPROVAL IN ACCORDANCE WITH THE PROVISION OF 506.04, SHOP DRAWINGS. ALL WELDING SHALL CONFORM WITH SECTION 506.10.

14. RAIL POSTS AND BASE PLATES SHALL BE TESTED FOR IMPACT PROPERTIES IN ACCORDANCE WITH ASTM A370 CHARPY IMPACT TESTING USING TYPE A SPECIMENS.

15. TO FACILITATE FIELD FIT – UP OF THE TRANSITION RAILING, POSTS SHALL BE SET LOOSELY INTO FIBER FORM TUBES WHILE TRANSITION PARTS ARE BEING ASSEMBLED. POST HOLES SHALL BE BACKED FILLED WITH A CONCRETE MIX APPROVED BY THE ENGINEER. PAYMENT FOR COMPONENTS, INCLUDING BACKUP PLATE AND END TERMINAL CONNECTOR FOR GUARD RAIL, AUGERING, FIBER FORM TUBES AND CONCRETE , AND INSTALLATION SHALL BE CONSIDERED INCIDENTAL TO ITEM 525.33, "BRIDGE RAILING – NETC 2 RAILING".

16. ALL APPROACH RAIL SPLICES SHALL BE LAPPED ON THE DIRECTION OF TRAFFIC FLOW.

MATERIALS

RAIL TUBES.....ASTM A500, GRADE B OR ASTM A501
RAIL POSTS AND BASE PLATES.....ASTM A709/A709M, GRADE 50
ALL OTHER SHAPEs AND PLATES.....ASTM A709/A709M, GRADE 36
ANCHOR STUDS.....ASTM A449
ALL OTHER BOLTS (UNLESS NOTED).....AASHTO M164M, TYPE1

NUTS FOR AASHTO M164M (ASTM A325M) BOLTS AND ANCHOR STUDS SHALL COMPLY WITH AASTHO M291M (ASTM A563M).

WASHERS SHALL COMPLY WITH AASHTO M293M (ASTM F436M) SPECIFCATIONS.

3mm PAD SHALL COMPLY WITH STANDARD SPECIFICATION SUBSECTION 731.01 OR 731.02.

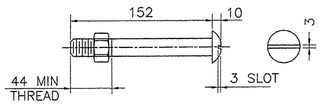

M20 DIA. M164M (TYPE 1)
ROUND HEAD BOLT

(WITH WASHER AND PREVAILING TORQUE TYPE LOCK NUT)
(SEE NOTE #9)
ONLY FULL DIAMETER BODY BOLTS WILL BE ALLOWED.

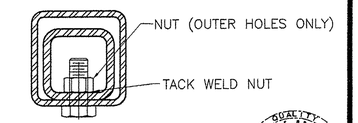

16ø TAPPED HOLE IN SPLICE TUBE &
19 ø HOLE IN RAIL TUBE FOR M16
BOLT & PLAIN HARDENED WASHER

RECEIVED
JUN 27 2008
G.P.I.

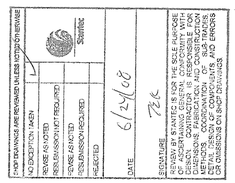

HIGHWAY SAFETY CORP.

GLASTONBURY, CT

BRIDGE RAILING – 3 & 4 RAIL
TOWN OF BENNINGTON
COUNTY OF BENNINGTON
PROJECT AC NH 019-1(53) BRIDGE B11
EAST ROAD OVER VT ROUTE 279

GENERAL CONTRACTOR

SUB CONTRACTOR F.R. LAFAYETTE, INC.

DRAWN	MHM
CHECKED	P Radice
DATE	12/30/07
SCALE	N.T.S.
HSC REFERENCE NO.	1615
SIZE	D
REVISION	2
SHEET NO.	10 of 11

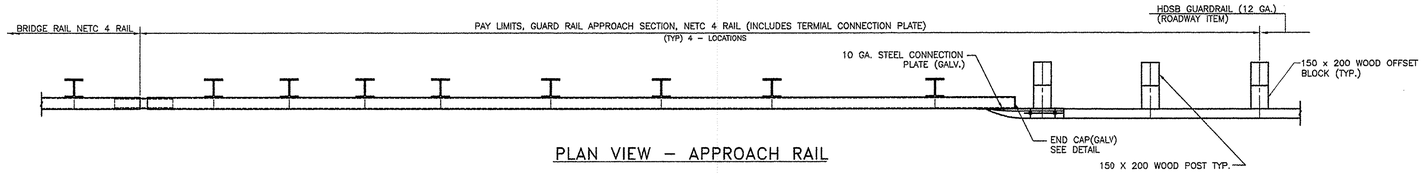

PLAN VIEW – APPROACH RAIL

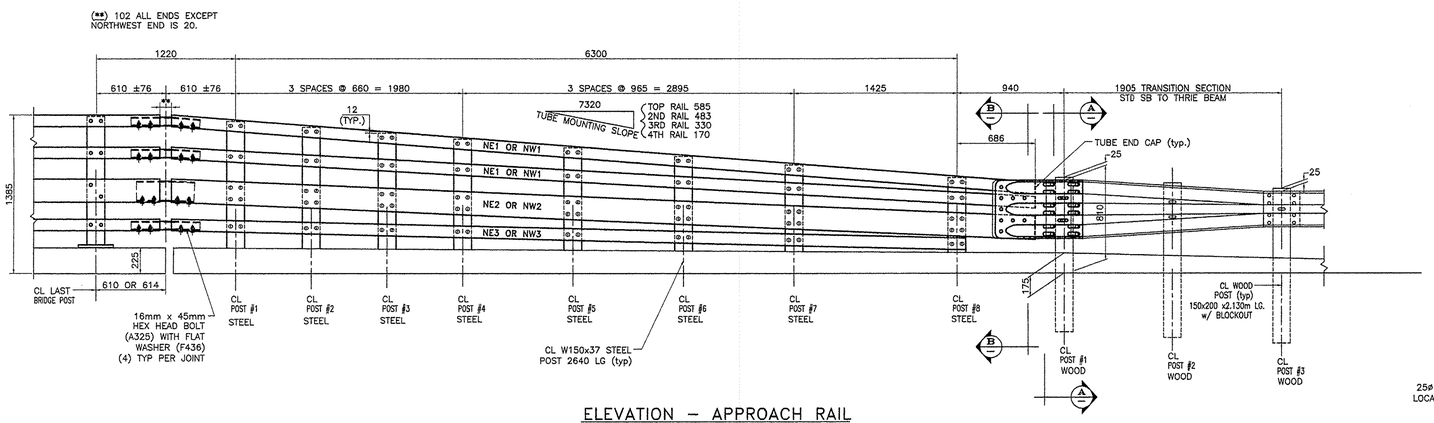

ELEVATION – APPROACH RAIL

BILL OF MATERIAL (3–APPROACHES)			
Mk.	Qty.	Description	Material
	24	STEEL POST W150x37 x 2.640m OAL	A709M gr 345
	9	WOOD POST 150x200 x 2.130m OAL	TIMBER
NE1	6	TS 102x102x6 x 7.537m	A500 gr B
NE2	3	RAIL TS 203x102x8mm x 7.537m	A500 gr B
NE3	3	TS 102x102x6 x 6.905m	A500 gr B
	3	THRIE TRANSITION PANEL – 12 GA	M180 A2
	3	TERMINAL CONNECTOR (10 GA)	M180 B2
	3	END CAP FOR 203 x 102 TUBE RAIL	A709M gr 250
	9	END CAP FOR 102 x 102 TUBE RAIL	A709M gr 250
	3	CONNECTION PLATE 10 x 508 x 686	A709M gr 250
	3	WOOD OFFSET BLOCK 150x200 x 572 LONG	TIMBER
	3	WOOD OFFSET BLOCK 150x200 x 457 LONG	TIMBER
	3	WOOD OFFSET BLOCK 150x200 x 355 LONG	TIMBER
	15	M16 x 457 LONG POST BOLT w/ PLATE WASHER, DBL RECESSED NUT & ROUND WASHER	M164M
	216	M20 x 152 LONG ROUND–SLOTTED HEAD BOLT WITH ROUND WASHER & LOCK NUT	A325M
	60	M16 x 32 SPLICE BOLT w/ DOUBLE RECESSED NUT	M164M
	3	SPLICE TUBE (ANGLED) – TS 178x76x10 600 OAL	A500 gr B
	9	SPLICE TUBE (ANGLED) – TS 76x76x8 600 OAL	A500 gr B
	48	M20 x 45 HEX HEAD BOLT w/ ROUND WASHER	A325M
	48	SPACER PIPE DN 20 SCH 40 x 13 LONG	A709M gr 250

BILL OF MATERIAL (NORTHWEST APPROACHE ONLY)			
Mk.	Qty.	Description	Material
	8	STEEL POST W150x37 x 2.640m OAL	A709M gr 345
	3	WOOD POST 150x200 x 2.130m OAL	TIMBER
NW1	2	TS 102x102x6 x 7.569m	A500 gr B
NW2	1	RAIL TS 203x102x8mm x 7.569m	A500 gr B
NW3	1	TS 102x102x6 x 6.937m	A500 gr B
	1	THRIE TRANSITION PANEL – 12 GA	M180 A2
	1	TERMINAL CONNECTOR (10 GA)	M180 B2
	1	END CAP FOR 203 x 102 TUBE RAIL	A709M gr 250
	3	END CAP FOR 102 x 102 TUBE RAIL	A709M gr 250
	1	CONNECTION PLATE 10 x 508 x 686	A709M gr 250
	1	WOOD OFFSET BLOCK 150x200 x 572 LONG	TIMBER
	1	WOOD OFFSET BLOCK 150x200 x 457 LONG	TIMBER
	1	WOOD OFFSET BLOCK 150x200 x 355 LONG	TIMBER
	5	M16 x 457 LONG POST BOLT w/ PLATE WASHER, DBL RECESSED NUT & ROUND WASHER	M164M
	72	M20 x 152 LONG ROUND–SLOTTED HEAD BOLT WITH ROUND WASHER & LOCK NUT	A325M
	20	M16 x 32 SPLICE BOLT w/ DOUBLE RECESSED NUT	M164M
	1	SPLICE TUBE (ANGLED) – TS 178x76x10 600 OAL	A500 gr B
	3	SPLICE TUBE (ANGLED) – TS 76x76x8 600 OAL	A500 gr B
	16	M20 x 45 HEX HEAD BOLT w/ ROUND WASHER	A325M
	16	SPACER PIPE DN 20 SCH 40 x 13 LONG	A709M gr 250

NOTES:

1. PAYMENT FOR GUARD RAIL APPROACH SECTION, NETC 4 RAIL SHALL INCLUDE THE TERMINAL CONNECTOR, THE CONNECTION PLATE, RAIL, POSTS, BLOCKS AND ATTACHMENT HARDWARE.
2. ALL APPROACH RAIL SPLICES SHALL BE LAPPED IN THE DIRECTION OF TRAFFIC FLOW.
3. ALL APPROACH RAIL MATERIALS, DIMENSION SIZE AND NOTES SHALL BE THE SAME AS OF THOSE OF THE BRIDGE RAIL, UNLESS OTHERWISE NOTED.
4. ALL PARTS SHALL BE GALVANIZED AFTER FABRICATION IN ACCORDANCE WITH AASHTO M111, EXCEPT THAT HARDWARE SHALL MEET THE REQUIREMENTS OF AASHTO M232.
5. ALL EXPOSED CUT OR SHEARED EDGES SHALL BE GROUND TO A 2mm RADIUS AND BE FREE OF BURRS.
6. CARRIAGE BOLTS SHALL BE AASHTO M 164M AND NUTS SHALL BE AASHTO M29 IM (ASTM A 563M) OR BETTER (GALVANIZED).
7. HOLES IN RAILS FOR ATTACHMENT TO POSTS WILL BE FIELD DRILLED. HOLES SHALL BE COATED WITH AN APPROVED ZINC–RICH PAINT PRIOR TO ERECTION.
8. WELD SPLICE BARS TO FIT BEND. USE COMPLETE PENETRATION WELD (B–U2).
9. THE REFLECTORIZED ALUMINUM DELINEATION IS TO BE ERECTED EVERY 9100 (OR CLOSEST POST) WITH A 16 DIAMETER BOLT. DELINEATORS SHALL MEET SPECIFICATION REQUIREMENTS FOR ASTM B209 ALLOY 5052–H32.
10. REFLECTIVE MATERIAL SHALL MEET REQUIREMENTS OF SUBSECTION 750.08 AND SHALL BE OF ENCAPSULATED LENS SILVER. SILVER IS TO BE INSTALLED ON THE DRIVER'S RIGHT.

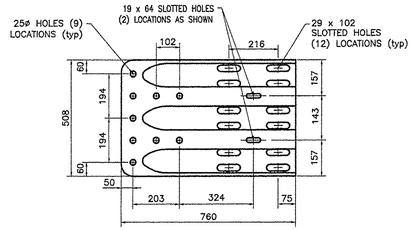

TERMINAL CONNECTOR

10 GAUGE (AASHTO M180 B2)

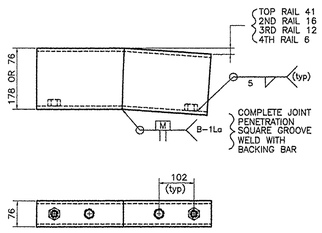

ANGLED SPLICE TUBE DETAIL

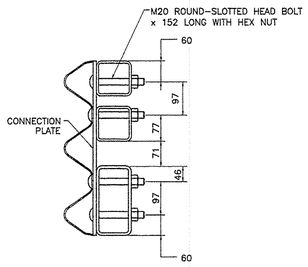

SECTION B–B

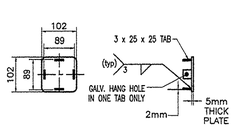

END CAP (102x102)

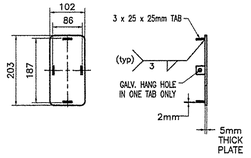

END CAP (203x102)

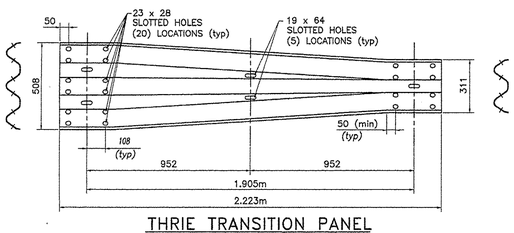

THRIE TRANSITION PANEL

12 GAUGE (AASHTO M180 A2)

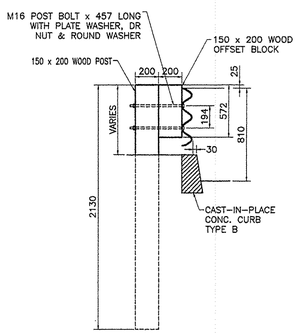

SECTION A–A

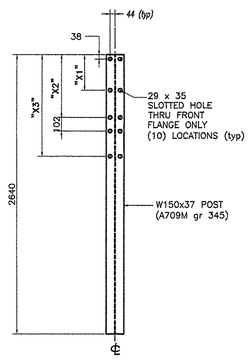

STEEL POST

STEEL POST CHART			
No.	"X1"	"X2"	"X3"
#1	308	578	917
#2	292	556	882
#3	279	533	844
#4	266	508	810
#5	247	476	759
#6	228	441	708
#7	206	410	654
#8	178	358	886

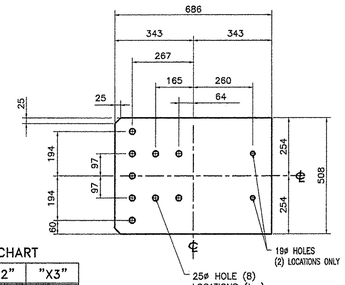

CONNECTION PLATE

10 x 508 x 686 (A709 gr 36)

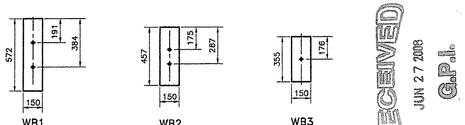

WOOD BLOCK DETAILS

RECEIVED
JUN 27 2008
G.P.I.

REVISIONS		
No.	Remarks	Date
0	Initial submittal	

SHOP DRAWINGS WERE REVIEWED IN ACCORDANCE WITH THE REQUIREMENTS OF THE CONTRACT DOCUMENTS. EXCEPTIONS TO THE CONTRACT DOCUMENTS ARE NOTED ON THE SHOP DRAWINGS. THE CONTRACTOR IS RESPONSIBLE FOR CONFIRMING AND CORRELATING ALL QUANTITIES AND DIMENSIONS, FABRICATION PROCESSES AND TECHNIQUES OF CONSTRUCTION, COORDINATION OF HIS WORK WITH THAT OF ALL OTHER TRADES AND THE SATISFACTORY PERFORMANCE OF HIS WORK. REVIEW OF A SPECIFIC ITEM SHALL NOT INDICATE REVIEW OF AN ASSEMBLY IN WHICH THE ITEM FUNCTIONS. THE CONTRACTOR SHALL REVIEW AND APPROVE SHOP DRAWINGS BEFORE SUBMITTING THEM TO THE ENGINEER. THE CONTRACTOR SHALL PERFORM NO PORTION OF THE WORK REQUIRING A SHOP DRAWING OR SAMPLE UNTIL THE APPROVED SHOP DRAWING OR SAMPLE HAS BEEN SUBMITTED TO THE ENGINEER. SUCH WORK SHALL BE IN ACCORDANCE WITH APPROVED SHOP DRAWINGS AND SAMPLES.

SHOP DRAWINGS NOT REQUIRED
REVISE AS NOTED
RESUBMISSION NOT REQUIRED
REVISE AS NOTED
RESUBMISSION REQUIRED
REJECTED

DATE 6/24/08

SIGNATURE

REVIEW BY STANTEC IS FOR THE SOLE PURPOSE OF ASSESSING CONFORMANCE WITH THE DESIGN CONCEPT. STANTEC IS RESPONSIBLE FOR DIMENSIONS, FABRICATION, AND CONSTRUCTION METHODS AND TECHNIQUES. STANTEC ACCEPTS NO RESPONSIBILITY FOR DETAIL DESIGN OF COMPONENTS, AND ERRORS OR OMISSIONS IN SHOP DRAWINGS.

HIGHWAY SAFETY CORP.
GLASTONBURY, CT

ITEM 621.73 BRIDGE APPROACH RAILING – NETC 4 RAIL
TOWN OF BENNINGTON
COUNTY OF BENNINGTON
PROJECT AC NH 019–1(53) BRIDGE B11
EAST ROAD OVER VT ROUTE 279

GENERAL CONTRACTOR

SUB CONTRACTOR
F.R. LAFAYETTE, INC.

DRAWN	MHM
CHECKED	P Radice
DATE	12/30/07
SCALE	NONE
HSC REFERENCE NO.	1615
SIZE	D
REVISION	0
SHEET NO.	11 of 11