INDEX OF SHEETS
SEE SHEET 2

SPECIFICATIONS
DESIGN:
- A. VERMONT AGENCY OF TRANSPORTATION, STRUCTURES DESIGN MANUAL, 5TH EDITION, 2010
- B. AASHTO LRFD BRIDGE DESIGN SPECIFICATION, 6TH EDITION, WITH 2013 INTERIM REVISIONS
- C. AREMA MANUAL FOR RAILWAY ENGINEERING, 2012
- D. VERMONT AGENCY OF TRANSPORTATION, RAIL BRIDGE MANAGEMENT PROGRAM MANUAL, VERSION 2.2, 2014

RECORD PLANS

Ryegate Design-Build Project STP CULV (10)

Resident Engineer: Nick Newland
Contractor: Engineers Construction, Inc.
Start Date: 07-14-2014
Completion Date: 08-28-2017
Prepared By: Jason Rowell

STATE OF VERMONT
AGENCY OF TRANSPORTATION

PROPOSED IMPROVEMENT
CULVERT PROJECT

TOWN OF RYEGATE
COUNTY OF CALEDONIA
US 5 (MAJOR COLLECTOR), BRIDGE NO 116
WASHINGTON COUNTY RAILROAD (WACR), CULVERT NO 27-E

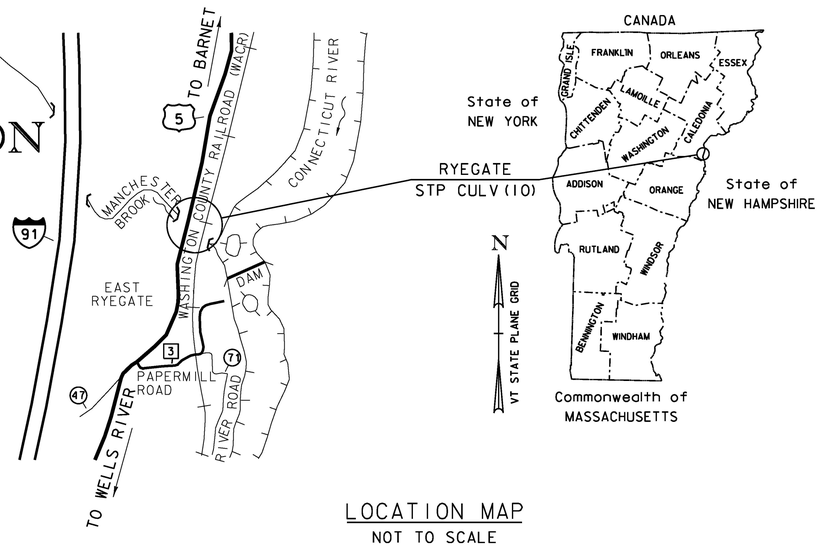

LOCATION MAP
NOT TO SCALE

PROJECT LOCATION: LOCATED IN THE COUNTY OF CALEDONIA, TOWN OF RYEGATE, ON US 5 & WACR; BRIDGE NO. 116/CULVERT NO. 27-E (MP 59.43) OVER MANCHESTER BROOK, APPROXIMATELY 0.4 MILES NORTH OF THE INTERSECTION OF PAPERMILL ROAD (TH 3) AND US 5.

PROJECT DESCRIPTION: INSTALL TRAFFIC CONTROL, REPLACE BRIDGE 116, AND REPLACE CULVERT NO. 27-E. ROADWAY AND RAIL APPROACH AND CHANNEL IMPROVEMENTS.

LENGTH OF US 5 STRUCTURE:	40.20	FEET (144.00 FEET ALONG CHANNEL LINE)
LENGTH OF WACR STRUCTURE:	37.03	FEET (128.00 FEET ALONG CHANNEL LINE)
LENGTH OF ROADWAY:	109.80	FEET
LENGTH OF RAILROAD:	187.97	FEET

PLAN SECTIONS:
- **Section 1: (3.1.1.1 Culvert Plans)**
- **Section 2: (3.3.2.1 and 3.3.2.2 Roadway & Railway Plans)**
- **Section 3: (Abandoned Structures)**

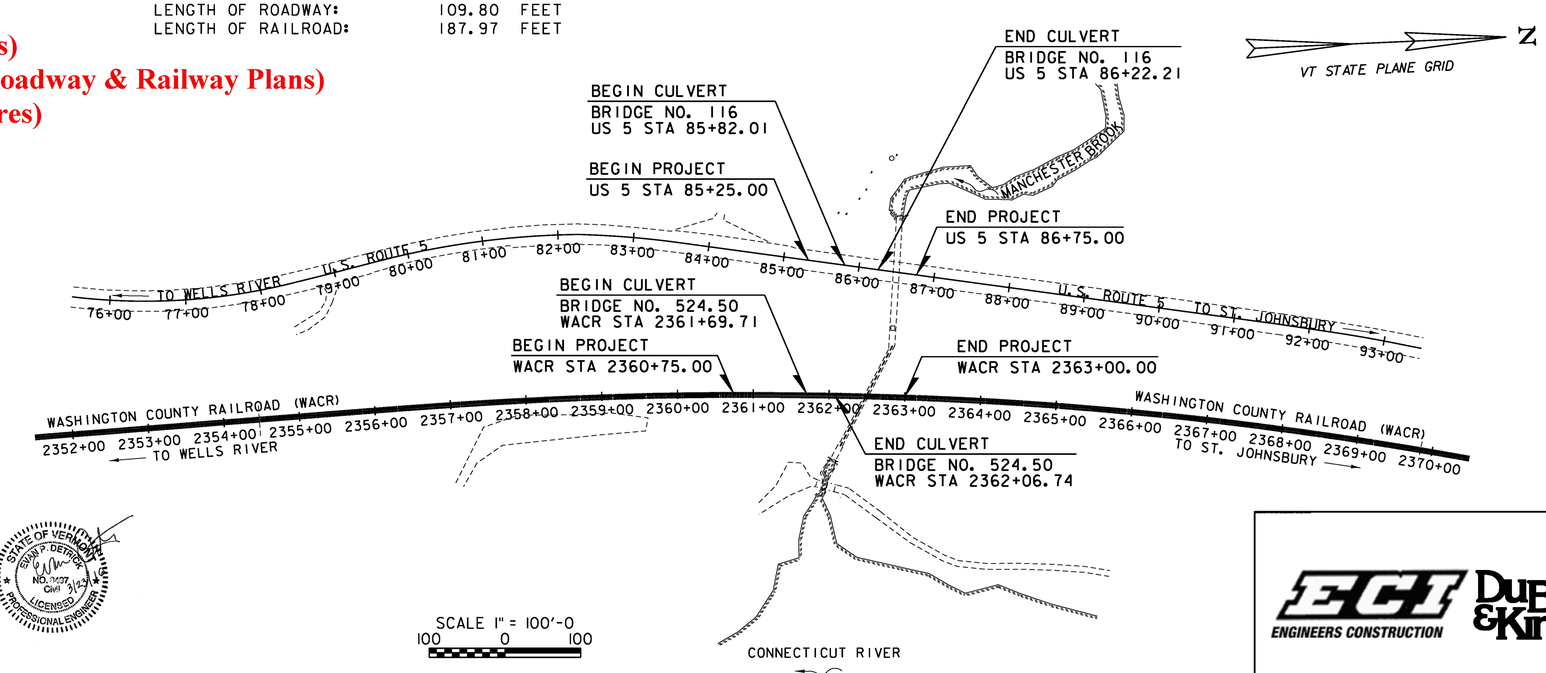

- **Section 1: (3.1.1.1 Culvert Plans)**

RELEASED FOR CONSTRUCTION
April 19, 2016

CONSTRUCTION IS TO BE CARRIED ON IN ACCORDANCE WITH THESE PLANS AND THE STANDARD SPECIFICATIONS FOR CONSTRUCTION DATED 2011, AS APPROVED BY THE FEDERAL HIGHWAY ADMINISTRATION ON JULY 20, 2011 FOR USE ON THIS PROJECT, INCLUDING ALL SUBSEQUENT REVISIONS AND SUCH REVISED SPECIFICATIONS AND SPECIAL PROVISIONS AS ARE INCORPORATED IN THESE PLANS.

QUALITY ASSURANCE PROGRAM : LEVEL I	
SURVEYED BY :	VTRANS
SURVEYED DATE :	2006 - 2010
DATUM	
VERTICAL	NAVD 88
HORIZONTAL	NAD 83

STATE OF VERMONT · BRIAN P. DETROW · NO. 10437 · CIVIL · 3/23/16 · LICENSED PROFESSIONAL ENGINEER

100% WACR & US ROUTE 5 CULVERTS PLANS WP 3.3.1.1
MARCH 23 2016

DEPARTMENT OF TRANSPORTATION
FEDERAL HIGHWAY ADMINISTRATOR
APPROVED _____ DATE _____

DIRECTOR OF PROJECT DELIVERY
APPROVED _____ DATE _____

PROJECT MANAGER : MAHENDRA THILLIYAR, P.E.

PROJECT NAME : RYEGATE
PROJECT NUMBER : STP CULV (10)

SHEET 1 OF 36 SHEETS

ENGINEERS CONSTRUCTION · DuBois & King inc.

STATE OF VERMONT
AGENCY OF TRANSPORTATION

PRELIMINARY INFORMATION SHEET (CULVERT)

Version 11.06.15

LRFD (AASHTO)/LFD (AREMA)

INDEX OF SHEETS

PLAN SHEETS

1	TITLE SHEET
2	PRELIMINARY INFORMATION SHEET (CULVERT)
3 - 4	TYPICAL STRUCTURE SECTIONS 1-2
5	WEIR AND CHANNEL BOULDER DETAILS
6	CULVERT NOTES
7	QUANTITY SHEET
8	CONVENTIONAL SYMBOLOGY LEGEND SHEET
9	STRUCTURE PLAN
10	CHANNEL PROFILE
11	STRUCTURE LAYOUT
12	UNDERDRAIN LAYOUT
13 - 14	STRUCTURE DETAILS 1-2
15	BURIED STRUCTURE REINFORCING PLAN
16	PEDESTAL WALL ELEVATIONS
17	PEDESTAL WALL REINFORCING
18	PEDESTAL WALL FOOTING REINFORCING PLAN
19	CHANNEL WALL #1 PLAN, ELEVATION, SECTION
20	CHANNEL WALL #2 PLAN AND ELEVATION
21	CHANNEL WALL FOOTING REINFORCING PLAN
22	US 5 INLET PLAN, ELEVATION, SECTION
23	US 5 INLET DETAILS
24	US 5 OUTLET PLAN, ELEVATION, SECTION
25	US 5 OUTLET DETAILS
26	WACR INLET PLAN AND ELEVATION
27	WACR INLET DETAILS
28	WACR OUTLET PLAN AND ELEVATION
29	WACR OUTLET DETAILS
30	T101 RAILING DETAILS
31 - 36	CHANNEL CROSS SECTIONS 1-6

STANDARDS LIST

D-1	PRECAST REINFORCED CONCRETE DROP INLET DETAILS	06-01-1994
D-30	UNDERDRAIN CONSTRUCTION DETAILS	08-13-2007
F-2	CHAIN LINK FENCE, TYPE I DETAILS	06-01-1994
G-1	STEEL BEAM GUARDRAIL DETAILS (POST, DELINEATOR, TYPICALS)	02-10-2014

NOTE: SUBSURFACE INFORMATION IS AVAILABLE IN WP 3.2.2, PART 2 - GEOTECHNICAL DATA REPORT (REV. 1).

STRUCTURES DETAIL DRAWINGS

SD-501.00	CONCRETE DETAILS AND NOTES	2/9/2012
SD-502.00	CONCRETE DETAILS AND NOTES	10/10/2012

LOAD RATING FACTORS (WACR BR. NO. 524.50)

LIVE LOAD VEHICLE CONFIGURATIONS

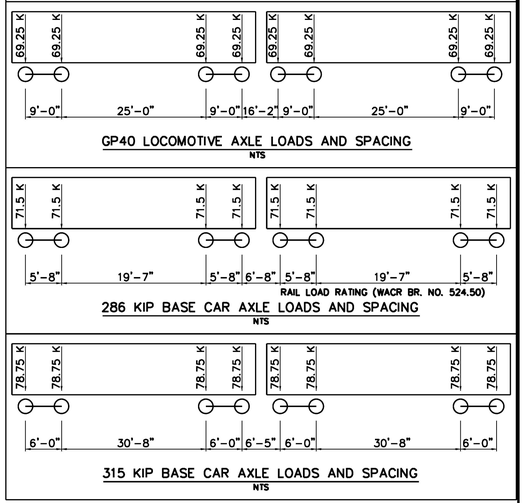

GP40 LOCOMOTIVE AXLE LOADS AND SPACING
NTS

RAIL LOAD RATING (WACR BR. NO. 524.50)
286 KIP BASE CAR AXLE LOADS AND SPACING
NTS

315 KIP BASE CAR AXLE LOADS AND SPACING
NTS

SPEED (mph)	LOAD RATING FACTOR						Permissible Engine Speed	
	Cooper E-80		286K Cars		315K Cars		GP-40 Engine	
	NORMAL	MAXIMUM	NORMAL	MAXIMUM	NORMAL	MAXIMUM	NORMAL	MAXIMUM
10	7.91	13.18	9.86	16.43	10.56	17.59	SEE COMMENTS	SEE COMMENTS
20	7.91	13.18	9.86	16.43	10.56	17.59		
30	7.91	13.18	9.86	16.43	10.56	17.59		
40	7.91	13.18	9.86	16.43	10.56	17.59		
60	7.91	13.18	9.86	16.43	10.56	17.59		

COMMENTS: DUE TO DEPTH BELOW GRADE, IMPACT IS NEGLECTED AND RATINGS ARE INDEPENDENT OF SPEED.

AS BUILT "REBAR" DETAIL

LEVEL I	LEVEL II	LEVEL III
TYPE:	TYPE:	TYPE:
GRADE:	GRADE:	GRADE:

TRAFFIC DATA

YEAR	ADT	DHV	% D	% T	ADTT
2014	860	120	54	17.4	150
2024	890	120	54	20.7	184

20 year ESAL for flexible pavement from 2014 to 2024 : 778000
40 year ESAL for flexible pavement from 2014 to 2034 : 1880000
Design Speed : 50 mph

ENGINEERS CONSTRUCTION — DuBois & King inc.

FINAL HYDRAULIC REPORT

HYDROLOGIC DATA

Date: Oct. 2014

DRAINAGE AREA : 8.5 sq. mi.
CHARACTER OF TERRAIN : Hilly to Mountainous, Mostly Forested
STREAM CHARACTERISTICS : Perennial, < 100 ft wide, sm. floodplain,sinuous, not braided
NATURE OF STREAMBED : Sand, gravel with coble and some boulders

PEAK FLOW DATA

Q 2.33 =	275 cfs	Q 50 =	1100 cfs
Q 10 =	675 cfs	Q 100 =	1350 cfs
Q 25 =	875 cfs	Q 500 =	1900 cfs

DATE OF FLOOD OF RECORD : Unknown
ESTIMATED DISCHARGE: Unknown
WATER SURFACE ELEV.: Unknown
NATURAL STREAM VELOCITY : 5 to 6 fps
ICE CONDITIONS : Light
DEBRIS: Heavy
DOES THE STREAM REACH MAXIMUM HIGHWATER ELEV. RAPIDLY? Yes
IS ORDINARY RISE RAPID? Yes
IS STAGE AFFECTED BY UPSTREAM OR DOWNSTREAM CONDITIONS? Yes
IF YES, DESCRIBE: Culvert discharges into the Connecticut River upstream of Ryegate (Dodge Falls) Dam.

WATERSHED STORAGE: Minimal
HEADWATERS: 3-small ponds
UNIFORM:
IMMEDIATELY ABOVE SITE:

EXISTING STRUCTURE INFORMATION

STRUCTURE TYPE: 8' w x 6' h conc. box (US 5) / twin 2' w x 5' h box (WACR center portion)
YEAR BUILT: UNKNOWN
CLEAR SPAN(NORMAL TO STREAM): 8' wide (US 5)/ 4' wide (WACR center portion)
VERTICAL CLEARANCE ABOVE STREAMBED: varies
WATERWAY OF FULL OPENING: 48 sq ft (US 5) / 10 sq ft (WACR)
DISPOSITION OF STRUCTURE: Partial removal / Partial fill w/flowable fill
TYPE OF MATERIAL UNDER SUBSTRUCTURE: UNKNOWN

WATER SURFACE ELEVATIONS AT:

Q2.33 =	Not evaluated	VELOCITY =	
Q10 =	Not evaluated	"	
Q25 =	Not evaluated	"	
Q50 =	Not evaluated	"	
Q100 =	Not evaluated	"	

LONG TERM STREAMBED CHANGES:

IS THE ROADWAY OVERTOPPED BELOW Q100: Not evaluated
FREQUENCY:
RELIEF ELEVATION: Not evaluated
DISCHARGE OVER ROAD @Q100: Not evaluated

UPSTREAM STRUCTURE

TOWN: Ryegate — DISTANCE: 1700 ft.
HIGHWAY # : I-91 — STRUCTURE #: C69-4
CLEAR SPAN: 11 ft. — CLEAR HEIGHT: 11 ft.
YEAR BUILT: 1976 — FULL WATERWAY: 121 sq. ft.
STRUCTURE TYPE: Reinforced Concrete Box

DOWNSTREAM STRUCTURE

TOWN: None — DISTANCE:
HIGHWAY # : — STRUCTURE #:
CLEAR SPAN: — CLEAR HEIGHT:
YEAR BUILT: — FULL WATERWAY:
STRUCTURE TYPE:

LRFR LOAD RATING FACTORS (US 5 BRIDGE NO. 116)

LOADING LEVELS	TRUCK						
	H-20	HL-93	3S2	6 AXLE	3A STR.	4A STR.	5A SEM
TONNAGE	20	36	36	66	30	34.5	38
INVENTORY	10.04	7.48					
POSTING							
OPERATING	13.02	9.69	10.76	6.07	8.14	7.58	8.14
COMMENTS:							

PROPOSED STRUCTURE

STRUCTURE TYPE: Concrete Arch

CLEAR SPAN (NORMAL TO STREAM): 32'-0"
VERTICAL CLEARANCE ABOVE STREAMBED: 20'-8 3/4" (at crown)
WATERWAY OF FULL OPENING: 514.6 square ft.

WATER SURFACE ELEVATIONS AT:

Q2.33 =	430.6 ft	VELOCITY=	3.7 fps
Q10 =	432.2 ft	"	5.7 fps
Q25 =	432.9 ft	"	6.4 fps
Q50 =	433.7 ft	"	6.9 fps
Q100 =	434.4 ft	"	7.5 fps

IS THE ROADWAY OVERTOPPED BELOW Q100: No
FREQUENCY:
RELIEF ELEVATION: US RT 5 -El. 450 to El. 470 ft., WACR - El. 480 ft
DISCHARGE OVER ROAD @Q100: No

AVERAGE LOW ELEVATION OF SUPERSTRUCTURE: US RT 5 - El. 447.7 ft
VERTICAL CLEARANCE: @ Q50 = 14.0 ft

SCOUR: None anticipated.

REQUIRED CHANNEL PROTECTION: Stone Fill, Type IV and FHWA Class VII Riprap

PERMIT INFORMATION

AVERAGE DAILY FLOW:	17 cfs	DEPTH OR ELEVATION:	
ORDINARY LOW WATER:	8 cfs		0.5 ft
ORDINARY HIGH WATER:	118 cfs		1.5

TEMPORARY BRIDGE REQUIREMENTS

STRUCTURE TYPE: 2-Lane Temp. Bridge (US 5), Temp. Rail Bridge (WACR)
CLEAR SPAN (NORMAL TO STREAM):
VERTICAL CLEARANCE ABOVE STREAMBED:
WATERWAY AREA OF FULL OPENING:

ADDITIONAL INFORMATION

SEE RAILROAD AGREEMENT FOR MAINTENANCE OF RAILROAD TRAFFIC

TRAFFIC MAINTENANCE NOTES

1. MAINTAIN TWO-WAY TRAFFIC ON A TEMPORARY BRIDGE.
2. TRAFFIC SIGNALS ARE NOT NECESSARY.
3. SIDEWALKS ARE NOT NECESSARY
4. THE APPROACHES FOR THE TEMPORARY BRIDGE SHALL BE PAVED.

DESIGN VALUES

1. DESIGN LIVE LOAD		HL-93, E80
2. FUTURE PAVEMENT	d_p:	3.0 INCH
3. CULVERT OPENING	D:	32.00 FT
4. MIN. MID-SPAN POS. CAMBER @ RELEASE (PRESTRESSED UNITS)	Δ:	---
5. PRESTRESSING STRAND	f_y:	---
6. PRESTRESSED CONCRETE STRENGTH	f'_c:	---
7. PRESTRESSED CONCRETE RELEASE STRENGTH	f'_{ci}:	---
8. CONCRETE, HIGH PERFORMANCE CLASS AA	f'_c:	---
9. CONCRETE, HIGH PERFORMANCE CLASS A (MOD.)	f'_c:	5.0 KSI
10. CONCRETE, HIGH PERFORMANCE CLASS B	f'_c:	3.5 KSI
11. CONCRETE, CLASS C	f'_c:	---
12. REINFORCING STEEL	f_y:	60 KSI
13. STRUCTURAL STEEL AASHTO M270	f_y:	---
14. SOIL UNIT WEIGHT	γ:	SEE NOTES
15. NOMINAL BEARING RESISTANCE OF SOIL	q_n:	15.0 KSF
16. SOIL BEARING RESISTANCE FACTOR (AASHTO LRFD) (SERVICE L.S.)	ϕ:	1.00
17. NOMINAL BEARING RESISTANCE OF ROCK	q_n:	---
18. ROCK BEARING RESISTANCE FACTOR (REFER TO AASHTO LRFD)	ϕ:	---
19. NOMINAL AXIAL PILE RESISTANCE	q_p:	---
20. PILE YIELD STRENGTH ASTM A572	f_y:	---
21. PILE SIZE		---
22. EST. PILE LENGTH	L_p:	
23. PILE RESISTANCE FACTOR	ϕ:	---
24. LATERAL PILE DEFLECTION	Δ:	---
25. BASIC WIND SPEED	V_{3s}:	---
26. MINIMUM GROUND SNOW LOAD	p_g:	---
27. SEISMIC DATA PGA : ---	S_s:	---
	S_1:	---

PROJECT NAME: **RYEGATE**
PROJECT NUMBER: **STP CULV(10)**

FILE NAME: z06c156frm.dgn — PLOT DATE: 2/4/2016
PROJECT LEADER: E. DETRICK — DRAWN BY: R. BARNES
DESIGNED BY: R. BARNES — CHECKED BY: E. DETRICK

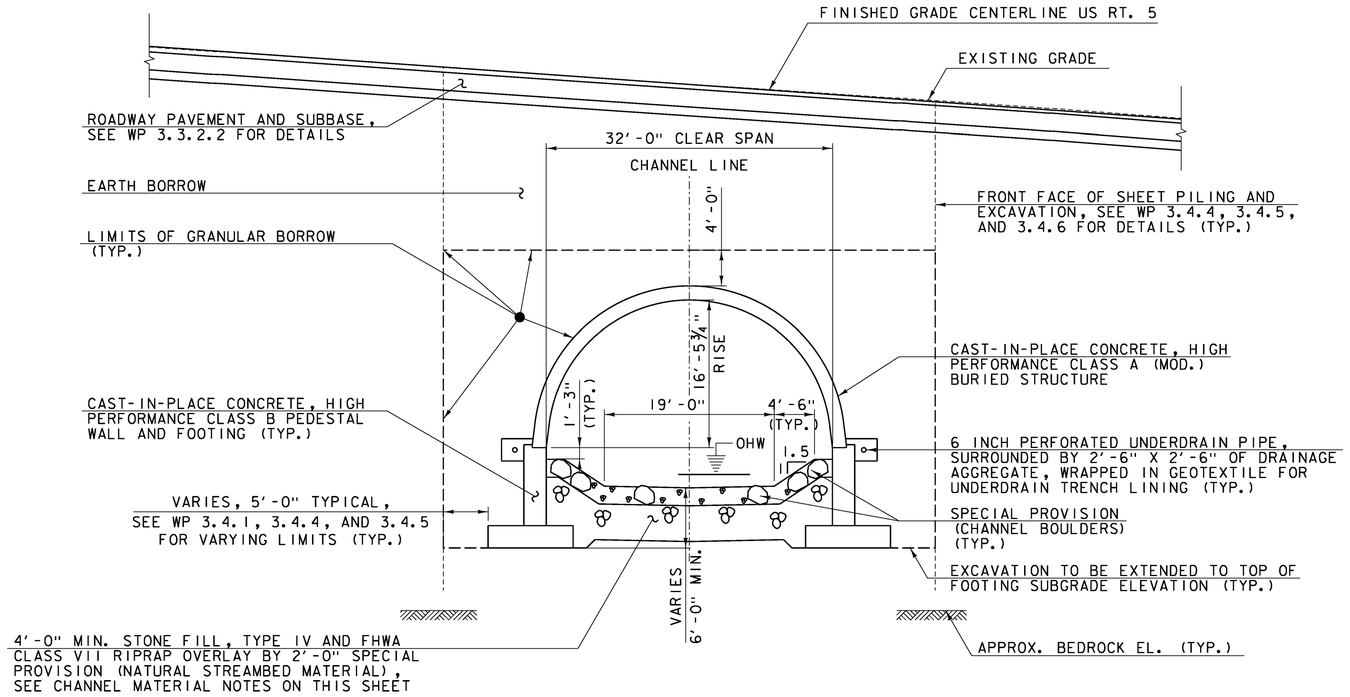

TYPICAL US 5 BURIED STRUCTURE SECTION

SCALE ⅛" = 1'-0"

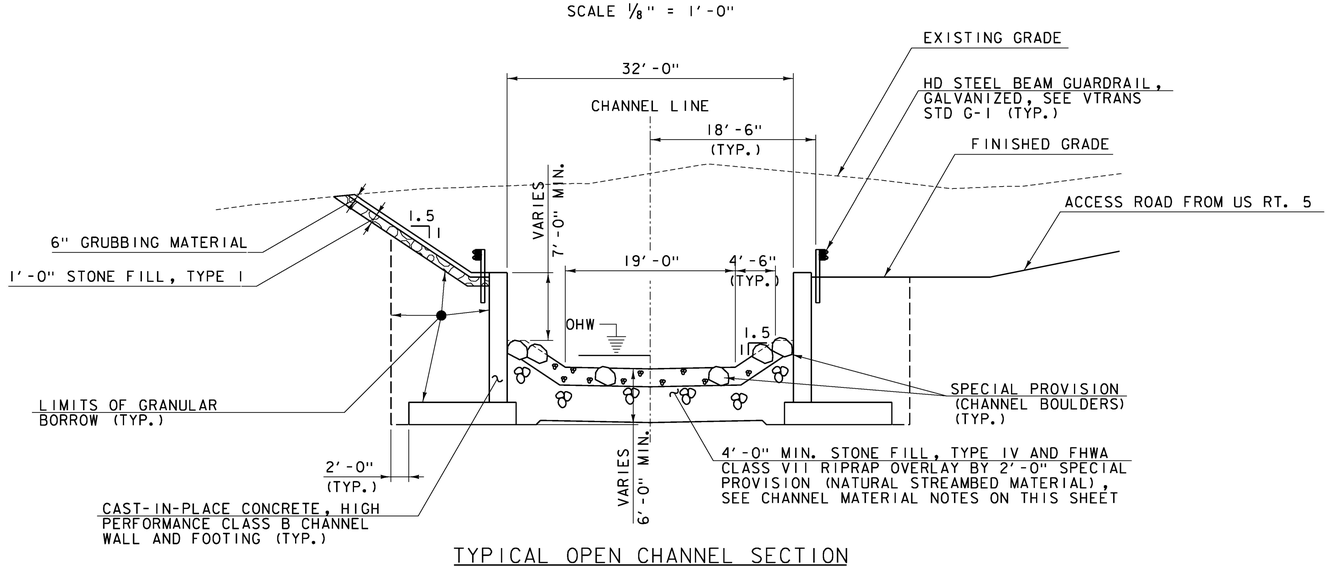

TYPICAL OPEN CHANNEL SECTION

SCALE ⅛" = 1'-0"

CHANNEL MATERIAL NOTES

1. STONE FILL, TYPE IV AND FHWA CLASS VII RIPRAP WILL CONFORM TO SUBSECTION 706.04 OF THE SPECIFICATIONS. THE SPECIFICATION OF 706.04 WILL BE AUGMENTED WITH THE FOLLOWING GRADATION FOR FHWA CLASS VII RIPRAP:

FHWA CLASS VII RIPRAP
NOMINAL SIZE = 24 IN.

	MIN (IN.)	MAX (IN.)
D100	-	48.0
D85	31.0	37.0
D50	23.0	27.5
D15	14.5	21.0

FOLLOWING PLACEMENT OF STONE FILL, GRAVEL AND SAND BORROW WILL BE ADDED TO INFILL THE STONE AND INHIBIT SUBSURFACE FLOW.

2. CHANNEL BOULDERS WILL BE ANGULAR TO SUB-ANGULAR ROCK HAVING AN INTERMEDIATE AXIS RANGING FROM 24 TO 36 INCHES, AND OTHERWISE IN CONFORMANCE WITH 706.04, STONE FOR STONE FILL.

3. USE CHANNEL BOULDERS TO ESTABLISH DURABLE CHANNEL BANK LINES ALONG BOTH SIDES OF THE CHANNEL AGAINST THE STRUCTURE WALLS. VARIATION IN THE FINISHED CHANNEL WIDTH OF +/-2 FEET (26' TO 30') IS ACCEPTABLE AND EVEN DESIRABLE.

4. PLACE CHANNEL BOULDERS AT A RATE OF 25 PER 100 LINEAR FEET THROUGHOUT THE LENGTH OF THE STRUCTURES (NOT INCLUDING BOULDERS PLACED TO FORM BANK LINES, WEIRS, OR TAILWATER CONTROL ROCKS). THE BOULDERS WILL BE PLACED DIRECTLY ON THE IMMOBILE RIPRAP LAYOUT. THE BOULDERS WILL BE PLACED IN A GENERALLY RANDOM FASHION RATHER THAN A UNIFORM FASHION SO THAT GAPS BETWEEN BOULDERS ARE HIGHLY VARIABLE AND SOME CLUSTERS OF BOULDERS ARE PRESENT. THE TOPS OF SOME BOULDERS MAY PROTRUDE ABOVE THE FINISHED BED ELEVATION, AND THE TOPS OF OTHER BOULDERS MAY BE ENTIRELY COVERED.

5. AT THREE LOCATIONS WITHIN THE STRUCTURE (APPROXIMATELY STATIONS 11+50, 13+00, AND 13+70) PLACE CHANNEL BOULDERS TO FORM CHANNEL SPANNING WEIRS. THE WEIRS WILL DIP FROM BANK ELEVATION AT THE SIDES OF THE CHANNEL DOWN TO CHANNEL INVERT IN THE MIDDLE. THE WEIRS WILL FORM AN ARCH PROJECTING IN THE UPSTREAM DIRECTION TO RESIST DOWNSTREAM FORCES ON THE WEIR STRUCTURE. FOOTER ROCKS, WEIR ROCKS, AND TAILWATER CONTROL ROCKS SHALL CONFORM TO THE DIMENSIONS SPECIFIED FOR CHANNEL BOULDERS. SEE WEIR AND CHANNEL BOULDER DETAILS, SHEET 5.

6. PLACE NATURAL STREAMBED MATERIAL THROUGHOUT THE CHANNEL BED FOLLOWING PLACEMENT OF CHANNEL BOULDERS. MATERIAL WILL CONFORM TO THE GRADATION BELOW AND WILL BE PLACED SO THERE IS A CONCENTRATED THREAD OF WATER DURING LOW FLOW CONDITIONS RATHER THAN A RELATIVELY SHALLOW VENEER OF WATER ACROSS THE ENTIRE CHANNEL WIDTH. ADD SAND BORROW ITEM AS NEEDED TO INFILL THE STONE AND INHIBIT SUBSURFACE FLOW.

NATURAL STREAMBED MATERIAL GRADATION

	MIN (IN.)	MAX (IN.)
D100	13.3	18.0
D50	10.5	12.0
D35	5.1	6.8
D15	0.8	2.0
D5	0.1	0.4

7. A FIELD REVIEW WILL BE PERFORMED BY THE HYDRAULICS ENGINEER TO ENSURE CHANNEL IS CONSTRUCTED AS DESIGNED.

8. 6" GRUBBING MATERIAL WILL BE PLACED ON TOP OF THE NATURAL STREAMBED MATERIAL IN CHANNEL LOCATIONS, ABOVE ORDINARY HIGH WATER, OR ON TOP OF STONE FILL IN EMBANKMENT LOCATIONS. GRUBBING MATERIAL WILL NOT BE PLACED INSIDE OF THE STRUCTURES OR IN THE OPEN CHANNEL SECTION.

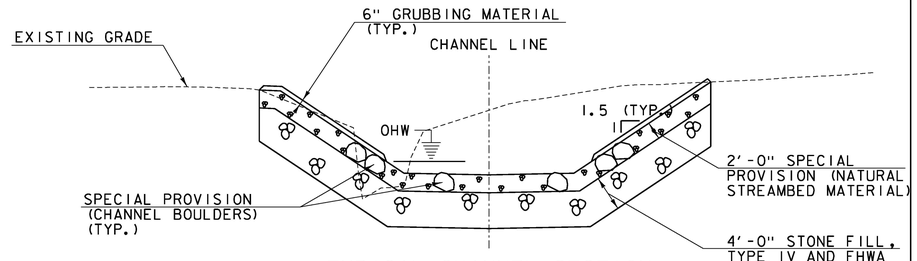

TYPICAL CHANNEL SECTION (US 5 INLET / WACR OUTLET)

NOT TO SCALE

PROJECT NAME:	RYEGATE
PROJECT NUMBER:	STP CULV(10)
FILE NAME: z06c156typ.dgn	PLOT DATE: 3/23/16
PROJECT LEADER: E. DETRICK	DRAWN BY: R. BARNES
DESIGNED BY: R. BARNES	CHECKED BY: E. DETRICK
TYPICAL STRUCTURE SECTIONS 1 OF 2	SHEET 3 OF 36

ECI ENGINEERS CONSTRUCTION — DuBois & King Inc.

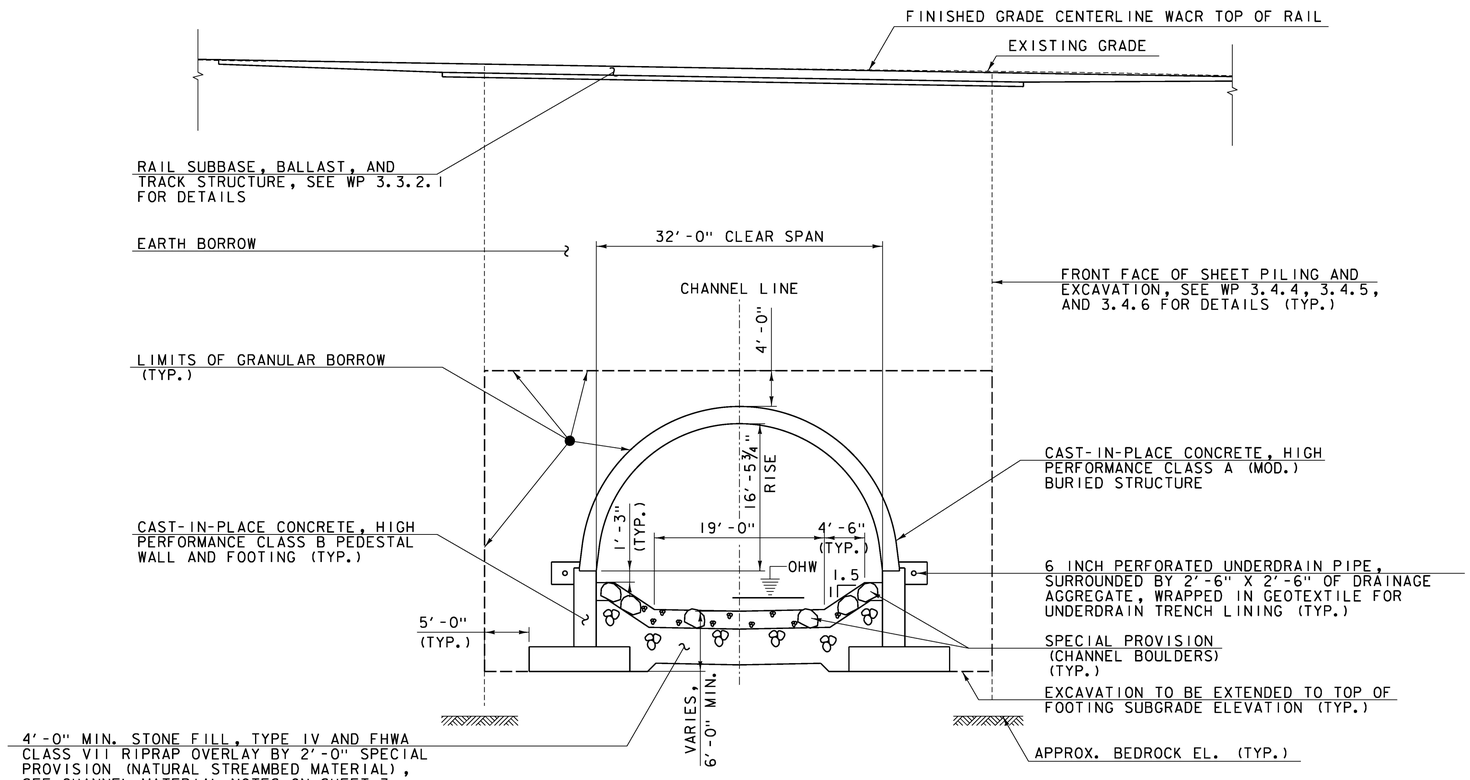

TYPICAL WACR BURIED STRUCTURE SECTION

SCALE 1/8" = 1'-0"

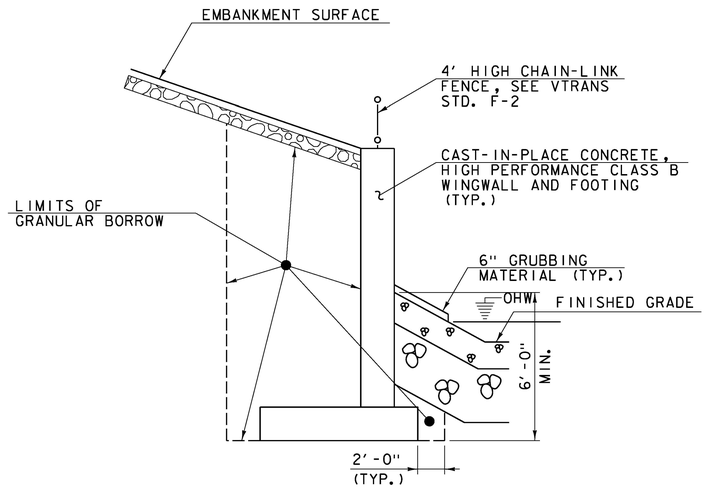

TYPICAL WINGWALL SECTION
(US 5 INLET / WACR OUTLET)

SCALE 3/16" = 1'-0"

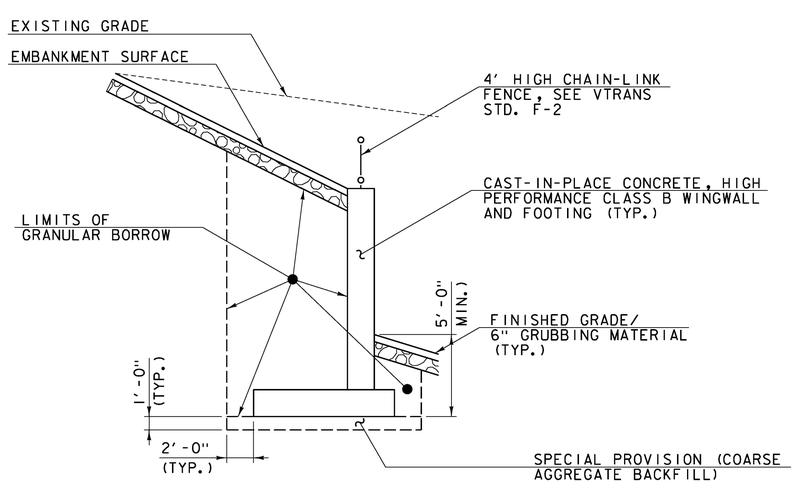

TYPICAL WINGWALL SECTION
(US 5 OUTLET / WACR INLET)

SCALE 3/16" = 1'-0"

PROJECT NAME:	RYEGATE
PROJECT NUMBER:	STP CULV(10)
FILE NAME: z06c156typ.dgn	PLOT DATE: 3/23/16
PROJECT LEADER: E. DETRICK	DRAWN BY: R. BARNES
DESIGNED BY: R. BARNES	CHECKED BY: E. DETRICK
TYPICAL STRUCTURE SECTIONS 2 OF 2	SHEET 4 OF 36

ENGINEERS CONSTRUCTION

DuBois & King Inc.

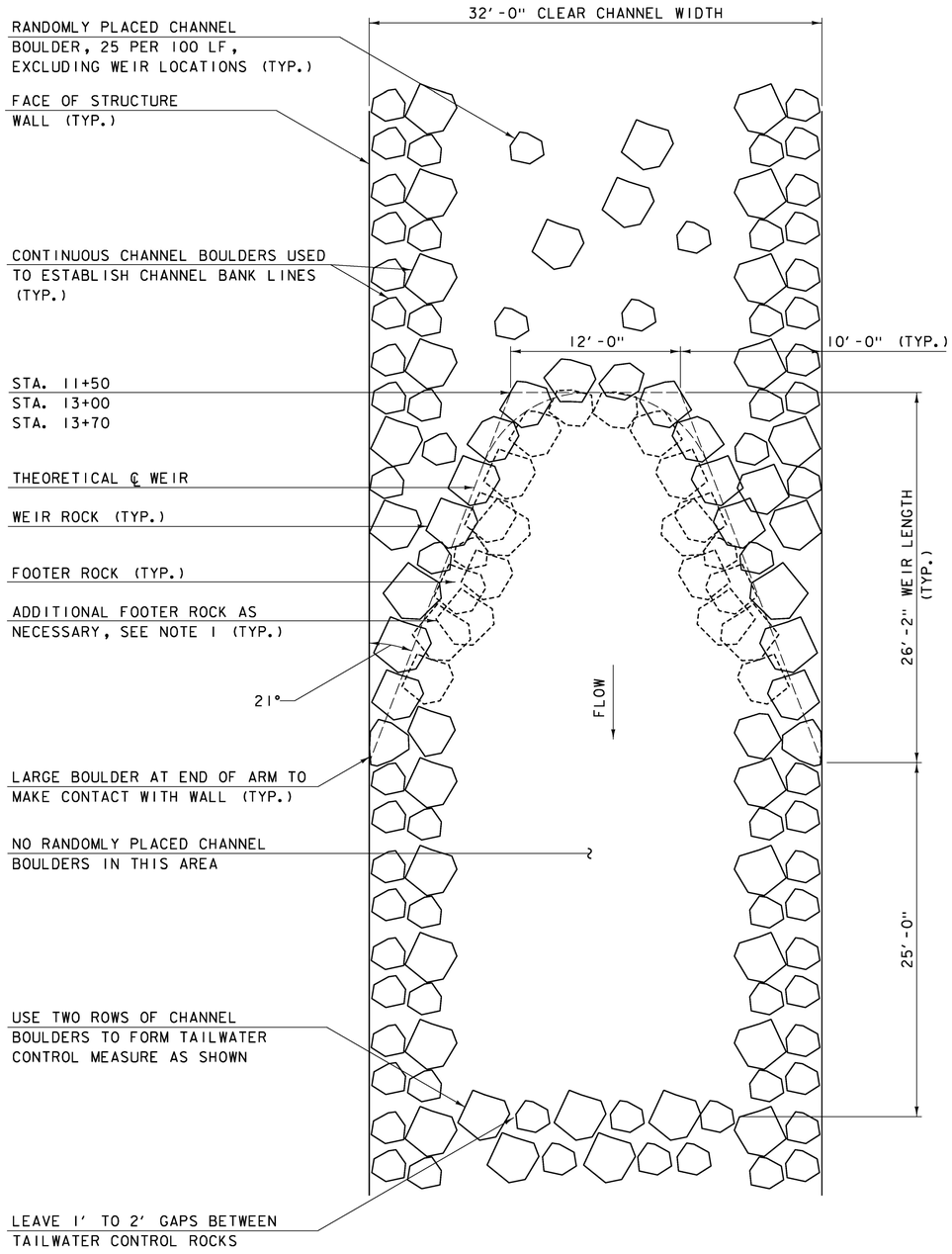

CHANNEL AND WEIR DETAIL - PLAN VIEW

NOT TO SCALE

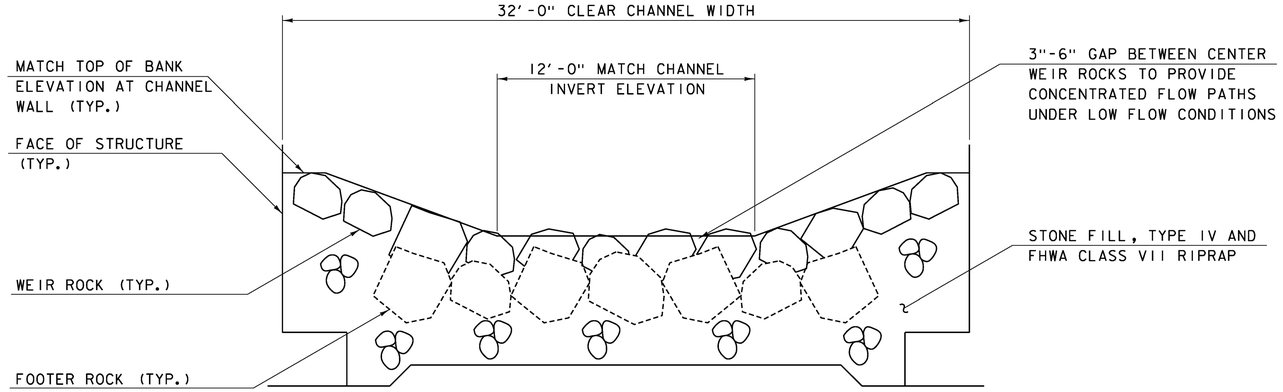

WEIR DETAIL - SECTION

(FACING UPSTREAM)
NOT TO SCALE

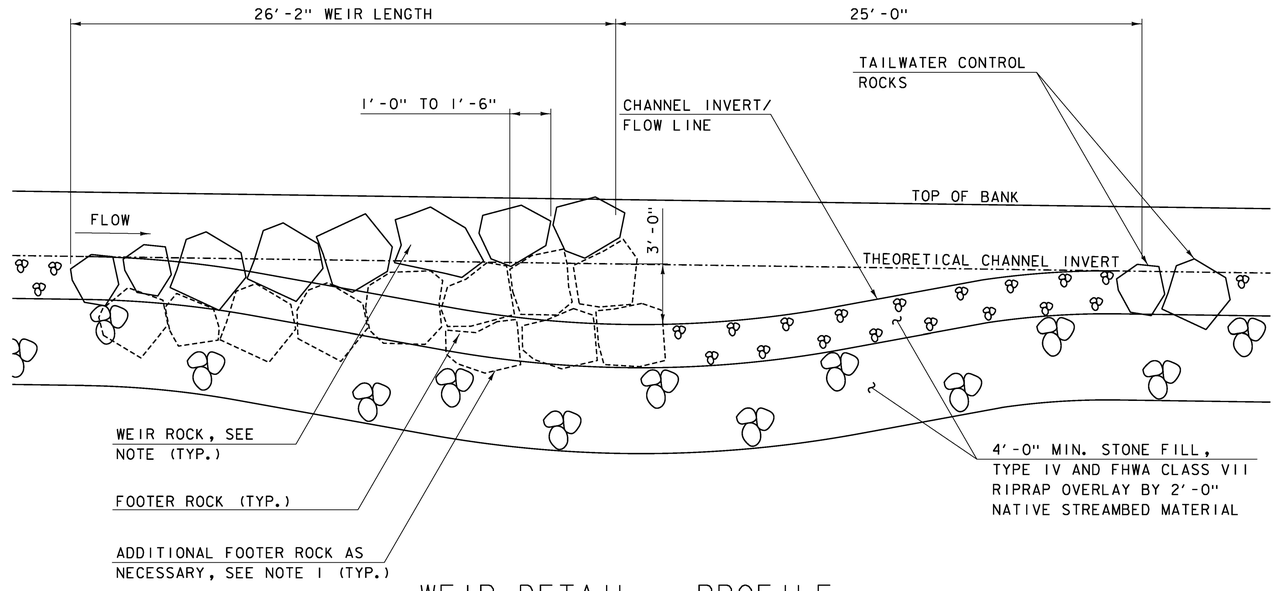

WEIR DETAIL - PROFILE

NOT TO SCALE

NOTES:

1. PLACEMENT OF WEIR ROCKS AND FOOTER ROCKS SHALL MAXIMIZE THE SURFACE CONTACT BETWEEN THE WEIR ROCK AND FOOTER ROCK. THE CONTRACTOR SHALL SELECT FAVORABLE SHAPE AND SIZE FOR FOOTER STONES TO PROVIDE A STABLE BASE. WEIR ROCKS WILL BE PLACED TO HAVE 1'-0" TO 1'-6" OVERLAP OF THE FOOTER ROCKS, AS SHOWN. FOOTER ROCKS WILL BE PLACED ON THE 4'-0" MIN. STONE FILL, TYPE IV AND FHWA CLASS VII RIPRAP LAYER, OR ON TOP OF ANOTHER FOOTER ROCK IF NECESSARY.
2. SEE CHANNEL MATERIAL NOTES ON SHEET 3 FOR ADDITIONAL INFORMATION.

PROJECT NAME:	RYEGATE
PROJECT NUMBER:	STP CULV(10)
FILE NAME: z06cl56weir.dgn	PLOT DATE: 3/23/16
PROJECT LEADER: E. DETRICK	DRAWN BY: R. BARNES
DESIGNED BY: M. MURAWSKI	CHECKED BY: E. DETRICK
WEIR AND CHANNEL BOULDER DETAILS	SHEET 5 OF 36

ENGINEERS CONSTRUCTION — DuBois & King, Inc.

GENERAL NOTES

1. US ROUTE 5 ROADWAY, ACCESS ROADS, AND GENERAL SITE GRADING WORK IS SHOWN IN THIS PLAN SET FOR REFERENCE ONLY, DETAILS WILL BE PROVIDED IN WP 3.3.2.2.

2. WACR RAILROAD WORK IS SHOWN IN THIS PLAN SET FOR REFERENCE ONLY, DETAILS WILL BE PROVIDED IN WP 3.3.2.1.

FOUNDATION AND BACKFILL NOTES

1. EXCAVATION AND BACKFILL WILL BE IN ACCORDANCE WITH SECTION 204 OF THE SPECIFICATIONS, AND THE BACKFILL AND COMPACTION DIAGRAM ON SHEET 13 OF THESE PLANS.

2. FOOTINGS WILL BE CONSTRUCTED ON UNDISTURBED NATURAL SUBSOIL, EXCEPT FOR THE US 5 OUTLET AND WACR INLET WINGWALLS (WW #3, 4, 5, AND 6), WHICH WILL BE CONSTRUCTED ON A 1'-0" LAYER OF SPECIAL PROVISION (COARSE AGGREGATE BACKFILL), AS SHOWN. THE GEOTECHNICAL AND STRUCTURES ENGINEERS OF THE DESIGN-BUILD TEAM WILL REVIEW THE SUBGRADE PRIOR TO CONSTRUCTION OF THE FOOTINGS.

3. MEASURES TO MINIMIZE DISTURBANCE OF SUBGRADE INCLUDE EXCAVATING THE LAST 6 IN. TO 12 IN. WITH A SMOOTH BLADED BUCKET IMMEDIATELY PRIOR TO PLACING FOOTING REINFORCING AND CONCRETE. LIMIT THE TIME THAT THE FINAL FOOTING SUBGRADE WILL REMAIN OPEN OR EXPOSED TO SIGNIFICANT PRECIPITATION (> 0.3 IN.). UTILIZE SUMPS OR OTHER FORMS OF DEWATERING TO KEEP THE WATER LEVEL BELOW THE FOOTING SUBGRADE UNTIL THE FOOTING CONCRETE IS IN PLACE.

4. NATURAL SUBSOIL MATERIAL WHICH HAS BEEN DISTURBED OR HAS BEEN DETERMINED TO BE UNSUITABLE WILL BE REMOVED AND REPLACED WITH A 1'-0" MIN. DEPTH OF COMPACTED COARSE AGGREGATE FOR CONCRETE, MEETING THE REQUIREMENTS OF TABLE 704.02B OF THE SPECIFICATIONS. GEOTEXTILE FOR ROADBED SEPARATOR, MEETING THE REQUIREMENTS OF SUBSECTION 720, EXCEPT NON-WOVEN, WILL BE PLACED UNDER THE COARSE AGGREGATE FOR CONCRETE WHERE USED BELOW FOOTINGS.

5. SOIL UNIT WEIGHTS ARE AS FOLLOWS:

A. GRANULAR BORROW	138 PCF
B. EXCAVATED FILL (TO BE USED AS EARTH BORROW)	129 PCF

6. SUBSURFACE INFORMATION IS AVAILABLE IN WP 3.2.2 PART 2 - GEOTECHNICAL DATA REPORT (REV. 1).

7. DURING THE BACKFILL AND COMPACTION PROCESS, TIEBACK AND SOIL NAIL NUTS AND PLATES WILL BE REMOVED AND ENDS WILL BE CUT TO FACILITATE FUTURE REMOVAL OF SHEET PILES. DETAILS TO BE PROVIDED IN WP 5.2.6.2, 5.2.6.3, 5.2.6.4, AND WP 5.3.7.2, 5.3.7.3, 5.3.7.4.

8. WHEN BACKFILLING BEHIND PEDESTAL WALLS AND BURIED STRUCTURES, OPERATIONS WILL PROGRESS IN A MANNER SYMETRICAL ABOUT THE CENTERLINE OF STRUCTURES, SUCH THAT THERE IS NOT MORE THAN A BACKFILL ELEVATION DIFFERENCE OF 3.3' FOR THE STEM WALLS, 4.8' FOR THE CHANNEL WALLS AND 4.0' FOR THE ARCH BETWEEN OPPOSING SIDES OF THE STRUCTURES.

9. BACKFILL OF CHANNEL MATERIAL ON THE INSIDE OF PEDESTAL WALLS WILL PROGRESS AS BACKFILL IS PLACED ON THE OUTSIDE OF PEDESTAL WALLS. BACKFILL WILL BE PLACED ON THE INSIDE OF THE PEDESTAL WALLS, UP TO THE CHANNEL INVERT ELEVATION AND ON THE OUTSIDE OF PEDESTAL WALLS, UP TO 1'-0" BELOW THE TOP OF PEDESTAL WALL, PRIOR TO BURIED STRUCTURE CONSTRUCTION.

10. THE MAXIMUM SIZE OF STONE PARTICLES IN THE GRANULAR BORROW BACKFILL WILL NOT EXCEED 3", WITHIN 2'-0" OF THE STRUCTURE.

STRUCTURE NOTES

1. CONCRETE WILL CONFORM TO SECTION 501 OF THE SPECIFICATIONS AND BE AS FOLLOWS:
   A. ALL PORTIONS OF THE PEDESTAL WALLS, CHANNEL WALLS, AND WINGWALLS FOOTINGS AND STEMS WILL BE "CONCRETE, HIGH PERFORMANCE CLASS B" WITH A 28-DAY COMPRESSIVE STRENGTH OF 3,500 PSI.
   B. ALL PORTIONS OF THE BURIED STRUCTURES AND HEADWALLS WILL BE "CONCRETE, HIGH PERFORMANCE CLASS A (MOD.)" WITH A 28-DAY COMPRESSIVE STRENGTH OF 5,000 PSI.

   CALCIUM NITRITE BASED CORROSION INHIBITING ADMIXTURE WILL BE USED IN ALL CAST-IN-PLACE CONCRETE.

2. REINFORCING STEEL WILL CONFORM TO SECTION 507 OF THE SPECIFICATIONS AND BE AS FOLLOWS:
   A. THE REINFORCING STEEL IN THE HEADWALLS, WINGWALL STEMS, AND CHANNEL WALL STEMS WILL BE DUAL-COATED OR STAINLESS CLAD (LEVEL II).
   B. ALL OTHER REINFORCING STEEL WILL BE PLAIN, UNCOATED (LEVEL I).

3. ALL REINFORCING STEEL FOR EACH DESIGNATED LEVEL WILL BE THE SAME TYPE. SOLID STAINLESS REINFORCING STEEL (LEVEL III) MAY BE SUBSTITUTED FOR LEVEL II, PROVIDED ALL OF THE LEVEL II REINFORCING STEEL IS SUBSTITUTED.

4. ALL REINFORCING STEEL WILL BE DETAILED AND FABRICATED USING PROCEDURES AND TOLERANCES IN ACCORDANCE WITH APPLICABLE PUBLICATIONS OF THE CONCRETE REINFORCING STEEL INSTITUTE (CRSI). FABRICATION DRAWINGS WILL BE SUBMITTED WITH WP 4.1.1.1, 4.1.1.2, 4.1.1.3, AND 4.1.1.4. FABRICATION DRAWINGS WILL DETAIL BAR BENDS, LENGTHS, AND QUANTITIES, BASED ON INFORMATION PROVIDED IN THESE DRAWINGS. ALL HOOKS ARE STANDARD 90 OR 180 DEGREE HOOKS, UNLESS OTHERWISE NOTED. ADDITIONAL TEST BARS WILL BE DESIGNATED AND SUPPLIED IN ACCORDANCE WITH THE VERMONT AGENCY OF TRANSPORTATION'S MATERIALS SAMPLING MANUAL.

5. MINIMUM COVER FOR REINFORCING STEEL WILL BE AS FOLLOWS:

A. FOOTINGS CAST AGAINST EARTH	3.0 IN.
B. WALL FACES	2.0 IN.
C. BURIED STRUCTURES AND HEADWALLS	2.0 IN.

6. SHEET MEMBRANE WATERPROOFING, TORCH APPLIED WILL BE APPLIED OVER THE ENTIRE BURIED SURFACES OF THE US 5 AND WACR BURIED STRUCTURES, INCLUDING OVER THE BURIED SURFACES OF THE HEADWALLS. THE MEMBRANE WILL EXTEND UP THE BACK FACES OF THE HEADWALLS TO 6" BELOW FINISHED GRADE AND WILL BE SEALED AT THE TOP PER MANUFACTURER'S RECOMMENDATIONS. THE MEMBRANE WILL EXTEND A MIN. OF 1'-0" BELOW THE BURIED STRUCTURE/PEDESTAL WALL JOINT. SHEET MEMBRANE WATERPROOFING, TORCH APPLIED WILL MEET THE REQUIREMENTS OF SECTION 519 OF THE SPECIFICATIONS, EXCEPT THAT ABRASIVE BLAST CLEANING CAN BE OMITTED. THE MEMBRANE WILL BE APPLIED IN A SHINGLED PATTERN SO THAT WATER IS PERMITTED TO DRAIN OFF THE STRUCTURE. SIDE LAP JOINTS WILL BE A MINIMUM OF 3" AND END LAP JOINTS WILL BE A MINIMUM OF 6", OR PER THE MANUFACTURER'S RECOMMENDATIONS.

7. GEOTEXTILE FOR ROADBED SEPARATOR, MEETING THE REQUIREMENTS OF SECTION 649 OF THE SPECIFICATIONS, WILL BE PLACED OVER MEMBRANE FOR PROTECTION. MATERIAL FOR GEOTEXTILE WILL MEET THE REQUIREMENTS OF SECTION 720 OF THE SPECIFICATIONS, EXCEPT WILL BE A 16 OZ. WEIGHT, NON-WOVEN TYPE. GEOTEXTILE WILL BE LAPPED A MINIMUM OF 12".

8. WATER REPELLENT, SILANE, CONFORMING TO SECTION 514 OF THE SPECIFICATIONS, WILL BE APPLIED TO ALL EXPOSED CONCRETE SURFACES INCLUDING THE UNDERSIDES OF THE BURIED STRUCTURES, PRIOR TO PLACING THE STREAM THROUGH THE STRUCTURES.

9. ALL EXPOSED EDGES OF CONCRETE COMPONENTS SHALL BE CHAMFERED 1" X 1".

STRUCTURE NOTES (CONTINUED)

10. CONSTRUCTION AND EXPANSION JOINTS WILL BE CONSTRUCTED AS SHOWN IN THE PLANS, OR AS REFERENCED TO IN SD-501.00. WATERSTOPS, AS DETAILED IN SD-501.00, FOR CONSTRUCTION OR EXPANSION JOINTS AS APPROPRIATE, WILL BE USED ON THE BACKFACE OF ALL JOINTS, EXCEPT AS NOTED FOR THE BURIED STRUCTURE JOINTS. EXPANDING CONCRETE JOINT (HYDROPHILIC) WATERSTOPS WILL BE USED WHERE INDICATED. EXPANDING CONCRETE JOINT WATERSTOPS WILL BE WATERSTOP RX-101, AND WILL BE INSTALLED PER THE MANUFACTURER'S RECOMMENDATIONS.

11. MECHANICAL BAR CONNECTORS WILL BE USED AT ALL VERTICAL CONSTRUCTION JOINTS, BURIED STRUCTURE JOINTS, AND OTHER LOCATIONS AS NOTED. MECHCANICAL BAR CONNECTORS WITHIN A COMPONENT WITH DUAL-COATED REINFORCING STEEL WILL BE EPOXY COATED.

12. FORMLINER WILL BE USED IN LOCATIONS SHOWN ON THE PLANS AND WILL BE A DRY-STACKED STONE PATTERN. SPECIFIC FORMLINER DETAILS WILL BE SUBMITTED WITH THE APPROPRIATE WORK PACKAGE (WP 5.2.5.4, 5.2.5.5, 5.2.5.6, AND WP 5.3.6.4, 5.3.6.5, 5.3.6.6). FORMLINER WILL BE EITHER GREENSTREAK NO. 328 - DRYSTACK RANDOM STONE, OR GREENSTREAK NO. 477 - MERAMEC DRYSTACK STONE, WITH MAXIMUM RECESS DEPTHS OF 1½" AND 1⅛" RESPECTIVELY. FORMS WILL BE ADJUSTED SUCH THAT THE SPECIFIED MINIMUM CLEAR COVER IS OBTAINED, ACCOUNTING FOR THESE RECESS DEPTHS.

13. CONCRETE FOR THE PEDESTAL WALLS, CHANNEL WALLS, AND BURIED STRUCTURES WILL BE PLACED IN ALTERNATING SECTIONS BETWEEN THE CONSTRUCTION JOINTS AS INDICATED ON THESE PLANS. THERE WILL BE A MINIMUM OF A 72 HOUR DELAY BETWEEN ADJACENT CONCRETE PLACEMENTS.

14. 4"Ø WEEP HOLES WILL BE CONSTRUCTED AS SHOWN ON PLANS. DRAINAGE AGGREGATE WRAPPED IN GEOTEXTILE FOR UNDERDRAIN TRENCH LINING WILL BE PLACED ON THE BACKSIDE OF ALL WEEP HOLES PER DETAIL ON SHEET 12.

15. IT IS THE INTENT TO CONSTRUCT THE HEADWALLS PRIOR TO CONSTRUCTION OF THE BURIED STRUCTURES. DETAILS OF FORMING AND CONCRETE PLACEMENT FOR THE BURIED STRUCTURES WILL BE PROVIDED IN WP 5.2.5.3 AND 5.3.6.3.

PROJECT NAME:	RYEGATE
PROJECT NUMBER:	STP CULV(10)
FILE NAME: z06c156strnotes.dgn	PLOT DATE: 3/23/16
PROJECT LEADER: E. DETRICK	DRAWN BY: R. BARNES
DESIGNED BY: R. BARNES	CHECKED BY: E. DETRICK
CULVERT NOTES	SHEET 6 OF 36

ECI ENGINEERS CONSTRUCTION — DuBois & King Inc.

STATE OF VERMONT
AGENCY OF TRANSPORTATION

QUANTITY SHEET

SUMMARY OF ESTIMATED QUANTITIES

		US 5 FOOTINGS	US 5 PEDESTAL WALLS	US 5 BURIED STRUCTURE	WACR FOOTINGS	WACR PEDESTAL WALLS	WACR BURIED STRUCTURE	HEADWALLS #1 & #2	HEADWALLS #3 & #4	WINGWALLS #1 & #2	WINGWALLS #3 & #4	WINGWALLS #5 & #6	WINGWALLS #7 & #8	CHANNEL WALLS #1 & #2	CHANNEL
				2500			4800								
			980	3800		940	3600			375	220	225	530	770	
				445			460	48	62						
		265	275		305	235				95	54	68	140	255	
			3	57		3	52	5	6	3	3	3	5	10	
				920			825	95	120						
														11	
														2	
			260			255									
			120			165									
			4			4									
															2950
								38	77	26	31	29	41		
														~~111~~	
				920			825	95	120						
															500
															1220
															205
		44			45					10	19	19	10	21	
								37.5							

BRIDGE QUANTITY	ROUND	GRAND TOTAL	FINAL	UNIT	ITEMS	ITEM NUMBER
		7300		CY	EARTH BORROW	203.30
		11440		CY	GRANULAR BORROW	203.32
		1015		CY	CONCRETE, HIGH PERFORMANCE CLASS A (MOD.)	501.33
		1692		CY	CONCRETE, HIGH PERFORMANCE CLASS B	501.34
		150		GAL	WATER REPELLENT, SILANE	514.10
		1960		SY	SHEET MEMBRANE WATERPROOFING, TORCH APPLIED	519.20
		11		LF	15" CPEP(SL)	601.2610
		2		EACH	PRECAST REINFORCED CONCRETE PIPE DI WITH CONCRETE COVER	604.26
		515		LF	6 INCH UNDERDRAIN PIPE	605.10
		285		LF	6 INCH UNDERDRAIN CARRIER PIPE	605.20
		8		EACH	UNDERDRAIN FLUSHING BASIN	605.95
		2950		CY	STONE FILL, TYPE IV	613.13
		~~242~~	367	LF	CHAIN-LINK FENCE, 4 FEET	620.11
		111		LF	~~HD STEEL BEAM GUARDRAIL, GALVANIZED~~	621.21
		1960		SY	GEOTEXTILE FOR ROADBED SEPARATOR	649.11
		500		SY	GRUBBING MATERIAL	651.40
		1220		CY	SPECIAL PROVISION (NATURAL STREAMBED MATERIAL)	900.608
		205		CY	SPECIAL PROVISION (CHANNEL BOULDERS)	900.608
		168		CY	SPECIAL PROVISION (COARSE AGGREGATE BACKFILL)	900.608
		37.5		LF	SPECIAL PROVISION (T101 BRIDGE RAIL)	900.640

Guardrail changed to wall-mounted 4' Chain-Link Fence as per RFI #39

DETAILED SUMMARY OF QUANTITIES

QUANTITIES	UNIT	ITEMS

NOTES:

1. THIS IS A DESIGN-BUILD PROJECT - QUANTITIES ARE PROVIDED FOR INFORMATIONAL PURPOSES ONLY.

2. QUANTITY SUMMARY INCLUDES ONLY THOSE ITEMS IN THE PERMANENT WORK DETAILED IN THIS DESIGN WORK PACKAGE. EXCAVATION ITEMS, TEMPORARY WORKS ITEMS, AND ITEMS DETAILED IN OTHER DESIGN WORK PACKAGES ARE NOT INCLUDED IN THIS SUMMARY.

3. QUANTITIES FOR ITEM 507.11, "REINFORCING STEEL, LEVEL I", ITEM 507.12, "REINFORCING STEEL, LEVEL II", AND ITEM 507.19, "MECHANICAL BAR CONNECTOR" WILL BE PROVIDED BY THE FABRICATOR UPON SUBMITTAL OF FABRICATION DRAWINGS.

ECI ENGINEERS CONSTRUCTION — DuBois & King Inc.

PROJECT NAME: RYEGATE
PROJECT NUMBER: STP CULV(10)

FILE NAME: z06c156frm.dgn
PROJECT LEADER: E. DETRICK
DESIGNED BY: R. BARNES
QUANTITY SHEET

PLOT DATE: 3/23/16
DRAWN BY: R. BARNES
CHECKED BY: E. DETRICK
SHEET 7 OF 36

GENERAL INFORMATION

SYMBOLOGY LEGEND NOTE

THE SYMBOLOGY ON THIS SHEET IS INTENDED TO COVER STANDARD CONVENTIONAL SYMBOLOGY. THE SYMBOLOGY IS USED FOR EXISTING & PROPOSED FEATURES WITH HEAVIER LINEWEIGHT, IN COMBINATION WITH PROJECT ANNOTATION, AS NOTED ON PROJECT PLAN SHEETS. THIS LEGEND SHEET COVERS THE BASICS. SYMBOLOGY ON PLANS MAY VARY, PLAN ANNOTATIONS AND NOTES SHOULD BE USED TO CLARIFY AS NEEDED.

R.O.W. ABBREVIATIONS (CODES) & SYMBOLS

POINT	CODE	DESCRIPTION
	CH	CHANNEL EASEMENT
	CONST	CONSTRUCTION EASEMENT
	CUL	CULVERT EASEMENT
	D&C	DISCONNECT & CONNECT
	DIT	DITCH EASEMENT
	DR	DRAINAGE EASEMENT
	DRIVE	DRIVEWAY EASEMENT
	EC	EROSION CONTROL
	HWY	HIGHWAY EASEMENT
	I&M	INSTALL & MAINTAIN EASEMENT
	LAND	LANDSCAPE EASEMENT
	R&RES	REMOVE & RESET
	R&REP	REMOVE & REPLACE
	SR	SLOPE RIGHT
	UE	UTILITY EASEMENT
	(P)	PERMANENT EASEMENT
	(T)	TEMPORARY EASEMENT
■	BNDNS	BOUND SET
⧈	BNDNS	BOUND TO BE SET
●	IPNS	IRON PIN SET
◎	IPNS	IRON PIN TO BE SET
⊠	CALC	EXISTING ROW POINT
○	PROW	PROPOSED ROW POINT
[LENGTH]		LENGTH CARRIED ON NEXT SHEET

COMMON TOPOGRAPHIC POINT SYMBOLS

POINT	CODE	DESCRIPTION
	APL	BOUND APPARENT LOCATION
	BM	BENCHMARK
	BND	BOUND
	CB	CATCH BASIN
	COMB	COMBINATION POLE
	DITHR	DROP INLET THROATED DNC
	EL	ELECTRIC POWER POLE
	FPOLE	FLAGPOLE
	GASFIL	GAS FILLER
	GP	GUIDE POST
	GSO	GAS SHUT OFF
	GUY	GUY POLE
	GUYW	GUY WIRE
	GV	GATE VALUE
	H	TREE HARDWOOD
	HCTRL	CONTROL HORIZONTAL
	HVCTRL	CONTROL HORIZ. & VERTICAL
	HYD	HYDRANT
	IP	IRON PIN
	IPIPE	IRON PIPE
	LI	LIGHT - STREET OR YARD
	MB	MAILBOX
	MH	MANHOLE (MH)
	MM	MILE MARKER
	PM	PARKING METER
	PMK	PROJECT MARKER
	POST	POST STONE/WOOD
	RRSIG	RAILROAD SIGNAL
	RRSL	RAILROAD SWITCH LEVER
	S	TREE SOFTWOOD
	SAT	SATELLITE DISH
	SHRUB	SHRUB
	SIGN	SIGN
	STUMP	STUMP
	TEL	TELEPHONE POLE
	TIE	TIE
	TSIGN	SIGN W/DOUBLE POST
	VCTRL	CONTROL VERTICAL
	WELL	WELL
	WSO	WATER SHUT OFF

THESE ARE COMMON VAOT SURVEY POINT SYMBOLS FOR EXISTING FEATURES, ALSO USED FOR PROPOSED FEATURES WITH HEAVIER LINEWEIGHT, IN COMBINATION WITH PROPOSED ANNOTATION.

PROPOSED GEOMETRY CODES

CODE	DESCRIPTION
PC	POINT OF CURVATURE
PI	POINT OF INTERSECTION
CC	CENTER OF CURVE
PT	POINT OF TANGENCY
PCC	POINT OF COMPOUND CURVE
PRC	POINT OF REVERSE CURVE
POB	POINT OF BEGINNING
POE	POINT OF ENDING
STA	STATION PREFIX
AH	AHEAD STATION SUFFIX
BK	BACK STATION SUFFIX
D	CURVE DEGREE OF (100FT)
R	CURVE RADUIS OF
T	CURVE TANGENT LENGTH
L	CURVE LENGTH OF
E	CURVE EXTERNAL DISTANCE

UTILITY SYMBOLOGY

UNDERGROUND UTILITIES

- UGU — UTILITY (GENERIC-UNKNOWN)
- UT — TELEPHONE
- UE — ELECTRIC
- UC — CABLE (TV)
- UEC — ELECTRIC+CABLE
- UET — ELECTRIC+TELEPHONE
- UCT — CABLE+TELEPHONE
- UECT — ELECTRIC+CABLE+TELEP.
- G — GAS LINE
- W — WATER LINE
- S — SANITARY SEWER (SEPTIC)

ABOVE GROUND UTILITIES (AERIAL)

- AGU — UTILITY (GENERIC-UNKNOWN)
- T — TELEPHONE
- E — ELECTRIC
- C — CABLE (TV)
- EC — ELECTRIC+CABLE
- ET — ELECTRIC+TELEPHONE
- AER E&T — ELECTRIC+TELEPHONE
- CT — CABLE+TELEPHONE
- ECT — ELECTRIC+CABLE+TELEP.
- UTILITY POLE GUY WIRE

PROJECT CONSTRUCTION SYMBOLOGY

PROJECT DESIGN & LAYOUT SYMBOLOGY

- CZ — CLEAR ZONE
- PLAN LAYOUT MATCHLINE

PROJECT CONSTRUCTION FEATURES

- TOP OF CUT SLOPE
- TOE OF FILL SLOPE
- STONE FILL
- BOTTOM OF DITCH ℄
- CULVERT PROPOSED
- STRUCTURE SUBSURFACE
- PDF — PROJECT DEMARCATION FENCE
- BF — BARRIER FENCE
- TREE PROTECTION ZONE (TPZ)
- STRIPING LINE REMOVAL
- SHEET PILES

CONVENTIONAL BOUNDARY SYMBOLOGY

BOUNDARY LINES

- TOWN LINE — TOWN BOUNDARY LINE
- COUNTY LINE — COUNTY BOUNDARY LINE
- STATE LINE — STATE BOUNDARY LINE
- PROPOSED STATE R.O.W. (LIMITED ACCESS)
- PROPOSED STATE R.O.W.
- STATE ROW (LIMITED ACCESS)
- STATE ROW
- TOWN ROW
- PERMANENT EASEMENT LINE (P)
- TEMPORARY EASEMENT LINE (T)
- SURVEY LINE
- P/L — PROPERTY LINE (P/L)
- SR SR SR — SLOPE RIGHTS
- 6F — 6F PROPERTY BOUNDARY
- 4F — 4F PROPERTY BOUNDARY
- HAZ — HAZ — HAZARDOUS WASTE

EPSC LAYOUT PLAN SYMBOLOGY

EPSC MEASURES

- FILTER CURTAIN
- SILT FENCE
- SILT FENCE WOVEN WIRE
- CHECK DAM
- DISTURBED AREAS REQUIRING RE-VEGETATION
- EROSION MATTING

SEE EPSC DETAIL SHEETS FOR ADDITIONAL SYMBOLOGY

ENVIRONMENTAL RESOURCES

- WETLAND BOUNDARY
- RIPARIAN BUFFER ZONE
- WETLAND BUFFER ZONE
- SOIL TYPE BOUNDARY
- T&E — THREATENED & ENDANGERED SPECIES
- HAZ — HAZ — HAZARDOUS WASTE AREA
- AG — AGRICULTURAL LAND
- HABITAT — FISH & WILDLIFE HABITAT
- FLOOD PLAIN — FLOOD PLAIN
- OHW — ORDINARY HIGH WATER (OHW)
- STORM WATER
- USDA FOREST SERVICE LANDS
- WILDLIFE HABITAT SUIT/CONN

ARCHEOLOGICAL & HISTORIC

- ARCH — ARCHEOLOGICAL BOUNDARY
- HISTORIC DIST — HISTORIC DISTRICT BOUNDARY
- HISTORIC — HISTORIC AREA
- Ⓗ HISTORIC STRUCTURE

CONVENTIONAL TOPOGRAPHIC SYMBOLOGY

EXISTING FEATURES

- ROAD EDGE PAVEMENT
- ROAD EDGE GRAVEL
- DRIVEWAY EDGE
- DITCH
- FOUNDATION
- FENCE (EXISTING)
- FENCE WOOD POST
- FENCE STEEL POST
- GARDEN
- ROAD GUARDRAIL
- RAILROAD TRACKS
- CULVERT (EXISTING)
- STONE WALL
- WALL
- WOOD LINE
- BRUSH LINE
- HEDGE
- BODY OF WATER EDGE
- LEDGE EXPOSED

PROJECT NAME: RYEGATE
PROJECT NUMBER: STP CULV(10)

ECI ENGINEERS CONSTRUCTION — DuBois & King INC

FILE NAME: z06c156leg.dgn
PROJECT LEADER: E. DETRICK
DESIGNED BY: R. BARNES
CONVENTIONAL SYMBOLOGY LEGEND SHEET

PLOT DATE: 3/23/16
DRAWN BY: R. BARNES
CHECKED BY: E. DETRICK
SHEET 8 OF 36

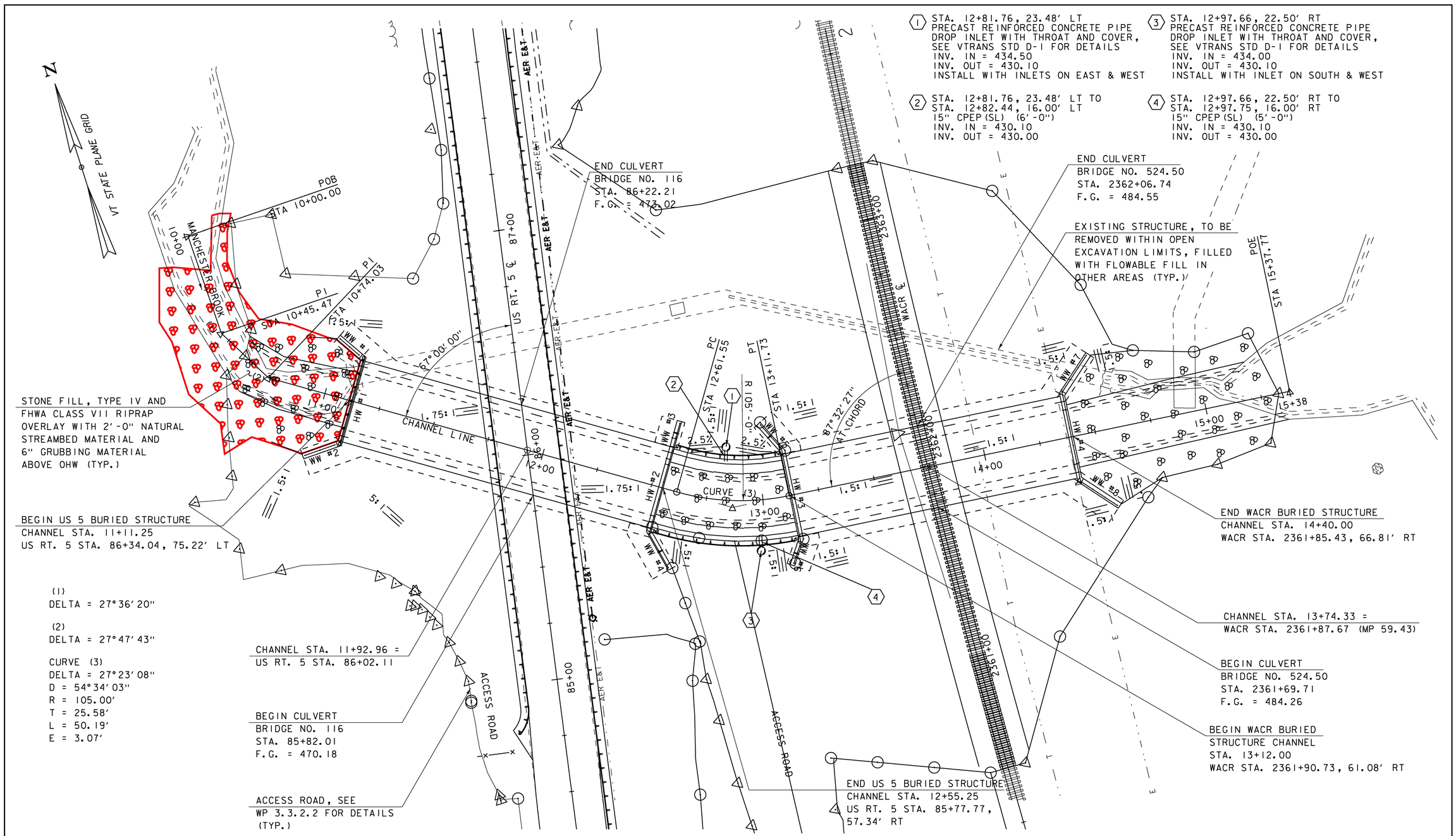

STRUCTURE PLAN

SCALE 1" = 20'-0"

NOTE: STONE FILL, TYPE I NOT SHOWN FOR CLARITY.

PROJECT NAME:	RYEGATE
PROJECT NUMBER:	STP CULV(10)
FILE NAME: z06c156pe.dgn	PLOT DATE: 11/24/2015
PROJECT LEADER: E. DETRICK	DRAWN BY: R. BARNES
DESIGNED BY: R. BARNES	CHECKED BY: E. DETRICK
STRUCTURE PLAN	SHEET 9 OF 56

ECI ENGINEERS CONSTRUCTION — DuBois & King INC.

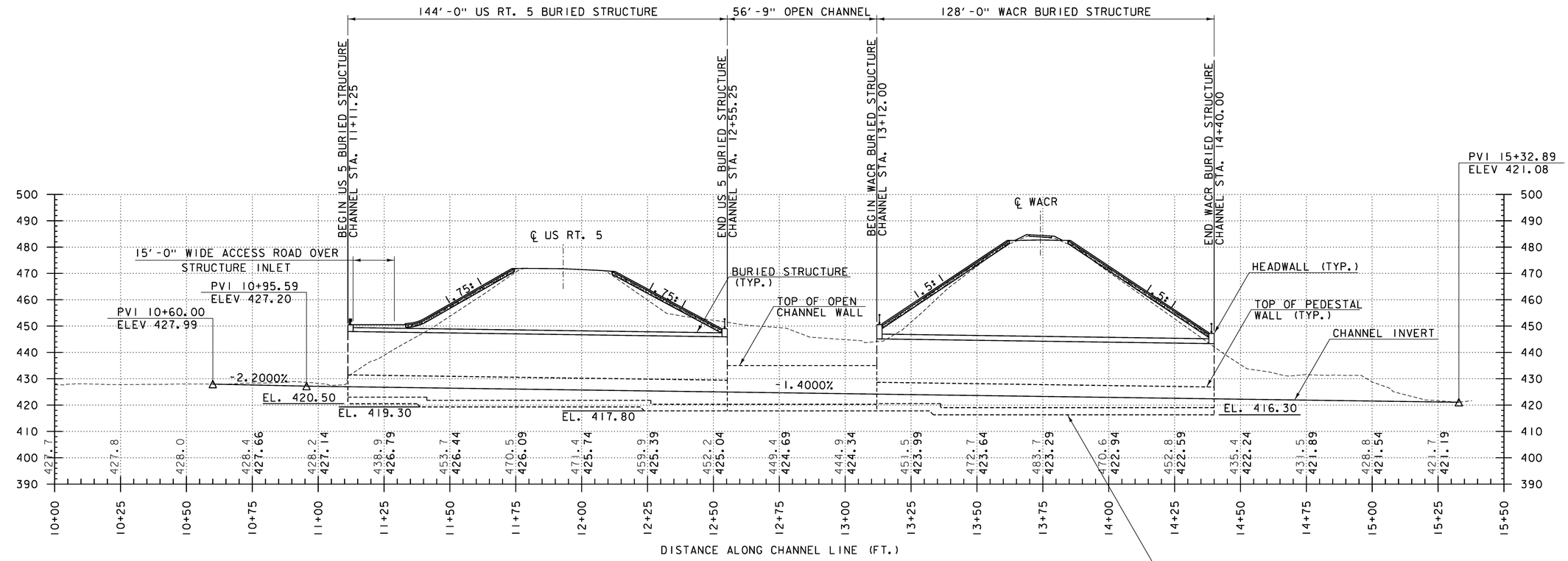

CHANNEL PROFILE

SCALE: 1" = 20'-0"

NOTE: CHANNEL WEIRS WILL BE PROVIDED AT APPROX. STATIONS 11+50, 13+00, AND 13+70 ALONG THE CHANNEL ALIGNMENT WHILE MAINTAINING THE MINIMUM CHANNEL PROFILE GRADE LINE SHOWN. SEE CHANNEL MATERIAL NOTES, SHEET 3 FOR DETAILS.

THE GRADES SHOWN TO THE TENTH ARE THE EXISTING GROUND ELEVATIONS ALONG THE NEW ALIGNMENT. THE GRADES SHOWN TO THE NEAREST HUNDREDTH ARE THE PROPOSED GRADES FOR THE NEW ALIGNMENT.

ECI ENGINEERS CONSTRUCTION — DuBois & King INC.

PROJECT NAME: RYEGATE
PROJECT NUMBER: STP CULV(10)

FILE NAME: z06cl56pro.dgn
PROJECT LEADER: E. DETRICK
DESIGNED BY: R. BARNES
CHANNEL PROFILE

PLOT DATE: 3/23/16
DRAWN BY: R. BARNES
CHECKED BY: E. DETRICK
SHEET 10 OF 36

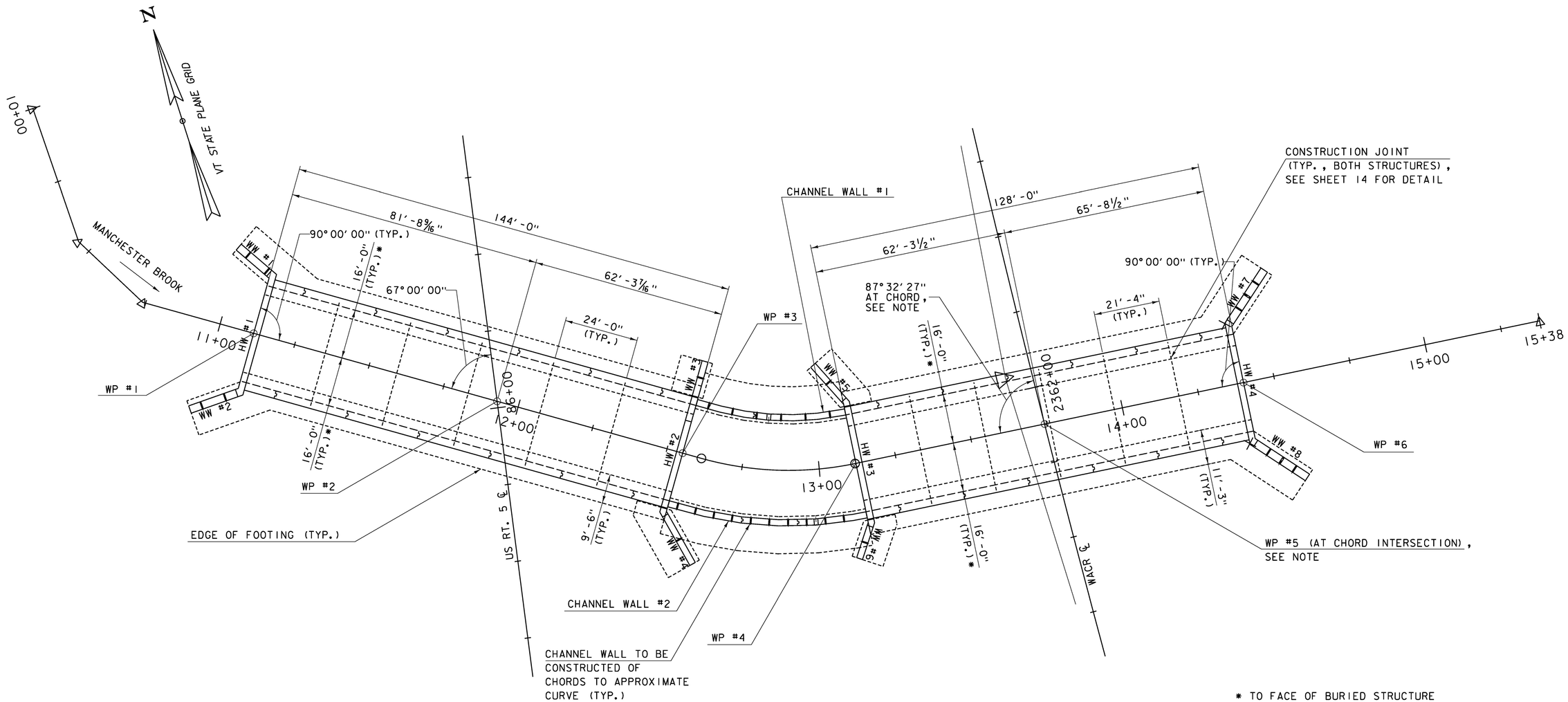

* TO FACE OF BURIED STRUCTURE

STRUCTURE LAYOUT

SCALE 1/16" = 1'-0"

WORKING POINT COORDINATES

	CHANNEL STA.	NORTHING	EASTING
WP #1	11+11.25	623633.6216	1755382.1221
WP #2	11+92.96	623588.7598	1755450.4213
WP #3	12+55.25	623554.5653	1755502.4803
WP #4	13+12.00	623534.3994	1755554.8424
WP #5	13+74.33	623527.9789	1755616.8344
WP #6	14+40.00	623521.2131	1755682.1613

NOTE: WACR CHORD IS BETWEEN BEGIN AND END CULVERT STATIONS ON WACR ℄.

ECI ENGINEERS CONSTRUCTION — DuBois & King Inc.

PROJECT NAME: RYEGATE
PROJECT NUMBER: STP CULV(10)

FILE NAME: z06c156strlay.dgn
PROJECT LEADER: E. DETRICK
DESIGNED BY: R. BARNES
STRUCTURE LAYOUT

PLOT DATE: 3/23/16
DRAWN BY: R. BARNES
CHECKED BY: E. DETRICK
SHEET 11 OF 36

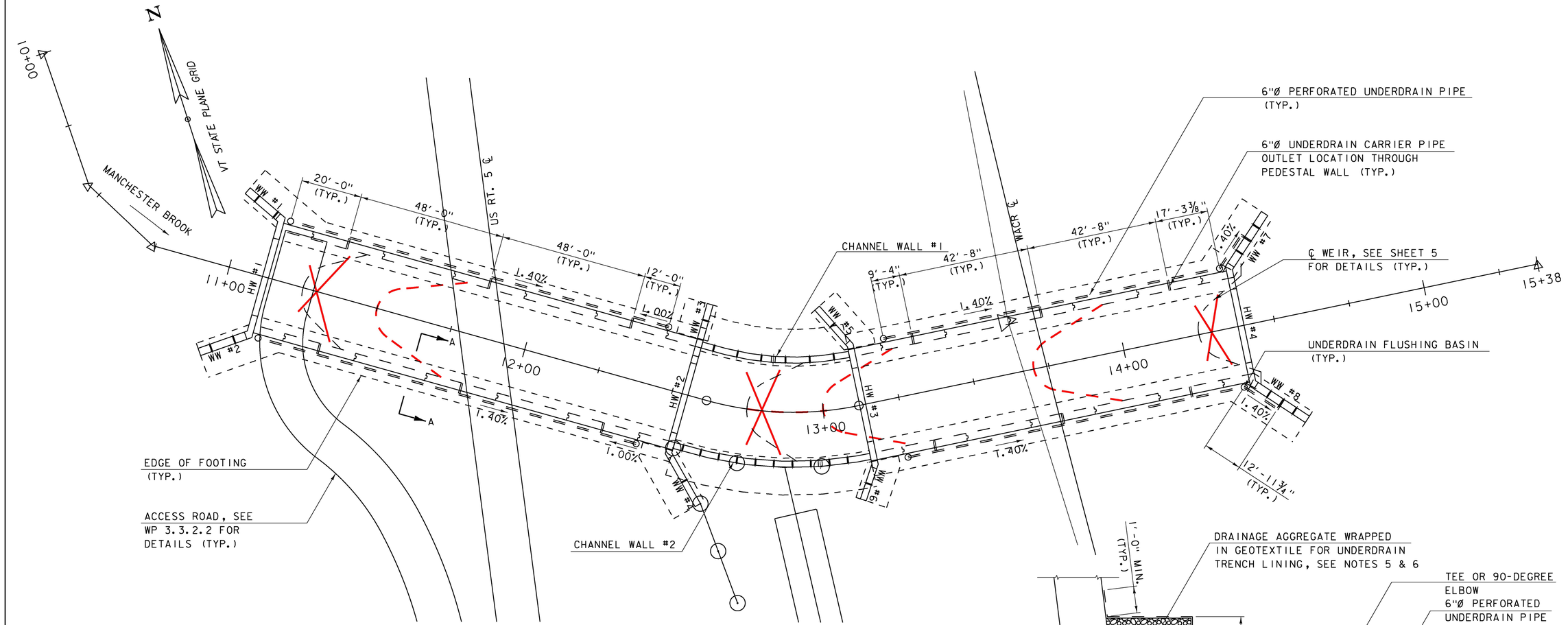

UNDERDRAIN LAYOUT

SCALE 1/16" = 1'-0"

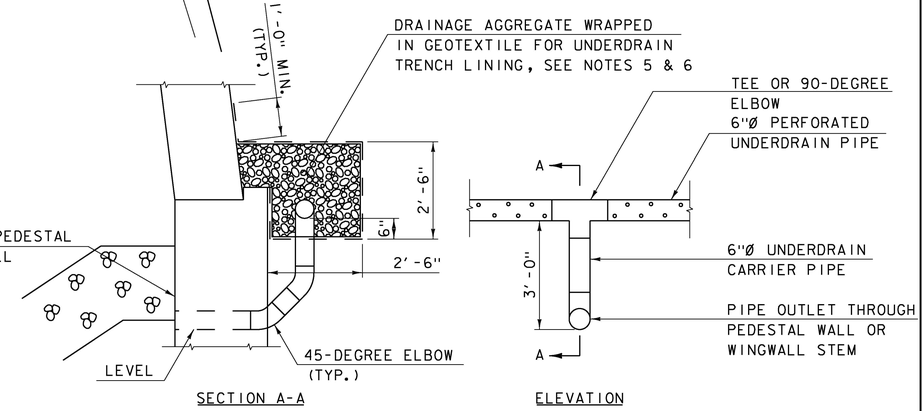

SECTION A-A ELEVATION

UNDERDRAIN OUTLET DETAIL

NOT TO SCALE

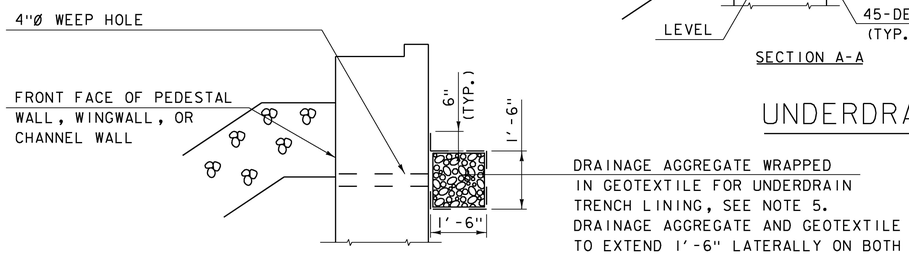

WEEP HOLE DETAIL

(AT ALL WEEP HOLE LOCATIONS)
NOT TO SCALE

UNDERDRAIN NOTES

1. THE PERFORATED UNDERDRAIN PIPE INVERT WILL BE 6" BELOW THE TOP OF PEDESTAL WALL ELEVATION, AND WILL BE SLOPED TO FOLLOW THE TOP OF PEDESTAL WALL, EXCEPT AT THE DOWNSTREAM END OF THE US 5 BURIED STRUCTURE BETWEEN THE FINAL OUTLET LOCATION AND FLUSHING BASIN, WHERE IT WILL BE SLOPED AT 1.0% TO THE OUTLET LOCATION.
2. SEE VTRANS STD D-30 FOR UNDERDRAIN FLUSHING BASIN CONSTRUCTION DETAIL.
3. UNDERDRAIN CONSTRUCTION WILL MEET THE REQUIREMENTS OF SECTION 605 OF THE SPECIFICATIONS.
4. PERFORATED UNDERDRAIN AND UNDERDRAIN CARRIER PIPE WILL BE SMOOTH WALL, POLYVINYL CHLORIDE (PVC) PLASTIC PIPE, SDR 35, MEETING THE REQUIREMENTS OF SUBSECTION 710.06 OF THE SPECIFICATIONS, OR OTHER APPROVED MATERIAL.
5. GEOTEXTILE FOR UNDERDRAIN TRENCH LINING WILL MEET THE REQUIREMENTS OF SECTION 720, EXCEPT WILL BE 16 OZ. WEIGHT.
6. DRAINAGE AGGREGATE AND GEOTEXTILE WILL CONTINUE 1'-0" MIN. BEYOND END OF PERFORATED UNDERDRAIN PIPE. END OF DRAINAGE AGGREGATE WILL BE WRAPPED IN GEOTEXTILE.

PROJECT NAME:	RYEGATE
PROJECT NUMBER:	STP CULV(10)
FILE NAME: z06c156bunderdrain.dgn	PLOT DATE: 11/24/2015
PROJECT LEADER: E. DETRICK	DRAWN BY: R. BARNES
DESIGNED BY: R. BARNES	CHECKED BY: E. DETRICK
UNDERDRAIN LAYOUT	SHEET 12 OF 56

ENGINEERS CONSTRUCTION — DuBois & King inc.

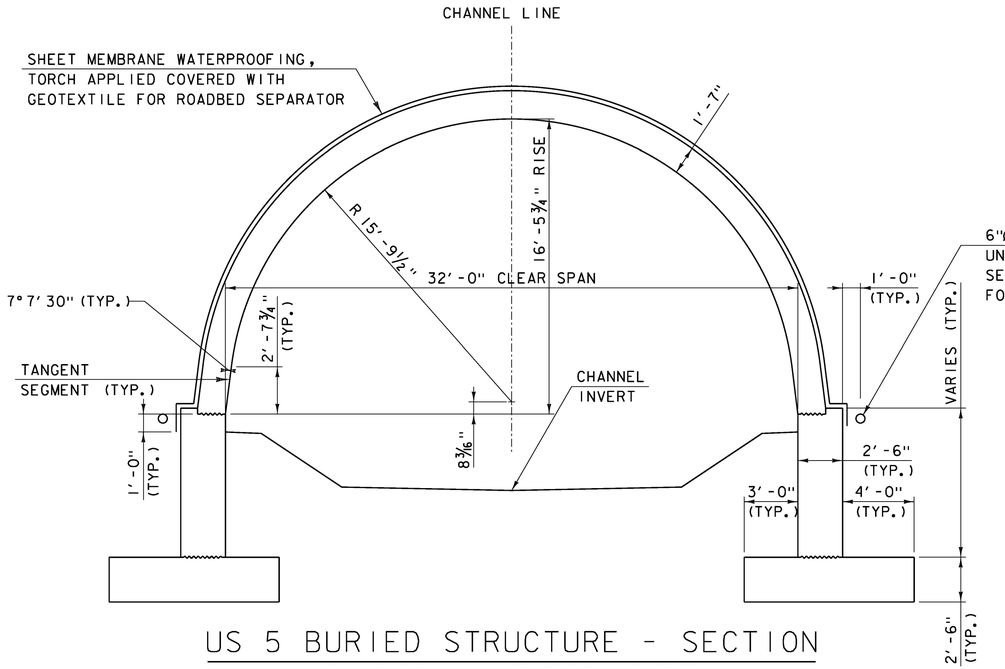

US 5 BURIED STRUCTURE - SECTION

CHANNEL STA. 11+11.25 TO STA. 12+55.25
SCALE ¼" = 1'-0"

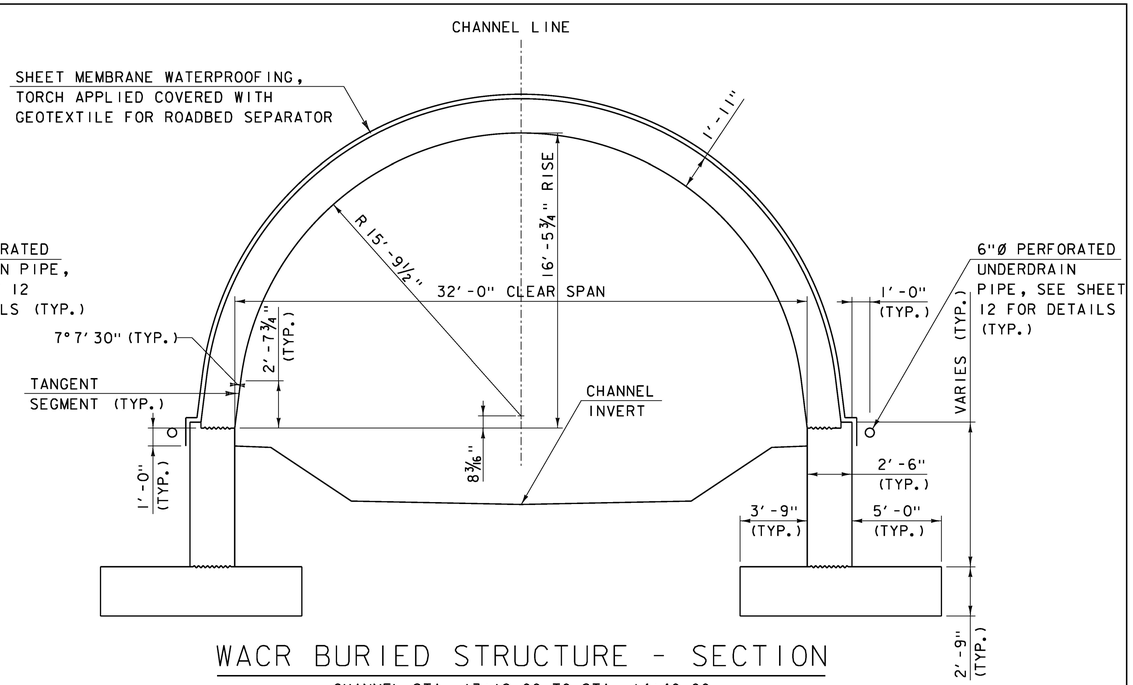

WACR BURIED STRUCTURE - SECTION

CHANNEL STA. 13+12.00 TO STA. 14+40.00
SCALE ¼" = 1'-0"

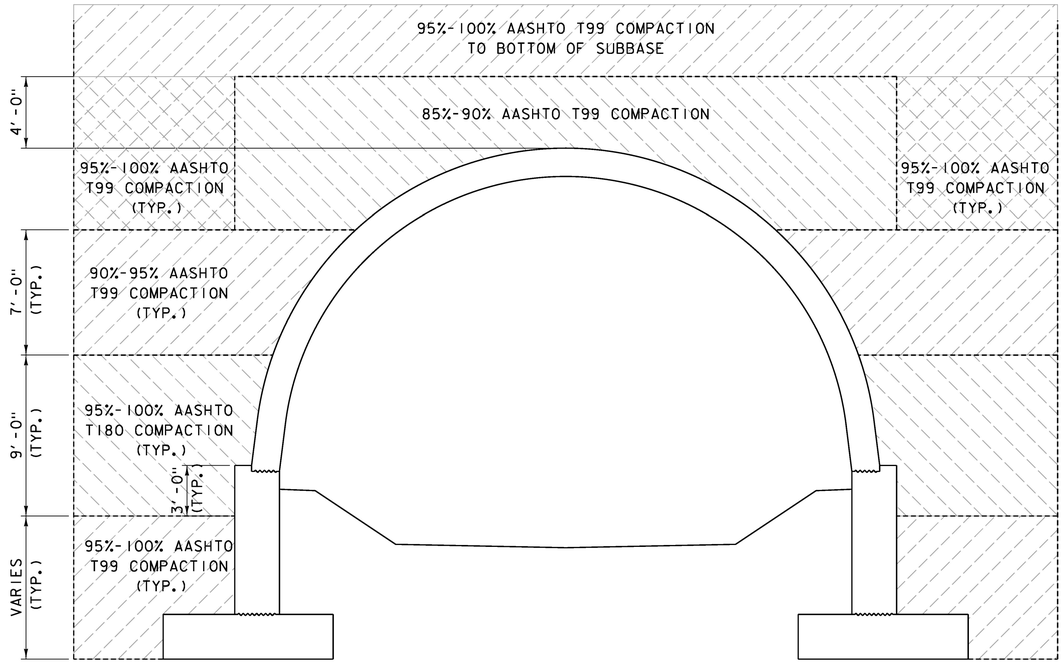

BACKFILL AND COMPACTION DIAGRAM (US 5 & WACR)

SCALE ¼" = 1'-0"

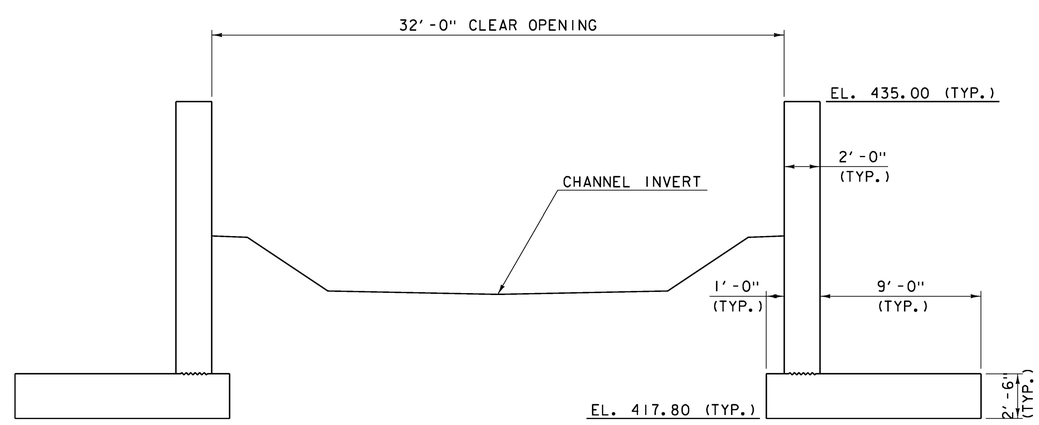

OPEN CHANNEL - SECTION

CHANNEL STA. 12+55.25 TO STA. 13+12.00
SCALE ¼" = 1'-0"

NOTE: CHANNEL CROSS-SECTIONS SHOWN REFLECT GENERAL CHANNEL GEOMETRY, IT WILL NOT BE A SMOOTHLY GRADED SURFACE AS SHOWN, SEE CHANNEL MATERIAL NOTES, SHEET 3.

PROJECT NAME: RYEGATE
PROJECT NUMBER: STP CULV(10)

ECI ENGINEERS CONSTRUCTION — DuBois & King Inc.

FILE NAME: z06cl56sup.dgn
PROJECT LEADER: E. DETRICK
DESIGNED BY: R. BARNES
STRUCTURE DETAILS 1 OF 2

PLOT DATE: 3/23/16
DRAWN BY: R. BARNES
CHECKED BY: E. DETRICK
SHEET 13 OF 36

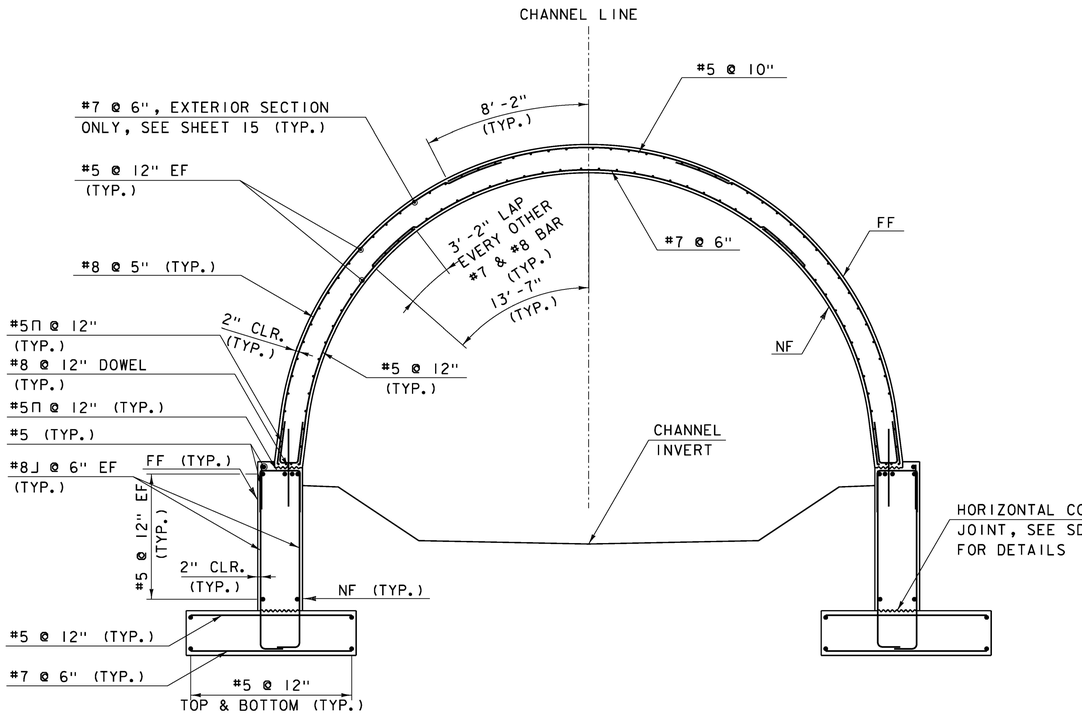

US 5 BURIED STRUCTURE REINFORCING - SECTION

SCALE 1/4" = 1'-0"

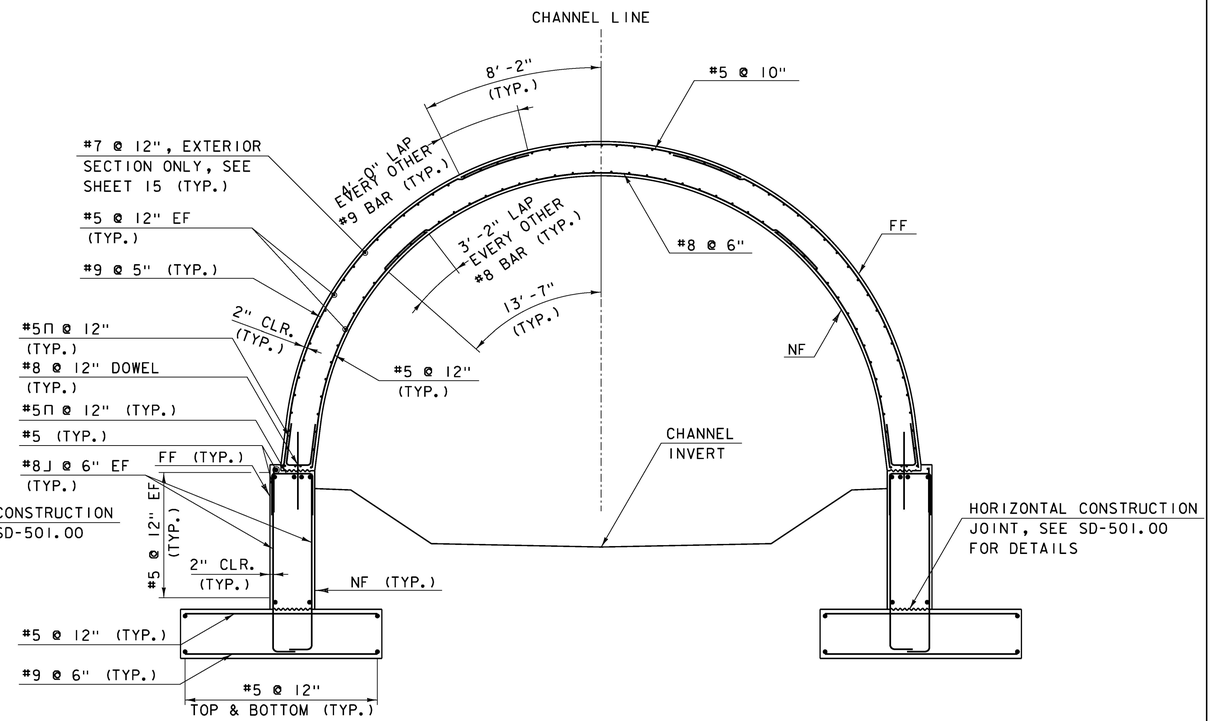

WACR BURIED STRUCTURE REINFORCING - SECTION

SCALE 1/4" = 1'-0"

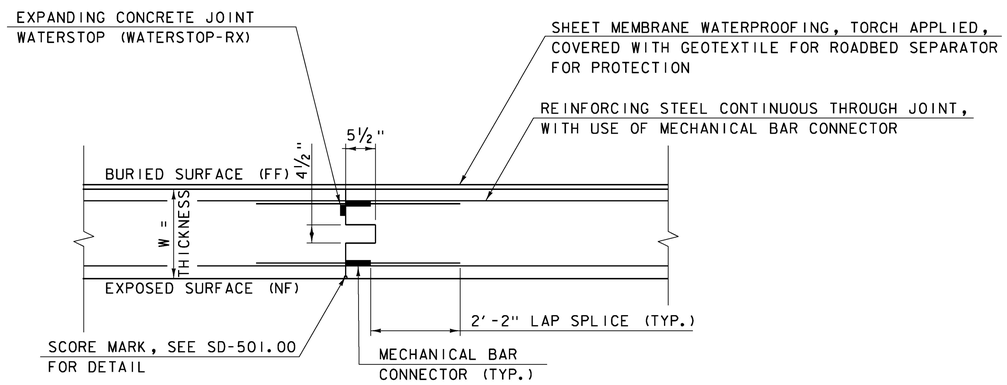

BURIED STRUCTURE CONSTRUCTION JOINT DETAIL

NOT TO SCALE

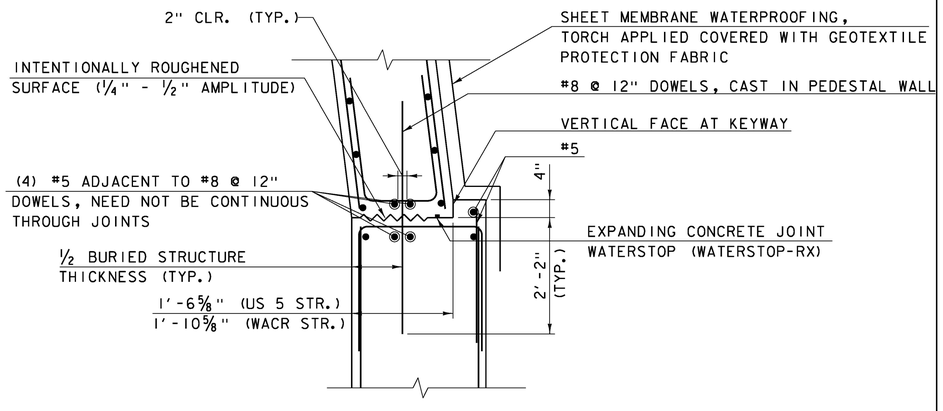

PEDESTAL WALL/BURIED STRUCTURE JOINT DETAIL

NOT TO SCALE

NOTE:

NF = NEAR FACE
FF = FAR FACE
EF = EACH FACE
▲ = CUT TO FIT IN FIELD
3" CLEAR, UNLESS OTHERWISE SPECIFIED ON THE PLANS.
2'-2" BAR LAP UNLESS OTHERWISE SPECIFIED ON THE PLANS.

NOTE: REINFORCING STEEL IS SYMMETRICAL ABOUT THE CENTERLINE OF EACH STRUCTURE.

ENGINEERS CONSTRUCTION — DuBois & King Inc.

PROJECT NAME: RYEGATE
PROJECT NUMBER: STP CULV(10)

FILE NAME: z06cl56sup.dgn
PROJECT LEADER: E. DETRICK
DESIGNED BY: R. BARNES
STRUCTURE DETAILS 2 OF 2

PLOT DATE: 3/23/16
DRAWN BY: R. BARNES
CHECKED BY: E. DETRICK
SHEET 14 OF 36

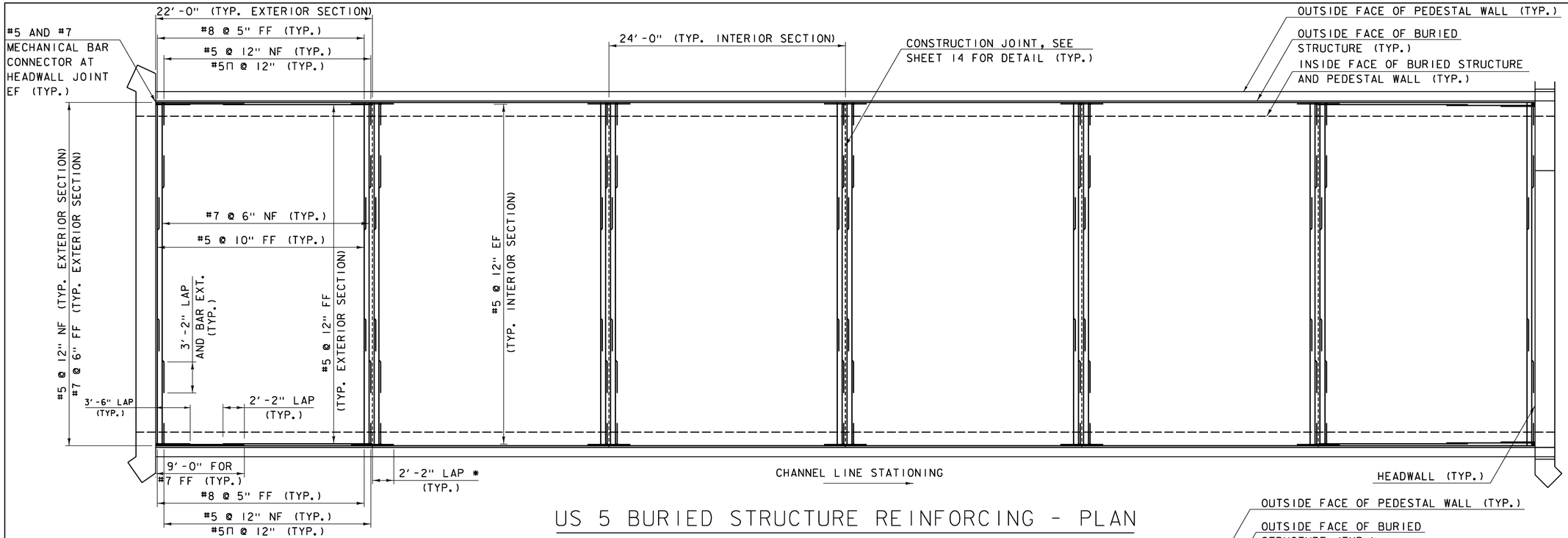

US 5 BURIED STRUCTURE REINFORCING - PLAN

SCALE 3/16" = 1'-0"

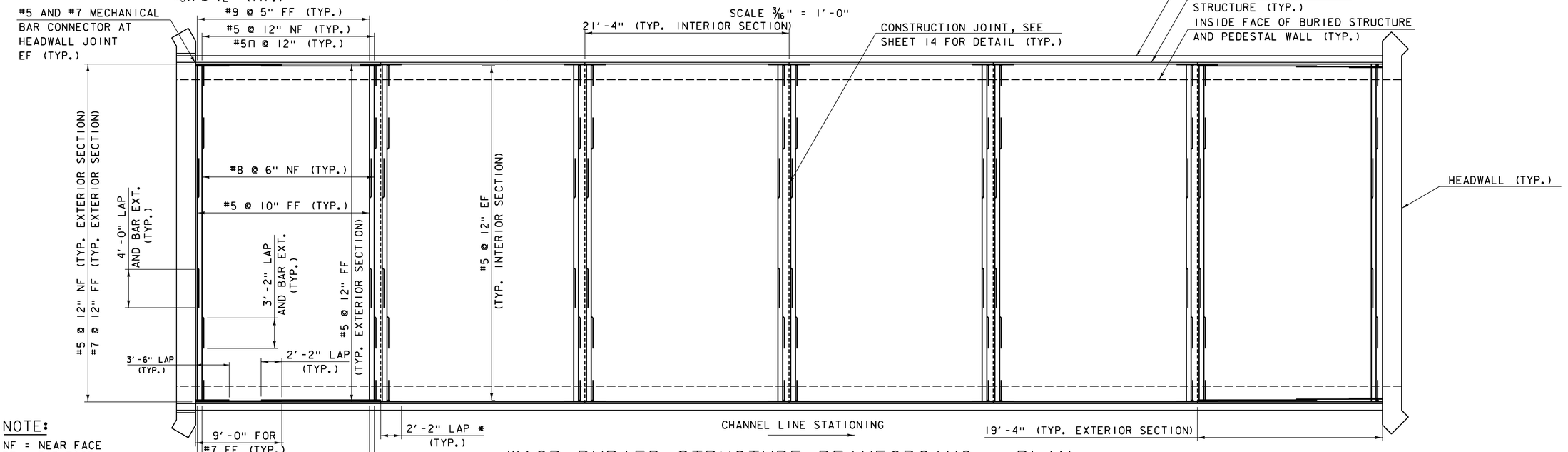

WACR BURIED STRUCTURE REINFORCING - PLAN

SCALE 3/16" = 1'-0"

NOTE: HEADWALL REINFORCING NOT SHOWN

NOTE:

NF = NEAR FACE
FF = FAR FACE
EF = EACH FACE
▲ = CUT TO FIT IN FIELD
3" CLEAR, UNLESS OTHERWISE SPECIFIED ON THE PLANS.
2'-2" BAR LAP UNLESS OTHERWISE SPECIFIED ON THE PLANS.

* LAP WITH MECHANICAL BAR CONNECTOR DOWEL AT ALL INTERIOR CONSTRUCTION JOINTS

PROJECT NAME:	RYEGATE
PROJECT NUMBER:	STP CULV(10)
FILE NAME: z06cl56sup.dgn	PLOT DATE: 3/23/16
PROJECT LEADER: E. DETRICK	DRAWN BY: R. BARNES
DESIGNED BY: R. BARNES	CHECKED BY: E. DETRICK
BURIED STRUCTURE REINFORCING PLAN	SHEET 15 OF 36

ECI ENGINEERS CONSTRUCTION — DuBois & King INC.

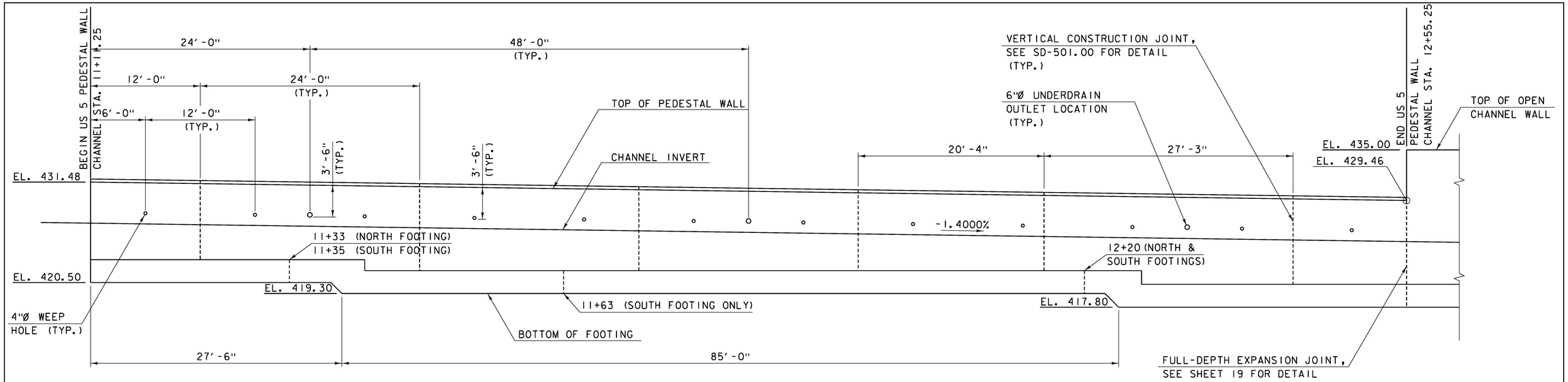

US 5 PEDESTAL WALL - ELEVATION

SCALE 3/16" = 1'-0"

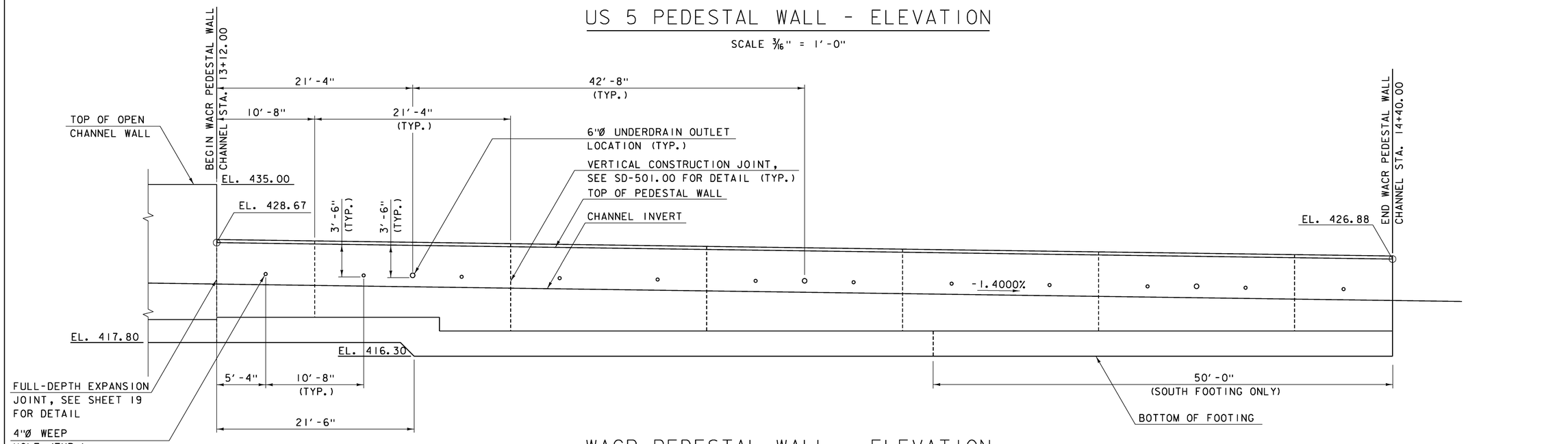

WACR PEDESTAL WALL - ELEVATION

SCALE 3/16" = 1'-0"

NOTE: ONE PEDESTAL WALL IS SHOWN FOR US 5 AND WACR, OPPOSING WALLS ARE THE MIRROR IMAGE.

PROJECT NAME: RYEGATE
PROJECT NUMBER: STP CULV(10)

ECI ENGINEERS CONSTRUCTION — DuBois & King Inc.

FILE NAME: z06cl56sup.dgn
PROJECT LEADER: E. DETRICK
DESIGNED BY: R. BARNES
PEDESTAL WALL ELEVATIONS

PLOT DATE: 3/23/16
DRAWN BY: R. BARNES
CHECKED BY: E. DETRICK
SHEET 16 OF 36

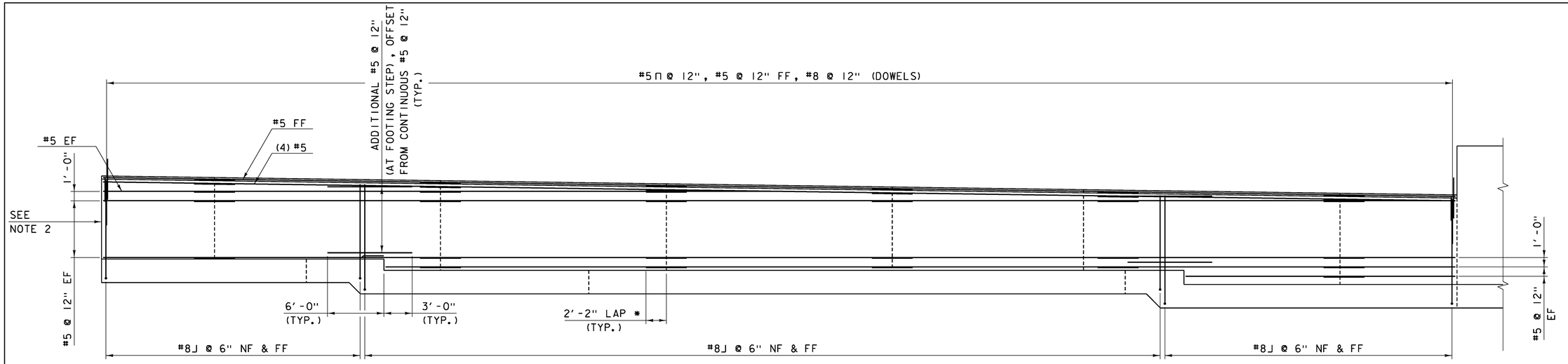

US 5 PEDESTAL WALL REINFORCING - ELEVATION

SCALE 3/16" = 1'-0"

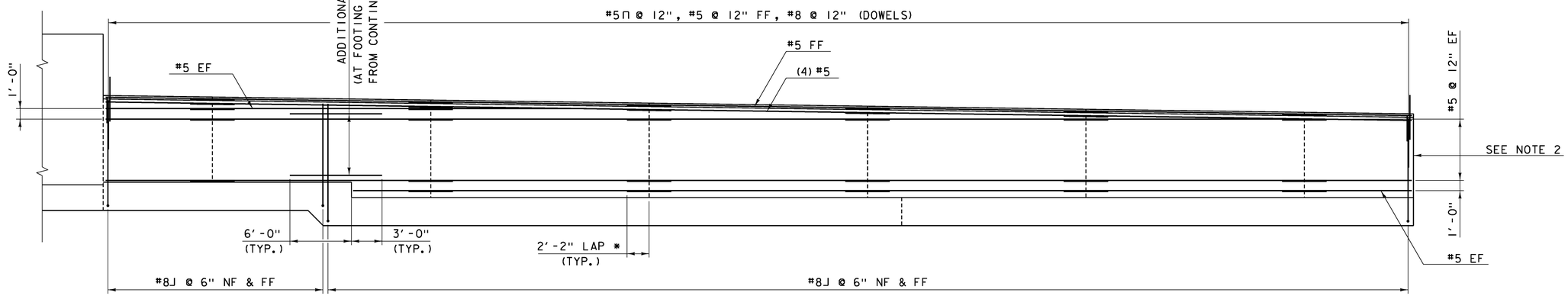

WACR PEDESTAL WALL REINFORCING - ELEVATION

SCALE 3/16" = 1'-0"

* LAP WITH MECHANICAL BAR CONNECTOR DOWEL

NOTE:

NF = NEAR FACE
FF = FAR FACE
EF = EACH FACE
▲ = CUT TO FIT IN FIELD
3" CLEAR, UNLESS OTHERWISE SPECIFIED ON THE PLANS.
2'-2" BAR LAP UNLESS OTHERWISE SPECIFIED ON THE PLANS.

NOTES:

1. ONE PEDESTAL WALL IS SHOWN FOR US 5 AND WACR, OPPOSING WALLS ARE THE MIRROR IMAGE.
2. HW #1 AND HW #4 CONNECTION REINFORCING NOT SHOWN, SEE SHEETS 23 AND 29 FOR DETAILS.

ENGINEERS CONSTRUCTION — DuBois & King Inc.

PROJECT NAME: RYEGATE
PROJECT NUMBER: STP CULV(10)

FILE NAME: z06cl56sup.dgn
PROJECT LEADER: E. DETRICK
DESIGNED BY: R. BARNES
PEDESTAL WALL REINFORCING

PLOT DATE: 3/23/16
DRAWN BY: R. BARNES
CHECKED BY: E. DETRICK
SHEET 17 OF 36

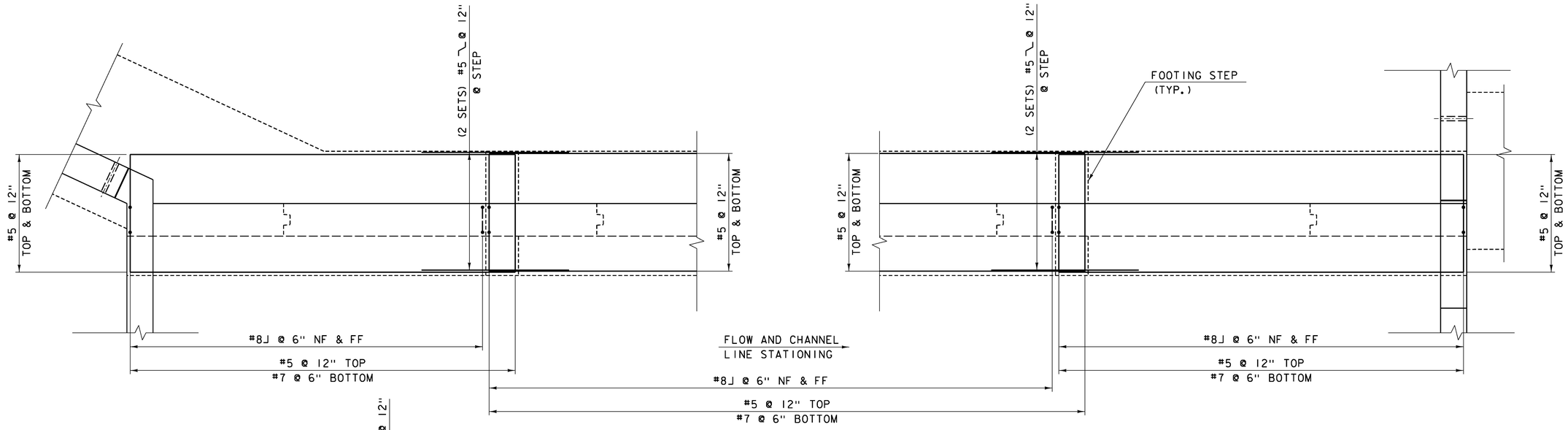

US 5 PEDESTAL WALL - FOOTING PLAN

SCALE 1/4" = 1'-0"

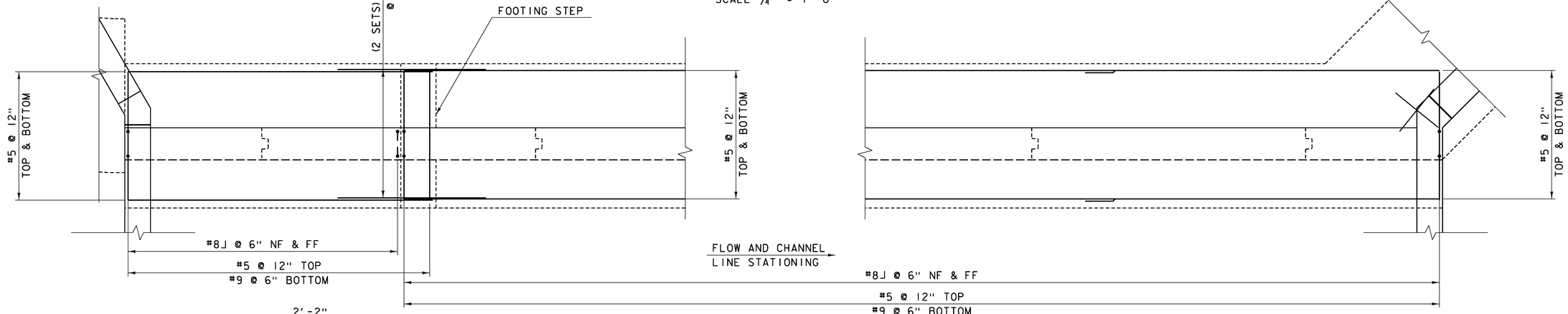

WACR PEDESTAL WALL - FOOTING PLAN

SCALE 1/4" = 1'-0"

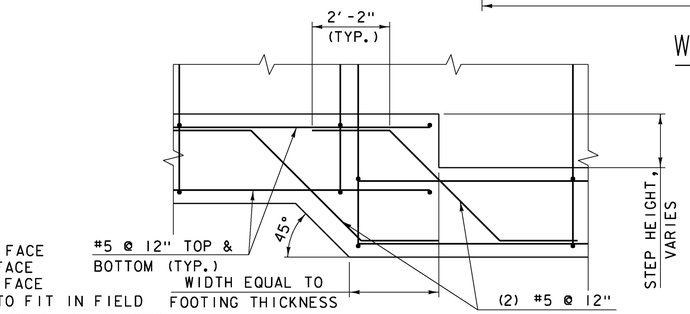

FOOTING STEP DETAIL

NOT TO SCALE

NOTE:

NF = NEAR FACE
FF = FAR FACE
EF = EACH FACE
▲ = CUT TO FIT IN FIELD
3" CLEAR, UNLESS OTHERWISE SPECIFIED ON THE PLANS.
2'-2" BAR LAP UNLESS OTHERWISE SPECIFIED ON THE PLANS.

NOTES:

1. ONE PEDESTAL WALL FOOTING IS SHOWN FOR US 5 AND WACR, OPPOSING FOOTINGS ARE IDENTICAL.
2. WINGWALL AND CHANNEL WALL FOOTING REINFORCING NOT SHOWN FOR CLARITY.

NOT FOR CONSTRUCTION

ENGINEERS CONSTRUCTION — DuBois & King Inc.

PROJECT NAME:	RYEGATE
PROJECT NUMBER:	STP CULV(10)
FILE NAME: z06cl56pedwallfoot.dgn	PLOT DATE: 3/23/16
PROJECT LEADER: E. DETRICK	DRAWN BY: R. BARNES
DESIGNED BY: R. BARNES	CHECKED BY: E. DETRICK
PEDESTAL WALL FOOTING REINFORCING PLAN	SHEET 18 OF 36

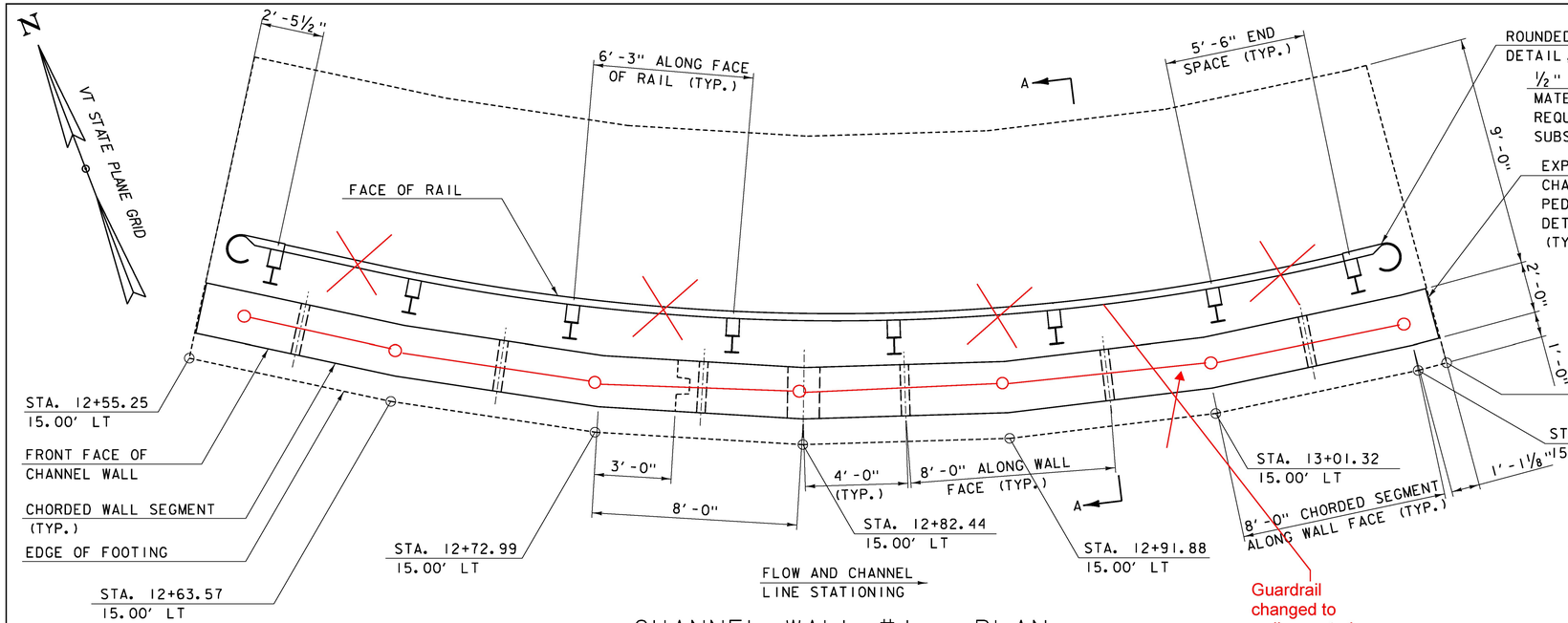

CHANNEL WALL #1 - PLAN

SCALE ⅜" = 1'-0"

EXPANSION JOINT DETAIL

NOT TO SCALE

EXPANSION JOINT NOTES:

1. AT THE CHANNEL WALL TO PEDESTAL WALL JOINTS, THE PVC WATERSTOP NEED NOT EXTEND ABOVE THE TOP OF PEDESTAL WALL.
2. WHERE AN EXPANSION JOINT ABUTS A MEMBER COVERED BY SHEET MEMBRANE WATERPROOFING, TORCH APPLIED, THIS MEMBRANE MAY BE USED IN LIEU OF SHEET MEMBRANE WATERPROOFING, PREFORMED SHEET.

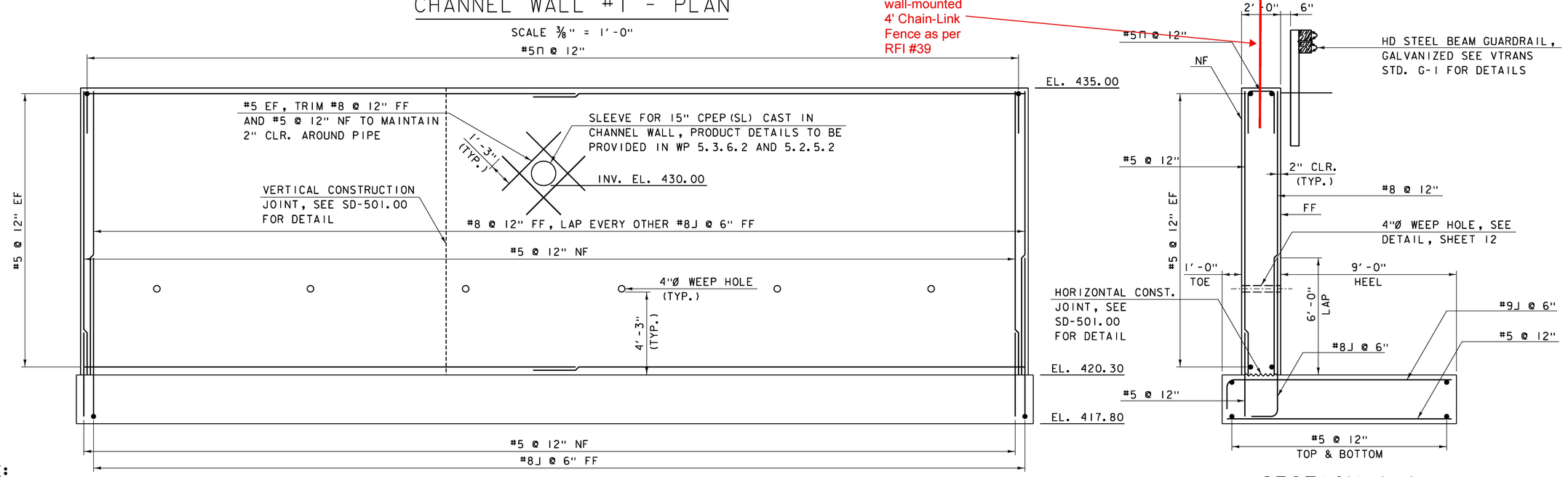

CHANNEL WALL #1 - ELEVATION (CURVED)

SCALE ⅜" = 1'-0"

NOTE: RAIL NOT SHOWN IN ELEVATION FOR CLARITY.

SECTION A-A

SCALE ⅜" = 1'-0"

NOTE:

NF = NEAR FACE
FF = FAR FACE
EF = EACH FACE
▲ = CUT TO FIT IN FIELD
3" CLEAR, UNLESS OTHERWISE SPECIFIED ON THE PLANS.
2'-2" BAR LAP UNLESS OTHERWISE SPECIFIED ON THE PLANS.

PROJECT NAME: RYEGATE
PROJECT NUMBER: STP CULV(10)

ECI ENGINEERS CONSTRUCTION — DuBois & King INC.

FILE NAME: z06c156chwall1.dgn
PROJECT LEADER: E. DETRICK
DESIGNED BY: P. BERO
CHANNEL WALL #1 PLAN, ELEVATION, SECTION

PLOT DATE: 3/23/16
DRAWN BY: R. BARNES
CHECKED BY: E. DETRICK
SHEET 19 OF 36

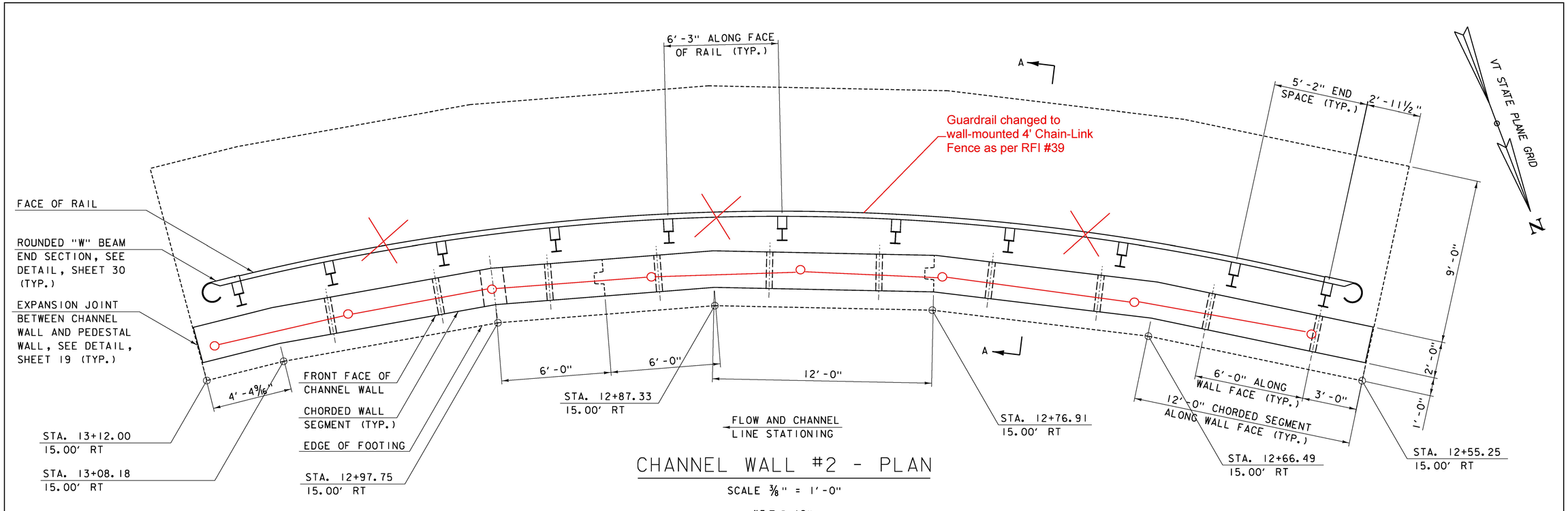

CHANNEL WALL #2 - PLAN

SCALE ⅜" = 1'-0"

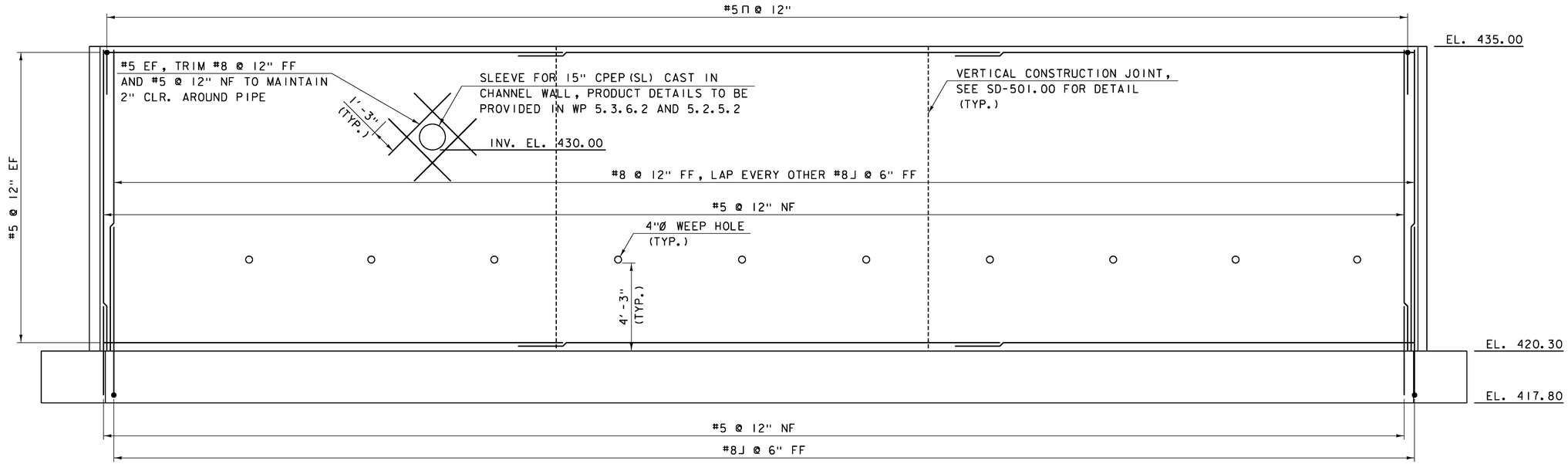

CHANNEL WALL #2 - ELEVATION (CURVED)

SCALE ⅜" = 1'-0"

NOTE:

NF = NEAR FACE
FF = FAR FACE
EF = EACH FACE
▲ = CUT TO FIT IN FIELD
3" CLEAR, UNLESS OTHERWISE SPECIFIED ON THE PLANS.
2'-2" BAR LAP UNLESS OTHERWISE SPECIFIED ON THE PLANS.

NOTES:
1. SEE SHEET 19 FOR SECTION A-A.
2. RAIL NOT SHOWN IN ELEVATION FOR CLARITY.

ENGINEERS CONSTRUCTION — DuBois & King Inc.

PROJECT NAME: RYEGATE
PROJECT NUMBER: STP CULV(10)

FILE NAME: z06cl56chwall2.dgn
PROJECT LEADER: E. DETRICK
DESIGNED BY: P. BERO
CHANNEL WALL #2 PLAN AND ELEVATION

PLOT DATE: 3/23/16
DRAWN BY: R. BARNES
CHECKED BY: E. DETRICK
SHEET 20 OF 36

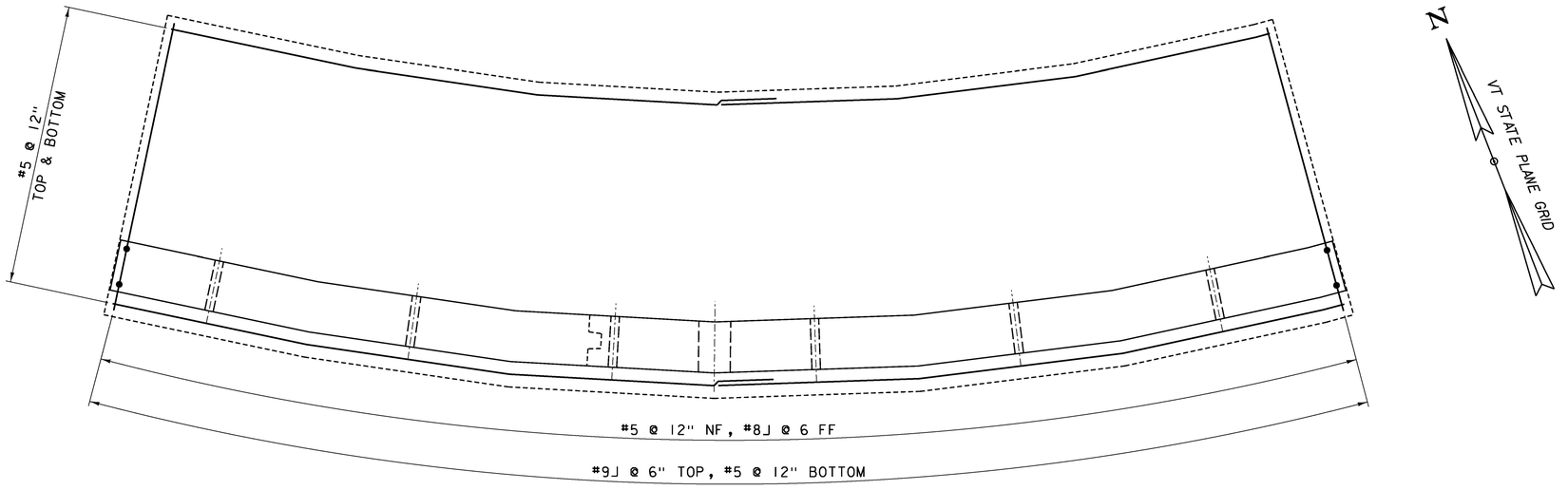

CHANNEL WALL #1 - FOOTING PLAN

SCALE 3/8" = 1'-0"

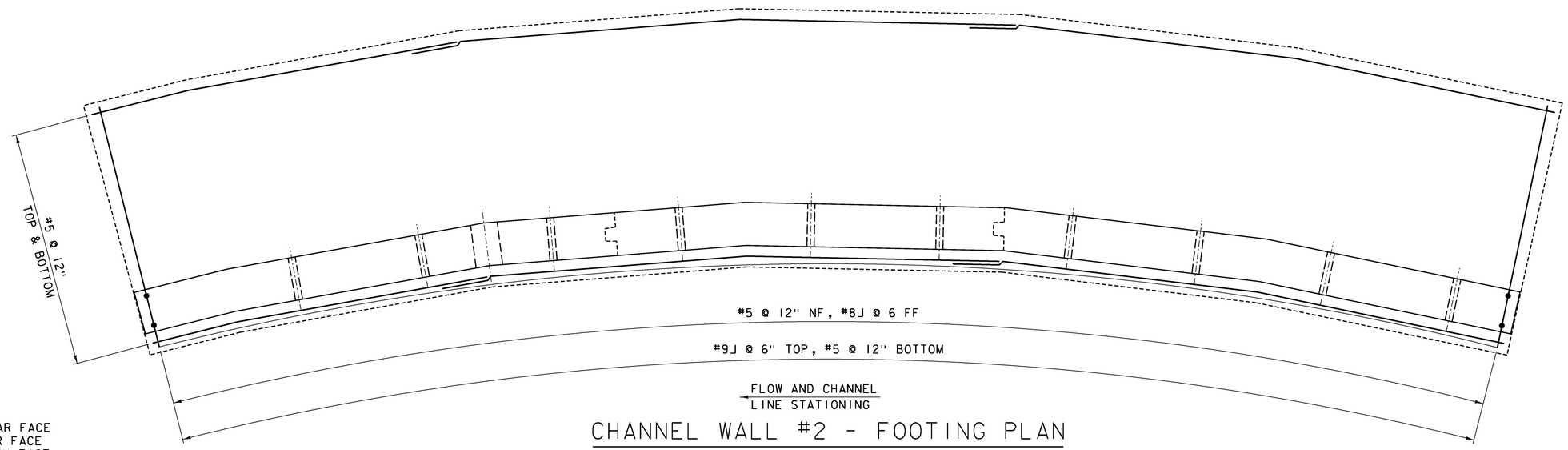

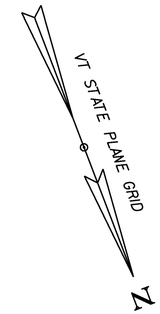

CHANNEL WALL #2 - FOOTING PLAN

SCALE 3/8" = 1'-0"

NOTE:

NF = NEAR FACE
FF = FAR FACE
EF = EACH FACE
▲ = CUT TO FIT IN FIELD
3" CLEAR, UNLESS OTHERWISE SPECIFIED ON THE PLANS.
2'-2" BAR LAP UNLESS OTHERWISE SPECIFIED ON THE PLANS.

ECI ENGINEERS CONSTRUCTION — DuBois & King INC

PROJECT NAME: RYEGATE	
PROJECT NUMBER: STP CULV(10)	
FILE NAME: z06cl56chwallfoot.dgn	PLOT DATE: 3/23/16
PROJECT LEADER: E. DETRICK	DRAWN BY: R. BARNES
DESIGNED BY: P. BERO	CHECKED BY: E. DETRICK
CHANNEL WALL FOOTING REINFORCING PLAN	SHEET 21 OF 36

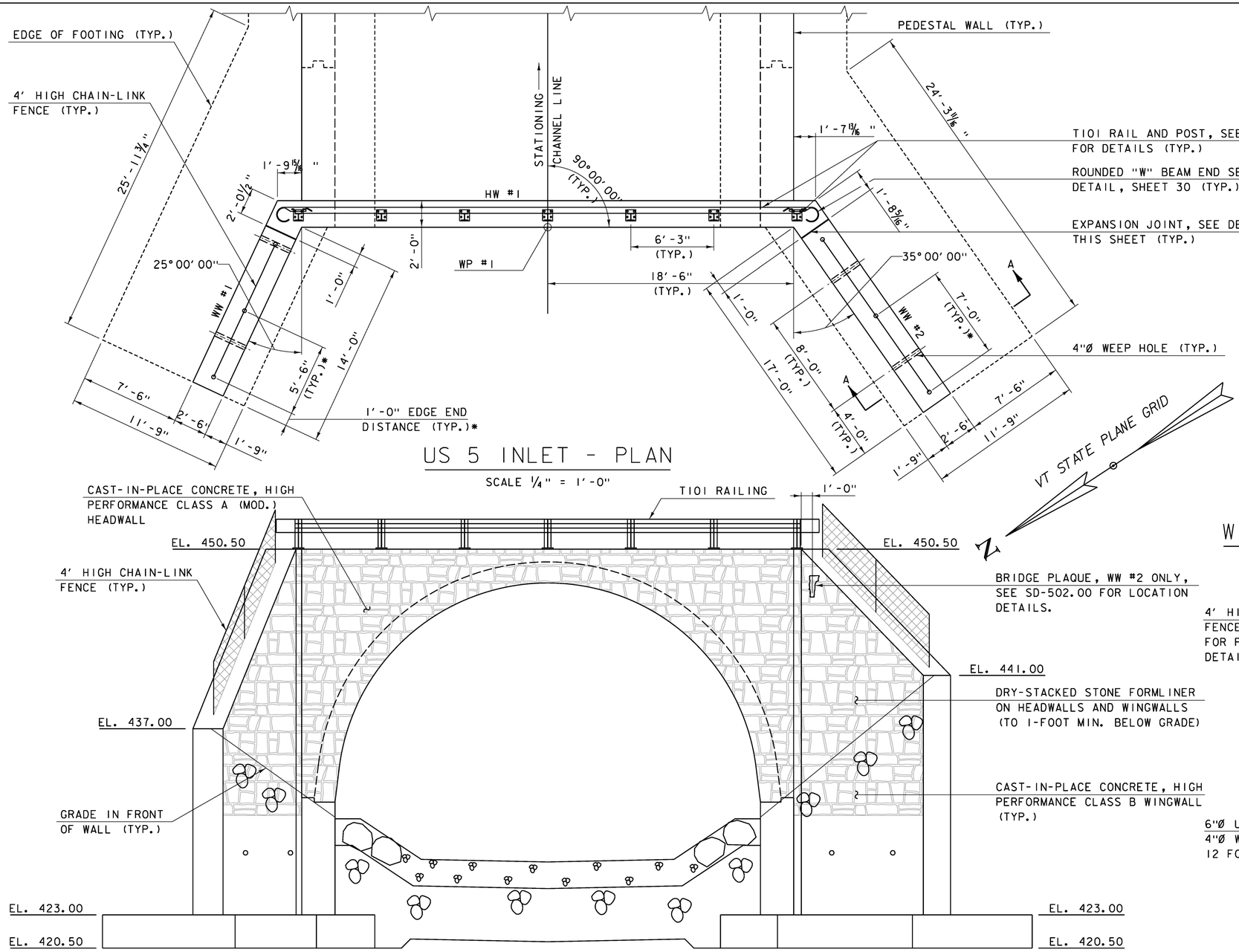

US 5 INLET - PLAN

SCALE ¼" = 1'-0"

US 5 INLET - ELEVATION

SCALE ¼" = 1'-0"

* POST SPACING MEASURED ALONG HORIZONTAL.

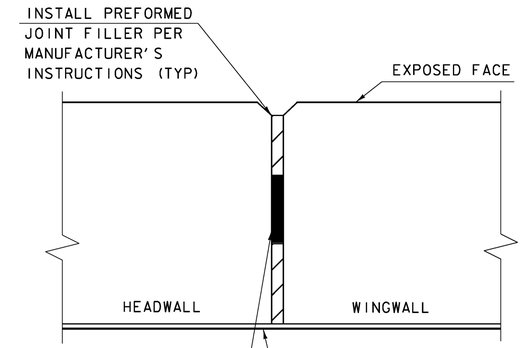

WINGWALL EXPANSION JOINT DETAIL

NOT TO SCALE

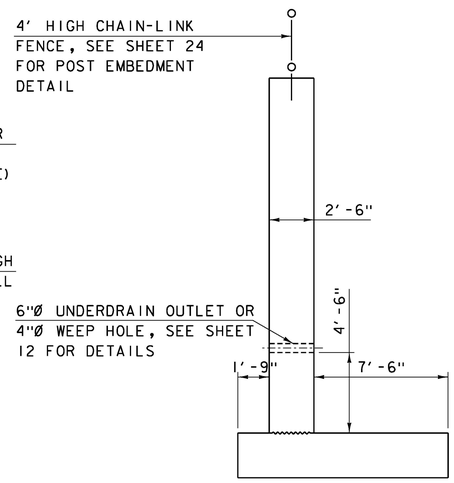

SECTION A-A

SCALE ¼" = 1'-0"

PROJECT NAME:	RYEGATE
PROJECT NUMBER:	STP CULV(10)
FILE NAME: z06c156subl.dgn	PLOT DATE: 3/23/16
PROJECT LEADER: E. DETRICK	DRAWN BY: R. BARNES
DESIGNED BY: R. BARNES	CHECKED BY: E. DETRICK
US 5 INLET PLAN, ELEVATION, SECTION	SHEET 22 OF 36

ECI ENGINEERS CONSTRUCTION — DuBois & King INC.

NOTE: BURIED STRUCTURE FOOTING REINFORCEMENT NOT SHOWN FOR CLARITY.

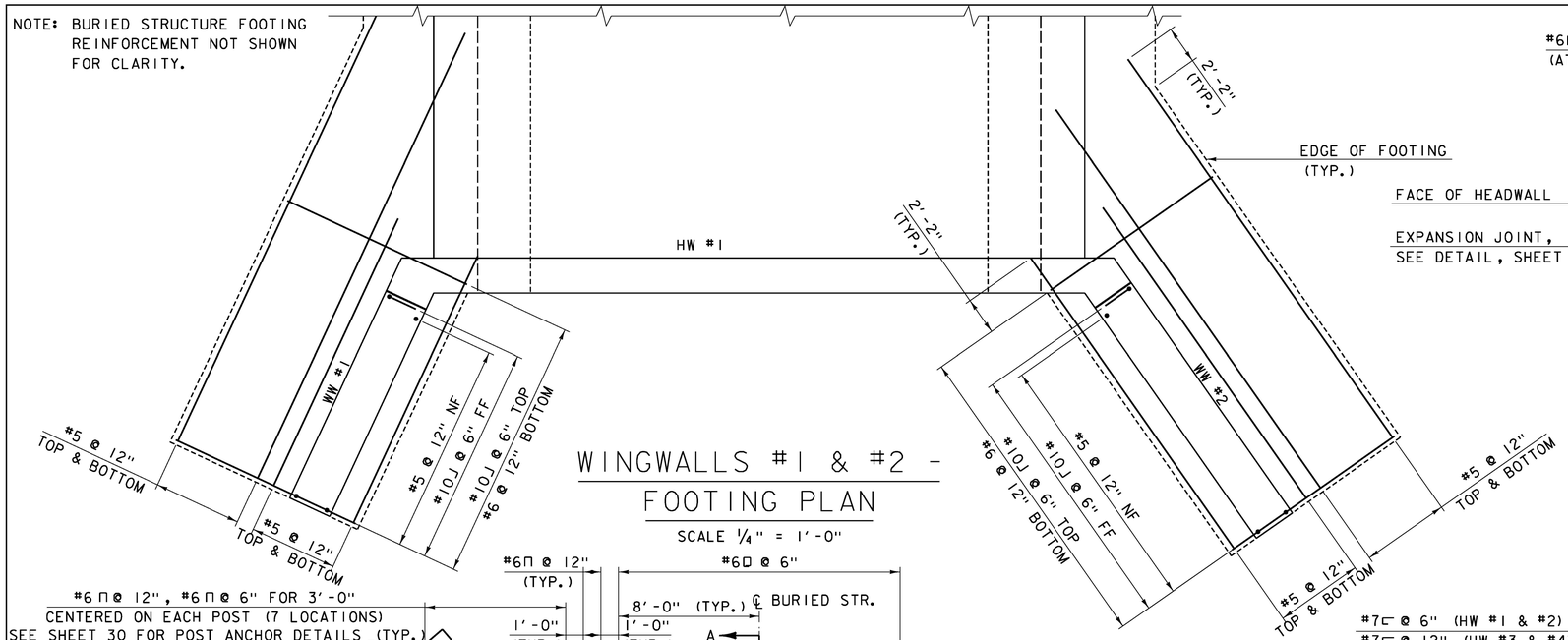

WINGWALLS #1 & #2 - FOOTING PLAN

SCALE 1/4" = 1'-0"

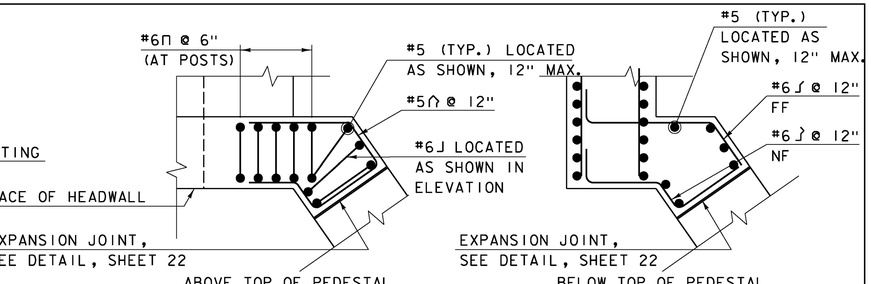

TYPICAL WINGWALL CORNER DETAIL

NOT TO SCALE

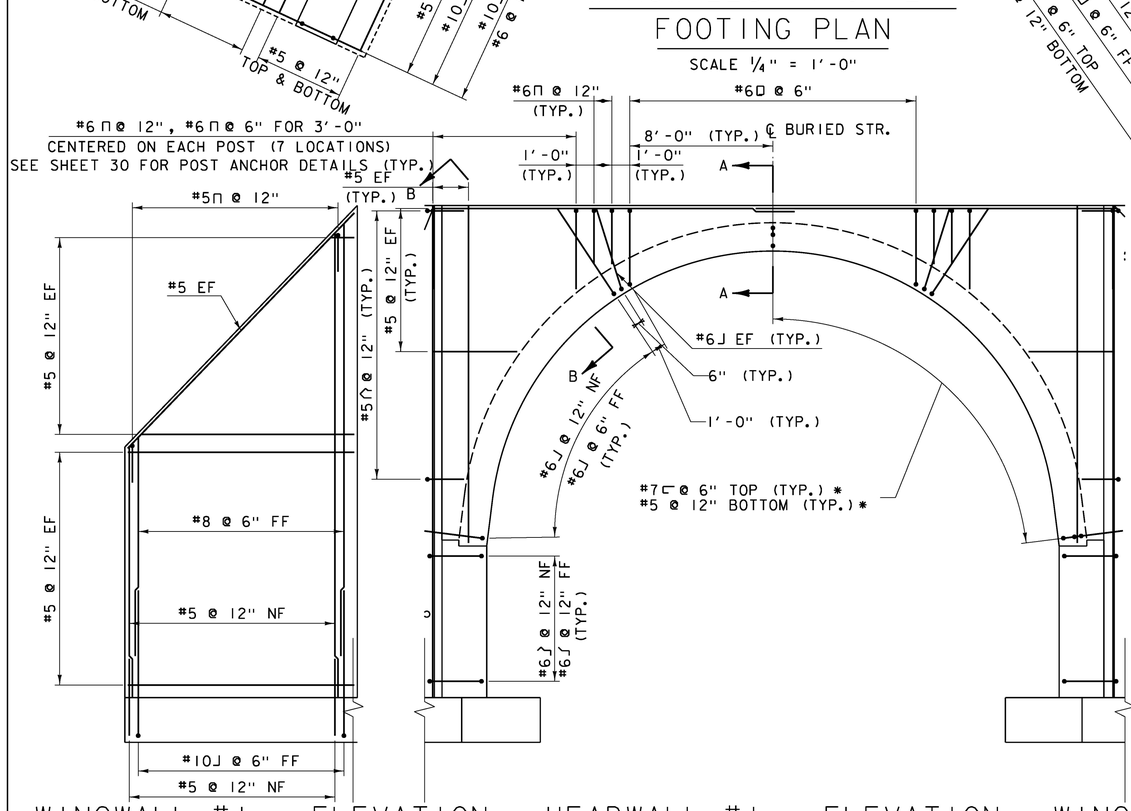

WINGWALL #1 - ELEVATION

SCALE 1/4" = 1'-0"

HEADWALL #1 - ELEVATION

SCALE 1/4" = 1'-0"

WINGWALL #2 - ELEVATION

SCALE 1/4" = 1'-0"

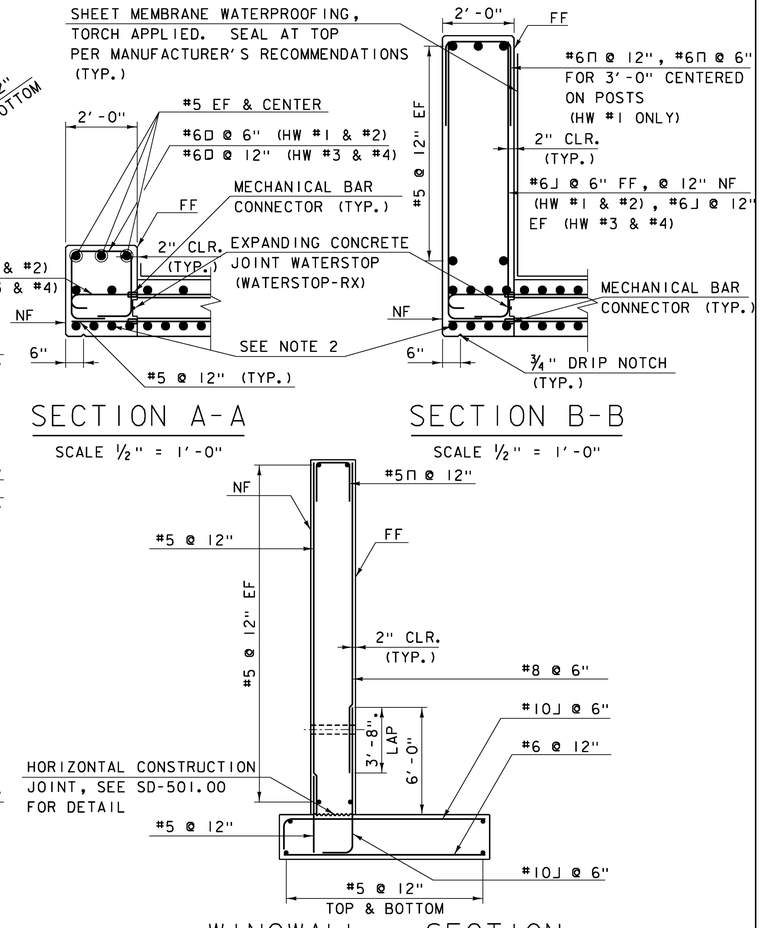

SECTION A-A

SCALE 1/2" = 1'-0"

SECTION B-B

SCALE 1/2" = 1'-0"

WINGWALL - SECTION

(WINGWALLS #1, #2, #7, AND #8)
SCALE 1/4" = 1'-0"

NOTE: SCALE 1/4" = 1'-0"

NF = NEAR FACE
FF = FAR FACE
EF = EACH FACE
▲ = CUT TO FIT IN FIELD
3" CLEAR, UNLESS OTHERWISE SPECIFIED ON THE PLANS.
2'-2" BAR LAP UNLESS OTHERWISE SPECIFIED ON THE PLANS.

NOTES:
1. HEADWALL REINFORCING STEEL MIRRORED ABOUT STRUCTURE CENTERLINE.
2. MAIN REINFORCING STEEL IN BOTTOM OF HEADWALL SECTION, ALTHOUGH NOT SHOWN IN ELEVATION FOR CLARITY, WILL BE THE SAME AS THAT USED IN THE ADJACENT BURIED STRUCTURE.
3. KEYED CONSTRUCTION JOINT OMITTED AT HEADWALL #1.

* #7 AND #5 MECHANICAL BAR CONNECTOR AT HEADWALL JOINT.

PROJECT NAME: RYEGATE
PROJECT NUMBER: STP CULV(10)

ENGINEERS CONSTRUCTION — DuBois & King Inc.

FILE NAME: z06cl56subl.dgn
PROJECT LEADER: E. DETRICK
DESIGNED BY: R. BARNES
US 5 INLET DETAILS

PLOT DATE: 3/23/16
DRAWN BY: R. BARNES
CHECKED BY: E. DETRICK
SHEET 23 OF 36

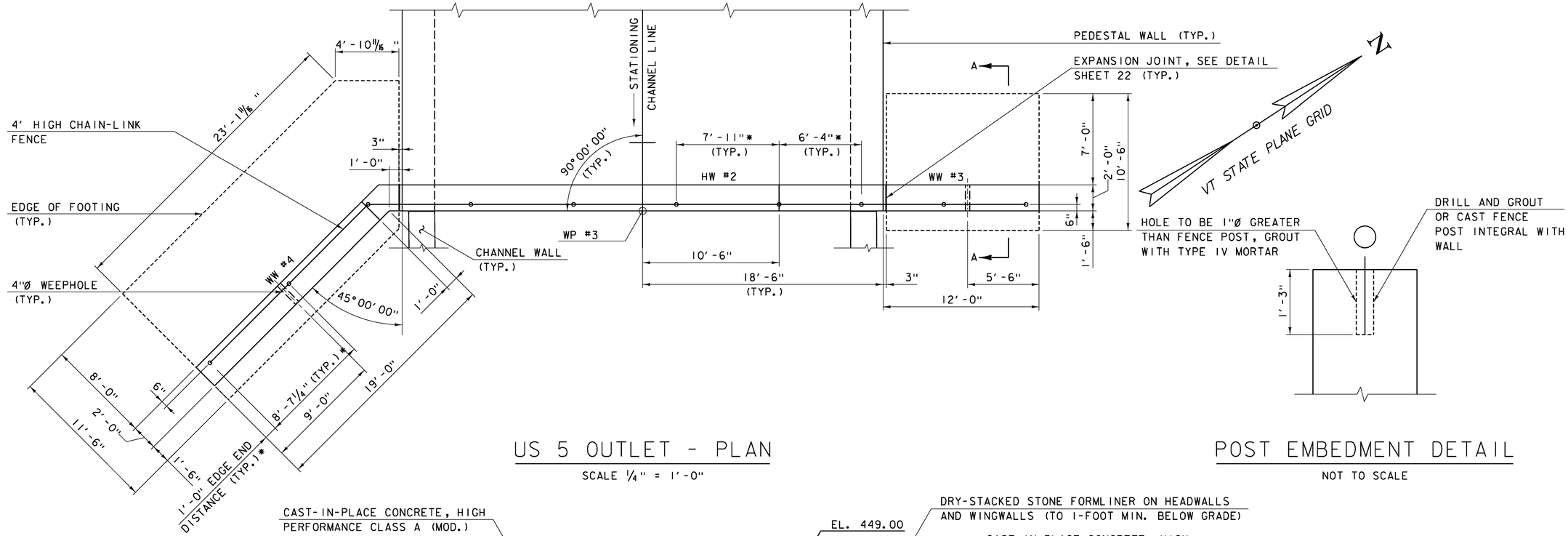

US 5 OUTLET - PLAN

SCALE 1/4" = 1'-0"

POST EMBEDMENT DETAIL

NOT TO SCALE

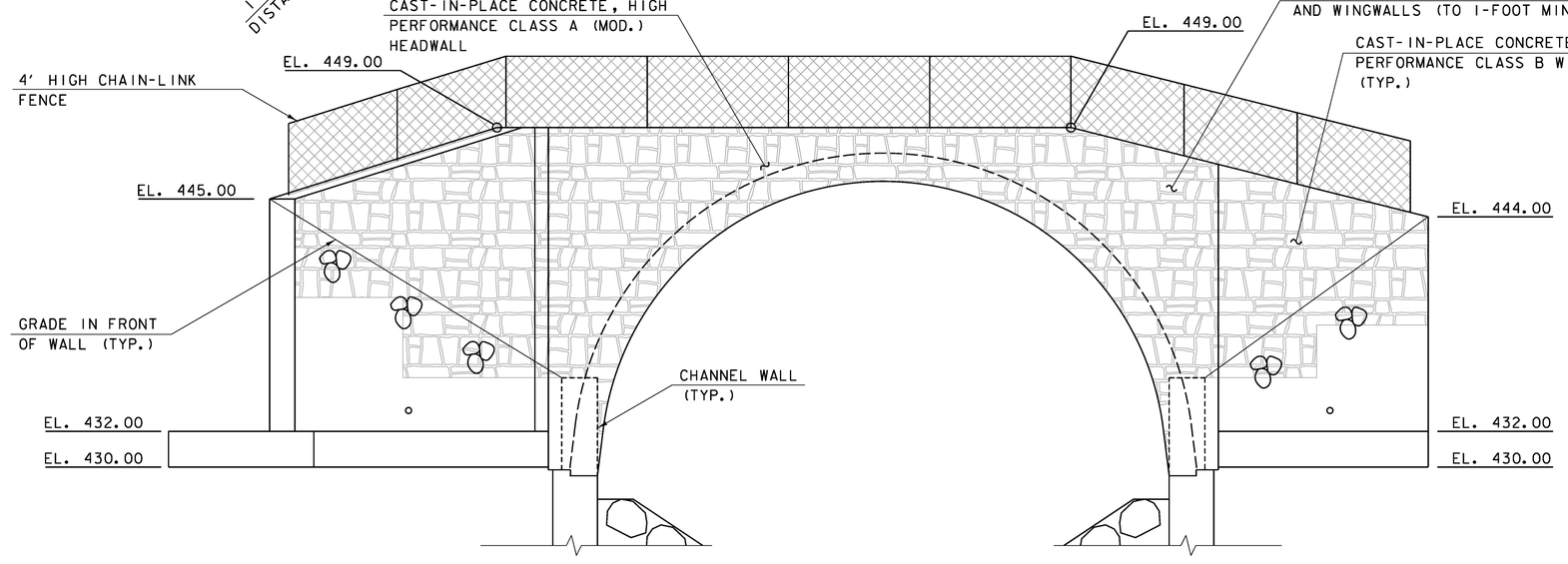

US 5 OUTLET - ELEVATION

SCALE 1/4" = 1'-0"

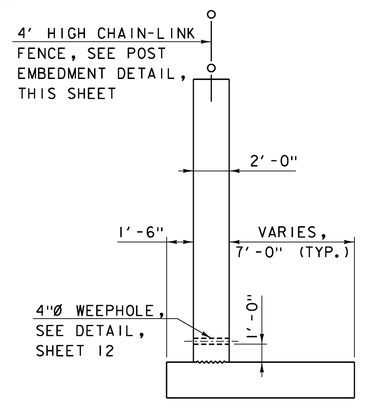

SECTION A-A

SCALE 1/4" = 1'-0"

NOTE: HW #2 & WW #4 HAVE BEEN DESIGNED FOR THE TEMPORARY SURCHARGE OF THE MSE WALL, IN-PLACE FOR THE US ROUTE 5 DIVERSION.

* POST SPACING MEASURED ALONG HORIZONTAL. POST SPACING INDICATED IS TYPICAL ALONG WINGWALL SLOPES AND HEADWALL, AS SHOWN.

PROJECT NAME: RYEGATE
PROJECT NUMBER: STP CULV(10)

ECI ENGINEERS CONSTRUCTION — DuBois & King Inc.

FILE NAME: z06c156sub2.dgn
PROJECT LEADER: E. DETRICK
DESIGNED BY: R. BARNES
US 5 OUTLET PLAN, ELEVATION, SECTION

PLOT DATE: 3/23/16
DRAWN BY: R. BARNES
CHECKED BY: E. DETRICK
SHEET 24 OF 36

NOTE: BURIED STRUCTURE AND CHANNEL WALL FOOTING REINFORCEMENT NOT SHOWN FOR CLARITY.

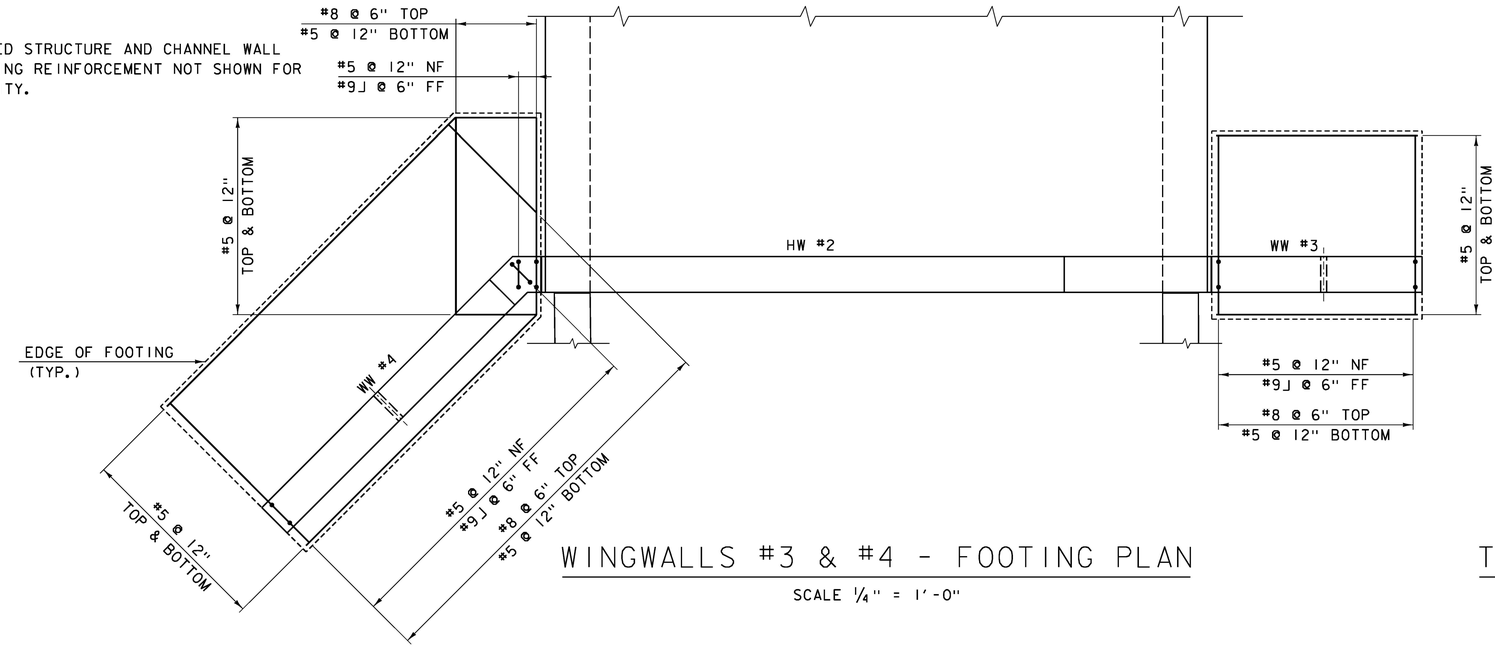

WINGWALLS #3 & #4 - FOOTING PLAN

SCALE 1/4" = 1'-0"

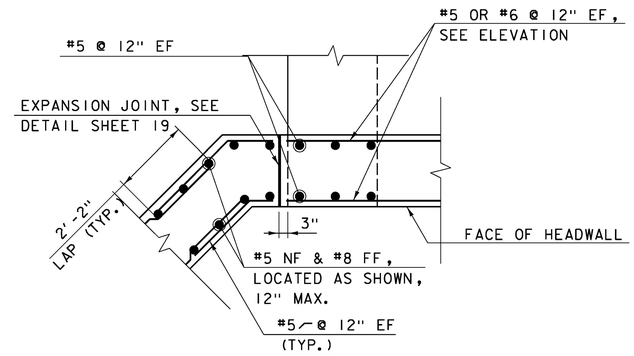

TYPICAL WINGWALL CORNER DETAIL

NOT TO SCALE

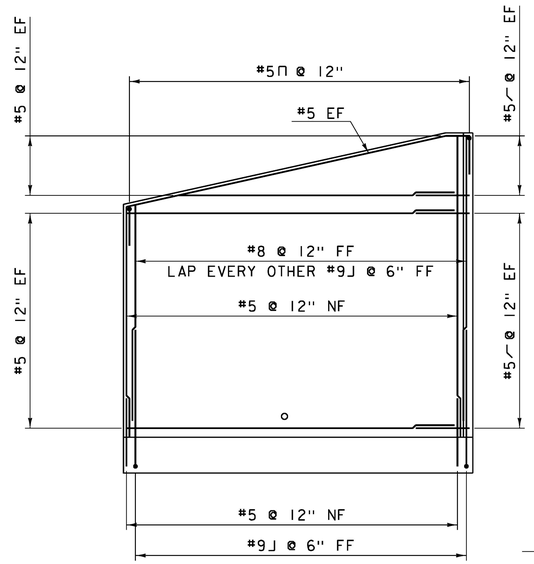

WINGWALL #4 - ELEVATION

SCALE 1/4" = 1'-0"

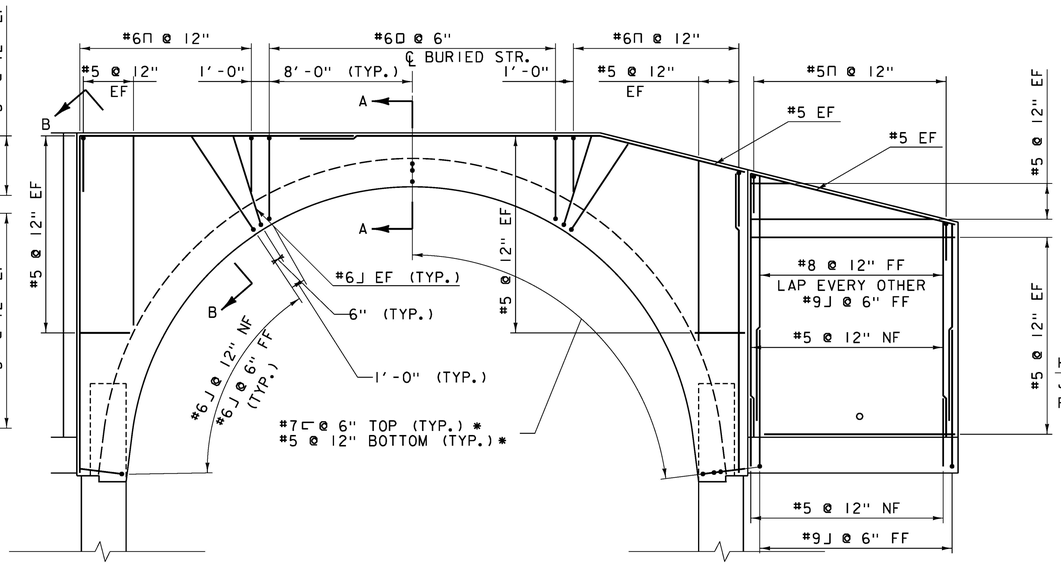

HEADWALL #2 & WINGWALL #3 - ELEVATION

SCALE 1/4" = 1'-0"

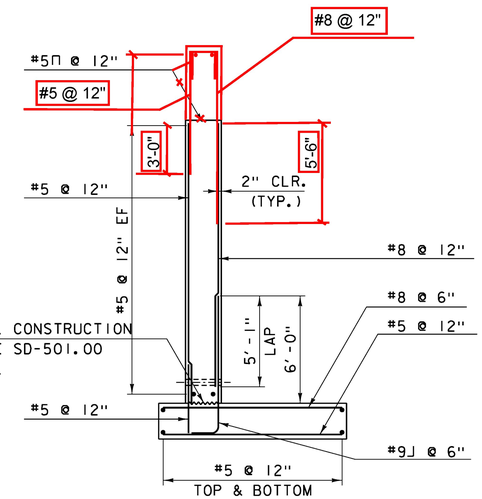

WINGWALL - SECTION

(WINGWALLS #3,#4,#5, AND #6)
SCALE 1/4" = 1'-0"

NOTE:
NF = NEAR FACE
FF = FAR FACE
EF = EACH FACE
▲ = CUT TO FIT IN FIELD
3" CLEAR, UNLESS OTHERWISE SPECIFIED ON THE PLANS.
2'-2" BAR LAP UNLESS OTHERWISE SPECIFIED ON THE PLANS.

NOTES:
1. SEE SHEET 23 FOR SECTIONS A-A AND B-B.
2. MAIN REINFORCING STEEL IN BOTTOM OF HEADWALL SECTION, ALTHOUGH NOT SHOWN IN ELEVATION FOR CLARITY, WILL BE THE SAME AS THAT USED IN THE ADJACENT BURIED STRUCTURE.

* #7 AND #5 MECHANICAL BAR CONNECTOR AT HEADWALL JOINT.

NOT FOR CONSTRUCTION

PROJECT NAME: RYEGATE
PROJECT NUMBER: STP CULV(10)

ECI ENGINEERS CONSTRUCTION — DuBois & King Inc.

FILE NAME: z06cl56sub2.dgn
PROJECT LEADER: E. DETRICK
DESIGNED BY: R. BARNES
US 5 OUTLET DETAILS

PLOT DATE: 6/23/2015
DRAWN BY: R. BARNES
CHECKED BY: E. DETRICK
SHEET 25 OF 36

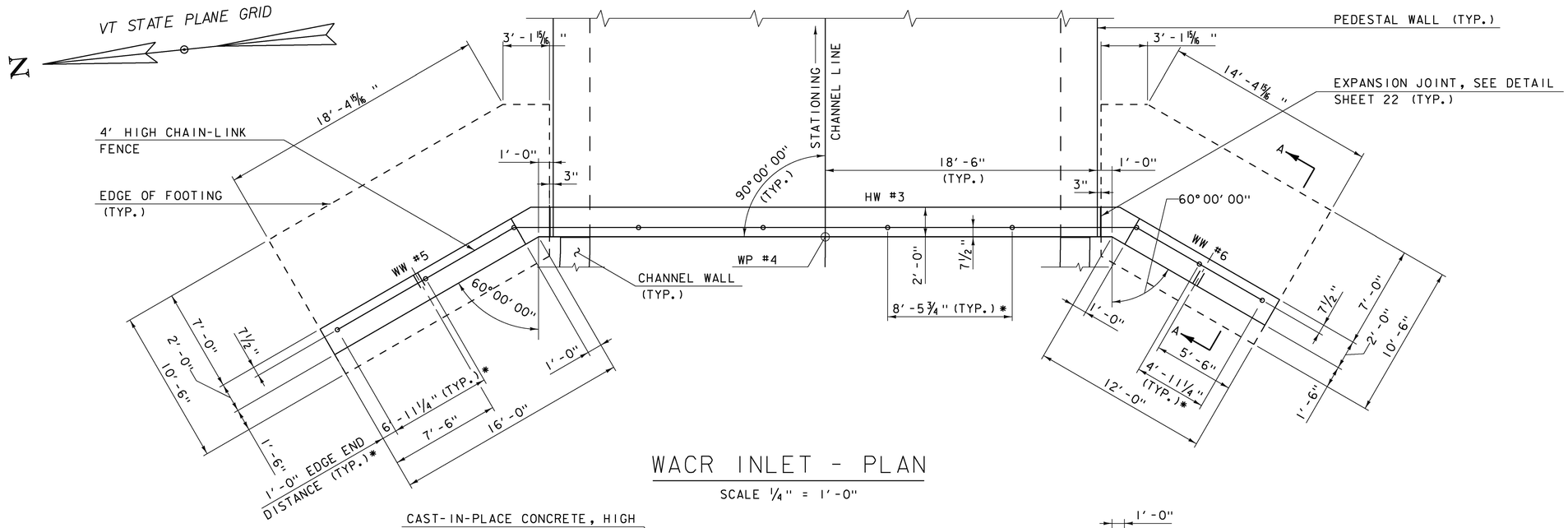

WACR INLET - PLAN

SCALE 1/4" = 1'-0"

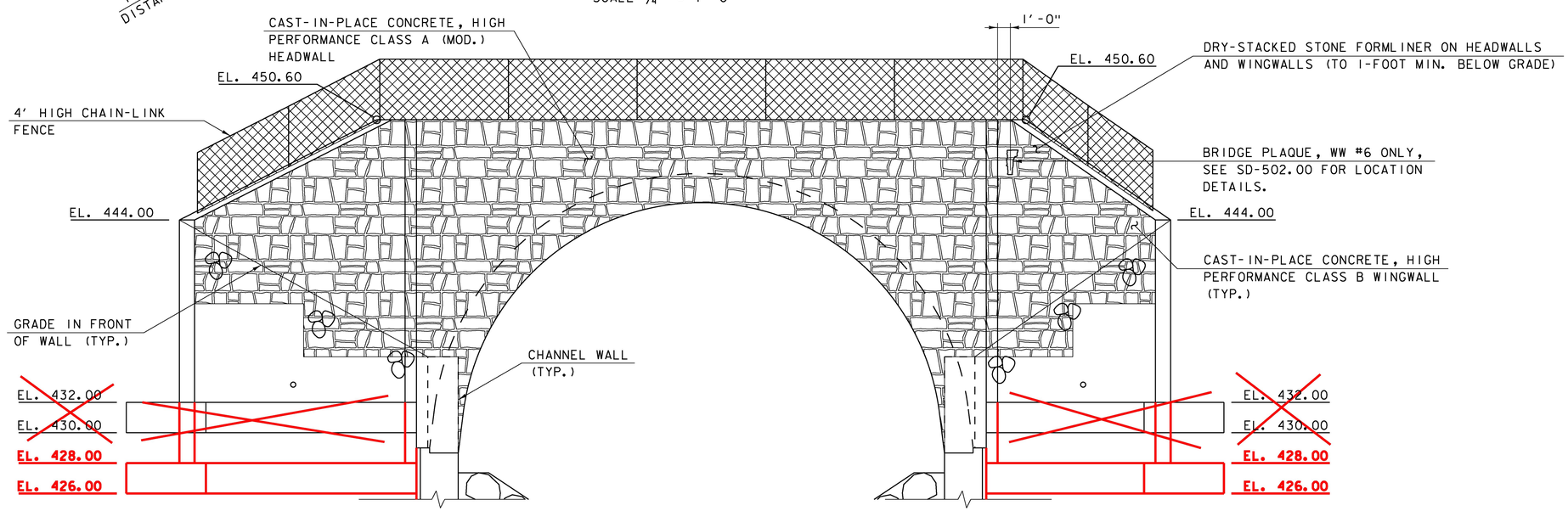

WACR INLET - ELEVATION

SCALE 1/4" = 1'-0"

NOTE: SEE SHEET 24 FOR SECTION A-A.

* POST SPACING MEASURED ALONG HORIZONTAL. POST SPACING INDICATED IS TYPICAL ALONG WINGWALL SLOPES AND HEADWALL, AS SHOWN.

ENGINEERS CONSTRUCTION — DuBois & King Inc.

PROJECT NAME:	RYEGATE
PROJECT NUMBER:	STP CULV(10)
FILE NAME: z06c156bSUB4.dgn	PLOT DATE: 11/24/2015
PROJECT LEADER: E. DETRICK	DRAWN BY: R. BARNES
DESIGNED BY: R. BARNES	CHECKED BY: E. DETRICK
WACR INLET PLAN AND ELEVATION	SHEET 26 OF 56

NOTE: BURIED STRUCTURE AND CHANNEL WALL FOOTING REINFORCEMENT NOT SHOWN FOR CLARITY.

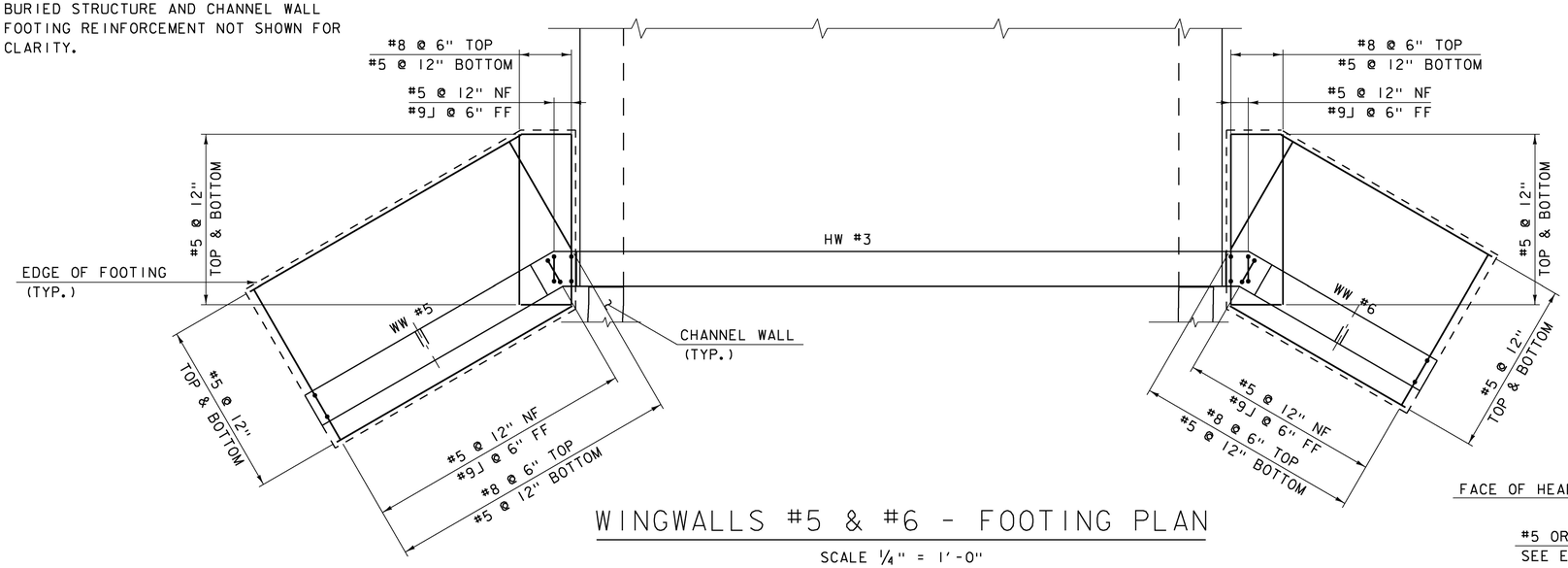

WINGWALLS #5 & #6 - FOOTING PLAN

SCALE 1/4" = 1'-0"

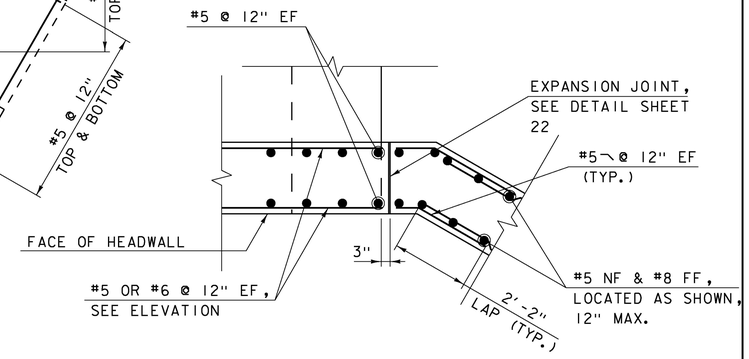

TYPICAL WINGWALL CORNER DETAIL

NOT TO SCALE

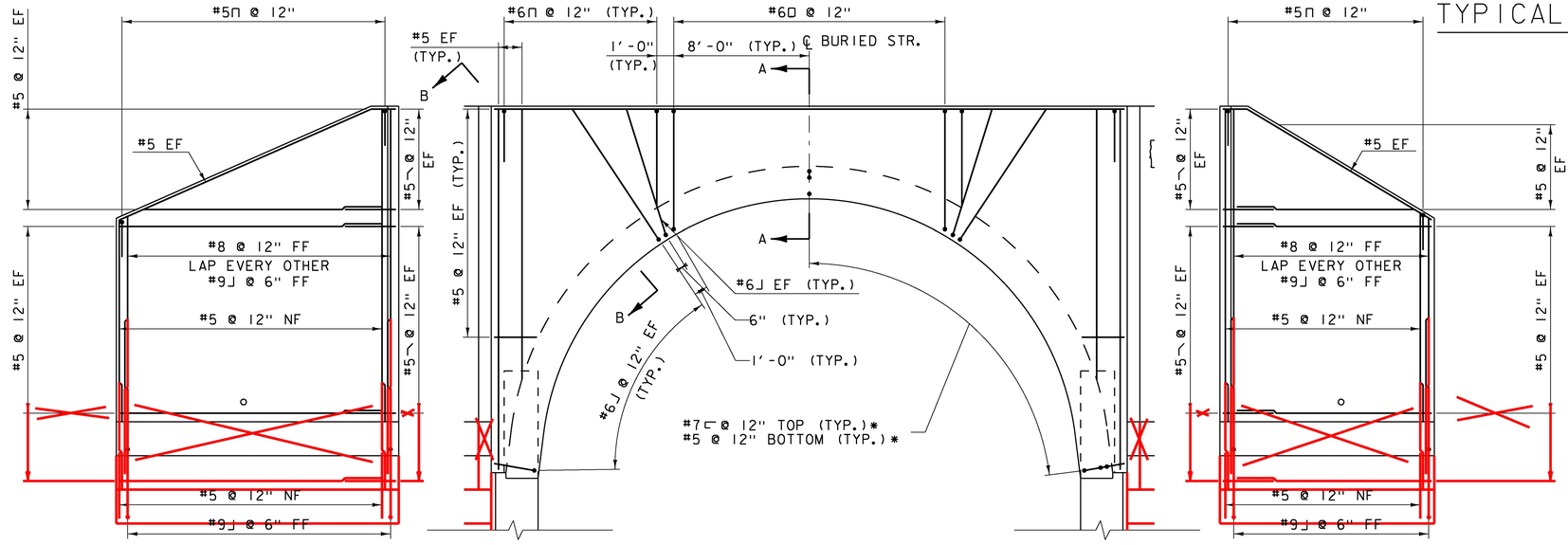

WINGWALL #5 - ELEVATION

SCALE 1/4" = 1'-0"

HEADWALL #3 - ELEVATION

SCALE 1/4" = 1'-0"

WINGWALL #6 - ELEVATION

SCALE 1/4" = 1'-0"

NOTE:

NF = NEAR FACE
FF = FAR FACE
EF = EACH FACE
▲ = CUT TO FIT IN FIELD
3" CLEAR, UNLESS OTHERWISE SPECIFIED ON THE PLANS.
2'-2" BAR LAP UNLESS OTHERWISE SPECIFIED ON THE PLANS.

NOTES:

1. SEE SHEET 23 FOR SECTIONS A-A AND B-B. SEE SHEET 25 FOR WINGWALL SECTION.
2. MAIN REINFORCING STEEL IN BOTTOM OF HEADWALL SECTION, ALTHOUGH NOT SHOWN IN ELEVATION FOR CLARITY, WILL BE THE SAME AS THAT USED IN THE ADJACENT BURIED STRUCTURE.

* #7 AND #5 MECHANICAL BAR CONNECTOR AT HEADWALL JOINT.

ENGINEERS CONSTRUCTION — DuBois & King inc.

PROJECT NAME: RYEGATE
PROJECT NUMBER: STP CULV(10)

FILE NAME: ...\AsBuilt\Survey\z06cl56bSUB4.dgn
PROJECT LEADER: E. DETRICK
DESIGNED BY: R. BARNES
WACR INLET DETAILS
PLOT DATE: 12/1/2016
DRAWN BY: R. BARNES
CHECKED BY: E. DETRICK
SHEET 27 OF 56

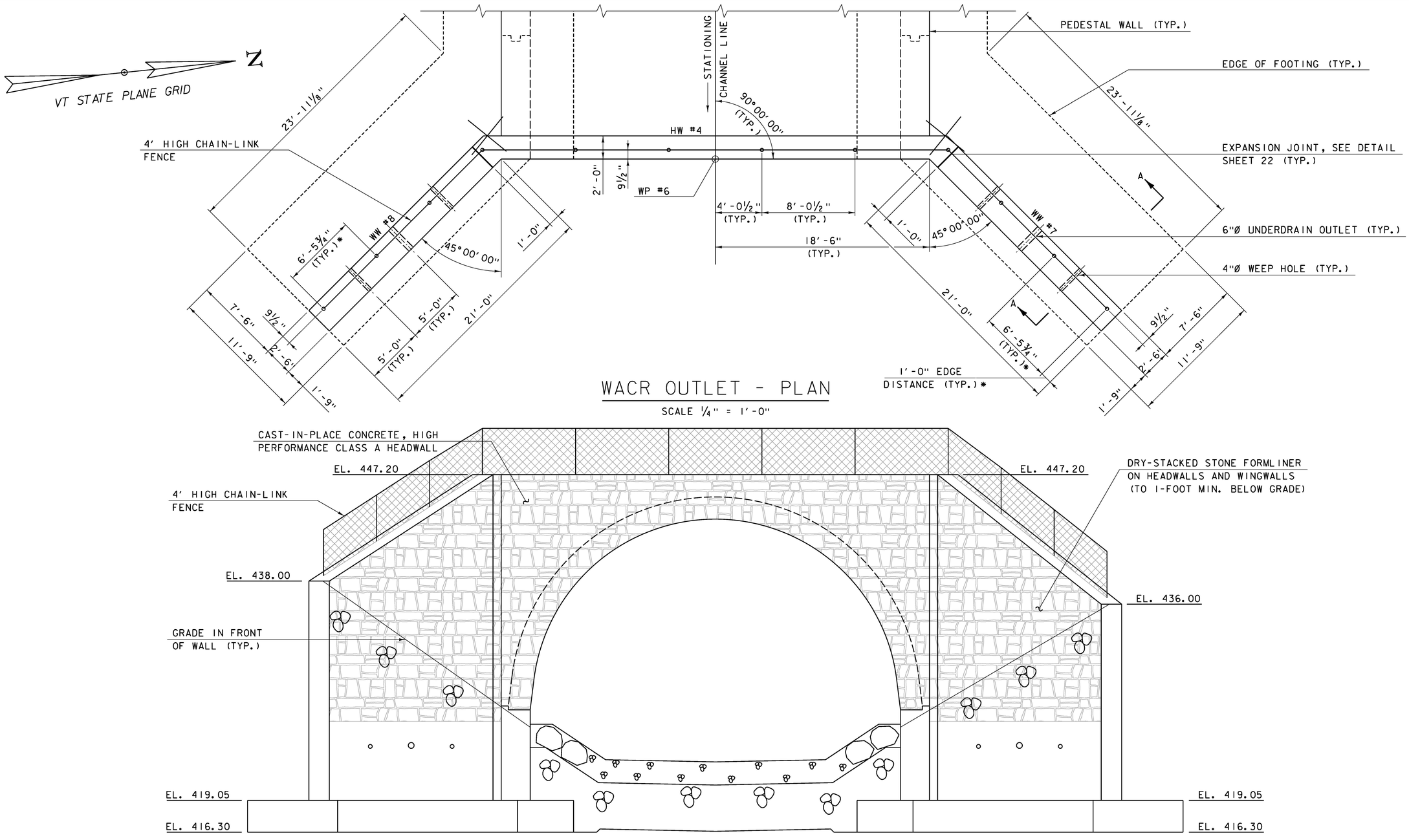

WACR OUTLET - PLAN

SCALE ¼" = 1'-0"

WACR OUTLET - ELEVATION

SCALE ¼" = 1'-0"

NOTE: SEE SHEET 22 FOR SECTION A-A.

* POST SPACING MEASURED ALONG HORIZONTAL. POST SPACING INDICATED IS TYPICAL ALONG WINGWALL SLOPES, AS SHOWN.

ENGINEERS CONSTRUCTION — DuBois & King Inc.

PROJECT NAME:	RYEGATE
PROJECT NUMBER:	STP CULV(10)
FILE NAME: z06c156sub4.dgn	PLOT DATE: 3/23/16
PROJECT LEADER: E. DETRICK	DRAWN BY: R. BARNES
DESIGNED BY: R. BARNES	CHECKED BY: E. DETRICK
WACR OUTLET PLAN AND ELEVATION	SHEET 28 OF 36

NOTE: BURIED STRUCTURE FOOTING REINFORCEMENT NOT SHOWN FOR CLARITY.

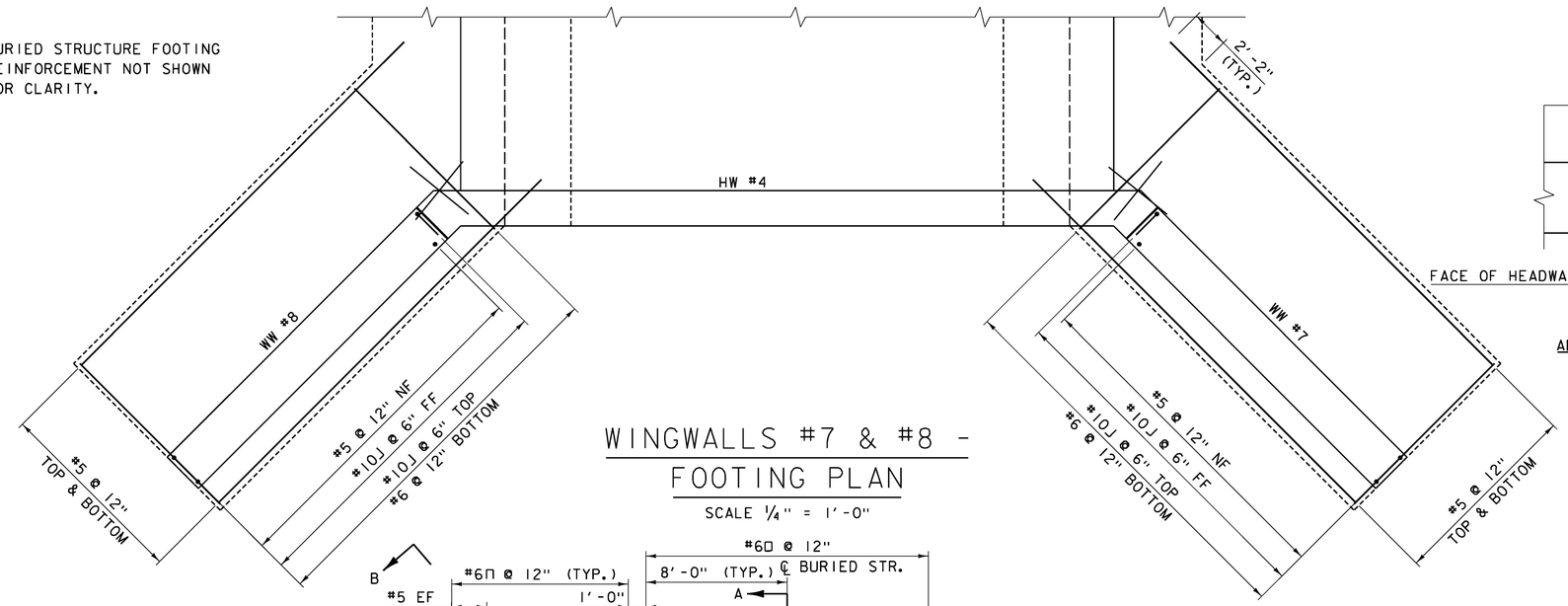

WINGWALLS #7 & #8 - FOOTING PLAN

SCALE 1/4" = 1'-0"

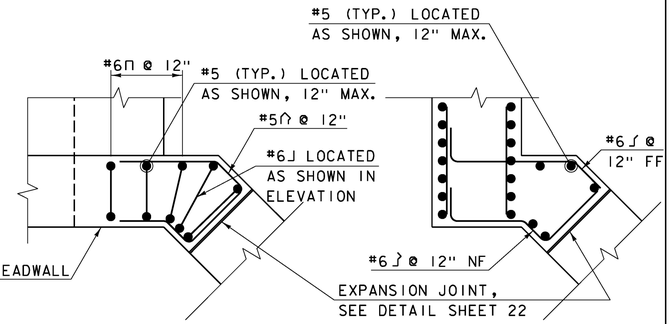

TYPICAL WINGWALL CORNER DETAIL

NOT TO SCALE

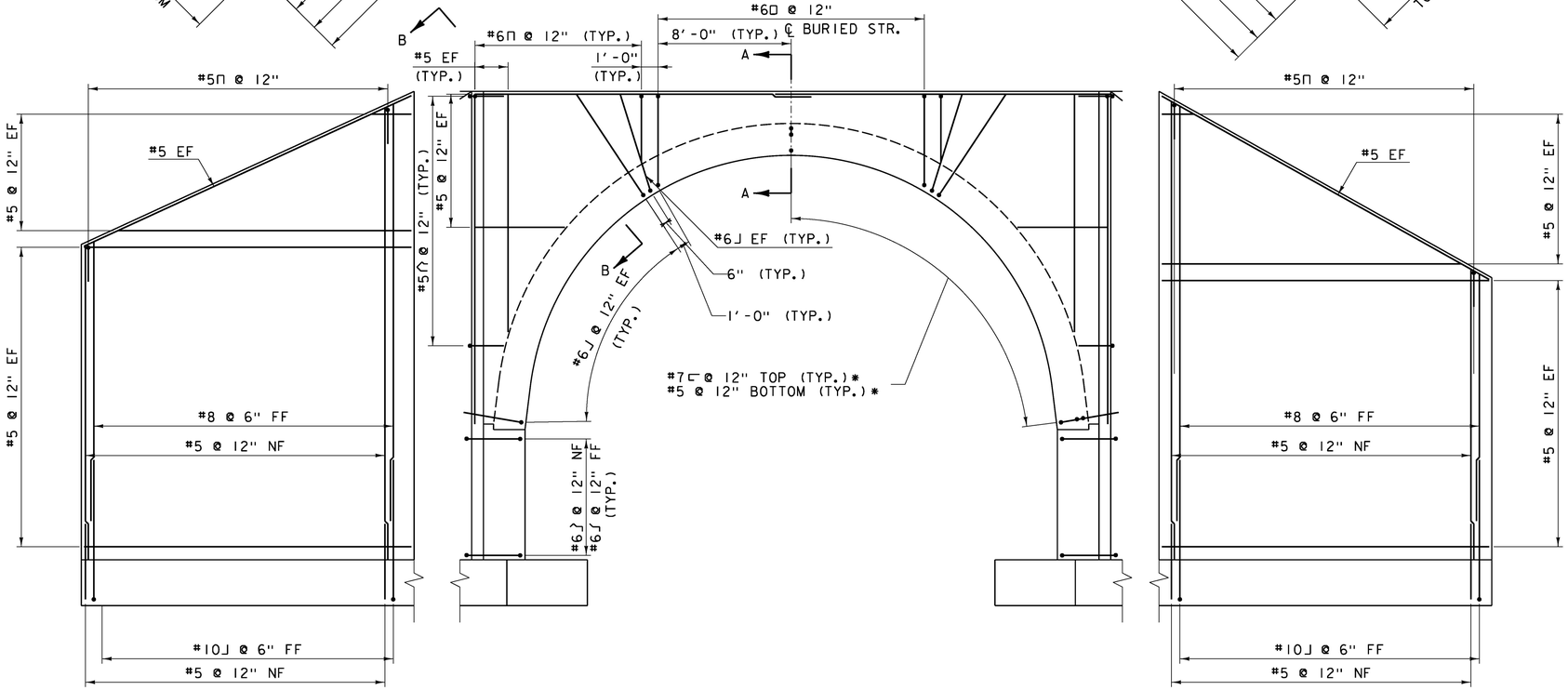

NOTE: WINGWALL #8 - ELEVATION

SCALE 1/4" = 1'-0"

HEADWALL #4 - ELEVATION

SCALE 1/4" = 1'-0"

WINGWALL #7 - ELEVATION

SCALE 1/4" = 1'-0"

NF = NEAR FACE
FF = FAR FACE
EF = EACH FACE
▲ = CUT TO FIT IN FIELD
3" CLEAR, UNLESS OTHERWISE SPECIFIED ON THE PLANS.
2'-2" BAR LAP UNLESS OTHERWISE SPECIFIED ON THE PLANS.

NOTES:
1. SEE SHEET 23 FOR WINGWALL SECTION.
2. HEADWALL REINFORCING STEEL MIRRORED ABOUT STRUCTURE CENTERLINE.
3. MAIN REINFORCING STEEL IN BOTTOM OF HEADWALL SECTION, ALTHOUGH NOT SHOWN IN ELEVATION FOR CLARITY, WILL BE THE SAME AS THAT USED IN THE ADJACENT BURIED STRUCTURE.

* #7 AND #5 MECHANICAL BAR CONNECTOR AT HEADWALL JOINT.

PROJECT NAME: RYEGATE
PROJECT NUMBER: STP CULV(10)

ENGINEERS CONSTRUCTION — DuBois & King Inc.

FILE NAME: z06cl56sub4.dgn
PROJECT LEADER: E. DETRICK
DESIGNED BY: R. BARNES
WACR OUTLET DETAILS

PLOT DATE: 3/23/16
DRAWN BY: R. BARNES
CHECKED BY: E. DETRICK
SHEET 29 OF 36

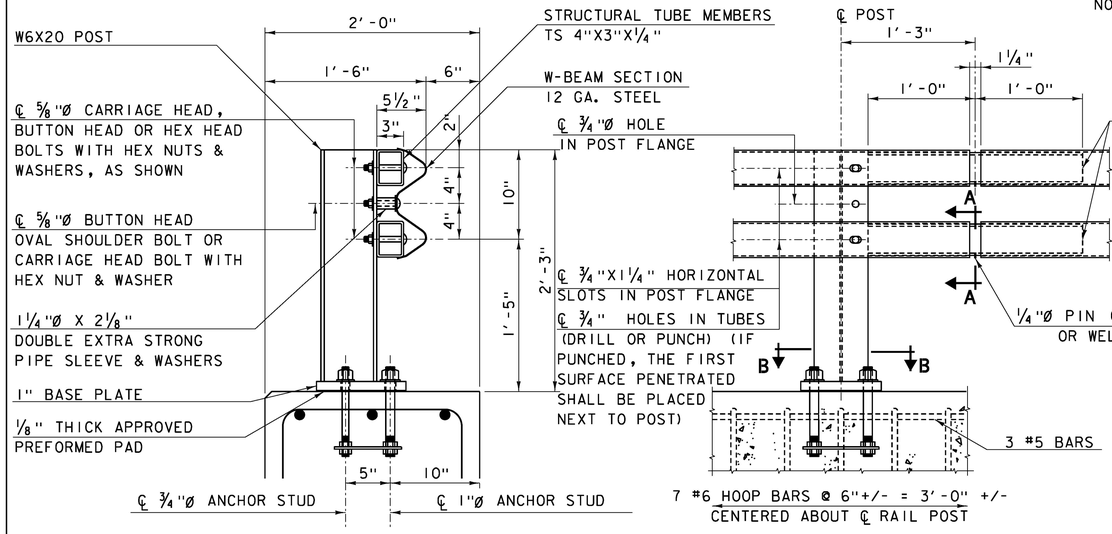

BRIDGE RAIL DETAIL

SCALE: 1½" = 1'-0"

TYPICAL SPLICE

NOTE: THE DIFFERENCE BETWEEN THE OUTSIDE DIMENSIONS OF SPLICE BARS AND THE INSIDE DIMENSIONS OF THE RAIL SHALL BE APPROXIMATELY ⅛" (NOT TO EXCEED 3/16") ALONG EITHER AXIS TO PERMIT CLEARANCE FOR INSIDE WELD FLASH

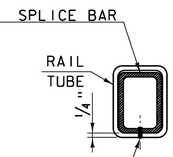

SECTION A-A

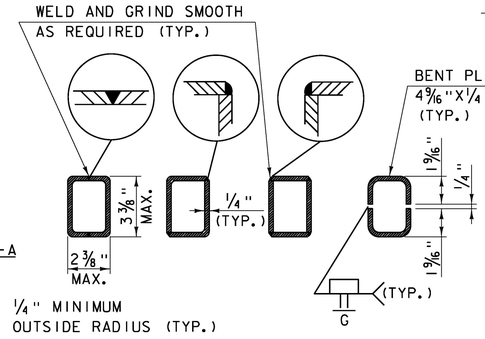

NOTE: OTHER SECTIONS OF EQUAL OR GREATER STRENGTH ARE ACCEPTABLE FOR SPLICE BARS

SPLICE BAR FABRICATION OPTIONS

SPLICE BAR DETAILS

NOT TO SCALE

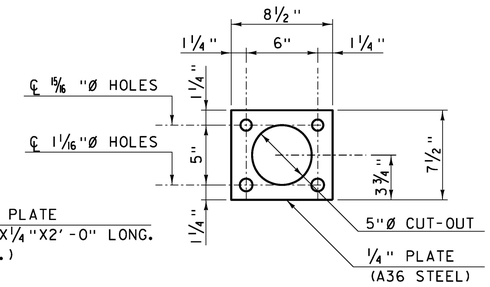

ANCHOR PLATE DETAIL

SCALE: 2" = 1'-0"

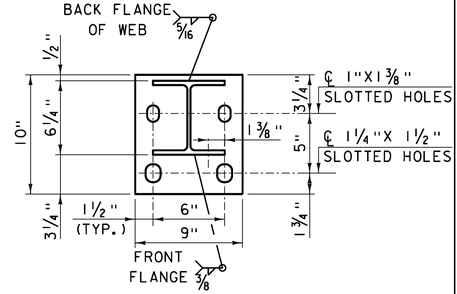

BASE PLATE DETAIL (SECTION B-B)

SCALE: 2" = 1'-0"

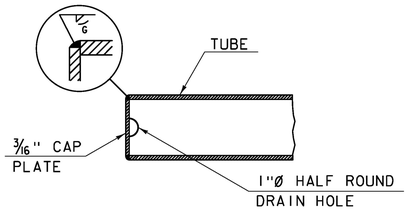

RAIL CAP DETAIL (BOTTOM VIEW)

SCALE: 3" = 1'-0"

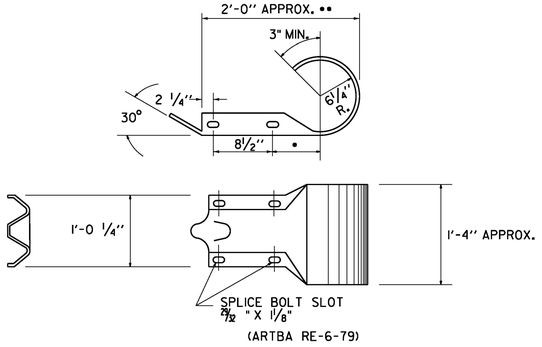

(ARTBA RE-6-79)

ROUNDED "W" BEAM END SECTION

• THIS DIMENSION IS 7½" INRE-7-79. IF THE DIMENSION IS USED IN THIS PART, IT WILL GIVE AN ACCEPTABLE OVERALL LENGTH (••) OF APPROXIMATELY 2'- 11/2."

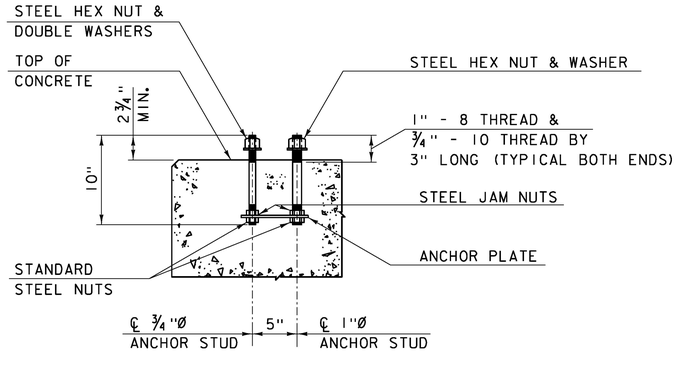

POST ANCHOR ASSEMBLY

SCALE: 1½" = 1'-0"

GENERAL NOTES

1. BRIDGE RAIL T101 WAS SUCCESSFULLY CRASHED TESTED FOR NCHRP 350 (@ HEIGHT OF 2'-3"), TL-3 PER FHWA MAY 30, 1997 MEMORANDUM.

2. MATERIALS WILL MEET THE FOLLOWING REQUIREMENTS:
   - ASTM A572 GRADE 50 : POSTS AND BASE PLATES
   - ASTM A500 GRADE B : STRUCTURAL TUBING
   - ASTM A36 : PIPE SLEEVES, RAIL SPLICE BARS AND ANCHOR PLATES
   - ASTM A449 : ANCHOR STUDS WITH STANDARD NUTS AND HARDENED STEEL COMMERCIAL TYPE A PLAIN WIDE WASHERS
   - A307 : RAIL BOLTS, NUTS, AND WASHERS
   - AASHTO M180 TYPE II : W-BEAM SECTIONS

3. ALL STEEL COMPONENTS WILL BE GALVANIZED AFTER FABRICATION IN CONFORMANCE WITH AASHTO M232 (ASTM A153) AND AASHTO M111 (ASTM A123). GALVANIZED SURFACES SHALL HAVE A UNIFORM APPEARANCE AND GALVANIZED MATERIAL SHALL BE PROPERLY STORED.

4. STRUCTURAL TUBING WILL BE SUPPLIED AS ONE PIECE FOR BRIDGE RAIL 40 FEET OR LESS IN LENGTH. IN OTHER CASES, TUBING SHALL BE SPLICED WITH A SPLICE BAR (SEE SPLICE BAR DETAILS). NO TRANSVERSE BUTT WELDS ARE PERMITTED ON RAIL TUBING WITHIN A CONTINUOUS LENGTH.

5. EACH PIECE OF RAIL TUBING WILL BE ATTACHED TO A MINIMUM OF THREE POSTS.

6. PREFORMED BEARING PADS SHALL CONFORM TO AASHTO M251.

7. NUTS FOR THREADED ANCHOR STUDS CONNECTING THE BASE PLATE TO THE CONCRETE SHALL BE TIGHTENED TO A SNUG FIT AND GIVEN AN ADDITIONAL ⅛ TURN.

8. T101 RAILING WILL CONFORM TO SECTION 525 OF THE SPECIFICATIONS.

PROJECT NAME: RYEGATE
PROJECT NUMBER: STP CULV(10)

ENGINEERS CONSTRUCTION — DuBois & King INC

FILE NAME: z06c156rail.dgn
PROJECT LEADER: E. DETRICK
DESIGNED BY: R. BARNES
T101 RAILING DETAILS

PLOT DATE: 3/23/16
DRAWN BY: R. BARNES
CHECKED BY: E. DETRICK
SHEET 30 OF 36

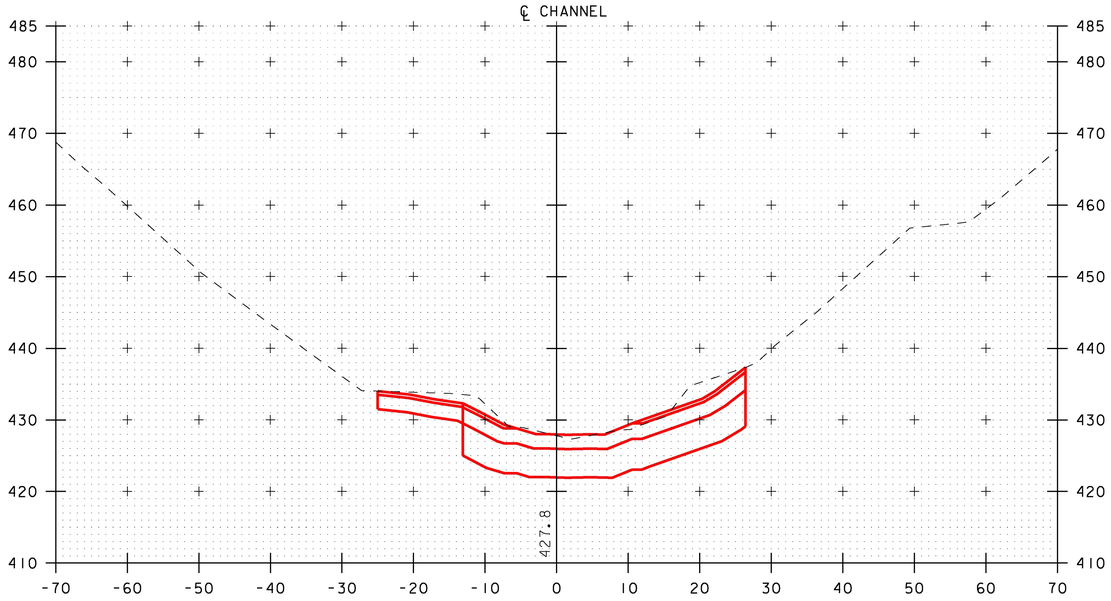

10+25

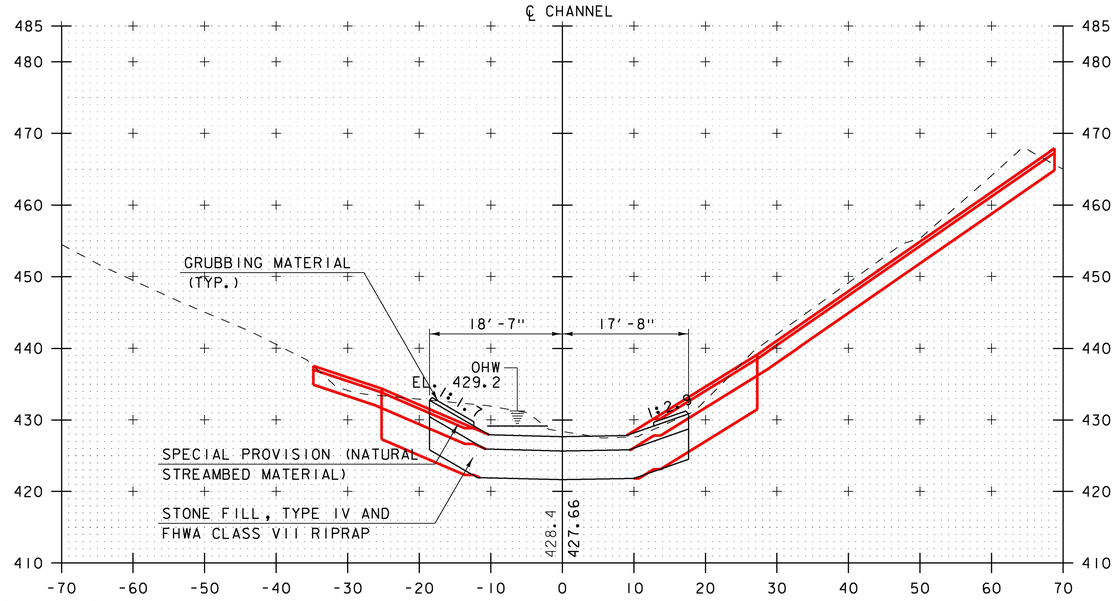

STA. ~~10+60.00~~ 10+00
BEGIN STONE FILL, TYPE IV AND FHWA CLASS VII RIPRAP
BEGIN NATIVE CHANNEL MATERIAL
BEGIN GRUBBING MATERIAL

10+75

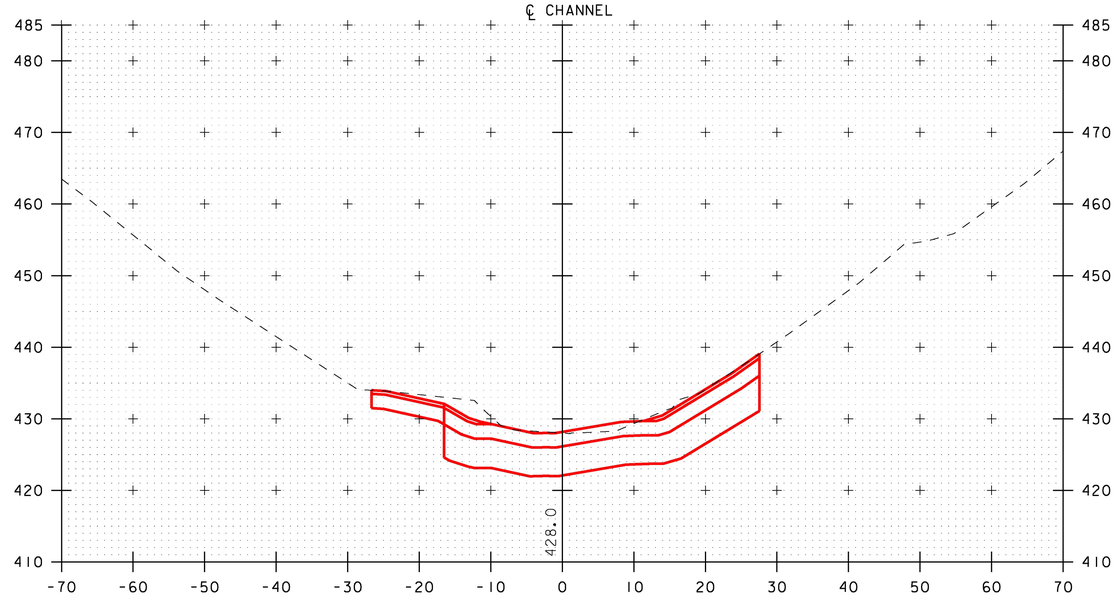

10+50

NOTE: CHANNEL CROSS-SECTION SHOWN REFLECTS GENERAL CHANNEL GEOMETRY, IT WILL NOT BE A SMOOTHLY GRADED SURFACE AS SHOWN, SEE CHANNEL MATERIAL NOTES, SHEET 3.

SCALE 1" = 10'-0"
10 0 10

ENGINEERS CONSTRUCTION — DuBois & King Inc.

PROJECT NAME:	RYEGATE
PROJECT NUMBER:	STP CULV(10)
FILE NAME: z06cl56chxs.dgn	PLOT DATE: 11/24/2015
PROJECT LEADER: E. DETRICK	DRAWN BY: R. BARNES
DESIGNED BY: R. BARNES	CHECKED BY: E. DETRICK
CHANNEL CROSS SECTIONS 1 OF 6	SHEET 31 OF 56

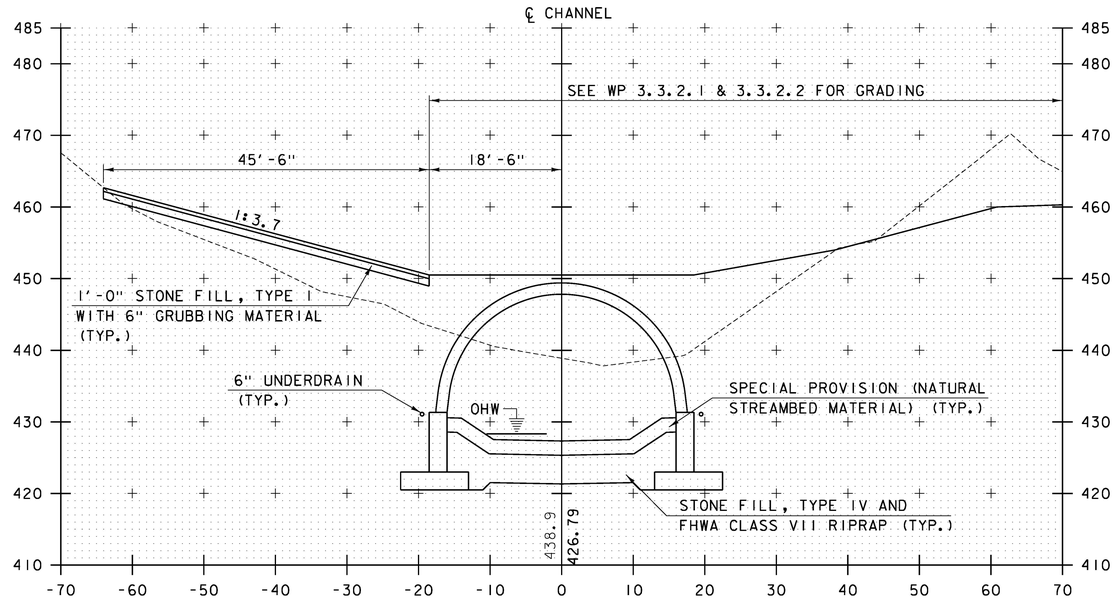

STA. 11+11.25
BEGIN US 5 BURIED STRUCTURE
END GRUBBING MATERIAL

11+25

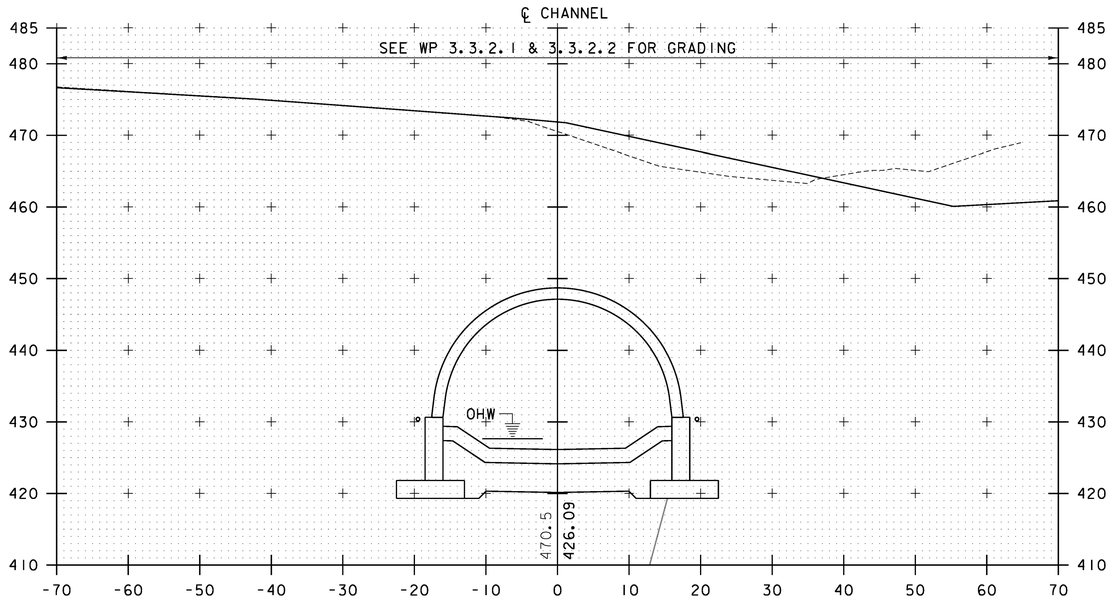

11+75

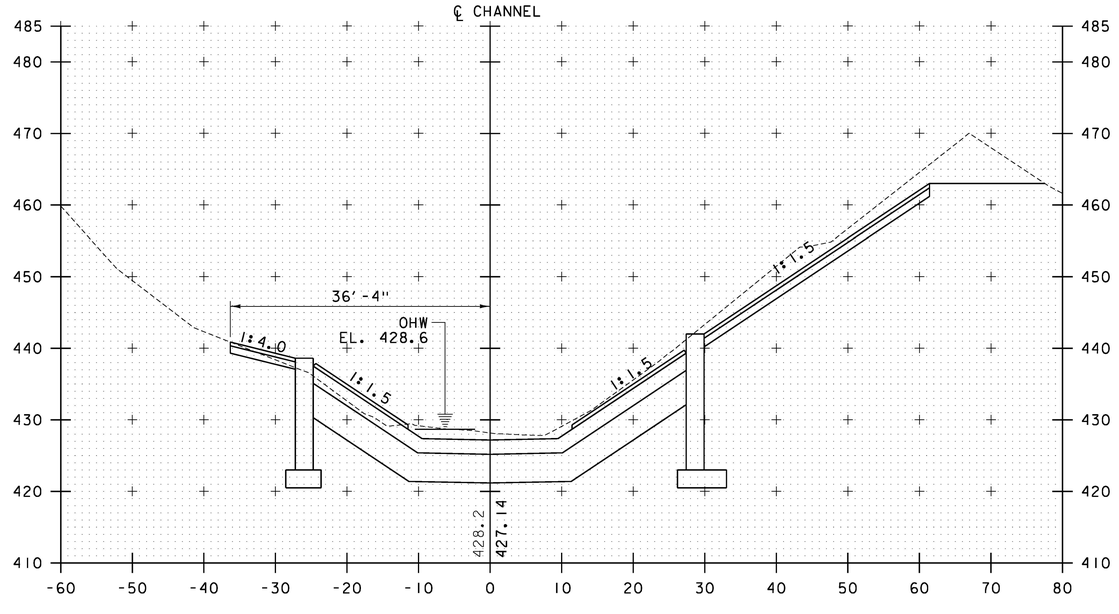

11+00

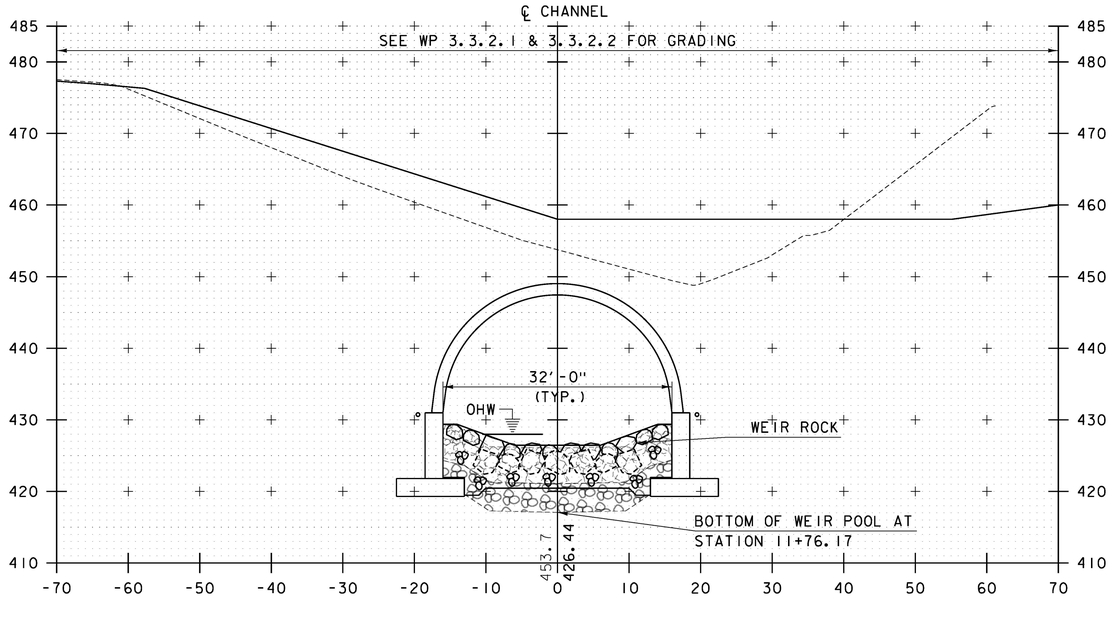

11+50

SCALE 1" = 10'-0"
10 0 10

ECI ENGINEERS CONSTRUCTION
DuBois & King, Inc.

PROJECT NAME: RYEGATE
PROJECT NUMBER: STP CULV(10)

FILE NAME: z06c156chxs.dgn
PROJECT LEADER: E. DETRICK
DESIGNED BY: R. BARNES
CHANNEL CROSS SECTIONS 2 OF 6

PLOT DATE: 3/23/16
DRAWN BY: R. BARNES
CHECKED BY: E. DETRICK
SHEET 32 OF 36

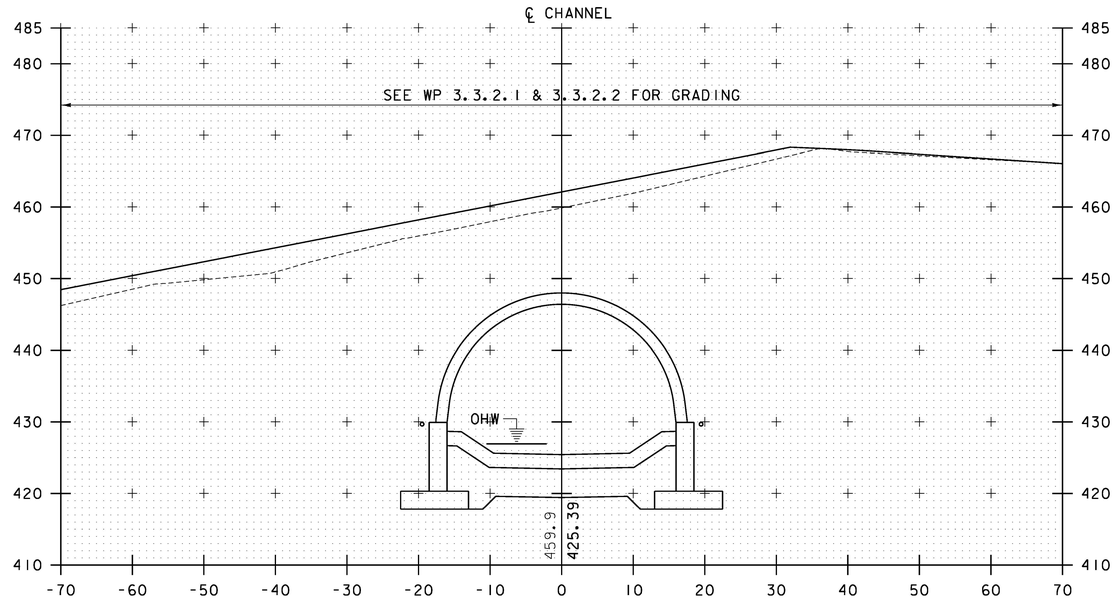

12+25

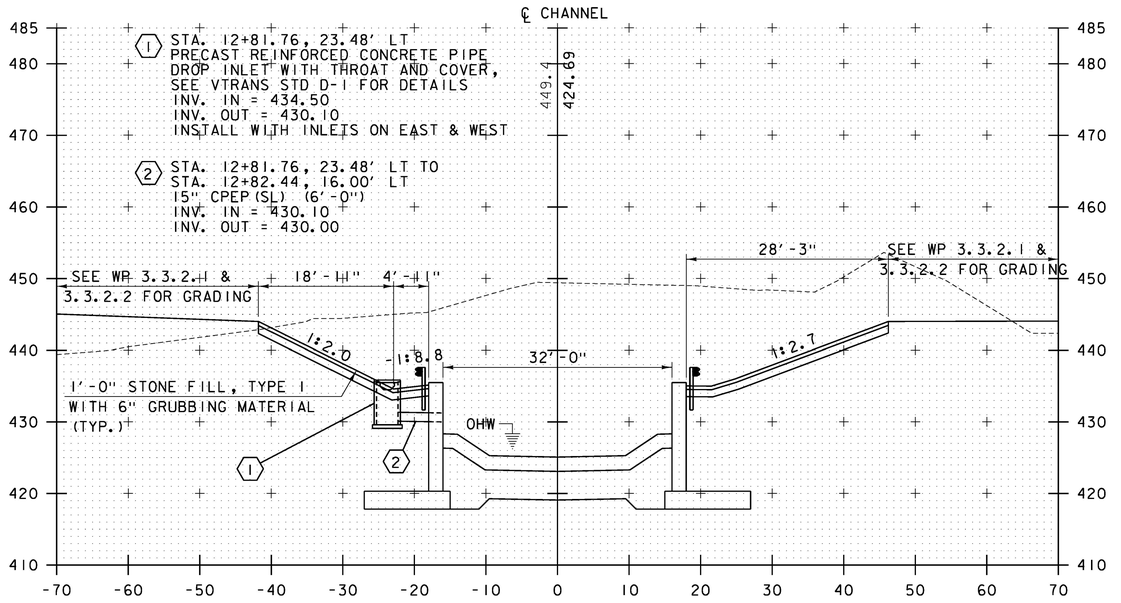

STA. 12+55.25
END US 5 BURIED STRUCTURE

12+75

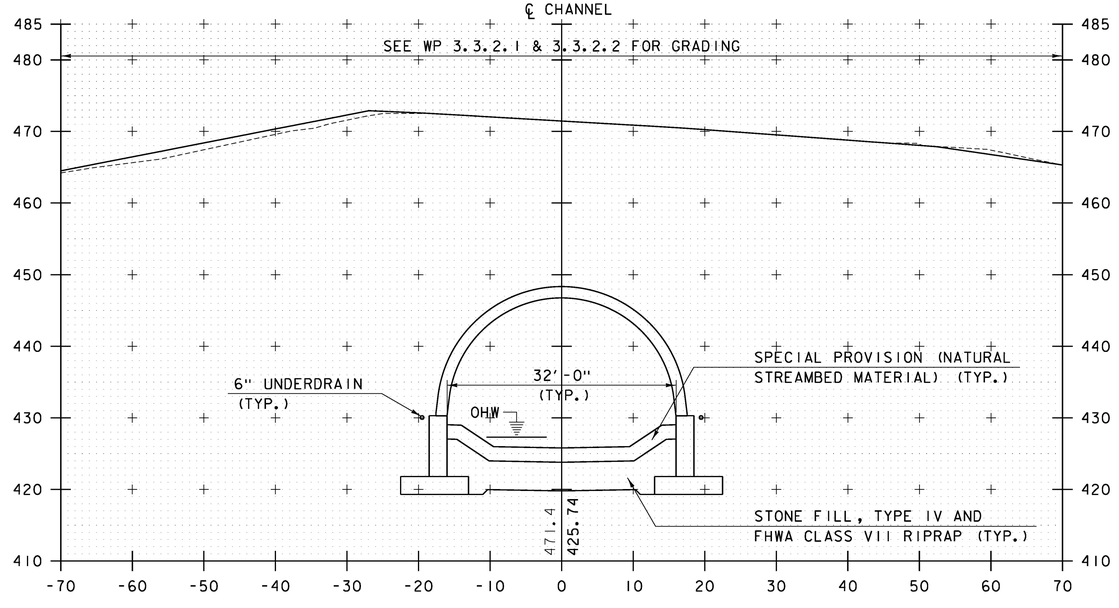

12+00

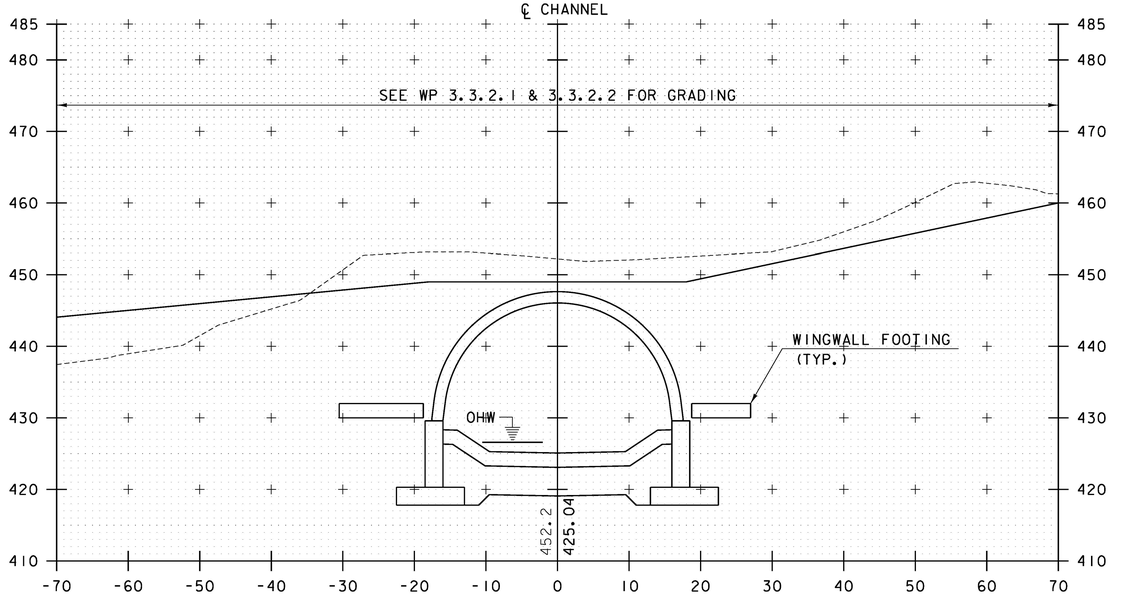

12+50

SCALE 1" = 10'-0"
10 0 10

ENGINEERS CONSTRUCTION ECI DuBois & King Inc.

PROJECT NAME: RYEGATE
PROJECT NUMBER: STP CULV(10)

FILE NAME: z06c156chxs.dgn
PROJECT LEADER: E. DETRICK
DESIGNED BY: R. BARNES
CHANNEL CROSS SECTIONS 3 OF 6

PLOT DATE: 3/23/16
DRAWN BY: R. BARNES
CHECKED BY: E. DETRICK
SHEET 33 OF 36

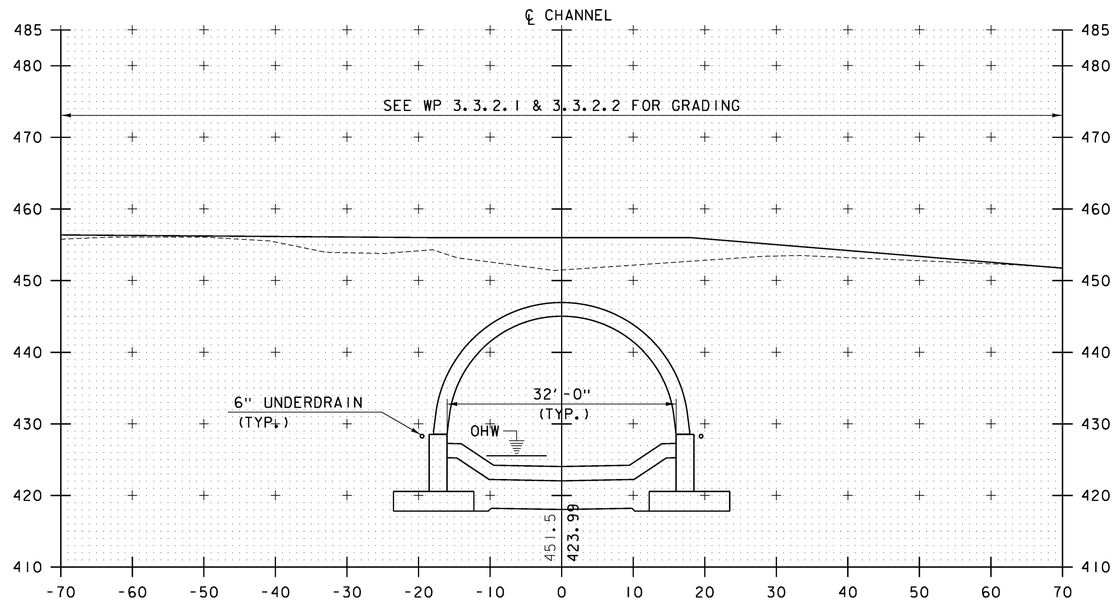

STA. 13+12.00
BEGIN WACR BURIED STRUCTURE

13+25

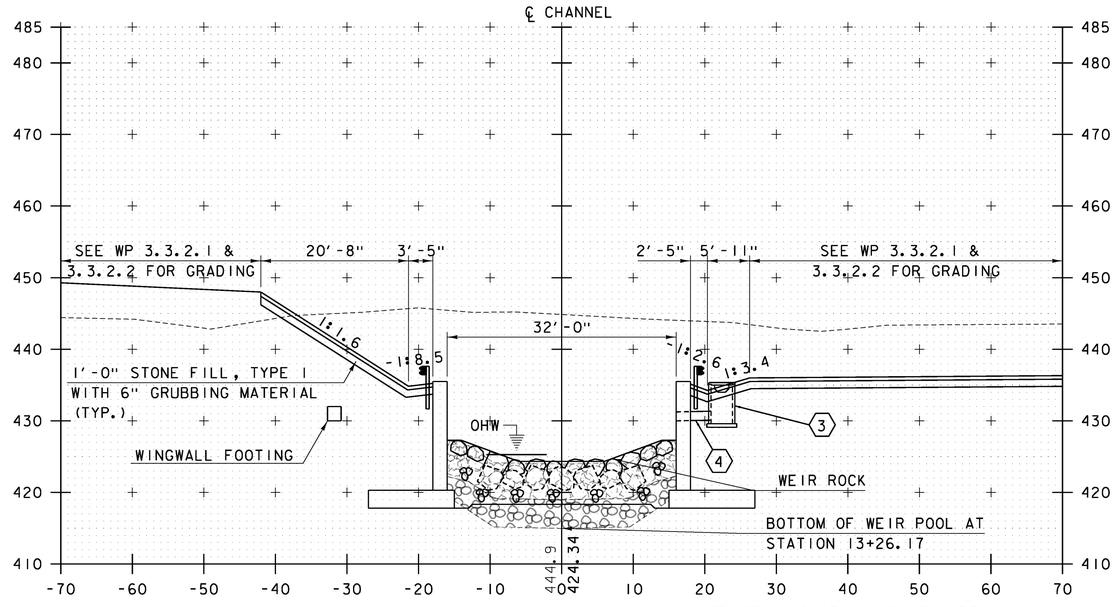

13+00

③ STA. 12+97.66, 22.50' RT
PRECAST REINFORCED CONCRETE PIPE
DROP INLET WITH THROAT AND COVER,
SEE VTRANS STD D-1 FOR DETAILS
INV. IN = 434.00
INV. OUT = 430.10
INSTALL WITH INLET ON SOUTH & WEST

④ STA. 12+97.66, 22.50' RT TO
STA. 12+97.75, 16.00' RT
15" CPEP (SL) (5'-0")
INV. IN = 430.10
INV. OUT = 430.00

13+75

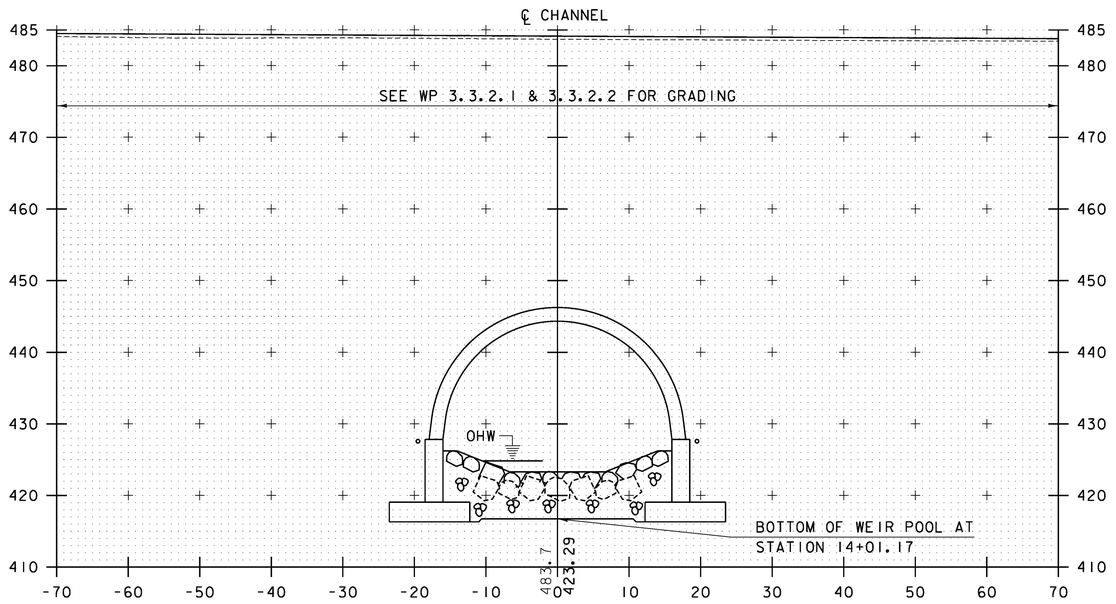

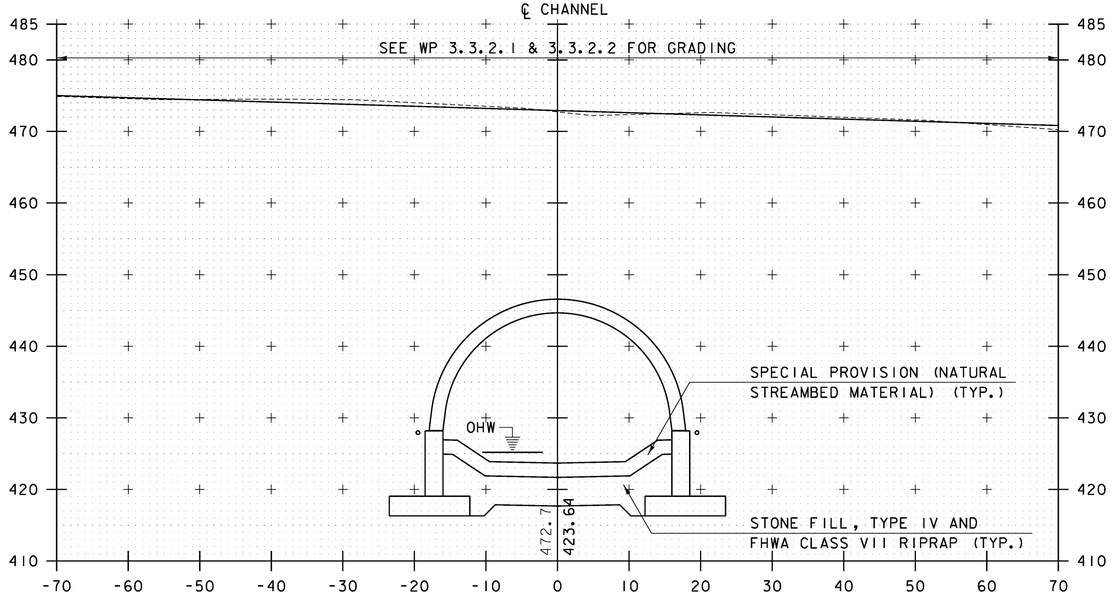

13+50

SCALE 1" = 10'-0"
10 0 10

ECI ENGINEERS CONSTRUCTION
DuBois & King, Inc.

PROJECT NAME: RYEGATE
PROJECT NUMBER: STP CULV(10)

FILE NAME: z06cl56chxs.dgn
PROJECT LEADER: E. DETRICK
DESIGNED BY: R. BARNES
CHANNEL CROSS SECTIONS 4 OF 6

PLOT DATE: 3/23/16
DRAWN BY: R. BARNES
CHECKED BY: E. DETRICK
SHEET 34 OF 36

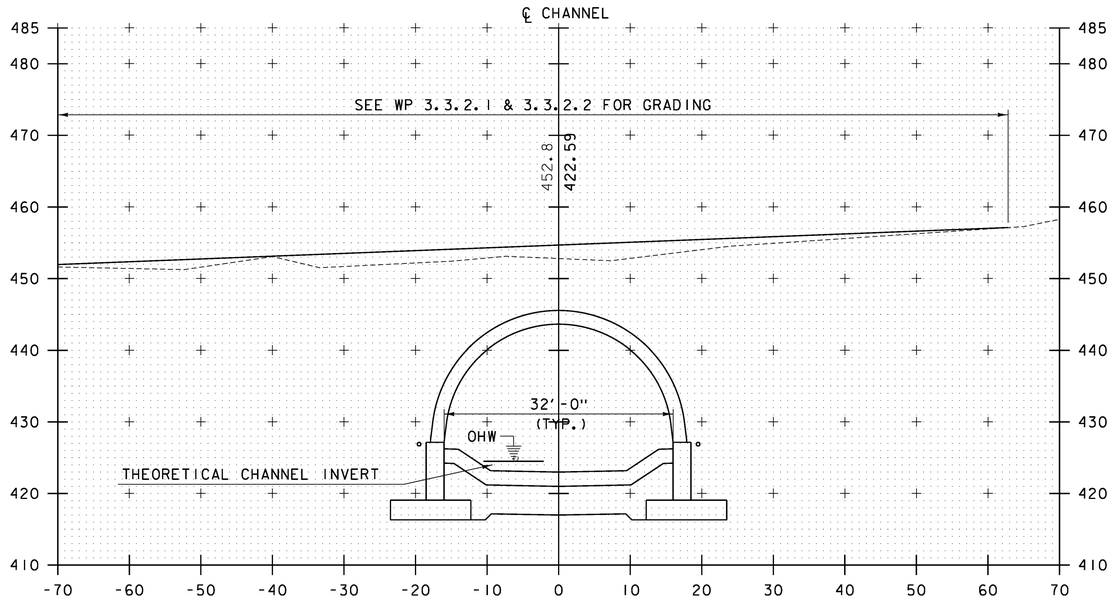

14+25

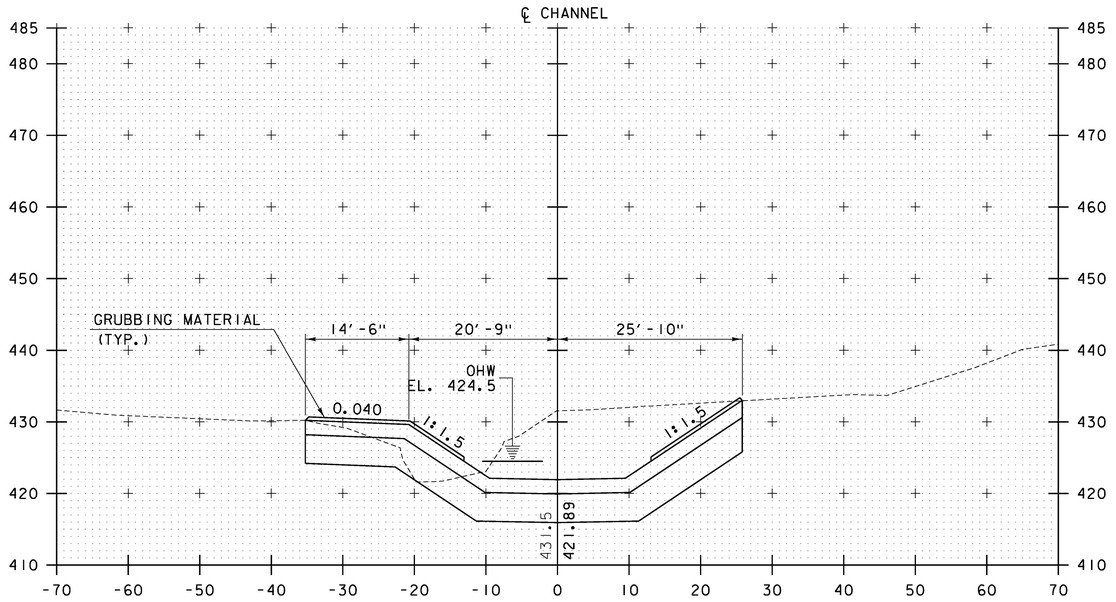

14+75

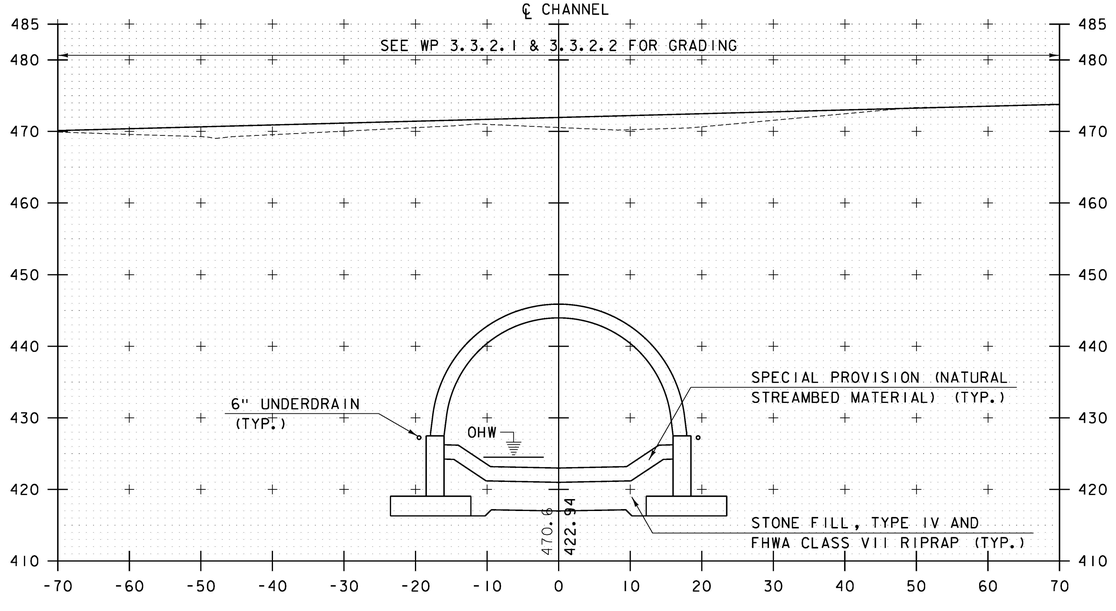

14+00

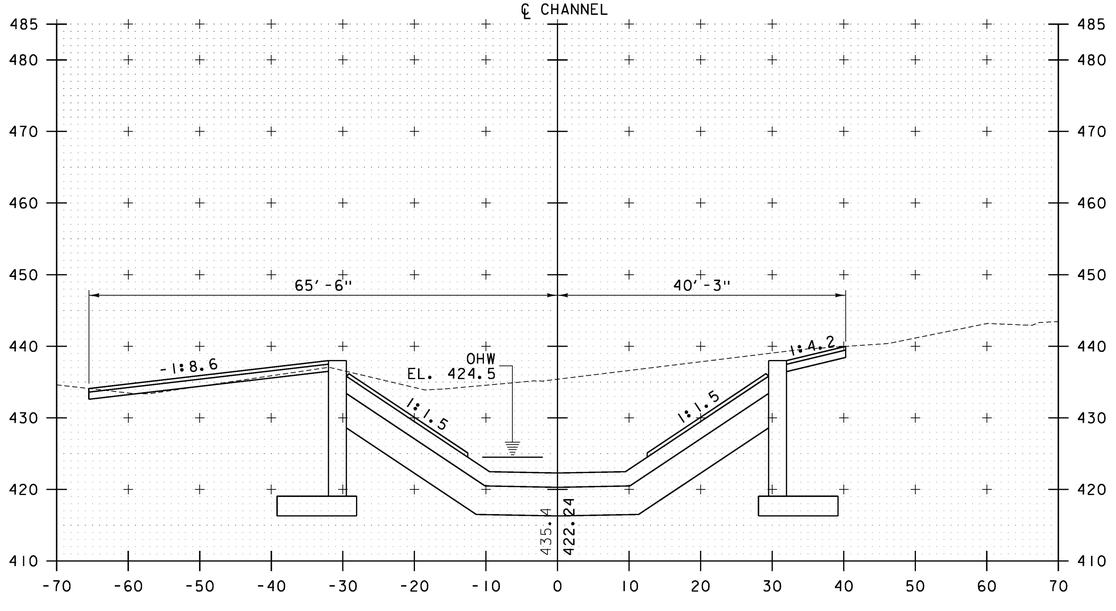

14+50

STA. 14+40.00
END WACR BURIED STRUCTURE
BEGIN GRUBBING MATERIAL

SCALE 1" = 10'-0"
10 0 10

ECI ENGINEERS CONSTRUCTION
DuBois & King Inc.

PROJECT NAME: RYEGATE
PROJECT NUMBER: STP CULV(10)

FILE NAME: z06cl56chxs.dgn
PROJECT LEADER: E. DETRICK
DESIGNED BY: R. BARNES
CHANNEL CROSS SECTIONS 5 OF 6

PLOT DATE: 3/23/16
DRAWN BY: R. BARNES
CHECKED BY: E. DETRICK
SHEET 35 OF 36

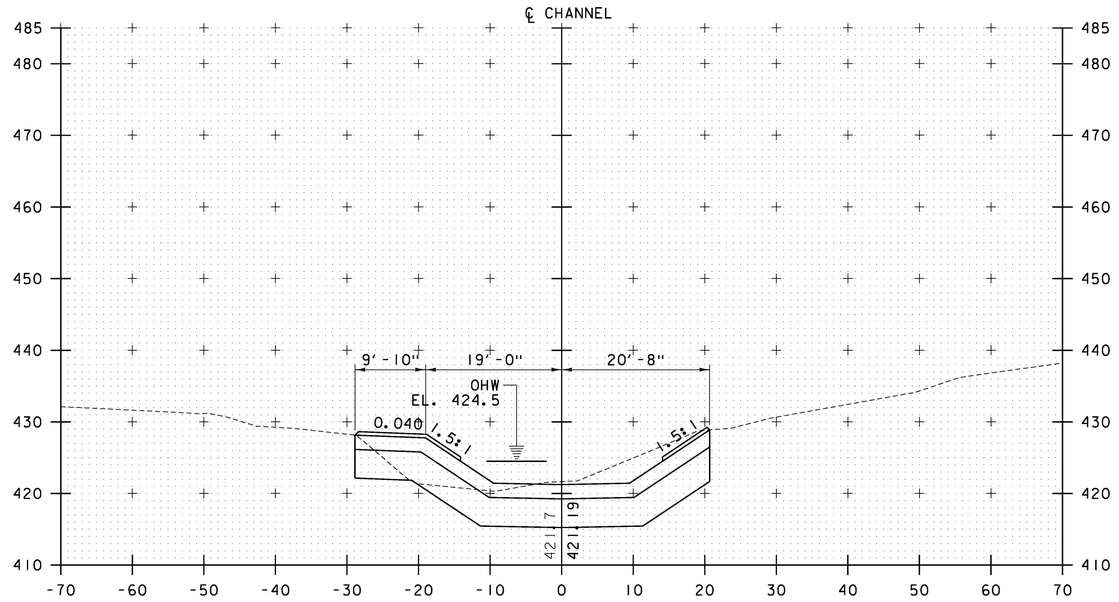

15+25

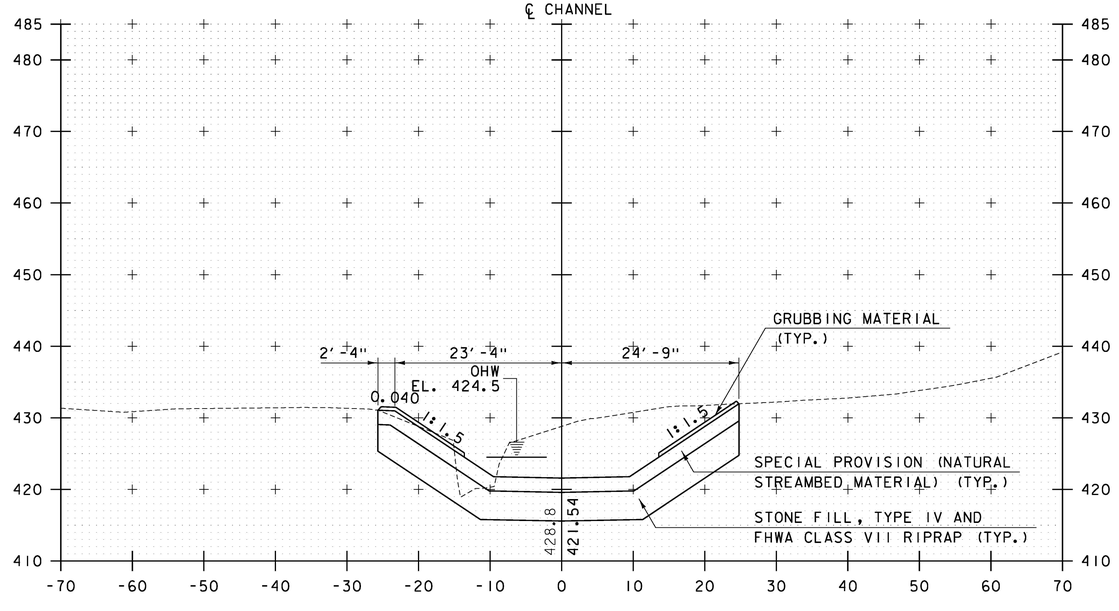

15+00

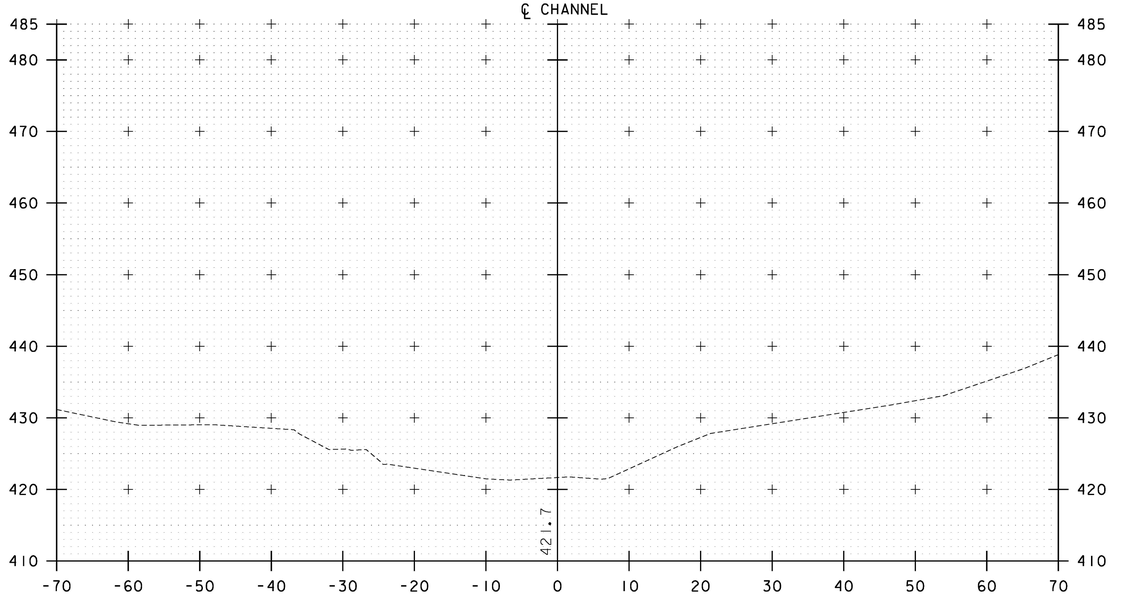

STA. 15+32.89
END STONE FILL, TYPE IV AND FHWA CLASS VII RIPRAP
END NATIVE CHANNEL MATERIAL
END GRUBBING MATERIAL

15+38

SCALE 1" = 10'-0"
10 0 10

ENGINEERS CONSTRUCTION ECI DuBois & King Inc.

PROJECT NAME: RYEGATE
PROJECT NUMBER: STP CULV(10)

FILE NAME: z06cl56chxs.dgn
PROJECT LEADER: E. DETRICK
DESIGNED BY: R. BARNES
CHANNEL CROSS SECTIONS 6 OF 6

PLOT DATE: 3/23/16
DRAWN BY: R. BARNES
CHECKED BY: E. DETRICK
SHEET 36 OF 36

CONCRETE GENERAL NOTES

1. ALL EXPOSED EDGES OF CONCRETE SHALL BE CHAMFERED 1" x 1"
2. REINFORCING STEEL SIZE AND SPACING SHOWN IN THE PLANS IS BASED ON 60 KSI STEEL, UNLESS NOTED OTHERWISE. WITH THE ENGINEER'S PERMISSION, BAR SIZE AND SPACING MAY BE MODIFIED ACCORDING TO THE LATEST AASHTO LRFD BRIDGE DESIGN SPECIFICATION AND STRUCTURES DESIGN MANUAL WHEN USING HIGHER STRENGTH STEEL.

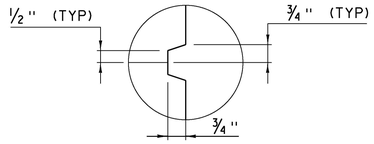

SCORE MARK DETAIL
(NOT TO SCALE)

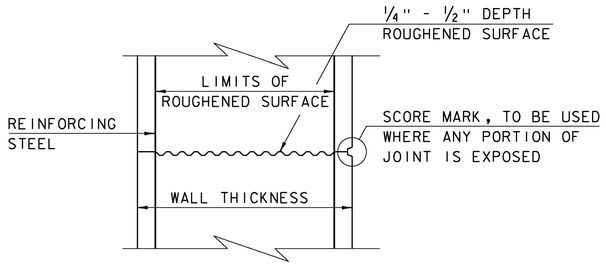

TYPICAL HORIZONTAL CONSTRUCTION JOINT
(NOT TO SCALE)

1. THE SURFACE OF THE CONCRETE CONSTRUCTION JOINTS SHALL BE CLEANED AND FREE OF LAITANCE.
2. IMMEDIATELY BEFORE NEW CONCRETE IS PLACED, ALL CONSTRUCTION JOINTS SHALL BE WETTED AND STANDING WATER REMOVED.

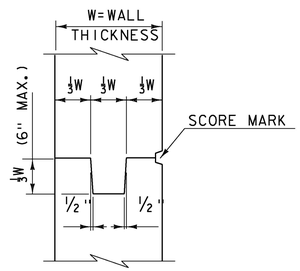

TYPICAL CONCRETE CONSTRUCTION JOINT
(NOT TO SCALE)

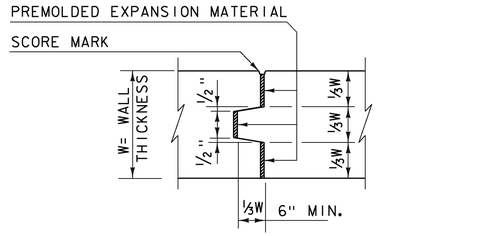

TYPICAL CONCRETE EXPANSION JOINT
(NOT TO SCALE)

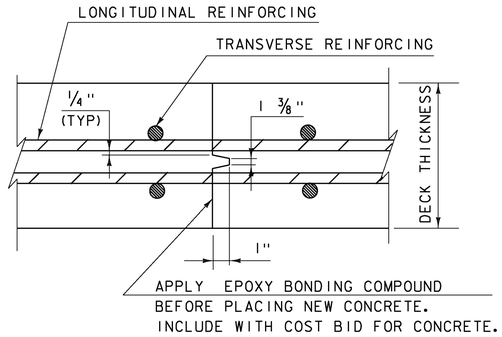

TRANSVERSE BRIDGE SLAB CONSTRUCTION JOINT DETAILS
(NOT TO SCALE)

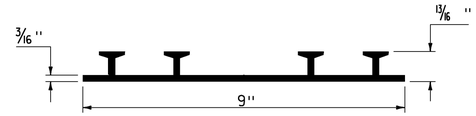

P.V.C. WATERSTOP FOR CONSTRUCTION JOINTS
(NOT TO SCALE)

PAYMENT FOR THE P.V.C. WATERSTOP SHALL BE INCIDENTAL TO THE UNIT BID PRICE FOR THE ADJACENT CONCRETE.

OTHER CONFIGURATIONS OF WATERSTOP MAY BE USED UPON APPROVAL OF THE ENGINEER.

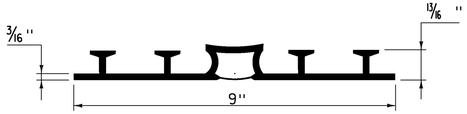

P.V.C. WATERSTOP FOR EXPANSION JOINTS
(NOT TO SCALE)

PAYMENT FOR THE P.V.C. WATERSTOP SHALL BE INCIDENTAL TO THE UNIT BID PRICE FOR THE ADJACENT CONCRETE.

OTHER CONFIGURATIONS OF WATERSTOP MAY BE USED UPON APPROVAL OF THE ENGINEER.

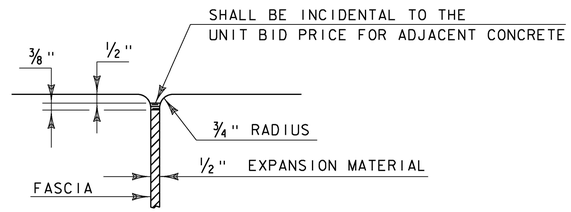

JOINT BETWEEN FASCIA AND WINGWALL
(NOT TO SCALE)

REVISIONS	
MAY 7, 2010	APPROVED FOR USE BY VAOT STRUCTURES SECTION
FEBRUARY 9, 2012	REBAR SUBSTITUTION ALLOWANCE ADDED TO CONCRETE GENERAL NOTES.

CONCRETE DETAILS AND NOTES

VERMONT AGENCY OF TRANSPORTATION
STRUCTURES - SECTION

STRUCTURES DETAIL
SD-501.00

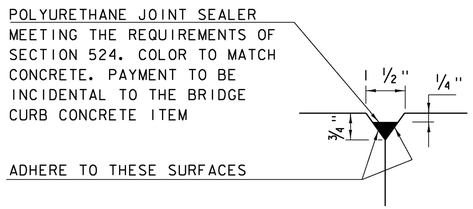

DETAIL "B"
(NOT TO SCALE)

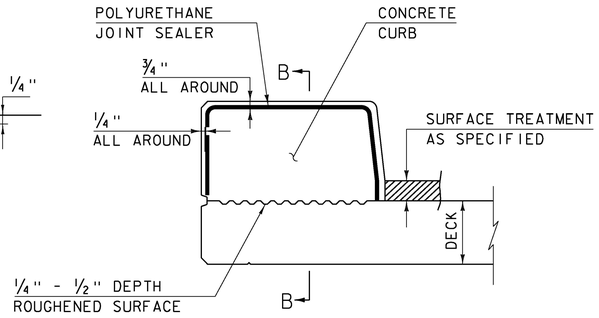

CONCRETE CURB JOINT SECTION
(NOT TO SCALE)

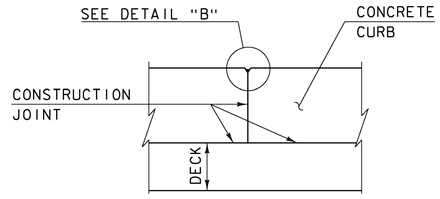

SECTION B - B
(NOT TO SCALE)

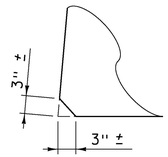

ACUTE ANGLE CLIP DETAIL
(NOT TO SCALE)

1. SEE TYPICAL HORIZONTAL CONSTRUCTION JOINT DETAIL FOR ADDITIONAL INFORMATION

CONCRETE CURB JOINT NOTES

1. CONCRETE CURBS MAY BE PLACED IN ONE CONTINUOUS OPERATION IF AN APPROVED SHRINKAGE REDUCING ADMIXTURE LISTED IN THE SPECIAL PROVISIONS IS USED WITH THE CONCRETE MIX DESIGN. PAYMENT FOR THE SHRINKAGE REDUCING ADMIXTURE WILL BE INCIDENTAL TO THE BRIDGE CURB CONCRETE ITEM.

2. IF THE CONTRACTOR CHOOSES NOT TO USE AN APPROVED SHRINKAGE REDUCING ADMIXTURE, THE CURBS SHALL BE CONSTRUCTED WITH CONSTRUCTION JOINTS SPACED AT A MAXIMUM OF 15'-0" CENTER TO CENTER AND 2'-0" MINIMUM FROM THE CENTER OF NEAREST BRIDGE RAILING POST.

3. ON MULTI-SPAN CONTINUOUS SUPERSTRUCTURES, REGARDLESS OF WHETHER APPROVED SHRINKAGE REDUCING ADMIXTURE IS USED, CURB JOINTS SHALL BE LOCATED OVER THE CENTERLINE OF PIERS AND 7'-0" EACH SIDE OF THE CENTERLINE OF EACH PIER.

4. WHEN CURB JOINTS ARE USED THE CURBS SHALL BE PLACED IN ALTERNATE SECTIONS WITH A MINIMUM OF 48 HOUR DELAY BETWEEN ADJACENT PLACEMENTS.

5. LONGITUDINAL REINFORCING SHALL BE CONTINUOUS THROUGH CURB CONSTRUCTION JOINTS. CURB STIRRUP BARS SHALL BE TURNED AS NECESSARY TO MAINTAIN COVER IN THE FLARED CURB ENDS.

6. THE JOINT SPACING AND DETAILS SHOWN SHALL APPLY TO SIDEWALKS WHEN SHOWN IN THE PLANS.

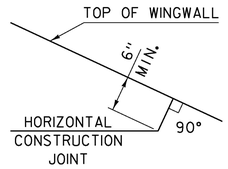

HORIZONTAL WINGWALL CONSTRUCTION JOINT
(NOT TO SCALE)

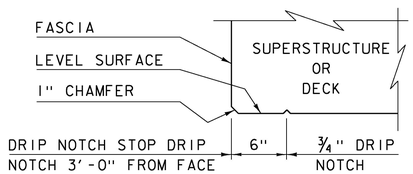

DRIP NOTCH DETAIL
(NOT TO SCALE)

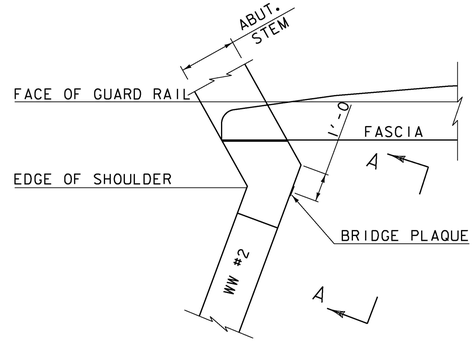

PLAN

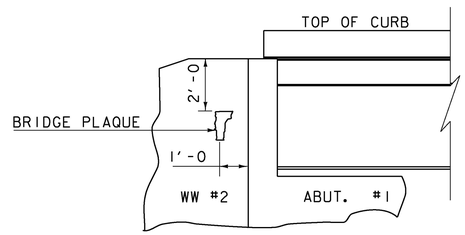

VIEW "A - A"

BRIDGE PLAQUE
(NOT TO SCALE)

THE BRIDGE PLAQUE WILL BE SUPPLIED BY THE AGENCY OF TRANSPORTATION AND SHALL BE INSTALLED BY THE CONTRACTOR AT ABUTMENT #1 ON THE RIGHT SIDE AS SHOWN OR AS DIRECTED BY THE ENGINEER.

PAYMENT FOR INSTALLATION OF THE BRIDGE PLAQUE SHALL BE INCIDENTAL TO THE ADJACENT CONCRETE.

REVISIONS	
MAY 7, 2010	APPROVED FOR USE BY VAOT STRUCTURES SECTION
JUNE 4, 2010	MODIFIED AND ADDED TWO DETAILS
OCTOBER 10, 2012	MODIFIED HORZ. JOINT WINGWALL ADD 6" MIN. DIMENSION

CONCRETE DETAILS AND NOTES

VERMONT AGENCY OF TRANSPORTATION
STRUCTURES - SECTION

STRUCTURES DETAIL
SD-502.00

xx. METHOD OF MEASUREMENT. The quantity of Special Provision (Coarse Aggregate Backfill) is incidental to the Contract.

xx. BASIS OF PAYMENT. The accepted quantity of Special Provision (Coarse Aggregate Backfill) will be paid under the Lump Sums for WP 5.2.5.1 and WP 5.3.6.1 of the Contract. Payment will be full compensation for furnishing, transporting, handling, and placing the material specified and for furnishing all labor, tools, equipment, and incidentals necessary to complete the work.

T101 BRIDGE RAIL

xx. DESCRIPTION. This work will consist of furnishing and erecting galvanized T101 Bridge Railing as shown in the Plans and as directed by the Engineer.

The work under this Section will be performed in accordance with these provisions, the Plans, and Section 525 of the Standard Specifications.

xx. MATERIALS. Materials will meet the requirements specified in the Release for Construction (RFC) Plans.

xx. CONSTRUCTION REQUIREMENTS. Bridge railing will be provided and erected to the configuration shown in the RFC Plans.

xx. METHOD OF MEASUREMENT. The quantity of Special Provision (T101 Bridge Rail) is incidental to the Contract.

Material will be placed upstream and downstream of the culvert as shown in the Plans.

Fill in voids in the stone with a mixture of fines from the existing stream bed material. Fill voids by hand tamping with metal tamping rods, plate compactors, and water pressure with a metal wand to reach between stones.

Once all material has been placed in the stream channel, the Contractor will slowly wet the stream to minimize the effects of the initial sediment pulse. Every attempt will be made to minimize the movement of sediment downstream of the site.

xx. METHOD OF MEASUREMENT. The quantity of Special Provision (Natural Streambed Material) is incidental to the Contract.

xx. BASIS OF PAYMENT. The accepted quantity of Special Provision (Natural Streambed Material) will be paid under the Lump Sum for WP 5.2.6.1 and WP 5.3.7.1 of the Contract. Payment will be full compensation for furnishing, transporting, handling, and placing the material specified and for furnishing all labor, tools, equipment, and incidentals necessary to complete the work.

complete the work.

INDEX OF SHEETS
SEE SHEET 2

RECORD PLANS

Ryegate Design-Build Project STP CULV (10)

Resident Engineer: Nick Newland
Contractor: Engineers Construction, Inc.
Start Date: 05-14-2014
Completion Date:
Prepared By: Jason Rowell

STATE OF VERMONT
AGENCY OF TRANSPORTATION

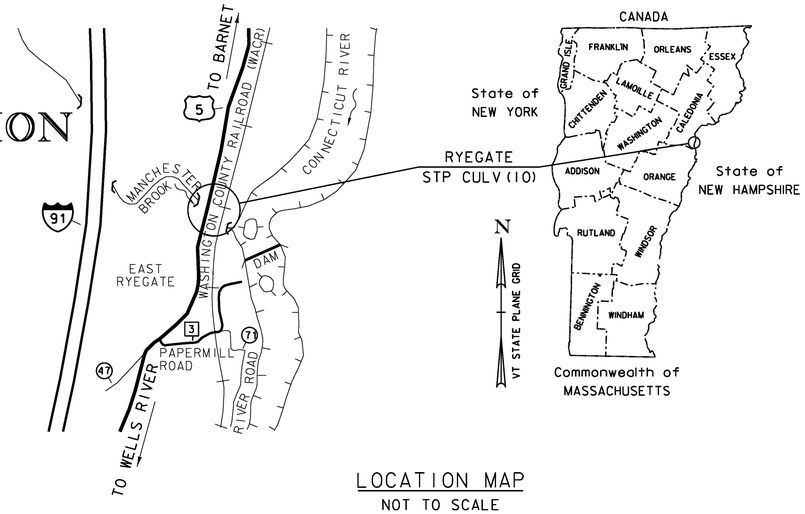

LOCATION MAP
NOT TO SCALE

PROPOSED IMPROVEMENT
CULVERT PROJECT

TOWN OF RYEGATE
COUNTY OF CALEDONIA
US 5 (MAJOR COLLECTOR), BRIDGE NO 116
WASHINGTON COUNTY RAILROAD (WACR), CULVERT NO 27-E

PROJECT LOCATION: LOCATED IN THE COUNTY OF CALEDONIA, TOWN OF RYEGATE, ON US 5 & WACR; BRIDGE NO. 116/CULVERT NO. 27-E (MP 59.43) OVER MANCHESTER BROOK, APPROXIMATELY 0.4 MILES NORTH OF THE INTERSECTION OF PAPERMILL ROAD (TH 3) AND US 5.

PROJECT DESCRIPTION: INSTALL TRAFFIC CONTROL, REPLACE BRIDGE 116, AND REPLACE CULVERT NO. 27-E. ROADWAY AND RAIL APPROACH AND CHANNEL IMPROVEMENTS

LENGTH OF US 5 STRUCTURE:	40.20	FEET
LENGTH OF WACR STRUCTURE:	37.03	FEET
LENGTH OF ROADWAY:	109.80	FEET
LENGTH OF RAILROAD:	187.97	FEET

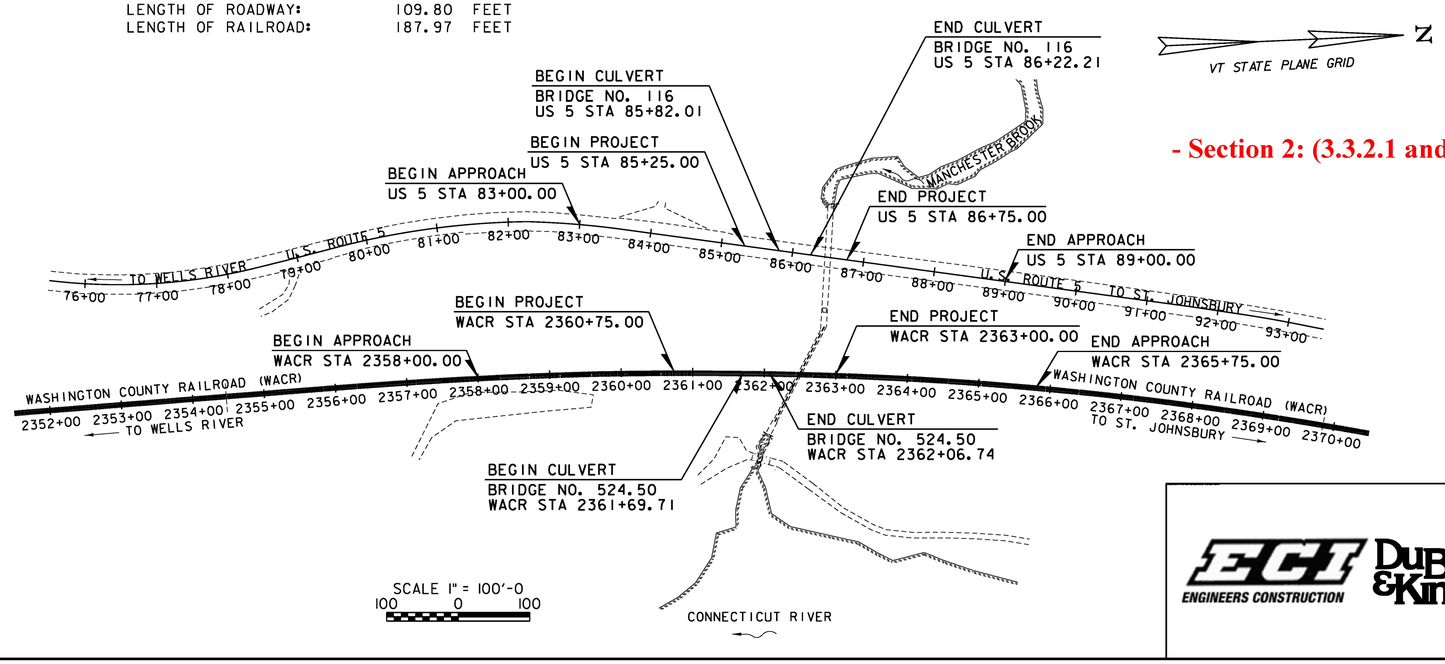

- Section 2: (3.3.2.1 and 3.3.2.2 Roadway & Railway Plans)

CONSTRUCTION IS TO BE CARRIED ON IN ACCORDANCE WITH THESE PLANS AND THE STANDARD SPECIFICATIONS FOR CONSTRUCTION DATED 2011, AS APPROVED BY THE FEDERAL HIGHWAY ADMINISTRATION ON JULY 20, 2011 FOR USE ON THIS PROJECT, INCLUDING ALL SUBSEQUENT REVISIONS AND SUCH REVISED SPECIFICATIONS AND SPECIAL PROVISIONS AS ARE INCORPORATED IN THESE PLANS.

QUALITY ASSURANCE PROGRAM : LEVEL I	
SURVEYED BY :	VTRANS
SURVEYED DATE :	2006 - 2010
DATUM	
VERTICAL	NAVD 88
HORIZONTAL	NAD 83

RELEASED FOR CONSTRUCTION
ROADWAY & RAILROAD PLANS
WP 3.3.2.1 & 3.3.2.2
NOVEMBER 24, 2015

DEPARTMENT OF TRANSPORTATION
FEDERAL HIGHWAY ADMINISTRATOR
APPROVED _____ DATE _____

DIRECTOR OF PROJECT DELIVERY
APPROVED _____ DATE _____

PROJECT MANAGER : MAHENDRA THILLIYAR, P.E.

PROJECT NAME : RYEGATE
PROJECT NUMBER : STP CULV(10)

SHEET 1 OF 29 SHEETS

ENGINEERS CONSTRUCTION
DuBois & King inc.

INDEX OF SHEETS

1	TITLE SHEET
2	INDEX OF SHEETS
3	CONVENTIONAL SYMBOLOGY LEGEND SHEET
4	GENERAL NOTES & QUANTITIES
5	TIE SHEET
6	TYPICAL ROADWAY AND RAILROAD SECTIONS SHEET
7	DETAIL SHEET
8	LAYOUT SHEET
9	US ROUTE 5 AND WACR PROFILE SHEET
10	ACCESS ROADS LAYOUT SHEET
11	ACCESS ROAD 1 PROFILE SHEET
12	ACCESS ROAD 2 PROFILE SHEET
13-16	US ROUTE 5 CROSS SECTION SHEETS 1-4
17-22	WACR CROSS SECTION SHEETS 1-6
23-24	ACCESS ROAD 1 CROSS SECTION SHEETS 1-2
25-29	ACCESS ROAD 2 CROSS SECTION SHEETS 1-5

VAOT STANDARDS

B-5	06/01/1994
B-71	07/08/2005
E-121	08/08/1995
F-4	06/01/1994
G-1	02/10/2014
G-1D	02/10/2014
G-19	11/15/2002
T-42	04/09/2014
T-45	01/02/2013

RELEASED FOR CONSTRUCTION

NOVEMBER 24, 2015

PROJECT NAME: RYEGATE

PROJECT NUMBER: STP CULV(10)

ENGINEERS CONSTRUCTION — DuBois & King inc.

FILE NAME: z06cl56index.dgn
PROJECT LEADER: E. DETRICK
DESIGNED BY: R. BARNES
INDEX OF SHEETS

PLOT DATE: 11/24/2015
DRAWN BY: R. BARNES
CHECKED BY: E. DETRICK
SHEET 2 OF 29

GENERAL INFORMATION

SYMBOLOGY LEGEND NOTE

THE SYMBOLOGY ON THIS SHEET IS INTENDED TO COVER STANDARD CONVENTIONAL SYMBOLOGY. THE SYMBOLOGY IS USED FOR EXISTING & PROPOSED FEATURES WITH HEAVIER LINEWEIGHT, IN COMBINATION WITH PROJECT ANNOTATION, AS NOTED ON PROJECT PLAN SHEETS. THIS LEGEND SHEET COVERS THE BASICS. SYMBOLOGY ON PLANS MAY VARY, PLAN ANNOTATIONS AND NOTES SHOULD BE USED TO CLARIFY AS NEEDED.

R.O.W. ABBREVIATIONS (CODES) & SYMBOLS

POINT	CODE	DESCRIPTION
	CH	CHANNEL EASEMENT
	CONST	CONSTRUCTION EASEMENT
	CUL	CULVERT EASEMENT
	D&C	DISCONNECT & CONNECT
	DIT	DITCH EASEMENT
	DR	DRAINAGE EASEMENT
	DRIVE	DRIVEWAY EASEMENT
	EC	EROSION CONTROL
	HWY	HIGHWAY EASEMENT
	I&M	INSTALL & MAINTAIN EASEMENT
	LAND	LANDSCAPE EASEMENT
	R&RES	REMOVE & RESET
	R&REP	REMOVE & REPLACE
	SR	SLOPE RIGHT
	UE	UTILITY EASEMENT
	(P)	PERMANENT EASEMENT
	(T)	TEMPORARY EASEMENT
■	BNDNS	BOUND SET
⊡	BNDNS	BOUND TO BE SET
●	IPNS	IRON PIN SET
◎	IPNS	IRON PIN TO BE SET
⊠	CALC	EXISTING ROW POINT
○	PROW	PROPOSED ROW POINT
[LENGTH]		LENGTH CARRIED ON NEXT SHEET

COMMON TOPOGRAPHIC POINT SYMBOLS

POINT	CODE	DESCRIPTION
	APL	BOUND APPARENT LOCATION
	BM	BENCHMARK
	BND	BOUND
	CB	CATCH BASIN
	COMB	COMBINATION POLE
	DITHR	DROP INLET THROATED DNC
	EL	ELECTRIC POWER POLE
	FPOLE	FLAGPOLE
	GASFIL	GAS FILLER
	GP	GUIDE POST
	GSO	GAS SHUT OFF
	GUY	GUY POLE
	GUYW	GUY WIRE
	GV	GATE VALUE
	H	TREE HARDWOOD
	HCTRL	CONTROL HORIZONTAL
	HVCTRL	CONTROL HORIZ. & VERTICAL
	HYD	HYDRANT
	IP	IRON PIN
	IPIPE	IRON PIPE
	LI	LIGHT - STREET OR YARD
	MB	MAILBOX
	MH	MANHOLE (MH)
	MM	MILE MARKER
	PM	PARKING METER
	PMK	PROJECT MARKER
	POST	POST STONE/WOOD
	RRSIG	RAILROAD SIGNAL
	RRSL	RAILROAD SWITCH LEVER
	S	TREE SOFTWOOD
	SAT	SATELLITE DISH
	SHRUB	SHRUB
	SIGN	SIGN
	STUMP	STUMP
	TEL	TELEPHONE POLE
	TIE	TIE
	TSIGN	SIGN W/DOUBLE POST
	VCTRL	CONTROL VERTICAL
	WELL	WELL
	WSO	WATER SHUT OFF

THESE ARE COMMON VAOT SURVEY POINT SYMBOLS FOR EXISTING FEATURES, ALSO USED FOR PROPOSED FEATURES WITH HEAVIER LINEWEIGHT, IN COMBINATION WITH PROPOSED ANNOTATION.

PROPOSED GEOMETRY CODES

CODE	DESCRIPTION
PC	POINT OF CURVATURE
PI	POINT OF INTERSECTION
CC	CENTER OF CURVE
PT	POINT OF TANGENCY
PCC	POINT OF COMPOUND CURVE
PRC	POINT OF REVERSE CURVE
POB	POINT OF BEGINNING
POE	POINT OF ENDING
STA	STATION PREFIX
AH	AHEAD STATION SUFFIX
BK	BACK STATION SUFFIX
D	CURVE DEGREE OF (100FT)
R	CURVE RADUIS OF
T	CURVE TANGENT LENGTH
L	CURVE LENGTH OF
E	CURVE EXTERNAL DISTANCE

UTILITY SYMBOLOGY

UNDERGROUND UTILITIES

- UGU — UTILITY (GENERIC-UNKNOWN)
- UT — TELEPHONE
- UE — ELECTRIC
- UC — CABLE (TV)
- UEC — ELECTRIC+CABLE
- UET — ELECTRIC+TELEPHONE
- UCT — CABLE+TELEPHONE
- UECT — ELECTRIC+CABLE+TELEP.
- G — GAS LINE
- W — WATER LINE
- S — SANITARY SEWER (SEPTIC)

ABOVE GROUND UTILITIES (AERIAL)

- AGU — UTILITY (GENERIC-UNKNOWN)
- T — TELEPHONE
- E — ELECTRIC
- C — CABLE (TV)
- EC — ELECTRIC+CABLE
- ET — ELECTRIC+TELEPHONE
- AER E&T — ELECTRIC+TELEPHONE
- CT — CABLE+TELEPHONE
- ECT — ELECTRIC+CABLE+TELEP.
- UTILITY POLE GUY WIRE

PROJECT CONSTRUCTION SYMBOLOGY

PROJECT DESIGN & LAYOUT SYMBOLOGY

- CZ — CLEAR ZONE
- PLAN LAYOUT MATCHLINE

PROJECT CONSTRUCTION FEATURES

- TOP OF CUT SLOPE
- TOE OF FILL SLOPE
- STONE FILL
- BOTTOM OF DITCH ℄
- CULVERT PROPOSED
- STRUCTURE SUBSURFACE
- PDF — PDF — PROJECT DEMARCATION FENCE
- BF — BF — BARRIER FENCE
- TREE PROTECTION ZONE (TPZ)
- STRIPING LINE REMOVAL
- SHEET PILES

CONVENTIONAL BOUNDARY SYMBOLOGY

BOUNDARY LINES

- TOWN LINE — TOWN BOUNDARY LINE
- COUNTY LINE — COUNTY BOUNDARY LINE
- STATE LINE — STATE BOUNDARY LINE
- PROPOSED STATE R.O.W. (LIMITED ACCESS)
- PROPOSED STATE R.O.W.
- STATE ROW (LIMITED ACCESS)
- STATE ROW
- TOWN ROW
- PERMANENT EASEMENT LINE (P)
- TEMPORARY EASEMENT LINE (T)
- SURVEY LINE
- P/L — PROPERTY LINE (P/L)
- SR SR SR — SLOPE RIGHTS
- 6F — 6F — 6F PROPERTY BOUNDARY
- 4F — 4F — 4F PROPERTY BOUNDARY
- HAZ — HAZ — HAZARDOUS WASTE

EPSC LAYOUT PLAN SYMBOLOGY

EPSC MEASURES

- FILTER CURTAIN
- SILT FENCE
- SILT FENCE WOVEN WIRE
- CHECK DAM
- DISTURBED AREAS REQUIRING RE-VEGETATION
- EROSION MATTING

SEE EPSC DETAIL SHEETS FOR ADDITIONAL SYMBOLOGY

ENVIRONMENTAL RESOURCES

- WETLAND BOUNDARY
- RIPARIAN BUFFER ZONE
- WETLAND BUFFER ZONE
- SOIL TYPE BOUNDARY
- T&E — THREATENED & ENDANGERED SPECIES
- HAZ — HAZ — HAZARDOUS WASTE AREA
- AG — AGRICULTURAL LAND
- HABITAT — FISH & WILDLIFE HABITAT
- FLOOD PLAIN — FLOOD PLAIN
- OHW — ORDINARY HIGH WATER (OHW)
- STORM WATER
- USDA FOREST SERVICE LANDS
- WILDLIFE HABITAT SUIT/CONN

ARCHEOLOGICAL & HISTORIC

- ARCH — ARCHEOLOGICAL BOUNDARY
- HISTORIC DIST — HISTORIC DISTRICT BOUNDARY
- HISTORIC — HISTORIC AREA
- (H) — HISTORIC STRUCTURE

CONVENTIONAL TOPOGRAPHIC SYMBOLOGY

EXISTING FEATURES

- ROAD EDGE PAVEMENT
- ROAD EDGE GRAVEL
- DRIVEWAY EDGE
- DITCH
- FOUNDATION
- FENCE (EXISTING)
- FENCE WOOD POST
- FENCE STEEL POST
- GARDEN
- ROAD GUARDRAIL
- RAILROAD TRACKS
- CULVERT (EXISTING)
- STONE WALL
- WALL
- WOOD LINE
- BRUSH LINE
- HEDGE
- BODY OF WATER EDGE
- LEDGE EXPOSED

RELEASED FOR CONSTRUCTION

NOVEMBER 24, 2015

PROJECT NAME: RYEGATE
PROJECT NUMBER: STP CULV(10)

ECI ENGINEERS CONSTRUCTION — DuBois & King INC.

FILE NAME: z06cl56leg.dgn
PROJECT LEADER: E. DETRICK
DESIGNED BY: R. BARNES
CONVENTIONAL SYMBOLOGY LEGEND SHEET

PLOT DATE: 11/24/2015
DRAWN BY: R. BARNES
CHECKED BY: E. DETRICK
SHEET 3 OF 29

PROJECT NOTES

1. ALL CONSTRUCTION ACTIVITIES WILL BE IN ACCORDANCE WITH THE VERMONT AGENCY OF TRANSPORTATION'S STANDARD SPECIFICATIONS FOR CONSTRUCTION, 2011 EDITION, LATEST REVISIONS, AND CURRENT DESIGN STANDARDS FOR CONSTRUCTION.
2. THE OWNER OF THIS PROJECT IS THE STATE OF VERMONT.
3. TOPOGRAPHY AND PLANIMETRIC DATA SHOWN ON THESE PLANS ARE BASED ON A FIELD SURVEY COMPLETED BY VTRANS BETWEEN 2006 AND 2010.
4. RESTORATION OF DISTURBED AREAS: RESTORE DISTURBED AREAS, EXCEPT STONE FILL AREAS, WITH 2 INCHES TOPSOIL, SEED, FERTILIZER, AGRICULTURAL LIMESTONE AND MULCH, UNLESS THE ENGINEER DIRECTS THE USE OF SUITABLE EXCAVATED MATERIAL. PAYMENT WILL BE INCIDENTAL TO THE CONTRACT.
5. THE FINISH GRADE SLOPES AND DITCHES WILL BE CONSTRUCTED AS SHOWN ON THE PLAN, DETAILS AND CROSS SECTIONS. TURF ESTABLISHMENT WILL BE PERFORMED IN ACCORDANCE WITH SECTION 651 OF THE VERMONT AGENCY OF TRANSPORTATION SPECIFICATIONS AND THE SPECIFICATIONS INCLUDED ON THESE PLANS. ALL FILL WILL BE PLACED IN ACCORDANCE WITH SECTION 203 OF THE STANDARD SPECIFICATIONS.
6. SLOPE ROUNDING: ALL CUT SLOPES WILL BE ROUNDED IN ACCORDANCE WITH VAOT STANDARD SHEET B-5.
7. AT COMPLETION OF GRADING, THE SLOPES, DITCHES, AND ALL DISTURBED AREAS WILL BE SMOOTH AND FREE OF POCKETS WITH SUFFICIENT SLOPE TO ENSURE DRAINAGE.
8. STATIONING SHOWN FOR PAY ITEMS IS APPROXIMATE AND ACTUAL WORK WILL BE CONDUCTED PER FIELD CONDITIONS.

SIGN NOTES

1. NEW SIGN AT STA. 83+04 LT WILL BE A W3-5(40) AND WILL BE SIZED 36"X36". IT WILL BE MOUNTED ON 2 (TWO) 2 INCH SQUARE TUBE SIGN POSTS WITH ANCHORS. SIGN WILL BE YELLOW BACKGROUND WITH BLACK AND WHITE LEGEND.
2. THE NEW SIGNS THAT WILL BE MOUNTED AT STA. 85+25 RT AND STA. 85+60 LT ARE VD-701 SIGNS THAT ARE SIZED 6"X10". THEY WILL BE MOUNTED ON 1.75 INCH SQUARE TUBE SIGN POSTS WITH ANCHORS. SIGNS WILL BE WHITE WITH BLACK LEGEND. THESE SIGNS WILL BE FABRICATED IN ACCORDANCE WITH VAOT STANDARD DRAWING T-42.

Permanent Erosion Matting changed to Temporary Erosion Matting Per RFI #42

PROJECT QUANTITIES FOR TESTING/CERTIFICATION

ITEM NO.	ITEM DESCRIPTION	UNITS	QUANTITY
203.30	EARTH BORROW	CY	4250
203.31	SAND BORROW	CY	260
301.26	SUBBASE OF CRUSHED GRAVEL, FINE GRADED	CY	250
301.35	SUBBASE OF DENSE GRADED CRUSHED STONE	CY	1000
402.10	AGGREGATE SHOULDERS, IN PLACE	CY	40
404.65	EMULSIFIED ASPHALT	CWT	10
406.25	BITUMINOUS CONCRETE PAVEMENT	TON	525
613.10	STONE FILL , TYPE I	CY	2700
620.16	GATE FOR CHAIN LINK FENCE, 6 FEET	LF	30
621.2	STEEL BEAM GUARDRAIL, GALVANIZED	LF	960
621.51	MANUFACTURED TERMINAL SECTION, TANGENT	EA	2
621.6	ANCHOR FOR STEEL BEAM RAIL	EA	2
646.40	DURABLE 4 INCH WHITE LINE	LF	1200
646.41	DURABLE 4 INCH YELLOW LINE	LF	1200
646.60	TEMPORARY 4 INCH WHITE LINE	LF	2400
646.61	TEMPORARY 4 INCH WHITE LINE	LF	2400
649.11	GEOTEXTILE FOR ROADBED SEPARATOR	SY	1450
649.21	GEOTEXTILE UNDER RAILROAD BALLAST	SY	600
651.15	SEED	LB	350
651.18	FERTILIZER	LB	600
651.20	AGRICULTURAL LIMESTONE	TON	3
651.25	HAY MULCH	TON	3
~~653.21~~	~~PERMANENT EROSION MATTING~~	SY	11000
675.20	TRAFFIC SIGNS, TYPE A	SF	10
675.341	SQUARE TUBE SIGN POST AND ANCHOR	LF	50
900.608	SPECIAL PROVISION (RAILROAD BALLAST)	CY	250

SCALE 1" = 40'-0"
40 0 40

ECI ENGINEERS CONSTRUCTION — DuBois & King INC.

RELEASED FOR CONSTRUCTION
NOVEMBER 24, 2015

PROJECT NAME: RYEGATE
PROJECT NUMBER: STP CULV(10)

FILE NAME: z06c156bdr_GENERAL NOTES.dgn PLOT DATE: 11/24/2015
PROJECT LEADER: E. DETRICK DRAWN BY: J. MERRIFIELD
DESIGNED BY: J. MERRIFIELD CHECKED BY: E. DETRICK
GENERAL NOTES SHEET 4 OF 29

TRAVERSE TIES

HVCTRL #10

NORTH = 622875.361
EAST = 1755453.491
ELEV. = 442.08
SCALE: 1" = 40'

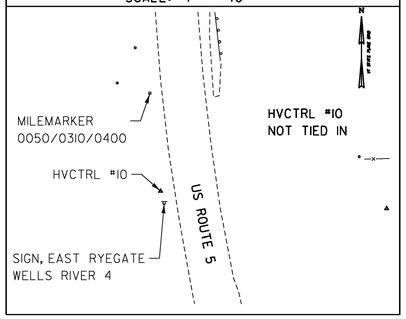

HVCTRL #2

NORTH = 623205.063
EAST = 1755371.937
ELEV. = 447.59
SCALE: 1" = 40'

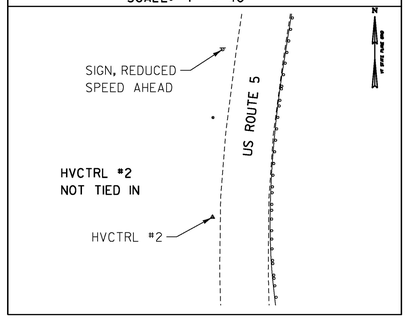

HVCTRL #56

NORTH = 622874.156
EAST = 1755455.202
ELEV. = 506.28
SCALE: 1" = 40'

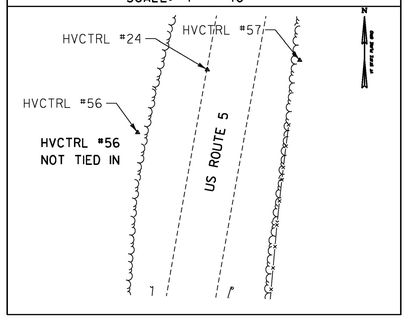

HVCTRL #57

NORTH = 623914.542
EAST = 1755545.810
ELEV. = 506.00
SCALE: 1" = 40'

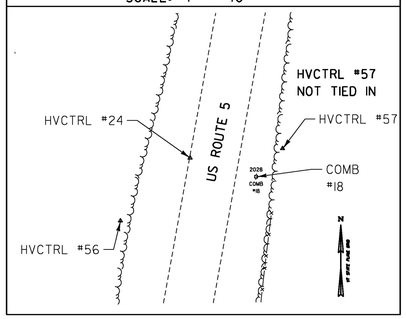

HVCTRL #23

NORTH = 624341.085
EAST = 1755581.317
ELEV. = 510.05
SCALE: 1" = 40'

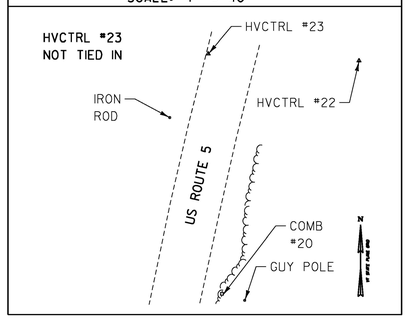

TRAVERSE TIES

HVCTRL #18

NORTH = 623062.523
EAST = 1755609.379
ELEV. = 480.25
SCALE: 1" = 40'

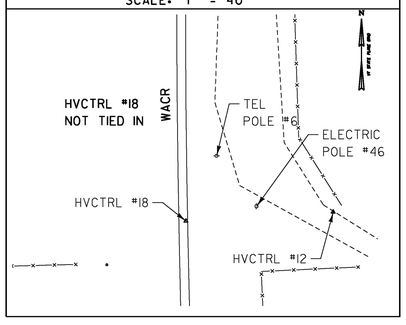

HVCTRL #59

NORTH = 623803.614
EAST = 1755702.653
ELEV. = 502.37
SCALE: 1" = 40'

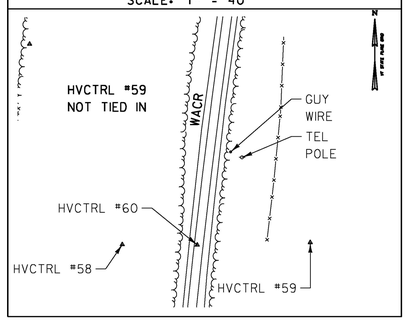

HVCTRL #15

NORTH = 623988.495
EAST = 1755644.375
ELEV. = 492.11
SCALE: 1" = 40'

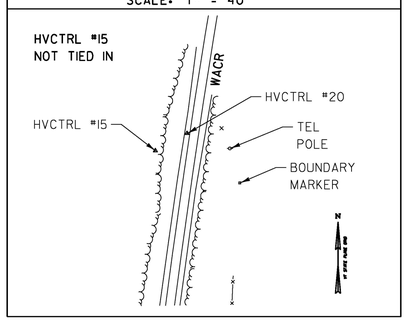

PI COORDINATES

US ROUTE 5

PI	STATION	NORTHING	EASTING
POB	STA. 80+14.89	623007.43	1755404.05
PI	STA. 81+95.30	623185.84	1755377.21
POE	STA. 91+61.62	624139.26	1755550.45

WACR

PI	STATION	NORTHING	EASTING
POB	STA. 2356+73.00	623013.51	1755605.56
PI	STA. 2362+05.43	623545.93	1755609.24
PI	STA. 2368+57.68	624194.12	1755687.46
POE	STA. 2371+37.13	624465.47	1755757.46

ACCESS ROAD 1

PI	STATION	NORTHING	EASTING
POB	STA. 0+00.00	623414.51	1755418.75
PI	STA. 0+44.21	623450.85	1755393.59
PI	STA. 1+07.24	623515.40	1755405.32
PI	STA. 1+51.89	623559.95	1755397.75
PI	STA. 1+98.01	623598.32	1755371.25
POE	STA. 2+71.01	623664.76	1755414.86

ACCESS ROAD 2

PI	STATION	NORTHING	EASTING
POB	STA. 20+00.00	623115.73	1755391.25
PI	STA. 22+09.00	623290.16	1755506.39
POE	STA. 24+40.57	623522.56	1755525.46

DATUM
VERTICAL NAVD 88
HORIZONTAL NAD 83

RELEASED FOR CONSTRUCTION
NOVEMBER 24, 2015

PROJECT NAME: RYEGATE
PROJECT NUMBER: STP CULV(10)

FILE NAME: z06c156t1.dgn
PROJECT LEADER: E. DETRICK
DESIGNED BY: R. BARNES
TIE SHEET

PLOT DATE: 11/24/2015
DRAWN BY: J. GOODALL
CHECKED BY: E. DETRICK
SHEET 5 OF 29

ECI ENGINEERS CONSTRUCTION — DuBois & King inc.

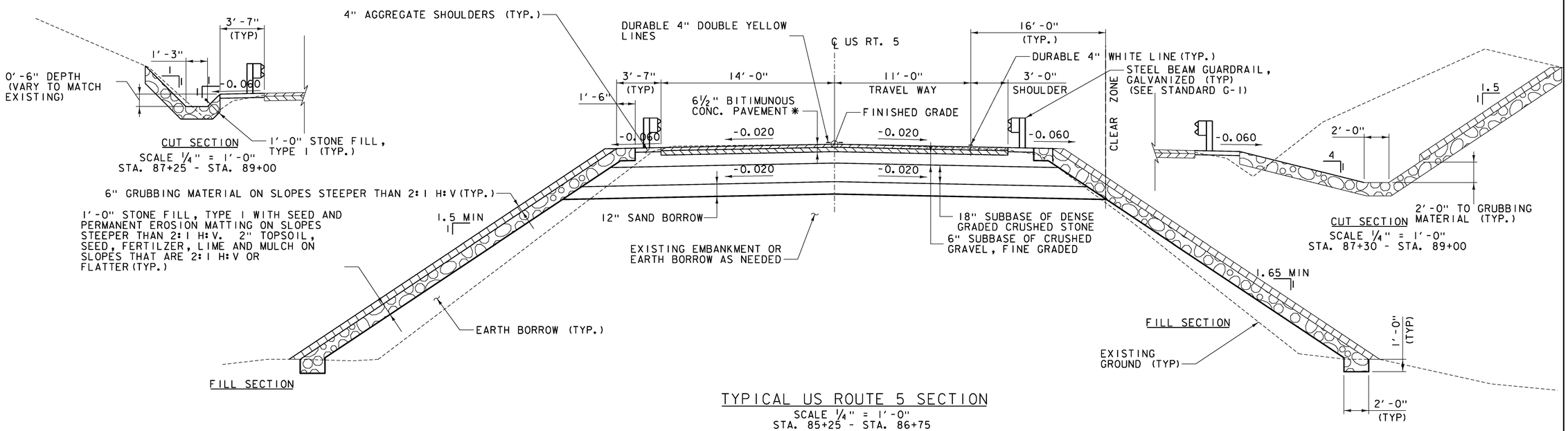

TYPICAL US ROUTE 5 SECTION

SCALE ¼" = 1'-0"
STA. 85+25 - STA. 86+75

* 1 - 1½" LIFT OF TYPE IVS OVER
2 - 2½" LIFTS OF TYPE IIS

TACK COAT: EMULSIFIED ASPHALT IS TO BE APPLIED AT A RATE OF 0.025 GAL/SY BETWEEN SUCCESSIVE COVERS OF PAVEMENT AND 0.040 GAL/SY BETWEEN SUBBASE AND BASE LAYER OF PAVEMENT

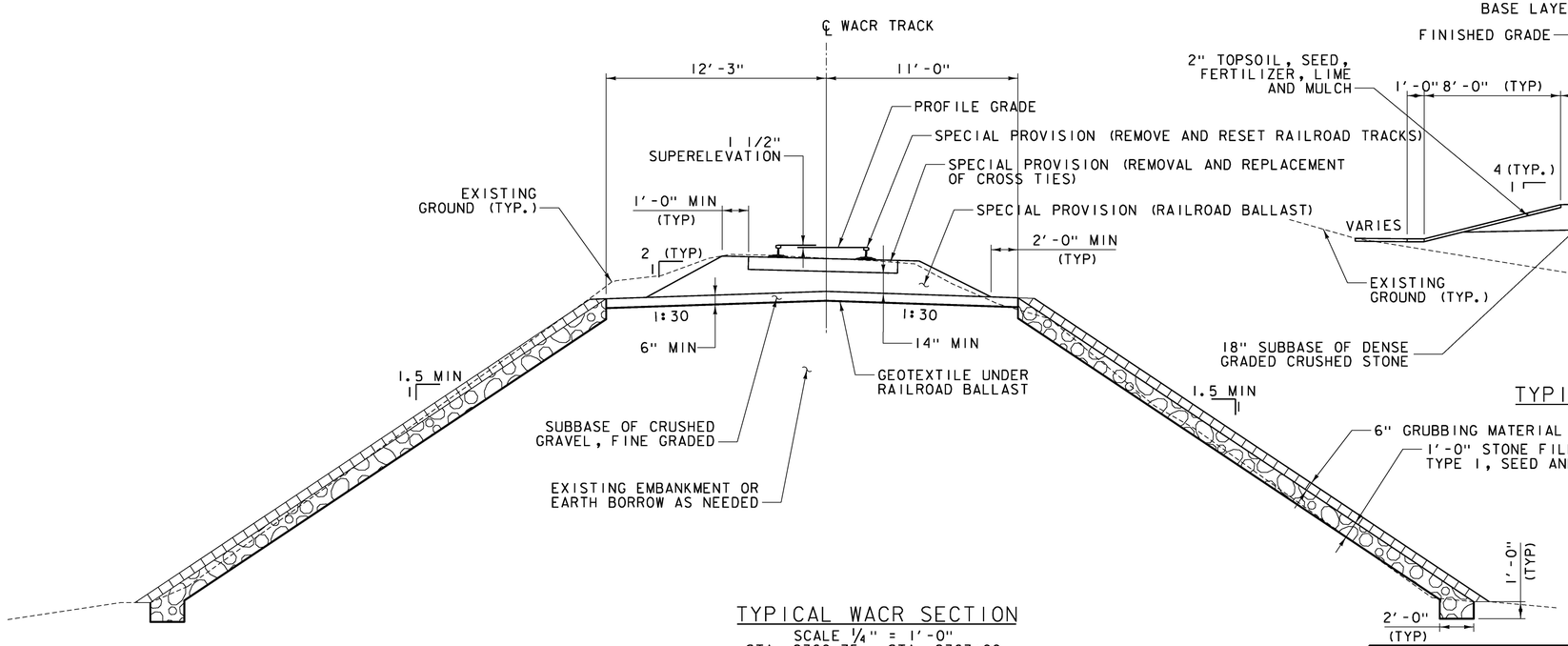

TYPICAL WACR SECTION

SCALE ¼" = 1'-0"
STA. 2360+75 - STA. 2363+00

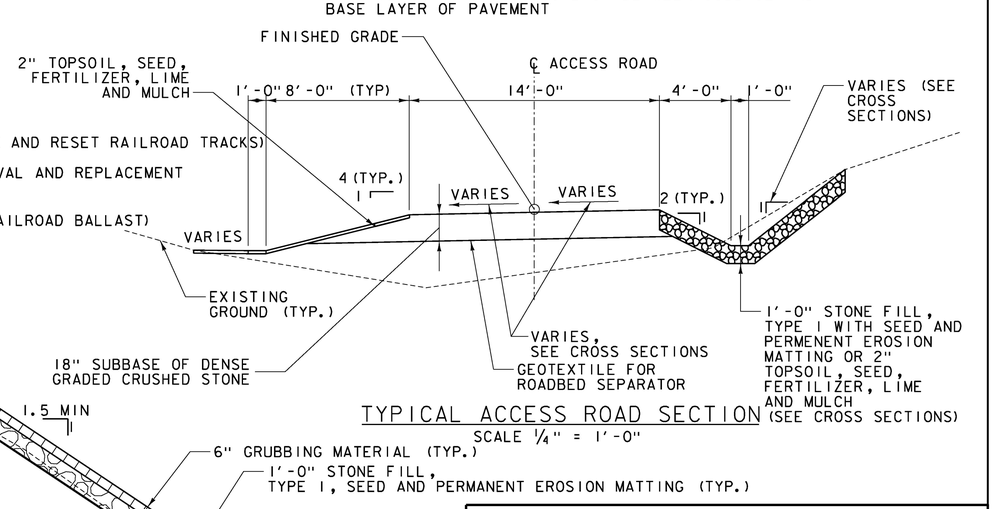

TYPICAL ACCESS ROAD SECTION

SCALE ¼" = 1'-0"

RELEASED FOR CONSTRUCTION
NOVEMBER 24, 2015

PROJECT NAME: RYEGATE
PROJECT NUMBER: STP CULV(10)

FILE NAME: z06cl56typrdy.dgn
PROJECT LEADER: E. DETRICK
DESIGNED BY: B. BRESLEND
TYPICAL ROADWAY AND RAILROAD SECTIONS

PLOT DATE: 11/24/2015
DRAWN BY: B. BRESLEND
CHECKED BY: E. DETRICK
SHEET 6 OF 29

ENGINEERS CONSTRUCTION — DuBois & King inc.

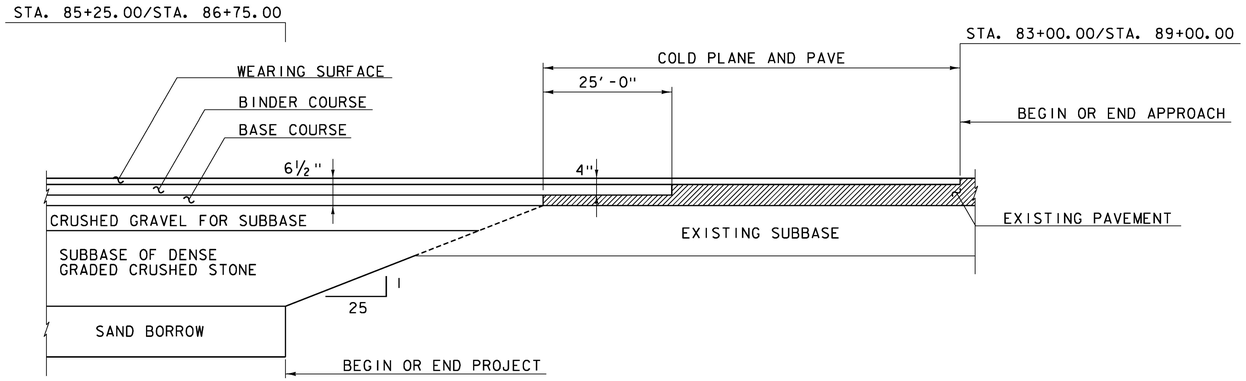

US ROUTE 5 APPROACH DETAIL

NOT TO SCALE

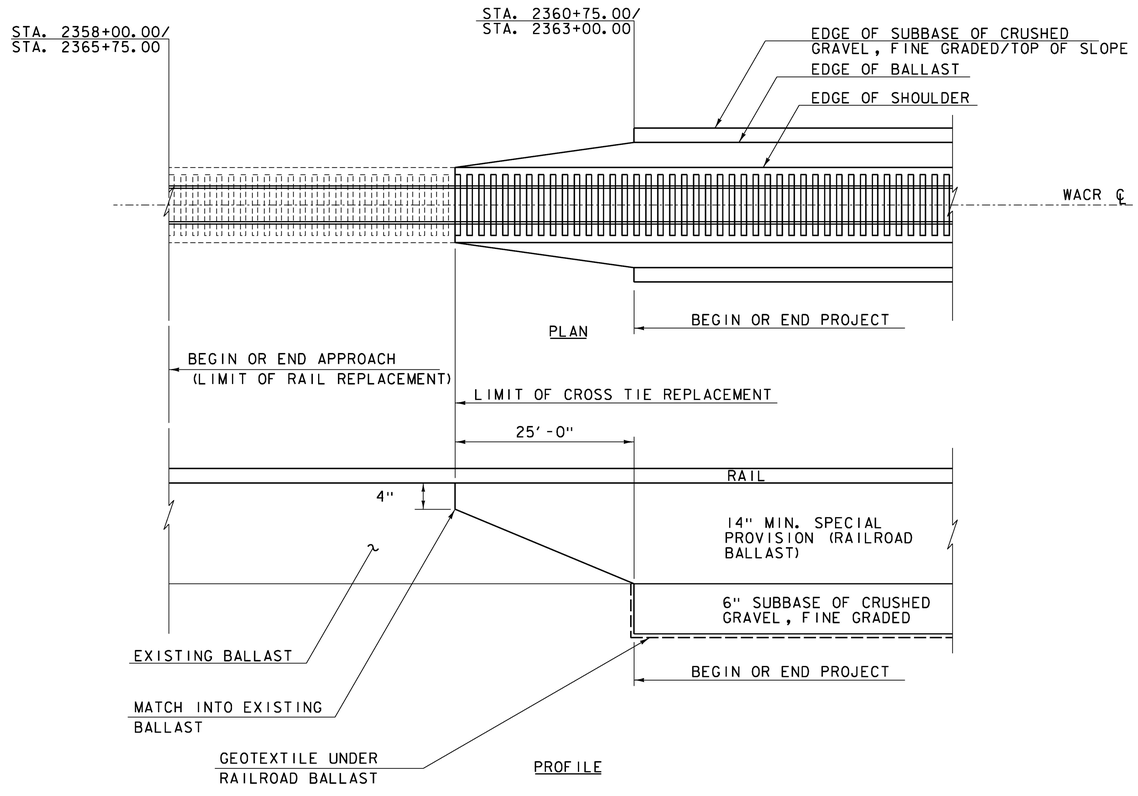

WACR APPROACH DETAIL

NOT TO SCALE

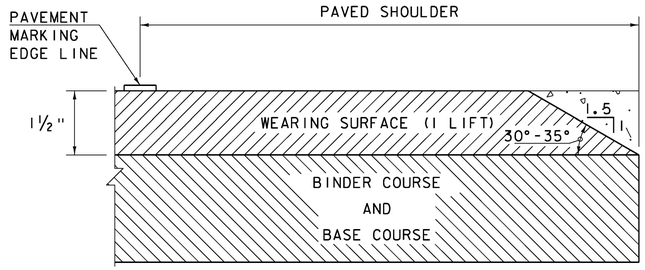

SAFETY EDGE DETAIL

NOT TO SCALE

NOTE:

1. THE EDGE OF PAVEMENT SHALL BE FORMED IN SUCH A WAY THAT THE BITUMINOUS CONCRETE PAVEMENT IS EXTRUDED OR COMPRESSED TO FORM THE 30 TO 35 DEGREE ANGLE. DEVICES THAT SIMPLY STRIKE-OFF THE MIX WITHOUT PROVIDING ANY COMPACTIVE EFFORT WILL NOT BE ALLOWED.

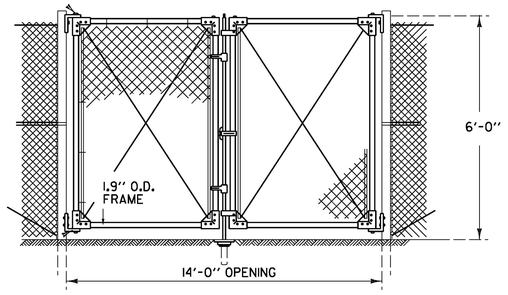

CHAIN LINK FENCE GATE DETAIL

NOT TO SCALE

NOTE:

1. SEE STANDARD DRAWING F-4 FOR ADDITIONAL DETAILS.

RELEASED FOR CONSTRUCTION

NOVEMBER 24, 2015

PROJECT NAME: RYEGATE
PROJECT NUMBER: STP CULV(10)

ENGINEERS CONSTRUCTION — DuBois & King inc.

FILE NAME: z06c156typrdy.dgn
PROJECT LEADER: E. DETRICK
DESIGNED BY: B. BRESLEND
DETAILS

PLOT DATE: 11/24/2015
DRAWN BY: B. BRESLEND
CHECKED BY: E. DETRICK
SHEET 7 OF 29

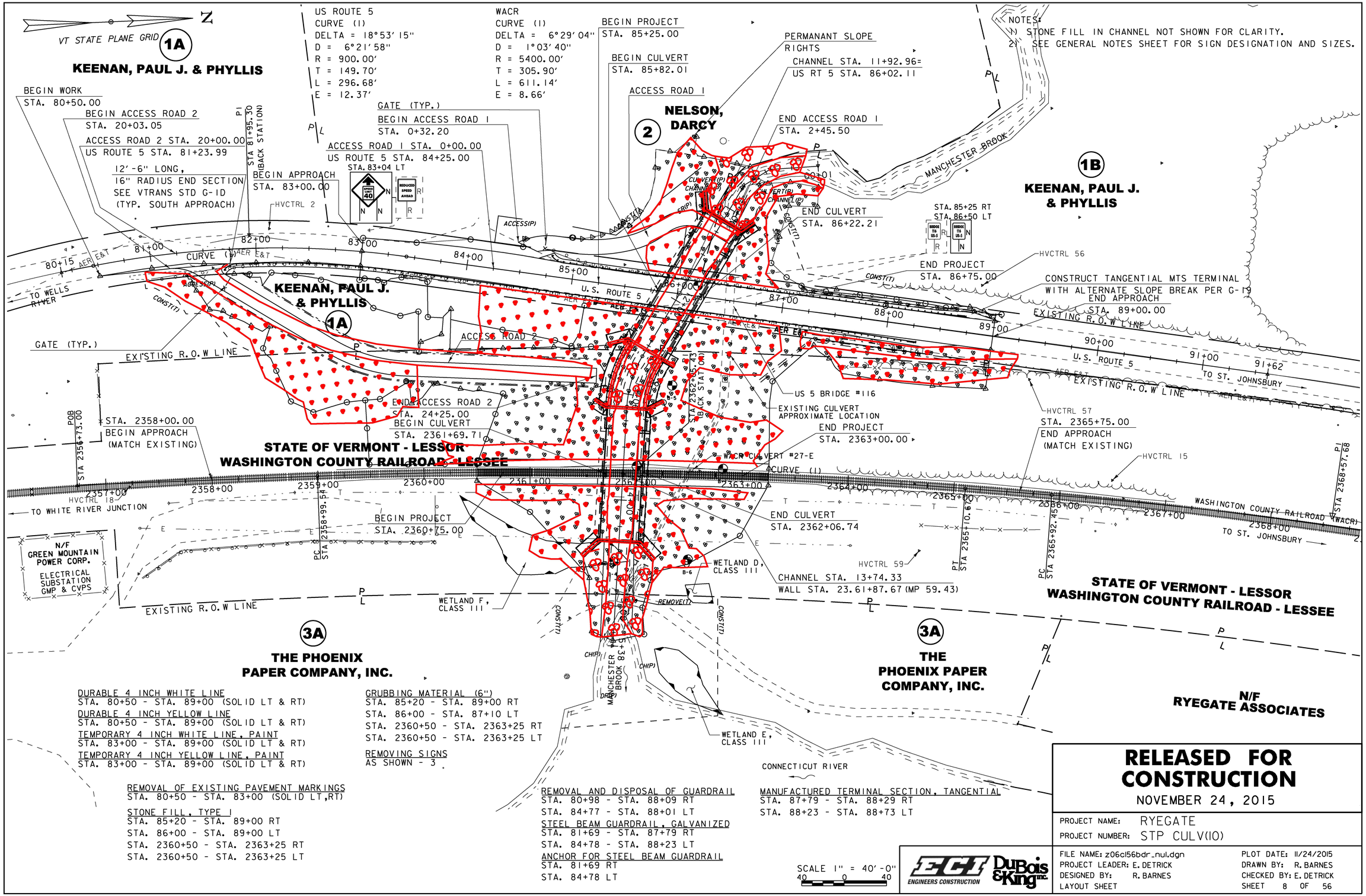

DURABLE 4 INCH WHITE LINE
STA. 80+50 - STA. 89+00 (SOLID LT & RT)

DURABLE 4 INCH YELLOW LINE
STA. 80+50 - STA. 89+00 (SOLID LT & RT)

TEMPORARY 4 INCH WHITE LINE, PAINT
STA. 83+00 - STA. 89+00 (SOLID LT & RT)

TEMPORARY 4 INCH YELLOW LINE, PAINT
STA. 83+00 - STA. 89+00 (SOLID LT & RT)

REMOVAL OF EXISTING PAVEMENT MARKINGS
STA. 80+50 - STA. 83+00 (SOLID LT,RT)

STONE FILL, TYPE I
STA. 85+20 - STA. 89+00 RT
STA. 86+00 - STA. 89+00 LT
STA. 2360+50 - STA. 2363+25 RT
STA. 2360+50 - STA. 2363+25 LT

GRUBBING MATERIAL (6")
STA. 85+20 - STA. 89+00 RT
STA. 86+00 - STA. 87+10 LT
STA. 2360+50 - STA. 2363+25 RT
STA. 2360+50 - STA. 2363+25 LT

REMOVING SIGNS
AS SHOWN - 3

REMOVAL AND DISPOSAL OF GUARDRAIL
STA. 80+98 - STA. 88+09 RT
STA. 84+77 - STA. 88+01 LT

STEEL BEAM GUARDRAIL, GALVANIZED
STA. 81+69 - STA. 87+79 RT
STA. 84+78 - STA. 88+23 LT

ANCHOR FOR STEEL BEAM GUARDRAIL
STA. 81+69 RT
STA. 84+78 LT

MANUFACTURED TERMINAL SECTION, TANGENTIAL
STA. 87+79 - STA. 88+29 RT
STA. 88+23 - STA. 88+73 LT

SCALE 1" = 40'-0"
40 0 40

RELEASED FOR CONSTRUCTION

NOVEMBER 24, 2015

PROJECT NAME: RYEGATE
PROJECT NUMBER: STP CULV(10)

ECI ENGINEERS CONSTRUCTION
DuBois & King inc.

FILE NAME: z06cl56bdr_nul.dgn
PROJECT LEADER: E. DETRICK
DESIGNED BY: R. BARNES
LAYOUT SHEET

PLOT DATE: 11/24/2015
DRAWN BY: R. BARNES
CHECKED BY: E. DETRICK
SHEET 8 OF 56

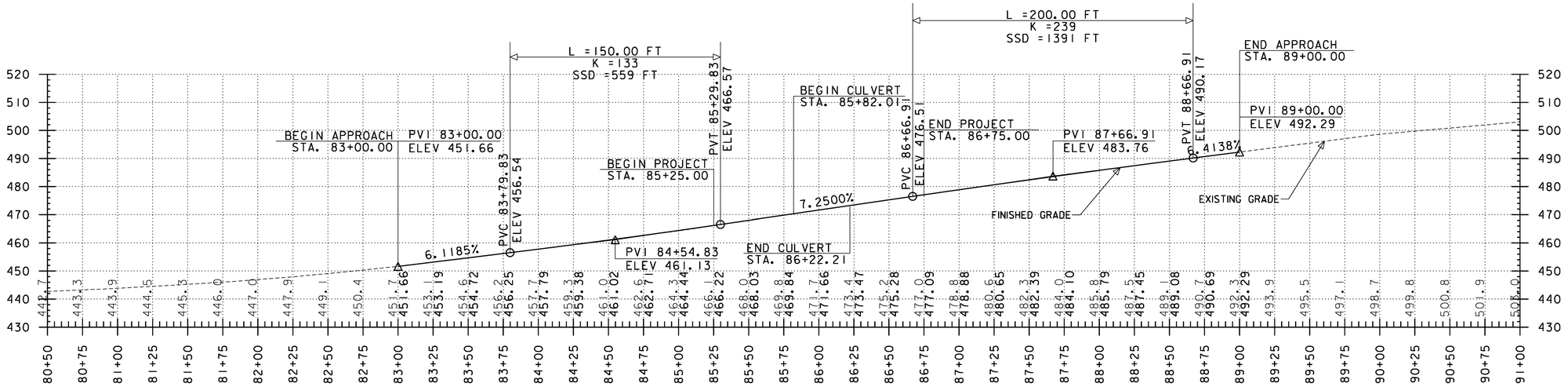

THE GRADES SHOWN TO THE TENTH ARE THE EXISTING GROUND ELEVATIONS ALONG THE NEW ALIGNMENT. THE GRADES SHOWN TO THE NEAREST HUNDREDTH ARE THE PROPOSED GRADES FOR THE NEW ALIGNMENT.

US ROUTE 5 PROFILE

SCALE: 1" = 40' HORZ.
1" = 20' VERT.

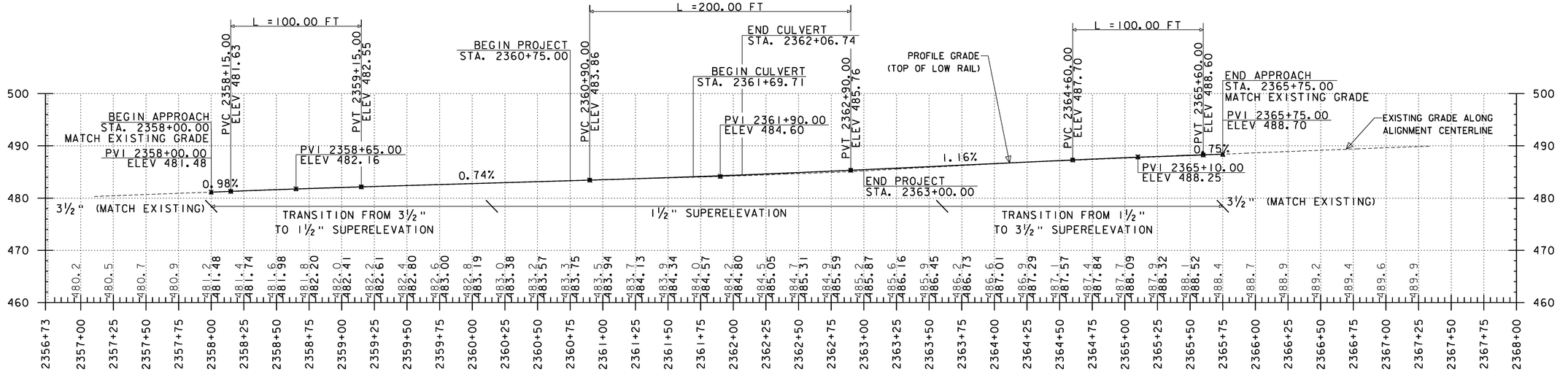

THE GRADES SHOWN TO THE TENTH ARE THE EXISTING GROUND ELEVATIONS ALONG THE NEW ALIGNMENT. THE GRADES SHOWN TO THE NEAREST HUNDREDTH ARE THE PROPOSED GRADES FOR TOP OF LOW RAIL.

WACR PROFILE

SCALE: 1" = 40' HORZ.
1" = 10' VERT.

NOTE: WACR PROFILE SHOWN IS FOR LOW RAIL. EXISTING GRADES ARE THE GROUND ELEVATIONS ALONG ALIGNMENT CENTERLINE.

RELEASED FOR CONSTRUCTION
NOVEMBER 24, 2015

PROJECT NAME: RYEGATE
PROJECT NUMBER: STP CULV(10)

ECI ENGINEERS CONSTRUCTION — DuBois & King Inc.

FILE NAME: z06cl56pro.dgn
PROJECT LEADER: E. DETRICK
DESIGNED BY: B. BRESLEND
US ROUTE 5 AND WACR PROFILE SHEET

PLOT DATE: 11/24/2015
DRAWN BY: B. BRESLEND
CHECKED BY: E. DETRICK
SHEET 9 OF 29

ACCESS ROAD 1
CURVE (1)
DELTA = 45°00'00"
D = 95°29'35"
R = 60.00'
T = 24.85'
L = 47.12'
E = 4.94'

ACCESS ROAD 1
CURVE (2)
DELTA = 19°57'40"
D = 38°11'50"
R = 150.00'
T = 26.40'
L = 52.26'
E = 2.30'

ACCESS ROAD 1
CURVE (3)
DELTA = 24°56'58"
D = 71°37'11"
R = 80.00'
T = 17.70'
L = 34.84'
E = 1.93'

ACCESS ROAD 1
CURVE (4)
DELTA = 67°54'38"
D = 143°14'22"
R = 40.00'
T = 26.93'
L = 47.41'
E = 8.22'

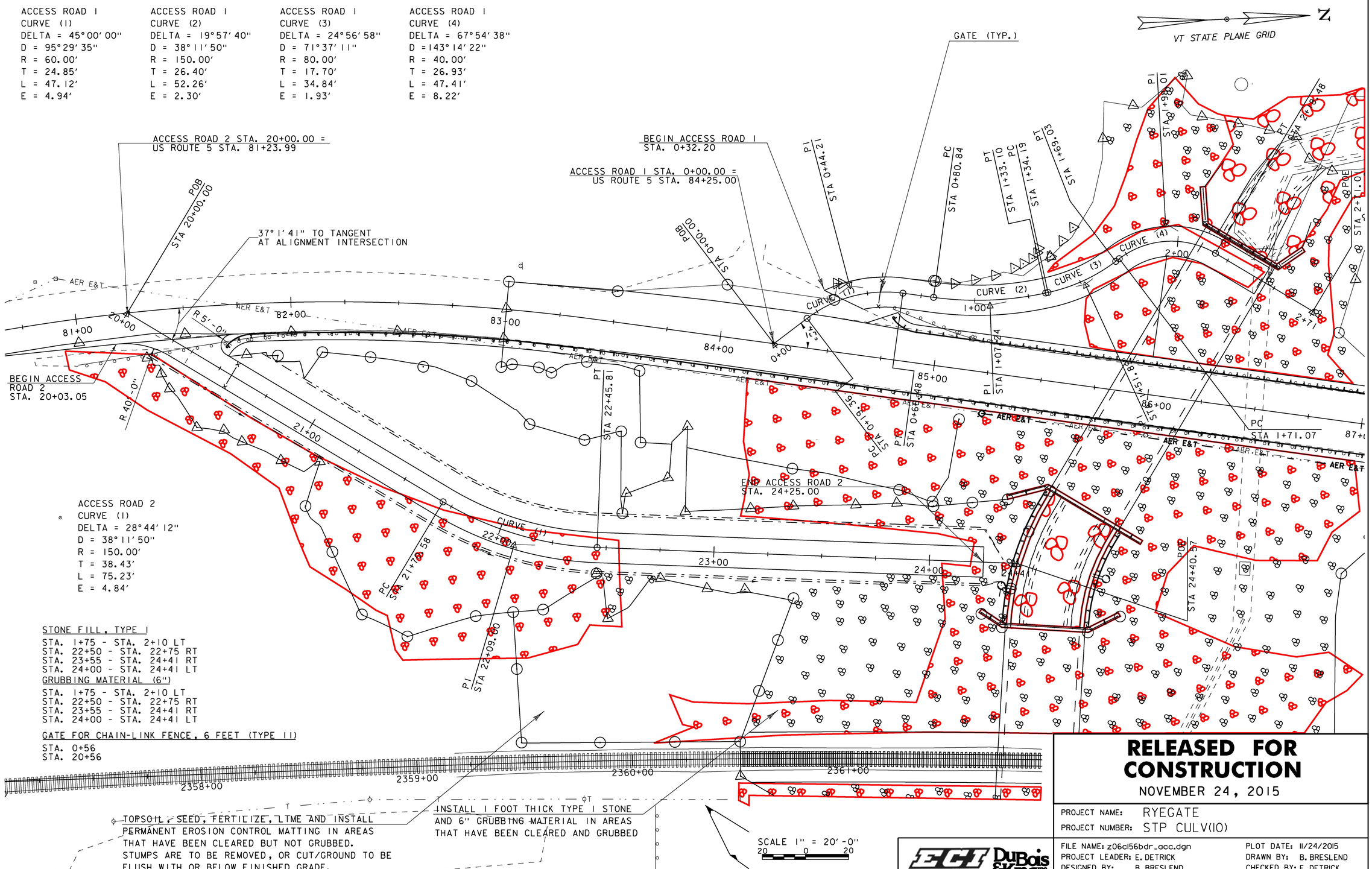

RELEASED FOR CONSTRUCTION

NOVEMBER 24, 2015

PROJECT NAME: RYEGATE
PROJECT NUMBER: STP CULV(10)

ECI ENGINEERS CONSTRUCTION
DuBois & King inc.

FILE NAME: z06c156bdr_acc.dgn
PROJECT LEADER: E. DETRICK
DESIGNED BY: B. BRESLEND
ACCESS ROADS LAYOUT SHEET

PLOT DATE: 11/24/2015
DRAWN BY: B. BRESLEND
CHECKED BY: E. DETRICK
SHEET 10 OF 56

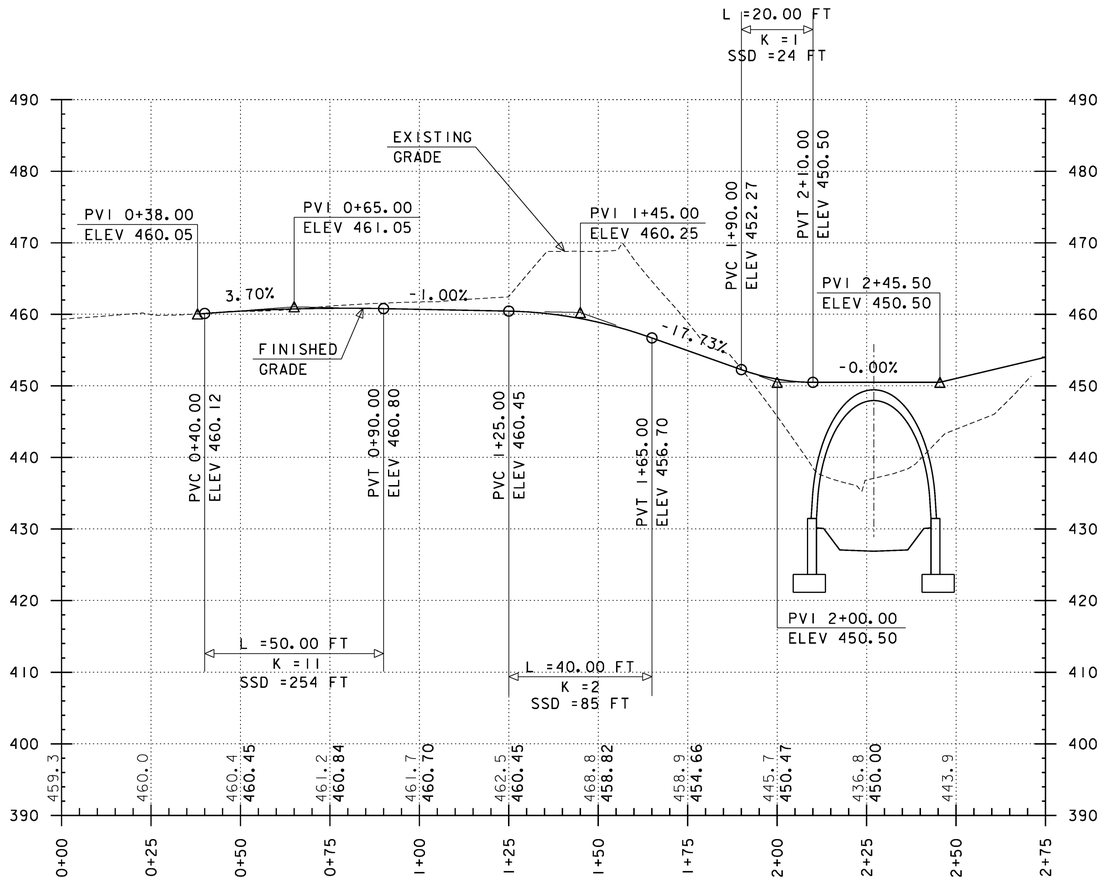

ACCESS ROAD 1 PROFILE

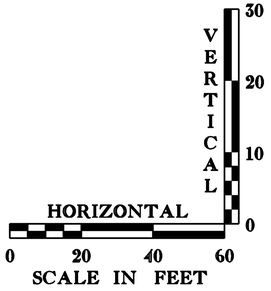

THE GRADES SHOWN TO THE TENTH ARE THE EXISTING GROUND ELEVATIONS ALONG THE NEW ALIGNMENT.
THE GRADES SHOWN TO THE NEAREST HUNDREDTH ARE THE PROPOSED GRADES FOR THE NEW ALIGNMENT.

RELEASED FOR CONSTRUCTION

NOVEMBER 24, 2015

PROJECT NAME: RYEGATE
PROJECT NUMBER: STP CULV(10)

ECI ENGINEERS CONSTRUCTION — DuBois & King INC.

FILE NAME: z06c156pro_acc1.dgn
PROJECT LEADER: E. DETRICK
DESIGNED BY: B. BRESLEND
ACCESS ROAD 1 PROFILE SHEET

PLOT DATE: 11/24/2015
DRAWN BY: B. BRESLEND
CHECKED BY: E. DETRICK
SHEET 11 OF 29

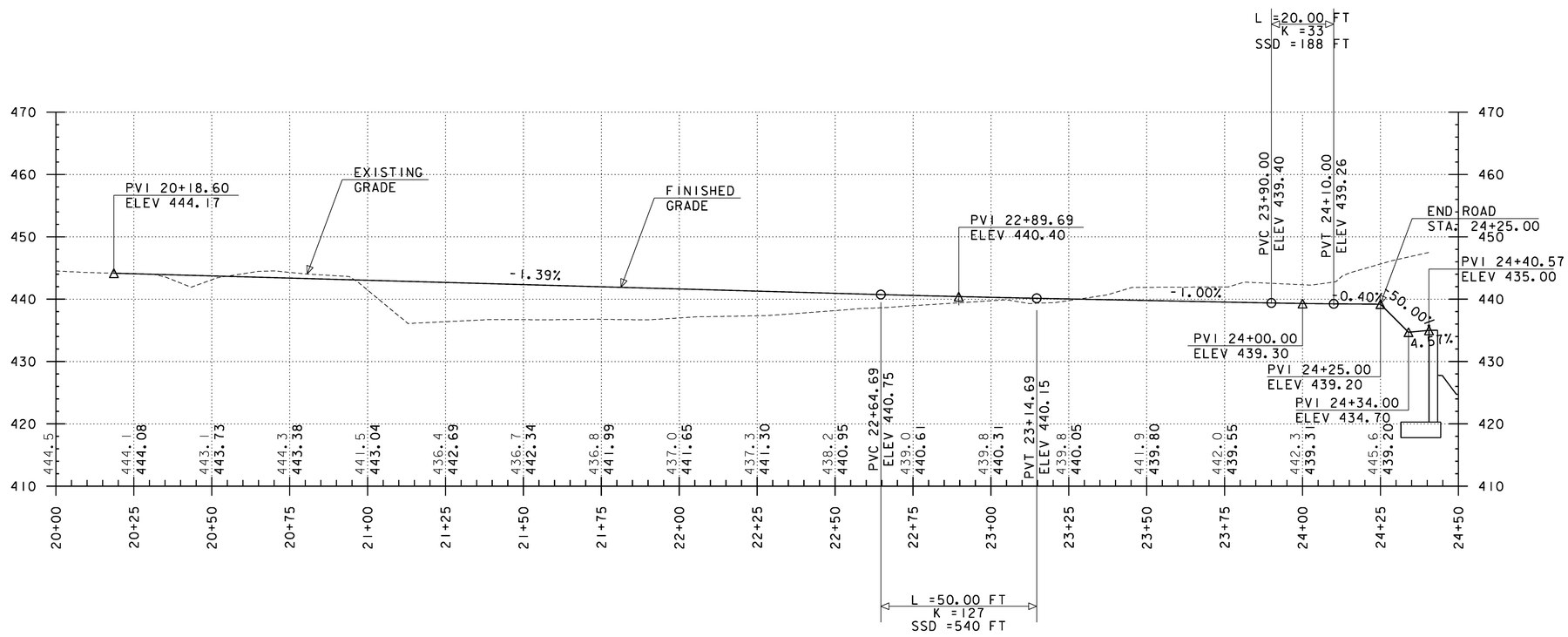

ACCESS ROAD 2 PROFILE

THE GRADES SHOWN TO THE TENTH ARE THE EXISTING GROUND ELEVATIONS ALONG THE NEW ALIGNMENT. THE GRADES SHOWN TO THE NEAREST HUNDREDTH ARE THE PROPOSED GRADES ALONG THE NEW ALIGNMENT.

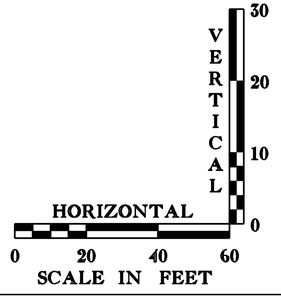

RELEASED FOR CONSTRUCTION

NOVEMBER 24, 2015

PROJECT NAME: RYEGATE
PROJECT NUMBER: STP CULV(10)

ECI ENGINEERS CONSTRUCTION — DuBois & King Inc.

FILE NAME: z06c156pro_acc2.dgn
PROJECT LEADER: E. DETRICK
DESIGNED BY: B. BRESLEND
ACCESS ROAD 2 PROFILE SHEET

PLOT DATE: 11/24/2015
DRAWN BY: B. BRESLEND
CHECKED BY: E. DETRICK
SHEET 12 OF 29

BEGIN APPROACH
STA. 83+00.00

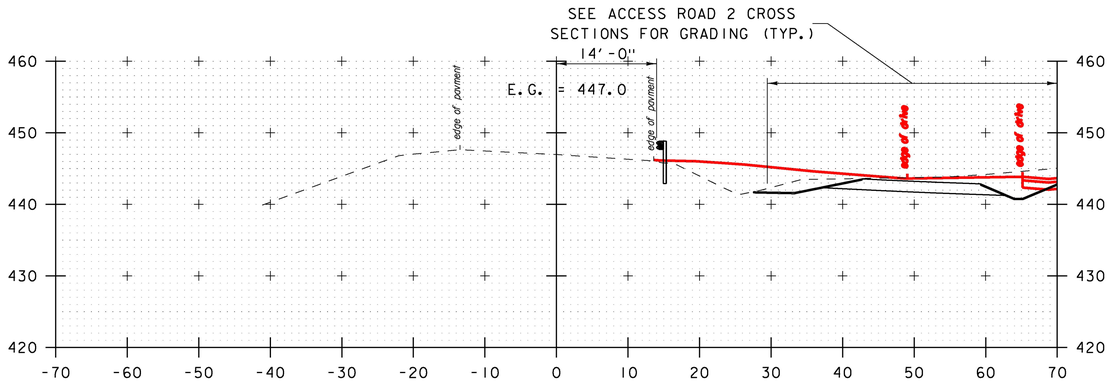

82+00

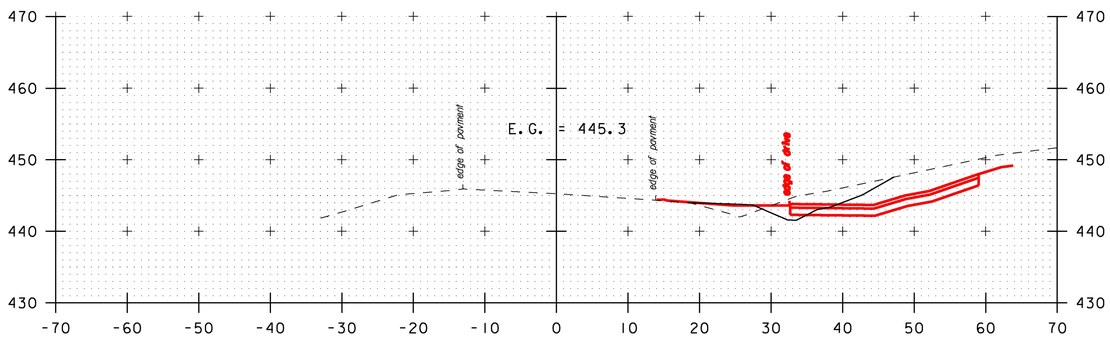

81+50

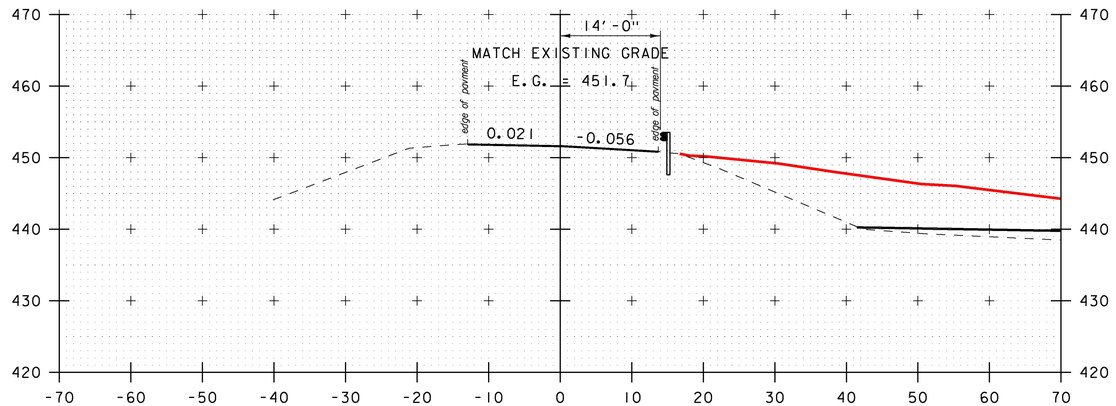

83+00

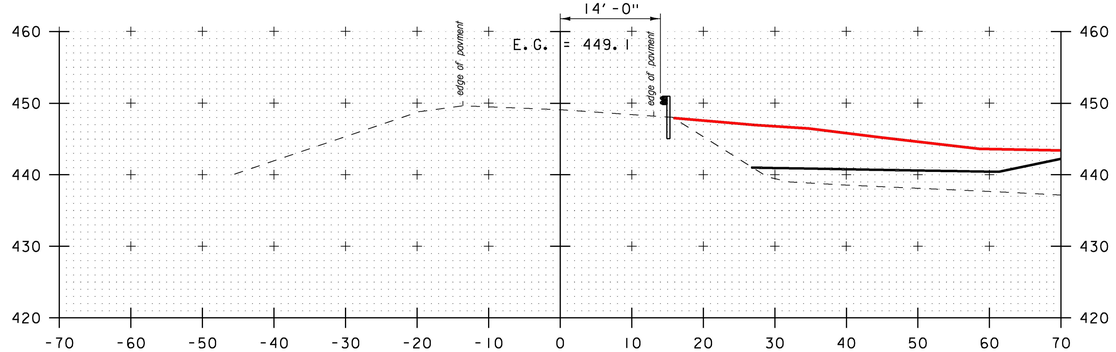

82+50

SCALE 1" = 10'-0"
10 0 10

STA. 81+50 TO STA. 83+00

RELEASED FOR CONSTRUCTION
NOVEMBER 24, 2015

PROJECT NAME: RYEGATE
PROJECT NUMBER: STP CULV(10)

ECI ENGINEERS CONSTRUCTION — DuBois & King inc.

FILE NAME: z06cl56xs.dgn
PROJECT LEADER: E. DETRICK
DESIGNED BY: B. BRESLEND
US ROUTE 5 CROSS SECTIONS SHEET 1

PLOT DATE: 11/24/2015
DRAWN BY: B. BRESLEND
CHECKED BY: E. DETRICK
SHEET 13 OF 56

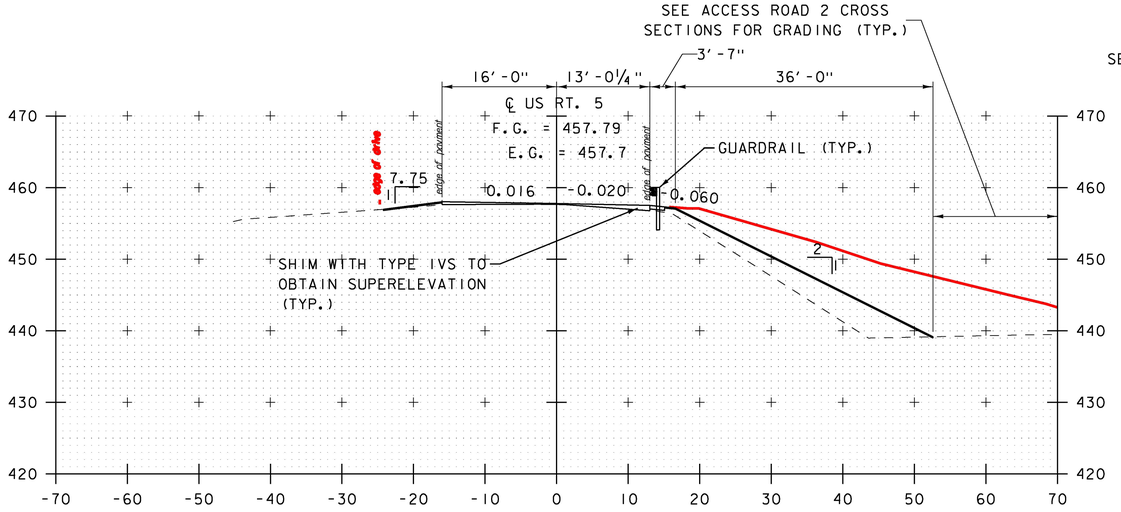

84+00

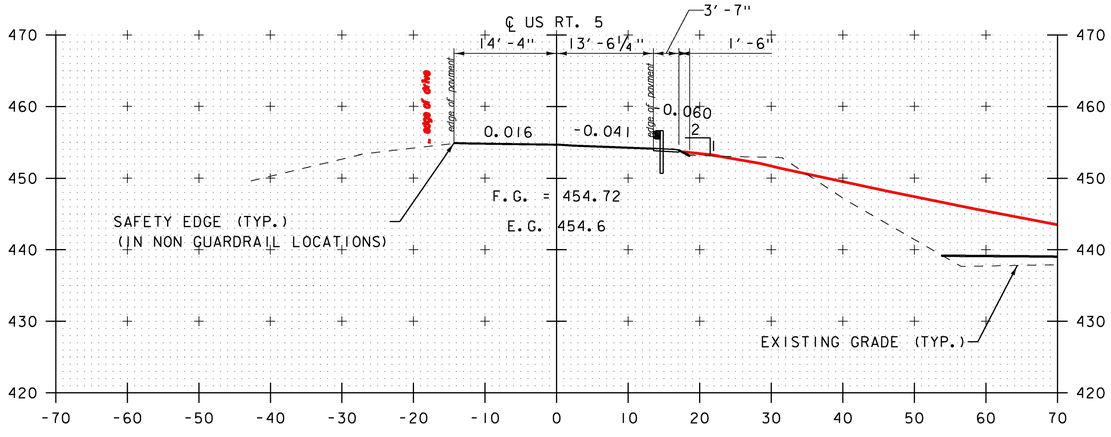

83+50

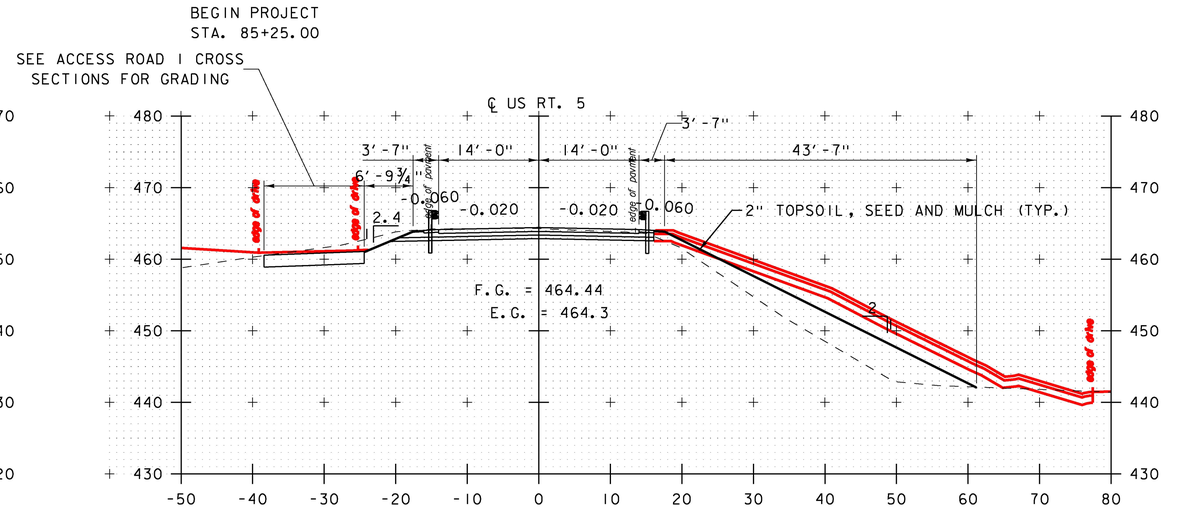

85+00

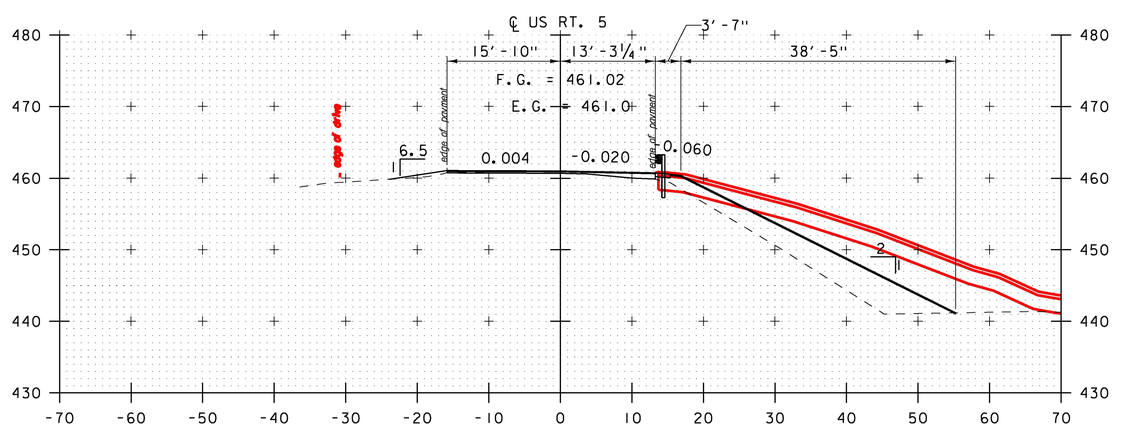

84+50

SCALE 1" = 10'-0"
10 0 10

STA. 83+50 TO STA. 85+00

ECI ENGINEERS CONSTRUCTION — DuBois & King inc.

RELEASED FOR CONSTRUCTION

NOVEMBER 24, 2015

PROJECT NAME: RYEGATE
PROJECT NUMBER: STP CULV(10)

FILE NAME: z06cl56xs.dgn
PROJECT LEADER: E. DETRICK
DESIGNED BY: B. BRESLEND
US ROUTE 5 CROSS SECTIONS SHEET 2

PLOT DATE: 11/24/2015
DRAWN BY: B. BRESLEND
CHECKED BY: E. DETRICK
SHEET 14 OF 56

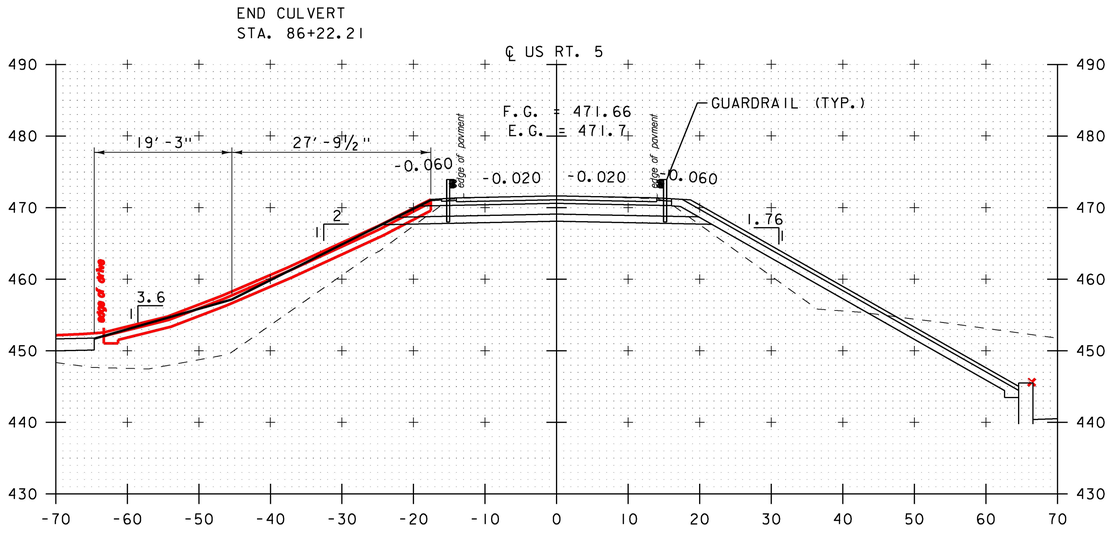

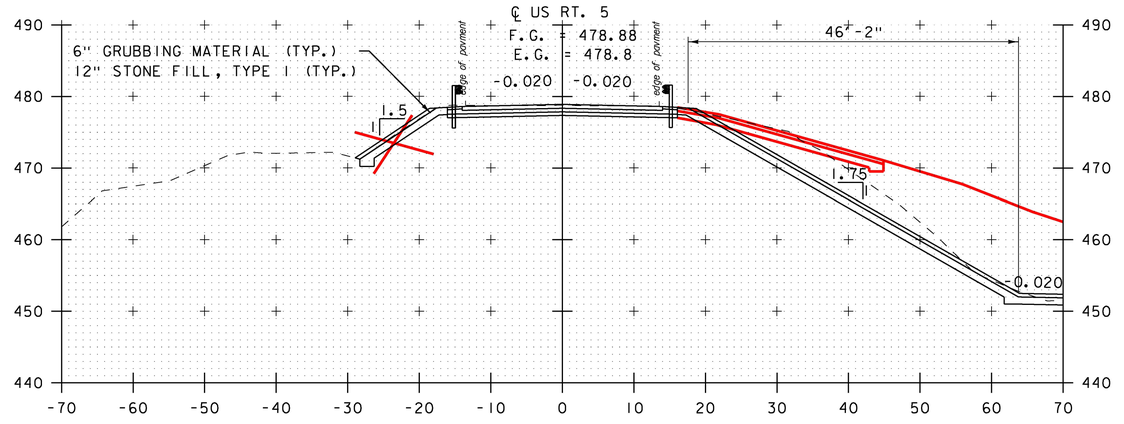

87+00

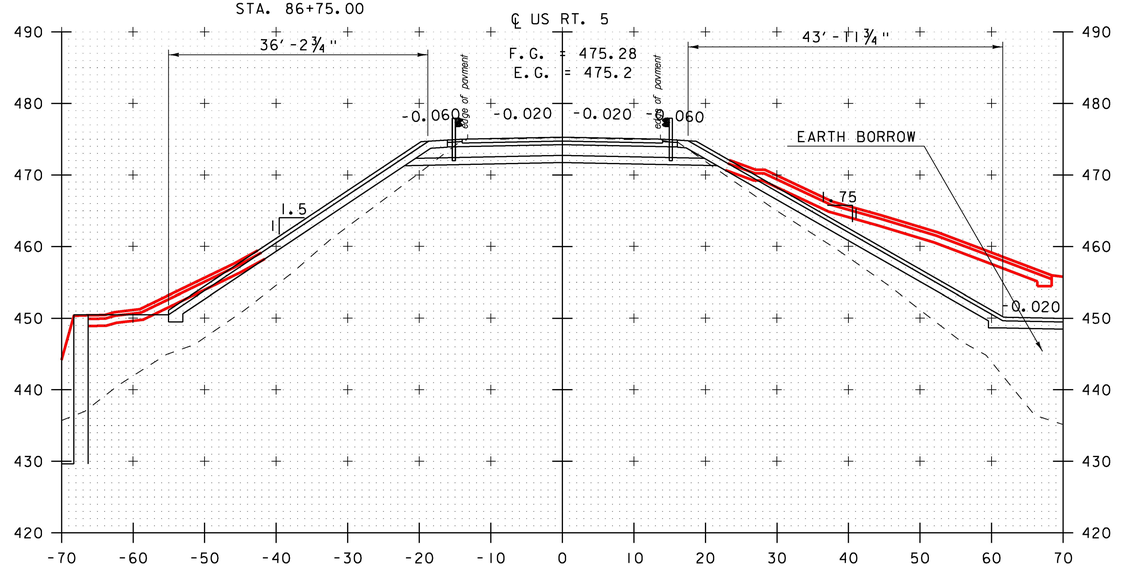

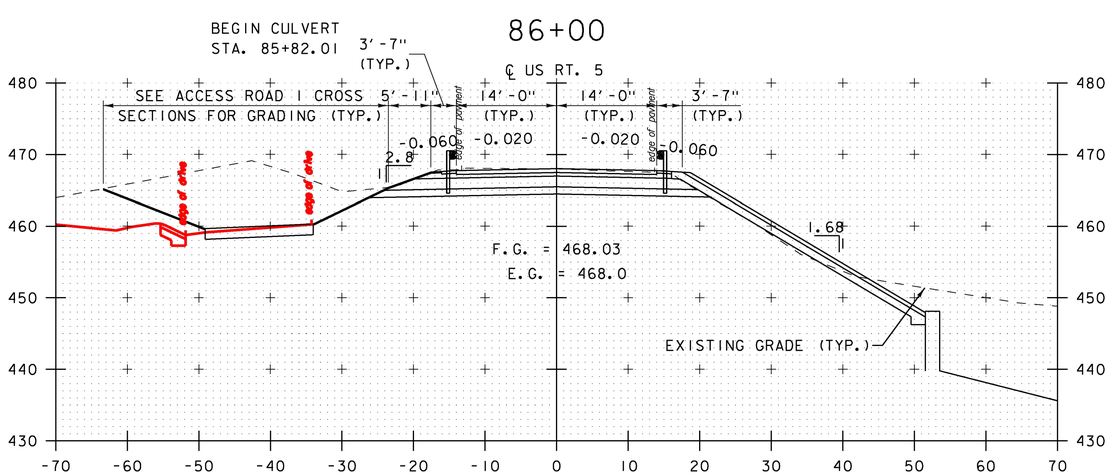

85+50

86+50

SCALE 1" = 10'-0"
10 0 10

STA. 85+50 TO STA. 87+00

ECI ENGINEERS CONSTRUCTION
DuBois & King inc.

RELEASED FOR CONSTRUCTION
NOVEMBER 24, 2015

PROJECT NAME: RYEGATE
PROJECT NUMBER: STP CULV(10)

FILE NAME: z06cl56xs.dgn
PROJECT LEADER: E. DETRICK
DESIGNED BY: B. BRESLEND
US ROUTE 5 CROSS SECTIONS SHEET 3

PLOT DATE: 11/24/2015
DRAWN BY: B. BRESLEND
CHECKED BY: E. DETRICK
SHEET 15 OF 56

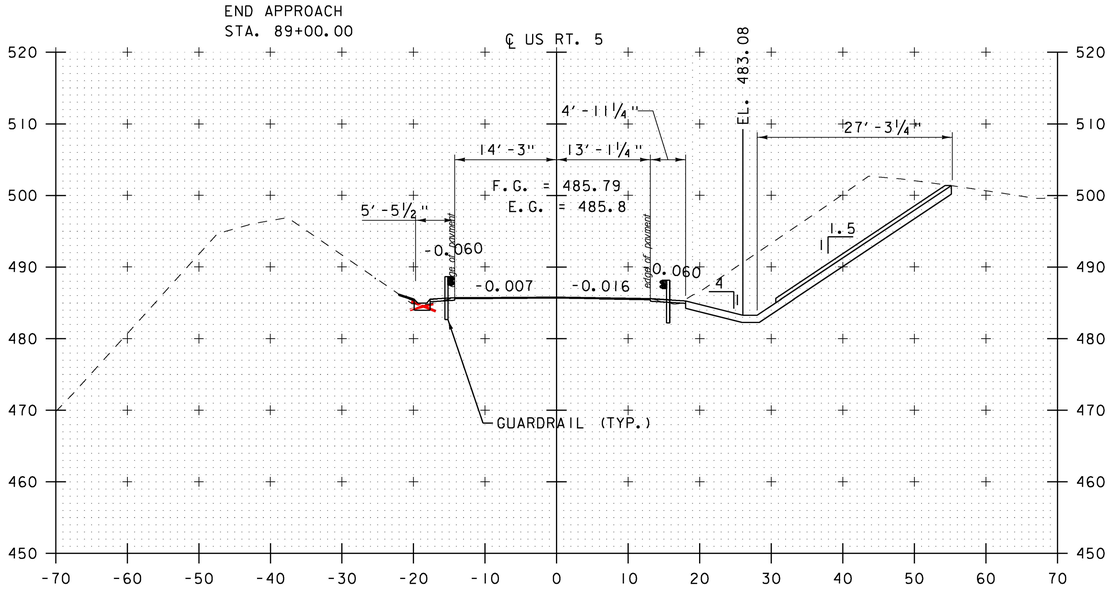

88+00

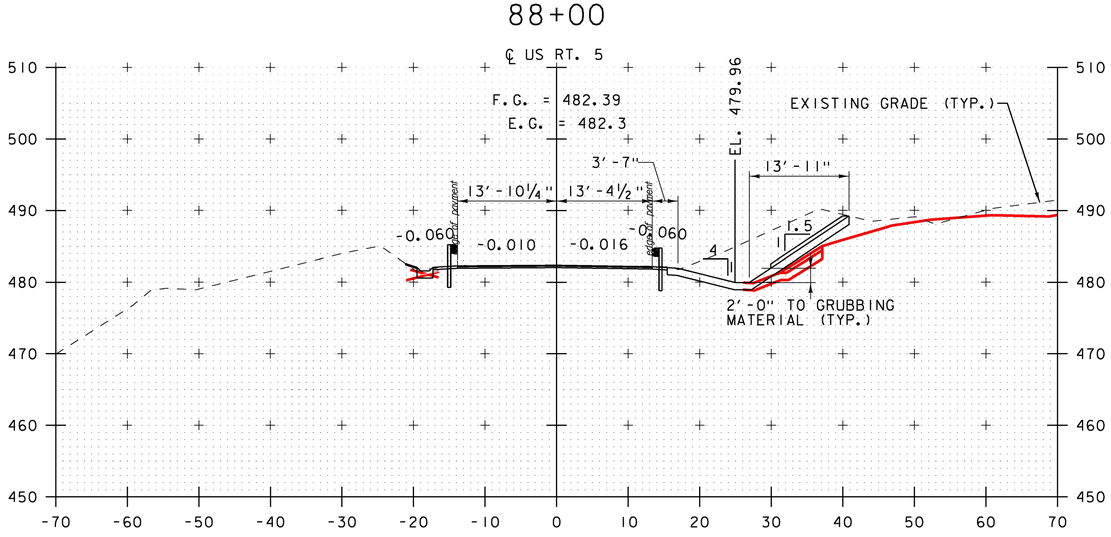

87+50

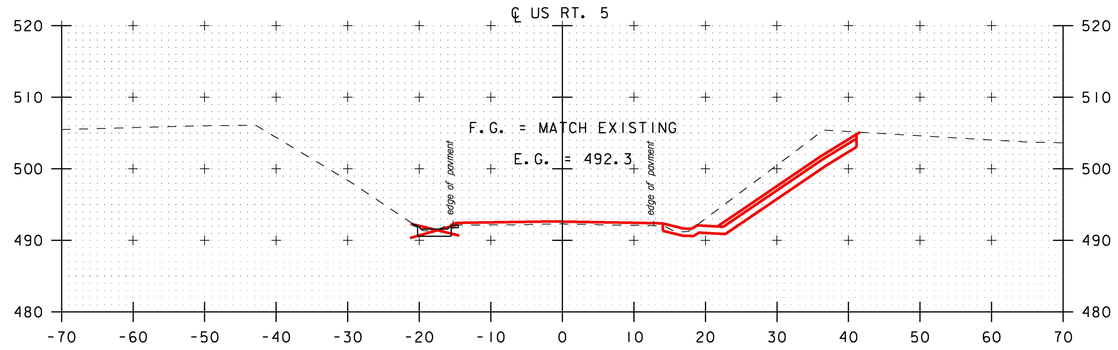

89+00

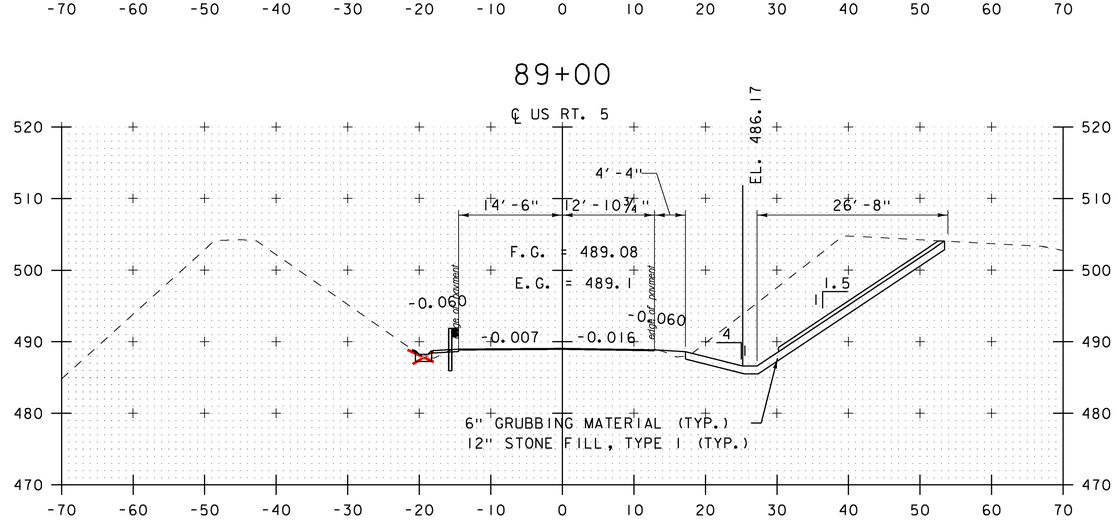

88+50

SCALE 1" = 10'-0"
10 0 10

STA. 87+50 TO STA. 89+00

ECI ENGINEERS CONSTRUCTION
DuBois & King inc.

RELEASED FOR CONSTRUCTION

NOVEMBER 24, 2015

PROJECT NAME: RYEGATE
PROJECT NUMBER: STP CULV(10)

FILE NAME: z06cl56xs.dgn
PROJECT LEADER: E. DETRICK
DESIGNED BY: B. BRESLEND
US ROUTE 5 CROSS SECTIONS SHEET 4

PLOT DATE: 11/24/2015
DRAWN BY: B. BRESLEND
CHECKED BY: E. DETRICK
SHEET 16 OF 56

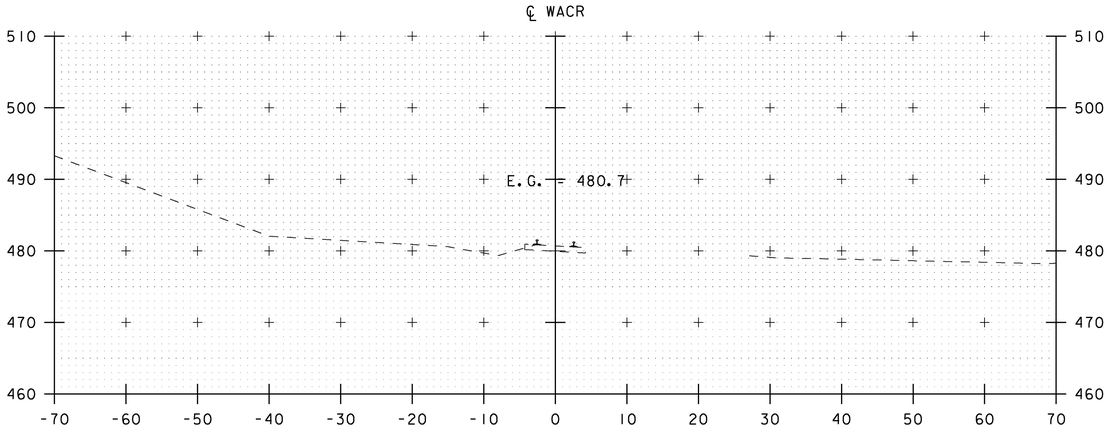

2357+50

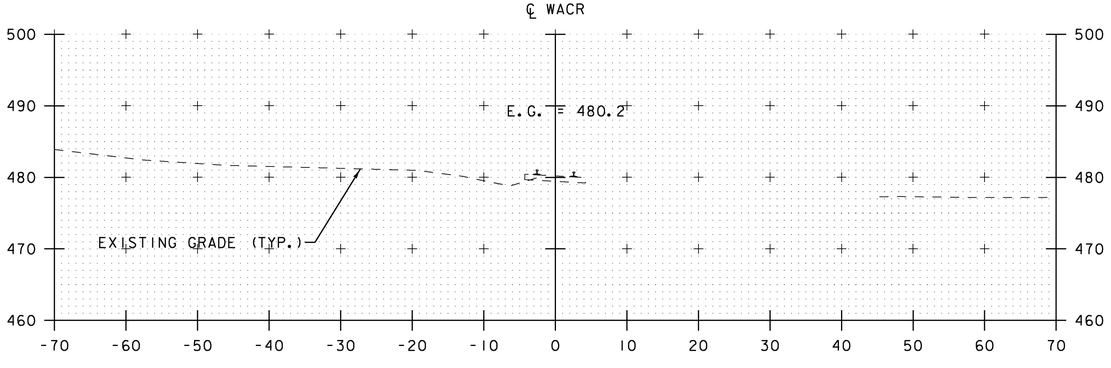

2357+00

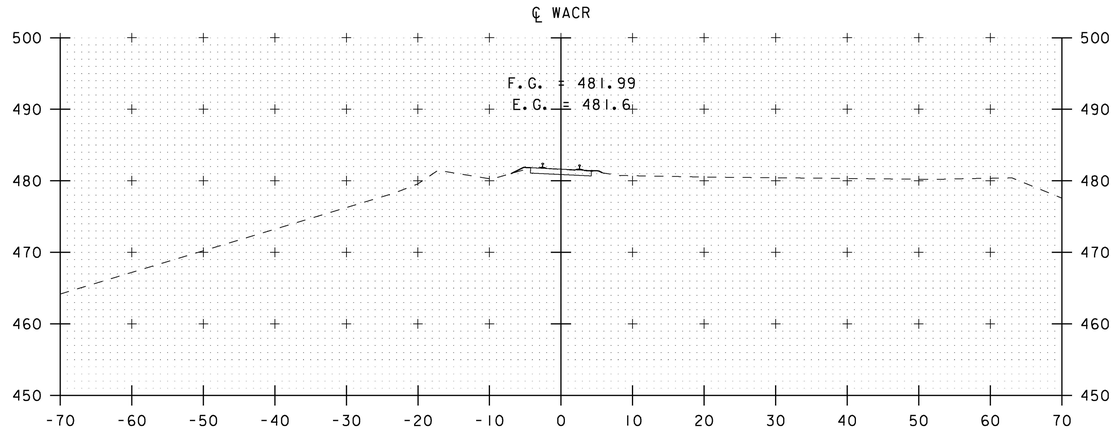

2358+50

BEGIN APPROACH
STA. 2358+00.00

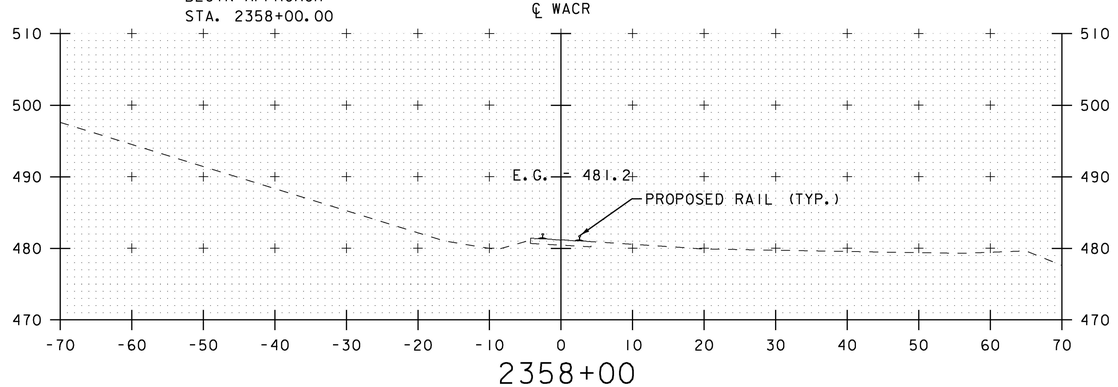

2358+00

NOTE: FINISH GRADE ELEVATION SHOWN IS FOR THE TOP OF THE LOW RAIL. EXISTING GRADE ELEVATION IS AT THE CENTERLINE.

SCALE 1" = 10'-0"
10 0 10

STA. 2357+00 TO STA. 2358+50

ECI ENGINEERS CONSTRUCTION
DuBois & King INC.

RELEASED FOR CONSTRUCTION

NOVEMBER 24, 2015

PROJECT NAME: RYEGATE
PROJECT NUMBER: STP CULV(10)

FILE NAME: z06cl56xs.dgn
PROJECT LEADER: E. DETRICK
DESIGNED BY: B. BRESLEND
WACR CROSS SECTION SHEET 1

PLOT DATE: 11/24/2015
DRAWN BY: B. BRESLEND
CHECKED BY: E. DETRICK
SHEET 17 OF 56

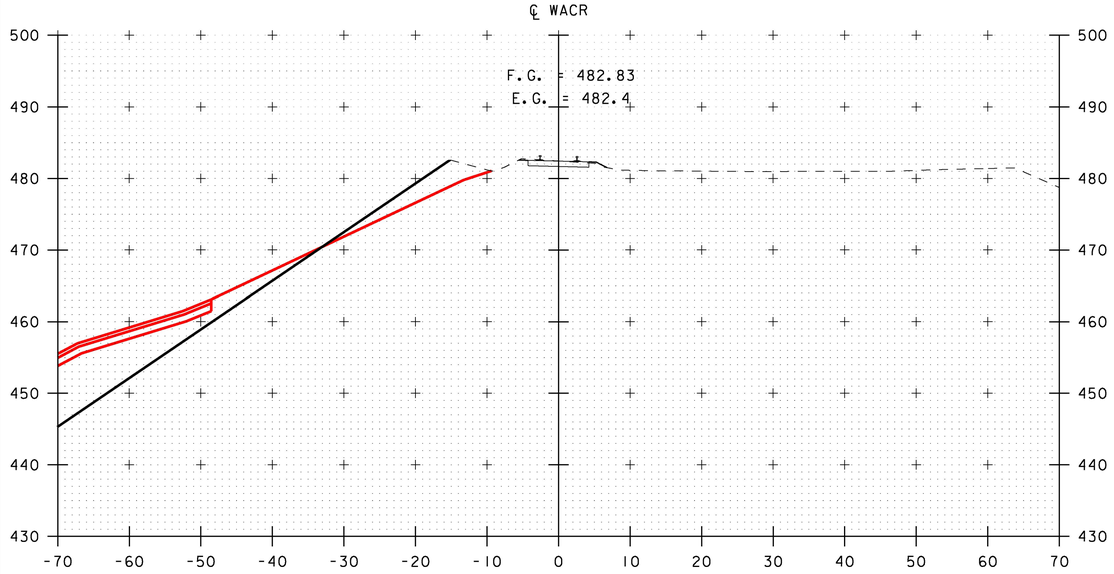

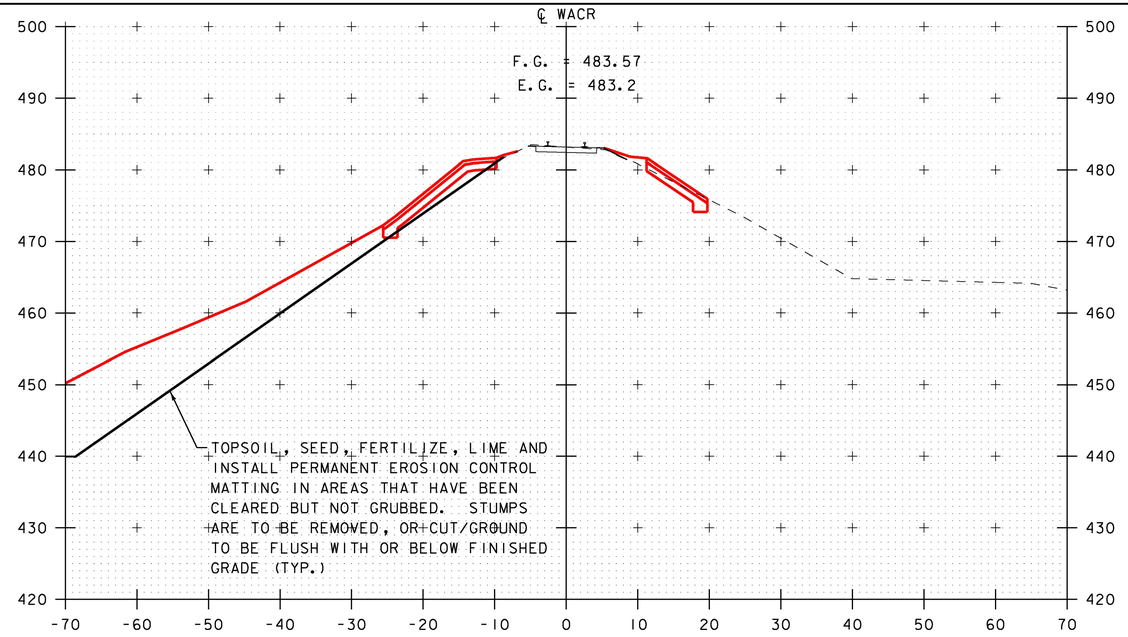

2359+50

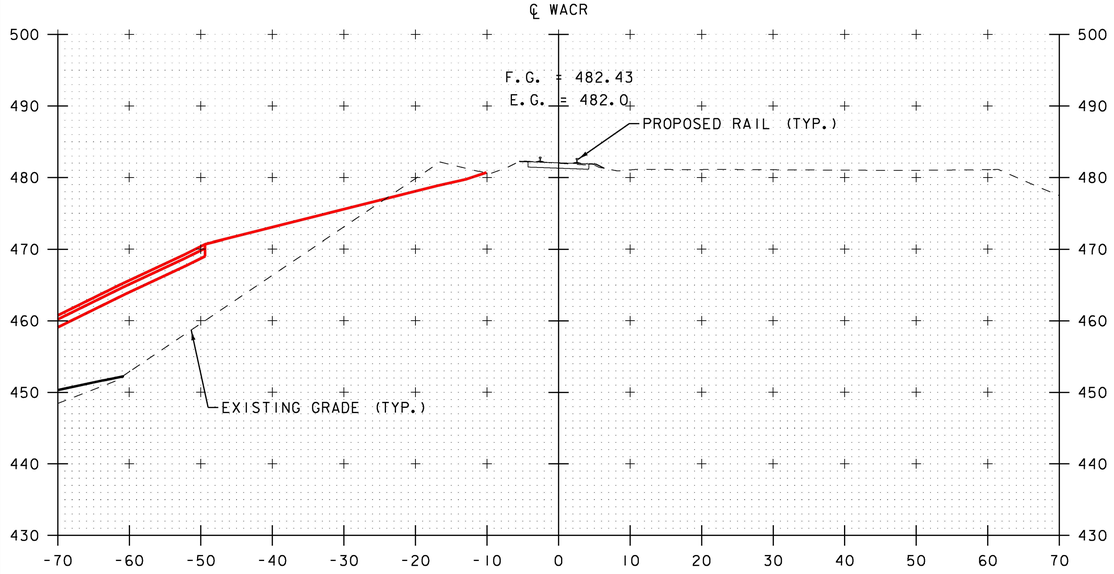

2359+00

2360+50

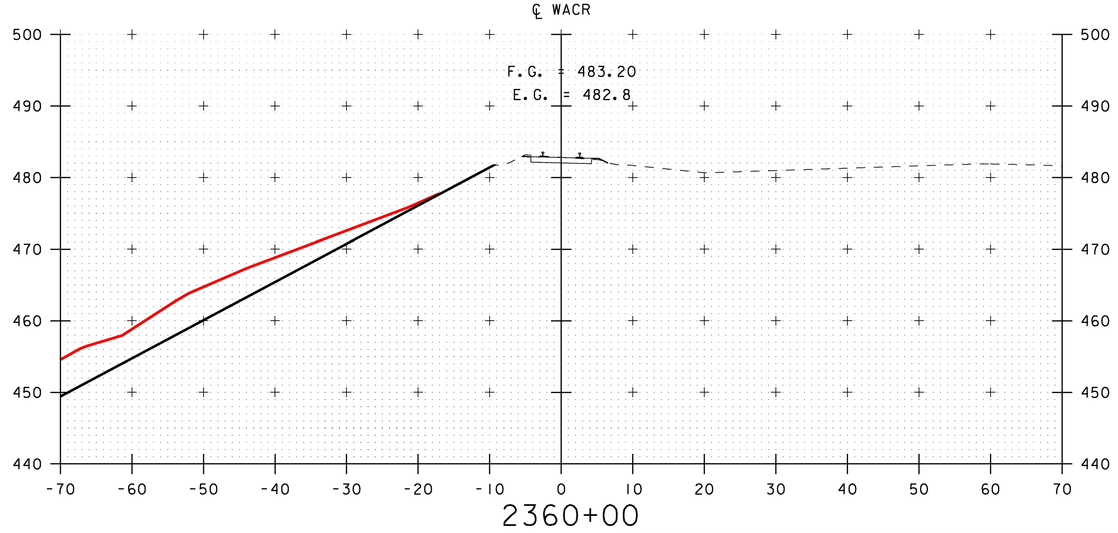

2360+00

NOTE: FINISH GRADE ELEVATION SHOWN IS FOR THE TOP OF THE LOW RAIL. EXISTING GRADE ELEVATION IS AT THE CENTERLINE.

SCALE 1" = 10'-0"

STA. 2359+00 TO STA. 2360+50

RELEASED FOR CONSTRUCTION

NOVEMBER 24, 2015

PROJECT NAME: RYEGATE
PROJECT NUMBER: STP CULV(10)

ECI ENGINEERS CONSTRUCTION — DuBois & King inc.

FILE NAME: z06cl56xs.dgn
PROJECT LEADER: E. DETRICK
DESIGNED BY: B. BRESLEND
WACR CROSS SECTION SHEET 2

PLOT DATE: 11/24/2015
DRAWN BY: B. BRESLEND
CHECKED BY: E. DETRICK
SHEET 18 OF 56

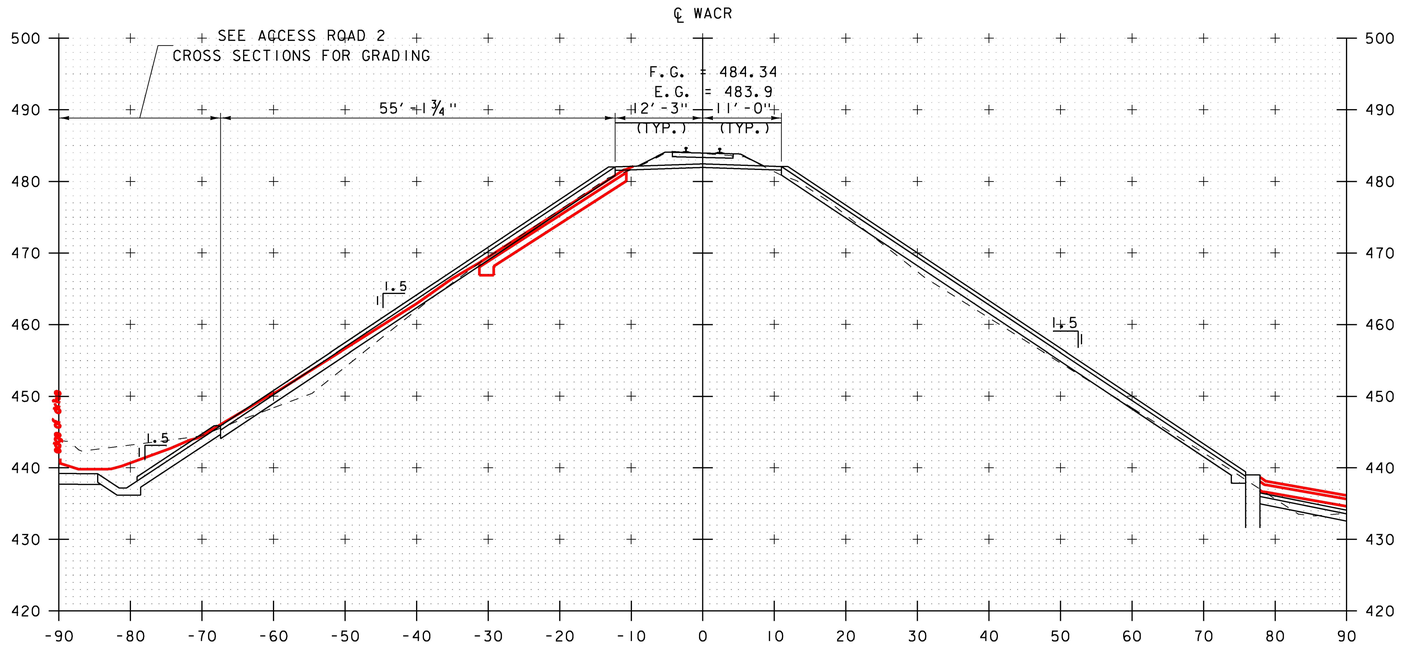

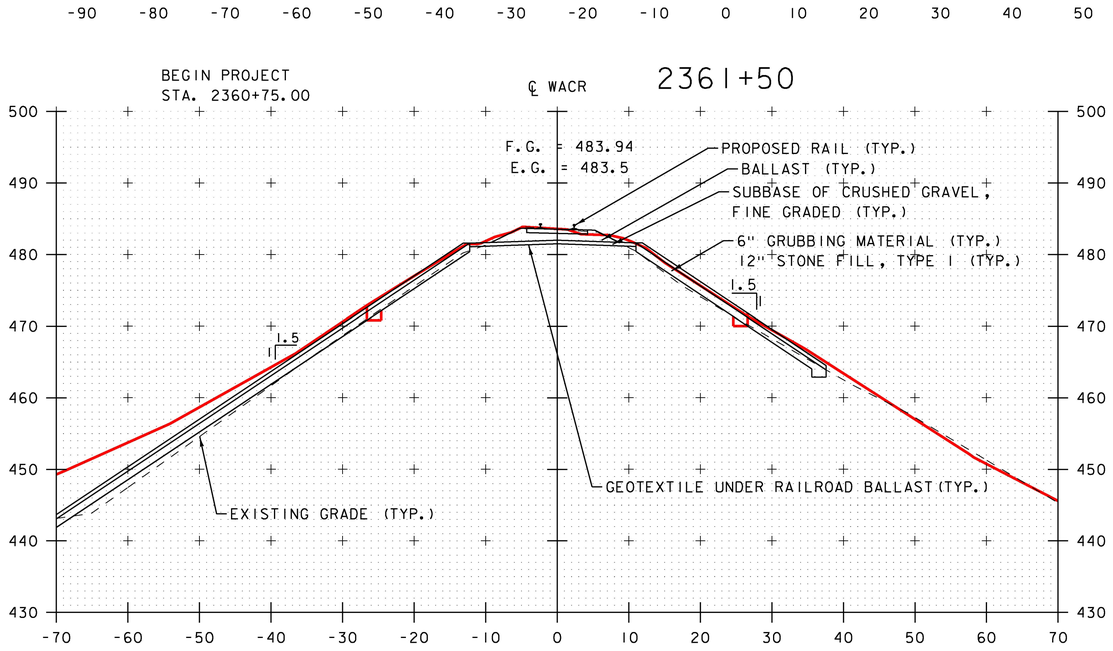

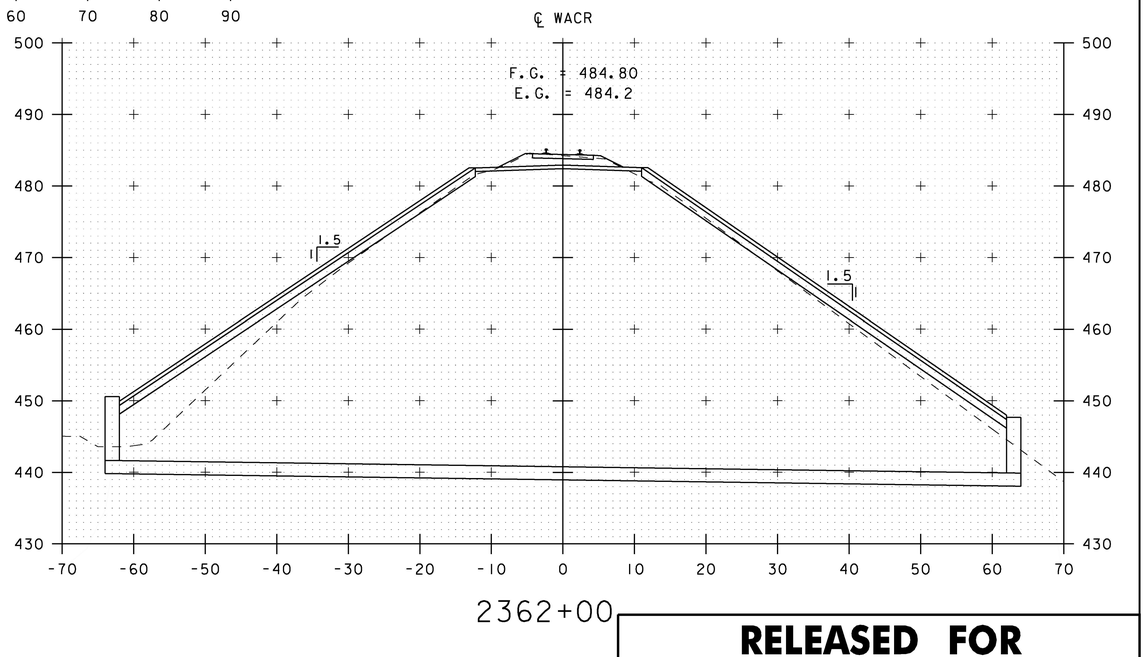

NOTE: FINISH GRADE ELEVATION SHOWN IS FOR THE TOP OF THE LOW RAIL. EXISTING GRADE ELEVATION IS AT THE CENTERLINE.

SCALE 1" = 10'-0"
10 0 10

STA. 2361+00 TO STA. 2362+00

RELEASED FOR CONSTRUCTION
NOVEMBER 24, 2015

PROJECT NAME: RYEGATE
PROJECT NUMBER: STP CULV(10)

FILE NAME: z06cl56xs.dgn
PROJECT LEADER: E. DETRICK
DESIGNED BY: B. BRESLEND
WACR CROSS SECTION SHEET 3

PLOT DATE: 11/24/2015
DRAWN BY: B. BRESLEND
CHECKED BY: E. DETRICK
SHEET 19 OF 56

ECI ENGINEERS CONSTRUCTION — DuBois & King inc.

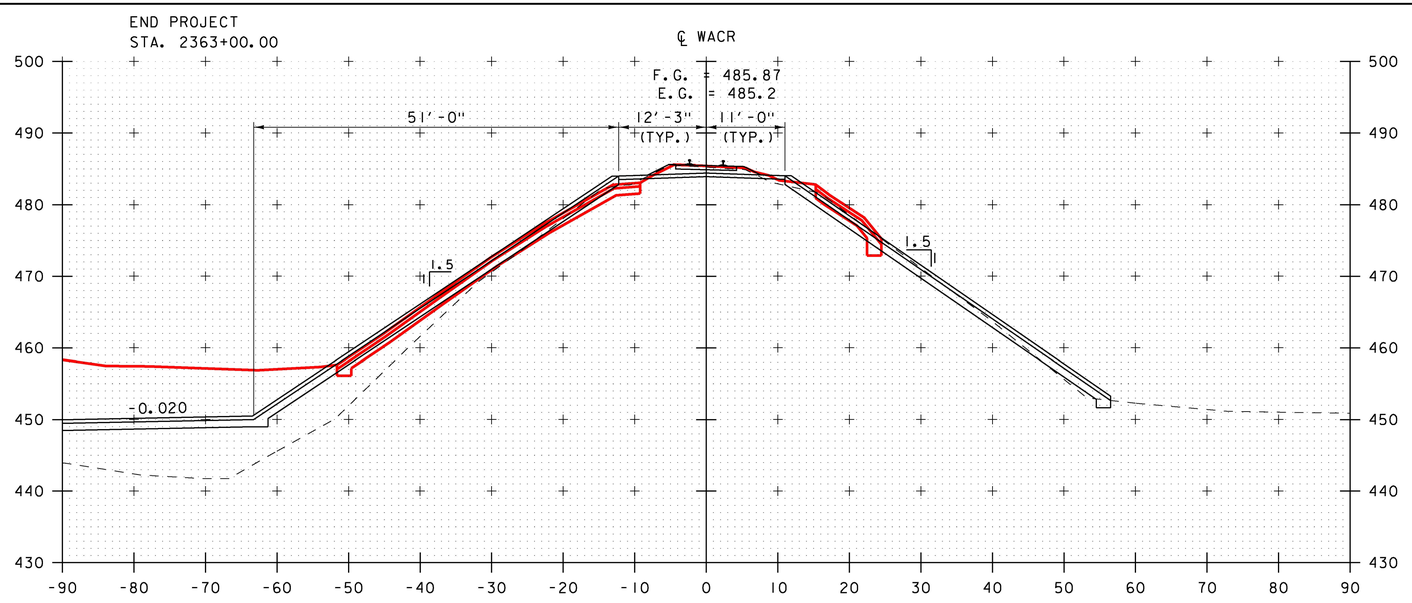

2363+00

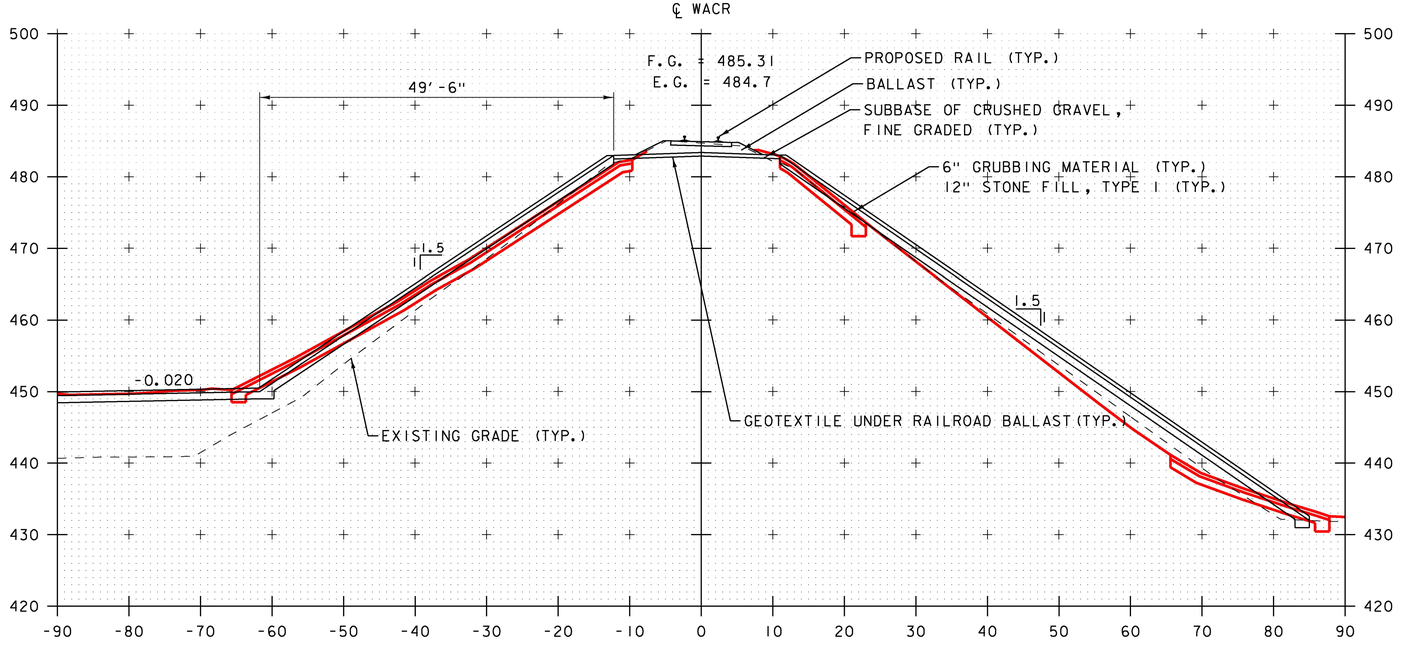

2362+50

NOTE: FINISH GRADE ELEVATION SHOWN IS FOR THE TOP OF THE LOW RAIL. EXISTING GRADE ELEVATION IS AT THE CENTERLINE.

SCALE 1" = 10'-0"
10 0 10

STA. 2362+50 TO STA. 2363+00

RELEASED FOR CONSTRUCTION
NOVEMBER 24, 2015

PROJECT NAME: RYEGATE
PROJECT NUMBER: STP CULV(10)

ECI ENGINEERS CONSTRUCTION — DuBois & King inc.

FILE NAME: z06cl56xs.dgn
PROJECT LEADER: E. DETRICK
DESIGNED BY: B. BRESLEND
WACR CROSS SECTION SHEET 4

PLOT DATE: 11/24/2015
DRAWN BY: B. BRESLEND
CHECKED BY: E. DETRICK
SHEET 20 OF 56

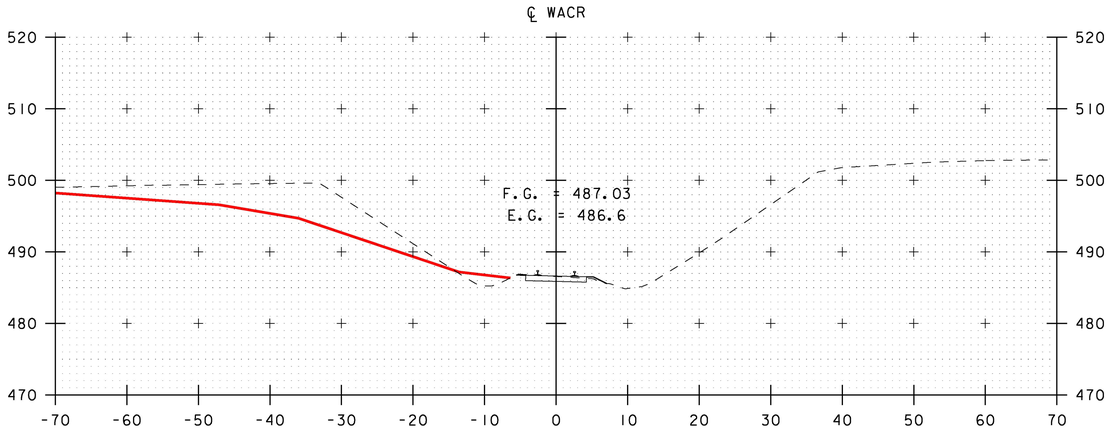

2363+50

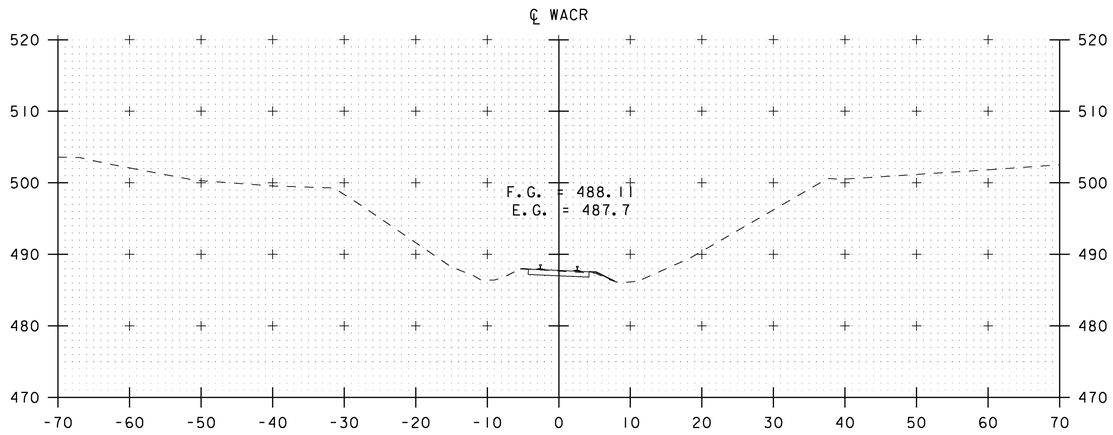

2365+00

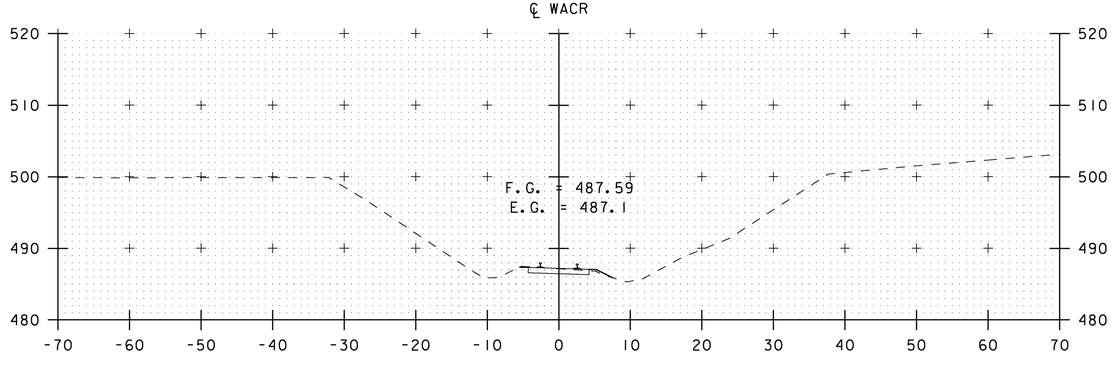

2364+50

NOTE: FINISH GRADE ELEVATION SHOWN IS FOR THE TOP OF THE LOW RAIL. EXISTING GRADE ELEVATION IS AT THE CENTERLINE.

SCALE 1" = 10'-0"
10 0 10

STA. 2363+50 TO STA. 2365+00

ECI ENGINEERS CONSTRUCTION
DuBois & King INC.

RELEASED FOR CONSTRUCTION
NOVEMBER 24, 2015

PROJECT NAME: RYEGATE
PROJECT NUMBER: STP CULV(10)

FILE NAME: z06cl56xs.dgn
PROJECT LEADER: E. DETRICK
DESIGNED BY: B. BRESLEND
WACR CROSS SECTION SHEET 5

PLOT DATE: 11/24/2015
DRAWN BY: B. BRESLEND
CHECKED BY: E. DETRICK
SHEET 21 OF 56

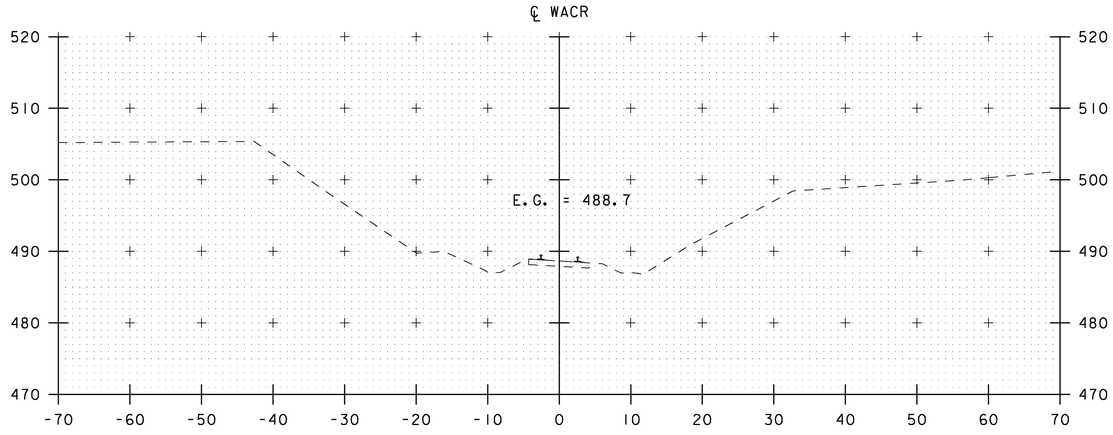

2366+00

END APPROACH
STA. 2365+75.00

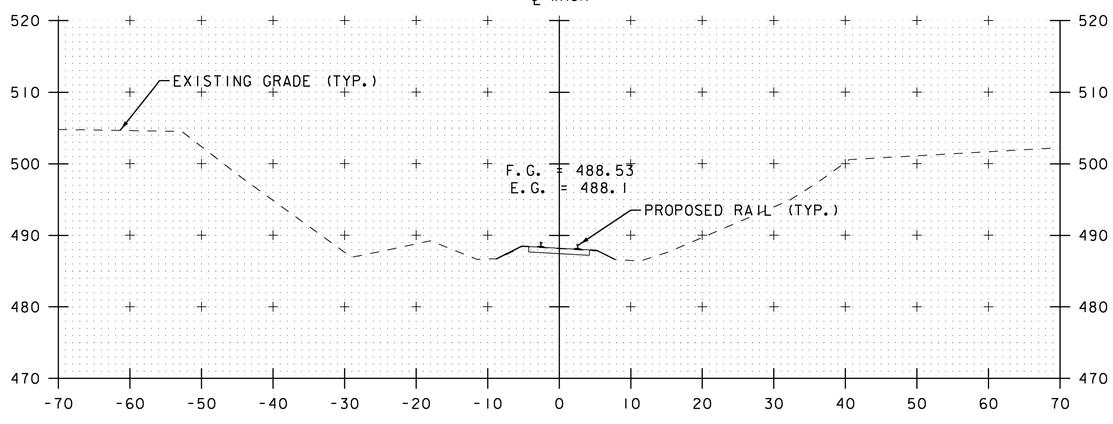

2365+50

NOTE: FINISH GRADE ELEVATION SHOWN IS FOR THE TOP OF THE LOW RAIL. EXISTING GRADE ELEVATION IS AT THE CENTERLINE.

SCALE 1" = 10'-0"
10 0 10

STA. 2365+50 TO STA. 2366+00

RELEASED FOR CONSTRUCTION
NOVEMBER 24, 2015

PROJECT NAME: RYEGATE
PROJECT NUMBER: STP CULV(10)

ECI ENGINEERS CONSTRUCTION — DuBois & King inc.

FILE NAME: z06cl56xs.dgn
PROJECT LEADER: E. DETRICK
DESIGNED BY: B. BRESLEND
WACR CROSS SECTION SHEET 6

PLOT DATE: 11/24/2015
DRAWN BY:
CHECKED BY: E. DETRICK
SHEET 22 OF 56

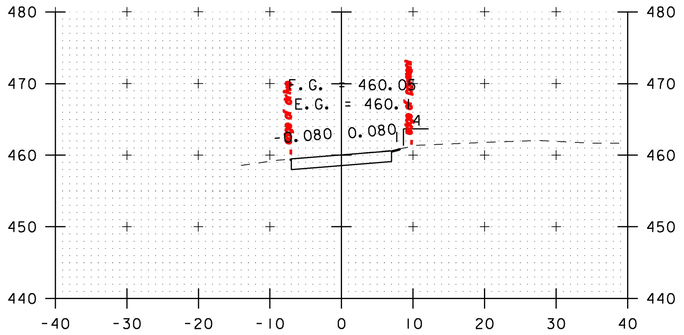

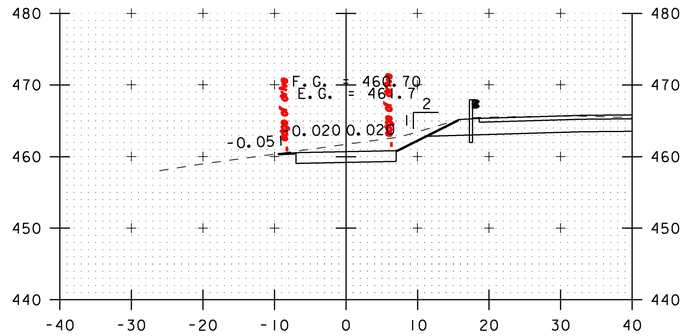

1+00

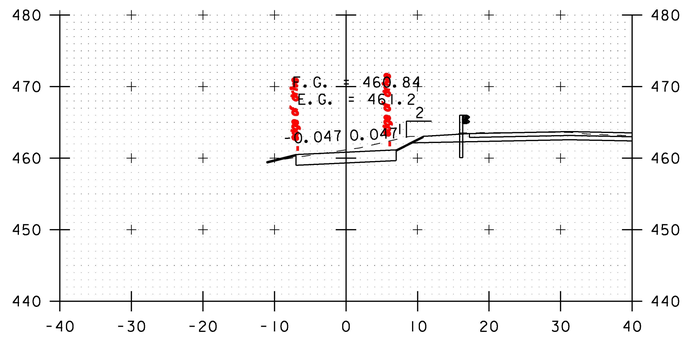

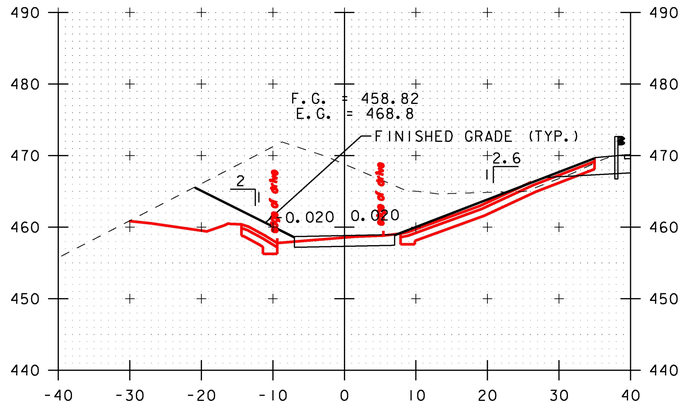

0+38

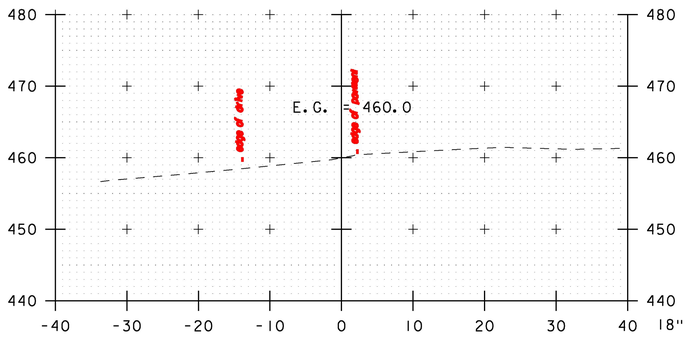

1+75

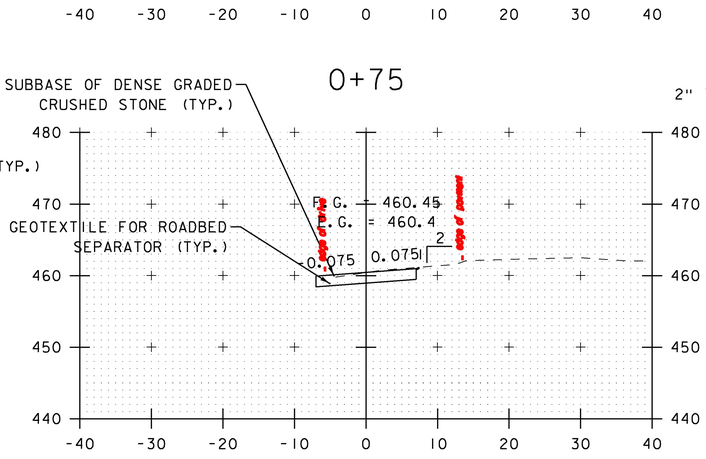

1+50

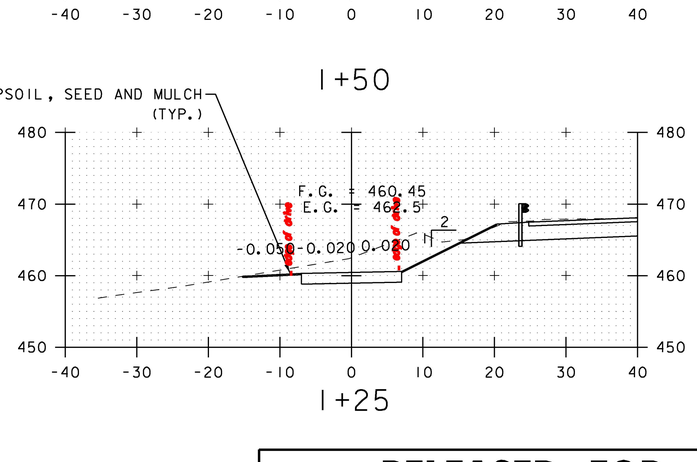

0+25

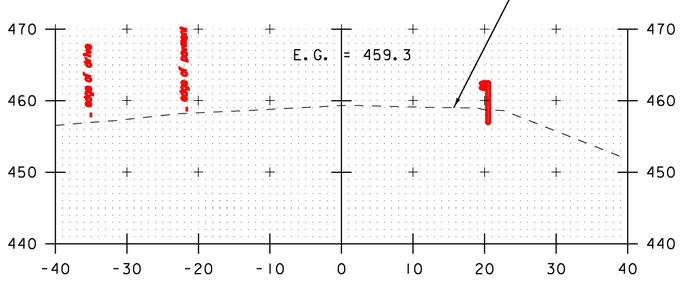

0+00

0+50

1+25

NOTE: US ROUTE 5 WORK NOT SHOWN ON STA. 0+00 - 0+50 CROSS SECTIONS.

SCALE 1" = 10'-0"
10 0 10

STA. 0+00 TO STA. 1+50

ENGINEERS CONSTRUCTION — DuBois & King inc.

RELEASED FOR CONSTRUCTION
NOVEMBER 24, 2015

PROJECT NAME: RYEGATE
PROJECT NUMBER: STP CULV(10)

FILE NAME: z06cl56xs_accl.dgn
PROJECT LEADER: E. DETRICK
DESIGNED BY: B. BRESLEND
ACCESS ROAD 1 CROSS SECTION SHEET 1

PLOT DATE: 11/24/2015
DRAWN BY: B. BRESLEND
CHECKED BY: E. DETRICK
SHEET 23 OF 56

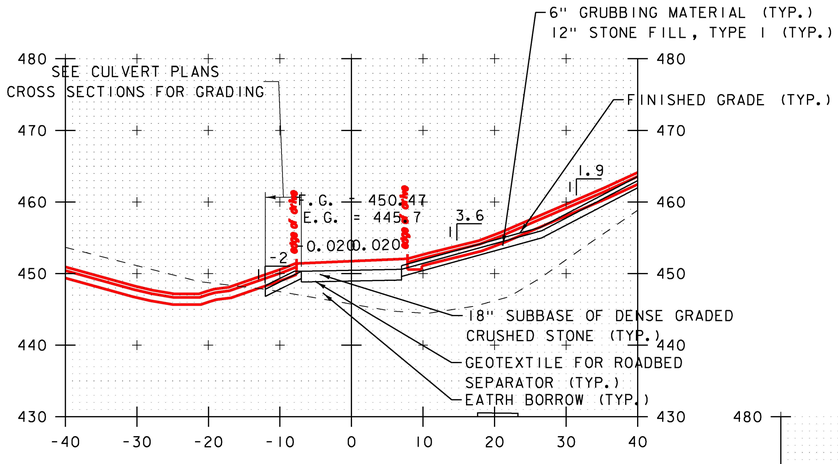

2+00

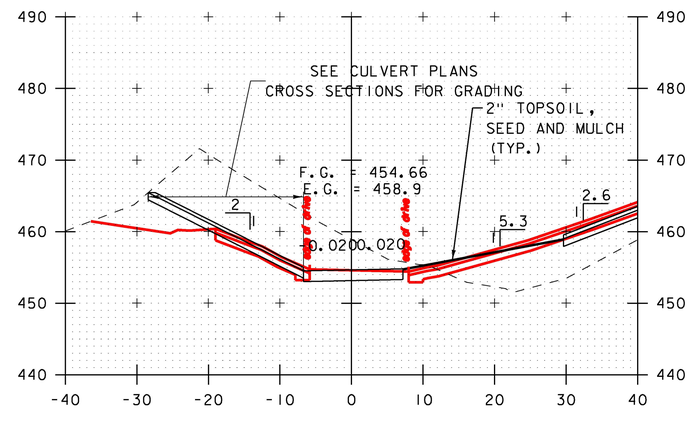

1+75

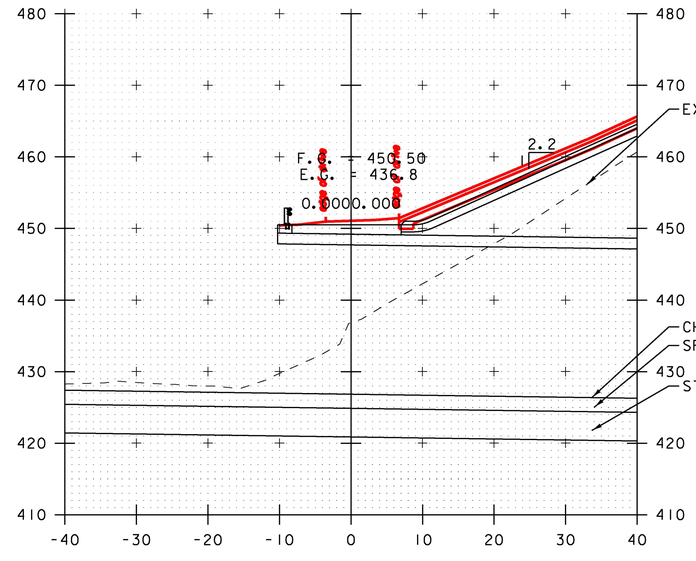

2+25

SCALE 1" = 10'-0"
10 0 10

STA. 1+75 TO STA. 2+25

RELEASED FOR CONSTRUCTION

NOVEMBER 24, 2015

PROJECT NAME: RYEGATE
PROJECT NUMBER: STP CULV(10)

FILE NAME: z06cl56xs_accl.dgn
PROJECT LEADER: E. DETRICK
DESIGNED BY: B. BRESLEND
ACCESS ROAD I CROSS SECTION SHEET 2

PLOT DATE: 11/24/2015
DRAWN BY: B. BRESLEND
CHECKED BY: E. DETRICK
SHEET 24 OF 56

ECI ENGINEERS CONSTRUCTION
DuBois & King INC.

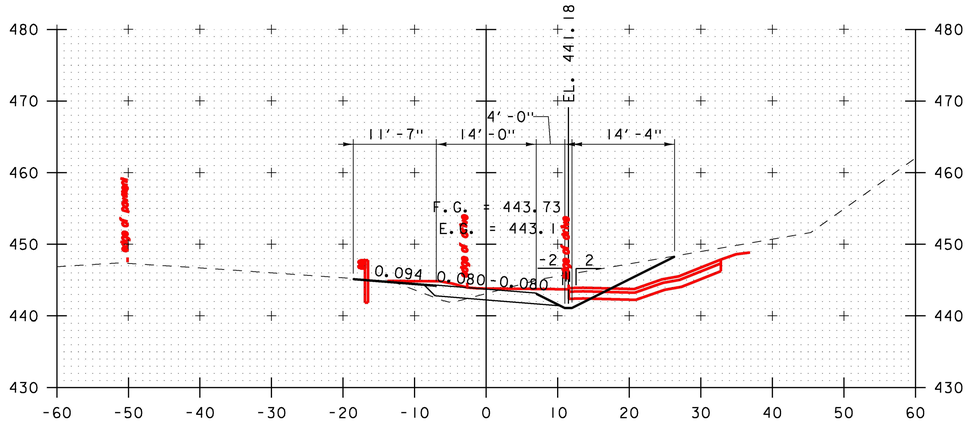

20+50

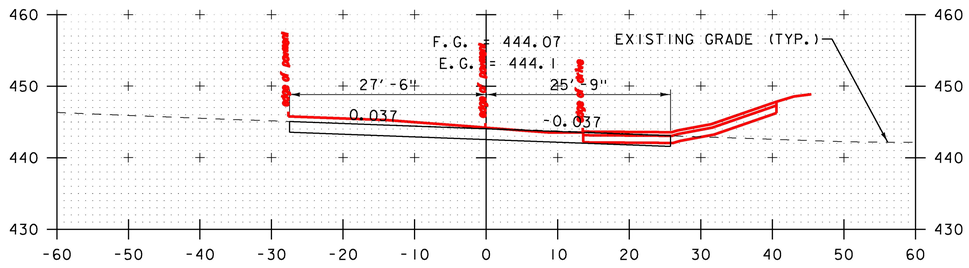

20+24 SKEWED (PARALLEL TO US ROUTE 5)

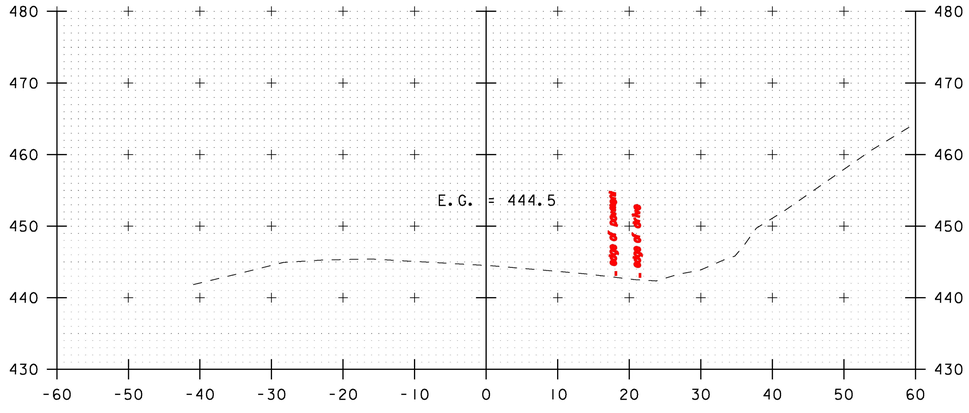

20+00

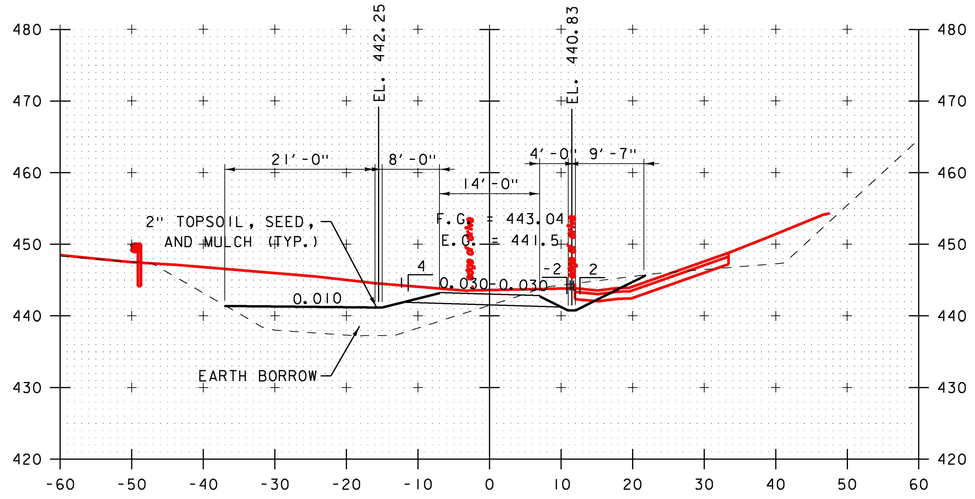

21+00

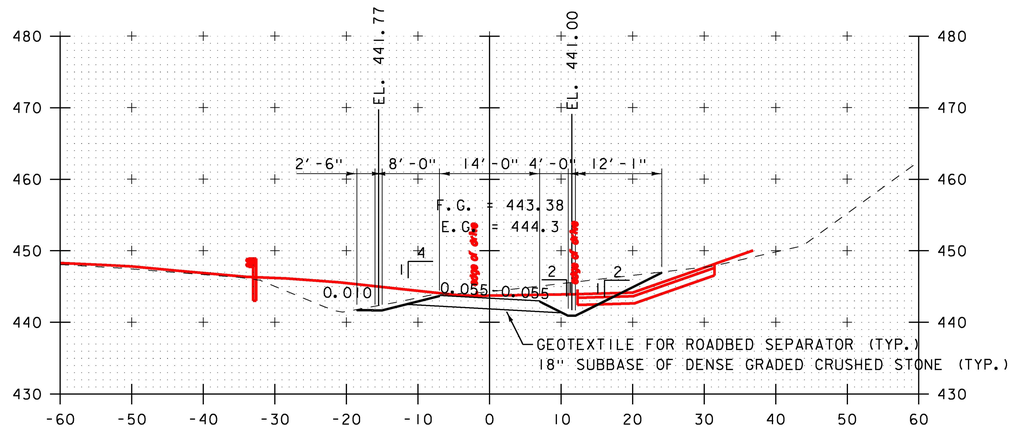

20+75

SCALE 1" = 10'-0"
10 0 10

STA. 20+00 TO STA. 21+00

RELEASED FOR CONSTRUCTION

NOVEMBER 24, 2015

PROJECT NAME: RYEGATE
PROJECT NUMBER: STP CULV(10)

FILE NAME: z06c156xs_acc2.dgn
PROJECT LEADER: E. DETRICK
DESIGNED BY: B. BRESLEND
ACCESS ROAD 2 CROSS SECTION SHEET 1

PLOT DATE: 11/24/2015
DRAWN BY: B. BRESLEND
CHECKED BY: E. DETRICK
SHEET 25 OF 56

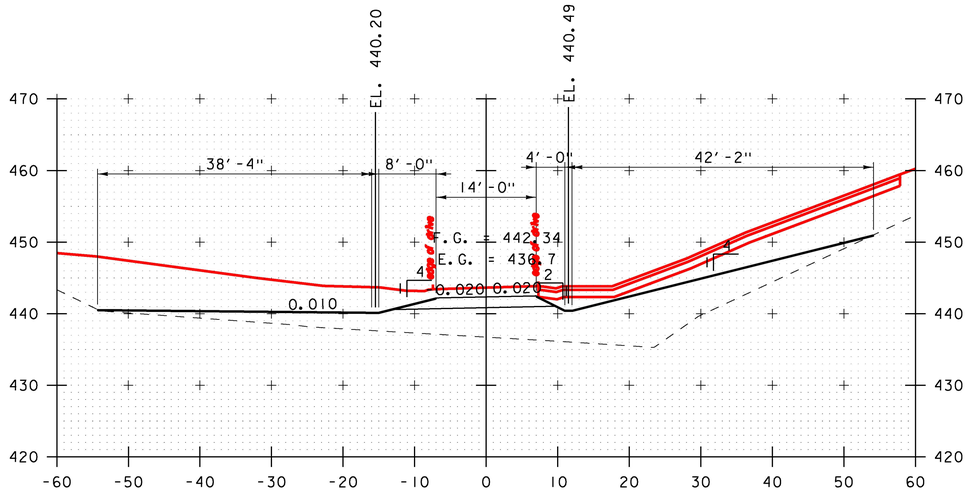

21+50

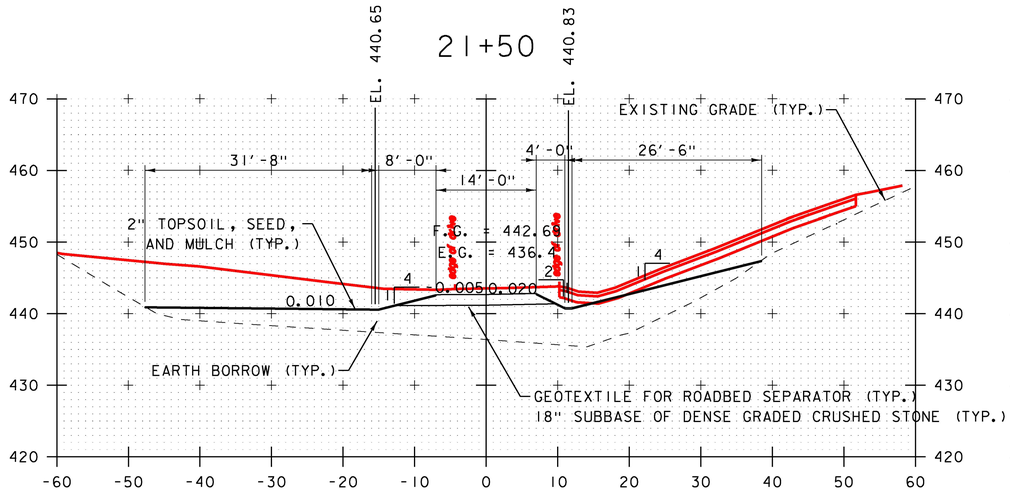

21+25

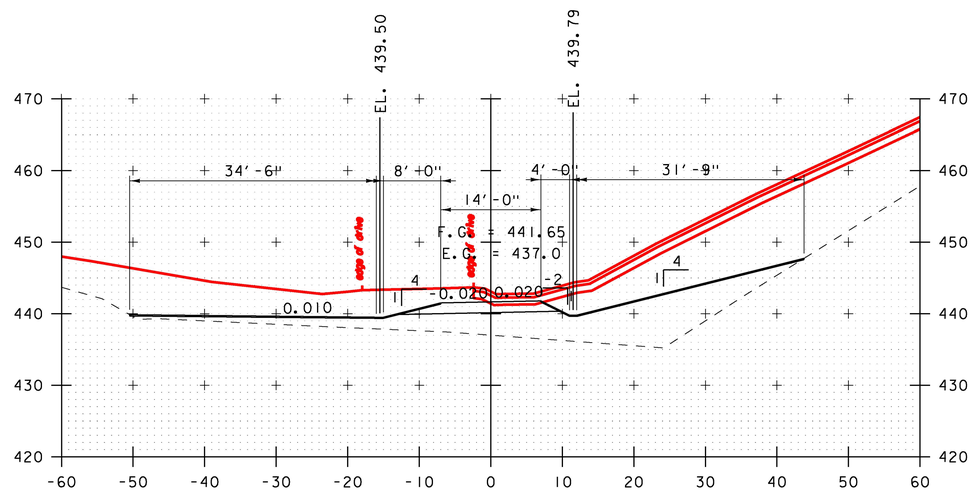

22+00

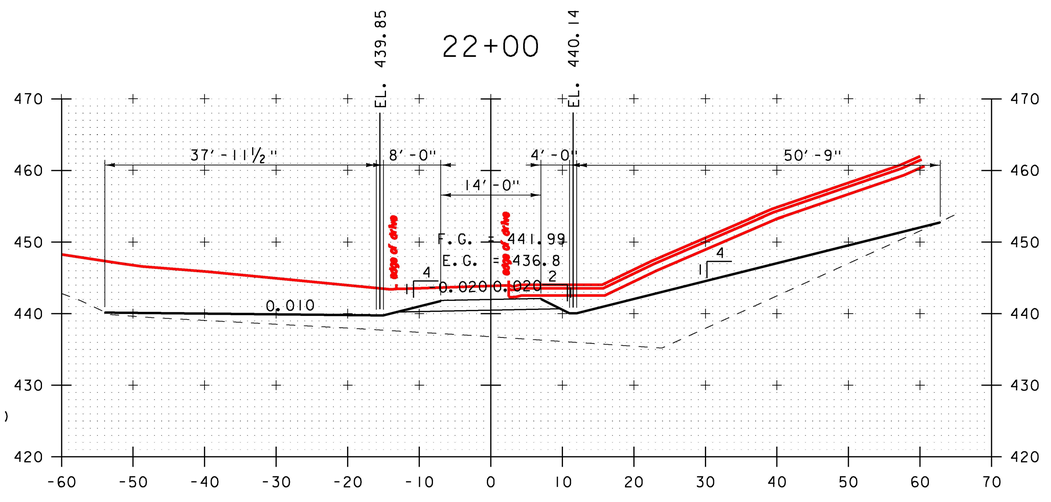

21+75

SCALE 1" = 10'-0"
10 0 10

STA. 21+25 TO STA. 22+00

RELEASED FOR CONSTRUCTION

NOVEMBER 24, 2015

PROJECT NAME: RYEGATE
PROJECT NUMBER: STP CULV(10)

FILE NAME: z06cl56xs_acc2.dgn
PROJECT LEADER: E. DETRICK
DESIGNED BY: B. BRESLEND
ACCESS ROAD 2 CROSS SECTION SHEET 2

PLOT DATE: 11/24/2015
DRAWN BY: B. BRESLEND
CHECKED BY: E. DETRICK
SHEET 26 OF 56

ECI ENGINEERS CONSTRUCTION
DuBois & King INC.

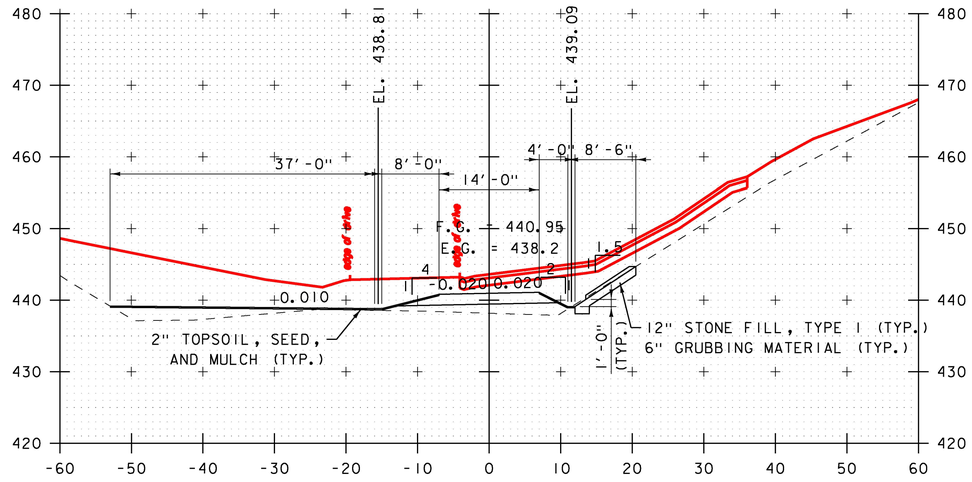

22+50

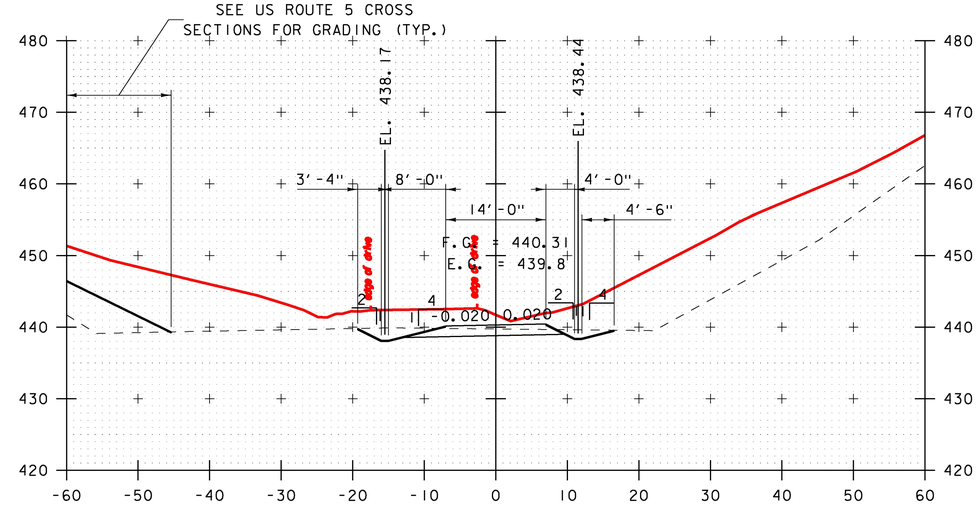

23+00

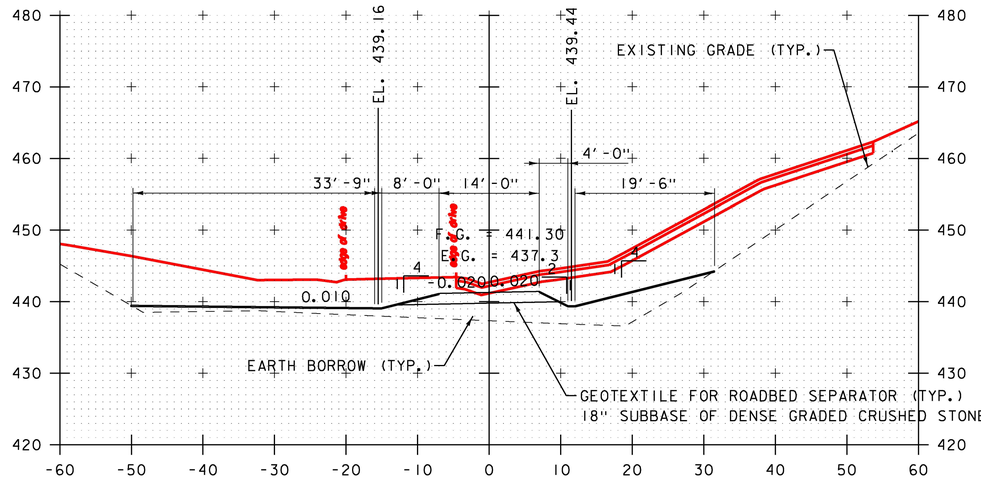

22+25

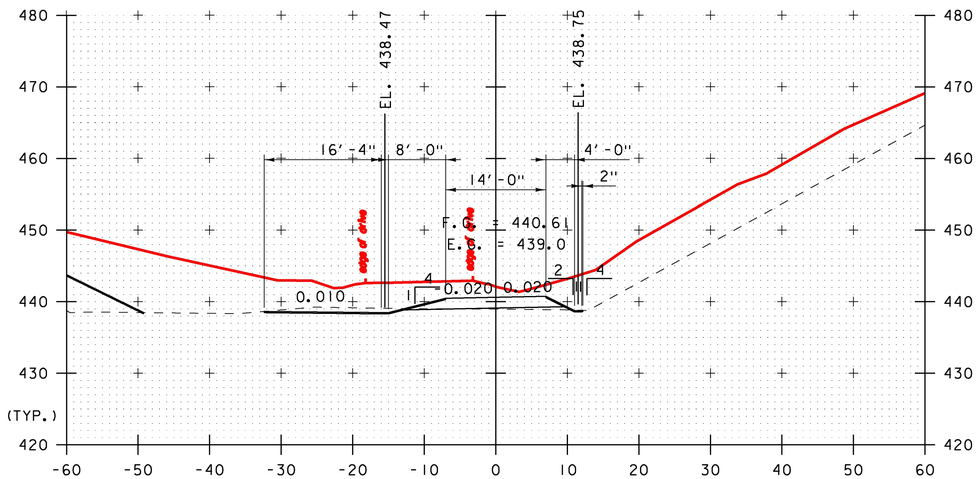

22+75

SCALE 1" = 10'-0"
10 0 10

STA. 22+25 TO STA. 23+00

RELEASED FOR CONSTRUCTION

NOVEMBER 24, 2015

PROJECT NAME: RYEGATE
PROJECT NUMBER: STP CULV(10)

ECI ENGINEERS CONSTRUCTION — DuBois & King inc.

FILE NAME: z06cl56xs_acc2.dgn
PROJECT LEADER: E. DETRICK
DESIGNED BY: B. BRESLEND
ACCESS ROAD 2 CROSS SECTION SHEET 3

PLOT DATE: 11/24/2015
DRAWN BY: B. BRESLEND
CHECKED BY: E. DETRICK
SHEET 27 OF 56

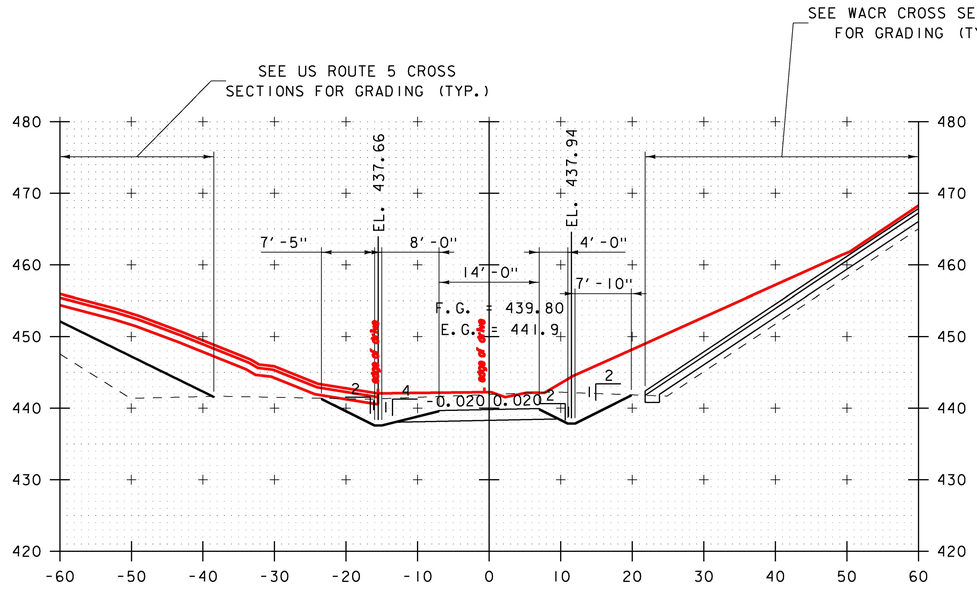

23+50

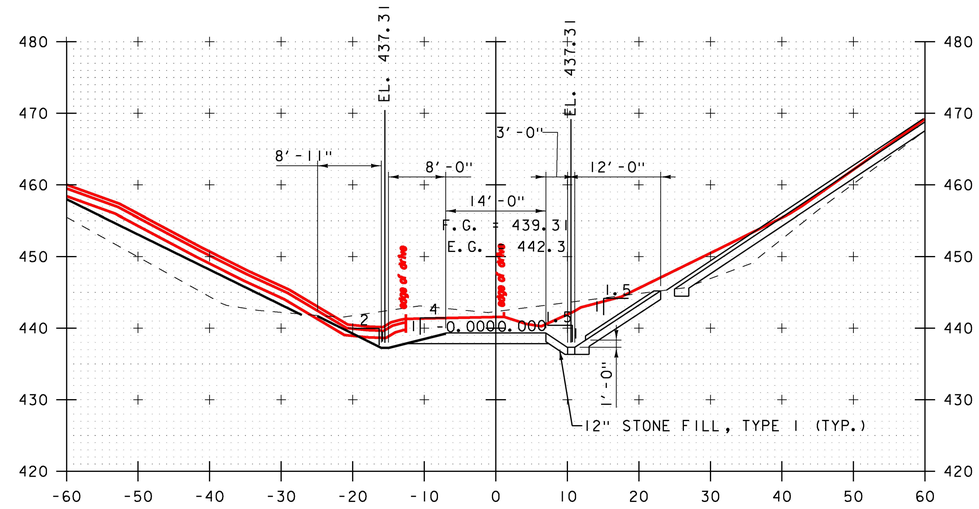

24+00

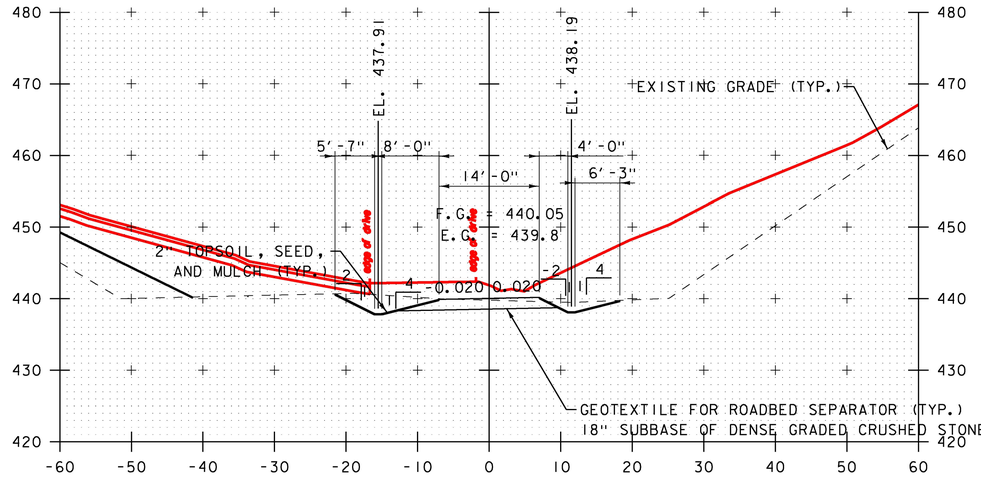

23+25

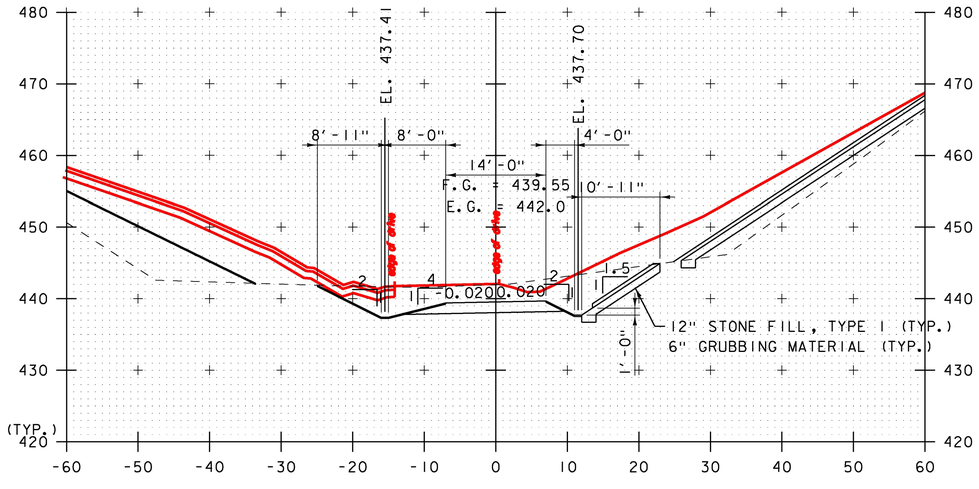

23+75

SCALE 1" = 10'-0"
10 0 10

STA. 23+25 TO STA. 24+00

RELEASED FOR CONSTRUCTION
NOVEMBER 24, 2015

PROJECT NAME: RYEGATE
PROJECT NUMBER: STP CULV(10)

ECI ENGINEERS CONSTRUCTION
DuBois & King inc.

FILE NAME: z06cl56xs_acc2.dgn
PROJECT LEADER: E. DETRICK
DESIGNED BY: B. BRESLEND
ACCESS ROAD 2 CROSS SECTION SHEET 4

PLOT DATE: 11/24/2015
DRAWN BY: B. BRESLEND
CHECKED BY: E. DETRICK
SHEET 28 OF 56

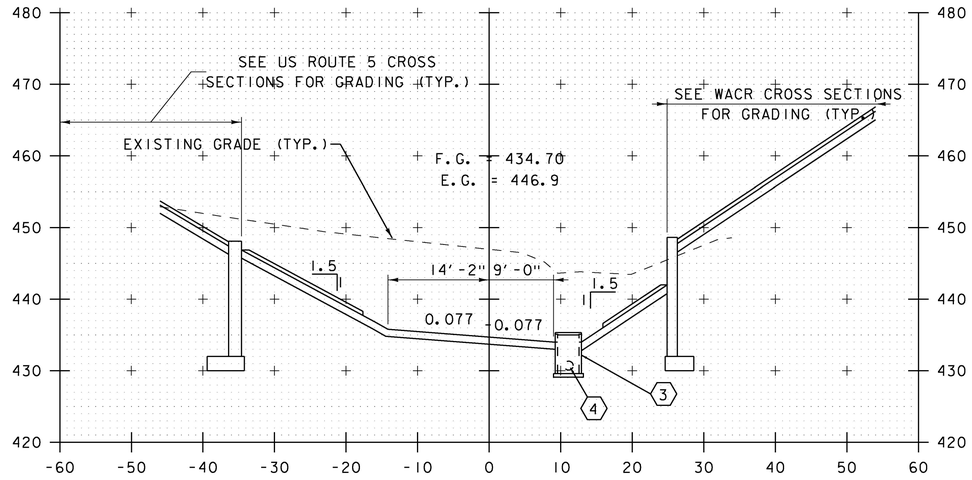

24+34
(PARALLEL TO CHANNEL WALL)

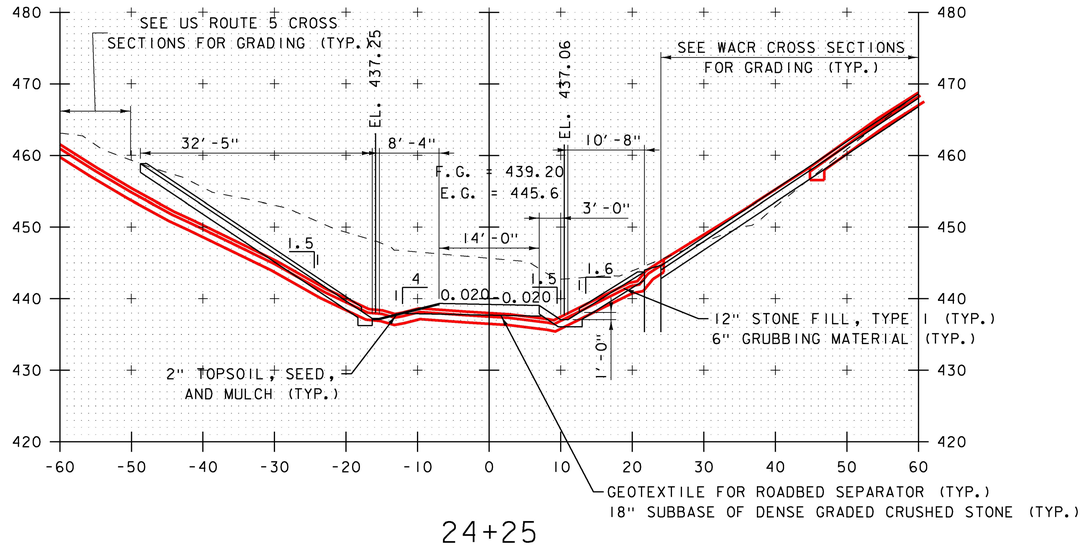

24+25

(3) STA. 12+97.66, 22.50' RT
PRECAST REINFORCED CONCRETE PIPE
DROP INLET WITH THROAT AND COVER,
SEE VTRANS STD D-1 FOR DETAILS
INV. IN = 434.00
INV. OUT = 430.10
INSTALL WITH INLET ON NORTH & SOUTH

(4) STA. 12+97.66, 22.50' RT TO
STA. 12+97.75, 16.00' RT
15" CPEP(SL) (5'-0")
INV. IN = 430.10
INV. OUT = 430.00

SCALE 1" = 10'-0"
10 0 10

STA. 24+25 TO STA. 24+41

RELEASED FOR CONSTRUCTION
NOVEMBER 24, 2015

PROJECT NAME: RYEGATE
PROJECT NUMBER: STP CULV(10)

FILE NAME: z06c156xs_acc2.dgn
PROJECT LEADER: E. DETRICK
DESIGNED BY: B. BRESLEND
ACCESS ROAD 2 CROSS SECTION SHEET 5

PLOT DATE: 11/24/2015
DRAWN BY: B. BRESLEND
CHECKED BY: E. DETRICK
SHEET 29 OF 56

ECI ENGINEERS CONSTRUCTION
DuBois & King inc.

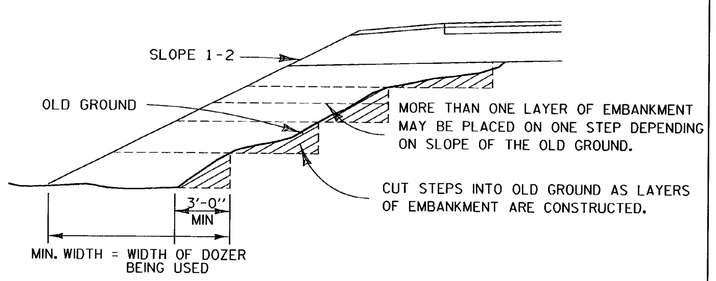

METHOD FOR CONSTRUCTING AN EMBANKMENT ON EARTH SLOPE

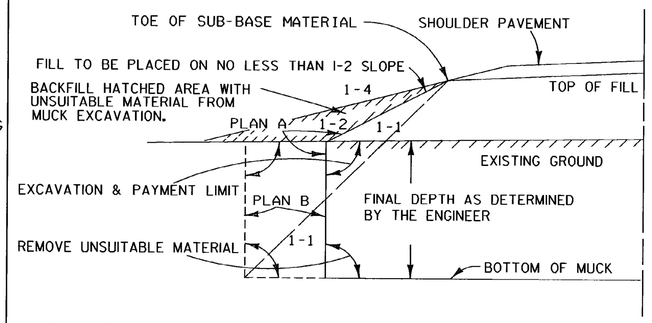

GENERAL NOTES :

THE MUCK OR UNSUITABLE MATERIAL SHALL BE EXCAVATED TO THE NEAT LINES SHOWN ON THE PLANS OR AS DETERMINED BY THE ENGINEER.

EXCAVATION AND PAYMENT LIMIT WILL BE DETERMINED FROM EITHER PLAN "A" OR PLAN "B", WHICHEVER PRODUCES THE GREATER WIDTH IN A GIVEN MUCK AREA.

BACKFILL MATERIAL MUST MEET THE REQUIREMENTS SET FORTH UNDER MUCK EXCAVATION,SECTION 203

TYPICAL NEAT PAY LINES FOR MUCK EXCAVATION

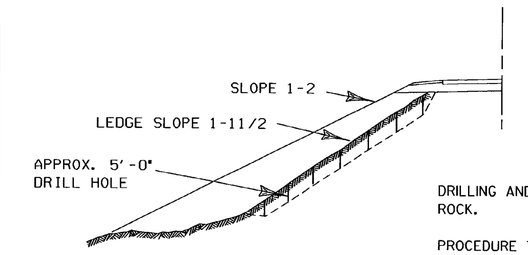

DRILL PATTERN

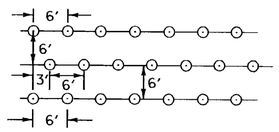

DRILLING AND BLASTING OF SOLID ROCK.

PROCEDURE TO BE FOLLOWED WHEN LEDGE SLOPE ON OLD GROUND IS BETWEEN A 1-1 AND A 1-5 SLOPE.

ALL HOLES TO BE APPROXIMATELY 5'-0" DEEP. HOLES TO BE IN ROWS, SPACED AND STAGGERED AS SHOWN IN DRILL PATTERN, OR AS DIRECTED BY THE ENGINEER, SEE SECTION 205

A METHOD FOR PREPARING LEDGE SLOPE BEFORE CONSTRUCTING AN EMBANKMENT

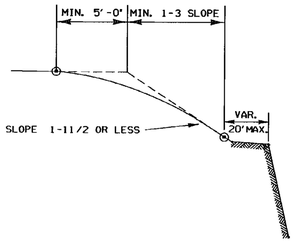

EARTH SECTIONS ABOVE STABLE ROCK OR EQUIVILENT OUTCROPS TO BE ROUNDED, AS FAR AS POSSIBLE AS THOUGH TOTAL HEIGHT OF SLOPE WAS IN EARTH CUT.

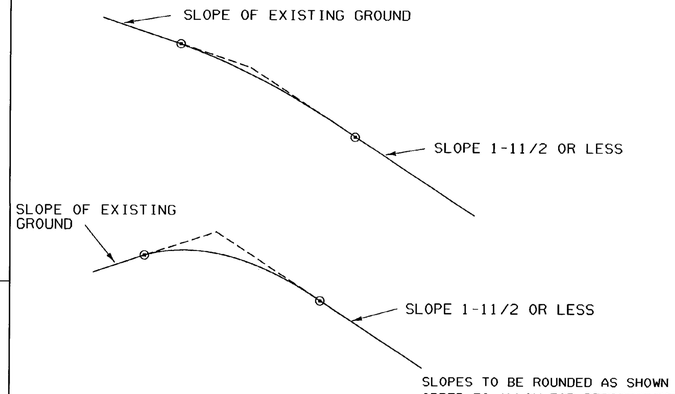

SLOPES TO BE ROUNDED AS SHOWN IN ORDER TO ALLOW FOR PERSPECTIVE FORESHORTENING AS SEEN FROM THE ROAD AND SO THAT FINISHED SLOPES WILL BETTER SUPPORT VEGETATIVE COVER.

ROUNDING TO MERGE WITH EXISTING GROUND SURFACE SO THAT NO HARD GRADE LINE WILL REMAIN WITHIN THE LINE OF SIGHT

WHEN STEEPNESS OF EXISTING GROUND OR PRESENCE OF EXISTING VEGETATION IS CONSIDERED A FACTOR PREVENTING NORMAL ROUNDING, THE EXTENT OF THE ROUNDING SHOULD BE MODIFIED TO MEET CONDITIONS.

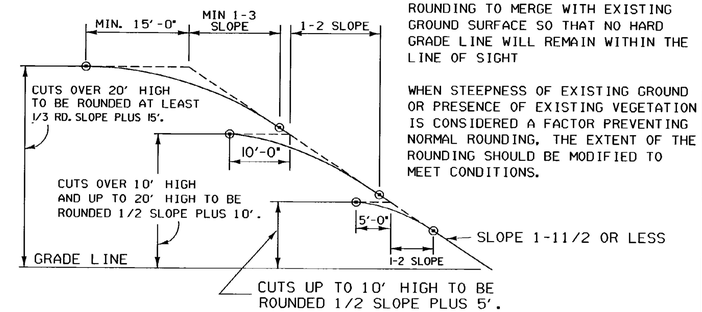

TYPICAL SLOPE ROUNDING

REVISIONS AND CORRECTIONS

DEC. 6, 1971 - ORIGINAL APPROVAL DATE

JUNE 1, 1994 - REISSUED, WITHOUT CHANGE, UNDER NEW SIGNATURES.

APPROVED

APPROVED FOR THIS PROJECT AND/OR DESIGN IMPLEMENTATION. FHWA FINAL APPROVAL PENDING.

Gordon B. MacAllen, P.E.
DIRECTOR OF ENGINEERING

Robert M. Murphy, PE
DESIGN ENGINEER

EMBANKMENT ON EARTH SLOPE
EMBANKMENT ON ROCK SLOPE
MUCK EXCAVATION
TYPICAL SLOPE ROUNDING

VERMONT AGENCY OF TRANSPORTATION

STANDARD B-5

DETAIL A — RESIDENTIAL DRIVE

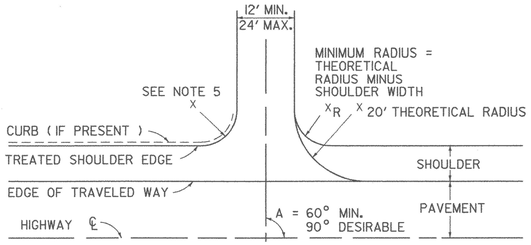

DETAIL B — DUAL COMMERCIAL DRIVE TO BE USED ONLY UNDER SPECIAL CONDITIONS

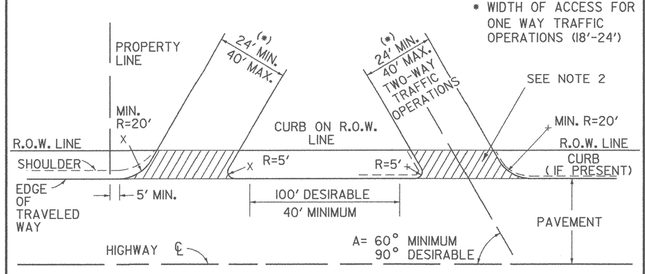

DETAIL C — TWO-WAY UNDIVIDED COMMERCIAL DRIVE FOR SINGLE STORES, BUSINESSES, SMALL HOUSING DEVELOPMENTS

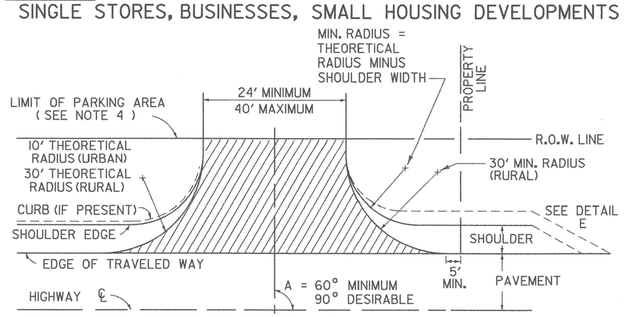

THIS DETAIL WILL ALSO APPLY TO COMMERCIAL SERVICE DRIVES, WHEN AUTHORIZED, HAVING A MAXIMUM WIDTH OF 20'. THE SERVICE DRIVE WILL HAVE A "SERVICE VEHICLES ONLY" SIGN PLACED AT THE HIGHWAY ROW LINE. SIGN SHALL BE 18"X 24" AS PRESCRIBED IN THE "STANDARD HIGHWAY SIGNS BOOK", A SUPPLEMENTAL PUBLICATION TO MUTCD.

DETAIL D — TWO-WAY COMMERCIAL DRIVE WITH DIVISIONAL ISLAND FOR SHOPPING CENTERS, LARGE HOUSING DEVELOPMENTS, INDUSTRIAL PLANTS AND SERVICE STATIONS

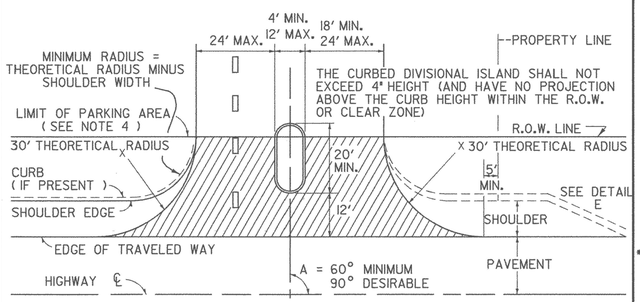

DETAIL E — RIGHT TURN LANE FOR COMMERCIAL DRIVE (UNSIGNALIZED INTERSECTIONS ONLY)

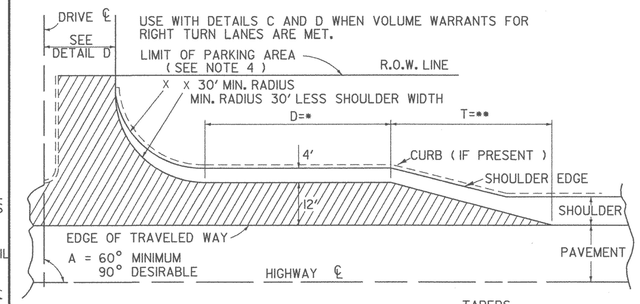

• STORAGE LENGTH IS VARIABLE DEPENDING ON TRAFFIC VOLUME AND MUST BE ADJUSTED TO PROVIDE PROPER DECELERATION LENGTH. REFER TO VAOT STANDARD E-192

TAPERS

SPEED (MPH)	30	35	40	50
••LENGTH (MIN)(FT)(T)	100	120	140	180
RATE	8:1	10:1	12:1	15:1

DETAIL F — MINIMUM HORIZONTAL SEPARATION BETWEEN DRIVEWAYS AND INTERSECTING SIDEROADS

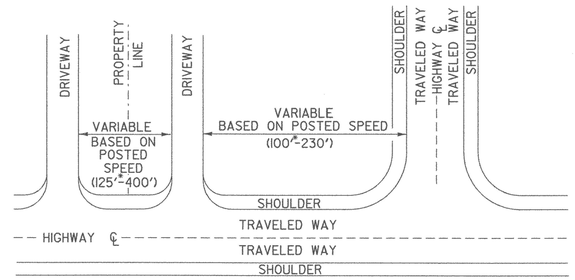

• MINIMUM UNLESS NO OTHER REASONABLE ACCESS IS AVAILABLE AND PRIOR APPROVAL IS GRANTED BY THE VAOT ITEMS SUCH AS TRAFFIC SIGNALS, HIGH TRAFFIC VOLUMES, OR FUNCTIONAL CLASS OF HIGHWAY SHOULD BE CONSIDERED WHEN DETERMINING APPROPRIATE SEPARATION DISTANCE. WHEN CURRENT RECOMMENDED SEPARATION DISTANCE CANNOT BE OBTAINED RESTRICTION OF TURNING MOVEMENTS MAY BE REQUIRED.

DETAIL G — PERSPECTIVE SKETCH OF DRIVE INTERSECTION SHOWING DEPRESSION

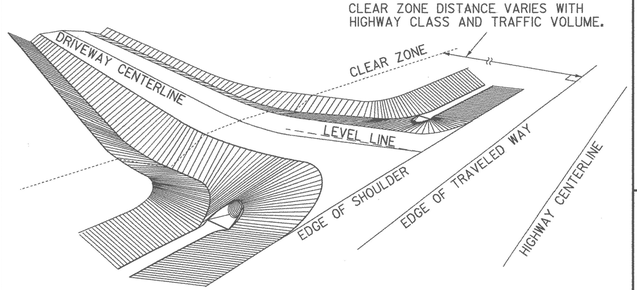

DETAIL H — PROFILE OF DRIVE INTERSECTION SHOWING 5" DEPRESSION (CUT SECTION)

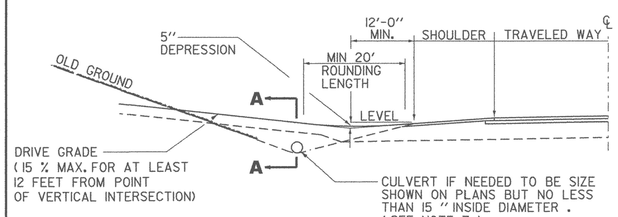

DETAIL I — PROFILE OF DRIVE INTERSECTION (FILL SECTION)

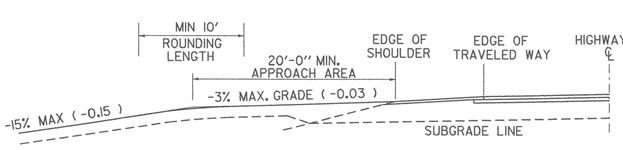

DETAIL J

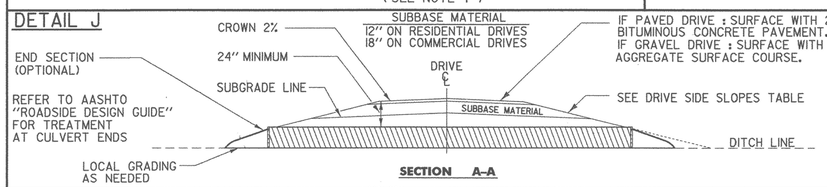

DRIVE SIDE SLOPES

LOCATION OF SLOPE	SLOPE RATE
V > 40 MPH	1:6 OR FLATTER
URBAN AREAS, OR V ≤ 40 MPH	1:4 DESIRABLE 1:2 ALLOWABLE
OUTSIDE CLEAR ZONE	1:2 OR FLATTER

NOTES:

1. THIS SHEET IS INTENDED FOR USE BY DESIGNERS ON HIGHWAY PROJECTS AND IN CONJUNCTION WITH A PERMIT FOR WORK WITHIN HIGHWAY RIGHTS OF WAY (FORM TA 210). ALL CONSTRUCTION REQUIRED BY THE PERMIT AND INDICATED ON THIS SHEET SHALL BE THE RESPONSIBILITY OF THE APPLICANT AND IS SUBJECT TO THE APPROVAL OF THE VT. AGENCY OF TRANSPORTATION. WHEN USED WITH THE PLANS FOR A HIGHWAY CONSTRUCTION PROJECT. THIS SHEET IS INTENDED TO BE A GUIDE FOR THE DESIGNER CONCERNING DRIVE WIDTHS, HORIZONTAL, VERTICAL AND GEOMETRIC CHARACTERISTICS.
2. ALL COMMERCIAL DRIVES SHALL BE PAVED FROM THE EDGE OF THE TRAVELED WAY TO THE HIGHWAY RIGHT-OF-WAY, TO THE FARTHEST POINT OF CURVATURE ON THE DRIVEWAY EDGE OR AS DIRECTED BY THE DISTRICT TRANSPORTATION ADMINISTRATOR. THIS PAVING IS INDICATED IN DETAILS (B THRU E) BY HATCHING.
3. DEPTH OF SUBBASE AND PAVEMENT TO BE THE SAME AS HIGHWAY OR AS SHOWN IN DETAIL J WITHIN THE LIMITS OF THE HIGHWAY RIGHT-OF-WAY.
4. VEHICULAR ACCESS FROM PARKING AREAS TO THE RIGHT-OF-WAY AT OTHER THAN APPROVED ACCESS POINTS WILL BE PREVENTED BY THE CONSTRUCTION OF CURBING OR OTHER SUITABLE PHYSICAL BARRIER.
5. IF CURB IS PRESENT, SEE APPROPRIATE CURB DETAIL STANDARD OR MATCH TOWN/CITY STANDARD CURB TREATMENT.
6. WHERE TRAFFIC VOLUME FOR A PROJECT IS SUBSTANTIAL THE AGENCY MAY REQUIRE SPECIAL LANES FOR TURNING, SIGNALS OR OTHER MODIFICATIONS. BASED ON TRAFFIC STUDIES THE AGENCY WILL DETERMINE SPECIFIC TREATMENT TO BE USED. ON DEVELOPER PROJECTS THE AGENCY WILL WORK WITH THE APPLICANT TO IMPLEMENT CHANGES TO THE STATE HIGHWAY.
7. CIRCULAR DRAINAGE CULVERTS UNDER DRIVES SHALL HAVE A MINIMUM INSIDE DIAMETER (I.D.) OF 15". PIPE ARCHES USED UNDER DRIVES SHALL HAVE A MINIMUM INSIDE CROSS-SECTIONAL AREA EQUIVALENT TO THAT PROVIDED BY A 15" CIRCULAR PIPE.
8. THE OFFSET BETWEEN THE PROPERTY LINE AND THE EDGE OF THE DRIVEWAY MAY BE GOVERNED BY LOCAL ZONING LAWS. DRIVEWAY WIDTH RESTRICTIONS SHOWN PERTAIN ONLY TO THE AREA WITHIN THE HIGHWAY R.O.W. OR THE END OF THE TURNING RADIUS WHICHEVER IS GREATEST.
9. DRIVEWAY GRADES STEEPER THAN THOSE SHOWN MAY BE ALLOWED AS LONG AS A 20' APPROACH AREA IS ACHIEVED FOR THE VEHICLE TO PAUSE BEFORE ENTERING THE HIGHWAY. (WHERE CURB & SIDEWALKS EXIST, SEE STANDARDS C-2A & C-2B)
10. INTERSECTION SIGHT DISTANCES, EQUAL TO OR GREATER THAN THOSE SHOWN BELOW, SHOULD BE PROVIDED IN BOTH DIRECTIONS FOR ALL DRIVES ENTERING ON PUBLIC HIGHWAYS, UNLESS OTHERWISE APPROVED BY THE AGENCY OF TRANSPORTATION. INTERSECTION SIGHT DISTANCE IS MEASURED FROM A POINT ON THE DRIVE AT LEAST 15 FEET FROM THE EDGE OF TRAVELED WAY OF THE ADJACENT ROADWAY AND MEASURED FROM A HEIGHT OF EYE OF 3.5 FEET ON THE DRIVE TO A HEIGHT OF 3.50 FEET ON THE ROADWAY.

SIGHT DISTANCE CHART

POSTED SPEED OR DESIGN SPEED (M.P.H.)	MINIMUM STOPPING SIGHT DISTANCE (FT)	MINIMUM INTERSECTION SIGHT DISTANCE • (FT)
25	155	280
30	200	335
35	250	390
40	305	445
45	360	500
50	425	555
55	495	610
60	570	665
65	645	720

THE ABOVE VALUES ARE TAKEN FROM THE 2004 AASHTO "A POLICY ON GEOMETRIC DESIGN OF HIGHWAYS & STREETS."

NOTE : ADVANCE WARNING SIGNS WILL BE REQUIRED IF OBTAINABLE INTERSECTION SIGHT DISTANCES ARE BELOW MINIMUM STOPPING SIGHT DISTANCES.

THE CHART IS ENTERED TO SELECT DESIGN VALUES BASED ON THE POSTED SPEED LIMIT IN MPH. VALUES FOR DESIGN ARE CALCULATED BASED ON THE DESIGN SPEED IN MPH.

• ASSUMES A GAP OF 7.5 SECONDS IN THE TRAFFIC STREAM ON THE HIGHWAY MAINLINE BASED ON THE HIGHWAY DESIGN SPEED IN MPH. THIS ALLOWS A STOPPED PASSENGER VEHICLE TO ENTER THE MAINLINE FROM THE DRIVE WITHOUT UNDULY INTERFERING WITH THE HIGHWAY OPERATIONS.

REVISIONS AND CORRECTIONS

DEC. 11, 1992 - THIS STANDARD SUPERCEDES B-71 (7/23/80R), B-71A (3/12/90), AND B-13 (12/14/71).
JUNE 1, 1994 - REISSUED, WITHOUT CHANGE, UNDER NEW SIGNATURES.
MAR. 10, 1995 - REISSUED, WITHOUT CHANGE, UNDER NEW SIGNATURES.
NOV. 16, 2000 - CHANGES MADE TO CONFORM WITH LANGUAGE AND DIMENSIONS IN ACCESS MANAGEMENT PROGRAM GUIDELINES.
FEB 1, 2004 - CHANGES MADE TO SIGHT DISTANCE CHART TO CONFORM WITH NEWEST AASHTO CRITERIA.
JULY 8, 2005 - CHANGE MADE TO OBJECT HEIGHT TO CONFORM WITH NEWEST AASHTO CRITERIA

APPROVED

Richard Fitzwater
DIRECTOR OF PROGRAM DEVELOPMENT

Craig S. Keller
CHIEF OF UTILITIES AND PERMITS

Michael Conroy
FEDERAL HIGHWAY ADMINISTRATION

STANDARDS FOR RESIDENTIAL AND COMMERCIAL DRIVES

VERMONT AGENCY OF TRANSPORTATION

STANDARD B-71

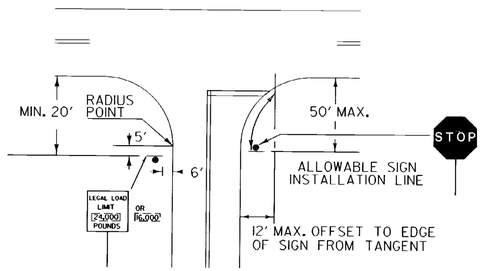

STOP SIGN SHALL BE PLACED ON DRIVERS RIGHT. MAINTAINING MAXIMUM VISIBLITY. CLEARANCE SHALL BE A MINIMUM OF 6' AND A MAXIMUM OF 50' FROM EDGE LINE OF INTERSECTING ROADWAY AND DOES NOT HAVE TO BE ADJACENT TO THE STOP BAR.

LEGAL LOAD LIMIT AND STOP SIGNS AT INTERSECTIONS WITH TOWN HIGHWAYS

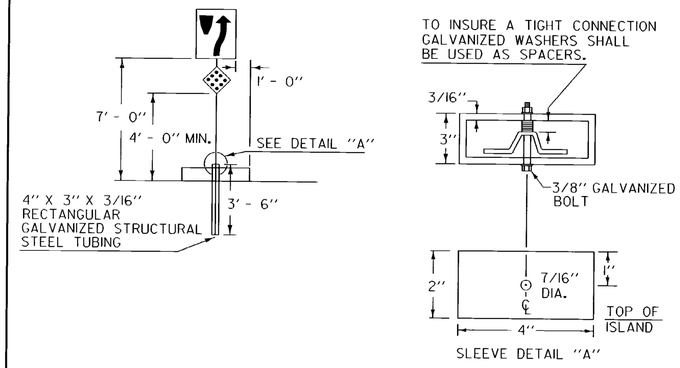

SIGNS ON MEDIAN ISLANDS IN THE LINE OF TRAFFIC

INCREASE VERTICAL CLEARANCE TO 7' IN AREAS OF FREQUENT ROADSIDE PARKING OR PEDESTRIAN ACTIVITY

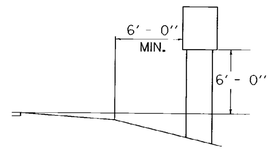

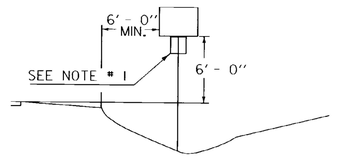

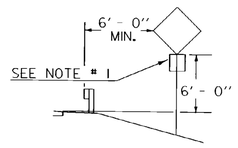

RURAL

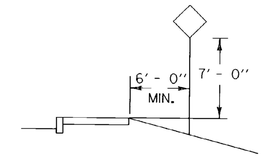

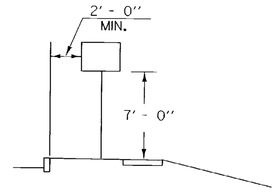

IF SUFFICIENT CLEARANCE IS NOT AVAILABLE BETWEEN CURB AND SIDEWALK MOUNT SIGN BEHIND SIDEWALK AS SHOWN AT TOP. CHECK FOR ADEQUATE R.O.W..

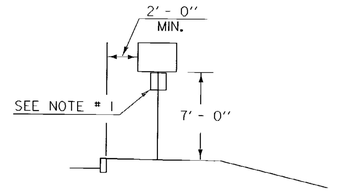

URBAN

NOTES:

1. IN BOTH RURAL AND URBAN LOCATIONS. IF A SECONDARY SIGN IS MOUNTED BELOW ANOTHER SIGN, THE MINIMUM CLEARANCE MAY BE REDUCED BY ONE FOOT.
2. IN RURAL AREAS WITH NO OR MINIMAL SHOULDER, THE LATERAL CLEARANCE TO THE EDGE OF A SIGN SHOULD BE A MINIMUM OF 12' FROM THE EDGE OF THE TRAVELED WAY.
3. ALSO SEE OTHER STANDARD SHEETS FOR MOUNTING CLEARANCE AND SPACING OF DESTINATION AND ROUTE MARKER ASSEMBLIES AND TOWN LINE SIGNS.

POST REFERENCE:

REFER TO THE DETAILS ON THE APPROPRIATE STANDARD DRAWING FOR INFORMATION CONCERNING THE PROPER MOUNTING OF SIGNS ON APPROPRIATE POSTS.

OTHER STDS. REQUIRED: **E-160** **E-161** **E-162** **E-163** **E-164**

REVISIONS AND CORRECTIONS

JAN. 23. 1995 - DATE OF ORIGINAL ISSUE

AUG. 08. 1995 - VARIOUS MINOR NOTE REVISIONS

APPROVED FOR THIS PROJECT AND/OR DESIGN IMPLEMENTATION. FHWA FINAL APPROVAL PENDING.

APPROVED

Gordon S. MacArthur
DIRECTOR OF ENGINEERING

David A. Ross
TRAFFIC AND SAFETY ENGINEER

STANDARD SIGN PLACEMENT CONVENTIONAL ROAD

/traf/std/stdel21.dgn : stdel21.i

VERMONT AGENCY OF TRANSPORTATION

STANDARD E-121

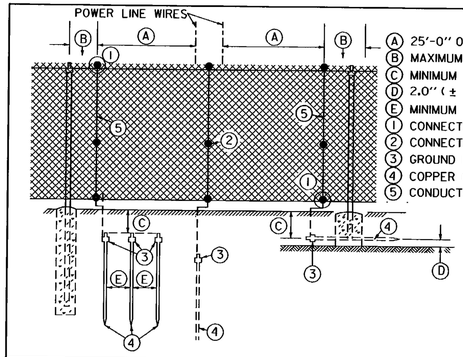

(A) 25'-0" OR TO 1.0' ± 0.5" FROM NEAREST FENCE POST (AT RIGHT ANGLE TO POWER LINE)
(B) MAXIMUM DISTANCE 1.0 (± 0.5")
(C) MINIMUM DISTANCE 1.0 (± 0.5")
(D) 2.0" (± 0.5")
(E) MINIMUM DISTANCE 6.0
(1) CONNECTOR, (2) CONNECTOR, } SUITABLE FOR WIRE GAUGES UTILIZED AND FOR DISSIMILAR METALS
(3) GROUND ROD CLAMP
(4) COPPER CLAD STEEL CORE GROUND ROD 5/8" x 8'-0"
(5) CONDUCTOR NO. 6 AWG COPPER SOFT DRAWN OR NO. 4 AWG ALUMINUM

INSTALLATION METHOD OF PROTECTIVE GROUNDING AT POWER LINE CROSSINGS

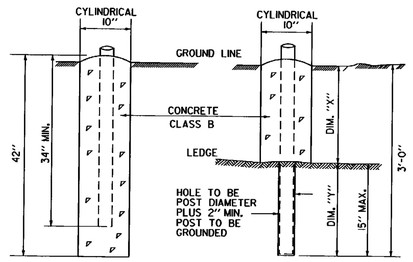

DIM. "Y" = 15" WHEN DIM. "X" VARIES BETWEEN 0" AND 24". WHEN DIM "X" EXCEEDS 24", DIM. "Y" DECREASES ACCORDINGLY

POST FOOTING

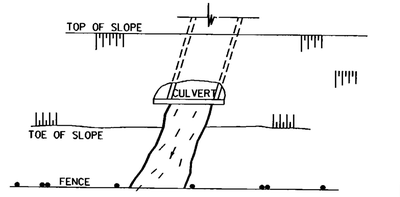

PLAN

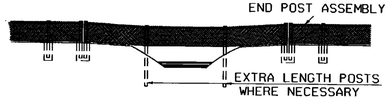

CROSSING AT STREAMS

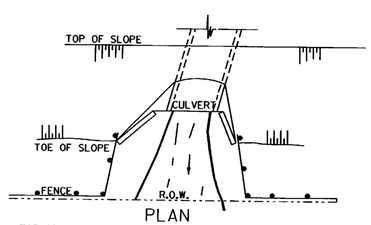

PLAN

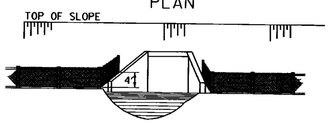

ELEVATION AT CULVERT

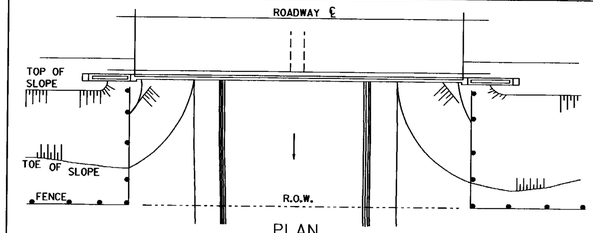

PLAN

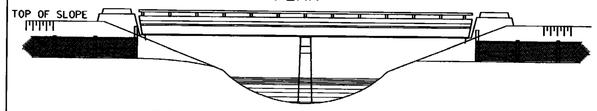

ELEVATION AT BRIDGE WITH PARAPET WALLS

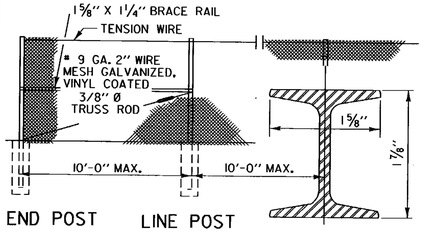

END POST LINE POST

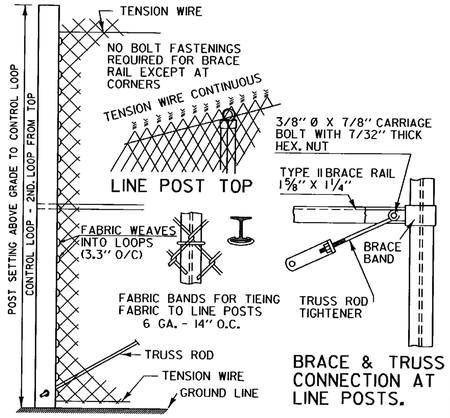

LINE POST (FULL SIZE SECTION)

TERMINAL POST

BRACE & TRUSS CONNECTION AT LINE POSTS.

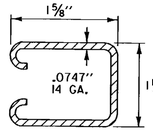

BRACE RAIL

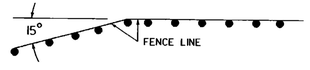

WHERE FENCE LINE HAS A CHANGE IN DIRECTION OF 15 DEGREES OR MORE, CORNER POSTS WITH BRACING SHALL BE ERECTED. WHERE ANGLE IN FENCE LINE IS LESS THAN 15 DEGREES AND EXISTING CONDITIONS REQUIRE TERMINAL OR CORNER POSTS, THEY SHALL BE ERECTED AS DIRECTED BY THE ENGINEER.

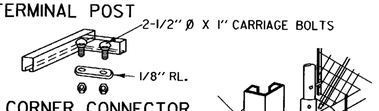

CORNER CONNECTOR (FOR BRACE RAILS ONLY)

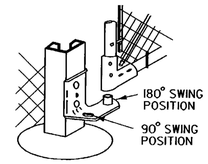

HINGE DETAIL
FOR SINGLE GATES 3' TO 6' AND DOUBLE GATES 6' TO 12' INCL. ONLY

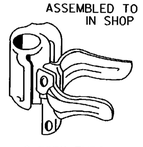

2-FORK ENDS

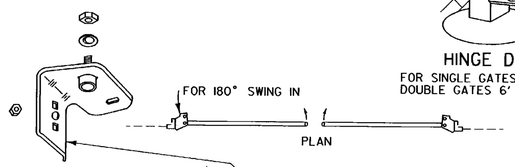

TOP HINGE

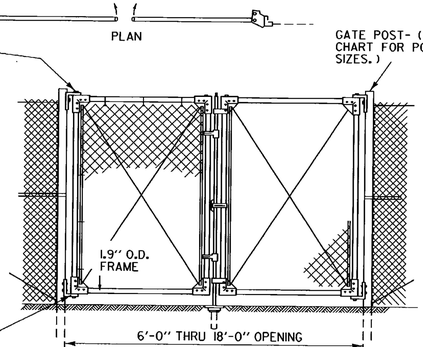

TYPICAL DOUBLE GATE
(ELEVATION FROM OUTSIDE)

GENERAL NOTES

HEIGHT - AS NOTED ON PLANS

FABRIC - CHAIN LINK, 2" MESH, # 9 GAUGE (0.148" DIAMETER) WIRE, TOP AND BOTTOM SELVAGES SHALL BE BARBED. BOTTOM SELVAGE SHALL BE 2" ABOVE THE GROUND LINE, TOP SELVAGE SHALL BE 1" ABOVE THE TENSION WIRE. WHERE FENCE IS 4' THE TOP EDGE SHALL BE KNUCKLED.

LINE POSTS - 17/8" x 1 5/8" "H" POSTS, 2.7 LBS/FT. FOR FENCE LESS THAN 6'-0" IN HEIGHT. 2" x 2 1/4" "H" POSTS, 4.1 LBS/FT. FOR FENCE 6'-0" AND OVER.

TERMINAL POSTS - SEE DRAWINGS.

POST SPACING - POSTS SHALL BE SPACED EQUIDISTANT ON A MAXIMUM OF 10 FEET CENTER TO CENTER EXCEPT GATE POSTS, WHICH SHALL BE SPACED ACCORDING TO THE REQUIRED GATE OPENING.

POST FOOTINGS - ALL POSTS SHALL BE SET TO A DEPTH OF TWO (2) FEET 10 INCHES IN A 10" CYLINDRICAL SHAPED HOLE 3'-6" DEEP FILLED WITH CONCRETE.
ALL FITTINGS AND HARDWARE SHALL BE AS SHOWN ON THIS SHEET OR EQUAL.

TENSION WIRE - SHALL BE 9 GAUGE WIRE ATTACHED 1" BELOW TOP SELVAGE AND 2" ABOVE BOTTOM SELVAGE OF FABRIC BY MEANS OF 11 GAUGE HOG RINGS ON 24" CENTERS.

GATE FRAMES - SHALL BE 1.90" O.D. PIPE CONNECTED WITH FITTINGS AND RIVETED AT EACH CORNER. EACH FRAME HAS 3/8" DIAMETER ADJUSTABLE TRUSS RODS. GATES HAVE POSITIVE TYPE LATCHING DEVICES WITH PROVISIONS FOR PADLOCKING; AND DRIVE GATES HAVE A CENTER PLUNGER ROD, CATCH AND SEMI-AUTOMATIC OUTER CATCHES.

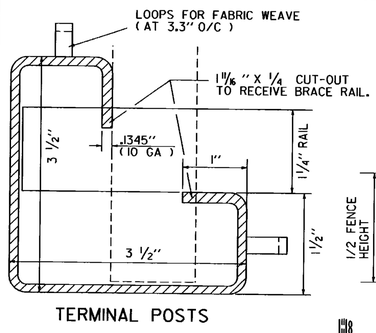

TERMINAL POSTS

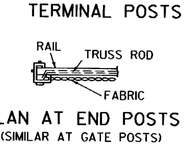

PLAN AT END POSTS
(SIMILAR AT GATE POSTS)

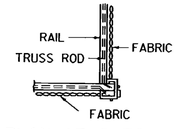

PLAN AT OUTSIDE CORNER

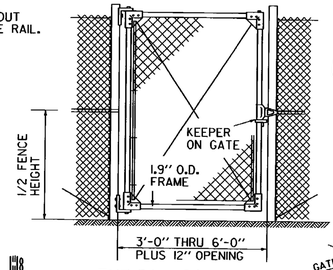

TYPICAL SINGLE GATE
(ELEVATION FROM OUTSIDE LEFT HAND GATE SHOWN)



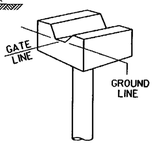

CENTER STOP FOR TWO PANEL GATES

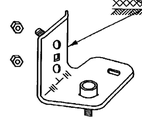

BOTTOM HINGE
(USE 1 BOLT & NUT)

POSTS FOR SINGLE SWING GATE

OPENING	POST SIZE	WGT./L.F.
UP TO 6'	3 ½" X 3 ½" *	5.14 LBS.
OVER 6' TO 13'	4 O.D.	9.11 LBS
OVER 13' TO 18'	6 ⅝" O.D.	18.97 LBS
OVER 18'	8 ⅝" O.D.	24.70 LBS.

* ROLL FORMED SECTION

REVISIONS AND CORRECTIONS

DEC. 6, 1971- ORIGINAL APPROVAL DATE
JULY 28, 1975- VINYL COATED FABRIC ADDED
FEB. 1, 1979- CHANGE TOP RAIL TO TENSION WIRE
MARCH 19, 1979- TORQUE ARM DETAILS REMOVED
JUNE 1, 1994 - REISSUED, WITHOUT CHANGE, UNDER NEW SIGNATURES.

APPROVED

APPROVED FOR THIS PROJECT AND/OR DESIGN IMPLEMENTATION. FHWA FINAL APPROVAL PENDING.

Gordon S. MacArthur, P.E.
DIRECTOR OF ENGINEERING

Robert M. Murphy, P.E.
DESIGN ENGINEER

CHAIN LINK FENCE, TYPE II
DRIVE GATE FOR CHAIN-LINK FENCE, TYPE II
WALK GATE FOR CHAIN-LINK FENCE, TYPE II

VERMONT AGENCY OF TRANSPORTATION

STANDARD F-4

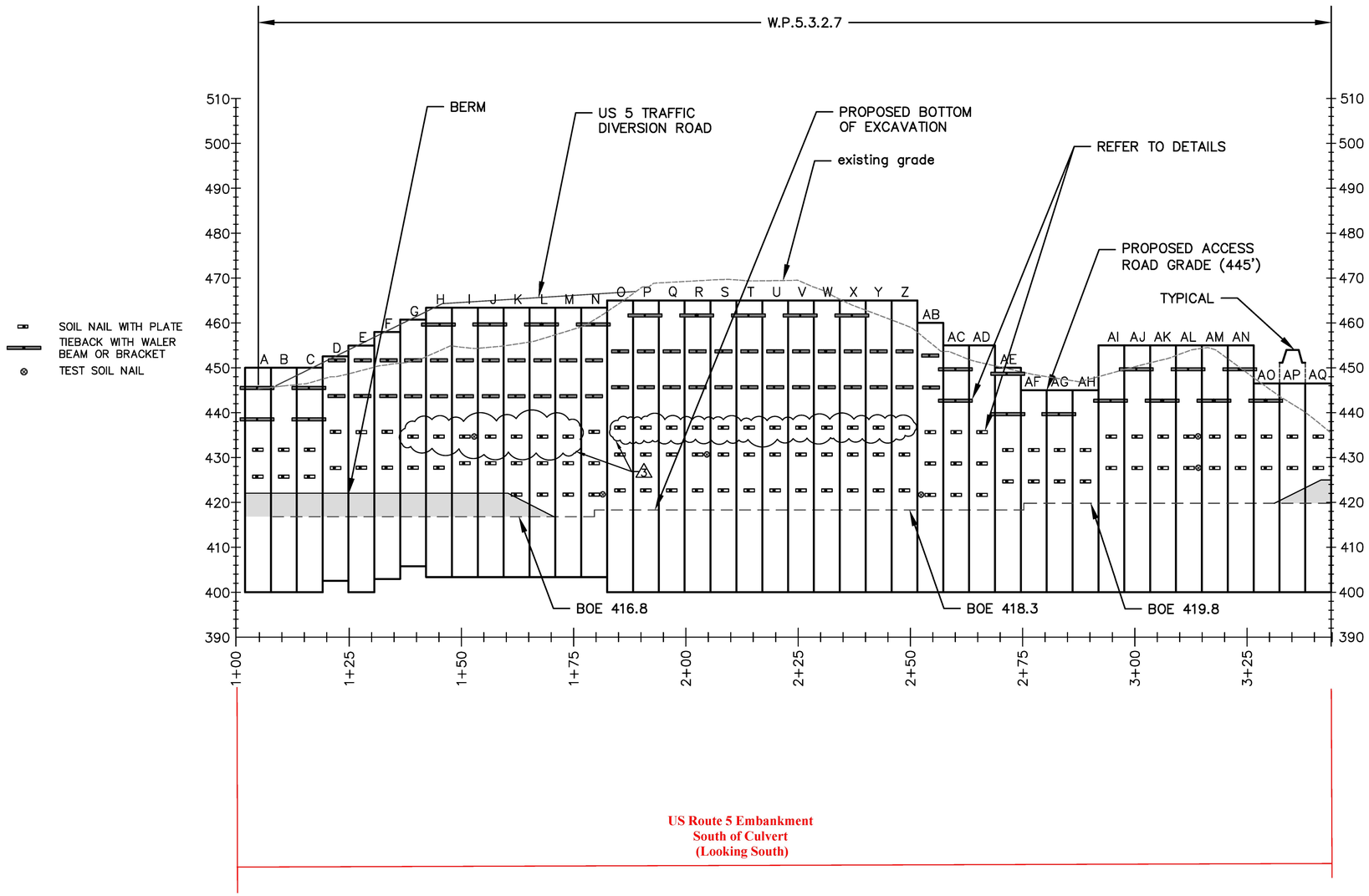

US Route 5 Embankment
South of Culvert
(Looking South)

- Wales and Soil Anchor Heads Removed
- Sheet Piles Removed Except As Shown In Plan View

(For Reference Only)

PROJECT NAME:	RYEGATE
PROJECT NUMBER:	STP CULV(10)
FILE NAME:	PLOT DATE:
PROJECT LEADER:	DRAWN BY:
DESIGNED BY:	CHECKED BY:
Abandoned Structures	SHEET 5 OF 8

SOIL NAIL WITH PLATE

TIEBACK OR SOIL NAIL WITH WALER BEAM OR BRACKET

TEST SOIL NAIL

5"STEEL LAGGING OR 3" WOOD LAGGING OR SHOTCRETE } SEE WP 3.4.4 AMENDMENT 2

HP12x53 SOLDIER PILE

GENERAL NOTES:

1. ACTUAL AS-BUILT CONDITION OF WALL IS SHOWN FROM APPROX. STA 6+00 TO STA 7+00 BECAUSE NOT ALL SHEETS ARE BELOW BOTTOM OF EXCAVATION. OUTSIDE THIS AREA SHEETS ARE SUFFICIENTLY EMBEDDED AND ARE SHOWN AS DESIGNED.
2. PATCH-WORK WALL SECTIONS ARE SHOWN TO ILLUSTRATE TIEBACK DETAILS ONLY. ACTUAL WALL DESIGN IS PROVIDED IN WP3.4.4.
3. TOE TIES NOT SHOWN FOR CLARITY.

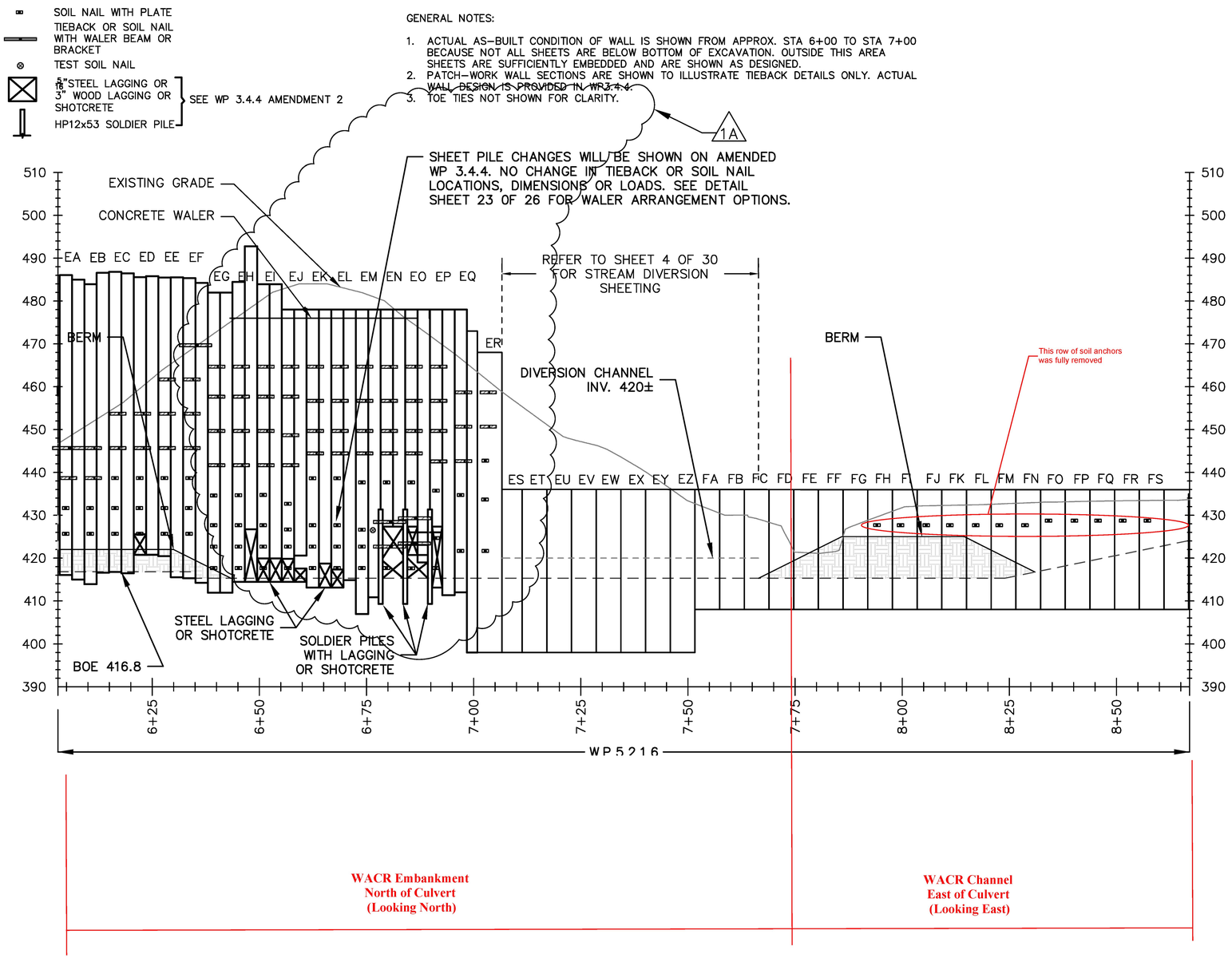

WACR Embankment North of Culvert (Looking North)

WACR Channel East of Culvert (Looking East)

(For Reference Only)

- Wales and Soil Anchor Heads Removed
- Sheet Piles Removed Except As Shown In Plan View

PROJECT NAME:	RYEGATE
PROJECT NUMBER:	STP CULV(10)
FILE NAME:	PLOT DATE:
PROJECT LEADER:	DRAWN BY:
DESIGNED BY:	CHECKED BY:
Abandoned Structures	SHEET 6 OF 8

SOIL NAIL WITH PLATE

TIEBACK OR SOIL NAIL WITH WALER BEAM OR BRACKET

TEST SOIL NAIL

5/16"STEEL LAGGING OR 3" WOOD LAGGING OR SHOTCRETE } SEE WP 3.4.4 AMENDMENT 2

HP12x53 SOLDIER PILE

GENERAL NOTES:

1. ACTUAL AS-BUILT CONDITION OF WALL IS SHOWN TO HIGHLIGHT SHEETPILE CONFIGURATION AROUND EXISTING STONE BOX CULVERT
2. SHEETS DRIVEN OVER CULVERT ARE TO REFUSAL. IT APPEARS THAT THEY ARE HITTING A FLAT ROCK OR STONE SURFACE WHICH MAY BE THE TOP OF CULVERT. HOWEVER, BECAUSE THE DISTANCE ABOVE THE VISIBLE CAP STONE IS SIGNIFICANT, THIS PLAN SHOWS LAGGING HERE WHICH WILL BE USED IF NEEDED

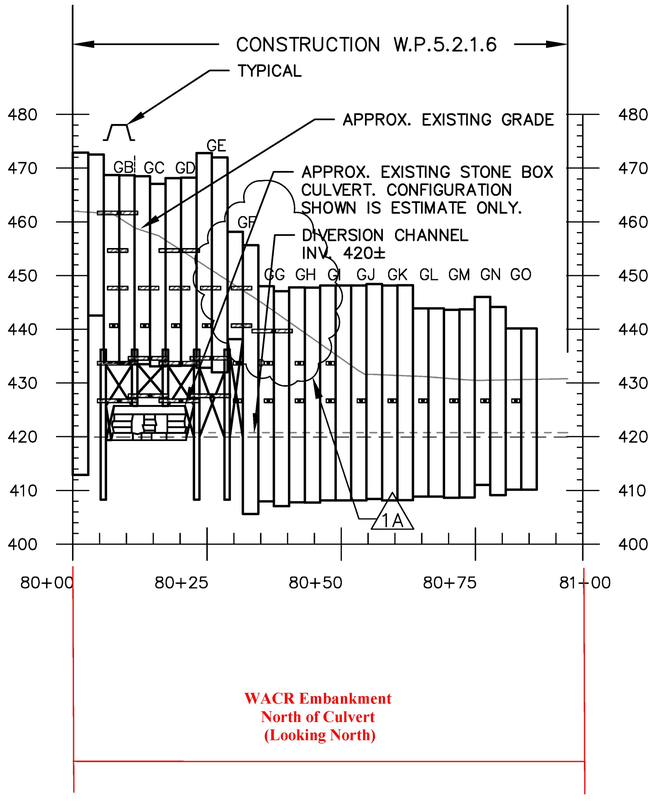

WACR Embankment
North of Culvert
(Looking North)

- Wales and Soil Anchor Heads Removed
- Sheet Piles Removed Except As Shown In Plan View

(For Reference Only)

PROJECT NAME:	RYEGATE
PROJECT NUMBER:	STP CULV(10)
FILE NAME:	PLOT DATE:
PROJECT LEADER:	DRAWN BY:
DESIGNED BY:	CHECKED BY:
Abandoned Structures	SHEET 7 OF 8

SOIL NAIL WITH PLATE

TIEBACK OR SOIL NAIL WITH WALER BEAM OR BRACKET

TEST SOIL NAIL

SHEETPILES AND SOLDIER PILES SHOWN FROM 10+00 TO 10+63 REPRESENT AS–BUILT CONDITION. SHEETPILES SHOWN OUTSIDE THIS AREA ARE DEPICTED AS DESIGNED BECAUSE THOSE SHEETS ARE INSTALLED CONSISTENT WITH THE RFC DESIGN OR WITHIN THE TOLERANCE ALLOWED THEREIN. SEE WP 3.4.4 FOR WALL DETAILS.

W.P.5.2.1.7

SOLDIER PILES ADDED TO THIS AREA. CHANGES WILL BE SHOWN ON AMENDED WP 3.4.4. NO CHANGE IN TIEBACK OR SOIL NAIL LOCATIONS, DIMENSIONS OR LOADS. SEE DETAIL SHEET 12 OF 15 FOR WALER DETAILS.

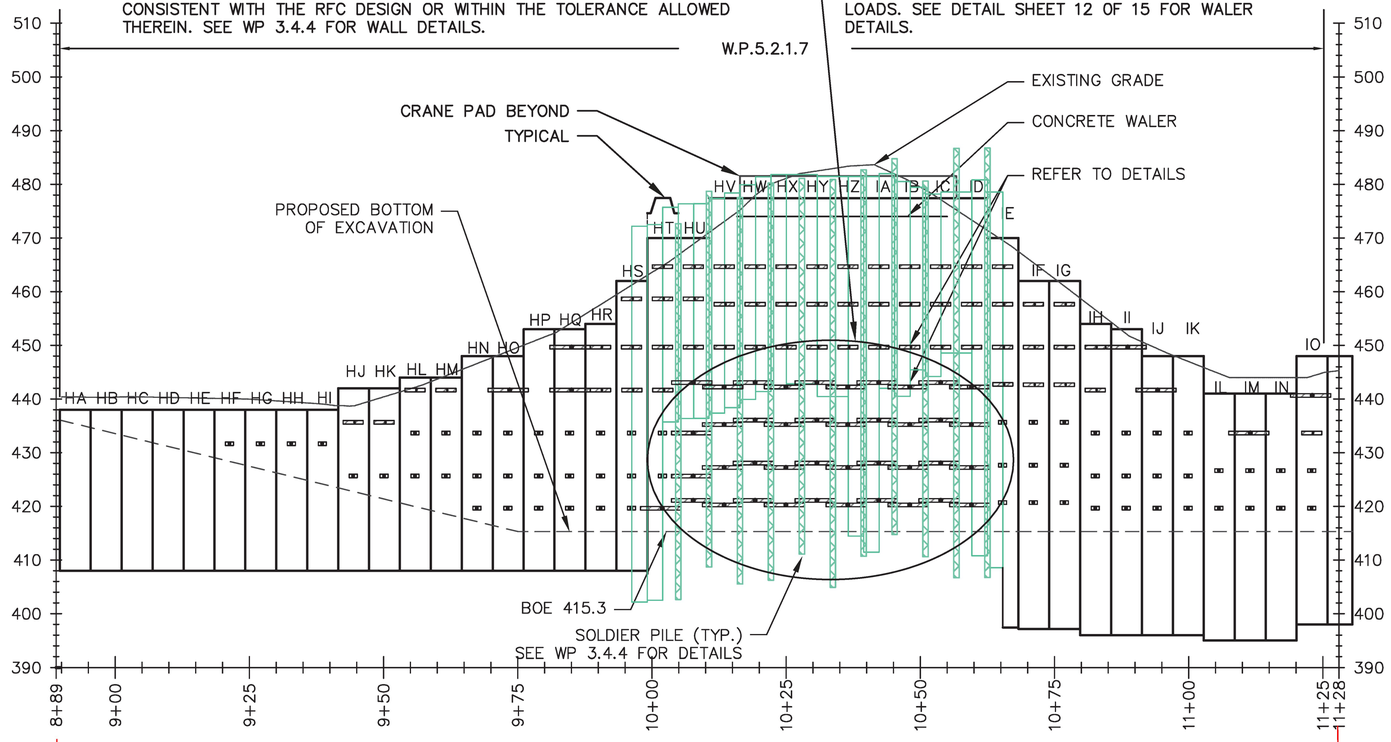

WACR Embankment
South of Culvert
(Looking South)

- Wales and Soil Anchor Heads Removed
- Sheet Piles Removed Except As Shown In Plan View

(For Reference Only)

PROJECT NAME:	RYEGATE
PROJECT NUMBER:	STP CULV(10)
FILE NAME:	PLOT DATE:
PROJECT LEADER:	DRAWN BY:
DESIGNED BY:	CHECKED BY:
Abandoned Structures	SHEET 8 OF 8