RECORD PLANS

CONTRACTOR: DON WESTON EXCAVATING,INC. – WILLISTON, VT

RESIDENT ENGINEER: JOE KNIPES

CONSTRUCTION BEGAN: APRIL 13, 2015

CONSTRUCTION COMPLETE: JANUARY 08, 2016

RECORD PLANS BY: JOE KNIPES & JESSE IVES

I HEREBY CERTIFY THAT ALL THE CONSTRUCTION REQUIRED BY THIS SET OF DRAWINGS HAS BEEN ACCOMPLISHED AS INDICATED HEREIN.

BY _____ RESIDENT ENGINEER

DATE 9.28.16

NOTE: Any further information concerning final quantities, amounts or other details relative to this project may be found at Central Files in the electronic archives.

THESE PLANS ARE SUBJECT TO SUCH ENGINEERING CHANGES AS MAY BE REQUIRED BY THE FEDERAL HIGHWAY ADMINISTRATION OR THE DIRECTOR OF PROGRAM DEVELOPMENT.

CONSTRUCTION IS TO BE CARRIED ON IN ACCORDANCE WITH THESE PLANS AND THE STANDARD SPECIFICATIONS FOR CONSTRUCTION DATED 201 1, AS APPROVED BY THE FEDERAL HIGHWAY ADMINISTRATION ON JULY 20, 201 1 FOR USE ON THIS PROJECT, INCLUDING ALL SUBSEQUENT REVISIONS AND SUCH REVISED SPECIFICATIONS AND SPECIAL PROVISIONS AS ARE INCORPORATED IN THESE PLANS.

QUALITY ASSURANCE PROGRAM : LEVEL 2	
SURVEYED BY :	VTRANS
SURVEYED DATE :	NOV 16, 2010
DATUM	
VERTICAL	NAVD 88
HORIZONTAL	NAD 83 (07)

RECORD PLANS

ACTOR: DON WESTON EXCAVATING,INC. – WILLISTON, VT

NT ENGINEER: JOE KNIPES

UCTION BEGAN: APRIL 13, 2015

UCTION COMPLETE: JANUARY 08, 2016

PLANS BY: JOE KNIPES & JESSE IVES

Y CERTIFY THAT ALL THE CONSTRUCTION REQUIRED BY THIS SET DRAWINGS HAS BEEN ACCOMPLISHED AS INDICATED HEREIN.

RESIDENT ENGINEER

ATE 9.28.16

Any further information concerning final quantities, amounts or other details this project may be found at Central Files in the electronic archives.

BJECT TO SUCH ENGINEERING EQUIRED BY THE FEDERAL HIGHWAY IE DIRECTOR OF PROGRAM

BE CARRIED ON IN ACCORDANCE THE STANDARD SPECIFICATIONS TED 201 1, AS APPROVED BY THE

ROGRAM : LEVEL 2

VTRANS

NOV 16, 2010

88

3 (07)

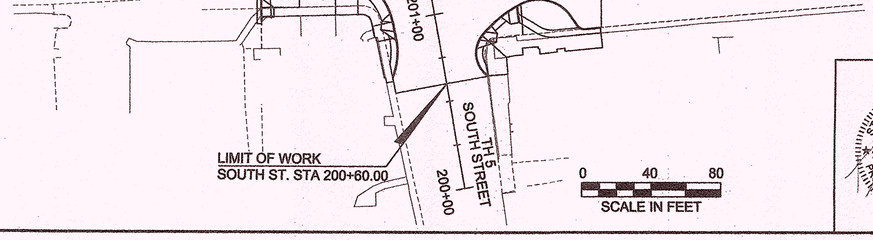

STATE OF VERMONT
THADDEUS P. STANLEY
No. 8281
Civil
LICENSED PROFESSIONAL ENGINEER

Stantec

Stantec Consulting Services Inc.
55 Green Mountain Drive
South Burlington VT U.S.A. 05403
Phone: (802) 864-0223
Fax: (802) 864-0165
www.stantec.com

DIR
APP
PRO
PRO
PRO
SHE

STATE OF VERMONT
AGENCY OF TRANSPORTATION

PROJECT LOCA
HES 021-1(2

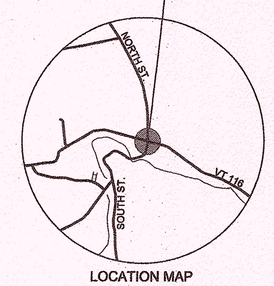

LOCATION MAP
NOT TO SCALE

PROPOSED IMPROVEMENT
TOWN OF BRISTOL
COUNTY OF ADDISON
VT ROUTE 116 (MINOR ARTERIAL)

PROJECT LOCATION: PROJECT IS LOCATED AT THE INTERSECTION OF VT 116, (MAIN STREET) NORTH STREET AND SOUTH STREET.

LENGTH OF PROJECT: 0.0375 MILES (198 FT)

PROJECT DESCRIPTION: WORK FOR THIS PROJECT IS TO INCLUDE UPGRADING SIGNAL WITH MAST ARM MOUNTED SIGNALS, CONSTRUCTING SIDEWALK CURB EXTENSIONS, UPGRADING SIGNAL WITH PEDESTAL MOUNTED SIGNAL HEADS AND SIGNALIZED PEDESTRIAN CROSSINGS

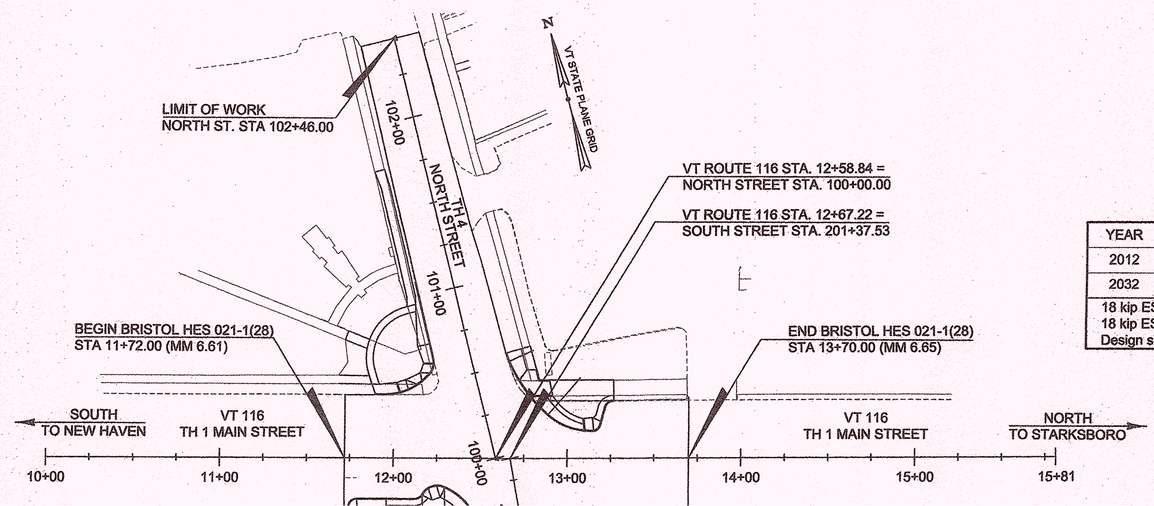

YEAR	ADT	
2012	6700	
2032	7100	
18 kip ESAL for flexible pavem		
18 kip ESAL for flexible pavem		
Design speed: 30 mph		

INDEX OF SHEETS

1	TITLE PAGE
2	INDEX SHEET
3	CONVENTIONAL SYMBOLOGY LEGEND SHEET
4-5	DETAIL SHEETS
6	TIE SHEET
7-8	BORING LOG SHEETS
9-10	QUANTITY SHEETS
11	ITEM DETAIL SHEET
12	CONSTRUCTION PLAN
13	GRADING PLAN
14	SIGNING AND STRIPING PLAN
15-17	TRAFFIC SIGN SUMMARY SHEETS
18	SIGN DETAILS
19	SIGNAL PLAN
20	MAST ARM CROSS SECTION
21-23	TRAFFIC SIGNAL NOTES
24	LIGHTING PLAN
25	LIGHTING NOTES
26-28	LIGHTING DETAILS
29	LANDSCAPING PLAN

VAOT STANDARDS

C-10	02/11/2008
C-2A	10/14/2005
C-2B	10/14/2005
C-3A	03/10/2008
C-3B	03/10/2008
D-15	06/01/1994
D-8	01/03/2000
D-9	06/01/1994
E-119	03/01/2004
E-121	08/08/1995
E-144	03/29/1999
E-145A	12/23/1994
E-170	11/04/1999
E-171A	08/09/1995
E-171B	08/09/1995
E-171C	08/09/1995
E-173	08/09/1995
E-180A	08/09/1995
E-180B	08/09/1995
E-191	02/01/1999
E-192	10/12/2000
E-193	08/18/1995
T-1	08/06/2012
T-10	08/06/2012
T-11	08/06/2012
T-12	08/06/2012
T-17	08/06/2012
T-21	08/06/2012
T-24	08/06/2012
T-28	08/06/2012
T-29	08/06/2012
T-30	08/06/2012
T-31	08/06/2012
T-35	08/06/2012

Stantec

PROJECT NAME: BRISTOL
PROJECT NUMBER: HES 021-1 (28)

FILE NAME: z10b078frm.dgn
PROJECT LEADER: T. LUTHER
DESIGNED BY: T. LUTHER
INDEX

PLOT DATE: 4/29/2014
DRAWN BY: P. ARMATA
CHECKED BY: G. EDWARDS
SHEET 2 OF 29

GENERAL INFORMATION

SYMBOLOGY LEGEND NOTE

THE SYMBOLOGY ON THIS SHEET IS INTENDED TO COVER STANDARD CONVENTIONAL SYMBOLOGY. THE SYMBOLOGY IS USED FOR EXISTING & PROPOSED FEATURES WITH HEAVIER LINEWEIGHT, IN COMBINATION WITH PROJECT ANNOTATION, AS NOTED ON PROJECT PLAN SHEETS. THIS LEGEND SHEET COVERS THE BASICS. SYMBOLOGY ON PLANS MAY VARY, PLAN ANNOTATIONS AND NOTES SHOULD BE USED TO CLARIFY AS NEEDED.

R.O.W. ABBREVIATIONS (CODES) & SYMBOLS

POINT	CODE	DESCRIPTION
	CH	CHANNEL EASEMENT
	CONST	CONSTRUCTION EASEMENT
	CUL	CULVERT EASEMENT
	D&C	DISCONNECT & CONNECT
	DIT	DITCH EASEMENT
	DR	DRAINAGE EASEMENT
	DRIVE	DRIVEWAY EASEMENT
	EC	EROSION CONTROL
	I&M	INSTALL & MAINTAIN EASEMENT
	LAND	LANDSCAPE EASEMENT
	R&RES	REMOVE & RESET
	R&REP	REMOVE & REPLACE
	SR	SLOPE RIGHT
	UE	UTILITY EASEMENT
	(P)	PERMANENT EASEMENT
	(T)	TEMPORARY EASEMENT
■	BNDNS	BOUND SET
⊡	BNDNS	BOUND TO BE SET
●	IPNS	IRON PIN SET
◎	IPNS	IRON PIN TO BE SET
⊠	CALC	EXISTING ROW POINT
○	PROW	PROPOSED ROW POINT
[LENGTH]		LENGTH CARRIED ON NEXT SHEET

COMMON TOPOGRAPHIC POINT SYMBOLS

POINT	CODE	DESCRIPTION
	APL	BOUND APPARENT LOCATION
	BM	BENCH MARK
	BND	BOUND
	CB	CATCH BASIN
	COMB	COMBINATION POLE
	DITHR	DROP INLET THROATED DNC
	EL	ELECTRIC POWER POLE
	FPOLE	FLAGPOLE
	GASFIL	GAS FILLER
	GP	GUIDE POST
	GSO	GAS SHUT OFF
	GUY	GUY POLE
	GUYW	GUY WIRE
	GV	GATE VALUE
	H	TREE HARDWOOD
	HCTRL	CONTROL HORIZONTAL
	HVCTRL	CONTROL HORIZ. & VERTICAL
	HYD	HYDRANT
	IP	IRON PIN
	IPIPE	IRON PIPE
	LI	LIGHT - STREET OR YARD
	MB	MAILBOX
	MH	MANHOLE (MH)
	MM	MILE MARKER
	PM	PARKING METER
	PMK	PROJECT MARKER
	POST	POST STONE/WOOD
	RRSIG	RAILROAD SIGNAL
	RRSL	RAILROAD SWITCH LEVER
	S	TREE SOFTWOOD
	SAT	SATELLITE DISH
	SHRUB	SHRUB
	SIGN	SIGN
	STUMP	STUMP
	TEL	TELEPHONE POLE
	TIE	TIE
	TSIGN	SIGN W/DOUBLE POST
	VCTRL	CONTROL VERTICAL
	WELL	WELL
	WSO	WATER SHUT OFF

THESE ARE COMMON VAOT SURVEY POINT SYMBOLS FOR EXISTING FEATURES, ALSO USED FOR PROPOSED FEATURES WITH HEAVIER LINEWEIGHT, IN COMBINATION WITH PROPOSED ANNOTATION.

PROPOSED GEOMETRY CODES

CODE	DESCRIPTION
PC	POINT OF CURVATURE
PI	POINT OF INTERSECTION
CC	CENTER OF CURVE
PT	POINT OF TANGENCY
PCC	POINT OF COMPOUND CURVE
PRC	POINT OF REVERSE CURVE
POB	POINT OF BEGINNING
POE	POINT OF ENDING
STA	STATION PREFIX
AH	AHEAD STATION SUFFIX
BK	BACK STATION SUFFIX
D	CURVE DEGREE OF (100FT)
R	CURVE RADIUS OF
T	CURVE TANGENT LENGTH
L	CURVE LENGTH OF
E	CURVE EXTERNAL DISTANCE

UTILITY SYMBOLOGY

UNDERGROUND UTILITIES

- UT — TELEPHONE
- UE — ELECTRIC
- UC — CABLE (TV)
- UEC — ELECTRIC+CABLE
- UET — ELECTRIC+TELEPHONE
- UCT — CABLE+TELEPHONE
- UECT — ELECTRIC+CABLE+TELEP.
- G — GAS LINE
- W — WATER LINE
- S — SANITARY SEWER (SEPTIC)

ABOVE GROUND UTILITIES (AERIAL)

- T — TELEPHONE
- E — ELECTRIC
- C — CABLE (TV)
- EC — ELECTRIC+CABLE
- ET — ELECTRIC+TELEPHONE
- AER E&T — ELECTRIC+TELEPHONE
- CT — CABLE+TELEPHONE
- ECT — ELECTRIC+CABLE+TELEP.
- UTILITY POLE GUY WIRE

PROJECT CONSTRUCTION SYMBOLOGY

PROJECT DESIGN & LAYOUT SYMBOLOGY

- CLEAR ZONE
- PLAN LAYOUT MATCHLINE

PROJECT CONSTRUCTION FEATURES

- TOP OF CUT SLOPE
- TOE OF FILL SLOPE
- STONE FILL
- BOTTOM OF DITCH 'L'
- CULVERT PROPOSED
- STRUCTURE SUBSURFACE
- PDF — PDF — PROJECT DEMARCATION FENCE
- BF — BF — BARRIER FENCE
- TREE PROTECTION ZONE (TPZ)
- STRIPING LINE REMOVAL
- SHEET PILES

CONVENTIONAL BOUNDARY SYMBOLOGY

BOUNDARY LINES

- TOWN LINE — TOWN BOUNDARY LINE
- COUNTY LINE — COUNTY BOUNDARY LINE
- STATE LINE — STATE BOUNDARY LINE
- PROPOSED STATE R.O.W. (LIMITED ACCESS)
- PROPOSED STATE R.O.W.
- STATE ROW (LIMITED ACCESS)
- STATE ROW
- TOWN ROW
- PERMANENT EASEMENT LINE (P)
- TEMPORARY EASEMENT LINE (T)
- SURVEY LINE
- PROPERTY LINE (P/L)
- SR SR SR — SLOPE RIGHTS
- 6f — 6f — 6F PROPERTY BOUNDARY
- 4f — 4f — 4F PROPERTY BOUNDARY
- HAZ — HAZ — HAZARDOUS WASTE

EPSC LAYOUT PLAN SYMBOLOGY

EPSC MEASURES

- FILTER CURTAIN
- SILT FENCE
- SILT FENCE WOVEN WIRE
- CHECK DAM
- DISTURBED AREAS REQUIRING RE-VEGETATION
- EROSION MATTING
- STABILIZED CONSTRUCTION ENTRANCE
- STONE & BLOCK DROP INLET PROTECTION
- FILTER FABRIC INLET PROTECTION
- PIPE INLET PROTECTION

ENVIRONMENTAL RESOURCES

- WETLAND BOUNDARY
- RIPARIAN BUFFER ZONE
- WETLAND BUFFER ZONE
- SOIL TYPE BOUNDARY
- THREATENED & ENDANGERED SPECIES
- HAZ — HAZ — HAZARDOUS WASTE AREA
- AGRICULTURAL LAND
- FISH & WILDLIFE HABITAT
- FLOOD PLAIN
- ORDINARY HIGH WATER (OHW)
- STORM WATER
- USDA FOREST SERVICE LANDS
- WILDLIFE HABITAT SUIT/CONN

ARCHEOLOGICAL & HISTORIC

- ARCHEOLOGICAL BOUNDARY
- HISTORIC DISTRICT BOUNDARY
- HISTORIC AREA
- (H) HISTORIC STRUCTURE

CONVENTIONAL TOPOGRAPHIC SYMBOLOGY

EXISTING FEATURES

- ROAD EDGE PAVEMENT
- ROAD EDGE GRAVEL
- DRIVEWAY EDGE
- DITCH
- FOUNDATION
- FENCE (EXISTING)
- FENCE WOOD POST
- FENCE STEEL POST
- GARDEN
- ROAD GUARDRAIL
- RAILROAD TRACKS
- CULVERT (EXISTING)
- STONE WALL
- WALL
- WOOD LINE
- BRUSH LINE
- HEDGE
- BODY OF WATER EDGE
- LEDGE EXPOSED

Stantec

PROJECT NAME:	BRISTOL
PROJECT NUMBER:	HES 021-1 (28)
FILE NAME: z10b078frm.dgn	PLOT DATE: 4/29/2014
PROJECT LEADER: T. LUTHER	DRAWN BY: P. ARMATA
DESIGNED BY: T. LUTHER	CHECKED BY: G. EDWARDS
CONVENTIONAL SYMBOLOGY LEGEND SHEET	SHEET 3 OF 29

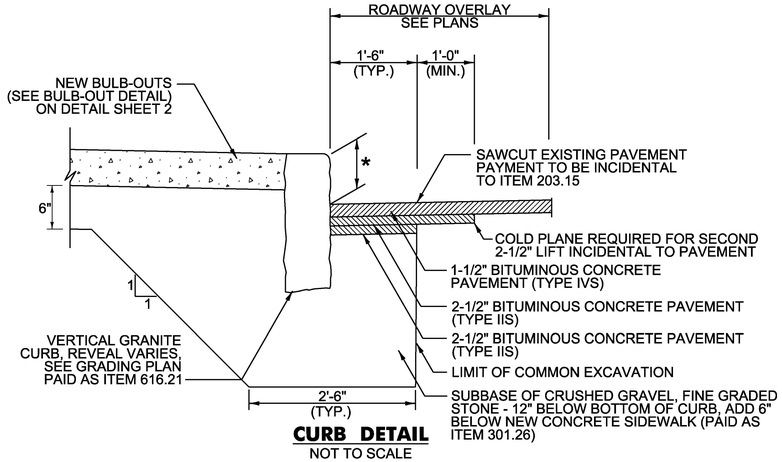

CURB DETAIL

NOT TO SCALE

* FOLLOW STANDARD DETAILS FOR CURB EXCEPT AS OTHERWISE NOTED IN THESE PLANS. SEE GRADING PLANS

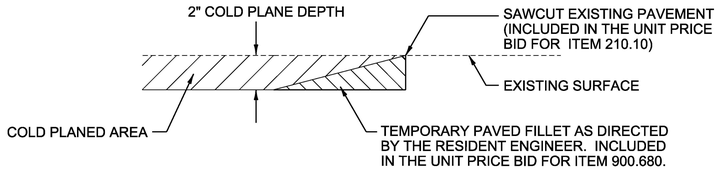

DETAIL AT VERTICAL COLD PLANE JOINTS

NOT TO SCALE

VAOT URBAN AREA MIX					
	LBS/AC				
% WEIGHT	BROADCAST	HYDROSEED	NAME	GERM %	PURITY %
42.5%	34	68	CREEPING RED FESCUE	85%	98%
10.0%	8	16	PERENNIAL RYE GRASS	90%	95%
42.5%	34	68	KENTUCKY BLUE GRASS	85%	85%
5.0%	4	8	ANNUAL RYE GRASS	85%	95%
100%	80	160			

CONSTRUCTION GUIDANCE

1. RURAL SEED MIX: USE AS INDICATED IN THE PLANS AND/OR FOR ALL ESTABLISHED UPLAND (NON WETLAND) AREAS DISTURBED BY THE CONTRACTOR.
2. URBAN SEED MIX: USE AS INDICATED IN THE PLANS AND/OR FOR ALL ESTABLISHED LAWN AREAS DISTURBED BY THE CONTRACTOR.
3. ALL SEED MIXTURES: SHALL NOT HAVE A WEED CONTENT EXCEEDING 0.40% BY WEIGHT AND SHALL BE FREE OF ALL NOXIOUS SEED.
4. FERTILIZER AND LIMESTONE: SHALL FOLLOW RATES SHOWN ON PLAN OR AS DIRECTED BY THE ENGINEER
5. HAY MULCH: TO BE PLACED ON EARTH SLOPES AT THE RATE OF 2 TONS/ACRE, ACHIEVE 90% GROUND COVER OR AS DIRECTED BY THE ENGINEER.
6. TOPSOIL: TO BE USED WITH SEED AS INDICATED ON THE PLANS, OR AS DIRECTED BY THE ENGINEER.
7. HYDROSEEDING: ALTHOUGH GUIDANCE IS GIVEN ABOVE THE SITE CONDITIONS AND THE TYPE OF HYDROSEED WILL ULTIMATELY DICTATE THE AMOUNTS AND TYPES OF SOIL AMENDMENTS TO BE APPLIED
8. TURF ESTABLISHMENT: PLACING SEED, FERTILIZER, LIME AND MULCH PRIOR TO SEPTEMBER 15 AND AFTER APRIL 15 CAN BETTER ENSURE A VIGOROUS GROWTH OF GRASS.
9. IN ADDITION TO THE ABOVE GUIDANCE, TURF ESTABLISHMENT TO BE DONE IN ACCORDANCE WITH STANDARD SPECIFICATION SECTION 651. PAYMENT WILL BE INCIDENTAL TO ALL CONTRACT ITEMS.

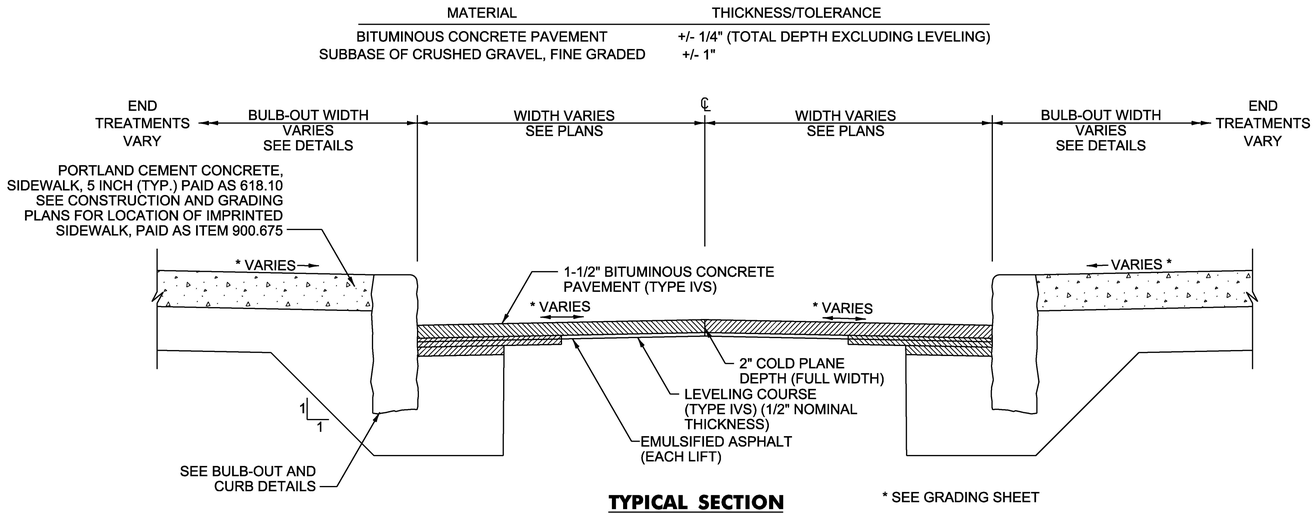

TYPICAL SECTION

NOT TO SCALE

* SEE GRADING SHEET

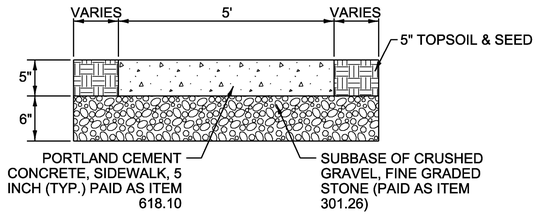

SIDEWALK TYPICAL

STA. 100+96 – STA. 101+75 LT.

NTS

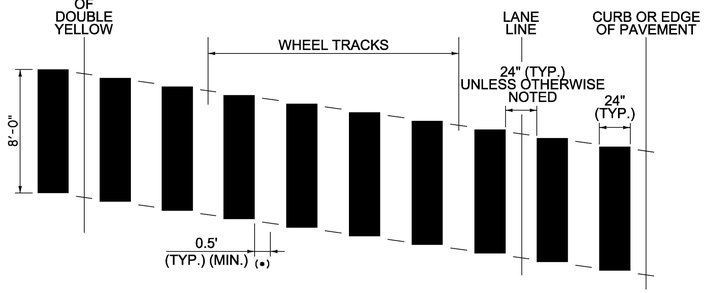

SKEWED CROSSWALK PATTERN DETAIL

* MAY VARY WITH 11' OR 12' LANE

NOTES:
1.) THIS DETAIL IS PROVIDED FOR AN 11 FOOT LANE.
2.) MARK LIGHT STRING LINE ON PAVEMENT ACROSS ROADWAY (CURB TO CURB).
3.) ESTABLISH THE CENTER LINE OF THE ROADWAY (DOUBLE YELLOW LINE OR LANE LINE).
4.) BLOCKS ARE PARALLEL TO THE CENTERLINE (DOUBLE YELLOW LINE OR LANE LINE). (OFFSET BLOCKS VERTICALLY TO ACHIEVE REQUIRED SKEW).
5.) ALWAYS START MEASURING FROM THE CENTERLINE OR LANE LINE RIGHT, WITH THE FLOW OF TRAFFIC.
*6.) THIS DISTANCE WILL INCREASE TO 1.0' FOR A 12 FOOT LANE.

Stantec

PROJECT NAME:	BRISTOL
PROJECT NUMBER:	HES 021-1 (28)
FILE NAME: z10b078frm.dgn	PLOT DATE: 5/20/2014
PROJECT LEADER: T. LUTHER	DRAWN BY: P. ARMATA
DESIGNED BY: T. LUTHER	CHECKED BY: G. EDWARDS
DETAIL SHEET 1	SHEET 4 OF 29

BULB OUT DETAILS

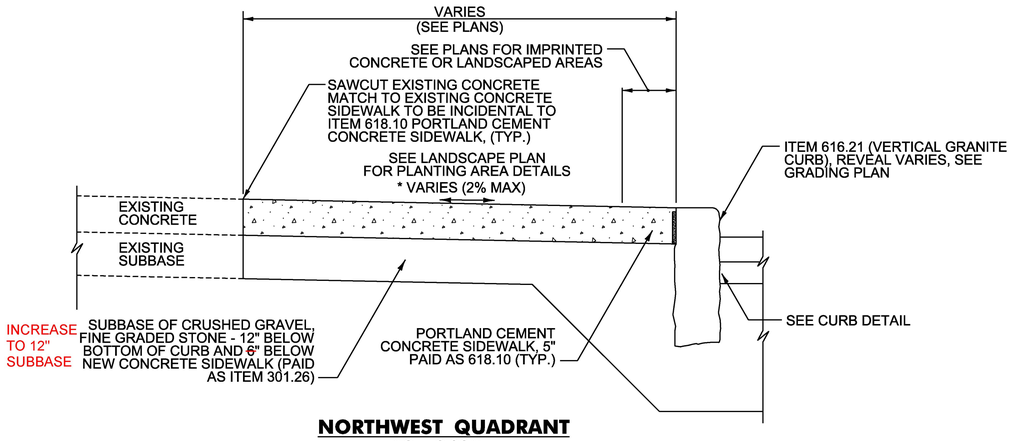

NORTHWEST QUADRANT
NOT TO SCALE
* NOT TO EXCEED 2%, SEE GRADING PLAN

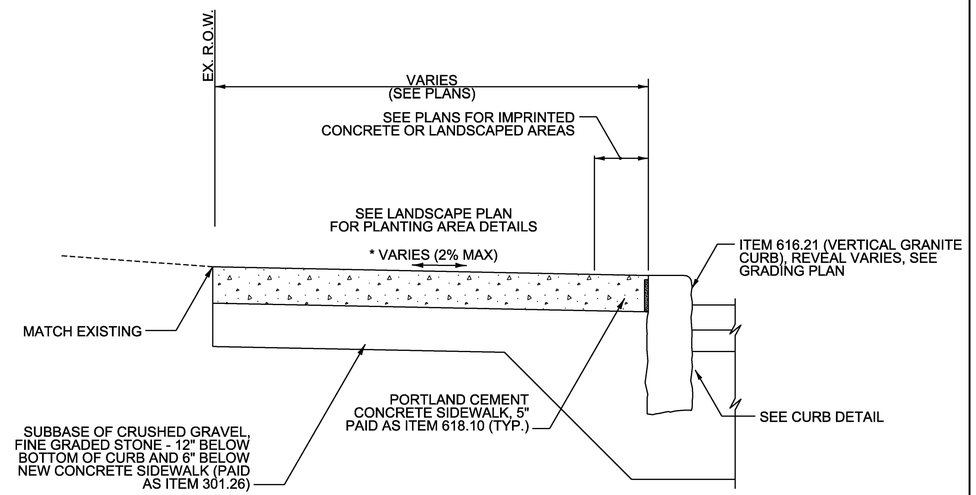

NORTHEAST QUADRANT
NOT TO SCALE
* NOT TO EXCEED 2%, SEE GRADING PLAN

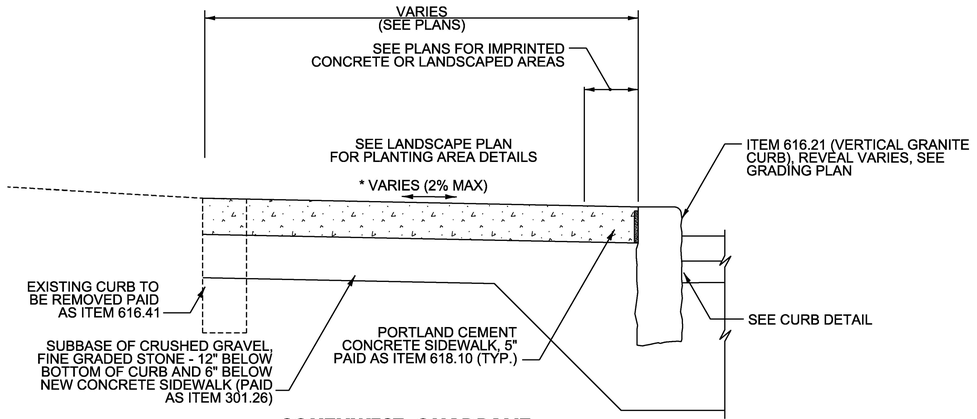

SOUTHWEST QUADRANT
NOT TO SCALE
* NOT TO EXCEED 2%, SEE GRADING PLAN

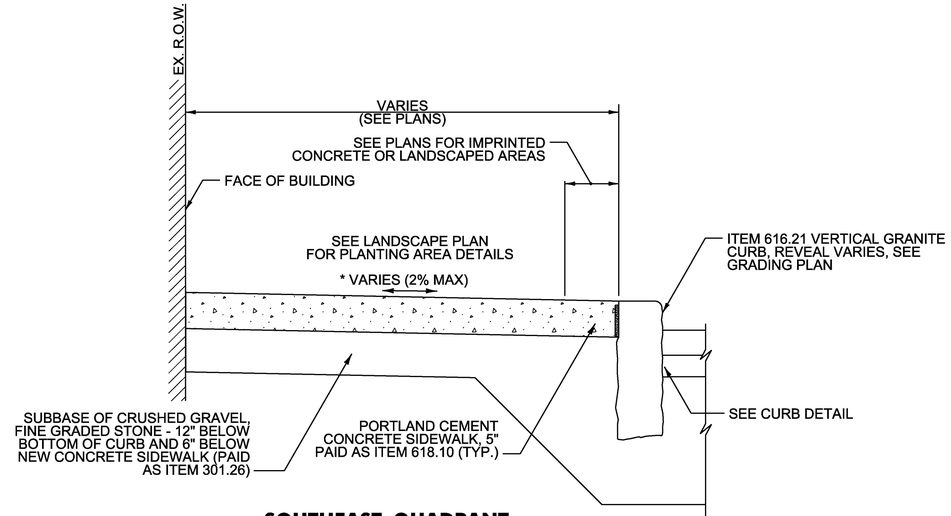

SOUTHEAST QUADRANT
NOT TO SCALE
* NOT TO EXCEED 2%, SEE GRADING PLAN

Stantec

PROJECT NAME:	BRISTOL
PROJECT NUMBER:	HES 021-1 (28)

FILE NAME: z10b078frm.dgn		PLOT DATE:	4/29/2014
PROJECT LEADER:	T. LUTHER	DRAWN BY:	P. ARMATA
DESIGNED BY:	T. LUTHER	CHECKED BY:	G. EDWARDS
DETAIL SHEET 2		SHEET 5	OF 29

GPS CONTROL POINTS

HVCTRL #1

LATHROP

NORTH = 595029.754
EAST = 1487003.577
ELEV. = 461.658

GENERAL LOCATION BRISTOL, VT. OWNERSHIP-- LATHROP LTD, 62 WEST STREET, BRISTOL, VT 05443. TO REACH FROM THE INTERSECTION OF BURPEE ROAD, VT ROUTE 17 AND VT ROUTE 116 SOUTH, JUST WEST OF BRISTOL VILLAGE, GO EAST ALONG VT ROUTES 17/116 FOR 1.1 MI (1.8 KM) TO THE INTERSECTION OF NORTH STREET LEFT AND SOUTH STREET RIGHT AT THE TRAFFIC LIGHT IN BRISTOL VILLAGE. TURN RIGHT AND GO SOUTH ALONG SOUTH STREET FOR 0.4 MI (0.6 KM) TO THE CLARE LATHROP LUMBER YARD ON THE RIGHT AND THE SITE OF THE MARK ON THE LEFT, ABOUT OPPOSITE THE MOST SOUTHERLY GATE TO THE LUMBER YARD. THE MARK IS SET IN THE TOP OF A 1.5 M (4.9 FT) X 1.2 M (3.9 FT) BOULDER WHICH PROJECTS ABOUT 0.8 M ABOVE GROUND SURFACE. IT IS 12.9 M (42.3 FT) EAST OF AND ABOUT 2.2 M (7.2 FT) HIGHER THAN THE CENTERLINE OF SOUTH STREET, 20.6 M (67.6 FT) EAST-NORTHEAST OF POLE NO 11, 22.8 M (74.8 FT) EAST-SOUTHEAST OF THE MOST SOUTHERLY GATE POST OF THE SOUTHERN GATE TO THE LATHROP LUMBER YARD, 41.2 M (135.2 FT) SOUTH-SOUTHWEST OF POLE NO 9, AND 1.7 M (5.6 FT) NORTHWEST OF A FIBERGLASS WITNESS POST.

HVCTRL 32

LATHROP AZ MK

NORTH = 596195.437
EAST = 1486663.832
ELEV. = 565.693

GENERAL LOCATION BRISTOL, VT.
TO REACH FROM THE INTERSECTION OF BURPEE ROAD, VT ROUTE 17 AND VT ROUTE 116 SOUTH, JUST WEST OF BRISTOL VILLAGE, GO EAST ALONG VT ROUTES 17/116 FOR 0.8 MI (1.3 KM) TO THE INTERSECTION OF MUNSILL AVENUE LEFT AND THE SITE OF THE MARK ON THE RIGHT. THE MARK IS SET IN THE TOP OF A 30 CM (12 INCHES) DIAMETER CONCRETE MONUMENT POURED 1.4 M (4.6 FT) DEEP. IT IS 6.5 M (21.3 FT) SOUTH OF AND ABOUT 0.3 M (1.0 FT) LOWER THAN THE CENTERLINE OF VT ROUTE 17/116, 1.8 M (5.9 FT) SOUTH OF A STEEL BEAM GUARD RAIL, 21.4 M (70.2 FT) EAST OF POLE NO 21/8/13, 10.7 M (35.1 FT) WEST OF POLE NO 20/12, 2.5 M (8.2 FT) NORTH OF THE TOP OF A STEEP BANK, AND 0.3 M (1.0 FT) NORTH OF A FIBERGLASS WITNESS POST.

TRAVERSE TIES

HVCTRL #3

NORTH = 596176.668
EAST = 1487251.926
ELEV. = 567.521

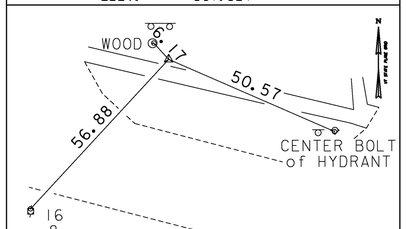

HVCTRL #4

NORTH = 595959.346
EAST = 1487784.953
ELEV. = 570.099

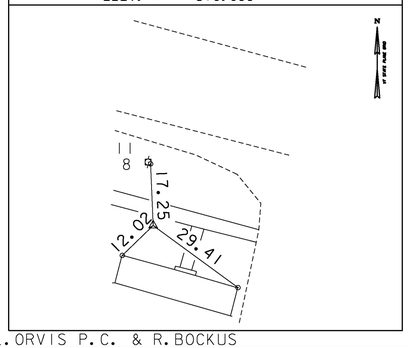

HVCTRL #5

NORTH = 595893.408
EAST = 1488450.503
ELEV. = 571.448

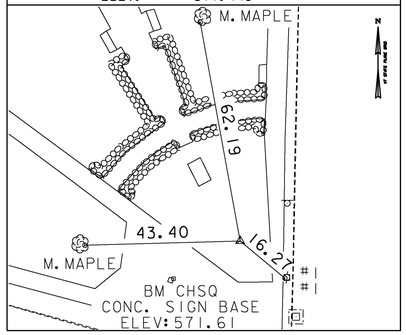

NORTH = / EAST = / ELEV. =

NORTH = / EAST = / ELEV. =

*MAIN TRAVERSE COMPLETED 11/04/2010 BY L.ORVIS P.C. & R.BOCKUS

ALIGNMENT TIES

NORTH =	NORTH =	NORTH =	NORTH =	NORTH =
EAST =	EAST =	EAST =	EAST =	EAST =
ELEV. =	ELEV. =	ELEV. =	ELEV. =	ELEV. =

DATUM

VERTICAL NAVD 88

HORIZONTAL NAD 83 (07)

ADJUSTMENT COMPASS

PROJECT NAME: BRISTOL
PROJECT NUMBER: HES 021-1 (28)

FILE NAME: x10b078ti.dgn
PROJECT LEADER: T. LUTHER
DESIGNED BY: T. LUTHER
TIE SHEET

PLOT DATE: 4/29/2014
DRAWN BY: R.BULLOCK
CHECKED BY: P.BEYOR
SHEET 6 OF 29

SOIL CLASSIFICATION

AASHTO

A1	GRAVEL AND SAND
A2	SILTY OR CLAYEY GRAVEL AND SAND
A3	FINE SAND
A4	SILTY SOIL - LOW COMPRESSIBILITY
A5	SILTY SOIL - HIGHLY COMPRESSIBLE
A6	CLAYEY SOIL - LOW COMPRESSIBILITY
A7	CLAYEY SOIL - HIGHLY COMPRESSIBLE

ROCK QUALITY DESIGNATION

R.Q.D. (%)	ROCK DESCRIPTION
<25	VERY POOR
25 to 50	POOR
51 to 75	FAIR
76 to 90	GOOD
>90	EXCELLENT

SHEAR STRENGTH

UNDRAINED SHEAR STRENGTH IN P.S.F.	CONSISTENCY
<250	VERY SOFT
250-500	SOFT
500-1000	MED. STIFF
1000-2000	STIFF
2000-4000	VERY STIFF
>4000	HARD

CORRELATION GUIDE OF "N" TO DENSITY / CONSISTENCY

DENSITY (GRANULAR SOILS)		CONSISTENCY (COHESIVE SOILS)	
N	DESCRIPTIVE TERM	N	DESCRIPTIVE TERM
<5	VERY LOOSE	<2	VERY SOFT
5-10	LOOSE	2-4	SOFT
11-24	MED. DENSE	5-8	MED. STIFF
25-50	DENSE	9-15	STIFF
>50	VERY DENSE	16-30	VERY STIFF
		31-60	HARD
		>60	VERY HARD

COMMONLY USED SYMBOLS

▼	WATER ELEVATION
⊗	STANDARD PENETRATION BORING
⊕	AUGER BORING
⊙	ROD SOUNDING
S	SAMPLE
N	STANDARD PENETRATION TEST BLOW COUNT PER FOOT FOR: 2" O.D. SAMPLER 1⅜" I.D. SAMPLER HAMMER WEIGHT OF 140 LBS. HAMMER FALL OF 30"
VS	FIELD VANE SHEAR TEST
US	UNDISTURBED SOIL SAMPLE
B	BLAST
DC	DIAMOND CORE
MD	MUD DRILL
WA	WASH AHEAD
HSA	HOLLOW STEM AUGER
AX	CORE SIZE 1⅛"
BX	CORE SIZE 1⅝"
NX	CORE SIZE 2⅛"
M	DOUBLE TUBE CORE BARREL USED
LL	LIQUID LIMIT
PL	PLASTIC LIMIT
PI	PLASTICITY INDEX
NP	NON PLASTIC
W	MOISTURE CONTENT (DRY WGT. BASIS)
D	DRY
M	MOIST
MTW	MOIST TO WET
W	WET
SAT	SATURATED
BO	BOULDER
GR	GRAVEL
SA	SAND
SI	SILT
CL	CLAY
HP	HARDPAN
LE	LEDGE
NLTD	NO LEDGE TO DEPTH
CNPF	CAN NOT PENETRATE FURTHER
TLOB	TO LEDGE OR BOULDER
NR	NO RECOVERY
REC.	RECOVERY
%REC.	PERCENT RECOVERY
RQD	ROCK QUALITY DESIGNATION
CBR	CALIFORNIA BEARING RATIO
<	LESS THAN
>	GREATER THAN
R	REFUSAL (N>100)

COLOR

blk	BLACK	pnk	PINK
bl	BLUE	pu	PURPLE
brn	BROWN	rd	RED
dk	DARK	tn	TAN
gry	GRAY	wh	WHITE
gn	GREEN	yel	YELLOW
lt	LIGHT	mltc	MULTICOLORED
or	ORANGE		

STATE OF VERMONT
AGENCY OF TRANSPORTATION
MATERIALS & RESEARCH SECTION
SUBSURFACE INFORMATION

BORING LOG

BRISTOL
HES 021-1(28)
VT 116/North St/South St Improvements

Boring No.: B-1
Page No.: 1 of 1
Pin No.:
Checked By: TAD

Boring Crew: MBC, East Barre, VT, Harrington (Stantec)
Date Started: 6/24/13 Date Finished: 6/24/13
VTSPG NAD83: N 595826.80 ft E 1488427.00 ft
Station: 11+99.19 Offset: -39.59
Ground Elevation: 570.44 ft

	Casing	Sampler
Type:	H.S.A.	SS
I.D.:	2.5 in	1.38 in
Hammer Wt:	N.A.	140
Hammer Fall:	N.A.	30
Hammer/Rod Type:		Safety/N
Rig:	Truck/Mobile B-53	CE = 1

Groundwater Observations

Date	Depth (ft)	Notes
06/24/13		Not Encountered

Depth (ft)	Strata (1)	CLASSIFICATION OF MATERIALS (Description)	Blows/6" (N Value)	Moisture Content %	Gravel %	Sand %	Fines %
		Visual Classification, Topsoil, Dk/brn, Moist, Rec. = 0.7 ft	1-2-2-2 (4)				
		Visual Classification, SlSa, brn, Moist					
		A-1-b, GrSa, brn, Moist, Rec. = 0.8 ft	3-5-8-5 (13)	9.8	40.0	44.0	16.0
5		Visual Classification, GrSa, brn, Moist, Rec. = 1.2 ft	5-5-5-5 (10)				
		Visual Classification, SaGr, brn, Moist, Rec. = 0.5 ft	8-6-10-10 (16)				
		A-1-a, SaGr, brn, Moist, Rec. = 1.2 ft	5-5-8-13 (13)	2.9	74.4	20.2	5.4
10		A-1-a, SaGr, brn, Moist, Rec. = 1.2 ft	8-13-18-42 (31)	2.7	64.1	27.9	8.0
		Visual Classification, SaGr, brn, Moist, Rec. = 1.2 ft	34-86-20-24 (106)				
15		Visual Classification, GrSa, brn, Moist, Rec. = 0.5 ft	24-24-24-13 (48)				
		Visual Classification, GrSa, brn, Moist, Rec. = 1.2 ft	13-13-11-17 (24)				
20		Visual Classification, GrSa, brn, Moist, Rec. = 1.2 ft	25-15-15-13 (30)				
25		Hole stopped @ 25.0 ft					

Remarks:
Based on drill action, cobbles are present from 10 to 17 feet.

Notes:
1. Stratification lines represent approximate boundary between material types. Transition may be gradual.
2. N Values have not been corrected for hammer energy. CE is the hammer energy correction factor.
3. Water level readings have been made at times and under conditions stated. Fluctuations of groundwater may occur due to other factors than those present at the time measurements were made.

BORING LOG VTRANS_BRISTOL INTERSECTION.GPJ VERMONT AOT.GDT 7/25/13

STATE OF VERMONT
AGENCY OF TRANSPORTATION
MATERIALS & RESEARCH SECTION
SUBSURFACE INFORMATION

BORING LOG

BRISTOL
HES 021-1(28)
VT 116/North St/South St Improvements

Boring No.: B-2
Page No.: 1 of 1
Pin No.:
Checked By: TAD

Boring Crew: MBC, East Barre, VT, Harrington (Stantec)
Date Started: 6/24/13 Date Finished: 6/24/13
VTSPG NAD83: N 595813.50 ft E 1488476.00 ft
Station: 12+50.04 Offset: 45.39
Ground Elevation: 567.19 ft

	Casing	Sampler
Type:	H.S.A.	SS
I.D.:	2.5 in	1.38 in
Hammer Wt:	N.A.	140
Hammer Fall:	N.A.	30
Hammer/Rod Type:		Safety/N
Rig:	Truck/Mobile B-53	CE = 1

Groundwater Observations

Date	Depth (ft)	Notes
06/24/13		NE

Depth (ft)	Strata (1)	CLASSIFICATION OF MATERIALS (Description)	Blows/6" (N Value)	Moisture Content %	Gravel %	Sand %	Fines %
		Asphalt, 0.0 ft – 0.25 ft					
		Visual Classification, GrSa, brn, Moist, Rec. = 0.7 ft	8-7-7-8 (14)				
		Visual Classification, SlGrSa, Dk/brn, Moist, Rec. = 0.2 ft	7-5-8-8 (13)				
5		A-1-b, GrSa, brn, Moist, Rec. = 0.8 ft	7-5-3-2 (8)	6.4	37.0	55.4	7.6
		Visual Classification, GrSa, brn, Moist, Rec. = 0.3 ft	5-2-3-2 (5)				
		A-1-a, SaGr, brn, Moist, Rec. = 0.8 ft	7-6-6-5 (12)	3.3	77.0	17.6	5.4
10		A-1-a, SaGr, brn, Moist, Rec. = 1.0 ft	10-7-7-6 (14)	2.5	76.0	18.1	5.9
15		Visual Classification, GrSa, brn, Moist, Rec. = 0.7 ft	8-8-12-8 (20)				
20		Field Note:, No Recovery, Rec. = 0.0 ft	100 (R)				
		Hole stopped @ 20.5 ft					
25							

Remarks:
Based on drill action, cobbles are present from 15 to 20.5 feet.

Notes:
1. Stratification lines represent approximate boundary between material types. Transition may be gradual.
2. N Values have not been corrected for hammer energy. CE is the hammer energy correction factor.
3. Water level readings have been made at times and under conditions stated. Fluctuations of groundwater may occur due to other factors than those present at the time measurements were made.

BORING LOG VTRANS_BRISTOL INTERSECTION.GPJ VERMONT AOT.GDT 7/25/13

GENERAL NOTES

1. THE SUBSURFACE EXPLORATIONS SHOWN HEREIN WAS MADE ON AUGUST 10, 2007 BY THE AGENCY.
2. SOIL AND ROCK CLASSIFICATIONS, PROPERTIES AND DESCRIPTIONS ARE BASED ON ENGINEERING INTERPRETATION FROM AVAILABLE SUBSURFACE INFORMATION BY THE AGENCY AND MAY NOT NECESSARILY REFLECT ACTUAL VARIATIONS IN SUBSURFACE CONDITIONS THAT MAY BE ENCOUNTERED BETWEEN INDIVIDUAL BORING OR SAMPLE LOCATIONS.
3. OBSERVED WATER LEVELS AND/OR CONDITIONS INDICATED ARE AS RECORDED AT THE TIME OF EXPLORATION AND MAY VARY ACCORDING TO THE PREVAILING RAINFALL, METHODS OF EXPLORATION AND OTHER FACTORS.
4. ENGINEERING JUDGEMENT WAS EXERCISED IN PREPARING THE SUBSURFACE INFORMATION PRESENTED HEREIN. ANALYSIS AND INTERPRETATION OF SUBSURFACE DATA WAS PERFORMED AND INTERPRETED FOR AGENCY DESIGN AND ESTIMATING PURPOSES. PRESENTATION OF THE INFORMATION IN THE CONTRACT IS INTENDED TO PROVIDE THE CONTRACTOR ACCESS TO THE SAME DATA AVAILABLE TO THE AGENCY. THE SUBSURFACE INFORMATION IS PRESENTED IN GOOD FAITH AND IS NOT INTENDED AS A SUBSTITUTE FOR PERSONAL INVESTIGATION, INDEPENDENT INTERPRETATION, INDEPENDENT ANALYSIS OR JUDGEMENT BY THE CONTRACTOR.

DEFINITIONS (AASHTO)

BEDROCK (LEDGE) - ROCK IN ITS NATIVE LOCATION OF INDEFINITE THICKNESS.
BOULDER - A ROCK FRAGMENT WITH AN AVERAGE DIMENSION >12 INCHES.
COBBLE - ROCK FRAGMENTS WITH AN AVERAGE DIMENSION BETWEEN 3 AND 12 INCHES.
GRAVEL - ROUNDED PARTICLES OF ROCK <3" AND > 0.0787" (#10 SIEVE).
SAND - PARTICLES OF ROCK < 0.0787" (#10 SIEVE) AND > 0.0029" (#200 SIEVE).
SILT - SOIL < 0.0029" (#200 SIEVE), NON OR SLIGHTLY PLASTIC AND EXHIBITS NO STRENGTH WHEN AIR-DRIED.
CLAY - FINE GRAINED SOIL, EXHIBITS PLASTICITY WHEN MOIST AND CONSIDERABLE STRENGTH WHEN AIR-DRIED.
VARVED - ALTERNATE LAYERS OF SILT AND CLAY.
HARDPAN - EXTREMELY DENSE SOIL, CEMENTED LAYER, NOT SOFTENED WHEN WET.
MUCK - SOFT ORGANIC SOIL (CONTAINING > 10% ORGANIC MATERIAL).
MOISTURE CONTENT - WEIGHT OF WATER DIVIDED BY DRY WEIGHT OF SOIL.
FLOWING SAND - GRANULAR SOIL SO SATURATED (LOOSE) THAT IT FLOWS INTO DRILL CASING DURING EXTRACTION OF WASH ROD.
STRIKE - ANGLE FROM MAGNETIC NORTH TO LINE OF INTERSECTION OF BED WITH A HORIZONTAL PLANE.
DIP - INCLINATION OF BED WITH A HORIZONTAL PLANE.

PROJECT NAME: BRISTOL
PROJECT NUMBER: HES 021-1 (28)

FILE NAME: z10b078frm.dgn
PROJECT LEADER: T. LUTHER
DESIGNED BY: T. LUTHER
BORING LOG SHEET 1

PLOT DATE: 4/29/2014
DRAWN BY: P. ARMATA
CHECKED BY: G. EDWARDS
SHEET 7 OF 29

SOIL CLASSIFICATION

AASHTO

A1	GRAVEL AND SAND
A2	SILTY OR CLAYEY GRAVEL AND SAND
A3	FINE SAND
A4	SILTY SOIL - LOW COMPRESSIBILITY
A5	SILTY SOIL - HIGHLY COMPRESSIBLE
A6	CLAYEY SOIL - LOW COMPRESSIBILITY
A7	CLAYEY SOIL - HIGHLY COMPRESSIBLE

ROCK QUALITY DESIGNATION

R.Q.D. (%)	ROCK DESCRIPTION
<25	VERY POOR
25 to 50	POOR
51 to 75	FAIR
76 to 90	GOOD
>90	EXCELLENT

SHEAR STRENGTH

UNDRAINED SHEAR STRENGTH IN P.S.F.	CONSISTENCY
<250	VERY SOFT
250-500	SOFT
500-1000	MED. STIFF
1000-2000	STIFF
2000-4000	VERY STIFF
>4000	HARD

CORRELATION GUIDE OF "N" TO DENSITY / CONSISTENCY

DENSITY (GRANULAR SOILS)		CONSISTENCY (COHESIVE SOILS)	
N	DESCRIPTIVE TERM	N	DESCRIPTIVE TERM
<5	VERY LOOSE	<2	VERY SOFT
5-10	LOOSE	2-4	SOFT
11-24	MED. DENSE	5-8	MED. STIFF
25-50	DENSE	9-15	STIFF
>50	VERY DENSE	16-30	VERY STIFF
		31-60	HARD
		>60	VERY HARD

COMMONLY USED SYMBOLS

▼	WATER ELEVATION
⊗	STANDARD PENETRATION BORING
⊕	AUGER BORING
⊙	ROD SOUNDING
S	SAMPLE
N	STANDARD PENETRATION TEST BLOW COUNT PER FOOT FOR: 2" O.D. SAMPLER 1⅜" I.D. SAMPLER HAMMER WEIGHT OF 140 LBS. HAMMER FALL OF 30"
VS	FIELD VANE SHEAR TEST
US	UNDISTURBED SOIL SAMPLE
B	BLAST
DC	DIAMOND CORE
MD	MUD DRILL
WA	WASH AHEAD
HSA	HOLLOW STEM AUGER
AX	CORE SIZE 1⅛"
BX	CORE SIZE 1⅝"
NX	CORE SIZE 2⅛"
M	DOUBLE TUBE CORE BARREL USED
LL	LIQUID LIMIT
PL	PLASTIC LIMIT
PI	PLASTICITY INDEX
NP	NON PLASTIC
W	MOISTURE CONTENT (DRY WGT. BASIS)
D	DRY
M	MOIST
MTW	MOIST TO WET
W	WET
SAT	SATURATED
BO	BOULDER
GR	GRAVEL
SA	SAND
SI	SILT
CL	CLAY
HP	HARDPAN
LE	LEDGE
NLTD	NO LEDGE TO DEPTH
CNPF	CAN NOT PENETRATE FURTHER
TLOB	TO LEDGE OR BOULDER
NR	NO RECOVERY
REC.	RECOVERY
%REC.	PERCENT RECOVERY
RQD	ROCK QUALITY DESIGNATION
CBR	CALIFORNIA BEARING RATIO
<	LESS THAN
>	GREATER THAN
R	REFUSAL (N>100)

COLOR

blk	BLACK	pnk	PINK
bl	BLUE	pu	PURPLE
brn	BROWN	rd	RED
dk	DARK	tn	TAN
gry	GRAY	wh	WHITE
gn	GREEN	yel	YELLOW
lt	LIGHT	mltc	MULTICOLORED
or	ORANGE		

STATE OF VERMONT
AGENCY OF TRANSPORTATION
MATERIALS & RESEARCH SECTION
SUBSURFACE INFORMATION

BORING LOG

BRISTOL
HES 021-1(28)
VT 116/North St/South St Improvements

Boring No.: B-3
Page No.: 1 of 1
Pin No.:
Checked By: TAD

Boring Crew: MBC, East Barre, VT, Harrington (Stantec)
Date Started: 6/25/13 Date Finished: 6/25/13
VTSPG NAD83: N 595802.10 ft E 1488519.00 ft
Station: 12+93.82 Offset: −31.53
Ground Elevation: 571.05 ft

	Casing	Sampler
Type:	H.S.A.	SS
I.D.:	2.5 in	1.38 in
Hammer Wt:	N.A.	140
Hammer Fall:	N.A.	30
Hammer/Rod Type:	Safety/N	
Rig:	Truck/Mobile B-53	CE = 1

Groundwater Observations

Date	Depth (ft)	Notes
06/25/13		NE

Depth (ft)	Strata (1)	CLASSIFICATION OF MATERIALS (Description)	Blows/6" (N Value)	Moisture Content %	Gravel %	Sand %	Fines %
		Asphalt, 0.0 ft − 0.25 ft					
		Visual Classification, GrSa, brn, Moist, Rec. = 1.2 ft	5-5-6-4 (11)				
		Visual Classification, GrSa, brn, Moist, Rec. = 0.7 ft	6-6-10-10 (16)				
5		A-1-a, SaGr, brn, Moist, Rec. = 1.2 ft	10-10-10-10 (20)	4.1	59.0	32.2	8.8
		A-1-a, SaGr, brn, Moist, Rec. = 1.0 ft	16-15-13-12 (28)	2.3	65.0	27.1	7.9
		Visual Classification, SaGr, tan, Moist, Rec. = 0.7 ft	8-7-8-10 (15)				
10		Visual Classification, SaGr, brn, Moist, Rec. = 0.8 ft	8-5-5-10 (10)				
15		Visual Classification, SaGr, brn, Moist, Rec. = 0.5 ft	7-2-10-7 (12)				
20		A-1-a, SaGr, brn, Moist, Rec. = 1.0 ft	15-16-15-15 (31)	2.7	69.0	24.9	6.1
25		Visual Classification, GrSa, brn, Moist, Rec. = 1.0 ft	15-12-22-28 (34)				

Hole stopped @ 27.0 ft

Remarks:
Based on drill action, cobbles are present from 15 to 27 feet.

Notes:
1. Stratification lines represent approximate boundary between material types. Transition may be gradual.
2. N Values have not been corrected for hammer energy. CE is the hammer energy correction factor.
3. Water level readings have been made at times and under conditions stated. Fluctuations of groundwater may occur due to other factors than those present at the time measurements were made.

VTRANS_BRISTOL INTERSECTION.GPJ VERMONT AOT.GDT 7/25/13
BORING LOG

STATE OF VERMONT
AGENCY OF TRANSPORTATION
MATERIALS & RESEARCH SECTION
SUBSURFACE INFORMATION

BORING LOG

BRISTOL
HES 021-1(28)
VT 116/North St/South St Improvements

Boring No.: B-4
Page No.: 1 of 1
Pin No.:
Checked By: TAD

Boring Crew: MBC, East Barre, VT, Harrington (Stantec)
Date Started: 6/25/13 Date Finished: 6/25/13
VTSPG NAD83: N 595794.60 ft E 1488547.00 ft
Station: 13+23.13 Offset: 41.70
Ground Elevation: 568.73 ft

	Casing	Sampler
Type:	H.S.A.	SS
I.D.:	2.5 in	1.38 in
Hammer Wt:	N.A.	140
Hammer Fall:	N.A.	30
Hammer/Rod Type:	Safety/N	
Rig:	Truck/Mobile B-53	CE = 1

Groundwater Observations

Date	Depth (ft)	Notes
06/25/13		See remarks

Depth (ft)	Strata (1)	CLASSIFICATION OF MATERIALS (Description)	Blows/6" (N Value)	Moisture Content %	Gravel %	Sand %	Fines %
		Asphalt, 0.0 ft − 0.25 ft					
		A-2-4, GrSa, brn, Moist, Rec. = 1.2 ft	9-8-13-8 (21)	5.5	40.0	44.0	16.0
		Visual Classification, GrSa, brn, Moist, Rec. = 0.7 ft	8-7-3-4 (10)				
5		A-1-b, GrSa, brn, Moist, Rec. = 1.2 ft	6-4-3-2 (7)	7.4	42.9	45.1	12.0
		Visual Classification, GrSa, brn, Moist, Rec. = 0.2 ft	2-2-2-2 (4)				
		Visual Classification, SaGr, brn, Wet, Rec. = 0.3 ft	1-1-2-2 (3)				
10		Visual Classification, SaGr, brn, Wet, Rec. = 0.5 ft	3-2-2-2 (4)				
15		Visual Classification, SaGr, brn, Wet, Rec. = 0.3 ft	13-8-10-11 (18)				
20		A-1-a, SaGr, brn, Moist, Rec. = 1.2 ft	18-16-16-18 (32)	3.3	74.9	19.3	5.8
		Visual Classification, GrSa, brn, Moist, Rec. = 0.7 ft	15-20-25-33 (45)				
25							

Hole stopped @ 24.5 ft

Remarks:
Soil samples from 8.5 to 17 feet were wet. Reportedly a water line is leaking nearby and the samples may be wet due to water from the leak.

Notes:
1. Stratification lines represent approximate boundary between material types. Transition may be gradual.
2. N Values have not been corrected for hammer energy. CE is the hammer energy correction factor.
3. Water level readings have been made at times and under conditions stated. Fluctuations of groundwater may occur due to other factors than those present at the time measurements were made.

VTRANS_BRISTOL INTERSECTION.GPJ VERMONT AOT.GDT 7/25/13
BORING LOG

GENERAL NOTES

1. THE SUBSURFACE EXPLORATIONS SHOWN HEREIN WAS MADE ON AUGUST 10, 2007 BY THE AGENCY.
2. SOIL AND ROCK CLASSIFICATIONS, PROPERTIES AND DESCRIPTIONS ARE BASED ON ENGINEERING INTERPRETATION FROM AVAILABLE SUBSURFACE INFORMATION BY THE AGENCY AND MAY NOT NECESSARILY REFLECT ACTUAL VARIATIONS IN SUBSURFACE CONDITIONS THAT MAY BE ENCOUNTERED BETWEEN INDIVIDUAL BORING OR SAMPLE LOCATIONS.
3. OBSERVED WATER LEVELS AND/OR CONDITIONS INDICATED ARE AS RECORDED AT THE TIME OF EXPLORATION AND MAY VARY ACCORDING TO THE PREVAILING RAINFALL, METHODS OF EXPLORATION AND OTHER FACTORS.
4. ENGINEERING JUDGEMENT WAS EXERCISED IN PREPARING THE SUBSURFACE INFORMATION PRESENTED HEREIN. ANALYSIS AND INTERPRETATION OF SUBSURFACE DATA WAS PERFORMED AND INTERPRETED FOR AGENCY DESIGN AND ESTIMATING PURPOSES. PRESENTATION OF THE INFORMATION IN THE CONTRACT IS INTENDED TO PROVIDE THE CONTRACTOR ACCESS TO THE SAME DATA AVAILABLE TO THE AGENCY. THE SUBSURFACE INFORMATION IS PRESENTED IN GOOD FAITH AND IS NOT INTENDED AS A SUBSTITUTE FOR PERSONAL INVESTIGATION, INDEPENDENT INTERPRETATION, INDEPENDENT ANALYSIS OR JUDGEMENT BY THE CONTRACTOR.

DEFINITIONS (AASHTO)

BEDROCK (LEDGE) - ROCK IN ITS NATIVE LOCATION OF INDEFINITE THICKNESS.
BOULDER - A ROCK FRAGMENT WITH AN AVERAGE DIMENSION >12 INCHES.
COBBLE - ROCK FRAGMENTS WITH AN AVERAGE DIMENSION BETWEEN 3 AND 12 INCHES.
GRAVEL - ROUNDED PARTICLES OF ROCK <3" AND > 0.0787" (#10 SIEVE).
SAND - PARTICLES OF ROCK < 0.0787" (#10 SIEVE) AND > 0.0029" (#200 SIEVE).
SILT - SOIL < 0.0029" (#200 SIEVE), NON OR SLIGHTLY PLASTIC AND EXHIBITS NO STRENGTH WHEN AIR-DRIED.
CLAY - FINE GRAINED SOIL, EXHIBITS PLASTICITY WHEN MOIST AND CONSIDERABLE STRENGTH WHEN AIR-DRIED.
VARVED - ALTERNATE LAYERS OF SILT AND CLAY.
HARDPAN - EXTREMELY DENSE SOIL, CEMENTED LAYER, NOT SOFTENED WHEN WET.
MUCK - SOFT ORGANIC SOIL (CONTAINING > 10% ORGANIC MATERIAL).
MOISTURE CONTENT - WEIGHT OF WATER DIVIDED BY DRY WEIGHT OF SOIL.
FLOWING SAND - GRANULAR SOIL SO SATURATED (LOOSE) THAT IT FLOWS INTO DRILL CASING DURING EXTRACTION OF WASH ROD.
STRIKE - ANGLE FROM MAGNETIC NORTH TO LINE OF INTERSECTION OF BED WITH A HORIZONTAL PLANE.
DIP - INCLINATION OF BED WITH A HORIZONTAL PLANE.

Stantec

PROJECT NAME: BRISTOL
PROJECT NUMBER: HES 021-1 (28)

FILE NAME: z10b078frm.dgn
PROJECT LEADER: T. LUTHER
DESIGNED BY: T. LUTHER
BORING LOG SHEET 2

PLOT DATE: 4/29/2014
DRAWN BY: P. ARMATA
CHECKED BY: G. EDWARDS
SHEET 8 OF 29

STATE OF VERMONT
AGENCY OF TRANSPORTATION

QUANTITY SHEET 1

SUMMARY OF ESTIMATED QUANTITIES

ROADWAY	EROSION CONTROL	FULL C.E. ITEMS
1		
270		
30		
60		
10		
1		
2500		
180		
10		
1		
71		
71		
1		
2		
30		
1		
1		
480		
345		
500		
90		
6		
300		
600		
		1
		1
		1
		3000
1		
1		
2		
1150		
400		
70		
4		
220		
2300		

TOTALS

GRAND TOTAL	FINAL
1	
270	
30	
60	
10	
1	
2500	
180	
10	
1	
71	
71	
1	
2	
30	
1	
1	
480	
345	
500	
90	
6	
300	
600	
1	
1	
1	
3000	
1	
1	
2	
1150	
400	
70	
4	
220	
2300	

DESCRIPTIONS

UNIT	ITEMS	ITEM NUMBER	ROUND
LS	CLEARING AND GRUBBING, INCLUDING INDIVIDUAL TREES AND STUMPS	201.10	-
CY	COMMON EXCAVATION	203.15	4
CY	SOLID ROCK EXCAVATION	203.16	EST.
CY	TRENCH EXCAVATION OF EARTH	204.20	5
CY	TRENCH EXCAVATION OF ROCK	204.21	EST.
CY	TRENCH EXCAVATION OF EARTH, EXPLORATORY (N.A.B.I.)	204.22	-
SY	COLD PLANING, BITUMINOUS PAVEMENT	210.10	99
CY	SUBBASE OF CRUSHED GRAVEL, FINE GRADED	301.26	11
CWT	EMULSIFIED ASPHALT	404.65	-
LU	PRICE ADJUSTMENT, ASPHALT CEMENT (N.A.B.I.)	406.50	-
	BEGIN OPTION AA		
LF	18" RCP CLASS III	601.0815	-
LF	18" CPEP(SL)	601.2615	-
	END OPTION AA		
EACH	PRECAST REINFORCED CONCRETE DROP INLET WITH CAST IRON GRATE	604.18	-
EACH	PRECAST REINFORCED CONCRETE MANHOLE WITH CAST IRON COVER	604.21	-
EACH	CHANGING ELEVATION OF DROP INLETS, CATCH BASINS, OR MANHOLES	604.40	-
HR	POWER BROOM RENTAL, TYPE I	608.30	EST.
MGAL	DUST CONTROL WITH WATER	609.10	-
TON	DUST AND ICE CONTROL WITH CALCIUM CHLORIDE	609.15	0.1
LF	VERTICAL GRANITE CURB	616.21	5
LF	REMOVAL OF EXISTING CURB	616.41	7
SY	PORTLAND CEMENT CONCRETE SIDEWALK, 5 INCH	618.10	16.6
SF	DETECTABLE WARNING SURFACE	618.30	-
EACH	ADJUST ELEVATION OF VALVE BOX	629.20	-
HR	UNIFORMED TRAFFIC OFFICERS	630.10	EST.
HR	FLAGGERS	630.15	EST.
LS	FIELD OFFICE, ENGINEERS	631.10	-
LS	TESTING EQUIPMENT, CONCRETE	631.16	-
LS	TESTING EQUIPMENT, BITUMINOUS	631.17	-
DL	FIELD OFFICE TELEPHONE (N.A.B.I.)	631.26	-
LS	MOBILIZATION/DEMOBILIZATION	635.11	-
LS	TRAFFIC CONTROL	641.10	-
EACH	PORTABLE CHANGEABLE MESSAGE SIGN	641.15	-
LF	DURABLE 4 INCH WHITE LINE, RECESSED POLYUREA	646.406	20
LF	DURABLE 4 INCH YELLOW LINE, RECESSED POLYUREA	646.416	1
LF	DURABLE 24 INCH STOP BAR, RECESSED TYPE C TAPE	646.4873	-
EACH	DURABLE LETTER OR SYMBOL, TYPE C TAPE	646.4913	-
LF	DURABLE CROSSWALK MARKING, RECESSED TYPE C TAPE	646.5073	-
LF	TEMPORARY 4 INCH WHITE LINE	646.600	40

DETAILED SUMMARY OF QUANTITIES

QUANTITIES	UNIT	ITEMS
		203.15 Common Excavation
67.8	CY	Southwest Quad
70.7	CY	Southeast Quad
70.4	CY	Northwest Quad
51.5	CY	Northeast Quad
5.5	CY	Extra SW Removal
265.9		Subtotal
4.1		Rounding
270		**Total**
		203.16 Solid Rock Excavation
7.5	CY	Southwest Quad
8	CY	Southeast Quad
10	CY	Northwest Quad
4.5	CY	Northeast Quad
30		Subtotal
-		Rounding
30		**Total**
		301.26 Subbase of Crushed Gravel, Fine Graded
44.7	CY	Southwest Quad
45.1	CY	Southeast Quad
44.5	CY	Northwest Quad 89.0 1' DEPTH
34.5	CY	Northeast Quad
169		Subtotal
11		Rounding
180		**Total**

Stantec

PROJECT NAME:	BRISTOL
PROJECT NUMBER:	HES 021-1 (28)

FILE NAME:	z10b078frm.dgn	PLOT DATE:	4/29/2014
PROJECT LEADER:	T. LUTHER	DRAWN BY:	P. ARMATA
DESIGNED BY:	T. LUTHER	CHECKED BY:	G. EDWARDS
QUANTITY SHEET 1		SHEET 9 OF 29	

STATE OF VERMONT
AGENCY OF TRANSPORTATION

QUANTITY SHEET 2

SUMMARY OF ESTIMATED QUANTITIES			TOTALS		DESCRIPTIONS				DETAILED SUMMARY OF QUANTITIES		
ROADWAY	EROSION CONTROL	FULL C.E. ITEMS	GRAND TOTAL	FINAL	UNIT	ITEMS	ITEM NUMBER	ROUND	QUANTITIES	UNIT	ITEMS
800			800		LF	TEMPORARY 4 INCH YELLOW LINE	646.610	2			
140			140		LF	TEMPORARY 24 INCH STOP BAR	646.680	8			
8			8		EACH	TEMPORARY LETTER OR SYMBOL	646.690	-			
440			440		LF	TEMPORARY CROSSWALK MARKING	646.700	18			
12			12		EACH	EVERGREEN SHRUBS (MICROBIOTA DECUSSATA)(SIBERIAN CARPET)(18-24" POTS)	656.25	-			
47			47		EACH	PERENNIALS (HEMEROCALLIS 'STELLA D'ORO')(STELLA D'ORO DAYLILY)(1 GAL POTS)	656.41	-			
55			55		EACH	PERENNIALS (NEPETA 'WALKERS LOW')(WALKERS LOW CATMINT)(1 GAL POTS)	656.41	-			
24			24		EACH	PERENNIALS (RUDBECKIA 'GOLDSTRUM')(GOLDSTRUM BLACK EYE SUSAN)(1 GAL POTS)	656.41	-			
9			9		EACH	PERENNIALS (SEDUM 'AUTUMN JOY')(AUTUMN JOY SEDUM)(1 GAL POTS)	656.41	-			
50			50		CY	LANDSCAPE BACKFILL, TRUCK MEASUREMENT	656.80	-			
29			29		SF	TRAFFIC SIGNS, TYPE A	675.20	0.01			
165			165		LF	SQUARE TUBE SIGN POST AND ANCHOR	675.341	-			
13			13		EACH	REMOVING SIGNS	675.50	-			
1			1		EACH	TRAFFIC CONTROL SIGNAL SYSTEM, INTERSECTION	678.15	-			
580			580		LF	WIRED CONDUIT (2")(PVC)	678.23	2			
1			1		EACH	TEMPORARY TRAFFIC SIGNAL SYSTEM	678.40	-			
4			4		EACH	LIGHT POLE BASE	679.21	-			
1			1		EACH	POWER DROP STANCHION, STREET LIGHTING	679.55	-			
1			1		EACH	SPECIAL PROVISION (ELECTRIC POWER BOARD AND CABINET)	900.620	-			
	5		5		EACH	SPECIAL PROVISION (INLET PROTECTION DEVICE, FILTER FIBER)	900.620	-			
4			4		EACH	SPECIAL PROVISION (STREET LIGHT, TYPE A)	900.620	-			
3			3		EACH	SPECIAL PROVISION (STREET LIGHT, TYPE B)	900.620	-			
1			1		EACH	SPECIAL PROVISION (STREET LIGHT, TYPE C)	900.620	-			
1			1		LS	SPECIAL PROVISION (DEMOLITION OF ABOVE GROUND ELECTRIC VAULT)	900.645	-			
1			1		LU	SPECIAL PROVISION (MAT DENSITY PAY ADJUSTMENT, SMALL QUANTITY)(N.A.B.I.)	900.650	-			
											900.680 Special Provision (Bituminous Concrete
1			1		LU	SPECIAL PROVISION (MIXTURE PAY ADJUSTMENT)(N.A.B.I.)	900.650	-			**Pavement, Small Quantity)**
90			90		SY	SPECIAL PROVISION (IMPRINTED CONCRETE SIDEWALK, 5 INCH)	900.675	9.9	25.2	TON	Type IIS
									272.8	TON	Type IVS
300			300		TON	SPECIAL PROVISION (BITUMINOUS CONCRETE PAVEMENT, SMALL QUANTITY)	900.680	2	298		Subtotal
									2		Rounding
									300		**Total**

Stantec

PROJECT NAME: BRISTOL
PROJECT NUMBER: HES 021-1 (28)

FILE NAME: z10b078frm.dgn
PROJECT LEADER: T. LUTHER
DESIGNED BY: T. LUTHER
QUANTITY SHEET 2

PLOT DATE: 4/29/2014
DRAWN BY: P. ARMATA
CHECKED BY: G. EDWARDS
SHEET 10 OF 29

STATE OF VERMONT
AGENCY OF TRANSPORTATION

ITEM DETAIL SHEET

CURB

BEGIN STATION	END STATION	POSITION LEFT FT	POSITION RIGHT FT	REMARKS
ITEM 616.21 - VERTICAL GRANITE CURB				
11+75	200+69		141	
11+90	101+09	102		
100+57	13+27	77		
200+60	13+70		80	
Ramps		75		
POSITION SUBTOTAL		254	221	
ROUNDING		5		
TOTAL		480.0		
ITEM 616.41 - REMOVAL OF EXISTING CURB				
11+75	200+93		75.5	
200+54	13+70		86.2	
11+90	10+19	98.6		
100+57	13+27	78.1		
POSITION SUBTOTAL		176.7	161.7	
ROUNDING		6.6		
TOTAL		345.0		

SIDEWALK

BEGIN STATION	END STATION	POSITION LEFT SY	POSITION RIGHT SY	REMARKS
ITEM 618.10 - PORTLAND CEMENT CONCRETE SIDEWALK, 5 INCH				
11+75	200+69		109.2	
200+60	13+70		109.0	
11+90	10+19	122.5		
100+57	13+27	98.5		
Sidewalk in NW quad		44.2		
POSITION SUBTOTAL		265.2	218.2	
ROUNDING		16.6		
TOTAL		500.0		
ITEM 900.675 - SPECIAL PROVISION (IMPRINTED CONCRETE SIDEWALK, 5 INCH)				
11+96	12+20		9.1	
12+06	12+16	3.3		
12+27	12+48		17.3	
12+88	13+09	7.7		
13+14	13+26	6.3		
13+22	13+69		20.3	
200+84	200+91		3.1	
200+60	200+77		5.7	
200+69	200+93	7.3		
POSITION SUBTOTAL		24.6	55.5	
ROUNDING		9.9		
TOTAL		90.0		

GUARD RAIL

BEGIN STATION	END STATION	POSITION LEFT FT	POSITION RIGHT FT	END TREATMENT BEGIN EA	END TREATMENT END EA

UNDERDRAIN

BEGIN STATION	END STATION	TYPE	POSITION	DIA. IN	LENGTH FT	TRENCH EARTH CY	TRENCH ROCK CY	GRAN BKFILL CY	FB EA	MKR PST EA

Stantec

PROJECT NAME: BRISTOL
PROJECT NUMBER: HES 021-1 (28)

FILE NAME: z10b078frm.dgn
PROJECT LEADER: T. LUTHER
DESIGNED BY: T. LUTHER
ITEM DETAIL SHEET

PLOT DATE: 4/29/2014
DRAWN BY: P. ARMATA
CHECKED BY: G. EDWARDS
SHEET 11 OF 29

DI1 STA. 13+62, 43' RT - CONSTRUCT 4'X4' DI W/TYPE 'D' GRATE, CONSTRUCT 30' X 18" OPTION PIPE
FINAL RIM ELEVATION = 568.82
18" INVERT OUT = 565.30

MH1 STA. 13+35, 32' RT - CONSTRUCT MH W/CAST IRON COVER, CONSTRUCT 41' X 18" OPTION PIPE
FINAL RIM ELEVATION = 569.50
18" INVERT IN = 565.00
18" INVERT OUT = 565.00

MH2 STA. 12+91, 39' RT - CONSTRUCT MH W/CAST IRON COVER, CUT EXISTING 48" PIPE AND CONNECT ENDS TO MH2
FINAL RIM ELEVATION = 568.20
18" INVERT IN = 564.60
48" INVERT IN
48" INVERT OUT

VERTICAL GRANITE CURB
STA. 11+75 - 200+69, RT.
STA. 11+90 - 101+09, LT.
STA. 12+01 - 12+03, RT.
STA. 13+09 - 13+09, LT.
STA. 13+21 - 13+22, RT.
STA. 100+26 - 100+29, RT.
STA. 100+60 - 100+62, LT.
STA. 100+57 - 13+27, LT.
STA. 200+60 - 13+70, RT.

CHANGING ELEVATION OF DROP INLETS, CATCH BASINS, OR MANHOLES
STA. 100+61.1, RT.
STA. 100+31.9, LT.

ADJUST ELEVATION OF VALVE BOX
STA. 12+41.9, RT.
STA. 12+48.9, RT.
STA. 12+56.7, RT.
STA. 13+20.6, RT.
STA. 13+39.0, RT.
STA. 200+71.0, RT.

REMOVAL OF EXISTING CURB
STA. 11+75 - 200+93, RT.
STA. 200+54 - 13+70, RT.
STA. 11+90 - 10+19, LT.
STA. 100+57 - 13+27, LT.

SPECIAL PROVISION (IMPRINTED CONCRETE SIDEWALK 5 INCH)
STA. 11+87 - 100+96, LT.
STA. 11+96 - 12+17, RT.
STA. 12+09 - 12+17, LT.
STA. 12+27 - 201+01, RT.
STA. 12+88 - 13+09, LT.
STA. 13+14 - 13+26, LT.
STA. 13+06 - 13+15, RT.
STA. 13+22 - 13+69, RT.
STA. 200+76 - 200+60, RT.
STA. 200+93 - 200+69, LT.

DETECTABLE WARNING SURFACE
12+06, LT.
12+23, RT.
13+12, LT.
13+18, RT.
100+36, RT.
100+58, LT.
200+83, RT.
200+97, LT.

PORTLAND CEMENT CONCRETE SIDEWALK, 5 INCH
STA. 11+75 - 200+66, RT.
STA. 200+60 - 13+70, RT.
STA. 11+68 - 101+01, LT.
STA. 100+57 - 13+27, LT.
STA. 100+96 - 101+75, LT.

PI
STA 12+58.84 = STA. 100+00
N= 595811.1381
E=1488484.9763

POT
STA 12+67.22 = STA. 201+37.53
N= 595808.9531
E= 1488493.0682

NOTES:
1. SEE GRADING PLAN SHEET FOR ROADWAY AND SIDEWALK GRADING.
2. SEE GRADING PLAN SHEET FOR BULB-OUT CONSTRUCTION LAYOUT INFORMATION.
3. HVCTRL #3 AND #4 LOCATED 625' +/- WEST OF PROJECT AREA.
4. NEW SIDEWALK ON NORTHEAST AND SOUTHEAST QUADRANTS SHALL BE CONSTRUCTED WITHIN EXISTING RIGHT OF WAY. NO IMPACTS PERMITTED BEYOND EXISTING RIGHT OF WAY.
5. IF TREE ROOTS ENCOUNTERED; SAWCUT AND PROTECT PER ENGINEER. INCIDENTAL TO COMMON EXCAVATION.
6. CONSTRUCT BACK OF SIDEWALK ALONG FACE OF EXISTING STONE WALL TO ELEVATIONS SHOWN ON GRADING PLAN.
7. SAWCUT EXISTING SIDEWALK INCIDENTAL TO SIDEWALK CONSTRUCTION.
8. UTILITY LOCATIONS ON THIS PLAN ARE APPROXIMATE. CONTRACTOR TO FIELD VERIFY PRIOR TO CONSTRUCTION.
9. AREAS SHOWN ON THIS PLAN THAT CALL FOR TURF ESTABLISHMENT SHALL BE TOPSOILED, SEEDED, FERTILIZED AND MULCHED IN ACCORDANCE WITH VTRANS STANDARD SPECIFICATION SECTION 651. THIS WORK SHALL NOT BE PAID FOR SEPARATELY BUT BE PAID INCIDENTAL TO ALL CONTRACT ITEMS.

TOWN WANTS
DELETE MH1 & MH2
CORE INTO DI @ STA. 13+04, 74' RT
NEW MH @ 13+20, 54' RT

0 20 40
SCALE IN FEET

Stantec

PROJECT NAME:	BRISTOL
PROJECT NUMBER:	HES 021-1 (28)
FILE NAME: z10b078bdr.dgn	PLOT DATE: 5/20/2014
PROJECT LEADER: T. LUTHER	DRAWN BY: P. ARMATA
DESIGNED BY: T. LUTHER	CHECKED BY: G. EDWARDS
CONSTRUCTION PLAN	SHEET 12 OF 29

NORTH WEST CORNER				
POINT	DESCRIPTION	NORTHING	EASTING	ELEVATION
1	PC	595862.5355	1488432.6595	569.89
2	PCC	595867.1931	1488460.7372	570.51
3	PT	595875.2214	1488465.1189	570.71
4	LP	595882.0604	1488465.2873	570.86

NORTH EAST CORNER				
POINT	DESCRIPTION	NORTHING	EASTING	ELEVATION
5	PC	595867.3808	1488505.9442	571.33
6	PCC	595862.3541	1488506.3880	571.25
7	PCC	595827.1324	1488520.0346	570.86
8	PCC	595814.0948	1488535.2849	570.77
9	PCC	595811.4922	1488542.5871	570.68
10	PT	595813.8394	1488548.2103	570.66
11	PC	595822.6747	1488553.2708	570.69
12	PT	595825.0212	1488558.8954	570.62
13	LP	595836.6794	1488561.9942	MATCH EXIST.
14	LP	595867.5200	1488520.6101	MATCH EXIST.

SOUTH WEST CORNER				
POINT	DESCRIPTION	NORTHING	EASTING	ELEVATION
15	LP	595800.7670	1488394.4178	567.82
16	PC	595806.3392	1488395.9370	567.84
17	PT	595809.8479	1488402.0761	567.88
18	PC	595801.0773	1488434.2453	568.21
19	PRC	595802.4152	1488439.1449	568.32
20	PCC	595803.1586	1488452.6035	568.52
21	PT	595773.7675	1488465.9977	567.66
22	PC	595764.4803	1488465.5135	566.81
23	POE	595742.5595	1488457.5648	565.95
24	POB	595741.0493	1488453.4960	566.06
25	FACE EX. STONE WALL			566.63
26	FACE EX. STONE WALL			567.79
27	CNR. OF EX. COBBLE STONE			568.75
28	WALKWAY			568.70
29	MATCH EXISTING			MATCH EX.

SOUTH EAST CORNER				
POINT	DESCRIPTION	NORTHING	EASTING	ELEVATION
30	PC	595729.9706	1488510.4683	565.46
31	PCC	595753.0845	1488513.3614	567.77
32	PCC	595764.7275	1488539.5101	569.17
33	PT	595749.6157	1488566.0117	569.09
34	PC	595744.3238	1488567.8093	568.93
35	PT	595741.0191	1488571.6144	568.82
36	LP	595739.4958	1488580.4320	568.86
37	BUILD FACE			569.64
38	BUILD FACE			566.80
39	BUILD FACE			567.89

NOTES:
1. ELEVATIONS SHOWN AT EDGE OF PAVEMENT ARE AT THE GUTTER LINE.

2. GRADING FOR PARK AREA SIDEWALK TO BE DETERMINED ONCE LAYOUT IS FINALIZED.

3. WALKABLE AREAS SHALL NOT EXCEED 2% CROSS SLOPE.

0 10 20
SCALE IN FEET

Stantec

PROJECT NAME:	BRISTOL
PROJECT NUMBER:	HES 021-1 (28)
FILE NAME: z10b078bdr_curbdet.dgn	PLOT DATE: 4/29/2014
PROJECT LEADER: T. LUTHER	DRAWN BY: P. ARMATA
DESIGNED BY: D. DEBAIE	CHECKED BY: G. EDWARDS
GRADING PLAN	SHEET 13 OF 29

DURABLE 4 INCH WHITE LINE, RECESSED POLYUREA
STA. 11+72 TO 12+03, SOLID LT (PARKING & DIAGONALS) (113 LF)
STA. 10+25 TO 12+07, SOLID RT (EDGE OF TRAVELWAY) (175 LF)
STA. 11+78 TO 12+26, SOLID RT (PARKING & DIAGONALS) (86 LF)
STA. 13+16 TO 13+69, SOLID LT (PARKING & DIAGONALS) (192 LF)
STA. 13+58 TO 13+68, SOLID RT (PARKING) (18 LF)
STA. 100+67 TO 101+38, SOLID RT (LANE LINE) (71 LF)
STA. 100+67 TO 102+46, SOLID RT (EDGE OF TRAVELWAY) (109 LF)
STA. 100+67 TO 102+33, SOLID LT (EDGE OF TRAVELWAY) (166 LF)
STA. 101+38 TO 101+87, DASHED RT (LANE LINES) (49 LF)
STA. 101+40 TO 102+26, SOLID RT (DIAGONALS) (60 LF)
STA. 200+14 TO 200+95, SOLID RT (PARKING & DIAGONALS) (149 LF)

DURABLE 4 INCH YELLOW LINE, RECESSED POLYUREA
STA. 10+25 TO 12+07, DOUBLE SOLID (CENTER LINE) (175 LF)
STA. 13+25 TO 13+69, DOUBLE SOLID (CENTER LINE) (44 LF)
STA. 100+67 TO 102+33, DOUBLE SOLID (CENTER LINE) (165 LF)
STA. 200+75 TO 200+60, DOUBLE SOLID (CENTER LINE) (15 LF)

DURABLE 24 INCH STOP BAR, RECESSED TYPE C TAPE
STA. 12+08 TO 12+08, RT (MAIN ST EB)
STA. 13+24 TO 13+24, LT (MAIN ST WB)
STA. 100+66 TO 100+66, RT (NORTH ST.)
STA. 200+74 TO 200+74, RT (SOUTH ST.)

DURABLE LETER OR SYMBOL, RECESSED TYPE C TAPE
STA. 11+97, RT (HANDICAP SYMBOL)
STA. 13+46, RT (HANDICAP SYMBOL)
STA. 100+76, RT (RT TURN ARROW)
STA. 101+32, RT (RT TURN ARROW)

DURABLE CROSSWALK MARKING, TYPE C TAPE
STA. 12+06 TO 12+22, LT-RT
STA. 13+12 TO 13+17, LT-RT
STA. 100+36 TO 100+57, RT- LT
STA. 200+99 TO 200+84, LT-RT

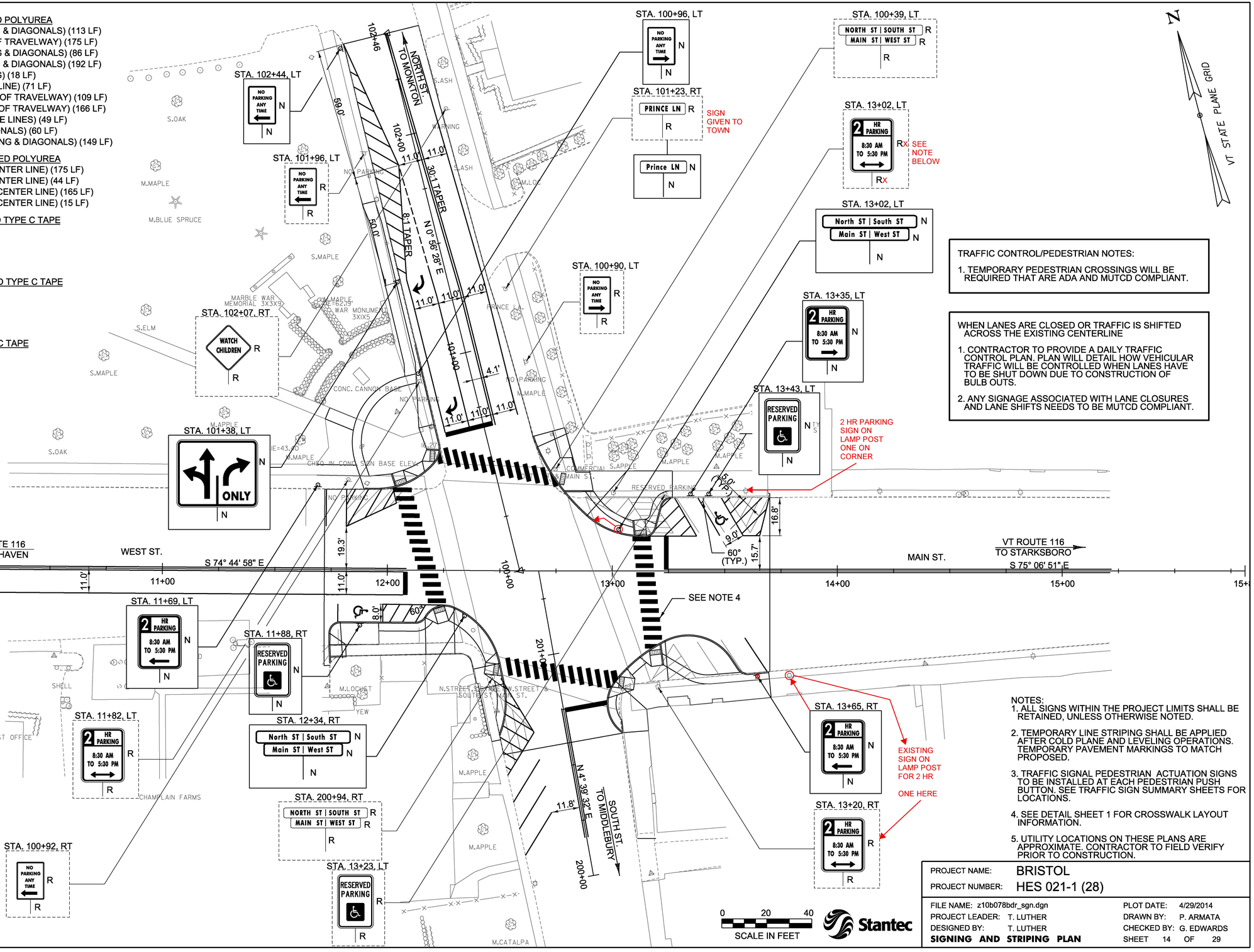

SIGN LEGEND

N	= NEW
R	= REMOVE
R&S	= REMOVE & SALVAGE
S	= SALVAGE SIGN
RET	= RETAIN
B-B	= BACK TO BACK

TRAFFIC CONTROL/PEDESTRIAN NOTES:

1. TEMPORARY PEDESTRIAN CROSSINGS WILL BE REQUIRED THAT ARE ADA AND MUTCD COMPLIANT.

WHEN LANES ARE CLOSED OR TRAFFIC IS SHIFTED ACROSS THE EXISTING CENTERLINE

1. CONTRACTOR TO PROVIDE A DAILY TRAFFIC CONTROL PLAN. PLAN WILL DETAIL HOW VEHICULAR TRAFFIC WILL BE CONTROLLED WHEN LANES HAVE TO BE SHUT DOWN DUE TO CONSTRUCTION OF BULB OUTS.

2. ANY SIGNAGE ASSOCIATED WITH LANE CLOSURES AND LANE SHIFTS NEEDS TO BE MUTCD COMPLIANT.

NOTES:
1. ALL SIGNS WITHIN THE PROJECT LIMITS SHALL BE RETAINED, UNLESS OTHERWISE NOTED.

2. TEMPORARY LINE STRIPING SHALL BE APPLIED AFTER COLD PLANE AND LEVELING OPERATIONS. TEMPORARY PAVEMENT MARKINGS TO MATCH PROPOSED.

3. TRAFFIC SIGNAL PEDESTRIAN ACTUATION SIGNS TO BE INSTALLED AT EACH PEDESTRIAN PUSH BUTTON. SEE TRAFFIC SIGN SUMMARY SHEETS FOR LOCATIONS.

4. SEE DETAIL SHEET 1 FOR CROSSWALK LAYOUT INFORMATION.

5. UTILITY LOCATIONS ON THESE PLANS ARE APPROXIMATE. CONTRACTOR TO FIELD VERIFY PRIOR TO CONSTRUCTION.

0 20 40
SCALE IN FEET

Stantec

PROJECT NAME: BRISTOL
PROJECT NUMBER: HES 021-1 (28)

FILE NAME: z10b078bdr_sgn.dgn
PROJECT LEADER: T. LUTHER
DESIGNED BY: T. LUTHER
PLOT DATE: 4/29/2014
DRAWN BY: P. ARMATA
CHECKED BY: G. EDWARDS
SIGNING AND STRIPING PLAN
SHEET 14 OF 29

STATE OF VERMONT
AGENCY OF TRANSPORTATION

TRAFFIC SIGN SUMMARY SHEET 1

MILEMARKER, STATION, OR SIGN NUMBER	SIGN LEGEND	SIGN DIMENSIONS EA	WIDTH (in)	HEIGHT (in)	NEW & SALVAGED SIGNS "A"	"B"	SALV SIGN	SALV TIS	EXIST POST RETAIN	SALVAGE	NO. OF POSTS	FLANGED CHANNEL lb/ft 1.12	2.0	3.0	SQUARE STEEL (in) 1.75 lb/ft 1.88	2.0 2.42	2.5 3.35	ANCHOR	SLEEVE	TUBULAR ALUMINUM Ø (in) 3.0 lb/ft 1.3	4.0 1.7	4.0 MOD 1.7	FOUNDATION	TUBULAR STEEL Ø (in) 3.0 lb/ft 7.6	3.5 9.0	4.0 10.8	5.0 14.6	W-SHAPE STEEL FTG. SIZE 24"	30"	WEIGHT	POST SIZE	SIGN FRAME REQUIRED	REMARKS	SIGN DETAIL SHSM	DETAIL ON SHEET NUMBER	STD. SHEET NUMBER
VT 116 BRISTOL, VT																																				
STA. 11+69, LT	2 HR PARKING 8:30 AM TO 5:30 PM	1	12	18	1.50						1					X		X																R7-108		
STA. 11+88, RT	RESERVED PARKING	1	12	18	1.50						1					X		X																R7-8		
STA. 12+34, RT	North ST | South ST	1	42	8	2.33																													D3-1	18	
	Main ST | West ST	1	42	8	2.33						1					X		X																D3-1	18	
STA. 13+02, LT	North ST | South ST	1	42	8	2.33																													D3-1	18	
	Main ST | West ST	1	42	8	2.33						1					X		X																D3-1	18	
STA. 13+35, LT	2 HR PARKING 8:30 AM TO 5:30 PM	1	12	18	1.50						1					X		X																R7-108		
STA. 13+43, LT	RESERVED PARKING	1	12	18	1.50						1					X		X																R7-8		
STA. 13+65, RT	2 HR PARKING 8:30 AM TO 5:30 PM	1	12	18	1.50						1 X					X		X																R7-108		
	INSTALLED ON LAMP POST @ STA. 13+76 RT																																			
												FT	FT	FT	FT	FT 105	FT		EA	LB	LB	LB		LB	LB	LB	LB									
	TOTALS				SF 16.82	SF	EA.	SF				FT			FT 105					LB			EA.	LB				EA.	EA.	LB						

FINAL POST LENGTHS ARE TO BE DETERMINED IN THE FIELD. POST SIZES ARE COMPUTED BASED ON INFORMATION FURNISHED ON THE STANDARD SHEETS AND THE VTRANS "SIGN POST DESIGN GUIDELINE."

Stantec

PROJECT NAME: BRISTOL
PROJECT NUMBER: HES 021-1(28)

FILE NAME: z10b078tss.dgn
PROJECT LEADER: T. LUTHER
DESIGNED BY: D. DEBAIE
TRAFFIC SIGN SUMMARY SHEET 1

PLOT DATE: 4/29/2014
DRAWN BY: P. ARMATA
CHECKED BY: G. EDWARDS
SHEET 15 OF 29

STATE OF VERMONT
AGENCY OF TRANSPORTATION

TRAFFIC SIGN SUMMARY SHEET 2

MILEMARKER, STATION, OR SIGN NUMBER	SIGN LEGEND	SIGN DIMENSIONS			NEW & SALVAGED SIGNS				EXIST POST		NEW SIGN POSTS																			REMARKS	SIGN DETAIL		
		EA	WIDTH (In)	HEIGHT (In)	"A"	"B"	SALV SIGN	SALV TIS	RETAIN	SALVAGE	NO. OF POSTS	FLANGED CHANNEL lb/ft			SQUARE STEEL (In)			ANCHOR	SLEEVE	TUBULAR ALUMINUM Ø (In)			FOUNDATION	TUBULAR STEEL Ø (In)				W-SHAPE STEEL FTG. SIZE		WEIGHT	POST SIZE	SIGN FRAME REQUIRED		SHSM	DETAIL ON SHEET NUMBER	STD. SHEET NUMBER
															1.75	2.0	2.5			3.0	4.0	4.0 MOD		3.0	3.5	4.0	5.0	24"	30"							
															lb/ft					lb/ft				lb/ft												
												1.12	2.0	3.0	1.88	2.42	3.35			1.3	1.7	1.7		7.6	9.0	10.8	14.6									
VT 116 BRISTOL, VT																																				
STA. 100+96, LT	NO PARKING ANY TIME →	1	12	18	1.50						1					X		X															R7-1		
STA. 101+23, RT	Prince LN	1	30	8	1.67						1					X		X															D3-1	18	
STA. 101+38, LT	ONLY	1	36	30	7.50						1					X		X															-		E-145A
STA. 102+44, LT	NO PARKING ANY TIME ←	1	12	18	1.50						1					X		X															R7-1		
TOTALS		SF 12.17	SF	EA.	SF						FT	FT	FT	FT	FT 60	FT		EA	LB	LB	LB		LB	LB	LB	LB	EA.	EA.	LB						
											FT				FT 60.0				LB				EA.	LB											

FINAL POST LENGTHS ARE TO BE DETERMINED IN THE FIELD. POST SIZES ARE COMPUTED BASED ON INFORMATION FURNISHED ON THE STANDARD SHEETS AND THE VTRANS "SIGN POST DESIGN GUIDELINE."

Stantec

PROJECT NAME: BRISTOL
PROJECT NUMBER: HES 021-1(28)

FILE NAME: z10b078tss.dgn
PROJECT LEADER: T. LUTHER
DESIGNED BY: D. DEBAIE
PLOT DATE: 4/29/2014
DRAWN BY: P. ARMATA
CHECKED BY: G. EDWARDS

TRAFFIC SIGN SUMMARY SHEET 2

STATE OF VERMONT
AGENCY OF TRANSPORTATION

TRAFFIC SIGN SUMMARY SHEET 3

MILEMARKER, STATION, OR SIGN NUMBER	SIGN LEGEND	SIGN DIMENSIONS			NEW & SALVAGED SIGNS				EXIST POST		NEW SIGN POSTS																		REMARKS	SIGN DETAIL		
		EA	WIDTH (In)	HEIGHT (In)	"A"	"B"	SALV SIGN	SALV TIS	RETAIN	SALVAGE	NO. OF POSTS	FLANGED CHANNEL			SQUARE STEEL (In)			ANCHOR	SLEEVE	TUBULAR ALUMINUM Ø (In)			TUBULAR STEEL Ø (In)					W-SHAPE STEEL				SIGN FRAME REQUIRED		SHSM	DETAIL ON SHEET NUMBER	STD. SHEET NUMBER
												lb/ft			1.75	2.0	2.5			3.0	4.0	4.0 MOD	FOUND-ATION	3.0	3.5	4.0	5.0	FTG. SIZE		WEIGHT	POST SIZE					
												1.12	2.0	3.0	1.88	2.42	3.35			1.3	1.7	1.7		7.6	9.0	10.8	14.6	24"	30"							
SUBTOTALS																																				
	TSS SHEET 1 SUBTOTALS				16.82											105.0																				
	TSS SHEET 2 SUBTOTALS				12.17											60.0																				
	PROJECT SUBTOTALS				28.99											165.0																				
	ROUNDING				0.01											-																				
	TOTALS				29.00											165.0																				
												FT	FT	FT	FT	FT 165.0	FT		EA	LB	LB	LB		LB	LB	LB	LB									
	TOTALS				SF 29.00	SF	EA.	SF				FT			FT 165.0					LB			EA.	LB				EA.	EA.	LB						

FINAL POST LENGTHS ARE TO BE DETERMINED IN THE FIELD. POST SIZES ARE COMPUTED BASED ON INFORMATION FURNISHED ON THE STANDARD SHEETS AND THE VTRANS "SIGN POST DESIGN GUIDELINE."

Stantec

PROJECT NAME: BRISTOL
PROJECT NUMBER: HES 021-1(28)

FILE NAME: z10b078tss.dgn
PROJECT LEADER: T. LUTHER
DESIGNED BY: D. DEBAIE
TRAFFIC SIGN SUMMARY SHEET 3

PLOT DATE: 4/29/2014
DRAWN BY: P. ARMATA
CHECKED BY: G. EDWARDS
SHEET 17 OF 29

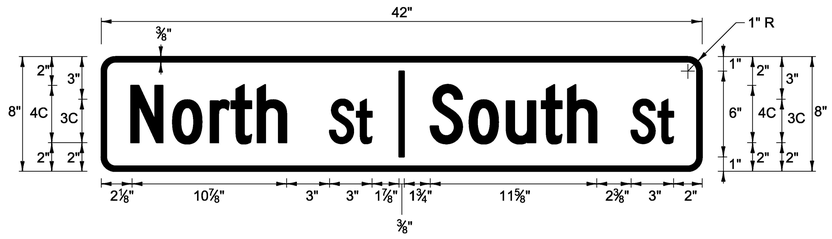

D3–1

LOCATION: BRISTOL: VT ROUTE 116
STA. 12+34, RT
STA. 13+02, LT

COLOR: WHITE BORDER AND TEXT (RETROREFLECTIVE)
GREEN BACKGROUND (RETROREFLECTIVE)

MATERIAL: 0.125" FLAT SHEET ALUMINUM

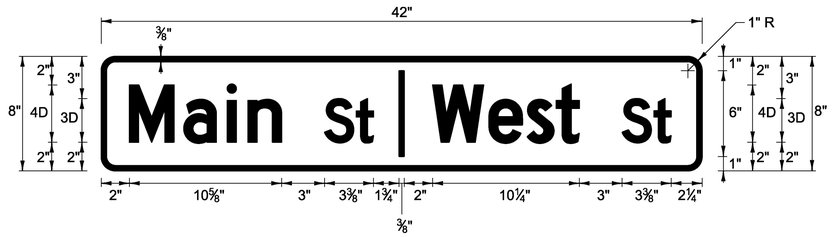

D3–1

LOCATION: BRISTOL: VT ROUTE 116
STA. 12+34, RT
STA. 13+02, LT

COLOR: WHITE BORDER AND TEXT (RETROREFLECTIVE)
GREEN BACKGROUND (RETROREFLECTIVE)

MATERIAL: 0.125" FLAT SHEET ALUMINUM

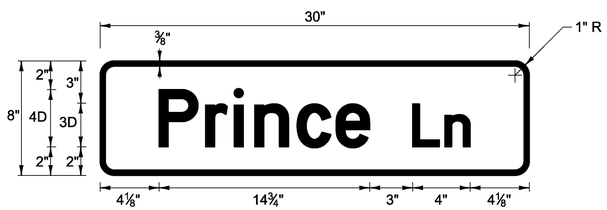

D3–1

LOCATION: BRISTOL: VT ROUTE 116
STA. 101+23, RT

COLOR: WHITE BORDER AND TEXT (RETROREFLECTIVE)
GREEN BACKGROUND (RETROREFLECTIVE)

MATERIAL: 0.125" FLAT SHEET ALUMINUM

NOTE: 12" WIDE ALUMINUM SIGN BRACKETS SHALL BE USED TO MOUNT STREET SIGNS.

Stantec

PROJECT NAME: BRISTOL
PROJECT NUMBER: HES 021-1 (28)

FILE NAME: z10b078frm.dgn
PROJECT LEADER: T. LUTHER
DESIGNED BY: G.BURGMEIER
PLOT DATE: 4/29/2014
DRAWN BY: G.BURGMEIER
CHECKED BY: G. EDWARDS

SIGN DETAILS

SHEET 18 OF 29

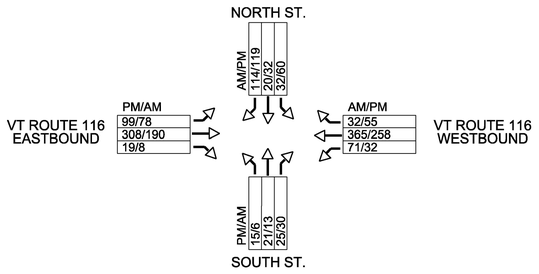

AM/PM PEAK HOUR (AVERAGE WEEKDAY) VOLUMES

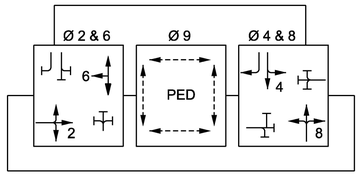

PHASING SEQUENCE

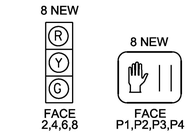

SIGNAL FACE ARRANGEMENT

NOTE: ALL NEW 12" LED LENSES WITH 5" LOUVERED BACKPLATES AND VISORS

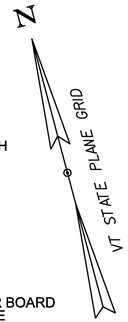

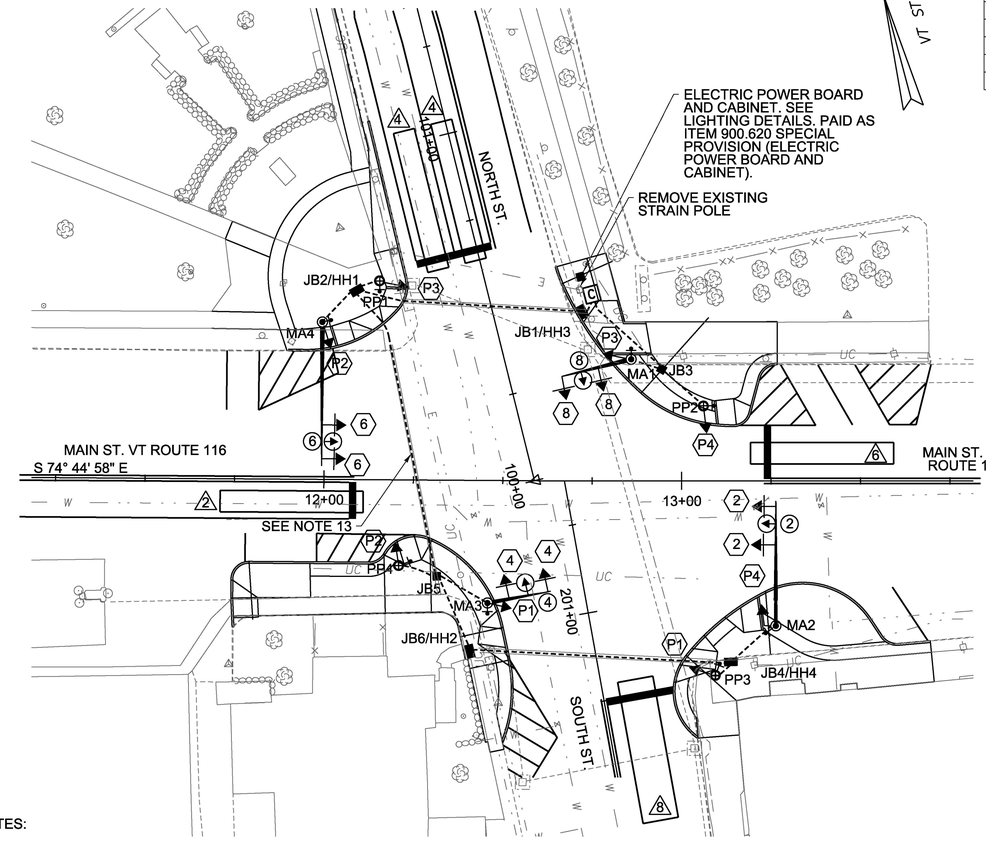

SIGNAL PHASE CLEARANCE – VT ROUTE 116 /NORTH ST./SOUTH ST.

FACE	R/W	PHASE 2&6 CLEAR TO PHASE 4&8			PED		R/W	PHASE 4&8 CLEAR TO PHASE 2&6			PED		PED CLEAR TO 2&6 OR 4&8				FLASHING OPERATION
2	G	Y	R		Y	R	R	R	R		R	R	R	R	R	FY	
4	R	R	R		R	R	G	Y	R		Y	R	R	R	R	FR	
6	G	Y	R		Y	R	R	R	R		R	R	R	R	R	FY	
8	R	R	R		R	R	G	Y	R		Y	R	R	R	R	FR	
P1-P4	DW	DW	DW		DW	DW	DW	DW	DW		DW	DW	W	FDW	DW	OUT	

CONTROLLER TIMINGS (SECONDS)

PHASE	MIN. GREEN	PASSAGE	YELLOW	RED	MAX 1	MAX 2	MAX 3	W	FDW	DW
2	12	3	3.5	2	20	30				
4	5	3	3	2.5	15	20				
6	12	3	3.5	2	20	30				
8	5	3	3	2.5	15	20				
9	-	-	-	-	-	-	-	7	16	3

MAX 2: M-F 1500-1800

LIST OF MAJOR ITEMS

QUANTITY	UNIT	DESCRIPTION
ITEM 679.55 POWER DROP STANCHION, STREET LIGHTING		
1	EA	POWER DROP STANCHION FROM UP
ITEM 678.15 TRAFFIC CONTROL SIGNAL SYSTEM		
8	EA	COUNTDOWN TYPE PEDESTRIAN SIGNAL HEADS
8	EA	3-SECTION SIGNAL HEADS (12")(MAST ARM MOUNTED)
3	EA	MAST ARM(CANTILEVER) WITH FOUNDATION
1	EA	MAST ARM(CANTILEVER) WITH LUMINAIRE EXTENSION) WITH FOUNDATION
4	EA	VEHICLE STOP BAR DETECTORS
8	EA	PEDESTRIAN PUSHBUTTON ASSEMBLY WITH SIGNS AND AUDIBLE LOCATOR TONE
1050	LF	SIGNAL CABLE (12C) (650 IN CONDUIT)
825	LF	DETECTOR CABLE (565 IN CONDUIT)
2	EA	JUNCTION BOXES
4	EA	DOUBLE JUNCTION BOXES
750	LF	WIRED CONDUIT (PVC)(SCH 80) FOR SIGNALS*
1	EA	GROUND MOUNTED CONTROLLER CABINET (P44) WITH FOUNDATION AND PAD
1	EA	CONTROLLER
1	EA	MALFUNCTION MONITORING UNIT
1	EA	CONTROLLER IDENTIFICATION PLAQUE (SEE TRAFFIC SIGNAL NOTES)
120	LF	2" CONDUIT
70	LF	4" CONDUIT

VEHICLE STOP BAR DETECTION

NO.	APPROACH/LANE	SIZE	CALL Ø	MODE	CAMERA LOC.	ID
2	EB RT/THRU	6X40	2	PRESENCE	MAST ARM	2
4	SB RT/THRU/LT	6X40	4	PRESENCE	MAST ARM	4
4A	SB RT	6X40	4	PRESENCE	MAST ARM	4
6	WB THRU	6X40	6	PRESENCE	MAST ARM	6
8	NB	10X40	8	PRESENCE	MAST ARM	8

NOTES:

1. UTILITY LOCATIONS ON THESE PLANS ARE APPROXIMATE. CONTRACTOR TO FIELD VERIFY PRIOR TO CONSTRUCTION.
2. FOR POWER SOURCE FOR SIGNALS AND LIGHTING SEE LIGHTING PLANS.
3. ALL NEW TRAFFIC SIGNAL EQUIPMENT IS TO BE INSTALLED AT THE LOCATION PROPOSED ON THE PLANS.
4. THE EXISTING TRAFFIC SIGNAL EQUIPMENT REMOVED IS TO BE SALVAGED AND RETURNED BY THE CONTRACTOR TO THE TOWN OF BRISTOL WITHIN 48 HOURS OF REMOVAL. SEE THE SPECIAL PROVISIONS FOR ADDITIONAL INFORMATION AND REQUIREMENTS.
5. ANY OTHER MISCELLANEOUS EQUIPMENT (CONDUIT, FITTINGS, CONNECTORS, ETC.) AND LABOR NECESSARY TO PROVIDE A FULLY FUNCTIONAL TRAFFIC SIGNAL SYSTEM SHALL BE INCIDENTAL TO ITEM 678.15.
6. CONSTRUCTION ACTIVITIES WILL BE OF SHORT DURATION. ALL WORK SHALL BE PERFORMED DURING DAYTIME, OFF-PEAK HOURS. REFER TO THE VERMONT AGENCY OF TRANSPORTATION STANDARD DRAWINGS T-1, T-12 AND T-21 FOR ADDITIONAL INFORMATION. TRAFFIC CONTROL WARNING SIGNS SHALL BE PROVIDED AS NECESSARY ON EACH APPROACH PER THE 2009 MANUAL ON UNIFORM TRAFFIC CONTROL DEVICES (MUTCD). PAYMENT FOR THESE SIGNS, REFLECTORIZED DRUMS, ETC. SHALL BE PAID UNDER CONTRACT ITEM 641.10 TRAFFIC CONTROL.
7. EXISTING CONDUIT SLEEVES TO BE REUSED AND SHORTENED /EXTENDED 1' MIN. PAST NEW CURB LINE. THIS WORK IS INCIDENTAL TO ITEM 678.15.
8. JUNCTION BOXES/HAND HOLES FOR COMMON TRAFFIC SIGNAL AND LIGHTING. USE AS SHOWN ON PLAN.
9. FOR LIGHTING CONDUIT SEE LIGHTING DETAILS.
10. PEDESTRIAN SIGNALS AND PUSH BUTTONS NOT MOUNTED ON MAST ARMS SHALL BE MOUNTED ON LIGHTING POLES.
11. AS REQUIRED, TO MAINTAIN SIGNAL CONTROL. A TEMPORARY TRAFFIC SIGNAL SHALL BE INSTALLED; PAID AS ITEM 678.40. A TEMPORARY SIGNAL PLAN SHOWING LAYOUT AND TIMING SHALL BE SUBMITTED TO VTRANS FOR REVIEW AND APPROVAL PRIOR TO INSTALLATION.
12. SEE TRAFFIC SIGNAL SYSTEM NOTES FOR PEDESTRIAN TEMPORARY TRAFFIC CONTROL NOTES.
13. EMPTY CONDUIT IN EXISTING SLEEVE BETWEEN 12+20 LT AND 12+27 RT SHALL BE 4" DIA. ALL OTHERS SHALL BE 2" DIA. EMPTY CONDUIT NOT PAID FOR SEPARATELY BUT PAID FOR UNDER ITEM 678.15.

EXISTING ELECTRICAL CONDUIT SLEEVES

SLEEVE DESC.	DIA.	LOCATION
ACROSS NORTH STREET	10"	12+22, 50 LT.-12+73, 47 LT.
ACROSS ROUTE 116	10"	12+12, 38 LT.-12+31, 27 RT.
ACROSS SOUTH STREET	10"	12+45, 45 RT.-13+08, 50 RT.

*APPROXIMATE LOCATIONS

POLE IDENTIFICATION TABLE

NUMBER	DESCRIPTION	LOCATION
MA 1	21' ARM W/POLE EXT.	12+85, 34 LT.
MA 2	33' ARM	13+26, 40 RT.
MA 3	18' ARM	12+45, 34 RT.
MA 4	40' ARM	11+99, 44 LT.
PP 1	LIGHTING POLE	12+10, 50 LT.
PP 2	LIGHTING POLE	13+06, 20 LT.
PP 3	LIGHTING POLE	13+09, 54 RT.
PP 4	LIGHTING POLE	12+20, 23 RT.

PULL BOX/JUNCTION BOX

NUMBER	DESCRIPTION	LOCATION
JB 1/HH3	DOUBLE JCT. BOX	12+73, 47 LT.
JB 2/HH1	DOUBLE JCT. BOX	12+09, 50 LT.
JB 3	JUNCTION BOX	12+95, 31 LT.
JB 4/HH4	DOUBLE JCT. BOX	13+16, 51 RT.
JB 5	JUNCTION BOX	12+31, 28 RT.
JB 6/HH 2	DOUBLE JCT. BOX	12+41, 47 RT.

WIRED CONDUIT (PVC)(SCH80) FOR SIGNALS *

LOCATION	2" DIA	LENGTH (LF)	DESCRIPTION
STANCHION TO CONTROLLER	1	8	SIGNAL POWER
CONTROLLER TO JB1/HH3	3	6	DETECTOR CABLE, SIGNAL CABLE & LIGHTING
CONTROLLER TO JB3	2	29	DETECTOR CABLE & SIGNAL CABLE
JB1/HH3 TO JB2/HH1**	3	64	DETECTOR CABLE, SIGNAL CABLE & LIGHTING
JB2/HH1 TO PP1	1	9	SIGNAL CABLE
JB2/HH1 TO MA4	2	13	DETECTOR CABLE & SIGNAL CABLE
JB2/HH1 TO JB5**	2	83	DETECTOR CABLE & SIGNAL CABLE
JB3 TO MA1	2	11	DETECTOR CABLE & SIGNAL CABLE
JB3 TO PP2	1	16	SIGNAL CABLE
JB4/HH4 TO MA2	2	16	DETECTOR CABLE & SIGNAL CABLE
JB4/HH4 TO PP3	1	8	SIGNAL CABLE
JB4/HH4 TO JB6/HH2**	3	78	DETECTOR CABLE, SIGNAL CABLE & LIGHTING
JB5 TO MA3	2	16	DETECTOR CABLE & SIGNAL CABLE
JB5 TO PP4	1	14	SIGNAL CABLE
JB5 TO JB 6/HH2	3	23	DETECTOR CABLE, SIGNAL CABLE & LIGHTING

* ONE CONDUIT FOR LIGHTING PAID UNDER ITEM 678.23 WIRED CONDUIT.

** ADD ONE EMPTY CONDUIT LINE IN EACH SLEEVE FOR FUTURE USE.

LEGEND

EXISTING	NEW	DESCRIPTION
		UTILITY POLE
		LUMINAIRE
		LIGHT POLE
		STRAIN POLE/CANTILEVER POLE
C	C	CONTROLLER CABINET
		PULLBOX/JUNCTION BOX
		SIGNAL HEAD
		SIGNAL HEAD WITH LOUVERED PLATE
		CONDUIT(SIGNAL)
		VEHICLE LOOPS
		VEHICLE DETECTION AREA
		PEDESTAL POLE/LIGHTING POLE
		CANTILEVER
		DRAINAGE STRUCTURE
		VEHICLE DETECTOR
		SLEEVE
		PREEMPT OPTICAL DETECTOR
		PEDESTRIAN PUSHBUTTON ASSEMBLY
		POWER DROP STANCHION
		POWER DROP STANCHION

0 20 40
SCALE IN FEET

Stantec

PROJECT NAME: BRISTOL
PROJECT NUMBER: HES 021-1 (28)

FILE NAME: z10b078bdr_sig.dgn
PROJECT LEADER: T. LUTHER
DESIGNED BY: D. DEBAIE
PLOT DATE: 4/29/2014
DRAWN BY: P. ARMATA
CHECKED BY: G. EDWARDS

SIGNAL PLAN

SHEET 19 OF 29

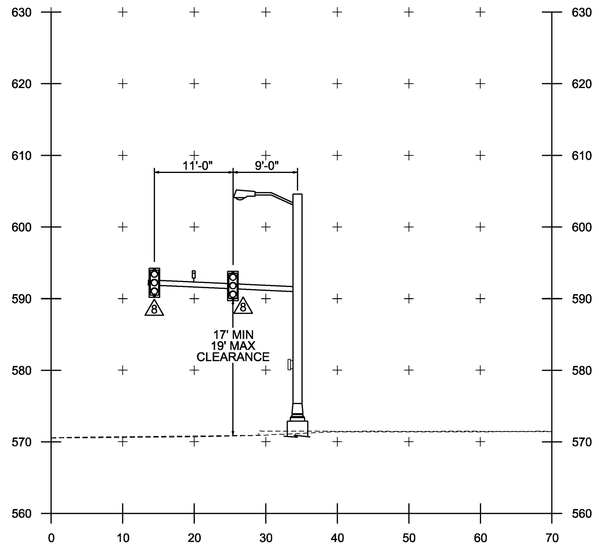

NORTH ST. STA 12+85, 34' LT
LOOKING NORTHERLY
MA 1

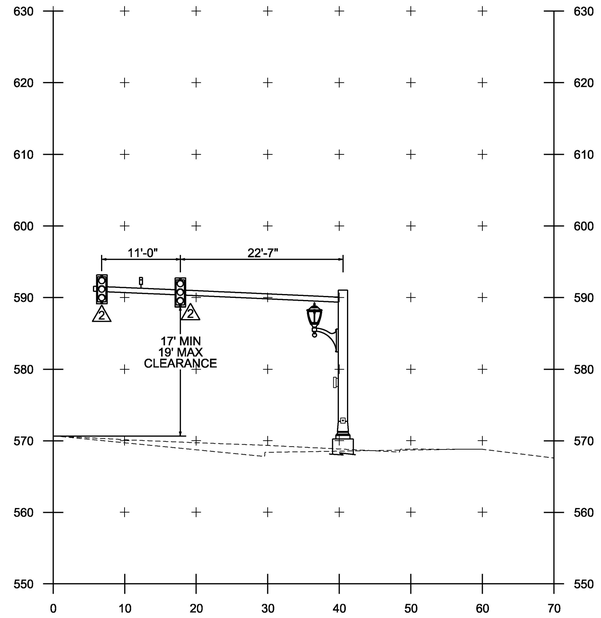

VT ROUTE 116 STA 13+26, 40.5'RT
LOOKING EASTERLY
MA 2

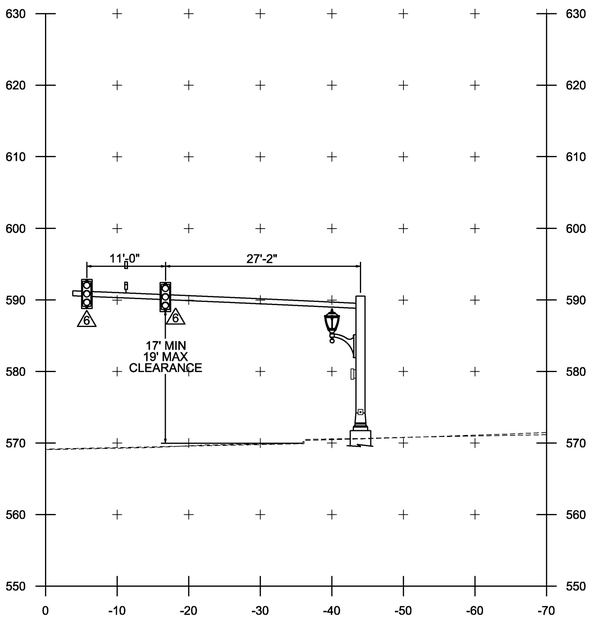

VT ROUTE 116 STA 11+99, 44.0LT
LOOKING WESTERLY
MA 4

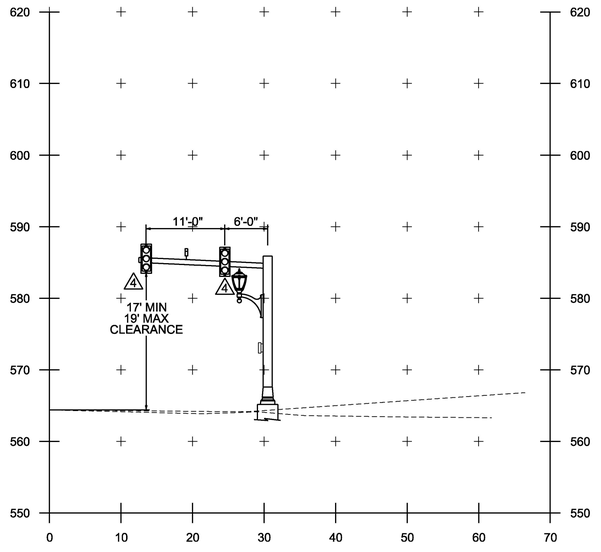

SOUTH ST. STA 12+45, 34 RT.
LOOKING SOUTHERLY
MA 3

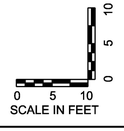

Stantec

PROJECT NAME:	BRISTOL
PROJECT NUMBER:	HES 021-1 (28)
FILE NAME: z10b078bdr_mastxs.dgn	PLOT DATE: 4/29/2014
PROJECT LEADER: T. LUTHER	DRAWN BY: P. ARMATA
DESIGNED BY: T. LUTHER	CHECKED BY: G. EDWARDS
MAST ARM CROSS SECTION	SHEET 20 OF 29

TRAFFIC SIGNAL SYSTEM NOTES

A. NEW SIGNAL EQUIPMENT

1. ALL SIGNAL HEADS SHALL BE 12" POLYCARBONATE. THE SIGNAL HEAD COLOR SHALL BE PARK GREEN INCLUDING VISORS.
2. ALL EAST/WEST SIGNAL HEADS SHALL HAVE PARK GREEN LOUVERED BACKPLATES.
3. THE TRAFFIC SIGNAL CONTROLLER AND RELATED EQUIPMENT SHALL BE AN ECONOLITE ASC/3-2100 (NEMA TS2) OR NAZTEC 980 (NEMA TS2) IN A NEMA P44 TRAFFIC CONTROL CABINENT WITH 15-INCH BASE EXTENSION INSTALLED AT THE LOCATION SHOWN ON THE PLANS. TRAFFIC CONTROL CABINET SHALL BE ORIENTED SUCH THAT THE DOOR DOES NOT FACE THE ROADWAY.
4. ALL SIGNAL HEADS SHALL HAVE RED, YELLOW AND GREEN L.E.D. SIGNALS WITH A VISIBLE BEAM SPREAD OF 80 DEGREES OFF AXIS.
5. ALL TRAFFIC SIGNALS, BACKPLATES, CABINET, AND OTHER VISIBLE SIGNAL EQUIPMENT SHALL MATCH THE COLOR SPECIFIED FOR LIGHTING FIXTURE ITEMS. PRIOR TO ORDERING THIS EQUIPMENT, THE CONTRACTOR SHALL PROVIDE TO THE ENGINEER FOR APPROVAL A PAINT CHIP MATCHING THE SPECIFIED COLOR.
6. ALL TRAFFIC SIGNAL EQUIPMENT AND SPAN WIRE MOUNTED SIGNS SHALL HAVE SAFETY CABLES.
7. A DISCONNECT BREAKER FOR EACH CIRCUIT SHALL BE INSTALLED IN A RAINPROOF (NEMA 3R), LOCKED CABINET ON A STANCHION NEXT TO OR BELOW THE METER SOCKET.

B. SIGNAL OPERATION

1. SWITCH-OVER TO THE NEW TRAFFIC SIGNAL SYSTEM SHALL NOT OCCUR DURING PEAK TRAFFIC OPERATING PERIODS. UNIFORMED TRAFFIC OFFICERS SHALL CONTROL TRAFFIC DURING THE SWITCH-OVER.
2. ALL SIGNALS SHALL DWELL ON ROUTE 116 UNLESS OTHERWISE NOTED.
3. ROUTE 116 THRU PHASE SHALL BE USED FOR THE START-UP PHASE FOLLOWING FLASHING OPERATION.
4. SIGNAL TIMING SHOWN ON THE PLANS MAY REQUIRE FINE-TUNING IN THE FIELD BASED ON TRAFFIC OBSERVATION AND/OR ADDITIONAL FIELD STUDIES.

C. PULL BOXES AND JUNCTION BOXES

1. PULLBOXES AND JUNCTION BOXES ARE DETAILED ON VTRANS STANDARD E-173. MINIMUM JUNCTION BOX SIZE SHALL BE 18" X 12" X 12", OR LARGER AS REQUIRED BY THE ELECTRICAL CODE.
2. THE LOGO ON PULLBOX AND JUNCTION BOX COVERS SHALL BE "TRAFFIC SIGNAL."
3. PULLBOXES WITH LIGHTING AND SIGNAL CONDUIT SHALL BE LABELED "TRAFFIC SIGNAL AND LIGHTING".
4. ALL PULLBOXES AND JUNCTION BOXES SHALL BE INSTALLED IN ACCORDANCE WITH VTRANS' "STANDARD SPECIFICATIONS FOR CONSTRUCTION", DATED 2011, SECTION 678.

D. TRAFFIC SIGNAL CONDUIT

1. ALL TRAFFIC SIGNAL CONDUIT SHALL BE SCHEDULE 80 PVC.
2. WHEN CONDUIT IS PLACED BELOW THE ROADWAY OR ACROSS SIDE ROADS, IT SHALL BE PLACED IN A SLEEVE, SIZE SHOWN ON THE PLANS.
3. ALL TRAFFIC SIGNAL CONDUIT WORK SHALL BE PERFORMED IN ACCORDANCE WITH VTRANS' "STANDARD SPECIFICATIONS FOR CONSTRUCTION", DATED 2011, SECTION 678.

E. VEHICLE STOP BAR DETECTION

1. VEHICLE DETECTORS SHALL BE PLACED SO THAT OCCLUSION IS MINIMIZED AND PHASING IS NOT AFFECTED.
2. VEHICLE DETECTION AREAS SHALL EXTEND FIVE FEET PAST THE STOP BAR.
3. VEHICLE DETECTION SYSTEM SHALL BE ECONOLITE AUTOSCOPE DUO VIDEO DETECTOR OR WAVETRONIX RADAR DETECTOR OR FLIR INFRARED DETECTOR.
4. SEE THE PLANS OR THE SPECIAL PROVISIONS FOR A DETAILED LIST OF EQUIPMENT.

F. GENERAL

1. A UNIFORMED TRAFFIC OFFICER WITH A BLUE LIGHT SHALL BE PRESENT DURING ALL LANE CLOSURES.
2. THE CONTRACTOR SHALL ACQUIRE ALL THE NECESSARY PERMITS AND MAKE ALL NECESSARY ARRANGEMENTS WITH THE UTILITY COMPANY TO PROVIDE A PERMANENT POWER SUPPLY TO THE TRAFFIC SIGNAL EQUIPMENT, IF APPLICABLE. THE ROUTING OF POWER TO THE INTERSECTION SHALL BE SUCH THAT THE STATE HAS FULL RESPONSIBILITY FROM THE TRANSFORMER THROUGH THE SIGNAL SYSTEM. NO INTERVENING OWNERSHIP/RESPONSIBILITY SHALL BE ALLOWED.
3. ALL ELECTRICAL WIRING SHALL BE DONE BY A LICENSED ELECTRICIAN AND OVERSEEN BY A MASTER ELECTRICIAN.
4. ALL MATERIALS AND CONSTRUCTION SHALL CONFORM TO VTRANS' "STANDARD SPECIFICATIONS FOR CONSTRUCTION", DATED 2011, WITH CURRENT MODIFICATIONS.
5. IF REQUIRED, OVERHEAD SIGN/SIGNAL SUPPORTS SHALL CONFORM TO AASHTO'S "STANDARD SPECIFICATIONS FOR STRUCTURAL SUPPORTS FOR HIGHWAY SIGNS, LUMINAIRE'S, AND TRAFFIC SIGNALS", DATED 2013, AND IT'S LATEST REVISIONS.
6. SEE STANDARD E-171A FOR ADDITIONAL NOTES.
7. CONTRACTOR SHALL SCHEDULE FINAL INSPECTION AND OBTAIN WRITTEN APPROVAL OF WORK FROM VTRANS TRAFFIC SIGNAL TECHNICIAN.

G. MAST ARM FOUNDATIONS

1. FOUNDATIONS SHALL BE DESIGNED IN ACCORDANCE WITH VTRANS MREI 10-01 GUIDELINES. THE CONTRACTOR SHALL BE RESPONSIBLE FOR SOIL BORINGS AND FOUNDATION DESIGN. IN ADDITION TO FABRICATION DRAWINGS, THE BORING LOGS, DESIGN CRITERIA AND DESIGN CALCULATIONS SHALL BE SUBMITTED AS WORKING DRAWINGS IN ACCORDANCE WITH VTRANS' "STANDARD SPECIFICATIONS FOR CONSTRUCTION" DATED 2011, SUBSECTION 105.03.

H. MAST ARM POLES AND BASES

1. MAST ARM POLES AND BASES SHALL BE DECORATIVE TO MATCH THE DECORATIVE LIGHT AND PEDESTAL POLES AND BASES.

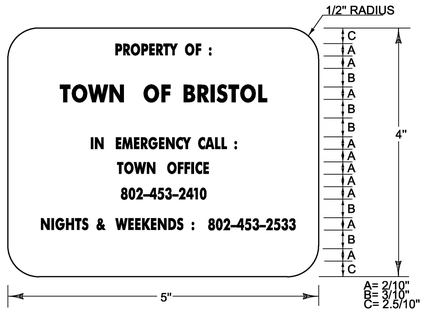

LEGEND: - BLACK (NON-REFL.) - STAMPED PRIOR TO PAINTING
BACKGROUND: NATURAL ALUMINUM OR BRASS SURFACE

CONTROLLER IDENTIFICATION PLAQUE NOTES:

1. THE PLAQUE SHALL BE MOUNTED ON ALL TRAFFIC SIGNAL CONTROLLER CABINETS. IT SHALL BE FASTENED TO THE CONTROLLER CABINET IN SUCH A MANNER AS TO BE NOT EASILY REMOVED, SUCH AS WELDED, RIVETED OR BOLTED WITH VANDAL PROOF FASTENERS.
2. THE LETTERS SHALL BE PUNCHED OR STAMPED, SUCH STAMPING SHALL PENETRATE AT LEAST ½ THE BASE MATERIAL THICKNESS.
3. THE BASE MATERIAL FOR THE PLAQUE SHALL BE BRASS OR ALUMINUM WITH A MINIMUM THICKNESS OF $\frac{1}{10}$".

CONTROLLER IDENTIFICATION PLAQUE
NOT TO SCALE

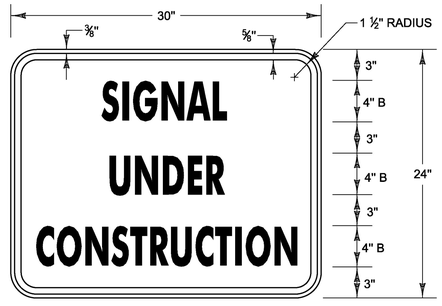

MATERIALS: SEE STD. E-144
COLORS: TEXT & BORDER - BLACK
BACKGROUND - ORANGE (RETRO REFLECTIVE SHEETING)

CONSTRUCTION SIGN DETAIL
NOT TO SCALE

Stantec

PROJECT NAME:	BRISTOL
PROJECT NUMBER:	HES 021-1 (28)
FILE NAME: z10b078frm.dgn	PLOT DATE: 7/9/2014
PROJECT LEADER: T. LUTHER	DRAWN BY: P. ARMATA
DESIGNED BY: T. LUTHER	CHECKED BY: G. EDWARDS
TRAFFIC SIGNAL NOTES 1	SHEET 21 OF 29

TRAFFIC SIGNAL SYSTEM NOTES

TRAFFIC CONTROL NOTES FOR TRAFFIC SIGNAL SYSTEM WORK

1. THE FOLLOWING NOTES APPLY TO TRAFFIC CONTROL NECESSARY FOR THE INSTALLATION OR MODIFICATION OF THE TRAFFIC SIGNALS ONLY. FOR OVERALL PROJECT TRAFFIC CONTROL MANAGEMENT REQUIREMENTS REFER TO NOTES ON SIGNAL PLANS, CONSTRUCTION PLAN AND SECTION 641 OF THE STANDARD SPECIFICATIONS.
2. TWO-WAY TRAFFIC SHALL BE MAINTAINED AT ALL TIMES ON VT ROUTE 116 AND NORTH AND SOUTH STREETS. AT THE DISCRETION OF THE ENGINEER, UNIFORMED TRAFFIC OFFICERS SHALL DIRECT TRAFFIC, WHENEVER REQUIRED.
3. TRAFFIC CONTROL SIGNING AND CHANNELIZING DEVICES SHALL BE IN ACCORDANCE WITH THE APPROPRIATE STANDARD DRAWINGS AND THE MANUAL ON UNIFORM TRAFFIC CONTROL DEVICES (MUTCD). WHERE CONFLICTS EXIST, THE MUTCD SHALL GOVERN.
4. AFTER SIGNAL INSTALLATION, ALL HEADS MUST BE COVERED (TURNING SHALL NOT BE ALLOWED) UNTIL TURNED ON. THE METHOD OF COVERING SHALL BE AS FOLLOWS:
   - ALL NEW TRAFFIC AND PEDESTRIAN SIGNAL HEADS WHICH HAVE BEEN INSTALLED BUT NOT PLACED IN EITHER FLASHING OR FULL OPERATION SHALL BE COVERED. EXISTING SIGNAL HEADS WHICH ARE PLACED OUT OF SERVICE IN ORDER TO PERFORM WORK ON THE SIGNAL SYSTEM SHALL ALSO BE COVERED, EXCEPT WHEN SUCH WORK CAN BE COMPLETED IN A RELATIVELY SHORT PERIOD OF TIME (SEVERAL HOURS) AND TRAFFIC CONTROL HAS BEEN PROVIDED FOR.
   - THE SIGNAL COVERS SHALL CONSIST OF A ONE-PIECE PLASTIC BAG HAVING A MINIMUM THICKNESS OF FOUR MIL. THE BAG SHALL BE OPAQUE. THE COVER SHALL SLIP OVER THE ENTIRE SIGNAL HEAD AND SHALL BE SECURELY TIED AT THE OPENING WITH A ROPE OF SUFFICIENT SIZE AND STRENGTH TO SECURE THE COVER. AN INTERMEDIATE ROPE OF THE SAME MATERIAL SHALL BE DRAWN AROUND THE CENTER OF THE COVER TO PREVENT EXCESS FLAPPING IN THE WIND.
   - A DRAIN HOLE SHALL BE MADE AT THE BOTTOM OF THE BAG TO ALLOW THE ESCAPE OF MOISTURE. NO TAPE OR ADHESIVE WILL BE ALLOWED TO BE ATTACHED TO ANY SURFACE OF THE SIGNAL HOUSING OR LENSES. ALL COVERS SHALL BE PLACED IN A NEAT WORKMANLIKE MANNER, ANY COVER WHICH IS TORN OR MISSING SHALL BE IMMEDIATELY REPLACED. PAYMENT FOR THE COVERS, THEIR REPLACEMENT, AND REMOVAL AND ALL INCIDENTALS FOR COMPLETION OF THE WORK SHALL BE CONSIDERED INCIDENTAL TO THE INSTALLATION OF THE TRAFFIC SIGNAL.
5. WHERE TWO-WAY TRAFFIC IS MAINTAINED DURING CONSTRUCTION, THE SIGN PACKAGE SHOWN ON STD. T-10 SHOULD BE USED. APPROACH CONSTRUCTION SIGNING SHALL REMAIN IN PLACE DURING THE ENTIRE CONSTRUCTION PERIOD. OTHER SIGNING SHALL BE REMOVED OR COVERED WHEN NOT APPLICABLE.
6. VARIATIONS IN THE SIGNING PACKAGES MAY BE DICTATED BY UNIQUE GEOMETRY AND/OR TRAFFIC CONDITIONS.
7. THE CONTRACTOR SHALL NOT WORK WITHIN THE HIGHWAY RIGHT-OF-WAY WITHOUT THE APPROPRIATE CONSTRUCTION SIGNING IN PLACE AS SHOWN ON STD. T-10.
8. AT LOCATIONS WHERE SIGNALS CURRENTLY EXIST, A WORKING SIGNAL SYSTEM SHALL BE IN PLACE AT THE END OF EACH DAY. IF THE SIGNAL SYSTEM IS NOT WORKING AT THE END OF THE DAY, THE CONTRACTOR SHALL PROVIDE UNIFORMED TRAFFIC OFFICERS TO CONTROL TRAFFIC, AT NO COST TO THE STATE OF VERMONT, UNTIL SUCH TIME THAT THE EXISTING OR NEW SIGNAL SYSTEM IS IN OPERATION.
9. "SIGNAL UNDER CONSTRUCTION" SIGN PANELS SHALL BE MOUNTED UNDER "ROAD WORK AHEAD" SIGNS ANYTIME SIGNAL SYSTEM WORK IS BEING PREFORMED. SEE SIGN DETAIL ON THIS SHEET. COST FOR THIS WORK SHALL BE INCIDENTAL TO ITEM 641.10.
10. TEMPORARY TRAFFIC BARRIER TO BE USED AT DISCRETION OF ENGINEER. TEMPORARY TRAFFIC BARRIER USED ON THIS PROJECT SHALL NOT BE PAID SEPARATELY, BUT SHALL BE INCIDENTAL TO ITEM 641.10 AND SHALL MEET THE REQUIREMENTS OF SECTION 621 OF THE VAOT STANDARD SPECIFICATIONS FOR CONSTRUCTION.

PEDESTRIAN TEMPORARY TRAFFIC CONTROL NOTES

1. THE CONTRACTOR SHALL MAINTAIN PEDESTRIAN THROUGH MOVEMENTS FROM ONE END OF THE CONSTRUCTION AREA TO THE OTHER, ON AT LEAST ONE SIDE OF THE STREET DURING CONSTRUCTION. ANY SIDEWALK CLOSURES SHALL MEET THE REQUIREMENTS OF THE MUTCD, PART 6.
2. PEDESTRIAN ACCESS SHALL BE PROVIDED TO ALL ADJACENT PROPERTIES, BUILDINGS, RESIDENCES AND COMMERCIAL PROPERTIES AT ALL TIMES. THIS MAY INCLUDE TEMPORARY WALKWAYS SPANNING THE CONSTRUCTION AREA.
3. IF SIDEWALKS ARE CLOSED, A TEMPORARY PEDESTRIAN ACCESS ROUTE (TPAR) SHALL BE PROVIDED ON THE SAME SIDE OF THE ROAD AS THE CLOSED SIDEWALK, IF POSSIBLE. SIGNS AND BARRICADES SHALL BE USED TO PROVIDE ADVANCE NOTICE OF THE CLOSURE AND THE ROUTE OF ANY PEDESTRIAN DETOURS. THE TPAR SHALL HAVE A MINIMUM UNOBSTRUCTED WIDTH OF 4 FEET. IF THE TPAR IS LESS THAN 5 FEET IN WIDTH, A 5 FOOT BY 5 FOOT PASSING SPACE SHOULD BE PROVIDED AT LEAST EVERY 200 FEET. THE SURFACE OF THE TPAR SHALL BE SMOOTH AND CONTINUOUS FOR THE LENGTH OF THE TPAR. THE TPAR SHALL MAINTAIN THE SAME LEVEL OF ACCESSIBILITY AND DETECTABILITY AS THE FACILITY THAT IS BEING CLOSED. THE TPAR SHALL NOT LEAD PEDESTRIANS INTO CONFLICTS WITH VEHICLES, EQUIPMENT, OR CONSTRUCTION OPERATIONS.
4. IF THE TPAR IS ADJACENT TO MOVING TRAFFIC, CONSTRUCTION OPERATIONS/EQUIPMENT, OR DROP-OFFS, THEN CRASH WORTHY CHANNELIZING DEVICES THAT MEET THE REQUIREMENTS OF THE MUTCD SHALL BE USED.
5. THE CONTRACTOR SHALL NOT STORE OR PLACE ANY CONSTRUCTION MATERIALS, EQUIPMENT OR SIGNS IN THE PEDESTRIAN PATH OF TRAVEL.
6. THE CONTRACTOR'S OPERATIONS SHALL NOT OCCUPY SIDEWALKS EXCEPT WHERE PROPER PROTECTION AND A TPAR HAVE BEEN PROVIDED.
7. THE CONTRACTOR SHALL PROVIDE A TEMPORARY PEDESTRIAN TRAFFIC CONTROL PLAN FOR REVIEW AND WRITTEN APPROVAL BY THE RESIDENT ENGINEER A MINIMUM OF THREE WEEKS BEFORE SUCH PLAN IS IMPLEMENTED. THIS PLAN SHALL DETAIL THE CONSTRUCTION PHASING AND SCHEDULE AND THE SPECIFIC METHODS OF MAINTAINING SAFE PEDESTRIAN ACCESS THROUGHOUT THE CONSTRUCTION AREA. THIS PLAN SHALL PROVIDE THE LOCATION AND DETAILS OF TEMPORARY CONSTRUCTION SIGNING, MARKINGS, BARRICADES, CHANNELIZING DEVICES, TPARS AND METHODS TO MAINTAIN ACCESS TO ADJACENT PROPERTIES, BUSINESSES, RESIDENCES, ETC.
8. PROVISION OF THE TPAR AND ALL OF ITS ELEMENTS, INCLUDING BUT NOT LIMITED TO SIGNS, CHANNELIZING DEVICES, BARRICADES, TEMPORARY PAVEMENT MARKINGS AND OTHER TRAFFIC CONTROL DEVICES IS TO BE PAID FOR INCIDENTAL TO TRAFFIC CONTROL (ITEM 641.10.)

Stantec

PROJECT NAME:	BRISTOL
PROJECT NUMBER:	HES 021-1 (28)
FILE NAME: z10b078frm.dgn	PLOT DATE: 4/29/2014
PROJECT LEADER: T. LUTHER	DRAWN BY: P. ARMATA
DESIGNED BY: T. LUTHER	CHECKED BY: G. EDWARDS
TRAFFIC SIGNAL NOTES 2	SHEET 22 OF 29

TRAFFIC SIGNAL GENERAL NOTES

1. ALL MATERIALS AND CONSTRUCTION SHALL CONFORM TO VTRANS' "STANDARD SPECIFICATIONS FOR CONSTRUCTION", DATED 2011, WITH CURRENT MODIFICATIONS.

2. OVERHEAD SIGN/SIGNAL SUPPORTS SHALL CONFORM TO AASHTO'S "STANDARD SPECIFICATIONS FOR STRUCTURAL SUPPORTS FOR HIGHWAY SIGNS, LUMINAIRE'S, AND TRAFFIC SIGNALS", DATED 2013, AND IT'S LATEST REVISIONS.

3. THE DESIGN CALCULATIONS SHALL TAKE INTO ACCOUNT THE FOLLOWING CRITERIA:

   STRUCTURE CRITERIA
   - DESIGN LIFE: 50 YEARS
   - WIND LOAD: 90 M.P.H., UNLESS SPECIAL SITE CONDITIONS DICTATE ICE LOAD PER AASHTO'S PUBLICATION ENTITLED "STANDARD SPECIFICATIONS FOR STRUCTURAL SUPPORTS FOR HIGHWAYS SIGNS, LUMINAIRE'S, AND TRAFFIC SIGNALS", DATED 2013, AND IT'S LATEST REVISIONS

   FATIGUE CRITERIA
   - FATIGUE CATEGORY: 1 FOR MAST ARM SIGN STRUCTURES, 2 FOR SIGNAL MAST ARMS
   - VORTEX SHEDDING: INCLUDE
   - NATURAL WIND GUSTS: INCLUDE
   - TRUCK INDUCED WIND GUSTS: INCLUDE FOR ROADWAYS WHERE SPEED LIMIT IS 40 M.P.H. OR GREATER
   - GALLOPING: DO NOT INCLUDE IN DESIGN CALCULATIONS

   FOUNDATION CRITERIA
   - CONCRETE: CONCRETE, HIGH PERFORMANCE CLASS B, SEE SUBSECTION 501
   - REINFORCING STEEL: SUBSECTION 713.01
   - ALLOWABLE BEARING CAPACITY: TO BE DETERMINED
   - INTERNAL SOIL FRICTION ANGLE, ϕ : TO BE DETERMINED

4. ANCHOR BOLTS

   FOUR STAINLESS STEEL ANCHOR BOLTS WITH TWO HEXAGON NUTS, ONE WASHER AND ONE LOCK WASHER PER BOLT SHALL BE FURNISHED WITH EACH POLE. ANCHOR BOLT PLATES, WHEN USED, SHALL ALSO BE STAINLESS STEEL. SEE SUBSECTION 714.09.

5. FLANGE BOLTS

   ALL FLANGE BOLTS AND HEX NUTS SHALL BE HIGH STRENGTH STEEL AND SHALL CONFORM TO ASTM A325. THE FLANGE BOLTS SHALL BE CAPABLE OF RESISTING 133% OF THE FULL DESIGN STRESS OF THE TUBE AT ITS YIELD STRENGTH STRESS.

6. HORIZONTAL AND VERTICAL MEMBERS

   STEEL TUBES SHALL BE FORMED AND WELDED WITH ONE CONTINUOUS LONGITUDINAL WELD ONLY. AFTER FORMING AND WELDING THEY SHALL BE COLD ROLLED TO ENSURE UNIFORMITY OF SIZE AND SMOOTHNESS OF WELD. THEY SHALL HAVE A MINIMUM YIELD STRENGTH OF 55 KSI. THERE SHALL BE NO TRANSVERSE WELDING EXCEPT AT THE FLANGE CONNECTIONS AND POLE BASE PLATES, WHERE THE TUBES SHALL TELESCOPE THE FLANGES AND PLATES AND BE CONTINUOUSLY WELDED BOTH SIDES INSIDE AND OUT TO WITHSTAND THE FULL TRANSFER OF THE BENDING STRENGTH TO THE BOLTS. OPTIONALLY, THE MEMBERS MAY BE A SERIES OF TWO OR THREE DIFFERENT DIAMETER PIPES WELDED TOGETHER. STEEL TUBES SHALL BE CONSTRUCTION FROM MATERIALS CONFORMING TO SUBSECTION 752.02.

7. GALVANIZING

   ALL STEEL COMPONENTS, EXCEPT CONCRETE REINFORCING AND STAINLESS STEEL HARDWARE, ARE TO BE HOT DIPPED GALVANIZED AFTER FABRICATION. THE ASSEMBLIES SHALL BE DESIGNED AND FABRICATED TO PERMIT GALVANIZING ON ALL INTERIOR AND EXTERIOR SURFACES AND SHALL BE FREE OF POCKETS AND OTHER STRUCTURAL OBSTRUCTIONS THAT WILL NOT PERMIT PROPER DEPOSITION OF ZINC COATING. GALVANIZING SHALL BE IN ACCORDANCE WITH SUBSECTION 752.02.

8. WELDING
   A. ALL DESIGN DETAILS, WORKMANSHIP, PROCEDURES AND INSPECTION SHALL CONFORM WITH SUBSECTION 506.10.
   B. ALL WELDS SHALL BE AT LEAST AS STRONG AS THE MATERIAL(S) BEING WELDED.

9. FOUNDATIONS
   A. FOOTINGS SHALL BE DESIGNED IN ACCORDANCE WITH VTRANS' MATERIALS & RESEARCH ENGINEERING INSTRUCTIONS - GEOTECHNICAL DESIGN PROCEDURES FOR MAST ARM AND OVERHEAD SIGN SUPPORT FOUNDATIONS (MREI 10-01), DATED MARCH 9, 2010, A COPY OF WHICH CAN BE FOUND ON THE AGENCY'S WEBSITE.
   B. FOUNDATIONS SHALL BE CONSTRUCTED IN ACCORDANCE WITH THE FOLLOWING NOTES:
      1. A MINIMUM EMBEDMENT DEPTH OF FIVE FEET SHALL BE USED FOR ALL SPREAD FOOTING FOUNDATIONS; MEASURED FROM THE GROUND SURFACE ELEVATION TO THE BOTTOM OF THE FOOTING ELEVATION.
      2. EXCEPT FOR THE UPPERMOST TWO FEET OF SOIL, DRILLED SHAFT FOUNDATIONS SHALL BE POURED AGAINST UNDISTURBED MATERIAL; THE TOP TWO FEET OF SOIL SHALL BE NEGLECTED FOR DESIGN PURPOSES. A DISPOSABLE CIRCULAR CONCRETE FORM, IF USED, SHALL NOT BE PLACED DEEPER THAN TWO FEET, IN ORDER NOT TO REDUCE THE FRICTION BETWEEN THE SOIL AND THE CONCRETE.
      3. AS AN ALTERNATIVE TO THE DRILLED HOLES, FOOTINGS MAY BE POURED IN EXCAVATED HOLES USING THE PROPER FORMS, WHICH MUST BE REMOVED. THE EXCAVATED HOLES SHALL BE AT LEAST TWO FEET CLEAR OF THE FOUNDATION SIDES AND ONE FOOT DEEPER THAN THE FOUNDATION. CARE SHALL BE TAKEN TO AVOID EXCAVATING AROUND THE TOP OF THE FOUNDATION. THE BACKFILL MATERIAL SHALL BE COMPACTED AS DESCRIBED IN SUBSECTION 204.08. DESIGN LIMITS AS FOR AUGURED FOOTINGS APPLIES.
      4. ANY BACKFILL PLACED ADJACENT TO THE FOOTING SHALL BE GRANULAR MATERIAL MEETING THE REQUIREMENTS FOR GRANULAR BACKFILL FOR STRUCTURES, SUBSECTION 704.08. IT SHALL BE COMPACTED AS DESCRIBED IN SUBSECTION 204.08.
      5. CONCRETE FOR THE FOUNDATION SHALL CONFORM TO THE REQUIREMENTS OF CONCRETE, CLASS B, SEE SECTION 501. IF DRILLED SHAFT FOUNDATIONS ARE REQUIRED, THE CONCRETE SPECIFICATIONS MAY NEED TO BE ADJUSTED FOR CONSTRUCTIBILITY ISSUES. IF REQUIRED, THE CONTRACTOR SHALL SUBMIT ANY CHANGES TO THE CONCRETE SPECIFICATION FOR REVIEW BY THE VTRANS PROJECT MANAGER.
      6. STEEL PILES SHALL MEET THE REQUIREMENTS OF SUBSECTION 505.
      7. WHEN THE DESIGN DEPTH OF A FOUNDATION CANNOT BE OBTAINED DUE TO UNFORSEEN FIELD CONDITIONS, THE CONTRACTOR SHALL NOTIFY THE ENGINEER FOR THE MANUFACTURER TO OBTAIN A REVISED FOUNDATION DESIGN. SUCH A REVISION SHALL BE SUBMITTED TO VTRANS PROJECT MANAGER AND MAY REQUIRE UP TO A FOUR WEEK REVIEW PERIOD BY VTRANS.
   C. SIGNALS/SIGNS SHALL BE INSTALLED AND LEVELED AND POLES SHALL BE PLUMB PRIOR TO PLACING GROUT UNDER POLE BASE. GROUT MATERIAL SHALL BE NON-SHRINKING MORTAR CONFORMING TO SUBSECTION 707.03.

10. EACH OVERHEAD TRAFFIC SIGNAL/SIGN SUPPORT SHALL BE GROUNDED. THE GROUND SHALL CONSIST OF THE FOLLOWING:
    A. AN INTERNAL GROUND LUG OPPOSITE THE HAND HOLE
    B. A #6 (MIN.) SOFT DRAWN COPPER GROUNDING ELECTRODE CONDUCTOR
    C. A ⅝" X 8' (MIN.) COPPER CLAD GROUNDING ELECTRODE:

    THE RESISTANCE TO GROUND SHALL BE 25 OHMS OR LESS. ADDITIONAL GROUNDING ELECTRODES MAY BE REQUIRED (MINIMUM SPACING SHALL BE 6'). WHEN A POWER SERVICE, METER AND DISCONNECT ARE ATTACHED TO A POLE, THERE SHALL BE A CONTINUOUS GROUND WIRE FROM THE METER AND DISCONNECT WHICH MAY RUN INTERNAL TO THE UPRIGHT, THROUGH THE ½" FLEXIBLE TUBING IN THE CONCRETE BASE TO THE REQUIRED GROUNDING ELECTRODE(S). THE GROUND WIRE FROM THE POLE GROUNDING LUG, CONTROLLER CABINET AND/OR LUMINAIRE MAY ATTACH TO THE CONTINUOUS GROUNDING ELECTRODE CONDUCTOR FROM THE SERVICE METER AND DISCONNECT. THE CONTRACTOR SHALL PERFORM A RESISTANCE TO GROUND TEST ON THE CONTINUOUS GROUND ELECTRODE CONDUCTOR FROM THE SERVICE METER AND DISCONNECT AND PROVIDE A WRITTEN STATEMENT TO THE AREA ELECTRICAL INSPECTOR THAT THE GROUNDING ELECTRODE CONDUCTOR IS CONTINUOUS FROM THE SERVICE METER AND DISCONNECT AND THE RESISTANCE TO GROUND IS 25 OHMS OR LESS.

11. HORIZONTAL MEMBERS SHALL BE CAMBERED AND THE VERTICAL POLES BACK RAKED, WHERE APPLICABLE, TO THE ANTICIPATED DEAD LOAD DEFLECTION PLUS THE CAMBER, IF ANY, SPECIFIED ON THE PLANS.

12. AN EQUIVALENT ALTERNATE DESIGN MAY BE SUBSTITUTED FOR THE DETAILS AND MATERIALS SHOWN.

13. THE DETAILS OF DESIGN FOR THE STRUCTURE AND FOUNDATION ARE TO BE SUPPLIED BY THE CONTRACTOR AND/OR BY THE MANUFACTURER, THE STRUCTURE SHALL BE DESIGNED TO RESIST THE MAXIMUM LOADING AS OUTLINED IN THE AASHTO STANDARD SPECIFICATIONS, SEE NOTE 2. ALL DESIGN CALCULATIONS FOR THE STRUCTURE AND THE FOUNDATION SHALL BE CHECKED AND STAMPED BY A LICENSED PROFESSIONAL ENGINEER REGISTERED IN THE STATE OF VERMONT PRIOR TO SUBMITTAL OF THE FABRICATION DRAWINGS TO VTRANS.

14. THE CONTRACTOR SHALL SUBMIT THREE COPIES OF THE DESIGN CALCULATIONS TO VTRANS PROJECT MANAGER SHOWING THE FOLLOWING INFORMATION FOR EACH OF THE VERTICAL AND HORIZONTAL COMPONENTS OF THE STRUCTURE AND FOUNDATION. FAILURE TO SUPPLY THE PROPER DESIGN INFORMATION SHALL BE CAUSE FOR REJECTION OF THE STRUCTURE. A MINIMUM OF FOUR WEEKS SHALL BE REQUIRED FOR REVIEW BY VTRANS. EVERY MEMBER AND CONNECTION IN AN OVERHEAD TRAFFIC SIGNAL SUPPORT SHALL BE DESIGNED TO PROVIDE ADDITIONAL RESIDUAL CAPACITY FOR FUTURE MODIFICATION EQUIVALENT TO A 5-SECTION TRAFFIC SIGNAL HEAD WITH A FIVE-INCH LOUVERED BACKPLATE LOCATED ON THE OUTERMOST EXTENT OF THE MAST ARM.:
    A. THE DESIGN AXIAL AND SHEAR FORCES AND BENDING AND TORSIONAL MOMENTS ACTING AT THE TOP OF THE FOUNDATION;
    B. THE DESIGN AXIAL, BENDING AND SHEAR STRESSES AND THE COMBINED STRESS RATIO;
    C. VIBRATION AND FATIGUE CALCULATIONS AS SET FORTH IN SECTION 11 OF THE AASHTO PUBLICATION REFERENCED IN NOTE 2;
    D. THE ALLOWABLE AXIAL, BENDING, AND SHEAR STRESSES;
    E. ITEMS A, B, AND D SHALL BE SHOWN FOR EACH OF THE GROUP LOADINGS (I, II, III) AND FOR THE BASIC WIND LOAD APPLIED TO THE TWO CASES OUTLINED IN THE AASHTO STANDARD SPECIFICATIONS (SEE NOTE 2), SECTION 1.2.5(D)(4);

15. FABRICATION DRAWINGS SHALL BE SUBMITTED TO VTRANS PROJECT MANAGEMENT FOR APPROVAL PRIOR TO FABRICATION. THE FABRICATION DRAWINGS SHALL INCLUDE THE FOLLOWING INFORMATION:
    A. DETAILED DRAWING OF EACH COMPONENT OF THE STRUCTURE;
    B. MATERIAL SPECIFICATION FOR EACH COMPONENT OF THE STRUCTURE, EITHER BY COMPLETE SPECIFICATION OR REFERENCE TO APPLICABLE ASTM STANDARDS;
    C. NOTATION OF PROJECT NAME, PROJECT NUMBER, ROUTE NUMBER, AND STRUCTURE STATIONING TO BE INCLUDED ON EACH SHEET;
    D. DETAILS FOR LOCATION OF SIGNS/SIGNALS AND ATTACHMENT HARDWARE FOR THE SUPPORT STRUCTURE;
    E. ALL ELEVATIONS AND DIMENSIONS NECESSARY TO PROVIDE A COMPLETE SET OF RECORD PLANS;
    F. DEAD LOAD DEFLECTION AND CAMBER INFORMATION;
    G. WELDING DETAILS AND PROCEDURES ARE REQUIRED FOR ALL WELDS. PROCEDURES SHALL BE SUBMITTED FOR APPROVAL WITH REFERENCE TO EACH WELD IDENTIFIED ON THE FABRICATION DRAWINGS. SEE VTRANS' "STANDARD SPECIFICATIONS FOR CONSTRUCTION", DATED 2011, SUBSECTION 506.10.

16. THE TRAFFIC SIGNALS SHALL BE MOUNTED TO THE ARM OR POLE USING A FIXED MOUNT SYSTEM, UNLESS OTHERWISE NOTED ON THE CROSS SECTION SHEET. FOR SIGNALS MOUNTED ON A MAST ARM, THE MAST ARM AND MOUNTING POINT SHALL BE IN THE MIDDLE OF THE SIGNAL HEAD.

17. BASE PLATES SHALL BE STAMPED WITH THE VERTICAL POLE DIAMETER, HEIGHT, YIELD STRENGTH, GAUGE AND THE HORIZONTAL MEMBER DIAMETER, YIELD STRENGTH, GAUGE, ALTERNATELY. THE INFORMATION MAY BE STAMPED ON A METAL TAG RIVETED TO THE POLE NEAR THE HAND HOLE.

18. SEE STANDARD E-171A FOR ADDITIONAL NOTES.

19. CONTRACTOR SHALL SCHEDULE FINAL INSPECTION AND OBTAIN WRITTEN APPROVAL OF WORK FROM VTRANS.

Stantec

PROJECT NAME: BRISTOL
PROJECT NUMBER: HES 021-1 (28)

FILE NAME: z10b078frm.dgn
PROJECT LEADER: T. LUTHER
DESIGNED BY: T. LUTHER
TRAFFIC SIGNAL NOTES 3

PLOT DATE: 6/2/2014
DRAWN BY: P. ARMATA
CHECKED BY: G. EDWARDS
SHEET 23 OF 29

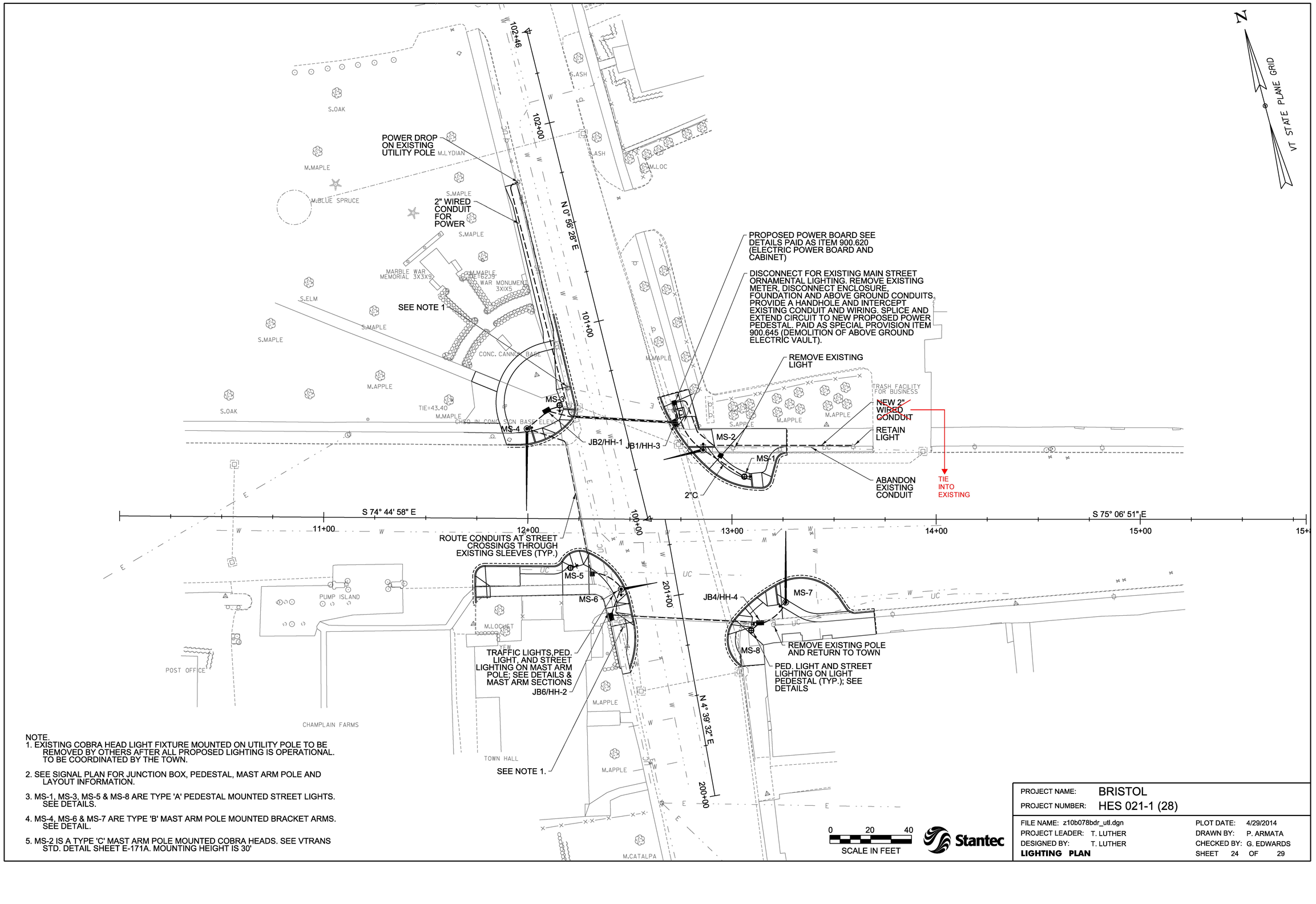

NOTE.
1. EXISTING COBRA HEAD LIGHT FIXTURE MOUNTED ON UTILITY POLE TO BE REMOVED BY OTHERS AFTER ALL PROPOSED LIGHTING IS OPERATIONAL. TO BE COORDINATED BY THE TOWN.
2. SEE SIGNAL PLAN FOR JUNCTION BOX, PEDESTAL, MAST ARM POLE AND LAYOUT INFORMATION.
3. MS-1, MS-3, MS-5 & MS-8 ARE TYPE 'A' PEDESTAL MOUNTED STREET LIGHTS. SEE DETAILS.
4. MS-4, MS-6 & MS-7 ARE TYPE 'B' MAST ARM POLE MOUNTED BRACKET ARMS. SEE DETAIL.
5. MS-2 IS A TYPE 'C' MAST ARM POLE MOUNTED COBRA HEADS. SEE VTRANS STD. DETAIL SHEET E-171A. MOUNTING HEIGHT IS 30'

Stantec

PROJECT NAME:	BRISTOL
PROJECT NUMBER:	HES 021-1 (28)
FILE NAME: z10b078bdr_utl.dgn	PLOT DATE: 4/29/2014
PROJECT LEADER: T. LUTHER	DRAWN BY: P. ARMATA
DESIGNED BY: T. LUTHER	CHECKED BY: G. EDWARDS
LIGHTING PLAN	SHEET 24 OF 29

GENERAL STREET LIGHT NOTES

POLES, ANCHOR BASES, ARMS, AND LUMINARIES.

1. NO POLE SHALL BE INSTALLED WITHOUT A LUMINAIRE ALREADY ATTACHED.
2. ANCHOR BASE AND ANCHOR BOLT DIMENSIONS ARE SHOWN ON THE DETAIL SHEET.
3. ALL LIGHT POLES WHICH ARE PROVIDED WITH A BREAKAWAY FEATURE SHALL CONFORM TO THE REQUIREMENTS OF THE AASHTO 1985 STANDARD SPECIFICATIONS FOR STRUCTURAL SUPPORTS FOR HIGHWAY SIGNS, LUMINARIES, AND TRAFFIC SIGNALS, SECTION 7 AND SUBSEQUENT REVISIONS.
4. LUMINARIES SHALL MEET SPECIFICATIONS AS SHOWN ON THE PLANS.
5. ALL ELECTRICAL MATERIAL AND ELECTRICAL WORK SHALL BE SUBJECT TO INSPECTION AND APPROVAL BY THE AREA ELECTRICAL INSPECTOR AND/OR THE POWER COMPANY WITH JURISDICTION IN THE PROJECT AREA.
6. ALL WORK MUST MEET THE REQUIREMENTS OF THE NATIONAL ELECTRICAL CODE, AS WELL AS LOCAL AND STATE CODES.
7. ALL STREET LIGHT POLES (EXCEPT ORNAMENTAL POLES) SHALL HAVE A METAL TAG ATTACHED TO THE POLE, SEE PLAN DETAIL SHEET. PAYMENT FOR TAGS WILL BE INCIDENTAL TO OTHER STREET LIGHTING ITEMS.
8. POLES, BASE PLATES, AND ARMS SHALL MEET THE LATEST EDITION OF AASHTO-AGC-ARTBA'S "GUIDE TO STANDARDIZED HIGHWAY LIGHTING POLE HARDWARE' OR AS OTHERWISE NOTED ON THE PLANS.
9. ANCHOR BOLTS WILL BE ACCEPTABLE WITH EITHER ROLLED OR CUT-IN THREADS WITH MINOR VARIATIONS FROM THE SPECIFIED DIAMETER.
10. ALL LIGHT POLES SHALL HAVE A BREAKAWAY DESIGN FEATURE UNLESS OTHERWISE NOTED ON THE PLANS.
11. ALL WELDS SHALL BE AT LEAST AS STRONG AS THE MATERIAL BEING WELDED.
12. LUMINAIRE SUPPORT ARMS IN A LENGTH OF EIGHT FEET ARE AVAILABLE IN EITHER SINGLE MEMBER OR TRUSS TYPE. PLAN SHEET SHALL SPECIFY WHICH IS TO BE USED .IF NOT SPECIFIED, OPTIONAL, OR IF REPLACEMENT, MATCH EXISTING OR SURROUNDING TYPE.
13. POLES FOR ORNAMENTAL LIGHTING ARE AVAILABLE IN MANY MATERIALS, SHAPES,STYLES AND LENGTHS, PLANS SHALL SPECIFY.

CONDUIT

1. ALL CONDUIT SHALL BE AT LEAST PVC (SCHEDULE 80) OR RIGID GALVANIZED STEEL ELECTRICAL CONDUIT (AND CONFORM TO THE REQUIREMENTS OF UL-6). TYPE OF CONDUIT (P.V.C. OR STEEL) SHALL BE NOTED ON THE PLANS.

CONDUIT SLEEVE (SEE GENERAL PLANS)

1. MINIMUM WALL THICKNESS FOR RIGID PLASTIC PIPE SLEEVES SHALL BE 1/35TH THE DIAMETER. ALL CONDUIT RUNS UNDER ROADWAY SHALL BE INSTALLED IN RIGID PLASTIC OR STEEL PIPE SLEEVES. THE SLEEVE SHALL EXTEND TO WITHIN 600 mm OF THE SIDE OF A CONCRETE BASE OR PULL BOX. WHERE NO CONCRETE BASE OR PULLBOX IS PRESENT, THE SLEEVE SHALL EXTEND 1.2 m BEYOND THE OUTSIDE EDGE OF SHOULDER OR FACE OF CURB. BACK FILLING AROUND A SLEEVE SHALL BE IN ACCORDANCE WITH THE MANUFACTURER'S SPECIFICATIONS.

WIRE

1. ALL WIRING BETWEEN THE METER AND/OR POWER SOURCE AND THE FIRST POLE AND/OR PULL BOX AND BETWEEN POLES AND/OR PULL BOXES SHALL BE COPPER AND SIZED AS SPECIFIED ON THE PLANS. ALL WIRE SHALL HAVE TYPE XHHW INSULATION OR EQUIVALENT.

GROUNDING

1. ALL CONDUIT MUST INCLUDE A GROUNDING CONDUCTOR. RIGID STEEL CONDUIT SHALL BE PROPERLY CONNECTED AT THE JOINTS SO AS TO BE WATERTIGHT AND MAINTAIN ELECTRICAL CONTINUITY AND HAVE GROUNDING BUSHINGS SO AS TO ACT AS A GROUND CONDUCTOR.
2. ALUMINUM WIRE SHALL NOT BE USED FOR GROUND WIRE.
3. EVERY LIGHT POLE SHALL HAVE A GROUNDING ELECTRODE.

GENERAL NOTES AND SPECIFICATIONS

1. THE SCOPE OF WORK IS TO PROVIDE ALL LABOR,MATERIALS, SERVICES, SUPPLIES, TOOLS, EQUIPMENT,TRANSPORTATION, AND FACILITIES NECESSARY TO FURNISH AND INSTALL A COMPLETE ELECTRICAL AND LIGHTING SYSTEM AS INDICATED ON THE DRAWINGS, SPECIFIED, OR AS MAY REASONABLY BE IMPLIED AS BEING INCIDENTAL TO THIS WORK.
2. SECURE AND PAY COSTS OF PERMITS, CERTIFICATES, LICENSES, INSPECTIONS, AND APPROVALS.
3. ALL MATERIALS AND INSTALLATION SHALL BE IN ACCORDANCE WITH THE LATEST EDITION OF THE NATIONAL ELECTRICAL CODE, AND ALL CODES, REGULATIONS AND REQUIREMENTS OF ALL MUNICIPAL, STATE, FEDERAL AND OTHER PUBLIC OR PRIVATE AUTHORITIES WHICH HAVE JURISDICTION. IN EACH CASE, CODES ARE MINIMUM REQUIREMENTS.
4. FABRICATION DRAWINGS: SUBMIT COMPLETE CATALOG INFORMATION FOR ALL MATERIALS AND EQUIPMENT TO BE PURCHASED AND USED ON THIS PROJECT, AS SPECIFIED ON THE DRAWINGS. DO NOT INSTALL MATERIALS OR EQUIPMENT WITHOUT APPROVAL BY THE OWNER. UNAPPROVED MATERIAL ALREADY INSTALLED SHALL BE SUBJECT TO REMOVAL AND REPLACEMENT WITH APPROVED MATERIALS AT THE CONTRACTOR'S EXPENSE.
5. THE FINISHED INSTALLATION SHALL BE COMPLETE IN EVERY RESPECT AND DETAIL, TESTED AND LEFT READY IN PERFECT OPERATING CONDITION FOR THE OWNER'S USE.
6. MATERIALS AND EQUIPMENT SHALL BE LISTED BY UNDERWRITERS' LABORATORIES AND SHALL BE INSTALLED IN ACCORDANCE WITH SUCH LISTINGS.
7. THE CONTRACTOR SHALL GUARANTEE THAT MATERIALS, EQUIPMENT AND WORKMANSHIP PROVIDED SHALL BE FREE FROM DEFECTS IN MATERIALS OR WORKMANSHIP FOR A PERIOD OF ONE YEAR FROM THE DATE OF ACCEPTANCE OF THE WORK DONE UNDER THIS CONTRACT, AND SHALL REPLACE PARTS FOUND TO BE DEFECTIVE WITHIN THE PERIOD COVERED BY SUCH GUARANTEE, WITHOUT COST TO THE OWNER.
8. INSTALLATION SHALL BE MADE IN ACCORDANCE WITH MANUFACTURER'S RECOMMENDATIONS.
9. CONTRACTOR TO CONTACT DIG SAFE IN VERMONT STATE PRIOR TO COMMENCING WORK.
10. CONTRACTOR TO CONTACT UTILITY COMPANY FOR COORDINATION OF NEW ELECTRICAL SERVICE.
11. THE LAST CONCRETE POLE BASE AT THE END OF EACH CIRCUIT AND SOME PULL BOXES SHALL HAVE A CONDUIT SWEEP WITH CAP INSTALLED FOR FUTURE USE.

METER STANCHION/POWER DROPS

1. PANEL BOARD SPECIFICATIONS: 100A, 120/240V, 1 PHASE, 3W, 22 KAIC, NEMA 3R
2. MAIN BREAKER - 100A, 2P BRANCH CIRCUIT BREAKERS SEE PLANS.

HAND HOLES

1. FOR DETAILS REGARDING SIZE/TYPES, REFER TO PLANS.

CONCRETE BASES

1. WHEN CONCRETE BASES ARE INSTALLED IN SLOPING GROUND, THE GREATEST EXPOSED HEIGHT TO KEEP ALL OF THE TOP ABOVE GROUND MUST BE DOUBLED AND THEN ADDED TO THE MINIMUM DEPTH FOR THE TOTAL BASE DEPTH.
2. CARE SHOULD BE TAKEN WHEN CONCRETE BASES, DRAINAGE STRUCTURES OR UTILITIES ARE CLOSE TOGETHER.

TYPICAL ELECTRICAL HAND HOLE (17"X30" X24" HEAVY DUTY (OPEN BOTTOM) WITH FLUSH MOUNTED LOCKABLE COVER WITH COVER LOGO TO READ "ELECTRIC". INSTALL FLUSH WITH GRADE OR SIDEWALK. COLOR-GREY. WITH HEAVY DUTY RATED COVER, SIZE AS SHOWN ON PLANS

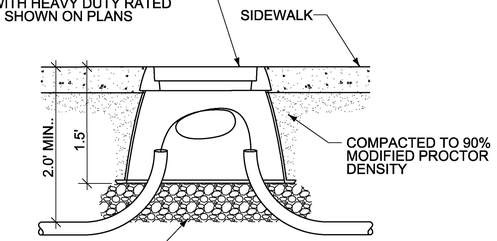

TYPICAL SECTION
HAND HOLE IN SIDEWALK
NOT TO SCALE

NOTE:
ENCLOSURES, BOXES AND COVERS ARE REQUIRED TO CONFORM TO ALL TEST PROVISIONS OF THE MOST CURRENT ANSI/SCTE 77 "SPECIFICATION FOR UNDERGROUND ENCLOSURE INTEGRITY" FOR TIER 22 APPLICATIONS. ALL COVERS SHALL HAVE THE TIER LEVEL RATING ON THE SURFACE

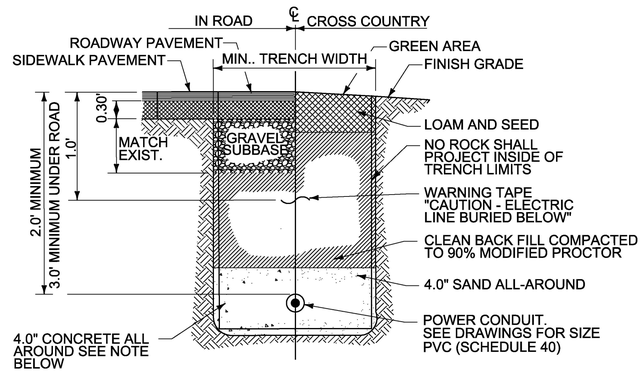

TYPICAL TRENCH SECTION
NOT TO SCALE

NOTE:
PROVIDE 4.0" CONCRETE ENCASEMENT AROUND PVC CONDUITS AT ALL DRIVEWAY CROSSING TO 5.0' BEYOND EDGE OF PAVEMENT. TYPICAL. PVC CONDUITS SHALL PASS THROUGH SLEEVES AT ALL ROAD CROSSINGS.

Stantec

PROJECT NAME:	BRISTOL
PROJECT NUMBER:	HES 021-1 (28)
FILE NAME: z10b078frm.dgn	PLOT DATE: 4/29/2014
PROJECT LEADER: T. LUTHER	DRAWN BY: P. ARMATA
DESIGNED BY: M. CROWLEY	CHECKED BY: G. EDWARDS
LIGHTING NOTES	SHEET 25 OF 29

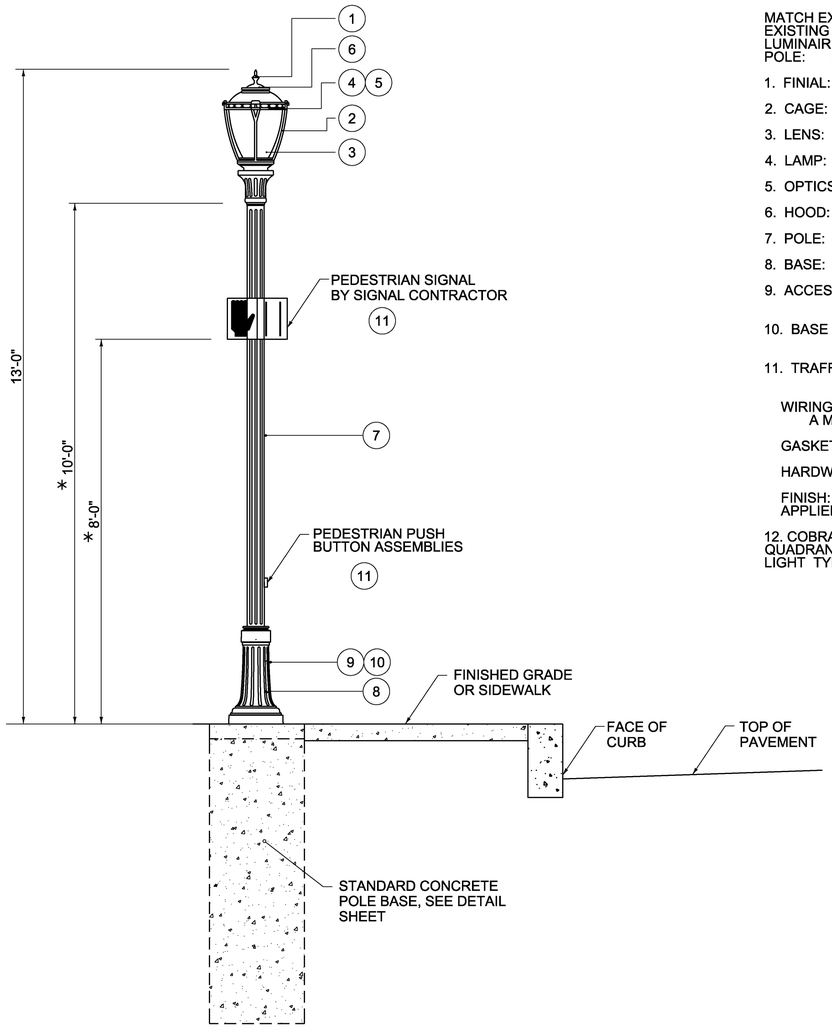

SPECIAL PROVISION (STREET LIGHT, TYPE A)
NOT TO SCALE

NOTE:
* MEASUREMENT TAKEN FROM TOP OF CONCRETE POLE BASE

DESCRIPTION OF COMPONENTS:

MATCH EXISTING FIXTURE STYLE
EXISTING MANUFACTURER: STERNBERG
LUMINAIRE: 1130ALED/4A1R45T3/ML/120/PARK GREEN
POLE: 4510-FP4-PARK GREEN

1. FINIAL: MADE OF CAST ALUMINUM.
2. CAGE: MADE OF CAST ALUMINUM. 18" DIAMETER AND 35" OVERALL HEIGHT.
3. LENS: TEXTURED LENS
4. LAMP: 82 ROOF-MOUNTED OPTICS
5. OPTICS: TYPE 3 DISTRIBUTION
6. HOOD: MADE OF CAST ALUMINUM, PIVOTING ON A PIVOT JOINT.
7. POLE: MADE OF FLUTED ALUMINUM, 4" O.D., MIN. A , 0.125" WALL THICKNESS, WELDED TO THE BASE.
8. BASE: MADE OF ALUMINUM, .250 TO .188 WALL THICKNESS, WELDED TO THE ANCHOR PLATE.
9. ACCESS DOOR: MADE OF ALUMINUM, COVERING AN OPENING, GIVING ACCESS TO A GROUND LUG. WITH STAINLESS STEEL SCREWS.
10. BASE COVER: MADE OF A TWO-PIECE CAST ALUMINUM COMPONENTS, MECHANICALLY SECURED.
11. TRAFFIC SIGNAL HARDWARE: H. D. GALVANIZED, CLAMSHELL TYPE. NO BANDING WILL BE ALLOWED.

WIRING: INCLUDED, FROM LUMINAIRE TO THE BRACKET, EXCEEDING THE LATTER BY A MINIMUM OF 6".

GASKETING: NEOPRENE AND/OR SILICONE GASKETING IS APPLIED.

HARDWARE: ALL EXPOSED SCREWS WILL BE STAINLESS STEEL.

FINISH: AN APPLICATION OF A THERMOSETTING POLYESTER POWDER COAT PAINT, APPLIED BY MEANS OF AN ELECTROSTATIC PROCESS, COLOR TO BE PARK GREEN.

12. COBRA HEAD STREET LIGHT MOUNTED ON MAST ARM POLE EXTENSION IN THE NORTHEAST QUADRANT PER VTRANS STANDARD SPECIFICATIONS & DETAILS. PAID AS SPECIAL PROVISION (STREET LIGHT TYPE C).

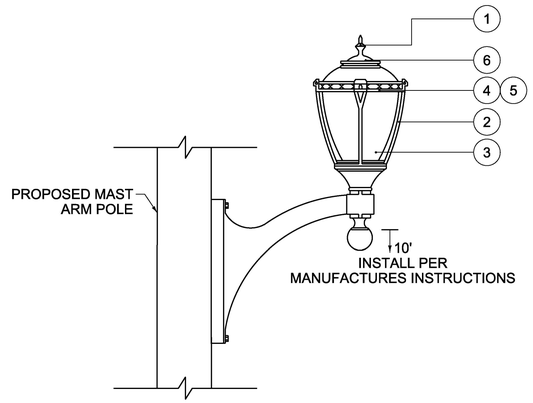

STERNBERG LIGHTING
BRACKET – 80PM
SPECIAL PROVISION
(STREET LIGHT, TYPE B)
NOT TO SCALE

BOLT PROJECTION

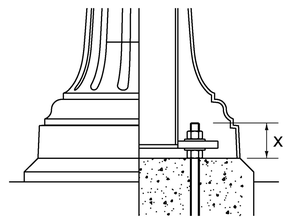

X = 3 1/2"(89MM).
COMES WITH 4 ANCHOR BOLTS, 8 NUTS AND 8 WASHERS.
- NOT TO SCALE -

TYPE 'A' BASE DETAILS
NOT TO SCALE

ANCHOR PLATE

- B.C.: 12 1/2"Ø
  318mmØ
- THICKNESS: 3/4"
  19mm
- NOTE:
  This anchor plate accepts a bolt circle from
  11"Ø @ 13"Ø
  279mmØ @ 330mmØ
  - NOT TO SCALE -
- ANCHORING BOLTS
  STAINLESS STEEL, 1"x 36"
  (supplied by LUMEC inc).

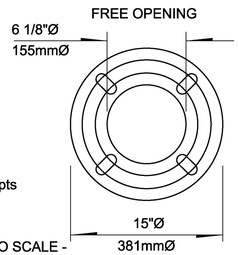

Stantec

PROJECT NAME:	BRISTOL
PROJECT NUMBER:	HES 021-1 (28)
FILE NAME: z10b078frm.dgn	PLOT DATE: 4/29/2014
PROJECT LEADER: T. LUTHER	DRAWN BY: P. ARMATA
DESIGNED BY: M. CROWLEY	CHECKED BY: G. EDWARDS
LIGHTING DETAILS 1	SHEET 26 OF 29

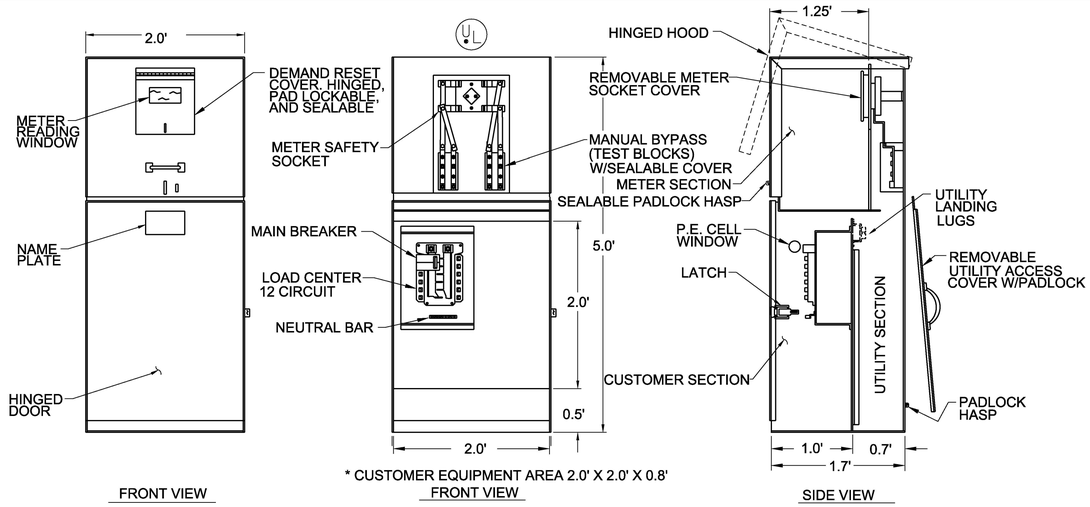

FEATURES

- METER SOCKET AND UTILITY SERVICE ENTRANCE SECTION SHALL BE PER CENTRAL VERMONT PUBLIC SERVICE REQUIREMENTS
- METER SOCKET 4 JAW 100 AMPS OR 200 AMPS.
- METER SOCKET WITH TEST BLOCKS.
- METER SOCKET WITH TEST BYPASS
- STANDARD VOLTAGE 120/240V SINGLE PHASE, 10 3W.
- 18 CIRCUIT COPPER BUSSED INTERIOR. FOR BOLT-ON CIRCUIT BREAKERS SEE PANEL SCHEDULE.
- MAIN BREAKER 100 AMP 22 KAIC.
- UTILITY LANDING LUGS 100 AMPS.
- UTILITY TEST SECTION.
- ALL FACTORY WIRING IS 600 VOLT RATED COPPER.
- HINGED DOOR & DEAD FRONT.
- (1) 8 POLE DEFINITE PURPOSE CONTRACTOR & W60A CONTRACTOR(MATCH EXISTING SQUARE D)
- (1) TIME CLOCK
- (1) PHOTO ELECTRIC CONTROL
- (1) ON/OFF/ AUTO LIGHTING CONTROL SWITCH
- (2) 12 POLE TERMINAL BLOCK FOR CONNECTION TO UNDERGROUND CONDUCTORS
- ALL WORK TO COMPLETE CONSTRUCTION OF THIS CABINET SHALL BE PAID AS ITEM 900.645 - SPECIAL PROVISION (ELECTRIC POWER BOARD AND CABINET)

SPECIFICATIONS

- 12 GAUGE ZINC COATED STEEL CONSTRUCTION. HOOD AND COVERS 14 GAUGE.
- RAINPROOF TYPE 3R ENCLOSURE.
- PARK GREEN POWDER COAT FINISH IN ACCORDANCE WITH ASTM B-117.
- MEETS EUSERC 308 REQUIREMENTS.
- VANDAL- RESISTANT ENCLOSURE WITH SIDE -HINGED DOOR AND DEAD FRONT.
- ALL FACTORY WIRING 600 VOLT RATED COPPER.
- LISTED BY UNDERWRITERS LABORATORIES, INC.
- PAD MOUNT BASE FOR CONCRETE FOUNDATION.

ELECTRIC POWER BOARD AND CABINET

NOT TO SCALE

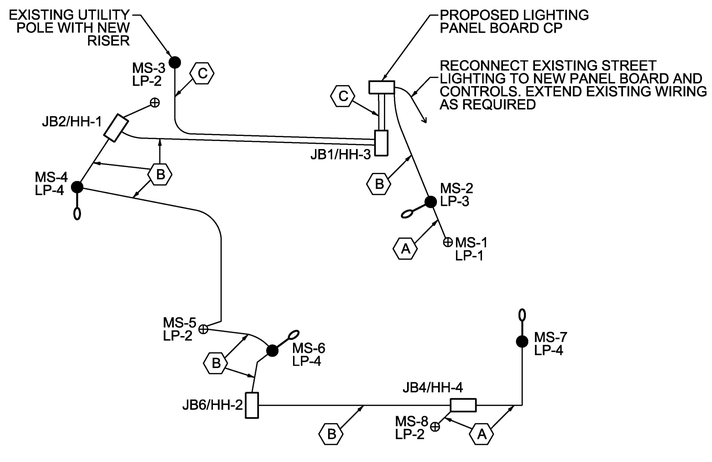

LINE DIAGRAM

NOT TO SCALE

SERVICE PEDESTAL SHALL HAVE RAINPROOF TYPE 3R PARK GREEN POWDER COAT FINISHED ALUMINUM ENCLOSURE AND VANDAL- RESISTANT HINGED DOOR AND INCLUDE METER, PANEL BOARD, TEST SWITCH, LIGHTING CONTROLLER (WITH ASTRONOMICAL TIME CLOCK), AND RECEPTACLE ENCLOSURE SHALL BE U.L. LISTED AND PAD-MOUNTED ON CONCRETE FOUNDATION

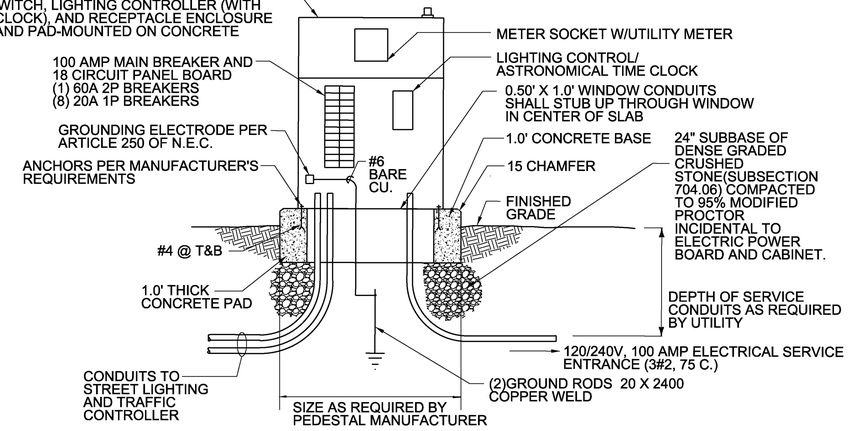

ELECTRIC SERVICE PEDESTAL

NOT TO SCALE

CONDUIT & CONDUCTOR SCHEDULE

KEY	CONDUIT SIZE	CONDUCTORS		
		FOR FIXTURES	FOR RECEPTACLES	FOR GROUND
A	2"	2#10		1#10G
B	2"	4#10		1#10G
C	2"	3#2		1#6G
E	2"	500 lb PULL CORD		1#6G

GENERAL NOTES:

1. MAXIMUM OF 270° IN TOTAL BENDS PERMITTED IN SINGLE RUN OF CONDUIT.
2. LIGHTS SHALL BE FUSED AT BASE WITH Y-TYPE FUSE KIT. WITH WATERPROOF INSULATED SEAL "FLOOD SEAL". SIZE OF SEAL SHALL MATCH WIRE AND HAVE 1 10AMP FUSE.
3. CIRCUIT CONDUCTORS INCLUDING NEUTRAL CONDUCTOR SHALL BE CLEARLY IDENTIFIED BY CORROSION RESISTANT TAGS INDICATING CIRCUIT NUMBER AND PANEL SOURCE AT EVERY POLE BASE AND HAND HOLE.
4. UTILIZE APPROVED DUAL-RATED PARALLEL TAP CONNECTOR WITH INSULATED COVER FOR TARPS AT POLE BASE.
5. UTILIZE APPROVED DUAL-RATED PARALLEL TAP CONNECTOR WITH WATERTIGHT CONNECTOR, SUITABLE FOR DIRECT BURIAL IN JUNCTION BOXES, HAND HOLES AND MANHOLES.
6. REFER TO THE LIGHTING & UTILITY PLANS FOR LOCATION OF ELECTRICAL CONDUIT SLEEVES (4")(PVC)(SCH. 80).

Stantec

PROJECT NAME: BRISTOL
PROJECT NUMBER: HES 021-1 (28)

FILE NAME: z10b078frm.dgn
PROJECT LEADER: T. LUTHER
DESIGNED BY: M. CROWLEY
PLOT DATE: 4/29/2014
DRAWN BY: P. ARMATA
CHECKED BY: G. EDWARDS

LIGHTING DETAILS 2

SHEET 27 OF 29

USE STD E 170
INSTEAD

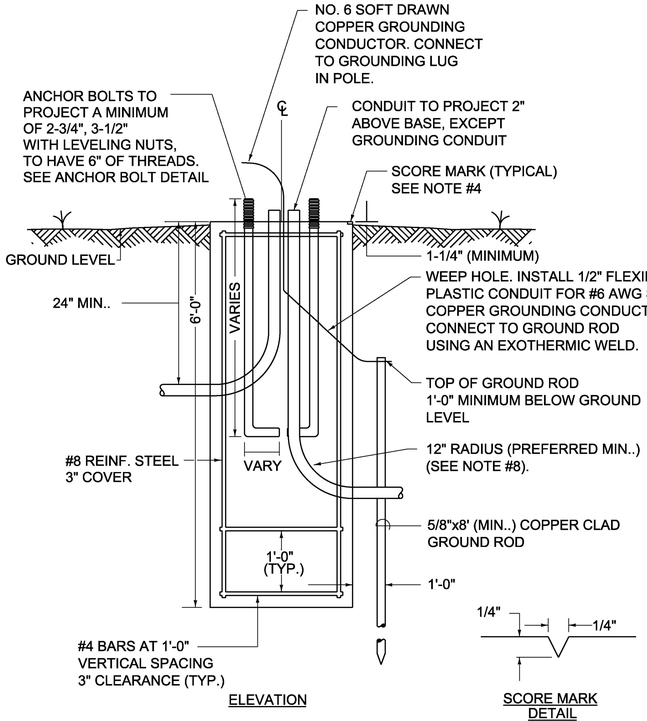

STANDARD CONCRETE LIGHTING POLE BASE DETAIL
NOT TO SCALE

LUMINAIRE:
LENS FINISH: FROSTED
CLEAR GLASS
HOUSING: ALUMINUM

LAMP:
TYPE: LED

ANSI/IES TYPE:
TYPE III CUT-OFF OPTICS

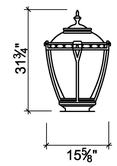

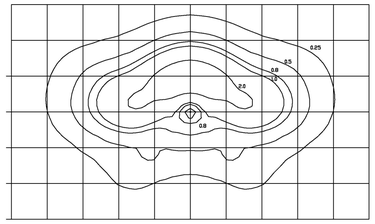

10'X10' GRID

FIXTURE TYPE 'A'&'B'
ISO–FOOTCANDLE DATA

LUMINAIRE:
LENS FINISH: FROSTED
CLEAR GLASS
HOUSING: ALUMINUM

LAMP:
TYPE: LED

ANSI/IES TYPE:
TYPE III CUT-OFF OPTICS



STREET SIDE

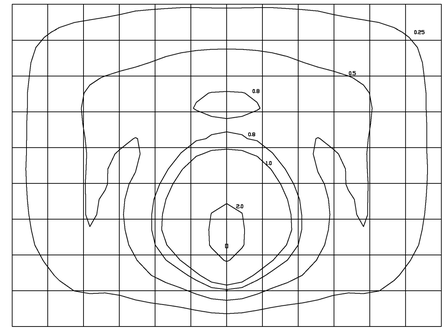

HOUSE SIDE 10'X10' GRID

FIXTURE TYPE 'C' PHOTOMETRIC DATA

CONCRETE BASE AND GENERAL NOTES:

1. ALL CONCRETE BASES TO BE CONCRETE CLASS B, AND SHALL HAVE A SMOOTH LEVEL TOP SURFACE FINISHED WITH A 1/2" RADIUS EDGING TOOL.
2. ALL REINFORCING STEEL TO CONFORM TO THE REQUIREMENTS OF SECTION 507.
3. TEMPLATE FOR ANCHOR BOLTS, STAINLESS STEEL ANCHOR BOLTS, NUTS AND WASHERS TO BE OBTAINED BY CONTRACTOR PRIOR TO CONSTRUCTION OF BASES.
4. SCORE TOP OF CONCRETE BASE TO SHOW LOCATION OF CONDUIT(S).
5. CONDUIT SIZE - AS SHOWN ON THE PLANS.
6. ALL EXPOSED METAL HARDWARE SHALL BE GALVANIZED OR STAINLESS STEEL.
7. IF THE ELECTRICAL CONDUIT IN THE CONCRETE BASE IS GALVANIZED STEEL, GROUNDING BUSHINGS SHALL BE USED.
8. THE MINIMUM RADIUS FOR RIGID METALLIC OR NONMETALLIC ELECTRICAL CONDUIT SHALL BE SIX TIMES THE INSIDE DIAMETER OF THE CONDUIT.
9. SEE V.A.O.T. STANDARD DRAWINGS E-180A AND E-180B FOR THE INSTALLATION OF STREET LIGHTING W/ CONCRETE BASES AND FOR TYPE 'D' FIXTURE (COBRA HEAD).
10. LIGHT POLE BASE PAID AS ITEM 679.21

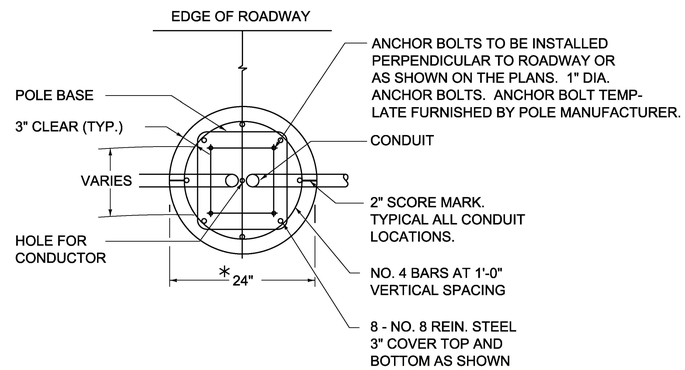

PLAN VIEW

* USE 18" DIAMETER FOR FIXTURE TYPE 'A'

Stantec

PROJECT NAME:	BRISTOL
PROJECT NUMBER:	HES 021-1 (28)
FILE NAME: z10b078frm.dgn	PLOT DATE: 6/2/2014
PROJECT LEADER: T. LUTHER	DRAWN BY: P. ARMATA
DESIGNED BY: M. CROWLEY	CHECKED BY: G. EDWARDS
LIGHTING DETAILS 3	SHEET 28 OF 29

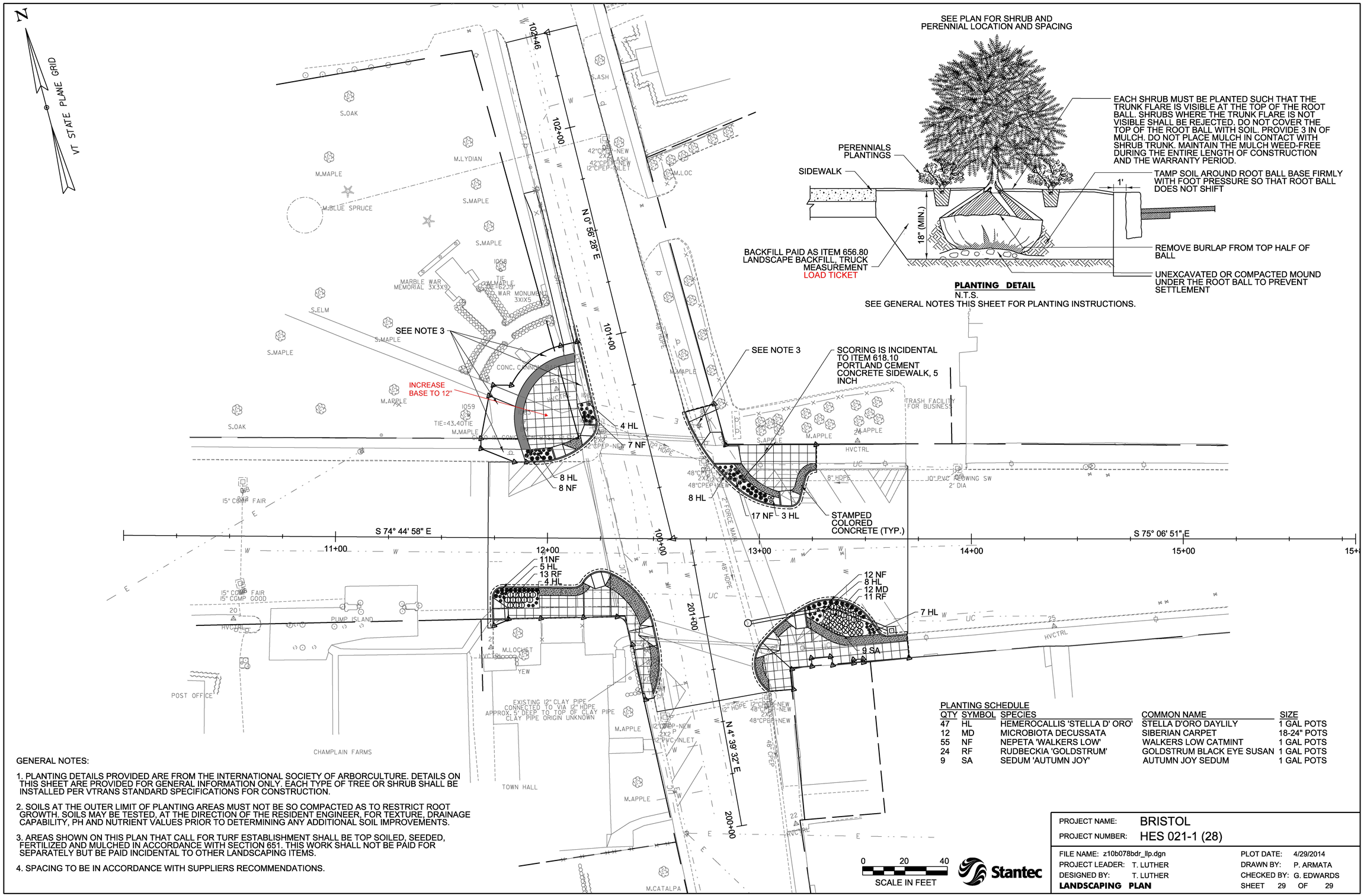

SEE PLAN FOR SHRUB AND PERENNIAL LOCATION AND SPACING

PLANTING DETAIL
N.T.S.
SEE GENERAL NOTES THIS SHEET FOR PLANTING INSTRUCTIONS.

PLANTING SCHEDULE

QTY	SYMBOL	SPECIES	COMMON NAME	SIZE
47	HL	HEMEROCALLIS 'STELLA D' ORO'	STELLA D'ORO DAYLILY	1 GAL POTS
12	MD	MICROBIOTA DECUSSATA	SIBERIAN CARPET	18-24" POTS
55	NF	NEPETA 'WALKERS LOW'	WALKERS LOW CATMINT	1 GAL POTS
24	RF	RUDBECKIA 'GOLDSTRUM'	GOLDSTRUM BLACK EYE SUSAN	1 GAL POTS
9	SA	SEDUM 'AUTUMN JOY'	AUTUMN JOY SEDUM	1 GAL POTS

GENERAL NOTES:

1. PLANTING DETAILS PROVIDED ARE FROM THE INTERNATIONAL SOCIETY OF ARBORCULTURE. DETAILS ON THIS SHEET ARE PROVIDED FOR GENERAL INFORMATION ONLY. EACH TYPE OF TREE OR SHRUB SHALL BE INSTALLED PER VTRANS STANDARD SPECIFICATIONS FOR CONSTRUCTION.

2. SOILS AT THE OUTER LIMIT OF PLANTING AREAS MUST NOT BE SO COMPACTED AS TO RESTRICT ROOT GROWTH. SOILS MAY BE TESTED, AT THE DIRECTION OF THE RESIDENT ENGINEER, FOR TEXTURE, DRAINAGE CAPABILITY, PH AND NUTRIENT VALUES PRIOR TO DETERMINING ANY ADDITIONAL SOIL IMPROVEMENTS.

3. AREAS SHOWN ON THIS PLAN THAT CALL FOR TURF ESTABLISHMENT SHALL BE TOP SOILED, SEEDED, FERTILIZED AND MULCHED IN ACCORDANCE WITH SECTION 651. THIS WORK SHALL NOT BE PAID FOR SEPARATELY BUT BE PAID INCIDENTAL TO OTHER LANDSCAPING ITEMS.

4. SPACING TO BE IN ACCORDANCE WITH SUPPLIERS RECOMMENDATIONS.

Stantec

PROJECT NAME: BRISTOL
PROJECT NUMBER: HES 021-1 (28)

FILE NAME: z10b078bdr_llp.dgn
PROJECT LEADER: T. LUTHER
DESIGNED BY: T. LUTHER
PLOT DATE: 4/29/2014
DRAWN BY: P. ARMATA
CHECKED BY: G. EDWARDS

LANDSCAPING PLAN

SHEET 29 OF 29

File 5.1.2

Contractor:	Don Weston Exc.		
Job Name:	Bristol HES 021-1 (28)		
Location:	Bristol, VT		
Job #	025-15	Date:	3/4/2015

CAMP Precast Concrete Products, Inc.
78 Precast Road, Milton, VT 05468
Phone (802) 893-2401 Fax (802) 893-1542

Product I.D. D.I.

Size: **4' x 4'**

Invert: **No** Ladders: **No** Coating: **No** Access Size: **24" x 24"**

Cast Iron / Hatch: **24"x24"x6" High Neenah R-3405-A Frame & Type "D" Checkerboard Grate**

Rim:	568.82			Riser#1:		Riser#4:		
Inv. Out:	565.30	Cover:	8" Spec.	Riser#2:		Riser#5:		
Diff:	3.52	Base:	4'	Riser#3:		Riser#6:		
Sump:	2.00							
Gross V.F.:	5.52	Angle	0					
C.I. Height:	0.50	Boot:	S206-24L					
Net V.F.:	5.02	Dist. Up:	21"					
Brick Space:	0.35	Pipe Type:	HDPE					
Actual V.F.	4.67	Pipe Size:	18"					

Quality Control

Prepour

Form Cleaning: Form Release:
Rein. Steel: VT AOT Job Form Closure:
Block Out: Rein. Size:
Comments: Q.C. by/date:

Postpour

Finish: Bricking:
Invert: Ladders:
Coating: Boots:
Comments: Q.C. by/date:

Special Info. / Comments: VT AOT Job, 8" Thick Base Slab

Mold #: YDS³ Flat Top. No Tongue. 1@18" HDPE Adapter Wt.

FLIPPED **BASE**

APPROVED

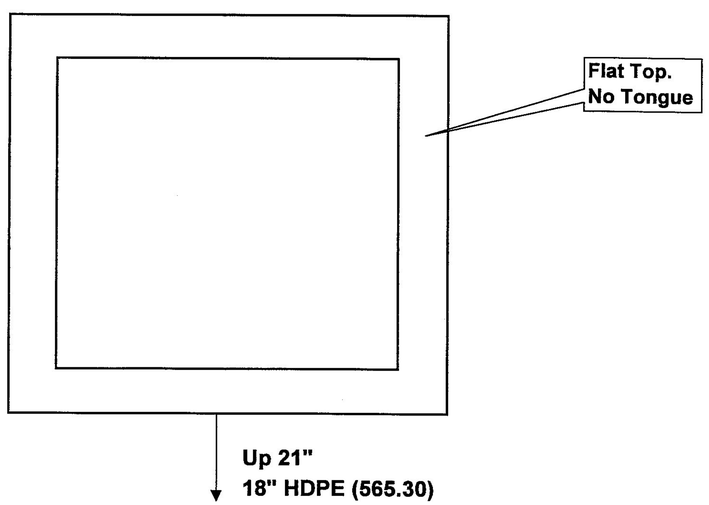

File 5.1.2

Contractor:	Don Weston Exc.		
Job Name:	Bristol HES 021-1 (28)		
Location:	Bristol, VT		
Job #	025-15	Date:	3/4/2015

CAMP Precast Concrete Products, Inc.
78 Precast Road, Milton, VT 05468
Phone (802) 893-2401 Fax (802) 893-1542

Product I.D. D.I.

Size: **4' x 4'**

Invert: **No** Ladders: **No** Coating: **No** Access Size: **24" x 24"**

Cast Iron / Hatch: **24"x24"x6" High Neenah R-3405-A Frame & Type "D" Checkerboard Grate**

Rim:	568.82			Riser#1:		Riser#4:	
Inv. Out:	565.30	Cover:	8" Spec.	Riser#2:		Riser#5:	
Diff:	3.52	Base:	4'	Riser#3:		Riser#6:	
Sump:	2.00						

Gross V.F.:	5.52	Angle						
C.I. Height:	0.50	Boot:						
Net V.F.:	5.02	Dist. Up:						
Brick Space:	0.35	Pipe Type:						
Actual V.F.	4.67	Pipe Size:						

Quality Control

Prepour

Form Cleaning: Form Release:
Rein. Steel: VT AOT Job Form Closure:
Block Out: Rein. Size:
Comments: Q.C. by/date:

Postpour

Finish: Bricking:
Invert: Ladders:
Coating: Boots:
Comments: Q.C. by/date:

Special Info. / Comments: **VT AOT Job**

Mold #: YDS³ **Cover with Drop Center** **Wt.**

PLAN **COVER**

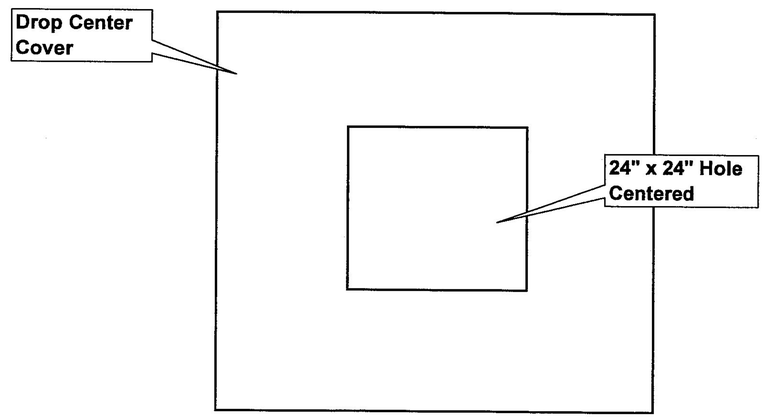

Precast Square Structure

48" Square (48SQ)

119 Gal. / Vertical ft.

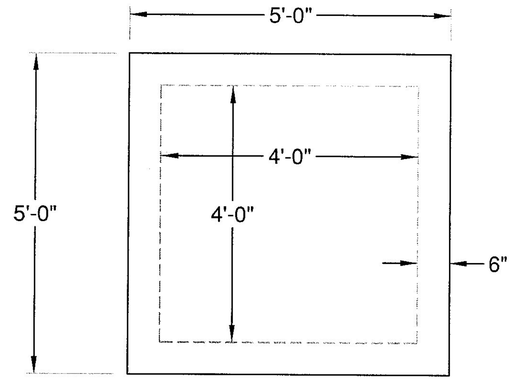

Plan

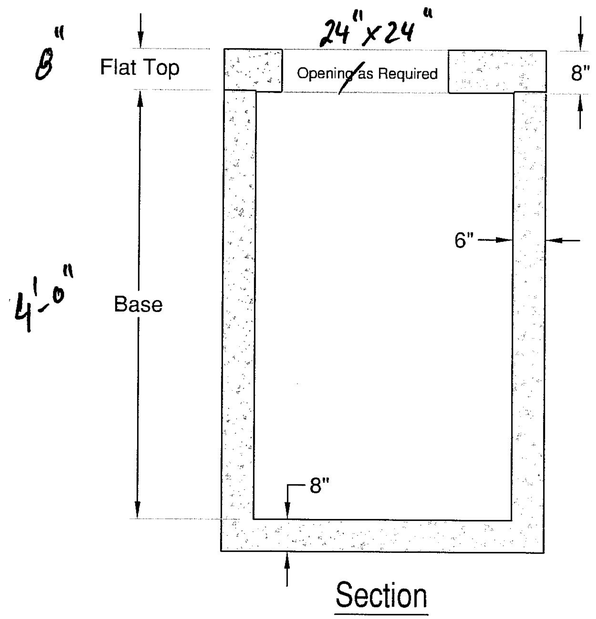

Section

SPECIFICATIONS:

- Concrete Minimum Strength 5000psi @ 28 days
- Steel Reinforcement grade 60
- Joints sealed with Butyl sealant
- Monolithic Construction
- H-20 Design Available
- Pipe Penetrations Supplied per Specifications
- Weights Subject to Variation

PRECAST CONCRETE PRODUCTS
78 PRECAST ROAD MILTON, VT 05468 • 802.893.2401
TOLL FREE 1.888.299.2401 FAX 802.893.1542

3405 449– 1 B8

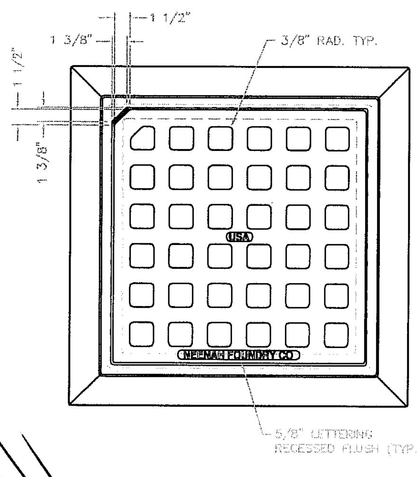

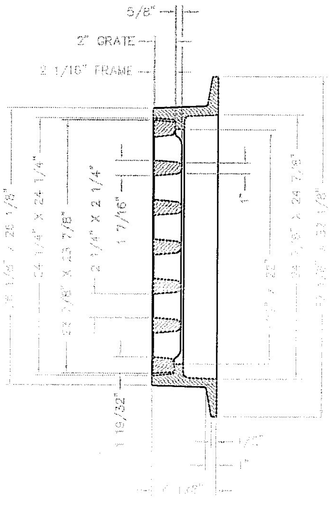

H-Flange Frame

NOTE: SUITABLE FOR H–20 LOADING
COMPONENT NO'S: FRAME 3405–0003, GRATE 3405–3004
MATERIAL: CAST GRAY IRON ASTM A–48, CLASS 35B
FINISH: NO PAINT UNLESS SPECIFIED ON PURCHASE ORDER
WEIGHT: FRAME 215 LBS, GRATE 210 LBS.

DR. E. NIVER	SCALE 1/8"=1"	TITLE: R–3405–A FRAME AND TYPE 'H' GRATE	
CH.			
APP.	DIM CHK.	NEENAH FOUNDRY NEENAH WISCONSIN 54956	NF-3405 449 B
DATE 06–13–2011			
www.neenahfoundry.com		PHONE: 1–800–558–5075	

CAD DWG. REF: 3405 449.DWG– 1

KOR-N-SEAL® II FLEXIBLE CONNECTOR

Recommended Installation Procedure

KORBAND INSTALLATION:

1. Assemble Korband as shown at right.
2. Install Korband into Connector by first fitting Wedge Expander into center of cutout provided, then installing remainder of Korband. Make sure that head of bolt on Wedge Expander is located to the outside of Connector/inside of manhole.
3. Using pipe lubricant, lightly lube at least three to four sections of Korband by bending back rubber one section at a time. *Do not lube wedge area.*
4. Check to be sure Korband is properly located in Connector groove.

1. Assemble Korbands.
2. Pop rivet together as shown.
3. Assemble Wedges.

Important: In order to ensure a good seal, assemble exactly as shown.

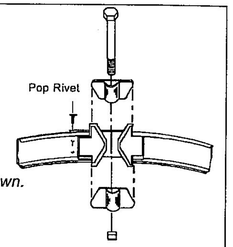

CONNECTOR INSTALLATION:

1. Insert Kor-N-Seal® II Assembly into hole properly positioning 1, 2, 3, or 4 Wedge Expander(s) (Fig. 1).
2. Position assembly so that it is flush with the inner wall of the manhole at top and bottom of hole (Fig. 2) and/or assuring full contact of the Korband.
3. Tighten Wedge Expander(s) equally with ¾" socket torque wrench to required foot pounds (Fig. 3).
4. After 15 minutes recheck torque and retighten if necessary.
5. Place plastic cap over end of bolt. (Fig. 4).
6. Re-torque Wedge Expander(s) to required foot pounds prior to shipment. (Fig. 3)

Wedge Expander Area(s)

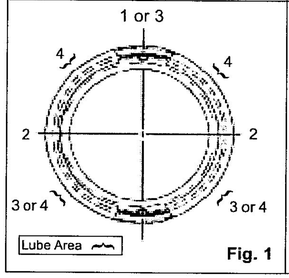

Fig. 1

Top View

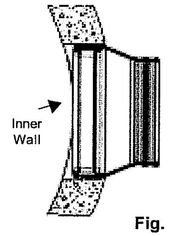

Fig. 2

Recommended Torque

Number of Wedge Expanders	Torque Foot Pounds [Newton Meters]
One	70 -75 [95 - 102]
Two or More	40 - 45 [54 - 61]

Fig. 3

Side View

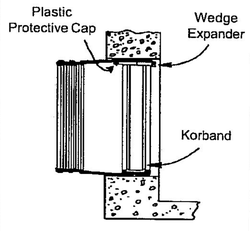

Fig. 4

PIPE INSTALLATION:

Caution: *Pipe must not rest on Connector Korband.*

1. Center pipe in Connector opening.
2. Position Clamp take-ups 90° apart. Using T-handle Torque Wrench (P/N 80090), tighten the two sets of clamps alternately to 60 in. lbs. [7 Newton Meters].
3. Inspect Connector to ensure that take-up is uniform and rubber is evenly compressed around pipe.
4. On minimum pipe O.D. installations, lift the rubber up underneath the Pipe Clamp screw so that the Connector contacts the bottom surface of the pipe while the Pipe Clamp screw is being tightened. Application of pipe lubrication on underside of the clamp will also help assure that an even contraction of rubber is maintained throughout the clamping area.
5. After the Pipe Clamp has been tightened down firmly, move the pipe horizontally and/or vertically to bring it to grade.

KOR-N-SEAL®

www.npc.com
250 Elm Street • P.O. Box 301
Milford, NH 03055, U.S.A.
Tel: 603-673-8680 • 800-626-2180 • Fax: 603-673-7271

KOR-N-SEAL® II FLEXIBLE CONNECTOR

Installation Chart



KORBAND
S.S. Series 304, 14 Gauge



CONNECTOR

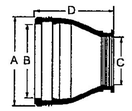



PIPE CLAMPS
S.S. Series 304, Quick Connect

Connector P/N	Suggested Pipe O.D. Range Inches	Hole Size Range Inches A	Connector Dimensions Inches B	C	D	Pipe Clamp Qty	P/N
S206-18L	15.000 — 15.625	17.98 — 18.13	15.875	16	10.50	2	I-282
S206-22 S206-22L	17.625 — 19.000 19.000 — 19.625	21.98 — 22.13	19.875	19 20	10.50	2 2	I-318 I-348
*S206-24A	18.000 — 19.500	23.98 — 24.13	21.875	18.75	12.00	4	I-180
S206-24 S206-24L	19.625 — 21.000 21.000 — 21.625	23.98 — 24.13	21.875	21 22	10.50	4 4	I-180
S206-26 S206-26L	21.625 — 23.000 23.000 — 23.625	26.00 — 26.20	23.875	23 24	10.50	4 4	I-190 I-218
S206-28 S206-28L	23.625 — 25.000 25.000 — 25.625	28.00 — 28.20	25.875	25 26	10.50	4 4	I-218
S206-30 S206-30L	25.625 — 27.000 27.000 — 27.625	30.00 — 30.20	27.875	27 28	10.50	4 4	I-218 I-242
S206-32 S206-32L	27.625 — 29.000 29.000 — 29.625	32.00 — 32.20	29.875	29 30	10.50	4 4	I-242
S206-34 S206-34L	29.625 — 31.000 31.000 — 31.625	34.00 — 34.20	31.875	31 32	10.50	4 4	I-258
S206-36 S206-36L	31.625 — 33.000 33.000 — 33.625	36.00 — 36.20	33.875	33 34	10.50	4 4	I-282
S206-38 S206-38L	33.625 — 35.000 35.000 — 35.625	38.00 — 38.20	35.875	35 36	10.50	4 4	I-282 I-306
S206-40 S206-40L	35.625 — 37.000 37.000 — 37.625	40.00 — 40.20	37.875	37 38	10.50	4 4	I-306
S206-42 S206-42L	37.625 — 39.000 39.000 — 39.625	42.00 — 42.20	39.875	39 40	10.50	4 4	I-318 I-348
S206-44 S206-44L	39.625 — 41.000 41.000 — 41.625	44.00 — 44.20	41.875	41 42	10.50	4 4	I-348
S206-46 S206-46L	41.625 — 43.000 43.000 — 43.625	46.00 — 46.20	43.875	43 44	10.50	4 6	I-348 I-242
S206-48 S206-48L	43.625 — 45.000 45.000 — 45.625	48.00 — 48.20	45.875	45 46	10.50	6 6	I-242 I-258
S206-50 S206-50L	45.000 — 45.625 45.625 — 47.000	50.00 — 50.25	47.250	46 47	10.50	6 6	I-258
S206-52 S206-52L	47.000 — 47.625 47.625 — 49.000	52.00 — 52.25	49.250	48 59	10.50	6 6	I-282
S206-54 S206-54L	49.000 — 49.625 49.625 — 51.000	54.00 — 54.25	51.250	50 51	10.50	6 6	I-282

18" HOPE

* Molded

- Double Wedge is available for 22 to 48 inch sizes, but .500 inches must be subtracted from the "B" dimension thus limiting your pipe O.D. range by .500 inches. The Double Wedge is only available on the "L" connectors.
- Special sizes quoted upon request.
- 50 inch (or larger) Connectors have 2 Wedges or more.

Caution:
- All stubs awaiting pipe installation at a later date must be restrained.
- Assure that a proper backfill material is used in adverse conditions.
- Prior to any critical usage, contact NPC Customer Service 800-626-2180.

KOR-N-SEAL®

Manufactured under the following patents:
U.S. 5,431,459 CAN. 2,004,749
EU/GERMANY. EP049811B

www.npc.com
250 Elm Street • P.O. Box 301
Milford, NH 03055, U.S.A.
Tel: 603-673-8680 • 800-626-2180 • Fax: 603-673-7271

01/03

PRODUCT SPECIFICATIONS

ConSeal™ CS102

Concrete Sealants INC.

Butyl Rubber Sealant For All Precast Structures; Meets Specs.

APPLICATIONS

For self-sealing joints in: Manholes, Concrete Vaults, Septic Tanks, Concrete Pipe, Box Culverts, Utility Vaults, Burial Vaults, and Vertical Panel Structures.

SEALING PROPERTIES

- Provides permanently flexible watertight joints.
- Low to high temperature workability: 30°F to 120°F (-1°C to 48°C)
- Rugged service temperature: -30°F to +200°F (-34°C to +93°C)
- Excellent chemical and mechanical adhesion to clean, dry surfaces.
- Sealed Joints will not shrink, harden or oxide upon aging.
- No priming normally necessary. When confronted with difficult installation conditions, such as wet concrete or temperatures below 40°F (4°C), priming the concrete will improve the bonding action. Consult Concrete Sealants for the proper primer to meet your application.

HYDROSTATIC STRENGTH

ConSeal CS-102 meets the hydrostatic performance requirement as set forth In ASTM C-990 section 10.1 (Performance requirement: 10psi for 10 minutes in straight alignment – in plant, quality control test for joint materials.)

SPECIFICATIONS

ConSeal CS-102 meets or exceeds the requirements of Federal Specification SS-S-210 (210-A), AASHTO M-198B, and ASTM C-990-91.

P.O. Box 176, New Carlisle OH, 45344 • 937.845.8776 or 800.332.7929
FAX 937-845-3687 • www.conseal.com

CONSEAL CS102

Concrete Sealants, Inc.

Butyl Rubber Sealant For All Precast Structures; Meets Specs.

PHYSICAL PROPERTIES

	Spec	Required*	CS 102
Hydrocarbon blend content % by weight	ASTM D4 (mod.)	50% min.	51%
Inert mineral filler % by weight	AASHTO T111	30% min.	35%
Volatile Matter % by weight	ASTM D6	2% max.	1.2
Specific Gravity, 77°F	ASTM D71	1.15-1.50	1.25
Ductility, 77°F	ASTM D113	5.0 min.	10
Penetration, cone 77°F, 150 gm. 5 sec.	ASTM D217	50-100	55-60
Penetration, cone 32°F, 150 gm. 5 sec.	ASTM D217	40 mm	40-65
Flash Point, C.O.C., °F	ASTM D92	350°F min.	450°F
Fire point, C.O.C., °F	ASTM D92	375°F min.	475°F

IMMERSION TESTING

- 30-Day Immersion Testing: No visible deterioration when tested in 5% Caustic Potash, 5% Hydrochloric Acid, 5% Sulfuric Acid, and 5% saturated Hydrogen Sulfide. *
- One Year Immersion Testing: No visible deterioration when tested in 5% Formaldehyde, 5% Formic Acid, 5% Sulfuric Acid, 5% Hydrochloric Acid, 5% Sodium Hydroxide, 5% Hydrogen Sulfide and 5% Potassium Hydroxide.
- Requirements of ASTM C-990 Standard Specification for Joints for Concrete Pipe, Manholes, and Precast Box Sections Using Preformed Flexible Joint Sealants.

LIMITED WARRANTY
This information is presented in good faith, but we cannot anticipate all conditions under which this information and our products, or the products of other manufacturers in combination with our products, may be used. We accept no responsibility for results obtained by the application of this information or the safety and suitability of our products, either alone or in combination with other products. Users are advised to make their own tests to determine the safety and suitability of each such product or product combinations for their own purposes. It is the user's responsibility to satisfy himself as to the suitability and completeness of such information for this own particular use. We sell this product without warranty, and buyers and users assume all responsibility and liability for loss or damage arising from the handling and use of this product, whether used alone or in combination with other products.

P.O. Box 175 New Carlisle OH, 45344 • 937.845.8776 or 800.332.7325
FAX 937-845-3687 • www.conseal.com

File 5.1.2

Contractor:	Don Weston Exc.		
Job Name:	Bristol HES 021-1 (28)		
Location:	Bristol, VT		
Job #	025-15	Date:	3/4/2015

CAMP Precast Concrete Products, Inc.
78 Precast Road, Milton, VT 05468
Phone (802) 893-2401 Fax (802) 893-1542

Product I.D. Storm MH Diameter: 4'

Invert: **No** Ladders: **Yes** Coating: **No** Access Size: **24" Dia.**

Cast Iron / Hatch: **26" Dia. X 7" High Neenah R-1642 Frame & Lid marked "DRAIN"**

Rim:	4.50	Cone:		Riser#1:		Riser#4:			
Inv. Out:	0.00	Cover:	1'	Riser#2:		Riser#5:			
Diff:	4.50	Base:	3'	Riser#3:		Riser#6:			
Sump:	0.33								
Gross V.F.:	4.83	Angle	0	225					
C.I. Height:	0.58	Boot:	S206-24L	S206-24L					
Net V.F.:	4.25	Dist. Up:	1"	1"					
Brick Space:	0.25	Pipe Type:	HDPE	HDPE					
Actual V.F.	4.00	Pipe Size:	18"	18"					

Quality Control

Prepour

Form Cleaning: Form Release:
Rein. Steel: **VT AOT Job** Form Closure:
Block Out: Rein. Size:
Comments: Q.C. by/date:

Postpour

Finish: Bricking:
Invert: Ladders:
Coating: Boots:
Comments: Q.C. by/date:

Special Info. / Comments: **VT AOT Job**

Mold #: YDS³ **8" Thick Base** **Wt.**

BASE

APPROVED

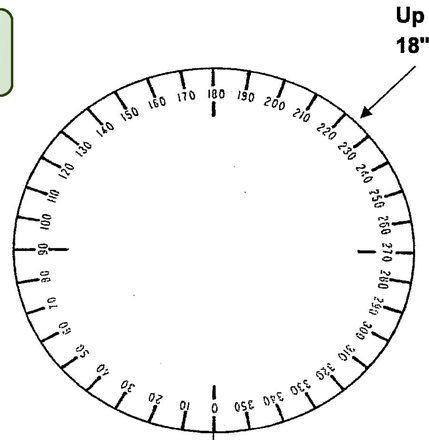

48" Diameter Manhole

94 Gal. / Vertical ft.

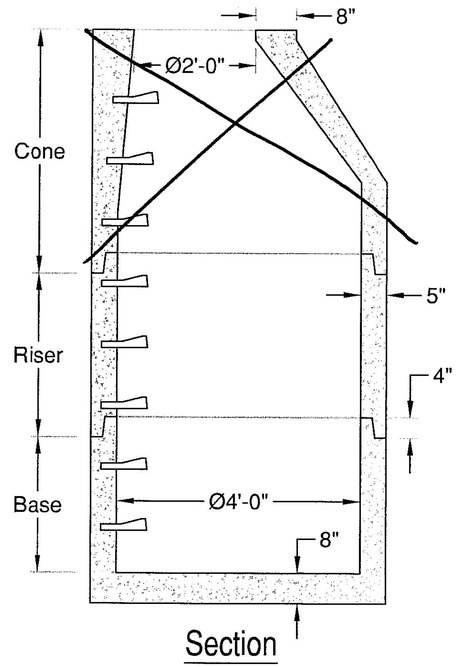

Section

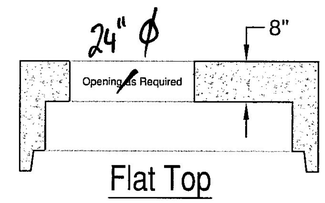

Flat Top

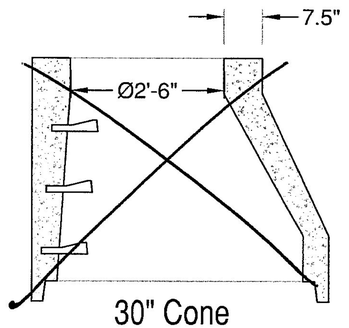

30" Cone

FLAT TOP SECTION

Height	Item #	Weight
1'-0"	MH48-12FT	1,650 lbs
1'-6"	MH48-18FT	2,080 lbs

Standard Heights Shown - Other Heights Available

RISER SECTION

Height	Item #	Weight
1'-0"	MH48-12R	860 lbs
2'-0"	MH48-24R	1,710 lbs
3'-0"	MH48-36R	2,570 lbs
4'-0"	MH48-48R	3,420 lbs

Standard Heights Shown - Other Heights Available

BASE SECTION

Height	Item #	Weight
2'-0"	MH48-24B	3,070 lbs
3'-0"	MH48-36B	3,880 lbs
4'-0"	MH48-48B	4,720 lbs
5'-0"	MH48-60B	5,560 lbs
6'-0"	MH48-72B	6,400 lbs

Standard Heights Shown - Other Heights Available

24" Cone

Height	Item #	Weight
3'-0"	MH48-24C36	2,680 lbs
3'-6"	MH48-24C42	3,120 lbs
4'-0"	MH48-24C48	3,560 lbs
4'-6"	MH48-24C54	4,000 lbs
5'-0"	MH48-24C60	4,440 lbs

30" Cone

Height	Item #	Weight
3'-0"	MH48-30C36	2,660 lbs
3'-6"	MH48-30C42	3,100 lbs
4'-0"	MH48-30C48	3,540 lbs
5'-0"	MH48-30C60	4,420 lbs

SPECIFICATIONS:

- Concrete Minimum Strength 5000psi @ 28 days
- Joints sealed with Butyl sealant
- Monolithic Construction
- Meets ASTM C478
- H-20 Loading
- Weights Subject to Variation

PRECAST CONCRETE PRODUCTS
78 PRECAST ROAD MILTON, VT 05468 • 802.893.2401
TOLL FREE 1.888.299.2401 FAX 802.893.1542

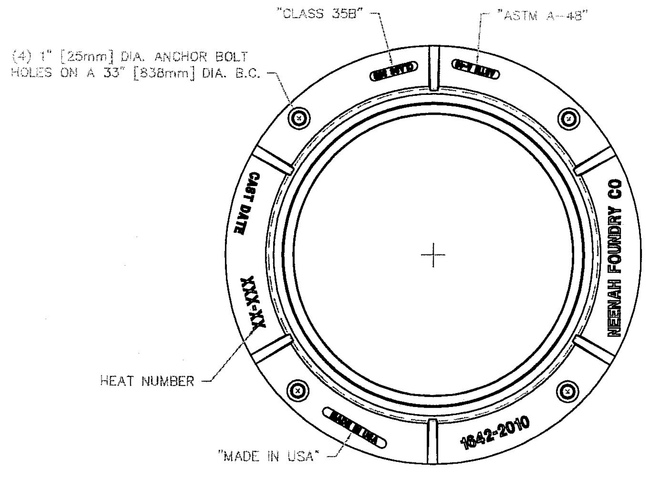

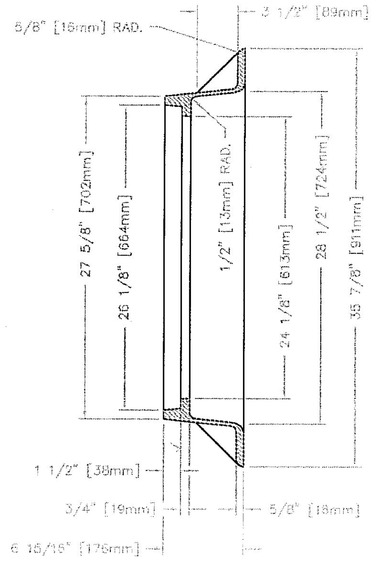

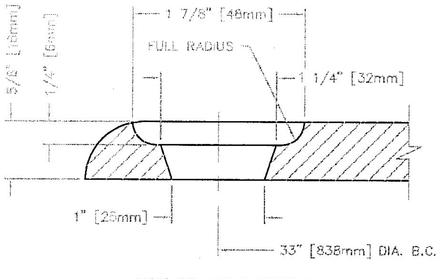

ANCHOR HOLE DETAIL
FULL SCALE

NOTE: ALL DIMENSIONS ARE SHOWN IN ENGLISH AND [METRIC].
SUITABLE FOR HS-25 LOADING
MATERIAL: CAST GRAY IRON ASTM A-48, CLASS 35B
FINISH: NOT PAINTED
WEIGHT: 147#

WAS COMPONENT NO. 1642-0001

DR. E. REMME	SCALE 1/8"=1"	TITLE: R-1642 FRAME	
CH.			
APP.	DIM CHK.	NEENAH FOUNDRY COMPANY NEENAH WISCONSIN 54956	NF-16422010 B
DATE 2-10-96			

	DATE	REVISION	INT
3	10-14-2003	CORRECTED FILLETS	KMH
2	06-06-2003	ADDED LETTERING ON FLANGE	ELR
1	10-30-96	CHG. A-A DIM. FROM 28 3/8"	CSK

CAD DWG. REF: 16422010.DWG- 4

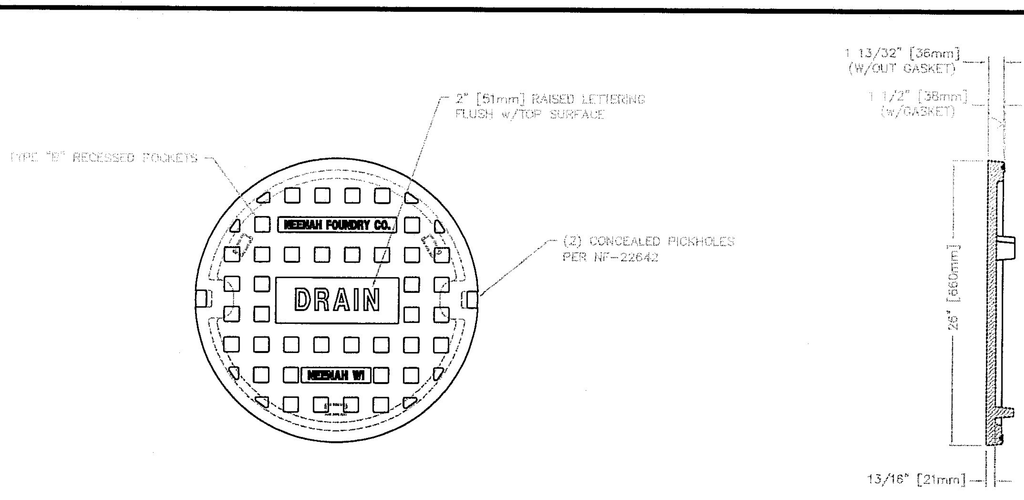

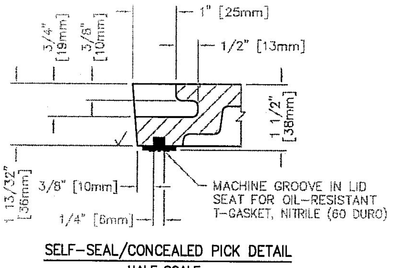

SELF-SEAL/CONCEALED PICK DETAIL
HALF SCALE

NOTE: ALL DIMENSIONS SHOWN ARE IN ENGLISH AND [METRIC]
MATERIAL: CAST GRAY IRON ASTM A-48, CLASS 35B
FINISH: NO PAINT
WEIGHT: 122#

DR. K HOGE	SCALE 1/8"=1"	TITLE: R-1642 PLATEN LID LETTERED "DRAIN"	
CH.			
APP.	DIM CHK.	NEENAH FOUNDRY COMPANY NEENAH WISCONSIN 54956	NF-16425549 B
DATE 04-08-2008			

CAD DWG. REF: 16425549.DWG- 1

KOR-N-SEAL® II FLEXIBLE CONNECTOR

Recommended Installation Procedure

KORBAND INSTALLATION:

1. Assemble Korband as shown at right.
2. Install Korband into Connector by first fitting Wedge Expander into center of cutout provided, then installing remainder of Korband. Make sure that head of bolt on Wedge Expander is located to the outside of Connector/inside of manhole.
3. Using pipe lubricant, lightly lube at least three to four sections of Korband by bending back rubber one section at a time. *Do not lube wedge area.*
4. Check to be sure Korband is properly located in Connector groove.

1. Assemble Korbands.
2. Pop rivet together as shown.
3. Assemble Wedges.

Important: In order to ensure a good seal, assemble exactly as shown.

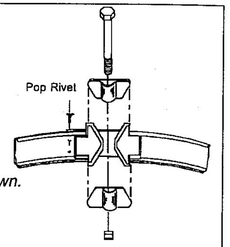

CONNECTOR INSTALLATION:

1. Insert Kor-N-Seal® II Assembly into hole properly positioning 1, 2, 3, or 4 Wedge Expander(s) (Fig. 1).
2. Position assembly so that it is flush with the inner wall of the manhole at top and bottom of hole (Fig. 2) and/or assuring full contact of the Korband.
3. Tighten Wedge Expander(s) equally with ¾" socket torque wrench to required foot pounds (Fig. 3).
4. After 15 minutes recheck torque and retighten if necessary.
5. Place plastic cap over end of bolt. (Fig. 4).
6. Re-torque Wedge Expander(s) to required foot pounds prior to shipment. (Fig. 3)

Wedge Expander Area(s)

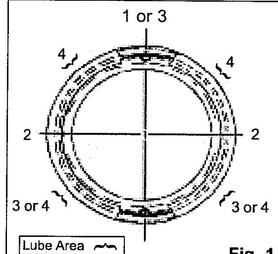

Fig. 1

Top View

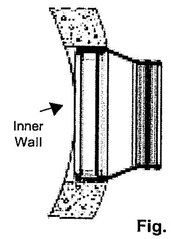

Fig. 2

Recommended Torque

Number of Wedge Expanders	Torque Foot Pounds [Newton Meters]
One	70 -75 [95 - 102]
Two or More	40 - 45 [54 - 61]

Fig. 3

Side View

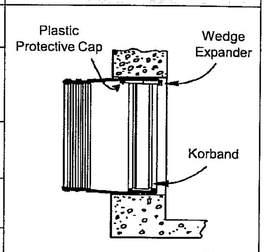

Fig. 4

PIPE INSTALLATION:

***Caution:** Pipe must not rest on Connector Korband.*

1. Center pipe in Connector opening.
2. Position Clamp take-ups 90° apart. Using T-handle Torque Wrench (P/N 80090), tighten the two sets of clamps alternately to 60 in. lbs. [7 Newton Meters].
3. Inspect Connector to ensure that take-up is uniform and rubber is evenly compressed around pipe.
4. On minimum pipe O.D. installations, lift the rubber up underneath the Pipe Clamp screw so that the Connector contacts the bottom surface of the pipe while the Pipe Clamp screw is being tightened. Application of pipe lubrication on underside of the clamp will also help assure that an even contraction of rubber is maintained throughout the clamping area.
5. After the Pipe Clamp has been tightened down firmly, move the pipe horizontally and/or vertically to bring it to grade.

www.npc.com
250 Elm Street • P.O. Box 301
Milford, NH 03055, U.S.A.
Tel: 603-673-8680 • 800-626-2180 • Fax: 603-673-7271

KOR-N-SEAL® II FLEXIBLE CONNECTOR

Installation Chart



KORBAND
S.S. Series 304, 14 Gauge



CONNECTOR

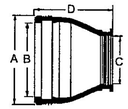



PIPE CLAMPS
S.S. Series 304, Quick Connect

Connector P/N	Suggested Pipe O.D. Range Inches	Hole Size Range Inches A	Connector Dimensions Inches B	C	D	Pipe Clamp Qty	P/N
S206-18L	15.000 — 15.625	17.98 — 18.13	15.875	16	10.50	2	I-282
S206-22 S206-22L	17.625 — 19.000 19.000 — 19.625	21.98 — 22.13	19.875	19 20	10.50	2 2	I-318 I-348
*S206-24A	18.000 — 19.500	23.98 — 24.13	21.875	18.75	12.00	4	I-180
S206-24 S206-24L	19.625 — 21.000 21.000 — 21.625	23.98 — 24.13	21.875	21 22	10.50	4 4	I-180
S206-26 S206-26L	21.625 — 23.000 23.000 — 23.625	26.00 — 26.20	23.875	23 24	10.50	4 4	I-190 I-218
S206-28 S206-28L	23.625 — 25.000 25.000 — 25.625	28.00 — 28.20	25.875	25 26	10.50	4 4	I-218
S206-30 S206-30L	25.625 — 27.000 27.000 — 27.625	30.00 — 30.20	27.875	27 28	10.50	4 4	I-218 I-242
S206-32 S206-32L	27.625 — 29.000 29.000 — 29.625	32.00 — 32.20	29.875	29 30	10.50	4 4	I-242
S206-34 S206-34L	29.625 — 31.000 31.000 — 31.625	34.00 — 34.20	31.875	31 32	10.50	4 4	I-258
S206-36 S206-36L	31.625 — 33.000 33.000 — 33.625	36.00 — 36.20	33.875	33 34	10.50	4 4	I-282
S206-38 S206-38L	33.625 — 35.000 35.000 — 35.625	38.00 — 38.20	35.875	35 36	10.50	4 4	I-282 I-306
S206-40 S206-40L	35.625 — 37.000 37.000 — 37.625	40.00 — 40.20	37.875	37 38	10.50	4 4	I-306
S206-42 S206-42L	37.625 — 39.000 39.000 — 39.625	42.00 — 42.20	39.875	39 40	10.50	4 4	I-318 I-348
S206-44 S206-44L	39.625 — 41.000 41.000 — 41.625	44.00 — 44.20	41.875	41 42	10.50	4 4	I-348
S206-46 S206-46L	41.625 — 43.000 43.000 — 43.625	46.00 — 46.20	43.875	43 44	10.50	4 6	I-348 I-242
S206-48 S206-48L	43.625 — 45.000 45.000 — 45.625	48.00 — 48.20	45.875	45 46	10.50	6 6	I-242 I-258
S206-50 S206-50L	45.000 — 45.625 45.625 — 47.000	50.00 — 50.25	47.250	46 47	10.50	6 6	I-258
S206-52 S206-52L	47.000 — 47.625 47.625 — 49.000	52.00 — 52.25	49.250	48 59	10.50	6 6	I-282
S206-54 S206-54L	49.000 — 49.625 49.625 — 51.000	54.00 — 54.25	51.250	50 51	10.50	6 6	I-282

18" HDPE

* Molded

- Double Wedge is available for 22 to 48 inch sizes, but .500 inches must be subtracted from the "B" dimension thus limiting your pipe O.D. range by .500 inches. The Double Wedge is only available on the "L" connectors.
- Special sizes quoted upon request.
- 50 inch (or larger) Connectors have 2 Wedges or more.

Caution:
- All stubs awaiting pipe installation at a later date must be restrained.
- Assure that a proper backfill material is used in adverse conditions.
- Prior to any critical usage, contact NPC Customer Service 800-626-2180.

KOR-N-SEAL®

Manufactured under the following patents:
U.S. 5,431,459 CAN. 2,004,749
EU/GERMANY. EP049811B

www.npc.com
250 Elm Street • P.O. Box 301
Milford, NH 03055, U.S.A.
Tel: 603-673-8680 • 800-626-2180 • Fax: 603-673-7271

PS2-PFSL **Manhole Step**

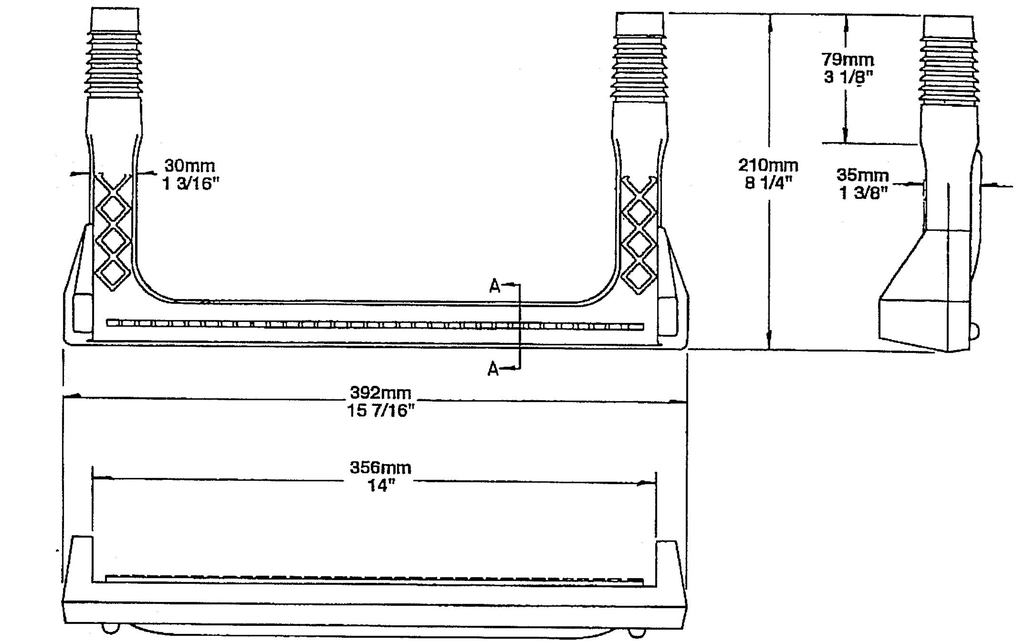

Copolymer Polypropylene Plastic

13mm 1/2" GRADE 60 STEEL REINFORCEMENT

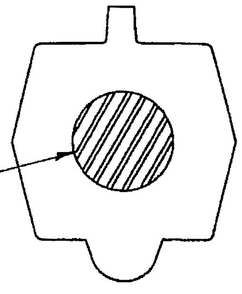

SECTION-A

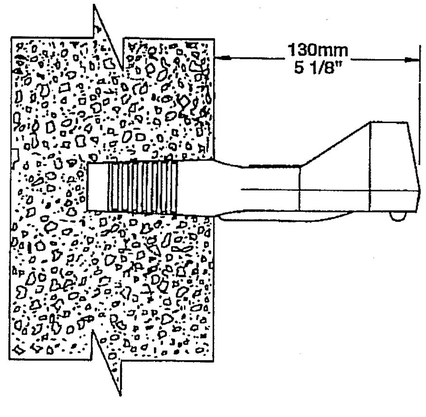

12" O.C.

M.A. INDUSTRIES, INC.

P.O. Box 2322, 303 Dividend Dr. • Peachtree City, GA 30269 • Phone: (770) 487-7761 • Molding Sales Fax: (770) 487-1482 • Corporate Fax: (770) 631-4679

PRODUCT SPECIFICATIONS

ConSeal™ CS102

Concrete Sealants INC.

Butyl Rubber Sealant For All Precast Structures; Meets Specs.

APPLICATIONS

For self-sealing joints in: Manholes, Concrete Vaults, Septic Tanks, Concrete Pipe, Box Culverts, Utility Vaults, Burial Vaults, and Vertical Panel Structures.

SEALING PROPERTIES

- Provides permanently flexible watertight joints.
- Low to high temperature workability: 30°F to 120°F (-1°C to 48°C)
- Rugged service temperature: -30°F to +200°F (-34°C to +93°C)
- Excellent chemical and mechanical adhesion to clean, dry surfaces.
- Sealed Joints will not shrink, harden or oxide upon aging.
- No priming normally necessary. When confronted with difficult installation conditions, such as wet concrete or temperatures below 40°F (4°C), priming the concrete will improve the bonding action. Consult Concrete Sealants for the proper primer to meet your application.

HYDROSTATIC STRENGTH

ConSeal CS-102 meets the hydrostatic performance requirement as set forth In ASTM C-990 section 10.1 (Performance requirement: 10psi for 10 minutes in straight alignment – in plant, quality control test for joint materials.)

SPECIFICATIONS

ConSeal CS-102 meets or exceeds the requirements of Federal Specification SS-S-210 (210-A), AASHTO M-198B, and ASTM C-990-91.

P.O. Box 179, New Carlisle OH, 45344 • 937.845.8776 or 800.332.7325
FAX 937-845-3587 • www.conseal.com

ConSeal™ CS102

Concrete Sealants INC.

Butyl Rubber Sealant For All Precast Structures; Meets Specs.

PHYSICAL PROPERTIES

	Spec	Required*	CS 102
Hydrocarbon blend content % by weight	ASTM D4 (mod.)	50% min.	51%
Inert mineral filler % by weight	AASHTO T111	30% min.	35%
Volatile Matter % by weight	ASTM D6	2% max.	1.2
Specific Gravity, 77°F	ASTM D71	1.15-1.50	1.25
Ductility, 77°F	ASTM D113	5.0 min.	10
Penetration, cone 77°F, 150 gm. 5 sec.	ASTM D217	50-100	55-60
Penetration, cone 32°F, 150 gm. 5 sec.	ASTM D217	40 mm	40-65
Flash Point, C.O.C., °F	ASTM D92	350°F min.	450°F
Fire point, C.O.C., °F	ASTM D92	375°F min.	475°F

IMMERSION TESTING

- 30-Day Immersion Testing: No visible deterioration when tested in 5% Caustic Potash, 5% Hydrochloric Acid, 5% Sulfuric Acid, and 5% saturated Hydrogen Sulfide. *
- One Year Immersion Testing: No visible deterioration when tested in 5% Formaldehyde, 5% Formic Acid, 5% Sulfuric Acid, 5% Hydrochloric Acid, 5% Sodium Hydroxide, 5% Hydrogen Sulfide and 5% Potassium Hydroxide.
- Requirements of ASTM C-990 Standard Specification for Joints for Concrete Pipe, Manholes, and Precast Box Sections Using Preformed Flexible Joint Sealants.

LIMITED WARRANTY
This information is presented in good faith, but we cannot anticipate all conditions under which this information and our products, or the products of other manufacturers in combination with our products, may be used. We accept no responsibility for results obtained by the application of this information or the safety and suitability of our products, either alone or in combination with other products. Users are advised to make their own tests to determine the safety and suitability of each such product or product combinations for their own purposes. It is the user's responsibility to satisfy himself as to the suitability and completeness of such information for this own particular use. We sell this product without warranty, and buyers and users assume all responsibility and liability for loss or damage arising from the handling and use of this product, whether used alone or in combination with other products.

P.O. Box 176, New Carlisle OH, 45344 • 937.845.8776 or 800.332.7325
FAX 937-845-3587 • www.conseal.com

APPROVED

FRITZ BROTHERS ENGINEERING, LTD.

MARCH 6, 2015

STRUCTURAL CALCULATIONS & DRAWINGS

FOR

TRAFFIC SIGNAL POLE FOUNDATIONS

VT ROUTE 116 (MAIN ST.) & NORTH ST./SOUTH ST.

BRISTOL 021-1 (28), VERMONT

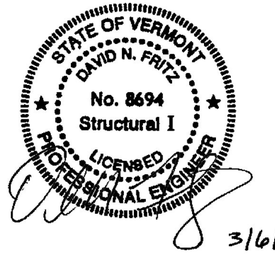

2009 AASHTO SPECIFICATION
VTRANS MREI 10-01
VTRANS STANDARD SPECIFICATIONS FOR CONSTRUCTION

PROPRIETARY INFORMATION
THESE DOCUMENTS, DRAWINGS AND CALCULATIONS AND ALL INFORMATION RELATED TO THEM ARE THE EXCLUSIVE PROPERTY AND THE PROPRIETARY INFORMATION OF FRITZ BROTHERS ENGINEERING, LTD. AND ARE FURNISHED SOLELY UPON THE CONDITIONS THAT THEY WILL BE RETAINED IN THE STRICTEST CONFIDENCE AND SHALL NOT BE DUPLICATED, USED OR DISCLOSED IN WHOLE OR IN PART FOR ANY PURPOSE, IN ANY WAY, WITHOUT THE PRIOR WRITTEN PERMISSION OF FRITZ BROTHERS ENGINEERING, LTD.

2800 POSSUM HOLLOW RD. SE, NEW PHILADELPHIA OHIO 44663-7322
PHONE: 330-844-0994 • FAX: 330-308-5461

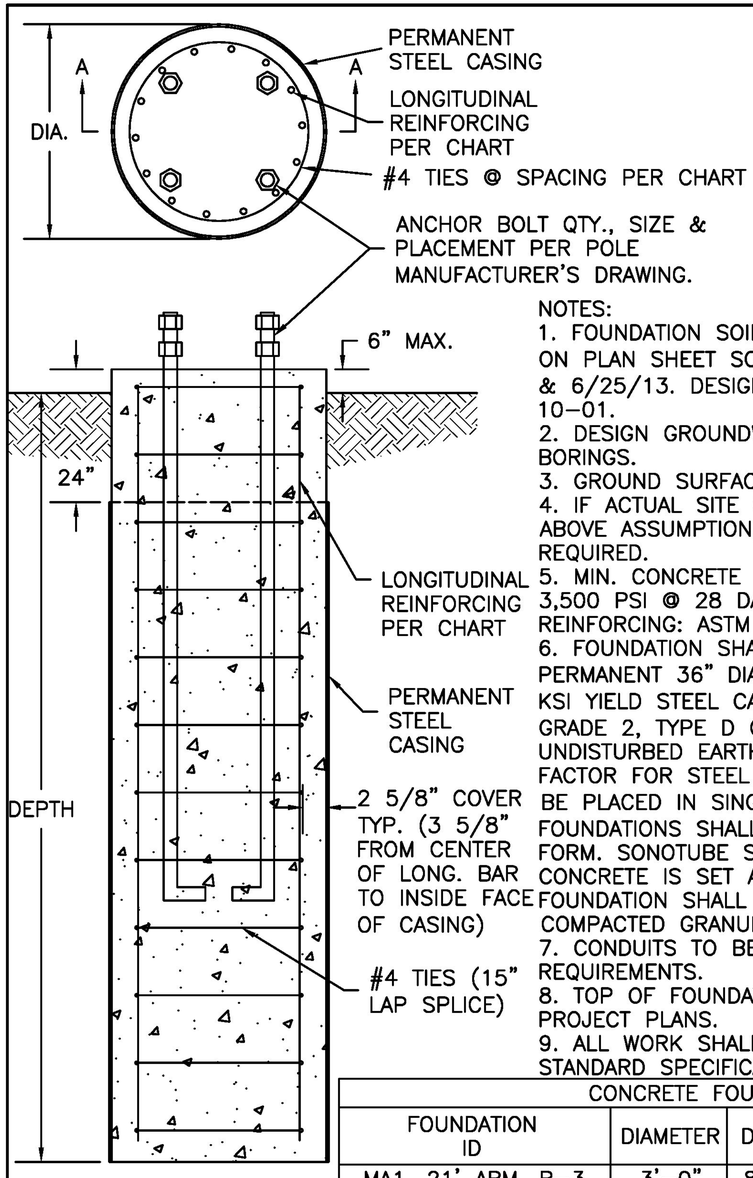

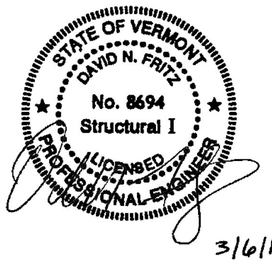

3/6/15

NOTES:
1. FOUNDATION SOIL PROPERTIES ARE BASED ON PLAN SHEET SOIL BORINGS DATED 6/24/13 & 6/25/13. DESIGN MEETS VTRANS MREI 10–01.
2. DESIGN GROUNDWATER ELEVATION PER SOIL BORINGS.
3. GROUND SURFACE PER CROSS SECTIONS.
4. IF ACTUAL SITE CONDITIONS VARY FROM ABOVE ASSUMPTION, FOUNDATION REDESIGN IS REQUIRED.
5. MIN. CONCRETE COMPRESSIVE STRENGTH OF 3,500 PSI @ 28 DAYS. REINFORCING: ASTM A615 GR. 60.
6. FOUNDATION SHALL BE CAST AGAINST PERMANENT 36" DIAMETER X 0.375" WALL, 36 KSI YIELD STEEL CASING PIPE (ASTM A252 GRADE 2, TYPE D CERTIFICATION) DRIVEN INTO UNDISTURBED EARTH. FRICTION REDUCTION FACTOR FOR STEEL CASING=0.75. CONCRETE TO BE PLACED IN SINGLE POUR. TOP 24" OF ALL FOUNDATIONS SHALL USE A 36" DIA. SONOTUBE FORM. SONOTUBE SHALL BE REMOVED AFTER CONCRETE IS SET AND ALL VOIDS AROUND FOUNDATION SHALL BE BACKFILLED WITH WELL COMPACTED GRANULAR MATERIAL.
7. CONDUITS TO BE PLACED BASED ON FIELD REQUIREMENTS.
8. TOP OF FOUNDATION ELEVATION PER PROJECT PLANS.
9. ALL WORK SHALL CONFORM TO VTRANS STANDARD SPECIFICATIONS FOR CONSTRUCTION.

CONCRETE FOUNDATION DATA

FOUNDATION ID	DIAMETER	DEPTH	LONG. BARS	TIE SPA.	CONCRETE VOL. (C.Y.)
MA1, 21' ARM, B–3	3'–0"	8'–0"	8–#8	12"	3
MA2, 34' ARM, B–4	3'–0"	10'–0"	8–#8	12"	3
MA3, 18' ARM, B–2	3'–0"	8'–6"	8–#8	12"	3
MA4, 40' ARM, B–1	3'–0"	9'–0"	8–#8	12"	3

TRAFFIC POLE FOUNDATION DESIGN
VT ROUTE 116 (MAIN ST.) & NORTHT./SOUTH ST.
BRISTOL HES 021–1 (28), VERMONT
DRAWING NO. 259710

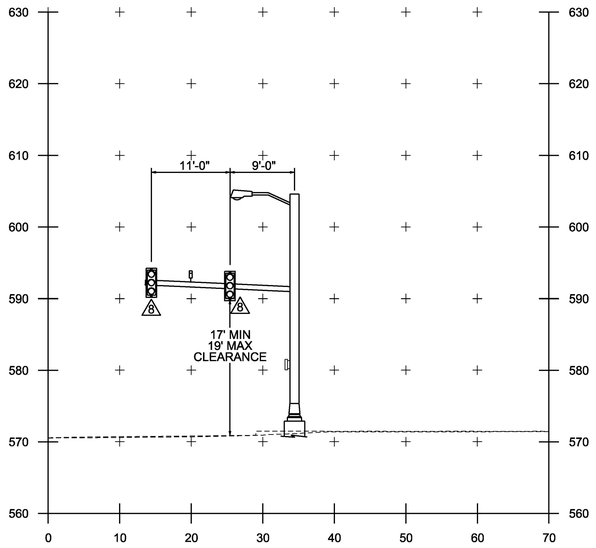

NORTH ST. STA 12+85, 34' LT
LOOKING NORTHERLY
MA 1

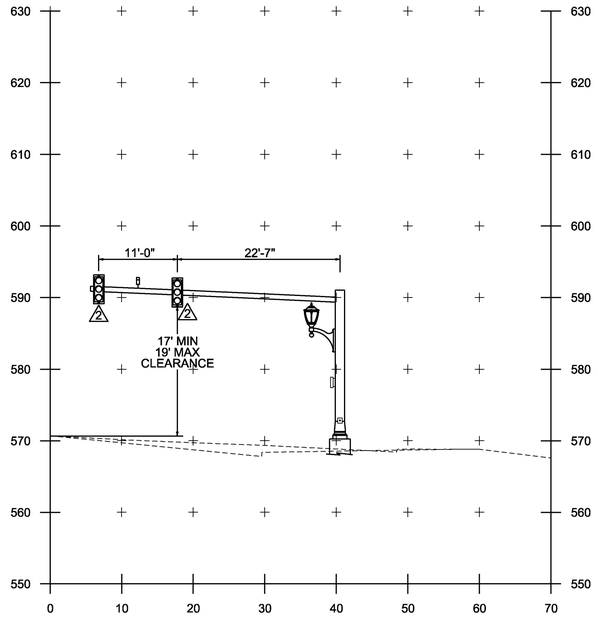

VT ROUTE 116 STA 13+26, 40.5'RT
LOOKING EASTERLY
MA 2

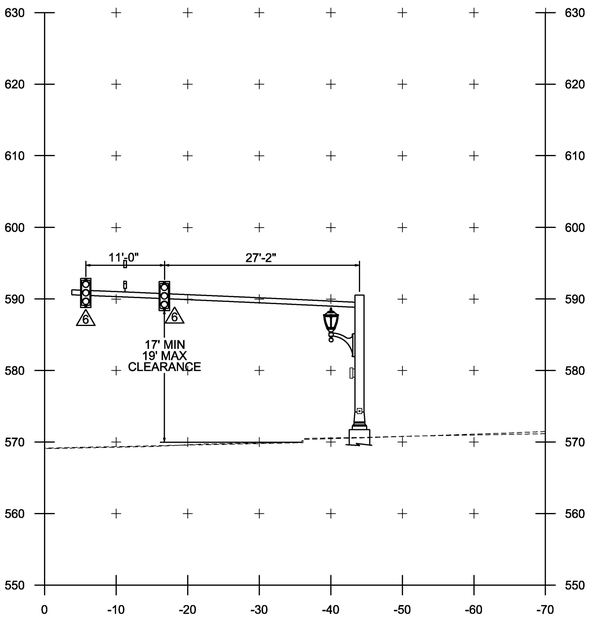

VT ROUTE 116 STA 11+99, 44.0LT
LOOKING WESTERLY
MA 4

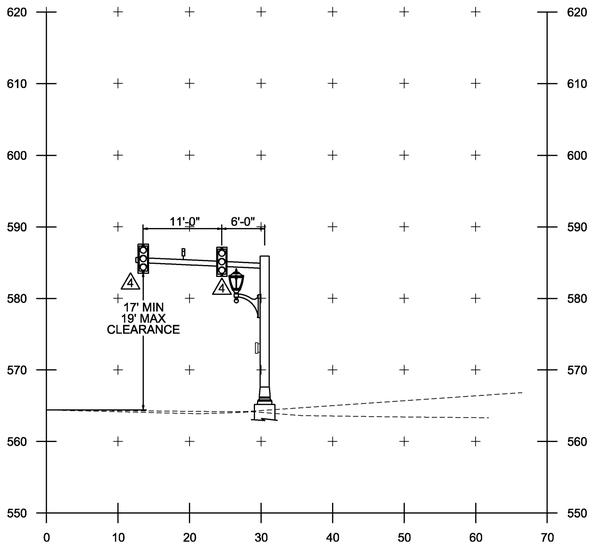

SOUTH ST. STA 12+45, 34 RT.
LOOKING SOUTHERLY
MA 3

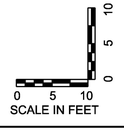

Stantec

PROJECT NAME:	BRISTOL
PROJECT NUMBER:	HES 021-1 (28)

FILE NAME: z10b078bdr_mastxs.dgn		PLOT DATE:	4/29/2014
PROJECT LEADER:	T. LUTHER	DRAWN BY:	P. ARMATA
DESIGNED BY:	T. LUTHER	CHECKED BY:	G. EDWARDS
MAST ARM CROSS SECTION		SHEET	20 OF 29

APPROVED

valmont

February 12, 2015

Highway Tech
6 Sabattus Rd.
Sabattus, ME 04280

Valmont Order: 259710-P1
Customer Order: 9261

Enclosed is the revised drawing package for your approval. This drawing represents the Traffic Products to be furnished by Valmont Industries, Inc.

Please return one (1) complete set of drawings marked **Approved** to Shadava M. Schneider, or provide other written authorization at the time of order release.

Send to:

VALMONT INDUSTRIES, INC.
Lighting, Traffic and Communication Structures
28800 Ida St.
P.O. Box 358
Valley, Nebraska 68064-8016

Valmont approval policy: *It is important that all verification information must accompany the order release. Omission of the information may cause a delay in the shipping schedule. Also note; should we require additional information, clarification, or if there is a customer initiated change, the quoted lead-time is subject to when we receive this information. Our quoted lead-time begins once we receive the completed information or the final customer change. Damages resulting from delays in receiving complete information or customer changes will not be the responsibility of Valmont Industries, Inc.*

Sincerely,
James T. Friesel
jfriesel@valmont.com

cc: file

Valmont Industries, Inc.
West Highway 275
P.O. Box 358
Valley, Nebraska 68064-0358 USA
(402) 359-2201

A Light & Traffic Structure Proposal
for
VERMONT D.O.T.
BRISTOL
PROJECT NO. HES 021-1(28)

Valmont Order No.: 259710

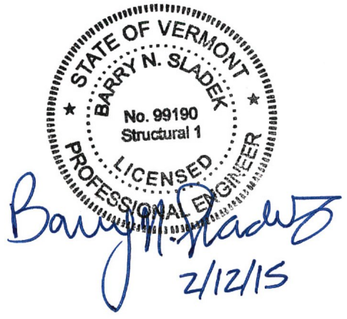

Prepared By:
Barry N. Sladek, P.E.
Senior Professional Engineer
February 9, 2015

Revison B

Proprietary Information
These documents, drawings and/or calculations and all information related to them are the exclusive property and the proprietary information of Valmont Industries, Inc. and are furnished solely upon the conditions that they will be retained in strictest confidence and shall not be duplicated, used or disclosed in whole or in part for any purpose, in any way, without the prior written permission of Valmont Industries, Inc.

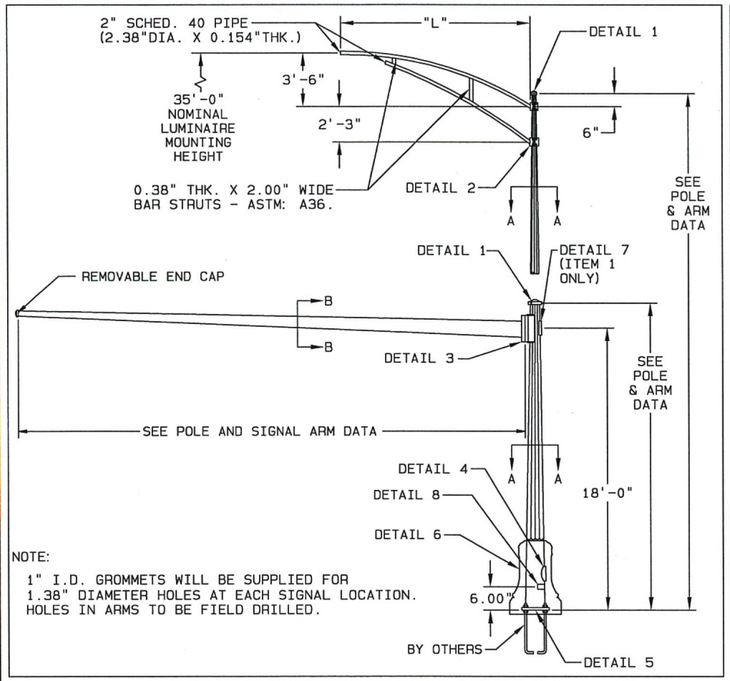

DETAIL 1 | POLE TOP

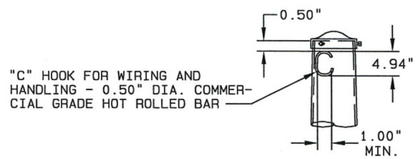

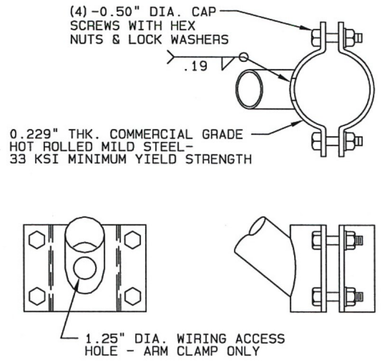

DETAIL 2 | LUMINAIRE ARM ATTACHMENT

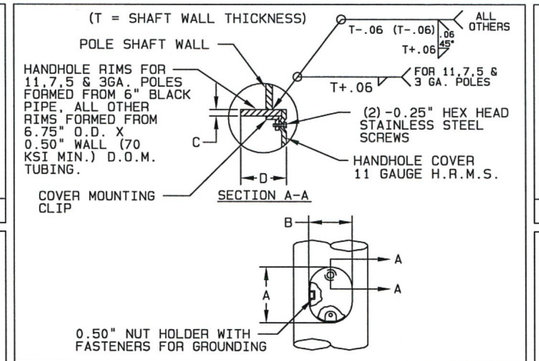

POLE GA.	A	B	C	D
5 GA. (0.2092")	7.31"	5.63"	0.432"	2.000"

DETAIL 4 | HANDHOLE

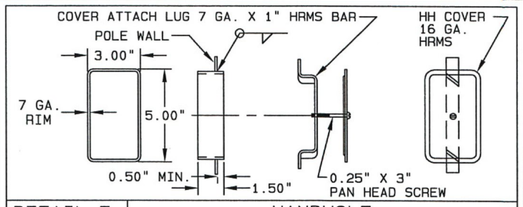

DETAIL 7 | HANDHOLE

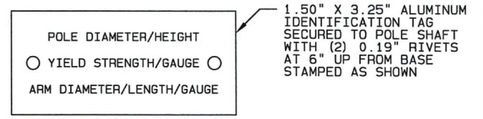

DETAIL 8 | I.D. TAG

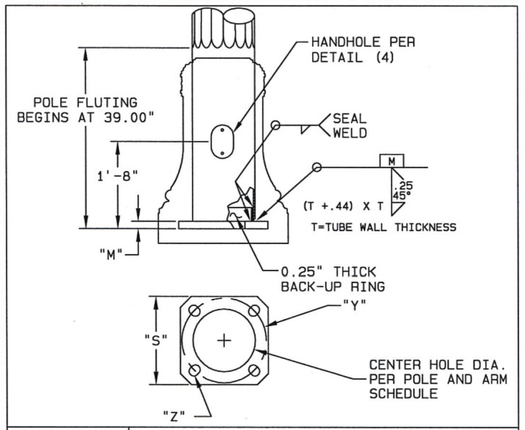

DETAIL 5 | POLE BASE

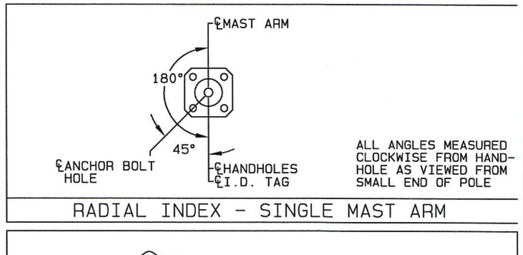

RADIAL INDEX - SINGLE MAST ARM

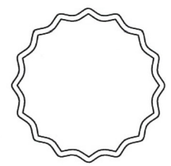

SECTION A-A

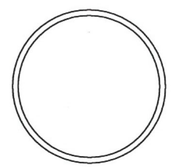

SECTION B-B

MATERIAL DATA

COMPONENT	ASTM DESIGNATION	MIN. YIELD (KSI)
TAPERED TUBES	A595 GR.A OR A572	55
POLE BASE	A36	36
LUMINAIRE ARM PIPE		36
SIGNAL ARM CONNECTION	A36	36
SIGNAL ARM CONN. BOLTS	A325	

COMPONENT	ASTM DESIGNATION	MIN. YIELD (KSI)
GALVANIZING- STRUCTURE	A123	
GALVANIZING- HARDWARE	A153	

FINISH NOTE:

BASE COAT: HOT DIP GALVANIZE TO ASTM: A123.

PRIME COAT: NEW HIGH BUILD EPOXY POWDER.

FINISH COAT: TGIC OR SUPER DURABLE POLYESTER POWDER. PARK GREEN IN COLOR. VALMONT SPEC. F540.

PAINT CHIP MUST BE PROVIDED AT TIME OF RELEASE TO ENSURE PROPER COLOR MATCH.

FAILURE TO DO SO WILL RESULT IN THE ORDER BEING PLACED ON HOLD.

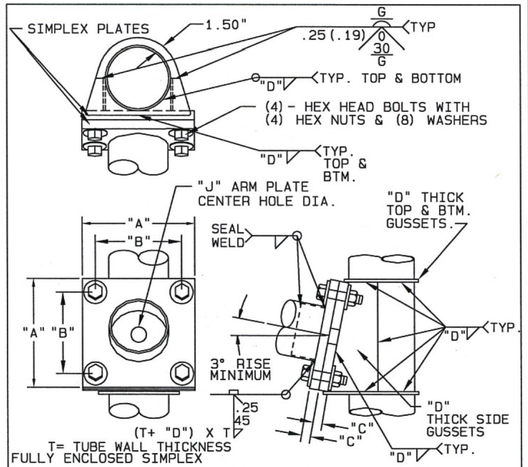

DETAIL 3 | SINGLE ARM ATTACHMENT

4 BOLT SIGNAL ARM ATTACHMENT DATA

MAST ARM LENGTH (FT)	"A" (IN)	"B" (IN)	"C" (IN)	"D" (IN)	"J" (IN)	"H" (IN)
21.00	17.25	14.00	2.000	0.375	6.50	1.25 X 6.00
34.00	17.25	14.00	2.000	0.375	7.50	1.25 X 6.00
18.00	17.25	14.00	2.000	0.375	6.64	1.25 X 6.00
40.00	17.75	14.50	2.000	0.375	9.00	1.25 X 6.00

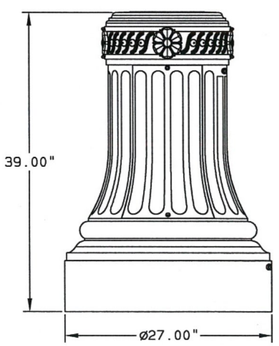

DETAIL 6 | HN27AC DECORATIVE BASE

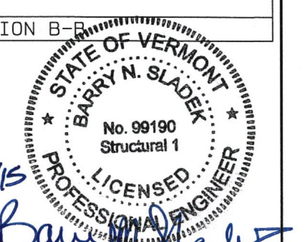

REV	DRAWN BY-DATE	CHECK BY-DATE	DESCRIPTION
B	JTF 02/11/15	JTF 02/11/15	ARMS WERE FLUTED
A	JTF 01/12/14	JTF 01/12/14	REVISED PER REQUEST. SHAFTS WERE ROUND.
—	JTF 10/28/14	JTF 10/28/14	— — — — — — — — — — — — — — — —

SOLD TO: HIGHWAY TECH
SHIP TO: DON WESTON EXCAVATING
P.O. #: 9261
AGENT: HIGHWAY TECH

JOB: VT D.O.T.
BRISTOL, VT - HES 021-1 (28)

TITLE: TRAFFIC SIGNAL STRUCTURES

VALMONT INDUSTRIES, INC. RESERVES THE RIGHT TO INSTALL VARIOUS, ENGINEER APPROVED, MATERIAL HANGING ACCOMMODATIONS TO FACILITATE THE MANUFACTURING PROCESS.

valmont
Valley, NE 68064
(402) 359-2201

ORDER NUMBER: 259710-P1
PAGE NUMBER: 1 OF 2
DRAWING NUMBER: VT259710P1
REV: B

POLE AND SIGNAL ARM DATA

ITEM	QTY.	POLE TUBE				POLE BASE					ANCHOR BOLT				SIGNAL ARM TUBE				LUMINAIRE ARM SPAN "L" (FT)
		BASE DIA. (IN)	TOP DIA. (IN)	LENGTH (FT)	GAUGE OR THK. (IN)	SQUARE "S" (IN)	CENTER HOLE DIA. (IN)	BOLT CIRCLE "Y" (IN)	THK. "M" (IN)	HOLE / SLOT "Z" (IN)	DIA. "K" (IN)	LENGTH "J" (IN)	HOOK "H" (IN)	THREAD LENGTH "U" (IN)	FIXED END DIA. (IN)	FREE END DIA. (IN)	GAUGE OR THICK (IN)	SPAN (FT)	
1	1	12.50	8.02	32.00	5	17.50	11.00	16.50	2.000	1.75	1.50	BY OTHERS			8.00	5.06	7	21.00	8.00
2	1	12.50	9.42	22.00	5	17.50	11.00	16.50	2.000	1.75	1.50	BY OTHERS			10.00	5.24	7	34.00	N.A.
3	1	12.50	9.42	22.00	5	17.50	11.00	16.50	2.000	1.75	1.50	BY OTHERS			8.00	5.48	7	18.00	N.A.
4	1	13.00	9.92	22.00	5	18.00	11.50	17.00	2.000	1.75	1.50	BY OTHERS			10.50	4.90	7	40.00	N.A.

ALTHOUGH RARE, VIBRATIONS SEVERE ENOUGH TO CAUSE DAMAGE CAN OCCASIONALLY OCCUR IN STRUCTURES OF ALL TYPES. BECAUSE THEY ARE INFLUENCED BY MANY INTERACTING VARIABLES, VIBRATIONS ARE GENERALLY UNPREDICTABLE. THE USER'S MAINTENANCE PROGRAM SHOULD INCLUDE OBSERVATION FOR EXCESSIVE VIBRATION AND EXAMINATION FOR ANY STRUCTURAL DAMAGE OR BOLT LOOSENING. THE VALMONT WARRANTY SPECIFICALLY EXCLUDES FATIGUE FAILURE OR SIMILAR PHENOMENA RESULTING FROM INDUCED VIBRATION, HARMONIC OSCILLATION OR RESONANCE ASSOCIATED WITH MOVEMENT OF AIR CURRENTS AROUND THE PRODUCT.

VIBRATION NOTE

THE MAST ARM TRAFFIC STRUCTURES SHOWN ON THIS DRAWING HAVE BEEN DESIGNED IN ACCORDANCE WITH THE LOADING AND THE ALLOWABLE STRESS REQUIREMENTS OF THE 2013 AASHTO "STANDARD SPECIFICATIONS FOR STRUCTURAL SUPPORTS FOR HIGHWAY SIGNS, LUMINAIRES AND TRAFFIC SIGNALS", SIXTH EDITION, LTS-6. THE WIND LOADS WERE CALCULATED FROM A BASIC WIND VELOCITY OF 90 MPH WITH A RECURRENCE INTERVAL OF 50 YEARS, AND A FATIGUE CATEGORY OF 2. THE FATIGUE LOADS WERE CALCULATED ON THE REQUIREMENTS OF SECTION 11 OF THE CODE, AND THE FOLLOWING DESIGN CONDITIONS:

- STRUCTURES ARE DESIGNED TO RESIST NATURAL WIND GUSTS BASED ON THE YEARLY MEAN WIND VELOCITY OF 11.2 MPH.
- STRUCTURES ARE NOT DESIGNED TO RESIST GALLOPING-INDUCED CYCLIC LOADS.
- STRUCTURES ARE DESIGNED FOR TRUCK-INDUCED GUST LOADS, AS REQUIRED BY THE OWNER OF THE STRUCTURES.

AASHTO 2013 SPECIFICATIONS

STATE OF VERMONT
BARRY N. SLADEK
No. 99190
Structural 1
LICENSED
PROFESSIONAL ENGINEER

2/12/15

JOB VT D.O.T.
BRISTOL, VT - HES 021-1 (28)

TITLE TRAFFIC SIGNAL STRUCTURES

VALMONT INDUSTRIES, INC. RESERVES THE RIGHT TO INSTALL VARIOUS, ENGINEER APPROVED, MATERIAL HANGING ACCOMMODATIONS TO FACILITATE THE MANUFACTURING PROCESS.

valmont
Valley, NE 68064
(402) 359-2201

ORDER NUMBER: 259710-P1
PAGE NUMBER: 2 OF 2
DRAWING NUMBER VT259710P1
REV B

APPROVED AS NOTED
By Spencer Palmer at 1:55 pm, May 14, 2015

STR-LWY-3M-HT-IP-07-12

LEDway® IP66 Street Light – Type III Medium – Horizontal Tenon Mount – 70-120 LEDs

Product Description

Luminaire housing is all aluminum construction. Standard luminaire utilizes terminal block for power input suitable for #2-#14 AWG wire. Luminaire is designed to mount on a 2" (51mm) IP, 2.375" (60mm) O.D. horizontal tenon or 1.25" (32mm) IP, 1.66" (42mm) O.D. horizontal tenon when ordered with XA-XIL125IP accessory kit and is adjustable +/-5° to allow for luminaire leveling (two axis T-level included). Horizontal tenon must be minimum 8" (203mm) long.

Performance Summary

Utilizes BetaLED® Technology

Patented NanoOptic® Product Technology

Made in the U.S.A. of U.S. and imported parts

CRI: Minimum 70 CRI

CCT: 5700K (+/- 500K) Standard, 4000K (+/- 300K)

Limited Warranty†: 10 years on luminaire/10 years on Colorfast DeltaGuard® finish

EPA and Weight: Reference EPA and Weight spec sheet

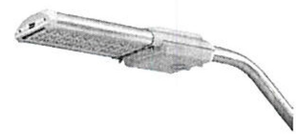

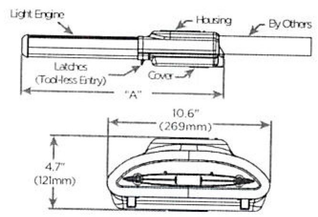

LED Count (x10)	Dimension	Measurement
07	"A"	26.8" (685mm)
08	"A"	26.8" (685mm)
09	"A"	26.8" (685mm)
10	"A"	33.1" (842mm)
11	"A"	33.1" (842mm)
12	"A"	33.1" (842mm)

Accessories

Field Installed Accessories	
XA-BRDSPK90 (70-90 LEDs)	**XA-XSLBLS90 (70-90 LEDs)** External Backlight Shield
XA-BRDSPK120 (100-120 LEDs) Bird Spikes for Light Engine	**XA-XSLBLS120 (100-120 LEDs)** External Backlight Shield
XA-BRDSPKHSG Bird Spikes for Housing	**XA-XIL125IP** 1.25" (32mm) IP Pipe Sealing Kit

Ordering Information

Example: STR-LWY-3M-HT-07-E-UL-SV-525-IP-OPTIONS

STR-LWY	3M	HT		E				IP -
Product	**Optic**	**Mounting**	**LED Count (x10)**	**Version**	**Voltage**	**Color Options***	**Drive Current**	**Options**
STR-LWY	**3M** Type III Medium	**HT** Horizontal Tenon	**07** **08** **09** **10** **11** **12**	**E**	**UL** Universal 120-277V **UH** Universal 347-480V	**SV** Silver (Standard) **BK** Black **BZ** Bronze **PB** Platinum Bronze **WH** White	**525** 525mA **700** 700mA	**IP** IP66 Classification **40K** 4000K Color Temperature - Color temperature per luminaire **DIM** 0-10V Dimming - Control by others - Refer to dimming spec sheet for details - Can't exceed specified drive current **F** Fuse - Not available with all ML options. Refer to ML spec sheet for availability with ML options - When code dictates fusing, use time delay fuse **HL** Hi/Low (175/350/525 Dual Circuit Input) - Refer to ML spec sheet for details - Sensor not included **ML** Multi-Level - Refer to ML spec sheet for details **N** No Quick Disconnect Harness or Leveling Bubble - Standard product features unless N option is specified **PD** Power Door - All connections between door and luminaire are shipped unconnected from the factory; door release spring included to open door automatically when the latches are released **R** NEMA Photocell Receptacle - Not available with all ML options. Refer to ML spec sheet for availability with ML options - Photocell by others - Intended for downlight applications at 0° tilt **SC** Door Safety Tether - Stainless steel aircraft cable **UTL** Utility - Includes exterior wattage label that reflects watts for the drive current selected. The ability to exceed selected drive current will be disabled

† See www.cree.com/lighting/products/warranty for warranty terms.

* Light engine portion of extrusion is not painted and will remain natural aluminum regardless of color selection.

BetaLED TECHNOLOGY

RoHS

c UL us

Rev. Date 03/22/2013

www.cree.com/lighting

T (800) 236-6800 F (262) 504-5415

CREE®

Product Specifications

CONSTRUCTION & MATERIALS

- Housing is all aluminum construction
- Terminal block for power input suitable for #2-#14 AWG wire
- Luminaire is designed to mount on a 2" (51mm) IP, 2.375" (60mm) O.D. horizontal tenon or 1.25" (32mm) IP, 1.66" (42mm) O.D. horizontal tenon when ordered with XA-XIL125IP accessory kit and is adjustable +/-5° to allow for luminaire leveling (two axis T-level included). Horizontal tenon must be minimum 8" (203mmm) long
- Exclusive Colorfast DeltaGuard® finish features an E-Coat epoxy primer with an ultra-durable powder topcoat, providing excellent resistance to corrosion, ultraviolet degradation and abrasion. Standard is silver. Bronze, black, white, and platinum bronze are also available

ELECTRICAL SYSTEM

- **Input Voltage:** 120-277V or 347-480V, 50/60Hz, Class 1 drivers
- **Power Factor:** > 0.9 at full load
- **Total Harmonic Distortion:** < 20% at full load
- Quick disconnect harness suitable for mate and break under load provided on power feed to driver for ease of maintenance
- Integral 10kV surge suppression protection standard
- To address inrush current, slow blow fuse or type C/D breaker should be used

REGULATORY & VOLUNTARY QUALIFICATIONS

- cULus Listed
- Suitable for wet locations
- Enclosure rated IP66 per IEC 60529 when ordered without R or ML options
- Consult factory for CE Certified products
- Meets CALTrans 611 Vibration testing and GR-63-CORE Section 4.4.1/5.4.2 Earthquake Zone 4
- Certified to ANSI C136.31-2001, 3G bridge and overpass vibration standards
- 10kV surge suppression protection tested in accordance with IEEE/ANSI C62.41.2
- Luminaire and finish are endurance tested to withstand 5,000 hours of elevated ambient salt fog as defined in ASTM Standard B 117
- Product qualified on the DesignLights Consortium ("DLC") Qualified Products List ("QPL") when ordered without full backlight control shield
- RoHS Compliant
- Meets Buy American requirements within ARRA

Photometry

All published luminaire photometric testing performed to IESNA LM-79-08 standards by a NVLAP certified laboratory.

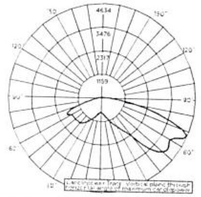

CESTL Test Report #: 2013-0068
STR-LWY-3M-**-06-E-UL-700-40K
Initial Delivered Lumens: 10,430



STR-LWY-3M-**-09-E-UL-700
Mounting Height: 25' (7.6m) A.F.G.
Initial Delivered Lumens: 16,514
Initial FC at grade

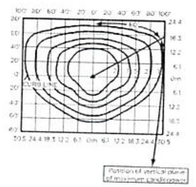

STR-LWY-3M-**-12-E-UL-700
Mounting Height: 25' (7.6m) A.F.G.
Initial Delivered Lumens: 22,004
Initial FC at grade

IES Files
To obtain an IES file specific to your project consult:
http://www.cree.com/lighting/tools-and-support/exterior-ies-configuration-tool

Lumen Output, Electrical, and Lumen Maintenance Data

Type III Medium Distribution													
LED Count (x10)	5700K Initial Delivered Lumens	5700K BUG Ratings* Per TM-15-11	4000K Initial Delivered Lumens	4000K BUG Ratings* Per TM-15-11	System Watts 120-277V	System Watts 347-480V	TOTAL CURRENT 120V	208V	240V	277V	347V	480V	50K Hours Projected Lumen Maintenance Factor @ 15°C (59°F)**
525mA @ 25°C (77°F)													
07	10,369	B3 U0 G3	9,985	B3 U0 G3	126	124	1.01	0.60	0.54	0.49	0.37	0.28	93%
08	11,797	B3 U0 G3	11,360	B3 U0 G3	139	140	1.17	0.69	0.62	0.56	0.41	0.31	
09	13,211	B3 U0 G3	13,722	B3 U0 G3	149	156	1.26	0.74	0.66	0.59	0.46	0.34	
10	14,762	B3 U0 G3	14,215	B3 U0 G3	167	172	1.41	0.83	0.73	0.65	0.50	0.38	
11	16,185	B3 U0 G3	15,586	B3 U0 G3	182	188	1.54	0.89	0.79	0.70	0.55	0.41	
12	17,604	B3 U0 G3	16,957	B3 U0 G3	197	204	1.67	0.96	0.85	0.75	0.59	0.44	
700mA @ 25°C (77°F)													
07	12,961	B3 U0 G3	12,481	B3 U0 G3	163	165	1.37	0.80	0.71	0.63	0.48	0.36	91%
08	14,746	B3 U0 G3	14,200	B3 U0 G3	182	186	1.54	0.89	0.79	0.70	0.54	0.40	
09	16,514	B3 U0 G3	15,902	B3 U0 G3	203	207	1.72	0.99	0.87	0.78	0.60	0.45	
10	18,452	B3 U0 G3	17,769	B3 U0 G3	237	229	1.92	1.11	0.97	0.86	0.67	0.49	
11	20,232	B3 U0 G3	19,483	B3 U0 G3	248	250	2.10	1.21	1.05	0.93	0.73	0.53	
12	22,004	B3 U0 G3	21,190	B3 U0 G3	267	274	2.26	1.30	1.13	1.00	0.80	0.58	

* For more information on the IES BUG (Backlight-Uplight-Glare) Rating visit www.ies.org/PDF/Errata/TM-15-11BugRatingsAddendum.pdf
** Projected L70(10k) Hours > 60,000 based on Series D LM-80 data. For recommended lumen maintenance factor data see TD-13. Cree classifies the Series E LED packages as "successors to previously tested subcomponents" (Section 5.1 per Sept 9, 2011 ENERGY STAR guidelines).
See http://www.energystar.gov/ia/partners/prod_development/new_specs/downloads/luminaires/ENERGY_STAR_Final_Lumen_Maintenance_Guidance.pdf

© 2013 Cree, Inc. All rights reserved. For informational purposes only. Content is subject to change. See www.cree.com/patents for patents that cover these products. Cree®, the Cree logo, LEDway®, BetaLED®, NanoOptic®, and Colorfast DeltaGuard® are registered trademarks, and the BetaLED Technology logo is a trademark of Cree, Inc.

www.cree.com/lighting T (800) 236-6800 F (262) 504-5415

STREET SIDE

HAND HOLE

APPROVED

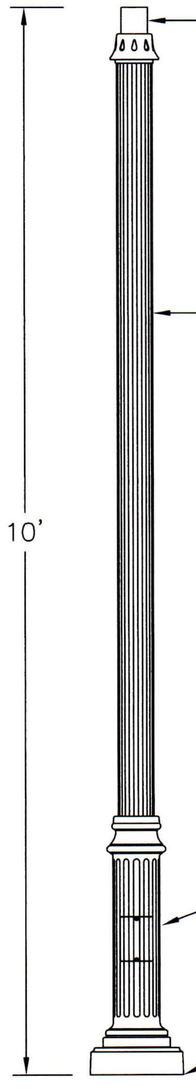

3" O.D. X 3" TALL TENON

We presume that PG denotes the color Park Green

4" DIA. FLUTED POLE
.188 WALL THICKNESS
6061–T6 STRUCTURAL
GRADE ALUMINUM

POLE WELDED FOR SINGLE
UNIT CONSTRUCTION

10'

HAND HOLE WITH COVER AND
STAINLESS STEEL ALLEN
HEAD SCREWS ALSO ONE
GROUND STUD

10 1/2" DIA. TWO PIECE
BASE COVER
.750 FLOOR THICKNESS
FOUR ANCHOR BOLTS

DRAWN LMG
SCALE 3/4"=1'

BRISTOL, VT

4510FP4.188/PG
TYPE: A

SternbergLighting

POLE HEIGHTS HAVE
A TOLERANCE OF
+ OR – 2"

DRAWING NUMBER
SC22325

REV	REVISIONS	DATE	RVSD
A	ORIGINAL	10-3-14	

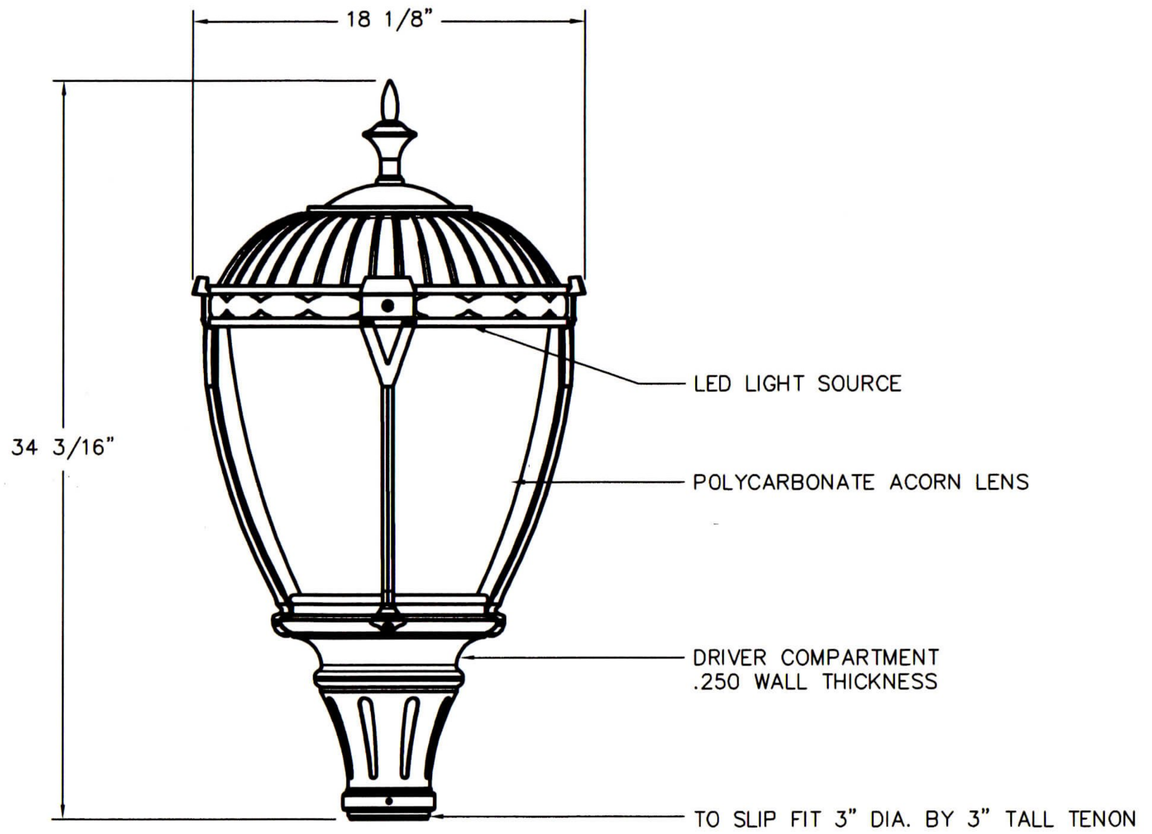

REV	REVISIONS	DATE	RVSD
A	ORIGINAL	10-3-14	

BRISTOL, VT

DRAWN LMG

SCALE 3/16"=1'

1130ALED/5PPT/4A1R45T3-120/MDL/PG
TYPE: A

SternbergLighting
ESTABLISHED 1923 / EMPLOYEE OWNED

POLE HEIGHTS HAVE A TOLERANCE OF + OR - 2"

DRAWING NUMBER
SC22324

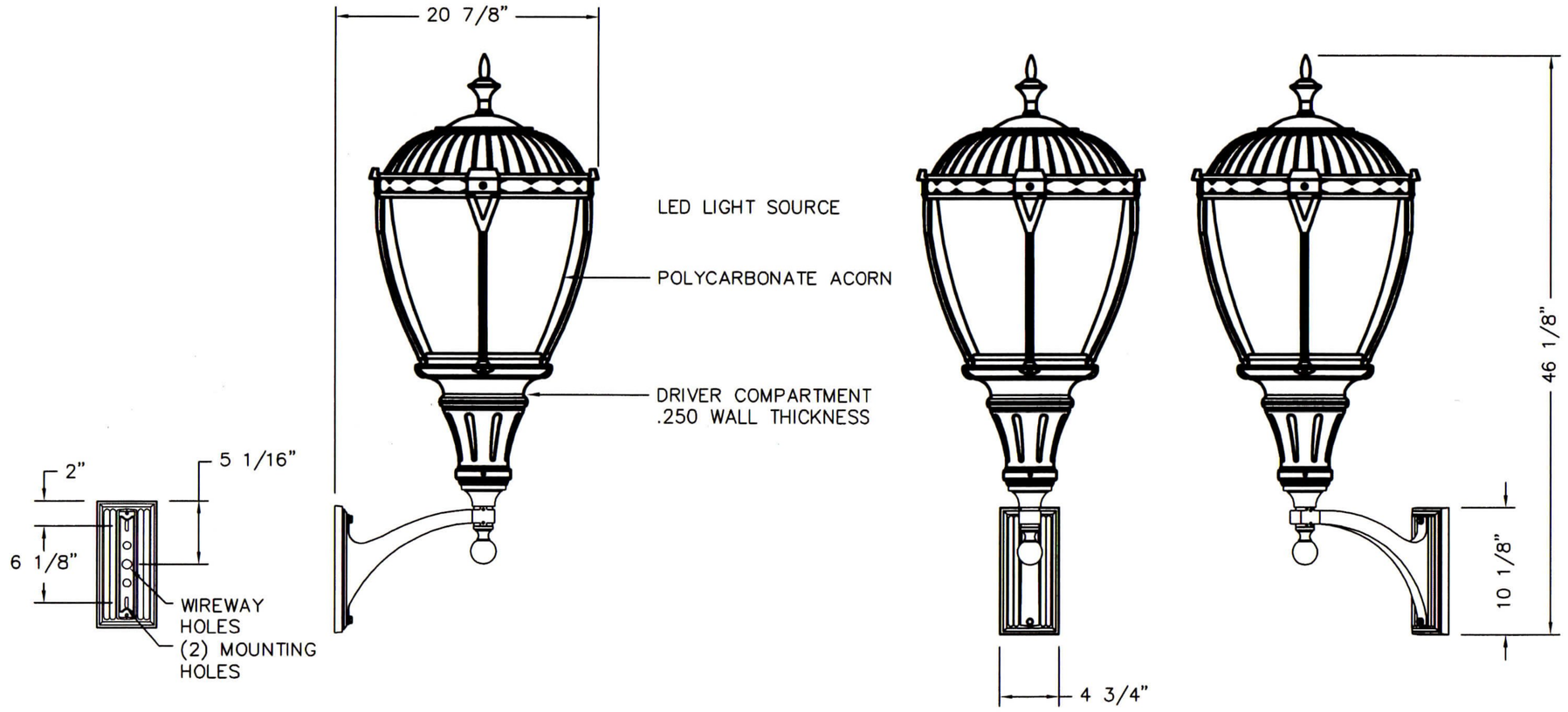

REV	REVISIONS	DATE	RVSD
A	ORIGINAL	10-3-14	

BRISTOL, VT

POLE HEIGHTS HAVE A TOLERANCE OF + OR - 2"

DRAWN LMG

SCALE 1/8"=1'

1130ALED/5P/80WB/4A1R45T3-120/MDL/PG

TYPE: B

STERNBERG

SINCE 1923

DRAWING NUMBER SC22326

APPROVED
By Spencer Palmer at 2:05 pm, Apr 14, 2015

Quazite®

SPECIFICATIONS/DATA

17" x 30" PG Style (Stackable) Assembly and 17" x 30" PD Style Assembly

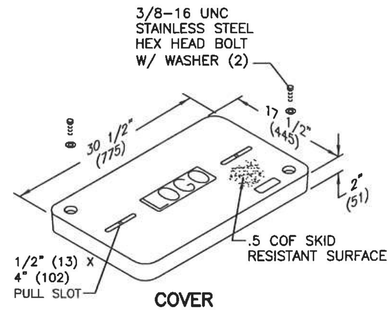

COVER

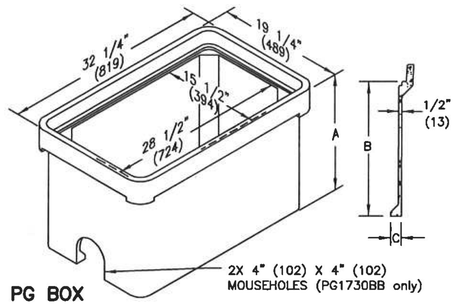

PG BOX

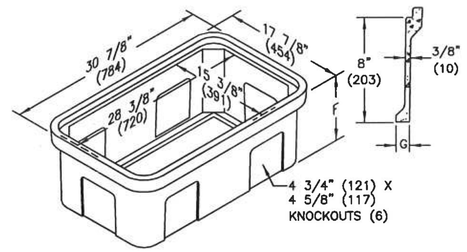

PG BOTTOM EXTENSION

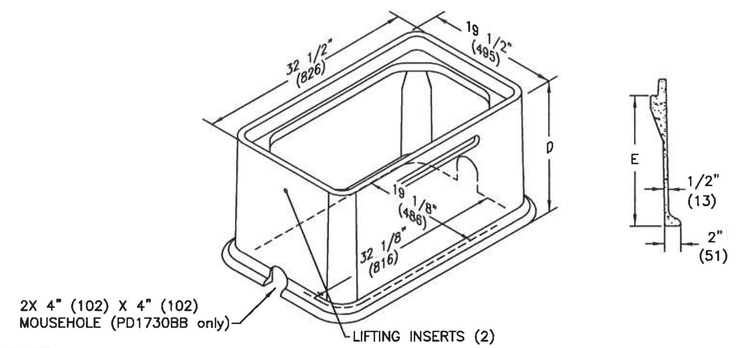

PD BOX

HUBBELL
LENOIR CITY, INC.

APRIL 2008

Quazite®

SPECIFICATIONS/DATA

17" x 30" PG Style (Stackable) Assembly and 17" x 30 PD Style Assembly

ENCLOSURE DRAWINGS

Covers (Blank unless logo is specified)

	DESCRIPTION	PART NO.	WEIGHT #	DESIGN/TEST LOAD #	ANSI TIER*
UL	W/2 Bolts	PG1730CA00	52 (23.6 kg)	8,000 / 12,000	8
UL	Gasketed w/2 Bolts	PG1730CG00	52 (23.6 kg)	8,000 / 12,000	8
UL	No Bolts	PG1730WA00	52 (23.6 kg)	8,000 / 12,000	8
UL	Heavy Duty w/2 Bolts	PG1730HA00	83 (37.6 kg)	15,000 / 22,500	15
UL	Gasketed Heavy Duty w/2 Bolts	PG1730HG00	83 (37.6 kg)	15,000 / 22,500	15
	Extra Heavy Duty w/2 Bolts	PG1730HH00	83 (37.6 kg)	22,500 / 33,750	22

- Covers with meter lids available upon request. See page 12 or page 56 for meter lid cover load rating explanation.
- Gasketed covers and bolt grommets must be used with a gasketed box. Gaskets reduce the inflow of fluids but do not make the enclosure water tight.

PG Boxes (Stackable with self-aligning, replaceable EZ Nut) **22" - 30" Deep boxes must be used as bottom of any stack.)

	DESCRIPTION	PART NO.	WEIGHT #	DIMENSION A	DIMENSION B	DIMENSION C	DESIGN/TEST LOAD #	ANSI TIER*
UL	Open Bottom	PG1730BA12	67 (30.4 kg)	12" (305 mm)	10" (254 mm)	1 1/4" (32 mm)	22,500 / 33,750	22
		PG1730BA18	94 (42.6 kg)	18" (457 mm)	16" (406 mm)	1 1/4" (32 mm)	22,500 / 33,750	22
		PG1730BA22	106 (48.1 kg)	22" (559 mm)	20" (508 mm)	1 1/4" (32 mm)	22,500 / 33,750	22
		PG1730BA24	122 (55.3 kg)	24" (610 mm)	22" (559 mm)	1 1/4" (32 mm)	22,500 / 33,750	22
		PG1730BA28	126 (57.2 kg)	28" (711 mm)	26" (660 mm)	1/2" (13 mm)	22,500 / 33,750	22
		PG1730BA30	144 (65.3 kg)	30" (762 mm)	28" (711 mm)	1/2" (13 mm)	22,500 / 33,750	22
UL	Open Bottom w/2 Mouseholes	PG1730BB12	65 (29.5 kg)	12" (305 mm)	10" (254 mm)	1 1/4" (32 mm)	22,500 / 33,750	22
		PG1730BB18	92 (41.7 kg)	18" (457 mm)	16" (406 mm)	1 1/4" (32 mm)	22,500 / 33,750	22
		PG1730BB22	104 (47.2 kg)	22" (559 mm)	20" (508 mm)	1 1/4" (32 mm)	22,500 / 33,750	22
		PG1730BB24	120 (54.4 kg)	24" (610 mm)	22" (559 mm)	1 1/4" (32 mm)	22,500 / 33,750	22
		PG1730BB28	124 (56.2 kg)	28" (711 mm)	26" (660 mm)	1/2" (13 mm)	22,500 / 33,750	22
		PG1730BB30	142 (64.4 kg)	30" (762 mm)	28" (711 mm)	1/2" (13 mm)	22,500 / 33,750	22
UL	Solid Bottom	PG1730DA12	85 (38.5 kg)	12 1/2" (318 mm)	10" (254 mm)	N/A	22,500 / 33,750	22
		PG1730DA18	112 (50.8 kg)	18 1/2" (470 mm)	16" (406 mm)	N/A	22,500 / 33,750	22
		PG1730DA22	124 (56.2 kg)	22 1/2" (572 mm)	20" (508 mm)	N/A	22,500 / 33,750	22
		PG1730DA24	137 (62.0 kg)	24 1/2" (622 mm)	22" (559 mm)	N/A	22,500 / 33,750	22
		PG1730DA28	143 (64.9 kg)	28 1/2" (724 mm)	26" (660 mm)	N/A	22,500 / 33,750	22
		PG1730DA30	150 (68.0 kg)	30 1/2" (775 mm)	28" (711 mm)	N/A	22,500 / 33,750	22

PD Boxes

DESCRIPTION	PART NO.	WEIGHT #	DIMENSION D	DIMENSION E	DESIGN/TEST LOAD #	ANSI TIER*
Open Bottom	PD1730BA18	129 (59 kg)	18" (457 mm)	16" (406 mm)	22,500 / 33,750	22
	PD1730BA26	166 (75 kg)	26" (660 mm)	24" (610 mm)	22,500 / 33,750	22
Open Bottom w/2 Mouseholes	PD1730BB18	127 (58 kg)	18" (457 mm)	16" (406 mm)	22,500 / 33,750	22
	PD1730BB26	164 (74 kg)	26" (660 mm)	24" (610 mm)	22,500 / 33,750	22
Open Bottom w/Gasket	PD1730BG18	129 (59 kg)	18" (457 mm)	16" (406 mm)	22,500 / 33,750	22
	PD1730BG26	166 (75 kg)	26" (660 mm)	24" (610 mm)	22,500 / 33,750	22

Extensions (For use under 12" and 18" boxes only, one per box.)

DESCRIPTION	PART NO.	WEIGHT #	DIMENSION F	DIMENSION G	DESIGN/TEST LOAD #	ANSI TIER*
Open Bottom	PG1730EA08	36 (16.3 kg)	8 3/4" (222 mm)	1" (25 mm)	22,500 / 33,750	22
Solid Bottom	PG1730RA08	55 (24.9 kg)	9 1/4" (235 mm)	N/A	22,500 / 33,750	22

Dimensions & weights in parentheses are metric equivalent.

* Loadings comply with ANSI/SCTE 77 (see page 9).

Southern Pipe, Inc.
P. O. Box 606, 135 Random Drive, New London, NC 28127
Phone: 704-463-5202 Fax: 704-463-5203 www.southern-pipe.com

Specifications

Southern Pipe, Inc. rigid non-metallic electrical conduit, ½"-6" Schedule 40 and Schedule 80 PVC pipe and elbows are produced in accordance with NEMA TC-2 and UL 651. Our molded fittings are produced in accordance to UL 514B, NEMA TC-3 and also UL 514C on our nonmetallic outlet boxes. The conduit and elbows are rated for 90 C wire and sunlight resistant for use both aboveground and underground. Our conduit is acceptable as "rigid nonmetallic conduit" as described in article 352 of the National Electric Code and all other applicable sections. Our products also meet the federal specification WC-1094. Our Schedule 40, Types EB and DB are also RUS listed. In addition, we manufacture 8" Schedule 40 conduit (non-UL approved) in accordance with NEMA TC-2 using our UL approved compound.

Each piece bears the UL listing number as follows:
Schedule 40 & 80 pipe and elbows – 3SAO
Each piece of RUS listed material is marked as RUS Listed:
Schedule 40 & 80, Type EB and DB

Samples are tested by our in house Quality Control Department along with representatives of Underwriters Laboratories to assure compliance to these specifications.

The PVC material used to manufacture Southern Pipe, Inc. conduit meets or exceeds compound cell classification 12254B as defined by ASTM D 1784 Standard Specification, Rigid Polyvinyl Chloride Compounds for Cell Classification 12454B (Formerly Type 1, Grade 1 and also designated PVC 1120).

All products manufactured by Southern Pipe, Inc. are produced in New London, North Carolina.

Highway Tech

Highway Tech Signal Equipment Sales, Inc.
6 Sabattus Road • P.O. Box 1209 • Sabattus, ME 04280
Tel. (207) 375-8248 • Fax (866) 232-7014

October 13, 2014

Don Weston Excavating, Inc.
349 Commerce Street
Williston, VT 05495

Attention: Don Weston

Here are the Signal Equipment Submittals for the Bristol HES 021-1 (28) Main Street (Route 116) & North St/South St. project. This should complete the submittal requirements for the signal equipment supplied by Highway Tech on this project. Please call if you have any questions or if you require any other documentation.

Submittal Status Chart

Item	Sets	Submitted
Naztec P-44 Controller Cabinet	1	10/13/14
Naztec TS2 Type 2 Controller	1	10/13/14
Generator Transfer Switch	1	10/13/14
Naztec BIU-130	1	10/13/14
Naztec TS2 Cabinet Power Supply	1	10/13/14
Naztec MMU-516E	1	10/13/14
PDC SSS-87I/O Load Switch	1	10/13/14
PDC SSF-87 Flasher	1	10/13/14
Wavetronix Matrix Radar Presence Sensor	1	10/13/14
Wavetronix SmartSensor Matrix Cable	1	10/13/14
Wavetronix Sensor Cable Junction Box	1	10/13/14
Wavetronix Click 650 SDLC Cabinet Interface	1	10/13/14
Wavetronix SmartSensor Matrix Mount	1	10/13/14
Pelco Astro-Bracs	1	10/13/14
Chapel Hill Green Poly Signal Housings	1	10/13/14
Chapel Hill Green Louvered Aluminum Backplates	1	10/13/14
GE 12" LED Full Ball LED Signal Modules	1	10/13/14
GE 16" x 18" LED Countdown Pedestrian Signal Modules	1	10/13/14
Chapel Hill 16" x 18" Green Poly Pedestrian Signal Housings with Clamshell Mount	1	10/13/14
Campbell Advisor Guide APS Push Button Assembly	1	10/13/14

Thank You,
Mike Stewart
Sales Representative

NAZTEC, INC.

NEMA P-44 Traffic Control Cabinet

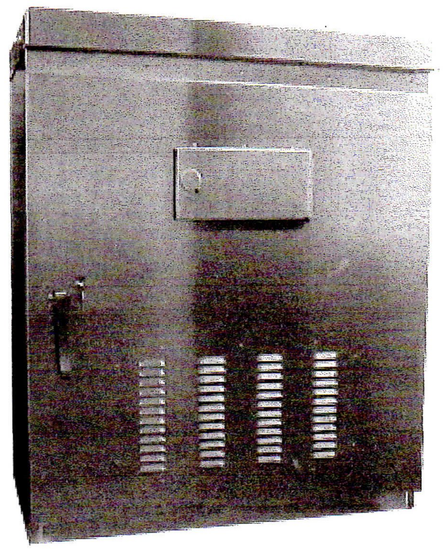

Features

- Meets NEMA standards
- Base mounted
- Constructed of 0.125" thick aluminum
- "C" mounting channels on side and back walls for mounting shelves and panels
- 3-point latching mechanism of zinc plated steel
- Stainless steel door handle designed for padlock
- Stainless steel door hinge
- Optional Lifting Ears

Highway Tech Signal Equipment Sales, Inc.
8 Gardiner Road / P.O. Box 1209
Sabattus, ME 04280
Tel. (207) 375-8248
Fax (207) 375-8279

SPECIFICATIONS:

Outside dimensions:	55" H x 44" W x 26" deep
Opening Dimensions:	53" H x 41" W
Mounting Pattern	40.50" W x 18.50" D
Material:	Aluminum (.125" thick)
Finish:	Bare or Painted
Mounting:	Base Mounted
Locking System:	3-point locking system with Corbin #2 lock
Door Stops:	Three position bar stop at bottom of door
Ventilation:	Pleated fiber filter in door, fan with thermostatic control
Light:	Incandescent or optional flourescent, door switch activated

NAZTEC, INC.

NEMA P-44 Traffic Control Cabinet

Options

- Mounting
  - ☐ Pole Mount
  - ☐ Base Mount
  - ☐ Base Mount with Extension Base
- Finish
  - ☐ Natural Aluminum
  - ☐ Park Green Outside / Aluminum Inside
  - ☐ Other:
- NEMA Type
  - ☐ NEMA TS1
  - ☐ NEMA TS2 Type 2
  - ☐ NEMA TS2 Type 1
- Panel Type
  - ☐ 8 Position
  - ☐ 12 Position
  - ☐ 16 Position
- Detector Type
  - ☐ Shelf Mount with Harnesses
  - ☐ Rack Mount
  - ☐ Rack Mount with BIU Slot
- Detector Channels
  - ☐ 8
  - ☐ 10
  - ☐ 12
  - ☐ 16
  - ☐ Other:
- Monitor Harness
  - ☐ 6 Channel
  - ☐ 12/16 Channel
- "D" Panel
  - ☐ Naztec 900 Series
  - ☐ IDC/Multisonics 820A
  - ☐ Other: None
- Lighting
  - ☐ Incandescent
  - ☐ Incandescent Flexible Work Light
  - ☐ Flourescent with Door Switch
- Miscellaneous
  - ☐ Main Door Open Switch
  - ☐ Heat Lamp Socket with Thermostat
  - ☐ Detector Test Switches
  - ☐ Auxiliary Receptacle
  - ☐ Other: Generator Hook-Up Panel, Laptop Pull-Out Drawer, Telemetry Panel with Surge Protection

Highway Tech Signal Equipment Sales, Inc.
8 Gardiner Road / P.O. Box 1209
Sabattus, ME 04280
Tel. (207) 375-8248
Fax (207) 375-8279

Technology That Moves America

Naztec, Inc. • 820 Park Two Drive • Sugar Land, Texas 77478 • Phone (281) 240-7233 • Fax (281) 240-7238
Email: naztec@naztec.com • http://www.naztec.com

Rev. 9/99

NAZTEC, INC.

Model 980 NEMA TS2
Type 2 Signal Controller

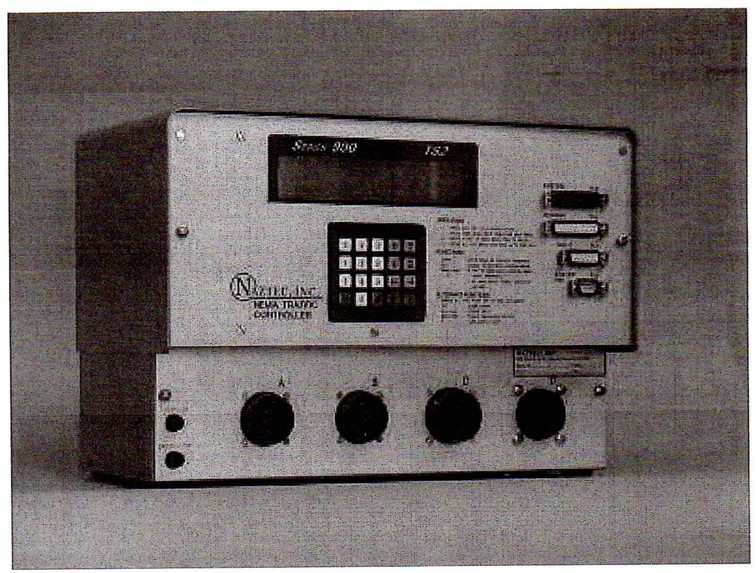

Traffic Responsive Secondary

The Model 980 NEMA Traffic Signal Secondary Controller is designed using state of the art electronics for reliability, long life, and superb performance in all signal control applications. The advanced architecture and NTCIP compliance provides the traffic engineer with a flexible platform for the future.

The Model 980 Secondary Controller meets and exceeds NEMA TS2 specifications, and includes advanced functionality for complex phasing, detector processing, coordination, preemption, communications, adaptive timing, as well as full systems operation in a closed-loop, hybrid, or centralized configuration.

The advanced LCD display and menu driven software provides a user-friendly approach to programming and access, and built-in diagnostics permit rapid evaluation of operational status. The use of Flash Memory allows software upgrades without PROM replacement.

Technology That Moves America

Naztec, Inc. • 820 Park Two Drive • Sugar Land, Texas 77478 • Phone (281) 240-7233 • Fax (281) 240-7238

Email: naztec@naztec.com • http://www.naztec.com

Rev. 9/99

Series 980 NEMA TS2 Type 2 Signal Controller

FEATURES

FLASH PROMS

The Model 980 Controller is easily configured to various firmware versions by the utilization of FLASH PROMS which eliminate the need for obsolete EPROM technology. A complete firmware update requires only ten minutes, and does not require hardware changes or EPROM replacements.

DISPLAY

A back-lighted 4-line by 40-character supertwist LCD display provides full menu screens for ease of data entry. The display maintains an optimum contrast and brightness over the entire NEMA specified temperature range, using special temperature-compensating circuitry. The menu-driven format and context sensitive help screens eliminate need for programming instructions or look-up codes.

EASILY SERVICED

The Model 980 Controller consists of only two printed circuit boards (three with optional modem) and an open frame power supply. The CPU/display board and the I/O board utilize machine tooled sockets for all integrated circuits for easy maintenance. An identification silkscreen on each circuit board clearly labels all components. No special tools or extender cards are needed for troubleshooting.

REAL-TIME CLOCK

The real-time clock maintains accurate timing by utilizing a "super capacitor" which allows accuracy of 0.005% during a 24-hour time period. Retention time during power failures for the real time clock is extendible to 30 consecutive days.

BARRIERS

Unique to the Naztec traffic controller product line is the flexibility of user programmable barriers. Four (4) separate barriers allow programming for applications from one (1) to eight (8) phases in each barrier.

KEYBOARD

A 20-position keyboard containing 4 red function keys, 6 gray cursor movement keys, and 10 white digit keys with built in audio/tactile feedback provides user-friendly enhanced data entry.

DIAGNOSTICS

Built-in diagnostics provide for improved maintenance and easier repairs. Internal diagnostics allow operator tests on all input and output signals, RAM devices, and memory. A built-in EEPROM eraser allows for a "clear-all" memory function.

COMMUNICATIONS

Two RS-232 ports and an optional FSK modem port are available with each secondary unit. These ports are keyboard programmable with selectable baud rates from 300 to 19.2K with full and half duplex options. Various communication configurations allow the user multiple interfaces to other cabinet devices: conflict monitor, preemption equipment, detectors, WWV clocks, modems, notebooks, printers, etc. A RS-485 SDLC Bus Interface Port is provided for all TS2 Applications. The NTCIP protocol is fully supported.

Your Naztec Representative:

Highway Tech Signal Equipment Sales, Inc.
8 Gardiner Road / P.O. Box 1209
Sabattus, ME 04280
Tel. (207) 375-8248
Fax (207) 375-8279

Voltage: 89 to 135 VAC 60 HZ
Power: 30 Watts Maximum
Temperature: -30° F to 165° F
Humidity: 0 to 95 percent
Dimensions: Height: 10.50"
Width: 14.75"
Depth: 8.20"

Naztec, Inc. • 820 Park Two Drive • Sugar Land, Texas 77478 • Phone (281) 240-7233 • Fax (281) 240-7238
Email: naztec@naztec.com • http://www.naztec.com

Rev. 9/99

Highway Tech

Automatic Generator Transfer Switch

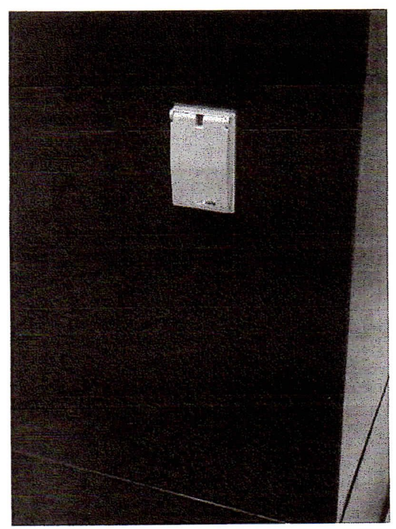

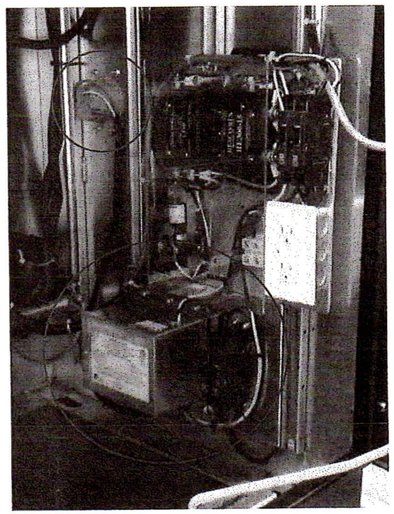

ATS Features

- Automatically Senses Generator Power and Switches Intersection Load to Generator.
- Smooth Power Transfer Regardless of Line Voltage Conditions.
- No Need to Open The Controller Cabinet or Flip Breakers
- Provides Overcurrent Protection on Both Generator Input and Line Input
- 20 Second Electronic Generator Time Delay Allows Generator to Stabilize and Protects Sensitive Traffic Control Equipment
- Chatter-Free Contact Operation Under Low Line Voltage Conditions
- 30 Amp, 120 Volt Rating
- 2-Year Warranty
- ETL Listed
- 50 Amp, 120/240 Volt ATS Also Available

Port Features

- Low Profile Generator Port
- Semi-Flush
- Hasp Lockable
- Small Footprint
- Compatible With All Generator Systems
- Other Generator Ports Available

Highway Tech Signal Equipment Sales, Inc.

6 Sabattus Road • P.O. Box 1209 • Sabattus, Maine 04280 • Phone (207) 375-8248 • Fax (866)-232-7014

Email: sales@highwaytech.com • http://www.highwaytech.com

Rev. 01/12/05

NAZTEC, INC.

Model BIU 130 Bus Interface Unit

Highway Tech Signal Equipment Sales, Inc.
8 Gardiner Road / P.O. Box 1209
Sabattus, ME 04280
Tel (207) 375-8248
Fax (207) 375-8279



Features

- Meets or Exceeds all NEMA TS-2 Standards
- Less than 50 mA Standby Current
- Designed for "Hot plugging"
- Socketed I/O Drivers for Easy Maintenance
- Heavy Duty 200 mA Output Drive Capability
- Power Brownout Indication
- 120 Hz Reference Failure Indication
- Optional RS-232C Port for Custom Applications

The Naztec Model BIU 130 Bus Interface Unit links the TS-2 Controller Unit to the Cabinet I/O. It is responsible for controlling load switches, providing dimming, receiving and isolating pedestrian calls, analyzing detector faults, time-stamping detector calls, and providing detector resets. By design, the BIU is free of operator contorls. The BIU performs its I/O functions based upon a pre-wired card rack address.

Power Specifications:
- 18-26 VDC
- 200 mA
- Less than 1.5 A Power-Up Surge
- Can be inserted with power applied

Input Specifications:
- 8 Dedicated Inputs
- 24 Configurable Inputs
- Low (True) Below 4 VDC
- High (False) Above 16 VDC
- Greater than 50 mA Sink Current

Port 1 Specifications:
- EIA-485 Standard Compliant
- 153.6 Kbps Data Rate
- SDLC Protocol

RS-232C Port Specifications
- RS-232 Standard Compliant
- Factory Customizable Interface

Opto-Input Specifications
- Less than 3 VRMS Active (True)
- Greater than 6 VRMS Inactive (False)
- 10 MΩ, 1000 VAC RMS Isolation

Power LED Indicator Details
- Short "Wink" Off Indicates 120 Hz Reference Failure
- Long Period On/Off Toggle Indicates Inadequate 24VDC Power Level
- Solid On Indicates Proper Power and Operation
- Solid Off Indicates No Power

Transmit LED Indicator Details
- Quick Blinking Indicates Proper Communications Activity
- Solid Off Indicates Communications Failure

Technology That Moves America

Naztec, Inc. • 820 Park Two Drive • Sugar Land, Texas 77478 • Phone (281) 240-7233 • Fax (281) 240-7238

Email: naztec@naztec.com • http://www.naztec.com

Rev. 9/99

Naztec, Inc.
ATMS Solutions

TS2 Power Supply w/ Test Jacks

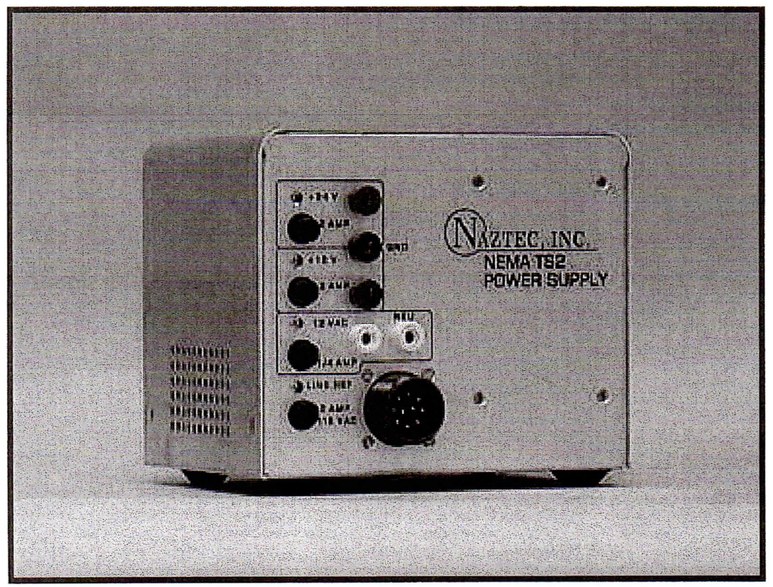

FEATURES

- 2 Amp Total Output Current at 24VDC
- 2 Amp Total Output Current at 12VDC
- .25 Amp Total Output Current at 12VAC
- 50 mA Line Reference Clock Output
- Shelf Mount Type with Rubber Feet
- Fuse for AC Line Input and Each Output
- Durable Aluminum Casing
- NEMA TS2 Pin Type Outputs
- Line Reference LED
- Test Jacks

Highway Tech Signal Equipment Sales, Inc.
6 Sabattus Road. P.O. Box 1209
Sabattus, ME 04280
Tel. (207) 375-8248
Fax (207) 375-8279
info@highwaytech.com

820 Park Two Drive Sugar Land, TX 77478 (281) 240-7233
www.naztec.com naztec@naztec.com Additional Offices in Florida and Virginia

Rev. 3/03

Naztec, Inc.
ATMS Solutions

MMU 516 Malfunction Management Unit RS232

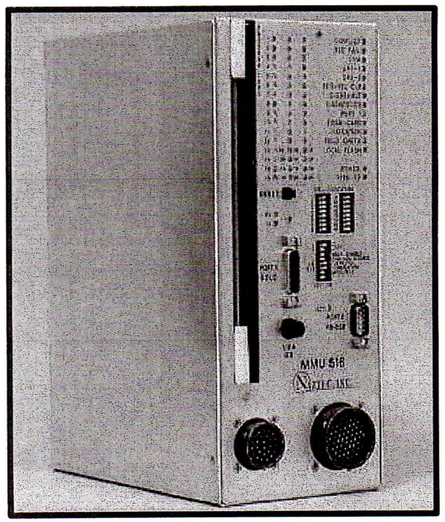

FEATURES

- Meets and exceeds all TS2 specifications
- High speed internal data transfer and communications via an SDLC port
- High speed external data transfer via an RS-232 port
- Tri-Color LEDs Red, Yellow, Green for channel display
- LED indicator lamps for operation analysis
- Removable program card
- High performance machine tooled sockets for integrated circuit mounting

Highway Tech Signal Equipment Sales, Inc.
8 Gardiner Road / P.O. Box 1209
Sabattus, ME 04280
Tel. (207) 375-8248
Fax (207) 375-8279

The Naztec Model MMU 516 Malfunction Management Unit is an enhanced MMU that monitors up to 16 traffic signal indications (channels) for conflict, improper sequencing, incorrect timing, and improper signal voltage levels. The MMU 516 is fully compliant with NEMA Standard TS2-1992. The MMU 516 is also capable of operating in older TS1 type cabinets, and is compatible with 12-channel Conflict Monitor Units conforming to the NEMA Standard TS1-1989.

All connectors, indicators and operator controls are located on the front panel of the MMU 516. Channel and control input signals and relay output connections are made through two MIL-C-26482 connectors, and the SDLC Port is an A-size, 15 contact, D shell connector. The RS232 Port is excellent for tracking important phase output data back to the controller or to a PC for logging. The programming card and the AC line fuse are easily accessed from the front panel.

The MMU 516 provides a Reset Timeout feature to prevent a broken switch or accidental wiring fault from holding the unit in the reset state for an extended period of time. LED indicators, in addition to the TS2 specified indicators, include Dual Indication Fault, Yellow+Red Clearance Fault, Programming Card Ajar, Field Check (active channels do not match SDLC message from controller) Fault, and LEDs for two +24VDC input faults and CVM input faults. Status indicators provided include: AC Line Power, Type 12 Indicator, SDLC Transmitter Active, and SDLC Msg Received.

For added safety, the MMU 516 performs continuous diagnostic tests during all operating modes. All memory elements, the microprocessor, operating voltages, and critical circuitry are checked.

820 Park Two Drive Sugar Land, TX 77478 (281) 240-7233
www.naztec.com naztec@naztec.com Additional Offices in Florida and Virginia

Rev. 3/03

Naztec, Inc.
ATMS Solutions

MMU 516 Malfunction Management Unit

PROGRAMMING

- Minimum flash, 0-16 seconds
- Short yellow per channel
- Programmable sequence monitor
- Latch selectable options

INDICATIONS

- Conflict LED
- Red Fail LED
- 24 V-1
- 24 V-2
- Controller Voltage Monitor
- Red+Yel Clearance
- Clearance
- Diagnostics
- Port 1 Fault, Tx, Rx
- Program Card Ajar
- Indication Fail LED
- Field Check
- Power LED
- Type 12 Mode

ENVIRONMENTAL

- Operating Temperature: -34° C to +74° C
- Storage Temperature: -45° C to +85° C
- Humidity: Less than 95% non-condensing to +43° C

FEATURES

- Meets and exceeds TS2-1992 Specifications
- Operates in TS1 Cabinets
- EPROM Memory
- No batteries
- Machine tooled socket I.C.'s
- Programmable Minimum Flash Time
- Latch 24 V failures
- Latch CVM Failure
- Enhanced Monitoring

ELECTRICAL

- **Power**

  Line Voltage: 75 to 150 VAC, RMS
  Line Frequency: 57 to 63 Hz, 60Hz nominal
  Power: 10 watts, typical
  Fuse, Front Panel: 0.5A Slow Blow

- **Monitoring Voltage**

  Pickup: 96 +/- 2.5 Volts AC, RMS
  Dropout: 91 +/- 2.5 Volts AC, RMS
  Hysteresis: 4 +/- 1.0 Volts AC, RMS

DIMENSIONS

- Height: 10.5 inches
- Width: 4.5 inches
- Depth: 10.9 inches

Your Naztec Representative:

Highway Tech

Highway Tech Signal Equipment Sales, Inc.
8 Gardiner Road / P.O. Box 1209
Sabattus, ME 04280
Tel. (207) 375-8248
Fax (207) 375-8279

DATA SHEET
SSS-87IO

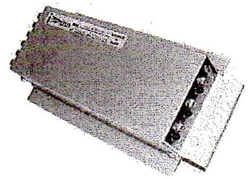

Solid State Loadswitch:

Description:

The PDC SSS-87I/O Loadswitch series is a tri-pack, modular, solid state relay designed specifically to meet NEMA specifications, as well as California and New York "Model 200" specifications. Each loadswitch contains 3 individually replaceable modules that are enclosed in a dust resistant, metal enclosure providing mechanical protection and excellent heat sinking for the modules. The modules are easily accessible with the use of a screwdriver. Each loadswitch also features a L.E.D. indicator on each output circuit.

Installation:

The switchpac inter mates with any standard NEMA loadbay or with the model 332 cabinet output file as well as with any NEMA loadbay. It is easily installed or removed by grasping the handle. Connector P1 pin outs are shown in FIG 1. The connector mates with a PDC BCS-12 or equal.

PIN	FUNCTION
1	+115VAC, 60 Hz
2	Chassis Ground
3	A Output (Red, Don't Walk)
4	Not Assigned
5	B Output (Yellow)
6	A Input (Red, Don't Walk)
7	C Output (Green, Walk)
8	B Input (Yellow)
9	+24 VDC
10	C Input (Green, Walk)
11	AC-
12	Not Assigned

FIG 1.

P1

(P1 as viewed from the outside of the product looking directly at the connector)

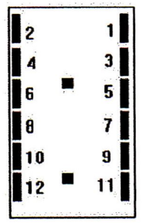

General Characteristics:

Model	SSS-87I/O Series	
Uses Module #	SSR-83-525 & SSR-87	
Meets Specs for	Nema, Caltrans, NY (model 200)	
Load	voltage	120 VAC
	current (max)	15.0 Amps
(Tungsten Filament Load)		
Control Signal	voltage	+24VDC
	current	20.0 MA (max)
Switching	1st alternation after signal is applied.	±10 Degrees of line voltage at the zero crossover point.
	Succeeding alterations	±5 Degrees of line voltage at the zero crossover point.
Off State	dv/dt	100 V per microsecond
	line to load resistance	15 K Ohms Min
	leakage current	less than 20 MA
Isolation	voltage	2500 VDC Min
	resistance	10 Meg Ohms Min
Surge Current	one cycle	175 Amps RMS Min
	one second	40 Amps RMS Min
Life	operations	30 million Min
Mechanical	lenght	8.40 inches
	width	1.74 inches
	height	4.185 inches
	weight	1.135 LBS

Guarantee: The SSS-87I/O series is fully guaranteed against all failures due to manufacturing defects for two years.

P.O. Box 7172 #205 Stateline, NV. 89449 • PH (925) 455-7711 • FAX (925) 455-7714

DATA SHEET
SSS-87IO

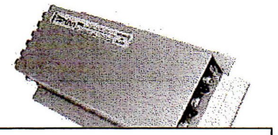

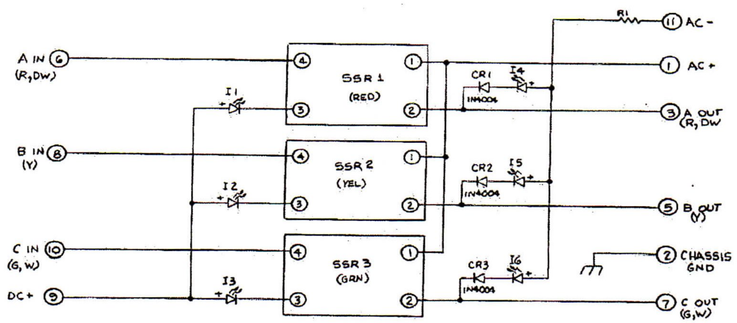

FIG. 2

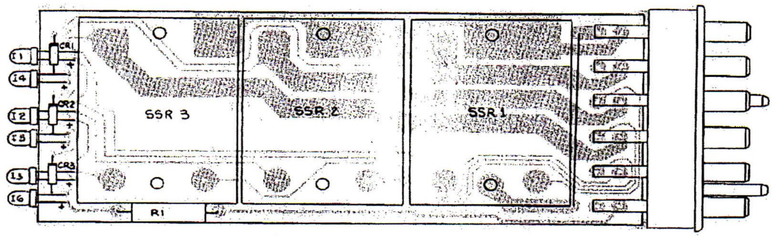

FIG. 3

	Qty	Description	PDC P/N	MFG	MFG P/N	REF DES
1	1	Label s/n	OOO43	PDC	OOO43	
2	3	Solid State Relay, SSR-87	OO144	PDC	OO144	SSR1,2,3
3	1	Chassis	OO204	PDC	OO204	
4	1	Cover	OO206	PDC	OO206	
5	1	Label, front panel	OO214-8	PDC	OO214-2	
6	1	P.C. Board fab.	OO284	PDC	OO284	
7	3	Diode, 1N4004	CR0001	PDC	CR0001	CR1,2,3
8	6	Screw,8-32 x 3/8 brass	HOO36			
9	6	screw,6-32 x 5/16	H0037			
10	6	Nut,keps 6-32	H0038			
11	1	Spacer	H0039			
12	4	Screw, #5 x 3/8	H0040			
13	8	Screw, 6-32 x 3/8	H0041			
14		Screw, 6-32 x 1 3/16	H0043			
15	1	Connector 12 pin	J0002	Beu	P5412-S	
16	3	L.E.D. Clear Red	LDOOO4	G.I.	MV5020	I1,2,3
17	3	L.E.D. Difused Red	LDOOO5	Litronics	RL2000	I4,5,6
18	3	Resistor 5.6K 3W	R0060	TRW	PW3-5.6KM	R1

P.O. Box 7172 #205 Stateline, NV. 89449 • PH (925) 455-7711 • FAX (925) 455-7714

DATA SHEET
SSF-87

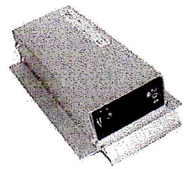

Solid State Flasher With Replaceable Modules:

General Description:
The PDC model SSF-87 is a dual pack, modular, solid state flasher designed specifically to meet NEMA specifications as well as New York "Model 204" specifications. Each flasher contains two individually replaceable modules that are enclosed in a dust resistant, metal enclosure, providing mechanical protection, and excellent heatsinking for the modules. The modules are easily accessible with the use of a crew driver.

Installation:
The flasher intermates with the model 332 cabinet as well as with any NEMA loadbay. It is easily installed or removed by grasping the extruded handle. Connector pinouts are shown in FIG 1. The connector mates with a Beau S-5406-LAB or equivalent.

FIG 1.

Pin	Function
7	Load #1
8	Load #2
9	Chassis ground
10	AC-
11	AC+
12	Spare

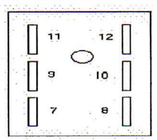

General Characteristics:

Load
- Voltage.....120 VAC
- Current (max).....15.0 Amps
- (Tungsten filament load)

Off State
- dv/dt.....100V per microsecond
- Line to load resistance...15k Ohms min.
- Leakage current.....less than 20 mA

Surge Current
- One cycle.....175 Amps RMS min.
- One second..... 40 Amps RMS min..

Life
- Operations.....30 million min.

Flash Rate
- 50-60 cycles (flashes) per minute.

Mechanical
- Length..... 8.40 inches
- Width..... 1.70 inches
- Height..... 4.185 inches
- Weight..... 1.50 Lbs.

Operating Temperature -35 to +74 degrees C
Adjustments: The model SSF-86 flasher has no adjustment controls.
Guaranteed : The flasher is fully guaranteed against all failures due to manufacturing defects for two years.

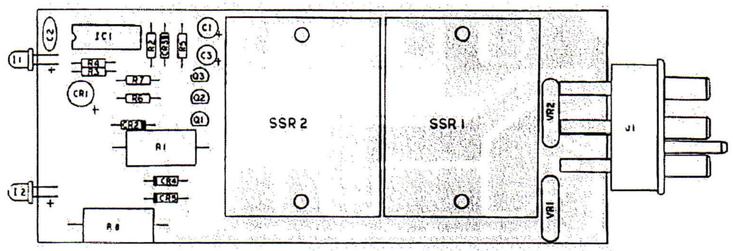

FIG. 2

Highway Tech Signal Equipment Sales, Inc.
6 Sabattus Road, P.O. Box 1209
Sabattus, ME 04280
Tel. (207) 375-8248
Fax (207) 375-8279
info@highwaytech.com

P.O. Box 7172 #205 Stateline, NV. 89449 • PH (925) 455-7711 • FAX (925) 455-7714

DATA SHEET
SSF-87

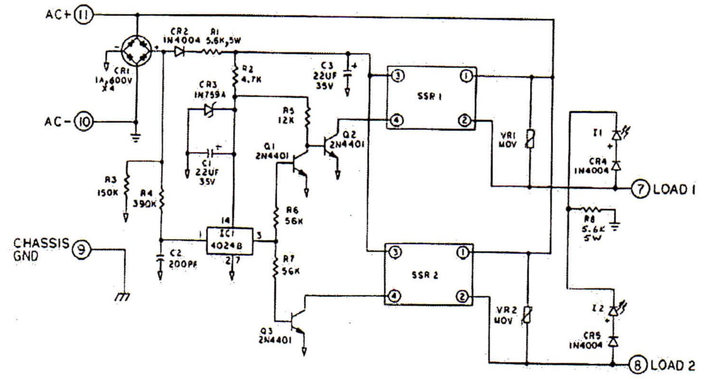

FIG. 3

Item	Qty	Description	PDC P/N	Mfg	Mfg P/N	Ref Des
1	1	Label S/N	00043	PDC	00043	
2	2	Solid State Relay, SSR-87	00144	PDC	00144	
3	1	Chassis	00204	PDC	00204	
4	1	Cover	00206	PDC	00206	
5	1	Label, Front Panel	00214-5	PDC	00214-5	
6	1	P.C. Board Fab.	00267	PDC	00267	
7	2	Cap. 22uf 35V	C0005	Sprague	503D	C1,3
8	1	Cap. 220 pf 50V	C0017	Dibar	220pf50V	C2
9	3	Diode, Power 1N4004	CR0001	Fairchild	1N4004	CR2,4,5
10	1	Diode Bridge, 1A 600V	CR0004	G.I.	WL06M	CR1
11	1	Diode, Zener 1N759A	CR0005	Fairchild	1N759A	
12	4	Screw PH BIN HD 8-32 x 3/8 BR	H0036			
13	4	Screw PH BIN HD 6-32 x 5/16	H0037			
14	4	Nut, Keps 6-32 BLK	H0038			
15	4	Screw PH Pan HD #5 x 3/8 S.T.	H0040			
16	2	Screw PH Pan HD 6-32 x 3/8	H0041			
17	1	I.C. CMOS 4024	IC0002	RCA	CD4024BE	IC1
18	1	Connector 6 Pin	J0001	Beau-Vernitron	P5406-S	J1
19	2	L.E.D. Clear Red	LD0004	G.I.	MV5020	I1,2
20	2	Res. 4.7K 1/4W	R0012	Dale		R2
21	1	Res. 12K 1/4W	R0014	Dale		R5
22	2	Res. 56K 1/4W	R0018	Dale		R6,7
23	1	Res. 150K 1/4W	R0020	Dale		R3
24	1	Res. 390K 1/4W	R0022	Dale		R4
25	2	Res. 5.6K 5W	R0048	TRW	PW5-5.6K	R1,8
26	3	Transistor 2N4401	Q0004	G.E.	2N4401	Q1,2,3
27	2	Varistor	VR0002	NEC	NV240D19	VR1,2

P.O. Box 7172 #205 Stateline, NV. 89449 • PH (925) 455-7711 • FAX (925) 455-7714

SmartSensor Matrix

The SmartSensor™ Matrix is a first-of-its-kind stop bar presence detector designed for use at signalized intersections to detect vehicles with the reliability of radar and with all the advantages of non-intrusive detection.

Features

- Matrix of 16 radars for two-dimensional coverage
- Tracks vehicles through a 90 degree field of view that extends out 140 ft. (42.7 m)
- Includes Radar Vision™ technology to detect and track in two dimensions
- Reports real-time presence of both moving and stopped vehicles
- Standard detector-rack contact-closure interface
- Easy to install and operate
- Supports curved and angled lanes
- Includes preassembled cabinet back-plate, reducing the need to field wire
- Automated manufacturing process
- Patented auto-configuration process
- Patented Digital Wave Radar II™ technology
- Remote accessible for traffic monitoring and sensor management
- Flash upgradable
- Robust to changing temperature, light and weather conditions

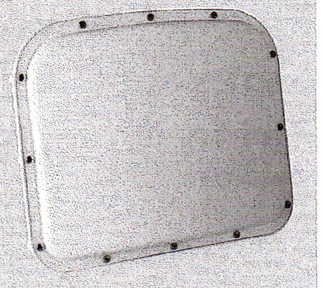

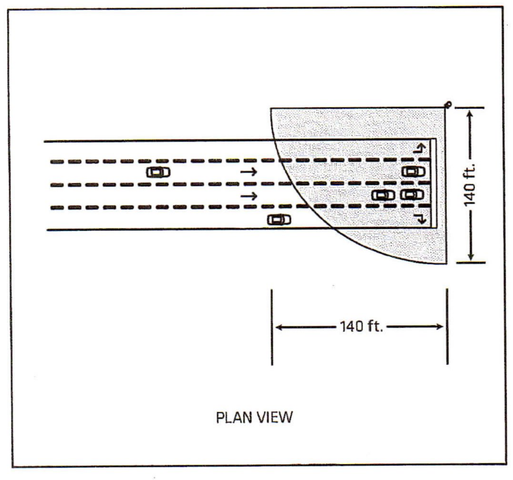

PLAN VIEW

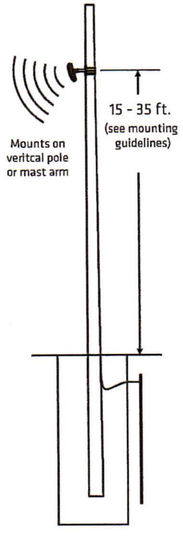

Technical Specifications

Sensor Outputs

- Real-time presence data in 10 lanes
- Maximum number of zones: 16
- Maximum number of channels: 16
- User-selectable zone to channel mapping
- AND logic triggers the channel when all the selected zones are active
- OR logic used to combine multiple zones to a channel output
- Channel output extend and delay functionality
- Algorithms mitigate detections from wrong way or cross traffic
- Fail-safe mode for contact closure outputs if communication is lost

Detectable Area

- Detection range: 6 to 140 ft. (1.8 to 42.7 m)
- Field of view: 90°
- Flexible lane configuration support including:
  - Up to 10 lanes
  - Curved lanes
  - Islands and medians

System Hardware

- A SmartSensor Matrix corner radar for each approach
- A traffic cabinet preassembled backplate with:
  - AC/DC power conversion
  - Surge suppression
  - Terminal blocks for cable landing
  - Communication connection points
  - Cabinet side mount or rack mount
- Contact closure input file cards:
  - 2 or 4 channel
  - Compatible with industry standard detector racks

Maintenance

- No cleaning or adjustment necessary
- No battery replacement necessary
- Recalibration is not necessary
- Mean time between failures: 10 years (estimated based on manufacturing techniques)

Physical Properties

- Weight: 4.2 lbs. (1.9 kg)
- Physical dimensions: 13.2 in. x 10.6 in. x 3.3 in. (33.5 cm x 26.9 cm x 8.4 cm)
- Resistant to corrosion, fungus, moisture deterioration, and ultraviolet rays
- Enclosure: Lexan EXL polycarbonate

Ordering Information

SmartSensor Matrix
SS-225

ACCESSORIES

SS-KIT – Wavetronix install kit

SS-112/114 – Click 112/114 rack cards

SS-704-xxx/705 – SmartSensor 6-conductor cable

SS-611 – SmartSensor mount

SS-B01-0003/0005/0008 – Intersection preassembled backplate – AC

SS-B01-0004/0006 – Intersection preassembled backplate – DC

SS-B02-0002/0003 – Intersection preassembled 19-inch rack

SS-710 – Sensor cable junction box

Wavetronix
78 East 1700 South
Provo, UT 84606
801.734.7200
sales@wavetronix.com
www.wavetronix.com

- Outdoor weatherable: UL 746C
- Watertight by NEMA 250 standard
- NEMA 250 compliant for:
  - External icing (clause 5.6)
  - Hose down (clause 5.7)
  - 4X corrosion protection (clause 5.10)
  - Gasket (clause 5.14)
- Withstands 5-ft. (1.5-m) drop
- Connector: MIL-C-26482
- Rotational backplate for 360° of roll

Electrical

- Power consumption: 9 W
- Supply voltage: 9–28 VDC

- Onboard surge protection

Communication Ports

- Two half-duplex RS-485 com ports support:
  - Dedicated detection comms
  - Configuration, verification or traffic display without disrupting detection comms
- Firmware upgradability over any com port
- User configurable:
  - Response delay
  - Push port

Radar Design

- Operating frequency: 24.0–24.25 GHz (K-band)
- Matrix of 16 radars
- No manual tuning to circuitry
- Transmits modulated signals generated digitally
- No temperature-based compensation necessary
- Bandwidth stable within 1%
- Printed circuit board antennas
- Antenna vertical 6 dB beam width (two-way pattern): 65°
- Horizontal field of view: 90°
- Antenna two-way sidelobes: -40 dB
- Transmit bandwidth: 245 MHz
- Un-windowed resolution: 2 ft. (0.6 m)
- RF channels: 8
- Self-test for verifying hardware functionality
- Diagnostics mode for verifying system functionality

Configuration

- Automatic and manual configuration of lanes, stop bars and zones
- Lane positioning increment: 1 ft. (0.3 m)
- Four-sided zones of any shape and size
- Overlapping zones supported
- Sensor reconfiguration without detection disruption supported
- Graphical user interface with traffic pattern display
- Counting and Pulsed channels supported
- Windows Mobile®-compatible software
- Supported operating systems:
  - Windows Mobile v5.0 or greater (Socket Mobile 650-M)
  - Windows XP
  - Windows Vista
  - Windows 7
- Software-supported functionality:
  - TCP/IP connectivity
  - Sensor configuration back-up and restore
  - Backed-up sensor configurations can be viewed and edited
  - Real-time traffic visualization for performance verification and traffic display
  - Zone and channel actuation display
  - Virtual sensor connections for demonstration and training
  - Local or remote sensor firmware upgradability

Operating Conditions

- Accurate performance in:
  - Rain up to 1 in. (2.5 cm) per hour
  - Freezing rain
  - Snow
  - Wind
  - Dust
  - Fog
  - Changing temperature
  - Changing lighting (even direct light on sensor at dawn and dusk)
- Ambient operating temperature: -40°F to 165°F (-40°C to 74°C)
- Humidity: Up to 95% RH (non-condensing)

Testing

- Tested under FCC CFR 47, part 15, section 15.249
- FCC certification on product label
- FCC regulation-compliant for life of the sensor
- Tested under IEC 61000-4-5 class 4
- Tested under NEMA TS 2-2003
  - Shock pulses of 10 g, 11 ms half sine wave
  - Vibration of 0.5 g up to 30 Hz
  - 300 V positive/negative pulses
  - Stored at -49°F (-45°C) for 24 hours
  - Stored at 185°F (85°C) for 24 hours
  - Operation at -29.2°F (-34°C) and 10.8 VDC
  - Operation at -29.2°F (-34°C) and 26.5 VDC
  - Operation at 165.2°F (74°C) and 26.5 VDC
  - Operation at 165.2°F (74°C) and 10.8 VDC

Manufacturing

- Manufactured in the USA
- Surface mount assembly
- IPC-A-610C Class 2-compliant
- Operational testing:
  - Sub-assembly test
  - 48-hour unit level burn-in
  - Final unit test
- Unit test results available

Support

- Training and tech support available from Wavetronix
- Wavetronix training includes:
  - Installation and configuration instruction to ensure accu-

rate performance
  - Classroom and in-field instruction
  - Knowledgeable trainers
  - Use of presentation materials
  - Virtual configuration using computer playback
  - Instruction in use of computer and handheld devices and other necessary equipment
- Wavetronix tech support includes:
  - Technical representatives available for installation and configuration
  - Ongoing troubleshooting and maintenance support

Documentation

- Instructional training guide
- Comprehensive user guide
- Installer quick-reference guide
- User quick-reference guide
- Documentation available upon request:
  - FCC certification
  - IEC 61000-4-5 class 4 test report

Warranty

- Two-year warranty against material and workmanship defect

The advertised detection accuracy of the company's sensors is based on both external and internal testing, as outlined in each product's specification document. Although our sensors are very accurate by industry standards, like all other sensor manufacturers we cannot guarantee perfection or assure that no errors will ever occur in any particular applications of our technology. Therefore, beyond the express Limited Warranty that accompanies each sensor sold by the company, we offer no additional representations, warranties, guarantees or remedies to our customers. It is recommended that purchasers and integrators evaluate the accuracy of each sensor to determine the acceptable margin of error for each application within their particular system(s).

SmartSensor 6-conductor Cable

The SmartSensor™ 6-conductor cable is used with the SmartSensor Matrix and SmartSensor Advance to provide power and communication connectivity to the sensors. Heavy-duty and weather-resistant, this custom cable is ideal for cable runs from the sensor to the cabinet.

Features

- 6-conductor cable that attaches to an 8-pin connector
- Provides power and RS-485 communications between sensor and cabinet
- Connector is keyed to ensure proper connection
- Color-coded for quick and easy wiring to terminal blocks, Click!™ modules
- RS-485 and power conductors are twisted pairs
- Cable assembly is shielded with aluminum/mylar shield and a tinned copper drain wire
- RoHS compliant
- Cable end connector backshell is environmentally sealed, offering excellent immersion capability
- Connector backshell supports cable slack under extreme weather conditions

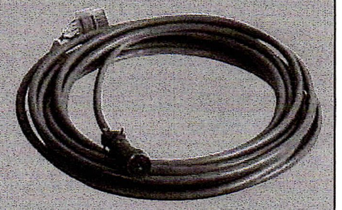

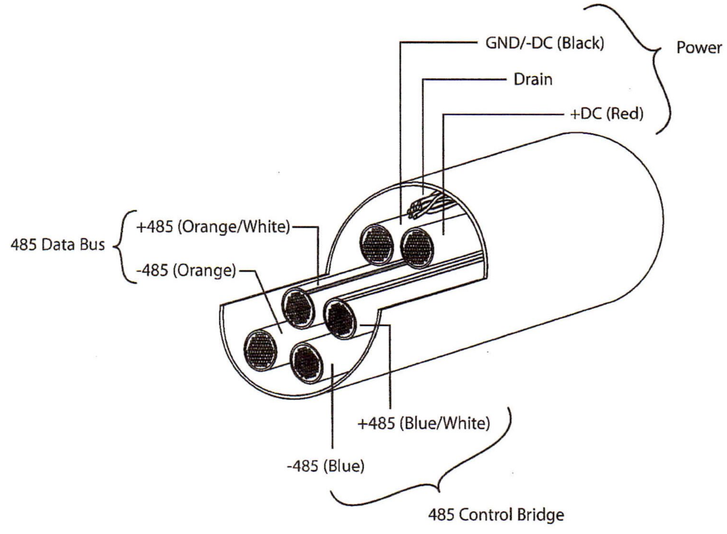

Technical Specifications

Cable

- RS-485 conductors: 2 twisted pairs
- RS-485 conductor nominal capacitance, conductor to conductor: less than 40 pF/ft at 1 kHz
- RS-485 conductor nominal conductor DC resistance: less than 16.7 ohms/1000 ft. (304.8 m) at 20°C
- Power conductors: twisted pair with nominal conductor DC resistance of less than 11 ohms/1000 ft. (304.8 m) at 20°C
- Cable assembly shielded with aluminum/polyester shield and tinned copper drain wire
- Jacket: 0.053-in. (1.3-mm) gray PVC
- Cable diameter: 0.41 in. (1.04 cm)
- Wire gauges:
  - Power wires: 20 AWG
  - Comms wires: 22 AWG
- RoHS compliant
- Approvals: UL/cUL Type CMG
- Ambient operating temperature: up to 221°F (105°C) dry / 167°F (75°C) wet
- Flammability rating: FT4
- UV resistant: Yes (per UL 720 Hour Sunlight Resistance Test)

Connector

- Meets MIL-C-26482 specification
- Backshell is environmentally sealed
- Backshell offers excellent immersion capability
- All conductors that interface with the connector are encased in a single jacket
- Backshell has a strain relief with enough strength to support the cable slack under extreme weather conditions

Ordering Information

Part Number – WX-SS-704-xxx with connectors– xxx indicates cable length

-020 20' Pre-terminated Cable Supplied

WX-SS-705 bulk spool–minimum 1000 ft. (304.8 m)

Bulk cable supplied to run from Sensor Junction box to Controller Cabinet

Wavetronix
78 East 1700 South
Provo, UT 84606
Phone: 801-764-0277
Fax: 801-764-0208
Email: sales@wavetronix.com
Website: www.wavetronix.com

A 20' pre-terminated cable will be supplied to run from the sensor to a junction box supplied to be mounted on the pole next to the sensor.
Bulk cable will be supplied to run from the junction box mounted near the sensor on the pole to the controller cabinet.

Highway Tech Signal Equipment Sales, Inc.
8 Gardiner Road / P.O. Box 3180
Sabattus, ME 04280
Tel. (207) 375-8246
Fax (207) 375-8279

Sensor Cable Junction Box

The Sensor Cable Junction Box provides connection between the sensor's pigtail cable and the homerun cable to the cabinet. This box's nine terminal blocks eliminate the need to pull a connectorized cable from the sensor to the cabinet. Its small size allows for an in-line connection that will fit in a hand hole.

Features

- Type 4, 4x enclosure
- Insulation displacement terminal blocks for quick wiring
- Small form factor for placement in traffic pole hand hole
- Cable grips for water resistance
- Same-side cable entry prevents cable path water trails from pooling on cable grip
- Nine terminal blocks means that the box can be used with cables with nine or fewer conductors, namely the Wavetronix 6-conductor cable and the 8-conductor cable

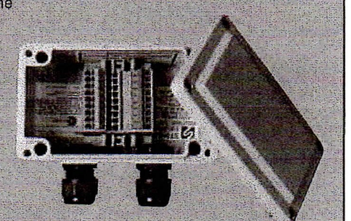

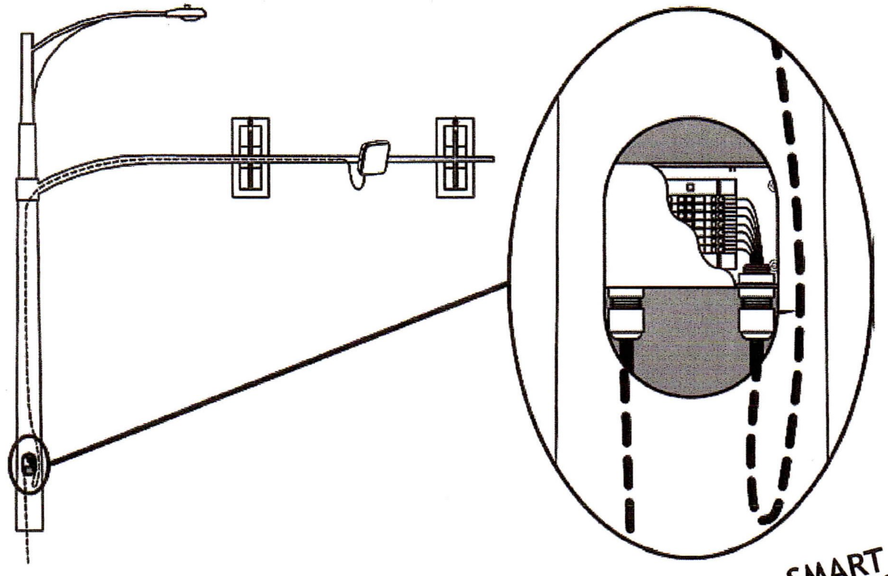

SMART SENSOR iQ®

WX-500-0160

Sensor Cable Junction Box

Technical Specifications

Physical

- Dimensions: 6 in. x 3.6 in. x 3.1 in. (15 cm x 9 cm 8 cm)
- Cable grip cable diameter: 0.2 in.–0.5 in. (5 mm–12.7 mm)
- Designed to meet IP 66 & NEMA 250 type 1, 3R, 4X, 6P and 12 ratings
- Material: fiberglass
- Aluminum backplate

Connector Block

- 9 terminal blocks
- Connections: insulation displacement
- Nominal current I_N: 17.5 A
- Nominal voltage U_N: 500 V
- Maximum load current: 17.5 A
- Wire: 24–16 AWG

Ordering Information

Part Number — WX-SS-710

Recommended Accessories

- SmartSensor 6-conductor cable — WX-SS-704
- SmartSensor 8-conductor cable — WX-SS-706
- SmartSensor Matrix preassembled traffic cabinet backplate — WX-SS-B01-0003, WX-SS-B01-0005

Wavetronix
78 East 1700 South
Provo, UT 84606
Phone: 801-764-0277
Fax: 801-764-0208
Email: sales@wavetronix.com
Website: www.wavetronix.com

Highway Tech Signal Equipment Sales, Inc.
8 Gardiner Road / P.O. Box 3180
Sabattus, ME 04280
Tel. (207) 375-8248
Fax (207) 375-8279

Cabinet Interface Device

The Click 650 provides streamlined communication for SmartSensor Matrix and Advance to traffic controllers in one compact case. This module communicates directly to the controller through SDLC, and supports contact closure devices as well. It also provides power, surge protection and Ethernet connectivity for all sensors.

Features

- Provides sensor detection data directly to controller through SDLC port
- Provides up to 64 detector channels
- Provides an Ethernet port for network connectivity.
- Can be used in place of Intersection Preassembled Backplates
- Provides DC power for up to 4 sensors
- Protects the sensor from surges
- Forwards detection data collected from the sensors to contact closure devices (not included)
- Has a power switch for each sensor, allowing you to turn sensors on and off individually
- Has multiple configuration connections for communicating from your computer to the connected sensors:
  - USB
  - RJ-11 jacks for RS-485
  - DB-9 connector for RS-232
  - T-bus port
- Can be used on a shelf or affixed to the cabinet wall

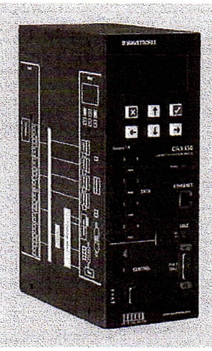

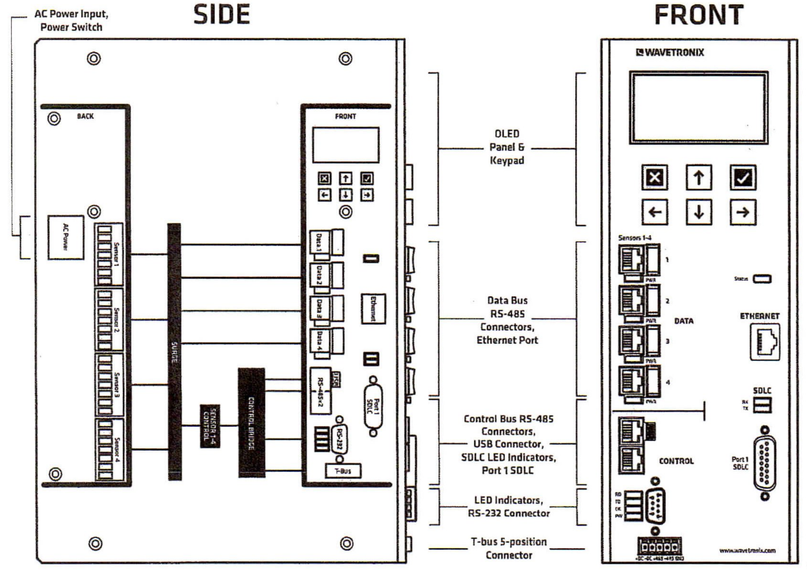

Technical Specifications

Included Components

- Click 650
- AC power cord
- Extra fuse
- Terminal blocks for attaching to cable
- 4 jumper cables

Physical

- Weight: 4.9 lbs. (2.2 kg)
- Physical dimensions: 7.8 in. × 10.3 in. × 3.9 in. (19.8 cm x 26.2 cm x 9.9 cm)
- Ambient operating temp: -29°F to 165°F (-34°C to 74°C)
- Humidity: up to 95% RH

Mounting

- Shelf-mount
- Optional U-channel mounting bracket accessory package allows mounting on the side of the traffic cabinet

Power

- Power supply voltage: 90 to 260 VAC
- AC frequency: 50–60 Hz
- Max power: 75 W @ 80°C
- 24 VDC output on sensor connectors

Connections and Communication

- Power
  - AC input: IEC AC input
- Ethernet
  - One RJ-45 10/100 Ethernet jack on the front of the device
- SDLC
  - One SDLC port on the front of the device
- Four terminal block connectors on back of device for connecting to sensors
  - Cable terminal points for sensor power and RS-485 communications
  - Matching terminal blocks are included with Click 650
  - Matches terminal blocks used for cable termination with Wavetronix intersection preassembled backplates
- Four RJ-11 jacks on faceplate of device for connecting to contact closure devices
  - Communicate via RS-485
  - Jacks make up physical interface of data bus on device and are for sending detection data from sensors on to contact closure devices such as rack cards (which are not included)
  - Communicate with rack cards via jumper cables (included)
- Four communication ports on faceplate make up physical interface of control bus and are for connecting to the sensors to configure them
  - DB-9 port for communicating via RS-232
  - Two RJ-11 jacks for communicating via RS-485
  - USB mini-B connector
  - T-bus port for connecting to a T-bus; allows Click 650 to send DC power and RS-485 communications to other devices connected to a T-bus

Other Features

- OLED panel and keypad for on-site device configuration
- Web interface for device discovery and output configuration using web browser
- Device configuration supports up to 64 detector channels
- Four multicolored LEDs with activity indicating functions:
  - Red LED (PW) illuminates when device has power
  - Blue LED (OK) extinguishes if device has been disabled by surges
  - Green LED (TD) illuminates when data is transmitted on the control bus
  - Yellow LED (RD) illuminates when data is received on the control bus
- Each data bus RJ-11 jack on the faceplate corresponds to one sensor and has the following features:
  - Switch for turning the power to that sensor on and off
  - LED for indicating when that sensor has power
- Switch for turning power on and off to entire device

Ordering Information

Click 650
102-0416

ACCESSORIES

102-0423 – U-Channel Mounting Bracket Accessory Pack

Wavetronix
78 East 1700 South
Provo, UT 84606
801.734.7200
sales@wavetronix.com
www.wavetronix.com

NEMA TS2-2003 Testing

- Complies with the applicable standards stated in the NEMA TS2-2003 Standard
- Test results available for each of the following tests:
  - Shock pulses of 10 g, 11 ms half sine wave
  - Vibration of 0.5 Grms up to 30 Hz
  - 300 V positive/negative pulses applied at one pulse per second at minimum and maximum DC supply voltage
  - Stored at -49°F (-45°C) for 24 hours
  - Stored at 185°F (85°C) for 24 hours
  - Operation at -29.2°F (-34°C) and 10.8 VDC
  - Operation at -29.2°F (-34°C) and 26.5 VDC
  - Operation at 165.2°F (74°C) and 26.5 VDC
  - Operation at 165.2°F (74°C) and 10.8 VDC

FCC Testing

- FCC-compliant

Testing

- Passes manufacturer's test before shipping

Extended Support

- Extended support options are available from Wavetronix; contact a Wavetronix representative for more information

Warranty

- One-year warranty against material and workmanship defect (see Click Warranty datasheet for complete details)

Highway Tech
6 Sabattus Road - P.O. Box 1209 - Sabattus, ME 04280
ME Office - Tel. (207) 375-8248 - Fax (866) 232-7014
NY Office - Tel. (607) 299-4604 - Fax (866) 350-3162

SmartSensor Mount

The SmartSensor™ mount makes installation quick and easy by helping you securely mount any of the Wavetronix SmartSensors. Sturdily built of powder-coated aluminum for durability and weather-resistance, this mount can withstand whatever the elements throw at it.

Features

- Two axes of rotation for horizontal and vertical positioning
- Mates with fixed and rotational back-plates on the SmartSensor V, Smart-Sensor HD, SmartSensor Advance, and SmartSensor Matrix
- Symmetric hole pattern for flexibility in sensor attachment
- Two contact points for attachment to circular or non-circular poles
- On circular poles, another axis of rotation around the pole is available
- Accepts ¾" banding
- Supports a 15-lb. (6.8-kg) load
- Heavy duty aluminum construction makes mount sturdy and long-lasting
- Powder coated for oxidization resistance, allowing mount to withstand the harshest weather conditions

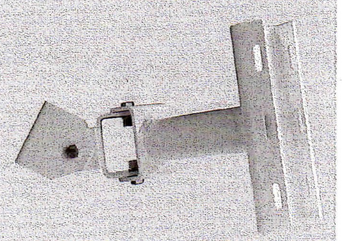

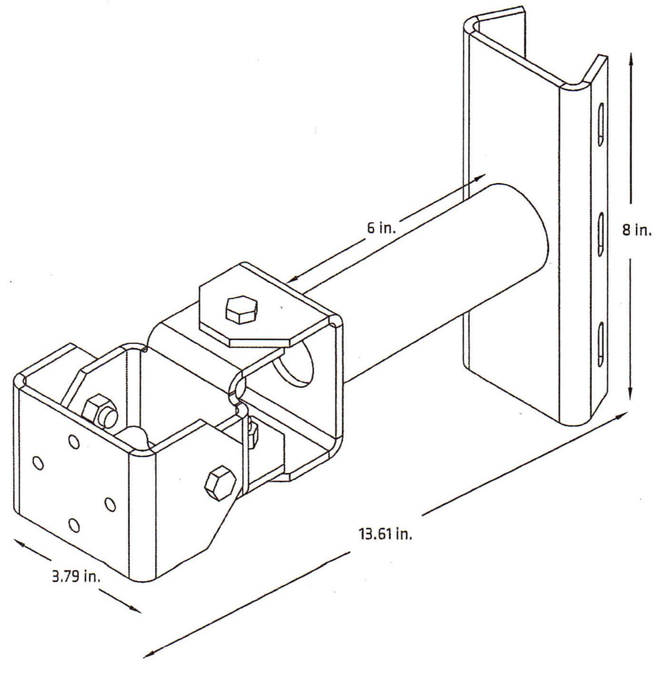

Technical Specifications

Mounting

- Rotational axes: 2
  - NOTE: SmartSensor Advance and SmartSensor Matrix are shipped with rotational backplate for third axis of rotation. SmartSensor V and SmartSensor HD can be ordered with rotational backplate if third axis is required.
- Maximum load: 15 lbs. (6.8 kg)
- Symmetric hole pattern that mates with fixed and rotational SmartSensor backplates
- Contact points with pole: 2
- Slotted for ¾-in. (1.9-cm) banding

Construction

- Constructed of aluminum 0.1875 in. (0.48 cm) thick
- 316 stainless steel hardware
- Powder coated
- Weight: 3 lbs. (1.36 kg)

Ordering Information

SmartSensor mount
SS-611

Wavetronix
78 East 1700 South
Provo, UT 84606
801.734.7200
sales@wavetronix.com
www.wavetronix.com

Astro-Brac
1-Way Bracket Assemblies

PELCO PRODUCTS, INC

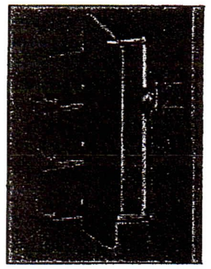

The Astro-Brac in its various configurations is a truly universal system for mounting signals.

The Astro-Brac is designed to facilitate the mounting of any size or combination of signals to any size of mast arm or pole. This complete adjustability is not possible with other types of rigid mountings.

ITEM	DESCRIPTION	PART NO.
	ASTRO-BRAC ASSY.:	
①	1-Way Band Mount	AB-0116
②	1-Way Cable Mount	AB-0125
③	1-Way Tenon Mount	AB-0137
	ASTRO-BRAC CLAMP KIT:	
4	Band Mount	AB-3004
5	Cable Mount	AB-3009
6	Tenon Mount	AB-3010
7	ARM KIT, 8½" CTC	AB-4000
8	GUSSETED TUBE, w/ Vinyl Insert, 1½" Alum TOE	AB-2003

Notes:

1. All assemblies are supplied standard with stainless fasteners and natural aluminum alodine coating. Stainless upgrade to include stainless steel clamp screw where applicable.
2. See pages T1-8 thru T1-14 for clamp kit pole diameter options.
3. Most assemblies are available with Stellar Series Clamp Kits. To order use prefix AS with part number.
4. Please specify options when ordering.

① 7 4 8

With Green Paint & Green E-Coated Bands

OPTIONS
SIGNAL SECTION: 1, 2, 3, 4, or 5
BAND LENGTH: 29", 36", 42", 46", or 56"
STAINLESS UPGRADE
PAINT Green Paint

② 7 5 8

OPTIONS
SIGNAL SECTION: 1, 2, 3, 4, or 5
CABLE LENGTH: 62", 84", or 96"
PAINT

③ 7 6 8

OPTIONS
SIGNAL SECTION: 1, 2, 3, 4, or 5
PAINT

Highway Tech
HIGHWAY TECH
PO BOX 1209
SABATTUS, ME
207-375-8248

Traffic Signals (8"/12" PC/AL)

Four screw visor attachment (threaded brass inserts on poly doors)

"Tab" Visor

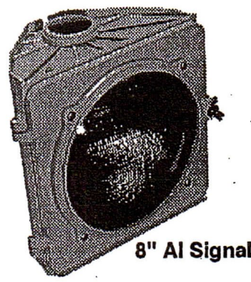

8" Al Signal

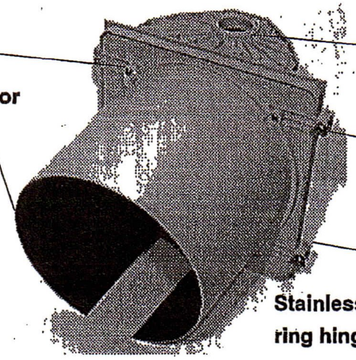

Self draining heavily ribbed end sections with integral shurlock

Captive wing nut style door latch assemblies

Backplate mounting holes (4 per section)

Stainless steel reflector ring hinge pins

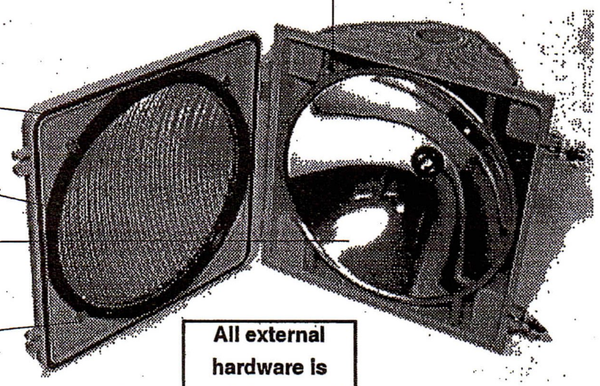

Door Gasket

One piece molded EPDM lens gasket (Silicone available)

Alzak Reflector

Stainless Steel lens tabs; (threaded brass inserts on poly doors)

All external hardware is stainless steel

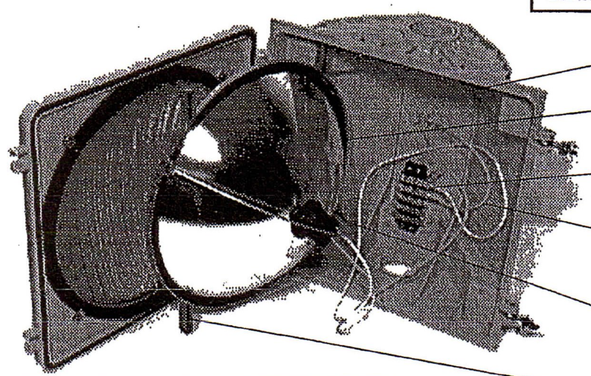

Reinforcing fins in poly head

Reflector Gasket

Fully insulated quick connect socket wire terminals

Color coded socket wires

Rotatable high temperature phenolic socket with lamp grip and gasket

Aluminum reflector ring

Meets/Exceeds ITE Specifications

1-800-345-6329

© Traffic Parts, Inc.

Options: Traffic Parts, Inc.

1. Size/Type

E=8" Vehicle | T=12" Vehicle

C=Combination Vehicle 8"/12"

P=12" Pedestrian

L=Lane Control (12" only)

S=Speed Indicator (12" only)

2. Material

P=Poly A=Alum

T=Top Section Al/Other PC (Vehicle Signals only)

C=Poly Signal/Alum Visor

3. Color

Y=Yell B=Blk F=Flt Blk

G=Dk Grn X=Special

C=Yellow Body, Blk Door, Blk Visor

D=Yellow Body, Blk Door, Yell Visor

E=Yellow Body/Door, Black Visor

V=Blk Body, Yellow Door, Blk Visor

4-5. Configuration

2 digit MPH for speed indicator

2 digit configuration code for others

6. Terminal Block Type

→ 5=5 position, 20a

6=6 position, 20a (12" only)

7=5 position, 30a

8=6 position, 30a (12" only)

2=2 position, 20a N=None

7. Terminal Block Location

T=Top C=Center B=Bottom

X=Special

8. Visor

T=Tunnel C=Cap

F=Full Circle N=No visor

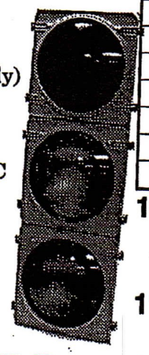

9. Lens

N=None X=None, w/1" lens clips

Option # -->	P	S	G	M	D
Material: PC	X	X			
Glass			X	X	X
12" Arrows: Stenciled	X		X		
Molded				X	
Shields		X			X
8" Arrows: Stenciled	X	X	X		
Molded				X	X

10. Lens Gasket Material

E=EPDM (High temp neoprene)

S=Silicone N=None

11. Orientation

V=Vertical H=Horizontal

12. Support Plates

1=One plate in top section

2=One plate in bottom section

3=Two plates in bottom section

4=One plate in top section + one plate in bottom section

5=Two plates for elevator plumbizer

6=Doghouse (top and bottom of red)

N=None

13. Mechanical

0=Pltd Tri-stud kits 1=SS Tri-stud kits

2=Plated screws 3=SS screws

14. LED Configuration

0=Not applicable

LED in:	LED incl	LED ready
All sections,120vac	A	N
All sections, 12vdc	B	N
Red balls,Hand only	J	K
Red,Grn balls/arrow	G	H

SIG	-				-				-				-				-				-			
Option Category →		1	2	3		4	5	6		7	8	9		10	11	12		13	14	15		16	17	18	19

© Traffic Parts, Inc.

Face Configuration Codes

8" or 12" Face

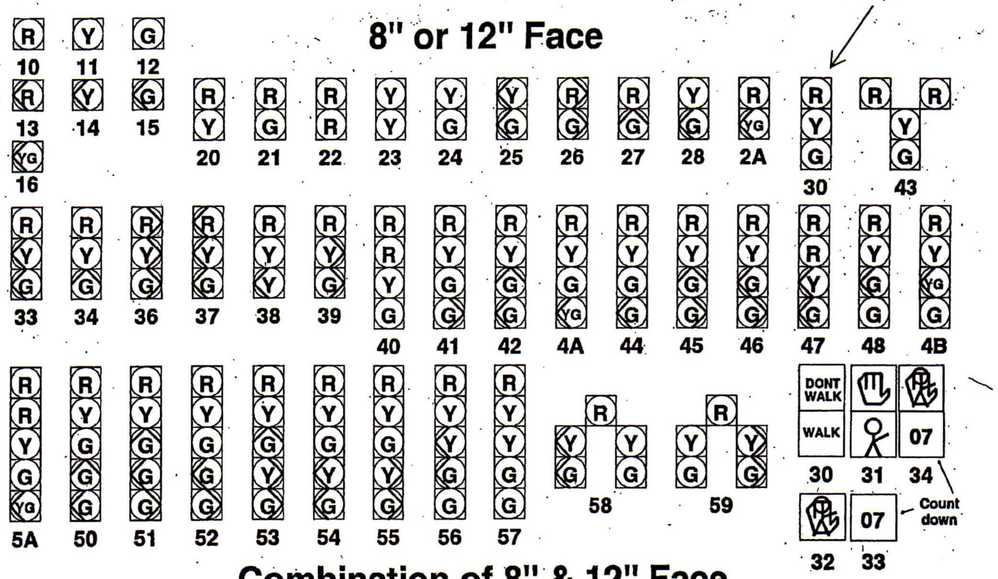

Combination of 8" & 12" Face

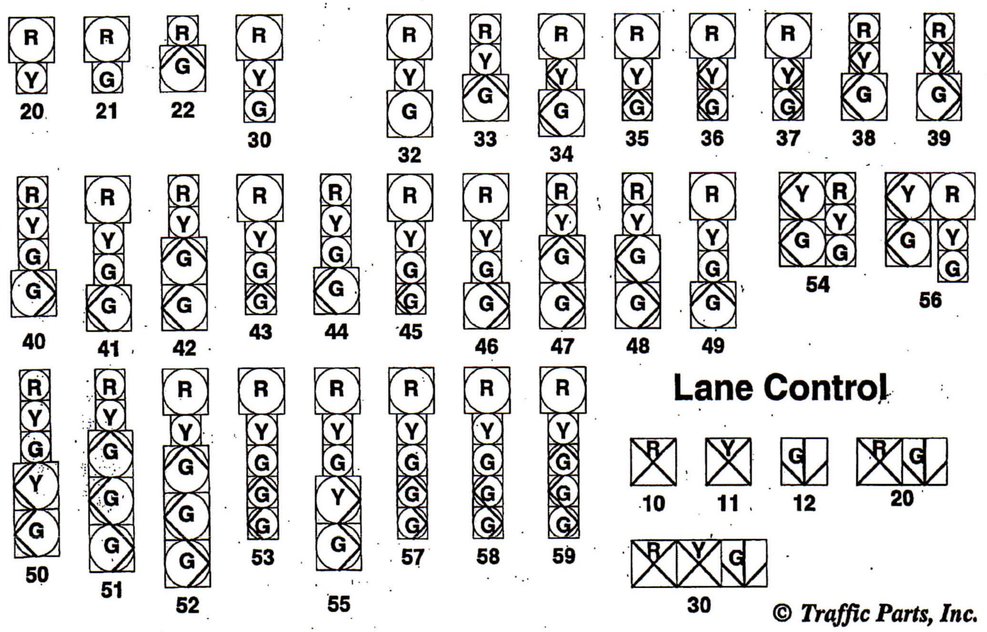

Lane Control

© *Traffic Parts, Inc.*

Backplates

	One Piece					Riveted		
	Flat PC (.093)	Vac Form ABS	ALUM (.050)			Flat PC (.093)	ALUM (.050)	
				w/3" Louvers				
			Plain	Vert	Horiz		Plain	Vert w/3" Lvrs
12" CH/TCT								
1 Sec						6762	6761	4146
2 Sec						6765	2793	
3 Sec	5848	4484	5297	5330	5626	6982		
4 Sec		4485	5299	5332	5627	6763		
5 Sec		4486	5300	5333	5628			
12" CH/TCT w/ 1 3/8" Plumbizer								
3 Sec			5298	5331				
4 Sec				2038				
5 Sec				2039				
12" CH/TCT 5 Section Clusters								
2" Spac	6307			6804				
1" Spac	7055							
8" CH/TCT								
3 Sec	7048		7047	7046				

Other Flat PC (.093) one piece blackplates available:

#6124 (3 sec Eagle PC,AL)
#6388 (3sec LFE/Auto)
#7217 (3 sec Auto or Eagle, w/breakout)
#6153 (3 sec Trafcon)
#7183 (3 sec McCain)

Note: Order Mounting screw kits separately

#1786 (For 3S PC signals)
#1784 (For 3S AL signals)
#1787 (For 4/5S PC signals)
#1785 (For 4/5S AL signals)



ABS Vacuum Form
Cross Section

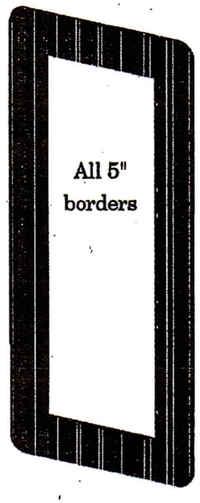

Backplates provided with Powder Coat Green Finish for East & West facing signals only!

© Traffic Parts, Inc.

GE
Lighting Solutions

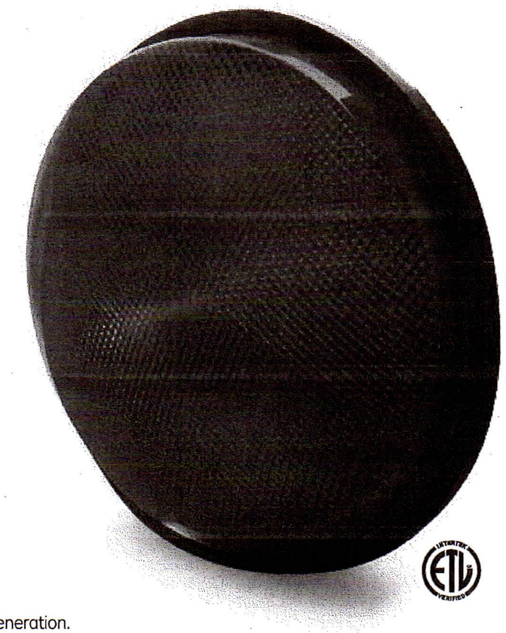

GTx™
LED Signal Modules
8 and 12 inch
Incandescent look (120V)

GE's 14th generation of LED signal, leveraging 15 years of experience & over 6,000,000 units sold worldwide

Outstanding Performance

- Consumes up to 15% less power than GE's previous signal generation.
- Intelligent controller measures usage and temperature. Will automatically adjust to compensate for light output degradation over time.*
- Over-molded electrical connectors prevent water wicking through wires.

Maximum Flexibility

- New micro-controlled power supply is packed with advanced functionality that can be unlocked and customized to fit your specific needs.
- Low profile module permits efficient installation into existing traffic housings.
- Power consumption levels allow compatibility with most controllers.
- Offers multiple dimming configurations for ultimate customization.**
- Mask compatible to fit your unique signaling needs.***

Meets Rigorous Certification & Testing Standards

- Intertek ETL Verified compliant.
- Compliant with ITE VTCSH LED Circular Signal Supplement dated June 27th 2005.
- CSA approved.

* Compensation levels vary depending on color.
** Customer controller and load switch compatibility testing may be required. Please contact you GE representative for details.
*** Sold separately. Refer to masks datasheet TRAF208.

imagination at work

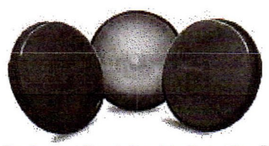

The Greatest Signals Stand the Test of Time.™

GTx™ LED Signal Modules

- 8 and 12 inch

Mechanical Outline Dimensions in inches [mm]

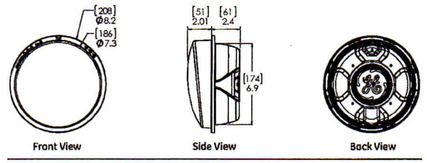

8 inch

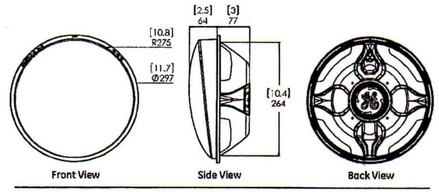

12 inch

Design Compliance

Test type	Compliance
Luminous Intensity	ITE VTCSH- LED Circular Signal Supplement -June 2005
Chromaticity	ITE VTCSH- LED Circular -June 2005
Moisture Resistance	Blown Wind Rain MIL-STD-810F method 506.4
Mechanical Vibration	MIL-STD-883 Method 2007
Electronic Noise	FCC Title 47 Sub. B Sec 15[1]
Transient Voltage Protection	Sec. 2.1.6 NEMA TS2-2003, 300V, 2500W Sec. 2 .1.6 NEMA TS2-2003, 600V, 10µF Sec. 2.1.8 NEMA TS2-2003, 1kV, 2Ω
Controller Compatibility	ITE VTCSH- LED Circular Signal Supplement -June 2005
Wiring	NFPA 70, National Electric Code
Transient Suppression	Sec. 8.2 IEC 61000-4-5 & Sec. 6.1.2 ANSI/IEEE C62.41.2 - 2002, 3KV, 2 Ω Sec. 8.0 IEC 61000-4-12 & Sec. 6.1.1 ANSI/IEEE C62.41.2 - 2002, 6KV, 30 Ω

Operating Specifications

Parameter	Rating
Operating Temperature Range*	-40 to +74°C (-40 to +165°F)
Operating Voltage Range	80 to 135 V (60Hz AC)
Power Factor (PF)	> 90%
Total Harmonic Distortion (THD)	< 20%
Minimum Voltage Turn-Off (VTO)	35 V
Turn-On / Turn-Off Time	< 50 ms
Lens & Shell Material	UV Stabilized Polycarbonate
Wiring	40 in, 18 AWG, Color Coded with Strain Relief
Dimming Option[2]	As per Section 5.8 of ITE VTCSH - LED Circular Signal Supplement- June 2005

* Operating Temperature Range per ITE 2005, Section 3.3.2

Distributed by:

Highway Tech

Product Information

Model Number	Front Shell	Size (in)	Nominal AC Voltage	Nominal Power[3] (W)	Nominal Wavelength (nm)	Minimum Maintained Intensity[4] (Cd)
DR6-RTFB-77A	Tinted	12	120V – 60Hz	6.7	625	365
DR6-RCFB-77A	Clear					
DR6-YTFB-77A	Tinted	12	120V – 60Hz	10.5	589	910
DR6-YCFB-77A	Clear					
DR6-GTFB-77A	Tinted	12	120V – 60Hz	9.1	502	475
DR6-GCFB-77A	Clear					
DR4-RTFB-77A	Tinted	8	120V – 60Hz	7	626	165
DR4-RCFB-77A	Clear					
DR4-YTFB-77A	Tinted	8	120V – 60Hz	9.5	589	410
DR4-YCFB-77A	Clear					
DR4-GTFB-77A	Tinted	8	120V – 60Hz	6.5	503	215
DR4-GCFB-77A	Clear					

Standard product equipped with universal connectors (insulated spade-quick disconnect).

All lamps available in tinted or clear lens.

[1] Class A

[2] Customer controller and load switch compatibility testing may be required. Please contact you GE representative for details.

[3] Power consumption for DR6-RTFB-77A, DR6-RCFB-77A, DR6-YTFB-77A, DR6-YCFB-77A, DR4-RTFB-77A, DR4-RCFB-77A, DR4-GTFB-77A and DR4-GCFB-77A could slightly increase over time to ensure light degradation compensation.

[4] Measured at vertical angle of -2.5° and at horizontal angle of 0°.

GE Lighting Solutions • **1-888-MY-GE-LED** • www.gelightingsolutions.com
1-888-69-43-533

GE Lighting Solutions, LLC is a subsidiary of the General Electric Company. GTx is a trademark of GE Lighting Solutions, LLC. The GE brand and logo are trademarks of the General Electric Company. © 2012 GE Lighting Solutions, LLC. Information provided is subject to change without notice. All values are design or typical values when measured under laboratory conditions.

TRAF192-R032712

GE
Lighting Solutions

GE LED Countdown Pedestrian Signals

16 x 18 inch



Excellent Appearance & Visibility

- Robust LED system design enables high luminous intensity over product life cycle
- Efficient optical system minimizes power consumption while providing excellent uniformity and viewing angles
- Single piece transparent front window with internal masking to prevent:
  - countdown and icons display from being readily visible when not in operation
  - scratches and abrasions compared with external silk screen technology
- Bright and clear icons
- Fully uniform look

Outstanding Reliability & Robust Operation

- Internal conflict monitor preventing walk and don't walk indications to light up at the same time
- Individual power supply drives each display to ensure proper indication

Meets Rigorous Certification & Testing Standards

- Intertek ETL Verified compliant
- DOE compliant
- Using MIL-STD-810F and NEMA 250-1991 Type 4 for environmental robustness, passed reliability and qualification testing including high temperature, high humidity cycling (HTHH for 1,000 hours)
- Compliant (for Full Hand/Full Person) with the ITE PTCSI LED Signal Modules
  - version dated August 2010

imagination at work

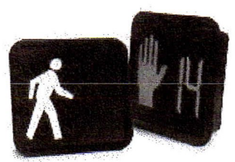

The Greatest Signals Stand the Test of Time.™

GE LED Countdown Pedestrian Signals

- 16 x 18 inch module

Mechanical Outline

Dimensions in inches. (mm) indicates metric equivalent

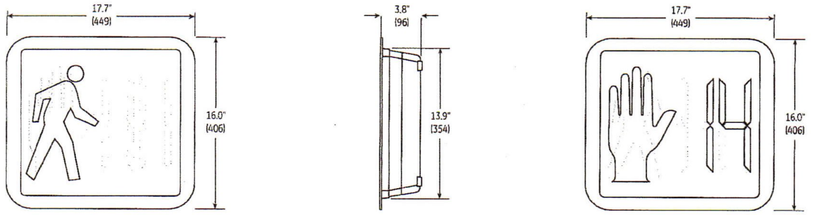

Design Compliance

Test type	Compliance
Luminous intensity, Uniformity & Viewing Angles	ITE PTCSI LED Signal Modules version of August 2010
Chromaticity	ITE PTCSI LED Signal Modules version of August 2010
Moisture Resistance	MIL-STD-810F Procedure 1, Rain & Blowing Rain
Mechanical Vibration	MIL-STD-883 Test Method 2007
Electronic Noise	FCC Title 47 Sec 15 Sub. B[1]
Transient Voltage Protection	Sec. 2.1.6 NEMA TS 2-2003 Sec. 2.1.8 NEMA TS 2-2003
Controller Compatibility	NEMA TS-2-2003
Transient Suppression	Sec. 8.2 IEC 1000-4-5 & Sec. 6.1.2 ANSI/IEEE C62.41.2 - 2002, 3KV, 2 Ω Sec. 8.0 IEC 1000-4-12 & Sec. 6.1.1 ANSI/IEEE C62.41.2 - 2002, 6KV, 30 Ω
Wiring	NFPA 70, National Electric Code
Digits	MUTCD 2003, Section 4E.07, Countdown Numbers Minimum 9" Height & 7" Width

[1] Class A

Operating Specifications

Parameter	Rating
Operating Temperature Range*	-40 to +74°C (-40 to +165°F)
Operating Voltage Range	80 to 135 V (60Hz AC)
Power Factor (PF)	> 90 %
Total Harmonic Distortion (THD)	< 20 %
Voltage Turn-Off (VTO)	35 V
Start-up Time	< 75msec
Lens & Shell Material	UV Stabilized Polycarbonate
Wiring	20 AWG, Color Coded with Strain Relief
LED Color	Hand: Portland Orange Person: Lunar White Countdown: Portland Orange
Default Mode	Hand only

* Performed in compliance with ITE test method described in the technical notes

Product Information

	Dimensions		Symbol		AC Voltage	Power (W)			Beam Pattern	Minimum Luminous Intensity Cd/m²	
Model Number	Dimensions	Layout	Hand	Person	Nominal	Hand	Person	Countdown	Degrees	Hand/Digit	Person
PS7-CFF1-27A[2]	16 x 18 in	Overlay Countdown	Full	Full	120V - 60Hz	11	7	6	26	1400	2200

[1] Class A.
[2] Full MUTCD Compliance
Test Condition : T_o = 25°C. All values are design or typical values when measured under laboratory conditions.

Highway Tech
Highway Tech
6 Sabattus Road - P.O. Box 1209 - Sabattus, ME 04280
ME Office - Tel. (207) 375-8248 - Fax (866) 232-7014
NY Office - Tel. (607) 299-4604 - Fax (866) 350-3162

GE Lighting Solutions • **1-888-MY-GE-LED** • www.gelightingsolutions.com
1 - 888 - 69 - 43 - 533

GE Lighting Solutions, LLC is a subsidiary of the General Electric Company. The GE brand and logo are trademarks of the General Electric Company. © 2013 GE Lighting Solutions, LLC.
Information provided is subject to change without notice. All values are design or typical values when measured under laboratory conditions.

TRAF254-R052313

SPECIFICATIONS	Chapel Hill Mfg.
DESCRIPTION Pedestrian Signal, Poly/ALUM LED Ready	Part Number SSPED-CNN-P22-N

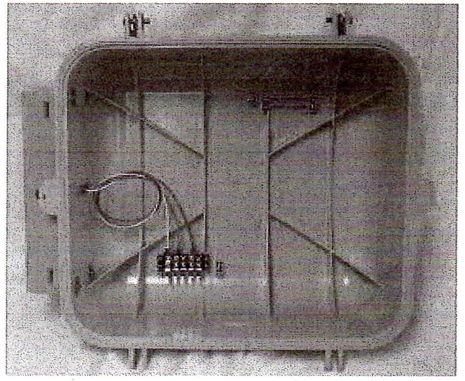

ITEM 1

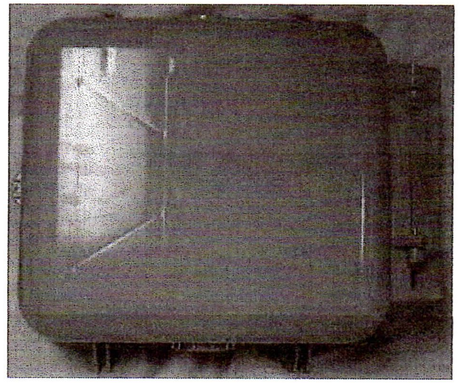

ITEM 2

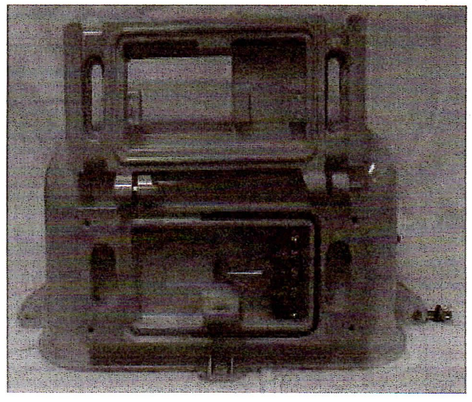

ITEM 3



ITEM 4

NO	P/N	DESCRIPTION	MATERIAL	QTY
1 2 3 4	Various	Front View, Polycarbonate Pedestrian Signal Housing, SS Hardware Back View, Polycarbonate Pedestrian Signal Housing, SS Hardware Side View, Aluminum Clamshell Mounting Hardware Attached Front View, Z-Crate Polycarbonate Visor Additional Options: 1) Aluminum Housing with or without Clamshell Mounting Hardware 2) Open Aluminum Front Door for Full View of LED Insert 3) Aluminum 6" Top Visor for Open Aluminum Front Door or Z-Crate 4) Drilled for Top and Bottom Ports (Side of Pole Mounting Hardware) 5) Specify Housing Color: Yellow, Black, Green	Poly/Aluminum	1

Manufactured By: Chapel Hill Manufacturing

Distributed by :

Highway Tech
6 Sabattus Road - P.O. Box 1209 - Sabattus, ME 04280
ME Office - Tel. (207) 375-8248 - Fax (866) 232-7014
NY Office - Tel. (607) 299-4604 - Fax (866) 350-3162

Ped Signal Housings will be supplied Green Polycarbonate Housings with Black Polycarbonate Z-Crate Visor and Clamshell Mounting Hardware

Campbell Company

APS

Advisor Guide Accessible Pedestrian Station (AGPS)



FEATURES

- Data Collection
- Night Mode Volume
- Forward Facing Speaker
- Simple Installation

KEY BENEFITS

- Independent Locations
- 4-wire Interface
- Event Tracking Log
- Ped Count/Call Data
- Laptop Interface
- Simple Menu Utility
- NEMA TS 2 Certified
- Meets MUTCD Guidelines

Overview

Regardless of physical capability, pedestrians are finding it more challenging to cross safely at signalized intersections. The Advisor APS provides important cues to assist all pedestrians to cross the intersection safely by providing audible, tactile, and visual indications at the crosswalk.

Independent Station

A locator tone, controlled with ambient gain compensation, tells a pedestrian that the crossing is equipped with APS and where it can be found. An extended press provides specific intersection information and access to additional functions. The audible walk tone or message is accompanied by a vibro-tactile indication during the visual walk display. Optional clearance phase indications may provide additional information to the pedestrian where appropriate.

Agency Benefits

The Advisor (AGPS) is designed around flexibility and ease of use. Each Advisor is configured at the factory, but customization and data extraction are simply obtained by utilizing any laptop with a USB connection. A menu driven utility guides the user through set up and downloads effortlessly. Night mode volume controls along with forward facing speakers incorporate Quiet Signals Technology to accommodate residential and evening business considerations.

Installation

Ready to mount, out of the box, a four conductor cable interfaces to the Signal Power Interface (SPI) in the pedestrian signal head. All adjustments and settings are made at the pedestrian station. Aesthetically pleasing extension brackets are available allowing stations to be mounted within accessibility guidelines.

Campbell Company • 450 W. McGregor Boise, ID 83705 • 208-345-7459 • www.pedsafety.com

Campbell Company

APS

Green Finish with 9" x 15" R10-3e Sign



Technical Specification

Parameter	Rating
BS Size	5 x 12 x 1 ¾ "
BS Weight	7.0 lbs
Power (rest)	0.48W @ 120 VAC
Current (rest)	4 mA @ 120 VAC
Max Power	1.68 W
Switch life	100 x 10^6
Operational force	< 3lbf
Operating Temp Range	-40C to +85C
Max Volume	100dB @ 1m
AGC Range	Adjustable 0 – 5dB over ambient
Audio Output Options	Default plus 4 options
LED	3000 mcd , 160 degree viewing angle
Volume control	Fully adjustable, independent channels
Reporting	Pedestrian Usage, Event Logging, System Evaluation
Synchronicity	Beaconing, Group Walk
Night Mode	Volume, Recall
Selectable Options (options selected via lap top USB connection via a menu drive utility)	EP APS, Vib Pulse Call, Recall, Beaconing, Group Walk, Walk time out, Locator Tempo, EP Time, Vib Intensity
Sizes	5 X 7 ¾ , 5 X 9", 9 X 12 ", 9 X 15"
Warranty	3 year
Test Type	**Compliance**
Functionality	MUTCD 2009 4E, TAC
Transient Voltage Protection	NEMA TS2
Mechanical Shock and Vibration	NEMA TS2

Configuration	Type
Interface	Windows Utility
Audio File update	USB
Data Format	CSV
Firmware Upgrade	USB

Parameter (SPI)	Rating
Input voltage	85 -135 VAC
Output voltage	12V DC
Connection	4 wire
Dimension	2 ¾ x 3 1/2 x 1 7/8"

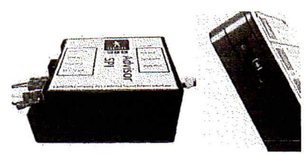

SPI USB

Additional information can be found at: www.pedsafety.com

Highway Tech Signal Equipment Sales, Inc.
6 Gardiner Road / P.O. Box 3180
Sabattus, ME 04280
Tel. (207) 375-8248
Fax (207) 375-8279

This document is copyright © May 7, 2012 Campbell Company. All rights reserved. This document is provided for information purposes only; contents are subject to change without notice.

MEUG16-31"

(formerly MEUGL-UM)

Designed to supply unmetered power to remote locations.
Typical applications included parking lot lighting, pump stations, and street lighting.

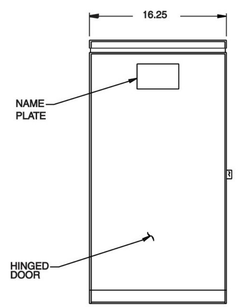

FRONT VIEW

APPROVED

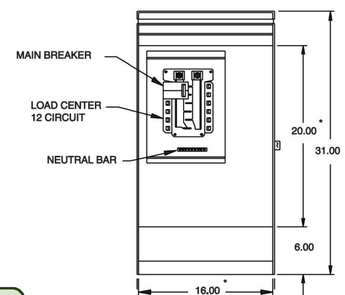

FRONT VIEW
LESS DOOR, DEADFRONT, AND COVER

* CUSTOMER EQUIPMENT AREA 20.00 X 16.00 X 8.25

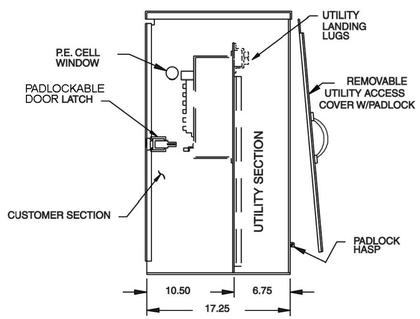

SIDE VIEW

STANDARD FEATURES

- Standard voltage 120/240V 1ø 3W.
- 12 circuit copper bussed interior.
- Main Breaker: 100 amps or 200 amps, 10k AIC.
- Utility Landing Lugs: 200 amps, 250 kcmil.
- Vandal-resistant side hinged door and dead front.
- Light green powder coat finish in accordance with ASTM B-117.

OPTIONAL FEATURES

- Maximum voltage 480Y/277V 3ø 4W (may affect optional equipment).
- 12 circuit interior may be increased to 30 circuit.
- Higher AIC available upon request.
- Aluminum and stainless steel cabinet.
- P.E. cell, test switch, lighting relay, receptacles may be added to standard.
- Some equipment modifications available. Consult your factory representative.
- Custom colors available.
- Pad Mounting Base available for concrete foundation. Order separately - MEUG16-BASE.
- Anchor Bolts, 5/8” dia. or 1/2” dia. Order separately - (quantity 4).

SPECIFICATIONS

- 12-gauge corrosion-resistant zinc-coated steel construction. Hood and covers 14-gauge.
- Rainproof Type 3R enclosure.
- Meets EUSERC 308 requirements.
- Acceptable circuit breakers are GE, ITE, Crouse-Hinds/ Murray, Cutler-Hammer.
- All factory wiring is 600 volt rated copper.
- Suitable for use without main when no more than six service disconnects are installed and used in accordance with article 384 of the NEC.
- Listed by Underwriters Laboratories, Inc.

Standard Models *Custom Configurations also available.* *Consult your factory representative.*	Catalog No.	Amps	Voltage	Main	AIC Rating
	MEUG16-31"-M100	100	120/240	100	10,000
	For aluminum enclosure, order MEUG16A- *For stainless steel enclosure, order MEUG16X-*				

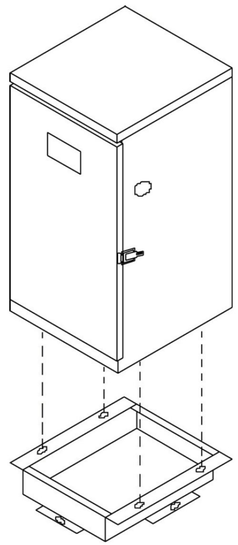

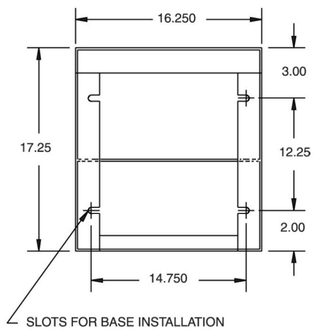

BOTTOM VIEW

MOUNTING SLOT DETAIL

BASE DETAIL

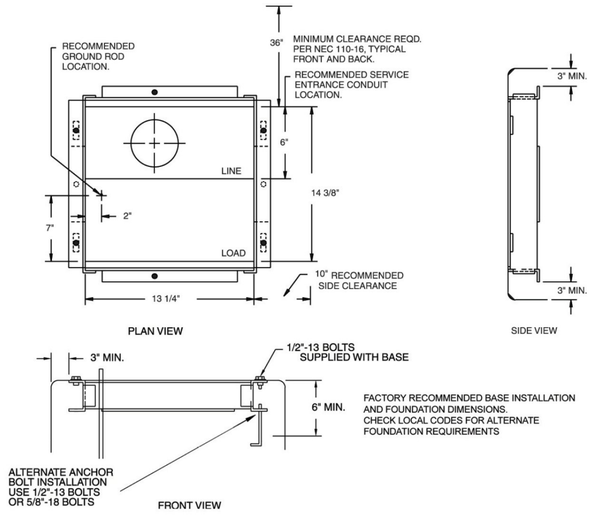

MYERS Power Products, Inc.
Tel: 866-MY-MYERS (866-696-9377) • Fax: 909-923-1806
www.myerspowerproducts.com

SPP-0003-DS-0611

Specifications are subject to change without notice.

GE
Lighting Solutions

GE LED Countdown Pedestrian Signals

16 x 18 inch



Excellent Appearance & Visibility

- Robust LED system design enables high luminous intensity over product life cycle
- Efficient optical system minimizes power consumption while providing excellent uniformity and viewing angles
- Single piece transparent front window with internal masking to prevent:
  - countdown and icons display from being readily visible when not in operation
  - scratches and abrasions compared with external silk screen technology
- Bright and clear icons
- Fully uniform look

Outstanding Reliability & Robust Operation

- Internal conflict monitor preventing walk and don't walk indications to light up at the same time
- Individual power supply drives each display to ensure proper indication

Meets Rigorous Certification & Testing Standards

- Intertek ETL Verified compliant
- DOE compliant
- Using MIL-STD-810F and NEMA 250-1991 Type 4 for environmental robustness, passed reliability and qualification testing including high temperature, high humidity cycling (HTHH for 1,000 hours)
- Compliant (for Full Hand/Full Person) with the ITE PTCSI LED Signal Modules
  - version dated August 2010

imagination at work

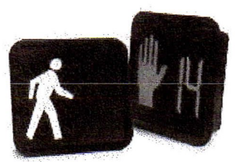

The Greatest Signals Stand the Test of Time.™

GE LED Countdown Pedestrian Signals

- 16 x 18 inch module

Mechanical Outline

Dimensions in inches. (mm) indicates metric equivalent

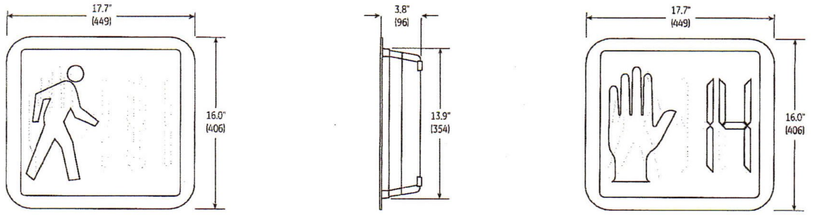

Design Compliance

Test type	Compliance
Luminous intensity, Uniformity & Viewing Angles	ITE PTCSI LED Signal Modules version of August 2010
Chromaticity	ITE PTCSI LED Signal Modules version of August 2010
Moisture Resistance	MIL-STD-810F Procedure 1, Rain & Blowing Rain
Mechanical Vibration	MIL-STD-883 Test Method 2007
Electronic Noise	FCC Title 47 Sec 15 Sub. B[1]
Transient Voltage Protection	Sec. 2.1.6 NEMA TS 2-2003 Sec. 2.1.8 NEMA TS 2-2003
Controller Compatibility	NEMA TS-2-2003
Transient Suppression	Sec. 8.2 IEC 1000-4-5 & Sec. 6.1.2 ANSI/IEEE C62.41.2 - 2002, 3KV, 2 Ω Sec. 8.0 IEC 1000-4-12 & Sec. 6.1.1 ANSI/IEEE C62.41.2 - 2002, 6KV, 30 Ω
Wiring	NFPA 70, National Electric Code
Digits	MUTCD 2003, Section 4E.07, Countdown Numbers Minimum 9" Height & 7" Width

[1] Class A

Operating Specifications

Parameter	Rating
Operating Temperature Range*	-40 to +74°C (-40 to +165°F)
Operating Voltage Range	80 to 135 V (60Hz AC)
Power Factor (PF)	> 90 %
Total Harmonic Distortion (THD)	< 20 %
Voltage Turn-Off (VTO)	35 V
Start-up Time	< 75msec
Lens & Shell Material	UV Stabilized Polycarbonate
Wiring	20 AWG, Color Coded with Strain Relief
LED Color	Hand: Portland Orange Person: Lunar White Countdown: Portland Orange
Default Mode	Hand only

* Performed in compliance with ITE test method described in the technical notes

Product Information

	Dimensions		Symbol		AC Voltage	Power (W)			Beam Pattern	Minimum Luminous Intensity Cd/m²	
Model Number	Dimensions	Layout	Hand	Person	Nominal	Hand	Person	Countdown	Degrees	Hand/Digit	Person
PS7-CFF1-27A[2]	16 x 18 in	Overlay Countdown	Full	Full	120V - 60Hz	11	7	6	26	1400	2200

[1] Class A.
[2] Full MUTCD Compliance
Test Condition : T_o = 25°C. All values are design or typical values when measured under laboratory conditions.

Highway Tech
Highway Tech
6 Sabattus Road - P.O. Box 1209 - Sabattus, ME 04280
ME Office - Tel. (207) 375-8248 - Fax (866) 232-7014
NY Office - Tel. (607) 299-4604 - Fax (866) 350-3162

GE Lighting Solutions • **1-888-MY-GE-LED** • www.gelightingsolutions.com
1 - 888 - 69 - 43 - 533

GE Lighting Solutions, LLC is a subsidiary of the General Electric Company. The GE brand and logo are trademarks of the General Electric Company. © 2013 GE Lighting Solutions, LLC.
Information provided is subject to change without notice. All values are design or typical values when measured under laboratory conditions.

TRAF254-R052313

SPECIFICATIONS	Chapel Hill Mfg.
DESCRIPTION Pedestrian Signal, Poly/ALUM LED Ready	Part Number SSPED-CNN-P22-N

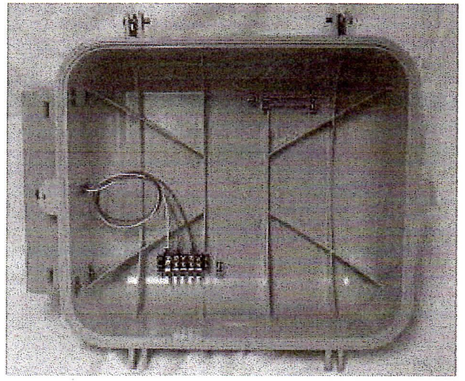

ITEM 1

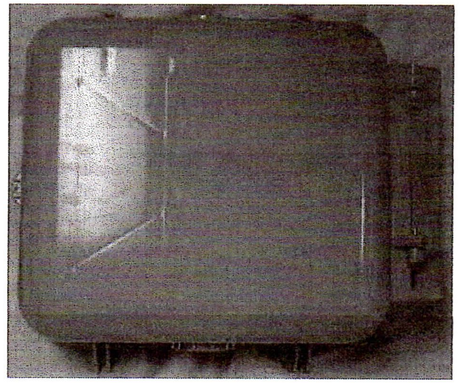

ITEM 2

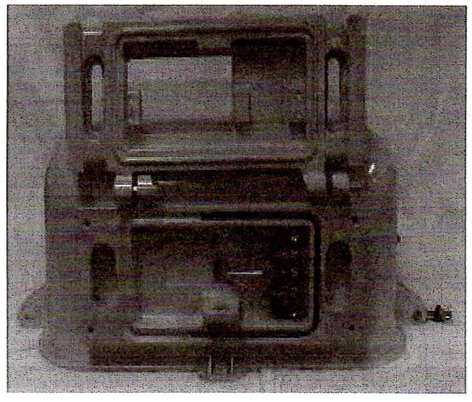

ITEM 3



ITEM 4

NO	P/N	DESCRIPTION	MATERIAL	QTY
1 2 3 4	Various	Front View, Polycarbonate Pedestrian Signal Housing, SS Hardware Back View, Polycarbonate Pedestrian Signal Housing, SS Hardware Side View, Aluminum Clamshell Mounting Hardware Attached Front View, Z-Crate Polycarbonate Visor Additional Options: 1) Aluminum Housing with or without Clamshell Mounting Hardware 2) Open Aluminum Front Door for Full View of LED Insert 3) Aluminum 6" Top Visor for Open Aluminum Front Door or Z-Crate 4) Drilled for Top and Bottom Ports (Side of Pole Mounting Hardware) 5) Specify Housing Color: Yellow, Black, Green	Poly/Aluminum	1

Manufactured By: Chapel Hill Manufacturing

Distributed by :

Highway Tech
6 Sabattus Road - P.O. Box 1209 - Sabattus, ME 04280
ME Office - Tel. (207) 375-8248 - Fax (866) 232-7014
NY Office - Tel. (607) 299-4604 - Fax (866) 350-3162

Ped Signal Housings will be supplied Green Polycarbonate Housings with Black Polycarbonate Z-Crate Visor and Clamshell Mounting Hardware

Campbell Company

APS

Advisor Guide Accessible Pedestrian Station (AGPS)



FEATURES

- Data Collection
- Night Mode Volume
- Forward Facing Speaker
- Simple Installation

KEY BENEFITS

- Independent Locations
- 4-wire Interface
- Event Tracking Log
- Ped Count/Call Data
- Laptop Interface
- Simple Menu Utility
- NEMA TS 2 Certified
- Meets MUTCD Guidelines

Overview

Regardless of physical capability, pedestrians are finding it more challenging to cross safely at signalized intersections. The Advisor APS provides important cues to assist all pedestrians to cross the intersection safely by providing audible, tactile, and visual indications at the crosswalk.

Independent Station

A locator tone, controlled with ambient gain compensation, tells a pedestrian that the crossing is equipped with APS and where it can be found. An extended press provides specific intersection information and access to additional functions. The audible walk tone or message is accompanied by a vibro-tactile indication during the visual walk display. Optional clearance phase indications may provide additional information to the pedestrian where appropriate.

Agency Benefits

The Advisor (AGPS) is designed around flexibility and ease of use. Each Advisor is configured at the factory, but customization and data extraction are simply obtained by utilizing any laptop with a USB connection. A menu driven utility guides the user through set up and downloads effortlessly. Night mode volume controls along with forward facing speakers incorporate Quiet Signals Technology to accommodate residential and evening business considerations.

Installation

Ready to mount, out of the box, a four conductor cable interfaces to the Signal Power Interface (SPI) in the pedestrian signal head. All adjustments and settings are made at the pedestrian station. Aesthetically pleasing extension brackets are available allowing stations to be mounted within accessibility guidelines.

Campbell Company • 450 W. McGregor Boise, ID 83705 • 208-345-7459 • www.pedsafety.com

Campbell Company

APS

Green Finish with 9" x 15" R10-3e Sign



Technical Specification

Parameter	Rating
BS Size	5 x 12 x 1 ¾ "
BS Weight	7.0 lbs
Power (rest)	0.48W @ 120 VAC
Current (rest)	4 mA @ 120 VAC
Max Power	1.68 W
Switch life	100 x 10^6
Operational force	< 3lbf
Operating Temp Range	-40C to +85C
Max Volume	100dB @ 1m
AGC Range	Adjustable 0 – 5dB over ambient
Audio Output Options	Default plus 4 options
LED	3000 mcd , 160 degree viewing angle
Volume control	Fully adjustable, independent channels
Reporting	Pedestrian Usage, Event Logging, System Evaluation
Synchronicity	Beaconing, Group Walk
Night Mode	Volume, Recall
Selectable Options (options selected via lap top USB connection via a menu drive utility)	EP APS, Vib Pulse Call, Recall, Beaconing, Group Walk, Walk time out, Locator Tempo, EP Time, Vib Intensity
Sizes	5 X 7 ¾ , 5 X 9", 9 X 12 ", 9 X 15"
Warranty	3 year
Test Type	**Compliance**
Functionality	MUTCD 2009 4E, TAC
Transient Voltage Protection	NEMA TS2
Mechanical Shock and Vibration	NEMA TS2

Configuration	Type
Interface	Windows Utility
Audio File update	USB
Data Format	CSV
Firmware Upgrade	USB

Parameter (SPI)	Rating
Input voltage	85 -135 VAC
Output voltage	12V DC
Connection	4 wire
Dimension	2 ¾ x 3 1/2 x 1 7/8"

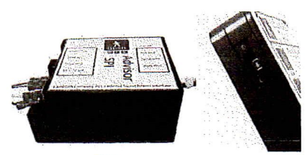

SPI USB

Additional information can be found at: www.pedsafety.com

Highway Tech Signal Equipment Sales, Inc.
6 Gardiner Road / P.O. Box 3180
Sabattus, ME 04280
Tel. (207) 375-8248
Fax (207) 375-8279

This document is copyright © May 7, 2012 Campbell Company. All rights reserved. This document is provided for information purposes only; contents are subject to change without notice.

Highway Tech

Highway Tech Signal Equipment Sales, Inc.
6 Sabattus Road • P.O. Box 1209 • Sabattus, ME 04280
Tel. (207) 375-8248 • Fax (866) 232-7014

October 13, 2014

Don Weston Excavating, Inc.
349 Commerce Street
Williston, VT 05495

Attention: Don Weston

Here are the Signal Equipment Submittals for the Bristol HES 021-1 (28) Main Street (Route 116) & North St/South St. project. This should complete the submittal requirements for the signal equipment supplied by Highway Tech on this project. Please call if you have any questions or if you require any other documentation.

Submittal Status Chart

Item	Sets	Submitted
Naztec P-44 Controller Cabinet	1	10/13/14
Naztec TS2 Type 2 Controller	1	10/13/14
Generator Transfer Switch	1	10/13/14
Naztec BIU-130	1	10/13/14
Naztec TS2 Cabinet Power Supply	1	10/13/14
Naztec MMU-516E	1	10/13/14
PDC SSS-87I/O Load Switch	1	10/13/14
PDC SSF-87 Flasher	1	10/13/14
Wavetronix Matrix Radar Presence Sensor	1	10/13/14
Wavetronix SmartSensor Matrix Cable	1	10/13/14
Wavetronix Sensor Cable Junction Box	1	10/13/14
Wavetronix Click 650 SDLC Cabinet Interface	1	10/13/14
Wavetronix SmartSensor Matrix Mount	1	10/13/14
Pelco Astro-Bracs	1	10/13/14
Chapel Hill Green Poly Signal Housings	1	10/13/14
Chapel Hill Green Louvered Aluminum Backplates	1	10/13/14
GE 12" LED Full Ball LED Signal Modules	1	10/13/14
GE 16" x 18" LED Countdown Pedestrian Signal Modules	1	10/13/14
Chapel Hill 16" x 18" Green Poly Pedestrian Signal Housings with Clamshell Mount	1	10/13/14
Campbell Advisor Guide APS Push Button Assembly	1	10/13/14

Thank You,
Mike Stewart
Sales Representative

Campbell Company

APS

Advisor Guide Accessible Pedestrian Station (AGPS)



FEATURES

- Data Collection
- Night Mode Volume
- Forward Facing Speaker
- Simple Installation

KEY BENEFITS

- Independent Locations
- 4-wire Interface
- Event Tracking Log
- Ped Count/Call Data
- Laptop Interface
- Simple Menu Utility
- NEMA TS 2 Certified
- Meets MUTCD Guidelines

Overview

Regardless of physical capability, pedestrians are finding it more challenging to cross safely at signalized intersections. The Advisor APS provides important cues to assist all pedestrians to cross the intersection safely by providing audible, tactile, and visual indications at the crosswalk.

Independent Station

A locator tone, controlled with ambient gain compensation, tells a pedestrian that the crossing is equipped with APS and where it can be found. An extended press provides specific intersection information and access to additional functions. The audible walk tone or message is accompanied by a vibro-tactile indication during the visual walk display. Optional clearance phase indications may provide additional information to the pedestrian where appropriate.

Agency Benefits

The Advisor (AGPS) is designed around flexibility and ease of use. Each Advisor is configured at the factory, but customization and data extraction are simply obtained by utilizing any laptop with a USB connection. A menu driven utility guides the user through set up and downloads effortlessly. Night mode volume controls along with forward facing speakers incorporate Quiet Signals Technology to accommodate residential and evening business considerations.

Installation

Ready to mount, out of the box, a four conductor cable interfaces to the Signal Power Interface (SPI) in the pedestrian signal head. All adjustments and settings are made at the pedestrian station. Aesthetically pleasing extension brackets are available allowing stations to be mounted within accessibility guidelines.

Campbell Company • 450 W. McGregor Boise, ID 83705 • 208-345-7459 • www.pedsafety.com

Campbell Company

APS

Green Finish with 9" x 15" R10-3e Sign



Technical Specification

Parameter	Rating
BS Size	5 x 12 x 1 ¾ "
BS Weight	7.0 lbs
Power (rest)	0.48W @ 120 VAC
Current (rest)	4 mA @ 120 VAC
Max Power	1.68 W
Switch life	100 x 10^6
Operational force	< 3lbf
Operating Temp Range	-40C to +85C
Max Volume	100dB @ 1m
AGC Range	Adjustable 0 – 5dB over ambient
Audio Output Options	Default plus 4 options
LED	3000 mcd , 160 degree viewing angle
Volume control	Fully adjustable, independent channels
Reporting	Pedestrian Usage, Event Logging, System Evaluation
Synchronicity	Beaconing, Group Walk
Night Mode	Volume, Recall
Selectable Options (options selected via lap top USB connection via a menu drive utility)	EP APS, Vib Pulse Call, Recall, Beaconing, Group Walk, Walk time out, Locator Tempo, EP Time, Vib Intensity
Sizes	5 X 7 ¾ , 5 X 9", 9 X 12 ", 9 X 15"
Warranty	3 year
Test Type	**Compliance**
Functionality	MUTCD 2009 4E, TAC
Transient Voltage Protection	NEMA TS2
Mechanical Shock and Vibration	NEMA TS2

Configuration	Type
Interface	Windows Utility
Audio File update	USB
Data Format	CSV
Firmware Upgrade	USB

Parameter (SPI)	Rating
Input voltage	85 -135 VAC
Output voltage	12V DC
Connection	4 wire
Dimension	2 ¾ x 3 1/2 x 1 7/8"

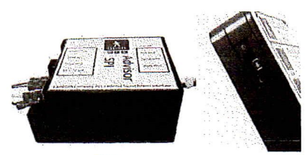

SPI USB

Additional information can be found at: www.pedsafety.com

Highway Tech Signal Equipment Sales, Inc.
6 Gardiner Road / P.O. Box 3180
Sabattus, ME 04280
Tel. (207) 375-8248
Fax (207) 375-8279

This document is copyright © May 7, 2012 Campbell Company. All rights reserved. This document is provided for information purposes only; contents are subject to change without notice.

CONFIDENTIAL WORKSHEET BENNETT BOLT WORKS

HOOK BOLT - RIGHT ANGLE BEND

ITEM ID
150C5400BANS

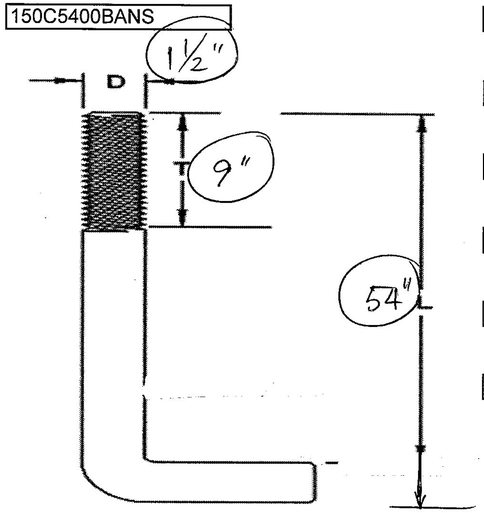

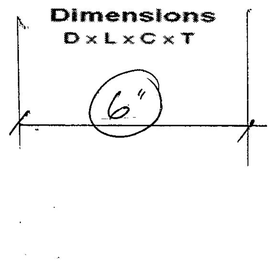

Order Number	Customer
	HIGHWAY TECH

Grade	EACH
304 Stainless IMPORTED	16

Finish	Thread Type
plain	cut

Dia (D)	Length (L)
1 1/2	54

Inside Bend Length (C)	Thread Length (T)
6	9

APPROVED

x _____
Signed approved

min 55,000 psi yield
80,000 psi tensile

DESCRIPTION
STAINLESS STEEL BRIGHT BARS

PEELED & POLISHED 304 S/S

SIZE	SHAPE	TOLERANCE	LENGTH	PIECES
1.500"	ROUND	ASTM A484	12' - 14'	17

CHEMICAL ANALYSIS

%C	%Mn	%Si	%S	%P	%Cr	%Ni	%Cu	%Mo	%Co	%N2
0.0410	1.160	0.450	0.0200	0.0360	18.180	8.020	0.740	0.350	0.150	0.0980

TEST RESULTS

0.2% yield strength ksi	Tensile Strength ksi	Elongation %	Reduction Of Area %	Hardness BHN	Grain Size NOS
56.0	96.0	48.0	70.0	194.0	6.0

SPECIFICATION:

MATERIAL CONFIRMS TO ASTM A 276-13,COND.A, A 479/479M-13, COND.A, A 193/193M-13b & A320/320M-13a B8 CL1,A48
A314-2008 CHEMISTRY ONLY. ASME SA 479-13a, COND.A, SA 193-2011a B8 CL1, SA 320-2011a B8 CL1, SA-182-2011a (CHEM
MR0175-2003, NACE MR0175-15156, NACE MR0103. SAE AMS QQ-S-763 B, COND. A. (EXCEPT MARKING). AMS 5639H/ 564'
MARKING).INTERGRANULAR CORROSION TEST AS PER ASTM A 262-10 PRACTICE E. GRAIN SIZE AS PER ASTM E112-20