STATE OF VERMONT
AGENCY OF TRANSPORTATION

RECORD PLANS	
CONTRACTOR:	COLD RIVER BRIDGES, LLC– KEENE, NH
RESIDENT ENGINEER:	CHRIS D. WILLIAMS
CONSTRUCTION BEGAN:	MAY 22, 2017
CONSTRUCTION COMPLETE:	SEPTEMBER 27, 2017
RECORD PLANS BY:	CHRIS D. WILLIAMS & AARON WEAVER

I HEREBY CERTIFY THAT ALL THE CONSTRUCTION REQUIRED BY THIS SET OF DRAWINGS HAS BEEN ACCOMPLISHED AS INDICATED HEREIN.

BY _____ RESIDENT ENGINEER

DATE June 18, 2018

NOTE: Any further information concerning final quantities amounts or other details relative to this project may be found at Central Files in the electronic archives.

PROPOSED IMPROVEMENT
BRIDGE PROJECT
TOWN OF LUDLOW
COUNTY OF WINDSOR
ROUTE: T.H. 1 (VT 103) CLASS I (PRINCIPAL ARTERIAL) F.A.S. 025-1
BRIDGE NO. 25

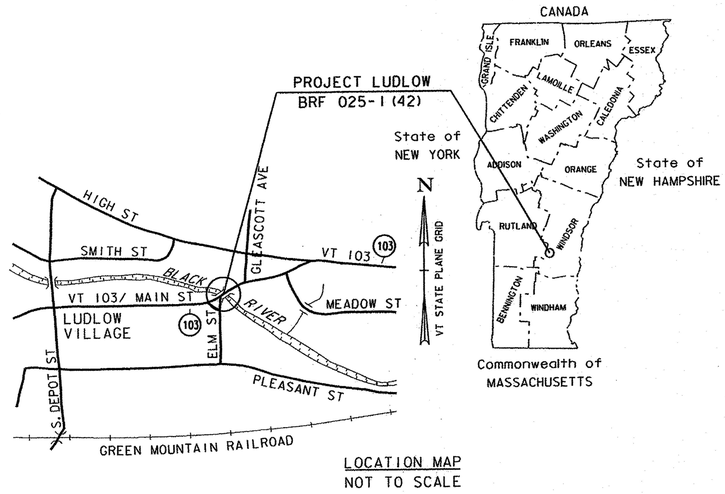

PROJECT LOCATION: LOCATED IN THE COUNTY OF WINDSOR, TOWN OF LUDLOW, ON VT ROUTE 103 (MAIN ST); BRIDGE NO. 25 EXTENDS OVER THE BLACK RIVER, APPROXIMATELY 0.23 MILES EASTERLY OF THE INTERSECTION OF T.H. 330 (SOUTH DEPOT ST) AND VT ROUTE 103 (MAIN ST).

PROJECT DESCRIPTION: WORK TO BE PERFORMED UNDER THIS PROJECT INCLUDES THE REMOVAL AND REPLACEMENT OF BRIDGE NO. 25 ON THE EXISTING ALIGNMENT, WITH ASSOCIATED ROADWAY AND CHANNEL WORK.

LENGTH OF ROADWAY: 176.32 FEET
LENGTH OF BRIDGE: 108.68 FEET
LENGTH OF PROJECT: 285.00 FEET

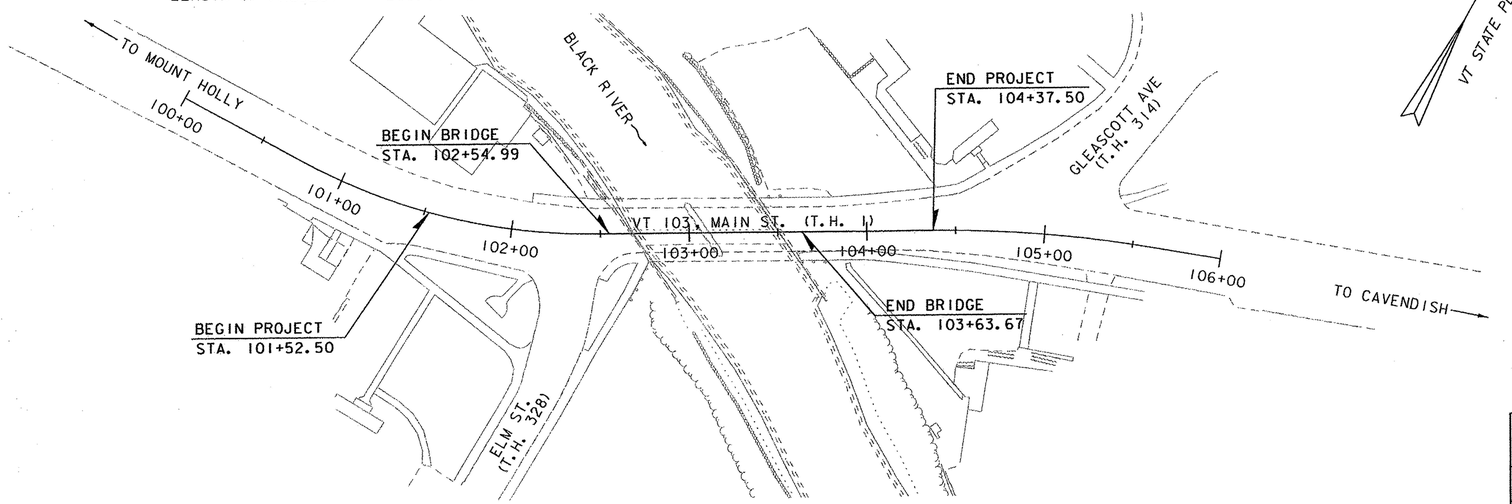

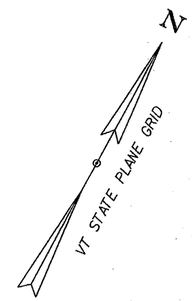

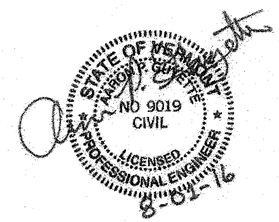

CONSTRUCTION IS TO BE CARRIED ON IN ACCORDANCE WITH THESE PLANS AND THE STANDARD SPECIFICATIONS FOR CONSTRUCTION DATED 2011, AS APPROVED BY THE FEDERAL HIGHWAY ADMINISTRATION ON JULY 20, 2011 FOR USE ON THIS PROJECT, INCLUDING ALL SUBSEQUENT REVISIONS AND SUCH REVISED SPECIFICATIONS AND SPECIAL PROVISIONS AS ARE INCORPORATED IN THESE PLANS.

QUALITY ASSURANCE PROGRAM : LEVEL I	
SURVEYED BY :	VHB
SURVEYED DATE :	NOV 2010
DATUM	
VERTICAL	NAVD 88
HORIZONTAL	NAD 83 (070)

DIRECTOR OF PROJECT DELIVERY APPROVED _____	DATE 8/23/2016
PROJECT MANAGER :	TODD A. SUMNER
PROJECT NAME :	LUDLOW
PROJECT NUMBER :	BRF 025-1 (42)
SHEET 1 OF 73 SHEETS	

VHB 57435

STATE OF VERMONT
AGENCY OF TRANSPORTATION

PRELIMINARY INFORMATION SHEET (BRIDGE)

Version 12.01.01c

LRFD

INDEX OF SHEETS

PLAN SHEETS

1	TITLE SHEET	
2	PRELIMINARY INFORMATION SHEET	⚠
3	TYPICAL BRIDGE SECTION	
4	TYPICAL ROADWAY SECTIONS	
5	TYPICAL EARTHWORK SECTIONS	
6 - 7	PROJECT NOTES	
8 - 10	QUANTITY SHEETS	
11	CONVENTIONAL SYMBOLOGY LEGEND	
12	TIE SHEET	
13	ALIGNMENT LAYOUT SHEET	
14	LAYOUT SHEET	
15	PROFILE SHEET	
16	SIDE ROAD PROFILE SHEET	
17 - 22	TRAFFIC CONTROL PLANS	
23	UTILITY LAYOUT SHEET	
24	DRAINAGE DETAIL SHEET #1	
25	WATERLINE PLAN AND ELEVATION	
26	WATERLINE SUPPORT DETAILS	
27	WATERLINE NOTES AND DETAILS	
28	DRAINAGE NOTES AND DETAILS	
29	TRAFFIC SIGNS AND LINE STRIPING	
30	TRAFFIC SIGN SUMMARY SHEET	
31	BORING INFORMATION SHEET	
32 - 34	BORING LOGS	
35	PLAN AND ELEVATION	
36	DECK AND FRAMING PLAN	
37	DECK REINFORCEMENT SECTION	
38	DECK REINFORCEMENT PLAN	
39	GIRDER DETAILS	
40 - 41	APPROACH SLAB DETAILS	
42	ABUTMENT NO. 1 PLAN AND ELEVATION	
43	ABUTMENT NO. 2 PLAN AND ELEVATION	
43A	WINGWALL POST-TENSIONING DIMENSIONS	
44	ABUTMENT REINFORCING	
45 - 46B	ABUTMENT DETAILS	
47	DECK-ABUTMENT REINFORCEMENT	
48	REINFORCING STEEL SCHEDULE SHEET	
49	BRIDGE RAILING AND GUARDRAIL LAYOUT	
50 - 53	BRIDGE RAIL DETAILS	
54	LIGHTING DETAILS	
55 - 58	ROADWAY CROSS SECTIONS	
59 - 61	CHANNEL CROSS SECTIONS	
62	EPSC NARRATIVE	
63	EPSC EXISTING CONDITIONS SHEET EPSC	
64	CONSTRUCTION CONDITIONS SHEET EPSC	
65	FINAL CONDITIONS SHEET EROSION	
66 - 67	CONTROL DETAILS	
68	R.O.W. DETAIL SHEET	
69	ROW LAYOUT SHEET 1 OF 1 REFERENCE	
70 - 73	PLANS	

STANDARDS LIST

C-10	CURBING	02-11-2008
C-2A	PORTLAND CEMENT CONCRETE SIDEWALK DRIVE ENTRANCES WITH SIDEWALK ADJACENT TO CURB	10-14-2005
C-2B	PORTLAND CEMENT CONCRETE SIDEWALK DRIVE ENTRANCES WITH SIDEWALK AND GREEN STRIP	10-14-2005
C-3A	SIDEWALK RAMPS	03-10-2008
D-9	REINFORCED CONCRETE DROP INLET WITH VERTICAL CURB & THROAT ADAPTER	06-01-1994
D-15	PRECAST REINF CONC. MH-GRATES, CAST IRON GRATE WITH FRAME, TYPE D&E	06-01-1994
D-20	HIGHWAY CROSSING SLEEVES FOR UNDERGROUND UTILITIES	03-03-2003
E-121	STANDARD SIGN PLACEMENT - CONVENTIONAL ROAD	08-08-1995
E-136B	STATE ROUTE MARKER SIGN DETAILS	08-08-1995
E-173	PULL BOXES AND JUNCTION BOXES	08-09-1995
E-191	PAVEMENT MARKING DETAILS	02-01-1999
E-193	PAVEMENT MARKING DETAILS	08-18-1995
G-1	STEEL BEAM GUARDRAIL DETAILS	11-10-2015
G-1Bm	BOX BEAM GUARDRAIL	06-13-1997
S-352A	BRIDGE RAILING, GALVANIZED STEEL TUBING/CONCRETE COMBINATION	08-22-2012
S-352B	BRIDGE RAILING, GALVANIZED STEEL TUBING/CONCRETE COMBINATION	08-22-2012
S-352C	BRIDGE RAILING, GALVANIZED STEEL TUBING/CONCRETE COMBINATION	08-22-2012
S-364C	GUARDRAIL APPROACH SECTION, GALVANIZED 3 RAIL BOX BEAM	02-10-2014
S-364D	GUARDRAIL APPROACH SECTION, GALVANIZED 3 RAIL BOX BEAM	04-23-2012
T-1	TRAFFIC CONTROL GENERAL NOTES	04-25-2016
T-10	CONVENTIONAL ROADS CONSTRUCTION APPROACH SIGNING	08-06-2012
T-40	DELINEATORS AND MILEPOSTS	01-02-2013
T-42	BRIDGE NUMBER PLAQUE	04-09-2014
T-44	MILEMARKER DETAILS - STATE & TOWN HIGHWAY	04-09-2014
T-45	SQUARE TUBE SIGN POST AND ANCHOR	01-02-2013
T-71	VERMONT REGULATORY SIGN DETAIL	04-25-2016
T-73	VERMONT REGULATORY SIGN DETAIL	04-25-2016
T-81	VERMONT WARNING SIGN DETAILS	02-12-2016
T-133	LIGHT POLE FOUNDATION DETAILS	07-25-2016
T-134	LIGHT POLE & TRANSFORMER BASE DETAILS	12-21-2015

STRUCTURES DETAILS

SD-501.00	CONCRETE DETAILS & NOTES	02-09-2012
SD-502.00	CONCRETE DETAILS & NOTES	10-10-2012
SD-516.10	BRIDGE JOINT ASPHALT PLUG	08-29-2011
SD-601.00	STRUCTURAL STEEL DETAILS AND NOTES	06-04-2010
SD-602.00	STRUCTURAL STEEL PLATE GIRDER DETAILS AND NOTES	05-02-2011
HSD-400.01	SAFETY EDGE DETAILS	03-29-2016

FINAL HYDRAULIC REPORT

HYDROLOGIC DATA

Date: March 2015

DRAINAGE AREA : 68.1 SQUARE MILES
CHARACTER OF TERRAIN : HILLY TO MOUNTAINOUS - MOSTLY FORESTED
STREAM CHARACTERISTICS : SINUOUS - CHANNELIZED THROUGH THE VILLAGE
NATURE OF STREAMBED : COBBLE GRAVEL

PEAK FLOW DATA

Q 2.33 =	3200 CFS	Q 50 =	9826 CFS
Q 10 =	5460 CFS	Q 100 =	12352 CFS
Q 25 =	7800 CFS	Q 500 =	19900 CFS

DATE OF FLOOD OF RECORD: 1927
ESTIMATED DISCHARGE: 24000 CFS
WATER SURFACE ELEV.: UNKNOWN
NATURAL STREAM VELOCITY : @ Q100 = 11.8 FPS
ICE CONDITIONS : MODERATE
DEBRIS: MODERATE
DOES THE STREAM REACH MAXIMUM HIGHWATER ELEV. RAPIDLY? NO
IS ORDINARY RISE RAPID? NO
IS STAGE AFFECTED BY UPSTREAM OR DOWNSTREAM CONDITIONS? UNKNOWN
IF YES, DESCRIBE:

WATERSHED STORAGE: < 1 %
HEADWATERS: X
UNIFORM:
IMMEDIATELY ABOVE SITE:

EXISTING STRUCTURE INFORMATION

STRUCTURE TYPE: 2 SPAN CIP T-BEAM ON CIP CONCRETE SUBSTRUCTURES
YEAR BUILT: 1928
CLEAR SPAN(NORMAL TO STREAM): 2 SPAN, 32.0 FT PER SPAN (67.0 FT TOTAL)
VERTICAL CLEARANCE ABOVE STREAMBED: 13.0 FT
WATERWAY OF FULL OPENING: 737 SQ. FT.
DISPOSITION OF STRUCTURE: REMOVAL AND REPLACEMENT
TYPE OF MATERIAL UNDER SUBSTRUCTURE: TIMBER PILES

WATER SURFACE ELEVATIONS AT:

Q2.33 =	988.4 FT	VELOCITY =	7.8 FPS
Q10 =	991.1 FT	"	9.5 FPS
Q25 =	994.7 FT	"	10.3 FPS
Q50 =	995.4 FT	"	10.0 FPS
Q100 =	996.8 FT	"	10.2 FPS

LONG TERM STREAMBED CHANGES: STABLE

IS THE ROADWAY OVERTOPPED BELOW Q100: YES
FREQUENCY: Q25
RELIEF ELEVATION: 993.1 FT
DISCHARGE OVER ROAD @Q100: 4952 CFS

UPSTREAM STRUCTURE

TOWN: LUDLOW — DISTANCE: 1170 FT
HIGHWAY# : TH 308 (N. DEPOT ST) — STRUCTURE #: B56
CLEAR SPAN: 28.7 FT — CLEAR HEIGHT:
YEAR BUILT: 1954 — FULL WATERWAY:
STRUCTURE TYPE: STEEL STRINGER

DOWNSTRUCTURE STRUCTURE

TOWN: LUDLOW — DISTANCE: 1380 FT
HIGHWAY# : TH 324 (MILL ST) — STRUCTURE #: B57
CLEAR SPAN: 25 FT — CLEAR HEIGHT:
YEAR BUILT: 1929 — FULL WATERWAY:
STRUCTURE TYPE: STEEL TRUSS

LRFR LOAD RATING FACTORS

LOADING LEVELS	TRUCK						
	H-20	HL-93	3S2	6 AXLE	3A. STR.	4A. STR.	5A. SEMI
TONNAGE	**20**	**36**	**36**	**66**	**30**	**34.5**	**38**
INVENTORY	3.77	1.64					
POSTING							
OPERATING	4.89	2.13	3.07	1.9	3.05	2.7	2.76
COMMENTS:							

AS BUILT "REBAR" DETAILS

LEVEL I	LEVEL II	LEVEL III
TYPE:	TYPE:	TYPE:
GRADE:	GRADE:	GRADE:

TRAFFIC DATA

	ADT	DHV	% D	% T	ADTT	
9						20 year ESAL for flexible pavement from 2012 to 2032 : 5,686,000
10	9500	1300	55	5.3	630	40 year ESAL for flexible pavement from 2012 to 2052 : 13,347,000
20	10400	1400	55	7.4	960	Design Speed : 30 mph

* - SEE PROJECT NOTES FOR VALUES.

PILE DRIVING AND TESTING REQUIREMENTS

1. NOMINAL PILE DRIVING CAPACITY — R_{ndr} : *
2. PILE TEST RESISTANCE FACTOR — ϕ: 0.65
3. MAXIMUM PILE TIP ELEVATION *
4. A MINIMUM OF 1 DYNAMIC TEST PER ABUTMENT SHALL BE PERFORMED DURING INSTALLATION. THE REMAINING SHOULD BE CALIBRATED BY WAVE EQUATION ANALYSIS. PILES MUST BE DRIVEN A MINIMUM OF 25' BELOW BOTTOM OF ABUTMENT REGARDLESS IF REQUIRED DRIVING RESISTANCE HAS BEEN MET.

PROPOSED STRUCTURE

STRUCTURE TYPE: SINGLE SPAN CIP CONCRETE/STEEL COMPOSITE SUPERSTRUCTURE ON INTEGRAL ABUTMENTS
CLEAR SPAN(NORMAL TO STREAM): 83.0 FT
VERTICAL CLEARANCE ABOVE STREAMBED: 12.7 FT
WATERWAY OF FULL OPENING: 815 SQ. FT.

WATER SURFACE ELEVATIONS AT:

Q2.33 =	988.3 FT	VELOCITY=	7.2 FPS
Q10 =	991.0 FT	"	8.4 FPS
Q25 =	994.4 FT	"	9.4 FPS
Q50 =	995.1 FT	"	9.6 FPS
Q100 =	996.6 FT	"	9.9 FPS

IS THE ROADWAY OVERTOPPED BELOW Q100: YES
FREQUENCY: Q25
RELIEF ELEVATION: 993.1 FT
DISCHARGE OVER ROAD @Q100: 4441 CFS

AVERAGE LOW ELEVATION OF SUPERSTRUCTURE: 992.0
VERTICAL CLEARANCE: @ Q50 = -3.1 FT

SCOUR: CONTRACTION SCOUR @ Q100 = 2.2-FT
CONTRACTION SCOUR @ Q200 = 2.4-FT
REQUIRED CHANNEL PROTECTION: STONE FILL, TYPE III *

PERMIT INFORMATION

AVERAGE DAILY FLOW:	---	DEPTH OR ELEVATION:
ORDINARY LOW WATER:	---	---
ORDINARY HIGH WATER:	---	---

TEMPORARY BRIDGE REQUIREMENTS

STRUCTURE TYPE: NO TEMPORARY BRIDGE PROPOSED
CLEAR SPAN (NORMAL TO STREAM): N/A
VERTICAL CLEARANCE ABOVE STREAMBED: N/A
WATERWAY AREA OF FULL OPENING: N/A

ADDITIONAL INFORMATION

* - HYDRAULICS REPORT RECOMMENDS TYPE IV, BUT DUE TO SITE CONSTRAINTS USE STONE FILL TYPE III

TRAFFIC MAINTENANCE NOTES

1. MAINTAIN TRAFFIC ON AN OFF SITE DETOUR.
2. TRAFFIC SIGNALS ARE NOT NECESSARY.
3. SIDEWALKS ARE NOT NECESSARY

DESIGN VALUES

1. DESIGN LIVE LOAD		HL-93
2. FUTURE PAVEMENT	d_p:	3.0 INCH
3. DESIGN SPAN	L:	105.50 FT
4. MIN. MID-SPAN POS. CAMBER @ RELEASE (PRESTRESSED UNITS)	Δ:	---
5. PRESTRESSING STRAND	f_y:	---
6. PRESTRESSED CONCRETE STRENGTH	f'_c:	---
7. PRESTRESSED CONCRETE RELEASE STRENGTH	f'_{ci}:	---
8. SPECIAL PROVISION (HIGH PERFORMANCE CONCRETE, RAPID SET)	f'_c:	5.0 KSI
9. CONCRETE, HIGH PERFORMANCE CLASS A	f'_c:	4.0 KSI
10. CONCRETE, HIGH PERFORMANCE CLASS B	f'_c:	---
11. CONCRETE, CLASS C	f'_c:	---
12. REINFORCING STEEL	f_y:	60 KSI
13. STRUCTURAL STEEL AASHTO M270	f_y:	50 KSI
14. SOIL UNIT WEIGHT	γ:	0.140 KCF
15. NOMINAL BEARING RESISTANCE OF SOIL	q_n:	---
16. SOIL BEARING RESISTANCE FACTOR (REFER TO AASHTO LRFD)	ϕ:	---
17. NOMINAL BEARING RESISTANCE OF ROCK	q_n:	---
18. ROCK BEARING RESISTANCE FACTOR (REFER TO AASHTO LRFD)	ϕ:	---
19. NOMINAL AXIAL PILE RESISTANCE	q_p:	328.0 KIPS
20. PILE YIELD STRENGTH ASTM A572	f_y:	50 KSI
21. PILE SIZE		HP 14X89
22. EST. PILE LENGTH	L_p:	54.0 FT
23. PILE RESISTANCE FACTOR	ϕ:	1.00
24. LATERAL PILE DEFLECTION	Δ:	--- INCH
25. BASIC WIND SPEED	V_{3s}:	---
26. MINIMUM GROUND SNOW LOAD	p_g:	---
27. SEISMIC DATA PGA: ---	S_s:	---
	S_1:	---

PROJECT NAME: LUDLOW
PROJECT NUMBER: BRF 025-1(42)

CALDERWOOD ENGINEERING, ETC.
STRUCTURAL ENGINEERING • DETAILING SERVICES
222 RIVER RD. RICHMOND, ME 04357 PH/FX (207)737-2007/(207) 737-2008

PREPARED FOR:
COLD RIVER BRIDGES, LLC
CEE 16-16-COLDRIVERBRIDGES
01-CS-LUDLOW

P.E. NUMBER: 8711
DATE:

	DATE	BY
REVISIONS 1	MAR 2017	TDC
REVISIONS 2		TDC
REVISIONS 3		
REVISIONS 4		
FIELD CHANGES		
DESIGN DETAILED		
CHECKED-REVIEWED		

VE SUPER DESIGN
LUDLOW VT. BRF 025-1(42)

PRELIMINARY INFORMATION SHEET

SHEET NUMBER
2
of 73

CALDERWOOD ENGINEERING
222 RIVER ROAD
W. RICHMOND, ME 04357
PH. (207)737-2007 FAX (207)737-2008

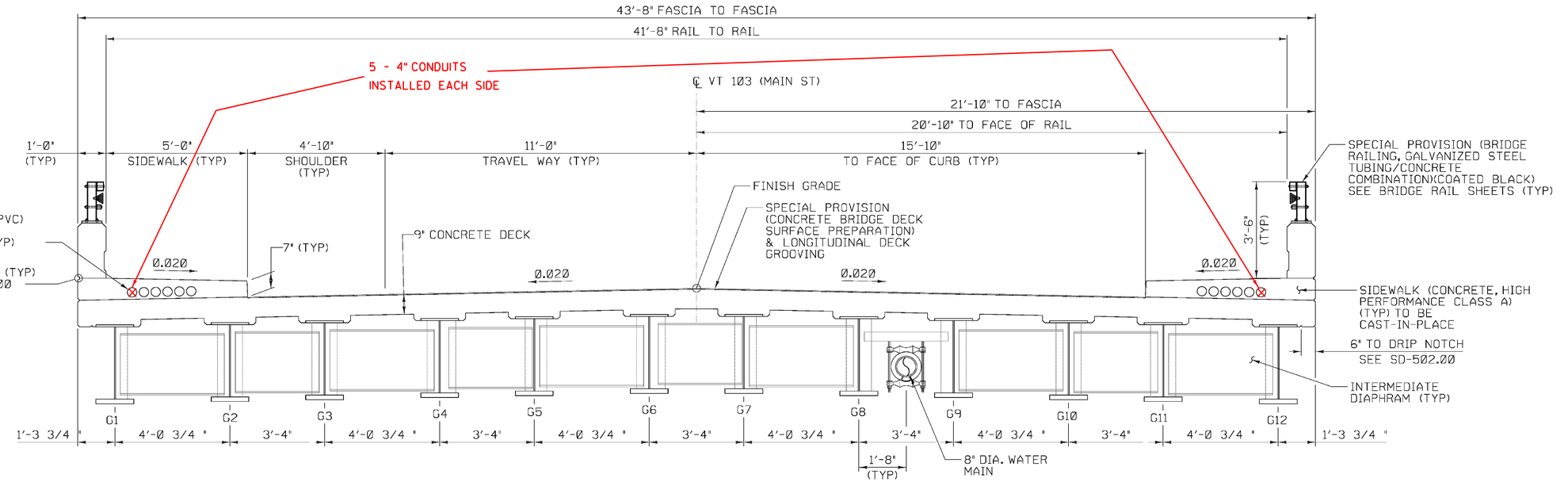

TYPICAL CAST-IN-PLACE BRIDGE SECTION

SCALE ½" = 1'-0"

NOTES:

1. STRUCTURAL STEEL SHALL BE METALLIZED IN ACCORDANCE WITH ITEM 900.645 "SPECIAL PROVISION(METALLIZING STRUCTURAL STEEL)".
2. THE ENTIRE BRIDGE DECK SURFACE BETWEEN THE CURBS SHALL BE DIAMOND GROUND. PAYMENT WILL BE PAID FOR UNDER ITEM 900.670, "SPECIAL PROVISION (SUFRACE PREPARATION)".
3. DECK SHALL BE GROOVED AND PAYMENT WILL BE PAID FOR UNDER ITEM 509.10, "LONGITUDINAL DECK GROOVING".
4. SUPPORTS FOR UTILITY WILL BE CONSIDERED INCIDENTAL TO ITEM 900.645, "SPECIAL PROVISION (WATER MAIN ON THE BRIDGE)(8")".

CALDERWOOD ENGINEERING, ETC.
STRUCTURAL ENGINEERING • DETAILING SERVICES
222 RIVER RD, RICHMOND, ME 04357 PH/FX (207)737-2007/(207) 737-2008

PREPARED FOR:
COLD RIVER BRIDGES, LLC

CEE 16-16-COLDRIVERBRIDGES
01-CS-LUDLOW

STATE OF VERMONT — ERIC T. CALDERWOOD — NO. 8711 — LICENSED PROFESSIONAL ENGINEER

8711 P.E. NUMBER

DATE

	BY	DATE
DESIGN-DETAILED	TDC	JAN 2017
CHECKED-REVIEWED		
REVISIONS 1	TDC	MAR 2017
REVISIONS 2		
REVISIONS 3		
REVISIONS 4		
FIELD CHANGES		

VE SUPER DESIGN
LUDLOW VT. BRF 025-1(42)

TYPICAL BRIDGE SECTION

SHEET NUMBER

3

of 73

CALDERWOOD ENGINEERING, ETC. — STRUCTURAL ENGINEERING • DETAILING SERVICES — 222 RIVER RD. RICHMOND, ME 04357 — PH. (207)737-2007 FAX (207) 737-2008

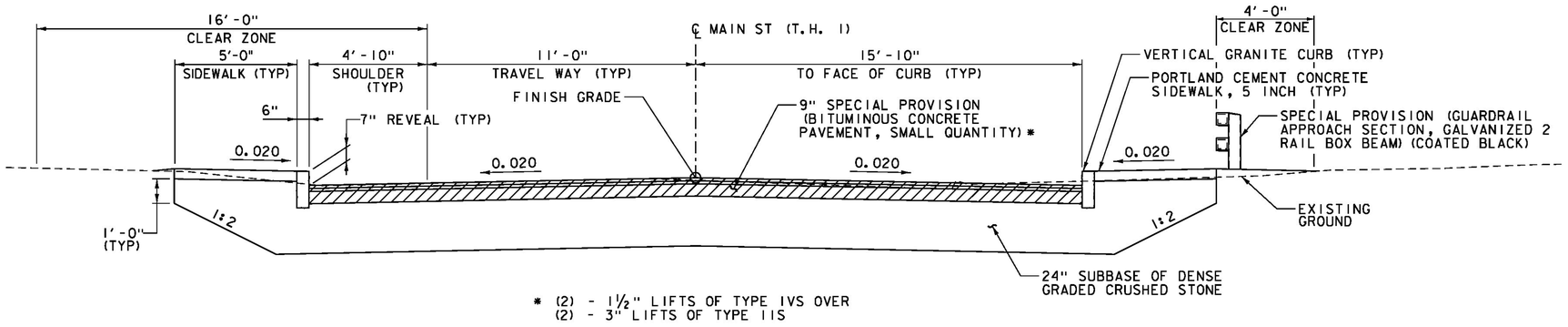

* (2) - 1½" LIFTS OF TYPE IVS OVER
(2) - 3" LIFTS OF TYPE IIS

TYPICAL VT 103 ROADWAY SECTION

SCALE ⅜" = 1'-0"

MATERIAL TOLERANCES

(IF USED ON PROJECT)

SURFACE	
PAVEMENT (TOTAL THICKNESS)	+/- ¼"
SUBBASE OF DENSE GRADED CRUSHED STONE	+/- 1"

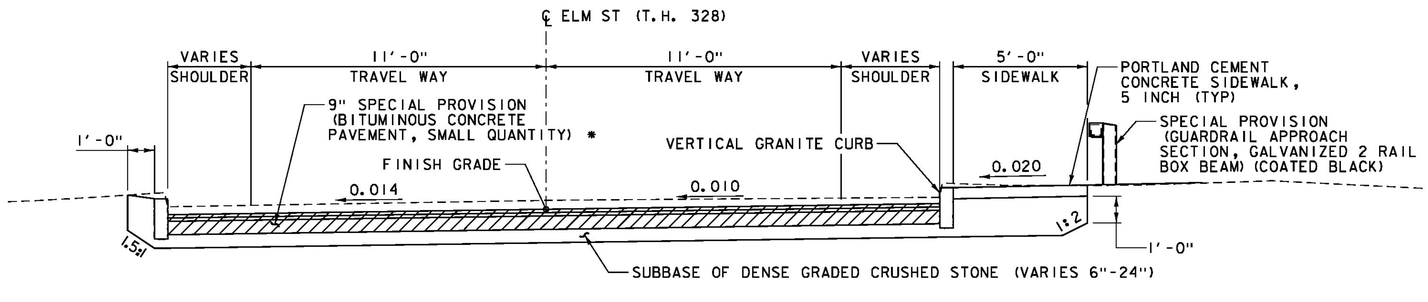

* (2) - 1½" LIFTS OF TYPE IVS OVER
(2) - 3" LIFTS OF TYPE IIS

TYPICAL ELM ST ROADWAY SECTION

SCALE ⅜" = 1'-0"

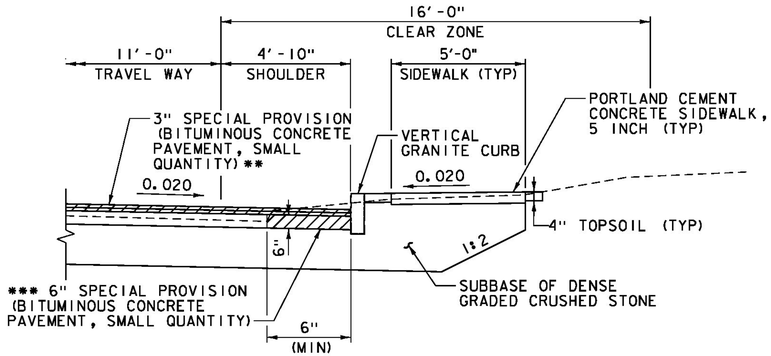

** (2) - 1½" LIFTS OF TYPE IVS
*** (2) - 3" LIFTS OF TYPE IIS

TYPICAL ROADWAY SECTION

WITH GRASS STRIP BETWEEN ROAD AND SIDEWALK
STA. 104+29 - 104+74, RT
SCALE ⅜" = 1'-0"

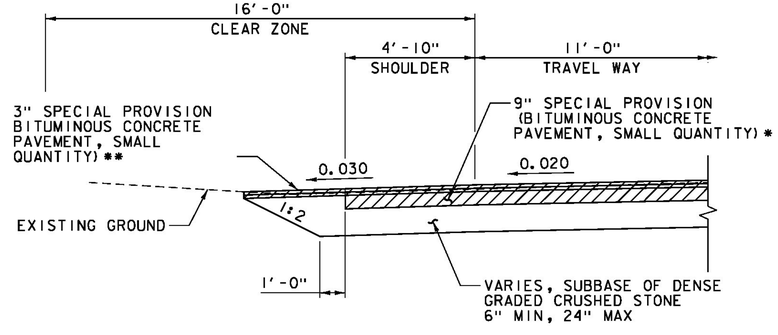

* (2) - 1½" LIFTS OF TYPE IVS OVER
(2) - 3" LIFTS OF TYPE IIS

** (2) - 1½" LIFTS OF TYPE IVS

TYPICAL ROADWAY SECTION AT PAVED DRIVE

NO CURB OR SIDEWALK
SCALE ⅜" = 1'-0"

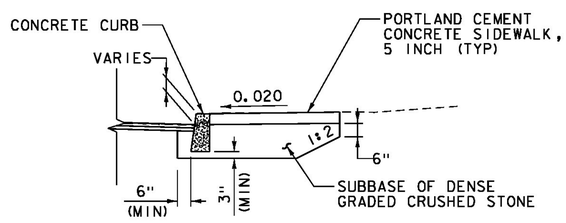

TYPICAL ROADWAY SECTION AT CURB REPLACEMENT

SIDEWALK AND CURB REPLACEMENT
STA. 100+94 - 101+17, RT
SCALE ⅜" = 1'-0"

PROJECT NAME:	LUDLOW
PROJECT NUMBER:	BRF 025-1(42)
FILE NAME: z10J068typ.dgn	PLOT DATE: 8/23/2016
PROJECT LEADER: A.P. GUYETTE	DRAWN BY: E.A. FIALA
DESIGNED BY: A.P. GUYETTE	CHECKED BY: A.P. GUYETTE
TYPICAL ROADWAY SECTIONS	SHEET 4 OF 73

VHB 57435

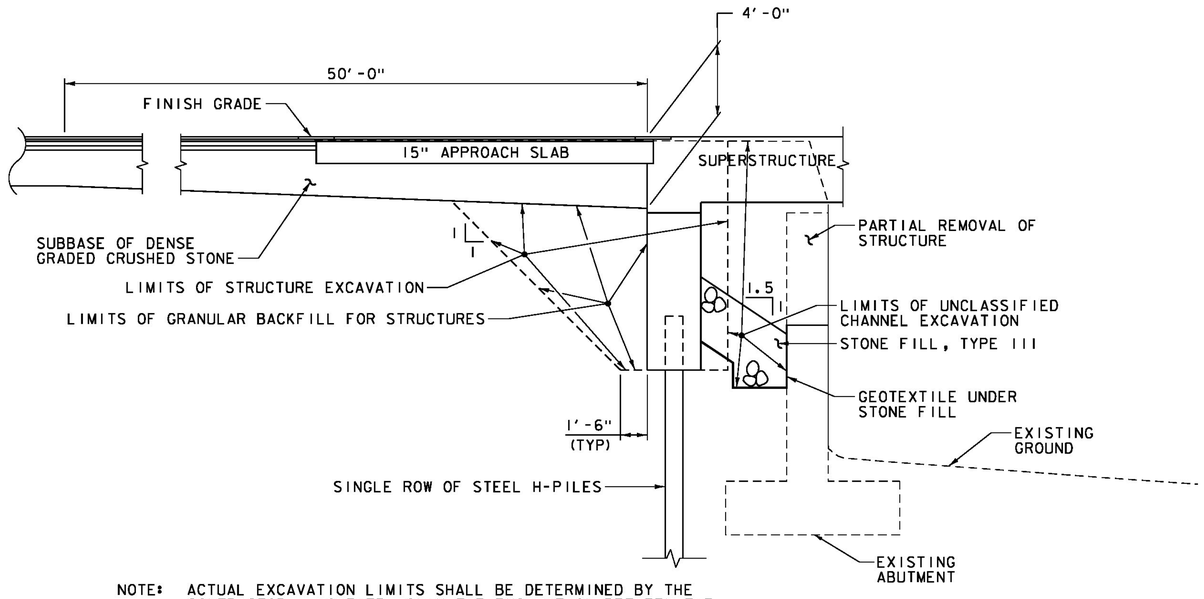

NOTE: ACTUAL EXCAVATION LIMITS SHALL BE DETERMINED BY THE CONTRACTOR. HOWEVER, ONLY THE EXCAVATION BETWEEN THE LIMITS SHOWN WILL BE PAID FOR UNDER ITEM 204.25, "STRUCTURE EXCAVATION". EXCAVATION OUTSIDE OF THESE LIMITS WILL BE AT THE EXPENSE OF THE CONTRACTOR.

ABUTMENT EARTHWORK SECTION
NOT TO SCALE

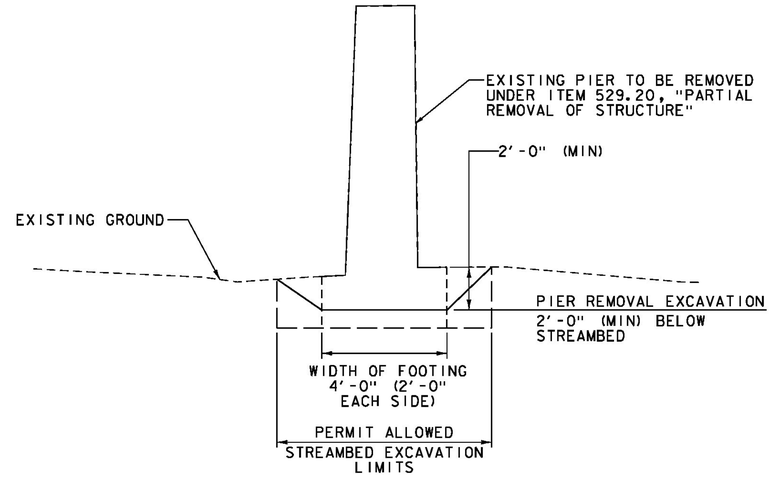

PIER REMOVAL SECTION
NOT TO SCALE

1. THE CONTRACTOR SHALL REVIEW THE APPROPRIATE ENVIRONMENTAL PERMITS FOR ALLOWABLE STREAMBED DISTURBANCE LIMITS.
2. ANY REQUIRED SUPPORT OF EXCAVATION, CONTROL OF WATER, OR COFFERDAM WILL NOT BE PAID FOR SEPARATELY, BUT WILL BE INCLUDED IN ITEM 529.20, "PARTIAL REMOVAL OF STRUCTURE".
3. EXCAVATED PIER MATERIAL TO BE FILLED IN WITH ITEM 900.608, "SPECIAL PROVISION (STONE FILL, STREAM BED MATERIAL) (TYPE III)".

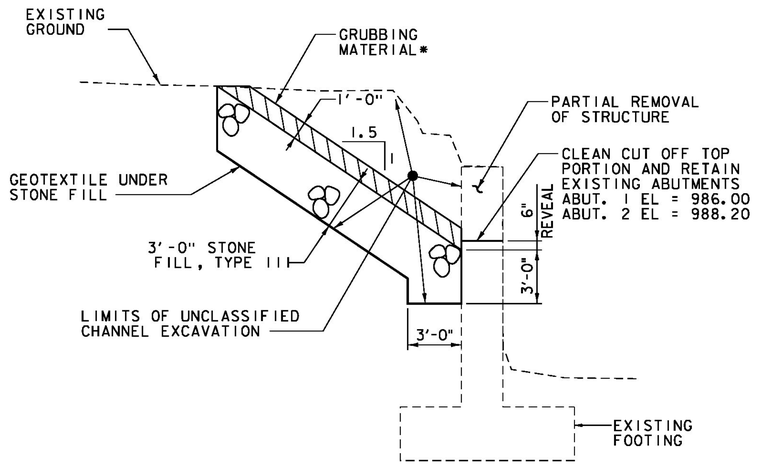

TYPICAL CHANNEL SECTION
NOT TO SCALE

* GRUBBING MATERIAL SHALL NOT BE PLACED ON THE STONE FILL IN THE AREA UNDER THE BRIDGE. WHENEVER CHANNEL SLOPE INTERSECTS ROADWAY SUBBASE, GRUBBING MATERIAL SHALL BEGIN AT THE BOTTOM OF SUBBASE.

NOTE: IN AREAS WHERE THERE IS NO EXISTING ABUTMENT, STONE FILL SHALL BE KEYED IN FRONT OF EXISTING STONE WALL OR INTO CHANNEL BANK.

PROJECT NAME:	LUDLOW
PROJECT NUMBER:	BRF 025-1(42)
FILE NAME: z10J068typ.dgn	PLOT DATE: 8/23/2016
PROJECT LEADER: A.P. GUYETTE	DRAWN BY: E.A. FIALA
DESIGNED BY: A.P. GUYETTE	CHECKED BY: A.P. GUYETTE
TYPICAL EARTHWORK SECTIONS	SHEET 5 OF 73

VHB 57435

PROJECT NOTES

GENERAL

1. ALL MATERIALS AND CONSTRUCTION SHALL CONFORM TO THE STATE OF VERMONT AGENCY OF TRANSPORTATION STANDARD SPECIFICATIONS FOR CONSTRUCTION, DATED 2011, THE AASHTO LRFD BRIDGE DESIGN SPECIFICATIONS, 6TH EDITION, AND THEIR LATEST REVISIONS.

2. ALL PRECAST CONCRETE ELEMENTS SHALL BE FABRICATED TO THE SPECIFIED DIMENSIONS WITHIN THE TOLERANCES DICTATED IN THE PRECAST/PRESTRESSED CONCRETE INSTITUTE TOLERANCE MANUAL FOR PRECAST AND PRESTRESSED CONCRETE CONSTRUCTION, MNL 135-00, AND ITS LATEST REVISIONS OR AS DIRECTED IN THE CONTRACT DOCUMENTS.

3. ALL DIMENSIONS ARE HORIZONTAL OR VERTICAL, AND ARE GIVEN AT 68 DEGREES FAHRENHEIT, UNLESS NOTED OTHERWISE.

4. THE BRIDGE IS DESIGNED FOR HL-93 LIVE LOAD WITH A 3.0 INCH ALLOWANCE FOR FUTURE PAVEMENT.

5. ITEM 529.20, "PARTIAL REMOVAL OF STRUCTURE", SHALL BE USED FOR THE REMOVAL AND DISPOSAL OF THE EXISTING BRIDGE SUPERSTRUCTURE, AND FOR ANY PORTION OF THE EXISTING ABUTMENTS THAT FALL OUTSIDE THE LIMITS OF STRUCTURE EXCAVATION OR UNCLASSIFIED CHANNEL EXCAVATION, INCLUDING THE REMOVAL OF THE PIER. ABUTMENTS ARE TO BE REMOVED TO THE ELEVATIONS SHOWN IN THE PLANS WITH A CLEAN CUT OR AS DIRECTED BY THE ENGINEER. PIER SHALL BE REMOVED TO A MINIMUM OF 2'-0" BELOW THE STREAMBED OR AS DIRECTED BY THE ENGINEER.

6. CONTRACTOR SHALL EXERCISE EXTREME CARE WHEN EXCAVATING NEAR AND BACKFILLING IN THE VICINITY OF EXISTING UTILITIES, AND SHALL USE HAND EXCAVATION WHERE APPROPRIATE. CONTRACTOR SHALL REPAIR ANY DAMAGE INCURRED DURING CONSTRUCTION TO EXISTING UTILITIES SCHEDULED TO REMAIN, AT NO COST TO THE OWNER. ALL EXISTING PIPING AND STRUCTURES EXPOSED DURING CONSTRUCTION SHALL BE ADEQUATELY SUPPORTED, BRACED OR OTHERWISE PROTECTED DURING CONSTRUCTION ACTIVITIES. UNLESS OTHERWISE NOTED OR APPROVED BY THE ENGINEER, THE CONTRACTOR SHALL MAINTAIN ALL EXISTING UTILITIES IN SERVICE AT ALL TIMES. ALL UNDERGROUND UTILITIES SHALL BE RETAINED UNLESS OTHERWISE NOTED OR DIRECTED BY THE ENGINEER. CONTRACTOR SHALL CALL DIG SAFE AND VERIFY LOCATION OF UTILITIES AS SHOWN ON THE PLANS.

7. DUE TO STABILITY CONCERNS AT THE ABUTMENTS DURING THE ERECTION OF THE SUPERSTRUCTURE, THE CONTRACTOR SHALL SUBMIT THE ERECTION PLAN A MINIMUM OF 30 WORKING DAYS PRIOR TO ERECTING THE SUPERSTRUCTURE. UNDER NO CIRCUMSTANCES SHALL A BRIDGE CLOSURE PERIOD BEGIN PRIOR TO HAVING AN ACCEPTED ERECTION PLAN.

8. FOLLOWING CONSTRUCTION THE HIGHWAY EASEMENT ON PARCEL #4 WILL BE USED BY THE TOWN OF LUDLOW ONLY FOR THE MAINTENANCE AND THE REPLACEMENT OF PROJECT INSTALLATIONS. THE OWNERS OF PARCEL #4 MAY PERFORM LANDSCAPING IN THE HIGHWAY EASEMENT AREA FOLLOWING CONSTRUCTION.

9. THIS NOTE INTENTIONALLY LEFT BLANK.

10. THIS NOTE INTENTIONALLY LEFT BLANK.

TRAFFIC CONTROL

11. THE CONTRACTOR SHALL IMPLEMENT THE ROAD CLOSURE, TRAFFIC CONTROL, AND DETOUR AS SHOWN ON THE PLANS. THE CONTRACTOR SHALL BE RESPONSIBLE FOR THE DESIGN AND IMPLEMENTATION OF A SITE SPECIFIC TRAFFIC CONTROL PLAN FOR ANY STAGES OF CONSTRUCTION NOT SHOWN IN THE PLANS. THE PLAN SHALL CLEARLY DETAIL HOW TRAFFIC WILL BE MAINTAINED. THE PLAN SHALL SPECIFY ALL CONSTRUCTION ACTIVITIES REQUIRING ALTERNATING ONE WAY TRAFFIC, RELATE THOSE ACTIVITIES TO THE CONSTRUCTION SCHEDULE, AND SHOW APPROPRIATE TEMPORARY TRAFFIC CONTROL. THE CONTRACTOR SHALL SUBMIT DETAILED TRAFFIC CONTROL PLANS TO THE ENGINEER FOR APPROVAL PER SUBSECTION 105.03. ALL COSTS WILL BE INCLUDED IN ITEM 900.645, "SPECIAL PROVISION (TRAFFIC CONTROL, ALL-INCLUSIVE)".

12. THE PORTABLE CHANGEABLE MESSAGE SIGNS (PCMS) WILL BE PAID FOR UNDER ITEM 641.15, "PORTABLE CHANGEABLE MESSAGE SIGN".

13. FULL ACCESS TO ALL DRIVES WITHIN THE PROJECT LIMITS SHALL BE MAINTAINED AT ALL TIMES. THIS WORK WILL BE CONSIDERED INCIDENTAL TO ITEM 900.645, "SPECIAL PROVISION (TRAFFIC CONTROL, ALL-INCLUSIVE)".

14. UNLESS COVERED UNDER INDIVIDUAL PAY ITEMS OR NOTED OTHERWISE, ALL COSTS FOR WORK SHOWN ON THE TRAFFIC CONTROL SHEETS AND FOR TEMPORARY TRAFFIC CONTROL DEVICES WILL BE INCLUDED IN THE CONTRACT LUMP SUM PRICE FOR ITEM 900.645, "SPECIAL PROVISION (TRAFFIC CONTROL, ALL-INCLUSIVE)". THIS INCLUDES, BUT IS NOT LIMITED TO, THE FOLLOWING ITEMS:

    RETROREFLECTIVE DRUMS
    SIGNS
    SIGN POSTS
    INSTALLATION OF SIGNS AND SIGN POSTS
    TEMPORARY TRAFFIC BARRIER

    TEMPORARY TRAFFIC BARRIER SHALL BE FURNISHED IN ACCORDANCE WITH SECTION 621. UNIFORM TRAFFIC OFFICERS AND FLAGGERS WILL BE PAID FOR SEPARATELY UNDER THE APPROPRIATE ITEM NUMBER.

15. ALL SIGNS SHALL BE IN ACCORDANCE WITH THE CURRENT EDITIONS OF THE "MANUAL ON UNIFORM TRAFFIC CONTROL DEVICES" (MUTCD) AND THE "STANDARD HIGHWAY SIGNS AND MARKINGS" BOOK (SHSM) PUBLISHED BY THE FEDERAL HIGHWAY ADMINISTRATION (FHWA).

16. INSTALLATION OF TEMPORARY TRAFFIC CONTROL SIGNS SHALL NOT BLOCK ANY EXISTING TRAFFIC CONTROL SIGN ASSEMBLIES. THE CONTRACTOR SHALL TRY TO MAINTAIN AT LEAST 200 FEET BETWEEN SIGN ASSEMBLIES.

EARTHWORK

17. THE "STONE FILL, TYPE III" UNDER THE BRIDGE AS SHOWN IN THE PLANS SHALL BE PLACED BEFORE THE STEEL SUPERSTRUCTURE IS SET.

18. TEMPORARY CONSTRUCTION FILLS WITHIN THE WATERCOURSE FOR ANY PURPOSE SHALL CONSIST OF CLEAN STONE FILL ONLY. SEE THE SPECIAL PROVISIONS FOR PERMIT INFORMATION. NO OTHER FILLING IN THE STREAM SHALL OCCUR WITHOUT THE APPROVAL OF THE STREAM ALTERATION ENGINEER.

CONCRETE AND REINFORCING STEEL

19. ITEM 514.10, "WATER REPELLENT, SILANE", SHALL BE APPLIED TO ALL EXPOSED CONCRETE ON THE BRIDGE SUPERSTRUCTURE AND SUBSTRUCTURE, WITH THE EXCEPTION OF THE UNDERSIDE OF THE DECK BETWEEN DRIP NOTCHES. THE SUBSTRUCTURE SHALL RECEIVE A MINIMUM OF ONE COAT AND THE SUPERSTRUCTURE SHALL RECEIVE A MINIMUM OF TWO COATS OF WATER REPELLENT, SILANE.

20. ALL FORM SUPPORTS AND FORM TIES THAT ARE TO REMAIN PERMANENTLY IN THE CONCRETE ABOVE THE BRIDGE SEAT SHALL BE GALVANIZED AND CONFORM TO SECTION 726 OF THE STANDARD SPECIFICATIONS. PAYMENT WILL BE CONSIDERED INCIDENTAL TO SUPERSTRUCTURE ITEMS.

21. ALL RECESSED LIFTING POINTS SHALL BE FILLED WITH A TYPE IV MORTAR PER SUBSECTION 707.03 AND WILL BE CONSIDERED INCIDENTAL TO THE APPROPRIATE PRECAST ITEM.

22. SIDEWALK CONCRETE WILL BE PAID FOR UNDER 501.33, "CONCRETE, HIGH PERFORMANCE CLASS A". UTILITY DUCTS AS SHOWN IN THE PLANS WILL BE CONSIDERED INCIDENTAL TO THE APPROPRIATE CONCRETE ITEM AND SHALL BE IN ACCORDANCE WITH SECTION 752.08.

23. BRIDGE RAIL SHALL BE HIGH PERFORMANCE CLASS A CONCRETE AND WILL BE PAID UNDER ITEM 900.640, "SPECIAL PROVISION (BRIDGE RAILING, GALVANIZED STEEL TUBING/CONCRETE COMBINATION)(COATED BLACK)". THE EFFECTIVE CURE TIME OF THE BRIDGE RAIL MAY BE REDUCED TO A MINIMUM OF (7) SEVEN DAYS PROVIDED THAT THE CONCRETE HAS REACHED 85% OF THE DESIGN COMPRESSIVE STRENGTH (f'c). THE BRIDGE RAIL SHALL MEET ALL OTHER SPECIFICATIONS OF SECTION 501 OF THE STANDARD SPECIFICATIONS.

24. MINIMUM CLEAR COVER FOR REINFORCING STEEL SHALL BE AS FOLLOWS:

ALONG BACK FACES OF WALLS AGAINST EARTH:	2 INCH
ALONG TOP SURFACE OF DECK SLAB:	3 INCH
ALONG BOTTOM SURFACE OF DECK SLAB:	1 1/2 INCH
ELSEWHERE UNLESS OTHERWISE NOTED:	3 INCH

25. THIS NOTE INTENTIONALLY LEFT BLANK.

26. THIS NOTE INTENTIONALLY LEFT BLANK.

PRECAST ABUTMENTS AND POST-TENSIONING

27. IF A VERTICAL CONSTRUCTION JOINT(S) IS REQUIRED BY THE CONTRACTOR FOR SHIPMENT OF THE ABUTMENTS SHALL BE KEYED AND MATCH CAST. A JOINT DETAIL SHALL BE SHOWN ON THE FABRICATION DRAWINGS. EACH JOINT SHALL NOT BE LOCATED CLOSER THAN 1'-0" AWAY FROM THE EDGE OF THE PILE CAVITY. NO LESS THAN TWO PILES SHALL SUPPORT EACH PRECAST ABUTMENT SECTION.

28. EPOXY BONDING COMPOUND SHALL BE APPLIED TO ALL VERTICAL MATCH CAST CONSTRUCTION JOINTS. SEE AGENCY WEBSITE FOR LIST OF APPROVED EPOXY BONDING COMPOUNDS. PAYMENT FOR EPOXY WILL BE INCLUDED IN THE UNIT PRICE BID FOR THE APPROPRIATE PRECAST ITEM.

29. POST-TENSIONING AND ASSOCIATED ITEMS ARE ONLY REQUIRED IF THE PILE CAP IS CONSTRUCTED OF MORE THAN ONE UNIT. ANY POST-TENSIONING STRANDS AND CONDUIT SHALL ADHERE TO THE REQUIREMENTS OF SECTION 510 - PRESTRESSED CONCRETE. GALVANIZED ANCHOR ASSEMBLIES, CONDUIT AND POST-TENSIONING STRANDS WILL BE INCLUDED IN THE UNIT PRICE BID FOR THE APPROPRIATE PRECAST ITEM. POST-TENSIONING STRANDS SHALL BE COVERED WITH SEAMLESS POLYPROPYLENE SHEATH (WITH CORROSION INHIBITOR GREASE BETWEEN SHEATH AND STRAND) FOR THE LENGTH OF THE STRAND, EXCEPT AT ANCHORAGE LOCATIONS. ABUTMENTS SHALL BE POST-TENSIONED PRIOR TO FILLING THE VOIDS.

30. POST-TENSIONING OF ABUTMENTS BELOW BRIDGE SEAT SHALL BE COMPLETED PRIOR TO POURING THE PILE CAVITY CLOSURE POUR.

31. GALVANIZE ANCHOR ASSEMBLIES AFTER FABRICATION ACCORDING TO AASHTO M232M/M 232.

32. ITEM 524.21, JOINT SEALER, POLYURETHANE, SHALL BE APPLIED TO THE OUTSIDE FAR FACE OF ALL VERTICAL MATCH CAST CONSTRUCTION JOINTS.

33. ANCHOR BOLTS, LEVELING PLATE, NUTS AND WASHERS EXPANDABLE JOINT FILLER, AND ELASTOMERIC PADS WILL BE INCLUDED IN THE UNIT PRICE BID FOR THE APPROPRIATE PRECAST ITEM.

34. DESIGN VALUES
    A. CONCRETE COMPRESSIVE STRENGTH: f'c = 5,000 PSI.
    B. POST-TENSIONING STRANDS: 0.5 INCH DIAMETER, 270 KSI, LOW RELAXATION 7-WIRE STRANDS.
    C. ASSUMED MODULUS OF ELASTICITY IS 28,500 KSI.
    D. THERE SHALL BE 2 STRANDS PER CONDUIT.
    E. JACKING FORCE PER STRAND = 32 KIPS.

35. THIS NOTE INTENTIONALLY LEFT BLANK.

36. THE CORRUGATED STEEL PIPE SHALL MEET THE REQUIREMENTS OF SUBSECTION 711.01 AND SHALL BE GALVANIZED PER SUBSECTION 726.08 OF THE STANDARD SPECIFICATIONS. ALL COSTS ASSOCIATED WITH FURNISHING AND PLACING THE CORRUGATED STEEL PIPE WILL BE INCLUDED IN THE UNIT PRICE BID FOR THE APPROPRIATE PRECAST ITEM.

37. ALL ABUTMENT REINFORCING TO BE EPOXY COATED.

CAST IN PLACE BRIDGE DECK

38. STRUCTURAL STEEL MEMBERS DESIGNATED "CVN" IN THE PLANS SHALL BE CHARPY V-NOTCH TESTED IN ACCORDANCE WITH SUBSECTION 714.01.

39. ANY HOLES IN THE WEBS OF THE FASCIA BEAMS NOT OTHERWISE FILLED SHALL BE FILLED WITH BUTTON HEAD BOLTS. THESE BOLTS SHALL BE TIGHTENED IN ACCORDANCE WITH SUBSECTION 506.19.

40. UNLESS OTHERWISE NOTED, ALL NEW STRUCTURAL STEEL SHALL CONFORM TO AASHTO M270/M270M GRADE 50 AND WILL BE PAID FOR UNDER ITEM 506.55, "STRUCTURAL STEEL PLATE GIRDER (FPQ)".

41. STRUCTURAL STEEL SHALL BE METALIZED IN ACCORDANCE WITH SECTION 726.09. METALLIZING WILL BE PAID FOR UNDER ITEM 900.645, "SPECIAL PROVISION (METALLIZING STRUCTURAL STEEL)". ALL WELDING TO THE STRUCTURAL STEEL SHALL BE COMPLETED PRIOR TO METALLIZING.

42. AFTER SUPERSTRUCTURE STEEL ELEMENTS HAVE BEEN SET UP, AND BEFORE ANY FORMWORK OR OTHER LOADS ARE ADDED TO THE GIRDERS, ELEVATIONS ALONG THE TOP OF THE GIRDERS SHALL BE TAKEN FOR USE IN DETERMINING DECK FORMWORK ELEVATIONS.

43. ENDS OF GIRDERS ARE TO BE VERTICAL IN FINAL POSITION.

44. BEAM WEBS AND DIAPHRAGMS SHALL BE PLUMB IN FINAL POSITION.

45. ANY CONNECTIONS NOT DETAILED ON THE PLANS SHALL BE DETAILED BY THE FABRICATOR AND SUBMITTED TO THE PROJECT MANAGER FOR APPROVAL.

46. ADDITIONAL HEIGHT STUDS MAY BE REQUIRED SO THE HEADS OF ALL STUDS ARE LOCATED BETWEEN THE MATS OF REINFORCING.

47. ALL FIELD CONNECTIONS SHALL BE MADE WITH 7/8" DIAMETER HIGH STRENGTH BOLTS IN 15/16" DIAMETER HOLES, PER SECTION 506 UNLESS OTHERWISE NOTED.

48. CIP DECK STRUCTURAL STEEL SHALL MEET THE REQUIREMENTS OF SECTION 506 OF THE STANDARD SPECIFICATIONS.

49. CIP DECK SHALL MEET THE REQUIREMENTS OF "CONCRETE, HIGH PERFORMANCE CLASS A".

50. UTILITY SUPPORTS ON THE BRIDGE WILL BE CONSIDERED INCIDENTAL TO ITEM 900.645, "SPECIAL PROVISION (WATER MAIN ON THE BRIDGE)(8")".

51. THIS NOTE INTENTIONALLY LEFT BLANK.

52. THIS NOTE INTENTIONALLY LEFT BLANK.

53. THIS NOTE INTENTIONALLY LEFT BLANK.

54. THIS NOTE INTENTIONALLY LEFT BLANK.

55. THIS NOTE INTENTIONALLY LEFT BLANK.

56. THIS NOTE INTENTIONALLY LEFT BLANK.

57. THIS NOTE INTENTIONALLY LEFT BLANK.

58. THIS NOTE INTENTIONALLY LEFT BLANK.

59. THIS NOTE INTENTIONALLY LEFT BLANK.

60. THIS NOTE INTENTIONALLY LEFT BLANK.

CALDERWOOD ENGINEERING, ETC.
STRUCTURAL ENGINEERING • DETAILING SERVICES
222 RIVER RD, RICHMOND, ME 04357 PH/FX (207)737-2007/(207) 737-2008

PREPARED FOR:
COLD RIVER BRIDGES, LLC
CEE 16-16-COLDRIVERBRIDGES
01-CS-LUDLOW

8711 P.E. NUMBER

DATE

BY	DATE
TDC	MAR 2017
TDC	
TDC	

DESIGN-DETAILED
CHECKED-REVIEWED
REVISIONS 1
REVISIONS 2
REVISIONS 3
REVISIONS 4
FIELD CHANGES

VE SUPER DESIGN
LUDLOW VT. BRF 025-1(42)

PROJECT NOTES (1 OF 2)

SHEET NUMBER
6
of 73

UHPC / LONGITUDINAL CLOSURE POUR

61. NO UHPC SUBSTITUTION WILL BE ACCEPTED.
62. THE CONCRETE EDGES ALONG THE LONGITUDINAL CLOSURE POURS SHALL BE TREATED TO PROVIDE A ROUGHENED/EXPOSED AGGREGATE SURFACE. THAT AMPLITUDE OF THE EXPOSED AGGREGATE SHALL BE A MINIMUM OF 1/8".
63. PRIOR TO PLACEMENT OF UHPC, THE CONCRETE JOINTS SHALL BE SATURATED FOR 24 HOURS TO ENSURE A GOOD BOND.
64. UHPC JOINTS MAY BE OVERFILLED 1/4" TO ALLOW FOR GRINDING THE APPROAH SLAB SURFACE ONCE THE UHPC HAS REACHED 6,000 PSI.
65. UHPC JOINTS SHALL BE CONSTRUCTED WITH FORMWORK THAT IS WATERTIGHT. TOP FORMS ARE REQUIRED TO KEEP UHPC FROM OVERFLOWING OUTSIDE OF THE JOINTS.

PRECAST APPROACH SLABS

66. PRECAST CONCRETE COMPRESSIVE STRENGTH: f'c = 5,000 PSI.
67. THE CONCRETE EDGES ALONG THE LONGITUDINAL CLOSURE POURS IN THE APPROACH SLABS SHALL BE TREATED TO PROVIDE A ROUGHENED/EXPOSED AGGREGATE SURFACE. THAT AMPLITUDE OF THE EXPOSED AGGREGATE SHALL BE A MINIMUM OF 1/8". THE FABRICATOR SHALL INDICATE THE METHOD USED TO ACHIEVE THIS PROFILE ON THE FABRICATION DRAWINGS AND METHOD USED TO PROTECT THE REINFORCING STEEL.
68. FILL APPROACH SLAB CLOSURE POURS WITH UHPC RAPID SET CONCRETE IN ACCORDANCE WITH ITEM 900.608, "SPECIAL PROVISION (ULTRA HIGH PERFORMANCE CONCRETE) (FPQ)". CONCRETE SHALL HAVE A 28 DAY MINIMUM COMPRESSIVE STRENGTH OF 5,000 PSI.
69. GROUT USED TO FILL DOWEL DUCTS IN THE PRECAST APPROACH SLABS FOR DOWEL CONNECTIONS SHALL BE MORTAR, TYPE IV IN ACCORDANCE WITH SECTION 540- PRECAST CONCRETE. ALL COSTS ASSOCIATED WITH PROVIDING AND PLACING GROUT FOR THE APPROACH SLAB DOWEL CONNECTIONS SHALL BE INCLUDED IN THE BID PRICE FOR THE APPROPRIATE PRECAST APPROACH SLAB OPTION.
70. THE FABRICATOR MAY ALTER THE DESIGN DETAILED WITHIN THESE PLANS TO ACCOMMODATE THEIR SPECIFIC OPERATION. THIS ALTERATION SHALL BE DESIGNED AND STAMPED BY A PROFESSIONAL ENGINEER LICENSED IN THE STATE OF VERMONT.
71. THE APPROACH SLABS ARE TO BE SET AT THE GIVEN ELEVATIONS IN ORDER TO ACCOMMODATE THE ROADWAY GEOMETRY. THE PAVEMENT OVER THE APPROACH SLAB WILL VARY TO ACCOUNT FOR THE DIFFERENCE BETWEEN THE TOP OF SLAB ELEVATIONS AND THE FINISH GRADE. A MINIMUM OF 3" PAVEMENT SHALL BE MAINTAINED OVER THE APPROACH SLABS.

H-PILES

72. TO PREVENT DAMAGE TO THE PILES, PILE SHOES ARE REQUIRED AND SHALL CONFORM TO SUBSECTION 505.04 (f).
73. ABUTMENT PILES
    A. THE PILES SHALL BE HP 14x89.
    B. RESISTANCE FACTOR = 0.65.
    C. THE PILES SHALL BE DRIVEN TO NOMINAL PILE DRIVING RESISTANCE (RNDR) OF 328 KIPS, PROVIDED A MINIMUM PENETRATION OF 29 FEET BELOW THE BOTTOM OF PILE CAP HAS BEEN ACHIEVED.
74. A MINIMUM OF ONE DYNAMIC TEST PER ABUTMENT IS REQUIRED DURING PILE INSTALLATION. PAYMENT WILL BE MADE UNDER ITEM 505.45, "DYNAMIC PILE LOADING TEST".
75. THE TOPS OF THE PILES AFTER DRIVING SHALL NOT VARY FROM THE POSITION SHOWN ON THE PLANS BY MORE THAN 3 INCHES. THE PILE ORIENTATION SHALL NOT VARY BY MORE THAN 5 DEGREES. THE CONTRACTOR SHALL DEMONSTRATE TO THE SATISFACTION OF THE ENGINEER HOW THE TOLERANCES WILL BE MET. THESE MEASURES SHALL BE DEMONSTRATED IN A SUBMITTAL TO BE ACCEPTED BEFORE PILE DRIVING COMMENCES.
76. FOR ESTIMATING PURPOSES, THE PILE TIP ELEVATIONS WERE ASSUMED AS SHOWN ON THE BORING LOGS. THE ACTUAL IN PLACE LENGTHS MAY VARY.

BRIDGE RAILING

77. ALL WORK AND MATERIALS SHALL CONFORM TO SECTION 525.
78. PRIOR TO GALVANIZING THE ASSEMBLED POST, GRIND ALL EDGES TO A MINIMUM RADIUS OF 1/16".
79. ALL POSTS SHALL BE SET NORMAL TO GRADE.
80. SECTIONS OF RAIL TUBE SHALL BE ATTACHED TO A MINIMUM OF TWO BRIDGE POSTS AND PREFERABLY TO AT LEAST 4 POSTS.
81. HOLES IN RAILS FOR TUBE ATTACHMENT MAY BE FIELD-DRILLED. HOLES SHALL BE COATED WITH AN APPROVED ZINC-RICH PAINT PRIOR TO INSTALLATION.
82. BOLTS SHALL BE TORQUED SNUG TIGHT (APPROXIMATELY 100 FT-LB).
83. RAIL TUBES SHALL BE ATTACHED USING ¾" FULL DIAMETER BODY ASTM A 449 (TYPE I) ROUND HEAD BOLTS INSERTED THROUGH THE FACE OF THE TUBE.
84. SEE STANDARD DRAWING G-1 FOR DETAILS OF DELINEATORS. A DELINEATOR SHALL BE INSTALLED AT 30 FOOT SPACING OR THE NEAREST POST. WHITE IS TO BE INSTALLED ON THE DRIVER'S RIGHT. PAYMENT FOR DELINEATORS SHALL BE INCIDENTAL TO OTHER ITEMS.
85. PANEL RECESSES SHALL BE APPLIED TO THE INSIDE FACE OF THE CONCRETE PORTION OF RAIL.
86. BRIDGE RAILING SHALL HAVE A RUBBED FINISH IN ACCORDANCE WITH SECTION 501.

MISCELLANEOUS

87. EXISTING LIGHT POLES SHALL BE REMOVED AND RESET. ANY DAMAGE TO THE LIGHT POLES WILL BE THE RESPONSIBILITY OF THE CONTRACTOR. THE COST FOR REMOVING AND RESETTING THE LIGHT POLES WILL BE PAID FOR UNDER ITEM 679.25, "REMOVING AND RESETTING LIGHT POLE".
88. CONTRACTOR SHALL HAVE A LICENSED ELECTRICIAN PERFORM ANY ELECTRIC WORK. ELECTRICIAN SHALL SPECIFY WIRING NEEDED FOR THE LIGHTS.
89. 4" PVC CONDUIT SHALL BE PROVIDED FOR FUTURE UTILITIES IN THE BRIDGE SIDEWALK AND SHALL BE PAID FOR UNDER ITEM 678.21, "ELECTRICAL CONDUIT (4")(PVC)".
90. JUNCTION BOXES TO BE LOCATED ON ALL FOUR APPROACH CORNERS TO THE BRIDGE. UTILITY DUCTS ON BRIDGE SHALL TERMINATE AT THE JUNCTION BOXES.
91. ONCE THE CIP DECK HAS BEEN POURED AND CURED, DIAMOND GRIND THE SURFACE FOR A DEPTH OF NO MORE THAN ½" TO LEVEL THE DECK. COST FOR THIS WORK WILL BE INCLUDED IN THE UNIT PRICE BID FOR 900.670, "SPECIAL PROVISION (CONCRETE BRIDGE DECK SURFACE PREPARATION)".
92. ELEVATIONS FOR INLET AND OUTLET OF PROPOSED 18" CPEP(SL) CONNECTION TO EXISTING 48" CGMP SHALL BE FIELD VERIFIED PRIOR TO THE CONSTRUCTION TO ENSURE THAT VTRANS MINIMUM SLOPE REQUIREMENTS ARE MET. CONNECTION TO THE 48" CGMP SHALL BE INCIDENTAL TO THE 18" CPEP(SL) ITEM.
93. EXISTING UTILITIES SHOWN ARE APPROXIMATE AND SHALL BE VERIFIED BY THE CONTRACTOR.
94. WINGWALL DESIGN VALUES
    a. CONCRETE COMPRESSIVE STRESS: f'c = 5,000 PSI
    b. POST-TENSIONING RODS: 1.25 INCH DIAMETER, 150 KSI, DYWIDAG THREADBAR.
    c. ASSUMED MODULUS OF ELASTICITY: 29,700 KSI.
    d. THERE SHALL BE 1 BAR PER CONDUIT.

CONCRETE		REINFORCING STEEL	
STRUCTURAL ELEMENT:	CONTRACT ITEM:	TO MEET THE REQUIREMENTS FOR:	PAYMENT TO BE INCLUDED IN:
CAST-IN-PLACE DECK	ITEM 501.33, "CONCRETE, HIGH PERFORMANCE CLASS A"	REINFORCING STEEL, LEVEL III	ITEM 507.13, "REINFORCING STEEL, LEVEL III"
PRECAST SUBSTRUCTURE	ITEM 540.10, "PRECAST CONCRETE STRUCTURE" OR ITEM 900.645, "SPECIAL PROVISION (CONTRACTOR-FABRICATED PRECAST CONCRETE STRUCTURE)", AS APPROPRIATE.	REINFORCING STEEL, LEVEL I (EPOXY COATED)	ITEM 540.10, "PRECAST CONCRETE STRUCTURE" OR ITEM 900.645, "SPECIAL PROVISION (CONTRACTOR-FABRICATED PRECAST CONCRETE STRUCTURE)", AS APPROPRIATE.
ABUTMENT CLOSURE POUR CONCRETE*	ITEM 900.608, "SPECIAL PROVISION (HIGH PERFORMANCE CONCRETE, RAPID SET) (FPQ)"	REINFORCING STEEL, LEVEL III	ITEM 900.608, "SPECIAL PROVISION (HIGH PERFORMANCE CONCRETE, RAPID SET) (FPQ)"
PRECAST WINGWALLS/ CHEEKWALLS	ITEM 540.10, "PRECAST CONCRETE STRUCTRUE" OR ITEM 900.645, "SPECIAL PROVISION (CONTRACTOR-FABRICATED PRECAST CONCRETE STRUCTURE)", AS APPROPRIATE	REINFORCING STEEL , LEVEL III	ITEM 540.10, "PRECAST CONCRETE STRUCTURE" OR ITEM 900.645, "SPECIAL PROVISION (CONTRACTOR-FABRICATED PRECAST CONCRETE STRUCTURE)", AS APPROPRIATE.
APPROACH SLAB CLOSURE POUR CONCRETE	ITEM 900.608, "SPECIAL PROVISION (ULTRA HIGH PERFORMANCE CONCRETE, RAPID SET) (FPQ)"	REINFORCING STEEL, LEVEL III	ITEM 540.10, "PRECAST CONCRETE STRUCTURE" OR ITEM 900.645, "SPECIAL PROVISION (CONTRACTOR-FABRICATED PRECAST CONCRETE STRUCTURE), AS APPROPRIATE.
APPROACH SLABS	ITEM 540.10, "PRECAST CONCRETE STRUCTURE" OR ITEM 900.645, "SPECIAL PROVISION (CONTRACTOR-FABRICATED PRECAST CONCRETE STRUCTURE)", AS APPROPRIATE.	REINFORCING STEEL LEVEL III	ITEM 540.10, "PRECAST CONCRETE STRUCTURE" OR ITEM 900.645, "SPECIAL PROVISION (CONTRACTOR-FABRICATED PRECAST CONCRETE STRUCTURE)", AS APPROPRIATE.
THIS ROW INTENTIONALLY LEFT BLANK	THIS ROW INTENTIONALLY LEFT BLANK	THIS ROW INTENTIONALLY LEFT BLANK	THIS ROW INTENTIONALLY LEFT BLANK
BRIDGE SIDEWALK	ITEM 501.33, "CONCRETE, HIGH PERFORMANCE CLASS A"	REINFORCING STEEL LEVEL III	ITEM 507.13, "REINFORCING STEEL, LEVEL III"
BRIDGE PARAPET	ITEM 900.640, "SPECIAL PROVISION (BRIDGE RAILING, GALVANIZED STEEL TUBING/CONCRETE COMBINATION)(COATED BLACK)"	REINFORCING STEEL LEVEL III	ITEM 900.640, "SPECIAL PROVISION (BRIDGE RAILING, GALVANIZED STEEL TUBING/CONCRETE COMBINATION)(COATED BLACK)"

* ABUTMENT CLOSURE POUR CONCRETE SHALL INCLUDE THE CONCRETE FOR THE PILE VOIDS AND PARTIAL BACKWALL POUR (SEE SHEET 46A).

CALDERWOOD ENGINEERING, ETC.
STRUCTURAL ENGINEERING • DETAILING SERVICES
222 RIVER RD, RICHMOND, ME 04357 PH/FX (207)737-2007/(207) 737-2008

PREPARED FOR:
COLD RIVER BRIDGES, LLC
CEE 16-16-COLDRIVERBRIDGES
01-CS-LUDLOW

8711
P.E. NUMBER
DATE

	BY	DATE
DESIGN-DETAILED	TDC	JAN 2017
CHECKED-REVIEWED		
REVISIONS 1	TDC	MAR 2017
REVISIONS 2		
REVISIONS 3		
REVISIONS 4		
FIELD CHANGES		

VE SUPER DESIGN
LUDLOW VT. BRF 025-1(42)

PROJECT NOTES (2 OF 2)

SHEET NUMBER
7
of 73

STATE OF VERMONT
AGENCY OF TRANSPORTATION

QUANTITY SHEET 1

SUMMARY OF ESTIMATED QUANTITIES									TOTALS		DESCRIPTIONS				DETAILED SUMMARY OF QUANTITIES		
				ROADWAY	EROSION CONTROL	UTILITIES	BRIDGE	FULL C.E.	WATERLINE	GRAND TOTAL	FINAL	UNIT	ITEMS	ITEM NUMBER	ROUND	QUANTITIES	UNIT	ITEMS
																		EARTHWORKS SUMMARY
				1						1		LS	CLEARING AND GRUBBING, INCLUDING INDIVIDUAL TREES AND STUMPS	201.10				
				1150						1150		CY	COMMON EXCAVATION	203.15		1150	CY	COMMON EXCAVATION (1150 * 1.0)
				55						55		CY	SOLID ROCK EXCAVATION	203.16		379	CY	UNCLASSIFIED CHANNEL EXCAVATION (505 * 0.75)
							505			505		CY	UNCLASSIFIED CHANNEL EXCAVATION	203.27		184	CY	TRENCH EXCAVATION OF EARTH (250 * 0.75)
				205		40				245		CY	TRENCH EXCAVATION OF EARTH	204.20		413	CY	STRUCTURE EXCAVATION (550 * 0.75)
				5						5		CY	TRENCH EXCAVATION OF ROCK	204.21		2125	CY	SUBTOTAL
				1						1		CY	TRENCH EXCAVATION OF EARTH, EXPLORATORY (N.A.B.I.)	204.22		17	CY	ROUNDING
							550			550		CY	STRUCTURE EXCAVATION	204.25		2150	CY	TOTAL
				190		35	285			510		CY	GRANULAR BACKFILL FOR STRUCTURES	204.30				
				1450						1450		SY	COLD PLANING, BITUMINOUS PAVEMENT	210.10				SPECIAL PROVISION
				915						915		CY	SUBBASE OF DENSE GRADED CRUSHED STONE	301.35				(BITUMINOUS CONCRETE PAVEMENT, SMALL QUANTITY)
				11						11		CWT	EMULSIFIED ASPHALT	404.65		2150	CY	FILL AVAILABLE
				1		⚠				1		LU	PRICE ADJUSTMENT, ASPHALT CEMENT (N.A.B.I.)	406.50		0	CY	FILL REQUIRED
							246			246		CY	CONCRETE, HIGH PERFORMANCE CLASS A	501.33				
							1			1		LS	FURNISHING EQUIPMENT FOR DRIVING PILING	504.10		2,150	CY	TOTAL WASTE
							850			850		LF	STEEL PILING, HP 14 X 89	505.18				
							2			2		EACH	DYNAMIC PILE LOADING TEST	505.45				
						⚠												
							294532			294532		LB	STRUCTURAL STEEL PLATE GIRDER (FPQ)	506.55				
							44500			44500		LB	REINFORCING STEEL, LEVEL III	507.13				
							1			1		LS	SHEAR CONNECTORS (3852-7")	531.11				
							385			385		SY	LONGITUDINAL DECK GROOVING	509.10				
							40			40		GAL	WATER REPELLENT, SILANE	514.10				
							165			165		LF	BRIDGE EXPANSION JOINT, ASPHALTIC PLUG	516.10				
							55			55		LF	JOINT SEALER, HOT POURED	524.11				
							1			1		EACH	PARTIAL REMOVAL OF STRUCTURE	529.20				
													BEGIN OPTION AA					
							1			1		LS	PRECAST CONCRETE STRUCTURE (ABUTMENT NO. 1)	540.10				
							1			1		LS	SPECIAL PROVISION (CONTRACTOR FABRICATED PRECAST CONCRETE STRUCTURE)(ABUTMENT NO. 1) (INDLUDES V.E. MODIFIED BEARINGS)	900.645				
													END OPTION AA					
													BEGIN OPTION BB					
							1			1		LS	PRECAST CONCRETE STRUCTURE (ABUTMENT NO. 2)	540.10				
							1			1		LS	SPECIAL PROVISION (CONTRACTOR FABRICATED PRECAST CONCRETE STRUCTURE)(ABUTMENT NO. 2) (INCLUDES V.E. MODIFIED BEARINGS)	900.645				
													END OPTION BB					
													BEGIN OPTION CC					
							1			1		LS	PRECAST CONCRETE STRUCTURE (APPROACH SLAB NO. 1)	540.10				
							1			1		LS	SPECIAL PROVISION (CONTRACTOR FABRICATED PRECAST CONCRETE STRUCTURE)(APPROACH SLAB NO. 1)	900.645				
													END OPTION CC					
													BEGIN OPTION DD					
							1			1		LS	PRECAST CONCRETE STRUCTURE (APPROACH SLAB NO. 2)	540.10				
							1			1		LS	SPECIAL PROVISION (CONTRACTOR FABRICATED PRECAST CONCRETE STRUCTURE)(APPROACH SLAB NO. 2)	900.645				

CALDERWOOD ENGINEERING, ETC.
STRUCTURAL ENGINEERING • DETAILING SERVICES
222 RIVER RD, RICHMOND, ME 04357 PH/FX (207)737-2007/(207) 737-2008

PREPARED FOR:
COLD RIVER BRIDGES, LLC
CEE 16-16-COLDRIVERBRIDGES
01-CS-LUDLOW

8711
P.E. NUMBER

DATE

	BY	DATE
DESIGN-DETAILED	TDC	JAN 2017
CHECKED-REVIEWED	TDC	MAR 2017
REVISIONS 1	TDC	
REVISIONS 2		
REVISIONS 3		
REVISIONS 4		
FIELD CHANGES		

VE SUPER DESIGN
LUDLOW VT. BRF 025-1(42)

QUANTITY SHEET (1 OF 3)

SHEET NUMBER
8
of 73

CALDERWOOD ENGINEERING
222 RIVER ROAD
RICHMOND, ME 04357
PH. (207) 737-2007 FAX (207) 737-2008

STATE OF VERMONT
AGENCY OF TRANSPORTATION

QUANTITY SHEET 2

SUMMARY OF ESTIMATED QUANTITIES										TOTALS		DESCRIPTIONS				DETAILED SUMMARY OF QUANTITIES		
				ROADWAY	EROSION CONTROL	UTILITIES	BRIDGE	FULL C.E.	WATERLINE	GRAND TOTAL	FINAL	UNIT	ITEMS	ITEM NUMBER	ROUND	QUANTITIES	UNIT	ITEMS
													END OPTION DD					
				225						225		LF	18" CPEP(SL)	601.2615				
				3						3		EACH	PRECAST REINFORCED CONCRETE DROP INLET WITH CAST IRON GRATE	604.18				
				2						2		EACH	CHANGING ELEVATION OF DROP INLETS, CATCH BASINS, OR MANHOLES	604.40				
				1						1		EACH	CHANGING ELEVATION OF SEWER MANHOLES	604.42				
				10						10		MGAL	DUST CONTROL WITH WATER	609.10				
					250					250		CY	STONE FILL, TYPE III	613.12				
				460						460		LF	VERTICAL GRANITE CURB	616.21				
				25						25		LF	CAST-IN-PLACE CONCRETE CURB, TYPE B	616.28				
				510						510		LF	REMOVAL OF EXISTING CURB	616.41				
				245						245		SY	PORTLAND CEMENT CONCRETE SIDEWALK, 5 INCH	618.10				
				35						35		SY	PORTLAND CEMENT CONCRETE SIDEWALK, 8 INCH	618.11				
				40						40		SF	DETECTABLE WARNING SURFACE	618.30				
				73						73		LF	REMOVAL AND DISPOSAL OF GUARDRAIL	621.80				
									2	2		EACH	ADJUST ELEVATION OF VALVE BOX	629.20				
									72	72		LF	DUCTILE IRON PIPE, CEMENT-LINED (8")	629.24				
									3	3		EACH	GATE VALVE WITH VALVE BOX (8")	629.27				
									1	1		LS	TRANSFER TO NEW SYSTEM, WATER SYSTEM	629.42				
				80						80		HR	UNIFORMED TRAFFIC OFFICERS	630.10				
				500						500		HR	FLAGGERS	630.15				
								1		1		LS	FIELD OFFICE, ENGINEERS	631.10				
								1		1		LS	TESTING EQUIPMENT, CONCRETE	631.16				
								1		1		LS	TESTING EQUIPMENT, BITUMINOUS	631.17				
								3000		3000		DL	FIELD OFFICE TELEPHONE (N.A.B.I.)	631.26				
				1						1		LS	MOBILIZATION/DEMOBILIZATION	635.11				
				8						8		EACH	PORTABLE CHANGEABLE MESSAGE SIGN	641.15				
				1115						1115		LF	DURABLE 4 INCH WHITE LINE	646.400				
				1060						1060		LF	DURABLE 4 INCH YELLOW LINE	646.410				
				310						310		LF	DURABLE 12 INCH WHITE LINE	646.460				
				45						45		LF	DURABLE 24 INCH STOP BAR	646.480				
				8						8		EACH	DURABLE LETTER OR SYMBOL	646.490				
					450					450		SY	GEOTEXTILE UNDER STONE FILL	649.31				
					130					130		SY	GEOTEXTILE FOR SILT FENCE	649.51				
					90					90		SY	GEOTEXTILE FOR SILT FENCE, WOVEN WIRE REINFORCED	649.515				
					3					3		LB	SEED	651.15				
					25					25		LB	FERTILIZER	651.18				
					1					1		TON	AGRICULTURAL LIMESTONE	651.20				
					1					1		TON	HAY MULCH	651.25				
					25					25		CY	TOPSOIL	651.35				
					175					175		SY	GRUBBING MATERIAL	651.40				

vhb

PROJECT NAME: LUDLOW
PROJECT NUMBER: BRF 025-1(42)

FILE NAME: z10j068qs.dgn
PROJECT LEADER: A.P. GUYETTE
DESIGNED BY: E.F. LAWES
QUANTITY SHEET #2

PLOT DATE: 07/21/2016
DRAWN BY: E.F. LAWES
CHECKED BY: A.P. GUYETTE
SHEET 9 OF 72

STATE OF VERMONT
AGENCY OF TRANSPORTATION

QUANTITY SHEET 3

SUMMARY OF ESTIMATED QUANTITIES										TOTALS		DESCRIPTIONS				DETAILED SUMMARY OF QUANTITIES		
				ROADWAY	EROSION CONTROL	UTILITIES	BRIDGE	FULL C.E.	WATERLINE	GRAND TOTAL	FINAL	UNIT	ITEMS	ITEM NUMBER	ROUND	QUANTITIES	UNIT	ITEMS
					1					1		LS	EPSC PLAN	652.10				
					80					80		HR	MONITORING EPSC PLAN	652.20				
					1					1		LU	MAINTENANCE OF EPSC PLAN (N.A.B.I.)	652.30				
					12					12		SY	TEMPORARY EROSION MATTING	653.20				
					30					30		CY	VEHICLE TRACKING PAD	653.35				
					7					7		EACH	INLET PROTECTION DEVICE, TYPE I	653.40				
					1					1		EACH	FILTER BAG	653.45				
					355					355		LF	BARRIER FENCE	653.50				
				29						29		SF	TRAFFIC SIGNS, TYPE A	675.20				
				75						75		LF	SQUARE TUBE SIGN POST AND ANCHOR	675.341				
				9						9		EACH	REMOVING SIGNS	675.50				
				1						1		EACH	ERECTING SALVAGED SIGNS	675.60				
						1500				1500		LF	ELECTRICAL CONDUIT (4")(PVC)	678.21				
						300				300		LF	WIRED CONDUIT (2")(PVC)	678.23				
						4				4		EACH	JUNCTION BOX	678.26				
						175				175		LF	ELECTRICAL CONDUIT SLEEVE (6")(PVC)	678.30				
							4			4		EACH	REMOVING AND RESETTING LIGHT POLE	679.25				
							4			4		EACH	LUMINAIRE	679.50				
							1			1		EACH	POWER DROP STANCHION, STREET LIGHTING	679.55				
				1						1		LU	PRICE ADJUSTMENT, FUEL (N.A.B.I.)	690.50				
					15					15		CY	SPECIAL PROVISION (STONE FILL, STREAM BED MATERIAL)(TYPE III)	900.608				
				174720						174720		DL	SPECIAL PROVISION (INCENTIVE/DISINCENTIVE)(N.A.B.I.)	900.615				
							6			6		EACH	SPECIAL PROVISION (CPM SCHEDULE)	900.620				
							4			4		EACH	SPECIAL PROVISION (GUARDRAIL APPROACH SECTION, GALVANIZED 2 RAIL BOX BEAM)(COATED BLACK)	900.620				
							220			220		LF	SPECIAL PROVISION (BRIDGE RAILING, GALVANIZED STEEL TUBING/CONCRETE COMBINATION)(COATED BLACK)	900.640				
				160						160		LF	SPECIAL PROVISION (DURABLE CROSSWALK MARKING, IMPRINTED/COLORIZED)	900.640				
⚠							1			1		LS	SPECIAL PROVISION (METALLIZING STRUCTURAL STEEL) (INCLUDES VE STRUCT. STEEL)	900.645				
				1						1		LS	SPECIAL PROVISION (TRAFFIC CONTROL, ALL-INCLUSIVE)	900.645				
								1		1		LS	SPECIAL PROVISION (WATER MAIN ON BRIDGE)(8")	900.645				
				1						1		LU	SPECIAL PROVISION (MAT DENSITY PAY ADJUSTMENT, SMALL QUANTITY)(N.A.B.I.)	900.650				
				1						1		LU	SPECIAL PROVISION (MIXTURE PAY ADJUSTMENT)(N.A.B.I.)	900.650				
							3450			3450		SF	SPECIAL PROVISION (CONCRETE BRIDGE DECK SURFACE PREPARATION)	900.670				
⚠																		
							39			39		CY	SP HP RAPID-SET CONCRETE (F) (PILE CAVITITES/BACKWALL) (FPQ) (VE MODIFIED QUANTITY)	900.608				
							5			5		CY	SP ULTRA HP CONCRETE (F) - APPROACH SLABS- NO MOCKUP (VE MODIFIED QUANTITY)	900.608				
				660						660		TON	SPECIAL PROVISION (BITUMINOUS CONCRETE PAVEMENT, SMALL QUANTITY)	900.680				

CALDERWOOD ENGINEERING, ETC.
STRUCTURAL ENGINEERING • DETAILING SERVICES
222 RIVER RD, RICHMOND, ME 04357 PH/FX (207)737-2007/(207) 737-2008

PREPARED FOR:
COLD RIVER BRIDGES, LLC

CEE 16-16-COLDRIVERBRIDGES
01-CS-LUDLOW

8711
P.E. NUMBER

DATE

	BY	DATE
DESIGN-DETAILED	TDC	
CHECKED-REVIEWED		
REVISIONS 1	TDC	JAN 2017
REVISIONS 2		
REVISIONS 3	TDC	MAR 2017
REVISIONS 4		
FIELD CHANGES		

VE SUPER DESIGN
LUDLOW VT. BRF 025-1(42)

QUANTITY SHEET (3 OF 3)

SHEET NUMBER
10
of 73

GENERAL INFORMATION

SYMBOLOGY LEGEND NOTE

THE SYMBOLOGY ON THIS SHEET IS INTENDED TO COVER STANDARD CONVENTIONAL SYMBOLOGY. THE SYMBOLOGY IS USED FOR EXISTING & PROPOSED FEATURES WITH HEAVIER LINEWEIGHT, IN COMBINATION WITH PROJECT ANNOTATION, AS NOTED ON PROJECT PLAN SHEETS. THIS LEGEND SHEET COVERS THE BASICS. SYMBOLOGY ON PLANS MAY VARY, PLAN ANNOTATIONS AND NOTES SHOULD BE USED TO CLARIFY AS NEEDED.

R.O.W. ABBREVIATIONS (CODES) & SYMBOLS

POINT	CODE	DESCRIPTION
	CH	CHANNEL EASEMENT
	CONST	CONSTRUCTION EASEMENT
	CUL	CULVERT EASEMENT
	D&C	DISCONNECT & CONNECT
	DIT	DITCH EASEMENT
	DR	DRAINAGE EASEMENT
	DRIVE	DRIVEWAY EASEMENT
	EC	EROSION CONTROL
	HWY	HIGHWAY EASEMENT
	I&M	INSTALL & MAINTAIN EASEMENT
	LAND	LANDSCAPE EASEMENT
	R&RES	REMOVE & RESET
	R&REP	REMOVE & REPLACE
	SR	SLOPE RIGHT
	UE	UTILITY EASEMENT
	(P)	PERMANENT EASEMENT
	(T)	TEMPORARY EASEMENT
■	BNDNS	BOUND SET
⧈	BNDNS	BOUND TO BE SET
●	IPNS	IRON PIN SET
◎	IPNS	IRON PIN TO BE SET
⊠	CALC	EXISTING ROW POINT
○	PROW	PROPOSED ROW POINT
[LENGTH]		LENGTH CARRIED ON NEXT SHEET

COMMON TOPOGRAPHIC POINT SYMBOLS

POINT	CODE	DESCRIPTION
	APL	BOUND APPARENT LOCATION
	BM	BENCHMARK
	BND	BOUND
	CB	CATCH BASIN
	COMB	COMBINATION POLE
	DITHR	DROP INLET THROATED DNC
	EL	ELECTRIC POWER POLE
	FPOLE	FLAGPOLE
	GASFIL	GAS FILLER
	GP	GUIDE POST
	GSO	GAS SHUT OFF
	GUY	GUY POLE
	GUYW	GUY WIRE
	GV	GATE VALUE
	H	TREE HARDWOOD
	HCTRL	CONTROL HORIZONTAL
	HVCTRL	CONTROL HORIZ. & VERTICAL
	HYD	HYDRANT
	IP	IRON PIN
	IPIPE	IRON PIPE
	LI	LIGHT - STREET OR YARD
	MB	MAILBOX
	MH	MANHOLE (MH)
	MM	MILE MARKER
	PM	PARKING METER
	PMK	PROJECT MARKER
	POST	POST STONE/WOOD
	RRSIG	RAILROAD SIGNAL
	RRSL	RAILROAD SWITCH LEVER
	S	TREE SOFTWOOD
	SAT	SATELLITE DISH
	SHRUB	SHRUB
	SIGN	SIGN
	STUMP	STUMP
	TEL	TELEPHONE POLE
	TIE	TIE
	TSIGN	SIGN W/DOUBLE POST
	VCTRL	CONTROL VERTICAL
	WELL	WELL
	WSO	WATER SHUT OFF

THESE ARE COMMON VAOT SURVEY POINT SYMBOLS FOR EXISTING FEATURES, ALSO USED FOR PROPOSED FEATURES WITH HEAVIER LINEWEIGHT, IN COMBINATION WITH PROPOSED ANNOTATION.

PROPOSED GEOMETRY CODES

CODE	DESCRIPTION
PC	POINT OF CURVATURE
PI	POINT OF INTERSECTION
CC	CENTER OF CURVE
PT	POINT OF TANGENCY
PCC	POINT OF COMPOUND CURVE
PRC	POINT OF REVERSE CURVE
POB	POINT OF BEGINNING
POE	POINT OF ENDING
STA	STATION PREFIX
AH	AHEAD STATION SUFFIX
BK	BACK STATION SUFFIX
D	CURVE DEGREE OF (100FT)
R	CURVE RADIUS OF
T	CURVE TANGENT LENGTH
L	CURVE LENGTH OF
E	CURVE EXTERNAL DISTANCE

UTILITY SYMBOLOGY

UNDERGROUND UTILITIES

- UGU — UTILITY (GENERIC-UNKNOWN)
- UT — TELEPHONE
- UE — ELECTRIC
- UC — CABLE (TV)
- UEC — ELECTRIC+CABLE
- UET — ELECTRIC+TELEPHONE
- UCT — CABLE+TELEPHONE
- UECT — ELECTRIC+CABLE+TELEP.
- G — GAS LINE
- W — WATER LINE
- S — SANITARY SEWER (SEPTIC)

ABOVE GROUND UTILITIES (AERIAL)

- AGU — UTILITY (GENERIC-UNKNOWN)
- T — TELEPHONE
- E — ELECTRIC
- C — CABLE (TV)
- EC — ELECTRIC+CABLE
- ET — ELECTRIC+TELEPHONE
- AER E&T — ELECTRIC+TELEPHONE
- CT — CABLE+TELEPHONE
- ECT — ELECTRIC+CABLE+TELEP.
- UTILITY POLE GUY WIRE

PROJECT CONSTRUCTION SYMBOLOGY

PROJECT DESIGN & LAYOUT SYMBOLOGY

- CZ — CLEAR ZONE
- PLAN LAYOUT MATCHLINE

PROJECT CONSTRUCTION FEATURES

- TOP OF CUT SLOPE
- TOE OF FILL SLOPE
- STONE FILL
- BOTTOM OF DITCH ℄
- CULVERT PROPOSED
- STRUCTURE SUBSURFACE
- PDF — PROJECT DEMARCATION FENCE
- BF — BARRIER FENCE
- TREE PROTECTION ZONE (TPZ)
- STRIPING LINE REMOVAL
- SHEET PILES

CONVENTIONAL BOUNDARY SYMBOLOGY

BOUNDARY LINES

- TOWN LINE — TOWN BOUNDARY LINE
- COUNTY LINE — COUNTY BOUNDARY LINE
- STATE LINE — STATE BOUNDARY LINE
- PROPOSED STATE R.O.W. (LIMITED ACCESS)
- PROPOSED STATE R.O.W.
- STATE ROW (LIMITED ACCESS)
- STATE ROW
- TOWN ROW
- PERMANENT EASEMENT LINE (P)
- TEMPORARY EASEMENT LINE (T)
- SURVEY LINE
- P/L — PROPERTY LINE (P/L)
- SR SR SR — SLOPE RIGHTS
- 6F — 6F PROPERTY BOUNDARY
- 4F — 4F PROPERTY BOUNDARY
- HAZ — HAZ HAZARDOUS WASTE

EPSC LAYOUT PLAN SYMBOLOGY

EPSC MEASURES

- FILTER CURTAIN
- SILT FENCE
- SILT FENCE WOVEN WIRE
- CHECK DAM
- DISTURBED AREAS REQUIRING RE-VEGETATION
- EROSION MATTING

SEE EPSC DETAIL SHEETS FOR ADDITIONAL SYMBOLOGY

ENVIRONMENTAL RESOURCES

- WETLAND BOUNDARY
- RIPARIAN BUFFER ZONE
- WETLAND BUFFER ZONE
- SOIL TYPE BOUNDARY
- T&E — THREATENED & ENDANGERED SPECIES
- HAZ — HAZ HAZARDOUS WASTE AREA
- AG — AGRICULTURAL LAND
- HABITAT — FISH & WILDLIFE HABITAT
- FLOOD PLAIN — FLOOD PLAIN
- OHW — ORDINARY HIGH WATER (OHW)
- STORM WATER
- USDA FOREST SERVICE LANDS
- WILDLIFE HABITAT SUIT/CONN

ARCHEOLOGICAL & HISTORIC

- ARCH — ARCHEOLOGICAL BOUNDARY
- HISTORIC DIST — HISTORIC DISTRICT BOUNDARY
- HISTORIC — HISTORIC AREA
- Ⓗ HISTORIC STRUCTURE

CONVENTIONAL TOPOGRAPHIC SYMBOLOGY

EXISTING FEATURES

- ROAD EDGE PAVEMENT
- ROAD EDGE GRAVEL
- DRIVEWAY EDGE
- DITCH
- FOUNDATION
- FENCE (EXISTING)
- FENCE WOOD POST
- FENCE STEEL POST
- GARDEN
- ROAD GUARDRAIL
- RAILROAD TRACKS
- CULVERT (EXISTING)
- STONE WALL
- WALL
- WOOD LINE
- BRUSH LINE
- HEDGE
- BODY OF WATER EDGE
- LEDGE EXPOSED

vhb

PROJECT NAME:	LUDLOW
PROJECT NUMBER:	BRF 025-1(42)
FILE NAME: z10J068LegendSheet.dgn	PLOT DATE: 8/23/2016
PROJECT LEADER: A.P. GUYETTE	DRAWN BY: E.A. FIALA
DESIGNED BY: VTRANS	CHECKED BY: A.P. GUYETTE
CONVENTIONAL SYMBOLOGY LEGEND	SHEET 11 OF 73

GPS CONTROL POINTS

VCTRL #100

U 61 1980
NORTH = 324010.8480
EAST = 1597887.2000
ELEV. = 960.5460

GENERAL LOCATION LUDLOW, VT. MARK IS LOCATED 2.4 MI (3.9 KM) EAST ALONG VT ROUTE 103 FROM THE POST OFFICE IN LUDLOW, SET NORTH OF THE HIGHWAY ON THE SOUTH SIDE OF AN OUTCROP OF BEDROCK IN A FIELD JUST WEST OF A WHITE WOOD FRAMED HOUSE, 161 FT (49 M) WEST OF THE NORTHWEST CORNER OF THE HOUSE, 141 FT (43 M) NORTH OF THE CENTER LINE OF THE HIGHWAY, 21 FT (6.4 M) EAST OF THE WEST END OF THE ROCK OUTCROP. THE MARK IS 5.91 FT (1.80 M) NORTHWEST FROM A WITNESS POST. THE MARK IS 2.56 FT (0.78 M) ABOVE GROUND.

HVCTRL #101

BRIGADE AZ MK 2006
NORTH = 326083.6150
EAST = 1591965.7870
ELEV. = 971.7550

GENERAL LOCATION LUDLOW, VT. THE MARK IS LOCATED 1 MILE EAST OF VT ROUTE 100 (ANDOVER ST). IT IS SET 0.10 FT (3 CM) BELOW GROUND SURFACE IN THE TOP OF A 1.0 FT (30 CM) DIAMETER CONCRETE MONUMENT, JUST EAST OF BROOKHAVEN RESORT. IT IS 23.3 FT (7.1 M) SOUTHWEST OF AND ABOUT 1.0 FT (0.3 M) LOWER THAN THE CENTERLINE OF VT ROUTE 103 (MAIN ST), 70.5 FT (21.5 M) SE OF POLE NO 7/24, 48.9 FT (14.9 M) NW OF POLE NO 7/25, 46.3 FT (14.1 M) EAST OF A 1.5 INCH DIAMETER IRON PIPE WHICH PROJECTS 1.6 FT (0.5 M) ABOVE GROUND SURFACE, AND 86.0 FT (26.2 M) ENE OF THE NE CORNER OF A WOODEN FENCE ENCLOSURE FOR A TENNIS COURT.

TRAVERSE TIES

HVCTRL #1

NORTH = 326862.4150
EAST = 1588373.8580
ELEV. = 1001.6000

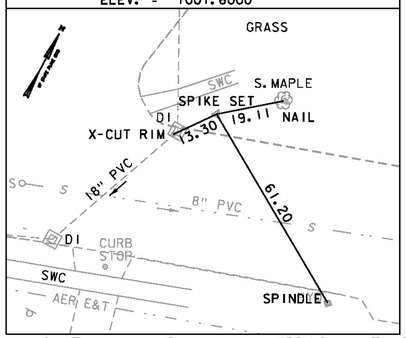

HVCTRL #2

NORTH = 326740.8300
EAST = 1588143.1200
ELEV. = 996.7900

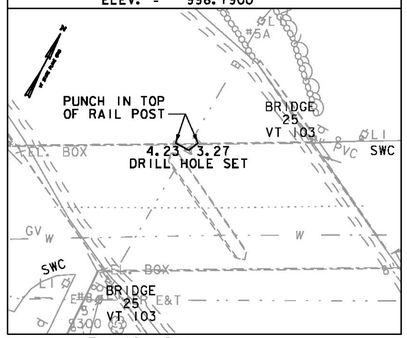

HVCTRL #3

NORTH = 326637.3220
EAST = 1588009.6620
ELEV. = 992.6400

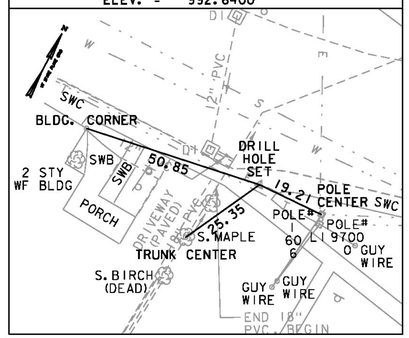

• Main Traverse Completed 11/29/10 by T.J.Gaudet and B.M.Klinefelter

DATUM
VERTICAL NAVD 88
HORIZONTAL NAD 83 (07)

PROJECT NAME: LUDLOW
PROJECT NUMBER: BRF 025-1(42)

FILE NAME: z10j068t1.dgn
PROJECT LEADER: A.P. GUYETTE
DESIGNED BY: B.M. KLINEFELTER
TIE SHEET

PLOT DATE: 8/23/2016
DRAWN BY: B.M. KLINEFELTER
CHECKED BY: A.P. GUYETTE
SHEET 12 OF 73

VHB 57435

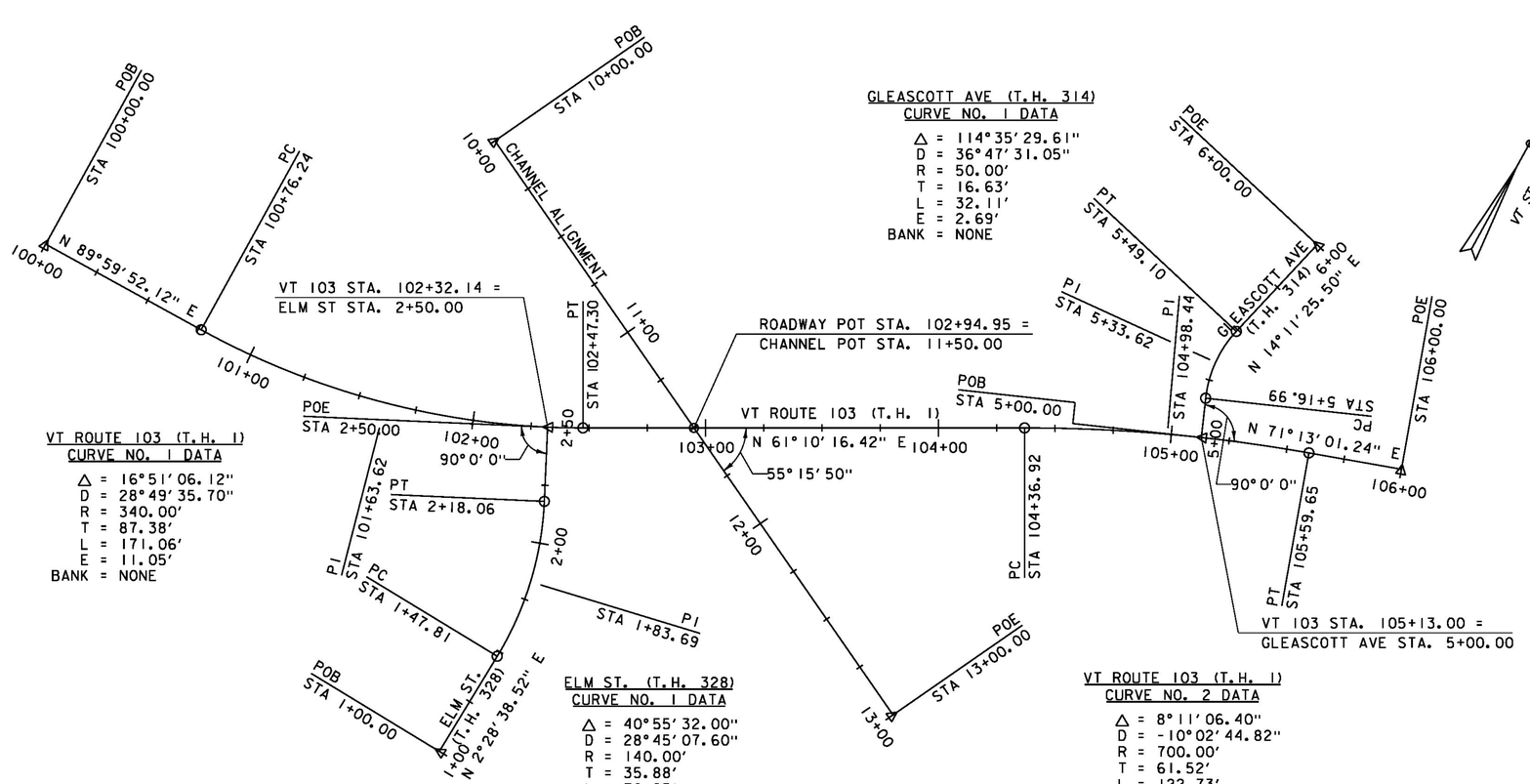

VT ROUTE 103 (T.H. 1) ALIGNMENT

HORIZONTAL ALIGNMENT NAME: VT103proposed

	STATION	NORTHING	EASTING
ELEMENT: LINEAR			
POB	100+00.00	326656.3297	1587862.5569
PC	100+76.24	326656.3326	1587938.7921
TANGENT DIRECTION:	N 89°59'52.12" E		
TANGENT LENGTH:	76.24		
ELEMENT: CIRCULAR			
PC	100+76.24	326656.3326	1587938.7921
PI	101+63.62	326656.3359	1588026.1733
CC		326996.3326	1587938.7791
PT	102+47.30	326870.0635	1588328.5140
RADIUS:	340.00		
DELTA:	28°49'35.70" LEFT		
DEGREE OF CURVATURE (ARC):	16°51'06.12"		
LENGTH:	171.06		
TANGENT:	87.38		
CHORD:	169.26		
MIDDLE ORDINATE:	10.70		
EXTERNAL:	11.05		
ELEMENT: LINEAR			
PT	102+47.30	326698.4706	1588102.7249
POE	104+36.92	326789.9063	1588268.8482
TANGENT DIRECTION:	N 61°10'16.42" E		
TANGENT LENGTH:	189.62		
ELEMENT: CIRCULAR			
PC	104+36.92	326789.9063	1588268.8482
PI	104+98.44	326819.5727	1588322.7471
CC		326176.6610	1588606.3837
PT	105+59.65	326839.3824	1588380.9945
RADIUS:	700.00		
DELTA:	10°02'44.82" RIGHT		
DEGREE OF CURVATURE (ARC):	08°11'06.40"		
LENGTH:	122.73		
TANGENT:	61.52		
CHORD:	122.58		
MIDDLE ORDINATE:	2.69		
EXTERNAL:	2.70		
ELEMENT: LINEAR			
PT	105+59.65	326839.3824	1588380.9945
POE	106+00.00	326852.3738	1588419.1934
TANGENT DIRECTION:	N 71°13'01.24" E		
TANGENT LENGTH:	40.35		

ELM ST. (T.H. 328) ALIGNMENT

HORIZONTAL ALIGNMENT NAME: TH328prop

	STATION	NORTHING	EASTING
ELEMENT: LINEAR			
POB	1+00.00	326547.0366	1588115.6916
PC	1+47.81	326594.8020	1588117.7581
TANGENT DIRECTION:	N 2°28'38.52" E		
TANGENT LENGTH:	47.81		
ELEMENT: CIRCULAR			
PC	1+47.81	326594.8020	1588117.7581
PI	1+83.69	326630.6520	1588119.3092
CC		326600.8535	1587977.8890
PT	2+18.06	326662.8281	1588103.4244
RADIUS:	140.00		
DELTA:	28°45'07.60" LEFT		
DEGREE OF CURVATURE (ARC):	40°55'32.00"		
LENGTH:	70.25		
TANGENT:	35.88		
CHORD:	69.52		
MIDDLE ORDINATE:	4.38		
EXTERNAL:	4.53		
ELEMENT: LINEAR			
PT	2+18.06	326662.8281	1588103.4244
POE	2+50.00	326691.4608	1588089.2889
TANGENT DIRECTION:	N 26°16'29.08" W		
TANGENT LENGTH:	31.93		

GLEASCOTT AVE (T.H. 314) ALIGNMENT

HORIZONTAL ALIGNMENT NAME: TH314prop

	STATION	NORTHING	EASTING
ELEMENT: LINEAR			
POB	5+00.00	326822.9009	1588337.3596
PC	5+16.99	326838.5903	1588330.8283
TANGENT DIRECTION:	N 22°36'05.55" W		
TANGENT LENGTH:	16.99		
ELEMENT: CIRCULAR			
PC	5+16.99	326838.5903	1588330.8283
PI	5+33.62	326853.9421	1588324.4375
CC		326857.8063	1588376.9883
PT	5+49.10	326870.0635	1588328.5140
RADIUS:	50.00		
DELTA:	36°47'31.05" RIGHT		
DEGREE OF CURVATURE (ARC):	114°35'29.61"		
LENGTH:	32.11		
TANGENT:	16.63		
CHORD:	31.56		
MIDDLE ORDINATE:	2.56		
EXTERNAL:	2.69		
ELEMENT: LINEAR			
PT	5+49.10	326870.0635	1588328.5140
POE	6+00.00	326919.4089	1588340.9915
TANGENT DIRECTION:	N 14°11'25.50" E		
TANGENT LENGTH:	50.90		

CHANNEL ALIGNMENT

HORIZONTAL ALIGNMENT NAME: BR25channel

	STATION	NORTHING	EASTING
ELEMENT: LINEAR			
POB	10+00.00	326788.2249	1588010.1548
POE	13+00.00	326654.6712	1588278.7873
TANGENT DIRECTION:	S 63°33'54.71" E		
TANGENT LENGTH:	300.00		

0 30 60
SCALE IN FEET

DATUM
VERTICAL NAVD 88
HORIZONTAL NAD 83 (07)

PROJECT NAME: LUDLOW
PROJECT NUMBER: BRF 025-1(42)

FILE NAME: z10J068allgn.dgn
PROJECT LEADER: A.P. GUYETTE
DESIGNED BY: A.P. GUYETTE
ALIGNMENT LAYOUT SHEET

PLOT DATE: 8/23/2016
DRAWN BY: E.F. LAWES
CHECKED BY: A.P. GUYETTE
SHEET 13 OF 73

VHB 57435

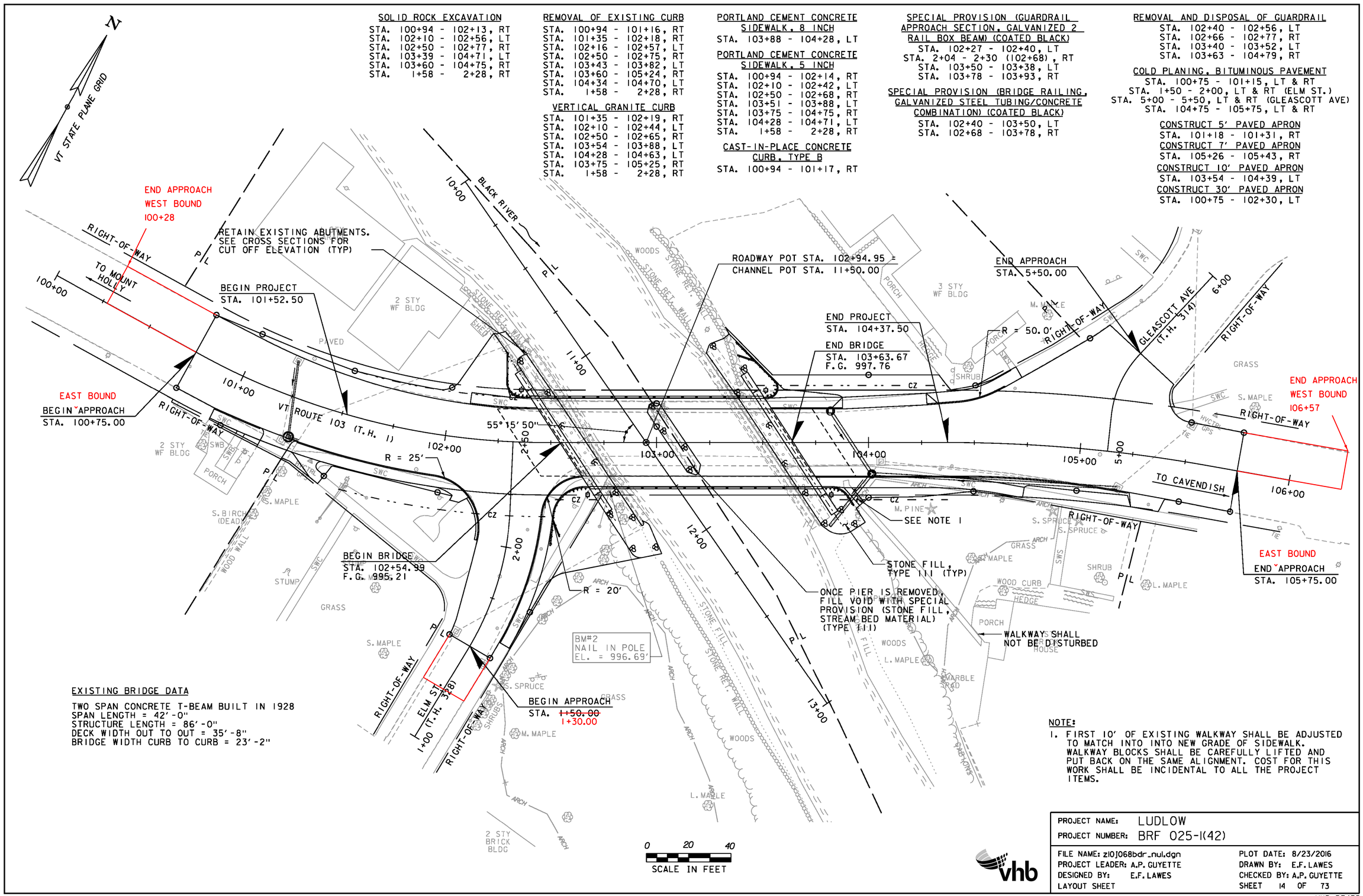

SOLID ROCK EXCAVATION
STA. 100+94 - 102+13, RT
STA. 102+10 - 102+56, LT
STA. 102+50 - 102+77, RT
STA. 103+39 - 104+71, LT
STA. 103+60 - 104+75, RT
STA. 1+58 - 2+28, RT

REMOVAL OF EXISTING CURB
STA. 100+94 - 101+16, RT
STA. 101+35 - 102+18, RT
STA. 102+16 - 102+57, LT
STA. 102+50 - 102+75, RT
STA. 103+43 - 103+82, LT
STA. 103+60 - 105+24, RT
STA. 104+34 - 104+70, LT
STA. 1+58 - 2+28, RT

VERTICAL GRANITE CURB
STA. 101+35 - 102+19, RT
STA. 102+10 - 102+44, LT
STA. 102+50 - 102+65, RT
STA. 103+54 - 103+88, LT
STA. 104+28 - 104+63, LT
STA. 103+75 - 105+25, RT
STA. 1+58 - 2+28, RT

PORTLAND CEMENT CONCRETE SIDEWALK, 8 INCH
STA. 103+88 - 104+28, LT

PORTLAND CEMENT CONCRETE SIDEWALK, 5 INCH
STA. 100+94 - 102+14, RT
STA. 102+10 - 102+42, LT
STA. 102+50 - 102+68, RT
STA. 103+51 - 103+88, LT
STA. 103+75 - 104+75, RT
STA. 104+28 - 104+71, LT
STA. 1+58 - 2+28, RT

CAST-IN-PLACE CONCRETE CURB, TYPE B
STA. 100+94 - 101+17, RT

SPECIAL PROVISION (GUARDRAIL APPROACH SECTION, GALVANIZED 2 RAIL BOX BEAM) (COATED BLACK)
STA. 102+27 - 102+40, LT
STA. 2+04 - 2+30 (102+68), RT
STA. 103+50 - 103+38, LT
STA. 103+78 - 103+93, RT

SPECIAL PROVISION (BRIDGE RAILING, GALVANIZED STEEL TUBING/CONCRETE COMBINATION) (COATED BLACK)
STA. 102+40 - 103+50, LT
STA. 102+68 - 103+78, RT

REMOVAL AND DISPOSAL OF GUARDRAIL
STA. 102+40 - 102+56, LT
STA. 102+66 - 102+77, RT
STA. 103+40 - 103+52, LT
STA. 103+63 - 104+79, RT

COLD PLANING, BITUMINOUS PAVEMENT
STA. 100+75 - 101+15, LT & RT
STA. 1+50 - 2+00, LT & RT (ELM ST.)
STA. 5+00 - 5+50, LT & RT (GLEASCOTT AVE)
STA. 104+75 - 105+75, LT & RT

CONSTRUCT 5' PAVED APRON
STA. 101+18 - 101+31, RT
CONSTRUCT 7' PAVED APRON
STA. 105+26 - 105+43, RT
CONSTRUCT 10' PAVED APRON
STA. 103+54 - 104+39, LT
CONSTRUCT 30' PAVED APRON
STA. 100+75 - 102+30, LT

EXISTING BRIDGE DATA

TWO SPAN CONCRETE T-BEAM BUILT IN 1928
SPAN LENGTH = 42'-0"
STRUCTURE LENGTH = 86'-0"
DECK WIDTH OUT TO OUT = 35'-8"
BRIDGE WIDTH CURB TO CURB = 23'-2"

NOTE:
1. FIRST 10' OF EXISTING WALKWAY SHALL BE ADJUSTED TO MATCH INTO INTO NEW GRADE OF SIDEWALK. WALKWAY BLOCKS SHALL BE CAREFULLY LIFTED AND PUT BACK ON THE SAME ALIGNMENT. COST FOR THIS WORK SHALL BE INCIDENTAL TO ALL THE PROJECT ITEMS.

PROJECT NAME: LUDLOW
PROJECT NUMBER: BRF 025-1(42)

FILE NAME: z101068bdr_nul.dgn
PROJECT LEADER: A.P. GUYETTE
DESIGNED BY: E.F. LAWES
LAYOUT SHEET
PLOT DATE: 8/23/2016
DRAWN BY: E.F. LAWES
CHECKED BY: A.P. GUYETTE
SHEET 14 OF 73

VHB 57435

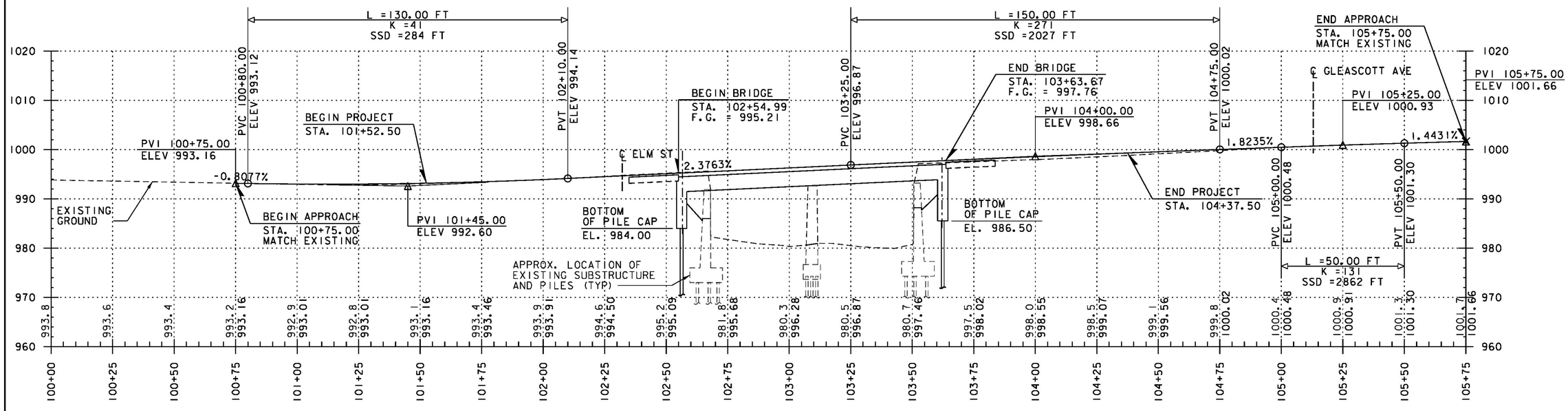

VERMONT ROUTE 103 (T.H. 1) PROFILE

SCALE 1" = 20' HORIZONTAL
1" = 10' VERTICAL

THE GRADES SHOWN TO THE NEAREST TENTH ARE THE ORIGINAL GROUND ELEVATIONS ALONG THE PROPOSED ALIGNMENT.

THE GRADES SHOWN TO THE NEAREST HUNDREDTH ARE THE FINISH GRADES ALONG THE PROPOSED ALIGNMENT.

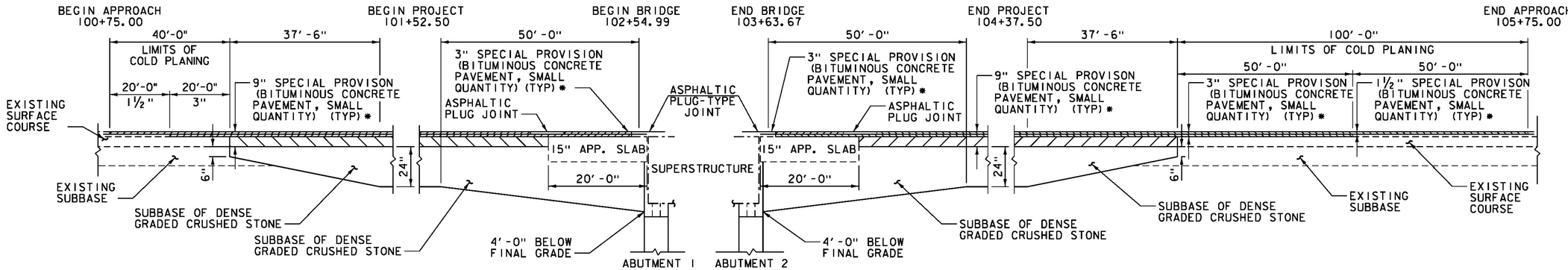

* AT COLD PLANE 1½": (1) - 1½" LIFT OF TYPE IVS

AT COLD PLANE 3": (2) - 1½"" LIFTS OF TYPE IVS

AT 9" PAVEMENT: (2) - 1½" LIFTS OF TYPE IVS OVER
(2) - 3" LIFTS OF TYPE IIS

BEGIN PROJECT MATERIAL TRANSITION

NOT TO SCALE

END PROJECT MATERIAL TRANSITION

NOT TO SCALE

NOTES:

1. SEE TYPICAL ROADWAY SECTIONS FOR INFORMATION NOT SHOWN.
2. EMULSIFIED ASPHALT SHALL BE APPLIED AT A RATE OF 0.040 GAL/SY BETWEEN ALL LIFTS OF BITUMINOUS CONCRETE PAVEMENT AND ON THE EXISTING PAVEMENT AND THE APPROACH SLAB PRIOR TO PLACING THE FIRST LIFT, AS DIRECTED BY THE ENGINEER.

vhb

PROJECT NAME: LUDLOW
PROJECT NUMBER: BRF 025-1(42)

FILE NAME: z10j068pro.dgn
PROJECT LEADER: A.P. GUYETTE
DESIGNED BY: E.F. LAWES
PROFILE SHEET

PLOT DATE: 8/23/2016
DRAWN BY: E.F. LAWES
CHECKED BY: A.P. GUYETTE
SHEET 15 OF 73

VHB 57435

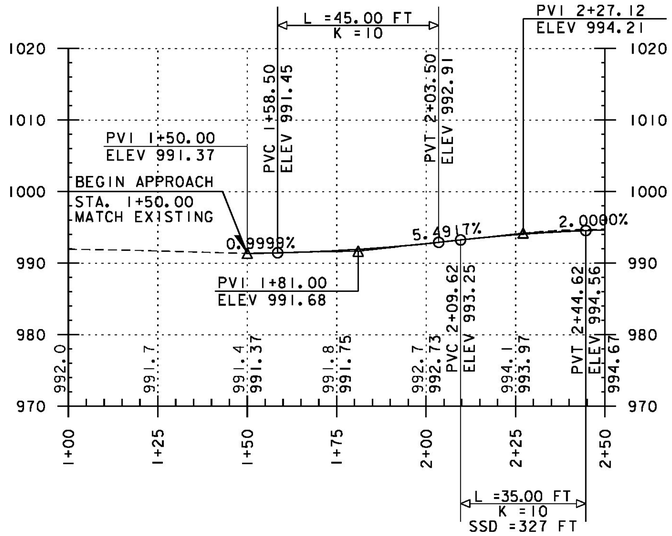

ELM ST. (T.H. 328) PROFILE

SCALE 1" = 20' HORIZONTAL
1" = 10' VERTICAL

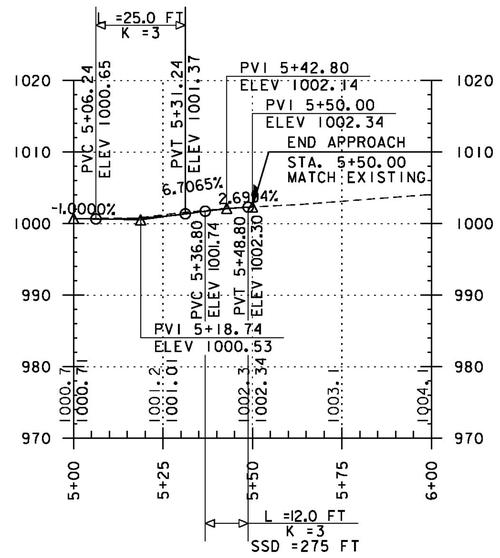

GLEASCOTT AVE (T.H. 314) PROFILE

SCALE 1" = 20' HORIZONTAL
1" = 10' VERTICAL

THE GRADES SHOWN TO THE NEAREST TENTH ARE THE ORIGINAL GROUND ELEVATIONS ALONG THE PROPOSED ALIGNMENT.

THE GRADES SHOWN TO THE NEAREST HUNDREDTH ARE THE FINISH GRADES ALONG THE PROPOSED ALIGNMENT.

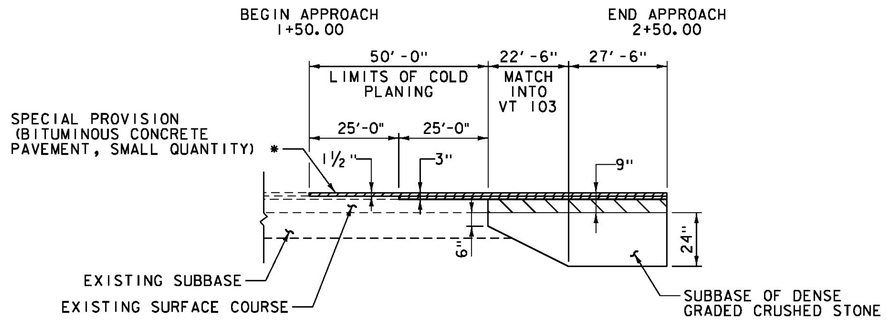

* AT COLD PLANE 1½": (1) - 1½" LIFT OF TYPE IVS

AT COLD PLANE 3": (2) - 1½" LIFTS OF TYPE IVS

AT 9" PAVEMENT:
(2) - 1½" LIFTS OF TYPE IVS OVER
(2) - 3" LIFTS OF TYPE IIS

BEGIN PROJECT MATERIAL TRANSITION (ELM ST.)

NOT TO SCALE

NOTE:
1. SEE TYPICAL ROADWAY SECTIONS FOR INFORMATION NOT SHOWN.

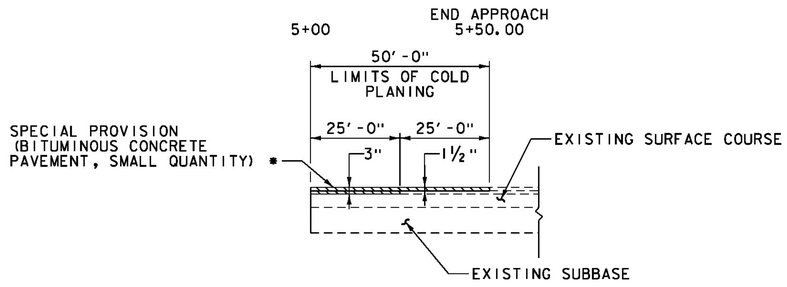

* AT COLD PLANE 1½": (1) - 1½" LIFT OF TYPE IVS

AT COLD PLANE 3": (2) - 1½" LIFTS OF TYPE IVS

END PROJECT MATERIAL TRANSITION
(GLEASCOTT AVE)

NOT TO SCALE

PROJECT NAME: LUDLOW
PROJECT NUMBER: BRF 025-1(42)

FILE NAME: z10J068pro.dgn
PROJECT LEADER: A.P. GUYETTE
DESIGNED BY: E.F. LAWES
SIDE ROAD PROFILE SHEET

PLOT DATE: 8/23/2016
DRAWN BY: E.F. LAWES
CHECKED BY: A.P. GUYETTE
SHEET 16 OF 73

VHB 57435

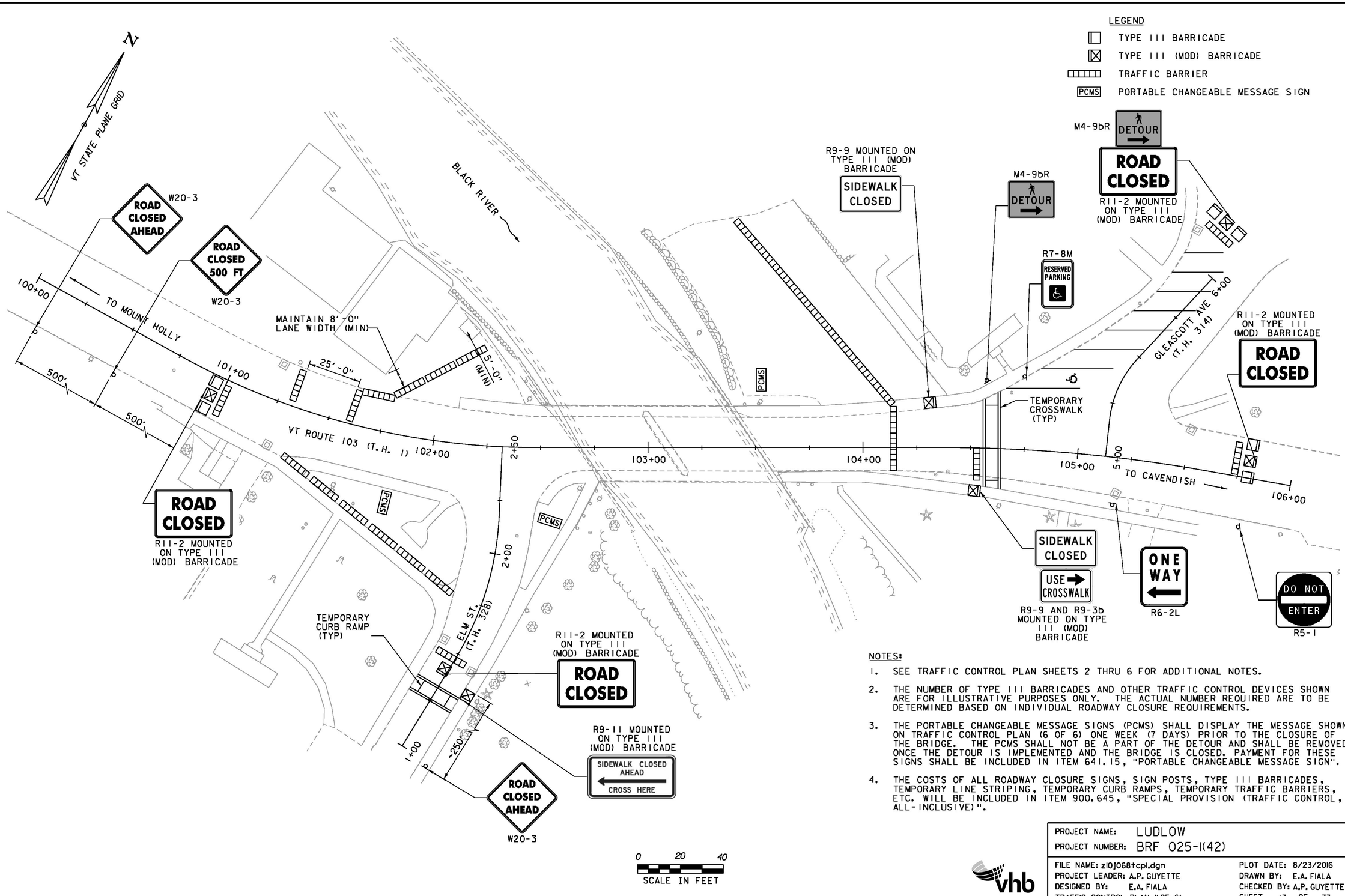

NOTES:

1. SEE TRAFFIC CONTROL PLAN SHEETS 2 THRU 6 FOR ADDITIONAL NOTES.
2. THE NUMBER OF TYPE III BARRICADES AND OTHER TRAFFIC CONTROL DEVICES SHOWN ARE FOR ILLUSTRATIVE PURPOSES ONLY. THE ACTUAL NUMBER REQUIRED ARE TO BE DETERMINED BASED ON INDIVIDUAL ROADWAY CLOSURE REQUIREMENTS.
3. THE PORTABLE CHANGEABLE MESSAGE SIGNS (PCMS) SHALL DISPLAY THE MESSAGE SHOWN ON TRAFFIC CONTROL PLAN (6 OF 6) ONE WEEK (7 DAYS) PRIOR TO THE CLOSURE OF THE BRIDGE. THE PCMS SHALL NOT BE A PART OF THE DETOUR AND SHALL BE REMOVED ONCE THE DETOUR IS IMPLEMENTED AND THE BRIDGE IS CLOSED. PAYMENT FOR THESE SIGNS SHALL BE INCLUDED IN ITEM 641.15, "PORTABLE CHANGEABLE MESSAGE SIGN".
4. THE COSTS OF ALL ROADWAY CLOSURE SIGNS, SIGN POSTS, TYPE III BARRICADES, TEMPORARY LINE STRIPING, TEMPORARY CURB RAMPS, TEMPORARY TRAFFIC BARRIERS, ETC. WILL BE INCLUDED IN ITEM 900.645, "SPECIAL PROVISION (TRAFFIC CONTROL, ALL-INCLUSIVE)".

vhb

PROJECT NAME:	LUDLOW
PROJECT NUMBER:	BRF 025-1(42)
FILE NAME: z10J068tcp1.dgn	PLOT DATE: 8/23/2016
PROJECT LEADER: A.P. GUYETTE	DRAWN BY: E.A. FIALA
DESIGNED BY: E.A. FIALA	CHECKED BY: A.P. GUYETTE
TRAFFIC CONTROL PLAN (1 OF 6)	SHEET 17 OF 73

VHB 57435

N

VT STATE PLANE GRID

NOTES:

1. ALL SIGNS SHALL BE IN ACCORDANCE WITH THE CURRENT EDITIONS OF THE "MANUAL ON UNIFORM TRAFFIC CONTROL DEVICES" (MUTCD) AND THE "STANDARD HIGHWAY SIGNS AND MARKINGS" BOOK (SHSM) PUBLISHED BY THE FEDERAL HIGHWAY ADMINISTRATION (FHWA).
2. SOLID SUBSTRATE CONSTRUCTION SIGNS SHALL HAVE RETROREFLECTIVE SHEETING EQUAL TO OR EXCEEDING "AMERICAN SOCIETY FOR TESTING AND MATERIALS" (ASTM) TYPE VII, VIII, OR IX REQUIREMENTS, UNLESS OTHERWISE NOTED. SOLID SUBSTRATE REGULATORY SIGNS (WHITE BACKGROUND) SHALL HAVE RETROFLECTIVE SHEETING EQUAL TO OR EXCEEDING ASTM TYPE III.
3. ALL SIGNS SHALL BE LOCATED SO THEY ARE VISIBLE AND ABLE TO BE READ BY THE TRAVELING PUBLIC. SIGNS SHALL BE INSTALLED SO AS TO NOT OBSTRUCT EXISTING SIGNS.
4. FIXED SIGNS SHALL BE ERECTED BEFORE THE START OF ANY WORK AND SHALL BE COVERED UNTIL WORK COMMENCES, AND UPON COMPLETION OF THE WORK. EACH SIGN SHALL BE ERECTED IN A NEAT AND WORKMANLIKE MANNER, SIGNS SHALL BE REMOVED UPON COMPLETION OF THE WORK AT THE DISCRETION OF THE ENGINEER.

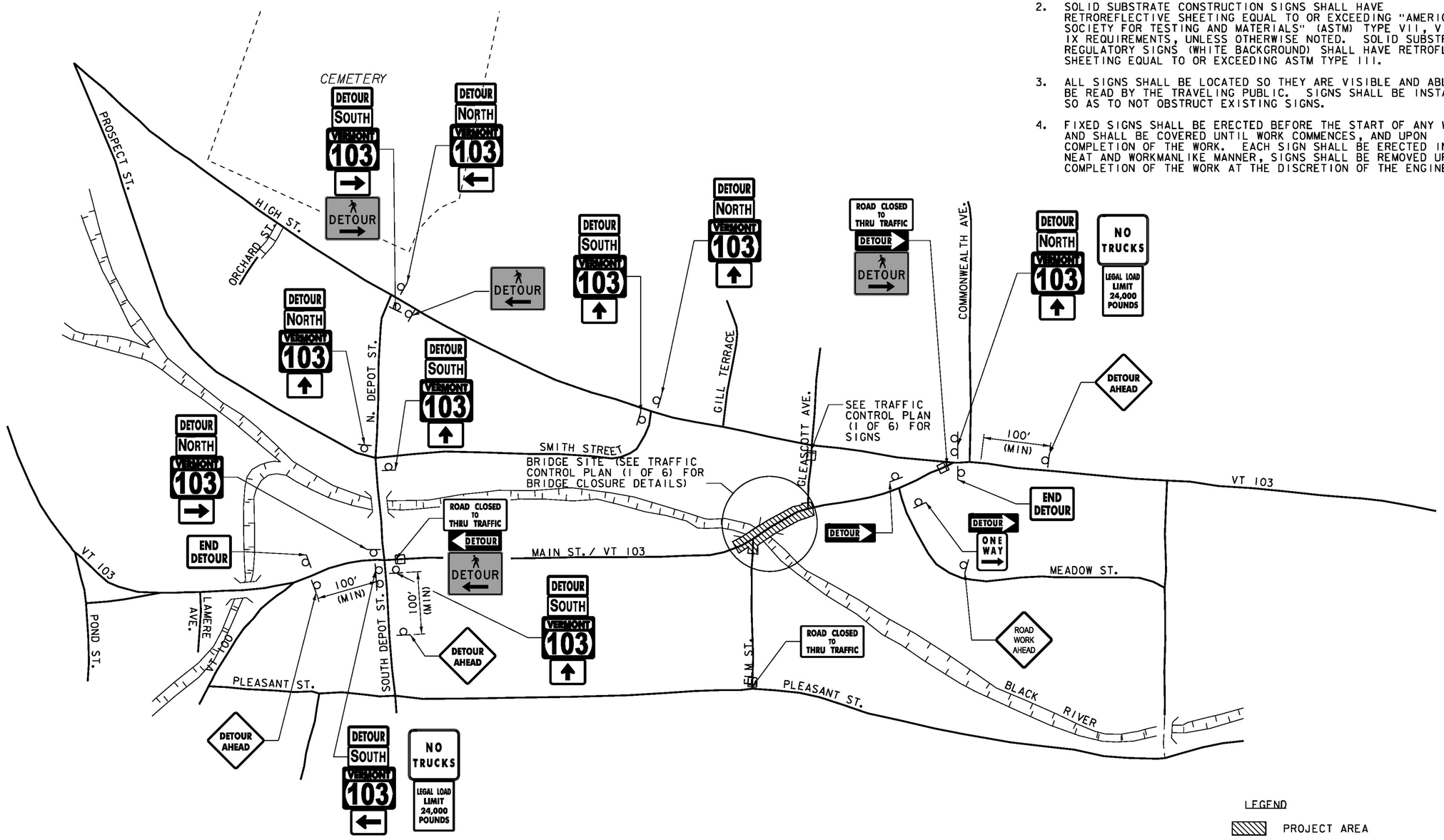

LEGEND

- PROJECT AREA
- TYPE III BARRICADE

LOCAL DETOUR
NOT TO SCALE

PROJECT NAME:	LUDLOW
PROJECT NUMBER:	BRF 025-1(42)
FILE NAME: z10J068tcp2.dgn	PLOT DATE: 8/23/2016
PROJECT LEADER: A.P. GUYETTE	DRAWN BY: E.A. FIALA
DESIGNED BY: E.A. FIALA	CHECKED BY: A.P. GUYETTE
TRAFFIC CONTROL PLAN (2 OF 6)	SHEET 18 OF 73

VHB 57435

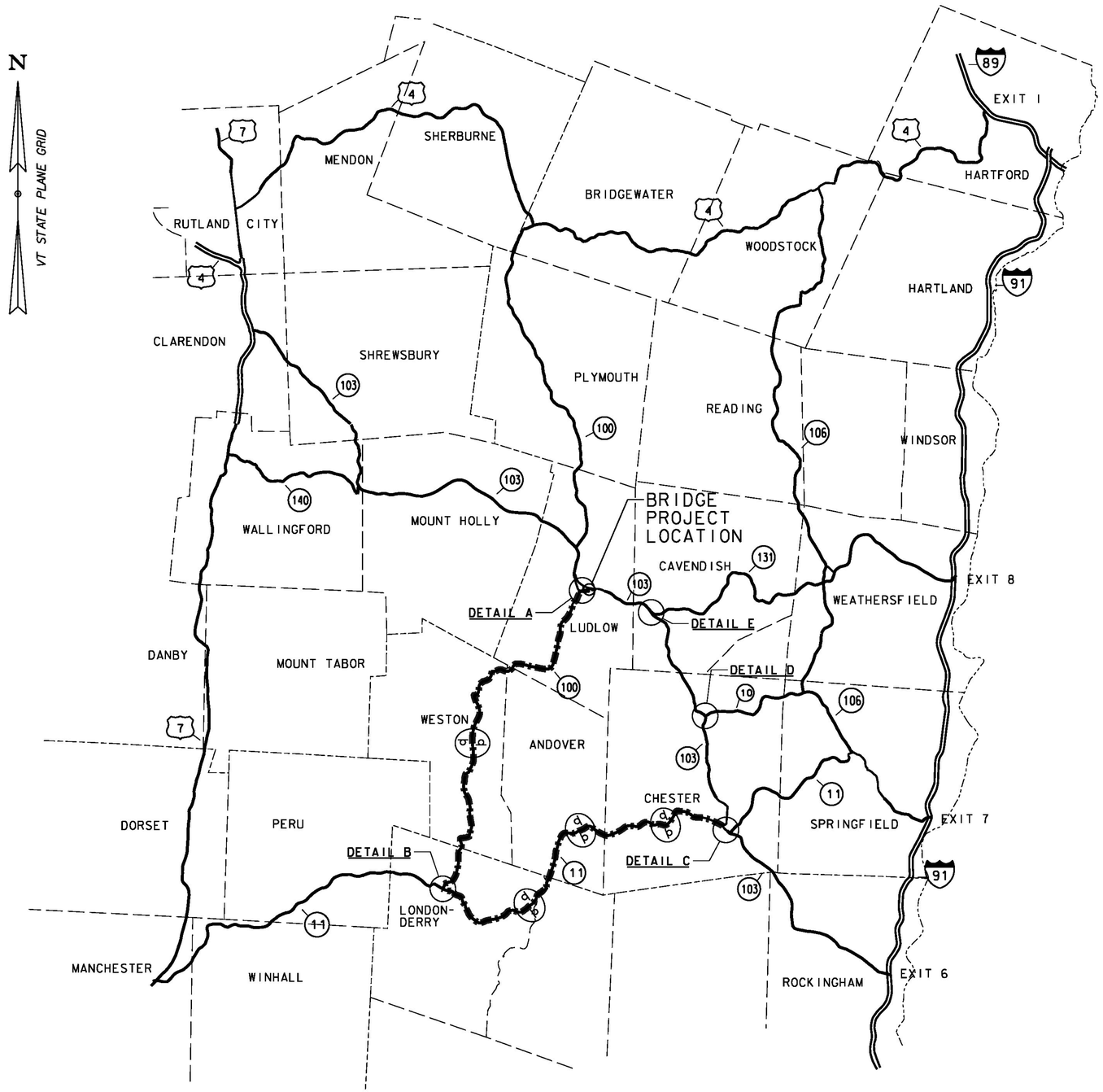

REGIONAL TRAFFIC DETOUR

TRAFFIC CONTROL NOTES:

1. SEE TRAFFIC CONTROL PLAN 1, 2 AND 6 FOR ADDITIONAL NOTES.
2. INSTALL CONFIRMATORY ROUTE MARKERS ALONG THE DETOUR ROUTE AT LOCATIONS AS INDICATED ON THIS PLAN.
3. WHEN EXISTING ROUTE MARKER ASSEMBLIES ARE LOCATED AT THE INTERSECTIONS OR ALONG THE DETOUR ROUTE, THE DETOUR ROUTE MARKER ASSEMBLIES SHALL BE INSTALLED ADJACENT TO THE EXISTING ROUTE MARKER ASSEMBLIES AND THE ROUTE MARKER SHALL BE COVERED IF ASSEMBLY CONFLICTS WITH DETOUR ROUTE MARKER ASSEMBLY.
4. WHERE SIGN INSTALLATIONS ARE NOT PROTECTED BY GUARDRAIL OR OTHER APPROVED TRAFFIC BARRIERS, ALL SIGN STANDS AND POST INSTALLATIONS SHALL BE "NATIONAL COOPERATIVE HIGHWAY RESEARCH PROGRAM" (NCHRP) REPORT 350 COMPLIANT. NO SIGN POSTS SHALL EXTEND OVER THE TOP OF THE SIGN INSTALLED ON SAID POST(S). WHEN ANCHORS ARE INSTALLED STUB SHALL NOT BE GREATER THAN FOUR INCHES ABOVE EXISTING GROUND.
5. PORTABLE CHANGEABLE MESSAGE SIGNS (PCMS) SHALL BE PLACED OFF THE EDGE OF THE ROADWAY, OUTSIDE THE CLEAR ZONE, BUT SHALL BE VISIBLE FROM THE ROADWAY. ANY VEGETATION THAT INTERFERES WITH VISIBILITY OF THE PCMS SHALL BE REMOVED. REMOVAL OF THE VEGETATION SHALL BE INCIDENTAL TO ITEM 641.15, "PORTABLE CHANGEABLE MESSAGE SIGN". WHEN PLACED BEHIND GUARDRAIL, THE BOTTOM OF THE SIGN FACE SHALL BE ABOVE THE TOP OF THE GUARDRAIL.
6. THE PCMS SHALL BE USED IN ACCORDANCE WITH SECTION 6F.60 OF THE MUTCD.
7. SEE TRAFFIC CONTROL PLANS 4-5 FOR DETAILS A-E.

LEGEND

CONFIRMATORY ROUTE MARKER ASSEMBLY (SEE NOTE 2 AND 3 ABOVE)

PROJECT NAME:	LUDLOW
PROJECT NUMBER:	BRF 025-1(42)
FILE NAME: z10J068detour.dgn	PLOT DATE: 8/23/2016
PROJECT LEADER: A.P. GUYETTE	DRAWN BY: E.A. FIALA
DESIGNED BY: A. GUYETTE	CHECKED BY: A.P. GUYETTE
TRAFFIC CONTROL PLAN (3 OF 6)	SHEET 19 OF 73

VHB 57435

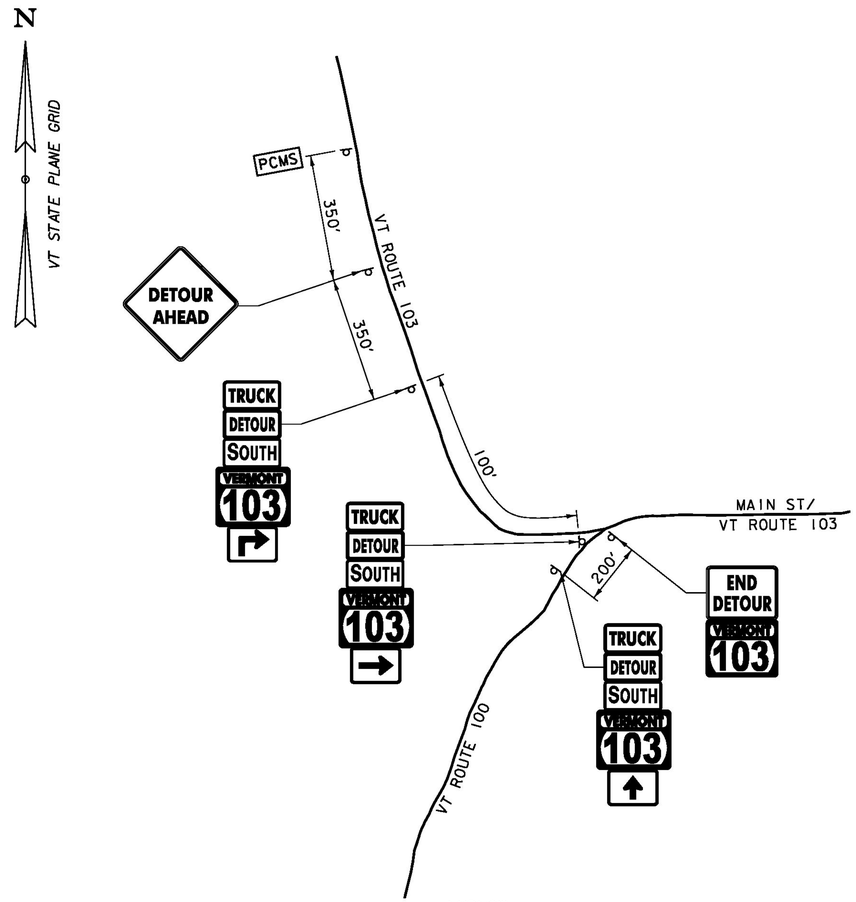

LUDLOW

DETAIL A
NOT TO SCALE

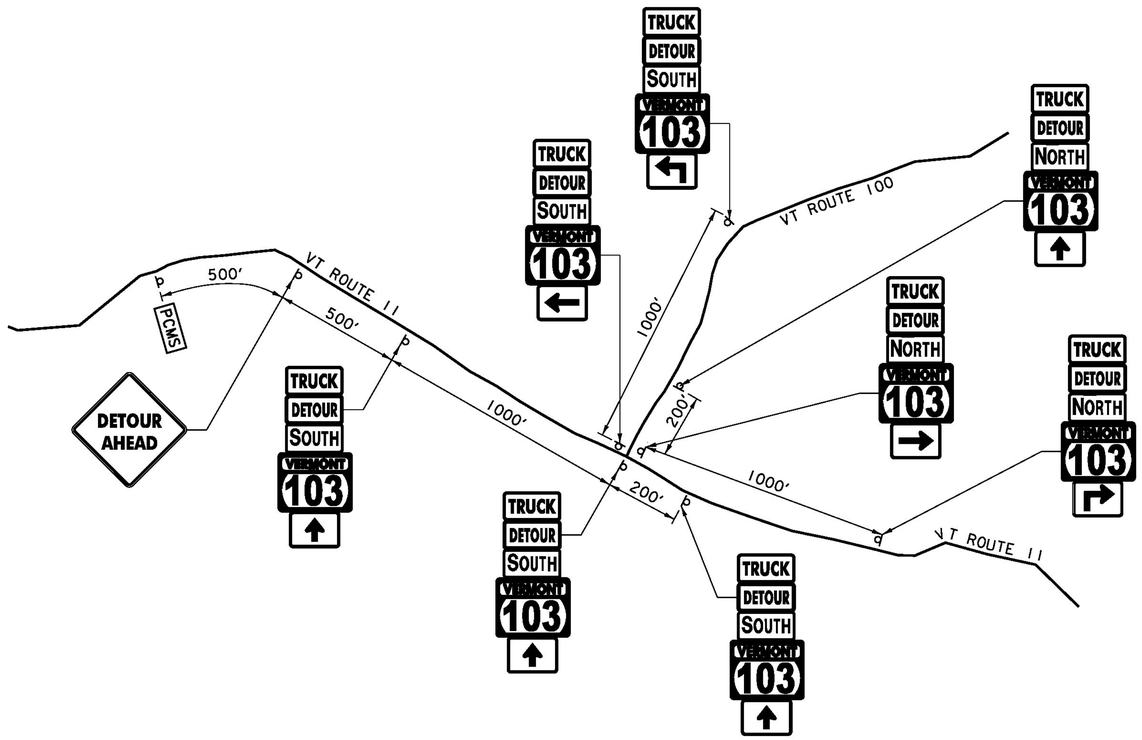

LONDONDERRY

DETAIL B
NOT TO SCALE

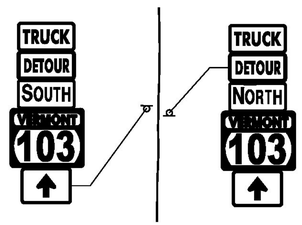

CONFIRMATORY ROUTE MARKER ASSEMBLY
NOT TO SCALE

LEGEND

PCMS PORTABLE CHANGEABLE MESSAGE SIGN

NOTE:

1. SEE TRAFFIC CONTROL PLAN (6 OF 6) FOR PCMS MESSAGES.
2. WHEN EXISTING ROUTE MARKER ASSEMBLIES ARE LOCATED AT THE INTERSECTIONS OR ALONG THE DETOUR ROUTE, THE DETOUR ROUTE MARKER ASSEMBLIES SHALL BE INSTALLED ADJACENT TO THE EXISTING ROUTE MARKER ASSEMBLIES.
3. ALL DISTANCES ARE APPROXIMATE AND MAY VARY IN THE FIELD.

PROJECT NAME:	LUDLOW
PROJECT NUMBER:	BRF 025-1(42)
FILE NAME: z10J068detour_dts.dgn	PLOT DATE: 8/23/2016
PROJECT LEADER: A.P. GUYETTE	DRAWN BY: E.A. FIALA
DESIGNED BY: E.A. FIALA	CHECKED BY: A.P. GUYETTE
TRAFFIC CONTROL PLAN (4 OF 6)	SHEET 20 OF 73

VHB 57435

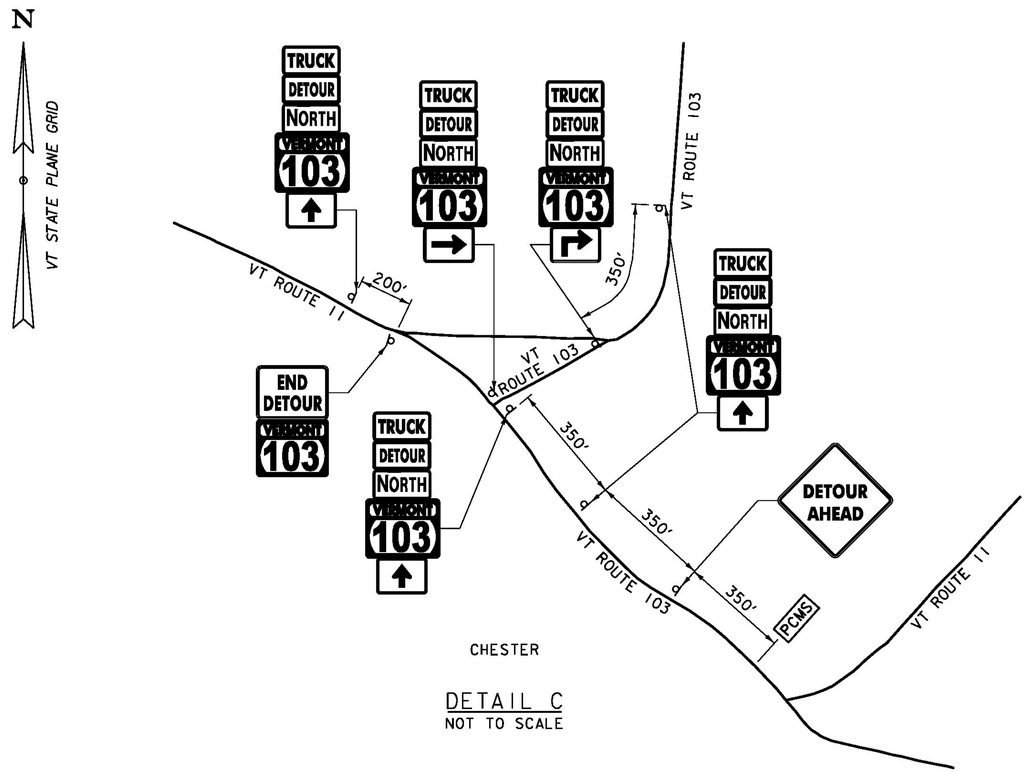

DETAIL C
NOT TO SCALE

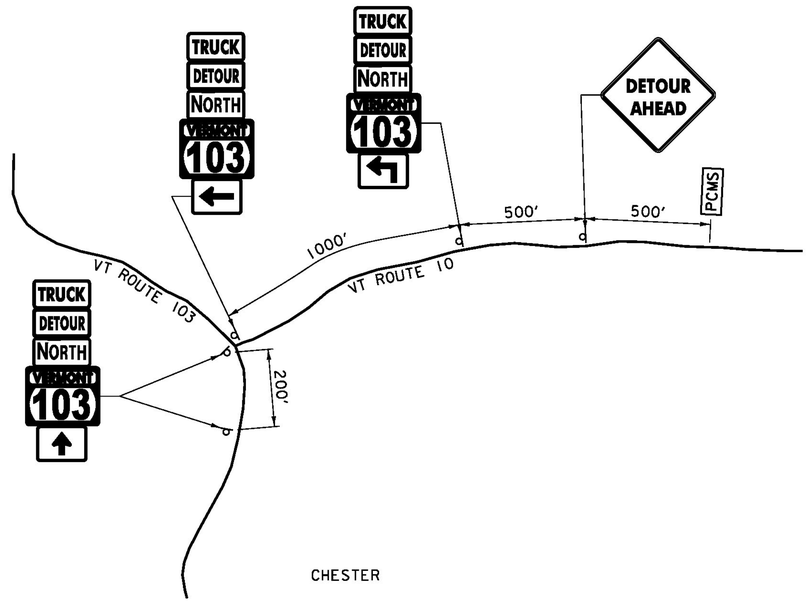

DETAIL D
NOT TO SCALE

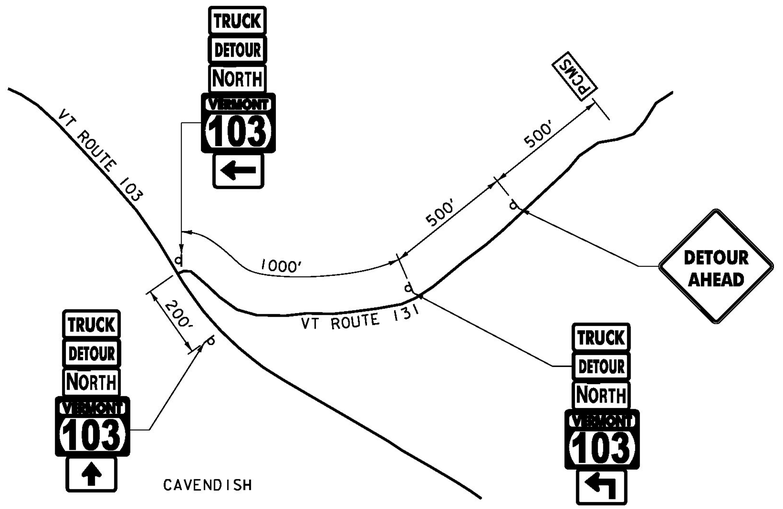

DETAIL E
NOT TO SCALE

LEGEND

PCMS PORTABLE CHANGEABLE MESSAGE SIGN

NOTE:

1. SEE TRAFFIC CONTROL PLAN (6 OF 6) FOR PCMS MESSAGES.
2. WHEN EXISTING ROUTE MARKER ASSEMBLIES ARE LOCATED AT THE INTERSECTIONS OR ALONG THE DETOUR ROUTE, THE DETOUR ROUTE MARKER ASSEMBLIES SHALL BE INSTALLED ADJACENT TO THE EXISTING ROUTE MARKER ASSEMBLIES.
3. ALL DISTANCES ARE APPROXIMATE AND MAY VARY IN THE FIELD.

PROJECT NAME:	LUDLOW
PROJECT NUMBER:	BRF 025-1(42)

FILE NAME: z10J068detour_dts.dgn	PLOT DATE: 8/23/2016
PROJECT LEADER: A.P. GUYETTE	DRAWN BY: E.A. FIALA
DESIGNED BY: E.A. FIALA	CHECKED BY: A.P. GUYETTE
TRAFFIC CONTROL PLAN (5 OF 6)	SHEET 21 OF 73

VHB 57435

IDENTIFICATION NUMBER	SIZE OF SIGN WIDTH (IN)	SIZE OF SIGN HEIGHT (IN)	TEXT	NUMBER OF SIGNS REQ'D	REMARKS
M1-5	24	24	VERMONT 103	44*	SEE NOTE 6
M3-1	24	12	NORTH	25*	SEE NOTE 6
M3-3	24	12	SOUTH	17*	SEE NOTE 6
M4-4	24	12	TRUCK	32*	MOUNT ABOVE THE M3-1 OR M3-3
M4-8	24	12	DETOUR	42*	MOUNT ABOVE THE M3-1 OR M3-3
M4-8A	24	18	END DETOUR	4	MOUNT ON ONE POST
M4-9bL	30	24	DETOUR ←	2	MOUNT BELOW THE R11-4
M4-9bR	30	24	DETOUR →	4	MOUNT BELOW THE R11-4
M4-10L	48	18	← DETOUR	1	MOUNT BELOW THE R11-4
M4-10R	48	18	DETOUR →	3	MOUNT BELOW THE R11-4
M5-1L	21	15	↰	3	MOUNT BELOW THE M1-5
M5-1R	21	15	↱	3	MOUNT BELOW THE M1-5
M6-1L	21	15	←	5	MOUNT BELOW THE M1-5
M6-1R	21	15	→	5	MOUNT BELOW THE M1-5
M6-3	21	15	↑	26*	MOUNT BELOW THE M1-5
R5-1	30	30	DO NOT ENTER	1	MOUNT ON ONE POST
R5-2A	30	30	NO TRUCKS	2	MOUNT ON ONE POST

* = NUMBER OF SIGNS REQ'D ASSUMING APPROXIMATELY 4 LOCATIONS OF CONFIRMATORY ROUTE MARKER ASSEMBLY DETAIL

IDENTIFICATION NUMBER	SIZE OF SIGN WIDTH (IN)	SIZE OF SIGN HEIGHT (IN)	TEXT	NUMBER OF SIGNS REQ'D	REMARKS
R6-2L	24	30	ONE WAY ←	1	MOUNT ON ONE POST
R6-2R	24	30	ONE WAY →	1	MOUNT ON ONE POST
R7-8M	12	18	RESERVED PARKING	1	MOUNT ON ONE POST
R9-3b	18	12	USE → CROSSWALK	1	MOUNT BELOW THE R9-9
R9-9	24	12	SIDEWALK CLOSED	2	MOUNT ON TYPE III (MOD) BARRICADE
R9-11	24	12	SIDEWALK CLOSED AHEAD ← CROSS HERE	1	MOUNT ON TYPE III (MOD) BARRICADE
R11-2	48	30	ROAD CLOSED	4	MOUNT ON TYPE III BARRICADE (MOD.)
R11-4	60	30	ROAD CLOSED TO THRU TRAFFIC	3	MOUNT ON TYPE III BARRICADE (MOD.)
VR_017	24	30	LEGAL LOAD LIMIT 24,000 POUNDS	2	MOUNT ON ONE POST
W20-1	48	48	ROAD WORK AHEAD	1	MOUNT ON TWO POSTS
W20-2	48	48	DETOUR AHEAD	8	MOUNT ON TWO POSTS
W20-3	48	48	ROAD CLOSED AHEAD	2	MOUNT ON TWO POSTS
W20-3	48	48	ROAD CLOSED 500 FT	1	MOUNT ON TWO POSTS

NOTES:

1. THE COSTS OF ALL DETOUR SIGNS AND REQUIRED SIGN POSTS WILL BE INCLUDED IN ITEM 900.645, "SPECIAL PROVISION (TRAFFIC CONTROL, ALL-INCLUSIVE)".
2. COLORS FOR THE M1-5, M3-1, AND M3-3 SIGNS SHALL MATCH THE COLORS SHOWN ON VTRANS STD. E-136B.
3. COLORS FOR THE M5-1L, M5-1R, M5-2R, M6-1L, M6-1R, M6-2R AND THE M6-3 SIGNS SHALL BE A BLACK ARROW AND BORDER ON RETROREFLECTIVE ORANGE BACKGROUND.
4. COLORS FOR THE W20-2, M4-4 AND M4-8 SIGN SHALL BE BLACK TEXT AND BORDER ON RETROREFLECTIVE FLUORESCENT ORANGE BACKGROUND.
5. COLORS FOR THE R9-3b, R9-9, AND R9-11 SIGNS SHALL BE BLACK TEXT AND BORDER ON RETROREFLECTIVE WHITE BACKGROUND.
6. THE M1-5, M3-1, AND THE M3-3 SIGNS SHALL BECOME PROPERTY OF THE STATE AFTER THEY ARE REMOVED FROM THE DETOUR. THE CONTRACTOR SHALL DELIVER THE SIGNS TO THE STATE GARAGE IN THE TOWN OF LUDLOW. ALL COSTS ASSOCIATED WITH PROVIDING SIGNS TO THE STATE WILL BE CONSIDERED INCIDENTAL TO ITEM 900.645, "SPECIAL PROVISION (TRAFFIC CONTROL, ALL-INCLUSIVE)".
7. ONE WEEK PRIOR (7 DAYS) TO CONSTRUCTION ON THE BRIDGE, PORTABLE CHANGEABLE MESSAGE SIGNS (PCMS) MESSAGES 1 AND 2 WILL BE DISPLAYED AT THE BRIDGE AND PCMS MESSAGES 3, 4, AND 5 WILL BE DISPLAYED REGIONALLY.
8. DURING THE BRIDGE CLOSURE, PCMS SHALL READ MESSAGES 6, 7, AND 8 REGIONALLY.

MESSAGES FOR PORTABLE CHANGEABLE MESSAGE SIGNS (PCMS) - AT BRIDGE

ONE WEEK PRIOR

	MESSAGE 1	MESSAGE 2	
(ROUTE) ***	VT 103	MMMM DD	(DATE) **
	BRIDGE	TO	
	CLOSED	MMMM DD	(DATE) **

MESSAGES FOR PORTABLE CHANGEABLE MESSAGE SIGNS (PCMS) - REGIONAL DETOUR

ONE WEEK PRIOR

	MESSAGE 3	MESSAGE 4	MESSAGE 5	
(ROUTE) ***	VT 103	EAST OF	MMMM DD	(DATE) **
	BRIDGE	VT 100	TO	
	CLOSED	SOUTH	MMMM DD	(DATE) **

DURING BRIDGE CLOSURE

	MESSAGE 6	MESSAGE 7	MESSAGE 8
(ROUTE) ***	VT 103	EAST OF	NO
	BRIDGE	VT 100	THRU
	CLOSED	SOUTH	TRUCKS

** - MONTH SHALL BE SPELLED OUT - JUNE 10 NOT 06/10

*** - ROUTE VT 103 SHALL SPECIFY W (WEST) OR E (EAST) AS APPROPRIATE FOR THE DETOUR.

vhb

PROJECT NAME: LUDLOW
PROJECT NUMBER: BRF 025-1(42)

FILE NAME: z10J068detour_dts.dgn
PROJECT LEADER: A.P. GUYETTE
DESIGNED BY: E.A. FIALA
TRAFFIC CONTROL PLAN (6 OF 6)

PLOT DATE: 8/23/2016
DRAWN BY: E.A. FIALA
CHECKED BY: A.P. GUYETTE
SHEET 22 OF 73

VHB 57435

DUCTILE IRON PIPE, CEMENT LINED (8")
STA. 102+18 - STA. 102+33, RT
STA. 103+95 - STA. 104+34, RT

GATE VALVE WITH VALVE BOX (8")
STA. ~~102+17, RT~~ TOWN WET TAP
STA. 102+30, RT NEW VALVE
STA. 104+01, RT

ADJUST ELEVATION OF VALVE BOX
STA. 104+34, RT
STA. 104+39, RT

SPECIAL PROVISION (WATER MAIN ON BRIDGE) (8")
STA. 102+33 - STA. 103+95, RT

JUNCTION BOX
STA. 102+34, 18.8' LT
STA. 102+60, 19.9' RT
STA. 103+57, 19.1' LT
STA. 103+82, 19.9' RT

NEW
~~REMOVE AND RESET~~ LUMINAIRE & LIGHT POLE
STA. 102+35, LT
STA. 102+67, RT*
STA. 103+51, LT
STA. 103+82, RT

CHANGING ELEVATION OF SEWER MANHOLES
STA. 101+89, RT

WIRED CONDUIT (2") (PVC) & ELECTRICAL CONDUIT SLEEVE (6") (PVC)
STA. 102+34, LT - 102+60, RT
STA. 1+88, RT - 102+60, RT
STA. 102+60, RT - 102+82, RT (NO SLEEVE)
STA. 102+82, RT - 103+57, LT
STA. 102+82, RT (5')
STA. 103+51, LT - 103+57, LT

ELECTRICAL CONDUIT (4") (PVC)
STA. 102+34 - 102+57, LT ~~(6 EA)~~ 5 EA
STA. 102+60 - 103+82, RT ~~(6 EA)~~ 5 EA

NOTE: EXTEND BRIDGE CONDUIT INTO JUNCTION BOXES ON ALL CORNERS OF THE BRIDGE.

8 STA. 103+81.8, 39.4' RT - STA. 104+01.6, 14.8' RT
REMOVE EXISTING 18" PVC PIPE
32' x 18" CPEP (SL)
18" INV. @ INLET (7) = 993.11
18" INV. @ OUTLET (39.4' RT) = 991.87

9 STA. ~~104+01.6~~ 104+05, 14.8' RT
NEW PRECAST REINFORCED CONCRETE DROP INLET WITH CAST IRON GRATE, TYPE D
RIM = 998.28

10 STA. ~~103+82.1~~ 103+89, 14.8' LT - STA. ~~104+01.6~~ 104+05, 14.8' RT
34' x 18" CPEP (SL)
18" INV. @ INLET (9) = 993.90
18" INV. @ OUTLET (7) = 993.21

11 STA. ~~103+82.1~~ 103+89, 14.8' LT
NEW PRECAST REINFORCED CONCRETE DROP INLET WITH CAST IRON GRATE, TYPE D
RIM = 997.88

12 ~~STA. 104+05.9, 8.80' RT~~ TOP REMOVED STRUCTURE FLOW FILLED
~~REMOVE EXISTING DROP INLET~~

SCHEMATIC SHOWN, CONTRACTOR TO DETERMINE CONDUIT CONFIGURATION (TYP)
4" DIA. CONDUIT AND SLEEVES TO BE LOCATED A MINIMUM OF 36" BELOW FINISHED GRADE. SEE STD. D-20 (TYP)
BEGIN PROJECT STA. 101+52.50
NEW JUNCTION BOX (TYP)
RETIRE EXISTING LINE
REMOVE AND RESET LIGHT POLE (TYP)
END PROJECT STA. 104+37.50
END BRIDGE STA. 103+63.67 F.G. 997.76
END APPROACH STA. 5+50.00
BEGIN APPROACH STA. 100+75.00
BEGIN BRIDGE STA. 102+54.99 F.G. 995.21
BEGIN APPROACH STA. 1+50.00
RETAINED EXISTING STRUCTURE & INSTALLED NEW FRAME AND GRADE
RETIRE EXISTING LINE
PROPOSED AERIAL UTILITY RELOCATION
NEW MANHOLE 104+28 INVERT: 993.48
104+05 - 104+28 18" CPEP(SL) INLET: 993.48 OUTLET: 993.21
22' POLE WAS TOO SHORT. NEW POLE INSTALLED
* - POLE IS NOT INSTALLED BUT IS PROPERTY OF THE TOWN. CONTRACTOR TO COORDINATE WITH THE TOWN AND USE TOWN'S POLE AT THIS LOCATION.
VT STATE PLANE GRID
VT ROUTE 103 (T.H. 1)
TO MOUNT HOLLY
TO CAVENDISH
GLEASCOTT AVE (T.H. 314)
ELM ST. (T.H. 328)
RIGHT-OF-WAY
BLACK RIVER
SCALE IN FEET 0 20 40

1 STA. 101+21.8, 17.0' LT
CHANGING ELEVATION OF DROP INLET
NEW RIM = 992.60

2 STA. 101+21.8, 17.0' LT - STA. 101+27.4, 20.9' RT
REMOVE EXISTING 12" PVC PIPE

3 STA. 101+21.8, 17.0' LT - STA. 101+29.8, 18.5' RT
37' x 18" CPEP (SL)
18" INV. @ INLET (1) = 988.97
18" INV. @ OUTLET (5) = 988.51

4 STA. 101+27.4, 20.9' RT
REMOVE EXISTING DROP INLET

5 STA. 101+29.8, 18.5' RT
NEW PRECAST REINFORCED CONCRETE DROP INLET WITH CAST IRON GRATE, TYPE D
RIM = 992.47

6 STA. 101+27.4, 20.9' RT - STA. 101+34.0, 22.0' RT
REMOVE EXISTING 12" PVC PIPE

7 STA. 101+29.9, 18.5' RT - STA. 101+34.6, 18.5' RT
5' x 18" CPEP (SL)
18" INV. @ INLET (5) = FIELD VERIFY
18" INV. @ OUTLET (EXISTING 48" CGMP) = FIELD VERIFY

13 STA. ~~103+81.8, 39.4' RT - STA. 104+05.9, 8.8' RT~~
~~REMOVE EXISTING 18" PVC PIPE~~

14 STA. ~~104+05.9, 8.8' RT - STA. 105+19.6, 16.7' RT~~
~~REMOVE EXISTING 18" PVC PIPE~~

15 STA. ~~104+01.6~~, 14.8' RT - STA. 105+19.6, 16.7' RT
117' x 18" CPEP (SL)
18" INV. @ INLET (14) = 994.43
18" INV. @ OUTLET (7) = 993.21

16 STA. ~~105+19.6~~, 16.7' RT
CHANGING ELEVATION OF DROP INLET
NEW RIM = 1000.49

17 STA. ~~103+38.6~~, 17.3' RT - ~~103+47.8~~, 14.0' RT
~~REMOVE EXISTING 8" PVC PIPE~~

PROJECT NAME:	LUDLOW
PROJECT NUMBER:	BRF 025-1(42)
FILE NAME:	z10J068bdr_utility_reloc.dgn
PROJECT LEADER:	A.P. GUYETTE
DESIGNED BY:	R.H. BARNES
UTILITY LAYOUT SHEET	
PLOT DATE:	8/23/2016
DRAWN BY:	E.F. LAWES
CHECKED BY:	A.P. GUYETTE
SHEET	23 OF 73

VHB 57435

STATE OF VERMONT
AGENCY OF TRANSPORTATION

DRAINAGE DETAIL SHEET

STATION	STATION	POS.	ASKEW	INLET/OUTLET TYPE		DITCH		PIPE ARCH			PIPE		ALLOWABLE OPTIONS						PIPE ELBOW	ES	CB	PRCDI	DEPTH DI	CONC CLASS B	REINF STEEL	DI GRATE	CHAN ELEV	CRM	TRENCH EXCAVATION		COMM EXC	UNC CHAN EXC	STRUCT EXCAV	GRAN BKFILL STRUCT	GRAN BORR	EROS MATT	STONE FILL		MARKER POSTS			FLAG	REMARKS
				INLET	OUTLET	IN	OUT	SPAN	RISE	L	D	L	PCCSP	CAAP	RCP	CSP	CPEP	PCCSP PI										EARTH	ROCK									LT	RT		
			NO. DEG.					IN	IN	FT	IN	FT	TH	TH	CL	TH	SL	TH	NO. DEG.	EA	EA		FT	CY	LBS	TYPE	EA	CY	CY	CY	CY	CY	CY	CY	SY	CY	TYPE	EA	EA		
101+22		LT																								1		0					0							1	CHANGE ELEVATION OF DROP INLET
101+22	101+22	LT-RT		DI	DI																							11.5					12.5							2	REMOVE EXISTING 12" PVC PIPE
101+22	101+30	LT-RT		DI	DI						18	37					X											14.0					12.0							3	NEW 18" CPEP(SL) PIPE
101+27		RT																										5	2.0				6.0							4	REMOVE EXISTING DI
101+30		RT																				X	5.2			D		7.5					3.5							5	NEW PRECAST DI
10+27	101+34	RT		DI	CGMP																							2.0					2.0							6	REMOVE EXISTING 12" PVC PIPE
101+30	101+35	RT		DI	CGMP						18	5					X											2.5					2.0							7	NEW 18" CPEP(SL) PIPE CONNECTING INTO EXISTING 48" CGMP
103+82	104+02	RT		DI	RIVER						18	32					X											0					2.0							8	REMOVE EXIST. 18" PVC PIPE, NEW 18" CPEP(SL) PIPE
104+02		RT																				X	6.2			D		6					3.5							9	NEW PRECAST DI
103+82	104+02	LT-RT		DI	DI						18	34					X											9.5					7.5							10	NEW 18" CPEP(SL) PIPE
103+82		LT																				X	5.0			D		18					3.5							11	NEW PRECAST DI
104+06		RT																										4	2.0				4.5							12	REMOVE EXISTING DI
103+82	104+06	RT		DI	DI																							8.5					11.0							13	REMOVE EXISTING 18" PVC PIPE
104+06	105+20	RT		DI	DI																							54.5					61.0							14	REMOVE EXISTING 18" PVC PIPE
104+02	105+20	RT		DI	DI						18	117					X											63.5					56.0							15	NEW 18" CPEP(SL) PIPE
105+20		RT																								1		0					0							16	CHANGE ELEVATION OF DROP INLET
103+39	103+50	RT																										0	0				0							17	REMOVE 8" PVC PIPE OVER EXIST. ABUTMENT NO. 2

PROJECT NAME: **LUDLOW**
PROJECT NUMBER: **BRF 025-1(42)**

FILE NAME: **z10j068dds.dgn**
PROJECT LEADER: **A.P. GUYETTE**
DESIGNED BY: **R.H. BARNES**
DRAINAGE DETAIL SHEET #1

PLOT DATE: **8/22/2016**
DRAWN BY: **R.H. BARNES**
CHECKED BY: **A.P. GUYETTE**
SHEET **24** OF **73**

VHB 57435

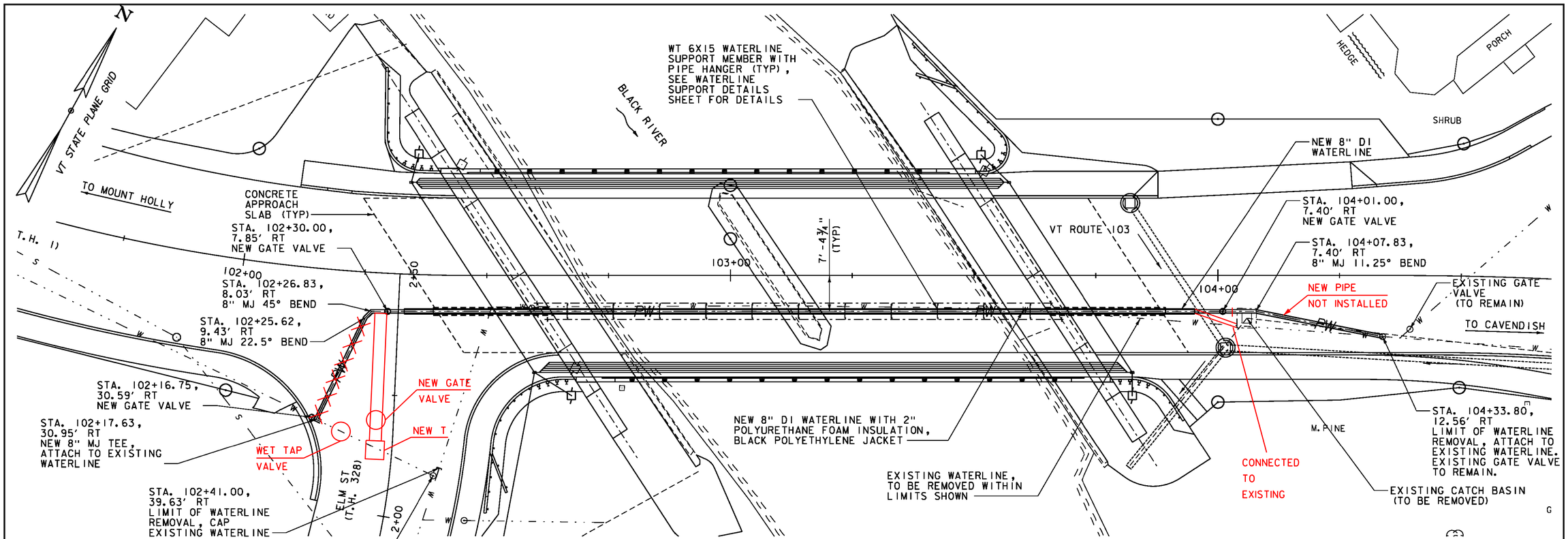

WATERLINE - PLAN

SCALE 1" = 10'-0"
10 0 10

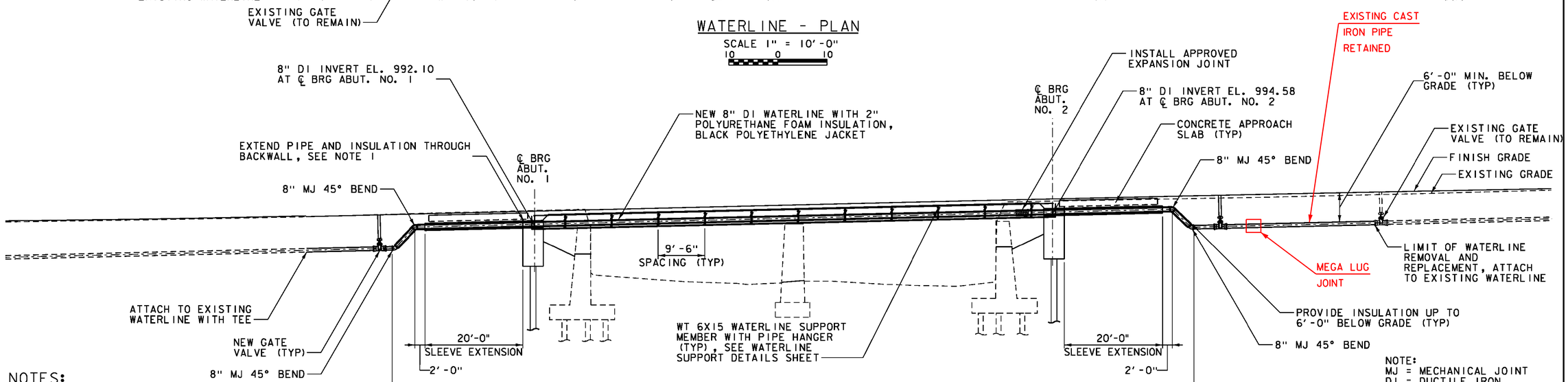

WATERLINE - ELEVATION

SCALE 1" = 10'-0"
10 0 10

NOTE:
MJ = MECHANICAL JOINT
DI = DUCTILE IRON

NOTES:

1. PIPE, INSULATION, AND JACKET SHALL BE EXTENDED THROUGH BACKWALL AND UNDERNEATH THE APPROACH SLAB WITH 18" SLEEVE. A LINK-SEAL SHALL BE PROVIDED BETWEEN THE PIPE AND SLEEVE AT EXPOSED FACE OF ABUTMENT. PIPE SUPPORTS SHALL BE PROVIDED IN SLEEVE AND THE END OF SLEEVE SHALL BE SEALED.
2. PROVIDE THRUST BLOCKS AT ALL BENDS IN THE WATERLINE, 22.5 DEGREES AND GREATER, SEE WATERLINE NOTES AND DETAILS SHEET.

PROJECT NAME:	LUDLOW
PROJECT NUMBER:	BRF 025-1(42)
FILE NAME: z10J068watpe.dgn	PLOT DATE: 8/23/2016
PROJECT LEADER: A.P. GUYETTE	DRAWN BY: R.H. BARNES
DESIGNED BY: R.H. BARNES	CHECKED BY: A.P. GUYETTE
WATERLINE PLAN AND ELEVATION	SHEET 25 OF 73

VHB 57435

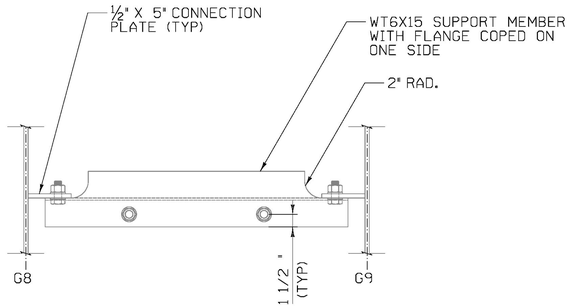

WATERLINE SUPPORT PLAN

SCALE: 1½" = 1'-Ø"

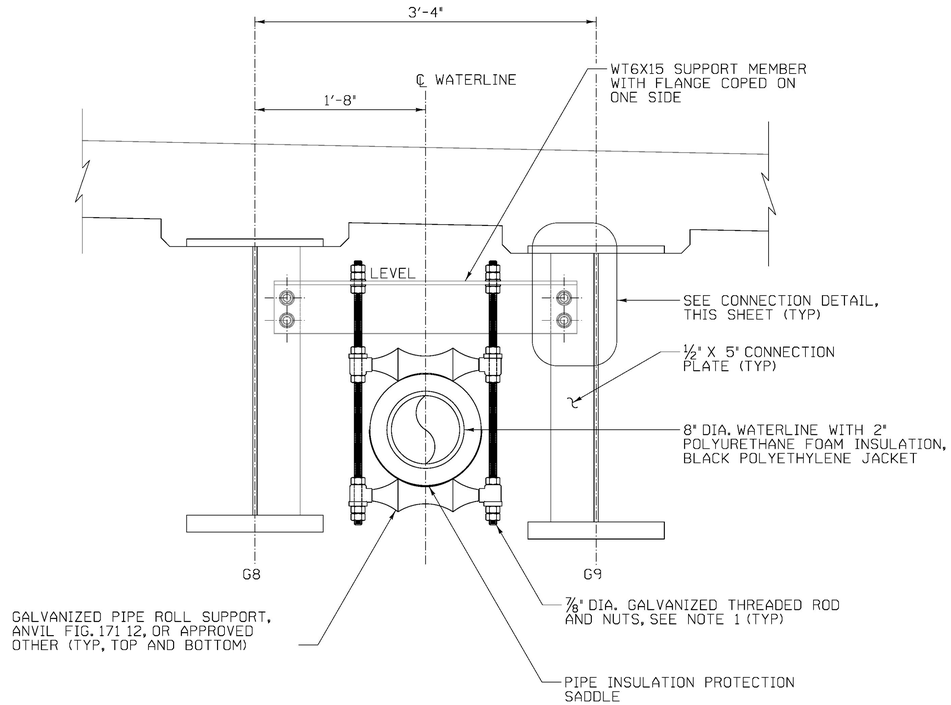

WATERLINE SUPPORT SECTION

SCALE: 1½" = 1'-Ø"

NOTES:

1. TOP AND BOTTOM NUTS SHALL BE DOUBLE NUTTED AS SHOWN.
2. WASHERS SHALL BE INSTALLED BETWEEN NUTS AND SUPPORT BEAM.
3. CONTRACTOR SHALL SET WATERLINE SO AS TO AVOID CONFLICT BETWEEN PIPE SUPPORTS AND JOINT ASSEMBLIES.
4. SEE SHEET 46A & 46B FOR TIMBER BACKWALL DETAILS AROUND SLEEVE

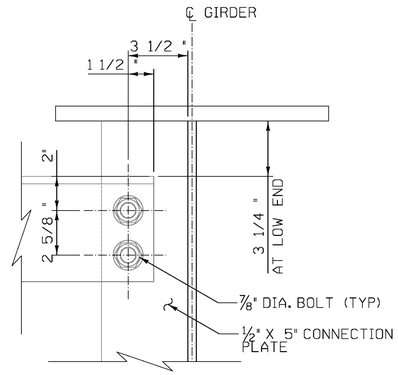

CONNECTION DETAIL

SCALE: 3" = 1'-Ø"

CALDERWOOD ENGINEERING, ETC.
STRUCTURAL ENGINEERING • DETAILING SERVICES
222 RIVER RD, RICHMOND, ME 04357 PH/FX (207)737-2007/(207) 737-2008

PREPARED FOR:
COLD RIVER BRIDGES, LLC
CEE 16-16-COLDRIVERBRIDGES
01-CS-LUDLOW

ERIC F. CALDERWOOD NO. 8711 BRADFORD, VT LICENSED PROFESSIONAL ENGINEER

P.E. NUMBER 8711

DATE

	BY	DATE
DESIGN-DETAILED	TDC	JAN 2007
CHECKED-REVIEWED	TDC	
REVISIONS 1	TDC	MAR 2007
REVISIONS 2	TDC	
REVISIONS 3		
REVISIONS 4		
FIELD CHANGES		

VE SUPER DESIGN
LUDLOW VT. BRF 025-1(42)

WATERLINE SUPPORT DETAILS

SHEET NUMBER

26

of 73

CALDERWOOD ENGINEERING, LLC 222 River Road RICHMOND, ME 04357 PH: (207) 737-2007 FAX: (207) 737-2008

WATERLINE NOTES:

1. ALL MATERIALS AND CONSTRUCTION SHALL BE IN ACCORDANCE WITH THE VERMONT AGENCY OF TRANSPORTATION'S STANDARD SPECIFICATIONS FOR CONSTRUCTION, DATED 2011, AND ITS LATEST REVISIONS.
2. EXISTING UTILITIES ARE APPROXIMATE ONLY AND MAY NOT BE COMPLETE. THE CONTRACTOR SHALL VERIFY ALL UTLITY LOCATIONS AND IDENTIFY ANY CONFLICTS PRIOR TO PLACEMENT OF THE PIPE. THE ENGINEER SHALL BE NOTIFIED OF ANY DISCREPANCIES. THE CONTRACTOR SHALL CONTACT "DIG SAFE" AT 811, PRIOR TO ANY CONSTRUCTION.
3. THE CONTRACTOR SHALL COORDINATE WITH THE TOWN OF LUDLOW FOR ALL WATERLINE EXCAVATIONS AND WATERLINE WORK.
4. THE WATERLINE WILL BE DEACTIVATED WITHIN THE LIMITS OF WORK DURING CONSTRUCTION AND A TEMPORARY WATERLINE IS NOT REQUIRED.
5. TESTING SHALL INCLUDE BUT NOT BE LIMITED TO CHLORINATION AND PRESSURE TESTING OF THE NEW SEGMENT OF WATERLINE PRIOR TO FINAL CONNECTION OF THE SYSTEM. TESTING SHALL BE IN ACCORDANCE WITH THE SPECIFICATIONS.
6. PROVIDE RESTRAINED JOINTS AND CONCRETE THRUST BLOCKS AT ALL BENDS IN THE WATERLINE, 22.5 DEGREES AND GREATER. REFER TO THRUST BLOCK REQUIREMENTS. IN LOCATIONS WHERE THE THRUST IS VERTICALLY UPWARD, THE THRUST BLOCK SHALL BE ANCHORED TO THE FITTING WITH ANCHOR RODS OR APPROVED OTHER. PLACE POLYETHYLENE SHEETING BETWEEN ALL CONCRETE THRUST BLOCKS AND FITTINGS TO PREVENT BOND.

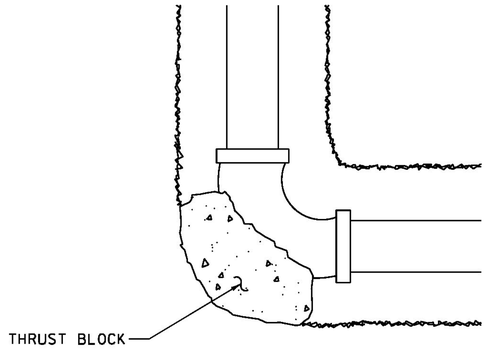

90°, 45°, OR 22.5° BEND

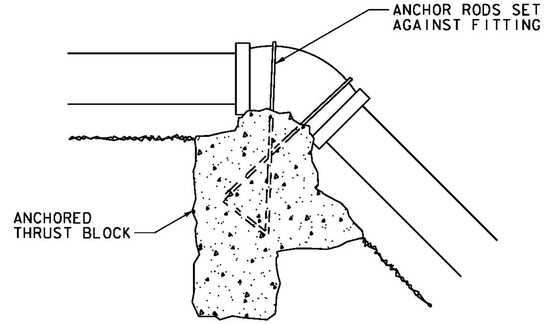

UPWARD THRUST

THRUST BLOCK DETAILS

NOT TO SCALE

	SOFT WET CLAY, SAND OR SILT (1000 PSF)	DRY SAND (3000 PSF)	COMPACT SAND, COARSE GRAVEL OR HARDPAN (5000 PSF)
CAP OR TEE	20 SF	7 SF	4 SF
90° BEND	27 SF	9 SF	6 SF
45° BEND	15 SF	5 SF	3 SF
22.5° BEND	8 SF	3 SF	2 SF

AREA OF BEARING ON FACE OF CONCRETE THRUST BLOCKS

(IN SQUARE FEET)

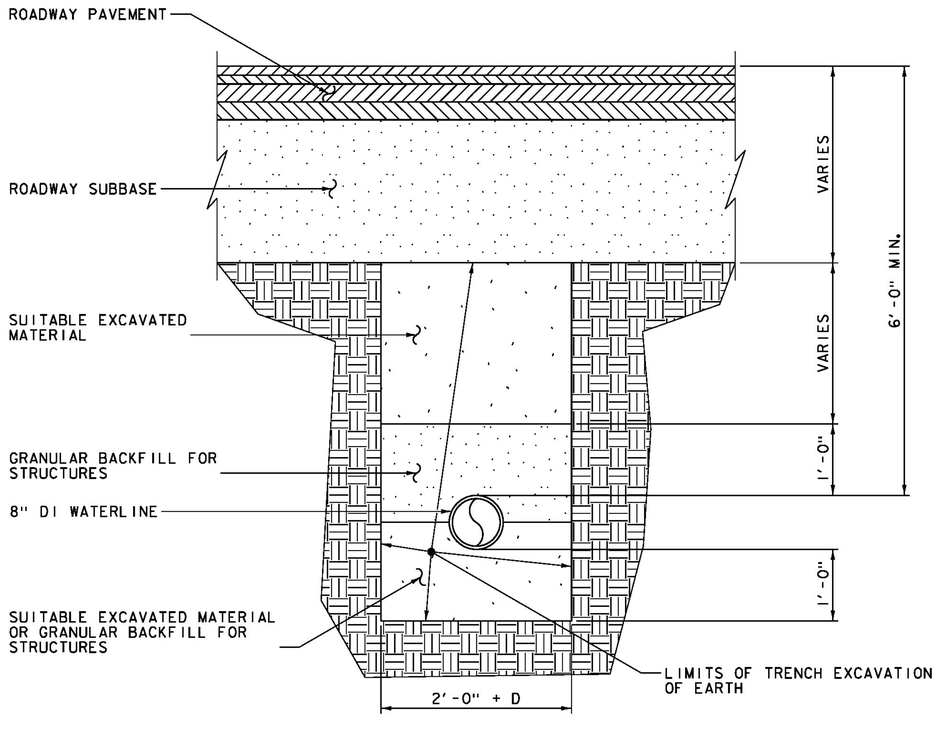

WATERLINE TRENCH DETAIL

NOT TO SCALE

PROJECT NAME:	LUDLOW
PROJECT NUMBER:	BRF 025-1(42)
FILE NAME: z10j068wat.dgn	PLOT DATE: 8/23/2016
PROJECT LEADER: A.P. GUYETTE	DRAWN BY: R.H. BARNES
DESIGNED BY: R.H. BARNES	CHECKED BY: A.P. GUYETTE
WATERLINE NOTES AND DETAILS	SHEET 27 OF 73

VHB 57435

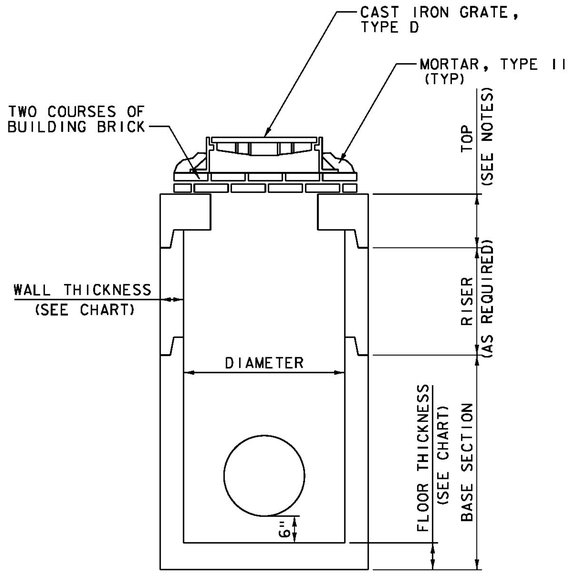

PRECAST REINFORCED CONCRETE DROP INLET

NOT TO SCALE

DROP INLET NOTES:

1. ALL PRECAST CONCRETE DROP INLETS SHALL BE DESIGNED AND MANUFACTURED IN ACCORDANCE WITH SUBSECTION 705.04.
2. THE CONTRACTOR IS RESPONSIBLE FOR VERIFYING ALL INVERT ELEVATIONS, PIPE SIZES AND LOCATIONS SHOWN PRIOR TO ORDERING PRECAST COMPONENTS.
3. SEE STANDARD D-15 FOR CAST IRON FRAME AND GRATE DETAILS.
4. THE TOP SECTIONS MAY BE EITHER THE FLAT TOPS AS SHOWN OR CONE SECTIONS. IF CONE SECTIONS ARE USED THEY MAY EITHER BE CONCENTRIC OR ECCENTRIC. PIPES ARE NOT TO ENTER CONE SECTIONS.
5. PRECAST SECTIONS SHALL HAVE A TONGUE AND GROOVE JOINT 4" HIGH AT AN ANGLE OF 11° CENTERED IN THE WIDTH OF THE JOINT. ALL SECTIONS SHALL BE ASSEMBLED USING AN APPROVED FLEXIBLE SEALANT.
6. ALL SECTIONS WITH MULTIPLE PIPES SHALL HAVE A MINIMUM OF 1'-0" OF OUTSIDE SURFACE BETWEEN HOLES. NO MORE THAN 75% OF A HORIZONTAL CROSS SECTION SHALL BE HOLES. HOLES SHALL BE NO CLOSER THAN 3" TO A JOINT.

SIZING CHART

DIAMETER	WALL THICKNESS	FLOOR THICKNESS
4'-0" OR SMALLER	5¼"	6"
5'-0"	6"	8"
6'-0"	7"	8"

PROJECT NAME:	LUDLOW
PROJECT NUMBER:	BRF 025-1(42)
FILE NAME: z10J068wat.dgn	PLOT DATE: 8/23/2016
PROJECT LEADER: A.P. GUYETTE	DRAWN BY: R.H. BARNES
DESIGNED BY: R.H. BARNES	CHECKED BY: A.P. GUYETTE
DRAINAGE NOTES AND DETAILS	SHEET 28 OF 73

VHB 57435

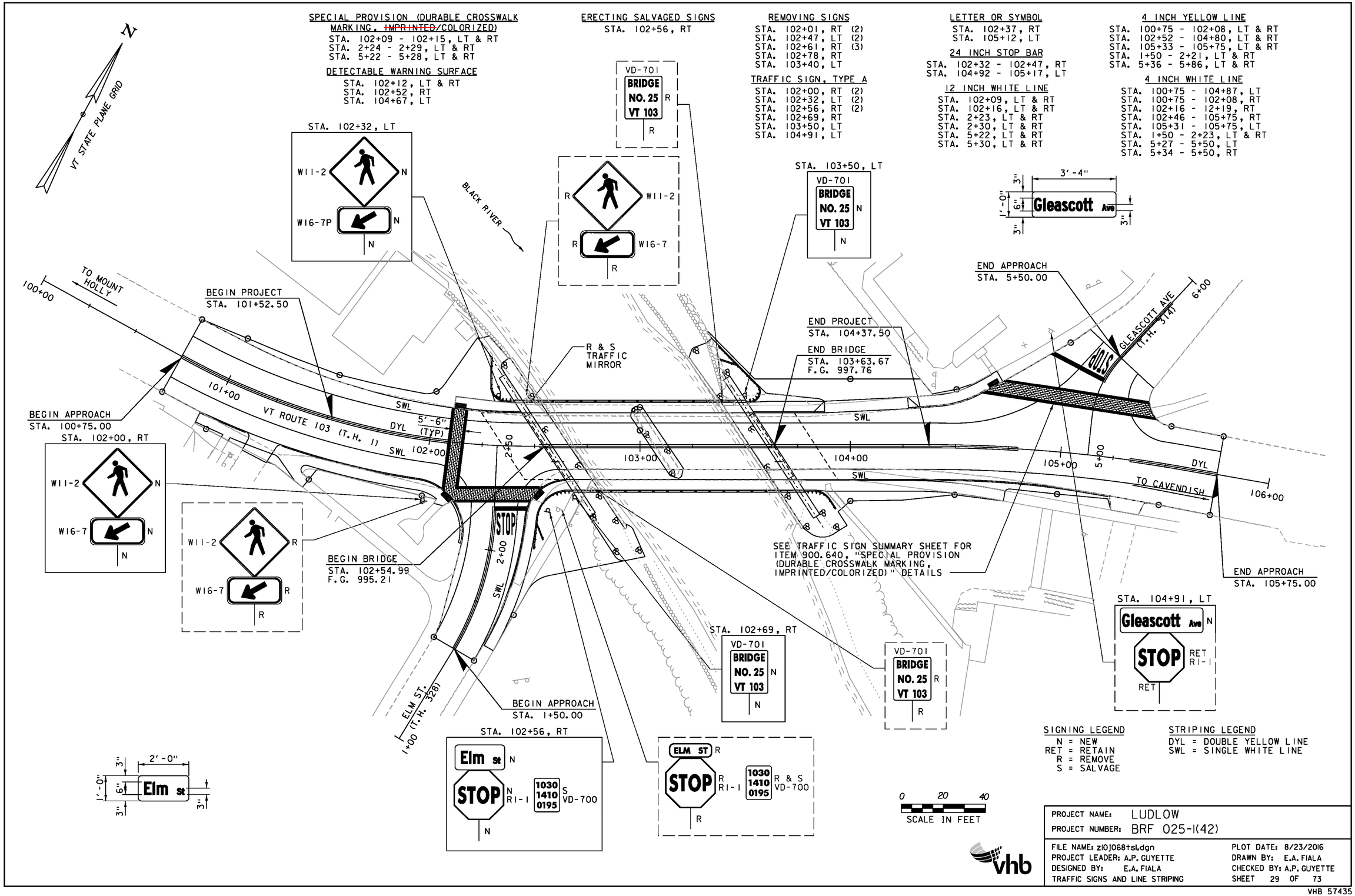

PROJECT NAME: LUDLOW	
PROJECT NUMBER: BRF 025-1(42)	
FILE NAME: z10J068tsl.dgn	PLOT DATE: 8/23/2016
PROJECT LEADER: A.P. GUYETTE	DRAWN BY: E.A. FIALA
DESIGNED BY: E.A. FIALA	CHECKED BY: A.P. GUYETTE
TRAFFIC SIGNS AND LINE STRIPING	SHEET 29 OF 73

VHB 57435

STATE OF VERMONT
AGENCY OF TRANSPORTATION

TRAFFIC SIGN SUMMARY SHEET

MILE MARKER, STATION, OR SIGN NUMBER	SIGN LEGEND	SIGN DIMENSIONS EA	WIDTH (IN)	HEIGHT (IN)	NEW & SALVAGED SIGNS "A"	"B"	SALV SIGN	SALV TIS	EXIST POST RETAIN	SALVAGE	NEW SIGN POSTS NO. OF POSTS	FLANGED CHANNEL LB/FT 1.12	2.0	3.0	SQUARE STEEL (IN) 1.75 LB/FT 1.88	2.0 2.42	2.5 3.35	ANCHOR	SLEEVE	TUBULAR ALUMINUM Ø (IN) 3.0 LB/FT 1.3	4.0 1.7	4.0 MOD 1.7	FOUNDATION	TUBULAR STEEL Ø (IN) 3.0 LB/FT 7.6	3.5 9.0	4.0 10.8	5.0 14.6	W-SHAPE STEEL FTG. SIZE 24"	30"	WEIGHT	POST SIZE	SIGN REMAINS REQUIRED	REMARKS	SIGN DETAIL DETAIL ON SHEET NUMBER	STD. SHEET NUMBER
											OPTION ITEMS																									
VT 103																																			
102+00, RT 102+32, LT		2 2	30 24	30 12	12.5 4.00						2					X		X																	WI1-2: SIGN BACKGROUND SHALL BE FLUORESCENT YELLOW GREEN WI6-7: SIGN BACKGROUND SHALL BE FLUORESCENT YELLOW GREEN		SHSM SHSM
102+56, RT		1 1 1	24 6 30	12 10 30	2.00 6.25		0.42				1					X		X																	STREET SIGN SHALL HAVE GREEN BACKGROUND WITH WHITE LETTERING VD-700 R1-1	29	 T-44 SHSM
102+69, RT 103+50, LT		2	6	8	0.67						2				X			X																	VD-701		T-42
104+91, LT		1	40	12	3.33						0																								STREET SIGN SHALL HAVE GREEN BACKGROUND WITH WHITE LETTERING	29	
AVERAGE POST LENGTH = 15 FEET FINAL POST LENGTHS ARE TO BE DETERMINED IN THE FIELD. POST SIZES ARE COMPUTED BASED ON INFORMATION FURNISHED ON THE STANDARD SHEETS AND THE VTRANS "SIGN POST DESIGN GUIDELINE."												FT	FT	FT	FT 30	FT 45	FT		EA	LB	LB	LB		LB	LB	LB	LB								
	TOTALS				SF 28.75	SF	EA. 1	SF				FT			FT 75					LB			EA.	LB				EA.	EA.	LB					

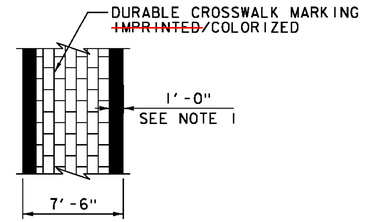

DETAIL OF ITEM 900.640, "SPECIAL PROVISION (DURABLE CROSSWALK MARKING, ~~IMPRINTED~~/COLORIZED)

NOT TO SCALE

NOTES:

1. PERMANENT CROSSWALKS SHALL HAVE A DURABLE 12 INCH WIDE THERMOPLASTIC WHITE LINE PLACED ON THE OUTSIDE EDGES OF THE ~~INLAID BRICK PATTERN~~ PAINTED CROSSWALK WILL BE CONSIDERED INCIDENTAL TO PAY ITEM 900.640, "SPECIAL PROVISION (DURABLE CROSSWALK MARKING, ~~IMPRINTED~~/COLORIZED)".
2. THE PER FOOT COST OF INSTALLED PERMANENT CROSSWALK MARKINGS WILL BE PAID FOR AS ITEM 900.640, "SPECIAL PROVISION (DURABLE CROSSWALK MARKING, IMPRINTED/COLORIZED)".

CROSSWALKS PAINTED WITH SHERWIN WILLIAMS "LUDLOW BRICK RED" SETFAST TM 5628 ACRYLIC TRAFFIC PAINT

PROJECT NAME: LUDLOW
PROJECT NUMBER: BRF 025-1(42)

FILE NAME: z10j068tss.dgn
PROJECT LEADER: A.P. GUYETTE
DESIGNED BY: E.A. FIALA
TRAFFIC SIGN SUMMARY SHEET

PLOT DATE: 8/23/2016
DRAWN BY: E.A. FIALA
CHECKED BY: A.P. GUYETTE
SHEET 30 OF 73

VHB 57435

SOIL CLASSIFICATION

AASHTO	
A1	Gravel and Sand
A3	Fine Sand
A2	Silty or Clayey Gravel and Sand
A4	Silty Soil - Low Compressibility
A5	Silty Soil - Highly Compressible
A6	Clayey Soil - Low Compressibility
A7	Clayey Soil - Highly Compressible

ROCK QUALITY DESIGNATION

R.Q.D. (%)	ROCK DESCRIPTION
<25	Very Poor
25 to 50	Poor
51 to 75	Fair
76 to 90	Good
>90	Excellent

SHEAR STRENGTH

UNDRAINED SHEAR STRENGTH IN P.S.F.	CONSISTENCY
<250	Very Soft
250-500	Soft
500-1000	Med. Stiff
1000-2000	Stiff
2000-4000	Very Stiff
>4000	Hard

CORRELATION GUIDE OF "N" TO DENSITY/CONSISTENCY

DENSITY (GRANULAR SOILS)		CONSISTENCY (COHESIVE SOILS)	
N	DESCRIPTIVE TERM	N	DESCRIPTIVE TERM
<5	Very Loose	<2	Very Soft
5-10	Loose	2-4	Soft
11-24	Med. Dense	5-8	Med. Stiff
25-50	Dense	9-15	Stiff
>50	Very Dense	16-30	Very Stiff
		31-60	Hard
		>60	Very Hard

COMMONLY USED SYMBOLS

▼	Water Elevation
⊕	Standard Penetration Boring
⊕	Auger Boring
⊙	Rod Sounding
S	Sample
N	Standard Penetration Test Blow Count Per Foot For: 2" O.D. Sampler 1 3/8" I.D. Sampler Hammer Weight Of 140 Lbs. Hammer Fall Of 30"
VS	Field Vane Shear Test
US	Undisturbed Soil Sample
B	Blast
DC	Diamond Core
MD	Mud Drill
WA	Wash Ahead
HSA	Hollow Stem Auger
AX	Core Size 1 1/8"
BX	Core Size 1 5/8"
NX	Core Size 2 1/8"
M	Double Tube Core Barrel Used
LL	Liquid Limit
PL	Plastic Limit
PI	Plasticity Index
NP	Non Plastic
w	Moisture Content (Dry Wgt. Basis)
D	Dry
M	Moist
MTW	Moist To Wet
W	Wet
Sat	Saturated
Bo	Boulder
Gr	Gravel
Sa	Sand
Si	Silt
Cl	Clay
HP	Hardpan
Le	Ledge
NLTD	No Ledge To Depth
CNPF	Can Not Penetrate Further
TLOB	Top of Ledge Or Boulder
NR	No Recovery
Rec.	Recovery
%Rec.	Percent Recovery
RQD	Rock Quality Designation
CBR	California Bearing Ratio
<	Less Than
>	Greater Than
R	Refusal (N > 100)
VTSPG	NAD83 - See Note 7

COLOR

blk	Black	pnk	Pink
bl	Blue	pu	Purple
brn	Brown	rd	Red
dk	Dark	tn	Tan
gry	Gray	wh	White
gn	Green	yel	Yellow
lt	Light	mltc	Multicolored
or	Orange		

DEFINITIONS (AASHTO)

BEDROCK (LEDGE) - Rock in its native location of indefinite thickness.

BOULDER - A rock fragment with an average dimension > 12 inches.

COBBLE - Rock fragments with an average dimension between 3 and 12 inches.

GRAVEL - Rounded particles of rock < 3" and > 0.0787" (#10 sieve).

SAND - Particles of rock < 0.0787" (#10 sieve) and > 0.0029" (#200 sieve).

SILT - Soil < 0.0029" (#200 sieve), non or slightly plastic and exhibits no strength when air-dried.

CLAY - Fine grained soil, exhibits plasticity when moist and considerable strength when air-dried.

VARVED - Alternate layers of silt and clay.

HARDPAN - Extremely dense soil, cemented layer, not softened when wet.

MUCK - Soft organic soil (containing > 10% organic material.

MOISTURE CONTENT - Weight of water divided by dry weight of soil.

FLOWING SAND - Granular soil so saturated (loose) that it flows into drill casing during extraction of wash rod.

STRIKE - Angle from magnetic north to line of intersection of bed with a horizontal plane.

DIP - Inclination of bed with a horizontal plane.

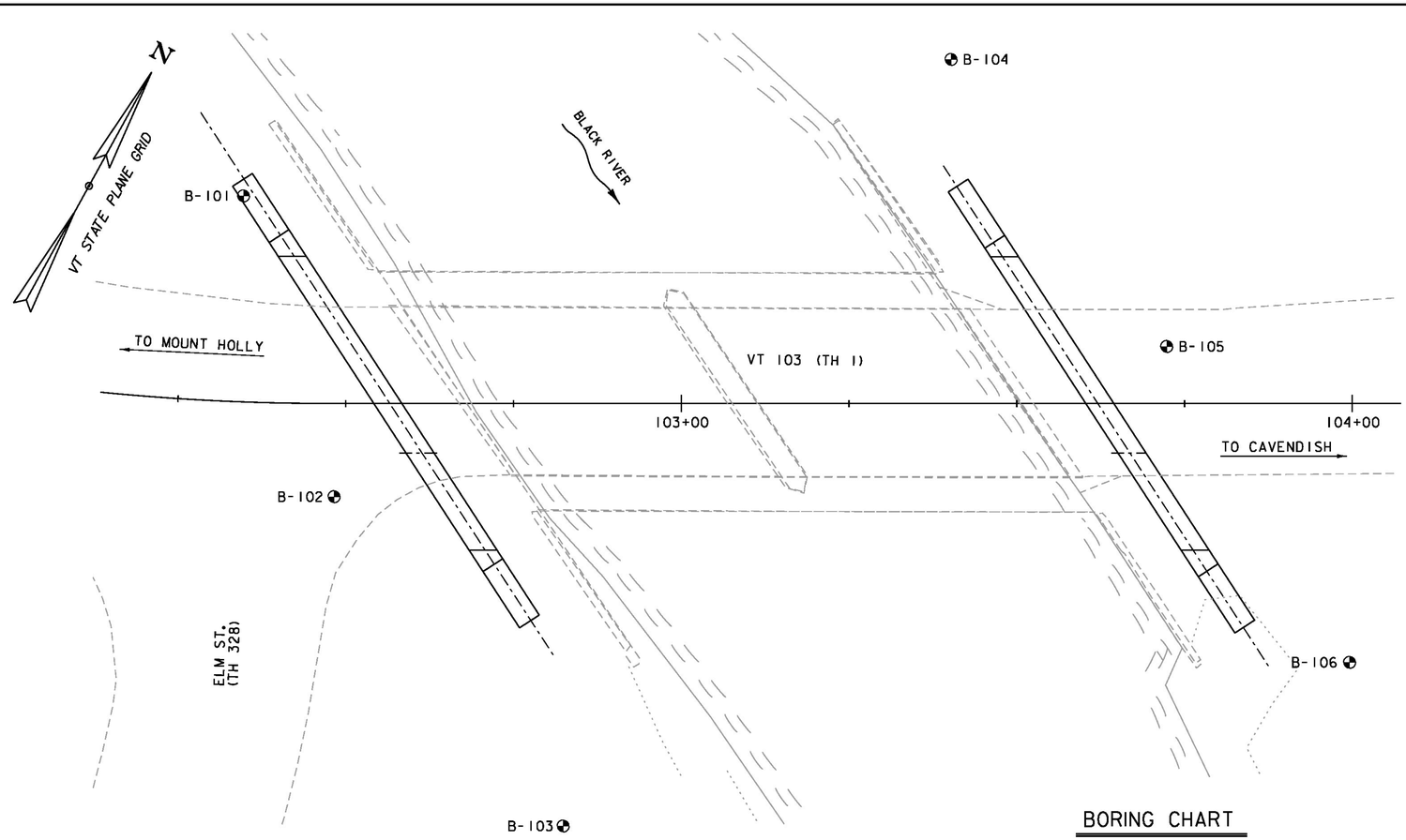

BORING LAYOUT

SCALE 1" = 10'-0"
10 0 10

BORING CHART

HOLE NO.	SURV. STATION	OFFSET	GROUND ELEV.	ELEV. TLOB
B-101	VT 103 (TH 1) 102+33.54	30.7 LT	994.0	----
B-102	VT 103 (TH 1) 102+48.28	13.9 RT	994.0	930.0
B-103	VT 103 (TH1) 102+82.42	63.0 RT	992.0	----
B-104	VT 103 (TH1) 103+40.22	51.3 LT	998.0	----
B-105	VT 103 (TH1) 103+72.35	8.5 LT	997.0	942.0
B-106	VT 103 (TH1) 103+99.60	38.6 RT	998.0	----

GENERAL NOTES

1. The subsurface explorations shown herein were made between in January, 2012 by Geosearch, Inc.
2. Soil and rock classifications, properties and descriptions are based on engineering interpretation from available subsurface information by Mikes Coring and Boring and the Agency. and may not necessarily reflect actual variations in subsurface conditions that may be encountered between individual boring or sample locations.
3. Observed water levels and/or conditions indicated are as recorded at the time of exploration and may vary according to the prevailing rainfall, methods of exploration and other factors.
4. Engineering judgment was exercised in preparing the subsurface information presented herein. Analysis and interpretation of subsurface data was performed and interpreted for Agency design and estimating purposes. Presentation of the information in the Contract is intended to provide the Contractor access to the same data available to the Agency. The subsurface information is presented in good faith and is not intended as a substitute for personal investigation, independent interpretation, independent analysis or judgment by the Contractor.
5. Pictorial structure details shown on the boring plan layout or soils profile are for illustrative purposes only and may not accurately portray final contract details.
6. Terminology used on boring logs to describe the hardness, degree of weathering, and spacing of fractures, joints and other discontinuities in the bedrock is defined in the AASHTO Manual on Subsurface Investigations, 1988.
7. Northing and Easting coordinates are shown in Vermont State Plane Grid North American Datum 1983 in survey feet.

vhb

PROJECT NAME: LUDLOW
PROJECT NUMBER: BRF 025-1(42)

FILE NAME: z10J068bor.dgn
PROJECT LEADER: A.P. GUYETTE
DESIGNED BY: B.M. KLINEFELTER
BORING INFORMATION SHEET

PLOT DATE: 8/23/2016
DRAWN BY: E.A. FIALA
CHECKED BY: A.P. GUYETTE
SHEET 31 OF 73

VHB 57435

STATE OF VERMONT
AGENCY OF TRANSPORTATION
MATERIALS & RESEARCH SECTION
SUBSURFACE INFORMATION

BORING LOG

LUDLOW
BRF 025-1 (42)

Boring No.: **B-101**
Page No.: 1 of 1
Pin No.: 10J068
Checked By: SMC

Boring Crew: Geosearch, Inc. Fitchburg, MA, MJC
Date Started: 1/26/12 Date Finished: 1/27/12
VTSPG NAD83: N 326718.81 ft E 1588076.53 ft
Station: 102+33.54 Offset: 30.7 LT
Ground Elevation: 994.0 ft

	Casing	Sampler
Type:	HW	SS
I.D.:	4 in	1.38 in
Hammer Wt:	300	140 lb.
Hammer Fall:	24	30 in.
Hammer/Rod Type:	Auto/N	
Rig:	CME 75	C_E = 1.3

Groundwater Observations		
Date	Depth (ft)	Notes
01/26/12	7.0	

Depth (ft)	Strata (1)	CLASSIFICATION OF MATERIALS (Description)	Blows/6" (N Value)	Moisture Content %	Gravel %	Sand %	Fines %
		Asphalt, 0.0 ft - 0.3 ft					
		A-2-4, SiGrSa, gry, Moist, Rec. = 1.5 ft	50-14-7-5 (21)	14.9	26.6	49.7	23.7
		A-2-4, Sa, brn, Moist, Rec. = 1.3 ft	4-2-2-2 (4)	5.3	0.9	87.7	11.4
		A-1-b, SaGr, brn, Moist, Rec. = 0.7 ft	8-5-4-6 (9)	12.6	53.8	35.7	10.5
		A-1-a, SaGr, brn, Wet, Rec. = 0.3 ft	7-4-5-4 (9)	10.2	64.1	30.1	5.8
10		A-2-4, GrSa, brn, Wet, Rec. = 0.5 ft	11-5-4-4 (9)	24.1	27.7	54.4	17.9
		A-1-a, Gr, brn, Wet, Rec. = 0.5 ft	15-16-13-10 (29)	14.7	73.5	17.1	9.4
		A-1-a, Gr, brn, Wet, Rec. = 0.8 ft	15-16-25-44 (41)	11.7	75.5	16.0	8.5
		A-3, GrSa, brn, Wet, Rec. = 1.5 ft	40-13-12-15 (25)	19.3	25.2	64.7	10.1
20		A-1-b, SaGr, tan, Wet, Rec. = 0.8 ft	24-33-31-25 (64)	11.9	55.8	28.1	16.1
		A-1-b, SaGr, tan, Wet, Rec. = 1.1 ft	8-29-26-36 (55)	11.5	49.2	36.1	14.7
30		A-2-4, SiSa, brn, Wet, Rec. = 1.2 ft	10-15-16-15 (31)	23.8		68.8	31.2
		Cobbles, 33.0 ft - 35.0 ft					
		Cobbles, 36.0 ft - 37.0 ft					
40		A-4, SaSi, gry, Wet, Rec. = 0.7 ft	75-50/2 (100+)	9.8	19.7	33.1	47.2
		Cobbles, 41.0 ft - 42.0 ft					
		A-2-4, SaGrSi, gry, Wet, Rec. = 0.4 ft	100/5 (100+)	8.4	33.4	32.8	33.8
		Cobbles, 45.0 ft - 47.0 ft					
50		A-4, GrSaSi, gry, Wet, Rec. = 0.4 ft	100/5 (100+)	9.1	25.7	36.6	37.7
		Hole stopped @ 49.5 ft					

Notes:
1. Stratification lines represent approximate boundary between material types. Transition may be gradual.
2. N Values have not been corrected for hammer energy. C_E is the hammer energy correction factor. C_E is an estimated value.
3. Water level readings have been made at times and under conditions stated. Fluctuations of groundwater may occur due to other factors than those present at the time measurements were made.

ABUT NO. I
BOTTOM OF
PILE CAP
EL. 984.0

STATE OF VERMONT
AGENCY OF TRANSPORTATION
MATERIALS & RESEARCH SECTION
SUBSURFACE INFORMATION

BORING LOG

LUDLOW
BRF 025-1 (42)

Boring No.: **B-102**
Page No.: 1 of 2
Pin No.: 10J068
Checked By: SMC

Boring Crew: Geosearch, Inc. Fitchburg, MA, MJC
Date Started: 1/17/12 Date Finished: 1/19/12
VTSPG NAD83: N 326686.47 ft E 1588110.59 ft
Station: 102+48.28 Offset: 13.9 RT
Ground Elevation: 994.0 ft

	Casing	Sampler
Type:	HW	SS
I.D.:	4 in	1.38 in
Hammer Wt:	300	140 lb.
Hammer Fall:	24	30 in.
Hammer/Rod Type:	Auto/N	
Rig:	CME 75	C_E = 1.3

Groundwater Observations		
Date	Depth (ft)	Notes
01/18/12	7.5	

Depth (ft)	Strata (1)	CLASSIFICATION OF MATERIALS (Description)	Run (Dip deg.)	Core Rec. % (RQD %)	Blows/6" (N Value)	Moisture Content %	Gravel %	Sand %	Fines %
		Asphalt, 0.0 ft - 0.5 ft							
		A-1-b, GrSa, gry, Moist, Rec. = 0.3 ft			25/4	5.2	39.0	44.5	16.5
		A-1-b, SaGr, tan, Moist, Rec. = 0.9 ft			5-12-8-8 (20)	4.6	45.2	40.8	14.0
		A-1-b, GrSa trace asphalt at 6 ft, gry, Rec. = 0.8 ft			9-6-3-3 (9)	3.4	41.9	45.3	12.8
		A-1-b, GrSa, tan, Moist							
		A-1-a, SaGr, brn, Moist, Rec. = 0.4 ft			5-7-13-9 (20)	5.3	53.1	37.5	9.4
10		A-2-4, Sa, tan, Moist, Rec. = 1.1 ft			2-3-4-7 (7)	10.8	6.9	79.2	13.9
		A-1-a, SaGr, brn, Moist, Rec. = 0.8 ft			6-9-16-25/1 (28)	4.2	50.5	40.4	9.1
		Cobbles and boulders, 14.0 ft - 18.0 ft							
		A-4, SiSa, brn, MTW, Rec. = 1.5 ft			14-17-19-16 (36)	28.8		62.1	37.9
20		A-2-4, SiSa, brn, MTW			16-17-14-18 (31)	25.6		73.2	26.8
		A-2-4, SiSa, brn, Moist			13-18-21-21 (39)	25.4		75.2	24.8
		A-2-4, Sa, tan, Wet, Rec. = 1.4 ft			8-17-19-16 (36)	24.3	1.8	83.8	14.4
		Cobbles, 27.5 ft - 28.5 ft							
30		A-1-b, SiSaGr, gry, Wet, Rec. = 1.1 ft			35-38-17 (55)	12.8	39.3	38.1	22.6
		Cobbles, 32.0 ft - 34.0 ft							
		A-1-b, SaGr, brn, Wet, Rec. = 0.9 ft			21-19-30-32 (49)	10.9	53.8	33.1	13.1
		Cobble, 36.0 ft - 36.5 ft							
40		A-4, SaSi, brn, Wet, Rec. = 1.2 ft			19-25-50/4 (75+)	24.1	13.7	34.1	52.2
		42.0 ft - 52.0 ft, NXDC, Cored glacial till from 42 to 52 feet. Visual classification: Silty sand with gravel.							
50									

Notes:
1. Stratification lines represent approximate boundary between material types. Transition may be gradual.
2. N Values have not been corrected for hammer energy. C_E is the hammer energy correction factor. C_E is an estimated value.
3. Water level readings have been made at times and under conditions stated. Fluctuations of groundwater may occur due to other factors than those present at the time measurements were made.

EST. PILE PENETRATION
930

STATE OF VERMONT
AGENCY OF TRANSPORTATION
MATERIALS & RESEARCH SECTION
SUBSURFACE INFORMATION

BORING LOG

LUDLOW
BRF 025-1 (42)

Boring No.: **B-102**
Page No.: 2 of 2
Pin No.: 10J068
Checked By: SMC

Boring Crew: Geosearch, Inc. Fitchburg, MA, MJC
Date Started: 1/17/12 Date Finished: 1/19/12
VTSPG NAD83: N 326686.47 ft E 1588110.59 ft
Station: 102+48.28 Offset: 13.9 RT
Ground Elevation: 994.0 ft

	Casing	Sampler
Type:	HW	SS
I.D.:	4 in	1.38 in
Hammer Wt:	300	140 lb.
Hammer Fall:	24	30 in.
Hammer/Rod Type:	Auto/N	
Rig:	CME 75	C_E = 1.3

Groundwater Observations		
Date	Depth (ft)	Notes
01/18/12	7.5	

Depth (ft)	Strata (1)	CLASSIFICATION OF MATERIALS (Description)	Run (Dip deg.)	Core Rec. % (RQD %)	Blows/6" (N Value)	Moisture Content %	Gravel %	Sand %	Fines %
60		A-4, SaGrSi, gry, Wet, Rec. = 1.2 ft			26-51-46-50/3 (97)	9.3	32.5	29.9	37.6
		Visual Class:, broken rock with silt and sand, gry, Wet, Rec. = 0.3 ft			50/4 (50+)	26.3			
		Possible cobbles, 61.0 ft - 64.0 ft							
70		64.0 ft - 74.0 ft, Gry, Micaceous Schist, Hard to very hard, Fresh, Fair rock, NXDC, Joints close to moderately close spacing	1 (25-45)	95 (74)	Top of Bedrock @ 64.0 ft				
		Hole stopped @ 74.0 ft							
80									
90									
100									

Notes:
1. Stratification lines represent approximate boundary between material types. Transition may be gradual.
2. N Values have not been corrected for hammer energy. C_E is the hammer energy correction factor. C_E is an estimated value.
3. Water level readings have been made at times and under conditions stated. Fluctuations of groundwater may occur due to other factors than those present at the time measurements were made.

PROJECT NAME:	LUDLOW
PROJECT NUMBER:	BRF 025-1(42)
FILE NAME: z10J068borlogs.dgn	PLOT DATE: 8/23/2016
PROJECT LEADER: A.P. GUYETTE	DRAWN BY: E.F. LAWES
DESIGNED BY: VTRANS	CHECKED BY: A.. GUYETTE
BORING LOGS (1 OF 3)	SHEET 32 OF 73

VHB 57435

2010.COPY J:\125101.GPJ VERMONT AOT.GDT 6/8/12

STATE OF VERMONT
AGENCY OF TRANSPORTATION
MATERIALS & RESEARCH SECTION
SUBSURFACE INFORMATION

BORING LOG

LUDLOW
BRF 025-1 (42)

Boring No.: **B-103**
Page No.: 1 of 1
Pin No.: 10J068
Checked By: SMC

Boring Crew: Geosearch, Inc. Fitchburg, MA, MJC
Date Started: 1/26/12 Date Finished: 1/26/12
VTSPG NAD83: N 326659.70 ft E 1588164.46 ft
Station: 102+82.42 Offset: 63.0 RT
Ground Elevation: 992.0 ft

	Casing	Sampler
Type:	HW	SS
I.D.:	4 in	1.38 in
Hammer Wt:	300	140 lb.
Hammer Fall:	24	30 in.
Hammer/Rod Type:	Auto/N	
Rig:	CME 75	C_E = 1.3

Groundwater Observations		
Date	Depth (ft)	Notes
01/26/12	10.0	

Depth (ft)	Strata (1)	CLASSIFICATION OF MATERIALS (Description)	Blows/6" (N Value)	Moisture Content %	Gravel %	Sand %	Fines %
		Visual Class:, Sandy Gravel, brn, Moist, Rec. = 0.3 ft	21-5-5-5 (10)	13.8			
		A-1-a, SaGr, gry, Moist, Rec. = 0.5 ft	20-10-15-8 (25)	7.7	51.7	37.0	11.3
		A-1-b, GrSa, brn, Moist, Rec. = 0.7 ft	16-10-6-9 (16)	16.5	35.6	48.9	15.5
		A-1-b, GrSa, brn, Moist, Rec. = 0.4 ft	3-7-6-10 (13)	12.3	38.1	48.0	13.9
10		A-1-a, SaGr, brn, Wet, Rec. = 0.8 ft	40-67-24-38 (91)	8.7	68.0	23.0	9.0
		A-1-a, SaGr, brn, Wet, Rec. = 1.0 ft	49-50-87-50/4 (117)	9.3	57.5	29.1	13.4
		Cobble, 14.0 ft - 14.5 ft					
		A-2-4, GrSiSa, brn, Wet, Rec. = 0.9 ft	16-15-9-13 (24)	17.9	25.1	44.2	30.7
		A-2-4, Sa, brn, Wet, Rec. = 1.7 ft	21-14-20-19 (34)	23.5	7.1	76.6	16.3
20		A-2-4, Sa, brn, Wet, Rec. = 1.5 ft	15-18-21-17 (39)	20.3	15.3	68.1	16.6
		A-2-4, SiSa, brn, Wet, Rec. = 1.8 ft	16-19-22-16 (41)	27.7		78.5	21.5
30		A-2-4, Sa, brn, Wet, Rec. = 1.6 ft	13-20-25-13 (45)	25.2		82.7	17.3
		A-2-4, SiSa, brn, Wet, Rec. = 1.4 ft	19-21-24-27 (45)	21.9	9.3	66.4	24.3
		Cobble, 37.0 ft - 38.0 ft					
40		A-1-b, SaGr, brn, Wet, Rec. = 1.4 ft	29-25-29-26 (54)	12.4	47.7	37.0	15.3
		A-4, GrSiSa, gry, Wet, Rec. = 1.7 ft	25-33-29-31 (62)	12.8	23.3	40.4	36.3
50		A-4, GrSaSi, gry, Wet, Rec. = 0.9 ft	27-73-50/2 (100+)	11.2	23.1	36.6	40.3
		Hole stopped @ 50.2 ft					

Notes:
1. Stratification lines represent approximate boundary between material types. Transition may be gradual.
2. N Values have not been corrected for hammer energy. C_E is the hammer energy correction factor. C_E is an estimated value.
3. Water level readings have been made at times and under conditions stated. Fluctuations of groundwater may occur due to other factors than those present at the time measurements were made.

2010.CORP. J1125101.GPJ VERMONT AOT.GDT 6/8/12

STATE OF VERMONT
AGENCY OF TRANSPORTATION
MATERIALS & RESEARCH SECTION
SUBSURFACE INFORMATION

BORING LOG

LUDLOW
BRF 025-1 (42)

Boring No.: **B-104**
Page No.: 1 of 1
Pin No.: 10J068
Checked By: SMC

Boring Crew: Geosearch, Inc. Fitchburg, MA, MJC
Date Started: 1/30/12 Date Finished: 1/30/12
VTSPG NAD83: N 326788.52 ft E 1588166.51 ft
Station: 103+40.22 Offset: 51.3 LT
Ground Elevation: 998.0 ft

	Casing	Sampler
Type:	HW	SS
I.D.:	4 in	1.38 in
Hammer Wt:	300	140 lb.
Hammer Fall:	24	30 in.
Hammer/Rod Type:	Auto/N	
Rig:	CME 75	C_E = 1.3

Groundwater Observations		
Date	Depth (ft)	Notes
01/30/12	7.0	

Depth (ft)	Strata (1)	CLASSIFICATION OF MATERIALS (Description)	Blows/6" (N Value)	Moisture Content %	Gravel %	Sand %	Fines %
		Ashpalt, 0.0 ft - 0.7 ft		9.4	48.9	35.2	15.9
		A-1-b, SaGr, brn, Moist, Rec. = 1.8 ft	39-58-39-23 (97)	7.4	38.8	45.1	16.1
		A-1-b, GrSa, brn, Moist, Rec. = 1.2 ft	12-10-4-7 (14)				
		Visual Class:, sandy gravel, red-brn, Moist, Rec. = 0.3 ft	20-50/0 (50+)				
		Cobble, 6.0 ft - 7.0 ft					
		A-2-4, SiGrSa, brn, Wet, Rec. = 0.9 ft	8-10-7-8 (17)	21.1	31.7	47.2	21.1
10		Visual Class:, stone with silty sand, brn, Wet, Rec. = 0.4 ft	10-6-10-8 (16)	14.7			
		Gravel lodged in tip of sampler, Rec. = 0.1 ft, 12.0 ft - 14.0 ft	6-7-5-4 (12)				
		Visual Class:, silty sandy gravel, yel-brn, Wet, Rec. = 0.3 ft	10-6-7-18 (13)				
		A-2-4, SaSiGr, gry-brn, Wet, Rec. = 1.0 ft	15-15-10-13 (25)	19.7	42.6	22.7	34.7
20		A-4, SiSa, brn, Wet, Rec. = 1.7 ft	19-15-18-18 (33)	26.5	3.3	51.6	45.1
		A-4, SiSa, brn, Wet, Rec. = 1.9 ft	18-17-20-15 (37)	24.2	6.0	48.2	45.8
		A-2-4, SiSa, brn, Wet, Rec. = 1.5 ft	15-19-20-25 (39)	25.7	6.8	62.6	30.6
30		A-2-4, SiSa, brn-gry, Wet, Rec. = 1.4 ft	18-19-20-22 (39)	21.4	7.1	66.5	26.4
		A-2-4, SiSa, red-brn, Wet, Rec. = 1.3 ft	21-18-23-20 (41)	24.5	4.9	70.5	24.6
40		A-4, SaSi, gry, Wet, Rec. = 1.8 ft	36-36-40-36 (76)	15.8	15.1	37.9	47.0
		Cobble, 42.0 ft - 43.0 ft					
		A-2-4, GrSiSa, gry, Wet, Rec. = 1.3 ft	49-38-42-61 (80)	12.8	26.0	45.4	28.6
50		Rec. = 0.0 ft, 49.0 ft - 49.0 ft	50/0 (50+)				
		Hole stopped @ 49.0 ft					

Notes:
1. Stratification lines represent approximate boundary between material types. Transition may be gradual.
2. N Values have not been corrected for hammer energy. C_E is the hammer energy correction factor. C_E is an estimated value.
3. Water level readings have been made at times and under conditions stated. Fluctuations of groundwater may occur due to other factors than those present at the time measurements were made.

2010.CORP. J1125101.GPJ VERMONT AOT.GDT 6/8/12

ABUT NO. 2
BOTTOM OF
PILE CAP
EL. 986.5

STATE OF VERMONT
AGENCY OF TRANSPORTATION
MATERIALS & RESEARCH SECTION
SUBSURFACE INFORMATION

BORING LOG

LUDLOW
BRF 025-1 (42)

Boring No.: **B-105**
Page No.: 1 of 2
Pin No.: 10J068
Checked By: SMC

Boring Crew: Geosearch, Inc. Fitchburg, MA, MJC
Date Started: 1/20/12 Date Finished: 1/24/12
VTSPG NAD83: N 326766.01 ft E 1588208.60 ft
Station: 103+72.35 Offset: 8.5 LT
Ground Elevation: 997.0 ft

	Casing	Sampler
Type:	HW	SS
I.D.:	4 in	1.38 in
Hammer Wt:	300	140 lb.
Hammer Fall:	24	30 in.
Hammer/Rod Type:	Auto/N	
Rig:	CME 75	C_E = 1.3

Groundwater Observations		
Date	Depth (ft)	Notes
01/23/12	10.0	

Depth (ft)	Strata (1)	CLASSIFICATION OF MATERIALS (Description)	Run (Dip deg.)	Core Rec. % (RQD %)	Blows/6" (N Value)	Moisture Content %	Gravel %	Sand %	Fines %
		Asphalt, 0.0 ft - 0.7 ft							
		Visual Class:, Gravel with asphalt, gry, Moist, Rec. = 0.2 ft			25/2				
		A-1-b, GrSa with asphalt, brn, Moist, Rec. = 1.1 ft			4-4-6-4 (10)	5.0	41.5	46.4	12.1
		A-3, Sa, brn, Moist, Rec. = 1.3 ft			4-4-5-4 (9)	2.7	0.6	91.5	7.9
		A-3, Sa, brn, Moist, Rec. = 1.5 ft			9-5-4-4 (9)	3.1	2.7	88.8	8.5
10		A-2-4, Sa, brn, MTW, Rec. = 0.8 ft			24-70/5 (70+)	14.6	6.9	75.3	17.8
		Cobbles, 11.0 ft - 13.5 ft							
		A-2-4, Sa, brn, Wet, Rec. = 1.2 ft			7-8-8-7 (16)	22.6	0.1	88.0	11.9
		A-2-4, Sa, brn, Wet, Rec. = 1.3 ft			4-9-11-11 (20)	23.2	0.1	86.4	13.5
20		A-4, Si, brn, Wet, Rec. = 1.3 ft			10-9-10-10 (19)	31.7		14.5	85.5
		A-4, Si, brn, Wet, Rec. = 1.5 ft			15-15-15-16 (30)	28.3	3.4	11.9	84.7
		A-2-4, Sa, brn, Moist, Rec. = 1.6 ft			15-19-19-16 (38)	22.6		86.2	13.8
30		Cobbles and boulders, 28.0 ft - 33.0 ft							
		A-4, SiSa, brn, Wet, Rec. = 1.5 ft			16-18-19-22 (37)	28.6		60.8	39.2
40		A-2-4, GrSiSa, gry-brn, Wet, Rec. = 1.4 ft			40-23-20-27 (43)	14.0	24.8	47.8	27.4
		A-2-4, GrSiSa, gry, Wet, Rec. = 1.7 ft			21-36-36-39 (72)	13.0	28.4	38.6	33.0
		Cobbles, 47.0 ft - 49.0 ft							
50		Rec. = 0.0 ft, 49.0 ft - 49.0 ft			50/0 (50+)				
		Cobbles, 49.1 ft - 52.0 ft							

Notes:
1. Stratification lines represent approximate boundary between material types. Transition may be gradual.
2. N Values have not been corrected for hammer energy. C_E is the hammer energy correction factor. C_E is an estimated value.
3. Water level readings have been made at times and under conditions stated. Fluctuations of groundwater may occur due to other factors than those present at the time measurements were made.

2010.CORP. J1125101.GPJ VERMONT AOT.GDT 6/8/12

EST. PILE PENETRATION

PROJECT NAME:	LUDLOW
PROJECT NUMBER:	BRF 025-1(42)
FILE NAME: z10J068borlogs.dgn	PLOT DATE: 8/23/2016
PROJECT LEADER: A.P. GUYETTE	DRAWN BY: E.F. LAWES
DESIGNED BY: VTRANS	CHECKED BY: A.P. GUYETTE
BORING LOGS (2 OF 3)	SHEET 33 OF 73

VHB 57435

STATE OF VERMONT
AGENCY OF TRANSPORTATION
MATERIALS & RESEARCH SECTION
SUBSURFACE INFORMATION

BORING LOG

LUDLOW
BRF 025-1 (42)

Boring No.: **B-105**
Page No.: 2 of 2
Pin No.: 10J068
Checked By: SMC

Boring Crew: Geosearch, Inc. Fitchburg, MA, MJC
Date Started: 1/20/12 Date Finished: 1/24/12
VTSPG NAD83: N 326766.01 ft E 1588208.60 ft
Station: 103+72.35 Offset: 8.5 LT
Ground Elevation: 997.0 ft

	Casing	Sampler
Type:	HW	SS
I.D.:	4 in	1.38 in
Hammer Wt:	300	140 lb.
Hammer Fall:	24	30 in.
Hammer/Rod Type:	Auto/N	
Rig:	CME 75	C_E = 1.3

Groundwater Observations		
Date	Depth (ft)	Notes
01/23/12	10.0	

Depth (ft)	Strata (1)	CLASSIFICATION OF MATERIALS (Description)	Run (Dip deg.)	Core Rec. % (RQD %)	Blows/6" (N Value)	Moisture Content %	Gravel %	Sand %	Fines %
		Probable weathered rock, 52.0 ft - 53.5 ft							
		53.5 ft - 55.0 ft							
		55.0 ft - 59.0 ft, Gry, Phyllitic Schist, Hard, Slightly weathered, Poor rock, NXDC	1 (?)	58 (15)	Top of Bedrock @ 55.0 ft				
60		59.0 ft - 64.0 ft, Gry, Phyllitic Schist, Very hard, Fresh, Very good rock, NXDC	2 (60)	100 (80)					
		64.0 ft - 69.0 ft, Gry, Phyllitic Schist, Very hard, Fresh, Very good rock, NXDC	3 (65)	100 (92)					
70		Hole stopped @ 69.0 ft							
80									
90									
100									

Notes:
1. Stratification lines represent approximate boundary between material types. Transition may be gradual.
2. N Values have not been corrected for hammer energy. C_E is the hammer energy correction factor. C_E is an estimated value.
3. Water level readings have been made at times and under conditions stated. Fluctuations of groundwater may occur due to other factors than those present at the time measurements were made.

2010.COPY J:\12\5101.GPJ VERMONT AOT.GDT 6/8/12

STATE OF VERMONT
AGENCY OF TRANSPORTATION
MATERIALS & RESEARCH SECTION
SUBSURFACE INFORMATION

BORING LOG

LUDLOW
BRF 025-1 (42)

Boring No.: **B-106**
Page No.: 1 of 1
Pin No.: 10J068
Checked By: SMC

Boring Crew: Geosearch, Inc. Fitchburg, MA, MJC
Date Started: 1/25/12 Date Finished: 1/25/12
VTSPG NAD83: N 326737.73 ft E 1588255.17 ft
Station: 103+99.60 Offset: 38.6 RT
Ground Elevation: 998.0 ft

	Casing	Sampler
Type:	HW	SS
I.D.:	4 in	1.38 in
Hammer Wt:	300	140 lb.
Hammer Fall:	24	30 in.
Hammer/Rod Type:	Auto/N	
Rig:	CME 75	C_E = 1.3

Groundwater Observations		
Date	Depth (ft)	Notes
01/25/12	15.0	

Depth (ft)	Strata (1)	CLASSIFICATION OF MATERIALS (Description)	Blows/6" (N Value)	Moisture Content %	Gravel %	Sand %	Fines %
		A-2-4, GrSiSa topsoil, brn, Moist, Rec. = 1.2 ft	3-2-3-4 (5)	43.7	21.2	45.3	33.5
		A-1-a, SaGr, brn, Moist, Rec. = 0.8 ft	8-8-5-4 (13)	5.3	51.7	37.7	10.6
		A-1-a, SaGr broken rock within sample; thin layer buried topsoil within sample, brn, Moist, Rec. = 0.4 ft	6-10-6-4 (16)	11.0	55.6	30.3	14.1
		A-1-b, SiGrSa, brn, Moist, Rec. = 0.6 ft	4-5-5-6 (10)	11.4			
10		Gravel lodged in tip of sampler, gry, Moist, Rec. = 0.1 ft, 10.0 ft - 10.1 ft	50/1 (50+)				
		Cobbles and boulders, 10.5 ft - 13.0 ft					
		Cobbles, 14.0 ft - 15.0 ft					
		A-1-a, SaGr, brn, Wet, Rec. = 1.1 ft	87-28-20-50/3 (48)	10.4	63.5	23.8	12.7
		A-1-a, Gr sample mostly broken rock, gry, Wet, Rec. = 0.7 ft	70-21-21-25 (42)	11.0	69.3	19.5	11.2
20		A-2-4, Sa, brn, Wet, Rec. = 1.2 ft	14-9-13-12 (21)	21.6	5.5	77.1	17.4
		A-2-4, Sa, brn, Wet, Rec. = 1.4 ft	12-9-9-6 (18)	19.2	2.7	85.0	12.3
30		A-4, Si, brn, Wet, Rec. = 1.2 ft	6-5-4-5 (9)	27.8	0.4	14.3	85.3
		A-2-4, Sa, brn, Wet, Rec. = 1.8 ft	17-17-18-22 (35)	20.2	0.8	82.2	17.0
40		A-2-4, SiSa, brn, Wet, Rec. = 1.3 ft	13-11-14-12 (25)	23.5	8.0	60.1	31.9
		Cobbles, 43.0 ft - 44.0 ft					
		A-2-4, SiSa, gry, Wet, Rec. = 1.2 ft	22-22-20-18 (42)	13.2	18.5	49.2	32.3
		Cobbles, 47.0 ft - 49.0 ft					
50		A-2-4, GrSiSa broken rock within sample, gry, Wet, Rec. = 0.7 ft	29-26-25-26 (51)	11.6	26.4	41.0	32.6
		Hole stopped @ 51.0 ft					

Notes:
1. Stratification lines represent approximate boundary between material types. Transition may be gradual.
2. N Values have not been corrected for hammer energy. C_E is the hammer energy correction factor. C_E is an estimated value.
3. Water level readings have been made at times and under conditions stated. Fluctuations of groundwater may occur due to other factors than those present at the time measurements were made.

2010.COPY J:\12\5101.GPJ VERMONT AOT.GDT 6/8/12

942 EST. PILE PENETRATION

PROJECT NAME:	LUDLOW
PROJECT NUMBER:	BRF 025-1(42)
FILE NAME: z10J068borlogs.dgn	PLOT DATE: 8/23/2016
PROJECT LEADER: A.P. GUYETTE	DRAWN BY: E.F. LAWES
DESIGNED BY: VTRANS	CHECKED BY: A.P. GUYETTE
BORING LOGS (3 OF 3)	SHEET 34 OF 73

VHB 57435

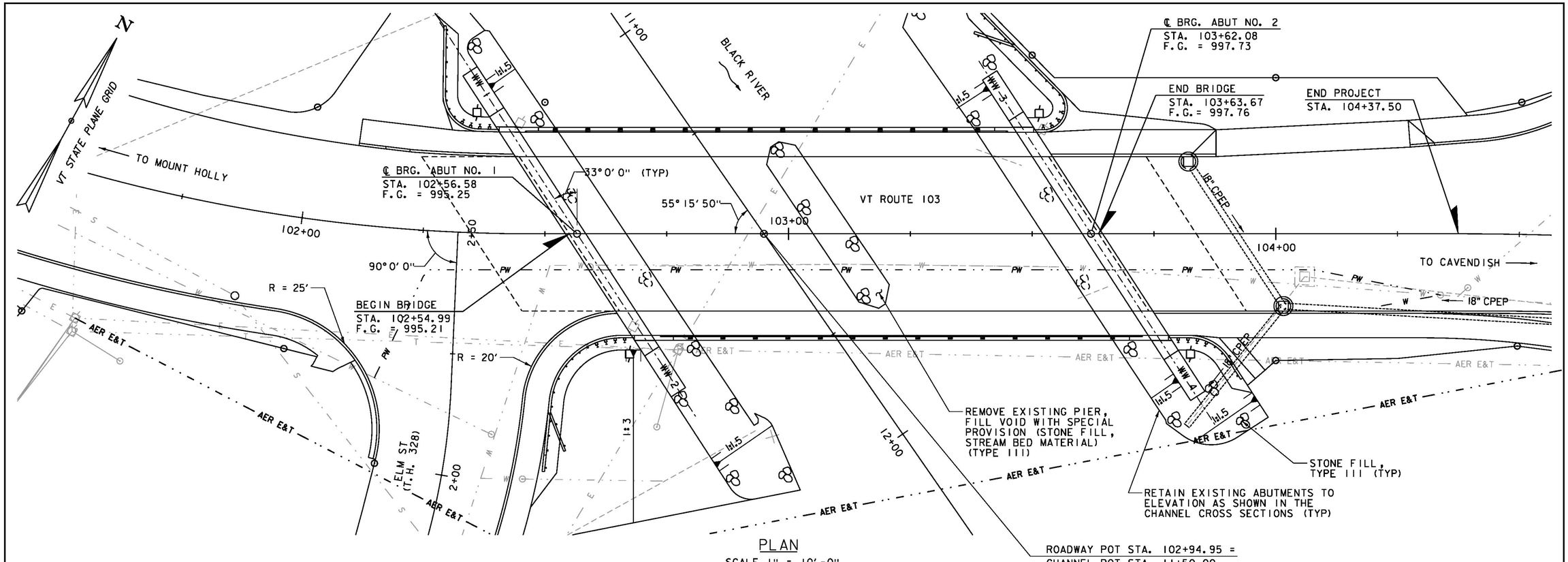

PLAN

SCALE 1" = 10'-0"

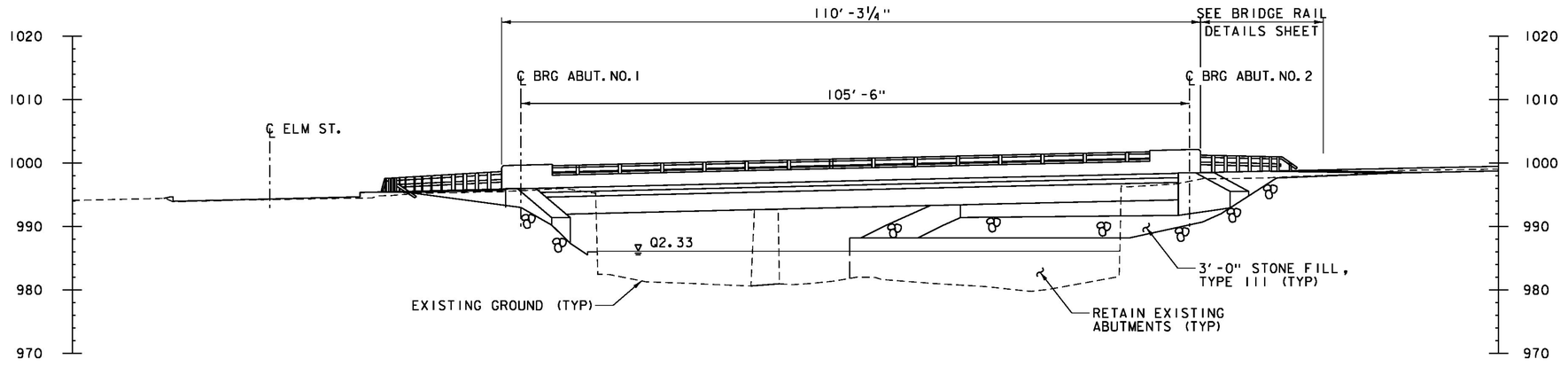

ELEVATION

SCALE 1" = 10'-0"

PROJECT NAME:	LUDLOW
PROJECT NUMBER:	BHF 025-1(42)
FILE NAME: z10j068pe.dgn	PLOT DATE: 8/23/2016
PROJECT LEADER: A.P. GUYETTE	DRAWN BY: E.F. LAWES
DESIGNED BY: E.F. LAWES	CHECKED BY: A.P. GUYETTE
PLAN AND ELEVATION	SHEET 35 OF 73

VHB 57435

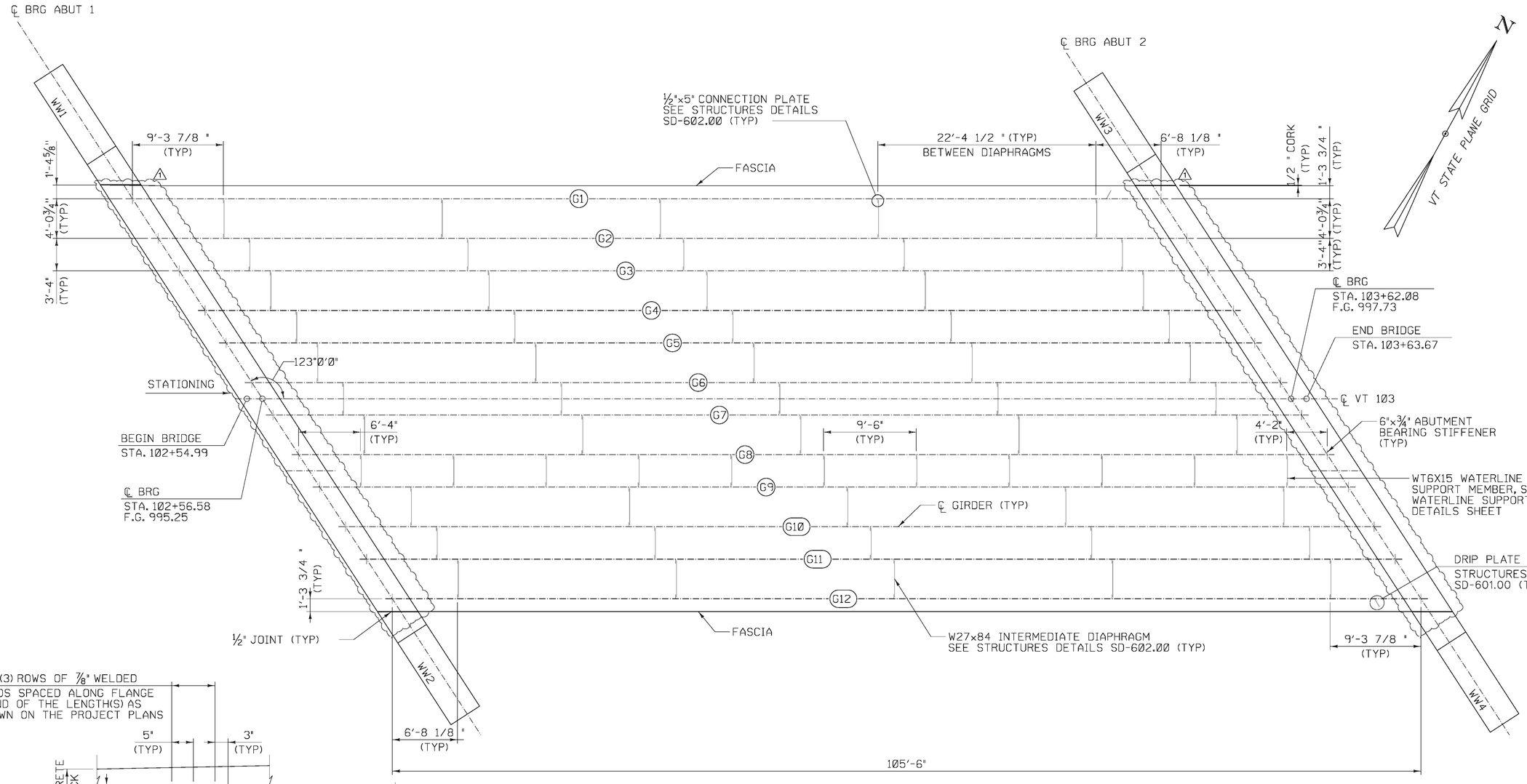

DECK AND FRAMING PLAN

SCALE 3/16" = 1'-0"

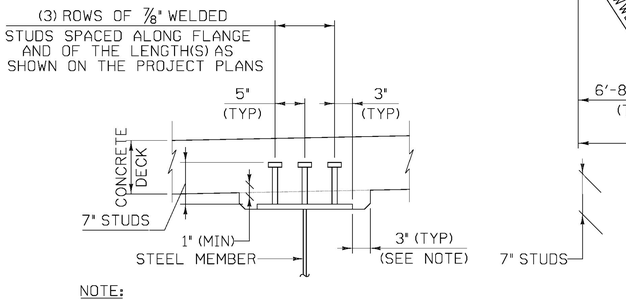

NOTE:

THE 3" HORIZONTAL SECTION MAY BE ELIMINATED FOR FORMING SYSTEMS DESIGNED FOR THE CONSTRUCTION OF VERTICAL HAUNCHES. ANY VOIDS RESULTING FROM FORMING SYSTEM ELEMENTS SHALL BE FILLED WITH JOINT SEALER, POLYURETHANE MEETING THE REQUIREMENTS OF SECTION 524. THE COST OF THE JOINT SEALER, POLYURETHANE WILL BE CONSIDERED INCIDENTAL TO THE ADJACENT CONCRETE.

HAUNCH AND SHEAR CONNECTOR DETAIL

SCALE 1" = 1'-0"

CALDERWOOD ENGINEERING, ETC.
STRUCTURAL ENGINEERING • DETAILING SERVICES
222 RIVER RD, RICHMOND, ME 04357 PH/FX (207)737-2007/(207) 737-2008

PREPARED FOR:
COLD RIVER BRIDGES, LLC

CEE 16-16-COLDRIVERBRIDGES
01-CS-LUDLOW

STATE OF VERMONT
ERIC J. CALDERWOOD
No. 8711
Structural
LICENSED
PROFESSIONAL ENGINEER

	BY	DATE
DESIGN-DETAILED	TDC	JAN 2017
CHECKED-REVIEWED		
REVISIONS 1	TDC	MAR 2017
REVISIONS 2		
REVISIONS 3		
REVISIONS 4		
FIELD CHANGES		

8711 P.E. NUMBER

DATE

VE SUPER DESIGN
LUDLOW VT. BRF 025-1(42)

DECK AND FRAMING PLAN

SHEET NUMBER
36
of 73

CALDERWOOD ENGINEERING
222 River Road
RICHMOND, ME 04357
PH. (207) 737-2007 FAX (207) 737-2008

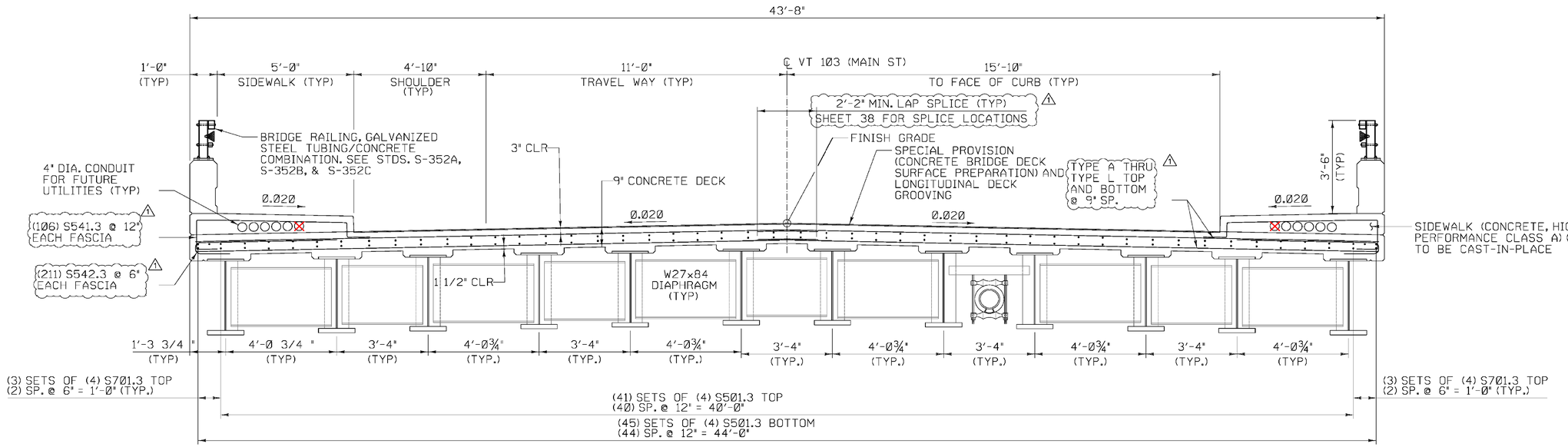

DECK TYPICAL SECTION

SCALE ½" = 1'-0"

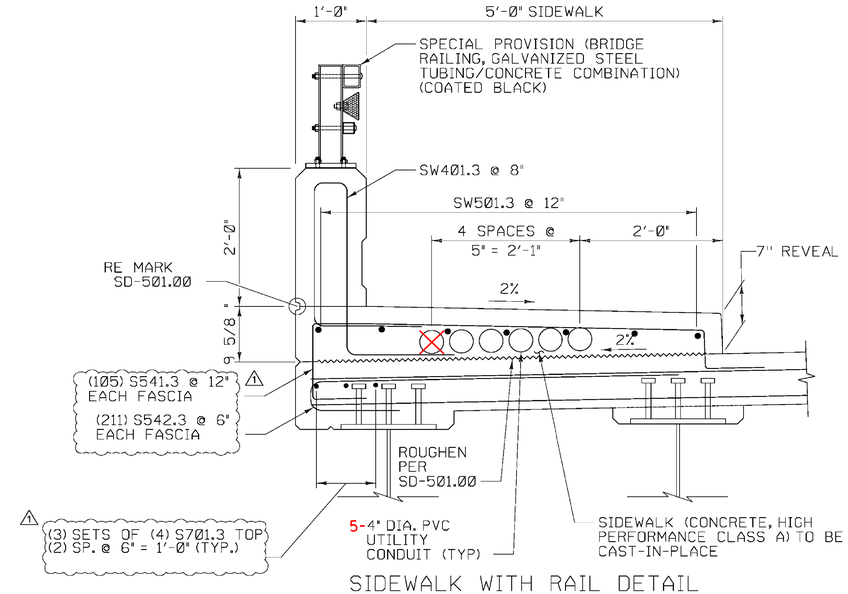

SIDEWALK WITH RAIL DETAIL

SCALE 1" = 1'-0"

NOTES:

1. LONGITUDINAL BARS IN BRIDGE RAIL & DECK NOT SHOWN FOR CLARITY.
2. SEE STANDARD S-352A FOR ADDITIONAL CONCRETE RAILING REINFORCING.

NOTE:

NF = NEAR FACE
FF = FAR FACE
EF = EACH FACE
▲ = CUT TO FIT IN FIELD
3" CLEAR, UNLESS OTHERWISE SPECIFIED ON THE PLANS.
2'-2" BAR LAP UNLESS OTHERWISE SPECIFIED ON THE PLANS.

CALDERWOOD ENGINEERING, ETC.
STRUCTURAL ENGINEERING • DETAILING SERVICES
222 RIVER RD, RICHMOND, ME 04357 PH/FX (207)737-2007/(207) 737-2008

PREPARED FOR:
COLD RIVER BRIDGES, LLC

CEE 16-16-COLDRIVERBRIDGES
01-CS-LUDLOW

STATE OF VERMONT
ERIC T. CALDERWOOD
No. 8711 Structural
LICENSED PROFESSIONAL ENGINEER

8/11
P.E. NUMBER
DATE

BY	DATE
TDC	JAN 2017
TDC	MAR 2017

DESIGN-DETAILED TDC
CHECKED-REVIEWED

REVISIONS 1
REVISIONS 2
REVISIONS 3
REVISIONS 4
FIELD CHANGES

VE SUPER DESIGN
LUDLOW VT. BRF 025-1(42)

DECK REINFORCEMENT SECTION

SHEET NUMBER
37
of 73

CALDERWOOD ENGINEERING
222 RIVER ROAD
RICHMOND, ME 04357
PH. (207) 737-2007 FAX (207) 737-2008

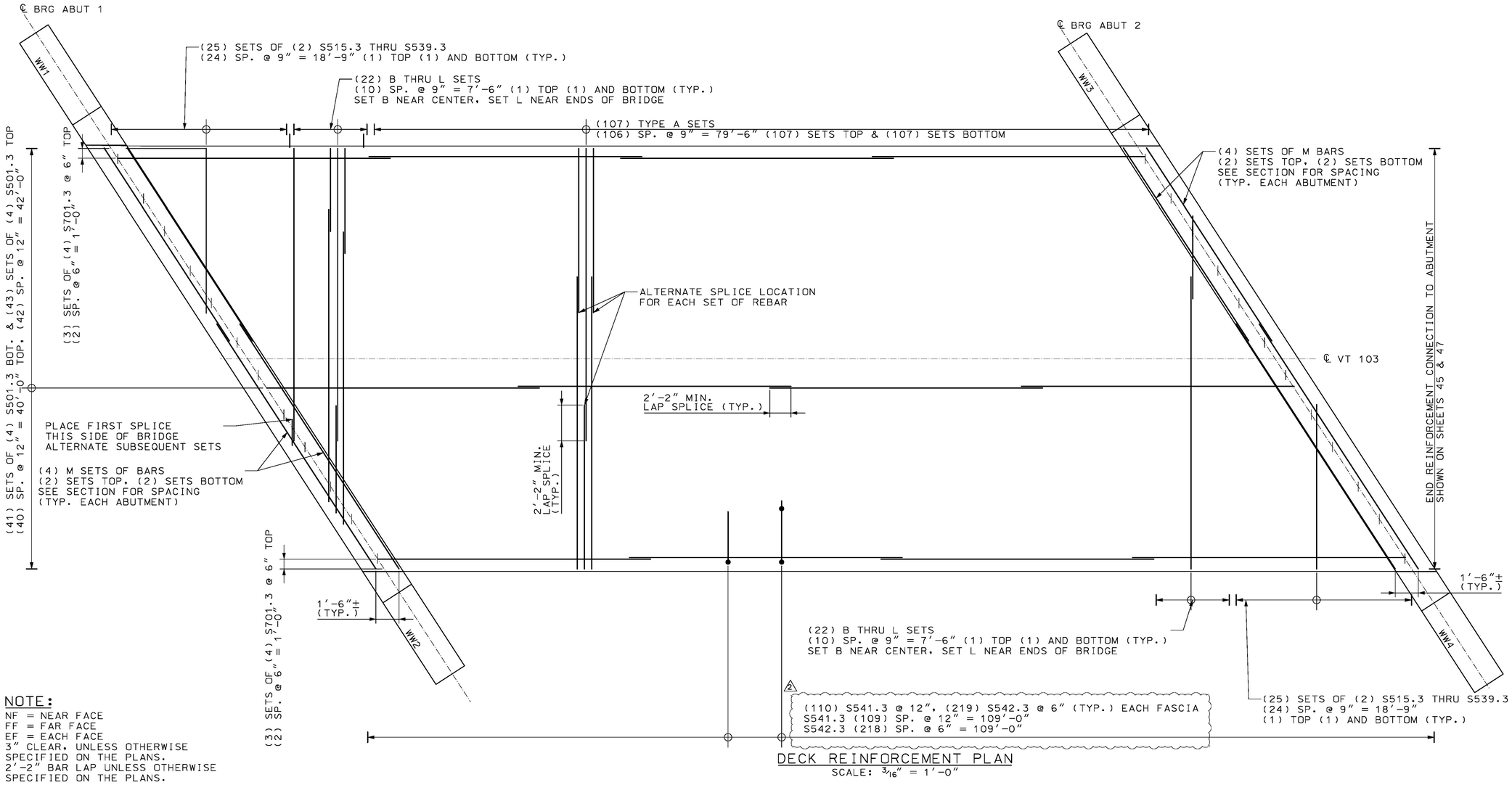

DECK REINFORCEMENT PLAN
SCALE: 3/16" = 1'-0"

NOTE:
NF = NEAR FACE
FF = FAR FACE
EF = EACH FACE
3" CLEAR, UNLESS OTHERWISE SPECIFIED ON THE PLANS.
2'-2" BAR LAP UNLESS OTHERWISE SPECIFIED ON THE PLANS.

BOTTOM OF SLAB ELEVATIONS - GIRDERS 1 THRU 12 (FEET)

POINT ON GIRDER	0.0L	0.1L	0.2L	0.3L	0.4L	0.5L	0.6L	0.7L	0.8L	0.9L	1.0L
GIRDER G1	993.77	994.14	994.50	994.84	995.14	995.41	995.64	995.84	996.01	996.15	996.27
GIRDER G2	993.92	994.29	994.65	994.98	995.28	995.55	995.79	995.98	996.15	996.29	996.41
GIRDER G3	994.03	994.41	994.76	995.10	995.40	995.67	995.90	996.10	996.27	996.41	996.53
GIRDER G4	994.18	994.55	994.91	995.24	995.55	995.81	996.05	996.24	996.41	996.55	996.67
GIRDER G5	994.30	994.67	995.03	995.36	995.66	995.93	996.17	996.36	996.53	996.66	996.78
GIRDER G6	994.44	994.81	995.17	995.50	995.81	996.08	996.31	996.51	996.67	996.81	996.92
GIRDER G7	994.49	994.86	995.22	995.55	995.86	996.13	996.36	996.56	996.72	996.85	996.97
GIRDER G8	994.47	994.84	995.20	995.54	995.84	996.11	996.34	996.54	996.70	996.83	996.95
GIRDER G9	994.46	994.83	995.19	995.52	995.83	996.09	996.33	996.52	996.68	996.82	996.93
GIRDER G10	994.44	994.81	995.17	995.50	995.81	996.08	996.31	996.50	996.66	996.79	996.91
GIRDER G11	994.42	994.80	995.15	995.49	995.79	996.06	996.29	996.49	996.64	996.78	996.89
GIRDER G12	994.41	994.78	995.14	995.47	995.77	996.04	996.27	996.46	996.62	996.75	996.87

BAR SET	BAR TYPES IN SET
A	(1) S502.3 & (1) S503.3
B	(1) S502.3 & (1) S504.3
C	(1) S502.3 & (1) S505.3
D	(1) S502.3 & (1) S506.3
E	(1) S502.3 & (1) S507.3
F	(1) S502.3 & (1) S508.3
G	(1) S502.3 & (1) S509.3
H	(1) S502.3 & (1) S510.3
I	(1) S502.3 & (1) S511.3
J	(1) S502.3 & (1) S512.3
K	(1) S502.3 & (1) S513.3
L	(1) S502.3 & (1) S514.3
M	(1) S502.3 & (1) S540.3

CALDERWOOD ENGINEERING, ETC.
STRUCTURAL ENGINEERING • DETAILING SERVICES
222 RIVER RD, RICHMOND, ME 04357 PH/FX (207)737-2007/(207) 737-2008

PREPARED FOR:
COLD RIVER BRIDGES, LLC

CEE 16-16-COLDRIVERBRIDGES
01-CS-LUDLOW

STATE OF VERMONT
JEFFERY T. CALDERWOOD
NO. 8711
LICENSED PROFESSIONAL ENGINEER

8711
P.E. NUMBER

DATE

	BY	DATE
DESIGN-DETAILED	TDC	
CHECKED-REVIEWED		
REVISIONS 1	TDC	MAR 2017
REVISIONS 2	TDC	APR 2017
REVISIONS 3		
REVISIONS 4		
FIELD CHANGES		FEB 2017

VE SUPER DESIGN
LUDLOW VT. BRF 025-1(42)

DECK SLAB REINFORCEMENT PLAN

SHEET NUMBER
38
of 73

CALDERWOOD ENGINEERING, ETC.
222 RIVER ROAD
RICHMOND, ME 04357
PH. (207)737-2007 / FAX (207)737-2008

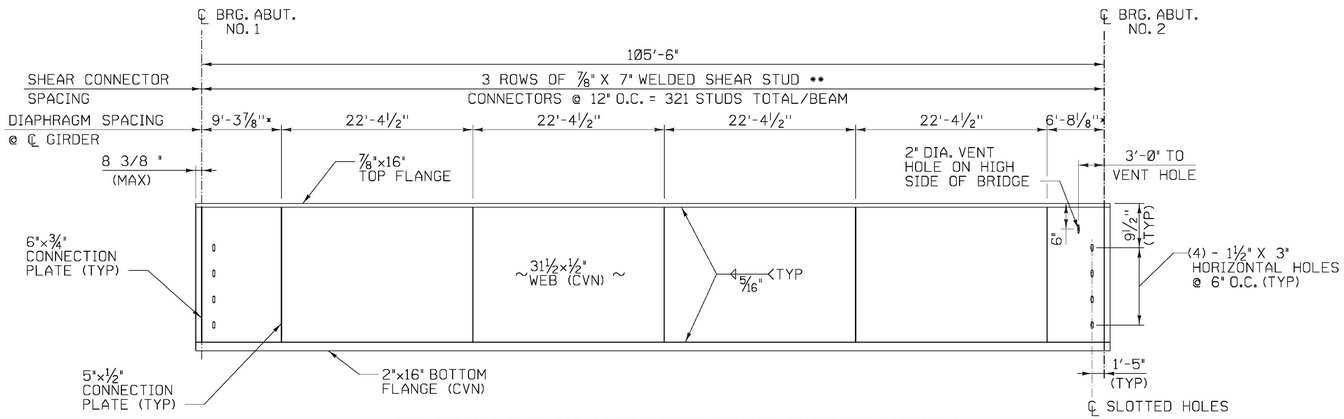

* - SEE FRAMING PLAN FOR CONNECTION PLATE AND DIAPHRAGM LOCATIONS
** - SEE PROJECT NOTES SHEET FOR STUD HEIGHT REQUIREMENTS

GIRDER ELEVATION

HORZ SCALE 1/8" = 1'-0"
VERT SCALE 3/4" = 1'-0"

CVN = CHARPY V-NOTCH TEST IN ACCORDANCE WITH SUBSECTION 714.01

CAMBER & DEFLECTION - GIRDERS 1 THRU 12 (INCHES)											
POINT ON GIRDER	0	0.1L	0.2L	0.3L	0.4L	0.5L	0.6L	0.7L	0.8L	0.9L	0
STEEL DL	0.00	0.55	1.03	1.42	1.66	1.74	1.66	1.42	1.03	0.55	0.00
CONCRETE SLAB	0.00	1.11	2.11	2.88	3.38	3.55	3.38	2.88	2.11	1.11	0.00
SUPERIMPOSED DL	0.00	0.33	0.62	0.84	0.99	1.04	0.99	0.84	0.62	0.33	0.00
TOTAL DEFLECTION	0.00	1.99	3.76	5.14	6.02	6.33	6.02	5.14	3.76	1.99	0.00
RESIDUAL CAMBER	0.00	0.51	0.98	1.35	1.61	1.74	1.71	1.50	1.13	0.61	0.00
TOTAL CAMBER	0.00	2.50	4.74	6.50	7.64	8.06	7.73	6.64	4.89	2.60	0.00

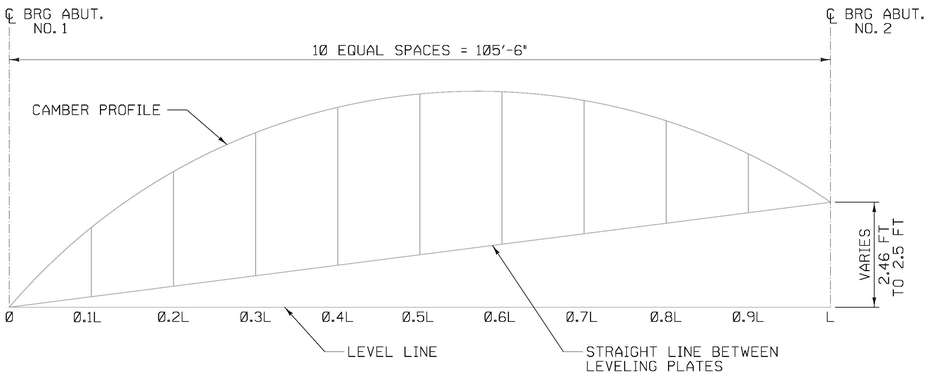

CAMBER DIAGRAM

NOT TO SCALE

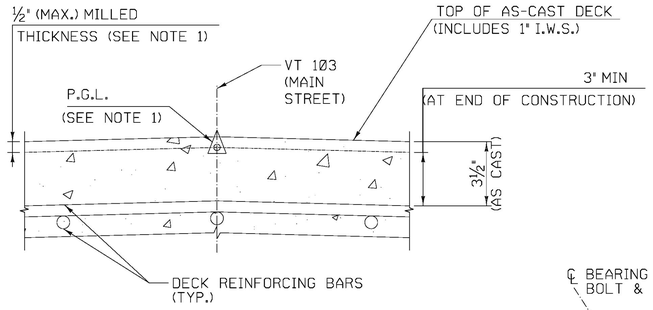

CONCRETE COVER DETAIL

NOT TO SCALE

NOTES:

1. AS MILLED THICKNESS OF 1/2" FOR RIDEABILITY IS ASSUMED FOR DEFINITION OF P.G.L. (TOP OF OF AS-CAST DECK IS 1/2 "ABOVE P.G.L.)
2. P.G.L. DENOTES PROFILE GRADE LINE.
3. I.W.S DENOTES INTEGRAL WEARING SURFACE

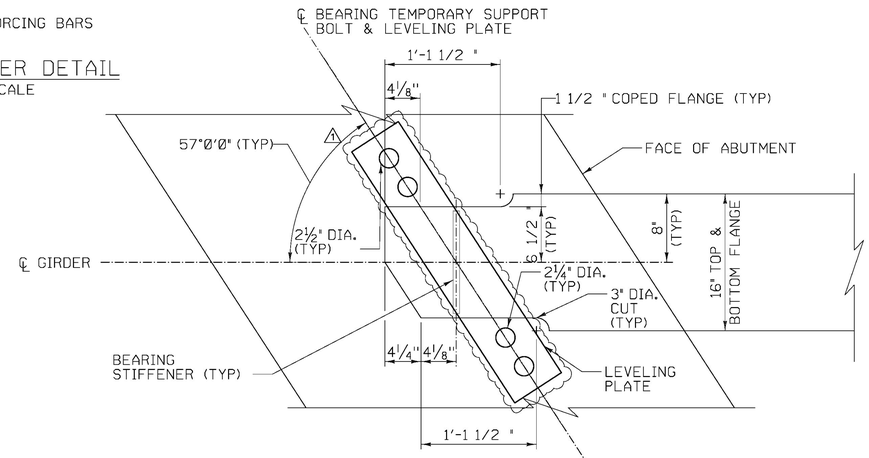

TYPICAL GIRDER END SECTION

SCALE 1 1/2" = 1'-0"
NOTE: ABUTMENT 1 END SHOWN, ABUTMENT 2 SIMILAR, SEE SHEETS 46 & 46A FOR BEARING PLATE DETAILS

CALDERWOOD ENGINEERING, ETC.
STRUCTURAL ENGINEERING • DETAILING SERVICES
222 RIVER RD, RICHMOND, ME 04357 PH/FX (207)737-2607/(207) 737-2008

PREPARED FOR:
COLD RIVER BRIDGES, LLC

CEE 16-16-COLDRIVERBRIDGES
01-CS-LUDLOW

STATE OF VERMONT — ERIC T. CALDERWOOD — NO. 8711 — Structural — LICENSED PROFESSIONAL ENGINEER

P.E. NUMBER 8711
DATE

BY	DATE	
TDC	JAN 2017	DESIGN-DETAILED
TDC		CHECKED-REVIEWED
TDC	MAR 2017	REVISIONS 1
		REVISIONS 2
		REVISIONS 3
		REVISIONS 4
		FIELD CHANGES

VE SUPER DESIGN
LUDLOW VT. BRF 025-1(42)

GIRDER DETAILS

SHEET NUMBER
39
of 73

CALDERWOOD ENGINEERING, ETC. STRUCTURAL ENGINEERING • DETAILING SERVICES 222 RIVER ROAD RICHMOND, ME 04357 PH/FX (207) 737-2607

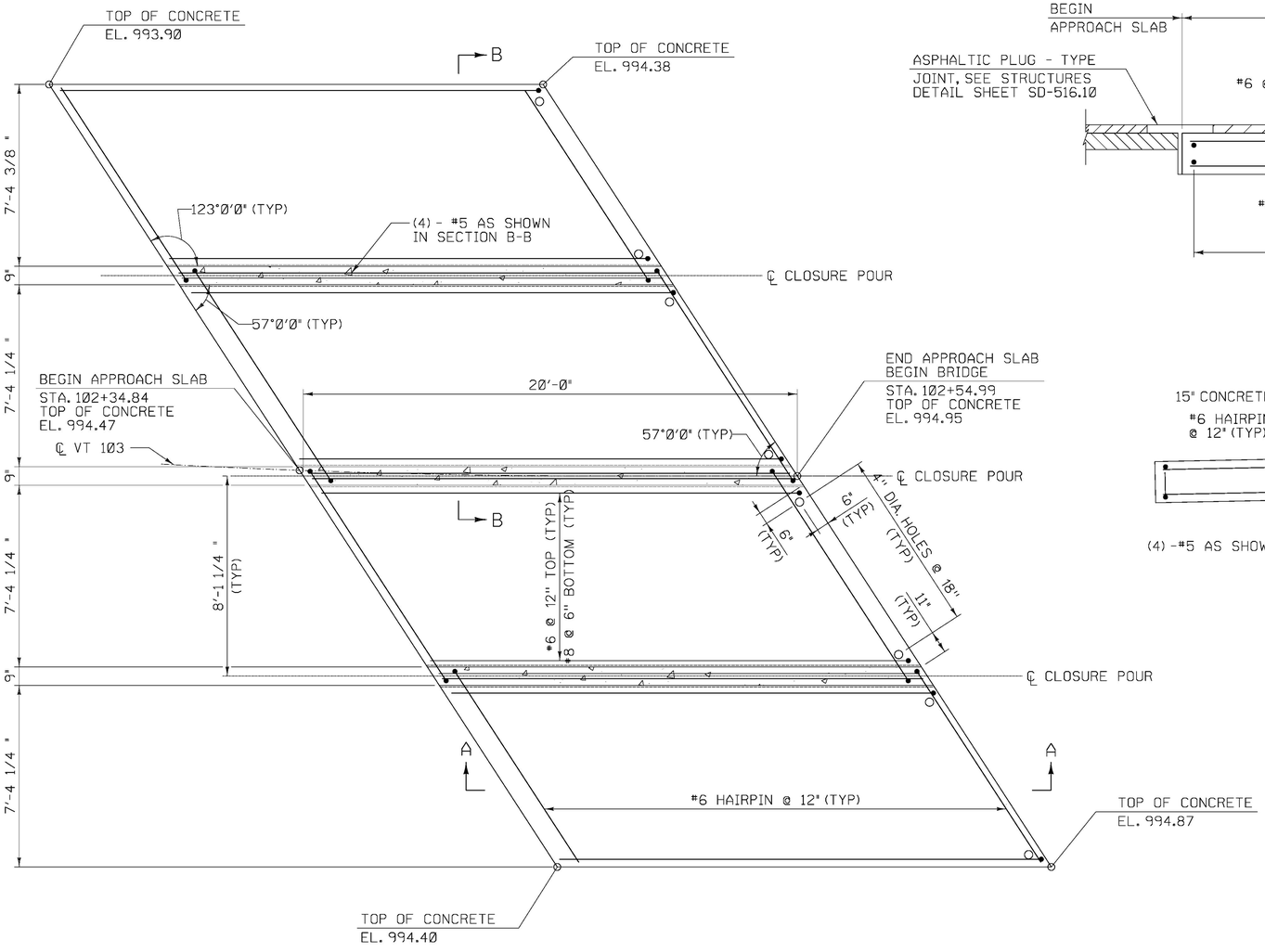

APPROACH SLAB NO. 1 PLAN

SCALE 3/8" = 1'-0"

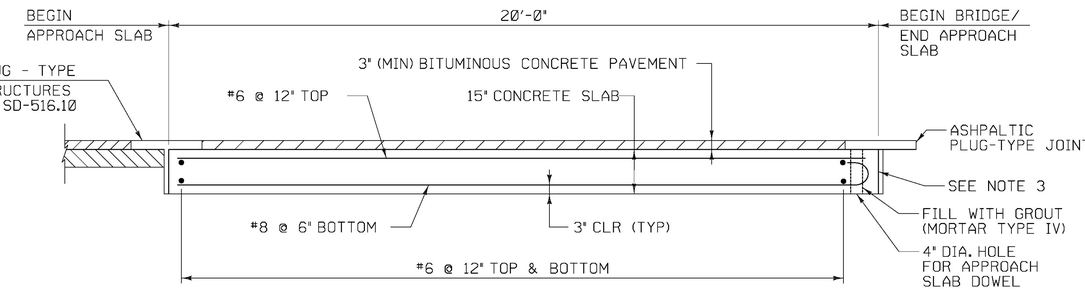

SECTION A-A

SCALE 1/2" = 1'-0"

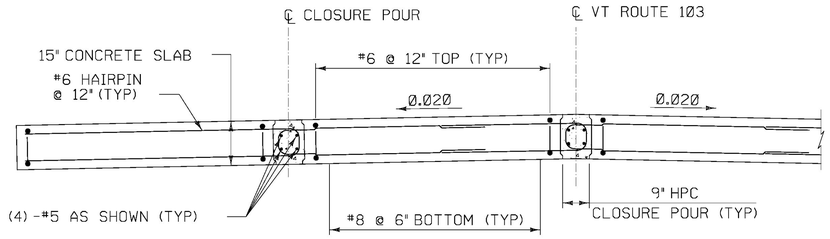

SECTION B-B

SCALE 1/2" = 1'-0"

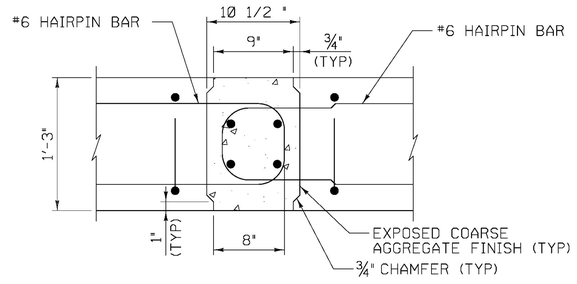

CONNECTION DETAIL

SCALE 1 1/2"=1'-0"

NOTE:

NF = NEAR FACE
FF = FAR FACE
EF = EACH FACE
▲ = CUT TO FIT IN FIELD
3" CLEAR, UNLESS OTHERWISE SPECIFIED ON THE PLANS.
2'-2" BAR LAP UNLESS OTHERWISE SPECIFIED ON THE PLANS.

- LIMITS OF SPECIAL PROVISION (ULTRA HIGH PERFORMANCE CONCRETE, RAPID SET)(FPG) CLOSURE POUR

NOTES:

1. LIFTING POINTS IN APPROACH SLABS TO BE LOCATED BY FABRICATOR.
2. CONTRACTOR SHALL INCLUDE IN THE FABRICATION DRAWINGS THE METHOD AND DETAILS FOR ESTABLISHING CONTINUOUS CONTACT WITH SUBGRADE AND SUPPORT FOR PRECAST APPROACH SLABS.
3. FRONT FACE OF APPROACH SLAB SHALL BE VERTICAL WHEN PLACED ON APPROACH SLAB SEAT.

CALDERWOOD ENGINEERING, ETC.
STRUCTURAL ENGINEERING • DETAILING SERVICES
222 RIVER RD, RICHMOND, ME 04357 PH/FX (207)737-2007/(207) 737-2008

PREPARED FOR:
COLD RIVER BRIDGES, LLC

CEE 16-16-COLDRIVERBRIDGES
01-CS-LUDLOW

STATE OF VERMONT
ERIC T. CALDERWOOD
No. 8711
Structural
LICENSED
PROFESSIONAL ENGINEER

8711 P.E. NUMBER

DATE

BY	DATE
TDC	JAN 2017
TDC	MAR 2017

DESIGN-DETAILED	TDC
CHECKED-REVIEWED	
REVISIONS 1	TDC
REVISIONS 2	
REVISIONS 3	
REVISIONS 4	
FIELD CHANGES	

VE SUPER DESIGN
LUDLOW VT. BRF 025-1(42)

APPROACH SLAB DETAILS (1 OF 2)

SHEET NUMBER
40
of 73

CALDERWOOD ENGINEERING, ETC.
222 River Road
RICHMOND, ME 04357
PH. (207) 737-2007 FAX (207) 737-2008

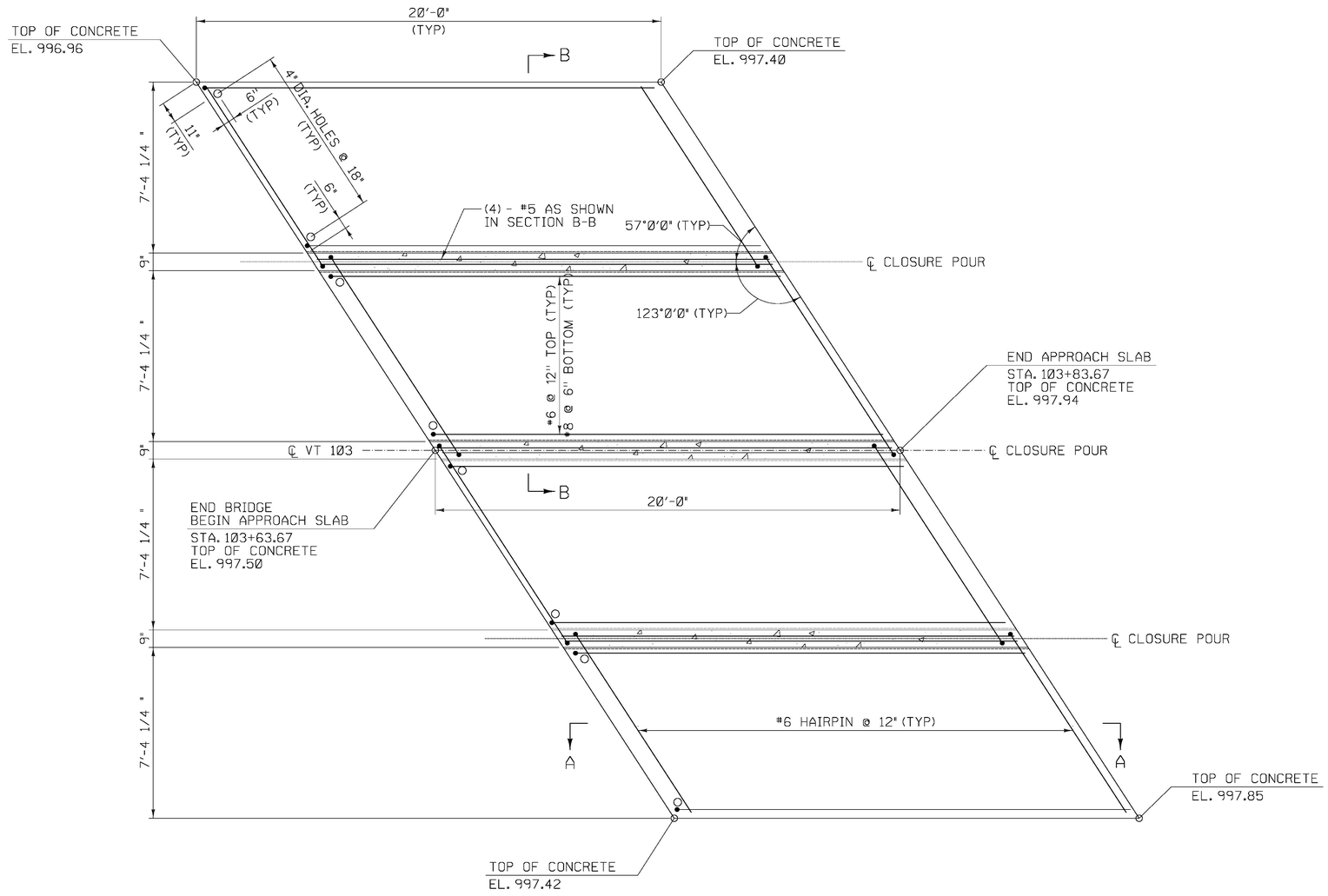

APPROACH SLAB NO. 2 PLAN

SCALE ⅜" = 1'-0"

NOTE:

NF = NEAR FACE
FF = FAR FACE
EF = EACH FACE
▲ = CUT TO FIT IN FIELD
3" CLEAR, UNLESS OTHERWISE SPECIFIED ON THE PLANS.
2'-2" BAR LAP UNLESS OTHERWISE SPECIFIED ON THE PLANS.

- LIMITS OF SPECIAL PROVISION (ULTRA HIGH PERFORMANCE CONCRETE, RAPID SET)(FPO) CLOSURE POUR

NOTES:

1. LIFTING POINTS IN APPROACH SLABS TO BE LOCATED BY FABRICATOR.
2. CONTRACTOR SHALL INCLUDE IN THE FABRICATION DRAWINGS THE METHOD AND DETAILS FOR ESTABLISHING CONTINUOUS CONTACT WITH SUBGRADE AND SUPPORT FOR PRECAST APPROACH SLABS.
3. FRONT FACE OF APPROACH SLAB SHALL BE VERTICAL WHEN PLACED ON APPROACH SLAB SEAT.
4. SEE PRECAST APPROACH SLAB (1 OF 2) FOR CONNECTION DETAIL, SECTION A-A, AND SECTION B-B.

CALDERWOOD ENGINEERING, ETC.
STRUCTURAL ENGINEERING • DETAILING SERVICES
222 RIVER RD. RICHMOND, ME 04357 PH/FX (207)737-2007/(207) 737-2008

PREPARED FOR:
COLD RIVER BRIDGES, LLC

CEE 16-16-COLDRIVERBRIDGES
01-CS-LUDLOW

STATE OF VERMONT
ERIC T. CALDERWOOD
NO. 8711
Structural
LICENSED
PROFESSIONAL ENGINEER

8711
P.E. NUMBER

DATE

BY	DATE
TDC	JAN 2017
TDC	MAR 2017

DESIGN-DETAILED TDC
CHECKED-REVIEWED

REVISIONS 1
REVISIONS 2
REVISIONS 3
REVISIONS 4
FIELD CHANGES

VE SUPER DESIGN
LUDLOW VT. BRF 025-1(42)

APPROACH SLAB DETAILS (2 OF 2)

SHEET NUMBER
41
of 73

CALDERWOOD ENGINEERING, ETC.
222 River Road
RICHMOND, ME 04357
PH. (207) 737-2007 FAX (207) 737-2008

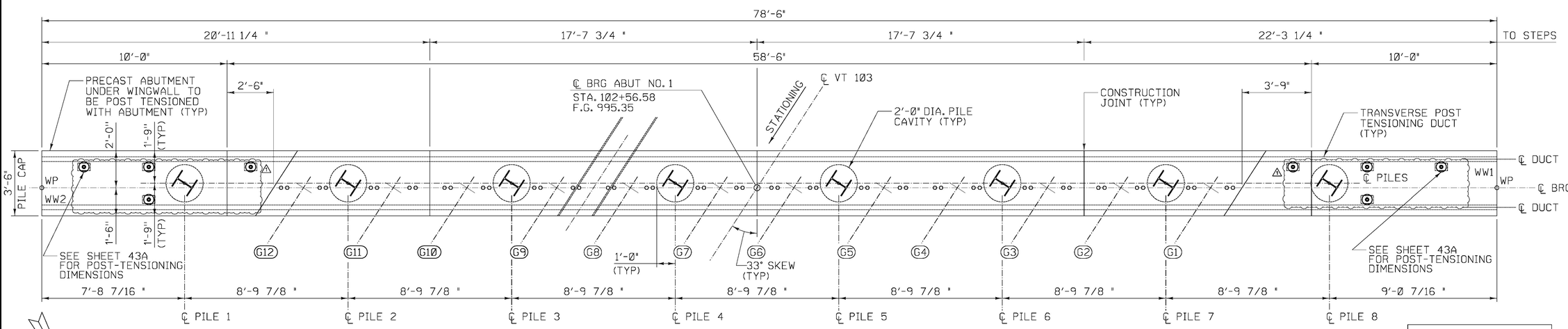

ABUTMENT NO. 1 PLAN

SCALE 3/8" = 1'-0"

VT STATE PLANE GRID

N

GIRDER TABLE ELEVATION	
GIRDER	ELEVATION
G1	990.65
G2	990.80
G3	990.92
G4	991.06
G5	991.18
G6	991.32
G7	991.38
G8	991.36
G9	991.34
G10	991.32
G11	991.31
G12	991.29

ALL ELEVATIONS ARE AT BOTTOM OF BOTTOM FLANGE.

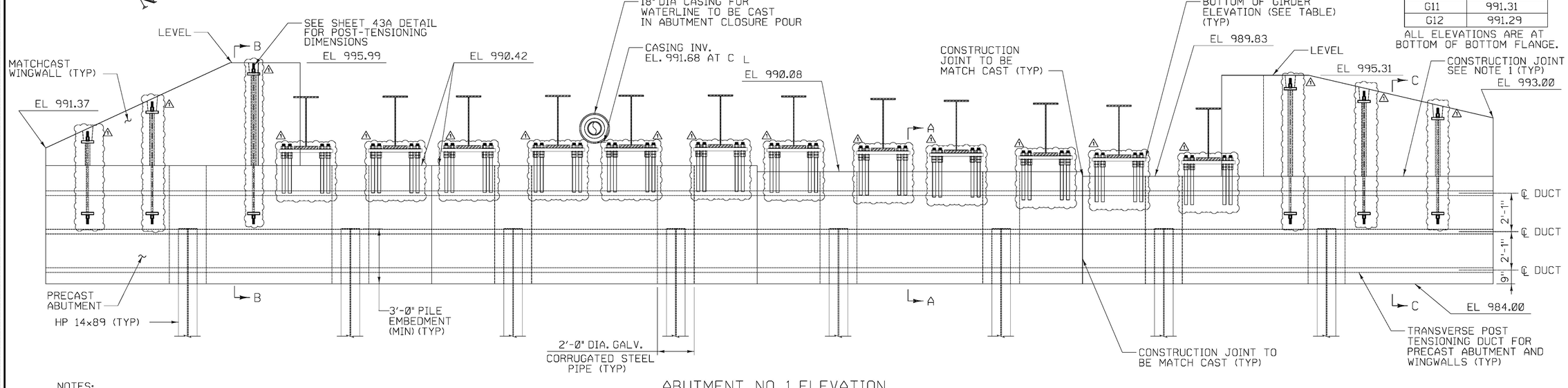

ABUTMENT NO. 1 ELEVATION

SCALE 3/8" = 1'-0"

SEE ABUTMENT SECTIONS SHEET FOR SECTIONS A-A AND B-B.

NOTES:

1. ABUTMENT TO BE PRECAST AS SHOWN. ONCE ABUTMENTS ARE POST-TENSIONED AND PILE VOIDS FILLED (RSC), THE TOP PORTION OF THE WINGWALLS ARE TO BE INSTALLED.
2. USE 24" GALVANIZED CORRUGATED STEEL PIPE FOR PILE POCKETS CONFORMING TO SUBSECTION 711.01.

CALDERWOOD ENGINEERING, ETC.
STRUCTURAL ENGINEERING • DETAILING SERVICES
222 RIVER RD. RICHMOND, ME 04357 PH/FX (207)737-2007/(207) 737-2008

PREPARED FOR:
COLD RIVER BRIDGES, LLC

CEE 16-16-COLDRIVERBRIDGES
01-CS-LUDLOW

STATE OF VERMONT
ERIC T. CALDERWOOD
NO. 8711
Structural
LICENSED
PROFESSIONAL ENGINEER

8711 P.E. NUMBER

DATE

BY	DATE
TDC	JAN 2017
TDC	MAR 2017

DESIGN-DETAILED TDC
CHECKED-REVIEWED

REVISIONS 1
REVISIONS 2
REVISIONS 3
REVISIONS 4
FIELD CHANGES

VE SUPER DESIGN
LUDLOW VT. BRF 025-1(42)

ABUTMENT #1 PLAN AND ELEVATION

SHEET NUMBER
42
of 73

CALDERWOOD ENGINEERING
222 River Road
Richmond, ME 04357
PH: (207) 737-2007 FAX (207) 737-2008

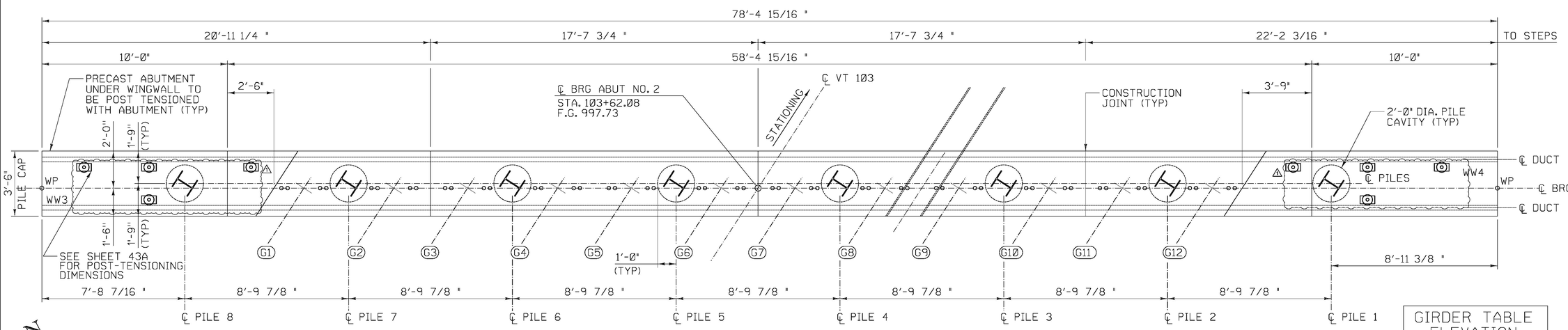

ABUTMENT NO. 2 PLAN
SCALE ½" = 1'-0"

GIRDER TABLE ELEVATION	
GIRDER	ELEVATION
G1	993.15
G2	993.29
G3	993.41
G4	993.55
G5	993.67
G6	993.81
G7	993.86
G8	993.83
G9	993.81
G10	993.79
G11	993.77
G12	993.75

ALL ELEVATIONS ARE AT BOTTOM OF BOTTOM FLANGE.

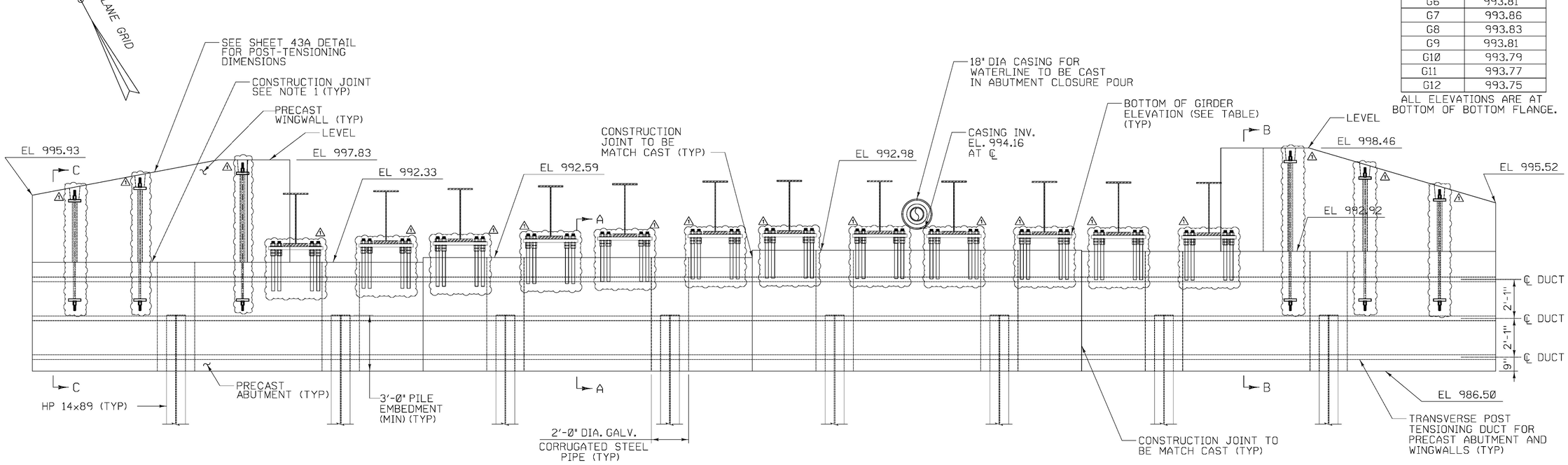

ABUTMENT NO. 2 ELEVATION
SCALE ⅜" = 1'-0"
SEE ABUTMENT SECTIONS SHEET FOR SECTIONS A-A AND B-B.

NOTES:

1. ABUTMENT TO BE PRECAST AS SHOWN. ONCE ABUTMENTS ARE POST-TENSIONED AND PILE VOIDS FILLED(RSC), THE TOP PORTION OF THE WINGWALLS ARE TO BE INSTALLED.
2. USE 24" GALVANIZED CORRUGATED STEEL PIPE FOR PILE POCKETS CONFORMING TO SUBSECTION 711.01.

CALDERWOOD ENGINEERING, ETC.
STRUCTURAL ENGINEERING • DETAILING SERVICES
222 RIVER RD, RICHMOND, ME 04357 PH/FX (207)737-2007/(207) 737-2008

PREPARED FOR:
COLD RIVER BRIDGES, LLC

CEE 16-16-COLDRIVERBRIDGES
01-CS-LUDLOW

STATE OF VERMONT
ERIC T. CALDERWOOD
NO. 8711
Structural
LICENSED
PROFESSIONAL ENGINEER

8711
P.E. NUMBER

DATE

BY	DATE
TDC	JAN 2017
TDC	MAR 2017

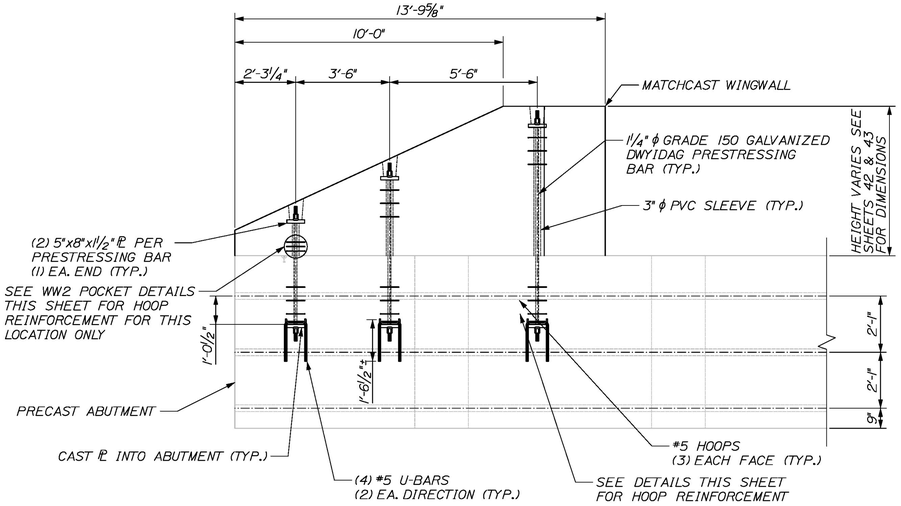

WINGWALL 2 POST-TENSIONING ELEVATION

NOTE: WINGWALL 3 SIMILAR
SCALE: ⅜" = 1'-0"

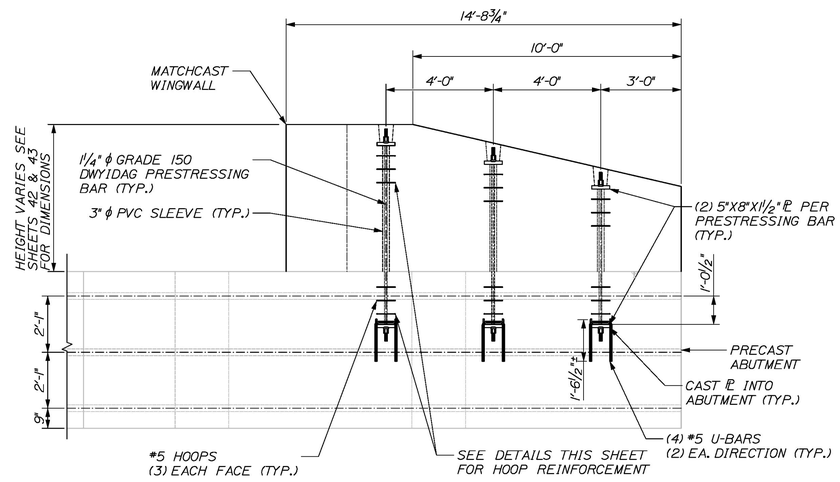

WINGWALL 1 POST-TENSIONING ELEVATION

NOTE: WINGWALL 4 SIMILAR
SCALE: ⅜" = 1'-0"

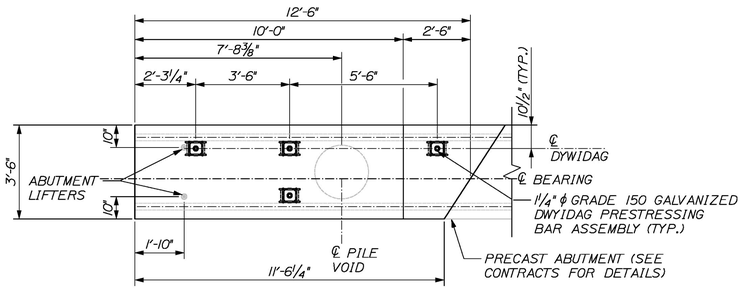

WINGWALL 2 POST-TENSIONING PLAN

NOTE: WINGWALL 3 SIMILAR
SCALE: ⅜" = 1'-0"

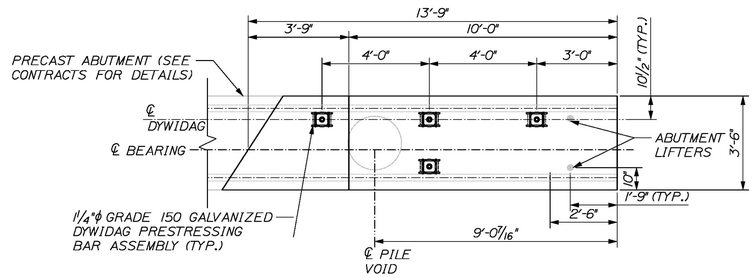

WINGWALL 1 POST-TENSIONING PLAN

NOTE: WINGWALL 4 SIMILAR
SCALE: ⅜" = 1'-0"

POST-TENSIONING NOTES

1. #5 HOOPS BY PRECASTER
2. REINFORCEMENT FOR ABUTMENT AND MATCH CAST WINGS NOT SHOWN. SEE SHEETS 44 AND 45
3. PLATE TO BE A36 GALVANIZED PER ASTM A 123
4. THREADBAR AND HARDWARE TO BE GALVANIZED PER ASTM A 153
5. FPU = 150KSI FOR THREADBAR PER DYWIDAG
6. THREADBARS SHALL BE PULLED TO A MAXIMUM OF 120 KSI AND LOCKED OFF AT A MINIMUM OF 105 KSI
7. INSTALL APPROVED NON-SHRINK GROUT TO FILL PT BAR POCKET
8. REQUIRED COMPRESSIVE STRENGTH OF CONCRETE TO BE 4 KSI
9. CONTRACTOR WILL USE SIKADUR 42 GROUT-PAK PT BETWEEN PRECAST ABUTMENT AND MATCHCAST WINGWALL
10. CONTRACTOR SHALL USE A CALIBRATED JACK TO POST-TENSION THREADBARS TO ENSURE THAT TENSION LIMITS ARE NOT EXCEEDED

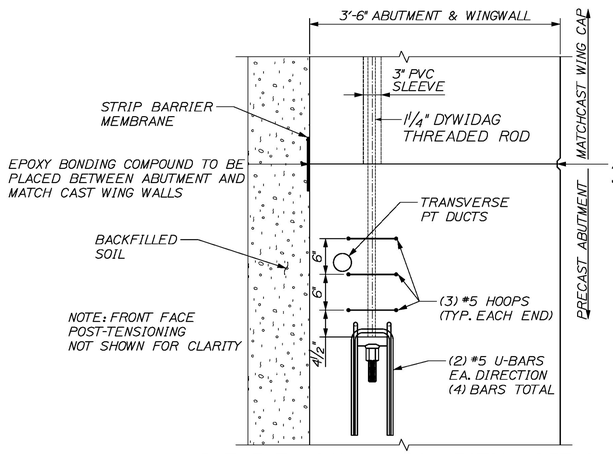

ABUTMENT/WINGWALL CONNECTION DETAIL

SCALE: 1" = 1'-0"

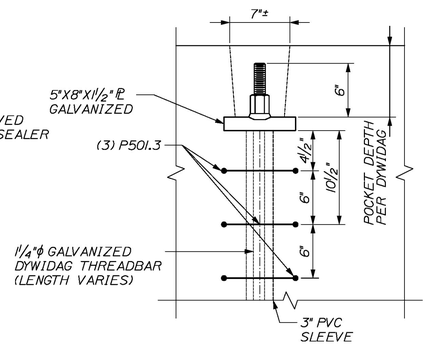

POST-TENSIONING BAR POCKET DETAIL (TYP)

SCALE: 1½" = 1'-0"

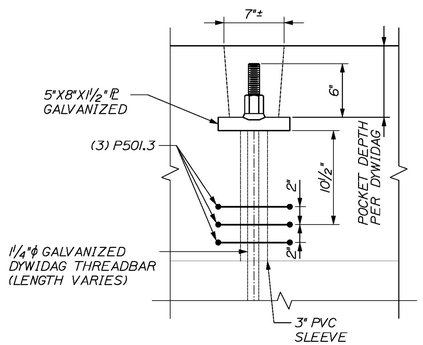

WW2 POST-TENSIONING POCKET DETAIL

SCALE: 1½" = 1'-0"

CALDERWOOD ENGINEERING, ETC.
STRUCTURAL ENGINEERING • DETAILING SERVICES
222 RIVER RD, RICHMOND, ME 04357 PH/FX (207)737-2007/(207) 737-2008

PREPARED FOR:
COLD RIVER BRIDGES, LLC

CEE 16-16-COLDRIVERBRIDGES
01-CS-LUDLOW

STATE OF VERMONT — JEREMY T. CALDERWOOD — NO. 87 — LICENSED PROFESSIONAL ENGINEER

P.E. NUMBER 8711

DATE

BY	DATE	
TDC	FEB 2017	REVISIONS 1
		REVISIONS 2
TDC	MAR 2017	REVISIONS 3
		REVISIONS 4
		FIELD CHANGES

DESIGN-DETAILED
CHECKED-REVIEWED

VE SUPER DESIGN
LUDLOW VT. BRF 025-1(42)

WINGWALL POST-TENSIONING DIMENSIONS

SHEET NUMBER
43a
of 73

CALDERWOOD ENGINEERING, ETC. 222 River Rd. Unit 2 RICHMOND, ME 04357 PH (207) 737-2007 FAX (207) 737-2008

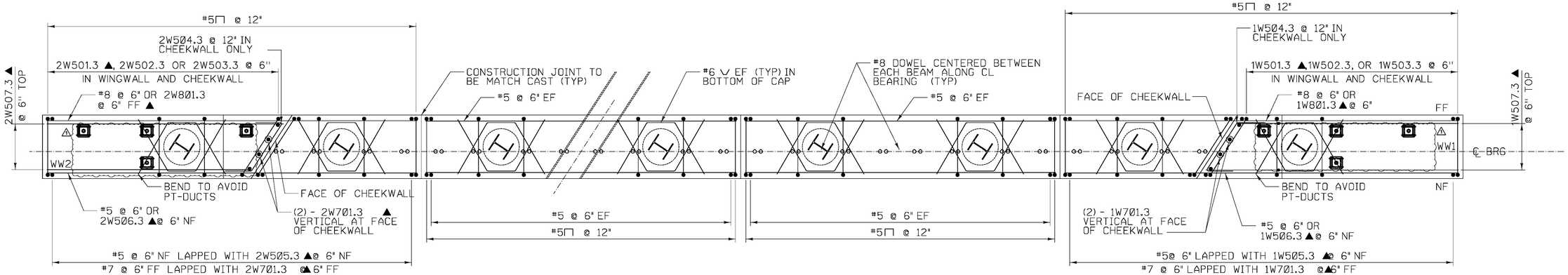

ABUTMENT NO. 1 REINFORCING PLAN

SCALE 3/8" = 1'-0"

(ABUTMENT NO. 2 SIMILAR)

NOTES:

1. TRANSVERSE POST-TENSIONING DUCTS & GROUT DUCTS NOT SHOWN FOR CLARITY.
2. (4) - #7 TRANSVERSE BARS AT TOP AND BOTTOM OF PRECAST CAP NOT SHOWN FOR CLARITY.

NOTE:

NF = NEAR FACE
FF = FAR FACE
EF = EACH FACE
▲ = CUT TO FIT IN FIELD
3" CLEAR, UNLESS OTHERWISE SPECIFIED ON THE PLANS.
2'-2" BAR LAP UNLESS OTHERWISE SPECIFIED ON THE PLANS.

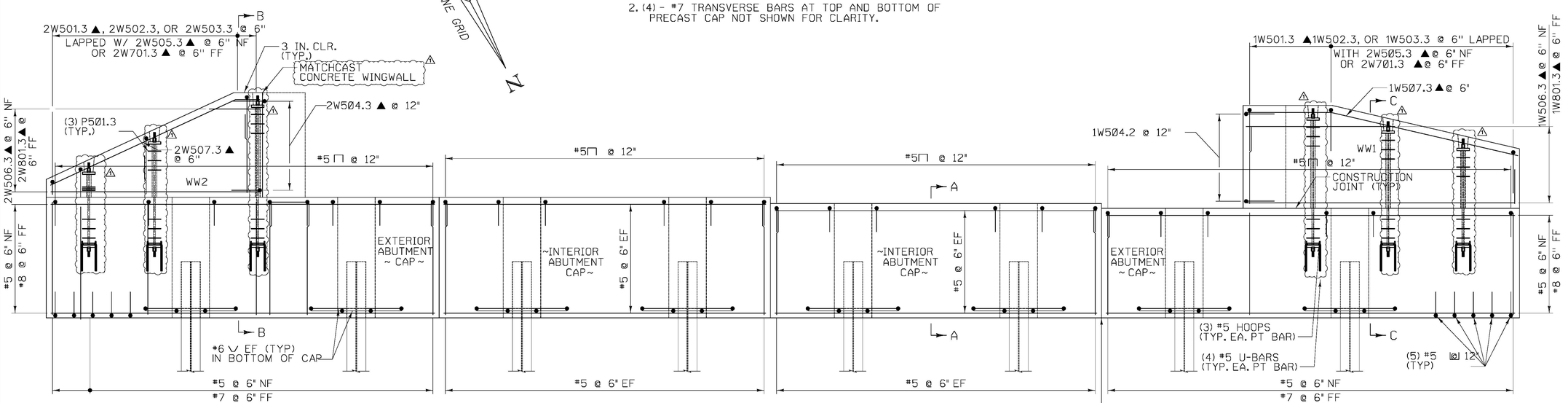

ABUTMENT NO. 1 REINFORCING ELEVATION

SCALE 3/8" = 1'-0"

(ABUTMENT NO. 2 SIMILAR, 4W SIMILAR TO 1W, 3W SIMILAR TO 2W)

NOTES:

1. SEE ABUTMENT SECTIONS SHEET FOR SECTIONS A-A, B-B, AND C-C.
2. TOP PORTION OF WINGWALLS TO BE MATCH CAST.
3. THE BRIDGE PLAQUE FURNISHED BY THE AGENCY SHALL BE CAST INTO WINGWALL 2. ALL WORK TO INSTALL THE PLAQUE SHALL BE INIDENTAL TO THE APPROPRAITE CONCRETE CONTRACT ITEM. SEE SD-502.00 FOR FURTHER DETAILS.

CALDERWOOD ENGINEERING, ETC.
STRUCTURAL ENGINEERING • DETAILING SERVICES
222 RIVER RD, RICHMOND, ME 04357 PH/FX (207)737-2007/(207) 737-2008

PREPARED FOR:
COLD RIVER BRIDGES, LLC

CEE 16-16-COLDRIVERBRIDGES
01-CS-LUDLOW

STATE OF VERMONT
ERIC T. CALDERWOOD
NO. 8711
Structural
LICENSED
PROFESSIONAL ENGINEER

8711 P.E. NUMBER
DATE

BY	DATE	
TDC	JAN. 2017	DESIGN-DETAILED
TDC		CHECKED-REVIEWED
TDC	MAR. 2017	REVISIONS 1
		REVISIONS 2
		REVISIONS 3
		REVISIONS 4
		FIELD CHANGES

VE SUPER DESIGN
LUDLOW VT. BRF 025-1(42)

ABUTMENT REINFORCING

SHEET NUMBER
44
of 73

CALDERWOOD ENGINEERING 222 River Road RICHMOND, ME 04357 PH. (207)737-2007 FAX (207) 737-2008

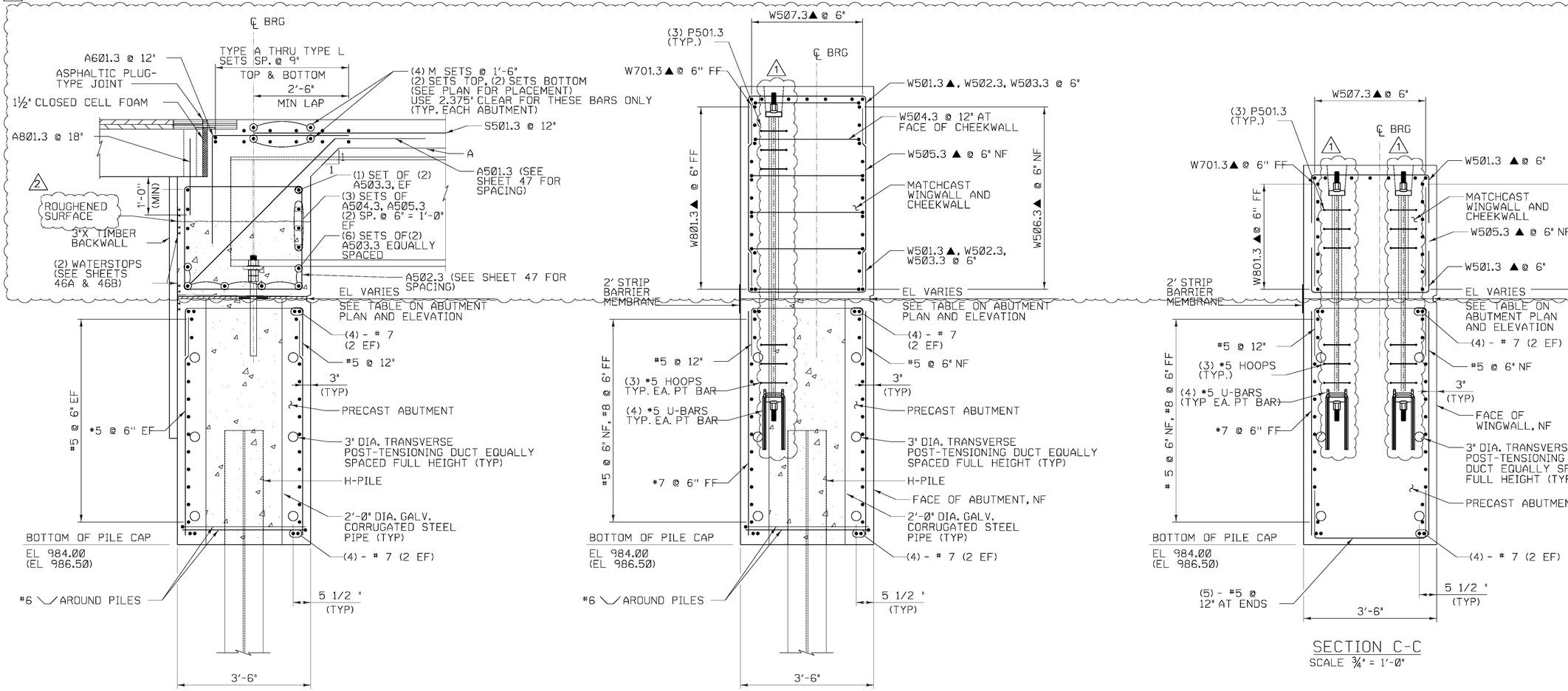

SECTION A-A

SCALE ¾" = 1'-0"

(SECTION TAKEN AT LONGITUDINAL JOINT)

NOTE: SECTION A-A CAP REINFORCING SHALL ONLY BE USED FOR INTERIOR ABUTMENT CAPS. SEE DETAILS B-B AND C-C FOR REINFORCING FOR EXTERIOR CAPS.

SECTION B-B

SCALE ¾" = 1'-0"

SECTION C-C

SCALE ¾" = 1'-0"

NOTE:

NF = NEAR FACE
FF = FAR FACE
EF = EACH FACE
▲ = CUT TO FIT IN FIELD
3" CLEAR, UNLESS OTHERWISE SPECIFIED ON THE PLANS.
2'-2" BAR LAP UNLESS OTHERWISE SPECIFIED ON THE PLANS.

NOTES:

1. PAYMENT FOR BEARING ASSEMBLIES WILL BE CONSIDERED INCIDENTAL TO RESPECTIVE 540.10 OR 900.645 ITEMS.
2. THE TOP SURFACE OF THE LEVELING PLATE @ ABUTMENT 2 SHALL BE GREASED PRIOR TO SETTING GIRDERS. EXCESS GREASE SHALL BE WIPED CLEAN AFTER GIRDERS HAVE BEEN SET.
3. LEVELING PLATES SHALL BE LEVEL PRIOR TO SETTING GIRDERS. THE CONTRACTOR SHALL ADJUST THE PLATE ELEVATIONS DURING SETTING THE GIRDERS TO ACHIEVE THE DESIGN ELEVATIONS OF THE DECK.
4. LEVELING PLATE SHALL BE GALVANIZED GRADE 50 AND CONFORM TO SUBSECTION 714.03. ANCHOR RODS SHALL MEET THE REQUIREMENTS OF SUBSECTION 714.08 AND SHALL BE GRADE 105.
5. SEE PROJECT NOTES FOR ADDITIONAL FABRICATION, CONSTRUCTION, AND SEQUENCE NOTES.
6. ELEVATIONS SHOWN ARE FOR ABUTMENT NO. 1. (ELEVATIONS FOR ABUTMENT NO. 2 ARE SHOWN IN PARENTHESIS.)
7. PRECAST WINGCAPS WILL BE PAID AS 501.33 & 507.13.

LEGEND

SPECIAL PROVISION (HIGH PERFORMANCE CONCRETE RAPID SET) (FPQ)

CALDERWOOD ENGINEERING, ETC.
STRUCTURAL ENGINEERING • DETAILING SERVICES
222 RIVER RD, RICHMOND, ME 04357 PH/FX (207)737-2007/(207) 737-2008

PREPARED FOR:
COLD RIVER BRIDGES, LLC

CEE 16-16-COLDRIVERBRIDGES
01-CS-LUDLOW

STATE OF VERMONT
ERIC T. CALDERWOOD
NO. 8711
Structural
LICENSED
PROFESSIONAL ENGINEER

P.E. NUMBER 8711
DATE

BY	DATE
TDC	JAN 2017
TDC	MAR 2017
TDC	APR 2017

DESIGN-DETAILED TDC
CHECKED-REVIEWED

REVISIONS 1
REVISIONS 2
REVISIONS 3
REVISIONS 4
FIELD CHANGES

VE SUPER DESIGN
LUDLOW VT. BRF 025-1(42)

ABUTMENT DETAILS (1 OF 4)

SHEET NUMBER
45
of 73

CALDERWOOD ENGINEERING, ETC.
222 RIVER ROAD
RICHMOND, ME 04357
PH. (207) 737-2007 FAX (207) 737-2008

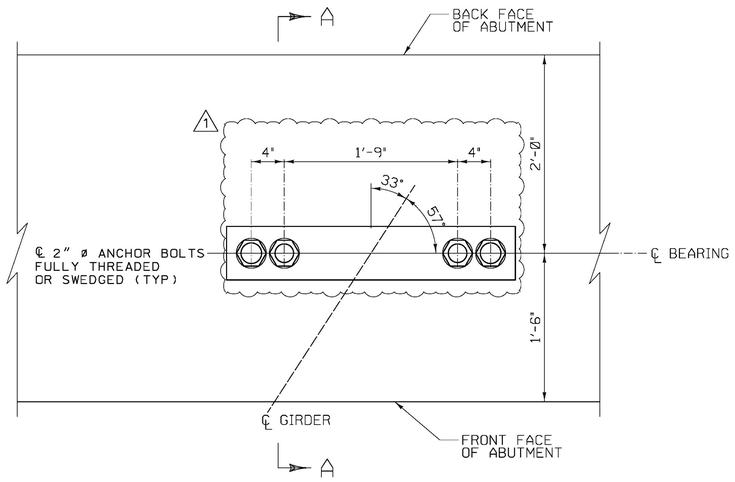

SUPPORT BOLT LAYOUT

SCALE 1½" = 1'-0"

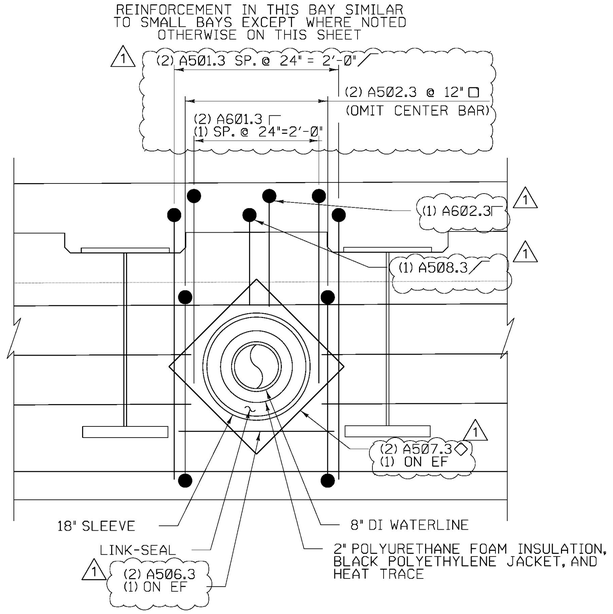

WATERLINE ABUTMENT PENETRATION DETAIL

NOT TO SCALE

NOTES:

1. SPACE BARS TO MAINTAIN 1½" MIN CLR AROUND SLEEVE. FIELD CUT CENTER BARS TO MAINTAIN 1½" MIN CLR AROUND SLEEVE.
2. SLEEVE SHALL BE STEEL WITH 18" INSIDE DIA. AND SHALL BE COMPATIBLE WITH LINK-SEAL AND REINFORCING LAYOUT.

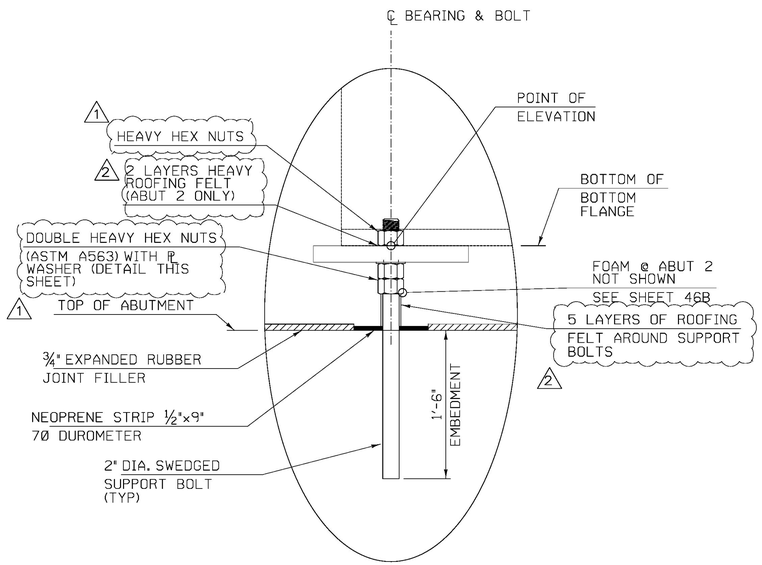

SECTION A-A

SUPPORT BOLT DETAIL (TYP)

SCALE 1½" = 1'-0"

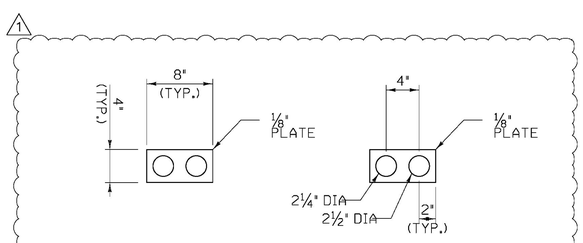

DOUBLE ANCHOR BOLT ASSEMBLY PLATE WASHER

NOTE: PLATE WASHERS ON BOTTOM OF LEVELING PLATE ONLY

NOT TO SCALE

NOTE:

NF = NEAR FACE
FF = FAR FACE
EF = EACH FACE
▲ = CUT TO FIT IN FIELD
3" CLEAR, UNLESS OTHERWISE SPECIFIED ON THE PLANS.
2'-2" BAR LAP UNLESS OTHERWISE SPECIFIED ON THE PLANS.

NOTES:

1. SEE ABUTMENT DETAILS (1 OF 3) AND PROJECT NOTES FOR ADDITIONAL FABRICATION, CONSTRUCTION, AND SEQUENCE NOTES.
2. ANCHOR BOLTS TO BE CAST IN PLACE.

CALDERWOOD ENGINEERING, ETC.
STRUCTURAL ENGINEERING • DETAILING SERVICES
222 RIVER RD, RICHMOND, ME 04357 PH/FX (207)737-2007/(207) 737-2008

PREPARED FOR:
COLD RIVER BRIDGES, LLC
CEE 16-16-COLDRIVERBRIDGES
01-CS-LUDLOW

STATE OF VERMONT
ERIC T. CALDERWOOD
NO. 8711
Structural I
LICENSED
PROFESSIONAL ENGINEER

8711
P.E. NUMBER
DATE

	BY	DATE
DESIGN-DETAILED	TDC	JAN 2017
CHECKED-REVIEWED	TDC	
REVISIONS 1	TDC	MAR 2017
REVISIONS 2	TDC	APR 2017
REVISIONS 3		
REVISIONS 4		
FIELD CHANGES		

VE SUPER DESIGN
LUDLOW VT. BRF 025-1(42)

ABUTMENT DETAILS (2 OF 4)

SHEET NUMBER
46
of 73

CALDERWOOD ENGINEERING
222 RIVER ROAD
RICHMOND, ME 04357
PH. (207) 737-2007 FAX (207) 737-2008

PRIOR TO START OF SEQUENCE

1. INSTALL AND POST TENSION ABUTMENTS, AND FILL PILE CAVITIES
2. INSTALL AND POST TENSION WINGWALL CAPS
3. BACKFILL BEHIND NEW ABUTMENT TO 3'-0"
4. PLACE STONE FILL ON FRONT FACE OF ABUTMENT
5. GREASE BEARINGS @ ABUTMENT 2

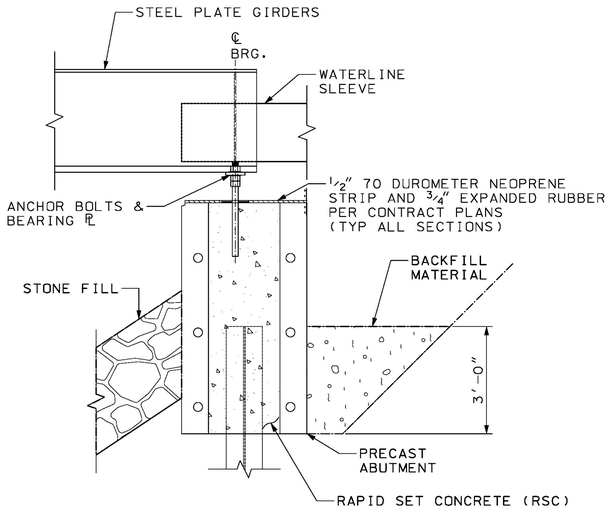

STAGE 1:

SCALE: ½" = 1'-0"

1. ERECT STRUCTURAL STEEL AND TORQUE ALL CONNECTIONS
2. INSTALL WATERLINE SLEEVE
3. GREASE BEARING PL (ABUT. 2 ONLY)

(NOTE: REBAR NOT SHOWN FOR CLARITY)
(NOTE: NO GREASE WILL BE ALLOWED ON THE END OF THE GIRDER

BACKFILL MATERIAL

RAPID SET CONCRETE (RSC)

STONE FILL

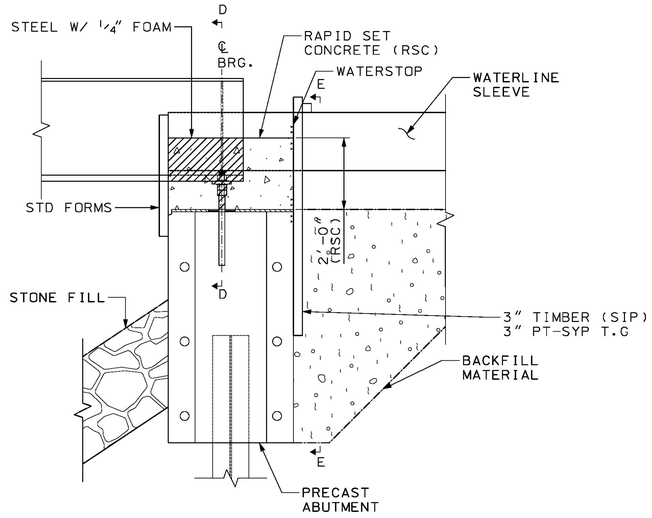

STAGE 2:

SCALE: ½" = 1'-0"

1. PLACE FOAM AS SHOWN AS WELL AS ON END OF GIRDER
2. ENCASE ALL STEEL AND ANCHOR BOLTS IN RAPID SET POUR W/ ¼" FOAM (ABUT. 2 ONLY)
3. PLACE FORMWORK, INSTALL REBAR, INSTALL WATERSTOP
4. POUR 2'-0"± OF RAPID SET CONCRETE

(NOTE: REBAR NOT SHOWN FOR CLARITY)

STEEL W/ ¼" FOAM (ABUT. 2 ONLY)

RAPID SET CONCRETE (RSC)

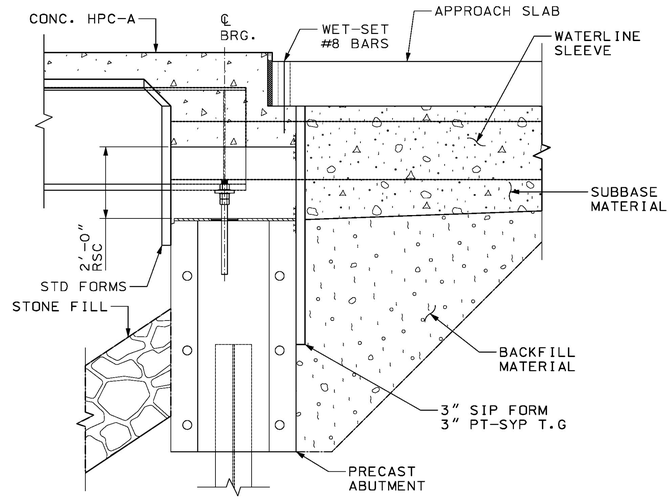

STAGE 3:

SCALE: ½" = 1'-0"

1. BACKFILL TO BOTTOM OF APPROACH SLAB W/ GBF'S AND SUBBASE MATERIALS
2. SET APPROACH SLAB
3. FORM AND POUR DECK

(NOTE: REBAR NOT SHOWN FOR CLARITY)

BACKFILL MATERIAL

SUBBASE MATERIAL

CONCRETE, HIGH PERFORMANCE CLASS A (HPC-A)

CALDERWOOD ENGINEERING, ETC.
STRUCTURAL ENGINEERING • DETAILING SERVICES
222 RIVER RD, RICHMOND, ME 04357 PH/FX (207)737-2007/(207) 737-2008

PREPARED FOR:
COLD RIVER BRIDGES, LLC

CEE 16-16-COLDRIVERBRIDGES
01-CS-LUDLOW

STATE OF VERMONT — ERIC T. CALDERWOOD — NO. 8711 — LICENSED PROFESSIONAL ENGINEER

8711
P.E. NUMBER

DATE

	BY	DATE
DESIGN-DETAILED	TDC	MAR 2017
CHECKED-REVIEWED		
REVISIONS 1	TDC	MAR 2017
REVISIONS 2		
REVISIONS 3		
REVISIONS 4		
FIELD CHANGES		

VE SUPER DESIGN
LUDLOW VT. BRF 025-1(42)

ABUTMENT DETAILS (3 OF 4)

SHEET NUMBER

46A

of 73

CALDERWOOD ENGINEERING, ETC. 222 River Road RICHMOND, ME 04357 PH (207) 737-2007 FAX (207) 737-2008

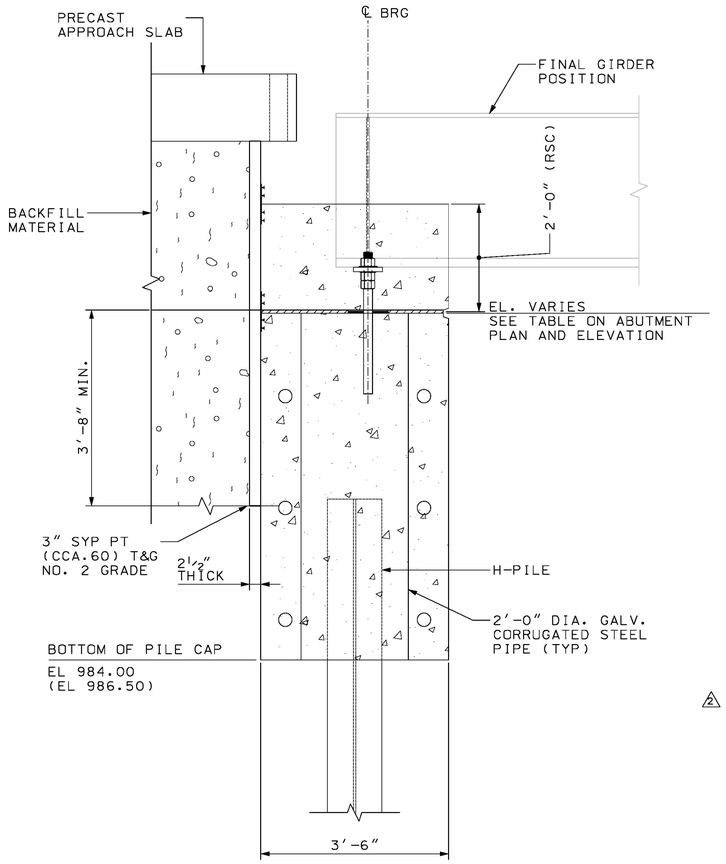

TEMPORARY TIMBER BACKWALL DETAIL

SCALE: 3/4" = 1'-0"

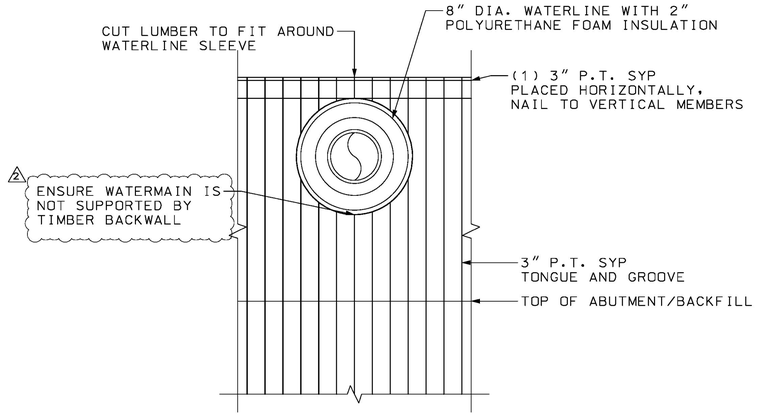

SECTION E-E (TIMBER BACKWALL @ WATERLINE)

SCALE: 1" = 1'-0"
NOTE: BACKFILL NOT SHOWN FOR CLARITY

2

NOTES

1. CONTRACTOR TO USE VISUALLY GRADED #2 SOUTHERN YELLOW PINE
2. MAX NOMINAL DIMENSIONS TO BE 3"X12"
3. MINIMUM IMBEDMENT OF LUMBER TO BE 3'-8"
4. LUMBER TO BE PLACED CONTINUOUSLY ALONG ABUTMENT
5. LUMBER NOT TO BE EMBEDED OR FASTENED TO THE ABUTMENT
6. LUMBER TO BE TONGUE AND GROOVE
7. COMPACTION OF SOIL BEHIND TIMBER BACKWALL TO VTRANS SPECIFICATIONS SECTION 300
8. PAYMENT FOR ALL FOAM AT GIRDER ENDS AND ON ANCHOR BOLTS SHALL BE SUBSIDIARY TO STRUCTURAL STEEL
9. FOAM SHALL BE CLOSED CELL POLYETHYLENE FOAM, ASTM D545-99
10. FOAM SHALL BE ATTACHED TO GIRDER ENDS AND ANCHOR BOLTS WITH GluDown CONSTRUCTION ADHESIVE

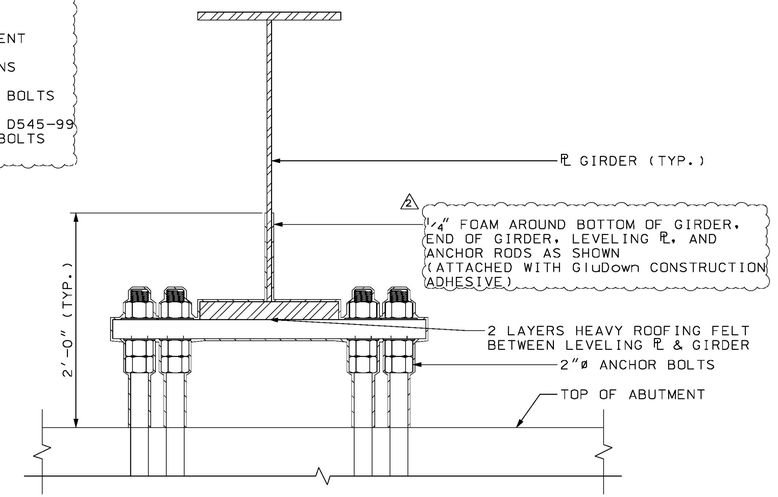

SECTION D-D (1/4" FOAM ON STEEL)

SCALE: 1 1/2" = 1'-0"
2 NOTE: FELT AND FOAM ON ABUTMENT 2 ONLY

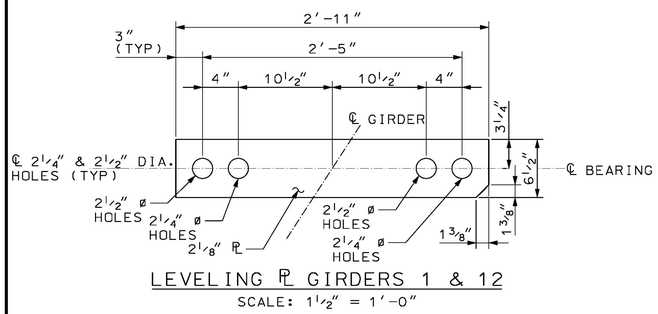

LEVELING ℄ GIRDERS 1 & 12

SCALE: 1 1/2" = 1'-0"

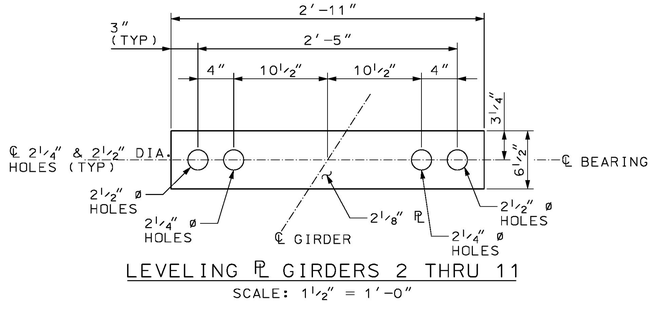

LEVELING ℄ GIRDERS 2 THRU 11

SCALE: 1 1/2" = 1'-0"

CALDERWOOD ENGINEERING, ETC.
STRUCTURAL ENGINEERING • DETAILING SERVICES
222 RIVER RD, RICHMOND, ME 04357 PH/FX (207)737-2007/(207) 737-2008

PREPARED FOR:
COLD RIVER BRIDGES, LLC

CEE 16-16-COLDRIVERBRIDGES
01-CS-LUDLOW

STATE OF VERMONT — ERIC T. CALDERWOOD — NO. 8711 — STUDENT — LICENSED — PROFESSIONAL ENGINEER

8/11

P.E. NUMBER

DATE

BY	DATE	
TDC	FEB 2017	DESIGN-DETAILED
TDC		CHECKED-REVIEWED
TDC	MAR 2017	REVISIONS 1
TDC	APR 2017	REVISIONS 2
		REVISIONS 3
		REVISIONS 4
		FIELD CHANGES

VE SUPER DESIGN
LUDLOW VT. BRF 025-1(42)

ABUTMENT DETAILS (3 OF 3)

SHEET NUMBER
46B
of 73

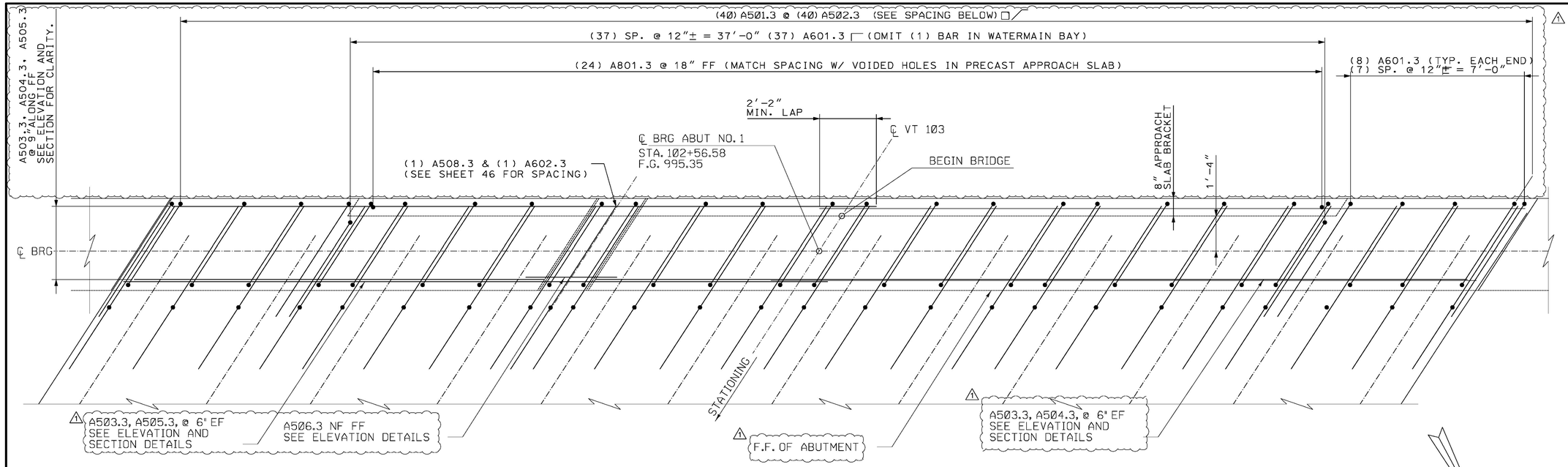

ABUTMENT NO. 1
DECK ABUTMENT CONNECTION REINFORCING PLAN
SCALE ½" = 1'-Ø"

NOTES:
1. ABUTMENT NO. 1 REINFORCING SHOWN. ABUTMENT NO. 2 REINFORCING SIMILAR.
2. ITEM 524.21, "JOINT SEALER, POLYURETHANE", SHALL BE APPLIED OVER THE CORK AND ON THE FAR FACE OF THE MATCH CAST VERTICAL CONSTRUCTION JOINTS.

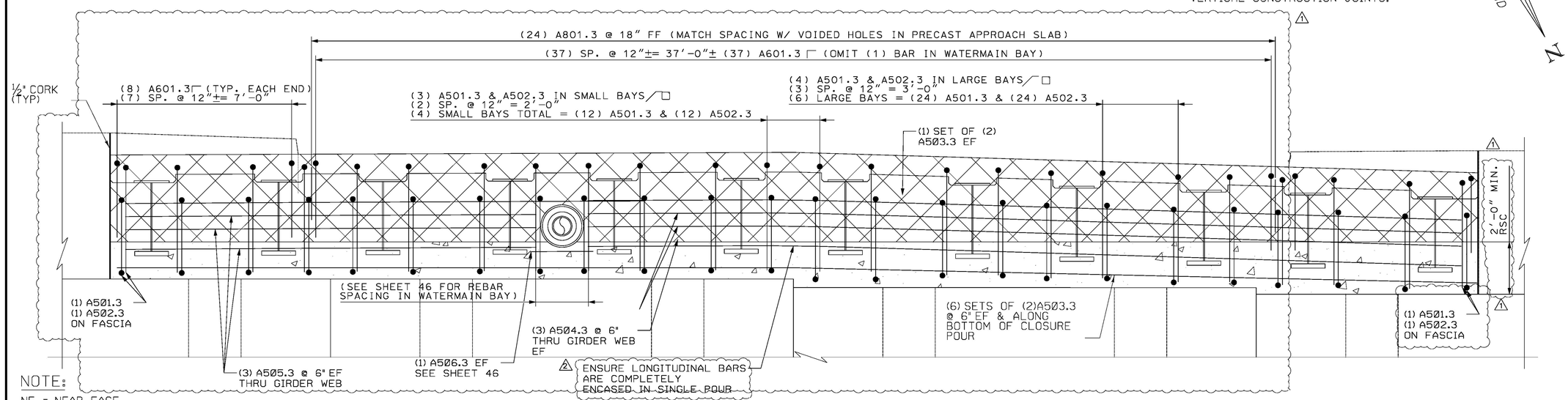

NOTE:
NF = NEAR FACE
FF = FAR FACE
EF = EACH FACE
▲ = CUT TO FIT IN FIELD
3" CLEAR, UNLESS OTHERWISE SPECIFIED ON THE PLANS.
2'-2" BAR LAP UNLESS OTHERWISE SPECIFIED ON THE PLANS.

501.33 CONCRETE (HIGH PERFORMANCE CLASS A)

SPECIAL PROVISION (HIGH PERFORMANCE CONCRETE, RAPID SET) (FPO)

ABUTMENT NO. 1
DECK ABUTMENT CONNECTION REINFORCING ELEVATION
SCALE ½" = 1'-Ø"

CALDERWOOD ENGINEERING, ETC.
STRUCTURAL ENGINEERING • DETAILING SERVICES
222 RIVER RD, RICHMOND, ME 04357 PH/FX (207)737-2007/(207) 737-2008

PREPARED FOR:
COLD RIVER BRIDGES, LLC

CEE 16-16-COLDRIVERBRIDGES
01-CS-LUDLOW

STATE OF VERMONT — ERIC T. CALDERWOOD — NO. 8711 — LICENSED PROFESSIONAL ENGINEER

P.E. NUMBER 8711

DATE

BY	DATE
TDC	JAN 2017
TDC	MAR 2017
TDC	APR 2017

DESIGN-DETAILED: TDC
CHECKED-REVIEWED:

REVISIONS 1
REVISIONS 2
REVISIONS 3
REVISIONS 4
FIELD CHANGES

VE SUPER DESIGN
LUDLOW VT. BRF 025-1(42)

DECK-ABUTMENT REINFORCEMENT

SHEET NUMBER
47
of 73

CALDERWOOD ENGINEERING, ETC. 222 River Road RICHMOND, ME 04357 PH. (207) 737-2007 FAX (207) 737-2008

STATE OF VERMONT
AGENCY OF TRANSPORTATION

REINFORCING STEEL SCHEDULE

ITEM	EACH	SIZE	LENGTH	MARK	TYPE	A	B	C	D	E	F	G	H	J	K	R	O
	WINGWALL NO. 1																
	26	5	7'- 4"	1W501.3	17		2'- 2"	3'- 0"	2'- 2"								
	2	5	7'- 7"	1W502.3	17		2'- 2"	3'- 3"	2'- 2"								
	2	5	7'- 11"	1W503.3	17		2'- 2"	3'- 7"	2'- 2"								
	6	5	6'- 8"	1W504.3	22		1'- 6"	3'- 7"	1'- 6"				1'- 3"	1'- 3"	0'- 10"	0'- -10"	
* ▲	30	5	5'- 0"	1W505.3	STR												
▲	11	5	14'- 3"	1W506.3	STR												
▲	7	5	14'- 6"	1W507.3	19		4'- 5"	10'- 1"	-- --				1'- 0"		4'- 4"		14'- 4"
	27	7	5'- 0"	1W701.3	STR												
	~~11~~	~~8~~	~~12'- 0"~~	~~1W801.3~~	~~STR~~												
	12	5	2'-6 1/2"	1P501.3	T1	0'-2"	0'-8"	0'-8"	0'-8"	0'-8"		0'-2"					
△1																	
	WINGWALL NO. 2																
▲	23	5	7'- 4"	2W501.3	17		2'- 2"	3'- 0"	2'- 2"								
	2	5	7'- 7"	2W502.3	17		2'- 2"	3'- 3"	2'- 2"								
	2	5	7'- 11"	2W503.3	17		2'- 2"	3'- 7"	2'- 2"								
	6	5	6'- 7"	2W504.3	22		1'- 6"	3'- 7"	1'- 6"				1'- 3"	1'- 3"	0'- 10"	0'- -10"	
▲	23	5	5'- 1"	2W505.3	STR												
* ▲	12	5	11'- 0"	2W506.3	STR												
▲	7	5	14'- 3"	2W507.3	19		3'- 5"	10'- 10"	-- --				1'- 5"		3'- 1"		14'- 3"
*	30	7	5'- 1"	2W701.3	STR												
	~~11~~	~~8~~	~~13'- 4"~~	~~2W801.3~~	~~STR~~												
	12	5	2'-6 1/2"	2P501.3	T1	0'-2"	0'-8"	0'-8"	0'-8"	0'-8"		0'-2"					
△1																	
	WINGWALL NO. 3																
	24	5	7'- 4"	3W501.3	17		2'- 2"	3'- 0"	2'- 2"								
	2	5	7'- 7"	3W502.3	17		2'- 2"	3'- 3"	2'- 2"								
	2	5	7'- 11"	3W503.3	17		2'- 2"	3'- 7"	2'- 2"								
	6	5	6'- 7"	3W504.3	22		1'- 6"	3'- 7"	1'- 6"				1'- 3"	1'- 3"	0'- 10"	0'- -10"	
* ▲	23	5	5'- 1"	3W505.3	STR												
▲	11	5	11'- 0"	3W506.3	STR												
▲	7	5	13'- 5"	3W507.3	19		3'- 6"	9'- 11"	-- --				0'- 8"		3'- 5"		13'- 5"
	30	7	5'- 1"	3W701.3	STR												
	~~11~~	~~8~~	~~13'- 4"~~	~~3W801.3~~	~~STR~~												
	12	5	2'-6 1/2"	3P501.3	T1	0'-2"	0'-8"	0'-8"	0'-8"	0'-8"		0'-2"					
△1																	
	WINGWALL NO. 4																
	25	5	7'- 4"	4W501.3	17		2'- 2"	3'- 0"	2'- 2"								
	2	5	7'- 7"	4W502.3	17		2'- 2"	3'- 3"	2'- 2"								
	2	5	7'- 11"	4W503.3	17		2'- 2"	3'- 7"	2'- 2"								
	6	5	6'- 8"	4W504.3	22		1'- 6"	3'- 7"	1'- 6"				1'- 3"	1'- 3"	0'- 10"	0'- -10"	
	30	5	5'- 0"	4W505.3	STR												
* ▲	12	5	14'- 3"	4W506.3	STR												
▲	7	5	14'- 6"	4W507.3	19		4'- 4"	10'- 2"	-- --				1'- 2"		4'- 1"		14'- 3"
▲	27	7	5'- 0"	4W701.3	STR												
*	~~11~~	~~8~~	~~12'- 0"~~	~~4W801.3~~	~~STR~~												
	12	5	6'-2 1/2"	4P501.3	T1	0'-2"	0'-8"	0'-8"	0'-8"	0'-8"		0'-2"					
△1																	
	SIDEWALK																
*	332	4	8'- 0"	SW401.3	S5	1'- 6"	2'- 0"	0'- 7"	2'- 5"			1'- 6"					
△1	56	5	28'- 0"	SW501.3	STR												

ITEM	EACH	SIZE	LENGTH	MARK	TYPE	A	B	C	D	E	F	G	H	J	K	R	O
△1	**DECK SLAB**																
	24	7	28'-0"	S701.3	STR												
	344	5	28'-0"	S501.3	STR												
	266	5	30'-0"	S502.3	STR												
	214	5	16'-10"	S503.3	STR												
	4	5	15'-11"	S504.3	STR												
	4	5	13'-4"	S505.3	STR												
	4	5	13'-7"	S506.3	STR												
	4	5	11'-0"	S507.3	STR												
	4	5	11'-3"	S508.3	STR												
	4	5	8'-9"	S509.3	STR												
	4	5	8'-11"	S510.3	STR												
	4	5	8'-5"	S511.3	STR												
	4	5	6'-7"	S512.3	STR												
	4	5	5'-8"	S513.3	STR												
	4	5	2'-11"	S514.3	STR												
	4	5	29'-7"	S515.3	STR												
	4	5	28'-5"	S516.3	STR												
	4	5	27'-3 1/4"	S517.3	STR												
	4	5	26'-1 1/2"	S518.3	STR												
	4	5	24'-11 1/2"	S519.3	STR												
	4	5	23'-9 3/4"	S520.3	STR												
	4	5	22'-7 3/4"	S521.3	STR												
	4	5	21'-6"	S522.3	STR												
	4	5	20'-4"	S523.3	STR												
	4	5	19'-2 1/4"	S524.3	STR												
	4	5	18'-0 1/4"	S525.3	STR												
	4	5	16'-10 1/2"	S526.3	STR												
	4	5	15'-8 1/2"	S527.3	STR												
	4	5	14'-6 3/4"	S528.3	STR												
	4	5	13'-5"	S529.3	STR												
	4	5	12'-3"	S530.3	STR												
	4	5	11'-1 1/4"	S531.3	STR												
	4	5	9'-11 1/2"	S532.3	STR												
	4	5	8'-9 1/2"	S533.3	STR												
	4	5	7'-7 3/4"	S534.3	STR												
	4	5	6'-5 3/4"	S535.3	STR												
	4	5	5'-4"	S536.3	STR												
	4	5	4'-2"	S537.3	STR												
	4	5	3'-0 1/4"	S538.3	STR												
	4	5	1'-10 1/4"	S539.3	STR												
	8	5	23'-8"	S540.3	STR												
	218	5	8'-5 3/4"	S541.3	S5	0'-9"	1'-1"	5'-6"	0'-7"			0'-10"					
	436	5	6'-7 1/2"	S542.3	17		5'-2"	0'-5"	1'-3"								
	ABUTMENT CAP																
	80	5	7'-8 1/4"	A501.3	19		2'-4 1/4"	5'-4 1/2"					1'-8"		1'-8"		7'-8 1/4"
	80	5	11'-6 1/2"	A502.3	T1	0'-2"	3'-1"	2'-8 1/4"	3'-1"	2'-8 1/4"		0'-2"					
	32	5	26'-11 1/4"	A503.3	STR												
	12	5	33'-3 1/2"	A504.3	STR												
	12	5	15'-7 3/4"	A505.3	STR												
	4	5	2'-4 1/4"	A506.3	STR												
	4	5	7'-6"	A507.3	T1	0'-2"	1'-10.5"	1'-10.5"	1'-10.5"	1'-10.5"		0'-2"					
	2	5	4'-5"	A508.3	19		2'-4 1/4"	1'-11.25"									
	48	8	2'-0"	A801.3	STR												
	106	6	6'-4 1/4"	A601.3	17		2'-10"	3'-7"									
	2	6	5'-2"	A602.3	17		1'-8"	3'-7"									

~ NOTES ~

1. UNLESS OTHERWISE DESIGNATED, ALL BAR REINFORCEMENT FOR CONCRETE IN SIZES UP TO AND INCLUDING NO. 18 SHALL CONFORM TO THE REQUIREMENTS OF THE "SPECIFICATIONS FOR DEFORMED BILLET-STEEL BARS FOR CONCRETE REINFORCEMENT", AASHTO M 31 (ASTM A 615-SI). ALL BARS SHALL BE GRADE 60, UNLESS OTHERWISE DESIGNATED.
2. FOR TYPICAL BENDING DETAILS, RECOMMENDED PIN DIAMETER "D" OF BENDS AND HOOKS, AND OTHER STANDARD PRACTICE, SEE CURRENT CONCRETE REINFORCING STEEL INSTITUTE "MANUAL OF STANDARD PRACTICE".
3. BARS WHICH REQUIRE MORE ACCURATE BENDING THAN STANDARD PRACTICES SHOULD HAVE LIMITS INDICATED.
4. ALL DIMENSIONS ARE OUT TO OUT OF BAR EXCEPT "A" AND "G" ON STANDARD 180 DEGREE AND 135 DEGREE HOOKS.
5. "J" DIMENSION ON 180 DEGREE HOOKS TO BE SHOWN ONLY WHERE NECESSARY TO RESTRICT HOOK SIZE. OTHERWISE, STANDARD HOOKS ARE TO BE USED.
6. "H" DIMENSION ON STIRRUPS TO BE SHOWN ONLY WHEN NECESSARY TO MAINTAIN CLEARANCES.
7. WHERE SLOPE DIFFERS FROM 45 DEGREES, DIMENSIONS "H" AND "K" MUST BE SHOWN.
8. ▲ DENOTES BARS TO BE CUT IN FIELD.
9. * DENOTES ONE EXTRA BAR ADDED FOR TESTING PURPOSES.
10. △ DENOTES TWO EXTRA BARS ADDED FOR TESTING PURPOSES.
11. E IN BAR MARK PREFIX DENOTES EPOXY COATED REINFORCING STEEL.

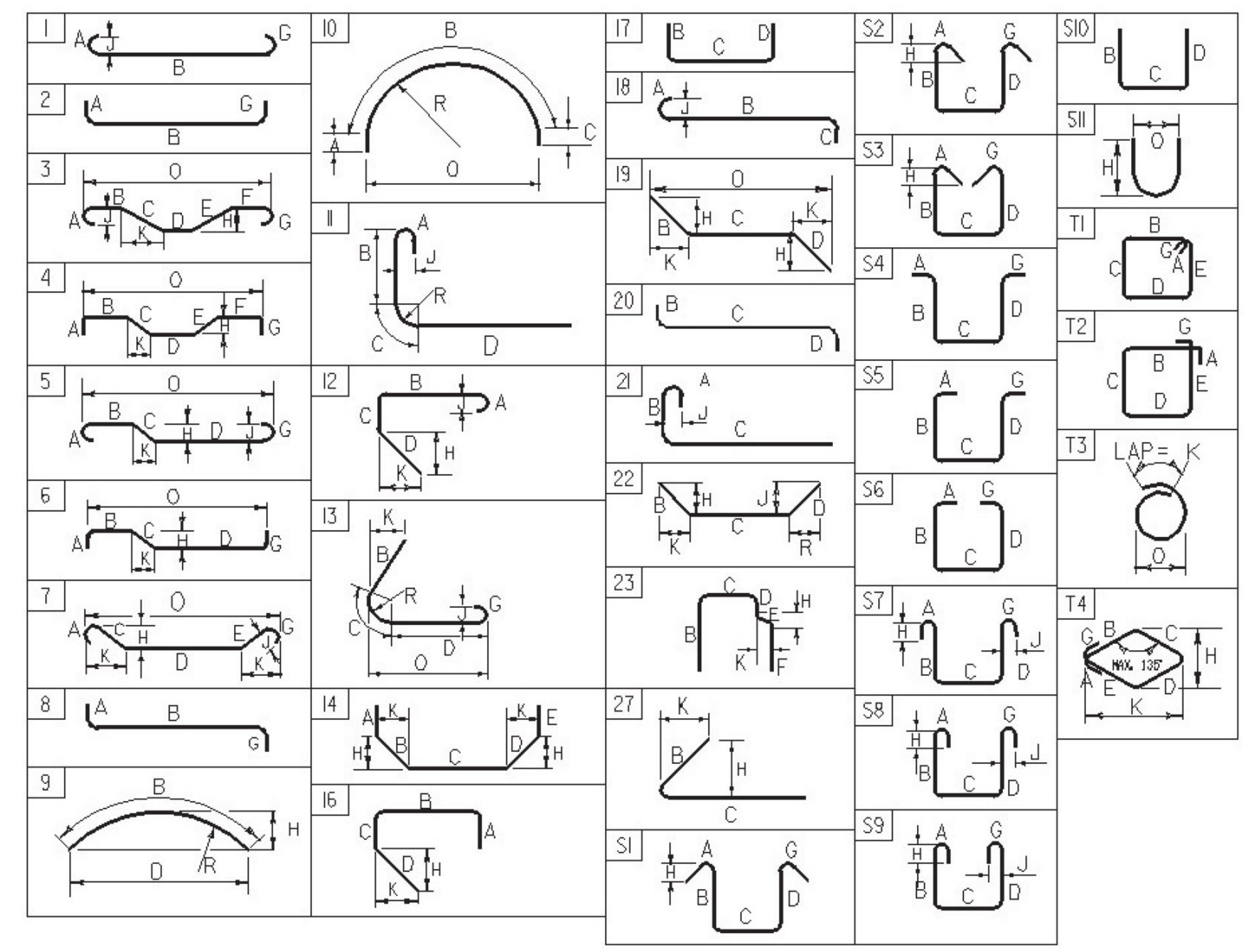

ASTM STANDARD REINFORCING BARS

BAR SIZE DESIGNATION	WEIGHT POUNDS PER FOOT	NOMINAL DIMENSIONS ROUND SECTION DIAMETER INCHES	AREA INCHES ^{2}	PERIMETER INCHES
#3	0.376	0.375	0.11	1.178
#4	0.668	0.500	0.20	1.571
#5	1.043	0.625	0.31	1.963
#6	1.502	0.750	0.44	2.356
#7	2.044	0.875	0.60	2.749
#8	2.670	1.000	0.79	3.142
#9	3.400	1.128	1.00	3.544
#10	4.303	1.270	1.27	3.990
#11	5.313	1.410	1.56	4.430
#14	7.65	1.693	2.25	5.32
#18	13.60	2.257	4.00	7.09

PROJECT NAME: LUDLOW
PROJECT NUMBER: BRF 025-1(42)
FILE NAME: z10j068rss.dgn
PLOT DATE: 5/11/2016
PROJECT MANAGER: A.P. GUYETTE
DRAWN BY: E.F. LAWES
DESIGNED BY: E.F. LAWES
CHECKED BY: R.H. BARNES
REINFORCING STEEL SCHEDULE SHEET #1
SHEET OF

CALDERWOOD ENGINEERING, ETC.
STRUCTURAL ENGINEERING • DETAILING SERVICES
222 RIVER RD, RICHMOND, ME 04357 PH/FX (207)737-2007/(207) 737-2008
PREPARED FOR:
COLD RIVER BRIDGES, LLC
CEE 16-16-COLDRIVERBRIDGES 01-CS-LUDLOW

P.E. NUMBER 8711
DATE

	BY	DATE
DESIGN-DETAILED	TDC	JAN 2017
CHECKED-REVIEWED	TDC	
REVISIONS 1	TDC	MAR 2017
REVISIONS 2		
REVISIONS 3		
REVISIONS 4		
FIELD CHANGES		

VE SUPER DESIGN
LUDLOW VT. BRF 025-1(42)
REINFORCING STEEL SCHEDULE

SHEET NUMBER
48
of 73

CALDERWOOD ENGINEERING 222 RIVER ROAD RICHMOND, ME 04357 PH. (207) 737-2007 FAX (207) 737-2008

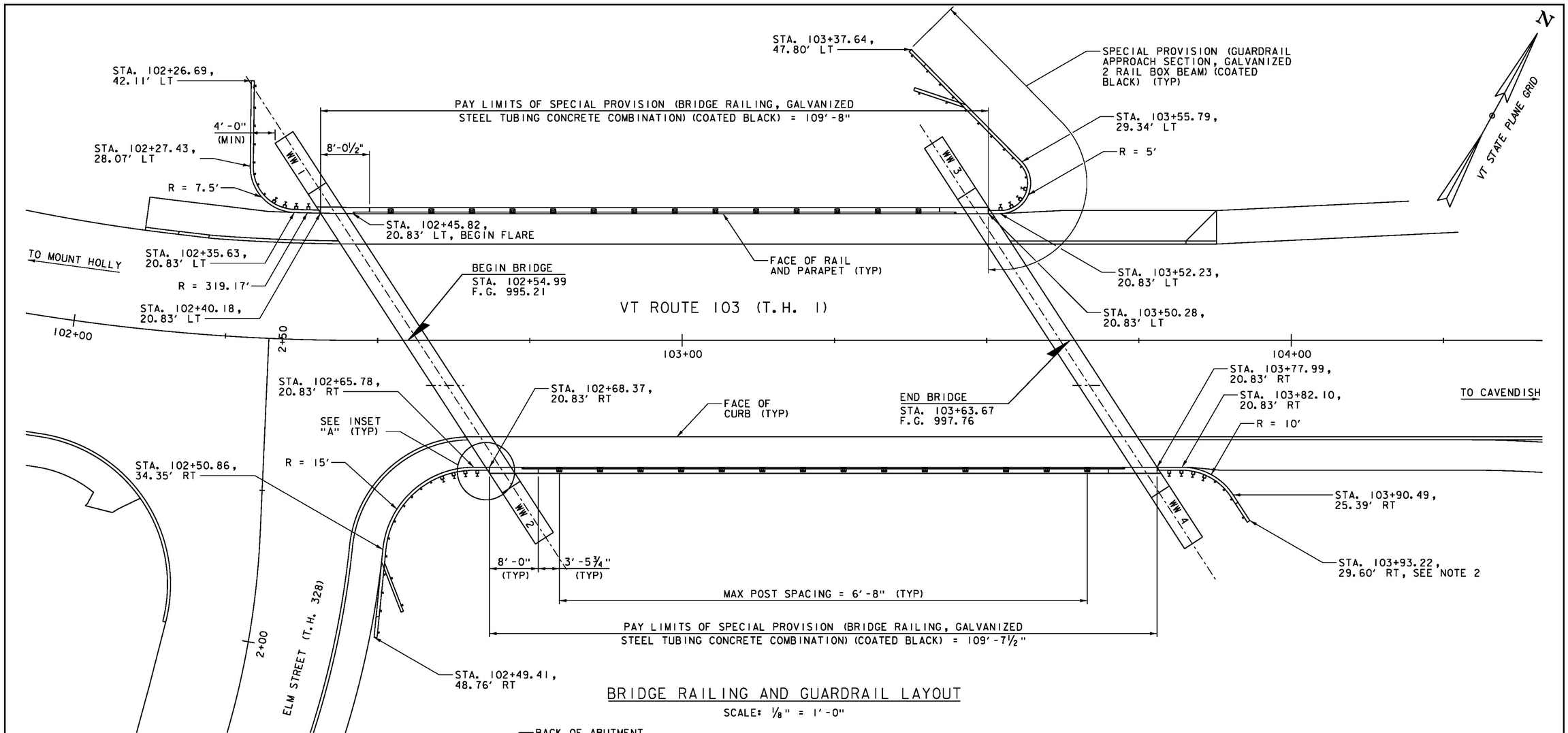

BRIDGE RAILING AND GUARDRAIL LAYOUT

SCALE: ⅛" = 1'-0"

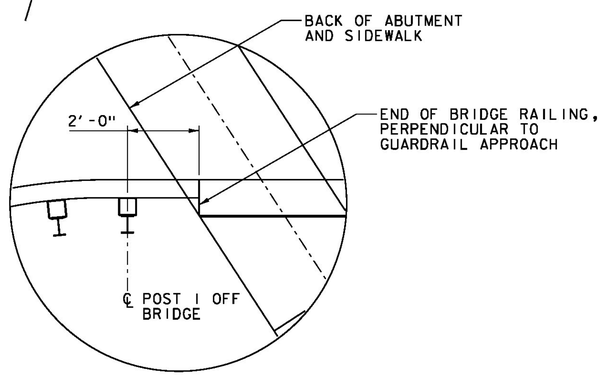

INSET "A"

NOT TO SCALE

NOTES:

1. SEE BRIDGE RAIL DETAILS SHEETS AND STANDARD G-1bM FOR FURTHER DETAILS.
2. GUARDRAIL APPROACH SECTION AT SOUTHEAST APPROACH SHALL BE MODIFIED TO BE SHORTER, SEE BRIDGE RAIL DETAILS SHEETS FOR FURTHER DETAILS.
3. ALL DIMENSIONS ARE MEASURED ALONG THE BACK FACE OF RAIL (CENTER TO CENTER POST SPACINGS).
4. APPROACH RAIL TO BE SHOP BENT FOR ALL RADII.
5. THE EXPANSION JOINT SHALL BE LOCATED A MINIMUM OF 25'-0" FROM EITHER END OF THE BRIDGE RAIL LIMITS.

PROJECT NAME: LUDLOW
PROJECT NUMBER: BRF 025-1(42)

FILE NAME: z10J068brail.dgn
PROJECT LEADER: A.P. GUYETTE
DESIGNED BY: R.H. BARNES
BRIDGE RAILING AND GUARDRAIL LAYOUT

PLOT DATE: 8/23/2016
DRAWN BY: R.H. BARNES
CHECKED BY: E.F. LAWES
SHEET 49 OF 73

VHB 57435

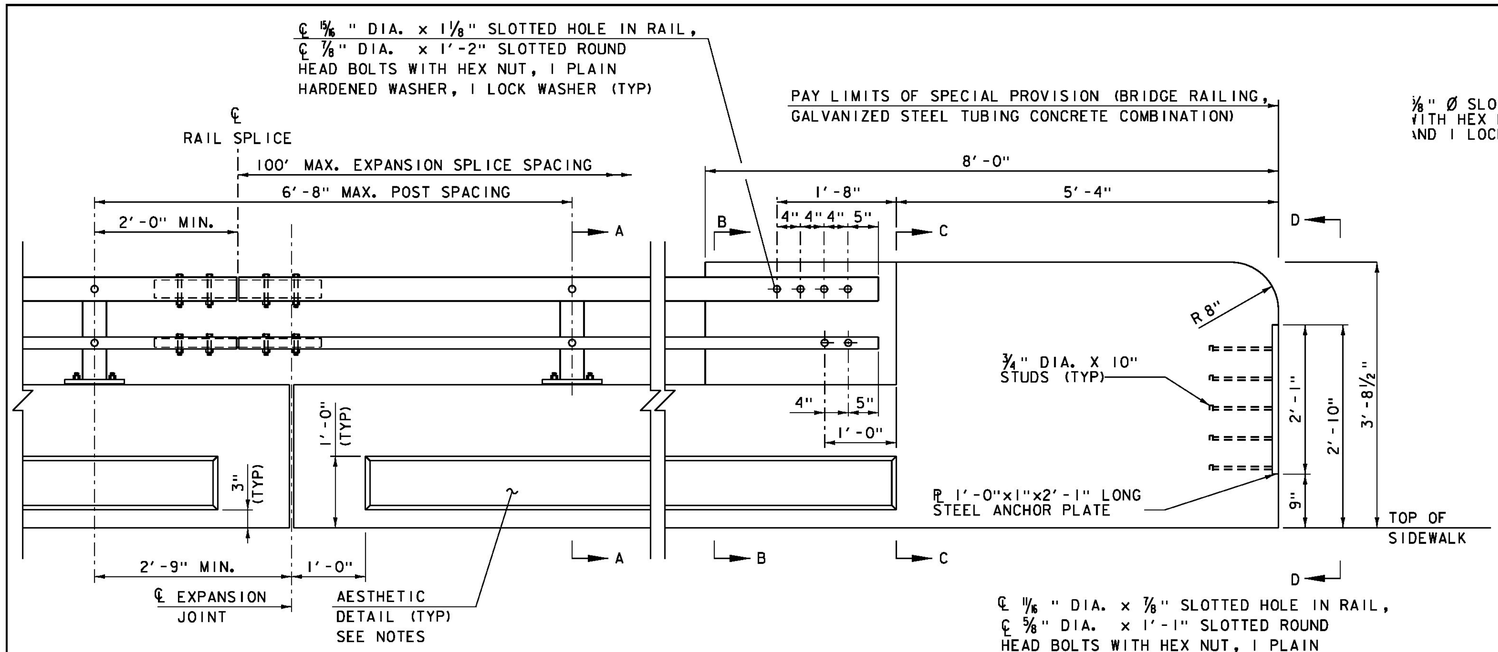

RAILING & END WALL APPROACH
SCALE 1" = 1'-0"

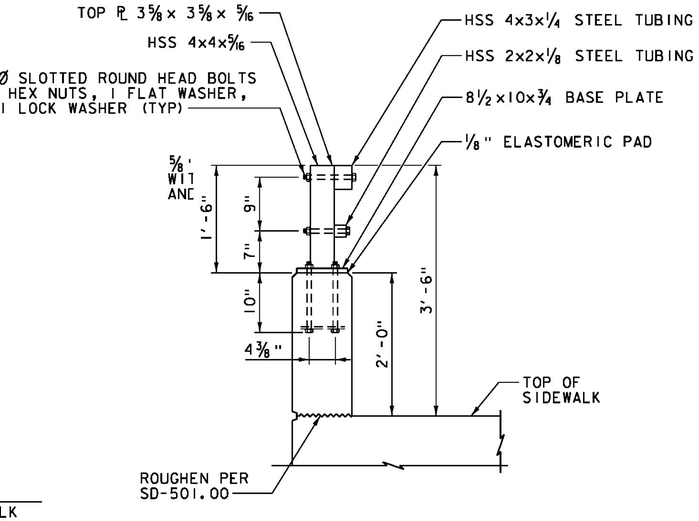

RAIL TYPICAL SECTION
SCALE 1" = 1'-0"

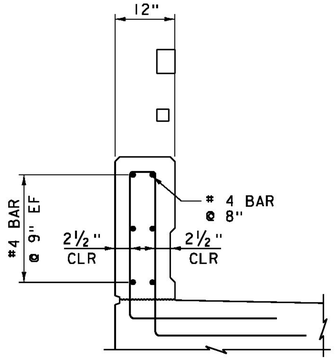

SECTION A-A
NOT TO SCALE

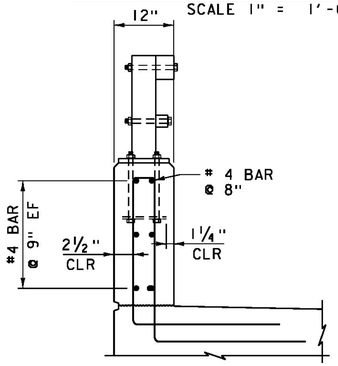

SECTION B-B
NOT TO SCALE

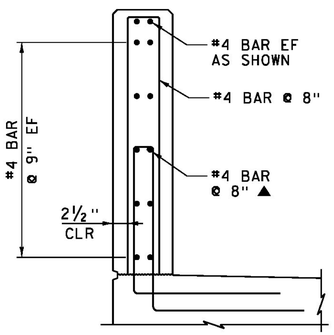

SECTION C-C
NOT TO SCALE

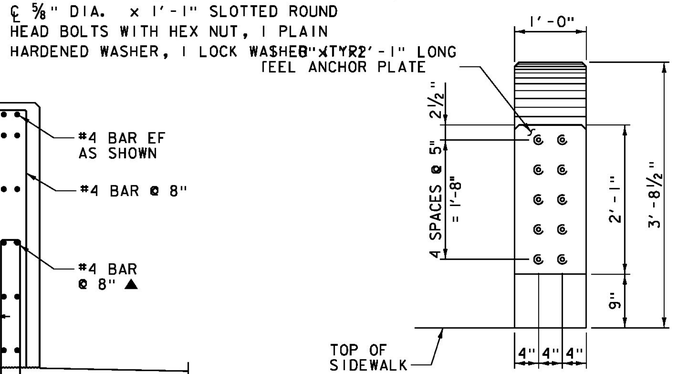

SHOWING EMBEDDED STUDS

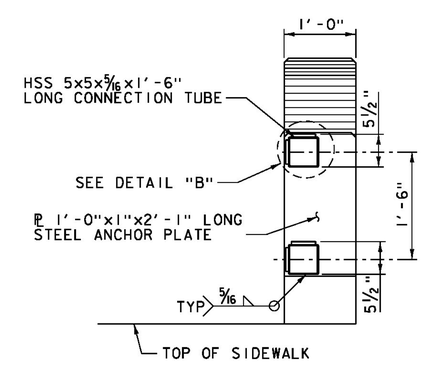

WITH HSS CONNECTOR TUBE

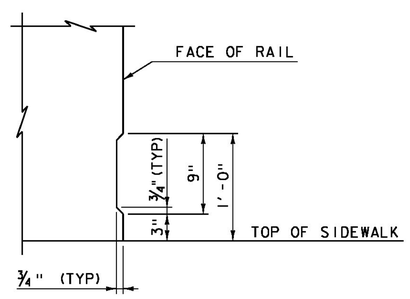

AESTHETIC TREATMENT DETAIL
SCALE 1 1/2" = 1'-0"

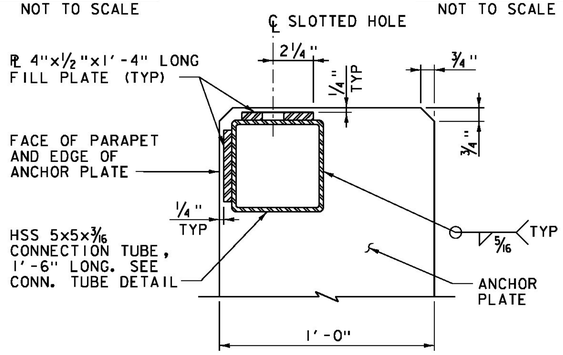

DETAIL B
SCALE 3" = 1'-0"

VIEW D-D

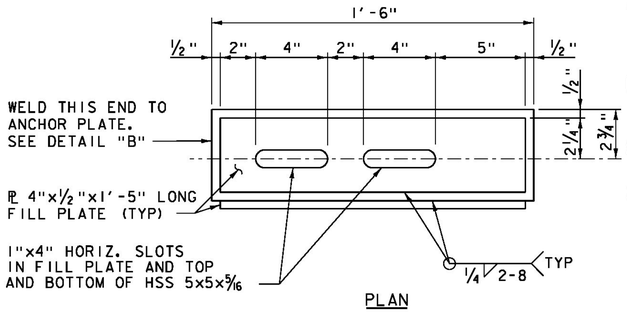

PLAN
CONNECTION TUBE DETAIL
SCALE 3" = 1'-0"

NOTE:

NF = NEAR FACE
FF = FAR FACE
EF = EACH FACE
▲ = CUT TO FIT IN FIELD
3" CLEAR, UNLESS OTHERWISE SPECIFIED ON THE PLANS.
2'-2" BAR LAP UNLESS OTHERWISE SPECIFIED ON THE PLANS.

NOTES:

1. SEE STANDARDS S-352B AND S-352C FOR STEEL TUBING SPLICE DETAILS AND RAIL POST BASE PLATE DETAILS.
2. THIS RAILING MEETS THE REQUIREMENTS FOR NCHRP REPORT 350 TL-4 SERVICE LEVEL.
3. ALL EXPOSED STEEL COMPONENTS TO BE PAINTED BLACK.

PROJECT NAME:	LUDLOW
PROJECT NUMBER:	BRF 025-1(42)
FILE NAME: z10J068brail_dt.dgn	PLOT DATE: 8/23/2016
PROJECT LEADER: A.P. GUYETTE	DRAWN BY: J.L. LEMIEUX
DESIGNED BY: S.E. BURBANK	CHECKED BY: A.P. GUYETTE
BRIDGE RAIL DETAILS (1 OF 4)	SHEET 50 OF 73

VHB 57435

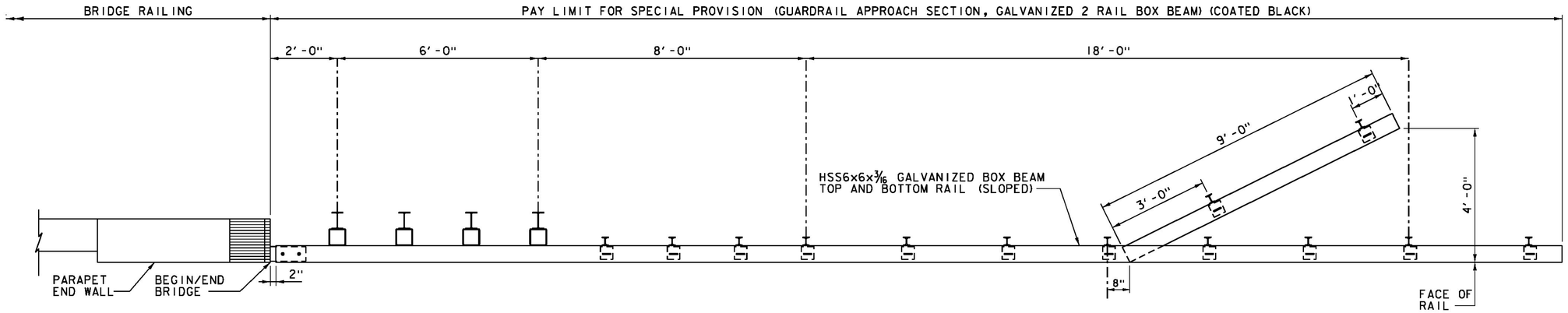

BOX BEAM APPROACH RAILING PLAN VIEW

N. T. S.

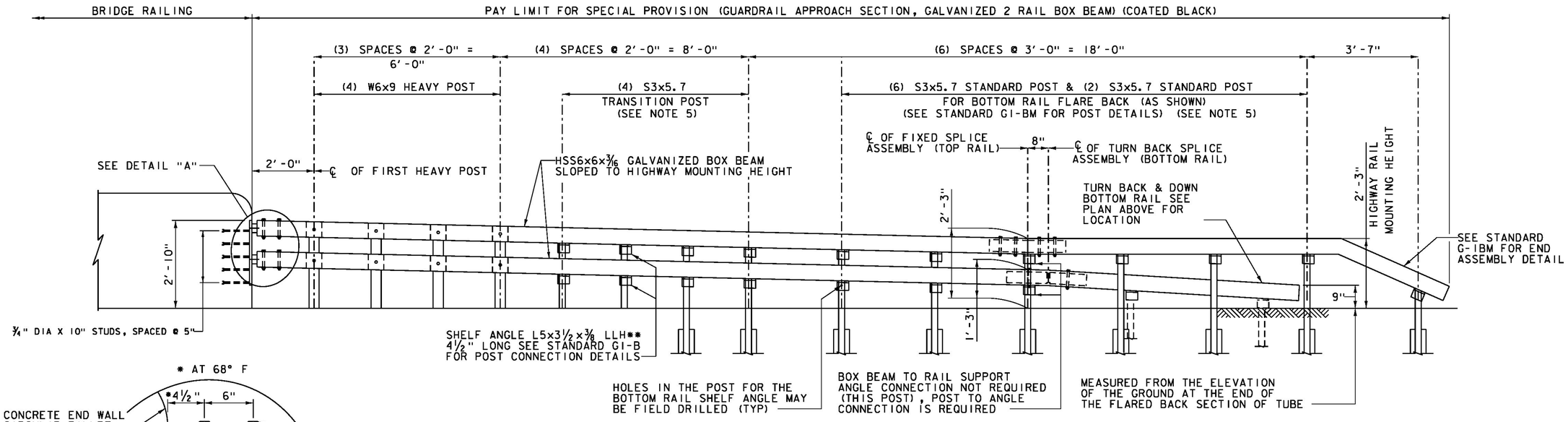

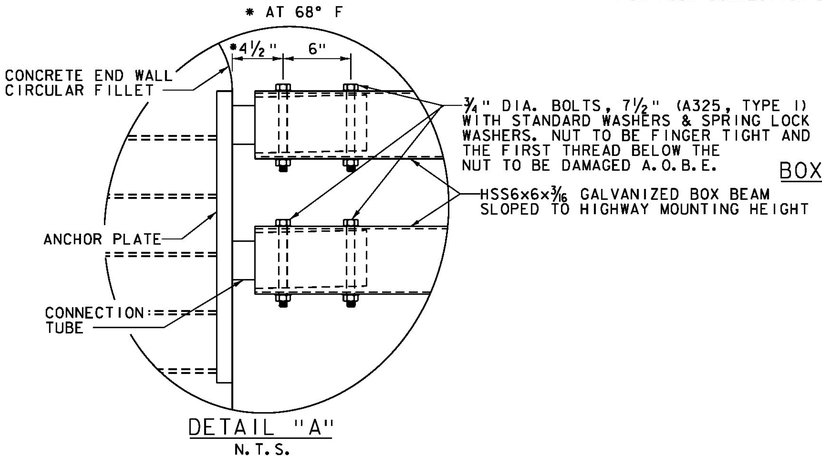

DETAIL "A"

N. T. S.

BOX BEAM APPROACH RAILING ELEVATION

N. T. S.

**LONG LEG HORIZONTAL

NOTES:

1. ALL STEEL COMPONENTS TO BE PAINTED BLACK.
2. SEE STANDARDS S-364C AND S-364D FOR FIXED SPLICE AND POST DETAILS.
3. SEE STANDARD G-1Bm FOR BOX BEAM RAIL AND POST DETAILS.
4. SEE BRIDGE RAIL DETAILS SHEET (1 OF 4) FOR ANCHOR PLATE AND CONNECTION TUBE DETAILS.
5. S3x5.7 SHALL MEET THE REQUIREMENTS OF 728.01(c).
6. RAILS ARE SHOWN STRAIGHT FOR CLARITY.

PROJECT NAME:	LUDLOW
PROJECT NUMBER:	BRF 025-1(42)

FILE NAME: z101068brail_dt.dgn	PLOT DATE: 8/23/2016
PROJECT LEADER: A.P. GUYETTE	DRAWN BY: R.H. BARNES
DESIGNED BY: S.E. BURBANK	CHECKED BY: A.P. GUYETTE
BRIDGE RAIL DETAILS (2 OF 4)	SHEET 51 OF 73

VHB 57435

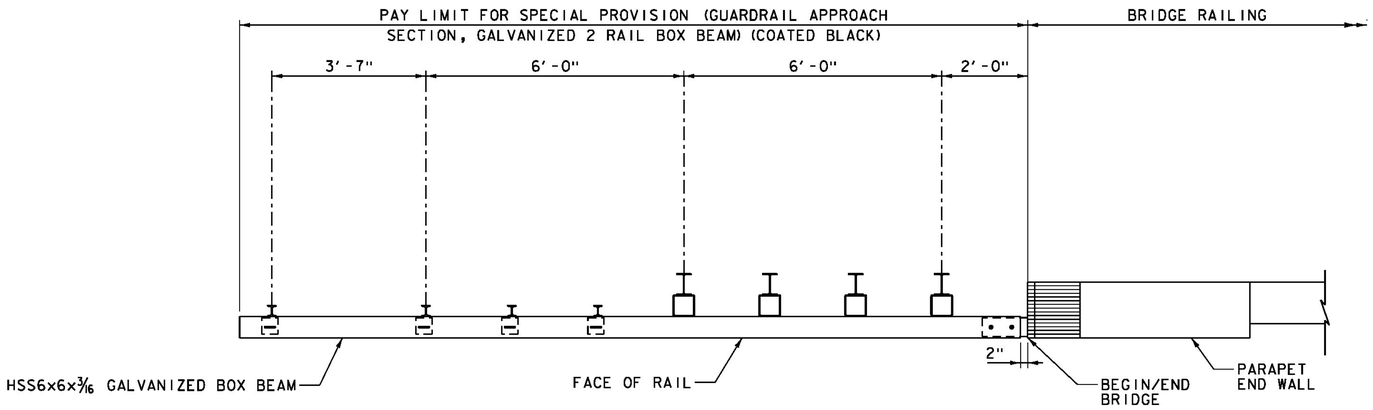

BOX BEAM APPROACH RAILING PLAN VIEW (SOUTHEAST APPROACH)

N.T.S.

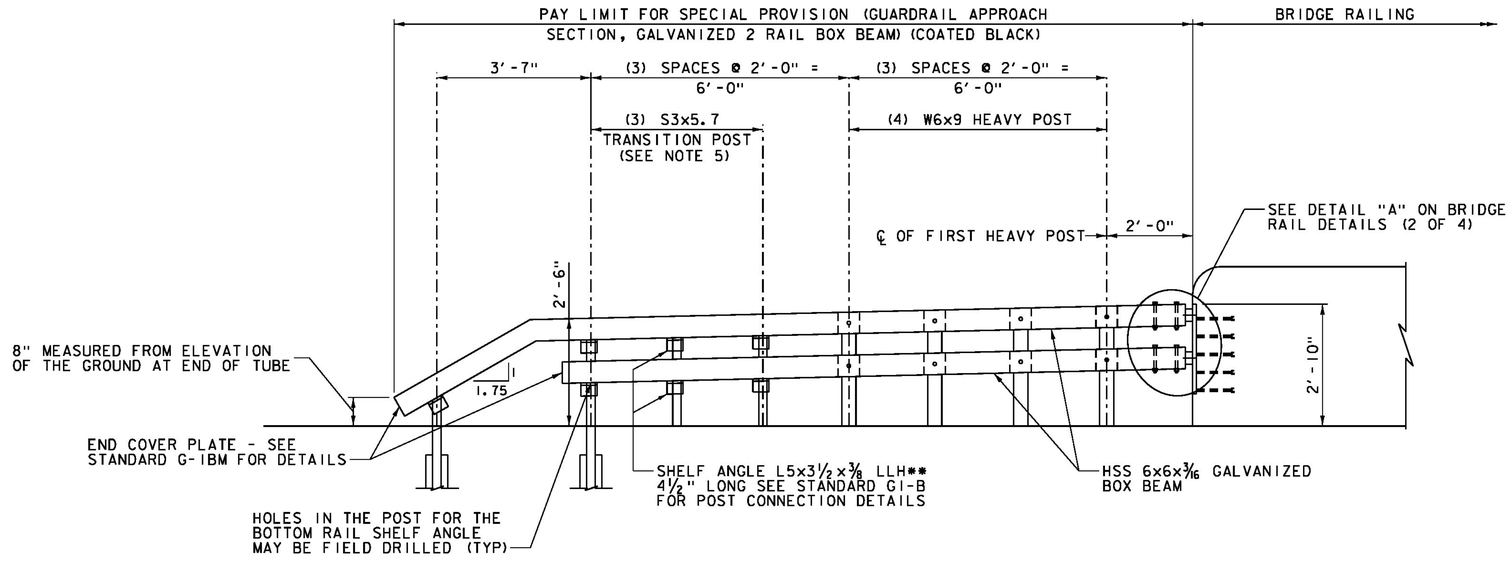

BOX BEAM APPROACH RAILING ELEVATION (SOUTHEAST APPROACH)

N.T.S.

NOTES:

1. ALL STEEL COMPONENTS TO BE PAINTED BLACK.
2. APPROACH RAIL TO BE SHOP BENT.
3. SEE BRIDGE RAIL DETAILS SHEET (1 OF 4) FOR ADDITIONAL DETAILS.
4. RAILS ARE SHOWN STRAIGHT FOR CLARITY.
5. S3x5.7 SHALL MEET THE REQUIREMENTS OF 728.01(c).

**LONG LEG HORIZONTAL

vhb

PROJECT NAME:	LUDLOW
PROJECT NUMBER:	BRF 025-1(42)
FILE NAME: z101068brail_dt.dgn	PLOT DATE: 8/23/2016
PROJECT LEADER: A.P. GUYETTE	DRAWN BY: R.H. BARNES
DESIGNED BY: S.E. BURBANK	CHECKED BY: A.P. GUYETTE
BRIDGE RAIL DETAILS (3 OF 4)	SHEET 52 OF 73

VHB 57435

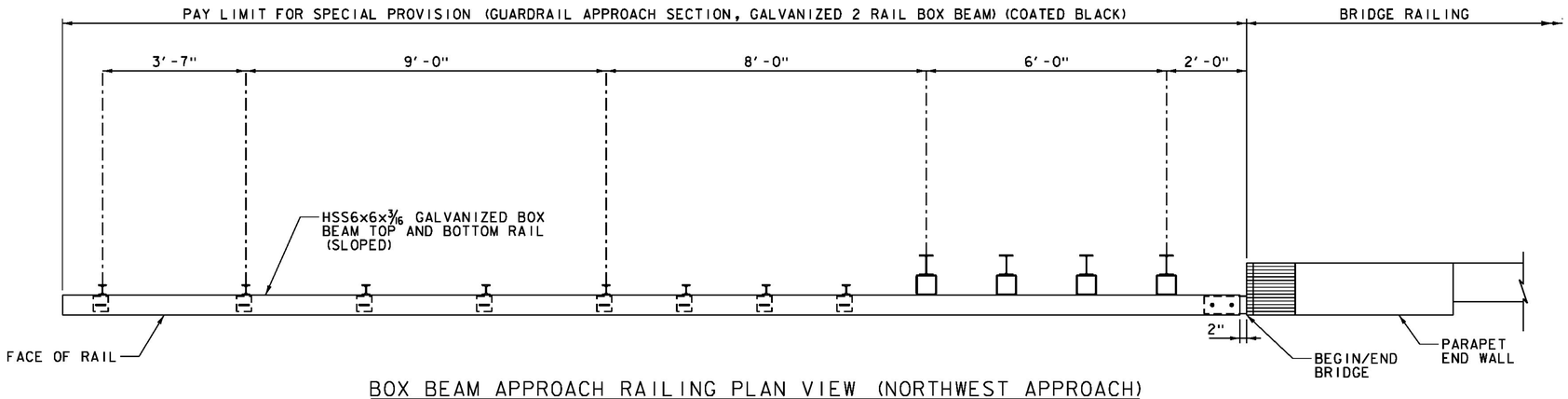

BOX BEAM APPROACH RAILING PLAN VIEW (NORTHWEST APPROACH)

N.T.S.

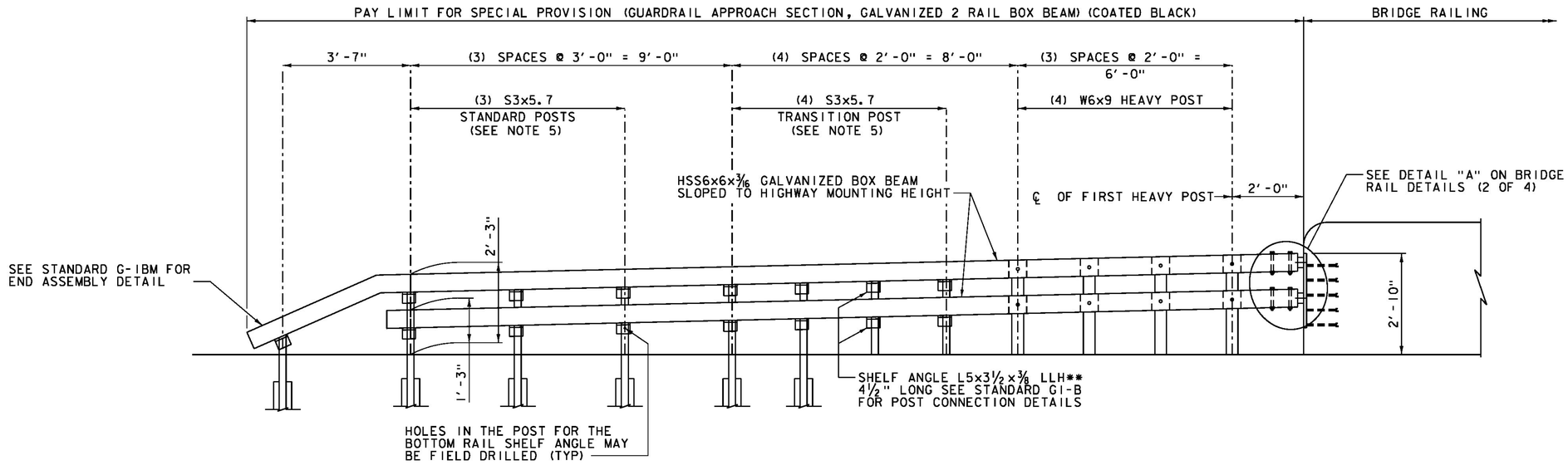

BOX BEAM APPROACH RAILING ELEVATION (NORTHWEST APPROACH)

N.T.S.

NOTES:

1. ALL STEEL COMPONENTS TO BE PAINTED BLACK.
2. APPROACH RAIL TO BE SHOP BENT.
3. SEE BRIDGE RAIL DETAILS SHEET (1 OF 4) FOR ADDITIONAL DETAILS.
4. RAILS ARE SHOWN STRAIGHT FOR CLARITY.
5. S3x5.7 SHALL MEET THE REQUIREMENTS OF 728.01(c).

**LONG LEG HORIZONTAL

PROJECT NAME:	LUDLOW
PROJECT NUMBER:	BRF 025-1(42)
FILE NAME: z101068brail_dt.dgn	PLOT DATE: 8/23/2016
PROJECT LEADER: A.P. GUYETTE	DRAWN BY: R.H. BARNES
DESIGNED BY: S.E. BURBANK	CHECKED BY: A.P. GUYETTE
BRIDGE RAIL DETAILS (4 OF 4)	SHEET 53 OF 73

VHB 57435

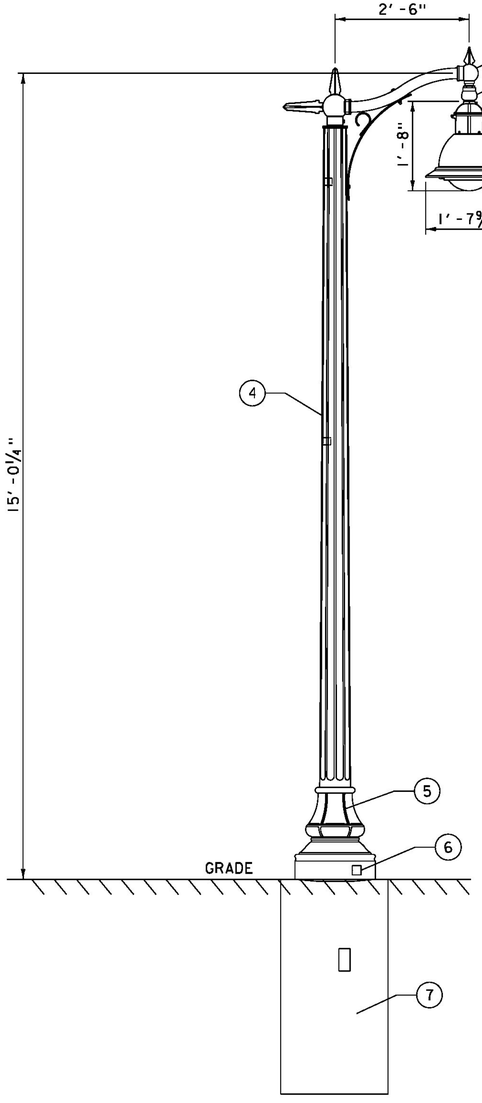

LUMINAIRE
NOT TO SCALE

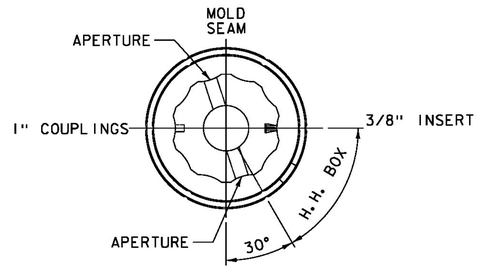

TOP VIEW

DESCRIPTION OF COMPONENTS:

1. LUMINAIRE: KING LUMINAIRE, CATALOGUE NO.: K729-P4SA-III-60(SSL)-7030-120:277V-KPL20.

   QUANTITY: 4 EA.

   OPTICAL SYSTEM: FLAT ARRAY, SAG LENS.

   IES CLASS: TYPE III.

   WATTAGE: 60W (7030 SERIES).

   LAMP: FLAT LED ARRAY (INCLUDED).

   CCT/DIODE: 4000K/HE5.

   LIGHT SOURCE: SOLID STATE LIGHTING.

   LINE VOLTAGE: 120:277V.

   PAINT: FOREST GREEN (MATCH EXISTING COLOR).

   OPTIONS: KPL-20 LEVELING DEVICE.
2. KPL10 LEVELING DEVICE (EXISTING) .
3. MODIFIED KA40-T-1 MINI-SCROLL ARM C/W DECORATIVE SCROLL (EXISTING).
4. POLE: KWC14-G-E51 C/W 140-25/30 S/F BA WASHINGTON COACHMAN SPUN CONCRETE POLE (EXISTING).
5. H.H. BOX AND COVERPLATE C/W GROUNDWIRE & ALLENHEAD SCREWS.
6. STD. SMALL NAMEPLATE.
7. CONCRETE FOUNDATION: SHALL BE CONSTRUCTED IN ACCORDANCE WITH VTRANS STANDARD DRAWING T-133.

NOTES:

1. THE CONTRACTOR SHALL REMOVE AND STOCKPILE EXISTING STREET LIGHTING MATERIALS FROM THE BRIDGE SITE. EXISTING POLES, BRACKET ARMS, LEVELING DEVICES, AND LUMINAIRES SHALL BE REMOVED AND STORED IN A SECURE LOCATION.
2. THE TOWN OF LUDLOW WILL SUPPLY A FOURTH POLE, BRACKET ARM, AND LEVELING DEVICE TO THE CONRACTOR FOR USE ON THE PROJECT.
3. EXISTING POLES, SCROLLL ARMS, AND LEVELING DEVICES SHALL BE RESET AT THE LOCATIONS INDICATED IN THESE PLANS.
4. THE WORK TO REMOVE, STOCKPILE, AND RESET LIGHTING ELEMENTS SHALL BE PAID FOR UNDER ITEM 679.25, REMOVING AND RESETTING LIGHT POLE.
5. NEW LIGHT POLE FOUNDATIONS SHALL BE CONSTRUCTED IN ACCORDANCE WITH VTRANS STANDARD DRAWING T-133. PAYMENT FOR EXCAVATION, BACKFILL, ANCHOR BOLTS, AND CONSTRUCTION OF THE NEW CONCRETE LIGHT FOUNDATION SHALL INCLUDED UNDER ITEM 679.25, REMOVING AND RESETTING LIGHT POLE.
6. NEW LUMINARIES AS SPECIFIED IN THESE PLANS SHALL BE INSTALLED ON EACH LIGHT POLE. THE LUMINARES SHALL BE MANUFACTURED BY KING LUMINAIRE.
7. EXISTING LUMINARES SHALL BECOME THE PROPERTY OF THE TOWN OF LUDLOW, VT AND DELIVERY TO THE TOWN SHALL BE COORDINATED THROUGH THE TOWN MANAGER.
8. WIRING FOR THE LUMINAIRE SHALL EXTEND FROM THE LUMINAIRE TO THE BASE OF THE POLE. THE COST FOR THE WIRING SHALL BE INCLUDED IN THE UNIT PRICE FOR ITEM 679.50, LUMINAIRE.
9. WIRING FROM THE POWER SOURCE TO THE BASE OF THE POLE SHALL BE DESIGNED AND SPECIFIED BY A QUALIFIED ELECTRICIAN. THE COST FOR WIRING FROM THE POWER SOURCE TO THE BASED OF THE POLE SHALL BE INCLUDED IN THE UNIT PRICE FOR ITEM 678.23, WIRED CONDUIT.
10. ALL EXPOSED HARDWARE SHALL BE STAINLESS STEEL.

vhb

PROJECT NAME: LUDLOW	
PROJECT NUMBER: BRF 025-1(42)	
FILE NAME: z10J0681lighting.dgn	PLOT DATE: 8/23/2016
PROJECT LEADER: A.P. GUYETTE	DRAWN BY: VHB
DESIGNED BY: STRESSCRETE GROUP	CHECKED BY: VHB
LIGHTING DETAILS	SHEET 54 OF 73

VHB 57435

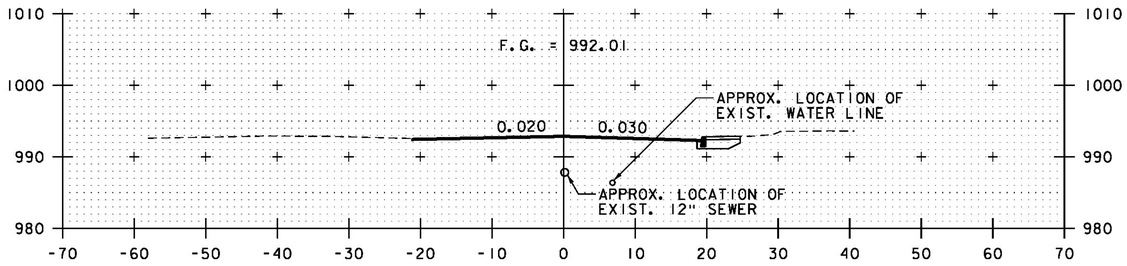

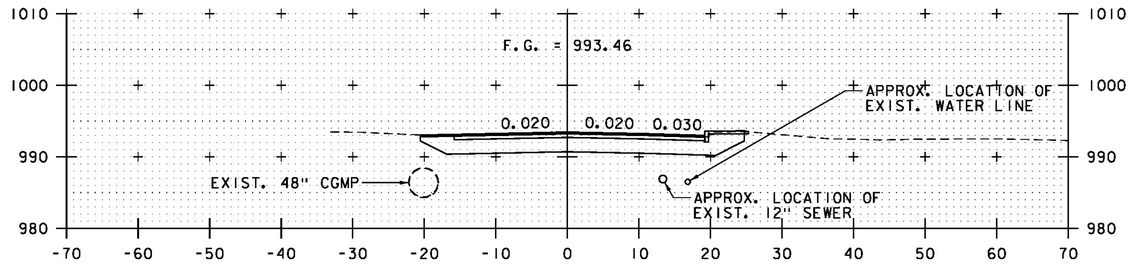

101+00

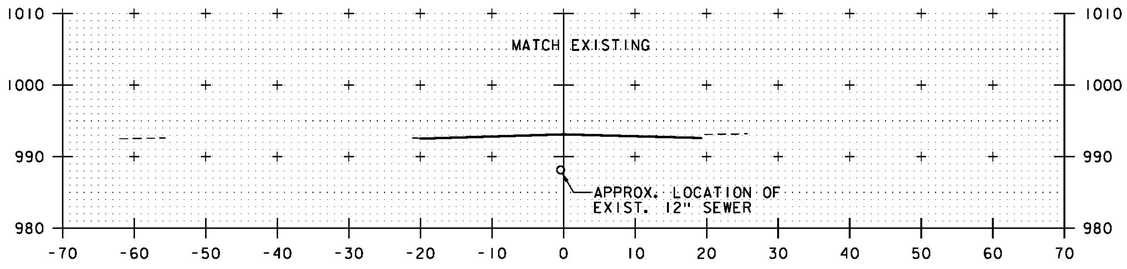

101+75
BEGIN PROJECT
STA. 101+52.50

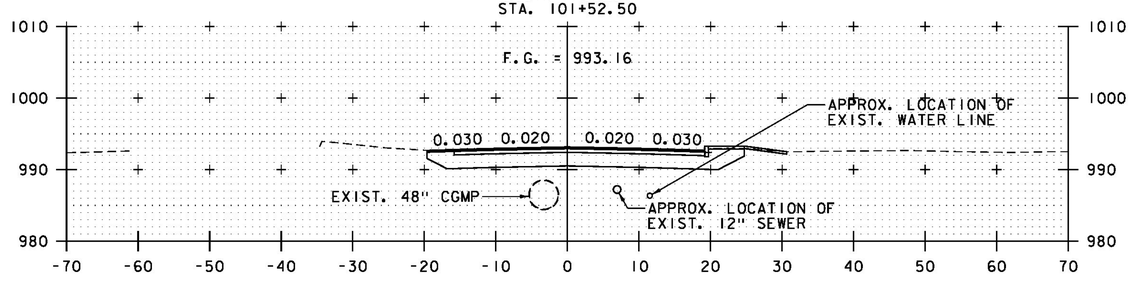

100+75
BEGIN APPROACH
STA. 100+75.00

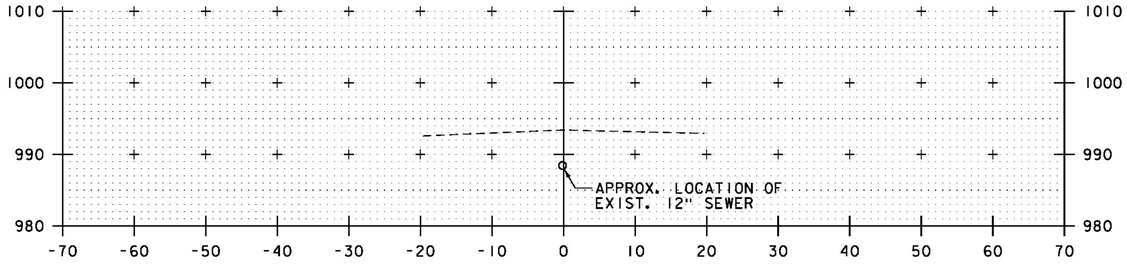

101+50

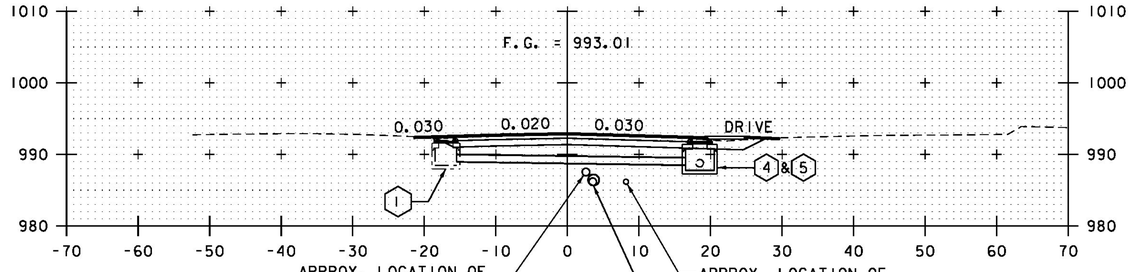

100+50

101+25

ROADWAY CROSS SECTIONS
STA. 100+50 - 101+75

PROJECT NAME:	LUDLOW
PROJECT NUMBER:	BRF 025-1(42)
FILE NAME: z10J068xsl.dgn	PLOT DATE: 8/23/2016
PROJECT LEADER: A.P. GUYETTE	DRAWN BY: E.F. LAWES
DESIGNED BY: E.F. LAWES	CHECKED BY: A.P. GUYETTE
ROADWAY CROSS SECTIONS (1 OF 4)	SHEET 55 OF 73

VHB 57435

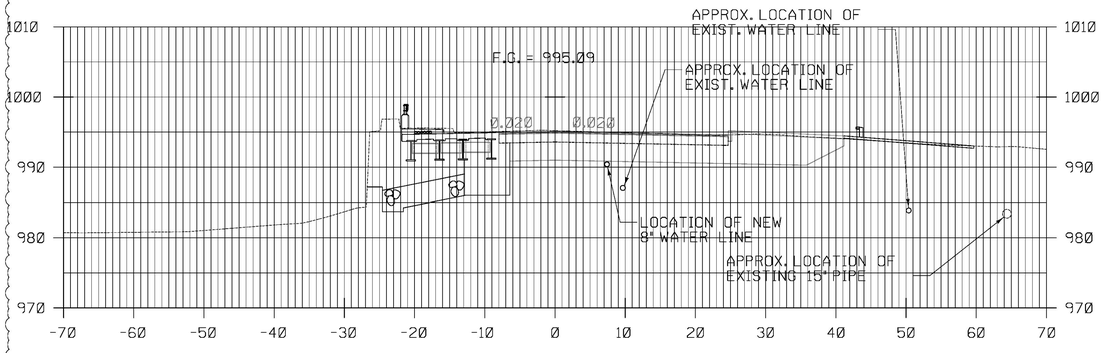

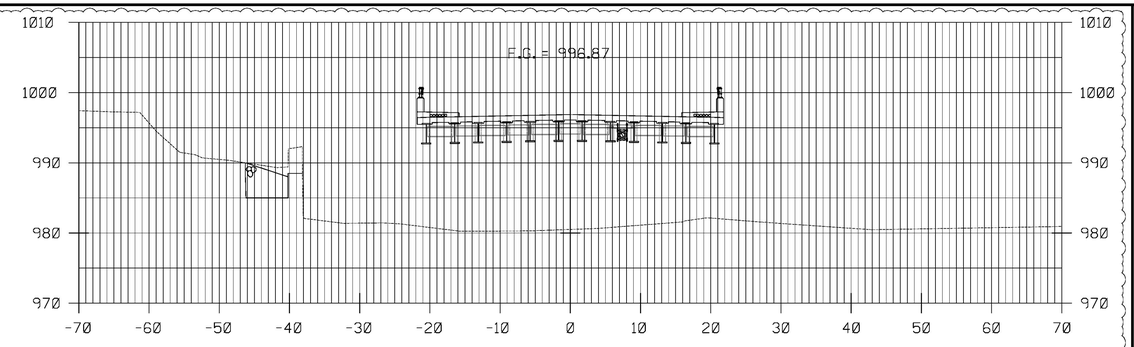

103+25

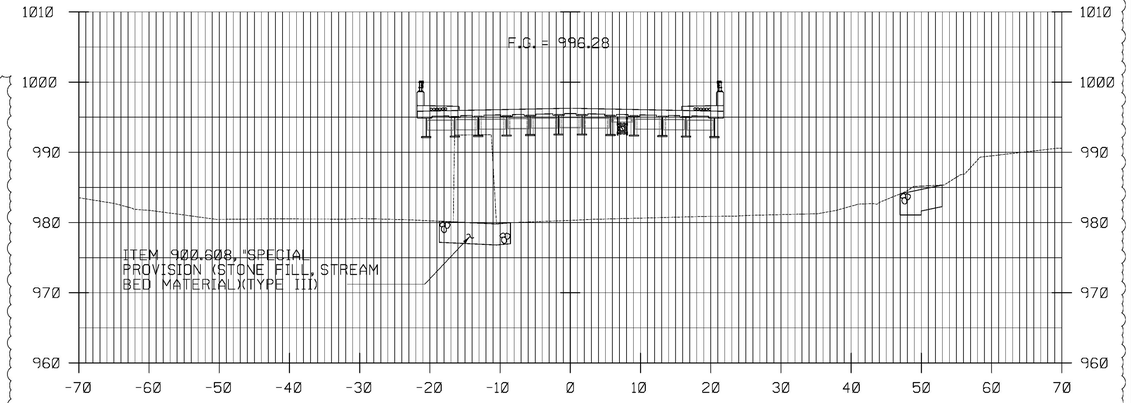

102+50

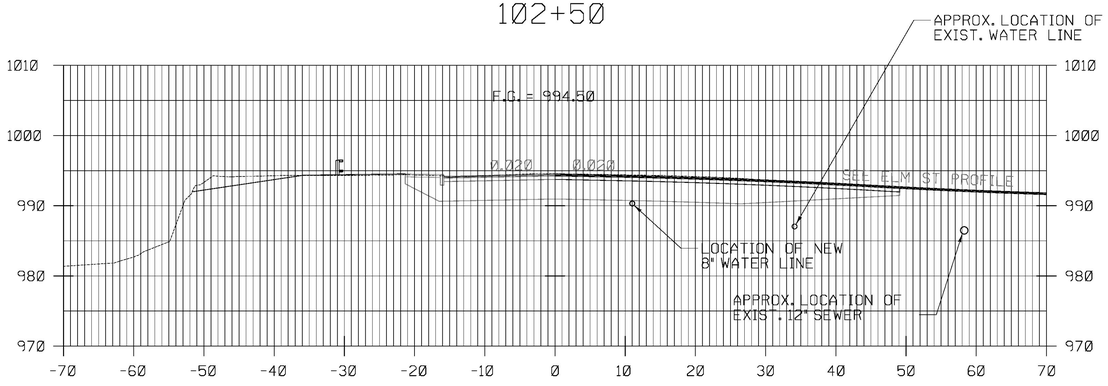

103+00

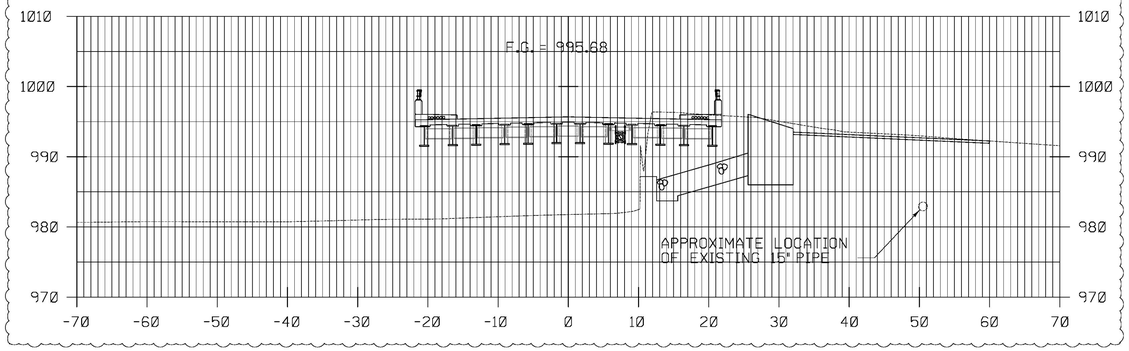

102+25

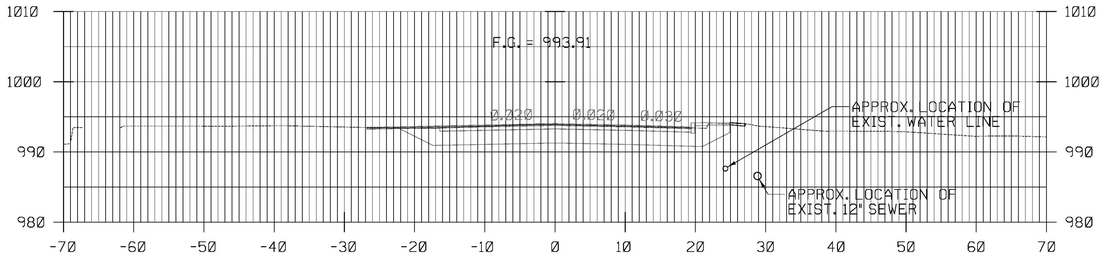

102+00

102+75
BEGIN BRIDGE
STA. 102+54.99

ROADWAY CROSS SECTIONS
STA. 102+00 - 103+25

CALDERWOOD ENGINEERING, ETC.
STRUCTURAL ENGINEERING • DETAILING SERVICES
222 RIVER RD, RICHMOND, ME 04357 PH/FX (207)737-2007/(207) 737-2008

PREPARED FOR:
COLD RIVER BRIDGES, LLC
CEE 16-16-COLDRIVERBRIDGES
01-CS-LUDLOW

STATE OF VERMONT
ERIC T. CALDERWOOD
NO. 8711
Structural
LICENSED
PROFESSIONAL ENGINEER

8711 P.E. NUMBER
DATE:

	BY	DATE
DESIGN-DETAILED	TDC	MAR 2017
CHECKED-REVIEWED		
REVISIONS 1		
REVISIONS 2		
REVISIONS 3		
REVISIONS 4		
FIELD CHANGES		

VE SUPER DESIGN
LUDLOW VT. BRF 025-1(42)

ROADWAY CROSS-SECTIONS (2 OF 4)

SHEET NUMBER
56
of 73

CALDERWOOD ENGINEERING, ETC.
222 RIVER ROAD
RICHMOND, ME 04357
PH. (207)737-2007 FAX (207)737-2008

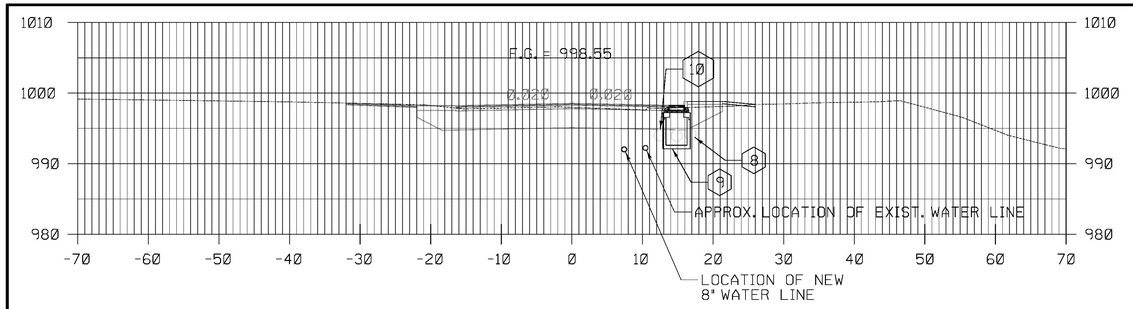

104+00

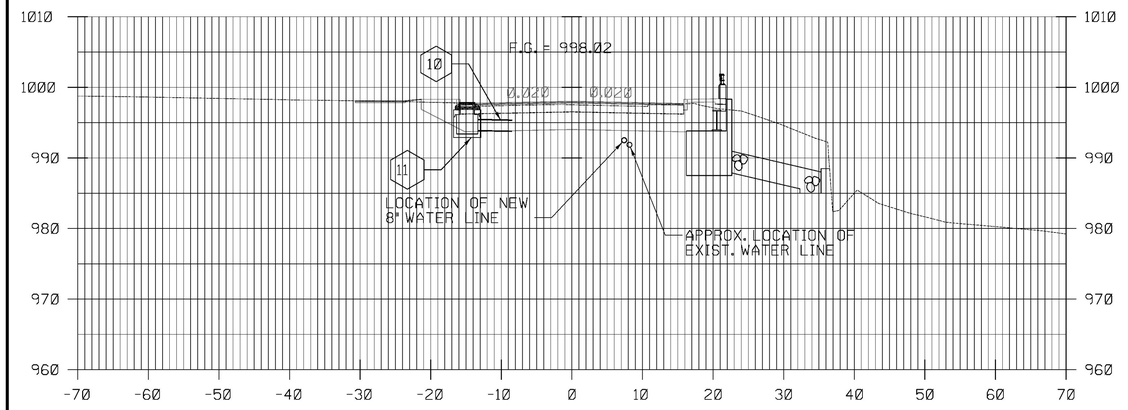

103+75
END BRIDGE
STA. 103+63.67

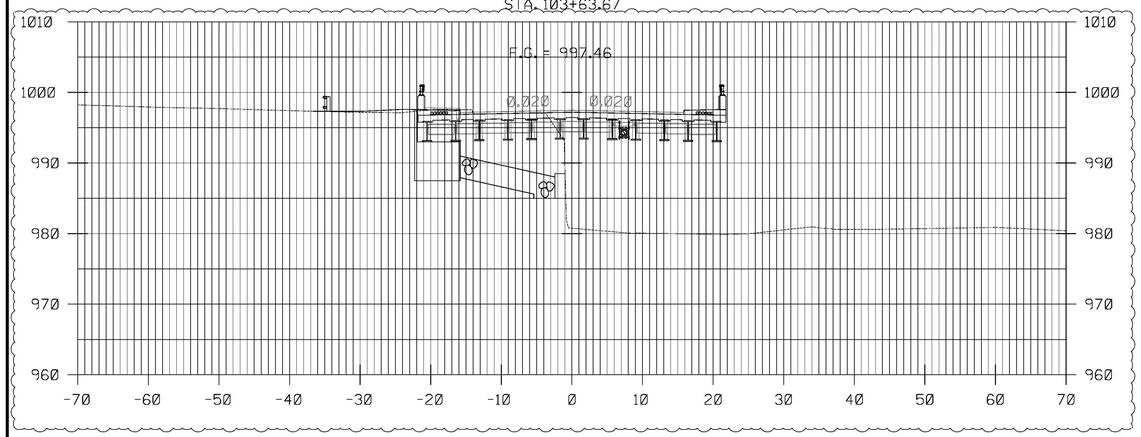

103+50

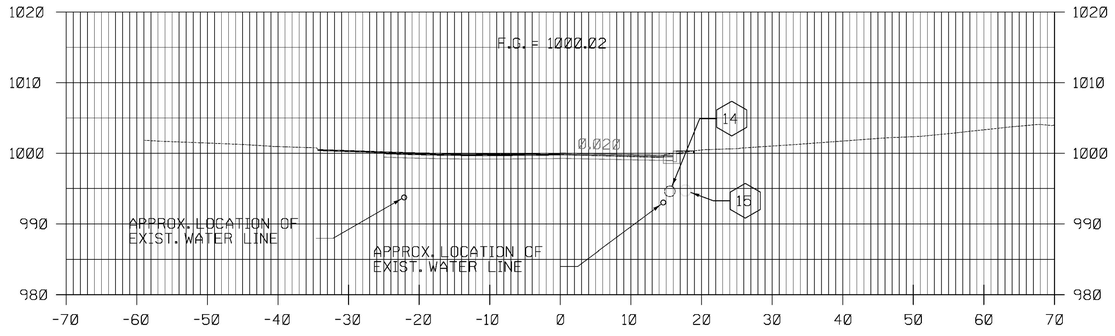

104+75

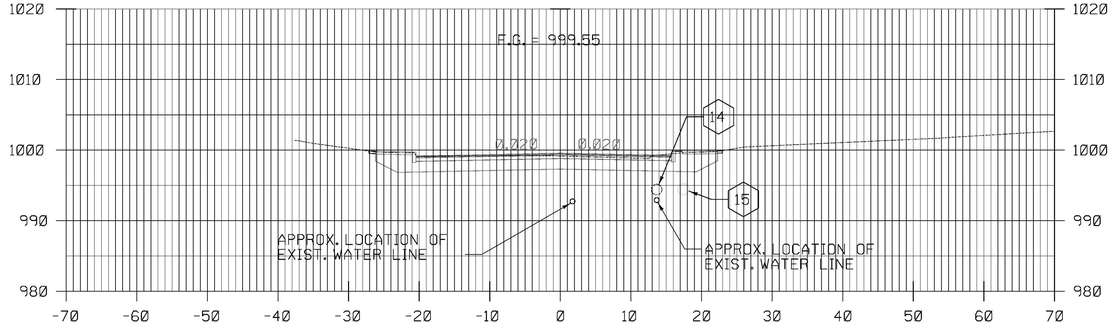

104+50
END PROJECT
STA. 104+37.50

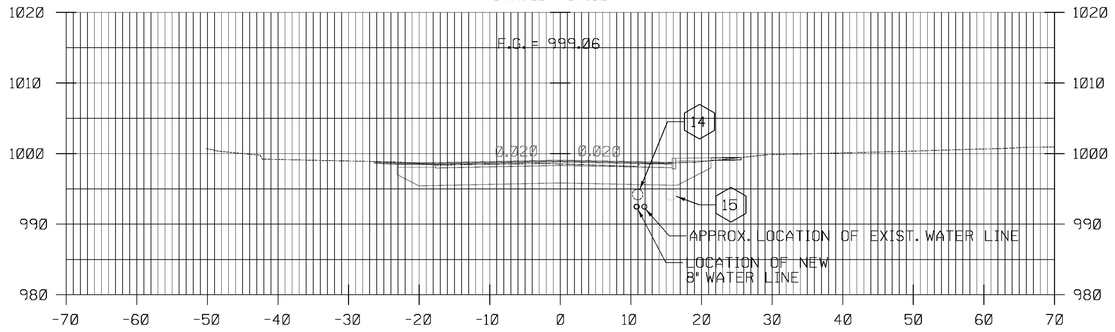

104+25

ROADWAY CROSS SECTIONS
STA. 103+50 - 104.75

CALDERWOOD ENGINEERING, ETC.
STRUCTURAL ENGINEERING • DETAILING SERVICES
222 RIVER RD, RICHMOND, ME 04357 PH/FX (207)737-2007/(207) 737-2008

PREPARED FOR:
COLD RIVER BRIDGES, LLC

CEE 16-16-COLDRIVERBRIDGES
01-CS-LUDLOW

STATE OF VERMONT
ERIC A. CALDERWOOD
NO. 8711
Structural
LICENSED
PROFESSIONAL ENGINEER

8711 P.E. NUMBER
DATE:

	BY	DATE
DESIGN-DETAILED		
CHECKED-REVIEWED		
REVISIONS 1	TDC	MAR 2017
REVISIONS 2		
REVISIONS 3		
REVISIONS 4		
FIELD CHANGES		

VE SUPER DESIGN
LUDLOW VT. BRF 025-1(42)

ROADWAY CROSS-SECTIONS (3 OF 4)

SHEET NUMBER
57
of 73

CALDERWOOD ENGINEERING, ETC.
STRUCTURAL ENGINEERING • DETAILING SERVICES
222 RIVER ROAD
RICHMOND, ME 04357
PH. (207) 737-2007 FAX (207) 737-2008

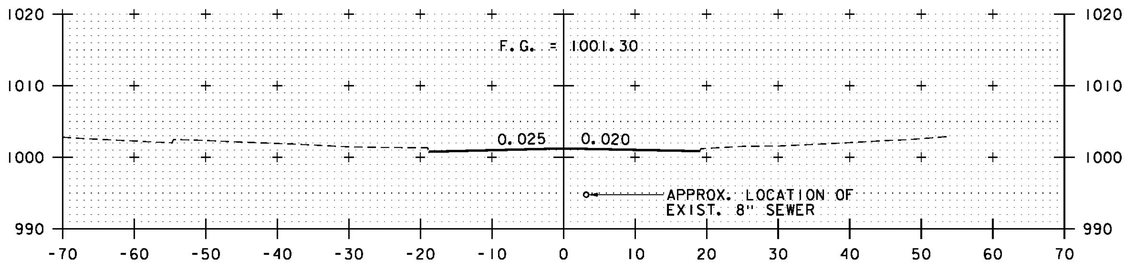

105+50

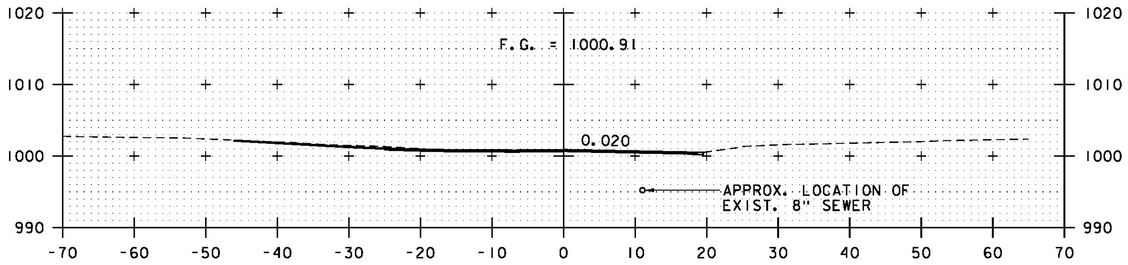

105+25

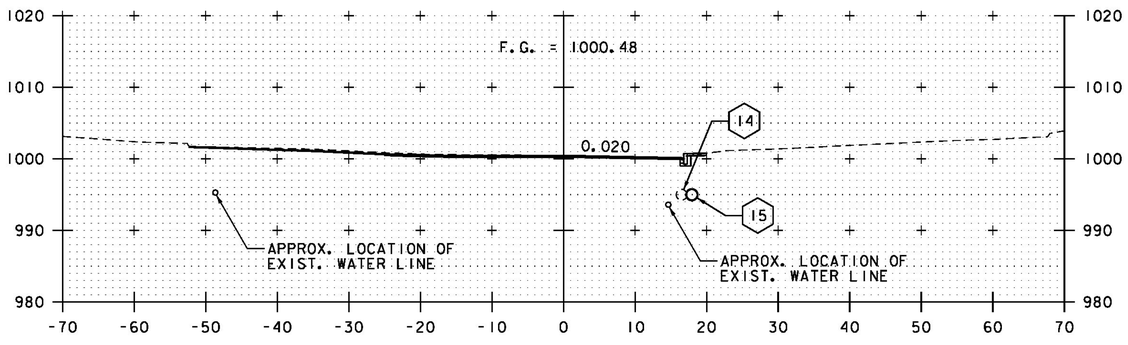

105+00

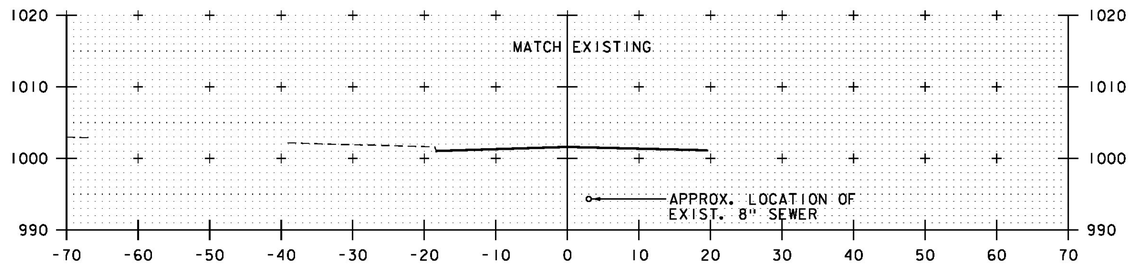

105+75
END APPROACH
STA. 105+75.00

ROADWAY CROSS SECTIONS
STA. 105+00 - 105+75

vhb

PROJECT NAME:	LUDLOW
PROJECT NUMBER:	BRF 025-1(42)
FILE NAME: z10J068xsl.dgn	PLOT DATE: 8/23/2016
PROJECT LEADER: A.P. GUYETTE	DRAWN BY: E.F. LAWES
DESIGNED BY: E.F. LAWES	CHECKED BY: A.P. GUYETTE
ROADWAY CROSS SECTIONS (4 OF 4)	SHEET 58 OF 73

VHB 57435

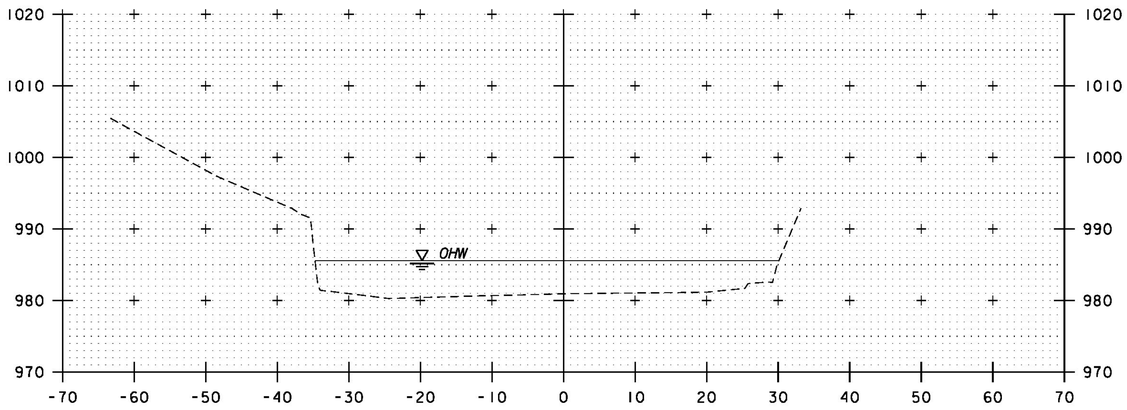

10+25

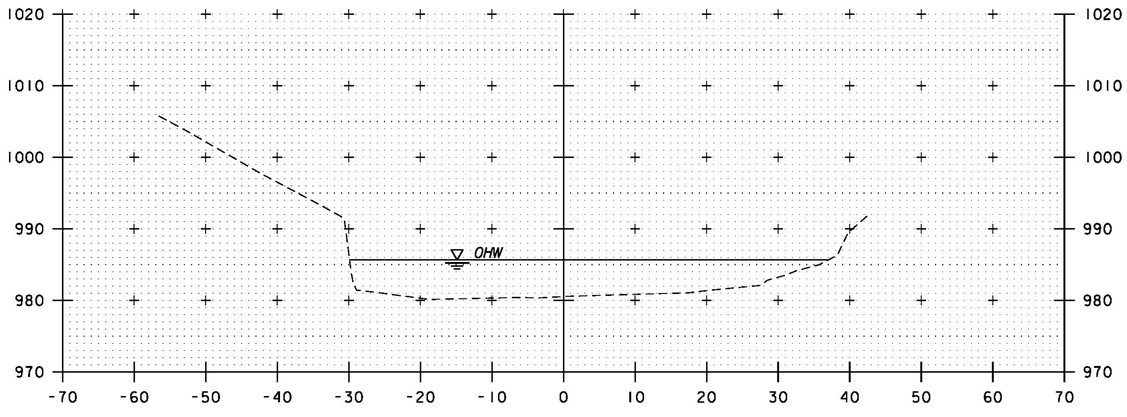

10+00

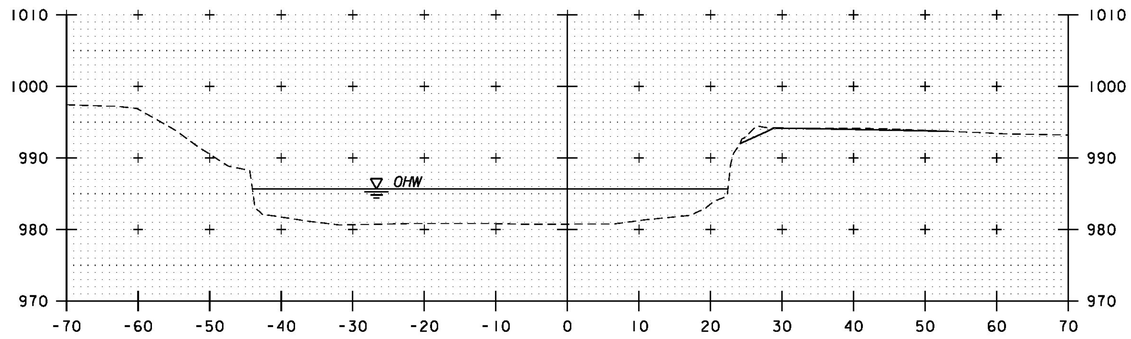

10+75

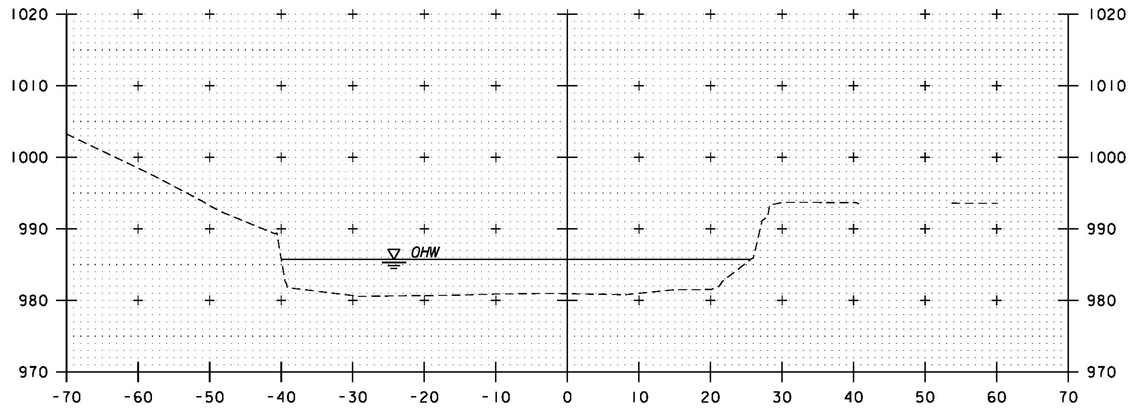

10+50

CHANNEL CROSS SECTIONS
STA. 10+00 TO 10+75

vhb

PROJECT NAME:	LUDLOW
PROJECT NUMBER:	BRF 025-1(42)

FILE NAME: z10j068xsl.dgn	PLOT DATE: 8/23/2016
PROJECT LEADER: A.P. GUYETTE	DRAWN BY: E.A. FIALA
DESIGNED BY: E.A. FIALA	CHECKED BY: A.P. GUYETTE
CHANNEL CROSS SECTIONS (1 OF 3)	SHEET 59 OF 73

VHB 57435

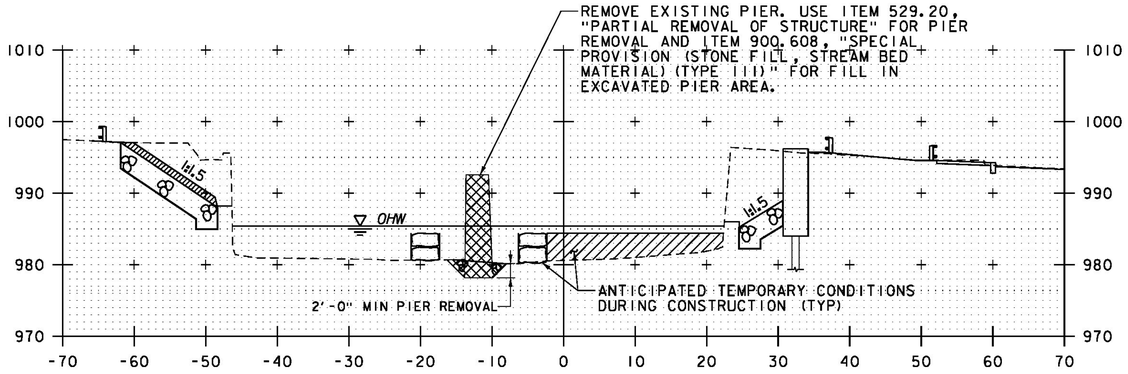

STA. 11+29, LT
BEGIN UNCLASSIFIED CHANNEL EXCAVATION
GEOTEXTILE UNDER STONE FILL
STONE FILL, TYPE III
GRUBBING MATERIAL

11+50

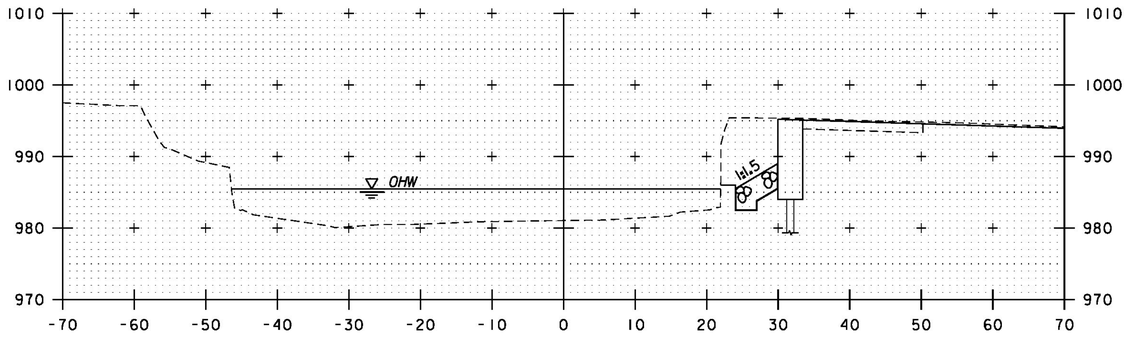

STA. 11+07, RT
END GRUBBING MATERIAL

11+25

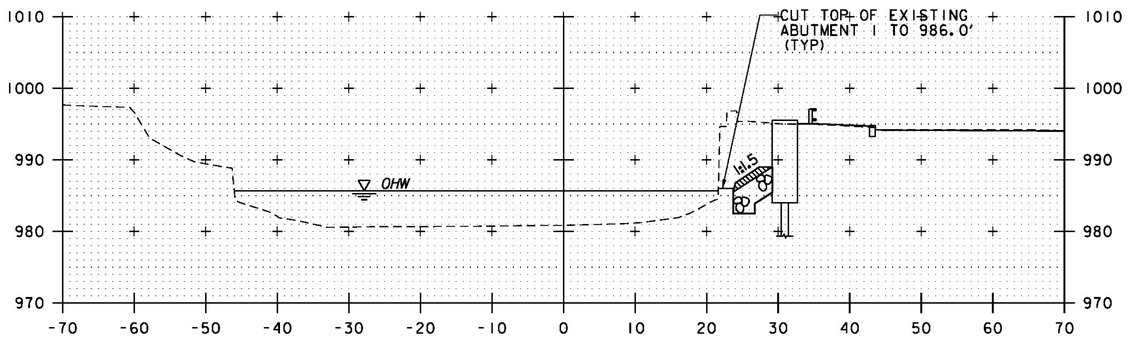

STA. 10+83, RT
BEGIN UNCLASSIFIED CHANNEL EXCAVATION
GEOTEXTILE UNDER STONE FILL
STONE FILL, TYPE III
GRUBBING MATERIAL

11+00

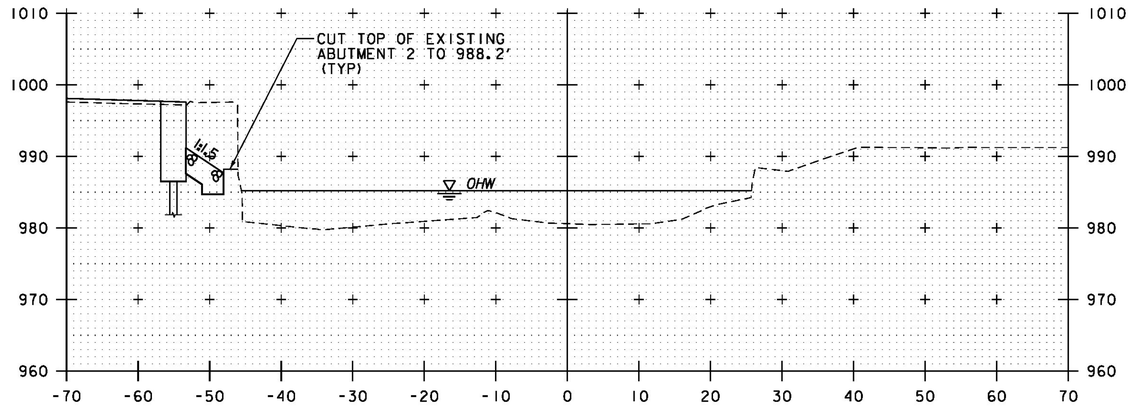

STA. 11+98, RT
END UNCLASSIFIED CHANNEL EXCAVATION
GEOTEXTILE UNDER STONE FILL
STONE FILL, TYPE III
GRUBBING MATERIAL

12+00

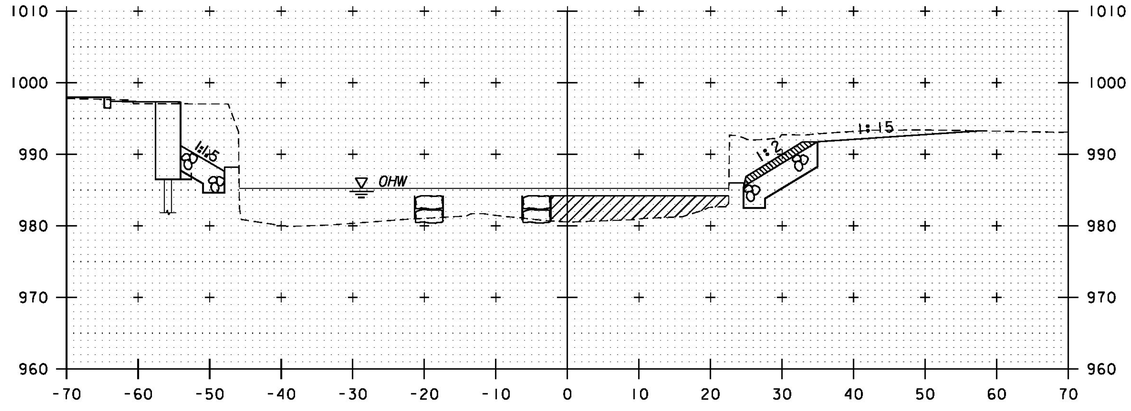

STA. 11+61, LT
END GRUBBING MATERIAL

STA. 11+55, RT
BEGIN GRUBBING MATERIAL

11+75

CHANNEL CROSS SECTIONS

STA. 11+00 TO 12+00

vhb

PROJECT NAME:	LUDLOW
PROJECT NUMBER:	BRF 025-1(42)
FILE NAME: z10j068xsl.dgn	PLOT DATE: 8/23/2016
PROJECT LEADER: A.P. GUYETTE	DRAWN BY: E.A. FIALA
DESIGNED BY: E.A. FIALA	CHECKED BY: A.P. GUYETTE
CHANNEL CROSS SECTIONS (2 OF 3)	SHEET 60 OF 73

VHB 57435

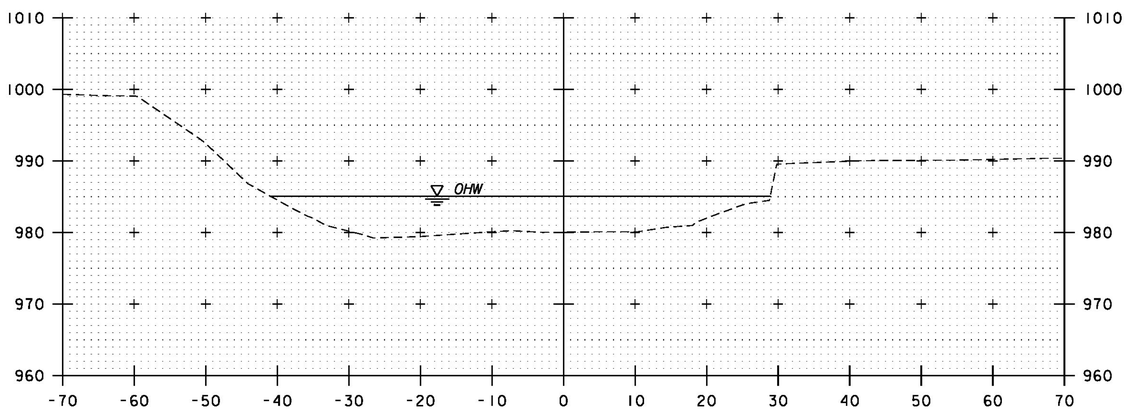

STA. 12+40, LT
END UNCLASSIFIED CHANNEL EXCAVATION
GEOTEXTILE UNDER STONE FILL
STONE FILL, TYPE III
GRUBBING MATERIAL

12+50

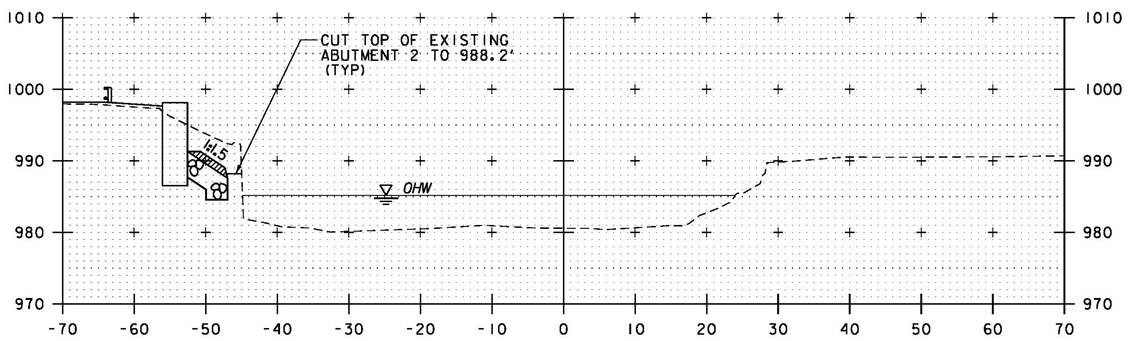

STA. 12+09, LT
BEGIN GRUBBING MATERIAL

12+25

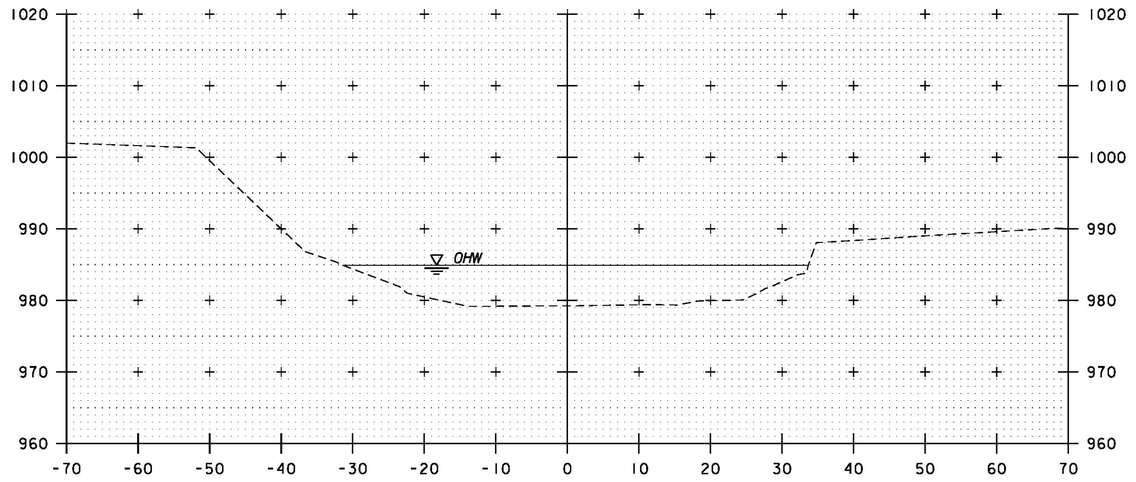

13+00

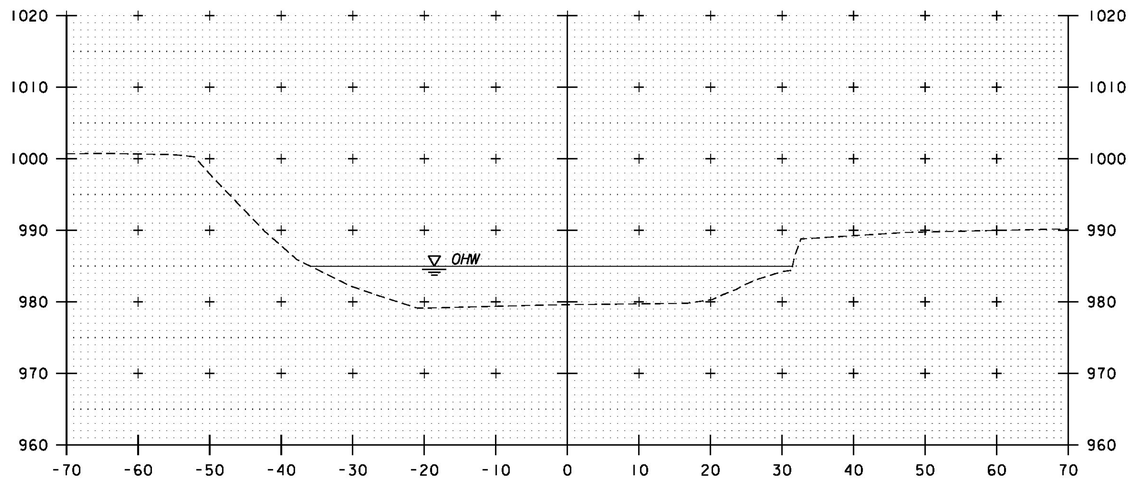

12+75

CHANNEL CROSS SECTIONS
STA. 12+25 TO 13+00

PROJECT NAME:	LUDLOW
PROJECT NUMBER:	BRF 025-1(42)
FILE NAME: z10J068xsl.dgn	PLOT DATE: 8/23/2016
PROJECT LEADER: A.P. GUYETTE	DRAWN BY: E.A. FIALA
DESIGNED BY: E.A. FIALA	CHECKED BY: A.P. GUYETTE
CHANNEL CROSS SECTIONS (3 OF 3)	SHEET 61 OF 73

VHB 57435

EPSC PLAN NARRATIVE

1.1 PROJECT DESCRIPTION

THIS PROJECT INVOLVES THE REMOVAL AND REPLACEMENT OF THE EXISTING TWO-SPAN CONCRETE T-BEAM SUPERSTRUCTURE AND SUBSTRUCTURE OF BRIDGE NO. 25 WITH RELATED APPROACH AND CHANNEL WORK. DURING CONSTRUCTION, TRAFFIC WILL BE DETOURED AROUND A LOCAL OR REGIONAL DETOUR. THIS PROJECT IS LOCATED ON VT 103, A HEAVILY TRAVELED ROAD, LOCATED WHERE MAIN STREET CROSSES THE BLACK RIVER, IN THE TOWN OF LUDLOW, VERMONT. THE EXISTING BRIDGE IS APPROXIMATELY 86 FEET LONG AND HAS A 35'-8" WIDE CONCRETE DECK. THE EXISTING SUBSTRUCTURE CONSISTS OF CONCRETE ABUTMENTS ON TIMBER PILES, WINGWALLS, AND A CONCRETE PIER.

THE BRIDGE REPLACEMENT INCLUDES THE REMOVAL OF THE EXISTING SUPERSTRUCTURE IN ITS ENTIRETY AND THE CONSTRUCTION OF A NEW 105'-6" SINGLE SPAN BRIDGE WITH PRECAST BRIDGE UNITS CONSISTING OF STEEL GIRDERS WITH PRECAST DECK TO CREATE A NEW BRIDGE WIDTH OF 43'-8". NEW INTEGRAL CONCRETE ABUTMENTS AND WINGWALLS WILL BE PRECAST AND SET IN PLACE ON PILES AND LOCATED BEHIND THE EXISTING ABUTMENTS. THE EXISTING ABUTMENTS WILL BE CUT DOWN AND RETAINED TO THE SPECIFIED ELEVATION AND RECEIVE A CONCRETE CLOSURE POUR TO PROTECT THE EXISTING ABUTMENT REINFORCING. ASSOCIATED APPROACH WORK INCLUDES BRIDGE APPROACH SLABS, NEW GUARDRAIL, CURBS, AND SIDEWALKS. ONCE THE BRIDGE IS COMPLETED, THE DETOUR SIGNS WILL BE REMOVED AND RESTORED TO THE PREVIOUS CONDITIONS.

NOTE: AREA OF DISTURBANCE INCLUDES LIMITS OF EARTH DISTURBANCE WITHIN THE PROJECT AREA, AS WELL AS WASTE, BORROW AND STAGING AREAS, AND OTHER EARTH DISTURBING ACTIVITIES WITHIN OR DIRECTLY ADJACENT TO THE PROJECT LIMITS AS SHOWN ON THE ATTACHED EPSC PLAN.

TOTAL AREA OF DISTURBANCE AS SHOWN ON THE ATTACHED EPSC PLAN IS APPROXIMATELY 0.50 ACRES.

IT IS ANTICIPATED THAT THIS PROJECT WILL LAST ONE CONSTRUCTION SEASON.

1.2 SITE INVENTORY

1.2.1 TOPOGRAPHY
THE TOPOGRAPHY OF THE AREA IS RELATIVELY FLAT, WITH A STEEP SLOPE DOWN TO THE BLACK RIVER. VT ROUTE 103, ELM STREET (T.H. 328), AND GLEASCOTT (T.H. 314) ARE WITHIN THE PROJECT SITE. THE BRIDGE IS LOCATED IN A HISTORIC DISTRICT WITH HISTORIC BUILDINGS AND A PARKING LOT ADJACENT TO THE SITE.

1.2.2 DRAINAGE, WATERWAYS, BODIES OF WATER, AND PROXIMITY TO NATURAL OR MAN-MADE WATER FEATURES
THE BLACK RIVER IS THE ONLY STREAM FEATURE ON THE PROJECT SITE. THE RIVER RUNS WEST TO EAST BENEATH MAIN STREET IN LUDLOW, VERMONT. THE OHW LEVEL IS APPROXIMATELY 50-FEET WIDE WITH AN AVERAGE DEPTH OF TWO FEET. THE AREAS ON EITHER SIDE OF THE RIVER ARE DEVELOPED AND PORTIONS OF THE RIVER BANKS CONSIST OF CONCRETE RETAINING WALLS. THE STREAM SUBSTRATE GENERALLY CONSISTS OF BOULDERS AND COBBLES. THE BLACK RIVER WILL REQUIRE COVERAGE AS A CATEGORY 2 ACTIVITY UNDER THE DEPARTMENT OF THE ARMY VERMONT GENERAL PERMIT.

1.2.3 VEGETATION
THE VEGETATION IN THE PROJECT AREA CONSISTS OF TRIMMED GRASS AND A FEW TREES. THE IMPACT TO VEGETATION WILL BE LIMITED TO THAT WHICH IS DIRECTLY AFFECTED BY REPLACEMENT OF THE EXISTING BRIDGE. UPON PROJECT COMPLETION, THE CHANNEL WILL BE ARMORED WITH STONE FILL TYPE III AS SPECIFIED ON THE PLANS. DISTURBED VEGETATION WILL BE REESTABLISHED WITH STANDARD SEED AND MULCH PRACTICES.

1.2.4 SOILS
ALL SOIL DATA CAME FROM THE U.S. DEPARTMENT OF AGRICULTURE SOIL CONSERVATION SERVICE FOR THE COUNTY OF WINDSOR, VERMONT. SOILS ON THE PROJECT SITE ARE URBAN LAND-COLTON-CROGHAN COMPLEX, 0% TO 8% SLOPES, "K FACTOR" = 0.43. THE SOIL IS CONSIDERED HIGHLY ERODIBLE.

NOTE: K-VALUES GENERALLY INDICATE THE FOLLOWING:
0.0-0.23 = LOW EROSION POTENTIAL
0.24-0.36 = MODERATE EROSION POTENTIAL
0.37 AND HIGHER = HIGH EROSION POTENTIAL

1.2.5 SENSITIVE RESOURCE AREAS
CRITICAL HABITATS: NO
HISTORICAL OR ARCHEOLOGICAL AREAS: YES, STRUCTURES ADJACENT TO THE MAIN STREET BRIDGE ARE IDENTIFIED WITHIN THE LUDLOW VILLAGE HISTORIC DISTRICT
PRIME AGRICULTURAL LAND: NO
THREATENED AND ENDANGERED SPECIES: SUBJECT TO NLEB REVIEW AND DETERMINATION
WATER RESOURCE: BLACK RIVER
WETLANDS: NO

1.3 RISK EVALUATION

THIS PROJECT DOES NOT FALL UNDER THE JURISDICTION OF GENERAL PERMIT 3-9020 FOR STORMWATER RUNOFF FROM CONSTRUCTION SITES. SHOULD CHANGES PRIOR TO OR DURING CONSTRUCTION RESULT IN ONE OR MORE ACRES OF EARTH DISTURBANCE OR SHOULD THE PROJECT BECOME PART OF A LARGER PLAN OF DEVELOPMENT, THE CONTRACTOR WILL BE RESPONSIBLE FOR ANY ADDITIONAL PERMITTING.

1.4 EROSION PREVENTION AND SEDIMENT CONTROL

THE EROSION CONTROL PLANS ARE MEANT AS A GUIDELINE FOR PREVENTING EROSION AND CONTROLLING SEDIMENT TRANSPORT. THE PRINCIPLES OUTLINED IN THIS NARRATIVE CONSIST OF APPLYING MEASURES THROUGHOUT CONSTRUCTION OF THE PROJECT IN ORDER TO MINIMIZE SEDIMENT TRANSPORT TO THE RECEIVING WATERS. THE MEASURES INCLUDE STABILIZATION AND STRUCTURAL PRACTICES, STORM WATER CONTROLS AND OTHER POLLUTION PREVENTION PRACTICES. THEY HAVE BEEN PROPOSED BY THE DESIGNER AS A BASIS FOR PROTECTING RESOURCES AND WILL NEED TO BE BUILT UPON BASED ON THE SPECIFIC MEANS AND METHODS OF THE CONTRACTOR. REFER TO THE LOW RISK SITE HANDBOOK AND APPROPRIATE DETAIL SHEETS FOR SPECIFIC GUIDANCE AND CONSTRUCTION DETAILING.

ALL MEASURES SHALL BE REGULARLY MAINTAINED AND SHALL BE CHECKED FOR SEDIMENT BUILD-UP. SEDIMENT SHALL BE DISPOSED OF AT AN APPROVED SITE WHERE IT WILL NOT BE SUBJECT TO EROSION.

1.4.1 MARK SITE BOUNDARIES
SITE BOUNDARIES AND AREAS CONSTRUCTION EQUIPMENT CAN ACCESS SHALL BE DELINEATED.

BARRIER FENCE (BF) SHALL BE USED TO PHYSICALLY MARK ARCHAEOLOGICAL AREAS.

1.4.2 LIMIT DISTURBANCE AREA
PREVENTING INITIAL SOIL EROSION BY MINIMIZING THE EXPOSED AREA IS MUCH MORE EFFECTIVE THAN TREATING ERODED SEDIMENT. EARTH DISTURBANCE CAN BE MINIMIZED THROUGH CONSTRUCTION PHASING BY ONLY OPENING UP EARTH AS NECESSARY. THIS CAN LIMIT THE AREA THAT WILL BE DISTURBED AND EXPOSED TO EROSION. EMPLOY TEMPORARY CONSTRUCTION STABILIZATION PRACTICES IN INCREMENTAL STAGES AS PHASES CHANGE. FOR PROJECTS WHICH FALL UNDER THE CONSTRUCTION GENERAL PERMIT, ONLY THE ACREAGE LISTED ON THE PERMIT AUTHORIZATION MAY BE EXPOSED AT ANY GIVEN TIME.

MAINTAINING VEGETATED BUFFERS ALONG STREAM BANKS, WETLANDS OR OTHER SENSITIVE AREAS IS A CRUCIAL EROSION AND SEDIMENT CONTROL MEASURE THAT SHOULD BE ESTABLISHED WHEREVER POSSIBLE.

1.4.3 SITE ENTRANCE/EXIT STABILIZATION
TRACKING OF SEDIMENT ONTO PUBLIC HIGHWAYS SHALL BE MINIMIZED TO REDUCE THE POTENTIAL FOR RUNOFF ENTERING RECEIVING WATERS. INSTALLATION SHALL COINCIDE WITH THE CONTRACTORS PROGRESS SCHEDULE.

STABILIZED CONSTRUCTION ENTRANCES SHALL BE INSTALLED AS PROPOSED ON THE EPSC PLAN AND ANYWHERE EQUIPMENT WILL BE GOING FROM AREAS OF EXPOSED SOILS TO PAVED SURFACES.

1.4.4 INSTALL SEDIMENT BARRIERS
SEDIMENT BARRIERS SHALL BE UTILIZED TO INTERCEPT RUNOFF AND ALLOW SUSPENDED SEDIMENT TO SETTLE OUT. THEY SHALL BE INSTALLED PRIOR TO ANY UP SLOPE WORK.

SILT FENCE WILL BE INSTALLED AS PROPOSED ON THE EPSC PLAN.

1.4.5 DIVERT UPLAND RUNOFF
DIVERSIONARY MEASURES SHALL BE USED TO INTERCEPT RUNOFF FROM ABOVE THE CONSTRUCTION AND DIRECT IT AROUND THE DISTURBED AREA SO THAT CLEAN WATER DOES NOT BECOME MUDDIED WHILE TRAVELING OVER EXPOSED SOILS ON THE CONSTRUCTION SITE.

THE PROJECT AREA IS RELATIVELY FLAT. THEREFORE IT IS NOT ANTICIPATED THAT DIVERSION MEASURES WILL BE NECESSARY.

1.4.6 SLOW DOWN CHANNELIZED RUNOFF
CHECK STRUCTURES ARE NOT ANTICIPATED FOR THIS PROJECT.

1.4.7 CONSTRUCT PERMANENT CONTROLS
PERMANENT EROSION CONTROL STRUCTURES ARE NOT ANTICIPATED FOR THIS PROJECT.

1.4.8 STABILIZE EXPOSED SOILS DURING CONSTRUCTION
ALL AREAS OF DISTURBANCE MUST HAVE TEMPORARY STABILIZATION IN PLACE WITHIN 48 HOURS OF DISTURBANCE.

SURFACE ROUGHENING OF ALL EXPOSED SLOPES, COMBINED WITH TEMPORARY MULCHING, SHALL BE UTILIZED ON A REGULAR BASIS. BIODEGRADABLE EROSION CONTROL MATTING OR AN EQUIVALENT SHALL BE USED TO STABILIZE ALL SLOPES STEEPER THAN 1:3.

THE FORECAST OF RAINFALL EVENTS SHALL TRIGGER IMMEDIATE PROTECTION OF EXPOSED SOILS.

1.4.9 WINTER STABILIZATION
VARIOUS MEASURES SPECIFIC TO WINTER MAY BE NECESSARY SHOULD THE PROJECT EXTEND INTO WINTER (OCTOBER 15 THROUGH APRIL 15). REFER TO THE LOW RISK SITE HANDBOOK FOR GUIDANCE.

1.4.10 STABILIZE SOIL AT FINAL GRADE
EXPOSED SOIL MUST BE STABILIZED WITHIN 48 HOURS OF REACHING FINAL GRADE.

SEED, MULCH, FERTILIZER AND LIME SHALL BE USED TO ESTABLISH PERMANENT VEGETATION. FOR SLOPES STEEPER THAN 1:3, BIODEGRADABLE EROSION CONTROL MATTING OR AN EQUIVALENT SHALL BE USED INSTEAD OF MULCH.

1.4.11 DE-WATERING ACTIVITIES
DISCHARGE FROM DEWATERING ACTIVITIES THAT FLOWS OFF OF THE CONSTRUCTION SITE MUST NOT CAUSE OR CONTRIBUTE TO A VIOLATION OF THE VERMONT WATER QUALITY STANDARDS.

TREATMENT OF DEWATERING COFFERDAM IS ANTICIPATED. A LOCATION FOR THE TREATMENT HAS BEEN PROPOSED AND IS SHOWN ON THE PLANS. HOWEVER, THE SPECIFIC MEANS FOR TREATMENT OF DISCHARGE SHALL BE PROVIDED BY THE CONTRACTOR.

1.4.12 INSPECT YOUR SITE
INSPECT THE PROJECT SITE BASED ON SPECIAL PROVISION REQUIREMENTS OR CONSTRUCTION GENERAL PERMIT AUTHORIZATION STIPULATIONS.

1.5 SEQUENCE AND STAGING

THIS SECTION WILL BE DEVELOPED BY THE CONTRACTOR USING THE GUIDANCE OUTLINED IN THE VTRANS EPSC PLAN CONTRACTOR CHECKLIST.

1.5.1 CONSTRUCTION SEQUENCE

1.5.2 OFF-SITE ACTIVITIES
IN ADDITION TO THE CONTRACTOR CHECKLIST ANY ACTIVITIES OUTSIDE THE CONSTRUCTION LIMITS SHALL FOLLOW SUBSECTIONS 105.25- 105.29 OF THE STANDARD SPECIFICATIONS FOR CONSTRUCTION.

1.5.3 UPDATES

vhb

PROJECT NAME: LUDLOW
PROJECT NUMBER: BRF 025-1(42)

FILE NAME: z10J068ero_Narrative.dgn
PROJECT LEADER: A.P. GUYETTE
DESIGNED BY: E.A. FIALA
EPSC NARRATIVE

PLOT DATE: 8/23/2016
DRAWN BY: E.A. FIALA
CHECKED BY: A.P. GUYETTE
SHEET 62 OF 73

VHB 57435

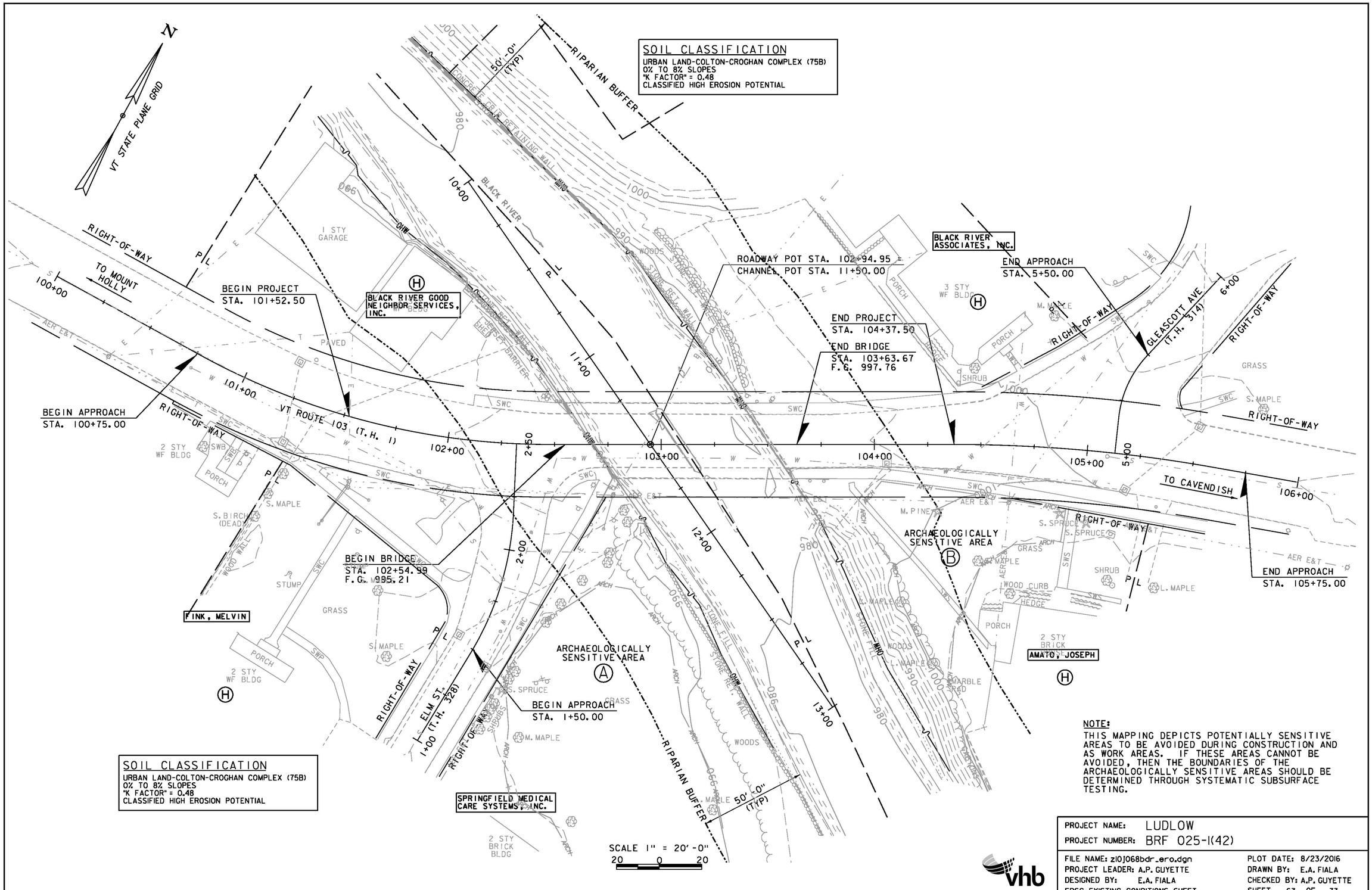

SOIL CLASSIFICATION
URBAN LAND-COLTON-CROGHAN COMPLEX (75B)
0% TO 8% SLOPES
"K FACTOR" = 0.48
CLASSIFIED HIGH EROSION POTENTIAL

NOTE:
THIS MAPPING DEPICTS POTENTIALLY SENSITIVE AREAS TO BE AVOIDED DURING CONSTRUCTION AND AS WORK AREAS. IF THESE AREAS CANNOT BE AVOIDED, THEN THE BOUNDARIES OF THE ARCHAEOLOGICALLY SENSITIVE AREAS SHOULD BE DETERMINED THROUGH SYSTEMATIC SUBSURFACE TESTING.

PROJECT NAME: LUDLOW	
PROJECT NUMBER: BRF 025-1(42)	
FILE NAME: z10J068bdr_ero.dgn	PLOT DATE: 8/23/2016
PROJECT LEADER: A.P. GUYETTE	DRAWN BY: E.A. FIALA
DESIGNED BY: E.A. FIALA	CHECKED BY: A.P. GUYETTE
EPSC EXISTING CONDITIONS SHEET	SHEET 63 OF 73

vhb

VHB 57435

NOTE: SEE EROSION CONTROL DETAILS FOR SYMBOLOGY.

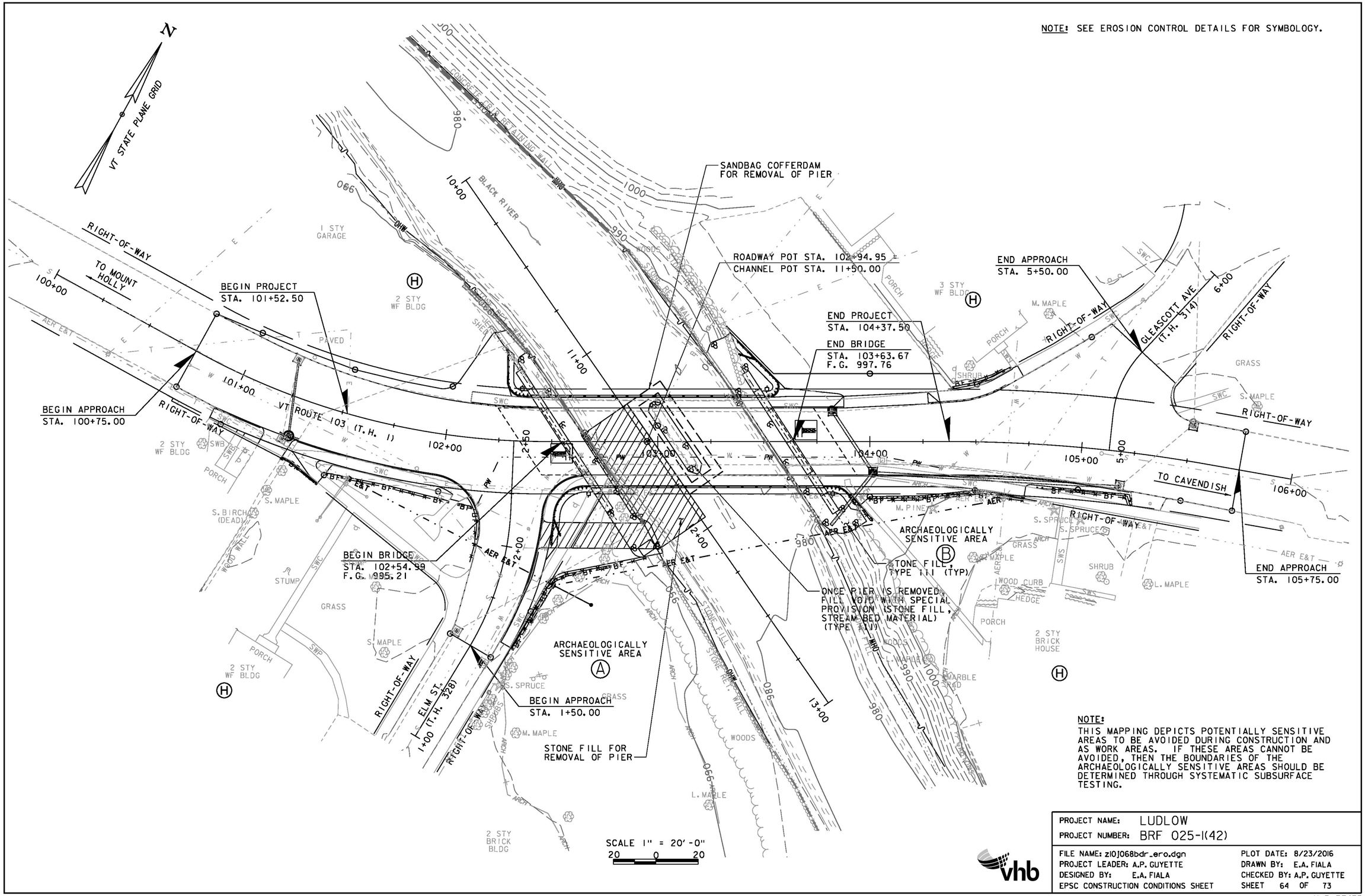

NOTE:
THIS MAPPING DEPICTS POTENTIALLY SENSITIVE AREAS TO BE AVOIDED DURING CONSTRUCTION AND AS WORK AREAS. IF THESE AREAS CANNOT BE AVOIDED, THEN THE BOUNDARIES OF THE ARCHAEOLOGICALLY SENSITIVE AREAS SHOULD BE DETERMINED THROUGH SYSTEMATIC SUBSURFACE TESTING.

PROJECT NAME: LUDLOW	
PROJECT NUMBER: BRF 025-1(42)	
FILE NAME: z10J068bdr_ero.dgn	PLOT DATE: 8/23/2016
PROJECT LEADER: A.P. GUYETTE	DRAWN BY: E.A. FIALA
DESIGNED BY: E.A. FIALA	CHECKED BY: A.P. GUYETTE
EPSC CONSTRUCTION CONDITIONS SHEET	SHEET 64 OF 73

VHB 57435

NOTE: SEE EROSION CONTROL DETAILS FOR SYMBOLOGY.

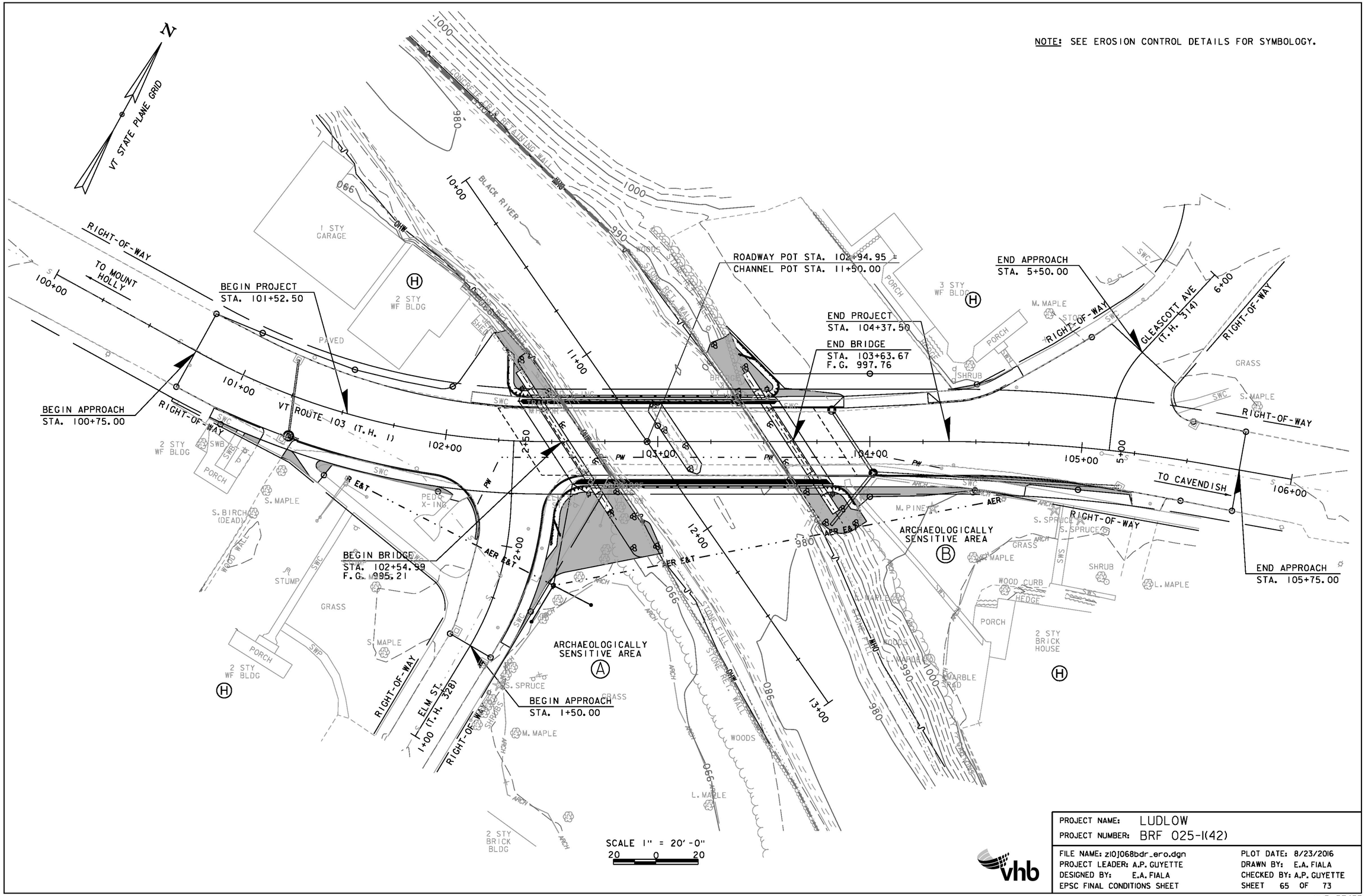

PROJECT NAME: LUDLOW	
PROJECT NUMBER: BRF 025-1(42)	
FILE NAME: z10J068bdr_ero.dgn	PLOT DATE: 8/23/2016
PROJECT LEADER: A.P. GUYETTE	DRAWN BY: E.A. FIALA
DESIGNED BY: E.A. FIALA	CHECKED BY: A.P. GUYETTE
EPSC FINAL CONDITIONS SHEET	SHEET 65 OF 73

VHB 57435

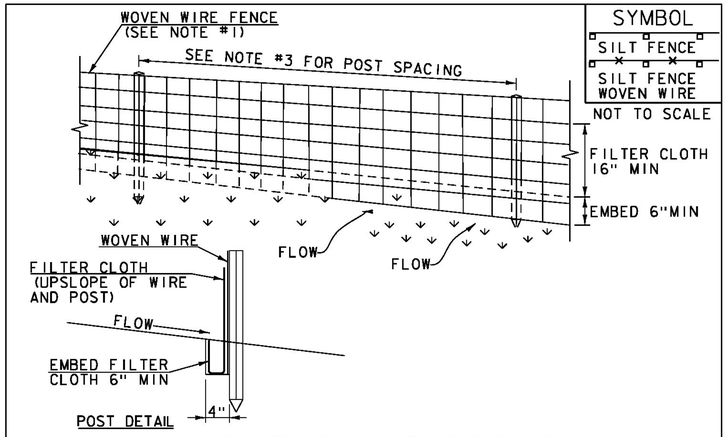

SYMBOL

SILT FENCE

SILT FENCE WOVEN WIRE

NOT TO SCALE

CONSTRUCTION SPECIFICATIONS

1. WOVEN WIRE REINFORCED FENCE IS REQUIRED WITHIN 100' UPSLOPE OF RECEIVING WATERS WHEN THE PROJECT FALLS UNDER A CONSTRUCTION STORMWATER PERMIT. WOVEN WIRE SHALL BE A MIN. 14 GAUGE WITH A 6" MAX. MESH OPENING.
2. FILTER CLOTH SHALL BE EITHER FILTER X, MIRAFI100X, STABILINKA T140N OR APPROVED EQUIVALENT.
3. POST SPACING FOR WIRE-BACKED FENCE SHALL BE 10' MAXIMUM. FOR FILTER-CLOTH FENCE, WHEN ELONGATION IS >50%, POST SPACING SHALL NOT EXCEED 4' AND WHEN ELONGATION IS <50%, POST SPACING SHALL NOT EXCEED 6'.
4. WOVEN WIRE FENCE IS TO BE FASTENED SECURELY TO FENCE POSTS WITH WIRE TIES. FILTER CLOTH IS TO BE FASTENED SECURELY TO WOVEN WIRE FENCE WITH TIES SPACED EVERY 24" AT TOP AND MID SECTION.
5. WHEN TWO SECTIONS OF FILTER CLOTH ADJOIN EACH OTHER THEY SHALL BE OVER-LAPPED BY 6" AND FOLDED.
6. MAINTENANCE SHALL BE PERFORMED AS NEEDED AND MATERIAL REMOVED WHEN SEDIMENT REACHES HALF OF FABRIC HEIGHT.

ADAPTED FROM DETAILS PROVIDED BY: NEW YORK STATE DEC ORIGINALLY DEVELOPED BY USDA-NRCS VERMONT DEPARTMENT OF ENVIRONMENTAL CONSERVATION

SILT FENCE

NOTES:
REFER TO "THE VERMONT STANDARDS & SPECIFICATIONS FOR EROSION PREVENTION & SEDIMENT CONTROL -2006- " FROM THE VT AGENCY OF NATURAL RESOURCES FOR ADDITIONAL GUIDANCE.

THIS WORK SHALL BE PERFORMED IN ACCORDANCE WITH SECTION 649 AND AS SHOWN IN THE PLANS FOR GEOTEXTILE FOR SILT FENCE (PAY ITEM 649.51) OR GEOTEXTILE FOR SILT FENCE, WOVEN WIRE REINFORCED (PAY ITEM 649.515).

REVISIONS	
MARCH 21, 2008	WHF
DECEMBER 11, 2008	WHF
JANUARY 13, 2009	WHF

VAOT RURAL AREA MIX

	LBS/AC				
% WEIGHT	BROADCAST	HYDROSEED	NAME	GERM %	PURITY %
37.5%	22.5	45	CREEPING RED FESCUE	85%	98%
37.5%	22.5	45	TALL FESCUE	90%	95%
5.0%	3	6	RED TOP	90%	95%
15.0%	9	18	BIRDSFOOT TREFOIL	85%	98%
5.0%	3	6	ANNUAL RYE GRASS	85%	95%
100%	60	120			

VAOT URBAN AREA MIX

	LBS/AC				
% WEIGHT	BROADCAST	HYDROSEED	NAME	GERM %	PURITY %
42.5%	34	68	CREEPING RED FESCUE	85%	98%
10.0%	8	16	PERENNIAL RYE GRASS	90%	95%
42.5%	34	68	KENTUCKY BLUE GRASS	85%	85%
5.0%	4	8	ANNUAL RYE GRASS	85%	95%
100%	80	160			

SOIL AMENDMENT GUIDANCE

FERTILIZER		LIME	
BROADCAST	HYDROSEED	BROADCAST	HYDROSEED
10-20-10	*FOLLOW*	PELLETIZED	*FOLLOW*
500 LBS/AC	*MANUFACTURER*	2 TONS/AC	*MANUFACTURER*

CONSTRUCTION GUIDANCE

1. RURAL SEED MIX: USE AS INDICATED IN THE PLANS AND/OR FOR ALL ESTABLISHED UPLAND (NON WETLAND) AREAS DISTURBED BY THE CONTRACTOR.
2. URBAN SEED MIX: USE AS INDICATED IN THE PLANS AND/OR FOR ALL ESTABLISHED LAWN AREAS DISTURBED BY THE CONTRACTOR.
3. ALL SEED MIXTURES: SHALL NOT HAVE A WEED CONTENT EXCEEDING 0.40% BY WEIGHT AND SHALL BE FREE OF ALL NOXIOUS SEED.
4. FERTILIZER AND LIMESTONE: SHALL FOLLOW RATES SHOWN ON PLAN OR AS DIRECTED BY THE ENGINEER
5. HAY MULCH: TO BE PLACED ON EARTH SLOPES AT THE RATE OF 2 TONS/ACRE, ACHIEVE 90% GROUND COVER OR AS DIRECTED BY THE ENGINEER.
6. TOPSOIL: TO BE USED WITH SEED AS INDICATED ON THE PLANS, OR AS DIRECTED BY THE ENGINEER.
7. HYDROSEEDING: ALTHOUGH GUIDANCE IS GIVEN ABOVE THE SITE CONDITIONS AND THE TYPE OF HYDROSEED WILL ULTIMATELY DICTATE THE AMOUNTS AND TYPES OF SOIL AMENDMENTS TO BE APPLIED
8. TURF ESTABLISHMENT: PLACING SEED, FERTILIZER, LIME AND MULCH PRIOR TO SEPTEMBER 15 AND AFTER APRIL 15 CAN BETTER ENSURE A VIGOROUS GROWTH OF GRASS.

ADAPTED FROM VTRANS TECHNICAL LANDSCAPE MANUAL FOR ROADWAYS AND TRANSPORTATION FACILITIES

TURF ESTABLISHMENT

REVISIONS	
JUNE 23, 2009	WHF
JANUARY 15, 2010	WHF
FEBRUARY 16, 2011	WHF

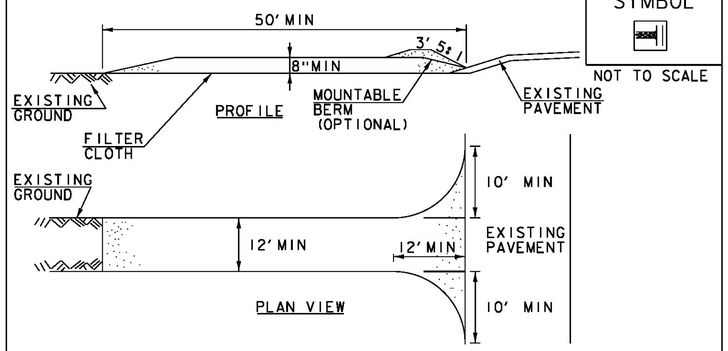

SYMBOL

NOT TO SCALE

CONSTRUCTION SPECIFICATIONS

1. STONE SIZE- USE 1-4" STONE, RECLAIMED OR RECYCLED CONCRETE EQUIVALENT.
2. LENGTH- NOT LESS THAN 50' (EXCEPT ON A SINGLE RESIDENCE LOT WHERE A 30' MINIMUM LENGTH APPLIES).
3. THICKNESS- NOT LESS THAN 8".
4. WIDTH- 12' MINIMUM, BUT NOT LESS THAN THE FULL WIDTH AT POINTS WHERE INGRESS OR EGRESS OCCURS. 24' IF SINGLE ENTRANCE TO SITE.
5. GEOTEXTILE MUST BE PLACED OVER THE ENTIRE AREA PRIOR TO PLACING STONE.
6. SURFACE WATER- ALL SURFACE WATER FLOWING OR DIVERTED TOWARD CONSTRUCTION ENTRANCES SHALL BE PIPED BENEATH THE ENTRANCE. IF PIPING IS IMPRACTICAL, A MOUNTABLE BERM WITH 5:1 SLOPES WILL BE PERMITTED.
7. MAINTENANCE- THE ENTRANCE SHALL BE MAINTAINED IN A CONDITION WHICH WILL PREVENT TRACKING OR FLOWING OF SEDIMENT ONTO PUBLIC RIGHTS-OF-WAY, ALL SEDIMENT SPILLED, DROPPED, WASHED OR TRACKED ONTO PUBLIC RIGHTS-OF-WAY MUST BE REMOVED IMMEDIATELY.
8. WHEN WASHING IS REQUIRED, IT SHALL BE DONE ON AN AREA STABILIZED WITH STONE AND WHICH DRAINS INTO AN APPROVED SEDIMENT TRAPPING DEVICE.
9. PERIODIC INSPECTION AND NEEDED MAINTENANCE SHALL BE PROVIDED ACCORDING TO PERMIT REQUIREMENTS.

ADAPTED FROM DETAILS PROVIDED BY: NEW YORK STATE DEC ORIGINALLY DEVELOPED BY USDA-NRCS VERMONT DEPARTMENT OF ENVIRONMENTAL CONSERVATION

STABILIZED CONSTRUCTION ENTRANCE

NOTES:
REFER TO "THE VERMONT STANDARDS & SPECIFICATIONS FOR EROSION PREVENTION & SEDIMENT CONTROL -2006- " FROM THE VT AGENCY OF NATURAL RESOURCES FOR ADDITIONAL GUIDANCE.

THIS WORK SHALL BE PERFORMED IN ACCORDANCE WITH SECTION 653 FOR VEHICLE TRACKING PAD (PAY ITEM 653.35) OR AS SPECIFIED IN THE CONTRACT.

REVISIONS	
MARCH 24, 2008	WHF
JANUARY 13, 2009	WHF

vhb

PROJECT NAME: LUDLOW
PROJECT NUMBER: BRF 025-1(42)

FILE NAME: z10J068details ero.dgn
PROJECT LEADER: A.P. GUYETTE
DESIGNED BY: VTRANS
EROSION CONTROL DETAILS (1 OF 2)

PLOT DATE: 8/23/2016
DRAWN BY: E.A. FIALA
CHECKED BY: A.P. GUYETTE
SHEET 66 OF 73

VHB 57435

SYMBOL

NOT TO SCALE

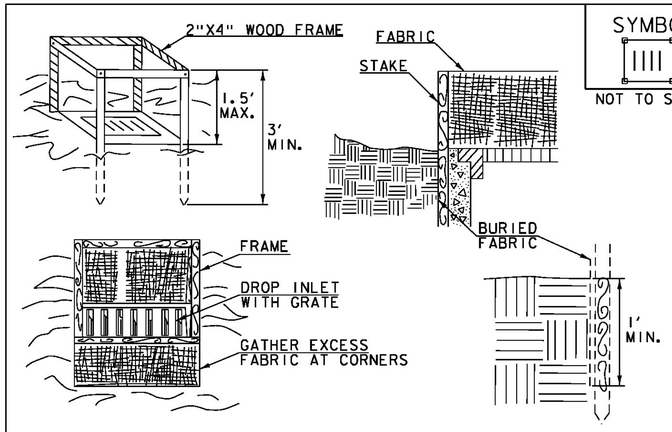

CONSTRUCTION SPECIFICATIONS

1. FILTER FABRIC SHALL HAVE AN APPARENT OPENING SIZE OF 40-85. BURLAP MAY BE USED FOR SHORT TERM APPLICATIONS.
2. CUT FABRIC FROM A CONTINUOUS ROLL TO ELIMINATE JOINTS. IF JOINTS ARE NEEDED THEY WILL BE OVERLAPPED TO THE NEXT STAKE.
3. STAKE MATERIALS WILL BE STANDARD 2"x 4" WOOD OR EQUIVALENT METAL WITH A MINIMUM LENGTH OF 3'.
4. SPACE STAKES EVENLY AROUND INLET 3' APART AND DRIVE A MINIMUM 18" DEEP. SPANS GREATER THAN 3' MAY BE BRIDGED WITH THE USE OF WIRE MESH BEHIND THE FILTER FABRIC FOR SUPPORT.
5. FABRIC SHALL BE EMBEDDED 1' MINIMUM BELOW GROUND AND BACKFILLED. IT SHALL BE SECURELY FASTENED TO THE STAKES AND FRAME.
6. A 2" x 4" WOOD FRAME SHALL BE COMPLETED AROUND THE CREST OF THE FABRIC FOR OVER FLOW STABILITY.
7. MAXIMUM DRAINAGE AREA 1 ACRE

ADAPTED FROM DETAILS PROVIDED BY: NEW YORK STATE DEC
ORIGINALLY DEVELOPED BY USDA-NRCS
VERMONT DEPARTMENT OF ENVIRONMENTAL CONSERVATION

FILTER FABRIC DROP INLET PROTECTION

NOTES:
REFER TO "THE VERMONT STANDARDS & SPECIFICATIONS FOR EROSION PREVENTION & SEDIMENT CONTROL -2006- " FROM THE VT AGENCY OF NATURAL RESOURCES FOR ADDITIONAL GUIDANCE.

THIS WORK SHALL BE PERFORMED IN ACCORDANCE WITH SECTION 653 FOR INLET PROTECTION DEVICE, TYPE I (PAY ITEM 653.40).

REVISIONS	
MARCH 7, 2008	WHF
JANUARY 13, 2009	WHF

SYMBOL

NOT TO SCALE

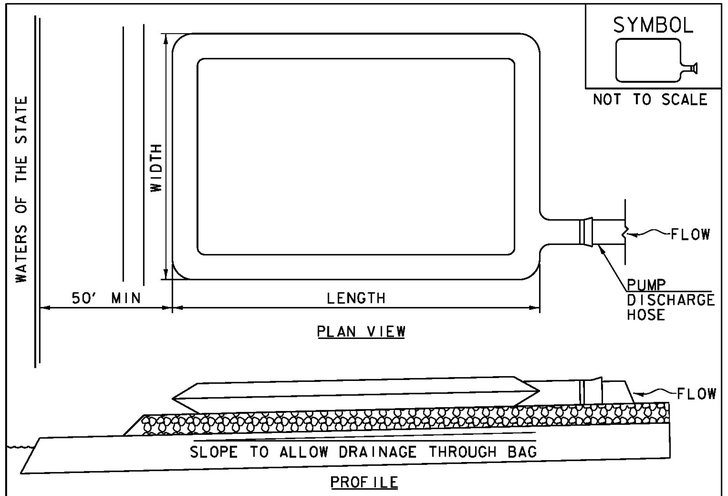

CONSTRUCTION SPECIFICATIONS

1. THE PRIMARY PURPOSE OF FILTER BAG IS TO RETAIN SILT, SAND, AND FINES DURING DEWATERING OPERATIONS.
2. FILTER BAGS SHALL BE INSTALLED ON A VEGETATED SLOPE GRADED TO ALLOW INCOMING WATER TO FLOW THROUGH THE BAG.
3. FILTER BAGS MAY ALSO BE PLACED ON COARSE AGGREGATE, STONE, OR HAYBALES TO INCREASE FILTRATION EFFICIENCY.
4. FILTER BAGS SHALL BE LOCATED A MINIMUM OF 50' FROM WATERS OF THE STATE UNLESS OTHERWISE APPROVED BY THE ENGINEER.
5. THE NECK OF THE FILTER BAG SHALL BE STRAPPED TIGHTLY TO THE DISCHARGE HOSE.
6. A FILTER BAG IS FULL WHEN IT NO LONGER CAN EFFICIENTLY FILTER SEDIMENT OR ALLOW WATER TO PASS AT A REASONABLE RATE.
7. FILTER BAG SHALL BE DISPOSED OF AS APPROVED IN THE EPSC PLAN OR AS DIRECTED BY THE ENGINEER.

FILTER BAG

NOTES:
REFER TO "THE VERMONT STANDARDS & SPECIFICATIONS FOR EROSION PREVENTION & SEDIMENT CONTROL -2006- " FROM THE VT AGENCY OF NATURAL RESOURCES FOR ADDITIONAL GUIDANCE.

THIS WORK SHALL BE PERFORMED IN ACCORDANCE WITH SECTION 653 FOR FILTER BAG (PAY ITEM 653.45) AND AS SPECIFIED IN THE CONTRACT.

REVISIONS	
MARCH 24, 2008	WHF
JANUARY 13, 2009	WHF

SYMBOL

NOT TO SCALE

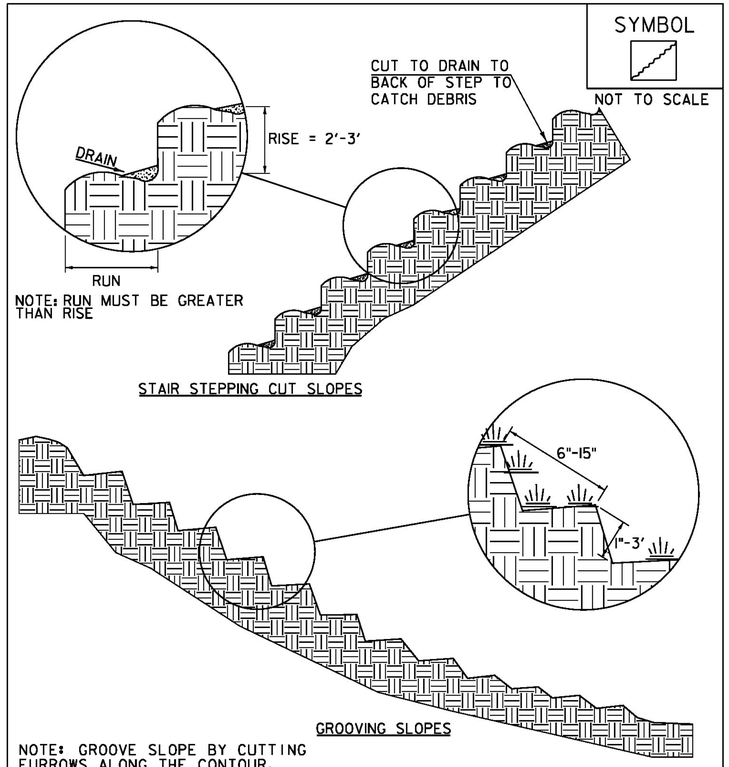

NOTE: GROOVE SLOPE BY CUTTING FURROWS ALONG THE CONTOUR. IRREGULARITIES IN THE SOIL SURFACE CATCH RAINWATER AND RETAIN LIME, FERTILIZER AND SEED.

ADAPTED FROM DETAILS PROVIDED BY: NEW YORK STATE DEC
ORIGINALLY DEVELOPED BY USDA-NRCS
VERMONT DEPARTMENT OF ENVIRONMENTAL CONSERVATION

SURFACE ROUGHENING

NOTES:
REFER TO "THE VERMONT STANDARDS & SPECIFICATIONS FOR EROSION PREVENTION & SEDIMENT CONTROL -2006- " FROM THE VT AGENCY OF NATURAL RESOURCES FOR ADDITIONAL GUIDANCE.

THIS WORK SHALL BE CONSIDERED INCIDENTAL TO THE CONTRACT

REVISIONS	
APRIL 1, 2008	WHF
JANUARY 13, 2009	WHF

vhb

PROJECT NAME:	LUDLOW
PROJECT NUMBER:	BRF 025-1(42)
FILE NAME: z10j068details ero.dgn	PLOT DATE: 8/23/2016
PROJECT LEADER: A.P. GUYETTE	DRAWN BY: E.A. FIALA
DESIGNED BY: VTRANS	CHECKED BY: A.P. GUYETTE
EROSION CONTROL DETAILS (2 OF 2)	SHEET 67 OF 73

VHB 57435

STATE OF VERMONT
AGENCY OF TRANSPORTATION

RIGHT - OF - WAY DETAIL SHEET

TABLE OF PROPERTY ACQUISITION

PARCEL NO.	PROPERTY OWNER	SHEET NO.	BEGINNING STATION	ENDING STATION	TAKE	REMAINDER	RIGHT			RECORDING DATA					REMARKS
					AREA±	AREA±	TYPE	(T)/(P)	AREA ±	TITLE	DATE	TOWN / CITY	BOOK	PAGE	
1	BLACK RIVER GOOD NEIGHBOR	1	101+37.58 LT	102+51.36 LT			HIGHWAY	P	576 SF						
	SERVICES, INC.		102+02 LT	102+29.66 LT			SLOPE	T	292 SF						
2	SPRINGFIELD MEDICAL CARE	1	102+66.70 RT	102+92.59± RT			HIGHWAY	P	228± SF						
	SYSTEMS, INC.	1	102+36 RT	103+03.77± RT			CONSTRUCTION	T	283± SF						INCLUDES BF & EC
			102+50.38 RT	102+95.75 RT			ACCESS	P	699 SF						
			102+84.50 RT	103+03.77± RT			CHANNEL	P	181± SF						INCLUDES STONE FILL
3	BLACK RIVER ASSOCIATES, INC.	1	103+03.87± LT	104+49.67 LT			HIGHWAY	P	926± SF						
			103+06 LT	104+10 LT			CONSTRUCTION	T	3,860 SF						INCLUDES TRAFFIC CONTROL BARRIER
			104+37 LT	104+65 LT			CONSTRUCTION	T	56 SF						INCLUDES BF & EC
4	BLACK RIVER AMATO, L.P.	1	103+67.16± RT	104+36.92 RT			HIGHWAY	P	508± SF						
			103+75.35 ± RT	104+08.71 RT			CHANNEL	P	739± SF						INCLUDES STONE FILL
			103+95.44 ± RT	104+22 RT			CONSTRUCTION	T	294 SF						INCLUDES BF & EC
			104+36.92 RT	104+81 RT			CONSTRUCTION	T	86 SF						INCLUDES BF & EC
5	TDS TELECOM		101+37.58 LT	105+12 RT 104+81 RT											UTILITY
6	COMCAST OF CONNECTICUT/GEORGIA/ MASSACHUSETTS/ NEW HAMPSHIRE/ NEW YORK/ NORTH CAROLINA/ VERMONT, LLC		101+37.58 LT	105+12 RT 104+81 RT											UTILITY
7	TOWN OF LUDLOW		101+37.58 LT	105+12 RT 104+81 RT											UTILITY
8	LUDLOW ELECTRIC LIGHT DEPARTMENT		101+37.58 LT	105+12 RT 104+81 RT											UTILITY
9	TELEPHONE OPERATING COMPANY OF VERMONT, LLC		101+37.58 LT	105+12 RT 104+81 RT											UTILITY

TABLE OF REVISIONS

REVISION NO.	SHEET NO.	DESCRIPTION	DATE

PLAN LEGEND

- EXISTING RIGHT-OF-WAY
- TAKING WITH ACCESS
- TAKING WITHOUT ACCESS
- CLEAR ZONE (CZ)
- PROPERTY LINE (P L)
- TOE OF SLOPE
- TOP OF CUT
- SLOPE RIGHT (SR (P))
- CONSTRUCTION RIGHT (CONST. (T))
- PROJECT DEMARCATION FENCE (PDF)

EC	-EROSION CONTROL
(P)	-PERMANENT
(T)	-TEMPORARY
DR.	-DRAINAGE RIGHT
DIT.	-DITCHING RIGHT
CH.	-CHANNEL RIGHT
DRIVE	-DRIVE RIGHT
CUL.	-CULVERT RIGHT
C&T	-CLEARING & TRIMMING RIGHT
SR	-SLOPE RIGHT
UE	-UTILITY EASEMENT

APPROVED: RYAN CLOUTIER DATE: 12-9-14
CHIEF, PLANS & TITLES

PROJECT NAME: **LUDLOW**
PROJECT NUMBER: **BRF 025-1(42)**

FILE NAME: **r10j068detail.xls**
PROJECT LEADER: **A. GUYETTE**
DESIGNED BY: **E. FIALA**
R.O.W. DETAIL SHEET

PLOT DATE: 14-JAN-2015
DRAWN BY: **MR**
CHECKED BY: **JB**
SHEET 68 OF 73

SOLID ROCK EXCAVATION
STA. 101+35 - 102+14, RT
STA. 102+10 - 102+57, LT
STA. 102+32 - 102+75, RT
STA. 103+43 - 104+68, LT
STA. 103+60 - 105+03, RT

REMOVAL OF EXISTING CURB
STA. 101+35 - 102+17, RT
STA. 102+10 - 102+57, LT
STA. 102+32 - 102+75, RT
STA. 103+43 - 104+68, LT
STA. 103+60 - 105+24, RT

VERTICAL GRANITE CURB
STA. 101+35 - 102+17, RT
STA. 102+10 - 102+51, LT
STA. 102+32 - 102+71, RT
STA. 103+49 - 104+71, LT
STA. 103+69 - 105+25, RT

PORTLAND CEMENT CONCRETE SIDEWALK, 8 INCH
STA. 103+88 - 104+28, LT

PORTLAND CEMENT CONCRETE SIDEWALK, 5 INCH
STA. 101+35 - 102+14, RT
STA. 102+10 - 102+50, LT
STA. 102+32 - 102+74, RT
STA. 103+46 - 103+88, LT
STA. 103+70 - 104+75, RT
STA. 104+27 - 104+71, LT

BOX BEAM GUARDRAIL
STA. 102+22 - 102+24, LT
STA. 102+50 - 102+51, RT
STA. 103+36 - 103+40, LT
STA. 104+00 - 104+03, RT

GUARDRAIL APPROACH SECTION, 3 RAIL BOX BEAM
STA. 102+22 - 102+47, LT
STA. 102+51 - 102+74, RT
STA. 103+46 - 103+52, LT
STA. 103+73 - 104+03, RT

BRIDGE RAILING, GALVANIZED STEEL TUBING/CONCRETE COMBINATION
STA. 102+47 - 103+46, LT
STA. 102+74 - 103+73, RT

REMOVAL AND DISPOSAL OF GUARDRAIL
STA. 102+40 - 102+56, LT
STA. 102+66 - 102+77, RT
STA. 103+40 - 103+52, LT
STA. 103+63 - 104+79, RT

COLD PLANING, BITUMINOUS PAVEMENT
STA. 100+80 - 101+00, LT & RT
STA. 1+50 - 2+00, LT & RT (ELM ST.)
STA. 5+00 - 5+50, LT & RT (GLEASCOTT AVE)
STA. 104+75 - 105+75, LT & RT

CONSTRUCT 5' PAVED APRON
STA. 103+57 - 104+39, RT

CONSTRUCT 6' PAVED APRON
STA. 101+19 - 101+31, RT
STA. 105+25 - 105+43, RT

CONSTRUCT 22' PAVED APRON
STA. 101+00 - 102+32, LT

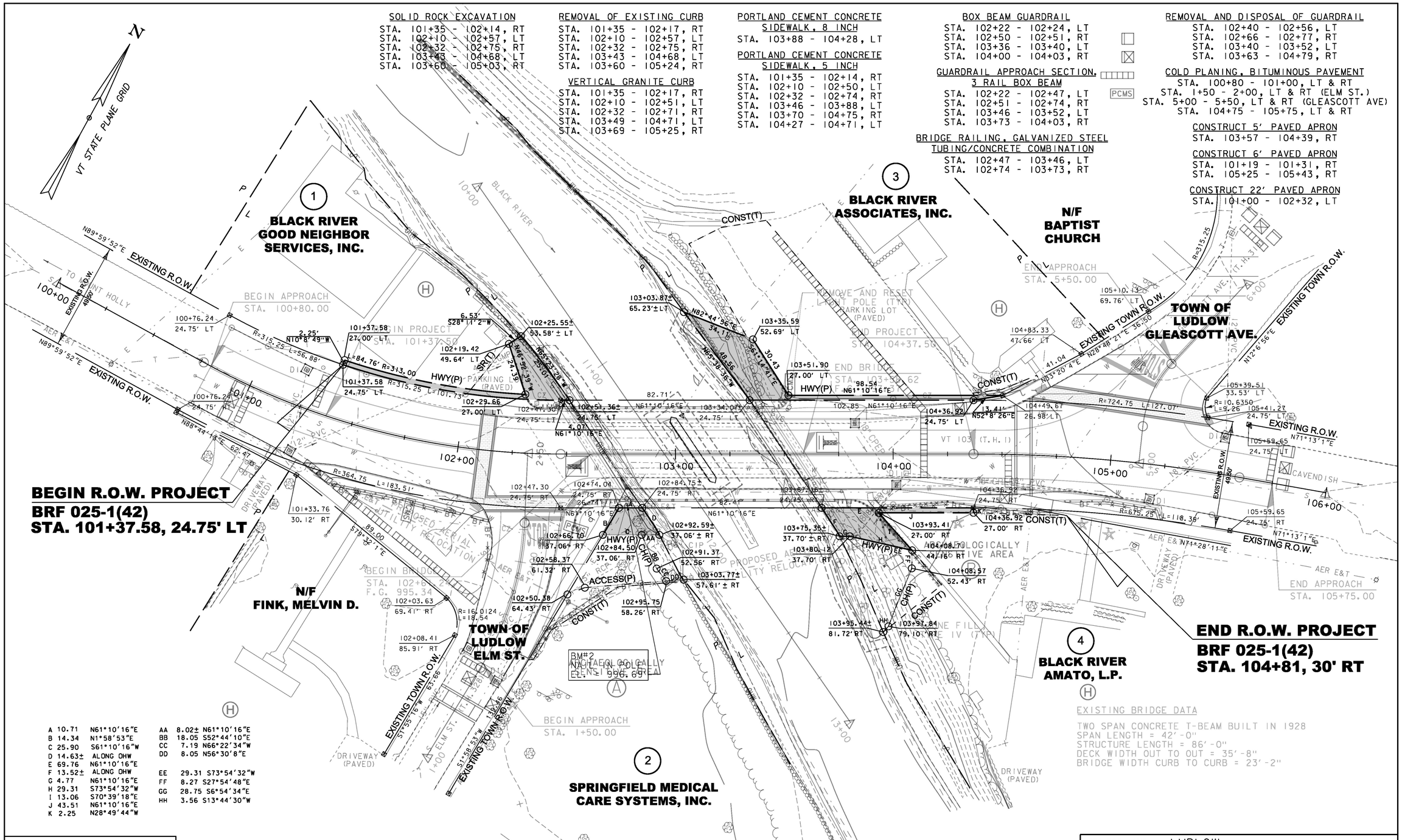

A	10.71	N61°10'16"E	AA	8.02±	N61°10'16"E
B	14.34	N1°58'53"E	BB	18.05	S52°44'10"E
C	25.90	S61°10'16"W	CC	7.19	N66°22'34"W
D	14.63±	ALONG OHW	DD	8.05	N56°30'8"E
E	69.76	N61°10'16"E			
F	13.52±	ALONG OHW	EE	29.31	S73°54'32"W
G	4.77	N61°10'16"E	FF	8.27	S27°54'48"E
H	29.31	S73°54'32"W	GG	28.75	S6°54'34"E
I	13.06	S70°39'18"E	HH	3.56	S13°44'30"W
J	43.51	N61°10'16"E			
K	2.25	N28°49'44"W			

EXISTING BRIDGE DATA
TWO SPAN CONCRETE T-BEAM BUILT IN 1928
SPAN LENGTH = 42'-0"
STRUCTURE LENGTH = 86'-0"
DECK WIDTH OUT TO OUT = 35'-8"
BRIDGE WIDTH CURB TO CURB = 23'-2"

LINES SHOWN ON THIS PLAN AS EXISTING PROPERTY LINES P/L ARE BELIEVED TO BE ACCURATE BUT SHOULD NOT BE RELIED UPON FOR PURPOSES UNRELATED TO THE STATE OF VERMONT'S ACQUISITION OF LAND AND RIGHTS FOR THIS PROJECT.

FOR R.O.W. USE ONLY

PROJECT NAME: LUDLOW
PROJECT NUMBER: BRF 025-1(42)

FILE NAME: r10j068layl.dgn
PROJECT LEADER: T. SUMNER
DESIGNED BY: VHB
ROW LAYOUT SHEET 1 OF 1

PLOT DATE: 14-JAN-2015
DRAWN BY: A. EGIZI
CHECKED BY: R. CLOUTIER
SHEET 69 OF 73

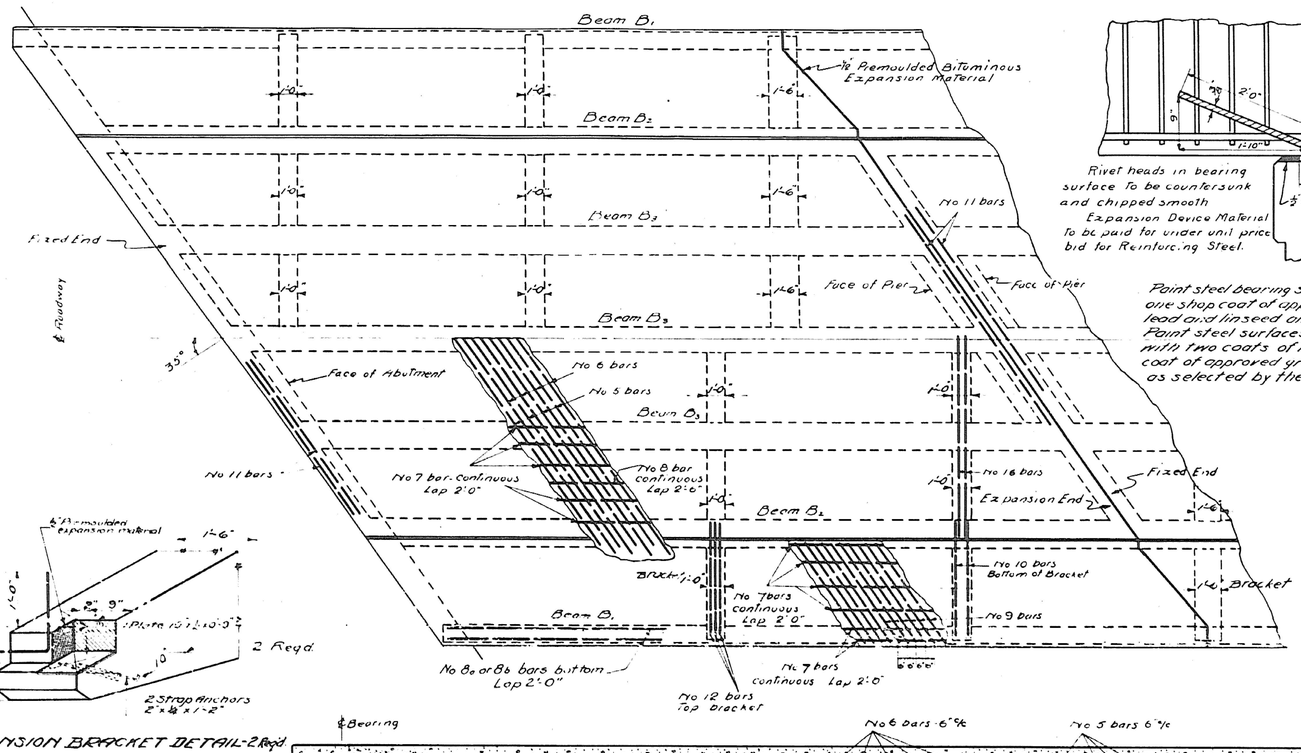

EXPANSION BRACKET DETAIL-2 Reqd

for detail of typical bracket see superstructure plan sheet

Paint steel bearing surfaces in contact with one shop coat of approved tallow, white lead and linseed and one field coat of same
Paint steel surfaces exposed after erection with two coats of red lead and oil and one coat of approved graphite paint of color as selected by the engineer

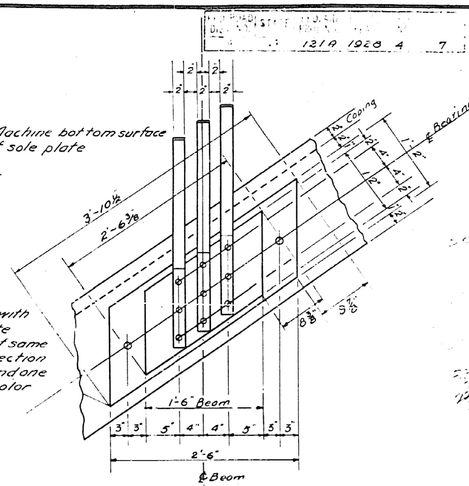

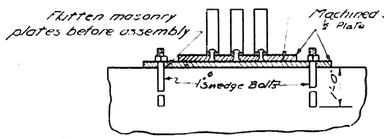

EXPANSION DEVICE DETAIL INTERIOR BEAMS 6 REQ'D

REINFORCING STEEL SCHEDULE

		Total lgth.	
No 1 bar	1⅛ Sq	23'-6"	
No 21 bar	1½ Sq	12'-0"	
No 2 bar	⅞ Sq	48'-6"	
No 22 bar	1⅝ Sq	12'-0" + 33'-6" + 2'-6"	
No 23 bar	1⅝ Sq	42'-6"	
No 3 bar	⅞ Sq	48'-6"	2'-6" + 2'-6" + 32'-0" + 2'-6" + 2'-6"
No 24 bar	1⅝ Sq	48'-6"	1'-6" + 2'-6" + 28'-0" + 2'-6" + 2'-6"
No 12 bar	1" Rd	10'-9"	1'-6" R, 9'-6"
No 5 bar	⅝ Rd	25'-0"	23'-2", c: 1'-0", d: 11"
No 6 bar	⅝ Rd	26'-0"	23'-2" + 2'-0", c: 1'-6", d: 11"

STIRRUPS	Size	Type	a	b	Total Lengths
No 9 bar	⅜ Rd	A			8'-0"
No 13 bar	⅜ Rd	B	2'-6		7'-0"
No 18 bar	⅜ Rd	C			9'-0"
No 19 bar	⅜ Rd	D			3'-3"
No 34 bar	⅜ Rd	A	Varies		Varies

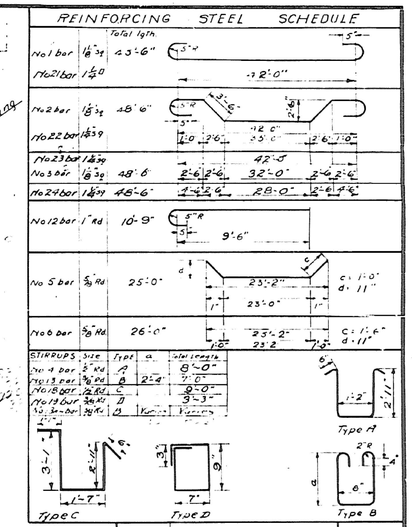

No 7 bar	⅞ Rd	22'-6"
No 8a bar	¾ Sq	30'-0"
No 9 bar	⅝ Rd	5'-9"
No 10 bar	⅝ Rd	9'-3"
No 11 bar	⅝ Rd	23'-0"
No 14 bar	1" Sq	9'-9"
No 15 bar	1" Rd	9'-9"
No 16 bar	⅞ Rd	12'-0"
No 38 bar	½" Rd	⅜ 6" c. to c. ½" X hook
No 39 bar	½" Rd	6'-0"

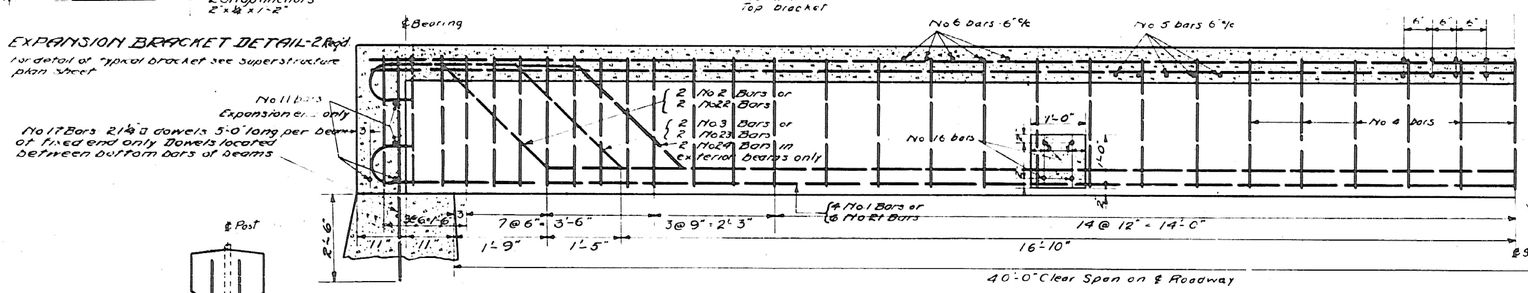

HALF-SECTION-OF-GIRDER

measurements on ℄ Roadway

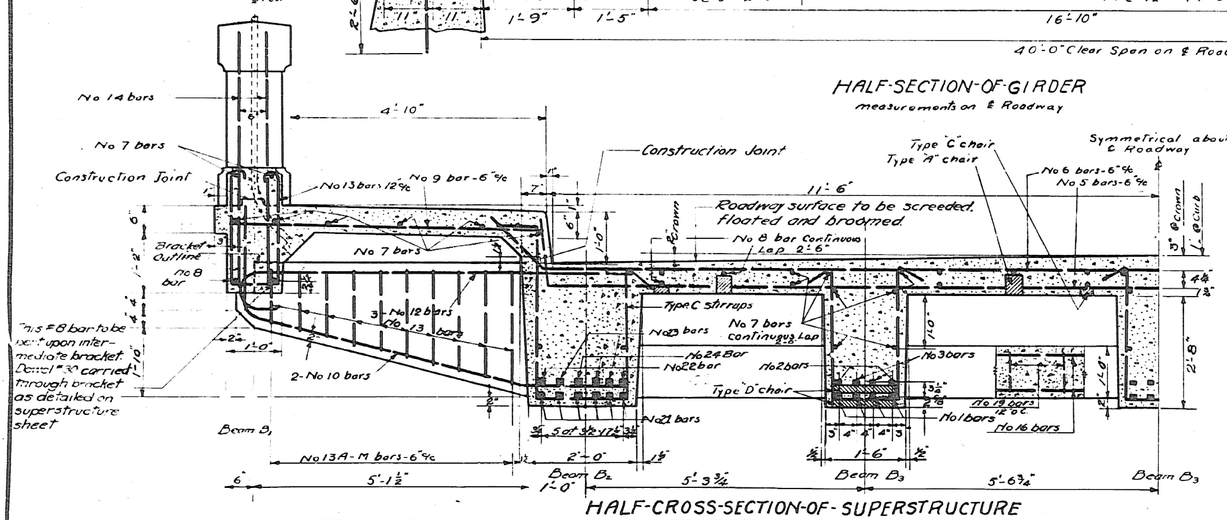

HALF-CROSS-SECTION-OF-SUPERSTRUCTURE

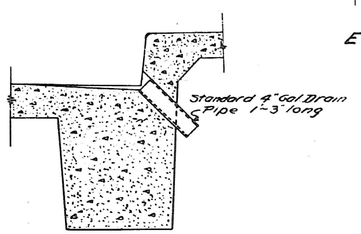

DRAINAGE DETAIL

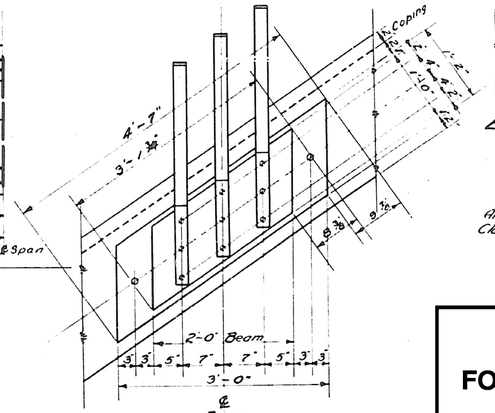

EXPANSION DEVICE DETAIL EXTERIOR BEAMS 4 REQ'D

Make similar to interior beam detail except as shown.

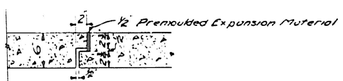

SIDEWALK EXPANSION JOINT

All concrete in this superstructure to be Class A concrete (1:2:4 mix)

Ludlow
BRF 025-1(42)
FOR REFERENCE ONLY
SHEET 70 OF 73

SUPER STRUCTURE FIRE STATION BRIDGE LUDLOW-VT.

ESTIMATED QUANTITIES

See superstructure plan sheet for estimate of quantities.

Surveyed by
Designed by
Drawn by A.H.D 8/13/28
Traced by A.H.D 8/13/28
Checked by M. L. Woodruff 4-17-28
Series F No. 1219 Filed 4-18-21
Sheet 4 of 7 Sheets

121A 1928 5 7

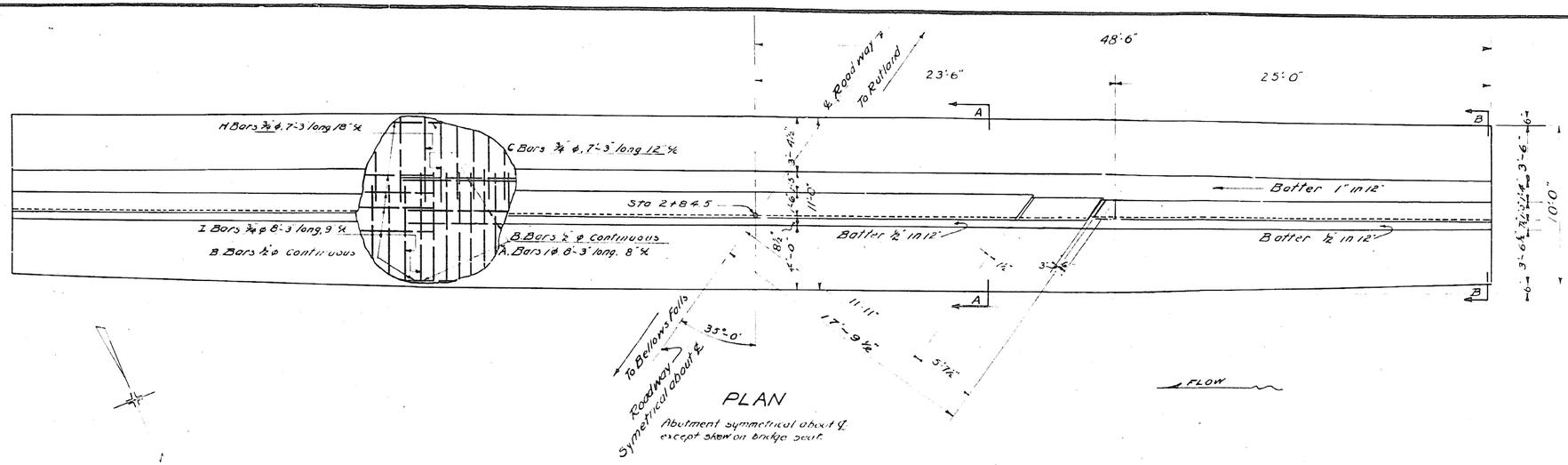

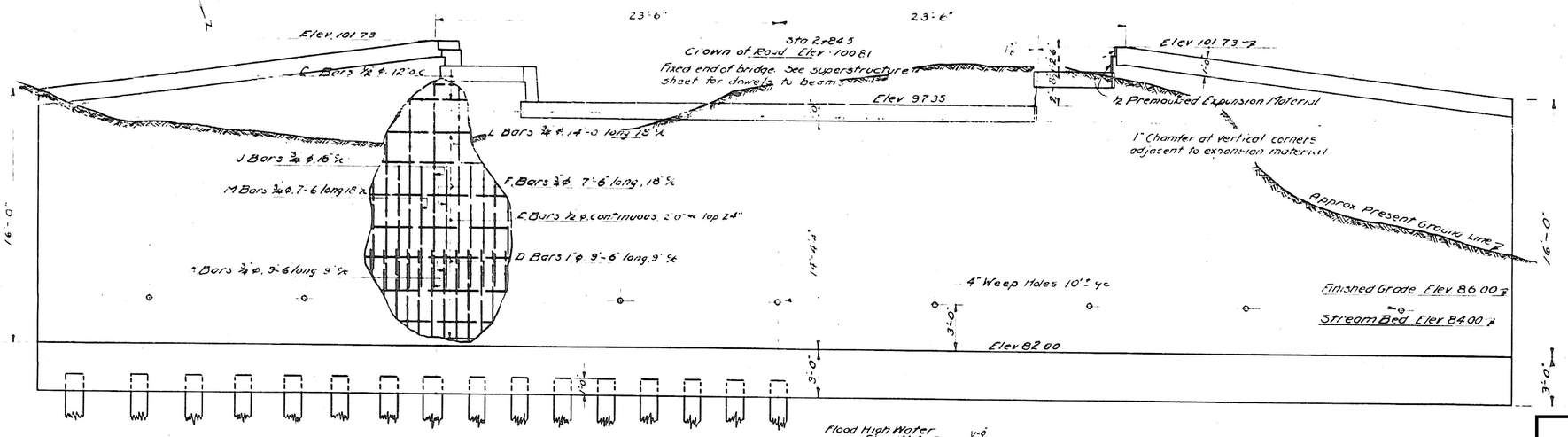

ELEVATION

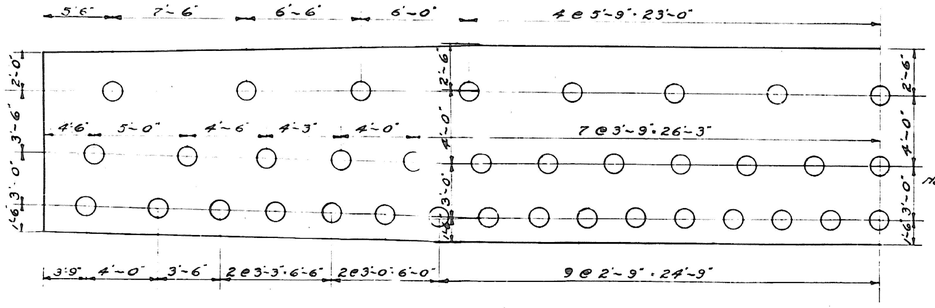

HALF PILING PLAN

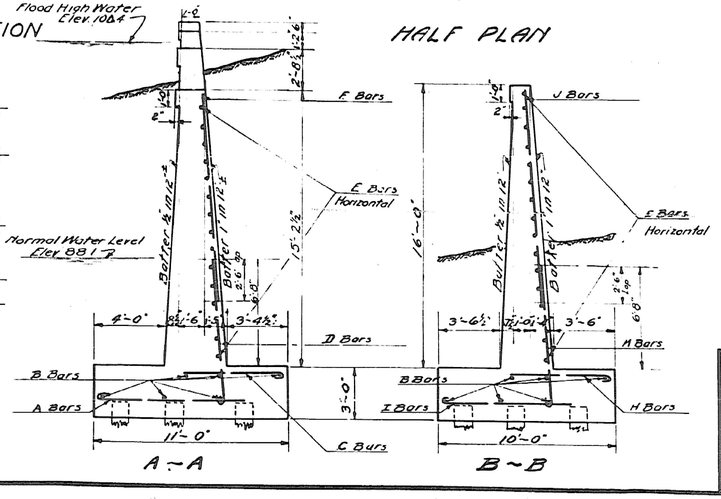

HALF PLAN

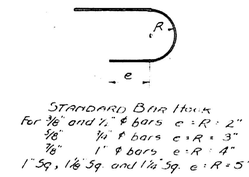

Ludlow
BRF 025-1(42)
FOR REFERENCE ONLY
SHEET 71 OF 73

WEST ABUTMENT
STA - 2+84.5
FIRE STATION BRIDGE
LUDLOW VT.

Estimate of Quantities

Structure Excavation	625 Cu yds
Timber Piling	1440 lin ft
Class B Concrete (2.5	245 Cu yds
Reinforcing Steel	7700 lbs

Surveyed by Rodigon
Designed by W.G.H
Drawn by K.B.W.
Traced by K.B.W.
Checked by M. Blodgett 4/14/21
Series F No. 121A Filed 4-19-21
Sheet 5 of 7 Sheets

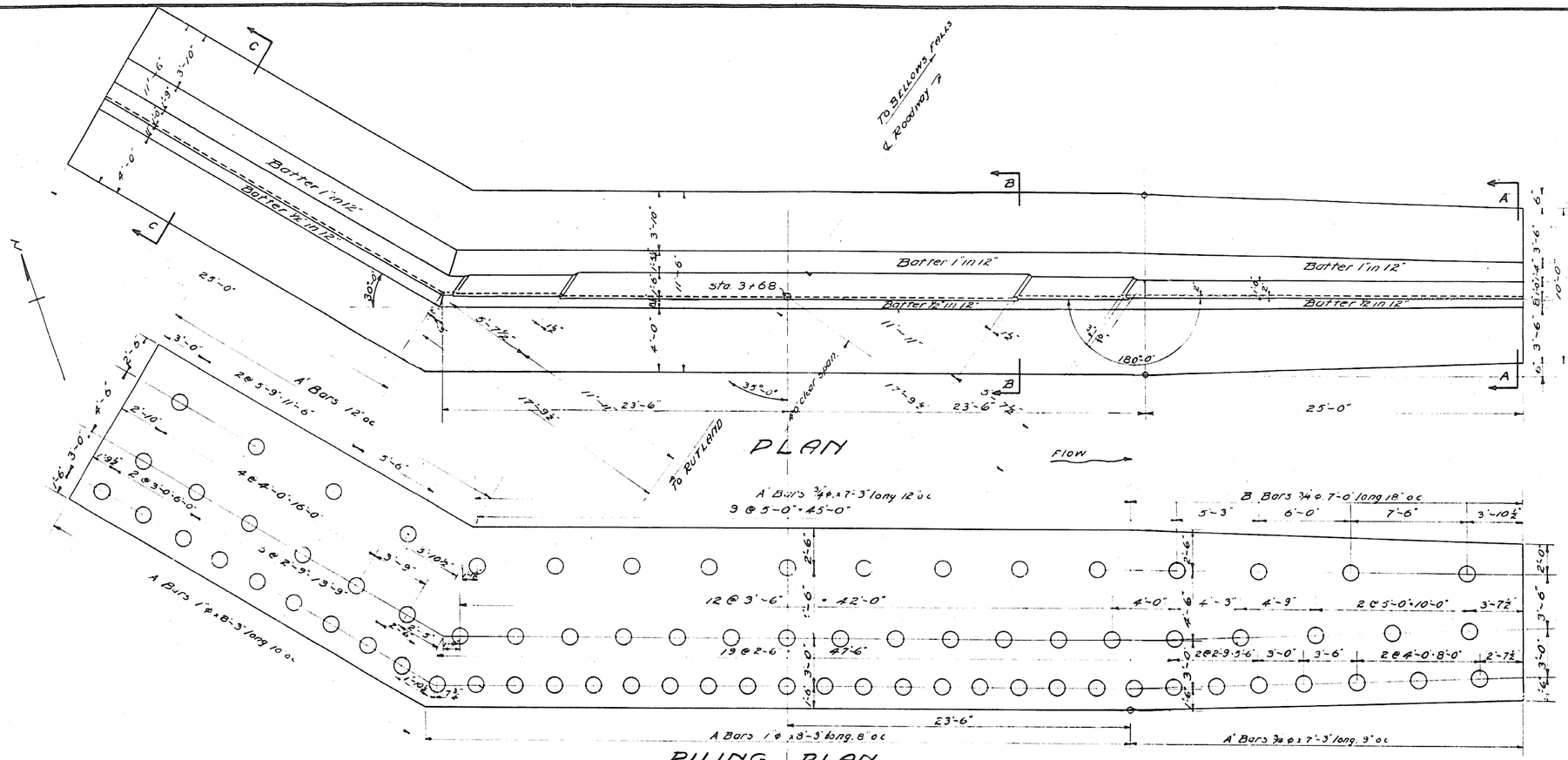

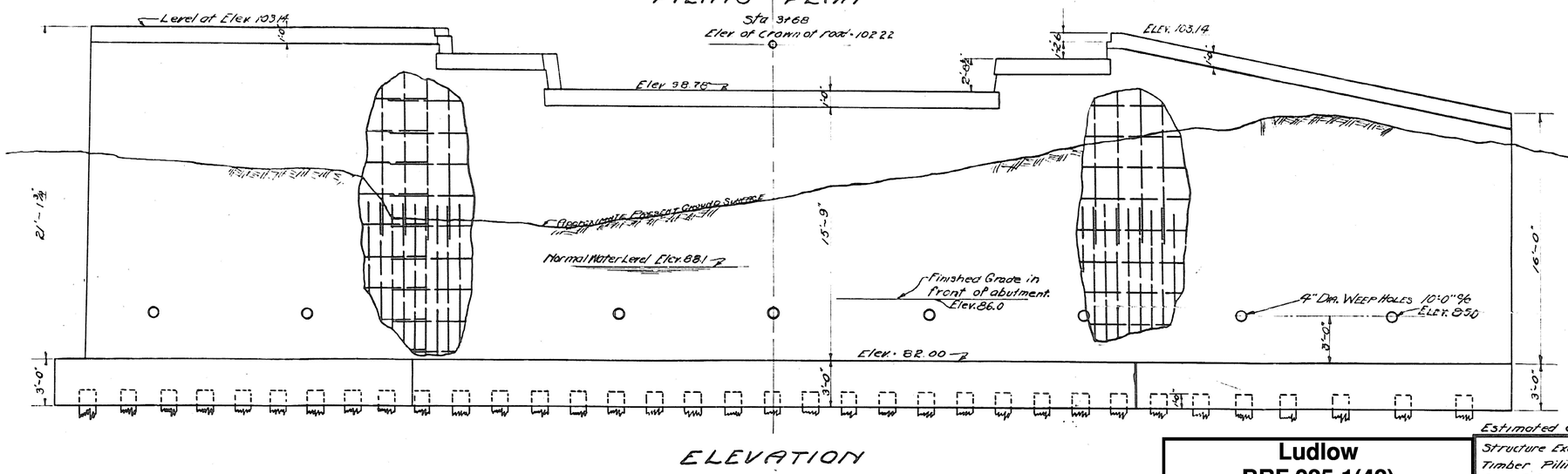

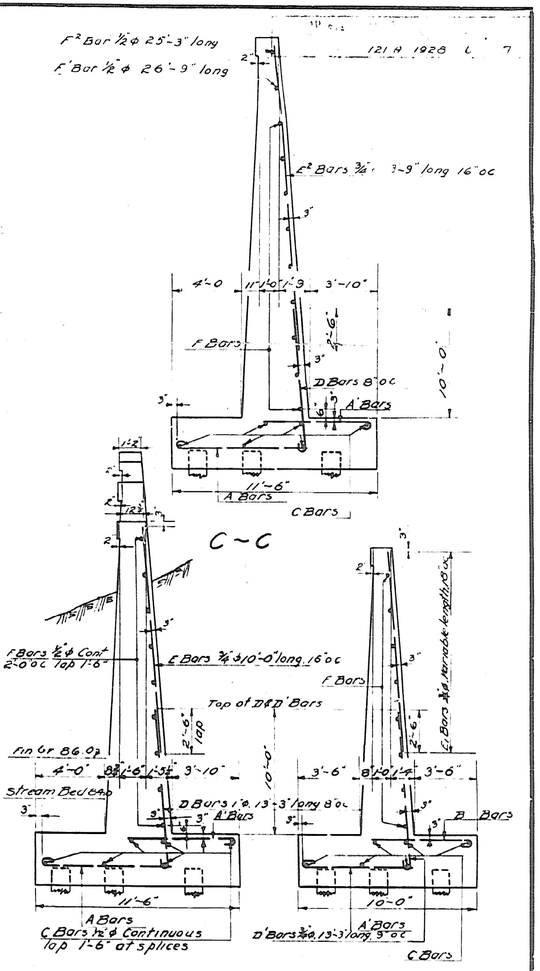

See Pier sheet for general notes, score marks and construction joint detail See West Abutment sheet for standard bar hook

EAST ABUTMENT
STA. 3+68
FIRE STATION BRIDGE
LUDLOW VT.

Ludlow
BRF 025-1(42)
FOR REFERENCE ONLY
SHEET 72 OF 73

Estimated Quantities

Structure Excavation	855 Cu yds.
Timber Piling	1320 Lin. ft
Class B Concrete 1:2½:5	282 cu. yds
Reinforcing Steel	10,000 Lbs

Surveyed by Radigan
Designed by W.G.H
Drawn by H.B.W
Traced by H.B.N
Checked by M.R. Woodruff 4/6/21
Series F No. 121A Filed 4-18-21
Sheet 6 of 7 Sheets

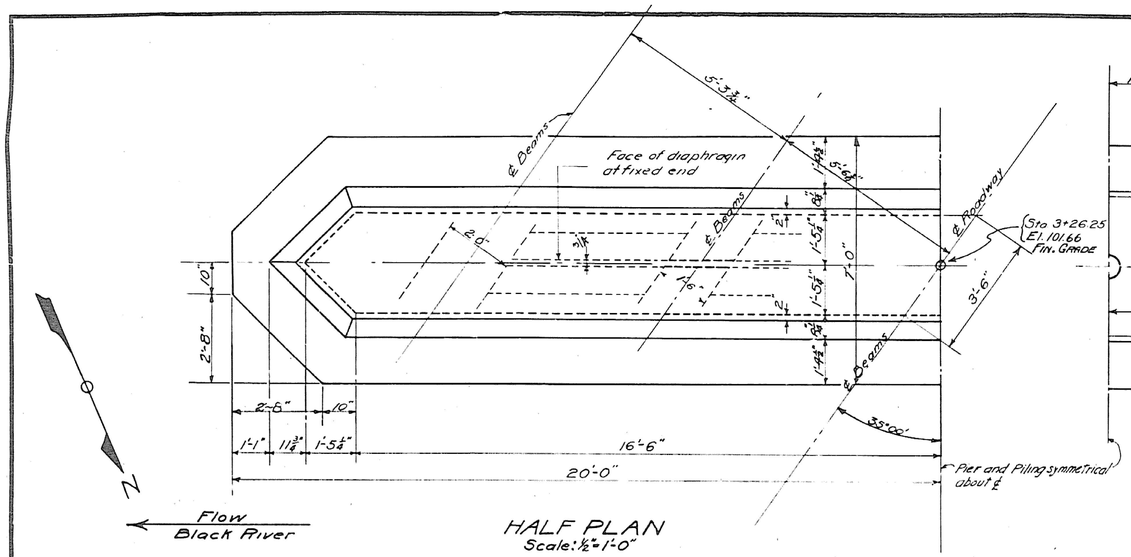

HALF PLAN
Scale: ½"=1'-0"

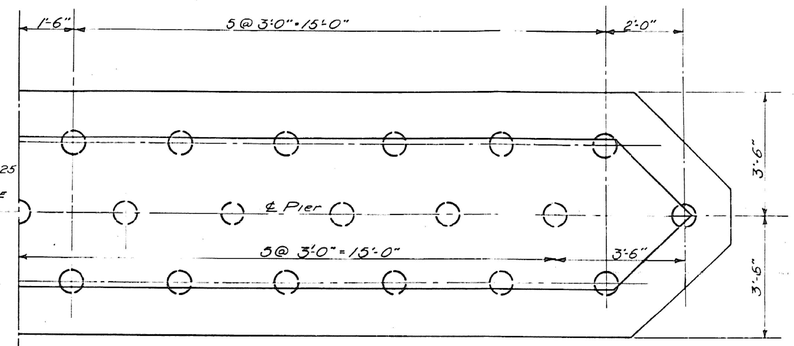

HALF PILING PLAN
Scale: ½"=1'-0"

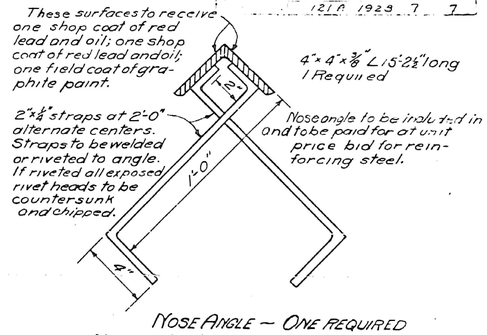

NOSE ANGLE — ONE REQUIRED
Nose angle to extend from footing to coping on upstream end of pier adjacent.

GENERAL NOTES:

All work and materials shall conform to the Standard Road and Bridge Specifications of the Vermont Department of Highway, 1926.

Any suitable structure excavation used by the Contractor for any purpose other than for back fill or approach fill shall be replaced by the Contractor at his own expense unless same is ordered wasted by the Engineer.

All concrete in pier and abutments to be Class B (1-2½-5) mix.

All steel to be deformed bars. Reinforcing steel shall conform to the Standard Specifications for Billet Steel Concrete Reinforcement bars, Intermediate or Structural Grade, of the American Society for Testing Materials, Serial Designation A.15-14.

All exposed edges shall be chamfered 1"

For dowels to beams at fixed ends of bridge spans, see superstructure detail.

Fill piles are computed for a safe load of 15 tons each.

For purposes of estimate all piles have been considered as being 20' piling.

The length, angle and heighth of wings may be determined or changed by the engineer.

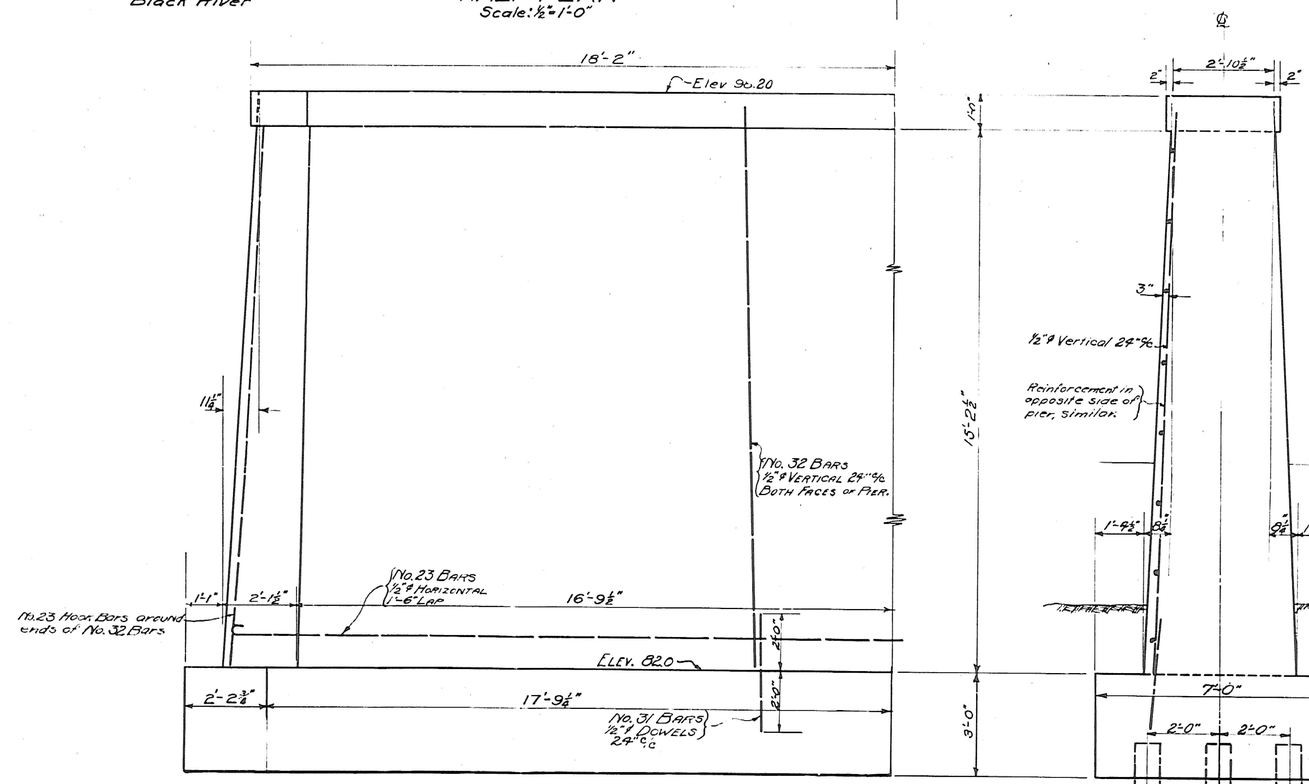

HALF ELEVATION
Scale: ½"=1'-0"

SECTION AT ℄
Scale: ½"=1'-0"

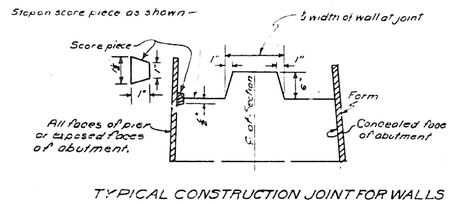

TYPICAL CONSTRUCTION JOINT FOR WALLS

Unless otherwise directed by the Engineer, score pieces shall be equally spaced vertically at about 1'-6" c. to c. and stop at underside of copings and shall be carried around ends of walls or piers where they may be exposed to view. Score marks shall line horizontally throughout job.

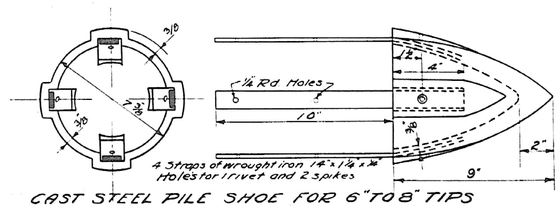

4 Straps of wrought iron 1½"×1⅛"×⅜" Holes for rivet and 2 spikes

CAST STEEL PILE SHOE FOR 6" TO 8" TIPS

If jetting is necessary, two water jets should be used with a water pressure of at least 150 lbs. per sq. in. Pump to be of piston type with a 6" diameter intake pipe and a 4" diameter outlet pipe. The jet pipe to be about 2" in diameter, nozzle to be circular in section of ½" to ¾" in diameter. Unit price bid for wooden piles shall include jetting if necessary and furnishing and placing pile shoes

PIER DETAIL FOR FIRE STATION BRIDGE OVER BLACK RIVER LUDLOW — VT

Ludlow
BRF 025-1(42)
FOR REFERENCE ONLY
SHEET 73 OF 73

ESTIMATED QUANTITIES

Class B Concrete	101 Cu. Yds.
Timber Piling	740 Lin. Ft.
Reinforcing Steel	1130 Lbs.
Structure Excavation	70 Cu. Yds.

Surveyed by	H.P. Rodigon
Designed by	W.G. Huber 3/14/28
Drawn by	C.D. Lord 3/15/28
Traced by	C.D. Lord 3/16/28
Checked by	M.L. Woodruff
Series	F No. 1219 Filed 4-18-21
	Sheet 7 of 7 Sheets

CONCRETE GENERAL NOTES

1. ALL EXPOSED EDGES OF CONCRETE SHALL BE CHAMFERED 1" x 1"
2. REINFORCING STEEL SIZE AND SPACING SHOWN IN THE PLANS IS BASED ON 60 KSI STEEL, UNLESS NOTED OTHERWISE. WITH THE ENGINEER'S PERMISSION, BAR SIZE AND SPACING MAY BE MODIFIED ACCORDING TO THE LATEST AASHTO LRFD BRIDGE DESIGN SPECIFICATION AND STRUCTURES DESIGN MANUAL WHEN USING HIGHER STRENGTH STEEL.

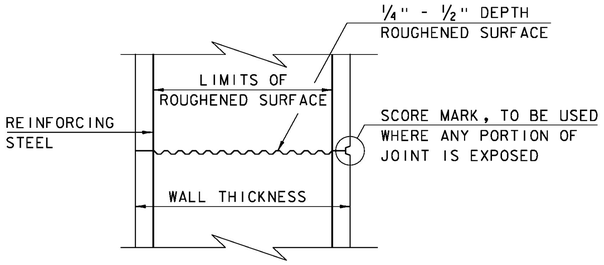

TYPICAL HORIZONTAL CONSTRUCTION JOINT
(NOT TO SCALE)

1. THE SURFACE OF THE CONCRETE CONSTRUCTION JOINTS SHALL BE CLEANED AND FREE OF LAITANCE.
2. IMMEDIATELY BEFORE NEW CONCRETE IS PLACED, ALL CONSTRUCTION JOINTS SHALL BE WETTED AND STANDING WATER REMOVED.

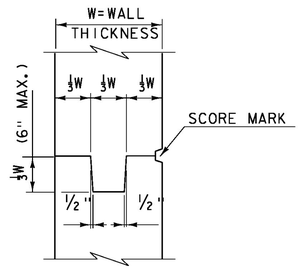

TYPICAL CONCRETE CONSTRUCTION JOINT
(NOT TO SCALE)

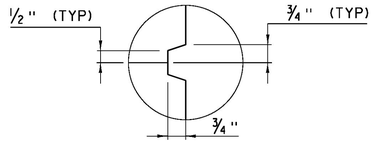

SCORE MARK DETAIL
(NOT TO SCALE)

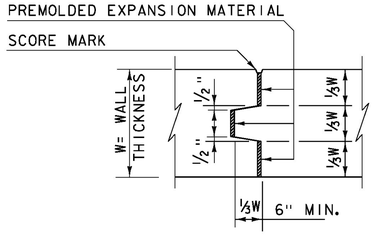

TYPICAL CONCRETE EXPANSION JOINT
(NOT TO SCALE)

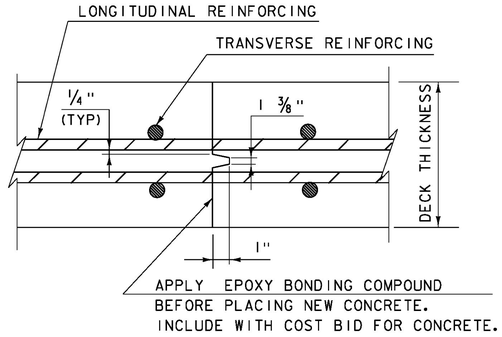

TRANSVERSE BRIDGE SLAB CONSTRUCTION JOINT DETAILS
(NOT TO SCALE)

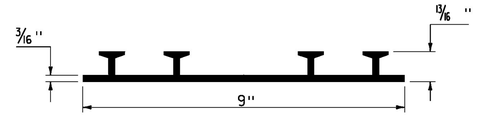

P.V.C. WATERSTOP FOR CONSTRUCTION JOINTS
(NOT TO SCALE)

PAYMENT FOR THE P.V.C. WATERSTOP SHALL BE INCIDENTAL TO THE UNIT BID PRICE FOR THE ADJACENT CONCRETE.

OTHER CONFIGURATIONS OF WATERSTOP MAY BE USED UPON APPROVAL OF THE ENGINEER.

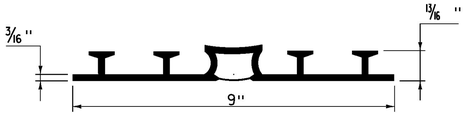

P.V.C. WATERSTOP FOR EXPANSION JOINTS
(NOT TO SCALE)

PAYMENT FOR THE P.V.C. WATERSTOP SHALL BE INCIDENTAL TO THE UNIT BID PRICE FOR THE ADJACENT CONCRETE.

OTHER CONFIGURATIONS OF WATERSTOP MAY BE USED UPON APPROVAL OF THE ENGINEER.

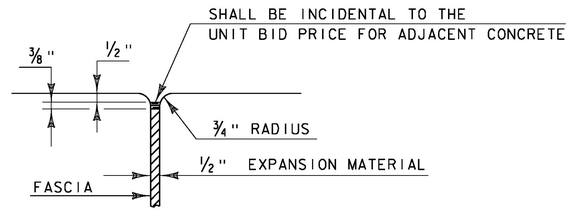

JOINT BETWEEN FASCIA AND WINGWALL
(NOT TO SCALE)

REVISIONS	
MAY 7, 2010	APPROVED FOR USE BY VAOT STRUCTURES SECTION
FEBRUARY 9, 2012	REBAR SUBSTITUTION ALLOWANCE ADDED TO CONCRETE GENERAL NOTES.

CONCRETE DETAILS AND NOTES

VERMONT AGENCY OF TRANSPORTATION
STRUCTURES SECTION

STRUCTURES DETAIL
SD-501.00

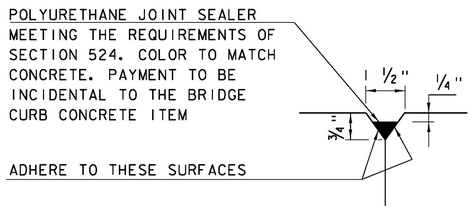

DETAIL "B"
(NOT TO SCALE)

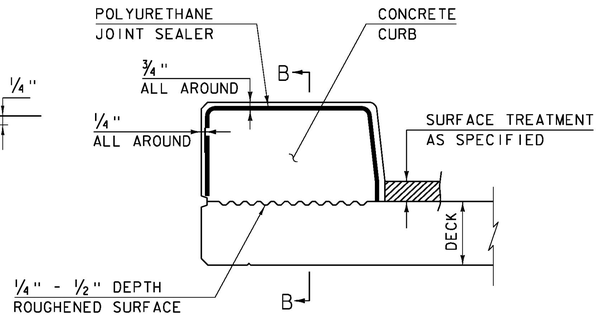

CONCRETE CURB JOINT SECTION
(NOT TO SCALE)

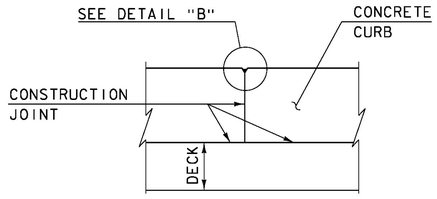

SECTION B - B
(NOT TO SCALE)

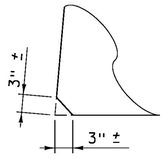

ACUTE ANGLE CLIP DETAIL
(NOT TO SCALE)

1. SEE TYPICAL HORIZONTAL CONSTRUCTION JOINT DETAIL FOR ADDITIONAL INFORMATION

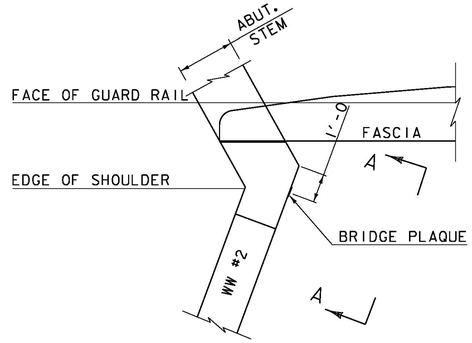

PLAN

CONCRETE CURB JOINT NOTES

1. CONCRETE CURBS MAY BE PLACED IN ONE CONTINUOUS OPERATION IF AN APPROVED SHRINKAGE REDUCING ADMIXTURE LISTED IN THE SPECIAL PROVISIONS IS USED WITH THE CONCRETE MIX DESIGN. PAYMENT FOR THE SHRINKAGE REDUCING ADMIXTURE WILL BE INCIDENTAL TO THE BRIDGE CURB CONCRETE ITEM.

2. IF THE CONTRACTOR CHOOSES NOT TO USE AN APPROVED SHRINKAGE REDUCING ADMIXTURE, THE CURBS SHALL BE CONSTRUCTED WITH CONSTRUCTION JOINTS SPACED AT A MAXIMUM OF 15'-0" CENTER TO CENTER AND 2'-0" MINIMUM FROM THE CENTER OF NEAREST BRIDGE RAILING POST.

3. ON MULTI-SPAN CONTINUOUS SUPERSTRUCTURES, REGARDLESS OF WHETHER APPROVED SHRINKAGE REDUCING ADMIXTURE IS USED, CURB JOINTS SHALL BE LOCATED OVER THE CENTERLINE OF PIERS AND 7'-0" EACH SIDE OF THE CENTERLINE OF EACH PIER.

4. WHEN CURB JOINTS ARE USED THE CURBS SHALL BE PLACED IN ALTERNATE SECTIONS WITH A MINIMUM OF 48 HOUR DELAY BETWEEN ADJACENT PLACEMENTS.

5. LONGITUDINAL REINFORCING SHALL BE CONTINUOUS THROUGH CURB CONSTRUCTION JOINTS. CURB STIRRUP BARS SHALL BE TURNED AS NECESSARY TO MAINTAIN COVER IN THE FLARED CURB ENDS.

6. THE JOINT SPACING AND DETAILS SHOWN SHALL APPLY TO SIDEWALKS WHEN SHOWN IN THE PLANS.

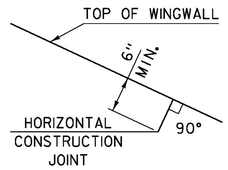

HORIZONTAL WINGWALL CONSTRUCTION JOINT
(NOT TO SCALE)

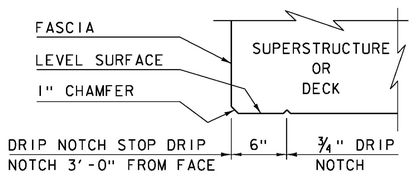

DRIP NOTCH DETAIL
(NOT TO SCALE)

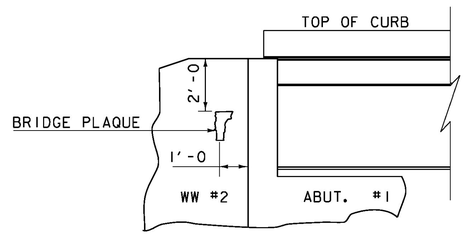

VIEW "A - A"

BRIDGE PLAQUE
(NOT TO SCALE)

THE BRIDGE PLAQUE WILL BE SUPPLIED BY THE AGENCY OF TRANSPORTATION AND SHALL BE INSTALLED BY THE CONTRACTOR AT ABUTMENT #1 ON THE RIGHT SIDE AS SHOWN OR AS DIRECTED BY THE ENGINEER.

PAYMENT FOR INSTALLATION OF THE BRIDGE PLAQUE SHALL BE INCIDENTAL TO THE ADJACENT CONCRETE.

REVISIONS	
MAY 7, 2010	APPROVED FOR USE BY VAOT STRUCTURES SECTION
JUNE 4, 2010	MODIFIED AND ADDED TWO DETAILS
OCTOBER 10, 2012	MODIFIED HORZ. JOINT WINGWALL ADD 6" MIN. DIMENSION

CONCRETE DETAILS AND NOTES

VERMONT AGENCY OF TRANSPORTATION
STRUCTURES - SECTION

STRUCTURES DETAIL
SD-502.00

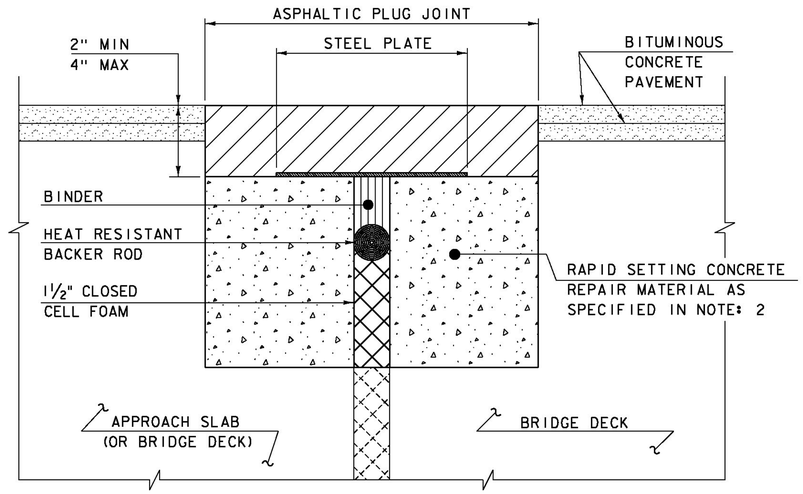

ASPHALTIC PLUG JOINT DETAIL - REHAB

NOTES:

1. THE CONTRACTOR SHALL REMOVE ALL ASPHALTIC PLUG JOINT MATERIAL AND DETERIORATED CONCRETE AS DIRECTED BY THE ENGINEER. REMOVAL OF THE FIRST 4 INCHES OF MATERIAL SHALL BE INCLUDED IN THE BID PRICE FOR ITEM 516.10 BRIDGE EXPANSION JOINT, ASPHALTIC PLUG. ANY REMOVAL OF MATERIAL GREATER THAN 4 INCHES SHALL BE INCLUDED IN THE BID PRICE OF ITEM 580.20 RAPID SETTING CONCRETE REPAIR MATERIAL WITH COARSE AGGREGATE.

2. THE CONTRACTOR SHALL REPLACE REMOVED MATERIAL THAT IS LESS THAN 4" FROM FINISHED GRADE WITH ASPHALTIC PLUG JOINT MATERIAL MEETING THE REQUIREMENTS OF SUBSECTION 707.15. ALL REMOVED MATERIAL THAT IS GREATER THAN 4 INCHES FROM FINISHED GRADE SHALL BE REPLACED WITH RAPID SETTING CONCRETE REPAIR MATERIAL WITH COARSE AGGREGATE MEETING THE REQUIREMENTS OF SUBSECTION 780.04.

3. REINFORCING STEEL NOT SHOWN FOR CLARITY.

4. PLACE 1/4" THICK BY 8" WIDE SECTIONS OF STEEL PLATE OVER THE CENTER OF THE MOVEMENT GAP. SECURE THE PLATES FROM MOVING BY INSERTING LOCATING PINS THROUGH THE PRE-STAMPED HOLES INTO BACKER ROD AND COVER WITH HOT BINDER. THE STEEL PLATES MAY BE OMITTED WHERE THE ENGINEER DETERMINES THAT THE APPROACH SLAB OR BRIDGE DECK WILL PROVIDE INADEQUATE SUPPORT AND WHERE VERTICAL MOVEMENT OF THE PLATES MIGHT OCCUR.

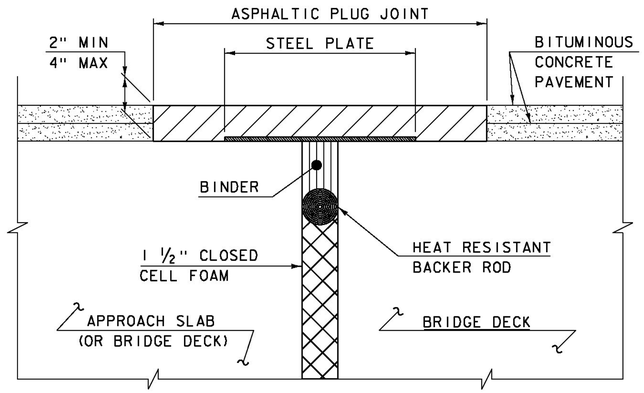

ASPHALTIC PLUG JOINT DETAIL "A" - NEW

NOTE:
PLACE 1/4" THICK BY 8" WIDE SECTIONS OF STEEL PLATE OVER THE CENTER OF THE MOVEMENT GAP. SECURE THE PLATES FROM MOVING BY INSERTING LOCATING PINS THROUGH THE PRE-STAMPED HOLES INTO BACKER ROD AND COVER WITH HOT BINDER.

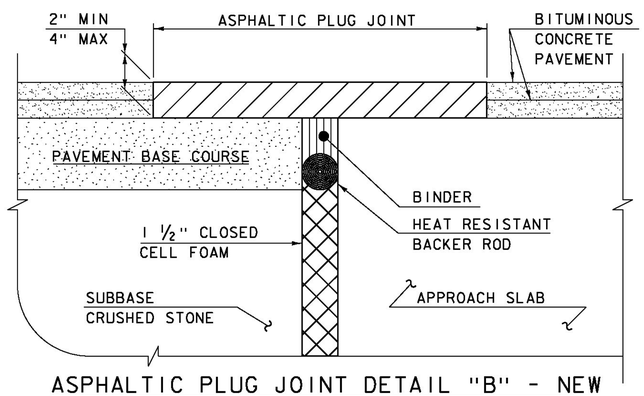

ASPHALTIC PLUG JOINT DETAIL "B" - NEW

ASPHALTIC PLUG JOINT NOTES

INSTALLATION:

1. LOCATE THE JOINT CENTRALLY OVER THE DECK OVERLAY EXPANSION GAP OR FIXED JOINT, MARKED OUT TO THE MANUFACTURER'S RECOMMENDED WIDTH.
2. REMOVE THE BITUMINOUS CONCRETE PAVEMENT FULL DEPTH AS SHOWN ON THE PLANS. THE PAVEMENT SHALL BE DRY AND SAW CUT TO THE LIMITS REQUIRED TO PLACE THE JOINT. A PNEUMATIC HAMMER AND CHISEL MAY BE USED ADJACENT TO THE CURB ONLY WHEN SAW CUTTING IS NOT POSSIBLE.
3. BLAST CLEAN THE JOINT AREA OF DEBRIS, ASPHALT AND SHEET MEMBRANE. THOROUGHLY DRY THE JOINT AREA WITH COMPRESSED AIR PRIOR TO APPLYING BINDER MATERIAL.
4. PLACE PROPERLY SIZED HEAT RESISTANT BACKER ROD IN THE MOVEMENT GAP ALLOWING FOR 1" +/- OF BINDER ABOVE THE ROD.
5. HEAT AND PLACE THE BINDER MATERIAL AS RECOMMENDED BY THE MANUFACTURER.
6. IMMEDIATELY AFTER TOP COATING, CAST AN ANTI-SKID MATERIAL OVER THE JOINT TO REDUCE THE RISK OF TRACKING.

WEATHER LIMITATIONS

APPLY BINDER MATERIAL ONLY WHEN THE FOLLOWING CONDITIONS PREVAIL OR AS RECOMMENDED BY THE MANUFACTURER:

1. THE AMBIENT AIR TEMPERATURE IS AT LEAST 10 DEG C (50 DEG F) AND RISING.
2. THE ROAD SURFACE IS DRY.
3. WEATHER CONDITIONS OR OTHER CONDITIONS ARE FAVORABLE AND ARE EXPECTED TO REMAIN SO FOR THE PERFORMANCE OF SATISFACTORY WORK.

DETAILS ON THIS SHEET ARE NOT TO SCALE.

REVISIONS	
MAY 7, 2010	APPROVED FOR USE BY VAOT STRUCTURES SECTION
AUGUST 29, 2011	ADD DETAIL "B" AND REV. NOTES

BRIDGE JOINT
ASPHALTIC PLUG

VERMONT AGENCY OF TRANSPORTATION
STRUCTURES - DIVISION

STRUCTURES DETAIL
SD-516.10

STRUCTURAL STEEL GENERAL NOTES:

1. ALL FIELD CONNECTIONS SHALL BE MADE WITH 7/8" DIAMETER HIGH-STRENGTH BOLTS IN 15/16" DIAMETER HOLES, PER SUBSECTION 506.19, UNLESS OTHERWISE SPECIFIED.
2. ALL HOLES IN THE WEBS OF THE FASCIA GIRDERS THAT ARE NOT OTHERWISE FILLED, SHALL BE FILLED WITH EITHER BUTTON HEAD OR HEX HEAD BOLTS. THESE BOLTS SHALL BE TIGHTENED IN ACCORDANCE WITH SUBSECTION 506.19.
3. ALL WELDING SHALL CONFORM TO THE PROVISIONS OF SUBSECTION 506.10.
4. ANY CONNECTIONS THAT ARE NOT DETAILED ON THE PLANS SHALL BE DETAILED BY THE FABRICATOR AND SUBMITTED TO THE STRUCTURES ENGINEER FOR APPROVAL.
5. STRUCTURAL STEEL MEMBERS DESIGNATED "CVN" IN THE PLANS SHALL BE CHARPY V-NOTCH TESTED IN ACCORDANCE WITH SUBSECTION 714.01 OF THE STANDARD SPECIFICATIONS.
6. ENDS OF GIRDERS ARE TO BE VERTICAL IN THEIR FINAL POSITION.
7. AFTER SUPERSTRUCTURE STEEL HAS BEEN ERECTED, ELEVATIONS ALONG THE TOP OF THE GIRDERS SHALL BE TAKEN AS DIRECTED BY THE RESIDENT ENGINEER FOR USE IN DETERMINING FINISHED GRADES.

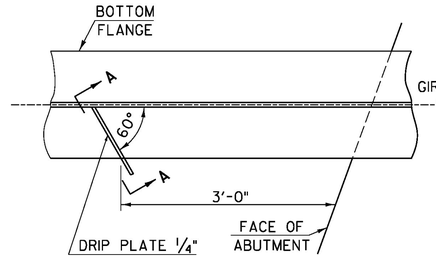

PLAN DRIP PLATE

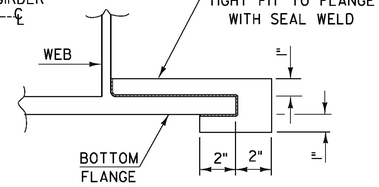

SECTION A - A

NOTE: DRIP PLATES SHALL BE PLACED ON OUTSIDE EDGE OF FASCIA GIRDERS ON THE HIGH SIDE OF ALL PIERS AND ABUTMENTS OR AS INDICATED ON PROJECT PLANS.

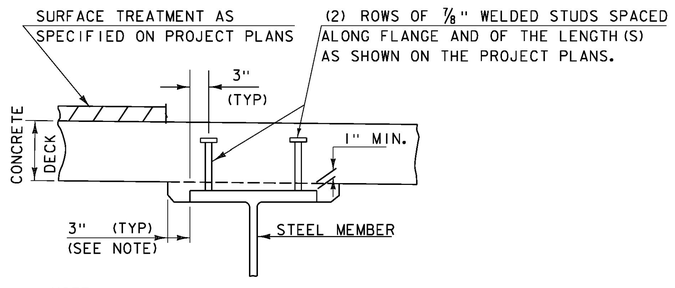

NOTE:
THE 3" HORIZONTAL SECTION MAY BE ELIMINATED FOR FORMING SYSTEMS DESIGNED FOR THE CONSTRUCTION OF VERTICAL HAUNCHES. ANY VOIDS RESULTING FROM FORMING SYSTEM ELEMENTS SHALL BE FILLED WITH JOINT SEALER, POLYURETHANE MEETING THE REQUIREMENTS OF SECTION 524. THE COST OF THE JOINT SEALER, POLYURETHANE SHALL BE INCIDENTAL TO THE ADJACENT CONCRETE.

HAUNCH AND SHEAR CONNECTOR DETAIL

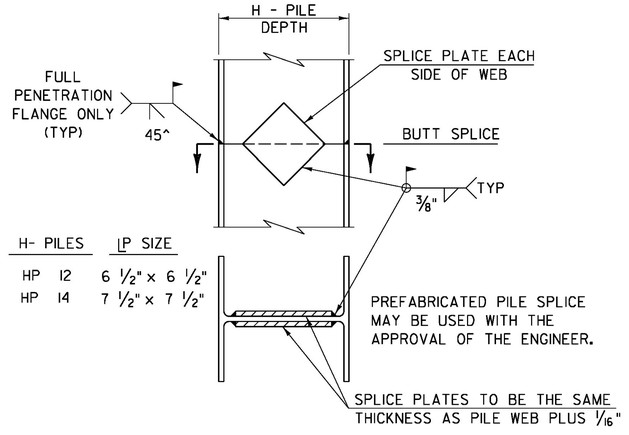

DETAIL OF PILE SPLICE

DETAILS ON THIS SHEET ARE "NOT TO SCALE" UNLESS NOTED OTHERWISE.

REVISIONS	
MAY 7, 2010	APPROVED FOR USE BY VAOT STRUCTURES SECTION
JUNE 4, 2010	MODIFIED NOTES

STRUCTURAL STEEL DETAILS & NOTES

VERMONT AGENCY OF TRANSPORTATION
STRUCTURES - SECTION

STRUCTURES DETAIL
SD-601.00

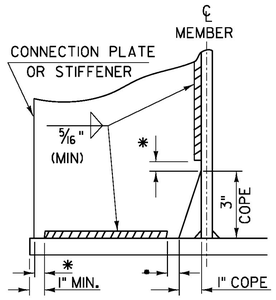

WELD TERMINATION AND COPING DETAILS FOR STEEL MEMBERS

*NO WELD FOR 3/8" MIN. 7/8" MAX. (EXCEPT MUST MAINTAIN 1" MINIMUM FROM EDGE OF FLANGE)

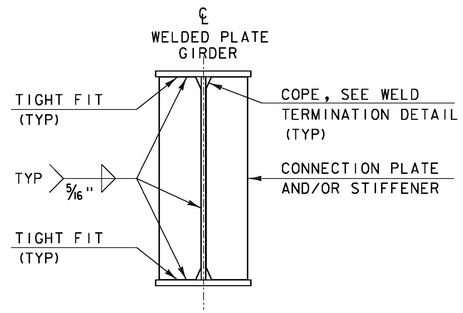

INTERMEDIATE CONNECTION PLATES AND/OR STIFFENERS FOR WELDED PLATE GIRDERS

INTERMEDIATE DETAIL IS ONLY USED WHEN PLATE DOES NOT OCCUR AT AN ABUTMENT OR PIER.

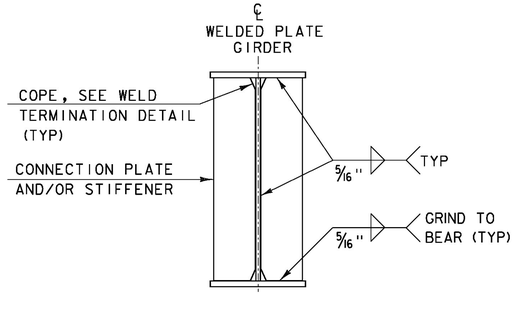

ABUTMENT BEARING STIFFENERS AND/OR CONNECTION PLATES FOR WELDED PLATE GIRDERS

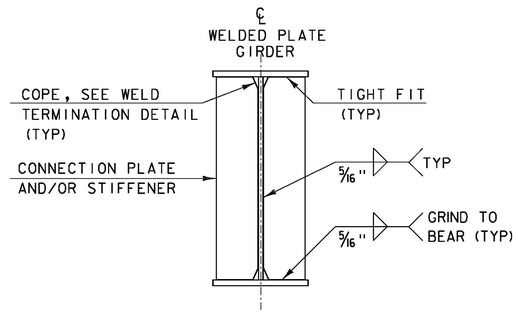

PIER BEARING STIFFENERS AND/OR CONNECTION PLATES FOR WELDED PLATE GIRDERS

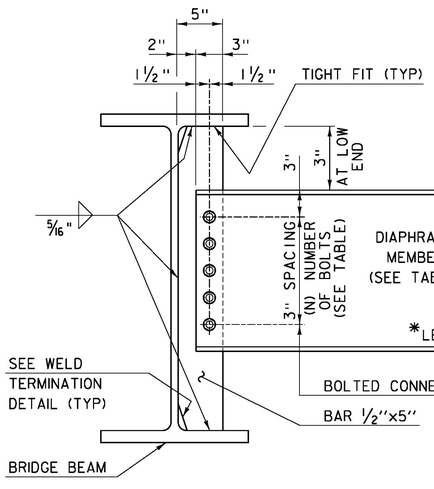

DEPTH		DIAPHRAGM MEMBER	(N) BOLTS
ROLLED BEAM	24" 30"	C15x33.9	4
	31" 36"	MC18x42.7	5
	37" 42"	W21x44	6
PLATE GIRDER WEB	31" 36"	W27x84	7
	37" 42"	W33x118	9
	43" 48"	W36x135	10

INTERMEDIATE DIAPHRAGMS FOR 24" TO 48" BRIDGE BEAMS

*IF CLEARANCE CANNOT BE MET, DIAPHRAGM MAY BE SLOPED.

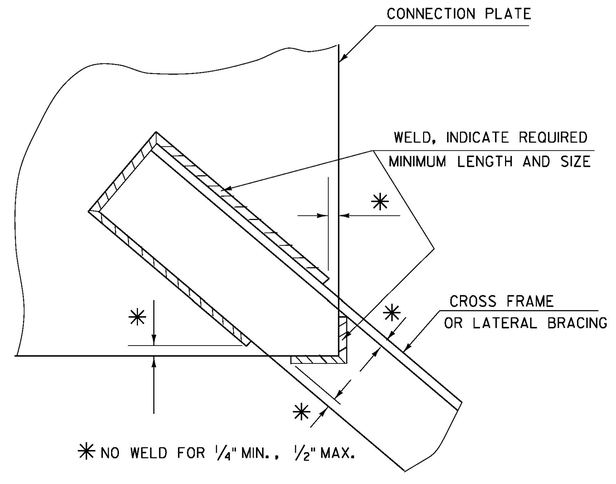

WELD LOCATION DETAIL AT CROSS FRAMES AND LATERAL BRACING

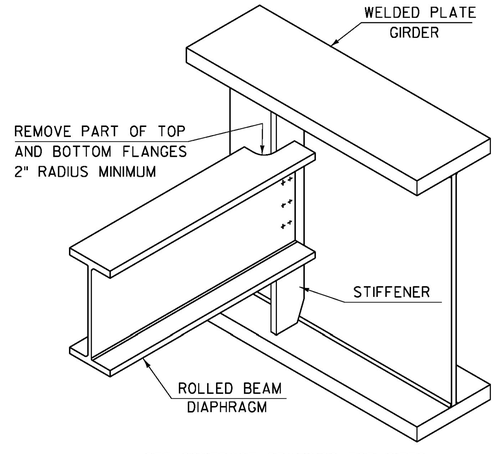

SEE CONTRACT DRAWINGS FOR SIZES OF MEMBERS AND CONNECTION DETAILS

ROLLED BEAM USED AS DIAPHRAGM

DETAILS ON THIS SHEET ARE "NOT TO SCALE" UNLESS NOTED OTHERWISE.

REVISIONS	
MAY 7, 2010	APPROVED FOR USE BY VAOT STRUCTURES SECTION
MAY 2, 2011	ADD INTERMEDIATE DIAPHRAGMS DETAIL & ADD NOT TO SCALE NOTE

STRUCTURAL STEEL PLATE GIRDER DETAILS AND NOTES

VERMONT AGENCY OF TRANSPORTATION
STRUCTURES - SECTION

STRUCTURES DETAIL
SD-602.00

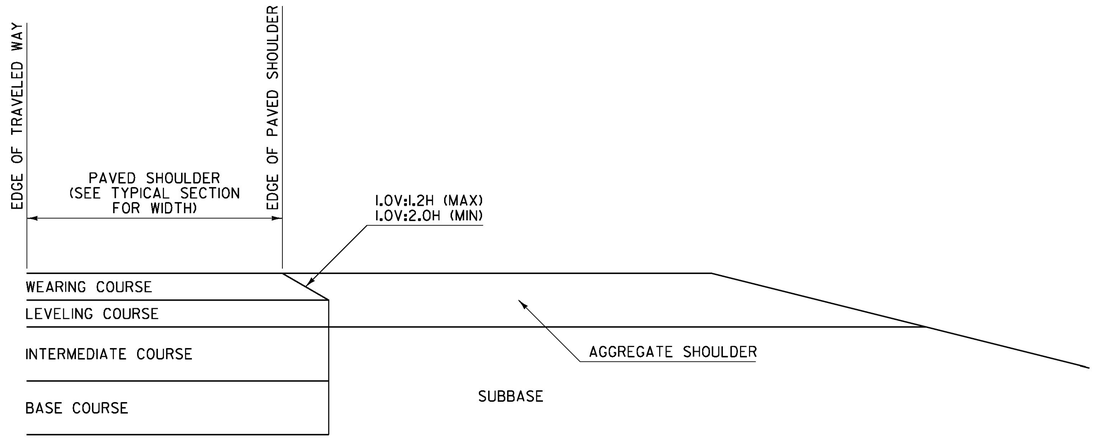

SAFETY EDGE DETAIL
FOR PAVING BELOW WEARING COURSE

NOTES:

1. THIS DETAIL IS INTENDED FOR WHEN PAVING EXTENDS BELOW THE WEARING COURSE.
2. PRIOR TO PLACEMENT OF THE LEVELING AND/OR WEARING COURSE, THE SUBBASE LOCATED BENEATH THE AGGREGATE SHOULDER SHALL BE PREPARED FLUSH WITH THE BOTTOM OF THE LEVELING COURSE.
3. BASE COURSE LIMITS MAY VARY, SEE TYPICAL SECTIONS FOR WIDTH.

SAFETY EDGE WIDTH BASED ON WEARING COURSE THICKNESS AND A 1V:1.6H SLOPE	
WEARING COURSE THICKNESS (INCHES)	NOMINAL SAFETY EDGE WIDTH (INCHES)
1.25	2.000
1.50	2.375
1.75	2.750
2.00	3.125
2.25	3.500
2.50	4.000

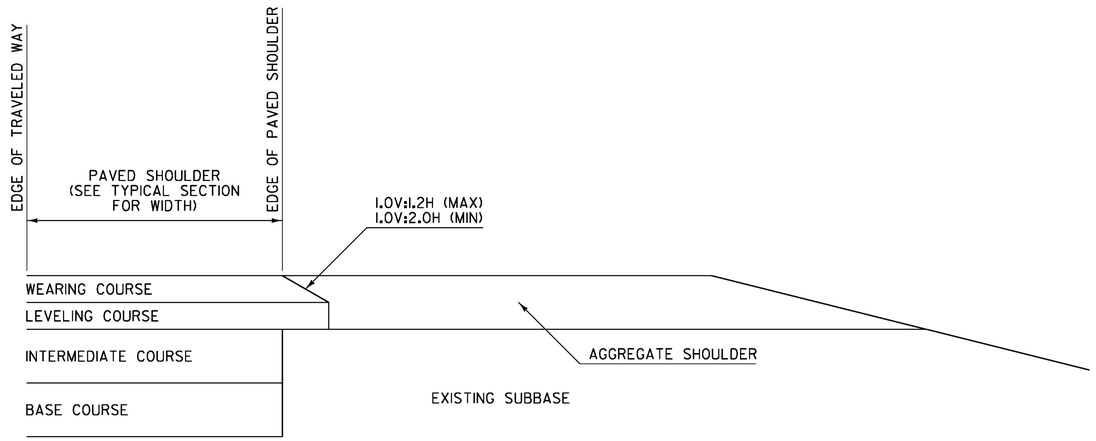

SAFETY EDGE DETAIL
FOR PAVING WEARING COURSE ONLY

NOTES:

1. THIS DETAIL IS INTENDED FOR WHEN ONLY THE LEVELING AND/OR WEARING COURSE IS TO BE PLACED.
2. PAVEMENT COURSES MAY VARY, SEE TYPICAL SECTIONS FOR ACTUAL PAVEMENT COURSES REQUIRED.

GENERAL NOTES:

1. PLACEMENT OF THE WEARING COURSE SHALL INCLUDE THE SAFETY EDGE, UNLESS THE FOLLOWING APPLIES:
   - A. THE ADJACENT SLOPE IS STEEPER THAN THE SAFETY EDGE.
   - B. THE EDGE OF PAVEMENT BEING PLACED ABUTS BOUND MATERIAL.
   - C. VEHICLES ARE RESTRICTED FROM LEAVING THE PAVED SURFACE (EXAMPLE: GUARDRAIL).
2. THE SAFETY EDGE SHALL BE FORMED IN SUCH A WAY THAT THE BITUMINOUS CONCRETE PAVEMENT IS EXTRUDED OR COMPRESSED TO FORM THE SLOPE. DEVICES THAT SIMPLY STRIKE-OFF THE MIX WITHOUT PROVIDING ANY COMPACTIVE EFFORT WILL NOT BE ALLOWED.
3. THE SAFETY EDGE SHALL NOT BE CONSIDERED PART OF THE PAVED SHOULDER.
4. THIS WORK SHALL BE INCIDENTAL TO THE RESPECTIVE BITUMINOUS CONCRETE PAVEMENT ITEM.

REV.	DATE	DESCRIPTION
0	MAR. 29, 2016	ORIGINAL APPROVAL

OTHER DETAILS REQUIRED: NONE

DETAILS APPROVED FOR USE BY HIGHWAY SAFETY & DESIGN

SAFETY EDGE DETAILS

VTrans Working to Get You There — VERMONT AGENCY OF TRANSPORTATION

HIGHWAY SAFETY & DESIGN DETAIL

HSD-400.01

COLD RIVER BRIDGES LLC.
CONTRACTOR FABRICATED PRE-CAST ABUTMENTS
VERMONT AGENCY OF TRANSPORTATION PROJECT
LUDLOW BRF 025-1(42)

SHEET 1-GENERAL NOTES
SHEET 2- ABUTMENT 1 ELEVATION
SHEET 3- ABUTMENT 1 PLAN
SHEET 4- ABUTMENT 2 ELEVATION
SHEET 5- ABUTMENT 2 PLAN
SHEET 6- ABUTMENT CASTING SEQUENCE
SHEET 7-11 ABUT POST TENSIONING DETAILS
SHEET 12- SWIFT LIFT ANCHORS
SHEET 13- ANCHOR ASSEMBLIES
SHEET 14- APPROVED CONCRETE MIX DESIGN
SHEET 15- SHIPPING DETAILS
SHEET 16-PRE-CAST WING WALLS
SHEETS 17-24-REINFORCING DRAWINGS
SHEETS 25-28-WING-WALL REINFORCING CALDERWOOD ENGINEERING

SHOP DRAWING REVIEW

☐ REVIEWED AS REQUIRED BY THE CONSTRUCTION CONTRACT DOCUMENTS AND APPROVED, BUT ONLY FOR CONFORMANCE TO THE DESIGN CONCEPT OF THE WORK, AND SUBJECT TO FURTHER LIMITATIONS AND REQUIREMENTS CONTAINED IN THE CONSTRUCTION CONTRACT DOCUMENTS.

☐ REJECTED ☐ REVISE AND RESUBMIT ☒ FURNISH AS CORRECTED

CORRECTIONS OR COMMENTS MADE ON THE SHOP DRAWINGS DURING THIS REVIEW DO NOT RELIEVE CONTRACTOR FROM COMPLIANCE WITH REQUIREMENTS OF THE DRAWINGS AND SPECIFICATIONS. THIS CHECK IS ONLY FOR REVIEW OF GENERAL CONFORMANCE WITH THE DESIGN CONCEPT OF THE PROJECT AND GENERAL COMPLIANCE WITH THE INFORMATION GIVEN IN THE CONTRACT DOCUMENTS. THE CONTRACTOR IS RESPONSIBLE FOR: CONFIRMING AND CORRELATING ALL QUANTITIES AND DIMENSIONS; SELECTING FABRICATION PROCESSES AND TECHNIQUES OF CONSTRUCTION; COORDINATING HIS WORK WITH THAT OF ALL OTHER TRADES; AND PERFORMING HIS WORK IN A SAFE AND SATISFACTORY MANNER.

vhb
40 IDX Drive
Building 100, Suite 200
South Burlington, VT 05403
802.497.6100

Job Number: BRF 025-1(42)
Reviewed By: E.F. LAWES
Date: MARCH 9, 2017

Vermont Agency of Transportation
RECEIVED
CK'D BY VHB OK'D BY TAS
March 7, 2017
RESUBMIT NO APPROVED AS NOTED
BY T Sumner DATE 3/9/17

COLD RIVER BRIDGES, LLC
10 LANBRO LANE
TEL 603-756-9300 WALPOLE, NH FAX 603-756-9303

REV 4 3/7/17

CONCRETE NOTES:
CONTRACTOR-FABRICATED PRECAST CONCRETE STRUCTURES, ABUTMENTS

1.ABUTMENTS CONCRETE-5000 PSI LW
2.CONCRETE WILL BE SUPPLIED BY CARROLL CONCRETE-CHARLESTOWN, NH PLANT
3.MIX DESIGN (VTRANS MIX DESIGN # 061) FOR LIGHT WEIGHT CONCRETE 5000 PSI HAS BEEN APPROVED
4. TOP OF PRE-CAST (CRB1-CRB8) TO HAVE A MAG FINISH IN ALL AREAS
5. CURE IS BASED ON TABLE 501.17A "CURING CONCRETE COMPONENTS" 7 DAYS OF CURING.
6. ALL EXPOSED CONCRETE EDGES SHALL BE CHAMFERED 1""
7. ALL LIFTING DEVISES ARE GALVANIZED
8. 2' DIA CSP GALVANIZED PIPE TO MEET REQUIREMENTS OF SECTION 711.01
9. FORM STRIPPING STRENGTH=1800PSI BASED ON AVERAGE OF 2 CYLINDERS
10 LIFTING AND HANDLING DESIGN STRENGTH OF 3500 PSI MUST BE ACHIEVED BEFORE HANDLING OF PRE-CAST. (AVG OF 2 CYLINDERS)
11. WATER REPELLENT WILL BE APPLIED TO ALL EXPOSED SURFACES AT 14 DAYS

BEARING NOTES:

1. BEARINGS WILL BE CAST IN PLACE.
2. ALL BEARING MATERIALS TO BE HD GALV .
3. ANCHOR BOLTS GRADE F1554

REINFORCING STEEL NOTES:

1.PRE-CAST SUBSTRUCTURE UNITS GRADE 60 EPOXY COATED REINFORCING STEEL.
2. ONE TEST BARS OF EACH SIZE AND MATERIAL WILL BE SUPPLIED AT A MIN 60" LONG SECTION

Vermont Agency of Transportation
RECEIVED
CK'D BY VHB OK'D BY TAS
March 7, 2017
RESUBMIT NO APPROVED AS NOTED
BY T Sumner DATE 3/9/17

SHOP DRAWING REVIEW
☐ REVIEWED AS REQUIRED BY THE CONSTRUCTION CONTRACT DOCUMENTS AND APPROVED, BUT ONLY FOR CONFORMANCE TO THE DESIGN CONCEPT OF THE WORK, AND SUBJECT TO FURTHER LIMITATIONS AND REQUIREMENTS CONTAINED IN THE CONSTRUCTION CONTRACT DOCUMENTS.
☐ REJECTED ☐ REVISE AND RESUBMIT ✕ FURNISH AS CORRECTED
CORRECTIONS OR COMMENTS MADE ON THE SHOP DRAWINGS DURING THIS REVIEW DO NOT RELIEVE CONTRACTOR FROM COMPLIANCE WITH REQUIRMENTS OF THE DRAWINGS AND SPECIFICATIONS. THIS CHECK IS ONLY FOR REVIEW OF GENERAL CONFORMANCE WITH THE DESIGN CONCEPT OF THE PROJECT AND GENERAL COMPLIANCE WITH THE INFORMATION GIVEN IN THE CONTRACT DOCUMENTS. THE CONTRACTOR IS RESPONSIBLE FOR: CONFIRMING AND CORRELATING ALL QUANTITIES AND DIMENSIONS; SELECTING FABRICATION PROCESSES AND TECHNIQUES OF CONSTRUCTION; COORDINATING HIS WORK WITH THAT OF ALL OTHER TRADES; AND PERFORMING HIS WORK IN A SAFE AND SATISFACTORY MANNER.
vhb 40 IDX Drive, Building 100, Suite 200, South Burlington, VT 05403, 802.497.6100
Job Number: BRF 025-1(42)
Reviewed By: E.F. LAWES
Date: MARCH 9, 2017

ABUTMENT POST-TENSIONING NOTES:
1. Epoxy Bonding compound from the Vermont approved Products list shall be applied to all vertical match cast joints.
2. PT Design Values
   a. Concrete design Strength=5000 psi
   b. PT strands: .5 inch dia, 270 ksi low relaxation 7 wire strands.
   c. Assumed mod of elasticity 28,500 ksi
   d. 2 strands per conduit
   e. Jacking force per strand= 32 Kips
   f. Post tensioning shall be done prior to the grouting of the pile caps.

PRE-CAST WING WALL POST-TENSIONING NOTES:
1. Epoxy Bonding compound from the Vermont approved Products list shall be applied to all horizontal match cast joints.
2. PT Design Values
   a. Concrete design Strength=5000 psi
   b. PT Rods: 1.25" dia 150 ksi galvanized stress bar with (2) 5"x8"x1-/2" galvanized plates.
   c. Fu 150 ksi
   d. Jacking force per bar max 120ksi 105 ksi min lock off
   e. Post tensioning block-outs to be filled with non-shrink grout from the VTRANS approved products list.
   f. Bars will be cut after casting to insure proper clearance.

BILL OF MATERIALS: WW POST TENSIONING
1.25" 150 KSI HDGALV THREAD BAR
BAR LENGTH
8'6"-4 EACH
7'6"-4 EACH
7'0"-6 EACH
5'0"-2 EACH

5"X8"X1.5" A36 HDGALV PLATE-32 EACH
1.25" HDGALV DWYIDAG NUTS-32 EACH

COLD RIVER BRIDGES, LLC
10 LANBRO LANE
TEL 603-756-9300 WALPOLE, NH FAX 603-756-9303

LUDLOW BRF 0251(42)

GENERAL NOTES

SHEET NUMBER 1

DATE :11/18/16

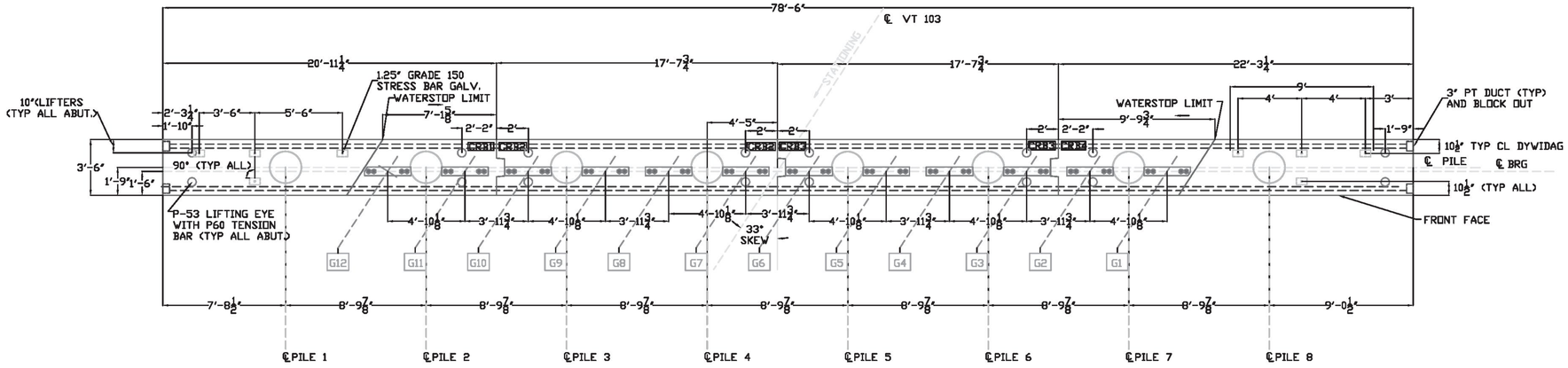

ABUTMENT 1 PLAN

**NOTE:THREAD BAR WILL BE CAST INTO ABUTMENTS LONG AND CUT TO MAINTAIN 3" CLEARANCE

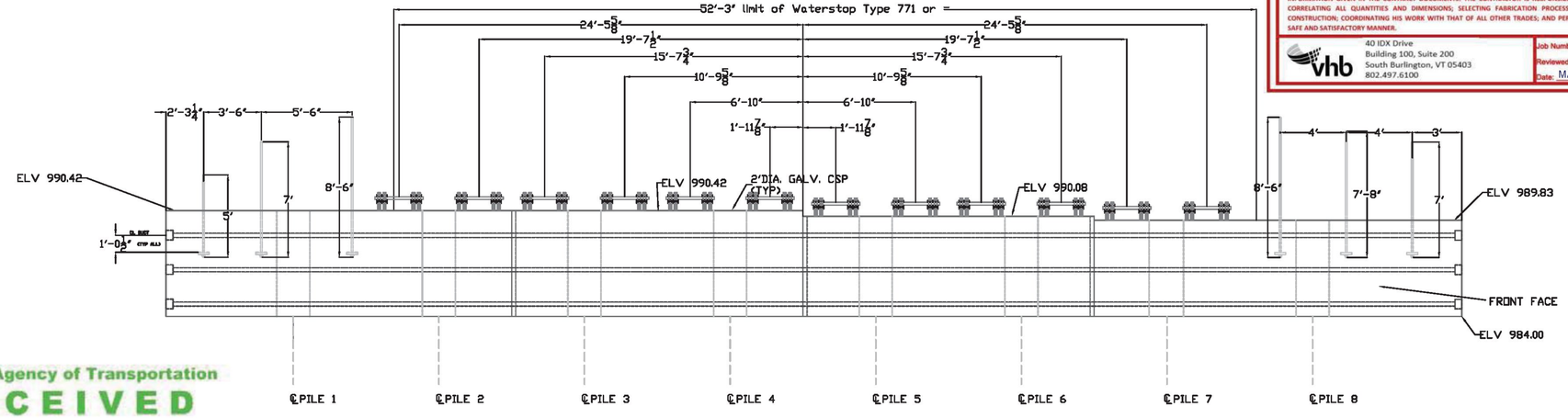

ABUTMENT 1 ELEVATION

NOTE: LIFTERS HAVE BEEN LEFT OUT OF ELEV VIEW FOR CLARITY

SHOP DRAWING REVIEW

☐ REVIEWED AS REQUIRED BY THE CONSTRUCTION CONTRACT DOCUMENTS AND APPROVED, BUT ONLY FOR CONFORMANCE TO THE DESIGN CONCEPT OF THE WORK, AND SUBJECT TO FURTHER LIMITATIONS AND REQUIREMENTS CONTAINED IN THE CONSTRUCTION CONTRACT DOCUMENTS.

☐ REJECTED ☐ REVISE AND RESUBMIT ☒ FURNISH AS CORRECTED

CORRECTIONS OR COMMENTS MADE ON THE SHOP DRAWINGS DURING THIS REVIEW DO NOT RELIEVE CONTRACTOR FROM COMPLIANCE WITH REQUIRMENTS OF THE DRAWINGS AND SPECIFICATIONS. THIS CHECK IS ONLY FOR REVIEW OF GENERAL CONFORMANCE WITH THE DESIGN CONCEPT OF THE PROJECT AND GENERAL COMPLIANCE WITH THE INFORMATION GIVEN IN THE CONTRACT DOCUMENTS. THE CONTRACTOR IS RESPONSIBLE FOR: CONFIRMING AND CORRELATING ALL QUANTITIES AND DIMENSIONS; SELECTING FABRICATION PROCESSES AND TECHNIQUES OF CONSTRUCTION; COORDINATING HIS WORK WITH THAT OF ALL OTHER TRADES; AND PERFORMING HIS WORK IN A SAFE AND SATISFACTORY MANNER.

vhb
40 IDX Drive
Building 100, Suite 200
South Burlington, VT 05403
802.497.6100

Job Number: BRF 025-1(42)
Reviewed By: E.F. LAWES
Date: MARCH 9, 2017

Vermont Agency of Transportation
RECEIVED
CK'D BY VHB OK'D BY TAS
March 7, 2017
RESUBMIT NO APPROVED AS NOTED
BY T Sumner DATE 3/9/17

COLD RIVER BRIDGES, LLC
10 LANBRO LANE
TEL 603-756-9300 WALPOLE, NH FAX 603-756-9303

LUDLOW BRF 025(42)

ABUTMENT #1 PLAN

SHEET NUMBER 2

DATE:11/18/16

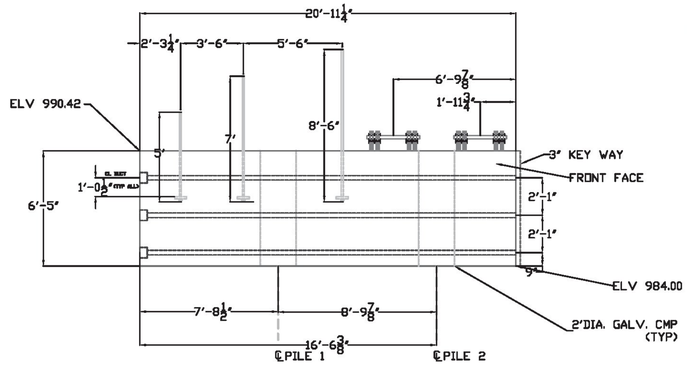

**NOTE:THREAD BAR WILL BE CAST INTO ABUTMENTS LONG AND CUT TO MAINTAIN 3" CLEARANCE

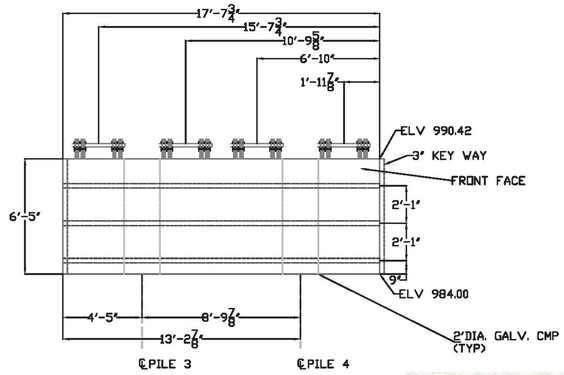

MARK:CRB1
CY=15.7
WEIGHT=51.6K

PVC WATERSTOP
TYPE 771 OR =
SEE SHEET 2 FOR WATER STOP LIMITS

MARK:CRB2
CY=13
WEIGHT=42.9K

Vermont Agency of Transportation
RECEIVED
CK'D BY VHB OK'D BY TAS
March 7, 2017
RESUBMIT NO APPROVED AS NOTED
BY T Sumner DATE 3/9/17

1.5" CLEAR BETWEEN PILE CAVITY AND ANCHOR BOLTS AS SHOWN. VERIFIED IN FIELD 1.5" CLEARANCE: EXTRA CARE SHALL BE TAKEN TO ENSURE CONCRETE CONSOLIDATION AROUND ANCHOR BOLT

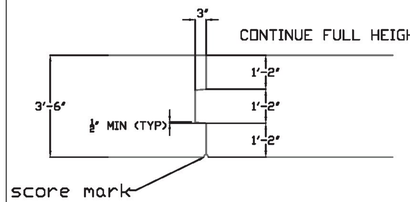

TYPICAL FULL HEIGHT SHEAR KEY
TYPICAL CRB1-CRB8

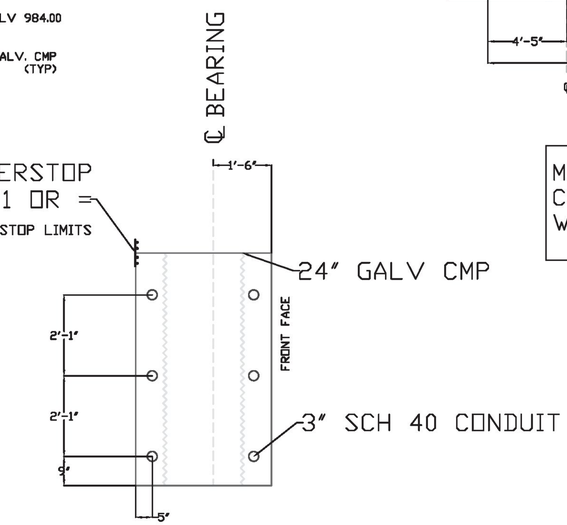

ABUTMENT TYP SECT.
SEE SHEET 16 FOR WING WALL/ABUT SECTION

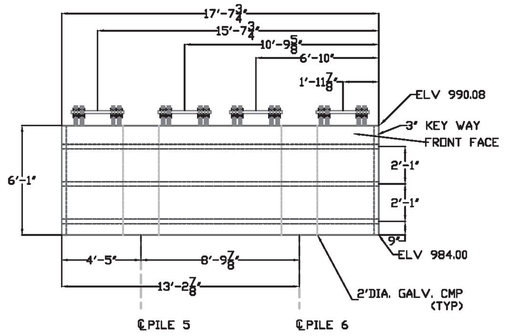

MARK:CRB3
CY=12.3
WEIGHT=40.7K

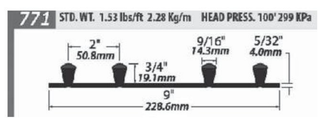

TYPE 771
WATERSTOP
52'-3"+-
REQUIRED
PER ABUTMENT

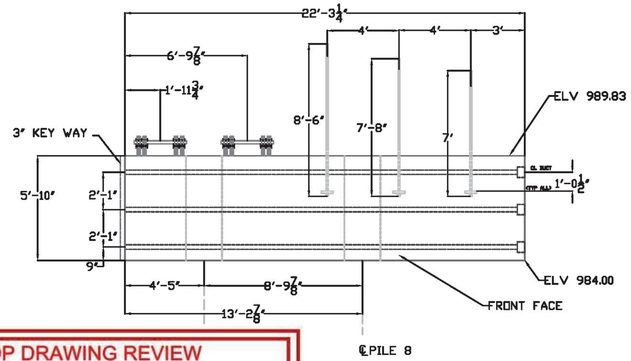

** SEE SHEET 6 FOR KEY WAY DETAILS

SHOP DRAWING REVIEW

☐ REVIEWED AS REQUIRED BY THE CONSTRUCTION CONTRACT DOCUMENTS AND APPROVED, BUT ONLY FOR CONFORMANCE TO THE DESIGN CONCEPT OF THE WORK, AND SUBJECT TO FURTHER LIMITATIONS AND REQUIREMENTS CONTAINED IN THE CONSTRUCTION CONTRACT DOCUMENTS.
☐ REJECTED ☐ REVISE AND RESUBMIT ☒ FURNISH AS CORRECTED

CORRECTIONS OR COMMENTS MADE ON THE SHOP DRAWINGS DURING THIS REVIEW DO NOT RELIEVE CONTRACTOR FROM COMPLIANCE WITH REQUIRMENTS OF THE DRAWINGS AND SPECIFICATIONS. THIS CHECK IS ONLY FOR REVIEW OF GENERAL CONFORMANCE WITH THE DESIGN CONCEPT OF THE PROJECT AND GENERAL COMPLIANCE WITH THE INFORMATION GIVEN IN THE CONTRACT DOCUMENTS. THE CONTRACTOR IS RESPONSIBLE FOR: CONFIRMING AND CORRELATING ALL QUANTITIES AND DIMENSIONS; SELECTING FABRICATION PROCESSES AND TECHNIQUES OF CONSTRUCTION; COORDINATING HIS WORK WITH THAT OF ALL OTHER TRADES; AND PERFORMING HIS WORK IN A SAFE AND SATISFACTORY MANNER.

vhb
40 IDX Drive
Building 100, Suite 200
South Burlington, VT 05403
802.497.6100

Job Number: BRF 025-1(42)
Reviewed By: E.F. LAWES
Date: MARCH 9, 2017

COLD RIVER BRIDGES, LLC
10 LANBRO LANE
TEL 603-756-9300 WALPOLE, NH FAX 603-756-9303

LUDLOW BRF 0251(42)

ABUTMENT #1 PLAN

SHEET NUMBER 3

DATE:11/18/16

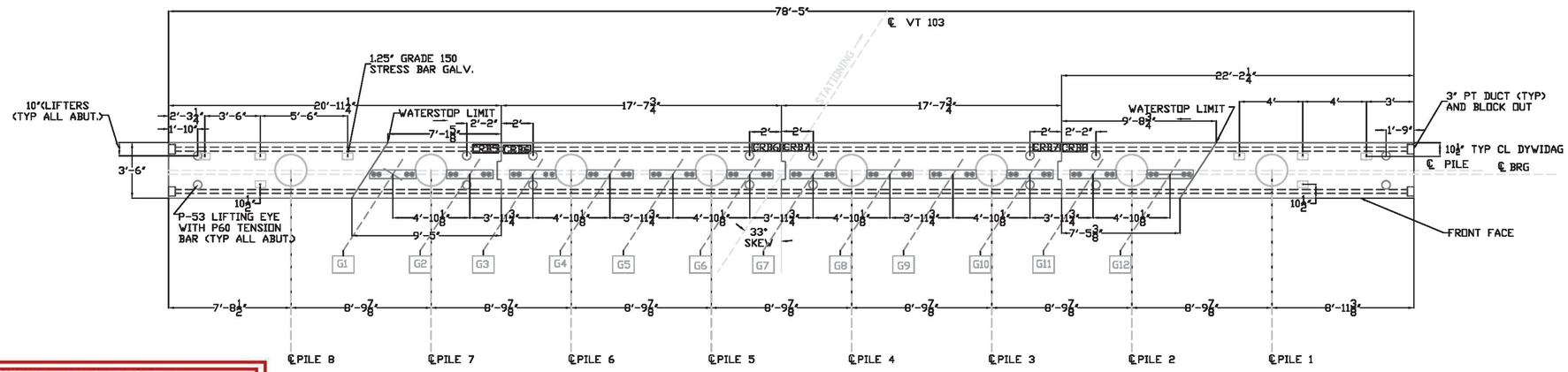

ABUTMENT 2 PLAN

**NOTE:THREAD BAR WILL BE CAST INTO ABUTMENTS LONG AND CUT TO MAINTAIN 3" CLEARANCE

1.5" CLEAR BETWEEN PILE CAVITY AND ANCHOR BOLTS AS SHOWN. VERIFIED IN FIELD 1.5" CLEARANCE: EXTRA CARE SHALL BE TAKEN TO ENSURE CONCRETE CONSOLIDATION AROUND ANCHOR BOLT

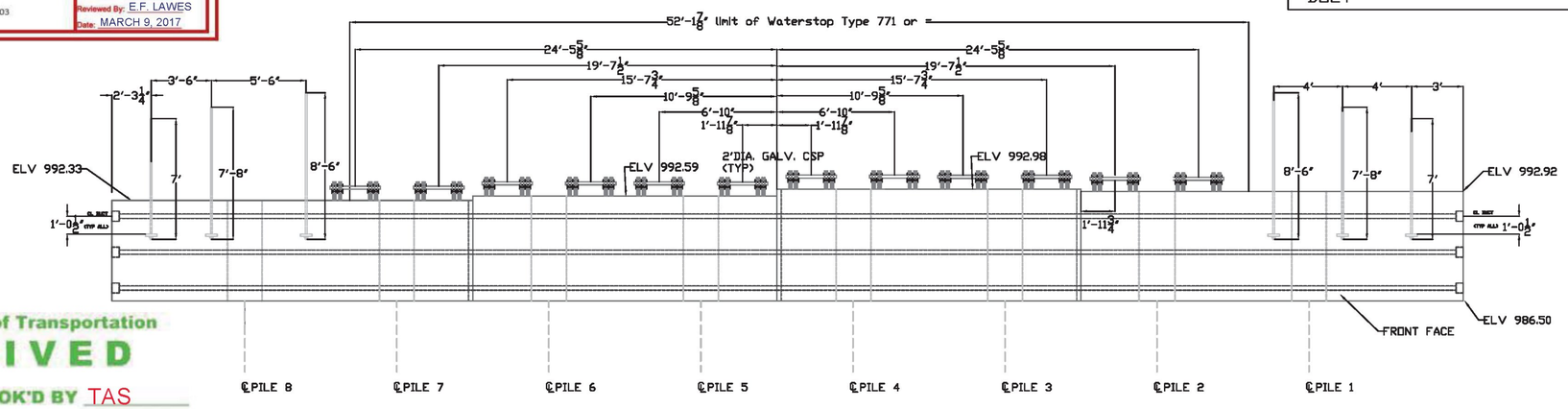

ABUTMENT 2 ELEVATION

NOTE: LIFTERS HAVE BEEN LEFT OUT OF ELEV VIEW FOR CLARITY

SHOP DRAWING REVIEW

☐ REVIEWED AS REQUIRED BY THE CONSTRUCTION CONTRACT DOCUMENTS AND APPROVED, BUT ONLY FOR CONFORMANCE TO THE DESIGN CONCEPT OF THE WORK, AND SUBJECT TO FURTHER LIMITATIONS AND REQUIREMENTS CONTAINED IN THE CONSTRUCTION CONTRACT DOCUMENTS.

☐ REJECTED ☐ REVISE AND RESUBMIT ☒ FURNISH AS CORRECTED

CORRECTIONS OR COMMENTS MADE ON THE SHOP DRAWINGS DURING THIS REVIEW DO NOT RELIEVE CONTRACTOR FROM COMPLIANCE WITH REQUIRMENTS OF THE DRAWINGS AND SPECIFICATIONS. THIS CHECK IS ONLY FOR REVIEW OF GENERAL CONFORMANCE WITH THE DESIGN CONCEPT OF THE PROJECT AND GENERAL COMPLIANCE WITH THE INFORMATION GIVEN IN THE CONTRACT DOCUMENTS. THE CONTRACTOR IS RESPONSIBLE FOR: CONFIRMING AND CORRELATING ALL QUANTITIES AND DIMENSIONS; SELECTING FABRICATION PROCESSES AND TECHNIQUES OF CONSTRUCTION; COORDINATING HIS WORK WITH THAT OF ALL OTHER TRADES; AND PERFORMING HIS WORK IN A SAFE AND SATISFACTORY MANNER.

vhb
40 IDX Drive
Building 100, Suite 200
South Burlington, VT 05403
802.497.6100

Job Number: BRF 025-1(42)
Reviewed By: E.F. LAWES
Date: MARCH 9, 2017

Vermont Agency of Transportation
RECEIVED
CK'D BY VHB OK'D BY TAS
March 7, 2017
RESUBMIT NO APPROVED AS NOTED
BY T Sumner DATE 3/9/17

COLD RIVER BRIDGES, LLC
10 LANBRO LANE
TEL 603-756-9300 WALPOLE, NH FAX 603-756-9303

LUDLOW BRF 0251(42)

ABUTMENT #2 PLAN

SHEET NUMBER 4

DATE: 11/18/16

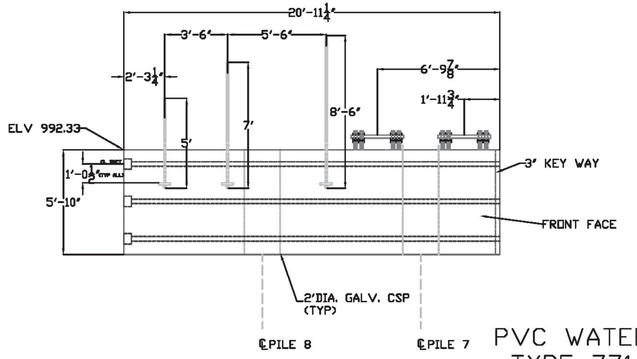

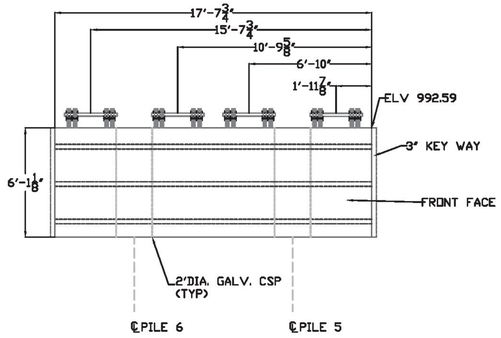

** NOTE: 1.25" THREAD BAR WILL BE CAST IN ABUTMENTS LONG AND CUT TO FINAL GRADE AFTER MATCH CASTING OF WING WALLS

MARK:CRB5
CY=14.2
WEIGHT=46.8K

PVC WATERSTOP
TYPE 771 OR =
SEE SHEET 4 FOR WATER STOP LIMITS

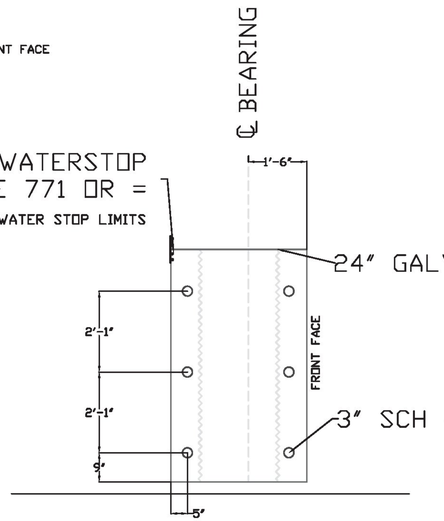

MARK:CRB6
CY=12.3
WEIGHT=40.8K

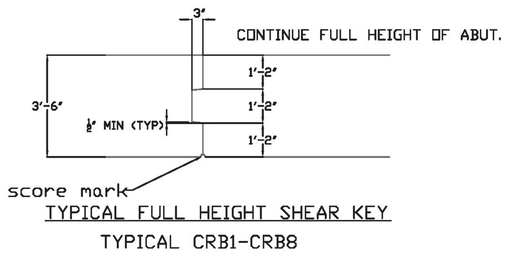

TYPICAL FULL HEIGHT SHEAR KEY
TYPICAL CRB1-CRB8

ABUTMENT TYP SECT.
SEE SHEET 16 FOR WING WALL/ABUT SECTION

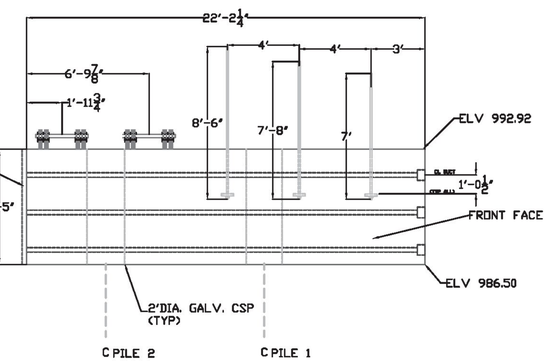

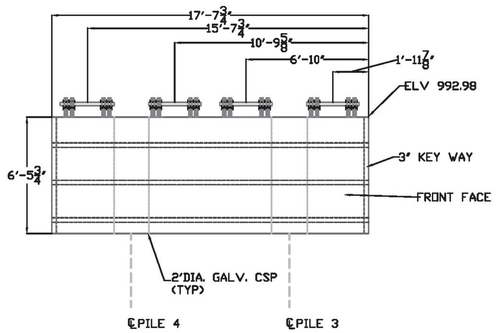

MARK:CRB7
CY=13.12
WEIGHT=43.4K

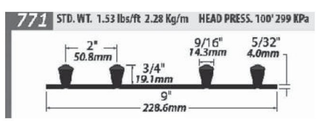

TYPE 771
WATERSTOP
52'-3"+-
REQUIRED
PER ABUTMENT

MARK:CRB8
CY=16.6
WEIGHT=54.4K

Vermont Agency of Transportation
RECEIVED
CK'D BY VHB OK'D BY TAS
March 7, 2017
RESUBMIT NO APPROVED AS NOTED
BY T Sumner DATE 3/9/17

SHOP DRAWING REVIEW

☐ REVIEWED AS REQUIRED BY THE CONSTRUCTION CONTRACT DOCUMENTS AND APPROVED, BUT ONLY FOR CONFORMANCE TO THE DESIGN CONCEPT OF THE WORK, AND SUBJECT TO FURTHER LIMITATIONS AND REQUIREMENTS CONTAINED IN THE CONSTRUCTION CONTRACT DOCUMENTS.
☐ REJECTED ☐ REVISE AND RESUBMIT ☒ FURNISH AS CORRECTED

CORRECTIONS OR COMMENTS MADE ON THE SHOP DRAWINGS DURING THIS REVIEW DO NOT RELIEVE CONTRACTOR FROM COMPLIANCE WITH REQUIRMENTS OF THE DRAWINGS AND SPECIFICATIONS. THIS CHECK IS ONLY FOR REVIEW OF GENERAL CONFORMANCE WITH THE DESIGN CONCEPT OF THE PROJECT AND GENERAL COMPLIANCE WITH THE INFORMATION GIVEN IN THE CONTRACT DOCUMENTS. THE CONTRACTOR IS RESPONSIBLE FOR: CONFIRMING AND CORRELATING ALL QUANTITIES AND DIMENSIONS; SELECTING FABRICATION PROCESSES AND TECHNIQUES OF CONSTRUCTION; COORDINATING HIS WORK WITH THAT OF ALL OTHER TRADES; AND PERFORMING HIS WORK IN A SAFE AND SATISFACTORY MANNER.

vhb 40 IDX Drive Building 100, Suite 200 South Burlington, VT 05403 802.497.6100
Job Number: BRF 025-1(42)
Reviewed By: E.F. LAWES
Date: MARCH 9, 2017

COLD RIVER BRIDGES, LLC
10 LANBRO LANE
TEL 603-756-9300 WALPOLE, NH FAX 603-756-9303

LUDLOW BRF 0251(42)

ABUTMENT #2 PLAN

SHEET NUMBER 5

DATE:11/18/16

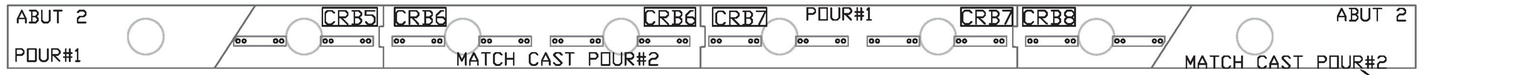

ABUTMENT 2 CASTING SEQUENCE

NOTE: WINGWALLS 1-4 TO BE MATCH CASTED AFTER ABUTMENT POURS.

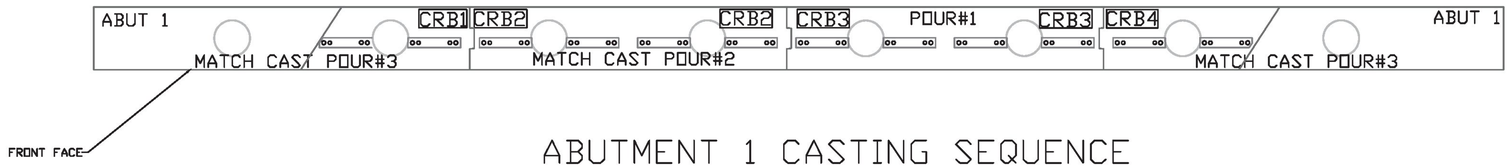

ABUTMENT 1 CASTING SEQUENCE

SHOP DRAWING REVIEW

☐ REVIEWED AS REQUIRED BY THE CONSTRUCTION CONTRACT DOCUMENTS AND APPROVED, BUT ONLY FOR CONFORMANCE TO THE DESIGN CONCEPT OF THE WORK, AND SUBJECT TO FURTHER LIMITATIONS AND REQUIREMENTS CONTAINED IN THE CONSTRUCTION CONTRACT DOCUMENTS.

☐ REJECTED ☐ REVISE AND RESUBMIT ✖ FURNISH AS CORRECTED

CORRECTIONS OR COMMENTS MADE ON THE SHOP DRAWINGS DURING THIS REVIEW DO NOT RELIEVE CONTRACTOR FROM COMPLIANCE WITH REQUIRMENTS OF THE DRAWINGS AND SPECIFICATIONS. THIS CHECK IS ONLY FOR REVIEW OF GENERAL CONFORMANCE WITH THE DESIGN CONCEPT OF THE PROJECT AND GENERAL COMPLIANCE WITH THE INFORMATION GIVEN IN THE CONTRACT DOCUMENTS. THE CONTRACTOR IS RESPONSIBLE FOR: CONFIRMING AND CORRELATING ALL QUANTITIES AND DIMENSIONS; SELECTING FABRICATION PROCESSES AND TECHNIQUES OF CONSTRUCTION; COORDINATING HIS WORK WITH THAT OF ALL OTHER TRADES; AND PERFORMING HIS WORK IN A SAFE AND SATISFACTORY MANNER.

vhb
40 IDX Drive
Building 100, Suite 200
South Burlington, VT 05403
802.497.6100

Job Number: BRF 025-1(42)
Reviewed By: E.F. LAWES
Date: MARCH 9, 2017

Vermont Agency of Transportation
RECEIVED
CK'D BY VHB OK'D BY TAS
March 7, 2017
RESUBMIT NO APPROVED AS NOTED
BY T Sumner DATE 3/9/17

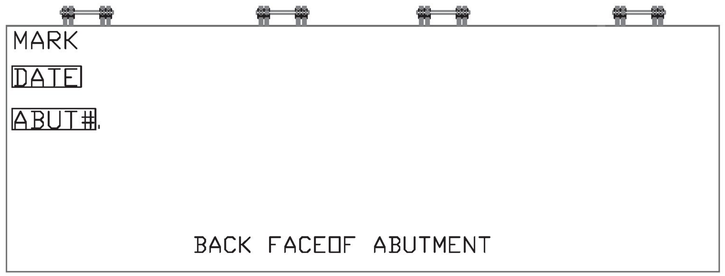

PIECE MARK REQUIREMENTS

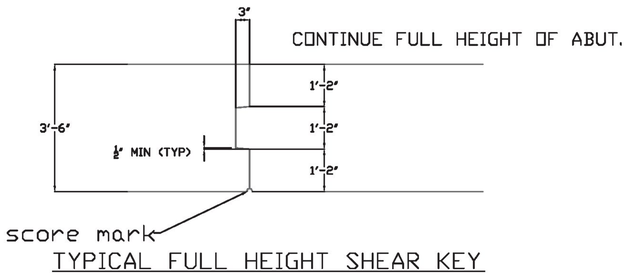

TYPICAL FULL HEIGHT SHEAR KEY

THIS SHEET IS FOR THE PURPOSE OF CASTING SEQUENCE/PIECE MARK REQUIREMENTS NOT FOR DIMENSIONAL PURPOSES

COLD RIVER BRIDGES, LLC
10 LANBRO LANE
TEL 603-756-9300 WALPOLE, NH FAX 603-756-9303

LUDLOW BRF 0251(42)

ABUT.CASTING SCH.

SHEET NUMBER 6

DATE 11/18/16

Vermont Agency of Transportation
RECEIVED
CK'D BY VHB OK'D BY TAS
March 7, 2017
RESUBMIT NO APPROVED AS NOTED
BY T Sumner DATE 3/9/17

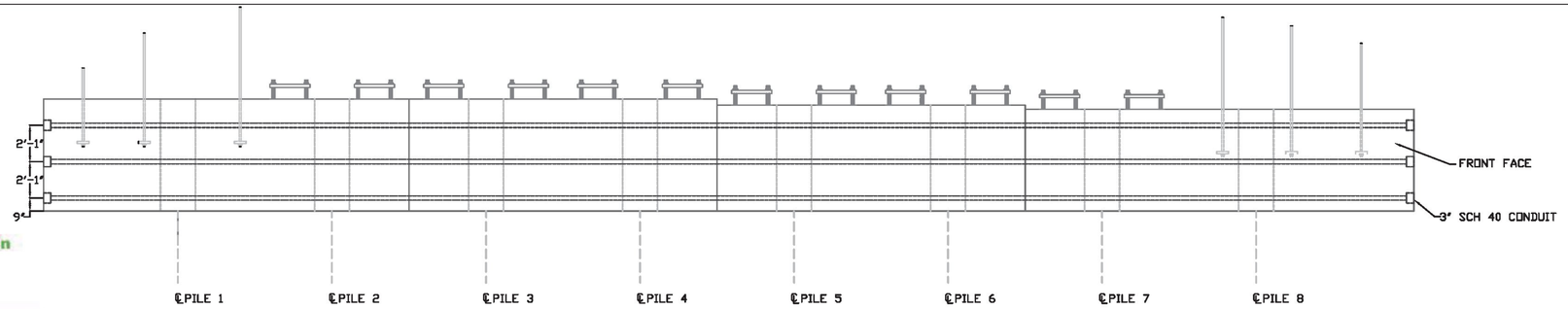

ABUTMENT 1 POST TENSIONING DUCT PLACEMENT

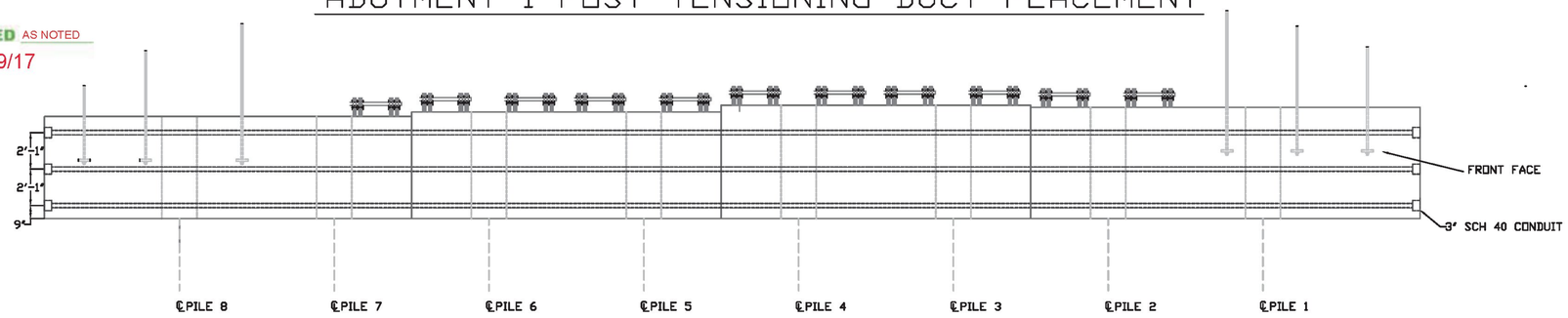

ABUTMENT 2 POST TENSIONING DUCT PLACEMENT

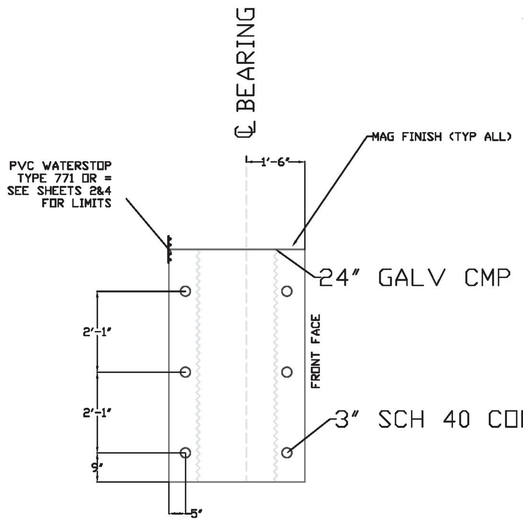

ABUTMENT TYP SECT.
NTS:

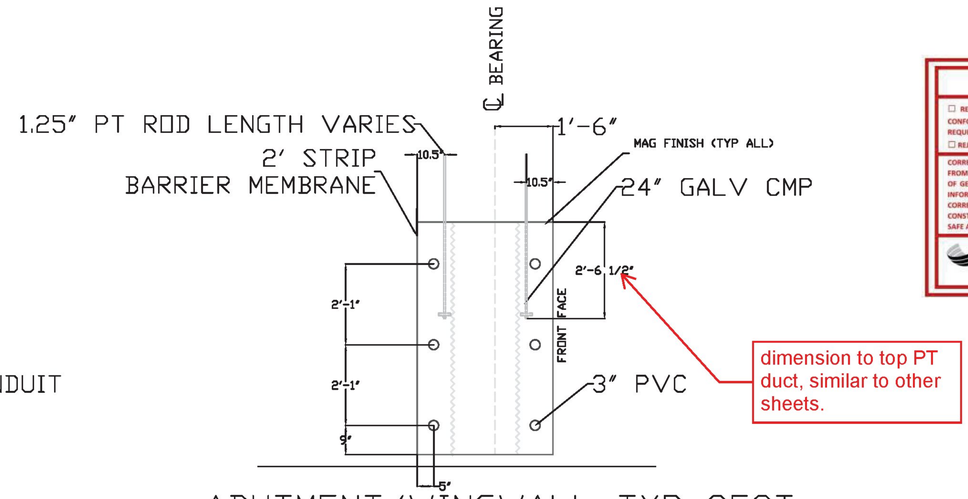

dimension to top PT duct, similar to other sheets.

ABUTMENT/WINGWALL TYP SECT.
NTS:

SHOP DRAWING REVIEW
☐ REVIEWED AS REQUIRED BY THE CONSTRUCTION CONTRACT DOCUMENTS AND APPROVED, BUT ONLY FOR CONFORMANCE TO THE DESIGN CONCEPT OF THE WORK, AND SUBJECT TO FURTHER LIMITATIONS AND REQUIREMENTS CONTAINED IN THE CONSTRUCTION CONTRACT DOCUMENTS.
☐ REJECTED ☐ REVISE AND RESUBMIT ☒ FURNISH AS CORRECTED
CORRECTIONS OR COMMENTS MADE ON THE SHOP DRAWINGS DURING THIS REVIEW DO NOT RELIEVE CONTRACTOR FROM COMPLIANCE WITH REQUIRMENTS OF THE DRAWINGS AND SPECIFICATIONS. THIS CHECK IS ONLY FOR REVIEW OF GENERAL CONFORMANCE WITH THE DESIGN CONCEPT OF THE PROJECT AND GENERAL COMPLIANCE WITH THE INFORMATION GIVEN IN THE CONTRACT DOCUMENTS. THE CONTRACTOR IS RESPONSIBLE FOR: CONFIRMING AND CORRELATING ALL QUANTITIES AND DIMENSIONS; SELECTING FABRICATION PROCESSES AND TECHNIQUES OF CONSTRUCTION; COORDINATING HIS WORK WITH THAT OF ALL OTHER TRADES; AND PERFORMING HIS WORK IN A SAFE AND SATISFACTORY MANNER.
vhb
40 IDX Drive
Building 100, Suite 200
South Burlington, VT 05403
802.497.6100
Job Number: BRF 025-1(42)
Reviewed By: E.F. LAWES
Date: MARCH 9, 2017

COLD RIVER BRIDGES, LLC
10 LANBRO LANE
TEL 603-756-9300 WALPOLE, NH FAX 603-756-9303

POST TENSION DETAILS

ABUTMENT 1&2 PLAN

DATE: 11/18/16

SHEET NUMBER 7

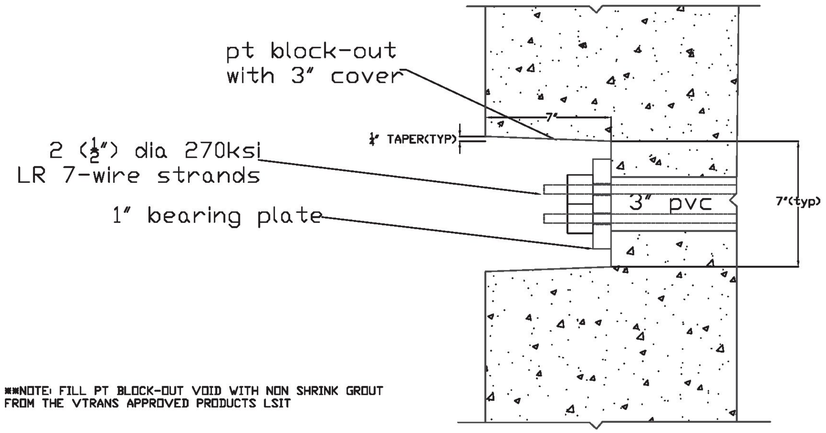

**NOTE: FILL PT BLOCK-OUT VOID WITH NON SHRINK GROUT FROM THE VTRANS APPROVED PRODUCTS LSIT

TYPICAL ABUTMENT POST TENSION SECTION

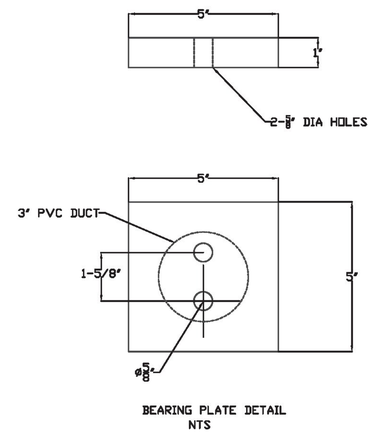

BEARING PLATE DETAIL
NTS

500143 is drawing #
500142 is material #

BILL OF MATERIALS
1. (24) ea .5 dia,270 ksi monostrand mastic tendons-84' length.(302556)
2. (48) each ½" Zinc chromate barrel anchors(500142) with plated wedges (303526)
3. (24) each 5"x5"x1" A36 galvanized bearing plates with 2-⅝" dia holes
4. 3" schedule 40 pipe 960 lf

pt material and services supplied by Constructive Services of Dedham,Ma

ALL STEEL TO MEET BUY AMERICA CERTIFICATION

SHOP DRAWING REVIEW

☐ REVIEWED AS REQUIRED BY THE CONSTRUCTION CONTRACT DOCUMENTS AND APPROVED, BUT ONLY FOR CONFORMANCE TO THE DESIGN CONCEPT OF THE WORK, AND SUBJECT TO FURTHER LIMITATIONS AND REQUIREMENTS CONTAINED IN THE CONSTRUCTION CONTRACT DOCUMENTS.
☐ REJECTED ☐ REVISE AND RESUBMIT ☒ FURNISH AS CORRECTED

CORRECTIONS OR COMMENTS MADE ON THE SHOP DRAWINGS DURING THIS REVIEW DO NOT RELIEVE CONTRACTOR FROM COMPLIANCE WITH REQUIRMENTS OF THE DRAWINGS AND SPECIFICATIONS. THIS CHECK IS ONLY FOR REVIEW OF GENERAL CONFORMANCE WITH THE DESIGN CONCEPT OF THE PROJECT AND GENERAL COMPLIANCE WITH THE INFORMATION GIVEN IN THE CONTRACT DOCUMENTS. THE CONTRACTOR IS RESPONSIBLE FOR: CONFIRMING AND CORRELATING ALL QUANTITIES AND DIMENSIONS; SELECTING FABRICATION PROCESSES AND TECHNIQUES OF CONSTRUCTION; COORDINATING HIS WORK WITH THAT OF ALL OTHER TRADES; AND PERFORMING HIS WORK IN A SAFE AND SATISFACTORY MANNER.

vhb
40 IDX Drive
Building 100, Suite 200
South Burlington, VT 05403
802.497.6100

Job Number: BRF 025-1(42)
Reviewed By: E.F. LAWES
Date: MARCH 9, 2017

Vermont Agency of Transportation
RECEIVED
CK'D BY VHB OK'D BY TAS
March 7, 2017
RESUBMIT NO APPROVED AS NOTED
BY T Sumner DATE 3/9/17

COLD RIVER BRIDGES, LLC
10 LANGRO LANE
TEL 603-756-9300 WALPOLE, NH FAX 603-756-9303

LUDLOW BRF 0251(42)

ABUTMENT
POST TENSION DETAILS
DATE: 11/18/16

SHEET NUMBER
8

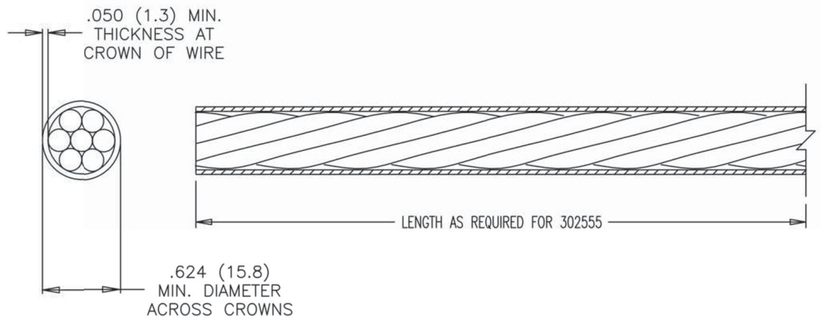

BILL OF MATERIALS				
P/N	DESCRIPTION	UNIT	MINIMUM WEIGHT [LBS/FT]	COMMENTS
COMPONENTS				
301010	HDPE COATING PELLETS	LBS	0.037	
301005	GREASE PTI TYPE	LBS	0.025	
301050	.5 STRAND 270 BARE	FT	0.521	OPTION 1
301055	.5 STRAND 270 BARE US	FT	0.521	OPTION 2
MANBOM - UNCUT				
302550	.5 STRAND 270 G&PE 50MIL	FT	0.583	OPTION 1
302556	.5 STRAND 270 G&PE 50MIL US	FT	0.583	OPTION 2
FABBOM - CUT TO LENGTH				
302555	.5 STRAND 270 G&PE 50MIL CUT	PC	0.583	

△3 NOTE:
OPTION 1 CAN BE DOMESTIC OR FOREIGN STRAND.
OPTION 2 MUST BE DOMESTIC STRAND.

△3 — TABLE CONTENTS AND FORMAT CHANGED; PART 302556 ADDED.

DYWIDAG POST-TENSIONING SYSTEMS

0.5" GREASED & PE SHEATHED 270 KSI STRAND
(50 MIL SHEATHING)

DATE: 05-30-96 | DWG: G. MALECKI | CHK: C.S. | APP: K.S.

This drawing, the pertinent enclossures, descriptions, calculations etc. and their contents are the property of DYWIDAG SYSTEMS INTERNATIONAL, USA, INC. They are not allowed to be duplicated with-out our permission. They are also not to be shown or explained for any reason to a third party other than for reasons expressly intended by the original receiver. They have to be returned on request.

DIMENSIONS: INCH/mm
mm FOR REFERENCE ONLY

MATERIAL:
SEE ABOVE

SCALE
NTS

Q.A.

QUALITY PLAN NUMBER:
QS003020500

WEIGHT
.583
PER/FT.

REV.	DATE	NAME	
1	08-05-97	A.W.	PB-095
2	05-10-04	C.S.	ECRN-0102
3	09-29-04	H.K.	

PART NUMBER
302550
302555
302556

DRAWING NUMBER
302550

DYWIDAG-SYSTEMS INTERNATIONAL, USA, INC. DSI

Vermont Agency of Transportation
RECEIVED
CK'D BY VHB OK'D BY TAS
March 7, 2017
RESUBMIT NO APPROVED AS NOTED
BY T Sumner DATE 3/9/17

SHOP DRAWING REVIEW

☐ REVIEWED AS REQUIRED BY THE CONSTRUCTION CONTRACT DOCUMENTS AND APPROVED, BUT ONLY FOR CONFORMANCE TO THE DESIGN CONCEPT OF THE WORK, AND SUBJECT TO FURTHER LIMITATIONS AND REQUIREMENTS CONTAINED IN THE CONSTRUCTION CONTRACT DOCUMENTS.
☐ REJECTED ☐ REVISE AND RESUBMIT ✖ FURNISH AS CORRECTED

CORRECTIONS OR COMMENTS MADE ON THE SHOP DRAWINGS DURING THIS REVIEW DO NOT RELIEVE CONTRACTOR FROM COMPLIANCE WITH REQUIRMENTS OF THE DRAWINGS AND SPECIFICATIONS. THIS CHECK IS ONLY FOR REVIEW OF GENERAL CONFORMANCE WITH THE DESIGN CONCEPT OF THE PROJECT AND GENERAL COMPLIANCE WITH THE INFORMATION GIVEN IN THE CONTRACT DOCUMENTS. THE CONTRACTOR IS RESPONSIBLE FOR: CONFIRMING AND CORRELATING ALL QUANTITIES AND DIMENSIONS; SELECTING FABRICATION PROCESSES AND TECHNIQUES OF CONSTRUCTION; COORDINATING HIS WORK WITH THAT OF ALL OTHER TRADES; AND PERFORMING HIS WORK IN A SAFE AND SATISFACTORY MANNER.

vhb 40 IDX Drive
Building 100, Suite 200
South Burlington, VT 05403
802.497.6100

Job Number: BRF 025-1(42)
Reviewed By: E.F. LAWES
Date: MARCH 9, 2017

COLD RIVER BRIDGES, LLC
10 LANBRO LANE
TEL 603-756-9300 WALPOLE, NH FAX 603-756-9303

LUDLOW BRF 0251(42)

POST TENSION DETAILS

SHEET NUMBER
9

DATE: 11/18/16

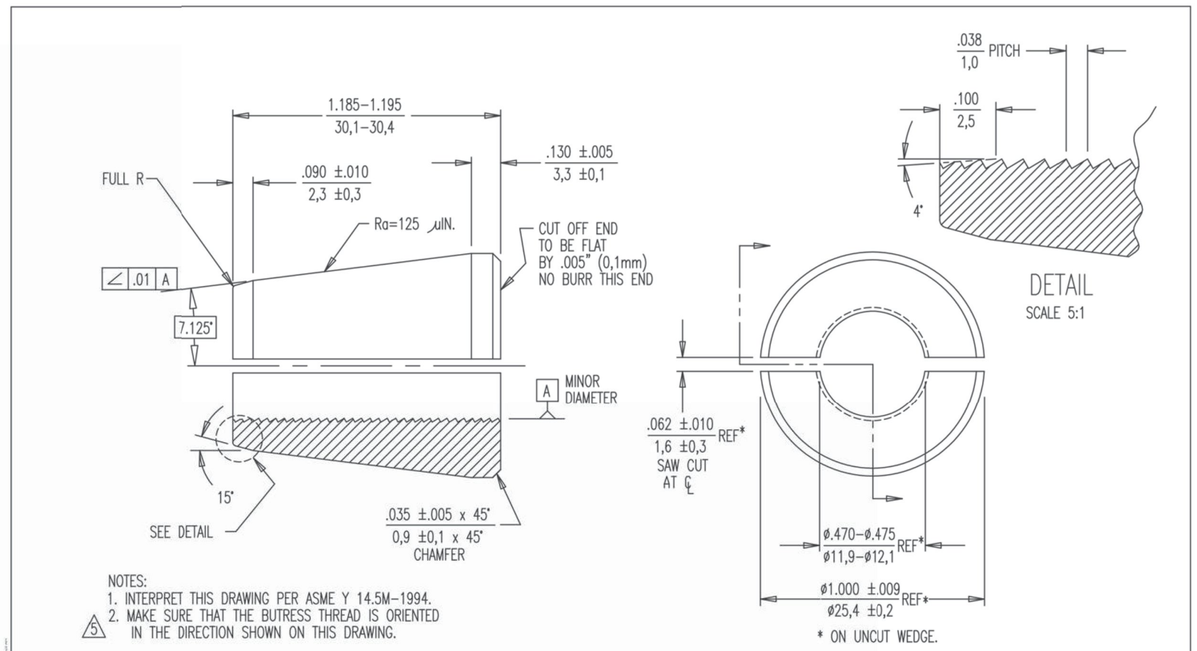

NOTES:
1. INTERPRET THIS DRAWING PER ASME Y 14.5M–1994.
2. MAKE SURE THAT THE BUTRESS THREAD IS ORIENTED IN THE DIRECTION SHOWN ON THIS DRAWING.

PART NO.	DESCRIPTION
303525	UNCOATED
303526	ZINC PLATED

DYWIDAG POST–TENSIONING SYSTEMS

0.5" 2–PART WEDGE, 1.2" LONG

DATE: 10–21–94 | DWG: G. MALECKI | CHK: C.S. | APP: K.S.

This drawing, the pertinent enclossures, descriptions, calculations etc. and their contents are the property of DYWIDAG SYSTEMS INTERNATIONAL, USA, INC. They are not allowed to be duplicated with-out our permission. They are also not to be shown or explained for any reason to a third party other than for reasons expressly intended by the original receiver. They have to be returned on request.

DIMENSIONS: INCH/mm
mm FOR REFERENCE ONLY

TOLERANCES: ±.020 UNLESS NOTED

MATERIAL: 1" ROUND 12L14

WEIGHT .134 LBS.

SCALE 2:1 5:1

Q.A.

QUALITY PLAN NUMBER: QS00000500S

REV.	DATE	NAME	
1	06–03–96	C.S.	
2	06–28–96	C.S.	
3	09–29–97	A.W.	PB–105
4	01–05–98	A.W.	ECRN–0049
5	09–17–04	C.S.	ECRN–0104

PART NUMBER 303525 303526

DRAWING NUMBER 303525

DYWIDAG–SYSTEMS INTERNATIONAL, USA, INC. DSI

Vermont Agency of Transportation

RECEIVED

CK'D BY VHB OK'D BY TAS

March 7, 2017

RESUBMIT NO APPROVED AS NOTED

BY T Sumner DATE 3/9/17

SHOP DRAWING REVIEW

☐ REVIEWED AS REQUIRED BY THE CONSTRUCTION CONTRACT DOCUMENTS AND APPROVED, BUT ONLY FOR CONFORMANCE TO THE DESIGN CONCEPT OF THE WORK, AND SUBJECT TO FURTHER LIMITATIONS AND REQUIREMENTS CONTAINED IN THE CONSTRUCTION CONTRACT DOCUMENTS.

☐ REJECTED ☐ REVISE AND RESUBMIT ✖ FURNISH AS CORRECTED

CORRECTIONS OR COMMENTS MADE ON THE SHOP DRAWINGS DURING THIS REVIEW DO NOT RELIEVE CONTRACTOR FROM COMPLIANCE WITH REQUIRMENTS OF THE DRAWINGS AND SPECIFICATIONS. THIS CHECK IS ONLY FOR REVIEW OF GENERAL CONFORMANCE WITH THE DESIGN CONCEPT OF THE PROJECT AND GENERAL COMPLIANCE WITH THE INFORMATION GIVEN IN THE CONTRACT DOCUMENTS. THE CONTRACTOR IS RESPONSIBLE FOR: CONFIRMING AND CORRELATING ALL QUANTITIES AND DIMENSIONS; SELECTING FABRICATION PROCESSES AND TECHNIQUES OF CONSTRUCTION; COORDINATING HIS WORK WITH THAT OF ALL OTHER TRADES; AND PERFORMING HIS WORK IN A SAFE AND SATISFACTORY MANNER.

vhb 40 IDX Drive Building 100, Suite 200 South Burlington, VT 05403 802.497.6100

Job Number: BRF 025-1(42)
Reviewed By: E.F. LAWES
Date: MARCH 9, 2017

COLD RIVER BRIDGES, LLC
10 LANBRO LANE
TEL 603–756–9300 WALPOLE, NH FAX 603–756–9303

LUDLOW BRF 0251(42)

POST TENSION DETAILS

DATE: 11/18/16

SHEET NUMBER 10

Drawing Number	REV.	CHANGED BY	CHKD	DESCRIPTION	DATE
Q500143	-	-	-	-	-

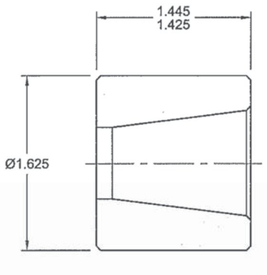

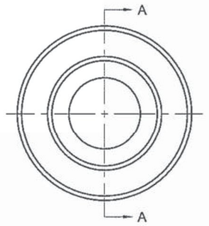

Section View A-A

Notes:
1) Remove all burrs and sharp edges.
2) Clear zinc plate in accordance with ASTM B633-11: .0002 - .0005" thick.

Drawn by: KB	Date: 10-24-13	Unspecified Tolerances (in Inches) DECIMAL: X .X = ± 0.015, X .XX = ± 0.010, X .XXX = ± 0.005, FRACTIONAL: ± 1/32, ANGULAR: ± 1.0°	PRECISION SURE-LOCK® This drawing and information herein is confidential and proprietary and is the property of Enerpac Precision SURE-LOCK. It is not to be copied or reproduced without written permission.
Checked by: RB	Date: 10-25-13		Material: 500142 - F8B ¼ - ½ OTU Chuck Body
Approved by: JG	Date: 10-25-13		Description: F8BP ¼ - ½ OTU Chuck Body Zinc
Release Date: 10-25-13		Purchase Part Number: -	Sheet: 1 of 1
Scale: 1:1			Drawing Number: Q500143

Vermont Agency of Transportation
RECEIVED
CK'D BY VHB OK'D BY TAS
March 7, 2017
RESUBMIT NO APPROVED AS NOTED
BY T Sumner DATE 3/9/17

SHOP DRAWING REVIEW

☐ REVIEWED AS REQUIRED BY THE CONSTRUCTION CONTRACT DOCUMENTS AND APPROVED, BUT ONLY FOR CONFORMANCE TO THE DESIGN CONCEPT OF THE WORK, AND SUBJECT TO FURTHER LIMITATIONS AND REQUIREMENTS CONTAINED IN THE CONSTRUCTION CONTRACT DOCUMENTS.
☐ REJECTED ☐ REVISE AND RESUBMIT ✕ FURNISH AS CORRECTED

CORRECTIONS OR COMMENTS MADE ON THE SHOP DRAWINGS DURING THIS REVIEW DO NOT RELIEVE CONTRACTOR FROM COMPLIANCE WITH REQUIREMENTS OF THE DRAWINGS AND SPECIFICATIONS. THIS CHECK IS ONLY FOR REVIEW OF GENERAL CONFORMANCE WITH THE DESIGN CONCEPT OF THE PROJECT AND GENERAL COMPLIANCE WITH THE INFORMATION GIVEN IN THE CONTRACT DOCUMENTS. THE CONTRACTOR IS RESPONSIBLE FOR: CONFIRMING AND CORRELATING ALL QUANTITIES AND DIMENSIONS; SELECTING FABRICATION PROCESSES AND TECHNIQUES OF CONSTRUCTION; COORDINATING HIS WORK WITH THAT OF ALL OTHER TRADES; AND PERFORMING HIS WORK IN A SAFE AND SATISFACTORY MANNER.

vhb 40 IDX Drive, Building 100, Suite 200, South Burlington, VT 05403, 802.497.6100

Job Number: BRF 025-1(42)
Reviewed By: E.F. LAWES
Date: MARCH 9, 2017

COLD RIVER BRIDGES, LLC
10 LANBRO LANE
TEL 603-756-9300 WALPOLE, NH FAX 603-756-9303

LUDLOW BRF 0251(42)

POST TENSION DETAILS

SHEET NUMBER 11

DATE 11/18/16

DAYTON SUPERIOR

P53 SWIFT LIFT® EYE ANCHOR

Precast / Tilt-Up

TECHNICAL DATA SHEET

DESCRIPTION

The P53 Swift Lift Eye Anchor is designed for use with the P60 Tension Bar placed through the eye of the anchor. This combination of Swift Lift Eye Anchor and P60 Tension Bar allows the anchor's full rated tensile load to be developed in thin, narrow wall applications. The anchor should be located at the center line of the wall. When two or more anchors are required, the minimum spacing between anchors must be equal to the minimum panel width.

APPLICATION

The Dayton Superior Swift Lift Eye Anchor (P53) is similar to the P52 Anchor but has an eye at the foot to accept P60 Tension Bars. The P53 anchor is used primarily in thin sections, thin panels of lightweight concrete or shapes that must be handled at concrete compressive strengths below 14 MPa.

Warning: P60 Tension Bar must be used with this anchor to achieve loads.

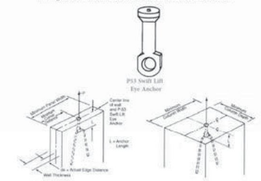

FEATURES

- Available in hot-dipped galvanized for extreme corrosion resistance
- The combination of the P53 Swift Lift Eye Anchor and P60 Tension Bar is an excellent system to use for lifting, handling, and setting precast column and thin walls.

TECHNICAL DATA

P53 Swift Eye Anchor Selection Chart

Anchor Rated Load (tons)	Anchor Length (L)	Minimum Thickness or Depth (de)	Actual Edge Distance (de)	Minimum Corner Distance	Minimum Panel Width	Tensile Safe Working Load per Anchor* (lbs)
1	2-1/2"	3"	1-1/2"	8"	16"	2,000
2	3-1/2"	3"	1-1/2"	4"	8"	4,000
4	4-3/4"	3-3/4"	1-7/8"	5"	10"	8,000
8	7-1/16"	4-3/4"	2-3/8"	7"	14"	16,000
20	9-7/8"	6-3/8"	3-3/16"	8-1/2"	17"	40,000

*Safe Working Load provided a factor of safety of approximately 4 to 1 in 2,000 psi normal weight concrete. The P53 Eye Anchor must be used in conjunction with the P60 Tension Bar in order to develop its published rated working loads.

RELATED PRODUCTS

- P60 Tension Bar

ORDERING INFORMATION

PLAIN

Product Code	Description	Weight
60686	1 TON SWL, [illegible] X 2-5/8"	0.139 LB
60683	2 TON SWL, 9/16" X 3-1/2"	0.34 LB
60684	4 TON SWL, 3/4" X 4-3/4"	0.94 LB
60685	8 TON SWL, 1-3/32" X 7-1/8"	2.469 LB
60682	20 TON SWL, 1-1/2" X 9-5/8"	7.42 LB

HOT-DIPPED GALV.

Product Code	Description	Weight
129860	2 TON SWL, 9/16" X 3-1/2"	0.4 LB
60687	4 TON SWL, 3/4" X 4-3/4"	0.935 LB
129857	8 TON SWL, 1-3/32" X 7-1/8"	3 LB
126861	20 TON SWL, 1-1/2" X 9-5/8"	7.5 LB

ABUT &WW'S

MANUFACTURER

Dayton Superior Corporation
1125 Byers Road
Miamisburg, OH 45342
Customer Service: 888-977-9600
Technical Services: 877-266-7732
Website: www.daytonsuperior.com

WARRANTY (ACCESSORIES)

Limited Warranty. Dayton warrants, for a period of 60 days from the date of shipment (three years from the date of shipment in the case of formwork, excluding any consumable Products included with such formwork), that Products and any associated application drawings and engineering services provided by Dayton ("Ancillary Services") will be free from defects in material and workmanship and, in the case of custom designed formwork, that the formwork will meet the specifications set forth in the design drawings approved by Dayton and Customer. Any claim under this warranty must be made in writing within such warranty period. If any Product and/or Ancillary Service covered by a timely claim are found to be defective, Dayton will, within a reasonable time, make any necessary repairs or corrections or, at Dayton's option, replace the Product. Unless pre-authorized by Dayton in writing, Dayton will not accept any charges for correcting defects or accept the return of any Product. This warranty will not apply to any Products that have been subjected to misuse, neglect, storage damage, misapplication, accident or any other damage caused by any person other than Dayton, or that have not been maintained in accordance with Dayton's specifications. THIS LIMITED WARRANTY IS IN LIEU OF ALL OTHER WARRANTIES AS TO THE PRODUCTS AND ANCILLARY SERVICES. DAYTON MAKES NO OTHER WARRANTIES OR GUARANTEES, EXPRESS OR IMPLIED, INCLUDING ANY WARRANTY OF MERCHANTABILITY, FITNESS FOR A PARTICULAR PURPOSE OR OTHERWISE. THE REMEDIES SET FORTH IN THIS SECTION ARE CUSTOMER'S EXCLUSIVE REMEDY FOR BREACH OF WARRANTY.

ABUTMENTS AND WING WALLS

File Date: 12/9/2014

Vermont Agency of Transportation
RECEIVED
CK'D BY VHB OK'D BY TAS
March 7, 2017
RESUBMIT NO APPROVED AS NOTED
BY T Sumner DATE 3/9/17

SHOP DRAWING REVIEW

☐ REVIEWED AS REQUIRED BY THE CONSTRUCTION CONTRACT DOCUMENTS AND APPROVED, BUT ONLY FOR CONFORMANCE TO THE DESIGN CONCEPT OF THE WORK, AND SUBJECT TO FURTHER LIMITATIONS AND REQUIREMENTS CONTAINED IN THE CONSTRUCTION CONTRACT DOCUMENTS.
☐ REJECTED ☐ REVISE AND RESUBMIT ✕ FURNISH AS CORRECTED

CORRECTIONS OR COMMENTS MADE ON THE SHOP DRAWINGS DURING THIS REVIEW DO NOT RELIEVE CONTRACTOR FROM COMPLIANCE WITH REQUIRMENTS OF THE DRAWINGS AND SPECIFICATIONS. THIS CHECK IS ONLY FOR REVIEW OF GENERAL CONFORMANCE WITH THE DESIGN CONCEPT OF THE PROJECT AND GENERAL COMPLIANCE WITH THE INFORMATION GIVEN IN THE CONTRACT DOCUMENTS. THE CONTRACTOR IS RESPONSIBLE FOR: CONFIRMING AND CORRELATING ALL QUANTITIES AND DIMENSIONS; SELECTING FABRICATION PROCESSES AND TECHNIQUES OF CONSTRUCTION; COORDINATING HIS WORK WITH THAT OF ALL OTHER TRADES; AND PERFORMING HIS WORK IN A SAFE AND SATISFACTORY MANNER.

vhb
40 IDX Drive
Building 100, Suite 200
South Burlington, VT 05403
802.497.6100

Job Number: BRF 025-1(42)
Reviewed By: E.F. LAWES
Date: MARCH 9, 2017

Notes:

All lifting eye recesses will be filled with an approved grout from the Vermont Approved products list.

COLD RIVER BRIDGES, LLC
10 LANBRO LANE
TEL 603-756-9300 WALPOLE, NH FAX 603-756-9303

LUDLOW BRF 0251(42)

SWIFT LIFT ANCHORS

SHEET NUMBER 12

DATE: 11/18/16

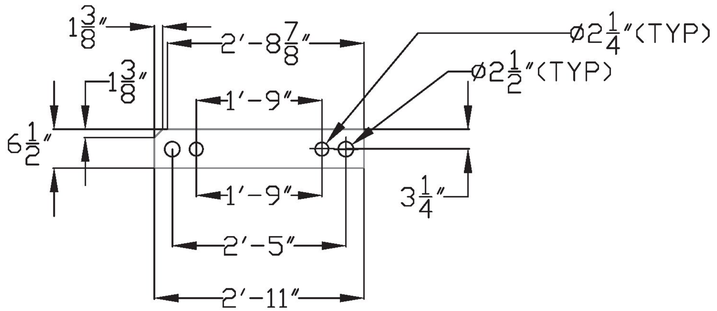

GIRDER 1

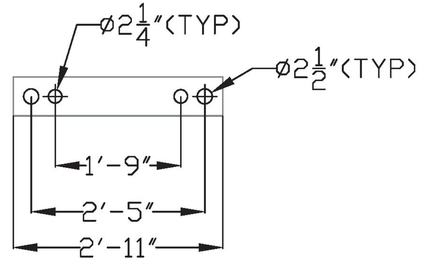

GIRDER 2-11

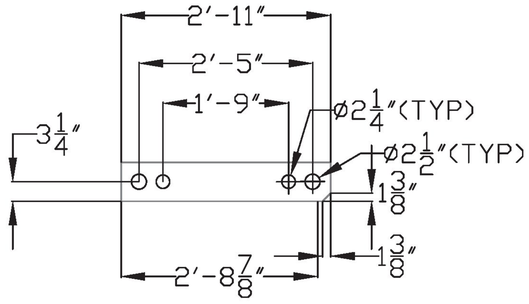

GIRDER 12

2-1/8" BEARING PLATE DETAILS

** ALL MATERIAL HOT DIP GALVANIZED

Vermont Agency of Transportation
RECEIVED
CK'D BY VHB OK'D BY TAS
March 7, 2017
RESUBMIT NO APPROVED AS NOTED
BY T Sumner DATE 3/9/17

BILL OF MATERIALS:
2" DIA ANCHOR BOLT=96 EACH
2" DIA HH NUT-288 EACH
4X8 WASHER-24 EACH
2 1/8"BEARING PLATE G2toG11-20 EACH
2 1/8"BEARING PLATE G1toG12-4EACH

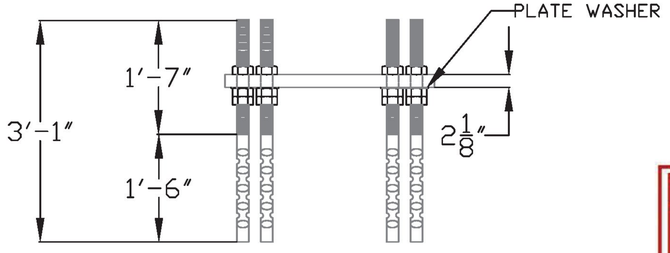

DOUBLE ANCHOR BOLT ASSEMBLY

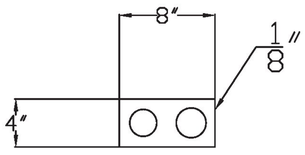

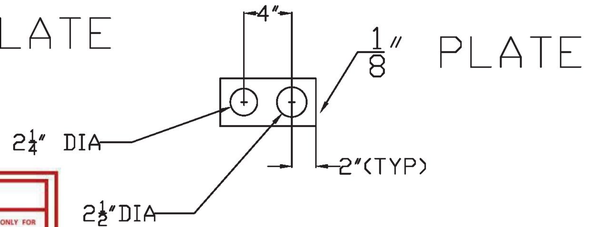

SHOP DRAWING REVIEW

☐ REVIEWED AS REQUIRED BY THE CONSTRUCTION CONTRACT DOCUMENTS AND APPROVED, BUT ONLY FOR CONFORMANCE TO THE DESIGN CONCEPT OF THE WORK, AND SUBJECT TO FURTHER LIMITATIONS AND REQUIREMENTS CONTAINED IN THE CONSTRUCTION CONTRACT DOCUMENTS.

☐ REJECTED ☐ REVISE AND RESUBMIT ☒ FURNISH AS CORRECTED

CORRECTIONS OR COMMENTS MADE ON THE SHOP DRAWINGS DURING THIS REVIEW DO NOT RELIEVE CONTRACTOR FROM COMPLIANCE WITH REQUIRMENTS OF THE DRAWINGS AND SPECIFICATIONS. THIS CHECK IS ONLY FOR REVIEW OF GENERAL CONFORMANCE WITH THE DESIGN CONCEPT OF THE PROJECT AND GENERAL COMPLIANCE WITH THE INFORMATION GIVEN IN THE CONTRACT DOCUMENTS. THE CONTRACTOR IS RESPONSIBLE FOR: CONFIRMING AND CORRELATING ALL QUANTITIES AND DIMENSIONS; SELECTING FABRICATION PROCESSES AND TECHNIQUES OF CONSTRUCTION; COORDINATING HIS WORK WITH THAT OF ALL OTHER TRADES; AND PERFORMING HIS WORK IN A SAFE AND SATISFACTORY MANNER.

vhb
40 IDX Drive
Building 100, Suite 200
South Burlington, VT 05403
802.497.6100

Job Number: BRF 025-1(42)
Reviewed By: E.F. LAWES
Date: MARCH 9, 2017

COLD RIVER BRIDGES, LLC
10 LANBRO LANE
TEL 603-756-9300 WALPOLE, NH FAX 603-756-9303

LUDLOW BRF 0251(42)

ANCHOR ASSEMBLIES

SHEET NUMBER 13

DATE: 11/18/16

STATE OF VERMONT
AGENCY OF TRANSPORTATION
MATERIAL AND RESEARCH SECTION - STRUCTURAL CONCRETE UNIT

STRUCTURAL CONCRETE MIX DESIGN SUBMISSION

Revision: 08/31/15

Agency Use Only	
Mix ID	PP17-061
Mix Design #	061
Approved by	jwild
Approved Date	1/9/2017
Spec Book Year	2011

Concrete class: Precast Prestressed
Additional Description:
Ready Mix Supplier: CARROLL CONCRETE - CHARLESTOWN, NH
Designed By: Scott Jordan
Design strength: 5000 PSI
Mix Design Style: Conventional
Agg weight - SSD or Dry: SSD

Mix designs are valid for a 12 month period from date of approval or unless there is a change in material, material property or design parameter.

Cement: 701.02	Source: / Brand Name:		Specific Gravity		lb/cy	0.00 cf
Cement Type III: 701.04	Source: / Brand Name:		Specific Gravity		lb/cy	0.00 cf
Blended Cement: 701.06	Source: LAFARGE - TERCEM - MONTREAL, EAST PLANT / Brand Name:		Specific Gravity	2.980	660 lb/cy	3.55 cf
Cement with Slag: 701.07	Source: / Brand Name:		Specific Gravity		lb/cy	0.00 cf
Pozzolan: 725.03(a)	Source: / Brand Name:		Specific Gravity		lb/cy	0.00 cf
Fly Ash: 725.03(a)	Source: / Brand Name:		Specific Gravity		lb/cy	0.00 cf
Silica Fume: 725.03(b)	Source: / Brand Name:		Specific Gravity		lb/cy	0.00 cf
Slag: 725.03(c)	Source: / Brand Name:		Specific Gravity		lb/cy	0.00 cf
Water				32 gals	267 lb/cy	4.28 cf
Air Content Target				7.0 %		1.89 cf
Coarse Aggregate 3/8" 704.02A	Source:	Absorption	Specific Gravity		lb/cy	0.00 cf
Coarse Aggregate 3/4" 704.02B	Source: NORLITE - COHOES, NY	Absorption 20.00	Specific Gravity 1.250		635 lb/cy	8.14 cf
Coarse Aggregate 1 1/2" 704.02C	Source:	Absorption	Specific Gravity		lb/cy	0.00 cf
Fine Aggregate: 704.01	Source: NEWPORT SAND & GRAVEL - NEWPORT, NH	Absorption 1.00	Specific Gravity 2.670 / Fineness Modulus 2.75		1523 lb/cy	9.14 cf
Air Entrainment Admixture 725.02(b)	Source: MASTER BUILDERS INC - MESQUITE, TX / Brand Name: MasterAir AE200		Specific Gravity		0.5 oz/cy	
Retarder Admixture: 725.02(c)	Source: MASTER BUILDERS INC - MESQUITE, TX / Brand Name: MasterSet R100		Specific Gravity		1 oz/cwt	
High Range Water Reducer Admixture: 725.02(h)	Source: MASTER BUILDERS INC - MESQUITE, TX / Brand Name: MasterGlenium 7500		Specific Gravity		5 oz/cwt	
Other Admixtures:	Source: / Brand Name:		Specific Gravity			0.00 cf
Specific performance admixture 725.02(l)	Source: MASTER BUILDERS INC - MESQUITE, TX / Brand Name: MasterSure Z60		Specific Gravity		1 oz/cwt	0.00 cf
	Source: / Brand Name:		Specific Gravity			0.00 cf
			TOTAL	45.900	3085 lb	27.00 cf

Maximum Water/Cementitious Ratio 0.44
Maximum Water (gal/cy) 34.8
Slump Min/Max (inch) 4.0 min 8.0 max
Air Content Min/Max (%) 5.5 min 8.5 max
Design Unit Wt. (lb/cf) 114.26

Approved by James Wild, VACT Structural Concrete Engineer 1/9/17 for Ludlow BRF025-1(42) self performed precast

Notes:
2016 construction season, 11-17-16, Unit weight to be +/- 3 lbs of design, tested in compliance with ASTM C567, gradation of light weight 3/4" 90-100% passing, 3/8" 10-50% passing, #4 0-15% passing, Norlite batch weight to be adjusted prior to batching based on unit weight and moisture content

Vermont Agency of Transportation
RECEIVED
CK'D BY VHB OK'D BY TAS
March 7, 2017
RESUBMIT NO APPROVED AS NOTED
BY T Sumner DATE 3/9/17

SHOP DRAWING REVIEW

☐ REVIEWED AS REQUIRED BY THE CONSTRUCTION CONTRACT DOCUMENTS AND APPROVED, BUT ONLY FOR CONFORMANCE TO THE DESIGN CONCEPT OF THE WORK, AND SUBJECT TO FURTHER LIMITATIONS AND REQUIREMENTS CONTAINED IN THE CONSTRUCTION CONTRACT DOCUMENTS.
☐ REJECTED ☐ REVISE AND RESUBMIT ✕ FURNISH AS CORRECTED

CORRECTIONS OR COMMENTS MADE ON THE SHOP DRAWINGS DURING THIS REVIEW DO NOT RELIEVE CONTRACTOR FROM COMPLIANCE WITH REQUIRMENTS OF THE DRAWINGS AND SPECIFICATIONS. THIS CHECK IS ONLY FOR REVIEW OF GENERAL CONFORMANCE WITH THE DESIGN CONCEPT OF THE PROJECT AND GENERAL COMPLIANCE WITH THE INFORMATION GIVEN IN THE CONTRACT DOCUMENTS. THE CONTRACTOR IS RESPONSIBLE FOR: CONFIRMING AND CORRELATING ALL QUANTITIES AND DIMENSIONS; SELECTING FABRICATION PROCESSES AND TECHNIQUES OF CONSTRUCTION; COORDINATING HIS WORK WITH THAT OF ALL OTHER TRADES; AND PERFORMING HIS WORK IN A SAFE AND SATISFACTORY MANNER.

vhb 40 IDX Drive, Building 100, Suite 200, South Burlington, VT 05403, 802.497.6100
Job Number: BRF 025-1(42)
Reviewed By: E.F. LAWES
Date: MARCH 9, 2017

COLD RIVER BRIDGES, LLC
10 LANBRO LANE
TEL 603-756-9300 WALPOLE, NH FAX 603-756-9303

LUDLOW BRF 0251(42)

CONCRETE MIX DESIGN

DATE: 11/18/16

SHEET NUMBER 14

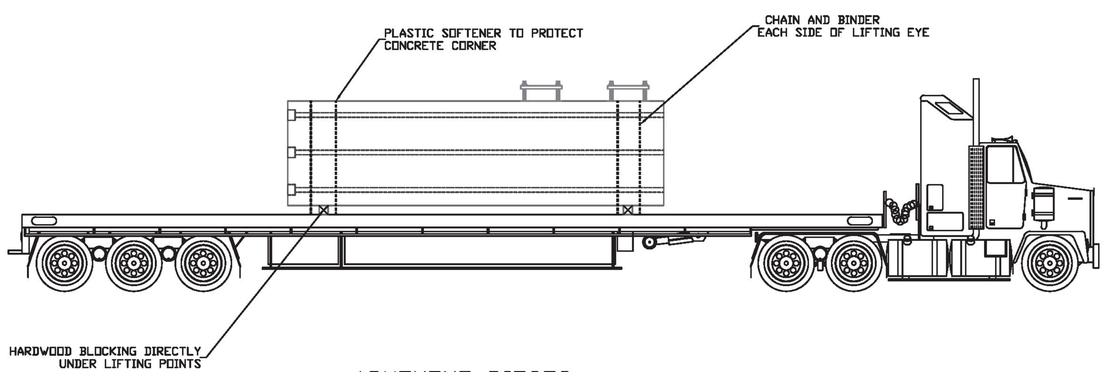

ABUTMENT PIECES

SHOP DRAWING REVIEW

☐ REVIEWED AS REQUIRED BY THE CONSTRUCTION CONTRACT DOCUMENTS AND APPROVED, BUT ONLY FOR CONFORMANCE TO THE DESIGN CONCEPT OF THE WORK, AND SUBJECT TO FURTHER LIMITATIONS AND REQUIREMENTS CONTAINED IN THE CONSTRUCTION CONTRACT DOCUMENTS.

☐ REJECTED ☐ REVISE AND RESUBMIT ☒ FURNISH AS CORRECTED

CORRECTIONS OR COMMENTS MADE ON THE SHOP DRAWINGS DURING THIS REVIEW DO NOT RELIEVE CONTRACTOR FROM COMPLIANCE WITH REQUIRMENTS OF THE DRAWINGS AND SPECIFICATIONS. THIS CHECK IS ONLY FOR REVIEW OF GENERAL CONFORMANCE WITH THE DESIGN CONCEPT OF THE PROJECT AND GENERAL COMPLIANCE WITH THE INFORMATION GIVEN IN THE CONTRACT DOCUMENTS. THE CONTRACTOR IS RESPONSIBLE FOR: CONFIRMING AND CORRELATING ALL QUANTITIES AND DIMENSIONS; SELECTING FABRICATION PROCESSES AND TECHNIQUES OF CONSTRUCTION; COORDINATING HIS WORK WITH THAT OF ALL OTHER TRADES; AND PERFORMING HIS WORK IN A SAFE AND SATISFACTORY MANNER.

vhb
40 IDX Drive
Building 100, Suite 200
South Burlington, VT 05403
802.497.6100

Job Number: BRF 025-1(42)
Reviewed By: E.F. LAWES
Date: MARCH 9, 2017

Vermont Agency of Transportation
RECEIVED
CK'D BY VHB OK'D BY TAS
March 7, 2017
RESUBMIT NO APPROVED AS NOTED
BY T Sumner DATE 3/9/17

COLD RIVER BRIDGES, LLC
10 LANBRO LANE
TEL 603-756-9300 WALPOLE, NH FAX 603-756-9303

LUDLOW BRF 0251(42)

SHIPPING DETAILS

SHEET NUMBER 15

DATE: 11/18/16

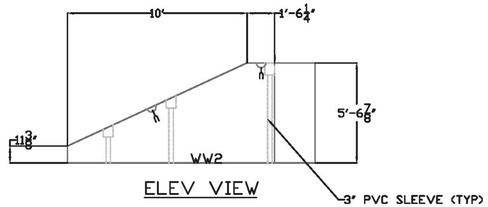

ELEV VIEW

3" PVC SLEEVE (TYP)

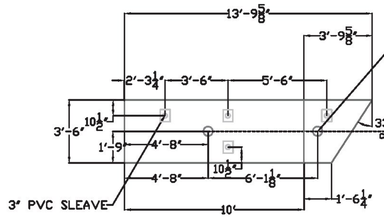

PLAN VIEW

WW#2

MARK:WW2
CY=6.98
WEIGHT=22.6k

Vermont Agency of Transportation

RECEIVED

CK'D BY VHB OK'D BY TAS

March 7, 2017

RESUBMIT NO APPROVED AS NOTED

BY T Sumner DATE 3/9/17

1.25" PT ROD LENGTH VARIES

℄ BEARING

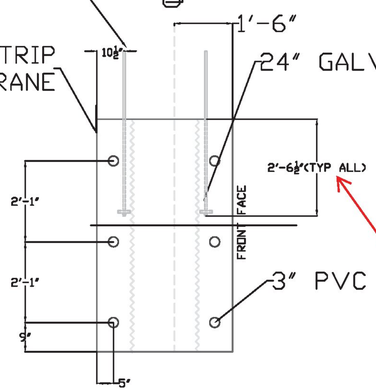

dimension to top PT duct, similar to other sheets.

ABUTMENT/WINGWALL TYP SECT.

NTS:

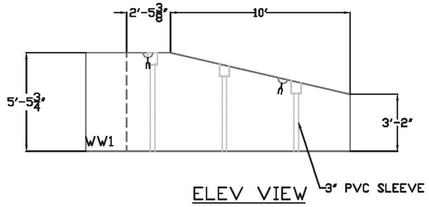

ELEV VIEW

3" PVC SLEEVE (TYP)

MARK:WW1
CY=7.92
WEIGHT=25.7k

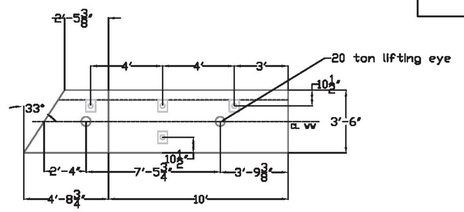

PLAN VIEW

WW#1

ELEV VIEW

3" PVC SLEEVE (TYP)

MARK:WW3
CY=7.5
WEIGHT=24.3k

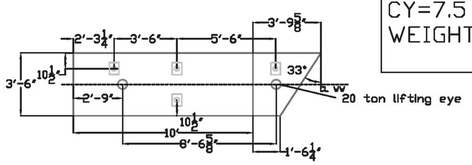

PLAN VIEW

WW#3

NOTE: SEE CALDERWOOD ENGINEERINGS PLANS FOR POST TENSIONING DESIGN

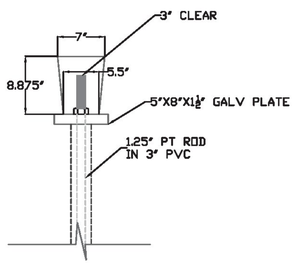

TYPICAL POCKET DETAIL

NTS:

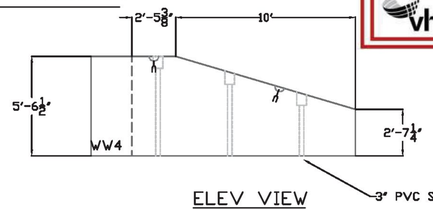

ELEV VIEW

3" PVC SLEEVE (TYP)

MARK:WW4
CY=7.56
WEIGHT=24.5k

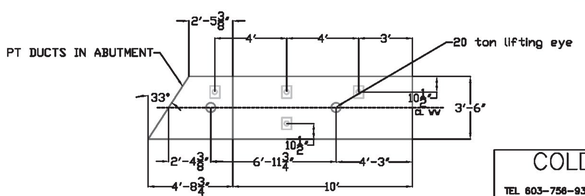

PLAN VIEW

WW#4

SHOP DRAWING REVIEW

☐ REVIEWED AS REQUIRED BY THE CONSTRUCTION CONTRACT DOCUMENTS AND APPROVED, BUT ONLY FOR CONFORMANCE TO THE DESIGN CONCEPT OF THE WORK, AND SUBJECT TO FURTHER LIMITATIONS AND REQUIREMENTS CONTAINED IN THE CONSTRUCTION CONTRACT DOCUMENTS.

☐ REJECTED ☐ REVISE AND RESUBMIT ☒ FURNISH AS CORRECTED

CORRECTIONS OR COMMENTS MADE ON THE SHOP DRAWINGS DURING THIS REVIEW DO NOT RELIEVE CONTRACTOR FROM COMPLIANCE WITH REQUIRMENTS OF THE DRAWINGS AND SPECIFICATIONS. THIS CHECK IS ONLY FOR REVIEW OF GENERAL CONFORMANCE WITH THE DESIGN CONCEPT OF THE PROJECT AND GENERAL COMPLIANCE WITH THE INFORMATION GIVEN IN THE CONTRACT DOCUMENTS. THE CONTRACTOR IS RESPONSIBLE FOR: CONFIRMING AND CORRELATING ALL QUANTITIES AND DIMENSIONS; SELECTING FABRICATION PROCESSES AND TECHNIQUES OF CONSTRUCTION; COORDINATING HIS WORK WITH THAT OF ALL OTHER TRADES; AND PERFORMING HIS WORK IN A SAFE AND SATISFACTORY MANNER.

vhb 40 IDX Drive, Building 100, Suite 200, South Burlington, VT 05403, 802.497.6100

Job Number: BRF 025-1(42)
Reviewed By: E.F. LAWES
Date: MARCH 9, 2017

COLD RIVER BRIDGES, LLC
10 LANBRO LANE
TEL 603-756-9300 WALPOLE, NH FAX 603-756-9303

LUDLOW BRF 0251(42)

PRE-CAST WINGS

SHEET NUMBER 16

DATE: 11/18/16

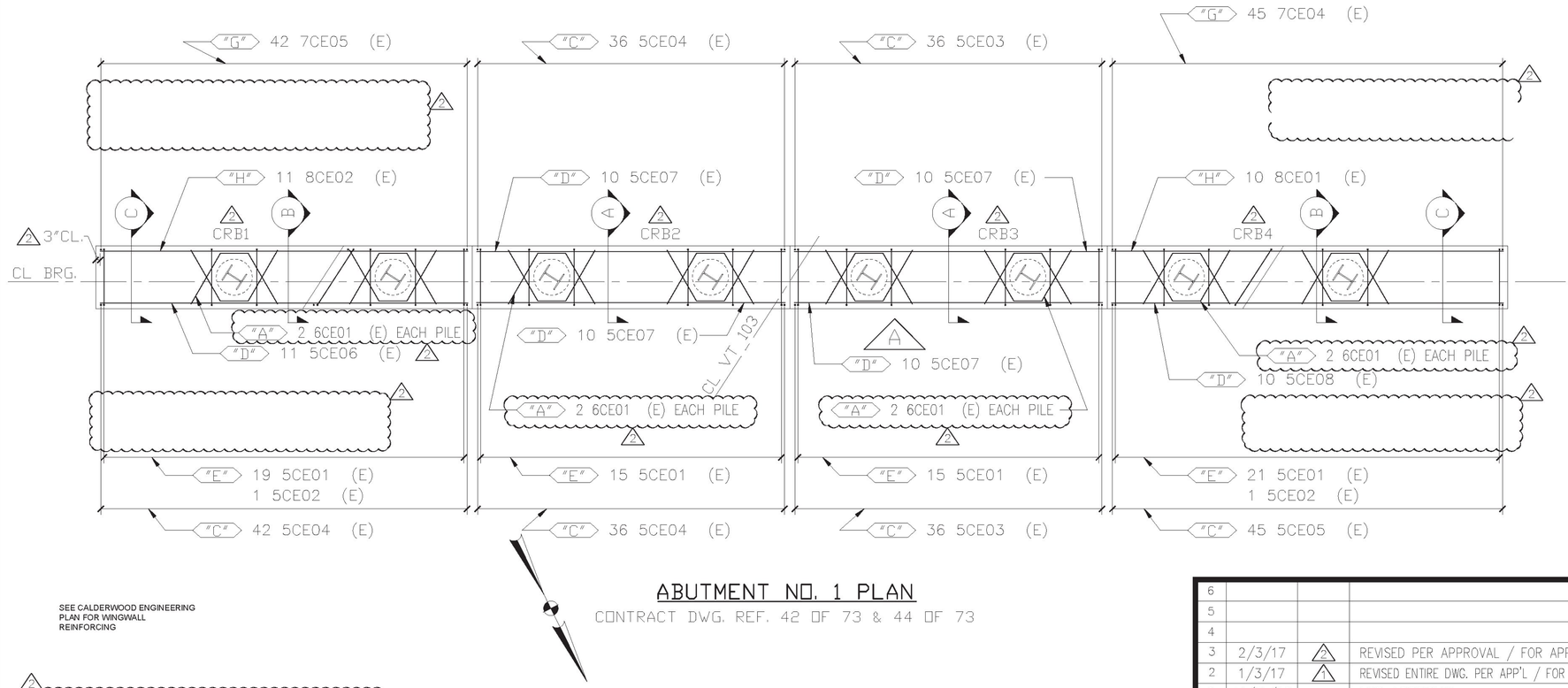

ABUTMENT NO. 1 PLAN

CONTRACT DWG. REF. 42 OF 73 & 44 OF 73

SEE CALDERWOOD ENGINEERING PLAN FOR WINGWALL REINFORCING

2 MATCH CAST DETAILS AND KEYWAY NOT SHOWN FOR CLARITY.

DECK, & BACKWALL ARE NOT PART OF THIS SUBMISSION

WORK THIS DRAWING WITH DRAWINGS C1, C2, & C3

ELEVATIONS & DIMENSIONS SHOWN ON THIS DWG. ARE FOR REINF. DETAILING PURPOSES ONLY AND ARE NOT INTENDED FOR DIMENSIONAL CONSTRUCTION.

BAR MARKS MAY CHANGE, DUE TO REVISIONS

EPOXY REINF. BARS ASTM A615 GRADE 60, MARKED (E)

LEGEND:

CONT.-CONTINUOUS	E.E.-EACH END
TRANS.-TRANSVERSE	E.F.-EACH FACE
DWLS.-DOWELS	N.F.-NEAR FACE
VERTS.-VERTICAL	F.F.-FAR FACE
HORIZ.-HORIZONTAL	E.W.-EACH WAY
T&B -TOP & BOTTOM	O.C.-ON CENTER
I.F.-INNER FACE	L.W.-LONG WAY
O.F.-OUTER FACE	S.W.-SHORT WAY

Vermont Agency of Transportation
RECEIVED
CK'D BY VHB OK'D BY TAS
March 7, 2017
RESUBMIT NO APPROVED AS NOTED
BY T Sumner DATE 3/9/17

SHOP DRAWING REVIEW

☐ REVIEWED AS REQUIRED BY THE CONSTRUCTION CONTRACT DOCUMENTS AND APPROVED, BUT ONLY FOR CONFORMANCE TO THE DESIGN CONCEPT OF THE WORK, AND SUBJECT TO FURTHER LIMITATIONS AND REQUIREMENTS CONTAINED IN THE CONSTRUCTION CONTRACT DOCUMENTS.
☐ REJECTED ☐ REVISE AND RESUBMIT ☒ FURNISH AS CORRECTED

CORRECTIONS OR COMMENTS MADE ON THE SHOP DRAWINGS DURING THIS REVIEW DO NOT RELIEVE CONTRACTOR FROM COMPLIANCE WITH REQUIREMENTS OF THE DRAWINGS AND SPECIFICATIONS. THIS CHECK IS ONLY FOR REVIEW OF GENERAL CONFORMANCE WITH THE DESIGN CONCEPT OF THE PROJECT AND GENERAL COMPLIANCE WITH THE INFORMATION GIVEN IN THE CONTRACT DOCUMENTS. THE CONTRACTOR IS RESPONSIBLE FOR: CONFIRMING AND CORRELATING ALL QUANTITIES AND DIMENSIONS; SELECTING FABRICATION PROCESSES AND TECHNIQUES OF CONSTRUCTION; COORDINATING HIS WORK WITH THAT OF ALL OTHER TRADES; AND PERFORMING HIS WORK IN A SAFE AND SATISFACTORY MANNER.

vhb 40 IDX Drive, Building 100, Suite 200, South Burlington, VT 05403, 802.497.6100
Job Number: BRF 025-1(42)
Reviewed By: E.F. LAWES
Date: MARCH 9, 2017

	DATE	REV.#	SENT FOR
6			
5			
4			
3	2/3/17	2	REVISED PER APPROVAL / FOR APPROVAL
2	1/3/17	1	REVISED ENTIRE DWG. PER APP'L / FOR APP'L
1	11/11/16	–	FOR APPROVAL

DIMENSION
DIMENSION FABRICATORS INC.
2000 7TH STREET
TROY, N.Y. 12302
PH: (518) 374-1936
FAX (518) 374-4830
www.dimensionfabricators.com

STRUCTURE	VTAOT LUDLOW BRF 025-1(42)
	VT 103, MAIN STREET (PRINCIPAL ARTERIAL)
LOCATION	TOWN OF LUDLOW, COUNTY OF WINDSOR, VT.
ARCHITECT	
ENGINEER	VHB
CUSTOMER	COLD RIVER BRIDGES, LLC

DRAWN BY	DATE	DFI #
CMB	11/10/16	10067

DRAWING COVERS	DRAWING #
ABUTMENT NO. 1	C

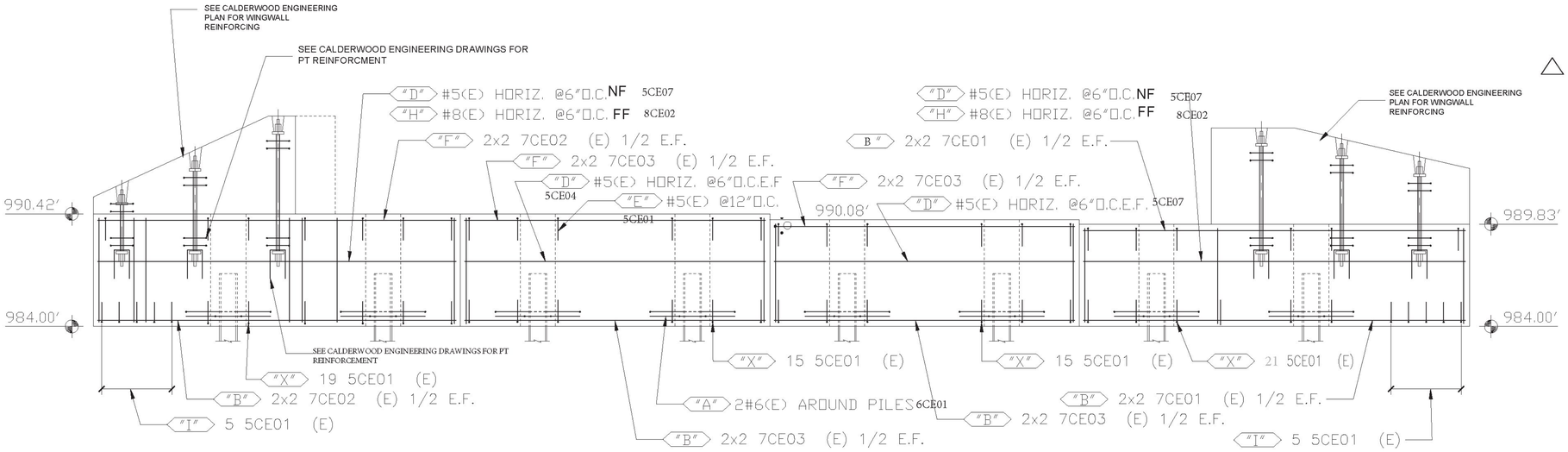

ABUTMENT NO. 1 ELEVATION (LOOKING SOUTH)

CONTRACT DWG. REF. 42 OF 73 & 44 OF 73

2 MATCH CAST DETAILS AND KEYWAY NOT SHOWN FOR CLARITY.

DECK, & BACKWALL ARE NOT PART OF THIS SUBMISSION

BAR MARKS MAY CHANGE, DUE TO REVISIONS

ELEVATIONS & DIMENSIONS SHOWN ON THIS DWG. ARE FOR REINF. DETAILING PURPOSES ONLY AND ARE NOT INTENDED FOR DIMENSIONAL CONSTRUCTION.

WORK THIS DRAWING WITH DRAWINGS C, C2, & C3

EPOXY REINF. BARS ASTM A615 GRADE 60, MARKED (E)

LEGEND:

CONT.-CONTINUOUS	E.E.-EACH END
TRANS.-TRANSVERSE	E.F.-EACH FACE
DWLS.-DOWELS	N.F.-NEAR FACE
VERTS.-VERTICAL	F.F.-FAR FACE
HORIZ.-HORIZONTAL	E.W.-EACH WAY
T&B -TOP & BOTTOM	O.C.-ON CENTER
I.F.-INNER FACE	L.W.-LONG WAY
O.F.-OUTER FACE	S.W.-SHORT WAY

Vermont Agency of Transportation
RECEIVED
CK'D BY VHB OK'D BY TAS
March 7, 2017
RESUBMIT NO APPROVED AS NOTED
BY T Sumner DATE 3/9/17

SHOP DRAWING REVIEW

☐ REVIEWED AS REQUIRED BY THE CONSTRUCTION CONTRACT DOCUMENTS AND APPROVED, BUT ONLY FOR CONFORMANCE TO THE DESIGN CONCEPT OF THE WORK, AND SUBJECT TO FURTHER LIMITATIONS AND REQUIREMENTS CONTAINED IN THE CONSTRUCTION CONTRACT DOCUMENTS.

☐ REJECTED ☐ REVISE AND RESUBMIT ☒ FURNISH AS CORRECTED

CORRECTIONS OR COMMENTS MADE ON THE SHOP DRAWINGS DURING THIS REVIEW DO NOT RELIEVE CONTRACTOR FROM COMPLIANCE WITH REQUIRMENTS OF THE DRAWINGS AND SPECIFICATIONS. THIS CHECK IS ONLY FOR REVIEW OF GENERAL CONFORMANCE WITH THE DESIGN CONCEPT OF THE PROJECT AND GENERAL COMPLIANCE WITH THE INFORMATION GIVEN IN THE CONTRACT DOCUMENTS. THE CONTRACTOR IS RESPONSIBLE FOR: CONFIRMING AND CORRELATING ALL QUANTITIES AND DIMENSIONS; SELECTING FABRICATION PROCESSES AND TECHNIQUES OF CONSTRUCTION; COORDINATING HIS WORK WITH THAT OF ALL OTHER TRADES; AND PERFORMING HIS WORK IN A SAFE AND SATISFACTORY MANNER.

vhb 40 IDX Drive, Building 100, Suite 200, South Burlington, VT 05403, 802.497.6100

Job Number: BRF 025-1(42)
Reviewed By: E.F. LAWES
Date: MARCH 9, 2017

6			
5			
4			
3	2/3/17	2	REVISED PER APPROVAL / FOR APPROVAL
2	1/3/17	1	REVISED ENTIRE DWG. PER APP'L / FOR APP'L
1	11/11/16	–	FOR APPROVAL
	DATE	REV.#	SENT FOR

DIMENSION
DIMENSION FABRICATORS INC.
2000 7TH STREET, SCOTIA, N.Y. 12302
PH: (518) 374-1936
FAX (518) 374-4830
www.dimensionfabricators.com

STRUCTURE	VTAOT LUDLOW BRF 025-1(42)
	VT 103, MAIN STREET (PRINCIPAL ARTERIAL)
LOCATION	TOWN OF LUDLOW, COUNTY OF WINDSOR, VT.
ARCHITECT	
ENGINEER	VHB
CUSTOMER	COLD RIVER BRIDGES, LLC

DRAWN BY	DATE	DFI #
CMB	11/10/16	10067

DRAWING COVERS	DRAWING #
ABUTMENT NO. 1	C1

BAR MARKS MAY CHANGE, DUE TO REVISIONS

WORK THIS DRAWING WITH DRAWINGS C, C1, & C3

2 MATCH CAST DETAILS AND KEYWAY NOT SHOWN FOR CLARITY.

DECK, & BACKWALL ARE NOT PART OF THIS SUBMISSION

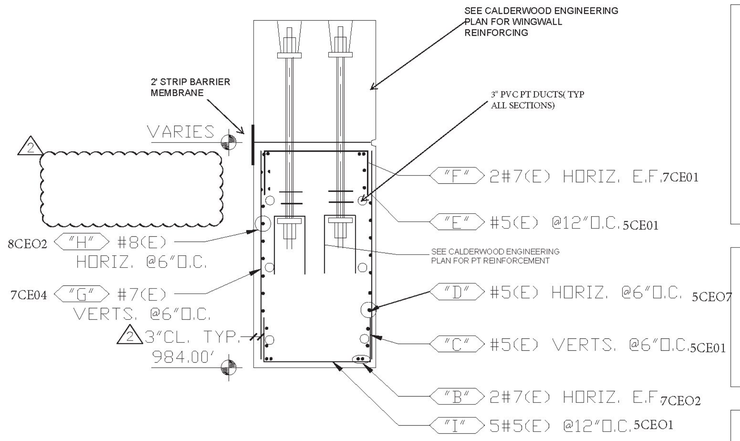

SECTION C

CONTRACT DWG. REF. 45 OF 73

Vermont Agency of Transportation
RECEIVED
CK'D BY VHB OK'D BY TAS
March 7, 2017
RESUBMIT NO APPROVED AS NOTED
BY T Sumner DATE 3/9/17

SHOP DRAWING REVIEW

☐ REVIEWED AS REQUIRED BY THE CONSTRUCTION CONTRACT DOCUMENTS AND APPROVED, BUT ONLY FOR CONFORMANCE TO THE DESIGN CONCEPT OF THE WORK, AND SUBJECT TO FURTHER LIMITATIONS AND REQUIREMENTS CONTAINED IN THE CONSTRUCTION CONTRACT DOCUMENTS.
☐ REJECTED ☐ REVISE AND RESUBMIT ☒ FURNISH AS CORRECTED

CORRECTIONS OR COMMENTS MADE ON THE SHOP DRAWINGS DURING THIS REVIEW DO NOT RELIEVE CONTRACTOR FROM COMPLIANCE WITH REQUIRMENTS OF THE DRAWINGS AND SPECIFICATIONS. THIS CHECK IS ONLY FOR REVIEW OF GENERAL CONFORMANCE WITH THE DESIGN CONCEPT OF THE PROJECT AND GENERAL COMPLIANCE WITH THE INFORMATION GIVEN IN THE CONTRACT DOCUMENTS. THE CONTRACTOR IS RESPONSIBLE FOR: CONFIRMING AND CORRELATING ALL QUANTITIES AND DIMENSIONS; SELECTING FABRICATION PROCESSES AND TECHNIQUES OF CONSTRUCTION; COORDINATING HIS WORK WITH THAT OF ALL OTHER TRADES; AND PERFORMING HIS WORK IN A SAFE AND SATISFACTORY MANNER.

vhb 40 IDX Drive, Building 100, Suite 200, South Burlington, VT 05403, 802.497.6100
Job Number: BRF 025-1(42)
Reviewed By: E.F. LAWES
Date: MARCH 9, 2017

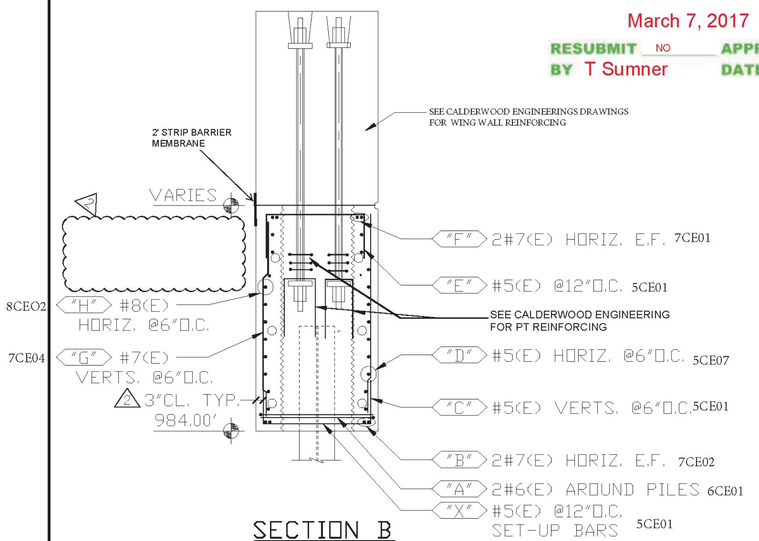

SECTION B

CONTRACT DWG. REF. 45 OF 73

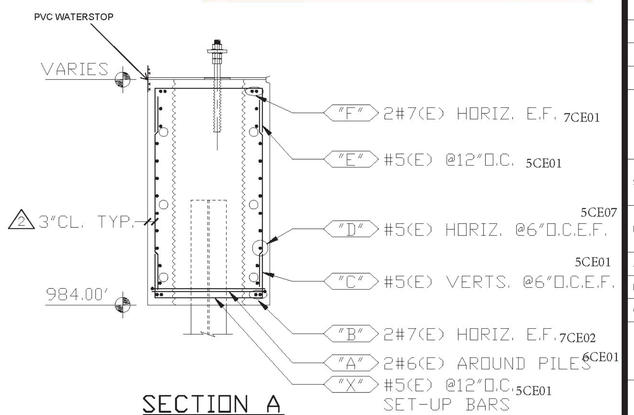

SECTION A

CONTRACT DWG. REF. 45 OF 73

LEGEND:

CONT.-CONTINUOUS	E.E.-EACH END
TRANS.-TRANSVERSE	E.F.-EACH FACE
DWLS.-DOWELS	N.F.-NEAR FACE
VERTS.-VERTICAL	F.F.-FAR FACE
HORIZ.-HORIZONTAL	E.W.-EACH WAY
T&B -TOP & BOTTOM	O.C.-ON CENTER
I.F.-INNER FACE	L.W.-LONG WAY
O.F.-OUTER FACE	S.W.-SHORT WAY

ELEVATIONS & DIMENSIONS SHOWN ON THIS DWG. ARE FOR REINF. DETAILING PURPOSES ONLY AND ARE NOT INTENDED FOR DIMENSIONAL CONSTRUCTION.

EPOXY REINF. BARS ASTM A615 GRADE 60, MARKED (E)

VERIFICATION OF UNCLEAR INFORMATION MAY BE REQUESTED ON THIS DRAWING. SHOULD VERIFICATION BE LEFT UN-ADDRESSED IT WILL REMAIN AS SHOWN AND ASSUME TO BE CORRECT.

6			
5			
4			
3	2/3/17	2	REVISED PER APPROVAL / FOR APPROVAL
2	1/3/17	1	REVISED ENTIRE DWG. PER APP'L / FOR APP'L
1	11/11/16	–	FOR APPROVAL
	DATE	REV.#	SENT FOR

DIMENSION
DIMENSION FABRICATORS INC.
2000 7TH STREET
SCOTIA, N.Y. 12302
PH: (518) 374-1936
FAX (518) 374-4830
www.dimensionfabricators.com

STRUCTURE	VTAOT LUDLOW BRF 025-1(42)
	VT 103, MAIN STREET (PRINCIPAL ARTERIAL)
LOCATION	
	TOWN OF LUDLOW, COUNTY OF WINDSOR, VT.
ARCHITECT	
ENGINEER	VHB
CUSTOMER	COLD RIVER BRIDGES, LLC

DRAWN BY	DATE	DFI #
CMB	11/10/16	10067

DRAWING COVERS	DRAWING #
ABUTMENT NO. 1	C2

Release Number:

BAR LIST 2

Bar Mark	Qty	Size	Total Length	Type	'A'	'B'	'C'	'D'	'E'	'F'	'G'	'H'	'J'	'K'	'O'	'R'
5CE01	178	#5	7'-4"	17		2'-2"	3'-0"	2'-2"								
5CE02	2	#5	7'-11"	17		2'-2"	3'-7"	2'-2"								
↑ 5CE03	74	#5	5'-7"	0		5'-7"										
5CE04	114	#5	5'-11"	0		5'-11"										
5CE05	45	#5	5'-4"	0		5'-4"										
5CE06	11	#5	20'-5"	0		20'-5"										
5CE07	40	#5	17'-1"	0		17'-1"										
5CE08	10	#5	21'-9"	0		21'-9"										
6CE01	16	#6	8'-3"	3			3'-5"	1'-5"	3'-5"			2'-11 ½"		1'-8 ½"	4'-10"	
7CE01	8	#7	21'-9"	0		21'-9"										
7CE02	8	#7	20'-5"	0		20'-5"										
7CE03	16	#7	17'-1"	0		17'-1"										
↑ 7CE04	47	#7	5'-4"	0		5'-4"										
7CE05	42	#7	5'-11"	0		5'-11"										
↑ 8CE01	11	#8	21'-9"	0		21'-9"										
8CE02	11	#8	20'-5"	0		20'-5"										
↑	#6 TEST BAR 2 @ 60"															

↑ 2-TEST BARS ADDED

Vermont Agency of Transportation
RECEIVED
CK'D BY VHB OK'D BY TAS
March 7, 2017
RESUBMIT NO APPROVED AS NOTED
BY T Sumner DATE 3/9/17

SHOP DRAWING REVIEW

☐ REVIEWED AS REQUIRED BY THE CONSTRUCTION CONTRACT DOCUMENTS AND APPROVED, BUT ONLY FOR CONFORMANCE TO THE DESIGN CONCEPT OF THE WORK, AND SUBJECT TO FURTHER LIMITATIONS AND REQUIREMENTS CONTAINED IN THE CONSTRUCTION CONTRACT DOCUMENTS.
☐ REJECTED ☐ REVISE AND RESUBMIT ☒ FURNISH AS CORRECTED

CORRECTIONS OR COMMENTS MADE ON THE SHOP DRAWINGS DURING THIS REVIEW DO NOT RELIEVE CONTRACTOR FROM COMPLIANCE WITH REQUIRMENTS OF THE DRAWINGS AND SPECIFICATIONS. THIS CHECK IS ONLY FOR REVIEW OF GENERAL CONFORMANCE WITH THE DESIGN CONCEPT OF THE PROJECT AND GENERAL COMPLIANCE WITH THE INFORMATION GIVEN IN THE CONTRACT DOCUMENTS. THE CONTRACTOR IS RESPONSIBLE FOR: CONFIRMING AND CORRELATING ALL QUANTITIES AND DIMENSIONS; SELECTING FABRICATION PROCESSES AND TECHNIQUES OF CONSTRUCTION; COORDINATING HIS WORK WITH THAT OF ALL OTHER TRADES; AND PERFORMING HIS WORK IN A SAFE AND SATISFACTORY MANNER.

vhb 40 IDX Drive, Building 100, Suite 200, South Burlington, VT 05403, 802.497.6100
Job Number: BRF 025-1(42)
Reviewed By: E.F. LAWES
Date: MARCH 9, 2017

LEGEND:

CONT.-CONTINUOUS	E.E.-EACH END
TRANS.-TRANSVERSE	E.F.-EACH FACE
DWLS.-DOWELS	N.F.-NEAR FACE
VERTS.-VERTICAL	F.F.-FAR FACE
HORIZ.-HORIZONTAL	E.W.-EACH WAY
T&B -TOP & BOTTOM	O.C.-ON CENTER
I.F.-INNER FACE	L.W.-LONG WAY
O.F.-OUTER FACE	S.W.-SHORT WAY

ELEVATIONS & DIMENSIONS SHOWN ON THIS DWG. ARE FOR REINF. DETAILING PURPOSES ONLY AND ARE NOT INTENDED FOR DIMENSIONAL CONSTRUCTION.

EPOXY REINF. BARS ASTM A615 GRADE 60, MARKED (E)



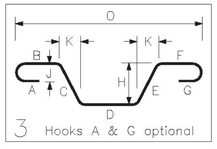

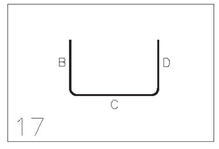





2 MATCH CAST DETAILS AND KEYWAY NOT SHOWN FOR CLARITY.
BAR MARKS ARE ONLY GIVEN ONCE PER ABUTMENT.
DECK, WINGWALL, & BACKWALL ARE NOT PART OF THIS SUBMISSION

BAR MARKS MAY CHANGE, DUE TO REVISIONS

WORK THIS DRAWING WITH DRAWINGS C, C1, & C2

6			
5			
4			
3	2/3/17	2	REVISED PER APPROVAL / FOR APPROVAL
2	1/3/17	1	REVISED ENTIRE DWG. PER APP'L / FOR APP'L
1	11/11/16	–	FOR APPROVAL
	DATE	REV.#	SENT FOR

DIMENSION
DIMENSION FABRICATORS INC.
2000 7TH STREET
SCOTIA, N.Y. 12302
PH: (518) 374-1936
FAX (518) 374-4830
www.dimensionfabricators.com

STRUCTURE	VTAOT LUDLOW BRF 025-1(42) VT 103, MAIN STREET (PRINCIPAL ARTERIAL)
LOCATION	TOWN OF LUDLOW, COUNTY OF WINDSOR, VT.
ARCHITECT	
ENGINEER	VHB
CUSTOMER	COLD RIVER BRIDGES, LLC

DRAWN BY	DATE	DFI #
CMB	11/10/16	10067

DRAWING COVERS	DRAWING #
ABUTMENT NO. 1	C3

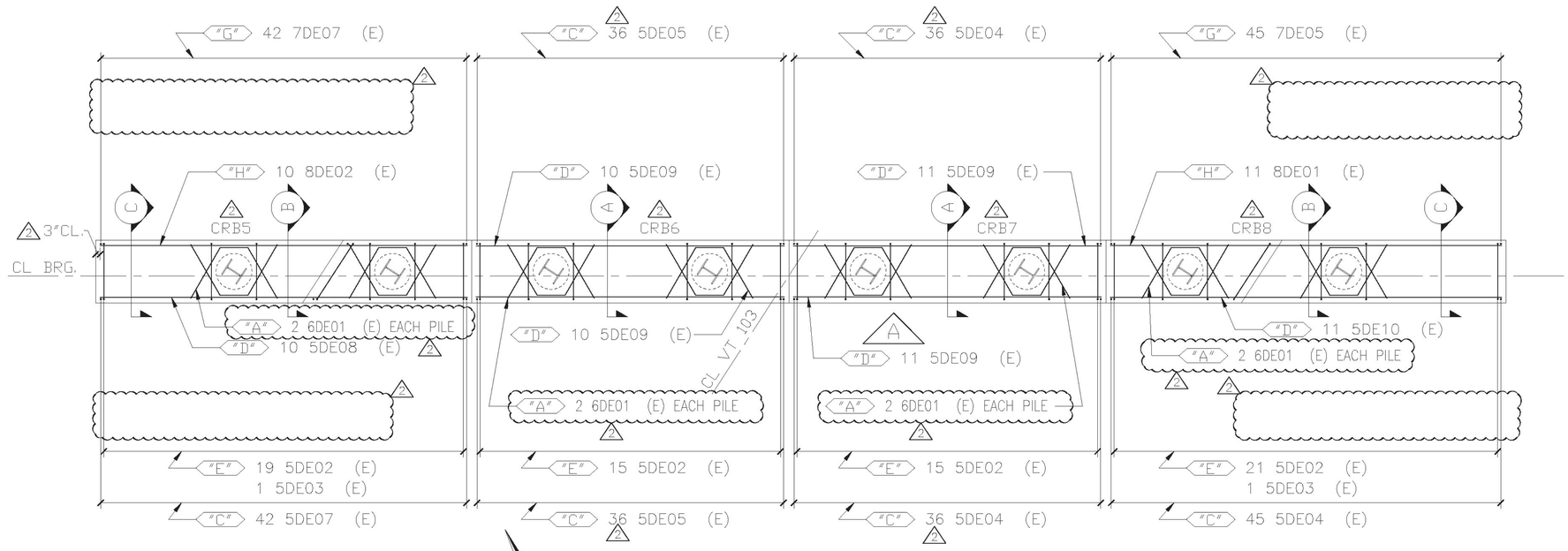

ABUTMENT NO. 2 PLAN

CONTRACT DWG. REF. 43 OF 73 & 44 OF 73

BAR MARKS MAY CHANGE, DUE TO REVISIONS

MATCH CAST DETAILS AND KEYWAY NOT SHOWN FOR CLARITY.

DECK, & BACKWALL ARE NOT PART OF THIS SUBMISSION

WORK THIS DRAWING WITH DRAWINGS D1, D2, & D3

ELEVATIONS & DIMENSIONS SHOWN ON THIS DWG. ARE FOR REINF. DETAILING PURPOSES ONLY AND ARE NOT INTENDED FOR DIMENSIONAL CONSTRUCTION.

EPOXY REINF. BARS ASTM A615 GRADE 60, MARKED (E)

LEGEND:

CONT.-CONTINUOUS	E.E.-EACH END
TRANS.-TRANSVERSE	E.F.-EACH FACE
DWLS.-DOWELS	N.F.-NEAR FACE
VERTS.-VERTICAL	F.F.-FAR FACE
HORIZ.-HORIZONTAL	E.W.-EACH WAY
T&B -TOP & BOTTOM	O.C.-ON CENTER
I.F.-INNER FACE	L.W.-LONG WAY
O.F.-OUTER FACE	S.W.-SHORT WAY

Vermont Agency of Transportation
RECEIVED
CK'D BY VHB OK'D BY TAS
March 7, 2017
RESUBMIT NO APPROVED AS NOTED
BY T Sumner DATE 3/9/17

SHOP DRAWING REVIEW

☐ REVIEWED AS REQUIRED BY THE CONSTRUCTION CONTRACT DOCUMENTS AND APPROVED, BUT ONLY FOR CONFORMANCE TO THE DESIGN CONCEPT OF THE WORK, AND SUBJECT TO FURTHER LIMITATIONS AND REQUIREMENTS CONTAINED IN THE CONSTRUCTION CONTRACT DOCUMENTS.
☐ REJECTED ☐ REVISE AND RESUBMIT ✖ FURNISH AS CORRECTED

CORRECTIONS OR COMMENTS MADE ON THE SHOP DRAWINGS DURING THIS REVIEW DO NOT RELIEVE CONTRACTOR FROM COMPLIANCE WITH REQUIREMENTS OF THE DRAWINGS AND SPECIFICATIONS. THIS CHECK IS ONLY FOR REVIEW OF GENERAL CONFORMANCE WITH THE DESIGN CONCEPT OF THE PROJECT AND GENERAL COMPLIANCE WITH THE INFORMATION GIVEN IN THE CONTRACT DOCUMENTS. THE CONTRACTOR IS RESPONSIBLE FOR: CONFIRMING AND CORRELATING ALL QUANTITIES AND DIMENSIONS; SELECTING FABRICATION PROCESSES AND TECHNIQUES OF CONSTRUCTION; COORDINATING HIS WORK WITH THAT OF ALL OTHER TRADES; AND PERFORMING HIS WORK IN A SAFE AND SATISFACTORY MANNER.

vhb 40 IDX Drive, Building 100, Suite 200, South Burlington, VT 05403, 802.497.6100
Job Number: BRF 025-1(42)
Reviewed By: E.F. LAWES
Date: MARCH 9, 2017

	DATE	REV.#	SENT FOR
6			
5			
4			
3	2/3/17	2	REVISED PER APPROVAL / FOR APPROVAL
2	1/3/17	1	REVISED ENTIRE DWG. PER APP'L / FOR APP'L
1	11/11/16	–	FOR APPROVAL

DIMENSION
DIMENSION FABRICATORS INC.
2000 7TH STREET
SCOTIA, N.Y. 12302
PH: (518) 374-1926
FAX (518) 374-4830
www.dimensionfabricators.com

STRUCTURE	VTAOT LUDLOW BRF 025-1(42)
	VT 103, MAIN STREET (PRINCIPAL ARTERIAL)
LOCATION	TOWN OF LUDLOW, COUNTY OF WINDSOR, VT.
ARCHITECT	
ENGINEER	VHB
CUSTOMER	COLD RIVER BRIDGES, LLC

DRAWN BY	DATE	DFI #
CMB	11/11/16	10067

DRAWING COVERS	DRAWING #
ABUTMENT NO. 2	D

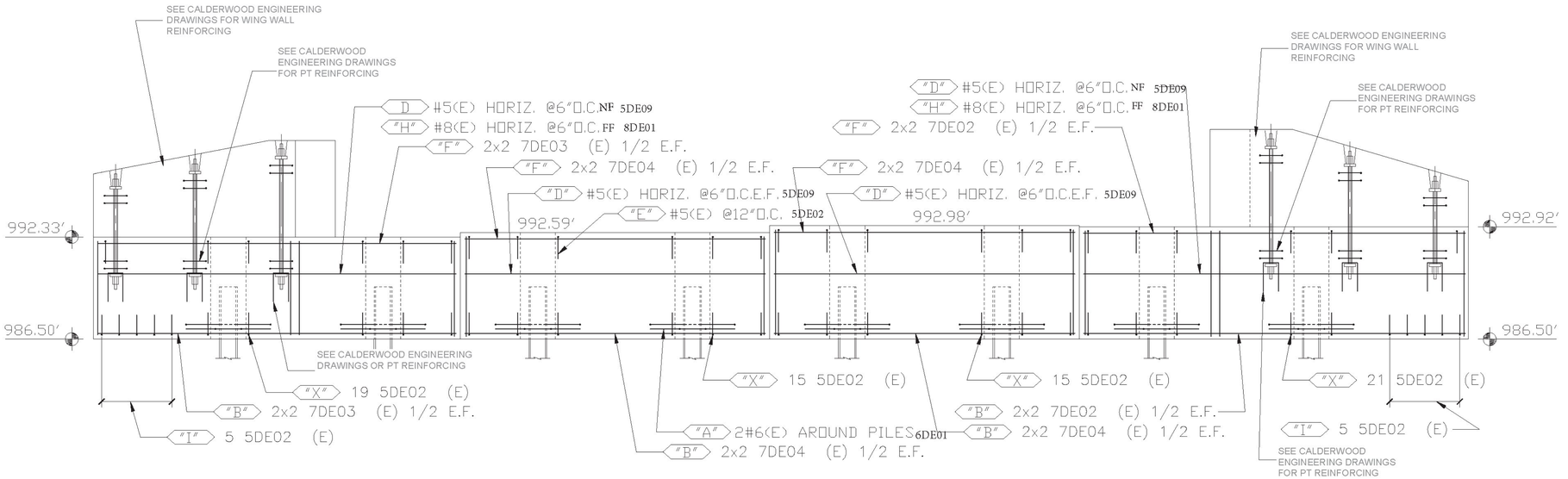

△ MATCH CAST DETAILS AND KEYWAY NOT SHOWN FOR CLARITY.

DECK, . & BACKWALL ARE NOT PART OF THIS SUBMISSION

BAR MARKS MAY CHANGE, DUE TO REVISIONS

ABUTMENT NO. 2 ELEVATION (LOOKING NORTH) A

CONTRACT DWG. REF. 43 OF 73 & 44 OF 73

ELEVATIONS & DIMENSIONS SHOWN ON THIS DWG. ARE FOR REINF. DETAILING PURPOSES ONLY AND ARE NOT INTENDED FOR DIMENSIONAL CONSTRUCTION.

WORK THIS DRAWING WITH DRAWINGS D, D2, & D3

EPOXY REINF. BARS ASTM A615 GRADE 60, MARKED (E)

LEGEND:

CONT.-CONTINUOUS	E.E.-EACH END
TRANS.-TRANSVERSE	E.F.-EACH FACE
DWLS.-DOWELS	N.F.-NEAR FACE
VERTS.-VERTICAL	F.F.-FAR FACE
HORIZ.-HORIZONTAL	E.W.-EACH WAY
T&B -TOP & BOTTOM	O.C.-ON CENTER
I.F.-INNER FACE	L.W.-LONG WAY
O.F.-OUTER FACE	S.W.-SHORT WAY

Vermont Agency of Transportation
RECEIVED
CK'D BY VHB OK'D BY TAS
March 7, 2017
RESUBMIT NO APPROVED AS NOTED
BY T Sumner DATE 3/9/17

SHOP DRAWING REVIEW

☐ REVIEWED AS REQUIRED BY THE CONSTRUCTION CONTRACT DOCUMENTS AND APPROVED, BUT ONLY FOR CONFORMANCE TO THE DESIGN CONCEPT OF THE WORK, AND SUBJECT TO FURTHER LIMITATIONS AND REQUIREMENTS CONTAINED IN THE CONSTRUCTION CONTRACT DOCUMENTS.
☐ REJECTED ☐ REVISE AND RESUBMIT ✖ FURNISH AS CORRECTED

CORRECTIONS OR COMMENTS MADE ON THE SHOP DRAWINGS DURING THIS REVIEW DO NOT RELIEVE CONTRACTOR FROM COMPLIANCE WITH REQUIREMENTS OF THE DRAWINGS AND SPECIFICATIONS. THIS CHECK IS ONLY FOR REVIEW OF GENERAL CONFORMANCE WITH THE DESIGN CONCEPT OF THE PROJECT AND GENERAL COMPLIANCE WITH THE INFORMATION GIVEN IN THE CONTRACT DOCUMENTS. THE CONTRACTOR IS RESPONSIBLE FOR: CONFIRMING AND CORRELATING ALL QUANTITIES AND DIMENSIONS; SELECTING FABRICATION PROCESSES AND TECHNIQUES OF CONSTRUCTION; COORDINATING HIS WORK WITH THAT OF ALL OTHER TRADES; AND PERFORMING HIS WORK IN A SAFE AND SATISFACTORY MANNER.

vhb 40 IDX Drive, Building 100, Suite 200, South Burlington, VT 05403, 802.497.6100
Job Number: BRF 025-1(42)
Reviewed By: E.F. LAWES
Date: MARCH 9, 2017

	DATE	REV.#	SENT FOR
6			
5			
4			
3	2/3/17	△	REVISED PER APPROVAL / FOR APPROVAL
2	1/3/17	1	REVISED ENTIRE DWG. PER APP'L / FOR APP'L
1	11/11/16	–	FOR APPROVAL

DIMENSION
DIMENSION FABRICATORS INC.
2000 7TH STREET
SCOTIA, N.Y. 12302
PH: (518) 374-1936
FAX (518) 374-4830
www.dimensionfabricators.com

STRUCTURE	VTAOT LUDLOW BRF 025-1(42)
	VT 103, MAIN STREET (PRINCIPAL ARTERIAL)
LOCATION	TOWN OF LUDLOW, COUNTY OF WINDSOR, VT.
ARCHITECT	
ENGINEER	VHB
CUSTOMER	COLD RIVER BRIDGES, LLC

DRAWN BY	DATE	DFI #
CMB	11/11/16	10067

DRAWING COVERS	DRAWING #
ABUTMENT NO. 2	D1

BAR MARKS MAY CHANGE, DUE TO REVISIONS

WORK THIS DRAWING WITH DRAWINGS D, D1, & D3

△2 MATCH CAST DETAILS AND KEYWAY NOT SHOWN FOR CLARITY.

DECK, & BACKWALL ARE NOT PART OF THIS SUBMISSION

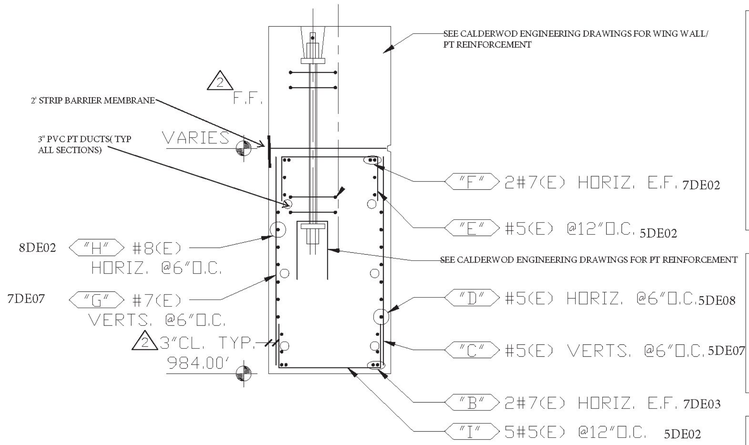

SECTION C

CONTRACT DWG. REF. 45 OF 73

LEGEND:

CONT.-CONTINUOUS	E.E.-EACH END
TRANS.-TRANSVERSE	E.F.-EACH FACE
DWLS.-DOWELS	N.F.-NEAR FACE
VERTS.-VERTICAL	F.F.-FAR FACE
HORIZ.-HORIZONTAL	E.W.-EACH WAY
T&B -TOP & BOTTOM	O.C.-ON CENTER
I.F.-INNER FACE	L.W.-LONG WAY
O.F.-OUTER FACE	S.W.-SHORT WAY

ELEVATIONS & DIMENSIONS SHOWN ON THIS DWG. ARE FOR REINF. DETAILING PURPOSES ONLY AND ARE NOT INTENDED FOR DIMENSIONAL CONSTRUCTION.

EPOXY REINF. BARS ASTM A615 GRADE 60, MARKED (E)

Vermont Agency of Transportation
RECEIVED
CK'D BY VHB OK'D BY TAS
March 7, 2017
RESUBMIT NO APPROVED AS NOTED
BY T Sumner DATE 3/9/17

SHOP DRAWING REVIEW

☐ REVIEWED AS REQUIRED BY THE CONSTRUCTION CONTRACT DOCUMENTS AND APPROVED, BUT ONLY FOR CONFORMANCE TO THE DESIGN CONCEPT OF THE WORK, AND SUBJECT TO FURTHER LIMITATIONS AND REQUIREMENTS CONTAINED IN THE CONSTRUCTION CONTRACT DOCUMENTS.
☐ REJECTED ☐ REVISE AND RESUBMIT ☒ FURNISH AS CORRECTED

CORRECTIONS OR COMMENTS MADE ON THE SHOP DRAWINGS DURING THIS REVIEW DO NOT RELIEVE CONTRACTOR FROM COMPLIANCE WITH REQUIRMENTS OF THE DRAWINGS AND SPECIFICATIONS. THIS CHECK IS ONLY FOR REVIEW OF GENERAL CONFORMANCE WITH THE DESIGN CONCEPT OF THE PROJECT AND GENERAL COMPLIANCE WITH THE INFORMATION GIVEN IN THE CONTRACT DOCUMENTS. THE CONTRACTOR IS RESPONSIBLE FOR: CONFIRMING AND CORRELATING ALL QUANTITIES AND DIMENSIONS; SELECTING FABRICATION PROCESSES AND TECHNIQUES OF CONSTRUCTION; COORDINATING HIS WORK WITH THAT OF ALL OTHER TRADES; AND PERFORMING HIS WORK IN A SAFE AND SATISFACTORY MANNER.

vhb 40 IDX Drive, Building 100, Suite 200, South Burlington, VT 05403, 802.497.6100
Job Number: BRF 025-1(42)
Reviewed By: E.F. LAWES
Date: MARCH 9, 2017

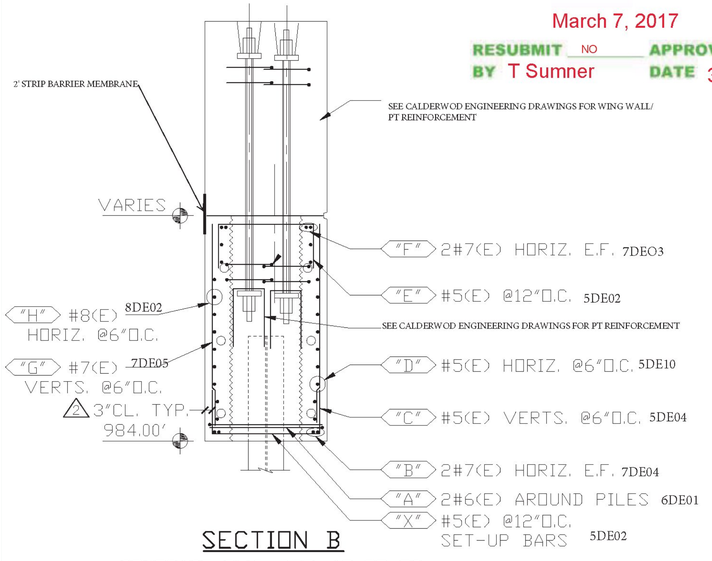

SECTION B

CONTRACT DWG. REF. 45 OF 73

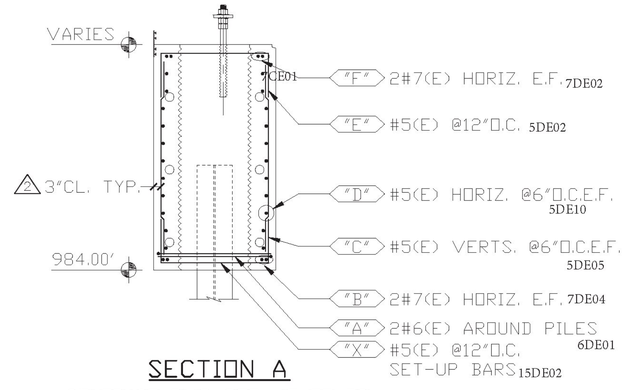

SECTION A

CONTRACT DWG. REF. 45 OF 73

6			
5			
4			
3	2/3/17	△2	REVISED PER APPROVAL / FOR APPROVAL
2	1/3/17	△1	REVISED ENTIRE DWG. PER APP'L / FOR APP'L
1	11/11/16	–	FOR APPROVAL
	DATE	REV.#	SENT FOR

DIMENSION
DIMENSION FABRICATORS INC.
2000 7TH STREET SCOTIA, N.Y. 12302 PH: (518) 374-1936 FAX (518) 374-4830 www.dimensionfabricators.com

STRUCTURE	VTAOT LUDLOW BRF 025-1(42)
	VT 103, MAIN STREET (PRINCIPAL ARTERIAL)
LOCATION	TOWN OF LUDLOW, COUNTY OF WINDSOR, VT.
ARCHITECT	
ENGINEER	VHB
CUSTOMER	COLD RIVER BRIDGES, LLC

DRAWN BY	DATE	DFI #
CMB	11/11/16	10067

DRAWING COVERS	DRAWING #
ABUTMENT NO. 2	D2

Release Number:

BAR LIST 2

Bar Mark	Qty	Size	Total Length	Type	'A'	'B'	'C'	'D'	'E'	'F'	'G'	'H'	'J'	'K'	'O'	'R'
5DE02	150	#5	7'-4"	17		2'-2"	3'-0"	2'-2"								
5DE03	2	#5	7'-11"	17		2'-2"	3'-7"	2'-2"								
↑ 5DE04	119	#5	5'-11"	0		5'-11"										
5DE05	72	#5	5'-7"	0		5'-7"										
5DE07	42	#5	5'-4"	0		5'-4"										
5DE08	10	#5	20'-5"	0		20'-5"										
5DE09	42	#5	17'-1"	0		17'-1"										
5DE10	11	#5	21'-8"	0		21'-8"										
↑ #6 TEST BARS 2@ 60"																
6DE01	16	#6	8'-3"	3			3'-5"	1'-5"	3'-5"			2'-11 ½"		1'-8 ½"	4'-10"	
7DE02	8	#7	21'-8"	0		21'-8"										
7DE03	8	#7	20'-5"	0		20'-5"										
7DE04	16	#7	17'-1"	0		17'-1"										
↑ 7DE05	47	#7	5'-11"	0		5'-11"										
7DE07	42	#7	5'-4"	0		5'-4"										
8DE01	11	#8	21'-8"	0		21'-8"										
↑ 8DE02	11	#8	20'-5"	0		20'-5"										

↑ DENOTES 2 TEST BARS ADDED

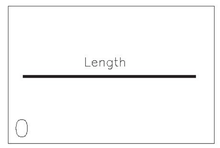

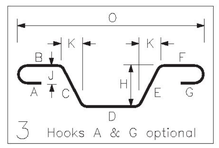

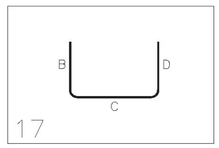

2

2

SHOP DRAWING REVIEW

☐ REVIEWED AS REQUIRED BY THE CONSTRUCTION CONTRACT DOCUMENTS AND APPROVED, BUT ONLY FOR CONFORMANCE TO THE DESIGN CONCEPT OF THE WORK, AND SUBJECT TO FURTHER LIMITATIONS AND REQUIREMENTS CONTAINED IN THE CONSTRUCTION CONTRACT DOCUMENTS.

☐ REJECTED ☐ REVISE AND RESUBMIT ✖ FURNISH AS CORRECTED

CORRECTIONS OR COMMENTS MADE ON THE SHOP DRAWINGS DURING THIS REVIEW DO NOT RELIEVE CONTRACTOR FROM COMPLIANCE WITH REQUIREMENTS OF THE DRAWINGS AND SPECIFICATIONS. THIS CHECK IS ONLY FOR REVIEW OF GENERAL CONFORMANCE WITH THE DESIGN CONCEPT OF THE PROJECT AND GENERAL COMPLIANCE WITH THE INFORMATION GIVEN IN THE CONTRACT DOCUMENTS. THE CONTRACTOR IS RESPONSIBLE FOR: CONFIRMING AND CORRELATING ALL QUANTITIES AND DIMENSIONS; SELECTING FABRICATION PROCESSES AND TECHNIQUES OF CONSTRUCTION; COORDINATING HIS WORK WITH THAT OF ALL OTHER TRADES; AND PERFORMING HIS WORK IN A SAFE AND SATISFACTORY MANNER.

vhb
40 IDX Drive
Building 100, Suite 200
South Burlington, VT 05403
802.497.6100

Job Number: BRF 025-1(42)
Reviewed By: E.F. LAWES
Date: MARCH 9, 2017

Vermont Agency of Transportation
RECEIVED
CK'D BY VHB OK'D BY TAS
March 7, 2017
RESUBMIT NO APPROVED AS NOTED
BY T Sumner DATE 3/9/17

2 MATCH CAST DETAILS AND KEYWAY NOT SHOWN FOR CLARITY.
BAR MARKS ARE ONLY GIVEN ONCE PER ABUTMENT.
DECK, WINGWALL, & BACKWALL ARE NOT PART OF THIS SUBMISSION

BAR MARKS MAY CHANGE, DUE TO REVISIONS

WORK THIS DRAWING WITH DRAWINGS D, D1, & D2

LEGEND:

CONT.-CONTINUOUS	E.E.-EACH END
TRANS.-TRANSVERSE	E.F.-EACH FACE
DWLS.-DOWELS	N.F.-NEAR FACE
VERTS.-VERTICAL	F.F.-FAR FACE
HORIZ.-HORIZONTAL	E.W.-EACH WAY
T&B -TOP & BOTTOM	O.C.-ON CENTER
I.F.-INNER FACE	L.W.-LONG WAY
O.F.-OUTER FACE	S.W.-SHORT WAY

ELEVATIONS & DIMENSIONS SHOWN ON THIS DWG. ARE FOR REINF. DETAILING PURPOSES ONLY AND ARE NOT INTENDED FOR DIMENSIONAL CONSTRUCTION.

EPOXY REINF. BARS ASTM A615 GRADE 60, MARKED (E)

VERIFICATION OF UNCLEAR INFORMATION MAY BE REQUESTED ON THIS DRAWING. SHOULD VERIFICATION BE LEFT UN-ADDRESSED IT WILL REMAIN AS SHOWN AND ASSUME TO BE CORRECT.

6			
5			
4			
3	2/3/17	2	REVISED PER APPROVAL / FOR APPROVAL
2	1/3/17	1	REVISED ENTIRE DWG. PER APP'L / FOR APP'L
1	11/11/16	–	FOR APPROVAL
	DATE	REV.#	SENT FOR

DIMENSION
DIMENSION FABRICATORS INC.
2000 7TH STREET
SCOTIA, N.Y. 12302
PH: (518) 374-1936
FAX (518) 374-4830
www.dimensionfabricators.com

STRUCTURE	VTAOT LUDLOW BRF 025-1(42)
	VT 103, MAIN STREET (PRINCIPAL ARTERIAL)
LOCATION	TOWN OF LUDLOW, COUNTY OF WINDSOR, VT.
ARCHITECT	
ENGINEER	VHB
CUSTOMER	COLD RIVER BRIDGES, LLC

DRAWN BY	DATE	DFI #
CMB	11/11/16	10067

DRAWING COVERS	DRAWING #
ABUTMENT NO. 2	D3

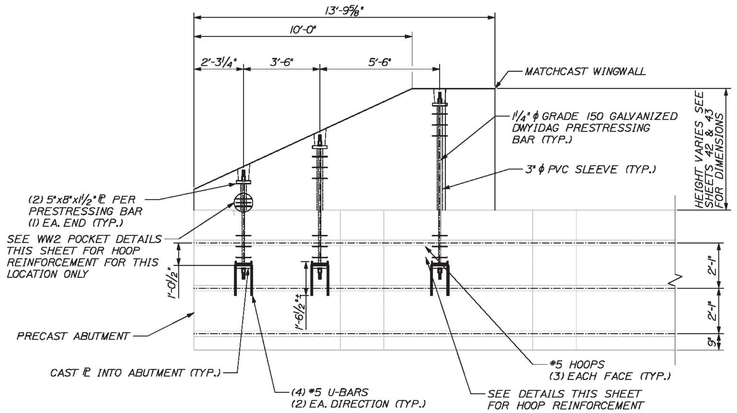

WINGWALL 2 POST-TENSIONING ELEVATION

NOTE: WINGWALL 3 SIMILAR
SCALE: ⅜" = 1'-0"

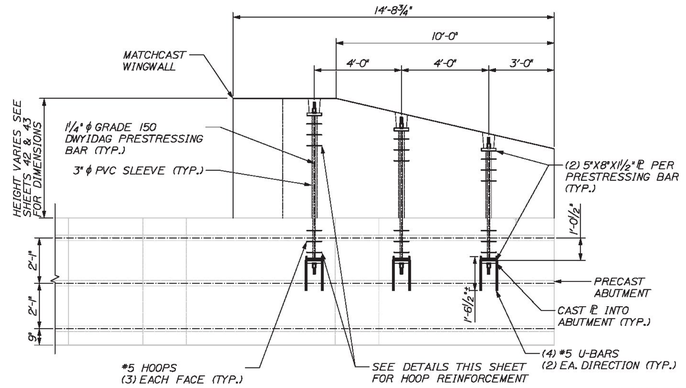

WINGWALL 1 POST-TENSIONING ELEVATION

NOTE: WINGWALL 4 SIMILAR
SCALE: ⅜" = 1'-0"

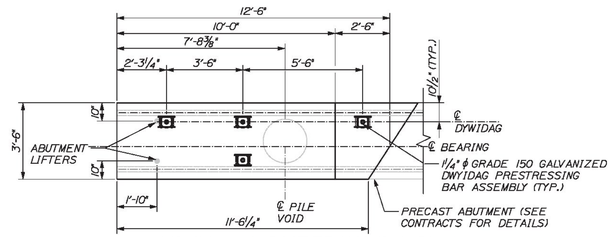

WINGWALL 2 POST-TENSIONING PLAN

NOTE: WINGWALL 3 SIMILAR
SCALE: ⅜" = 1'-0"

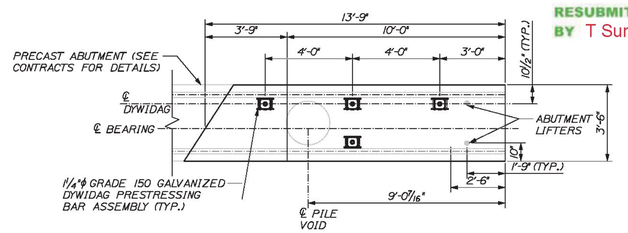

WINGWALL 1 POST-TENSIONING PLAN

NOTE: WINGWALL 4 SIMILAR
SCALE: ⅜" = 1'-0"

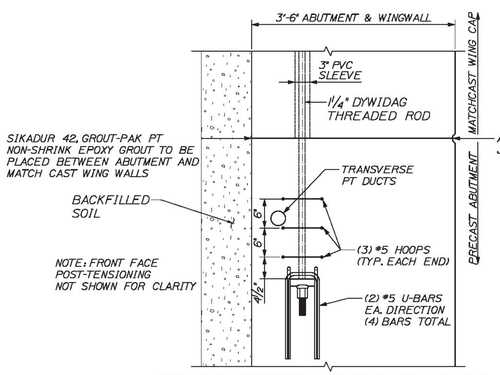

ABUTMENT/WINGWALL CONNECTION DETAIL

SCALE: 1" = 1'-0"

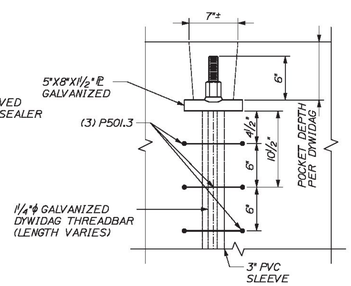

POST-TENSIONING BAR POCKET DETAIL (TYP)

SCALE: 1½" = 1'-0"

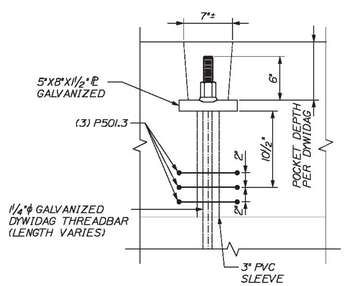

WW2 POST-TENSIONING POCKET DETAIL

SCALE: 1½" = 1'-0"

POST-TENSIONING NOTES

1. #5 HOOPS BY PRECASTER
2. REINFORCEMENT FOR ABUTMENT AND MATCH CAST WINGS NOT SHOWN, SEE SHEETS 44 AND 45
3. PLATE TO BE A36 GALVANIZED PER ASTM A 123
4. THREADBAR AND HARDWARE TO BE GALVANIZED PER ASTM A 153
5. FPU = 150KSI FOR THREADBAR PER DYWIDAG
6. THREADBARS SHALL BE PULLED TO A MAXIMUM OF 120 KSI AND LOCKED OFF AT A MINIMUM OF 105 KSI
7. INSTALL APPROVED NON-SHRINK GROUT TO FILL PT BAR POCKET
8. REQUIRED COMPRESSIVE STRENGTH OF CONCRETE TO BE 4 KSI
9. CONTRACTOR WILL USE SIKADUR 42 GROUT-PAK PT BETWEEN PRECAST ABUTMENT AND MATCHCAST WINGWALL
10. CONTRACTOR SHALL USE A CALIBRATED JACK TO POST-TENSION THREADBARS TO ENSURE THAT TENSION LIMITS ARE NOT EXCEEDED

Vermont Agency of Transportation
RECEIVED
CK'D BY VHB OK'D BY TAS
March 7, 2017
RESUBMIT NO APPROVED AS NOTED
BY T Sumner DATE 3/9/17

SHOP DRAWING REVIEW

☐ REVIEWED AS REQUIRED BY THE CONSTRUCTION CONTRACT DOCUMENTS AND APPROVED, BUT ONLY FOR CONFORMANCE TO THE DESIGN CONCEPT OF THE WORK, AND SUBJECT TO FURTHER LIMITATIONS AND REQUIREMENTS CONTAINED IN THE CONSTRUCTION CONTRACT DOCUMENTS.
☐ REJECTED ☐ REVISE AND RESUBMIT ☒ FURNISH AS CORRECTED

CORRECTIONS OR COMMENTS MADE ON THE SHOP DRAWINGS DURING THIS REVIEW DO NOT RELIEVE CONTRACTOR FROM COMPLIANCE WITH REQUIRMENTS OF THE DRAWINGS AND SPECIFICATIONS. THIS CHECK IS ONLY FOR REVIEW OF GENERAL CONFORMANCE WITH THE DESIGN CONCEPT OF THE PROJECT AND GENERAL COMPLIANCE WITH THE INFORMATION GIVEN IN THE CONTRACT DOCUMENTS. THE CONTRACTOR IS RESPONSIBLE FOR: CONFIRMING AND CORRELATING ALL QUANTITIES AND DIMENSIONS; SELECTING FABRICATION PROCESSES AND TECHNIQUES OF CONSTRUCTION; COORDINATING HIS WORK WITH THAT OF ALL OTHER TRADES; AND PERFORMING HIS WORK IN A SAFE AND SATISFACTORY MANNER.

vhb
40 IDX Drive
Building 100, Suite 200
South Burlington, VT 05403
802.497.6100

Job Number: BRF 025-1(42)
Reviewed By: E.F. LAWES
Date: MARCH 9, 2017

CALDERWOOD ENGINEERING, ETC.
STRUCTURAL ENGINEERING • DETAILING SERVICES
222 RIVER RD. RICHMOND, ME 04357 PH/FX (207)737-2007/(207) 737-2008

PREPARED FOR
COLD RIVER BRIDGES, LLC
CEE 16-16-COLDRIVERBRIDGES
01-CS-LUDLOW

STATE OF MAINE
ERIK D. CALDERWOOD
No. 9099
LICENSED PROFESSIONAL ENGINEER

P.E. NUMBER 9099
DATE

	BY	DATE
DESIGN DETAILED	GM	FEB 2017
CHECKED REVIEWED	TDC	
REVISIONS 1		
REVISIONS 2		
REVISIONS 3		
REVISIONS 4		
FIELD CHANGES		

VE SUPER DESIGN
LUDLOW VT. BRF 025-1(42)

WINGWALL POST-TENSIONING DIMENSIONS

SHEET NUMBER
crb page 25
43a
of 73

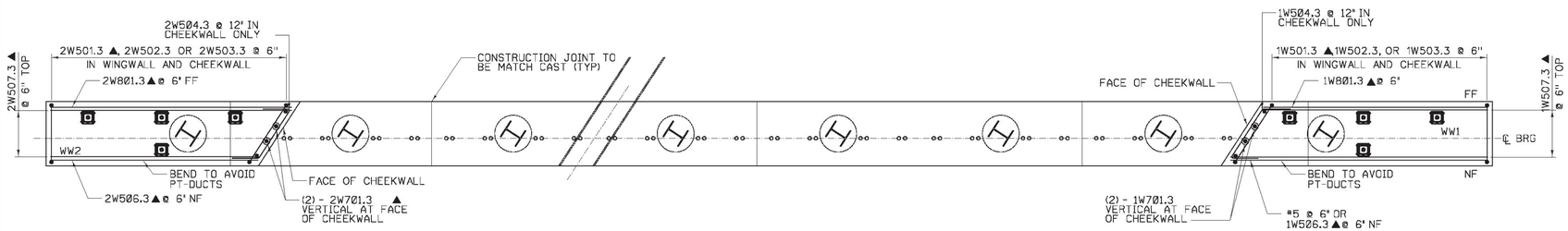

ABUTMENT NO. 1 REINFORCING PLAN

SCALE ⅜" = 1'-0"

(ABUTMENT NO. 2 SIMILAR)

NOTES:

1. TRANSVERSE POST-TENSIONING DUCTS & GROUT DUCTS NOT SHOWN FOR CLARITY.
2. (4) - #7 TRANSVERSE BARS AT TOP AND BOTTOM OF PRECAST CAP NOT SHOWN FOR CLARITY.

Vermont Agency of Transportation

RECEIVED

CK'D BY VHB OK'D BY TAS

March 7, 2017

RESUBMIT NO APPROVED AS NOTED

BY T Sumner DATE 3/9/17

NOTE:

NF = NEAR FACE
FF = FAR FACE
EF = EACH FACE
▲ = CUT TO FIT IN FIELD
3' CLEAR, UNLESS OTHERWISE SPECIFIED ON THE PLANS.
2'-2" BAR LAP UNLESS OTHERWISE SPECIFIED ON THE PLANS.

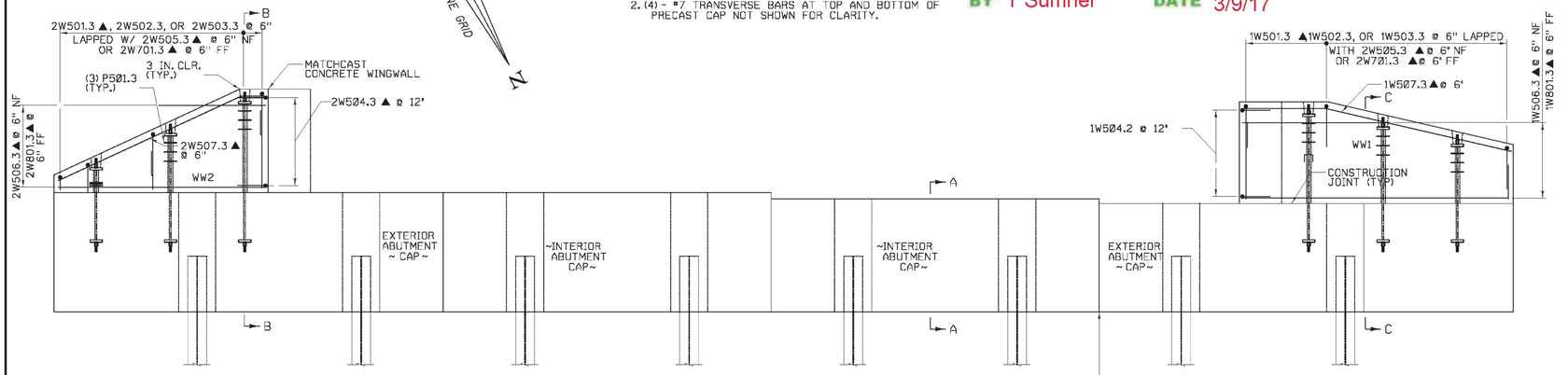

ABUTMENT NO. 1 REINFORCING ELEVATION

SCALE ⅜" = 1'-0"

(ABUTMENT NO. 2 SIMILAR, 4W SIMILAR TO 1W, 3W SIMILAR TO 2W)

NOTES:

1. SEE ABUTMENT SECTIONS SHEET FOR SECTIONS A-A, B-B, AND C-C.
2. TOP PORTION OF WINGWALLS TO BE MATCH CAST.
3. THE BRIDGE PLAQUE FURNISHED BY THE AGENCY SHALL BE CAST INTO WINGWALL 2. ALL WORK TO INSTALL THE PLAQUE SHALL BE INCIDENTAL TO THE APPROPRIATE CONCRETE CONTRACT ITEM. SEE SD-502.00 FOR FURTHER DETAILS.

SHOP DRAWING REVIEW

☐ REVIEWED AS REQUIRED BY THE CONSTRUCTION CONTRACT DOCUMENTS AND APPROVED, BUT ONLY FOR CONFORMANCE TO THE DESIGN CONCEPT OF THE WORK, AND SUBJECT TO FURTHER LIMITATIONS AND REQUIREMENTS CONTAINED IN THE CONSTRUCTION CONTRACT DOCUMENTS.

☐ REJECTED ☐ REVISE AND RESUBMIT ☒ FURNISH AS CORRECTED

CORRECTIONS OR COMMENTS MADE ON THE SHOP DRAWINGS DURING THIS REVIEW DO NOT RELIEVE CONTRACTOR FROM COMPLIANCE WITH REQUIRMENTS OF THE DRAWINGS AND SPECIFICATIONS. THIS CHECK IS ONLY FOR REVIEW OF GENERAL CONFORMANCE WITH THE DESIGN CONCEPT OF THE PROJECT AND GENERAL COMPLIANCE WITH THE INFORMATION GIVEN IN THE CONTRACT DOCUMENTS. THE CONTRACTOR IS RESPONSIBLE FOR: CONFIRMING AND CORRELATING ALL QUANTITIES AND DIMENSIONS; SELECTING FABRICATION PROCESSES AND TECHNIQUES OF CONSTRUCTION; COORDINATING HIS WORK WITH THAT OF ALL OTHER TRADES; AND PERFORMING HIS WORK IN A SAFE AND SATISFACTORY MANNER.

vhb 40 IDX Drive, Building 100, Suite 200, South Burlington, VT 05403, 802.497.6100

Job Number: BRF 025-1(42)
Reviewed By: E.F. LAWES
Date: MARCH 9, 2017

CALDERWOOD ENGINEERING, ETC.
STRUCTURAL ENGINEERING • DETAILING SERVICES
222 RIVER RD, RICHMOND, ME 04357 PH/FX (207)737-2007/(207) 737-2006

PREPARED FOR:
COLD RIVER BRIDGES, LLC
CEE 16-16-COLDRIVERBRIDGES 01-CS-LUDLOW

P.E. NUMBER

DATE

DESIGN DETAILED CHECKED REVIEWED	BY	DATE
TDC	TDC	MAR 2017
REVISIONS 1		
REVISIONS 2		
REVISIONS 3		
REVISIONS 4		
FIELD CHANGES		

VE SUPER DESIGN
LUDLOW VT. BRF 025-1(42)

ABUTMENT REINFORCING

SHEET NUMBER
crb page 26
44
of 73

NOTE:
DECK SECTION AND CONNECTING REINFORCEMENT NOT SHOWN

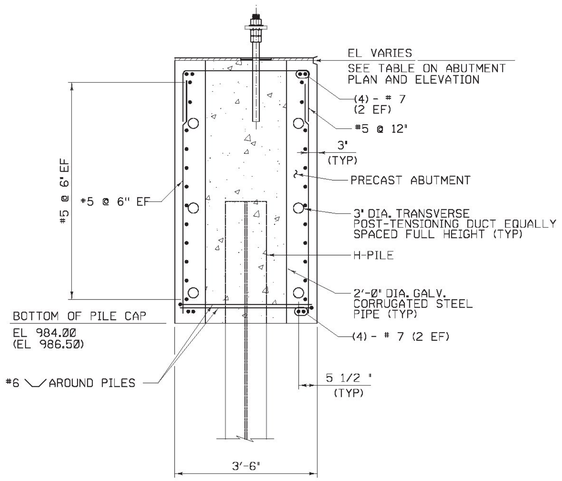

SECTION A-A
SCALE ¾" = 1'-0"

(SECTION TAKEN AT LONGITUDINAL JOINT)

NOTE: SECTION A-A CAP REINFORCING SHALL ONLY BE USED FOR INTERIOR ABUTMENT CAPS. SEE DETAILS B-B AND C-C FOR REINFORCING FOR EXTERIOR CAPS.

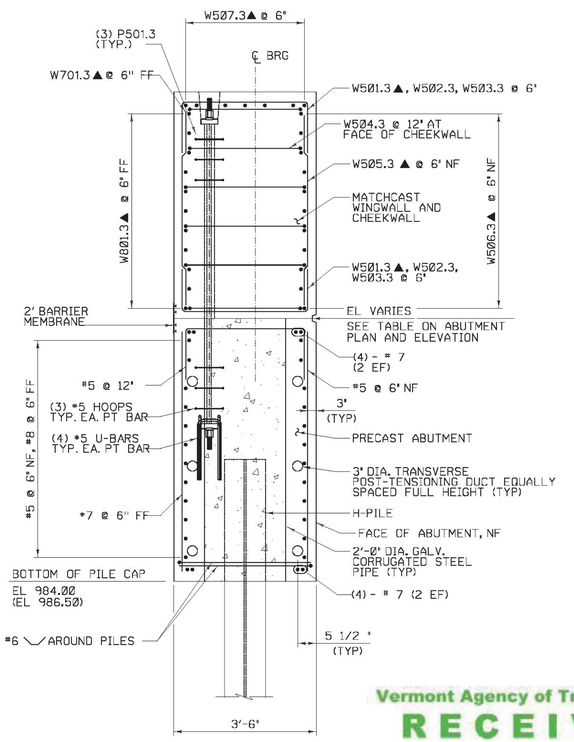

SECTION B-B
SCALE ¾" = 1'-0"

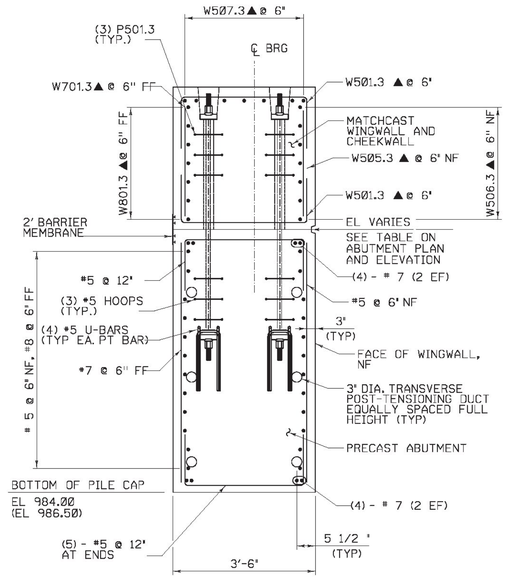

SECTION C-C
SCALE ¾" = 1'-0"

NOTES:
1. PAYMENT FOR TEMPORARY SUPPORT ASSEMBLIES WILL BE CONSIDERED INCIDENTAL TO RESPECTIVE 540.10 OR 900.645 ITEMS.
2. THE TOP SURFACE OF THE LEVELING PLATE SHALL BE GREASED PRIOR TO SETTING GIRDERS. EXCESS GREASE SHALL BE WIPED CLEAN AFTER GIRDERS HAVE BEEN SET.
3. LEVELING PLATES SHALL BE LEVEL PRIOR TO SETTING GIRDERS. THE CONTRACTOR SHALL ADJUST THE PLATE ELEVATIONS DURING SETTING THE GIRDERS TO ACHIEVE THE DESIGN ELEVATIONS OF THE DECK.
4. LEVELING PLATE SHALL BE GALVANIZED GRADE 50 AND CONFORM TO SUBSECTION 714.03. ANCHOR RODS SHALL MEET THE REQUIREMENTS OF SUBSECTION 714.08 AND SHALL BE GRADE 105.
5. SEE PROJECT NOTES FOR ADDITIONAL FABRICATION, CONSTRUCTION, AND SEQUENCE NOTES.
6. ELEVATIONS SHOWN ARE FOR ABUTMENT NO. 1. (ELEVATIONS FOR ABUTMENT NO. 2 ARE SHOWN IN PARENTHESIS.)

NOTE:
NF = NEAR FACE
FF = FAR FACE
EF = EACH FACE
▲ = CUT TO FIT IN FIELD
3" CLEAR, UNLESS OTHERWISE SPECIFIED ON THE PLANS.
2'-2" BAR LAP UNLESS OTHERWISE SPECIFIED ON THE PLANS.

Vermont Agency of Transportation
RECEIVED
CK'D BY VHB OK'D BY TAS
March 7, 2017
RESUBMIT NO APPROVED AS NOTED
BY T Sumner DATE 3/9/17

LEGEND
SPECIAL PROVISION (HIGH PERFORMANCE CONCRETE RAPID SET) (FPG)

SHOP DRAWING REVIEW
☐ REVIEWED AS REQUIRED BY THE CONSTRUCTION CONTRACT DOCUMENTS AND APPROVED, BUT ONLY FOR CONFORMANCE TO THE DESIGN CONCEPT OF THE WORK, AND SUBJECT TO FURTHER LIMITATIONS AND REQUIREMENTS CONTAINED IN THE CONSTRUCTION CONTRACT DOCUMENTS.
☐ REJECTED ☐ REVISE AND RESUBMIT ✕ FURNISH AS CORRECTED
CORRECTIONS OR COMMENTS MADE ON THE SHOP DRAWINGS DURING THIS REVIEW DO NOT RELIEVE CONTRACTOR FROM COMPLIANCE WITH REQUIREMENTS OF THE DRAWINGS AND SPECIFICATIONS. THIS CHECK IS ONLY FOR REVIEW OF GENERAL CONFORMANCE WITH THE DESIGN CONCEPT OF THE PROJECT AND GENERAL COMPLIANCE WITH THE INFORMATION GIVEN IN THE CONTRACT DOCUMENTS. THE CONTRACTOR IS RESPONSIBLE FOR: CONFIRMING AND CORRELATING ALL QUANTITIES AND DIMENSIONS; SELECTING FABRICATION PROCESSES AND TECHNIQUES OF CONSTRUCTION; COORDINATING HIS WORK WITH THAT OF ALL OTHER TRADES; AND PERFORMING HIS WORK IN A SAFE AND SATISFACTORY MANNER.
vhb 40 IDX Drive, Building 100, Suite 200, South Burlington, VT 05403, 802.497.6100
Job Number: BRF 025-1(42)
Reviewed By: E.F. LAWES
Date: MARCH 9, 2017

CALDERWOOD ENGINEERING, ETC.
STRUCTURAL ENGINEERING • DETAILING SERVICES
222 RIVER RD, RICHMOND, ME 04357 PH/FX (207)737-2007/(207) 737-2006

PREPARED FOR:
COLD RIVER BRIDGES, LLC
CEE 16-16-COLDRIVERBRIDGES
01-CS-LUDLOW

P.E. NUMBER
DATE

	BY	DATE
DESIGN DETAILED	TDC	JAN 2017
DESIGN REVIEWED		
REVISIONS 1		
REVISIONS 2		
REVISIONS 3		
REVISIONS 4		
FIELD CHANGES		

VE SUPER DESIGN
LUDLOW VT. BRF 025-1(42)

ABUTMENT DETAILS (1 OF 3)

SHEET NUMBER
crb page 27
45
of 73

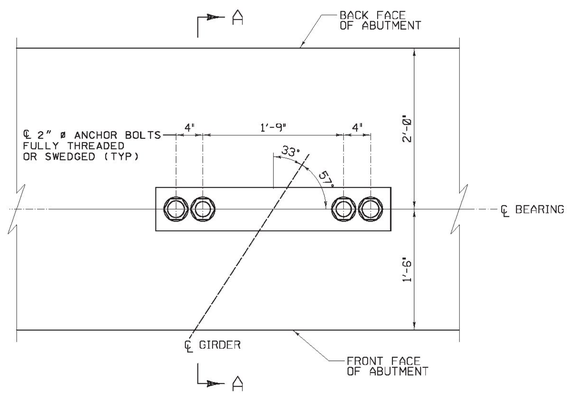

SUPPORT BOLT LAYOUT

SCALE 1½" = 1'-0"

REINFORCEMENT IN THIS BAY SIMILAR TO SMALL BAYS EXCEPT WHERE NOTED OTHERWISE ON THIS SHEET

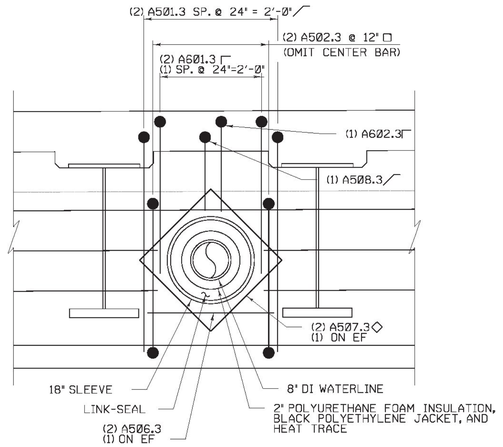

• SEE NOTE 1

WATERLINE ABUTMENT PENETRATION DETAIL

NOT TO SCALE

NOTES:

1. SPACE BARS TO MAINTAIN 1½" MIN CLR AROUND SLEEVE. FIELD CUT CENTER BARS TO MAINTAIN 1½" MIN CLR AROUND SLEEVE.
2. SLEEVE SHALL BE STEEL WITH 18" INSIDE DIA. AND SHALL BE COMPATIBLE WITH LINK-SEAL AND REINFORCING LAYOUT.

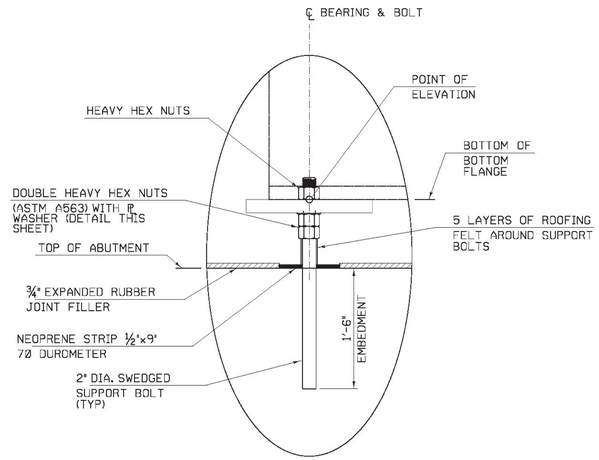

SECTION A-A

SUPPORT BOLT DETAIL (TYP)

SCALE 1½" = 1'-0"

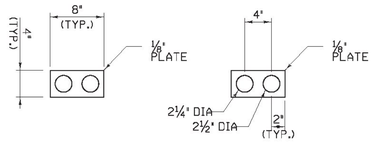

DOUBLE ANCHOR BOLT ASSEMBLY PLATE WASHER

NOT TO SCALE

NOTE:

NF = NEAR FACE
FF = FAR FACE
EF = EACH FACE
▲ = CUT TO FIT IN FIELD
3" CLEAR, UNLESS OTHERWISE SPECIFIED ON THE PLANS.
2'-2" BAR LAP UNLESS OTHERWISE SPECIFIED ON THE PLANS.

NOTES:

1. SEE ABUTMENT DETAILS (1 OF 3) AND PROJECT NOTES FOR ADDITIONAL FABRICATION, CONSTRUCTION, AND SEQUENCE NOTES.

Vermont Agency of Transportation

RECEIVED

CK'D BY VHB OK'D BY TAS

March 7, 2017

RESUBMIT NO APPROVED AS NOTED

BY T Sumner DATE 3/9/17

SHOP DRAWING REVIEW

☐ REVIEWED AS REQUIRED BY THE CONSTRUCTION CONTRACT DOCUMENTS AND APPROVED, BUT ONLY FOR CONFORMANCE TO THE DESIGN CONCEPT OF THE WORK, AND SUBJECT TO FURTHER LIMITATIONS AND REQUIREMENTS CONTAINED IN THE CONSTRUCTION CONTRACT DOCUMENTS.

☐ REJECTED ☐ REVISE AND RESUBMIT ☒ FURNISH AS CORRECTED

CORRECTIONS OR COMMENTS MADE ON THE SHOP DRAWINGS DURING THIS REVIEW DO NOT RELIEVE CONTRACTOR FROM COMPLIANCE WITH REQUIREMENTS OF THE DRAWINGS AND SPECIFICATIONS. THIS CHECK IS ONLY FOR REVIEW OF GENERAL CONFORMANCE WITH THE DESIGN CONCEPT OF THE PROJECT AND GENERAL COMPLIANCE WITH THE INFORMATION GIVEN IN THE CONTRACT DOCUMENTS. THE CONTRACTOR IS RESPONSIBLE FOR: CONFIRMING AND CORRELATING ALL QUANTITIES AND DIMENSIONS; SELECTING FABRICATION PROCESSES AND TECHNIQUES OF CONSTRUCTION; COORDINATING HIS WORK WITH THAT OF ALL OTHER TRADES; AND PERFORMING HIS WORK IN A SAFE AND SATISFACTORY MANNER.

vhb 40 IDX Drive, Building 100, Suite 200, South Burlington, VT 05403, 802.497.6100

Job Number: BRF 025-1(42)
Reviewed By: E.F. LAWES
Date: MARCH 9, 2017

CALDERWOOD ENGINEERING, ETC.
STRUCTURAL ENGINEERING • DETAILING SERVICES
222 RIVER RD, RICHMOND, ME 04357 PHFX (207)737-2200/(207) 737-2008

PREPARED FOR:
COLD RIVER BRIDGES, LLC
CEE 16-16-COLDRIVERBRIDGES
01-CS-LUDLOW

	BY	DATE
DESIGN-DETAILED	TDC	JAN 2017
CHECKED-REVIEWED	TDC	
℞ WORKING 1		
℞ WORKING 2		
℞ WORKING 3		
℞ WORKING 4		
FINAL DRAWINGS		

P.E. NUMBER

DATE

VE SUPER DESIGN
LUDLOW VT. BRF 025-1(42)

ABUTMENT DETAILS (2 OF 3)

SHEET NUMBER
crb page 28
46
of 73

STATE OF VERMONT
AGENCY OF TRANSPORTATION

REINFORCING STEEL SCHEDULE

ITEM	EACH	SIZE	LENGTH	MARK	TYPE	A	B	C	D	E	F	G	H	J	K	R	O
WINGWALL NO. 1																	
	52	5	7'- 4"	1W501.3	17		2'- 2"	3'- 0"	2'- 2"								
	2	5	7'- 7"	1W502.3	17		2'- 2"	3'- 3"	2'- 2"								
	2	5	7'- 11"	1W503.3	17		2'- 2"	3'- 7"	2'- 2"								
	6	5	6'- 8"	1W504.3	22		1'- 6"	3'- 7"	1'- 6"				1'- 3"	1'- 3"	0'- 10"	0'- 10"	
✳ ▲	30	5	5'- 0"	1W505.3	STR												
▲	11	5	14'- 3"	1W506.3	STR												
▲	7	5	14'- 6"	1W507.3	19		4'- 5"	10'- 1"	-- --				1'- 0"		4'- 4"		14'- 4"
	27	7	5'- 0"	1W701.3	STR												
	11	8	12'- 0"	1W801.3	STR												
	12	5	2'-6 1/2"	1P501.3	T1	0'-2"	0'-8"	0'-8"	0'-8"	0'-8"		0'-2"					
WINGWALL NO. 2																	
▲	46	5	7'- 4"	2W501.3	17		2'- 2"	3'- 0"	2'- 2"								
	2	5	7'- 7"	2W502.3	17		2'- 2"	3'- 3"	2'- 2"								
	2	5	7'- 11"	2W503.3	17		2'- 2"	3'- 7"	2'- 2"								
	6	5	6'- 7"	2W504.3	22		1'- 6"	3'- 7"	1'- 6"				1'- 3"	1'- 3"	0'- 10"	0'- 10"	
▲	23	5	5'- 1"	2W505.3	STR												
✳ ▲	12	5	11'- 0"	2W506.3	STR												
▲	7	5	14'- 3"	2W507.3	19		3'- 5"	10'- 10"	-- --				1'- 5"		3'- 1"		14'- 3"
✳	30	7	5'- 1"	2W701.3	STR												
	11	8	13'- 4"	2W801.3	STR												
	12	5	2'-6 1/2"	2P501.3	T1	0'-2"	0'-8"	0'-8"	0'-8"	0'-8"		0'-2"					
WINGWALL NO. 3																	
	48	5	7'- 4"	3W501.3	17		2'- 2"	3'- 0"	2'- 2"								
	2	5	7'- 7"	3W502.3	17		2'- 2"	3'- 3"	2'- 2"								
	2	5	7'- 11"	3W503.3	17		2'- 2"	3'- 7"	2'- 2"								
	6	5	6'- 7"	3W504.3	22		1'- 6"	3'- 7"	1'- 6"				1'- 3"	1'- 3"	0'- 10"	0'- 10"	
✳ ▲	23	5	5'- 1"	3W505.3	STR												
▲	11	5	11'- 0"	3W506.3	STR												
▲	7	5	13'- 5"	3W507.3	19		3'- 6"	9'- 11"	-- --				0'- 8"		3'- 5"		13'- 5"
	30	7	5'- 1"	3W701.3	STR												
	11	8	13'- 4"	3W801.3	STR												
	12	5	2'-6 1/2"	3P501.3	T1	0'-2"	0'-8"	0'-8"	0'-8"	0'-8"		0'-2"					
WINGWALL NO. 4																	
	50	5	7'- 4"	4W501.3	17		2'- 2"	3'- 0"	2'- 2"								
	2	5	7'- 7"	4W502.3	17		2'- 2"	3'- 3"	2'- 2"								
	2	5	7'- 11"	4W503.3	17		2'- 2"	3'- 7"	2'- 2"								
	6	5	6'- 8"	4W504.3	22		1'- 6"	3'- 7"	1'- 6"				1'- 3"	1'- 3"	0'- 10"	0'- 10"	
	30	5	5'- 0"	4W505.3	STR												
✳ ▲	12	5	14'- 3"	4W506.3	STR												
▲	7	5	14'- 6"	4W507.3	19		4'- 4"	10'- 2"	-- --				1'- 2"		4'- 1"		14'- 3"
▲	27	7	5'- 0"	4W701.3	STR												
✳	11	8	12'- 0"	4W801.3	STR												
	12	5	6'-2 1/2"	4P501.3	T1	0'-2"	0'-8"	0'-8"	0'-8"	0'-8"		0'-2"					
SIDEWALK																	
✳	332	4	8'- 0"	SW401.3	S5	1'- 6"	2'- 0"	0'- 7"	2'- 5"			1'- 6"					
	42	5	40'- 0"	SW501.3	STR												

ITEM	EACH	SIZE	LENGTH	MARK	TYPE	A	B	C	D	E	F	G	H	J	K	R	O

Vermont Agency of Transportation
RECEIVED
CK'D BY VHB OK'D BY TAS
March 7, 2017
RESUBMIT NO APPROVED AS NOTED
BY T Sumner DATE 3/9/17

~ NOTES ~

1. UNLESS OTHERWISE DESIGNATED, ALL BAR REINFORCEMENT FOR CONCRETE IN SIZES UP TO AND INCLUDING NO. 18 SHALL CONFORM TO THE REQUIREMENTS OF THE "SPECIFICATIONS FOR DEFORMED BILLET-STEEL BARS FOR CONCRETE REINFORCEMENT", AASHTO M 31 (ASTM A 615-SI). ALL BARS SHALL BE GRADE 60, UNLESS OTHERWISE DESIGNATED.
2. FOR TYPICAL BENDING DETAILS, RECOMMENDED PIN DIAMETER "D" OF BENDS AND HOOKS, AND OTHER STANDARD PRACTICE, SEE CURRENT CONCRETE REINFORCING STEEL INSTITUTE "MANUAL OF STANDARD PRACTICE".
3. BARS WHICH REQUIRE MORE ACCURATE BENDING THAN STANDARD PRACTICES SHOULD HAVE LIMITS INDICATED.
4. ALL DIMENSIONS ARE OUT TO OUT OF BAR EXCEPT "A" AND "G" ON STANDARD 180 DEGREE AND 135 DEGREE HOOKS.
5. "J" DIMENSION ON 180 DEGREE HOOKS TO BE SHOWN ONLY WHERE NECESSARY TO RESTRICT HOOK SIZE. OTHERWISE, STANDARD HOOKS ARE TO BE USED.
6. "H" DIMENSION ON STIRRUPS TO BE SHOWN ONLY WHEN NECESSARY TO MAINTAIN CLEARANCES.
7. WHERE SLOPE DIFFERS FROM 45 DEGREES, DIMENSIONS "H" AND "K" MUST BE SHOWN.
8. ▲ DENOTES BARS TO BE CUT IN FIELD.
9. ✳ DENOTES ONE EXTRA BAR ADDED FOR TESTING PURPOSES.
10. △ DENOTES TWO EXTRA BARS ADDED FOR TESTING PURPOSES.
11. E IN BAR MARK PREFIX DENOTES EPOXY COATED REINFORCING STEEL.

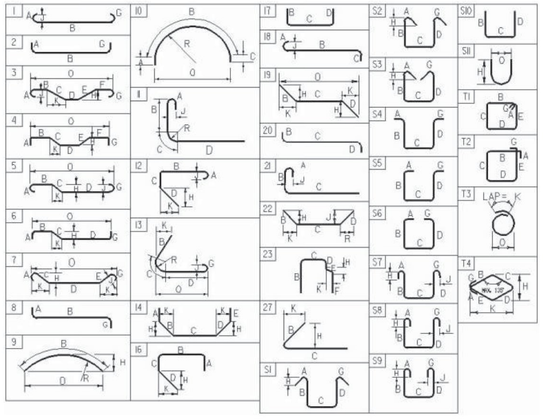

ASTM STANDARD REINFORCING BARS

BAR SIZE DESIGNATION	WEIGHT POUNDS PER FOOT	NOMINAL DIMENSIONS ROUND SECTION DIAMETER INCHES	AREA INCHES²	PERIMETER INCHES
#3	0.376	0.375	0.11	1.178
#4	0.668	0.500	0.20	1.571
#5	1.043	0.625	0.31	1.963
#6	1.502	0.750	0.44	2.356
#7	2.044	0.875	0.60	2.749
#8	2.670	1.000	0.79	3.142
#9	3.400	1.128	1.00	3.544
#10	4.303	1.270	1.27	3.990
#11	5.313	1.410	1.56	4.430
#14	7.65	1.693	2.25	5.32
#18	13.60	2.257	4.00	7.09

SHOP DRAWING REVIEW

☐ REVIEWED AS REQUIRED BY THE CONSTRUCTION CONTRACT DOCUMENTS AND APPROVED, BUT ONLY FOR CONFORMANCE TO THE DESIGN CONCEPT OF THE WORK AND SUBJECT TO FURTHER LIMITATIONS AND REQUIREMENTS CONTAINED IN THE CONSTRUCTION CONTRACT DOCUMENTS.
☐ REJECTED ☐ REVISE AND RESUBMIT ☒ FURNISH AS CORRECTED

CORRECTIONS OR COMMENTS MADE ON THE SHOP DRAWINGS DURING THIS REVIEW DO NOT RELIEVE CONTRACTOR FROM COMPLIANCE WITH REQUIREMENTS OF THE DRAWINGS AND SPECIFICATIONS. THIS CHECK IS ONLY FOR REVIEW OF GENERAL CONFORMANCE WITH THE DESIGN CONCEPT OF THE PROJECT AND GENERAL COMPLIANCE WITH THE INFORMATION GIVEN IN THE CONTRACT DOCUMENTS. THE CONTRACTOR IS RESPONSIBLE FOR: CONFIRMING AND CORRELATING ALL QUANTITIES AND DIMENSIONS; SELECTING FABRICATION PROCESSES AND TECHNIQUES OF CONSTRUCTION; COORDINATING HIS WORK WITH THAT OF ALL OTHER TRADES; AND PERFORMING HIS WORK IN A SAFE AND SATISFACTORY MANNER.

vhb 40 IDX Drive, Building 100, Suite 200, South Burlington, VT 05403, 802.497.6100
Job Number: BRF 025-1(42)
Reviewed By: E.F. LAWES
Date: MARCH 9, 2017

PROJECT NAME: LUDLOW
PROJECT NUMBER: BRF 025-1(42)
FILE NAME:

CALDERWOOD ENGINEERING, ETC.
STRUCTURAL ENGINEERING • DETAILING SERVICES
222 RIVER RD, RICHMOND, ME 04357 PH/FX (207)737-2207/(207) 737-2208
PREPARED FOR:
COLD RIVER BRIDGES, LLC
CEE 16-16-COLDRIVERBRIDGES
01-CS-LUDLOW

BY	DATE
TDC	JAN 2017

DESIGN-DETAILED TDC
CHECKED-REVIEWED
REVISIONS 1
REVISIONS 2
REVISIONS 3
REVISIONS 4
FIELD CHANGES

P.E. NUMBER
DATE

VE SUPER DESIGN
LUDLOW VT. BRF 025-1(42)

REINFORCING STEEL SCHEDULE

SHEET NUMBER
48

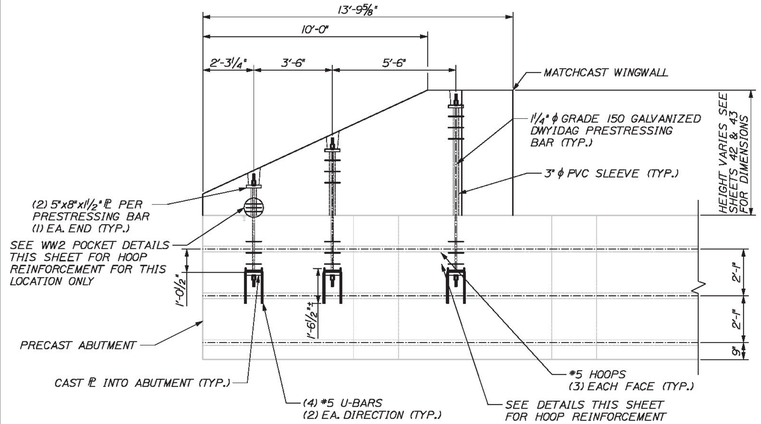

WINGWALL 2 POST-TENSIONING ELEVATION

NOTE: WINGWALL 3 SIMILAR
SCALE: 3/8" = 1'-0"

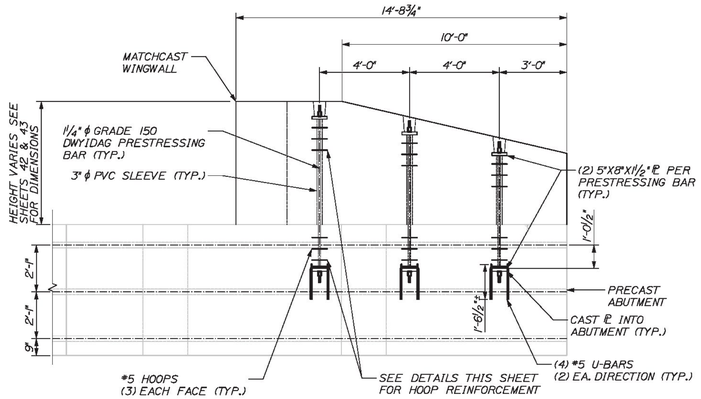

WINGWALL 1 POST-TENSIONING ELEVATION

NOTE: WINGWALL 4 SIMILAR
SCALE: 3/8" = 1'-0"

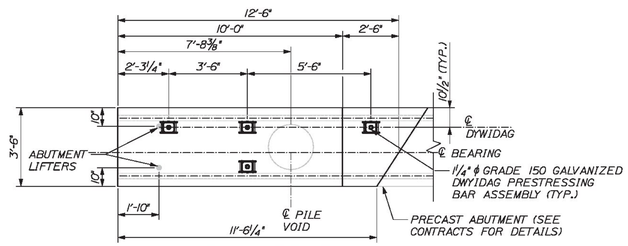

WINGWALL 2 POST-TENSIONING PLAN

NOTE: WINGWALL 3 SIMILAR
SCALE: 3/8" = 1'-0"

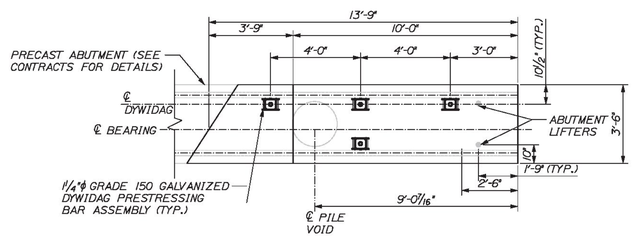

WINGWALL 1 POST-TENSIONING PLAN

NOTE: WINGWALL 4 SIMILAR
SCALE: 3/8" = 1'-0"

POST-TENSIONING NOTES

1. #5 HOOPS BY PRECASTER
2. REINFORCEMENT FOR ABUTMENT AND MATCH CAST WINGS NOT SHOWN. SEE SHEETS 44 AND 45
3. PLATE TO BE A36 GALVANIZED PER ASTM A 123
4. THREADBAR AND HARDWARE TO BE GALVANIZED PER ASTM A 153
5. FPU = 150KSI FOR THREADBAR PER DYWIDAG
6. THREADBARS SHALL BE PULLED TO A MAXIMUM OF 120 KSI AND LOCKED OFF AT A MINIMUM OF 105 KSI
7. INSTALL APPROVED NON-SHRINK GROUT TO FILL PT BAR POCKET
8. REQUIRED COMPRESSIVE STRENGTH OF CONCRETE TO BE 4 KSI
9. CONTRACTOR WILL USE SIKADUR 42 GROUT-PAK PT BETWEEN PRECAST ABUTMENT AND MATCHCAST WINGWALL
10. CONTRACTOR SHALL USE A CALIBRATED JACK TO POST-TENSION THREADBARS TO ENSURE THAT TENSION LIMITS ARE NOT EXCEEDED

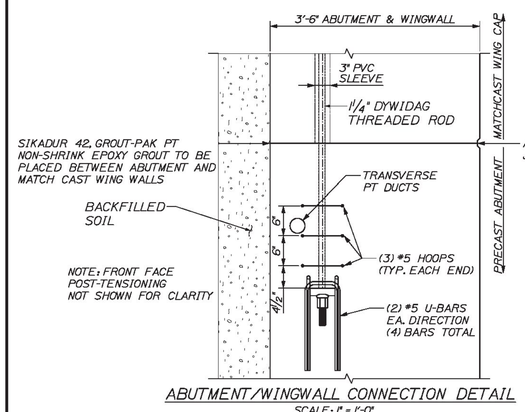

ABUTMENT/WINGWALL CONNECTION DETAIL

SCALE: 1" = 1'-0"

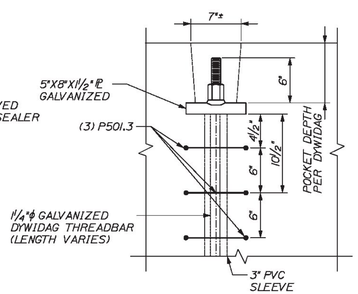

POST-TENSIONING BAR POCKET DETAIL (TYP)

SCALE: 1 1/2" = 1'-0"

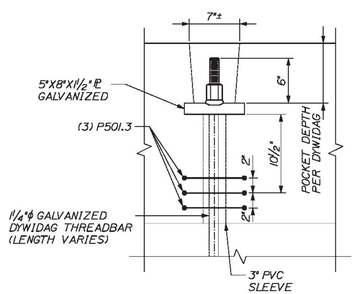

WW2 POST-TENSIONING POCKET DETAIL

SCALE: 1 1/2" = 1'-0"

Vermont Agency of Transportation
RECEIVED
CK'D BY VHB OK'D BY TAS
March 7, 2017
RESUBMIT NO APPROVED AS NOTED
BY T Sumner DATE 3/9/17

CALDERWOOD ENGINEERING, ETC.
STRUCTURAL ENGINEERING • DETAILING SERVICES
122 RIVER RD, RICHMOND, ME 04357 PH/FX (207)737-2007/(207) 737-2008

PREPARED FOR
COLD RIVER BRIDGES, LLC
CEE 16-16-COLDRIVERBRIDGES
01-CS-LUDLOW

STATE OF MAINE
ERIC CALDERWOOD
NO. 9099
LICENSED PROFESSIONAL ENGINEER

P.E. NUMBER 9099
DATE

BY	DATE
TDC	FEB 2017

DESIGN-DFT-ALES: GM
CHECKED-REVIEWED:

REVISIONS 1
REVISIONS 2
REVISIONS 3
REVISIONS 4
FIELD CHANGES

VE SUPER DESIGN
LUDLOW VT. BRF 025-1(42)

WINGWALL POST-TENSIONING DIMENSIONS

SHEET NUMBER
43a
of 73

CALDERWOOD ENGINEERING, ETC.
122 River Rd.
Richmond, ME 04357
PH. (207)737-2007 FAX (207)737-2008

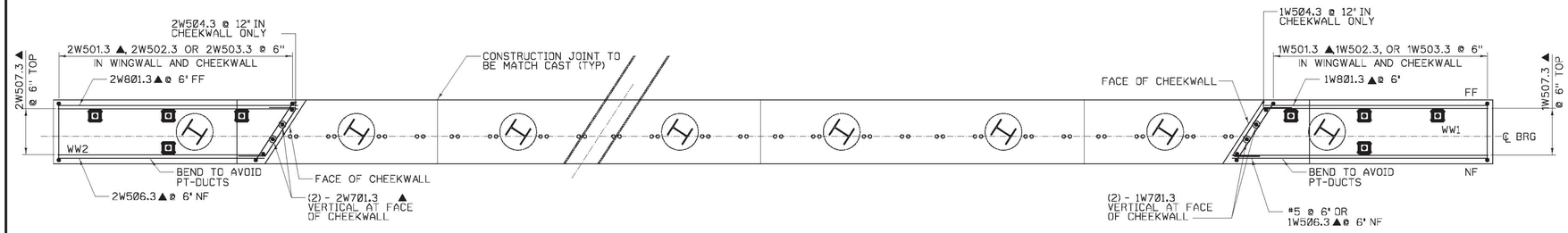

ABUTMENT NO. 1 REINFORCING PLAN

SCALE ⅜" = 1'-0"

(ABUTMENT NO. 2 SIMILAR)

NOTES:

1. TRANSVERSE POST-TENSIONING DUCTS & GROUT DUCTS NOT SHOWN FOR CLARITY.
2. (4) - #7 TRANSVERSE BARS AT TOP AND BOTTOM OF PRECAST CAP NOT SHOWN FOR CLARITY.

NOTE:

NF = NEAR FACE
FF = FAR FACE
EF = EACH FACE
▲ = CUT TO FIT IN FIELD
3' CLEAR, UNLESS OTHERWISE SPECIFIED ON THE PLANS.
2'-2' BAR LAP UNLESS OTHERWISE SPECIFIED ON THE PLANS.

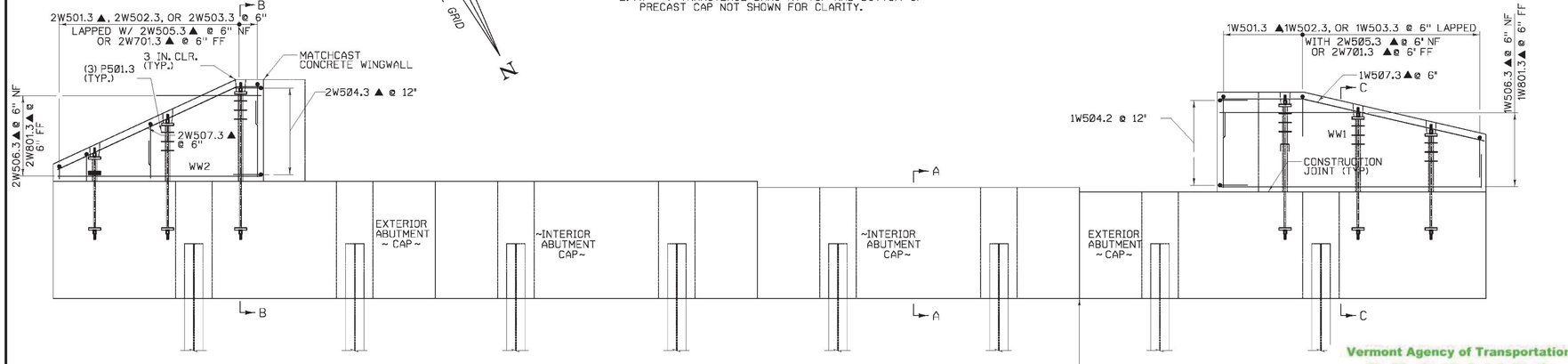

ABUTMENT NO. 1 REINFORCING ELEVATION

SCALE ⅜" = 1'-0"

(ABUTMENT NO. 2 SIMILAR, 4W SIMILAR TO 1W, 3W SIMILAR TO 2W)

NOTES:

1. SEE ABUTMENT SECTIONS SHEET FOR SECTIONS A-A, B-B, AND C-C.
2. TOP PORTION OF WINGWALLS TO BE MATCH CAST.
3. THE BRIDGE PLAQUE FURNISHED BY THE AGENCY SHALL BE CAST INTO WINGWALL 2. ALL WORK TO INSTALL THE PLAQUE SHALL BE INIDENTAL TO THE APPROPRAITE CONCRETE CONTRACT ITEM. SEE SD-502.00 FOR FURTHER DETAILS.

Vermont Agency of Transportation
RECEIVED
CK'D BY VHB OK'D BY TAS
March 7, 2017
RESUBMIT NO APPROVED AS NOTED
BY T Sumner DATE 3/9/17

CALDERWOOD ENGINEERING, ETC.
STRUCTURAL ENGINEERING • DETAILING SERVICES
222 RIVER RD, RICHMOND, ME 04357 PH/FX (207)737-2007/(207) 737-2006

PREPARED FOR:
COLD RIVER BRIDGES, LLC
CEE 16-16-COLDRIVERBRIDGES
01-CS-LUDLOW

BY	DATE	REVISIONS
TDC	MAR 2017	
TDC		REVISIONS 1
		REVISIONS 2
		REVISIONS 3
		REVISIONS 4
		FIELD CHANGES

DESIGNED/DETAILED
CHECKED/REVIEWED

P.E. NUMBER
DATE

VE SUPER DESIGN
LUDLOW VT. BRF 025-1(42)

ABUTMENT REINFORCING

SHEET NUMBER
44
of 73

NOTE:
DECK SECTION AND CONNECTING REINFORCEMENT NOT SHOWN

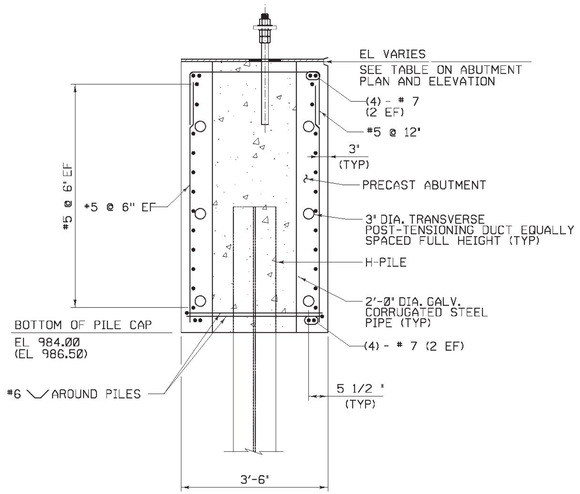

SECTION A-A
SCALE 3/4" = 1'-0"

(SECTION TAKEN AT LONGITUDINAL JOINT)

NOTE: SECTION A-A CAP REINFORCING SHALL ONLY BE USED FOR INTERIOR ABUTMENT CAPS. SEE DETAILS B-B AND C-C FOR REINFORCING FOR EXTERIOR CAPS.

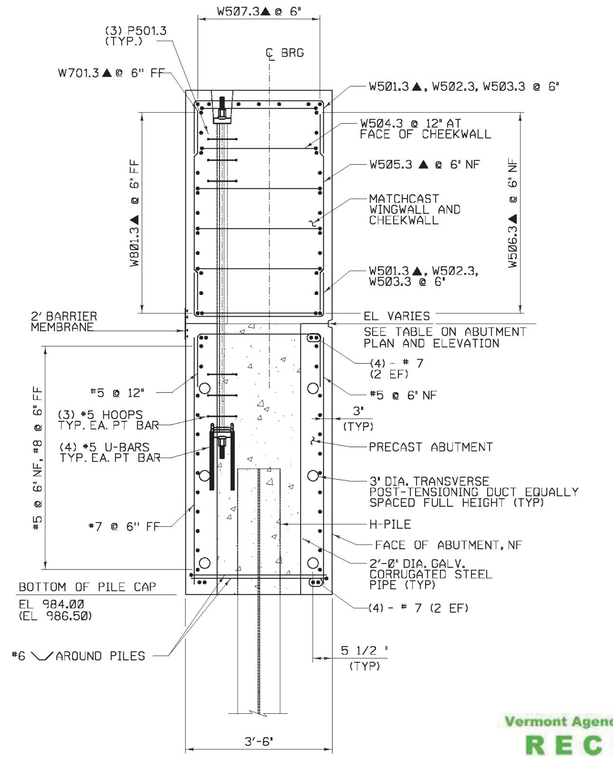

SECTION B-B
SCALE 3/4" = 1'-0"

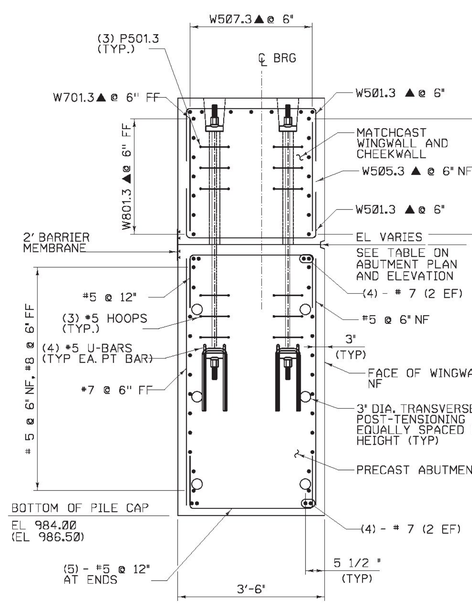

SECTION C-C
SCALE 3/4" = 1'-0"

Vermont Agency of Transportation
RECEIVED
CK'D BY VHB OK'D BY TAS
March 7, 2017
RESUBMIT NO APPROVED AS NOTED
BY T Sumner DATE 3/9/17

NOTES:
1. PAYMENT FOR TEMPORARY SUPPORT ASSEMBLIES WILL BE CONSIDERED INCIDENTAL TO RESPECTIVE 540.10 OR 900.645 ITEMS.
2. THE TOP SURFACE OF THE LEVELING PLATE SHALL BE GREASED PRIOR TO SETTING GIRDERS. EXCESS GREASE SHALL BE WIPED CLEAN AFTER GIRDERS HAVE BEEN SET.
3. LEVELING PLATES SHALL BE LEVEL PRIOR TO SETTING GIRDERS. THE CONTRACTOR SHALL ADJUST THE PLATE ELEVATIONS DURING SETTING THE GIRDERS TO ACHIEVE THE DESIGN ELEVATIONS OF THE DECK.
4. LEVELING PLATE SHALL BE GALVANIZED GRADE 50 AND CONFORM TO SUBSECTION 714.03. ANCHOR RODS SHALL MEET THE REQUIREMENTS OF SUBSECTION 714.08 AND SHALL BE GRADE 105.
5. SEE PROJECT NOTES FOR ADDITIONAL FABRICATION, CONSTRUCTION, AND SEQUENCE NOTES.
6. ELEVATIONS SHOWN ARE FOR ABUTMENT NO. 1. (ELEVATIONS FOR ABUTMENT NO. 2 ARE SHOWN IN PARENTHESIS.)

NOTE:
NF = NEAR FACE
FF = FAR FACE
EF = EACH FACE
▲ = CUT TO FIT IN FIELD
3" CLEAR, UNLESS OTHERWISE SPECIFIED ON THE PLANS.
2'-2" BAR LAP UNLESS OTHERWISE SPECIFIED ON THE PLANS.

LEGEND

SPECIAL PROVISION (HIGH PERFORMANCE CONCRETE RAPID SET) (FPO)

CALDERWOOD ENGINEERING, ETC.
STRUCTURAL ENGINEERING • DETAILING SERVICES
222 RIVER RD, RICHMOND, ME 04357 PHFX (207)737-2007(207) 737-2006

PREPARED FOR:
COLD RIVER BRIDGES, LLC
CEE 16-16-COLDRIVERBRIDGES
01-CS-LUDLOW

P.E. NUMBER
DATE

	BY	DATE
DESIGN-DETAILED	TDC	JAN 2017
DRAWN-REVIEWED		
REVISIONS 1		
REVISIONS 2		
REVISIONS 3		
REVISIONS 4		
FIELD CHANGES		

VE SUPER DESIGN
LUDLOW VT. BRF 025-1(42)

ABUTMENT DETAILS (1 OF 3)

SHEET NUMBER
45
of 73

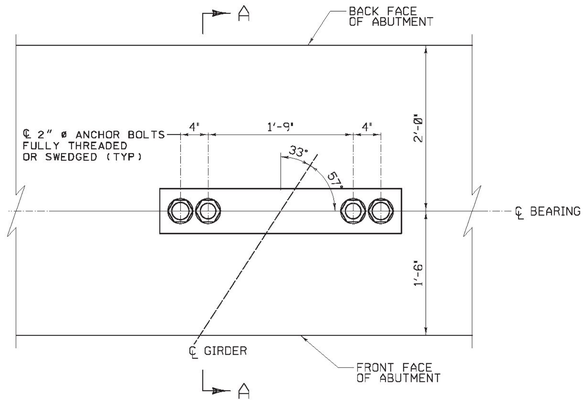

SUPPORT BOLT LAYOUT

SCALE 1½" = 1'-0"

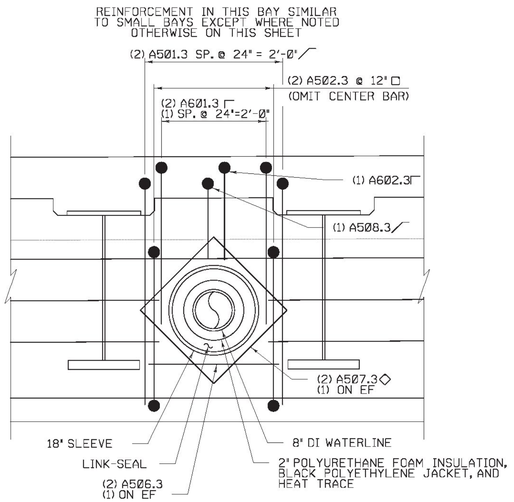

* SEE NOTE 1

WATERLINE ABUTMENT PENETRATION DETAIL

NOT TO SCALE

NOTES:

1. SPACE BARS TO MAINTAIN 1½" MIN CLR AROUND SLEEVE. FIELD CUT CENTER BARS TO MAINTAIN 1½" MIN CLR AROUND SLEEVE.
2. SLEEVE SHALL BE STEEL WITH 18" INSIDE DIA. AND SHALL BE COMPATIBLE WITH LINK-SEAL AND REINFORCING LAYOUT.

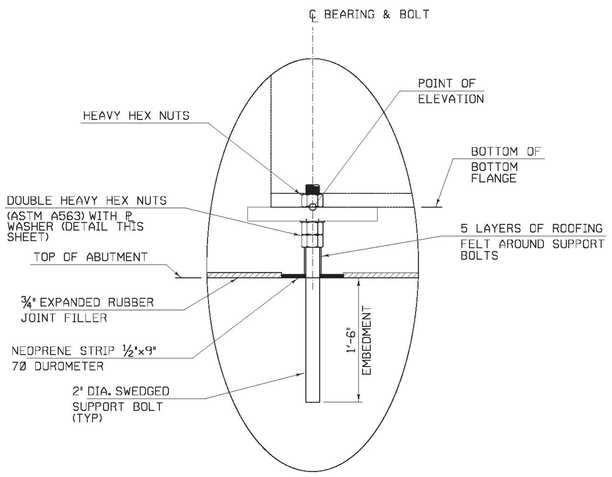

SECTION A-A

SUPPORT BOLT DETAIL (TYP)

SCALE 1½" = 1'-0"

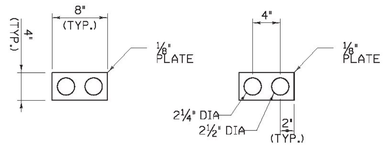

DOUBLE ANCHOR BOLT ASSEMBLY PLATE WASHER

NOT TO SCALE

Vermont Agency of Transportation

RECEIVED

CK'D BY VHB OK'D BY TAS

March 7, 2017

RESUBMIT NO APPROVED AS NOTED

BY T Sumner DATE 3/9/17

NOTE:

NF = NEAR FACE
FF = FAR FACE
EF = EACH FACE
▲ = CUT TO FIT IN FIELD
3" CLEAR, UNLESS OTHERWISE SPECIFIED ON THE PLANS.
2'-2" BAR LAP UNLESS OTHERWISE SPECIFIED ON THE PLANS.

NOTES:

1. SEE ABUTMENT DETAILS (1 OF 3) AND PROJECT NOTES FOR ADDITIONAL FABRICATION, CONSTRUCTION, AND SEQUENCE NOTES.

CALDERWOOD ENGINEERING, ETC.
STRUCTURAL ENGINEERING • DETAILING SERVICES
232 RIVER RD, RICHMOND, ME 04357 PH/FX (207)737-3307/(207) 737-3308

PREPARED FOR:

COLD RIVER BRIDGES, LLC

CEE 16-16-COLDRIVERBRIDGES
01-CS-LUDLOW

	BY	DATE
DESIGN-DETAILED	TDC	
CHECKED-REVIEWED	TDC	JAN 2017
REVISIONS 1		
REVISIONS 2		
REVISIONS 3		
REVISIONS 4		
FIELD CHANGES		

P.E. NUMBER

DATE

VE SUPER DESIGN
LUDLOW VT. BRF 025-1(42)

ABUTMENT DETAILS (2 OF 3)

SHEET NUMBER

46

of 73

STATE OF VERMONT
AGENCY OF TRANSPORTATION

REINFORCING STEEL SCHEDULE

ITEM	EACH	SIZE	LENGTH	MARK	TYPE	A	B	C	D	E	F	G	H	J	K	R	O
WINGWALL NO. 1																	
	52	5	7'- 4"	1W501.3	17		2'- 2"	3'- 0"	2'- 2"								
	2	5	7'- 7"	1W502.3	17		2'- 2"	3'- 3"	2'- 2"								
	2	5	7'- 11"	1W503.3	17		2'- 2"	3'- 7"	2'- 2"								
	6	5	6'- 8"	1W504.3	22		1'- 6"	3'- 7"	1'- 6"				1'- 3"	1'- 3"	0'- 10"	0'- 10"	
✳ ▲	30	5	5'- 0"	1W505.3	STR												
▲	11	5	14'- 3"	1W506.3	STR												
▲	7	5	14'- 6"	1W507.3	19		4'- 5"	10'- 1"	-- --				1'- 0"		4'- 4"		14'- 4"
	27	7	5'- 0"	1W701.3	STR												
	11	8	12'- 0"	1W801.3	STR												
	12	5	2'-6 1/2"	1P501.3	T1	0'-2"	0'-8"	0'-8"	0'-8"	0'-8"		0'-2"					
WINGWALL NO. 2																	
▲	46	5	7'- 4"	2W501.3	17		2'- 2"	3'- 0"	2'- 2"								
	2	5	7'- 7"	2W502.3	17		2'- 2"	3'- 3"	2'- 2"								
	2	5	7'- 11"	2W503.3	17		2'- 2"	3'- 7"	2'- 2"								
	6	5	6'- 7"	2W504.3	22		1'- 6"	3'- 7"	1'- 6"				1'- 3"	1'- 3"	0'- 10"	0'- 10"	
▲	23	5	5'- 1"	2W505.3	STR												
✳ ▲	12	5	11'- 0"	2W506.3	STR												
▲	7	5	14'- 3"	2W507.3	19		3'- 5"	10'- 10"	-- --				1'- 5"		3'- 1"		14'- 3"
✳	30	7	5'- 1"	2W701.3	STR												
	11	8	13'- 4"	2W801.3	STR												
	12	5	2'-6 1/2"	2P501.3	T1	0'-2"	0'-8"	0'-8"	0'-8"	0'-8"		0'-2"					
WINGWALL NO. 3																	
	48	5	7'- 4"	3W501.3	17		2'- 2"	3'- 0"	2'- 2"								
	2	5	7'- 7"	3W502.3	17		2'- 2"	3'- 3"	2'- 2"								
	2	5	7'- 11"	3W503.3	17		2'- 2"	3'- 7"	2'- 2"								
	6	5	6'- 7"	3W504.3	22		1'- 6"	3'- 7"	1'- 6"				1'- 3"	1'- 3"	0'- 10"	0'- 10"	
✳ ▲	23	5	5'- 1"	3W505.3	STR												
▲	11	5	11'- 0"	3W506.3	STR												
▲	7	5	13'- 5"	3W507.3	19		3'- 6"	9'- 11"	-- --				0'- 8"		3'- 5"		13'- 5"
	30	7	5'- 1"	3W701.3	STR												
	11	8	13'- 4"	3W801.3	STR												
	12	5	2'-6 1/2"	3P501.3	T1	0'-2"	0'-8"	0'-8"	0'-8"	0'-8"		0'-2"					
WINGWALL NO. 4																	
	50	5	7'- 4"	4W501.3	17		2'- 2"	3'- 0"	2'- 2"								
	2	5	7'- 7"	4W502.3	17		2'- 2"	3'- 3"	2'- 2"								
	2	5	7'- 11"	4W503.3	17		2'- 2"	3'- 7"	2'- 2"								
	6	5	6'- 8"	4W504.3	22		1'- 6"	3'- 7"	1'- 6"				1'- 3"	1'- 3"	0'- 10"	0'- 10"	
	30	5	5'- 0"	4W505.3	STR												
✳ ▲	12	5	14'- 3"	4W506.3	STR												
▲	7	5	14'- 6"	4W507.3	19		4'- 4"	10'- 2"	-- --				1'- 2"		4'- 1"		14'- 3"
▲	27	7	5'- 0"	4W701.3	STR												
✳	11	8	12'- 0"	4W801.3	STR												
	12	5	6'-2 1/2"	4P501.3	T1	0'-2"	0'-8"	0'-8"	0'-8"	0'-8"		0'-2"					
SIDEWALK																	
✳	332	4	8'- 0"	SW401.3	S5	1'- 6"	2'- 0"	0'- 7"	2'- 5"			1'- 6"					
	42	5	40'- 0"	SW501.3	STR												

ITEM	EACH	SIZE	LENGTH	MARK	TYPE	A	B	C	D	E	F	G	H	J	K	R	O

~ NOTES ~

1. UNLESS OTHERWISE DESIGNATED, ALL BAR REINFORCEMENT FOR CONCRETE IN SIZES UP TO AND INCLUDING NO. 18 SHALL CONFORM TO THE REQUIREMENTS OF THE "SPECIFICATIONS FOR DEFORMED BILLET-STEEL BARS FOR CONCRETE REINFORCEMENT", AASHTO M 31 (ASTM A 615-SI). ALL BARS SHALL BE GRADE 60, UNLESS OTHERWISE DESIGNATED.
2. FOR TYPICAL BENDING DETAILS, RECOMMENDED PIN DIAMETER "D" OF BENDS AND HOOKS, AND OTHER STANDARD PRACTICE, SEE CURRENT CONCRETE REINFORCING STEEL INSTITUTE "MANUAL OF STANDARD PRACTICE".
3. BARS WHICH REQUIRE MORE ACCURATE BENDING THAN STANDARD PRACTICES SHOULD HAVE LIMITS INDICATED.
4. ALL DIMENSIONS ARE OUT TO OUT OF BAR EXCEPT "A" AND "G" ON STANDARD 180 DEGREE AND 135 DEGREE HOOKS.
5. "J" DIMENSION ON 180 DEGREE HOOKS TO BE SHOWN ONLY WHERE NECESSARY TO RESTRICT HOOK SIZE. OTHERWISE, STANDARD HOOKS ARE TO BE USED.
6. "H" DIMENSION ON STIRRUPS TO BE SHOWN ONLY WHEN NECESSARY TO MAINTAIN CLEARANCES.
7. WHERE SLOPE DIFFERS FROM 45 DEGREES, DIMENSIONS "H" AND "K" MUST BE SHOWN.
8. ▲ DENOTES BARS TO BE CUT IN FIELD.
9. ✳ DENOTES ONE EXTRA BAR ADDED FOR TESTING PURPOSES.
10. △ DENOTES TWO EXTRA BARS ADDED FOR TESTING PURPOSES.
11. E IN BAR MARK PREFIX DENOTES EPOXY COATED REINFORCING STEEL.

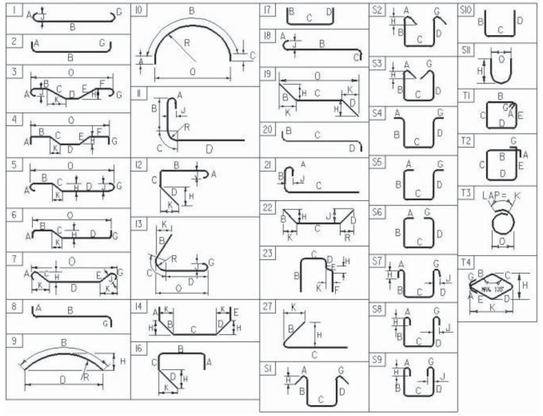

ASTM STANDARD REINFORCING BARS

BAR SIZE DESIGNATION	WEIGHT POUNDS PER FOOT	NOMINAL DIMENSIONS ROUND SECTION DIAMETER INCHES	AREA INCHES²	PERIMETER INCHES
#3	0.376	0.375	0.11	1.178
#4	0.668	0.500	0.20	1.571
#5	1.043	0.625	0.31	1.963
#6	1.502	0.750	0.44	2.356
#7	2.044	0.875	0.60	2.749
#8	2.670	1.000	0.79	3.142
#9	3.400	1.128	1.00	3.544
#10	4.303	1.270	1.27	3.990
#11	5.313	1.410	1.56	4.430
#14	7.65	1.693	2.25	5.32
#18	13.60	2.257	4.00	7.09

Vermont Agency of Transportation
RECEIVED
CK'D BY VHB OK'D BY TAS
March 7, 2017
RESUBMIT NO APPROVED AS NOTED
BY T Sumner DATE 3/9/17

PROJECT NAME: LUDLOW
PROJECT NUMBER: BRF 025-1(42)
FILE NAME:

CALDERWOOD ENGINEERING, ETC.
STRUCTURAL ENGINEERING • DETAILING SERVICES
222 RIVER RD, RICHMOND, ME 04357 PH/FX (207)737-2207/(207) 737-2208

PREPARED FOR:
COLD RIVER BRIDGES, LLC
CEE 16-16-COLDRIVERBRIDGES
01-CS-LUDLOW

P.E. NUMBER
DATE

	BY	DATE
DESIGN-DETAILED	TDC	JAN 2017
CHECKED-REVIEWED	TDC	
REVISIONS 1		
REVISIONS 2		
REVISIONS 3		
REVISIONS 4		
FIELD CHANGES		

VE SUPER DESIGN
LUDLOW VT. BRF 025-1(42)

REINFORCING STEEL SCHEDULE

SHEET NUMBER
48
of 73

NON STR. THK.	STRUCT. THK.	WEIGHT	WIDTH	HEIGHT	NO. REQ'D.	PANEL NUMBER OR TYPE
	42"	32.9 kips	14'-8 3/4"	5'-5 3/4"	1	WW#1

Vermont Agency of Transportation

RECEIVED

CK'D BY VHB OK'D BY TAS

March 7, 2017

RESUBMIT NO APPROVED AS NOTED

BY T Sumner DATE 3/9/17

REVISED 2-23-17. PLEASE DISREGARD ALL PREVIOUS COPIES OF THIS DRAWING

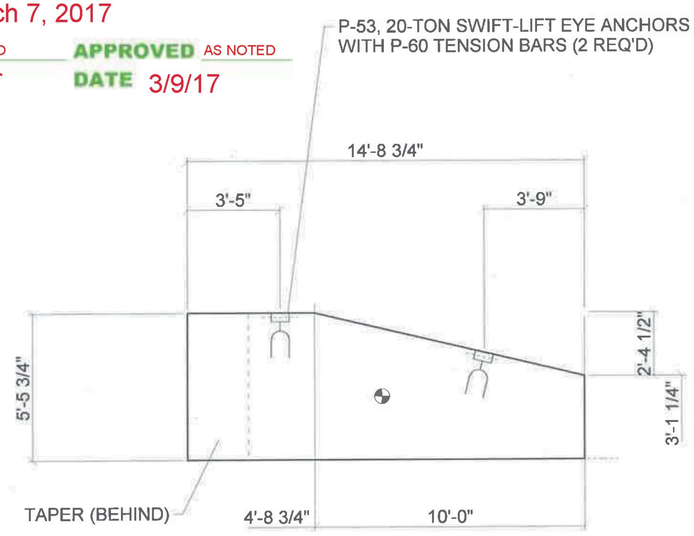

M = 7.65^2 (2.3)/8 x 12 = 202 in-k
S=16,128 fb = 13 psi < 350 OK
This calculation covers all wing walls. donvangerve pe

STATE OF VERMONT
DONALD VAN GERVE
NO.8012
STRUCTURAL
LICENSED
PROFESSIONAL ENGINEER

2/23/17

W B F

VERIFY ALL DIMENSIONS PRIOR TO POURING PANEL

MINIMUM COMPRESSIVE STRENGTH REQ'D.= 3,500 PSI

Construction Period Design Wind Speed	TOTAL BRACE LOAD =	B=	W=	F=	BRACE REQ'D.:
84 mph					

GROUND RELEASE II TILT-UP SYSTEM

This drawing is furnished solely for the purpose of clarifying the proper use, installation and application of products supplied by Dayton Superior. Dayton Superior does not assume any responsibility for the correctness of structural designs or dimensions furnished by others. These drawings are intended merely to supplement the architectural and structural drawings and are to be used only in conjunction with them. In no way are these drawings to be interpreted as shop drawings for panel fabrication.

X 7'-2 5/8"	△X -.15 <	CY= 8.1	SCALE:	RIGGING DETAILS
Y 2'-4 7/16"	2△X -.29	GROSS AREA 80.7	3/16"	R02
PANEL VIEWED FROM:	CHECKED BY	NET AREA 68.8	JOB NO.	SHEET
INSIDE	LAYOUT BY BP	DATE 2/23/17	16774	8 OF 11

NOTE: INSERT AND BRACING DESIGN SHOWN IS BASED ON THE USE OF DAYTON SUPERIOR PRODUCTS ONLY!

NON STR. THK.	STRUCT. THK.	WEIGHT	WIDTH	HEIGHT	NO. REQ'D.	PANEL NUMBER OR TYPE
	42"	26.0 kips	13'-9 5/8"	5'-6 7/8"	1	WW#2

Vermont Agency of Transportation

RECEIVED

CK'D BY VHB OK'D BY TAS

March 7, 2017

RESUBMIT NO APPROVED AS NOTED

BY T Sumner DATE 3/9/17

REVISED 2-23-17. PLEASE DISREGARD ALL PREVIOUS COPIES OF THIS DRAWING

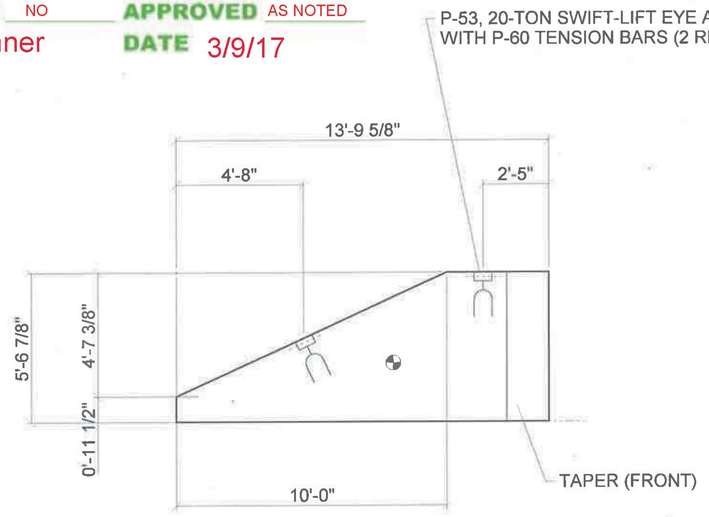

STATE OF VERMONT DONALD VAN GERVE NO.8012 STRUCTURAL LICENSED PROFESSIONAL ENGINEER

2/23/17

W B F

VERIFY ALL DIMENSIONS PRIOR TO POURING PANEL

MINIMUM COMPRESSIVE STRENGTH REQ'D.= 3,500 PSI

Construction Period Design Wind Speed	TOTAL BRACE LOAD =	B=	W=	F=	BRACE REQ'D.:
84 mph					

GROUND RELEASE II TILT-UP SYSTEM

This drawing is furnished solely for the purpose of clarifying the proper use, installation and application of products supplied by Dayton Superior. Dayton Superior does not assume any responsibility for the correctness of structural designs or dimensions furnished by others. These drawings are intended merely to supplement the architectural and structural drawings and are to be used only in conjunction with them. In no way are these drawings to be interpreted as shop drawings for panel fabrication.

$\bar{X}$	8'-0 5/16"	△X	1.12 >	CY= 6.4	SCALE:	RIGGING DETAILS
$\bar{Y}$	2'-2 7/16"	2△X	2.25	GROSS AREA 76.9	3/16"	R02
PANEL VIEWED FROM:		CHECKED BY		NET AREA 53.8	JOB NO.	SHEET
INSIDE		LAYOUT BY BP		DATE 2/23/17	16774	9 OF 11

NOTE: INSERT AND BRACING DESIGN SHOWN IS BASED ON THE USE OF DAYTON SUPERIOR PRODUCTS ONLY!

NON STR. THK.	STRUCT. THK.	WEIGHT	WIDTH	HEIGHT	NO. REQ'D.	PANEL NUMBER OR TYPE
	42"	32.6 kips	13'-9 5/8"	5'-6"	1	WW#3

REVISED 2-23-17. PLEASE DISREGARD ALL PREVIOUS COPIES OF THIS DRAWING

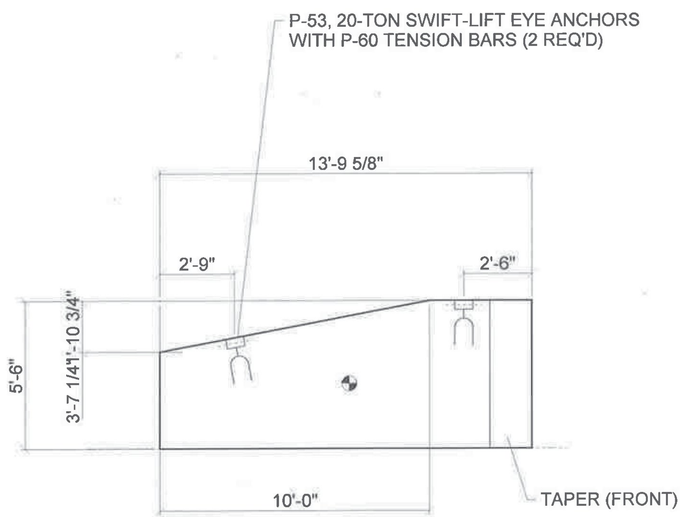

STATE OF VERMONT
DONALD VAN GERVE
NO.8012
STRUCTURAL
LICENSED
PROFESSIONAL ENGINEER
2/23/17

Vermont Agency of Transportation
RECEIVED
CK'D BY VHB OK'D BY TAS
March 7, 2017
RESUBMIT NO APPROVED AS NOTED
BY T Sumner DATE 3/9/17

W B F

VERIFY ALL DIMENSIONS PRIOR TO POURING PANEL

MINIMUM COMPRESSIVE STRENGTH REQ'D.= 3,500 PSI

Construction Period Design Wind Speed	TOTAL BRACE LOAD =	B=	W=	F=	BRACE REQ'D.:
84 mph					

GROUND RELEASE II TILT-UP SYSTEM

This drawing is furnished solely for the purpose of clarifying the proper use, installation and application of products supplied by Dayton Superior. Dayton Superior does not assume any responsibility for the correctness of structural designs or dimensions furnished by others. These drawings are intended merely to supplement the architectural and structural drawings and are to be used only in conjunction with them. In no way are these drawings to be interpreted as shop drawings for panel fabrication.

X 7'-0 1/4"	△X .12 >	CY= 8.1	SCALE: 3/16"	RIGGING DETAILS R02
Y 2'-5 1/8"	2△X .24	GROSS AREA 75.9		
PANEL VIEWED FROM: INSIDE	CHECKED BY	NET AREA 66.4	JOB NO. 16774	SHEET /0 OF //
	LAYOUT BY BP	DATE 2/23/17		

NOTE: INSERT AND BRACING DESIGN SHOWN IS BASED ON THE USE OF DAYTON SUPERIOR PRODUCTS ONLY!

NON STR. THK.	STRUCT. THK.	WEIGHT	WIDTH	HEIGHT	NO. REQ'D.	PANEL NUMBER OR TYPE
	42"	31.8 kips	14'-8 3/4"	5'-6 1/2"	1	WW#4

REVISED 2-23-17. PLEASE DISREGARD ALL PREVIOUS COPIES OF THIS DRAWING

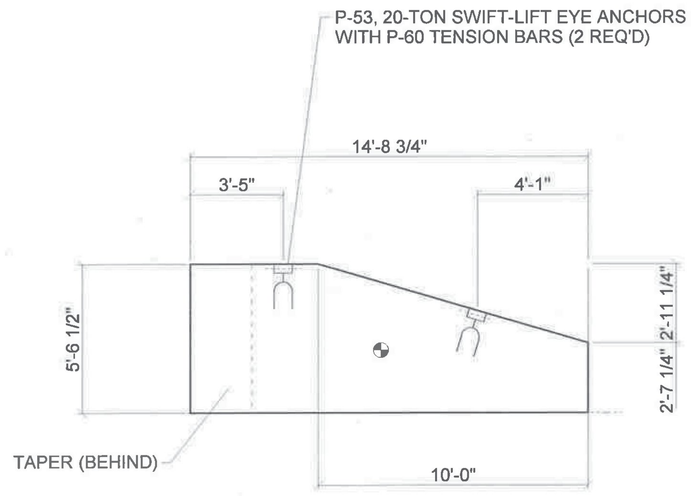

Vermont Agency of Transportation
RECEIVED
CK'D BY VHB OK'D BY TAS
March 7, 2017
RESUBMIT NO APPROVED AS NOTED
BY T Sumner DATE 3/9/17

STATE OF VERMONT
DONALD VAN GERVE
NO.8012
STRUCTURAL
LICENSED
PROFESSIONAL ENGINEER
2/23/17

W B F

VERIFY ALL DIMENSIONS PRIOR TO POURING PANEL

MINIMUM COMPRESSIVE STRENGTH REQ'D.= 3,500 PSI

Construction Period Design Wind Speed	TOTAL BRACE LOAD =	B=	W=	F=	BRACE REQ'D.:
84 mph					

GROUND RELEASE II TILT-UP SYSTEM

This drawing is furnished solely for the purpose of clarifying the proper use, installation and application of products supplied by Dayton Superior. Dayton Superior does not assume any responsibility for the correctness of structural designs or dimensions furnished by others. These drawings are intended merely to supplement the architectural and structural drawings and are to be used only in conjunction with them. In no way are these drawings to be interpreted as shop drawings for panel fabrication.

X 7'-0 7/16"	△X -.33 <	CY= 7.9	SCALE:	RIGGING DETAILS
Y 2'-4 1/16"	2△X -.66	GROSS AREA 81.6	3/16"	R02
PANEL VIEWED FROM:	CHECKED BY	NET AREA 66.9	JOB NO.	SHEET
INSIDE	LAYOUT BY BP	DATE 2/23/17	16774	/ / OF / /

NOTE: INSERT AND BRACING DESIGN SHOWN IS BASED ON THE USE OF DAYTON SUPERIOR PRODUCTS ONLY!

Swift Lift System

DAYTON SUPERIOR

P-52 Swift Lift Anchor

The P-52 Swift Lift Anchor is hot forged from carbon steel. The formed head provides spherical seating that the Lifting Eye engages, while a disc-shaped foot is embedded in the concrete.

Due to its being a forged part, the Swift Lift Anchor does not depend on welds or thread engagement to develop its safe working load. Forging provides maximum safety with its advantageous material structure. This allows the anchor to easily meet the OSHA requirement of a 4 to 1 factor of safety.

In addition to the carbon steel anchors, Type 304 or 316 Stainless Steel Swift Lift Anchors are available on special order. Use stainless steel anchors when maximum protection against corrosion is required.

For safety, refer to the P-52 Swift Lift Anchor Selection Chart on page 31 to determine the actual safe working load of an individual anchor. The MAXIMUM safe working load is clearly visible on the head of the anchor for easy recognition of the appropriate hardware and accessories for-use with each Swift Lift Anchor.

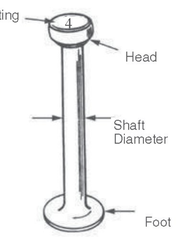

Caution: The Swift Lift Anchor is designed to be used with Dayton Superior components. Failure to use this combination may result in concrete spalling or premature failure.

To Order:
Specify: (1) quantity, (2) name, (3) system size, (4) length

Example:
200, P-52 Swift Lift Anchors, 4 ton, 9-1/2" long

P-52 Swift Lift Anchor and Recess Plug Dimensions

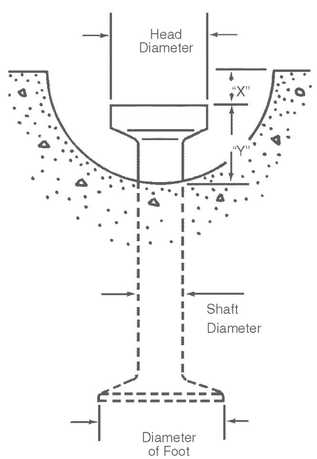

P-52 Swift Lift Anchor

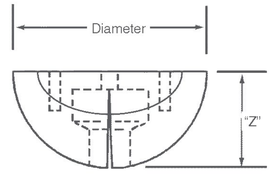

Swift Lift Round Recess Plug

Vermont Agency of Transportation
RECEIVED
CK'D BY VHB OK'D BY TAS
March 7, 2017
RESUBMIT NO APPROVED AS NOTED
BY T Sumner DATE 3/9/17

Swift Lift Round Recess Plug Dimensions		
Swift Lift Anchor	Diameter of Recess Plug	Dimension "Z"
1	2-7/16"	1-3/16"
2	3-5/16"	1-7/16"
4	4"	1-13/16"
8	5"	2-5/16"
20 Tons	6-3/8"	3-1/8"

Note: The diameter of the narrow recess plug is the same as the diameter of the round recess plug.

P-52 Swift Lift Anchor Dimensions					
Swift Lift Anchor	**Dimension "X"**	**Dimension "Y"**	**Shaft Diameter**	**Foot Diameter**	**Head Diameter**
1	5/16"	7/8"	3/8"	1"	11/16"
2	7/16"	1-1/16"	9/16"	1-3/8"	1-1/32"
4	9/16"	1-5/16"	3/4"	1-7/8"	1-11/32"
8	9/16"	1-5/8"	1-3/32"	2-5/8"	1-7/8"
20 Tons	9/16"	2-5/8"	1-1/2"	3-3/4"	2-3/4"

TECHNICAL DATA SHEET

ORDERING INFORMATION

U.S. PATENT NO. 4,398,762

Product Code	Description	Weight
60571	1 TON SWL	2.04 LB
60574	2 TON SWL	3.44 LB
60577	4 TON SWL	6.68 LB
60580	8 TON SWL	20.6 LB
60583	20 TON SWL	46.35 LB

MANUFACTURER

Da t S peri r C rp rati
ers a
ia is r H
C st er Ser ice - -
Tec ical Ser ices - -
e site a t s peri r c

WARRANTY (ACCESSORIES)

Li ite arra t Da t arra ts r a peri a s r
t e ate s ip e t t ree ears r t e ate s ip e t i
t e case r r e cl i a c s a le Pr cts
i cl e it s c r r t at Pr cts a a ass ciate
applicati ra i s a e i eeri ser ices pr i e Da t
A cillar Ser ices ill e ree r e ects i aterial a
r a s ip a i t e case c st esi e r r t at
t e r r ill eet t e speci icati s set rt i t e esi
ra i s appr e Da t a C st er A clai er t is
arra t st e a e i riti it i s c arra t peri l
a Pr ct a / r A cillar Ser ice c ere a ti el clai are
t e e ecti e Da t ill it i a reas a le ti e
a e a ecessar repairs r c rrecti s r at Da t s pti
replace t e Pr ct U less pre-a t ri e Da t i riti
Da t ill t accept a c ar es r c rrecti e ects r
accept t e ret r a Pr ct T is arra t ill t appl t
a Pr cts t at a e ee s ecte t is se e lect st ra e
a a e isapplicati acci e t ra t er a a e ca se
a pers t ert a Da t rt at a e t ee ai tai e
i acc r a ce it Da t s speci icati s THIS LI ITED
A ANT IS IN LIEU ALL THE A ANTIES AS T THE
P DUCTS AND ANCILLA SE ICES DA T N A ES N THE
A ANTIES UA ANTEES E P ESS I PLIED INCLUDIN
AN A ANT E CHANTA ILIT ITNESS A
PA TICULA PU P SE THE ISE THE E EDIES SET TH
IN THIS SECTI N A E CUST E S E CLUSI E E ED
EACH A ANT

Vermont Agency of Transportation
RECEIVED
CK'D BY VHB OK'D BY TAS
March 7, 2017
RESUBMIT NO APPROVED AS NOTED
BY T Sumner DATE 3/9/17

File Date: 10/28/2016

P50 SWIFT LIFT UNIVERSAL LIFTING EYES

Precast

TECHNICAL DATA SHEET

DESCRIPTION

T eP S itLitU iversal Liti E ec sists a lat-si e sp erical li ti a a i stre t all

APPLICATION

T eP li ti as a T-s ape sl t t at per its rapi attac e t a release t e ea S itLit A c rs

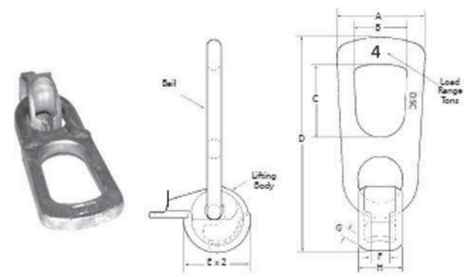

FEATURES

- T e esi t eP U iversal Li ti E e per its te ail t reel r tate ile t ec plete li ti e e a r tate t r a arc
- Da t S peri r es t rec e t e se t is li ti e e re e li ti t i precast c crete pa els

TECHNICAL DATA

P50 SWIFT LIFT UNIVERSAL LIFTING EYE DIMENSIONS

Rated Load Tons	A	B	C	D	Ex2	F Maximum Width	G Minimum Thickness	H
1	2.9"	1.7"	2.8"	7.5"	2.20"	0.56"	0.22"	1.26"
2	3.5"	2.3"	3.3"	9.0"	2.68"	0.76"	0.23"	1.65"
4	4.6"	2.8"	3.5"	11.0"	3.46"	1.02"	0.31"	2.26"
8	6.3"	3.3"	4.4"	15.6"	4.40"	1.31"	0.47"	2.90"
20	7.3"	4.6"	5.9"	20.4"	5.98"	1.86"	0.71"	4.35"

The rated load provides a factor of safety of approximately 5 to 1 (ultimate rated load)

INSTALLATION

T i stall t eP li ti e e l t e it psi e it t eT-s ape sl t irectl e t e ea t eS itLit a c r

L e t eli ti e e t t ea c r t il t eT-sl t e a est e ea t ea c r

tate t eli ti e e t il t ee t e e lip t e t c est e ri tal s race t ec crete

N TE Pri t li ti a precase ele e t appl a i itial ca le te si t a es ret att e ail a t eli ti e e are ali e i t e irecti

T e ail t eP li ti e eca e t r a sa le ra e

T e ai t eli ti e e as a r tati al ra e

T eP li ti e eca esa el se it t eT-s ape sl t aci a a r rt ar t e irecti t e applie l a

T ise a et eli ti e e t ecra e is l ere a t e re e r tati t ee te e lip p ar

Pri t li ti a precast ele e t appl a i itial ca le te si t a e certai t att e ail a t e li ti e e are ali e i t e irecti t eca le p ll

e appl i t e i itial ca le te i e e lit applicati s a es ret att eca les are at a a le rlar er t t es race t e precast ele e t

A NIN D tall t ecra e li est r a a le less t a ri t e e e lit applicati T is c iti ca e t e li ti e e ail a c l lea t pre at re ail re

A NIN T ecra e li e a ail t e li ti ar are st et r e i t e irecti t eca le rces e re t e li ti perati e is T ecra e li e st t e all e t appl a si e ar rce t e ail T is c iti is a er sa c l lea t pre at re ail re t e ar are ri sert

A NIN D t i ralteri a a t e S it LitU iversal Li ti E e

Ispecti a ai te a ce

T eP U iversal Li ti E e a es ect t ear is se erl a i a t er act rs t at ca a ect t e li ti e es rate l a T ere re it is i perati e t att e li ti e e e ser-i spected at least ce a t t eter i e its e eral c iti a e ree ear

D ri t e sers t l i specti t e li ti e e s l ec ec e r e i e ce eat applicati l e i e ce eat applicati is t e it st e scrappe C ec ra e t rt iste ail a iscar all its t a e t ese la s Als c ec t a e certai t att e ail r tates reel i all irecti s

At least ce e er t ree t s i e si s a eac its l ec ec e T e pper li its are s i t ec art l eit er t ese li its is e cee e t eP U iversal Li ti E e st ere e r ser ice a estr e

T e pr per et r scrappi a li ti e e ist c t t r t e ail it ac tti t rc t re ert e it seless as a li ti e ice

N repairs r el i t t eP S itLitU iversal Li ti E e are per itte

RELATED PRODUCTS

- P S itLitA c rs
- P S itLitE eA c rs

Vermont Agency of Transportation
RECEIVED
CK'D BY VHB OK'D BY TAS
March 7, 2017
RESUBMIT NO APPROVED AS NOTED
BY T Sumner DATE 3/9/17

File Date: 10/28/2016

GENERAL NOTES

CONSTRUCTION SPECIFICATIONS

ALL MATERIAL AND WORKMANSHIP TO BE IN ACCORDANCE WITH THE STATE OF VERMONT AGENCY OF TRANSPORTATION STANDARD SPECIFICATIONS FOR CONSTRUCTION DATED 2011 WITH LATEST REVISIONS AND THE AASHTO LRFD BRIDGE DESIGN SPECIFICATIONS, 6TH EDITION, AND ITS LATEST REVISIONS.

MATERIAL SPECIFICATIONS

1) ALL STRUCTURAL STEEL TO BE AASHTO M270 (ASTM A709) GRADE 50, UNLESS NOTED.

2) MATERIAL NOTED "CVN" OR "T2" ON DETAIL DRAWINGS SHALL BE CHARPY V-NOTCH TESTED IN ACCORDANCE WITH THE REQUIREMENTS OF VERMONT STANDARD SPECIFICATIONS SECTION 714.01.

3) HIGH STRENGTH BOLTS SHALL BE 7/8" DIAMETER, ASTM A325 (TYPE 1) MECHANICALLY GALVANIZED, IN 15/16" DIAMETER HOLES. NUTS SHALL BE A563 (TYPE 1) GRADE C3 MECHANICALLY GALVANIZED, WASHERS SHALL BE F436 (TYPE 1) MECHANICALLY GALVANIZED AND DIRECT TENSION INDICATORS (DTI) SHALL BE ASTM F959 (TYPE 1) MECHANICALLY GALVANIZED.

   BOLTS, NUTS & WASHERS SHALL BE ROTATIONAL CAPACITY TESTED. DO NOT MIX BOLTS & NUTS FROM DIFFERENT CONTAINERS UNLESS ALL BOLTS & NUTS HAVE THE SAME LOT NUMBER.

4) DIRECT TENSION INDICATOR WASHERS CONFORMING TO ASTM F959 SHALL BE INSTALLED WITH ALL HIGH STRENGTH BOLTS.

FABRICATION

1) ALL HOLES SHALL BE DRILLED FULL SIZE UNLESS NOTED.

2) ALL FINS, SLIVERS AND TEARS SHALL BE REMOVED.

3) ALL ROUGH SURFACES SHALL BE GROUND SMOOTH.

4) FLAME CUT EDGES SHALL BE GROUND OVER THEIR ENTIRE SURFACE SUCH THAT ANY HARDENED SURFACE LAYER IS REMOVED.

WELDING

1) THE CONFIGURATION OF THE WELD JOINTS AND ALL WELDING PROCEDURES SHALL BE IN ACCORDANCE WITH THE CURRENT AASHTO/AWS D1.5 BRIDGE WELDING CODE AND IN ADDITION TO SPECIFICATIONS SHOWN ABOVE. ALL WELDING WILL BE DETAILED TO PRE-QUALIFIED JOINTS, UNLESS PROHIBITED BY THE DESIGNER.

2) WELDING OF MAIN LOAD CARRYING MEMBERS AND ATTACHMENTS SHALL BE PERFORMED USING THE AUTOMATIC SUBMERGED ARC & SHIELDED METAL ARC PROCESSES. ALL WELDS ARE CONTINUOUS U.N.

3) NON DESTRUCTIVE TESTING OF WELDS SHALL BE IN ACCORDANCE WITH THE REFERENCED SPECIFICATION.

4) SEE DETAIL "WT1" ON THIS DRAWING FOR WELD TERMINATION DETAIL.

5) SHOP APPLIED STUDS SHALL BE AUTO END WELDED. SEE DETAIL "S1".

WELD PROCEDURE

THE FOLLOWING CASCO WELDING PROCEDURES SHALL BE USED:

	WELD DESCRIPTION	MAT'L GRADE	WP	CASCO WELD PROC.
GIRDERS	GIRDER WEB BUTT WELDS	M270-50 TO M270-50	WP2	202 ⚠2
	GIRDER FLANGE BUTT WELDS	M270-50 TO M270-50	WP3	203 ⚠1
	GIRDER WEB TO FLANGE FILLET WELD	M270-50 TO M270-50	WP1	201
	GIRDER STIFFENER TO WEB FILLET WELDING	M270-50 TO M270-50	WP4	250
	GIRDER STIFFENER TO FLANGE FILLET WELDING	M270-50 TO M270-50	WP5	480
	DRIP PLATES TO GIRDER FLANGE	M270-50 TO M270-50	WP6	480 or 610

FIELD CONNECTIONS

⚠2⚠1 1. ALL FIELD CONNECTIONS SHALL BE MADE WITH 7/8" DIAMETER HIGH STRENGTH A325 BOLTS, INSTALLED PER SECTION 506.19(c). REFER TO SECTION 506.19 OF THE 2011 GENERAL SPECIAL PROVISIONS.

2. BOLTS SHALL HAVE A HEAVY HEX HEAD, HEAVY HEX NUT, AT LEAST ONE HARD FLAT WASHER EACH AND DIRECT TENSION INDICATOR (DTI). WASHER TO BE PLACED UNDER THE TURNED ELEMENT.

3. PIECE MARKS WILL BE LOCATED AS SHOWN ON SHEET E1.

4. DTI WASHERS SHALL BE USED IN ALL FIELD BOLTS. DTI SHALL BE POSITIONED IN ACCORDANCE WITH ASTM F959 SPECIFICATIONS. SEE DETAILS "DT1-DT4" THIS SHEET.

CLEANING

1. ALL STEEL SHALL BE BLAST CLEANED IN ACCORDANCE WITH SSPC-VIS 1 (SSPC-SP5)..

METALLIZING:

⚠2 1. METALLIZING, SURFACE PREP & SEAL COAT SHALL BE IN ACCORDANCE WITH CASCO BAY STEEL STRUCTURES, INC. APPROVED METALLIZING PROCEDURE AND PER VERMONT AOT ITEM 900.645 "SPECIAL PROVISION (METALLIZING STRUCTURAL STEEL)" AND STANDARD SPECIFICATIONS SECTION 726.09.

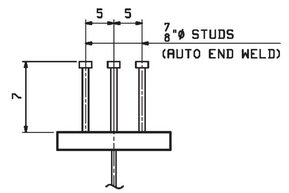

DETAIL "S1"
STUD SPACING AND WELDING
⚠1 (ADDITIONAL STUDS IF REQUIRED WILL BE FIELD APPLIED BY OTHERS)

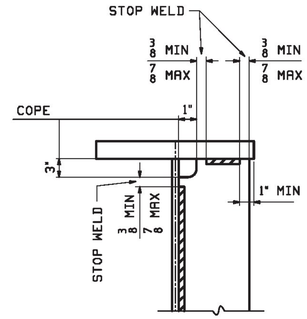

DETAIL "WT1"
STIFFENER WELD TERMINATION

Vermont Agency of Transportation
RECEIVED
CK'D BY VHB OK'D BY TAS
March 31, 2017
RESUBMIT ____ APPROVED YES
BY T Sumner DATE 4/11/17

SHOP DRAWING REVIEW

☒ REVIEWED AS REQUIRED BY THE CONSTRUCTION CONTRACT DOCUMENTS AND APPROVED, BUT ONLY FOR CONFORMANCE TO THE DESIGN CONCEPT OF THE WORK, AND SUBJECT TO FURTHER LIMITATIONS AND REQUIREMENTS CONTAINED IN THE CONSTRUCTION CONTRACT DOCUMENTS.

☐ REJECTED ☐ REVISE AND RESUBMIT ☐ FURNISH AS CORRECTED

CORRECTIONS OR COMMENTS MADE ON THE SHOP DRAWINGS DURING THIS REVIEW DO NOT RELIEVE CONTRACTOR FROM COMPLIANCE WITH REQUIRMENTS OF THE DRAWINGS AND SPECIFICATIONS. THIS CHECK IS ONLY FOR REVIEW OF GENERAL CONFORMANCE WITH THE DESIGN CONCEPT OF THE PROJECT AND GENERAL COMPLIANCE WITH THE INFORMATION GIVEN IN THE CONTRACT DOCUMENTS. THE CONTRACTOR IS RESPONSIBLE FOR: CONFIRMING AND CORRELATING ALL QUANTITIES AND DIMENSIONS; SELECTING FABRICATION PROCESSES AND TECHNIQUES OF CONSTRUCTION; COORDINATING HIS WORK WITH THAT OF ALL OTHER TRADES; AND PERFORMING HIS WORK IN A SAFE AND SATISFACTORY MANNER.

vhb
40 IDX Drive
Building 100, Suite 200
South Burlington, VT 05403
802.497.6100

Job Number: BRF 025-1(42)
Reviewed By: E.F. LAWES
Date: April 11, 2017

NOTE TO ENGINEER:
THESE NOTES ARE NOT INTENDED TO BE ALL INCLUSIVE AND COMPLIANCE WITH RELEVANT SPECIFICATIONS REMAIN UNCHANGED.

DETAILS FOR POSITIONING DTI (LIW) WASHERS (PER ASTM F-959)

DTI UNDER HEAD - TURN NUT	DTI UNDER NUT - TURN NUT	DTI UNDER NUT - TURN HEAD	DTI UNDER HEAD - TURN HEAD

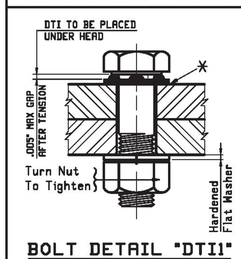

BOLT DETAIL "DTI1"
THIS IS THE PREFERED METHOD.

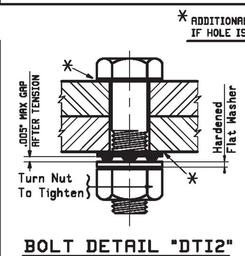

BOLT DETAIL "DTI2"
DTI UNDER NUT FOR VISIBILITY.

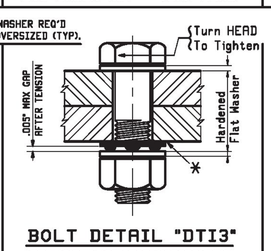

BOLT DETAIL "DTI3"
DTI UNDER NUT FOR VISIBILITY.
2 HARD FLAT WASHERS ARE REQ'D

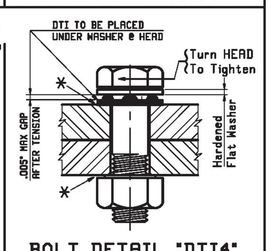

BOLT DETAIL "DTI4"
DTI UNDER HEAD FOR VISIBILITY.

REV.	DATE	REMARKS	DWN	CHK	APVL	SHOP
⚠2	03/30 2017	APPROVAL COMMENTS & REVISED METALLIZING NOTES	ATD	PCP		
⚠1	03/08 2017	APPROVAL COMMENTS & ADDED WEB/FLG BUTT WELD PROC.	ATD	PCP		
0						

MATERIAL: | SURFACE PREP. & PRINT: | HOLES: | SHOP BOLTS:

DESCRIPTION: GENERAL NOTES

CASCO BAY STEEL STRUCTURES, INC.
1 WALLACE AVE. PHONE (207) 780-6722
SOUTH PORTLAND, ME 04106 FAX. (207) 780-6726
TENSOR 3428

STRUCTURE:
VT RTE 103 (MAIN STREET) OVER BLACK RIVER
BRIDGE NO. 25
ROUTE T.H.1 (VT 103) CLASS 1 F.A.S. 025-1

DRAWN: ATD DATE: 12/08
CHK'D: PCP DATE: 12/13

LOCATION: TOWN OF LUDLOW, WINDSOR COUNTY, VT
JOB NO. 684
DWG NO. GN1
PROJ NO. BRF 025-1(42)
CUSTOMER: COLD RIVER BRIDGES, LLC.
REV. ⚠2

PCP Thu, Mar 30, 2017 08:31:44 AM J:\users\jobs\2432\Dwl : Rev2

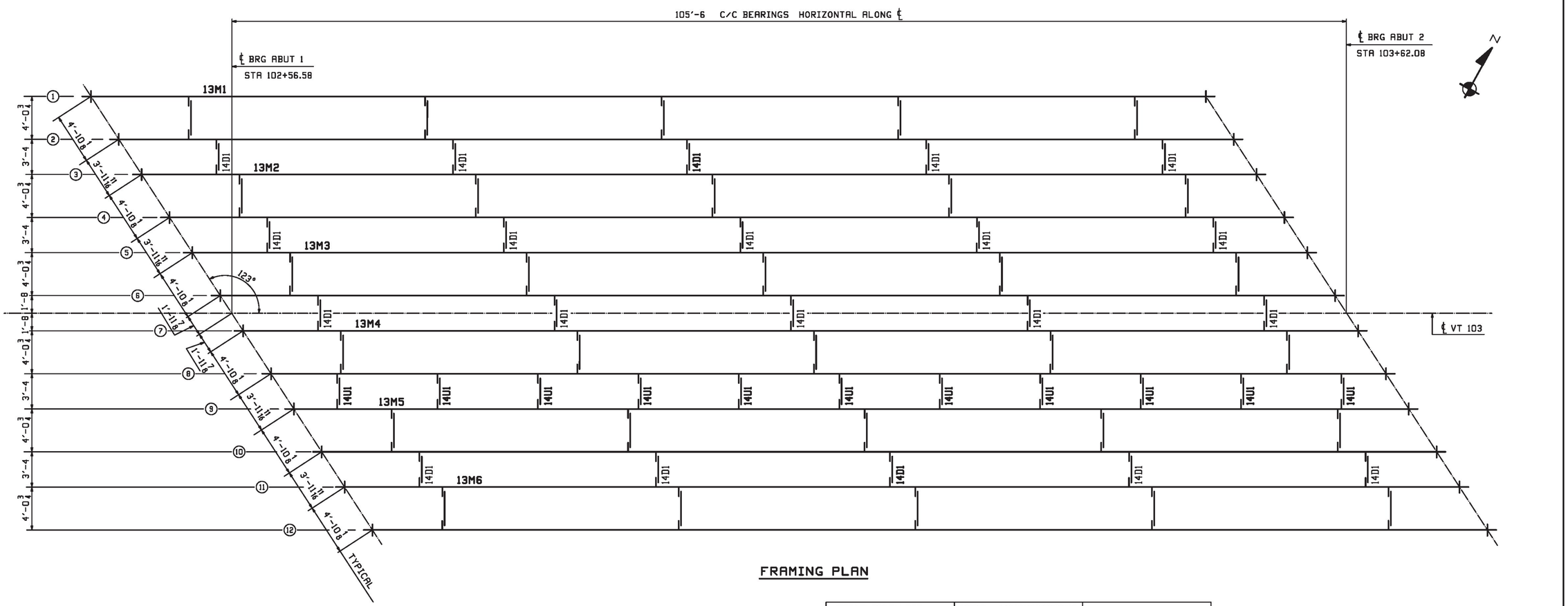

FRAMING PLAN

FIELD BOLT LIST							A325 Type 1 (MECH GALV) BOLTS							
LINE	NO REQ'D.	BOLT DIAM.	BOLT LEN.	BOLTS /CONN.	# OF CONN.	GRIP	THICKNESS OF PCS. CONNECTED						WASH CODE	PIECES CONNECTED AND REMARKS
1														EXTERIOR DIAPH - 14D1
2	280	7/8	2 1/2	7	40	15/16	7/16	1/2					L1	Diaph Web - Stiffener
3														
4														WATER MAIN SUPPORT - 14U1
5	22	7/8	2 1/4	2	11	3/4	1/4	1/2					L1	WT Stem - Stiffener
6														

WASHER CODES

L1: 1 Flat, 1 Load Ind.
LIW @ head,hard wa. @ nut

FIELD BOLT SUMMARY			2% + 2 ADDED, MIN. 2 EXTRA			
LINE	NO. OF BOLTS	BOLT DIAM.	TYPE	BOLT LEN	ACTUAL COUNT	REMARKS
1	24	7/8	A325 Type 1	2 1/4	22	(MECH GALV) RCT
2	288	7/8	A325 Type 1	2 1/2	280	(MECH GALV) RCT
3						
4	312	Hard Flat Washers	for 7/8 ø	BOLT	(ACTUAL 302)	(MECH GALV) RCT
5	312	Load Ind. Washers	for 7/8 ø	BOLT	(ACTUAL 302)	(MECH GALV) RCT
6						
7						
8						

Vermont Agency of Transportation
RECEIVED
CK'D BY VHB OK'D BY TAS
March 31, 2017
RESUBMIT APPROVED YES
BY T Sumner DATE 4/11/17

SHOP DRAWING REVIEW

☒ REVIEWED AS REQUIRED BY THE CONSTRUCTION CONTRACT DOCUMENTS AND APPROVED, BUT ONLY FOR CONFORMANCE TO THE DESIGN CONCEPT OF THE WORK, AND SUBJECT TO FURTHER LIMITATIONS AND REQUIREMENTS CONTAINED IN THE CONSTRUCTION CONTRACT DOCUMENTS.

☐ REJECTED ☐ REVISE AND RESUBMIT ☐ FURNISH AS CORRECTED

CORRECTIONS OR COMMENTS MADE ON THE SHOP DRAWINGS DURING THIS REVIEW DO NOT RELIEVE CONTRACTOR FROM COMPLIANCE WITH REQUIRMENTS OF THE DRAWINGS AND SPECIFICATIONS. THIS CHECK IS ONLY FOR REVIEW OF GENERAL CONFORMANCE WITH THE DESIGN CONCEPT OF THE PROJECT AND GENERAL COMPLIANCE WITH THE INFORMATION GIVEN IN THE CONTRACT DOCUMENTS. THE CONTRACTOR IS RESPONSIBLE FOR: CONFIRMING AND CORRELATING ALL QUANTITIES AND DIMENSIONS; SELECTING FABRICATION PROCESSES AND TECHNIQUES OF CONSTRUCTION; COORDINATING HIS WORK WITH THAT OF ALL OTHER TRADES; AND PERFORMING HIS WORK IN A SAFE AND SATISFACTORY MANNER.

vhb
40 IDX Drive
Building 100, Suite 200
South Burlington, VT 05403
802.497.6100

Job Number: BRF 025-1(42)
Reviewed By: E.F. LAWES
Date: April 11, 2017

REV.	DATE	REMARKS	DWN	CHK	APVL	SHOP
2	03/08 2017	APPROVAL COMMENTS	ATD	PCP		
1	01/05 2017	REV FIELD BOLTS QTY, ADD NEW DIAPH & REMOVE SECT A-A & B-B (EXTRA-TEC-3429-001)	ATD	PCP		
0						

MATERIAL: SURFACE PREP. & PAINT: HOLES: SHOP BOLTS:

DESCRIPTION: FRAMING PLAN & FIELD BOLTS

CASCO BAY STEEL STRUCTURES, INC.
1 WALLACE AVE. PHONE (207) 780-6722
SOUTH PORTLAND, ME 04106 FAX. (207) 780-6726
TENSOR 3429

STRUCTURE:
VT RTE 103 (MAIN STREET) OVER BLACK RIVER
BRIDGE NO. 25
ROUTE T.H.1 (VT 103) CLASS 1 F.A.S. 025-1

DRAWN: ATD DATE: 12/08
CHKD: PCP DATE: 12/13

LOCATION: TOWN OF LUDLOW, WINDSOR COUNTY, VT
PROJ NO. BRF 025-1(42)
CUSTOMER: COLD RIVER BRIDGES, LLC.
JOB NO. 684
DWG NO. E1
REV. 2

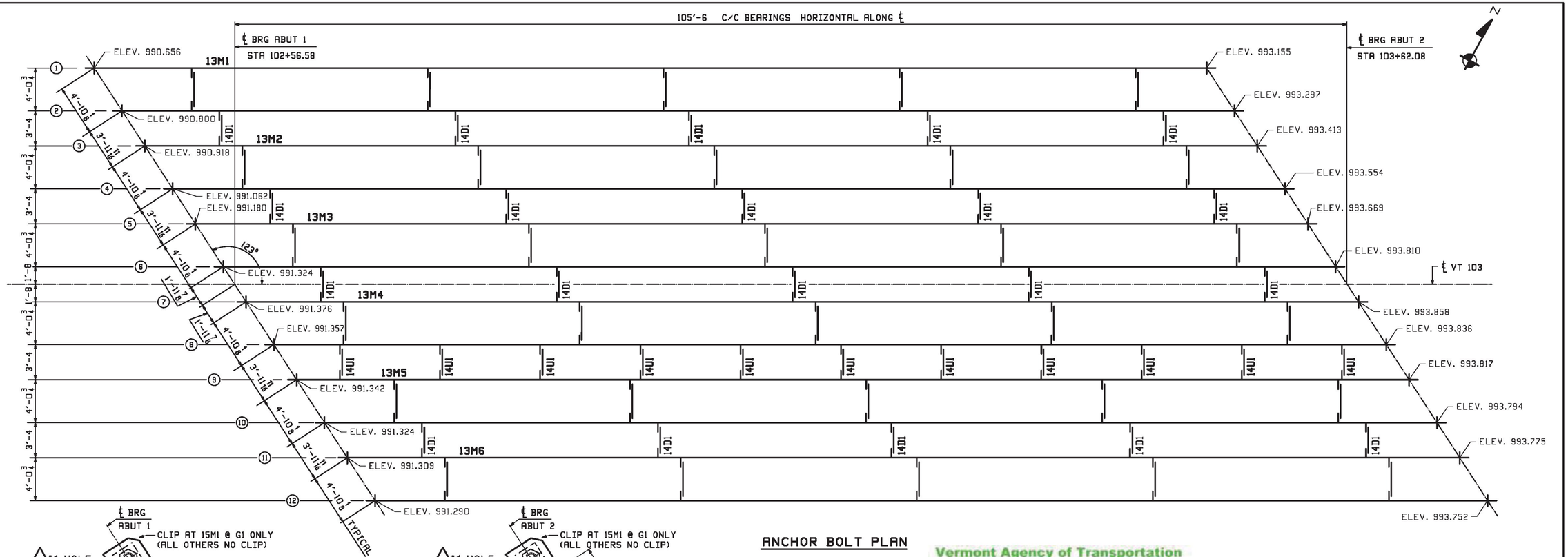

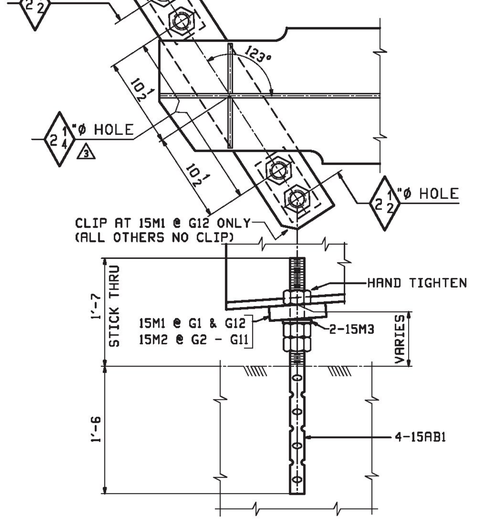

⚠2 ELEVATION VIEW - ABUT 1

TYP LINES 1 THRU 12

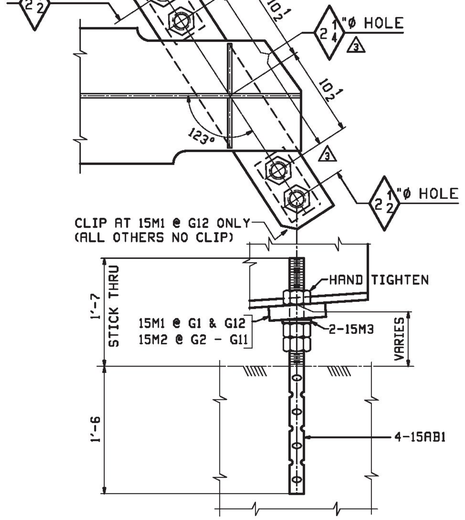

⚠2 ELEVATION VIEW - ABUT 2

TYP LINES 1 THRU 12

ANCHOR BOLT PLAN

Vermont Agency of Transportation

RECEIVED

CK'D BY VHB OK'D BY TAS

March 31, 2017

RESUBMIT _____ APPROVED YES

BY T Sumner DATE 4/11/17

SHOP DRAWING REVIEW

☒ REVIEWED AS REQUIRED BY THE CONSTRUCTION CONTRACT DOCUMENTS AND APPROVED, BUT ONLY FOR CONFORMANCE TO THE DESIGN CONCEPT OF THE WORK, AND SUBJECT TO FURTHER LIMITATIONS AND REQUIREMENTS CONTAINED IN THE CONSTRUCTION CONTRACT DOCUMENTS.

☐ REJECTED ☐ REVISE AND RESUBMIT ☐ FURNISH AS CORRECTED

CORRECTIONS OR COMMENTS MADE ON THE SHOP DRAWINGS DURING THIS REVIEW DO NOT RELIEVE CONTRACTOR FROM COMPLIANCE WITH REQUIRMENTS OF THE DRAWINGS AND SPECIFICATIONS. THIS CHECK IS ONLY FOR REVIEW OF GENERAL CONFORMANCE WITH THE DESIGN CONCEPT OF THE PROJECT AND GENERAL COMPLIANCE WITH THE INFORMATION GIVEN IN THE CONTRACT DOCUMENTS. THE CONTRACTOR IS RESPONSIBLE FOR: CONFIRMING AND CORRELATING ALL QUANTITIES AND DIMENSIONS; SELECTING FABRICATION PROCESSES AND TECHNIQUES OF CONSTRUCTION; COORDINATING HIS WORK WITH THAT OF ALL OTHER TRADES; AND PERFORMING HIS WORK IN A SAFE AND SATISFACTORY MANNER.

vhb
40 IDX Drive
Building 100, Suite 200
South Burlington, VT 05403
802.497.6100

Job Number: BRF 025-1(42)
Reviewed By: E.F. LAWES
Date: April 11, 2017

NOTE:
ELEVATION TAKEN AT THE BOTTOM OF BTM FLANGE AT THE ℄ BRG & ℄ GIRDER

REV.	DATE	REMARKS	DWN	CHK	APVL	SHOP
3	03/30 2017	APPROVAL COMMENTS	ATD	PCP		
2	03/09 2017	APPROVAL COMMENTS	ATD	PCP		
1	01/25 2017	ADD NEW DIAPH (EXTRA-TEC-3429-001) & REVISED ANCHOR MARK TO BE "15AB1" ONLY	ATD	PCP		
0						

MATERIAL: | SURFACE PREP. & PRINT: | HOLES: | SHOP BOLTS:

DESCRIPTION: ANCHOR BOLT PLAN

CASCO BAY STEEL STRUCTURES, INC.
1 WALLACE AVE. PHONE (207) 780-6722
SOUTH PORTLAND, ME 04106 FAX. (207) 780-6726
TENSOR 3429

STRUCTURE:
VT RTE 103 (MAIN STREET) OVER BLACK RIVER
BRIDGE NO. 25
ROUTE T.H.I (VT 103) CLASS 1 F.A.S. 025-1

DRAWN: ATD DATE: 12/19
CHKD: PCP DATE: 12/20

LOCATION: TOWN OF LUDLOW, WINDSOR COUNTY, VT
PROJ NO. BRF 025-1(42)
CUSTOMER: COLD RIVER BRIDGES, LLC.

JOB NO. 684
DWG NO. E2
REV. 3

Thu, Mar 30, 2017 08:31:54 AM //users/jda/2432/E2 : Rev3
PCP

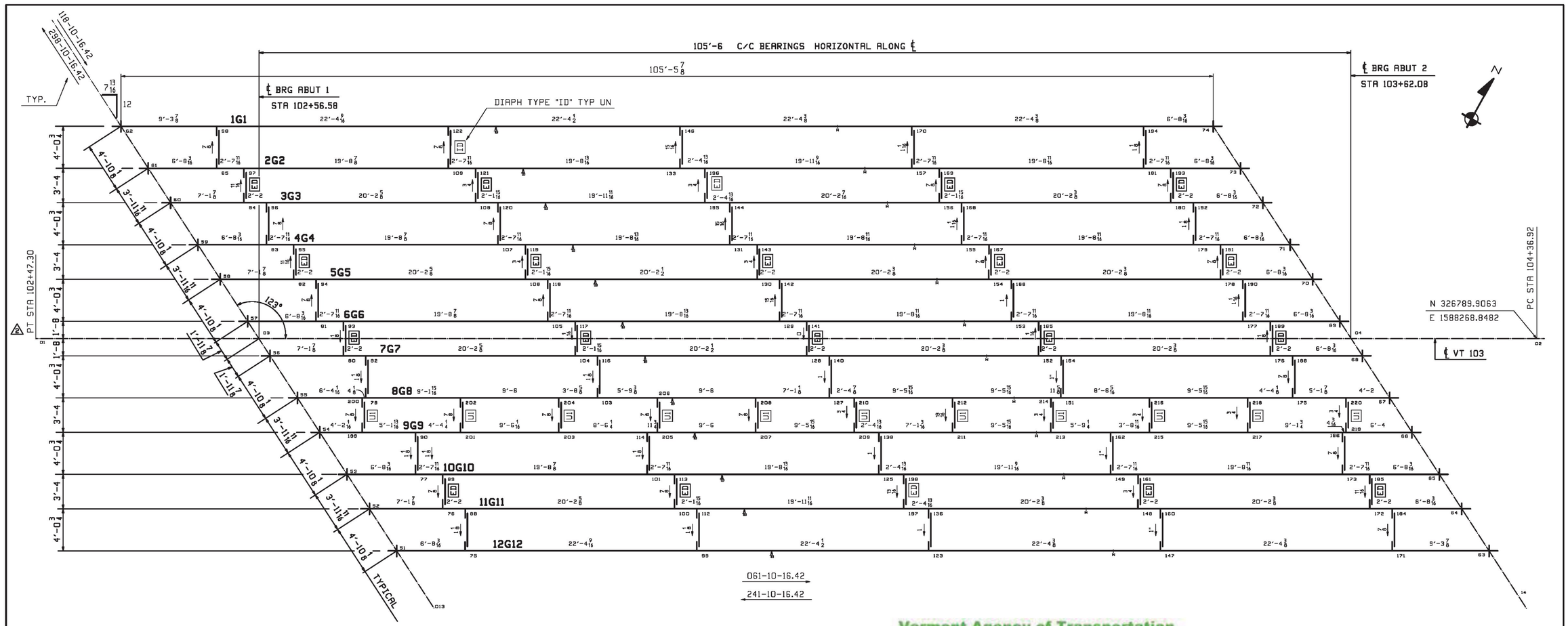

CALCULATION PLAN

	GRADES	
Line	Abut 1	Abut 2
1	0.0278	0.0187
2	0.0277	0.0187
3	0.0277	0.0187
4	0.0277	0.0186
5	0.0277	0.0186
6	0.0276	0.0185
7	0.0276	0.0185
8	0.0275	0.0185
9	0.0275	0.0185
10	0.0275	0.0184
11	0.0275	0.0184
12	0.0274	0.0183

SHOP DRAWING REVIEW

X REVIEWED AS REQUIRED BY THE CONSTRUCTION CONTRACT DOCUMENTS AND APPROVED, BUT ONLY FOR CONFORMANCE TO THE DESIGN CONCEPT OF THE WORK, AND SUBJECT TO FURTHER LIMITATIONS AND REQUIREMENTS CONTAINED IN THE CONSTRUCTION CONTRACT DOCUMENTS.

☐ REJECTED ☐ REVISE AND RESUBMIT ☐ FURNISH AS CORRECTED

CORRECTIONS OR COMMENTS MADE ON THE SHOP DRAWINGS DURING THIS REVIEW DO NOT RELIEVE CONTRACTOR FROM COMPLIANCE WITH REQUIRMENTS OF THE DRAWINGS AND SPECIFICATIONS. THIS CHECK IS ONLY FOR REVIEW OF GENERAL CONFORMANCE WITH THE DESIGN CONCEPT OF THE PROJECT AND GENERAL COMPLIANCE WITH THE INFORMATION GIVEN IN THE CONTRACT DOCUMENTS. THE CONTRACTOR IS RESPONSIBLE FOR: CONFIRMING AND CORRELATING ALL QUANTITIES AND DIMENSIONS; SELECTING FABRICATION PROCESSES AND TECHNIQUES OF CONSTRUCTION; COORDINATING HIS WORK WITH THAT OF ALL OTHER TRADES; AND PERFORMING HIS WORK IN A SAFE AND SATISFACTORY MANNER.

vhb
40 IDX Drive
Building 100, Suite 200
South Burlington, VT 05403
802.497.6100

Job Number: BRF 025-1(42)
Reviewed By: E.F. LAWES
Date: April 11, 2017

Vermont Agency of Transportation
RECEIVED
CK'D BY VHB OK'D BY TAS
March 31, 2017
RESUBMIT ____ APPROVED YES
BY T Sumner DATE 4/11/17

** NOTE **
THE PURPOSE OF THIS DRAWING IS TO COORDINATE GEOMETRIC CONTROL INFORMATION. THIS DWG IS SUBMITTED FOR INFORMATION ONLY AND IS NOT INTENDED FOR SHOP FABRICATION.

NOTES
1. LONGITUDINAL DIMENSIONS ARE SLOPING ALONG BOTT OF WEB WITH CORRECTIONS MADE FOR VERTICAL CURVE, GRADE & DL CAMBER (UN).
2. TRANSVERSE DIMENSIONS ARE IN A HORIZ. PLANE (UN).
3. DROP ARROW POINTS TOWARDS LOW END OF MEMBER.
4. ENDS OF GIRDERS AND BRG. STIFF'S ARE VERTICAL AFTER DL ROTATION.
5. DIAPH. STIFF, INT STIFF ARE NORMAL TO GRADE.
6. BOTT PT NUMBERS =TOP PT NUMBERS + 300.
7. FOR LAYOUTS SEE "TD" SHEETS.
8. DIAPHRAGM DROPS ARE CALCULATED IN THEIR FINAL POSITION.
9. COMBINE DIAPHRAGM CONN'S FOR DIFFERENCES IN DROPS OF ± 1/8.

REV.	DATE	REMARKS	DWN	CHK	APVL	SHOP
2	03/08 2017	APPROVAL COMMENTS	ATD	PCP		
1	01/04 2017	ADD NEW DIAPHRAGMS (EXTRA-TEC-3429-001)	ATD	PCP		
0						

MATERIAL: | SURFACE PREP. & PRINT: | HOLES: AS NOTED | SHOP BOLTS: AS NOTED

DESCRIPTION: CALCULATION PLAN

CASCO BAY STEEL STRUCTURES, INC.
1 WALLACE AVE.
SOUTH PORTLAND, ME 04106
PHONE (207) 780-6722
FAX. (207) 780-6726
TENSAR 3429

STRUCTURE:
VT RTE 103 (MAIN STREET) OVER BLACK RIVER
BRIDGE NO. 25
ROUTE T.H.1 (VT 103) CLASS 1 F.A.S. 025-1

DRAWN: WJG DATE: 11/09
CHKD: WL DATE: 11/10/16

LOCATION: TOWN OF LUDLOW, WINDSOR COUNTY, VT
JOB NO. 684
DWG NO. WS1
PROJ NO. BRF 025-1(42)
CUSTOMER: COLD RIVER BRIDGES, LLC.
REV. 2

PCP Mon, Nov 13, 2017 03:48:18 PM //users/jobs/3429/WS1 : Rev2

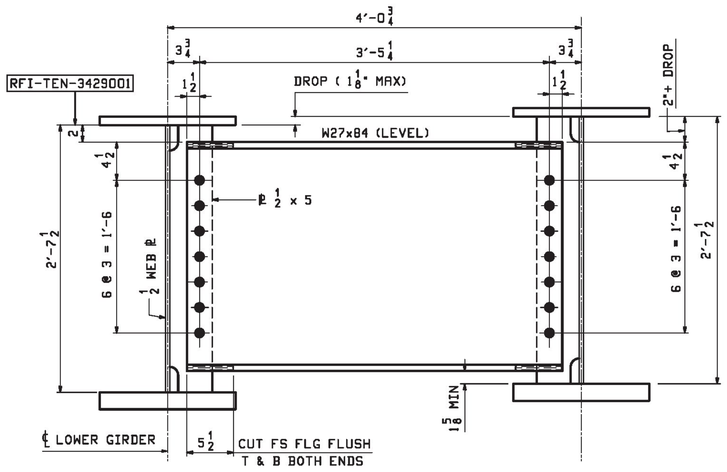

TYPICAL INT. DIAPH.~ ID

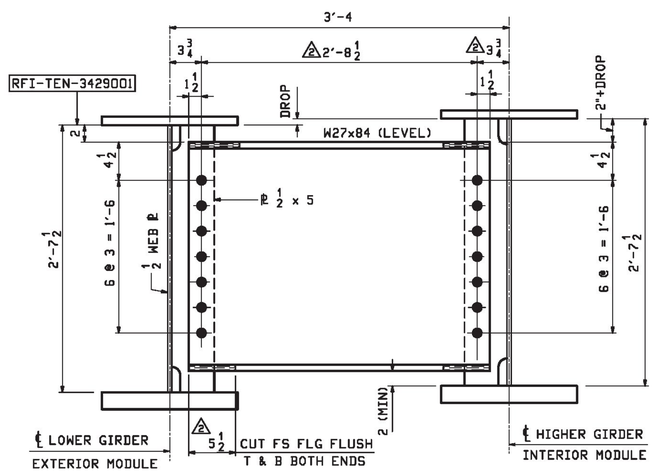

TYPICAL EXT. DIAPH.~ED

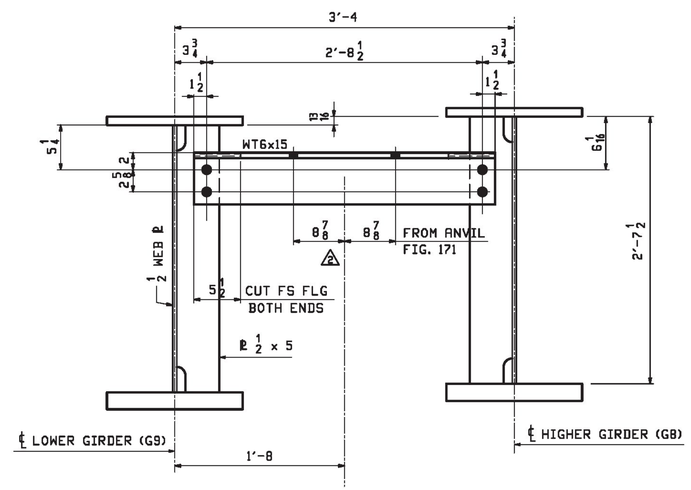

TYP. WATER MAIN SUPPORT ~ U1

RE: DES 26 OF 73

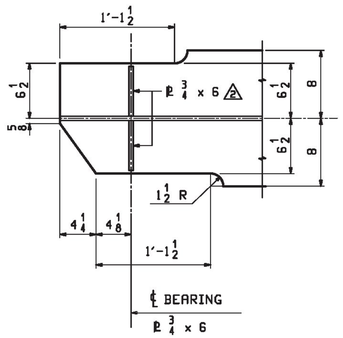

TYPICAL GIRDER END DETAIL

Vermont Agency of Transportation

RECEIVED

CK'D BY VHB OK'D BY TAS

March 31, 2017

RESUBMIT ____ APPROVED YES

BY T Sumner DATE 4/11/17

SHOP DRAWING REVIEW

☒ REVIEWED AS REQUIRED BY THE CONSTRUCTION CONTRACT DOCUMENTS AND APPROVED, BUT ONLY FOR CONFORMANCE TO THE DESIGN CONCEPT OF THE WORK, AND SUBJECT TO FURTHER LIMITATIONS AND REQUIREMENTS CONTAINED IN THE CONSTRUCTION CONTRACT DOCUMENTS.

☐ REJECTED ☐ REVISE AND RESUBMIT ☐ FURNISH AS CORRECTED

CORRECTIONS OR COMMENTS MADE ON THE SHOP DRAWINGS DURING THIS REVIEW DO NOT RELIEVE CONTRACTOR FROM COMPLIANCE WITH REQUIRMENTS OF THE DRAWINGS AND SPECIFICATIONS. THIS CHECK IS ONLY FOR REVIEW OF GENERAL CONFORMANCE WITH THE DESIGN CONCEPT OF THE PROJECT AND GENERAL COMPLIANCE WITH THE INFORMATION GIVEN IN THE CONTRACT DOCUMENTS. THE CONTRACTOR IS RESPONSIBLE FOR: CONFIRMING AND CORRELATING ALL QUANTITIES AND DIMENSIONS; SELECTING FABRICATION PROCESSES AND TECHNIQUES OF CONSTRUCTION; COORDINATING HIS WORK WITH THAT OF ALL OTHER TRADES; AND PERFORMING HIS WORK IN A SAFE AND SATISFACTORY MANNER.

vhb
40 IDX Drive
Building 100, Suite 200
South Burlington, VT 05403
802.497.6100

Job Number: BRF 025-1(42)
Reviewed By: E.F. LAWES
Date: April 11, 2017

NOTES:
HOLES: 15/16 Ø (UN)
BOLTS: 7/8 Ø (UN)
MATL: AASHTO M270-50 (METALIZED)

** NOTE **
THE PURPOSE OF THIS DRAWING IS TO COORDINATE GEOMETRIC CONTROL INFORMATION AND CONNECTION SPACING. THIS DWG IS SUBMITTED FOR INFORMATION ONLY & IS NOT INTENDED FOR SHOP FABRICATION. DETAIL DWGS WILL SHOW ALL WELDING AND DIMENSIONS REQ'D FOR FABRICATION.

REV.	DATE	REMARKS	DWN	CHK	APVL	SHOP
2	03/08 2017	APPROVAL COMMENTS	ATD	PCP		
1	01/09 2017	REMOVED FIELD DRILL NOTE & ADJUSTED DROP IN EXT DIAPH (EXTRA-TEC-3429-001)	ATD	PCP		
0						

MATERIAL: | SURFACE PREP. & PRINT: | HOLES: AS NOTED | SHOP BOLTS:

DESCRIPTION: TYPICAL LAYOUTS

CASCO BAY STEEL STRUCTURES, INC.
1 WALLACE AVE. SOUTH PORTLAND, ME 04106
PHONE (207) 780-6722 FAX. (207) 780-6726
TENSOR 3429

STRUCTURE:
VT RTE 103 (MAIN STREET) OVER BLACK RIVER
BRIDGE NO. 25
ROUTE T.H.1 (VT 103) CLASS 1 F.A.S. 025-1

DRAWN: WJG DATE: 11/09
CHKD: WL DATE: 11/10/16

LOCATION: TOWN OF LUDLOW, WINDSOR COUNTY, VT
PROJ NO. BRF 025-1(42)
CUSTOMER: COLD RIVER BRIDGES, LLC.

JOB NO. 684
DWG NO. TD1
REV. 2

PCP Mon, Nov 13, 2017 03:44:44 PM /users/jobs/3429/TD1 : Rev2

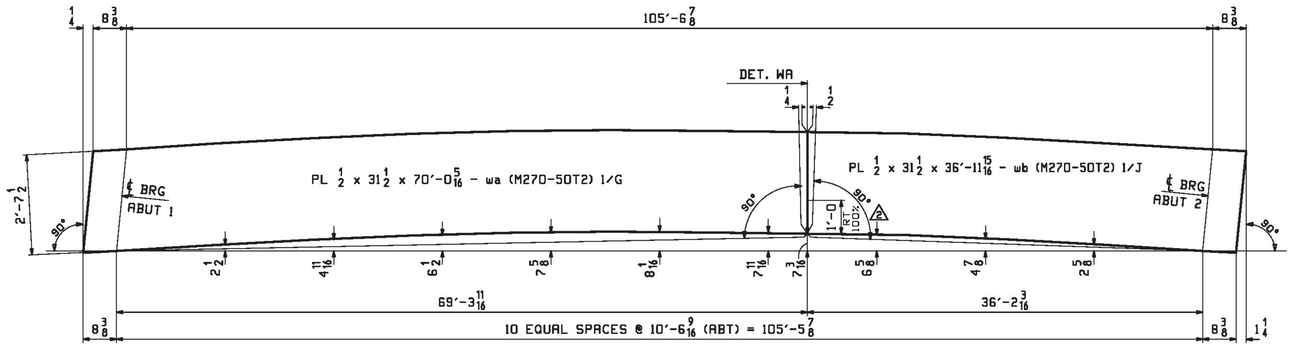

CAMBER DIAGRAM FOR 1G1, 2G2, 3G3, 4G4, 5G5, 6G6, 7G7, 8G8, 9G9, 10G10, 11G11 & 12G12

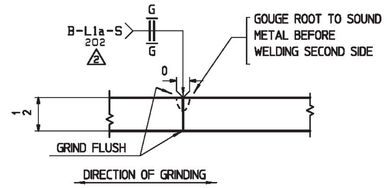

WEB PLATE SPLICE DETAIL "WA"

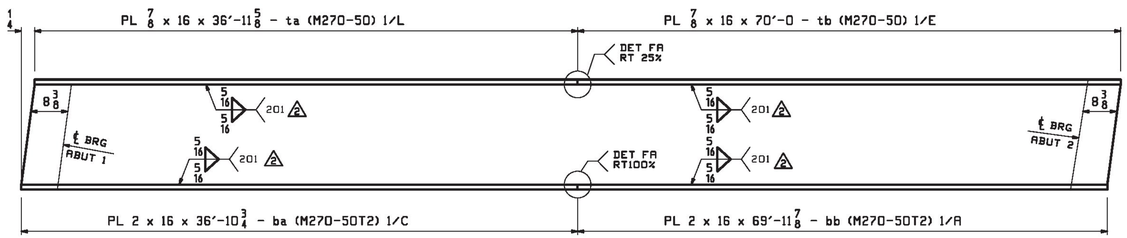

FLANGE DIAGRAM FOR 1G1, 2G2, 3G3, 4G4, 5G5, 6G6, 7G7, 8G8, 9G9, 10G10, 11G11 & 12G12

FLG THK	"A"
7/8	1/4
2	1/2

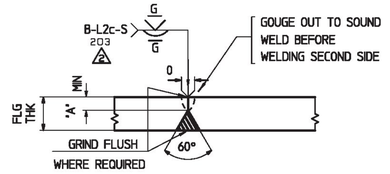

FLANGE PLATE SPLICE DETAIL "FA"

Vermont Agency of Transportation

RECEIVED

CK'D BY VHB OK'D BY TAS

March 31, 2017

RESUBMIT _____ APPROVED YES

BY T Sumner DATE 4/11/17

SHOP DRAWING REVIEW

X REVIEWED AS REQUIRED BY THE CONSTRUCTION CONTRACT DOCUMENTS AND APPROVED, BUT ONLY FOR CONFORMANCE TO THE DESIGN CONCEPT OF THE WORK, AND SUBJECT TO FURTHER LIMITATIONS AND REQUIREMENTS CONTAINED IN THE CONSTRUCTION CONTRACT DOCUMENTS.

☐ REJECTED ☐ REVISE AND RESUBMIT ☐ FURNISH AS CORRECTED

CORRECTIONS OR COMMENTS MADE ON THE SHOP DRAWINGS DURING THIS REVIEW DO NOT RELIEVE CONTRACTOR FROM COMPLIANCE WITH REQUIRMENTS OF THE DRAWINGS AND SPECIFICATIONS. THIS CHECK IS ONLY FOR REVIEW OF GENERAL CONFORMANCE WITH THE DESIGN CONCEPT OF THE PROJECT AND GENERAL COMPLIANCE WITH THE INFORMATION GIVEN IN THE CONTRACT DOCUMENTS. THE CONTRACTOR IS RESPONSIBLE FOR: CONFIRMING AND CORRELATING ALL QUANTITIES AND DIMENSIONS; SELECTING FABRICATION PROCESSES AND TECHNIQUES OF CONSTRUCTION; COORDINATING HIS WORK WITH THAT OF ALL OTHER TRADES; AND PERFORMING HIS WORK IN A SAFE AND SATISFACTORY MANNER.

vhb
40 IDX Drive
Building 100, Suite 200
South Burlington, VT 05403
802.497.6100

Job Number: BRF 025-1(42)
Reviewed By: E.F. LAWES
Date: April 11, 2017

REV.	DATE	REMARKS	DWN	CHK	APVL	SHOP
2	03/08 2017	APPROVAL COMMENTS	ATD	PCP		
1	12/19/16	CORRECTED DIMENSION	ATD	PCP		
0						

MATERIAL: | SURFACE PREP. & PRINT: | HOLES: | SHOP BOLTS:

DESCRIPTION: WEB & FLG CUTTING DIAGRAM

CASCO BAY STEEL STRUCTURES, INC.
1 WALLACE AVE. PHONE (207) 780-6722
SOUTH PORTLAND, ME 04106 FAX. (207) 780-6726
TENSOR 3429

STRUCTURE:
VT RTE 103 (MAIN STREET) OVER BLACK RIVER
BRIDGE NO. 25
ROUTE T.H.1 (VT 103) CLASS 1 F.A.S. 025-1

DRAWN: ATD DATE: 11/12
CHKD: PCP DATE: 12/15

LOCATION: TOWN OF LUDLOW, WINDSOR COUNTY, VT
PROJ NO. BRF 025-1(42)
CUSTOMER: COLD RIVER BRIDGES, LLC.

JOB NO. 684
DWG NO. C1
REV. 2

PCP Mon, Nov 13, 2017 03:45:03 PM //users/jobs/2685/C1.dwg

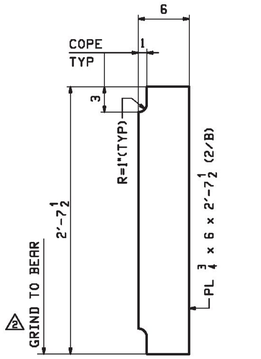

48 ~ BRG STIFFENER ~ x1a

ABUT. 1 & 2

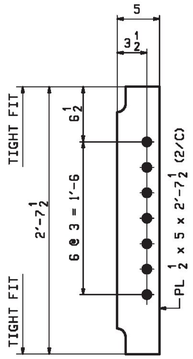

55 ~ CONN STIFFENER ~ x1b

TYPE ID & ED LOW GIRD

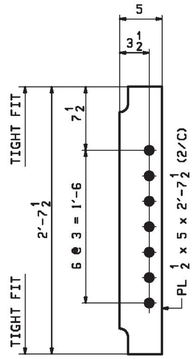

30 ~ CONN STIFFENER ~ x1c

TYPE ID HIGH GIRD
(DROP 7/8 - 1 1/8)

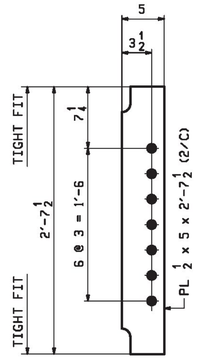

15 ~ CONN STIFFENER ~ x1d

TYPE ED HIGH GIRD

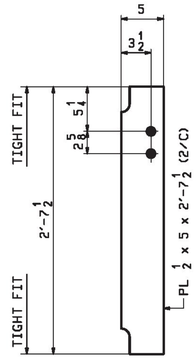

11 ~ CONN STIFFENER ~ x1f

TYPE UI LOW GIRD

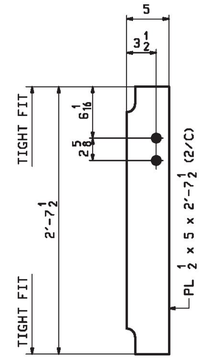

11 ~ CONN STIFFENER ~ x1g

TYPE UI HIGH GIRD

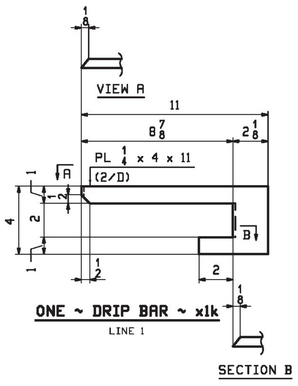

ONE ~ DRIP BAR ~ x1k

LINE 1

SECTION B

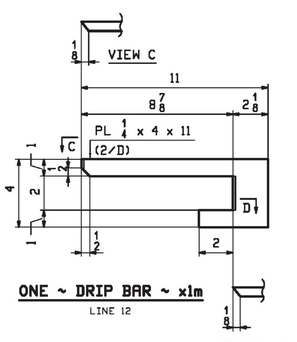

ONE ~ DRIP BAR ~ x1m

LINE 12

SECTION D

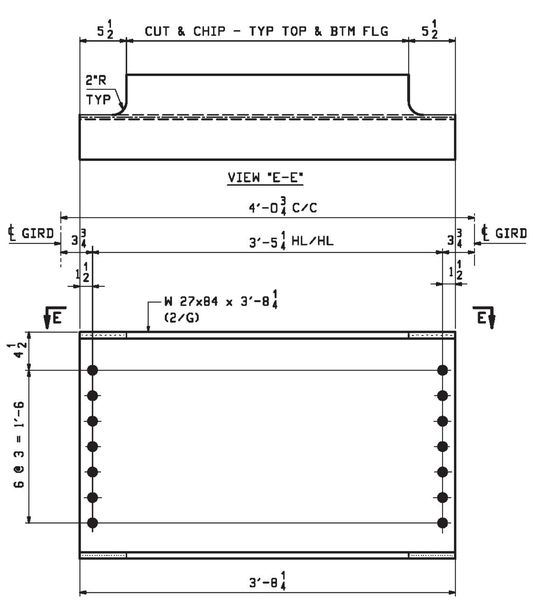

30 ~ INT. DIAPH ~ x1n

TYPE ID

Vermont Agency of Transportation

RECEIVED

CK'D BY VHB OK'D BY TAS

March 31, 2017

RESUBMIT _____ APPROVED YES

BY T Sumner DATE 4/11/17

NOTE:
FOR GENERAL NOTES SEE DRAWING GN1.

SHOP DRAWING REVIEW

X REVIEWED AS REQUIRED BY THE CONSTRUCTION CONTRACT DOCUMENTS AND APPROVED, BUT ONLY FOR CONFORMANCE TO THE DESIGN CONCEPT OF THE WORK, AND SUBJECT TO FURTHER LIMITATIONS AND REQUIREMENTS CONTAINED IN THE CONSTRUCTION CONTRACT DOCUMENTS.

☐ REJECTED ☐ REVISE AND RESUBMIT ☐ FURNISH AS CORRECTED

CORRECTIONS OR COMMENTS MADE ON THE SHOP DRAWINGS DURING THIS REVIEW DO NOT RELIEVE CONTRACTOR FROM COMPLIANCE WITH REQUIRMENTS OF THE DRAWINGS AND SPECIFICATIONS. THIS CHECK IS ONLY FOR REVIEW OF GENERAL CONFORMANCE WITH THE DESIGN CONCEPT OF THE PROJECT AND GENERAL COMPLIANCE WITH THE INFORMATION GIVEN IN THE CONTRACT DOCUMENTS. THE CONTRACTOR IS RESPONSIBLE FOR: CONFIRMING AND CORRELATING ALL QUANTITIES AND DIMENSIONS; SELECTING FABRICATION PROCESSES AND TECHNIQUES OF CONSTRUCTION; COORDINATING HIS WORK WITH THAT OF ALL OTHER TRADES; AND PERFORMING HIS WORK IN A SAFE AND SATISFACTORY MANNER.

vhb
40 IDX Drive
Building 100, Suite 200
South Burlington, VT 05403
802.497.6100

Job Number: BRF 025-1(42)
Reviewed By: E.F. LAWES
Date: April 11, 2017

REV.	DATE	REMARKS	DWN	CHK	APVL	SHOP
2	03/08 2017	APPROVAL COMMENTS	ATD	PCP		
1	01/09 2017	ADD HOLES TO STIFFS & REV QTY (EXTRA-TEC-3429-DDD)	ATD	PCP		
0						

MATERIAL:	SURFACE PREP. & PRINT:	HOLES:	SHOP BOLTS:
M270-50	SEE DWG GN1	15/16"Ø	NONE

DESCRIPTION: STANDARD DETAILS

CASCO BAY STEEL STRUCTURES — CASCO BAY STEEL STRUCTURES, INC.
1 WALLACE AVE. SOUTH PORTLAND, ME 04106
PHONE (207) 780-6722 FAX. (207) 780-6726
TENSOR 3429

STRUCTURE:
VT RTE 103 (MAIN STREET) OVER BLACK RIVER
BRIDGE NO. 25
ROUTE T.H.1 (VT 103) CLASS 1 F.A.S. 025-1

DRAWN: ATD DATE: 12/06
CHKD: PCP DATE: 12/13

LOCATION:	TOWN OF LUDLOW, WINDSOR COUNTY, VT	JOB NO.	DWG NO.
PROJ NO.	BRF 025-1(42)	684	X1
CUSTOMER:	COLD RIVER BRIDGES, LLC.		REV. 2

Mon, Mar 13, 2017 03:45:03 PM /users/jobs/3429/x1 - Rev2
PCP

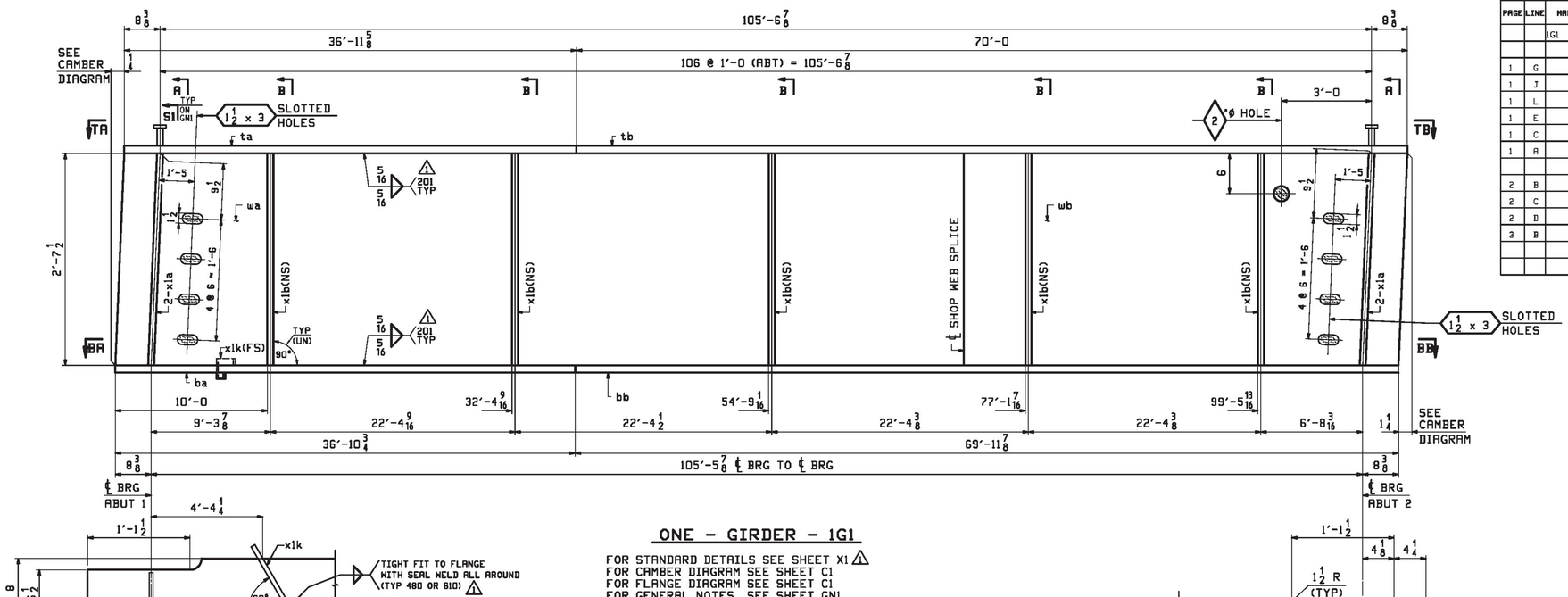

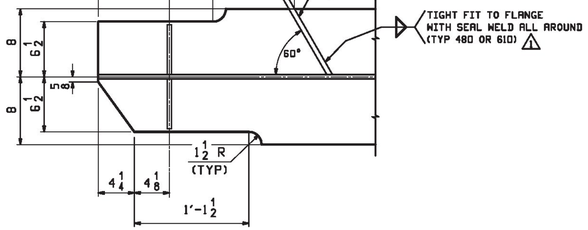

SECTION BA (AS SHOWN)
VIEW TA (SIMILAR)

ONE - GIRDER - 1G1

FOR STANDARD DETAILS SEE SHEET X1
FOR CAMBER DIAGRAM SEE SHEET C1
FOR FLANGE DIAGRAM SEE SHEET C1
FOR GENERAL NOTES SEE SHEET GN1
T2 DENOTES MATERIAL SUBJECT TO CHARPY V-NOTCH TESTING.

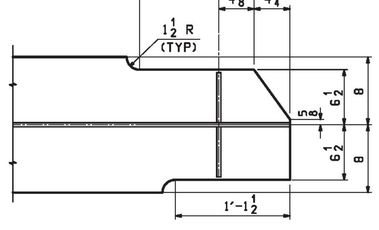

SECTION BB (AS SHOWN)
VIEW TB (SIMILAR)

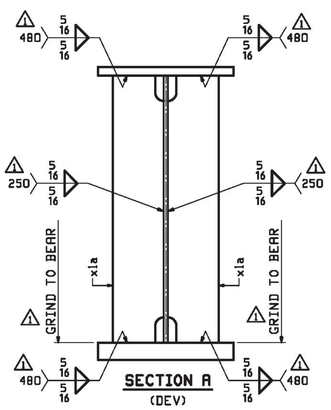

SECTION A (DEV)

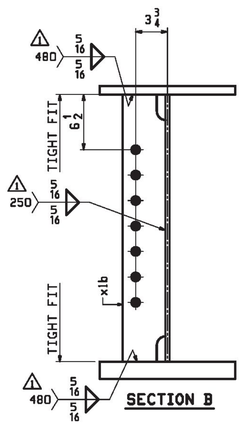

SECTION B

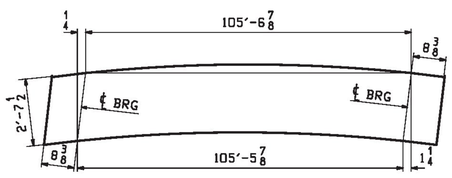

ORIENTATION DIAGRAM

Vermont Agency of Transportation
RECEIVED
CK'D BY VHB OK'D BY TAS
March 31, 2017
RESUBMIT ____ APPROVED YES
BY T Sumner DATE 4/11/17

ABM INFO PAGE	ABM INFO LINE	SHIP MARK	QTY	MARK	MATERIAL	LENGTH FT	LENGTH INCHES	REMARKS	WT	PROCUREMENT NOTES
		1G1	1		GIRDER				23170	
1	G		1	wa	PL 1/2 x 31 1/2	70	0 5/16	M270-50T2	3753	
1	J		1	wb	PL 1/2 x 31 1/2	36	11 15/16	M270-50T2	1983	
1	L		1	ta	PL 7/8 x 16	36	11 5/8		1761	
1	E		1	tb	PL 7/8 x 16	70	0	M270-50T2	3335	
1	C		1	ba	PL 2 x 16	36	10 3/4	M270-50T2	4018	
1	A		1	bb	PL 2 x 16	69	11 7/8	M270-50T2	7621	
2	B		4	x1a	PL 3/4 x 6	2	7 1/2	(MIE)	40	
2	C		5	x1b	PL 1/2 x 5	2	7 1/2		22	
2	D		1	x1k	PL 1/4 x 4	0	11		3	
3	B		321		STUD 7/8 ø	0	7	A108	1	

BILL OF MATERIAL

JOB NO. 684 | DRAWING NO. 1 | REV. 1

SHOP DRAWING REVIEW

REVIEWED AS REQUIRED BY THE CONSTRUCTION CONTRACT DOCUMENTS AND APPROVED, BUT ONLY FOR CONFORMANCE TO THE DESIGN CONCEPT OF THE WORK, AND SUBJECT TO FURTHER LIMITATIONS AND REQUIREMENTS CONTAINED IN THE CONSTRUCTION CONTRACT DOCUMENTS.
☐ REVISE AND RESUBMIT
☐ REJECTED
☐ FURNISH AS CORRECTED

CORRECTIONS OR COMMENTS MADE ON THE SHOP DRAWINGS DURING THIS REVIEW DO NOT RELIEVE CONTRACTOR FROM COMPLIANCE WITH REQUIRMENTS OF THE DRAWINGS AND SPECIFICATIONS. THIS CHECK IS ONLY FOR REVIEW OF GENERAL CONFORMANCE WITH THE DESIGN CONCEPT OF THE PROJECT AND GENERAL COMPLIANCE WITH THE INFORMATION GIVEN IN THE CONTRACT DOCUMENTS. THE CONTRACTOR IS RESPONSIBLE FOR: CONFIRMING AND CORRELATING ALL QUANTITIES AND DIMENSIONS; SELECTING FABRICATION PROCESSES AND TECHNIQUES OF CONSTRUCTION; COORDINATING HIS WORK WITH THAT OF ALL OTHER TRADES; AND PERFORMING HIS WORK IN A SAFE AND SATISFACTORY MANNER.

Job Number: BRF 025-1(42)
Reviewed By: E.F. LAWES
Date: April 11, 2017

vhb
40 IDX Drive
Building 100, Suite 200
South Burlington, VT 05403
802.497.6100

REV.	DATE	REMARKS	DWN	CHK	APVL	SHOP
1	03/08 2017	APPROVAL COMMENTS	ATD	PCP		
0						

MATERIAL:	SURFACE PREP. & PAINT:	HOLES:	SHOP BOLTS:
M270-50 (UN)	SEE DWG GN1	13/16"ø (UN)	NONE

DESCRIPTION: GIRDER - 1G1

CASCO BAY STEEL STRUCTURES, INC.
1 WALLACE AVE. SOUTH PORTLAND, ME 04106
PHONE (207) 780-6722 FAX. (207) 780-6726
TENSOR 3429

STRUCTURE:	DRAWN:	DATE:
VT RTE 103 (MAIN STREET) OVER BLACK RIVER BRIDGE NO. 25 ROUTE T.H.1 (VT 103) CLASS 1 F.A.S. 025-1	ATD	12/06
	CHKD: PCP	DATE: 12/13
LOCATION: TOWN OF LUDLOW, WINDSOR COUNTY, VT	JOB NO. 684	DWG NO. 1
PROJ NO. BRF 025-1(42)		REV. 1
CUSTOMER: COLD RIVER BRIDGES, LLC.		

PCP Mon, Mar 13, 2017 02:45:41 PM //users/jobs/2425/1.1.Rev1

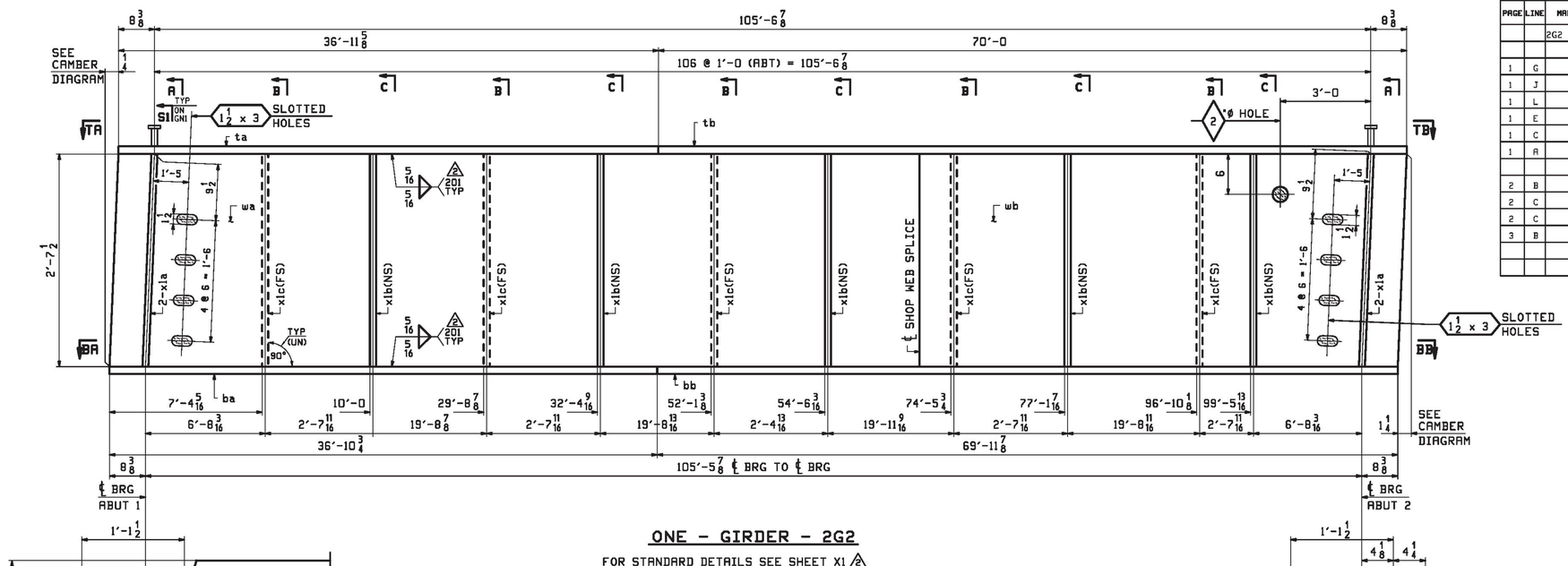

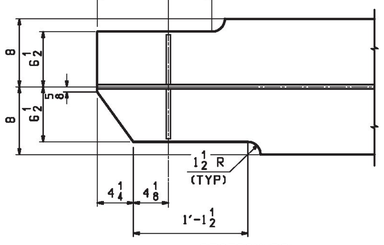

SECTION BA (AS SHOWN)
VIEW TA (SIMILAR)

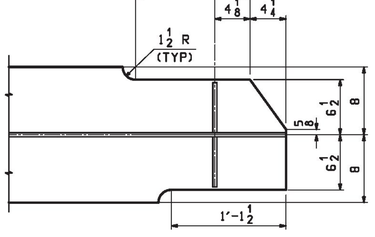

SECTION BB (AS SHOWN)
VIEW TB (SIMILAR)

ONE - GIRDER - 2G2

FOR STANDARD DETAILS SEE SHEET X1 2
FOR CAMBER DIAGRAM SEE SHEET C1
FOR FLANGE DIAGRAM SEE SHEET C1
FOR GENERAL NOTES SEE SHEET GN1
T2 DENOTES MATERIAL SUBJECT TO CHARPY V-NOTCH TESTING

Vermont Agency of Transportation
RECEIVED
CK'D BY VHB OK'D BY TAS
March 31, 2017
RESUBMIT ____ APPROVED YES
BY T Sumner DATE 4/11/17

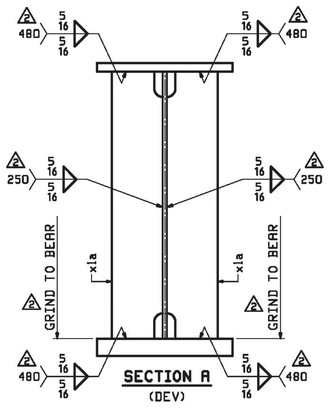

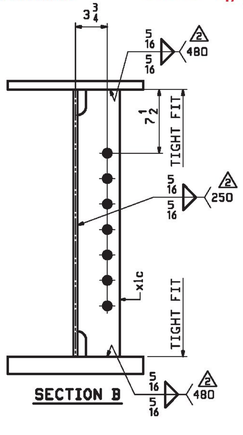

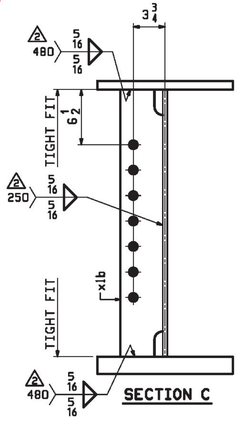

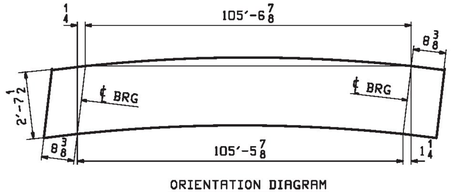

ORIENTATION DIAGRAM

ABM INFO PAGE	ABM INFO LINE	SHIP MARK	QTY	MARK	MATERIAL	LENGTH FT	LENGTH INCHES	REMARKS	WT	PROCUREMENT NOTES
		2G2	1		GIRDER				23279	
1	G		1	wa	PL 1/2 x 31 1/2	70	0 5/16	M270-50T2	3753	
1	J		1	wb	PL 1/2 x 31 1/2	36	11 15/16	M270-50T2	1983	
1	L		1	ta	PL 7/8 x 16	36	11 5/8		1761	
1	E		1	tb	PL 7/8 x 16	70	0	M270-50T2	3335	
1	C		1	ba	PL 2 x 16	36	10 3/4	M270-50T2	4018	
1	A		1	bb	PL 2 x 16	69	11 7/8	M270-50T2	7621	
2	B		4	x1a	PL 3/8 x 6	2	7 1/2	(MIE)	40	
2	C		5	x1b	PL 1/2 x 5	2	7 1/2		22	
2	C		5	x1c	PL 1/2 x 5	2	7 1/2		22	
3	B		321		STUD 7/8 ø	0	7	A108	1	

BILL OF MATERIAL

JOB NO. 684 | DRAWING NO. 2 | REV. 2

SHOP DRAWING REVIEW

X REVIEWED AS REQUIRED BY THE CONSTRUCTION CONTRACT DOCUMENTS AND APPROVED, BUT ONLY FOR CONFORMANCE TO THE DESIGN CONCEPT OF THE WORK, AND SUBJECT TO FURTHER LIMITATIONS AND REQUIREMENTS CONTAINED IN THE CONSTRUCTION CONTRACT DOCUMENTS.

☐ REJECTED ☐ REVISE AND RESUBMIT ☐ FURNISH AS CORRECTED

CORRECTIONS OR COMMENTS MADE ON THE SHOP DRAWINGS DURING THIS REVIEW DO NOT RELIEVE CONTRACTOR FROM COMPLIANCE WITH REQUIREMENTS OF THE DRAWINGS AND SPECIFICATIONS. THIS CHECK IS ONLY FOR REVIEW OF GENERAL CONFORMANCE WITH THE DESIGN CONCEPT OF THE PROJECT AND GENERAL COMPLIANCE WITH THE INFORMATION GIVEN IN THE CONTRACT DOCUMENTS. THE CONTRACTOR IS RESPONSIBLE FOR: CONFIRMING AND CORRELATING ALL QUANTITIES AND DIMENSIONS; SELECTING FABRICATION PROCESSES AND TECHNIQUES OF CONSTRUCTION; COORDINATING HIS WORK WITH THAT OF ALL OTHER TRADES; AND PERFORMING HIS WORK IN A SAFE AND SATISFACTORY MANNER.

Job Number: BRF 025-1(42)
Reviewed By: E.F. LAWES
Date: April 11, 2017

vhb
40 IDX Drive
Building 100, Suite 200
South Burlington, VT 05403
802.497.6100

REV.	DATE	REMARKS	DWN	CHK	APVL	SHOP
2	03/08 2017	APPROVAL COMMENTS	ATD	PCP		
1	01/05 2017	ADD STIFFENERS (EXTRA-TEC-3429-001)	ATD	PCP		
0						

MATERIAL:	SURFACE PREP. & PAINT:	HOLES:	SHOP BOLTS:
M270-50 (UN)	SEE DWG GN1	15/16"ø (UN)	NONE

DESCRIPTION: GIRDER - 2G2

CASCO BAY STEEL STRUCTURES, INC.
1 WALLACE AVE. PHONE (207) 780-6722
SOUTH PORTLAND, ME 04106 FAX. (207) 780-6726
TENSOR 3429

STRUCTURE:
VT RTE 103 (MAIN STREET) OVER BLACK RIVER
BRIDGE NO. 25
ROUTE T.H.1 (VT 103) CLASS 1 F.A.S. 025-1

		DRAWN: ATD	DATE: 12/07
		CHKD: PCP	DATE: 12/13
LOCATION:	TOWN OF LUDLOW, WINDSOR COUNTY, VT	JOB NO. 684	DWG NO. 2
PROJ NO.	BRF 025-1(42)		REV. 2
CUSTOMER:	COLD RIVER BRIDGES, LLC.		

PCP Mon, Mar 13, 2017 01:45:18 PM /users/john/1457/2 : Rev2

ABM INFO		SHIP	BILL OF MATERIAL					JOB NO.	DRAWING NO.	REV.
								684	3	2
PAGE	LINE	MARK	QTY	MARK	MATERIAL	LENGTH FT	LENGTH INCHES	REMARKS	WT	PROCUREMENT NOTES
		3G3	1		GIRDER				23279	
1	G		1	wa	PL $\frac{1}{2}$x31$\frac{1}{2}$	70	$0\frac{5}{16}$	M270-50T2	3753	
1	J		1	wb	PL $\frac{1}{2}$x31$\frac{1}{2}$	36	$11\frac{15}{16}$	M270-50T2	1983	
1	L		1	ta	PL $\frac{7}{8}$x16	36	$11\frac{5}{8}$		1761	
1	E		1	tb	PL $\frac{7}{8}$x16	70	0	M270-50T2	3335	
1	C		1	ba	PL 2x16	36	$10\frac{3}{4}$	M270-50T2	4018	
1	A		1	bb	PL 2x16	69	$11\frac{7}{8}$	M270-50T2	7621	
2	B		4	x1a	PL $\frac{3}{4}$x6	2	$7\frac{1}{2}$	(MIE)	40	
2	C		5	x1b	PL $\frac{1}{2}$x5	2	$7\frac{1}{2}$		22	
2	C		5	x1d	PL $\frac{1}{2}$x5	2	$7\frac{1}{2}$		22	
3	B		321		STUD $\frac{7}{8}\phi$	0	7	A108	1	

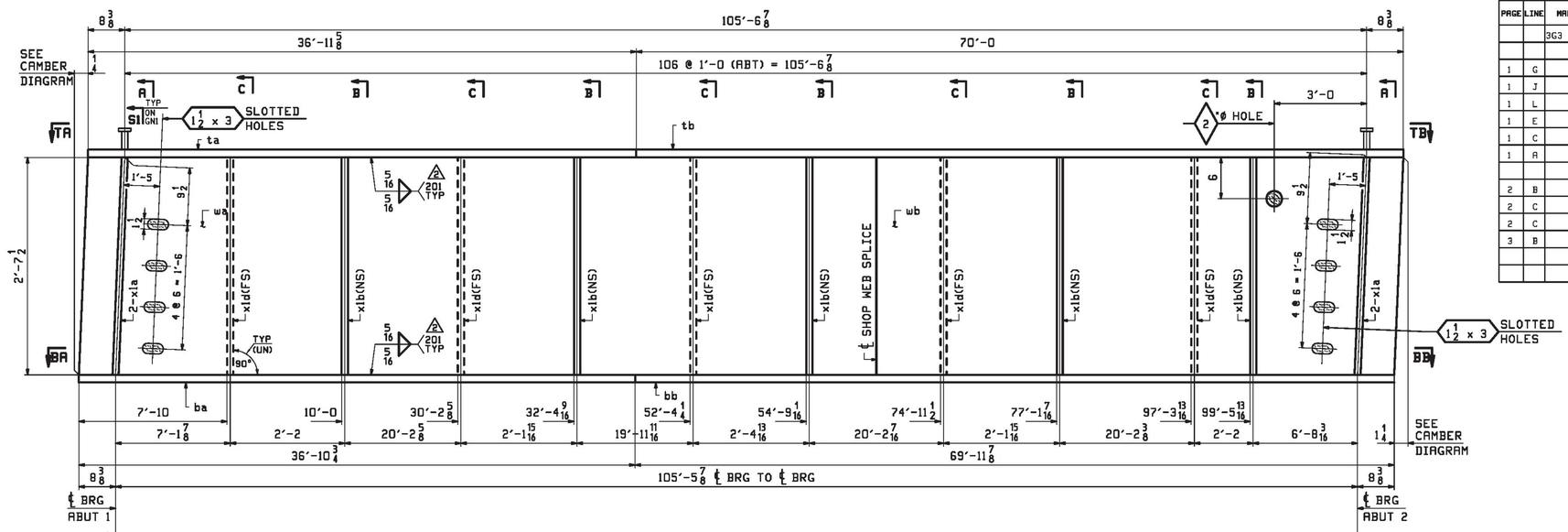

ONE - GIRDER - 3G3

FOR STANDARD DETAILS SEE SHEET X1 2
FOR CAMBER DIAGRAM SEE SHEET C1
FOR FLANGE DIAGRAM SEE SHEET C1
FOR GENERAL NOTES SEE SHEET GN1
T2 DENOTES MATERIAL SUBJECT TO CHARPY V-NOTCH TESTING

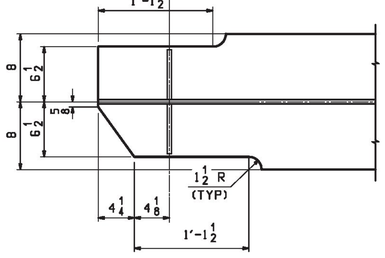

SECTION BA (AS SHOWN)
VIEW TA (SIMILAR)

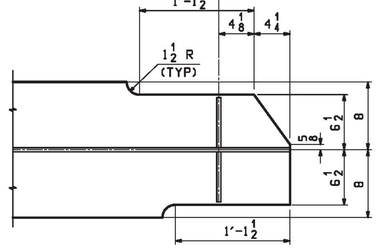

SECTION BB (AS SHOWN)
VIEW TB (SIMILAR)

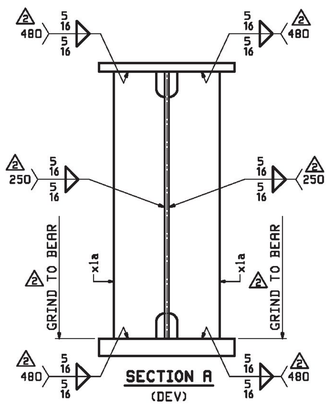

SECTION A (DEV)

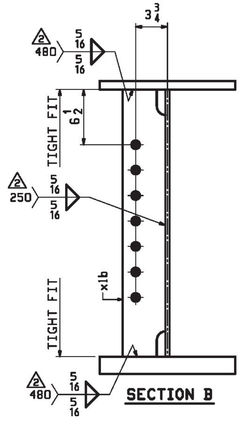

SECTION B

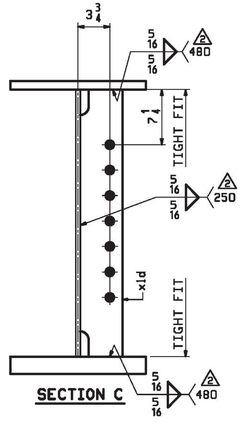

SECTION C

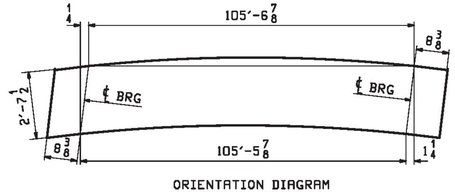

ORIENTATION DIAGRAM

Vermont Agency of Transportation
RECEIVED
CK'D BY VHB OK'D BY TAS
March 31, 2017
RESUBMIT _____ APPROVED YES
BY T Sumner DATE 4/11/17

SHOP DRAWING REVIEW

X REVIEWED AS REQUIRED BY THE CONSTRUCTION CONTRACT DOCUMENTS AND APPROVED, BUT ONLY FOR CONFORMANCE TO THE DESIGN CONCEPT OF THE WORK, AND SUBJECT TO FURTHER LIMITATIONS AND REQUIREMENTS CONTAINED IN THE CONSTRUCTION CONTRACT DOCUMENTS.
☐ REVISE AND RESUBMIT
☐ REJECTED
☐ FURNISH AS CORRECTED

CORRECTIONS OR COMMENTS MADE ON THE SHOP DRAWINGS DURING THIS REVIEW DO NOT RELIEVE CONTRACTOR FROM COMPLIANCE WITH REQUIRMENTS OF THE DRAWINGS AND SPECIFICATIONS. THIS CHECK IS ONLY FOR REVIEW OF GENERAL CONFORMANCE WITH THE DESIGN CONCEPT OF THE PROJECT AND GENERAL COMPLIANCE WITH THE INFORMATION GIVEN IN THE CONTRACT DOCUMENTS. THE CONTRACTOR IS RESPONSIBLE FOR: CONFIRMING AND CORRELATING ALL QUANTITIES AND DIMENSIONS; SELECTING FABRICATION PROCESSES AND TECHNIQUES OF CONSTRUCTION; COORDINATING HIS WORK WITH THAT OF ALL OTHER TRADES; AND PERFORMING HIS WORK IN A SAFE AND SATISFACTORY MANNER.

Job Number: BRF 025-1(42)
Reviewed By: E.F. LAWES
Date: April 11, 2017

vhb
40 IDX Drive
Building 100, Suite 200
South Burlington, VT 05403
802.497.6100

REV.	DATE	REMARKS	DWN	CHK	APVL	SHOP
2	03/08 2017	APPROVAL COMMENTS	ATD	PCP		
1	01/05 2017	ADD STIFFENERS (EXTRA-TEC-3429-001)	ATD	PCP		
0						

MATERIAL:	SURFACE PREP. & PAINT:	HOLES:	SHOP BOLTS:
M270-50 (UN)	SEE DWG GN1	$\frac{13}{16}$"ø (UN)	NONE

DESCRIPTION: GIRDER - 3G3

CASCO BAY STEEL STRUCTURES, INC.
1 WALLACE AVE. SOUTH PORTLAND, ME 04106
PHONE (207) 780-6722 FAX. (207) 780-6726
TENSOR 3429

STRUCTURE:
VT RTE 103 (MAIN STREET) OVER BLACK RIVER
BRIDGE NO. 25
ROUTE T.H.1 (VT 103) CLASS 1 F.A.S. 025-1

LOCATION: TOWN OF LUDLOW, WINDSOR COUNTY, VT
PROJ NO. BRF 025-1(42)
CUSTOMER: COLD RIVER BRIDGES, LLC.

DRAWN:	DATE:
ATD	12/07
CHKD:	DATE:
PCP	12/13
JOB NO.	DWG NO.
684	3
	REV. 2

PCP Mon, Mar 13, 2017 01:48:18 PM //users/jobs/14197/3 : Rev2

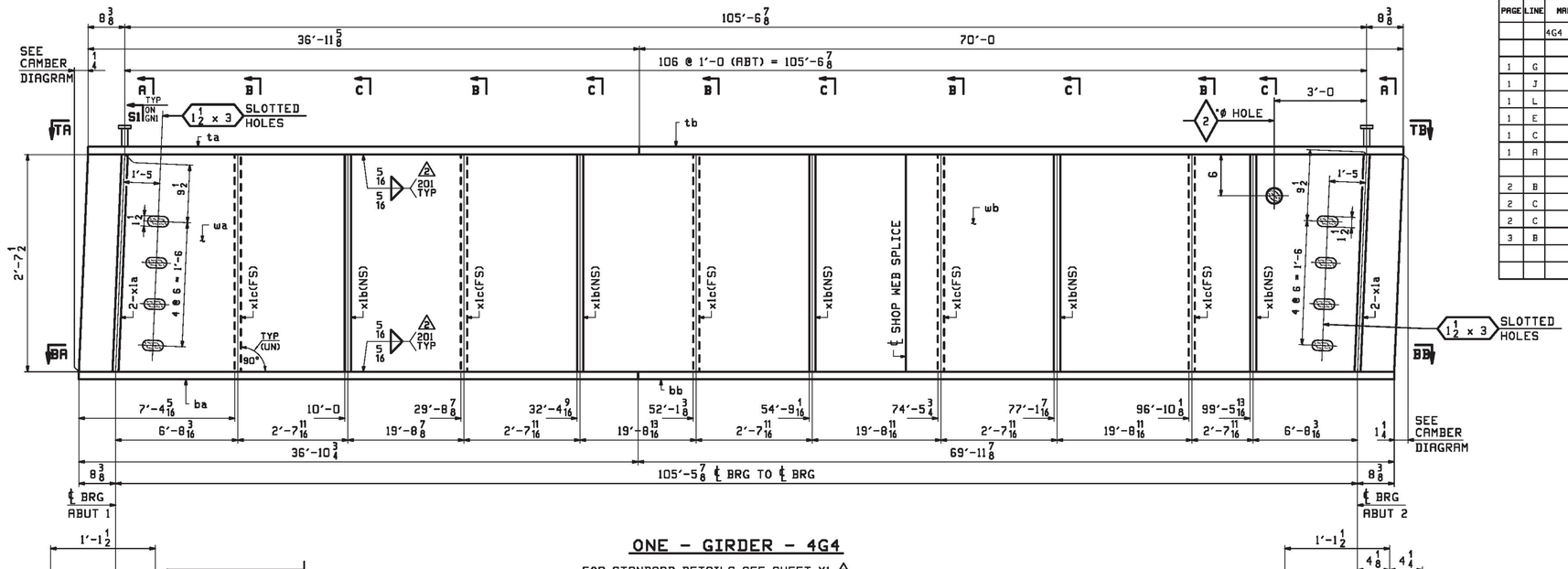

ONE - GIRDER - 4G4

FOR STANDARD DETAILS SEE SHEET X1 (2)
FOR CAMBER DIAGRAM SEE SHEET C1
FOR FLANGE DIAGRAM SEE SHEET C1
FOR GENERAL NOTES SEE SHEET GN1
T2 DENOTES MATERIAL SUBJECT TO CHARPY V-NOTCH TESTING

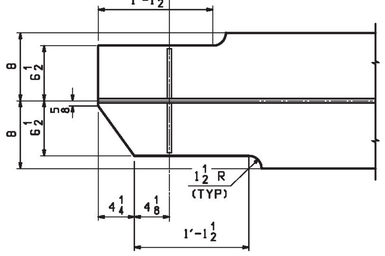

SECTION BA (AS SHOWN)
VIEW TA (SIMILAR)

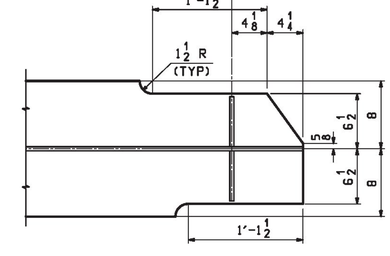

SECTION BB (AS SHOWN)
VIEW TB (SIMILAR)

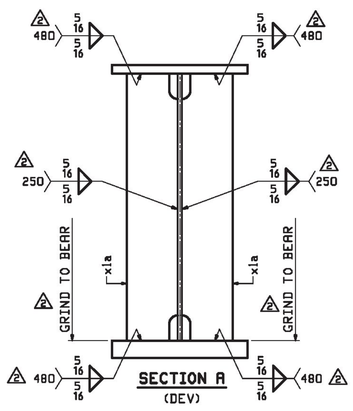

SECTION A (DEV)

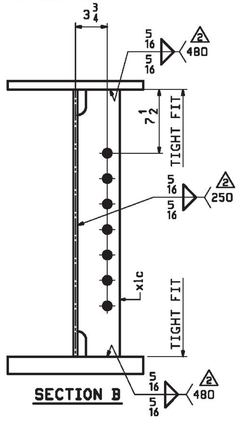

SECTION B

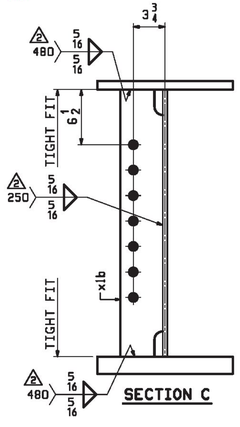

SECTION C

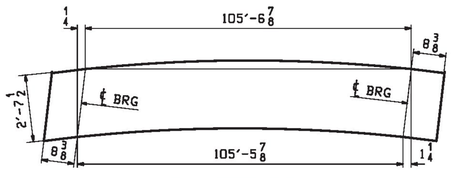

ORIENTATION DIAGRAM

ABM INFO PAGE	ABM INFO LINE	SHIP MARK	QTY	MARK	MATERIAL	LENGTH FT	LENGTH INCHES	REMARKS	WT	PROCUREMENT NOTES
		4G4	1		GIRDER				23279	
1	G		1	wa	PL 1/2x31 1/2	70	0 5/16	M270-50T2	3753	
1	J		1	wb	PL 1/2x31 1/2	36	11 15/16	M270-50T2	1983	
1	L		1	ta	PL 7/8x16	36	11 5/8		1761	
1	E		1	tb	PL 7/8x16	70	0	M270-50T2	3335	
1	C		1	ba	PL 2x16	36	10 3/4	M270-50T2	4018	
1	A		1	bb	PL 2x16	69	11 7/8	M270-50T2	7621	
2	B		4	x1a	PL 3/8x6	2	7 1/2	(MIE)	40	
2	C		5	x1b	PL 1/2x5	2	7 1/2		22	
2	C		5	x1c	PL 1/2x5	2	7 1/2		22	
3	B		321		STUD 7/8 ø	0	7	A108	1	

BILL OF MATERIAL

JOB NO. 684 | DRAWING NO. 4 | REV. (2)

SHOP DRAWING REVIEW

X REVIEWED AS REQUIRED BY THE CONSTRUCTION CONTRACT DOCUMENTS AND APPROVED, BUT ONLY FOR CONFORMANCE TO THE DESIGN CONCEPT OF THE WORK, AND SUBJECT TO FURTHER LIMITATIONS AND REQUIREMENTS CONTAINED IN THE CONSTRUCTION CONTRACT DOCUMENTS.
☐ REVISE AND RESUBMIT
☐ REJECTED
☐ FURNISH AS CORRECTED

CORRECTIONS OR COMMENTS MADE ON THE SHOP DRAWINGS DURING THIS REVIEW DO NOT RELIEVE CONTRACTOR FROM COMPLIANCE WITH REQUIREMENTS OF THE DRAWINGS AND SPECIFICATIONS. THIS CHECK IS ONLY FOR REVIEW OF GENERAL CONFORMANCE WITH THE DESIGN CONCEPT OF THE PROJECT AND GENERAL COMPLIANCE WITH THE INFORMATION GIVEN IN THE CONTRACT DOCUMENTS. THE CONTRACTOR IS RESPONSIBLE FOR: CONFIRMING AND CORRELATING ALL QUANTITIES AND DIMENSIONS; SELECTING FABRICATION PROCESSES AND TECHNIQUES OF CONSTRUCTION; COORDINATING HIS WORK WITH THAT OF ALL OTHER TRADES; AND PERFORMING HIS WORK IN A SAFE AND SATISFACTORY MANNER.

Job Number: BRF 025-1(42)
Reviewed By: E.F. LAWES
Date: April 11, 2017

40 IDX Drive
Building 100, Suite 200
South Burlington, VT 05403
802.497.6100
vhb

Vermont Agency of Transportation
RECEIVED
CK'D BY VHB OK'D BY TAS
March 31, 2017
RESUBMIT ____ APPROVED YES
BY T Sumner DATE 4/11/17

REV.	DATE	REMARKS	DWN	CHK	APVL	SHOP
2	03/08 2017	APPROVAL COMMENTS	ATD	PCP		
1	01/05 2017	ADD STIFFENERS (EXTRA-TEC-3429-001)	ATD	PCP		
0						

MATERIAL:	SURFACE PREP. & PRINT:	HOLES:	SHOP BOLTS:
M270-50 (UN)	SEE DWG GN1	15/16"ø (UN)	NONE

DESCRIPTION: GIRDER - 4G4

CASCO BAY STEEL STRUCTURES, INC.
1 WALLACE AVE. SOUTH PORTLAND, ME 04106
PHONE (207) 780-6722 FAX. (207) 780-6726
TENSOR 3429

STRUCTURE:
VT RTE 103 (MAIN STREET) OVER BLACK RIVER
BRIDGE NO. 25
ROUTE T.H.1 (VT 103) CLASS 1 F.A.S. 025-1

DRAWN:	DATE:
ATD	12/07
CHKD:	DATE:
PCP	12/13

LOCATION: TOWN OF LUDLOW, WINDSOR COUNTY, VT
PROJ NO. BRF 025-1(42)
CUSTOMER: COLD RIVER BRIDGES, LLC.

JOB NO. 684 | DWG NO. 4 | REV. (2)

PCP Mon, Mar 13, 2017 03:46:35 PM J:\users\jobs\3429\4.1.Dwg

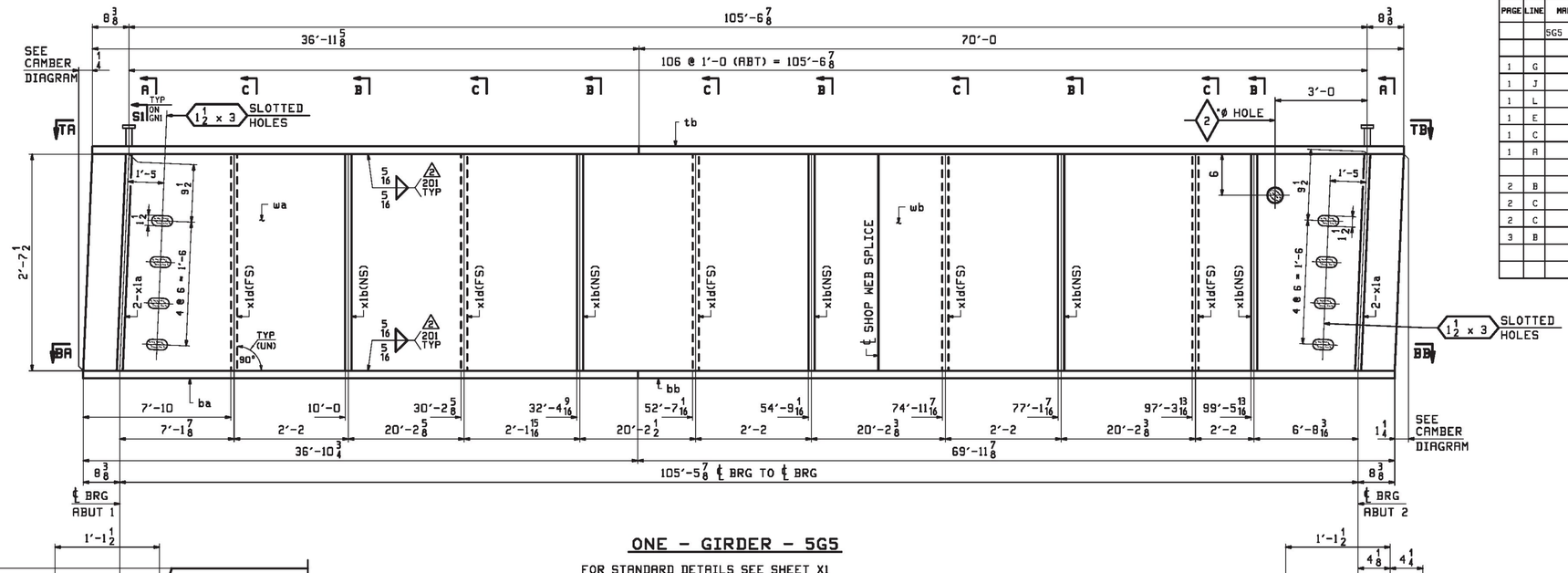

SECTION BA (AS SHOWN)
VIEW TA (SIMILAR)

SECTION BB (AS SHOWN)
VIEW TB (SIMILAR)

ONE - GIRDER - 5G5

FOR STANDARD DETAILS SEE SHEET X1
FOR CAMBER DIAGRAM SEE SHEET C1
FOR FLANGE DIAGRAM SEE SHEET C1
FOR GENERAL NOTES SEE SHEET GN1
T2 DENOTES MATERIAL SUBJECT TO CHARPY V-NOTCH TESTING

Vermont Agency of Transportation
RECEIVED
CK'D BY VHB OK'D BY TAS
March 31, 2017
RESUBMIT _____ APPROVED YES
BY T Sumner DATE 4/11/17

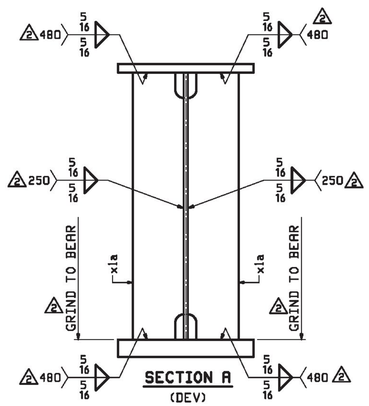

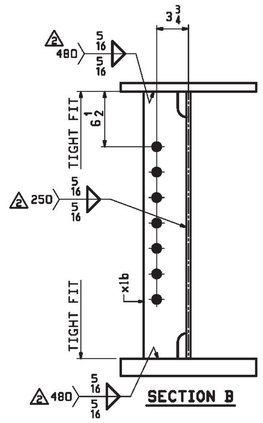

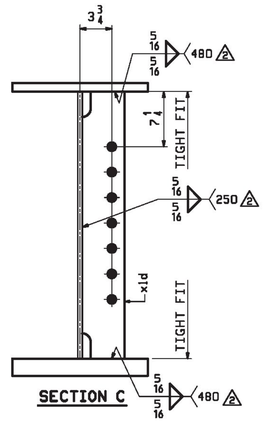

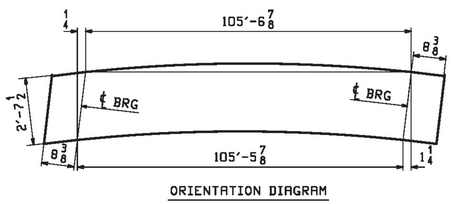

ORIENTATION DIAGRAM

ABM INFO		SHIP	BILL OF MATERIAL					JOB NO.	DRAWING NO.	REV.
								684	5	2
PAGE	LINE	MARK	QTY	MARK	MATERIAL	LENGTH FT	LENGTH INCHES	REMARKS	WT	PROCUREMENT NOTES
		5G5	1		GIRDER				23279	
1	G		1	wa	PL 1/2x31 1/2	70	0 5/16	M270-50T2	3753	
1	J		1	wb	PL 1/2x31 1/2	36	11 15/16	M270-50T2	1983	
1	L		1	ta	PL 7/8x16	36	11 5/8		1761	
1	E		1	tb	PL 7/8x16	70	0	M270-50T2	3335	
1	C		1	ba	PL 2x16	36	10 3/4	M270-50T2	4018	
1	A		1	bb	PL 2x16	69	11 7/8	M270-50T2	7621	
2	B		4	x1a	PL 3/8x6	2	7 1/2	(MIE)	40	
2	C		5	x1b	PL 1/2x5	2	7 1/2		22	
2	C		5	x1d	PL 1/2x5	2	7 1/2		22	
3	B		321		STUD 7/8 ø	0	7	A108	1	

SHOP DRAWING REVIEW

REVIEWED AS REQUIRED BY THE CONSTRUCTION CONTRACT DOCUMENTS AND APPROVED, BUT ONLY FOR CONFORMANCE TO THE DESIGN CONCEPT OF THE WORK, AND SUBJECT TO FURTHER LIMITATIONS AND REQUIREMENTS CONTAINED IN THE CONSTRUCTION CONTRACT DOCUMENTS.
☐ REVISE AND RESUBMIT
☐ REJECTED
☐ FURNISH AS CORRECTED

CORRECTIONS OR COMMENTS MADE ON THE SHOP DRAWINGS DURING THIS REVIEW DO NOT RELIEVE CONTRACTOR FROM COMPLIANCE WITH REQUIRMENTS OF THE DRAWINGS AND SPECIFICATIONS. THIS CHECK IS ONLY FOR REVIEW OF GENERAL CONFORMANCE WITH THE DESIGN CONCEPT OF THE PROJECT AND GENERAL COMPLIANCE WITH THE INFORMATION GIVEN IN THE CONTRACT DOCUMENTS. THE CONTRACTOR IS RESPONSIBLE FOR: CONFIRMING AND CORRELATING ALL QUANTITIES AND DIMENSIONS; SELECTING FABRICATION PROCESSES AND TECHNIQUES OF CONSTRUCTION; COORDINATING HIS WORK WITH THAT OF ALL OTHER TRADES; AND PERFORMING HIS WORK IN A SAFE AND SATISFACTORY MANNER.

vhb
40 IDX Drive
Building 100, Suite 200
South Burlington, VT 05403
802.497.6100

Job Number: BRF 025-1(42)
Reviewed By: E.F. LAWES
Date: April 11, 2017

REV.	DATE	REMARKS	DWN	CHK	APVL	SHOP
2	03/08 2017	APPROVAL COMMENTS	ATD	PCP		
1	01/03 2017	ADD STIFFENERS (EXTRA-TEC-3429-001)	ATD	PCP		
0						

MATERIAL:	SURFACE PREP. & PAINT:	HOLES:	SHOP BOLTS:
M270-50 (UN)	SEE DWG GN1	13/16"ø (UN)	NONE

DESCRIPTION: GIRDER - 5G5

CASCO BAY STEEL STRUCTURES, INC.
1 WALLACE AVE. PHONE (207) 780-6722
SOUTH PORTLAND, ME 04106 FAX. (207) 780-6726
TENSOR 3429

STRUCTURE:
VT RTE 103 (MAIN STREET) OVER BLACK RIVER
BRIDGE NO. 25
ROUTE T.H.1 (VT 103) CLASS 1 F.A.S. 025-1

DRAWN:	DATE:
ATD	12/07
CHK'D: PCP	DATE: 12/13
JOB NO.	DWG NO.
684	5
	REV. 2

LOCATION: TOWN OF LUDLOW, WINDSOR COUNTY, VT
PROJ NO. BRF 025-1(42)
CUSTOMER: COLD RIVER BRIDGES, LLC.

PCP Mon, Mar 13, 2017 03:48:33 PM J:\steel\jobs\3429\5 1 Rev2

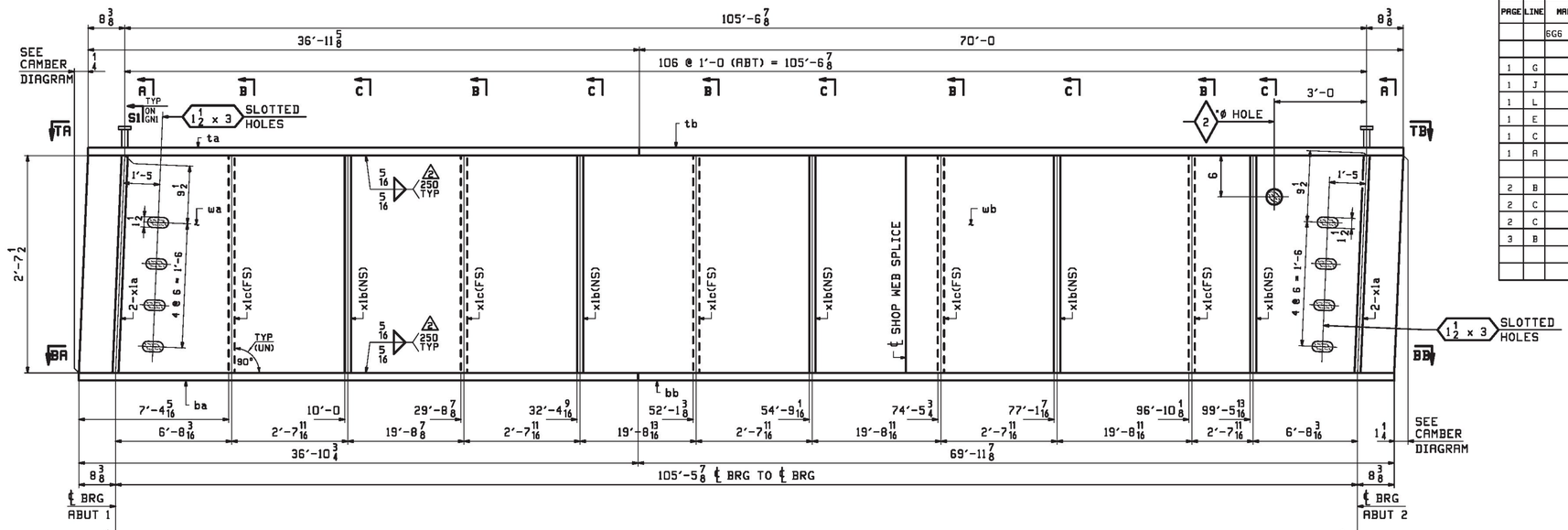

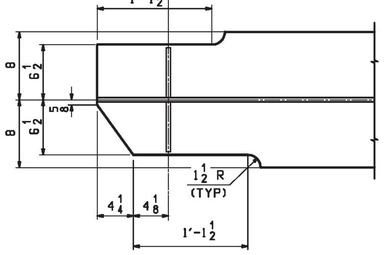

SECTION BA (AS SHOWN)
VIEW TA (SIMILAR)

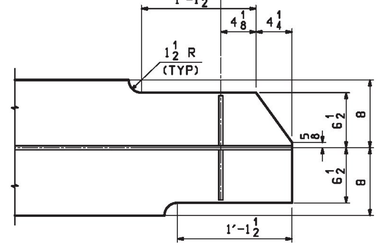

SECTION BB (AS SHOWN)
VIEW TB (SIMILAR)

ONE - GIRDER - 6G6

FOR STANDARD DETAILS SEE SHEET X1 2
FOR CAMBER DIAGRAM SEE SHEET C1
FOR FLANGE DIAGRAM SEE SHEET C1
FOR GENERAL NOTES SEE SHEET GN1
T2 DENOTES MATERIAL SUBJECT TO CHARPY V-NOTCH TESTING

Vermont Agency of Transportation
RECEIVED
CK'D BY VHB OK'D BY TAS
March 31, 2017
RESUBMIT ____ APPROVED YES
BY T Sumner DATE 4/11/17

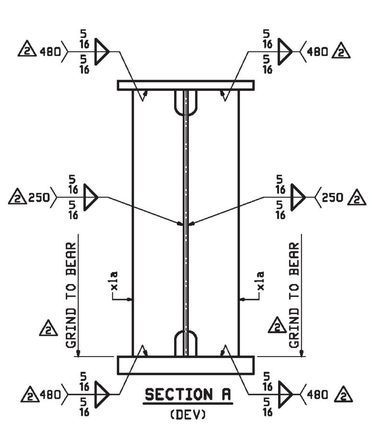

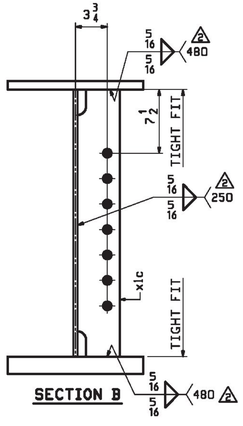

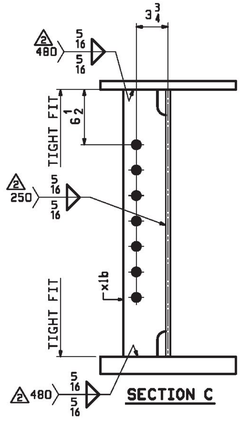

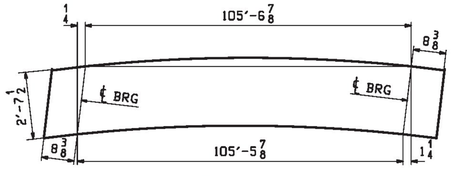

ORIENTATION DIAGRAM

ABM INFO PAGE	ABM INFO LINE	SHIP MARK	QTY	MARK	MATERIAL	LENGTH FT	LENGTH INCHES	REMARKS	WT	PROCUREMENT NOTES
		6G6	1		GIRDER				23279	
1	G		1	wa	PL 1/2×31 1/2	70	0 5/16	M270-50T2	3753	
1	J		1	wb	PL 1/2×31 1/2	36	11 15/16	M270-50T2	1983	
1	L		1	ta	PL 7/8×16	36	11 5/8		1761	
1	E		1	tb	PL 7/8×16	70	0	M270-50T2	3335	
1	C		1	ba	PL 2×16	36	10 3/4	M270-50T2	4018	
1	A		1	bb	PL 2×16	69	11 7/8	M270-50T2	7621	
2	B		4	x1a	PL 3/8×6	2	7 1/2	(MIE)	40	
2	C		5	x1b	PL 1/2×5	2	7 1/2		22	
2	C		5	x1c	PL 1/2×5	2	7 1/2		22	
3	B		321		STUD 7/8 ø	0	7	A108	1	

BILL OF MATERIAL

JOB NO. 684 | DRAWING NO. 6 | REV. 2

SHOP DRAWING REVIEW

X REVIEWED AS REQUIRED BY THE CONSTRUCTION CONTRACT DOCUMENTS AND APPROVED, BUT ONLY FOR CONFORMANCE TO THE DESIGN CONCEPT OF THE WORK, AND SUBJECT TO FURTHER LIMITATIONS AND REQUIREMENTS CONTAINED IN THE CONSTRUCTION CONTRACT DOCUMENTS.
☐ REJECTED ☐ FURNISH AS CORRECTED ☐ REVISE AND RESUBMIT

CORRECTIONS OR COMMENTS MADE ON THE SHOP DRAWINGS DURING THIS REVIEW DO NOT RELIEVE CONTRACTOR FROM COMPLIANCE WITH REQUIRMENTS OF THE DRAWINGS AND SPECIFICATIONS. THIS CHECK IS ONLY FOR REVIEW OF GENERAL CONFORMANCE WITH THE DESIGN CONCEPT OF THE PROJECT AND GENERAL COMPLIANCE WITH THE INFORMATION GIVEN IN THE CONTRACT DOCUMENTS. THE CONTRACTOR IS RESPONSIBLE FOR: CONFIRMING AND CORRELATING ALL QUANTITIES AND DIMENSIONS; SELECTING FABRICATION PROCESSES AND TECHNIQUES OF CONSTRUCTION; COORDINATING HIS WORK WITH THAT OF ALL OTHER TRADES; AND PERFORMING HIS WORK IN A SAFE AND SATISFACTORY MANNER.

Job Number: BRF 025-1(42)
Reviewed By: E.F. LAWES
Date: April 11, 2017

vhb
40 IDX Drive
Building 100, Suite 200
South Burlington, VT 05403
802.497.6100

REV.	DATE	REMARKS	DWN	CHK	APVL	SHOP
2	03/08 2017	APPROVAL COMMENTS	ATD	PCP		
1	01/05 2017	ADD STIFFENERS (EXTRA-TEC-3429-001)	ATD	PCP		
0						

MATERIAL:	SURFACE PREP. & PAINT:	HOLES:	SHOP BOLTS:
M270-50 (UN)	SEE DWG GN1	13/16"ø (UN)	NONE

DESCRIPTION: GIRDER - 6G6

CASCO BAY STEEL STRUCTURES, INC.
1 WALLACE AVE. PHONE (207) 780-6722
SOUTH PORTLAND, ME 04106 FAX. (207) 780-6726

STRUCTURE:
VT RTE 103 (MAIN STREET) OVER BLACK RIVER
BRIDGE NO. 25
ROUTE T.H.1 (VT 103) CLASS 1 F.A.S. 025-1

LOCATION: TOWN OF LUDLOW, WINDSOR COUNTY, VT
PROJ NO. BRF 025-1(42)
CUSTOMER: COLD RIVER BRIDGES, LLC.

DRAWN:	DATE:
ATD	12/07
CHKD: PCP	DATE: 12/13
JOB NO. 684	DWG NO. 6
	REV. 2

PCP Mon, Mar 13, 2017 01:48:20 PM /users/jobs/14197/1 : Rev2

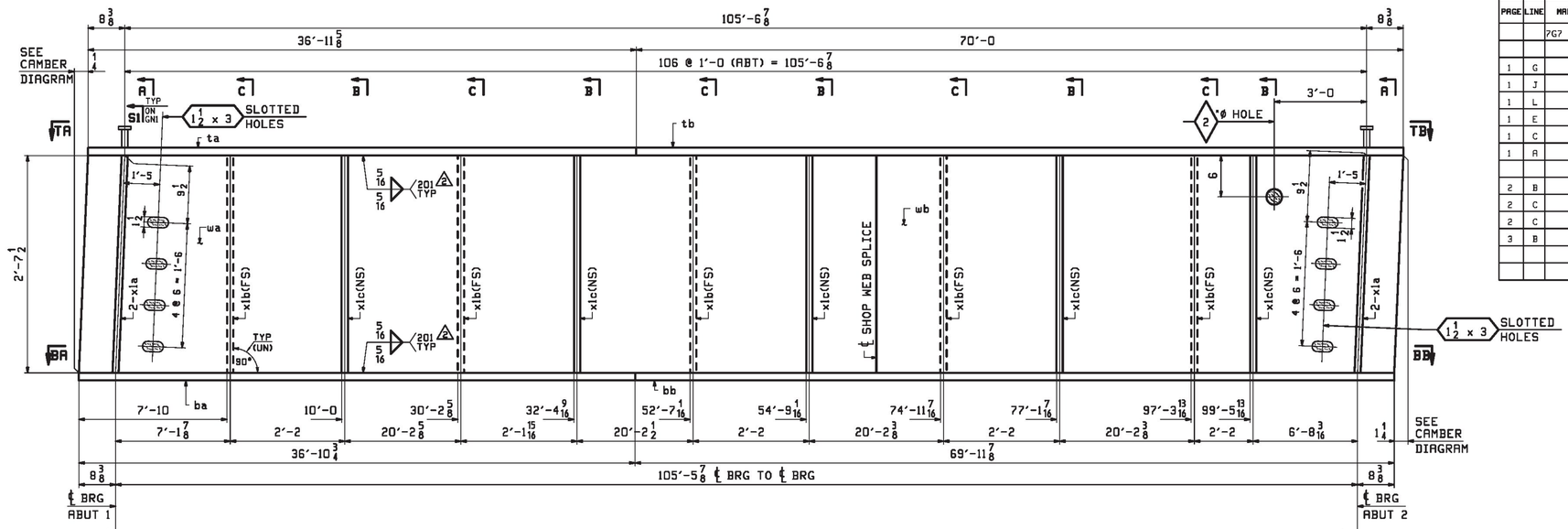

ONE - GIRDER - 7G7

FOR STANDARD DETAILS SEE SHEET X1 2
FOR CAMBER DIAGRAM SEE SHEET C1
FOR FLANGE DIAGRAM SEE SHEET C1
FOR GENERAL NOTES SEE SHEET GN1
T2 DENOTES MATERIAL SUBJECT TO CHARPY V-NOTCH TESTING

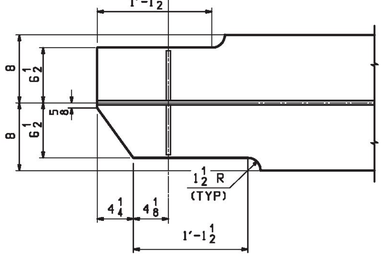

SECTION BA (AS SHOWN)
VIEW TA (SIMILAR)

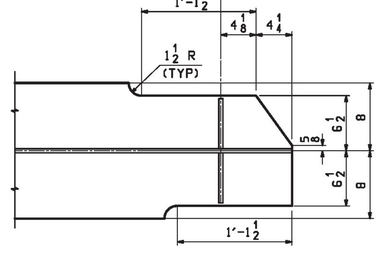

SECTION BB (AS SHOWN)
VIEW TB (SIMILAR)

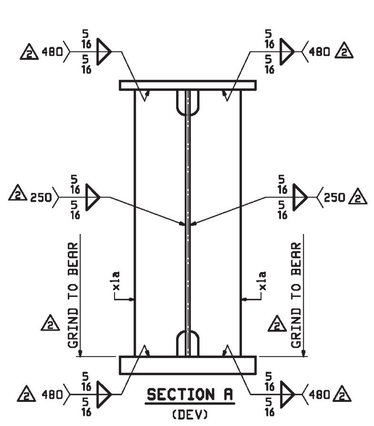

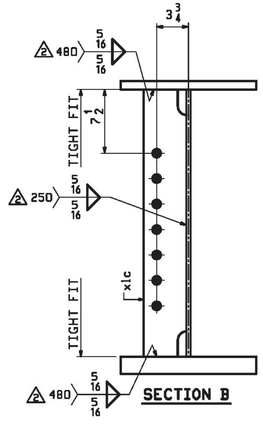

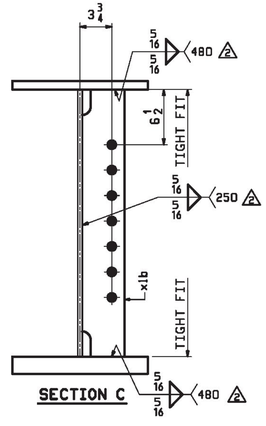

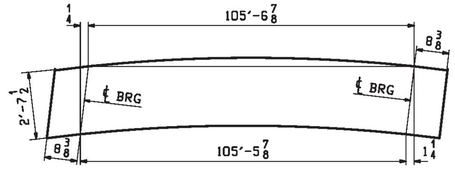

ORIENTATION DIAGRAM

Vermont Agency of Transportation
RECEIVED
CK'D BY VHB OK'D BY TAS
March 31, 2017
RESUBMIT _____ APPROVED YES
BY T Sumner DATE 4/11/17

ABM INFO PAGE	ABM INFO LINE	SHIP MARK	QTY	MARK	MATERIAL	LENGTH FT	LENGTH INCHES	REMARKS	WT	PROCUREMENT NOTES
		7G7	1		GIRDER				23279	
1	G		1	wa	PL 1/2 x 31 1/2	70	0 5/16	M270-50T2	3753	
1	J		1	wb	PL 1/2 x 31 1/2	36	11 15/16	M270-50T2	1983	
1	L		1	ta	PL 7/8 x 16	36	11 5/8		1761	
1	E		1	tb	PL 7/8 x 16	70	0	M270-50T2	3335	
1	C		1	ba	PL 2 x 16	36	10 3/4	M270-50T2	4018	
1	A		1	bb	PL 2 x 16	69	11 7/8	M270-50T2	7621	
2	B		4	x1a	PL 3/4 x 6	2	7 1/2	(MIE)	40	
2	C		5	x1b	PL 1/2 x 5	2	7 1/2		22	
2	C		5	x1c	PL 1/2 x 5	2	7 1/2		22	
3	B		321		STUD 7/8 ø	0	7	A108	1	

BILL OF MATERIAL

JOB NO. 684 | DRAWING NO. 7 | REV. 2

SHOP DRAWING REVIEW

REVIEWED AS REQUIRED BY THE CONSTRUCTION CONTRACT DOCUMENTS AND APPROVED, BUT ONLY FOR CONFORMANCE TO THE DESIGN CONCEPT OF THE WORK, AND SUBJECT TO FURTHER LIMITATIONS AND REQUIREMENTS CONTAINED IN THE CONSTRUCTION CONTRACT DOCUMENTS.
☐ REJECTED ☐ REVISE AND RESUBMIT ☐ FURNISH AS CORRECTED

CORRECTIONS OR COMMENTS MADE ON THE SHOP DRAWINGS DURING THIS REVIEW DO NOT RELIEVE CONTRACTOR FROM COMPLIANCE WITH REQUIRMENTS OF THE DRAWINGS AND SPECIFICATIONS. THIS CHECK IS ONLY FOR REVIEW OF GENERAL CONFORMANCE WITH THE DESIGN CONCEPT OF THE PROJECT AND GENERAL COMPLIANCE WITH THE INFORMATION GIVEN IN THE CONTRACT DOCUMENTS. THE CONTRACTOR IS RESPONSIBLE FOR: CONFIRMING AND CORRELATING ALL QUANTITIES AND DIMENSIONS; SELECTING FABRICATION PROCESSES AND TECHNIQUES OF CONSTRUCTION; COORDINATING HIS WORK WITH THAT OF ALL OTHER TRADES; AND PERFORMING HIS WORK IN A SAFE AND SATISFACTORY MANNER.

Job Number: BRF 025-1(42)
Reviewed By: E.F. LAWES
Date: April 11, 2017

40 IDX Drive
Building 100, Suite 200
South Burlington, VT 05403
802.497.6100
vhb

REV.	DATE	REMARKS	DWN	CHK	APVL	SHOP
2	03/08/2017	APPROVAL COMMENTS	ATD	PCP		
1	01/05/2017	ADD STIFFENERS (EXTRA-TEC-3429-001)	ATD	PCP		
0						

MATERIAL: M270-50 (UN) | SURFACE PREP. & PRINT: SEE DWG GN1 | HOLES: 15/16"ø (UN) | SHOP BOLTS: NONE

DESCRIPTION: GIRDER - 7G7

CASCO BAY STEEL STRUCTURES, INC.
1 WALLACE AVE. SOUTH PORTLAND, ME 04106
PHONE (207) 780-6722 FAX. (207) 780-6726
TENSOR 3429

STRUCTURE:
VT RTE 103 (MAIN STREET) OVER BLACK RIVER
BRIDGE NO. 25
ROUTE T.H.1 (VT 103) CLASS 1 F.A.S. 025-1

LOCATION: TOWN OF LUDLOW, WINDSOR COUNTY, VT
PROJ NO. BRF 025-1(42)
CUSTOMER: COLD RIVER BRIDGES, LLC.

DRAWN: ATD DATE: 12/07
CHK'D: PCP DATE: 12/13
JOB NO. 684
DWG NO. 7
REV. 2

PCP Mon, Mar 13, 2017 02:57:52 PM J:\acad\jobs\1425\7.1 Rev2

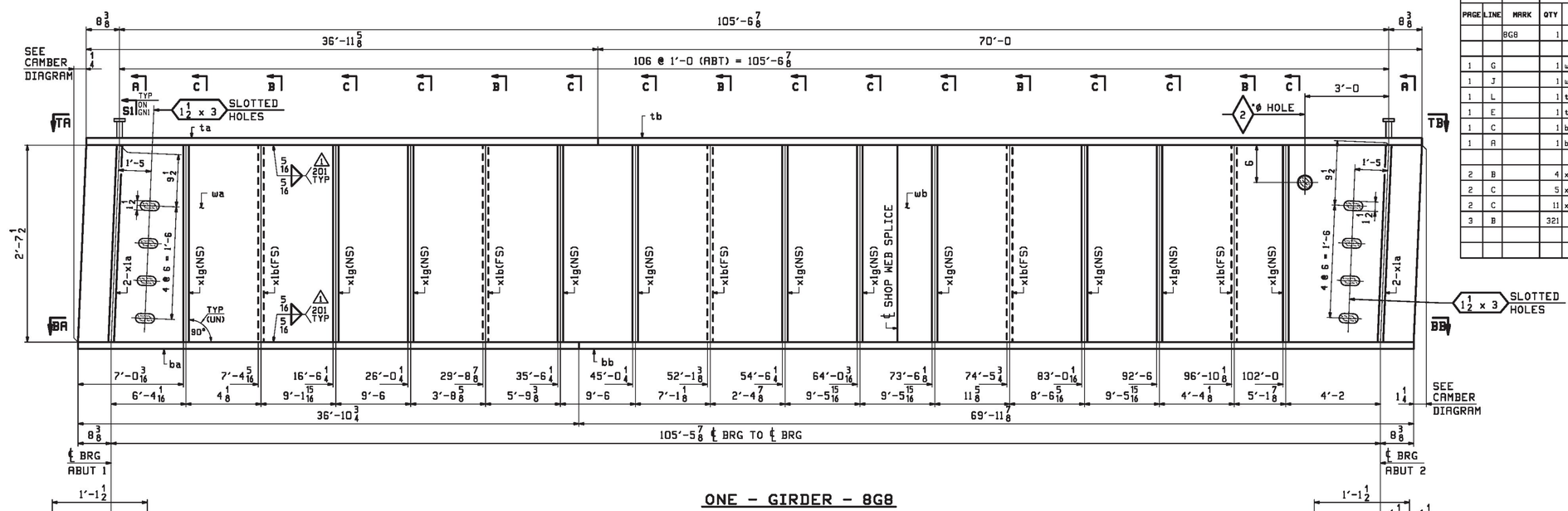

ONE - GIRDER - 8G8

FOR STANDARD DETAILS SEE SHEET X1 ⚠1
FOR CAMBER DIAGRAM SEE SHEET C1
FOR FLANGE DIAGRAM SEE SHEET C1
FOR GENERAL NOTES SEE SHEET GN1
T2 DENOTES MATERIAL SUBJECT TO CHARPY V-NOTCH TESTING

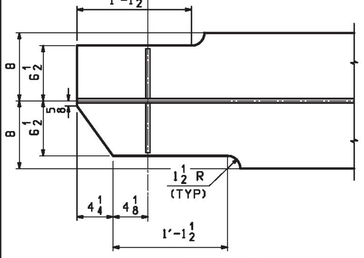

SECTION BA (AS SHOWN)
VIEW TA (SIMILAR)

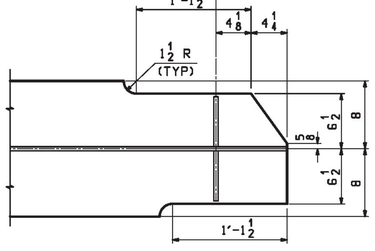

SECTION BB (AS SHOWN)
VIEW TB (SIMILAR)

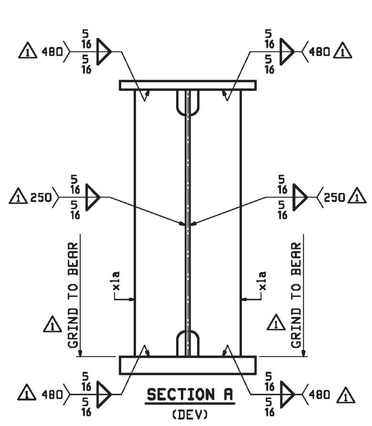

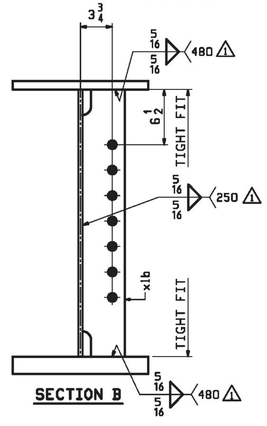

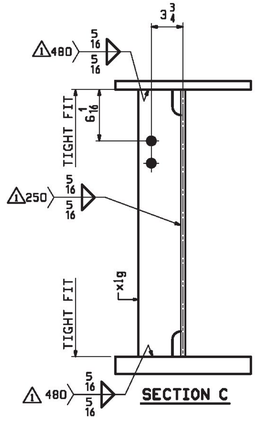

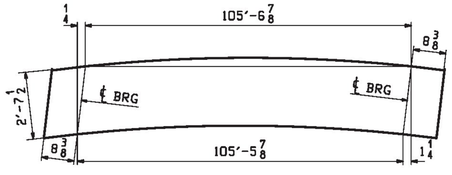

ORIENTATION DIAGRAM

ABM INFO PAGE	ABM INFO LINE	SHIP MARK	QTY	MARK	MATERIAL	LENGTH FT	LENGTH INCHES	REMARKS	WT	PROCUREMENT NOTES
		8G8	1		GIRDER				23413	
1	G		1	wa	PL 1/2×31 1/2	70	0 5/16	M270-50T2	3753	
1	J		1	wb	PL 1/2×31 1/2	36	11 15/16	M270-50T2	1983	
1	L		1	ta	PL 7/8×16	36	11 5/8		1761	
1	E		1	tb	PL 7/8×16	70	0	M270-50T2	3335	
1	C		1	ba	PL 2×16	36	10 3/4	M270-50T2	4018	
1	A		1	bb	PL 2×16	69	11 7/8	M270-50T2	7621	
2	B		4	x1a	PL 3/8×6	2	7 1/2	(MIE)	40	
2	C		5	x1b	PL 1/2×5	2	7 1/2		22	
2	C		11	x1g	PL 1/2×5	2	7 1/2		22	
3	B		321		STUD 7/8 ø	0	7	A108	1	

BILL OF MATERIAL

JOB NO. 684 | DRAWING NO. 8 | REV. ⚠1

SHOP DRAWING REVIEW

REVIEWED AS REQUIRED BY THE CONSTRUCTION CONTRACT DOCUMENTS AND APPROVED, BUT ONLY FOR CONFORMANCE TO THE DESIGN CONCEPT OF THE WORK, AND SUBJECT TO FURTHER LIMITATIONS AND REQUIREMENTS CONTAINED IN THE CONSTRUCTION CONTRACT DOCUMENTS.

☐ REJECTED ☐ FURNISH AS CORRECTED ☐ REVISE AND RESUBMIT

CORRECTIONS OR COMMENTS MADE ON THE SHOP DRAWINGS DURING THIS REVIEW DO NOT RELIEVE CONTRACTOR FROM COMPLIANCE WITH REQUIRMENTS OF THE DRAWINGS AND SPECIFICATIONS. THIS CHECK IS ONLY FOR REVIEW OF GENERAL CONFORMANCE WITH THE DESIGN CONCEPT OF THE PROJECT AND GENERAL COMPLIANCE WITH THE INFORMATION GIVEN IN THE CONTRACT DOCUMENTS. THE CONTRACTOR IS RESPONSIBLE FOR: CONFIRMING AND CORRELATING ALL QUANTITIES AND DIMENSIONS; SELECTING FABRICATION PROCESSES AND TECHNIQUES OF CONSTRUCTION; COORDINATING HIS WORK WITH THAT OF ALL OTHER TRADES; AND PERFORMING HIS WORK IN A SAFE AND SATISFACTORY MANNER.

Job Number: BRF 025-1(42)
Reviewed By: E.F. LAWES
Date: April 11, 2017

vhb
40 IDX Drive
Building 100, Suite 200
South Burlington, VT 05403
802.497.6100

Vermont Agency of Transportation
RECEIVED
CK'D BY VHB OK'D BY TAS
March 31, 2017
RESUBMIT ____ APPROVED YES
BY T Sumner DATE 4/11/17

REV.	DATE	REMARKS	DWN	CHK	APVL	SHOP
⚠1	03/09 2017	APPROVAL COMMENTS	ATD	PCP		
0						

MATERIAL:	SURFACE PREP. & PAINT:	HOLES:	SHOP BOLTS:
M270-50 (UN)	SEE DWG GN1	13/16"ø (UN)	NONE

DESCRIPTION: GIRDER - 8G8

CASCO BAY STEEL STRUCTURES, INC.
1 WALLACE AVE. PHONE (207) 780-6722
SOUTH PORTLAND, ME 04106 FAX. (207) 780-6726
TENSOR 3429

STRUCTURE: VT RTE 103 (MAIN STREET) OVER BLACK RIVER BRIDGE NO. 25 ROUTE T.H.1 (VT 103) CLASS 1 F.A.S. 025-1	DRAWN: ATD	DATE: 12/07	
	CHKD: PCP	DATE: 12/13	
LOCATION: TOWN OF LUDLOW, WINDSOR COUNTY, VT	JOB NO. 684	DWG NO. 8	
PROJ NO. BRF 025-1(42)		REV. ⚠1	
CUSTOMER: COLD RIVER BRIDGES, LLC.			

PCP Mon, Mar 13, 2017 01:47:13 PM //users/jobs/1457/3 - Rev1

ABM INFO		SHIP	BILL OF MATERIAL					JOB NO.	DRAWING NO.	REV.
								684	9	1
PAGE	LINE	MARK	QTY	MARK	MATERIAL	LENGTH FT	LENGTH INCHES	REMARKS	WT	PROCUREMENT NOTES
		9G9	1		GIRDER				23413	
1	G		1	wa	PL $\frac{1}{2}$×31 $\frac{1}{2}$	70	$0\frac{5}{16}$	M270-50T2	3753	
1	J		1	wb	PL $\frac{1}{2}$×31 $\frac{1}{2}$	36	$11\frac{5}{16}$	M270-50T2	1983	
1	L		1	ta	PL $\frac{7}{8}$×16	36	$11\frac{5}{8}$		1761	
1	E		1	tb	PL $\frac{7}{8}$×16	70	0	M270-50T2	3335	
1	C		1	ba	PL 2×16	36	$10\frac{3}{4}$	M270-50T2	4018	
1	A		1	bb	PL 2×16	69	$11\frac{7}{8}$	M270-50T2	7621	
2	B		4	x1a	PL $\frac{3}{4}$×6	2	$7\frac{1}{2}$	(MIE)	40	
2	C		5	x1c	PL $\frac{1}{2}$×5	2	$7\frac{1}{2}$		22	
2	C		11	x1f	PL $\frac{1}{2}$×5	2	$7\frac{1}{2}$		22	
3	B		321		STUD $\frac{7}{8}\phi$	0	7	A108	1	

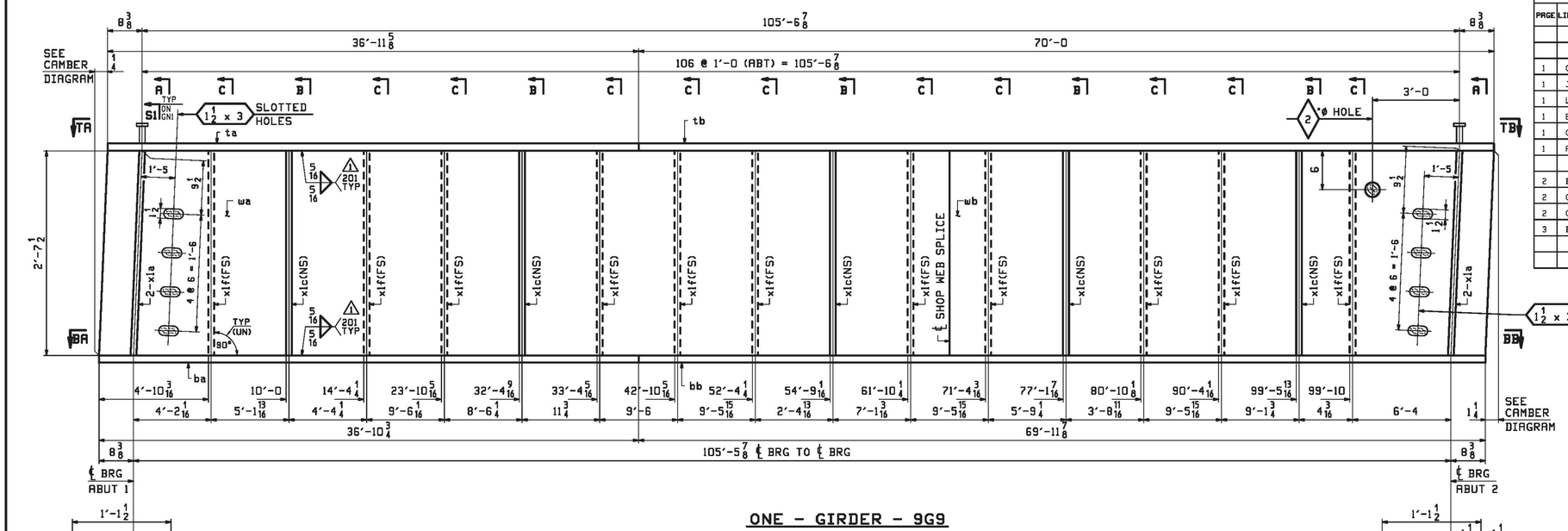

ONE - GIRDER - 9G9

FOR STANDARD DETAILS SEE SHEET X1 ⚠
FOR CAMBER DIAGRAM SEE SHEET C1
FOR FLANGE DIAGRAM SEE SHEET C1
FOR GENERAL NOTES SEE SHEET GN1
T2 DENOTES MATERIAL SUBJECT TO CHARPY V-NOTCH TESTING

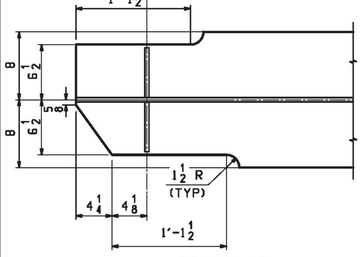

SECTION BA (AS SHOWN)
VIEW TA (SIMILAR)

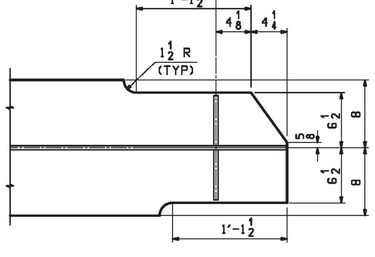

SECTION BB (AS SHOWN)
VIEW TB (SIMILAR)

Vermont Agency of Transportation
RECEIVED
CK'D BY VHB OK'D BY TAS
March 31, 2017
RESUBMIT ____ APPROVED YES
BY T Sumner DATE 4/11/17

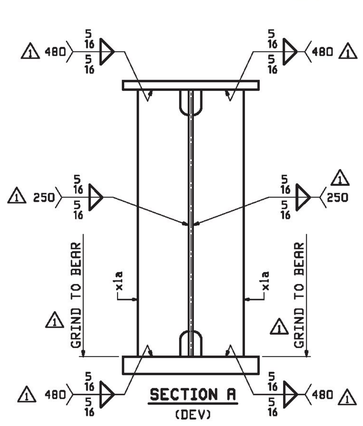

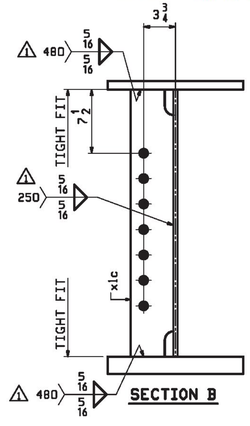

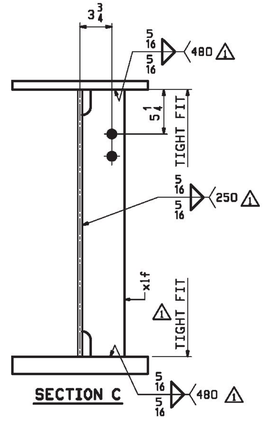

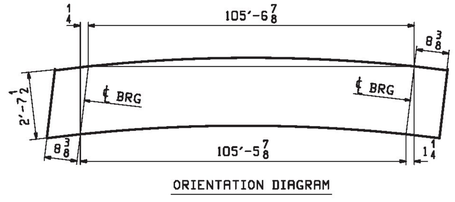

ORIENTATION DIAGRAM

SHOP DRAWING REVIEW

- ☒ REVIEWED AS REQUIRED BY THE CONSTRUCTION CONTRACT DOCUMENTS AND APPROVED, BUT ONLY FOR CONFORMANCE TO THE DESIGN CONCEPT OF THE WORK, AND SUBJECT TO FURTHER LIMITATIONS AND REQUIREMENTS CONTAINED IN THE CONSTRUCTION CONTRACT DOCUMENTS.
- ☐ REVISE AND RESUBMIT
- ☐ REJECTED
- ☐ FURNISH AS CORRECTED

CORRECTIONS OR COMMENTS MADE ON THE SHOP DRAWINGS DURING THIS REVIEW DO NOT RELIEVE CONTRACTOR FROM COMPLIANCE WITH REQUIRMENTS OF THE DRAWINGS AND SPECIFICATIONS. THIS CHECK IS ONLY FOR REVIEW OF GENERAL CONFORMANCE WITH THE DESIGN CONCEPT OF THE PROJECT AND GENERAL COMPLIANCE WITH THE INFORMATION GIVEN IN THE CONTRACT DOCUMENTS. THE CONTRACTOR IS RESPONSIBLE FOR: CONFIRMING AND CORRELATING ALL QUANTITIES AND DIMENSIONS; SELECTING FABRICATION PROCESSES AND TECHNIQUES OF CONSTRUCTION; COORDINATING HIS WORK WITH THAT OF ALL OTHER TRADES; AND PERFORMING HIS WORK IN A SAFE AND SATISFACTORY MANNER.

Job Number: BRF 025-1(42)
Reviewed By: E.F. LAWES
Date: April 11, 2017

40 IDX Drive
Building 100, Suite 200
South Burlington, VT 05403
802.497.6100
vhb

REV.	DATE	REMARKS	DWN	CHK	APVL	SHOP
1	03/09 2017	APPROVAL COMMENTS	ATD	PCP		
0						

MATERIAL:	SURFACE PREP. & PAINT:	HOLES:	SHOP BOLTS:
M270-50 (UN)	SEE DWG GN1	$\frac{13}{16}$"Ø (UN)	NONE

DESCRIPTION: GIRDER - 9G9

CASCO BAY STEEL STRUCTURES, INC.
1 WALLACE AVE. PHONE (207) 780-6722
SOUTH PORTLAND, ME 04106 FAX. (207) 780-6726
TENSOR 3429

STRUCTURE:	DRAWN:	DATE:
VT RTE 103 (MAIN STREET) OVER BLACK RIVER BRIDGE NO. 25 ROUTE T.H.1 (VT 103) CLASS 1 F.A.S. 025-1	ATD	12/07
	CHKD: PCP	DATE: 12/13
LOCATION: TOWN OF LUDLOW, WINDSOR COUNTY, VT	JOB NO. 684	DWG NO. 9
PROJ NO. BRF 025-1(42)		REV. ⚠
CUSTOMER: COLD RIVER BRIDGES, LLC.		

PCP Mon, Mar 13, 2017 01:47:24 PM C:\Users\John\1415\9 - Revi

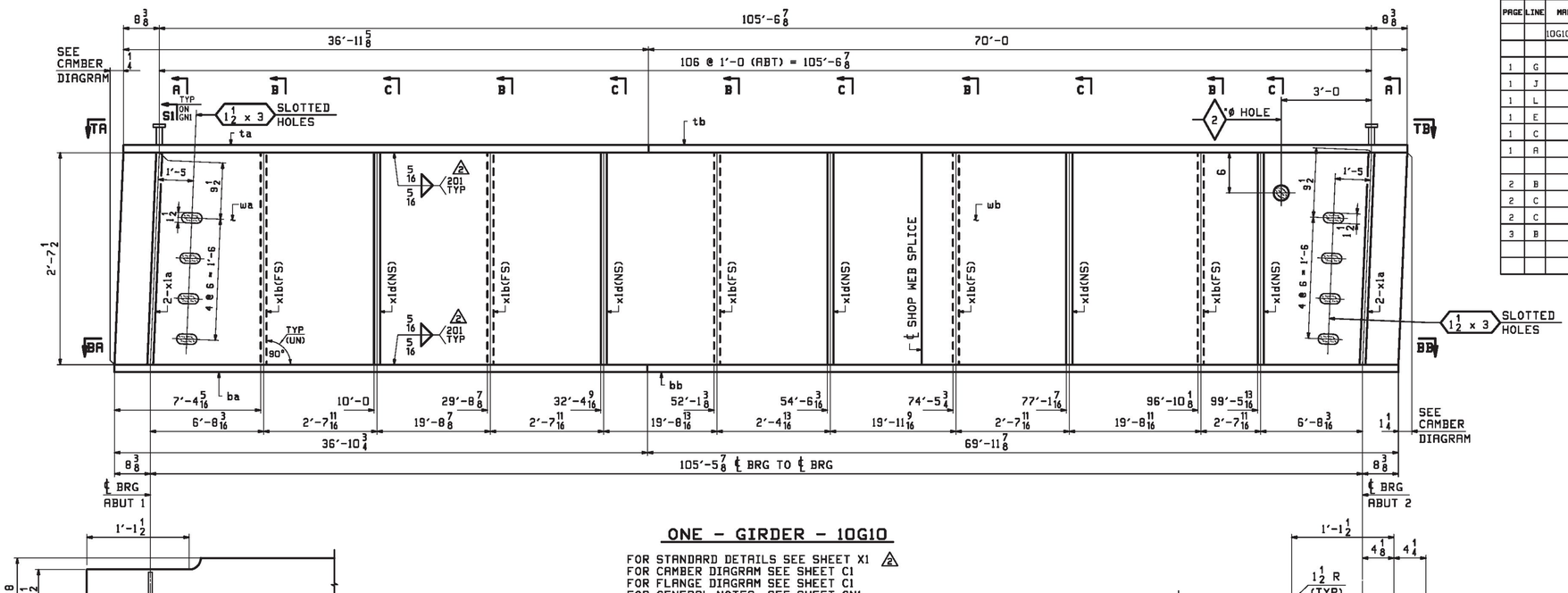

SECTION BA (AS SHOWN)
VIEW TA (SIMILAR)

ONE - GIRDER - 10G10

FOR STANDARD DETAILS SEE SHEET X1 2
FOR CAMBER DIAGRAM SEE SHEET C1
FOR FLANGE DIAGRAM SEE SHEET C1
FOR GENERAL NOTES SEE SHEET GN1
T2 DENOTES MATERIAL SUBJECT TO CHARPY V-NOTCH TESTING

Vermont Agency of Transportation
RECEIVED
CK'D BY VHB OK'D BY TAS
March 31, 2017
RESUBMIT APPROVED YES
BY T Sumner DATE 4/11/17

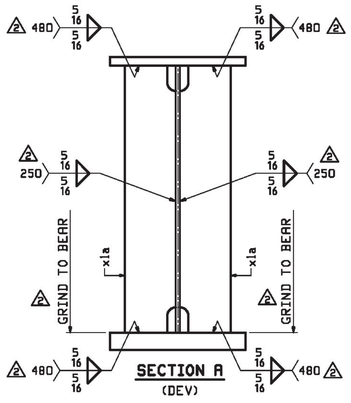

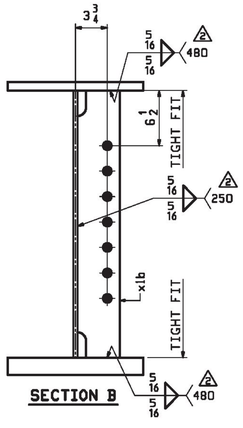

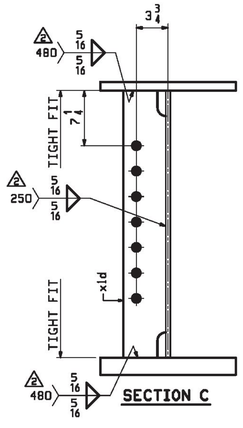

SECTION BB (AS SHOWN)
VIEW TB (SIMILAR)

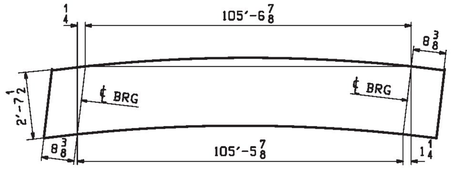

ORIENTATION DIAGRAM

ABM INFO PAGE	ABM INFO LINE	SHIP MARK	QTY	MARK	MATERIAL	LENGTH FT	LENGTH INCHES	REMARKS	WT	PROCUREMENT NOTES
		10G10	1		GIRDER				23279	
1	G		1	wa	PL 1/2x31 1/2	70	0 5/16	M270-50T2	3753	
1	J		1	wb	PL 1/2x31 1/2	36	11 15/16	M270-50T2	1983	
1	L		1	ta	PL 7/8x16	36	11 5/8		1761	
1	E		1	tb	PL 7/8x16	70	0	M270-50T2	3335	
1	C		1	ba	PL 2x16	36	10 3/4	M270-50T2	4018	
1	A		1	bb	PL 2x16	69	11 7/8	M270-50T2	7621	
2	B		4	x1a	PL 3/4x6	2	7 1/2	(MIE)	40	
2	C		5	x1b	PL 1/2x5	2	7 1/2		22	
2	C		5	x1d	PL 1/2x5	2	7 1/2		22	
3	B		321		STUD 7/8 ø	0	7	A108	1	

BILL OF MATERIAL

JOB NO. 684 | DRAWING NO. 10 | REV. 2

SHOP DRAWING REVIEW

X REVIEWED AS REQUIRED BY THE CONSTRUCTION CONTRACT DOCUMENTS AND APPROVED, BUT ONLY FOR CONFORMANCE TO THE DESIGN CONCEPT OF THE WORK, AND SUBJECT TO FURTHER LIMITATIONS AND REQUIREMENTS CONTAINED IN THE CONSTRUCTION CONTRACT DOCUMENTS.

☐ REVISE AND RESUBMIT

☐ REJECTED

☐ FURNISH AS CORRECTED

CORRECTIONS OR COMMENTS MADE ON THE SHOP DRAWINGS DURING THIS REVIEW DO NOT RELIEVE CONTRACTOR FROM COMPLIANCE WITH REQUIRMENTS OF THE DRAWINGS AND SPECIFICATIONS. THIS CHECK IS ONLY FOR REVIEW OF GENERAL CONFORMANCE WITH THE DESIGN CONCEPT OF THE PROJECT AND GENERAL COMPLIANCE WITH THE INFORMATION GIVEN IN THE CONTRACT DOCUMENTS. THE CONTRACTOR IS RESPONSIBLE FOR: CONFIRMING AND CORRELATING ALL QUANTITIES AND DIMENSIONS; SELECTING FABRICATION PROCESSES AND TECHNIQUES OF CONSTRUCTION; COORDINATING HIS WORK WITH THAT OF ALL OTHER TRADES; AND PERFORMING HIS WORK IN A SAFE AND SATISFACTORY MANNER.

Job Number: BRF 025-1(42)
Reviewed By: E.F. LAWES
Date: April 11, 2017

40 IDX Drive
Building 100, Suite 200
South Burlington, VT 05403
802.497.6100
vhb

REV.	DATE	REMARKS	DWN	CHK	APVL	SHOP
2	03/09 2017	APPROVAL COMMENTS	ATD	PCP		
1	01/05 2017	ADD STIFFENERS (EXTRA-TEC-3429-001)	ATD	PCP		
0						

MATERIAL:	SURFACE PREP. & PRINT:	HOLES:	SHOP BOLTS:
M270-50 (UN)	SEE DWG GN1	15/16"ø (UN)	NONE

DESCRIPTION: GIRDER - 10G10

CASCO BAY STEEL STRUCTURES, INC.
1 WALLACE AVE. SOUTH PORTLAND, ME 04106
PHONE (207) 780-6722 FAX. (207) 780-6726
TENSOR 3429

STRUCTURE:
VT RTE 103 (MAIN STREET) OVER BLACK RIVER
BRIDGE NO. 25
ROUTE T.H.1 (VT 103) CLASS 1 F.A.S. 025-1

DRAWN: ATD DATE: 12/07
CHKD: PCP DATE: 12/13

LOCATION: TOWN OF LUDLOW, WINDSOR COUNTY, VT
PROJ NO. BRF 025-1(42)
CUSTOMER: COLD RIVER BRIDGES, LLC.

JOB NO. 684
DWG NO. 10
REV. 2

Mon, Mar 13, 2017 03:47:33 PM //users/jobs/3429/10_Rev2
PCP

ABM INFO		SHIP	BILL OF MATERIAL					JOB NO.	DRAWING NO.	REV.
								684	11	2
PAGE	LINE	MARK	QTY	MARK	MATERIAL	LENGTH FT	LENGTH INCHES	REMARKS	WT	PROCUREMENT NOTES
		11G11	1		GIRDER				23279	
1	G		1	wa	PL $\frac{1}{2}$×31 $\frac{1}{2}$	70	0 $\frac{5}{16}$	M270-50T2	3753	
1	J		1	wb	PL $\frac{1}{2}$×31 $\frac{1}{2}$	36	11 $\frac{15}{16}$	M270-50T2	1983	
1	L		1	ta	PL $\frac{7}{8}$×16	36	11 $\frac{5}{8}$		1761	
1	E		1	tb	PL $\frac{7}{8}$×16	70	0	M270-50T2	3335	
1	C		1	ba	PL 2×16	36	10 $\frac{3}{4}$	M270-50T2	4018	
1	A		1	bb	PL 2×16	69	11 $\frac{7}{8}$	M270-50T2	7621	
2	B		4	x1a	PL $\frac{3}{4}$×6	2	7 $\frac{1}{2}$	(MIE)	40	
2	C		5	x1b	PL $\frac{1}{2}$×5	2	7 $\frac{1}{2}$		22	
2	C		5	x1c	PL $\frac{1}{2}$×5	2	7 $\frac{1}{2}$		22	
3	B		321		STUD $\frac{7}{8}$ ø	0	7	A108	1	

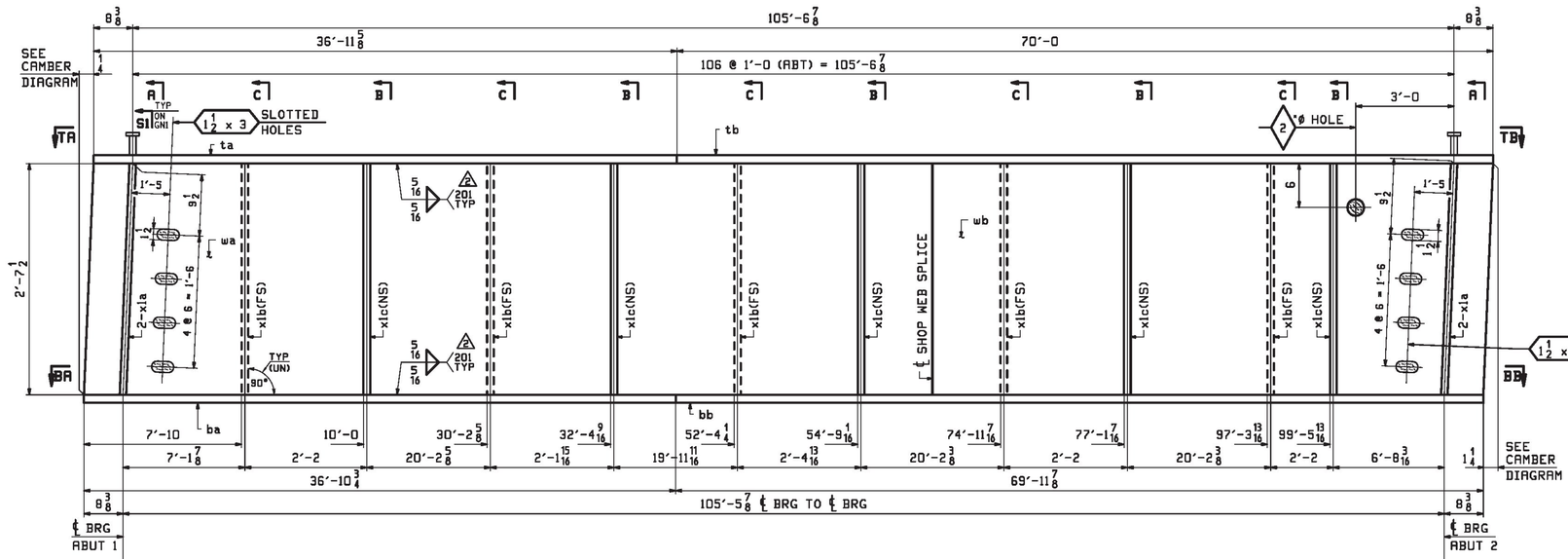

ONE - GIRDER - 11G11

FOR STANDARD DETAILS SEE SHEET X1 2
FOR CAMBER DIAGRAM SEE SHEET C1
FOR FLANGE DIAGRAM SEE SHEET C1
FOR GENERAL NOTES SEE SHEET GN1
T2 DENOTES MATERIAL SUBJECT TO CHARPY V-NOTCH TESTING

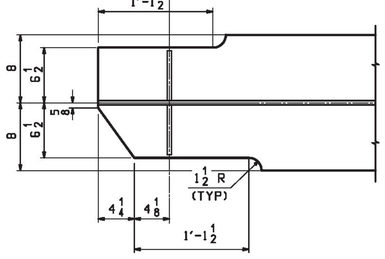

SECTION BA (AS SHOWN)
VIEW TA (SIMILAR)

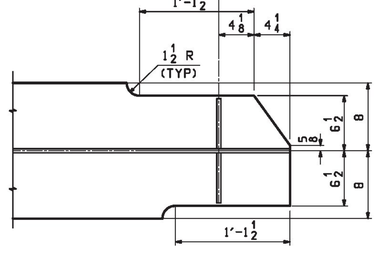

SECTION BB (AS SHOWN)
VIEW TB (SIMILAR)

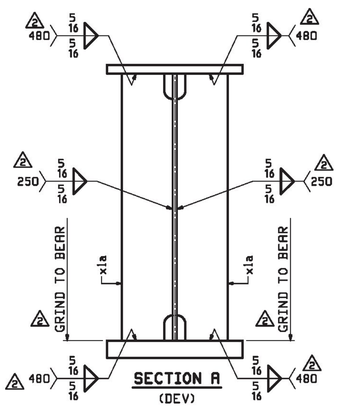

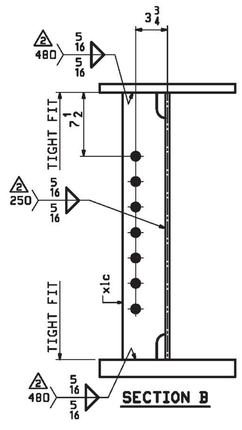

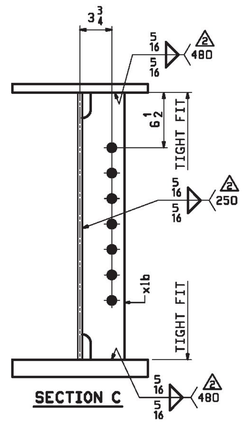

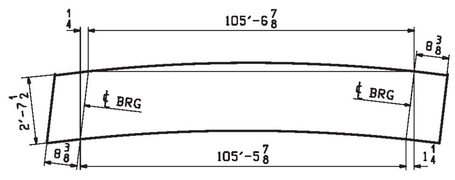

ORIENTATION DIAGRAM

Vermont Agency of Transportation
RECEIVED
CK'D BY VHB OK'D BY TAS
March 31, 2017
RESUBMIT ____ APPROVED YES
BY T Sumner DATE 4/11/17

SHOP DRAWING REVIEW

- REVIEWED AS REQUIRED BY THE CONSTRUCTION CONTRACT DOCUMENTS AND APPROVED, BUT ONLY FOR CONFORMANCE TO THE DESIGN CONCEPT OF THE WORK, AND SUBJECT TO FURTHER LIMITATIONS AND REQUIREMENTS CONTAINED IN THE CONSTRUCTION CONTRACT DOCUMENTS.
- ☐ REJECTED
- ☐ FURNISH AS CORRECTED
- ☐ REVISE AND RESUBMIT

CORRECTIONS OR COMMENTS MADE ON THE SHOP DRAWINGS DURING THIS REVIEW DO NOT RELIEVE CONTRACTOR FROM COMPLIANCE WITH REQUIREMENTS OF THE DRAWINGS AND SPECIFICATIONS. THIS CHECK IS ONLY FOR REVIEW OF GENERAL CONFORMANCE WITH THE DESIGN CONCEPT OF THE PROJECT AND GENERAL COMPLIANCE WITH THE INFORMATION GIVEN IN THE CONTRACT DOCUMENTS. THE CONTRACTOR IS RESPONSIBLE FOR: CONFIRMING AND CORRELATING ALL QUANTITIES AND DIMENSIONS; SELECTING FABRICATION PROCESSES AND TECHNIQUES OF CONSTRUCTION; COORDINATING HIS WORK WITH THAT OF ALL OTHER TRADES; AND PERFORMING HIS WORK IN A SAFE AND SATISFACTORY MANNER.

40 IDX Drive
Building 100, Suite 200
South Burlington, VT 05403
802.497.6100

Job Number: BRF 025-1(42)
Reviewed By: E.F. LAWES
Date: April 11, 2017

REV.	DATE	REMARKS	DWN	CHK	APVL	SHOP
2	03/09 2017	APPROVAL COMMENTS	ATD	PCP		
1	01/05 2017	ADD STIFFENERS (EXTRA-TEC-3429-001)	ATD	PCP		
0						

MATERIAL:	SURFACE PREP. & PRINT:	HOLES:	SHOP BOLTS:
M270-50 (UN)	SEE DWG GN1	15/16"ø (UN)	NONE

DESCRIPTION: GIRDER - 11G11

CASCO BAY STEEL STRUCTURES, INC.
1 WALLACE AVE. SOUTH PORTLAND, ME 04106
PHONE (207) 780-6722 FAX. (207) 780-6726
TENSOR 3429

STRUCTURE:	DRAWN:	DATE:
VT RTE 103 (MAIN STREET) OVER BLACK RIVER BRIDGE NO. 25 ROUTE T.H.1 (VT 103) CLASS 1 F.A.S. 025-1	ATD	12/07
	CHKD: PCP	DATE: 12/13
LOCATION: TOWN OF LUDLOW, WINDSOR COUNTY, VT	JOB NO. 684	DWG NO. 11
PROJ NO. BRF 025-1(42)		REV. 2
CUSTOMER: COLD RIVER BRIDGES, LLC.		

Mon, Mar 13, 2017 03:47:44 PM //users/jobs/3429/11 : Rev2
PCP

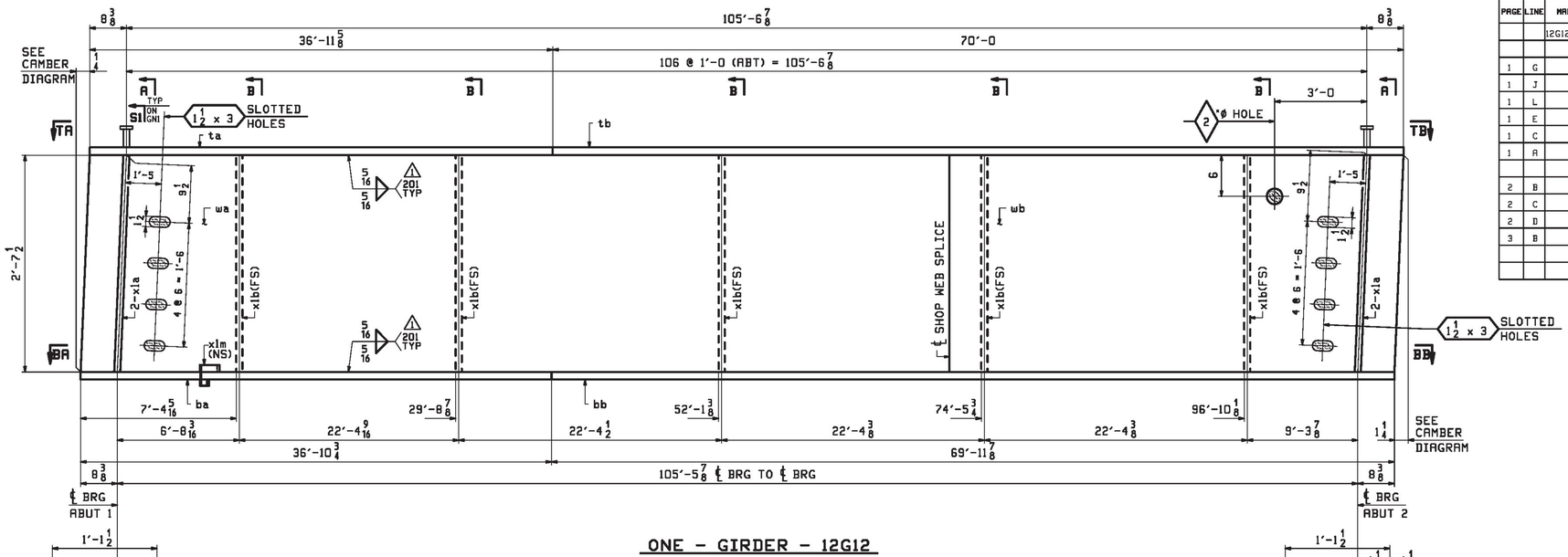

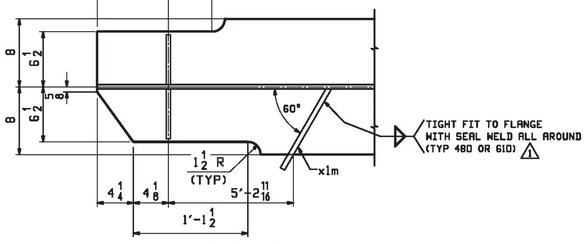

SECTION BA (AS SHOWN)
VIEW TA (SIMILAR)

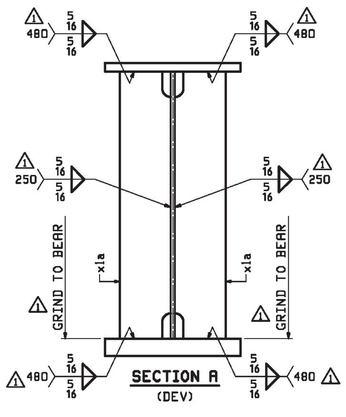

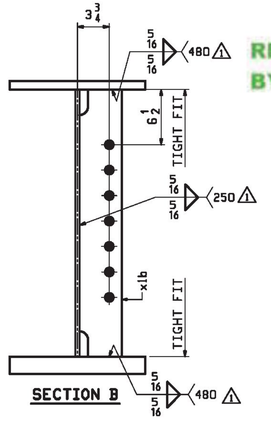

ONE - GIRDER - 12G12

FOR STANDARD DETAILS SEE SHEET X1
FOR CAMBER DIAGRAM SEE SHEET C1
FOR FLANGE DIAGRAM SEE SHEET C1
FOR GENERAL NOTES SEE SHEET GN1
T2 DENOTES MATERIAL SUBJECT TO CHARPY V-NOTCH TESTING

Vermont Agency of Transportation
RECEIVED
CK'D BY VHB OK'D BY TAS
March 31, 2017
RESUBMIT ____ APPROVED YES
BY T Sumner DATE 4/11/17

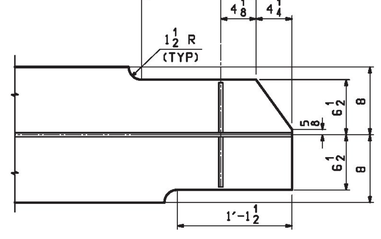

SECTION BB (AS SHOWN)
VIEW TB (SIMILAR)

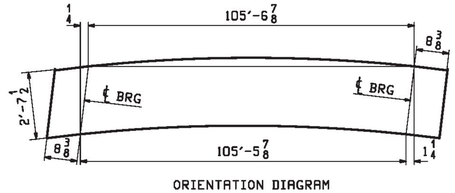

ORIENTATION DIAGRAM

ABM INFO PAGE	LINE	SHIP MARK	QTY	MARK	MATERIAL	LENGTH FT	LENGTH INCHES	REMARKS	WT	PROCUREMENT NOTES
		12G12	1		GIRDER				23170	
1	G		1	wa	PL 1/2 x 31 1/2	70	0 5/16	M270-50T2	3753	
1	J		1	wb	PL 1/2 x 31 1/2	36	11 15/16	M270-50T2	1983	
1	L		1	ta	PL 7/8 x 16	36	11 5/8		1761	
1	E		1	tb	PL 7/8 x 16	70	0	M270-50T2	3335	
1	C		1	ba	PL 2 x 16	36	10 3/4	M270-50T2	4018	
1	A		1	bb	PL 2 x 16	69	11 7/8	M270-50T2	7621	
2	B		4	x1a	PL 3/8 x 6	2	7 1/2	(MIE)	40	
2	C		5	x1b	PL 1/2 x 5	2	7 1/2		22	
2	D		1	x1m	PL 1/4 x 4	0	11		3	
3	B		321		STUD 7/8 ø	0	7	A108	1	

BILL OF MATERIAL — JOB NO. 684 — DRAWING NO. 12 — REV. 1

SHOP DRAWING REVIEW

REVIEWED AS REQUIRED BY THE CONSTRUCTION CONTRACT DOCUMENTS AND APPROVED, BUT ONLY FOR CONFORMANCE TO THE DESIGN CONCEPT OF THE WORK, AND SUBJECT TO FURTHER LIMITATIONS AND REQUIREMENTS CONTAINED IN THE CONSTRUCTION CONTRACT DOCUMENTS.
REJECTED
REVISE AND RESUBMIT
FURNISH AS CORRECTED

CORRECTIONS OR COMMENTS MADE ON THE SHOP DRAWINGS DURING THIS REVIEW DO NOT RELIEVE CONTRACTOR FROM COMPLIANCE WITH REQUIREMENTS OF THE DRAWINGS AND SPECIFICATIONS. THIS CHECK IS ONLY FOR REVIEW OF GENERAL CONFORMANCE WITH THE DESIGN CONCEPT OF THE PROJECT AND GENERAL COMPLIANCE WITH THE INFORMATION GIVEN IN THE CONTRACT DOCUMENTS. THE CONTRACTOR IS RESPONSIBLE FOR: CONFIRMING AND CORRELATING ALL QUANTITIES AND DIMENSIONS; SELECTING FABRICATION PROCESSES AND TECHNIQUES OF CONSTRUCTION; COORDINATING HIS WORK WITH THAT OF ALL OTHER TRADES; AND PERFORMING HIS WORK IN A SAFE AND SATISFACTORY MANNER.

Job Number: BRF 025-1(42)
Reviewed By: E.F. LAWES
Date: April 11, 2017

40 IDX Drive
Building 100, Suite 200
South Burlington, VT 05403
802.497.6100
vhb

REV.	DATE	REMARKS	DWN	CHK	APVL	SHOP
1	03/09 2017	APPROVAL COMMENTS	ATD	PCP		
0						

MATERIAL:	SURFACE PREP. & PRINT:	HOLES:	SHOP BOLTS:
M270-50 (UN)	SEE DWG GN1	15/16"ø (UN)	NONE

DESCRIPTION: GIRDER - 12G12

CASCO BAY STEEL STRUCTURES, INC.
1 WALLACE AVE. PHONE (207) 780-6722
SOUTH PORTLAND, ME 04106 FAX. (207) 780-6726
TENSOR 3429

STRUCTURE:
VT RTE 103 (MAIN STREET) OVER BLACK RIVER
BRIDGE NO. 25
ROUTE T.H.1 (VT 103) CLASS 1 F.A.S. 025-1

		DRAWN: ATD	DATE: 12/07
		CHK'D: PCP	DATE: 12/13
LOCATION:	TOWN OF LUDLOW, WINDSOR COUNTY, VT	JOB NO. 684	DWG NO. 12
PROJ NO.	BRF 025-1(42)		REV. 1
CUSTOMER:	COLD RIVER BRIDGES, LLC.		

PCP Mon, Mar 13, 2017 02:47:52 PM J:\work\jobs\1415\12 - Rev1

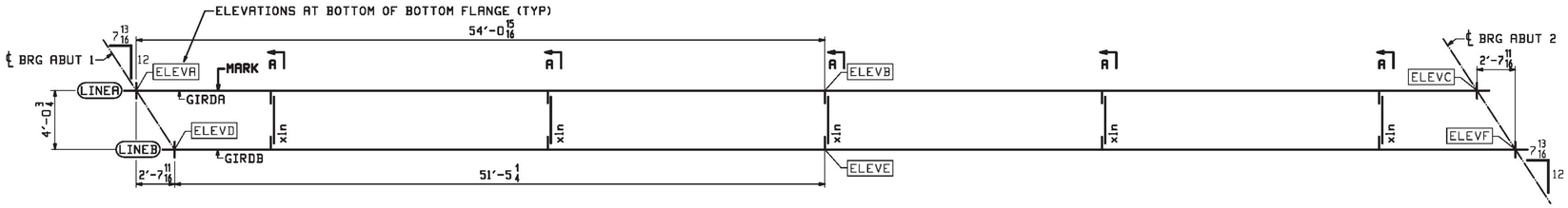

UNIT ASSEMBLY

MARK	LINEA	LINEB	GIRDA	GIRDB	ELEVA	ELEVB	ELEVC	ELEVD	ELEVE	ELEVF
13M1	1	2	1G1	2G2	1'-0	1'-8 1/16	1'-0	1'-1	1'-9	1'-0 15/16
13M2	3	4	3G3	4G4	1'-0	1'-8 1/16	1'-0	1'-1	1'-9	1'-0 15/16
13M3	5	6	5G5	6G6	1'-0	1'-8 1/16	1'-0	1'-1	1'-9	1'-0 15/16
13M4	7	8	7G7	8G8	1'-0 15/16	1'-9 1/16	1'-1	1'-0	1'-8 1/16	1'-0
13M5	9	10	9G9	10G10	1'-0 15/16	1'-9 1/16	1'-1	1'-0	1'-8 1/16	1'-0
13M6	11	12	11G11	12G12	1'-0 15/16	1'-9 1/16	1'-1	1'-0	1'-8 1/16	1'-0

△2

A DTI REP. (ALONG WTIH VTRAN'S QAI) WILL BE REQUIRED TO BE ON-SITE AT THE SHOP PRIOR TO ANY FINAL BOLTING, AS WELL AS ALL REQUIRED DTI VERIFICATION TESTS COMPLETED AND WITNESSED.

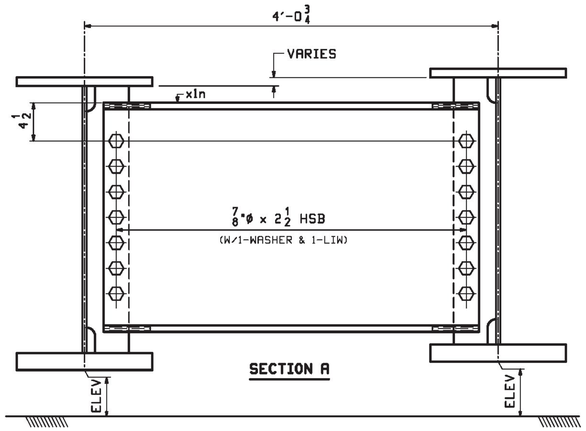

SECTION A

Vermont Agency of Transportation
RECEIVED
CK'D BY VHB OK'D BY TAS
March 31, 2017
RESUBMIT _____ APPROVED YES
BY T Sumner DATE 4/11/17

SHOP DRAWING REVIEW

X REVIEWED AS REQUIRED BY THE CONSTRUCTION CONTRACT DOCUMENTS AND APPROVED, BUT ONLY FOR CONFORMANCE TO THE DESIGN CONCEPT OF THE WORK, AND SUBJECT TO FURTHER LIMITATIONS AND REQUIREMENTS CONTAINED IN THE CONSTRUCTION CONTRACT DOCUMENTS.

☐ REJECTED ☐ REVISE AND RESUBMIT ☐ FURNISH AS CORRECTED

CORRECTIONS OR COMMENTS MADE ON THE SHOP DRAWINGS DURING THIS REVIEW DO NOT RELIEVE CONTRACTOR FROM COMPLIANCE WITH REQUIRMENTS OF THE DRAWINGS AND SPECIFICATIONS. THIS CHECK IS ONLY FOR REVIEW OF GENERAL CONFORMANCE WITH THE DESIGN CONCEPT OF THE PROJECT AND GENERAL COMPLIANCE WITH THE INFORMATION GIVEN IN THE CONTRACT DOCUMENTS. THE CONTRACTOR IS RESPONSIBLE FOR: CONFIRMING AND CORRELATING ALL QUANTITIES AND DIMENSIONS; SELECTING FABRICATION PROCESSES AND TECHNIQUES OF CONSTRUCTION; COORDINATING HIS WORK WITH THAT OF ALL OTHER TRADES; AND PERFORMING HIS WORK IN A SAFE AND SATISFACTORY MANNER.

vhb
40 IDX Drive
Building 100, Suite 200
South Burlington, VT 05403
802.497.6100

Job Number: BRF 025-1(42)
Reviewed By: E.F. LAWES
Date: April 11, 2017

NOTES:
1. ALL ELEVATIONS AND DIMENSIONS ARE GIVEN TO THE BOTTOM OF THE BOTTOM FLANGE.
2. FOR GENERAL NOTES SEE DRAWING GN1.
3. SECTION SHOWN IS TO ILLUSTRATE ELEVATION DIMENSIONS.

ABM INFO PAGE	ABM INFO LINE	SHIP MARK	BILL OF MATERIAL QTY	MARK	MATERIAL	LENGTH FT	LENGTH INCHES	REMARKS	WT	PROCUREMENT NOTES
		13M1	1		UNIT ASSEMBLY				48064	
			1	1G1	GIRDER SUB-ASSEMBLY			SEE DWG 1	23170	
			1	2G2	GIRDER SUB-ASSEMBLY			SEE DWG 2	23279	
2	G		5	xIn	W 27x84	3	8 1/4		310	
3	G		70		7/8 ø HSB	0	2 1/2	MECH GALV A325-1	0.80	
3	J		70		7/8 ø HSW			MECH GALV F436-1	0.07	
3	K		70		LOAD IND. 7/8 ø WASH FOR HSB			MECH GALV F959	0.07	
		13M2	1		UNIT ASSEMBLY				48173	
			1	3G3	GIRDER SUB-ASSEMBLY			SEE DWG 3	23279	
			1	4G4	GIRDER SUB-ASSEMBLY			SEE DWG 4	23279	
2	G		5	xIn	W 27x84	3	8 1/4		310	
3	G		70		7/8 ø HSB	0	2 1/2	MECH GALV A325-1	0.80	
3	J		70		7/8 ø HSW			MECH GALV F436-1	0.07	
3	K		70		LOAD IND. 7/8 ø WASH FOR HSB			MECH GALV F959	0.07	
		13M3	1		UNIT ASSEMBLY				48173	
			1	5G5	GIRDER SUB-ASSEMBLY			SEE DWG 5	23279	
			1	6G6	GIRDER SUB-ASSEMBLY			SEE DWG 6	23279	
2	G		5	xIn	W 27x84	3	8 1/4		310	
3	G		70		7/8 ø HSB	0	2 1/2	MECH GALV A325-1	0.80	
3	J		70		7/8 ø HSW			MECH GALV F436-1	0.07	
3	K		70		LOAD IND. 7/8 ø WASH FOR HSB			MECH GALV F959	0.07	
		13M4	1		UNIT ASSEMBLY				48307	
			1	7G7	GIRDER SUB-ASSEMBLY			SEE DWG 7	23279	
			1	8G8	GIRDER SUB-ASSEMBLY			SEE DWG 8	23413	
2	G		5	xIn	W 27x84	3	8 1/4		310	
3	G		70		7/8 ø HSB	0	2 1/2	MECH GALV A325-1	0.80	
3	J		70		7/8 ø HSW			MECH GALV F436-1	0.07	
3	K		70		LOAD IND. 7/8 ø WASH FOR HSB			MECH GALV F959	0.07	
		13M5	1		UNIT ASSEMBLY				48307	
			1	9G9	GIRDER SUB-ASSEMBLY			SEE DWG 9	23413	
			1	10G10	GIRDER SUB-ASSEMBLY			SEE DWG 10	23279	
2	G		5	xIn	W 27x84	3	8 1/4		310	
3	G		70		7/8 ø HSB	0	2 1/2	MECH GALV A325-1	0.80	
3	J		70		7/8 ø HSW			MECH GALV F436-1	0.07	
3	K		70		LOAD IND. 7/8 ø WASH FOR HSB			MECH GALV F959	0.07	
		13M6	1		UNIT ASSEMBLY				48064	
			1	11G11	GIRDER SUB-ASSEMBLY			SEE DWG 11	23279	
			1	12G12	GIRDER SUB-ASSEMBLY			SEE DWG 12	23170	
2	G		5	xIn	W 27x84	3	8 1/4		310	
3	G		70		7/8 ø HSB	0	2 1/2	MECH GALV A325-1	0.80	
3	J		70		7/8 ø HSW			MECH GALV F436-1	0.07	
3	K		70		LOAD IND. 7/8 ø WASH FOR HSB			MECH GALV F959	0.07	

JOB NO. 684 | DRAWING NO. 13 | REV. △2

REV.	DATE	REMARKS	DWN	CHK	APVL	SHOP
△2	03/09 2017	APPROVAL COMMENTS/REV TABLE FORMAT	ATD	PCP		
△1	01/09 2017	REV WEIGHTS (EXTRR-TEC-3429-001)	ATD	PCP		
0						

MATERIAL:	SURFACE PREP. & PAINT:	HOLES:	SHOP BOLTS:
M270-50 (UN)	SEE DWG GN1	AS NOTED	AS NOTED

DESCRIPTION: UNIT ASSEMBLY DIAGRAM

CASCO BAY STEEL STRUCTURES, INC.
1 WALLACE AVE.
SOUTH PORTLAND, ME 04106
PHONE (207) 780-6722
FAX. (207) 780-6726
TENSOR 3429

STRUCTURE:
VT RTE 103 (MAIN STREET) OVER BLACK RIVER
BRIDGE NO. 25
ROUTE T.H.1 (VT 103) CLASS 1 F.A.S. 025-1

DRAWN: ATD DATE: 12/07
CHKD: PCP DATE: 12/13

LOCATION: TOWN OF LUDLOW, WINDSOR COUNTY, VT
PROJ NO. BRF 025-1(42)
CUSTOMER: COLD RIVER BRIDGES, LLC.

JOB NO. 684 | DWG NO. 13 | REV. △2

PCP Mon, Nov 13, 2017 03:48:52 PM //users/jobs/2482/13_Rev2

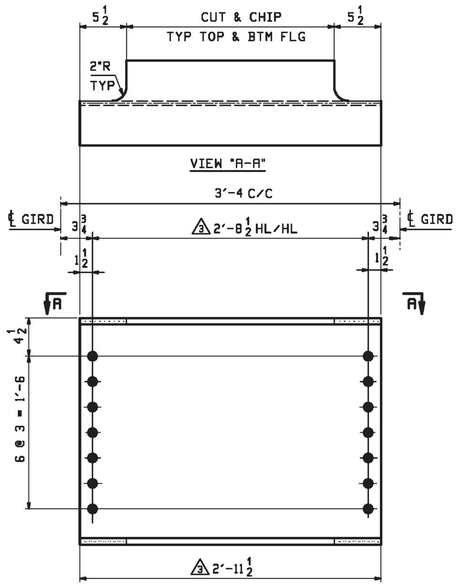

20 - EXT. DIAPH. - 14D1

EXT. DIAPHRAGM (TYPE ED)

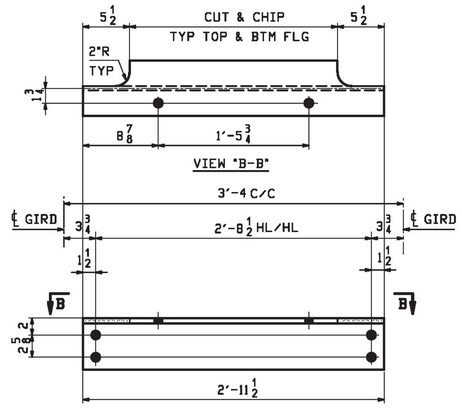

11 - WATER MAIN SUPPORT - 14U1

EXT. DIAPHRAGM (TYPE ED)

ABM INFO		SHIP	BILL OF MATERIAL					JOB NO.	DRAWING NO.	REV.
								684	14	3
PAGE	LINE	MARK	QTY	MARK	MATERIAL	LENGTH FT	LENGTH INCHES	REMARKS	WT	PROCUREMENT NOTES
					EXT. DIAPHRAGM					
2	H	14D1	20		W 27x84	2	11 1/2		248	
					WATER MAIN SUPPORT					
2	J	14U1	11		WT 6x15	2	11 1/2		44	

NOTE:
FOR GENERAL NOTES SEE DRAWING GN1.

Vermont Agency of Transportation
RECEIVED
CK'D BY VHB OK'D BY TAS
March 31, 2017
RESUBMIT APPROVED YES
BY T Sumner DATE 4/11/17

SHOP DRAWING REVIEW

☒ REVIEWED AS REQUIRED BY THE CONSTRUCTION CONTRACT DOCUMENTS AND APPROVED, BUT ONLY FOR CONFORMANCE TO THE DESIGN CONCEPT OF THE WORK, AND SUBJECT TO FURTHER LIMITATIONS AND REQUIREMENTS CONTAINED IN THE CONSTRUCTION CONTRACT DOCUMENTS.

☐ REJECTED ☐ REVISE AND RESUBMIT ☐ FURNISH AS CORRECTED

CORRECTIONS OR COMMENTS MADE ON THE SHOP DRAWINGS DURING THIS REVIEW DO NOT RELIEVE CONTRACTOR FROM COMPLIANCE WITH REQUIRMENTS OF THE DRAWINGS AND SPECIFICATIONS. THIS CHECK IS ONLY FOR REVIEW OF GENERAL CONFORMANCE WITH THE DESIGN CONCEPT OF THE PROJECT AND GENERAL COMPLIANCE WITH THE INFORMATION GIVEN IN THE CONTRACT DOCUMENTS. THE CONTRACTOR IS RESPONSIBLE FOR: CONFIRMING AND CORRELATING ALL QUANTITIES AND DIMENSIONS; SELECTING FABRICATION PROCESSES AND TECHNIQUES OF CONSTRUCTION; COORDINATING HIS WORK WITH THAT OF ALL OTHER TRADES; AND PERFORMING HIS WORK IN A SAFE AND SATISFACTORY MANNER.

vhb
40 IDX Drive
Building 100, Suite 200
South Burlington, VT 05403
802.497.6100

Job Number: BRF 025-1(42)
Reviewed By: E.F. LAWES
Date: April 11, 2017

REV.	DATE	REMARKS	DWN	CHK	APVL	SHOP
3	03/09 2017	APPROVAL COMMENTS	ATD	PCP		
2	01/27 2017	CORRECTED WT SIZE IN BOM	ATD	PCP		
1	01/05 2017	REV EXT. DIAPH QTY (EXTRA-TEC-3429-001)	ATD	PCP		
0						

MATERIAL:	SURFACE PREP. & PAINT:	HOLES:	SHOP BOLTS:
M270-50	SEE DWG GN1	15/16" ø	NONE

DESCRIPTION: DIAPHRAGMS

CASCO BAY STEEL STRUCTURES, INC.
1 WALLACE AVE. PHONE (207) 780-6722
SOUTH PORTLAND, ME 04106 FAX. (207) 780-6726
TENSOR 3429

STRUCTURE:
VT RTE 103 (MAIN STREET) OVER BLACK RIVER
BRIDGE NO. 25
ROUTE T.H.1 (VT 103) CLASS 1 F.A.S. 025-1

DRAWN:	DATE:
ATD	12/08
CHKD: PCP	DATE: 12/13

LOCATION: TOWN OF LUDLOW, WINDSOR COUNTY, VT
PROJ NO. BRF 025-1(42)
CUSTOMER: COLD RIVER BRIDGES, LLC.

JOB NO. 684
DWG NO. 14
REV. 3

	ABM INFO		SHIP	BILL OF MATERIAL					JOB NO. 684	DRAWING NO. 15	REV. 2
	PAGE	LINE	MARK	QTY	MARK	MATERIAL	LENGTH FT	LENGTH INCHES	REMARKS	WT	PROCUREMENT NOTES
2			15AB1	96		ANCHOR BOLTS				42	
2	5	B		96		2 ø ROD	3	1	(HDG) F1554-105	33	
2	5	F		288		2 ø HHN			(HDG) A563 (DH3)	3	
2											
						LEVELING PLATES					
2	5	H	15M1	4		PL $2\frac{1}{8}$x$6\frac{1}{2}$	2	11	(HDG) M270-50	137	
						LEVELING PLATES					
2	5	H	15M2	20		PL $2\frac{1}{8}$x$6\frac{1}{2}$	2	11	(HDG) M270-50	137	
						PLATE WASHERS					
2	5	J	15M3	48		PL $\frac{1}{8}$x4	0	8	(HDG) M270-50	1	

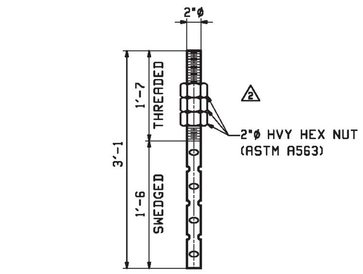

2 96 - ANCHOR BOLTS - 15AB1
(HOT-DIP GALVANIZED)

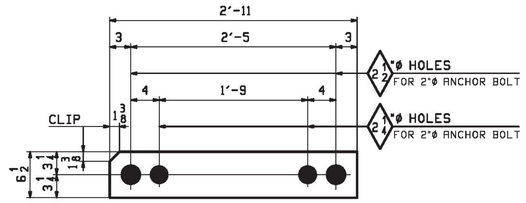

2 4 - LEVELING PLATES - 15M1
GIRDERS 1 & 12
(HOT-DIP GALVANIZED)

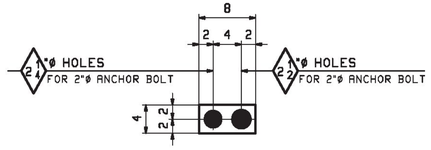

2 48 - PLATE WASHERS - 15M3
(HOT-DIP GALVANIZED)

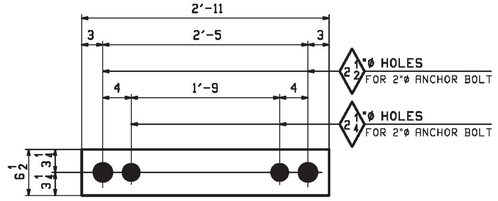

2 20 - LEVELING PLATES - 15M2
GIRDERS 2 - 11
(HOT-DIP GALVANIZED)

NOTE:
FOR GENERAL NOTES SEE DRAWING GN1.

Vermont Agency of Transportation
RECEIVED
CK'D BY VHB OK'D BY TAS
March 31, 2017
RESUBMIT ____ APPROVED YES
BY T Sumner DATE 4/11/17

SHOP DRAWING REVIEW

X REVIEWED AS REQUIRED BY THE CONSTRUCTION CONTRACT DOCUMENTS AND APPROVED, BUT ONLY FOR CONFORMANCE TO THE DESIGN CONCEPT OF THE WORK, AND SUBJECT TO FURTHER LIMITATIONS AND REQUIREMENTS CONTAINED IN THE CONSTRUCTION CONTRACT DOCUMENTS.

☐ REJECTED ☐ REVISE AND RESUBMIT ☐ FURNISH AS CORRECTED

CORRECTIONS OR COMMENTS MADE ON THE SHOP DRAWINGS DURING THIS REVIEW DO NOT RELIEVE CONTRACTOR FROM COMPLIANCE WITH REQUIRMENTS OF THE DRAWINGS AND SPECIFICATIONS. THIS CHECK IS ONLY FOR REVIEW OF GENERAL CONFORMANCE WITH THE DESIGN CONCEPT OF THE PROJECT AND GENERAL COMPLIANCE WITH THE INFORMATION GIVEN IN THE CONTRACT DOCUMENTS. THE CONTRACTOR IS RESPONSIBLE FOR: CONFIRMING AND CORRELATING ALL QUANTITIES AND DIMENSIONS; SELECTING FABRICATION PROCESSES AND TECHNIQUES OF CONSTRUCTION; COORDINATING HIS WORK WITH THAT OF ALL OTHER TRADES; AND PERFORMING HIS WORK IN A SAFE AND SATISFACTORY MANNER.

vhb
40 IDX Drive
Building 100, Suite 200
South Burlington, VT 05403
802.497.6100

Job Number: BRF 025-1(42)
Reviewed By: E.F. LAWES
Date: April 11, 2017

REV.	DATE	REMARKS	DWN	CHK	APVL	SHOP
2	03/09 2017	APPROVAL COMMENTS	ATD	PCP		
1	01/09 2017	REV ANCHOR BOLTS TO BE ONE SIZE	ATD	PCP		
0						

MATERIAL:	SURFACE PREP. & PAINT:	HOLES:	SHOP BOLTS:
M270-50 (UN)	SEE DWG GN1	AS NOTED	NONE

DESCRIPTION: ANCHOR BOLTS

CASCO BAY STEEL STRUCTURES, INC.
1 WALLACE AVE. PHONE (207) 780-6722
SOUTH PORTLAND, ME 04106 FAX. (207) 780-6726
TENSOR 3429

STRUCTURE:
VT RTE 103 (MAIN STREET) OVER BLACK RIVER
BRIDGE NO. 25
ROUTE T.H.1 (VT 103) CLASS 1 F.A.S. 025-1

DRAWN: ATD DATE: 12/16
CHK'D: PCP DATE: 12/21

LOCATION: TOWN OF LUDLOW, WINDSOR COUNTY, VT
PROJ NO. BRF 025-1(42)
CUSTOMER: COLD RIVER BRIDGES, LLC.

JOB NO. 684
DWG NO. 15
REV. 2

PCP Mon, Mar 13, 2017 03:45:00 PM /users/jobs/2439/15 - Rev2

Vermont Agency of Transportation

RECEIVED

CK'D BY VHB OK'D BY TAS

February 8, 2017

RESUBMIT _____ APPROVED AS NOTED

BY T Sumner DATE 2/10/17

REV.	ALTERATION	DATE	BY

NOTE:
ARM TO BE FIELD DRILLED BY OTHERS.

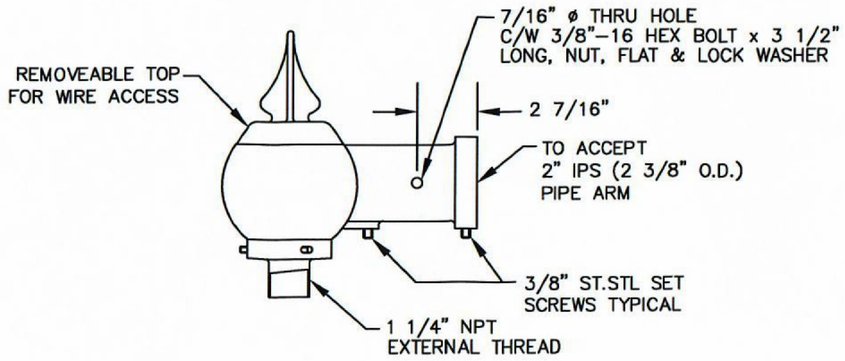

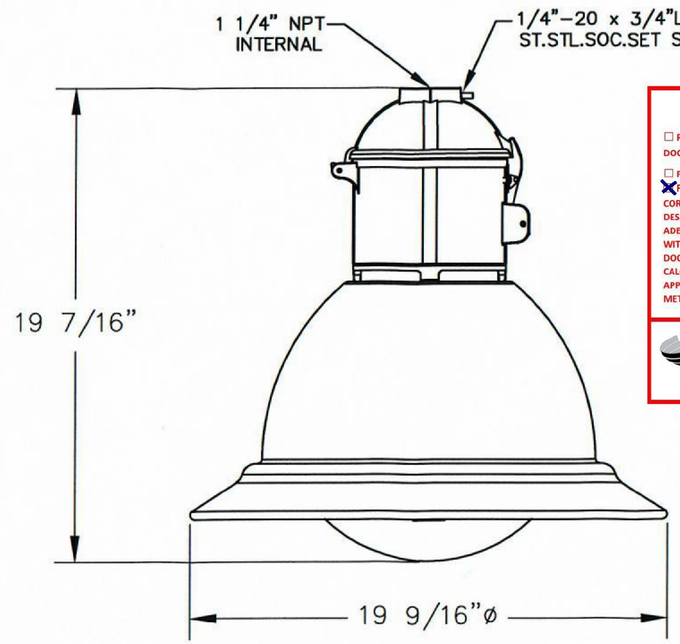

LUMINAIRE SPECIFICATIONS

CATALOGUE NO.:	K729–P4SA–III–60(SSL) –7030–120:277V–KPL20
QUANTITY:	
OPTICAL SYSTEM:	FLAT ARRAY, SAG LENS
IES CLASS.:	TYPE III
WATTAGE:	60W (7030 SERIES)
CCT/DIODE:	4000K/HE5
LIGHT SOURCE:	SOLID STATE LIGHTING
LINE VOLTAGE:	120:277V
PAINT:	TEXTURED FOREST GREEN
OPTIONS	KPL–20 LEVELING DEVICE

OPTIONS

QUICK DISCONNECT ☒
TERMINAL BLOCK ☐
} PLEASE SELECT ONE

Please specify "SMOOTH FOREST GREEN" to match the existing fixtures in the Town.

SUBMITTAL REVIEW

☐ REVIEWED AND APPROVED BUT ONLY FOR CONFORMANCE TO THE CONSTRUCTION CONTRACT DOCUMENTS

☐ REVISE AND RESUBMIT

☒ FURNISH AS CORRECTED

CORRECTIONS OR COMMENTS MADE DURING THIS REVIEW DO NOT RELIEVE THE CONTRACTOR OR HIS DESIGNER FROM COMPLIANCE WITH PROFESSIONAL REQUIRMENTS OR FOR RESPONSIBILITY FOR THE ADEQUACY OF THE SUBMITTAL INFORMATION. THIS CHECK IS ONLY FOR REVIEW OF GENERAL CONFORMANCE WITH INDUSTRY STANDARDS AND GENERAL COMPLIANCE WITH THE INFORMATION GIVEN IN THE CONTRACT DOCUMENTS. VHB HAS NOT CONDUCTED A DETAILED REVIEW OF THE SUBMITTAL AND HAS NOT PERFORMED CALCULATIONS OR ASSESSED THE ADEQUACY OF LOADS, DESIGN CRITERIA, QUANTITIES, DIMENSIONS, ETC. APPROVAL OF THE SUBMITTTAL DOES NOT CONSTITUTE VHB'S APROVAL OF ANY CONSTRUCTION MEANS, METHOEDS OR TECHNIQUES. THESE REMAIN THE RESPONSIBILITY OF THE CONTRACTOR.

vhb
40 IDX Drive
Building 100, Suite 200
South Burlington, VT 05403
802.497.6100

Job Number: BRF 025-1(42)
Reviewed By: E.F. LAWES
Date: Feb. 10, 2017

PPROVAL & DATE:

CUSTOMER ORDER No:	–
KING U.S. ORDER No:	–
KMFG. ORDER No:	–

King Luminaire • StressCrete • Est. 1953
STRESSCRETE GROUP

Manufacturing Locations:
Burlington, Ontario 1–800–268–7809
Northport, Alabama 1–800–435–6563
Atchison, Kansas 1–800–837–1024
Jefferson, Ohio 1–800–268–7809

PROJECT/CUSTOMER: LUDLOW, VT

DRAWN BY:	AT:	CHECKED BY:	DATE:	REVISION:
TASHI B.	SC1		05/26/16	

DRAWING TYPE:	DRAWING NUMBER:
CONCEPT DWG.	206A8733–1

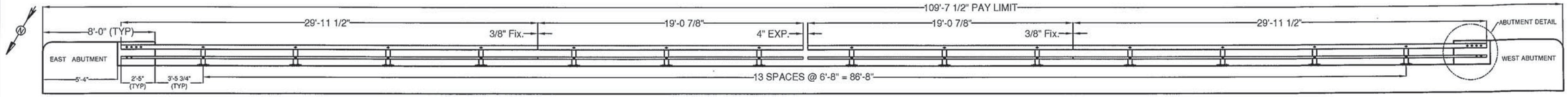

SOUTH RAILING, FACING SOUTH

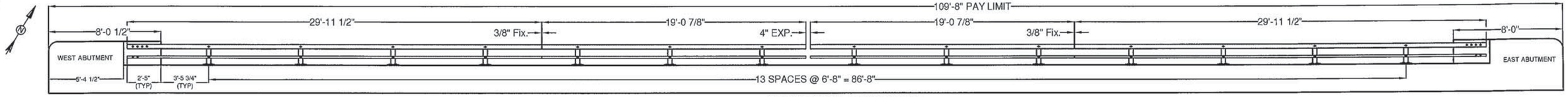

NORTH RAILING, FACING NORTH

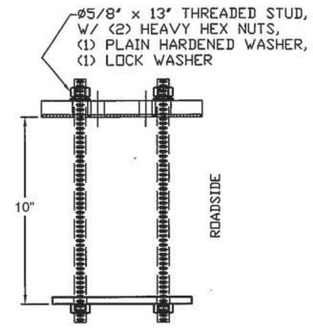

ANCHORAGE DETAIL

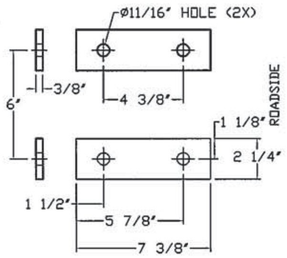

ANCHOR PLATES

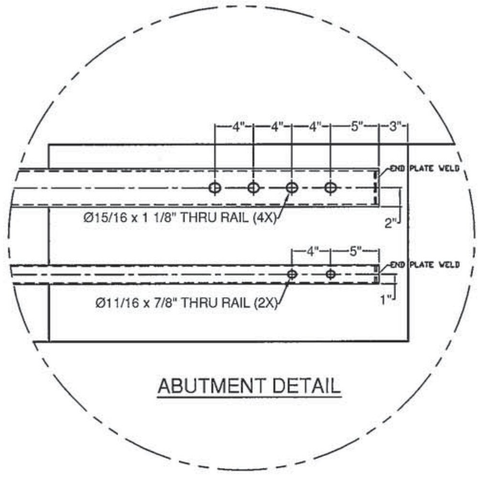

ABUTMENT DETAIL

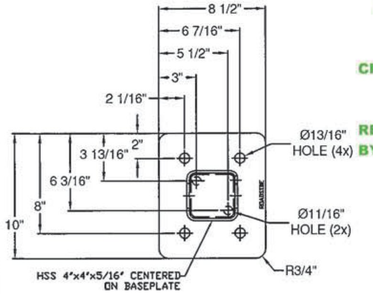

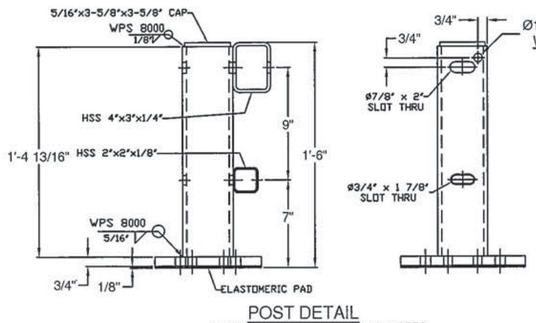

POST DETAIL
HARDWARE PER HARDWARE NOTES

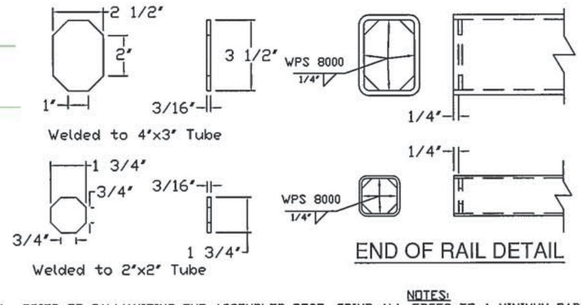

END OF RAIL DETAIL

Vermont Agency of Transportation
RECEIVED
CK'D BY VHB OK'D BY TAS
March 14, 2017
RESUBMIT ____ APPROVED YES
BY T Sumner DATE 3/14/17

NOTES:

1. PRIOR TO GALVANIZING THE ASSEMBLED POST, GRIND ALL EDGES TO A MINIMUM RADIUS OF 1/16".
2. ALL POSTS SHALL BE SET NORMAL TO GRADE.
3. SECTIONS OF RAIL TUBE SHALL BE ATTACHED TO A MINIMUM OF TWO BRIDGE POSTS AND PREFERABLY TO AT LEAST 4 POSTS.
4. HOLES IN RAILS FOR TUBE ATTACHMENT, WILL BE SHOP-DRILLED AND MAY BE FIELD DRILLED. HOLES SHALL BE COATED WITH AN APPROVED ZINC-RICH PAINT PRIOR TO INSTALLATION.
5. BOLTS SHALL BE TORQUED SNUG TIGHT (APPROXIMATELY 100 FT-LB).
6. RAIL TUBES SHALL BE ATTACHED USING FULL DIAMETER BODY ASTM A449 (TYPE I) ROUND HEAD BOLTS INSERTED THROUGH THE FACE OF THE TUBE.
7. SEE STANDARD DRAWING G-I FOR DETAILS OF DELINEATORS. A DELINEATOR SHALL BE INSTALLED AT 30 FOOT SPACING OR THE NEAREST POST. WHITE IS TO BE INSTALLED ON THE DRIVER'S RIGHT. FOR ONE WAY BRIDGES, YELLOW IS TO BE INSTALLED ON THE DRIVER'S LEFT. PAYMENT FOR DELINEATORS SHALL BE INCIDENTAL TO OTHER ITEMS.
8. AESTHETIC TREATMENT TYPE SHALL BE APPLIED AS SPECIFIED IN THE CONTRACT PLANS. IF NONE IS SPECIFIED IT SHALL NOT BE USED. AESTHETIC TREATMENT DETAILED ON THIS SHEET MAY ALSO BE APPLIED ON THE FASCIA SIDE OF THE RAIL, IF SPECIFIED IN THE CONTRACT PLANS.
9. BRIDGE RAILING SHALL HAVE A RUBBED FINISH IN ACCORDANCE WITH SECTION 501.
10. THIS RAILING MEETS THE REQUIREMENTS FOR A NCHRP REPORT 350 TL-4 SERVICE LEVEL.
11. HOLES FOR MOUNTING DELINEATORS TO BE FIELD DRILLED. HOLES SHALL BE COATED WITH AN APPROVED ZINC-RICH PAINT PRIOR TO INSTALLATION.
12. ALL STEEL COMPONENTS OF BRIDGE RAILING AND BOX BEAM GUARDRAIL, INCLUDING THE RAIL CONNECTION TO THE BRIDGE RAIL SHALL BE GALVANIZED IN ACCORDANCE WITH THE STANDARD SPECIFICATIONS.
13. ALL EXPOSED GALVANIZED STEEL COMPONENTS TO BE POWDER COATED BLACK 27038 PER FEDERAL STANDARD NO 595, & PER ASTM D7803

BILL OF MATERIAL

ITEM #	QTY	PART #	DESCRIPTION	ASTM DESIGNATION
1	28	0033.90017	TWO RAIL POST & BASE PLATE ASSEMBLY	A572 Gr. 50, A500 Gr. B
2	4	-	2' X 2' X 1/8' RAIL @ 29'-11 1/2' W/ END PLATES	A500 Gr. B
3	4	-	2' X 2' X 1/8' RAIL @ 19'-0 7/8'	A500 Gr. B
4	4	-	4' X 3' X 1/4' RAIL @ 29'-11 1/2' W/ END PLATES	A500 Gr. B
5	4	-	4' X 3' X 1/4' RAIL @ 19'-0 7/8' W/ END PLATES	A500 Gr. B
6	4	0033.90069	1-1/2' X 1-1/2' FIX. SPL BAR @ 2' 4'	A572 Gr. 50
7	2	0033.90328	1-1/2' X 1-1/2' EXP. SPL BAR @ 2' 4'	A572 Gr. 50
8	4	0033.90071	2-1/4' X 3-1/4' FIX. SPL. BAR @ 2' 4'	A572 Gr. 50
9	2	0033.90072	2-1/4' X 3-1/4' EXP. SPL. BAR @ 2' 4'	A572 Gr. 50
10	28	0033.00295	3/8' X 2 1/4' X 7 3/8' ANCHOR PLATES	A36
11	114*	0042.05813	ø 5/8' X 13' ANCHOR STUDS	A449
12	226*	0080.15901	ø 5/8' HEAVY HEX NUTS	A563
13	112	0080.15911	ø 5/8' FLAT WASHERS	F436
14	112	0080.15920	ø 5/8' LOCK WASHERS	ASME B18.21.1
15	28	0080.05565	ø 5/8' X 7 1/2' SLOTTED, ROUND HEAD BOLT, NUT, F.W., & L.W.	A449, A563 DH, F436, & ASME D18.21.1
16	28	0080.06410	ø 3/4' X 8 1/2' SLOTTED, ROUND HEAD BOLT, NUT, F.W., & L.W.	A449, A563 DH, F436, & ASME D18.21.1
17	24	0080.05275	ø 5/8' X 3' HEX BOLT, NUT, F.W., & L.W.	A325, A563 DH, F436, & ASME D18.21.1
18	24	0080.07330	ø 7/8' X 5 1/2' HEX BOLT, NUT, F.W., & L.W.	A325, A563 DH, F436, & ASME D18.21.1
19	8	0080.05760	ø 5/8' X 13' SLOTTED, ROUND HEAD BOLT, NUT, F.W., & L.W.	A449, A563 DH, F436, & ASME D18.21.1
20	16	0080.07710	ø 7/8' X 14' SLOTTED, ROUND HEAD BOLT, NUT, F.W., & L.W.	A449, A563 DH, F436, & ASME D18.21.1
21	28	0033.00053	1/8' ELASTOMERIC PAD	D2240
22	2	0054.900015	APPROACH, END WALL CONNECTORS	PER BOM
23	2	0054.900016	TRAILING, END WALL CONNECTORS	PER BOM

*-2 EXTRA FOR VOAT TESTING

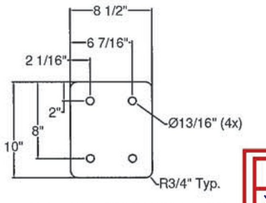

1/8" ELASTOMERIC PAD

HARDWARE NOTES

ITEM #	FUNCTION
15	BOLT BOTTOM RAIL TO POST (ITEM #1)
16	BOLT TOP RAIL TO POST (ITEM #1)
17	BOLT BOTTOM SPLICE BARS (ITEM #6) TO BOTTOM RAIL
18	BOLT TOP SPLICE BARS (ITEM #7) TO TOP RAIL
19	BOLT BOTTOM RAIL TO END ABUTMENT
20	BOLT TOP RAIL TO END ABUTMENT

SHOP DRAWING REVIEW

X REVIEWED AS REQUIRED BY THE CONSTRUCTION CONTRACT DOCUMENTS AND APPROVED, BUT ONLY FOR CONFORMANCE TO THE DESIGN CONCEPT OF THE WORK, AND SUBJECT TO FURTHER LIMITATIONS AND REQUIREMENTS CONTAINED IN THE CONSTRUCTION CONTRACT DOCUMENTS.

☐ REJECTED ☐ REVISE AND RESUBMIT ☐ FURNISH AS CORRECTED

CORRECTIONS OR COMMENTS MADE ON THE SHOP DRAWINGS DURING THIS REVIEW DO NOT RELIEVE CONTRACTOR FROM COMPLIANCE WITH REQUIREMENTS OF THE DRAWINGS AND SPECIFICATIONS. THIS CHECK IS ONLY FOR REVIEW OF GENERAL CONFORMANCE WITH THE DESIGN CONCEPT OF THE PROJECT AND GENERAL COMPLIANCE WITH THE INFORMATION GIVEN IN THE CONTRACT DOCUMENTS. THE CONTRACTOR IS RESPONSIBLE FOR: CONFIRMING AND CORRELATING ALL QUANTITIES AND DIMENSIONS; SELECTING FABRICATION PROCESSES AND TECHNIQUES OF CONSTRUCTION; COORDINATING HIS WORK WITH THAT OF ALL OTHER TRADES; AND PERFORMING HIS WORK IN A SAFE AND SATISFACTORY MANNER.

vhb 40 IDX Drive, Building 100, Suite 200, South Burlington, VT 05403, 802.497.6100

Job Number: BRF 025-1(42)
Reviewed By: E.F. LAWES
Date: MARCH 14, 2017

ITEM #: 900.640

STRUCTURAL STEEL TO COMPLY W/ ASTM A6

TOLERANCE UNLESS OTHERWISE NOTED:
FRACTIONS = ± 1/16"
ANGLES = ± 1/2°
DIAMETERS = ± 1/32"

25

R	NO.	SCRIPTION	BY
E	1		
V			

ELDERLEE, INC.
OAKS CORNERS, NEW YORK 14518
email: dlong@elderlee.com / epeek@elderlee.com
Tel: 315-789-6670 Fax: 315-789-6615

CERTIFIED FABRICATOR

ORTHOGRAPHIC PROJECTION

DRAWN	D.K.	12/12/16
CHECKED	E.P.	12/12/16
APPROVED	D.L.	12/12/16
SCALE	SCHEMATIC	
DRAWING NO.	FR LAFAYETTE - LUDLOW	

TOP RAIL FIXED SPLICE DETAIL

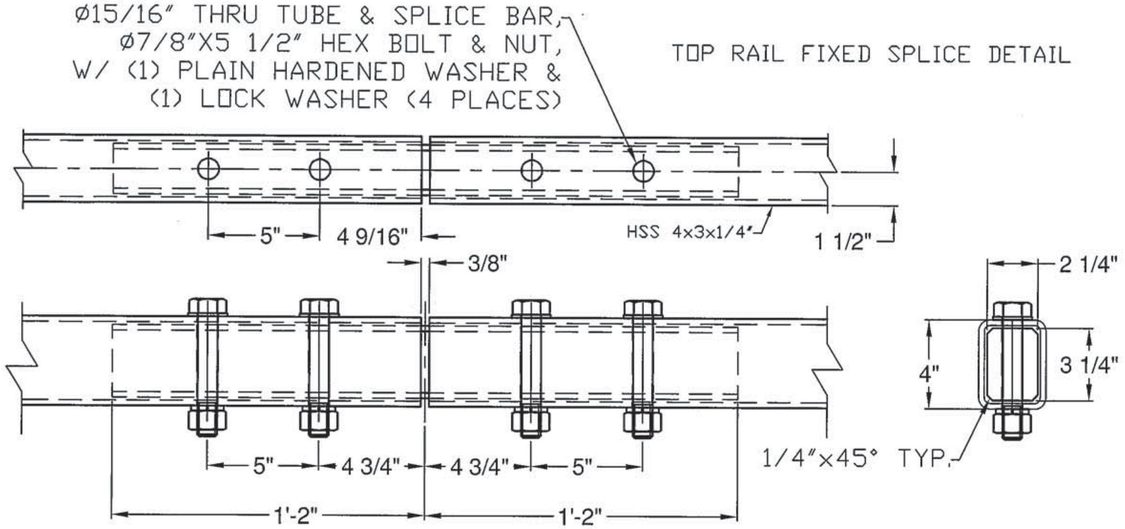

TOP RAIL EXPANSION SPLICE DETAIL

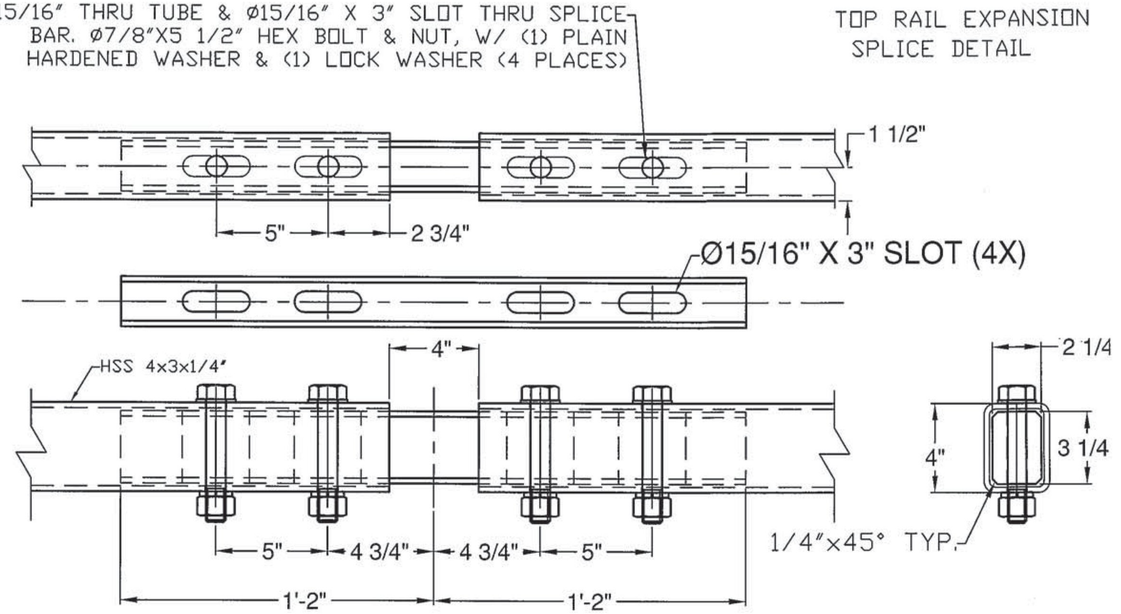

BOTTOM RAIL FIXED SPLICE DETAIL

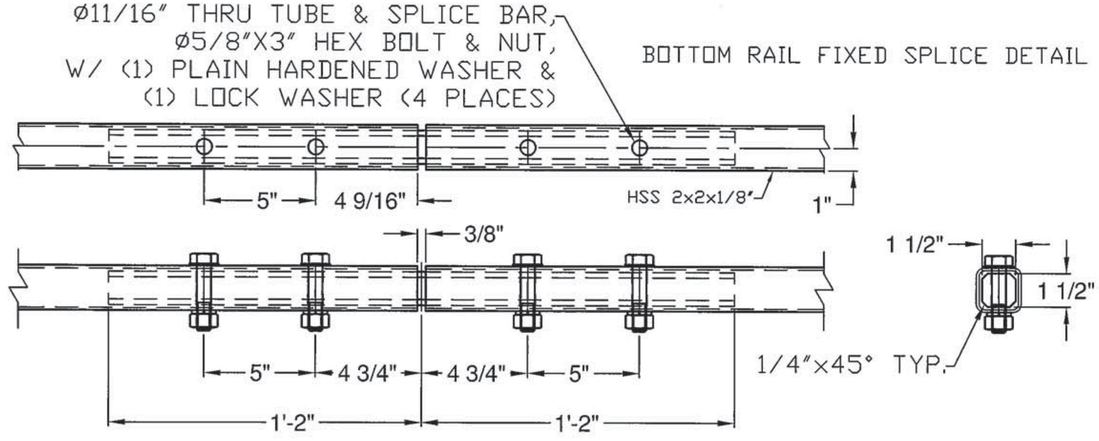

BOTTOM RAIL EXPANSION SPLICE DETAIL

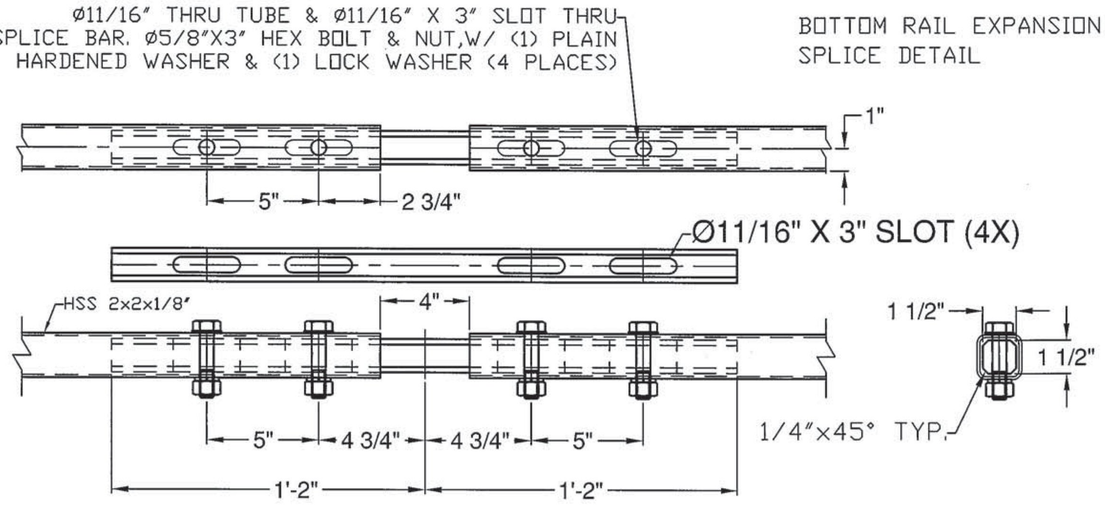

Vermont Agency of Transportation

RECEIVED

CK'D BY VHB OK'D BY TAS

March 14, 2017

RESUBMIT _____ APPROVED YES

BY T Sumner DATE 3/14/17

SHOP DRAWING REVIEW

X REVIEWED AS REQUIRED BY THE CONSTRUCTION CONTRACT DOCUMENTS AND APPROVED, BUT ONLY FOR CONFORMANCE TO THE DESIGN CONCEPT OF THE WORK, AND SUBJECT TO FURTHER LIMITATIONS AND REQUIREMENTS CONTAINED IN THE CONSTRUCTION CONTRACT DOCUMENTS.

☐ REJECTED ☐ REVISE AND RESUBMIT ☐ FURNISH AS CORRECTED

CORRECTIONS OR COMMENTS MADE ON THE SHOP DRAWINGS DURING THIS REVIEW DO NOT RELIEVE CONTRACTOR FROM COMPLIANCE WITH REQUIRMENTS OF THE DRAWINGS AND SPECIFICATIONS. THIS CHECK IS ONLY FOR REVIEW OF GENERAL CONFORMANCE WITH THE DESIGN CONCEPT OF THE PROJECT AND GENERAL COMPLIANCE WITH THE INFORMATION GIVEN IN THE CONTRACT DOCUMENTS. THE CONTRACTOR IS RESPONSIBLE FOR: CONFIRMING AND CORRELATING ALL QUANTITIES AND DIMENSIONS; SELECTING FABRICATION PROCESSES AND TECHNIQUES OF CONSTRUCTION; COORDINATING HIS WORK WITH THAT OF ALL OTHER TRADES; AND PERFORMING HIS WORK IN A SAFE AND SATISFACTORY MANNER.

vhb 40 IDX Drive Building 100, Suite 200 South Burlington, VT 05403 802.497.6100

Job Number: BRF 025-1(42)
Reviewed By: E.F. LAWES
Date: MARCH 14, 2017

ITEM #: 900.640

SHEET 2 OF 5

STRUCTURAL STEEL TO COMPLY W/ ASTM A6

TOLERANCE UNLESS OTHERWISE NOTED:
FRACTIONS = ± 1/16"
ANGLES = ± 1/2°
DIAMETERS = ± 1/32"

BRIDGE RAIL DETAILS SHEET

T.H. 1 (V.T. 103) CLASS I (PRINCIPAL ARTERIAL) F.A.S. 025-1, BRIDGE # 25
TOWN OF LUDLOW, WINDSOR COUNTY

R	NO.	DATE	DESCRIPTION	BY	R	NO.	DATE	DESCRIPTION	BY
E	1	1/9/17	REVISED PER 1/4/17 MARK-UP	D.K.	E				
V					V				

ELDERLEE, INC.
OAKS CORNERS, NEW YORK 14518
email: dlong@elderlee.com / epeak@elderlee.com
Tel: 315-789-6670 Fax: 315-789-6615

AISC CERTIFIED FABRICATOR

ORTHOGRAPHIC PROJECTION

DRAWN	D.K.	12/12/16
CHECKED	E.P.	12/12/16
APPROVED	D.L.	12/12/16
SCALE	SCHEMATIC	
DRAWING NO.	FR LAFAYETTE - LUDLOW	

BILL OF MATERIALS- PER "RIGHT / APPROACH"			
ITEM #	QTY	DESCRIPTION	ASTM #
1	1	DBL TUBE WALL PLATE - 1" X 12" x 25"	ASTM A572 Gr. 50
2	10	ø3/4" X 10" STUD	TO BE PURCHASED
3	2	5" X 5" X 5/16" TUBE W/ SLOTS @ 18"	ASTM A500 Gr. B
4	2	SHIM PL 1/2" X 4" X 17" W/ SLOTS	ASTM A709 Gr. 36 CVN
5	2	SHIM PL 1/2" X 4" X 17" (W/O SLOTS)	ASTM A709 Gr. 36 CVN

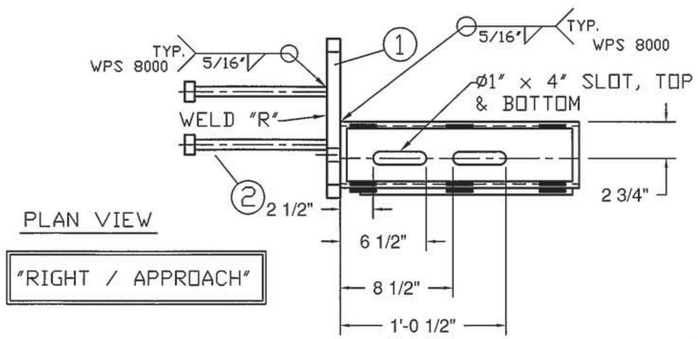

PLAN VIEW

"RIGHT / APPROACH"

PROTRUSIONS CAUSED BY WELDING OR GALVANIZING ARE NOT PERMITTED ON THE SPLICE TUBES AND FILL PLATES

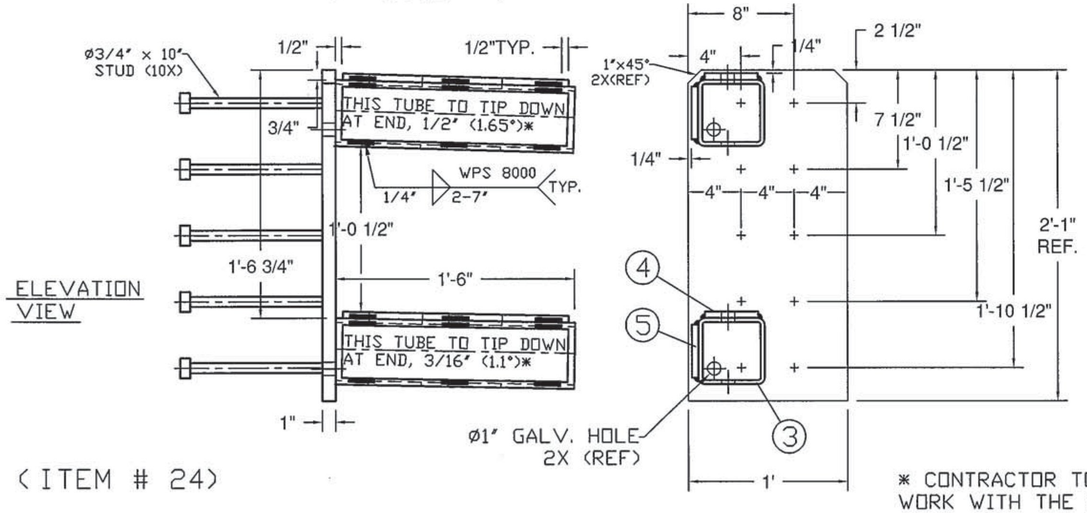

ELEVATION VIEW

(ITEM # 24)

BILL OF MATERIALS - PER "LEFT / TRAILING"			
ITEM #	QTY	DESCRIPTION	ASTM #
1	1	DBL TUBE WALL PLATE - 1" X 12" x 25"	ASTM A572 Gr. 50
2	10	ø3/4" X 10" STUD	TO BE PURCHASED
3	2	5" X 5" X 5/16" TUBE W/ SLOTS @ 18"	ASTM A500 Gr. B
4	2	SHIM PL 1/2" X 4" X 17" W/ SLOTS	ASTM A709 Gr. 36 CVN
5	2	SHIM PL 1/2" X 4" X 17" (W/O SLOTS)	ASTM A709 Gr. 36 CVN

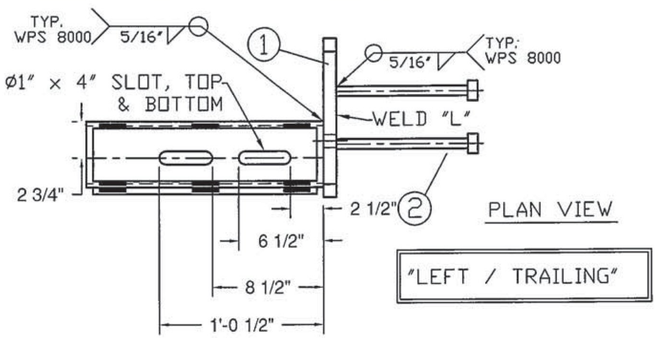

PLAN VIEW

"LEFT / TRAILING"

PROTRUSIONS CAUSED BY WELDING OR GALVANIZING ARE NOT PERMITTED ON THE SPLICE TUBES AND FILL PLATES

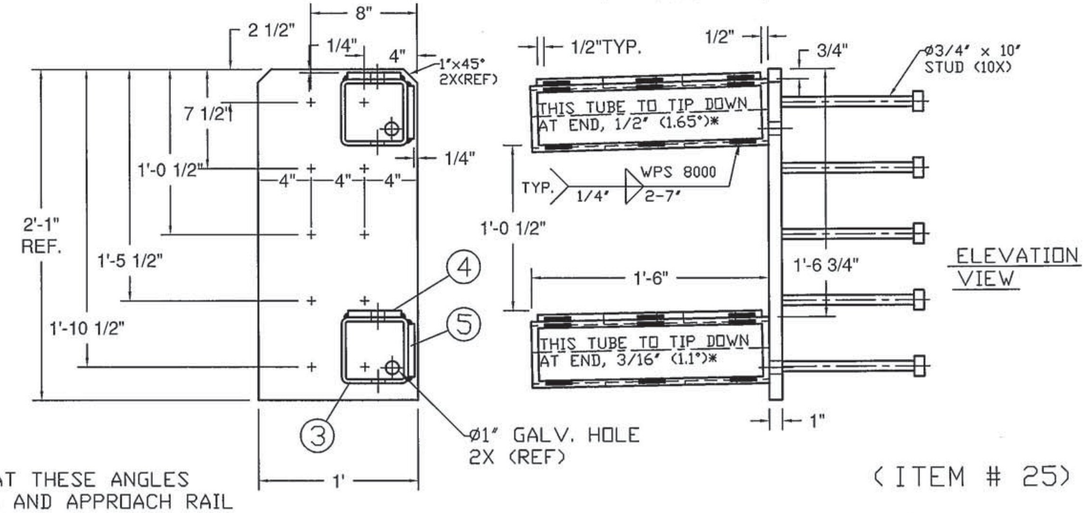

ELEVATION VIEW

(ITEM # 25)

* CONTRACTOR TO VERIFY THAT THESE ANGLES WORK WITH THE SITE GRADING AND APPROACH RAIL

Vermont Agency of Transportation

RECEIVED

CK'D BY VHB OK'D BY TAS

March 14, 2017

RESUBMIT _____ APPROVED YES

BY T Sumner DATE 3/14/17

SHOP DRAWING REVIEW

X REVIEWED AS REQUIRED BY THE CONSTRUCTION CONTRACT DOCUMENTS AND APPROVED, BUT ONLY FOR CONFORMANCE TO THE DESIGN CONCEPT OF THE WORK, AND SUBJECT TO FURTHER LIMITATIONS AND REQUIREMENTS CONTAINED IN THE CONSTRUCTION CONTRACT DOCUMENTS.

☐ REJECTED ☐ REVISE AND RESUBMIT ☐ FURNISH AS CORRECTED

CORRECTIONS OR COMMENTS MADE ON THE SHOP DRAWINGS DURING THIS REVIEW DO NOT RELIEVE CONTRACTOR FROM COMPLIANCE WITH REQUIRMENTS OF THE DRAWINGS AND SPECIFICATIONS. THIS CHECK IS ONLY FOR REVIEW OF GENERAL CONFORMANCE WITH THE DESIGN CONCEPT OF THE PROJECT AND GENERAL COMPLIANCE WITH THE INFORMATION GIVEN IN THE CONTRACT DOCUMENTS. THE CONTRACTOR IS RESPONSIBLE FOR: CONFIRMING AND CORRELATING ALL QUANTITIES AND DIMENSIONS; SELECTING FABRICATION PROCESSES AND TECHNIQUES OF CONSTRUCTION; COORDINATING HIS WORK WITH THAT OF ALL OTHER TRADES; AND PERFORMING HIS WORK IN A SAFE AND SATISFACTORY MANNER.

vhb 40 IDX Drive, Building 100, Suite 200, South Burlington, VT 05403, 802.497.6100

Job Number: BRF 025-1(42)
Reviewed By: E.F. LAWES
Date: MARCH 14, 2017

ITEM #: 900.640

STRUCTURAL STEEL TO COMPLY W/ ASTM A6

TOLERANCE UNLESS OTHERWISE NOTED:
FRACTIONS = ± 1/16"
ANGLES = ± 1/2°
DIAMETERS = ± 1/32"

SHEET 3 OF 5

BRIDGE RAIL DETAILS SHEET

T.H. 1 (V.T. 103) CLASS I (PRINCIPAL ARTERIAL) F.A.S. 025-1, BRIDGE # 25
TOWN OF LUDLOW, WINDSOR COUNTY

R E V	NO.	DATE	DESCRIPTION	BY
	1	1/9/17	REVISED PER 1/4/17 MARK-UP	D.K.

R E V	NO.	DATE	DESCRIPTION	BY

ELDERLEE, INC.
OAKS CORNERS, NEW YORK 14518
email: dlong@elderlee.com / epeek@elderlee.com
Tel:315-789-6670 Fax:315-789-6615

CERTIFIED FABRICATOR

ORTHOGRAPHIC PROJECTION

DRAWN	D.K.	12/12/16
CHECKED	E.P.	12/12/16
APPROVED	D.L.	12/12/16
SCALE	SCHEMATIC	
DRAWING NO.	FR LAFAYETTE - LUDLOW	

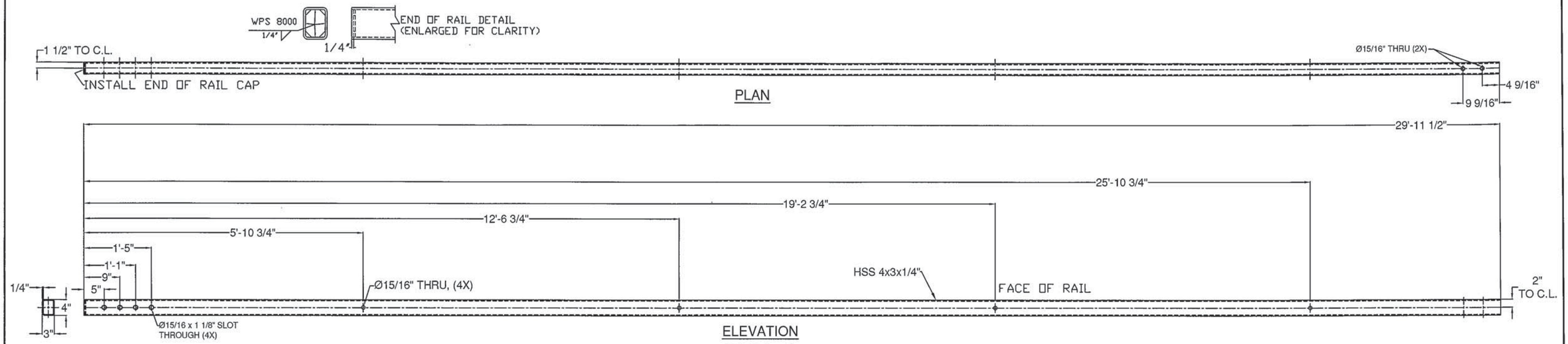

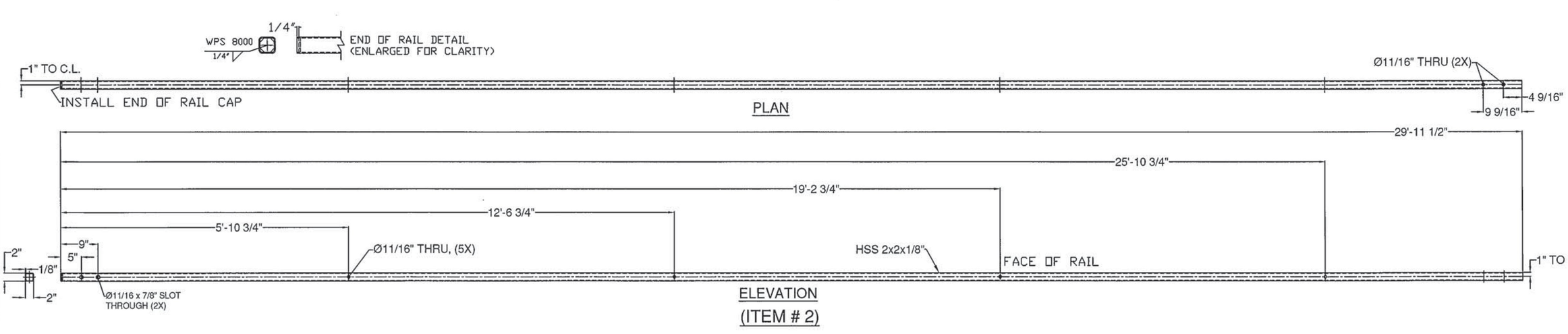

Vermont Agency of Transportation

RECEIVED

CK'D BY VHB OK'D BY TAS

March 14, 2017

RESUBMIT _____ APPROVED YES

BY T Sumner DATE 3/14/17

SHOP DRAWING REVIEW

X REVIEWED AS REQUIRED BY THE CONSTRUCTION CONTRACT DOCUMENTS AND APPROVED, BUT ONLY FOR CONFORMANCE TO THE DESIGN CONCEPT OF THE WORK, AND SUBJECT TO FURTHER LIMITATIONS AND REQUIREMENTS CONTAINED IN THE CONSTRUCTION CONTRACT DOCUMENTS.

☐ REJECTED ☐ REVISE AND RESUBMIT ☐ FURNISH AS CORRECTED

CORRECTIONS OR COMMENTS MADE ON THE SHOP DRAWINGS DURING THIS REVIEW DO NOT RELIEVE CONTRACTOR FROM COMPLIANCE WITH REQUIRMENTS OF THE DRAWINGS AND SPECIFICATIONS. THIS CHECK IS ONLY FOR REVIEW OF GENERAL CONFORMANCE WITH THE DESIGN CONCEPT OF THE PROJECT AND GENERAL COMPLIANCE WITH THE INFORMATION GIVEN IN THE CONTRACT DOCUMENTS. THE CONTRACTOR IS RESPONSIBLE FOR: CONFIRMING AND CORRELATING ALL QUANTITIES AND DIMENSIONS; SELECTING FABRICATION PROCESSES AND TECHNIQUES OF CONSTRUCTION; COORDINATING HIS WORK WITH THAT OF ALL OTHER TRADES; AND PERFORMING HIS WORK IN A SAFE AND SATISFACTORY MANNER.

vhb
40 IDX Drive
Building 100, Suite 200
South Burlington, VT 05403
802.497.6100

Job Number: BRF 025-1(42)
Reviewed By: E.F. LAWES
Date: MARCH 14, 2017

ITEM #: 900.640

STRUCTURAL STEEL TO COMPLY W/ ASTM A6

TOLERANCE UNLESS OTHERWISE NOTED:
FRACTIONS = ± 1/16"
ANGLES = ± 1/2°
DIAMETERS = ± 1/32"

SHEET 4 OF 5

BRIDGE RAIL DETAILS SHEET

T.H. 1 (V.T. 103) CLASS I (PRINCIPAL ARTERIAL) F.A.S. 025-1, BRIDGE # 25
TOWN OF LUDLOW, WINDSOR COUNTY

R	NO.	DATE	DESCRIPTION	BY	R	NO.	DATE	DESCRIPTION	BY
E	1	1/9/17	REVISED PER 1/4/17 MARK-UP	D.K.	E				
V					V				

ELDERLEE, INC.
OAKS CORNERS, NEW YORK 14518
email: dlong@elderlee.com / epeek@elderlee.com
Tel: 315-789-6670 Fax: 315-789-6615

CERTIFIED FABRICATOR

ORTHOGRAPHIC PROJECTION

DRAWN	D.K.	12/12/16
CHECKED	E.P.	12/12/16
APPROVED	D.L.	12/12/16
SCALE	SCHEMATIC	
DRAWING NO.	FR LAFAYETTE - LUDLOW	

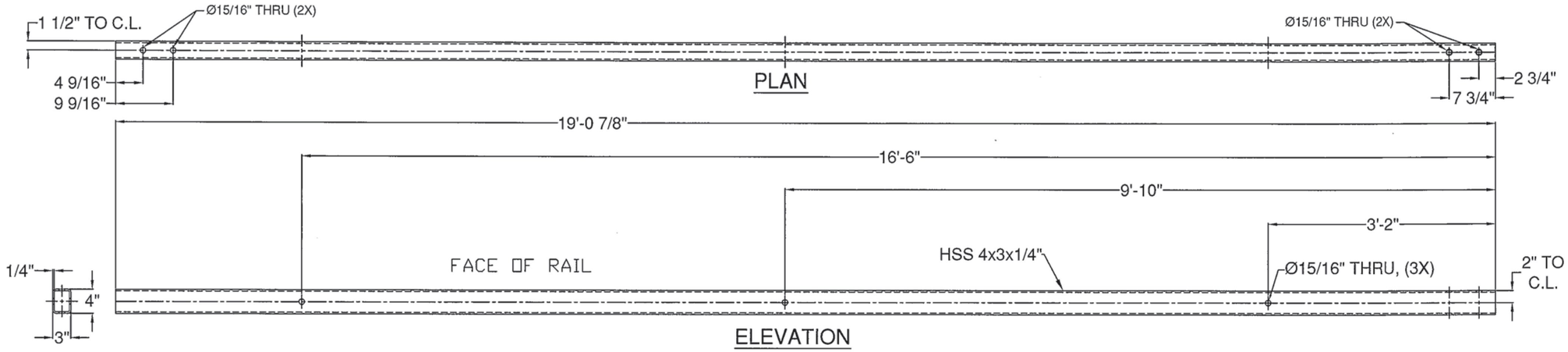

ELEVATION
(ITEM #5)

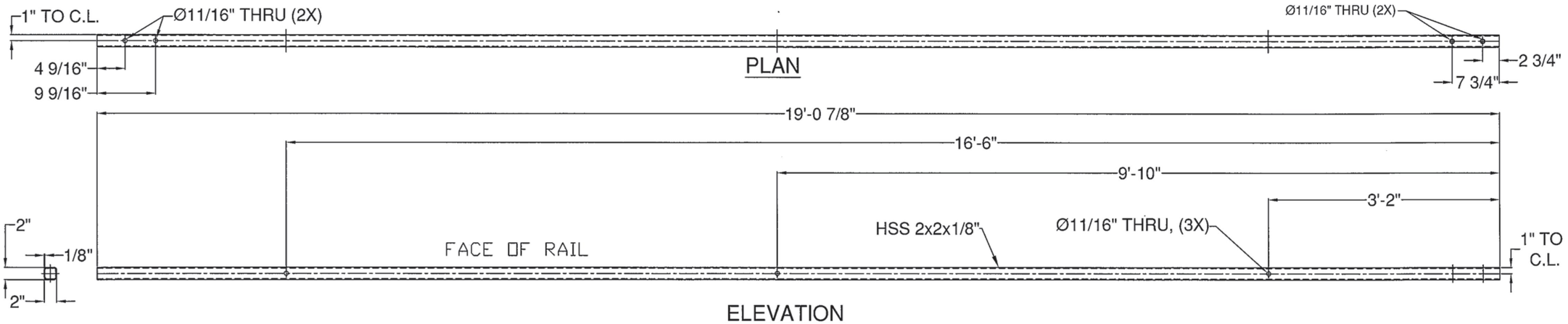

ELEVATION
(ITEM #3)

Vermont Agency of Transportation
RECEIVED
CK'D BY VHB OK'D BY TAS
March 14, 2017
RESUBMIT _____ APPROVED YES
BY T Sumner DATE 3/14/17

SHOP DRAWING REVIEW

X REVIEWED AS REQUIRED BY THE CONSTRUCTION CONTRACT DOCUMENTS AND APPROVED, BUT ONLY FOR CONFORMANCE TO THE DESIGN CONCEPT OF THE WORK, AND SUBJECT TO FURTHER LIMITATIONS AND REQUIREMENTS CONTAINED IN THE CONSTRUCTION CONTRACT DOCUMENTS.

☐ REJECTED ☐ REVISE AND RESUBMIT ☐ FURNISH AS CORRECTED

CORRECTIONS OR COMMENTS MADE ON THE SHOP DRAWINGS DURING THIS REVIEW DO NOT RELIEVE CONTRACTOR FROM COMPLIANCE WITH REQUIREMENTS OF THE DRAWINGS AND SPECIFICATIONS. THIS CHECK IS ONLY FOR REVIEW OF GENERAL CONFORMANCE WITH THE DESIGN CONCEPT OF THE PROJECT AND GENERAL COMPLIANCE WITH THE INFORMATION GIVEN IN THE CONTRACT DOCUMENTS. THE CONTRACTOR IS RESPONSIBLE FOR: CONFIRMING AND CORRELATING ALL QUANTITIES AND DIMENSIONS; SELECTING FABRICATION PROCESSES AND TECHNIQUES OF CONSTRUCTION; COORDINATING HIS WORK WITH THAT OF ALL OTHER TRADES; AND PERFORMING HIS WORK IN A SAFE AND SATISFACTORY MANNER.

vhb
40 IDX Drive
Building 100, Suite 200
South Burlington, VT 05403
802.497.6100

Job Number: BRF 025-1(42)
Reviewed By: E.F. LAWES
Date: MARCH 14, 2017

ITEM #: 900.640

STRUCTURAL STEEL TO COMPLY W/ ASTM A6

TOLERANCE UNLESS OTHERWISE NOTED:
FRACTIONS = ± 1/16"
ANGLES = ± 1/2°
DIAMETERS = ± 1/32"

SHEET 5 OF 5

BRIDGE RAIL DETAILS SHEET

T.H. 1 (V.T. 103) CLASS I (PRINCIPAL ARTERIAL) F.A.S. 025-1, BRIDGE # 25
TOWN OF LUDLOW, WINDSOR COUNTY

R E V	NO.	DATE	DESCRIPTION	BY
	1	1/9/17	REVISED PER 1/4/17 MARK-UP	D.K.

R E V	NO.	DATE	DESCRIPTION	BY

ELDERLEE, INC.
OAKS CORNERS, NEW YORK 14518
email: dlong@elderlee.com / epeek@elderlee.com
Tel: 315-789-6670 Fax: 315-789-6615

AISC CERTIFIED FABRICATOR

ORTHOGRAPHIC PROJECTION

DRAWN	D.K.	12/12/16
CHECKED	E.P.	12/12/16
APPROVED	D.L.	12/12/16
SCALE	SCHEMATIC	
DRAWING NO.	FR LAFAYETTE - LUDLOW	

WELDING PROCEDURE SPECIFICATION

PQR ELDERLEE # 3

Material Specification	A36/A500GR.B/A53/A572GR.36/50/A709GR.36/50/A108 / A307/A325/A563/A449.			
Welding Process	FCAW			
Manual or Machine	SEMAUTOMATIC			
Position of Welding	FLAT/HORIZONTAL			
Filler Metal Specification	A5.29			
Filler Metal Classification	E81T1-NI1C-JH4 LINCOLN ULTERCORE 81i1C-H			
Flux	N/A			
Shielding Gas	CO 2	Dew Point -40DEG F	Flow Rate 50CFH	
Single or Multiple Pass	SINGLE		(45 TO 63 CFH)	
Single or Multiple Arc	SINGLE			
Welding Current	DC			
Polarity	REVERSE ELECTRODE POSITIVE	CTWD 3/4"		
Welding Progression	STRINGER			
Root Treatment	ROOT SHALL BE CLEAN AND FREE OF FOREIGN MATTER			
Preheat and Interpass Temperature	MIN PREHEAT 50 DEG ≤ 0.75" 70 DEG > 0.75" MAX INTERPASS 400 DEG			
Postheat Temperature	NONE			
Heat Input	Min 33.92	Max 50.42		

WELDING PROCEDURE

Pass no.	Electrode size	Welding Current		Travel speed	Joint detail
		Amperes	Volts		
1	1/16	310	25	11	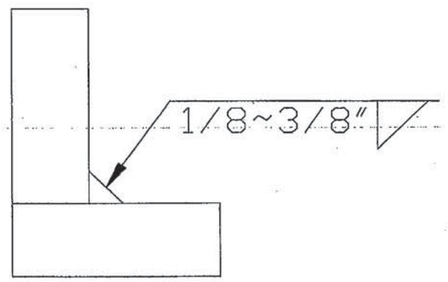
		320 TO 285	26 TO 24	12.1 TO 9.9	

This procedure may vary due to fabrication sequence, fit-up, pass size, etc., within the limitation of variables given in Section 5.

Procedure No. 8000
Revision No. 3

Contractor Elderlee, Inc.
Authorized By RANDY SCOTT
Date 3/1/2017

Form III-2

SHOP DRAWING REVIEW

X REVIEWED AS REQUIRED BY THE CONSTRUCTION CONTRACT DOCUMENTS AND APPROVED, BUT ONLY FOR CONFORMANCE TO THE DESIGN CONCEPT OF THE WORK, AND SUBJECT TO FURTHER LIMITATIONS AND REQUIREMENTS CONTAINED IN THE CONSTRUCTION CONTRACT DOCUMENTS.

☐ REJECTED ☐ REVISE AND RESUBMIT ☐ FURNISH AS CORRECTED

CORRECTIONS OR COMMENTS MADE ON THE SHOP DRAWINGS DURING THIS REVIEW DO NOT RELIEVE CONTRACTOR FROM COMPLIANCE WITH REQUIRMENTS OF THE DRAWINGS AND SPECIFICATIONS. THIS CHECK IS ONLY FOR REVIEW OF GENERAL CONFORMANCE WITH THE DESIGN CONCEPT OF THE PROJECT AND GENERAL COMPLIANCE WITH THE INFORMATION GIVEN IN THE CONTRACT DOCUMENTS. THE CONTRACTOR IS RESPONSIBLE FOR: CONFIRMING AND CORRELATING ALL QUANTITIES AND DIMENSIONS; SELECTING FABRICATION PROCESSES AND TECHNIQUES OF CONSTRUCTION; COORDINATING HIS WORK WITH THAT OF ALL OTHER TRADES; AND PERFORMING HIS WORK IN A SAFE AND SATISFACTORY MANNER.

vhb
40 IDX Drive
Building 100, Suite 200
South Burlington, VT 05403
802.497.6100

Job Number: BRF 025-1(42)
Reviewed By: E.F. LAWES
Date: MARCH 14, 2017

Vermont Agency of Transportation

RECEIVED

CK'D BY VHB OK'D BY TAS

March 14, 2017

RESUBMIT BY T Sumner APPROVED YES DATE 3/14/17

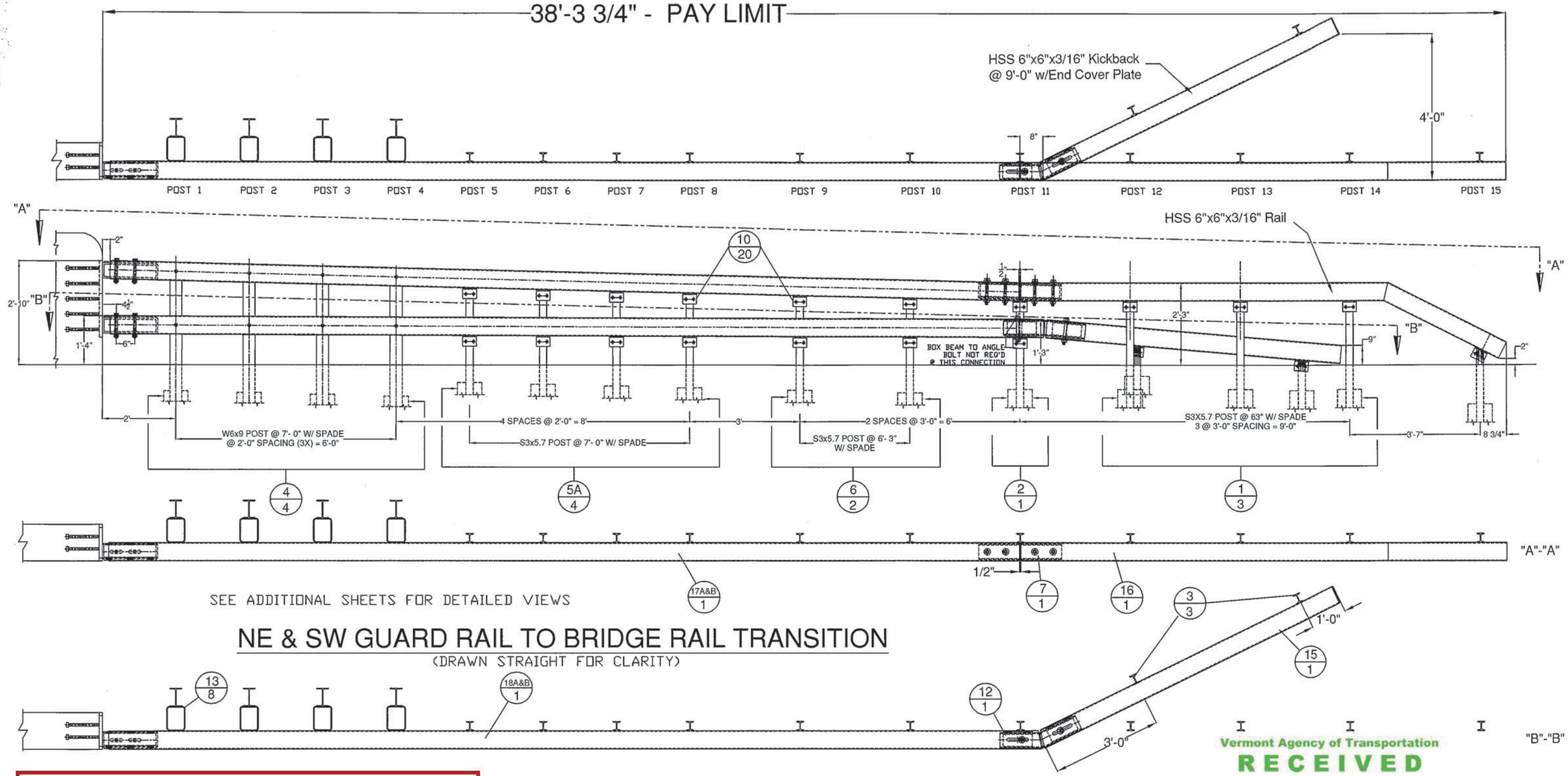

SEE ADDITIONAL SHEETS FOR DETAILED VIEWS

NE & SW GUARD RAIL TO BRIDGE RAIL TRANSITION

(DRAWN STRAIGHT FOR CLARITY)

SHOP DRAWING REVIEW

X REVIEWED AS REQUIRED BY THE CONSTRUCTION CONTRACT DOCUMENTS AND APPROVED, BUT ONLY FOR CONFORMANCE TO THE DESIGN CONCEPT OF THE WORK, AND SUBJECT TO FURTHER LIMITATIONS AND REQUIREMENTS CONTAINED IN THE CONSTRUCTION CONTRACT DOCUMENTS.

☐ REJECTED ☐ REVISE AND RESUBMIT ☐ FURNISH AS CORRECTED

CORRECTIONS OR COMMENTS MADE ON THE SHOP DRAWINGS DURING THIS REVIEW DO NOT RELIEVE CONTRACTOR FROM COMPLIANCE WITH REQUIRMENTS OF THE DRAWINGS AND SPECIFICATIONS. THIS CHECK IS ONLY FOR REVIEW OF GENERAL CONFORMANCE WITH THE DESIGN CONCEPT OF THE PROJECT AND GENERAL COMPLIANCE WITH THE INFORMATION GIVEN IN THE CONTRACT DOCUMENTS. THE CONTRACTOR IS RESPONSIBLE FOR: CONFIRMING AND CORRELATING ALL QUANTITIES AND DIMENSIONS; SELECTING FABRICATION PROCESSES AND TECHNIQUES OF CONSTRUCTION; COORDINATING HIS WORK WITH THAT OF ALL OTHER TRADES; AND PERFORMING HIS WORK IN A SAFE AND SATISFACTORY MANNER.

vhb
40 IDX Drive
Building 100, Suite 200
South Burlington, VT 05403
802.497.6100

Job Number: BRF 025-1(42)
Reviewed By: E.F. LAWES
Date: MARCH 15, 2017

GENERAL NOTES:

1) ALL RAILING TO BE FABRICATED AND ERECTED ACCORDING TO SECTION 525 OF THE STANDARD SPECIFICATIONS.
2) BOLTS SHALL BE TORQUED SNUG TIGHT (APPROXIMATELY 100 FT-LB).
3) PROTRUSIONS CAUSED BY WELDING OR GALVANIZING ARE NOT PERMITTED ON THE ADJOINING SURFACES OF THE BOX BEAM RAILS, SPLICE TUBES AND FILL PLATES.
4) ANY BENDING OF RAIL SHALL BE DONE AT THE FABRICATION PLANT. RADII GREATER THAN 16' TO BE CURVED ON A TUBE BENDING MACHINE. RADII LESS THAN 16' TO BE "PIE CUT" AND WELDED. CURVED RAILING WILL HAVE AN 18" LENGTH ON EACH END STRAIGHT TO ACCOMMODATE SPLICES. "PIE CUTS ARE LOCATED SO AS TO NOT CONFLICT WITH POST FASTENING HOLES. PIE CUTS WILL BE WELDED ACCORDING TO PROCEDURE WPS-8003.
5) ALL EXPOSED STEEL COMPONENTS TO BE POWDER COATED BLACK 27038 PER FEDERAL STANDARD NO 595 & PER ASTM D7803

Vermont Agency of Transportation

RECEIVED

CK'D BY VHB OK'D BY TAS

March 14, 2017

RESUBMIT ____ APPROVED YES

BY T Sumner DATE 3/16/17

ITEM #: 900.620

STRUCTURAL STEEL TO COMPLY W/ ASTM A6

TOLERANCE UNLESS OTHERWISE NOTED:
FRACTIONS = ± 1/16"
ANGLES = ± 1/2°
DIAMETERS = ± 1/32"

SHEET 1 OF 9

SPECIAL PROVISION, GUIDERAIL APPROACH SYSTEM, GALVANIZED 2 RAIL BB

PROJECT 111 BRF 025-1(42), T.H. 1 (V.T. 103) CLASS I (PRINCIPAL ARTERIAL) F.A.S. 025-1, BRIDGE # 25
TOWN OF LUDLOW, WINDSOR COUNTY

R	NO.	DATE	DESCRIPTION	BY
E	1	3/1/17	REVISED PER 2/23/17 MARK-UP	D.K.
V	2	3/14/17	REVISED PER 3/10/17 MARK-UP	D.K.

R	NO.	DATE	DESCRIPTION	BY
E				
V				

ELDERLEE, INC.
OAKS CORNERS, NEW YORK 14518
email: dlong@elderlee.com / epeek@elderlee.com
Tel: 315-789-6670 Fax: 315-789-6615

CERTIFIED FABRICATOR

ORTHOGRAPHIC PROJECTION

DRAWN	D.K.	1/3/17
CHECKED	E.P.	1/3/17
APPROVED	D.L.	1/3/17
SCALE	SCHEMATIC	
DRAWING NO.	FR LaFayette LUDLOW-T	

PLAN VIEW

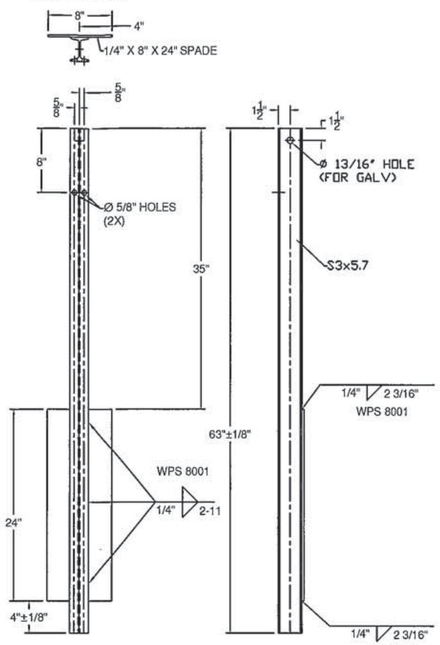

FRONT SIDE

(ITEM # 1)

PLAN VIEW

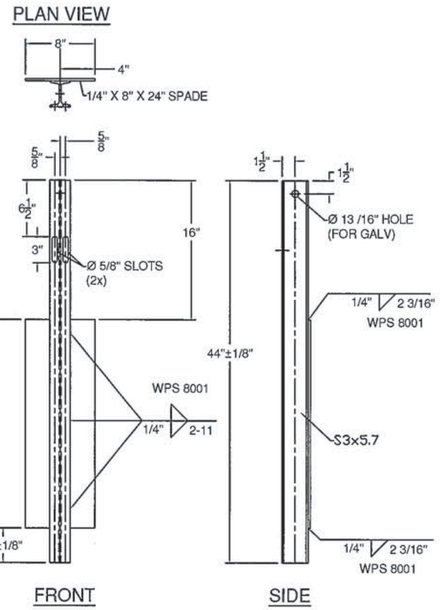

FRONT SIDE

(ITEM # 3)

PLAN VIEW

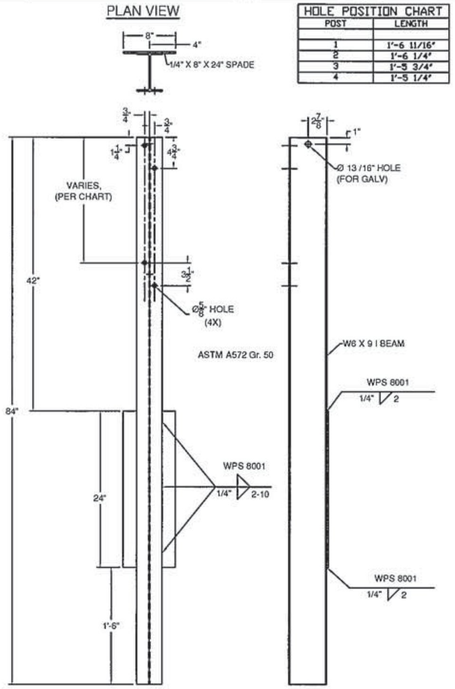

FRONT SIDE

(ITEM # 4)

HOLE POSITION CHART

POST	LENGTH
1	1'-6 11/16"
2	1'-6 1/4"
3	1'-5 3/4"
4	1'-5 1/4"

PLAN VIEW

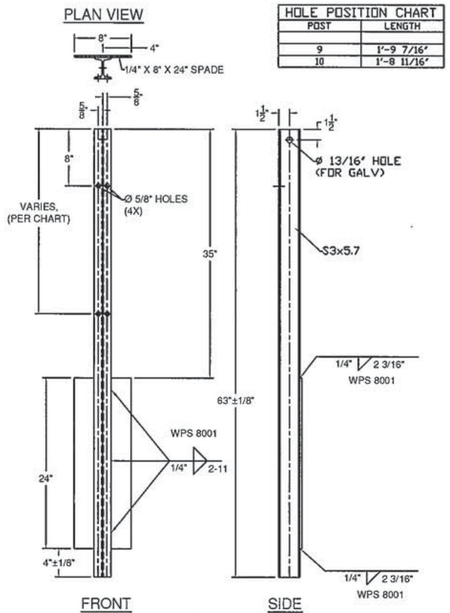

FRONT SIDE

(ITEM # 6)

HOLE POSITION CHART

POST	LENGTH
9	1'-9 7/16"
10	1'-8 11/16"

PLAN VIEW

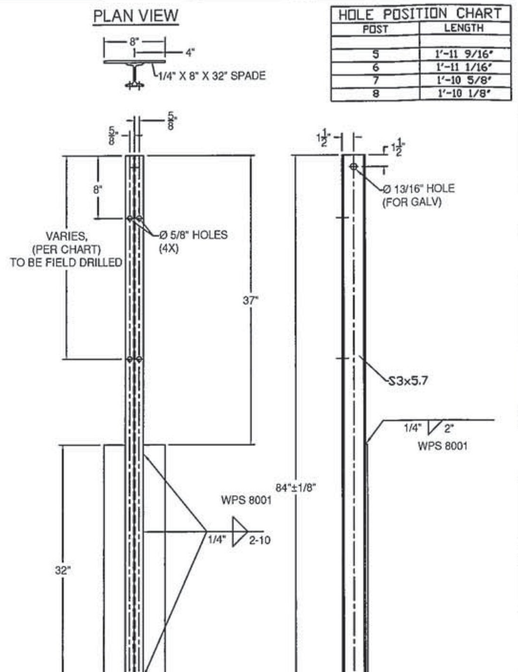

FRONT SIDE

HOLE POSITION CHART

POST	LENGTH
5	1'-11 9/16"
6	1'-11 1/16"
7	1'-10 5/8"
8	1'-10 1/8"

PLAN VIEW

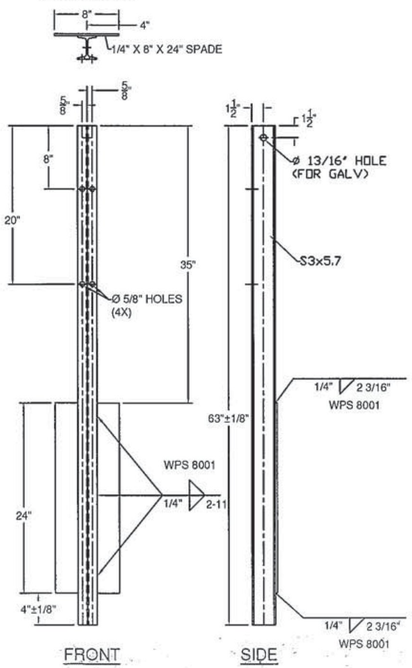

FRONT SIDE

(ITEM # 2)

BILL OF MATERIALS, NE & SW CORNERS, PER EACH CORNER

ITEM #	QTY.	COMPONENT #	DESCRIPTION	MATERIAL (ASTM)
1	3	0013.57021	3' I-POST, PUNCH 8' W/SPD @ 63' LG	ASTM A572 Gr. 50
2	1	0013.57025	3' I-POST W/SPD @ 63', PUNCH 8', & 20'	ASTM A572 Gr. 50
3	3	0013.57060	3' I-END POST W/SPD @ 3'-8' LG	ASTM A572 Gr. 50
4	4	-	W6X9 POST @ 7' W/SPD & ø9/16' HOLES @ VARIOUS	ASTM A572 Gr. 50
5A	4	-	3' I-POST, PUNCH 8' & VARIOUS', W/8X32' SPADE @ 7'	ASTM A572 Gr. 50
6	2	-	3' I-POST, PUNCH 8' & VARIOUS', W/8X32' SPADE @ 6'3'	ASTM A572 Gr. 50
7	1	0033.00640	HSS 5X5 TUBE SPLICE @ 27' LG W/ 1/4' SHIMS	A500 Gr. B / A572 Gr 50
10	20	0054.00050	REG BB SHELF ANGLES @ 4-1/2'	ASTM A36
12	1	0054.00074	HSS 5X5 DBL BEND TUBE SPL @ 26 3/4' LG - 25° ANGLE	A500 Gr. B / A572 Gr 50
13	8	0054.00563	6X8' TRANS. TUBE B/O @ 6' LG	A500 Gr. B
15	1	0054.09000	6X6' BB @ 9'-0" KICKBACK, W/ CAP	A500 Gr. B / A36
16	1	-	6X6' BB @ 13'-3 9/16', DRILL 3' CC W/ TURNDOWN	A500 Gr. B
17A	1	-	6X6' BB TOP TRANS @ 24'-9 1/4' LG (FOR NE CORNER) W/5'-0' CONVEX RAD.	A500 Gr. B
17B	1	-	6X6' BB TOP TRANS @ 24'-9 1/4' LG (FOR SW CORNER) W/15'-0' CONVEX RAD.	A500 Gr. B
18A	1	-	6X6' BB BTM TRANS @ 25'-5 1/4' LG (FOR NE CORNER) W/ 5'-0' CONVEX. RAD.	A500 Gr. B
18B	1	-	6X6' BB BTM TRANS @ 25'-5 1/4' LG (FOR SW CORNER) W/15'-0' CONVEX RAD.	A500 Gr. B
19	18	0080.03355	3/8' X 7 1/2' BOLT, NUT, & 2 FW	A307, A563, F844
20	16	0080.04100	1/2' x 1-1/2' BOLT, NUT, & FW	A307, A563, F844
21	16	0080.04120	1/2' x 1-1/2' BOLT, NUT, 2 FW & LW	A307, A563, F844
23	10	0080.06340	3/4' X 7-1/2' BOLT, NUT, 2 FW	A325, A563, F436
23	10	0080.16920	3/4' LOCK WASHER	ASME B18.21.1
24	8	0080.06370	3/4' X 8' CARR BOLT, NUT, FW & LW	A307, A563, F844
25	1	-	3/4' X 7' HEX BOLT, NUT, & FW	A307, A563, F844
26	-	-	PARAPET WALL CONNECTION (APPROACH)	INCLUDED W/PAY ITEM #900.640

HARDWARE NOTES

ITEM #	FUNCTION
19	BOLT RAIL TO SHELF ANGLE (ITEM #10)
20	BOLT SHELF ANGLE (ITEM # 10) TO POST
21	BOLT BLOCK-OUTS (ITEM # 13) TO HEAVY POST (ITEM # 4)
23	SPLICE TUBING (ITEM #'S 7 & 12), & (4) PER PARAPET WALL CONNECTION
24	BOLT RAIL (ITEMS #'S 17, & 18 TO BLOCK-OUTS (ITEM # 13)
25	BOLT SHELF ANGLE (ITEM #11) TO RAIL

Vermont Agency of Transportation

RECEIVED

CK'D BY VHB OK'D BY TAS

March 14, 2017

RESUBMIT ____ APPROVED YES

BY T Sumner DATE 3/16/17

SHOP DRAWING REVIEW

X REVIEWED AS REQUIRED BY THE CONSTRUCTION CONTRACT DOCUMENTS AND APPROVED, BUT ONLY FOR CONFORMANCE TO THE DESIGN CONCEPT OF THE WORK, AND SUBJECT TO FURTHER LIMITATIONS AND REQUIREMENTS CONTAINED IN THE CONSTRUCTION CONTRACT DOCUMENTS.

☐ REJECTED ☐ REVISE AND RESUBMIT ☐ FURNISH AS CORRECTED

CORRECTIONS OR COMMENTS MADE ON THE SHOP DRAWINGS DURING THIS REVIEW DO NOT RELIEVE CONTRACTOR FROM COMPLIANCE WITH REQUIRMENTS OF THE DRAWINGS AND SPECIFICATIONS. THIS CHECK IS ONLY FOR REVIEW OF GENERAL CONFORMANCE WITH THE DESIGN CONCEPT OF THE PROJECT AND GENERAL COMPLIANCE WITH THE INFORMATION GIVEN IN THE CONTRACT DOCUMENTS. THE CONTRACTOR IS RESPONSIBLE FOR: CONFIRMING AND CORRELATING ALL QUANTITIES AND DIMENSIONS; SELECTING FABRICATION PROCESSES AND TECHNIQUES OF CONSTRUCTION; COORDINATING HIS WORK WITH THAT OF ALL OTHER TRADES; AND PERFORMING HIS WORK IN A SAFE AND SATISFACTORY MANNER.

vhb
40 IDX Drive
Building 100, Suite 200
South Burlington, VT 05403
802.497.6100

Job Number: BRF 025-1(42)
Reviewed By: E.F. LAWES
Date: MARCH 15, 2017

ITEM #: 900.620

SHEET 2 OF 9

STRUCTURAL STEEL TO COMPLY W/ ASTM A6

TOLERANCE UNLESS OTHERWISE NOTED:
FRACTIONS = ± 1/16"
ANGLES = ± 1/2°
DIAMETERS = ± 1/32"

SPECIAL PROVISION, GUIDERAIL APPROACH SYSTEM, GALVANIZED 2 RAIL BB

PROJECT 111 BRF 025-1(42), T.H. 1 (V.T. 103) CLASS I (PRINCIPAL ARTERIAL) F.A.S. 025-1, BRIDGE # 25
TOWN OF LUDLOW, WINDSOR COUNTY

R	NO.	DATE	DESCRIPTION	BY
E	1	3/1/17	REVISED PER 2/23/17 MARK-UP	D.K.
V	2	3/14/17	REVISED PER 3/10/17 MARK-UP	D.K.

R	NO.	DATE	DESCRIPTION	BY
E				
V				

ELDERLEE, INC.
OAKS CORNERS, NEW YORK 14518
email: dlong@elderlee.com / cpeek@elderlee.com
Tel: 315-789-6670 Fax: 315-789-6615

ISO 9001:2008 CERTIFIED FABRICATOR

ORTHOGRAPHIC PROJECTION

DRAWN	D.K.	1/3/17
CHECKED	E.P.	1/3/17
APPROVED	D.L.	1/3/17
SCALE	SCHEMATIC	
DRAWING NO.	FR LaFayette LUDLOW-T	

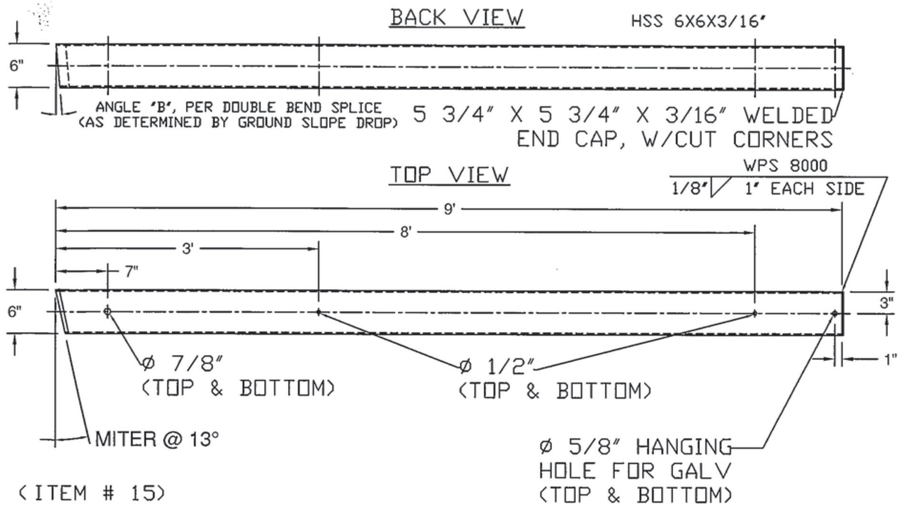

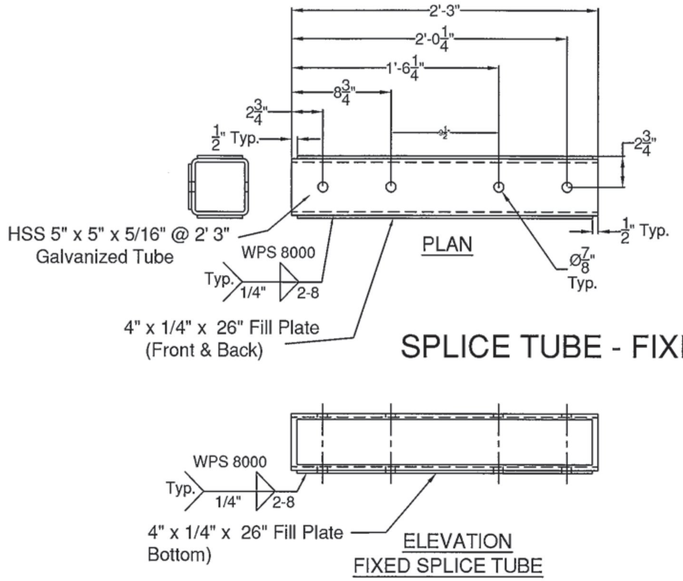

SPLICE TUBE - FIXED

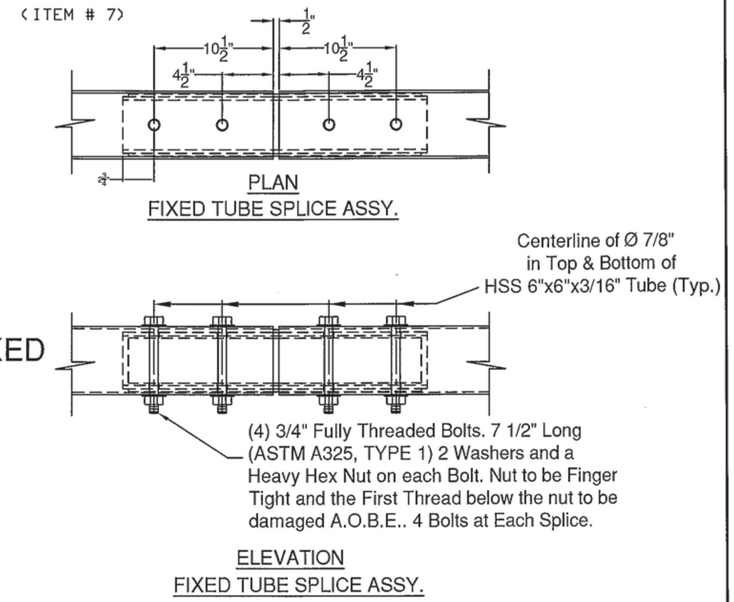

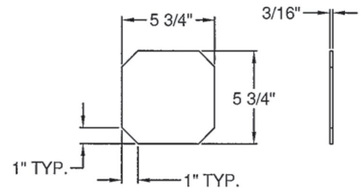

6" X 6" KICKBACK
ENDCAP DETAIL

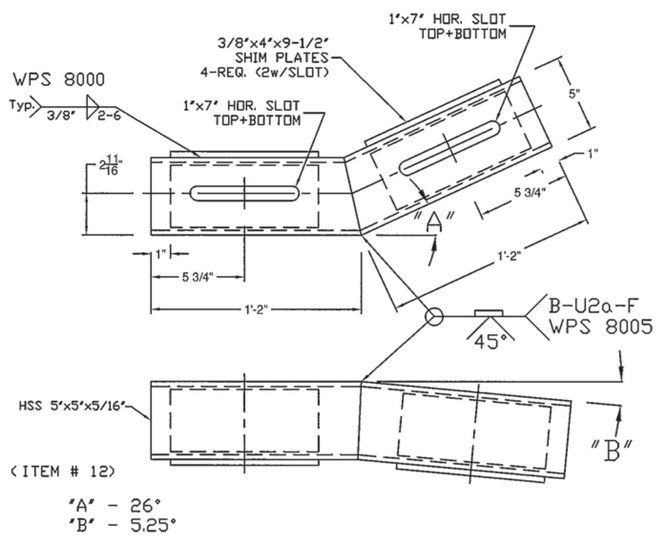

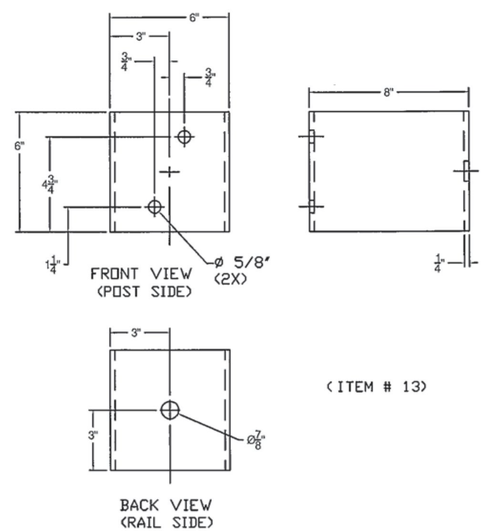

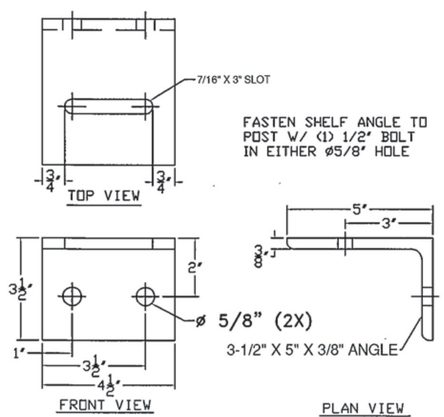

(ITEM # 10)

Vermont Agency of Transportation

RECEIVED

CK'D BY VHB OK'D BY TAS

March 14, 2017

RESUBMIT _____ APPROVED YES

BY T Sumner DATE 3/16/17

SHOP DRAWING REVIEW

X REVIEWED AS REQUIRED BY THE CONSTRUCTION CONTRACT DOCUMENTS AND APPROVED, BUT ONLY FOR CONFORMANCE TO THE DESIGN CONCEPT OF THE WORK, AND SUBJECT TO FURTHER LIMITATIONS AND REQUIREMENTS CONTAINED IN THE CONSTRUCTION CONTRACT DOCUMENTS.

☐ REJECTED ☐ REVISE AND RESUBMIT ☐ FURNISH AS CORRECTED

CORRECTIONS OR COMMENTS MADE ON THE SHOP DRAWINGS DURING THIS REVIEW DO NOT RELIEVE CONTRACTOR FROM COMPLIANCE WITH REQUIRMENTS OF THE DRAWINGS AND SPECIFICATIONS. THIS CHECK IS ONLY FOR REVIEW OF GENERAL CONFORMANCE WITH THE DESIGN CONCEPT OF THE PROJECT AND GENERAL COMPLIANCE WITH THE INFORMATION GIVEN IN THE CONTRACT DOCUMENTS. THE CONTRACTOR IS RESPONSIBLE FOR: CONFIRMING AND CORRELATING ALL QUANTITIES AND DIMENSIONS; SELECTING FABRICATION PROCESSES AND TECHNIQUES OF CONSTRUCTION; COORDINATING HIS WORK WITH THAT OF ALL OTHER TRADES; AND PERFORMING HIS WORK IN A SAFE AND SATISFACTORY MANNER.

vhb 40 IDX Drive, Building 100, Suite 200, South Burlington, VT 05403, 802.497.6100

Job Number: BRF 025-1(42)
Reviewed By: E.F. LAWES
Date: MARCH 15, 2017

ITEM #: 900.620

STRUCTURAL STEEL TO COMPLY W/ ASTM A6

TOLERANCE UNLESS OTHERWISE NOTED:
FRACTIONS = ± 1/16"
ANGLES = ± 1/2°
DIAMETERS = ± 1/32"

SPECIAL PROVISION, GUIDERAIL APPROACH SYSTEM, GALVANIZED 2 RAIL BB

PROJECT 111 BRF 025-1(42), T.H. 1 (V.T. 103) CLASS I (PRINCIPAL ARTERIAL) F.A.S. 025-1, BRIDGE # 25
TOWN OF LUDLOW, WINDSOR COUNTY

R	NO.	DATE	DESCRIPTION	BY
E	1	3/1/17	REVISED PER 2/23/17 MARK-UP	D.K.
V	2	3/14/17	REVISED PER 3/10/17 MARK-UP	D.K.

R	NO.	DATE	DESCRIPTION	BY
E				
V				

ELDERLEE, INC.
OAKS CORNERS, NEW YORK 14518
email: dlong@elderlee.com / epeak@elderlee.com
Tel: 315-789-6670 Fax: 315-789-6615

CERTIFIED FABRICATOR

ORTHOGRAPHIC PROJECTION

DRAWN	D.K.	1/3/17
CHECKED	E.P.	1/3/17
APPROVED	D.L.	1/3/17
SCALE	SCHEMATIC	
DRAWING NO.	FR LaFayette LUDLOW-T	

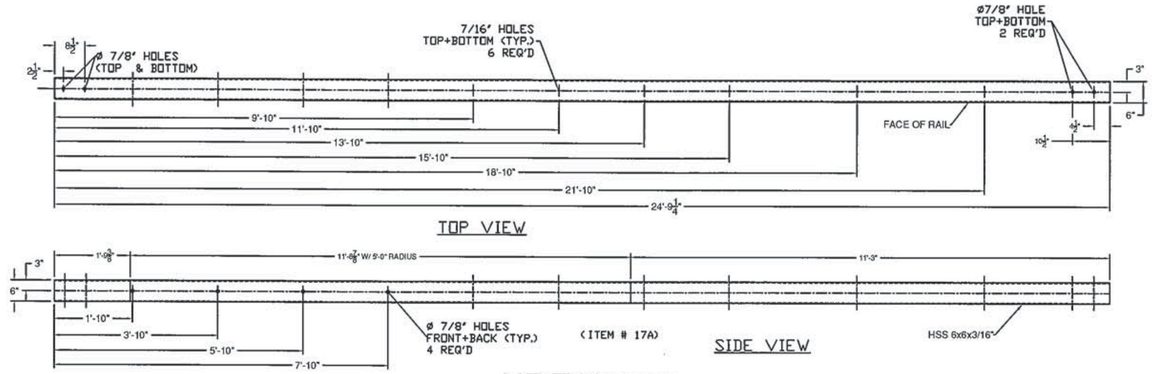

NE TOP RAIL
PRIOR TO FORMING

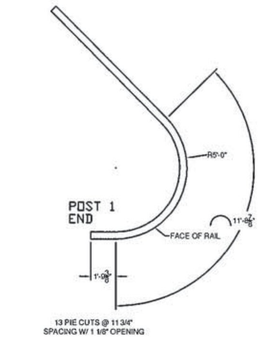

RADIUS DETAIL
(FACE OF RAIL-CONVEX)

SEE GENERAL NOTES
ON SHEET 1 OF 9

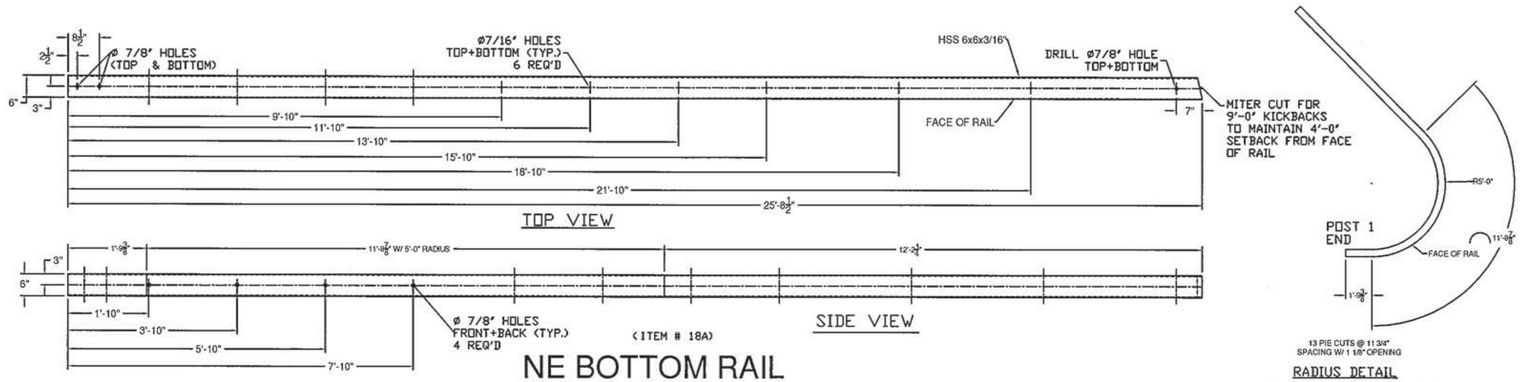

NE BOTTOM RAIL
PRIOR TO FORMING

RADIUS DETAIL
(FACE OF RAIL-CONVEX)

SEE GENERAL NOTES
ON SHEET 1 OF 9

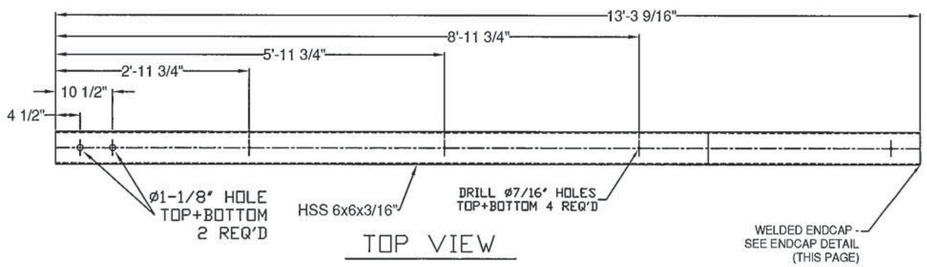

TOP VIEW

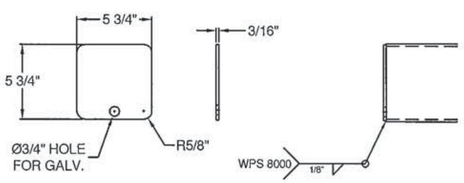

ENDCAP DETAIL

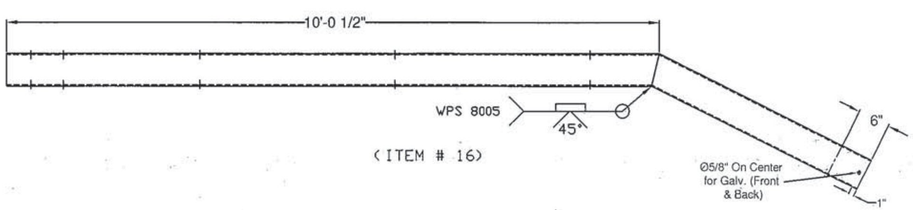

Vermont Agency of Transportation
RECEIVED
CK'D BY VHB OK'D BY TAS
March 14, 2017
RESUBMIT ____ APPROVED YES
BY T Sumner DATE 3/16/17

SHOP DRAWING REVIEW

X REVIEWED AS REQUIRED BY THE CONSTRUCTION CONTRACT DOCUMENTS AND APPROVED, BUT ONLY FOR CONFORMANCE TO THE DESIGN CONCEPT OF THE WORK, AND SUBJECT TO FURTHER LIMITATIONS AND REQUIREMENTS CONTAINED IN THE CONSTRUCTION CONTRACT DOCUMENTS.

☐ REJECTED ☐ FURNISH AS CORRECTED ☐ REVISE AND RESUBMIT

CORRECTIONS OR COMMENTS MADE ON THE SHOP DRAWINGS DURING THIS REVIEW DO NOT RELIEVE CONTRACTOR FROM COMPLIANCE WITH REQUIRMENTS OF THE DRAWINGS AND SPECIFICATIONS. THIS CHECK IS ONLY FOR REVIEW OF GENERAL CONFORMANCE WITH THE DESIGN CONCEPT OF THE PROJECT AND GENERAL COMPLIANCE WITH THE INFORMATION GIVEN IN THE CONTRACT DOCUMENTS. THE CONTRACTOR IS RESPONSIBLE FOR: CONFIRMING AND CORRELATING ALL QUANTITIES AND DIMENSIONS; SELECTING FABRICATION PROCESSES AND TECHNIQUES OF CONSTRUCTION; COORDINATING HIS WORK WITH THAT OF ALL OTHER TRADES; AND PERFORMING HIS WORK IN A SAFE AND SATISFACTORY MANNER.

Job Number: BRF 025-1(42)
Reviewed By: E.F. LAWES
Date: MARCH 15, 2017

40 IDX Drive
Building 100, Suite 200
South Burlington, VT 05403
802.497.6100

ITEM #: 900.620

STRUCTURAL STEEL TO COMPLY W/ ASTM A6

TOLERANCE UNLESS OTHERWISE NOTED:
FRACTIONS = ± 1/16"
ANGLES = ± 1/2°
DIAMETERS = ± .1/32"

SHEET 4 OF 9

SPECIAL PROVISION, GUIDERAIL APPROACH SYSTEM, GALVANIZED 2 RAIL BB

PROJECT 111 BRF 025-1(42), T.H. 1 (V.T. 103) CLASS I (PRINCIPAL ARTERIAL) F.A.S. 025-1, BRIDGE # 25
TOWN OF LUDLOW, WINDSOR COUNTY

R	NO.	DATE	DESCRIPTION	BY	R	NO.	DATE	DESCRIPTION	BY
E	1	3/1/17	REVISED PER 2/23/17 MARK-UP	D.K.	E				
V	2	3/14/17	REVISED PER 3/10/17 MARK-UP	D.K.	V				

ELDERLEE, INC.
OAKS CORNERS, NEW YORK 14518
email: dlong@elderlee.com / epeek@elderlee.com
Tel: 315-789-6670 Fax: 315-789-6615

CERTIFIED FABRICATOR
ORTHOGRAPHIC PROJECTION

DRAWN	D.K.	1/3/17
CHECKED	E.P.	1/3/17
APPROVED	D.L.	1/3/17
SCALE	SCHEMATIC	
DRAWING NO.	FR LaFayette LUDLOW-T	

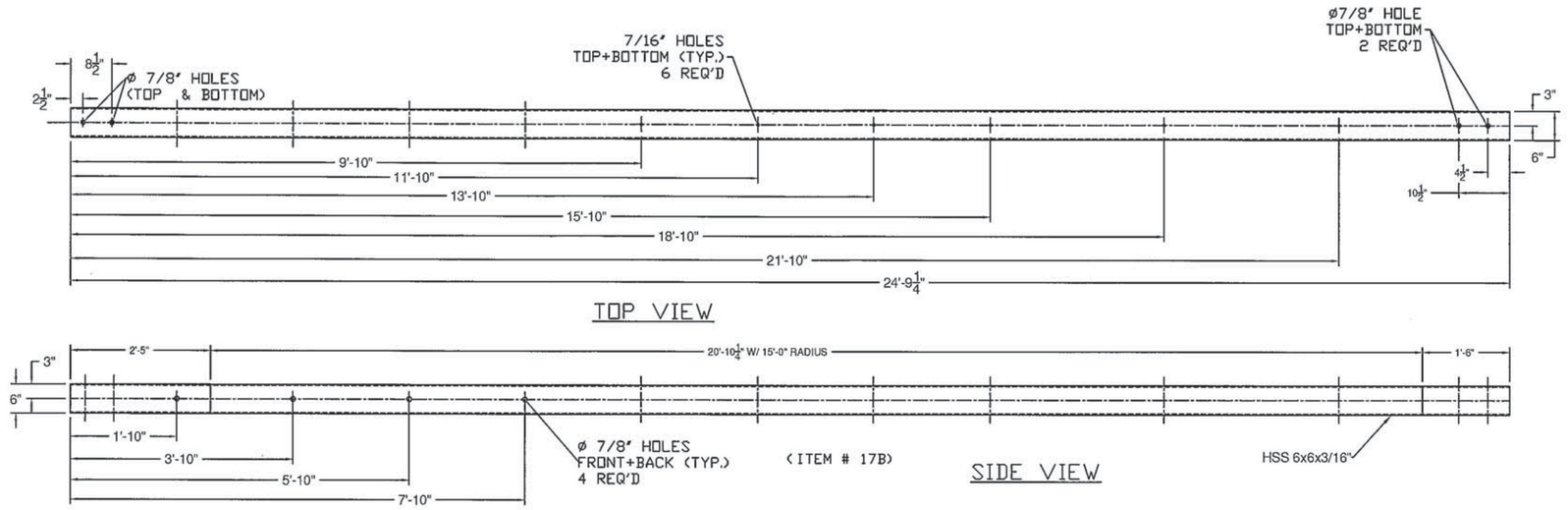

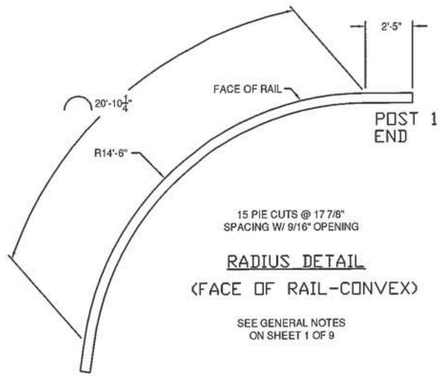

SW TOP RAIL
PRIOR TO FORMING

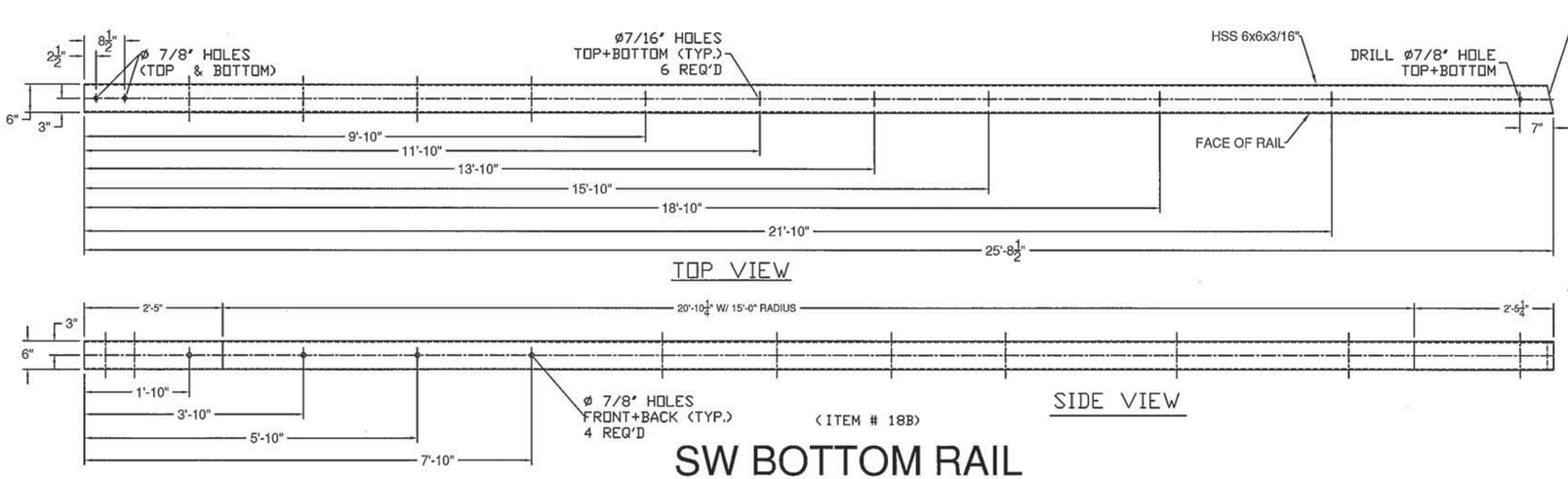

MITER CUT FOR
9'-0" KICKBACKS
TO MAINTAIN 4'-0"
SETBACK FROM FACE
OF RAIL

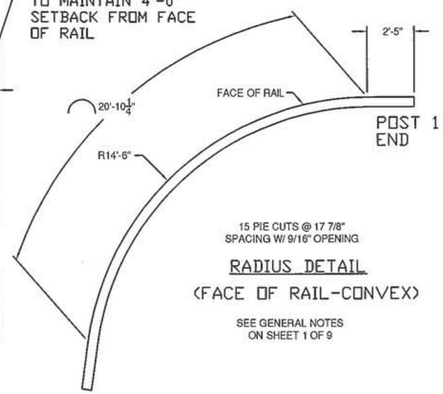

SW BOTTOM RAIL
PRIOR TO FORMING

Vermont Agency of Transportation
RECEIVED
CK'D BY VHB OK'D BY TAS
March 14, 2017
RESUBMIT ____ APPROVED YES
BY T Sumner DATE 3/16/17

SHOP DRAWING REVIEW

X REVIEWED AS REQUIRED BY THE CONSTRUCTION CONTRACT DOCUMENTS AND APPROVED, BUT ONLY FOR CONFORMANCE TO THE DESIGN CONCEPT OF THE WORK, AND SUBJECT TO FURTHER LIMITATIONS AND REQUIREMENTS CONTAINED IN THE CONSTRUCTION CONTRACT DOCUMENTS.

☐ REJECTED ☐ REVISE AND RESUBMIT ☐ FURNISH AS CORRECTED

CORRECTIONS OR COMMENTS MADE ON THE SHOP DRAWINGS DURING THIS REVIEW DO NOT RELIEVE CONTRACTOR FROM COMPLIANCE WITH REQUIRMENTS OF THE DRAWINGS AND SPECIFICATIONS. THIS CHECK IS ONLY FOR REVIEW OF GENERAL CONFORMANCE WITH THE DESIGN CONCEPT OF THE PROJECT AND GENERAL COMPLIANCE WITH THE INFORMATION GIVEN IN THE CONTRACT DOCUMENTS. THE CONTRACTOR IS RESPONSIBLE FOR: CONFIRMING AND CORRELATING ALL QUANTITIES AND DIMENSIONS; SELECTING FABRICATION PROCESSES AND TECHNIQUES OF CONSTRUCTION; COORDINATING HIS WORK WITH THAT OF ALL OTHER TRADES; AND PERFORMING HIS WORK IN A SAFE AND SATISFACTORY MANNER.

vhb
40 IDX Drive
Building 100, Suite 200
South Burlington, VT 05403
802.497.6100

Job Number: BRF 025-1(42)
Reviewed By: E.F. LAWES
Date: MARCH 15, 2017

ITEM #: 900.620

STRUCTURAL STEEL TO COMPLY W/ ASTM A6

TOLERANCE UNLESS OTHERWISE NOTED:
FRACTIONS = ± 1/16"
ANGLES = ± 1/2°
DIAMETERS = ± 1/32"

SHEET 5 OF 9

SPECIAL PROVISION, GUIDERAIL APPROACH SYSTEM, GALVANIZED 2 RAIL BB

PROJECT 111 BRF 025-1(42), T.H. 1 (V.T. 103) CLASS I (PRINCIPAL ARTERIAL) F.A.S. 025-1, BRIDGE # 25
TOWN OF LUDLOW, WINDSOR COUNTY

R	NO.	DATE	DESCRIPTION	BY
E	1	3/1/17	REVISED PER 2/23/17 MARK-UP	D.K.
V	2	3/14/17	REVISED PER 3/10/17 MARK-UP	D.K.

R	NO.	DATE	DESCRIPTION	BY
E				
V				

ELDERLEE, INC.
OAKS CORNERS, NEW YORK 14518
email: dlong@elderlee.com / epeek@elderlee.com
Tel: 315-789-6670 Fax: 315-789-6615

CERTIFIED FABRICATOR

ORTHOGRAPHIC PROJECTION

DRAWN	D.K.	1/3/17
CHECKED	E.P.	1/3/17
APPROVED	D.L.	1/3/17
SCALE	SCHEMATIC	
DRAWING NO.	FR LaFayette LUDLOW-T	

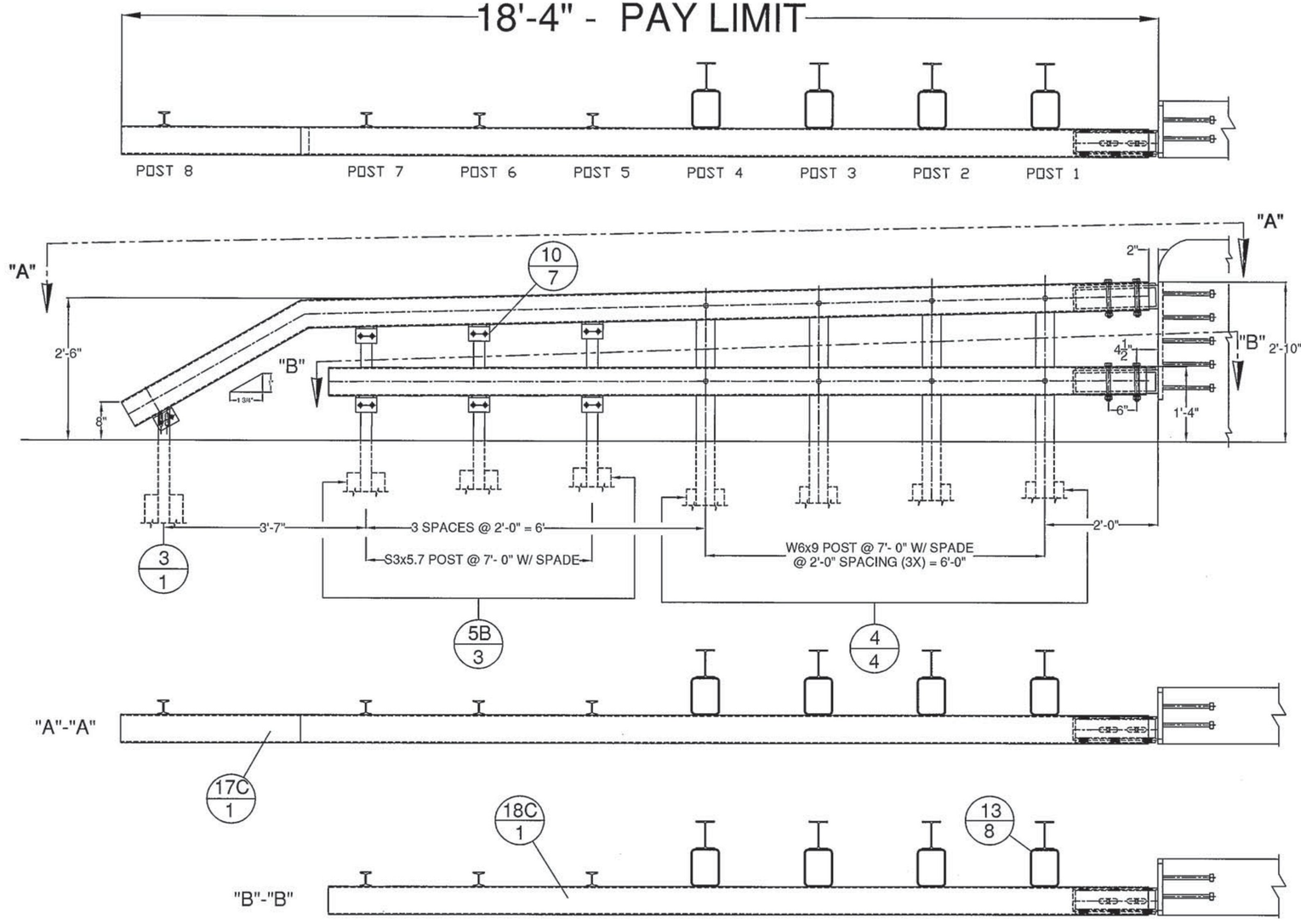

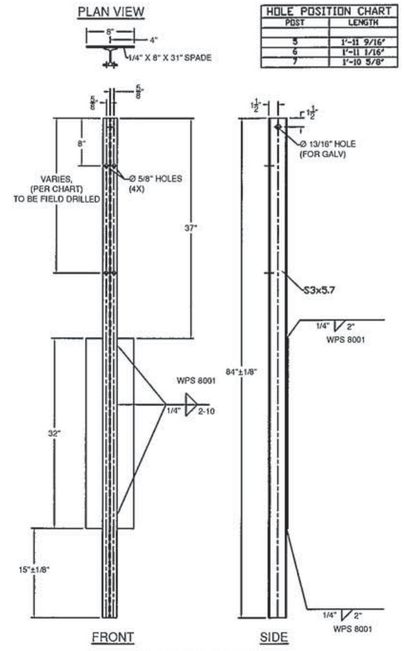

HOLE POSITION CHART	
POST	LENGTH
5	1'-11 9/16"
6	1'-11 1/16"
7	1'-10 5/8"

(ITEM # 5B)

BILL OF MATERIALS, SOUTH EAST CORNER ONLY

ITEM #	QTY.	COMPONENT #	DESCRIPTION	MATERIAL (ASTM)
3	1	0013.57060	3' I-END POST W/SPD @ 3'-8" LG	ASTM A572 Gr. 50
4	4	-	W6X9 POST @ 7' W/SPD & Ø9/16" HOLES @ VARIOUS	ASTM A572 Gr. 50
5B	3	-	3' I-POST, PUNCH 8" & VARIOUS', W/8X32" SPADE @ 7'	ASTM A572 Gr. 50
10	7	0054.00050	REG BB SHELF ANGLES @ 4-1/2"	ASTM A36
13	8	0054.00563	6X8" TRANS. TUBE B/O @ 6' LG	A500 Gr. B
17C	1	-	6X6" BB TOP TRANS @ 18'-1 1/16" LG W/ 10'-0" CONVEX RAD. & TURNDOWN	A500 Gr. B
18C	1	-	6X6" BB BTM TRANS @ 14'-5 1/2" LG W/ 10'-0" CONVEX RAD.	A500 Gr. B
19	6	0080.03355	3/8" X 7 1/2" BOLT, NUT, & 2 FW	A307, A563, F844
20	7	0080.04100	1/2" x 1-1/2" BOLT, NUT, & FW	A307, A563, F844
21	16	0080.04120	1/2" x 1-1/2" BOLT, NUT, 2 FW & LW	A307, A563, F844
24	8	0080.06370	3/4" X 8" CARR BOLT, NUT, FW & LW	A307, A563, F844
25	1	-	3/4" X 7" HEX BOLT, NUT, & FW	A307, A563, F844
27	-	-	PARAPET WALL CONNECTION (TRAILING)	INCLUDED W/PAY ITEM #900.640

SEE HARDWARE NOTES ON SHEET 2

SE APPROACH GUARD RAIL TO BRIDGE RAIL TRANSITION

(DRAWN STRAIGHT FOR CLARITY)
SEE ADDITIONAL SHEETS FOR DETAILED

Vermont Agency of Transportation
RECEIVED
CK'D BY VHB OK'D BY TAS
March 14, 2017
RESUBMIT ____ APPROVED YES
BY T Sumner DATE 3/16/17

SHOP DRAWING REVIEW

X REVIEWED AS REQUIRED BY THE CONSTRUCTION CONTRACT DOCUMENTS AND APPROVED, BUT ONLY FOR CONFORMANCE TO THE DESIGN CONCEPT OF THE WORK, AND SUBJECT TO FURTHER LIMITATIONS AND REQUIREMENTS CONTAINED IN THE CONSTRUCTION CONTRACT DOCUMENTS.

☐ REJECTED ☐ REVISE AND RESUBMIT ☐ FURNISH AS CORRECTED

CORRECTIONS OR COMMENTS MADE ON THE SHOP DRAWINGS DURING THIS REVIEW DO NOT RELIEVE CONTRACTOR FROM COMPLIANCE WITH REQUIREMENTS OF THE DRAWINGS AND SPECIFICATIONS. THIS CHECK IS ONLY FOR REVIEW OF GENERAL CONFORMANCE WITH THE DESIGN CONCEPT OF THE PROJECT AND GENERAL COMPLIANCE WITH THE INFORMATION GIVEN IN THE CONTRACT DOCUMENTS. THE CONTRACTOR IS RESPONSIBLE FOR: CONFIRMING AND CORRELATING ALL QUANTITIES AND DIMENSIONS; SELECTING FABRICATION PROCESSES AND TECHNIQUES OF CONSTRUCTION; COORDINATING HIS WORK WITH THAT OF ALL OTHER TRADES; AND PERFORMING HIS WORK IN A SAFE AND SATISFACTORY MANNER.

vhb
40 IDX Drive
Building 100, Suite 200
South Burlington, VT 05403
802.497.6100

Job Number: BRF 025-1(42)
Reviewed By: E.F. LAWES
Date: MARCH 15, 2017

ITEM #: 900.620

STRUCTURAL STEEL TO COMPLY W/ ASTM A6

TOLERANCE UNLESS OTHERWISE NOTED:
FRACTIONS = ± 1/16"
ANGLES = ± 1/2°
DIAMETERS = ± 1/32"

SHEET 6 OF 9

SPECIAL PROVISION, GUIDERAIL APPROACH SYSTEM, GALVANIZED 2 RAIL BB

PROJECT 111 BRF 025-1(42), T.H. 1 (V.T. 103) CLASS I (PRINCIPAL ARTERIAL) F.A.S. 025-1, BRIDGE # 25
TOWN OF LUDLOW, WINDSOR COUNTY

R	NO.	DATE	DESCRIPTION	BY	R	NO.	DATE	DESCRIPTION	BY
E	1	3/1/17	REVISED PER 2/23/17 MARK-UP	D.K.	E				
V	2	3/14/17	REVISED PER 3/10/17 MARK-UP	D.K.	V				

ELDERLEE, INC.
OAKS CORNERS, NEW YORK 14518
email:dlong@elderlee.com / epeek@elderlee.com
Tel:315-789-6670 Fax:315-789-6615

CERTIFIED FABRICATOR

DRAWN	D.K.	1/3/17
CHECKED	E.P.	1/3/17
APPROVED	D.L.	1/3/17
SCALE	SCHEMATIC	
DRAWING NO.	FR LaFayette LUDLOW-T	

ORTHOGRAPHIC PROJECTION

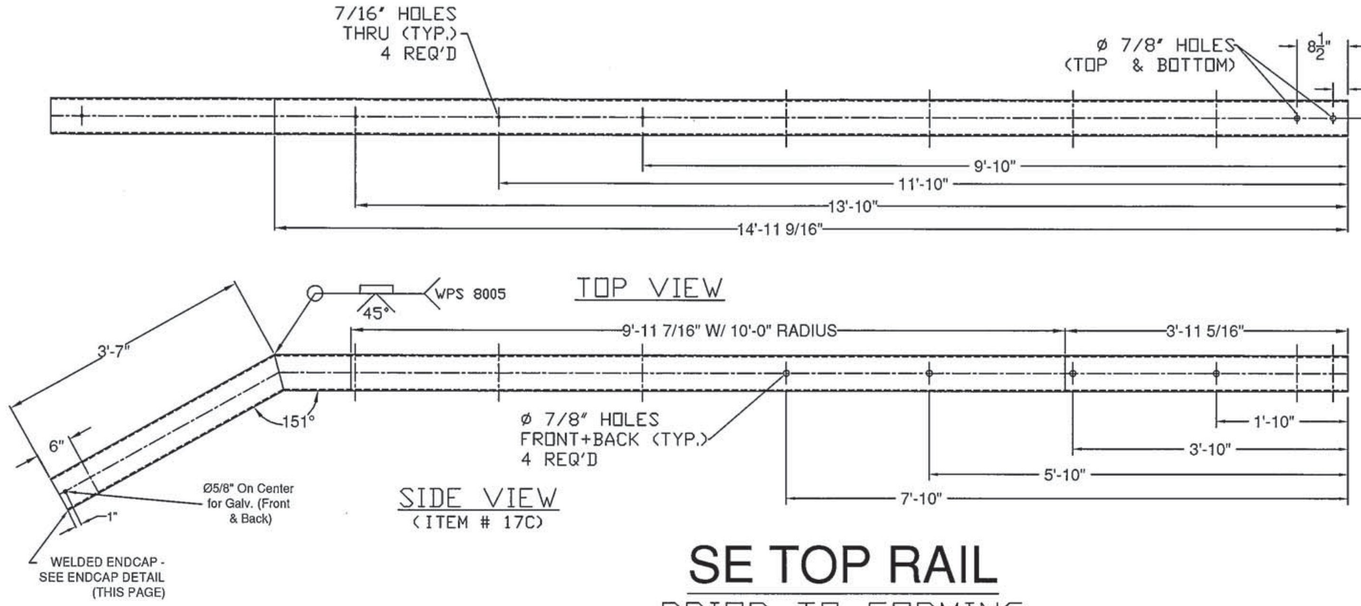

SE TOP RAIL
PRIOR TO FORMING

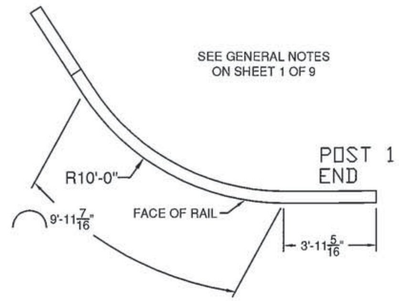

8 PIE CUTS @ 17 1/16"
SPACING W/ 3/4" OPENING

RADIUS DETAIL
(FACE OF RAIL-CONVEX)

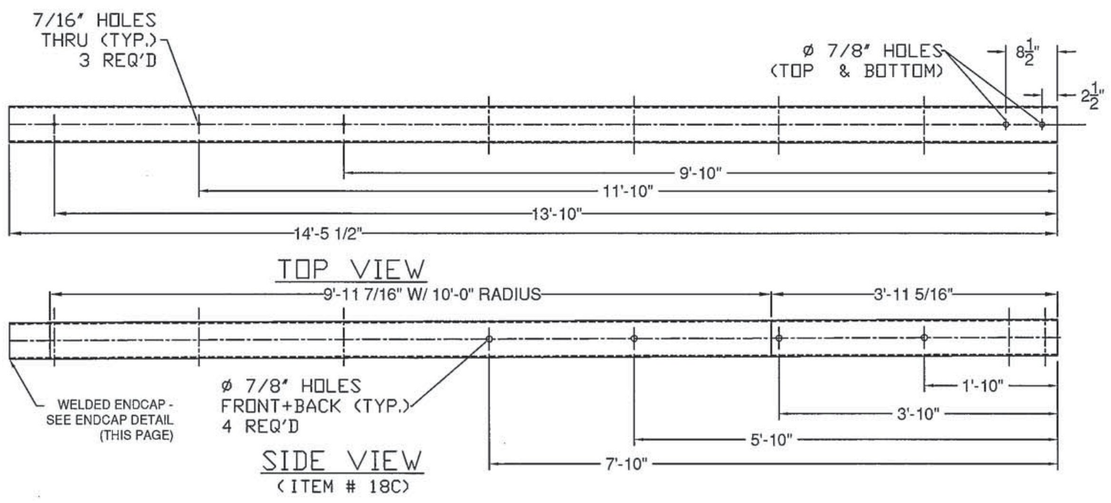

SE BOTTOM RAIL
PRIOR TO FORMING

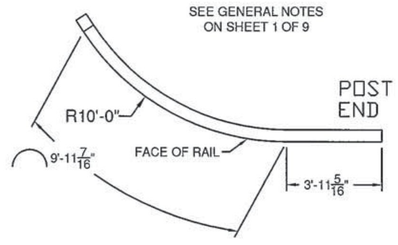

8 PIE CUTS @ 17 1/16"
SPACING W/ 3/4" OPENING

RADIUS DETAIL
(FACE OF RAIL-CONVEX)

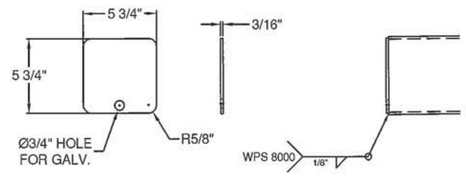

ENDCAP DETAIL

Vermont Agency of Transportation
RECEIVED
CK'D BY VHB OK'D BY TAS
March 14, 2017
RESUBMIT ____ APPROVED YES
BY T Sumner DATE 3/16/17

SHOP DRAWING REVIEW

X REVIEWED AS REQUIRED BY THE CONSTRUCTION CONTRACT DOCUMENTS AND APPROVED, BUT ONLY FOR CONFORMANCE TO THE DESIGN CONCEPT OF THE WORK, AND SUBJECT TO FURTHER LIMITATIONS AND REQUIREMENTS CONTAINED IN THE CONSTRUCTION CONTRACT DOCUMENTS.

☐ REJECTED ☐ REVISE AND RESUBMIT ☐ FURNISH AS CORRECTED

CORRECTIONS OR COMMENTS MADE ON THE SHOP DRAWINGS DURING THIS REVIEW DO NOT RELIEVE CONTRACTOR FROM COMPLIANCE WITH REQUIRMENTS OF THE DRAWINGS AND SPECIFICATIONS. THIS CHECK IS ONLY FOR REVIEW OF GENERAL CONFORMANCE WITH THE DESIGN CONCEPT OF THE PROJECT AND GENERAL COMPLIANCE WITH THE INFORMATION GIVEN IN THE CONTRACT DOCUMENTS. THE CONTRACTOR IS RESPONSIBLE FOR: CONFIRMING AND CORRELATING ALL QUANTITIES AND DIMENSIONS; SELECTING FABRICATION PROCESSES AND TECHNIQUES OF CONSTRUCTION; COORDINATING HIS WORK WITH THAT OF ALL OTHER TRADES; AND PERFORMING HIS WORK IN A SAFE AND SATISFACTORY MANNER.

vhb 40 IDX Drive
Building 100, Suite 200
South Burlington, VT 05403
802.497.6100

Job Number: BRF 025-1(42)
Reviewed By: E.F. LAWES
Date: MARCH 15, 2017

ITEM #: 900.620

STRUCTURAL STEEL TO COMPLY W/ ASTM A6

TOLERANCE UNLESS OTHERWISE NOTED:
FRACTIONS = ± 1/16"
ANGLES = ± 1/2°
DIAMETERS = ± 1/32"

SHEET 7 OF 9

SPECIAL PROVISION, GUIDERAIL APPROACH SYSTEM, GALVANIZED 2 RAIL BB

PROJECT 111 BRF 025-1(42), T.H. 1 (V.T. 103) CLASS I (PRINCIPAL ARTERIAL) F.A.S. 025-1, BRIDGE # 25
TOWN OF LUDLOW, WINDSOR COUNTY

R	NO.	DATE	DESCRIPTION	BY
E	1	3/1/17	REVISED PER 2/23/17 MARK-UP	D.K.
V	2	3/14/17	REVISED PER 3/10/17 MARK-UP	D.K.

R	NO.	DATE	DESCRIPTION	BY
E				
V				

ELDERLEE, INC.
OAKS CORNERS, NEW YORK 14518
email: dlong@elderlee.com / epeek@elderlee.com
Tel:315-789-6670 Fax:315-789-6615

CERTIFIED FABRICATOR

ORTHOGRAPHIC PROJECTION

DRAWN	D.K.	1/3/17
CHECKED	E.P.	1/3/17
APPROVED	D.L.	1/3/17
SCALE	SCHEMATIC	
DRAWING NO.	FR LaFayette LUDLOW-T	

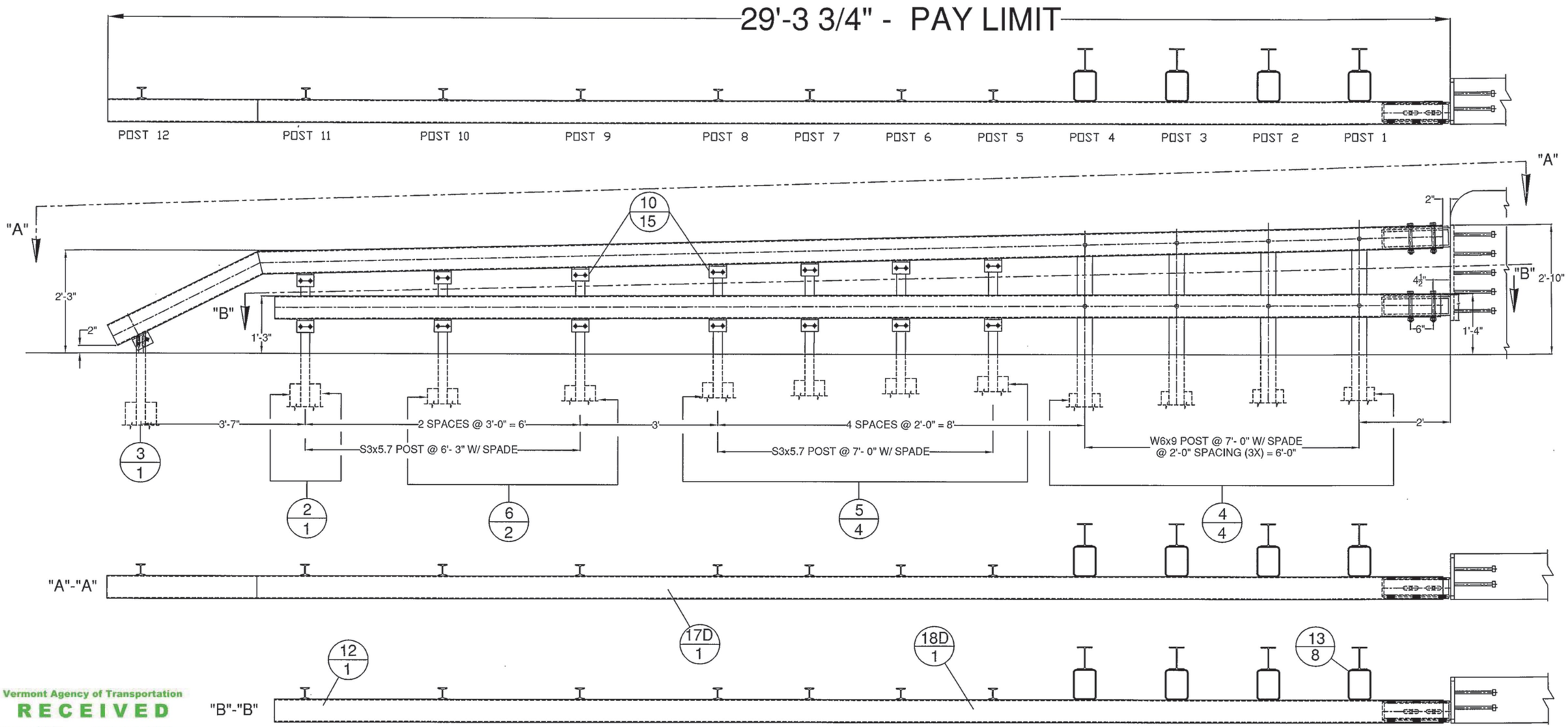

Vermont Agency of Transportation

RECEIVED

CK'D BY VHB OK'D BY TAS

March 14, 2017

RESUBMIT ____ APPROVED YES

BY T Sumner DATE 3/16/17

NW APPROACH GUARD RAIL TO BRIDGE RAIL TRANSITION

(DRAWN STRAIGHT FOR CLARITY)

SEE ADDITIONAL SHEETS FOR DETAILED VIEWS

BILL OF MATERIALS, NORTHWEST CORNER ONLY

ITEM #	QTY.	COMPONENT #	DESCRIPTION	MATERIAL (ASTM)
2	1	0013.57025	3' I-POST W/SPD @ 63", PUNCH 8", & 20"	ASTM A572 Gr. 50
3	1	0013.57060	3' I-END POST W/SPD @ 3'-8" LG	ASTM A572 Gr. 50
4	4	-	W6X9 POST @ 7' W/SPD & ø9/16" HOLES @ VARIOUS	ASTM A572 Gr. 50
5	4	-	3' I-POST, PUNCH 8" & VARIOUS*, W/8X32" SPADE @ 7'	ASTM A572 Gr. 50
6	2	-	3' I-POST, PUNCH 8" & VARIOUS*, W/8X32" SPADE @ 6'3"	ASTM A572 Gr. 50
10	15	0054.00050	REG BB SHELF ANGLES @ 4-1/8"	ASTM A36
13	8	0054.00563	6X8" TRANS. TUBE B/O @ 6" LG	A500 Gr. B
17D	1	-	6X6" BB TOP TRANS @ 24'-9 1/4" LG W/ 7'-6" CONVEX RAD. & TURNDOWN	A500 Gr. B
18D	1	-	6X6" BB BTM TRANS @ 25'-5 1/4" LG W/ 7'-6" CONVEX RAD.	A500 Gr. B
19	14	0080.03355	3/8" X 7 1/2" BOLT, NUT, & 2 FW	A307, A563, F844
20	15	0080.04100	1/2" x 1-1/2" BOLT, NUT, & FW	A307, A563, F844
21	16	0080.04120	1/2" x 1-1/2" BOLT, NUT, 2 FW & LW	A307, A563, F844
24	8	0080.06370	3/4" X 8" CARR BOLT, NUT, FW & LW	A307, A563, F844
25	1	-	3/4" X 7" HEX BOLT, NUT, & FW	A307, A563, F844
27	-	-	PARAPET WALL CONNECTION (TRAILING)	INCLUDED W/PAY ITEM #900.640

SEE HARDWARE NOTES ON SHEET 2

SHOP DRAWING REVIEW

X REVIEWED AS REQUIRED BY THE CONSTRUCTION CONTRACT DOCUMENTS AND APPROVED, BUT ONLY FOR CONFORMANCE TO THE DESIGN CONCEPT OF THE WORK, AND SUBJECT TO FURTHER LIMITATIONS AND REQUIREMENTS CONTAINED IN THE CONSTRUCTION CONTRACT DOCUMENTS.

☐ REJECTED ☐ REVISE AND RESUBMIT ☐ FURNISH AS CORRECTED

CORRECTIONS OR COMMENTS MADE ON THE SHOP DRAWINGS DURING THIS REVIEW DO NOT RELIEVE CONTRACTOR FROM COMPLIANCE WITH REQUIRMENTS OF THE DRAWINGS AND SPECIFICATIONS. THIS CHECK IS ONLY FOR REVIEW OF GENERAL CONFORMANCE WITH THE DESIGN CONCEPT OF THE PROJECT AND GENERAL COMPLIANCE WITH THE INFORMATION GIVEN IN THE CONTRACT DOCUMENTS. THE CONTRACTOR IS RESPONSIBLE FOR: CONFIRMING AND CORRELATING ALL QUANTITIES AND DIMENSIONS; SELECTING FABRICATION PROCESSES AND TECHNIQUES OF CONSTRUCTION; COORDINATING HIS WORK WITH THAT OF ALL OTHER TRADES; AND PERFORMING HIS WORK IN A SAFE AND SATISFACTORY MANNER.

vhb
40 IDX Drive
Building 100, Suite 200
South Burlington, VT 05403
802.497.6100

Job Number: BRF 025-1(42)
Reviewed By: E.F. LAWES
Date: MARCH 15, 2017

ITEM #: 900.620

STRUCTURAL STEEL TO COMPLY W/ ASTM A6

TOLERANCE UNLESS OTHERWISE NOTED:
FRACTIONS = ± 1/16"
ANGLES = ± 1/2°
DIAMETERS = ± 1/32"

SPECIAL PROVISION, GUIDERAIL APPROACH SYSTEM, GALVANIZED 2 RAIL BB

PROJECT 111 BRF 025-1(42), T.H. 1 (V.T. 103) CLASS I (PRINCIPAL ARTERIAL) F.A.S. 025-1, BRIDGE # 25
TOWN OF LUDLOW, WINDSOR COUNTY

R	NO.	DATE	DESCRIPTION	BY	R	NO.	DATE	DESCRIPTION	BY
E	1	3/1/17	REVISED PER 2/23/17 MARK-UP	D.K.	E				
V	2	3/14/17	REVISED PER 3/10/17 MARK-UP	D.K.	V				

ELDERLEE, INC.
OAKS CORNERS, NEW YORK 14518
email:dlong@elderlee.com / epeek@elderlee.com
Tel:315-789-6670 Fax:315-789-6615

CERTIFIED F.H.W.A. FABRICATOR

DRAWN	D.K.	1/3/17
CHECKED	E.P.	1/3/17
APPROVED	D.L.	1/3/17
SCALE	SCHEMATIC	
DRAWING NO.	FR LaFayette LUDLOW-T	

ORTHOGRAPHIC PROJECTION

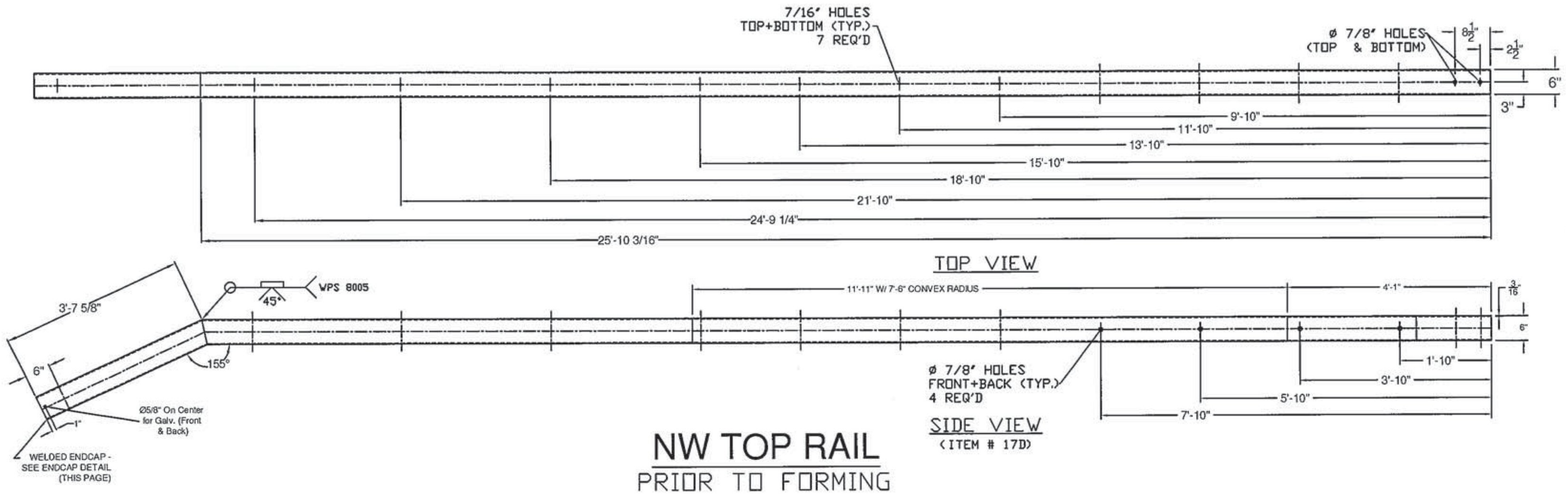

NW TOP RAIL
PRIOR TO FORMING

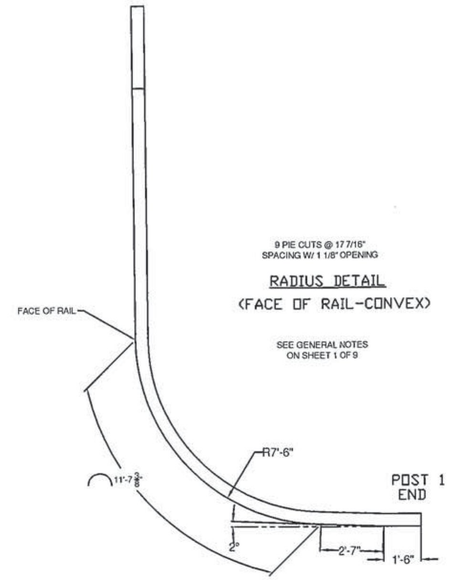

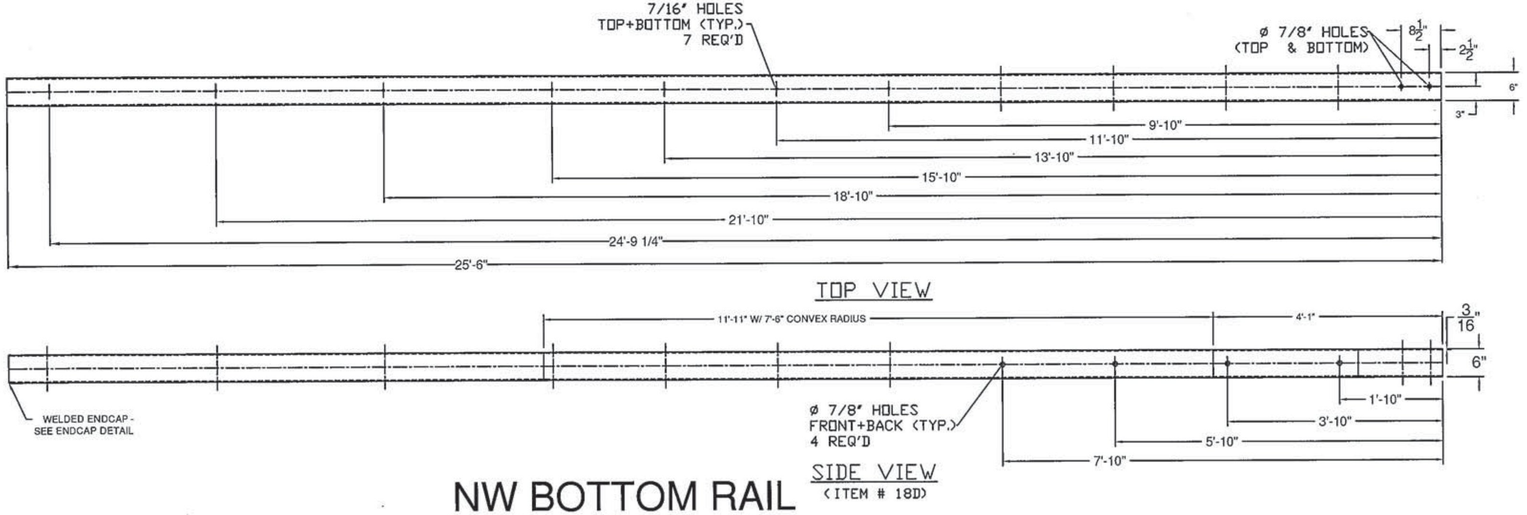

NW BOTTOM RAIL
PRIOR TO FORMING

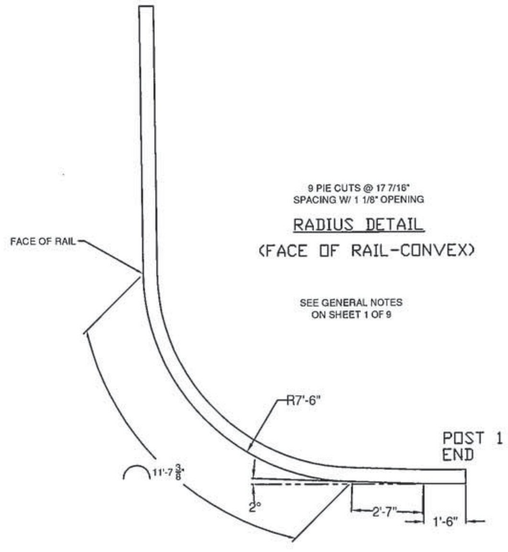

SHOP DRAWING REVIEW

X REVIEWED AS REQUIRED BY THE CONSTRUCTION CONTRACT DOCUMENTS AND APPROVED, BUT ONLY FOR CONFORMANCE TO THE DESIGN CONCEPT OF THE WORK, AND SUBJECT TO FURTHER LIMITATIONS AND REQUIREMENTS CONTAINED IN THE CONSTRUCTION CONTRACT DOCUMENTS.

☐ REJECTED ☐ REVISE AND RESUBMIT ☐ FURNISH AS CORRECTED

CORRECTIONS OR COMMENTS MADE ON THE SHOP DRAWINGS DURING THIS REVIEW DO NOT RELIEVE CONTRACTOR FROM COMPLIANCE WITH REQUIRMENTS OF THE DRAWINGS AND SPECIFICATIONS. THIS CHECK IS ONLY FOR REVIEW OF GENERAL CONFORMANCE WITH THE DESIGN CONCEPT OF THE PROJECT AND GENERAL COMPLIANCE WITH THE INFORMATION GIVEN IN THE CONTRACT DOCUMENTS. THE CONTRACTOR IS RESPONSIBLE FOR: CONFIRMING AND CORRELATING ALL QUANTITIES AND DIMENSIONS; SELECTING FABRICATION PROCESSES AND TECHNIQUES OF CONSTRUCTION; COORDINATING HIS WORK WITH THAT OF ALL OTHER TRADES; AND PERFORMING HIS WORK IN A SAFE AND SATISFACTORY MANNER.

vhb
40 IDX Drive
Building 100, Suite 200
South Burlington, VT 05403
802.497.6100

Job Number: BRF 025-1(42)
Reviewed By: E.F. LAWES
Date: MARCH 15, 2017

Vermont Agency of Transportation

RECEIVED

CK'D BY VHB OK'D BY TAS

March 14, 2017

RESUBMIT ____ APPROVED YES

BY T Sumner DATE 3/16/17

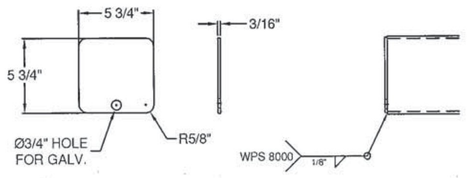

ENDCAP DETAIL

ITEM #: 900.620

STRUCTURAL STEEL TO COMPLY W/ ASTM A6

TOLERANCE UNLESS OTHERWISE NOTED:
FRACTIONS = ± 1/16"
ANGLES = ± 1/2°
DIAMETERS = ± 1/32"

SHEET 9 OF 9

SPECIAL PROVISION, GUIDERAIL APPROACH SYSTEM, GALVANIZED 2 RAIL BB

PROJECT 111 BRF 025-1(42), T.H. 1 (V.T. 103) CLASS I (PRINCIPAL ARTERIAL) F.A.S. 025-1, BRIDGE # 25
TOWN OF LUDLOW, WINDSOR COUNTY

R	NO.	DATE	DESCRIPTION	BY
E	1	3/1/17	REVISED PER 2/23/17 MARK-UP	D.K.
V	2	3/14/17	REVISED PER 3/10/17 MARK-UP	D.K.

R	NO.	DATE	DESCRIPTION	BY
E				
V				

ELDERLEE, INC.
OAKS CORNERS, NEW YORK 14518
email: dlong@elderlee.com / epeek@elderlee.com
Tel: 315-789-6670 Fax: 315-789-6615

CERTIFIED FABRICATOR
ORTHOGRAPHIC PROJECTION

DRAWN	D.K.	1/3/17
CHECKED	E.P.	1/3/17
APPROVED	D.L.	1/3/17
SCALE	SCHEMATIC	
DRAWING NO.	FR LaFayette LUDLOW-T	

WELDING PROCEDURE SPECIFICATION

PQR ELDERLEE # 3

Material Specification	A36/A500GR.B/A53/A572GR.36/50/A709GR.36/50/A108 / A307/A325/A563/A449.
Welding Process	FCAW
Manual or Machine	SEMAUTOMATIC
Position of Welding	FLAT/HORIZONTAL
Filler Metal Specification	A5.29
Filler Metal Classification	E81T1-NI1C-JH4 LINCOLN ULTERCORE 81i1C-H
Flux	N/A
Shielding Gas	CO 2 Dew Point -40DEG F Flow Rate 50CFH (45 TO 63 CFH)
Single or Multiple Pass	SINGLE
Single or Multiple Arc	SINGLE
Welding Current	DC
Polarity	REVERSE ELECTRODE POSITIVE CTWD 3/4"
Welding Progression	STRINGER
Root Treatment	ROOT SHALL BE CLEAN AND FREE OF FOREIGN MATTER
Preheat and Interpass Temperature	MIN PREHEAT 50 DEG ≤ 0.75" 70 DEG > 0.75" MAX INTERPASS 400 DEG
Postheat Temperature	NONE
Heat Input	Min 33.92 Max 50.42

WELDING PROCEDURE

Pass no.	Electrode size	Welding Current Amperes	Welding Current Volts	Travel speed	Joint detail
1	1/16	310	25	11	
		320 TO 285	26 TO 24	12.1 TO 9.9	

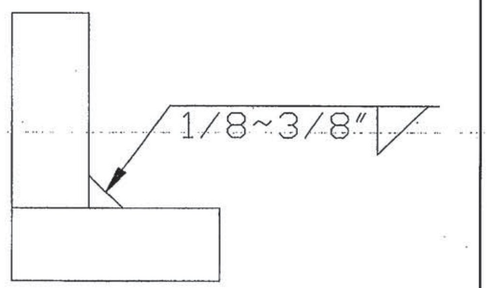

This procedure may vary due to fabrication sequence, fit-up, pass size, etc., within the limitation of variables given in Section 5.

Procedure No. 8000
Revision No. 3

Contractor Elderlee, Inc.
Authorized By RANDY SCOTT
Date 3/1/2017

Form III-2

Vermont Agency of Transportation

RECEIVED

CK'D BY VHB OK'D BY TAS

March 14, 2017

RESUBMIT ____ APPROVED YES

BY T Sumner DATE 3/16/17

SHOP DRAWING REVIEW

X REVIEWED AS REQUIRED BY THE CONSTRUCTION CONTRACT DOCUMENTS AND APPROVED, BUT ONLY FOR CONFORMANCE TO THE DESIGN CONCEPT OF THE WORK, AND SUBJECT TO FURTHER LIMITATIONS AND REQUIREMENTS CONTAINED IN THE CONSTRUCTION CONTRACT DOCUMENTS.

☐ REJECTED ☐ REVISE AND RESUBMIT ☐ FURNISH AS CORRECTED

CORRECTIONS OR COMMENTS MADE ON THE SHOP DRAWINGS DURING THIS REVIEW DO NOT RELIEVE CONTRACTOR FROM COMPLIANCE WITH REQUIRMENTS OF THE DRAWINGS AND SPECIFICATIONS. THIS CHECK IS ONLY FOR REVIEW OF GENERAL CONFORMANCE WITH THE DESIGN CONCEPT OF THE PROJECT AND GENERAL COMPLIANCE WITH THE INFORMATION GIVEN IN THE CONTRACT DOCUMENTS. THE CONTRACTOR IS RESPONSIBLE FOR: CONFIRMING AND CORRELATING ALL QUANTITIES AND DIMENSIONS; SELECTING FABRICATION PROCESSES AND TECHNIQUES OF CONSTRUCTION; COORDINATING HIS WORK WITH THAT OF ALL OTHER TRADES; AND PERFORMING HIS WORK IN A SAFE AND SATISFACTORY MANNER.

vhb
40 IDX Drive
Building 100, Suite 200
South Burlington, VT 05403
802.497.6100

Job Number: BRF 025-1(42)
Reviewed By: E.F. LAWES
Date: MARCH 15, 2017

WELDING PROCEDURE SPECIFICATION

PQR ELDERLEE #4

Material Specification	A36/A572 GR. 36 / 50 / A709 GR. 36 / 50
Welding Process	GMAW
Manual or Machine	SEMAUTOMATIC ROBOTIC
Position of Welding	FLAT
Filler Metal Specification	A5.18
Filler Metal Classification	L-56 ER70S-6 LINCOLN
Flux	N/A
Shielding Gas	90% ARGON / 10% CO2 Dew Point -40DEG F Flow Rate 45CFH
Single or Multiple Pass	SINGLE
Single or Multiple Arc	SINGLE
Welding Current	DC
Polarity	REVERSE ELECTRODE POSITIVE CTWD 3/4"
Welding Progression	STRINGER
Root Treatment	ROOT SHALL BE CLEAN AND FREE OF FOREIGN MATTER
Preheat and Interpass Temperature	MIN PREHEAT 50 DEG ≤ 0.75" 70 DEG > 0.75" MAX INTERPASS 400 DEG
Postheat Temperature	NONE
Heat Input	Min 10.56 Max 15.84

WELDING PROCEDURE

Pass no.	Electrode size	Welding Current Amperes	Welding Current Volts	Travel speed	Joint detail
1	.045	190	22	19	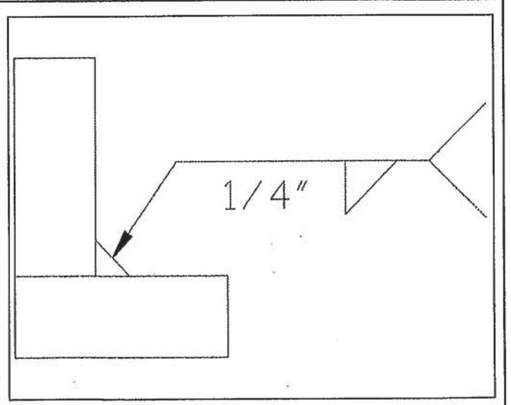
		171 TO 200	20 TO 23	18 TO 21	

This procedure may vary due to fabrication sequence, fit-up, pass size, etc., within the limitation of variables given in Section 5.

Procedure No. 8001
Revision No. 1

Contractor Elderlee, Inc.
Authorized By RANDY SCOTT
Date 2/7/2017

Form III-2

Vermont Agency of Transportation
RECEIVED
CK'D BY VHB OK'D BY TAS
March 14, 2017
RESUBMIT ____ APPROVED YES
BY T Sumner DATE 3/16/17

SHOP DRAWING REVIEW

☒ REVIEWED AS REQUIRED BY THE CONSTRUCTION CONTRACT DOCUMENTS AND APPROVED, BUT ONLY FOR CONFORMANCE TO THE DESIGN CONCEPT OF THE WORK, AND SUBJECT TO FURTHER LIMITATIONS AND REQUIREMENTS CONTAINED IN THE CONSTRUCTION CONTRACT DOCUMENTS.

☐ REJECTED ☐ REVISE AND RESUBMIT ☐ FURNISH AS CORRECTED

CORRECTIONS OR COMMENTS MADE ON THE SHOP DRAWINGS DURING THIS REVIEW DO NOT RELIEVE CONTRACTOR FROM COMPLIANCE WITH REQUIRMENTS OF THE DRAWINGS AND SPECIFICATIONS. THIS CHECK IS ONLY FOR REVIEW OF GENERAL CONFORMANCE WITH THE DESIGN CONCEPT OF THE PROJECT AND GENERAL COMPLIANCE WITH THE INFORMATION GIVEN IN THE CONTRACT DOCUMENTS. THE CONTRACTOR IS RESPONSIBLE FOR: CONFIRMING AND CORRELATING ALL QUANTITIES AND DIMENSIONS; SELECTING FABRICATION PROCESSES AND TECHNIQUES OF CONSTRUCTION; COORDINATING HIS WORK WITH THAT OF ALL OTHER TRADES; AND PERFORMING HIS WORK IN A SAFE AND SATISFACTORY MANNER.

vhb
40 IDX Drive
Building 100, Suite 200
South Burlington, VT 05403
802.497.6100

Job Number: BRF 025-1(42)
Reviewed By: E.F. LAWES
Date: MARCH 15, 2017

WELDING PROCEDURE SPECIFICATION

	PQR ELDERLEE #3				
Material Specification	A36/A500GR.B/A53/A572GR.36/50/A709GR.36/50/A108				
Welding Process	FCAW				
Manual or Machine	SEMAUTOMATIC				
Position of Welding	FLAT				
Filler Metal Specification	A5.29				
Filler Metal Classification	E81T1-NI1C-JH4 LINCOLN ULTERCORE 81i1C-H				
Flux	N/A				
Shielding Gas	CO 2	Dew Point	-40DEG F	Flow Rate	50CFH
Single or Multiple Pass	SINGLE			(45 TO 63	CFH)
Single or Multiple Arc	SINGLE				
Welding Current	DC				
Polarity	REVERSE ELECTRODE POSITIVE		CTWD 3/4"		
Welding Progression	STRINGER				
Root Treatment	ROOT SHALL BE CLEAN AND FREE OF FOREIGN MATTER				
Preheat and Interpass Temperature	MIN PREHEAT 50 DEG ≤ 0.75" 70 DEG > 0.75" MAX INTERPASS 400 DEG				
Postheat Temperature	NONE				
Heat Input	Min 33.92		Max 50.42		

WELDING PROCEDURE

Pass no.	Electrode size	Welding Current Amperes	Welding Current Volts	Travel speed	Joint detail
1	1/16	310	25	11	
		320 TO 285	26 TO 24	12.1 TO 9.9	

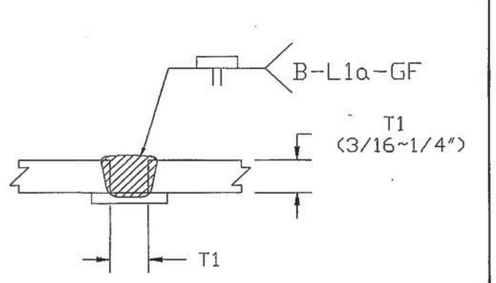

This procedure may vary due to fabrication sequence, fit-up, pass size, etc., within the limitation of variables given in Section 5.

Procedure No. 8003
Revision No. 1

Contractor Elderlee, Inc.
Authorized By RANDY SCOTT
Date 2/7/2017

Form III-2

Vermont Agency of Transportation
RECEIVED
CK'D BY VHB OK'D BY TAS
March 14, 2017
RESUBMIT _____ APPROVED YES
BY T Sumner DATE 3/16/17

SHOP DRAWING REVIEW

X REVIEWED AS REQUIRED BY THE CONSTRUCTION CONTRACT DOCUMENTS AND APPROVED, BUT ONLY FOR CONFORMANCE TO THE DESIGN CONCEPT OF THE WORK, AND SUBJECT TO FURTHER LIMITATIONS AND REQUIREMENTS CONTAINED IN THE CONSTRUCTION CONTRACT DOCUMENTS.

☐ REJECTED ☐ REVISE AND RESUBMIT ☐ FURNISH AS CORRECTED

CORRECTIONS OR COMMENTS MADE ON THE SHOP DRAWINGS DURING THIS REVIEW DO NOT RELIEVE CONTRACTOR FROM COMPLIANCE WITH REQUIRMENTS OF THE DRAWINGS AND SPECIFICATIONS. THIS CHECK IS ONLY FOR REVIEW OF GENERAL CONFORMANCE WITH THE DESIGN CONCEPT OF THE PROJECT AND GENERAL COMPLIANCE WITH THE INFORMATION GIVEN IN THE CONTRACT DOCUMENTS. THE CONTRACTOR IS RESPONSIBLE FOR: CONFIRMING AND CORRELATING ALL QUANTITIES AND DIMENSIONS; SELECTING FABRICATION PROCESSES AND TECHNIQUES OF CONSTRUCTION; COORDINATING HIS WORK WITH THAT OF ALL OTHER TRADES; AND PERFORMING HIS WORK IN A SAFE AND SATISFACTORY MANNER.

vhb
40 IDX Drive
Building 100, Suite 200
South Burlington, VT 05403
802.497.6100

Job Number: BRF 025-1(42)
Reviewed By: E.F. LAWES
Date: MARCH 15, 2017

WELDING PROCEDURE SPECIFICATION

PQR ELDERLEE #3

Material Specification	A36/A500GR.B/A53/A572GR.36/50/A709GR.36/50/A108			
Welding Process	FCAW			
Manual or Machine	SEMAUTOMATIC			
Position of Welding	FLAT			
Filler Metal Specification	A5.29			
Filler Metal Classification	E81T1-NI1C-JH4 LINCOLN ULTERCORE 81i1C-H			
Flux	N/A			
Shielding Gas	CO 2	Dew Point -40DEG F	Flow Rate 50CFH	(45 TO 63 CFH)
Single or Multiple Pass	SINGLE			
Single or Multiple Arc	SINGLE			
Welding Current	DC			
Polarity	REVERSE ELECTRODE POSITIVE	CTWD 3/4"		
Welding Progression	STRINGER			
Root Treatment	ROOT SHALL BE CLEAN AND FREE OF FOREIGN MATTER			
Preheat and Interpass Temperature	MIN PREHEAT 50 DEG ≤ 0.75" 70 DEG > 0.75" MAX INTERPASS 400 DEG			
Postheat Temperature	NONE			
Heat Input	Min 33.92	Max 50.42		

WELDING PROCEDURE

Pass no.	Electrode size	Welding Current Amperes	Welding Current Volts	Travel speed	Joint detail
1	1/16	310	25	11	
		320 TO 285	26 TO 24	12.1 TO 9.9	

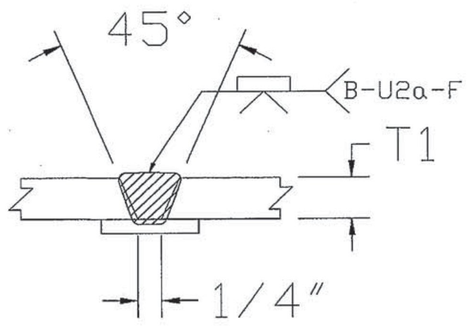

This procedure may vary due to fabrication sequence, fit-up, pass size, etc., within the limitation of variables given in Section 5.

Procedure No. 8005
Revision No. 1

Contractor Elderlee, Inc.
Authorized By RANDY SCOTT
Date 2/7/2017

Form III-2

Vermont Agency of Transportation
RECEIVED
CK'D BY VHB OK'D BY TAS
March 14, 2017
RESUBMIT ____ APPROVED YES
BY T Sumner DATE 3/16/17

SHOP DRAWING REVIEW

X REVIEWED AS REQUIRED BY THE CONSTRUCTION CONTRACT DOCUMENTS AND APPROVED, BUT ONLY FOR CONFORMANCE TO THE DESIGN CONCEPT OF THE WORK, AND SUBJECT TO FURTHER LIMITATIONS AND REQUIREMENTS CONTAINED IN THE CONSTRUCTION CONTRACT DOCUMENTS.

☐ REJECTED ☐ REVISE AND RESUBMIT ☐ FURNISH AS CORRECTED

CORRECTIONS OR COMMENTS MADE ON THE SHOP DRAWINGS DURING THIS REVIEW DO NOT RELIEVE CONTRACTOR FROM COMPLIANCE WITH REQUIRMENTS OF THE DRAWINGS AND SPECIFICATIONS. THIS CHECK IS ONLY FOR REVIEW OF GENERAL CONFORMANCE WITH THE DESIGN CONCEPT OF THE PROJECT AND GENERAL COMPLIANCE WITH THE INFORMATION GIVEN IN THE CONTRACT DOCUMENTS. THE CONTRACTOR IS RESPONSIBLE FOR: CONFIRMING AND CORRELATING ALL QUANTITIES AND DIMENSIONS; SELECTING FABRICATION PROCESSES AND TECHNIQUES OF CONSTRUCTION; COORDINATING HIS WORK WITH THAT OF ALL OTHER TRADES; AND PERFORMING HIS WORK IN A SAFE AND SATISFACTORY MANNER.

vhb
40 IDX Drive
Building 100, Suite 200
South Burlington, VT 05403
802.497.6100

Job Number: BRF 025-1(42)
Reviewed By: E.F. LAWES
Date: MARCH 15, 2017