STATE OF VERMONT
AGENCY OF TRANSPORTATION

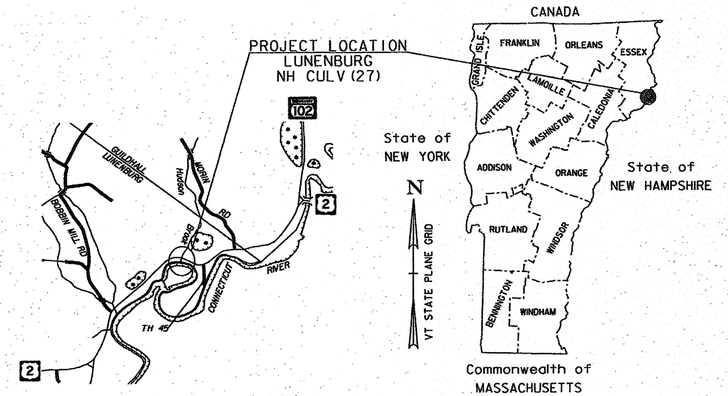

LOCATION MAP
NOT TO SCALE

RECORD PLANS

CONTRACTOR: J. A. MCDONALD INC. – LYNDON CENTER, VT

RESIDENT ENGINEER: ~~DOUG BUMPS~~ NICK NEWLAND

CONSTRUCTION BEGAN: DECEMBER 02, 2015

CONSTRUCTION COMPLETE: JULY 21, 2017

RECORD PLANS BY: DOUG BUMPS & AARON WEAVER

I HEREBY CERTIFY THAT ALL THE CONSTRUCTION REQUIRED BY THIS SET OF DRAWINGS HAS BEEN ACCOMPLISHED AS INDICATED HEREIN.

BY [signature] RESIDENT ENGINEER

DATE 4-11-2018

NOTE: Any further information concerning final quantities, amounts or other details relative to this project may be found at Central Files in the electronic archives.

PROPOSED IMPROVEMENT
BRIDGE PROJECT
TOWN OF LUNENBURG
COUNTY OF ESSEX
US ROUTE 2 (RURAL PRINCIPAL ARTERIAL - NHS) BRIDGE NO. 126

PROJECT LOCATION: LOCATED IN THE TOWN OF LUNENBURG, ON US ROUTE 2, APPROXIMATELY 0.90 MILES WEST OF THE LUNENBURG/GUILDHALL TOWN LINE.

PROJECT DESCRIPTION: WORK TO BE PERFORMED UNDER THIS PROJECT INCLUDES REPLACEMENT OF THE EXISTING CULVERT, CHANNEL WORK, AND ASSOCIATED ROADWAY IMPROVEMENTS.

LENGTH OF ROADWAY: 974.98 FEET
LENGTH OF STRUCTURE: 25.02 FEET
LENGTH OF PROJECT: 1000.00 FEET

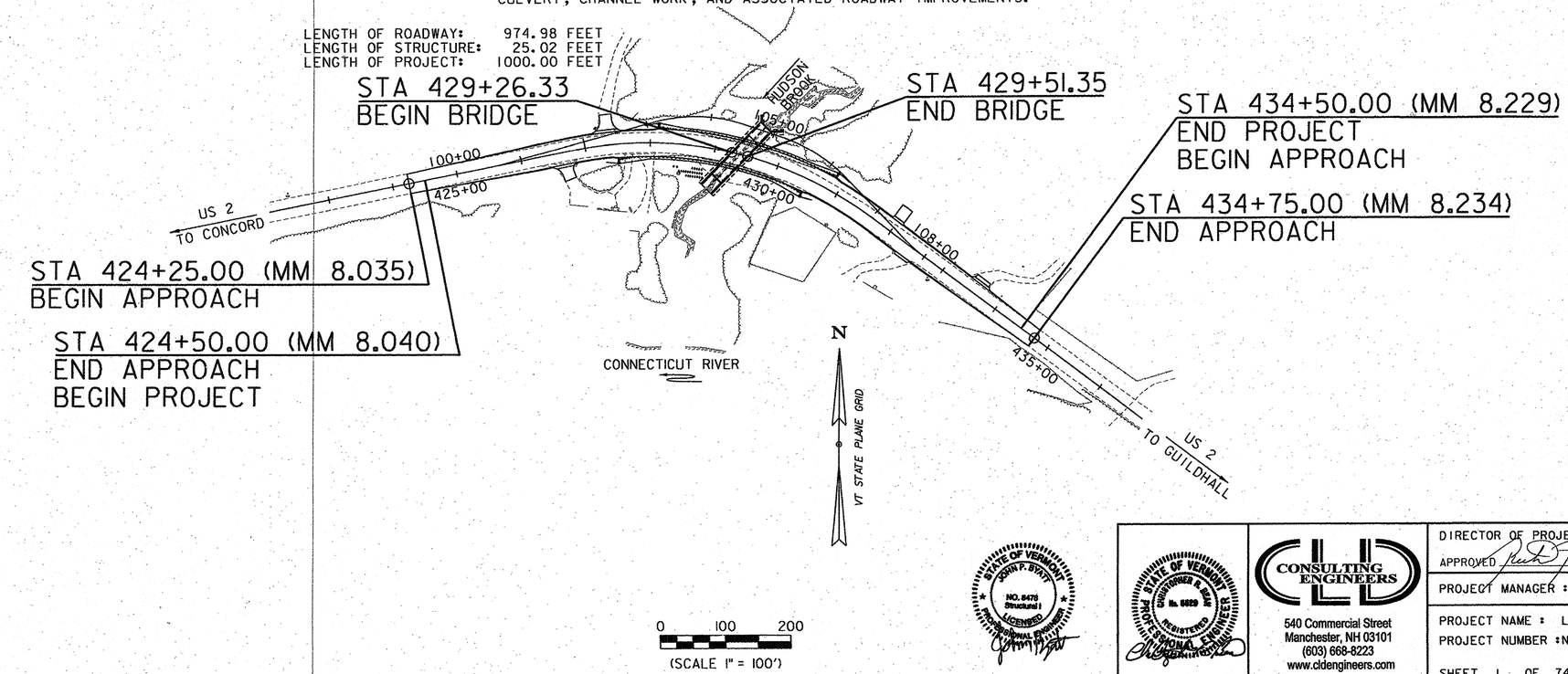

CONSTRUCTION IS TO BE CARRIED ON IN ACCORDANCE WITH THESE PLANS AND THE STANDARD SPECIFICATIONS FOR CONSTRUCTION DATED 2011, AS APPROVED BY THE FEDERAL HIGHWAY ADMINISTRATION ON JULY 20, 2011 FOR USE ON THIS PROJECT, INCLUDING ALL SUBSEQUENT REVISIONS AND SUCH REVISED SPECIFICATIONS AND SPECIAL PROVISIONS AS ARE INCORPORATED IN THESE PLANS.

QUALITY ASSURANCE PROGRAM : LEVEL I

SURVEYED BY : VSE
SURVEYED DATE : 02/27/2012

DATUM
VERTICAL NAVD 88
HORIZONTAL NAD83

0 100 200
(SCALE 1" = 100')

STATE OF VERMONT JOHN P. BYATT NO. 8478 Structural I LICENSED PROFESSIONAL ENGINEER

STATE OF VERMONT CHRISTOPHER R. BEAM No. 5829 REGISTERED PROFESSIONAL ENGINEER

CLD CONSULTING ENGINEERS
540 Commercial Street
Manchester, NH 03101
(603) 668-8223
www.cldengineers.com

DIRECTOR OF PROJECT DELIVERY
APPROVED [signature] DATE 8-10-15

PROJECT MANAGER : DAN LANDRY, P.E.

PROJECT NAME : LUNENBURG
PROJECT NUMBER : NH CULV(27)

SHEET 1 OF 74 SHEETS

STATE OF VERMONT
AGENCY OF TRANSPORTATION

PRELIMINARY INFORMATION SHEET (BRIDGE)

Version 11.06.15

LRFD

INDEX OF SHEETS

PLAN SHEETS

1	TITLE SHEET	
2	PRELIMINARY INFORMATION SHEET	
3 - 4	TYPICAL BRIDGE SECTIONS SHEETS 1-2	
5 - 6	TYPICAL ROADWAY SECTIONS SHEETS 1-2	
7 - 8	TYPICAL EARTHWORK SECTIONS SHEETS 1-2	
9 - 10	GENERAL NOTES SHEETS 1-2	
11 - 13	QUANTITY SHEETS 1-3	
14	CONVENTIONAL SYMBOLOGY LEGEND SHEET	
15 - 16	TIE SHEETS 1-2	
17 - 18	LAYOUT SHEETS 1-2	
19 - 20	US 2 PROFILE AND BANKING DIAGRAM SHEETS 1-2	
21	TYPICAL DETOUR SECTION SHEET	
22 - 25	PHASED TRAFFIC CONTROL SHEETS SPLIT PHASE 1 AND 2	
26 - 27	TEMPORARY DETOUR PROFILE SHEETS 1-2	
28 - 29	PHASED TEMPORARY TRAFFIC SIGNAL SHEETS SPLIT PHASE 1 AND 2	
30	TRAFFIC CONTROL PLAN	
31	SIGN DETAIL SHEET	
32	BORING INFORMATION SHEET	
33 - 40	BORING LOGS SHEETS 1-8	
41	PLAN AND ELEVATION	
42	SLOPE STABILIZATION PILES SHEET	
43 - 44	ARCH AND WINGWALL DETAILS SHEETS 1-2	
45 - 46	SUBSTRUCTURE DETAILS SHEETS 1-2	
47 - 48	SUBSTRUCTURE REINFORCING SHEETS 1-2	
49	REINFORCING STEEL SCHEDULE	
50 - 54	ROADWAY CROSS SECTIONS SHEETS 1-5	
55 - 58	TEMPORARY DETOUR CROSS SECTIONS SHEETS 1-4	
59 - 61	CHANNEL CROSS SECTIONS SHEET 1-3	
62	EROSION CONTROL NARRATIVE	
63 - 64	EPSC EXISTING PLAN SHEETS 1-2	
65 - 66	EPSC CONSTRUCTION PLAN SHEETS 1-2	
67 - 68	EPSC FINAL PLAN SHEETS 1-2	
69 - 71	EPSC DETAILS SHEETS 1-3	
72	ROW DETAIL SHEET	
73 - 74	ROW LAYOUT SHEETS 1-2	

STRUCTURES DETAILS

SD-501.00	CONCRETE DETAILS AND NOTES	02-09-2012
SD-502.00	CONCRETE DETAILS AND NOTES	10-10-2012

STANDARDS LIST

B-5	SLOPE GRADING, EMBANKMENTS, MUCK	06-01-1994
B-71	STANDARD FOR RESIDENTIAL AND COMMERCIAL DRIVES	07-08-2005
D-30	UNDERDRAIN CONSTRUCTION DETAILS	08-13-2007
E-119	UTILITY WORK ZONE	03-01-2004
E-121	STANDARD SIGN PLACEMENT - CONVENTIONAL ROAD	08-08-1995
E-123	GUIDE SIGN PLACEMENT - MISCELLANEOUS DETAILS	03-16-2004
E-193	PAVEMENT MARKING DETAILS	08-18-1995
G-1	STEEL BEAM GUARDRAIL DETAILS (POST, DELINEATOR, TYPICALS)	02-10-2014
G-1d	STEEL BEAM GUARDRAIL DETAILS (END TERMINAL, ANCHOR, MEDIAN)	02-10-2014
G-19	GENERIC GRADING PLANS FOR GUARDRAIL END TERMINALS	11-15-2002
J-3	MAIL BOX SUPPORT DETAILS	08-07-1995
T-1	TRAFFIC CONTROL GENERAL NOTES	08-06-2012
T-17	TRAFFIC CONTROL MISCELLANEOUS DETAILS	08-06-2012
T-24	TRAFFIC CONTROL FOR MAINTENANCE PAVEMENT MARKING OPERATION	08-06-2012
T-28	CONSTRUCTION SIGN DETAILS	08-06-2012
T-29	CONSTRUCTION SIGN DETAILS	08-06-2012
T-30	CONSTRUCTION SIGN DETAILS	08-06-2012
T-31	CONSTRUCTION SIGN DETAILS	08-06-2012
T-35	CONSTRUCTION ZONE LONGITUDINAL DROP-OFFS	08-06-2012
T-36	CONSTRUCTION ZONE LONGITUDINAL DROP-OFFS FOR PAVING	08-06-2012
T-40	DELINEATORS AND MILEPOSTS	01-02-2013
T-42	BRIDGE NUMBER PLAQUE	04-09-2014
T-45	SQUARE TUBE SIGN POST AND ANCHOR	01-02-2013

NOTE:
THE TEMPORARY BRIDGE AS SHOWN IN THE TEMPORARY BRIDGE PROFILE ALONG TEMP CL DETAIL BELOW WAS DESIGNED FOR TRAFFIC CONTROL PURPOSES ONLY AND WILL MORE THAN MEET THE MINIMUM TEMPORARY BRIDGE HYDRAULIC REQUIREMENTS SPECIFIED ON THIS SHEET. AN ALTERNATE METHOD OF BYPASSING STREAM FLOW THROUGH THE PROJECT AREA WILL BE REQUIRED FOR THE DURATION OF THE PROJECT AND SHALL BE DESIGNED BY THE CONTRACTOR TO MEET THE MINIMUM REQUIREMENTS SPECIFIED IN THE VTRANS HYDRAULICS MANUAL.

TRAFFIC DATA

YEAR	ADT	DHV	% D	% T	ADTT
2014	2600	320	57	11.9	400
2024	2700	330	57	13.7	480

20 year ESAL for flexible pavement from 2014 to 2034 : 4615000

40 year ESAL for flexible pavement from 2014 to 2054 : 10053000

Design Speed : 50 mph

AS BUILT "REBAR" DETAIL

LEVEL I	LEVEL II	LEVEL III
TYPE:	TYPE:	TYPE:
GRADE:	GRADE:	GRADE:

TEMPORARY BRIDGE PROFILE ALONG TEMP CL

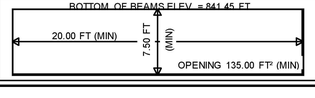

MODEL: P1
CLD 12-0106

FINAL HYDRAULIC REPORT

HYDROLOGIC DATA

Date: JUNE 3, 2013

DRAINAGE AREA : 3.2 SQ. MI.
CHARACTER OF TERRAIN : HILLY TO MOUNTAINOUS
STREAM CHARACTERISTICS : SINUOUS ALLUVIAL CHANNEL
NATURE OF STREAMBED : FINE SAND & SILTS W/ RIFFLE/POOL BED MORPHOLOGY

PEAK FLOW DATA

Q 2.33 =	130 CFS	Q 50 =	470 CFS
Q 10 =	300 CFS	Q 100 =	550 CFS
Q 25 =	400 CFS	Q 500 =	710 CFS

DATE OF FLOOD OF RECORD : AUGUST 2011 (TROPICAL STORM IRENE)
ESTIMATED DISCHARGE: UNKNOWN
WATER SURFACE ELEV.: UNKNOWN
NATURAL STREAM VELOCITY : @ Q50 = 10.0 FPS
ICE CONDITIONS : HEAVY
DEBRIS: HEAVY
DOES THE STREAM REACH MAXIMUM HIGHWATER ELEV. RAPIDLY? NO
IS ORDINARY RISE RAPID? NO
IS STAGE AFFECTED BY UPSTREAM OR DOWNSTREAM CONDITIONS? NO
IF YES, DESCRIBE:

WATERSHED STORAGE: 1% HEADWATERS:
UNIFORM: X
IMMEDIATELY ABOVE SITE:

EXISTING STRUCTURE INFORMATION

STRUCTURE TYPE: 30-INCH IRON PIPE WITH 27-INCH EXT. AND 4X4 BOX EXT.
YEAR BUILT: UNKNOWN
CLEAR SPAN(NORMAL TO STREAM): 27 INCH
VERTICAL CLEARANCE ABOVE STREAMBED: 27 INCH
WATERWAY OF FULL OPENING: 4 SQ. FT.
DISPOSITION OF STRUCTURE: REMOVAL
TYPE OF MATERIAL UNDER SUBSTRUCTURE: SEE BORINGS

WATER SURFACE ELEVATIONS AT:

Q2.33 =	*	VELOCITY =	*
Q10 =	*	"	*
Q25 =	*	"	*
Q50 =	*	"	*
Q100 =	*	"	*

LONG TERM STREAMBED CHANGES: UPSTREAM CHANNEL IS SIGNIFICANTLY WIDER THAN THE DOWNSTREAM CHANNEL AND HAS A LARGE SCOUR HOLE.

IS THE ROADWAY OVERTOPPED BELOW Q100: *
FREQUENCY: *
RELIEF ELEVATION: 855.3 FT
DISCHARGE OVER ROAD @Q100: *

UPSTREAM STRUCTURE

TOWN: GUILDHALL DISTANCE: 1.7 MI
HIGHWAY# : MORIN ROAD STRUCTURE #: UNKNOWN
CLEAR SPAN: UNKNOWN CLEAR HEIGHT: UNKNOWN
YEAR BUILT: UNKNOWN FULL WATERWAY: UNKNOWN
STRUCTURE TYPE: UNKNOWN

DOWNSTRUCTURE STRUCTURE

TOWN: LUNENBURG DISTANCE: 0.1 MI
HIGHWAY# : N/A STRUCTURE #: N/A
CLEAR SPAN: N/A CLEAR HEIGHT: N/A
YEAR BUILT: N/A FULL WATERWAY: N/A
STRUCTURE TYPE: N/A DUE TO CONFLUENCE WITH CONNECTICUT RIVER

LRFR LOAD RATING FACTORS*

LOADING LEVELS	TRUCK						
	H-20	HL-93	3S2	6 AXLE	3A. STR.	4A. STR.	5A. SEMI
TONNAGE	20	36	36	66	30	34.5	38
INVENTORY							
POSTING							
OPERATING							
COMMENTS:							

* LRFR LOAD RATING FACTORS TABLE TO BE COMPLETED BY CONTRACTOR'S DESIGNER.

PILE DRIVING AND TESTING REQUIREMENTS

1. NOMINAL PILE DRIVING CAPACITY	Rndr:	150.00 KIP
2. PILE TEST RESISTANCE FACTOR	ϕ:	---
3. MAXIMUM PILE TIP ELEVATION		VARIES

PROPOSED STRUCTURE

STRUCTURE TYPE: PRECAST CONCRETE ARCH ON MAT FOUNDATION

CLEAR SPAN(NORMAL TO STREAM): 20 FT
VERTICAL CLEARANCE ABOVE STREAMBED: 7.5 FT
WATERWAY OF FULL OPENING: 115 SF

WATER SURFACE ELEVATIONS AT:

Q2.33 =	836.3 FT	VELOCITY=	5.8 FPS
Q10 =	838.1 FT	"	8.7 FPS
Q25 =	839.0 FT	"	9.9 FPS
Q50 =	839.6 FT	"	10.1 FPS
Q100 =	840.2 FT	"	10.5 FPS

IS THE ROADWAY OVERTOPPED BELOW Q100: NO
FREQUENCY: N/A
RELIEF ELEVATION: 856.1 FT
DISCHARGE OVER ROAD @Q100: N/A

AVERAGE LOW ELEVATION OF SUPERSTRUCTURE: 840.2 FT OUTLET (841.5 FT INLET)
VERTICAL CLEARANCE: @ Q50 = 1.2 FT AT OUTLET (1.9 FT AT INLET)

SCOUR: CONTRACTION SCOUR 1 FT

REQUIRED CHANNEL PROTECTION: TYPE IV STONE FILL

PERMIT INFORMATION

		DEPTH OR ELEVATION:
AVERAGE DAILY FLOW:	30 CFS	
ORDINARY LOW WATER:	15 CFS	834.7 FT
ORDINARY HIGH WATER:	55 CFS	835.2 FT

TEMPORARY BRIDGE REQUIREMENTS

STRUCTURE TYPE: TEMPORARY BRIDGE (SEE NOTE ON PI SHEET)
CLEAR SPAN (NORMAL TO STREAM): 4 FT
VERTICAL CLEARANCE ABOVE STREAMBED: 838.1 FT AT INLET
WATERWAY AREA OF FULL OPENING: 46 SF

ADDITIONAL INFORMATION

* THE EXISTING CULVERT IS SEVERELY UNDERSIZED AND HEC-RAS MODEL DOES NOT ACCURATELY REFLECT EXISTING CONDITIONS. THE ONLY TIME THE ROAD HAS BEEN OVERTOPPED ACCORDING TO LOCAL OBSERVATIONS WAS DURING TROPICAL STORM IRENE.

TRAFFIC MAINTENANCE NOTES

1. MAINTAIN ONE-WAY TRAFFIC ON A TEMPORARY BRIDGE.
2. INSTALL AND MAINTAIN TRAFFIC SIGNALS.
3. SIDEWALKS ARE NOT NECESSARY
4. THE APPROACHES FOR THE TEMPORARY BRIDGE SHALL BE PAVED.
5. PHASED CONSTRUCTION IS REQUIRED.

DESIGN VALUES

1. DESIGN LIVE LOAD		HL-93
2. FUTURE PAVEMENT	d_P:	8.0 INCH
3. DESIGN SPAN	L:	20.00 FT
4. MIN. MID-SPAN POS. CAMBER @ RELEASE (PRESTRESSED UNITS)	Δ:	---
5. PRESTRESSING STRAND	f_y:	---
6. PRESTRESSED CONCRETE STRENGTH	f'_c:	---
7. PRESTRESSED CONCRETE RELEASE STRENGTH	f'_{ci}:	---
8. CONCRETE, HIGH PERFORMANCE CLASS AA	f'_c:	---
9. CONCRETE, HIGH PERFORMANCE CLASS A	f'_c:	---
10. CONCRETE, HIGH PERFORMANCE CLASS B	f'_c:	3.5 KSI
11. CONCRETE, CLASS C	f'_c:	---
12. REINFORCING STEEL	f_y:	60 KSI
13. STRUCTURAL STEEL AASHTO M270	f_y:	---
14. SOIL UNIT WEIGHT	γ:	0.125 KCF
15. NOMINAL BEARING RESISTANCE OF SOIL	q_n:	2.5 KSF
16. SOIL BEARING RESISTANCE FACTOR (REFER TO AASHTO LRFD)	ϕ:	0.45
17. NOMINAL BEARING RESISTANCE OF ROCK	q_n:	---
18. ROCK BEARING RESISTANCE FACTOR (REFER TO AASHTO LRFD)	ϕ:	---
19. NOMINAL AXIAL PILE RESISTANCE	q_p:	---
20. PILE YIELD STRENGTH ASTM A572	f_y:	50 KSI
21. PILE SIZE		HP 14X 89
22. EST. PILE LENGTHS (THREE SLOPE OFFSET LOCATIONS) (SLOPE 35.3' RT = 33, SLOPE 41.4' RT = 30 AND SLOPE 45.4' RT = 27) FT	L_P:	
23. PILE RESISTANCE FACTOR	ϕ:	---
24. LATERAL PILE DEFLECTION	Δ:	2.42 INCH
25. BASIC WIND SPEED	V_{3s}:	---
26. MINIMUM GROUND SNOW LOAD	p_g:	---
27. SEISMIC DATA PGA: 8 %g	S_s:	18 %g
	S_1:	5 %g

PROJECT NAME: LUNENBURG
PROJECT NUMBER: NH CULV(27)

FILE NAME: llb294/cos/zllb294pi.dgn
PROJECT LEADER: J. BYATT
DESIGNED BY: S. BEAUMONT
PRELIMINARY INFORMATION SHEET

PLOT DATE: 8/24/2015
DRAWN BY: S. BEAUMONT
CHECKED BY: J. BYATT
SHEET 2 OF 74

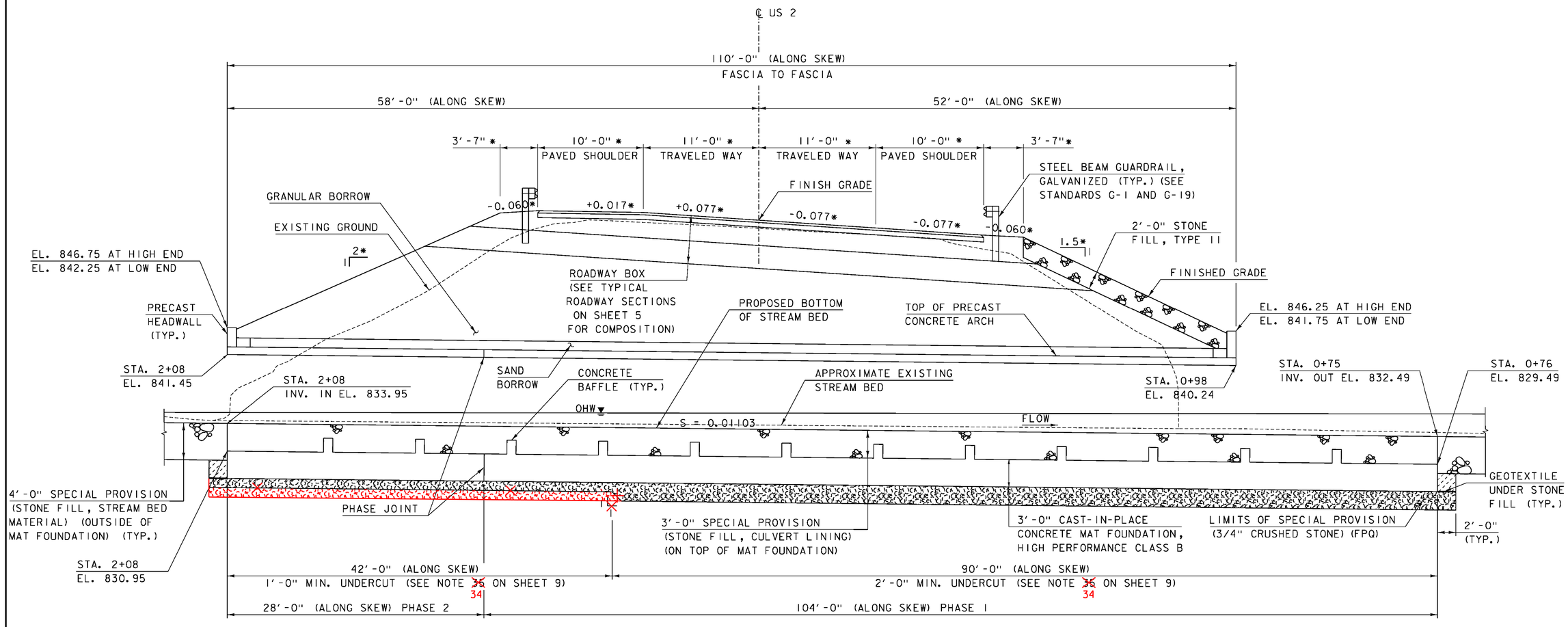

TYPICAL LONGITUDINAL BRIDGE SECTION

(SHOWN ALONG ℄ OF ARCH)

SCALE: 3/16" = 1'-0"

NOTES:

* DIMENSIONS AND SLOPES GIVEN PERPENDICULAR TO ROADWAY ℄

PROJECT NAME: LUNENBURG	
PROJECT NUMBER: NH CULV(27)	
FILE NAME: llb294/cos/zllb294sub.dgn	PLOT DATE: 8/6/2015
PROJECT LEADER: J. BYATT	DRAWN BY: M. SMITH
DESIGNED BY: S. BEAUMONT	CHECKED BY: J. BYATT
TYPICAL BRIDGE SECTION SHEET 1	SHEET 3 OF 74

CONSULTING ENGINEERS

CLD 12-0106 MODEL: Sheet01

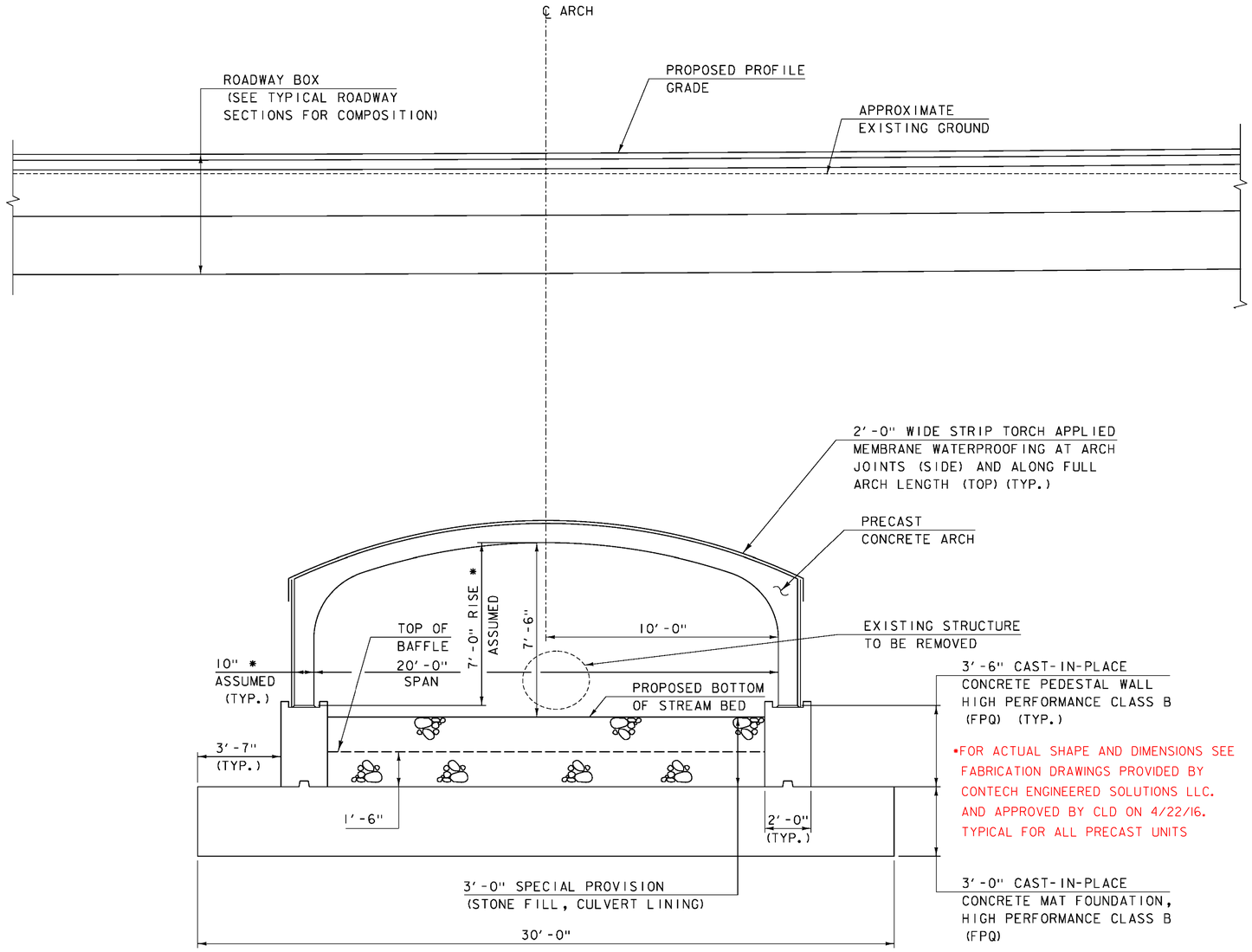

PRECAST CONCRETE STRUCTURE TYPICAL SECTION

SCALE: 3/8" = 1′-0"

NOTES:

* SEE PRECAST CONCRETE ARCH NOTES ON SHEET 10.

PROJECT NAME: LUNENBURG	
PROJECT NUMBER: NH CULV(27)	
FILE NAME: IIb294/cos/zIIb294sub.dgn	PLOT DATE: 8/6/2015
PROJECT LEADER: J. BYATT	DRAWN BY: M. SMITH
DESIGNED BY: S. BEAUMONT	CHECKED BY: J. BYATT
TYPICAL BRIDGE SECTION SHEET 2	SHEET 4 OF 74

CLD CONSULTING ENGINEERS

CLD 12-006 MODEL: Sheet02

3" BITUMINOUS CONCRETE PAVEMENT (2-1½" LIFTS) (TYPE IVS)
5" BITUMINOUS CONCRETE PAVEMENT (2-2½" LIFTS) (TYPE IIS)
24" SUBBASE OF DENSE GRADED CRUSHED STONE
30" SAND BORROW

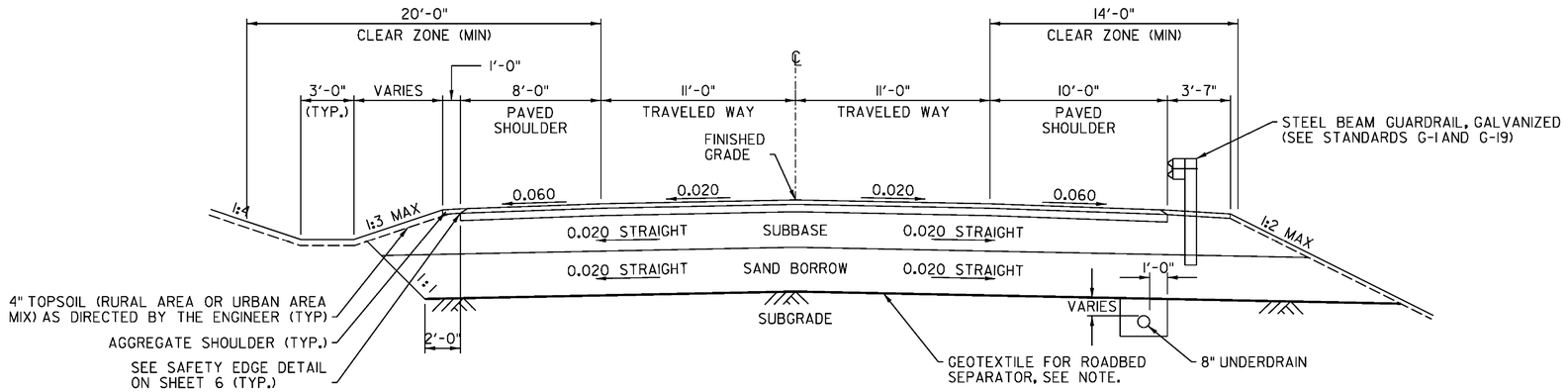

US 2
NORMAL SECTION

SCALE: 1/4" = 1'-0"

MATERIAL TOLERANCES
(IF USED ON PROJECT)

SURFACE	
- PAVEMENT (TOTAL THICKNESS)	+/- ¼"
- AGGREGATE SURFACE COURSE	+/- ½"
SUBBASE	+/- 1"
SAND BORROW	+/- 1"

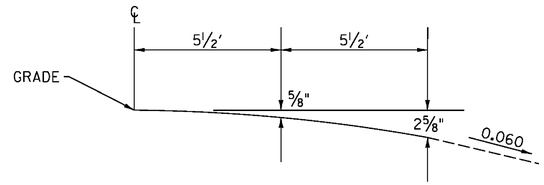

PARABOLIC DETAIL

3" BITUMINOUS CONCRETE PAVEMENT (2-1½" LIFTS) (TYPE IVS)
5" BITUMINOUS CONCRETE PAVEMENT (2-2½" LIFTS) (TYPE IIS)
24" SUBBASE OF DENSE GRADED CRUSHED STONE
30" SAND BORROW

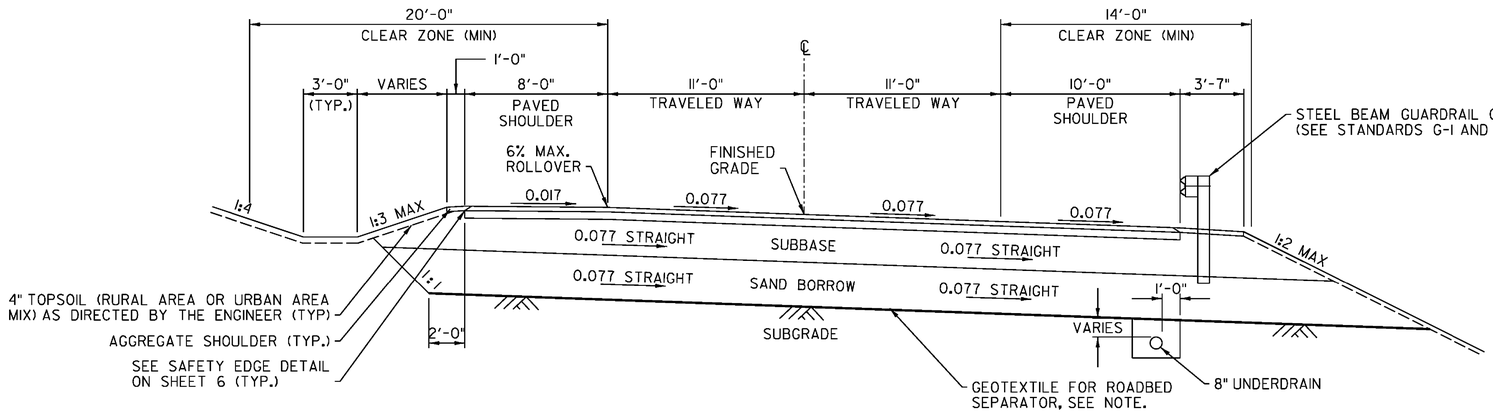

US 2
MAXIMUM BANKED SECTION

SCALE: 1/4" = 1'-0"

NOTE

THE CONTRACTOR MAY SUBSTITUTE SUBBASE MATERIAL FOR THE SAND BORROW SHOWN ON THE PLANS. THE SUBBASE MATERIAL SHALL BE THE TYPE SPECIFIED IN THE CONTRACT AND SHALL BE PLACED TO MEET THE SUBBASE SPECIFICATIONS. IF SUBBASE IS PLACED IN LIEU OF SAND BORROW, A GEOTEXTILE MEETING THE REQUIREMENTS OF ITEM 649.11 "GEOTEXTILE FOR ROAD BED SEPARATOR" SHALL BE PLACED BETWEEN THE SUBGRADE AND THE SUBBASE MATERIAL. ALL COSTS ASSOCIATED WITH THE SUBSTITUTION INCLUDING THE GEOTEXTILE SHALL BE INCIDENTAL TO ITEM 203.31 "SAND BORROW".

*NOTE: ROADWAY BUILT AS DESIGNED

SCALE ¼" = 1'-0"
0 4 8

CONSULTING ENGINEERS

PROJECT NAME: LUNENBURG
PROJECT NUMBER: NH CULV(27)

FILE NAME: llb294/cos/zllb294frm.dgn
PROJECT LEADER: J. BYATT
DESIGNED BY: M. HALEY
TYPICAL ROADWAY SECTIONS SHEET 1

PLOT DATE: 8/6/2015
DRAWN BY: W. GORDON
CHECKED BY: P. SHEDD
SHEET 5 OF 74

CLD 12-0106 MODEL: TYP01

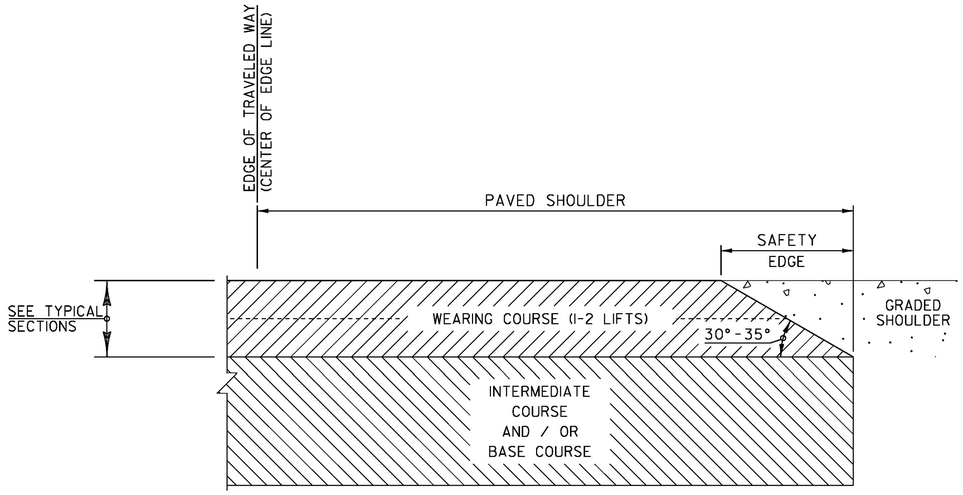

SAFETY EDGE DETAIL

SAFETY EDGE NOTES

1. LEVELING COURSE MAY INCLUDE THE "SAFETY EDGE" AT THE CONTRACTOR'S CHOICE.
2. THE EDGE OF PAVEMENT SHALL BE FORMED IN SUCH A WAY THAT THE BITUMINOUS CONCRETE PAVEMENT IS EXTRUDED OR COMPRESSED TO FORM THE 30 TO 35 DEGREE ANGLE. DEVICES THAT SIMPLY STRIKE-OFF THE MIX WITHOUT PROVIDING ANY COMPACTIVE EFFORT WILL NOT BE ALLOWED.
3. THE PAVED SHOULDER EXTENDS FROM THE EDGE OF TRAVELED WAY TO THE EDGE OF THE WEARING COURSE, INCLUDING THE "SAFETY EDGE".

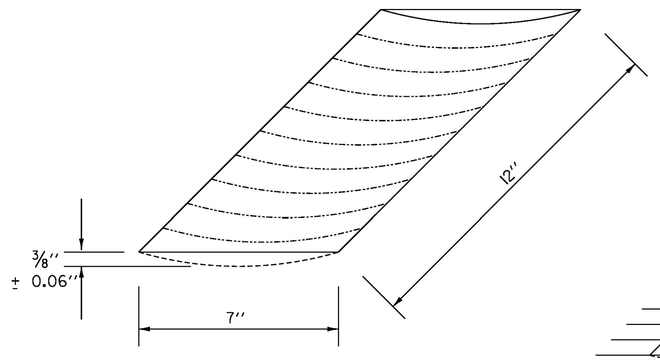

RUMBLE STRIP DETAIL

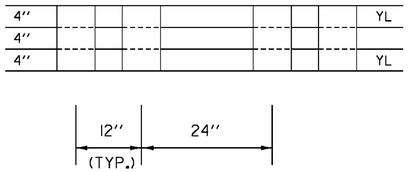

RUMBLE STRIP LAYOUT

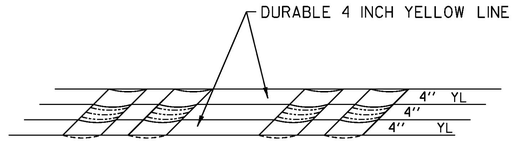

RUMBLE STRIP
PAVEMENT MARKINGS DETAIL

RUMBLE STRIP NOTE

RUMBLE STRIPS NOT TO EXTEND BEYOND CENTERLINE WHEN CENTERLINE IS A DOUBLE YELLOW LINE, WITH OR WITHOUT A PASSING ZONE.

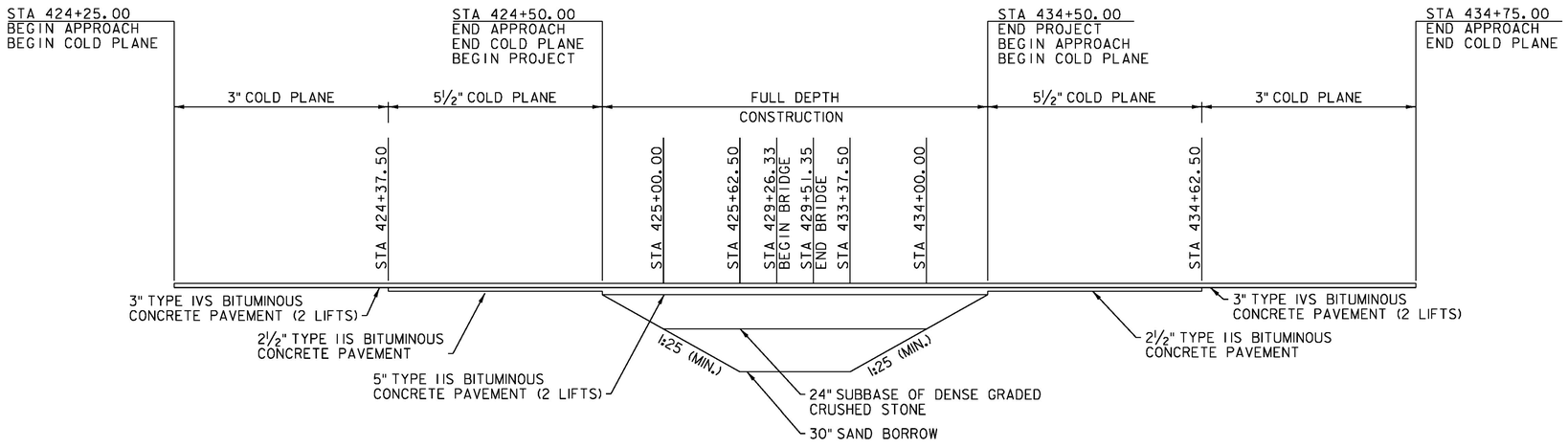

MATERIAL TRANSITION DIAGRAM

NOT TO SCALE

PROJECT NAME:	LUNENBURG
PROJECT NUMBER:	NH CULV(27)
FILE NAME: llb294/cos/zllb294frm.dgn	PLOT DATE: 8/6/2015
PROJECT LEADER: J. BYATT	DRAWN BY: S. GOODWIN
DESIGNED BY: M. HALEY	CHECKED BY: P. SHEDD
TYPICAL ROADWAY SECTIONS SHEET 2	SHEET 6 OF 74

CLD CONSULTING ENGINEERS

CLD 12-0106 MODEL: TYP02

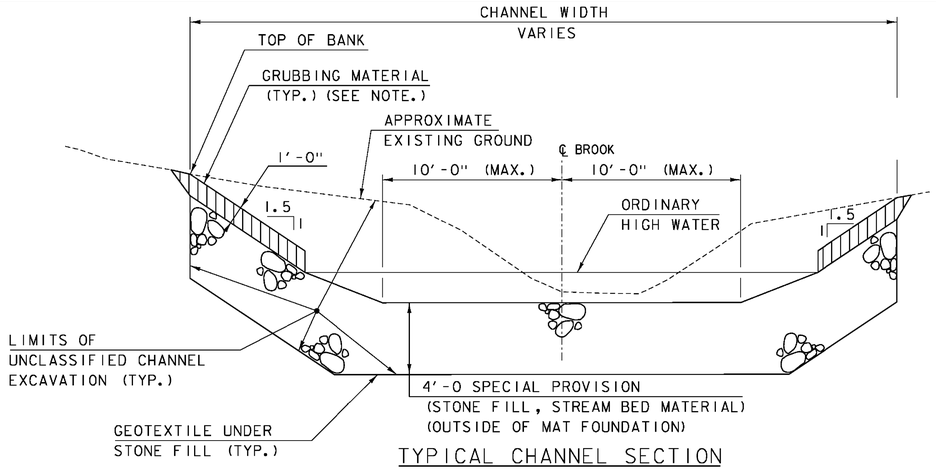

TYPICAL CHANNEL SECTION

SCALE: 1/4" = 1'-0"

NOTE: GRUBBING MATERIAL SHALL NOT BE PLACED ON THE STONE FILL IN THE AREA UNDER THE BRIDGE. WHENEVER CHANNEL SLOPE INTERSECTS SUBBASE, GRUBBING MATERIAL SHALL BEGIN AT THE BOTTOM OF SUBBASE UNLESS NOTED OTHERWISE.

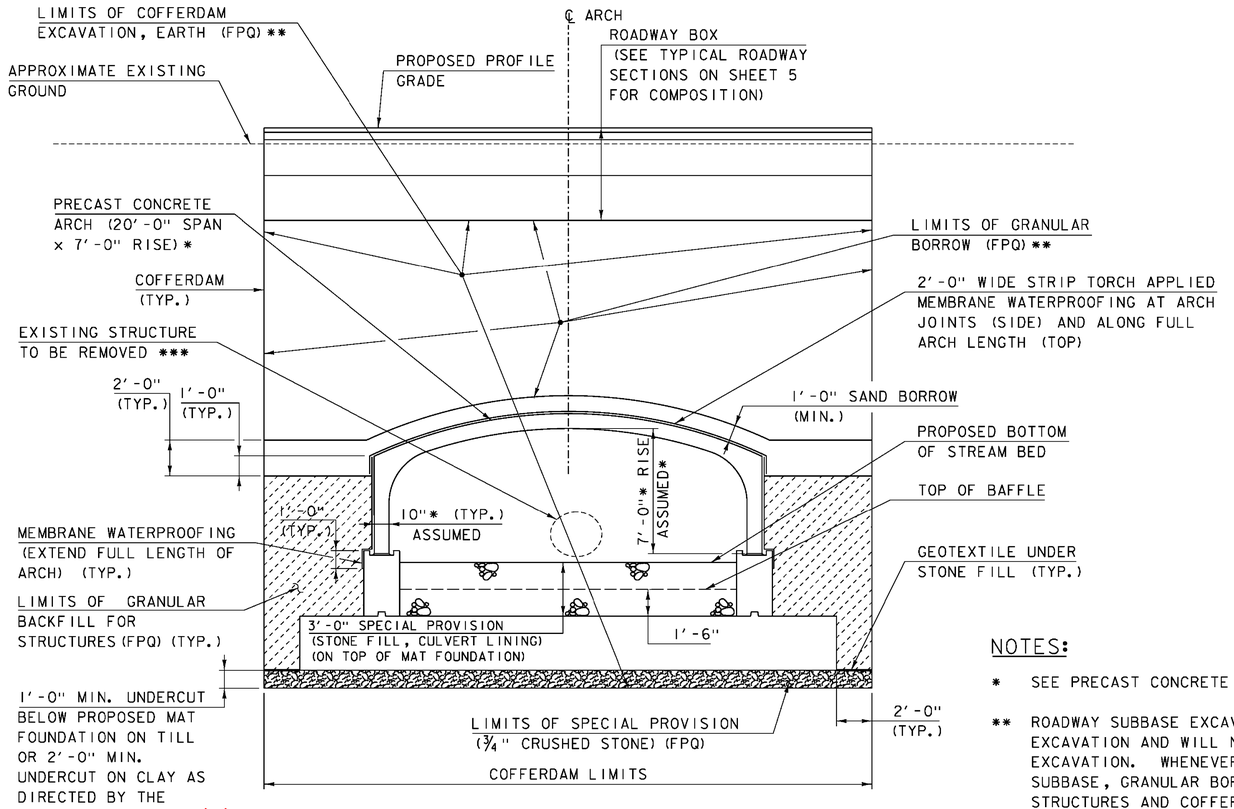

TYPICAL ARCH EARTHWORK SECTION

SCALE: 1/4" = 1'-0"

NOTES:

* SEE PRECAST CONCRETE ARCH NOTES ON SHEET 10.

** ROADWAY SUBBASE EXCAVATION WILL BE PAID FOR UNDER COMMON EXCAVATION AND WILL NOT BE INCLUDED UNDER COFFERDAM EXCAVATION. WHENEVER BACKFILL SLOPE INTERSECTS ROADWAY SUBBASE, GRANULAR BORROW, GRANULAR BACKFILL FOR STRUCTURES AND COFFERDAM EXCAVATION, EARTH SHALL BEGIN AT THE BOTTOM OF SUBBASE.

*** COST INCLUDED IN COFFERDAM EXCAVATION, ROCK.

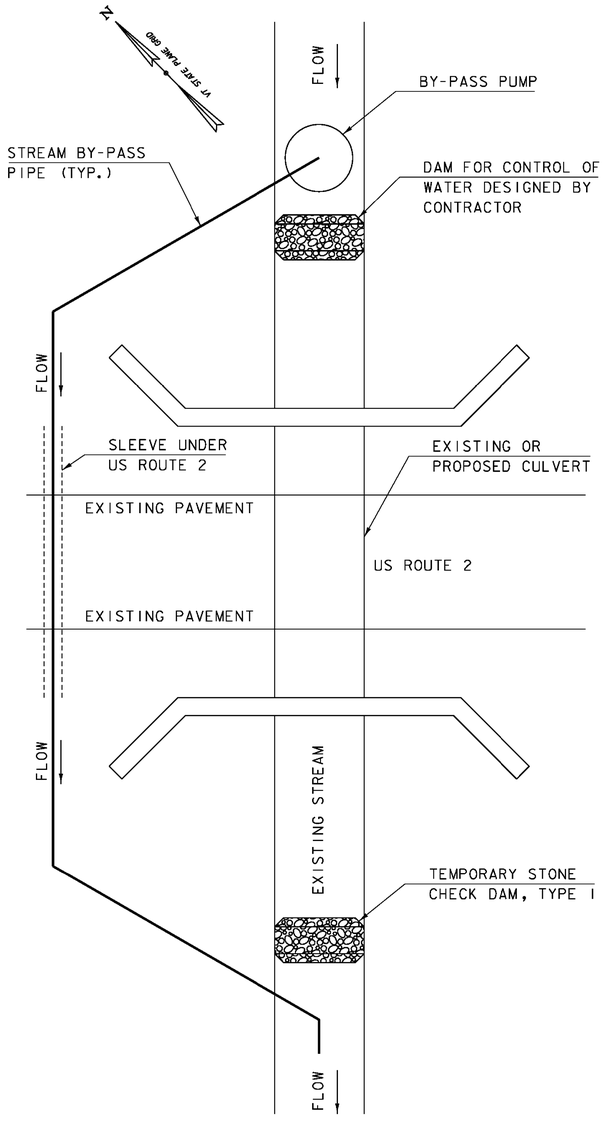

SPECIAL PROVISION
(TEMPORARY RELOCATION OF STREAM)

NOT TO SCALE

NOTES:

1. SEE TEMPORARY STREAM RELOCATION NOTES ON SHEET 9.

PROJECT NAME:	LUNENBURG
PROJECT NUMBER:	NH CULV(27)
FILE NAME: IIb294/cos/zIIb294sub.dgn	PLOT DATE: 8/19/2015
PROJECT LEADER: J. BYATT	DRAWN BY: M. SMITH
DESIGNED BY: S. BEAUMONT	CHECKED BY: J. BYATT
TYPICAL EARTHWORK SECTIONS SHEET 1	SHEET 7 OF 74

CONSULTING ENGINEERS

CLD 12-0106 MODEL: Sheet03

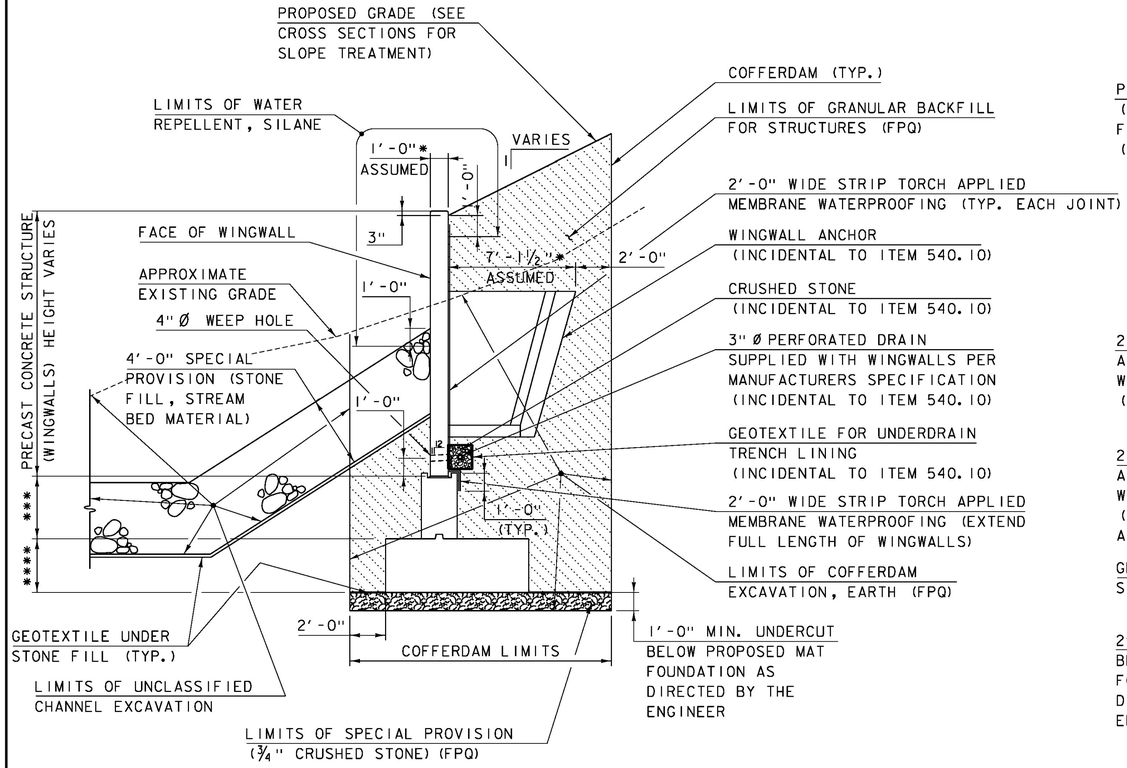

TYPICAL UPSTREAM WINGWALL EARTHWORK SECTION

SCALE: ¼" = 1'-0"

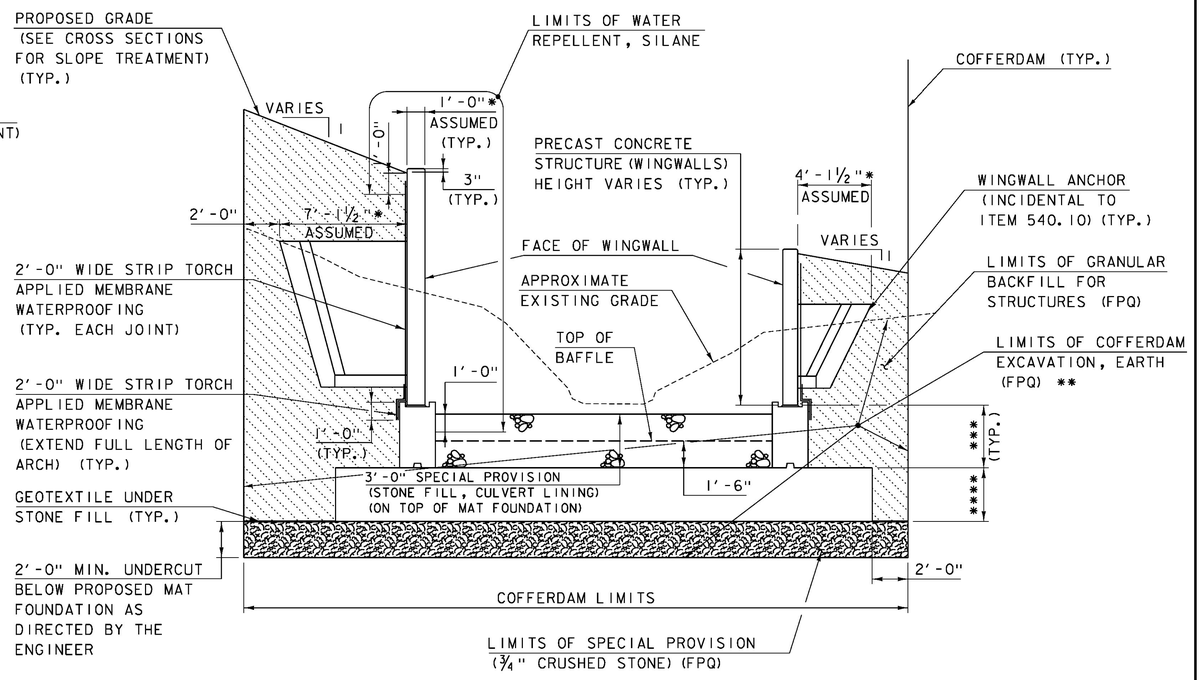

TYPICAL DOWNSTREAM WINGWALL EARTHWORK SECTION

SCALE: ¼" = 1'-0"

NOTES:

* SEE PRECAST CONCRETE ARCH NOTES ON SHEET 10.

** ROADWAY SUBBASE EXCAVATION WILL BE PAID FOR UNDER COMMON EXCAVATION AND WILL NOT BE INCLUDED UNDER COFFERDAM EXCAVATION. WHENEVER BACKFILL SLOPE INTERSECTS ROADWAY SUBBASE, GRANULAR BORROW, GRANULAR BACKFILL FOR STRUCTURES AND COFFERDAM EXCAVATION, EARTH SHALL BEGIN AT THE BOTTOM OF SUBBASE.

*** 3'-6" CAST-IN-PLACE CONCRETE, HIGH PERFORMANCE CLASS B (FPQ) PEDESTAL WALL

**** 3'-0" CAST-IN-PLACE CONCRETE, HIGH PERFORMANCE CLASS B (FPQ) MAT FOUNDATION

QLD 12-0106 MODEL: Sheet04

PROJECT NAME:	LUNENBURG
PROJECT NUMBER:	NH CULV(27)
FILE NAME:	IIb294/cos/zIIb294sub.dgn
PROJECT LEADER:	J. BYATT
DESIGNED BY:	S. BEAUMONT
TYPICAL EARTHWORK SECTIONS SHEET 2	
PLOT DATE:	8/19/2015
DRAWN BY:	M. SMITH
CHECKED BY:	J. BYATT
SHEET	8 OF 74

CONSULTING ENGINEERS

GENERAL

1. ALL MATERIALS AND CONSTRUCTION SHALL CONFORM TO THE STATE OF VERMONT AGENCY OF TRANSPORTATION STANDARD SPECIFICATIONS FOR CONSTRUCTION DATED 2011, AND ITS LATEST REVISIONS, AND THE AASHTO LRFD BRIDGE DESIGN SPECIFICATIONS, DATED 2014, AND ITS LATEST REVISIONS.

2. DIMENSIONS, ANGLES, AND ELEVATIONS SHOWN ON THESE PLANS HAVE BEEN OBTAINED FROM SURVEY INFORMATION AND LIMITED FIELD INVESTIGATION AND MAY NOT ACCURATELY REFLECT FIELD MEASUREMENTS FOR ALL STRUCTURE COMPONENTS IMPACTED BY THE WORK (EXISTING OR PROPOSED) TO ASSURE CONSISTENCY WITH THE PROPOSED MODIFICATIONS. ANY DISCREPANCIES IN DIMENSIONS, CHARACTER, OR EXTENT OF THE EXISTING FEATURES SHALL BE BROUGHT TO THE ATTENTION OF THE ENGINEER BEFORE ADVANCING THE WORK. FABRICATION DRAWINGS REQUIRED FOR VARIOUS ITEMS OF THE WORK SHALL INDICATE THE ACTUAL FIELD MEASUREMENTS AND SHALL BE SO NOTED.

3. ALL DIMENSIONS SHOWN IN THE PLANS ARE HORIZONTAL OR VERTICAL AND ARE GIVEN AT 68 DEGREES FAHRENHEIT, UNLESS NOTED OTHERWISE.

4. ALL PG BINDER USED IN BITUMINOUS CONCRETE PAVEMENT SHALL BE INCLUDED IN THE WEARING COURSE PAY ITEM.

5. EMULSIFIED ASPHALT SHALL BE APPLIED ON COLD PLANED SURFACES AT THE RATE OF 0.040 GAL/SY AND BETWEEN ALL COURSES OF PAVEMENT AT THE RATE OF 0.025 GAL/SY OR AS DIRECTED BY THE ENGINEER.

6. ANY REQUIRED SAWCUT OF EXISTING PAVEMENT WILL BE CONSIDERED INCIDENTAL TO THE WEARING COURSE PAY ITEM 490.30, "SUPERPAVE BITUMINOUS CONCRETE PAVEMENT".

7. THE CONTRACTOR SHALL BE MADE AWARE THAT EXISTING UTILITIES ARE WITHIN THE CONSTRUCTION LIMITS OF BRIDGE 126. THE UTILITIES WILL BE RELOCATED BY OTHERS PRIOR TO THE START OF CONSTRUCTION. NO CLAIMS ARE MADE AS TO THE ACCURACY OR COMPLETENESS OF THE UTILITIES SHOWN. THE CONTRACTOR IS SOLELY RESPONSIBLE FOR LOCATING AND PROTECTION FROM DAMAGE ALL UTILITIES ON SITE DURING ALL STAGES OF CONSTRUCTION.

8. THE CONTRACTOR SHALL REVIEW AND UNDERSTAND ALL APPLICABLE ENVIRONMENTAL PERMITS AND ENSURE THAT ALL CONSTRUCTION CONDITIONS ARE MET.

9. THE CONTRACTOR SHALL BE RESPONSIBLE FOR REPAIRING ANY DAMAGE TO PRIVATE OR PUBLIC PROPERTY CAUSED BY THE CONTRACTOR AT THE CONTRACTOR'S EXPENSE AND TO THE SATISFACTION OF THE ENGINEER.

10. UPON COMPLETION OF THE BRIDGE CONSTRUCTION, THE CONTRACTOR SHALL REMOVE THE DETOUR, RESTORE THE DETOUR SITE TO THE ORIGINAL GRADE OR PROPOSED GRADE AS APPLICABLE, AND STABILIZE AS SHOWN ON THE EPSC FINAL CONDITIONS PLAN.

11. MARKER POST: TO BE PLACED AS INDICATED OR AS DIRECTED BY THE ENGINEER.

12. SLOPE ROUNDING: ALL CUT SLOPES TO BE ROUNDED IN ACCORDANCE WITH VAOT STANDARD SHEET B-5.

13. DRIVEWAYS: ALL DRIVEWAYS SHALL BE CONSTRUCTED IN ACCORDANCE WITH VAOT STANDARD SHEET B-71.

CONCRETE

14. PRECAST CONCRETE SHALL MEET THE REQUIREMENTS OF SECTION 540 AND WILL BE PAID UNDER CONTRACT ITEM 540.10.

15. CAST-IN-PLACE CONCRETE USED FOR MAT FOUNDATION, FOOTINGS, AND PEDESTAL WALLS SHALL BE HIGH PERFORMANCE CONCRETE CLASS B AND WILL BE PAID FOR UNDER CONTRACT ITEM 501.34.

16. ITEM 514.10, "WATER REPELLENT, SILANE", SHALL BE APPLIED TO ALL EXPOSED CONCRETE SURFACES, EXCEPT THE INTERIOR OF THE PRECAST CONCRETE ARCH, TO 1'-0" BELOW GRADE.

17. ALL EXPOSED EDGES OF CONCRETE SHALL BE CHAMFERED 1" X 1".

REINFORCING STEEL

18. ALL REINFORCING STEEL IN THE FOOTINGS AND PEDESTAL WALLS SHALL BE LEVEL I - PLAIN REINFORCING STEEL AND WILL BE PAID FOR UNDER CONTRACT ITEM 507.11.

19. ALL REINFORCING STEEL SHALL BE DETAILED AND FABRICATED USING PROCEDURES AND TOLERANCES IN ACCORDANCE WITH APPLICABLE PUBLICATIONS ON THE "CONCRETE REINFORCING INSTITUTE".

20. REINFORCING PLACEMENT TOLERANCES SHALL BE:
    SPACING: +/- 1 INCH
    CLEARANCES: +/- 1/4 INCH

21. MINIMUM CLEAR COVER FOR REINFORCING STEEL SHALL BE AS FOLLOWS:
    a. WALL FACES NOT EXPOSED TO DEICING SALTS: 2.0 INCH
    b. CAST AGAINST EARTH: 3.0 INCH
    c. ELSEWHERE UNLESS OTHERWISE INDICATED: 3.0 INCH

22. TEST BARS SHALL BE PROVIDED IN ACCORDANCE WITH THE "VERMONT AGENCY OF TRANSPORTATION MATERIALS SAMPLING MANUAL".

EARTHWORK AND RELATED ITEMS

23. TEMPORARY CONSTRUCTION FILLS WITHIN THE WATERCOURSE FOR ANY PURPOSE SHALL CONSIST OF CLEAN STONE FILL ONLY. NO OTHER FILLING IN THE STREAM SHALL OCCUR WITHOUT THE APPROVAL OF THE STREAM ALTERATION ENGINEER.

24. BACKFILL ARCH EVENLY.

STONE FILL

25. THE INTENT OF THE STONE FILL INSIDE THE CULVERT AND IN THE UPSTREAM AND DOWNSTREAM CHANNELS IS TO CREATE A NATURAL-LIKE STREAM CHANNEL THROUGH THE PROJECT AREA AND WITHIN THE ARCH THAT WILL RESIST SCOUR DURING EXTREME FLOOD EVENTS.

26. THE STONE IN THE UPSTREAM AND DOWNSTREAM CHANNELS SHALL CONSIST OF WELL-GRADED, 4'-0" MAXIMUM DIMENSION NATURAL STREAM BED MATERIAL. PAYMENT FOR THIS MATERIAL WILL BE MADE UNDER ITEM 900.608, "SPECIAL PROVISION (STONE FILL, STREAM BED MATERIAL)".

27. THE STONE FILL WITHIN THE ARCH SHALL CONSIST OF WELL-GRADED, 3'-0" MAXIMUM DIMENSION NATURAL STREAM BED MATERIAL. PAYMENT FOR THIS MATERIAL WILL BE MADE UNDER ITEM 900.608, "SPECIAL PROVISION (STONE FILL, CULVERT LINING)".

28. 35 TO 40 BOULDERS WITH MIDDLE AXIS MEASURING 2-6" TO 3-0" SHALL BE DISTRIBUTED THROUGHOUT THE ARCH LENGTH, WITH THE REMAINING SPECIAL PROVISION (STONE FILL, CULVERT LINING) PLACED AROUND THEM. PAYMENT FOR THESE BOULDERS WILL BE CONSIDERED INCIDENTAL TO ITEM 900.608, "SPECIAL PROVISION (STONE FILL, CULVERT LINING)".

29. THE STONE FILL SHALL BE PLACED SUCH THAT THERE ARE NO DISCRETE VERTICAL DROPS IN EXCESS OF 3 INCHES, AND SO THE FLOW OF WATER IS GENERALLY CONCENTRATED IN THE CENTER OF THE ARCH RATHER THAN DISPERSED ACROSS THE ENTIRE WIDTH.

30. THE UPSTREAM AND DOWNSTREAM CHANNELS FROM THE ARCH INVERTS TO THE LIMITS OF CHANNEL WORK SHALL BE REGRADED TO PROVIDE A GRADUAL TRANSITION TO THE ARCH. PRESERVE LARGE COBBLES (IF APPLICABLE). AVOID DISCRETE ELEVATION CHANGES GREATER THAN 3 INCHES.

COFFERDAM NOTES

31. ACTUAL EXCAVATION SHALL BE DETERMINED BY THE CONTRACTOR. HOWEVER, ONLY THE EXCAVATION BETWEEN THE LIMITS SHOWN WILL BE PAID FOR UNDER ITEM 208.30, "COFFERDAM EXCAVATION, EARTH (FPQ)" OR ITEM 208.35, "COFFERDAM EXCAVATION, ROCK".

32. THE CONTRACTOR IS TO DETERMINE THE COFFERDAM SIZE. PAYMENT FOR ANY COFFERDAMS REQUIRED FOR EXCAVATION AND/OR PHASING WILL BE MADE UNDER ITEM 208.40, "COFFERDAM (ARCH AND WINGWALLS - PHASE 1)" OR ITEM 208.40, "COFFERDAM (ARCH AND WINGWALLS - PHASE 2)", AS APPLICABLE.

COFFERDAM NOTES (CONTINUED)

33. THE PAY LIMITS OF (COFFERDAM EXCAVATION, EARTH) (FPQ), (COFFERDAM EXCAVATION, ROCK), AND GRANULAR BACKFILL FOR STRUCTURES (FPQ) SHALL BE TWO FEET OUTSIDE THE PERIMETER OF THE FOOTING OR ANCHOR, AS APPLICABLE.

34. USE A 1'-0" MINIMUM UNDERCUT ON TILL AND 2'-0" MINIMUM UNDERCUT ON CLAY BELOW THE MAT FOUNDATION AS DETERMINED BY THE ENGINEER OR DEEMED NECESSARY BASED ON BORINGS.

35. ALL EXCAVATION AND BACKFILLING SHALL BE CONDUCTED IN DRY CONDITIONS. DEWATERING SHALL BE CONTINUOUS UNTIL THE PRECAST CONCRETE ARCH AND WINGWALLS ARE BACKFILLED TO THE SURROUNDING WATER TABLE, UNLESS OTHERWISE NOTED.

36. DEWATERING OF EXCAVATION AREAS SHALL MAINTAIN GROUNDWATER LEVELS 2'-0" BELOW THE EXCAVATION SUBGRADE IN AREAS WHERE LEDGE IS NOT ENCOUNTERED, WHICH MAY REQUIRE THE USE OF WELL POINTS OR DEEP WELLS.

TEMPORARY RELOCATION OF STREAM NOTES

37. THE CONTRACTOR SHALL PROVIDE TEMPORARY STREAM RELOCATION BY STREAM RELOCATION PUMPING OR OTHER APPROVED METHODS AS REQUIRED DURING CONSTRUCTION.

38. THE SPECIAL PROVISION (TEMPORARY STREAM RELOCATION) DETAIL ON SHEET 7 ARE SCHEMATIC ONLY. ACTUAL LOCATIONS OF THE PUMPS, PIPING, COFFERDAMS (IF APPLICABLE), CHECKDAMS, AND OTHER EQUIPMENT REQUIRED TO COMPLETE THE TEMPORARY STREAM RELOCATION SHALL BE ADJUSTED TO MATCH FIELD CONDITIONS AS DESIGNED BY THE CONTRACTOR AND APPROVED BY THE ENGINEER. THE DESIGN AND PLANS SHALL BE STAMPED BY A PROFESSIONAL ENGINEER REGISTERED IN THE STATE OF VERMONT AND SHALL BE APPROVED BY THE PROJECT MANAGER. ALL WORK AND EQUIPMENT SHALL BE PERFORMED AND PLACED WITHIN THE PROJECT SLOPE LIMITS.

39. THE SPECIAL PROVISION (TEMPORARY STREAM RELOCATION) DETAIL ON SHEET 7 SHOW POTENTIAL STREAM RELOCATION METHODS. THE CONTRACTOR IS RESPONSIBLE FOR DEVELOPING ITS OWN SITE SPECIFIC PLAN AND DESIGN FOR DEWATERING AND STREAM RELOCATION. SEE SPECIAL PROVISION FOR ADDITIONAL INFORMATION AND REQUIREMENTS.

40. THE WORK WITHIN THE STREAM SHALL BE PERFORMED DURING THE SEASONAL LOW FLOW PERIOD (JUNE 1 TO OCTOBER 1). THE DESIGN OF THE SITE SPECIFIC SITE PLANS SHALL BE CAPABLE OF PUMPING AT LEAST TWICE THE FLOWS ASSOCIATED WITH THE AVERAGE DAILY FLOW. THE WORK RELATED TO THE CONSTRUCTION OF THE CULVERT SHALL BE PLANNED ACCORDING TO THE WEATHER AND SHALL NOT BE PERFORMED DURING A PERIOD DURING WHICH A BAD WEATHER EVENT IS FORECAST.

41. PAYMENT FOR ITEM 900.645, "SPECIAL PROVISION (TEMPORARY RELOCATION OF STREAM)" WILL INCLUDE, BUT IS NOT LIMITED TO, THE FOLLOWING WORK:

    A. PREPARATION OF THE SITE SPECIFIC TEMPORARY RELOCATION PLAN.
    B. THE DAM FOR CONTROLLING WATER.
    C. THE BY-PASS PUMP(S), BY-PASS PIPE(S), SLEEVE(S), AND HARDWARE.
    D. ANY EXCAVATION NEEDED TO PLACE AND REMOVE THE BY-PASS PIPE THAT FALLS OUTSIDE THE PAY LIMITS OF STRUCTURE OR COMMON EXCAVATION AS DEFINED IN THE PLANS.
    E. ANY BACKFILL NEEDED TO PLACE THE BY-PASS PIPE SUCH THAT THE EXISTING STREAM ELEVATIONS WILL MAINTAIN THE FLOW OF WATER AT ALL TIMES.
    F. MATERIAL AND LABOR TO PLACE THE BACKFILL WHICH FALLS OUTSIDE THE PAY LIMITS OF THE ROADWAY SUBBASE AND GRANULAR BACKFILL FOR STRUCTURES AS DEFINED ON THE PLANS.
    G. INCIDENTALS USED TO DIVERT THE WATER TO THE BY-PASS PIPE(S) (SANDBAGS, CHECK DAM, ETC.), TO CONSTRUCT THE CULVERT, AND TO RESTORE THE STREAM BED IN DRY CONDITIONS.

CLD 12-0106 MODEL:Sheet01

PROJECT NAME: LUNENBURG
PROJECT NUMBER: NH CULV(27)

CONSULTING ENGINEERS

FILE NAME: llb294/cos/ zllb294gennotes.dgn PLOT DATE: 8/24/2015
PROJECT LEADER: J. BYATT DRAWN BY: M. SMITH
DESIGNED BY: N. CARON CHECKED BY: S. BEAUMONT
GENERAL NOTES SHEET 1 SHEET 9 OF 74

PRECAST CONCRETE BRIDGE SYSTEM

42. ALL PRECAST CONCRETE ELEMENTS TO BE FABRICATED TO THE SPECIFIED DIMENSIONS WITHIN THE TOLERANCES DICTATED IN THE PRECAST/PRESTRESSED CONCRETE INSTITUTE TOLERANCE MANUAL FOR PRECAST AND PRESTRESSED CONCRETE CONSTRUCTION, MNL 135-00, AND ITS LATEST REVISIONS.

43. THE DESIGN AND DETAILING OF THE PRECAST CONCRETE ARCH AND WINGWALLS AND ALL DETAILS, APPURTENANCES, AND CONNECTIONS FOR THE ARCH AND WINGWALLS, INCLUDING THE CONNECTION BETWEEN THE ARCH/WINGWALL CONNECTION WITH THE PEDESTAL WALLS SHALL BE THE CONTRACTOR'S RESPONSIBILITY. DESIGN SHALL BE BASED ON THE CURRENT AASHTO AND VTRANS STANDARDS USING LOAD AND RESISTANCE FACTOR DESIGN (LRFD). THE JOINTS BETWEEN THE PRECAST ARCH SECTIONS SHALL BE WATERTIGHT UTILIZING FLEXIBLE RUBBER OR PLASTIC GASKETS. MECHANICAL DEVICES SHALL BE USED TO LOCK THE INDIVIDUAL SECTIONS TOGETHER. THE MANUFACTURER SHALL PROVIDE STAMPED DESIGN CALCULATIONS PREPARED BY A REGISTERED VERMONT PROFESSIONAL ENGINEER. THE MANUFACTURER SHALL CONSIDER STRENGTH, SERVICEABILITY, STIFFNESS, AND STABILITY OF THE PRECAST ELEMENTS FOR LOADS GENERATED DURING FABRICATION, TRANSPORTATION, ERECTION, CONSTRUCTION OPERATIONS, AND ULTIMATE TRAFFIC CONDITIONS. THE MANUFACTURER SHALL OBTAIN WRITTEN APPROVAL FROM THE VERMONT AGENCY OF TRANSPORTATION STRUCTURES SECTION PRIOR TO FABRICATION. THE DESIGN SHALL INCLUDE A LOAD RATING COMPLETED USING THE LOAD AND RESISTANCE FACTOR RATING METHOD AND CONFORMING TO STANDARD VTRANS PRACTICE. ALL COSTS WILL BE CONSIDERED INCIDENTAL TO ITEM 540.10, "PRECAST CONCRETE STRUCTURE (7'-0" X 20'-0" X 110'-0" ARCH) OR ITEM 540.10, "PRECAST CONCRETE STRUCTURE (WINGWALLS)", AS APPLICABLE.

44. THE ARCH LAYOUT WAS DETERMINED ASSUMING A TOP CENTER ROOF THICKNESS OF 10" AND INSTALLATION OF AN 7'-0" RISE X 20'-0" SPAN ARCH. THE CONTRACTOR MAY UTILIZE AN ARCH OR FRAME WITH ALTERNATE GEOMETRY FROM THAT SHOWN IN THE PLANS. HOWEVER, IF THE THICKNESSES OF THE STRUCTURE SHAPE VARY FROM THE ASSUMED DIMENSIONS, INVERT ELEVATIONS SHALL REMAIN THE SAME, AND STRUCTURE SPAN, RISE, AND WATERWAY OF FULL OPENING SHALL REMAIN THE SAME OR GREATER. THE HEADWALL SHALL BE ADJUSTED TO MAINTAIN THE PROPOSED ROADWAY PROFILE AND SIDE SLOPE GRADES.

45. QUANTITIES SHOWN FOR STRUCTURAL EARTHWORK AND HIGH PERFORMANCE CONCRETE CLASS B ARE BASED ON THE ASSUMED STRUCTURE DIMENSIONS SHOWN AND SHALL NOT BE UTILIZED BY THE FABRICATOR AS REQUIRED DIMENSIONS FOR THE STRUCTURE. THESE ITEMS WILL BE PAID AS FINAL PLAN QUANTITIES (FPQ) ACCORDING TO SECTION 109.10. IF ACTUAL QUANTITIES VARY, NO ADDITIONAL COMPENSATION WILL BE ALLOWED.

46. THE PRECAST BRIDGE SYSTEM SHALL BE DESIGNED PER THE AASHTO LRFD BRIDGE DESIGN SPECIFICATIONS, DATED 2014, AND ITS LATEST REVISIONS, AND SHALL CONSIDER THE FOLLOWING DESIGN CRITERIA:

A.	DESIGN LOADING:	HL-93
B.	WEIGHT OF BACKFILL MATERIAL:	125 PCF
C.	PRECAST CONCRETE COMPRESSIVE STRENGTH:	f'c = 5,000 PSI
D.	REINFORCING STEEL, LEVEL I:	fy = 60,000 PSI

47. THE CAST-IN-PLACE CONCRETE ARCH PEDESTAL WALLS AND MAT FOUNDATION WERE DESIGNED ASSUMING FULL PORE PRESSURE BELOW THE GROUNDWATER ELEVATION AS SHOWN IN THE BORINGS INCLUDING UPLIFT ON THE MAT FOUNDATION AND UTILIZING THE FOLLOWING UNFACTORED ARCH REACTIONS:

VERTICAL LOAD PER LEG	(SELF WEIGHT) DC:	2.20 KLF
	(EARTH COVER) EV:	20.30 KLF
	(LIVE LOAD) LL:	1.90 KLF
HORIZONTAL LOAD PER LEG	(OUTWARD THRUST)	
	(SELF WEIGHT) DC:	0.00 KLF TO 1.00 KLF
	(EARTH COVER) EV:	0.00 KLF TO 6.50 KLF
	(LIVE LOAD) LL:	0.00 KLF TO 1.00 KLF

PRECAST CONCRETE BRIDGE SYSTEM (CONTINUED)

THE CAST-IN-PLACE CONCRETE DOWNSTREAM WINGWALL PEDESTAL WALLS WERE DESIGNED ASSUMING PRECAST CONCRETE ANCHORS TAKE THE FULL LATERAL LOAD ABOVE THE PEDESTAL WALL AND FULL PORE PRESSURE BELOW THE APPROXIMATE GROUNDWATER ELEVATION AS SHOWN IN THE BORINGS INCLUDING UPLIFT ON THE MAT FOUNDATION AND UTILIZING A PRECAST CONCRETE WINGWALL STEM VERTICAL LOAD (DC) EQUAL TO 1.91 KIP.

THE CAST-IN-PLACE CONCRETE UPSTREAM WINGWALL PEDESTAL WALLS WERE DESIGNED ASSUMING PRECAST CONCRETE ANCHORS TAKE THE FULL LATERAL LOAD ABOVE THE PEDESTAL WALL AND FULL PORE PRESSURE BELOW THE WEEPHOLES INCLUDING UPLIFT ON THE MAT FOUNDATION AND UTILIZING A PRECAST CONCRETE WINGWALL STEM VERTICAL LOAD (DC) EQUAL TO 1.67 KIP.

IF A CHANGE IN STRUCTURE GEOMETRY OR TYPE RESULTS IN DESIGN LOADS THAT VARY FROM THE ABOVE LOADS, THE CONTRACTOR SHALL PROVIDE THESE LOADS TO THE ENGINEER. NO ADDITIONAL COMPENSATION WILL BE PROVIDED FOR CALCULATING OR SUBMITTING THESE LOADS. THE ENGINEER SHALL UPDATE THE MAT FOUNDATION AND PEDESTAL WALL DESIGN CALCULATIONS TO ACCOMMODATE THE ACTUAL PROVIDED DESIGN LOADS AND PROVIDE THE REVISED MAT FOUNDATION AND PEDESTAL WALL DIMENSIONS AND REINFORCING CHANGES TO THE CONTRACTOR.

48. DESIGN AND WORKING DRAWINGS SHALL BE SUBMITTED FOR APPROVAL AND SHALL SHOW REINFORCING BAR SIZES AND LOCATIONS, JOINT DETAILS, AND OTHER DETAILS NECESSARY TO MANUFACTURE THE ELEMENTS. ALL COSTS FOR THE DESIGN, DRAWINGS, FABRICATION, DELIVERY, AND ERECTION OF ALL THE PRECAST STRUCTURE ELEMENTS WILL BE CONSIDERED INCIDENTAL TO ITEM 540.10, "PRECAST CONCRETE STRUCTURE (7'-0" X 20'-0" X 110'-0" ARCH)" OR ITEM 540.10, "PRECAST CONCRETE STRUCTURE (WINGWALLS)", AS APPLICABLE, INCLUDING ANY INCIDENTALS NECESSARY TO FURNISH THE PRODUCT COMPLETE IN PLACE.

49. THE COST OF ANY CAST-IN-PLACE CONCRETE PROPOSED TO BE USED IN CONJUNCTION WITH PRECAST CONCRETE ELEMENTS (NOT INCLUDING THE CAST-IN-PLACE CONCRETE PEDESTAL WALLS AND MAT FOUNDATION DETAILED IN THE CONTRACT PLANS), IF APPLICABLE, WILL BE CONSIDERED INCIDENTAL TO ITEM 540.10, "PRECAST CONCRETE STRUCTURE (7'-0" X 20'-0" X 110'-0" ARCH)" OR ITEM 540.10, "PRECAST CONCRETE STRUCTURE (WINGWALLS)", AS APPLICABLE, INCLUDING ANY REINFORCEMENT OR INCIDENTALS NECESSARY TO PLACE THE CAST-IN-PLACE CONCRETE.

50. THE COST OF ALL REINFORCING BARS THAT ARE CAST INTO THE PRECAST CONCRETE ARCH AND HEADWALLS SHALL BE INCLUDED IN ITEM 540.10, "PRECAST CONCRETE STRUCTURE (7'-0" X 20'-0" X 110'-0" ARCH)". THE COST OF ALL REINFORCING BARS THAT ARE CAST INTO THE PRECAST CONCRETE WINGWALLS WILL BE INCLUDED UNDER PAY ITEM 540.10, "PRECAST CONCRETE STRUCTURE (WINGWALLS)".

51. GALVANIZED STEEL ANGLES AND BOLTS AS SHOWN IN ARCH JOINT DETAIL (SHEET 43) SHALL BE UTILIZED TO DRAW ARCH SECTIONS TOGETHER. THESE HARDWARE ASSEMBLIES SHALL BE ATTACHED AS SHOWN ON THE DETAIL AND SHALL BE LEFT IN PLACE. COST WILL BE CONSIDERED INCIDENTAL TO ITEM 540.10, "PRECAST CONCRETE STRUCTURE (7'-0" X 20'-0" X 110'-0" ARCH)".

52. JOINTS BETWEEN ABUTTING PRECAST UNITS SHALL BE WATERTIGHT. THE EXTERIOR SIDE/VERTICAL JOINTS AND OTHER AREAS TO BE FILLED ON A VERTICAL SURFACE SHALL BE FILLED USING A VERTICAL OVERHEAD MATERIAL FROM THE APPROVED PRODUCTS LIST. THE EXTERIOR TOP/HORIZONTAL JOINTS SHALL BE FILLED WITH MORTAR, TYPE IV, AFTER BEING SET IN THEIR FINAL POSITION. MORTAR SHALL BE WET CURED A MINIMUM OF 4 HOURS PRIOR TO APPLYING WATERPROOFING MEASURES. VERTICAL OVERHEAD MATERIAL AND MORTAR WILL BE CONSIDERED INCIDENTAL TO ITEM 540.10, "PRECAST CONCRETE STRUCTURE (7'-0" X 20'-0" X 110'-0" ARCH)".

PRECAST CONCRETE BRIDGE SYSTEM (CONTINUED)

53. THE CONTRACTOR SHALL FOLLOW THE MANUFACTURER'S RECOMMENDATIONS REGARDING BACKFILL AND COMPACTION LIMITS, PROPERTIES, AND PROCEDURES, INCLUDING RESTRICTIONS OF CONSTRUCTION MACHINERY AND OPERATIONS.

54. THE CONTRACTOR SHALL PROVIDE EQUIPMENT CAPABLE OF UNLOADING, LIFTING, AND PLACING PRECAST UNITS IN ACCORDANCE WITH THE MANUFACTURER'S FIELD REPRESENTATIVE. COST WILL BE CONSIDERED INCIDENTAL TO ITEM 540.10, "PRECAST CONCRETE STRUCTURE (7'-0" X 20'-0" X 110'-0" ARCH)" OR ITEM 540.10, "PRECAST CONCRETE STRUCTURE (WINGWALLS)", AS APPLICABLE.

55. PRIOR TO SHIPPING THE PRECAST ELEMENTS, THE CONTRACTOR SHALL SUPPLY CERTIFICATION STATING THAT THE BACKFILL SOIL MEETS THE REQUIREMENTS OF THE PROJECT SPECIFICATIONS. NO BACKFILL SHALL BE PLACED AGAINST ANY STRUCTURAL ELEMENTS PRIOR TO APPROVAL OF THE ENGINEER. PAYMENT WILL BE CONSIDERED INCIDENTAL TO ITEM 204.30.

56. THE DRILLING OF HOLES IN THE PRECAST ELEMENTS SHALL NOT BE PERMITTED, UNLESS APPROVED IN WRITING BY THE VERMONT AGENCY OF TRANSPORTATION STRUCTURES SECTION. ANY LIFTING HOLES SHALL BE FILLER WITH MORTAR, TYPE IV. COST FOR MORTAR WILL BE CONSIDERED INCIDENTAL TO ITEM 540.10, "PRECAST CONCRETE STRUCTURE (7'-0" X 20'-0" X 110'-0" ARCH)" OR ITEM 540.10, "PRECAST CONCRETE STRUCTURE (WINGWALLS)", AS APPLICABLE.

57. THE CONTRACTOR SHALL REPAIR ANY DAMAGE TO PRECAST CONCRETE ELEMENTS AT THE CONTRACTOR'S EXPENSE AND TO THE SATISFACTION OF THE ENGINEER.

58. A 2 FOOT WIDE STRIP OF TORCH APPLIED MEMBRANE WATERPROOFING SHALL BE APPLIED AT EACH OUTER SIDE JOINT OF THE ARCH AND WINGWALLS, INCLUDING THE JOINT BETWEEN THE ARCH AND EACH WINGWALL. ON THE ARCH, THE MEMBRANE SHALL BE CENTERED ON THE JOINT AND COVER THE FULL HEIGHT OF THE SIDE JOINTS AND EXTEND 1'-0" BELOW THE TOP OF THE PEDESTAL WALLS. ON THE WINGWALLS, THE MEMBRANE SHALL BE CENTERED ON THE JOINT AND EXTEND FROM 6" BELOW THE TOP OF THE WINGWALL TO 1'-0" BELOW THE TOP OF THE PEDESTAL WALLS. THE ENTIRE TOP OF THE ARCH SHALL THEN BE COVERED WITH MEMBRANE. THE MEMBRANE SHALL OVERLAP THE EDGES BY 1'-0" ON EACH SIDE. MEMBRANE SHALL ALSO BE APPLIED ALONG THE FULL LENGTH OF THE PEDESTAL WALL/ARCH LEG JOINT AND THE PEDESTAL WALL/WINGWALL STEM JOINT. MEMBRANE WILL BE PAID UNDER CONTRACT ITEM 519.20, "SHEET MEMBRANE WATERPROOFING, TORCH APPLIED)".

59. A 3" DIAMETER PERFORATED PVC DRAIN PIPE SHALL BE INSTALLED BEHIND THE ARCH HEADWALLS AND UPSTREAM WINGWALLS PER THE FABRICATOR'S SPECIFICATIONS AND SHALL BE PLACED WITHIN A MINIMUM 16" THICK ZONE OF DRAINAGE AGGREGATE CONFORMING TO SUBSECTION 704.16. STONE SHALL BE COMPLETELY SEPARATED FROM THE IN SITU SOILS BY GEOTEXTILE CONFORMING TO THE REQUIREMENTS OF SECTION 649, GEOTEXTILE FOR UNDERDRAIN TRENCH LINING. PERFORATED PVC PIPE SHALL BE LAID WITH PERFORATIONS DOWN. THIS WORK AND MATERIALS WILL BE CONSIDERED INCIDENTAL TO ITEM 540.10, "PRECAST CONCRETE STRUCTURE (7'-0" X 20'-0" X 110'-0" ARCH)" OR ITEM 540.10, "PRECAST CONCRETE STRUCTURE (WINGWALLS)", AS APPLICABLE.

60. WEEPHOLES IN THE UPSTREAM WINGWALLS AND ARCH HEADWALLS SHALL BE PLACED APPROXIMATELY EVERY 10'-0" OR AS INDICATED ON THE PLANS. WEEPHOLES SHALL BE SCREENED TO RETAIN CRUSHED STONE (MAXIMUM 1#2" SQUARE OPENINGS) AND TO PREVENT ENTRY BY ANIMALS.

61. THE SIDE SLOPES SHALL BE GRADED TO MATCH THE TOP OF THE WINGWALL ELEVATIONS, AS SHOWN.

CLD 12-0106 MODEL:Sheet02

CONSULTING ENGINEERS

PROJECT NAME:	LUNENBURG
PROJECT NUMBER:	NH CULV(27)
FILE NAME: llb294/cos/ zllb294gennotes.dgn	PLOT DATE: 8/24/2015
PROJECT LEADER: J. BYATT	DRAWN BY: M. SMITH
DESIGNED BY: N. CARON	CHECKED BY: S. BEAUMONT
GENERAL NOTES SHEET 2	SHEET 10 OF 74

STATE OF VERMONT
AGENCY OF TRANSPORTATION

QUANTITY SHEET 1

SUMMARY OF ESTIMATED QUANTITIES

ROADWAY	EROSION CONTROL	BRIDGE 126	FULL C.E. ITEMS	GRAND TOTAL	FINAL	UNIT	ITEMS	ITEM NUMBER	ROUND
1				1		LS	CLEARING AND GRUBBING, INCLUDING INDIVIDUAL TREES AND STUMPS	201.10	-
15				15		EACH	REMOVING MEDIUM STUMPS	201.20	-
9450				9450		CY	COMMON EXCAVATION	203.15	4
		780		780		CY	UNCLASSIFIED CHANNEL EXCAVATION	203.27	4.7
3800		185		3985		CY	SAND BORROW	203.31	33.2
		1025		1025		CY	GRANULAR BORROW (FPQ)	203.32	1.8
190				190		CY	TRENCH EXCAVATION OF EARTH	204.20	5.2
1				1		CY	TRENCH EXCAVATION OF EARTH, EXPLORATORY (N.A.B.I.)	204.22	-
		667		667		CY	GRANULAR BACKFILL FOR STRUCTURES (FPQ)	204.30	0.4
50				50		CY	GRANULAR BACKFILL FOR STRUCTURES	204.30	9.6
		3351		3351		CY	COFFERDAM EXCAVATION, EARTH (FPQ)	208.30	0.5
		574		574		CY	COFFERDAM EXCAVATION, ROCK	208.35	0.6
		1		1		LS	COFFERDAM (ARCH AND WINGWALLS - PHASE 1)	208.40	-
		1		1		LS	COFFERDAM (ARCH AND WINGWALLS - PHASE 2)	208.40	-
250				250		SY	COLD PLANING, BITUMINOUS PAVEMENT	210.10	-
1050				1050		LF	MILLED RUMBLE STRIPS	213.10	-
75				75		CY	SUBBASE OF GRAVEL	301.15	4
3325				3325		CY	SUBBASE OF DENSE GRADED CRUSHED STONE	301.35	11
15				15		CY	AGGREGATE SURFACE COURSE	401.10	2
100				100		TON	AGGREGATE SHOULDERS	402.12	11
1				1		LU	PRICE ADJUSTMENT, ASPHALT CEMENT (N.A.B.I.)	406.50	-
2020				2020		TON	SUPERPAVE BITUMINOUS CONCRETE PAVEMENT	490.30	9
		554		554		CY	CONCRETE, HIGH PERFORMANCE CLASS B (FPQ)	501.34	0.6
		1		1		LS	FURNISHING EQUIPMENT FOR DRIVING PILING	504.10	-
		46010		46010		LB	REINFORCING STEEL, LEVEL I	507.11	3.4
		10		10		GAL	WATER REPELLENT, SILANE	514.10	0.8
		354		354		SY	SHEET MEMBRANE WATERPROOFING, TORCH APPLIED	519.20	0.8
		1		1		LS	PRECAST CONCRETE STRUCTURE (7'-0" X 20'-0" X 110'-0" ARCH)	540.10	-
		1		1		LS	PRECAST CONCRETE STRUCTURE (WINGWALLS)	540.10	-
							BEGIN OPTION AA		
42				42		LF	15" RCP CLASS III	601.0810	-
42				42		LF	15" CPEP(SL)	601.2610	-
							END OPTION AA		
750				750		LF	8 INCH UNDERDRAIN PIPE	605.11	-
2				2		EACH	UNDERDRAIN FLUSHING BASIN	605.95	-
11				11		HR	POWER BROOM RENTAL, TYPE II	608.31	EST.
250				250		CY	STONE FILL, TYPE II	613.11	-
510				510		CY	STONE FILL, TYPE III	613.12	3
1				1		EACH	RELOCATE MAILBOX, SINGLE SUPPORT	617.10	-
2				2		EACH	YIELDING MARKER POSTS	619.17	-

DETAILED SUMMARY OF QUANTITIES

QUANTITIES	UNIT	ITEMS
		EARTHWORK SUMMARY
		US ROUTE 2 CONSTRUCTION
9450	CY	COMMON EXCAVATION
190	CY	TRENCH EXCAVATION OF EARTH (ASSUME 100% SUITABLE)
195	CY	UNCLASSIFIED CHANNEL EXCAVATION (ASSUME 25% SUITABLE
838	CY	COFFERDAM EXCAVATION, EARTH (ASSUME 25% SUITABLE)
10673	CY	TOTAL FILL AVAILABLE
255	CY	TOTAL FILL REQUIRED (INCL. 1.15 FILL FACTOR)
10418	CY	EXCESS EXCAVATION
		GRANULAR BACKFILL FOR STRUCTURES
37.1	CY	UNDERDRAIN
3.3	CY	DRIVE CULVERT
40.4	CY	SUBTOTAL
9.6	CY	ROUNDING
50.0	CY	TOTAL
		SUPERPAVE BITUMINOUS CONCRETE PAVEMENT
1242	TON	TYPE IIS
769	TON	TYPE IVS
2011	TON	SUBTOTAL
9	TON	ROUNDING
2020	TON	TOTAL
		SPECIAL PROVISION (TEMPORARY ROADWAY)
		DETOUR INSTALLATION
995	CY	COMMON EXCAVATION
0	CY	TRENCH EXCAVATION OF EARTH (ASSUME 100% SUITABLE)
0	CY	UNCLASSIFIED CHANNEL EXCAVATION (ASSUME 25% SUITABLE
0	CY	COFFERDAM EXCAVATION, EARTH (ASSUME 25% SUITABLE)
995	CY	TOTAL FILL AVAILABLE
679	CY	TOTAL FILL REQUIRED (INCL. 1.15 FILL FACTOR)
316	CY	EXCESS EXCAVATION
		DETOUR REMOVAL
563	CY	COMMON EXCAVATION
0	CY	TRENCH EXCAVATION OF EARTH (ASSUME 100% SUITABLE)
0	CY	UNCLASSIFIED CHANNEL EXCAVATION (ASSUME 25% SUITABLE
0	CY	COFFERDAM EXCAVATION, EARTH (ASSUME 25% SUITABLE)
563	CY	TOTAL FILL AVAILABLE
796	CY	TOTAL FILL REQUIRED (INCL. 1.15 FILL FACTOR)
233	CY	FILL REQUIRED

CLD 12-0106 MODEL: OSS 1

CONSULTING ENGINEERS

PROJECT NAME: LUNENBURG
PROJECT NUMBER: NH CULV(27)

FILE NAME: llb294/cos/zllb294frm.dgn
PROJECT LEADER: J. BYATT
DESIGNED BY: M. HALEY
QUANTITY SHEET 1

PLOT DATE: 8/25/2015
DRAWN BY: M. HALEY
CHECKED BY: P. SHEDD
SHEET 11 OF 74

STATE OF VERMONT
AGENCY OF TRANSPORTATION

QUANTITY SHEET 2

SUMMARY OF ESTIMATED QUANTITIES										TOTALS		DESCRIPTIONS				DETAILED SUMMARY OF QUANTITIES		
							ROADWAY	EROSION CONTROL	BRIDGE 126	FULL C.E. ITEMS	GRAND TOTAL	FINAL	UNIT	ITEMS	ITEM NUMBER	ROUND	QUANTITIES	UNIT	ITEMS
							75				75		LF	REMOVING AND RESETTING FENCE	620.50	3			
							425				425		LF	STEEL BEAM GUARDRAIL, GALVANIZED	621.20	-			
							4				4		EACH	MANUFACTURED TERMINAL SECTION, FLARED	621.50	-			
							400				400		LF	REMOVAL AND DISPOSAL OF GUARDRAIL	621.80	-			
							800				800		HR	UNIFORMED TRAFFIC OFFICERS	630.10	EST.			
							1300				1300		HR	FLAGGERS	630.15	EST.			
										1	1		LS	FIELD OFFICE, ENGINEERS	631.10	-			
										1	1		LS	TESTING EQUIPMENT, CONCRETE	631.16	-			
										1	1		LS	TESTING EQUIPMENT, BITUMINOUS	631.17	-			
										5000	5000		DL	FIELD OFFICE TELEPHONE (N.A.B.I.)	631.26	-			
							1				1		LS	MOBILIZATION/DEMOBILIZATION	635.11	-			
							1				1		LS	TRAFFIC CONTROL	641.10	-			
							2				2		EACH	PORTABLE CHANGEABLE MESSAGE SIGN	641.15	-			
							2100				2100		LF	DURABLE 4 INCH WHITE LINE, POLYUREA	646.404	-			
							2100				2100		LF	DURABLE 4 INCH YELLOW LINE, POLYUREA	646.414	-			
							4200				4200		LF	TEMPORARY 4 INCH WHITE LINE, PAINT	646.602	-			
							4200				4200		LF	TEMPORARY 4 INCH YELLOW LINE, PAINT	646.612	-			
							330				330		EACH	LINE STRIPING TARGETS	646.76	3			
							1050		806		1856		SY	GEOTEXTILE UNDER STONE FILL	649.31	22.4			
								125			125		SY	GEOTEXTILE FOR SILT FENCE	649.51	13			
								55			55		SY	GEOTEXTILE FOR SILT FENCE, WOVEN WIRE REINFORCED	649.515	5			
								110			110		LB	SEED	651.15	4			
								425			425		LB	FERTILIZER	651.18	9			
								2			2		TON	AGRICULTURAL LIMESTONE	651.20	0.6			
								2			2		TON	HAY MULCH	651.25	0.6			
							275				275		CY	TOPSOIL	651.35	10			
							575		281		856		SY	GRUBBING MATERIAL	651.40	16			
								1			1		LS	EPSC PLAN	652.10	-			
								400			400		HR	MONITORING EPSC PLAN	652.20	EST.			
								1			1		LU	MAINTENANCE OF EPSC PLAN (N.A.B.I.)	652.30	-			
								975			975		SY	TEMPORARY EROSION MATTING	653.20	8			
								4			4		CY	TEMPORARY STONE CHECK DAM, TYPE I	653.25	-			
								625			625		LF	BARRIER FENCE	653.50	11			
								1475			1475		LF	PROJECT DEMARCATION FENCE	653.55	5			
							1				1		SF	TRAFFIC SIGNS, TYPE A	675.20	0.17			
							16				16		LF	SQUARE TUBE SIGN POST AND ANCHOR	675.341	-			
							12				12		EACH	REMOVING SIGNS	675.50	-			
							12				12		EACH	ERECTING SALVAGED SIGNS	675.60	-			
							14				14		EACH	DELINEATOR WITH STEEL POST	676.10	-			
									306		306		CY	SPECIAL PROVISION (3/4" CRUSHED STONE) (FPQ)	900.608	1			

CLD 12-0006 MODEL: OSS 2

CONSULTING ENGINEERS

PROJECT NAME: LUNENBURG
PROJECT NUMBER: NH CULV(27)

FILE NAME: llb294/cos/zllb294frm.dgn
PROJECT LEADER: J. BYATT
DESIGNED BY: M. HALEY
QUANTITY SHEET 2

PLOT DATE: 8/24/2015
DRAWN BY: M. HALEY
CHECKED BY: P. SHEDD
SHEET 12 OF 74

STATE OF VERMONT
AGENCY OF TRANSPORTATION

QUANTITY SHEET 3

SUMMARY OF ESTIMATED QUANTITIES										TOTALS		DESCRIPTIONS				DETAILED SUMMARY OF QUANTITIES		
						ROADWAY	EROSION CONTROL	BRIDGE 126	FULL C.E. ITEMS	GRAND TOTAL	FINAL	UNIT	ITEMS	ITEM NUMBER	ROUND	QUANTITIES	UNIT	ITEMS
								277		277		CY	SPECIAL PROVISION (STONE FILL, CULVERT LINING)	900.608	0.8			
								623		623		CY	SPECIAL PROVISION (STONE FILL, STREAM BED MATERIAL)	900.608	1			
						12				12		EACH	SPECIAL PROVISION (CPM SCHEDULE)	900.620	-			
								69153		69153		LB	SPECIAL PROVISION (INSTALLATION OF STEEL PILINGS) (HP 14X89)	900.635	-			
								1		1		LS	SPECIAL PROVISION (TEMPORARY RELOCATION OF STREAM)	900.645	-			
						1				1		LS	SPECIAL PROVISION (TEMPORARY ROADWAY)	900.645	-			
						620				620		SY	SPECIAL PROVISION (HAND-PLACED BITUMINOUS CONCRETE MATERIAL, DRIVES)	900.675	7.2			
						15				15		CWT	SPECIAL PROVISION (EMULSIFIED ASPHALT) (RS-1H OR CRS-1H)	900.683	0.2			

CLD 12-0106 MODEL: QSS 3

CONSULTING ENGINEERS

PROJECT NAME: LUNENBURG
PROJECT NUMBER: NH CULV(27)

FILE NAME: llb294/cos/zllb294frm.dgn
PROJECT LEADER: J. BYATT
DESIGNED BY: M. HALEY
QUANTITY SHEET 3

PLOT DATE: 8/24/2015
DRAWN BY: M. HALEY
CHECKED BY: P. SHEDD
SHEET 13 OF 74

GENERAL INFORMATION

SYMBOLOGY LEGEND NOTE

THE SYMBOLOGY ON THIS SHEET IS INTENDED TO COVER STANDARD CONVENTIONAL SYMBOLOGY. THE SYMBOLOGY IS USED FOR EXISTING & PROPOSED FEATURES WITH HEAVIER LINEWEIGHT, IN COMBINATION WITH PROJECT ANNOTATION, AS NOTED ON PROJECT PLAN SHEETS. THIS LEGEND SHEET COVERS THE BASICS. SYMBOLOGY ON PLANS MAY VARY, PLAN ANNOTATIONS AND NOTES SHOULD BE USED TO CLARIFY AS NEEDED.

R.O.W. ABBREVIATIONS (CODES) & SYMBOLS

POINT	CODE	DESCRIPTION
	CH	CHANNEL EASEMENT
	CONST	CONSTRUCTION EASEMENT
	CUL	CULVERT EASEMENT
	D&C	DISCONNECT & CONNECT
	DIT	DITCH EASEMENT
	DR	DRAINAGE EASEMENT
	DRIVE	DRIVEWAY EASEMENT
	EC	EROSION CONTROL
	HWY	HIGHWAY EASEMENT
	I&M	INSTALL & MAINTAIN EASEMENT
	LAND	LANDSCAPE EASEMENT
	R&RES	REMOVE & RESET
	R&REP	REMOVE & REPLACE
	SR	SLOPE RIGHT
	UE	UTILITY EASEMENT
	(P)	PERMANENT EASEMENT
	(T)	TEMPORARY EASEMENT
■	BNDNS	BOUND SET
⧈	BNDNS	BOUND TO BE SET
●	IPNS	IRON PIN SET
◎	IPNS	IRON PIN TO BE SET
⊠	CALC	EXISTING ROW POINT
○	PROW	PROPOSED ROW POINT
[LENGTH]		LENGTH CARRIED ON NEXT SHEET

COMMON TOPOGRAPHIC POINT SYMBOLS

POINT	CODE	DESCRIPTION
	APL	BOUND APPARENT LOCATION
	BM	BENCHMARK
	BND	BOUND
	CB	CATCH BASIN
	COMB	COMBINATION POLE
	DITHR	DROP INLET THROATED DNC
	EL	ELECTRIC POWER POLE
	FPOLE	FLAGPOLE
	GASFIL	GAS FILLER
	GP	GUIDE POST
	GSO	GAS SHUT OFF
	GUY	GUY POLE
	GUYW	GUY WIRE
	GV	GATE VALUE
	H	TREE HARDWOOD
	HCTRL	CONTROL HORIZONTAL
	HVCTRL	CONTROL HORIZ. & VERTICAL
	HYD	HYDRANT
	IP	IRON PIN
	IPIPE	IRON PIPE
	LI	LIGHT - STREET OR YARD
	MB	MAILBOX
	MH	MANHOLE (MH)
	MM	MILE MARKER
	PM	PARKING METER
	PMK	PROJECT MARKER
	POST	POST STONE/WOOD
	RRSIG	RAILROAD SIGNAL
	RRSL	RAILROAD SWITCH LEVER
	S	TREE SOFTWOOD
	SAT	SATELLITE DISH
	SHRUB	SHRUB
	SIGN	SIGN
	STUMP	STUMP
	TEL	TELEPHONE POLE
	TIE	TIE
	TSIGN	SIGN W/DOUBLE POST
	VCTRL	CONTROL VERTICAL
	WELL	WELL
	WSO	WATER SHUT OFF

THESE ARE COMMON VAOT SURVEY POINT SYMBOLS FOR EXISTING FEATURES, ALSO USED FOR PROPOSED FEATURES WITH HEAVIER LINEWEIGHT, IN COMBINATION WITH PROPOSED ANNOTATION.

PROPOSED GEOMETRY CODES

CODE	DESCRIPTION
PC	POINT OF CURVATURE
PI	POINT OF INTERSECTION
CC	CENTER OF CURVE
PT	POINT OF TANGENCY
PCC	POINT OF COMPOUND CURVE
PRC	POINT OF REVERSE CURVE
POB	POINT OF BEGINNING
POE	POINT OF ENDING
STA	STATION PREFIX
AH	AHEAD STATION SUFFIX
BK	BACK STATION SUFFIX
D	CURVE DEGREE OF (100FT)
R	CURVE RADIUS OF
T	CURVE TANGENT LENGTH
L	CURVE LENGTH OF
E	CURVE EXTERNAL DISTANCE

UTILITY SYMBOLOGY

UNDERGROUND UTILITIES

- UTILITY (GENERIC-UNKNOWN)
- UT — TELEPHONE
- UE — ELECTRIC
- UC — CABLE (TV)
- UEC — ELECTRIC+CABLE
- UET — ELECTRIC+TELEPHONE
- UCT — CABLE+TELEPHONE
- UECT — ELECTRIC+CABLE+TELEP.
- G — GAS LINE
- W — WATER LINE
- S — SANITARY SEWER (SEPTIC)

ABOVE GROUND UTILITIES (AERIAL)

- UTILITY (GENERIC-UNKNOWN)
- T — TELEPHONE
- E — ELECTRIC
- C — CABLE (TV)
- EC — ELECTRIC+CABLE
- ET — ELECTRIC+TELEPHONE
- AER E&T — ELECTRIC+TELEPHONE
- CT — CABLE+TELEPHONE
- ECT — ELECTRIC+CABLE+TELEP.
- UTILITY POLE GUY WIRE

PROJECT CONSTRUCTION SYMBOLOGY

PROJECT DESIGN & LAYOUT SYMBOLOGY

- CZ — CLEAR ZONE
- PLAN LAYOUT MATCHLINE

PROJECT CONSTRUCTION FEATURES

- TOP OF CUT SLOPE
- TOE OF FILL SLOPE
- STONE FILL
- BOTTOM OF DITCH ℄
- CULVERT PROPOSED
- STRUCTURE SUBSURFACE
- PDF — PDF — PROJECT DEMARCATION FENCE
- BF — BF — BARRIER FENCE
- TREE PROTECTION ZONE (TPZ)
- STRIPING LINE REMOVAL
- SHEET PILES

CONVENTIONAL BOUNDARY SYMBOLOGY

BOUNDARY LINES

- TOWN LINE — TOWN BOUNDARY LINE
- COUNTY LINE — COUNTY BOUNDARY LINE
- STATE LINE — STATE BOUNDARY LINE
- PROPOSED STATE R.O.W. (LIMITED ACCESS)
- PROPOSED STATE R.O.W.
- STATE ROW (LIMITED ACCESS)
- STATE ROW
- TOWN ROW
- PERMANENT EASEMENT LINE (P)
- TEMPORARY EASEMENT LINE (T)
- SURVEY LINE
- P/L — PROPERTY LINE (P/L)
- SR SR SR — SLOPE RIGHTS
- 6F — 6F — 6F PROPERTY BOUNDARY
- 4F — 4F — 4F PROPERTY BOUNDARY
- HAZ — HAZ — HAZARDOUS WASTE

EPSC LAYOUT PLAN SYMBOLOGY

EPSC MEASURES

- FILTER CURTAIN
- SILT FENCE
- SILT FENCE WOVEN WIRE
- CHECK DAM
- DISTURBED AREAS REQUIRING RE-VEGETATION
- EROSION MATTING

ENVIRONMENTAL RESOURCES

- WETLAND BOUNDARY
- RIPARIAN BUFFER ZONE
- WETLAND BUFFER ZONE
- SOIL TYPE BOUNDARY
- T&E — THREATENED & ENDANGERED SPECIES
- HAZ — HAZ — HAZARDOUS WASTE AREA
- AG — AGRICULTURAL LAND
- HABITAT — FISH & WILDLIFE HABITAT
- FLOOD PLAIN — FLOOD PLAIN
- OHW — ORDINARY HIGH WATER (OHW)
- STORM WATER
- USDA FOREST SERVICE LANDS
- WILDLIFE HABITAT SUIT/CONN

ARCHEOLOGICAL & HISTORIC

- ARCH — ARCHEOLOGICAL BOUNDARY
- HISTORIC DIST — HISTORIC DISTRICT BOUNDARY
- HISTORIC — HISTORIC AREA
- (H) HISTORIC STRUCTURE

CONVENTIONAL TOPOGRAPHIC SYMBOLOGY

EXISTING FEATURES

- ROAD EDGE PAVEMENT
- ROAD EDGE GRAVEL
- DRIVEWAY EDGE
- DITCH
- FOUNDATION
- FENCE (EXISTING)
- FENCE WOOD POST
- FENCE STEEL POST
- GARDEN
- ROAD GUARDRAIL
- RAILROAD TRACKS
- CULVERT (EXISTING)
- STONE WALL
- WALL
- WOOD LINE
- BRUSH LINE
- HEDGE
- BODY OF WATER EDGE
- LEDGE EXPOSED

CLD 12-0106 MODEL: LEGEND

CONSULTING ENGINEERS

PROJECT NAME:	LUNENBURG
PROJECT NUMBER:	NH CULV(27)
FILE NAME: llb294/cos/zllb294frm.dgn	PLOT DATE: 8/6/2015
PROJECT LEADER: J. BYATT	DRAWN BY: M. HALEY
DESIGNED BY: M. HALEY	CHECKED BY: P. SHEDD
CONVENTIONAL SYMBOLOGY LEGEND SHEET	SHEET 14 OF 74

GPS/NGS CONTROL POINTS

SAINT JOHNSBURY CORS ARP

PID DK4107
N = 692116.24
E = 1764393.17
ELLIP HEIGHT = 546.36

STATION IS A GPS CONTINOUSLY OPERATING REFERENCE STATION. STATION IS THE ANTENNA REFERENCE POINT OF THE GPS ANTENNA. THE MONUMENT IS ATTACHED TO A TWO STORY CONCRETE BLOCK BUILDING WITH A 6 FT CONCRETE FOUNDATION BUILT IN 1972. MAST IS A 1.75 INCH DIA GALV PIPE THAT IS 108 INCHES LONG. THE MAST IS ATTACHED TO A STEEL MOUNTING FRAME WITH THREE ATTACHMENTS CONSISTING OF 3/8 INCH SS THROUGH BOLTS. THE MOUNTING FRAME IS ATTACHED TO THE BUILDING USING 8 THROUGH BOLTED ATTACHMENT POINTS THAT CONSIST OF 1/2 INCH SS THREADED RODS AND NUTS.

TRAVERSE TIES

HVCTRL #1

5/8"REBAR SET FLUSH W/ VSE CONTROL CAP

NORTH = 724441.07
EAST = 1868509.64
ELEV. = 857.31

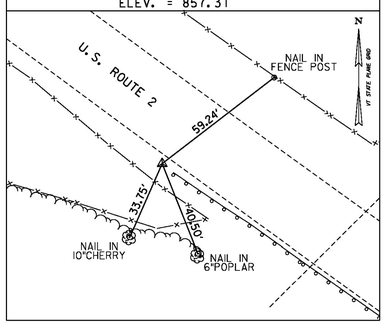

HVCTRL #2

5/8"REBAR SET FLUSH W/ VSE CONTROL CAP

NORTH = 724820.56
EAST = 1867977.59
ELEV. = 855.96

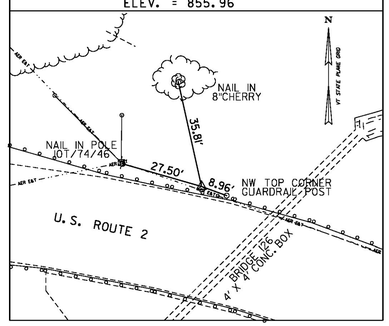

HVCTRL #3

5/8"REBAR SET FLUSH W/ VSE CONTROL CAP

NORTH = 724806.84
EAST = 1867612.18
ELEV. = 860.92

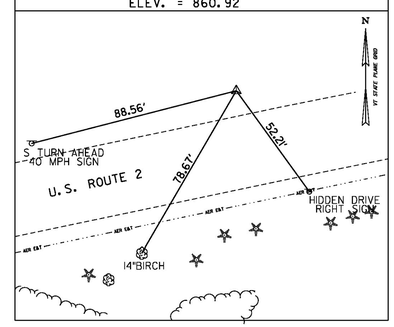

* SURVEY COMPLETED: FEBRUARY 27, 2012 BY VSE, M. YEFCHAK-PC, T. YEFCHAK

ALIGNMENT TIES

DATUM
VERTICAL NAVD 88(GEOID09) FT
HORIZONTAL NAD 83(CORS) sFT
ADJUSTMENT LSQ

VERMONT SURVEY AND ENGINEERING

PROJECT NAME: LUNENBURG
PROJECT NUMBER: NH CULV(27)

FILE NAME: z11b294tie.dgn
PROJECT LEADER: J. BYATT
DESIGNED BY: VSE
TIE SHEET 1

PLOT DATE: 8/6/2015
DRAWN BY: VSE
CHECKED BY: VSE
SHEET 15 OF 74

ALIGNMENT TIES

POT 419+36.33
NORTH = 724657.22
EAST = 1867003.45

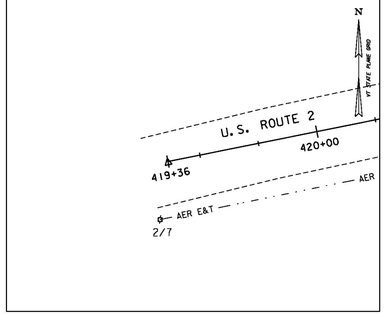

PC 426+81.30
NORTH = 724803.83
EAST = 1867733.85

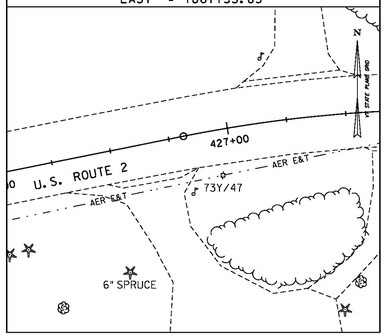

PT 431+61.26
NORTH = 724702.03
EAST = 1868188.67

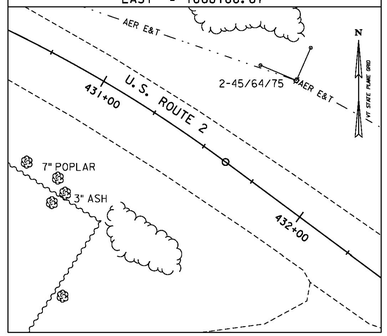

POT 436+81.23
NORTH = 724392.13
EAST = 1868606.21

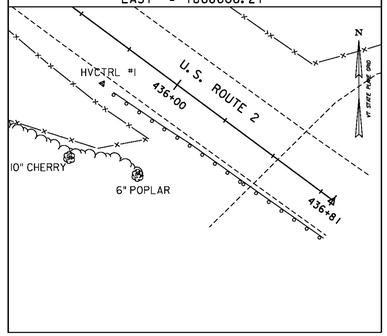

ALIGNMENT TIES

POT 100+00.00
NORTH = 724768.15
EAST = 1867556.09

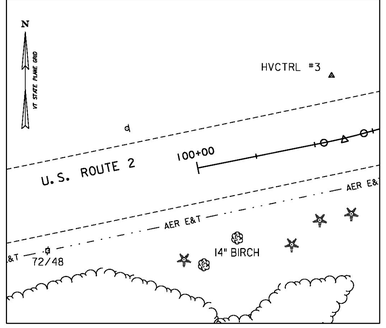

PC 100+53.95
NORTH = 724778.77
EAST = 1867608.98

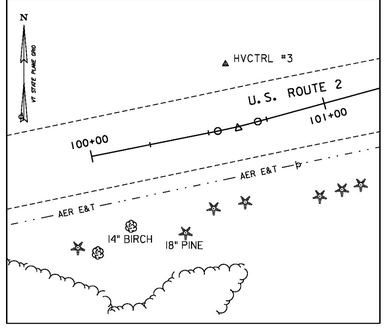

PT 100+71.17
NORTH = 724782.74
EAST = 1867625.74

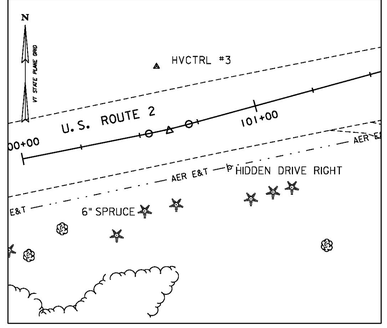

PC 103+10.73
NORTH = 724845.94
EAST = 1867856.81

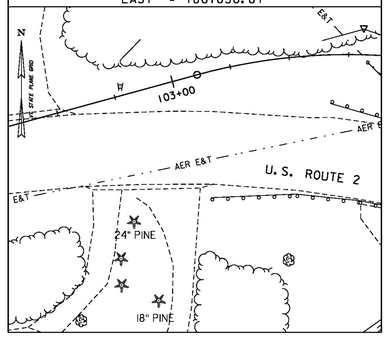

PT 104+51.52
NORTH = 724842.28
EAST = 1867995.55

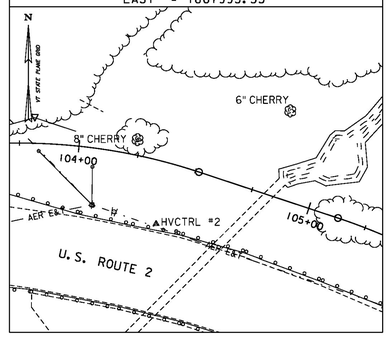

ALIGNMENT TIES

PC 105+12.91
NORTH = 724822.99
EAST = 1868053.83

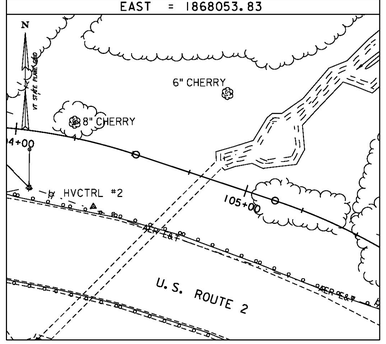

PT 106+29.80
NORTH = 724761.21
EAST = 1868151.69

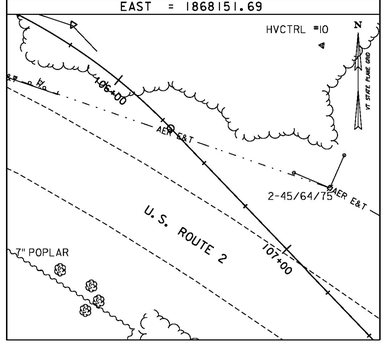

PC 107+60.93
NORTH = 724666.53
EAST = 1868242.42

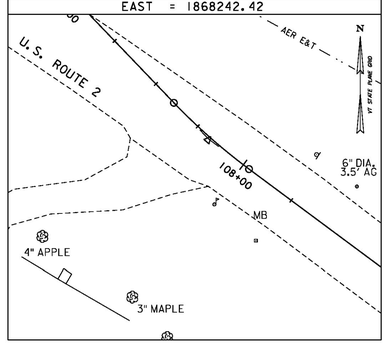

PT 108+02.97
NORTH = 724638.76
EAST = 1868273.92

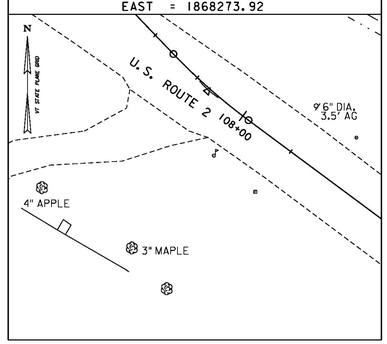

POT 109+35.56
NORTH = 724559.74
EAST = 1868380.38

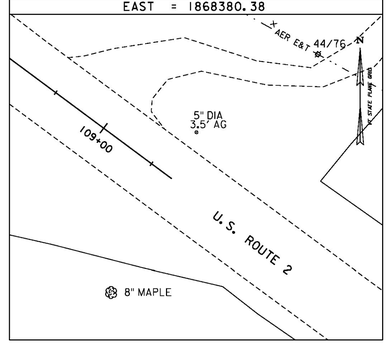

DATUM
VERTICAL NAVD 88(GEOID09) FT
HORIZONTAL NAD 83(CORS) sFT
ADJUSTMENT LSQ

CLD 12-0106 MODEL: TIE02

PROJECT NAME: LUNENBURG
PROJECT NUMBER: NH CULV(27)

FILE NAME: llb294/cos/zllb294tie.dgn
PROJECT LEADER: J. BYATT
DESIGNED BY: M. HALEY
TIE SHEET 2

PLOT DATE: 8/6/2015
DRAWN BY: S. GOODWIN
CHECKED BY: P. SHEDD
SHEET 16 OF 74

TEMPORARY 4 INCH WHITE LINE, PAINT
DURABLE 4 INCH WHITE LINE, POLYUREA
424+25 TO 429+75 SOLID LT & RT

TEMPORARY 4 INCH YELLOW LINE, PAINT
DURABLE 4 INCH YELLOW LINE, POLYUREA
424+25 TO 429+75 LT & RT

CONSTRUCT DRIVES WITH 4 FOOT PAVED APRON
426+65 RT (18.0 FT WIDE, GRAVEL, RES.)
427+35 LT (18.4 FT WIDE, GRAVEL, RES.)

RIGHT-OF-WAY PLAN REFERENCE
"STATE OF VERMONT STATE HIGHWAY DEPARTMENT - PLAN AND PROFILE OF PROPOSED STATE HIGHWAY FEDERAL AID PROJECT - TOWNS OF LUNENBURG - GUILDHALL, ST. JOHNSBURY VT. - LANCASTER N.H. ROAD, VT F 131-C", DATED 1932, ON FILE AT THE VERMONT AGENCY OF TRANSPORTATION.

STEEL BEAM GUARDRAIL, GALVANIZED
427+87.5 TO 429+75 RT
428+50.0 TO 429+75 LT

MANUFACTURED
TERMINAL SECTION, FLARED
427+50.0 TO 427+87.5 RT
428+12.5 TO 428+50.0 LT

RELOCATE MAILBOX, SINGLE SUPPORT
426+82 RT
427+18 LT

REMOVAL AND DISPOSAL OF GUARDRAIL
428+11 TO 429+75 RT
428+58 TO 429+75 LT

DELINEATOR WITH STEEL POST
425+40.0 LT (2)
426+80.0 LT (2)
427+51.0 LT (2)
427+50.0 RT
428+12.5 LT

8 INCH UNDERDRAIN PIPE
425+60 ~~425+00~~ TO 428+50 RT

UNDERDRAIN FLUSHING BASIN
425+60 ~~425+00~~ RT

MILLED RUMBLE STRIPS
424+25 TO 429+75 CL

REMOVING SIGNS
ERECTING SALVAGED SIGNS
AS SHOWN - 7

SQUARE TUBE SIGN POST AND ANCHOR
AS SHOWN - 1 (SEE SIGN DETAIL SHEET)

TRAFFIC SIGNS, TYPE A
AS SHOWN - 1 (SEE SIGN DETAIL SHEET)

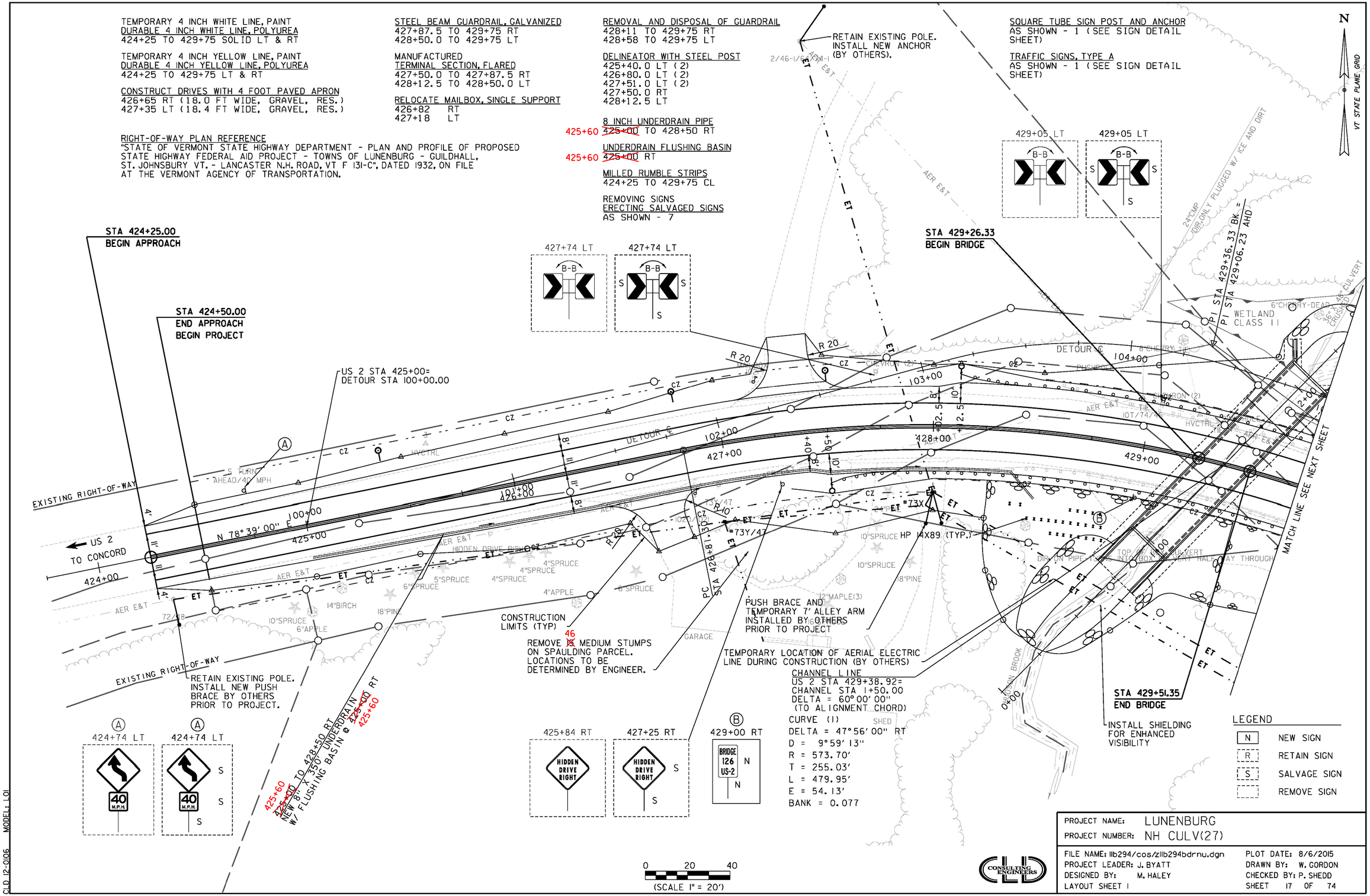

LEGEND

N	NEW SIGN
R	RETAIN SIGN
S	SALVAGE SIGN
	REMOVE SIGN

PROJECT NAME: LUNENBURG
PROJECT NUMBER: NH CULV(27)

FILE NAME: llb294/cos/zllb294bdrnu.dgn
PROJECT LEADER: J. BYATT
DESIGNED BY: M. HALEY
LAYOUT SHEET 1

PLOT DATE: 8/6/2015
DRAWN BY: W. GORDON
CHECKED BY: P. SHEDD
SHEET 17 OF 74

CLD 12-0106 MODEL: L01

TEMP. RELOCATION OF STREAM 36" CPEP PIPE ABANDONED AND FILLED WITH FLOWABLE FILL. TOP OF THE PIPE IS APPROX. 15' - 20' BELOW CENTERLINE F.G.

SQUARE TUBE SIGN POST AND ANCHOR AS SHOWN - 1 (SEE SIGN DETAIL SHEET)

TRAFFIC SIGNS, TYPE A AS SHOWN - 1 (SEE SIGN DETAIL SHEET)

430+45 LT B-B

430+45 LT B-B S S S

431+73 TO 432+21 LT NEW 15" X 42" RCP CLASS III OR CPEP(SL) INV IN = 856.71 INV OUT = 856.29

432+87 LT 40 M.P.H.

432+87 LT 40 M.P.H. S S S

429+75 LT BRIDGE 126 US-2 N N

10 HVCTR

WETLAND CLASS II

HUDSON BROOK

3+00

CONSTRUCTION LIMITS (TYP)

RETAIN EXIST POLE. INSTALL NEW ANCHOR (BY OTHERS).

AER E&T

EL METER 44/76 W/ 10DROP

45/64/75

DETOUR

EXISTING RIGHT-OF-WAY

SAW CUT & REMOVE CONCRETE

105+00

106+00

107+00

108+00

430+00

431+00

432+00

433+00

434+00

435+00

R 10

5R

SHARP LEFT TURN AHEAD 10 MPH

6 DIA. 3.5' AG

5 DIA. 3.5' AG

S 53°25'01" E

US 2 TO JCT OF VT ROUTE 102 / LANCASTER, NH

HVCTR

MATCH LINE SEE PREVIOUS SHEET

ET

CZ

8'

11'

4'

10'

+87.16

+97.16

+60

+50

L

R5

R

002 0514 0820

PT STA 431+61.26

1"POPLAR

3"ASH

1"POPLAR

APPLE CLUSTER

GARDEN

4"APPLE(4)

4"APPLE

3"MAPLE

ISWF

4"APPLE(2)

8"MAPLE(7)

ELECTRIC

10"CHERRP

6"CHERRY

#74

TEMPORARY LOCATION OF AERIAL ELECTRIC LINE DURING CONSTRUCTION (BY OTHERS)

TEMPORARY 7' ALLEY ARM INSTALLED BY OTHERS PRIOR TO PROJECT

TEMPORARY LOCATION OF AERIAL ELECTRIC LINE DURING CONSTRUCTION (BY OTHERS)

US 2 STA 432+64.44= DETOUR STA 108+00.00

433+90 TO 434+00 RT NEW 8" X 400' UNDERDRAIN W/ FLUSHING BASIN @ 433+90

432+87 RT 0020 0514 0820

432+87 RT 0020 0514 0820 S S

STA 434+50.00 END PROJECT BEGIN APPROACH

STA 434+75.00 END APPROACH

LEGEND

N	NEW SIGN
R	RETAIN SIGN
S	SALVAGE SIGN
	REMOVE SIGN

TEMPORARY 4 INCH WHITE LINE, PAINT
DURABLE 4 INCH WHITE LINE, POLYUREA
429+75 TO 434+75 SOLID LT & RT

TEMPORARY 4 INCH YELLOW LINE, PAINT
DURABLE 4 INCH YELLOW LINE, POLYUREA
429+75 TO 434+75 LT & RT

CONSTRUCT DRIVES WITH 4 FOOT PAVED APRON
432+36 RT (24.0 FT WIDE, GRAVEL, RES.)
432+00 LT (18.0 FT WIDE, GRAVEL, FIELD)
433+59 LT (24.0 FT WIDE, GRAVEL, RES.)

STEEL BEAM GUARDRAIL, GALVANIZED
429+75 TO 430+12.5 RT
429+75 TO 430+50.0 LT

MANUFACTURED TERMINAL SECTION, FLARED
430+12.5 TO 430+50.0 RT
430+50.0 TO 430+87.5 LT

~~REMOVING AND RESETTING FENCE~~
~~433+95 TO 434+50 RT~~

REMOVAL AND DISPOSAL OF GUARDRAIL
429+75 TO 430+17 RT
429+75 TO 430+52 LT

DELINEATOR WITH STEEL POST
430+50.0 RT
430+87.5 LT
431+61.0 LT (2)
433+01.0 LT (2)

8 INCH UNDERDRAIN PIPE
430+00 TO ~~434+00~~ 433+90 RT

UNDERDRAIN FLUSHING BASIN
433+90 ~~434+00~~ RT

MILLED RUMBLE STRIPS
429+75 TO 434+75 CL

REMOVING SIGNS
ERECTING SALVAGED SIGNS
AS SHOWN - 5

0 20 40
(SCALE 1" = 20')

CONSULTING ENGINEERS

PROJECT NAME: LUNENBURG
PROJECT NUMBER: NH CULV(27)

FILE NAME: llb294/cos/zllb294bdrnu.dgn
PROJECT LEADER: J. BYATT
DESIGNED BY: M. HALEY
LAYOUT SHEET 2

PLOT DATE: 8/24/2015
DRAWN BY: W. GORDON
CHECKED BY: P. SHEDD
SHEET 18 OF 74

CLD 12-0106 MODEL: L02

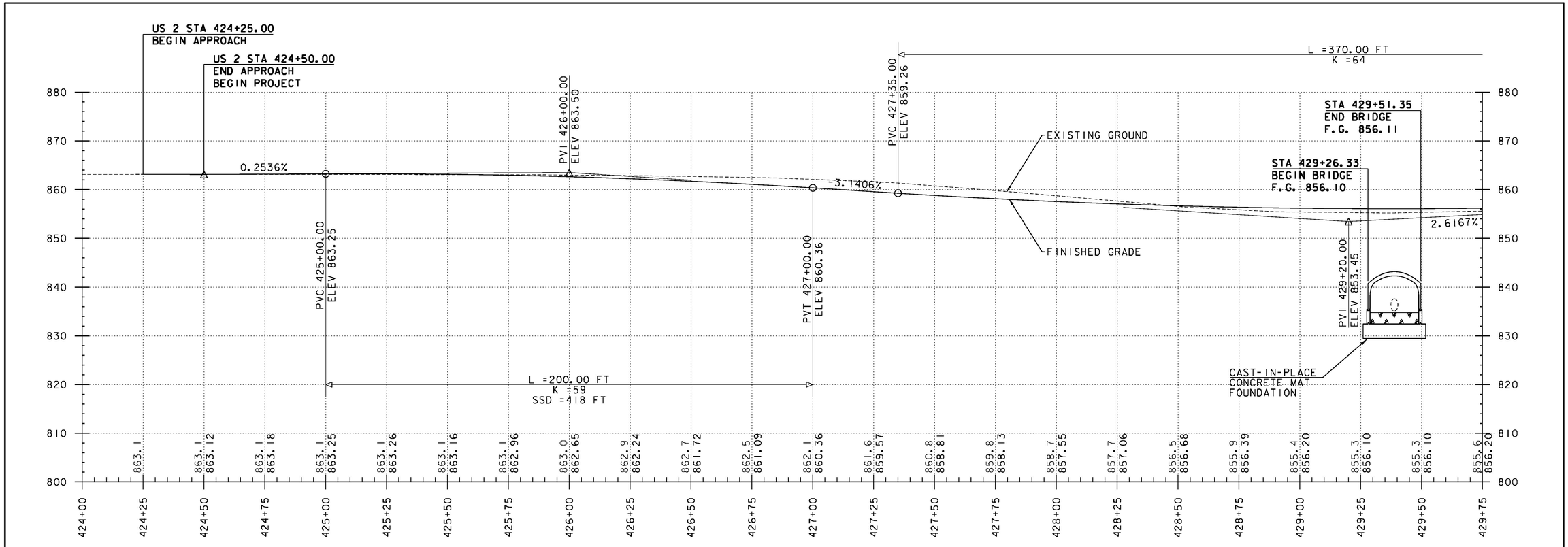

US 2 PROFILE

HOR. SCALE 1" = 20'-0"
VER. SCALE 1" = 10'-0"

STATIONS AND ELEVATIONS ARE IN FEET.

THE ELEVATIONS SHOWN TO THE NEAREST TENTH ARE THE OLD GROUND ALONG THE CENTERLINE.

THE ELEVATIONS SHOWN TO THE NEAREST HUNDREDTH ARE THE PROPOSED FINISHED GRADE ALONG THE CENTERLINE.

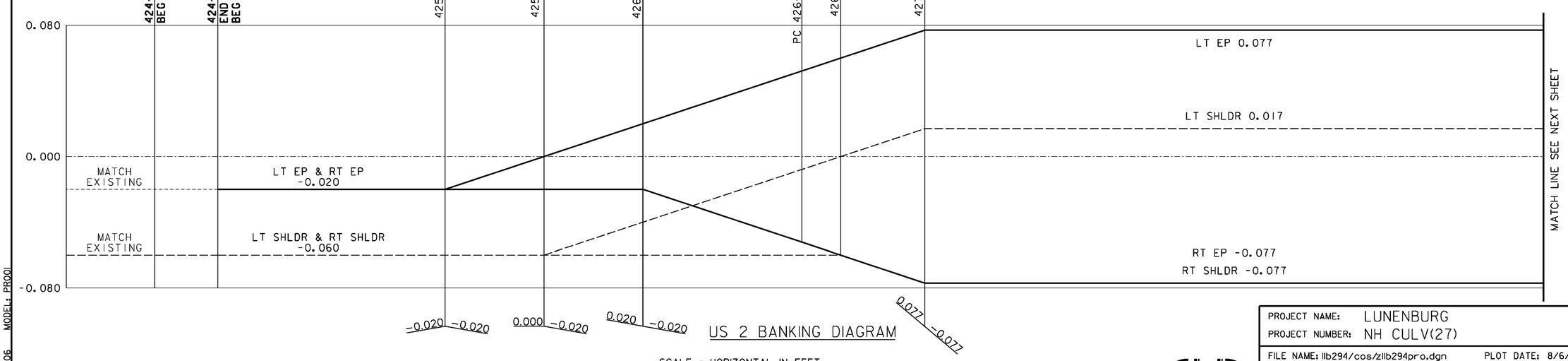

US 2 BANKING DIAGRAM

SCALE = HORIZONTAL IN FEET
= VERTICAL SUPERELEVATION IN PERCENTAGE

CONSULTING ENGINEERS

PROJECT NAME: LUNENBURG	
PROJECT NUMBER: NH CULV(27)	
FILE NAME: llb294/cos/zllb294pro.dgn	PLOT DATE: 8/6/2015
PROJECT LEADER: J. BYATT	DRAWN BY: W. GORDON
DESIGNED BY: M. HALEY	CHECKED BY: P. SHEDD
US 2 PROFILE AND BANKING DIAGRAM 1	SHEET 19 OF 74

CLD 12-0106 MODEL: PROFI

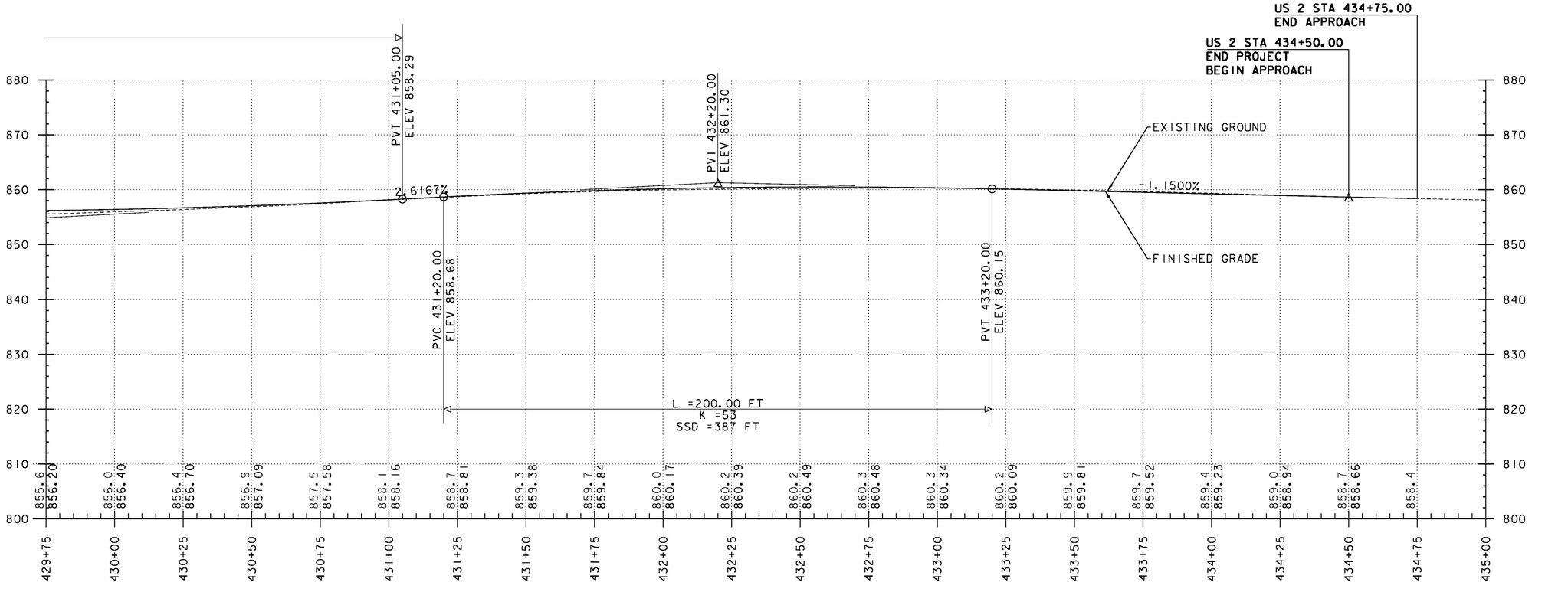

STATIONS AND ELEVATIONS ARE IN FEET.

THE ELEVATIONS SHOWN TO THE NEAREST TENTH ARE THE OLD GROUND ALONG THE CENTERLINE.

THE ELEVATIONS SHOWN TO THE NEAREST HUNDREDTH ARE THE PROPOSED FINISHED GRADE ALONG THE CENTERLINE.

US 2 PROFILE

HOR. SCALE 1" = 20'-0"
VER. SCALE 1" = 10'-0"

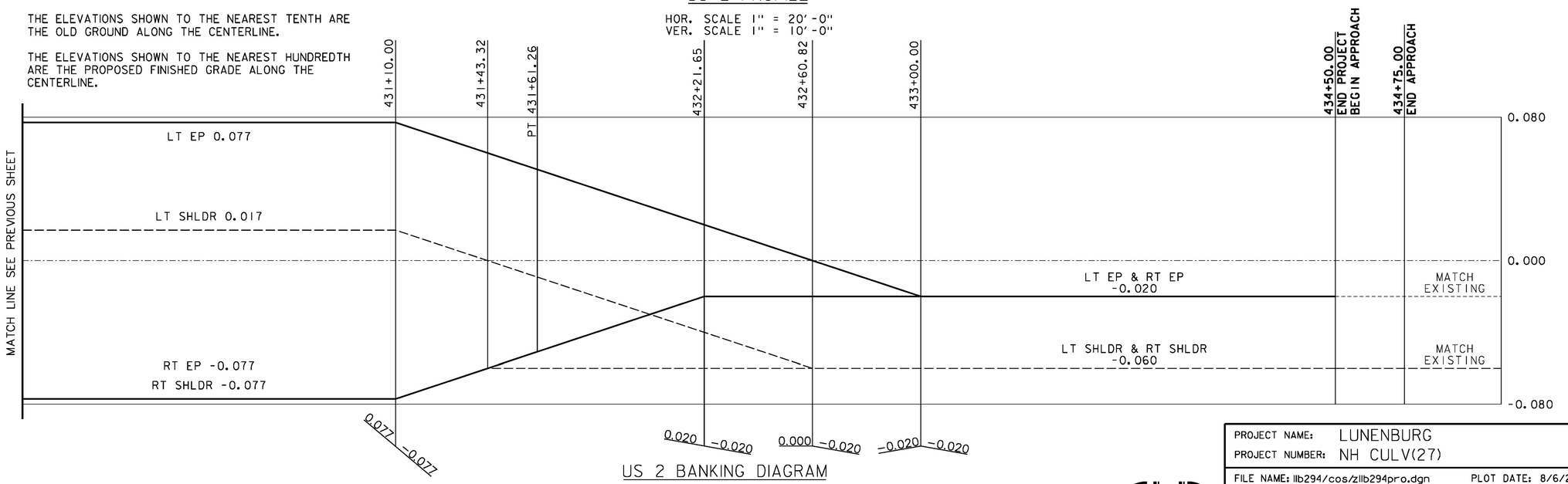

US 2 BANKING DIAGRAM

SCALE = HORIZONTAL IN FEET
= VERTICAL SUPERELEVATION IN PERCENTAGE

CONSULTING ENGINEERS

PROJECT NAME: LUNENBURG	
PROJECT NUMBER: NH CULV(27)	
FILE NAME: llb294/cos/zllb294pro.dgn	PLOT DATE: 8/6/2015
PROJECT LEADER: J. BYATT	DRAWN BY: W. GORDON
DESIGNED BY: M. HALEY	CHECKED BY: P. SHEDD
US 2 PROFILE AND BANKING DIAGRAM 2	SHEET 20 OF 74

CLD 12-0106 MODEL: PR002

4" BITUMINOUS CONCRETE PAVEMENT (2-2" LIFTS) (TYPE III)
12" SUBBASE OF DENSE GRADED CRUSHED STONE

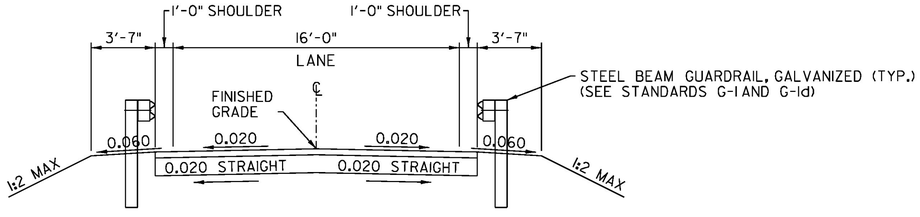

TYPICAL DETOUR ROADWAY SECTION WITH
ALTERNATING ONE-WAY TRAFFIC

SCALE: 1/4" = 1'-0"

TRAFFIC CONTROL NOTES

1. ANY USE OF UNIFORMED TRAFFIC OFFICERS SHALL BE PAID UNDER ITEM 630.10, "UNIFORMED TRAFFIC OFFICERS". ANY USE OF FLAGGERS SHALL BE PAID UNDER ITEM 630.15, "FLAGGERS".

2. TRAFFIC CONTROL SHALL CONSIST OF ONE-WAY ALTERNATING TRAFFIC UNDER SIGNALIZED CONTROL. ANY EXCAVATION, GRANULAR BACKFILL FOR STRUCTURES, SUBBASE MATERIALS, DRAINAGE CULVERTS, TEMPORARY BRIDGE, TEMPORARY TRAFFIC BARRIER, TRAFFIC CONTROL DEVICES, TEMPORARY SIGNALS, TEMPORARY PAVEMENT MARKINGS, REMOVAL OF EXISTING AND TEMPORARY PAVEMENT MARKINGS, BITUMINOUS CONCRETE PAVEMENT, AND OTHER ITEMS REQUIRED TO CONSTRUCT, INSPECT, MAINTAIN AND REMOVE THE TEMPORARY DETOUR WILL BE INCLUDED UNDER PAY ITEM 900.645, "SPECIAL PROVISION (TEMPORARY ROADWAY)". ALL OTHER ITEMS RELATED TO TRAFFIC CONTROL, INCLUDING THE PROJECT TRAFFIC CONTROL PLAN AND ALL OTHER ON AND OFF-PROJECT TEMPORARY CONSTRUCTION SIGNING, WILL BE INCLUDED UNDER PAY ITEM 641.10, "TRAFFIC CONTROL".

3. ANY VEGETATION WITHIN OR OUTSIDE THE CONSTRUCTION LIMITS SHOWN ON THE PLANS WHICH IS DISTURBED IN ORDER TO MAINTAIN TRAFFIC IN CONJUNCTION WITH THIS PLAN OR ANY OTHER PLAN, SHALL BE RE-ESTABLISHED TO THE SATISFACTION OF THE ENGINEER. PAYMENT WILL BE MADE UNDER THE APPROPRIATE PAY ITEM.

4. NO ACCOMMODATIONS NEED TO BE MADE FOR PEDESTRIAN AND BICYCLE TRAFFIC.

5. ACCESS TO ALL EXISTING DRIVES SHALL BE MAINTAINED AT ALL TIMES DURING CONSTRUCTION.

6. INSTALLATION OF NECESSARY SIGNS SHALL NOT BLOCK ANY EXISTING TRAFFIC CONTROL SIGN ASSEMBLIES. THE CONTRACTOR SHALL ATTEMPT TO MAINTAIN AT LEAST 100 FEET BETWEEN SIGN ASSEMBLIES.

7. THE CONTRACTOR SHALL CONTACT DIG SAFE AT 1-888-344-7233 PRIOR TO COMMENCING ANY WORK.

8. ALL TRAFFIC SIGNS, TYPE A THAT ARE 36" X 36" OR LARGER SHALL BE MOUNTED ON TWO POSTS.

9. ALL SIGN PACKAGES SHALL CONFORM TO THE 2009 MUTCD OR ITS LATEST REVISION.

10. NON CRASHWORTHY FEATURES RESULTING FROM CONSTRUCTION ACTIVITIES THAT ARE LOCATED WITHIN THE CLEAR ZONE SHALL BE PROPERLY PROTECTED. ALL TEMPORARY DEVICES SHALL BE NCHRP REPORT 350 OR MASH COMPLIANT AND SHALL BE FURNISHED IN ACCORDANCE WITH SECTION 621.

11. WHERE TEMPORARY BARRIER IS USED, BARRIER ENDS FACING ONCOMING TRAFFIC SHALL BE TAPERED BEYOND THE CLEAR ZONE OR PROTECTED WITH AN ENERGY ABSORPTION ATTENUATOR. ENERGY ABSORPTION ATTENUATORS WILL BE INCLUDED UNDER PAY ITEM 900.645, "SPECIAL PROVISION (TEMPORARY ROADWAY)".

12. REFER TO MUTCD FIGURE 6H-12, LANE CLOSURE ON A TWO-LANE ROAD USING TRAFFIC CONTROL SIGNALS (TA-12) AND THE TRAFFIC CONTROL PLAN ON SHEET 30 FOR ADDITIONAL INFORMATION REGARDING REQUIRED SIGNAGE AND SIGN LOCATIONS.

13. THE CONTRACTOR SHALL SUBMIT A SITE SPECIFIC TRAFFIC CONTROL PLAN FOR APPROVAL PRIOR TO THE START OF CONSTRUCTION. THE COST OF PREPARING THE PLAN (AND MAKING CHANGES IF NECESSARY) SHALL BE INCLUDED IN THE UNIT PRICE BID FOR ITEM 641.10, "TRAFFIC CONTROL".

14. PORTABLE CHANGEABLE MESSAGE SIGNS (PCMS) WARNING MOTORISTS OF THE CONSTRUCTION PROJECT AND CHANGING TRAFFIC PATTERNS WILL BE INCLUDED UNDER PAY ITEM 641.15, "PORTABLE CHANGEABLE MESSAGE SIGN". THE CONTRACTOR SHALL COORDINATE WITH THE ENGINEER TO DETERMINE APPROPRIATE LOCATIONS FOR PCMS.

SCALE 1/4" = 1'-0"
0 4 8

CLD CONSULTING ENGINEERS

PROJECT NAME: LUNENBURG	
PROJECT NUMBER: NH CULV(27)	
FILE NAME: llb294/cos/zllb294frm.dgn	PLOT DATE: 8/24/2015
PROJECT LEADER: J. BYATT	DRAWN BY: W. GORDON
DESIGNED BY: M. HALEY	CHECKED BY: P. SHEDD
TYPICAL DETOUR SECTION SHEET	SHEET 21 OF 74

CLD 12-0106 MODEL: TYP03

NOTE

REMOVAL OF EXISTING PAVEMENT MARKINGS AND APPLICATION OF TEMPORARY PAVEMENT MARKINGS, GUARDRAIL, ANCHORS, DELINEATORS AND DRIVE CONSTRUCTION AS NOTED ON THIS SHEET WILL BE INCLUDED UNDER PAY ITEM 900.645, "SPECIAL PROVISION (TEMPORARY ROADWAY)". NOTES ARE PROVIDED FOR INFORMATIONAL PURPOSES ONLY.

TEMPORARY 4 INCH WHITE LINE, PAINT
100+50 TO 104+96 SOLID LT & RT

TEMPORARY 4 INCH YELLOW LINE, PAINT
100+50 TO 101+95 SOLID LT & RT

TEMPORARY 24 INCH STOP BAR, PAINT
101+95 RT

STEEL BEAM GUARDRAIL, GALVANIZED
102+90.0 TO 104+40.0 LT
103+65.0 TO 104+40.0 RT

ANCHOR FOR STEEL BEAM RAIL
102+90.0 LT
103+65.0 RT

DELINEATOR WITH STEEL POST
102+90.0 LT
103+65.0 RT

CONSTRUCT DRIVES WITH 4 FOOT PAVED APRON
102+38 LT (18.4 FT WIDE, GRAVEL, RES.)

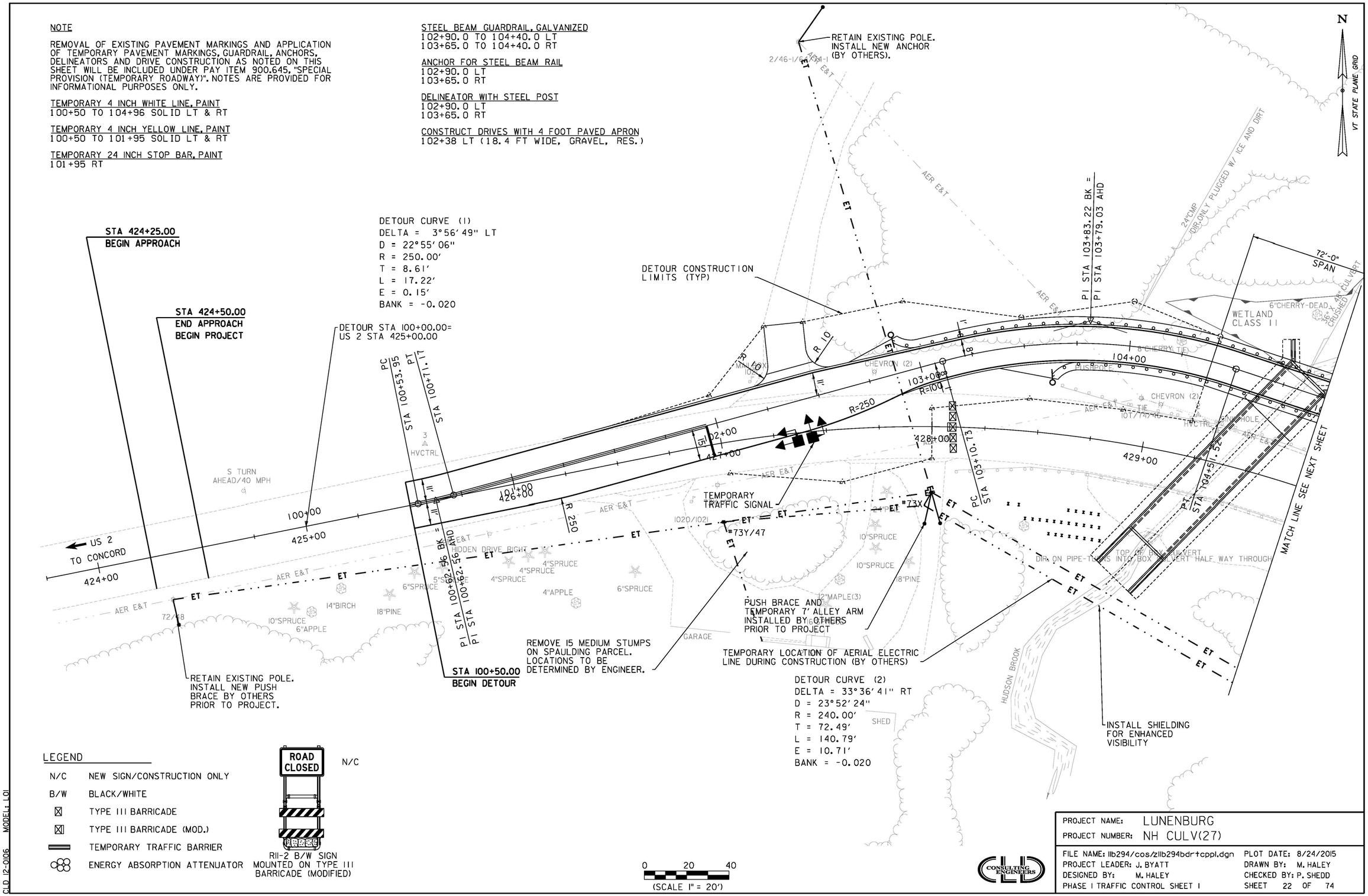

LEGEND

N/C	NEW SIGN/CONSTRUCTION ONLY
B/W	BLACK/WHITE
⊠	TYPE III BARRICADE
⊠	TYPE III BARRICADE (MOD.)
▬	TEMPORARY TRAFFIC BARRIER
⊂⊃	ENERGY ABSORPTION ATTENUATOR

N/C

R11-2 B/W SIGN MOUNTED ON TYPE III BARRICADE (MODIFIED)

0 20 40
(SCALE 1" = 20')

CLD 12-0106 MODEL: L01

PROJECT NAME: LUNENBURG	
PROJECT NUMBER: NH CULV(27)	
FILE NAME: llb294/cos/zllb294bdrtcppl.dgn	PLOT DATE: 8/24/2015
PROJECT LEADER: J. BYATT	DRAWN BY: M. HALEY
DESIGNED BY: M. HALEY	CHECKED BY: P. SHEDD
PHASE I TRAFFIC CONTROL SHEET I	SHEET 22 OF 74

CONSULTING ENGINEERS

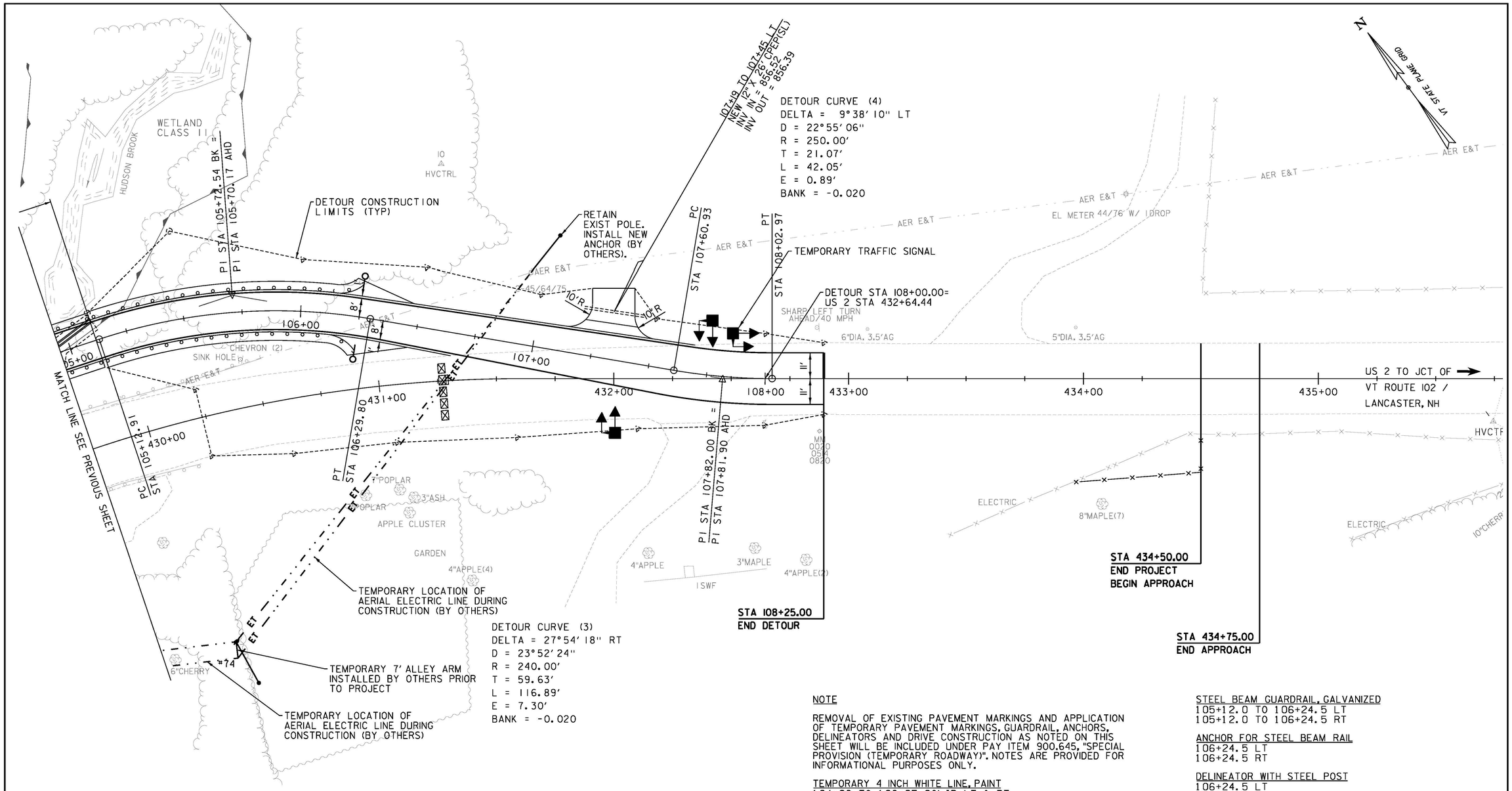

NOTE

REMOVAL OF EXISTING PAVEMENT MARKINGS AND APPLICATION OF TEMPORARY PAVEMENT MARKINGS, GUARDRAIL, ANCHORS, DELINEATORS AND DRIVE CONSTRUCTION AS NOTED ON THIS SHEET WILL BE INCLUDED UNDER PAY ITEM 900.645, "SPECIAL PROVISION (TEMPORARY ROADWAY)". NOTES ARE PROVIDED FOR INFORMATIONAL PURPOSES ONLY.

TEMPORARY 4 INCH WHITE LINE, PAINT
104+96 TO 108+25 SOLID LT & RT

TEMPORARY 24 INCH STOP BAR, PAINT
108+25 LT

STEEL BEAM GUARDRAIL, GALVANIZED
105+12.0 TO 106+24.5 LT
105+12.0 TO 106+24.5 RT

ANCHOR FOR STEEL BEAM RAIL
106+24.5 LT
106+24.5 RT

DELINEATOR WITH STEEL POST
106+24.5 LT
106+24.5 RT

CONSTRUCT DRIVES WITH 4 FOOT PAVED APRON
107+33.1 LT (18.0 FT WIDE, GRAVEL, FIELD)

LEGEND

N/C	NEW SIGN/CONSTRUCTION ONLY
B/W	BLACK/WHITE
☒	TYPE III BARRICADE
☒	TYPE III BARRICADE (MOD.)
═	TEMPORARY TRAFFIC BARRIER
⁂	ENERGY ABSORPTION ATTENUATOR



RII-2 B/W SIGN MOUNTED ON TYPE III BARRICADE (MODIFIED)

0 20 40
(SCALE 1" = 20')

CLD 12-0106 MODEL: L02

PROJECT NAME:	LUNENBURG
PROJECT NUMBER:	NH CULV(27)
FILE NAME:	IIb294/cos/zIIb294bdrtcppl.dgn
PROJECT LEADER:	J. BYATT
DESIGNED BY:	M. HALEY
PHASE I TRAFFIC CONTROL SHEET 2	
PLOT DATE:	8/24/2015
DRAWN BY:	M. HALEY
CHECKED BY:	P. SHEDD
SHEET	23 OF 74

NOTE

REMOVAL OF EXISTING PAVEMENT MARKINGS AND APPLICATION OF TEMPORARY PAVEMENT MARKINGS, GUARDRAIL, ANCHORS, DELINEATORS AND DRIVE CONSTRUCTION AS NOTED ON THIS SHEET WILL BE INCLUDED UNDER PAY ITEM 900.645, "SPECIAL PROVISION (TEMPORARY ROADWAY)". NOTES ARE PROVIDED FOR INFORMATIONAL PURPOSES ONLY.

TEMPORARY 4 INCH WHITE LINE, PAINT
425+50 TO 429+75 LT & RT

TEMPORARY 4 INCH YELLOW LINE, PAINT
425+50 TO 426+85 LT & RT

TEMPORARY 24 INCH STOP BAR, PAINT
426+85 RT

ENERGY ABSORPTION ATTENUATOR
427+75 RT
427+85 LT

TEMPORARY TRAFFIC BARRIER
427+75 TO 429+75 RT
427+85 TO 429+75 LT

CONSTRUCT DRIVES WITH 4 FOOT PAVED APRON
102+38 LT (18.4 FT WIDE, GRAVEL, RES.)

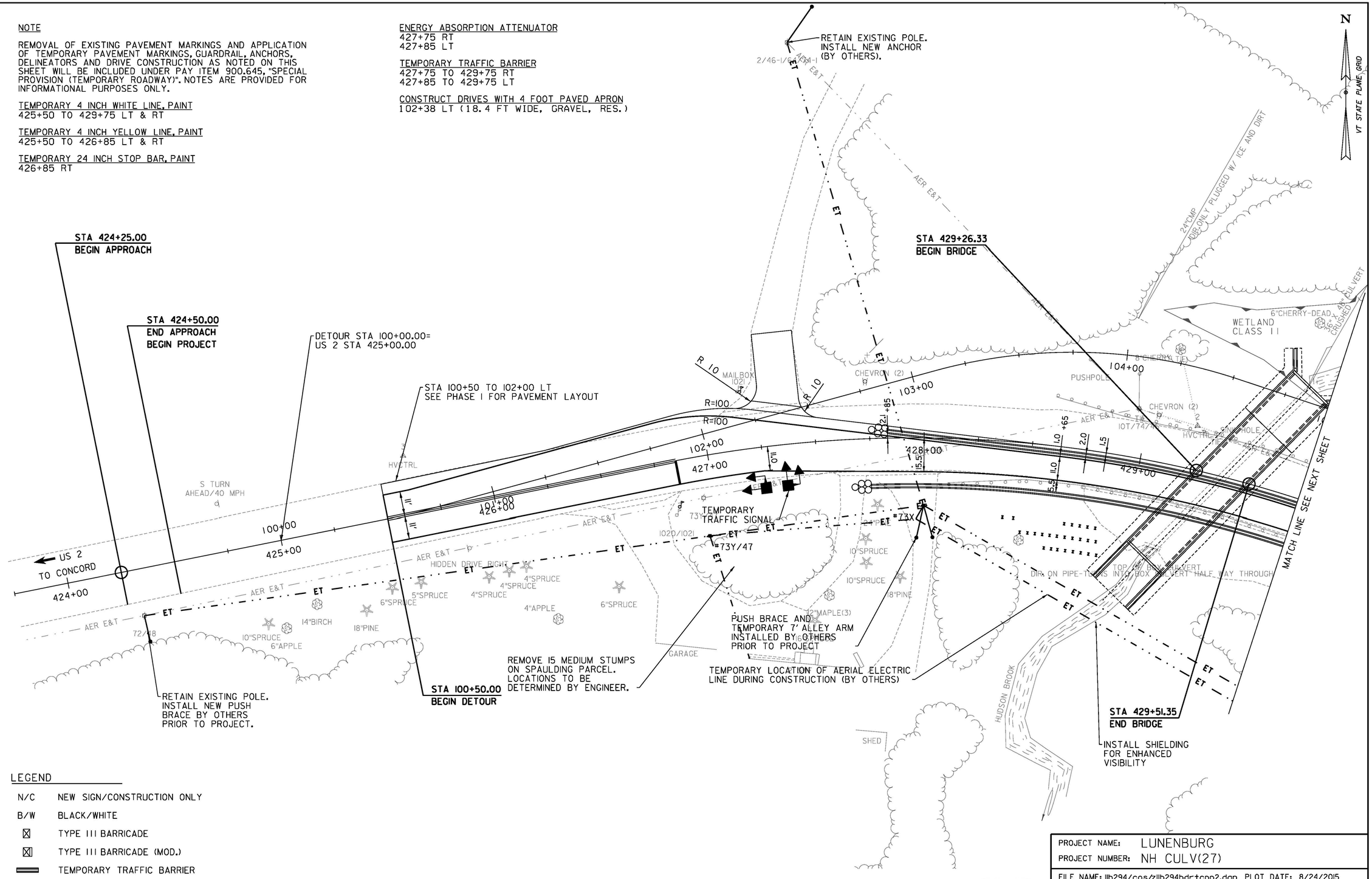

LEGEND

N/C	NEW SIGN/CONSTRUCTION ONLY
B/W	BLACK/WHITE
⊠	TYPE III BARRICADE
⊠	TYPE III BARRICADE (MOD.)
═	TEMPORARY TRAFFIC BARRIER
⊕	ENERGY ABSORPTION ATTENUATOR

0 20 40
(SCALE 1" = 20')

PROJECT NAME:	LUNENBURG
PROJECT NUMBER:	NH CULV(27)
FILE NAME:	llb294/cos/zllb294bdrtcpp2.dgn
PROJECT LEADER:	J. BYATT
DESIGNED BY:	M. HALEY
PHASE 2 TRAFFIC CONTROL SHEET 1	
PLOT DATE:	8/24/2015
DRAWN BY:	M. HALEY
CHECKED BY:	P. SHEDD
SHEET	24 OF 74

CONSULTECH ENGINEERS

QLD 12-0006 MODEL: L01

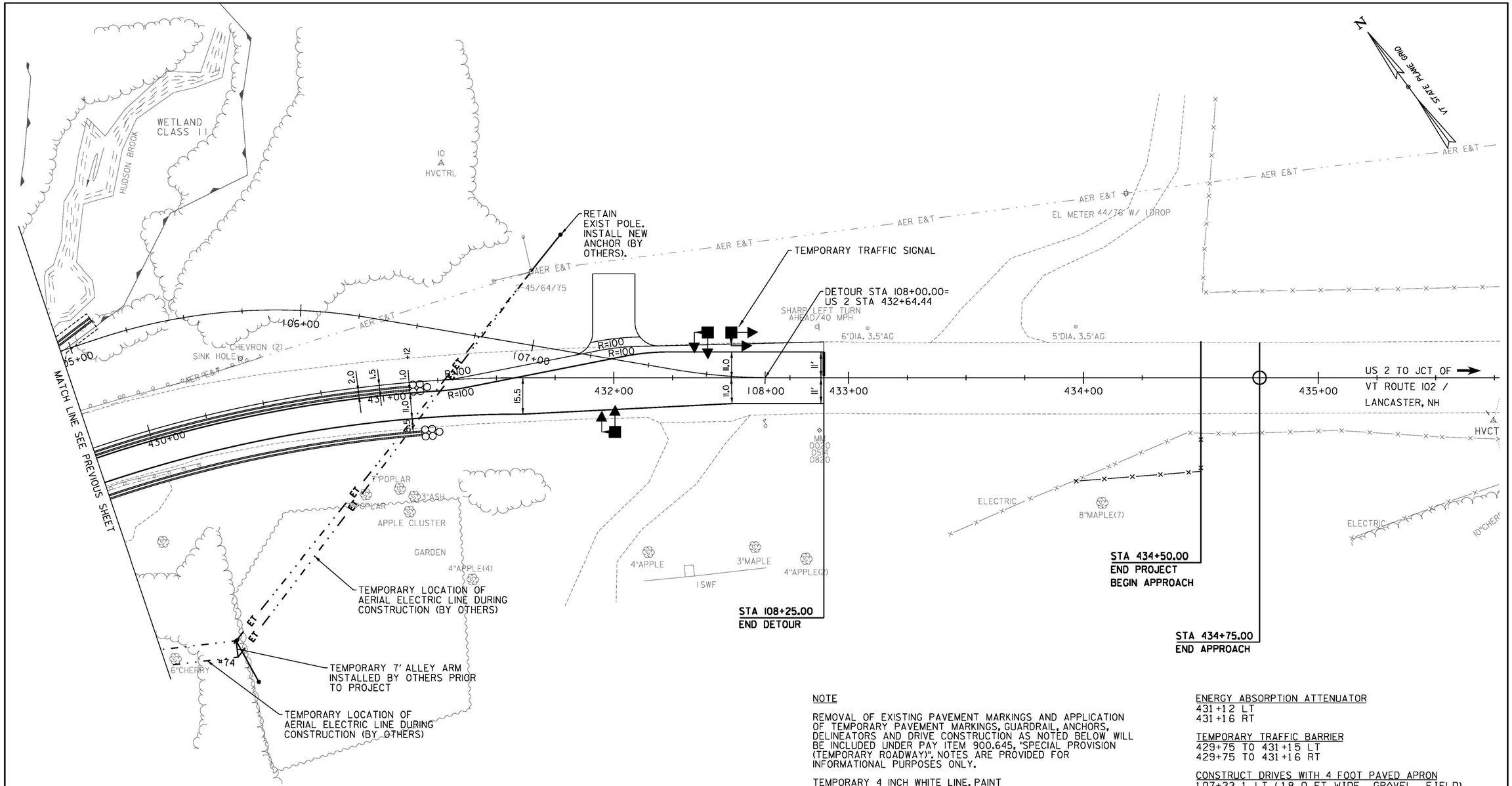

NOTE

REMOVAL OF EXISTING PAVEMENT MARKINGS AND APPLICATION OF TEMPORARY PAVEMENT MARKINGS, GUARDRAIL, ANCHORS, DELINEATORS AND DRIVE CONSTRUCTION AS NOTED BELOW WILL BE INCLUDED UNDER PAY ITEM 900.645, "SPECIAL PROVISION (TEMPORARY ROADWAY)". NOTES ARE PROVIDED FOR INFORMATIONAL PURPOSES ONLY.

TEMPORARY 4 INCH WHITE LINE, PAINT
429+75 TO 432+90 LT & RT

TEMPORARY 24 INCH STOP BAR, PAINT
432+90 LT

ENERGY ABSORPTION ATTENUATOR
431+12 LT
431+16 RT

TEMPORARY TRAFFIC BARRIER
429+75 TO 431+15 LT
429+75 TO 431+16 RT

CONSTRUCT DRIVES WITH 4 FOOT PAVED APRON
107+33.1 LT (18.0 FT WIDE, GRAVEL, FIELD)

LEGEND

N/C	NEW SIGN/CONSTRUCTION ONLY
B/W	BLACK/WHITE
☒	TYPE III BARRICADE
☒	TYPE III BARRICADE (MOD.)
═	TEMPORARY TRAFFIC BARRIER
⁂	ENERGY ABSORPTION ATTENUATOR

0 20 40
(SCALE 1" = 20')

CONSULTING ENGINEERS

PROJECT NAME: LUNENBURG
PROJECT NUMBER: NH CULV(27)

FILE NAME: llb294/cos/zllb294bdrtcpp2.dgn PLOT DATE: 8/24/2015
PROJECT LEADER: J. BYATT DRAWN BY: M. HALEY
DESIGNED BY: M. HALEY CHECKED BY: P. SHEDD
PHASE 2 TRAFFIC CONTROL SHEET 2 SHEET 25 OF 74

QLD 12-0106 MODEL: L02

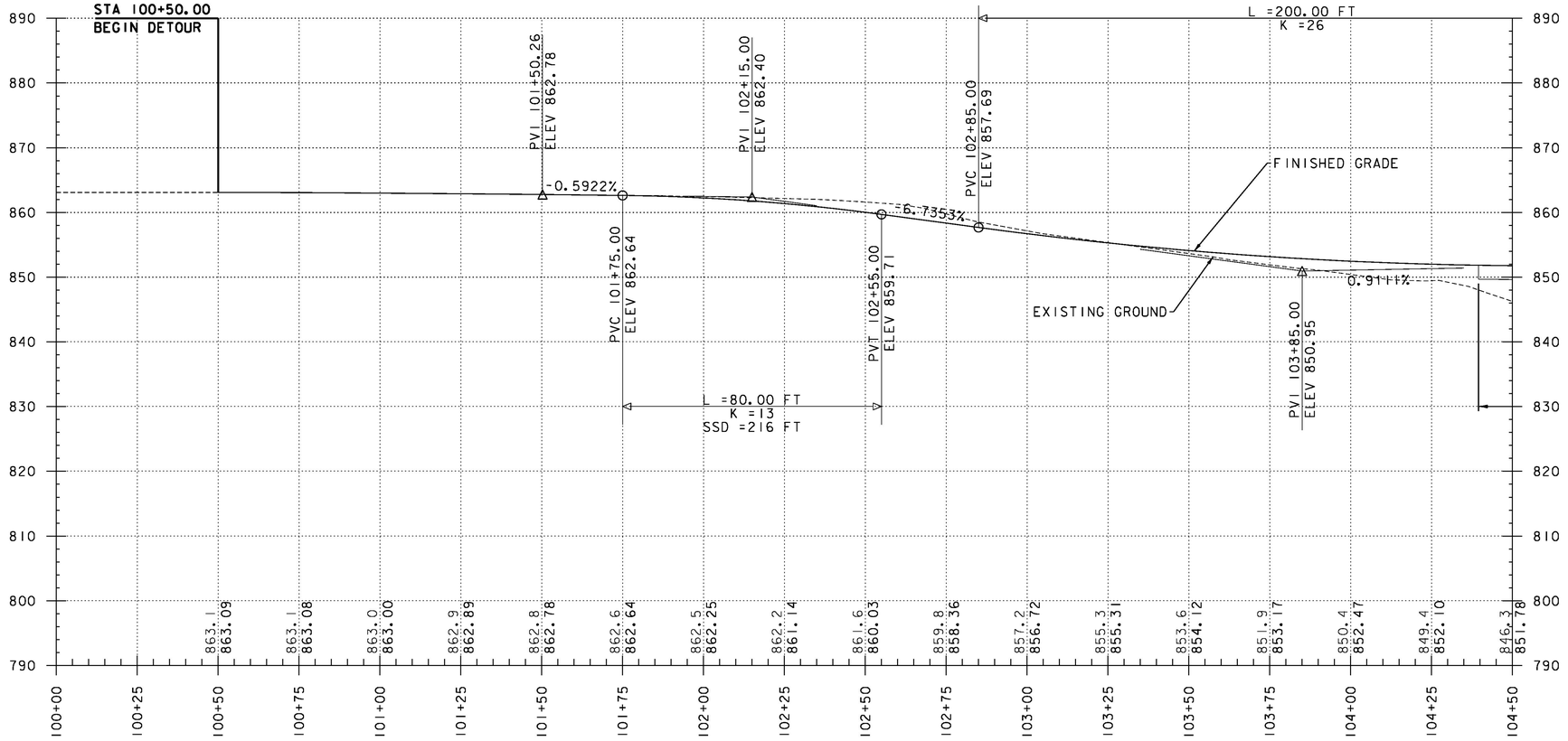

US 2 DETOUR PROFILE

HOR. SCALE 1" = 20'-0"
VER. SCALE 1" = 10'-0"

STATIONS AND ELEVATIONS ARE IN FEET.

THE ELEVATIONS SHOWN TO THE NEAREST TENTH ARE THE OLD GROUND ALONG THE CENTERLINE.

THE ELEVATIONS SHOWN TO THE NEAREST HUNDREDTH ARE THE PROPOSED FINISHED GRADE ALONG THE CENTERLINE.

CLD 12-0106 MODEL: PROOF

PROJECT NAME: LUNENBURG	
PROJECT NUMBER: NH CULV(27)	
FILE NAME: llb294/cos/zllb294prodtr.dgn	PLOT DATE: 8/6/2015
PROJECT LEADER: J. BYATT	DRAWN BY: M. HALEY
DESIGNED BY: M. HALEY	CHECKED BY: P. SHEDD
TEMPORARY DETOUR PROFILE SHEET 1	SHEET 26 OF 74

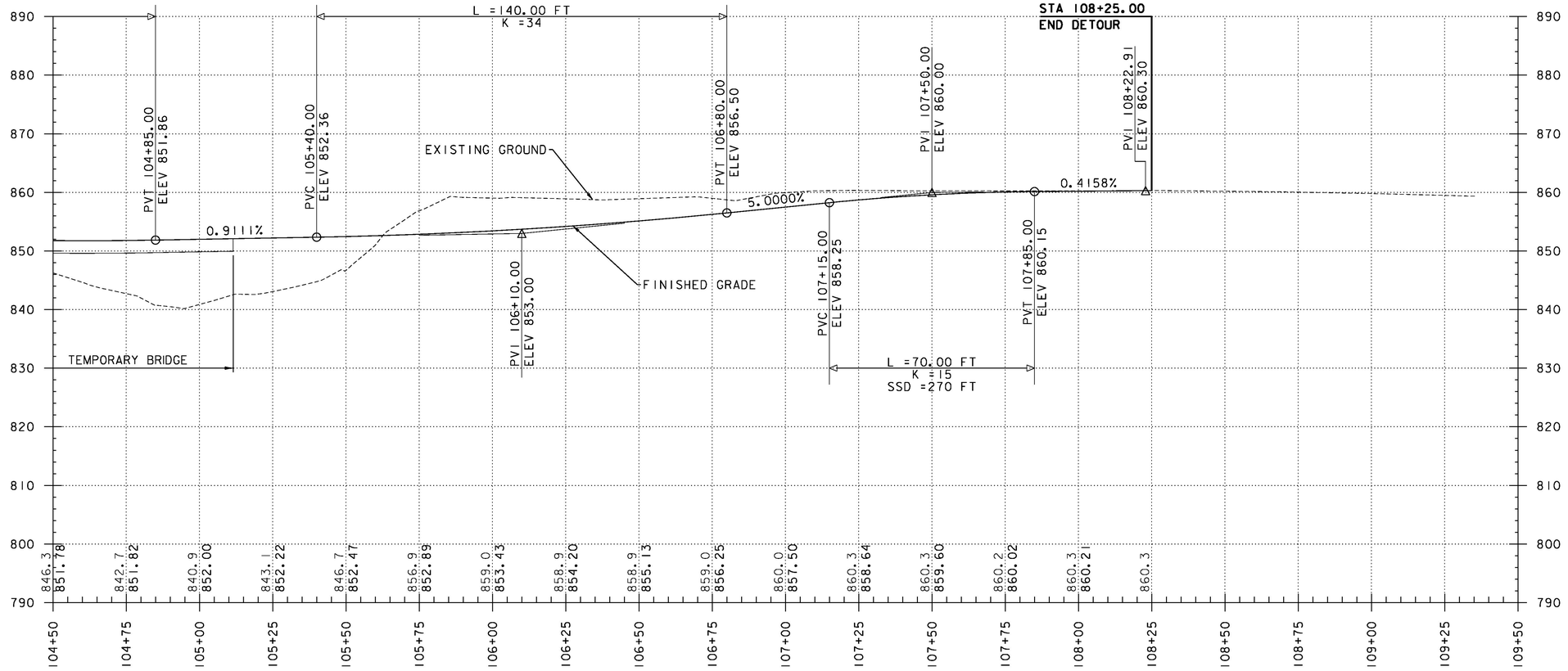

US 2 DETOUR PROFILE

HOR. SCALE 1" = 20'-0"
VER. SCALE 1" = 10'-0"

STATIONS AND ELEVATIONS ARE IN FEET.

THE ELEVATIONS SHOWN TO THE NEAREST TENTH ARE THE OLD GROUND ALONG THE CENTERLINE.

THE ELEVATIONS SHOWN TO THE NEAREST HUNDREDTH ARE THE PROPOSED FINISHED GRADE ALONG THE CENTERLINE.

PROJECT NAME:	LUNENBURG
PROJECT NUMBER:	NH CULV(27)
FILE NAME: llb294/cos/zllb294prodtr.dgn	PLOT DATE: 8/6/2015
PROJECT LEADER: J. BYATT	DRAWN BY: M. HALEY
DESIGNED BY: M. HALEY	CHECKED BY: P. SHEDD
TEMPORARY DETOUR PROFILE SHEET 2	SHEET 27 OF 74

CLD 12-0106 MODEL: PROD2

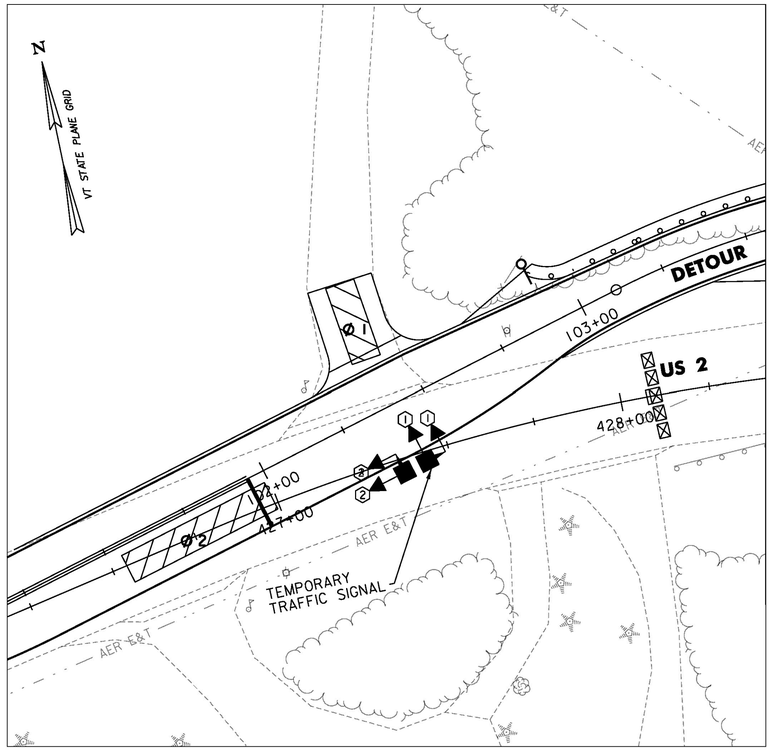

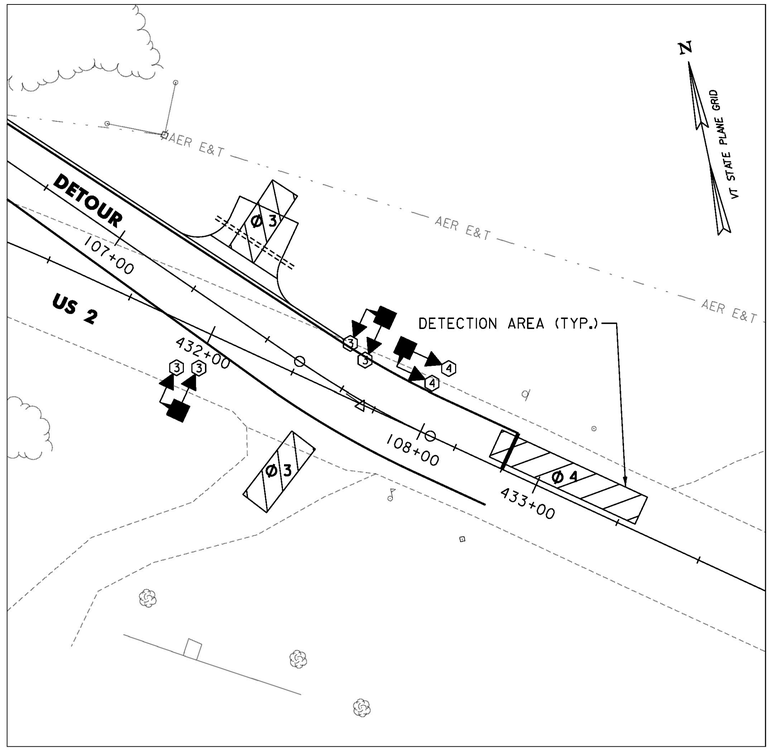

NEW	LEGEND
→▶⬡	SIGNAL HEAD (12 INCH, LED)
■	PORTABLE TRAFFIC SIGNAL TRAILER WITH TRAFFIC ACTUATORS, EMERGENCY VEHICLE PRE-EMPTION, AND RADIO COMMUNICATION.

PHASE SEQUENCE

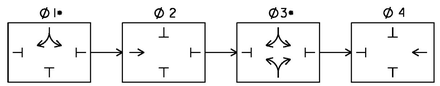

• IF CALLED

US 2

SIGNAL PHASING DATA				
SIGNAL PHASING (ALL ENTRIES BELOW ARE IN SECONDS)				
PHASE	Ø1	Ø2	Ø3	Ø4
INTIAL	5	10	5	10
VEHICLE EXT.	3	3	3	3
MAX. 1	10	30	10	30
MAX. 2	--	--	--	--
YELLOW	4	4	4	4
RED	2	30	2	30
RECALL	NONE	SOFT	NONE	NONE
DELAY	10	0	10	0

SIGNAL OPERATION NOTES

1. ALL MATERIALS AND CONSTRUCTION SHALL CONFORM TO THE STATE OF VERMONT AGENCY OF TRANSPORTATION'S (VTRANS) "STANDARD SPECIFICATIONS FOR CONSTRUCTION", DATED 2011, WITH CURRENT MODIFICATIONS.
2. TEMPORARY TRAFFIC SIGNAL SYSTEM SHALL COMPLY WITH THE REQUIREMENTS OF SECTION 678, "TRAFFIC CONTROL SIGNALS" AND WILL BE CONSIDERED INCIDENTAL TO ITEM 900.645, "SPECIAL PROVISION (TEMPORARY ROADWAY)".
3. THE SIGNAL SYSTEM SHALL CONSIST OF POLES, SIGNS, AND POSTS, WARNING SIGNS, LUMINAIRES, FLASHING BEACONS, ASSOCIATED PAVEMENT MARKINGS AND SIGNAL EQUIPMENT TO PROVIDE FOR AN ADEQUATE DESIGN. IT ALSO INCLUDES PERMITS AND COSTS ASSOCIATED WITH PROVIDING ELECTRICAL POWER.
4. THE CONTRACTOR SHALL INSTALL PORTABLE TRAFFIC SIGNAL TRAILERS IN PLACE OF A STATIC SIGNAL SYSTEM AS SHOWN ON THE PLANS. THE TRAILERS SHALL COMMUNICATE VIA RADIO INTERFACE TO FUNCTION AS A SINGLE CONTROL SYSTEM. AT LEAST ONE SIGNAL HEAD SHALL BE UNMISTAKABLY IN LINE WITH THE CENTER OF APPROACHING TRAFFIC AT ALL TIMES. THE SECOND SIGNAL HEAD MAY BE POST MOUNTED ON THE TRAILER, LOCATED AT A DISTANCE OF 14.5 FEET FROM THE CENTER OF THE APPROACH LANE WHEN THE STOP BAR IS 40 FEET FROM THE SIGNAL HEAD. CONSULT THE LATEST EDITION OF THE MUTCD FOR ADDITIONAL INFORMATION CONCERNING SIGNAL PLACEMENT.
5. THE BOTTOM OF A SIGNAL FACE NOT MOUNTED OVER A ROADWAY SHALL NOT BE LESS THAN 8.0 FEET NOR MORE THAN 15.0 FEET ABOVE THE GROUND. CAUTION SHOULD BE USED TO ENSURE COMPLIANCE WITH THE HEIGHT REQUIREMENTS IN THE EVENT THE NEW APPROACH GRADES DIFFER SIGNIFICANTLY FROM THE OLD ROADWAY GRADE.
6. SIGNAL FACES FOR ANY ONE APPROACH SHALL NOT BE LESS THAN 8 FEET APART MEASURED HORIZONTALLY BETWEEN CENTER FACES.
7. SIGNAL FACES SHALL BE L.E.D. AND CONSIST OF 12 INCH LENSES (RED, YELLOW AND GREEN)
8. SIGNAL HEAD PLACEMENT IS CRITICAL. HEADS SHALL BE ADJUSTED TO REFLECT LANE LOCATION CHANGES UNDER EACH PHASE OF CONSTRUCTION.
9. THE TRAFFIC SIGNALS SHALL NOT OPERATE WITHOUT THE PAVEMENT MARKINGS AND SIGNAL RELATED SIGNING IN PLACE.
10. INSTALL WIRING BETWEEN POWER SOURCES AND SIGNAL TRAILERS TO PROVIDE FOR A SAFE INSTALLATION. ANY NECESSARY CONNECTIONS TO UTILITY POLES SHALL BE COORDINATED BY THE CONTRACTOR WITH THE UTILITY COMPANY.
11. ANY TEMPORARY POLES SHALL BE PLACED BEHIND GUARDRAIL OR OUTSIDE OF THE CLEAR ZONE.
12. LUMINAIRES SHALL BE INSTALLED AT EACH OF THE APPROACHES TO ADEQUATELY ILLUMINATE THE STOP BAR AREAS. 250 WATT HIGH PRESSURE SODIUM, 150 WATT MERCURY OR AN EQUIVALENT WATTAGE L.E.D. LAMP ARE ALL ACCEPTABLE FORMS OF LUMINAIRE. THE MOUNTING HEIGHT SHALL BE 30 FEET ABOVE THE CENTERLINE OR AS DIRECTED BY THE ENGINEER. WHILE THE INTENT IS TO ILLUMINATE THE TEMPORARY SIGNAL SYSTEM, MEASURED NIGHTTIME ILLUMINANCE AT EACH STOP BAR SHALL NOT BE LESS THAN 1.0 FOOT-CANDLE. THE ENGINEER SHALL ORDER CHANGES TO THE LIGHTING COMPONENTS IF DETERMINED TO BE INSUFFICIENT.
13. ALL TRAFFIC SIGNS, INCLUDING STOP SIGNS, MADE IRRELEVANT DUE TO THE TEMPORARY SIGNAL SHALL BE COMPLETELY COVERED DURING OPERATION OF THE TEMPORARY SIGNAL OR AT THE DISCRETION OF THE ENGINEER.
14. CONSTRUCTION APPROACH SIGNS SHALL BE PROVIDED ON EACH APPROACH PER THE TRAFFIC CONTROL PLANS IN THIS PLAN SET. ADDITIONAL SIGNS SHALL BE INSTALLED AS REQUIRED BY THE ENGINEER PER STANDARD T-1.
15. SIGNAL TIMING SHOWN ON THE PLANS MAY REQUIRE FINE-TUNING BY THE ENGINEER IN THE FIELD BASED ON TRAFFIC OBSERVATION (COST OF ADJUSTMENTS SHALL BE INCIDENTAL TO OTHER ITEMS).
16. WHEN THE TEMPORARY TRAFFIC CONTROL SIGNALS ARE CHANGED TO FLASHING MODE, EITHER MANUALLY OR AUTOMATICALLY, RED SIGNAL INDICATIONS SHALL BE FLASHED TO ALL APPROACHES.
17. ALL TEMPORARY SIGNAL EQUIPMENT, SIGNS, ETC., SHALL BELONG TO THE CONTRACTOR AT THE END OF THE PROJECT AND THE CONTRACTOR SHALL BE RESPONSIBLE FOR THEIR REMOVAL INCLUDING ANY TEMPORARY PAVEMENT MARKINGS, UTILITY POLES, WIRES, ETC.

0 20 40
SCALE IN FEET

CONSULTING ENGINEERS

PROJECT NAME: LUNENBURG
PROJECT NUMBER: NH CULV(27)

FILE NAME: llb294/cos/zllb294trf.dgn
PROJECT LEADER: J. BYATT
DESIGNED BY: R. LYFORD
PHASE 1 TEMPORARY TRAFFIC SIGNAL SHEET

PLOT DATE: 8/24/2015
DRAWN BY: S. GOODWIN
CHECKED BY: P. KONIECZKA
SHEET 28 OF 74

CLD 12-0106 MODEL: TSO1

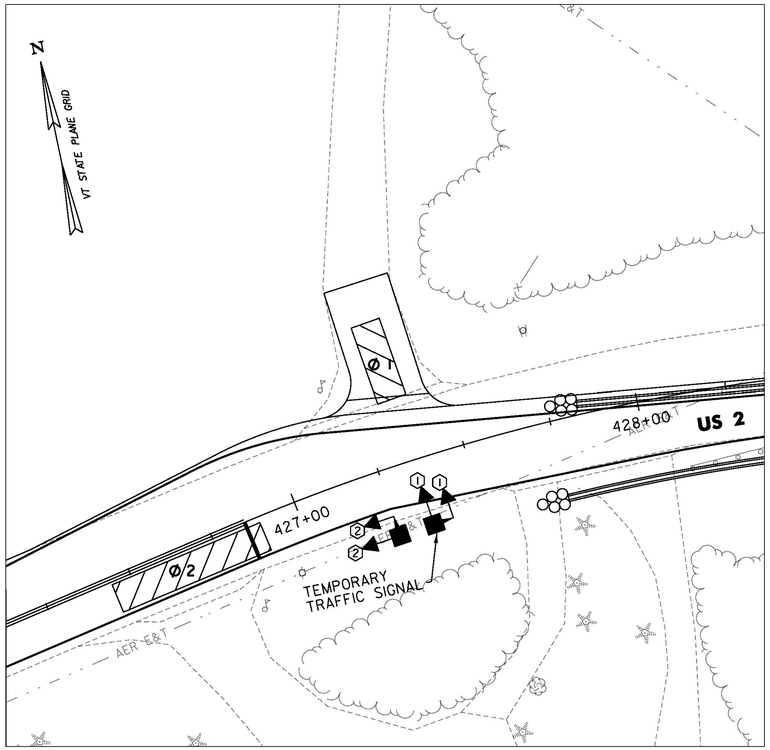

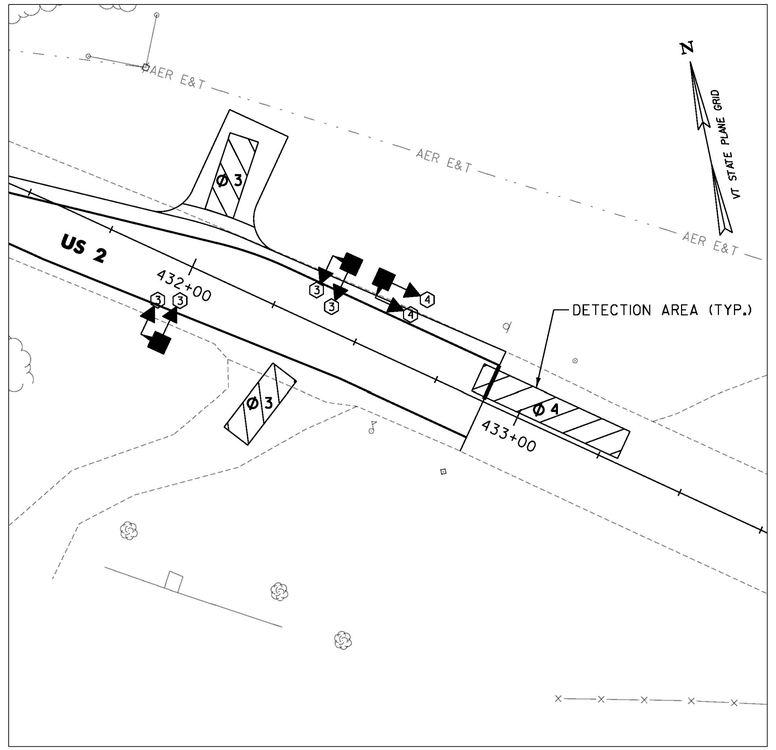

NEW	LEGEND
→⬡	SIGNAL HEAD (12 INCH, LED)
■	PORTABLE TRAFFIC SIGNAL TRAILER WITH TRAFFIC ACTUATORS, EMERGENCY VEHICLE PRE-EMPTION, AND RADIO COMMUNICATION.

PHASE SEQUENCE

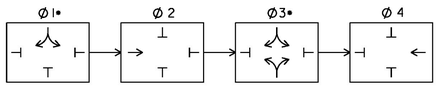

• IF CALLED

US 2

SIGNAL PHASING DATA				
SIGNAL PHASING (ALL ENTRIES BELOW ARE IN SECONDS)				
PHASE	Ø1	Ø2	Ø3	Ø4
INTIAL	5	10	5	10
VEHICLE EXT.	3	3	3	3
MAX. 1	10	30	10	30
MAX. 2	--	--	--	--
YELLOW	4	4	4	4
RED	2	30	2	30
RECALL	NONE	SOFT	NONE	NONE
DELAY	10	0	10	0

SIGNAL OPERATION NOTES

1. ALL MATERIALS AND CONSTRUCTION SHALL CONFORM TO THE STATE OF VERMONT AGENCY OF TRANSPORTATION'S (VTRANS) "STANDARD SPECIFICATIONS FOR CONSTRUCTION", DATED 2011, WITH CURRENT MODIFICATIONS.
2. TEMPORARY TRAFFIC SIGNAL SYSTEM SHALL COMPLY WITH THE REQUIREMENTS OF SECTION 678, "TRAFFIC CONTROL SIGNALS" AND WILL BE CONSIDERED INCIDENTAL TO ITEM 900.645, "SPECIAL PROVISION (TEMPORARY ROADWAY)".
3. THE SIGNAL SYSTEM SHALL CONSIST OF POLES, SIGNS, AND POSTS, WARNING SIGNS, LUMINAIRES, FLASHING BEACONS, ASSOCIATED PAVEMENT MARKINGS AND SIGNAL EQUIPMENT TO PROVIDE FOR AN ADEQUATE DESIGN. IT ALSO INCLUDES PERMITS AND COSTS ASSOCIATED WITH PROVIDING ELECTRICAL POWER.
4. THE CONTRACTOR SHALL INSTALL PORTABLE TRAFFIC SIGNAL TRAILERS IN PLACE OF A STATIC SIGNAL SYSTEM AS SHOWN ON THE PLANS. THE TRAILERS SHALL COMMUNICATE VIA RADIO INTERFACE TO FUNCTION AS A SINGLE CONTROL SYSTEM. AT LEAST ONE SIGNAL HEAD SHALL BE UNMISTAKABLY IN LINE WITH THE CENTER OF APPROACHING TRAFFIC AT ALL TIMES. THE SECOND SIGNAL HEAD MAY BE POST MOUNTED ON THE TRAILER, LOCATED AT A DISTANCE OF 14.5 FEET FROM THE CENTER OF THE APPROACH LANE WHEN THE STOP BAR IS 40 FEET FROM THE SIGNAL HEAD. CONSULT THE LATEST EDITION OF THE MUTCD FOR ADDITIONAL INFORMATION CONCERNING SIGNAL PLACEMENT.
5. THE BOTTOM OF A SIGNAL FACE NOT MOUNTED OVER A ROADWAY SHALL NOT BE LESS THAN 8.0 FEET NOR MORE THAN 15.0 FEET ABOVE THE GROUND. CAUTION SHOULD BE USED TO ENSURE COMPLIANCE WITH THE HEIGHT REQUIREMENTS IN THE EVENT THE NEW APPROACH GRADES DIFFER SIGNIFICANTLY FROM THE OLD ROADWAY GRADE.
6. SIGNAL FACES FOR ANY ONE APPROACH SHALL NOT BE LESS THAN 8 FEET APART MEASURED HORIZONTALLY BETWEEN CENTER FACES.
7. SIGNAL FACES SHALL BE L.E.D. AND CONSIST OF 12 INCH LENSES (RED, YELLOW AND GREEN)
8. SIGNAL HEAD PLACEMENT IS CRITICAL. HEADS SHALL BE ADJUSTED TO REFLECT LANE LOCATION CHANGES UNDER EACH PHASE OF CONSTRUCTION.
9. THE TRAFFIC SIGNALS SHALL NOT OPERATE WITHOUT THE PAVEMENT MARKINGS AND SIGNAL RELATED SIGNING IN PLACE.
10. INSTALL WIRING BETWEEN POWER SOURCES AND SIGNAL TRAILERS TO PROVIDE FOR A SAFE INSTALLATION. ANY NECESSARY CONNECTIONS TO UTILITY POLES SHALL BE COORDINATED BY THE CONTRACTOR WITH THE UTILITY COMPANY.
11. ANY TEMPORARY POLES SHALL BE PLACED BEHIND GUARDRAIL OR OUTSIDE OF THE CLEAR ZONE.
12. LUMINAIRES SHALL BE INSTALLED AT EACH OF THE APPROACHES TO ADEQUATELY ILLUMINATE THE STOP BAR AREAS. 250 WATT HIGH PRESSURE SODIUM, 150 WATT MERCURY OR AN EQUIVALENT WATTAGE L.E.D. LAMP ARE ALL ACCEPTABLE FORMS OF LUMINAIRE. THE MOUNTING HEIGHT SHALL BE 30 FEET ABOVE THE CENTERLINE OR AS DIRECTED BY THE ENGINEER. WHILE THE INTENT IS TO ILLUMINATE THE TEMPORARY SIGNAL SYSTEM, MEASURED NIGHTTIME ILLUMINANCE AT EACH STOP BAR SHALL NOT BE LESS THAN 1.0 FOOT-CANDLE. THE ENGINEER SHALL ORDER CHANGES TO THE LIGHTING COMPONENTS IF DETERMINED TO BE INSUFFICIENT.
13. ALL TRAFFIC SIGNS, INCLUDING STOP SIGNS, MADE IRRELEVANT DUE TO THE TEMPORARY SIGNAL SHALL BE COMPLETELY COVERED DURING OPERATION OF THE TEMPORARY SIGNAL OR AT THE DISCRETION OF THE ENGINEER.
14. CONSTRUCTION APPROACH SIGNS SHALL BE PROVIDED ON EACH APPROACH PER THE TRAFFIC CONTROL PLANS IN THIS PLAN SET. ADDITIONAL SIGNS SHALL BE INSTALLED AS REQUIRED BY THE ENGINEER PER STANDARD T-1.
15. SIGNAL TIMING SHOWN ON THE PLANS MAY REQUIRE FINE-TUNING BY THE ENGINEER IN THE FIELD BASED ON TRAFFIC OBSERVATION (COST OF ADJUSTMENTS SHALL BE INCIDENTAL TO OTHER ITEMS).
16. WHEN THE TEMPORARY TRAFFIC CONTROL SIGNALS ARE CHANGED TO FLASHING MODE, EITHER MANUALLY OR AUTOMATICALLY, RED SIGNAL INDICATIONS SHALL BE FLASHED TO ALL APPROACHES.
17. ALL TEMPORARY SIGNAL EQUIPMENT, SIGNS, ETC., SHALL BELONG TO THE CONTRACTOR AT THE END OF THE PROJECT AND THE CONTRACTOR SHALL BE RESPONSIBLE FOR THEIR REMOVAL INCLUDING ANY TEMPORARY PAVEMENT MARKINGS, UTILITY POLES, WIRES, ETC.

0 20 40
SCALE IN FEET

CLD 12-0106 MODEL: TS02

PROJECT NAME: LUNENBURG
PROJECT NUMBER: NH CULV(27)

FILE NAME: llb294/cos/zllb294trf.dgn PLOT DATE: 8/19/2015
PROJECT LEADER: J. BYATT DRAWN BY: S. GOODWIN
DESIGNED BY: R. LYFORD CHECKED BY: P. KONIECZKA
PHASE 2 TEMPORARY TRAFFIC SIGNAL SHEET SHEET 29 OF 74

US 2 STA 429+38.92 =
CHANNEL STA. 1+50.00
ASKEW ANGLE = 60° 00'00"

G20-2
END ROAD WORK

R10-6
STOP HERE ON RED

W3-3

W20-4
ONE LANE ROAD AHEAD

W20-1
ROAD WORK AHEAD

VT STATE PLANE GRID

PCMS

US 2

500'

750'

500'

500'

500'

PCMS

US 2

W20-1
ROAD WORK AHEAD

W20-4
ONE LANE ROAD AHEAD

W3-3

R10-6
STOP HERE ON RED

G20-2
END ROAD WORK

0 100 200
SCALE IN FEET

CONSULTING ENGINEERS

PROJECT NAME:	LUNENBURG
PROJECT NUMBER:	NH CULV(27)
FILE NAME: llb294/cos/zllb294tcp.dgn	PLOT DATE: 8/6/2015
PROJECT LEADER: J. BYATT	DRAWN BY: M. HALEY
DESIGNED BY: M. HALEY	CHECKED BY: P. SHEDD
TRAFFIC CONTROL PLAN	SHEET 30 OF 74

CLD 12-0106 MODEL: TCP01

STATE OF VERMONT
AGENCY OF TRANSPORTATION

TRAFFIC SIGN SUMMARY

SHSM = FHWA 2004 STANDARD HIGHWAY SIGNS AND MARKINGS BOOK AND THE 2012 SUPPLEMENT TO THE 2004 EDITION

MILEMARKER, STATION, OR SIGN NUMBER	SIGN LEGEND	SIGN DIMENSIONS EA	WIDTH (in)	HEIGHT (in)	NEW & SALVAGED SIGNS "A"	"B"	SALV SIGN	SALV TIS	EXIST POST RETAIN	SALVAGE	NEW SIGN POSTS NO. OF POSTS	SQUARE STEEL (in) 1.75 lb/ft 1.88	2.0 lb/ft 2.42	2.5 lb/ft 3.35	ANCHOR	SLEEVE	TUBULAR ALUMINUM Ø (in) 3.0 lb/ft 1.3	4.0 lb/ft 1.7	4.0 MOD lb/ft 1.7	FOUNDATION	TUBULAR STEEL Ø (in) 3.0 lb/ft 7.6	3.5 lb/ft 9.0	4.0 lb/ft 10.8	5.0 lb/ft 14.6	W-SHAPE STEEL FTG. SIZE 24"	30"	WEIGHT	POST SIZE	SIGN REMOVED	REMARKS	SIGN DETAIL SHSM	DETAIL ON SHEET NUMBER	STD. SHEET NUMBER
424+74 LT							1			~~\~~	1		X		X																		
	40 M.P.H.						1																											
427+25 RT	HIDDEN DRIVE RIGHT						1			~~\~~	1		X		X																		
427+74 LT 429+05 LT 430+45 LT							2 2 2			~~\~~ ~~\~~ ~~\~~	1 1 1		X X X		X X X																		
429+00 RT 429+75 LT	BRIDGE 126 US-2	1 1	6 6	10 10	0.42 0.42						1 1	X X			X X																		T-42 T-42
432+87 LT							1			~~\~~	1		X		X																		
	40 M.P.H.						1																											
432+87 RT	0020 0514 0820 ROUNDING				0.16		1			~~\~~	1		X		X																		
FINAL POST LENGTHS ARE TO BE DETERMINED IN THE FIELD. POST SIZES ARE COMPUTED BASED ON INFORMATION FURNISHED ON THE STANDARD SHEETS AND VAOT "SIGN POST DESIGN GUIDELINE."										7		FT ~~16~~ 17.8	FT - 18.4	FT		EA	LB	LB	LB		LB	LB	LB	LB									
	PROJECT TOTAL	SF 1.00			SF		EA. 12	SF				FT ~~16~~ 136.2					LB			EA.	LB				EA.	EA.	LB						

CLD 12-0106

SIGN DESIGN AND FABRICATION NOTES

1. ALL SIGNS SHALL BE DESIGNED IN ACCORDANCE WITH THE LATEST REVISION OF THE 2009 MUTCD, THE 2004 STANDARD HIGHWAY SIGNS AND MARKINGS (SHSM), AND THE 2012 SUPPLEMENT TO THE 2004 EDITION (SHSM) DETAILS AS AVAILABLE, VAOT STANDARDS OR AS DETAILED IN THE PLANS.
2. ALL LETTERS AND NUMBERS USED FOR ALL SIGNS SHALL CONFORM TO THE APPLICABLE FONT AS DEFINED AND DETAILED IN THE 2004 SHSM AND THE 2012 SUPPLEMENT.
3. ALL ARROWS AND SYMBOLS SHALL CONFORM WITH THE 2004 SHSM AND THE 2012 SUPPLEMENT UNLESS OTHERWISE DETAILED IN THE PLANS.
4. COLORS USED ON ALL SIGNS SHALL CONFORM WITH THE REQUIREMENTS OF SECTION 1A.12 OF THE LATEST REVISION OF THE 2009 MUTCD.
5. SIGN SHEETING FOR FLUORESCENT YELLOW AND FLUORESCENT YELLOW GREEN SHALL BE AASHTO M268 (ASTM D4956) TYPE VII, VIII OR IX. ALL OTHER SIGN SHEETING SHALL BE TYPE III OR IV.
6. SHEETING TYPES AND MANUFACTURERS SHALL NOT BE MIXED ON A SINGLE SIGN ASSEMBLY. SHEETING COLOR/TYPE SHALL BE BY THE SAME MANUFACTURER AND BE CONSISTENT THROUGHOUT THE PROJECT UNLESS OTHERWISE DETAILED ON THE PLANS.

SIGN DESIGN AND FABRICATION NOTES (CONTINUED)

7. SIGN BASE MATERIAL FOR DELINEATORS AND MILE MARKER PLAQUES (VD-700) SHALL BE 0.063" THICK FLAT SHEET ALUMINUM. ALL TOWN HIGHWAY SIGNS (D3-1) SHALL BE 0.125" THICK FLAT SHEET ALUMINUM OR EXTRUDED ALUMINUM WITH 0.25 INCH FLANGE AND 0.090 INCH WEB. UNLESS OTHERWISE NOTED ON THE PLANS, ALL OTHER SIGNS SHALL BE FLAT SHEET ALUMINUM WITH THE FOLLOWING MINIMUM THICKNESSES:

SIGN SIZE	12" X 12"		
	18" X 18"		
	21" X 15"		
	24" X 8"		
	24" X 10"		48" X 18"
	24" X 12"	36" X 12"	48" X 24"
	24" X 18"	36" X 15"	48" X 30"
	24" X 24"	36" X 18"	48" X 42"
	24" X 30"	36" X 24"	48" X 48"
	30" X 15"	36" X 36"	48" X 60"
	30" X 18"	36" X 42"	72" X 10"
	30" X 30"	36" X 48"	72" X 12"
	30" X 42"	36" X 54"	72" X 20"
THICKNESS	0.080"	0.100"	0.125"

SIGN POST NOTES

1. ALL SIGN POSTS SHALL BE INSTALLED IN A NEW ANCHOR. ALL SIGNS INSTALLED IN PAVED OR CONCRETE ISLANDS OR SIDEWALKS SHALL ALSO BE INSTALLED WITH AN 18" SLEEVE. PAYMENT FOR SLEEVE WILL BE CONSIDERED INCIDENTAL TO 675.341, "SQUARE TUBE SIGN POST AND ANCHOR".
2. 1.75" SQUARE STEEL POSTS SHALL BE 14 GAUGE STEEL. 2.0" AND 2.5" SQUARE STEEL POSTS SHALL BE 12 GAUGE STEEL.

SIGN INSTALLATION NOTES

1. THE CONTRACTOR SHALL BE RESPONSIBLE FOR REPAIRING ANY DAMAGE TO PRIVATE OR PUBLIC PROPERTY CAUSED BY THE CONTRACTOR, AT THE CONTRACTOR'S EXPENSE.
2. ALL SIGNS WITHIN THE PROJECT LIMITS ARE TO BE REPLACED UNLESS OTHERWISE NOTED OR AS DIRECTED BY THE ENGINEER. SIGN LOCATIONS AS SHOWN ON THE PLANS ARE APPROXIMATE. EXACT LOCATIONS TO BE DETERMINED IN THE FIELD.
3. ALL SIGN PLACEMENT SHALL BE IN CONFORMANCE WITH VTRANS STANDARD E-121 STANDARD SIGN PLACEMENT CONVENTIONAL ROADS, UNLESS OTHERWISE NOTED.
4. ALL SIGNS, FRAMES, MOUNTING HARDWARE, POSTS, AND ANCHORS FOR ANY SIGN ASSEMBLY SHALL BE REPLACED AT THE SAME TIME. MIXING OF OLD AND NEW SIGNS ON THE SAME ASSEMBLY WILL NOT BE ALLOWED EXCEPT AS NOTED ON THE PLANS.
5. NEW SIGNS WITH THEIR GREATER NIGHTTIME REFLECTIVITY CAN OBSCURE OLDER SIGNS MOUNTED ADJACENT TO THEM. TO AVOID CONFUSION OF ROAD USERS, WORK SHALL BE COORDINATED SUCH THAT ALL SIGNS ASSOCIATED WITH A CURVE, INTERSECTION, OR SPEED CHANGE, SHALL BE REPLACED ON THE SAME DAY AND NOT LEFT INCOMPLETE NOR WITH A MIXTURE OF OLD AND NEW SIGNS WITHIN A GROUP OF ASSOCIATED SIGNS.

NOT TO SCALE

CONSULTING ENGINEERS

PROJECT NAME: LUNENBURG
PROJECT NUMBER: NH CULV(27)

FILE NAME: 11b294/cos/z11b294tsdet.dgn
PROJECT LEADER: J. BYATT
DESIGNED BY: M. HALEY
SIGN DETAIL SHEET

PLOT DATE: 8/6/2015
DRAWN BY: M. HALEY
CHECKED BY: P. SHEDD
SHEET 31 OF 74

SOIL CLASSIFICATION

AASHTO	
A1	Gravel and Sand
A3	Fine Sand
A2	Silty or Clayey Gravel and Sand
A4	Silty Soil - Low Compressibility
A5	Silty Soil - Highly Compressible
A6	Clayey Soil - Low Compressibility
A7	Clayey Soil - Highly Compressible

ROCK QUALITY DESIGNATION

R.Q.D. (%)	ROCK DESCRIPTION
<25	Very Poor
25 to 50	Poor
51 to 75	Fair
76 to 90	Good
>90	Excellent

SHEAR STRENGTH

UNDRAINED SHEAR STRENGTH IN P.S.F.	CONSISTENCY
<250	Very Soft
250-500	Soft
500-1000	Med. Stiff
1000-2000	Stiff
2000-4000	Very Stiff
>4000	Hard

CORRELATION GUIDE OF "N" TO DENSITY/CONSISTENCY

DENSITY (GRANULAR SOILS)		CONSISTENCY (COHESIVE SOILS)	
N	DESCRIPTIVE TERM	N	DESCRIPTIVE TERM
<5	Very Loose	<2	Very Soft
5-10	Loose	2-4	Soft
11-24	Med. Dense	5-8	Med. Stiff
25-50	Dense	9-15	Stiff
>50	Very Dense	16-30	Very Stiff
		31-60	Hard
		>60	Very Hard

COMMONLY USED SYMBOLS

▼	Water Elevation
⊗	Standard Penetration Boring
⊕	Auger Boring
⊙	Rod Sounding
S	Sample
N	Standard Penetration Test Blow Count Per Foot For: 2" O.D. Sampler 1 3/8" I.D. Sampler Hammer Weight Of 140 Lbs. Hammer Fall Of 30"
VS	Field Vane Shear Test
US	Undisturbed Soil Sample
B	Blast
DC	Diamond Core
MD	Mud Drill
WA	Wash Ahead
HSA	Hollow Stem Auger
AX	Core Size 1 1/8"
BX	Core Size 1 5/8"
NX	Core Size 2 1/8"
M	Double Tube Core Barrel Used
LL	Liquid Limit
PL	Plastic Limit
PI	Plasticity Index
NP	Non Plastic
w	Moisture Content (Dry Wgt. Basis)
D	Dry
M	Moist
MTW	Moist To Wet
W	Wet
Sat	Saturated
Bo	Boulder
Gr	Gravel
Sa	Sand
Si	Silt
Cl	Clay
HP	Hardpan
Le	Ledge
NLTD	No Ledge To Depth
CNPF	Can Not Penetrate Further
TLOB	Top of Ledge Or Boulder
NR	No Recovery
Rec.	Recovery
%Rec.	Percent Recovery
RQD	Rock Quality Designation
CBR	California Bearing Ratio
<	Less Than
>	Greater Than
R	Refusal (N > 100)
VTSPG	NAD83 - See Note 7

COLOR

blk	Black	pnk	Pink
bl	Blue	pu	Purple
brn	Brown	rd	Red
dk	Dark	tn	Tan
gry	Gray	wh	White
gn	Green	yel	Yellow
lt	Light	mltc	Multicolored
or	Orange		

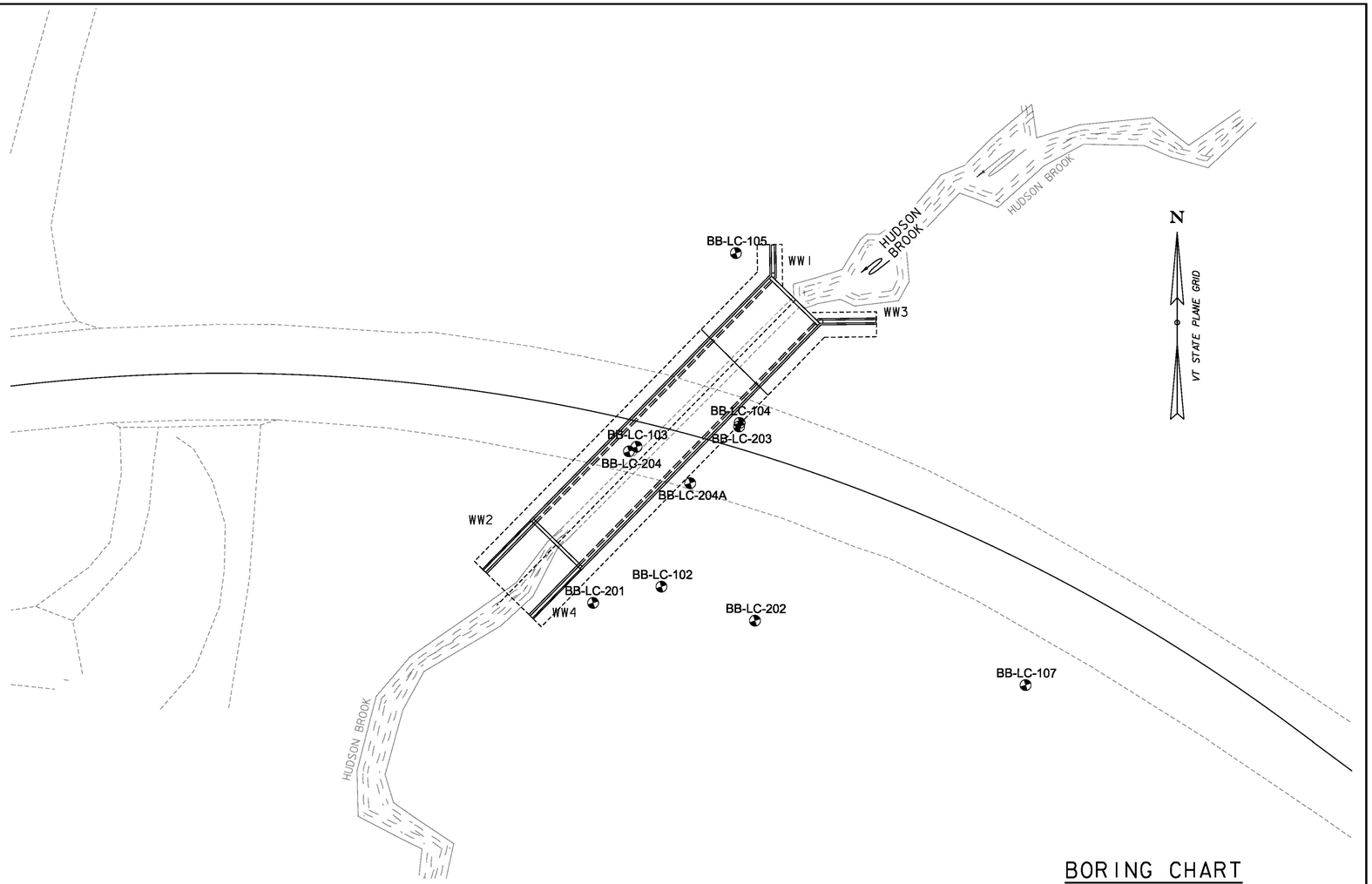

BORING PLAN

SCALE 1" = 20'-0"

20 0 10

SCALE IN FEET

BORING CHART

HOLE NO.	SURV. STATION	OFFSET	GROUND ELEV.	ELEV. TLOB
BB-LC-102	429+50	50 RT	838.0 FT	N/A
BB-LC-103	429+30	8 RT	854.0 FT	N/A
BB-LC-104	429+60	8 LT	855.0 FT	N/A
BB-LC-105	429+45	60 LT	843.0 FT	N/A
BB-LC-107	430+80	35 RT	850.0 FT	N/A
BB-LC-201	429+28	60 RT	839.0 FT	809.0 FT
BB-LC-202	429+85	51 RT	844.0 FT	811.0 FT
BB-LC-203	429+60	7 LT	856.0 FT	822.0 FT
BB-LC-204	429+28	10 RT	854.0 FT	N/A
BB-LC-204A	429+48	15 RT	854.0 FT	N/A

DEFINITIONS (AASHTO)

BEDROCK (LEDGE) - Rock in its native location of indefinite thickness.

BOULDER - A rock fragment with an average dimension > 12 inches.

COBBLE - Rock fragments with an average dimension between 3 and 12 inches.

GRAVEL - Rounded particles of rock < 3" and > 0.0787" (#10 sieve).

SAND - Particles of rock < 0.0787" (#10 sieve) and > 0.0029" (#200 sieve).

SILT - Soil < 0.0029" (#200 sieve), non or slightly plastic and exhibits no strength when air-dried.

CLAY - Fine grained soil, exhibits plasticity when moist and considerable strength when air-dried.

VARVED - Alternate layers of silt and clay.

HARDPAN - Extremely dense soil, cemented layer, not softened when wet.

MUCK - Soft organic soil (containing > 10% organic material.

MOISTURE CONTENT - Weight of water divided by dry weight of soil.

FLOWING SAND - Granular soil so saturated (loose) that it flows into drill casing during extraction of wash rod.

STRIKE - Angle from magnetic north to line of intersection of bed with a horizontal plane.

DIP - Inclination of bed with a horizontal plane.

GENERAL NOTES

1. The subsurface explorations shown herein were made between 9/24/12 and 9/28/12 and between 1/25/13 and 2/1/13 by New Hampshire Boring, Inc.

2. Soil and rock classifications, properties and descriptions are based on engineering interpretation from available subsurface information by the Agency and may not necessarily reflect actual variations in subsurface conditions that may be encountered between individual boring or sample locations.

3. Observed water levels and/or conditions indicated are as recorded at the time of exploration and may vary according to the prevailing rainfall, methods of exploration and other factors.

4. Engineering judgment was exercised in preparing the subsurface information presented herein. Analysis and interpretation of subsurface data was performed and interpreted for Agency design and estimating purposes. Presentation of the information in the Contract is intended to provide the Contractor access to the same data available to the Agency. The subsurface information is presented in good faith and is not intended as a substitute for personal investigation, independent interpretation, independent analysis or judgment by the Contractor.

5. Pictorial structure details shown on the boring plan layout or soils profile are for illustrative purposes only and may not accurately portray final contract details.

6. Terminology used on boring logs to describe the hardness, degree of weathering, and spacing of fractures, joints and other discontinuities in the bedrock is defined in the AASHTO Manual on Subsurface Investigations, 1988.

7. Northing and Easting coordinates are shown in Vermont State Plane Grid North American Datum 1983 in meters and survey feet.

CONSULTING ENGINEERS

PROJECT NAME: LUNENBURG

PROJECT NUMBER: NH CULV(27)

FILE NAME: llb294/cos/zllb294bor.dgn
PROJECT LEADER: J. BYATT
DESIGNED BY: S. BEAUMONT
BORING INFORMATION SHEET

PLOT DATE: 8/6/2015
DRAWN BY: M. SMITH
CHECKED BY: J. BYATT
SHEET 32 OF 74

QLD 12-0106 MODEL: Bor01

STATE OF VERMONT
AGENCY OF TRANSPORTATION
MATERIALS & RESEARCH SECTION
SUBSURFACE INFORMATION

BORING NUMBER: BB-LC-102
SHEET 1 of 2
DATE STARTED: 9/25/12
DATE COMPLETED: 9/26/12

PROJECT NAME: CLD Lunenburg Culvert
SITE NAME:
STATION: 429+25
OFFSET: 50 RT
VTSPG: N 724746.56 ft E 1867986.70 ft

PROJECT NUMBER: 123-87438
SITE NUMBER: BR 126
GROUND ELEVATION: 838.0 ft
GROUNDWATER DEPTH: 3.6 ft 9/26/12
PROJECT PIN NUMBER: Lunenburg NH Culv (27)

BORING CREW:
DRILLER: D. Thompson
LOGGER: M. Henrick
BORING RIG: Diedrich D-50 Track

BORING TYPE: WASH BORE
SAMPLE TYPE: SPLIT BARREL & TUBE
HAMMER TYPE:
CHECKED BY: JRS

DEPTH (ft)	SYMBOL	CLASSIFICATION OF MATERIALS (Description)	BLOWS PER 6 IN (N VALUE)	M.C. (%)	AASHTO GRAVEL (%)	AASHTO SAND (%)	AASHTO FINES (%)	LL (%)	PI (%)
		0.0 ft - 2.5 ft, Field note: Rock fill at surface.							
2.5		2.5 ft - 5.0 ft, Field note: brown sandy silt based on auger cuttings. Augered to 5 ft., then switched to Drive and Wash							
5.0		5.0 ft - 5.8 ft, ClSaSi, medium brown, Sat, Rec. = 1.8 ft	1-2-1-1 (3)						
		5.8 ft - 7.0 ft, ClSi Faintly varved, medium gray, Sat, Torvane = 0.25, 0.25 kg/cm2							
7.5		7.0 ft - 9.0 ft, ClSi Faintly varved, medium gray, Sat, Torvane = 0.10, 0.10 kg/cm2, Rec. = 1.7 ft	1-1-2-3 (3)	35.0				41	22
10.0		10.0 ft - 12.0 ft, ClSi Thinly varved, medium gray, Sat, Torvane = 0.20, 0.19 kg/cm2, Rec. = 0.8 ft	2-5-4-4 (9)						
12.5									
15.0		15.0 ft - 17.0 ft, ClSi Thinly varved, medium gray, Sat, Torvane = 0.22, 0.21 kg/cm2, Rec. = 2.0 ft	2-2-2-2 (4)						
17.5									
		18.0 ft - 20.0 ft, ClSi Shelby tube sample, medium gray, Sat, Rec. = 2.0 ft	NA (NA)						
20.0				35.0				30	10
22.5									

LOG OF BORING & WELL 123-87438 CLD LUNENBURG.GPJ VT AOT.GDT 10/2/14

STATE OF VERMONT
AGENCY OF TRANSPORTATION
MATERIALS & RESEARCH SECTION
SUBSURFACE INFORMATION

BORING NUMBER: BB-LC-102
SHEET 2 of 2
DATE STARTED: 9/25/12
DATE COMPLETED: 9/26/12

PROJECT NAME: CLD Lunenburg Culvert
SITE NAME:
STATION: 429+25
OFFSET: 50 RT
VTSPG: N 724746.56 ft E 1867986.70 ft

PROJECT NUMBER: 123-87438
SITE NUMBER: BR 126
GROUND ELEVATION: 838.0 ft
GROUNDWATER DEPTH: 3.6 ft 9/26/12
PROJECT PIN NUMBER: Lunenburg NH Culv (27)

BORING CREW:
DRILLER: D. Thompson
LOGGER: M. Henrick
BORING RIG: Diedrich D-50 Track

BORING TYPE: WASH BORE
SAMPLE TYPE: SPLIT BARREL & TUBE
HAMMER TYPE:
CHECKED BY: JRS

DEPTH (ft)	SYMBOL	CLASSIFICATION OF MATERIALS (Description)	BLOWS PER 6 IN (N VALUE) / RUN	M.C. (%) / REC. (%)	AASHTO GRAVEL (%) / RQD (%)	AASHTO SAND (%) / Drill Rate (min/ft)	AASHTO FINES (%) / UCS (psi)	LL (%)	PI (%)
27.5		25.0 ft - 27.0 ft, ClSi Thinly varved, medium gray, Sat, Torvane = 0.40 kg/cm2 in bottom 6-in., 0.11 kg/cm2 in middle., Rec. = 2.0 ft	0-1-2-3 (3)	34.0				40	16
30.0		30.0 ft - 32.0 ft, ClSiSa, brown-gray, Sat, Sand and gravel lens at 29.5 ft. based on drill behavior., Rec. = 2.0 ft	4-1-2-2 (3)						
32.5		32.0 ft - 34.5 ft, Cannot push casing with rig past 32 ft. Casing refusal at 34 ft., glacial till based on drill behavior to 34.5 ft.							
		Top of Bedrock @ 34.5 ft							
35.0		RR1: 35.0 ft - 39.8 ft, NQ, Rec. = 3.33 ft, greenish gray, Phyllite, discontinuities close to very closely spaced, subhorizontal to vertical, planar to irregular, smooth to very rough. Thin quartz/calcite veins generally parallel to foliation, 1/4" thick. Discontinuities generally discordant to foliation. Weakly foliated, Weak to medium weak, moderately weathered	RR1	69	396	3.75			
37.5									
40.0		Hole stopped @ 39.8 ft							
42.5									
45.0									
47.5									

Notes:
- Advanced with 2 1/4" ID HSAs to 5 ft.
- Boring location estimated from swing ties. Location not surveyed.

LOG OF BORING & WELL 123-87438 CLD LUNENBURG.GPJ VT AOT.GDT 10/2/14

CLD 12-0106 MODEL: Bor02

CONSULTING ENGINEERS

PROJECT NAME: LUNENBURG
PROJECT NUMBER: NH CULV(27)

FILE NAME: llb294/cos/zllb294bor.dgn
PROJECT LEADER: J. BYATT
DESIGNED BY: S. BEAUMONT
BORING LOGS SHEET 1

PLOT DATE: 8/6/2015
DRAWN BY: M. SMITH
CHECKED BY: J. BYATT
SHEET 33 OF 74

STATE OF VERMONT
AGENCY OF TRANSPORTATION
MATERIALS & RESEARCH SECTION
SUBSURFACE INFORMATION

BORING NUMBER: BB-LC-103
SHEET 1 of 3
DATE STARTED: 9/27/12
DATE COMPLETED: 9/27/12

PROJECT NAME: CLD Lunenburg Culvert
SITE NAME:
STATION: 429+30
OFFSET: 8 RT
VTSPG: N 724791.44 ft E 1867978.72 ft

PROJECT NUMBER: 123-87438
SITE NUMBER: BR 126
GROUND ELEVATION: 854.0 ft
GROUNDWATER DEPTH: 14.1 ft 9/27/12
PROJECT PIN NUMBER: Lunenburg NH Culv (27)

BORING CREW:
DRILLER: D. Thompson
LOGGER: M. Henrick
BORING RIG: Diedrich D-50 Track

BORING TYPE: WASH BORE
SAMPLE TYPE: SPLIT BARREL
HAMMER TYPE:
CHECKED BY: JRS

DEPTH (ft)	SYMBOL	CLASSIFICATION OF MATERIALS (Description)	BLOWS PER 6 IN (N VALUE)	M.C. (%)	AASHTO GRAVEL (%)	AASHTO SAND (%)	AASHTO FINES (%)	LL (%)	PI (%)
		0.0 ft - 1.4 ft, Field Note: Approximately 1.4 ft. of asphalt at roadway surface.							
		1.5 ft - 2.0 ft, Field Note: Gravel subbase, Rec. = 0.4 ft	50 (50)						
2.5									
		4.0 ft - 6.0 ft, GrSaSi, medium brown, Wet, Rec. = 1.7 ft	18-15-16-26 (31)		20.0	27.0	53.0		
5.0									
7.5									
		9.0 ft - 11.0 ft, SaSiGr Resampled with 3" spoon, medium brown, Wet, Rec. = 0.0 ft	29-17-17-18 (34)						
10.0									
12.5									
		14.0 ft - 14.9 ft, ClSaSi, medium brown, Wet, Rec. = 1.0 ft	3-2-3-3 (5)						
15.0		14.9 ft - 16.0 ft, SaSi Organic PEAT, dark gray, Wet							
		16.0 ft - 18.0 ft, ClSaSi Trace organics, medium brown, Wet, Rec. = 0.7 ft	1-1-1-3 (2)						
17.5									
20.0		20.0 ft - 22.0 ft, A-6, ClSaSi, medium brown, Wet, Rec. = 2.0 ft	2-1-1-2 (2)		0.0	29.0	71.0	35	13
		22.0 ft - 30.0 ft, Field Note: Gravel lenses based on drill behavior							
22.5									

BOTTOM OF MAT FOUNDATION EL. 827.20 +/-

SLOPE STABILIZATION PILE TIP EL. 811.00 +/-

LOG OF BORING & WELL 123-87438 CLD LUNENBURG.GPJ VT AOT.GDT 10/2/14

STATE OF VERMONT
AGENCY OF TRANSPORTATION
MATERIALS & RESEARCH SECTION
SUBSURFACE INFORMATION

BORING NUMBER: BB-LC-103
SHEET 2 of 3
DATE STARTED: 9/27/12
DATE COMPLETED: 9/27/12

PROJECT NAME: CLD Lunenburg Culvert
SITE NAME:
STATION: 429+30
OFFSET: 8 RT
VTSPG: N 724791.44 ft E 1867978.72 ft

PROJECT NUMBER: 123-87438
SITE NUMBER: BR 126
GROUND ELEVATION: 854.0 ft
GROUNDWATER DEPTH: 14.1 ft 9/27/12
PROJECT PIN NUMBER: Lunenburg NH Culv (27)

BORING CREW:
DRILLER: D. Thompson
LOGGER: M. Henrick
BORING RIG: Diedrich D-50 Track

BORING TYPE: WASH BORE
SAMPLE TYPE: SPLIT BARREL
HAMMER TYPE:
CHECKED BY: JRS

DEPTH (ft)	SYMBOL	CLASSIFICATION OF MATERIALS (Description)	BLOWS PER 6 IN (N VALUE)	M.C. (%)	AASHTO GRAVEL (%)	AASHTO SAND (%)	AASHTO FINES (%)	LL (%)	PI (%)
			RUN	REC (%)	RQD (%)	Drill Rate (min/ft)	UCS (psi)		
		25.0 ft - 27.0 ft, ClSaSi, medium brown, Wet, Rec. = 0.8 ft	12-20-20-28 (40)						
27.5									
30.0		30.0 ft - 32.0 ft, SaGrSi, brown-gray, Wet, Rec. = 0.7 ft	39-29-18-17 (47)						
32.5									
35.0		34.0 ft - 36.0 ft, SaGrSi, brown-gray, Wet, Rec. = 0.5 ft	28-21-29-11 (50)						
37.5									
		38.5 ft - 44.0 ft, Field Note: Cobbles based on drill behavior							
40.0									
42.5									
		44.0 ft - 44.5 ft, No recovery, cobbles based on drill behavior, Rec. = 0.0 ft	53 (50)						
45.0		RR1: 45.0 ft - 48.8 ft, NQ, Rec. = 1.3 ft, Casing refusal at 44.5 ft. Began core run at 45 feet, cobbles and boulders to 48.8 ft.	RR1	22	1183	3.3			
47.5		48.8 ft - 51.0 ft, Dark gray, Phyllite, discontinuities very close to close, generally parallel to folation, irregular to			Top of Bedrock @ 48.8 ft				

LOG OF BORING & WELL 123-87438 CLD LUNENBURG.GPJ VT AOT.GDT 10/2/14

STATE OF VERMONT
AGENCY OF TRANSPORTATION
MATERIALS & RESEARCH SECTION
SUBSURFACE INFORMATION

BORING NUMBER: BB-LC-103
SHEET 3 of 3
DATE STARTED: 9/27/12
DATE COMPLETED: 9/27/12

PROJECT NAME: CLD Lunenburg Culvert
SITE NAME:
STATION: 429+30
OFFSET: 8 RT
VTSPG: N 724791.44 ft E 1867978.72 ft

PROJECT NUMBER: 123-87438
SITE NUMBER: BR 126
GROUND ELEVATION: 854.0 ft
GROUNDWATER DEPTH: 14.1 ft 9/27/12
PROJECT PIN NUMBER: Lunenburg NH Culv (27)

BORING CREW:
DRILLER: D. Thompson
LOGGER: M. Henrick
BORING RIG: Diedrich D-50 Track

BORING TYPE: WASH BORE
SAMPLE TYPE: SPLIT BARREL
HAMMER TYPE:
CHECKED BY: JRS

DEPTH (ft)	SYMBOL	CLASSIFICATION OF MATERIALS (Description)	RUN	REC (%)	RQD (%)	Drill Rate (min/ft)	UCS (psi)		
		curved to planar, rough to smooth. Moderately foliated, very fine grained, Medium strong, moderately weathered							
		Hole stopped @ 51.0 ft							
52.5									
55.0									
57.5									
60.0									
62.5									
65.0									
67.5									
70.0									
72.5									

Notes:
- Boring location estimated from swing ties. Location not surveyed.

LOG OF BORING & WELL 123-87438 CLD LUNENBURG.GPJ VT AOT.GDT 10/2/14

CLD 12-0106 MODEL: Bor03

PROJECT NAME: LUNENBURG
PROJECT NUMBER: NH CULV(27)

FILE NAME: llb294/cos/zllb294bor.dgn
PROJECT LEADER: J. BYATT
DESIGNED BY: S. BEAUMONT
BORING LOGS SHEET 2

PLOT DATE: 8/6/2015
DRAWN BY: M. SMITH
CHECKED BY: J. BYATT
SHEET 34 OF 74

STATE OF VERMONT
AGENCY OF TRANSPORTATION
MATERIALS & RESEARCH SECTION
SUBSURFACE INFORMATION

BORING NUMBER: BB-LC-104
SHEET 1 of 1
DATE STARTED: 9/28/12
DATE COMPLETED: 9/28/12

PROJECT NAME: CLD Lunenburg Culvert
SITE NAME:
STATION: 429+60
OFFSET: 8 LT
VTSPG: N 724799.12 ft E 1868011.78 ft

PROJECT NUMBER: 123-87438
SITE NUMBER: BR 126
GROUND ELEVATION: 855.0 ft
GROUNDWATER DEPTH: 11.9 ft 9/28/12
PROJECT PIN NUMBER: Lunenburg NH Culv (27)

BORING CREW:
DRILLER: D. Thompson
LOGGER: M. Henrick
BORING RIG: Diedrich D-50 Track

BORING TYPE: WASH BORE
SAMPLE TYPE: SPLIT BARREL
HAMMER TYPE:
CHECKED BY: JRS

DEPTH (ft)	SYMBOL	CLASSIFICATION OF MATERIALS (Description)	BLOWS PER 6 IN (N VALUE)	M.C. (%)	AASHTO GRAVEL (%)	AASHTO SAND (%)	AASHTO FINES (%)
		0.0 ft - 1.5 ft, Field note: Approximately 1.5 ft. of Asphalt.					
2.5		2.0 ft - 4.0 ft, SiSaGr, Dark gray, Moist, Roadway subbase, Rec. = 0.8 ft	22-19-15-11 (34)				
		4.0 ft - 4.7 ft, SiSaGr, brown, Moist, Roadway subbase, Rec. = 1.0 ft	16-11-7-7 (18)				
5.0		4.7 ft - 5.0 ft, SaSi, brown-gray, Moist					
7.5							
10.0		9.0 ft - 11.0 ft, SaSi, brown, Moist, Rec. = 0.3 ft	2-3-10-6 (13)				
12.5							
15.0		14.0 ft - 16.0 ft, SaSiGr, brown, Wet, Rec. = 0.4 ft	15-29-17-9 (46)				
17.5							
20.0		19.0 ft - 19.9 ft, SaSi Some organics (wood), brown, Wet, Field note: Drilling obstruction encountered at 19.9 ft, could not advance button bit., Rec. = 0.5 ft	5-50 (Refusal)				
22.5		Hole stopped @ 19.9 ft					

Notes:
- Boring location estimated from swing ties. Location not surveyed.

LOG OF BORING & WELL 123-87438 CLD LUNENBURG.GPJ VT AOT.GDT 10/2/14

B.O.F. WWI
EL. 827.95

STATE OF VERMONT
AGENCY OF TRANSPORTATION
MATERIALS & RESEARCH SECTION
SUBSURFACE INFORMATION

BORING NUMBER: BB-LC-105
SHEET 1 of 2
DATE STARTED: 9/24/12
DATE COMPLETED: 9/25/12

PROJECT NAME: CLD Lunenburg Culvert
SITE NAME:
STATION: 429+45
OFFSET: 60 LT
VTSPG: N 724853.50 ft E 1868010.59 ft

PROJECT NUMBER: 123-87438
SITE NUMBER: BR 126
GROUND ELEVATION: 843.0 ft
GROUNDWATER DEPTH: 4.2 ft 9/25/12
PROJECT PIN NUMBER: Lunenburg NH Culv (27)

BORING CREW:
DRILLER: D. Thompson
LOGGER: M. Henrick
BORING RIG: Diedrich D-50 Track

BORING TYPE: WASH BORE
SAMPLE TYPE: SPLIT BARREL
HAMMER TYPE:
CHECKED BY: JRS

DEPTH (ft)	SYMBOL	CLASSIFICATION OF MATERIALS (Description)	BLOWS PER 6 IN (N VALUE)	M.C. (%)	AASHTO GRAVEL (%)	AASHTO SAND (%)	AASHTO FINES (%)
			RUN	REC (%)	RQD (%)	Drill Rate (min/ft)	UCS (psi)
		0.0 ft - 2.0 ft, GrSaSi, brown, Moist, Rec. = 0.7 ft	9-14-19-11 (33)				
2.5		2.0 ft - 4.0 ft, SaSiGr, medium gray, Moist, Rec. = 0.8 ft	5-40-43-55 (83)		41.0	31.0	28.0
		4.0 ft - 6.0 ft, SaSiGr, medium gray, Wet, Rec. = 0.7 ft	31-30-58-19 (88)				
5.0		6.0 ft - 8.0 ft, SaSiGr, medium gray, Wet, Rec. = 1.0 ft	27-19-15-17 (34)				
7.5							
10.0		10.0 ft - 12.0 ft, SaSiGr, medium gray, Wet, Rec. = 0.5 ft	5-20-24-16 (44)				
12.5		12.0 ft - 13.8 ft, SaSiGr, medium gray, Wet, Rec. = 1.6 ft	19-31-38-50 (69)		46.0	33.0	21.0
		14.0 ft - 14.7 ft, SaSiGr, medium brown, Wet, Boulder 14.7-15.8 ft., Rec. = 0.6 ft	58-50 (Refusal)				
15.0		16.0 ft - 16.8 ft, SaSiGr, medium gray, Wet, Rec. = 0.2 ft	12-50 (Refusal)				
17.5		RR1: 17.0 ft - 17.7 ft, NQ, Rec. = 0.0 ft, No recovery, boulder based on drill behavior	RR1	0	0	1.2	
		19.0 ft - 19.7 ft, SaSiGr, medium gray, Wet, Rec. = 9.0 ft	33-50 (Refusal)				
20.0		19.7 ft - 30.5 ft, Cobbles based on drill behavior.					
22.5							

LOG OF BORING & WELL 123-87438 CLD LUNENBURG.GPJ VT AOT.GDT 10/2/14

STATE OF VERMONT
AGENCY OF TRANSPORTATION
MATERIALS & RESEARCH SECTION
SUBSURFACE INFORMATION

BORING NUMBER: BB-LC-105
SHEET 2 of 2
DATE STARTED: 9/24/12
DATE COMPLETED: 9/25/12

PROJECT NAME: CLD Lunenburg Culvert
SITE NAME:
STATION: 429+45
OFFSET: 60 LT
VTSPG: N 724853.50 ft E 1868010.59 ft

PROJECT NUMBER: 123-87438
SITE NUMBER: BR 126
GROUND ELEVATION: 843.0 ft
GROUNDWATER DEPTH: 4.2 ft 9/25/12
PROJECT PIN NUMBER: Lunenburg NH Culv (27)

BORING CREW:
DRILLER: D. Thompson
LOGGER: M. Henrick
BORING RIG: Diedrich D-50 Track

BORING TYPE: WASH BORE
SAMPLE TYPE: SPLIT BARREL
HAMMER TYPE:
CHECKED BY: JRS

DEPTH (ft)	SYMBOL	CLASSIFICATION OF MATERIALS (Description)	RUN	REC (%)	RQD (%)	Drill Rate (min/ft)	UCS (psi)
27.5							
30.0		Top of Bedrock @ 30.1 ft					
		RR2: 30.5 ft - 35.6 ft, NQ, Rec. = 4.95 ft, medium gray, Phyllite, discontinuities spaced very close to close, high angle (60-70 degrees), generally parallel to foliation, planar to irregular, very smooth to rough, some light brown iron oxide staining, weak to medium weak, moderately weathered	RR2	97	608	4.8	
32.5							
35.0		Hole stopped @ 35.6 ft					
37.5							
40.0							
42.5							
45.0							
47.5							

Notes:
- Boring location estimated from swing ties. Location not surveyed.

LOG OF BORING & WELL 123-87438 CLD LUNENBURG.GPJ VT AOT.GDT 10/2/14

CLD I2-0106 MODEL: Bor04

CONSULTING ENGINEERS

PROJECT NAME: LUNENBURG
PROJECT NUMBER: NH CULV(27)

FILE NAME: llb294/cos/zllb294bor.dgn
PROJECT LEADER: J. BYATT
DESIGNED BY: S. BEAUMONT
BORING LOGS SHEET 3

PLOT DATE: 8/6/2015
DRAWN BY: M. SMITH
CHECKED BY: J. BYATT
SHEET 35 OF 74

STATE OF VERMONT
AGENCY OF TRANSPORTATION
MATERIALS & RESEARCH SECTION
SUBSURFACE INFORMATION

BORING NUMBER: BB-LC-107
SHEET 1 of 2
DATE STARTED: 9/26/12
DATE COMPLETED: 9/26/12

PROJECT NAME: CLD Lunenburg Culvert
SITE NAME:
STATION: 430+80
OFFSET: 35 RT
VTSPG: N 724714.97 ft E 1868103.54 ft

PROJECT NUMBER: 123-87438
SITE NUMBER: BR 126
GROUND ELEVATION: 850.0 ft
GROUNDWATER DEPTH: NM 9/28/12
PROJECT PIN NUMBER: Lunenburg NH Culv (27)

BORING CREW:
DRILLER: D. Thompson
LOGGER: M. Henrick
BORING RIG: Diedrich D-50 Track

BORING TYPE: WASH BORE
SAMPLE TYPE: SPLIT BARREL
HAMMER TYPE:
CHECKED BY: JRS

DEPTH (ft)	SYMBOL	CLASSIFICATION OF MATERIALS (Description)	BLOWS PER 6 IN (N VALUE)	M.C. (%)	AASHTO GRAVEL (%)	AASHTO SAND (%)	AASHTO FINES (%)	LL (%)	PI (%)
		0.0 ft - 0.7 ft, SaSi Topsoil, Dark gray, Moist, Rec. = 0.7 ft	1-6-9-15 (15)						
		0.7 ft - 2.0 ft, SaSiGr, brown, Moist							
2.5		2.0 ft - 3.0 ft, Field note: Cobbles based on drill behavior.							
		3.0 ft - 5.0 ft, Field Note: Sandy silt based on auger cuttings.							
5.0		5.0 ft - 7.0 ft, SiCl Varved, gray, Wet, Torvane = 0.25 kg/cm2, Rec. = 1.8 ft	3-3-4-5 (7)	27.0				26	8
7.5									
10.0		10.0 ft - 12.0 ft, SiCl Varved, gray, Wet, Torvane = 0.15 kg/cm2, Rec. = 2.0 ft	2-2-3-3 (5)						
12.5									
15.0		15.0 ft - 17.0 ft, SiCl Varved, gray, Wet, Torvane = 0.22 kg/cm2, Rec. = 2.0 ft	0-2-1-3 (3)					38	18
17.5									
20.0		20.0 ft - 22.0 ft, SiCl Varved, gray, Wet, Torvane = 0.20, 0.22 kg/cm2, Rec. = 2.0 ft	0-2-2-3 (4)						
22.5									

LOG OF BORING & WELL - 123-87438 CLD LUNENBURG.GPJ VT AOT.GDT 10/2/14

STATE OF VERMONT
AGENCY OF TRANSPORTATION
MATERIALS & RESEARCH SECTION
SUBSURFACE INFORMATION

BORING NUMBER: BB-LC-107
SHEET 2 of 2
DATE STARTED: 9/26/12
DATE COMPLETED: 9/26/12

PROJECT NAME: CLD Lunenburg Culvert
SITE NAME:
STATION: 430+80
OFFSET: 35 RT
VTSPG: N 724714.97 ft E 1868103.54 ft

PROJECT NUMBER: 123-87438
SITE NUMBER: BR 126
GROUND ELEVATION: 850.0 ft
GROUNDWATER DEPTH: NM 9/28/12
PROJECT PIN NUMBER: Lunenburg NH Culv (27)

BORING CREW:
DRILLER: D. Thompson
LOGGER: M. Henrick
BORING RIG: Diedrich D-50 Track

BORING TYPE: WASH BORE
SAMPLE TYPE: SPLIT BARREL
HAMMER TYPE:
CHECKED BY: JRS

DEPTH (ft)	SYMBOL	CLASSIFICATION OF MATERIALS (Description)	BLOWS PER 6 IN (N VALUE)	M.C. (%)	AASHTO GRAVEL (%)	AASHTO SAND (%)	AASHTO FINES (%)	LL (%)	PI (%)
		25.0 ft - 27.0 ft, SiCl Varved, gray, Wet, Torvane = 0.24, 0.20 kg/cm2, Rec. = 2.0 ft	0-2-3-3 (5)					33	11
27.5									
30.0		30.0 ft - 32.0 ft, SiCl Varved, gray, Wet, Torvane = 0.25 kg/cm2, Rec. = 2.0 ft	0-0-2-3 (2)						
32.5		Hole stopped @ 32.0 ft							
35.0									
37.5									
40.0									
42.5									
45.0									
47.5									

Notes:
- Used 2 1/4" HSAs to 30 ft.
- Boring location estimated from swing ties. Location not surveyed.

LOG OF BORING & WELL - 123-87438 CLD LUNENBURG.GPJ VT AOT.GDT 10/2/14

CLD 12-0106 MODEL: Bor05

PROJECT NAME: LUNENBURG
PROJECT NUMBER: NH CULV(27)

FILE NAME: llb294/cos/zllb294bor.dgn
PROJECT LEADER: J. BYATT
DESIGNED BY: S. BEAUMONT
BORING LOGS SHEET 4

PLOT DATE: 8/6/2015
DRAWN BY: M. SMITH
CHECKED BY: J. BYATT
SHEET 36 OF 74

STATE OF VERMONT
AGENCY OF TRANSPORTATION
MATERIALS & RESEARCH SECTION
SUBSURFACE INFORMATION

BORING NUMBER: BB-LC-201
SHEET 1 of 2
DATE STARTED: 1/30/13
DATE COMPLETED: 1/30/13

PROJECT NAME: CLD Lunenburg Culvert
SITE NAME:
STATION: 429+28
OFFSET: 60 RT
VTSPG: N 724741.35 ft E 1867964.79 ft

PROJECT NUMBER: 123-87438
SITE NUMBER: BR 126
GROUND ELEVATION: 839.0 ft
GROUNDWATER DEPTH: 4.5 ft 1/30/13
PROJECT PIN NUMBER: Lunenburg NH Culv (27)

BORING CREW:
DRILLER: D. Palmer
LOGGER: M. Henrick
BORING RIG: Diedrich D-50 Track

BORING TYPE: WASH BORE
SAMPLE TYPE: SPLIT BARREL & TUBE
HAMMER TYPE:
CHECKED BY: JDL

DEPTH (ft)	SYMBOL	CLASSIFICATION OF MATERIALS (Description)	BLOWS PER 6 IN (N VALUE)	M.C. (%)	AASHTO GRAVEL (%)	AASHTO SAND (%)	AASHTO FINES (%)	LL (%)	PI (%)
		0.0 ft - 2.5 ft, Field note: Rock fill at surface to approximately 2.5 ft, 6-12-inch diameter.							
2.5									
5.0		4.0 ft - 6.0 ft, SaGrSi, Gray, Wet, (ML) Gravelly SILT, some clay, some medium to coarse sand [Sample 1D]., Rec. = 0.5 ft	4-5-4-3 (9)						
7.5		6.0 ft - 8.0 ft, ClSi, Gray, Wet, (CL) SILT and CLAY, wet, soft, varved with 1/8-inch layers [Sample 2D]. 603 psf from FVT at 7 ft, 647 psf from FVT at 8 ft with the 55x110mm vane., Rec. = 2.0 ft	NA (FVT)	33.8					
10.0		9.0 ft - 10.5 ft, SiCl, Gray, Wet, (CL) Silty CLAY, Shelby tube sample with GUS sampler [Sample 1U]. Tube did not deploy completely. A-6, Rec. = 1.4 ft	NA (Tube)	35.0				35	14
		10.5 ft - 12.5 ft, SiCl, Gray, Wet, (CL) SILT and CLAY, some fine sand, varved [Sample 3D]. 797 psf from FVT at 11.0 ft with the 65x130mm vane. Could not push vane past 11.0 ft.							
B.O.F. WW4 EL. 826.67									
12.5									
15.0		15.0 ft - 17.0 ft, SiCl, Gray, Wet, (CL) SILT and CLAY, some fine sand, varved [Sample 4D]. 659 psf from FVT at 15.8 ft with 65x130mm vane. Could not push vane past 15.8 ft., Rec. = 1.7 ft	NA (FVT)	32.9					
17.5									
		18.0 ft - 20.0 ft, No recovery, unsuccessful tube attempt [Sample 2U]., Rec. = 0.0 ft	NA (Tube)						
20.0		20.0 ft - 22.0 ft, No recovery, possible GUS sampler malfunction or driller error [Sample 3U]. 1027 psf from FVT at 21 ft, 982 psf from FVT at 22 ft with the 55x110mm vane., Rec. = 0.0 ft	NA (FVT)						
22.5									

LOG OF BORING & WELL 123-87438 CLD LUNENBURG.GPJ VT AOT.GDT 10/2/14

STATE OF VERMONT
AGENCY OF TRANSPORTATION
MATERIALS & RESEARCH SECTION
SUBSURFACE INFORMATION

BORING NUMBER: BB-LC-201
SHEET 2 of 2
DATE STARTED: 1/30/13
DATE COMPLETED: 1/30/13

PROJECT NAME: CLD Lunenburg Culvert
SITE NAME:
STATION: 429+28
OFFSET: 60 RT
VTSPG: N 724741.35 ft E 1867964.79 ft

PROJECT NUMBER: 123-87438
SITE NUMBER: BR 126
GROUND ELEVATION: 839.0 ft
GROUNDWATER DEPTH: 4.5 ft 1/30/13
PROJECT PIN NUMBER: Lunenburg NH Culv (27)

BORING CREW:
DRILLER: D. Palmer
LOGGER: M. Henrick
BORING RIG: Diedrich D-50 Track

BORING TYPE: WASH BORE
SAMPLE TYPE: SPLIT BARREL & TUBE
HAMMER TYPE:
CHECKED BY: JDL

DEPTH (ft)	SYMBOL	CLASSIFICATION OF MATERIALS (Description)	BLOWS PER 6 IN (N VALUE)	M.C. (%)	AASHTO GRAVEL (%)	AASHTO SAND (%)	AASHTO FINES (%)	LL (%)	PI (%)
		25.0 ft - 27.0 ft, SiCl, Shelby Tube - (CL) Silty clay [Sample 4U]. A-6, Rec. = 2.0 ft	NA (Tube)	32.0				30	10
SLOPE STABILIZATION PILE TIP EL. 811.00 +/-									
27.5		27.0 ft - 29.0 ft, SaSiGr, Gray, Wet, (GM) Silty, Sandy GRAVEL, medium dense [Sample 5D]. Could not push vane past 27.3 ft., Rec. = 1.0 ft	6-8-22-50 (30)						
30.0		29.0 ft, Triconed through cobble from 28.7 to 29.0 ft. End of exploration at 30.0 ft in Glacial Till. Boring backfilled with cuttings upon completion. Hole stopped @ 30.0 ft							
32.5									
35.0									
37.5									
40.0									
42.5									
45.0									
47.5									

Notes:
- Boring location estimated from swing ties. Location not surveyed.

LOG OF BORING & WELL 123-87438 CLD LUNENBURG.GPJ VT AOT.GDT 10/2/14

CLD 12-0106 MODEL: Bor06

CONSULTING ENGINEERS

PROJECT NAME: LUNENBURG
PROJECT NUMBER: NH CULV(27)

FILE NAME: llb294/cos/zllb294bor.dgn
PROJECT LEADER: J. BYATT
DESIGNED BY: S. BEAUMONT
BORING LOGS SHEET 5

PLOT DATE: 8/6/2015
DRAWN BY: M. SMITH
CHECKED BY: J. BYATT
SHEET 37 OF 74

STATE OF VERMONT
AGENCY OF TRANSPORTATION
MATERIALS & RESEARCH SECTION
SUBSURFACE INFORMATION

BORING NUMBER: BB-LC-202
SHEET 1 of 2
DATE STARTED: 1/30/13
DATE COMPLETED: 1/31/13

PROJECT NAME: CLD Lunenburg Culvert
SITE NAME:
STATION: 429+85
OFFSET: 51 RT
VTSPG: N 724735.64 ft E 1868016.72 ft

PROJECT NUMBER: 123-87438
SITE NUMBER: BR 126
GROUND ELEVATION: 844.0 ft
GROUNDWATER DEPTH: 7.2 ft 1/31/13
PROJECT PIN NUMBER: Lunenburg NH Culv (27)

BORING CREW:
DRILLER: D. Palmer
LOGGER: M. Henrick
BORING RIG: Diedrich D-50 Track

BORING TYPE: WASH BORE
SAMPLE TYPE: SPLIT BARREL & TUBE
HAMMER TYPE:
CHECKED BY: JDL

DEPTH (ft)	SYMBOL	CLASSIFICATION OF MATERIALS (Description)	BLOWS PER 6 IN (N VALUE)	M.C. (%)	AASHTO GRAVEL (%)	AASHTO SAND (%)	AASHTO FINES (%)	LL (%)	PI (%)
2.5		2.0 ft - 3.5 ft, Driller reports gravel based on drill behavior from 2.0 to 3.5 ft.							
5.0		4.0 ft - 6.0 ft, GrSaSi Cl, brown, Wet, (CL) Sandy Silty CLAY, some gravel [Sample 1D]., Rec. = 0.1 ft	8-7-6-7 (13)						
7.5		8.0 ft, Could not push vane at 8 ft, washed to 9 ft.							
10.0		9.0 ft - 11.0 ft, SiCl, Gray, Wet, (CL) Silty CLAY, faintly varved [Sample 2D]. 580 psf from FVT at 10 ft, 625 psf from FVT at 11 ft with the 55x110mm vane. A-6, Rec. = 2.0 ft	NA (FVT)	40.0				39	25
12.5									
15.0		15.0 ft - 17.0 ft, SiCl, Gray, Wet, (CL) Silty CLAY, 1/4" varves with thin dessicated lenses [Sample 3D]. 848 psf from FVT at 16 ft, 893 psf from FVT at 17 ft with the 55x110mm vane., Rec. = 2.0 ft	NA (FVT)						
17.5									
20.0		18.0 ft - 20.0 ft, SiCl, Gray, Wet, Tube Sample - (CL) Silty CLAY [Sample 1U]. A-6, Rec. = 1.7 ft	NA (Tube)	36.0				34	14
		20.0 ft - 22.0 ft, SiCl, Gray, Wet, (CL) Silty CLAY, wet, with 1/2-inch varves [Sample 4D]. 1072 psf from FVT at 21 ft, 1027 psf from FVT at 22 ft with the 55x110mm vane., Rec. = 2.0 ft	NA (FVT)	50.7					
22.5									

LOG OF BORING & WELL 123-87438 CLD LUNENBURG.GPJ VT AOT.GDT 10/2/14

STATE OF VERMONT
AGENCY OF TRANSPORTATION
MATERIALS & RESEARCH SECTION
SUBSURFACE INFORMATION

BORING NUMBER: BB-LC-202
SHEET 2 of 2
DATE STARTED: 1/30/13
DATE COMPLETED: 1/31/13

PROJECT NAME: CLD Lunenburg Culvert
SITE NAME:
STATION: 429+85
OFFSET: 51 RT
VTSPG: N 724735.64 ft E 1868016.72 ft

PROJECT NUMBER: 123-87438
SITE NUMBER: BR 126
GROUND ELEVATION: 844.0 ft
GROUNDWATER DEPTH: 7.2 ft 1/31/13
PROJECT PIN NUMBER: Lunenburg NH Culv (27)

BORING CREW:
DRILLER: D. Palmer
LOGGER: M. Henrick
BORING RIG: Diedrich D-50 Track

BORING TYPE: WASH BORE
SAMPLE TYPE: SPLIT BARREL & TUBE
HAMMER TYPE:
CHECKED BY: JDL

DEPTH (ft)	SYMBOL	CLASSIFICATION OF MATERIALS (Description)	BLOWS PER 6 IN (N VALUE)	M.C. (%)	AASHTO GRAVEL (%)	AASHTO SAND (%)	AASHTO FINES (%)	LL (%)	PI (%)
27.5		25.0 ft - 27.0 ft, GrSiSa, Gray, Wet, (SM) Silty medium to coarse SAND [Sample 5D], some fine gravel., Rec. = 1.2 ft	17-20-10-9 (30)						
30.0		29.0 ft - 31.0 ft, SaSiGr, Gray, Wet, (GM) Silty fine to coarse sandy GRAVEL [Sample 6D]., Rec. = 0.8 ft	27-28-16-19 (44)						
32.5		33.0 ft, Bedrock at 33.0 ft based on tricone bit behavior. End of exploration at 33.0 ft. Boring backfill with cuttings upon completion. Hole stopped @ 33.0 ft							
35.0									
37.5									
40.0									
42.5									
45.0									
47.5									

Notes:
- Boring location estimated from swing ties. Location not surveyed.

LOG OF BORING & WELL 123-87438 CLD LUNENBURG.GPJ VT AOT.GDT 10/2/14

CLD 12-0106 MODEL: Bor07

PROJECT NAME: LUNENBURG
PROJECT NUMBER: NH CULV(27)

FILE NAME: llb294/cos/zllb294bor.dgn
PROJECT LEADER: J. BYATT
DESIGNED BY: S. BEAUMONT
BORING LOGS SHEET 6

PLOT DATE: 8/6/2015
DRAWN BY: M. SMITH
CHECKED BY: J. BYATT
SHEET 38 OF 74

STATE OF VERMONT
AGENCY OF TRANSPORTATION
MATERIALS & RESEARCH SECTION
SUBSURFACE INFORMATION

BORING NUMBER: BB-LC-203
SHEET 1 of 2
DATE STARTED: 2/01/13
DATE COMPLETED: 2/01/13

PROJECT NAME: CLD Lunenburg Culvert
SITE NAME:
STATION: 429+60
OFFSET: 7 LT
VTSPG: N 724797.95 ft E 1868011.61 ft

PROJECT NUMBER: 123-87438
SITE NUMBER: BR 126
GROUND ELEVATION: 856.0 ft
GROUNDWATER DEPTH: 17.5 ft 2/01/13
PROJECT PIN NUMBER: Lunenburg NH Culv (27)

BORING CREW:
DRILLER: D. Palmer
LOGGER: M. Henrick
BORING RIG: Diedrich D-50 Track

BORING TYPE: HOLLOW STEM AUGER
SAMPLE TYPE: SPLIT BARREL
HAMMER TYPE:
CHECKED BY: JDL

DEPTH (ft)	SYMBOL	CLASSIFICATION OF MATERIALS (Description)	BLOWS PER 6 IN (N VALUE)	M.C. (%)	AASHTO GRAVEL (%)	AASHTO SAND (%)	AASHTO FINES (%)
2.5		0.0 ft - 15.0 ft, Roadway fill, no samples collected.					
5.0							
7.5							
10.0		10.0 ft - 14.0 ft, Brown gravel, little sand 10-14 ft observed in auger cuttings.					
12.5							
		14.0 ft, Gray, dry silty sand at 14 ft observed in auger cuttings.					
15.0		15.0 ft - 17.0 ft, SaSi, gray-brown, Wet, (ML) SILT, some fine sand, non-plastic, homogeneous [Sample 1D]., Rec. = 1.7 ft	5-4-4-5 (8)				
17.5		17.0 ft - 18.5 ft, SaSi, Gray-brown, Wet, (ML) SILT, some fine sand, non-plastic, homogeneous [Sample 2D]., Rec. = 1.8 ft	7-4-6-11 (10)				
		18.5 ft - 18.8 ft, Dark gray, Wet, (OL) Decaying wood and Peat, non-plastic [Sample 2D].					
20.0		18.8 ft - 19.0 ft, SaSi, Wet, (ML) SILT, some fine sand, non-plastic, homogeneous [Sample 2D].					
		20.0 ft - 22.0 ft, ClSi, Gray-brown, Wet, (ML) SILT, some clay, grades to medium gray, slight cracking, non-plastic [Sample 3D]., Rec. = 1.8 ft	5-11-10-12 (21)	22.9	0.0	1.1	98.9
22.5		22.0 ft - 24.0 ft, ClSi, Gray, Wet, (CL) Clayey SILT, very stiff, varved with thin dessicated layers [Sample 4D]. 2829 psf from FVT at 24.4 ft with the 16x32mm vane. Drove vane through spoon hole., Rec. = 1.6 ft	13-15-16-15 (31)				

LOG OF BORING & WELL 123-87438 CLD LUNENBURG.GPJ VT AOT.GDT 10/2/14

STATE OF VERMONT
AGENCY OF TRANSPORTATION
MATERIALS & RESEARCH SECTION
SUBSURFACE INFORMATION

BORING NUMBER: BB-LC-203
SHEET 2 of 2
DATE STARTED: 2/01/13
DATE COMPLETED: 2/01/13

PROJECT NAME: CLD Lunenburg Culvert
SITE NAME:
STATION: 429+60
OFFSET: 7 LT
VTSPG: N 724797.95 ft E 1868011.61 ft

PROJECT NUMBER: 123-87438
SITE NUMBER: BR 126
GROUND ELEVATION: 856.0 ft
GROUNDWATER DEPTH: 17.5 ft 2/01/13
PROJECT PIN NUMBER: Lunenburg NH Culv (27)

BORING CREW:
DRILLER: D. Palmer
LOGGER: M. Henrick
BORING RIG: Diedrich D-50 Track

BORING TYPE: HOLLOW STEM AUGER
SAMPLE TYPE: SPLIT BARREL
HAMMER TYPE:
CHECKED BY: JDL

DEPTH (ft)	SYMBOL	CLASSIFICATION OF MATERIALS (Description)	BLOWS PER 6 IN (N VALUE)	M.C. (%)	AASHTO GRAVEL (%)	AASHTO SAND (%)	AASHTO FINES (%)
		25.0 ft - 27.0 ft, ClSi, Gray, Wet, (CL) Clayey SILT, trace wood, varved [Sample 5D]., Rec. = 0.5 ft	3-3-5-7 (8)				
27.5		27.0 ft - 27.7 ft, ClSi, Gray, Wet, (CL) Clayey SILT, trace wood, varved [Sample 6D]. 3537 psf from FVT at 27.4 ft with the 16x32mm vane., Rec. = 2.0 ft	13-18-12-10 (30)				
		27.7 ft - 29.0 ft, GrClSa Si, Gray, Wet, (ML) Sandy SILT, some clay, some gravel [Sample 6D].					
30.0		30.0 ft - 32.0 ft, SaSiGr, Gray, Wet, (GM) Silty GRAVEL, some fine to coarse sand [Sample 7D]., Rec. = 0.6 ft	7-7-10-13 (17)				
32.5		32.0 ft - 34.0 ft, SaSiGr, Gray, Wet, (GM) Sandy silty GRAVEL [Sample 8D]., Rec. = 0.7 ft	15-12-11-17 (23)				
35.0		34.0 ft, End of exploration in Glacial Till. Boring backfilled with cuttings and approximately 10-inches of cold patch at surface upon completion. Hole stopped @ 34.0 ft					

Notes:
- Boring location estimated from swing ties. Location not surveyed.

LOG OF BORING & WELL 123-87438 CLD LUNENBURG.GPJ VT AOT.GDT 10/2/14

CLD 12-0106 MODEL: Bor08

CONSULTING ENGINEERS

PROJECT NAME: LUNENBURG
PROJECT NUMBER: NH CULV(27)

FILE NAME: llb294/cos/zllb294bor.dgn
PROJECT LEADER: J. BYATT
DESIGNED BY: S. BEAUMONT
BORING LOGS SHEET 7

PLOT DATE: 8/6/2015
DRAWN BY: M. SMITH
CHECKED BY: J. BYATT
SHEET 39 OF 74

STATE OF VERMONT
AGENCY OF TRANSPORTATION
MATERIALS & RESEARCH SECTION
SUBSURFACE INFORMATION

BORING NUMBER: BB-LC-204
SHEET 1 of 1
DATE STARTED: 1/29/13
DATE COMPLETED: 1/29/13

PROJECT NAME: CLD Lunenburg Culvert
SITE NAME:
STATION: 429+28
OFFSET: 10 RT
VTSPG: N 724789.97 ft E 1867976.29 ft

PROJECT NUMBER: 123-87438
SITE NUMBER: BR 126
GROUND ELEVATION: 854.0 ft
GROUNDWATER DEPTH: NE 1/29/13
PROJECT PIN NUMBER: Lunenburg NH Culv (27)

BORING CREW:
DRILLER: D. Palmer
LOGGER: M. Henrick
BORING RIG: Diedrich D-50 Track

BORING TYPE: WASH BORE
SAMPLE TYPE: SPLIT BARREL
HAMMER TYPE:
CHECKED BY: JDL

DEPTH (ft)	SYMBOL	CLASSIFICATION OF MATERIALS (Description)	BLOWS PER 6 IN (N VALUE)	M.C. (%)	AASHTO GRAVEL (%)	AASHTO SAND (%)	AASHTO FINES (%)
2.5		0.0 ft - 9.0 ft, Asphalt at roadway surface, no samples collected until 9 ft.					
5.0		4.0 ft, Gravel and small cobbles at 5 ft based on drill behavior.					
7.5							
10.0		9.0 ft - 11.0 ft, SiSiGr, Light brown, Wet, (GM) Silty coarse GRAVEL, some fine to coarse sand, medium dense [Sample 1D]., Rec. = 0.2 ft	24-12-11-14 (23)				
12.5		11.0 ft - 13.0 ft, SaGrSi, Light brown, Wet, (ML) Gravelly SILT, some fine to medium sand, dense [Sample 2D]., Rec. = 0.9 ft	44-20-27-13 (47)				
15.0		13.0 ft - 15.0 ft, No recovery - suspect spoon pushed cobble [Sample 3D]., Rec. = 0.0 ft	35-21-17-12 (38)				
17.5		15.0 ft - 16.3 ft, SaSiGr, Tan, Wet, (GM) Silty, fine to medium sandy, GRAVEL, dense [Sample 4D]. Hit refusal at 16.3 ft., Rec. = 0.2 ft	15-21-100 (121)				
		16.3 ft - 17.2 ft, Triconed through concrete culvert. Abandoned hole at 17.2 ft. Plugged hole with bentonite chips and soil cuttings from 7 ft. Placed and compacted approximately 10 inches of cold patch at surface.					
20.0		Hole stopped @ 17.2 ft					
22.5							

Notes:
- Boring location estimated from swing ties. Location not surveyed.

LOG OF BORING & WELL 123-87438 CLD LUNENBURG.GPJ VT AOT.GDT 10/2/14

BOTTOM OF
MAT FOUNDATION
EL. 827.20 +/-

STATE OF VERMONT
AGENCY OF TRANSPORTATION
MATERIALS & RESEARCH SECTION
SUBSURFACE INFORMATION

BORING NUMBER: BB-LC-204A
SHEET 1 of 2
DATE STARTED: 2/01/13
DATE COMPLETED: 2/01/13

PROJECT NAME: CLD Lunenburg Culvert
SITE NAME:
STATION: 429+48
OFFSET: 15 RT
VTSPG: N 724779.77 ft E 1867995.92 ft

PROJECT NUMBER: 123-87438
SITE NUMBER: BR 126
GROUND ELEVATION: 854.0 ft
GROUNDWATER DEPTH: 19.0 ft 2/01/13
PROJECT PIN NUMBER: Lunenburg NH Culv (27)

BORING CREW:
DRILLER: D. Palmer
LOGGER: M. Henrick
BORING RIG: Diedrich D-50 Track

BORING TYPE: WASH BORE
SAMPLE TYPE: SPLIT BARREL & TUBE
HAMMER TYPE:
CHECKED BY: JDL

DEPTH (ft)	SYMBOL	CLASSIFICATION OF MATERIALS (Description)	BLOWS PER 6 IN (N VALUE)	M.C. (%)	AASHTO GRAVEL (%)	AASHTO SAND (%)	AASHTO FINES (%)	LL (%)	PI (%)
2.5		0.0 ft - 15.0 ft, Embankment fill, no samples collected.							
5.0									
7.5									
10.0									
12.5									
15.0		15.0 ft - 17.0 ft, No recovery, suspect spoon pushed cobbles/gravel [Sample 1D]. Failed vane attempt at 15 ft, could not push vane., Rec. = 0.0 ft	11-7-6-3 (13)						
17.5		17.0 ft - 19.0 ft, GrSiCl, Gray, Wet, (CL) Silty gravelly CLAY, [Sample 2D], low recovery, suspect spoon pushed cobble/gravel. Failed vane attempt at 17 ft, could not push vane., Rec. = 0.2 ft	5-3-7-6 (10)						
		19.0 ft, Driller reported gravel in wash to 20 ft.							
20.0		20.0 ft - 22.0 ft, SiCl, Gray, Wet, No recovery, gray silty clay on outside of spoon [Sample 3D]. Suspect spoon pushed a cobble. Failed vane attempt at 20 ft, could not push vane., Rec. = 0.0 ft	19-21-16-16 (3" Spoon)						
22.5		22.0 ft - 24.0 ft, SiCl, Gray, Wet, (CL) Silty CLAY, faintly varved in 1/2-inch layers [Sample 4D]. 1126 psf from FVT at 23 ft, 1071 psf from FVT at 24 ft with the 65x130mm vane. A-6, Rec. = 2.0 ft	NA (FVT)	35.0				34	14

LOG OF BORING & WELL 123-87438 CLD LUNENBURG.GPJ VT AOT.GDT 10/2/14

STATE OF VERMONT
AGENCY OF TRANSPORTATION
MATERIALS & RESEARCH SECTION
SUBSURFACE INFORMATION

BORING NUMBER: BB-LC-204A
SHEET 2 of 2
DATE STARTED: 2/01/13
DATE COMPLETED: 2/01/13

PROJECT NAME: CLD Lunenburg Culvert
SITE NAME:
STATION: 429+48
OFFSET: 15 RT
VTSPG: N 724779.77 ft E 1867995.92 ft

PROJECT NUMBER: 123-87438
SITE NUMBER: BR 126
GROUND ELEVATION: 854.0 ft
GROUNDWATER DEPTH: 19.0 ft 2/01/13
PROJECT PIN NUMBER: Lunenburg NH Culv (27)

BORING CREW:
DRILLER: D. Palmer
LOGGER: M. Henrick
BORING RIG: Diedrich D-50 Track

BORING TYPE: WASH BORE
SAMPLE TYPE: SPLIT BARREL & TUBE
HAMMER TYPE:
CHECKED BY: JDL

DEPTH (ft)	SYMBOL	CLASSIFICATION OF MATERIALS (Description)	BLOWS PER 6 IN (N VALUE)	M.C. (%)	AASHTO GRAVEL (%)	AASHTO SAND (%)	AASHTO FINES (%)	LL (%)	PI (%)
27.5		25.0 ft - 27.0 ft, SiCl, Gray, Wet, (CL) Silty CLAY, Shelby tube sample with GUS sampler [Sample 1U]. A-6, Rec. = 2.0 ft	NA (Tube)	38.0				34	13
30.0		27.0 ft - 29.0 ft, SiCl, Gray, Wet, No spoon collected. 1049 psf from FVT at 28 ft, 1027 psf from FVT at 29 ft with the 55x110mm vane.	NA (FVT)						
32.5		32.0 ft - 34.0 ft, Driller reported sand and gravel lenses from 32 to 34 ft.							
35.0		34.0 ft - 36.0 ft, Till based on drill behavior from 34 to 36 ft. End of boring at 36.0 ft in Glacial Till. Boring backfilled with soil cuttings upon completion. Placed and compacted approximately 8 inches of cold patch at surface.							
37.5		Hole stopped @ 36.0 ft							
40.0									
42.5									
45.0									
47.5									

Notes:
- Boring location estimated from swing ties. Location not surveyed.

LOG OF BORING & WELL 123-87438 CLD LUNENBURG.GPJ VT AOT.GDT 10/2/14

CLD 12-0106 MODEL: Bor09

PROJECT NAME: LUNENBURG
PROJECT NUMBER: NH CULV(27)

FILE NAME: llb294/cos/zllb294bor.dgn
PROJECT LEADER: J. BYATT
DESIGNED BY: S. BEAUMONT
BORING LOGS SHEET 8

PLOT DATE: 8/6/2015
DRAWN BY: M. SMITH
CHECKED BY: J. BYATT
SHEET 40 OF 74

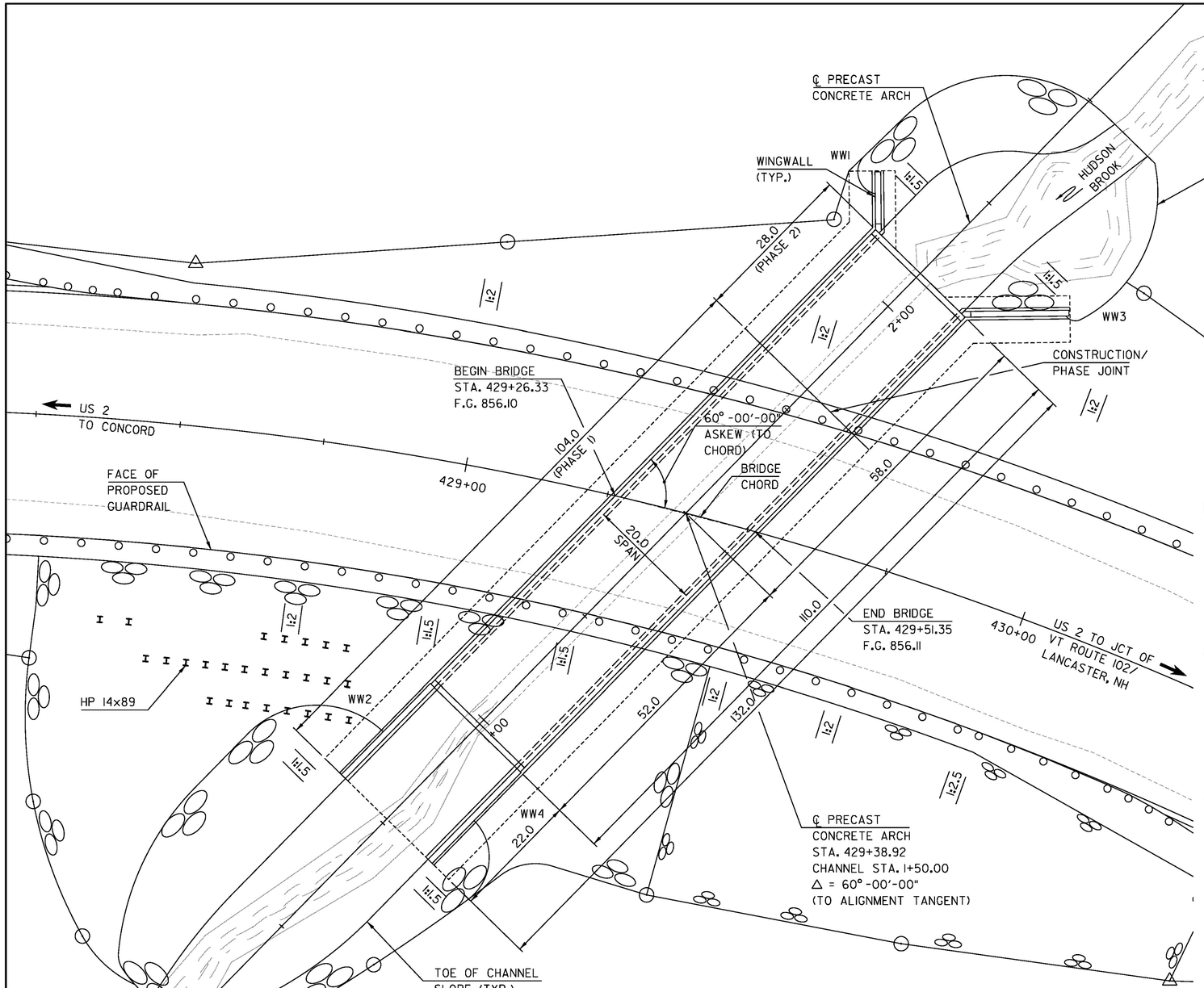

PLAN

SCALE 1" = 10'-0"

10 0 10

SCALE IN FEET

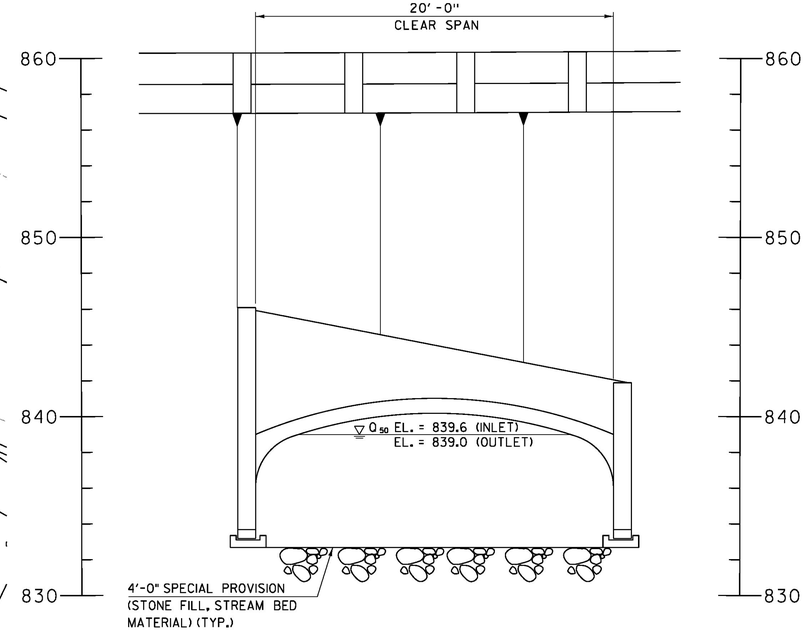

DOWNSTREAM ELEVATION

SCALE 1/4" = 1'-0"

1 0 2 4 6

SCALE IN FEET

LEGEND:

STONE FILL, TYPE II

STONE FILL, TYPE III

SPECIAL PROVISION (STONE FILL, STREAM BED MATERIAL)

EXISTING CULVERT DATA:
30" IRON PIPE EXTENDED AT OUTLET
WITH 4'-0" x 4'-0" CONCRETE BOX
EXTENDED AT INLET WITH A 27"/28"
LINER

CLD 12-0006 MODEL: PE01

PROJECT NAME: LUNENBURG	
PROJECT NUMBER: NH CULV(27)	
FILE NAME: llb294/cos/zllb294pe.dgn	PLOT DATE: 8/6/2015
PROJECT LEADER: J. BYATT	DRAWN BY: M. SMITH
DESIGNED BY: S. BEAUMONT	CHECKED BY: J. BYATT
PLAN AND ELEVATION	SHEET 41 OF 74

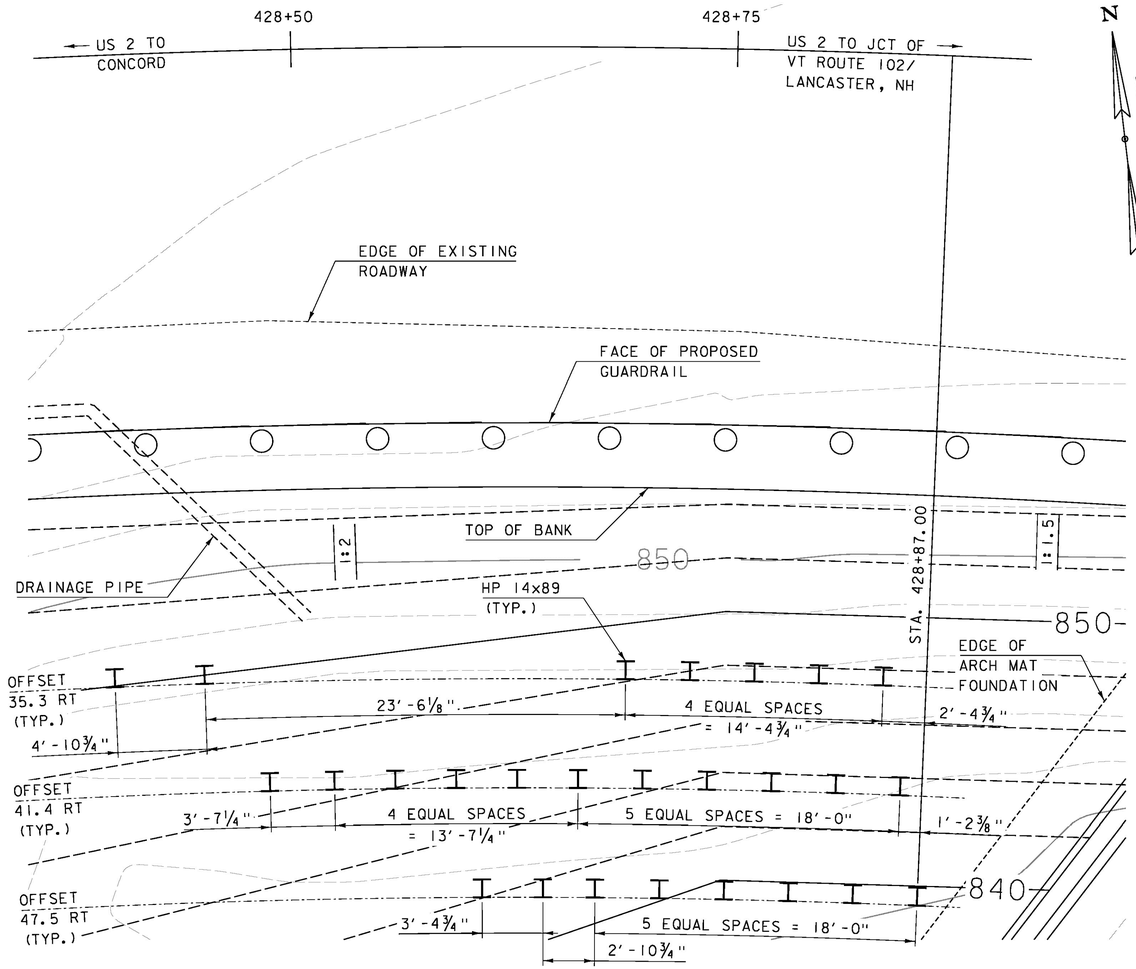

SLOPE STABILIZATION PILE LAYOUT PLAN

SCALE: 1/4" = 1'-0"

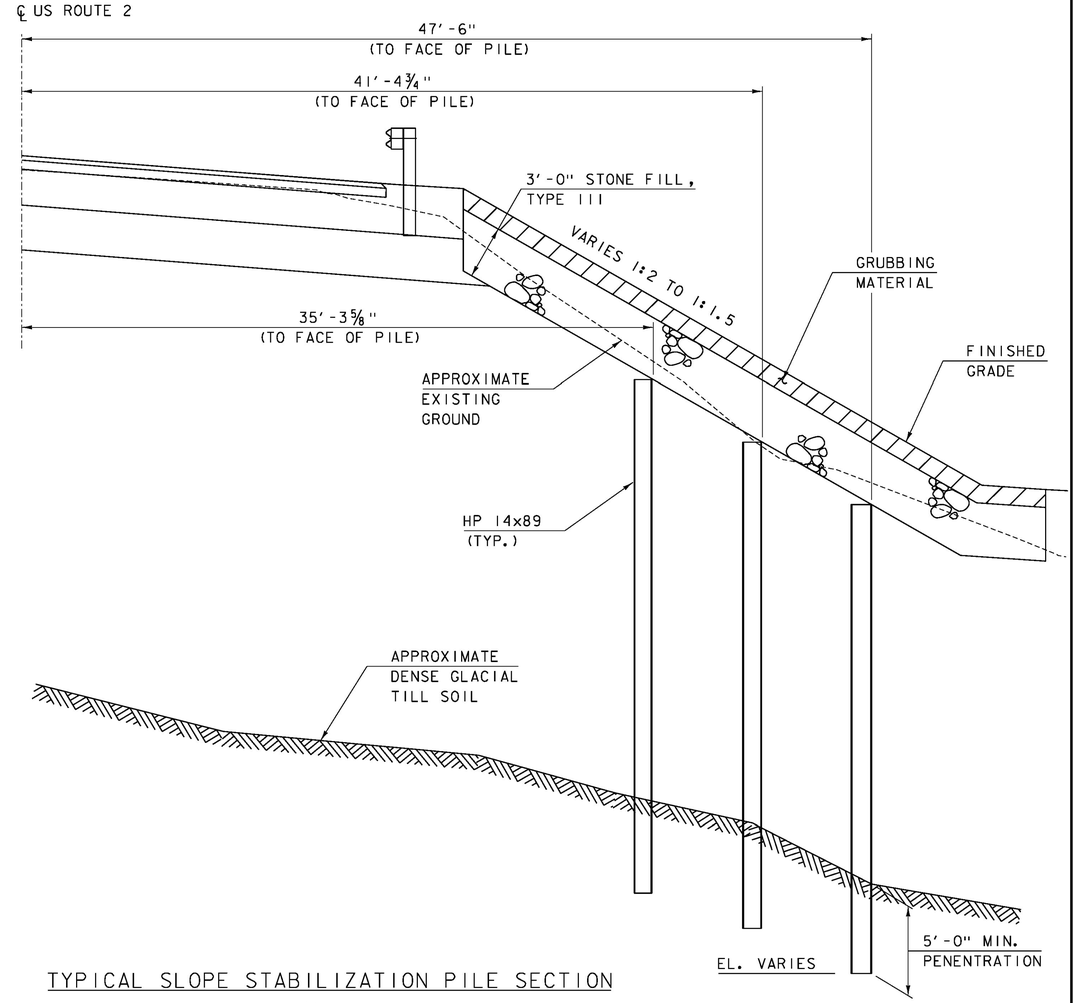

TYPICAL SLOPE STABILIZATION PILE SECTION

SCALE: 1/4" = 1'-0"

SLOPE STABILIZATION PILE NOTES:

1. A TOTAL OF 13 PILES A MINIMUM OF 50 FEET IN LENGTH THAT WILL BE USED FOR SLOPE STABILIZATION ARE AVAILABLE AT THE VTRANS DISTRICT 5 FORT GARAGE IN COLCHESTER. THE REMAINING PILES ARE AVAILABLE AT THE VTRANS DISTRICT 5 FERRISBURGH YARD AND SHALL BE A MINIMUM OF 60 FEET IN LENGTH. AN ON-SITE MEETING AT FERRISBURGH YARD SHALL BE REQUIRED PRIOR TO REMOVING THE PILES. ALL PILES SHALL BE DELIVERED TO THE SITE AT THE CONTRACTOR'S EXPENSE. THE CONTACT INFORMATION FOR THE DISTRICT 5 OFFICE IS:

PRIMARY:	SECONDARY:
REJEAN LAFLECHE	DICK HOSKING
802-654-1721 (W)	802-654-1722 (W)
802-343-1699 (C)	802-488-0222 (C)

2. ALL SLOPE STABILIZATION PILING SHALL BE IN ACCORDANCE WITH VTRANS STANDARD SPECIFICATION SECTION 505 UNLESS OTHERWISE NOTED IN THE PLANS. TRANSPORTATION AND INSTALLATION OF THE PILING WILL BE PAID UNDER CONTRACT ITEM 900.640, "SPECIAL PROVISION (INSTALLATION OF STEEL PILINGS, HP 14X89)".

3. THE PILES SHALL BE INSTALLED PRIOR TO PLACEMENT OF ADDITIONAL EMBANKMENT FILL OR EXCAVATION AT THE TOE OF SLOPE WEST OF THE CULVERT TO MAINTAIN SATISFACTORY GLOBAL SLOPE STABILITY DURING CONSTRUCTION.

4. EQUIPMENT USED TO INSTALL THE PILES SHALL BE LOCATED AT THE BASE OF THE EXISTING EMBANKMENT AREA AND NOT AT THE CREST OF THE EMBANKMENT UNLESS THE CONTRACTOR SUBMITS DESIGN CALCULATIONS, SEALED BY A LICENSED ENGINEER IN THE STATE OF VERMONT, THAT DEMONSTRATE A SATISFACTORY SLOPE STABILITY FACTOR OF SAFETY OF THE EMBANKMENT UNDER THE EQUIPMENT LOAD.

5. ACCEPTANCE OF THE PILES SHALL BE BASED ON INSTALLATION OF THE PILES TO A MINIMUM DEPTH OF 5 FEET BELOW THE SURFACE OF DENSE GLACIAL TILL SOILS AS DETERMINED BY THE ENGINEER BASED ON THE PENETRATION RATE. A MAXIMUM ULTIMATE AXIAL PILE CAPACITY OR NOMINAL AXIAL PILE RESISTANCE IS NOT A PROJECT REQUIREMENT. PILE LOAD TESTS ARE NOT REQUIRED.

6. VIBRATORY OR SONIC METHODS TO INSTALL THE PILES SHALL BE ACCEPTABLE PROVIDED THAT THE PILES ARE INSTALLED TO THE MINIMUM DEPTH OF 5 FEET BELOW THE SURFACE OF DENSE GLACIAL TILL SOILS.

7. PILE LENGTH ESTIMATES ARE BASED ON THE ESTIMATED ELEVATION OF THE SURFACE OF DENSE GLACIAL TILL SOILS IN THE PILE STABILIZATION AREA. FOR ESTIMATING PURPOSES ONLY, THE FINISHED PILE LENGTHS BELOW THE CUTOFF ELEVATION VARY FROM 23 TO 31 FEET WITH AN AVERAGE OF 27 FEET. ACTUAL PILE LENGTHS MAY VARY.

8. THE NOMINAL AXIAL PILE RESISTANCE IS ESTIMATED TO BE 150 KIPS BASED ON STATIC CAPACITY ANALYSES.

9. THE TOPS OF THE PILES AFTER DRIVING SHALL NOT VARY FROM THE POSITION SHOWN ON THE PLANS BY MORE THAN 4 INCHES.

10. PREDRILLING OF THE PILES SHALL NOT BE PERMITTED.

11. PILE SPLICES SHALL NOT BE PERMITTED.

12. A HARDENED DRIVING POINT IS NOT REQUIRED, HOWEVER ANY PILES SUPPLIED BY THE AGENCY THAT ALREADY HAVE A DRIVING POINT SHALL BE PREFERABLY USED OVER PILES THAT HAVE NO TIP.

13. PILES SHALL BE CUT OFF AT THE BOTTOM OF THE STONE FILL LAYER, APPROXIMATELY 4 FEET BELOW FINISHED GRADE.

PROJECT NAME: LUNENBURG
PROJECT NUMBER: NH CULV(27)

CONSULTING ENGINEERS

FILE NAME: llb294/cos/zllb294slopepiles.dgn PLOT DATE: 8/6/2015
PROJECT LEADER: J. BYATT DRAWN BY: M. SMITH
DESIGNED BY: S. BEAUMONT CHECKED BY: J. BYATT
SLOPE STABILIZATION PILES SHEET SHEET 42 OF 74

CLD 12-0106 MODEL: Sheet 1

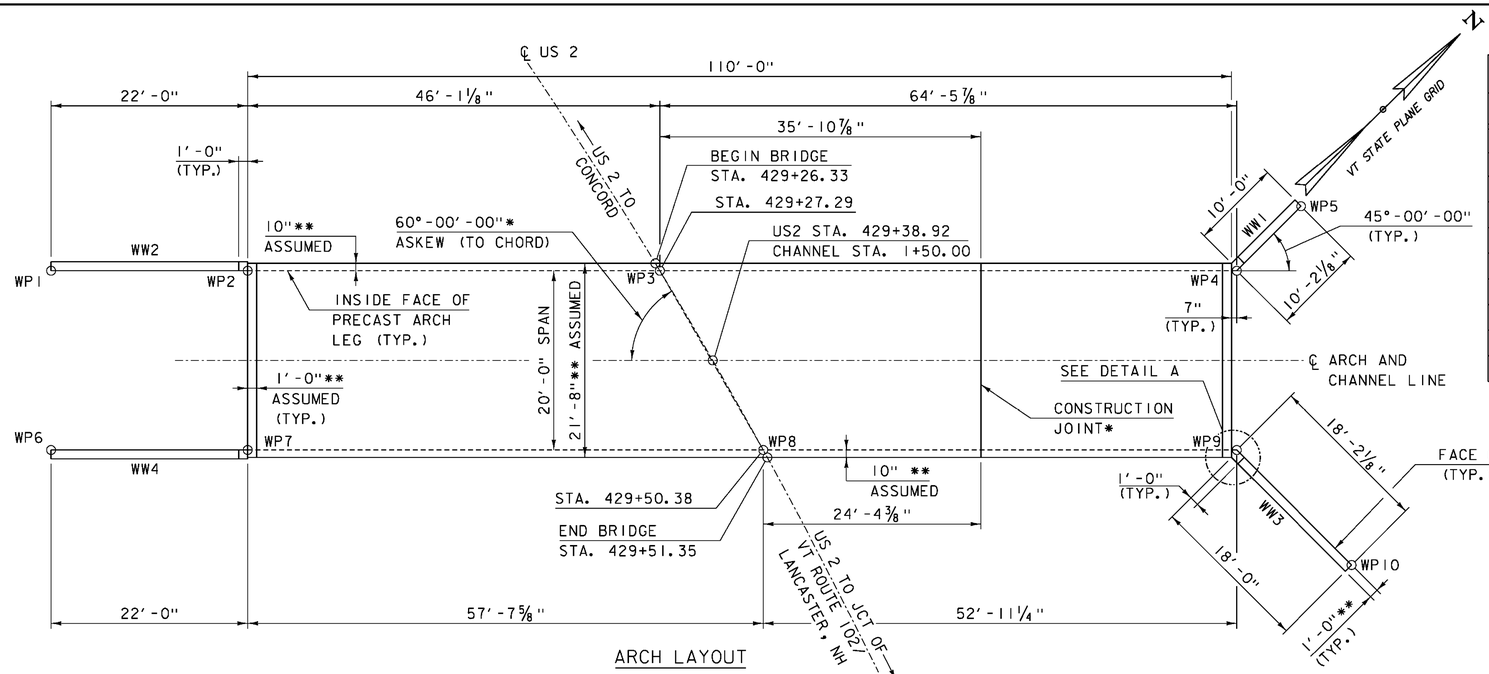

ARCH LAYOUT

SCALE: ⅛" = 1′-0"

WORKING POINTS				
	STA.	OFFSET	NORTHING	EASTING
WP1	428+88.14	57.07	724,751.1812	1,867,930.3047
WP2	429+01.70	38.91	724,766.9077	1,867,945.6890
WP3	429+27.29	0.00	724,799.8564	1,867,977.9207
WP4	429+57.69	-56.07	724,845.9555	1,868,023.0168
WP5	429+55.04	-65.82	724,856.1333	1,868,022.9048
WP6	429+06.73	68.29	724,737.1954	1,867,944.6015
WP7	429+19.92	49.75	724,752.9219	1,867,959.9858
WP8	429+50.38	0.00	724,794.1249	1,868,000.2922
WP9	429+74.00	-46.89	724,831.9670	1,868,037.3109
WP10	429+89.79	-52.90	724,832.1669	1,868,055.4882

NOTES:

* ANGLE IS TO A CHORD BETWEEN WP3 AND WP8.

** SEE PRECAST CONCRETE ARCH NOTES ON SHEET 10.

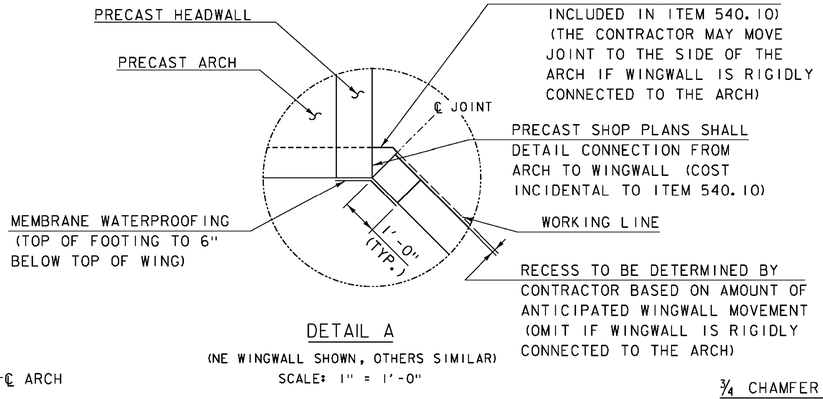

DETAIL A

(NE WINGWALL SHOWN, OTHERS SIMILAR)

SCALE: 1" = 1′-0"

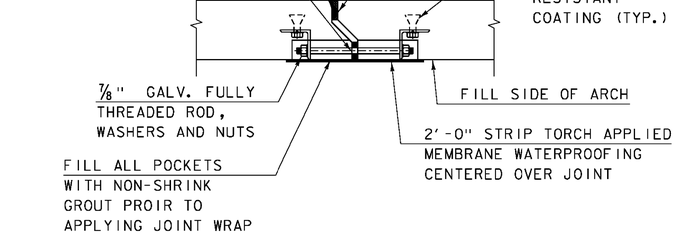

ARCH JOINT DETAIL

SCALE: 1" = 1′-0"

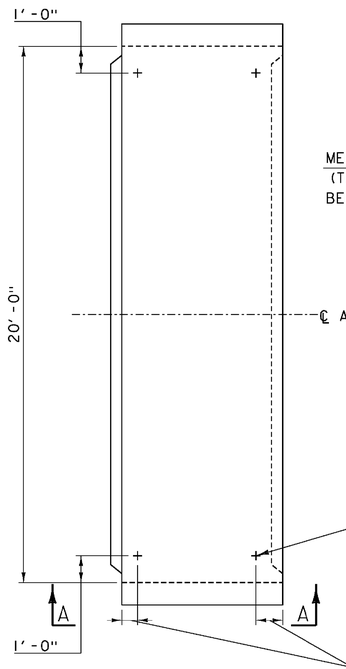

FERRULE LOOP INSERT PLAN

SCALE: ⅜" = 1′-0"

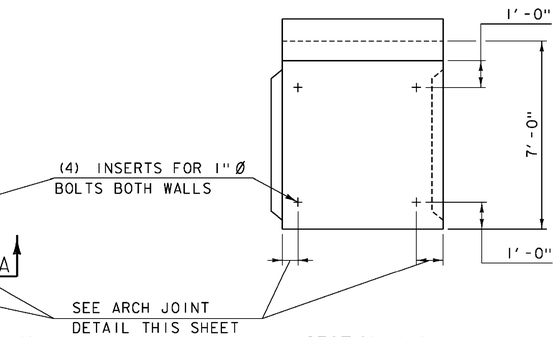

SECTION A-A

SCALE: ⅜" = 1′-0"

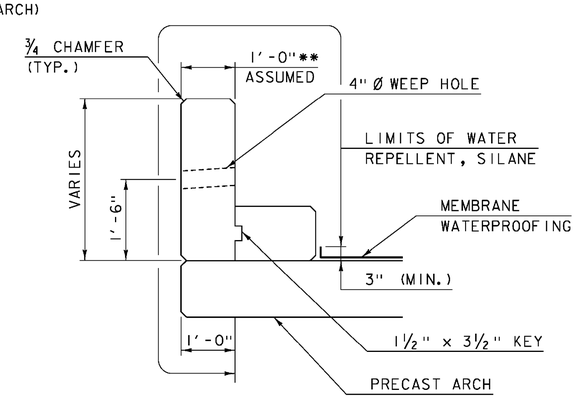

TYPICAL DETACHED HEADWALL DETAIL

SCALE: ¾" = 1′-0"

•NOTE: FOR ACTUAL DETAILS AND DIMENSIONS SEE FABRICAITON DRAWINGS PROVIDED BY CONTECH ENGINEERED SOLUTIONS LLC. AND APPROVED BY CLD ON 4/22/16. TYPICAL FOR ALL PRECAST UNITS

CONSULTING ENGINEERS

PROJECT NAME: LUNENBURG
PROJECT NUMBER: NH CULV(27)

FILE NAME: llb294/cos/zllb294sub.dgn
PROJECT LEADER: J. BYATT
DESIGNED BY: S. BEAUMONT
ARCH AND WINGWALL DETAILS SHEET 1

PLOT DATE: 8/6/2015
DRAWN BY: M. SMITH
CHECKED BY: J. BYATT
SHEET 43 OF 74

CLD 12-0106 MODEL: Sheet05

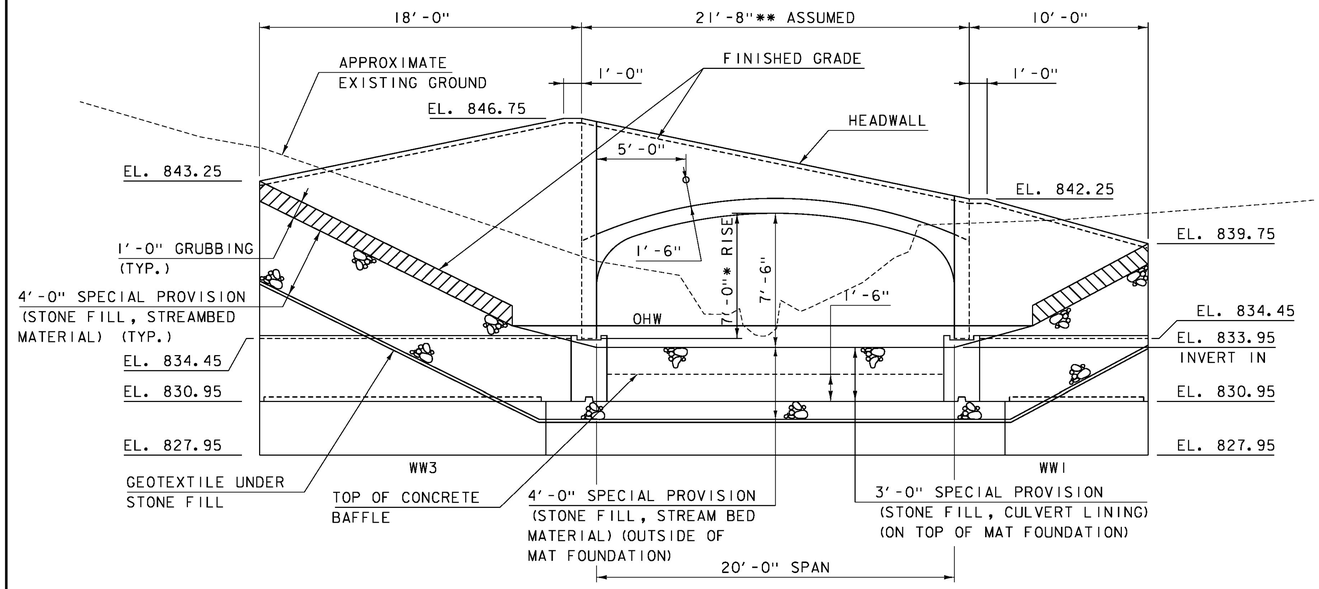

UPSTREAM ELEVATION

SCALE: 1/4" = 1'-0"

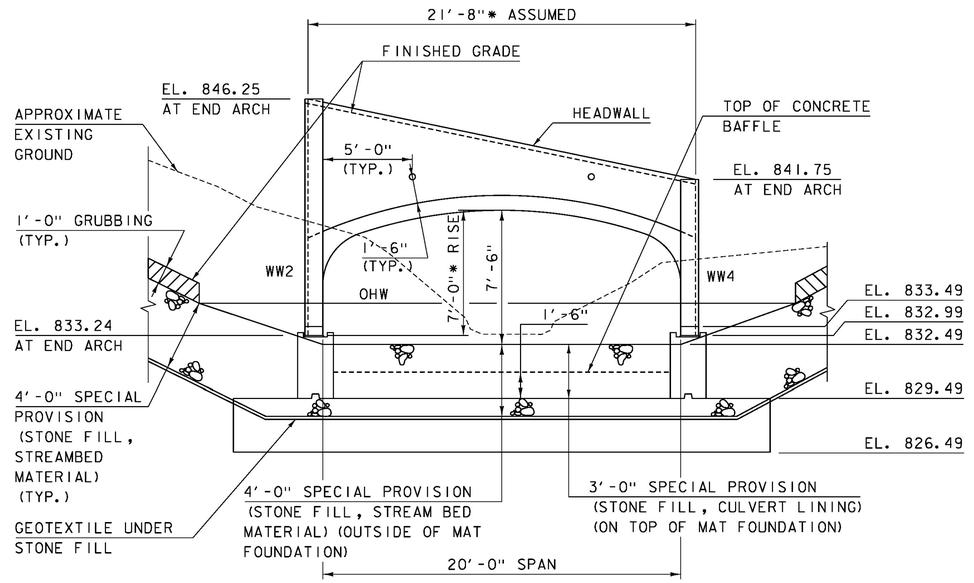

DOWNSTREAM ELEVATION

SCALE: 1/4" = 1'-0"

NOTE: ALL ELEVATIONS SHOWN AT END OF MAT FOUNDATION (INVERT OUT) LOCATION UNLESS OTHERWISE NOTED.

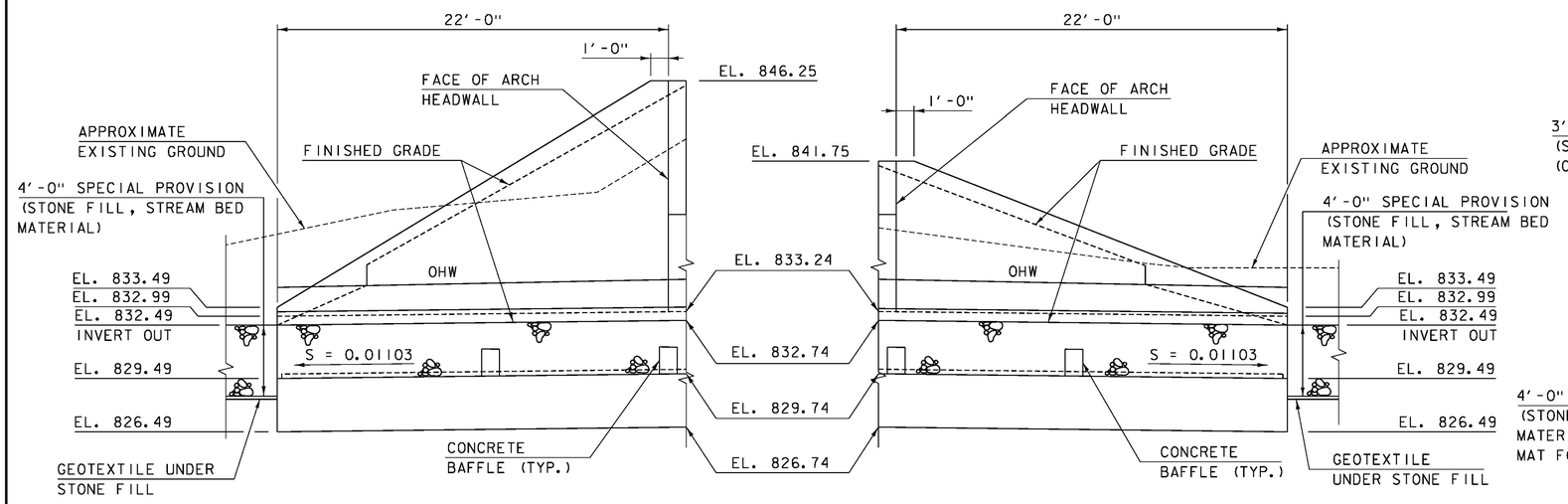

WW2 ELEVATION

WW4 ELEVATION

DOWNSTREAM WINGWALL ELEVATIONS

SCALE: 1/4" = 1'-0"

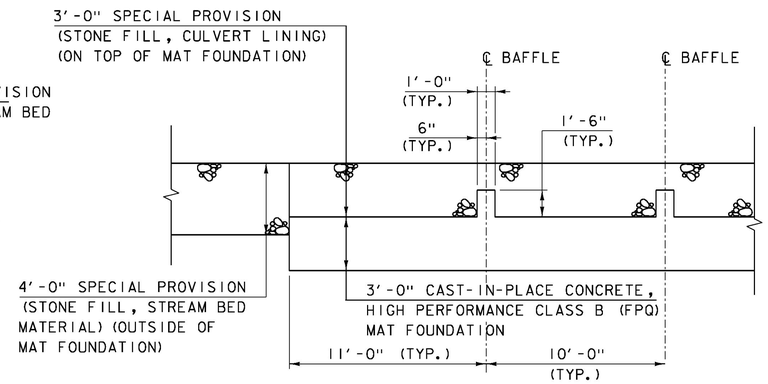

TYPICAL BAFFLE DETAIL

SCALE: 1/4" = 1'-0"

NOTES:

* SEE PRECAST CONCRETE ARCH NOTES ON SHEET 10.

ALL TOP OF PEDESTAL WALL ELEVATIONS ARE TO THE WORKING LINE AS DEFINED ON THE TYPICAL SECTIONS ON SHEET 46.

PROJECT NAME: LUNENBURG	
PROJECT NUMBER: NH CULV(27)	
FILE NAME: llb294/cos/zllb294sub.dgn	PLOT DATE: 8/6/2015
PROJECT LEADER: J. BYATT	DRAWN BY: M. SMITH
DESIGNED BY: S. BEAUMONT	CHECKED BY: J. BYATT
ARCH AND WINGWALL DETAILS SHEET 2	SHEET 44 OF 74

CLD 12-0106 MODEL: Sheet06

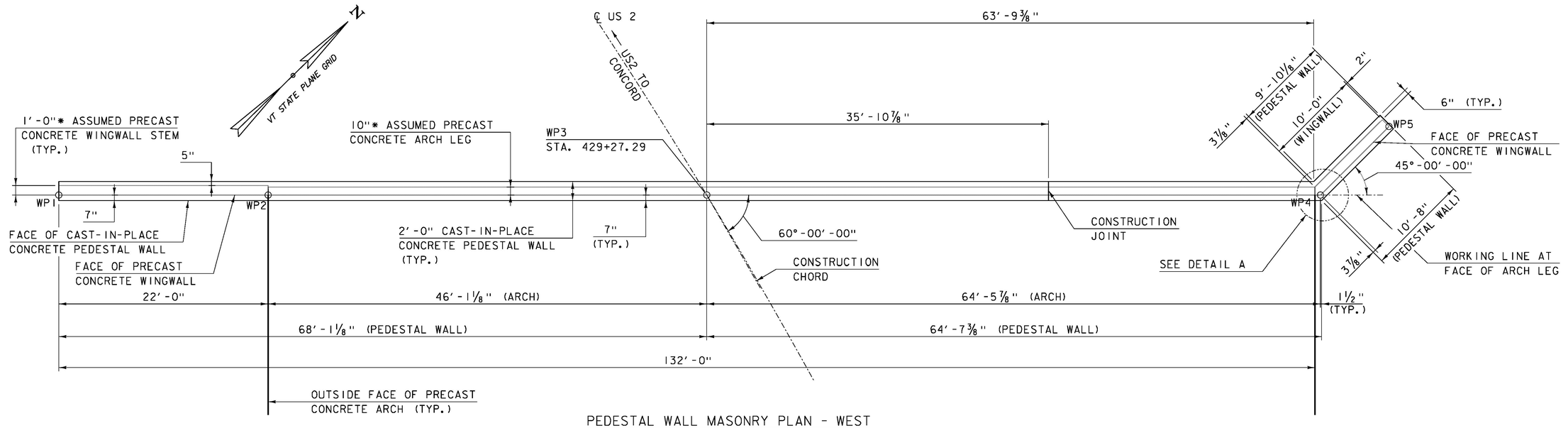

PEDESTAL WALL MASONRY PLAN - WEST

SCALE: 3/16" = 1′-0"

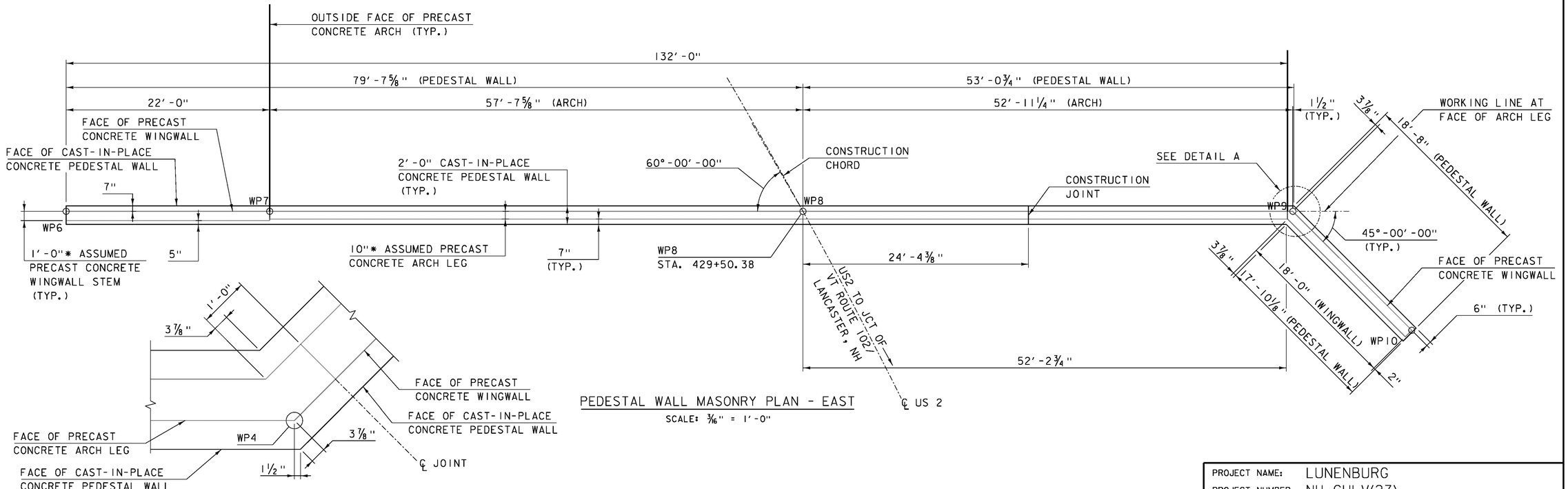

PEDESTAL WALL MASONRY PLAN - EAST

SCALE: 3/16" = 1′-0"

DETAIL A

(NORTHWEST WINGWALL SHOWN, OTHER WINGWALLS SIMILAR)

SCALE: 1" = 1′-0"

NOTES:

* SEE PRECAST CONCRETE ARCH NOTES ON SHEET 10.

PROJECT NAME: LUNENBURG	
PROJECT NUMBER: NH CULV(27)	
FILE NAME: llb294/cos/zllb294sub.dgn	PLOT DATE: 8/6/2015
PROJECT LEADER: J. BYATT	DRAWN BY: M. SMITH
DESIGNED BY: S. BEAUMONT	CHECKED BY: N. CARON
SUBSTRUCTURE DETAILS SHEET 1	SHEET 45 OF 74

CLD 12-0106 MODEL: Sheet07

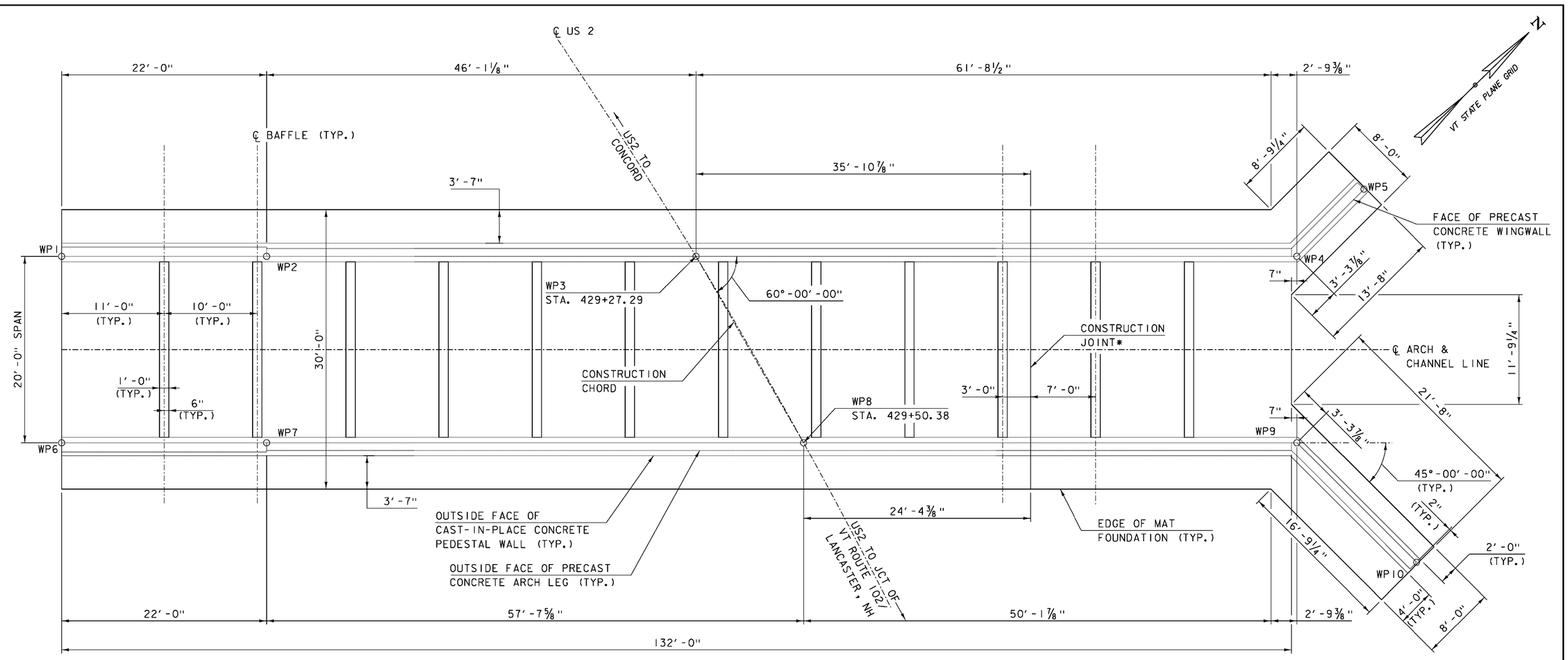

MAT FOUNDATION MASONRY PLAN

SCALE: 3/16" = 1′-0"

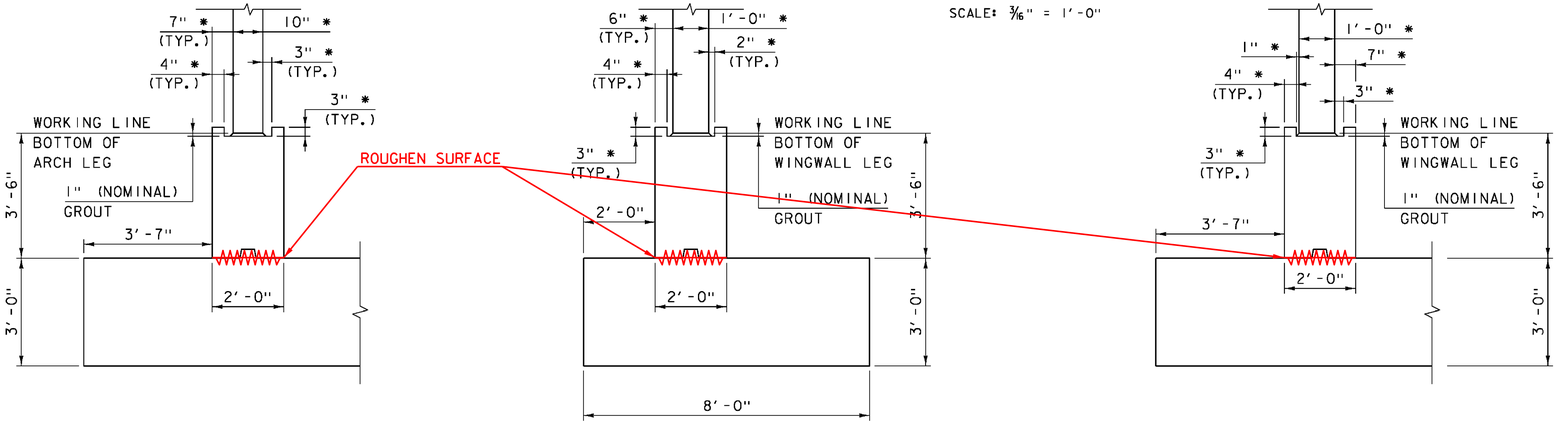

TYPICAL ARCH MAT FOUNDATION SECTION

SCALE: ¾" = 1′-0"

TYPICAL UPSTREAM WINGWALL FOOTNG SECTION

SCALE: ¾" = 1′-0"

TYPICAL DOWNSTREAM WINGWALL MAT FOUNDATION SECTION

SCALE: ¾" = 1′-0"

NOTES:

* ASSUMED. SEE PRECAST CONCRETE ARCH NOTES ON SHEET 10.

PROJECT NAME:	LUNENBURG
PROJECT NUMBER:	NH CULV(27)
FILE NAME: llb294/cos/zllb294sub.dgn	PLOT DATE: 8/6/2015
PROJECT LEADER: J. BYATT	DRAWN BY: M. SMITH
DESIGNED BY: S. BEAUMONT	CHECKED BY: N. CARON
SUBSTRUCTURE DETAILS SHEET 2	SHEET 46 OF 74

CONSULTING ENGINEERS

CLD 12-0106 MODEL: Sheet08

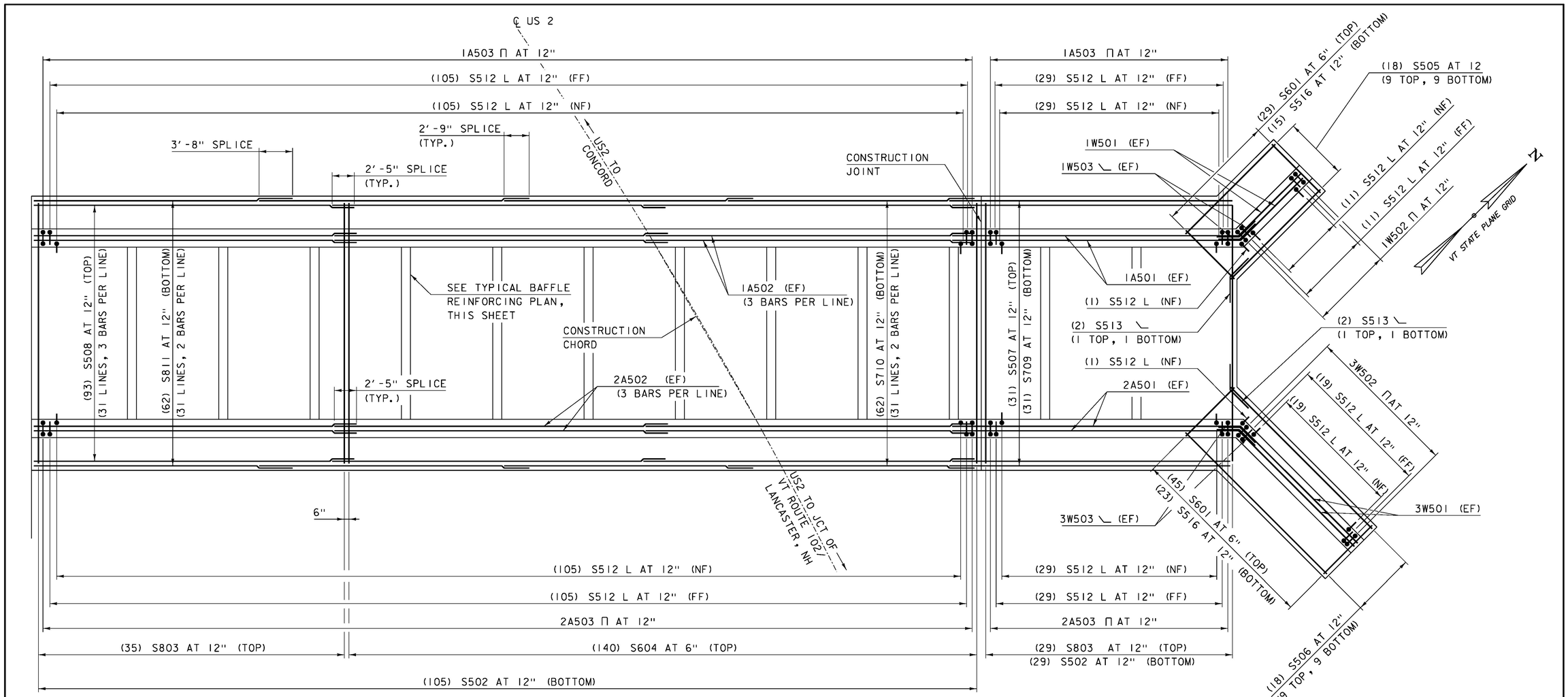

MAT FOUNDATION AND PEDESTAL WALL REINFORCING PLAN

SCALE: 3/16" = 1'-0"

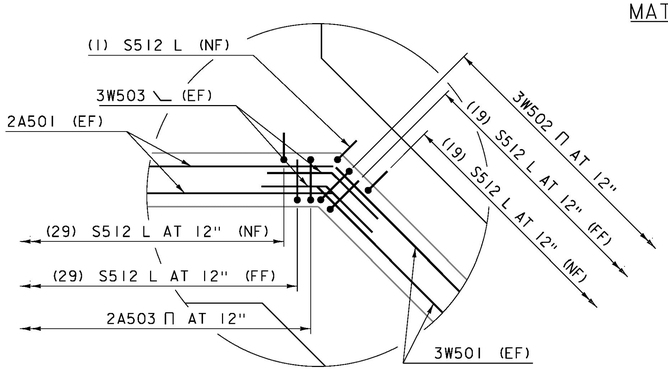

TYPICAL PEDESTAL WALL CORNER REINFORCING SECTION

(NE CORNER SHOWN, NW CORNER SIMILAR)

SCALE: 3/4" = 1'-0"

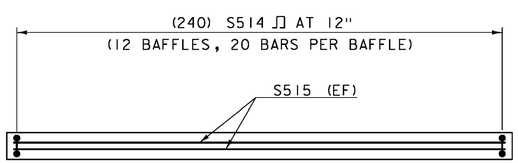

TYPICAL BAFFLE REINFORCING PLAN

SCALE: 3/8" = 1'-0"

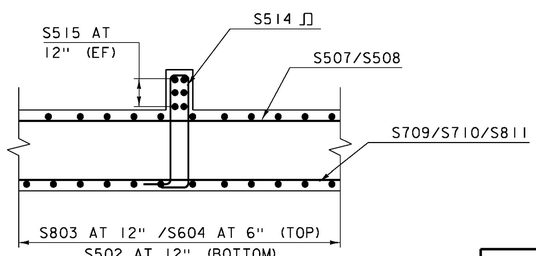

TYPICAL BAFFLE REINFORCING SECTION

SCALE: 3/8" = 1'-0"

NOTES:

NF = NEAR FACE
FF = FAR FACE
EF = EACH FACE
3" CLEAR IN MAT FOUNDATION,
2" CLEAR AT ALL OTHER LOCATIONS.
2'-5" BAR LAP UNLESS OTHERWISE SPECIFIED ON THE PLANS

CONSULTING ENGINEERS

PROJECT NAME: LUNENBURG
PROJECT NUMBER: NH CULV(27)

FILE NAME: llb294/cos/zllb294sub.dgn
PROJECT LEADER: J. BYATT
DESIGNED BY: S. BEAUMONT
SUBSTRUCTURE REINFORCING SHEET 1

PLOT DATE: 8/6/2015
DRAWN BY: M. SMITH
CHECKED BY: N. CARON
SHEET 47 OF 74

CLD 12-0106 MODEL: Sheet09

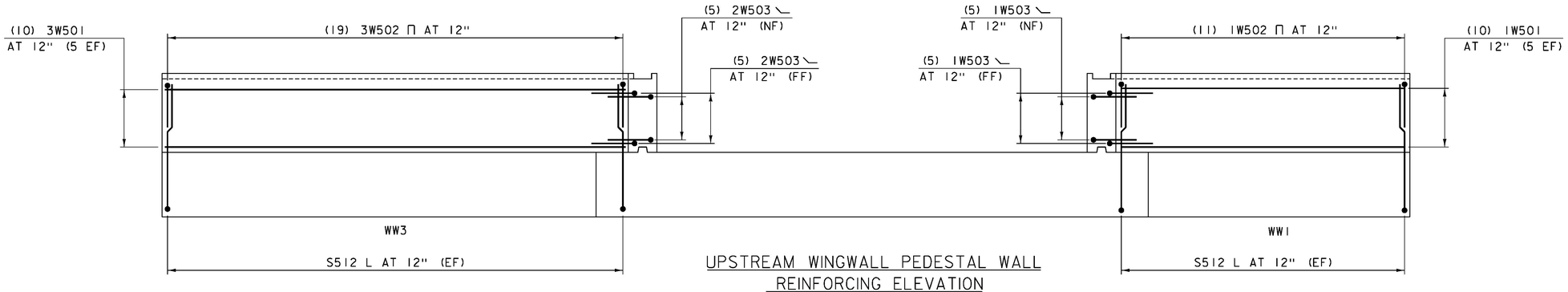

UPSTREAM WINGWALL PEDESTAL WALL
REINFORCING ELEVATION

SCALE: 3/8" = 1'-0"

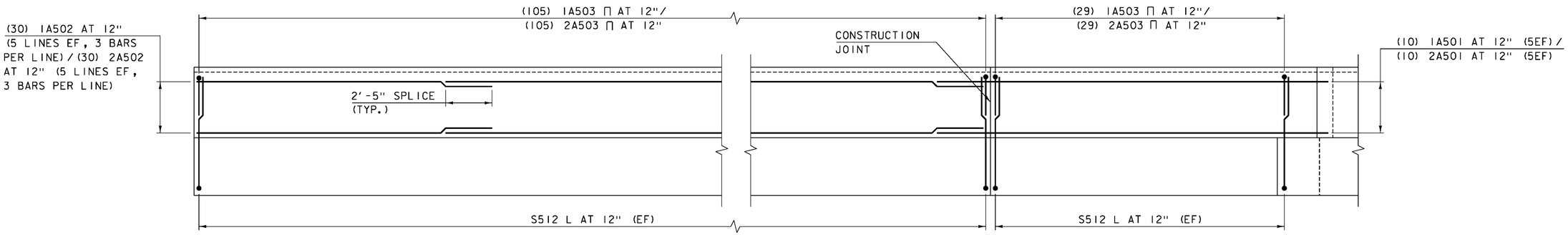

ARCH AND DOWNSTREAM WINGWALL PEDESTAL WALL
REINFORCING ELEVATION

SCALE: 3/8" = 1'-0"

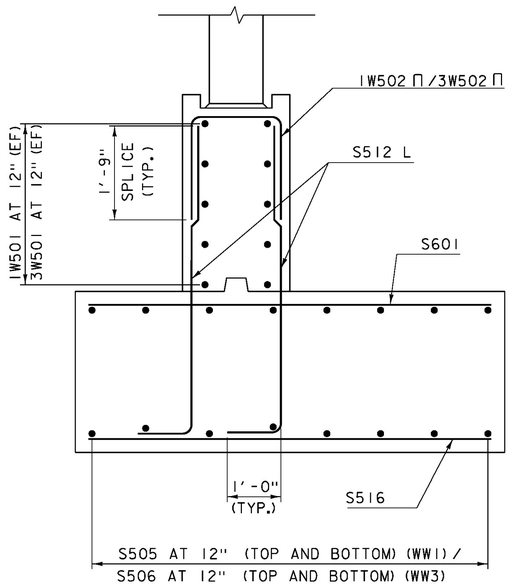

TYPICAL UPSTREAM WINGWALL FOOTING
REINFORCING SECTION

SCALE: 3/4" = 1'-0"

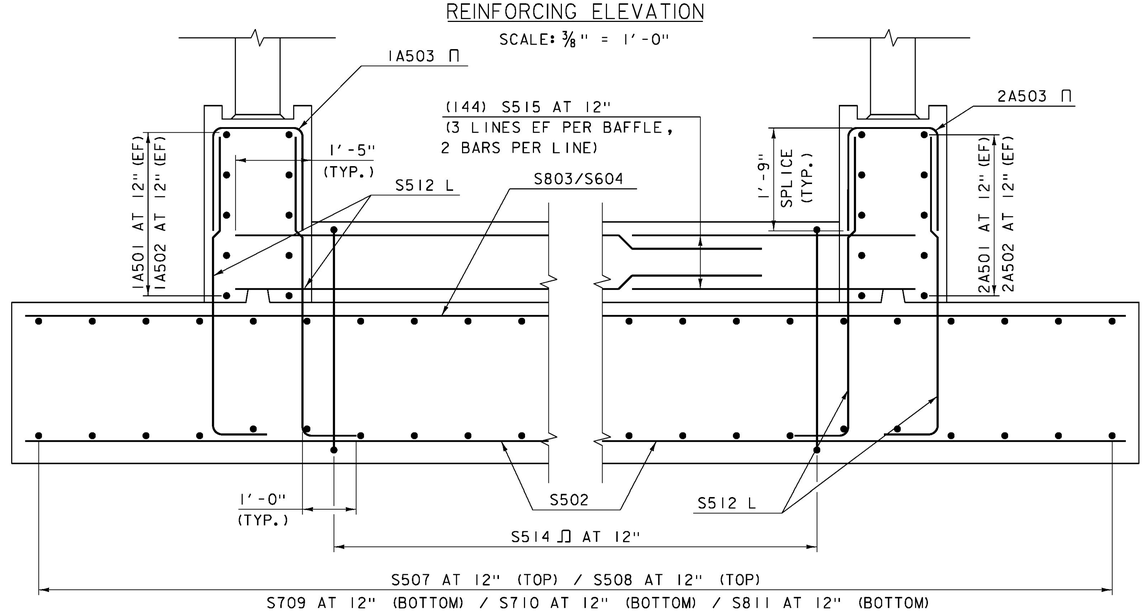

TYPICAL ARCH MAT FOUNDATION REINFORCING SECTION (AT BAFFLE)
(TYPICAL DOWNSTREAM WINGWALL MAT FOUNDATION REINFORCING SECTION SIMILAR)

SCALE: 3/4" = 1'-0"

NOTES:

NF = NEAR FACE
FF = FAR FACE
EF = EACH FACE
3" CLEAR IN MAT FOUNDATION,
2" CLEAR AT ALL OTHER LOCATIONS.
2'-5" BAR LAP UNLESS OTHERWISE
SPECIFIED ON THE PLANS

PROJECT NAME:	LUNENBURG
PROJECT NUMBER:	NH CULV(27)
FILE NAME:	IIb294/cos/zIIb294sub.dgn
PROJECT LEADER:	J. BYATT
DESIGNED BY:	S. BEAUMONT
SUBSTRUCTURE REINFORCING SHEET 2	
PLOT DATE:	8/6/2015
DRAWN BY:	M. SMITH
CHECKED BY:	J. BYATT
SHEET	48 OF 74

CLD 12-0106 MODEL: Sheet10

STATE OF VERMONT
AGENCY OF TRANSPORTATION

REINFORCING STEEL SCHEDULE

ITEM	EACH	SIZE	LENGTH	MARK	TYPE	A	B	C	D	E	F	G	H	J	K	R	O
	ARCH WALL #1 (WEST)																
	10	5	31'- 4"	1A501	STR	31'- 4"											
	30	5	36'- 2"	1A502	STR	36'- 2"											
	134	5	5'- 2"	1A503	17		1'- 9"	1'- 8"	1'- 9"								
	ARCH WALL #2 (EAST)																
	10	5	31'- 4"	2A501	STR	31'- 4"											
	30	5	36'- 2"	2A502	STR	36'- 2"											
	134	5	5'- 2"	2A503	17		1'- 9"	1'- 8"	1'- 9"								
	WINGWALL #1																
	10	5	10'- 4"	1W501	STR	10'- 4"											
✳	12	5	5'- 2"	1W502	17		1'- 9"	1'- 8"	1'- 9"								
	10	5	4'- 10"	1W503	22		2'- 5"	2'- 5"	---				1'- 8.5"	---	1'- 8.5"	---	
	WINGWALL #3																
	10	5	18'- 4"	3W501	STR	18'- 4"											
	19	5	5'- 2"	3W502	17		1'- 9"	1'- 8"	1'- 9"								
	10	5	4'- 10"	3W503	22		2'- 5"	2'- 5"	---				1'- 8.5"	---	1'- 8.5"	---	
	MAT FOUNDATION																
	74	6	7'- 6"	S601	STR	7'- 6"											
	134	5	29'- 6"	S502	STR	29'- 6"											
✳	65	8	29'- 6"	S803	STR	29'- 6"											
	140	6	29'- 6"	S604	STR	29'- 6"											
	18	5	13'- 5"	S505	STR	13'- 5"											
	18	5	21'- 5"	S506	STR	21'- 5"											
	31	5	30'- 5"	S507	STR	30'- 5"											
	93	5	36'- 2"	S508	STR	36'- 2"											
	31	7	30'- 9"	S709	STR	30'- 9"											
	62	7	27'- 3"	S710	STR	27'- 3"											
	62	8	29'- 1"	S811	STR	29'- 1"											
	598	5	7'- 1"	S512	17		6'- 1"	1'- 0"	---								
	4	5	4'- 10"	S513	22		2'- 5"	2'- 5"	---				1'- 8.5"	---	1'- 8.5"	---	
	240	5	10'- 10"	S514	S5	1'- 0"	4'- 1"	0'- 8"	4'- 1"			1'- 0"					
	144	5	13'- 3"	S515	STR	13'- 3"											
	38	5	7'- 6"	S516	STR	7'- 6"											

ITEM	EACH	SIZE	LENGTH	MARK	TYPE	A	B	C	D	E	F	G	H	J	K	R	O

~ NOTES ~

1. UNLESS OTHERWISE DESIGNATED, ALL BAR REINFORCEMENT FOR CONCRETE IN SIZES UP TO AND INCLUDING NO. 18 SHALL CONFORM TO THE REQUIREMENTS OF THE "SPECIFICATIONS FOR DEFORMED BILLET-STEEL BARS FOR CONCRETE REINFORCEMENT", AASHTO M 31 (ASTM A 615-SI). ALL BARS SHALL BE GRADE 60, UNLESS OTHERWISE DESIGNATED.
2. FOR TYPICAL BENDING DETAILS, RECOMMENDED PIN DIAMETER "D" OF BENDS AND HOOKS, AND OTHER STANDARD PRACTICE, SEE CURRENT CONCRETE REINFORCING STEEL INSTITUTE "MANUAL OF STANDARD PRACTICE".
3. BARS WHICH REQUIRE MORE ACCURATE BENDING THAN STANDARD PRACTICES SHOULD HAVE LIMITS INDICATED.
4. ALL DIMENSIONS ARE OUT TO OUT OF BAR EXCEPT "A" AND "G" ON STANDARD 180 DEGREE AND 135 DEGREE HOOKS.
5. "J" DIMENSION ON 180 DEGREE HOOKS TO BE SHOWN ONLY WHERE NECESSARY TO RESTRICT HOOK SIZE. OTHERWISE, STANDARD HOOKS ARE TO BE USED.
6. "H" DIMENSION ON STIRRUPS TO BE SHOWN ONLY WHEN NECESSARY TO MAINTAIN CLEARANCES.
7. WHERE SLOPE DIFFERS FROM 45 DEGREES, DIMENSIONS "H" AND "K" MUST BE SHOWN.
8. ▲ DENOTES BARS TO BE CUT IN FIELD.
9. ✳ DENOTES ONE EXTRA BAR ADDED FOR TESTING PURPOSES.
10. △ DENOTES TWO EXTRA BARS ADDED FOR TESTING PURPOSES.
11. E IN BAR MARK PREFIX DENOTES EPOXY COATED REINFORCING STEEL.

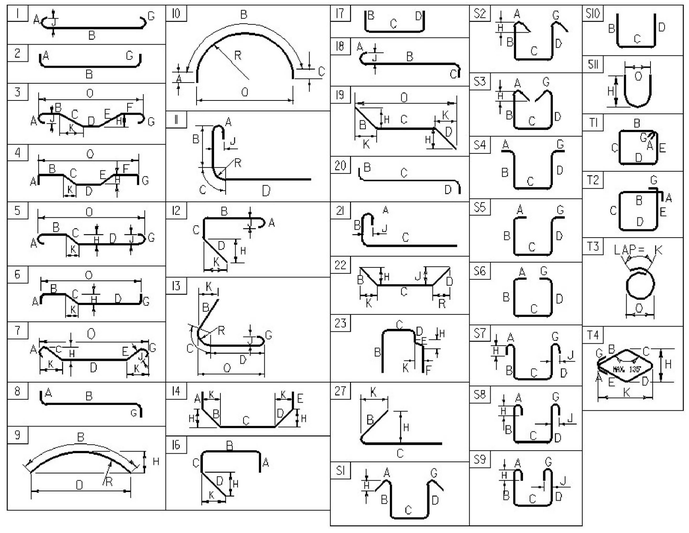

ASTM STANDARD REINFORCING BARS

BAR SIZE DESIGNATION	WEIGHT POUNDS PER FOOT	NOMINAL DIMENSIONS ROUND SECTION DIAMETER INCHES	AREA INCHES^2	PERIMETER INCHES
#3	0.376	0.375	0.11	1.178
#4	0.668	0.500	0.20	1.571
#5	1.043	0.625	0.31	1.963
#6	1.502	0.750	0.44	2.356
#7	2.044	0.875	0.60	2.749
#8	2.670	1.000	0.79	3.142
#9	3.400	1.128	1.00	3.544
#10	4.303	1.270	1.27	3.990
#11	5.313	1.410	1.56	4.430
#14	7.65	1.693	2.25	5.32
#18	13.60	2.257	4.00	7.09

PROJECT NAME: LUNENBURG
PROJECT NUMBER: NH CULV(27)

FILE NAME: 10c412/cos/z11b294schedule.dgn
PROJECT LEADER: J. BYATT
DESIGNED BY: S. BEAUMONT
REINFORCING STEEL SCHEDULE

PLOT DATE: 8/6/2015
DRAWN BY: M. SMITH
CHECKED BY: N. CARON
SHEET 49 OF 74

CLD 12-021 MODEL: Schedule

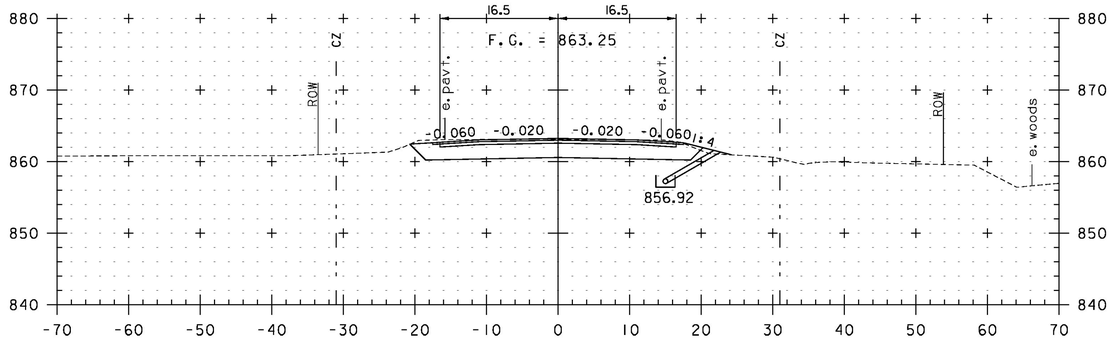

425+00

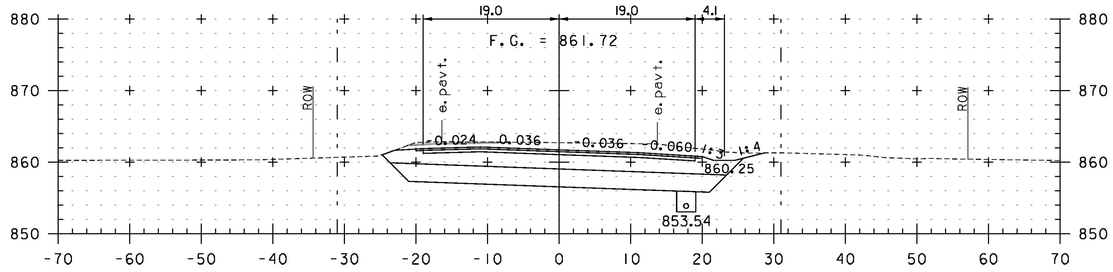

426+50

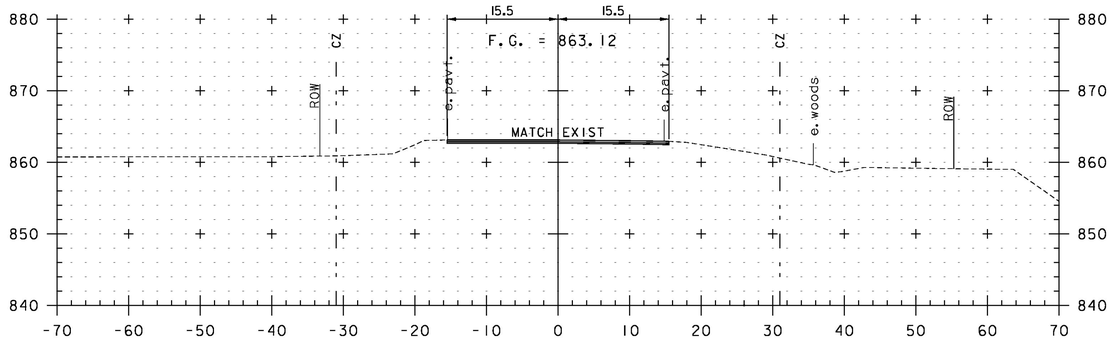

424+50
BEGIN PROJECT

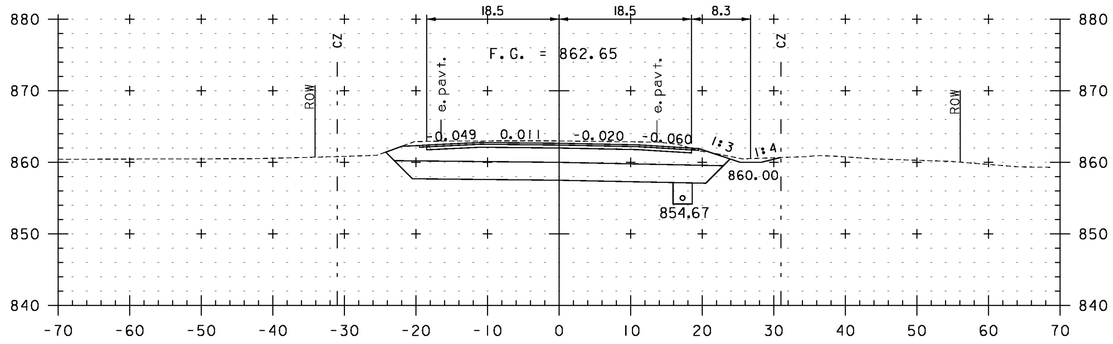

426+00

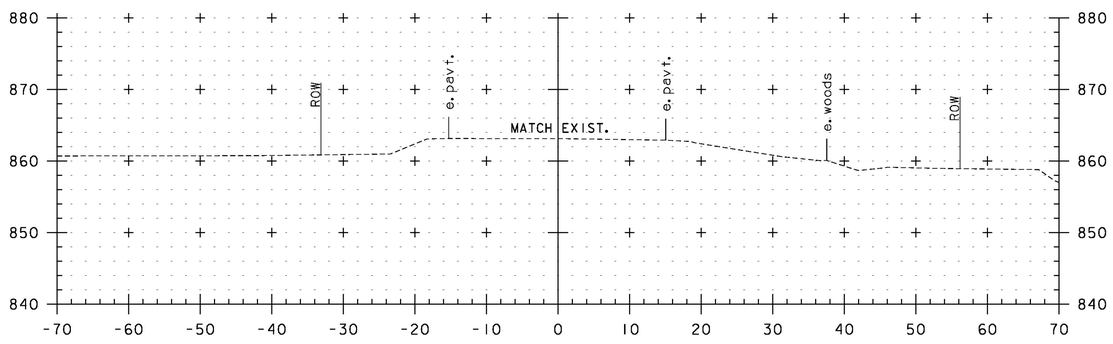

424+25
BEGIN APPROACH

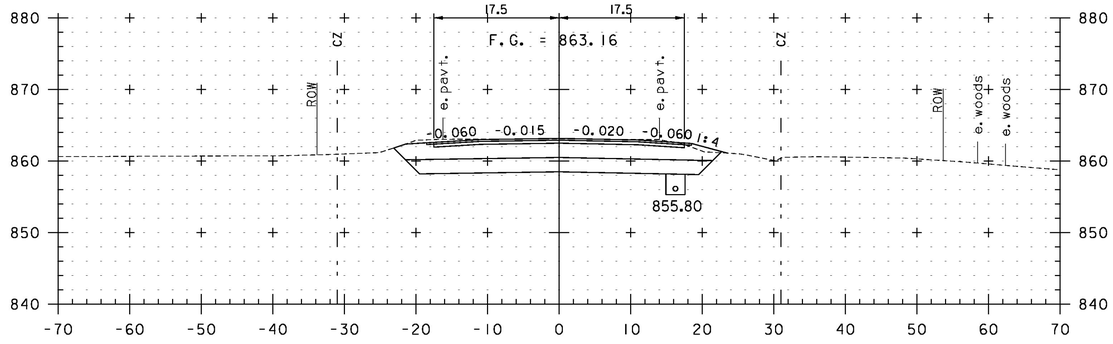

425+50

STA. 424+25 TO STA. 426+50

0 10 20
(SCALE 1" = 10')

PROJECT NAME:	LUNENBURG
PROJECT NUMBER:	NH CULV(27)
FILE NAME: IIB294/cos/zIIb294xsl.dgn	PLOT DATE: 8/6/2015
PROJECT LEADER: J. BYATT	DRAWN BY: M. HALEY
DESIGNED BY: M. HALEY	CHECKED BY: P. SHEDD
ROADWAY CROSS SECTIONS I	SHEET 50 OF 74

CLD 12-0106 MODEL: XS01

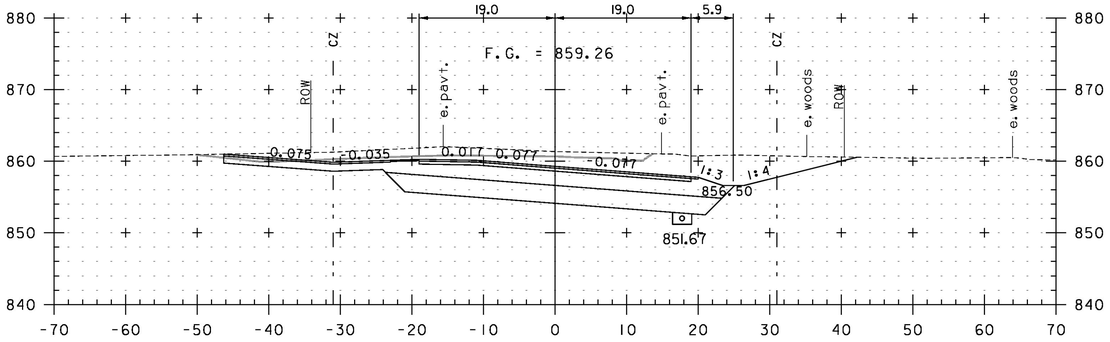

427+35
DRIVE LT

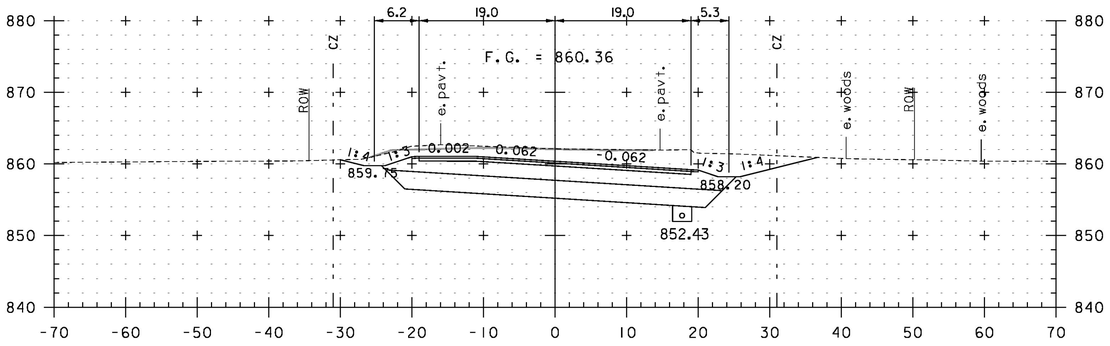

427+00

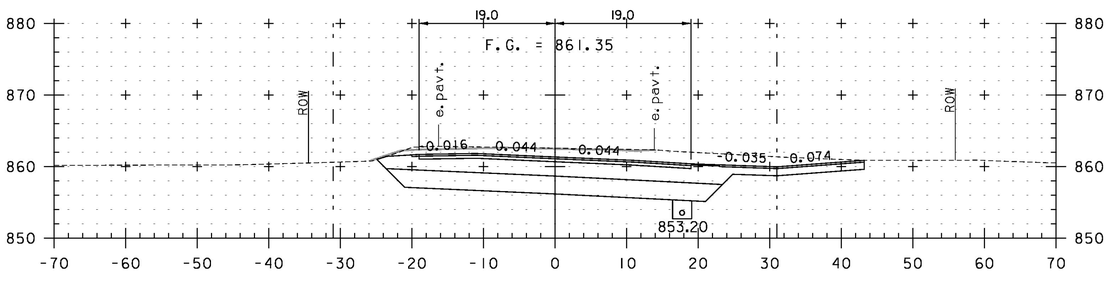

426+65
DRIVE RT

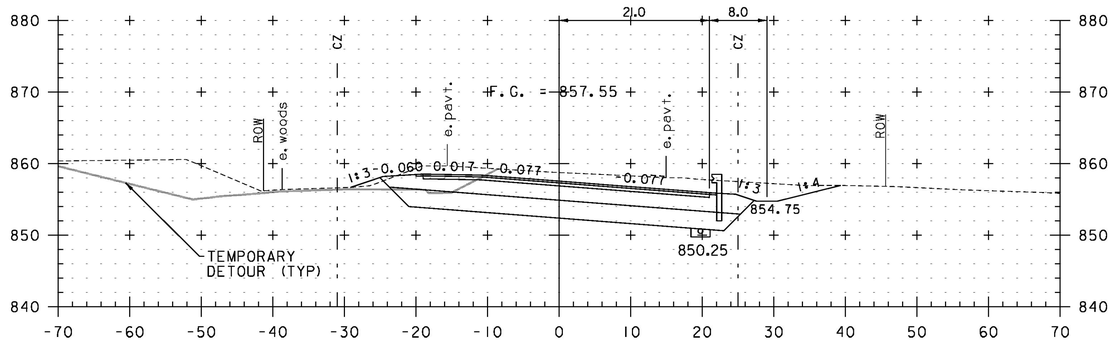

428+00

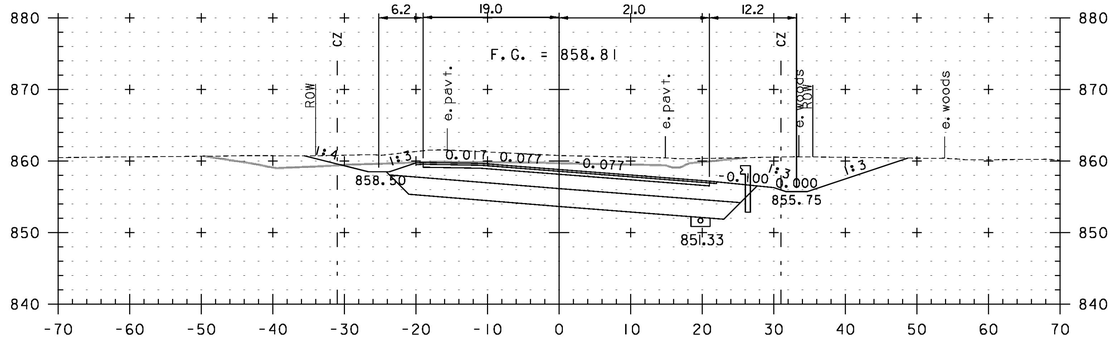

427+50

STA. 426+65 TO STA. 428+00

0 10 20
(SCALE 1" = 10')

PROJECT NAME:	LUNENBURG
PROJECT NUMBER:	NH CULV(27)
FILE NAME: IIB294/cos/zIIb294xsl.dgn	PLOT DATE: 8/6/2015
PROJECT LEADER: J. BYATT	DRAWN BY: M. HALEY
DESIGNED BY: M. HALEY	CHECKED BY: P. SHEDD
ROADWAY CROSS SECTIONS 2	SHEET 51 OF 74

CLD 12-006 MODEL: XS02

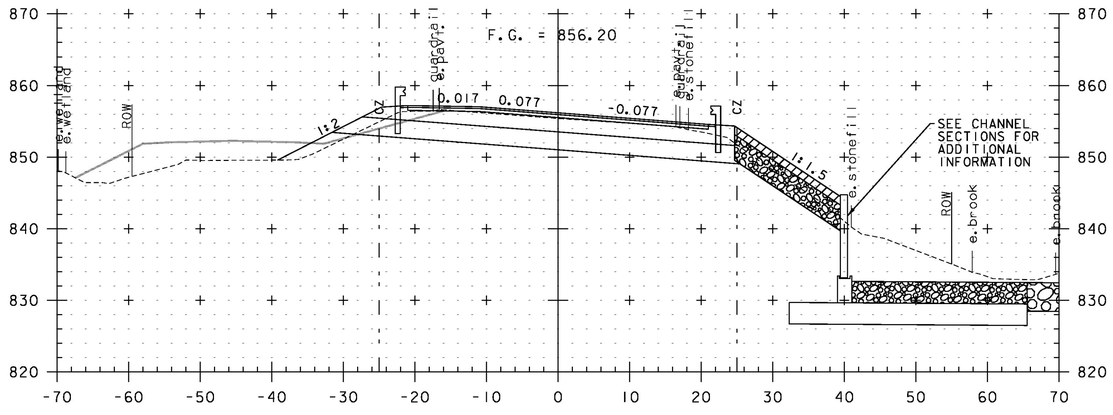

429+00

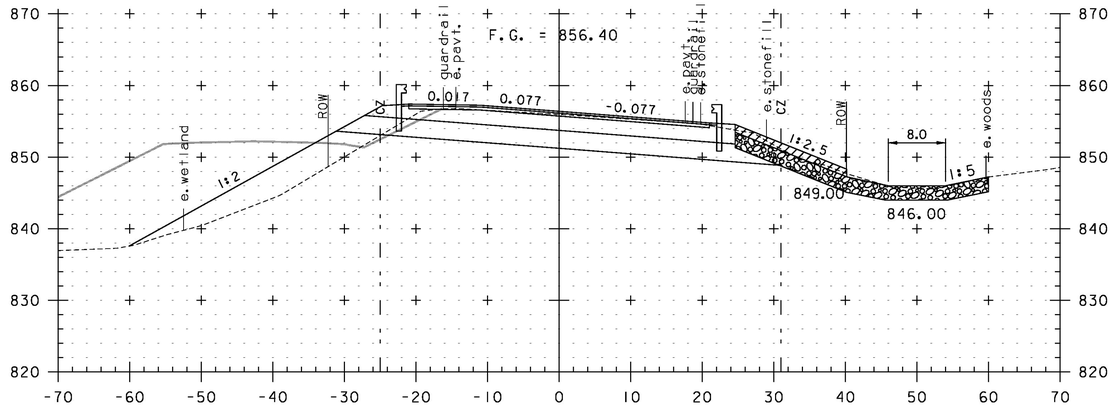

430+00

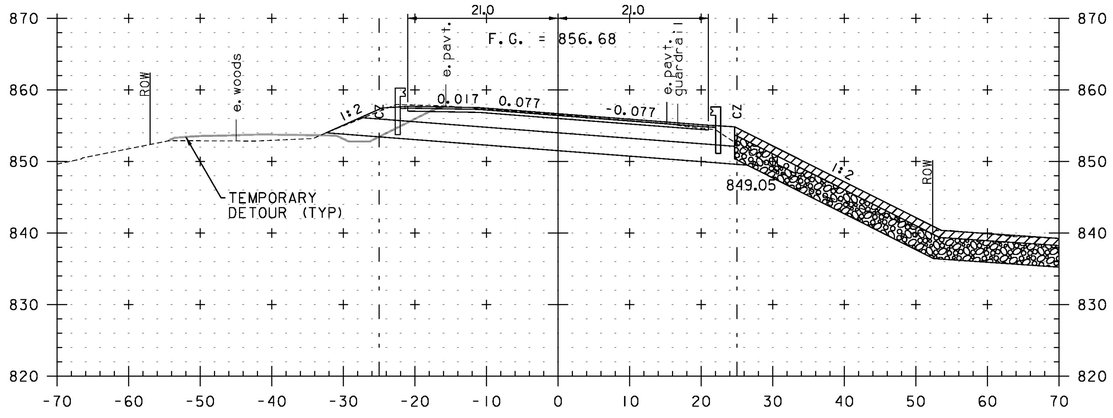

428+50

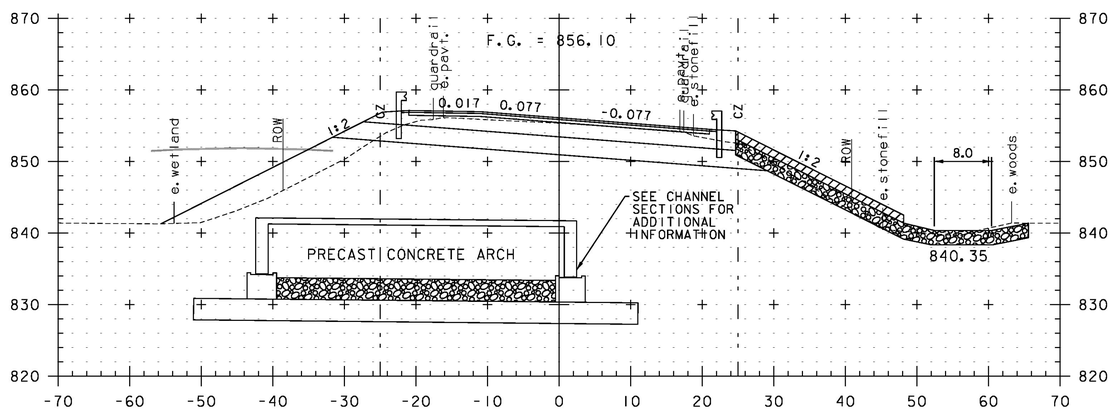

429+50

STA. 428+50 TO STA. 430+00

0 10 20
(SCALE 1" = 10')

CLD 12-0106 MODEL: XS03

PROJECT NAME:	LUNENBURG
PROJECT NUMBER:	NH CULV(27)
FILE NAME: IIB294/cos/zIIb294xsl.dgn	PLOT DATE: 8/6/2015
PROJECT LEADER: J. BYATT	DRAWN BY: M. HALEY
DESIGNED BY: M. HALEY	CHECKED BY: P. SHEDD
ROADWAY CROSS SECTIONS 3	SHEET 52 OF 74

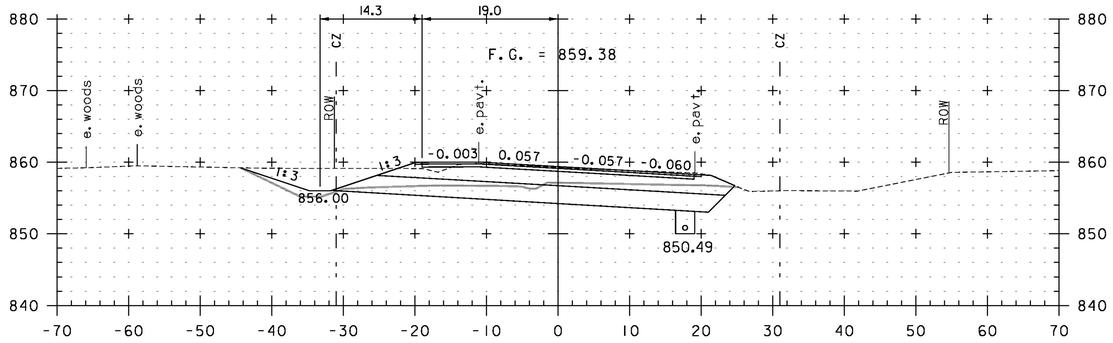

431+50

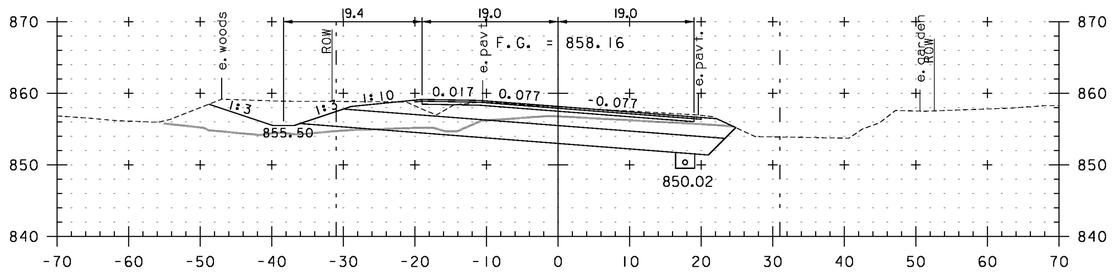

431+00

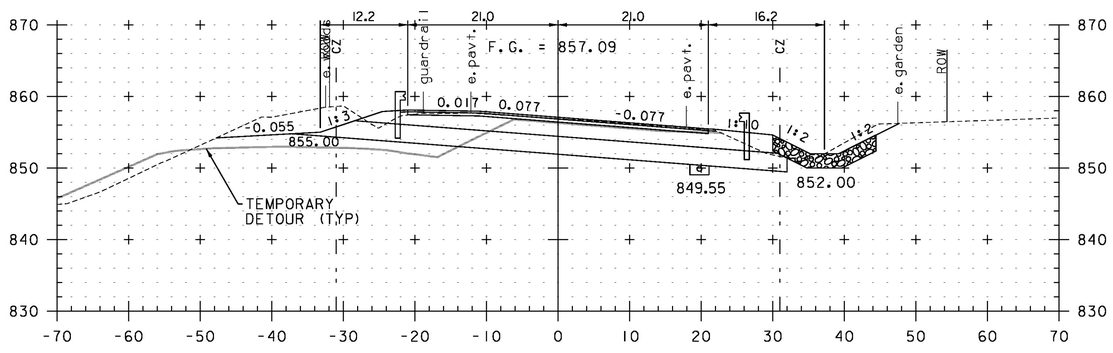

430+50

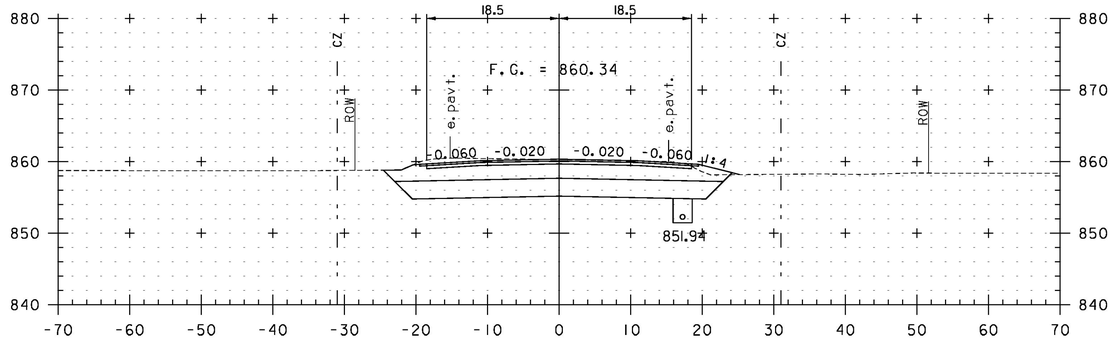

433+00

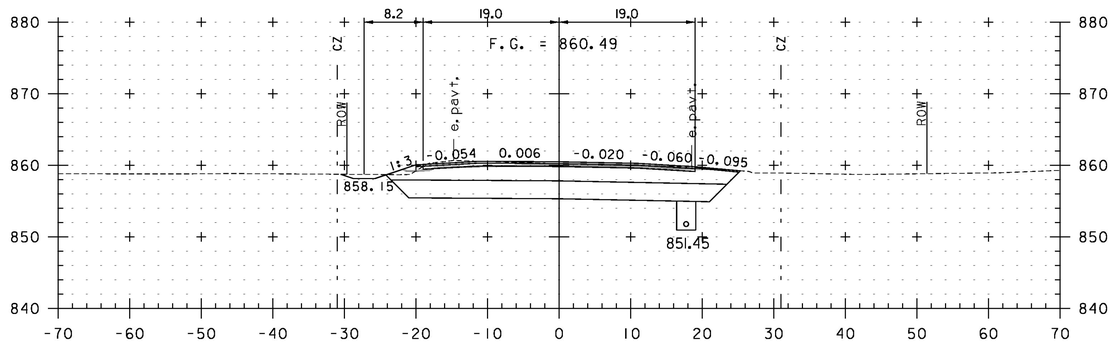

432+50
DRIVE RT

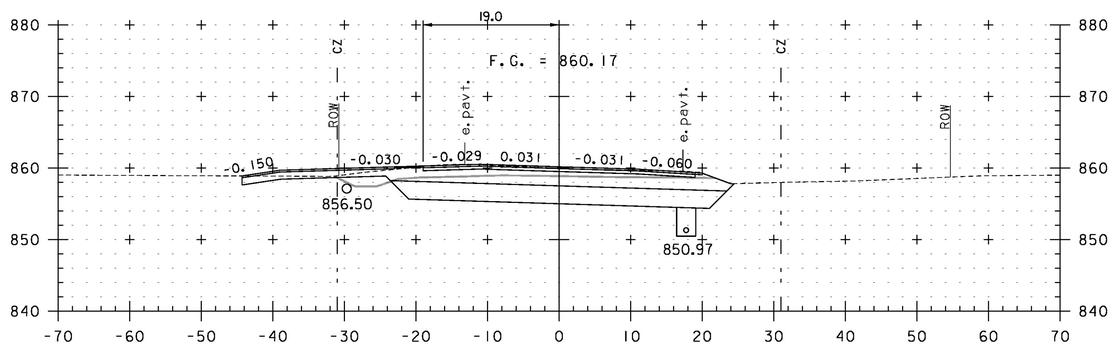

432+00
DRIVE LT

STA. 430+50 TO STA. 433+00

0 10 20
(SCALE 1" = 10')

CONSULTING ENGINEERS

PROJECT NAME:	LUNENBURG
PROJECT NUMBER:	NH CULV(27)
FILE NAME: IIB294/cos/zIIb294xsl.dgn	PLOT DATE: 8/6/2015
PROJECT LEADER: J. BYATT	DRAWN BY: M. HALEY
DESIGNED BY: M. HALEY	CHECKED BY: P. SHEDD
ROADWAY CROSS SECTIONS 4	SHEET 53 OF 74

CLD 12-0106 MODEL: XS04

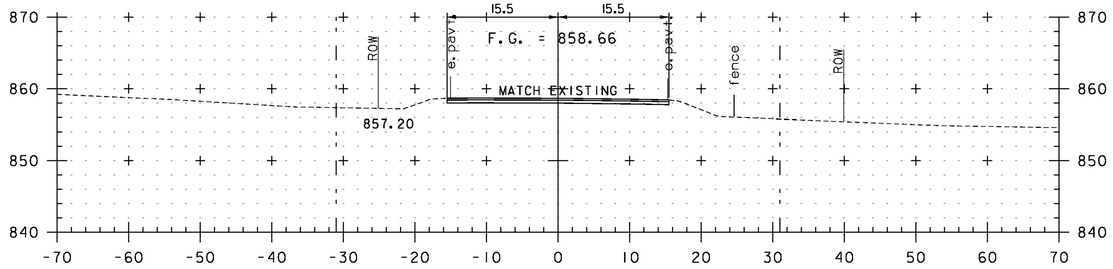

434+50
END PROJECT

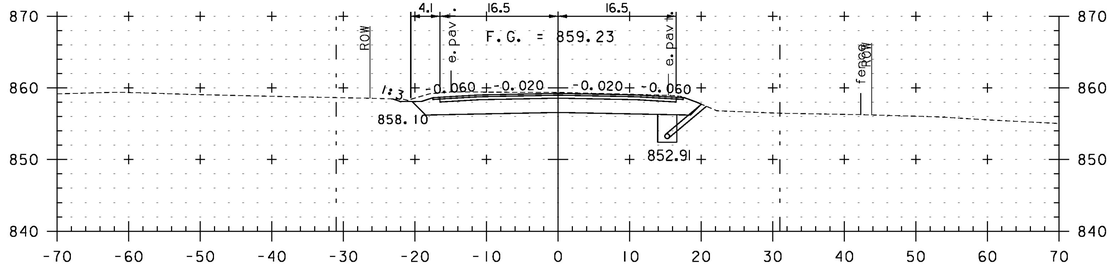

434+00

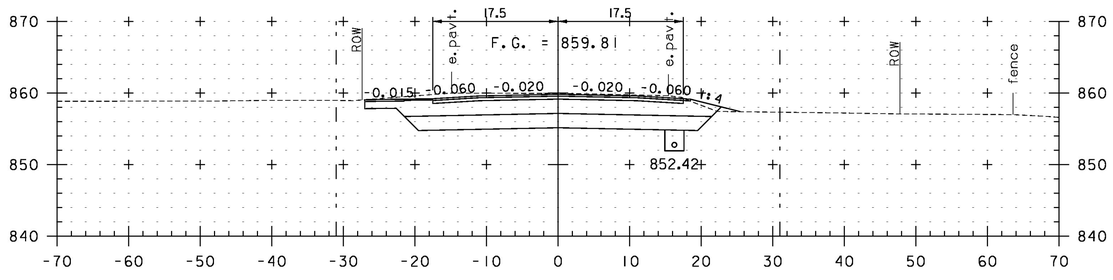

433+50
DRIVE LT

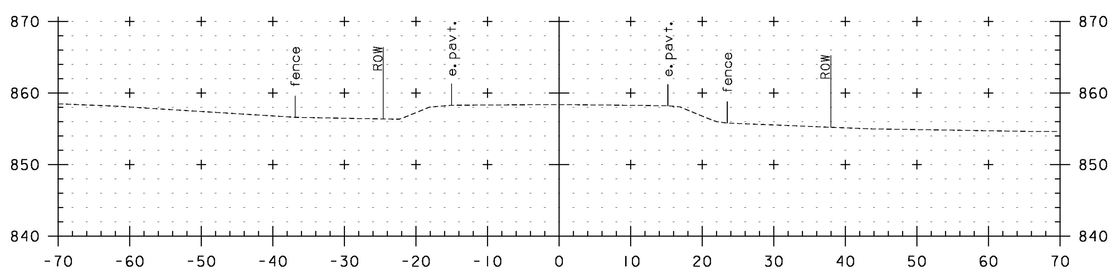

434+75
END APPROACH

STA. 433+50 TO STA. 434+75

0 10 20
(SCALE 1" = 10')

PROJECT NAME:	LUNENBURG
PROJECT NUMBER:	NH CULV(27)
FILE NAME: IIB294/cos/zIIb294xsl.dgn	PLOT DATE: 8/6/2015
PROJECT LEADER: J. BYATT	DRAWN BY: M. HALEY
DESIGNED BY: M. HALEY	CHECKED BY: P. SHEDD
ROADWAY CROSS SECTIONS 5	SHEET 54 OF 74

CONSULTING ENGINEERS

QLD 12-0106 MODEL: XS05

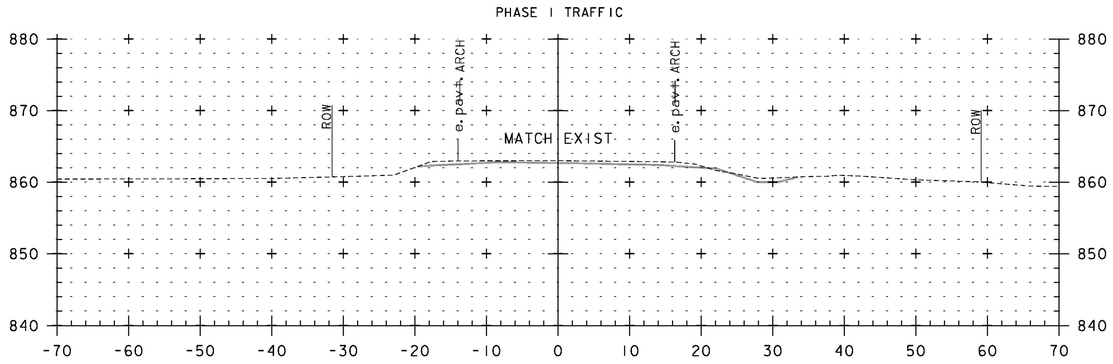

101+00

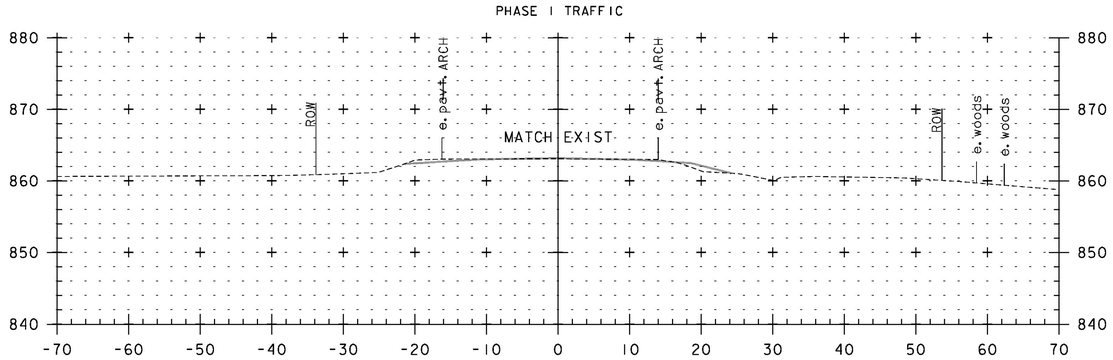

100+50
BEGIN DETOUR

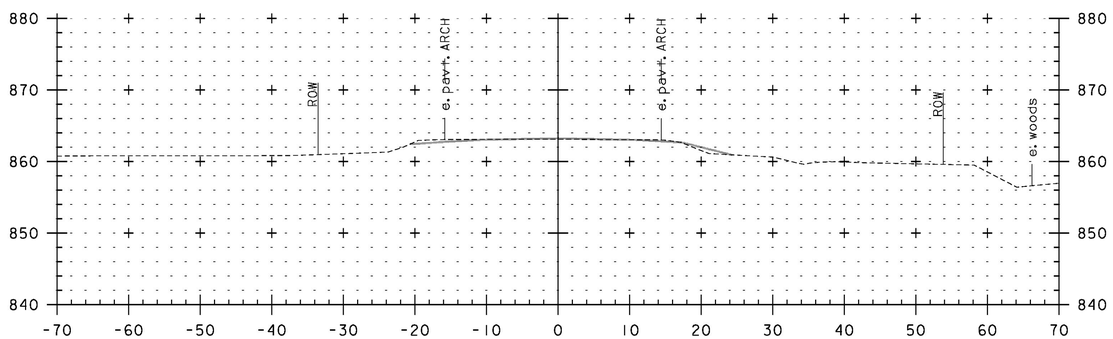

100+00

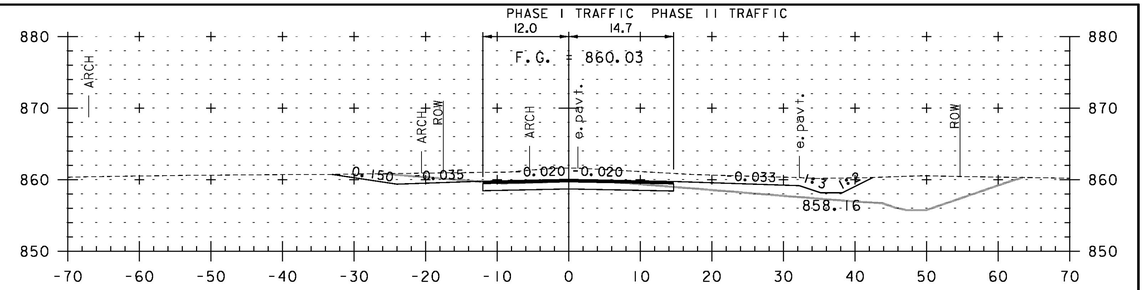

102+50

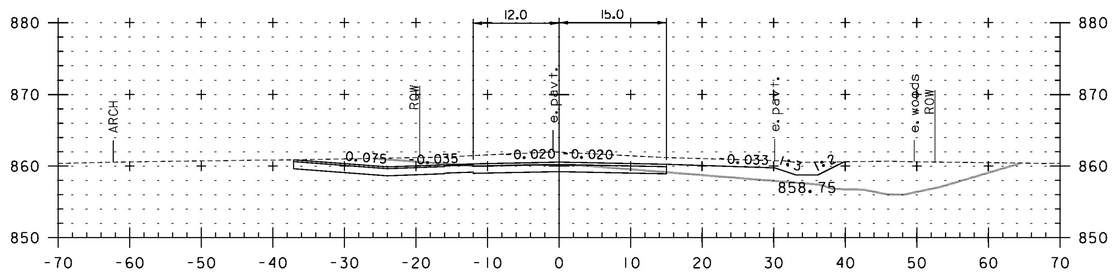

102+38
DRIVE LT

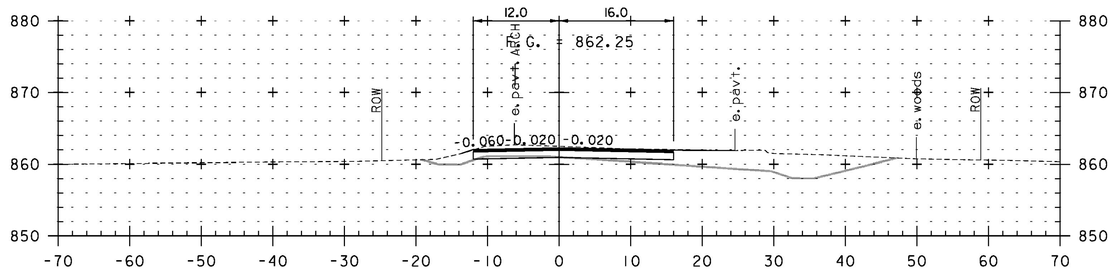

102+00

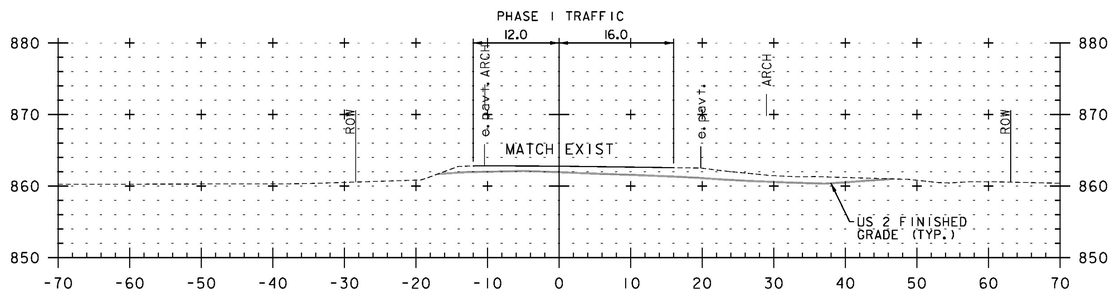

101+50

STA. 100+00 TO STA. 102+50

0 10 20
(SCALE 1" = 10')

CONSULTING ENGINEERS

PROJECT NAME: LUNENBURG	
PROJECT NUMBER: NH CULV(27)	
FILE NAME: IIB294/cos/zIIb294xsldtr.dgn	PLOT DATE: 8/6/2015
PROJECT LEADER: J. BYATT	DRAWN BY: M. HALEY
DESIGNED BY: M. HALEY	CHECKED BY: P. SHEDD
TEMPORARY DETOUR CROSS SECTIONS I	SHEET 55 OF 74

CLD 12-0106 MODEL: XS01

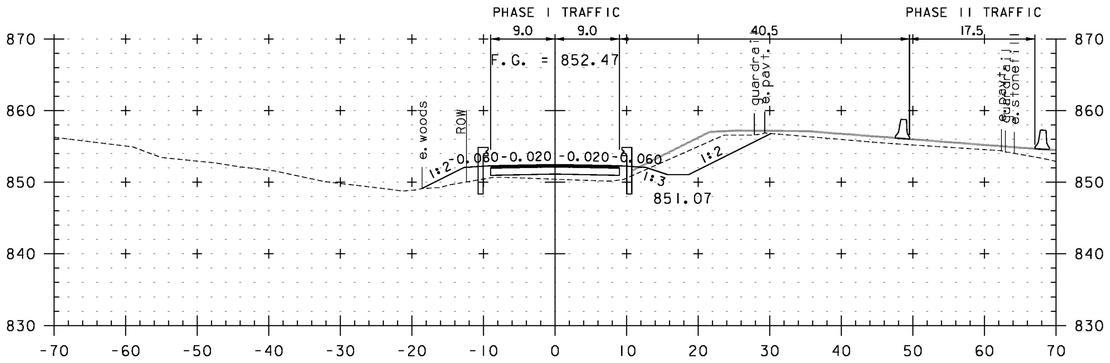

104+00

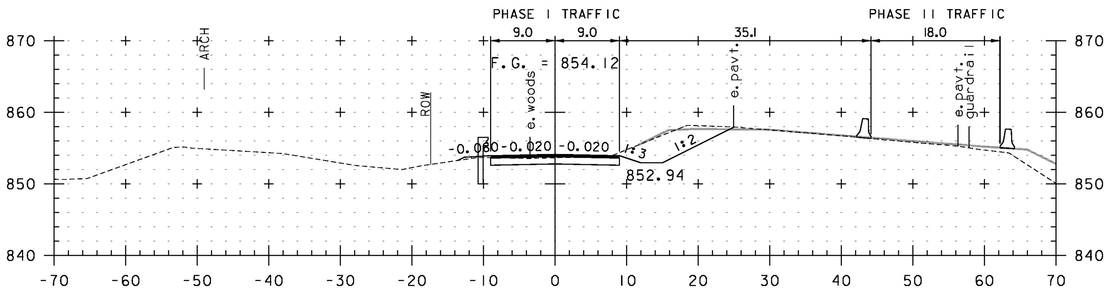

103+50

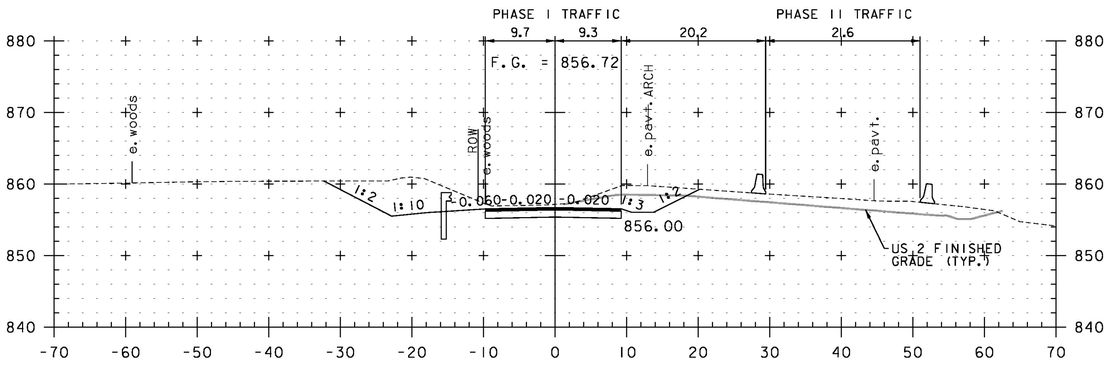

103+00

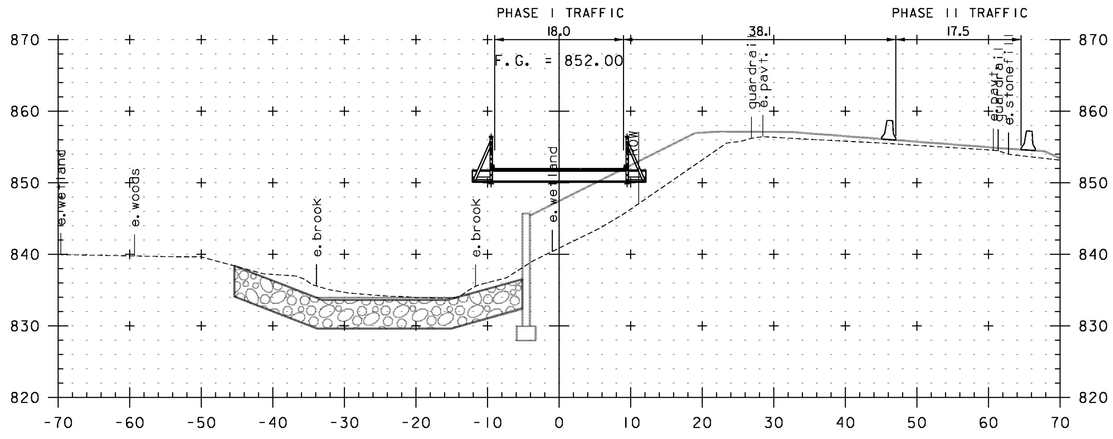

105+00

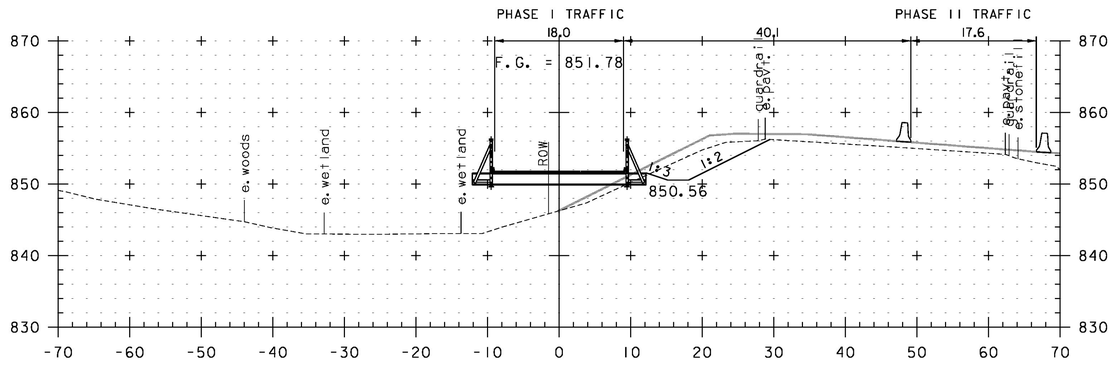

104+50

STA. 103+00 TO STA. 105+00

0 10 20
(SCALE 1" = 10')

CONSULTING ENGINEERS

PROJECT NAME:	LUNENBURG
PROJECT NUMBER:	NH CULV(27)
FILE NAME: IIB294/cos/zIIb294xsldtr.dgn	PLOT DATE: 8/6/2015
PROJECT LEADER: J. BYATT	DRAWN BY: M. HALEY
DESIGNED BY: M. HALEY	CHECKED BY: P. SHEDD
TEMPORARY DETOUR CROSS SECTIONS 2	SHEET 56 OF 74

CLD 12-0106 MODEL: XS02

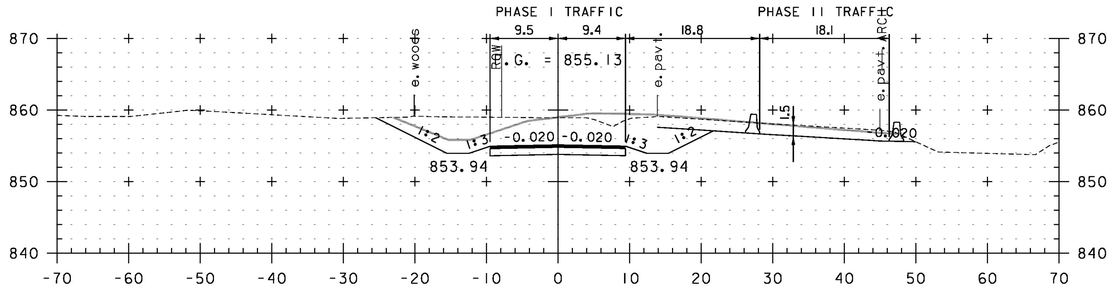

106+50

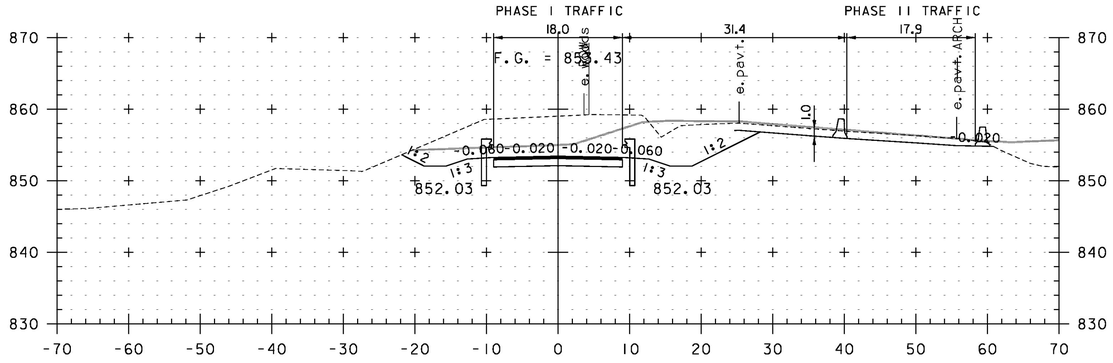

106+00

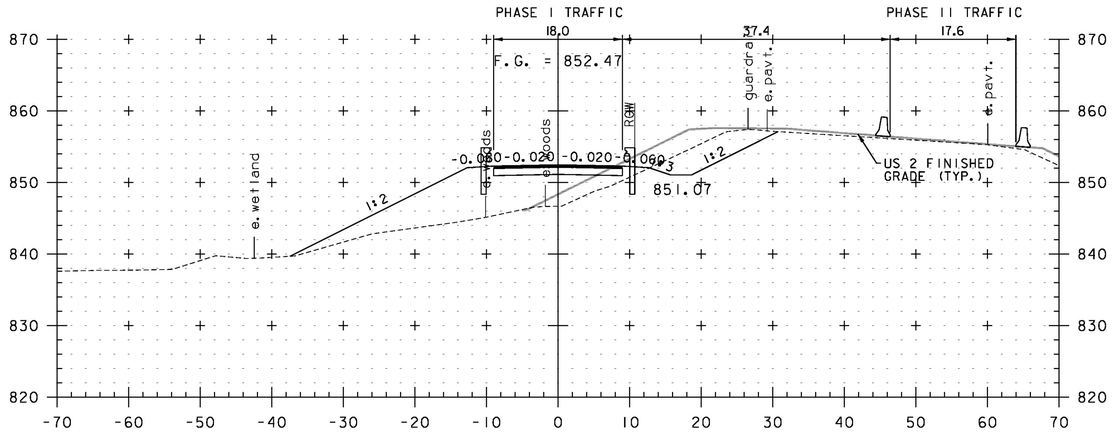

105+50

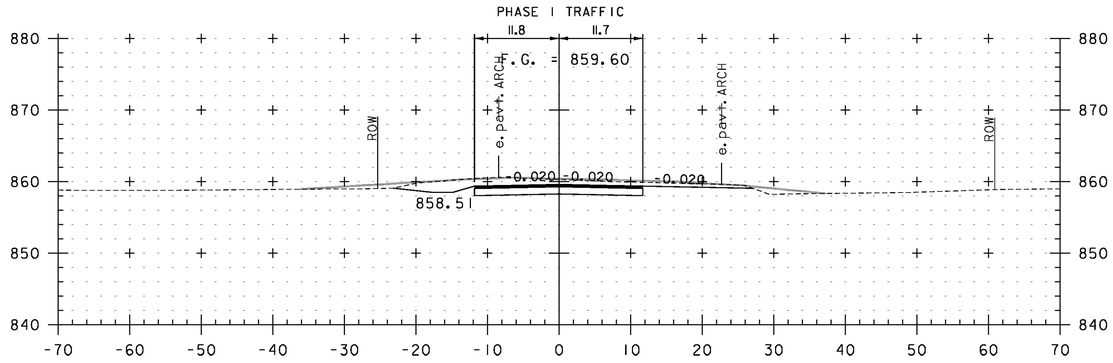

107+50

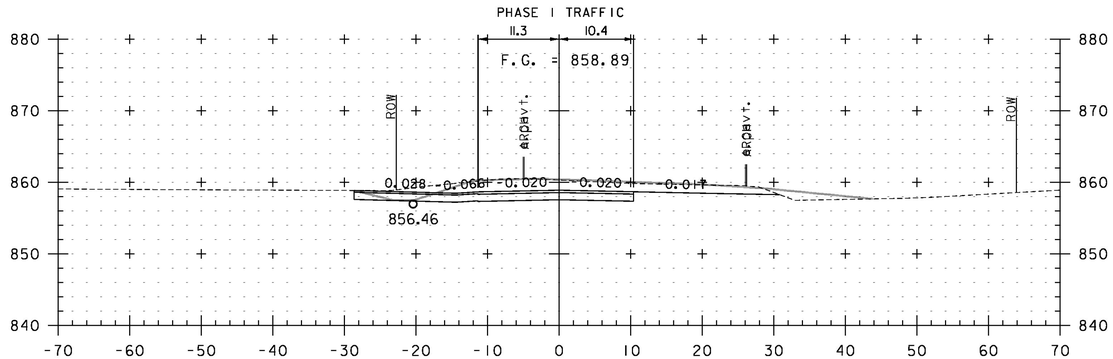

107+33
DRIVE LT

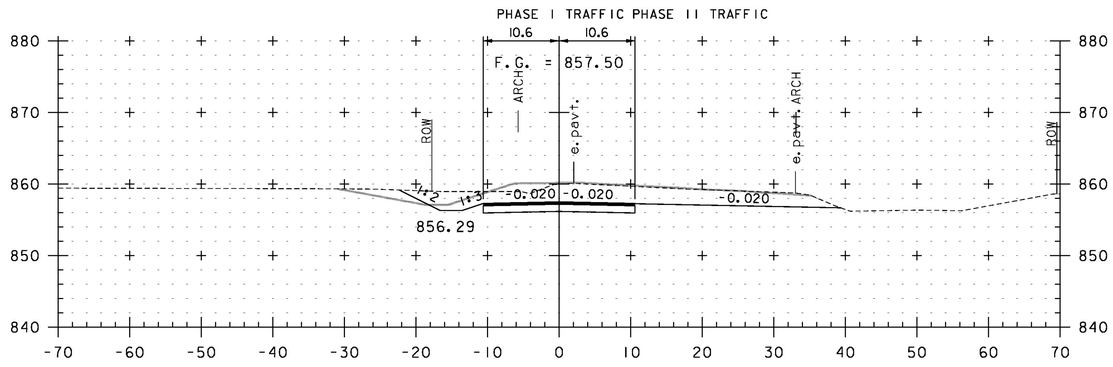

107+00

STA. 105+50 TO STA. 107+50

0 10 20
(SCALE 1" = 10')

CONSULTING ENGINEERS

PROJECT NAME: LUNENBURG	
PROJECT NUMBER: NH CULV(27)	
FILE NAME: IIB294/cos/zIIb294xsldtr.dgn	PLOT DATE: 8/6/2015
PROJECT LEADER: J. BYATT	DRAWN BY: M. HALEY
DESIGNED BY: M. HALEY	CHECKED BY: P. SHEDD
TEMPORARY DETOUR CROSS SECTIONS 3	SHEET 57 OF 74

CLD 12-0106 MODEL: XS03

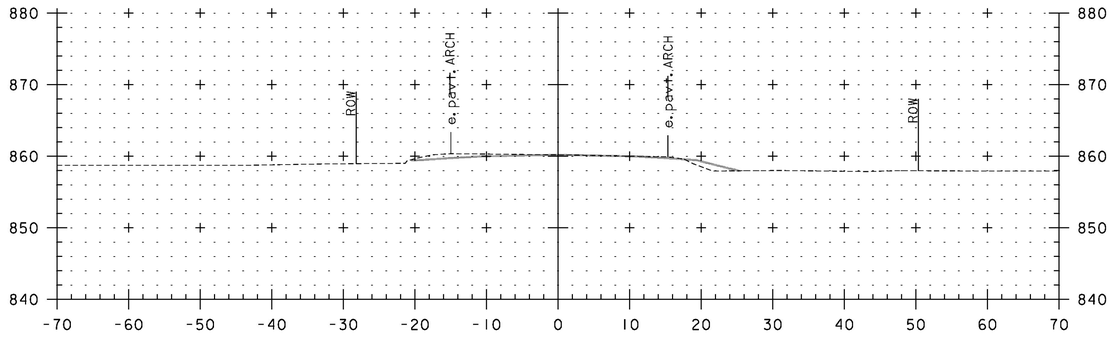

108+50

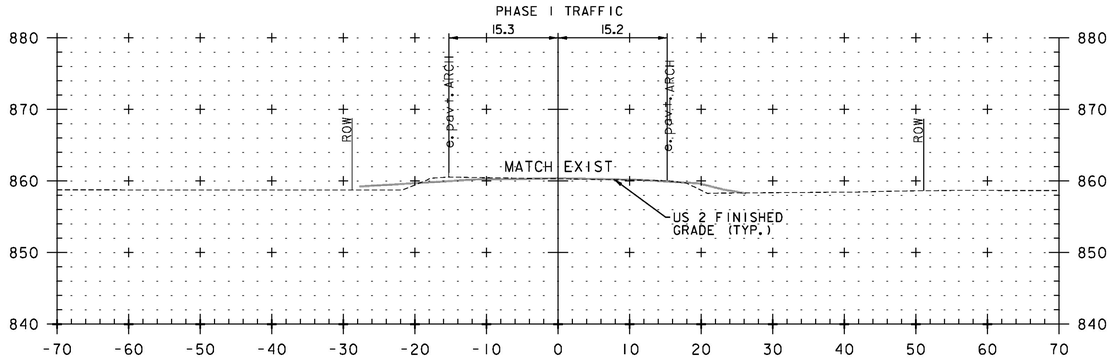

108+25
END DETOUR

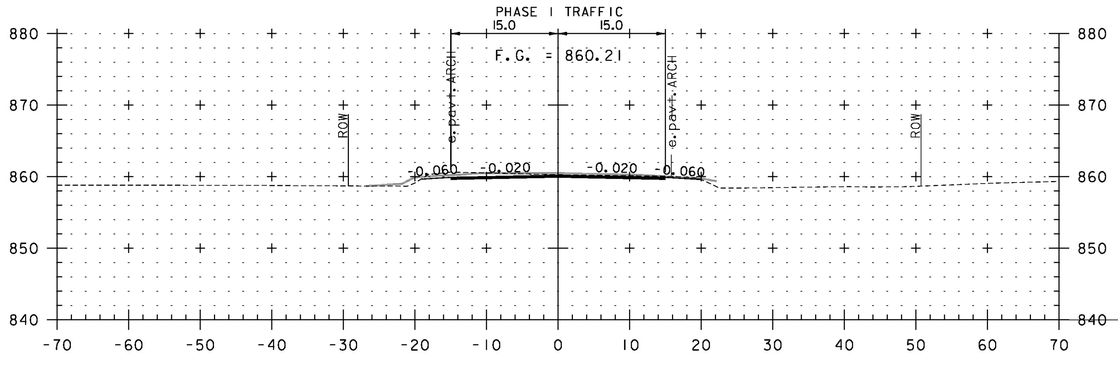

108+00

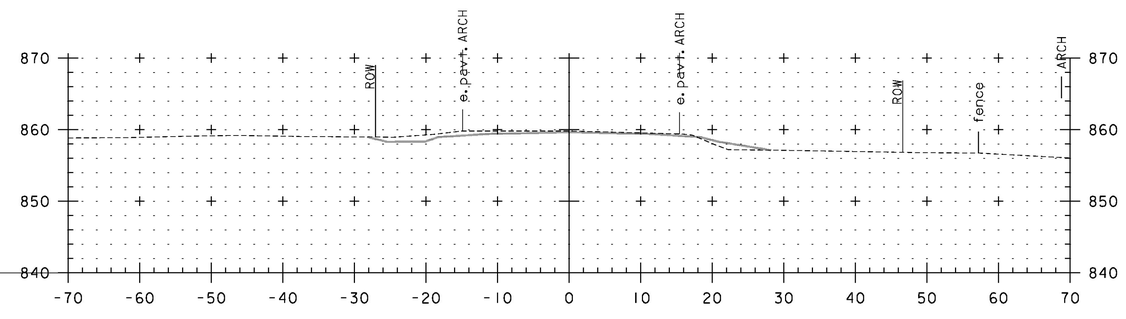

109+00

STA. 108+00 TO STA. 109+00

0 10 20
(SCALE 1" = 10')

CLD 12-0106 MODEL: XS04

PROJECT NAME: LUNENBURG	
PROJECT NUMBER: NH CULV(27)	
FILE NAME: IIB294/cos/zIIb294xsldtr.dgn	PLOT DATE: 8/6/2015
PROJECT LEADER: J. BYATT	DRAWN BY: M. HALEY
DESIGNED BY: M. HALEY	CHECKED BY: P. SHEDD
TEMPORARY DETOUR CROSS SECTIONS 4	SHEET 58 OF 74

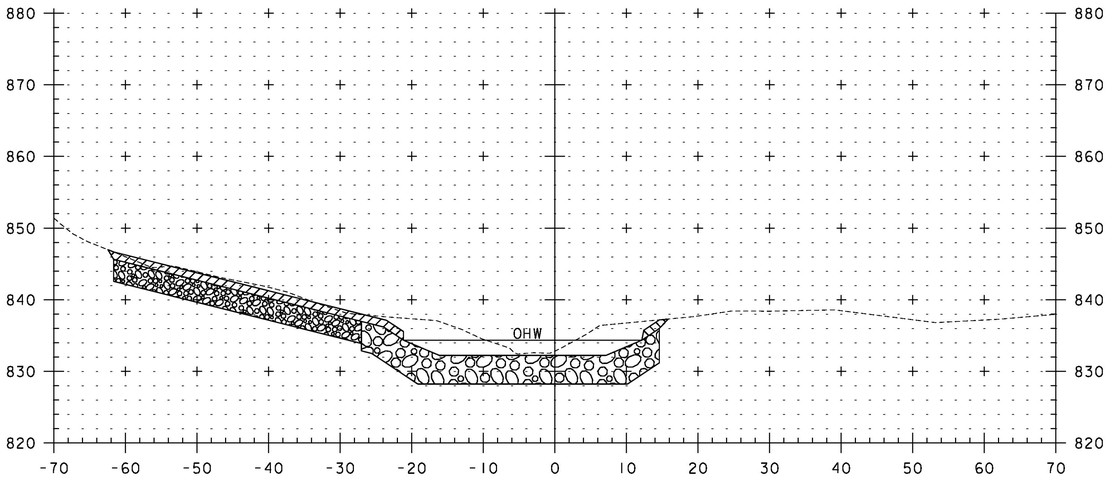

0+50

STA. 0+27 RT
BEGIN UNCLASSIFIED CHANNEL EXCAVATION
SPECIAL PROVISION (STONE FILL, STREAM BED MATERIAL)
GEOTEXTILE UNDER STONE FILL
GRUBBING MATERIAL

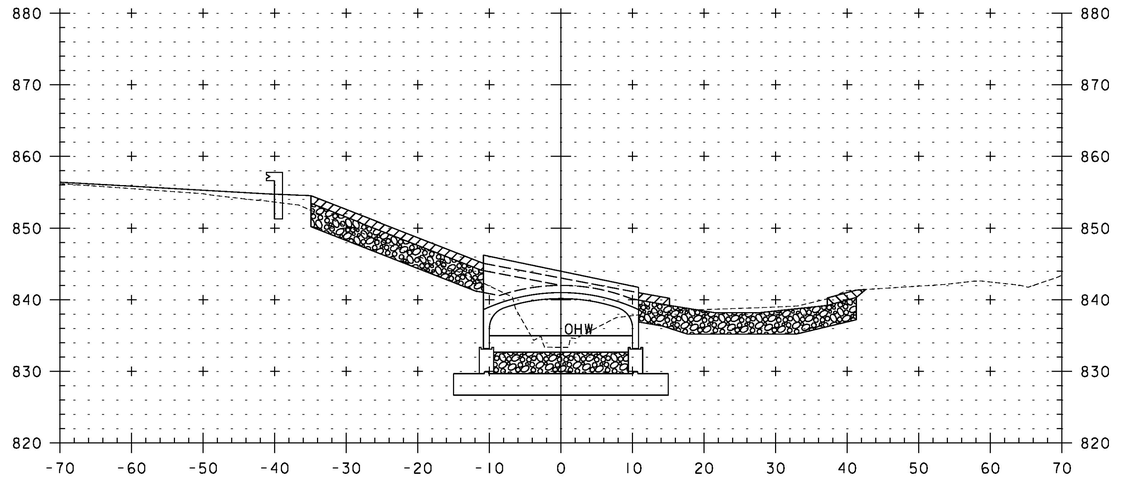

0+98 END ARCH

STA. 0+86 LT AND RT
STOP UNCLASSIFIED CHANNEL EXCAVATION
SPECIAL PROVISON STONE
FILL, STREAM BED MATERIAL
GEOTEXTILE UNDER STONE FILL
GRUBBING MATERIAL

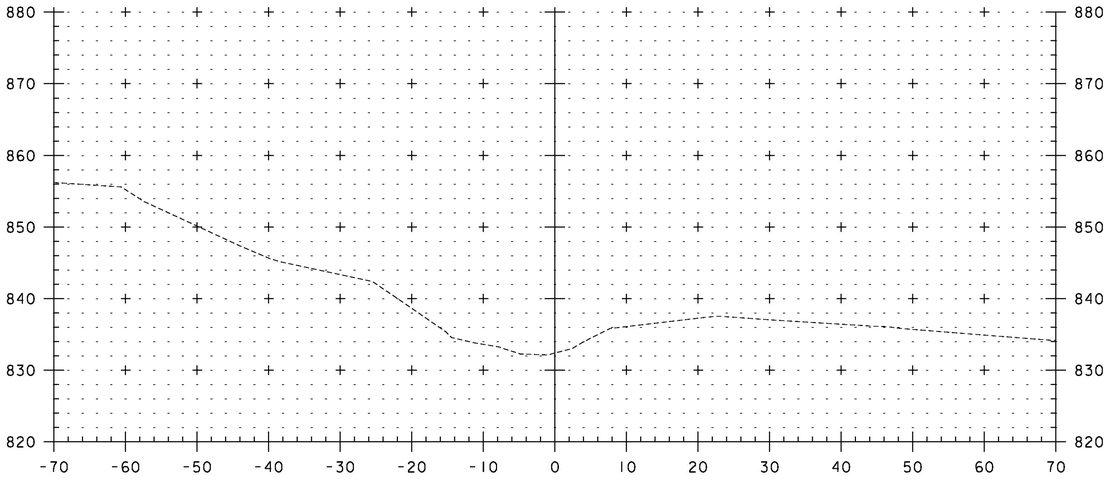

0+25 LIMIT OF WORK

STA. 0+25 LT
BEGIN UNCLASSIFIED CHANNEL EXCAVATION
SPECIAL PROVISION (STONE FILL, STREAM BED MATERIAL)
GEOTEXTILE UNDER STONE FILL
GRUBBING MATERIAL

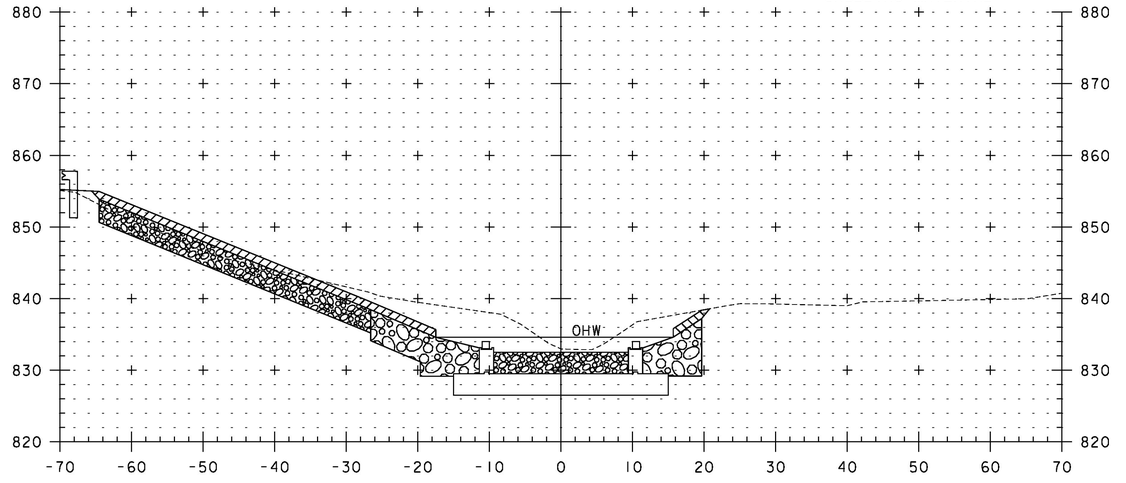

0+76 INVERT OUT

STA. 0+76 LT AND RT
BEGIN SPECIAL PROVISION (STONE
FILL, CULVERT LINING)

STA. 0+25 TO STA. 0+92

0 10 20
(SCALE 1" = 10')

CONSULTING ENGINEERS

PROJECT NAME: LUNENBURG	
PROJECT NUMBER: NH CULV(27)	
FILE NAME: IIB294/cos/zIIb294xslchan.dgn	PLOT DATE: 8/6/2015
PROJECT LEADER: J. BYATT	DRAWN BY: M. SMITH
DESIGNED BY: S. BEAUMONT	CHECKED BY: J. BYATT
CHANNEL CROSS SECTIONS I	SHEET 59 OF 74

CLD 12-0106 MODEL: XSOI

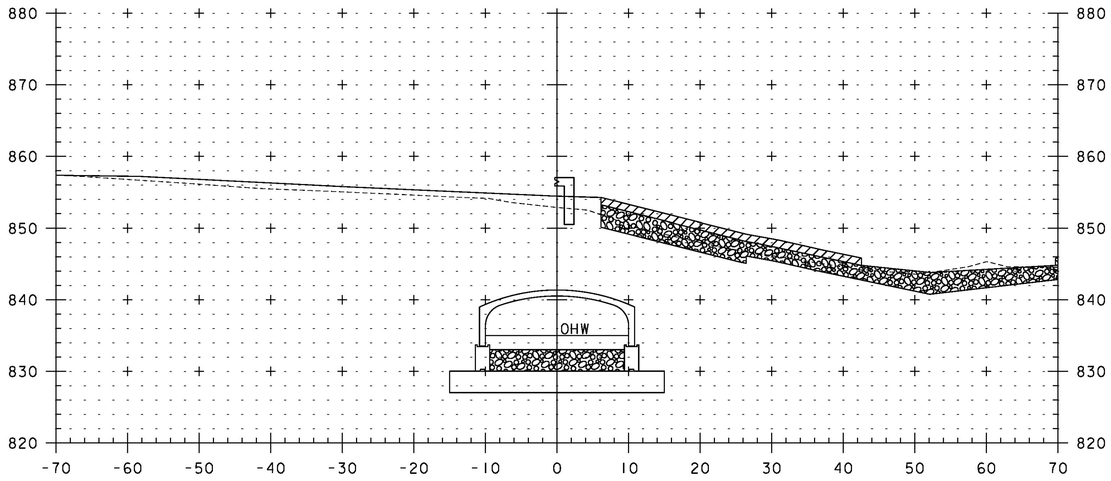

1+25

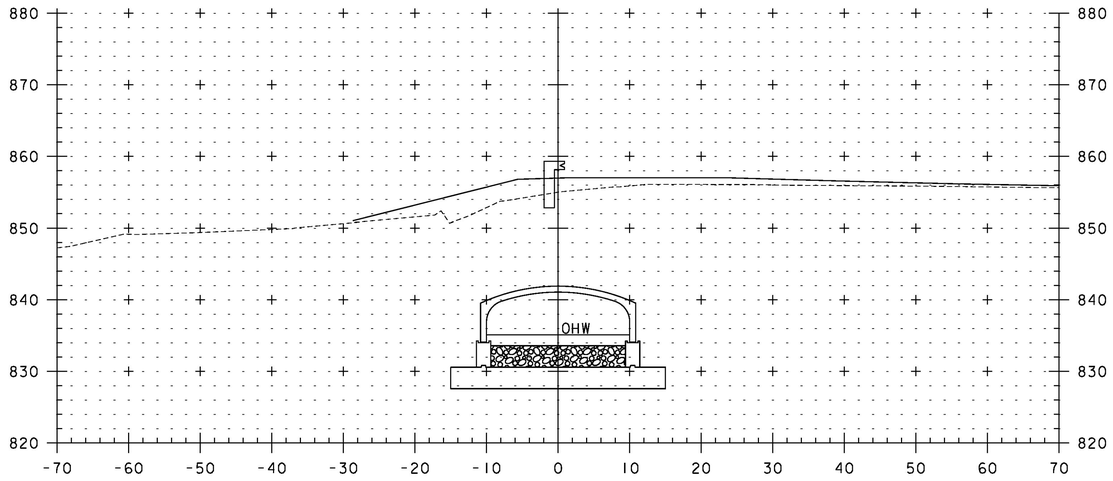

1+75

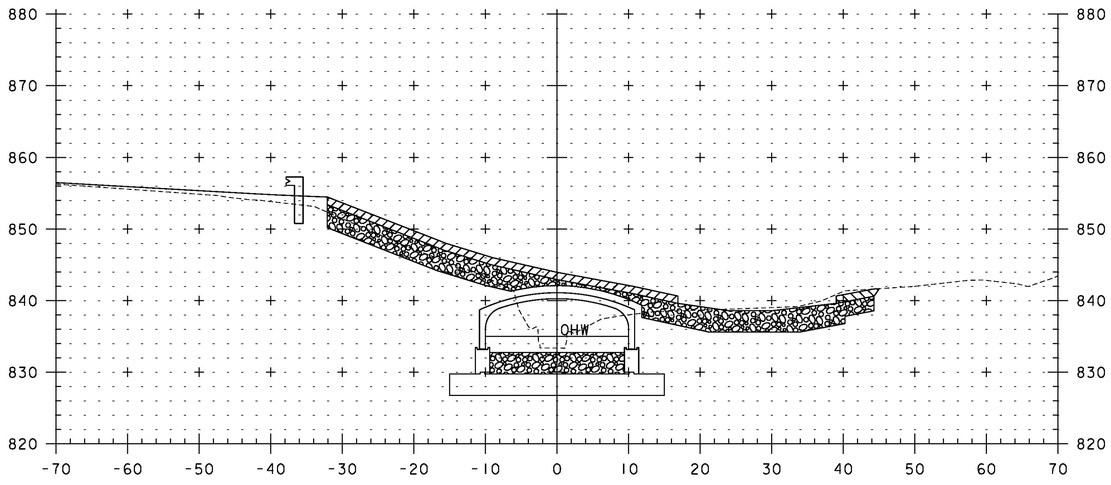

1+00

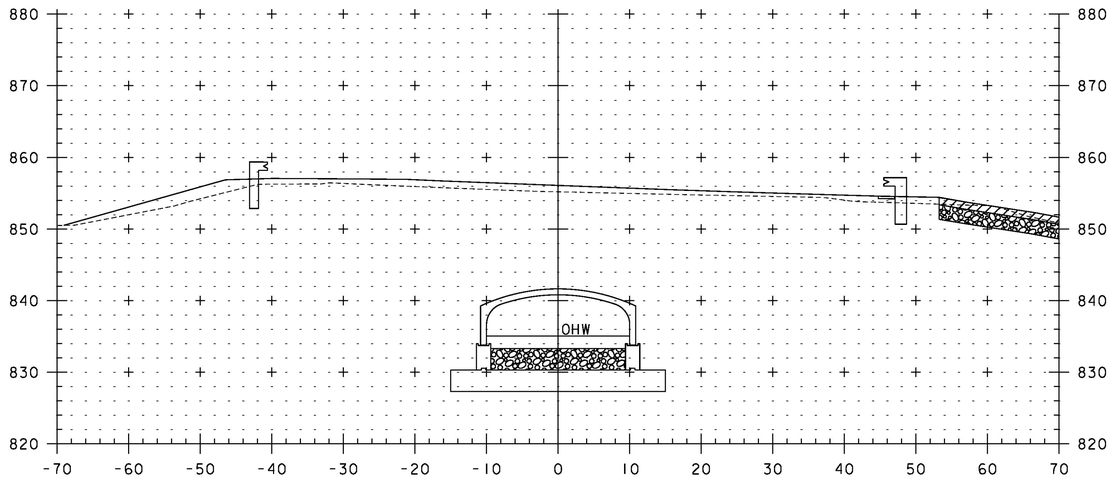

1+50

STA. 1+00 TO STA. 1+75

0 10 20
(SCALE 1" = 10')

CLD 12-0106 MODEL: XS02

PROJECT NAME:	LUNENBURG
PROJECT NUMBER:	NH CULV(27)
FILE NAME: IIB294/cos/zIIb294xslchan.dgn	PLOT DATE: 8/6/2015
PROJECT LEADER: J. BYATT	DRAWN BY: M. SMITH
DESIGNED BY: S. BEAUMONT	CHECKED BY: J. BYATT
CHANNEL CROSS SECTIONS 2	SHEET 60 OF 74

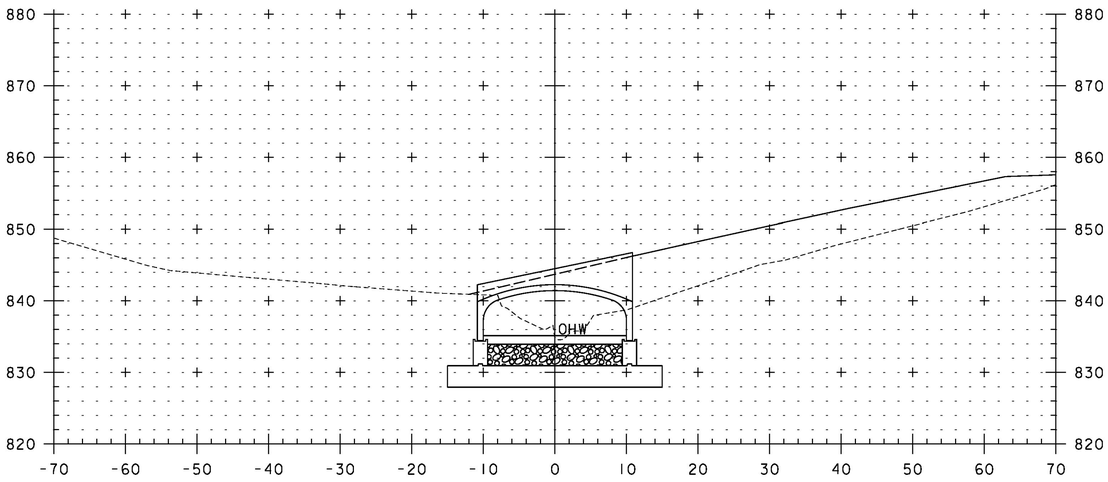

2+08 INVERT IN

STA. 2+08 LT AND RT
END SPECIAL PROVISION (STONE FILL, CULVERT LINING)
BEGIN UNCLASSIFIED CHANNEL EXCAVATION
SPECIAL PROVISION (STONE FILL, STREAM BED MATERIAL
GEOTEXTILE UNDER STONE FILL
GRUBBING MATERIAL

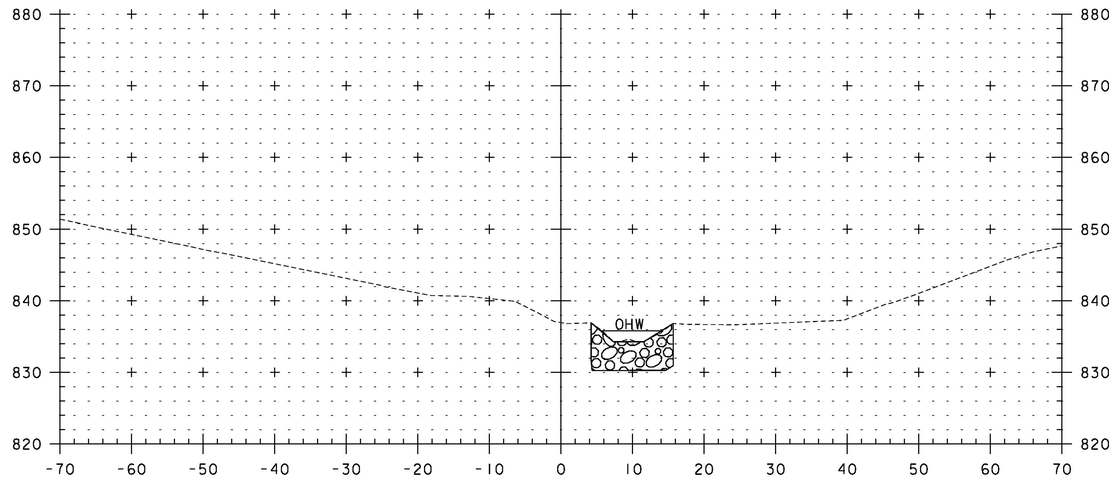

2+50 LIMIT OF WORK

STA. 2+50 LT AND RT
END UNCLASSIFIED CHANNEL EXCAVATION
SPECIAL PROVISION (STONE FILL, STREAM BED MATERIAL)
GEOTEXTILE UNDER STONE FILL
GRUBBING MATERIAL

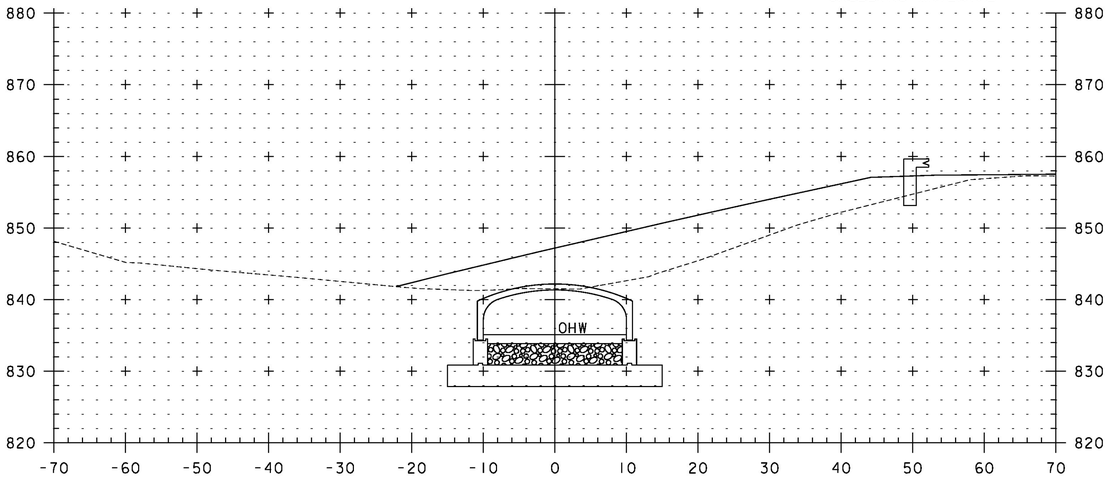

2+00

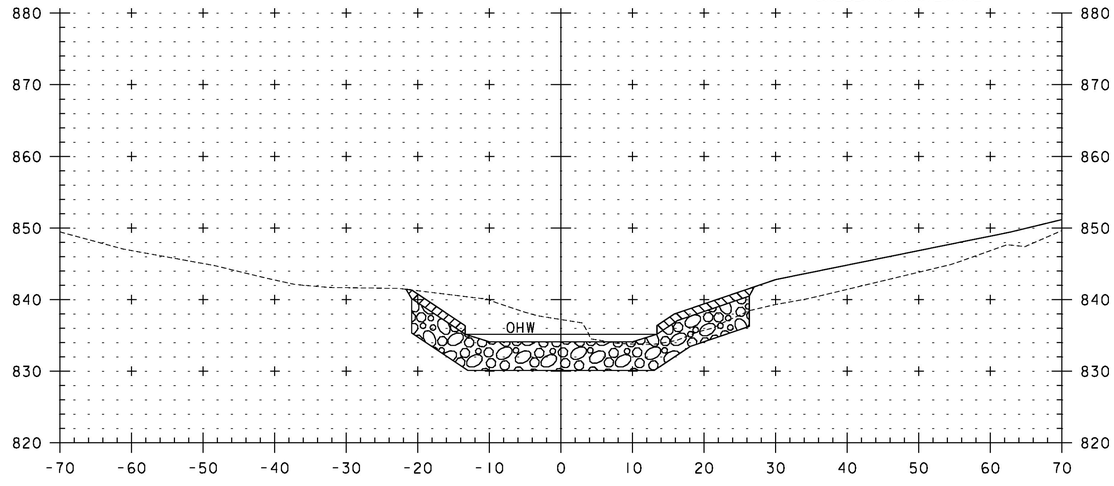

2+25

STA. 2+00 TO STA. 2+50

0 10 20
(SCALE 1" = 10')

CLD 12-0106 MODEL: XS03

PROJECT NAME:	LUNENBURG
PROJECT NUMBER:	NH CULV(27)
FILE NAME: IIB294/cos/zIIb294xslchan.dgn	PLOT DATE: 8/6/2015
PROJECT LEADER: J. BYATT	DRAWN BY: M. SMITH
DESIGNED BY: S. BEAUMONT	CHECKED BY: J. BYATT
CHANNEL CROSS SECTIONS 3	SHEET 61 OF 74

EPSC PLAN NARRATIVE

1.1 PROJECT DESCRIPTION

THIS PROJECT INVOLVES THE REMOVAL OF BRIDGE 126 WHICH IS A 30" IRON PIPE EXTENDED AT THE OUTLET WITH A 4'-0"x4'-0" CONCRETE BOX CONSTRUCTED IN 1932 AND EXTENDED AT THE INLET WITH A 27"/28" LINER AND ITS HEADWALLS. BRIDGE 126 WILL BE REPLACED WITH A 116 FOOT PRECAST CONCRETE ARCH CULVERT WITH A 10 FOOT RISE, SPANNING 20 FEET OVER THE HUDSON BROOK, ON NEW FOOTINGS ALONG THE SAME ALIGNMENT. BRIDGE 126 IS LOCATED IN THE TOWN OF LUNENBURG, ON US ROUTE 2, APPROXIMATELY 0.90 MILES WEST OF THE LUNENBURG/GUILDHALL TOWN LINE.

NOTE: AREA OF DISTURBANCE INCLUDES LIMITS OF EARTH DISTURBANCE WITHIN THE PROJECT AREA, AS WELL AS WASTE, BORROW AND STAGING AREAS, AND OTHER EARTH DISTURBING ACTIVITIES WITHIN OR DIRECTLY ADJACENT TO THE PROJECT LIMITS AS SHOWN ON THE ATTACHED EPSC PLAN.

TOTAL AREA OF DISTURBANCE AS SHOWN ON THE ATTACHED EPSC PLAN IS APPROXIMATELY 1.82 ACRES. IT IS ANTICIPATED THAT THIS PROJECT WILL LAST 18 MONTHS.

1.2 SITE INVENTORY

1.2.1 TOPOGRAPHY

THE TOPOGRAPHY OF THE AREA IS A SADDLE THAT IS MOSTLY WELL ESTABLISHED OPEN AREAS WITH SOME WOODED AREAS. US ROUTE 2, A PAVED DRIVEWAY, AND FOUR GRAVEL DRIVEWAYS ARE WITHIN THE PROJECT SITE. THERE ARE TWO RESIDENCES ON THE SOUTH SIDE OF THE SITE AND A RESIDENCE ON THE NORTHEAST SIDE OF THE PROJECT WITH GRASS AND TREE BUFFERS AT EACH RESIDENCE.

1.2.2 DRAINAGE, WATERWAYS, BODIES OF WATER, AND PROXIMITY TO NATURAL OR MAN-MADE WATER FEATURES

THE HUDSON BROOK IS THE ONLY WATER SOURCE ON THE PROJECT SITE. THE BROOK IS CLASSIFIED AS LOW-GRADIENT, VEGETATED WETLAND AT THE SITE. THE STREAM BED CONSISTS OF SILTS AND FINE SAND WITH OCCASIONAL SMALL POCKETS OF FINE GRAVEL. THE TRIBUTARY AREA AT THE CULVERT CROSSING IS 3.2 SQUARE MILES. DUE TO THE NATURE OF THE SURROUNDING TERRAIN THE PROJECT SITE COULD RECEIVE RUNOFF WATER FROM A FEW NEARBY SLOPES.

1.2.3 VEGETATION

THE VEGETATION IN THE PROJECT AREA CONSISTS OF PINE AND HARDWOOD TREES, UNDERGROWTH, AND BRUSH. THE IMPACT TO VEGETATION WILL BE LIMITED TO THAT WHICH IS DIRECTLY AFFECTED BY REPLACEMENT OF THE EXISTING CULVERT. UPON PROJECT COMPLETION, THE CHANNEL WILL BE ARMORED WITH ITEM 900.608, "SPECIAL PROVISION (STONE FILL, STREAMBED MATERIAL)" AS SPECIFIED ON THE PLANS. SLOPES WILL BE ARMORED WITH STONE FILL, TYPE II AND III AS SPECIFIED ON THE PLANS. DISTURBED VEGETATION WILL BE REESTABLISHED WITH STANDARD SEED AND MULCH PRACTICES.

1.2.4 SOILS

ALL SOIL DATA CAME FROM THE U.S. DEPARTMENT OF AGRICULTURE SOIL CONSERVATION SERVICE FOR THE COUNTY OF ESSEX, VERMONT. SOILS ON THE PROJECT SITE ARE KINSMAN SAND, 0 TO 3% SLOPES, "K FACTOR" = 0.17. THE SOIL IS NOT CONSIDERED HIGHLY ERODIBLE.

NOTE: K-VALUES GENERALLY INDICATE THE FOLLOWING:
0.0-0.23 = LOW EROSION POTENTIAL
0.24-0.36 = MODERATE EROSION POTENTIAL
0.37 AND HIGHER = HIGH EROSION POTENTIAL

1.2.5 SENSITIVE RESOURCE AREAS

CRITICAL HABITATS: NO
HISTORICAL OR ARCHEOLOGICAL AREAS: YES, FOUR ARCHAEOLOGICAL AREAS IN EACH QUADRANT
PRIME AGRICULTURAL LAND: YES, PRIME(b) ON WEST SIDE OF US ROUTE 2
THREATENED AND ENDANGERED SPECIES: NO
WATER RESOURCE: HUDSON BROOK
WETLANDS: YES, UPSTREAM OF THE CULVERT

1.3 RISK EVALUATION

THIS PROJECT FALLS UNDER THE JURISDICTION OF GENERAL PERMIT 3-9020 FOR STORMWATER RUNOFF FROM CONSTRUCTION SITES FOR LOW RISK PROJECTS. ANY MODIFICATIONS TO THE PROJECT THAT INCREASE THE RISK TO ENVIRONMENTAL RESOURCES SHALL BE EVALUATED IN ACCORDANCE WITH THE PERMIT REQUIREMENTS. THE CONTRACTOR WILL BE RESPONSIBLE FOR ANY ADDITIONAL PERMITTING.

1.4 EROSION PREVENTION AND SEDIMENT CONTROL

THE EROSION CONTROL PLANS ARE MEANT AS A GUIDELINE FOR PREVENTING EROSION AND CONTROLLING SEDIMENT TRANSPORT. THE PRINCIPLES OUTLINED IN THIS NARRATIVE CONSIST OF APPLYING MEASURES THROUGHOUT CONSTRUCTION OF THE PROJECT IN ORDER TO MINIMIZE SEDIMENT TRANSPORT TO THE RECEIVING WATERS. THE MEASURES INCLUDE STABILIZATION AND STRUCTURAL PRACTICES, STORM WATER CONTROLS AND OTHER POLLUTION PREVENTION PRACTICES. THEY HAVE BEEN PROPOSED BY THE DESIGNER AS A BASIS FOR PROTECTING RESOURCES AND WILL NEED TO BE BUILT UPON BASED ON THE SPECIFIC MEANS AND METHODS OF THE CONTRACTOR. REFER TO THE LOW RISK SITE HANDBOOK AND APPROPRIATE DETAIL SHEETS FOR SPECIFIC GUIDANCE AND CONSTRUCTION DETAILING. THE CONTRACTOR IS RESPONSIBLE FOR DEVELOPING AND SUBMITTING AN EPSC PLAN IN ACCORDANCE WITH SECTION 652 OF THE SPECIAL PROVISIONS.

ALL MEASURES SHALL BE REGULARLY MAINTAINED AND SHALL BE CHECKED FOR SEDIMENT BUILD-UP. SEDIMENT SHALL BE DISPOSED OF AT AN APPROVED SITE WHERE IT WILL NOT BE SUBJECT TO EROSION.

1.4.1 MARK SITE BOUNDARIES

SITE BOUNDARIES AND AREAS CONSTRUCTION EQUIPMENT CAN ACCESS SHALL BE DELINEATED.

PROJECT DEMARCATION FENCING (PDF) SHALL BE USED TO PHYSICALLY MARK SITE BOUNDARIES. BECAUSE THIS PROJECT FALLS UNDER THE CGP 3-9020, BARRIER FENCE SHALL BE USED INSTEAD OF PROJECT DEMARCATION FENCE WITHIN 100 FEET OF A WATER RESOURCE (STREAM, BROOK, LAKE, POND, WETLAND, ETC).

1.4.2 LIMIT DISTURBANCE AREA

PREVENTING INITIAL SOIL EROSION BY MINIMIZING THE EXPOSED AREA IS MUCH MORE EFFECTIVE THAN TREATING ERODED SEDIMENT. EARTH DISTURBANCE CAN BE MINIMIZED THROUGH CONSTRUCTION PHASING BY ONLY OPENING UP EARTH AS NECESSARY. THIS CAN LIMIT THE AREA THAT WILL BE DISTURBED AND EXPOSED TO EROSION. EMPLOY TEMPORARY CONSTRUCTION STABILIZATION PRACTICES IN INCREMENTAL STAGES AS PHASES CHANGE. FOR PROJECTS WHICH FALL UNDER THE CONSTRUCTION GENERAL PERMIT, ONLY THE ACREAGE LISTED ON THE PERMIT AUTHORIZATION MAY BE EXPOSED AT ANY GIVEN TIME.

MAINTAINING VEGETATED BUFFERS ALONG STREAM BANKS, WETLANDS OR OTHER SENSITIVE AREAS IS A CRUCIAL EROSION AND SEDIMENT CONTROL MEASURE THAT SHOULD BE ESTABLISHED WHEREVER POSSIBLE.

1.4.3 SITE ENTRANCE/EXIT STABILIZATION

TRACKING OF SEDIMENT ONTO PUBLIC HIGHWAYS SHALL BE MINIMIZED TO REDUCE THE POTENTIAL FOR RUNOFF ENTERING RECEIVING WATERS. INSTALLATION SHALL COINCIDE WITH THE CONTRACTORS PROGRESS SCHEDULE.

STABILIZED CONSTRUCTION ENTRANCES ARE NOT ANTICIPATED ON THIS PROJECT. THE EXISTING ROADWAY WILL BE UTILIZED TO ACCESS THE BRIDGE.

1.4.4 INSTALL SEDIMENT BARRIERS

SEDIMENT BARRIERS SHALL BE UTILIZED TO INTERCEPT RUNOFF AND ALLOW SUSPENDED SEDIMENT TO SETTLE OUT. THEY SHALL BE INSTALLED PRIOR TO ANY UP SLOPE WORK.

SILT FENCE WILL BE INSTALLED AS PROPOSED ON THE EPSC PLAN. BECAUSE THIS PROJECT FALLS UNDER THE CGP 3-9020, WOVEN WIRE REINFORCED SILT FENCE SHALL BE USED INSTEAD OF SILT FENCE WITHIN 100 FEET UPSLOPE OF RECEIVING WATERS.

1.4.5 DIVERT UPLAND RUNOFF

DIVERSIONARY MEASURES SHALL BE USED TO INTERCEPT RUNOFF FROM ABOVE THE CONSTRUCTION AND DIRECT IT AROUND THE DISTURBED AREA SO THAT CLEAN WATER DOES NOT BECOME MUDDIED WHILE TRAVELING OVER EXPOSED SOILS ON THE CONSTRUCTION SITE.

THIS PROJECT WILL HAVE A PAVED DETOUR. CONSTRUCTION VEHICLES WILL BE ABLE TO UTILIZE THE EXISTING ROADWAY. THEREFORE IT IS NOT ANTICIPATED THAT DIVERSION MEASURES WILL BE NECESSARY.

1.4.6 SLOW DOWN CHANNELIZED RUNOFF

CHECK STRUCTURES SHALL BE UTILIZED TO REDUCE THE VELOCITY, AND THUS THE EROSIVE POTENTIAL, OF CONCENTRATED FLOW IN CHANNELS.

STONE CHECK DAMS WILL BE INSTALLED AS PROPOSED ON THE EPSC PLAN, AT A MINIMUM.

1.4.7 CONSTRUCT PERMANENT CONTROLS

PERMANENT STORMWATER TREATMENT DEVICES SHALL BE INSTALLED AS SHOWN ON THE PLANS AND IN ACCORDANCE WITH PERMIT CONDITIONS.

PERMANENT STORMWATER TREATMENT DEVICES ARE NOT ANTICIPATED ON THIS PROJECT.

1.4.8 STABILIZE EXPOSED SOILS DURING CONSTRUCTION

ALL AREAS OF DISTURBANCE MUST HAVE TEMPORARY STABILIZATION IN PLACE WITHIN 48 HOURS OF DISTURBANCE OR IN ACCORDANCE WITH THE CONSTRUCTION GENERAL PERMIT 3-9020 AUTHORIZATION.

SURFACE ROUGHENING OF ALL EXPOSED SLOPES, COMBINED WITH TEMPORARY MULCHING, SHALL BE UTILIZED ON A REGULAR BASIS. BIODEGRADABLE EROSION CONTROL MATTING OR AN EQUIVALENT SHALL BE USED TO STABILIZE ALL SLOPES STEEPER THAN 1:3.

THE FORECAST OF RAINFALL EVENTS SHALL TRIGGER IMMEDIATE PROTECTION OF EXPOSED SOILS.

TEMPORARY EROSION CONTROL MATTING WILL BE INSTALLED AS PROPOSED ON THE EPSC PLAN, AT A MINIMUM.

1.4.9 WINTER STABILIZATION

VARIOUS MEASURES SPECIFIC TO WINTER MAY BE NECESSARY SHOULD THE PROJECT EXTEND INTO WINTER (OCTOBER 15 THROUGH APRIL 15). REFER TO THE LOW RISK SITE HANDBOOK FOR GUIDANCE.

1.4.10 STABILIZE SOIL AT FINAL GRADE

EXPOSED SOIL MUST BE STABILIZED WITHIN 48 HOURS OF REACHING FINAL GRADE.

SEED, MULCH, FERTILIZER AND LIME SHALL BE USED TO ESTABLISH PERMANENT VEGETATION. FOR SLOPES STEEPER THAN 1:3, BIODEGRADABLE EROSION CONTROL MATTING OR AN EQUIVALENT SHALL BE USED INSTEAD OF MULCH. STONE FILL SHALL BE USED TO STABILIZE ROADWAY SLOPES AND THE CHANNEL AS SHOWN ON THE PLANS.

1.4.11 DE-WATERING ACTIVITIES

DISCHARGE FROM DEWATERING ACTIVITIES THAT FLOWS OFF OF THE CONSTRUCTION SITE MUST NOT CAUSE OR CONTRIBUTE TO A VIOLATION OF THE VERMONT WATER QUALITY STANDARDS.

TREATMENT OF DEWATERING COFFERDAM IS ANTICIPATED. THE SPECIFIC MEANS FOR TREATMENT OF DISCHARGE SHALL BE PROVIDED BY THE CONTRACTOR.

1.4.12 INSPECT YOUR SITE

INSPECT THE PROJECT SITE BASED ON SPECIAL PROVISION REQUIREMENTS OR CONSTRUCTION GENERAL PERMIT AUTHORIZATION STIPULATIONS.

1.5 SEQUENCE AND STAGING

THIS SECTION WILL BE DEVELOPED BY THE CONTRACTOR USING THE GUIDANCE OUTLINED IN THE VTRANS EPSC PLAN CONTRACTOR CHECKLIST.

1.5.1 CONSTRUCTION SEQUENCE

1.5.2 OFF-SITE ACTIVITIES

IN ADDITION TO THE CONTRACTOR CHECKLIST ANY ACTIVITIES OUTSIDE THE CONSTRUCTION LIMITS SHALL FOLLOW SUBSECTIONS 105.25- 105.29 OF THE STANDARD SPECIFICATIONS FOR CONSTRUCTION.

1.5.3 UPDATES

QLD 12-0106 MODEL: ECO1

CONSULTING ENGINEERS

PROJECT NAME:	LUNENBURG
PROJECT NUMBER:	NH CULV(27)
FILE NAME:	llb294/cos/zllb294erodet.dgn
PROJECT LEADER:	J. BYATT
DESIGNED BY:	M. HALEY
EROSION CONTROL NARRATIVE	
PLOT DATE:	8/6/2015
DRAWN BY:	M. HALEY
CHECKED BY:	P. SHEDD
SHEET	62 OF 74

SOIL INFORMATION: KINSMAN SAND
K = 0.17, NOT HIGHLY ERODIBLE
HYDROLOGIC SOIL GROUP: C

SOIL INFORMATION: KINSMAN SAND
K = 0.17, NOT HIGHLY ERODIBLE
HYDROLOGIC SOIL GROUP: C

N

VT STATE PLANE GRID

COMB

AER E&T

GRAVEL DRIVE

FIELD

FOREST

WETLAND
CLASS II

GRASS

GUYW

BRIDGE #126

CONIFEROUS TREES

GRAVEL
DRIVE

GARAGE

2 SWF

STONE
FILL

TREES

50' RIPARIAN BUFFER (TYP.)

HUDSON BROOK

SHED

MATCH LINE SEE NEXT SHEET

0 20 40
(SCALE 1" = 20')

CONSULTING ENGINEERS

PROJECT NAME:	LUNENBURG
PROJECT NUMBER:	NH CULV(27)
FILE NAME:	llb294/cos/zllb294bdreroex.dgn
PROJECT LEADER:	J. BYATT
DESIGNED BY:	M. HALEY
EPSC EXISTING PLAN SHEET 1	
PLOT DATE:	8/6/2015
DRAWN BY:	S. GOODWIN
CHECKED BY:	P. SHEDD
SHEET	63 OF 74

QLD 12-0106 MODEL: L01

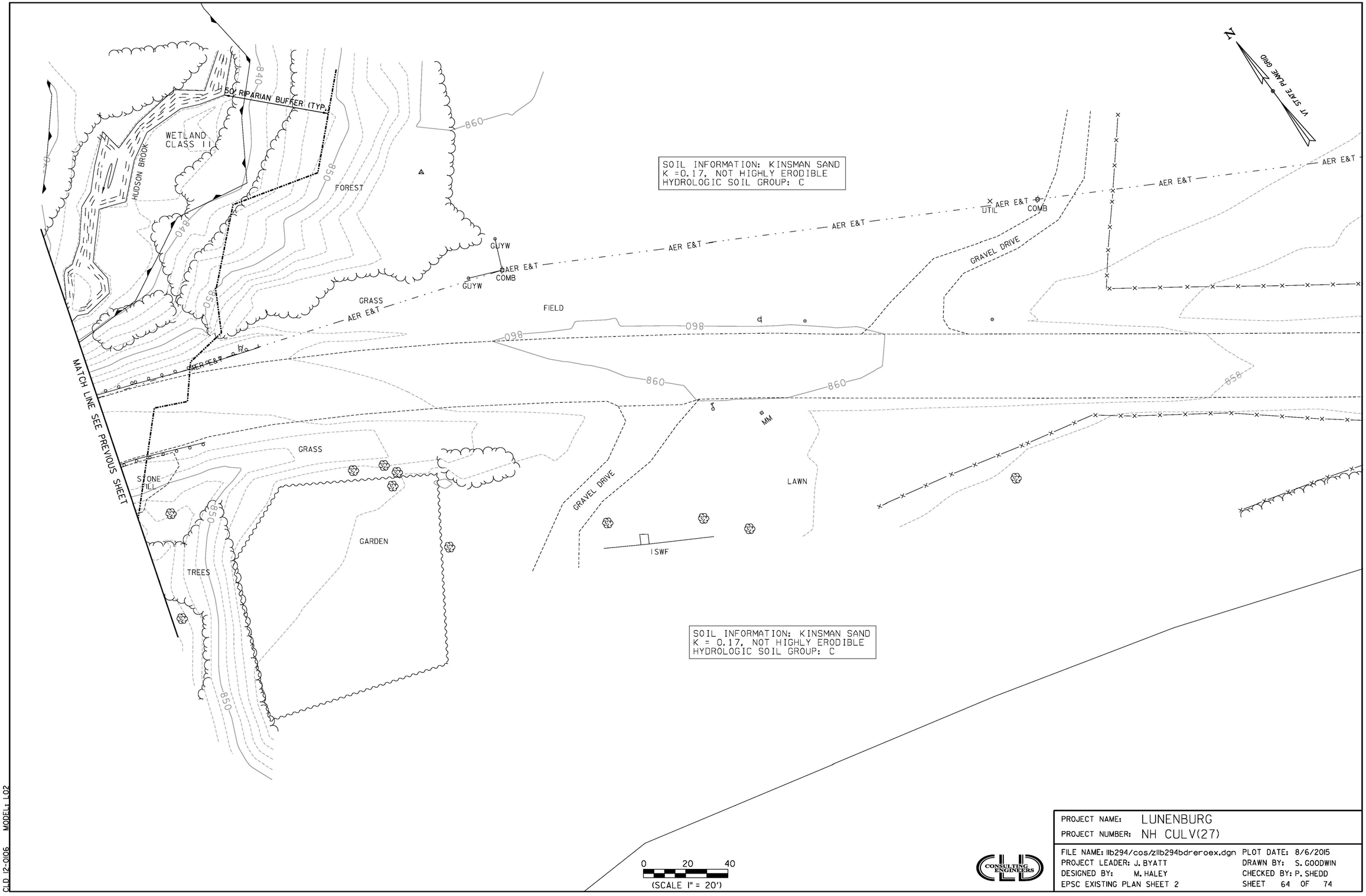

CLD 12-0106 MODEL: L02

PROJECT NAME: LUNENBURG	
PROJECT NUMBER: NH CULV(27)	
FILE NAME: llb294/cos/zllb294bdreroex.dgn	PLOT DATE: 8/6/2015
PROJECT LEADER: J. BYATT	DRAWN BY: S. GOODWIN
DESIGNED BY: M. HALEY	CHECKED BY: P. SHEDD
EPSC EXISTING PLAN SHEET 2	SHEET 64 OF 74

GEOTEXTILE FOR SILT FENCE
425+00 TO 426+00 RT
103+17 TO 103+25 LT
103+51 TO 103+66 LT

GEOTEXTILE FOR SILT FENCE, WOVEN WIRE REINFORCED
428+38 TO 428+42 RT
428+68 TO 428+70 RT
429+39 TO 429+40 RT
103+96 TO 104+00 LT
104+39 TO 104+40 LT
104+67 TO 104+68 LT

TEMPORARY EROSION MATTING
103+50 TO 104+40 LT

TEMPORARY STONE CHECK DAM, TYPE I
427+00 TO 428+26 RT
103+00 TO 104+40 RT

BARRIER FENCE
427+46 TO 428+53 RT
428+63 TO 429+75 RT
428+66 TO 429+75 LT

PROJECT DEMARCATION FENCE
424+25 TO 426+63 RT
424+25 TO 427+30 LT
426+83 TO 427+46 RT
427+46 TO 428+66 LT

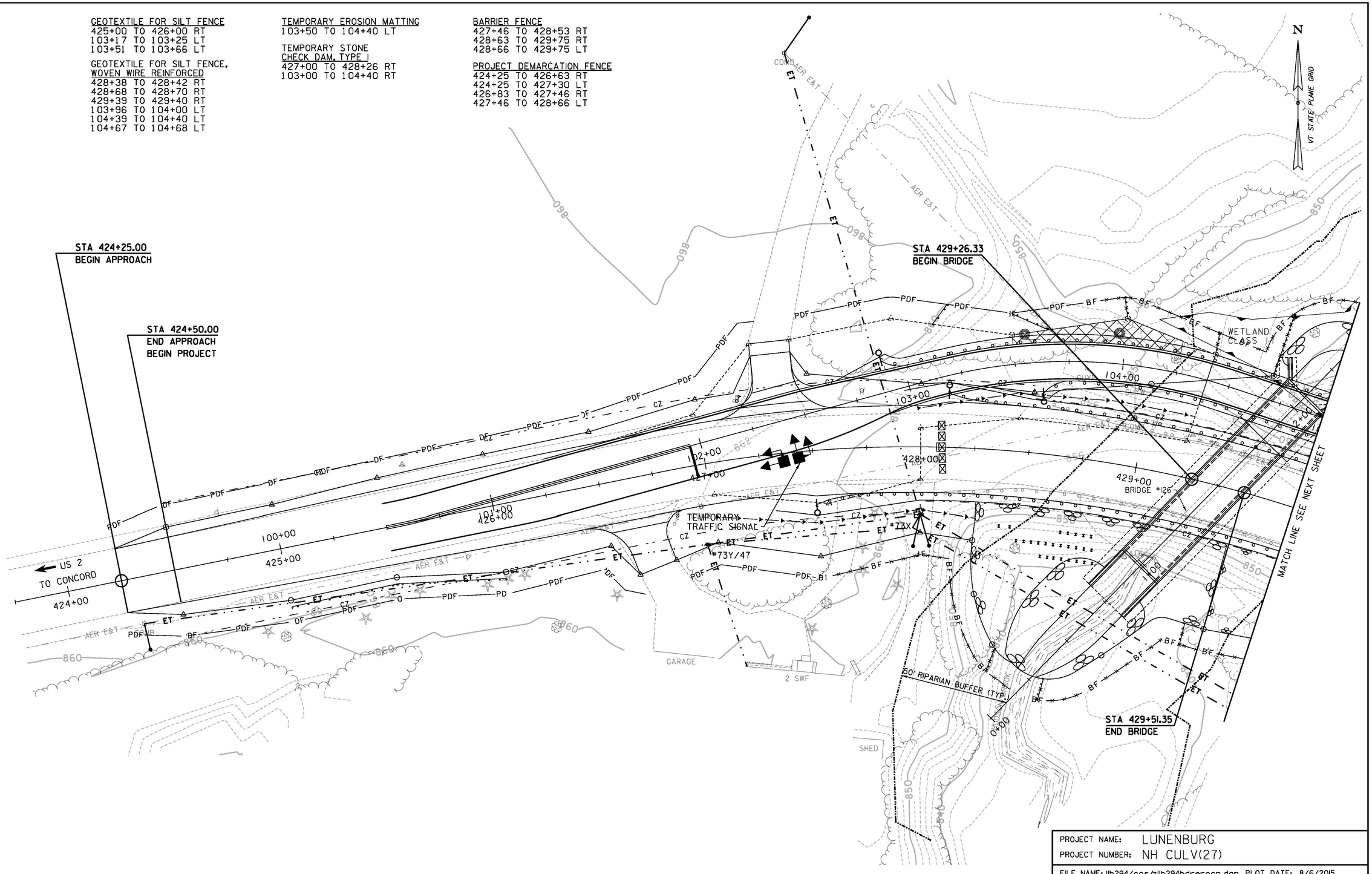

0 20 40
(SCALE 1" = 20')

CLD 12-0106 MODEL: L01

PROJECT NAME:	LUNENBURG
PROJECT NUMBER:	NH CULV(27)
FILE NAME: llb294/cos/zllb294bdrerocn.dgn	PLOT DATE: 8/6/2015
PROJECT LEADER: J. BYATT	DRAWN BY: S. GOODWIN
DESIGNED BY: M. HALEY	CHECKED BY: P. SHEDD
EPSC CONSTRUCTION SHEET 1	SHEET 65 OF 74

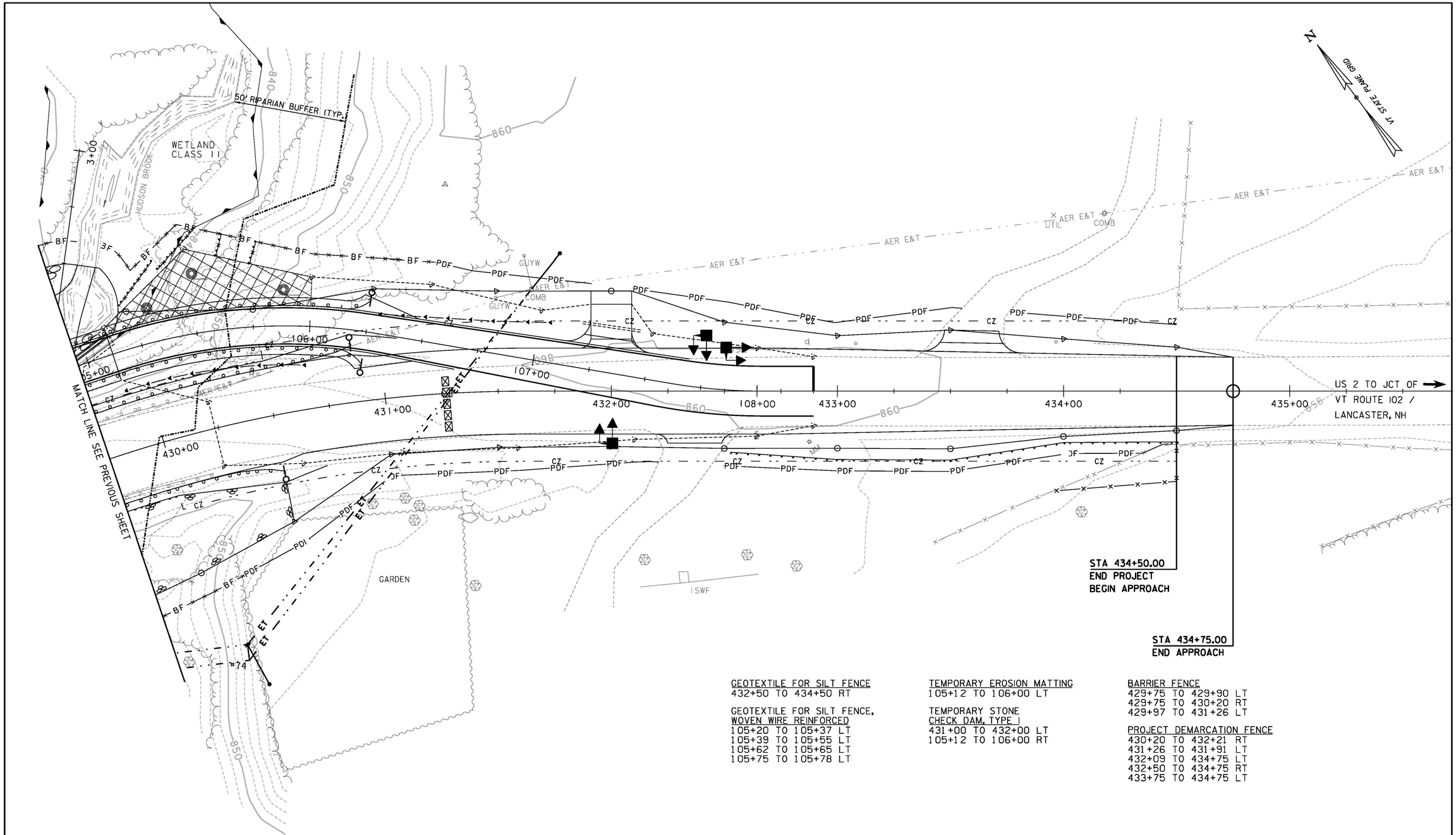

GEOTEXTILE FOR SILT FENCE
432+50 TO 434+50 RT

GEOTEXTILE FOR SILT FENCE, WOVEN WIRE REINFORCED
105+20 TO 105+37 LT
105+39 TO 105+55 LT
105+62 TO 105+65 LT
105+75 TO 105+78 LT

TEMPORARY EROSION MATTING
105+12 TO 106+00 LT

TEMPORARY STONE CHECK DAM, TYPE I
431+00 TO 432+00 LT
105+12 TO 106+00 RT

BARRIER FENCE
429+75 TO 429+90 LT
429+75 TO 430+20 RT
429+97 TO 431+26 LT

PROJECT DEMARCATION FENCE
430+20 TO 432+21 RT
431+26 TO 431+91 LT
432+09 TO 434+75 LT
432+50 TO 434+75 RT
433+75 TO 434+75 LT

0 20 40
(SCALE 1" = 20')

PROJECT NAME:	LUNENBURG
PROJECT NUMBER:	NH CULV(27)
FILE NAME:	llb294/cos/zllb294bdrerocn.dgn
PROJECT LEADER:	J. BYATT
DESIGNED BY:	M. HALEY
EPSC CONSTRUCTION PLAN SHEET 2	
PLOT DATE:	8/6/2015
DRAWN BY:	S. GOODWIN
CHECKED BY:	P. SHEDD
SHEET	66 OF 74

CONSULTING ENGINEERS

QLD 12-0106 MODEL: L02

GRUBBING MATERIAL
STONE FILL, TYPE III
GEOTEXTILE UNDER STONE FILL
428+27 TO 429+50 RT (SLOPE)

GRUBBING MATERIAL
STONE FILL, TYPE II
GEOTEXTILE UNDER STONE FILL
429+50 TO 429+75 RT (SLOPE)

STONE FILL, TYPE II
GEOTEXTILE UNDER STONE FILL
429+50 TO 429+75 RT (DITCH)

STONE FILL, STREAMBED MATERIAL
GEOTEXTILE UNDER STONE FILL
428+48 TO 429+21 RT (CHANNEL)
429+52 TO 429+75 LT (CHANNEL)

TEMPORARY EROSION MATTING
428+50 TO 429+75 LT

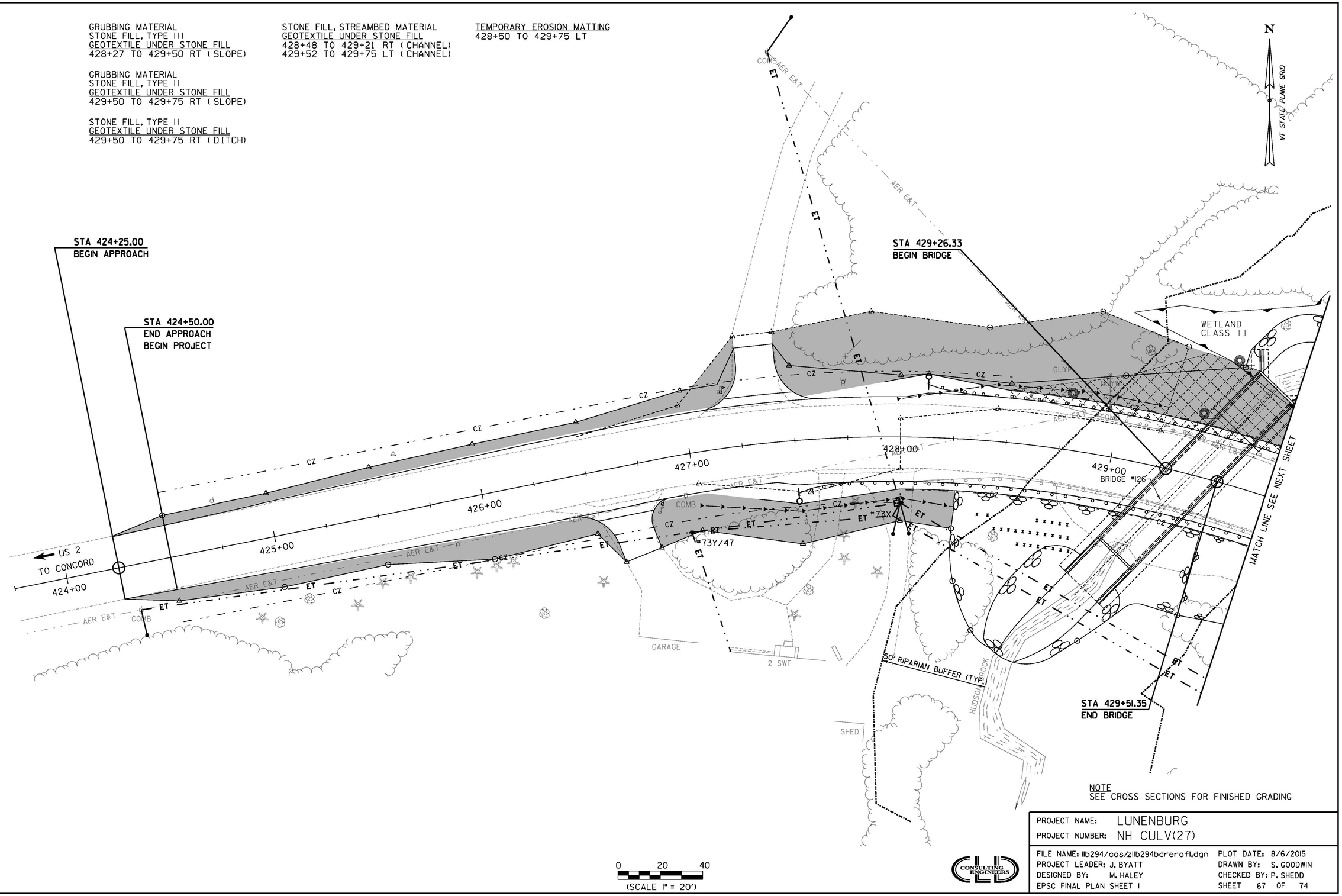

NOTE
SEE CROSS SECTIONS FOR FINISHED GRADING

0 20 40
(SCALE 1" = 20')

PROJECT NAME:	LUNENBURG
PROJECT NUMBER:	NH CULV(27)
FILE NAME:	llb294/cos/zllb294bdrerofl.dgn
PROJECT LEADER:	J. BYATT
DESIGNED BY:	M. HALEY
EPSC FINAL PLAN SHEET	I
PLOT DATE:	8/6/2015
DRAWN BY:	S. GOODWIN
CHECKED BY:	P. SHEDD
SHEET	67 OF 74

CLD CONSULTING ENGINEERS

CLD 12-0106 MODEL: L01

GRUBBING MATERIAL
STONE FILL, TYPE II
GEOTEXTILE UNDER STONE FILL
429+75 TO 430+50 RT (SLOPE)

STONE FILL, TYPE II
GEOTEXTILE UNDER STONE FILL
429+75 TO 430+50 RT (DITCH)

TEMPORARY STONE
CHECK DAM, TYPE I
431+00 TO 432+50 LT

STONE FILL, STREAM BED MATERIAL
GEOTEXTILE UNDER STONE FILL
429+75 TO 429+98 LT (CHANNEL)

TEMPORARY EROSION MATTING
429+75 TO 430+50 LT

N
VT STATE PLANE GRID

50' RIPARIAN BUFFER (TYP.)
WETLAND CLASS II
HUDSON BROOK
MATCH LINE SEE PREVIOUS SHEET
GARDEN
#74
ISWF
GUYW
AER E&T
COMB
UTIL
CZ
ET
MM
431+00
432+00
433+00
434+00
435+00
430+00
US 2 TO JCT OF VT ROUTE 102 / LANCASTER, NH

STA 434+50.00
END PROJECT
BEGIN APPROACH

STA 434+75.00
END APPROACH

NOTE
SEE CROSS SECTIONS FOR FINISHED GRADING

0 20 40
(SCALE 1" = 20')

PROJECT NAME:	LUNENBURG
PROJECT NUMBER:	NH CULV(27)
FILE NAME:	llb294/cos/zllb294bdrerofl.dgn
PROJECT LEADER:	J. BYATT
DESIGNED BY:	M. HALEY
EPSC FINAL PLAN SHEET 2	
PLOT DATE:	8/6/2015
DRAWN BY:	S. GOODWIN
CHECKED BY:	P. SHEDD
SHEET	68 OF 74

CLD 12-0106 MODEL: L02

VAOT LOW GROW/FINE FESCUE MIX

LBS/AC						
WEIGHT	BROADCAST	HYDROSEED	NAME	LATIN NAME	GERM	PURITY
38%	57	95	CREEPING RED FESCUE	FESTUCA RUBRA VAR. RUBRA	90%	98%
29%	43.5	72.5	HARD FESCUE	FESTUCA LONGIFOLIA	85%	95%
15%	22.5	37.5	CHEWINGS FESCUE	FESTUCA RUBRA VAR. COMMUTATA	87%	95%
15%	22.5	37.5	ANNUAL RYEGRASS	LOLIUM MULTIFLORUM	90%	95%
3%	4.5	7.5	INERTS			
100%	150	250				

VAOT RURAL AREA MIX

LBS/AC						
WEIGHT	BROADCAST	HYDROSEED	NAME	LATIN NAME	GERM	PURITY
37.5%	22.5	45	CREEPING RED FESCUE	FESTUCA RUBRA VAR. RUBRA	85%	98%
37.5%	22.5	45	TALL FESCUE	FESTUCA ARUNDINACEA	90%	95%
5.0%	3	6	RED TOP	AGROSTIS GIGANTEA	90%	95%
15.0%	9	18	WHITE FIELD CLOVER	TRIFOLIUM REPENS	85%	98%
5.0%	3	6	ANNUAL RYE GRASS	LOLIUM MULTIFLORUM	85%	95%
100%	60	120				

GENERAL AMENDMENT GUIDANCE		
FERTILIZER	LIME	
10/20/10	AG LIME	PELLITIZED
500 LBS/AC	2 TONS/AC	1 TONS/AC

CONSTRUCTION GUIDANCE

1. SEED MIX: THE CONTRACTOR SHALL COORDINATE WITH THE RESIDENT ENGINEER ON WHICH SEED MIX TO USE.
2. SEED MIX: USE AS INDICATED IN THE PLANS AND/OR FOR ALL ESTABLISHED UPLAND (NON WETLAND) AREAS DISTURBED BY THE CONTRACTOR.
3. ALL SEED MIXTURES: SHALL NOT HAVE A WEED CONTENT EXCEEDING 0.40% BY WEIGHT AND SHALL BE FREE OF ALL NOXIOUS SEED.
4. FERTILIZER AND LIMESTONE: SHALL FOLLOW RATES SHOWN ON PLAN OR AS DIRECTED BY THE ENGINEER.
5. HAY MULCH: TO BE PLACED ON EARTH SLOPES AT THE RATE OF 2 TONS/ACRE, ACHIEVE 90% GROUND COVER OR AS DIRECTED BY THE ENGINEER.
6. HYDROSEEDING: ALTHOUGH GUIDANCE IS GIVEN ABOVE THE SITE CONDITIONS AND THE TYPE OF HYDROSEED PROPOSED FOR USE WILL ULTIMATELY DICTATE THE AMOUNTS AND TYPES OF SOIL AMENDMENTS TO BE APPLIED.
7. TURF ESTABLISHMENT: PLACING SEED, FERTILIZER, LIME AND MULCH PRIOR TO SEPTEMBER 15 AND AFTER APRIL 15 CAN BETTER ENSURE A VIGOROUS GROWTH OF GRASS.

ADAPTED FROM VTRANS TECHNICAL LANDSCAPE MANUAL FOR ROADWAYS AND TRANSPORTATION FACILITIES

TURF ESTABLISHMENT

THIS WORK SHALL BE PERFORMED IN ACCORDANCE WITH SECTION 651 FOR SEED (PAY ITEM 651.15)

REVISIONS	
JANUARY 12, 2015	WHF

VAOT URBAN LAWN MIX

LBS/AC						
WEIGHT	BROADCAST	HYDROSEED	NAME	LATIN NAME	GERM	PURITY
42.5%	34	68	CREEPING RED FESCUE	FESTUCA RUBRA X RUBRA	85%	98%
20.0%	16	32	PERENNIAL RYE GRASS	LOLIUM PERENNE	90%	95%
32.5%	26	52	KENTUCKY BLUE GRASS	POA PRATENSIS	85%	85%
5.0%	4	8	ANNUAL RYE GRASS	LOLIUM MULTIFLORUM	85%	95%
100%	80	160				

GENERAL AMENDMENT GUIDANCE		
FERTILIZER	LIME	
10/20/10	AG LIME	PELLITIZED
500 LBS/AC	2 TONS/AC	1 TONS/AC

CONSTRUCTION GUIDANCE

1. SEED MIX: THE URBAN AREA MIX SHALL NOT BE USED IN WETLANDS OR ANY WATERS OF THE STATE OF VERMONT.
2. SEED MIX: USE ONLY AS INDICATED IN THE PLANS.
3. SEED MIX: SHALL NOT HAVE A WEED CONTENT EXCEEDING 0.40% BY WEIGHT AND SHALL BE FREE OF ALL NOXIOUS SEED.
4. FERTILIZER AND LIMESTONE: SHALL FOLLOW RATES SHOWN ON PLAN OR AS DIRECTED BY THE ENGINEER
5. HAY MULCH: TO BE PLACED ON EARTH SLOPES AT THE RATE OF 2 TONS/ACRE, ACHIEVE 90% GROUND COVER OR AS DIRECTED BY THE ENGINEER.
6. HYDROSEEDING: ALTHOUGH GUIDANCE IS GIVEN ABOVE THE SITE CONDITIONS AND THE TYPE OF HYDROSEED WILL ULTIMATELY DICTATE THE AMOUNTS AND TYPES OF SOIL AMENDMENTS TO BE APPLIED
7. TURF ESTABLISHMENT: PLACING SEED, FERTILIZER, LIME AND MULCH PRIOR TO SEPTEMBER 15 AND AFTER APRIL 15 CAN BETTER ENSURE A VIGOROUS GROWTH OF GRASS.

ADAPTED FROM VTRANS TECHNICAL LANDSCAPE MANUAL FOR ROADWAYS AND TRANSPORTATION FACILITIES

TURF ESTABLISHMENT

THIS WORK SHALL BE PERFORMED IN ACCORDANCE WITH SECTION 651 FOR SEED (PAY ITEM 651.15)

REVISIONS	
JANUARY 22, 2015	WHF

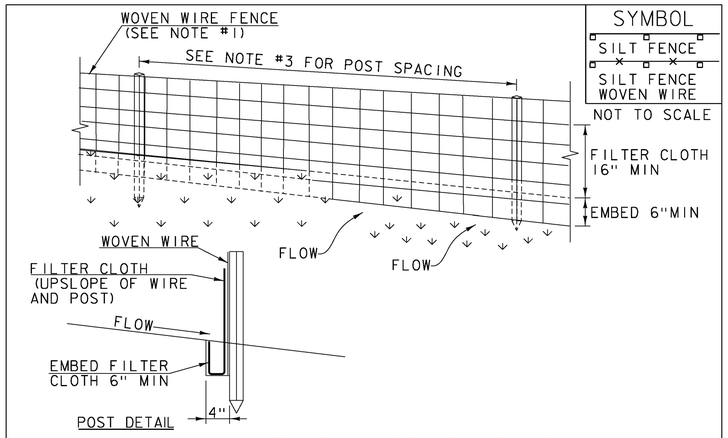

CONSTRUCTION SPECIFICATIONS

1. WOVEN WIRE REINFORCED FENCE IS REQUIRED WITHIN 100' UPSLOPE OF RECEIVING WATERS WHEN THE PROJECT FALLS UNDER A CONSTRUCTION STORMWATER PERMIT. WOVEN WIRE SHALL BE A MIN. 14 GAUGE WITH A 6" MAX. MESH OPENING.
2. FILTER CLOTH SHALL BE EITHER FILTER X, MIRAFI100X, STABILINKA T140N OR APPROVED EQUIVALENT.
3. POST SPACING FOR WIRE-BACKED FENCE SHALL BE 10' MAXIMUM. FOR FILTER-CLOTH FENCE, WHEN ELONGATION IS >50%, POST SPACING SHALL NOT EXCEED 4' AND WHEN ELONGATION IS <50%, POST SPACING SHALL NOT EXCEED 6'.
4. WOVEN WIRE FENCE IS TO BE FASTENED SECURELY TO FENCE POSTS WITH WIRE TIES. FILTER CLOTH IS TO BE FASTENED SECURELY TO WOVEN WIRE FENCE WITH TIES SPACED EVERY 24" AT TOP AND MID SECTION.
5. WHEN TWO SECTIONS OF FILTER CLOTH ADJOIN EACH OTHER THEY SHALL BE OVER-LAPPED BY 6" AND FOLDED.
6. MAINTENANCE SHALL BE PERFORMED AS NEEDED AND MATERIAL REMOVED WHEN SEDIMENT REACHES HALF OF FABRIC HEIGHT.

ADAPTED FROM DETAILS PROVIDED BY: NEW YORK STATE DEC ORIGINALLY DEVELOPED BY USDA-NRCS VERMONT DEPARTMENT OF ENVIRONMENTAL CONSERVATION

SILT FENCE

NOTES:
REFER TO "THE VERMONT STANDARDS & SPECIFICATIONS FOR EROSION PREVENTION & SEDIMENT CONTROL -2006- "FROM THE VT AGENCY OF NATURAL RESOURCES FOR ADDITIONAL GUIDANCE.

THIS WORK SHALL BE PERFORMED IN ACCORDANCE WITH SECTION 649 AND AS SHOWN IN THE PLANS FOR GEOTEXTILE FOR SILT FENCE (PAY ITEM 649.51) OR GEOTEXTILE FOR SILT FENCE, WOVEN WIRE REINFORCED (PAY ITEM 649.515).

REVISIONS	
MARCH 21, 2008	WHF
DECEMBER 11, 2008	WHF
JANUARY 13, 2009	WHF

CONSULTECH ENGINEERS

PROJECT NAME: LUNENBURG
PROJECT NUMBER: NH CULV(27)

FILE NAME: llb294/cos/zllb294erodet.dgn
PROJECT LEADER: J. BYATT
DESIGNED BY: M. HALEY
EPSC DETAILS 1

PLOT DATE: 8/6/2015
DRAWN BY: M. HALEY
CHECKED BY: P. SHEDD
SHEET 69 OF 74

QLD 12-0106 MODEL: EC02

SYMBOL

NOT TO SCALE

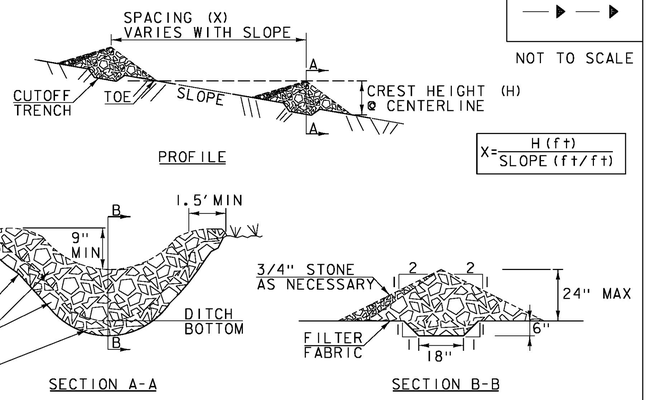

CONSTRUCTION SPECIFICATIONS

1. STONE WILL BE PLACED ON A FILTER FABRIC FOUNDATION.
2. CHECK DAMS SHALL BE SPACED SO THAT THE ELEVATION OF THE CREST OF THE DOWNSTREAM DAM IS AT THE SAME ELEVATION AS THE TOE OF THE UPSTREAM DAM.
3. 3/4" FILTERING STONE MAY BE ADDED TO THE FACE OF THE CHECK DAM AS NECESSARY.
4. EXTEND THE STONE A MINIMUM OF 1.5' BEYOND THE DITCH BANKS TO PREVENT CUTTING AROUND THE DAM.
5. PROTECT CHANNEL DOWNSTREAM OF THE LOWEST CHECK DAM FROM SCOUR AND EROSION WITH STONE OR LINER AS APPROPRIATE.
6. ENSURE THAT CHANNEL APPURTENANCES SUCH AS CULVERT ENTRANCES BELOW CHECK DAMS ARE NOT SUBJECT TO DAMAGE OR BLOCKAGE FROM DISPLACED STONE.
7. MAXIMUM DRAINAGE AREA 2 ACRES.

ADAPTED FROM DETAILS PROVIDED BY: NEW YORK STATE DEC
ORIGINALLY DEVELOPED BY USDA-NRCS
VERMONT DEPARTMENT OF ENVIRONMENTAL CONSERVATION

CHECK DAM

NOTES:
REFER TO "THE VERMONT STANDARDS & SPECIFICATIONS FOR EROSION PREVENTION & SEDIMENT CONTROL -2006- "FROM THE VT AGENCY OF NATURAL RESOURCES FOR ADDITIONAL GUIDANCE.

THIS WORK SHALL BE PERFORMED IN ACCORDANCE WITH SECTION 653 FOR TEMPORARY STONE CHECK DAM, TYPE I (PAY ITEM 653.25)

REVISIONS	
MARCH 21, 2008	WHF
JANUARY 8, 2009	WHF

SYMBOL

NOT TO SCALE

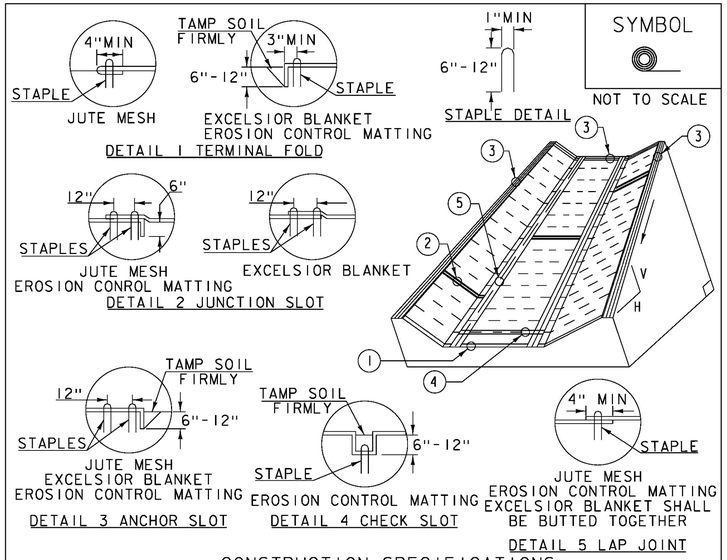

CONSTRUCTION SPECIFICATIONS

1. EROSION MATTING, CHECK SLOTS, SHALL BE SPACED IN DITCH CHANNEL SO THAT ONE OCCURS WITHIN EACH 50' ON SLOPES OF MORE THAN 4% AND LESS THAN 6%. ON SLOPES OF 6% OR MORE, THEY SHALL BE SPACED SO THAT ONE OCCURS WITHIN EACH 25'.
2. APPLY FERTILIZER, LIME SEED PRIOR TO PLACING MATTING.
3. STAPLES ARE TO BE PLACED ALTERNATELY, IN COLUMNS APPROXIMATELY 2' APART AND IN ROWS APPROXIMATELY 3' APART. APPROXIMATELY 175 STAPLES ARE REQUIRED PER 4'X225' ROLL OF MATERIAL AND 125 STAPLES ARE REQUIRED PER 4'X150' ROLL OF MATERIAL.
4. DISTURBED AREAS SHALL BE SMOOTHLY GRADED. EROSION CONTROL MATERIAL SHALL BE PLACED LOOSELY OVER GROUND SURFACE. DO NOT STRETCH.
5. ALL TERMINAL ENDS AND TRANSVERSE LAPS SHALL BE STAPLED AT APPROXIMATELY 12" INTERVALS.

ADAPTED FROM DETAILS PROVIDED BY: NEW YORK STATE DEC
ORIGINALLY DEVELOPED BY USDA-NRCS
VERMONT DEPARTMENT OF ENVIRONMENTAL CONSERVATION

ROLLED EROSION CONTROL PRODUCT (RECP) DITCH

NOTES:
REFER TO "THE VERMONT STANDARDS & SPECIFICATIONS FOR EROSION PREVENTION & SEDIMENT CONTROL -2006- "FROM THE VT AGENCY OF NATURAL RESOURCES FOR ADDITIONAL GUIDANCE.

THIS WORK SHALL BE PERFORMED IN ACCORDANCE WITH SECTION 653 AND AS SHOWN IN THE PLANS FOR TEMPORARY EROSION MATTING (PAY ITEM 653.20) ~~OR PERMANENT EROSION MATTING (PAY ITEM 653.21)~~.

REVISIONS	
MARCH 8, 2007	JMF
APRIL 16, 2007	WHF
JANUARY 13, 2009	WHF

SYMBOL

NOT TO SCALE

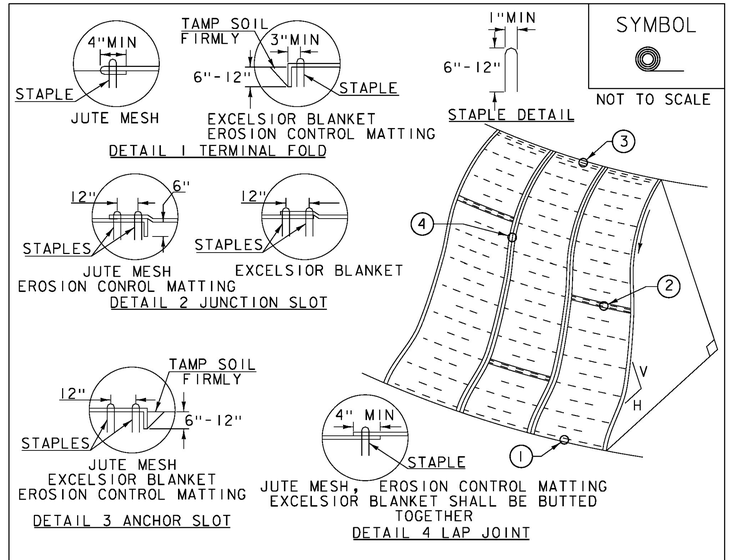

CONSTRUCTION SPECIFICATIONS

1. APPLY TO SLOPES GREATER THAN 3H:1V OR WHERE NECESSARY TO AID IN ESTABLISHING VEGETATION.
2. APPLY FERTILIZER, LIME SEED PRIOR TO PLACING MATTING.
3. STAPLES ARE TO BE PLACED ALTERNATELY, IN COLUMNS APPROXIMATELY 2' APART AND IN ROWS APPROXIMATELY 3' APART. APPROXIMATELY 175 STAPLES ARE REQUIRED PER 4'X225' ROLL OF MATERIAL AND 125 STAPLES ARE REQUIRED PER 4'X150' ROLL OF MATERIAL.
4. DISTURBED AREAS SHALL BE SMOOTHLY GRADED. EROSION CONTROL MATERIAL SHALL BE PLACED LOOSELY OVER GROUND SURFACE. DO NOT STRETCH.
5. ALL TERMINAL ENDS AND TRANSVERSE LAPS SHALL BE STAPLED AT APPROXIMATELY 12" INTERVALS.

ADAPTED FROM DETAILS PROVIDED BY: NEW YORK STATE DEC
ORIGINALLY DEVELOPED BY USDA-NRCS
VERMONT DEPARTMENT OF ENVIRONMENTAL CONSERVATION

ROLLED EROSION CONTROL PRODUCT (RECP) SIDE SLOPE

NOTES:
REFER TO "THE VERMONT STANDARDS & SPECIFICATIONS FOR EROSION PREVENTION & SEDIMENT CONTROL -2006- "FROM THE VT AGENCY OF NATURAL RESOURCES FOR ADDITIONAL GUIDANCE.

THIS WORK SHALL BE PERFORMED IN ACCORDANCE WITH SECTION 653 AND AS SHOWN IN THE PLANS FOR TEMPORARY EROSION MATTING (PAY ITEM 653.20) ~~OR PERMANENT EROSION MATTING (PAY ITEM 653.21)~~.

REVISIONS	
APRIL 16, 2007	JMF
JANUARY 13, 2009	WHF

CLD 12-0106 MODEL: ECO3

CONSULTING ENGINEERS

PROJECT NAME:	LUNENBURG
PROJECT NUMBER:	NH CULV(27)
FILE NAME: llb294/cos/zllb294erodet.dgn	PLOT DATE: 8/6/2015
PROJECT LEADER: J. BYATT	DRAWN BY: M. HALEY
DESIGNED BY: M. HALEY	CHECKED BY: P. SHEDD
EPSC DETAILS 2	SHEET 70 OF 74

SYMBOL

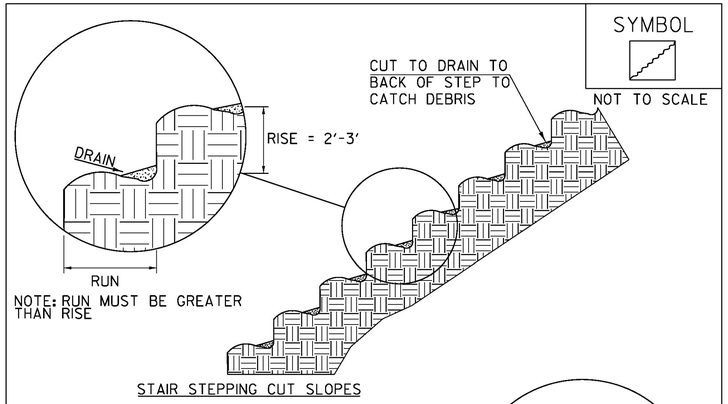

NOTE: RUN MUST BE GREATER THAN RISE

STAIR STEPPING CUT SLOPES

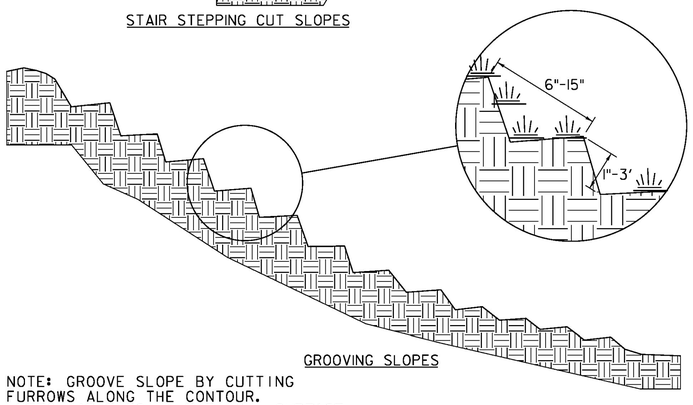

GROOVING SLOPES

NOTE: GROOVE SLOPE BY CUTTING FURROWS ALONG THE CONTOUR. IRREGULARITIES IN THE SOIL SURFACE CATCH RAINWATER AND RETAIN LIME, FERTILIZER AND SEED.

ADAPTED FROM DETAILS PROVIDED BY: NEW YORK STATE DEC
ORIGINALLY DEVELOPED BY USDA-NRCS
VERMONT DEPARTMENT OF ENVIRONMENTAL CONSERVATION

SURFACE ROUGHENING

NOTES:
REFER TO "THE VERMONT STANDARDS & SPECIFICATIONS FOR EROSION PREVENTION & SEDIMENT CONTROL -2006- " FROM THE VT AGENCY OF NATURAL RESOURCES FOR ADDITIONAL GUIDANCE.

THIS WORK SHALL BE CONSIDERED INCIDENTAL TO THE CONTRACT

REVISIONS	
APRIL 1, 2008	WHF
JANUARY 13, 2009	WHF

QLD 12-0106 MODEL: EC04

CONSULTING ENGINEERS

PROJECT NAME:	LUNENBURG
PROJECT NUMBER:	NH CULV(27)

FILE NAME: llb294/cos/zllb294erodet.dgn	PLOT DATE: 8/6/2015
PROJECT LEADER: J. BYATT	DRAWN BY: M. HALEY
DESIGNED BY: M. HALEY	CHECKED BY: P. SHEDD
EPSC DETAILS 3	SHEET 71 OF 74

STATE OF VERMONT
AGENCY OF TRANSPORTATION

RIGHT - OF - WAY DETAIL SHEET

TABLE OF PROPERTY ACQUISITION

PARCEL NO.	PROPERTY OWNER	ROW LAYOUT NO.	BEGINNING STATION	ENDING STATION	TAKE	REMAINDER	RIGHT			RECORDING DATA					REMARKS
					AREA ±	AREA ±	TYPE	(T)/(P)	AREA ±	TITLE	DATE	TOWN / CITY	BOOK	PAGE	
1A	FORBES FARM PARTNERSHIP	1	429+08.06 LT	429+44.60 LT	155 SF							LUNENBURG			
			426+60 LT	427+02 LT			CONSTRUCTION	(T)	105 SF						INCL. PDF
			426+96 LT	427+30 LT			DETOUR	(T)	505 SF						INCL. PDF
			427+35 LT				ACCESS	(T)							
			427+35 LT				DRIVE	(T)							18.4'; GRAVEL W/4' PAVED APRON; MM 8.09
			427+44 LT	427+95 LT			UTILITY	(P)	2,965 SF						
			427+44 LT	429+15.66 LT			DETOUR	(T)	3,590 SF						INCL. BF, EC & PDF
			427+45 LT	427+61 LT			SLOPE	(T)	15 SF						
1B		1	424+50.00 RT	429+44.60 LT	0.29 Ac.		ALL R. T. & I.								U.S. RTE. 2; 12,800 SF
2A	SPAULDING, JOHN A. & ROSALIE E.	1	428+50.00 RT	429+05.24 RT	325 SF							LUNENBURG			
			426+65 RT												DRIVE 18.0'; GRAVEL W/4' PAVED APRON; MM 8.08
			426+86 RT	428+95.98 RT			UTILITY	(P)	1,580 SF						
			427+03 RT	428+60 RT			CONSTRUCTION	(T)	1,515 SF						INCL. BF, EC & PDF
			427+24 RT	427+85 RT			SLOPE	(T)	390 SF						
			427+66 RT				REMOVE	(T)							DRIVE
			428+00 RT				REMOVE	(T)							DRIVE
			428+26 RT	428+95.98 RT			CHANNEL	(P)	1,735 SF						INCL. STONE FILL
2B		1	424+93.81 RT	429+44.06 LT	0.26 Ac.		ALL R. T. & I.								U.S. RTE. 2; 11,410 SF
3A	HOBART, FREDERICK S., II	1-2	428+95.98 RT	430+50.00 RT	3,030 SF							LUNENBURG			
			428+58 RT	430+63 RT			CONSTRUCTION	(T)	1,155 SF						INCL. BF, EC & PDF
			428+60 RT	429+17 RT			CHANNEL	(P)	740 SF						INCL. STONE FILL
			428+79 RT	430+97 RT			UTILITY	(P)	0.11 Ac.						4,775 SF
			430+18 RT	430+19 RT			INSTALL & MAINTAIN	(P)							GUY WIRE & ANCHOR
			432+36 RT												DRIVE 24.0'; GRAVEL W/4' PAVED APRON; MM 8.19
3B		1-2	429+33.41 RT	432+00.00 RT	0.15 Ac.		ALL R. T. & I.								U.S. RTE. 2; 6,385 SF
			433+95 RT	434+50.00 RT			REMOVE & RESET	(T)							ELECTRIC FENCE
4A	STINEHOUR, STEPHEN R.	1-2	429+15.66 LT	431+54.56 LT	0.10 Ac.							LUNENBURG			4,430 SF
			429+06 LT	429+26 LT			INSTALL	(T)	80 SF						BF & EC
			429+48 LT	430+34 LT			INSTALL	(T)	1,110 SF						BF & EC
			429+57 LT	429+97 LT			CHANNEL	(P)	790 SF						INCL. STONE FILL
			429+98 LT	431+34 LT			DETOUR	(T)	1,755 SF						
			429+98 LT	431+91 LT			SLOPE	(T)	1,730 SF						
			430+21 LT	431+91 LT			CONSTRUCTION	(T)	1,625 SF						INCL. BF, EC & PDF
			432+00 LT				ACCESS	(T)							
			432+00 LT				DRIVE	(T)							18.0'; GRAVEL W/4' PAVED APRON; MM 8.18
			432+09 LT	432+45 LT			CONSTRUCTION	(T)	165 SF						INCL. PDF
			432+09 LT	432+45.10 LT			SLOPE	(T)	260 SF						
4B		2	431+90.14 LT	432+45.15 LT	35 SF										
4C		1-2	429+34.45 LT	432+46.15 RT	0.18 Ac.		ALL R. T. & I.								U.S. RTE. 2; 7,755 SF
5A	MAGGIO, JOSEPHINE	2	432+45.10 LT	434+50.00 LT	730 SF							LUNENBURG			
			432+45 LT	432+95 LT			CONSTRUCTION	(T)	245 SF						INCL. PDF
			433+04 LT	433+55 LT			CONSTRUCTION	(T)	150 SF						INCL. PDF
			433+74 LT	434+29 LT			CONSTRUCTION	(T)	110 SF						INCL. PDF
			433+59 LT												DRIVE 24.0'; GRAVEL W/4' PAVED APRON; MM 8.21
5B		2	432+45.72 RT	434+50.00 LT	0.12 Ac.		ALL R. T. & I.								U.S. RTE. 2; 5,065 SF
6A	GREEN MOUNTAIN POWER CORP.	1-2	424+50.00 RT	432+87.46 LT			ALL R. T. & I.					LUNENBURG			60' WIDE UTILITY EASEMENT
6B		1-2	424+50.00 RT	434+50.00 LT											UTILITY
7	NORTHERN NEW ENGLAND TELEPHONE OPERATIONS, LLC d/b/a FAIRPOINT COMMUNICATIONS-NNE	1-2	424+50.00 RT	434+50.00 LT								LUNENBURG			UTILITY

TABLE OF REVISIONS

REVISION NO.	ROW SET SHEET #	DESCRIPTION	DATE
1	3, 4	PARCEL NO. 2A SPAULDING - ADDED EXISTING DRIVE AT	6/24/14
		STA 428+00 PER C.O. 9907	
		MADE BY: CLD APPROVED BY: RRC	
2	3, 5	PARCEL NO. 3B HOBART - CHANGED END STATION OF PARCE	10/10/14
		3B TO 432+00 PER C.O. 9932	
		MADE BY: CLD APPROVED BY: RRC	
3	3, 5	PARCEL NO. 5 NAME CHANGE - REMOVE JANICE MAGGIO	10/10/14
		HENDERSON AND HARVEY HENDERSON PER C.O. 9933	
		MADE BY: CLD APPROVED BY: RRC	
4	3, 5	PARCEL NO. 6A GREEN MOUNTAIN POWER - CHANGED	1/15/15
		ENDING STATION OF ALL R.T. & I. PER C.O. 9962	
		MADE BY: CLD APPROVED BY: RRC	

APPROVED: RYAN R. CLOUTIER, L.S. DATE: 5/30/2014
CHIEF, PLANS & TITLES

PROJECT NAME: LUNENBURG
PROJECT NUMBER: NH CULV(27)

FILE NAME: llb294/cos/zllb294rowdet.dgn
PROJECT LEADER: J. BYATT
DESIGNED BY: P. SHEDD
ROW DETAIL SHEET #1

PLOT DATE: 10/10/2014
DRAWN BY: S. GOODWIN
CHECKED BY: P. SHEDD
SHEET 72 OF 74

CLD 12-0106

TEMPORARY 4 INCH WHITE LINE, PAINT
DURABLE 4 INCH WHITE LINE, POLYUREA
424+25 TO 429+75 SOLID LT & RT

TEMPORARY 4 INCH YELLOW LINE, PAINT
DURABLE 4 INCH YELLOW LINE, POLYUREA
424+25 TO 429+75 LT & RT

CONSTRUCT DRIVES WITH 4 FOOT PAVED APRON
426+65 RT (18.0 FT WIDE, GRAVEL, RES.)
427+35 LT (18.4 FT WIDE, GRAVEL, RES.)

STEEL BEAM GUARDRAIL, GALVANIZED
427+87.5 TO 429+75 RT
428+50.0 TO 429+75 LT

MANUFACTURED
TERMINAL SECTION, FLARED
427+50.0 TO 427+87.5 RT
428+12.5 TO 428+50.0 LT

RELOCATE MAILBOX, SINGLE SUPPORT
426+82 RT
427+18 LT

REMOVAL AND DISPOSAL OF GUARDRAIL
428+11 TO 429+75 RT
428+58 TO 429+75 LT

DELINEATOR WITH STEEL POST
425+40.0 LT (2)
426+80.0 LT (2)
427+51.0 LT (2)
427+50.0 RT
428+12.5 LT

8 INCH UNDERDRAIN PIPE
425+00 TO 428+50 RT

UNDERDRAIN FLUSHING BASIN
425+00 RT

MILLED RUMBLE STRIPS
424+25 TO 429+75 CL

REMOVING SIGNS
ERECTING SALVAGED SIGNS
AS SHOWN - 7

SQUARE TUBE SIGN POST AND ANCHOR
AS SHOWN - 1 (SEE SIGN DETAIL SHEET)

TRAFFIC SIGNS, TYPE A
AS SHOWN - 1 (SEE SIGN DETAIL SHEET)

RIGHT-OF-WAY PLAN REFERENCE
"STATE OF VERMONT STATE HIGHWAY DEPARTMENT - PLAN AND PROFILE OF PROPOSED STATE HIGHWAY FEDERAL AID PROJECT - TOWNS OF LUNENBURG - GUILDHALL, ST. JOHNSBURY VT. - LANCASTER N.H. ROAD, VT F 131-C", DATED 1932, ON FILE AT THE VERMONT AGENCY OF TRANSPORTATION.

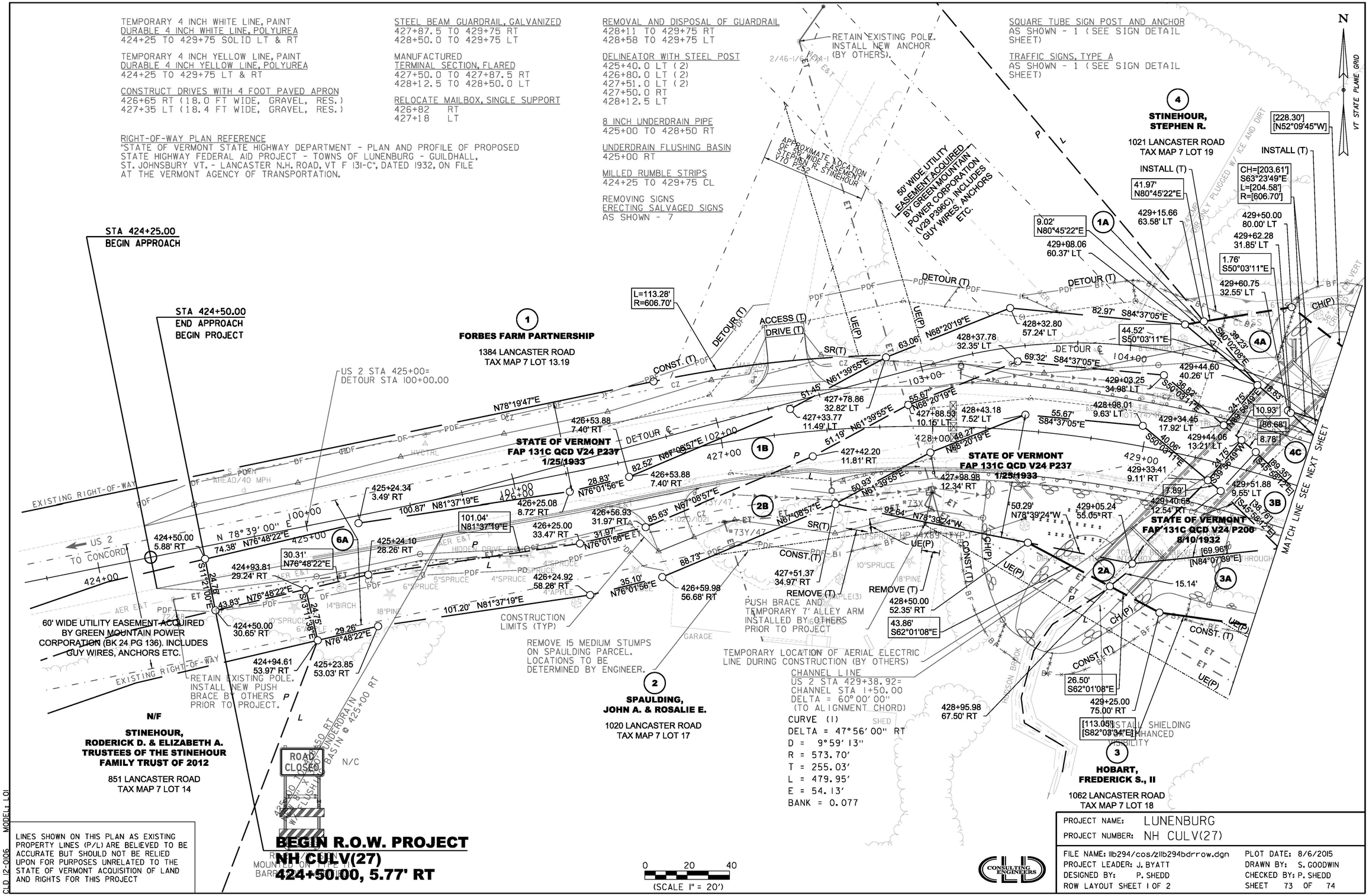

LINES SHOWN ON THIS PLAN AS EXISTING PROPERTY LINES (P/L) ARE BELIEVED TO BE ACCURATE BUT SHOULD NOT BE RELIED UPON FOR PURPOSES UNRELATED TO THE STATE OF VERMONT ACQUISITION OF LAND AND RIGHTS FOR THIS PROJECT

BEGIN R.O.W. PROJECT
NH CULV(27)
424+50.00, 5.77' RT

CLD 12-0106 MODEL: L01

PROJECT NAME: LUNENBURG	
PROJECT NUMBER: NH CULV(27)	
FILE NAME: llb294/cos/zllb294bdrrow.dgn	PLOT DATE: 8/6/2015
PROJECT LEADER: J. BYATT	DRAWN BY: S. GOODWIN
DESIGNED BY: P. SHEDD	CHECKED BY: P. SHEDD
ROW LAYOUT SHEET 1 OF 2	SHEET 73 OF 74

CONSULTING ENGINEERS

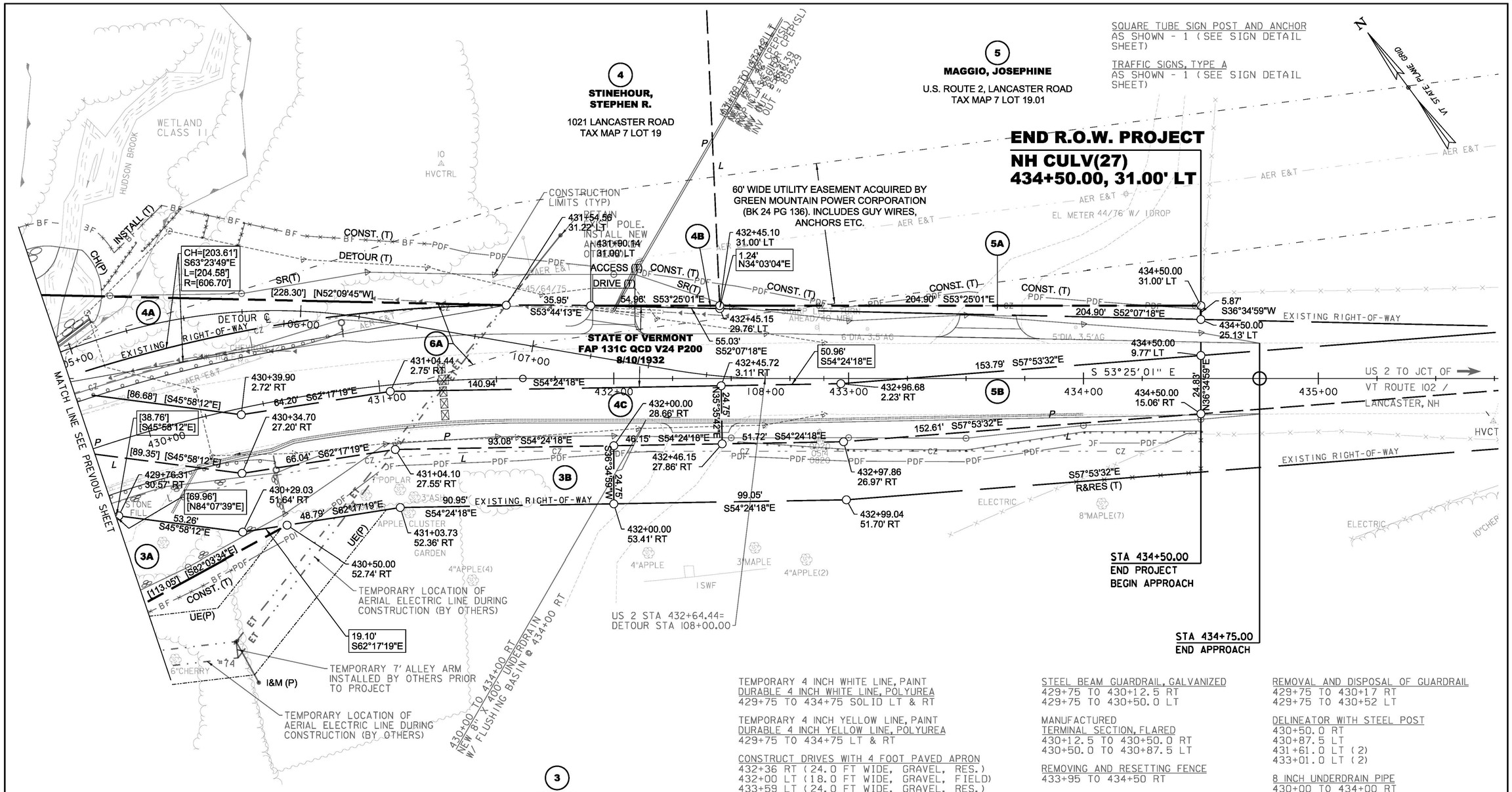

TEMPORARY 4 INCH WHITE LINE, PAINT
DURABLE 4 INCH WHITE LINE, POLYUREA
429+75 TO 434+75 SOLID LT & RT

TEMPORARY 4 INCH YELLOW LINE, PAINT
DURABLE 4 INCH YELLOW LINE, POLYUREA
429+75 TO 434+75 LT & RT

CONSTRUCT DRIVES WITH 4 FOOT PAVED APRON
432+36 RT (24.0 FT WIDE, GRAVEL, RES.)
432+00 LT (18.0 FT WIDE, GRAVEL, FIELD)
433+59 LT (24.0 FT WIDE, GRAVEL, RES.)

STEEL BEAM GUARDRAIL, GALVANIZED
429+75 TO 430+12.5 RT
429+75 TO 430+50.0 LT

MANUFACTURED TERMINAL SECTION, FLARED
430+12.5 TO 430+50.0 RT
430+50.0 TO 430+87.5 LT

REMOVING AND RESETTING FENCE
433+95 TO 434+50 RT

REMOVAL AND DISPOSAL OF GUARDRAIL
429+75 TO 430+17 RT
429+75 TO 430+52 LT

DELINEATOR WITH STEEL POST
430+50.0 RT
430+87.5 LT
431+61.0 LT (2)
433+01.0 LT (2)

8 INCH UNDERDRAIN PIPE
430+00 TO 434+00 RT

UNDERDRAIN FLUSHING BASIN
434+00 RT

MILLED RUMBLE STRIPS
429+75 TO 434+75 CL

REMOVING SIGNS
ERECTING SALVAGED SIGNS
AS SHOWN - 5

RIGHT-OF-WAY PLAN REFERENCE
"STATE OF VERMONT STATE HIGHWAY DEPARTMENT - PLAN AND PROFILE OF PROPOSED STATE HIGHWAY FEDERAL AID PROJECT - TOWNS OF LUNENBURG - GUILDHALL, ST. JOHNSBURY VT. - LANCASTER N.H. ROAD, VT F 131-C", DATED 1932, ON FILE AT THE VERMONT AGENCY OF TRANSPORTATION.

LINES SHOWN ON THIS PLAN AS EXISTING PROPERTY LINES (P/L) ARE BELIEVED TO BE ACCURATE BUT SHOULD NOT BE RELIED UPON FOR PURPOSES UNRELATED TO THE STATE OF VERMONT ACQUISITION OF LAND AND RIGHTS FOR THIS PROJECT

0 20 40
(SCALE 1" = 20')

CONSULTING ENGINEERS

PROJECT NAME: LUNENBURG
PROJECT NUMBER: NH CULV(27)

FILE NAME: llb294/cos/llb294bdrrow.dgn
PROJECT LEADER: J. BYATT
DESIGNED BY: P. SHEDD
ROW LAYOUT SHEET 2 OF 2
PLOT DATE: 8/6/2015
DRAWN BY: S. GOODWIN
CHECKED BY: P. SHEDD
SHEET 74 OF 74

CLD 12-0106 MODEL: L02

CONCRETE GENERAL NOTES

1. ALL EXPOSED EDGES OF CONCRETE SHALL BE CHAMFERED 1" x 1"
2. REINFORCING STEEL SIZE AND SPACING SHOWN IN THE PLANS IS BASED ON 60 KSI STEEL, UNLESS NOTED OTHERWISE. WITH THE ENGINEER'S PERMISSION, BAR SIZE AND SPACING MAY BE MODIFIED ACCORDING TO THE LATEST AASHTO LRFD BRIDGE DESIGN SPECIFICATION AND STRUCTURES DESIGN MANUAL WHEN USING HIGHER STRENGTH STEEL.

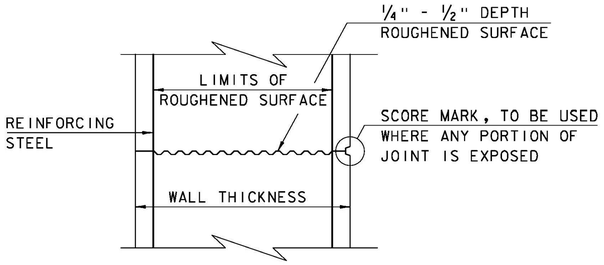

TYPICAL HORIZONTAL CONSTRUCTION JOINT
(NOT TO SCALE)

1. THE SURFACE OF THE CONCRETE CONSTRUCTION JOINTS SHALL BE CLEANED AND FREE OF LAITANCE.
2. IMMEDIATELY BEFORE NEW CONCRETE IS PLACED, ALL CONSTRUCTION JOINTS SHALL BE WETTED AND STANDING WATER REMOVED.

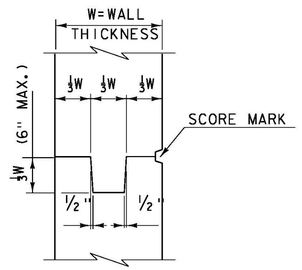

TYPICAL CONCRETE CONSTRUCTION JOINT
(NOT TO SCALE)

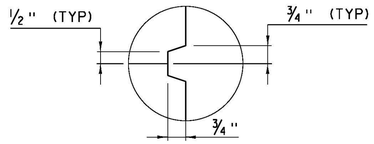

SCORE MARK DETAIL
(NOT TO SCALE)

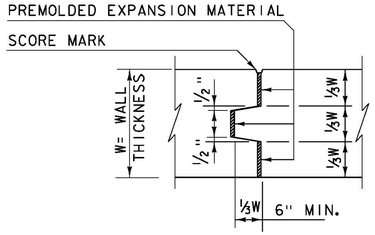

TYPICAL CONCRETE EXPANSION JOINT
(NOT TO SCALE)

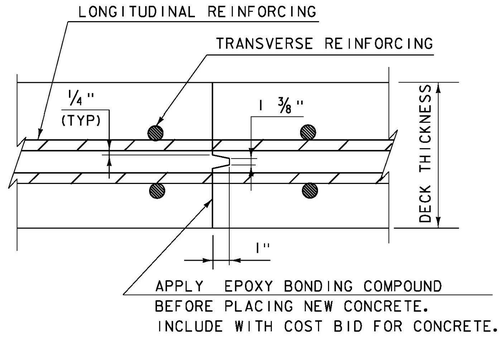

TRANSVERSE BRIDGE SLAB CONSTRUCTION JOINT DETAILS
(NOT TO SCALE)

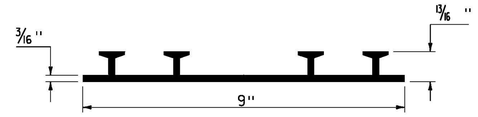

P.V.C. WATERSTOP FOR CONSTRUCTION JOINTS
(NOT TO SCALE)

PAYMENT FOR THE P.V.C. WATERSTOP SHALL BE INCIDENTAL TO THE UNIT BID PRICE FOR THE ADJACENT CONCRETE.

OTHER CONFIGURATIONS OF WATERSTOP MAY BE USED UPON APPROVAL OF THE ENGINEER.

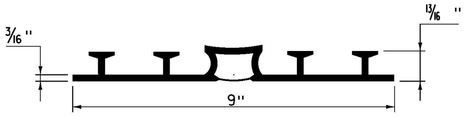

P.V.C. WATERSTOP FOR EXPANSION JOINTS
(NOT TO SCALE)

PAYMENT FOR THE P.V.C. WATERSTOP SHALL BE INCIDENTAL TO THE UNIT BID PRICE FOR THE ADJACENT CONCRETE.

OTHER CONFIGURATIONS OF WATERSTOP MAY BE USED UPON APPROVAL OF THE ENGINEER.

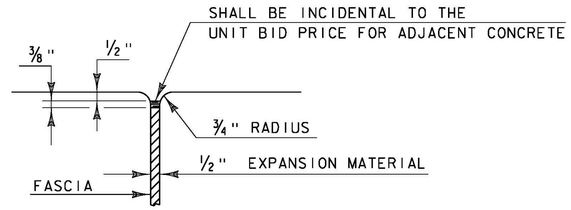

JOINT BETWEEN FASCIA AND WINGWALL
(NOT TO SCALE)

REVISIONS	
MAY 7, 2010	APPROVED FOR USE BY VAOT STRUCTURES SECTION
FEBRUARY 9, 2012	REBAR SUBSTITUTION ALLOWANCE ADDED TO CONCRETE GENERAL NOTES.

CONCRETE DETAILS AND NOTES

VERMONT AGENCY OF TRANSPORTATION
STRUCTURES - SECTION

STRUCTURES DETAIL
SD-501.00

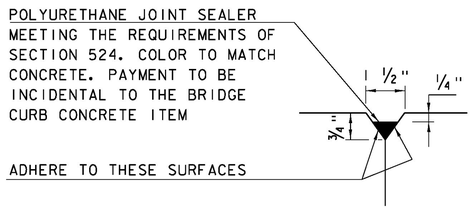

DETAIL "B"
(NOT TO SCALE)

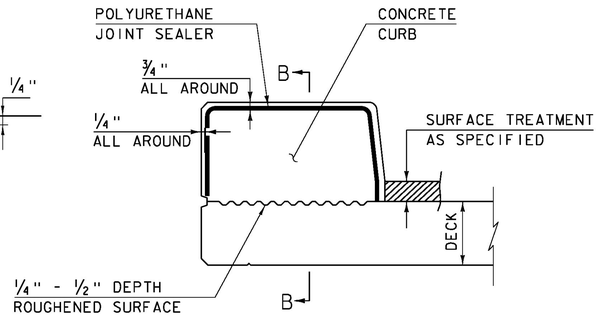

CONCRETE CURB JOINT SECTION
(NOT TO SCALE)

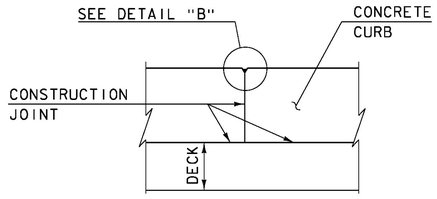

SECTION B - B
(NOT TO SCALE)

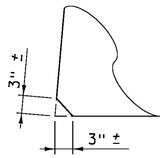

ACUTE ANGLE CLIP DETAIL
(NOT TO SCALE)

1. SEE TYPICAL HORIZONTAL CONSTRUCTION JOINT DETAIL FOR ADDITIONAL INFORMATION

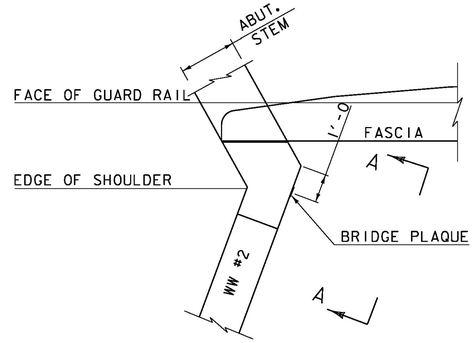

PLAN

CONCRETE CURB JOINT NOTES

1. CONCRETE CURBS MAY BE PLACED IN ONE CONTINUOUS OPERATION IF AN APPROVED SHRINKAGE REDUCING ADMIXTURE LISTED IN THE SPECIAL PROVISIONS IS USED WITH THE CONCRETE MIX DESIGN. PAYMENT FOR THE SHRINKAGE REDUCING ADMIXTURE WILL BE INCIDENTAL TO THE BRIDGE CURB CONCRETE ITEM.

2. IF THE CONTRACTOR CHOOSES NOT TO USE AN APPROVED SHRINKAGE REDUCING ADMIXTURE, THE CURBS SHALL BE CONSTRUCTED WITH CONSTRUCTION JOINTS SPACED AT A MAXIMUM OF 15'-0" CENTER TO CENTER AND 2'-0" MINIMUM FROM THE CENTER OF NEAREST BRIDGE RAILING POST.

3. ON MULTI-SPAN CONTINUOUS SUPERSTRUCTURES, REGARDLESS OF WHETHER APPROVED SHRINKAGE REDUCING ADMIXTURE IS USED, CURB JOINTS SHALL BE LOCATED OVER THE CENTERLINE OF PIERS AND 7'-0" EACH SIDE OF THE CENTERLINE OF EACH PIER.

4. WHEN CURB JOINTS ARE USED THE CURBS SHALL BE PLACED IN ALTERNATE SECTIONS WITH A MINIMUM OF 48 HOUR DELAY BETWEEN ADJACENT PLACEMENTS.

5. LONGITUDINAL REINFORCING SHALL BE CONTINUOUS THROUGH CURB CONSTRUCTION JOINTS. CURB STIRRUP BARS SHALL BE TURNED AS NECESSARY TO MAINTAIN COVER IN THE FLARED CURB ENDS.

6. THE JOINT SPACING AND DETAILS SHOWN SHALL APPLY TO SIDEWALKS WHEN SHOWN IN THE PLANS.

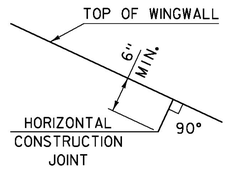

HORIZONTAL WINGWALL CONSTRUCTION JOINT
(NOT TO SCALE)

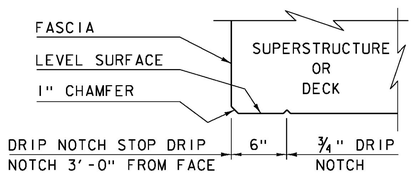

DRIP NOTCH DETAIL
(NOT TO SCALE)

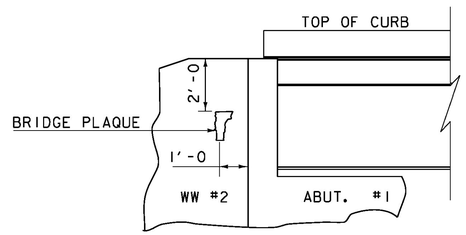

VIEW "A - A"

BRIDGE PLAQUE
(NOT TO SCALE)

THE BRIDGE PLAQUE WILL BE SUPPLIED BY THE AGENCY OF TRANSPORTATION AND SHALL BE INSTALLED BY THE CONTRACTOR AT ABUTMENT #1 ON THE RIGHT SIDE AS SHOWN OR AS DIRECTED BY THE ENGINEER.

PAYMENT FOR INSTALLATION OF THE BRIDGE PLAQUE SHALL BE INCIDENTAL TO THE ADJACENT CONCRETE.

REVISIONS	
MAY 7, 2010	APPROVED FOR USE BY VAOT STRUCTURES SECTION
JUNE 4, 2010	MODIFIED AND ADDED TWO DETAILS
OCTOBER 10, 2012	MODIFIED HORZ. JOINT WINGWALL ADD 6" MIN. DIMENSION

CONCRETE DETAILS AND NOTES

VERMONT AGENCY OF TRANSPORTATION
STRUCTURES - SECTION

STRUCTURES DETAIL
SD-502.00

US ROUTE 2
BRIDGE NO. 126
TOWN OF LUNENBURG
ESSEX COUNTY, VERMONT

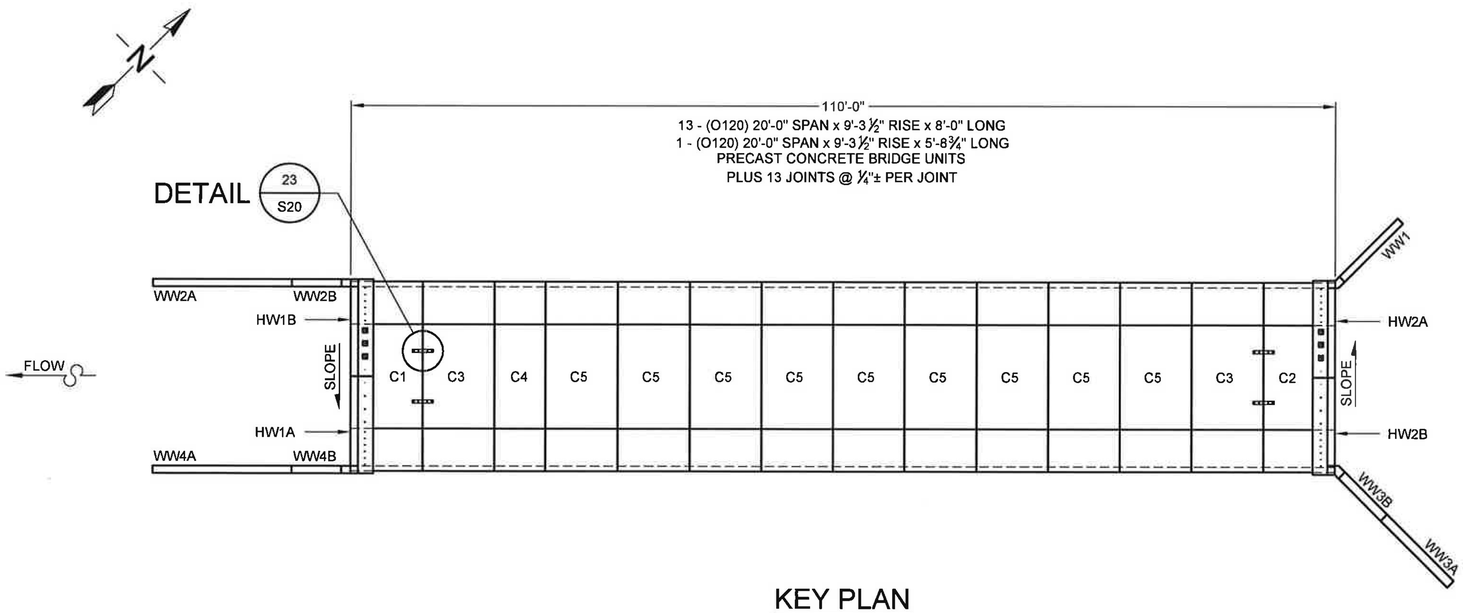

KEY PLAN

4/14/16

STATE OF VERMONT
PHILIP A. CREAMER
NO. 9278
Civil
LICENSED
PROFESSIONAL ENGINEER

The design and information shown on this drawing is provided as a service to the project owner, engineer and contractor by Contech Engineered Solutions LLC ("Contech"). Neither this drawing, nor any part thereof, may be used, reproduced or modified in any manner without the prior written consent of Contech. Failure to comply is done at the user's own risk and Contech expressly disclaims any liability or responsibility for such use.

If discrepancies between the supplied information upon which the drawing is based and actual field conditions are encountered as site work progresses, these discrepancies must be reported to Contech immediately for re-evaluation of the design. Contech accepts no liability for designs based on missing, incomplete or inaccurate information supplied by others.

MARK	DATE	REVISION DESCRIPTION	BY
2	4/14/2016	REVIEW COMMENTS	JDR
1	3/16/2016	NO CHANGES THIS SHEET	KDK

CONTECH® ENGINEERED SOLUTIONS LLC
www.ContechES.com
9025 Centre Pointe Dr., Suite 400, West Chester, OH 45069
800-338-1122 513-645-7000 513-645-7993 FAX

CON/SPAN® SERIES
FABRICATION DRAWING

US ROUTE 2
BRIDGE NO. 126
TOWN OF LUNENBURG
ESSEX COUNTY, VERMONT

PROJECT No.:	SEQ. No.:	DATE:
468920	010	12/8/2015
DESIGNED: KDK		DRAWN: TRL
CHECKED: JDR		APPROVED: PAC
SHEET NO.: S1 OF S22		

I:\MERLIN\PROJECTACTIVE\468900\468920\468920-10-CON_SPAN_O_SERIES\DRAWINGS\FABRICATION\PRE-468920-010-CO-FAB-0.DWG 4/14/2016 11:19 AM

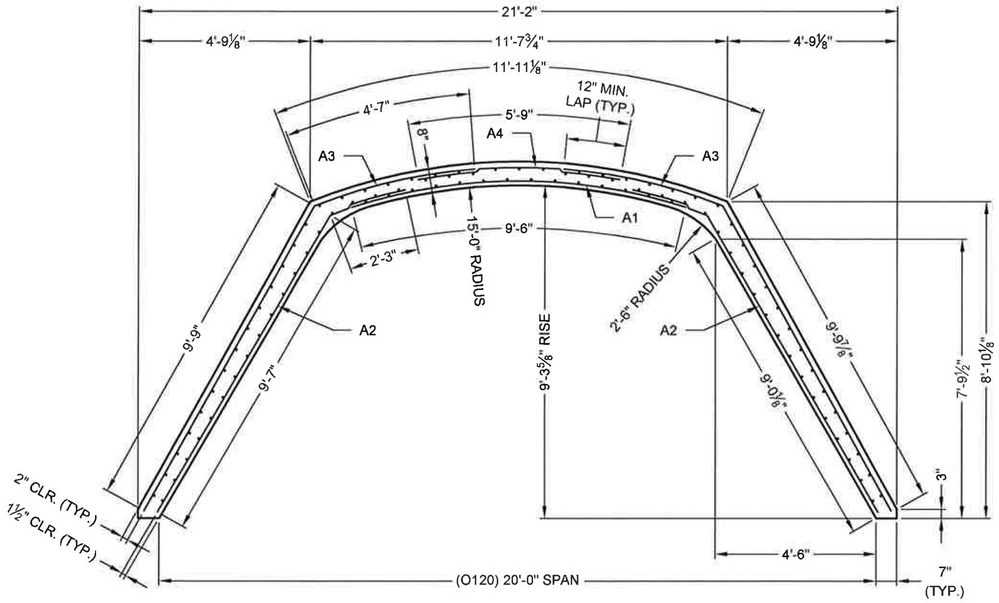

PRECAST UNIT REINFORCEMENT

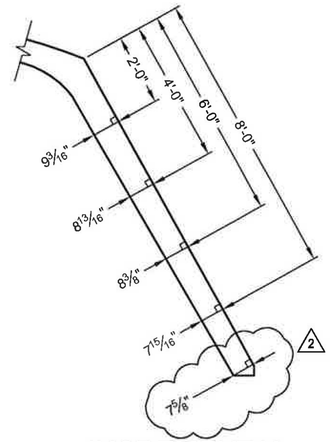

INCREMENTAL ARCH LEG THICKNESSES

NOTES:
1. MINIMUM 28-DAY CONCRETE COMPRESSIVE STRENGTH SHALL BE 5000 PSI.
2. OVERLAP LENGTH SHALL BE MEASURED FROM LAST CROSSWIRE.
3. DIMENSIONS SHOWN ARE FOR FORM SYSTEM O-100 SERIES.
4. MINIMUM YIELD STRENGTH FOR WELDED WIRE FABRIC SHALL BE 65,000 PSI.
5. REINFORCING SHALL BE LIMITED TO A MAXIMUM OF THREE LAYERS OF REINFORCING (WWF OR BARS) PER AREA (A1, A2, A3 OR A4).
6. ALL EDGES OF PRECAST TO HAVE A ¾" CHAMFER.
7. SPACING OF LONGITUDINAL REINFORCEMENT MUST BE A MAXIMUM OF 8" O.C. FOR MULTIPLE LAYERS OF MESH, ONLY THE OUTER MOST LAYER (A1A OR A3A) MUST BE A MAXIMUM OF 8" O.C.
8. SPACING OF A2 & A4 CIRCUMFERENTIAL REINFORCEMENT SHALL BE 2" MIN. TO 4" MAX. SPACING OF A1 & A3 CIRCUMFERENTIAL REINFORCEMENT SHALL BE 2".

WEIGHT OF REQUIRED REINFORCEMENT = 118.0 LBS/FT

SHEET NO.	CIRCUMFERENTIAL AREA REQ'D (IN²/FT)	LONGITUDINAL AREA REQ'D (IN²/FT)	MESH SIZE	LENGTH (FT)	CIRCUMFERENTIAL AREA SUPL'D (IN²/FT)	LONGITUDINAL AREA SUPL'D (IN²/FT)
1	A1 = 0.30	0.13		9'-6"		
2	A2 = 0.48	0.13		11'-10"		
3	A3 = 0.36	0.13		14'-4"		
4	A4 = 0.24	0.13		5'-9"		
5						

DESIGN LOADING: HL-93

COVER = 2'-0" MIN. \ 13'-0" MAX.

4/14/16

STATE OF VERMONT
PHILIP A. CREAMER
NO. 9278
Civil
LICENSED
PROFESSIONAL ENGINEER

The design and information shown on this drawing is provided as a service to the project owner, engineer and contractor by Contech Engineered Solutions LLC ("Contech"). Neither this drawing, nor any part thereof, may be used, reproduced or modified in any manner without the prior written consent of Contech. Failure to comply is done at the user's own risk and Contech expressly disclaims any liability or responsibility for such use.

If discrepancies between the supplied information upon which the drawing is based and actual field conditions are encountered as site work progresses, these discrepancies must be reported to Contech immediately for re-evaluation of the design. Contech accepts no liability for designs based on missing, incomplete or inaccurate information supplied by others.

MARK	DATE	REVISION DESCRIPTION	BY
2	4/14/2016	REVIEW COMMENTS	JDR
1	3/16/2016	NO CHANGES THIS SHEET	KDK

CONTECH®
ENGINEERED SOLUTIONS LLC
www.ContechES.com
9025 Centre Pointe Dr., Suite 400, West Chester, OH 45069
800-338-1122 513-645-7000 513-645-7993 FAX

CON-SPAN® O-SERIES

FABRICATION DRAWING

US ROUTE 2
BRIDGE NO. 126
TOWN OF LUNENBURG
ESSEX COUNTY, VERMONT

PROJECT No.:	SEQ. No.:	DATE:
468920	010	12/8/2015
DESIGNED: KDK	DRAWN: TRL	
CHECKED: JDR	APPROVED: PAC	
SHEET NO.: S2 OF S22		

I:\MERLIN\PROJECTACTIVE\468900\468920\468920-10-CON_SPAN_O_SERIES\DRAWINGS\FABRICATION\PRE-468920-010-CO-FAB-D.DWG 4/14/2016 11:19 AM

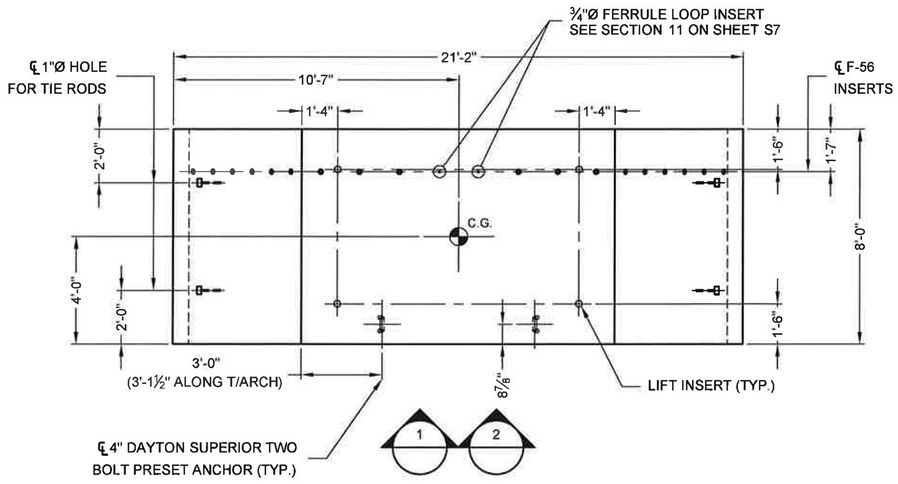

PLAN - C1

TOTAL WEIGHT = 13.1 TONS

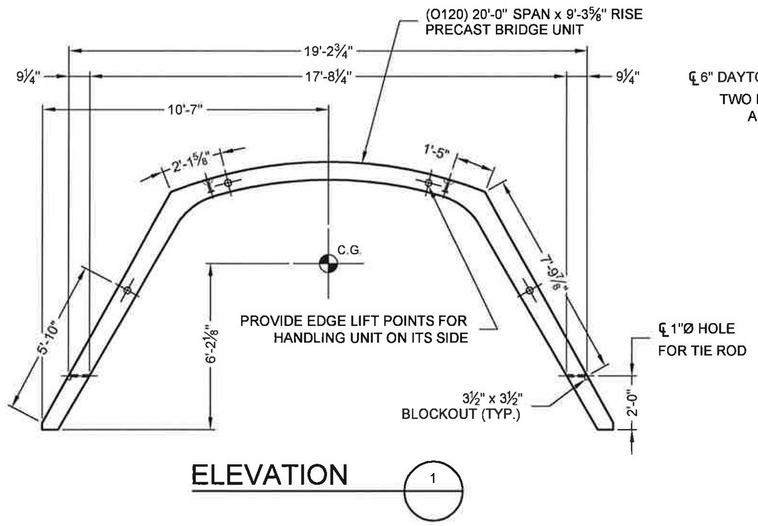

ELEVATION 1

HEADWALL		ARCH UNIT		
CONCRETE	REINF. STEEL	CONCRETE	REINF. STEEL	WWF
28-DAY: 5000 PSI	60,000 PSI UNCOATED	28-DAY: 5000 PSI	60,000 PSI UNCOATED	65,000 PSI UNCOATED

WHEREVER THE REINFORCING IS CUT FOR THE PLACEMENT OF LIFT HOLES OR OTHER BLOCKOUTS, REINFORCING BARS OR WIRES OF EQUIVALENT CROSS-SECTIONAL AREA SHALL BE PLACED SYMMETRICALLY AROUND THE HOLE. AT LEAST ONE BAR MUST BE ON EACH SIDE OF THE HOLE, AND THE DEVELOPMENT LENGTH OF THE BAR MUST BE ACHIEVED ON EITHER SIDE OF THE CUT.

NOTES:
- ALL EDGES OF PRECAST TO HAVE A ¾" CHAMFER
- ELEVATION IS LOOKING AT BACK FACE OF HEADWALL
- SEE SHEET S4 FOR HEADWALL C.G. & LIFT POINTS
- HEADWALL TO BE CAST AGAINST BRIDGE UNIT
- BRIDGE UNITS MUST BE GROUTED OR BRACED WHEN SETTING PRECAST HEADWALLS
- SEE SHEET S2 FOR BRIDGE UNIT DIMENSIONS
- INSTALL TIE RODS BEFORE UNIT IS SET UPRIGHT & LEAVE IN PLACE UNTIL UNIT IS GROUTED INTO FINAL POSITION

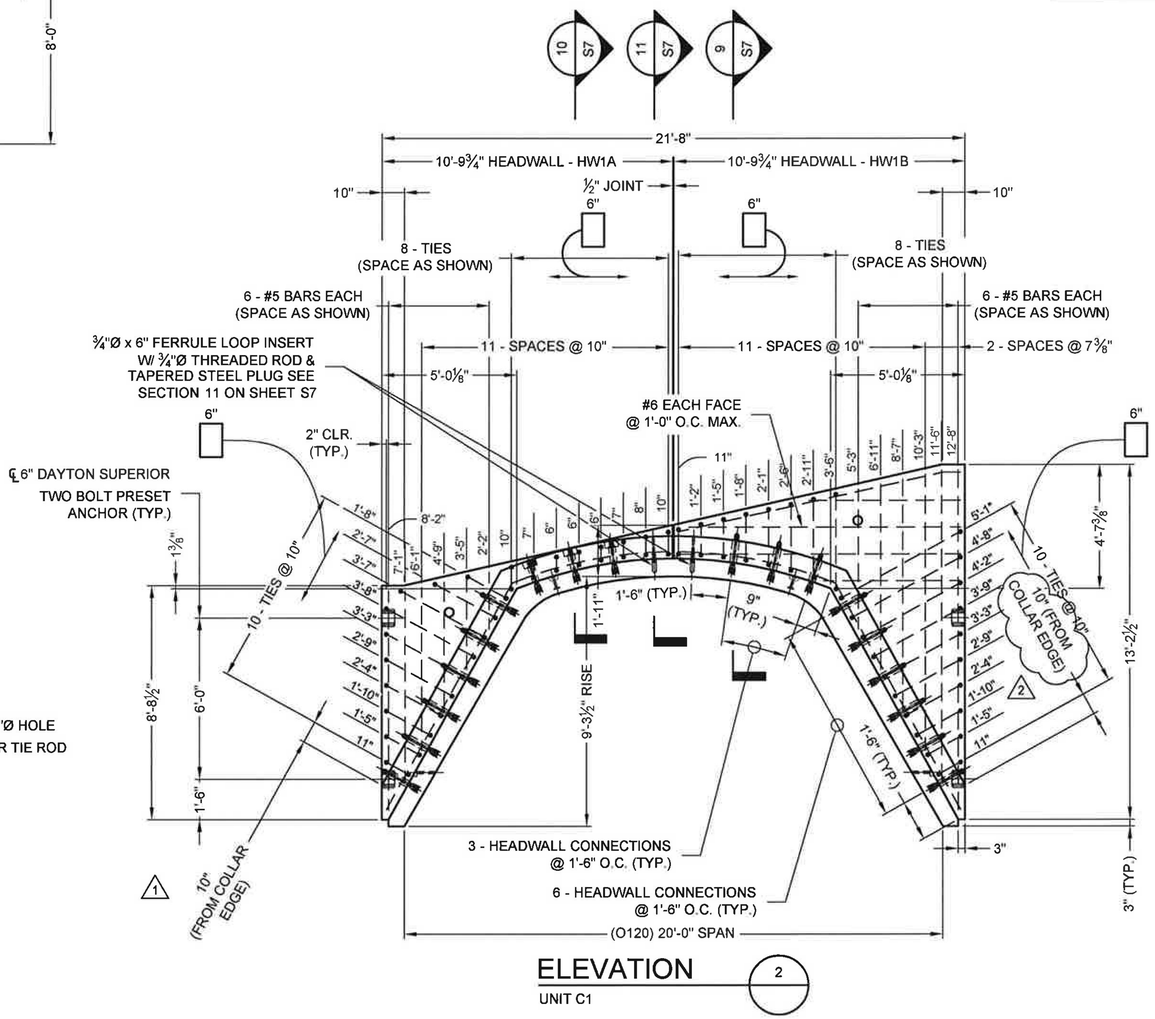

ELEVATION 2

UNIT C1

The design and information shown on this drawing is provided as a service to the project owner, engineer and contractor by Contech Engineered Solutions LLC ("Contech"). Neither this drawing, nor any part thereof, may be used, reproduced or modified in any manner without the prior written consent of Contech. Failure to comply is done at the user's own risk and Contech expressly disclaims any liability or responsibility for such use.

If discrepancies between the supplied information upon which the drawing is based and actual field conditions are encountered as site work progresses, these discrepancies must be reported to Contech immediately for re-evaluation of the design. Contech accepts no liability for designs based on missing, incomplete or inaccurate information supplied by others.

MARK	DATE	REVISION DESCRIPTION	BY
2	4/14/2016	REVIEW COMMENTS	JDR
1	3/16/2016	REVISIONS PER REVIEW COMMENTS	KDK

CONTECH® ENGINEERED SOLUTIONS LLC
www.ContechES.com
9025 Centre Pointe Dr., Suite 400, West Chester, OH 45069
800-338-1122 513-645-7000 513-645-7993 FAX

CON SPAN® O-SERIES

FABRICATION DRAWING

US ROUTE 2
BRIDGE NO. 126
TOWN OF LUNENBURG
ESSEX COUNTY, VERMONT

PROJECT No.:	SEQ. No.:	DATE:
468920	010	12/8/2015
DESIGNED: KDK		DRAWN: TRL
CHECKED: JDR		APPROVED: PAC
SHEET NO.: S3 OF S22		

I:\MERLIN\PROJECTACTIVE\468600\468920\468920-10-CON_SPAN_O_SERIES\DRAWINGS\FABRICATION\PRE-468920-010-CO-FAB-D.DWG 4/14/2016 11:19 AM

NOTES:
- ALL EDGES OF PRECAST TO HAVE A ¾" CHAMFER
- ELEVATION IS LOOKING AT BACK FACE OF HEADWALL
- HEADWALL TO BE CAST AGAINST BRIDGE UNIT
- BRIDGE UNITS MUST BE GROUTED OR BRACED WHEN SETTING PRECAST HEADWALLS
- HEADWALL WILL NOT HANG LEVEL. ADJUST CABLE LENGTHS AS REQUIRED

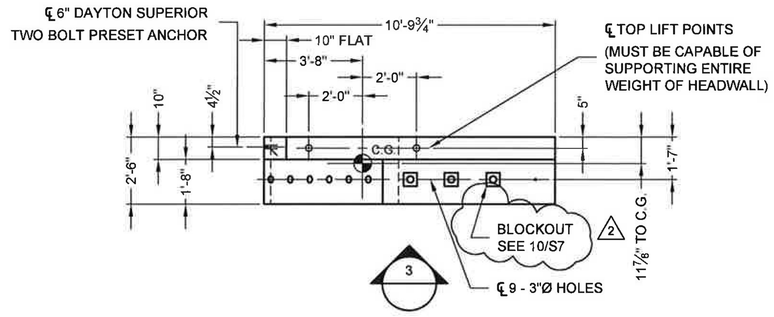

PLAN - HW1A

TOTAL WEIGHT = 3.6 TONS

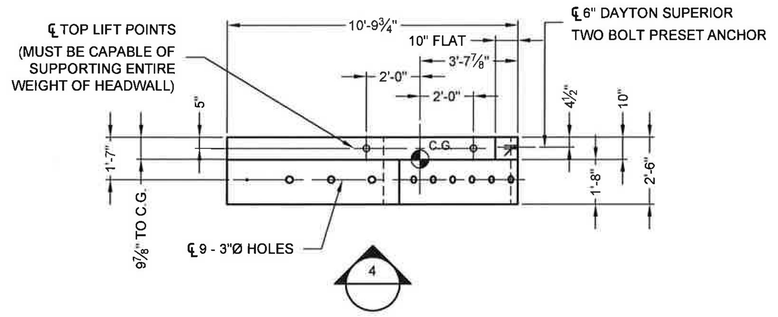

PLAN - HW1B

TOTAL WEIGHT = 5.2 TONS

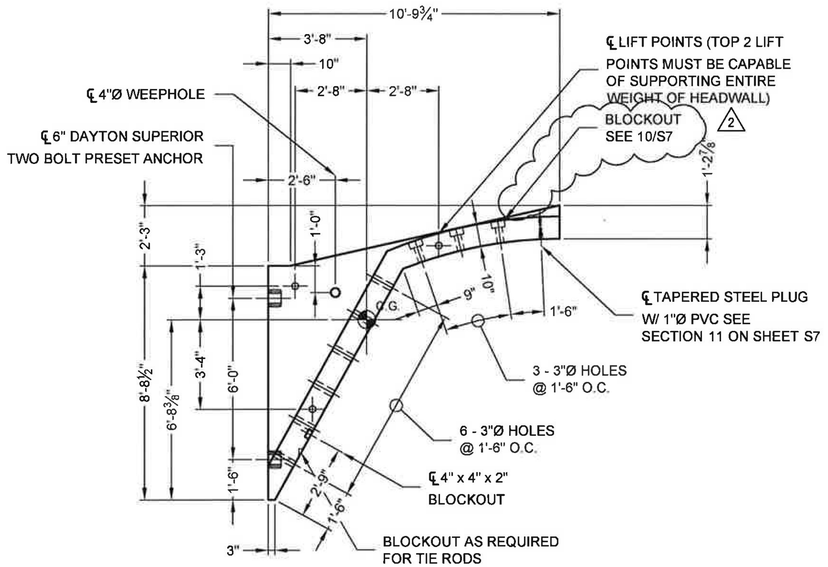

ELEVATION 3

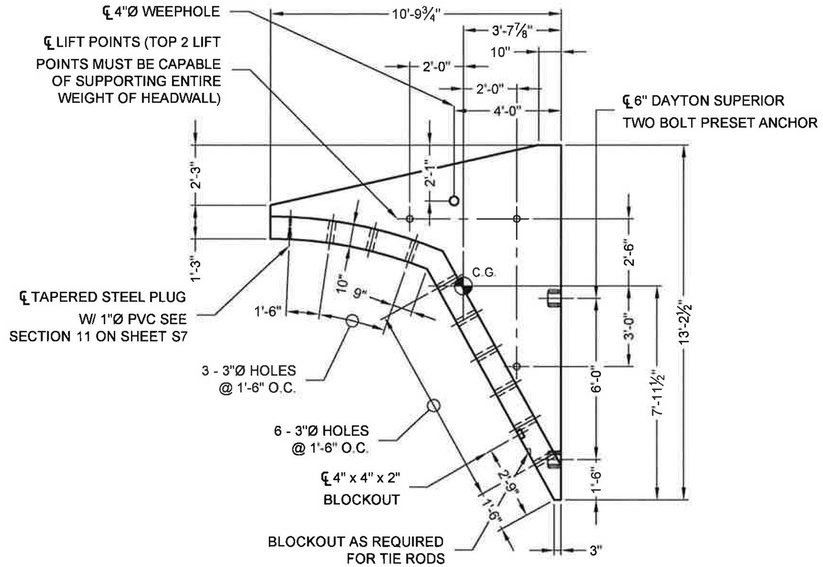

ELEVATION 4

The design and information shown on this drawing is provided as a service to the project owner, engineer and contractor by Contech Engineered Solutions LLC ("Contech"). Neither this drawing, nor any part thereof, may be used, reproduced or modified in any manner without the prior written consent of Contech. Failure to comply is done at the user's own risk and Contech expressly disclaims any liability or responsibility for such use.

If discrepancies between the supplied information upon which the drawing is based and actual field conditions are encountered as site work progresses, these discrepancies must be reported to Contech immediately for re-evaluation of the design. Contech accepts no liability for designs based on missing, incomplete or inaccurate information supplied by others.

MARK	DATE	REVISION DESCRIPTION	BY
2	4/14/2016	REVIEW COMMENTS	JDR
1	3/16/2016	NO CHANGES THIS SHEET	KDK

CONTECH ENGINEERED SOLUTIONS LLC
www.ContechES.com
9025 Centre Pointe Dr., Suite 400, West Chester, OH 45069
800-338-1122 513-645-7000 513-645-7993 FAX

CON-SPAN O-SERIES
FABRICATION DRAWING

US ROUTE 2
BRIDGE NO. 126
TOWN OF LUNENBURG
ESSEX COUNTY, VERMONT

PROJECT No.:	SEQ. No.:	DATE:
468920	010	12/8/2015
DESIGNED: KDK		DRAWN: TRL
CHECKED: JDR		APPROVED: PAC
SHEET NO.: S4 OF S22		

I:\MERLIN\PROJECTACTIVE\468900\468920\468920-10-CON_SPAN_O_SERIES\DRAWINGS\FABRICATION\PRE-468920-010-CO-FAB-D.DWG 4/14/2016 11:19 AM

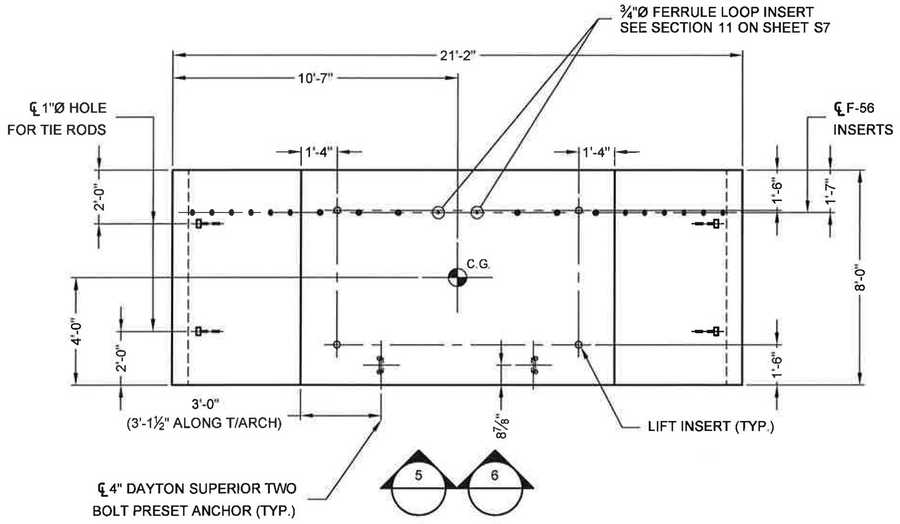

PLAN - C2

TOTAL WEIGHT = 13.1 TONS

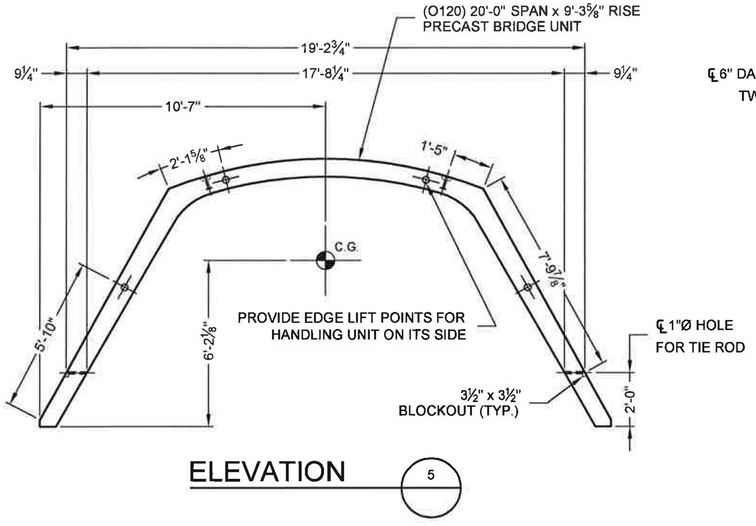

ELEVATION 5

HEADWALL		ARCH UNIT		
CONCRETE	REINF. STEEL	CONCRETE	REINF. STEEL	WWF
28-DAY: 5000 PSI	60,000 PSI UNCOATED	28-DAY: 5000 PSI	60,000 PSI UNCOATED	65,000 PSI UNCOATED

WHEREVER THE REINFORCING IS CUT FOR THE PLACEMENT OF LIFT HOLES OR OTHER BLOCKOUTS, REINFORCING BARS OR WIRES OF EQUIVALENT CROSS-SECTIONAL AREA SHALL BE PLACED SYMMETRICALLY AROUND THE HOLE. AT LEAST ONE BAR MUST BE ON EACH SIDE OF THE HOLE, AND THE DEVELOPMENT LENGTH OF THE BAR MUST BE ACHIEVED ON EITHER SIDE OF THE CUT.

NOTES:
- ALL EDGES OF PRECAST TO HAVE A ¾" CHAMFER
- ELEVATION IS LOOKING AT BACK FACE OF HEADWALL
- SEE SHEET S6 FOR HEADWALL C.G. & LIFT POINTS
- HEADWALL TO BE CAST AGAINST BRIDGE UNIT
- BRIDGE UNITS MUST BE GROUTED OR BRACED WHEN SETTING PRECAST HEADWALLS
- SEE SHEET S2 FOR BRIDGE UNIT DIMENSIONS
- INSTALL TIE RODS BEFORE UNIT IS SET UPRIGHT & LEAVE IN PLACE UNTIL UNIT IS GROUTED INTO FINAL POSITION

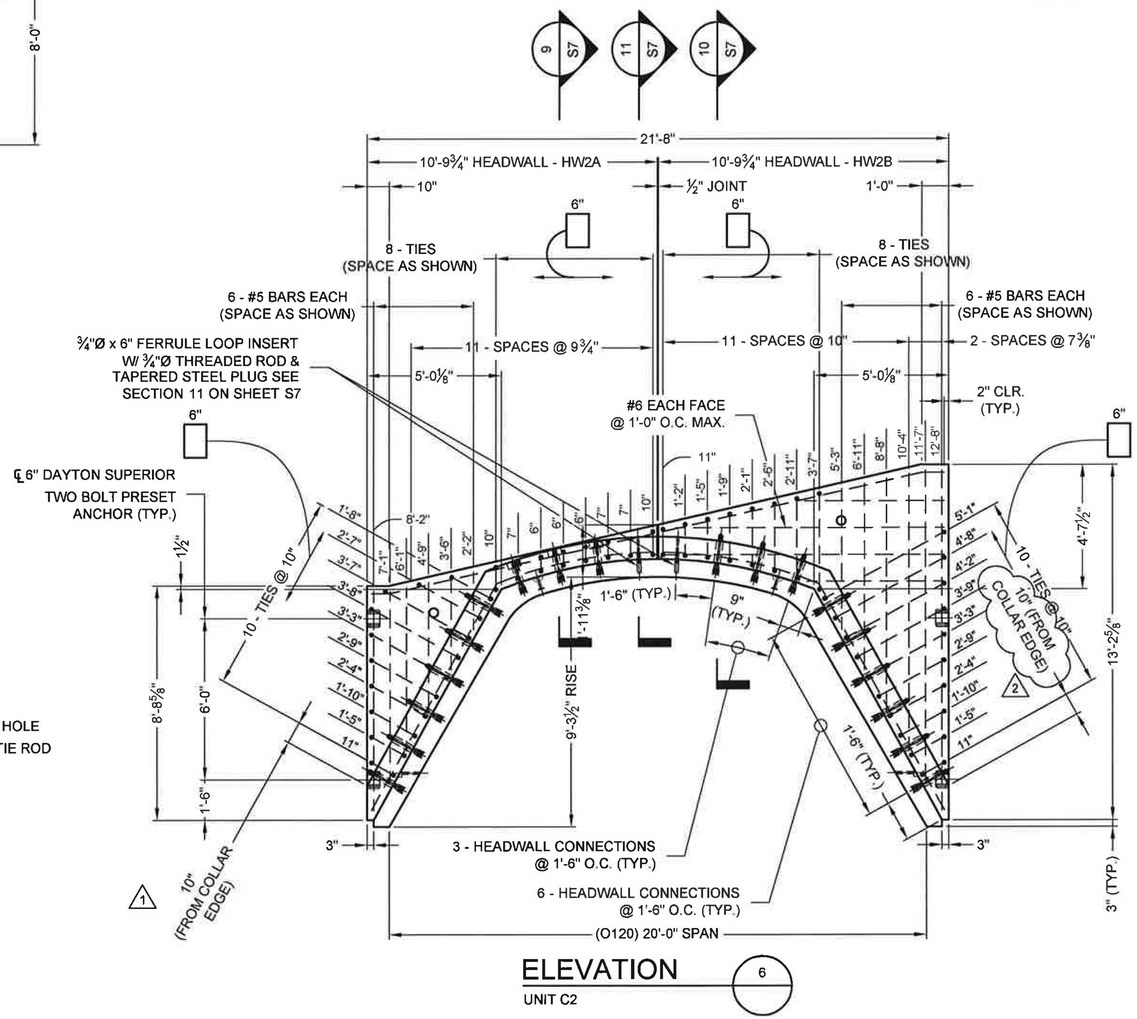

ELEVATION 6

UNIT C2

The design and information shown on this drawing is provided as a service to the project owner, engineer and contractor by Contech Engineered Solutions LLC ("Contech"). Neither this drawing, nor any part thereof, may be used, reproduced or modified in any manner without the prior written consent of Contech. Failure to comply is done at the user's own risk and Contech expressly disclaims any liability or responsibility for such use.

If discrepancies between the supplied information upon which the drawing is based and actual field conditions are encountered as site work progresses, these discrepancies must be reported to Contech immediately for re-evaluation of the design. Contech accepts no liability for designs based on missing, incomplete or inaccurate information supplied by others.

MARK	DATE	REVISION DESCRIPTION	BY
2	4/14/2016	REVIEW COMMENTS	JDR
1	3/16/2016	REVISIONS PER REVIEW COMMENTS	KDK

CONTECH® ENGINEERED SOLUTIONS LLC
www.ContechES.com
9025 Centre Pointe Dr., Suite 400, West Chester, OH 45069
800-338-1122 513-645-7000 513-645-7993 FAX

CON SPAN® O-SERIES®

FABRICATION DRAWING

US ROUTE 2
BRIDGE NO. 126
TOWN OF LUNENBURG
ESSEX COUNTY, VERMONT

PROJECT No.:	SEQ. No.:	DATE:
468920	010	12/8/2015
DESIGNED: KDK	DRAWN: TRL	
CHECKED: JDR	APPROVED: PAC	
SHEET NO.: S5 OF S22		

I:\MERLIN\PROJECTACTIVE\468900\468920\468920-10-CON_SPAN_O_SERIES\DRAWINGS\FABRICATION\PRE-468920-010-CO-FAB-D.DWG 4/14/2016 11:20 AM

NOTES:
- ALL EDGES OF PRECAST TO HAVE A ¾" CHAMFER
- ELEVATION IS LOOKING AT BACK FACE OF HEADWALL
- HEADWALL TO BE CAST AGAINST BRIDGE UNIT
- BRIDGE UNITS MUST BE GROUTED OR BRACED WHEN SETTING PRECAST HEADWALLS
- HEADWALL WILL NOT HANG LEVEL. ADJUST CABLE LENGTHS AS REQUIRED

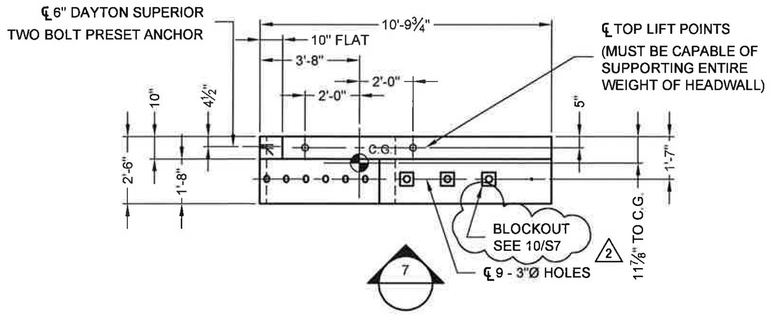

PLAN - HW2A

TOTAL WEIGHT = 3.6 TONS

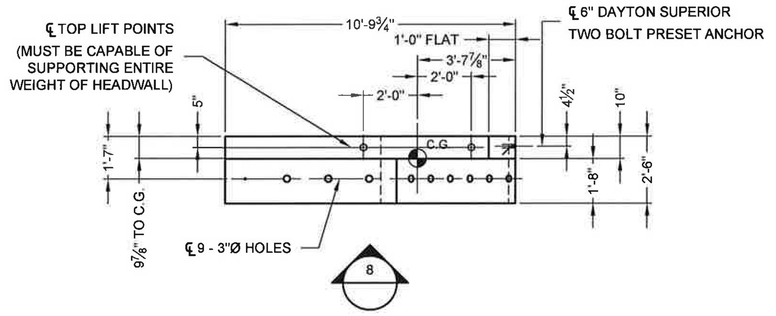

PLAN - HW2B

TOTAL WEIGHT = 5.2 TONS

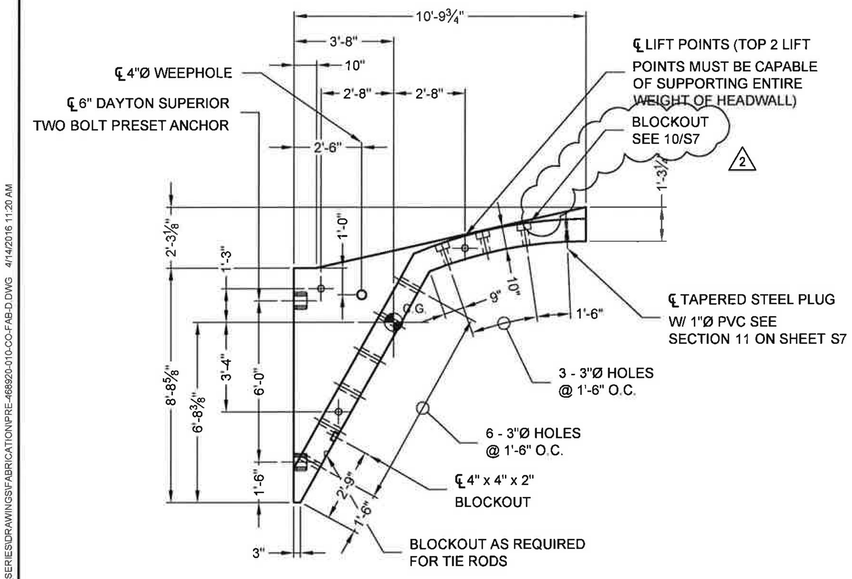

ELEVATION 7

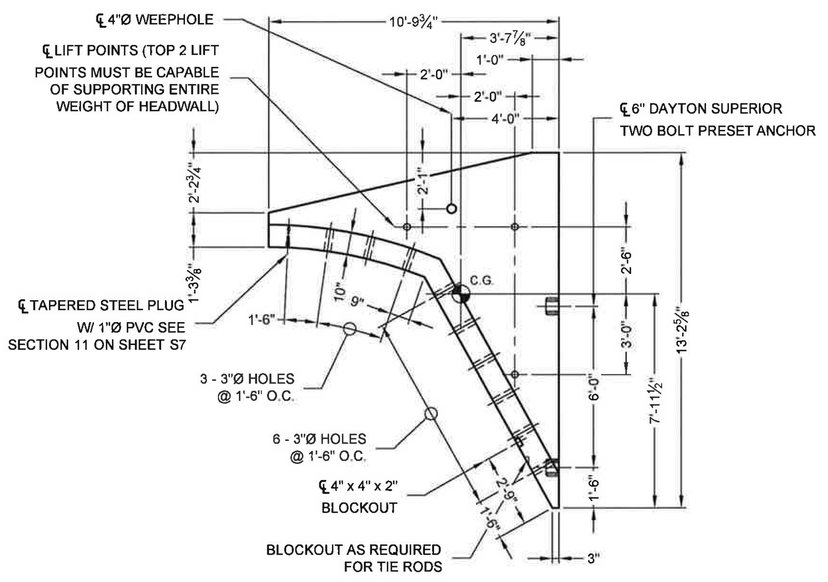

ELEVATION 8

The design and information shown on this drawing is provided as a service to the project owner, engineer and contractor by Contech Engineered Solutions LLC ("Contech"). Neither this drawing, nor any part thereof, may be used, reproduced or modified in any manner without the prior written consent of Contech. Failure to comply is done at the user's own risk and Contech expressly disclaims any liability or responsibility for such use.

If discrepancies between the supplied information upon which the drawing is based and actual field conditions are encountered as site work progresses, these discrepancies must be reported to Contech immediately for re-evaluation of the design. Contech accepts no liability for designs based on missing, incomplete or inaccurate information supplied by others.

MARK	DATE	REVISION DESCRIPTION	BY
2	4/14/2016	REVIEW COMMENTS	JDR
1	3/16/2016	NO CHANGES THIS SHEET	KDK

CONTECH® ENGINEERED SOLUTIONS LLC
www.ContechES.com
9025 Centre Pointe Dr., Suite 400, West Chester, OH 45069
800-338-1122 513-645-7000 513-645-7993 FAX

CON SPAN® SERIES
FABRICATION DRAWING

US ROUTE 2
BRIDGE NO. 126
TOWN OF LUNENBURG
ESSEX COUNTY, VERMONT

PROJECT No.:	SEQ. No.:	DATE:
468920	010	12/8/2015
DESIGNED: KDK		DRAWN: TRL
CHECKED: JDR		APPROVED: PAC
SHEET NO.: S6 OF S22		

I:\MERL\INPROJECTACTIVE\468920\468920-010-CON_SPAN_O_SERIES\DRAWINGS\FABRICATION\PRE-468920-010-CO-FAB-D.DWG 4/14/2016 11:20 AM

NOTES:
- ALL EDGES OF PRECAST TO HAVE A ¾" CHAMFER
- HEADWALL TO BE CAST AGAINST BRIDGE UNIT
- BRIDGE UNITS MUST BE GROUTED OR BRACED WHEN SETTING PRECAST HEADWALLS

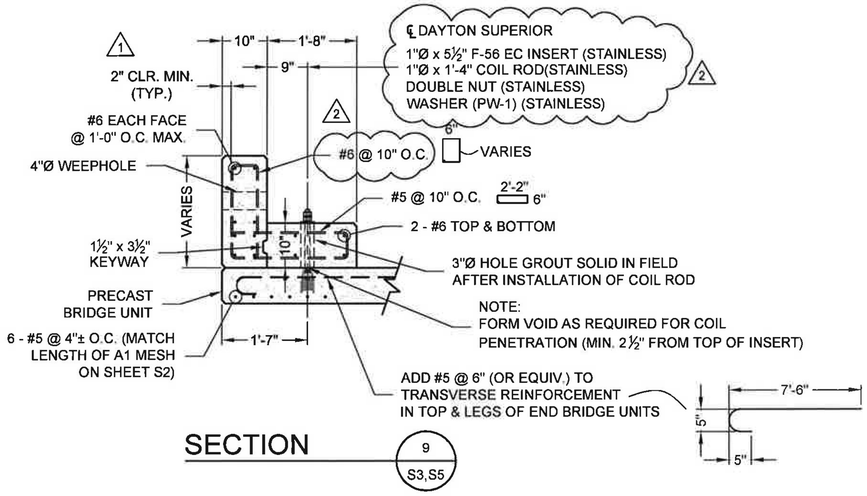

SECTION 9 S3,S5

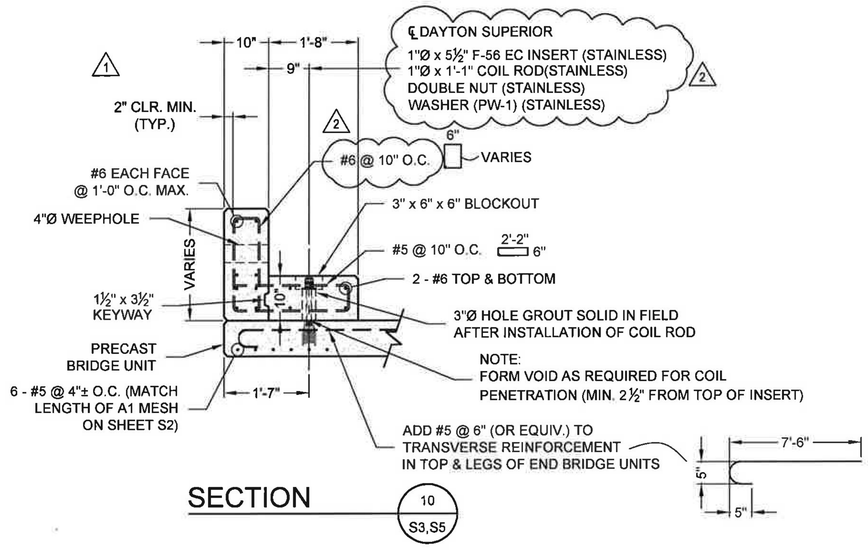

SECTION 10 S3,S5

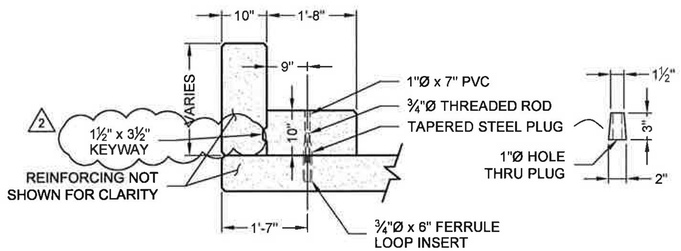

SECTION 11 S3,S5

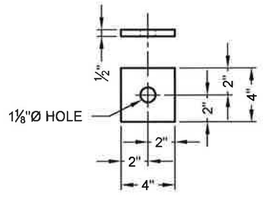

PW-1

(℄ WASHER, ½" x 4" x 4")
(GALVANIZED AS PER ASTM A123)

The design and information shown on this drawing is provided as a service to the project owner, engineer and contractor by Contech Engineered Solutions LLC ("Contech"). Neither this drawing, nor any part thereof, may be used, reproduced or modified in any manner without the prior written consent of Contech. Failure to comply is done at the user's own risk and Contech expressly disclaims any liability or responsibility for such use.

If discrepancies between the supplied information upon which the drawing is based and actual field conditions are encountered as site work progresses, these discrepancies must be reported to Contech immediately for re-evaluation of the design. Contech accepts no liability for designs based on missing, incomplete or inaccurate information supplied by others.

MARK	DATE	REVISION DESCRIPTION	BY
2	4/14/2016	REVIEW COMMENTS	JDR
1	3/16/2016	REVISIONS PER REVIEW COMMENTS	KDK

CONTECH® ENGINEERED SOLUTIONS LLC
www.ContechES.com
9025 Centre Pointe Dr., Suite 400, West Chester, OH 45069
800-338-1122 513-645-7000 513-645-7993 FAX

CON-SPAN® O-SERIES®
FABRICATION DRAWING

US ROUTE 2
BRIDGE NO. 126
TOWN OF LUNENBURG
ESSEX COUNTY, VERMONT

PROJECT No.:	SEQ. No.:	DATE:
468920	010	12/8/2015
DESIGNED: KDK		DRAWN: TRL
CHECKED: JDR		APPROVED: PAC
SHEET NO.: S7 OF S22		

I:\MERLIN\PROJECTACTIVE\468900\468920\468920-10-CON_SPAN_O_SERIES\DRAWINGS\FABRICATION\PRE-468920-010-CO-FAB-D.DWG 4/14/2016 11:20 AM

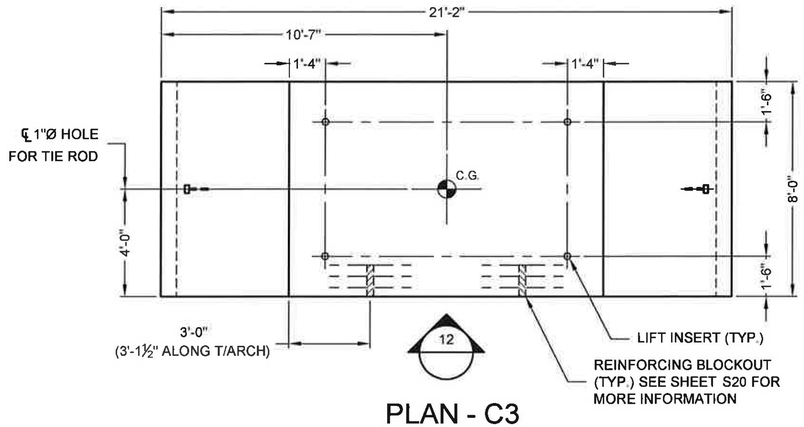

PLAN - C3

TOTAL WEIGHT = 13.1 TONS

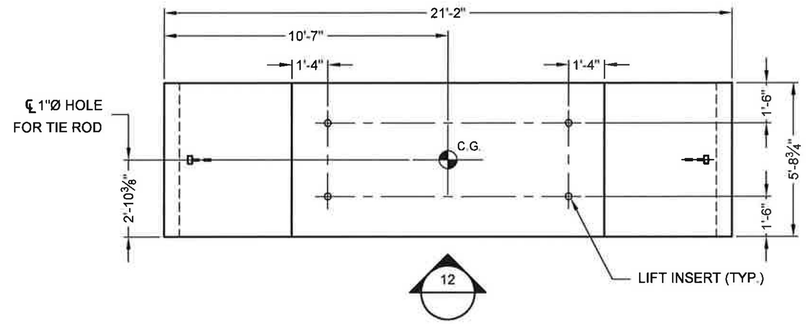

PLAN - C4

TOTAL WEIGHT = 9.4 TONS

NOTES:
- ALL EDGES OF PRECAST TO HAVE A ¾" CHAMFER
- SEE SHEET S2 FOR BRIDGE UNIT DIMENSIONS
- INSTALL TIE RODS BEFORE UNIT IS SET UPRIGHT & LEAVE IN PLACE UNTIL UNIT IS GROUTED INTO FINAL POSITION
- MANUFACTURER SHALL MARK END OF UNIT C3 WITH REINFORCING BLOCKOUT PRIOR TO SHIPPING.

ARCH UNIT		
CONCRETE	REINF. STEEL	WWF
28-DAY: 5000 PSI	60,000 PSI UNCOATED	65,000 PSI UNCOATED

WHEREVER THE REINFORCING IS CUT FOR THE PLACEMENT OF LIFT HOLES OR OTHER BLOCKOUTS, REINFORCING BARS OR WIRES OF EQUIVALENT CROSS-SECTIONAL AREA SHALL BE PLACED SYMMETRICALLY AROUND THE HOLE. AT LEAST ONE BAR MUST BE ON EACH SIDE OF THE HOLE, AND THE DEVELOPMENT LENGTH OF THE BAR MUST BE ACHIEVED ON EITHER SIDE OF THE CUT.

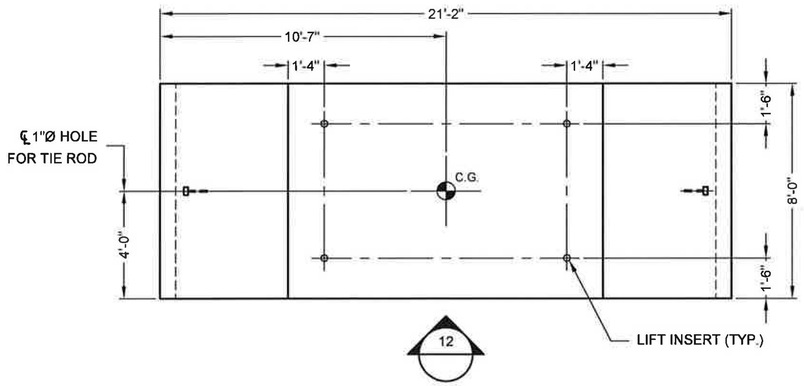

PLAN - C5

TOTAL WEIGHT = 13.1 TONS

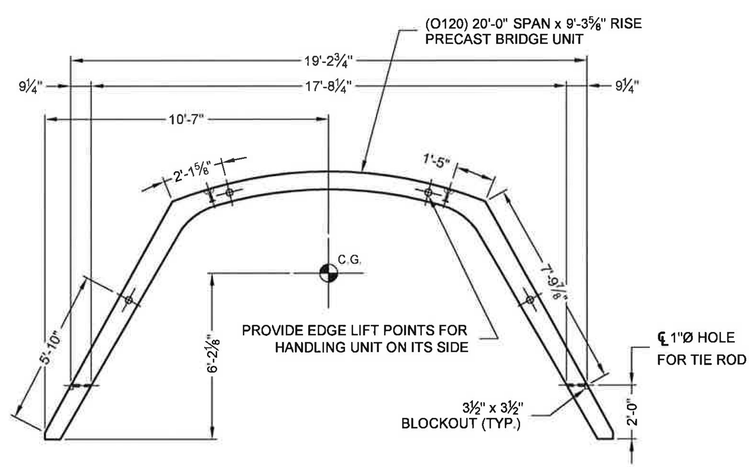

ELEVATION

12

I:\MERLIN\PROJECTACTIVE\468900\468920\468920-10-CON_SPAN_O_SERIES\DRAWINGS\FABRICATION\PRE-468920-010-CO-FAB-D.DWG 4/14/2016 11:20 AM

The design and information shown on this drawing is provided as a service to the project owner, engineer and contractor by Contech Engineered Solutions LLC ("Contech"). Neither this drawing, nor any part thereof, may be used, reproduced or modified in any manner without the prior written consent of Contech. Failure to comply is done at the user's own risk and Contech expressly disclaims any liability or responsibility for such use.

If discrepancies between the supplied information upon which the drawing is based and actual field conditions are encountered as site work progresses, these discrepancies must be reported to Contech immediately for re-evaluation of the design. Contech accepts no liability for designs based on missing, incomplete or inaccurate information supplied by others.

MARK	DATE	REVISION DESCRIPTION	BY
2	4/14/2016	REVIEW COMMENTS	JDR
1	3/16/2016	NO CHANGES THIS SHEET	KDK

CONTECH® ENGINEERED SOLUTIONS LLC
www.ContechES.com
9025 Centre Pointe Dr., Suite 400, West Chester, OH 45069
800-338-1122 513-645-7000 513-645-7993 FAX

CON SPAN O-SERIES

FABRICATION DRAWING

US ROUTE 2
BRIDGE NO. 126
TOWN OF LUNENBURG
ESSEX COUNTY, VERMONT

PROJECT No.:	SEQ. No.:	DATE:
468920	010	12/8/2015
DESIGNED: KDK		DRAWN: TRL
CHECKED: JDR		APPROVED: PAC

SHEET NO.: S8 OF S22

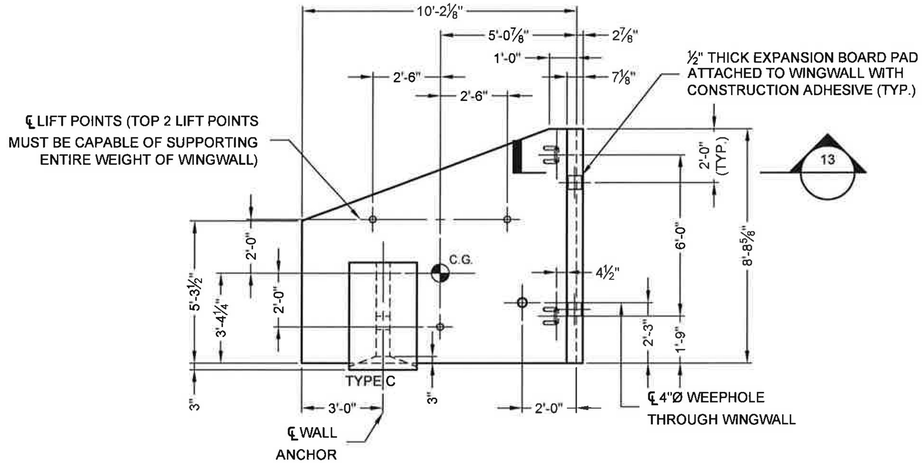

WINGWALL - WW1

TOTAL WEIGHT = 5.5 TONS

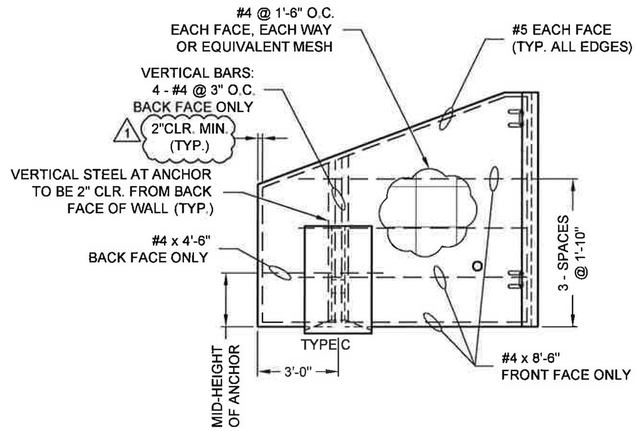

REINFORCING DETAIL - WW1

(FOR ANCHOR REINFORCING SEE SHEET S17)

NOTES:
- ALL EDGES OF PRECAST TO HAVE A ¾" CHAMFER
- ELEVATION IS LOOKING AT BACK FACE OF WINGWALL
- BACK FACE DENOTES ANCHOR SIDE OF WINGWALL
- WINGWALL WILL NOT HANG LEVEL. ADJUST CABLE LENGTHS AS REQUIRED

WINGWALL		
CONCRETE	REINF. STEEL	WWF
28-DAY: 5000 PSI	60,000 PSI UNCOATED	65,000 PSI UNCOATED

WHEREVER THE REINFORCING IS CUT FOR THE PLACEMENT OF LIFT HOLES OR OTHER BLOCKOUTS, REINFORCING BARS OR WIRES OF EQUIVALENT CROSS-SECTIONAL AREA SHALL BE PLACED SYMMETRICALLY AROUND THE HOLE. AT LEAST ONE BAR MUST BE ON EACH SIDE OF THE HOLE, AND THE DEVELOPMENT LENGTH OF THE BAR MUST BE ACHIEVED ON EITHER SIDE OF THE CUT.

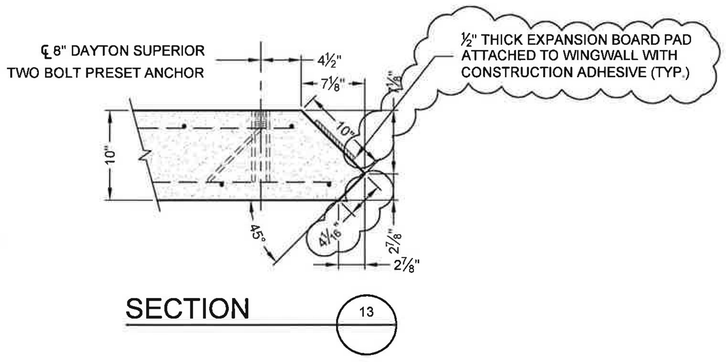

SECTION 13

The design and information shown on this drawing is provided as a service to the project owner, engineer and contractor by Contech Engineered Solutions LLC ("Contech"). Neither this drawing, nor any part thereof, may be used, reproduced or modified in any manner without the prior written consent of Contech. Failure to comply is done at the user's own risk and Contech expressly disclaims any liability or responsibility for such use.

If discrepancies between the supplied information upon which the drawing is based and actual field conditions are encountered as site work progresses, these discrepancies must be reported to Contech immediately for re-evaluation of the design. Contech accepts no liability for designs based on missing, incomplete or inaccurate information supplied by others.

MARK	DATE	REVISION DESCRIPTION	BY
2	4/14/2016	REVIEW COMMENTS	JDR
1	3/16/2016	REVISIONS PER REVIEW COMMENTS	KDK

CONTECH® ENGINEERED SOLUTIONS LLC
www.ContechES.com
9025 Centre Pointe Dr., Suite 400, West Chester, OH 45069
800-338-1122 513-645-7000 513-645-7993 FAX

CON SPAN® O-SERIES®

FABRICATION DRAWING

US ROUTE 2
BRIDGE NO. 126
TOWN OF LUNENBURG
ESSEX COUNTY, VERMONT

PROJECT No.:	SEQ. No.:	DATE:
468920	010	12/8/2015
DESIGNED: KDK		DRAWN: TRL
CHECKED: JDR		APPROVED: PAC
SHEET NO.: S9 OF S22		

I:\MERLIN\PROJECTS\ACTIVE\468900\468920\468920-10-CON_SPAN_O_SERIES\DRAWINGS\FABRICATION\PRE-468920-010-CO-FAB-D.DWG 4/14/2016 11:20 AM

NOTES:
- ALL EDGES OF PRECAST TO HAVE A ¾" CHAMFER
- ELEVATION IS LOOKING AT BACK FACE OF WINGWALL
- BACK FACE DENOTES ANCHOR SIDE OF WINGWALL
- WINGWALL WILL NOT HANG LEVEL. ADJUST CABLE LENGTHS AS REQUIRED

WINGWALL		
CONCRETE	REINF. STEEL	WWF
28-DAY: 5000 PSI	60,000 PSI UNCOATED	65,000 PSI UNCOATED

WHEREVER THE REINFORCING IS CUT FOR THE PLACEMENT OF LIFT HOLES OR OTHER BLOCKOUTS, REINFORCING BARS OR WIRES OF EQUIVALENT CROSS-SECTIONAL AREA SHALL BE PLACED SYMMETRICALLY AROUND THE HOLE. AT LEAST ONE BAR MUST BE ON EACH SIDE OF THE HOLE, AND THE DEVELOPMENT LENGTH OF THE BAR MUST BE ACHIEVED ON EITHER SIDE OF THE CUT.

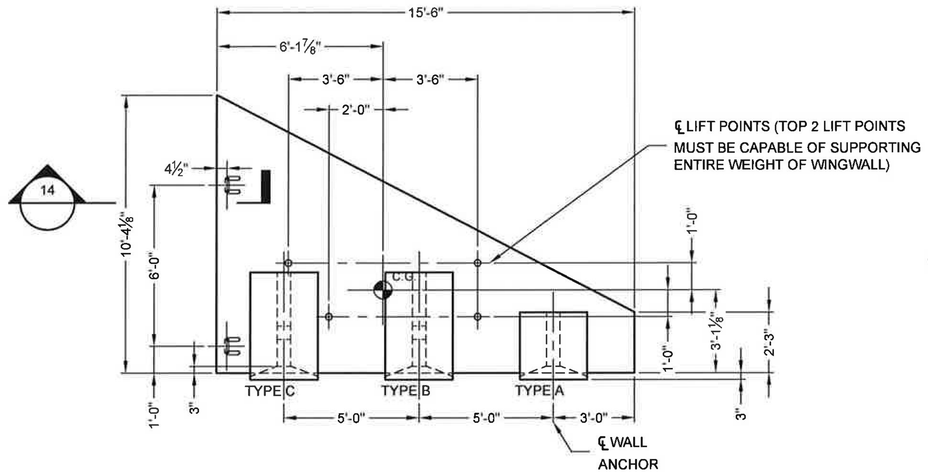

WINGWALL - WW2A

TOTAL WEIGHT = 8.2 TONS

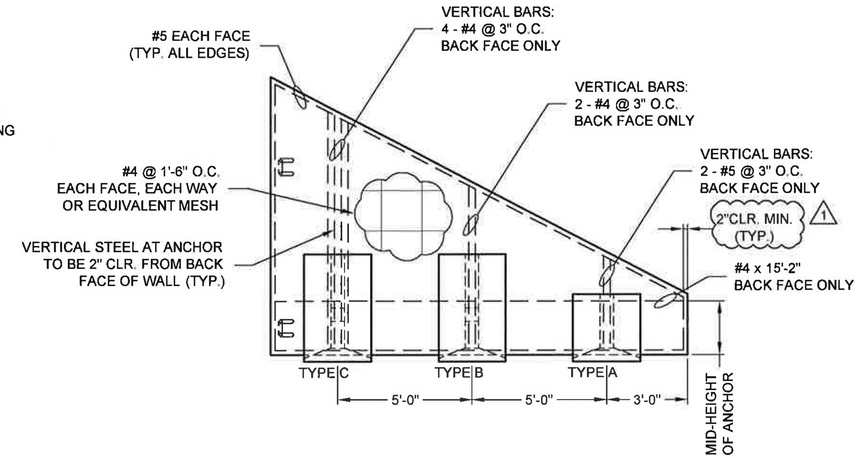

REINFORCING DETAIL - WW2A

(FOR ANCHOR REINFORCING SEE SHEET S16 & S17)

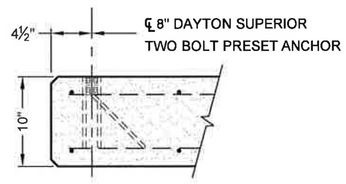

SECTION 14

The design and information shown on this drawing is provided as a service to the project owner, engineer and contractor by Contech Engineered Solutions LLC ("Contech"). Neither this drawing, nor any part thereof, may be used, reproduced or modified in any manner without the prior written consent of Contech. Failure to comply is done at the user's own risk and Contech expressly disclaims any liability or responsibility for such use.

If discrepancies between the supplied information upon which the drawing is based and actual field conditions are encountered as site work progresses, these discrepancies must be reported to Contech immediately for re-evaluation of the design. Contech accepts no liability for designs based on missing, incomplete or inaccurate information supplied by others.

MARK	DATE	REVISION DESCRIPTION	BY
2	4/14/2016	REVIEW COMMENTS	JDR
1	3/16/2016	REVISIONS PER REVIEW COMMENTS	KDK

CONTECH® ENGINEERED SOLUTIONS LLC
www.ContechES.com
9025 Centre Pointe Dr., Suite 400, West Chester, OH 45069
800-338-1122 513-645-7000 513-645-7993 FAX

CON-SPAN® O-SERIES

FABRICATION DRAWING

US ROUTE 2
BRIDGE NO. 126
TOWN OF LUNENBURG
ESSEX COUNTY, VERMONT

PROJECT No.:	SEQ. No.:	DATE:
468920	010	12/8/2015
DESIGNED: KDK		DRAWN: TRL
CHECKED: JDR		APPROVED: PAC
SHEET NO.: S10 OF S22		

I:\MERLIN\PROJECTS\ACTIVE\468900\468920\468920-10-CON_SPAN_O_SERIES\DRAWINGS\FABRICATION\PRE-468920-010-CO-FAB-D.DWG 4/14/2016 11:20 AM

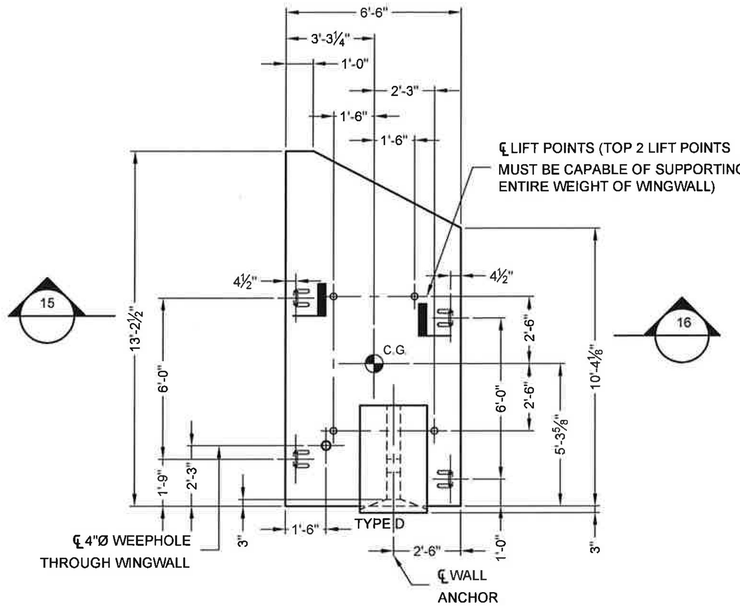

WINGWALL - WW2B

TOTAL WEIGHT = 5.9 TONS

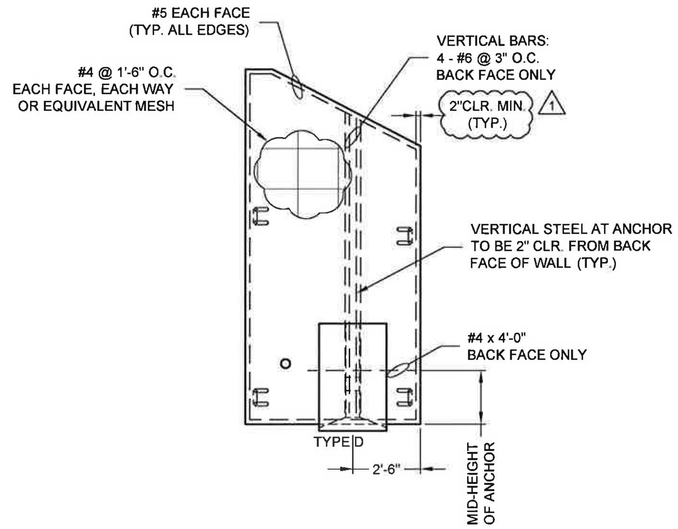

REINFORCING DETAIL - WW2B

(FOR ANCHOR REINFORCING SEE SHEET S17)

NOTES:
- ALL EDGES OF PRECAST TO HAVE A ¾" CHAMFER
- ELEVATION IS LOOKING AT BACK FACE OF WINGWALL
- BACK FACE DENOTES ANCHOR SIDE OF WINGWALL
- WINGWALL WILL NOT HANG LEVEL. ADJUST CABLE LENGTHS AS REQUIRED

WINGWALL		
CONCRETE	REINF. STEEL	WWF
28-DAY: 5000 PSI	60,000 PSI UNCOATED	65,000 PSI UNCOATED

WHEREVER THE REINFORCING IS CUT FOR THE PLACEMENT OF LIFT HOLES OR OTHER BLOCKOUTS, REINFORCING BARS OR WIRES OF EQUIVALENT CROSS-SECTIONAL AREA SHALL BE PLACED SYMMETRICALLY AROUND THE HOLE. AT LEAST ONE BAR MUST BE ON EACH SIDE OF THE HOLE, AND THE DEVELOPMENT LENGTH OF THE BAR MUST BE ACHIEVED ON EITHER SIDE OF THE CUT.

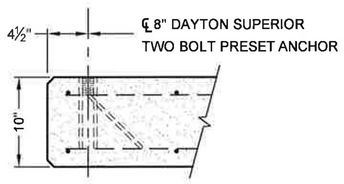

SECTION 15

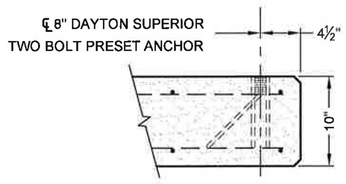

SECTION 16

The design and information shown on this drawing is provided as a service to the project owner, engineer and contractor by Contech Engineered Solutions LLC ("Contech"). Neither this drawing, nor any part thereof, may be used, reproduced or modified in any manner without the prior written consent of Contech. Failure to comply is done at the user's own risk and Contech expressly disclaims any liability or responsibility for such use.

If discrepancies between the supplied information upon which the drawing is based and actual field conditions are encountered as site work progresses, these discrepancies must be reported to Contech immediately for re-evaluation of the design. Contech accepts no liability for designs based on missing, incomplete or inaccurate information supplied by others.

MARK	DATE	REVISION DESCRIPTION	BY
2	4/14/2016	REVIEW COMMENTS	JDR
1	3/16/2016	REVISIONS PER REVIEW COMMENTS	KDK

CONTECH ENGINEERED SOLUTIONS LLC
www.ContechES.com
9025 Centre Pointe Dr., Suite 400, West Chester, OH 45069
800-338-1122 513-645-7000 513-645-7993 FAX

CON-SPAN SERIES

FABRICATION DRAWING

US ROUTE 2
BRIDGE NO. 126
TOWN OF LUNENBURG
ESSEX COUNTY, VERMONT

PROJECT No.:	SEQ. No.:	DATE:
468920	010	12/8/2015
DESIGNED: KDK		DRAWN: TRL
CHECKED: JDR		APPROVED: PAC
SHEET NO.: S11 OF S22		

I:\MERLIN\PROJECTACTIVE\468920\468920-10-CON_SPAN_O_SERIES\DRAWINGS\FABRICATION\FRE-468920-010-CO-FAB-D.DWG 4/14/2016 11:20 AM

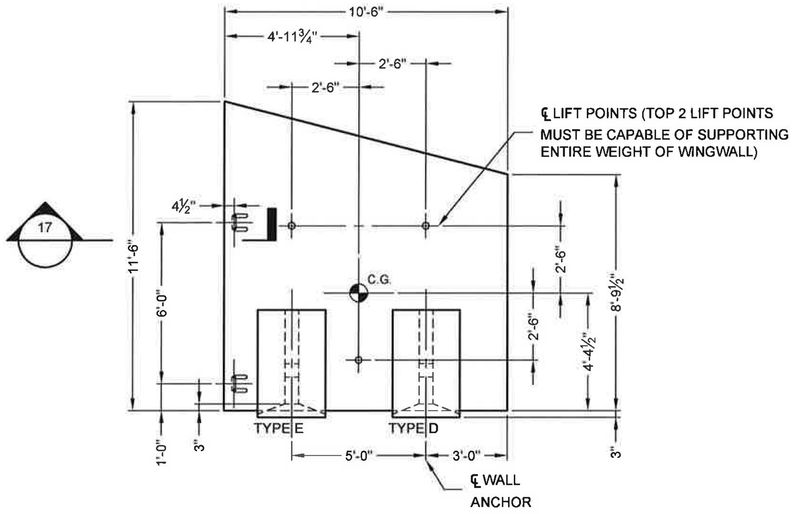

WINGWALL - WW3A

TOTAL WEIGHT = 10.2 TONS

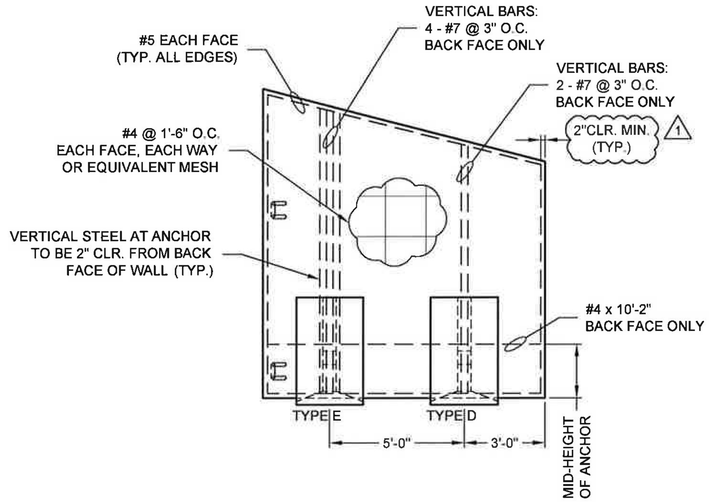

REINFORCING DETAIL - WW3A

(FOR ANCHOR REINFORCING SEE SHEET S18)

NOTES:
- ALL EDGES OF PRECAST TO HAVE A ¾" CHAMFER
- ELEVATION IS LOOKING AT BACK FACE OF WINGWALL
- BACK FACE DENOTES ANCHOR SIDE OF WINGWALL
- WINGWALL WILL NOT HANG LEVEL. ADJUST CABLE LENGTHS AS REQUIRED

WINGWALL		
CONCRETE	REINF. STEEL	WWF
28-DAY: 5000 PSI	60,000 PSI UNCOATED	65,000 PSI UNCOATED

WHEREVER THE REINFORCING IS CUT FOR THE PLACEMENT OF LIFT HOLES OR OTHER BLOCKOUTS, REINFORCING BARS OR WIRES OF EQUIVALENT CROSS-SECTIONAL AREA SHALL BE PLACED SYMMETRICALLY AROUND THE HOLE. AT LEAST ONE BAR MUST BE ON EACH SIDE OF THE HOLE, AND THE DEVELOPMENT LENGTH OF THE BAR MUST BE ACHIEVED ON EITHER SIDE OF THE CUT.

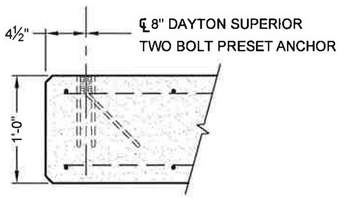

SECTION 17

The design and information shown on this drawing is provided as a service to the project owner, engineer and contractor by Contech Engineered Solutions LLC ("Contech"). Neither this drawing, nor any part thereof, may be used, reproduced or modified in any manner without the prior written consent of Contech. Failure to comply is done at the user's own risk and Contech expressly disclaims any liability or responsibility for such use.

If discrepancies between the supplied information upon which the drawing is based and actual field conditions are encountered as site work progresses, these discrepancies must be reported to Contech immediately for re-evaluation of the design. Contech accepts no liability for designs based on missing, incomplete or inaccurate information supplied by others.

MARK	DATE	REVISION DESCRIPTION	BY
2	4/14/2016	REVIEW COMMENTS	JDR
1	3/16/2016	REVISIONS PER REVIEW COMMENTS	KDK

CONTECH® ENGINEERED SOLUTIONS LLC
www.ContechES.com
9025 Centre Pointe Dr., Suite 400, West Chester, OH 45069
800-338-1122 513-645-7000 513-645-7993 FAX

CON-SPAN® -SERIES

FABRICATION DRAWING

US ROUTE 2
BRIDGE NO. 126
TOWN OF LUNENBURG
ESSEX COUNTY, VERMONT

PROJECT No.:	SEQ. No.:	DATE:
468920	010	12/8/2015
DESIGNED: KDK		DRAWN: TRL
CHECKED: JDR		APPROVED: PAC
SHEET NO.: S12 OF S22		

I:\MERLIN\PROJECTACTIVE\468900\468920\468920-10-CON_SPAN_O_SERIES\DRAWINGS\FABRICATION\PRE-468920-010-CO-FAB-D.DWG 4/14/2016 11:20 AM

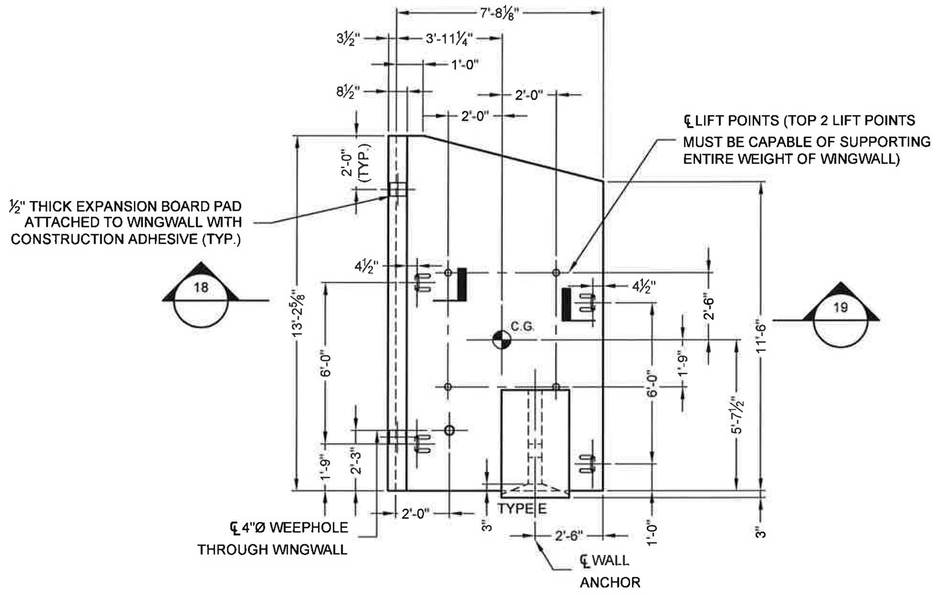

WINGWALL - WW3B

TOTAL WEIGHT = 8.3 TONS

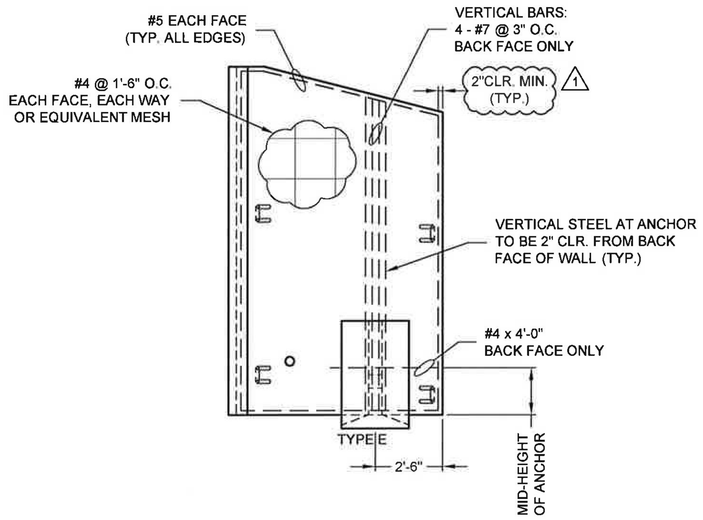

REINFORCING DETAIL - WW3B

(FOR ANCHOR REINFORCING SEE SHEET S18)

NOTES:
- ALL EDGES OF PRECAST TO HAVE A ¾" CHAMFER
- ELEVATION IS LOOKING AT BACK FACE OF WINGWALL
- BACK FACE DENOTES ANCHOR SIDE OF WINGWALL
- WINGWALL WILL NOT HANG LEVEL. ADJUST CABLE LENGTHS AS REQUIRED

WINGWALL		
CONCRETE	REINF. STEEL	WWF
28-DAY: 5000 PSI	60,000 PSI UNCOATED	65,000 PSI UNCOATED

WHEREVER THE REINFORCING IS CUT FOR THE PLACEMENT OF LIFT HOLES OR OTHER BLOCKOUTS, REINFORCING BARS OR WIRES OF EQUIVALENT CROSS-SECTIONAL AREA SHALL BE PLACED SYMMETRICALLY AROUND THE HOLE. AT LEAST ONE BAR MUST BE ON EACH SIDE OF THE HOLE, AND THE DEVELOPMENT LENGTH OF THE BAR MUST BE ACHIEVED ON EITHER SIDE OF THE CUT.

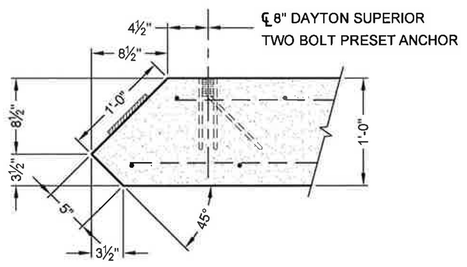

SECTION 18

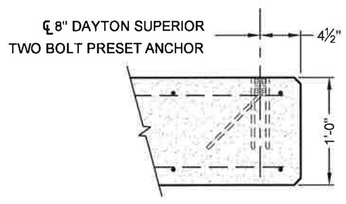

SECTION 19

The design and information shown on this drawing is provided as a service to the project owner, engineer and contractor by Contech Engineered Solutions LLC ("Contech"). Neither this drawing, nor any part thereof, may be used, reproduced or modified in any manner without the prior written consent of Contech. Failure to comply is done at the user's own risk and Contech expressly disclaims any liability or responsibility for such use.

If discrepancies between the supplied information upon which the drawing is based and actual field conditions are encountered as site work progresses, these discrepancies must be reported to Contech immediately for re-evaluation of the design. Contech accepts no liability for designs based on missing, incomplete or inaccurate information supplied by others.

MARK	DATE	REVISION DESCRIPTION	BY
2	4/14/2016	REVIEW COMMENTS	JDR
1	3/16/2016	REVISIONS PER REVIEW COMMENTS	KDK

CONTECH ENGINEERED SOLUTIONS LLC
www.ContechES.com
9025 Centre Pointe Dr., Suite 400, West Chester, OH 45069
800-338-1122 513-645-7000 513-645-7993 FAX

CON-SPAN O-SERIES

FABRICATION DRAWING

US ROUTE 2
BRIDGE NO. 126
TOWN OF LUNENBURG
ESSEX COUNTY, VERMONT

PROJECT No.:	SEQ. No.:	DATE:
468920	010	12/8/2015
DESIGNED: KDK		DRAWN: TRL
CHECKED: JDR		APPROVED: PAC
SHEET NO.: S13 OF S22		

I:\MERLIN\PROJECTS\ACTIVE\468900\468920\468920-10-CON_SPAN_O_SERIES\DRAWINGS\FABRICATION\PRE-468920-010-CO-FAB-D.DWG 4/14/2016 11:20 AM

NOTES:
- ALL EDGES OF PRECAST TO HAVE A ¾" CHAMFER
- ELEVATION IS LOOKING AT BACK FACE OF WINGWALL
- BACK FACE DENOTES ANCHOR SIDE OF WINGWALL
- WINGWALL WILL NOT HANG LEVEL. ADJUST CABLE LENGTHS AS REQUIRED

WINGWALL		
CONCRETE	REINF. STEEL	WWF
28-DAY: 5000 PSI	60,000 PSI UNCOATED	65,000 PSI UNCOATED

WHEREVER THE REINFORCING IS CUT FOR THE PLACEMENT OF LIFT HOLES OR OTHER BLOCKOUTS, REINFORCING BARS OR WIRES OF EQUIVALENT CROSS-SECTIONAL AREA SHALL BE PLACED SYMMETRICALLY AROUND THE HOLE. AT LEAST ONE BAR MUST BE ON EACH SIDE OF THE HOLE, AND THE DEVELOPMENT LENGTH OF THE BAR MUST BE ACHIEVED ON EITHER SIDE OF THE CUT.

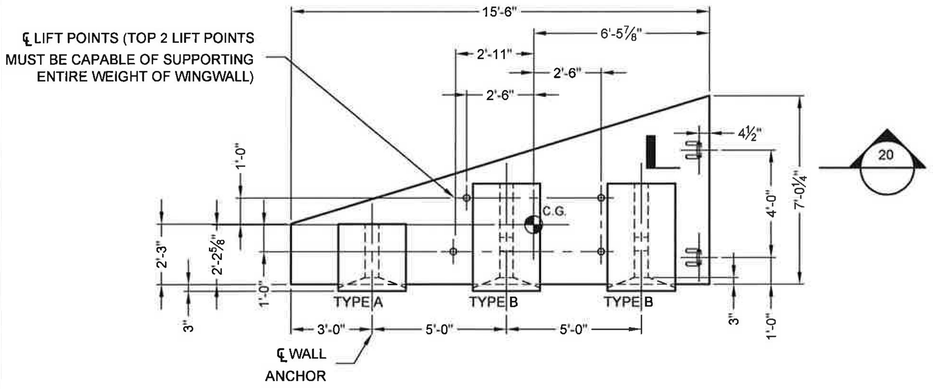

WINGWALL - WW4A

TOTAL WEIGHT = 6.5 TONS

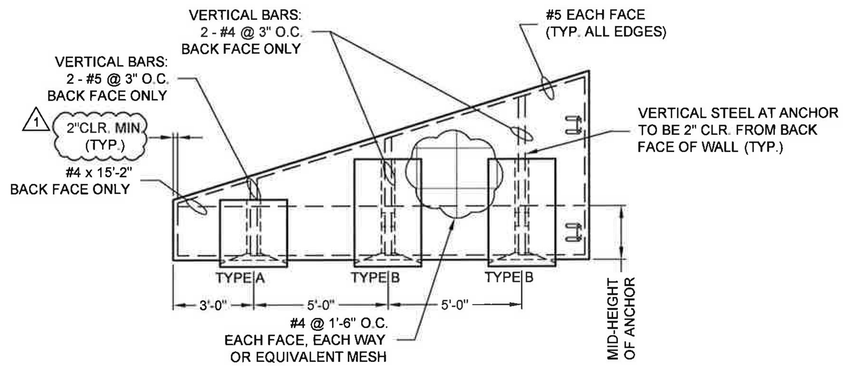

REINFORCING DETAIL - WW4A

(FOR ANCHOR REINFORCING SEE SHEET S16)

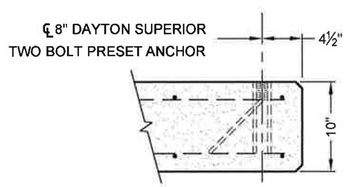

SECTION 20

The design and information shown on this drawing is provided as a service to the project owner, engineer and contractor by Contech Engineered Solutions LLC ("Contech"). Neither this drawing, nor any part thereof, may be used, reproduced or modified in any manner without the prior written consent of Contech. Failure to comply is done at the user's own risk and Contech expressly disclaims any liability or responsibility for such use.

If discrepancies between the supplied information upon which the drawing is based and actual field conditions are encountered as site work progresses, these discrepancies must be reported to Contech immediately for re-evaluation of the design. Contech accepts no liability for designs based on missing, incomplete or inaccurate information supplied by others.

MARK	DATE	REVISION DESCRIPTION	BY
2	4/14/2016	REVIEW COMMENTS	JDR
1	3/16/2016	REVISIONS PER REVIEW COMMENTS	KDK

CONTECH® ENGINEERED SOLUTIONS LLC
www.ContechES.com
9025 Centre Pointe Dr., Suite 400, West Chester, OH 45069
800-338-1122 513-645-7000 513-645-7993 FAX

CON/SPAN® O-SERIES®

FABRICATION DRAWING

US ROUTE 2
BRIDGE NO. 126
TOWN OF LUNENBURG
ESSEX COUNTY, VERMONT

PROJECT No.:	SEQ. No.:	DATE:
468920	010	12/8/2015
DESIGNED: KDK	DRAWN: TRL	
CHECKED: JDR	APPROVED: PAC	
SHEET NO.: S14 OF S22		

I:\MERLIN\PROJECTIACTIVE\468900\468920\468920-10-CON_SPAN_O_SERIES\DRAWINGS\FABRICATION\PRE-468920-010-CO-FAB-D.DWG 4/14/2016 11:20 AM

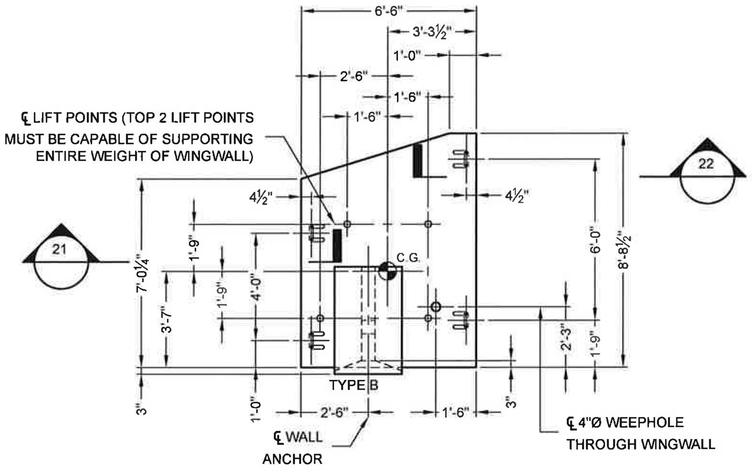

WINGWALL - WW4B

TOTAL WEIGHT = 4.0 TONS

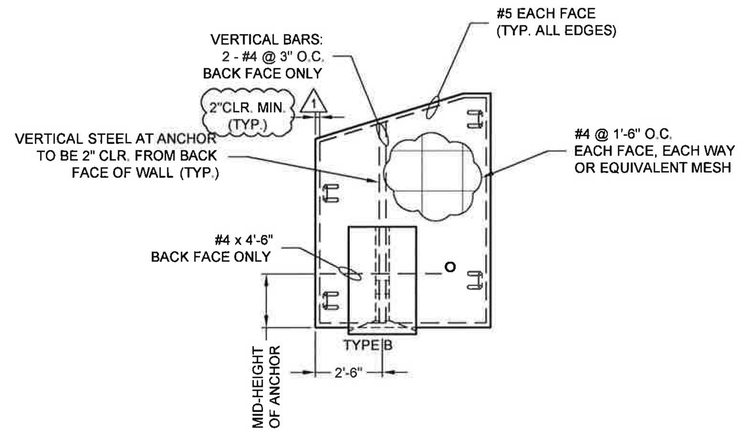

REINFORCING DETAIL - WW4B

(FOR ANCHOR REINFORCING SEE SHEET S16)

NOTES:
- ALL EDGES OF PRECAST TO HAVE A ¾" CHAMFER
- ELEVATION IS LOOKING AT BACK FACE OF WINGWALL
- BACK FACE DENOTES ANCHOR SIDE OF WINGWALL
- WINGWALL WILL NOT HANG LEVEL. ADJUST CABLE LENGTHS AS REQUIRED

WINGWALL		
CONCRETE	REINF. STEEL	WWF
28-DAY: 5000 PSI	60,000 PSI UNCOATED	65,000 PSI UNCOATED

WHEREVER THE REINFORCING IS CUT FOR THE PLACEMENT OF LIFT HOLES OR OTHER BLOCKOUTS, REINFORCING BARS OR WIRES OF EQUIVALENT CROSS-SECTIONAL AREA SHALL BE PLACED SYMMETRICALLY AROUND THE HOLE. AT LEAST ONE BAR MUST BE ON EACH SIDE OF THE HOLE, AND THE DEVELOPMENT LENGTH OF THE BAR MUST BE ACHIEVED ON EITHER SIDE OF THE CUT.

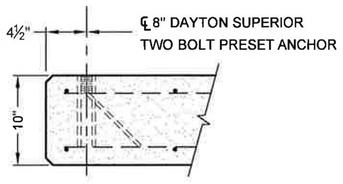

SECTION 21

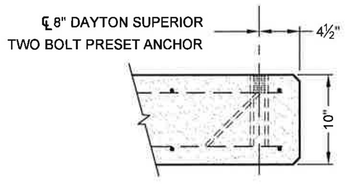

SECTION 22

The design and information shown on this drawing is provided as a service to the project owner, engineer and contractor by Contech Engineered Solutions LLC ("Contech"). Neither this drawing, nor any part thereof, may be used, reproduced or modified in any manner without the prior written consent of Contech. Failure to comply is done at the user's own risk and Contech expressly disclaims any liability or responsibility for such use.

If discrepancies between the supplied information upon which the drawing is based and actual field conditions are encountered as site work progresses, these discrepancies must be reported to Contech immediately for re-evaluation of the design. Contech accepts no liability for designs based on missing, incomplete or inaccurate information supplied by others.

MARK	DATE	REVISION DESCRIPTION	BY
2	4/14/2016	REVIEW COMMENTS	JDR
1	3/16/2016	REVISIONS PER REVIEW COMMENTS	KDK

CONTECH® ENGINEERED SOLUTIONS LLC
www.ContechES.com
9025 Centre Pointe Dr., Suite 400, West Chester, OH 45069
800-338-1122 513-645-7000 513-645-7993 FAX

CON-SPAN® O-SERIES

FABRICATION DRAWING

US ROUTE 2
BRIDGE NO. 126
TOWN OF LUNENBURG
ESSEX COUNTY, VERMONT

PROJECT No.:	SEQ. No.:	DATE:
468920	010	12/8/2015
DESIGNED: KDK		DRAWN: TRL
CHECKED: JDR		APPROVED: PAC
SHEET NO.: S15 OF S22		

I:\MERLIN\PROJECTIACTIVE\468900\468920\468920-10-CON_SPAN_O_SERIES\DRAWING\SIF\FABRICATION\PRE-468920-010-CO-FAB-D.DWG 4/14/2016 11:20 AM

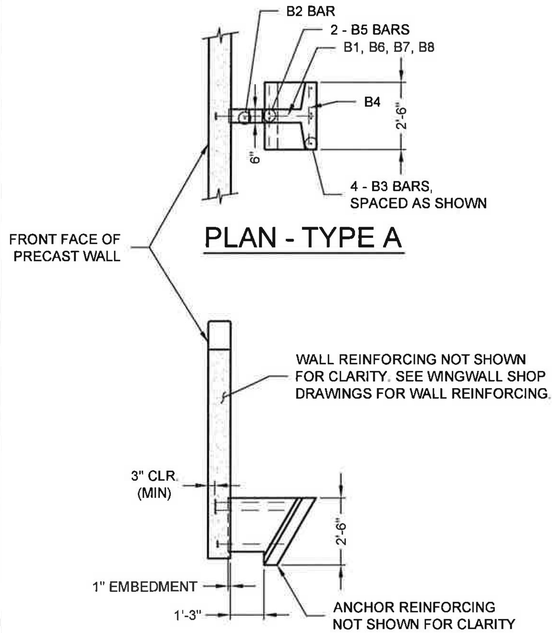

PLAN - TYPE A

SECTION - TYPE A

1 10" THICK WINGWALL

BAR LIST - TYPE A						
MARK	QTY.	SIZE	A	TYPE	LENGTH	FINISH
B1	3	#6	3'-0"	3	——	EPOXY*
B2	1	#5	——	STR.	1'-8"	BLACK
B3	4	#5	——	STR.	2'-6"	BLACK
B4	6	#5	——	STR.	2'-2"	BLACK
B5	2	#5	2'-2"	2	——	BLACK
B6	1	#5	2'-2"	1	——	BLACK
B7	1	#5	2'-6"	1	——	BLACK
B8	1	#5	2'-9"	1	——	BLACK

NOTE: "STR." DENOTES STRAIGHT
BAR. STANDARD CLEARANCE = 2"

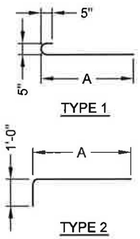

*NOTE: HRC HEADS PROVIDED BY
HEADED REINFORCEMENT CORP.

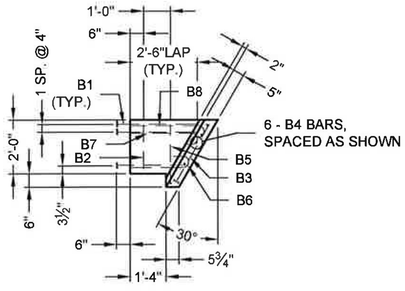

PRECAST ANCHOR
TYPE A

TOTAL WEIGHT = .428 TONS

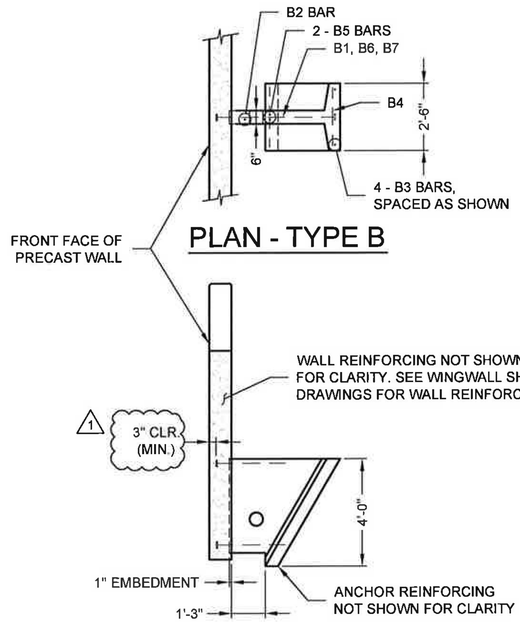

PLAN - TYPE B

SECTION - TYPE B

1 10" THICK WINGWALL

BAR LIST - TYPE B						
MARK	QTY.	SIZE	A	TYPE	LENGTH	FINISH
B1	2	#6	3'-0"	3	——	EPOXY*
B2	1	#5	——	STR.	3'-2"	BLACK
B3	4	#5	——	STR.	4'-3"	BLACK
B4	7	#5	——	STR.	2'-2"	BLACK
B5	2	#5	3'-8"	2	——	BLACK
B6	1	#5	2'-2"	1	——	BLACK
B7	1	#5	3'-7"	1	——	BLACK

NOTE: "STR." DENOTES STRAIGHT
BAR. STANDARD CLEARANCE = 2"

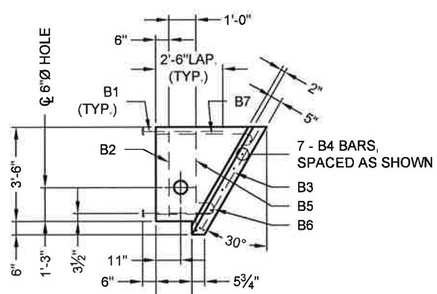

PRECAST ANCHOR
TYPE B

TOTAL WEIGHT = .765 TONS

The design and information shown on this drawing is provided as a service to the project owner, engineer and contractor by Contech Engineered Solutions LLC ("Contech"). Neither this drawing, nor any part thereof, may be used, reproduced or modified in any manner without the prior written consent of Contech. Failure to comply is done at the user's own risk and Contech expressly disclaims any liability or responsibility for such use.

If discrepancies between the supplied information upon which the drawing is based and actual field conditions are encountered as site work progresses, those discrepancies must be reported to Contech immediately for re-evaluation of the design. Contech accepts no liability for designs based on missing, incomplete or inaccurate information supplied by others.

MARK	DATE	REVISION DESCRIPTION	BY
2	4/14/2016	REVIEW COMMENTS	JDR
1	3/16/2016	REVISIONS PER REVIEW COMMENTS	KDK

CONTECH®
ENGINEERED SOLUTIONS LLC
www.ContechES.com
9025 Centre Pointe Dr., Suite 400, West Chester, OH 45069
800-338-1122 513-645-7000 513-645-7993 FAX

CON-SPAN® O-SERIES

FABRICATION
DRAWING

US ROUTE 2
BRIDGE NO. 126
TOWN OF LUNENBURG
ESSEX COUNTY, VERMONT

PROJECT No.:	SEQ. No.:	DATE:
468920	010	12/8/2015
DESIGNED: KDK		DRAWN: TRL
CHECKED: JDR		APPROVED: PAC
SHEET NO.: S16 OF S22		

I:\MERLIN\PROJECT\ACTIVE\468900\468920\468920-10-CON_SPAN_O_SERIES\SUDRAWINGS\FABRICATION\PRE-468920-010-CO-FAB-D.DWG 4/14/2016 11:20 AM

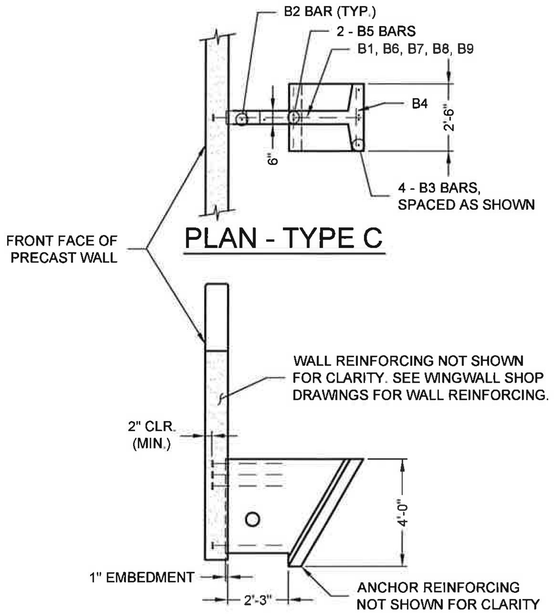

PLAN - TYPE C

SECTION - TYPE C

1 10" THICK WINGWALL

BAR LIST - TYPE C						
MARK	QTY.	SIZE	A	TYPE	LENGTH	FINISH
B1	4	#6	3'-0"	3	——	EPOXY*
B2	2	#5	——	STR.	3'-2"	BLACK
B3	4	#5	——	STR.	4'-3"	BLACK
B4	7	#5	——	STR.	2'-2"	BLACK
B5	2	#5	3'-8"	2	——	BLACK
B6	1	#5	3'-2"	1	——	BLACK
B7	1	#5	4'-2"	1	——	BLACK
B8	1	#5	4'-5"	1	——	BLACK
B9	1	#5	4'-8"	1	——	BLACK

NOTE: "STR." DENOTES STRAIGHT
BAR. STANDARD CLEARANCE = 2"

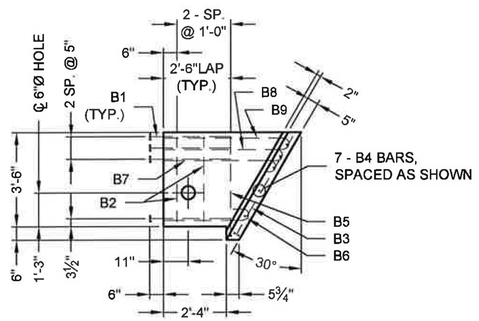

PRECAST ANCHOR TYPE C

TOTAL WEIGHT = .896 TONS

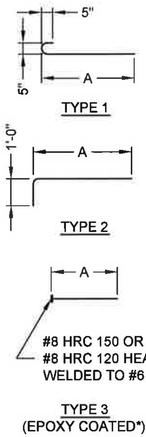

*NOTE: HRC HEADS PROVIDED BY
HEADED REINFORCEMENT CORP.

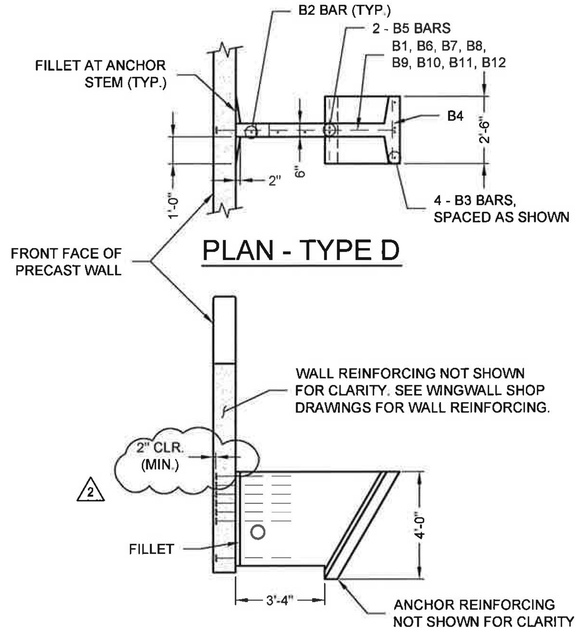

PLAN - TYPE D

SECTION - TYPE D

10" THICK WINGWALL WW2B

BAR LIST - TYPE D						
MARK	QTY.	SIZE	A	TYPE	LENGTH	FINISH
B1	7	#6	3'-0"	3	——	EPOXY*
B2	3	#5	——	STR.	3'-2"	BLACK
B3	4	#5	——	STR.	4'-3"	BLACK
B4	9	#5	——	STR.	2'-2"	BLACK
B5	2	#5	3'-8"	2	——	BLACK
B6	1	#5	4'-2"	1	——	BLACK
B7	1	#5	4'-8"	1	——	BLACK
B8	1	#5	4'-10"	1	——	BLACK
B9	1	#5	5'-1"	1	——	BLACK
B10	1	#5	5'-3"	1	——	BLACK
B11	1	#5	5'-5"	1	——	BLACK
B12	1	#5	5'-8"	1	——	BLACK

NOTE: "STR." DENOTES STRAIGHT
BAR. STANDARD CLEARANCE = 2"

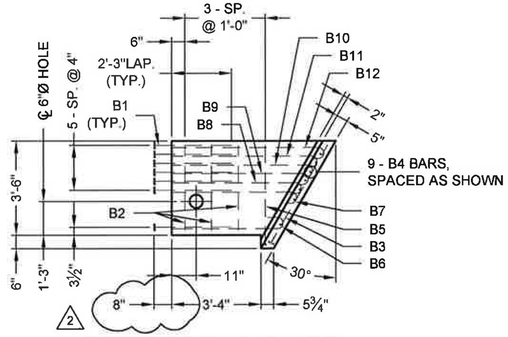

PRECAST ANCHOR TYPE D

TOTAL WEIGHT = 1.028 TONS

The design and information shown on this drawing is provided as a service to the project owner, engineer and contractor by Contech Engineered Solutions LLC ("Contech"). Neither this drawing, nor any part thereof, may be used, reproduced or modified in any manner without the prior written consent of Contech. Failure to comply is done at the user's own risk and Contech expressly disclaims any liability or responsibility for such use.

If discrepancies between the supplied information upon which the drawing is based and actual field conditions are encountered as site work progresses, these discrepancies must be reported to Contech immediately for re-evaluation of the design. Contech accepts no liability for designs based on missing, incomplete or inaccurate information supplied by others.

MARK	DATE	REVISION DESCRIPTION	BY
2	4/14/2016	REVIEW COMMENTS	JDR
1	3/16/2016	REVISIONS PER REVIEW COMMENTS	KDK

CONTECH®
ENGINEERED SOLUTIONS LLC
www.ContechES.com
9025 Centre Pointe Dr., Suite 400, West Chester, OH 45069
800-338-1122 513-645-7000 513-645-7993 FAX

CON/SPAN® SERIES

FABRICATION
DRAWING

US ROUTE 2
BRIDGE NO. 126
TOWN OF LUNENBURG
ESSEX COUNTY, VERMONT

PROJECT No.:	SEQ. No.:	DATE:
468920	010	12/8/2015
DESIGNED: KDK		DRAWN: TRL
CHECKED: JDR		APPROVED: PAC
SHEET NO.: S17 OF S22		

I:\MEB_INPROJECT\ACTIVE\468900\468920\468920-10-CON_SPAN_O_SERIES\DRAWINGS\FABRICATION\PRE-468920-010-CO-FAB-D.DWG 4/14/2016 11:21 AM

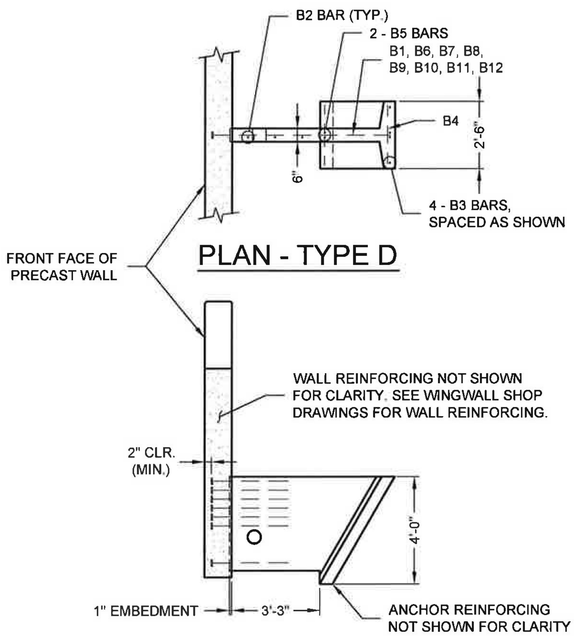

PLAN - TYPE D

SECTION - TYPE D

12" THICK WINGWALL WW3A

BAR LIST - TYPE D						
MARK	QTY.	SIZE	A	TYPE	LENGTH	FINISH
B1	7	#6	3'-0"	3	——	EPOXY*
B2	3	#5	——	STR.	3'-2"	BLACK
B3	4	#5	——	STR.	4'-3"	BLACK
B4	9	#5	——	STR.	2'-2"	BLACK
B5	2	#5	3'-8"	2	——	BLACK
B6	1	#5	4'-2"	1	——	BLACK
B7	1	#5	4'-8"	1	——	BLACK
B8	1	#5	4'-10"	1	——	BLACK
B9	1	#5	5'-1"	1	——	BLACK
B10	1	#5	5'-3"	1	——	BLACK
B11	1	#5	5'-5"	1	——	BLACK
B12	1	#5	5'-8"	1	——	BLACK

NOTE: "STR." DENOTES STRAIGHT BAR. STANDARD CLEARANCE = 2"

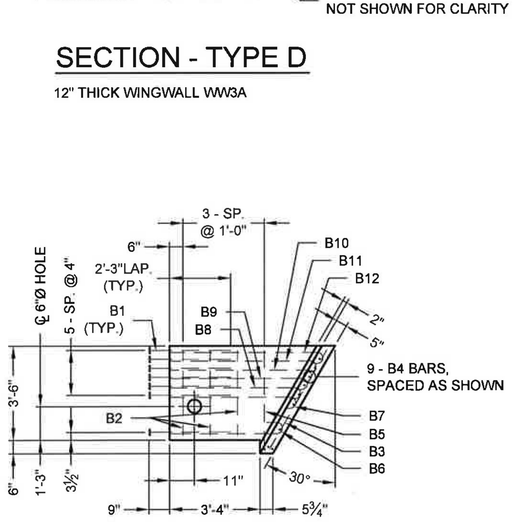

PRECAST ANCHOR TYPE D

TOTAL WEIGHT = 1.028 TONS

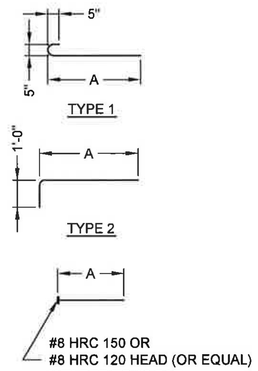

*NOTE: HRC HEADS PROVIDED BY HEADED REINFORCEMENT CORP.

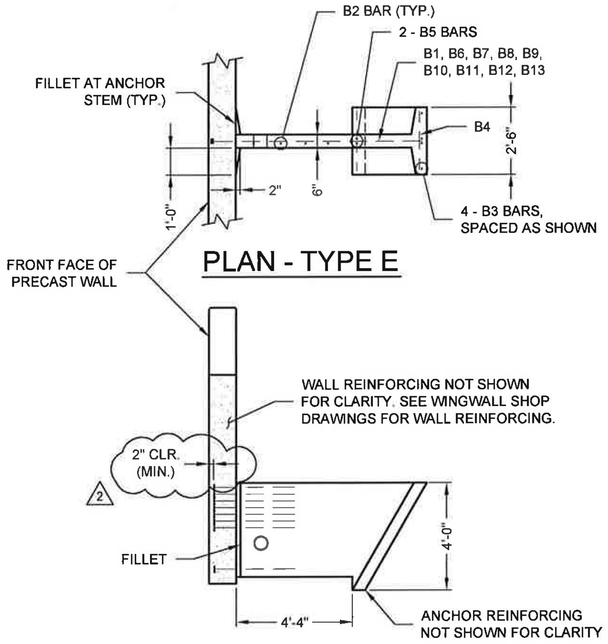

PLAN - TYPE E

SECTION - TYPE E

1 12" THICK WINGWALL

BAR LIST - TYPE E						
MARK	QTY.	SIZE	A	TYPE	LENGTH	FINISH
B1	8	#6	3'-0"	3	——	EPOXY*
B2	4	#5	——	STR.	3'-2"	BLACK
B3	4	#5	——	STR.	4'-3"	BLACK
B4	11	#5	——	STR.	2'-2"	BLACK
B5	2	#5	3'-8"	2	——	BLACK
B6	1	#5	5'-2"	1	——	BLACK
B7	1	#5	5'-9"	1	——	BLACK
B8	1	#5	5'-11"	1	——	BLACK
B9	1	#5	6'-1"	1	——	BLACK
B10	1	#5	6'-3"	1	——	BLACK
B11	1	#5	6'-5"	1	——	BLACK
B12	1	#5	6'-6"	1	——	BLACK
B13	1	#5	6'-8"	1	——	BLACK

NOTE: "STR." DENOTES STRAIGHT BAR. STANDARD CLEARANCE = 2"

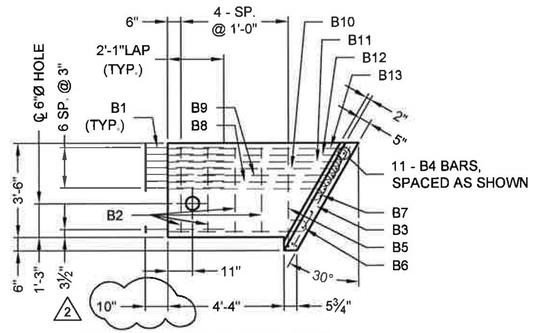

PRECAST ANCHOR TYPE E

TOTAL WEIGHT = 1.159 TONS

The design and information shown on this drawing is provided as a service to the project owner, engineer and contractor by Contech Engineered Solutions LLC ("Contech"). Neither this drawing, nor any part thereof, may be used, reproduced or modified in any manner without the prior written consent of Contech. Failure to comply is done at the user's own risk and Contech expressly disclaims any liability or responsibility for such use.

If discrepancies between the supplied information upon which the drawing is based and actual field conditions are encountered as site work progresses, these discrepancies must be reported to Contech immediately for re-evaluation of the design. Contech accepts no liability for designs based on missing, incomplete or inaccurate information supplied by others.

MARK	DATE	REVISION DESCRIPTION	BY
2	4/14/2016	REVIEW COMMENTS	JDR
1	3/16/2016	REVISIONS PER REVIEW COMMENTS	KDK

CONTECH® ENGINEERED SOLUTIONS LLC
www.ContechES.com
9025 Centre Pointe Dr., Suite 400, West Chester, OH 45069
800-338-1122 513-645-7000 513-645-7993 FAX

CON/SPAN® O-SERIES®

FABRICATION DRAWING

US ROUTE 2
BRIDGE NO. 126
TOWN OF LUNENBURG
ESSEX COUNTY, VERMONT

PROJECT No.:	SEQ. No.:	DATE:
468920	010	12/8/2015
DESIGNED: KDK		DRAWN: TRL
CHECKED: JDR		APPROVED: PAC
SHEET NO.: S18 OF S22		

I:\MERLIN\PROJECTVAULT\WEB900\468920\468920-10-CON_SPAN_O_SERIES\DRAWINGS\FABRICATION\PRE-468920-010-CO-FAB-D.DWG 4/14/2016 11:21 AM

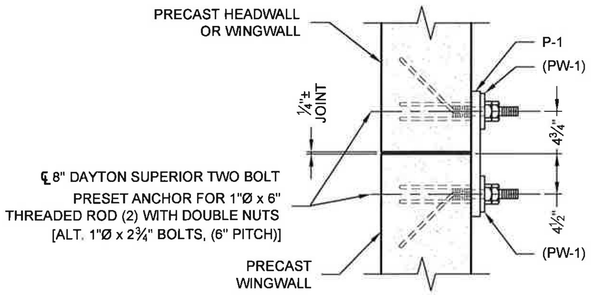

PLAN VIEW

TYPICAL CONNECTION DETAIL - P-1

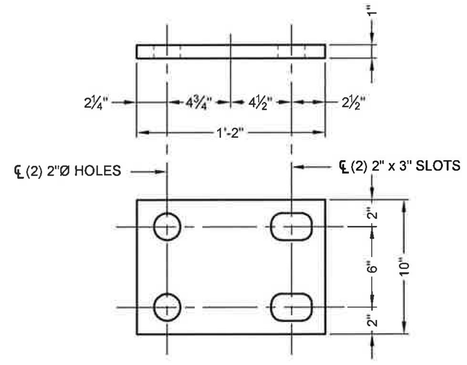

P-1

(℄ PL, 1" x 14" x 10")
(GALVANIZED AS PER ASTM A123)

PLATE P-1
TOTAL REQUIRED = 10 (4) PW-1 REQ'D. PER PLATE

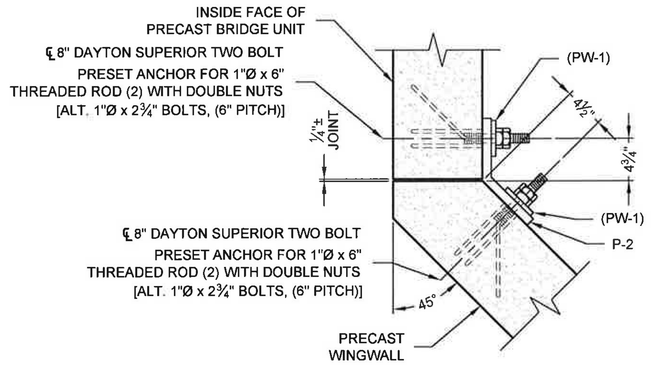

PLAN VIEW

TYPICAL CONNECTION DETAIL - P-2

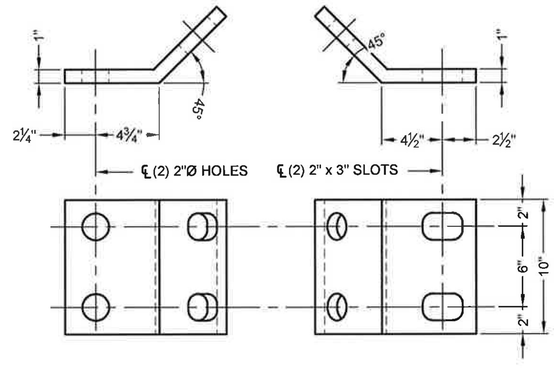

UNIT LEG WINGWALL LEG

P-2

(℄ PL, 1" x 14" x 10")
(GALVANIZED AS PER ASTM A123)

PLATE P-2
TOTAL REQUIRED = 4 (4) PW-1 REQ'D. PER PLATE

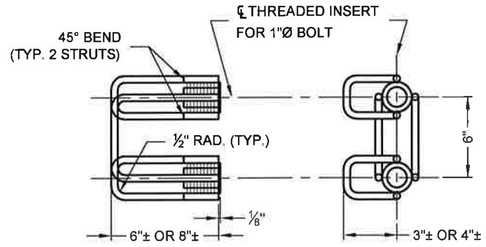

DAYTON SUPERIOR
TWO BOLT PRESET ANCHOR

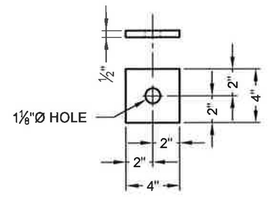

PW-1

(℄ WASHER, ½" x 4" x 4")
(GALVANIZED AS PER ASTM A123)

The design and information shown on this drawing is provided as a service to the project owner, engineer and contractor by Contech Engineered Solutions LLC ("Contech"). Neither this drawing, nor any part thereof, may be used, reproduced or modified in any manner without the prior written consent of Contech. Failure to comply is done at the user's own risk and Contech expressly disclaims any liability or responsibility for such use.

If discrepancies between the supplied information upon which the drawing is based and actual field conditions are encountered as site work progresses, these discrepancies must be reported to Contech immediately for re-evaluation of the design. Contech accepts no liability for designs based on missing, incomplete or inaccurate information supplied by others.

MARK	DATE	REVISION DESCRIPTION	BY
2	4/14/2016	REVIEW COMMENTS	JDR
1	3/16/2016	NO CHANGES THIS SHEET	KDK

CONTECH® ENGINEERED SOLUTIONS LLC
www.ContechES.com
9025 Centre Pointe Dr., Suite 400, West Chester, OH 45069
800-338-1122 513-645-7000 513-645-7993 FAX

CON-SPAN® O-SERIES
FABRICATION DRAWING

US ROUTE 2
BRIDGE NO. 126
TOWN OF LUNENBURG
ESSEX COUNTY, VERMONT

PROJECT No.:	SEQ. No.:	DATE:
468920	010	12/8/2015
DESIGNED: KDK		DRAWN: TRL
CHECKED: JDR		APPROVED: PAC
SHEET NO.: S19 OF S22		

I:\MERLIN\PROJECTACTIVE\468920\468920-10-CON_SPAN_O_SERIES\DRAWINGS\FABRICATION\PRE-468920-010-CO-FAB-D.DWG 4/14/2016 11:21 AM

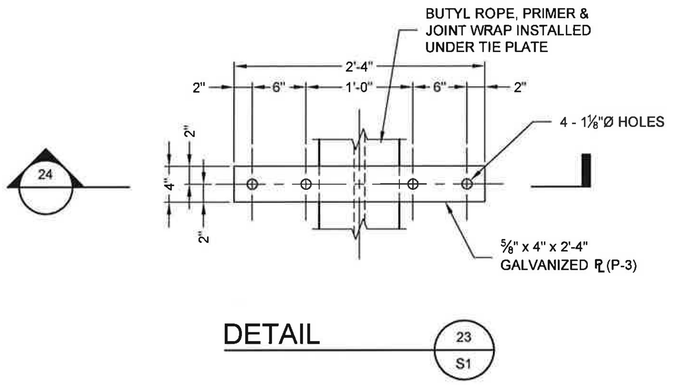

DETAIL 23 / S1

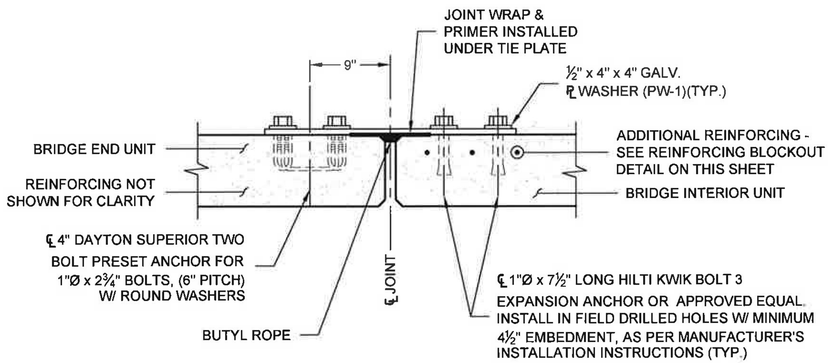

SECTION 24

PLATE P-3
TOTAL REQUIRED = 4 (4) PW-1 REQ'D. PER PLATE

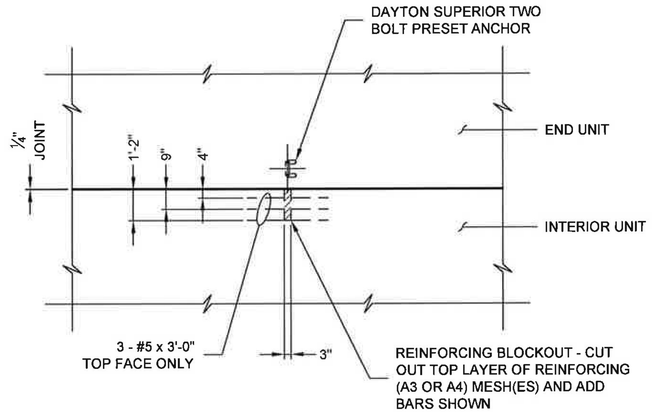

REINFORCING BLOCKOUT DETAIL

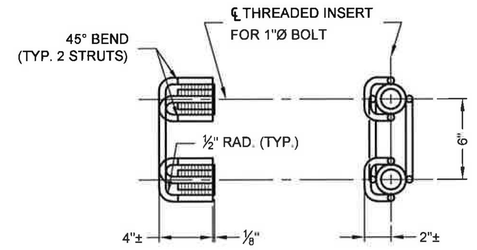

SIDE VIEW FRONT VIEW

DAYTON SUPERIOR TWO BOLT PRESET ANCHOR

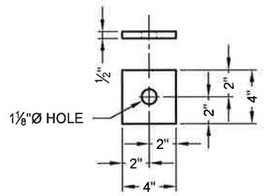

PW-1

(℄ WASHER, ½" x 4" x 4")
(GALVANIZED AS PER ASTM A123)

The design and information shown on this drawing is provided as a service to the project owner, engineer and contractor by Contech Engineered Solutions LLC ("Contech"). Neither this drawing, nor any part thereof, may be used, reproduced or modified in any manner without the prior written consent of Contech. Failure to comply is done at the user's own risk and Contech expressly disclaims any liability or responsibility for such use.

If discrepancies between the supplied information upon which the drawing is based and actual field conditions are encountered as site work progresses, these discrepancies must be reported to Contech immediately for re-evaluation of the design. Contech accepts no liability for designs based on missing, incomplete or inaccurate information supplied by others.

MARK	DATE	REVISION DESCRIPTION	BY
2	4/14/2016	REVIEW COMMENTS	JDR
1	3/16/2016	NO CHANGES THIS SHEET	KDK

CONTECH® ENGINEERED SOLUTIONS LLC
www.ContechES.com
9025 Centre Pointe Dr., Suite 400, West Chester, OH 45069
800-338-1122 513-645-7000 513-645-7993 FAX

CON/SPAN® O-SERIES®
FABRICATION DRAWING

US ROUTE 2
BRIDGE NO. 126
TOWN OF LUNENBURG
ESSEX COUNTY, VERMONT

PROJECT No.:	SEQ. No.:	DATE:
468920	010	12/8/2015
DESIGNED: KDK		DRAWN: TRL
CHECKED: JDR		APPROVED: PAC
SHEET NO.: S20 OF S22		

I:\MERLIN\PROJECTACTIVE\468900\468920\468920-10-CON_SPAN_O_SERIES\DRAWINGS\FABRICATION\PRE-468920-010-CO-FAB-D.DWG 4/14/2016 11:21 AM

SPECIFICATIONS FOR MANUFACTURE AND INSTALLATION OF CON/SPAN® O-SERIES BRIDGE SYSTEMS

1. DESCRIPTION
   1.1. TYPE - THIS WORK SHALL CONSIST OF FURNISHING AND CONSTRUCTING A CON/SPAN® O-SERIES BRIDGE SYSTEM IN ACCORDANCE WITH THESE SPECIFICATIONS AND THE VERMONT AGENCY OF TRANSPORTATION SPECIFICATIONS AND IN REASONABLY CLOSE CONFORMITY WITH THE LINES, GRADES, DESIGN AND DIMENSIONS SHOWN ON THE PLANS OR AS ESTABLISHED BY THE ENGINEER. IN SITUATIONS WHERE TWO OR MORE SPECIFICATIONS APPLY TO THIS WORK, THE MOST STRINGENT REQUIREMENTS SHALL GOVERN. (1)
   1.2. DESIGNATION - PRECAST REINFORCED CONCRETE CON/SPAN® O-SERIES BRIDGE UNITS MANUFACTURED IN ACCORDANCE WITH THIS SPECIFICATION SHALL BE DESIGNATED BY SPAN AND RISE. PRECAST REINFORCED CONCRETE WINGWALLS AND HEADWALLS MANUFACTURED IN ACCORDANCE WITH THIS SPECIFICATION SHALL BE DESIGNATED BY LENGTH, HEIGHT, AND DEFLECTION ANGLE. PRECAST REINFORCED CONCRETE EXPRESS™ FOUNDATION UNITS MANUFACTURED IN ACCORDANCE WITH THIS SPECIFICATION SHALL BE DESIGNATED BY LENGTH, HEIGHT AND WIDTH.

2. DESIGN
   2.1. SPECIFICATIONS - THE PRECAST ELEMENTS ARE DESIGNED IN ACCORDANCE WITH THE "AASHTO LRFD BRIDGE SPECIFICATION" 6TH EDITION, ADOPTED BY THE AMERICAN ASSOCIATION OF STATE HIGHWAY AND TRANSPORTATION OFFICIALS, 2012. A MINIMUM OF ONE FOOT OF COVER ABOVE THE CROWN OF THE BRIDGE UNITS IS REQUIRED IN THE INSTALLED CONDITION. (UNLESS NOTED OTHERWISE ON THE SHOP DRAWINGS AND DESIGNED ACCORDINGLY.)

3. MATERIALS
   3.1. CONCRETE - THE CONCRETE FOR THE PRECAST ELEMENTS SHALL BE AIR-ENTRAINED WHEN INSTALLED IN AREAS SUBJECT TO FREEZE-THAW CONDITIONS, COMPOSED OF PORTLAND CEMENT, FINE AND COARSE AGGREGATES, ADMIXTURES AND WATER. AIR-ENTRAINED CONCRETE SHALL CONTAIN 6 ± 2 PERCENT AIR. THE AIR- ENTRAINING ADMIXTURE SHALL CONFORM TO AASHT0 M154. THE MINIMUM CONCRETE COMPRESSIVE STRENGTH SHALL BE AS SHOWN ON THE SHOP DRAWINGS.
      3.1.1. PORTLAND CEMENT - SHALL CONFORM TO THE REQUIREMENTS OF ASTM SPECIFICATIONS C150-TYPE I, TYPE II, OR TYPE III CEMENT.
      3.1.2. COARSE AGGREGATE - SHALL CONSIST OF STONE HAVING A MAXIMUM SIZE OF 1 INCH. AGGREGATE SHALL MEET REQUIREMENTS FOR ASTM C33.
      3.1.3. WATER REDUCING ADMIXTURE - THE MANUFACTURER MAY SUBMIT, FOR APPROVAL BY THE ENGINEER, A WATER-REDUCING ADMIXTURE FOR THE PURPOSE OF INCREASING WORKABILITY AND REDUCING THE WATER REQUIREMENT FOR THE CONCRETE.
      3.1.4. CALCIUM CHLORIDE - THE ADDITION TO THE MIX OF CALCIUM CHLORIDE OR ADMIXTURES CONTAINING CALCIUM CHLORIDE WILL NOT BE PERMITTED.
      3.1.5. MIXTURE - THE AGGREGATES, CEMENT AND WATER SHALL BE PROPORTIONED AND MIXED IN A BATCH MIXER TO PRODUCE A HOMOGENEOUS CONCRETE MEETING THE STRENGTH REQUIREMENTS OF THIS SPECIFICATION. THE PROPORTION OF PORTLAND CEMENT IN THE MIXTURE SHALL NOT BE LESS THAN 564 POUNDS (6 SACKS) PER CUBIC YARD OF CONCRETE.
   3.2. STEEL REINFORCEMENT
      3.2.1. THE MINIMUM STEEL YIELD STRENGTH SHALL BE 60,000 PSI, UNLESS OTHERWISE NOTED ON THE SHOP DRAWINGS.
      3.2.2. ALL REINFORCING STEEL FOR THE PRECAST ELEMENTS SHALL BE FABRICATED AND PLACED IN ACCORDANCE WITH THE DETAILED SHOP DRAWINGS SUBMITTED BY THE MANUFACTURER.
      3.2.3. REINFORCEMENT SHALL CONSIST OF WELDED WIRE REINFORCING CONFORMING TO ASTM SPECIFICATION A 1064, OR DEFORMED BILLET STEEL BARS CONFORMING TO ASTM SPECIFICATION A 615, GRADE 60. LONGITUDINAL DISTRIBUTION REINFORCEMENT MAY CONSIST OF WELDED WIRE FABRIC OR DEFORMED BILLET-STEEL BARS.
   3.3. STEEL HARDWARE
      3.3.1. BOLTS AND THREADED RODS FOR WINGWALL CONNECTIONS SHALL CONFORM TO ASTM A 307. NUTS SHALL CONFORM TO AASHTO M292 (ASTM A194) GRADE 2H. ALL BOLTS, THREADED RODS AND NUTS USED IN WINGWALL CONNECTIONS SHALL BE MECHANICALLY ZINC COATED IN ACCORDANCE WITH ASTM B695 CLASS 50.
      3.3.2. STRUCTURAL STEEL FOR WINGWALL CONNECTION PLATES AND PLATE WASHERS SHALL CONFORM TO AASHTO M 270 (ASTM A 709) GRADE 36 AND SHALL BE HOT DIP GALVANIZED AS PER AASHTO M111 (ASTM A123).
      3.3.3. INSERTS FOR WINGWALLS SHALL BE 1" DIAMETER TWO-BOLT PRESET WINGWALL ANCHORS AS MANUFACTURED BY DAYTON SUPERIOR CONCRETE ACCESSORIES, MIAMISBURG, OHIO, (800) 745-3700 AND SHALL BE MECHANICALLY ZINC COATED IN ACCORDANCE WITH ASTM B695 CLASS 50.
      3.3.4. FERRULE LOOP INSERTS SHALL BE F-64 FERRULE LOOP INSERTS AS MANUFACTURED BY DAYTON SUPERIOR CONCRETE ACCESSORIES, MIAMISBURG, OHIO, (800) 745-3700.
      3.3.5. HOOK BOLTS USED IN ATTACHED HEADWALL CONNECTIONS SHALL BE ASTM A307.
      3.3.6. INSERTS FOR DETACHED HEADWALL CONNECTIONS SHALL BE AISI TYPE 304 STAINLESS STEEL, EXPANDED COIL INSERTS AS MANUFACTURED BY DAYTON SUPERIOR CONCRETE ACCESSORIES, MIAMISBURG, OHIO, (800) 745-3700. COIL RODS AND NUTS USED IN HEADWALL CONNECTIONS SHALL BE AISI TYPE 304 STAINLESS STEEL. WASHERS USED IN HEADWALL CONNECTIONS SHALL BE EITHER AISI TYPE 304 STAINLESS STEEL PLATE WASHERS OR AASHTO M270 (ASTM A709) GRADE 36 PLATE WASHERS HOT DIP GALVANIZED AS PER AASHTO M111 (ASTM A123).
      3.3.7. MECHANICAL SPLICES OF REINFORCING BARS SHALL BE MADE USING THE DOWEL BAR SPLICER SYSTEM AS MANUFACTURED BY DAYTON SUPERIOR CONCRETE ACCESSORIES, MIAMISBURG, OHIO, (800) 745-3700, AND SHALL CONSIST OF THE DOWEL BAR SPLICER (DB-SAE) AND DOWEL-IN (DI).

4. MANUFACTURE OF PRECAST ELEMENTS - SUBJECT TO THE PROVISIONS OF SECTION 5, BELOW, THE PRECAST ELEMENT DIMENSION AND REINFORCEMENT DETAILS SHALL BE AS PRESCRIBED IN THE PLAN AND SHOP DRAWINGS PROVIDED BY THE MANUFACTURER.
   4.1. FORMS - THE FORMS USED IN MANUFACTURE SHALL BE SUFFICIENTLY RIGID AND ACCURATE TO MAINTAIN THE REQUIRED PRECAST ELEMENT DIMENSIONS WITHIN THE PERMISSIBLE VARIATIONS GIVEN IN SECTION 5 OF THESE SPECIFICATIONS. ALL CASTING SURFACES SHALL BE OF A SMOOTH MATERIAL.
   4.2. PLACEMENT OF REINFORCEMENT
      4.2.1. PLACEMENT OF REINFORCEMENT IN PRECAST BRIDGE UNITS - THE COVER OF CONCRETE OVER THE OUTSIDE CIRCUMFERENTIAL REINFORCEMENT SHALL BE 2" MINIMUM. THE COVER OF CONCRETE OVER THE INSIDE CIRCUMFERENTIAL REINFORCEMENT SHALL BE 1½" MINIMUM, UNLESS OTHERWISE NOTED ON THE SHOP DRAWINGS. THE CLEAR DISTANCE OF THE END CIRCUMFERENTIAL WIRES SHALL NOT BE LESS THAN 1" NOR MORE THAN 2" FROM THE ENDS OF EACH SECTION. REINFORCEMENT SHALL BE ASSEMBLED UTILIZING SINGLE OR MULTIPLE LAYERS OF WELDED WIRE FABRIC (NOT TO EXCEED 3 LAYERS), SUPPLEMENTED WITH A SINGLE LAYER OF DEFORMED BILLET-STEEL BARS, WHEN NECESSARY. WELDED WIRE FABRIC SHALL BE COMPOSED OF CIRCUMFERENTIAL AND LONGITUDINAL WIRES MEETING THE SPACING REQUIREMENTS OF 4.3, BELOW, AND SHALL CONTAIN SUFFICIENT LONGITUDINAL WIRES EXTENDING THROUGH THE BRIDGE UNIT TO MAINTAIN THE SHAPE AND POSITION OF THE REINFORCEMENT. LONGITUDINAL DISTRIBUTION REINFORCEMENT MAY BE WELDED WIRE FABRIC OR DEFORMED BILLET-STEEL BARS AND SHALL MEET THE SPACING REQUIREMENTS OF 4.3, BELOW. THE ENDS OF THE LONGITUDINAL DISTRIBUTION REINFORCEMENT SHALL BE NOT MORE THAN 3" AND NOT LESS THAN 1½" FROM THE ENDS OF THE BRIDGE UNIT.
      4.2.2. BENDING OF REINFORCEMENT FOR PRECAST BRIDGE UNITS - THE OUTSIDE AND INSIDE CIRCUMFERENTIAL REINFORCING STEEL FOR THE CORNERS OF THE BRIDGE SHALL BE BENT TO SUCH AN ANGLE THAT IS APPROXIMATELY EQUAL TO THE CONFIGURATION OF THE BRIDGE'S OUTSIDE CORNER.
      4.2.3. PLACEMENT OF REINFORCEMENT FOR PRECAST WINGWALLS AND HEADWALLS - THE COVER OF CONCRETE OVER THE LONGITUDINAL AND TRANSVERSE REINFORCEMENT SHALL BE 2" MINIMUM. THE CLEAR DISTANCE FROM THE END OF EACH PRECAST ELEMENT TO THE END OF REINFORCING STEEL SHALL NOT BE LESS THAN 1½" NOR MORE THAN 3". REINFORCEMENT SHALL BE ASSEMBLED UTILIZING A SINGLE LAYER OF WELDED WIRE FABRIC, OR A SINGLE LAYER OF DEFORMED BILLET-STEEL BARS. WELDED WIRE FABRIC SHALL BE COMPOSED OF TRANSVERSE AND LONGITUDINAL WIRES MEETING THE SPACING REQUIREMENTS OF 4.3, BELOW, AND SHALL CONTAIN SUFFICIENT LONGITUDINAL WIRES EXTENDING THROUGH THE ELEMENT TO MAINTAIN THE SHAPE AND POSITION OF THE REINFORCEMENT. LONGITUDINAL REINFORCEMENT MAY BE WELDED WIRE FABRIC OR DEFORMED BILLET-STEEL BARS AND SHALL MEET THE SPACING REQUIREMENTS OF 4.3, BELOW.
      4.2.4. PLACEMENT OF REINFORCMENT FOR PRECAST FOUNDATION UNITS - THE COVER OF CONCRETE OVER THE BOTTOM REINFORCEMENT SHALL BE 3 INCHES MINIMUM. THE COVER OF CONCRETE FOR ALL OTHER REINFORCEMENT SHALL BE 2 INCHES MINIMUM. THE CLEAR DISTANCE FROM THE END OF EACH PRECAST ELEMENT TO THE END OF REINFORCING STEEL SHALL NOT BE LESS THAN 2 INCHES NOR MORE THAN 3 INCHES. REINFORCEMENT SHALL BE ASSEMBLED UTILIZING A SINGLE LAYER OF WELDED WIRE FABRIC OR A SINGLE LAYER OF DEFOREMED BILLET-STEEL BARS. WELDED WIRE FABRIC SHALL BE COMPOSED OF TRANSVERSE AND LONGITUDINAL WIRES MEETING THE SPACING REQUIREMENTS OF 4.3, BELOW, AND SHALL CONTAIN SUFFICIENT LONGITUDINAL WIRES EXTENDING THROUGH THE ELEMENT TO MAINTAIN THE SHAPE AND POSITION OF THE REINFORCEMENT. LONGITUDINAL REINFORCEMENT MAY BE WELDED WIRE FABRIC OR DEFORMED BILLET-STEEL BARS AND SHALL MEET THE SPACING REQUIREMENTS OF 4.3, BELOW.
   4.3. LAPS, WELDS, SPACING
      4.3.1. LAPS, WELDS, AND SPACING FOR PRECAST BRIDGE UNITS - TENSION SPLICES IN THE CIRCUMFERENTIAL REINFORCEMENT SHALL BE MADE BY LAPPING. LAPS MAY BE TACK WELDED TOGETHER FOR ASSEMBLY PURPOSES. FOR SMOOTH WELDED WIRE FABRIC, THE OVERLAP SHALL MEET THE REQUIREMENTS OF AASHTO 5.11.2.5.2 AND 5.11.6.2. FOR DEFORMED WELDED WIRE FABRIC, THE OVERLAP SHALL MEET THE REQUIREMENTS OF AASHTO 5.11.2.5.1 AND 5.11.6.1. THE OVERLAP OF WELDED WIRE FABRIC SHALL BE MEASURED BETWEEN THE OUTER-MOST LONGITUDINAL WIRES OF EACH FABRIC SHEET. FOR DEFORMED BILLET-STEEL BARS, THE OVERLAP SHALL MEET THE REQUIREMENTS OF AASHTO 5.11.2.1 FOR SPLICES OTHER THAN TENSION SPLICES, THE OVERLAP SHALL BE A MINIMUM OF 1'-0" FOR WELDED WIRE FABRIC OR DEFORMED BILLET-STEEL BARS. THE SPACING CENTER TO CENTER OF THE CIRCUMFERENTIAL WIRES IN A WIRE FABRIC SHEET SHALL BE NOT LESS THAN 2" NOR MORE THAN 4". THE SPACING CENTER TO CENTER OF THE LONGITUDINAL WIRES SHALL NOT BE MORE THAN 8". THE SPACING CENTER TO CENTER OF THE LONGITUDINAL DISTRIBUTION STEEL FOR EITHER LINE OF REINFORCING IN THE TOP SLAB SHALL BE NOT MORE THAN 1'-4".
      4.3.2. LAPS, WELDS, AND SPACING FOR PRECAST WINGWALLS, HEADWALLS AND FOUNDATIONS - SPLICES IN THE REINFORCEMENT SHALL BE MADE BY LAPPING. LAPS MAY BE TACK WELDED TOGETHER FOR ASSEMBLY PURPOSES. FOR SMOOTH WELDED WIRE FABRIC, THE OVERLAP SHALL MEET THE REQUIREMENTS OF AASHTO 5.11.2.5.2 AND 5.11.6.2. FOR DEFORMED WELDED WIRE FABRIC, THE OVERLAP SHALL MEET THE REQUIREMENTS OF AASHTO 5.11.2.5.1 AND 5.11.6.1. FOR DEFORMED BILLET-STEEL BARS, THE OVERLAP SHALL MEET THE REQUIREMENTS OF AASHTO 5.11.2.1. THE SPACING CENTER-TO-CENTER OF THE WIRES IN A WIRE FABRIC SHEET SHALL BE NOT LESS THAN 2" NOR MORE THAN 8".
   4.4. CURING - THE PRECAST CONCRETE ELEMENTS SHALL BE CURED FOR A SUFFICIENT LENGTH OF TIME SO THAT THE CONCRETE WILL DEVELOP THE SPECIFIED COMPRESSIVE STRENGTH IN 28 DAYS OR LESS. ANY ONE OF THE FOLLOWING METHODS OF CURING OR COMBINATIONS THERE OF SHALL BE USED:
      4.4.1. STEAM CURING - THE PRECAST ELEMENTS MAY BE LOW-PRESSURE STEAM CURED BY A SYSTEM THAT WILL MAINTAIN A MOIST ATMOSPHERE.
      4.4.2. WATER CURING - THE PRECAST ELEMENTS MAY BE WATER CURED BY ANY METHOD THAT WILL KEEP THE SECTIONS MOIST.
      4.4.3. MEMBRANE CURING - A SEALING MEMBRANE CONFORMING TO THE REQUIREMENTS OF ASTM SPECIFICATION C309 MAY BE APPLIED AND SHALL BE LEFT INTACT UNTIL THE REQUIRED CONCRETE COMPRESSIVE STRENGTH IS ATTAINED. THE CONCRETE TEMPERATURE AT THE TIME OF APPLICATION SHALL BE WITHIN +/- 10 DEGREES F OF THE ATMOSPHERIC TEMPERATURE. ALL SURFACES SHALL BE KEPT MOIST PRIOR TO THE APPLICATION OF THE COMPOUNDS AND SHALL BE DAMP WHEN THE COMPOUND IS APPLIED.
   4.5. STORAGE, HANDLING & DELIVERY
      4.5.1. STORAGE - PRECAST CONCRETE BRIDGE ELEMENTS SHALL BE LIFTED AND STORED IN "AS-CAST" POSITION. PRECAST CONCRETE HEADWALL AND WINGWALL UNITS ARE CAST, STORED AND SHIPPED IN A FLAT POSITION. THE PRECAST ELEMENTS SHALL BE STORED IN SUCH A MANNER TO PREVENT CRACKING OR DAMAGE. STORE ELEMENTS USING TIMBER SUPPORTS AS APPROPRIATE. THE UNITS SHALL NOT BE MOVED UNTIL THE CONCRETE COMPRESSIVE STRENGTH HAS REACHED A MINIMUM OF 2500 PSI, AND THEY SHALL NOT BE STORED IN AN UPRIGHT POSITION.
      4.5.2. HANDLING - HANDLING DEVICES SHALL BE PERMITTED IN EACH PRECAST ELEMENT FOR THE PURPOSE OF HANDLING AND SETTING. SPREADER BEAMS MAY BE REQUIRED FOR THE LIFTING OF PRECAST CONCRETE BRIDGE ELEMENTS TO PRECLUDE DAMAGE FROM BENDING OR TORSION FORCES.
      4.5.3. DELIVERY - PRECAST CONCRETE ELEMENTS MUST NOT BE SHIPPED UNTIL THE CONCRETE HAS ATTAINED THE SPECIFIED DESIGN COMPRESSIVE STRENGTH, OR AS DIRECTED BY THE DESIGN ENGINEER. PRECAST CONCRETE ELEMENTS MAY BE UNLOADED AND PLACED ON THE GROUND AT THE SITE UNTIL INSTALLED. STORE ELEMENTS USING TIMBER SUPPORTS AS APPROPRIATE.
   4.6. QUALITY ASSURANCE - THE PRECASTER SHALL DEMONSTRATE ADHERENCE TO THE STANDARDS SET FORTH IN THE NPCA QUALITY CONTROL MANUAL. THE PRECASTER SHALL MEET EITHER SECTION 4.6.1 OR 4.6.2
      4.6.1. CERTIFICATION - THE PRECASTER SHALL BE CERTIFIED BY THE PRECAST/PRESTRESSED CONCRETE INSTITUTE PLANT CERTIFICATION PROGRAM OR THE NATIONAL PRECAST CONCRETE ASSOCIATION'S PLANT CERTIFICATION PROGRAM PRIOR TO AND DURING PRODUCTION OF THE PRODUCTS COVERED BY THIS SPECIFICATION.
      4.6.2. QUALIFICATIONS, TESTING AND INSPECTION
         4.6.2.1. THE PRECASTER SHALL HAVE BEEN IN THE BUSINESS OF PRODUCING PRECAST CONCRETE PRODUCTS SIMILAR TO THOSE SPECIFIED FOR A MINIMUM OF THREE YEARS. HE SHALL MAINTAIN A PERMANENT QUALITY CONTROL DEPARTMENT OR RETAIN AN INDEPENDENT TESTING AGENCY ON A CONTINUING BASIS. THE AGENCY SHALL ISSUE A REPORT, CERTIFIED BY A LICENSED ENGINEER, DETAILING THE ABILITY OF THE PRECASTER TO PRODUCE QUALITY PRODUCTS CONSISTENT WITH INDUSTRY STANDARDS.
         4.6.2.2. THE PRECASTER SHALL SHOW THAT THE FOLLOWING TESTS ARE PERFORMED IN ACCORDANCE WITH THE ASTM STANDARDS INDICATED. TESTS SHALL BE PERFORMED AS INDICATED IN SECTION 6 OF THESE SPECIFICATIONS.
            4.6.2.2.1. AIR CONTENT: C231 OR C173
            4.6.2.2.2. COMPRESSIVE STRENGTH: C31,C39,C497
      4.6.2.3. THE PRECASTER SHALL PROVIDE DOCUMENTATION DEMONSTRATING COMPLIANCE WITH THIS SECTION TO CONTECH® ENGINEERED SOLUTIONS AT REGULAR INTERVALS OR UPON REQUEST.
      4.6.2.4. THE OWNER MAY PLACE AN INSPECTOR IN THE PLANT WHEN THE PRODUCTS COVERED BY THIS SPECIFICATION ARE BEING MANUFACTURED.
   4.6.3. DOCUMENTATION - THE PRECASTER SHALL SUBMIT PRECAST PRODUCTION REPORTS TO CONTECH® ENGINEERED SOLUTIONS AS REQUIRED.

5. PERMISSIBLE VARIATIONS
   5.1. BRIDGE UNITS
      5.1.1. INTERNAL DIMENSIONS - THE INTERNAL DIMENSION SHALL VARY NOT MORE THAN 1% FROM THE DESIGN DIMENSIONS NOR MORE THAN 1½" WHICHEVER IS LESS.
      5.1.2. SLAB AND WALL THICKNESS - THE SLAB AND WALL THICKNESS SHALL NOT BE LESS THAN THAT SHOWN IN THE DESIGN BY MORE THAN ¼". A THICKNESS MORE THAN THAT REQUIRED IN THE DESIGN SHALL NOT BE CAUSE FOR REJECTION.
      5.1.3. LENGTH OF OPPOSITE SURFACES - VARIATIONS IN LAYING LENGTHS OF TWO OPPOSITE SURFACES OF THE BRIDGE UNIT SHALL NOT BE MORE THAN ½" IN ANY SECTION, EXCEPT WHERE BEVELED ENDS FOR LAYING OF CURVES ARE SPECIFIED BY THE PURCHASER.
      5.1.4. LENGTH OF SECTION - THE UNDERRUN IN LENGTH OF A SECTION SHALL NOT BE MORE THAN ½" IN ANY BRIDGE UNIT.
      5.1.5. POSITION OF REINFORCEMENT - THE MAXIMUM VARIATION IN POSITION OF THE REINFORCEMENT SHALL BE ± ½" IN NO CASE SHALL THE COVER OVER THE REINFORCEMENT BE LESS THAN ½" FOR THE OUTSIDE CIRCUMFERENTIAL STEEL OR BE LESS THAN 1" FOR THE INSIDE CIRCUMFERENTIAL STEEL AS MEASURED TO THE EXTERNAL OR INTERNAL SURFACE OF THE BRIDGE. THESE TOLERANCES OR COVER REQUIREMENTS DO NOT APPLY TO MATING SURFACES OF THE JOINTS. (1) (2)
      5.1.6. AREA OF REINFORCEMENT - THE AREAS OF STEEL REINFORCEMENT SHALL BE THE DESIGN STEEL AREAS AS SHOWN IN THE MANUFACTURER'S SHOP DRAWINGS. STEEL AREAS GREATER THAN THOSE REQUIRED SHALL NOT BE CAUSE FOR REJECTION. THE PERMISSIBLE VARIATION IN DIAMETER OF ANY REINFORCEMENT SHALL CONFORM TO THE TOLERANCES PRESCRIBED IN THE ASTM SPECIFICATION FOR THAT TYPE OF REINFORCEMENT.
   5.2. WINGWALLS & HEADWALLS
      5.2.1. WALL THICKNESS - THE WALL THICKNESS SHALL NOT VARY FROM THAT SHOWN IN THE DESIGN BY MORE THAN ¼".
      5.2.2. LENGTH/HEIGHT OF WALL SECTIONS - THE LENGTH AND HEIGHT OF THE WALL SHALL NOT VARY FROM THAT SHOWN IN THE DESIGN BY MORE THAN ½".
      5.2.3. POSITION OF REINFORCEMENT - THE MAXIMUM VARIATION IN THE POSITION OF THE REINFORCEMENT SHALL BE ± ½", IN NO CASE SHALL THE COVER OVER THE REINFORCEMENT BE LESS THAN ½".
      5.2.4. SIZE OF REINFORCEMENT - THE PERMISSIBLE VARIATION IN DIAMETER OF ANY REINFORCING SHALL CONFORM TO THE TOLERANCES PRESCRIBED IN THE ASTM SPECIFICATION FOR THAT TYPE OF REINFORCING. STEEL AREA GREATER THAN THAT REQUIRED SHALL NOT BE CAUSE FOR REJECTION.
   5.3. FOUNDATION UNITS
      5.3.1. WALL THICKNESS - THE WALL THICKNESS SHALL NOT VARY FROM THAT SHOWN IN THE DESIGN BY MORE THAN ¼".
      5.3.2. LENGTH/ HEIGHT/WIDTH OF FOUNDATION SECTIONS - THE LENGTH, HEIGHT AND WIDTH OF THE FOUNDATION UNITS SHALL NOT VARY FROM THAT SHOWN IN THE DESIGN BY MORE THAN ½".
      5.3.3. POSITION OF REINFORCEMENT - THE MAXIMUM VARIATION IN THE POSITION OF THE REINFORCEMENT SHALL BE ± ½", IN NO CASE SHALL THE COVER OVER THE REINFORCEMENT BE LESS THAN 1½".
      5.3.4. SIZE OF REINFORCEMENT - THE PERMISSIBLE VARIATION IN DIAMETER OF ANY REINFORCING SHALL CONFORM TO THE TOLERANCES PRESCRIBED IN THE ASTM SPECIFICATION FOR THAT TYPE OF REINFORCING. STEEL AREA GREATER THAN THAT REQUIRED SHALL NOT BE CAUSE FOR REJECTION.

6. TESTING/ INSPECTION
   6.1. TESTING
      6.1.1. TYPE OF TEST SPECIMEN - CONCRETE COMPRESSIVE STRENGTH SHALL BE DETERMINED FROM COMPRESSION TESTS MADE ON CYLINDERS OR CORES. FOR CYLINDER TESTING, A MINIMUM OF 4 CYLINDERS SHALL BE TAKEN FOR EACH BRIDGE ELEMENT. EACH ELEMENT SHALL BE CONSIDERED SEPARATELY FOR THE PURPOSE OF TESTING AND ACCEPTANCE.
      6.1.2. COMPRESSION TESTING - CYLINDERS SHALL BE MADE AND TESTED AS PRESCRIBED BY THE ASTM C39 SPECIFICATION. CYLINDERS SHALL BE CURED IN THE SAME ENVIRONMENT AS THE BRIDGE ELEMENTS. CORES SHALL BE OBTAINED AND TESTED FOR COMPRESSIVE STRENGTH IN ACCORDANCE WITH THE PROVISIONS OF THE ASTM C42 SPECIFICATION.
      6.1.3. ACCEPTABILITY OF CYLINDER TESTS - WHEN THE AVERAGE COMPRESSIVE STRENGTH OF ALL CYLINDERS TESTED IS EQUAL TO OR GREATER THAN THE DESIGN COMPRESSIVE STRENGTH, AND NOT MORE THAN 10% OF THE CYLINDERS TESTED HAVE A COMPRESSIVE STRENGTH LESS THAN THE DESIGN CONCRETE STRENGTH, AND NO CYLINDER TESTED HAS A COMPRESSIVE STRENGTH LESS THAN 80% OF THE DESIGN COMPRESSIVE STRENGTH, THEN THE ELEMENT SHALL BE ACCEPTED. WHEN THE COMPRESSIVE STRENGTH OF THE CYLINDERS TESTED DOES NOT CONFORM TO THESE ACCEPTANCE CRITERIA, THE ACCEPTABILITY OF THE ELEMENT MAY BE DETERMINED AS DESCRIBED IN SECTION 6.1.4, BELOW.
      6.1.4. ACCEPTABILITY OF CORE TESTS - THE COMPRESSIVE STRENGTH OF THE CONCRETE IN A BRIDGE ELEMENT IS ACCEPTABLE WHEN THE AVERAGE CORE TEST STRENGTH IS EQUAL TO OR GREATER THAN THE DESIGN CONCRETE STRENGTH. WHEN THE COMPRESSIVE STRENGTH OF A CORE TESTED IS LESS THAN THE DESIGN CONCRETE STRENGTH, THE PRECAST ELEMENT FROM WHICH THAT CORE WAS TAKEN MAY BE RE-CORED. WHEN THE COMPRESSIVE STRENGTH OF THE RE-CORE IS EQUAL TO OR GREATER THAN THE DESIGN CONCRETE STRENGTH, THE COMPRESSIVE STRENGTH OF THE CONCRETE IN THAT BRIDGE ELEMENT IS ACCEPTABLE.
         6.1.4.1. WHEN THE COMPRESSIVE STRENGTH OF ANY RECORE IS LESS THAN THE DESIGN CONCRETE STRENGTH, THE PRECAST ELEMENT FROM WHICH THAT CORE WAS TAKEN SHALL BE REJECTED.
         6.1.4.2. PLUGGING CORE HOLES - THE CORE HOLES SHALL BE PLUGGED AND SEALED BY THE MANUFACTURER IN A MANNER SUCH THAT THE ELEMENTS WILL MEET ALL OF THE TEST REQUIREMENTS OF THIS SPECIFICATION. PRECAST ELEMENTS SO SEALED SHALL BE CONSIDERED SATISFACTORY FOR USE.
         6.1.4.3. TEST EQUIPMENT - EVERY MANUFACTURER FURNISHING PRECAST ELEMENTS UNDER THIS SPECIFICATION SHALL FURNISH ALL FACILITIES AND PERSONNEL NECESSARY TO CARRY OUT THE TEST REQUIRED.
   6.2. INSPECTION - THE QUALITY OF MATERIALS, THE PROCESS OF MANUFACTURE, AND THE FINISHED PRECAST ELEMENTS SHALL BE SUBJECT TO INSPECTION BY THE PURCHASER.

7. JOINTS
   THE BRIDGE UNITS SHALL BE PRODUCED WITH FLAT BUTT ENDS. THE ENDS OF THE BRIDGE UNITS SHALL BE SUCH THAT WHEN THE SECTIONS ARE LAID TOGETHER THEY WILL MAKE A CONTINUOUS LINE WITH A SMOOTH INTERIOR FREE OF APPRECIABLE IRREGULARITIES, ALL COMPATIBLE WITH THE PERMISSIBLE VARIATIONS IN SECTION 5, ABOVE. THE JOINT WIDTH BETWEEN ADJACENT PRECAST UNITS SHALL NOT EXCEED ¾".

8. WORKMANSHIP/ FINISH
   THE BRIDGE UNITS, WINGWALLS, HEADWALLS AND FOUNDATION UNITS SHALL BE SUBSTANTIALLY FREE OF FRACTURES. THE ENDS OF THE BRIDGE UNITS SHALL BE NORMAL TO THE WALLS AND CENTERLINE OF THE BRIDGE SECTION, WITHIN THE LIMITS OF THE VARIATIONS GIVEN IN SECTION 5, ABOVE, EXCEPT WHERE BEVELED ENDS ARE SPECIFIED. THE FACES OF THE WINGWALLS AND HEADWALLS SHALL BE PARALLEL TO EACH OTHER, WITHIN THE LIMITS OF VARIATIONS GIVEN IN SECTION 5, ABOVE. THE SURFACE OF THE PRECAST ELEMENTS SHALL BE A SMOOTH STEEL FORM OR TROWELED SURFACE. TRAPPED AIR POCKETS CAUSING SURFACE DEFECTS SHALL BE CONSIDERED AS PART OF A SMOOTH, STEEL FORM FINISH.

9. REPAIRS
   PRECAST ELEMENTS MAY BE REPAIRED, IF NECESSARY, BECAUSE OF IMPERFECTIONS IN MANUFACTURE OR HANDLING DAMAGE AND WILL BE ACCEPTABLE IF, IN THE OPINION OF THE PURCHASER, THE REPAIRS ARE SOUND, PROPERLY FINISHED AND CURED, AND THE REPAIRED SECTION CONFORMS TO THE REQUIREMENTS OF THIS SPECIFICATION.

10. REJECTION
    THE PRECAST ELEMENTS SHALL BE SUBJECT TO REJECTION ON ACCOUNT OF ANY OF THE SPECIFICATION REQUIREMENTS. INDIVIDUAL PRECAST ELEMENTS MAY BE REJECTED BECAUSE OF ANY OF THE FOLLOWING:
    10.1. FRACTURES OR CRACKS PASSING THROUGH THE WALL, EXCEPT FOR A SINGLE END CRACK THAT DOES NOT EXCEED ONE HALF THE THICKNESS OF THE WALL.
    10.2. DEFECTS THAT INDICATE PROPORTIONING, MIXING, AND MOLDING NOT IN COMPLIANCE WITH SECTION 4 OF THESE SPECIFICATIONS.
    10.3. HONEYCOMBED OR OPEN TEXTURE.
    10.4. DAMAGED ENDS, WHERE SUCH DAMAGE WOULD PREVENT MAKING A SATISFACTORY JOINT.

I:\MERLIN\PROJECTACTIVE\468920\468920\468920-10-CON_SPAN_O_SERIES\DRAWINGS\FABRICATION\PRE-468920-010-CO-FAB-D.DWG 4/14/2016 11:21 AM

The design and information shown on this drawing is provided as a service to the project owner, engineer and contractor by Contech Engineered Solutions LLC ("Contech"). Neither this drawing, nor any part thereof, may be used, reproduced or modified in any manner without the prior written consent of Contech. Failure to comply is done at the user's own risk and Contech expressly disclaims any liability or responsibility for such use.

If discrepancies between the supplied information upon which the drawing is based and actual field conditions are encountered as site work progresses, these discrepancies must be reported to Contech immediately for re-evaluation of the design. Contech accepts no liability for designs based on missing, incomplete or inaccurate information supplied by others.

MARK	DATE	REVISION DESCRIPTION	BY
2	4/14/2016	REVIEW COMMENTS	JDR
1	3/16/2016	REVISIONS PER REVIEW COMMENTS	KDK

CONTECH® ENGINEERED SOLUTIONS LLC
www.ContechES.com
9025 Centre Pointe Dr., Suite 400, West Chester, OH 45069
800-338-1122 513-645-7000 513-645-7993 FAX

CON/SPAN® O-SERIES
FABRICATION DRAWING

US ROUTE 2
BRIDGE NO. 126
TOWN OF LUNENBURG
ESSEX COUNTY, VERMONT

PROJECT No.:	SEQ. No.:	DATE:
468920	010	12/8/2015
DESIGNED: KDK	DRAWN: TRL	
CHECKED: JDR	APPROVED: PAC	
SHEET NO.: S21 OF S22		

SPECIFICATIONS FOR MANUFACTURE AND INSTALLATION OF CON/SPAN® O-SERIES BRIDGE SYSTEMS (CONT'D)

11. MARKING
EACH BRIDGE UNIT SHALL BE CLEARLY MARKED BY WATERPROOF PAINT. THE FOLLOWING SHALL BE SHOWN ON THE INSIDE OF THE VERTICAL LEG OF THE BRIDGE SECTION:
BRIDGE SPAN x BRIDGE RISE
DATE OF MANUFACTURE
NAME OR TRADEMARK OF THE MANUFACTURER

12. INSTALLATION PREPARATION
TO ENSURE CORRECT INSTALLATION OF THE PRECAST CONCRETE BRIDGE SYSTEM, CARE AND CAUTION MUST BE EXERCISED IN FORMING THE SUPPORT AREAS FOR BRIDGE UNITS, HEADWALL, AND WINGWALL ELEMENTS. EXERCISING SPECIAL CARE WILL FACILITATE THE RAPID INSTALLATION OF THE PRECAST COMPONENTS.

12.1. FOOTINGS
DO NOT OVER EXCAVATE FOUNDATIONS UNLESS DIRECTED BY SITE SOIL ENGINEER TO REMOVE UNSUITABLE SOIL.

THE SITE SOILS ENGINEER SHALL CERTIFY THAT THE BEARING CAPACITY MEETS OR EXCEEDS THE FOOTING DESIGN REQUIREMENTS, PRIOR TO THE CONTRACTOR POURING OF THE FOOTINGS.

THE BRIDGE UNITS AND WINGWALLS SHALL BE INSTALLED ON EITHER PRECAST OR CAST-IN-PLACE CONCRETE FOOTINGS. THE SIZE AND ELEVATION OF THE FOOTINGS SHALL BE AS DESIGNED BY THE ENGINEER. A KEYWAY SHALL BE FORMED IN THE TOP SURFACE OF THE BRIDGE FOOTING AS SPECIFIED ON THE PLANS. NO KEYWAY IS REQUIRED IN THE WINGWALL FOOTINGS, UNLESS OTHERWISE SPECIFIED ON THE PLANS.

THE FOOTINGS SHALL BE GIVEN A SMOOTH FLOAT FINISH AND SHALL REACH A COMPRESSIVE STRENGTH OF 2,000 PSI BEFORE PLACEMENT OF THE BRIDGE AND WINGWALL ELEMENTS. BACKFILLING SHALL NOT BEGIN UNTIL THE FOOTING HAS REACHED THE FULL DESIGN COMPRESSIVE STRENGTH.

THE FOOTING SURFACE SHALL BE CONSTRUCTED IN ACCORDANCE WITH GRADES SHOWN ON THE PLANS. WHEN TESTED WITH A 10'-0" STRAIGHT EDGE, THE SURFACE SHALL NOT VARY MORE THAN ¼" IN 10'-0".

IF A PRECAST CONCRETE FOOTING IS USED, THE CONTRACTOR SHALL PREPARE A 4" THICK BASE LAYER OF COMPACTED GRANULAR MATERIAL THE FULL WIDTH OF THE FOOTING PRIOR TO PLACING THE PRECAST FOOTING.

THE FOUNDATIONS FOR PRECAST CONCRETE BRIDGE ELEMENTS AND WINGWALLS MUST BE CONNECTED BY REINFORCEMENT TO FORM ONE MONOLITHIC BODY. EXPANSION JOINTS SHALL NOT BE USED.

THE CONTRACTOR SHALL BE RESPONSIBLE FOR THE CONSTRUCTION OF THE FOUNDATIONS PER THE PLANS AND SPECIFICATIONS.

13. INSTALLATION
13.1. GENERAL - THE INSTALLATION OF THE PRECAST CONCRETE ELEMENTS SHALL BE AS EXPLAINED IN THE PUBLICATION CON/SPAN BRIDGE SYSTEMS INSTALLATION HANDBOOK.

13.1.1. LIFTING - IT IS THE RESPONSIBILITY OF THE CONTRACTOR TO ENSURE THAT A CRANE OF THE CORRECT LIFTING CAPACITY IS AVAILABLE TO HANDLE THE PRECAST CONCRETE UNITS. THIS CAN BE ACCOMPLISHED BY USING THE WEIGHTS GIVEN FOR THE PRECAST CONCRETE COMPONENTS AND BY DETERMINING THE LIFTING REACH FOR EACH CRANE UNIT. SITE CONDITIONS MUST BE CHECKED WELL IN ADVANCE OF SHIPPING TO ENSURE PROPER CRANE LOCATION AND TO AVOID ANY LIFTING RESTRICTIONS. THE LIFT ANCHORS OR HOLES PROVIDED IN EACH UNIT ARE THE ONLY MEANS TO BE USED TO LIFT THE ELEMENTS. THE PRECAST CONCRETE ELEMENTS MUST NOT BE SUPPORTED OR RAISED BY OTHER MEANS THAN THOSE GIVEN IN THE MANUALS AND DRAWINGS WITHOUT WRITTEN APPROVAL FROM CONTECH® ENGINEERED SOLUTIONS.

13.1.2. CONSTRUCTION EQUIPMENT WEIGHT RESTRICTIONS - IN NO CASE SHALL EQUIPMENT OPERATING IN EXCESS OF THE DESIGN LOAD (HL-93) BE PERMITTED OVER THE BRIDGE UNITS UNLESS APPROVED BY CONTECH® ENGINEERED SOLUTIONS.

13.1.2.1. IN THE IMMEDIATE AREA OF THE BRIDGE UNITS, THE FOLLOWING RESTRICTIONS FOR THE USE OF HEAVY CONSTRUCTION MACHINERY DURING BACKFILLING OPERATIONS APPLY:

- NO CONSTRUCTION EQUIPMENT SHALL CROSS THE BARE PRECAST CONCRETE BRIDGE UNIT.
- AFTER THE COMPACTED FILL LEVEL HAS REACHED A MINIMUM OF 4" OVER THE CROWN OF THE BRIDGE, CONSTRUCTION EQUIPMENT WITH A WEIGHT OF LESS THAN 10 TONS MAY CROSS THE BRIDGE.
- AFTER THE COMPACTED FILL LEVEL HAS REACHED A MINIMUM OF 1'-0" OVER THE CROWN OF THE BRIDGE, CONSTRUCTION EQUIPMENT WITH A WEIGHT OF LESS THAN 30 TONS MAY CROSS THE BRIDGE.
- AFTER THE COMPACTED FILL LEVEL HAS REACHED THE DESIGN COVER, OR 2'-0" MINIMUM, OVER THE CROWN OF THE PRECAST CONCRETE BRIDGE, CONSTRUCTION EQUIPMENT WITHIN THE DESIGN LOAD LIMITS FOR THE ROAD MAY CROSS THE PRECAST CONCRETE BRIDGE.

13.2. LEVELING PAD/SHIMS - THE BRIDGE UNITS AND WINGWALLS SHALL BE SET ON HARDBOARD SHIMS CONFORMING TO ASTM D1037 OR PLASTIC SHIMS (DAYTON SUPERIOR P-80, P-81 OR APPROVED EQUAL) MEASURING 5" x 5", MINIMUM, UNLESS SHOWN OTHERWISE ON THE PLANS. A MINIMUM GAP OF ½" SHALL BE PROVIDED BETWEEN THE FOOTING AND THE BOTTOM OF THE BRIDGE'S VERTICAL LEGS OR THE BOTTOM OF THE WINGWALL. ALSO, A SUPPLY OF ½", ¼" AND ⅛" THICK HARDBOARD OR PLASTIC SHIMS FOR VARIOUS SHIMMING PURPOSES SHALL BE ON SITE.

13.3. PLACEMENT OF BRIDGE UNITS - THE BRIDGE UNITS SHALL BE PLACED AS SHOWN ON THE ENGINEER'S PLAN DRAWINGS. SPECIAL CARE SHALL BE TAKEN IN SETTING THE ELEMENTS TO THE TRUE LINE AND GRADE. THE JOINT WIDTH BETWEEN ADJACENT PRECAST UNITS SHALL NOT EXCEED ¾".

13.4. IT IS THE CONTRACTOR'S RESPONSIBILITY TO MAINTAIN THE STRUCTURE SPAN DURING ALL PHASES OF INSTALLATION. DUE TO THE ARCH SHAPE, BRIDGE ELEMENTS WILL TEND TO SPREAD UNDER SELF-WEIGHT. IT IS IMPERATIVE THAT ANY LATERAL SPREADING OF THE BRIDGE ELEMENTS BE AVOIDED DURING AND AFTER THEIR PLACEMENT. GENERALLY, HORIZONTAL CABLE TIES OR TIE RODS ARE SHIPPED IN THE LARGER BRIDGE ELEMENTS TO ASSIST IN PREVENTING THIS SPREADING. CABLE TIES/TIE RODS SHALL NOT BE REMOVED UNTILL BRIDGE UNITS ARE GROUTED AND GROUT HAS CURED. IT IS RECOMMENDED THAT TEMPORARY HARDWOOD BLOCKS BE USED IN CONJUNCTION WITH THE CABLE TIES/TIE RODS TO MAINTAIN SPAN. IF, HOWEVER, DUE TO SITE RESTRICTIONS, THESE CABLE TIES/TIE RODS MUST BE REMOVED PRIOR TO PLACEMENT OF THE BRIDGE ELEMANTS, THE CONTRACTOR MUST NOTIFY CONTECH (MANUFACTURER) AND REQUEST A SUGGESTED INSTALLATION PROCEDURE.

IN ADDITION, IF THE CABLE TIES/TIE RODS MUST BE REMOVED PRIOR TO SETTING ARCH UNITS, THE FOLLOWING QUALITY CONTROL PROCEDURE MUST BE FOLLOWED:
1) FIND "MEASURED SPAN" UPON ARCH UNIT'S DELIVERY TO SITE, PRIOR TO LIFTING FROM TRUCK AND REMOVING CABLE TIES/TIE RODS. "MEASURED SPAN" SHALL BE THE AVERAGE OF (3) SPAN MEASUREMENTS ALONG THE LAY LENGTH OF THE ARCH UNIT.
2) AFTER SETTING OF BRIDGE UNIT ON THE FOUNDATION, VERIFY THE SPAN. THIS "INSTALLED SPAN MEASUREMENT" SHALL NOT EXCEED THE MAXIMUM OF:
A) THE NOMINAL SPAN +½" OR
B) THE "MEASURED SPAN"
IF THE "INSTALLED SPAN MEASUREMENT" EXCEEDS THIS AMOUNT, THE ARCH UNIT SHALL BE LIFTED AND RE-SET UNTIL THE "INSTALLED SPAN MEASUREMENT" MEETS THE LIMITS.

13.5. PLACEMENT OF WINGWALLS, HEADWALLS AND FOUNDATION UNITS - THE WINGWALLS, HEADWALLS AND FOUNDATIONS SHALL BE PLACED AS SHOWN ON THE PLAN DRAWINGS. SPECIAL CARE SHALL BE TAKEN IN SETTING THE ELEMENTS TO THE TRUE LINE AND GRADE.

13.6. WATERPROOFING/JOINT PROTECTION AND SUBSURFACE DRAINAGE

13.6.1. EXTERNAL PROTECTION OF JOINTS - THE BUTT JOINT MADE BY TWO ADJOINING BRIDGE UNITS SHALL BE COVERED WITH A ⅞" x 1⅜" PREFORMED BITUMINOUS JOINT SEALANT AND A MINIMUM OF A 9" WIDE JOINT WRAP. THE SURFACE SHALL BE FREE OF DIRT BEFORE APPLYING THE JOINT MATERIAL. A PRIMER COMPATIBLE WITH THE JOINT WRAP TO BE USED SHALL BE APPLIED FOR A MINIMUM WIDTH OF 9" ON EACH SIDE OF THE JOINT. THE EXTERNAL WRAP SHALL BE CS212 BY CONCRETE SEALANTS INC., EZ-WRAP RUBBER BY PRESS-SEAL GASKET CORPORATION, SEAL WRAP BY MAR MAC MANUFACTURING CO. INC. OR APPROVED EQUAL. THE JOINT SHALL BE COVERED CONTINUOUSLY FROM THE BOTTOM OF ONE BRIDGE SECTION LEG, ACROSS THE TOP OF THE BRIDGE AND TO THE OPPOSITE BRIDGE SECTION LEG. ANY LAPS THAT RESULT IN THE JOINT WRAP SHALL BE A MINIMUM OF 6" LONG WITH THE OVERLAP RUNNING DOWNHILL.

13.6.2. IN ADDITION TO THE JOINTS BETWEEN BRIDGE UNITS, THE JOINT BETWEEN THE END BRIDGE UNIT AND THE HEADWALL SHALL ALSO BE SEALED AS DESCRIBED ABOVE. IF PRECAST WINGWALLS ARE USED, THE JOINT BETWEEN THE END BRIDGE UNIT AND THE WINGWALL SHALL BE SEALED WITH A 2'-0" STRIP OF FILTER FABRIC. ALSO, IF LIFT HOLES ARE FORMED IN THE BRIDGE UNITS, THEY SHALL BE PRIMED AND COVERED WITH A 9" x 9" SQUARE OF JOINT WRAP.

13.6.3. DURING THE BACKFILLING OPERATION, CARE SHALL BE TAKEN TO KEEP THE JOINT WRAP IN ITS PROPER LOCATION OVER THE JOINT.

13.6.4. SUBSOIL DRAINAGE SHALL BE AS DIRECTED BY THE ENGINEER.

13.7. GROUTING

13.7.1. GROUTING SHALL NOT BE PERFORMED WHEN TEMPERATURES ARE EXPECTED TO GO BELOW 35° FOR A PERIOD OF 72 HOURS. FILL THE BRIDGE-FOUNDATION KEYWAY WITH CEMENT GROUT (PORTLAND CEMENT AND WATER OR CEMENT MORTAR COMPOSED OF PORTLAND CEMENT, SAND AND WATER) WITH A MINIMUM 28-DAY COMPRESSIVE STRENGTH OF 3000 PSI. VIBRATE AS REQUIRED TO ENSURE THAT THE ENTIRE KEY AROUND THE BRIDGE ELEMENT IS COMPLETELY FILLED. IF BRIDGE ELEMENTS HAVE BEEN SET WITH TEMPORARY TIES (CABLES, BARS, ETC.) GROUT MUST ATTAIN A MINIMUM COMPRESSIVE STRENGTH OF 1500 PSI BEFORE TIES MAY BE REMOVED.

13.7.2. ALL GROUT SHALL HAVE A MAXIMUM AGGREGATE SIZE OF ¼".

13.7.3. LIFTING AND ERECTION ANCHOR RECESSES SHALL BE FILLED WITH GROUT.

13.7.4. AFTER GROUT HAS REACHED ITS DESIGN STRENGTH THE TEMPORARY HARDWOOD WEDGES SHALL BE REMOVED AND THEIR HOLES FILLED WITH GROUT.

13.8. BACKFILL

13.8.1. DO NOT PERFORM BACKFILLING DURING WET OR FREEZING WEATHER.

13.8.2. NO BACKFILL SHALL BE PLACED AGAINST ANY STRUCTURAL ELEMENTS UNTIL THEY HAVE BEEN APPROVED BY THE ENGINEER.

13.8.3. BACKFILL SHALL BE CONSIDERED AS ALL REPLACED EXCAVATION AND NEW EMBANKMENT ADJACENT TO THE PRECAST CONCRETE ELEMENTS. THE PROJECT CONSTRUCTION AND MATERIAL SPECIFICATIONS, WHICH INCLUDE THE SPECIFICATIONS FOR EXCAVATION FOR STRUCTURES AND ROADWAY EXCAVATION AND EMBANKMENT CONSTRUCTION, SHALL APPLY EXCEPT AS MODIFIED IN THIS SECTION.

13.8.4. BACKFILL ZONES:

- IN-SITU SOIL
- ZONE A: CONSTRUCTED EMBANKMENT OR OVERFILL.
- ZONE B: FILL THAT IS DIRECTLY ASSOCIATED WITH PRECAST CONCRETE BRIDGE INSTALLATION.
- ZONE C: ROAD STRUCTURE.

13.8.5. REQUIRED BACKFILL PROPERTIES

13.8.5.1. IN-SITU SOIL - NATURAL GROUND IS TO BE SUFFICIENTLY STABLE TO ALLOW EFFECTIVE SUPPORT TO THE PRECAST CONCRETE BRIDGE UNITS. AS A GUIDE, THE EXISTING NATURAL GROUND SHOULD BE OF SIMILAR QUALITY AND DENSITY TO ZONE B MATERIAL FOR MINIMUM LATERAL DIMENSION OF ONE BRIDGE SPAN OUTSIDE OF THE BRIDGE FOOTING.

13.8.5.2. ZONE A - ZONE A REQUIRES FILL MATERIAL WITH SPECIFICATIONS AND COMPACTING PROCEDURES EQUAL TO THAT FOR NORMAL ROAD EMBANKMENTS.

13.8.5.3. ZONE B - GENERALLY, SOILS SHALL BE REASONABLY FREE OF ORGANIC MATTER, AND, NEAR CONCRETE SURFACES, FREE OF STONES LARGER THAN 3" IN DIAMETER SEE CHARTS FOR DETAILED DESCRIPTIONS OF ACCEPTABLE SOILS.

13.8.5.4. ZONE C - ZONE C IS THE ROAD SECTION OF GRAVEL, ASPHALT OR CONCRETE BUILT IN COMPLIANCE WITH LOCAL ENGINEERING PRACTICES.

13.8.5.5. GEOTECHNICAL ENGINEER SHALL REVIEW GRADATIONS OF ALL INTERFACING MATERIALS AND, IF NECESSARY, RECOMMEND GEOTEXTILE FILTER FABRIC (PROVIDED BY CONTRACTOR)

13.8.6. PLACING AND COMPACTING BACKFILL
DUMPING FOR BACKFILLING IS NOT ALLOWED ANY NEARER THAN 3'-0" FROM THE BRIDGE LEG.

THE FILL MUST BE PLACED AND COMPACTED IN LAYERS NOT EXCEEDING 8". THE MAXIMUM DIFFERENCE IN THE SURFACE LEVELS OF THE FILL ON OPPOSITE SIDES OF THE BRIDGE MUST NOT EXCEED 2'-0".

THE FILL BEHIND WINGWALLS MUST BE PLACED AT THE SAME TIME AS THAT OF THE BRIDGE FILL. IT MUST BE PLACED IN PROGRESSIVELY PLACED HORIZONTAL LAYERS NOT EXCEEDING 8" PER LAYER.

THE BACKFILL OF ZONE B SHALL BE COMPACTED TO A MINIMUM DENSITY OF 95% OF THE STANDARD PROCTOR, AS REQUIRED BY AASHTO T-99.

SOIL WITHIN 1'-0" OF CONCRETE SURFACES SHALL BE HAND-COMPACTED. ELSEWHERE, USE OF ROLLERS IS ACCEPTABLE. IF VIBRATING ROLLER-COMPACTORS ARE USED, THEY SHALL NOT BE STARTED OR STOPPED WITHIN ZONE B AND THE VIBRATION FREQUENCY SHOULD BE AT LEAST 30 REVOLUTIONS PER SECOND.

THE BACKFILL MATERIAL AND COMPACTING BEHIND WINGWALLS SHALL SATISFY THE CRITERIA FOR THE BRIDGE BACKFILL, ZONE B.

BACKFILL AGAINST A WATERPROOFED SURFACE SHALL BE PLACED CAREFULLY TO AVOID DAMAGE TO THE WATERPROOFING MATERIAL.

13.8.7. BRIDGE UNITS
FOR FILL HEIGHTS OVER 12 FEET (AS MEASURED FROM TOP CROWN OF BRIDGE TO FINISHED GRADE), NO BACKFILLING MAY BEGIN UNTIL A BACKFILL COMPACTION TESTING PLAN HAS BEEN COORDINATED WITH AND APPROVED BY CONTECH® ENGINEERED SOLUTIONS.

13.8.8. WINGWALLS
BACKFILL IN FRONT OF WINGWALLS SHALL BE CARRIED TO GROUND LINES SHOWN IN THE PLANS.

13.8.9. MONITORING
THE CONTRACTOR SHALL CHECK SETTLEMENTS AND HORIZONTAL DISPLACEMENT OF FOUNDATION TO ENSURE THAT THEY ARE WITHIN THE ALLOWABLE LIMIT PROVIDED BY THE ENGINEER. THESE MEASUREMENTS SHOULD GIVE AN INDICATION OF THE SETTLEMENTS AND DEFORMATIONS ALONG THE LENGTH OF THE FOUNDATIONS.

THE FIRST MEASUREMENT SHOULD TAKE PLACE AFTER THE ERECTION OF ALL PRECAST BRIDGE SYSTEM ELEMENTS, A SECOND AFTER COMPLETION OF BACKFILLING, AND A THIRD BEFORE OPENING OF THE BRIDGE TO TRAFFIC. FURTHER MEASUREMENTS MAY BE MADE ACCORDING TO LOCAL CONDITIONS.

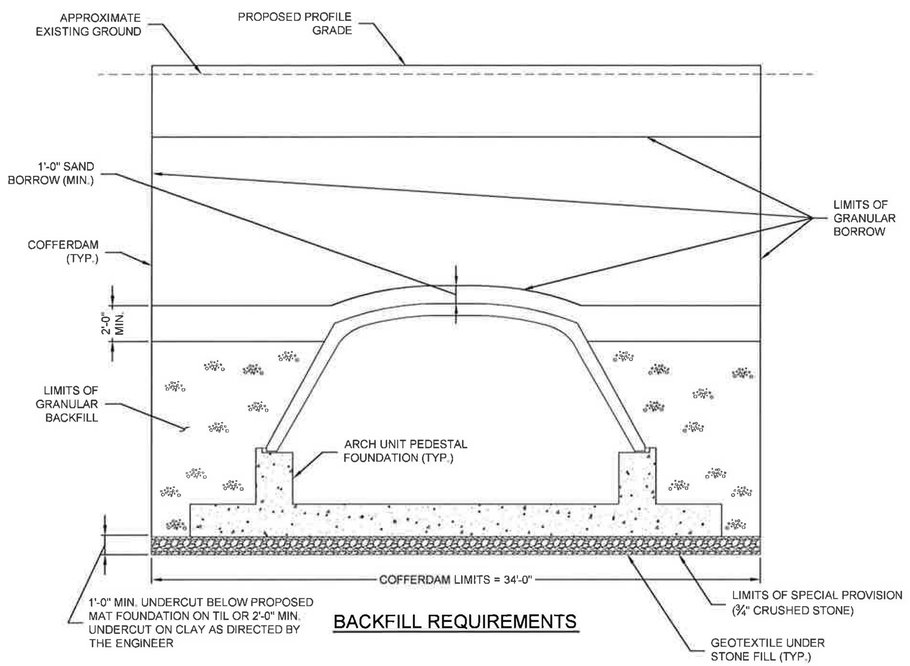

BACKFILL REQUIREMENTS

TYPICAL ARCH EARTH WORK SECTION

(PER SHEET 7 OF 74 OF BID DOCUMENTS)

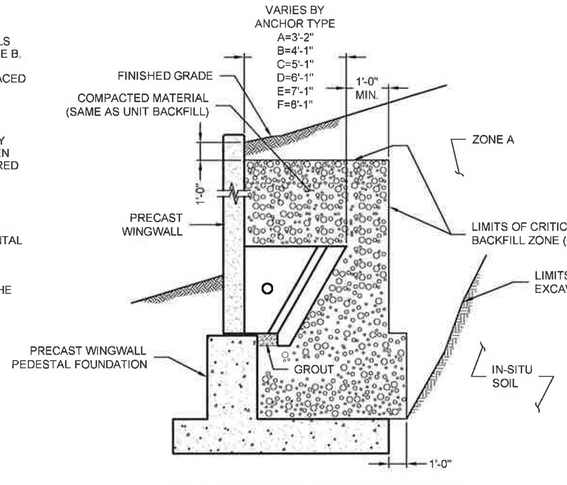

WALL BACKFILL REQUIREMENTS

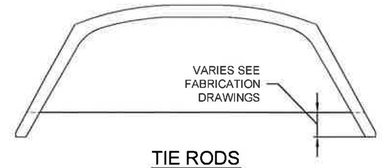

TIE RODS

The design and information shown on this drawing is provided as a service to the project owner, engineer and contractor by Contech Engineered Solutions LLC ("Contech"). Neither this drawing, nor any part thereof, may be used, reproduced or modified in any manner without the prior written consent of Contech. Failure to comply is done at the user's own risk and Contech expressly disclaims any liability or responsibility for such use.

If discrepancies between the supplied information upon which the drawing is based and actual field conditions are encountered as site work progresses, these discrepancies must be reported to Contech immediately for re-evaluation of the design. Contech accepts no liability for designs based on missing, incomplete or inaccurate information supplied by others.

MARK	DATE	REVISION DESCRIPTION	BY
2	4/14/2016	REVIEW COMMENTS	JDR
1	3/16/2016	NO CHANGES THIS SHEET	KDK

CONTECH® ENGINEERED SOLUTIONS LLC
www.ContechES.com
9025 Centre Pointe Dr., Suite 400, West Chester, OH 45069
800-338-1122 513-645-7000 513-645-7993 FAX

CON/SPAN® O-SERIES
FABRICATION DRAWING

US ROUTE 2
BRIDGE NO. 126
TOWN OF LUNENBURG
ESSEX COUNTY, VERMONT

PROJECT No.:	SEQ. No.:	DATE:
468920	010	12/8/2015
DESIGNED: KDK	DRAWN: TRL	
CHECKED: JDR	APPROVED: PAC	
SHEET NO.: S22 OF S22		

I:\MER.LIN\PROJECTACTIVE\468900\468920\468920-10-CON_SPAN_O_SERIES\DRAWINGS\FABRICATION\PRE-468920-010-CO-FAB-D.DWG 4/14/2016 11:21 AM

Barker Steel LLC
PO Box 553
450 US Route 4
Canaan, NH 03741
USA

MATERIAL BAR LIST

Job No.: 33505883
Job Name: Lunenburg NH CULV (27)
Sell-To Customer: J10362 - J. A. Mcdonald
Release No.: 0001
Release Description: ARCH WALLS 1 & 2 PH. I

Ship To: Lunenburg NH CULV (27)
US Route 2, Approx 0.9 Miles W of
Lunenburg/Guildhall Town Line
Lunenburg, VT 05096

Shipping Agent:

Prepared By: ADM
Drawing Set No.: LIST
Drawing Sheet No.: LIST
Mill Cert. Required: Yes
Bending On Site: No
Cert. of Comp.:

Bill of Lading No.:
Load No.:
Shipping Location: Canaan
Tag Color/Code:

Expected Ship Date: 01/01/29
Bar Weight (Lb) 3,452
Bar Weight (Ton) 1.726
Total No. of Bars: 270
Longest Bar: 37'-1

Bid Item No.: 507.11 **Grade Group:** 60B (A615-60 Black)

Quantity	Bar Size	Bend Type	Vary Group	Bar Mark	Length	A	B	C	D	E	F	G	H	J	K	O	R	Weight (Lb)
105	5	17		1A503	5'-2		1'-9	1'-8	1'-9									566.00
105	5	17		2A503	5'-2		1'-9	1'-8	1'-9									566.00
30	5	0		1A502	37'-1		37'-1											1,160.00
30	5	0		2A502	37'-1		37'-1											1,160.00

Bar Size Summary

Bar Size	Quantity	Weight (Lb)
5	270	3,452.00

Vermont Agency of Transportation
RECEIVED
ON: May 12, 2016
and Checked for
CONFORMANCE
BY: Danny Landry DATE: 05/18/16

SHOP DRAWING REVIEW

[X] REVIEWED AS REQUIRED BY THE CONSTRUCTION CONTRACT DOCUMENTS AND APPROVED, BUT ONLY FOR CONFORMANCE TO THE DESIGN CONCEPT OF THE WORK, AND SUBJECT TO FURTHER LIMITATIONS AND REQUIREMENTS CONTAINED IN THE CONSTRUCTION CONTRACT DOCUMENTS.

[ ] REJECTED [ ] REVISE AND RESUBMIT [ ] APPROVED AS NOTED

CORRECTIONS OR COMMENTS MADE ON THE SHOP DRAWINGS DURING THIS REVIEW DID NOT RELIEVE CONTRACTOR FROM COMPLIANCEWITH REQUIREMENTS OF THE DRAWINGS AND SPECIFICATIONS. THIS CHECK IS ONLY FOR REVIEW OF GENERAL CONFORMANCE WITH THE DESIGN CONCEPT OF THE PROJECT AND GENERAL COMPLIANCE WITH THE INFORMATION GIVEN IN THE CONTRACT DOCUMENTS. THE CONTRACTOR IS RESPOINSIBLE FOR: CONFIRMING AND CORRELATING ALL QUANTITIES AND DIMENSIONS: SELECTING FABRICATION PROCESSES AND TECHNIQUES OF CONSTRUCTION: COORDINATING THEIR WORK WITH THAT OF ALL OTHER TRADES: AND PERFORMING THEIR WORK IN A SAFE AND SATISFACTORY MANNER.

CLD Consulting Engineers
540 Commercial Street
Manchester, NH 03101
603-668-8223

Job Number: 12-0106
Reviewed by: NDC
Date: 5/12/16

Barker Steel LLC
PO Box 553
450 US Route 4
Canaan, NH 03741
USA

MATERIAL BAR LIST

Job No.: 33505883
Job Name: Lunenburg NH CULV (27)
Sell-To Customer: J10362 - J. A. Mcdonald

Release No.: 0002
Release Description: MAT FOUNDATION PH. I

Ship To: Lunenburg NH CULV (27)
US Route 2, Approx 0.9 Miles W of
Lunenburg/Guildhall Town Line
Lunenburg, VT 05096

Shipping Agent:

Prepared By: ADM
Drawing Set No.: LIST
Drawing Sheet No.: LIST
Mill Cert. Required: Yes
Bending On Site: No
Cert. of Comp.:

Bill of Lading No.:
Load No.:
Shipping Location: Canaan
Tag Color/Code:

Expected Ship Date: 01/01/29
Bar Weight (Lb) 31,759
Bar Weight (Ton) 15.880
Total No. of Bars: 1,270
Longest Bar: 37'-1

Bid Item No.: 507.11 **Grade Group:** 60B (A615-60 Black)

Quantity	Bar Size	Bend Type	Vary Group	Bar Mark	Length	A	B	C	D	E	F	G	H	J	K	O	R	Weight (Lb)
36	8	0		S803	29'-6		29'-6											2,836.00
62	8	0		S811	29'-1		29'-1											4,814.00
62	7	0		S710	28'-11		28'-11											3,665.00
140	6	0		S604	29'-6		29'-6											6,203.00
220	5	S5		S514	10'-10	1'-0	4'-1	0'-8	4'-1			1'-0						2,486.00
420	5	17A		S512	7'-1		6'-1	1'-0										3,103.00
93	5	0		S508	37'-1		37'-1											3,597.00
105	5	0		S502	29'-6		29'-6											3,231.00
132	5	0		S515	13'-3		13'-3											1,824.00

Bar Size Summary

Bar Size	Quantity	Weight (Lb)
8	98	7,650.00
7	62	3,665.00
6	140	6,203.00
5	970	14,241.00

Vermont Agency of Transportation
Lunenburg_Rebar Resubmittal_Stamped_Flattened.pdf
RECEIVED
ON: May 12, 2016
and Checked for
CONFORMANCE
BY: Danny Landry DATE: 05/18/16

SHOP DRAWING REVIEW

[X] REVIEWED AS REQUIRED BY THE CONSTRUCTION CONTRACT DOCUMENTS AND APPROVED, BUT ONLY FOR CONFORMANCE TO THE DESIGN CONCEPT OF THE WORK, AND SUBJECT TO FURTHER LIMITATIONS AND REQUIREMENTS CONTAINED IN THE CONSTRUCTION CONTRACT DOCUMENTS.

[ ] REJECTED [ ] REVISE AND RESUBMIT [ ] APPROVED AS NOTED

CORRECTIONS OR COMMENTS MADE ON THE SHOP DRAWINGS DURING THIS REVIEW DID NOT RELIEVE CONTRACTOR FROM COMPLIANCEWITH REQUIREMENTS OF THE DRAWINGS AND SPECIFICATIONS. THIS CHECK IS ONLY FOR REVIEW OF GENERAL CONFORMANCE WITH THE DESIGN CONCEPT OF THE PROJECT AND GENERAL COMPLIANCE WITH THE INFORMATION GIVEN IN THE CONTRACT DOCUMENTS. THE CONTRACTOR IS RESPOINSIBLE FOR: CONFIRMING AND CORRELATING ALL QUANTITIES AND DIMENSIONS: SELECTING FABRICATION PROCESSES AND TECHNIQUES OF CONSTRUCTION: COORDINATING THEIR WORK WITH THAT OF ALL OTHER TRADES: AND PERFORMING THEIR WORK IN A SAFE AND SATISFACTORY MANNER.

CLD Consulting Engineers
540 Commercial Street
Manchester, NH 03101
603-668-8223

Job Number: 12-0106
Reviewed by: NDC
Date: 5/12/16

MATERIAL BAR LIST

Barker Steel LLC
PO Box 553
450 US Route 4
Canaan, NH 03741
USA

Job No.: 33505883
Job Name: Lunenburg NH CULV (27)
Sell-To Customer: J10362 - J. A. Mcdonald

Release No.: 0005
Release Description: MAT FOUNDATION PH. II

Ship To: Lunenburg NH CULV (27)
US Route 2, Approx 0.9 Miles W of
Lunenburg/Guildhall Town Line
Lunenburg, VT 05096

Shipping Agent:

Prepared By: ADM
Drawing Set No.: LIST
Drawing Sheet No.: LIST
Mill Cert. Required: Yes
Bending On Site: No
Cert. of Comp.:

Bill of Lading No.:
Load No.:
Shipping Location: Canaan
Tag Color/Code:

Expected Ship Date: 01/01/29
Bar Weight (Lb) 9,320
Bar Weight (Ton) 4.660
Total No. of Bars: 482
Longest Bar: 29'-6

Bid Item No.: 507.11 **Grade Group:** 60B (A615-60 Black)

Quantity	Bar Size	Bend Type	Vary Group	Bar Mark	Length	A	B	C	D	E	F	G	H	J	K	O	R	Weight (Lb)
29	8	0		S803	29'-6		29'-6											2,284.00
31	7	0		S709	27'-6		27'-6											1,743.00
74	6	0		S601	7'-6		7'-6											834.00
20	5	S5		S514	10'-10	1'-0	4'-1	0'-8	4'-1			1'-0						226.00
178	5	17A		S512	7'-1		6'-1	1'-0										1,315.00
4	5	3C		S513	4'-10	0	2'-5	2'-5					1'-8 ½	0	1'-8 ½	0		20.00
29	5	0		S502	29'-6		29'-6											892.00
31	5	0		S507	27'-6		27'-6											889.00
18	5	0		S506	21'-5		21'-5											402.00
18	5	0		S505	13'-5		13'-5											252.00
12	5	0		S515	13'-3		13'-3											166.00
38	5	0		S516	7'-6		7'-6											297.00

Bar Size Summary

Bar Size	Quantity	Weight (Lb)
8	29	2,284.00
7	31	1,743.00
6	74	834.00
5	348	4,459.00

Vermont Agency of Transportation

RECEIVED

ON: May 12, 2016

and Checked for

CONFORMANCE

BY: Danny Landry DATE: 05/18/16

SHOP DRAWING REVIEW

[X] REVIEWED AS REQUIRED BY THE CONSTRUCTION CONTRACT DOCUMENTS AND APPROVED, BUT ONLY FOR CONFORMANCE TO THE DESIGN CONCEPT OF THE WORK, AND SUBJECT TO FURTHER LIMITATIONS AND REQUIREMENTS CONTAINED IN THE CONSTRUCTION CONTRACT DOCUMENTS.

[ ] REJECTED [ ] REVISE AND RESUBMIT [ ] APPROVED AS NOTED

CORRECTIONS OR COMMENTS MADE ON THE SHOP DRAWINGS DURING THIS REVIEW DID NOT RELIEVE CONTRACTOR FROM COMPLIANCEWITH REQUIREMENTS OF THE DRAWINGS AND SPECIFICATIONS. THIS CHECK IS ONLY FOR REVIEW OF GENERAL CONFORMANCE WITH THE DESIGN CONCEPT OF THE PROJECT AND GENERAL COMPLIANCE WITH THE INFORMATION GIVEN IN THE CONTRACT DOCUMENTS. THE CONTRACTOR IS RESPOINSIBLE FOR: CONFIRMING AND CORRELATING ALL QUANTITIES AND DIMENSIONS: SELECTING FABRICATION PROCESSES AND TECHNIQUES OF CONSTRUCTION: COORDINATING THEIR WORK WITH THAT OF ALL OTHER TRADES: AND PERFORMING THEIR WORK IN A SAFE AND SATISFACTORY MANNER.

CLD Consulting Engineers
540 Commercial Street
Manchester, NH 03101
603-668-8223

Job Number: 12-0106
Reviewed by: NDC
Date: 5/12/16

Barker Steel LLC
PO Box 553
450 US Route 4
Canaan, NH 03741
USA

MATERIAL BAR LIST

Job No.: 33505883
Job Name: Lunenburg NH CULV (27)
Sell-To Customer: J10362 - J. A. Mcdonald
Release No.: 0003
Release Description: ARCH WALLS 1 & 2 PH. II

Ship To: Lunenburg NH CULV (27)
US Route 2, Approx 0.9 Miles W of
Lunenburg/Guildhall Town Line
Lunenburg, VT 05096

Shipping Agent:

Prepared By: ADM
Drawing Set No.: LIST
Drawing Sheet No.: LIST
Mill Cert. Required: Yes
Bending On Site: No
Cert. of Comp.:

Bill of Lading No.:
Load No.:
Shipping Location: Canaan
Tag Color/Code:

Expected Ship Date: 01/01/29
Bar Weight (Lb) 904
Bar Weight (Ton) 0.452
Total No. of Bars: 78
Longest Bar: 28'-4

Bid Item No.: 507.11 **Grade Group:** 60B (A615-60 Black)

Quantity	Bar Size	Bend Type	Vary Group	Bar Mark	Length	A	B	C	D	E	F	G	H	J	K	O	R	Weight (Lb)
29	5	17		1A503	5'-2		1'-9	1'-8	1'-9									156.00
29	5	17		2A503	5'-2		1'-9	1'-8	1'-9									156.00
10	5	0		1A501	28'-4		28'-4											296.00
10	5	0		2A501	28'-4		28'-4											296.00

Bar Size Summary

Bar Size	Quantity	Weight (Lb)
5	78	904.00

Vermont Agency of Transportation
Lunenburg_Rebar Resubmittal_Stamped_Flattened.pdf
RECEIVED
ON: May 12, 2016
and Checked for
CONFORMANCE
BY: Danny Landry DATE: 05/18/16

SHOP DRAWING REVIEW

[X] REVIEWED AS REQUIRED BY THE CONSTRUCTION CONTRACT DOCUMENTS AND APPROVED, BUT ONLY FOR CONFORMANCE TO THE DESIGN CONCEPT OF THE WORK, AND SUBJECT TO FURTHER LIMITATIONS AND REQUIREMENTS CONTAINED IN THE CONSTRUCTION CONTRACT DOCUMENTS.

[ ] REJECTED [ ] REVISE AND RESUBMIT [ ] APPROVED AS NOTED

CORRECTIONS OR COMMENTS MADE ON THE SHOP DRAWINGS DURING THIS REVIEW DID NOT RELIEVE CONTRACTOR FROM COMPLIANCEWITH REQUIREMENTS OF THE DRAWINGS AND SPECIFICATIONS. THIS CHECK IS ONLY FOR REVIEW OF GENERAL CONFORMANCE WITH THE DESIGN CONCEPT OF THE PROJECT AND GENERAL COMPLIANCE WITH THE INFORMATION GIVEN IN THE CONTRACT DOCUMENTS. THE CONTRACTOR IS RESPOINSIBLE FOR: CONFIRMING AND CORRELATING ALL QUANTITIES AND DIMENSIONS: SELECTING FABRICATION PROCESSES AND TECHNIQUES OF CONSTRUCTION: COORDINATING THEIR WORK WITH THAT OF ALL OTHER TRADES: AND PERFORMING THEIR WORK IN A SAFE AND SATISFACTORY MANNER.

CLD Consulting Engineers
540 Commercial Street
Manchester, NH 03101
603-668-8223

Job Number: 12-0106
Reviewed by: NDC
Date: 5/12/16

SHOP DRAWING REVIEW

REVIEWED AS REQUIRED BY THE CONSTRUCTION CONTRACT DOCUMENTS AND APPROVED, BUT ONLY FOR CONFORMANCE TO THE DESIGN CONCEPT OF THE WORK, AND SUBJECT TO FURTHER LIMITATIONS AND REQUIREMENTS CONTAINED IN THE CONSTRUCTION CONTRACT DOCUMENTS.

☐ REJECTED ☐ REVISE AND RESUBMIT ☒ APPROVED AS NOTED

CORRECTIONS OR COMMENTS MADE ON THE SHOP DRAWINGS DURING THIS REVIEW DID NOT RELIEVE CONTRACTOR FROM COMPLIANCE WITH REQUIREMENTS OF THE DRAWINGS AND SPECIFICATIONS. THIS CHECK IS ONLY FOR REVIEW OF GENERAL CONFORMANCE WITH THE DESIGN CONCEPT OF THE PROJECT AND GENERAL COMPLIANCE WITH THE INFORMATION GIVEN IN THE CONTRACT DOCUMENTS. THE CONTRACTOR IS RESPONSIBLE FOR CONFIRMING AND CORRELATING ALL QUANTITIES AND DIMENSIONS; SELECTING FABRICATION PROCESSES AND TECHNIQUES OF CONSTRUCTION; COORDINATING THEIR WORK WITH THAT OF ALL OTHER TRADES; AND PERFORMING THEIR WORK IN A SAFE AND SATISFACTORY MANNER.

CLD Consulting Engineers
540 Commercial Street
Manchester, NH 03101
603-668-8223

Job Number: 12-0106
Reviewed by: NDC
Date: 5/12/16

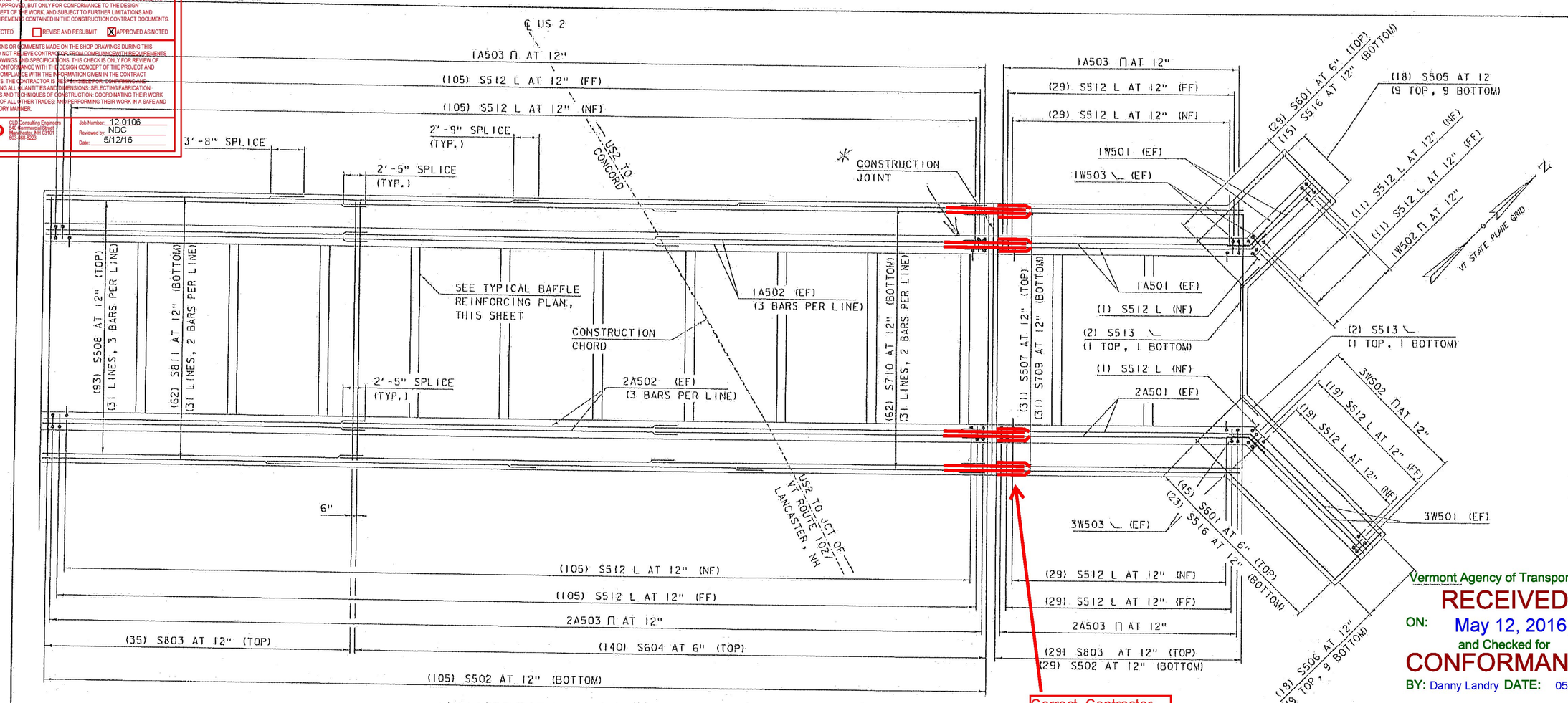

MAT FOUNDATION AND PEDESTAL WALL REINFORCING PLAN
SCALE: 3/16" = 1'-0"

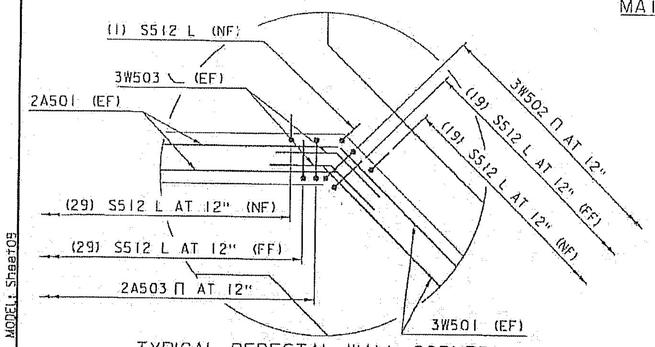

TYPICAL PEDESTAL WALL CORNER REINFORCING SECTION
(NE CORNER SHOWN, NW CORNER SIMILAR)
SCALE: 3/4" = 1'-0"

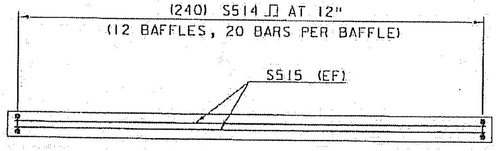

TYPICAL BAFFLE REINFORCING PLAN
SCALE: 3/8" = 1'-0"

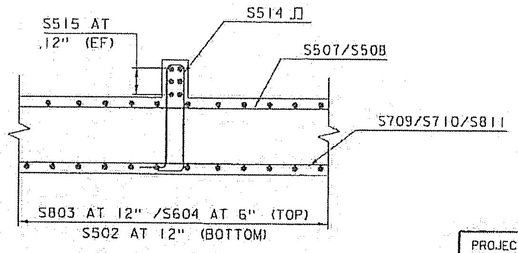

TYPICAL BAFFLE REINFORCING SECTION
SCALE: 3/8" = 1'-0"

Correct, Contractor please note that rebar splice should be in Phase II pour.

* Construction Joint: Rebar overlap at construction joint is shown on wrong side of joint. See revised rebar schedule for adjusted bar lengths.

NOTES:
NF = NEAR FACE
FF = FAR FACE
EF = EACH FACE
3" CLEAR IN MAT FOUNDATION,
2" CLEAR AT ALL OTHER LOCATIONS.
2'-5" BAR LAP UNLESS OTHERWISE SPECIFIED ON THE PLANS

Vermont Agency of Transportation
RECEIVED
ON: May 12, 2016
and Checked for
CONFORMANCE
BY: Danny Landry DATE: 05/18/16

PROJECT NAME:	LUNENBURG
PROJECT NUMBER:	NH CULV(27)
FILE NAME: llb294/cos/zllb294sub.dgn	PLOT DATE: 8/6/2015
PROJECT LEADER: J. BYATT	DRAWN BY: M. SMITH
DESIGNED BY: S. BEAUMONT	CHECKED BY: N. CARON
SUBSTRUCTURE REINFORCING SHEET 1	SHEET 47 OF 74

CLD 12-0106 MODEL: Sheet05

Vermont Agency of Transportation

RECEIVED

ON: May 12, 2016

and Checked for

CONFORMANCE

BY: Danny Landry DATE: 05/18/16

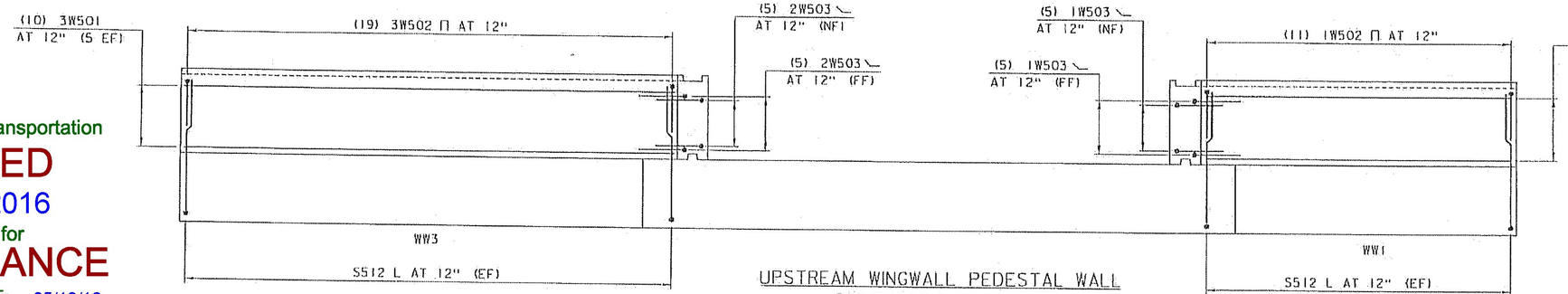

UPSTREAM WINGWALL PEDESTAL WALL REINFORCING ELEVATION

SCALE: 3/8" = 1'-0"

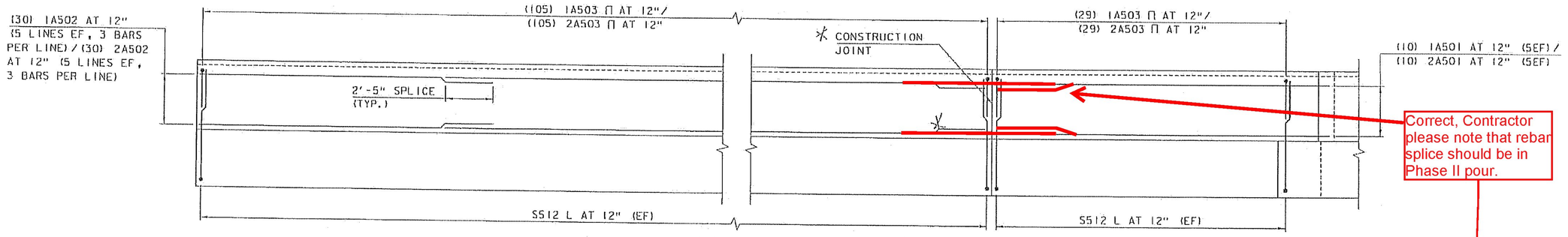

ARCH AND DOWNSTREAM WINGWALL PEDESTAL WALL REINFORCING ELEVATION

SCALE: 3/8" = 1'-0"

Correct, Contractor please note that rebar splice should be in Phase II pour.

* Construction Joint: Rebar overlap at Construction joint is shown on wrong side of joint. See revised rebar Schedule for adjusted bar lengths.

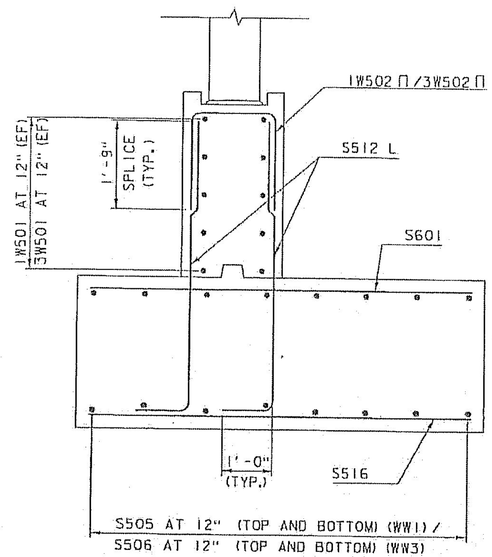

TYPICAL UPSTREAM WINGWALL FOOTING REINFORCING SECTION

SCALE: 3/4" = 1'-0"

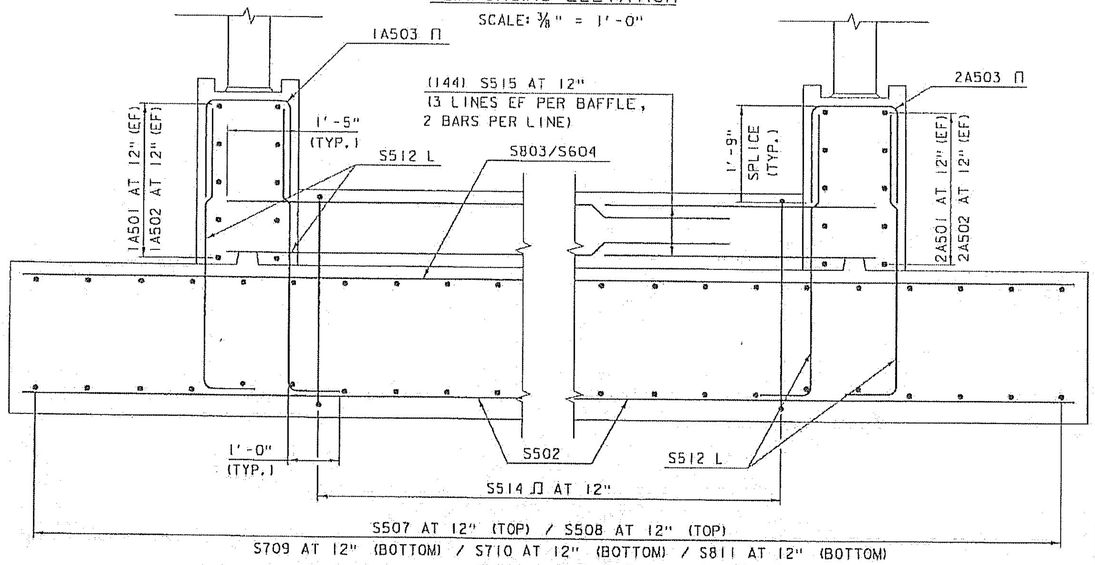

TYPICAL ARCH MAT FOUNDATION REINFORCING SECTION (AT BAFFLE)

(TYPICAL DOWNSTREAM WINGWALL MAT FOUNDATION REINFORCING SECTION SIMILAR)

SCALE: 3/4" = 1'-0"

NOTES:

NF = NEAR FACE
FF = FAR FACE
EF = EACH FACE
3" CLEAR IN MAT FOUNDATION,
2" CLEAR AT ALL OTHER LOCATIONS.
2'-5" BAR LAP UNLESS OTHERWISE SPECIFIED ON THE PLANS

SHOP DRAWING REVIEW

☐ REVIEWED AS REQUIRED BY THE CONSTRUCTION CONTRACT DOCUMENTS AND APPROVED, BUT ONLY FOR CONFORMANCE TO THE DESIGN CONCEPT OF THE WORK, AND SUBJECT TO FURTHER LIMITATIONS AND REQUIREMENTS CONTAINED IN THE CONSTRUCTION CONTRACT DOCUMENTS.

☐ REJECTED ☐ REVISE AND RESUBMIT ☒ APPROVED AS NOTED

CORRECTIONS OR COMMENTS MADE ON THE SHOP DRAWINGS DURING THIS REVIEW DID NOT RELIEVE CONTRACTOR FROM COMPLIANCEWITH REQUIREMENTS OF THE DRAWINGS AND SPECIFICATIONS. THIS CHECK IS ONLY FOR REVIEW OF GENERAL CONFORMANCE WITH THE DESIGN CONCEPT OF THE PROJECT AND GENERAL COMPLIANCE WITH THE INFORMATION GIVEN IN THE CONTRACT DOCUMENTS. THE CONTRACTOR IS RESPONSIBLE FOR: CONFIRMING AND CORRELATING ALL QUANTITIES AND DIMENSIONS; SELECTING FABRICATION PROCESSES AND TECHNIQUES OF CONSTRUCTION; COORDINATING THEIR WORK WITH THAT OF ALL OTHER TRADES; AND PERFORMING THEIR WORK IN A SAFE AND SATISFACTORY MANNER.

CLD Consulting Engineers
540 Commercial Street
Manchester, NH 03101
603-668-8223

Job Number: 12-0106
Reviewed by: NDC
Date: 5/12/16

PROJECT NAME:	LUNENBURG
PROJECT NUMBER:	NH CULV(27)
FILE NAME:	llb294/cos/zllb294sub.dgn
PROJECT LEADER:	J. BYATT
DESIGNED BY:	S. BEAUMONT
SUBSTRUCTURE REINFORCING SHEET 2	
PLOT DATE:	8/6/2015
DRAWN BY:	M. SMITH
CHECKED BY:	J. BYATT
SHEET	48 OF 74

CLD 12-0106 MODEL: Sheet10