STATE OF VERMONT
AGENCY OF TRANSPORTATION

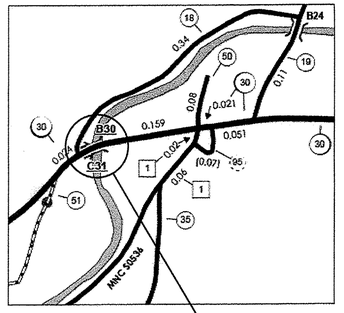

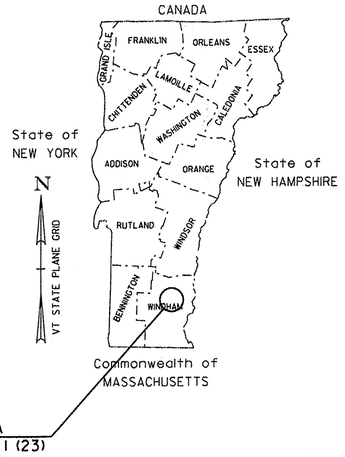

RECORD PLANS

CONTRACTOR: MILLER CONSTRUCTION, INC – WINDSOR, VT

RESIDENT ENGINEER: CHAD GREENWOOD

CONSTRUCTION BEGAN: APRIL 16, 2013

CONSTRUCTION COMPLETE: SEPTEMBER 20, 2014

RECORD PLANS BY: CHAD GREENWOOD & KEVIN KING

I HEREBY CERTIFY THAT ALL THE CONSTRUCTION REQUIRED BY THIS SET OF DRAWINGS HAS BEEN ACCOMPLISHED AS INDICATED HEREIN.

BY _____ RESIDENT ENGINEER

DATE 5/19/16

NOTE: Any further information concerning final quantities, amounts or other details relative to this project may be found at Central Files in the electronic archives.

PROPOSED IMPROVEMENT
BRIDGE PROJECT

TOWN OF JAMAICA

COUNTY OF WINDHAM

ROUTE NO : VT RTE 30 (MINOR ARTERIAL) BRIDGE NO : 30

PROJECT LOCATION : LOCATED 4.8 MILES SOUTH OF THE NORTHERN JUNCTION OF VT 100 AND VT 30 AT MILE MARKER 3.99 (STA 209+75) AND PROCEEDS SOUTHWESTERLY FOR 375 FEET TO MILE MARKER 4.06 (STA 213+50).

PROJECT DESCRIPTION : REPLACE EXISTING BRIDGE AND BOX CULVERT WITH RELATED ROADWAY APPROACH AND CHANNEL WORK.

LENGTH OF STRUCTURE : 131.66 FEET.
LENGTH OF ROADWAY : 243.34 FEET.
LENGTH OF PROJECT : 375.00 FEET.

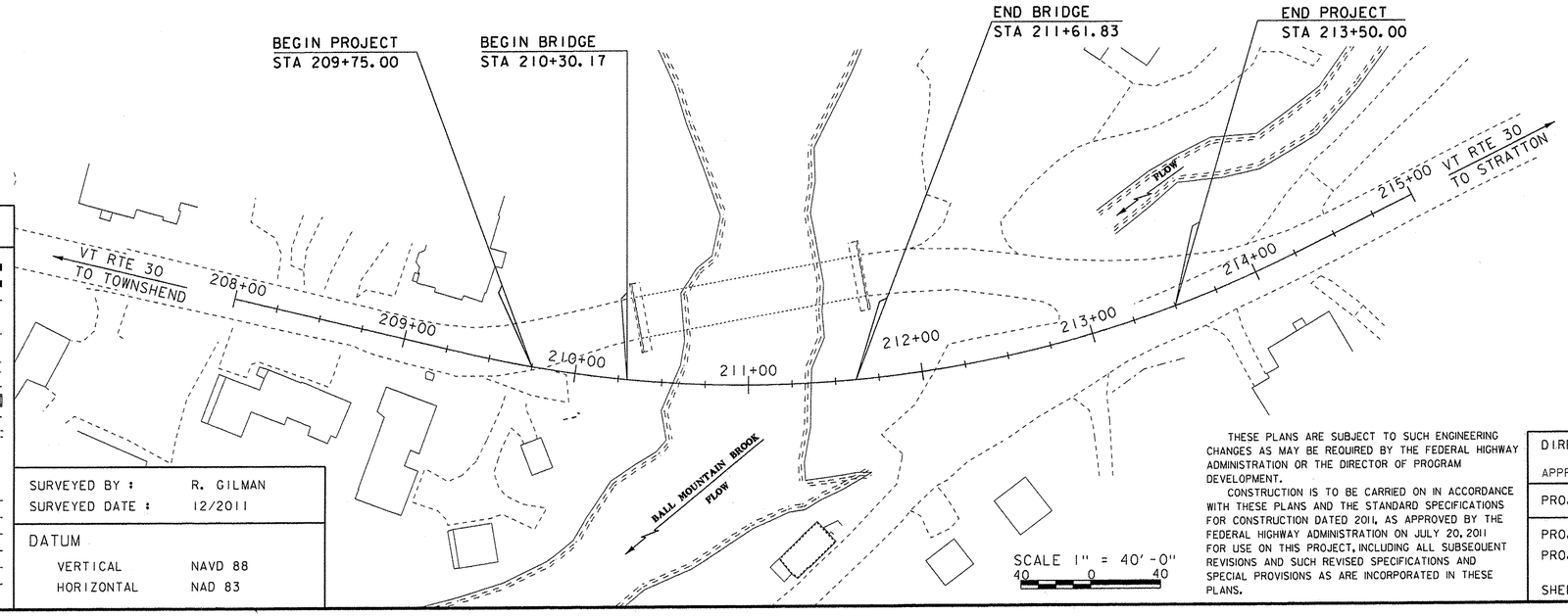

QUALITY ASSURANCE PROGRAM: LEVEL 2

CONVENTIONAL SYMBOLS

COUNTY LINE
TOWN LINE
LIMITS OF ACCESS
POINT OF ACCESS
FENCE LINE
STONE WALL
TRAVELED WAY
GUARD RAIL
RAILROAD
SURVEY LINE
CULVERT
POWER POLE
TELEPHONE POLE
TREES
CONTROL OF ACCESS
PROPERTY LINE
R.O.W. TAKING LINE
SLOPE RIGHTS
TOP OF CUT
TOE OF SLOPE

SURVEYED BY : R. GILMAN
SURVEYED DATE : 12/2011

DATUM
VERTICAL NAVD 88
HORIZONTAL NAD 83

THESE PLANS ARE SUBJECT TO SUCH ENGINEERING CHANGES AS MAY BE REQUIRED BY THE FEDERAL HIGHWAY ADMINISTRATION OR THE DIRECTOR OF PROGRAM DEVELOPMENT.

CONSTRUCTION IS TO BE CARRIED ON IN ACCORDANCE WITH THESE PLANS AND THE STANDARD SPECIFICATIONS FOR CONSTRUCTION DATED 2011, AS APPROVED BY THE FEDERAL HIGHWAY ADMINISTRATION ON JULY 20, 2011 FOR USE ON THIS PROJECT, INCLUDING ALL SUBSEQUENT REVISIONS AND SUCH REVISED SPECIFICATIONS AND SPECIAL PROVISIONS AS ARE INCORPORATED IN THESE PLANS.

DIRECTOR OF PROGRAM DEVELOPMENT
APPROVED _____ DATE 11-29-12

PROJECT MANAGER : KRISTIN HIGGINS

PROJECT NAME : JAMAICA
PROJECT NUMBER : ER-BRF 015-1 (23)

SHEET 1 OF 82 SHEETS

STATE OF VERMONT
AGENCY OF TRANSPORTATION

PRELIMINARY INFORMATION SHEET (BRIDGE)

Version 11.06.15

LRFD

INDEX OF SHEETS

PLAN SHEETS

1	TITLE SHEET
2	PRELIMINARY INFORMATION SHEET (BRIDGE)
3	PRELIMINARY INFORMATION SHEET (BOX CULVERT)
4	GENERAL NOTES
5 - 7	QUANTITY SHEET 1-3
8	BRIDGE QUANTITY SHEET
9 - 10	TYPICAL SECTIONS 1-2
11	TIE SHEET
12	ALIGNMENT
13 - 14	LAYOUT 1-2
15 - 16	MAINLINE PROFILE 1-2
17	FIRE DRIVE & WATER STREET PROFILES
18	BOX CULVERT PROFILE
19	DRAINAGE PIPE PROFILE
20	DRAINAGE DETAIL SHEET
21 - 22	SIGN & PAVEMENT MARKINGS 1-2
23	PROPOSED UTILITY LAYOUT
24	RAIL LAYOUT
25	BRIDGE RAIL DETAILS
26	APPROACH RAIL WW1 AND WW3
27	APPROACH RAIL WW2 AND WW4
28 - 29	APPROACH RAIL DETAILS 1-2
30	BORING LAYOUT SHEET
31 - 33	BORING LOGS 1-3
34	DECK REINFORCING PLAN
35	FRAMING PLAN & GIRDER ELEVATION
36	CAMBER & DEFLECTION
37	BEARING DETAILS
38	APPROACH SLAB DETAILS
39 - 40	ABUTMENTS 1-2
41 - 42	WINGWALLS 1-2
43	BOX LAYOUT
44	EPSC NARRATIVE
45 - 46	EPSC EXISTING CONDITIONS SHEET 1-2
47 - 48	EPSC DURING CONSTRUCTION SHEET 1-2
49 - 50	EPSC FINAL CONDITIONS SHEET 1-2
51 - 53	EPSC DETAILS 1-3
54 - 55	MATERIAL TRANSITION / BANKING DIAGRAMS 1-2
56 - 61	MAINLINE SECTIONS 1-6
62 - 63	WATER STREET SECTIONS 1-2
64 - 65	FIRE DRIVE SECTIONS 1-2
66 - 69	BOX CULVERT SECTIONS 1-4
70 - 79	CHANNEL SECTIONS 1-10
80	ROW DETAIL SHEET
81 - 82	ROW LAYOUT SHEETS 1-2

STANDARDS LIST

C-2A	PORTLAND CEMENT CONCRETE SIDEWALK DRIVE ENTRANCES WITH SIDEWALK A	10-14-2005
C-10	CURBING	02-11-2008
D-1	PRECAST REINFORCED CONCRETE DROP INLET DETAILS	06-01-1994
E-100	CONSTRUCTION APPROACH SIGNS	01-02-2004
E-100A	SIDE ROAD CONSTRUCTION - APPROACH SIGNS	01-02-2004
E-101	CONSTRUCTION SIGN DETAILS	05-30-2003
E-102	CONSTRUCTION SIGN DETAILS	06-30-2003
E-102A	CONSTRUCTION SIGN DETAILS	05-01-2004
E-107	DELINEATION, BARRICADES AND DETOURS FOR CONSTRUCTION AREAS	06-30-2003
E-107A	BREAKAWAY BARRICADE DETAILS	06-08-2009
E-121	STANDARD SIGN PLACEMENT - CONVENTIONAL ROAD	08-08-1995
E-134	BRIDGE NUMBER PLAQUE	08-08-1995
E-140	REGULATORY SIGN DETAILS	08-30-1996
E-141	REGULATORY SIGN DETAILS	09-20-1995
E-143	REGULATORY SIGN DETAILS	06-15-2004
E-152	WARNING SIGN DETAILS	05-01-2004
E-154	WARNING SIGN DETAILS	05-01-2004
E-164	SQUARE STEEL SIGN POST	06-08-2009
E-191	PAVEMENT MARKING DETAILS	02-01-1999
E-193	PAVEMENT MARKING DETAILS	08-18-1995
G-1B	BOX BEAM GUARD RAIL	06-01-1994
S-352A	BRIDGE RAILING, GALVANIZED STEEL TUBING/CONCRETE COMBINATION	08-22-2012
S-352B	BRIDGE RAILING, GALVANIZED STEEL TUBING/CONCRETE COMBINATION	08-22-2012
S-352C	BRIDGE RAILING, GALVANIZED STEEL TUBING/CONCRETE COMBINATION	08-22-2012

STRUCTURES DETAILS

SD-501.00	CONCRETE DETAILS AND NOTES	04-07-2010
SD-502.00	CONCRETE DETAILS AND NOTES	05-04-2010
SD-516.10	BRIDGE JOINT ASPHALTIC PLUG	04-07-2010
SD-601.00	STRUCTURAL STEEL DETAILS & NOTES	05-04-2010
SD-602.00	STRUCTURAL STEEL PLATE GIRDER DETAILS AND NOTES	04-02-2011

AS BUILT "REBAR" DETAIL

LEVEL I	LEVEL II	LEVEL III
TYPE:	TYPE:	TYPE:
GRADE:	GRADE:	GRADE:

TRAFFIC DATA

YEAR	ADT	DHV	% D	% T	ADTT
2013	2700	440	53	9	240
2033	2900	480	53	14.5	410

20 year ESAL for flexible pavement from 2013 to 2033 : 1219000

40 year ESAL for flexible pavement from 2013 to 2053 : 2834000

Design Speed : 30 mph

FINAL HYDRAULIC REPORT

HYDROLOGIC DATA

Date: March 2012

DRAINAGE AREA : 33.4 sq. mi.
CHARACTER OF TERRAIN : Hilly to mountainous, mostly forested with some open areas
STREAM CHARACTERISTICS : Sinuous and alluvial. Currently flood damaged and unstable.
NATURE OF STREAMBED : Mostly cobbles with some gravel and boulders

PEAK FLOW DATA

Q 2.33 =	2,400 cfs	Q 50 =	9,300 cfs
Q 10 =	5,100 cfs	Q 100 =	11,500 cfs
Q 25 =	7,200 cfs	Q 500 =	19,000 cfs

DATE OF FLOOD OF RECORD : Unknown
ESTIMATED DISCHARGE: Unknown
WATER SURFACE ELEV.: Unknown
NATURAL STREAM VELOCITY : @ Q50 = 18.1 fps
ICE CONDITIONS : Moderate
DEBRIS: Moderate
DOES THE STREAM REACH MAXIMUM HIGHWATER ELEV. RAPIDLY? Yes
IS ORDINARY RISE RAPID? Yes
IS STAGE AFFECTED BY UPSTREAM OR DOWNSTREAM CONDITIONS? No
IF YES, DESCRIBE:

WATERSHED STORAGE: < 1%
HEADWATERS:
UNIFORM: X
IMMEDIATELY ABOVE SITE:

EXISTING STRUCTURE INFORMATION

STRUCTURE TYPE: Two span steel beam bridge with concrete deck. Removed in 2011.
YEAR BUILT: Built in 1936 and widened in 1979
CLEAR SPAN(NORMAL TO STREAM): Two 55' clear spans = 110' total clear span
VERTICAL CLEARANCE ABOVE STREAMBED: 14' maximun on upstream side
WATERWAY OF FULL OPENING: 1040 sq. ft.
DISPOSITION OF STRUCTURE: It has been removed.
TYPE OF MATERIAL UNDER SUBSTRUCTURE: See boring logs.

WATER SURFACE ELEVATIONS AT:

Q2.33 =	723.7'	VELOCITY =	9.9 fps
Q10 =	726.0'	"	13.9 fps
Q25 =	727.4'	"	14.0 fps
Q50 =	728.6'	"	15.2 fps
Q100 =	729.6'	"	16.3 fps

LONG TERM STREAMBED CHANGES: Up to 6' of channel degradation and scour from 1936 to 2007. Recent flooding changed the river and future changes are expected.

IS THE ROADWAY OVERTOPPED BELOW Q100: No
FREQUENCY: Above Q100
RELIEF ELEVATION: 729.5' within project survey limits
DISCHARGE OVER ROAD @Q100: None

UPSTREAM STRUCTURE

TOWN:	Jamaica	DISTANCE:	4500'
HIGHWAY # :	TH 1	STRUCTURE #:	22
CLEAR SPAN:	52'	CLEAR HEIGHT:	16'
YEAR BUILT:	1939	FULL WATERWAY:	
STRUCTURE TYPE:	Single span bridge		

DOWNSTREAM STRUCTURE

TOWN:	Jamaica	DISTANCE:	1700'
HIGHWAY # :	TH 19	STRUCTURE #:	24
CLEAR SPAN:	58' +58' = 116' total	CLEAR HEIGHT:	14'
YEAR BUILT:	1939	FULL WATERWAY:	
STRUCTURE TYPE:	Two span bridge		

LRFR LOAD RATING FACTORS

LOADING LEVELS	TRUCK						
	H-20	HL-93	3S2	6 AXLE	3A STR.	4A STR.	5A SEMI
TONNAGE	20	36	36	66	30	34.5	38
INVENTORY	2.95	1.2					
POSTING							
OPERATING	3.82	1.56	2.57	1.54	2.64	2.32	2.32
COMMENTS:							

PILE DRIVING AND TESTING REQUIREMENTS

1. NOMINAL PILE DRIVING CAPACITY — Rndr: SEE GEN. NOTES
2. PILE TEST RESISTANCE FACTOR — ϕ: 0.65
3. MAXIMUM PILE TIP ELEVATION — SEE GEN. NOTES
4. A MINIMUM OF 3 DYNAMIC TESTS SHALL BE PERFORMED DURING INSTALLATION. NO LESS THAN 1 TEST SHALL BE PERFORMED AT EACH ABUTMENT. THE REMAINING PILES SHALL BE CALIBRATED BY WAVE EQUATION ANALYSIS.

PROPOSED STRUCTURE

STRUCTURE TYPE: Single span curved plate girder bridge

CLEAR SPAN(NORMAL TO STREAM): 123'
VERTICAL CLEARANCE ABOVE STREAMBED: 14'
WATERWAY OF FULL OPENING: 1100 sq. ft.

WATER SURFACE ELEVATIONS AT:

Q2.33 =	723.7'	VELOCITY=	9.8 fps
Q10 =	726.0'	"	12.5 fps
Q25 =	727.4'	"	13.8 fps
Q50 =	728.6'	"	16.9 fps
Q100 =	729.6'	"	16.2 fps

IS THE ROADWAY OVERTOPPED BELOW Q100: No
FREQUENCY: Above Q100
RELIEF ELEVATION: 729.5' within project survey limits
DISCHARGE OVER ROAD @Q100: None

AVERAGE LOW ELEVATION OF SUPERSTRUCTURE: 729.6'
VERTICAL CLEARANCE: @ Q50 = 1.0'

SCOUR: 3' of contraction scour up to Q100 and Q500. An additional 5' of long term stream degradation estimated, for a total of 8' of channel scour. Other flood related changes possible.
REQUIRED CHANNEL PROTECTION: Stone Fill, Type IV

PERMIT INFORMATION

AVERAGE DAILY FLOW:	70 cfs	DEPTH OR ELEVATION:
ORDINARY LOW WATER:	30 cfs	Depth = 1'
ORDINARY HIGH WATER:	1030 cfs	Depth = 4'

TEMPORARY BRIDGE REQUIREMENTS

STRUCTURE TYPE: Temporary bridge already in place
CLEAR SPAN (NORMAL TO STREAM):
VERTICAL CLEARANCE ABOVE STREAMBED:
WATERWAY AREA OF FULL OPENING:

ADDITIONAL INFORMATION

Existing bridge hydraulics based on the former bridge geometry placed on new post-flood survey. That may not represent the actual pre-flood existing bridge conditions, but it provides an accurate comparison between the former bridge and proposed bridge.

TEMP. IN PLACE

DESIGN VALUES

1. DESIGN LIVE LOAD		HL-93
2. FUTURE PAVEMENT	d_p:	3.0 INCH
3. DESIGN SPAN	L:	130.00 FT
4. MIN. MID-SPAN POS. CAMBER @ RELEASE (PRESTRESSED UNITS)	Δ:	---
5. PRESTRESSING STRAND	f_y:	---
6. PRESTRESSED CONCRETE STRENGTH	f'_c:	6.0 KSI
7. PRESTRESSED CONCRETE RELEASE STRENGTH	f'_{ci}:	5.0 KSI
8. CONCRETE, HIGH PERFORMANCE CLASS AA	f'_c:	4.0 KSI
9. CONCRETE, HIGH PERFORMANCE CLASS A	f'_c:	4.0 KSI
10. CONCRETE, HIGH PERFORMANCE CLASS B	f'_c:	3.5 KSI
11. CONCRETE, CLASS C	f'_c:	3.0 KSI
12. REINFORCING STEEL	f_y:	60 KSI
13. STRUCTURAL STEEL AASHTO M270 (WEATHERING)	f_y:	50 KSI
14. SOIL UNIT WEIGHT	γ:	0.140 KCF
15. NOMINAL BEARING RESISTANCE OF SOIL	q_n:	4.0 KSF
16. SOIL BEARING RESISTANCE FACTOR (REFER TO AASHTO LRFD)	ϕ:	---
17. NOMINAL BEARING RESISTANCE OF ROCK	q_n:	10.0 KSF
18. ROCK BEARING RESISTANCE FACTOR (REFER TO AASHTO LRFD)	ϕ:	---
19. NOMINAL AXIAL PILE RESISTANCE	q_p:	SEE GEN. NOTES
20. PILE YIELD STRENGTH ASTM A572	f_y:	50 KSI
21. PILE SIZE		HP 12X 84
22. EST. PILE LENGTH	L_p:	
23. PILE RESISTANCE FACTOR	ϕ:	---
24. LATERAL PILE DEFLECTION	Δ:	---
25. BASIC WIND SPEED	V_{3s}:	---
26. MINIMUM GROUND SNOW LOAD	p_g:	---
27. SEISMIC DATA PGA: ---	S_s:	---
	S_1:	---

PROJECT NAME: **JAMAICA**
PROJECT NUMBER: **ER-BRF 015-1(23)**

FILE NAME: **s11b316pi.xls**
PROJECT LEADER: **K. HIGGINS**
DESIGNED BY: **G. LAROCHE**
PRELIMINARY INFORMATION SHEET (BRIDGE)

PLOT DATE: 1/3/2013
DRAWN BY: **K. FRIEDLAND**
CHECKED BY: **J. SALVATORI**
SHEET 2 OF 82

STATE OF VERMONT
AGENCY OF TRANSPORTATION

PRELIMINARY INFORMATION SHEET (CULVERT)

Version 11.06.15

LRFD

INDEX OF SHEETS

PLAN SHEETS

STANDARDS LIST

TRAFFIC DATA

YEAR	ADT	DHV	% D	% T	ADTT
0	0	0	0	0	0
XXXX	0	0	0	0	0

~~20 year ESAL for flexible pavement from XXXX to XXXX : 0~~

~~40 year ESAL for flexible pavement from XXXX to XXXX : 0~~

~~Design Speed : 0 mph~~

FINAL HYDRAULIC REPORT

HYDROLOGIC DATA

Date: June 2012

DRAINAGE AREA : 1.9 sq. mi.
CHARACTER OF TERRAIN : Hilly to mountainous, mostly forested, drainage basin
STREAM CHARACTERISTICS : Small perenial stream. Sinuous and semi-alluvial.
NATURE OF STREAMBED : Mostly cobbles with some gravel and boulders

PEAK FLOW DATA

Q 2.33 =	150 cfs	Q 50 =	550 cfs
Q 10 =	340 cfs	Q 100 =	650 cfs
Q 25 =	450 cfs	Q 500 =	900 cfs

DATE OF FLOOD OF RECORD : unknown
ESTIMATED DISCHARGE: unknown
WATER SURFACE ELEV.: unknown
NATURAL STREAM VELOCITY : @ Q50 = 13.5 fps
ICE CONDITIONS : Moderate
DEBRIS: Moderate
DOES THE STREAM REACH MAXIMUM HIGHWATER ELEV. RAPIDLY? Yes
IS ORDINARY RISE RAPID? Yes
IS STAGE AFFECTED BY UPSTREAM OR DOWNSTREAM CONDITIONS? No
IF YES, DESCRIBE:

WATERSHED STORAGE: < 1%
HEADWATERS:
UNIFORM: X
IMMEDIATELY ABOVE SITE:

EXISTING STRUCTURE INFORMATION

STRUCTURE TYPE: Concrete box
YEAR BUILT: 1936
CLEAR SPAN(NORMAL TO STREAM): 7'
VERTICAL CLEARANCE ABOVE STREAMBED: 7'
WATERWAY OF FULL OPENING: 49 sq. ft.
DISPOSITION OF STRUCTURE: Remove
TYPE OF MATERIAL UNDER SUBSTRUCTURE: unknown

WATER SURFACE ELEVATIONS AT:

Q2.33 =	728.1'	VELOCITY =	14.6 fps
Q10 =	731.0'	"	17.5 fps
Q25 =	732.7'	"	18.6 fps
Q50 =	734.3'	"	19.3 fps
Q100 =	734.9'	"	19.6 fps

LONG TERM STREAMBED CHANGES: None known

IS THE ROADWAY OVERTOPPED BELOW Q100: Water overtops drive before road
FREQUENCY: Fire department drive overtopped at slightly less than Q50.
RELIEF ELEVATION: 734.0'
DISCHARGE OVER ROAD @Q100: 76 cfs over drive at Q100

UPSTREAM STRUCTURE

TOWN: Jamaica — DISTANCE: 400'
HIGHWAY # : TH 52 — STRUCTURE #: 18
CLEAR SPAN: 11' — CLEAR HEIGHT: 5'
YEAR BUILT: unknown — FULL WATERWAY: 55 sq. ft.
STRUCTURE TYPE: Bridge

DOWNSTREAM STRUCTURE

TOWN: N.A. - confluence with Ball Mountain Brook — DISTANCE: < 100'
HIGHWAY # : — STRUCTURE #:
CLEAR SPAN: — CLEAR HEIGHT:
YEAR BUILT: — FULL WATERWAY:
STRUCTURE TYPE:

LRFR LOAD RATING FACTORS

LOADING LEVELS	TRUCK						
	H-20	HL-93	3S2	6 AXLE	3A. STR.	4A. STR.	5A. SEMI
TONNAGE	**20**	**36**	**36**	**66**	**30**	**34.5**	**38**
INVENTORY							
POSTING							
OPERATING	**TABLE TO BE COMPLETED BY CONTRACTOR'S DESIGNER**						
COMMENTS:							

CULVERT DESIGN CRITERIA

1. PROPOSED CULVERT IS A PRECAST CONCRETE STRUCTURE (16'-0" X 8'-0" X 85'-0" BOX).
2. CULVERT ENDS ARE SKEWED BY AN ANGLE OF VARIES°
3. CULVERT WILL BE SET AT A SLOPE OF 12.00 IN. ON 26 FT.
4. CULVERT WILL NOT REQUIRE FISH PASSAGE ACCOMMODATIONS
5. CULVERT CONSTRUCTION WILL NOT REQUIRE A TEMPORARY PIPE

PROPOSED STRUCTURE

STRUCTURE TYPE: Precast concrete box with the invert buried 3' below channel bottom.

CLEAR SPAN(NORMAL TO STREAM): 16'
VERTICAL CLEARANCE ABOVE STREAMBED: 5'
WATERWAY OF FULL OPENING: 80 sq. ft.

WATER SURFACE ELEVATIONS AT:

Q2.33 =	726.1' (726.1')*	VELOCITY=	8.6 fps (8.6')*
Q10 =	727.6' (727.6')	"	12.0 fps (8.6 fps)
Q25 =	728.3' (728.3')	"	13.3 fps (9.7 fps)
Q50 =	729.0' (730.1')	"	14.5 fps (6.9 fps)
Q100 =	729.8' (731.7')	"	15.4 fps (8.1 fps)

IS THE ROADWAY OVERTOPPED BELOW Q100: No
FREQUENCY: Above Q100
RELIEF ELEVATION: 734.3' over fire department drive
DISCHARGE OVER ROAD @Q100: No overtopping of road or drive at Q100

AVERAGE LOW ELEVATION OF SUPERSTRUCTURE: Top of box = 729.1' at inlet
VERTICAL CLEARANCE: @ Q50 = 0.1' at inlet (Inlet submerged with Q50 tailwater)

SCOUR: Not applicable for a box

REQUIRED CHANNEL PROTECTION: Stone Fill, Type III at inlet and Type IV at outlet

PERMIT INFORMATION

AVERAGE DAILY FLOW:	4 cfs	
ORDINARY LOW WATER:	2 cfs	DEPTH OR ELEVATION: Depth = < 0.5'
ORDINARY HIGH WATER:	65 cfs	Depth = 1.0'

TEMPORARY BRIDGE REQUIREMENTS

STRUCTURE TYPE: No temporary bridge needed.
CLEAR SPAN (NORMAL TO STREAM):
VERTICAL CLEARANCE ABOVE STREAMBED:
WATERWAY AREA OF FULL OPENING:

ADDITIONAL INFORMATION

* Hydraulics of the new box is affected by high tailwater on Ball Mountain Brook. Water surface elevations and velocities are first listed for conditions without Ball Mountain Brook tailwater, followed by values based on equal frequency floods on both streams in ( ).
The existing box is in inlet control, so is not affected by Ball Mountain Brook tailwater.

TEMP. IN PLACE

DESIGN VALUES

1. DESIGN LIVE LOAD		HL-93
2. FUTURE PAVEMENT	d_p:	3.0 INCH
3. CULVERT OPENING	D:	16.00 FT
4. MIN. MID-SPAN POS. CAMBER @ RELEASE (PRESTRESSED UNITS)	Δ:	---
5. PRESTRESSING STRAND	f_y:	---
6. PRESTRESSED CONCRETE STRENGTH	f'_c:	---
7. PRESTRESSED CONCRETE RELEASE STRENGTH	f'_{ci}:	---
8. CONCRETE, HIGH PERFORMANCE CLASS AA	f'_c:	---
9. CONCRETE, HIGH PERFORMANCE CLASS A	f'_c:	---
10. CONCRETE, HIGH PERFORMANCE CLASS B	f'_c:	---
11. CONCRETE, CLASS C	f'_c:	---
12. REINFORCING STEEL	f_y:	60 KSI
13. STRUCTURAL STEEL AASHTO M270	f_y:	---
14. SOIL UNIT WEIGHT	γ:	0.140 KCF
15. NOMINAL BEARING RESISTANCE OF SOIL	q_n:	4.0 KSF
16. SOIL BEARING RESISTANCE FACTOR (REFER TO AASHTO LRFD)	ϕ:	---
17. NOMINAL BEARING RESISTANCE OF ROCK	q_n:	10.0 KSF
18. ROCK BEARING RESISTANCE FACTOR (REFER TO AASHTO LRFD)	ϕ:	---
19. NOMINAL AXIAL PILE RESISTANCE	q_p:	---
20. PILE YIELD STRENGTH ASTM A572	f_y:	---
21. PILE SIZE		---
22. EST. PILE LENGTH	L_p:	
23. PILE RESISTANCE FACTOR	ϕ:	---
24. LATERAL PILE DEFLECTION	Δ:	---
25. BASIC WIND SPEED	V_{3s}:	---
26. MINIMUM GROUND SNOW LOAD	p_g:	---
27. SEISMIC DATA PGA: ---	S_s:	---
	S_1:	---

PROJECT NAME: **JAMAICA**
PROJECT NUMBER: **ER-BRF 015-1(23)**

FILE NAME: **s11b316pi_BoxCulvert.xls**
PROJECT LEADER: **K. HIGGINS**
DESIGNED BY: **G. LAROCHE**
PRELIMINARY INFO SHEET (BOX CULVERT)

PLOT DATE: 11/30/2012
DRAWN BY: **K. FRIEDLAND**
CHECKED BY: **J. SALVATORI**

GENERAL

1. ALL MATERIALS AND CONSTRUCTION SHALL CONFORM TO THE STATE OF VERMONT AGENCY OF TRANSPORTATION 2011 STANDARD SPECIFICATIONS FOR CONSTRUCTION, AND THE 2012 AASHTO LRFD BRIDGE DESIGN SPECIFICATIONS, AND THEIR LATEST REVISIONS.

2. A TEMPORARY BRIDGE WAS PLACED UPSTREAM OF THE EXISTING, FAILED STRUCTURE. REMOVAL OF THIS TEMPORARY BRIDGE AND IT'S APPROACHES SHALL BE PAID FOR UNDER ITEM 900.645 "SPECIAL PROVISION (REMOVAL OF TEMPORARY BRIDGE AND APPROACHES)". THE TEMPORARY BRIDGE IS THE PROPERTY OF VTRANS AND SHALL BE RETURNED TO THE VTRANS MAINTENANCE FACILITY IN SPRINGFIELD, VT. CONTACT HOBERT GATES AT (802) 524-5926 TO MAKE NECESSARY ARRANGEMENTS AS PER THE SPECIAL PROVISIONS.

3. DURING CONSTRUCTION, TRAFFIC SHALL BE MAINTAINED ON AN EXISTING TWO-WAY TEMPORARY BRIDGE LOCATED UPSTREAM OF THE EXISTING STRUCTURE. ALL WORK ASSOCIATED WITH THE MAINTENANCE OF THE EXISTING TEMPORARY BRIDGE AND ITS APPROACHES, INCLUDING TEMPORARY TRAFFIC BARRIER, ENERGY ABSORPTION ATTENUATORS, PAVEMENT AND PAVEMENT MARKINGS WILL BE INCLUDED IN THE UNIT PRICE FOR CONTRACT ITEM 527.10, "MAINTENANCE OF STRUCTURES AND APPROACHES".

4. PAYMENT FOR ALL NEW ON AND OFF-PROJECT CONSTRUCTION SIGNING AND TRAFFIC CONTROL DEVICES, INCLUDING DRUMS AND BARRICADES, WILL BE MADE UNDER CONTRACT ITEM 900.645, "SPECIAL PROVISION (TRAFFIC CONTROL, ALL-INCLUSIVE)".

5. FULL ACCESS TO ALL SIDE ROADS AND DRIVES WITHIN THE PROJECT LIMITS SHALL BE MAINTAINED AT ALL TIMES. THIS WORK SHALL BE CONSIDERED INCIDENTAL TO ITEM 900.645 "SPECIAL PROVISION (TRAFFIC CONTROL, ALL-INCLUSIVE)".

6. ALL DIMENSIONS SHOWN IN THE PLANS ARE HORIZONTAL OR VERTICAL AND ARE GIVEN AT 68 DEGREES FAHRENHEIT, UNLESS NOTED OTHERWISE.

7. THE CONTRACTOR SHALL INSTALL TWO GRANITE PLAQUES SUPPLIED BY THE STATE IN LOCATIONS AS SHOWN ON THE PLANS. THE PLAQUES SHALL BE INSTALLED TO THE SATISFACTION OF THE TOWN OF JAMAICA AND THE ENGINEER. INSTALLATION OF THE PLAQUES SHALL BE INCIDENTAL TO THE BRIDGE RAIL CONCRETE.

8. THE CONTRACTOR SHOULD NOTE THAT THE EXISTING TEMPORARY BRIDGE APPROACH AND APPROACH RAIL CONFLICTS WITH THE LOCATION OF WINGWALL #1. IT IS THE CONTRACTOR'S RESPONSIBILITY TO DEVELOP A PLAN, ACCEPTABLE TO THE ENGINEER, FOR THE CONSTRUCTION OF WINGWALL #1 IN ITS PROPOSED LOCATION AND DIMENSION. THIS PLAN SHALL BE SUBMITTED TO THE ENGINEER AT THE PRECONSTRUCTION MEETING. THE DEVELOPMENT OF THIS PLAN, ALL MATERIALS, LABOR, ETC. REQUIRED TO CONSTRUCT WINGWALL #1 AS PER THE CONTRACTOR'S PLAN WILL BE CONSIDERED INCLUDED IN THE BID PRICE FOR ITEM 501.33 "CONCRETE, HIGH PERFORMANCE, CLASS A"; AND ITEM 501.34 "CONCRETE, HIGH PERFORMANCE CLASS B." MECHANICAL SPLICE CONNECTORS ARE SHOWN IN THE DETAILS FOR WINGWALL #1 SHOULD THE CONTRACTOR CHOOSE TO PHASE ITS CONSTRUCTION. TEMPORARY TRAFFIC WILL BE ALLOWED ON THE NEW BRIDGE ONCE THE DECK HAS CURED AND PROVISIONS HAVE BEEN MADE FOR SAFE VEHICULAR TRAVEL. THE APPROACH SLAB AT ABUTMENT #1 NEED NOT BE IN PLACE FOR TEMPORARY TRAFFIC.

EARTHWORK AND RELATED ITEMS

9. THE "STONE FILL, TYPE IV" UNDER THE BRIDGE AS SHOWN IN THE PLANS SHALL BE PLACED BEFORE THE NEW STEEL GIRDERS ARE SET.

STRUCTURAL STEEL

10. STRUCTURAL STEEL MEMBERS DESIGNATED "CVN" IN THE PLANS SHALL BE CHARPY V-NOTCH TESTED IN ACCORDANCE WITH SUBSECTION 714.01.

11. ANY HOLES IN THE WEBS OF FASCIA GIRDERS NOT OTHERWISE FILLED SHALL BE FILLED WITH BUTTON HEAD BOLTS. THESE BOLTS SHALL BE TIGHTENED IN ACCORDANCE WITH SUBSECTIONS 506.19.

12. ANY CONNECTIONS NOT DETAILED ON THE PLANS SHALL BE DETAILED BY THE FABRICATOR AND SUBMITTED TO THE STRUCTURES ENGINEER FOR APPROVAL.

13. ALL WELDING SHALL CONFORM TO THE PROVISIONS OF SUBSECTION 506.10.

14. ALL FIELD CONNECTIONS SHALL BE MADE WITH 7/8" DIAMETER HIGH STRENGTH BOLTS IN 15/16" DIAMETER HOLES, PER SECTION 506 UNLESS OTHERWISE NOTED.

15. FLEMING BRACKETS OR SIMILAR FALSE WORK SHALL BE PLACED AT A MAXIMUM SPACING OF 4 FEET. THE BRACKETS SHALL BEAR NEAR THE BOTTOM FLANGE AND IN NO CASE SHALL THEY BEAR ABOVE THE BOTTOM QUARTER WEB.

16. AFTER THE GIRDERS HAVE BEEN ERECTED, ELEVATIONS SHALL BE TAKEN ALONG THE TOP OF THE GIRDERS AS DIRECTED BY THE RESIDENT ENGINEER, FOR USE IN DETERMINING THE FINISHED GRADE.

17. GIRDER WEBS AND CROSS FRAMES SHALL BE PLUMB IN FINAL POSITION.

PILES

18. THE PILES SHALL BE HP 12 X 84.

19. IF NO BEDROCK IS ENCOUNTERED, THE PILES SHALL BE DRIVEN TO A NOMINAL PILE DRIVING RESISTANCE OF 380 KIPS WITH A MINIMUM DEPTH OF 20 FEET BELOW THE BOTTOM OF THE PILE CAP AND THEREFORE NO PRE-BORING IS REQUIRED. IF BEDROCK IS ENCOUNTERED AT DEPTHS SHALLOWER THAN 20 FEET BELOW THE BOTTOM OF PILE CAP, THE PILE LOCATIONS SHALL BE PRE-BORED WITH A PENETRATION OF 3 FEET INTO BEDROCK. IF BEDROCK IS ENCOUNTERED SHALLOWER THAN 5 FEET, PRE-BORING TO A MINIMUM DEPTH OF 8 FEET BELOW THE PILE CAP IS REQUIRED WHILE ONLY BACKFILLING THE BOTTOM THREE FEET WITH CONCRETE.

20. ALL PRE-BORED HOLES SHALL BE 24 INCHES IN DIAMETER. THE BOTTOM THREE (3) FEET IN BEDROCK SHALL BE FILLED WITH CONCRETE AFTER PLACEMENT OF THE PILE. SAND SHALL BE USED TO BACKFILL THE ANNULAR SPACE ABOVE THE CONCRETE TO THE BOTTOM OF GRANULAR BACKFILL FOR STRUCTURES. REFER TO THE SPECIAL PROVISIONS FOR ADDITIONAL INFORMATION.

21. TO PREVENT DAMAGE TO THE PILES, PILE SHOES ARE REQUIRED FOR DRIVEN PILES AND SHALL CONFORM TO SUBSECTION 505.04 (f).

22. PILE TESTING AND SEQUENCE
    A. A MINIMUM OF 3 DYNAMIC TESTS SHALL BE PERFORMED DURING INSTALLATION. NO LESS THAN 1 TEST SHALL BE PERFORMED AT EACH ABUTMENT. THE REMAINING PILES SHOULD BE CALIBRATED BY WAVE EQUATION ANALYSIS.
    B. ABUTMENT PILES SHALL BE DRIVEN STARTING AT THE CENTERLINE OF VT 30 AND WORKING OUTWARD SO THAT THE EXTERIOR PILES ARE DRIVEN LAST.

23. FOR ESTIMATING PURPOSES, THE PILE TIP ELEVATIONS WERE ASSUMED AS SHOWN ON THE BORING LOGS. THE ACTUAL IN PLACE LENGTHS MAY VARY.

24. THE TOPS OF THE PILES AFTER DRIVING SHALL NOT VARY FROM THE POSITION SHOWN ON THE PLANS BY MORE THAN 3 INCHES. THE PILE ORIENTATION SHALL NOT VARY BY MORE THAN 5 DEGREES. THE CONTRACTOR SHALL DEMONSTRATE TO THE SATISFACTION OF THE ENGINEER HOW THE TOLERANCES WILL BE MET. THESE MEASURES SHALL BE DEMONSTRATED IN A SUBMITTAL TO BE ACCEPTED BEFORE PILE DRIVING COMMENCES.

25. PRE-BORING AT ABUTMENT 1 PILE LOCATIONS IS OPTIONAL, PROVIDED ALL PILE DRIVING REQUIREMENTS CAN BE MET. PRE-BORING AT ABUTMENT 2 PILE LOCATIONS IS REQUIRED. PAYMENT SHALL BE PAID FOR UNDER ITEM 900.640 "SPECIAL PROVISION (PRE-EXCAVATION OF INTEGRAL ABUTMENTS PILES, EARTH)" OR ITEM 900.640 "SPECIAL PROVISION (PRE-EXCAVATION OF INTEGRAL ABUTMENTS PILES, ROCK)".

CONCRETE

26. THE DECK, BRIDGE RAIL, ABUTMENTS & WINGWALLS ABOVE BRIDGE SEAT SHALL BE CONCRETE, HIGH PERFORMANCE CLASS A.

27. ALL OTHER SUBSTRUCTURE CONCRETE SHALL BE CONCRETE, HIGH PERFORMANCE CLASS B.

28. CONCRETE PORTIONS OF ABUTMENTS AND WINGWALLS ABOVE ADJACENT BRIDGE SEAT ELEVATIONS SHALL NOT BE PLACED UNTIL FINISH GRADES HAVE BEEN DETERMINED BY THE RESIDENT ENGINEER.

29. IN ACCORDANCE WITH SUBSECTION 506.23(A) AND AS DIRECTED BY THE RESIDENT ENGINEER, THE CONTRACTOR SHALL TAKE MEASURES NECESSARY TO PROTECT ALL SUBSTRUCTURE CONCRETE FROM STAINING DUE TO OXIDE FORMATION ON THE STRUCTURAL STEEL PRIOR TO PLACEMENT OF THE DECK. THESE MEASURES WILL NOT BE PAID FOR SEPARATELY BUT SHALL BE CONSIDERED INCIDENTAL TO ITEM 501.34, "CONCRETE, HIGH PERFORMANCE CLASS B". ANY SUCH STAINING THAT OCCURS PRIOR TO DECK PLACEMENT SHALL BE REMOVED AT NO ADDITIONAL COST TO THE STATE.

30. THE DECK IS TO BE POURED IN ONE CONTINUOUS POUR WITH A MAXIMUM DURATION OF EIGHT HOURS. IF CIRCUMSTANCES BEYOND THE CONTRACTOR'S CONTROL PREVENT THIS FROM BEING ACCOMPLISHED, A TRANSVERSE CONSTRUCTION JOINT SHALL BE USED BETWEEN ADJACENT POURS. A MINIMUM 96 HOUR DELAY BETWEEN ADJACENT POURS SHALL BE OBSERVED.

31. ALL EXPOSED EDGES OF CONCRETE SHALL BE CHAMFERED 1 INCH X 1 INCH.

32. ITEM 514.10 "WATER REPELLENT, SILANE", SHALL BE APPLIED TO ALL EXPOSED CONCRETE SURFACES, EXCEPT THE UNDERSIDE OF THE DECK BETWEEN DRIP NOTCHES.

33. JOINTS AND SCORE MARKS IN CONCRETE SHALL BE CONSTRUCTED AS SHOWN IN THE PLANS OR AS DIRECTED BY THE RESIDENT ENGINEER.

34. THE KEY IN CONCRETE CONSTRUCTION JOINTS SHALL BE MONOLITHIC AND CONTINUOUS FOR THE FULL LENGTH OF THE JOINT. UPWARD KEYS SHALL BE PLACED INTEGRALLY WITH THE CONCRETE BELOW THE JOINT.

35. REINFORCING STEEL ABOVE THE BRIDGE SEATS IN THE ABUTMENTS, BRIDGE RAIL, AND APPROACH SLABS SHALL BE LEVEL II REINFORCING STEEL IN ACCORDANCE WITH SECTION 507.

36. REINFORCING STEEL BELOW THE BRIDGE SEATS IN THE ABUTMENTS SHALL BE LEVEL I REINFORCING STEEL IN ACCORDANCE WITH SECTION 507.

37. MINIMUM COVER FOR REINFORCING STEEL SHALL BE AS INDICATED IN THE PLANS.

38. REINFORCING STEEL PLACEMENT TOLERANCES SHALL BE:
    A. SPACING: +/- 1 INCH
    B. CLEARANCE: +/- 1/4 INCH

PRECAST CONCRETE STRUCTURE

39. DESIGN CRITERIA:
    A. SOIL UNIT WEIGHT = 140 PCF
    B. DESIGN LIVE LOAD = HL-93
    C. NOMINAL BEARING RESISTANCE = 6.7 KSF
    D. BEARING RESISTANCE FACTOR = 0.45
    E. DESIGN FILL OVER BOX = 3 FEET
    F. CONCRETE COMPRESSIVE STRENGTH = SEE SUBSECTION 540.05(e)

40. ALL CONCRETE SHALL BE PRECAST. ITEM 540.10 "PRECAST CONCRETE STRUCTURE" INCLUDES ALL BOX SEGMENTS, RETENTION SILLS, HEADWALLS, CUTOFF WALLS AND WINGWALLS. ALL CONNECTIONS SHALL BE DESIGNED BY THE FABRICATOR AND SHALL BE CONSIDERED INCIDENTAL TO ITEM 540.10.

41. THE PRECAST BOX SECTIONS ARE SHOWN FOR REFERENCE ONLY. THE ACTUAL DIMENSIONS AND SHAPE WILL BE DEPENDENT ON THE FABRICATOR. THE MINIMUM INSIDE DIMENSIONS SHALL BE 8'-0" IN HEIGHT AND 16'-0" IN WIDTH. THE OVERALL LENGTH OF THE BOX SHALL BE 85'-0'' ALONG THE STREAMBED GRADE. THE EXPOSED ENDS OF THE FIRST AND LAST UNITS SHALL BE VERTICAL.

42. THE EXTERIOR (TOP AND SIDES) OF ALL CONCRETE BOX JOINTS ALONG WITH ALL LIFTING HOLES SHALL BE FILLED WITH MORTAR TYPE IV AFTER BEING SET IN THEIR FINAL POSITION. THIS WORK WILL BE INCLUDED IN THE UNIT PRICE BID FOR ITEM 540.10.

43. MEMBRANE WATERPROOFING SHALL BE APPLIED TO THE ENTIRE TOP OF THE CONCRETE BOX. A TWO (2) FOOT WIDE STRIP OF MEMBRANE SHALL BE PLACED AT EACH VERTICAL JOINT (SIDES). MEMBRANE SHALL BE CENTERED ON THE JOINT AND COVER THE FULL HEIGHT. THE SIDES SHALL BE COVERED PRIOR TO THE TOP. ANY OVERLAPPING OF MEMBRANE SHALL BE DONE IN A SHINGLE TYPE STYLE TO SHED WATER AND SHALL OVERLAP A MINIMUM OF ONE FOOT. PAYMENT FOR MEMBRANE WILL BE INCLUDED IN THE UNIT PRICE BID FOR CONTRACT ITEM 540.10.

44. THE CONTRACTOR SHALL CONSIDER THE PLACEMENT OF THE BOX CULVERT SECTIONS BEGINNING AT THE OUTLET AS TO MATCH THE WINGWALL ELEVATION TO THE FINISH GRADE OF THE ABUTMENT.

45. WATER REPELLENT, SILANE SHALL BE SHOP APPLIED TO ALL EXPOSED CONCRETE SURFACES OF THE PRECAST CONCRETE STRUCTURE. PAYMENT FOR SILANE WILL BE INCLUDED IN THE UNIT PRICE BID FOR CONTRACT ITEM 540.10.

46. REINFORCING STEEL FOR THE PRECAST WINGWALLS AND HEADWALLS SHALL BE LEVEL II REINFORCING STEEL IN ACCORDANCE WITH SECTION 507. ALL REMAINING REINFORCING STEEL SHALL BE LEVEL I REINFORCING STEEL IN ACCORDANCE WITH SECTION 507.

MISCELLANEOUS

47. AFTER REMOVAL OF THE TEMPORARY BRIDGE, THE CONTRACTOR SHALL CONTACT TODD MENEES AT 802-786-8921, FOR CONSULTATION REGARDING FINAL GRADING TO CHANNEL ON THE BECK WITH PROPERTY.

48. UTILITY RELOCATION SHALL BE COMPLETE WITHIN 28 DAYS OF THE COMPLETE REMOVAL OF THE TEMPORARY BRIDGE AND DETOUR. THE CONTRACTOR SHALL CONTACT THE RESPECTIVE UTILITY COMPANY PRIOR TO THE REMOVAL OF THE DETOUR. SEE UTILITY SPECIAL PROVISION FOR CONTACT INFORMATION.

49. AN URBAN SEED MIX SHALL BE USED WHEN RESEEDING THE AREA IMPACTED FROM REMOVAL OF THE TEMPORARY BRIDGE AND DETOUR.

50. THE REMOVAL OF THE PIPE UNDER THE EXISTING DETOUR SHALL BE INCIDENTAL TO CONTRACT ITEM 900.645 "SPECIAL PROVISION (REMOVAL OF TEMPORARY BRIDGE AND APPROACHES)".

51. THE REMOVAL OF THE WINGWALLS AND HEADWALLS FOR THE CONCRETE BOX THAT CROSSES UNDERNEATH VT ROUTE 30 SHALL BE PAID FOR UNDER ITEM 529.20 "PARTIAL REMOVAL OF STRUCTURE (7'-0" x 7'-0" x 90'-0" BOX).

52. ONCE THE NEW BOX CULVERT IS CONSTRUCTED, ITEM 541.45 "CONTROLLED DENSITY (FLOWABLE) FILL" SHALL BE USED TO FILL THE EXISTING BOX CULVERT THAT CROSSES UNDERNEATH VT ROUTE 30.

53. A PULL OFF SHALL BE CONSTRUCTED FROM FIRE DRIVE STA 20+38 - STA 21+42, AS SHOWN ON THE PLANS, TO ACCOMMODATE ACCESS TO A FUTURE DRY HYDRANT TO BE INSTALLED ALONG THE BANK OF BALL MOUNTAIN BROOK.

54. THE SEPTIC TANK RISER AT STATION 209+95.00 LT AND DRY WELL AT STATION 31+93.00 RIGHT SHALL NOT BE DISTURBED.

STATE OF VERMONT
AGENCY OF TRANSPORTATION

QUANTITY SHEET 1

SUMMARY OF ESTIMATED QUANTITIES

ROADWAY	CULVERT	EROSION CONTROL	TRAINING	BRIDGE	FULL C.E. ITEMS
1					
1600					
	1700			2300	
260					
85					
15	1700			240	
55	1075			200	
450					
1100					
1100					
1100					
55					
12					
1					
				249	
				144	
				1	
				333	
				3	
				300860	
				20000	
				68000	
				1	
				15	
				68	
				500	
				68	
				265	
1					
	1				
				14	
	1				
	200				
110					
110					
110					

TOTALS

GRAND TOTAL	FINAL
1	
1600	
4000	
260	
85	
1955	
1330	
450	
1100	
1100	
1100	
55	
12	
1	
249	
144	
1	
333	
3	
300860	
20000	
68000	
1	
15	
68	
500	
68	
265	
1	
1	
14	
1	
200	
110	
110	
110	

DESCRIPTIONS

UNIT	ITEMS	ITEM NUMBER	ROUND
LS	CLEARING AND GRUBBING, INCLUDING INDIVIDUAL TREES AND STUMPS	201.10	
CY	COMMON EXCAVATION	203.15	
CY	UNCLASSIFIED CHANNEL EXCAVATION	203.27	
CY	SAND BORROW	203.31	
CY	TRENCH EXCAVATION OF EARTH	204.20	
CY	STRUCTURE EXCAVATION	204.25	
CY	GRANULAR BACKFILL FOR STRUCTURES	204.30	
SY	COLD PLANING, BITUMINOUS PAVEMENT	210.10	
	BEGIN OPTION AA		
CY	SUBBASE OF GRAVEL	301.15	
CY	SUBBASE OF CRUSHED GRAVEL, COARSE GRADED	301.25	
CY	SUBBASE OF DENSE GRADED CRUSHED STONE	301.35	
	END OPTION AA		
CY	AGGREGATE SURFACE COURSE	401.10	
CWT	EMULSIFIED ASPHALT	404.65	
LU	PRICE ADJUSTMENT, ASPHALT CEMENT (N.A.B.I.)	406.50	
CY	CONCRETE, HIGH PERFORMANCE CLASS A	501.33	
CY	CONCRETE, HIGH PERFORMANCE CLASS B	501.34	
LS	FURNISHING EQUIPMENT FOR DRIVING PILING	504.10	
LF	STEEL PILING, HP 12 X 84	505.165	
EACH	DYNAMIC PILE LOADING TEST	505.45	
LB	STRUCTURAL STEEL, CURVED PLATE GIRDER	506.56	
LB	REINFORCING STEEL, LEVEL I	507.11	
LB	REINFORCING STEEL, LEVEL II	507.12	
LS	SHEAR CONNECTORS (2216-7/8" X 7")	508.15	
GAL	WATER REPELLENT, SILANE	514.10	
LF	BRIDGE EXPANSION JOINT, ASPHALTIC PLUG	516.10	
SY	SHEET MEMBRANE WATERPROOFING, TORCH APPLIED	519.20	
LF	JOINT SEALER, HOT POURED	524.11	
LF	BRIDGE RAILING, GALVANIZED STEEL TUBING/CONCRETE COMBINATION	525.45	
LS	MAINTENANCE OF STRUCTURES AND APPROACHES	527.10	
EACH	PARTIAL REMOVAL OF STRUCTURE (7'-0" x 7'-0" x 90'-0" BOX)	529.20	
EACH	BEARING DEVICE ASSEMBLY, STEEL REINFORCED ELASTOMERIC PAD	531.17	
LS	PRECAST CONCRETE STRUCTURE (16'-0" x 8'-0" x 85'-0" BOX)	540.10	
CY	CONTROLLED DENSITY (FLOWABLE) FILL	541.45	
	BEGIN OPTION BB		
LF	24" CAAP .060 (2-2/3 X 1/2)	601.0225	
LF	24" PCCSP .064 (2-2/3 X 1/2)	601.0425	
LF	24" CPEP	601.0920	
	END OPTION BB		

DETAILED SUMMARY OF QUANTITIES

QUANTITIES	UNIT	ITEMS
		EARTHWORK SUMMARY
1600	CY	COMMON EXCAVATION (1600 x 1.0)
1200	CY	UNCLASSIFIED CHANNEL EXCAVATION (4000 x 0.30)
586.5	CY	STRUCTURE EXCAVATION (1955 x 0.30)
3386.5	CY	SUB TOTAL
13.5	CY	ROUNDING
3400	CY	TOTAL FILL AVAILIBLE
1000	CY	TOTAL FILL REQUIRED
2400	CY	TOTAL WASTE
		SPECIAL PROVISION (BITUMINOUS CONCRETE PAVEMENT, SMALL QUANTITY)
510	TON	TYPE IVS
155	TON	TYPE IIS
665	TON	TOTAL SUPERPAVE

PROJECT NAME: JAMAICA
PROJECT NUMBER: ER-BRF 015-1(23)

FILE NAME: sllb316quantitysheet.dgn
PROJECT LEADER: K. HIGGINS
DESIGNED BY: G. LAROCHE
QUANTITY SHEET 1

PLOT DATE: 14-DEC-2012
DRAWN BY: G. LAROCHE
CHECKED BY: K. FRIEDLAND
SHEET 5 OF 82

STATE OF VERMONT
AGENCY OF TRANSPORTATION

QUANTITY SHEET 2

SUMMARY OF ESTIMATED QUANTITIES										TOTALS		DESCRIPTIONS				DETAILED SUMMARY OF QUANTITIES		
				ROADWAY	CULVERT	EROSION CONTROL	TRAINING	BRIDGE	FULL C.E. ITEMS	GRAND TOTAL	FINAL	UNIT	ITEMS	ITEM NUMBER	ROUND	QUANTITIES	UNIT	ITEMS
				1						1		EACH	PRECAST REINFORCED CONCRETE DROP INLET WITH CAST IRON GRATE	604.18				
				1						1		EACH	CHANGING ELEVATION OF DROP INLETS, CATCH BASINS, OR MANHOLES	604.40				
						10				10		HR	ALL PURPOSE EXCAVATOR RENTAL, TYPE I	608.25				
						1				1		TON	DUST AND ICE CONTROL WITH CALCIUM CHLORIDE	609.15				
				45						45		CY	STONE FILL, TYPE II	613.11				
					1100					1100		CY	STONE FILL, TYPE III	613.12				
								2550		2550		CY	STONE FILL, TYPE IV	613.13				
				195						195		LF	CAST-IN-PLACE CONCRETE CURB, TYPE B	616.28				
				120						120		SY	PORTLAND CEMENT CONCRETE SIDEWALK, 5 INCH	618.10				
				8						8		SF	DETECTABLE WARNING SURFACE	618.30				
				5						5		EACH	STEEL MARKER POSTS	619.16				
				292						292		LF	BOX BEAM GUARDRAIL	621.30				
				1						1		EACH	MANUFACTURED TERMINAL SECTION, TANGENT	621.51				
				98						98		LF	REMOVAL AND DISPOSAL OF GUARDRAIL	621.80				
				200						200		HR	UNIFORMED TRAFFIC OFFICERS	630.10				
				600						600		HR	FLAGGERS	630.15				
									1	1		LS	FIELD OFFICE, ENGINEERS	631.10				
									1	1		LS	TESTING EQUIPMENT, CONCRETE	631.16				
									1	1		LS	TESTING EQUIPMENT, BITUMINOUS	631.17				
									5000	5000		DL	FIELD OFFICE TELEPHONE (N.A.B.I.)	631.26				
							520			520		HR	EMPLOYEE TRAINEESHIP	634.10				
				1						1		LS	MOBILIZATION/DEMOBILIZATION	635.11				
				1150						1150		LF	4 INCH WHITE LINE	646.20				
				1190						1190		LF	4 INCH YELLOW LINE	646.21				
				12						12		LF	24 INCH STOP BAR	646.26				
				4						4		EACH	LETTER OR SYMBOL	646.30				
					1000			2400		3400		SY	GEOTEXTILE UNDER STONE FILL	649.31				
						150				150		SY	GEOTEXTILE FOR SILT FENCE, WOVEN WIRE REINFORCED	649.515				
						400				400		SY	GEOTEXTILE FOR FILTER CURTAIN	649.61				
						40				40		LB	SEED	651.15				
						240				240		LB	FERTILIZER	651.18				
						1				1		TON	AGRICULTURAL LIMESTONE	651.20				
						1				1		TON	HAY MULCH	651.25				
						250				250		CY	TOPSOIL	651.35				
						1800				1800		SY	GRUBBING MATERIAL	651.40				
						1				1		LS	EPSC PLAN	652.10				
						100				100		HR	MONITORING EPSC PLAN	652.20				
						1				1		LU	MAINTENANCE OF EPSC PLAN (N.A.B.I.)	652.30				
						290				290		SY	TEMPORARY EROSION MATTING	653.20				
						90				90		CY	VEHICLE TRACKING PAD	653.35				

PROJECT NAME: JAMAICA
PROJECT NUMBER: ER-BRF 015-1(23)

FILE NAME: sllb316quantitysheet.dgn
PROJECT LEADER: K. HIGGINS
DESIGNED BY: G. LAROCHE
QUANTITY SHEET 2

PLOT DATE: 03-JAN-2013
DRAWN BY: G. LAROCHE
CHECKED BY: K. FRIEDLAND
SHEET 6 OF 82

STATE OF VERMONT
AGENCY OF TRANSPORTATION

QUANTITY SHEET 3

SUMMARY OF ESTIMATED QUANTITIES										TOTALS		DESCRIPTIONS				DETAILED SUMMARY OF QUANTITIES		
				ROADWAY	CULVERT	EROSION CONTROL	TRAINING	BRIDGE	FULL C.E. ITEMS	GRAND TOTAL	FINAL	UNIT	ITEMS	ITEM NUMBER	ROUND	QUANTITIES	UNIT	ITEMS
						2				2		EACH	INLET PROTECTION DEVICE, TYPE I	653.40				
						820				820		LF	BARRIER FENCE	653.50				
						350				350		LF	PROJECT DEMARCATION FENCE	653.55				
				67						67		SF	TRAFFIC SIGNS, TYPE A	675.20				
				172						172		LF	SQUARE TUBE SIGN POST AND ANCHOR	675.341				
				11						11		EACH	REMOVING SIGNS	675.50				
								1		1		LU	PRICE ADJUSTMENT, FUEL (N.A.B.I.)	690.50				
				4						4		EACH	SPECIAL PROVISION (GUARDRAIL APPROACH SECTION TO CONCRETE COMBINATION BRIDGE RAILING, TL-3)	900.620				
								258		258		LF	SPECIAL PROVISION (PRE-EXCAVATION OF INTEGRAL ABUTMENT PILES, EARTH)	900.640				
								45		45		LF	SPECIAL PROVISION (PRE-EXCAVATION OF INTEGRAL ABUTMENT PILES, ROCK)	900.640				
				1						1		LS	SPECIAL PROVISION (REMOVAL OF TEMPOARY BRIDGE AND APPROACHES)	900.645				
				1						1		LS	SPECIAL PROVISION (TRAFFIC CONTROL, ALL-INCLUSIVE)	900.645				
				1						1		LU	SPECIAL PROVISION (MAT DENSITY PAY ADJUSTMENT, SMALL QUANTITY)(N.A.B.I)	900.650				
				1						1		LU	SPECIAL PROVISION (MIXTURE PAY ADJUSTMENT)(N.A.B.I.)	900.650				
				665						665		TON	SPECIAL PROVISION (BITUMINOUS CONCRETE PAVEMENT, SMALL QUANTITY)	900.680				

PROJECT NAME: JAMAICA
PROJECT NUMBER: ER-BRF 015-1(23)

FILE NAME: s11b316quantitysheet.dgn
PROJECT LEADER: K. HIGGINS
DESIGNED BY: G. LAROCHE
QUANTITY SHEET 3

PLOT DATE: 14-DEC-2012
DRAWN BY: G. LAROCHE
CHECKED BY: K. FRIEDLAND
SHEET 7 OF 82

STATE OF VERMONT
AGENCY OF TRANSPORTATION

BRIDGE QUANTITY SHEET 1

| SUMMARY OF BRIDGE QUANTITIES | | |

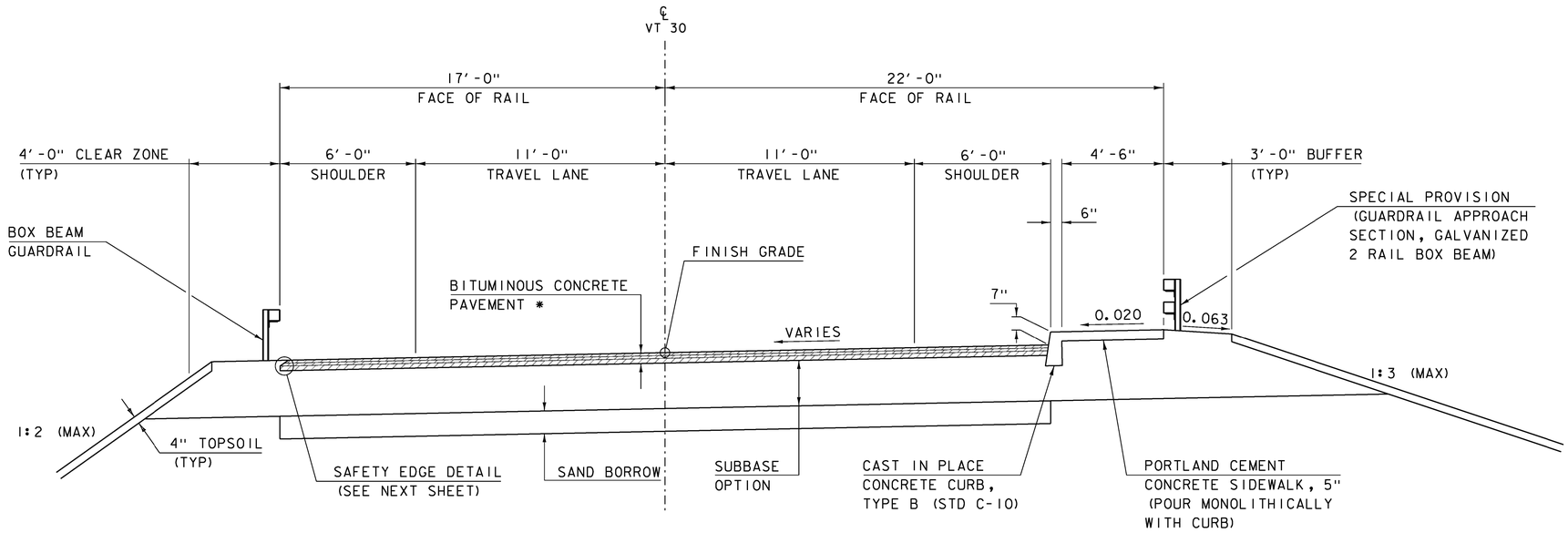

TYPICAL ROAD SECTION

SCALE 1" = 3'-0"

* 1 ½" BITUMINOUS CONCRETE PAVEMENT (TYPE IVS)
1 ½" BITUMINOUS CONCRETE PAVEMENT (TYPE IVS)
2 ½" BITUMINOUS CONCRETE PAVEMENT (TYPE IIS)

2'-0" SUBBASE OPTION
1'-0" SAND BORROW

DECK REINFORCING STEEL COVER
2½" TOP
1½" BOTTOM

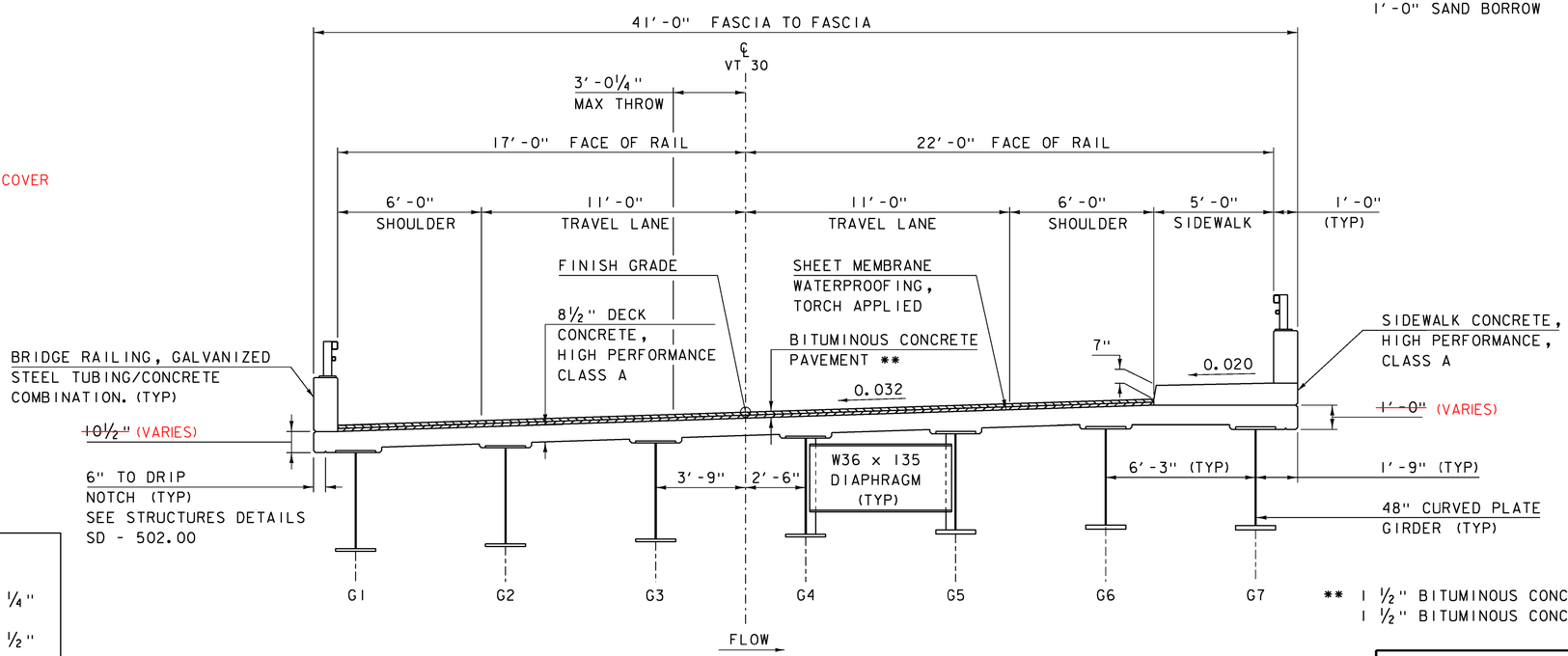

TYPICAL BRIDGE SECTION

SCALE 1" = 3'-0"

** 1 ½" BITUMINOUS CONCRETE PAVEMENT (TYPE IVS) OVER
1 ½" BITUMINOUS CONCRETE PAVEMENT (TYPE IVS)

MATERIAL TOLERANCES

(IF USED ON PROJECT)

SURFACE	
- PAVEMENT (TOTAL THICKNESS)	+/- ¼"
- AGGREGATE SURFACE COURSE	+/- ½"
SUBBASE	+/- 1"
SAND BORROW	+/- 1"

PROJECT NAME: JAMAICA
PROJECT NUMBER: ER-BRF 015-1(23)

FILE NAME: sllb316typ.dgn
PROJECT LEADER: K. HIGGINS
DESIGNED BY: G. LAROCHE
TYPICAL SECTIONS 1

PLOT DATE: 07-DEC-2012
DRAWN BY: K. FRIEDLAND
CHECKED BY: W. LAMMER
SHEET 9 OF 82

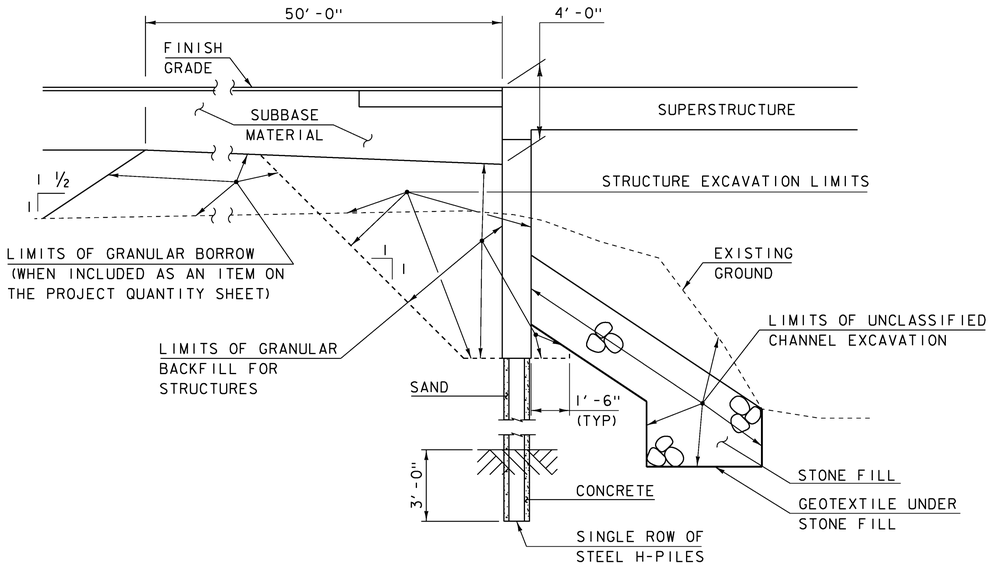

TYPICAL INTEGRAL ABUTMENT SECTION

NOT TO SCALE

ACTUAL LIMITS OF STRUCTURE EXCAVATION SHALL BE DETERMINED BY THE CONTRACTOR. HOWEVER, ONLY THE EXCAVATION BETWEEN THE LIMITS SHOWN WILL BE PAID FOR UNDER ITEM 204.25 "STRUCTURE EXCAVATION". EXCAVATION BY THE CONTRACTOR OUTSIDE OF THESE LIMITS WILL BE AT THE EXPENSE OF THE CONTRACTOR.

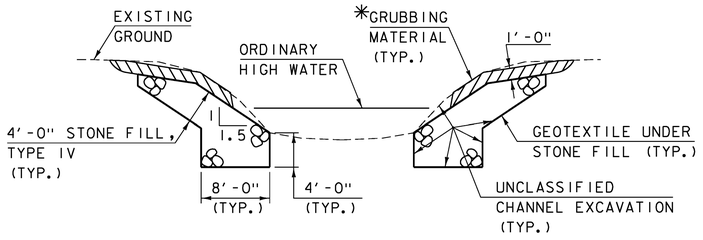

TYPICAL CHANNEL SECTION

(NOT TO SCALE)

*GRUBBING MATERIAL SHALL NOT BE PLACED ON THE STONE FILL IN THE AREA UNDER THE BRIDGE. WHENEVER CHANNEL SLOPE INTERSECTS ROADWAY SUBBASE, GRUBBING MATERIAL SHALL BEGIN AT THE BOTTOM OF SUBBASE.

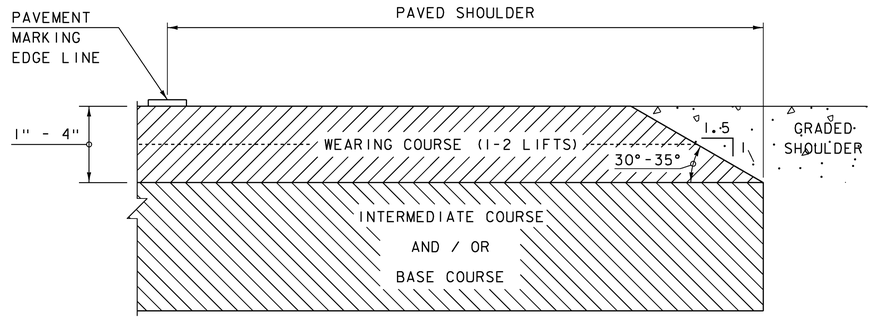

SAFETY EDGE DETAIL

NOT TO SCALE

NOTE: LEVELING COURSE MAY INCLUDE THE "SAFETY EDGE" AT THE CONTRACTOR'S CHOICE.

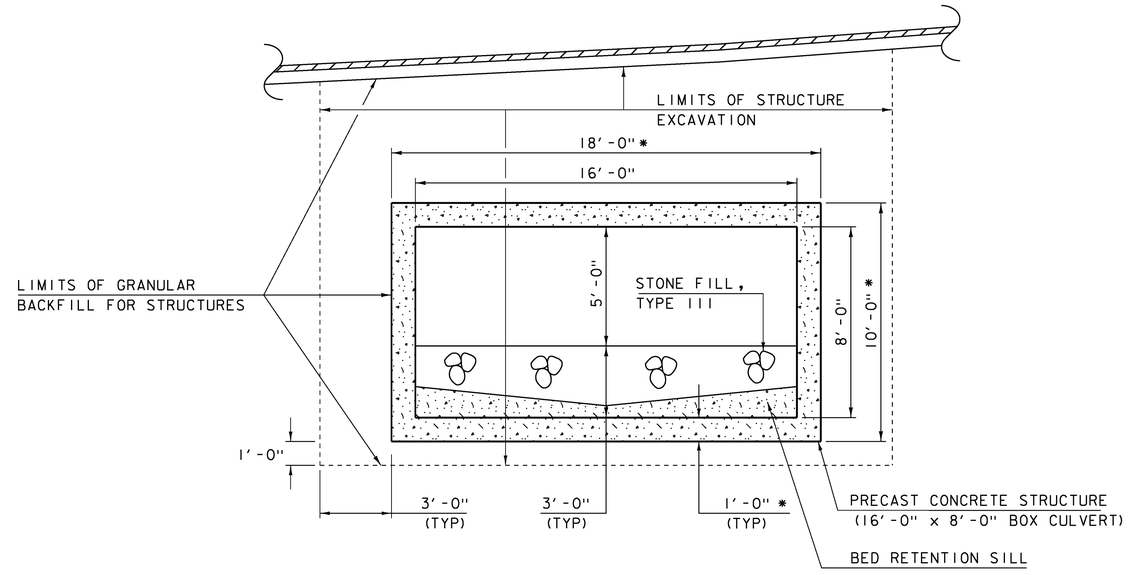

BOX CULVERT TYPICAL SECTION

SCALE 1" = 3'-0"

* FOR ESTIMATING PURPOSES ONLY. ACTUAL DIMENSION SHALL BE DETERMINED BY THE CONTRACTOR

PROJECT NAME:	JAMAICA
PROJECT NUMBER:	ER-BRF 015-1(23)
FILE NAME: sllb316typ.dgn	PLOT DATE: 07-DEC-2012
PROJECT LEADER: K. HIGGINS	DRAWN BY: K. FRIEDLAND
DESIGNED BY: G. LAROCHE	CHECKED BY: W. LAMMER
TYPICAL SECTIONS 2	SHEET 10 OF 82

GPS CONTROL POINTS

HVCTRL #1

REBAR

NORTH = 217794.372
EAST = 1568067.516
ELEV. = 666.270

GENERAL LOCATION; IT IS ABOUT 84 M (275.6 FT) SOUTH OF HOUSE NO 3327 AND THE INTERSECTION OF MEADOWS ROAD J64 AND VT ROUTE 30, SET IN THE EDGE OF A FIELD.
THE MARK IS A REBAR WITH CAP SET 2 CM (1 INCH) BELOW GROUND SURFACE.
IT IS 5.0 M (16.4 FT) WEST OF AND 0.3 M (1.0 FT) LOWER THAN THE CENTERLINE OF VT ROUTE 30, 0.5 M (1.6 FT) WEST OF THE WEST EDGE OF PAVEMENT OF VT ROUTE 30, 12.6 M (41.3 FT) NORTH OF A 50 MPH METAL SIGN POST, 24.6 M (80.7 FT) NORTH OF POLE NO 5/436/667, 23.0 M (75.5 FT) SOUTH-SOUTHEAST OF POLE 5/435/91/668.

HVCTRL #2

REBAR

NORTH = 218681.832
EAST = 1567457.472
ELEV. = 679.148

GENERAL LOCATION; IT IS ABOUT 0.1 MI (0.2 KM) NORTHWEST FROM THE INTERSECTION OF VT ROUTE 30 AND MEADOWS ROAD J64, SET ON THE SOUTHWEST EDGE OF A SMALL FIELD.
THE MARK IS A REBAR WITH CAP SET 2 CM (1 INCH) BELOW GROUND SURFACE.
IT IS 6.7 M (22.0 FT) NORTHEAST OF AND LEVEL WITH THE CENTERLINE OF VT ROUTE 30, 0.2 M (0.7 FT) NORTHEAST OF THE NORTHEAST EDGE OF PAVEMENT OF VT ROUTE 30, 20.5 M (67.3 FT) SOUTH-SOUTHEAST OF POLE NO 431-1, 20.0 M (65.6 FT) SOUTH-SOUTHEAST OF THE SOUTHEAST END POST OF A WOODEN SLATE FENCE FOR A CEMETERY, 23.0 M (75.5 FT) EAST OF AND ACROSS THE ROAD FROM POLE NO 431/672, 37.6 M (123.4 FT) NORTH-NORTHWEST OF POLE NO 32A/671S, 35.6 M (116.8 FT) NORTHWEST OF THE WEST CORNER OF A 2-BAY ATTACHED GARAGE FOR HOUSE NO 3458.

TRAVERSE TIES

HVCTRL #4

NORTH = 218806.426
EAST = 1565797.450
ELEV. = 726.429

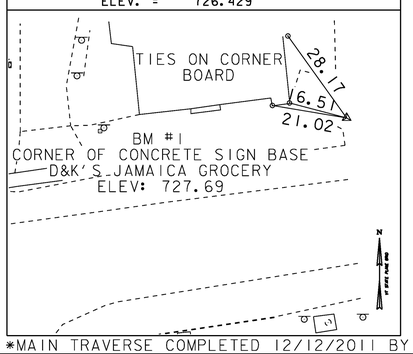

HVCTRL #5

NORTH = 218698.495
EAST = 1565165.557
ELEV. = 730.762

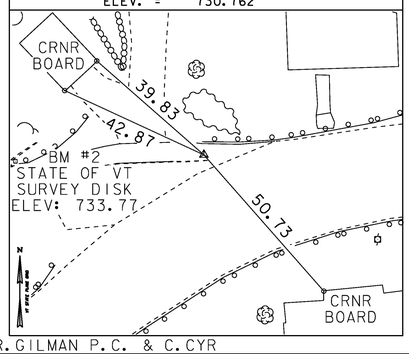

HVCTRL #6

NORTH = 218439.500
EAST = 1564899.784
ELEV. = 735.539

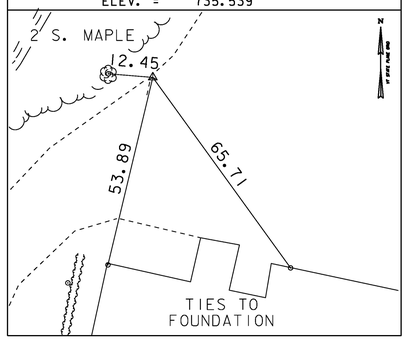

HVCTRL #7

NORTH = 218921.082
EAST = 1565075.801
ELEV. = 731.897

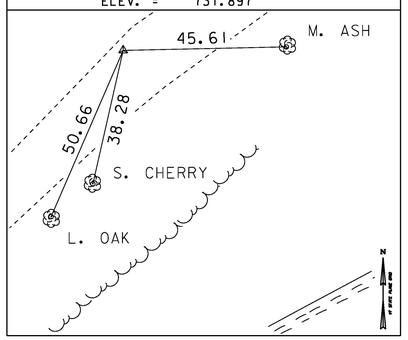

HVCTRL #8

NORTH = 218676.824
EAST = 1565210.087
ELEV. = 728.708

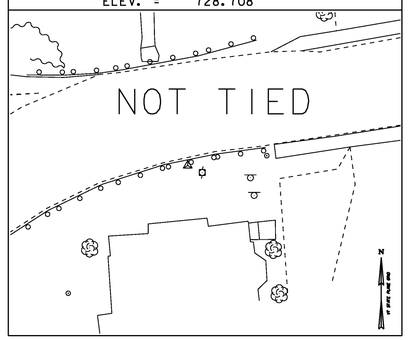

*MAIN TRAVERSE COMPLETED 12/12/2011 BY R.GILMAN P.C. & C.CYR

ALIGNMENT TIES

Horizontal Alignment Name: VT30

	STATION	NORTHING	EASTING
Element: Linear			
POB (3)	208+00.00	218709.3299	1565319.8020
PC (13)	209+34.66	218688.2641	1565186.7990
Tangent Direction: S 80°59'59.77" W			
Tangent Length: 134.66			
Element: Circular			
PC (13)	209+34.66	218688.2641	1565186.7990
PI( )	211+89.44	218648.4077	1564935.1571
CC (11)	217996.8824	1565296.3039	
PT (4)	214+23.35	218456.1237	1564768.0072
Radius: 700.00			
Design Speed(mph): 35.00			
Superelevation: 2.00%			
Delta: 39°59'59.77" Left			
Degree of Curvature(Arc): 8°11'06.40"			
Length: 488.69			
Tangent: 254.78			
Chord: 478.83			
Middle Ordinate: 42.22			
External: 44.92			
Tangent Direction: S 80°59'59.77" W			
Radial Direction: N 9°00'00.23" W			
Chord Direction: S 60°59'59.88" W			
Radial Direction: N 49°00'00.00" W			
Tangent Direction: S 41°00'00.00" W			
Element: Linear			
PT (4)	214+23.35	218456.1237	1564768.0072
POE (1)	215+00.00	218398.2770	1564717.7218
Tangent Direction: S 41°00'00.00" W			
Tangent Length: 76.65			

Horizontal Alignment Name: CHANNEL

	STATION	NORTHING	EASTING
Element: Linear			
POB (26)	8+00.00	218877.5750	1565077.3201
PI(27)	10+00.00	218689.6365	1565008.9160
Tangent Direction: S 20°00'00.00" W			
Tangent Length: 200.00			
Element: Linear			
PI(27)	10+00.00	218689.6365	1565008.9160
POE (23)	13+00.00	218412.4726	1565123.7211
Tangent Direction: S 22°30'00.00" E			
Tangent Length: 300.00			

Horizontal Alignment Name: WaterSt

	STATION	NORTHING	EASTING
Element: Linear			
POB (2)	30+00.00	218590.8645	1564925.9187
PC (6)	30+14.40	218603.0798	1564918.2858
Tangent Direction: N 32°00'00.00" W			
Tangent Length: 14.40			
Element: Circular			
PC (6)	30+14.40	218603.0798	1564918.2858
PI( )	30+37.99	218623.0780	1564905.7895
CC (10)	218629.5757	1564960.6882	
PT (12)	30+58.47	218645.4410	1564913.2720
Radius: 50.00			
Delta: 50°30'00.00" Right			
Degree of Curvature(Arc): 114°35'29.61"			
Length: 44.07			
Tangent: 23.58			
Chord: 42.66			
Middle Ordinate: 4.78			
External: 5.28			
Tangent Direction: N 32°00'00.00" W			
Radial Direction: N 58°00'00.00" E			
Chord Direction: N 6°45'00.00" W			
Radial Direction: S 71°30'00.00" E			
Tangent Direction: N 18°30'00.00" E			
Element: Linear			
PT (12)	30+58.47	218645.4410	1564913.2720
PC (19)	30+80.80	218666.6150	1564920.3568
Tangent Direction: N 18°30'00.00" E			
Tangent Length: 22.33			
Element: Circular			
PC (19)	30+80.80	218666.6150	1564920.3568
PI( )	31+25.39	218708.8985	1564934.5046
CC (20)	218476.2322	1565489.3509	
PT (21)	31+69.81	218748.6265	1564954.7470
Radius: 600.00			
Delta: 8°30'00.00" Right			
Degree of Curvature(Arc): 9°32'57.47"			
Length: 89.01			
Tangent: 44.59			
Chord: 88.93			
Middle Ordinate: 1.65			
External: 1.65			
Tangent Direction: N 18°30'00.00" E			
Radial Direction: S 71°30'00.00" E			
Chord Direction: N 22°45'00.00" E			
Radial Direction: S 63°00'00.00" E			
Tangent Direction: N 27°00'00.00" E			
Element: Linear			
PT (21)	31+69.81	218748.6265	1564954.7470
POE (9)	32+00.00	218775.5243	1564968.4522
Tangent Direction: N 27°00'00.00" E			
Tangent Length: 30.19			

Horizontal Alignment Name: BOX 2

	STATION	NORTHING	EASTING
Element: Linear			
POB (110)	50+00.00	218598.1836	1565034.8937
PC (111)	51+02.90	218540.6414	1564949.5839
Tangent Direction: S 56°00'00.00" W			
Tangent Length: 102.90			
Element: Circular			
PC (111)	51+02.90	218540.6414	1564949.5839
PI( )	52+11.40	218479.9703	1564859.6352
CC (112)	218043.2189	1565285.0996	
PT (113)	53+17.58	218391.6406	1564796.6303
Radius: 600.00			
Delta: 20°30'00.00" Left			
Degree of Curvature(Arc): 9°32'57.47"			
Length: 214.68			
Tangent: 108.50			
Chord: 213.53			
Middle Ordinate: 9.58			
External: 9.73			
Tangent Direction: S 56°00'00.00" W			
Radial Direction: N 34°00'00.00" W			
Chord Direction: S 45°45'00.00" W			
Radial Direction: N 54°30'00.00" W			
Tangent Direction: S 35°30'00.00" W			
Element: Linear			
PT (113)	53+17.58	218391.6406	1564796.6303
PC (114)	53+23.11	218387.1343	1564793.4160
Tangent Direction: S 35°30'00.00" W			
Tangent Length: 5.54			
Element: Circular			
PC (114)	53+23.11	218387.1343	1564793.4160
PI( )	53+45.52	218368.8941	1564780.4054
CC (115)	218329.0640	1564874.8275	
PT (116)	53+67.19	218346.8464	1564776.4213
Radius: 100.00			
Delta: 25°25'17" Left			
Degree of Curvature(Arc): 57°17'44.81"			
Length: 44.08			
Tangent: 22.40			
Chord: 43.73			
Middle Ordinate: 2.42			
External: 2.48			
Tangent Direction: S 35°30'00.00" W			
Radial Direction: N 54°30'00.00" W			
Chord Direction: S 22°52'17.42" W			
Radial Direction: N 79°45'25.17" W			
Tangent Direction: S 10°14'34.83" W			
Element: Linear			
PT (116)	53+67.19	218346.8464	1564776.4213
POE (17)	54+00.00	218314.5640	1564770.5878
Tangent Direction: S 10°14'34.83" W			
Tangent Length: 32.81			

Horizontal Alignment Name: FIRE DRIVE
Description: Fire Station Driveway Proposed

	STATION	NORTHING	EASTING
Element: Linear			
POB (2)	20+00.00	218590.8645	1564925.9187
PC (5)	20+36.29	218560.0876	1564945.1503
Tangent Direction: S 32°00'00.00" E			
Tangent Length: 36.29			
Element: Circular			
PC (5)	20+36.29	218560.0876	1564945.1503
PI( )	20+58.03	218541.6505	1564956.6710
CC (7)	218533.5917	1564902.7479	
PT (8)	20+77.31	218520.6507	1564951.0442
Radius: 50.00			
Design Speed(mph): 25.00			
Superelevation: 6.00%			
Delta: 47°00'00.00" Right			
Degree of Curvature(Arc): 114°35'29.61"			
Length: 41.02			
Tangent: 21.74			
Chord: 39.87			
Middle Ordinate: 4.15			
External: 4.52			
Tangent Direction: S 32°00'00.00" E			
Radial Direction: S 58°00'00.00" W			
Chord Direction: S 8°30'00.00" E			
Radial Direction: N 75°00'00.00" W			
Tangent Direction: S 15°00'00.00" W			
Element: Linear			
PT (8)	20+77.31	218520.6507	1564951.0442
POE ( )	22+08.48	218393.9512	1564917.0951
Tangent Direction: S 15°00'00.00" W			
Tangent Length: 131.17			

DATUM

VERTICAL NAVD 88
HORIZONTAL NAD 83 (CORS)
ADJUSTMENT COMPASS

PROJECT NAME: JAMAICA
PROJECT NUMBER: ER-BRF 015-1(23)

FILE NAME: 11B316\Survey\x11b316ti.dgn
PROJECT LEADER: K. HIGGINS
DESIGNED BY: J. SALVATORI
TIE SHEET

PLOT DATE: 11-29-12
DRAWN BY: S. DONOVAN
CHECKED BY: J.SALVATORI
SHEET 11 OF 82

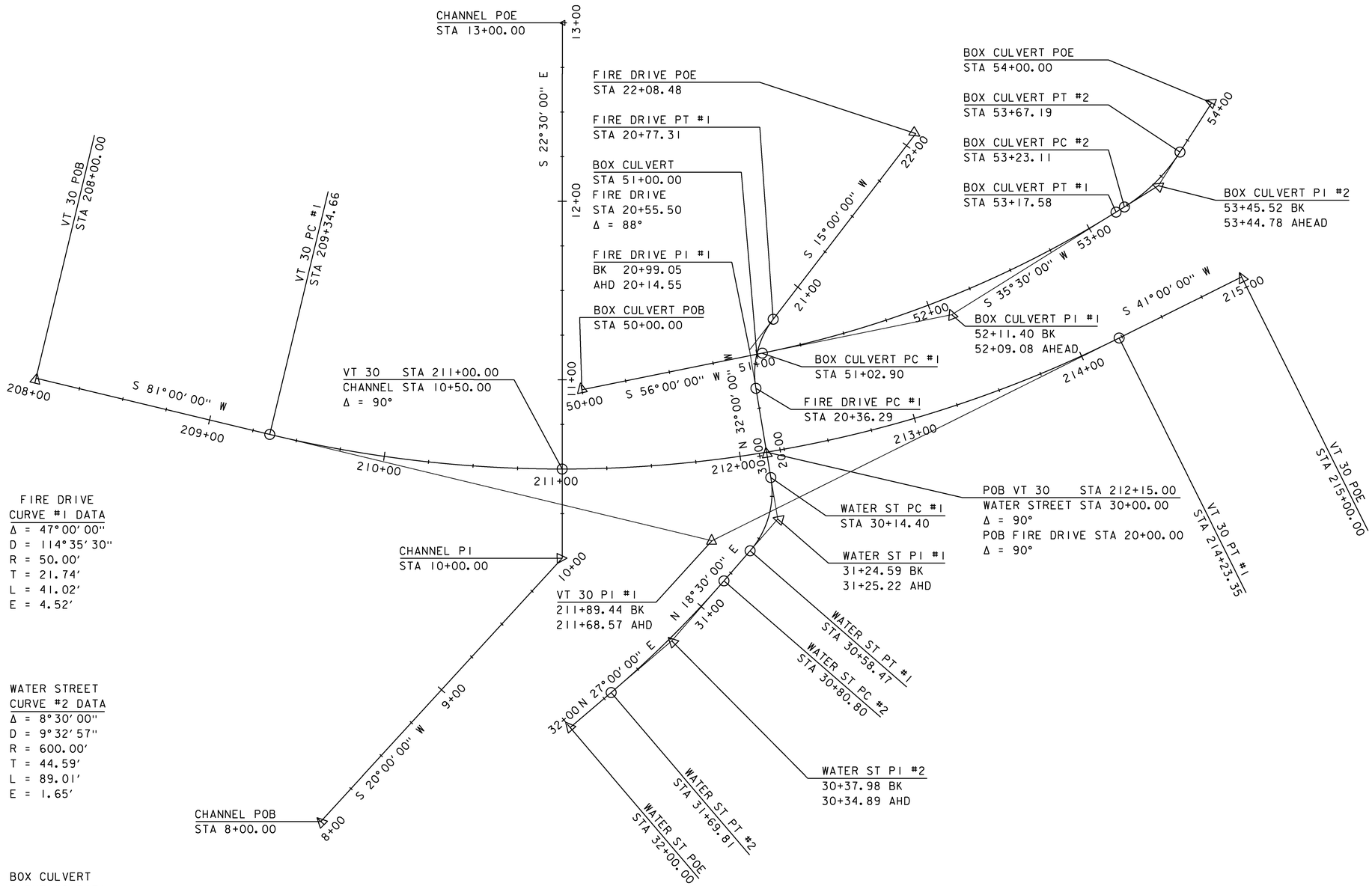

VT 30 CURVE #1 DATA	FIRE DRIVE CURVE #1 DATA
Δ = 40°00′00″	Δ = 47°00′00″
D = 8°11′06″	D = 114°35′30″
R = 700.00′	R = 50.00′
T = 254.78′	T = 21.74′
L = 488.69′	L = 41.02′
E = 44.92′	E = 4.52′

WATER STREET CURVE #1 DATA	WATER STREET CURVE #2 DATA
Δ = 50°30′00″	Δ = 8°30′00″
D = 114°35′30″	D = 9°32′57″
R = 50.00′	R = 600.00′
T = 23.58′	T = 44.59′
L = 44.07′	L = 89.01′
E = 5.28′	E = 1.65′

BOX CULVERT CURVE #1 DATA	BOX CULVERT CURVE #2 DATA
Δ = 20°30′00″	Δ = 25°15′25″
D = 9°32′57″	D = 57°17′45″
R = 600.00′	R = 100.00′
T = 108.50′	T = 22.40′
L = 214.68′	L = 44.08′
E = 9.73′	E = 2.48′

ALIGNMENT

SCALE 1" = 30'-0"
30 0 30

PROJECT NAME:	JAMAICA
PROJECT NUMBER:	ER-BRF 015-1(23)
FILE NAME: slib316.alignmentsheet.dgn	PLOT DATE: 07-DEC-2012
PROJECT LEADER: K. HIGGINS	DRAWN BY: K. FRIEDLAND
DESIGNED BY: G. LAROCHE	CHECKED BY: G. LAROCHE
ALIGNMENT	SHEET 12 OF 82

SPECIAL PROVISION (REMOVAL OF TEMPORARY BRIDGE AND APPROACHES)
STA 208+75.00 - 214+02.00

STEEL MARKER POST
STA 209+60.00 LT
STA 209+86.85 RT
STA 211+60.52 RT
STA 212+61.85 RT

BEGIN APPROACH
STA 208+~~75.00~~ 68.00

BEGIN PROJECT
STA 209+75.00

BEGIN BRIDGE
STA 210+30.17
F.G.= 733.32

CAST-IN-PLACE CONCRETE CURB (MOD)
209+25 - 210+30 LT

APPROXIMATE FUTURE DRY HYDRANT LOCATION (INDEPENDENT PROJECT)

CONSTRUCT 20' DRIVE FOR DRY HYDRANT ACCESS
6" AGGREGATE SURFACE COURSE
HVCTRL #120
120=VSE#200

CULVERT INLET
STA 51+41.00

CULVERT OUTLET
STA 50+56.00

END FIRE DRIVE
STA 21+08.77

STONE FILL, TYPE IV

STONE FILL, TYPE III

BENCHMARK
CHISELED SQUARE IN TOP OF ABUT.
ELEV. 732.93

BENCHMARK
RR SPIKE IN POLE
ELEV. 728.63

BENCHMARK
RR SPIKE IN POLE
ELEV. 732.78

BENCHMARK
CHISELED SQUARE ON ABUT.
ELEV. 731.75

BENCHMARK
STATE OF VERMONT SURVEY DISK
ELEV. 733.77

MATCHLINE 213+75

VT STATE PLANE GRID

VT RTE 30 TO TOWNSHEND

VT RTE 30 TO STRATTON

SWALE FLOW

STONE FILL, TYPE IV (TYP)

END BRIDGE
STA 211+61.83
F.G.= 737.42

24" OPTION PIPE ①

STONE FILL, TYPE II

EXIST STRUCTURE TIED TO NEW STRUCTURE

END WATER ST
STA 31+25.00

⑤ END PROJECT
STA 213+50.00

CAST IN PLACE CONCRETE CURB, TYPE B
STA 208+75.00 - 209+60.00 RT
SAT 209+80.50 - 210+29.50 RT
STA 211+62.60 - 211+87.00 RT

PORTLAND CEMENT CONCRETE SIDEWALK, 5"
STA 208+75.00 - 209+25.00 LT
STA 208+75.00 - 210+29.50 RT
STA 211+62.60 - ~~211+87.00 RT~~ 30+56 RT

CONSTRUCT 5'-0" PAVED APRON
STA 209+59.00 - 209+80.44 RT
STA 212+71.70 - 213+14.32 RT
STA 213+62.49 - 213+88.36 RT

AGGREGATE SURFACE COURSE
STA 209+59.00 - 209+80.44 RT
STA 212+71.70 - 213+14.32 RT
STA 20+38.00 - 21+42.00 LT

CULVERTS AND STORM DRAINS
(SEE DRAINAGE DETAIL SHEET)
① STA 211+60.52 RT - 212+61.85 RT
② STA 211+68.21 RT - 212+29.00 LT
③ STA 212+61.00 RT
④ STA 212+62.00 RT
⑤ STA 212+34.40 LT - 213+23.71 LT

LAYOUT 1
SCALE 1" = 20'-0"
20 0 20

PROJECT NAME:	JAMAICA
PROJECT NUMBER:	ER-BRF 015-1(23)
FILE NAME: sllb316.bdr.dgn	PLOT DATE: 07-DEC-2012
PROJECT LEADER: K. HIGGINS	DRAWN BY: K. FRIEDLAND
DESIGNED BY: G. LAROCHE	CHECKED BY: J. SALVATORI
LAYOUT 1	SHEET 13 OF 82

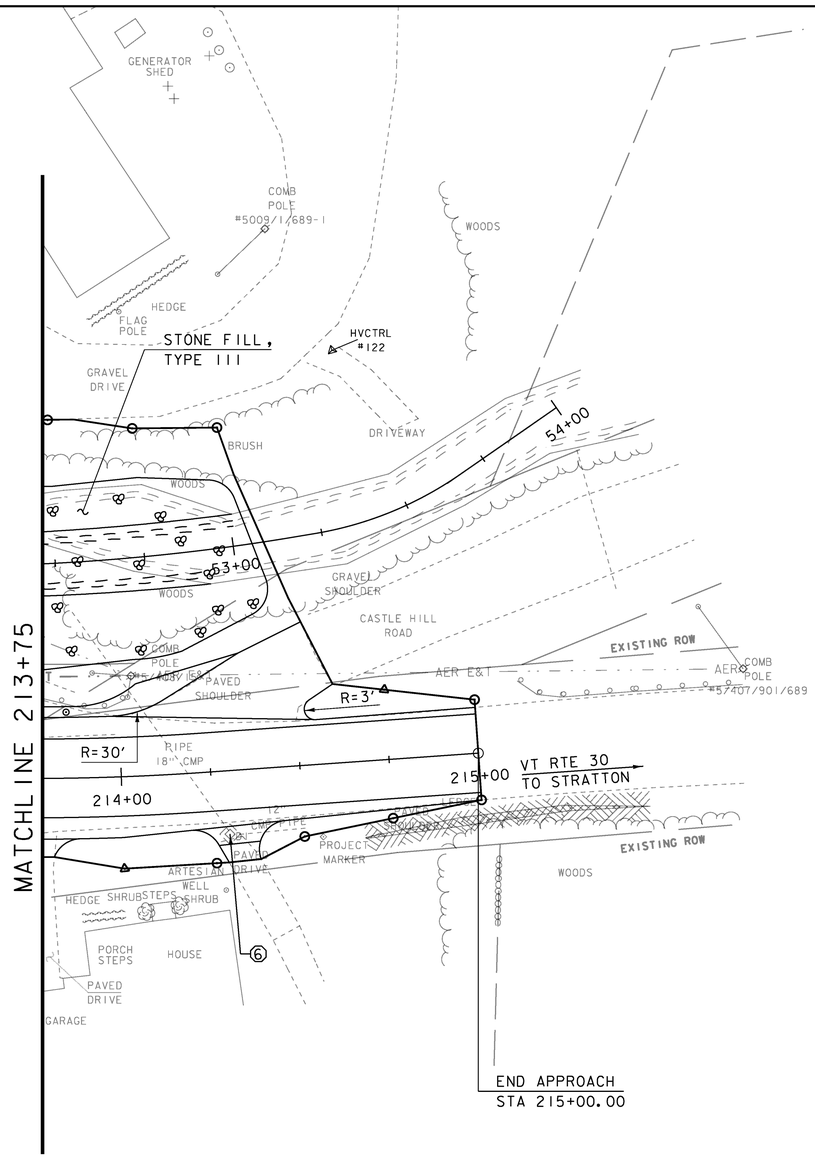

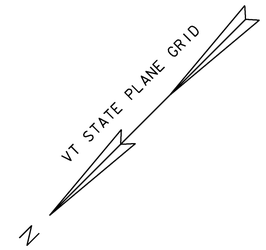

STEEL MARKER POST
STA 213+85.00 LT

CONSTRUCT 5'-0" PAVED APRON
STA 214+19.48 - 214+42.00 RT

AGGREGATE SURFACE COURSE
STA 214+19.48 - 214+42.00 RT

CHANGING ELEVATION OF DROP INLETS, CATCH BASINS OR MANHOLES
⑥ 214+29.20 RT

LAYOUT 2
SCALE 1" = 20'-0"
20 0 20

PROJECT NAME: JAMAICA	
PROJECT NUMBER: ER-BRF 015-1(23)	
FILE NAME: s11b316.bdr.dgn	PLOT DATE: 07-DEC-2012
PROJECT LEADER: K. HIGGINS	DRAWN BY: K. FRIEDLAND
DESIGNED BY: G. LAROCHE	CHECKED BY: J. SALVATORI
LAYOUT 2	SHEET 14 OF 82

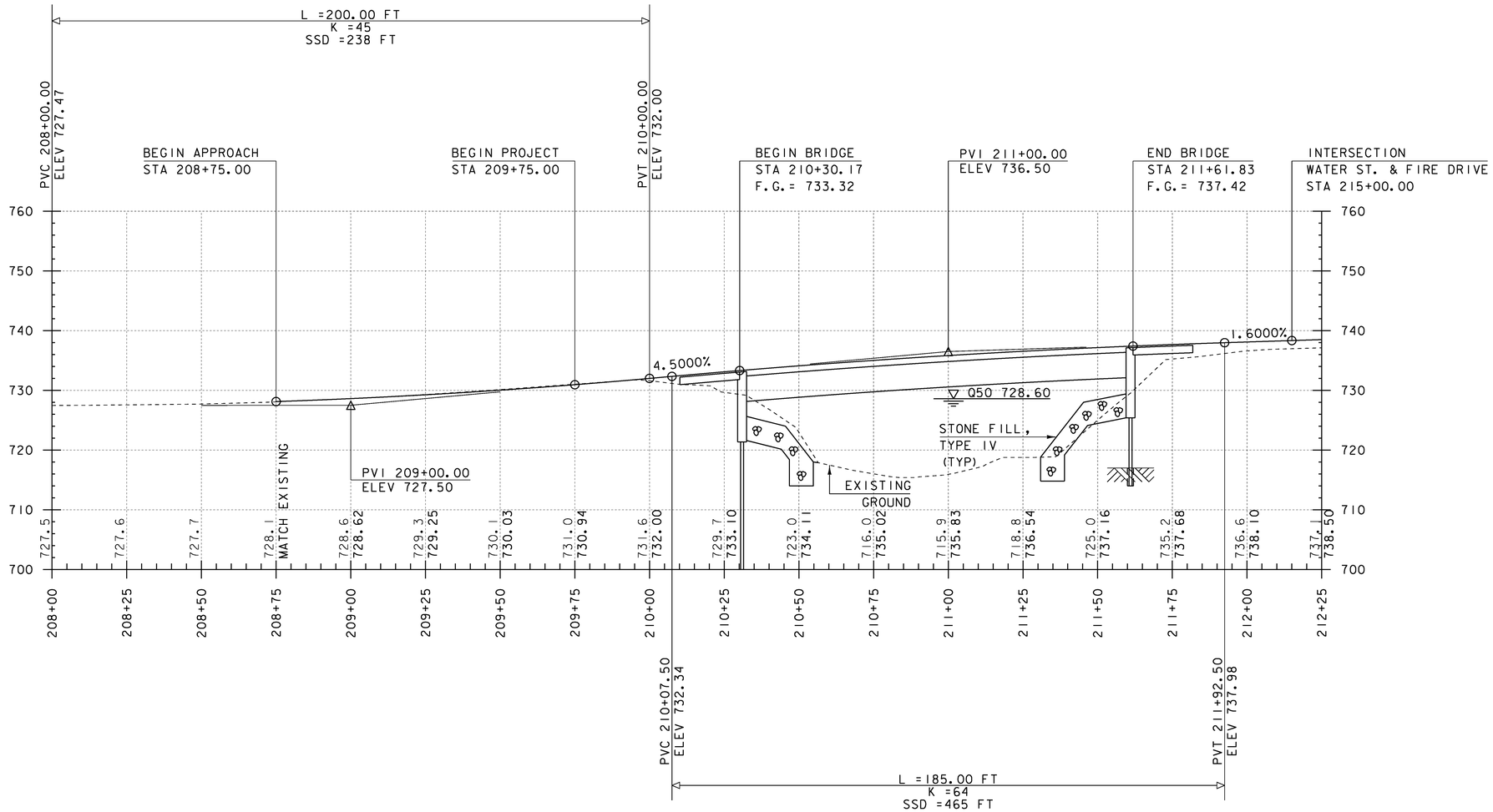

MAINLINE PROFILE 1

THE GRADES SHOWN TO THE NEAREST TENTH ARE THE ORIGINAL GROUND ELEVATIONS ALONG THE PROPOSED ALIGNMENT.

THE GRADES SHOWN TO THE NEAREST HUNDREDTH ARE THE FINISH GRADES ALONG THE PROPOSED ALIGNMENT.

PROJECT NAME:	JAMAICA
PROJECT NUMBER:	ER-BRF 015-1(23)
FILE NAME: s11b316.pro.dgn	PLOT DATE: 07-DEC-2012
PROJECT LEADER: K. HIGGINS	DRAWN BY: K. FRIEDLAND
DESIGNED BY: G. LAROCHE	CHECKED BY: G. LAROCHE
MAINLINE PROFILE 1	SHEET 15 OF 82

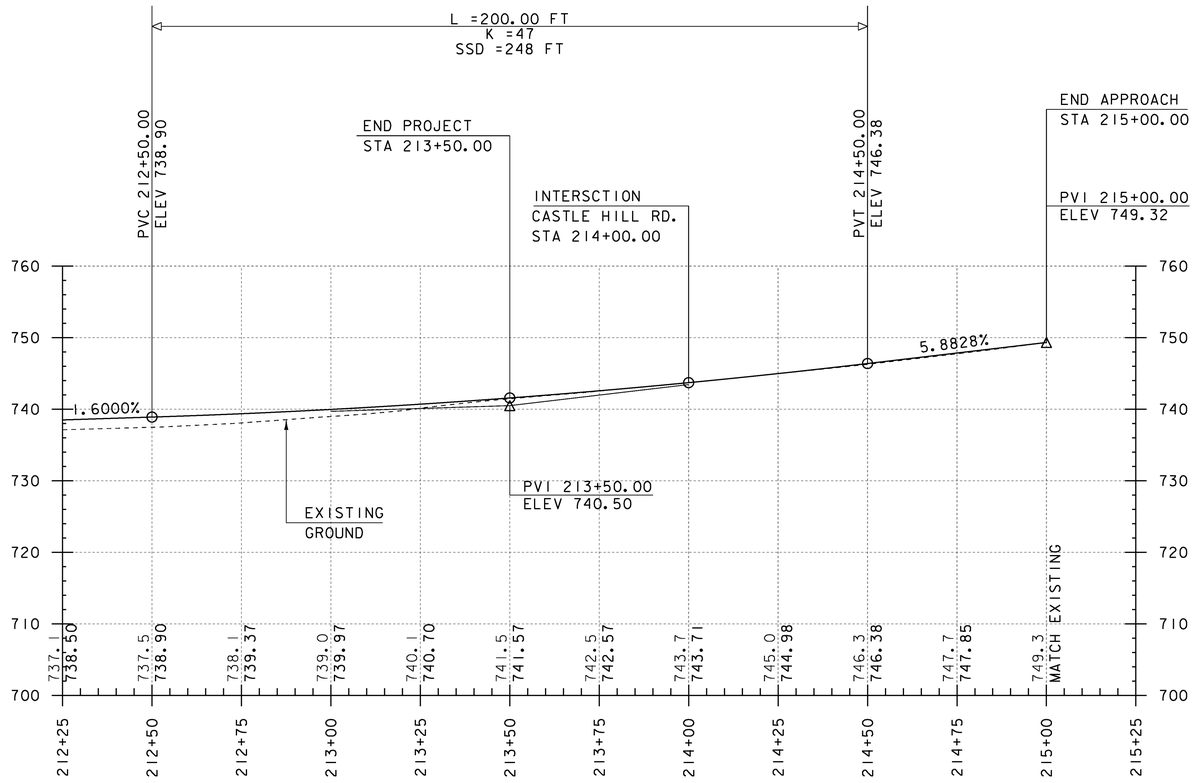

MAINLINE PROFILE 2

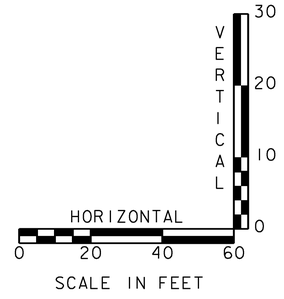

THE GRADES SHOWN TO THE NEAREST TENTH ARE THE ORIGINAL GROUND ELEVATIONS ALONG THE PROPOSED ALIGNMENT.

THE GRADES SHOWN TO THE NEAREST HUNDREDTH ARE THE FINISH GRADES ALONG THE PROPOSED ALIGNMENT.

PROJECT NAME: JAMAICA
PROJECT NUMBER: ER-BRF 015-1(23)

FILE NAME: sllb316.pro.dgn
PROJECT LEADER: K. HIGGINS
DESIGNED BY: G. LAROCHE
MAINLINE PROFILE 2

PLOT DATE: 07-DEC-2012
DRAWN BY: K. FRIEDLAND
CHECKED BY: G. LAROCHE
SHEET 16 OF 82

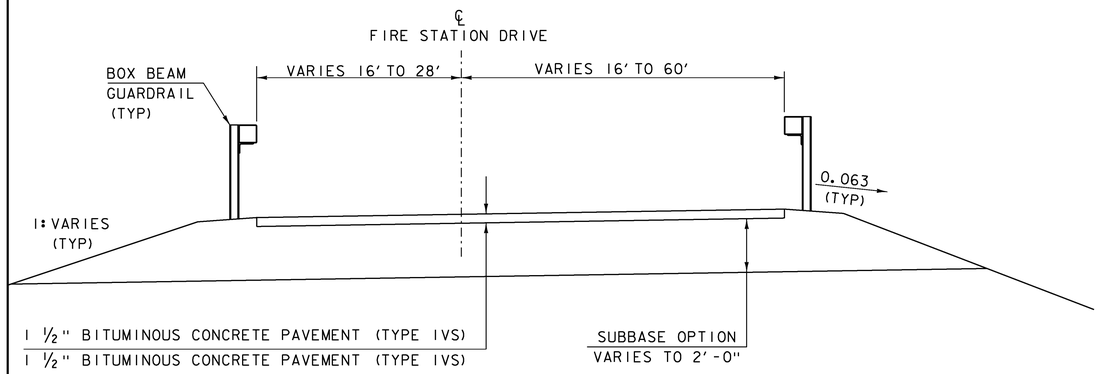

FIRE DRIVE TYPICAL SECTION

NOT TO SCALE

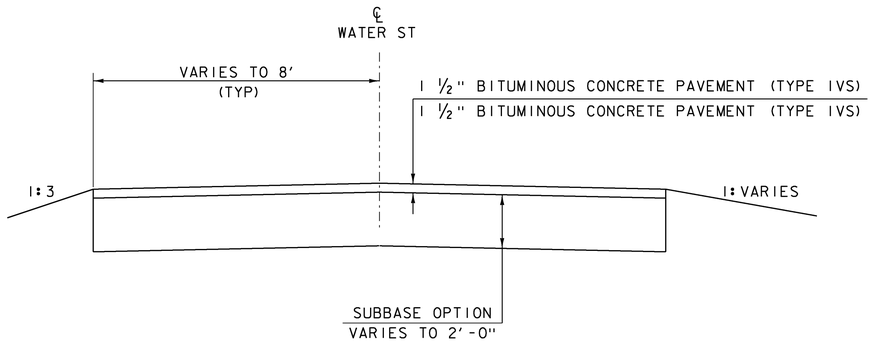

WATER STREET TYPICAL SECTION

NOT TO SCALE

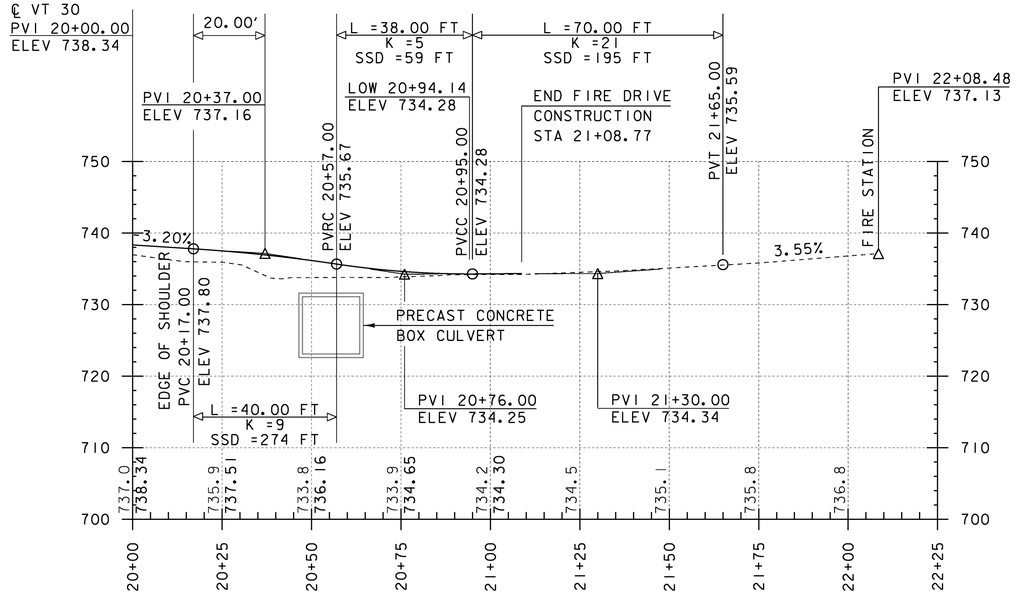

FIRE DRIVE PROFILE

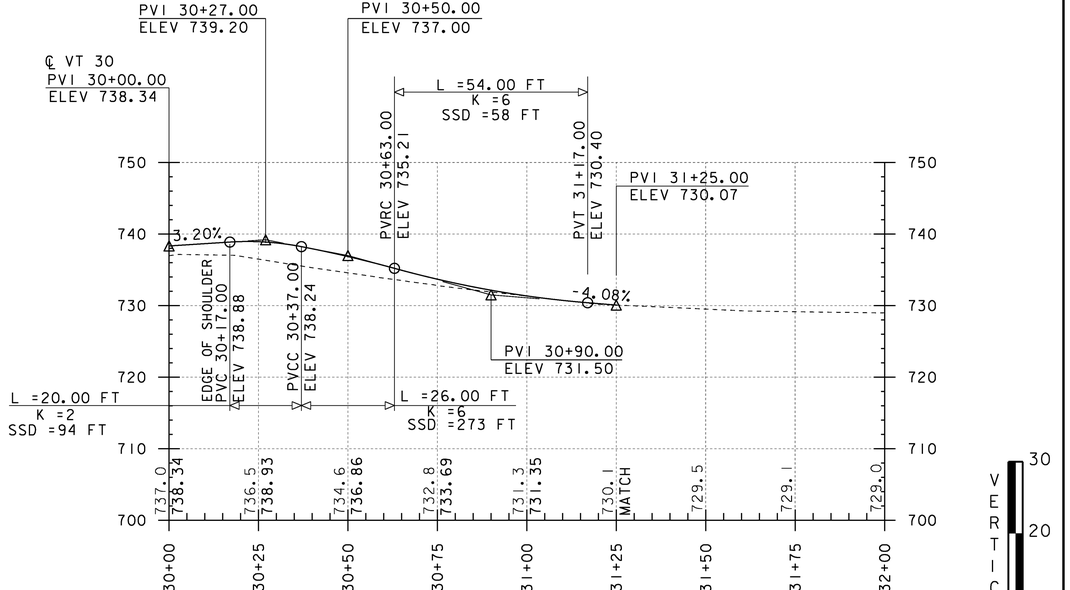

WATER STREET PROFILE

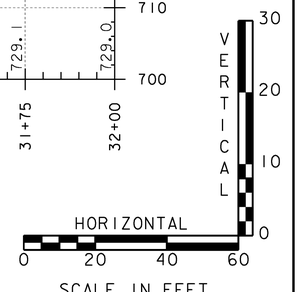

THE GRADES SHOWN TO THE NEAREST TENTH ARE THE ORIGINAL GROUND ELEVATIONS ALONG THE PROPOSED ALIGNMENT.

THE GRADES SHOWN TO THE NEAREST HUNDREDTH ARE THE FINISH GRADES ALONG THE PROPOSED ALIGNMENT.

PROJECT NAME: JAMAICA	
PROJECT NUMBER: ER-BRF 015-1(23)	
FILE NAME: s11b316.pro.dgn	PLOT DATE: 07-DEC-2012
PROJECT LEADER: K. HIGGINS	DRAWN BY: K. FRIEDLAND
DESIGNED BY: G. LAROCHE	CHECKED BY: G. LAROCHE
FIRE DRIVE & WATER STREET PROFILES	SHEET 17 OF 82

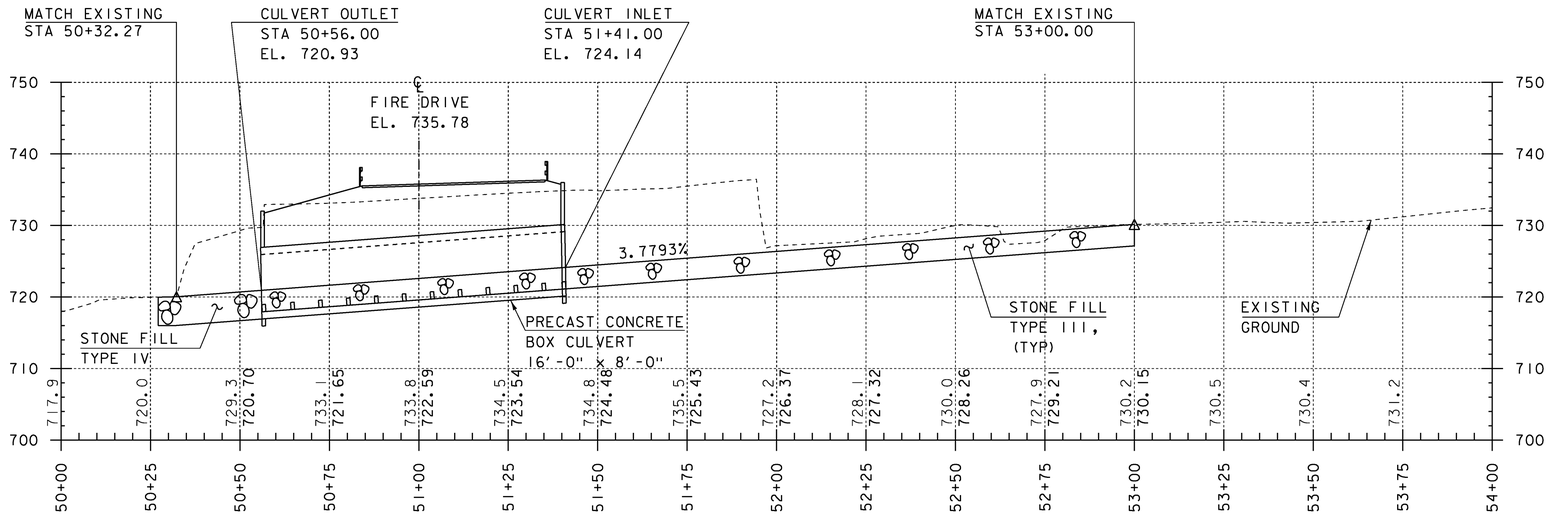

BOX CULVERT PROFILE

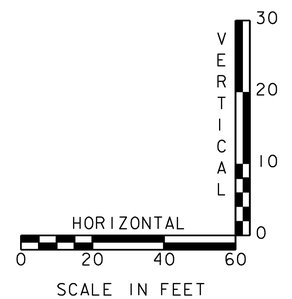

THE GRADES SHOWN TO THE NEAREST TENTH ARE THE ORIGINAL GROUND ELEVATIONS ALONG THE PROPOSED ALIGNMENT.

THE GRADES SHOWN TO THE NEAREST HUNDREDTH ARE THE FINISH GRADES ALONG THE PROPOSED ALIGNMENT.

PROJECT NAME: JAMAICA
PROJECT NUMBER: ER-BRF 015-1(23)

FILE NAME: s11b316.pro.dgn
PROJECT LEADER: K. HIGGINS
DESIGNED BY: G. LAROCHE
BOX CULVERT PROFILE

PLOT DATE: 07-DEC-2012
DRAWN BY: K. FRIEDLAND
CHECKED BY: G. LAROCHE
SHEET 18 OF 82

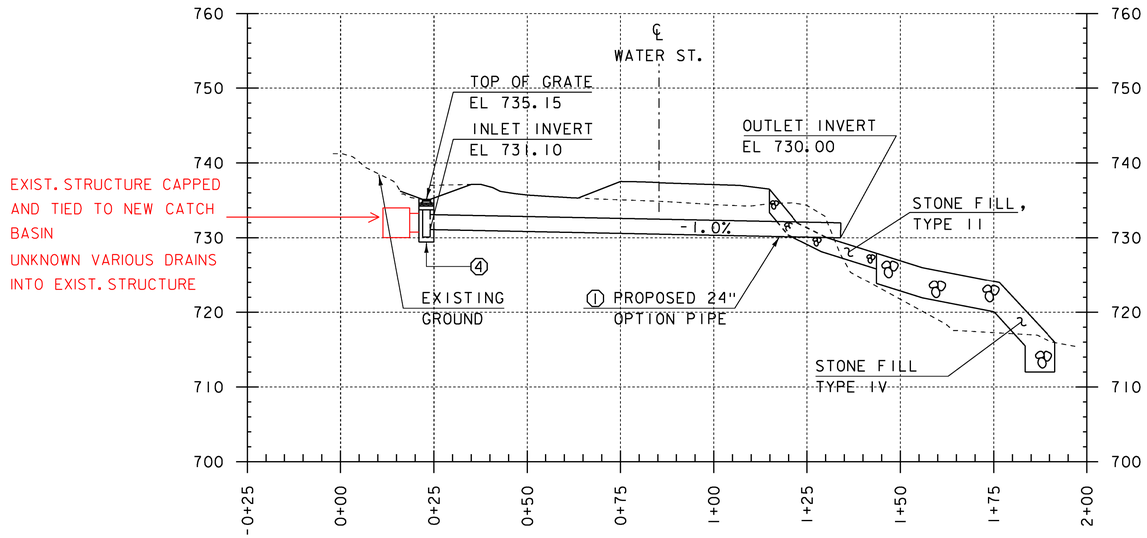

24" OPTION PIPE PROFILE
STA 211+60.52 - 212+61.85 RT

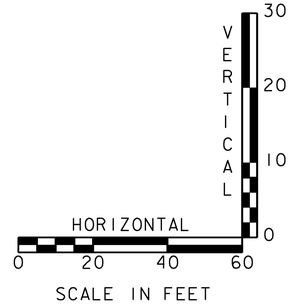

PROJECT NAME:	JAMAICA
PROJECT NUMBER:	ER-BRF 015-1(23)
FILE NAME: sllb316.pro.dgn	PLOT DATE: 07-DEC-2012
PROJECT LEADER: K. HIGGINS	DRAWN BY: K. FRIEDLAND
DESIGNED BY: G. LAROCHE	CHECKED BY: G. LAROCHE
DRAINAGE PIPE PROFILE	SHEET 19 OF 82

STATE OF VERMONT
AGENCY OF TRANSPORTATION

DRAINAGE DETAIL SHEET

STATION	STATION	POS.	ASKEW	INLET/OUTLET TYPE		DITCH		PIPE ARCH			PIPE		ALLOWABLE OPTIONS						PIPE ELBOW	ES	CB	PRC	DI	DEPTH DI	CONC CLASS B	REINF STEEL	DI GRATE	CHAN ELEV	CRM	TRENCH EXCAVATION		COMM EXC	UNC CHAN EXC	STRUCT EXCAV	GRAN BKFILL STRUCT	GRAN BORR	EROS MATT	STONE FILL		MARKER POSTS				REMARKS
				INLET	OUTLET	IN	OUT	SPAN	RISE	L	D	L	PCCSP	CAAP	RCP	CSP	CPEP	PCCSP PI											EARTH	ROCK									LT	RT			
			NO. DEG.					IN	IN	FT	IN	FT	TH	TH	CL	TH	SL	TH	NO. DEG.	EA	EA			FT	CY	LBS	TYPE	EA	CY	CY	CY	CY	CY	CY	CY	CY	SY	CY	TYPE	EA	EA			
211+60.52	212+61.85	RT-RT	YES	DI		X	X				24	110	X	X			X											85					45					1	1		1	NEW 24" OPTION PIPE. SEE CROSS SECTION SHEETS. INLET INVERT EL. = 731.10' / OUTLET INVERT EL. = 730.00'
211+68.21	212+29.00	RT-LT																																						2	PARTIAL REMOVAL OF EXISTING 7' x 7' BOX CULVERT. SEE GENERAL NOTES.
212+61.00		RT																																						3	LEFT ~~REMOVE~~ EXISTING 4' x 4' DROP INLET.
212+62.00		RT																				X										15	10							4	NEW PRECAST REINFORCED CONCRETE DROP INLET WITH CAST IRON GRATE WITH FRAME. EL. = 735.15'
212+34.40	213+23.71	LT-LT																																						5	REMOVE EXISTING 96" CGMP. SEE GENERAL NOTES.
214+29.20		RT	YES																																					6	RAISE ELEVATION OF EXISTING DROP INLET TO 745.70'

PROJECT NAME:	**JAMAICA**
PROJECT NUMBER:	**ER-BRF 015-1(23)**
FILE NAME:	**s11b316.drn.dgn**
PROJECT LEADER:	**K. HIGGINS**
DESIGNED BY:	**G. LAROCHE**
DRAINAGE DETAIL SHEET	
PLOT DATE:	**11/30/2012**
DRAWN BY:	**K. FRIEDLAND**
CHECKED BY:	**J. SALVATORI**
SHEET	**20** OF **82**

DETECTABLE WARNING SURFACE
STA ~~211+83.60 RT~~ 30+56 RT

4 INCH WHITE LINE
STA 208+75.00 - STA 211+81.00 RT
STA 208+75.00 - STA 213+75.00 LT
STA 212+25.00 - STA 213+75.00 RT

4 INCH YELLOW LINE (DOUBLE)
STA 208+75.00 - STA 211+95.00 ℄
STA 212+35.00 - STA 213+75.00 ℄
STA 30+21.00 - SAT 30+71.00 ℄

REMOVING SIGNS
STA 211+69.00 RT
STA 211+76.60 RT
STA 211+76.90 RT
STA 213+12.00 RT
STA 213+19.40 RT (2)

TRAFFIC SIGNS, TYPE A
STA 209+90.00 LT (2)
STA 210+00.00 RT
STA 211+68.00 LT (2)
STA 211+72.50 RT
STA 212+27.00 RT (2)
STA 213+12.00 LT (3)
STA 213+12.00 RT (3)

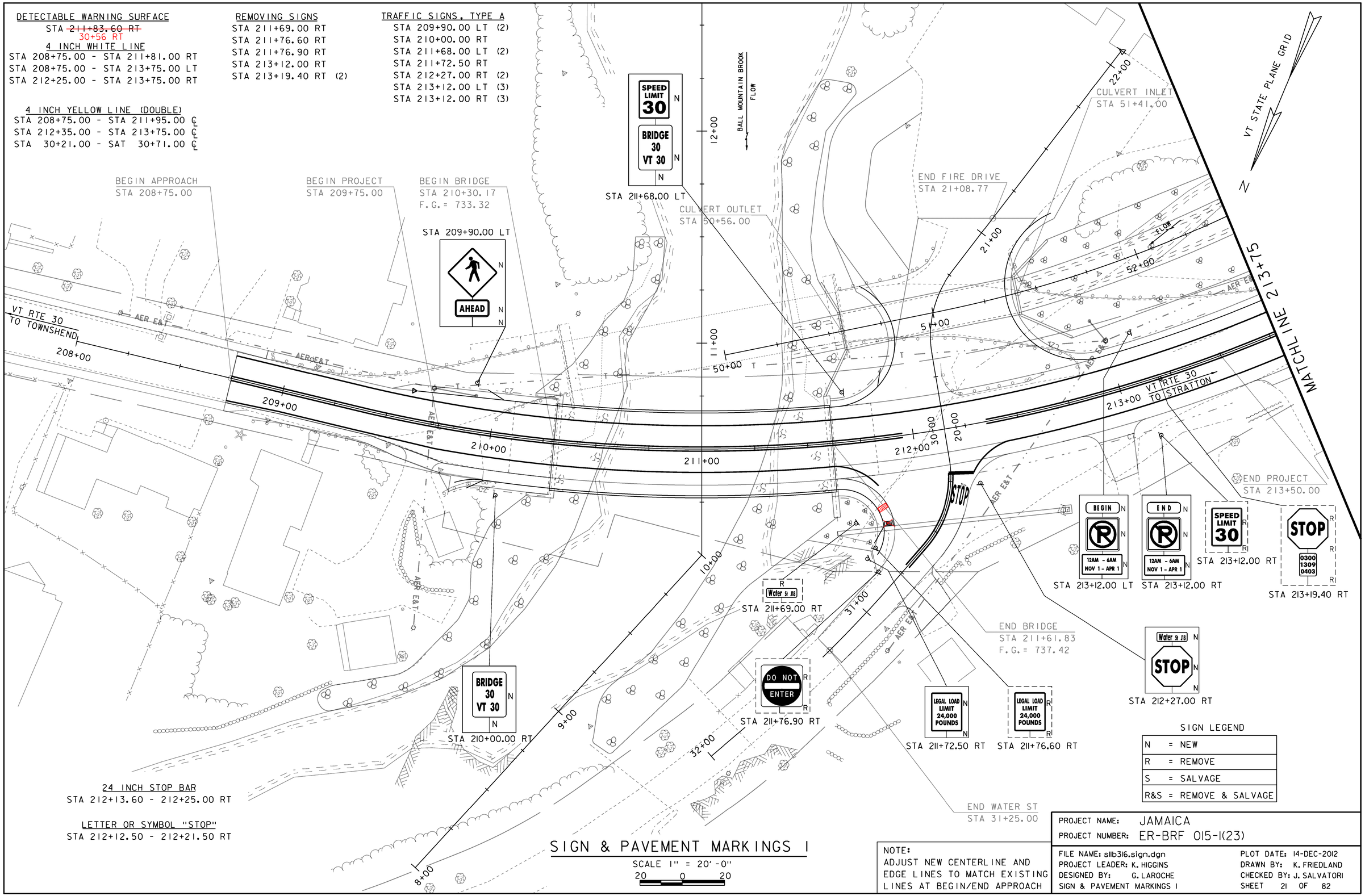

24 INCH STOP BAR
STA 212+13.60 - 212+25.00 RT

LETTER OR SYMBOL "STOP"
STA 212+12.50 - 212+21.50 RT

SIGN LEGEND

N	= NEW
R	= REMOVE
S	= SALVAGE
R&S	= REMOVE & SALVAGE

SIGN & PAVEMENT MARKINGS I

SCALE 1" = 20'-0"
20 0 20

NOTE:
ADJUST NEW CENTERLINE AND EDGE LINES TO MATCH EXISTING LINES AT BEGIN/END APPROACH

PROJECT NAME: JAMAICA
PROJECT NUMBER: ER-BRF 015-1(23)

FILE NAME: s11b316.sign.dgn
PROJECT LEADER: K. HIGGINS
DESIGNED BY: G. LAROCHE
SIGN & PAVEMENT MARKINGS I

PLOT DATE: 14-DEC-2012
DRAWN BY: K. FRIEDLAND
CHECKED BY: J. SALVATORI
SHEET 21 OF 82

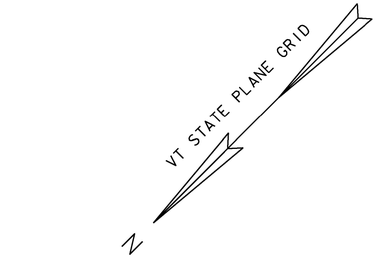

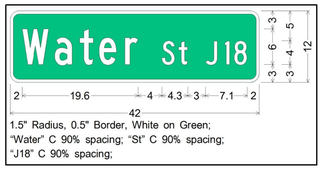

REMOVING SIGNS
STA 214+10.00 LT
STA 214+20.30 LT
STA 214+49.60 RT
STA 214+73.40 LT (2)

TRAFFIC SIGNS, TYPE A
STA 214+10.00 LT
STA 214+20.30 LT
STA 214+49.60 RT
STA 214+73.40 LT

4 INCH WHITE LINE
STA 213+75.00 - STA 215+00.00 RT
STA 213+75.00 - STA 213+90.00 LT
STA 214+55.00 - STA 215+00.00 LT

4 INCH YELLOW LINE (DOUBLE)
STA 213+75.00 - STA 214+10.00 ℄
STA 214+50.00 - SAT 215+00.00 ℄

SIGN LEGEND

N	=	NEW
R	=	REMOVE
S	=	SALVAGE
R&S	=	REMOVE & SALVAGE

* LENGTHS INCLUDE ANCHOR

MILEMARKER OR STATION	SIGN LEGEND	SIGN DIMENSIONS WIDTH (in)	SIGN DIMENSIONS HEIGHT (in)	NEW SIGN "A"	EXIST POST RETAIN	EXIST POST SALVAGE	NO. OF POSTS	NEW SIGN POSTS SQUARE STEEL (in) 1.75 lb/ft 1.88	2.0 lb/ft 2.42	2.5 lb/ft 3.35	ANCHOR	SLEEVE	REMARKS	SIGN DETAIL DETAIL ON SHEET NUMBER	SIGN DETAIL STD. SHEET NUMBER
STA 209+90.00 LT	W11-2 (FYG)	30	30	6.25			1		~~15~~ 14.25				W11-2 (FYG)		E-152
	AHEAD	24	12	2.00									W16-9p (FYG)		E-152
STA 210+00.00 RT	BRIDGE 30 VT 30	6	8	0.33			1	~~7~~ 6.75			X		VD-701		E-134
STA 211+68.00 LT	BRIDGE 30 VT 30	6	8	0.33			1		~~15~~ 12.25		X		VD-701		E-134
	SPEED LIMIT 30	24	30	5.00									R2-1		SHS
STA 211+72.50 RT	LEGAL LOAD LIMIT 24,000 POUNDS	24	30	5.00			1		~~15~~ 13.25		X		VR-017		E-141
STA 212+27.00 RT	Water St J18	42	12	3.50			1		~~15~~ 13.75		X		D3-1	SEE THIS SHEET	SHS
	STOP	30	30	6.25									R1-1		SHS
STA 213+12.00 LT	R	24	24	4.00			1		~~15~~ 14.0				R8-3		E-143
	12AM - 6AM NOV 1 - APR 1	24	10	1.67									VR-122	SEE THIS SHEET	
	BEGIN	24	12	2.00									M4-6		E-140
STA 213+12.00 RT	R	24	24	4.00			1		15				R8-3		E-143
	12AM - 6AM NOV 1 - APR 1	24	10	1.67									VR-122	SEE THIS SHEET	
	END	24	12	2.00									M4-14		E-140
STA 214+10.00 LT	Castle Hill RD J51	66	12	5.50			2		10.25 ~~30~~ 10.25		X		D3-1	SEE THIS SHEET	SHS
STA 214+20.30 LT	STOP	30	30	6.25			1		~~15~~ 12.25		X		R1-1		SHS
STA 214+49.60 RT	HIDDEN DRIVE RIGHT	30	30	6.25			1		~~15~~ 14.0		X		VW-054		E-154
STA 214+73.40 LT	LEGAL LOAD LIMIT 24,000 POUNDS	24	30	5.00			1		~~15~~ 12.25		X		VR-017		E-141
FINAL POST LENGTHS ARE TO BE DETERMINED IN THE FIELD. POST SIZES ARE COMPUTED BASED ON INFORMATION FURNISHED ON THE STANDARD SHEETS AND THE VTRANS "SIGN POST DESIGN GUIDELINE."								FT 7	FT 165	FT		EA			
	TOTALS			SF 67.00					FT ~~172~~ 148.25				SHS = STANDARD HIGHWAY SIGNS (MUTCD)		

SIGN & PAVEMENT MARKINGS 2

SCALE 1" = 20'-0"
20 0 20

NOTE:
ADJUST NEW CENTERLINE AND EDGE LINES TO MATCH EXISTING LINES AT BEGIN/END APPROACH

PROJECT NAME: JAMAICA
PROJECT NUMBER: ER-BRF 015-1(23)

FILE NAME: sllb316.sign.dgn
PROJECT LEADER: K. HIGGINS
DESIGNED BY: G. LAROCHE
SIGN & PAVEMENT MARKINGS 2

PLOT DATE: 14-DEC-2012
DRAWN BY: K. FRIEDLAND
CHECKED BY: J. SALVATORI
SHEET 22 OF 82

EXISTING POLE
TO REMAIN

EXISTING POLE
AND GUY WIRE
TO BE REMOVED

EXISTING UTILITY
LINE TO BE
RELOCATED

EXISTING POLE
AND GUY WIRE
TO BE REMOVED

NEW UTILITY POLE
W/ 20' GUY WIRE
STA 209+70, 17' LT

EXISTING POLES
AND GUY WIRES
TO BE REMOVED

VT STATE PLANE GRID

N

EXISTING POLE
TO REMAIN

NEW UTILITY POLE
W/ STREET LIGHT AND
TWO 12' GUY WIRES
STA 213+00, 24' LT

NEW UTILITY
LINE

EXISTING
WIRE TO BE
REMOVED

EXISTING POLE
AND GUY WIRE
TO REMAIN

EXISTING POLE
TO REMAIN

PROPOSED UTILITY LAYOUT

SCALE 1" = 20'-0"
20 0 20

PROJECT NAME: JAMAICA	
PROJECT NUMBER: ER-BRF 015-1(23)	
FILE NAME: s11b316ut12.dgn	PLOT DATE: 07-DEC-2012
PROJECT LEADER: K. HIGGINS	DRAWN BY: K. FRIEDLAND
DESIGNED BY: J. SALVATORI	CHECKED BY: G. LAROCHE
PROPOSED UTILITY LAYOUT	SHEET 23 OF 82

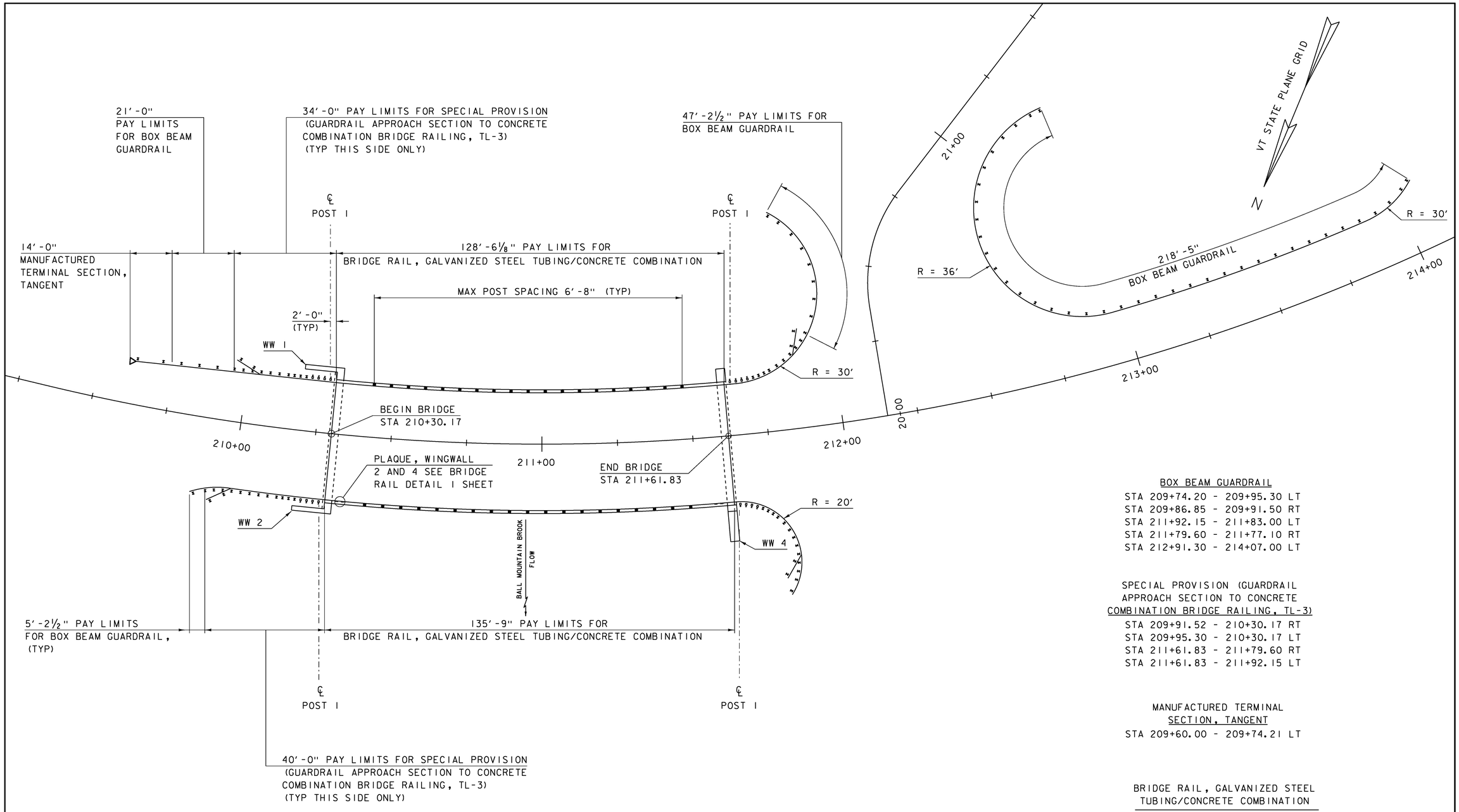

BOX BEAM GUARDRAIL
STA 209+74.20 - 209+95.30 LT
STA 209+86.85 - 209+91.50 RT
STA 211+92.15 - 211+83.00 LT
STA 211+79.60 - 211+77.10 RT
STA 212+91.30 - 214+07.00 LT

SPECIAL PROVISION (GUARDRAIL APPROACH SECTION TO CONCRETE COMBINATION BRIDGE RAILING, TL-3)
STA 209+91.52 - 210+30.17 RT
STA 209+95.30 - 210+30.17 LT
STA 211+61.83 - 211+79.60 RT
STA 211+61.83 - 211+92.15 LT

MANUFACTURED TERMINAL SECTION, TANGENT
STA 209+60.00 - 209+74.21 LT

BRIDGE RAIL, GALVANIZED STEEL TUBING/CONCRETE COMBINATION
STA 210+30.17 - 211+61.83 LT/RT

NOTES:

1) ALL DIMENSIONS ARE TAKEN ALONG THE FACE OF RAIL.

2) SEE STANDARD G-1b FOR END ASSEMBLY DETAIL.

RAIL LAYOUT

SCALE 1" = 15'-0"

PROJECT NAME:	JAMAICA
PROJECT NUMBER:	ER-BRF 015-1(23)
FILE NAME: sllb316rail.dgn	PLOT DATE: 07-DEC-2012
PROJECT LEADER: K. HIGGINS	DRAWN BY: K. FRIEDLAND
DESIGNED BY: G. LAROCHE	CHECKED BY: G. LAROCHE
RAIL LAYOUT	SHEET 24 OF 82

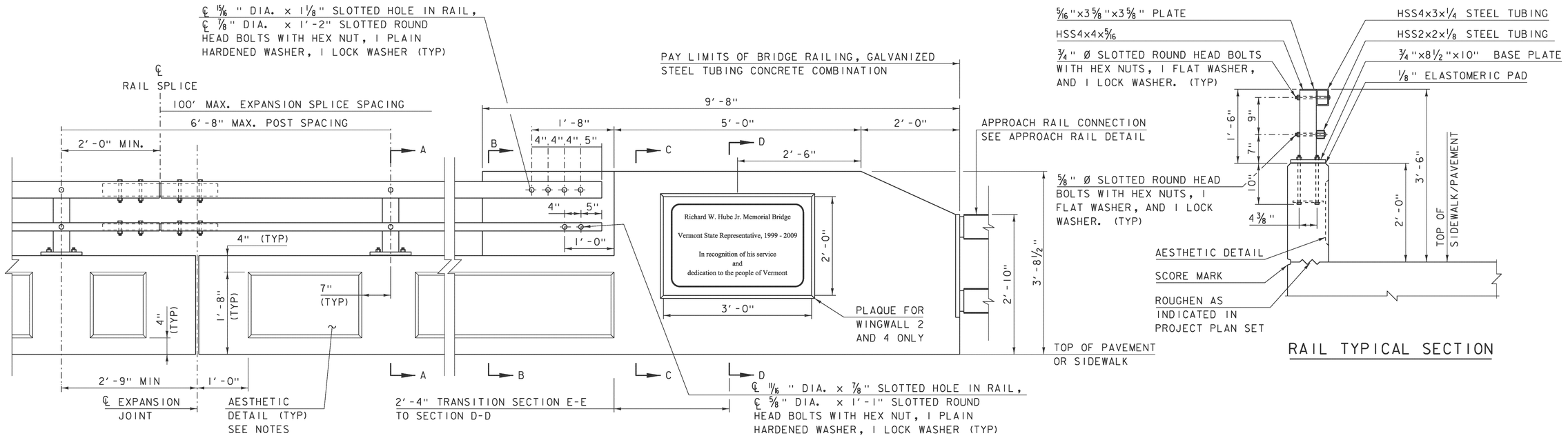

RAIL TYPICAL SECTION

RAILING & END WALL APPROACH

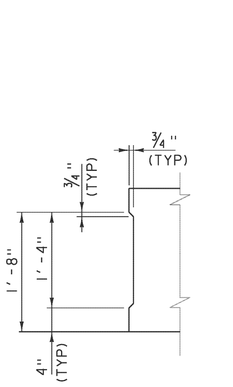

AESTHETIC DETAIL

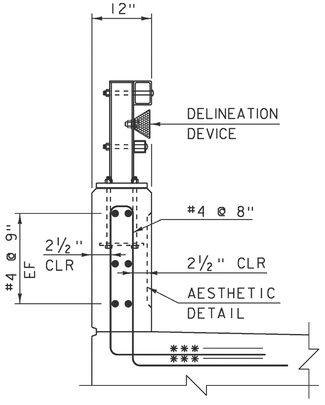

SECTION A-A

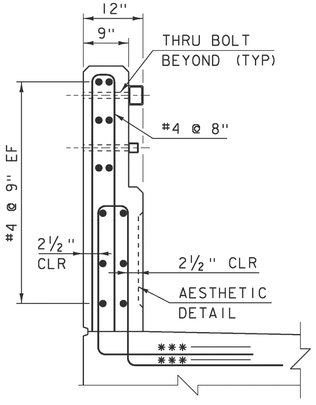

SECTION B-B

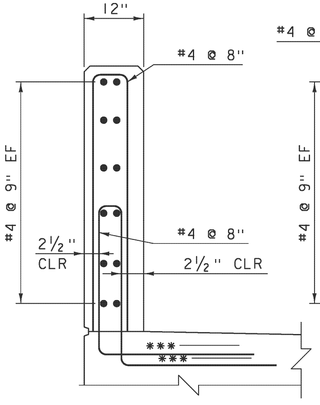

SECTION C-C

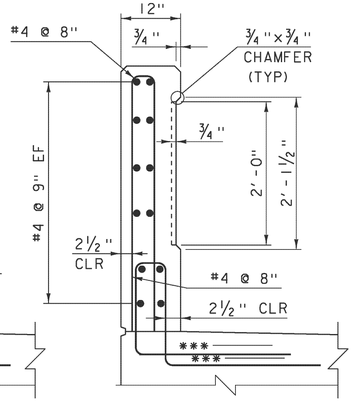

SECTION D-D

NOTE:
EF = EACH FACE
3" CLEAR, UNLESS OTHERWISE SPECIFIED ON THE PLANS.
2'-2" BAR LAP UNLESS OTHERWISE SPECIFIED ON THE PLANS.
*** MATCH SLOPE OF NEAREST TRANSVERSE STEEL

SEE STANDARDS S352-A, S352-B AND S352-C FOR FURTHER DETAILS

PROJECT NAME:	JAMAICA
PROJECT NUMBER:	ER-BRF 015-1(23)
FILE NAME: sllb316raildet.dgn	PLOT DATE: 07-DEC-2012
PROJECT LEADER: K. HIGGINS	DRAWN BY: G. LAROCHE
DESIGNED BY: G. LAROCHE	CHECKED BY: J. SALVATORI
BRIDGE RAIL DETAILS	SHEET 25 OF 82

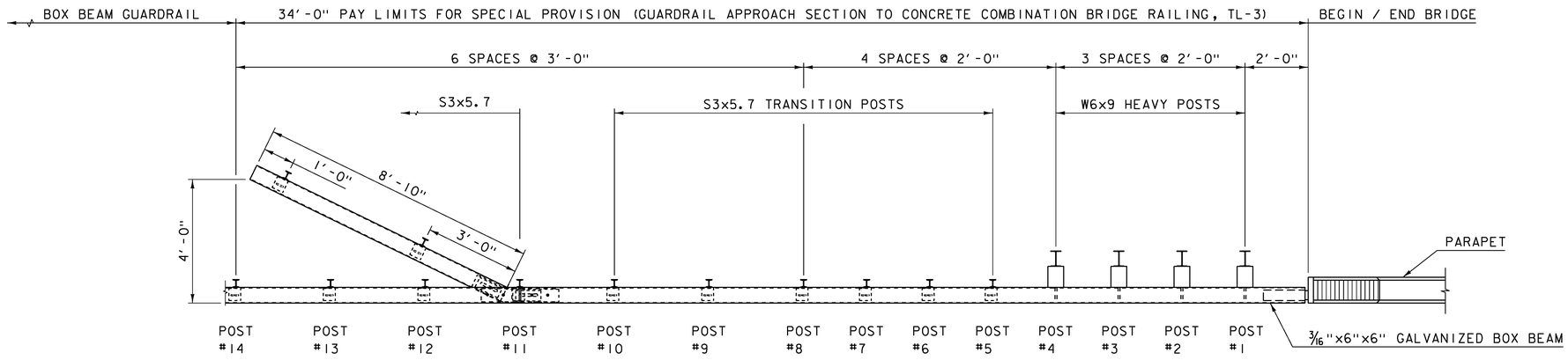

APPROACH RAIL PLAN @ WW1

(WW3 SIMILIAR BUT CURVED)
NOT TO SCALE

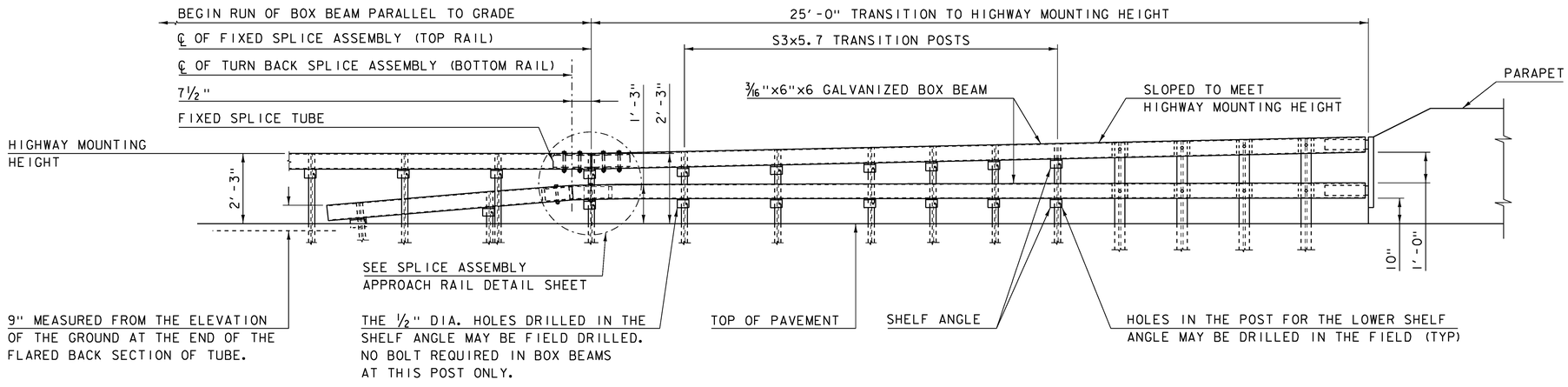

APPROACH RAIL ELEVATION

NOT TO SCALE

PROJECT NAME: JAMAICA	
PROJECT NUMBER: ER-BRF 015-1(23)	
FILE NAME: sllb316raildet.dgn	PLOT DATE: 07-DEC-2012
PROJECT LEADER: K. HIGGINS	DRAWN BY: G. LAROCHE
DESIGNED BY: G. LAROCHE	CHECKED BY: J. SALVATORI
APPROACH RAIL WW1 AND WW3	SHEET 26 OF 82

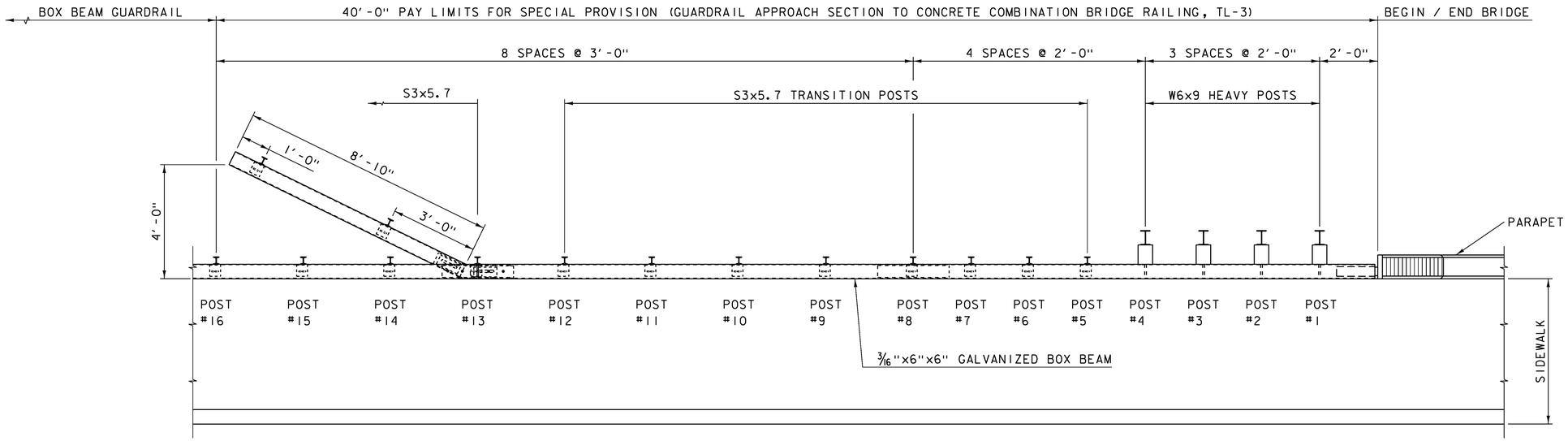

APPROACH RAIL PLAN @ WW2

(WW4 SIMILIAR BUT CURVED)
NOT TO SCALE

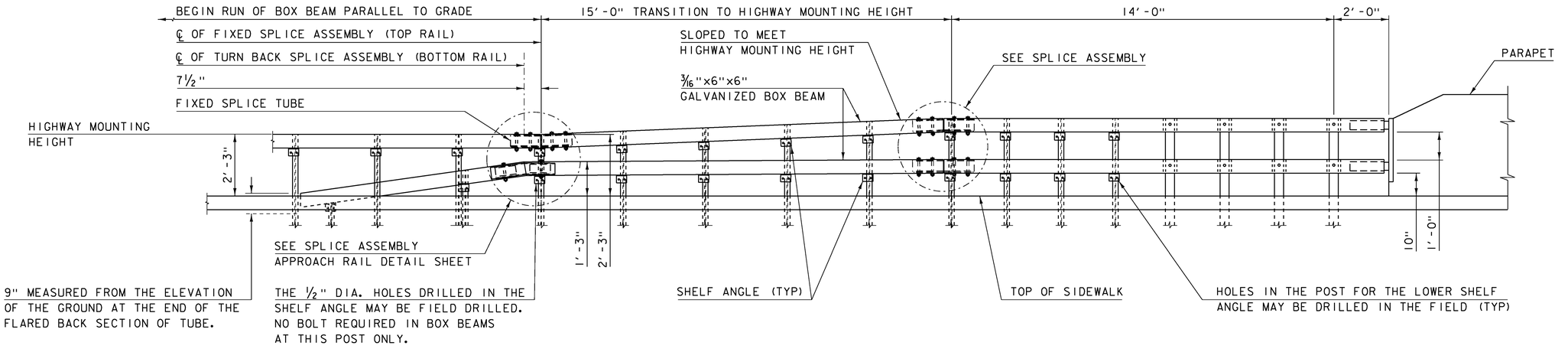

APPROACH RAIL ELEVATION

NOT TO SCALE

OTHER STANDARDS REQUIRED: G-1B

PROJECT NAME:	JAMAICA
PROJECT NUMBER:	ER-BRF 015-1(23)

FILE NAME: sllb316raildet.dgn	PLOT DATE: 07-DEC-2012
PROJECT LEADER: K. HIGGINS	DRAWN BY: G. LAROCHE
DESIGNED BY: G. LAROCHE	CHECKED BY: J. SALVATORI
APPROACH RAIL WW2 AND WW4	SHEET 27 OF 82

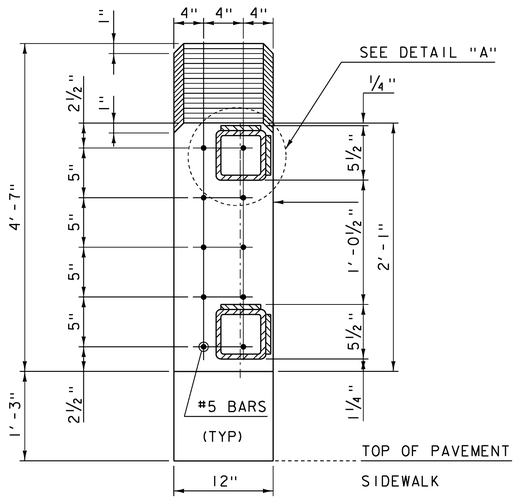

SECTION A-A

NOT TO SCALE

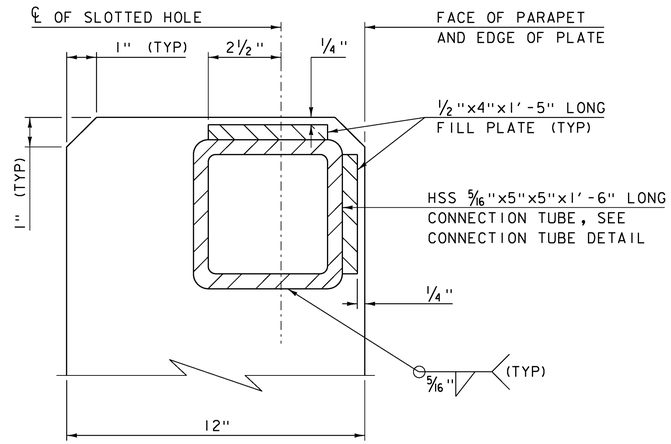

DETAIL "A"

NOT TO SCALE

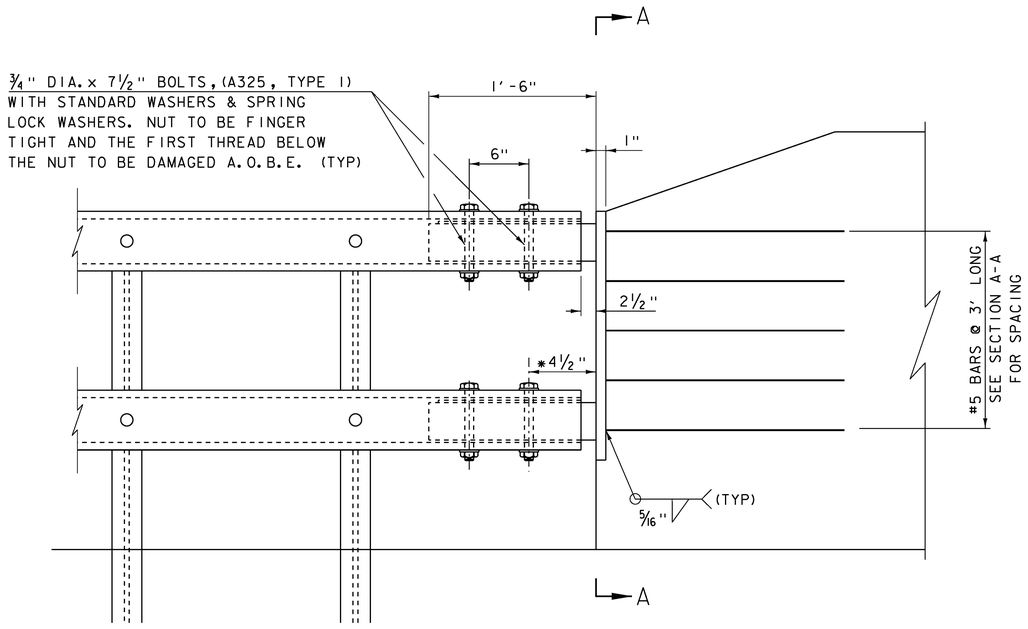

APPROACH RAIL DETAIL

WW1 - WW4

NOT TO SCALE

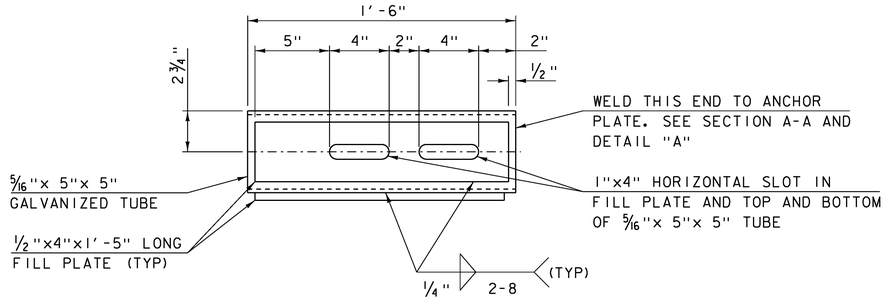

CONNECTION TUBE PLATE

PLAN VIEW

NOT TO SCALE

* AT 68°F (INCREASE DIMENSIONS IF MORE THAN 1 1/2" OF EXPANSION IS ANTICIPATED).

PROJECT NAME: JAMAICA	
PROJECT NUMBER: ER-BRF 015-1(23)	
FILE NAME: sllb316raildet.dgn	PLOT DATE: 07-DEC-2012
PROJECT LEADER: K. HIGGINS	DRAWN BY: K. FRIEDLAND
DESIGNED BY: G. LAROCHE	CHECKED BY: J. SALVATORI
APPROACH RAIL DETAILS 1	SHEET 28 OF 82

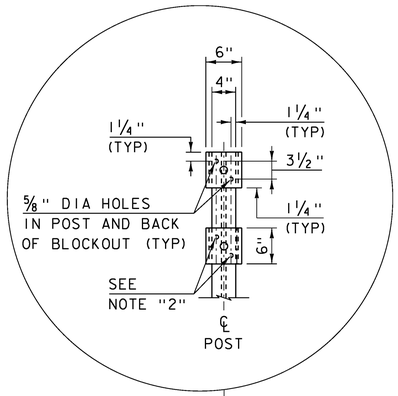

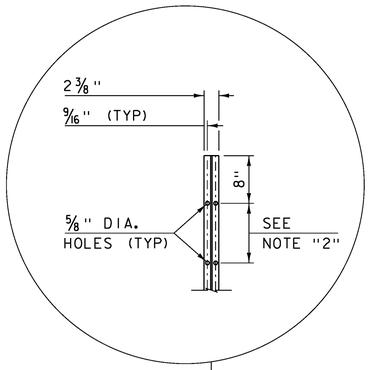

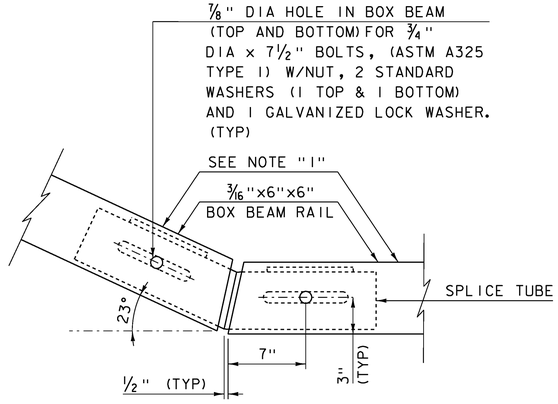

SPLICE DETAIL AT BOTTOM RAIL TURN BACK PLAN

NOT TO SCALE

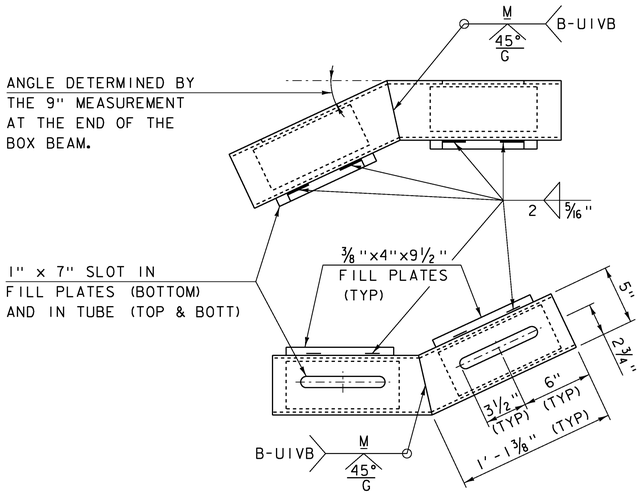

SPLICE TUBE DETAIL FOR TURN BACK

NOT TO SCALE

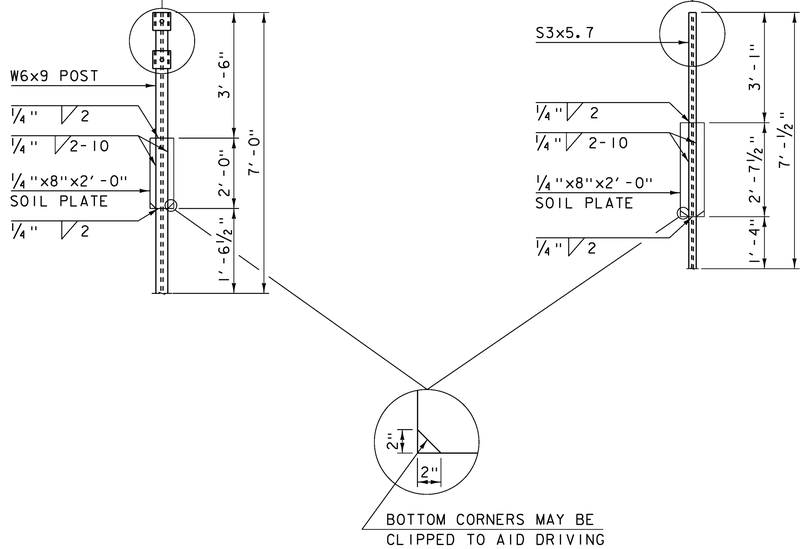

HEAVY POST DETAIL

NOT TO SCALE

TRANSITION POST DETAIL

NOT TO SCALE

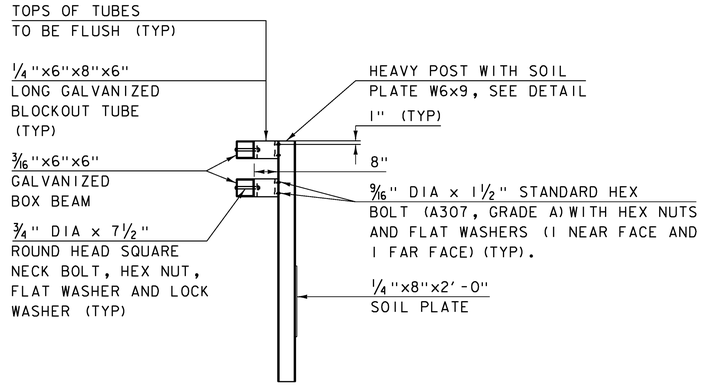

HEAVY POST ELEVATION

NOT TO SCALE

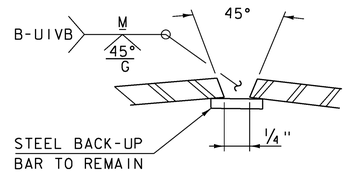

WELD DETAIL FOR SPLICE TUBE

NOT TO SCALE

NOTES:

1. PROTRUSIONS CAUSED BY WELDING OR GALVANIZING ARE NOT PERMITTED ON THE ADJOINING SURFACES OF THE BOX BEAM RAILS, SPLICE TUBES AND FILL PLATES.
2. HOLES IN POST FOR LOWER RAIL MAY BE LOCATED AND DRILLED IN THE FIELD. IF SO, GALVANIZING SHALL BE REPAIRED.

PROJECT NAME: JAMAICA	
PROJECT NUMBER: ER-BRF 015-1(23)	
FILE NAME: sllB316raildet.dgn	PLOT DATE: 07-DEC-2012
PROJECT LEADER: K. HIGGINS	DRAWN BY: K. FRIEDLAND
DESIGNED BY: G. LAROCHE	CHECKED BY: J. SALVATORI
APPROACH RAIL DETAILS 2	SHEET 29 OF 82

SOIL CLASSIFICATION

AASHTO	
A1	Gravel and Sand
A3	Fine Sand
A2	Silty or Clayey Gravel and Sand
A4	Silty Soil - Low Compressibility
A5	Silty Soil - Highly Compressible
A6	Clayey Soil - Low Compressibility
A7	Clayey Soil - Highly Compressible

ROCK QUALITY DESIGNATION

R.Q.D. (%)	ROCK DESCRIPTION
<25	Very Poor
25 to 50	Poor
51 to 75	Fair
76 to 90	Good
>90	Excellent

SHEAR STRENGTH

UNDRAINED SHEAR STRENGTH IN P.S.F.	CONSISTENCY
<250	Very Soft
250-500	Soft
500-1000	Med. Stiff
1000-2000	Stiff
2000-4000	Very Stiff
>4000	Hard

CORRELATION GUIDE OF "N" TO DENSITY/CONSISTENCY

DENSITY (GRANULAR SOILS)		CONSISTENCY (COHESIVE SOILS)	
N	DESCRIPTIVE TERM	N	DESCRIPTIVE TERM
<5	Very Loose	<2	Very Soft
5-10	Loose	2-4	Soft
11-24	Med. Dense	5-8	Med. Stiff
25-50	Dense	9-15	Stiff
>50	Very Dense	16-30	Very Stiff
		31-60	Hard
		>60	Very Hard

COMMONLY USED SYMBOLS

▼	Water Elevation
⊙	Standard Penetration Boring
⊕	Auger Boring
⊙	Rod Sounding
S	Sample
N	Standard Penetration Test Blow Count Per Foot For: 2" O.D. Sampler 1⅜" I.D. Sampler Hammer Weight Of 140 Lbs. Hammer Fall Of 30"
VS	Field Vane Shear Test
US	Undisturbed Soil Sample
B	Blast
DC	Diamond Core
MD	Mud Drill
WA	Wash Ahead
HSA	Hollow Stem Auger
AX	Core Size 1⅛"
BX	Core Size 1⅝"
NX	Core Size 2⅛"
M	Double Tube Core Barrel Used
LL	Liquid Limit
PL	Plastic Limit
PI	Plasticity Index
NP	Non Plastic
w	Moisture Content (Dry Wgt. Basis)
D	Dry
M	Moist
MTW	Moist To Wet
W	Wet
Sat	Saturated
Bo	Boulder
Gr	Gravel
Sa	Sand
Si	Silt
Cl	Clay
HP	Hardpan
Le	Ledge
NLTD	No Ledge To Depth
CNPF	Can Not Penetrate Further
TLOB	Top of Ledge Or Boulder
NR	No Recovery
Rec.	Recovery
%Rec.	Percent Recovery
RQD	Rock Quality Designation
CBR	California Bearing Ratio
<	Less Than
>	Greater Than
R	Refusal (N > 100)
VTSPG	NAD83 - See Note 7

COLOR

blk	Black	pnk	Pink
bl	Blue	pu	Purple
brn	Brown	rd	Red
dk	Dark	tn	Tan
gry	Gray	wh	White
gn	Green	yel	Yellow
lt	Light	mltc	Multicolored
or	Orange		

DEFINITIONS (AASHTO)

BEDROCK (LEDGE) - Rock in its native location of indefinite thickness.

BOULDER - A rock fragment with an average dimension > 12 inches.

COBBLE - Rock fragments with an average dimension between 3 and 12 inches.

GRAVEL - Rounded particles of rock < 3" and > 0.0787" (#10 sieve).

SAND - Particles of rock < 0.0787" (#10 sieve) and > 0.0029" (#200 sieve).

SILT - Soil < 0.0029" (#200 sieve), non or slightly plastic and exhibits no strength when air-dried.

CLAY - Fine grained soil, exhibits plasticity when moist and considerable strength when air-dried.

VARVED - Alternate layers of silt and clay.

HARDPAN - Extremely dense soil, cemented layer, not softened when wet.

MUCK - Soft organic soil (containing > 10% organic material.

MOISTURE CONTENT - Weight of water divided by dry weight of soil.

FLOWING SAND - Granular soil so saturated (loose) that it flows into drill casing during extraction of wash rod.

STRIKE - Angle from magnetic north to line of intersection of bed with a horizontal plane.

DIP - Inclination of bed with a horizontal plane.

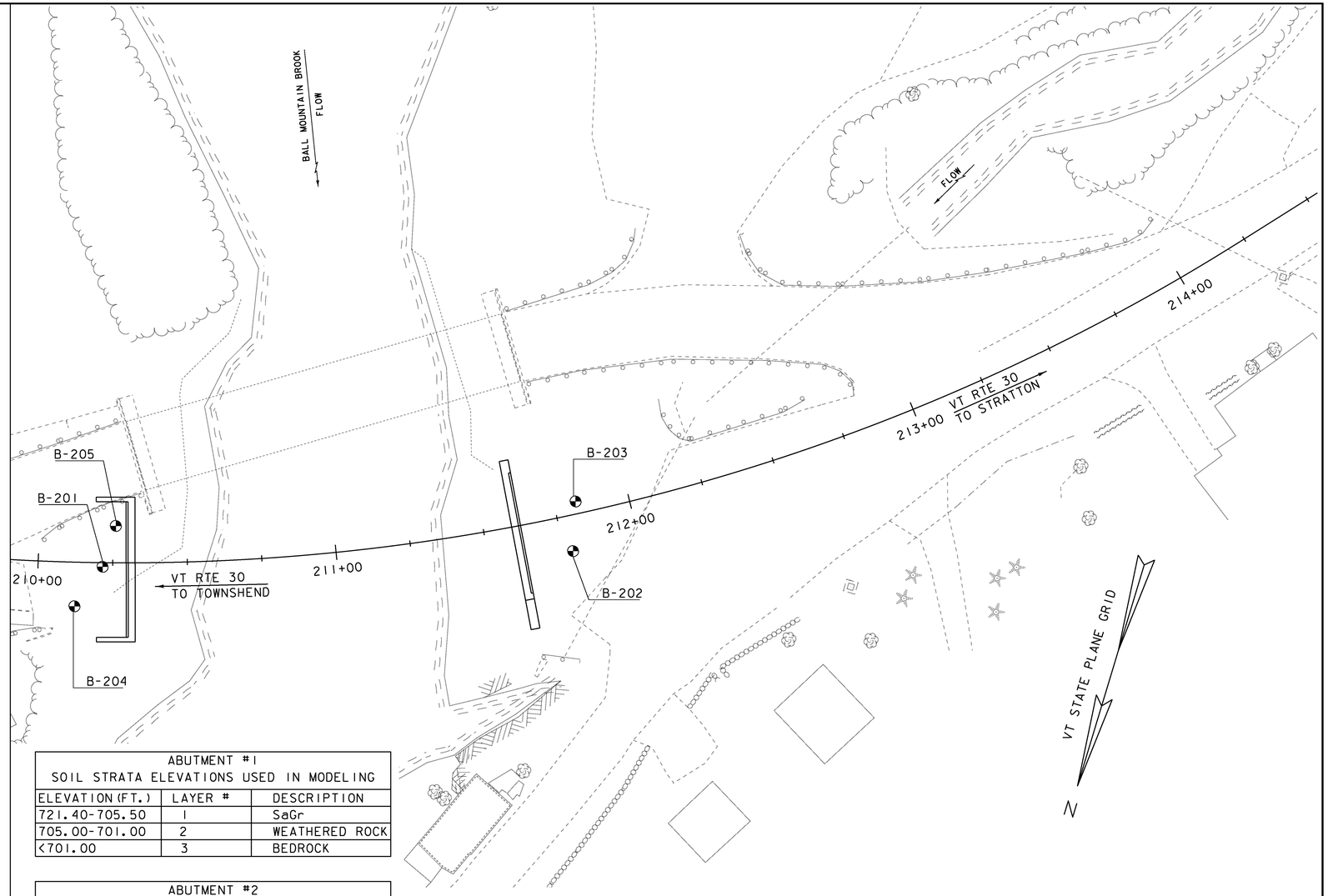

ABUTMENT #1
SOIL STRATA ELEVATIONS USED IN MODELING

ELEVATION (FT.)	LAYER #	DESCRIPTION
721.40-705.50	1	SaGr
705.00-701.00	2	WEATHERED ROCK
<701.00	3	BEDROCK

ABUTMENT #2
SOIL STRATA ELEVATIONS USED IN MODELING

ELEVATION (FT.)	LAYER #	DESCRIPTION
725.40-717.00	1	SaGr
<717.00	3	BEDROCK

BORING LAYOUT SHEET

SCALE 1" = 20'-0"

20 0 20

GENERAL NOTES

1. The subsurface explorations shown herein were made between 11/29/11 and 12/14/11 by the Agency.
2. Soil and rock classifications, properties and descriptions are based on engineering interpretation from available subsurface information by the Agency and may not necessarily reflect actual variations in subsurface conditions that may be encountered between individual boring or sample locations.
3. Observed water levels and/or conditions indicated are as recorded at the time of exploration and may vary according to the prevailing rainfall, methods of exploration and other factors.
4. Engineering judgment was exercised in preparing the subsurface information presented herein. Analysis and interpretation of subsurface data was performed and interpreted for Agency design and estimating purposes. Presentation of the information in the Contract is intended to provide the Contractor access to the same data available to the Agency. The subsurface information is presented in good faith and is not intended as a substitute for personal investigation, independent interpretation, independent analysis or judgment by the Contractor.
5. Pictorial structure details shown on the boring plan layout or soils profile are for illustrative purposes only and may not accurately portray final contract details.
6. Terminology used on boring logs to describe the hardness, degree of weathering, and spacing of fractures, joints and other discontinuities in the bedrock is defined in the AASHTO Manual on Subsurface Investigations, 1988.
7. Northing and Easting coordinates are shown in Vermont State Plane Grid North American Datum 1983 in meters and survey feet.

BORING CHART

HOLE NO.	SURV. STATION	OFFSET	GROUND ELEV.	ELEV. TLOB
B-201	210+22	1.4' RT	729.9	699.7
B-202	211+78	12.0' RT	735.8	717.2
B-203	211+83	4.1' LT	735.7	713.9
B-204	210+13	14.8' RT	731.9	699.4
B-205	210+26	12.4' LT	730.3	700.8

PROJECT NAME: JAMAICA
PROJECT NUMBER: ER-BRF 015-1(23)

FILE NAME: sllb316bor.dgn
PROJECT LEADER: K. HIGGINS
DESIGNED BY: G. LAROCHE
BORING LAYOUT SHEET

PLOT DATE: 07-DEC-2012
DRAWN BY: K. FRIEDLAND
CHECKED BY: G. LAROCHE
SHEET 30 OF 82

STATE OF VERMONT
AGENCY OF TRANSPORTATION
MATERIALS & RESEARCH SECTION
SUBSURFACE INFORMATION

BORING LOG

JAMAICA
ER-BRF 015-1(23)
VT-30 BR-19

Boring No.: B-201
Page No.: 1 of 1
Pin No.: 11B316
Checked By: CEE

Boring Crew: GARROW, SALISBURY, PORTER
Date Started: 11/30/11 Date Finished: 12/01/11
VTSPG NAD83: N 218670.70 ft E 1565101.60 ft
Station: 210+22 Offset: 1.4' RT
Ground Elevation: 729.9 ft

	Casing	Sampler
Type:	WB	SS
I.D.:	4 in	1.5 in
Hammer Wt:	N.A.	140 lb.
Hammer Fall:	N.A.	30 in.
Hammer/Rod Type:		Auto/AWJ
Rig:	CME 45C SKID	CE = 1.33

Groundwater Observations

Date	Depth (ft)	Notes
12/01/11	13.5	AM

Depth (ft)	Strata (1)	CLASSIFICATION OF MATERIALS (Description)	Run (Dip deg.)	Core Rec. % (RQD %)	Drill Rate minutes/ft	Blows/6" (N Value)	Moisture Content %	Gravel %	Sand %	Fines %
		A-1-b, GrSa, brn, Moist, Rec. = 1.0 ft				6-9-6-6 (15)	9.0	39.9	46.6	13.5
		A-1-b, GrSa, brn, Moist, Rec. = 1.0 ft				7-6-3-4 (9)	14.7	39.7	41.4	18.9
5		Lab Note, Lots of broken Concrete was within sample., gry-brn, Moist, Rec. = 0.8 ft				6-22-15-25 (37)	7.0	70.6	23.5	5.9
		Field Note:, NXDC, Boulder								
AB#1 BOTTOM OF PILE CAP EL. 721.35		A-2-4, GrSa with Wood & Roots, brn, Wet, Rec. = 0.5 ft				5-6-4-4 (10)	26.2	27.3	55.5	17.2
10		Visual Classification, Broken Rock with little sand, brn, Moist, Rec. = 0.5 ft				4-4-4-6 (8)	8.0			
		Field Note:, NXDC, Cobbles & Gravel								
15		A-1-b, SaGr, gry, Moist, Rec. = 1.0 ft				10-13-16-15 (29)	11.1	47.8	32.7	19.5
20		A-1-b, SaGr, gry, Moist, Rec. = 0.8 ft				5-15-18-30 (33)	10.1	53.3	33.5	13.2
		A-1-b, SaGr, brn-gry, Moist, Rec. = 0.8 ft				42-R@3.5"	11.2	43.7	40.5	15.8
		A-1-b, SiSaGr, gry, Moist, Rec. = 0.9 ft				7-14-13-12 (27)	13.3	39.9	39.6	20.5
25		Lab Note, Sample had very severely weathered rock that turned into fines with pressure applied., grn-brn, Moist, Rec. = 1.1 ft				9-18-R@5.0"	14.8	16.1	40.9	43.0
		Lab Note, Mostly very severely weathered rock that turned into fines with pressure applied., red-gry, Moist, Rec. = 0.4 ft				R@5.0"	13.1	3.3	66.0	30.7
						R@2.5"	9.6	54.8	33.9	11.3
30		Lab Note, SaGr, gry-blk, Moist, Rec. = 0.2 ft, Very severely Weathered Rock was witihin sample.	1 (30)	84 (60)	5	Top of Bedrock @ 30.2 ft				
		30.2 ft – 35.2 ft, Gray, Biotite Schist, Moderately hard, Unweathered, Good rock, NXMDC, RMR = 62			6 5 5 5					
PILE TIP EL. 696.00										
35		35.2 ft – 40.2 ft, Gray, Biotite Schist, Moderately hard, Unweathered, Good rock, NXMDC, RMR = 62	2 (30)	84 (72)	4 4 6 6 5					
40		Hole stopped @ 40.2 ft								

Notes:
1. Stratification lines represent approximate boundary between material types. Transition may be gradual.
2. N Values have not been corrected for hammer energy. CE is the hammer energy correction factor.
3. Water level readings have been made at times and under conditions stated. Fluctuations of groundwater may occur due to other factors than those present at the time measurements were made.

BORING LOG 2 JAMAICA ER-BRF 015-1(23).GPJ VERMONT AOT.GDT 1/6/12

STATE OF VERMONT
AGENCY OF TRANSPORTATION
MATERIALS & RESEARCH SECTION
SUBSURFACE INFORMATION

BORING LOG

JAMAICA
ER-BRF 015-1(23)
VT-30 BR-19

Boring No.: B-202
Page No.: 1 of 1
Pin No.: 11B316
Checked By: CEE

Boring Crew: GARROW, SALISBURY, PORTER
Date Started: 11/29/11 Date Finished: 11/30/11
VTSPG NAD83: N 218620.10 ft E 1564952.10 ft
Station: 211+78 Offset: 12.0' RT
Ground Elevation: 735.8 ft

	Casing	Sampler
Type:	WB	SS
I.D.:	4 in	1.5 in
Hammer Wt:	N.A.	140 lb.
Hammer Fall:	N.A.	30 in.
Hammer/Rod Type:		Auto/AWJ
Rig:	CME 45C SKID	CE = 1.33

Groundwater Observations

Date	Depth (ft)	Notes
11/30/11	7.0	AM

Depth (ft)	Strata (1)	CLASSIFICATION OF MATERIALS (Description)	Run (Dip deg.)	Core Rec. % (RQD %)	Drill Rate minutes/ft	Blows/6" (N Value)	Moisture Content %	Gravel %	Sand %	Fines %
		A-1-a, SaGr, brn, MTW, Rec. = 0.8 ft				5-20-30-25 (50)	9.5	58.3	33.8	7.9
5		Field Note:, NXDC, Cobbles & Gravel								
		A-1-a, SaGr, gry, Moist, Rec. = 0.4 ft				6-6-3-3 (9)	21.9	64.8	29.3	5.9
10		Field Note:, NXDC, Gravel & Sand								
AB#2 BOTTOM OF PILE CAP EL. 725.40		Visual Classification, Broken Rock, brn-gry, Moist, Rec. = 0.2 ft, Insufficient sample for testing.				2-1-2-3 (3)				
		Field Note:, NXDC, Boulder & Cobbles								
15		A-1-a, SaGr, gry, Moist, Rec. = 0.6 ft				7-7-7-9 (14)	9.1	49.9	42.2	7.9
20		18.6 ft – 23.6 ft, Light gray, Quartzite, with zones of large porphyroblasts of plagioclase feldspar. Very hard, Unweathered, Good rock, NXMDC, RMR = 62	1 (40)	90 (68)	4 5 5 5 5	Top of Bedrock @ 18.6 ft				
PILE TIP EL. 714.00										
25		23.6 ft – 28.6 ft, Light gray, Quartzite, with zones of large porphyroblasts of plagioclase feldspar. Very hard, Unweathered, Fair rock, NXMDC, RMR = 49	2 (40)	100 (40)	5 4 4 4 10					
30		Hole stopped @ 28.6 ft								
35										

Notes:
1. Stratification lines represent approximate boundary between material types. Transition may be gradual.
2. N Values have not been corrected for hammer energy. CE is the hammer energy correction factor.
3. Water level readings have been made at times and under conditions stated. Fluctuations of groundwater may occur due to other factors than those present at the time measurements were made.

BORING LOG 2 JAMAICA ER-BRF 015-1(23).GPJ VERMONT AOT.GDT 1/6/12

PROJECT NAME: JAMAICA
PROJECT NUMBER: ER-BRF 015-1(23)

FILE NAME: sllb316.boring.dgn
PROJECT LEADER: K. HIGGINS
DESIGNED BY: G. LAROCHE
BORING LOGS 1

PLOT DATE: 07-DEC-2012
DRAWN BY: K. FRIEDLAND
CHECKED BY: G. LAROCHE
SHEET 31 OF 82

STATE OF VERMONT
AGENCY OF TRANSPORTATION
MATERIALS & RESEARCH SECTION
SUBSURFACE INFORMATION

BORING LOG

JAMAICA
ER-BRF 015-1(23)
VT-30 BR-19

Boring No.: B-203
Page No.: 1 of 1
Pin No.: 11B316
Checked By: CEE

Boring Crew: GARROW, SALISBURY, PORTER
Date Started: 12/02/11 Date Finished: 12/03/11
VTSPG NAD83: N 218603.90 ft E 1564956.10 ft
Station: 211+83 Offset: 4.1' LT
Ground Elevation: 735.7 ft

	Casing	Sampler
Type:	WB	SS
I.D.:	4 in	1.5 in
Hammer Wt:	N.A.	140 lb.
Hammer Fall:	N.A.	30 in.
Hammer/Rod Type:		Auto/AWJ
Rig:	CME 45C SKID	CE = 1.33

Groundwater Observations		
Date	Depth (ft)	Notes
		Not taken.

Depth (ft)	Strata (1)	CLASSIFICATION OF MATERIALS (Description)	Blows/6" (N Value)	Moisture Content %	Gravel %	Sand %	Fines %
		Field Class:, Coarse Gravel					
		Field Note:, NXDC, Cobbles					
5		Field Class:, Coarse Gravel					
AB#2 BOTTOM OF PILE CAP EL. 725.40							
10		Field Class:, Sandy Gravel, Old Ground at 15.0 ft.					
15		Field Class:, Silty Sand					
20		Field Note:, NXDC, Cobbles					
		Hole stopped @ 21.8 ft Possible Bedrock.					
PILE TIP EL. 711.00							
25							
30							
35							

Notes:
1. Stratification lines represent approximate boundary between material types. Transition may be gradual.
2. N Values have not been corrected for hammer energy. CE is the hammer energy correction factor.
3. Water level readings have been made at times and under conditions stated. Fluctuations of groundwater may occur due to other factors than those present at the time measurements were made.

BORING LOG 2 JAMAICA ER-BRF 015-1(23).GPJ VERMONT AOT.GDT 1/6/12

STATE OF VERMONT
AGENCY OF TRANSPORTATION
MATERIALS & RESEARCH SECTION
SUBSURFACE INFORMATION

BORING LOG

JAMAICA
ER-BRF 015-1(23)
VT-30 BR-19

Boring No.: B-204
Page No.: 1 of 1
Pin No.: 11B316
Checked By: CEE

Boring Crew: GARROW, SALISBURY
Date Started: 12/13/11 Date Finished: 12/14/11
VTSPG NAD83: N 218686.10 ft E 1565106.80 ft
Station: 210+13 Offset: 14.8' RT
Ground Elevation: 731.9 ft

	Casing	Sampler
Type:	WB	
I.D.:	4 in	
Hammer Wt:	N.A.	N.A.
Hammer Fall:	N.A.	N.A.
Hammer/Rod Type:		
Rig:	CME 45C SKID	CE =

Groundwater Observations		
Date	Depth (ft)	Notes
12/14/11	14.2	Casing Pulled.

Depth (ft)	Strata (1)	CLASSIFICATION OF MATERIALS (Description)	Blows/6" (N Value)	Moisture Content %	Gravel %	Sand %	Fines %
		Field Class:, SaGr					
		Field Class:, Cobbles					
5		Field Class:, GrSa					
		Field Class:, NXDC, Cobbles					
		Field Class:, NXDC, Cobbles, A section of plywood was found in this area.					
AB#1 BOTTOM OF PILE CAP EL. 721.35							
10		Field Class:, NXDC, Cobbles					
15		Field Class:, Sa					
20		Field Class:, Weathered Rock					
25							
30							
		Hole stopped @ 32.5 ft Possible Bedrock.					
PILE TIP EL. 696.50							
35							

Notes:
1. Stratification lines represent approximate boundary between material types. Transition may be gradual.
2. N Values have not been corrected for hammer energy. CE is the hammer energy correction factor.
3. Water level readings have been made at times and under conditions stated. Fluctuations of groundwater may occur due to other factors than those present at the time measurements were made.

BORING LOG 2 JAMAICA ER-BRF 015-1(23).GPJ VERMONT AOT.GDT 1/6/12

PROJECT NAME: JAMAICA
PROJECT NUMBER: ER-BRF 015-1(23)

FILE NAME: s11b316.boring.dgn
PROJECT LEADER: K. HIGGINS
DESIGNED BY: G. LAROCHE
BORING LOGS 2

PLOT DATE: 07-DEC-2012
DRAWN BY: K. FRIEDLAND
CHECKED BY: G. LAROCHE
SHEET 32 OF 82

STATE OF VERMONT
AGENCY OF TRANSPORTATION
MATERIALS & RESEARCH SECTION
SUBSURFACE INFORMATION

BORING LOG

JAMAICA
ER-BRF 015-1(23)
VT-30 BR-19

Boring No.: B-205
Page No.: 1 of 1
Pin No.: 11B316
Checked By: CEE

Boring Crew: GARROW, SALISBURY
Date Started: 12/14/11 Date Finished: 12/14/11
VTSPG NAD83: N 218656.30 ft E 1565101.30 ft
Station: 210+26 Offset: 12.4' LT
Ground Elevation: 730.3 ft

	Casing	Sampler
Type:	WB	
I.D.:	4 in	
Hammer Wt:	N.A.	N.A.
Hammer Fall:	N.A.	N.A.
Hammer/Rod Type:		
Rig:	CME 45C SKID	CE =

Groundwater Observations

Date	Depth (ft)	Notes
		Hole Collapsed.
12/14/11		Open to 15 ft.

Depth (ft)	Strata (1)	CLASSIFICATION OF MATERIALS (Description)	Blows/6" (N Value)	Moisture Content %	Gravel %	Sand %	Fines %
		Field Class:, GrSa					
		Field Class:, NXDC, Cobbles					
5		Field Class:, Gr					
		Field Class:, NXDC, Concrete					
10		Field Class:, Sa					
		Field Class:, GrSa					
15		Field Class:, Sa					
		Field Class:, NXDC, Cobbles					
20		Field Class:, Sa					
25							
30		Hole stopped @ 29.5 ft Possible Bedrock.					
35							

AB# 1
BOTTOM OF PILE CAP
EL. 721.35

PILE TIP
EL. 699.5

Notes:
1. Stratification lines represent approximate boundary between material types. Transition may be gradual.
2. N Values have not been corrected for hammer energy. CE is the hammer energy correction factor.
3. Water level readings have been made at times and under conditions stated. Fluctuations of groundwater may occur due to other factors than those present at the time measurements were made.

BORING LOG 2 JAMAICA ER-BRF 015-1(23).GPJ VERMONT AOT.GDT 1/6/12

PROJECT NAME: JAMAICA
PROJECT NUMBER: ER-BRF 015-1(23)

FILE NAME: s11b316.boring.dgn
PROJECT LEADER: K. HIGGINS
DESIGNED BY: G. LAROCHE
BORING LOGS 3

PLOT DATE: 07-DEC-2012
DRAWN BY: K. FRIEDLAND
CHECKED BY: G. LAROCHE
SHEET 33 OF 82

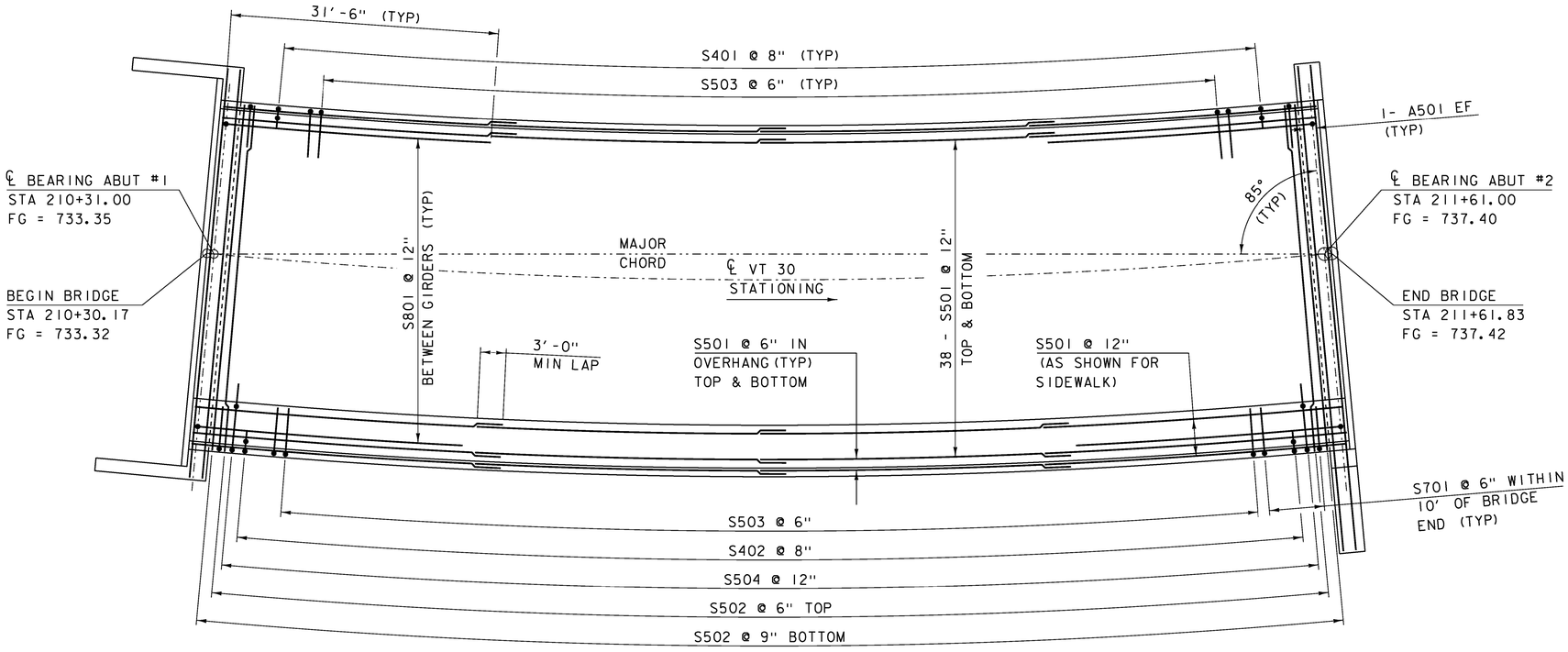

DECK REINFORCING PLAN

SCALE 1/8" = 1'-0"

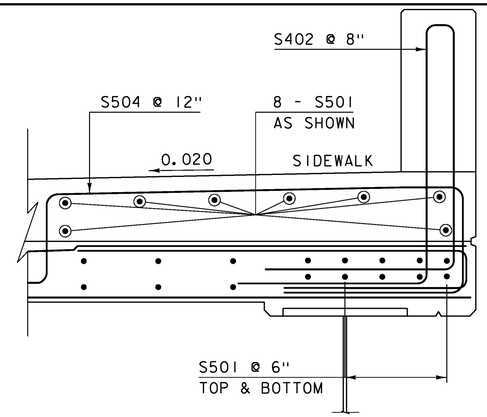

TYPICAL OVERHANG REINFORCEMENT WITH SIDEWALK

SCALE 1" = 1'-0"

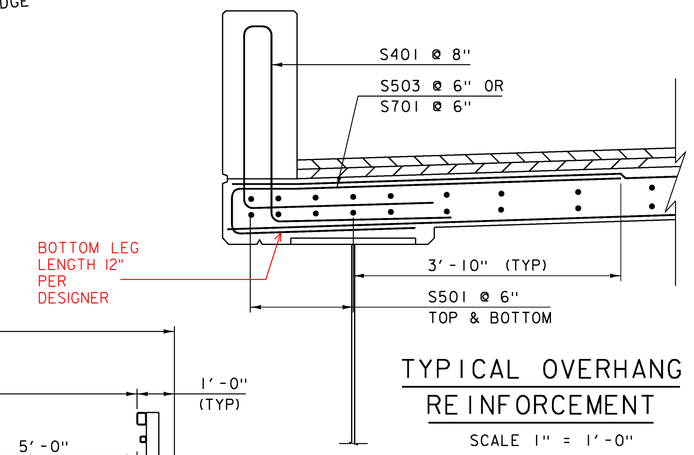

TYPICAL OVERHANG REINFORCEMENT

SCALE 1" = 1'-0"

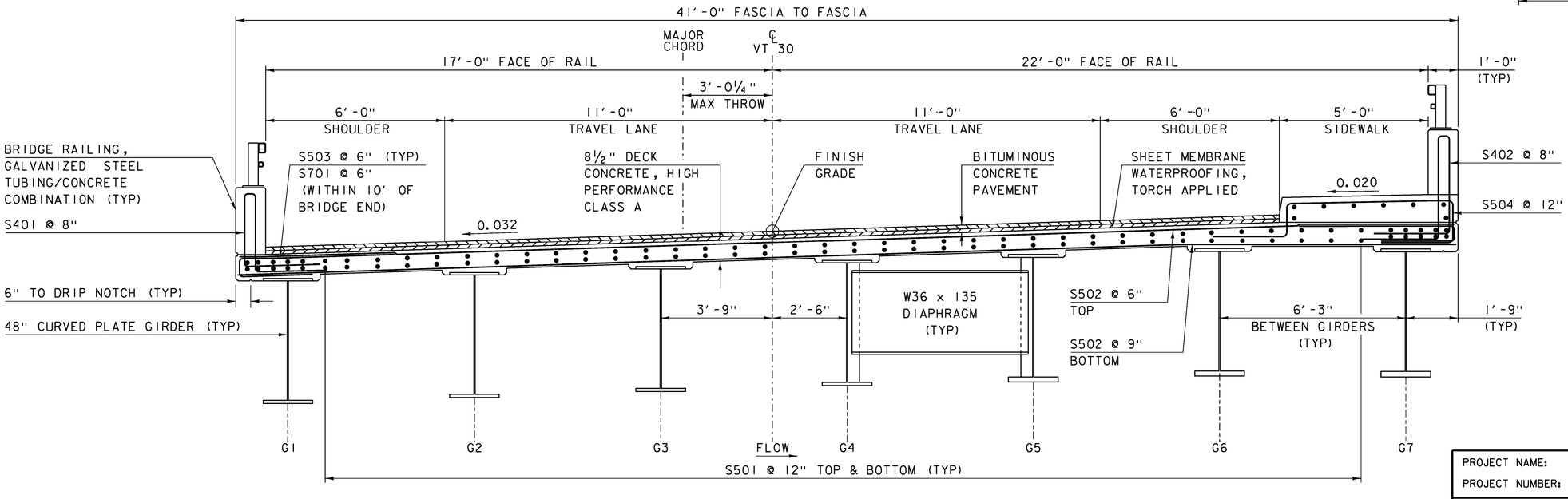

TYPICAL DECK REINFORCEMENT

SCALE 1/2" = 1'-0"

NOTE:

NF = NEAR FACE
FF = FAR FACE
EF = EACH FACE
▲ = CUT TO FIT IN FIELD
3" CLEAR, UNLESS OTHERWISE SPECIFIED ON THE PLANS.
3'-0" BAR LAP UNLESS OTHERWISE SPECIFIED ON THE PLANS.

PROJECT NAME:	JAMAICA
PROJECT NUMBER:	ER-BRF 015-1(23)
FILE NAME: sllb316sup.dgn	PLOT DATE: 07-DEC-2012
PROJECT LEADER: K. HIGGINS	DRAWN BY: K. FRIEDLAND
DESIGNED BY: G. LAROCHE	CHECKED BY: J. LACROIX
DECK REINFORCING PLAN	SHEET 34 OF 82

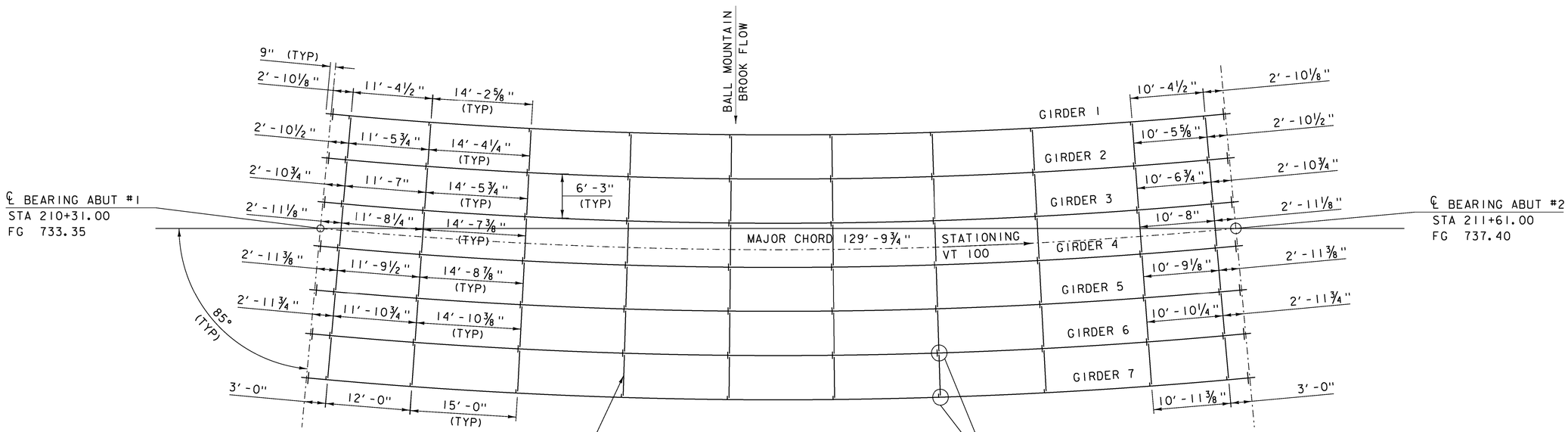

FRAMING PLAN

SCALE ⅛" = 1'-0"

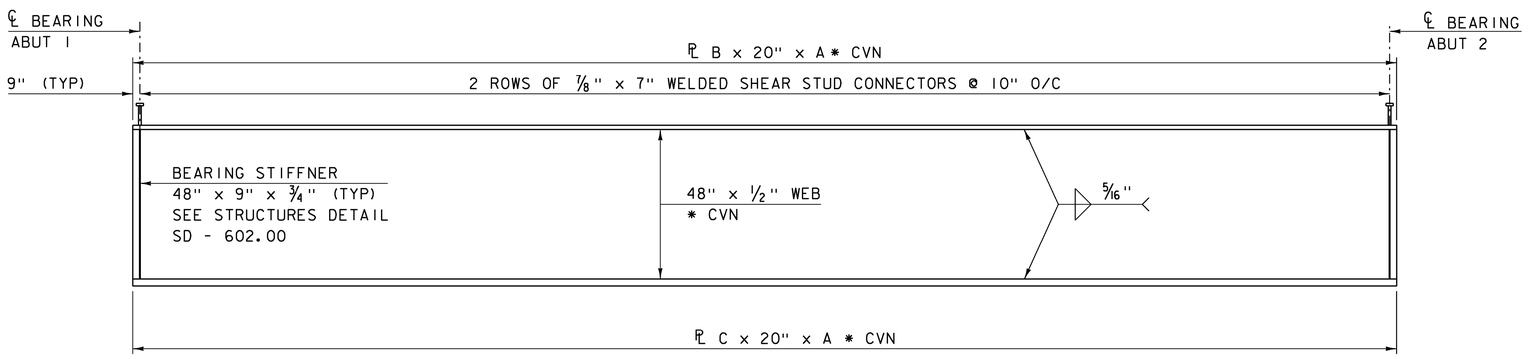

TYPICAL GIRDER ELEVATION

HORIZONTAL SCALE ⅛" = 1'-0"
VERTICAL SCALE ½" = 1'-0"

GIRDER DIMENSION TABLE				
GIRDER	RADIUS	A (LENGTH)	B TOP FLANGE PLATE THICKNESS	C BOTTOM FLANGE PLATE THICKNESS
#1	683.75'	PER SHOP DRAWING 128' - 5 3/4"	1"	1 1/4"
#2	690.00'	129' - ~~7 5/8"~~ 7 9/16"	1"	1 1/4"
#3	696.25'	130' - ~~9 5/8"~~ 9 7/16"	1"	1 1/4"
#4	702.5'	131' - ~~11 1/2"~~ 11 5/16"	1"	1 1/4"
#5	708.75'	133' - ~~1 1/2"~~ 1 1/16"	1 1/4"	2"
#6	715.00'	134' - ~~3 1/2"~~ 3"	1 1/4"	2"
#7	721.25'	135' - ~~5 3/8"~~ 4 7/8"	1 1/4"	2 1/4"

NOTES:

1. *CVN DENOTES THAT CHARPY V-NOTCH TEST IS REQUIRED.
2. ALL STEEL GRADE 50W
3. PLACE DRIP PLATE ON LOW END OF EXTERIOR GIRDERS, SEE STRUCTURES DETAILS, SD - 601.00

PROJECT NAME: JAMAICA
PROJECT NUMBER: ER-BRF 015-1(23)

FILE NAME: sllb316sup.dgn
PROJECT LEADER: K. HIGGINS
DESIGNED BY: G. LAROCHE
FRAMING PLAN & GIRDER ELEVATION

PLOT DATE: 07-DEC-2012
DRAWN BY: K. FRIEDLAND
CHECKED BY: J. LACROIX
SHEET 35 OF 82

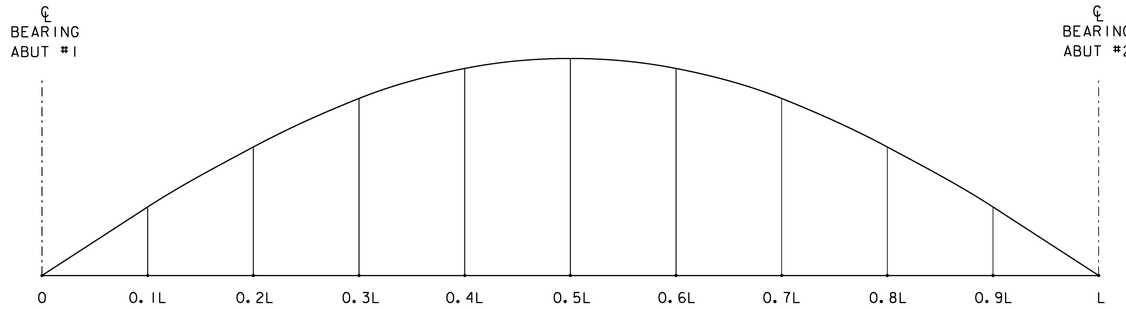

CAMBER DIAGRAM

NOT TO SCALE

Girder		0.00	0.10	0.20	0.30	0.40	0.50	0.60	0.70	0.80	0.90	1.00
1	Steel Deflection	0	7/16	7/8	1 3/16	1 3/8	1 7/16	1 3/8	1 3/16	7/8	7/16	0
	Slab & Super Deflection	0	1 1/2	2 13/16	3 7/8	4 1/2	4 3/4	4 1/2	3 7/8	2 13/16	1 1/2	0
	Total Deflection	0	1 15/16	3 11/16	5 1/16	5 7/8	6 3/16	5 7/8	5 1/16	3 11/16	1 15/16	0
	Vertical Curve Camber	0	1 7/16	2 9/16	3 5/16	3 13/16	3 15/16	3 13/16	3 5/16	2 9/16	1 7/16	0
	Total Camber	0	3 3/8	6 1/4	8 3/8	9 11/16	10 1/8	9 11/16	8 3/8	6 1/4	3 3/8	0
2	Steel Deflection	0	9/16	1	1 3/8	1 5/8	1 11/16	1 5/8	1 3/8	1	9/16	0
	Slab & Super Deflection	0	1 5/8	3 1/16	4 3/16	4 7/8	5 1/8	4 7/8	4 3/16	3 1/16	1 5/8	0
	Total Deflection	0	2 1/8	4 1/16	5 9/16	6 1/2	6 13/16	6 1/2	5 9/16	4 1/16	2 1/8	0
	Vertical Curve Camber	0	1 7/16	2 9/16	3 5/16	3 13/16	3 15/16	3 13/16	3 5/16	2 9/16	1 7/16	0
	Total Camber	0	3 9/16	6 5/8	8 7/8	10 5/16	10 3/4	10 5/16	8 7/8	6 5/8	3 9/16	0
3	Steel Deflection	0	5/8	1 3/16	1 5/8	1 7/8	1 15/16	1 7/8	1 5/8	1 3/16	5/8	0
	Slab & Super Deflection	0	1 3/4	3 1/4	4 7/16	5 3/16	5 7/16	5 3/16	4 7/16	3 1/4	1 11/16	0
	Total Deflection	0	2 5/16	4 7/16	6 1/16	7 1/16	7 7/16	7 1/16	6 1/16	4 7/16	2 5/16	0
	Vertical Curve Camber	0	1 7/16	2 9/16	3 5/16	3 13/16	3 15/16	3 13/16	3 5/16	2 9/16	1 7/16	0
	Total Camber	0	3 3/4	7	9 3/8	10 7/8	11 3/8	10 7/8	9 3/8	7	3 3/4	0
4	Steel Deflection	0	11/16	1 5/16	1 13/16	2 1/8	2 3/16	2 1/8	1 13/16	1 5/16	11/16	0
	Slab & Super Deflection	0	1 13/16	3 7/16	4 3/4	5 9/16	5 13/16	5 9/16	4 3/4	3 7/16	1 13/16	0
	Total Deflection	0	2 1/2	4 3/4	6 9/16	7 5/8	8 1/16	7 5/8	6 9/16	4 3/4	2 1/2	0
	Vertical Curve Camber	0	1 7/16	2 9/16	3 5/16	3 13/16	3 15/16	3 13/16	3 5/16	2 9/16	1 7/16	0
	Total Camber	0	3 15/16	7 5/16	9 7/8	11 7/16	12	11 7/16	9 7/8	7 5/16	3 15/16	0
5	Steel Deflection	0	3/4	1 1/2	2	2 3/8	2 1/2	2 3/8	2	1 1/2	3/4	0
	Slab & Super Deflection	0	1 15/16	3 11/16	5	5 7/8	6 3/16	5 7/8	5	3 11/16	1 15/16	0
	Total Deflection	0	2 11/16	5 1/8	7 1/16	8 1/4	8 5/8	8 1/4	7 1/16	5 1/8	2 11/16	0
	Vertical Curve Camber	0	1 7/16	2 9/16	3 5/16	3 13/16	3 15/16	3 13/16	3 5/16	2 9/16	1 7/16	0
	Total Camber	0	4 1/8	7 11/16	10 3/8	12 1/16	12 9/16	12 1/16	10 3/8	7 11/16	4 1/8	0
6	Steel Deflection	0	7/8	1 5/8	2 1/4	2 5/8	2 3/4	2 5/8	2 1/4	1 5/8	7/8	0
	Slab & Super Deflection	0	2 1/16	3 7/8	5 5/16	6 3/16	6 1/2	6 3/16	5 5/16	3 7/8	2 1/16	0
	Total Deflection	0	2 15/16	5 1/2	7 9/16	8 13/16	9 1/4	8 13/16	7 9/16	5 1/2	2 7/8	0
	Vertical Curve Camber	0	1 7/16	2 9/16	3 5/16	3 13/16	3 15/16	3 13/16	3 5/16	2 9/16	1 7/16	0
	Total Camber	0	4 3/8	8 1/16	10 7/8	12 5/8	13 3/16	12 5/8	10 7/8	8 1/16	4 5/16	0
7	Steel Deflection	0	15/16	1 13/16	2 7/16	2 7/8	3	2 7/8	2 7/16	1 13/16	15/16	0
	Slab & Super Deflection	0	2 3/16	4 1/16	5 5/8	6 9/16	6 7/8	6 9/16	5 5/8	4 1/16	2 1/8	0
	Total Deflection	0	3 1/8	5 7/8	8 1/16	9 7/16	9 15/16	9 7/16	8 1/16	5 7/8	3 1/8	0
	Vertical Curve Camber	0	1 7/16	2 9/16	3 5/16	3 13/16	3 15/16	3 13/16	3 5/16	2 9/16	1 7/16	0
	Total Camber	0	4 9/16	8 7/16	11 3/8	13 1/4	13 7/8	13 1/4	11 3/8	8 7/16	4 9/16	0

CAMBER AND DEFLECTION

(INCHES)

PROJECT NAME: JAMAICA
PROJECT NUMBER: ER-BRF 015-1(23)

FILE NAME: s11b316sup.dgn
PROJECT LEADER: K. HIGGINS
DESIGNED BY: G. LAROCHE
CAMBER & DEFLECTION

PLOT DATE: 07-DEC-2012
DRAWN BY: K. FRIEDLAND
CHECKED BY: J. LACROIX
SHEET 36 OF 82

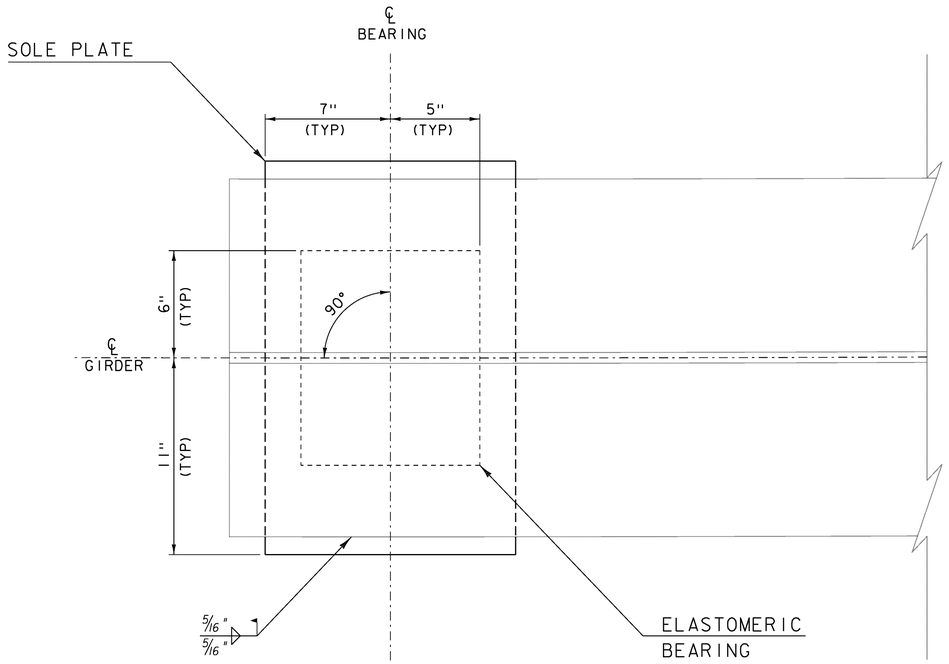

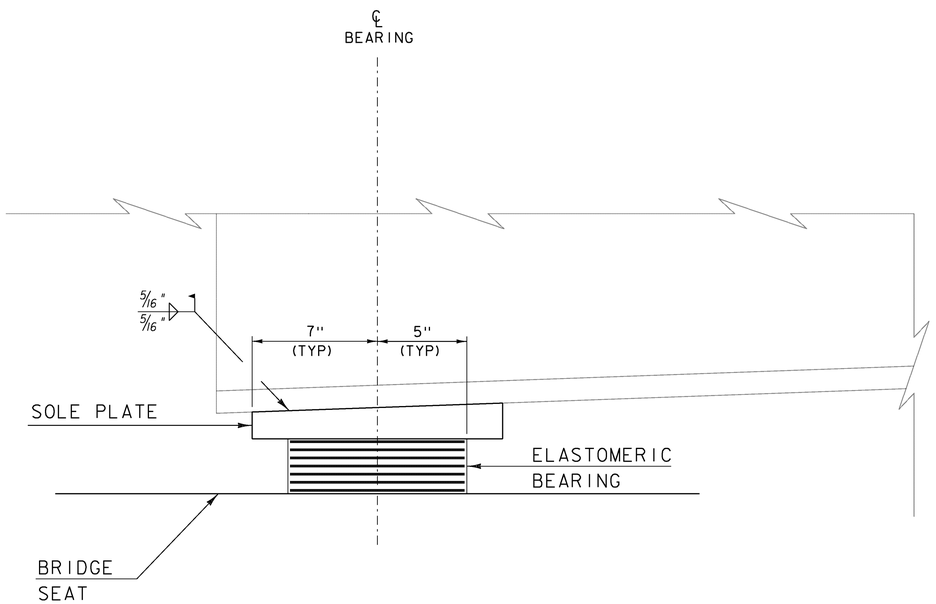

BEARING NOTES

1. BEARINGS SHALL CONFORM TO THE APPLICABLE SUBSECTIONS OF SECTIONS 531 AND 731.
2. ALL REINFORCEMENT BETWEEN LAYERS OF ELASTOMER SHALL BE STEEL MEETING THE REQUIREMENTS OF SUBSECTION 714.02. ALL INTERNAL STEEL PLATES SHALL BE SAND BLASTED AND FREE OF COATINGS, RUST AND MILL SCALE. THE PLATES SHALL BE FREE OF SHARP EDGES AND BURRS.
3. STEEL REINFORCED ELASTOMERIC BEARINGS SHALL HAVE A MINIMUM 1/8" EDGE SEAL OF ELASTOMER INTEGRAL WITH BEARING OVER ALL INTERNAL PLATES.
4. THE ELASTOMER WAS DESIGNED WITH A SHEAR MODULUS OF 100 PSI +/- 15%
5. THE CONCRETE UNDER THE BEARING DEVICE SHALL BE LEVEL.
6. THE CONTRACTOR IS ADVISED TO HAVE A MINIMUM OF 16 - 1/4"x11"x1'-1" GALVANIZED STEEL SHIMS AVAILABLE FOR USE FOR ELEVATION ADJUSTMENTS UPON THE SETTING OF THE SUPERSTRUCTURE UNITS. THE SHIMS SHALL BE FABRICATED ACCORDING TO SECTION 531 AND SHALL BE INCLUDED UNDER ITEM 531.17,"BEARING DEVICE ASSEMBLY, STEEL REINFORCED ELASTOMERIC PAD".

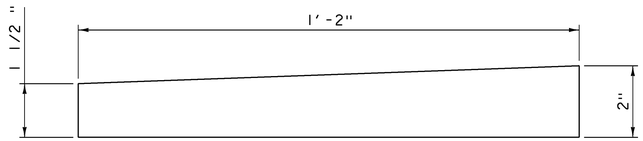

SOLE PLATE DETAIL
1½ TO 2" x 1'-2" x 1'-10"
SCALE 3" = 1'-0"

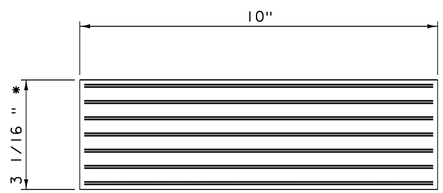

ELASTOMERIC BEARING DETAIL
3 1/16" x 10" x 1'-0"

SCALE 3" = 1'-0"

* 2 - 0.125" EXTERIOR LAYERS OF ELASTOMER
6 - 0.375 INTERIOR LAYERS OF ELASTOMER
7 - 0.078" (14 GAUGE) STEEL REINFORCING PLATES

PROJECT NAME: JAMAICA	
PROJECT NUMBER: ER-BRF 015-1(23)	
FILE NAME: 11b316brg.dgn	PLOT DATE: 07-DEC-2012
PROJECT LEADER: K. HIGGINS	DRAWN BY: J. SALVATORI
DESIGNED BY: G. LAROCHE	CHECKED BY: W. LAMMER
BEARING DETAILS	SHEET 37 OF 82

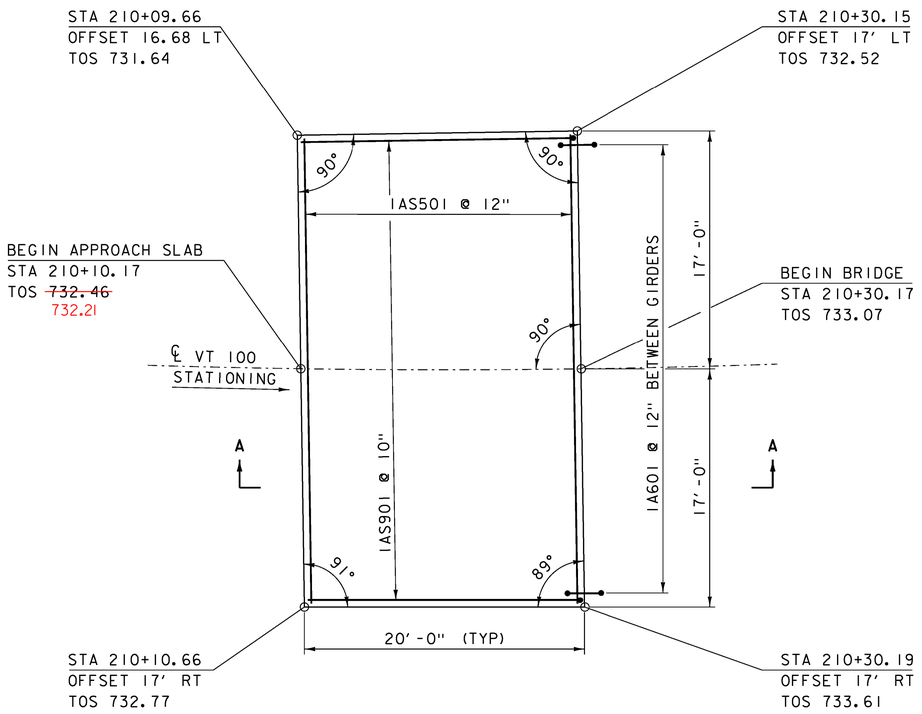

TOS = TOP OF SLAB

BALL MOUNTAIN BROOK FLOW

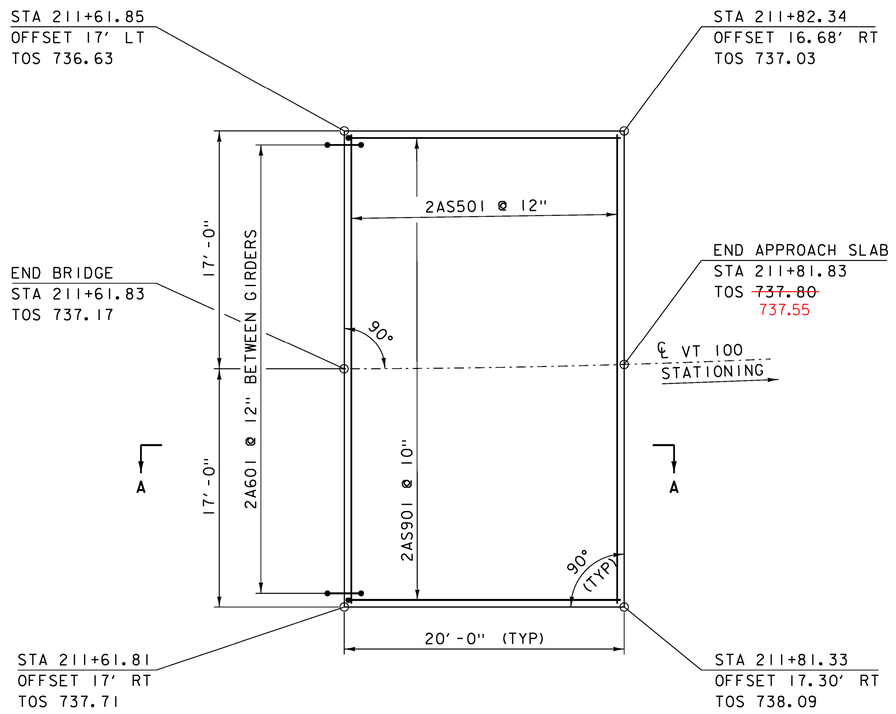

NOTE:

NF = NEAR FACE
FF = FAR FACE
EF = EACH FACE
▲ = CUT TO FIT IN FIELD
3" CLEAR, UNLESS OTHERWISE SPECIFIED ON THE PLANS.
3'-0" BAR LAP UNLESS OTHERWISE SPECIFIED ON THE PLANS.

APPROACH SLAB 1 PLAN

SCALE 3/16" = 1'-0"

APPROACH SLAB 2 PLAN

SCALE 3/16" = 1'-0"

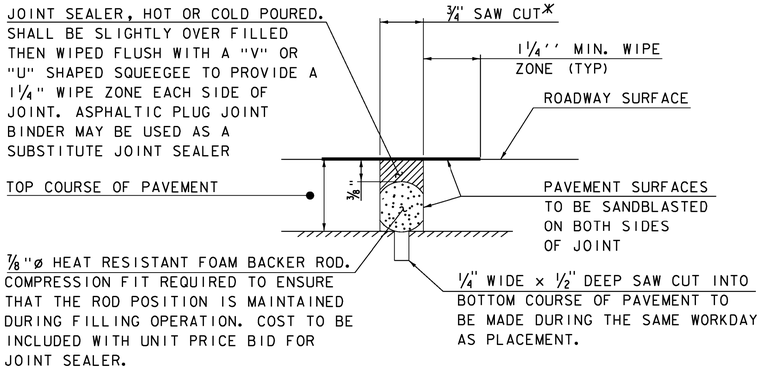

SAWED PAVEMENT JOINT DETAIL

(NOT TO SCALE)

* JOINT IS TO BE LOCATED ACCURATELY BY STRING LINING, OR OTHER MEANS, PRIOR TO PAVING, SO THAT THE SAW CUTS WILL BE MADE DIRECTLY OVER THE END OF CONCRETE DECK. JOINT SHALL BE CUT DRY IN A SINGLE PASS AND BE SEALED WITHIN 24 HOURS OR PRIOR TO EXPOSURE TO TRAFFIC. JOINT SHALL BE CLEANED PRIOR TO APPLYING THE JOINT SEALER.

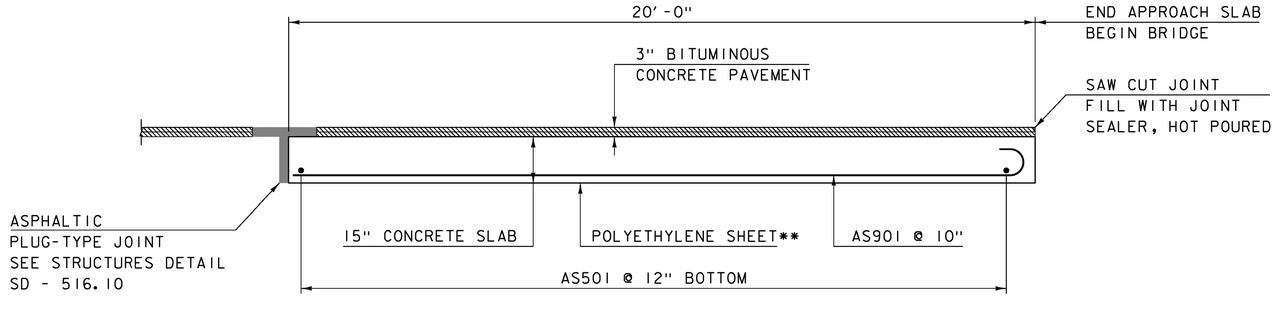

APPROACH SLAB DETAIL

SCALE ½" = 1'-0"

** THE POLYETHYLENE SHEET SHALL BE INCIDENTAL TO THE CONCRETE BID ITEM

PROJECT NAME:	JAMAICA
PROJECT NUMBER:	ER-BRF 015-1(23)
FILE NAME: sllb316sup.dgn	PLOT DATE: 07-DEC-2012
PROJECT LEADER: K. HIGGINS	DRAWN BY: K. FRIEDLAND
DESIGNED BY: G. LAROCHE	CHECKED BY: W. LAMMER
APPROACH SLAB DETAILS	SHEET 38 OF 82

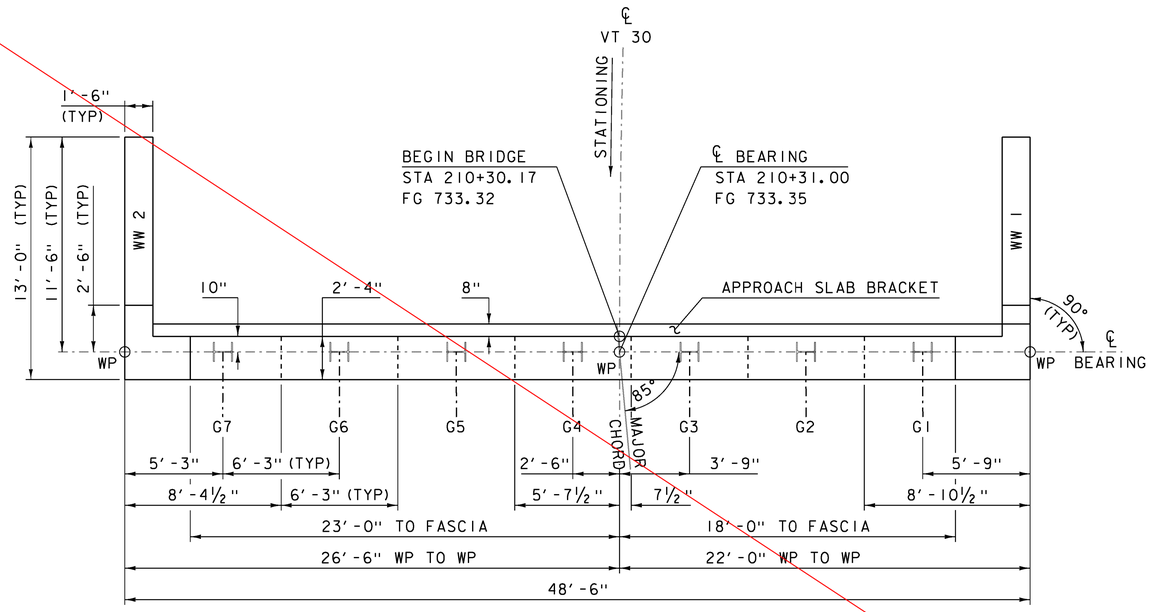

ABUTMENT I PLAN

SCALE ¼" = 1'-0"

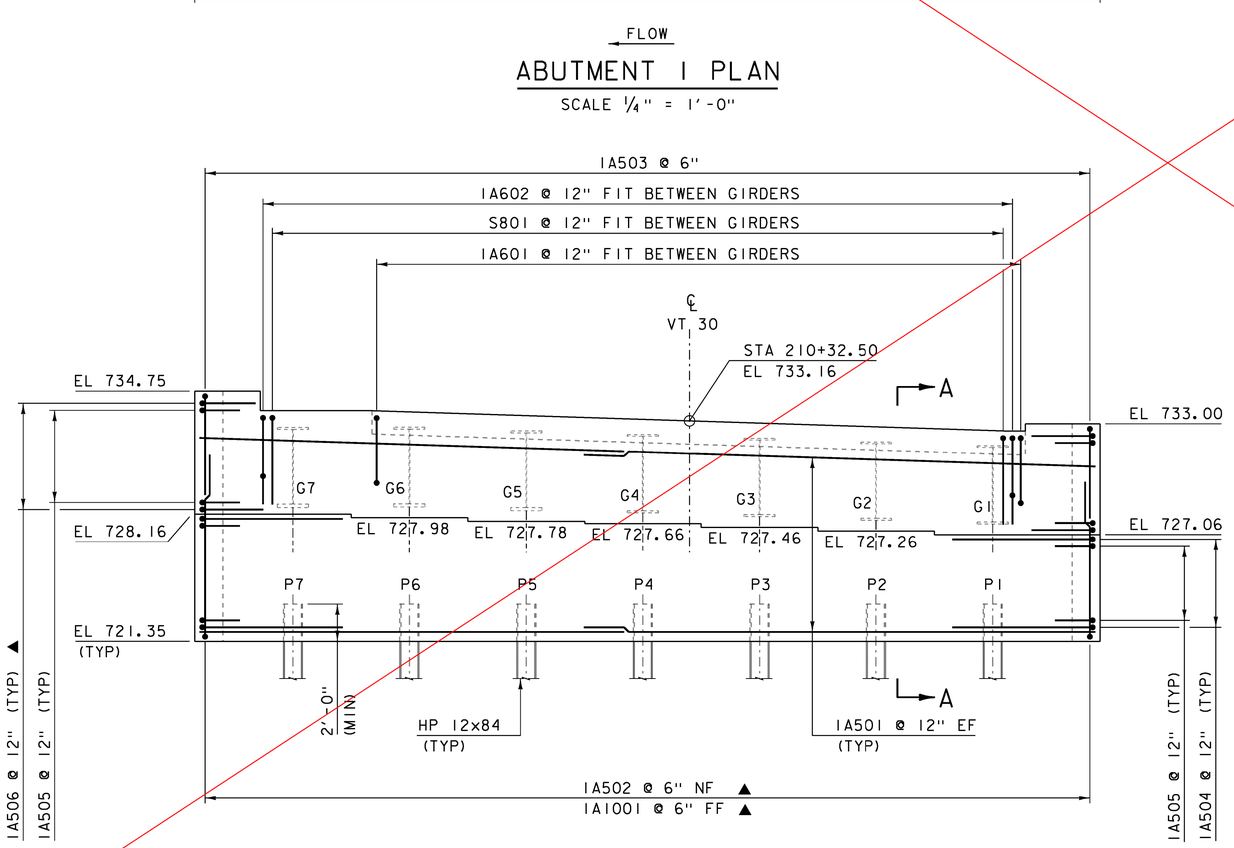

ABUTMENT I ELEVATION

SCALE ¼" = 1'-0"

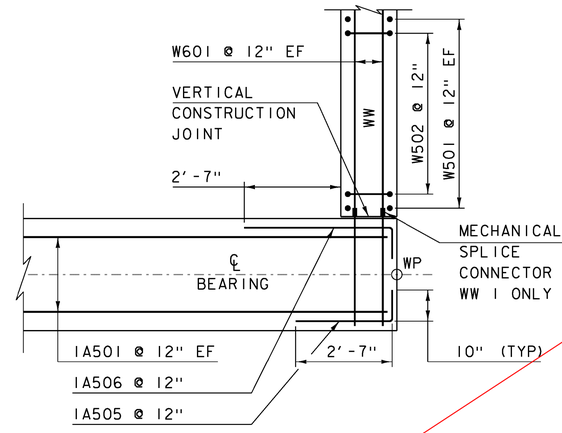

CORNER DETAIL ABOVE BRIDGE SEAT

SCALE ½" = 1'-0"

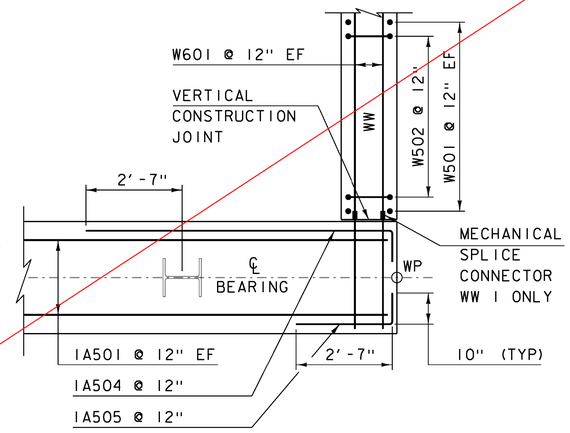

CORNER DETAIL BELOW BRIDGE SEAT

SCALE ½" = 1'-0"

* SEE ATTACHED REVISION SHEET 39R 4-16-16

NOTE:

NF = NEAR FACE
FF = FAR FACE
EF = EACH FACE
▲ = CUT TO FIT IN FIELD
3" CLEAR, UNLESS OTHERWISE SPECIFIED ON THE PLANS.
2'-7" BAR LAP UNLESS OTHERWISE SPECIFIED ON THE PLANS.

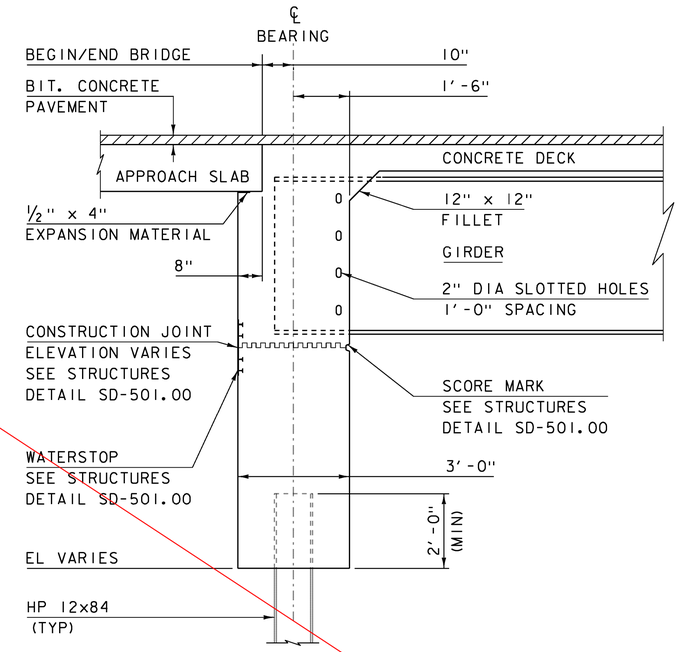

SECTION A-A
ABUTMENT TYPICAL SECTION

SCALE ½" = 1'-0"

PROJECT NAME:	JAMAICA
PROJECT NUMBER:	ER-BRF 015-1(23)
FILE NAME: sllb316sub.dgn	PLOT DATE: 14-DEC-2012
PROJECT LEADER: K. HIGGINS	DRAWN BY: K. FRIEDLAND
DESIGNED BY: G. LAROCHE	CHECKED BY: W. LAMMER
ABUTMENT I	SHEET 39 OF 82

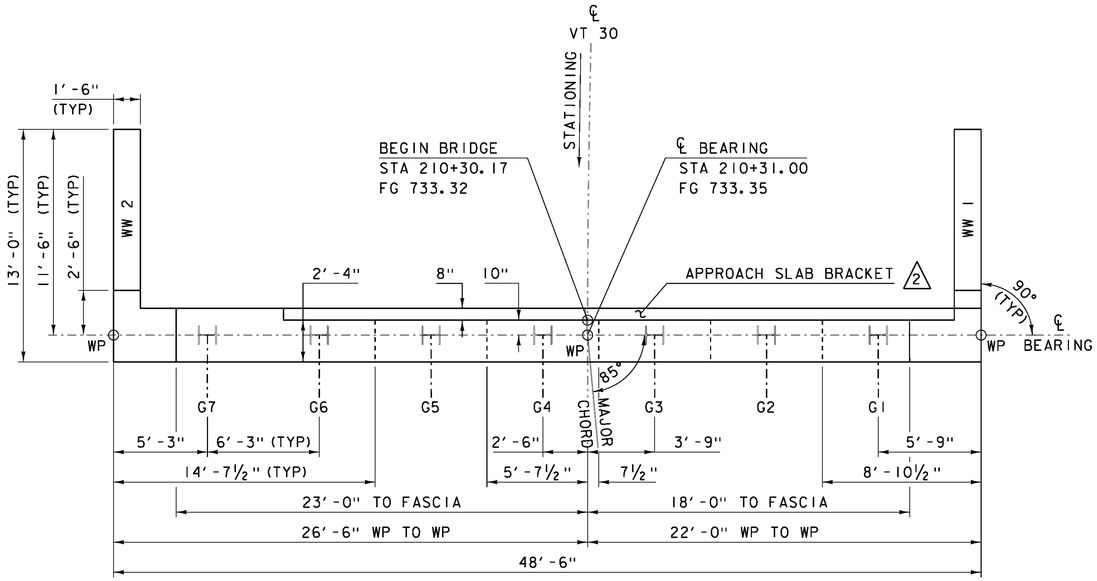

FLOW

ABUTMENT 1 PLAN

SCALE ¼" = 1'-0"

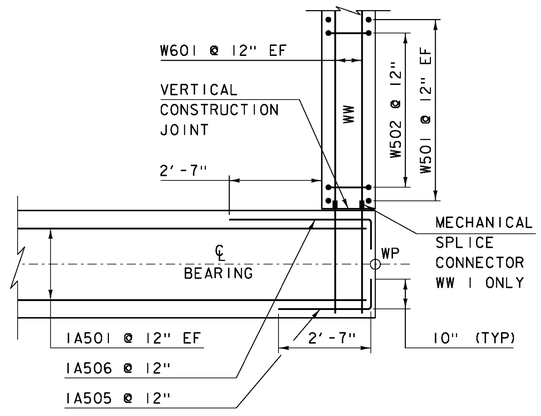

CORNER DETAIL ABOVE BRIDGE SEAT

SCALE ½" = 1'-0"

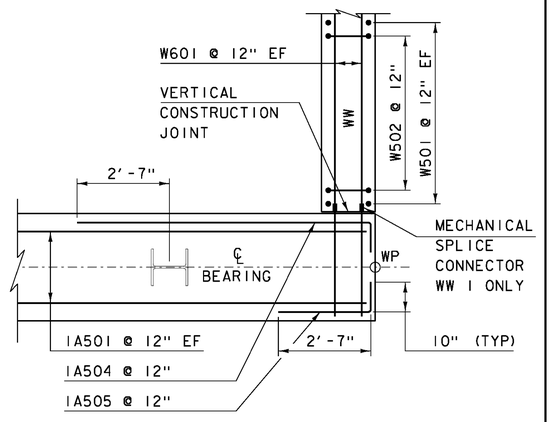

CORNER DETAIL BELOW BRIDGE SEAT

SCALE ½" = 1'-0"

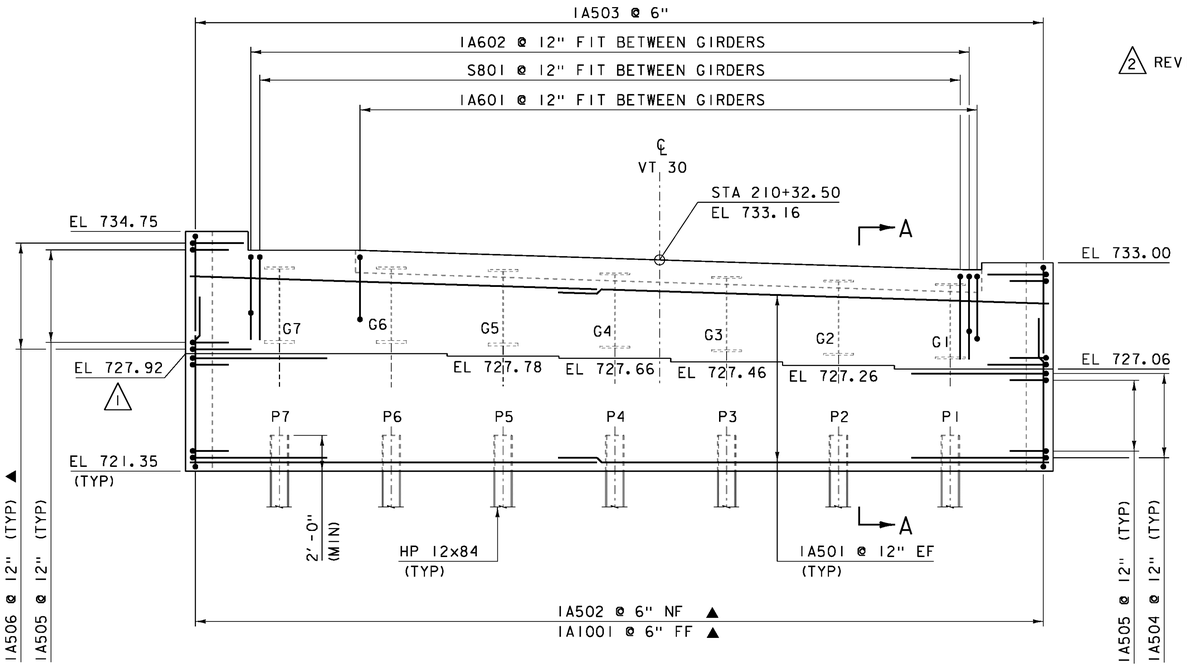

ABUTMENT 1 ELEVATION

SCALE ¼" = 1'-0"

1 REVISED 3-26-13

- REVISED BRIDGE SEAT ELEVATIONS FOR GIRDERS 6-7

2 REVISED 4-16-13

- REVISED APPROACH SLAB BRACKET WIDTH IN PLAN VIEW

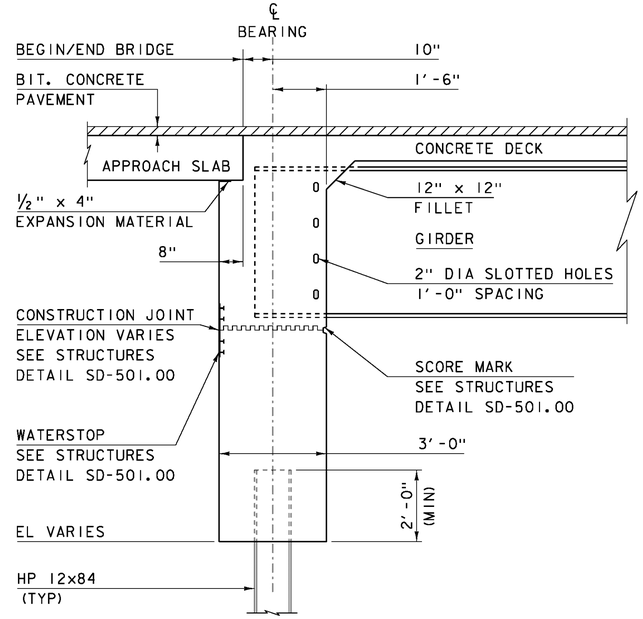

SECTION A-A
ABUTMENT TYPICAL SECTION

SCALE ½" = 1'-0"

NOTE:

NF = NEAR FACE
FF = FAR FACE
EF = EACH FACE
▲ = CUT TO FIT IN FIELD
3" CLEAR, UNLESS OTHERWISE SPECIFIED ON THE PLANS.
2'-7" BAR LAP UNLESS OTHERWISE SPECIFIED ON THE PLANS.

PROJECT NAME: JAMAICA
PROJECT NUMBER: ER-BRF 015-1(23)

FILE NAME: s11b316sub.dgn
PROJECT LEADER: K. HIGGINS
DESIGNED BY: G. LAROCHE
ABUTMENT 1

PLOT DATE: 16-APR-2013
DRAWN BY: K. FRIEDLAND
CHECKED BY: W. LAMMER
SHEET 39 OF 82

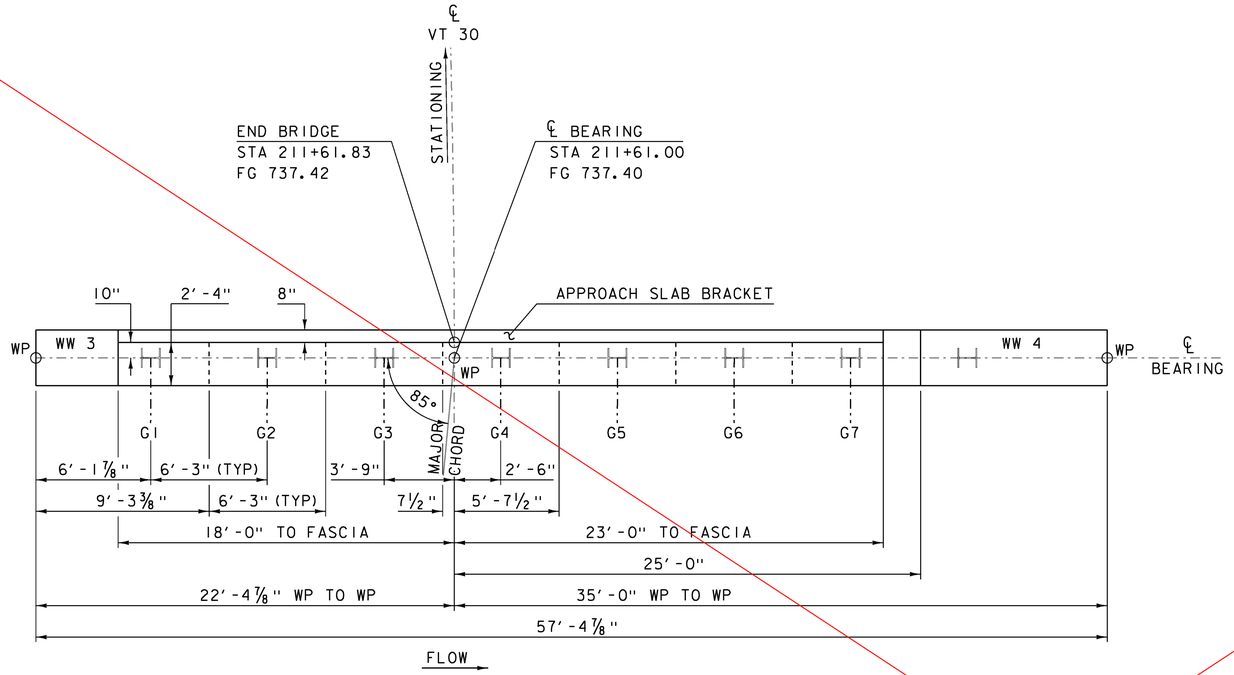

ABUTMENT 2 PLAN

SCALE ¼" = 1'-0"

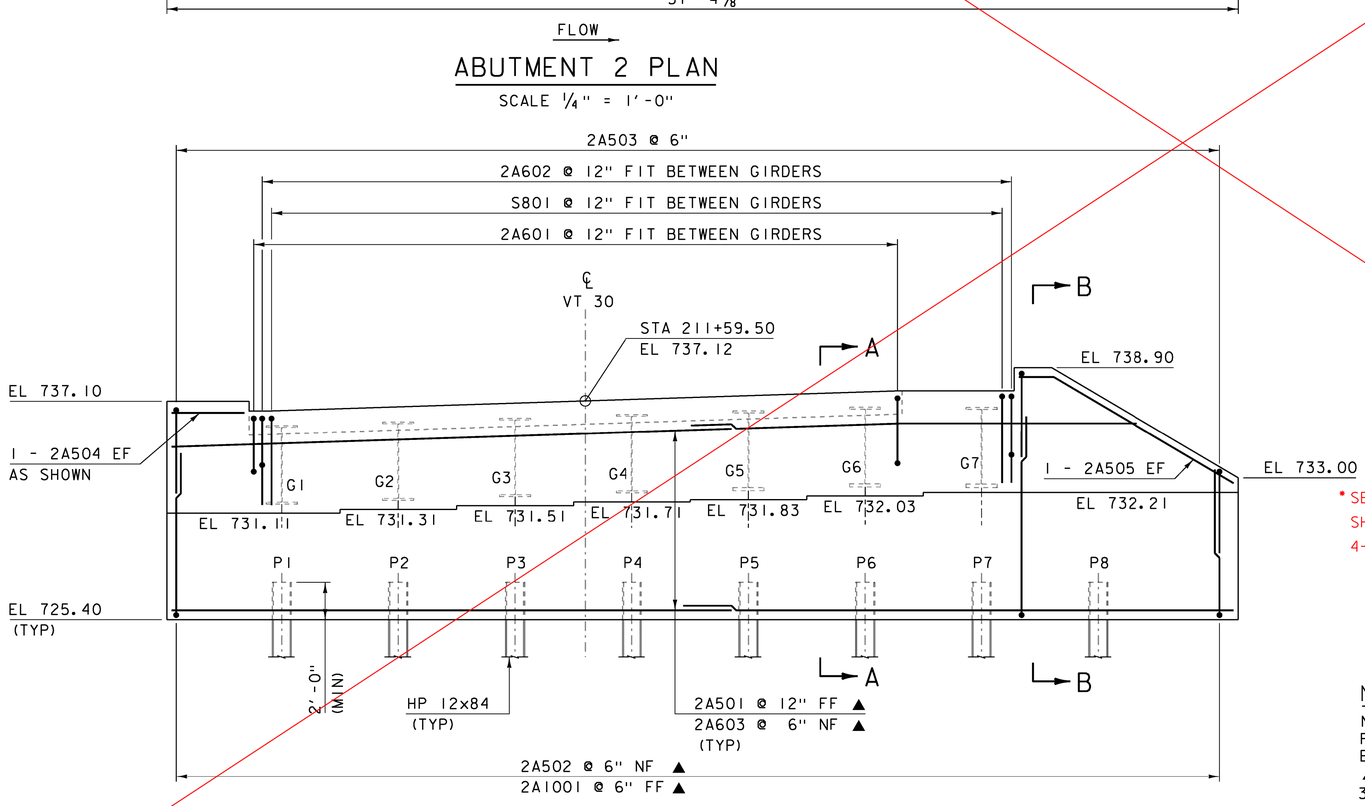

ABUTMENT 2 ELEVATION

SCALE ¼" = 1'-0"

* SEE ATTACHED REVISION SHEET 39R 4-16-16

NOTE:

NF = NEAR FACE
FF = FAR FACE
EF = EACH FACE
▲ = CUT TO FIT IN FIELD
3" CLEAR, UNLESS OTHERWISE SPECIFIED ON THE PLANS.
2'-7" BAR LAP UNLESS OTHERWISE SPECIFIED ON THE PLANS.

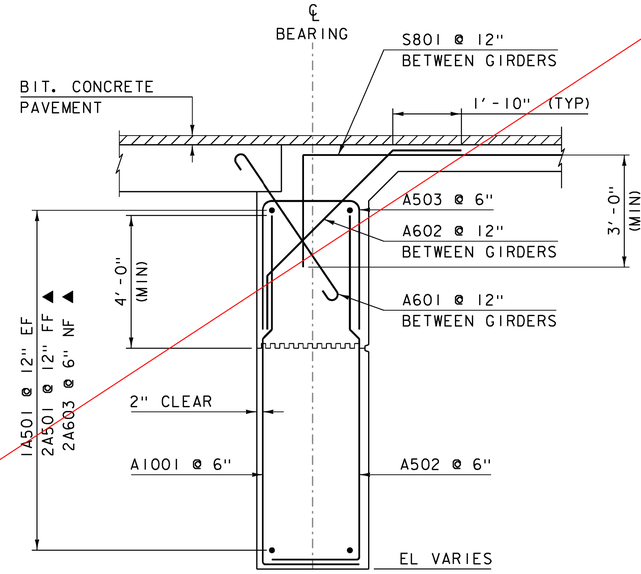

SECTION A-A
ABUTMENT REINFORCING TYPICAL

SCALE ½" = 1'-0"

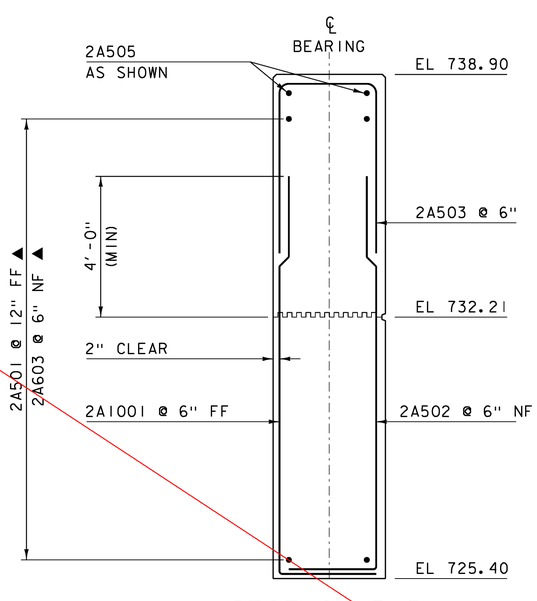

SECTION B-B
WINGWALL 4 REINFORCING TYPICAL

SCALE ½" = 1'-0"

PROJECT NAME:	JAMAICA
PROJECT NUMBER:	ER-BRF 015-1(23)
FILE NAME: sllb316sub.dgn	PLOT DATE: 14-DEC-2012
PROJECT LEADER: K. HIGGINS	DRAWN BY: K. FRIEDLAND
DESIGNED BY: G. LAROCHE	CHECKED BY: W. LAMMER
ABUTMENT 2	SHEET 40 OF 82

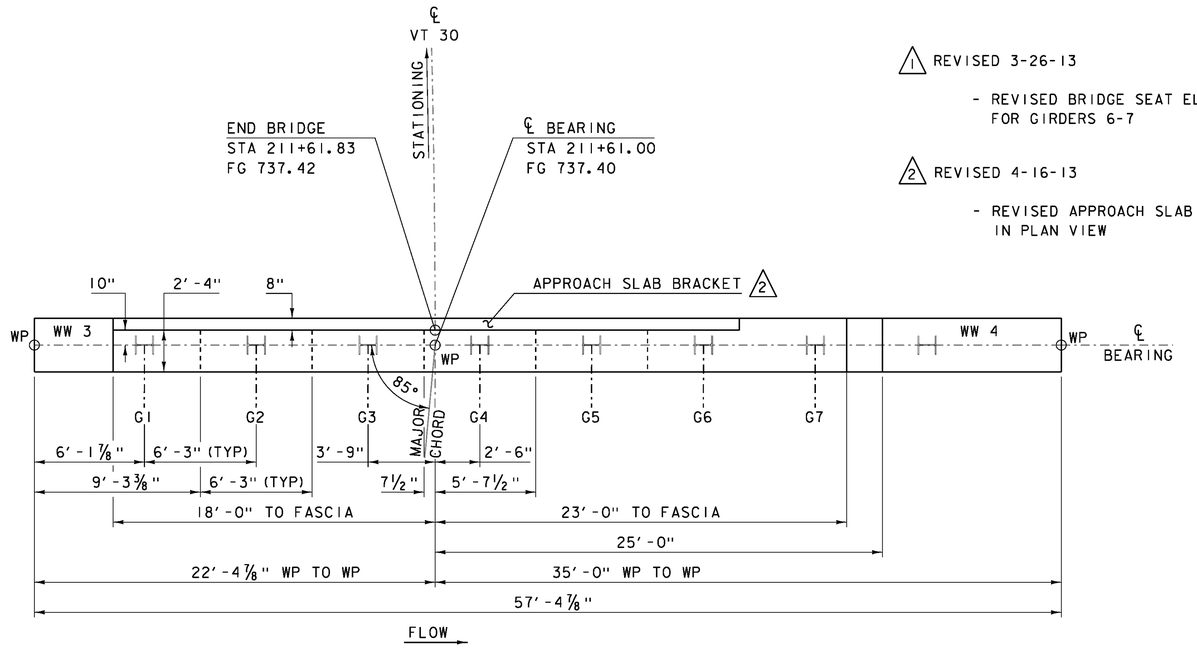

ABUTMENT 2 PLAN

SCALE ¼" = 1'-0"

1 REVISED 3-26-13

- REVISED BRIDGE SEAT ELEVATIONS FOR GIRDERS 6-7

2 REVISED 4-16-13

- REVISED APPROACH SLAB BRACKET WIDTH IN PLAN VIEW

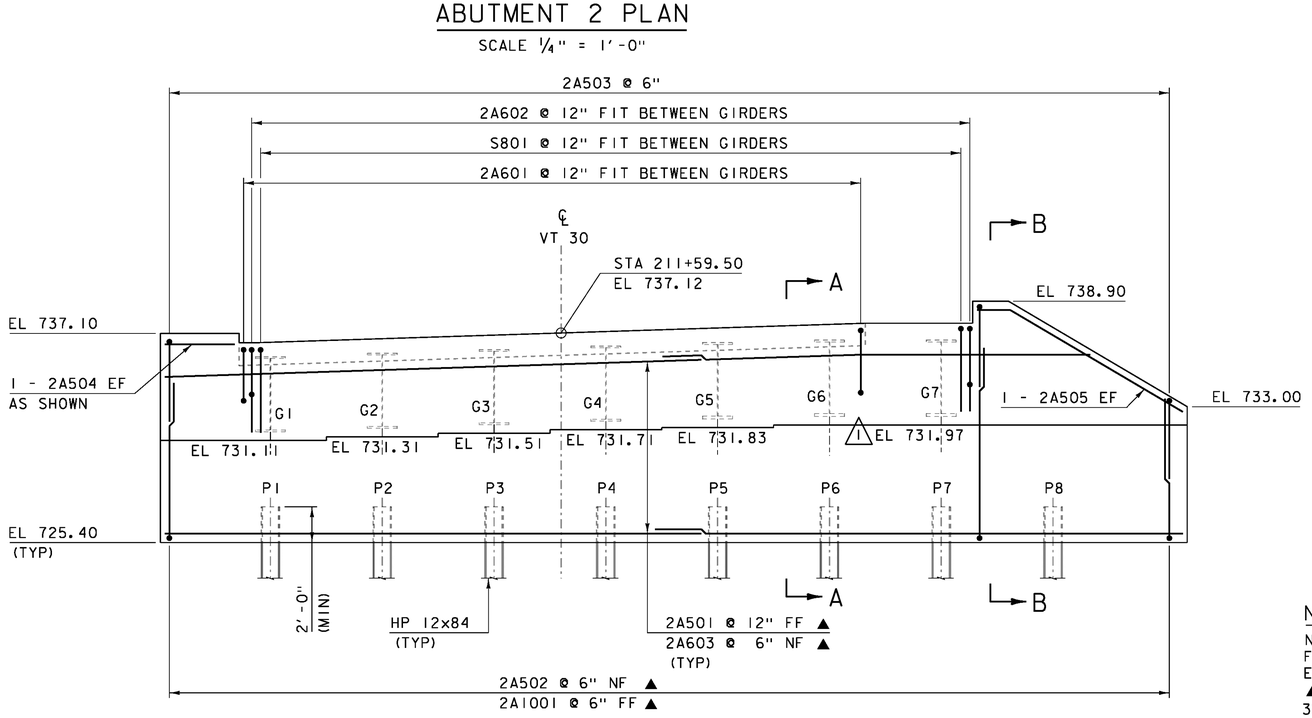

ABUTMENT 2 ELEVATION

SCALE ¼" = 1'-0"

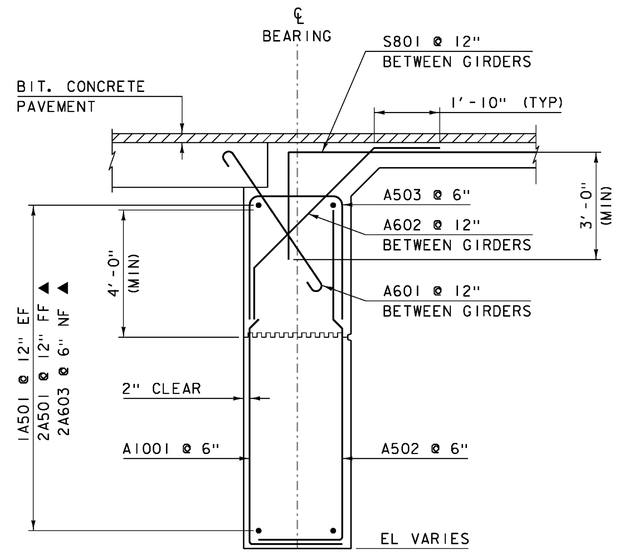

SECTION A-A
ABUTMENT REINFORCING TYPICAL

SCALE ½" = 1'-0"

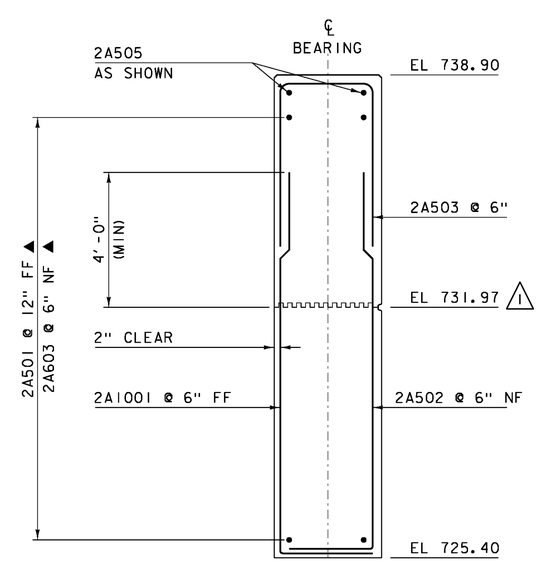

SECTION B-B
WINGWALL 4 REINFORCING TYPICAL

SCALE ½" = 1'-0"

NOTE:

NF = NEAR FACE
FF = FAR FACE
EF = EACH FACE
▲ = CUT TO FIT IN FIELD
3" CLEAR, UNLESS OTHERWISE SPECIFIED ON THE PLANS.
2'-7" BAR LAP UNLESS OTHERWISE SPECIFIED ON THE PLANS.

PROJECT NAME: JAMAICA
PROJECT NUMBER: ER-BRF 015-1(23)

FILE NAME: s11b316sub.dgn
PROJECT LEADER: K. HIGGINS
DESIGNED BY: G. LAROCHE
ABUTMENT 2

PLOT DATE: 16-APR-2013
DRAWN BY: K. FRIEDLAND
CHECKED BY: W. LAMMER
SHEET 40 OF 82

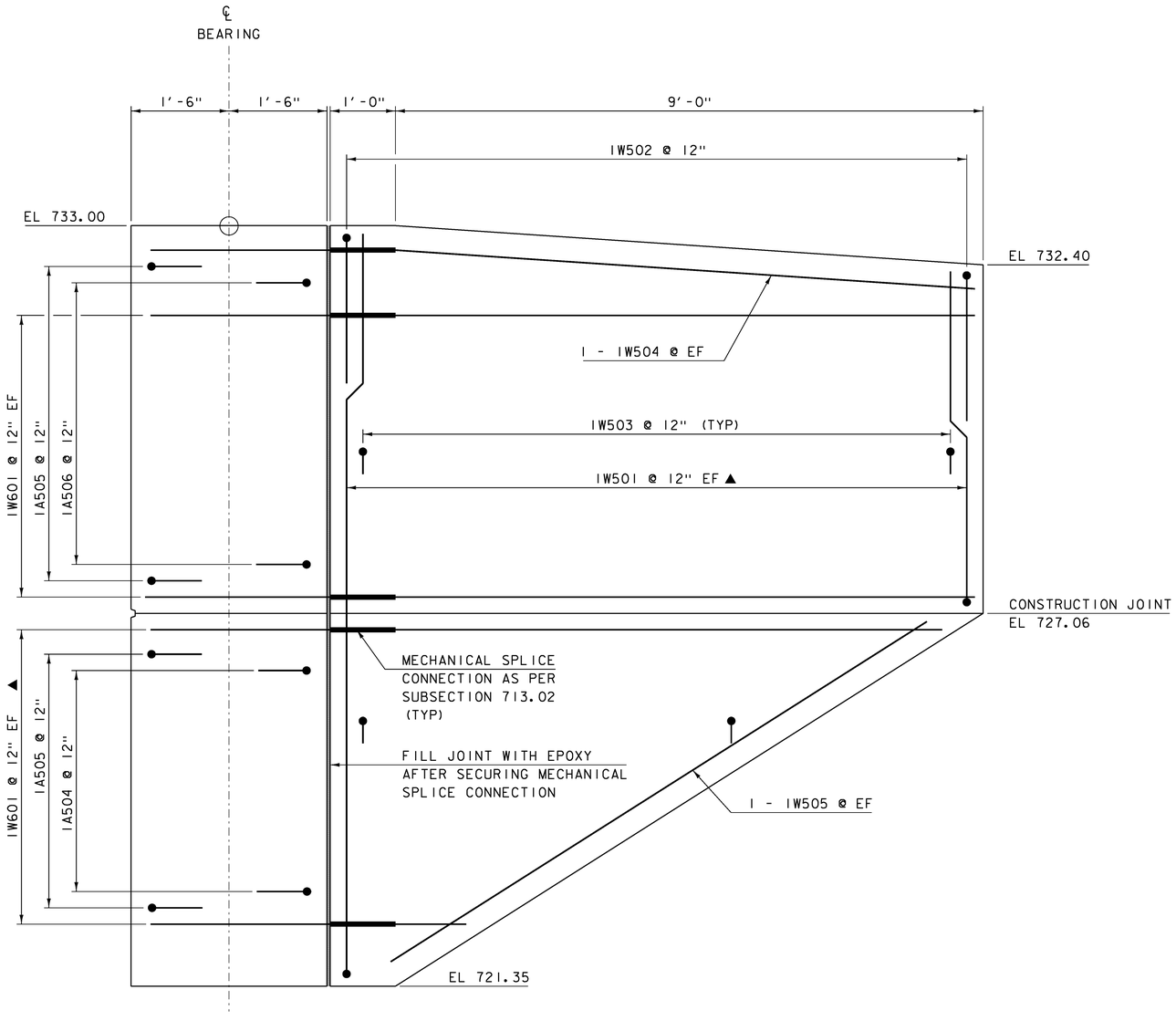

WINGWALL 1 ELEVATION

SCALE 1"=1'-0"

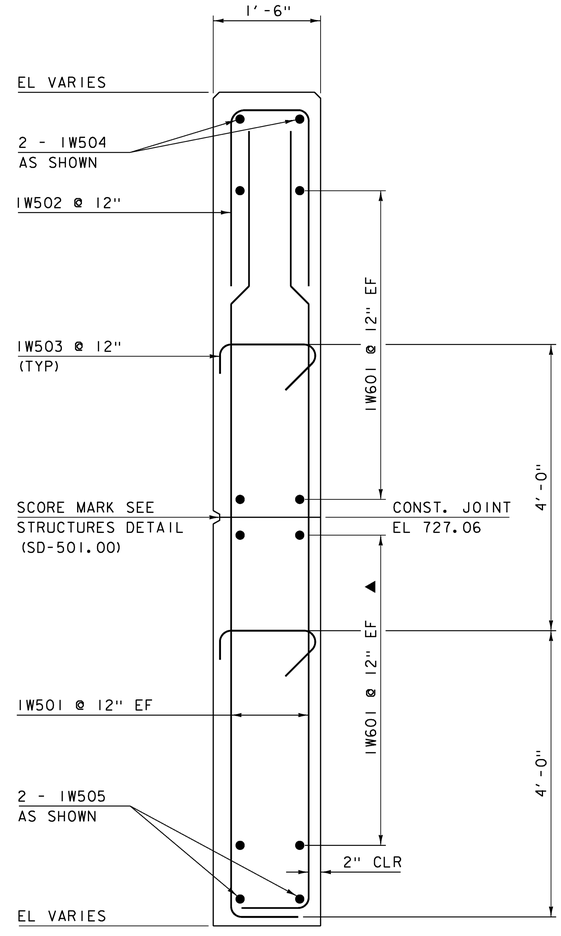

WINGWALL 1 TYPICAL SECTION

SCALE 1"=1'-0"

NOTES:
1. EPOXY SHALL BE INCIDENTAL TO CONCRETE BID ITEMS.

NOTE:
NF = NEAR FACE
FF = FAR FACE
EF = EACH FACE
▲ = CUT TO FIT IN FIELD
3" CLEAR, UNLESS OTHERWISE SPECIFIED ON THE PLANS.
2'-7" BAR LAP UNLESS OTHERWISE SPECIFIED ON THE PLANS.

PROJECT NAME: JAMAICA
PROJECT NUMBER: ER-BRF 015-1(23)

FILE NAME: s1lb212sub.dgn
PROJECT LEADER: K. HIGGINS
DESIGNED BY: G. LAROCHE
WINGWALL #1
PLOT DATE: 07-DEC-2012
DRAWN BY: K. FRIEDLAND
CHECKED BY: W. LAMMER
SHEET 41 OF 82

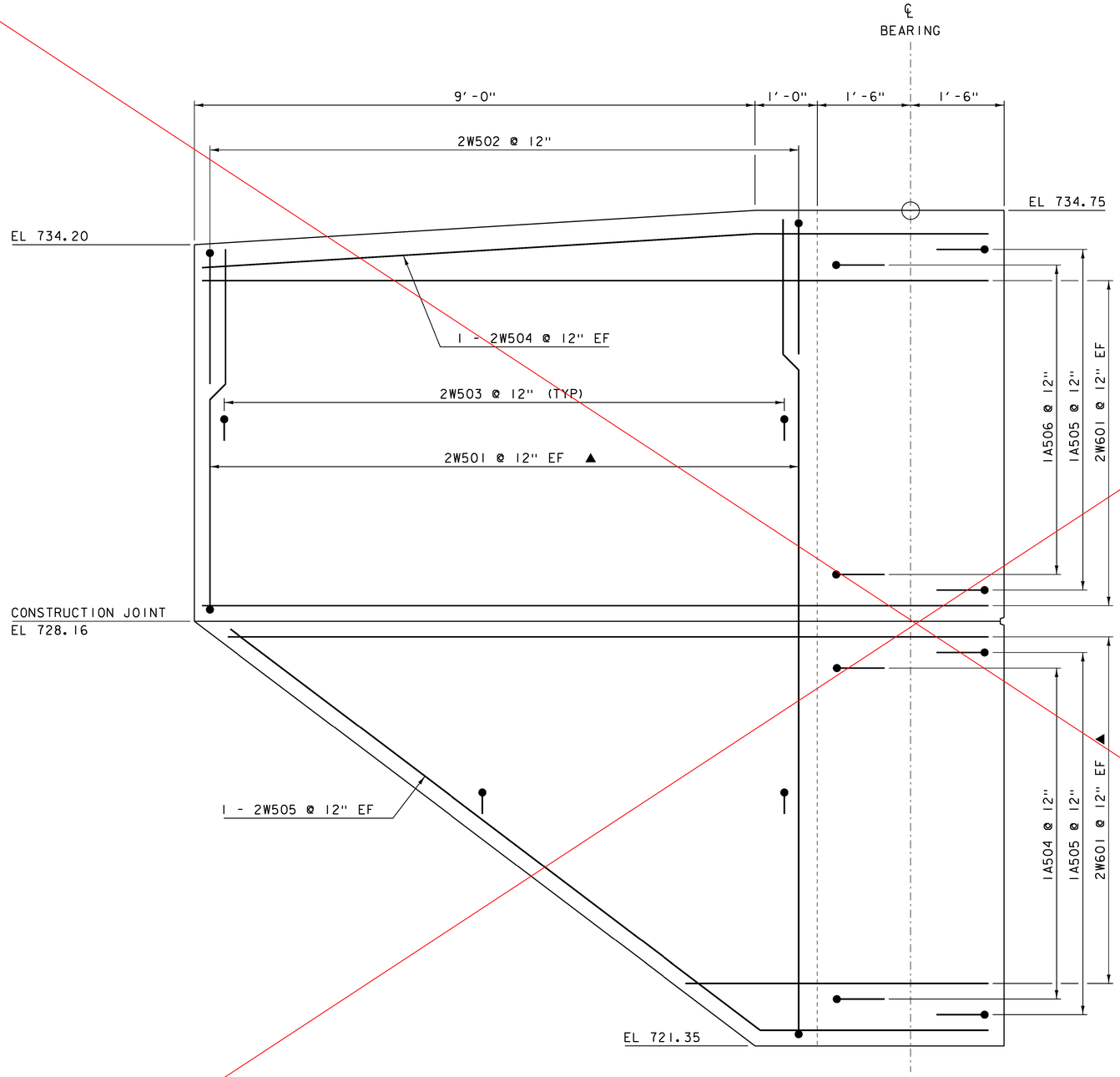

WINGWALL 2 ELEVATION

SCALE 1"=1'-0"

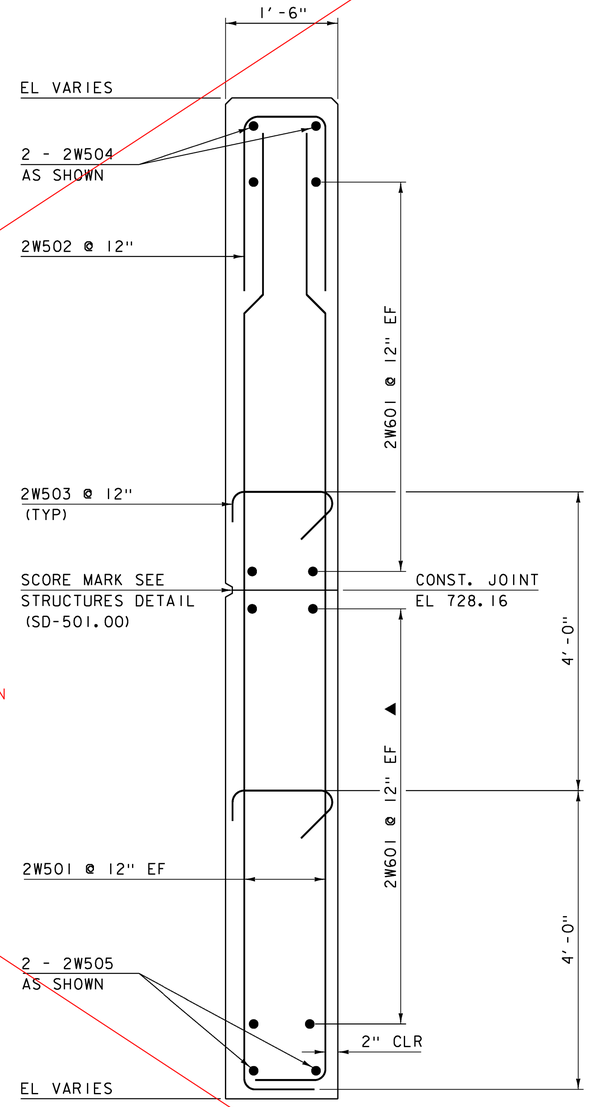

* SEE ATTACHED REVISION
SHEET 42R
3-26-16

WINGWALL 2 TYPICAL SECTION

SCALE 1"=1'-0"

NOTE:

NF = NEAR FACE
FF = FAR FACE
EF = EACH FACE
▲ = CUT TO FIT IN FIELD
3" CLEAR, UNLESS OTHERWISE SPECIFIED ON THE PLANS.
2'-7" BAR LAP UNLESS OTHERWISE SPECIFIED ON THE PLANS.

PROJECT NAME:	JAMAICA
PROJECT NUMBER:	ER-BRF 015-1(23)
FILE NAME: sllb212sub.dgn	PLOT DATE: 07-DEC-2012
PROJECT LEADER: K. HIGGINS	DRAWN BY: K. FRIEDLAND
DESIGNED BY: G. LAROCHE	CHECKED BY: W. LAMMER
WINGWALL #2	SHEET 42 OF 82

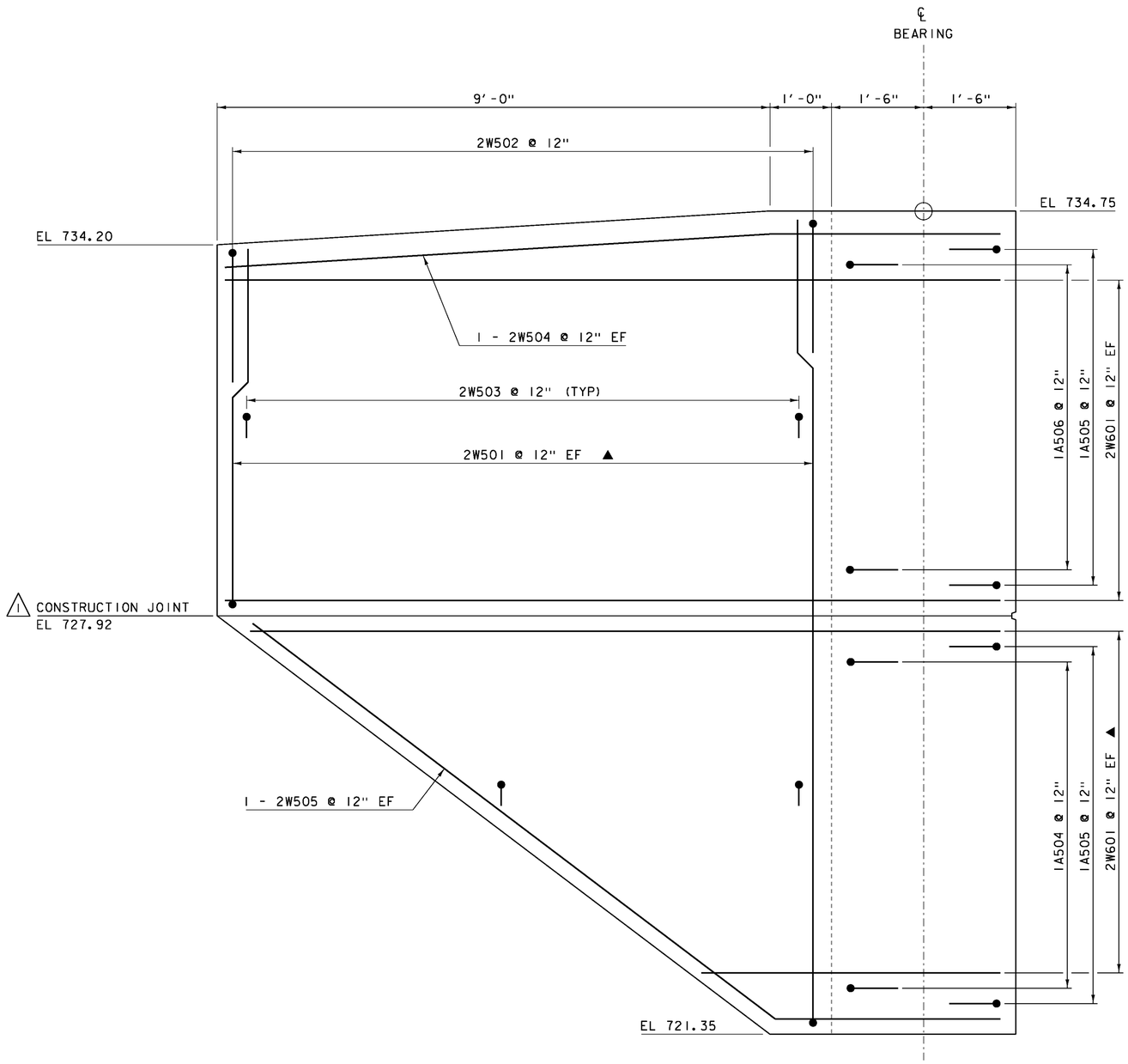

WINGWALL 2 ELEVATION

SCALE 1"=1'-0"

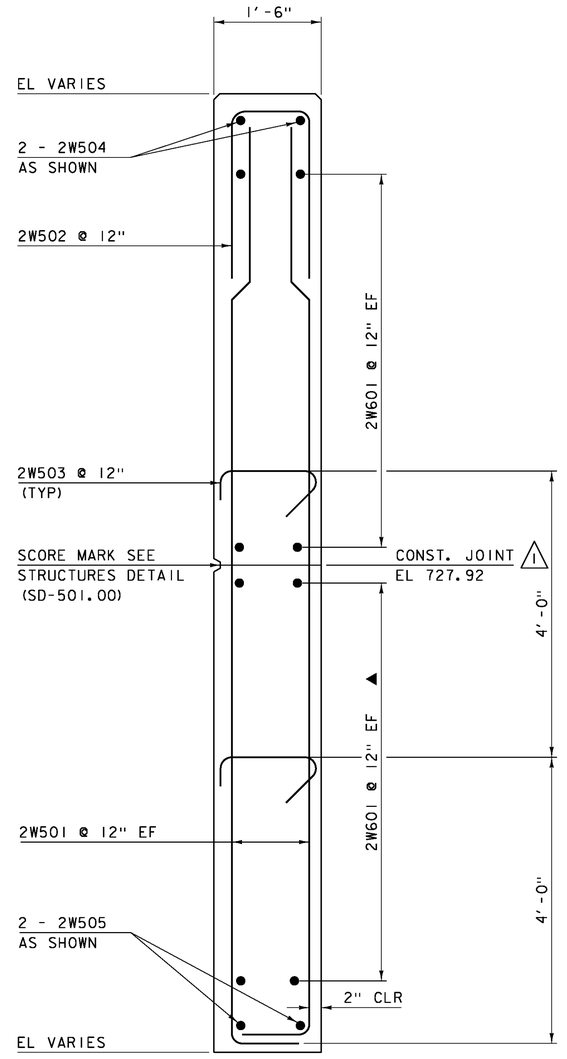

WINGWALL 2 TYPICAL SECTION

SCALE 1"=1'-0"

NOTE:

NF = NEAR FACE
FF = FAR FACE
EF = EACH FACE
▲ = CUT TO FIT IN FIELD
3" CLEAR, UNLESS OTHERWISE SPECIFIED ON THE PLANS.
2'-7" BAR LAP UNLESS OTHERWISE SPECIFIED ON THE PLANS.

1 REVISED 3-26-13

- REVISED BRIDGE SEAT ELEVATIONS FOR GIRDERS 6-7

PROJECT NAME:	JAMAICA
PROJECT NUMBER:	ER-BRF 015-1(23)
FILE NAME: sllb212sub.dgn	PLOT DATE: 26-MAR-2013
PROJECT LEADER: K. HIGGINS	DRAWN BY: K. FRIEDLAND
DESIGNED BY: G. LAROCHE	CHECKED BY: W. LAMMER
WINGWALL #2	SHEET 42 OF 82

NOTES:

1. DIMENSIONS SHOWN ARE BASED ON AN ASSUMED WALL THICKNESS OF 1'-0"

2. THE PRECAST BOX SECTIONS ARE SHOWN FOR REFERENCE ONLY. THE ACTUAL DIMENSIONS AND SHAPE WILL BE DEPENDENT ON THE FABRICATOR.

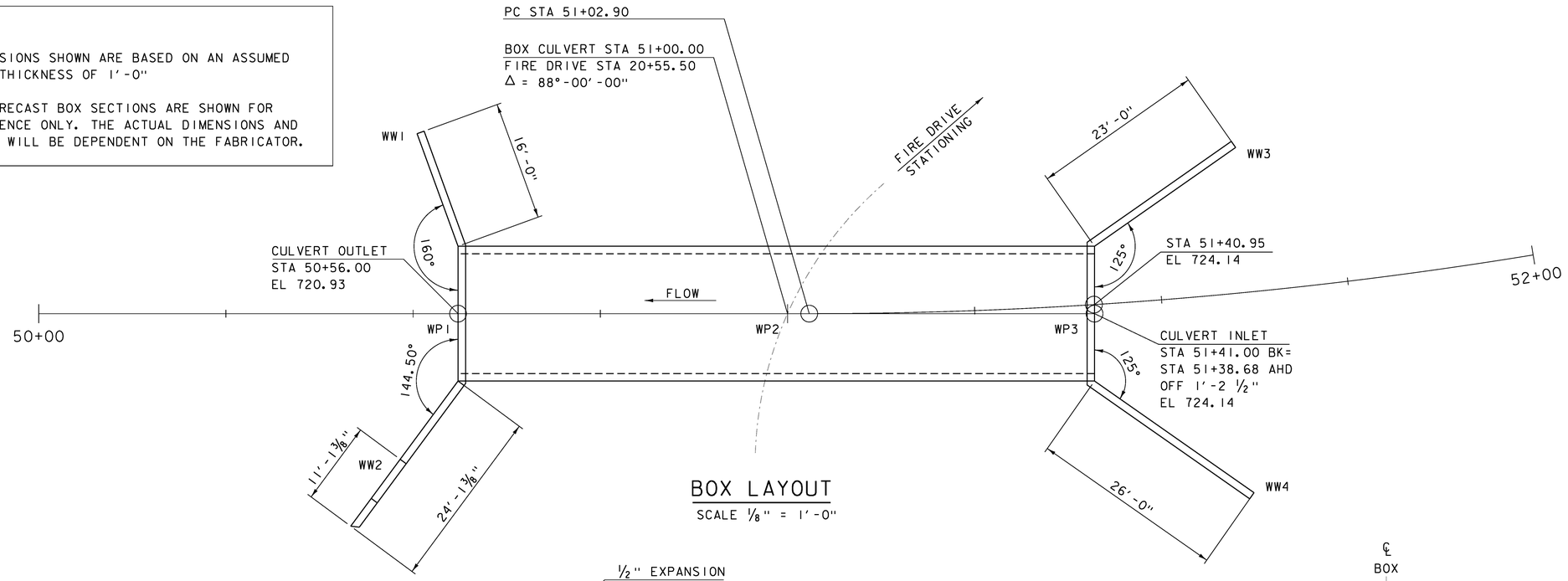

BOX LAYOUT

SCALE 1/8" = 1'-0"

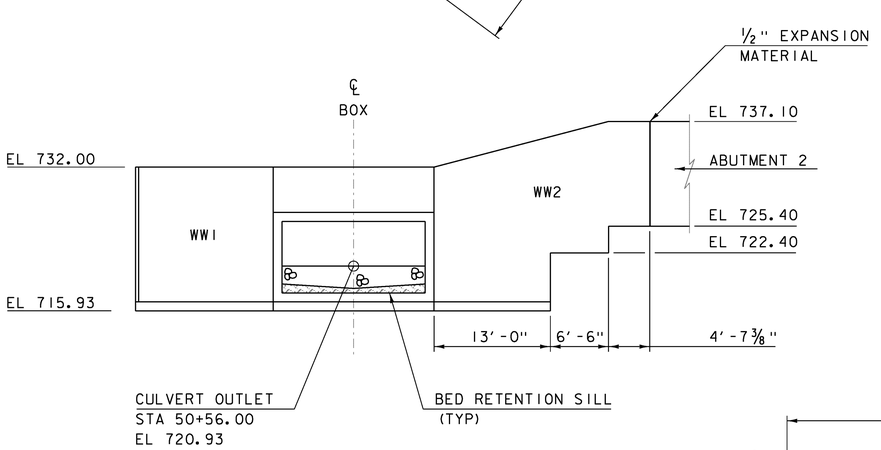

OUTLET ELEVATION

SCALE 1/8" = 1'-0"

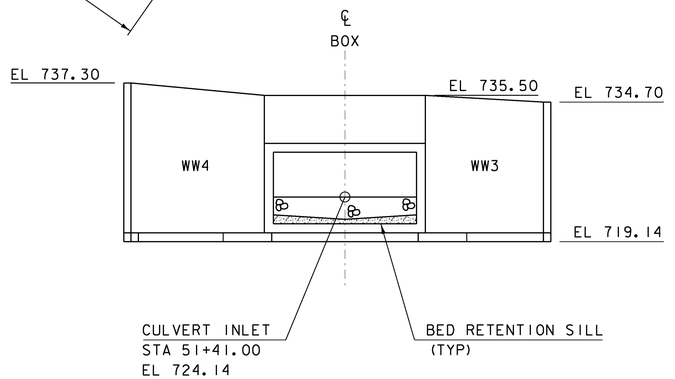

INLET ELEVATION

SCALE 1/8" = 1'-0"

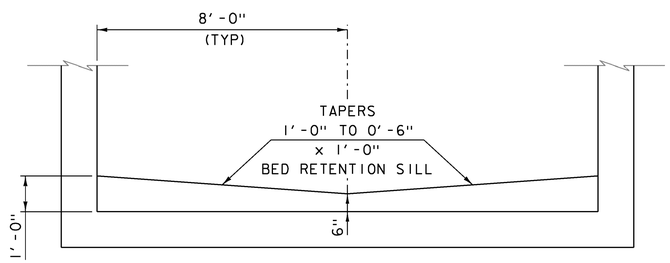

NOTES:
1. SILLS TO BE SPACED A MAXIMUM OF EVERY 8'-0"
2. FABRACATOR TO DETAIL BED RETENTION SILL CONNECTION.

BED RETENTION SILL DETAIL

NOT TO SCALE

PROJECT NAME: JAMAICA	
PROJECT NUMBER: ER-BRF 015-1(23)	
FILE NAME: sllb316box.dgn	PLOT DATE: 07-DEC-2012
PROJECT LEADER: K. HIGGINS	DRAWN BY: J. SALVATORI
DESIGNED BY: G. LAROCHE	CHECKED BY: J. SALVATORI
BOX LAYOUT	SHEET 43 OF 82

EPSC PLAN NARRATIVE

1.1 PROJECT DESCRIPTION

THIS PROJECT INVOLVES THE REPLACEMENT OF BRIDGE 30 WHICH IS LOCATED IN THE TOWN OF JAMAICA ON VERMONT ROUTE 30, APPROXIMATELY 4.8 MILES SOUTH OF THE NORTHERN JUNCTION OF VERMONT ROUTE 100 AND 30. THERE IS CURRENTLY A TEMPORARY BRIDGE IN PLACE, OFF ALIGNMENT, THAT WAS INSTALLED AFTER TROPICAL STORM IRENE. THE NEW STRUCTURE WILL BE APPROXIMATELY 132 FEET IN LENGTH WITH 243 FEET OF ROADWAY WORK. THIS PROJECT ALSO INVOLVES THE REPLACEMENT OF AN EXISTING BOX CULVERT. THE NEW PRECAST CONCRETE BOX CULVERT WILL BE APPROXIMATELY 85 FEET IN LENGTH.

TOTAL AREA OF DISTURBANCE AS SHOWN ON THE ATTACHED EPSC PLAN IS APPROXIMATELY 1.63 ACRES.

IT IS ANTICIPATED THAT THIS PROJECT WILL LAST ONE CONSTRUCTION SEASON.

1.2 SITE INVENTORY

1.2.1 TOPOGRAPHY
THE TOPOGRAPHY OF THE AREA IS RELATIVELY FLAT TO ROLLING AND LOCATED IN A SEMI URBAN AREA. THERE ARE RESIDENCES LOCATED ALONG BOTH SIDES OF ROUTE 30 FOR THE ENTIRE LENGTH OF THE PROJECT. THESE RESIDENCES HAVE WELL ESTABLISHED VEGETATION. VERMONT ROUTE 30, WATER STREET, CASTLE HILL ROAD AND THE DRIVE TO THE FIRE DEPARTMENT ARE WITHIN THE PROJECT AREA. FOR FINAL CONTOURS AND SLOPES SEE CROSS SECTION SHEETS.

1.2.2 DRAINAGE, WATERWAYS, BODIES OF WATER, AND PROXIMITY TO NATURAL OR MAN-MADE WATER FEATURES
BALL MOUNTAIN BROOK IS NOT THE ONLY WATER SOURCE IN THE PROJECT AREA. THE BROOK IS CLASSIFIED AS SINUOUS, ALLUVIAL AND CURRENTLY FLOOD DAMAGED. THE STREAM BED CONSISTS OF MOSTLY COBBLES WITH SOME GRAVEL AND BOULDERS. THERE IS ALSO AN UNNAMED BROOK FLOWING INTO BALL MOUNTAIN BROOK WITHIN THE PROJECT AREA.

1.2.3 VEGETATION
THE VEGETATION IN THE PROJECT AREA CONSISTS OF LAWNS WITH TREES. WELL ESTABLISHED TREES AND SHRUBS ARE LOCATED ALONG THE RIVER BANKS. THE IMPACT TO VEGETATION WILL BE LIMITED TO THAT WHICH IS DIRECTLY AFFECTED BY REPLACEMENT OF THE BRIDGE STRUCTURE AND BOX CULVERT. UPON PROJECT COMPLETION, THE CHANNEL WILL BE ARMORED WITH STONE FILL TYPE IV AS SPECIFIED ON THE PLANS. DISTURBED VEGETATION WILL BE REESTABLISHED WITH STANDARD SEED AND MULCH PRACTICES.

1.2.4 SOILS
ALL SOIL DATA CAME FROM THE U.S. DEPARTMENT OF AGRICULTURE SOIL CONSERVATION SERVICE FOR THE COUNTY OF WINDHAM, VERMONT. SOILS ON THE PROJECT SITE ARE:

50B COLTON LOAMY FINE SAND	2% TO 8% SLOPES	"K FACTOR" = 0.17
16B ADAMS LOAMY FINE SAND	2% TO 8% SLOPES	"K FACTOR" = 0.17
61E HOUGHTONVILLE FINE SANDY LOAM	25% TO 50% SLOPES	"K FACTOR" = 0.49
48D RAWSONVILLE-HOGBACK FINE SANDY LOAM	15% TO 25% SLOPES	"K FACTOR" = 0.49
56B MONADNOCK FINE SANDY LOAM	3% TO 8% SLOPES	"K FACTOR" = 0.28

NOTE: K-VALUES GENERALLY INDICATE THE FOLLOWING:
0.0-0.23 = LOW EROSION POTENTIAL
0.24-0.36 = MODERATE EROSION POTENTIAL
0.37 AND HIGHER = HIGH EROSION POTENTIAL

1.2.5 SENSITIVE RESOURCE AREAS
CRITICAL HABITATS: NO
HISTORICAL OR ARCHEOLOGICAL AREAS: NO
PRIME AGRICULTURAL LAND: NO
THREATENED AND ENDANGERED SPECIES: NO
WATER RESOURCE: BALL MOUNTAIN BROOK
WETLANDS: NO

1.3 RISK EVALUATION

THIS PROJECT FALLS UNDER THE JURISDICTION OF GENERAL PERMIT 3-9020 FOR STORMWATER RUNOFF FROM CONSTRUCTION SITES FOR LOW RISK PROJECTS. ANY MODIFICATIONS TO THE PROJECT THAT INCREASE THE RISK TO ENVIRONMENTAL RESOURCES SHALL BE EVALUATED IN ACCORDANCE WITH THE PERMIT REQUIREMENTS. THE CONTRACTOR WILL BE RESPONSIBLE FOR ANY ADDITIONAL PERMITTING.

1.4 EROSION PREVENTION AND SEDIMENT CONTROL

THE EROSION CONTROL PLANS ARE MEANT AS A GUIDELINE FOR PREVENTING EROSION AND CONTROLLING SEDIMENT TRANSPORT. THE PRINCIPLES OUTLINED IN THIS NARRATIVE CONSIST OF APPLYING MEASURES THROUGHOUT CONSTRUCTION OF THE PROJECT IN ORDER TO MINIMIZE SEDIMENT TRANSPORT TO THE RECEIVING WATERS. THE MEASURES INCLUDE STABILIZATION AND STRUCTURAL PRACTICES, STORM WATER CONTROLS AND OTHER POLLUTION PREVENTION PRACTICES. THEY HAVE BEEN PROPOSED BY THE DESIGNER AS A BASIS FOR PROTECTING RESOURCES AND WILL NEED TO BE BUILT UPON BASED ON THE SPECIFIC MEANS AND METHODS OF THE CONTRACTOR. REFER TO THE LOW RISK SITE HANDBOOK AND APPROPRIATE DETAIL SHEETS FOR SPECIFIC GUIDANCE AND CONSTRUCTION DETAILING.

ALL MEASURES SHALL BE REGULARLY MAINTAINED AND SHALL BE CHECKED FOR SEDIMENT BUILD-UP. SEDIMENT SHALL BE DISPOSED OF AT AN APPROVED SITE WHERE IT WILL NOT BE SUBJECT TO EROSION.

1.4.1 MARK SITE BOUNDARIES
SITE BOUNDARIES AND AREAS CONSTRUCTION EQUIPMENT CAN ACCESS SHALL BE DELINEATED.

PROJECT DEMARCATION FENCING (PDF) SHALL BE USED TO PHYSICALLY MARK SITE BOUNDARIES. BECAUSE THIS PROJECT FALLS UNDER THE CGP 3-9020, BARRIER FENCE SHALL BE USED INSTEAD OF PROJECT DEMARCATION FENCE WITHIN 100 FEET OF A WATER RESOURCE (STREAM, BROOK, LAKE, POND, WETLAND, ETC).

1.4.2 LIMIT DISTURBANCE AREA
PREVENTING INITIAL SOIL EROSION BY MINIMIZING THE EXPOSED AREA IS MUCH MORE EFFECTIVE THAN TREATING ERODED SEDIMENT. EARTH DISTURBANCE CAN BE MINIMIZED THROUGH CONSTRUCTION PHASING BY ONLY OPENING UP EARTH AS NECESSARY. THIS CAN LIMIT THE AREA THAT WILL BE DISTURBED AND EXPOSED TO EROSION. EMPLOY TEMPORARY CONSTRUCTION STABILIZATION PRACTICES IN INCREMENTAL STAGES AS PHASES CHANGE. FOR PROJECTS WHICH FALL UNDER THE CONSTRUCTION GENERAL PERMIT, ONLY THE ACREAGE LISTED ON THE PERMIT AUTHORIZATION MAY BE EXPOSED AT ANY GIVEN TIME.

MAINTAINING VEGETATED BUFFERS ALONG STREAM BANKS, WETLANDS OR OTHER SENSITIVE AREAS IS A CRUCIAL EROSION AND SEDIMENT CONTROL MEASURE THAT SHOULD BE ESTABLISHED WHEREVER POSSIBLE.

1.4.3 SITE ENTRANCE/EXIT STABILIZATION
TRACKING OF SEDIMENT ONTO PUBLIC HIGHWAYS SHALL BE MNIMIZED TO REDUCE THE POTENTIAL FOR RUNOFF ENTERING RECEIVING WATERS. INSTALLATION SHALL COINCIDE WITH THE CONTRACTORS PROGRESS SCHEDULE.

STABILIZED CONSTRUCTION ENTRANCES SHALL BE INSTALLED AS PROPOSED ON THE EPSC PLAN AND ANYWHERE EQUIPMENT WILL BE GOING FROM AREAS OF EXPOSED SOILS TO PAVED SURFACES.

1.4.4 INSTALL SEDIMENT BARRIERS
SEDIMENT BARRIERS SHALL BE UTILIZED TO INTERCEPT RUNOFF AND ALLOW SUSPENDED SEDIMENT TO SETTLE OUT. THEY SHALL BE INSTALLED PRIOR TO ANY UP SLOPE WORK.

FILTER CURTAIN SHALL BE INSTALLED AS PROPOSED ON THE EPSC PLANS PRIOR TO ANY CHANNEL WORK.

FILTER FABRIC DROP INLET PROTECTION SHALL BE INSTALLED AS PROPOSED ON THE EPSC PLANS.

BECAUSE THIS PROJECT FALLS UNDER THE CGP 3-9020, WOVEN WIRE REINFORCED SILT FENCE SHALL BE USED INSTEAD OF SILT FENCE WITHIN 100 FEET UPSLOPE OF RECEIVING WATERS.

1.4.5 DIVERT UPLAND RUNOFF
DIVERSIONARY MEASURES SHALL BE USED TO INTERCEPT RUNOFF FROM ABOVE THE CONSTRUCTION AND DIRECT IT AROUND THE DISTURBED AREA SO THAT CLEAN WATER DOES NOT BECOME MUDDIED WHILE TRAVELING OVER EXPOSED SOILS ON THE CONSTRUCITON SITE.

IT IS NOT ANTICIPATED THAT DIVERSIONARY MEASURES WILL BE NEEDED ON THIS PROJECT.

1.4.6 SLOW DOWN CHANNELIZED RUNOFF
CHECK STRUCTURES SHALL BE UTILIZED TO REDUCE THE VELOCITY, AND THUS THE EROSIVE POTENTIAL, OF CONCENTRATED FLOW IN CHANNELS.

IT IS NOT ANTICIPATED THAT CHECK STRUCTURES WILL BE NEEDED ON THIS PROJECT.

1.4.7 CONSTRUCT PERMANENT CONTROLS
PERMANENT STORM WATER TREATMENT DEVICES SHALL BE INSTALLED AS SHOWN ON THE PLANS AND IN ACCORDANCE WITH PERMIT CONDITIONS. STONE FILL SHALL BE INSTALLED AS SHOWN ON THE EPSC PLANS. GEOTEXTILE SHALL BE INSTALLED BELOW THE STONE FILL TYPE IV AS SHOWN ON THE CHANNEL CROSS SECTIONS.

1.4.8 STABILIZE EXPOSED SOILS DURING CONSTRUCTION
ALL AREAS OF DISTURBANCE MUST HAVE TEMPORARY STABILIZATION IN PLACE WITHIN 48 HOURS OF DISTURBANCE OR IN ACCORDANCE WITH THE CONSTRUCTION GENERAL PERMIT 3-9020 AUTHORIZATION.

SURFACE ROUGHENING OF ALL EXPOSED SLOPES, COMBINED WITH TEMPORARY MULCHING, SHALL BE UTILIZED ON A REGULAR BASIS. BIODEGRADABLE EROSION CONTROL MATTING OR AN EQUIVALENT SHALL BE USED TO STABILIZE ALL SLOPES STEEPER THAN 1:3.

THE FORECAST OF RAINFALL EVENTS SHALL TRIGGER IMMEDIATE PROTECTION OF EXPOSED SOILS.

1.4.9 WINTER STABILIZATION
VARIOUS MEASURES SPECIFIC TO WINTER MAY BE NECESSARY SHOULD THE PROJECT EXTEND INTO WINTER (OCTOBER 15 THROUGH APRIL 15). REFER TO THE LOW RISK SITE HANDBOOK FOR GUIDANCE.

1.4.10 STABILIZE SOIL AT FINAL GRADE
THE URBAN SEED MIX SHALL BE USED ON ALL AREAS TO BE RE-VEGETATED AS SHOWN ON THE FINAL CONDITIONS PLANS.

EXPOSED SOIL MUST BE STABILIZED WITHIN 48 HOURS OF REACHING FINAL GRADE.

SEED, MULCH, FERTILIZER AND LIME SHALL BE USED TO ESTABLISH PERMANENT VEGETATION. FOR SLOPES STEEPER THAN 1:3, BIODEGRADABLE EROSION CONTROL MATTING OR AN EQUIVALENT SHALL BE USED INSTEAD OF MULCH.

1.4.11 DE-WATERING ACTIVITIES
DISCHARGE FROM DEWATERING ACTIVITIES THAT FLOWS OFF OF THE CONSTRUCTION SITE MUST NOT CAUSE OR CONTRIBUTE TO A VIOLATION OF THE VERMONT WATER QUALITY STANDARDS.

TREATMENT OF DEWATERING COFFERDAM IS NOT ANTICIPATED.

1.4.12 INSPECT YOUR SITE
INSPECT THE PROJECT SITE BASED ON SPECIAL PROVISION REQUIREMENTS OR CONSTRUCTION GENERAL PERMIT AUTHORIZATION STIPULATIONS.

1.5 SEQUENCE AND STAGING

THIS SECTION WILL BE DEVELOPED BY THE CONTRACTOR USING THE GUIDANCE OUTLINED IN THE VTRANS EPSC PLAN CONTRACTOR CHECKLIST.

1.5.1 CONSTRUCTION SEQUENCE

1.5.2 OFF-SITE ACTIVITIES
IN ADDITION TO THE CONTRACTOR CHECKLIST ANY ACTIVITIES OUTSIDE THE CONSTRUCTION LIMITS SHALL FOLLOW SUBSECTION 105.25- 105.29 OF THE STANDARD SPECIFICATIONS FOR CONSTRUCTION.

PROJECT NAME:	JAMAICA
PROJECT NUMBER:	ER-BRF 015-1(23)
FILE NAME: sllb316epsc_narrative.dgn	PLOT DATE: 07-DEC-2012
PROJECT LEADER: K. HIGGINS	DRAWN BY: K. FRIEDLAND
DESIGNED BY: K. FRIEDLAND	CHECKED BY: G. LAROCHE
EPSC NARRATIVE	SHEET 44 OF 82

50B COLTON LOAMY FINE SAND
WITH 2% TO 8% SLOPES
"K FACTOR" = 0.17

16B ADAMS LOAMY FINE SAND
WITH 2% TO 8% SLOPES
"K FACTOR" 0.17

61E HOUGHTONVILLE
FINE SANDY LOAM
WITH 25% TO 50% SLOPES
"K FACTOR" = 0.49

48D RAWSONVILLE-HOGBACK
FINE SANDY LOAM
WITH 15% TO 25% SLOPES
"K FACTOR" = 0.49

VT STATE PLANE GRID

MATCHLINE 213+75

VT RTE 30
TO TOWNSHEND

VT RTE 30
TO STRATTON

RIPARIAN BUFFER

BENCHMARK
CHISELED SQUARE
IN TOP OF ABUT.
ELEV. 732.93

BENCHMARK
RR SPIKE IN POLE
ELEV. 728.63

BENCHMARK
RR SPIKE IN POLE
ELEV. 732.78

BENCHMARK
CHISELED SQUARE
ON ABUT.
ELEV. 731.75

BENCHMARK
STATE OF VERMONT
SURVEY DISK
ELEV. 733.77

ELAINE BECKWITH
GALLERY
FINE ART

BALL MOUNTAIN BROOK

LEGEND

RIPARIAN BUFFER	
P/L	PROPERTY LINE
	RIGHT-OF-WAY LINE
	SOIL BOUNDARY

EPSC EXISTING CONDITIONS SHEET 1

SCALE 1" = 20'-0"
20 0 20

PROJECT NAME:	JAMAICA
PROJECT NUMBER:	ER-BRF 015-1(23)
FILE NAME: s11b316.epsc_ex.dgn	PLOT DATE: 07-DEC-2012
PROJECT LEADER: K. HIGGINS	DRAWN BY: K. FRIEDLAND
DESIGNED BY: K. FRIEDLAND	CHECKED BY: G. LAROCHE
EPSC EXISTING CONDITIONS SHEET 1	SHEET 45 OF 82

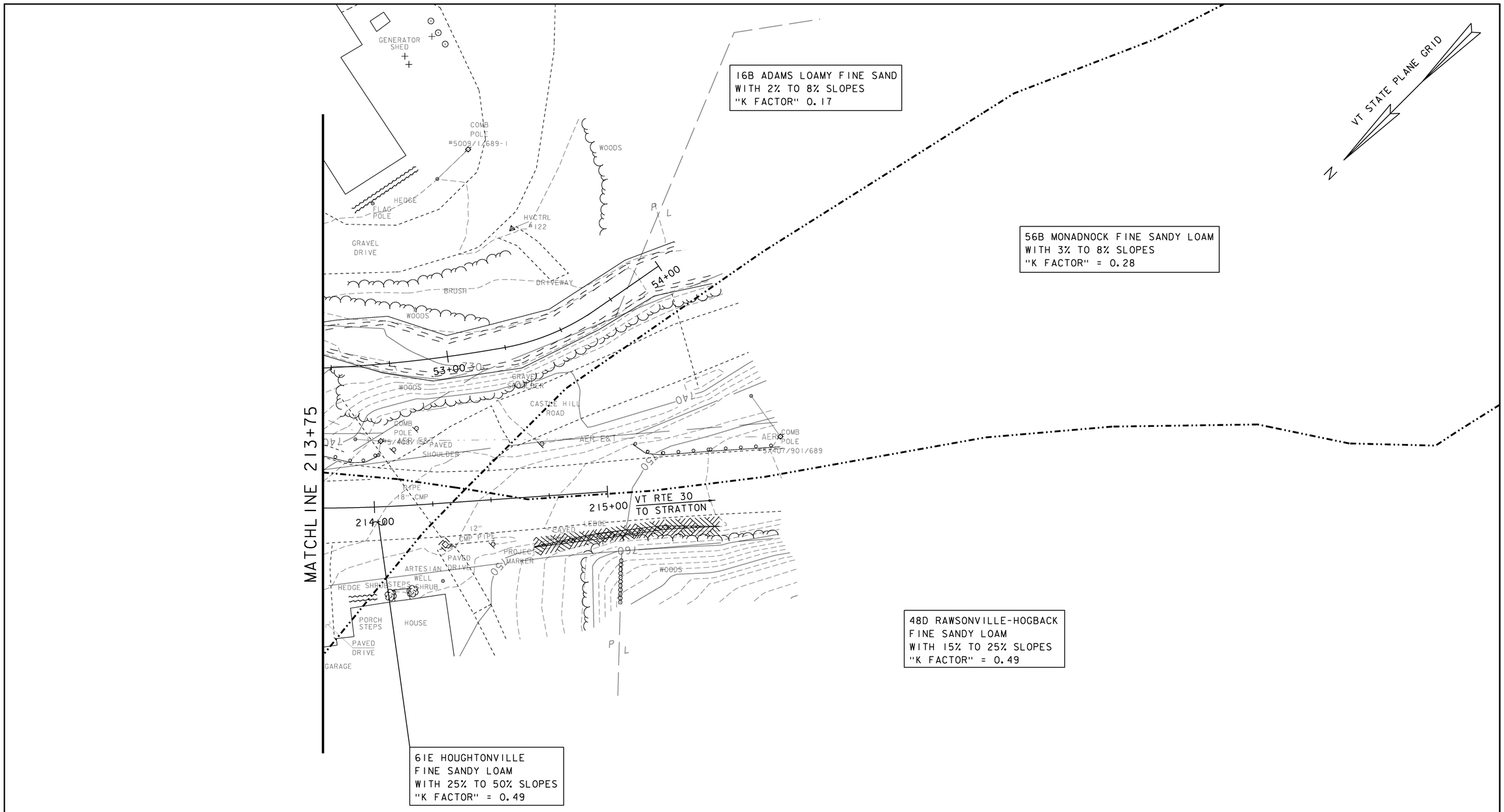

LEGEND

-·-·-·-·-·-·-	RIPARIAN BUFFER
——— P/L ———	PROPERTY LINE
——— ———	RIGHT-OF-WAY LINE
-·-·-·-·-·-·-	SOIL BOUNDARY

EPSC EXISTING CONDITIONS SHEET 2

SCALE 1" = 20'-0"
20 0 20

PROJECT NAME:	JAMAICA
PROJECT NUMBER:	ER-BRF 015-1(23)
FILE NAME: s11b316.epsc_ex.dgn	PLOT DATE: 07-DEC-2012
PROJECT LEADER: K. HIGGINS	DRAWN BY: K. FRIEDLAND
DESIGNED BY: K. FRIEDLAND	CHECKED BY: G. LAROCHE
EPSC EXISTING CONDITIONS SHEET 2	SHEET 46 OF 82

50B COLTON LOAMY FINE SAND
WITH 2% TO 8% SLOPES
"K FACTOR" = 0.17

16B ADAMS LOAMY FINE SAND
WITH 2% TO 8% SLOPES
"K FACTOR" 0.17

BEGIN APPROACH
STA 208+75.00

BEGIN PROJECT
STA 209+75.00

BEGIN BRIDGE
STA 210+30.17
F.G. = 733.32

CULVERT OUTLET
STA 50+56.00

STONE FILL,
TYPE IV

END FIRE DRIVE
STA 21+08.77

CULVERT INLET
STA 51+41.00

STONE FILL,
TYPE IV

VT STATE PLANE GRID

N

MATCHLINE 213+75

VT RTE 30
TO TOWNSHEND

VT RTE 30
TO STRATTON

END PROJECT
STA 213+50.00

END BRIDGE
STA 211+61.83
F.G. = 737.42

STONE FILL,
TYPE II

END WATER ST
STA 31+25.00

STONE FILL,
TYPE IV
(TYP)

6IE HOUGHTONVILLE
FINE SANDY LOAM
WITH 25% TO 50% SLOPES
"K FACTOR" = 0.49

48D RAWSONVILLE-HOGBACK
FINE SANDY LOAM
WITH 15% TO 25% SLOPES
"K FACTOR" = 0.49

RIPARIAN BUFFER

BALL MOUNTAIN BROOK
FLOW

SWALE FLOW

EXISTING ROW

LEGEND

- CUT/FILL LIMITS
- PDF — PROJECT DEMARCATION FENCE
- SILT FENCE
- SILT FENCE, WIRE WOVEN REINFORCED
- BF — BARRIER FENCE
- FILTER FABRIC DROP INLET PROTECTION
- SURFACE ROUGHENING
- ROLLED EROSION CONTROL PRODUCT (RECP)
- STONE FILL
- STABILIZED CONSTRUCTION ENTRANCE
- FILTER CURTAIN

EPSC DURING CONSTRUCTION I

SCALE 1" = 20'-0"
20 0 20

PROJECT NAME:	JAMAICA
PROJECT NUMBER:	ER-BRF 015-1(23)
FILE NAME: slib316.epsc_dur.dgn	PLOT DATE: 07-DEC-2012
PROJECT LEADER: K. HIGGINS	DRAWN BY: K. FRIEDLAND
DESIGNED BY: K. FRIEDLAND	CHECKED BY: G. LAROCHE
EPSC DURING CONSTRUCTION I	SHEET 47 OF 82

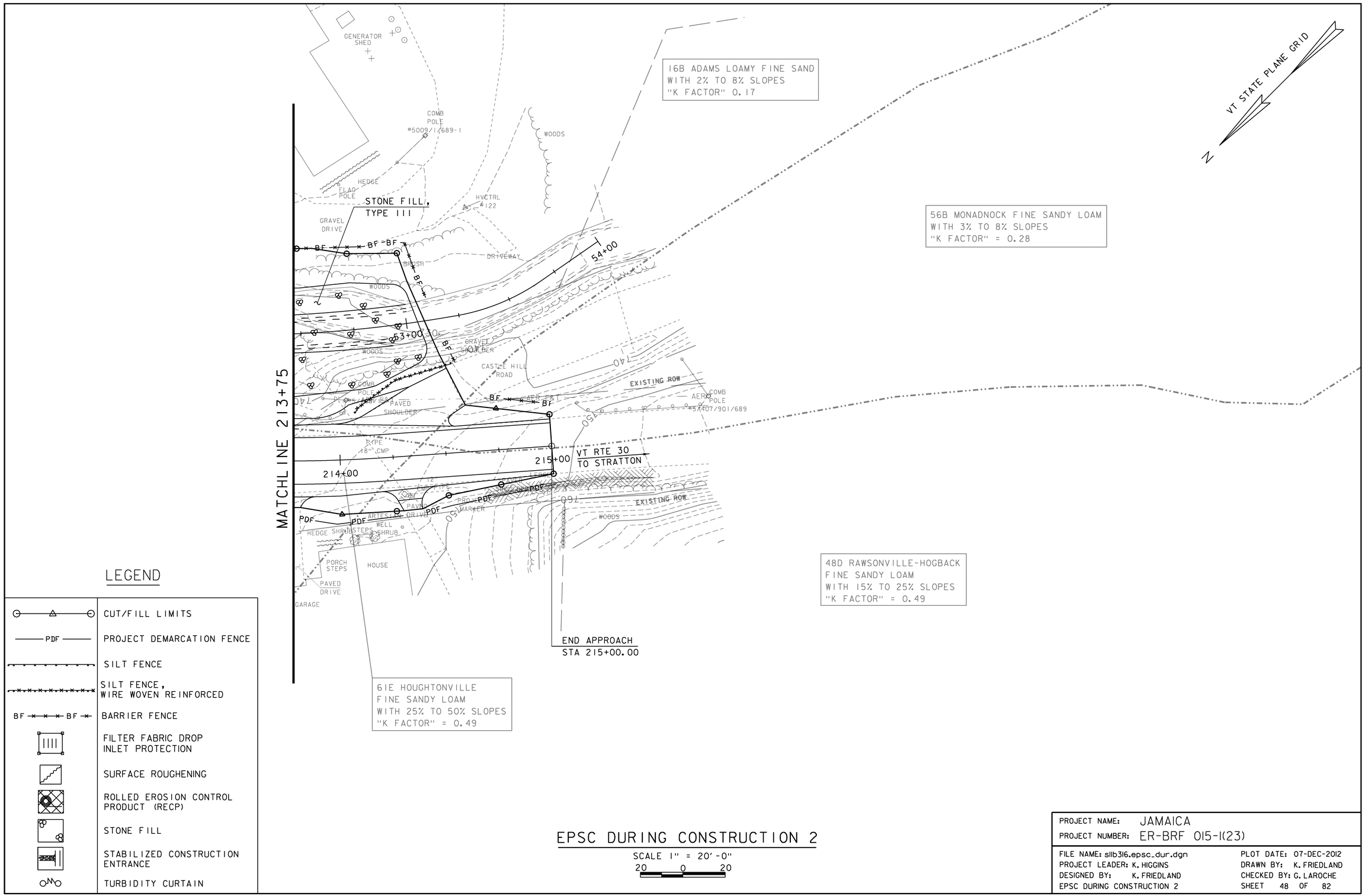

LEGEND

	CUT/FILL LIMITS
PDF	PROJECT DEMARCATION FENCE
	SILT FENCE
	SILT FENCE, WIRE WOVEN REINFORCED
BF BF	BARRIER FENCE
	FILTER FABRIC DROP INLET PROTECTION
	SURFACE ROUGHENING
	ROLLED EROSION CONTROL PRODUCT (RECP)
	STONE FILL
	STABILIZED CONSTRUCTION ENTRANCE
	TURBIDITY CURTAIN

EPSC DURING CONSTRUCTION 2

SCALE 1" = 20'-0"

20 0 20

PROJECT NAME: JAMAICA
PROJECT NUMBER: ER-BRF 015-1(23)

FILE NAME: s11b316.epsc_dur.dgn
PROJECT LEADER: K. HIGGINS
DESIGNED BY: K. FRIEDLAND
EPSC DURING CONSTRUCTION 2

PLOT DATE: 07-DEC-2012
DRAWN BY: K. FRIEDLAND
CHECKED BY: G. LAROCHE
SHEET 48 OF 82

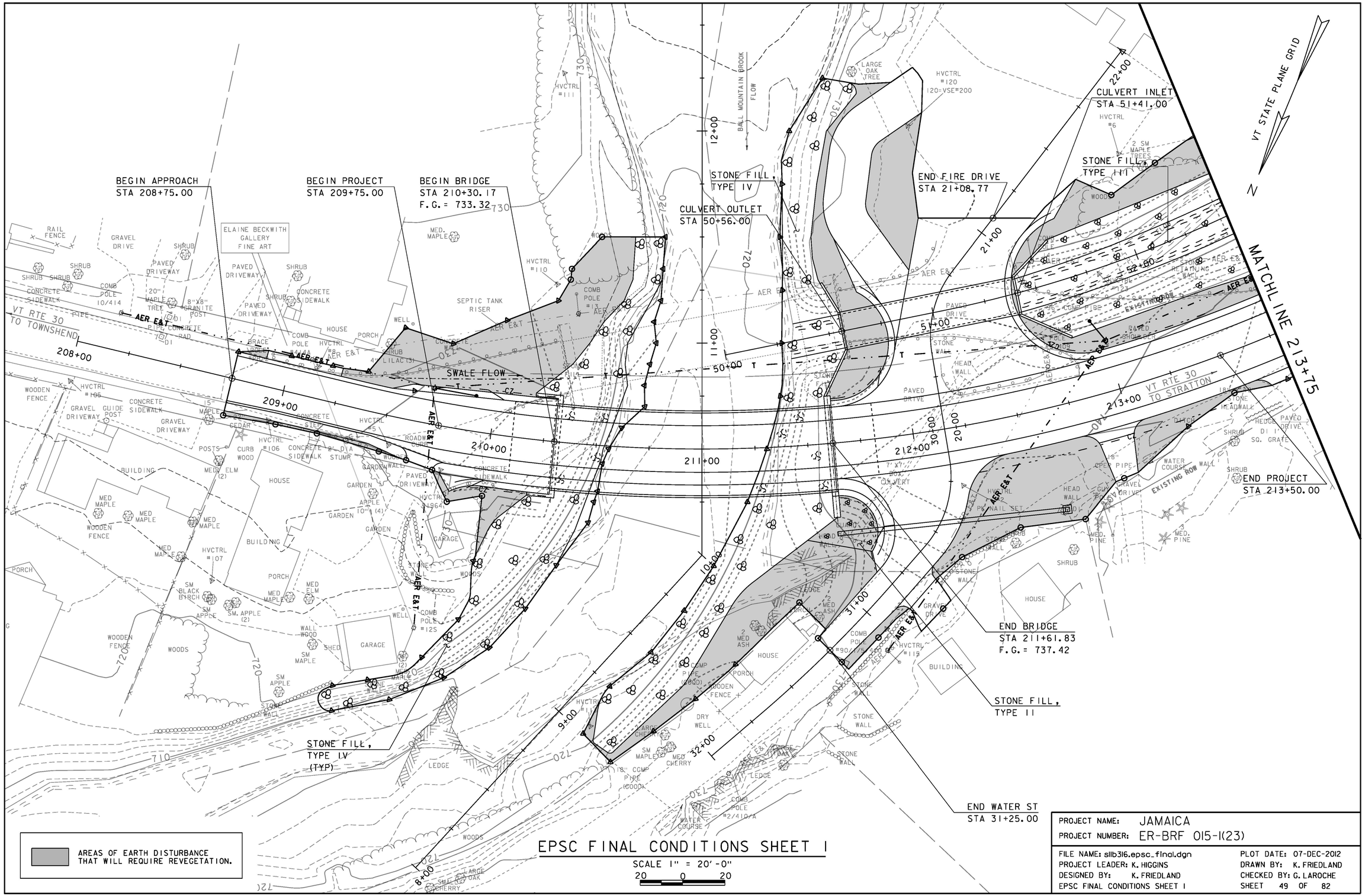

EPSC FINAL CONDITIONS SHEET 1

SCALE 1" = 20'-0"
20 0 20

PROJECT NAME:	JAMAICA
PROJECT NUMBER:	ER-BRF 015-1(23)
FILE NAME: slib316.epsc_final.dgn	PLOT DATE: 07-DEC-2012
PROJECT LEADER: K. HIGGINS	DRAWN BY: K. FRIEDLAND
DESIGNED BY: K. FRIEDLAND	CHECKED BY: G. LAROCHE
EPSC FINAL CONDITIONS SHEET 1	SHEET 49 OF 82

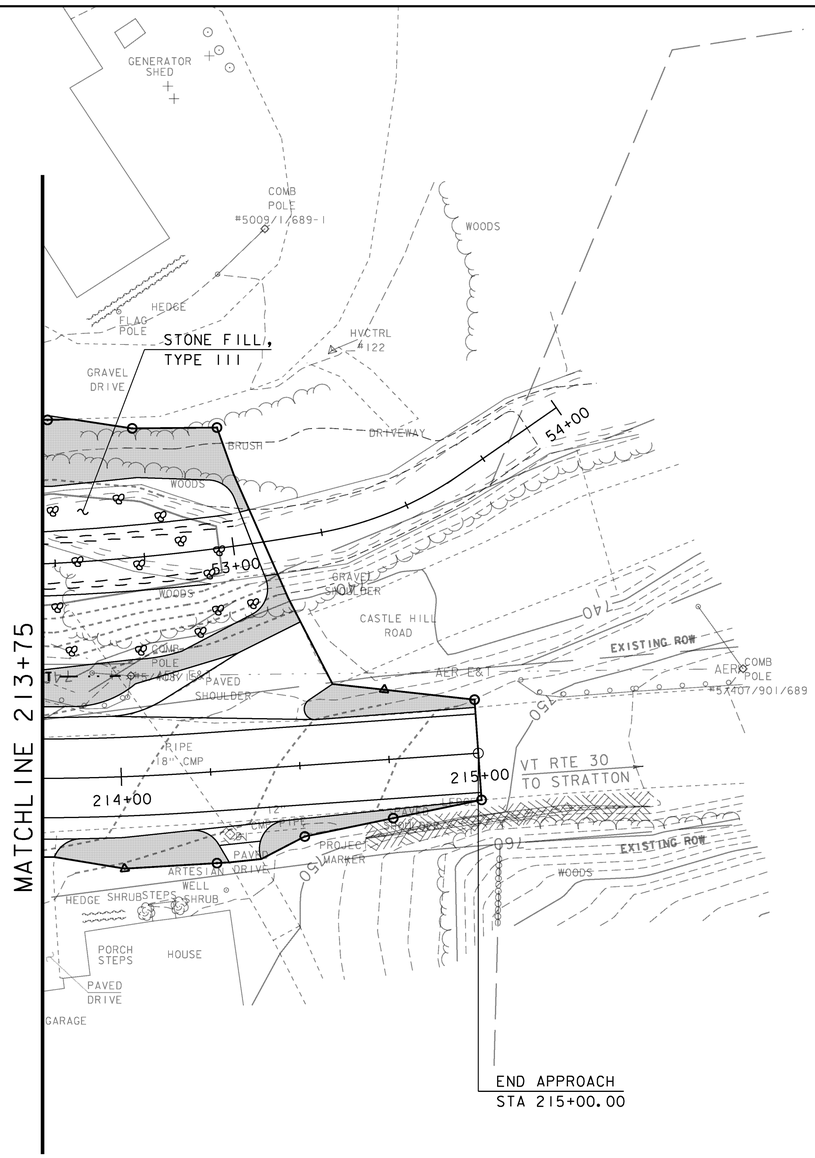

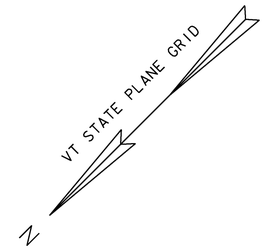

AREAS OF EARTH DISTURBANCE THAT WILL REQUIRE REVEGETATION.

EPSC FINAL CONDITIONS SHEET 2

SCALE 1" = 20'-0"

20 0 20

PROJECT NAME:	JAMAICA
PROJECT NUMBER:	ER-BRF 015-1(23)
FILE NAME: slib316.epsc_final.dgn	PLOT DATE: 07-DEC-2012
PROJECT LEADER: K. HIGGINS	DRAWN BY: K. FRIEDLAND
DESIGNED BY: K. FRIEDLAND	CHECKED BY: G. LAROCHE
EPSC FINAL CONDITIONS SHEET 2	SHEET 50 OF 82

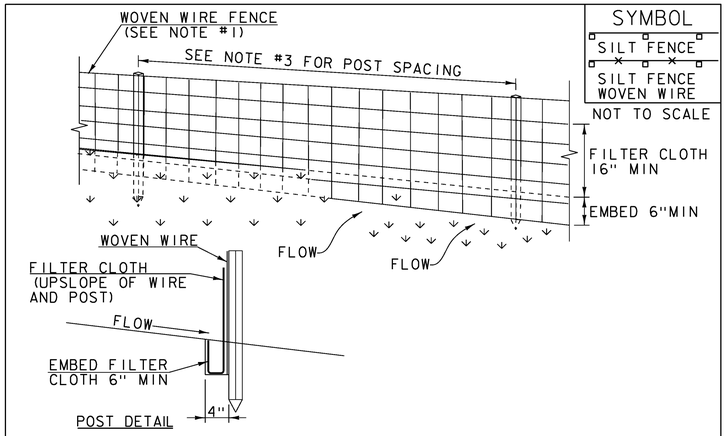

SYMBOL

SILT FENCE

SILT FENCE WOVEN WIRE

NOT TO SCALE

CONSTRUCTION SPECIFICATIONS

1. WOVEN WIRE REINFORCED FENCE IS REQUIRED WITHIN 100' UPSLOPE OF RECEIVING WATERS WHEN THE PROJECT FALLS UNDER A CONSTRUCTION STORMWATER PERMIT. WOVEN WIRE SHALL BE A MIN. 14 GAUGE WITH A 6" MAX. MESH OPENING.
2. FILTER CLOTH SHALL BE EITHER FILTER X, MIRAFI100X, STABILINKA T140N OR APPROVED EQUIVALENT.
3. POST SPACING FOR WIRE-BACKED FENCE SHALL BE 10' MAXIMUM. FOR FILTER-CLOTH FENCE, WHEN ELONGATION IS >50%, POST SPACING SHALL NOT EXCEED 4' AND WHEN ELONGATION IS <50%, POST SPACING SHALL NOT EXCEED 6'.
4. WOVEN WIRE FENCE IS TO BE FASTENED SECURELY TO FENCE POSTS WITH WIRE TIES. FILTER CLOTH IS TO BE FASTENED SECURELY TO WOVEN WIRE FENCE WITH TIES SPACED EVERY 24" AT TOP AND MID SECTION.
5. WHEN TWO SECTIONS OF FILTER CLOTH ADJOIN EACH OTHER THEY SHALL BE OVER-LAPPED BY 6" AND FOLDED.
6. MAINTENANCE SHALL BE PERFORMED AS NEEDED AND MATERIAL REMOVED WHEN SEDIMENT REACHES HALF OF FABRIC HEIGHT.

ADAPTED FROM DETAILS PROVIDED BY: NEW YORK STATE DEC
ORIGINALLY DEVELOPED BY USDA-NRCS
VERMONT DEPARTMENT OF ENVIRONMENTAL CONSERVATION

SILT FENCE

NOTES:
REFER TO "THE VERMONT STANDARDS & SPECIFICATIONS FOR EROSION PREVENTION & SEDIMENT CONTROL -2006- "FROM THE VT AGENCY OF NATURAL RESOURCES FOR ADDITIONAL GUIDANCE.

THIS WORK SHALL BE PERFORMED IN ACCORDANCE WITH SECTION 649 AND AS SHOWN IN THE PLANS FOR ~~GEOTEXTILE FOR SILT FENCE (PAY ITEM 649.51) OR~~ GEOTEXTILE FOR SILT FENCE, WOVEN WIRE REINFORCED (PAY ITEM 649.515).

REVISIONS	
MARCH 21, 2008	WHF
DECEMBER 11, 2008	WHF
JANUARY 13, 2009	WHF

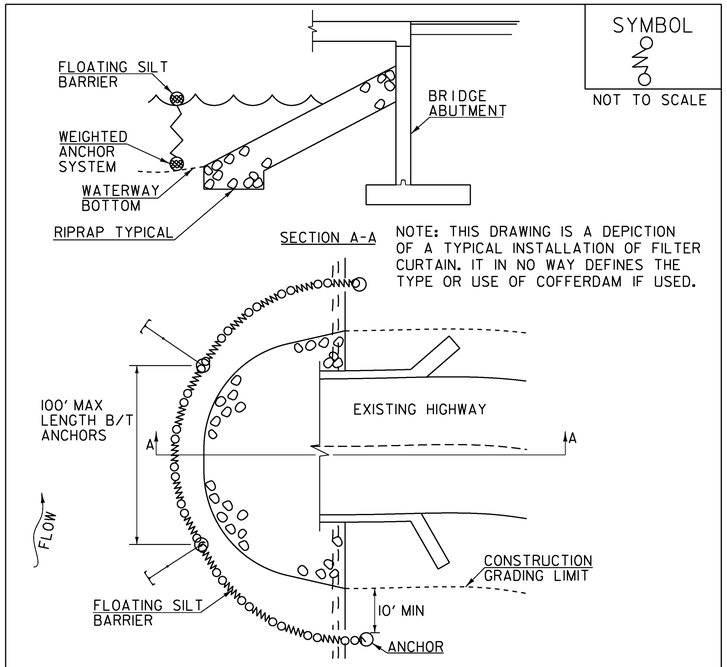

SYMBOL

NOT TO SCALE

NOTE: THIS DRAWING IS A DEPICTION OF A TYPICAL INSTALLATION OF FILTER CURTAIN. IT IN NO WAY DEFINES THE TYPE OR USE OF COFFERDAM IF USED.

CONSTRUCTION SPECIFICATIONS

1. FILTER CURTAIN SHALL NOT BE PLACED ACROSS A FLOWING WATERWAY, OR IN A WATERWAY WITH STREAM VELOCITIES GREATER THAN 1.5 FEET/SECOND.
2. MAXIMUM 100' LENGTH BETWEEN ANCHORS.
3. LAST SECTION SHALL TERMINATE A MINIMUM OF 10' BEYOND LIMIT OF DISTURBANCE.
4. THE WEIGHTED ANCHOR SYSTEM SHALL BE A TYPE WHICH ALLOWS THE CURTAIN TO CONFORM TO THE BOTTOM OF THE WATERWAY.
5. THE CURTAIN SHALL BE REMOVED BY SLOWLY PULLING TOWARD THE SHORE MINIMIZING THE ESCAPE OF SEDIMENTS INTO WATERWAY.

FILTER CURTAIN

THIS WORK SHALL BE PERFORMED IN ACCORDANCE WITH SECTION 649 FOR GEOTEXTILE FOR FILTER CURTAIN (PAY ITEM 649.61).

REVISIONS	
APRIL 1, 2008	WHF
JANUARY 13, 2009	WHF
SEPTEMBER 4, 2009	WHF

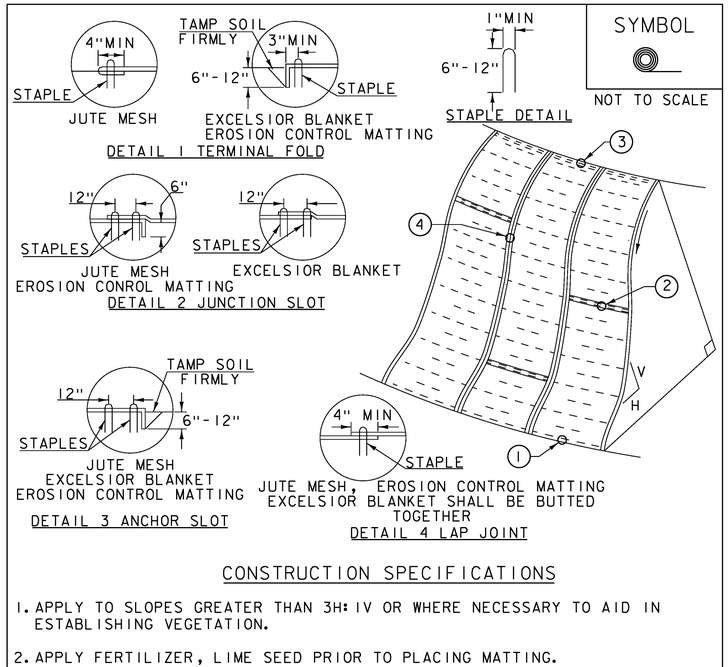

SYMBOL

NOT TO SCALE

CONSTRUCTION SPECIFICATIONS

1. APPLY TO SLOPES GREATER THAN 3H: 1V OR WHERE NECESSARY TO AID IN ESTABLISHING VEGETATION.
2. APPLY FERTILIZER, LIME SEED PRIOR TO PLACING MATTING.
3. STAPLES ARE TO BE PLACED ALTERNATELY, IN COLUMNS APPROXIMATELY 2' APART AND IN ROWS APPROXIMATELY 3' APART. APPROXIMATELY 175 STAPLES ARE REQUIRED PER 4'X225' ROLL OF MATERIAL AND 125 STAPLES ARE REQUIRED PER 4'X150' ROLL OF MATERIAL.
4. DISTURBED AREAS SHALL BE SMOOTHLY GRADED. EROSION CONTROL MATERIAL SHALL BE PLACED LOOSELY OVER GROUND SURFACE. DO NOT STRETCH.
5. ALL TERMINAL ENDS AND TRANSVERSE LAPS SHALL BE STAPLED AT APPROXIMATELY 12" INTERVALS.

ADAPTED FROM DETAILS PROVIDED BY: NEW YORK STATE DEC
ORIGINALLY DEVELOPED BY USDA-NRCS
VERMONT DEPARTMENT OF ENVIRONMENTAL CONSERVATION

ROLLED EROSION CONTROL PRODUCT (RECP) SIDE SLOPE

NOTES:
REFER TO "THE VERMONT STANDARDS & SPECIFICATIONS FOR EROSION PREVENTION & SEDIMENT CONTROL -2006- "FROM THE VT AGENCY OF NATURAL RESOURCES FOR ADDITIONAL GUIDANCE.
THIS WORK SHALL BE PERFORMED IN ACCORDANCE WITH SECTION 653 AND AS SHOWN IN THE PLANS FOR TEMPORARY EROSION MATTING (PAY ITEM 653.20) ~~OR PERMANENT EROSION MATTING (PAY ITEM 653.21)~~.

REVISIONS	
APRIL 16, 2007	JMF
JANUARY 13, 2009	WHF

PROJECT NAME: JAMAICA
PROJECT NUMBER: ER-BRF 015-1(23)

FILE NAME: sllb316epsc_details.dgn
PROJECT LEADER: K. HIGGINS
DESIGNED BY: K. FRIEDLAND
EPSC DETAILS SHEET 1

PLOT DATE: 07-DEC-2012
DRAWN BY: K. FRIEDLAND
CHECKED BY: G. LAROCHE
SHEET 51 OF 82

SYMBOL

NOT TO SCALE

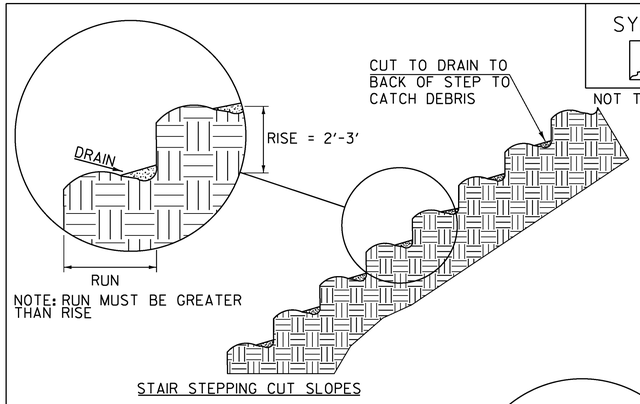

STAIR STEPPING CUT SLOPES

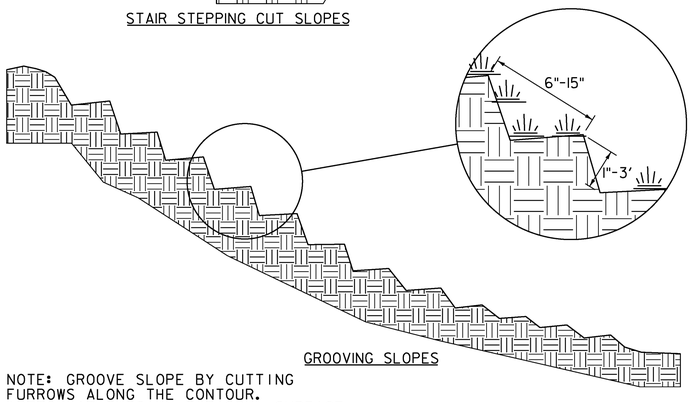

GROOVING SLOPES

NOTE: GROOVE SLOPE BY CUTTING
FURROWS ALONG THE CONTOUR.
IRREGULARITIES IN THE SOIL SURFACE
CATCH RAINWATER AND RETAIN LIME,
FERTILIZER AND SEED.

ADAPTED FROM DETAILS PROVIDED BY: NEW YORK STATE DEC
ORIGINALLY DEVELOPED BY USDA-NRCS
VERMONT DEPARTMENT OF ENVIRONMENTAL CONSERVATION

SURFACE ROUGHENING

NOTES:
REFER TO "THE VERMONT STANDARDS & SPECIFICATIONS FOR EROSION PREVENTION & SEDIMENT CONTROL -2006- "FROM THE VT AGENCY OF NATURAL RESOURCES FOR ADDITIONAL GUIDANCE.

THIS WORK SHALL BE CONSIDERED INCIDENTAL TO THE CONTRACT

REVISIONS	
APRIL 1, 2008	WHF
JANUARY 13, 2009	WHF

SYMBOL

NOT TO SCALE

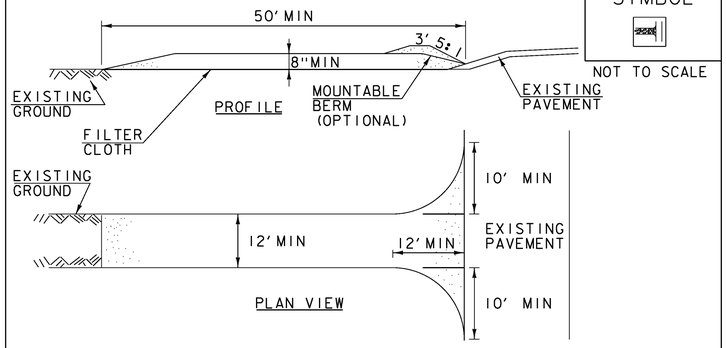

CONSTRUCTION SPECIFICATIONS

1. STONE SIZE- USE 1-4" STONE, RECLAIMED OR RECYCLED CONCRETE EQUIVALENT.
2. LENGTH- NOT LESS THAN 50' (EXCEPT ON A SINGLE RESIDENCE LOT WHERE A 30' MINIMUM LENGTH APPLIES).
3. THICKNESS- NOT LESS THAN 8".
4. WIDTH- 12' MINIMUM, BUT NOT LESS THAN THE FULL WIDTH AT POINTS WHERE INGRESS OR EGRESS OCCURS. 24' IF SINGLE ENTRANCE TO SITE.
5. GEOTEXTILE MUST BE PLACED OVER THE ENTIRE AREA PRIOR TO PLACING STONE.
6. SURFACE WATER- ALL SURFACE WATER FLOWING OR DIVERTED TOWARD CONSTRUCTION ENTRANCES SHALL BE PIPED BENEATH THE ENTRANCE. IF PIPING IS IMPRACTICAL, A MOUNTABLE BERM WITH 5:1 SLOPES WILL BE PERMITTED.
7. MAINTENANCE- THE ENTRANCE SHALL BE MAINTAINED IN A CONDITION WHICH WILL PREVENT TRACKING OR FLOWING OF SEDIMENT ONTO PUBLIC RIGHTS-OF-WAY, ALL SEDIMENT SPILLED, DROPPED, WASHED OR TRACKED ONTO PUBLIC RIGHTS-OF-WAY MUST BE REMOVED IMMEDIATELY.
8. WHEN WASHING IS REQUIRED, IT SHALL BE DONE ON AN AREA STABILIZED WITH STONE AND WHICH DRAINS INTO AN APPROVED SEDIMENT TRAPPING DEVICE.
9. PERIODIC INSPECTION AND NEEDED MAINTENANCE SHALL BE PROVIDED ACCORDING TO PERMIT REQUIREMENTS.

ADAPTED FROM DETAILS PROVIDED BY: NEW YORK STATE DEC
ORIGINALLY DEVELOPED BY USDA-NRCS
VERMONT DEPARTMENT OF ENVIRONMENTAL CONSERVATION

STABILIZED CONSTRUCTION ENTRANCE

NOTES:
REFER TO "THE VERMONT STANDARDS & SPECIFICATIONS FOR EROSION PREVENTION & SEDIMENT CONTROL -2006- "FROM THE VT AGENCY OF NATURAL RESOURCES FOR ADDITIONAL GUIDANCE.

THIS WORK SHALL BE PERFORMED IN ACCORDANCE WITH SECTION 653 FOR VEHICLE TRACKING PAD (PAY ITEM 653.35) OR AS SPECIFIED IN THE CONTRACT.

REVISIONS	
MARCH 24, 2008	WHF
JANUARY 13, 2009	WHF

VAOT RURAL AREA MIX

	LBS/AC				
% WEIGHT	BROADCAST	HYDROSEED	NAME	GERM %	PURITY %
37.5%	22.5	45	CREEPING RED FESCUE	85%	98%
37.5%	22.5	45	TALL FESCUE	90%	95%
5.0%	3	6	RED TOP	90%	95%
15.0%	9	18	BIRDSFOOT TREFOIL	85%	98%
5.0%	3	6	ANNUAL RYE GRASS	85%	95%
100%	60	120			

VAOT URBAN AREA MIX

	LBS/AC				
% WEIGHT	BROADCAST	HYDROSEED	NAME	GERM %	PURITY %
42.5%	34	68	CREEPING RED FESCUE	85%	98%
10.0%	8	16	PERENNIAL RYE GRASS	90%	95%
42.5%	34	68	KENTUCKY BLUE GRASS	85%	85%
5.0%	4	8	ANNUAL RYE GRASS	85%	95%
100%	80	160			

SOIL AMENDMENT GUIDANCE

FERTILIZER		LIME	
BROADCAST	HYDROSEED	BROADCAST	HYDROSEED
10-20-10	*FOLLOW*	PELLETIZED	*FOLLOW*
500 LBS/AC	*MANUFACTURER*	2 TONS/AC	*MANUFACTURER*

CONSTRUCTION GUIDANCE

1. RURAL SEED MIX: USE AS INDICATED IN THE PLANS AND/OR FOR ALL ESTABLISHED UPLAND (NON WETLAND) AREAS DISTURBED BY THE CONTRACTOR.
2. URBAN SEED MIX: USE AS INDICATED IN THE PLANS AND/OR FOR ALL ESTABLISHED LAWN AREAS DISTURBED BY THE CONTRACTOR.
3. ALL SEED MIXTURES: SHALL NOT HAVE A WEED CONTENT EXCEEDING 0.40% BY WEIGHT AND SHALL BE FREE OF ALL NOXIOUS SEED.
4. FERTILIZER AND LIMESTONE: SHALL FOLLOW RATES SHOWN ON PLAN OR AS DIRECTED BY THE ENGINEER
5. HAY MULCH: TO BE PLACED ON EARTH SLOPES AT THE RATE OF 2 TONS/ACRE, ACHIEVE 90% GROUND COVER OR AS DIRECTED BY THE ENGINEER.
6. TOPSOIL: TO BE USED WITH SEED AS INDICATED ON THE PLANS, OR AS DIRECTED BY THE ENGINEER.
7. HYDROSEEDING: ALTHOUGH GUIDANCE IS GIVEN ABOVE THE SITE CONDITIONS AND THE TYPE OF HYDROSEED WILL ULTIMATELY DICTATE THE AMOUNTS AND TYPES OF SOIL AMENDMENTS TO BE APPLIED
8. TURF ESTABLISHMENT: PLACING SEED, FERTILIZER, LIME AND MULCH PRIOR TO SEPTEMBER 15 AND AFTER APRIL 15 CAN BETTER ENSURE A VIGOROUS GROWTH OF GRASS.

ADAPTED FROM VTRANS TECHNICAL LANDSCAPE MANUAL FOR ROADWAYS AND TRANSPORTATION FACILITIES

TURF ESTABLISHMENT

REVISIONS	
JUNE 23, 2009	WHF
JANUARY 15, 2010	WHF
FEBRUARY 16, 2011	WHF

PROJECT NAME: JAMAICA
PROJECT NUMBER: ER-BRF 015-1(23)

FILE NAME: sllb316epsc_details.dgn
PROJECT LEADER: K. HIGGINS
DESIGNED BY: K. FRIEDLAND
EPSC DETAILS SHEET 2

PLOT DATE: 07-DEC-2012
DRAWN BY: K. FRIEDLAND
CHECKED BY: G. LAROCHE
SHEET 52 OF 82

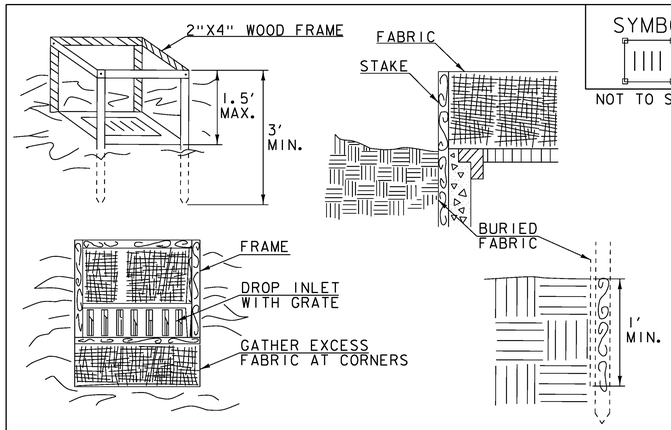

SYMBOL

NOT TO SCALE

CONSTRUCTION SPECIFICATIONS

1. FILTER FABRIC SHALL HAVE AN APPARENT OPENING SIZE OF 40-85. BURLAP MAY BE USED FOR SHORT TERM APPLICATIONS.
2. CUT FABRIC FROM A CONTINUOUS ROLL TO ELIMINATE JOINTS. IF JOINTS ARE NEEDED THEY WILL BE OVERLAPPED TO THE NEXT STAKE.
3. STAKE MATERIALS WILL BE STANDARD 2"x 4" WOOD OR EQUIVALENT METAL WITH A MINIMUM LENGTH OF 3'.
4. SPACE STAKES EVENLY AROUND INLET 3' APART AND DRIVE A MINIMUM 18" DEEP. SPANS GREATER THAN 3' MAY BE BRIDGED WITH THE USE OF WIRE MESH BEHIND THE FILTER FABRIC FOR SUPPORT.
5. FABRIC SHALL BE EMBEDDED 1' MINIMUM BELOW GROUND AND BACKFILLED. IT SHALL BE SECURELY FASTENED TO THE STAKES AND FRAME.
6. A 2" x 4" WOOD FRAME SHALL BE COMPLETED AROUND THE CREST OF THE FABRIC FOR OVER FLOW STABILITY.
7. MAXIMUM DRAINAGE AREA 1 ACRE

ADAPTED FROM DETAILS PROVIDED BY: NEW YORK STATE DEC
ORIGINALLY DEVELOPED BY USDA-NRCS
VERMONT DEPARTMENT OF ENVIRONMENTAL CONSERVATION

FILTER FABRIC DROP INLET PROTECTION

NOTES:
REFER TO "THE VERMONT STANDARDS & SPECIFICATIONS FOR EROSION PREVENTION & SEDIMENT CONTROL -2006- "FROM THE VT AGENCY OF NATURAL RESOURCES FOR ADDITIONAL GUIDANCE.

THIS WORK SHALL BE PERFORMED IN ACCORDANCE WITH SECTION 653 FOR INLET PROTECTION DEVICE, TYPE I (PAY ITEM 653.40).

REVISIONS	
MARCH 7, 2008	WHF
JANUARY 13, 2009	WHF

PROJECT NAME: JAMAICA
PROJECT NUMBER: ER-BRF 015-1(23)

FILE NAME: s11b316epsc_details.dgn
PROJECT LEADER: K. HIGGINS
DESIGNED BY: K. FRIEDLAND
EPSC DETAILS SHEET 3

PLOT DATE: 07-DEC-2012
DRAWN BY: K. FRIEDLAND
CHECKED BY: G. LAROCHE
SHEET 53 OF 82

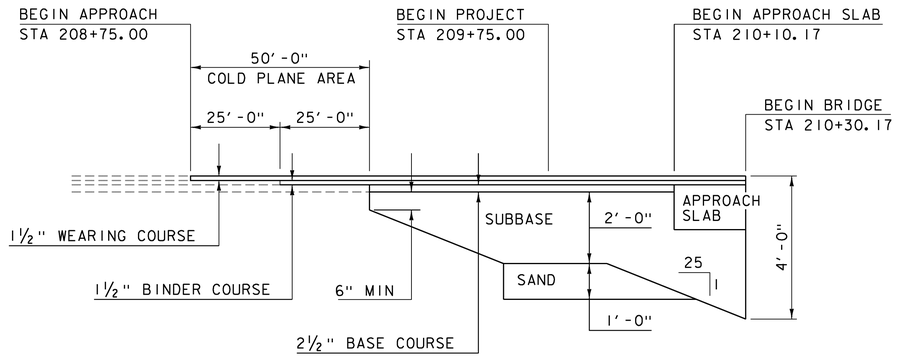

MATERIAL TRANSITION DIAGRAM 1

HOR. SCALE 1" = 20'-0"
NO VERT. SCALE

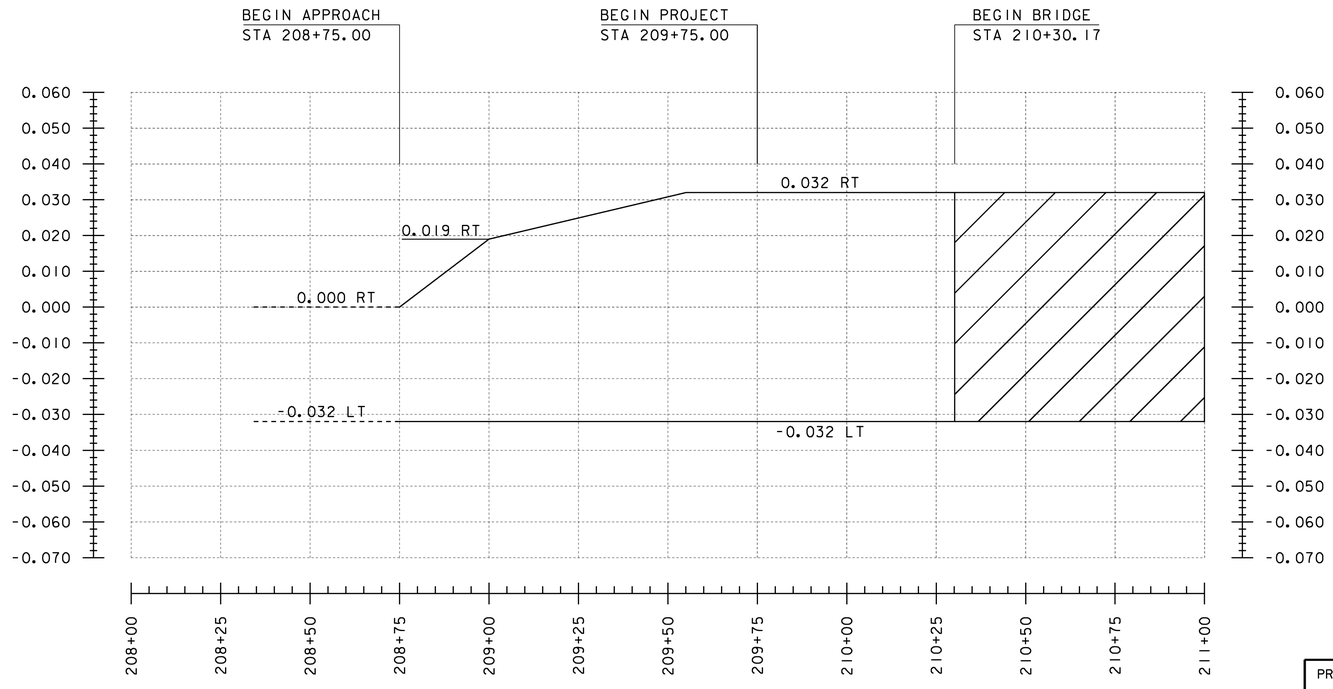

BANKING DIAGRAM 1

HORIZONTAL SCALE 1" = 20'
VERTICAL NOT TO SCALE

PROJECT NAME:	JAMAICA
PROJECT NUMBER:	ER-BRF 015-1(23)
FILE NAME: sllb316.xs.dgn	PLOT DATE: 07-DEC-2012
PROJECT LEADER: K. HIGGINS	DRAWN BY: K. FRIEDLAND
DESIGNED BY: G. LAROCHE	CHECKED BY: G. LAROCHE
MATERIAL TRANSITION / BANKING DIAGRAM 1	SHEET 54 OF 82

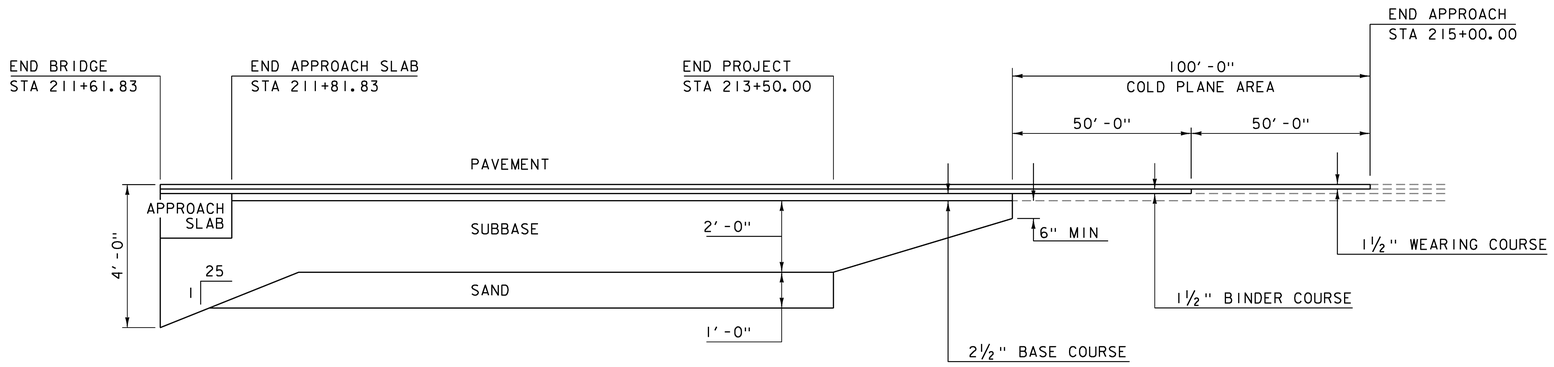

MATERIAL TRANSITION DIAGRAM 2

HOR. SCALE 1" = 20'-0"
NO VERT. SCALE

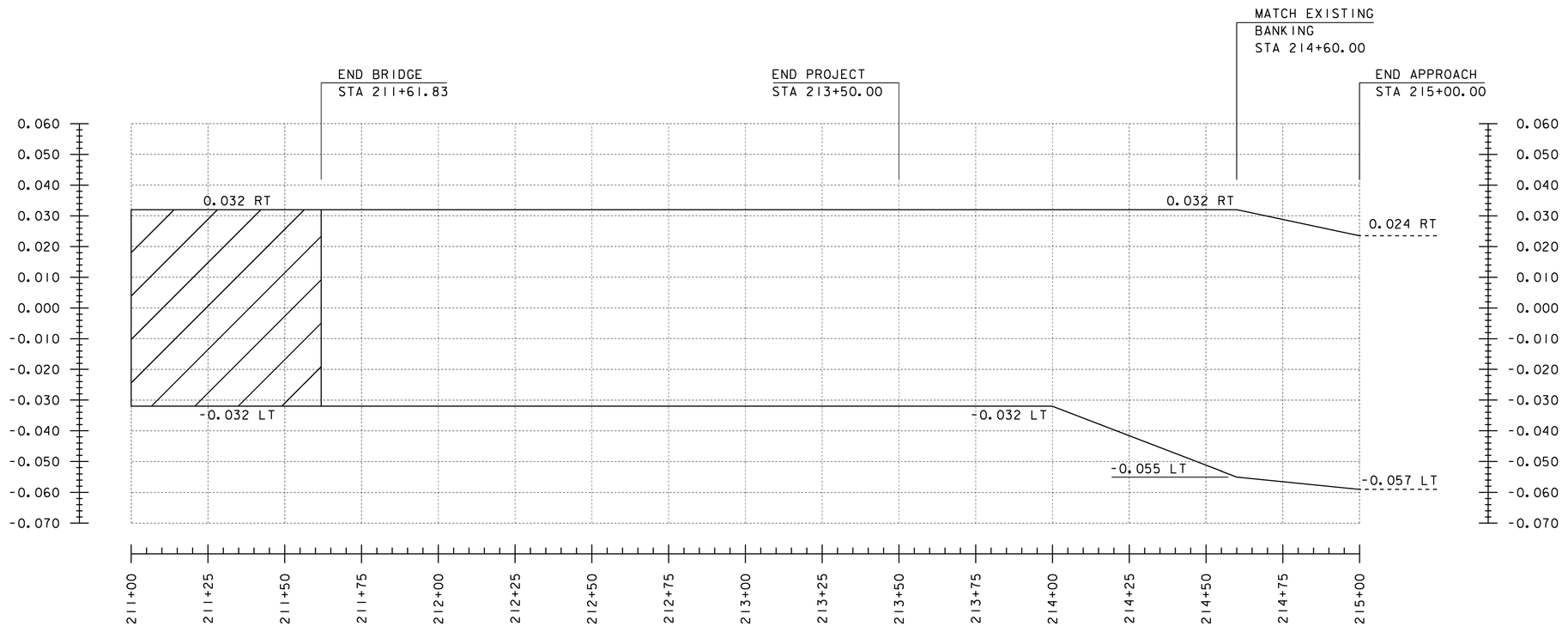

BANKING DIAGRAM 2

HORIZONTAL SCALE 1" = 20'
VERTICAL NOT TO SCALE

PROJECT NAME:	JAMAICA
PROJECT NUMBER:	ER-BRF 015-1(23)
FILE NAME: sllb316.xs.dgn	PLOT DATE: 07-DEC-2012
PROJECT LEADER: K. HIGGINS	DRAWN BY: K. FRIEDLAND
DESIGNED BY: G. LAROCHE	CHECKED BY: G. LAROCHE
MATERIAL TRANSITION /BANKING DIAGRAM 2	SHEET 55 OF 82

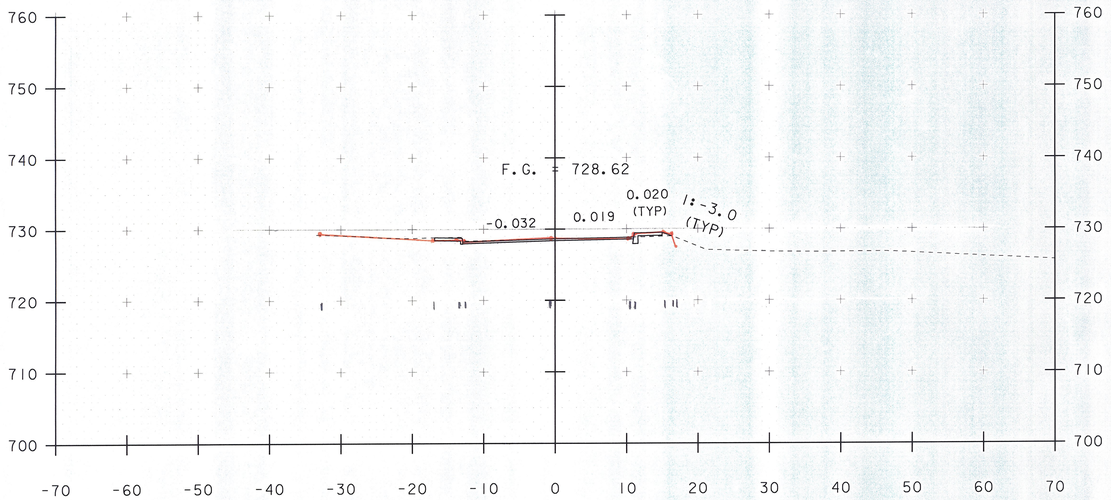

209+00

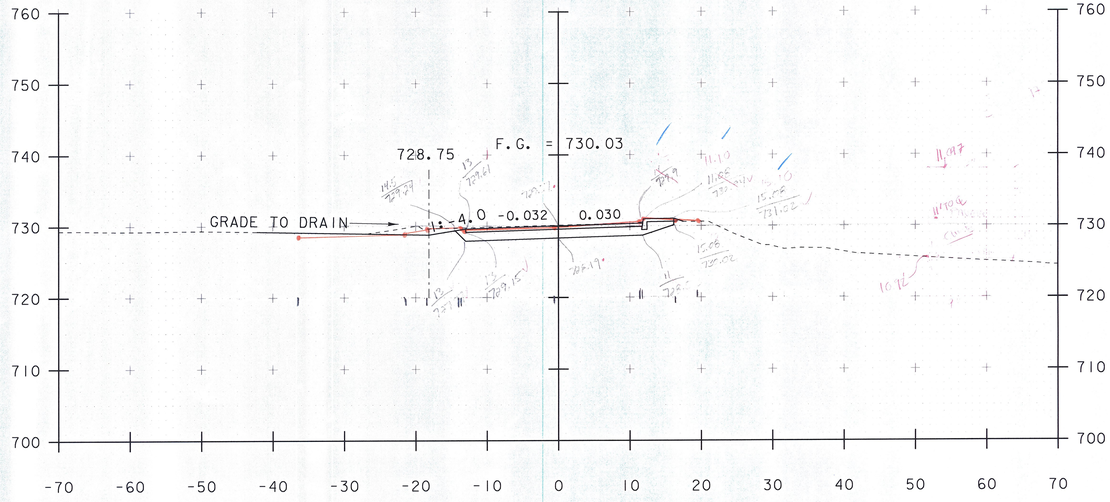

209+50

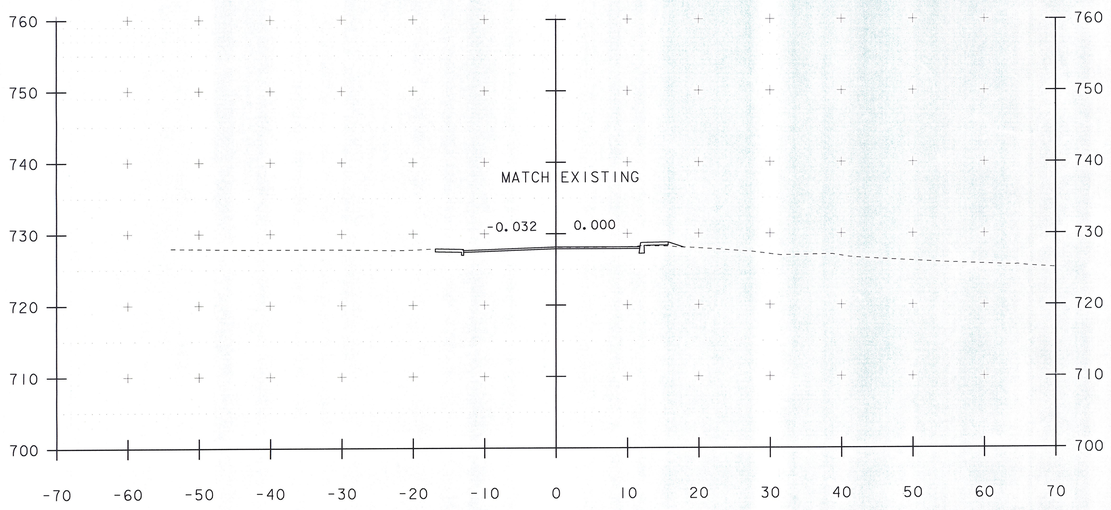

208+75
BEGIN APPROACH

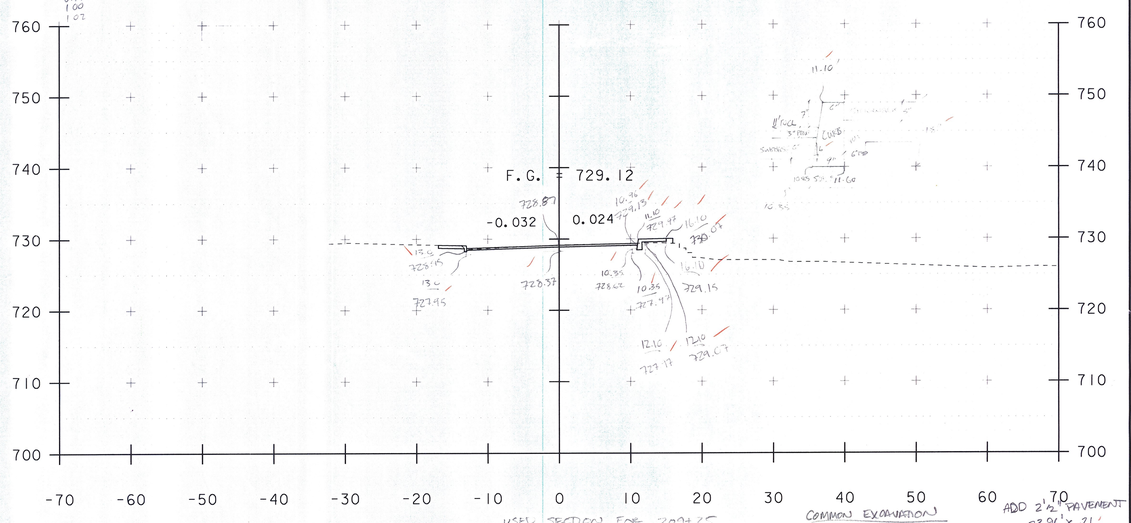

209+20

SCALE 1" = 10'-0"
10 0 10

STA. 208+75 TO STA. 209+50

PROJECT NAME:	JAMAICA
PROJECT NUMBER:	ER-BRF 015-1(23)
FILE NAME: sllb316.xs.dgn	PLOT DATE: 07-DEC-2012
PROJECT LEADER: K. HIGGINS	DRAWN BY: K. FRIEDLAND
DESIGNED BY: G. LAROCHE	CHECKED BY: G. LAROCHE
MAINLINE SECTIONS 1	SHEET 56 OF 82

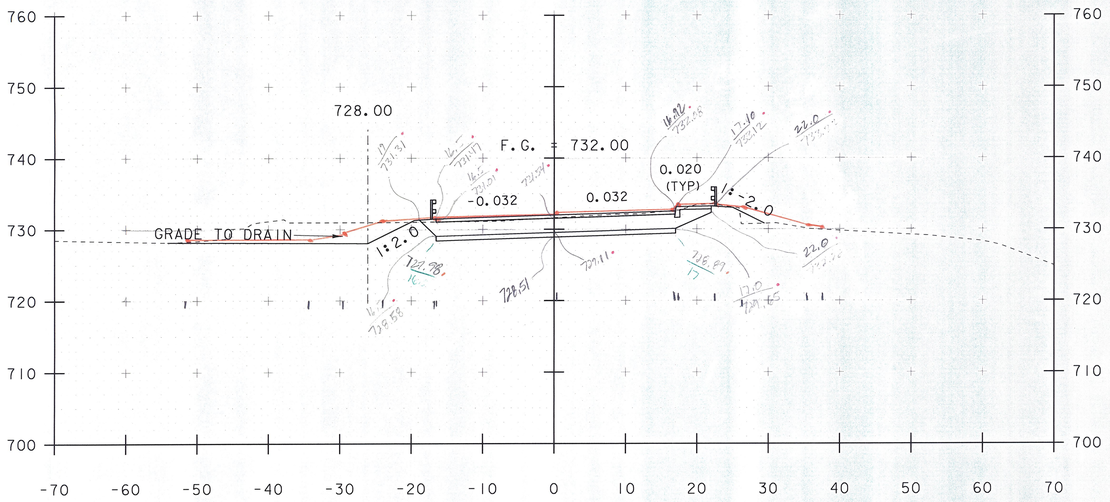

210+00

COMMON EXC
0.69 1.13
0.68 1.13
0.69 1.10
542/2 = 1.8067 x 100 = 180.67 SF

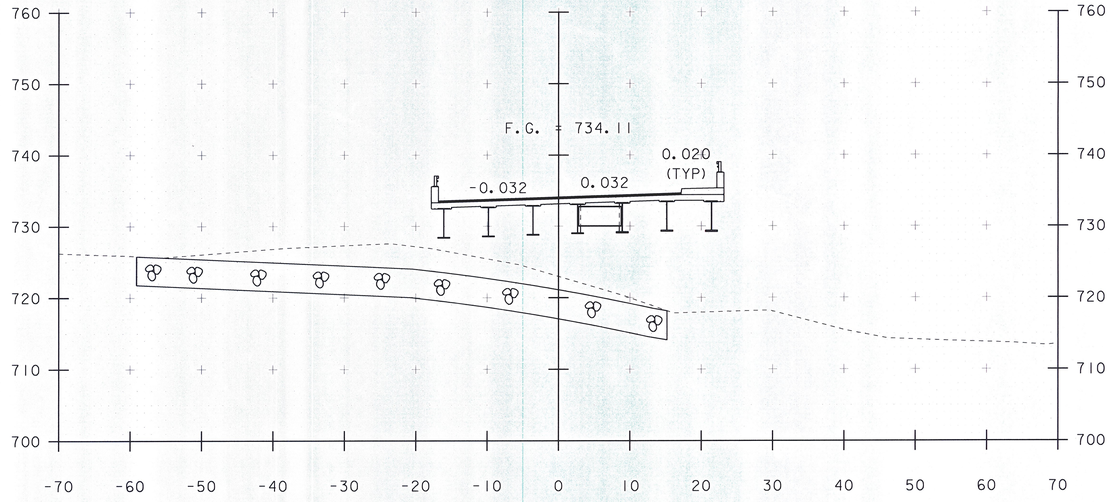

210+50
BEGIN BRIDGE 210+30.17

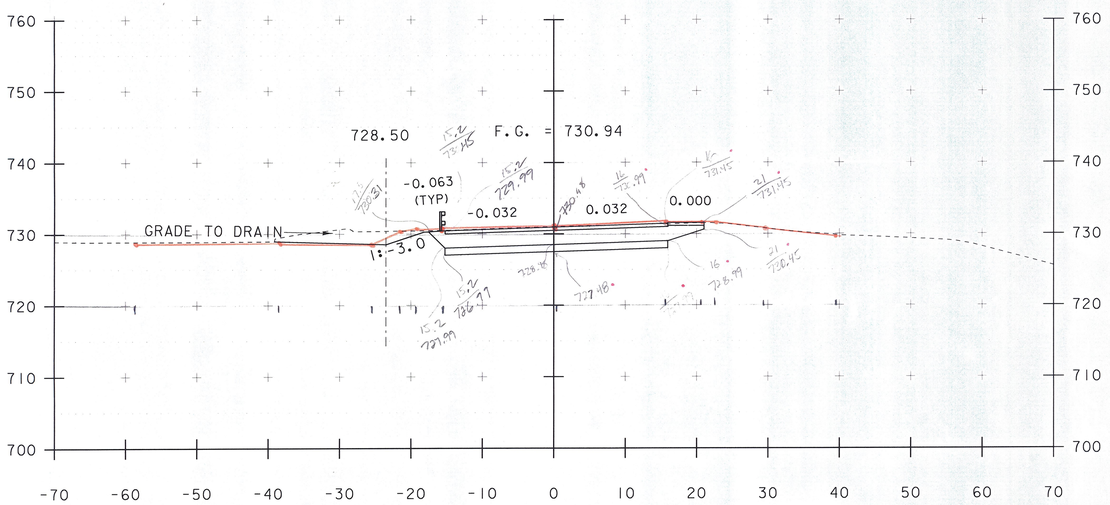

209+75
BEGIN PROJECT

COMMON EXC
1.98
1.97
1.97
442/3 = 1.4733 x 100 = 147.33 SF

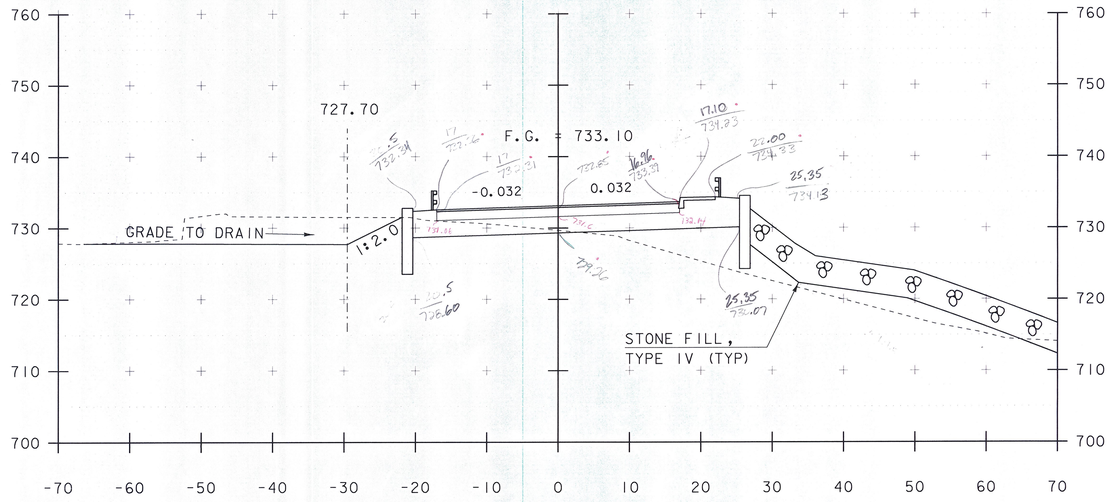

210+25

Common Exc.
1.05 .31
1.03 .31
1.03 .31
403/3 = 1.3567 x 100 = 135.67 SF

SCALE 1" = 10'-0"
10 0 10

STA. 209+75 TO STA. 210+50

PROJECT NAME: JAMAICA
PROJECT NUMBER: ER-BRF 015-1(23)

FILE NAME: sllb316.xs.dgn
PROJECT LEADER: K. HIGGINS
DESIGNED BY: G. LAROCHE
MAINLINE SECTIONS 2

PLOT DATE: 07-DEC-2012
DRAWN BY: K. FRIEDLAND
CHECKED BY: G. LAROCHE
SHEET 57 OF 82

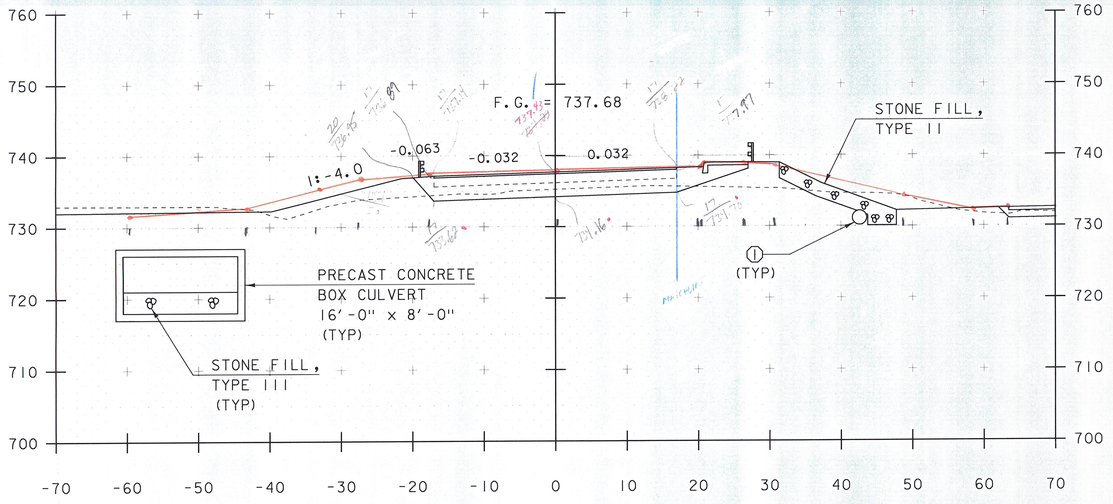

211+75

END BRIDGE 211+61.83

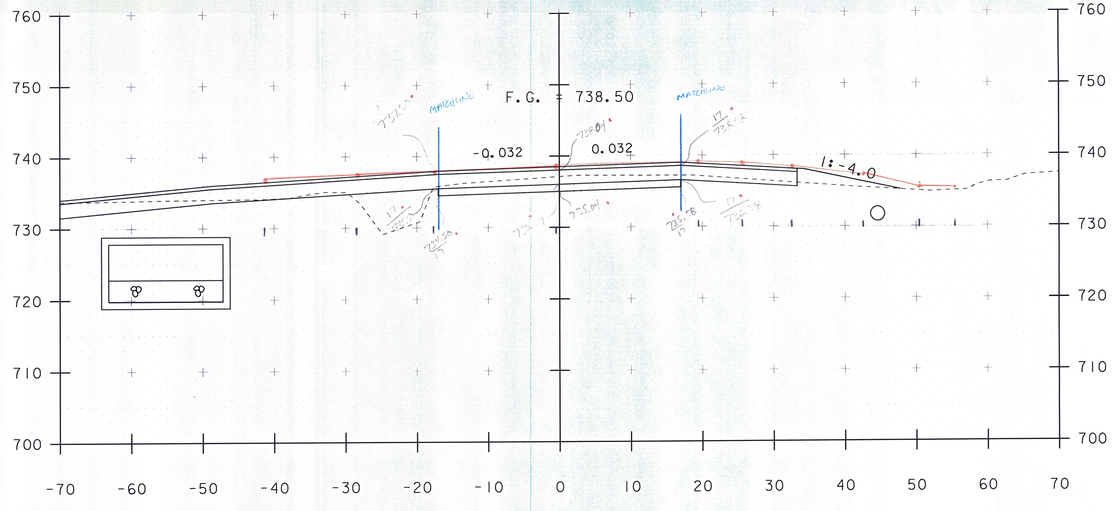

212+25

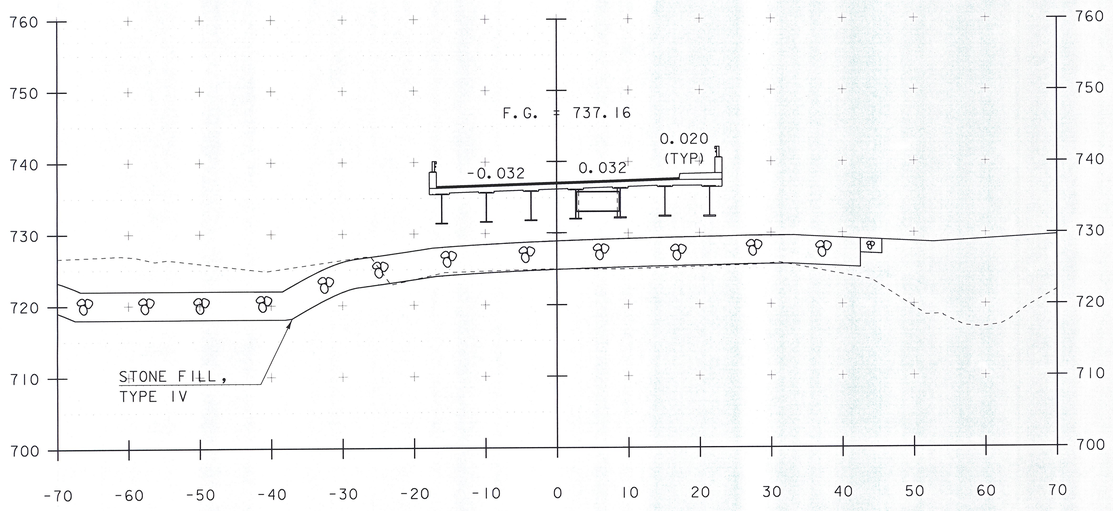

211+50

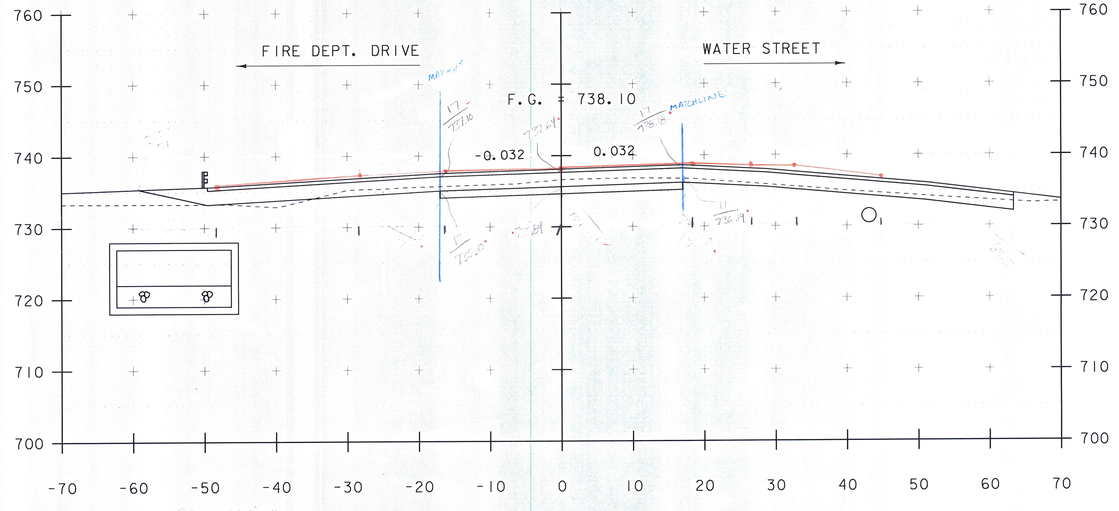

212+00

SCALE 1" = 10'-0"
10 0 10

STA. 211+50 TO STA. 212+25

PROJECT NAME:	JAMAICA
PROJECT NUMBER:	ER-BRF 015-1(23)
FILE NAME: sllb316.xs.dgn	PLOT DATE: 07-DEC-2012
PROJECT LEADER: K. HIGGINS	DRAWN BY: K. FRIEDLAND
DESIGNED BY: G. LAROCHE	CHECKED BY: G. LAROCHE
MAINLINE SECTIONS 3	SHEET 58 OF 82

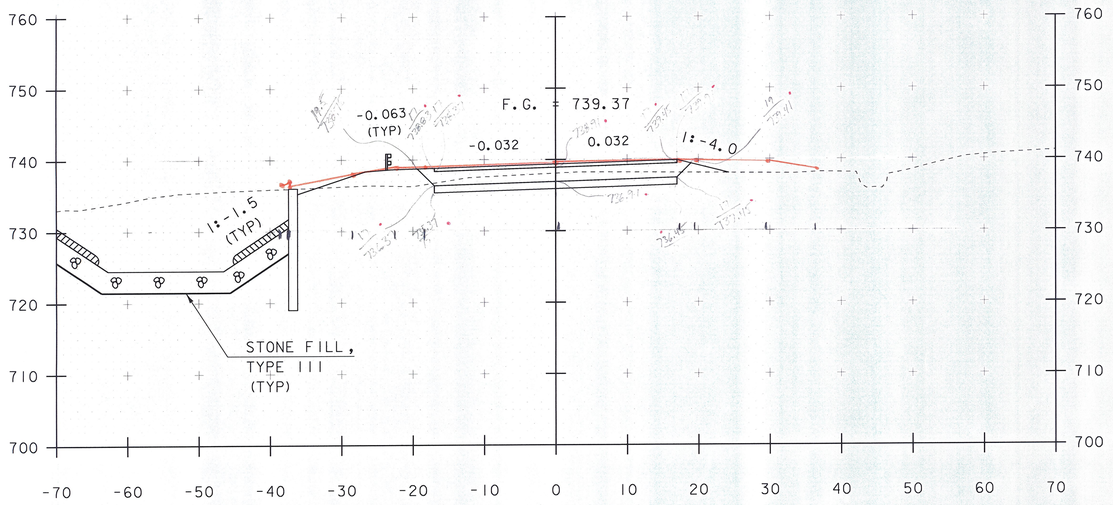

212+75

Common Exc:
0.60
0.63
0.65

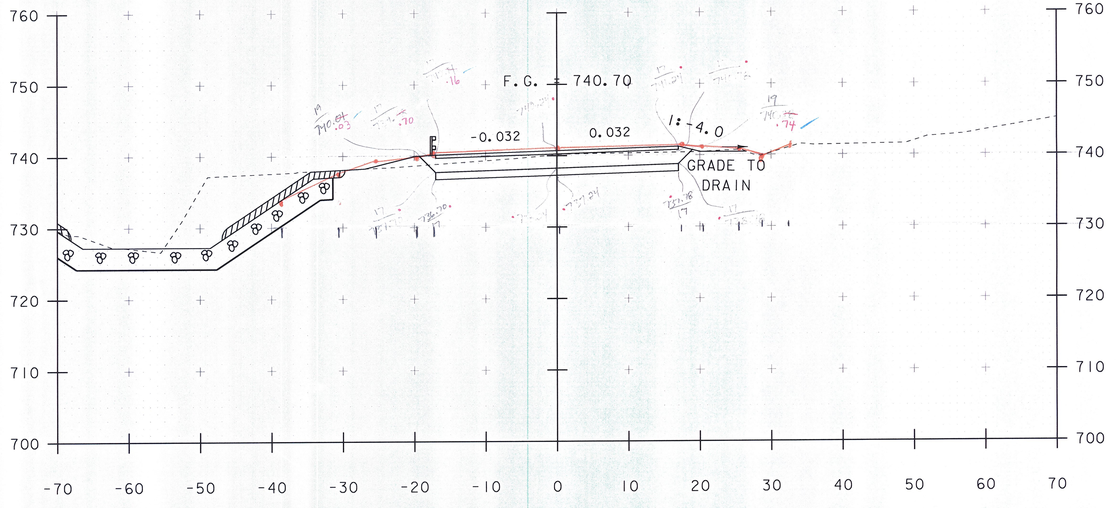

213+25

Common Exc
.99
.93
.94

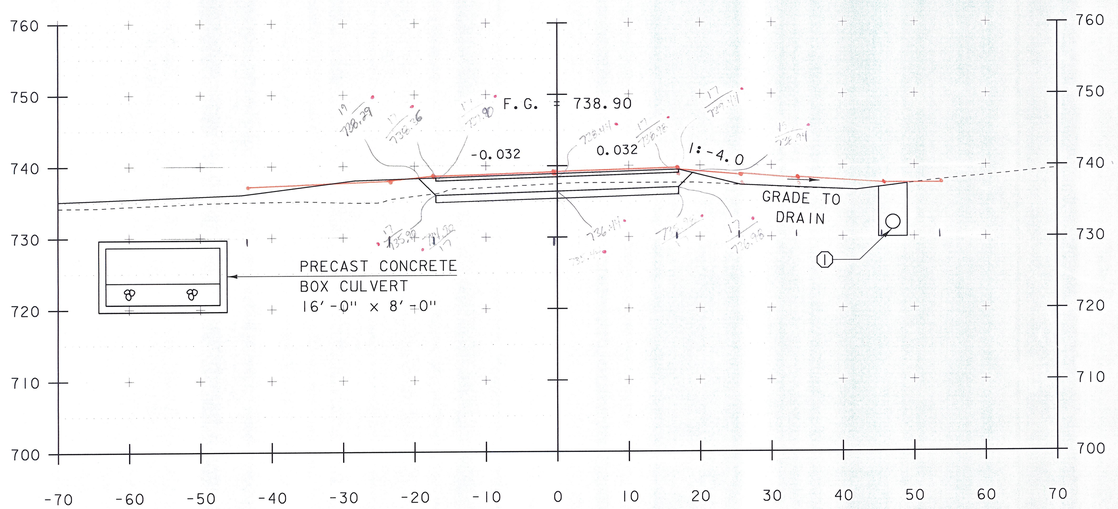

212+50

Common Exc
0.63
0.64
0.65

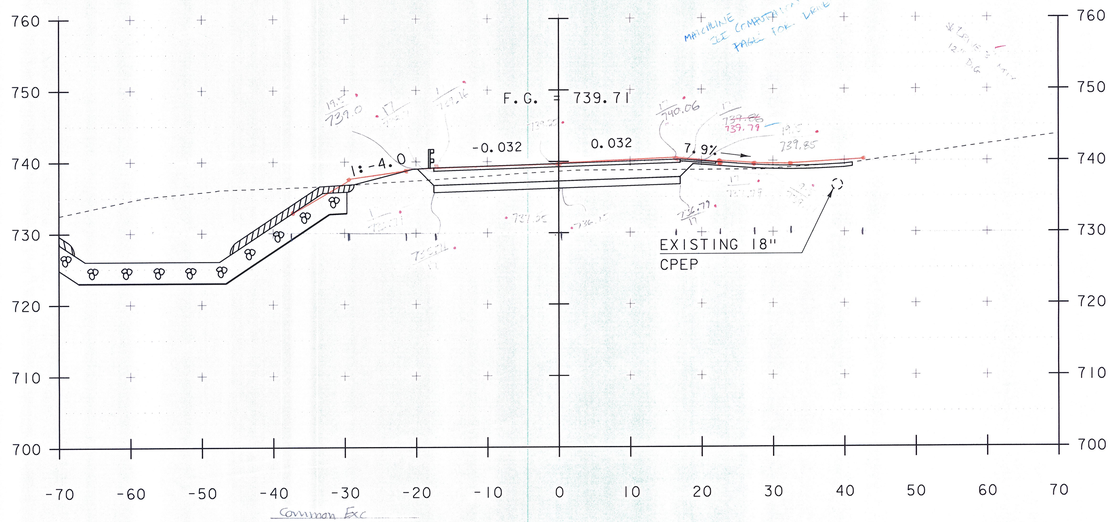

212+90

Common Exc
0.74
0.71
0.75

SCALE 1" = 10'-0"
10 0 10

STA. 212+50 TO STA. 213+25

PROJECT NAME:	JAMAICA
PROJECT NUMBER:	ER-BRF 015-1(23)
FILE NAME: sllb316.xs.dgn	PLOT DATE: 07-DEC-2012
PROJECT LEADER: K. HIGGINS	DRAWN BY: K. FRIEDLAND
DESIGNED BY: G. LAROCHE	CHECKED BY: G. LAROCHE
MAINLINE SECTIONS 4	SHEET 59 OF 82

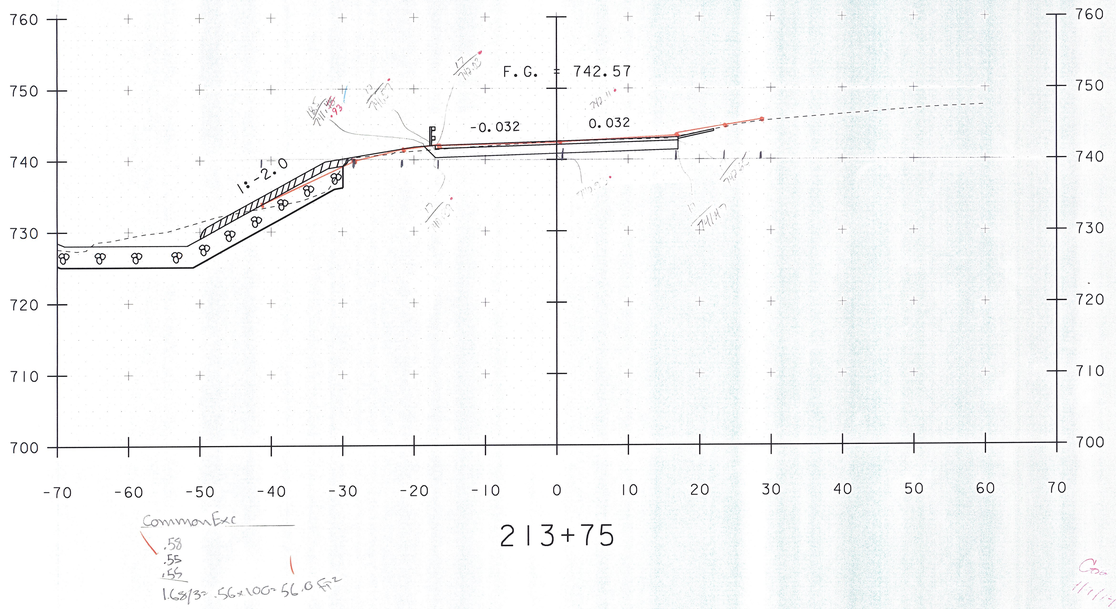

213+75

Common Exc
.58
.55
.55
163/3= .56×100= 56.0 FT²

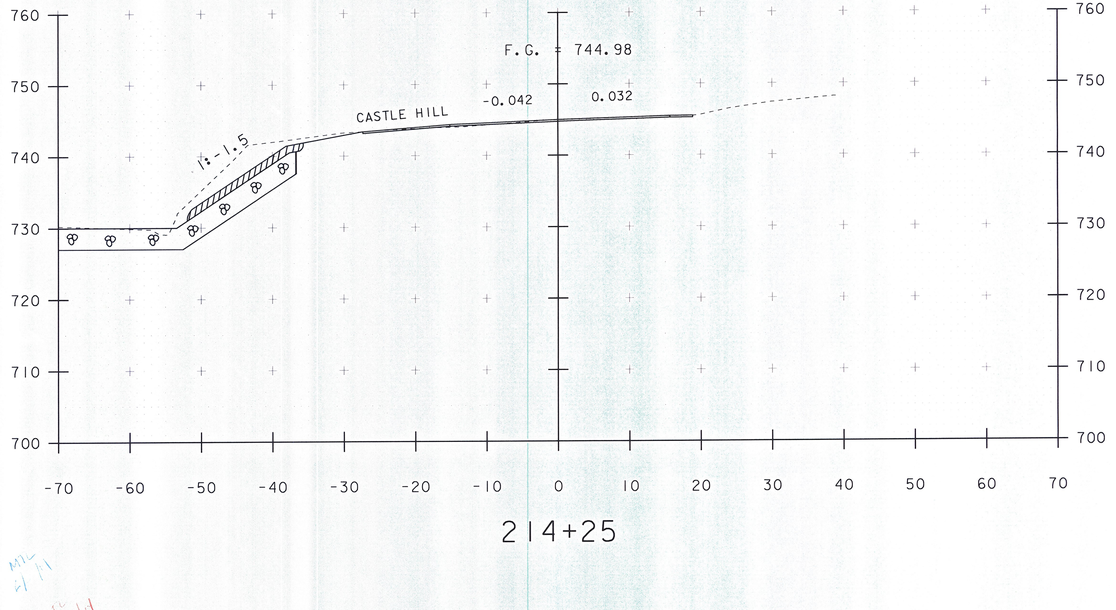

214+25

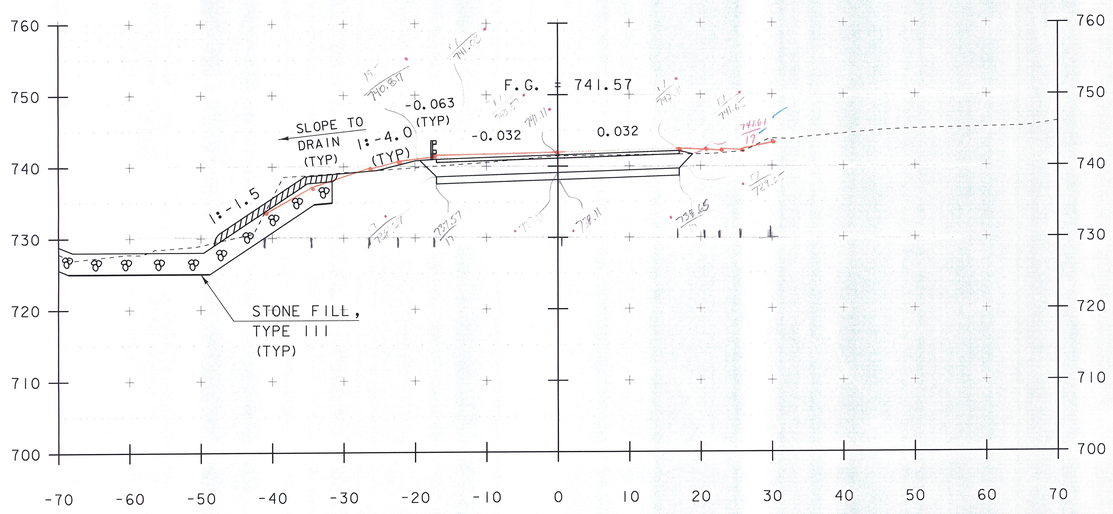

213+50
END PROJECT

Common Excavation
102
102
103
307/3= 102.33×1.00= 102.33 CY

SCALE 1" = 10'-0"
10 0 10

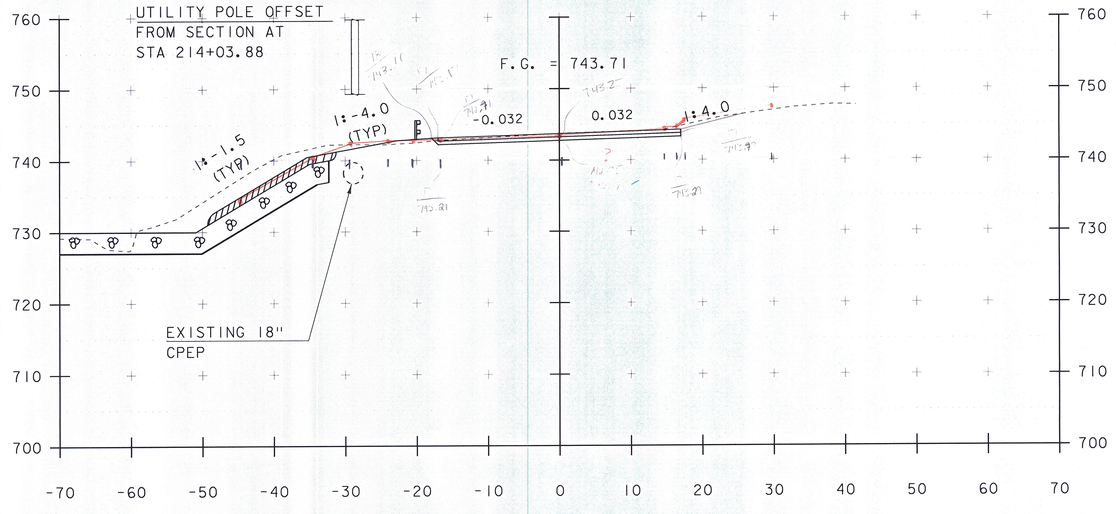

214+00

Common Exc
.37
.32
.34
107/3.3567×100= 35.67 CY

STA. 213+50 TO STA. 214+25

PROJECT NAME: JAMAICA
PROJECT NUMBER: ER-BRF 015-1(23)

FILE NAME: sllb316.xs.dgn
PROJECT LEADER: K. HIGGINS
DESIGNED BY: G. LAROCHE
MAINLINE SECTIONS 5

PLOT DATE: 07-DEC-2012
DRAWN BY: K. FRIEDLAND
CHECKED BY: G. LAROCHE
SHEET 60 OF 82

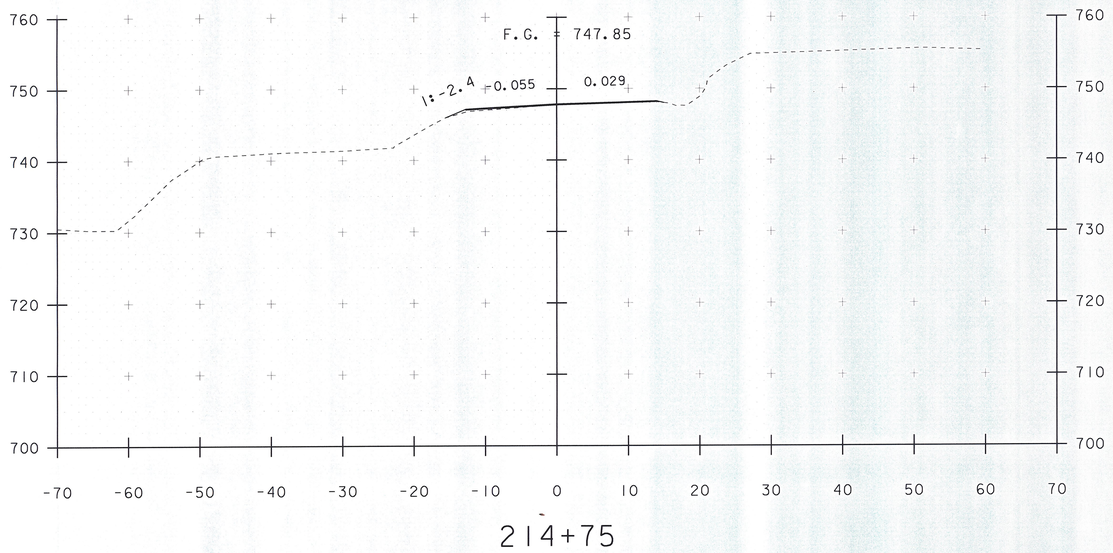

214+75

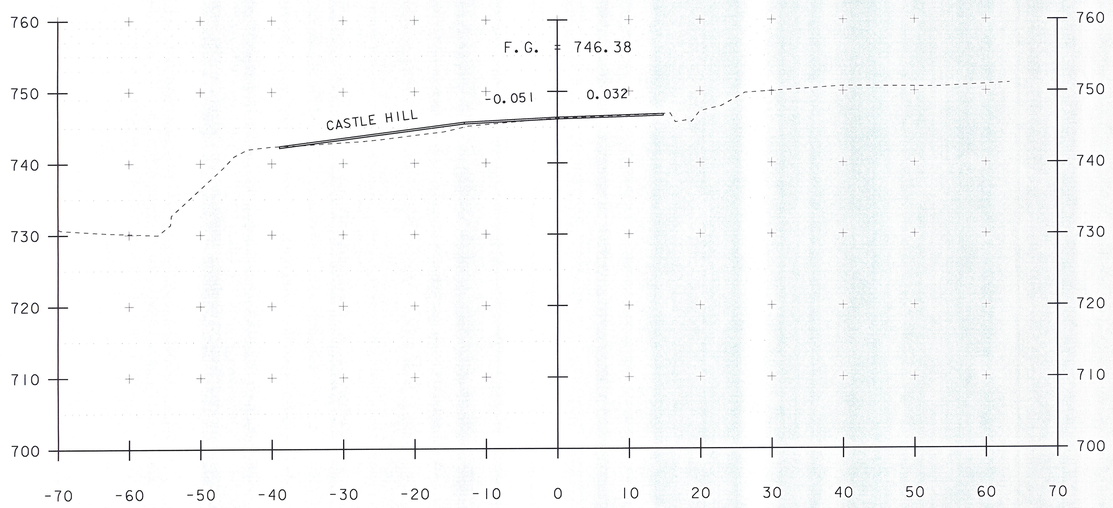

214+50

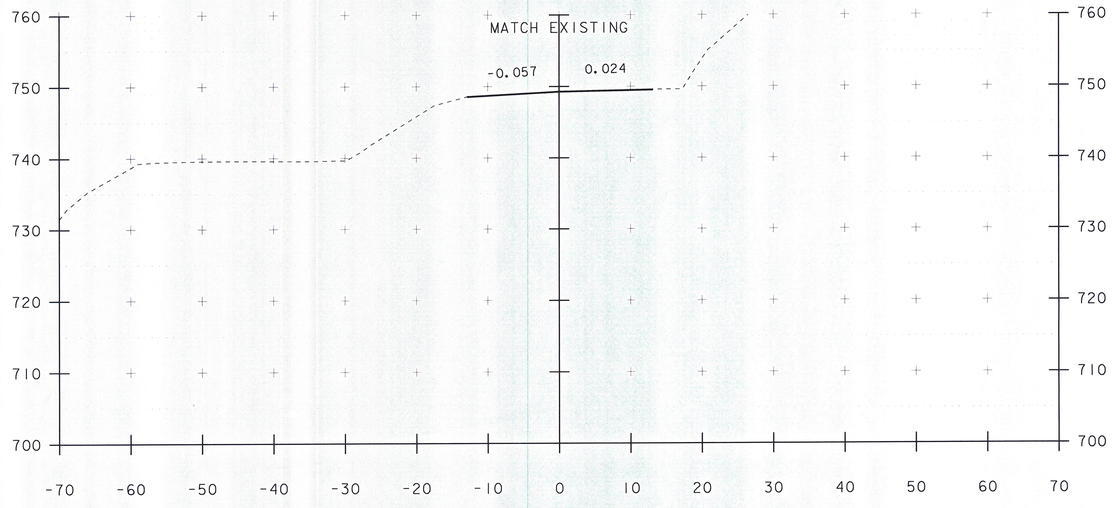

215+00
END APPROACH

SCALE 1" = 10'-0"
10 0 10

STA. 214+50 TO STA. 215+00

PROJECT NAME: JAMAICA
PROJECT NUMBER: ER-BRF 015-1(23)

FILE NAME: sllb316.xs.dgn
PROJECT LEADER: K. HIGGINS
DESIGNED BY: G. LAROCHE
MAINLINE SECTIONS 6

PLOT DATE: 07-DEC-2012
DRAWN BY: K. FRIEDLAND
CHECKED BY: G. LAROCHE
SHEET 61 OF 82

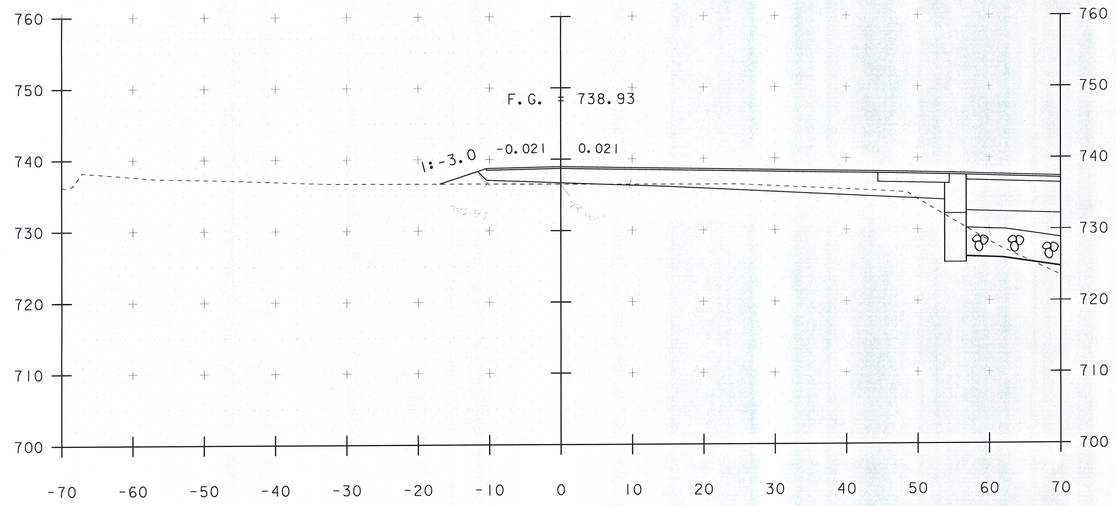

30+25

Subbase
1.50
1.55
1.55
4.60/3 = 1.5333 x 100 = 153.33 SF.

Common Exc.
0.27
0.27
0.27
.27 x 100 = 27 SF.

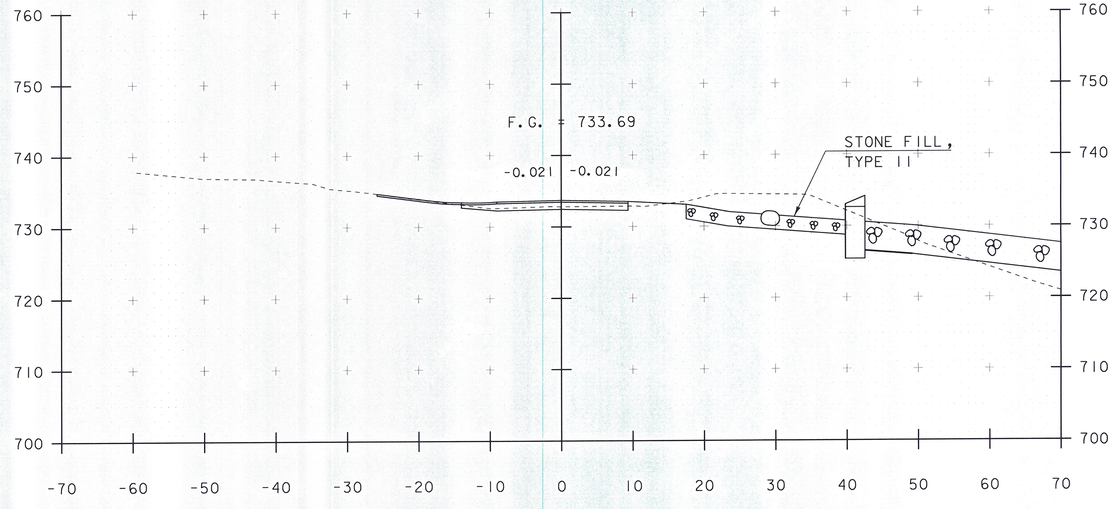

30+75

Subbase
.31
.31
.31
.96/3 = .32 x 100 = 32 SF.

Common Exc
.09 .99
.07 .99
.09 .96
.083 .98 = 1.063 x 100 = 106.3

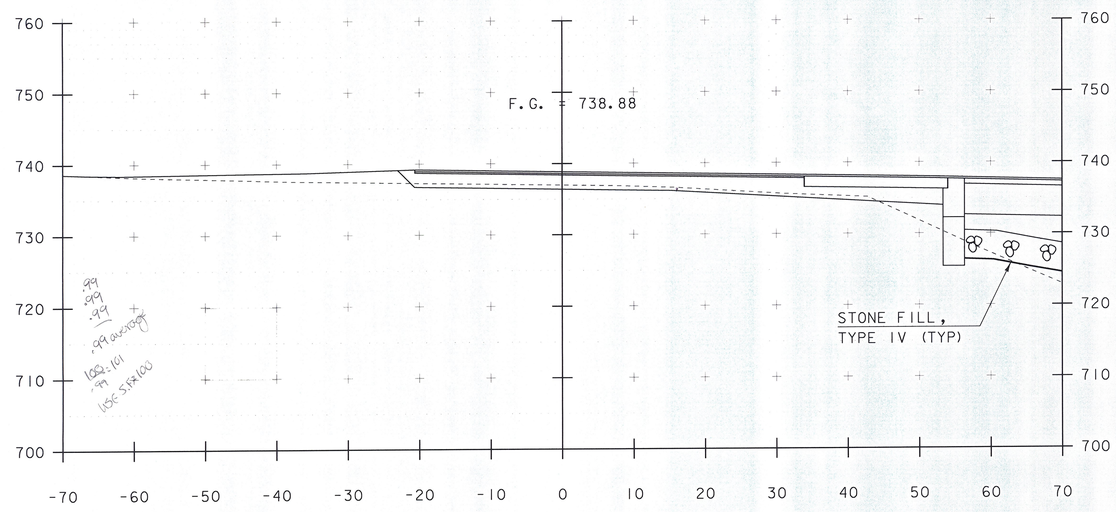

30+17

BEGIN WATER ST

Common Exc
0.34
0.31
0.31
.96/3 = .32 x 100 = 32 S.F.

Match Line

Subbase
1.51
1.55
1.50
4.56/3 = 1.52 x 100 = 152 S.F.

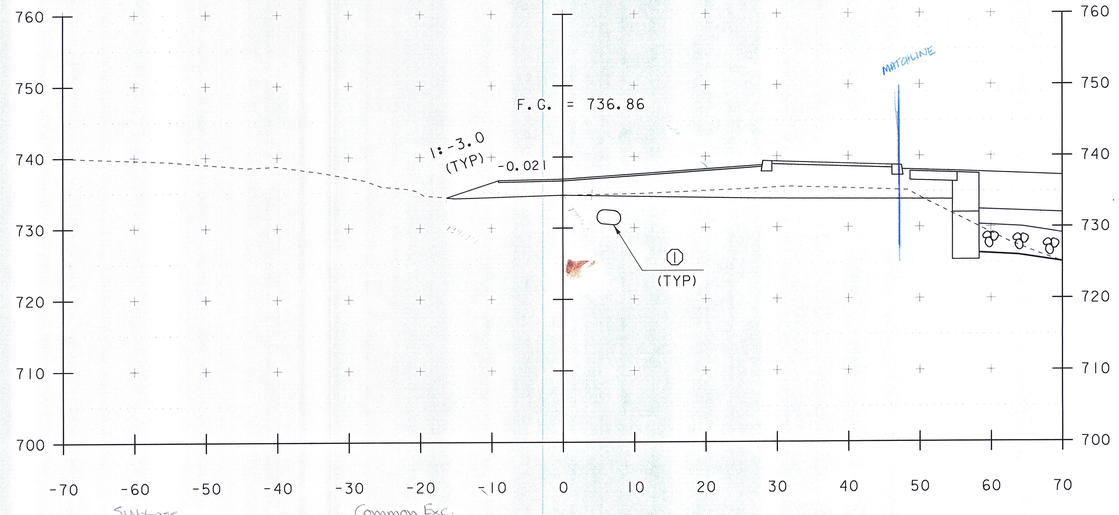

30+50

Subbase
1.89
1.95
1.91
1.9167 x 100 = 191.67

Common Exc.
.48
.42
.43
.4433 x 100 = 44.33

SCALE 1" = 10'-0"

STA. 30+17 TO STA. 30+75

PROJECT NAME: JAMAICA	
PROJECT NUMBER: ER-BRF 015-1(23)	
FILE NAME: sllb316.xs.dgn	PLOT DATE: 07-DEC-2012
PROJECT LEADER: K. HIGGINS	DRAWN BY: K. FRIEDLAND
DESIGNED BY: G. LAROCHE	CHECKED BY: G. LAROCHE
WATER STREET SECTIONS I	SHEET 62 OF 82

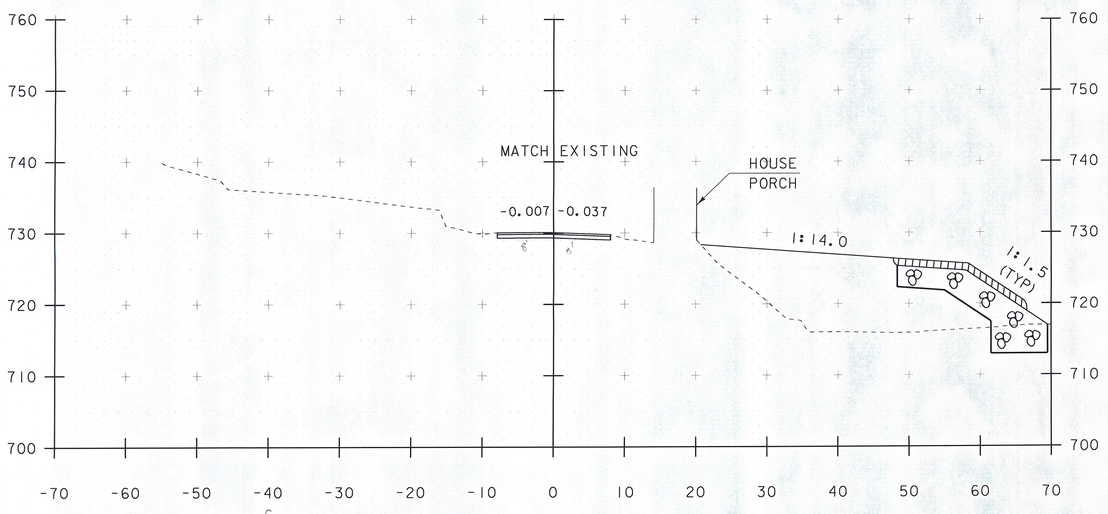

Subbase + Common
16' x 0.5' = 8 ft²

31+25
END WATER ST

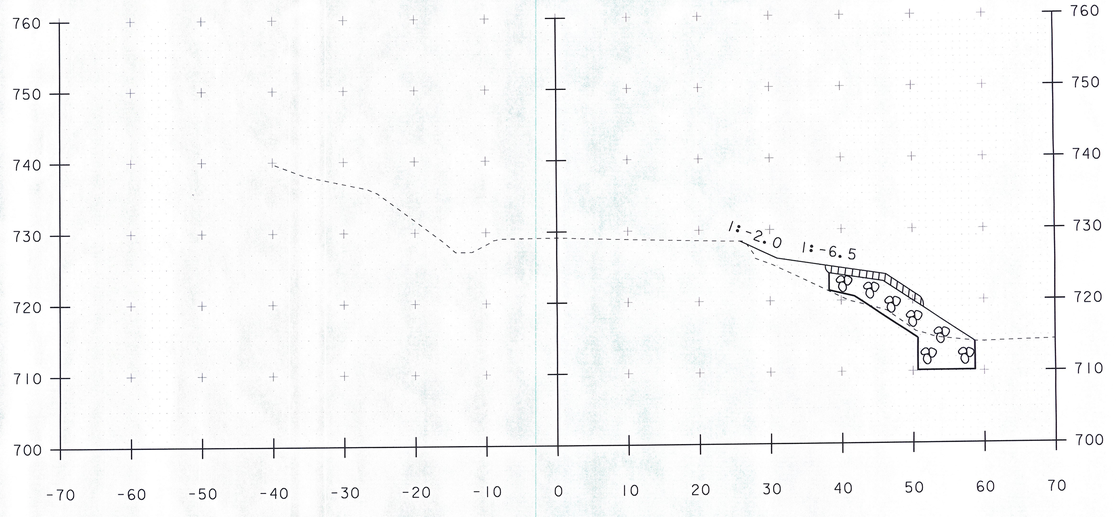

31+75

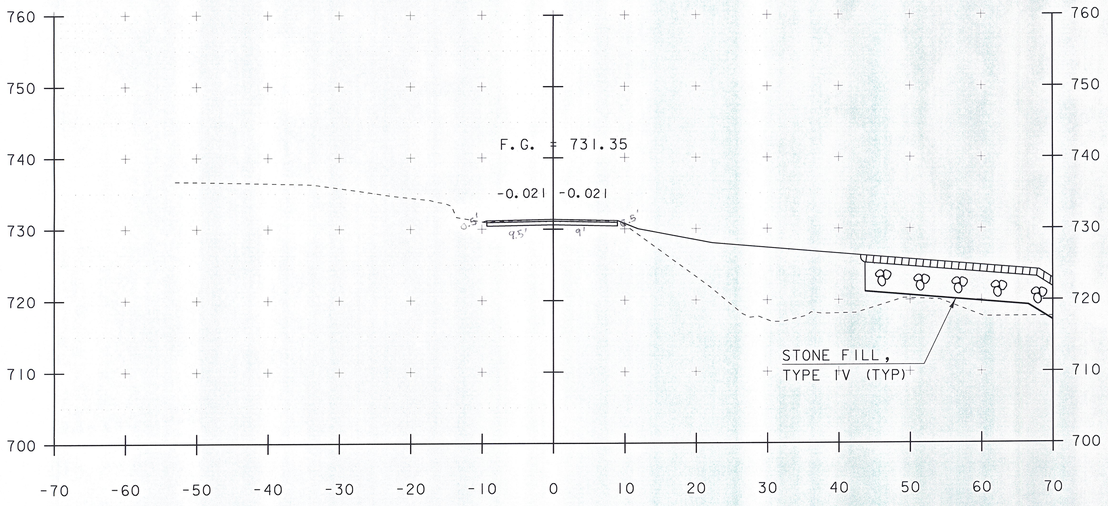

Subbase + Common
18.5' x 0.5' = 9.25 SF

31+00

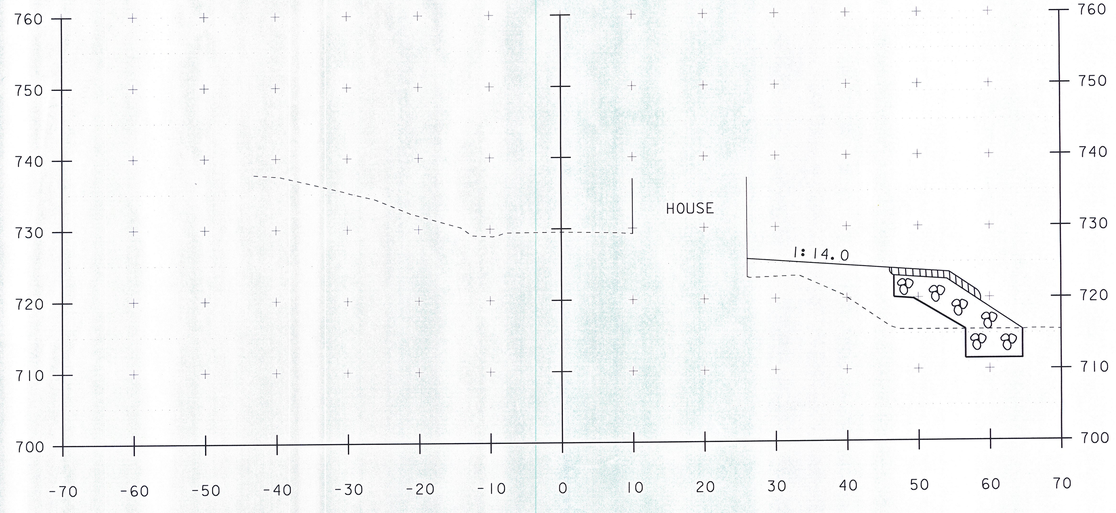

31+50

SCALE 1" = 10'-0"
10 0 10

STA. 31+00 TO STA. 31+75

PROJECT NAME: JAMAICA	
PROJECT NUMBER: ER-BRF 015-1(23)	
FILE NAME: sllb316.xs.dgn	PLOT DATE: 07-DEC-2012
PROJECT LEADER: K. HIGGINS	DRAWN BY: K. FRIEDLAND
DESIGNED BY: G. LAROCHE	CHECKED BY: G. LAROCHE
WATER STREET SECTIONS 2	SHEET 63 OF 82

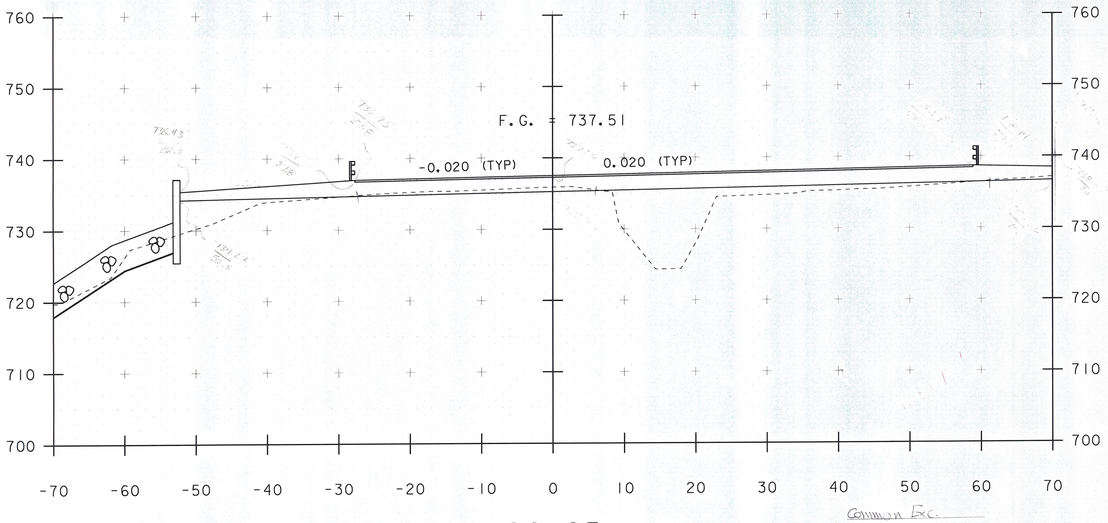

20+25

BEGIN FIRE DRIVE @ 20+17.00

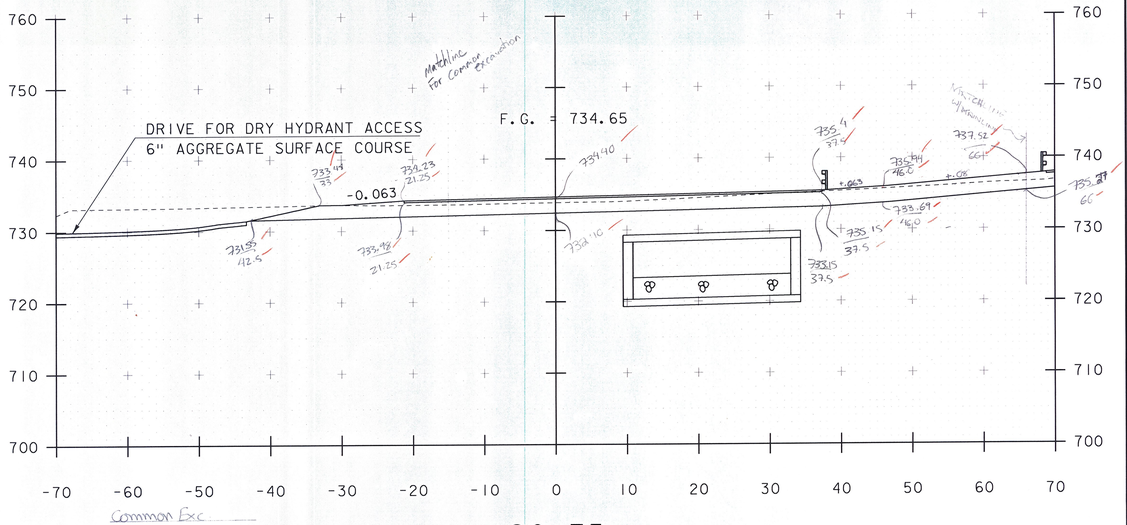

20+75

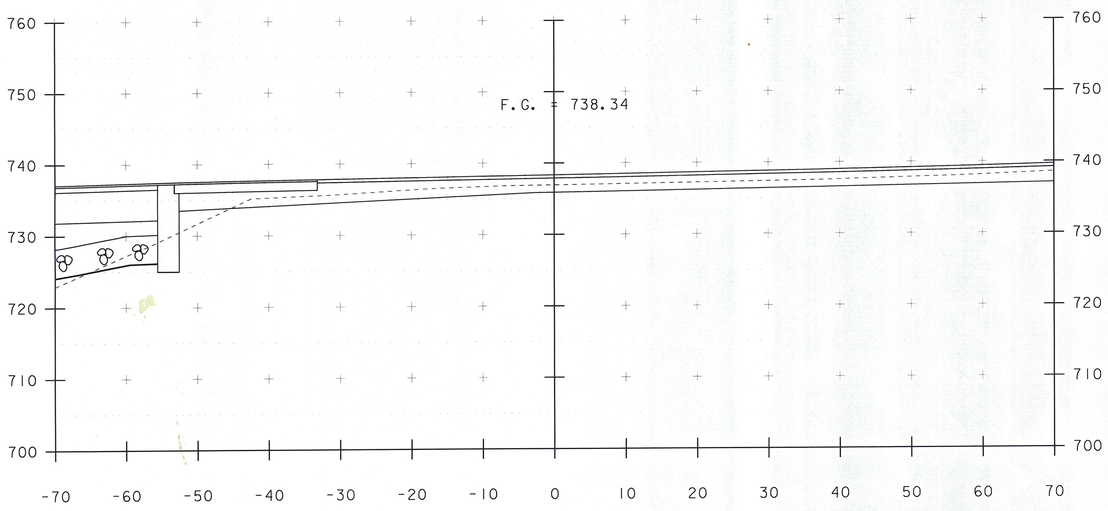

20+00

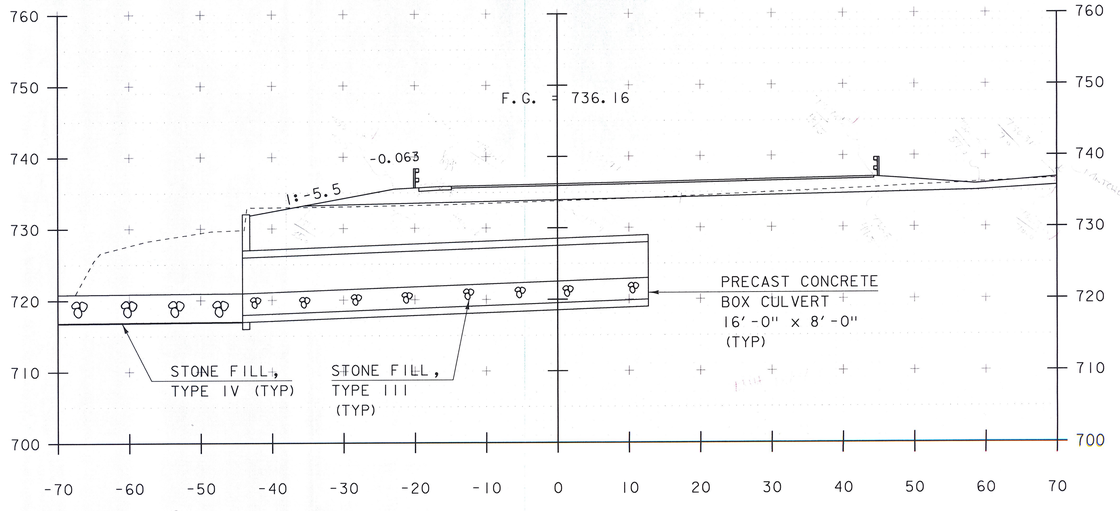

20+50

SCALE 1" = 10'-0"
10 0 10

STA. 20+00 TO STA. 20+75

PROJECT NAME:	JAMAICA
PROJECT NUMBER:	ER-BRF 015-1(23)
FILE NAME: slib316.xs.dgn	PLOT DATE: 07-DEC-2012
PROJECT LEADER: K. HIGGINS	DRAWN BY: K. FRIEDLAND
DESIGNED BY: G. LAROCHE	CHECKED BY: G. LAROCHE
FIRE DRIVE SECTIONS 1	SHEET 64 OF 82

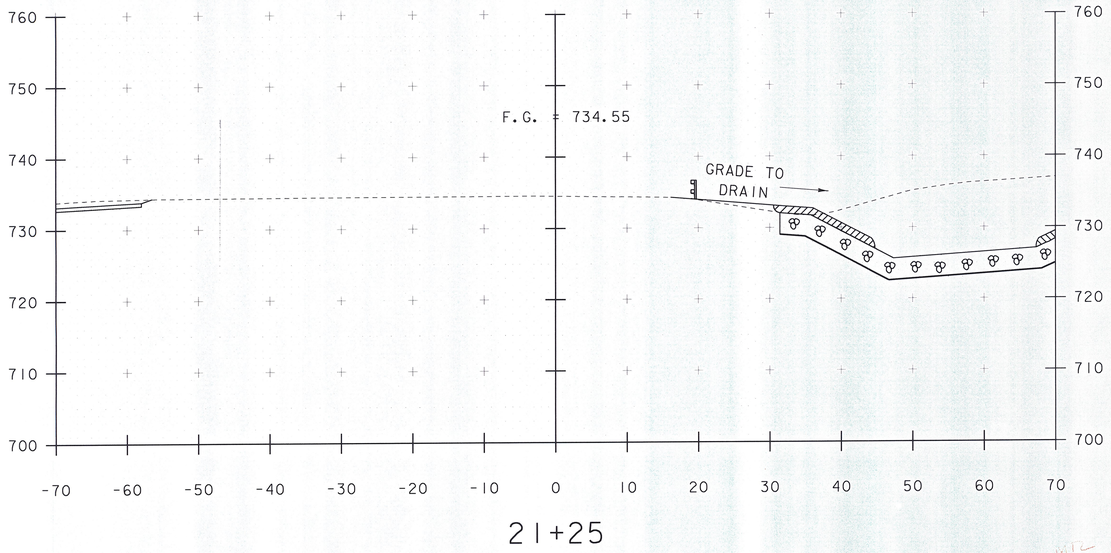

21+25

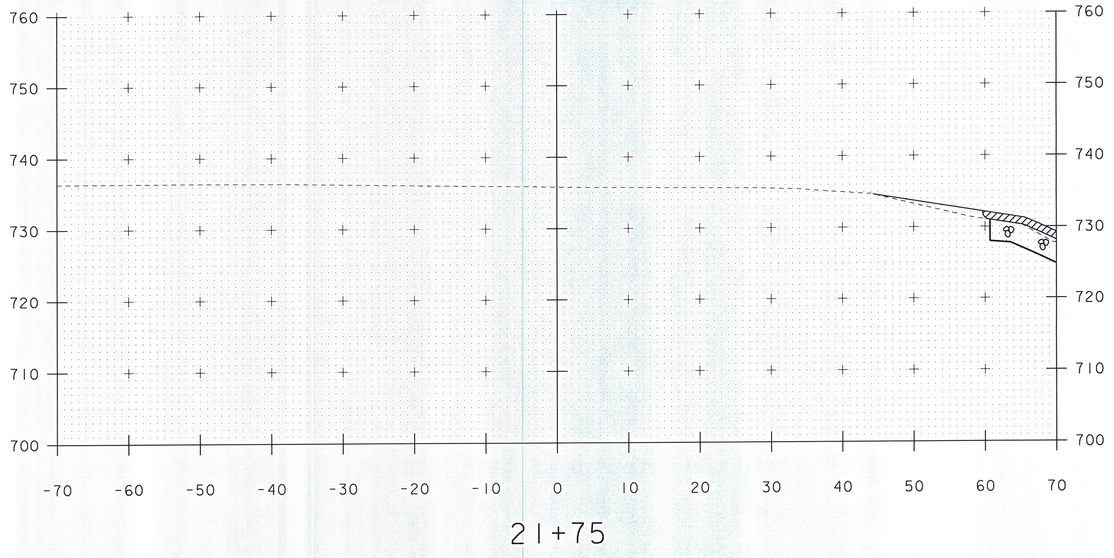

21+75

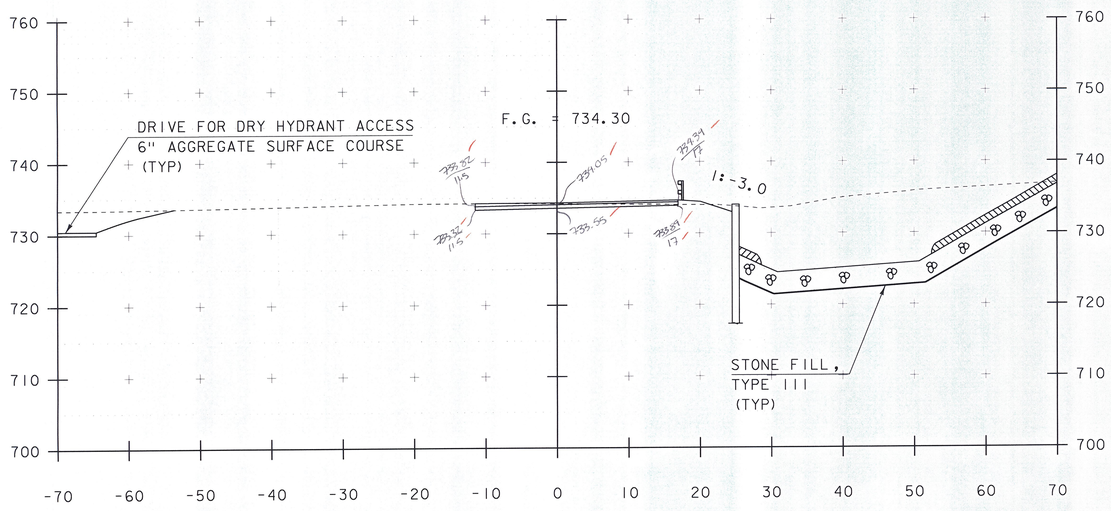

21+00

END FIRE DRIVE @ 21+08.77

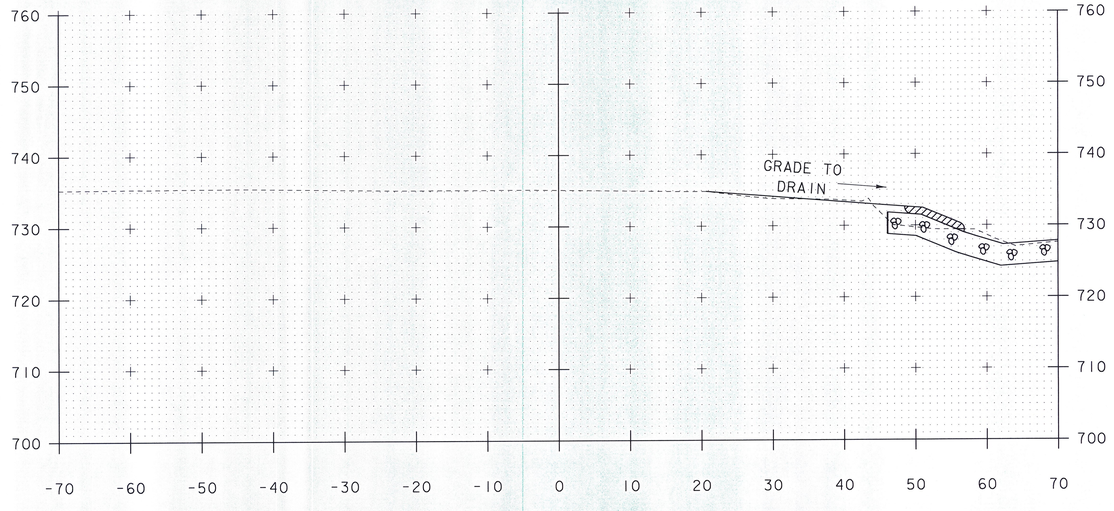

21+50

SCALE 1" = 10'-0"
10 0 10

STA. 1+00 TO STA. 1+10

PROJECT NAME: JAMAICA	
PROJECT NUMBER: ER-BRF 015-1(23)	
FILE NAME: sllb316.xs.dgn	PLOT DATE: 07-DEC-2012
PROJECT LEADER: K. HIGGINS	DRAWN BY: K. FRIEDLAND
DESIGNED BY: G. LAROCHE	CHECKED BY: G. LAROCHE
FIRE DRIVE SECTIONS 2	SHEET 65 OF 82

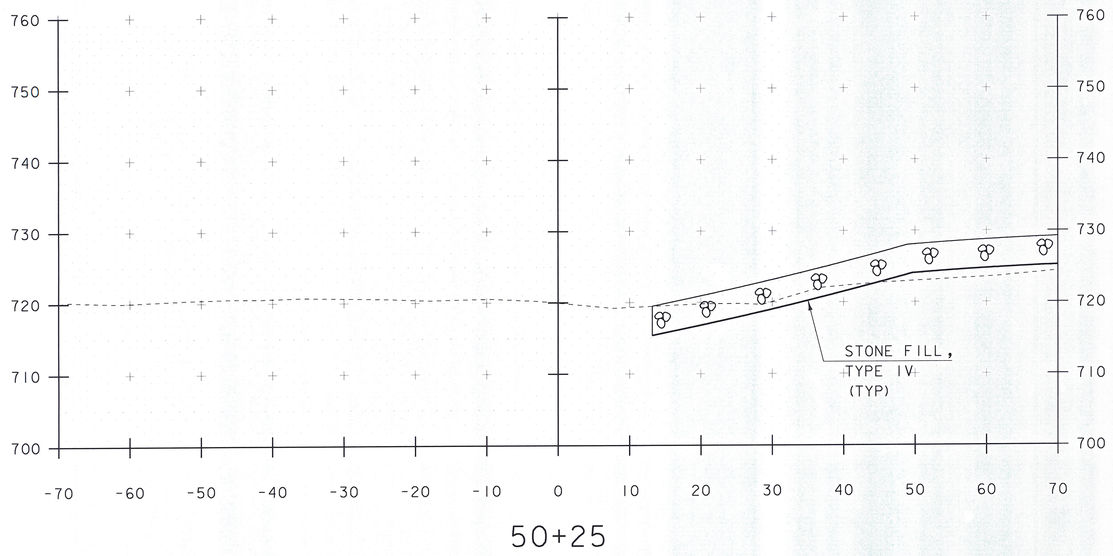

50+25

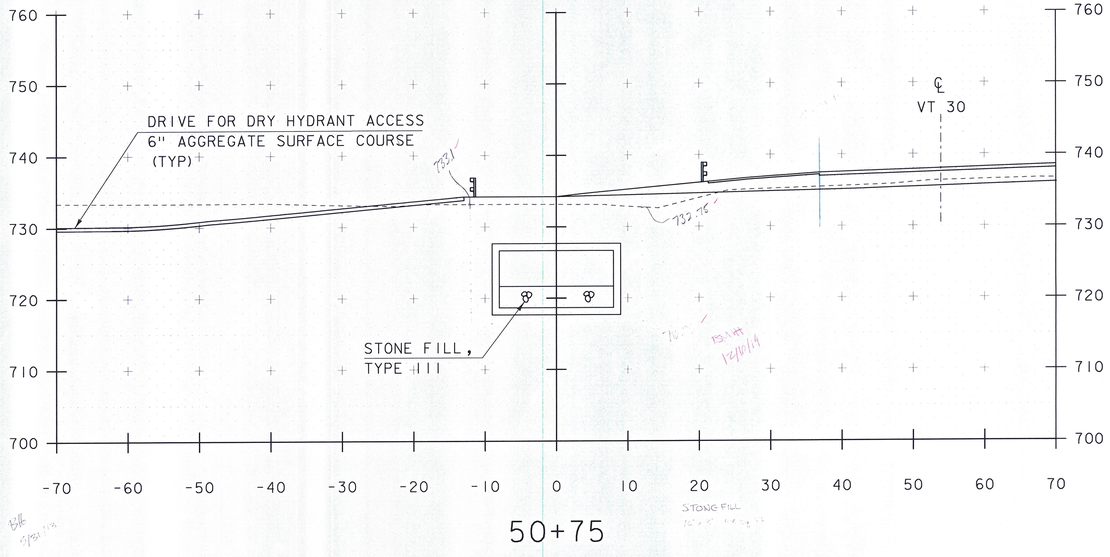

50+75

Box Culvert Outlet = 50+56
Inlet = 51+41

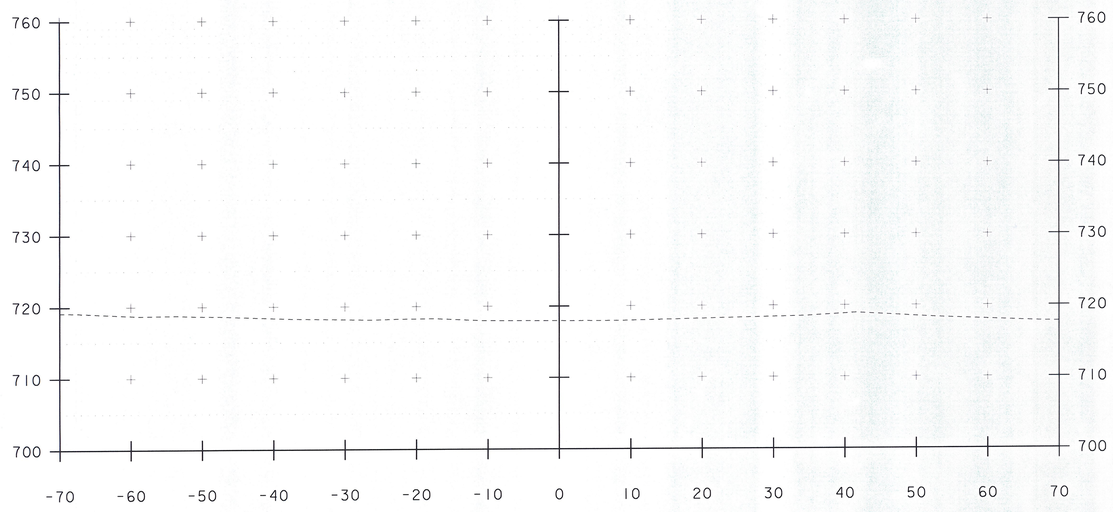

50+00

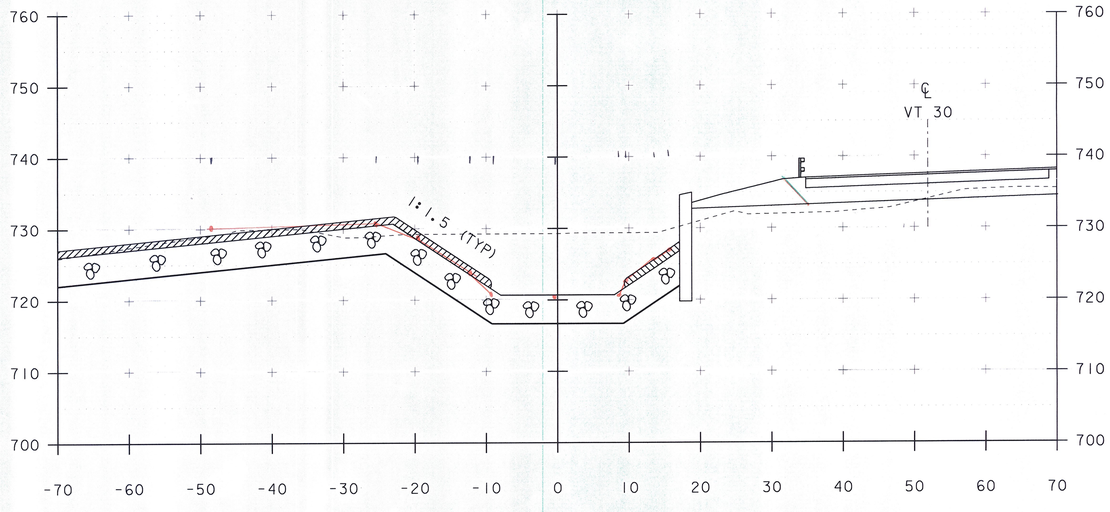

50+50

SCALE 1" = 10'-0"
10 0 10

STA. 50+00 TO STA. 50+75

PROJECT NAME: JAMAICA	
PROJECT NUMBER: ER-BRF 015-1(23)	
FILE NAME: sllb316.xs.dgn	PLOT DATE: 07-DEC-2012
PROJECT LEADER: K. HIGGINS	DRAWN BY: K. FRIEDLAND
DESIGNED BY: G. LAROCHE	CHECKED BY: G. LAROCHE
BOX CULVERT SECTIONS 1	SHEET 66 OF 82

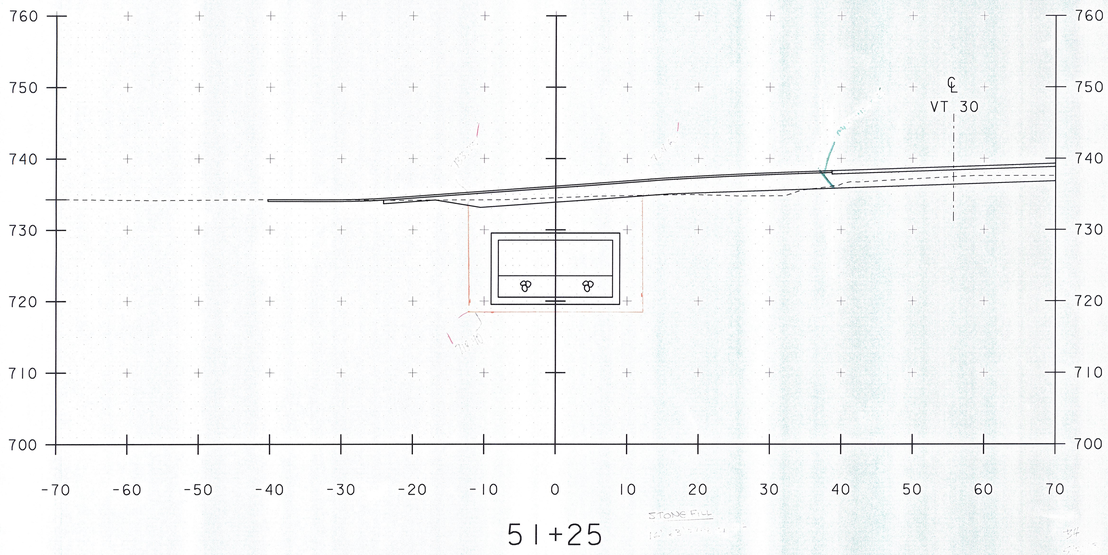

51+25

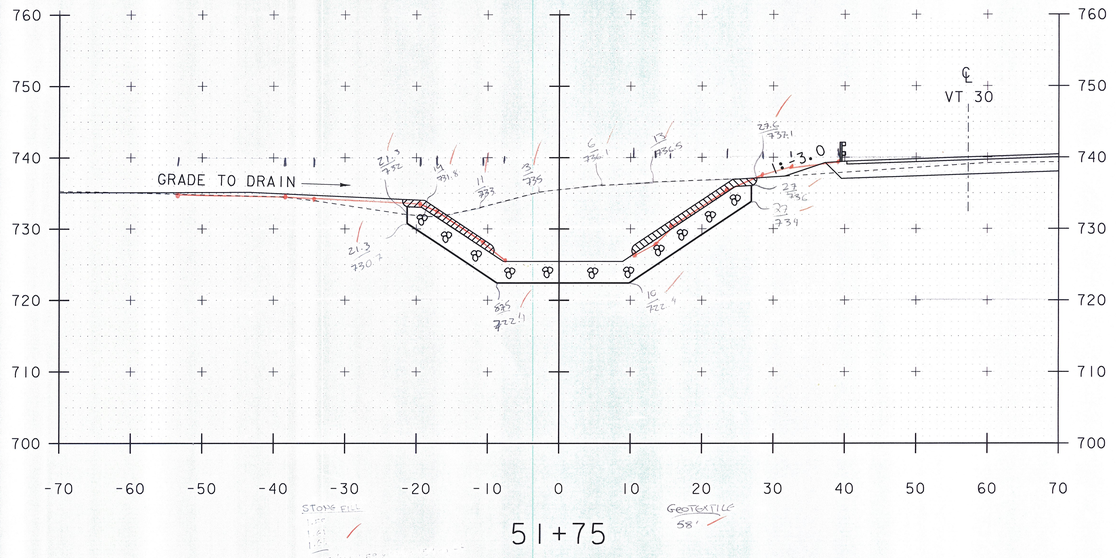

51+75

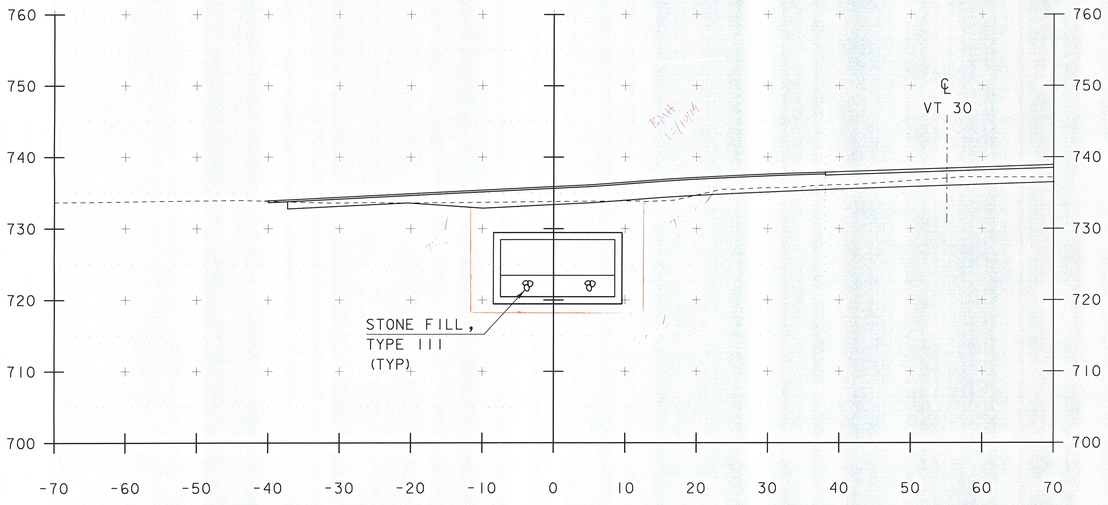

51+00

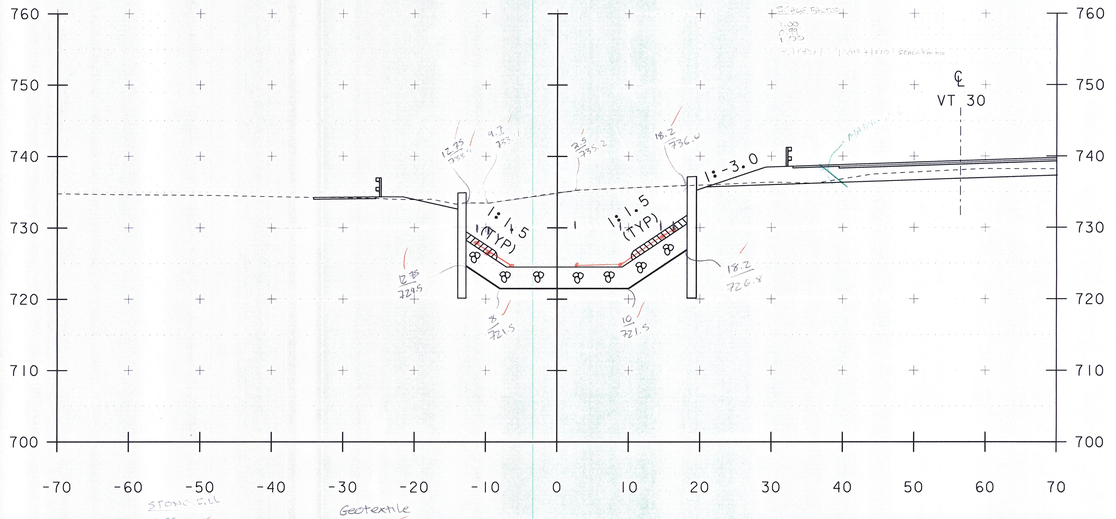

51+50

SCALE 1" = 10'-0"
10 0 10

STA. 51+00 TO STA. 51+75

PROJECT NAME: JAMAICA	
PROJECT NUMBER: ER-BRF 015-1(23)	
FILE NAME: sllb316.xs.dgn	PLOT DATE: 07-DEC-2012
PROJECT LEADER: K. HIGGINS	DRAWN BY: K. FRIEDLAND
DESIGNED BY: G. LAROCHE	CHECKED BY: G. LAROCHE
BOX CULVERT SECTIONS 2	SHEET 67 OF 82

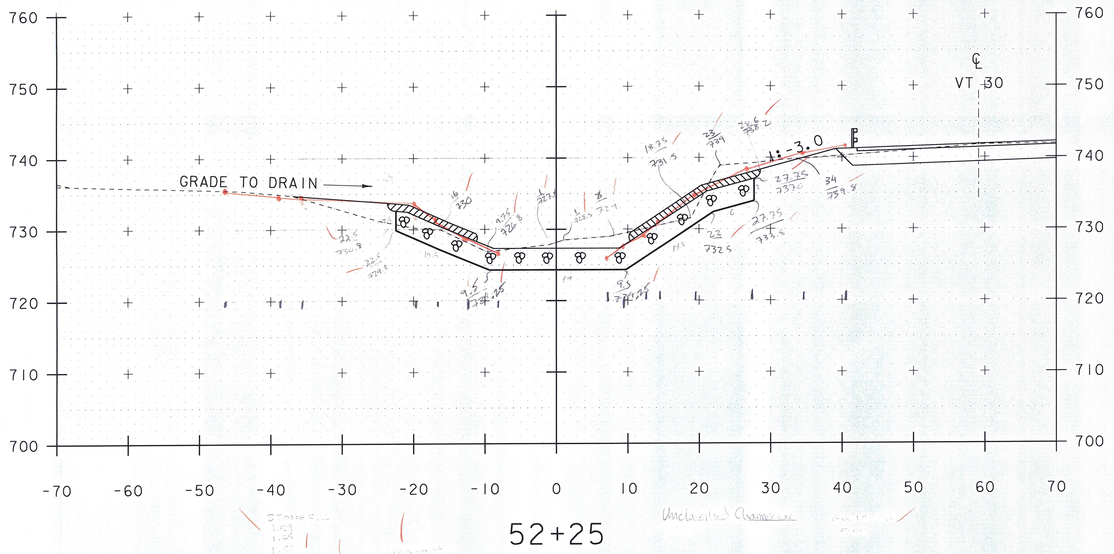

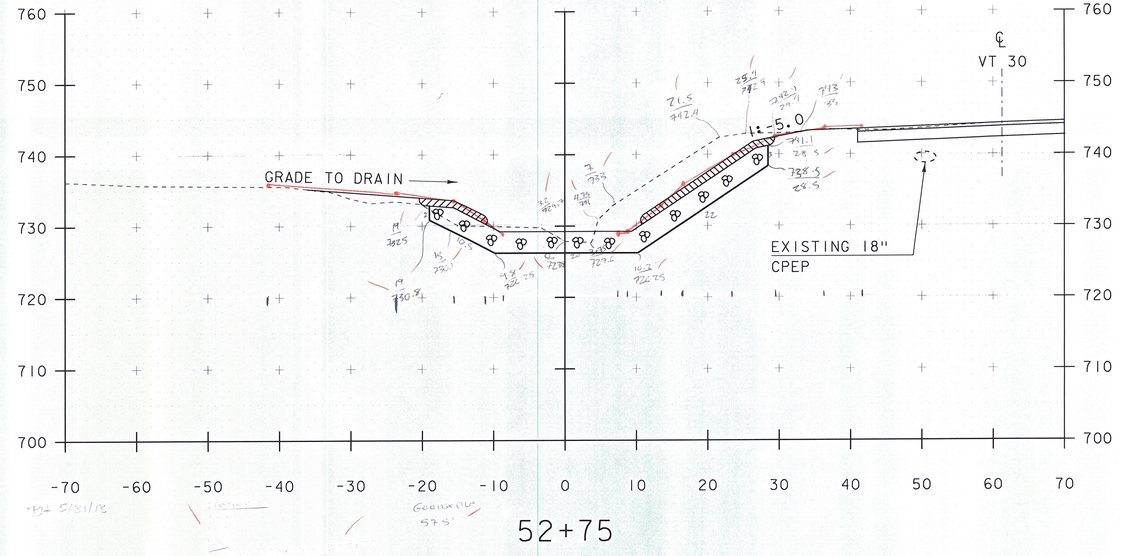

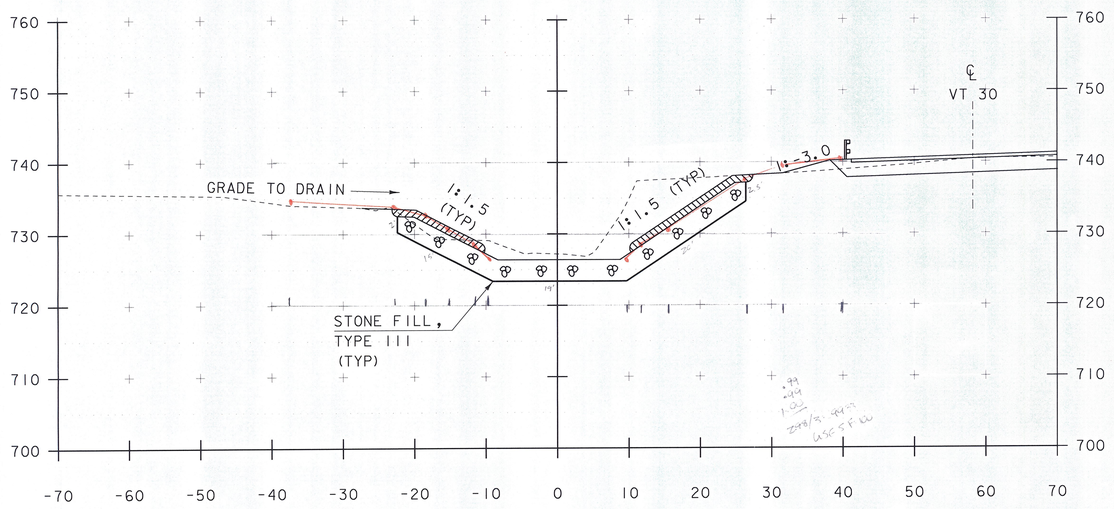

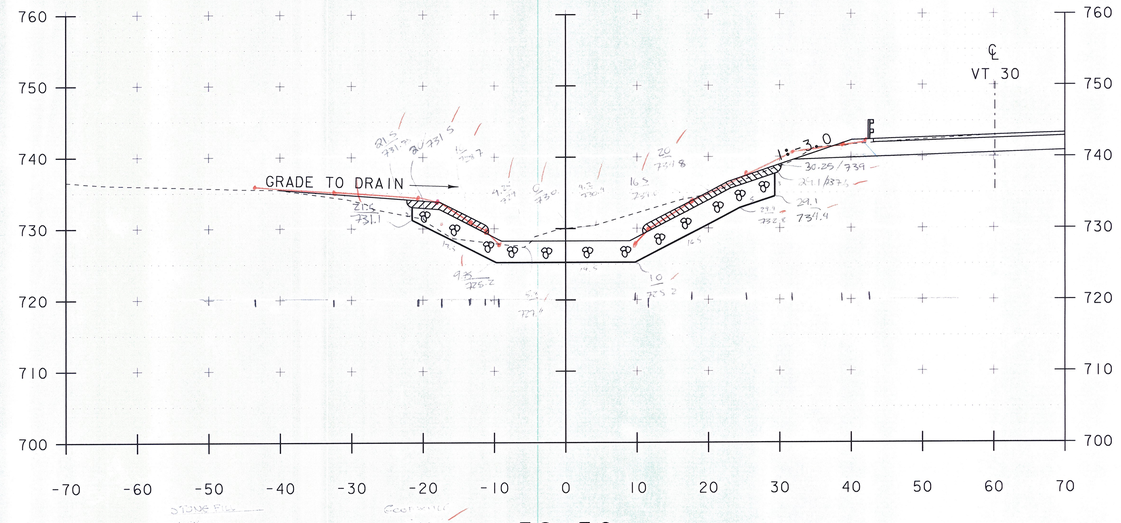

SCALE 1" = 10'-0"
10 0 10

STA. 52+00 TO STA. 52+75

PROJECT NAME:	JAMAICA
PROJECT NUMBER:	ER-BRF 015-1(23)
FILE NAME: sllb316.xs.dgn	PLOT DATE: 07-DEC-2012
PROJECT LEADER: K. HIGGINS	DRAWN BY: K. FRIEDLAND
DESIGNED BY: G. LAROCHE	CHECKED BY: G. LAROCHE
BOX CULVERT SECTIONS 3	SHEET 68 OF 82

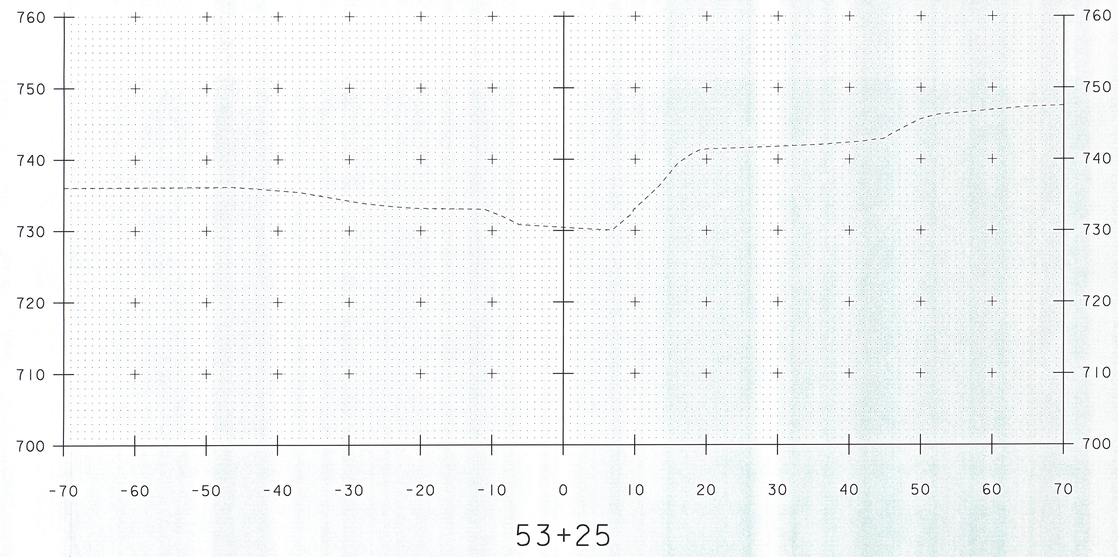

53+25

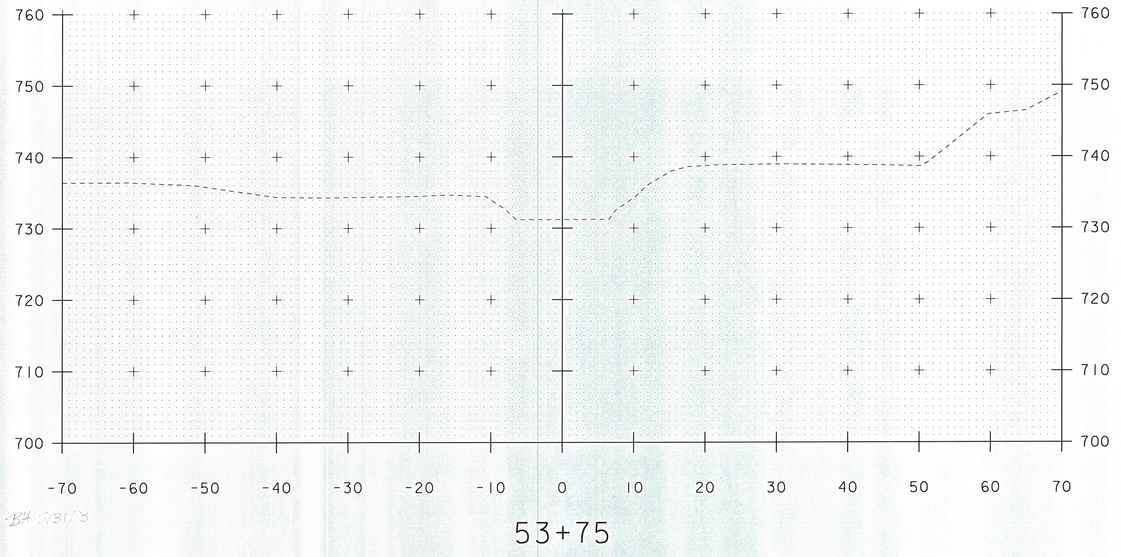

53+75

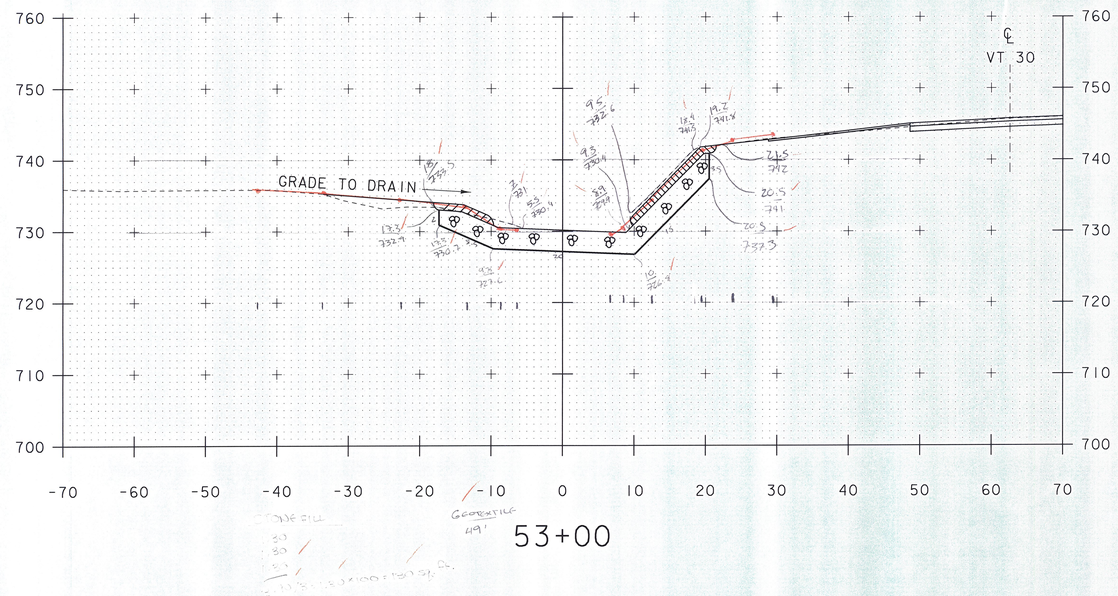

53+00

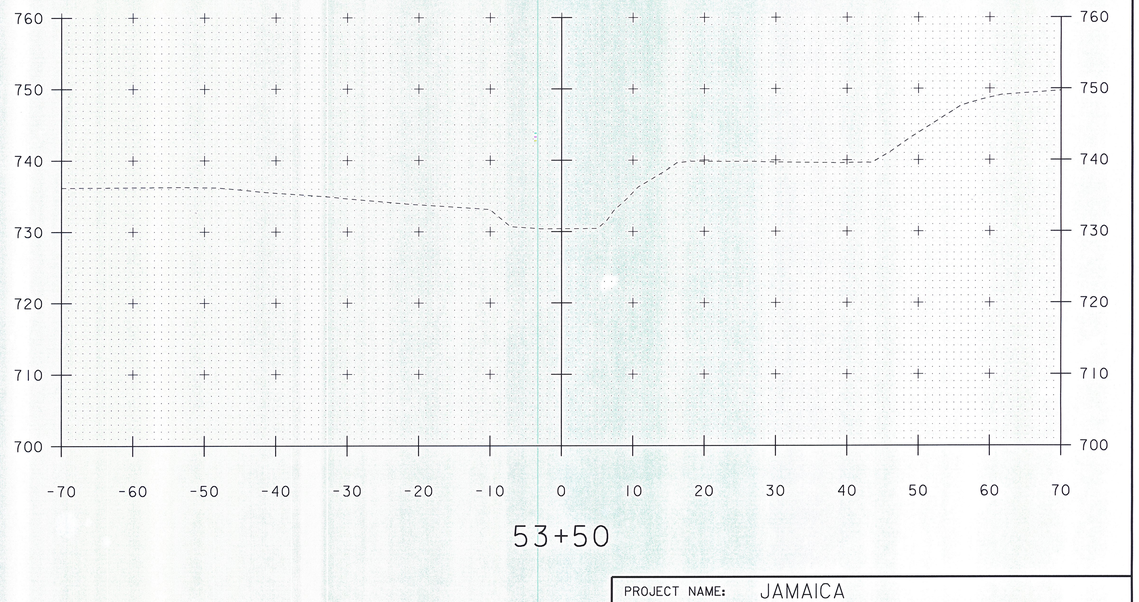

53+50

SCALE 1" = 10'-0"
10 0 10

STA. 53+00 TO STA. 53+75

PROJECT NAME: JAMAICA
PROJECT NUMBER: ER-BRF 015-1(23)

FILE NAME: sllb316.xs.dgn
PROJECT LEADER: K. HIGGINS
DESIGNED BY: G. LAROCHE
BOX CULVERT SECTIONS 4

PLOT DATE: 07-DEC-2012
DRAWN BY: K. FRIEDLAND
CHECKED BY: G. LAROCHE
SHEET 69 OF 82

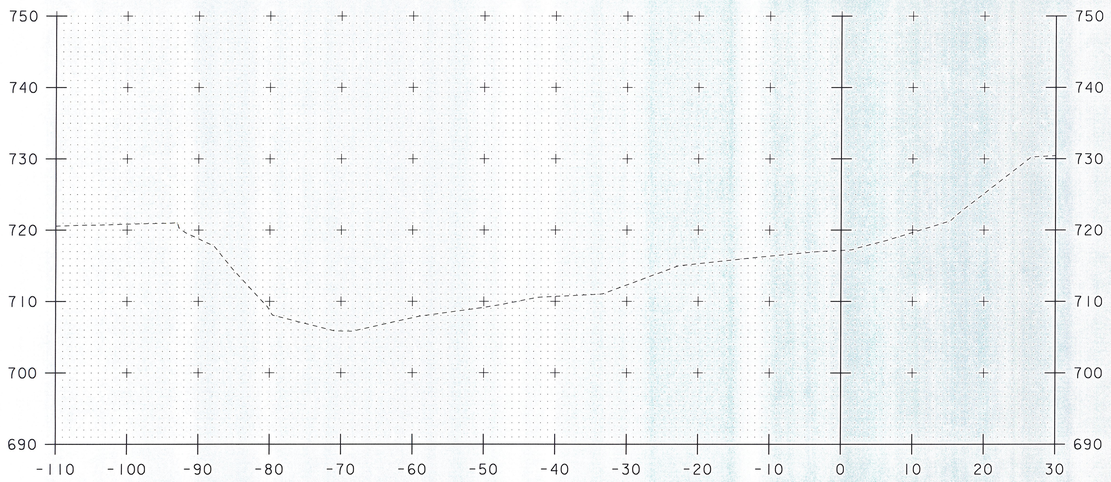

8+25

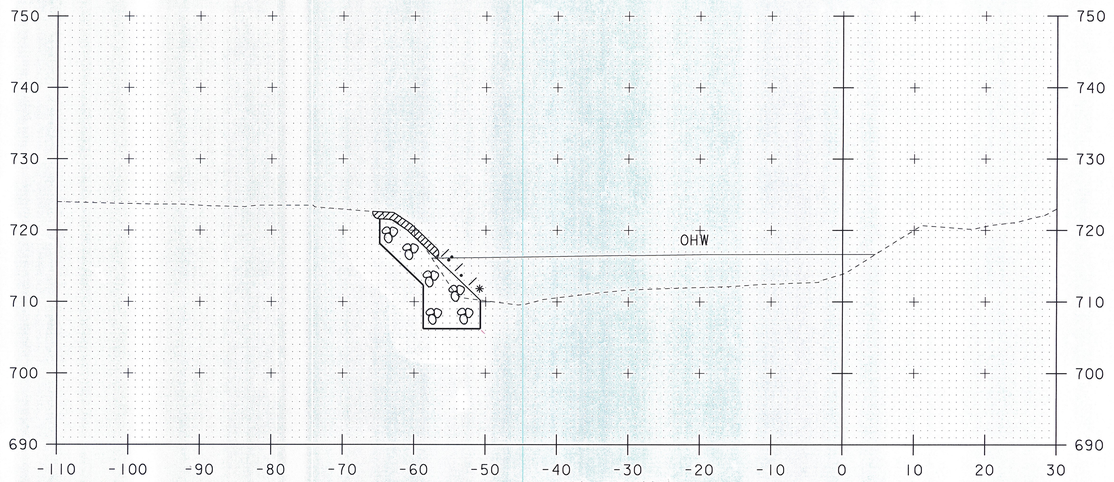

8+75

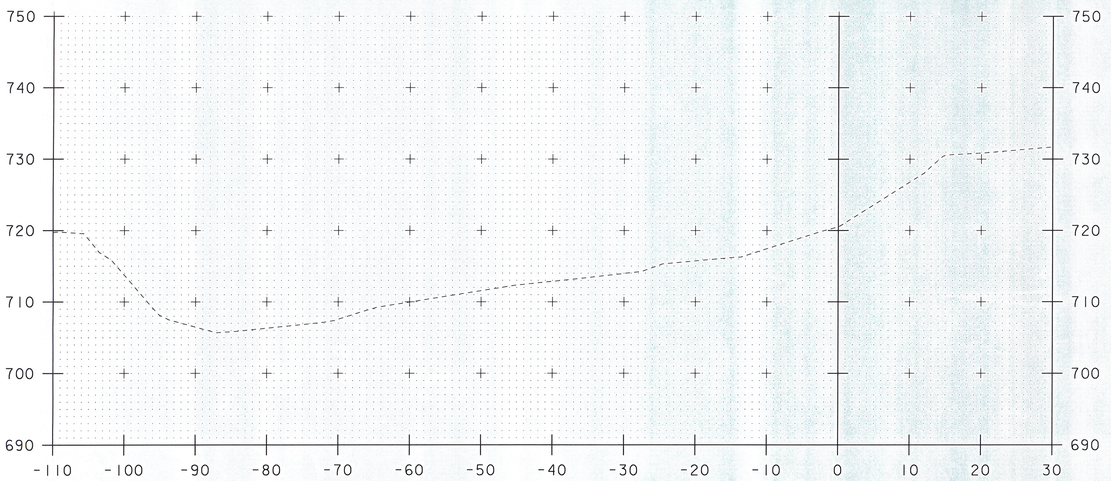

8+00

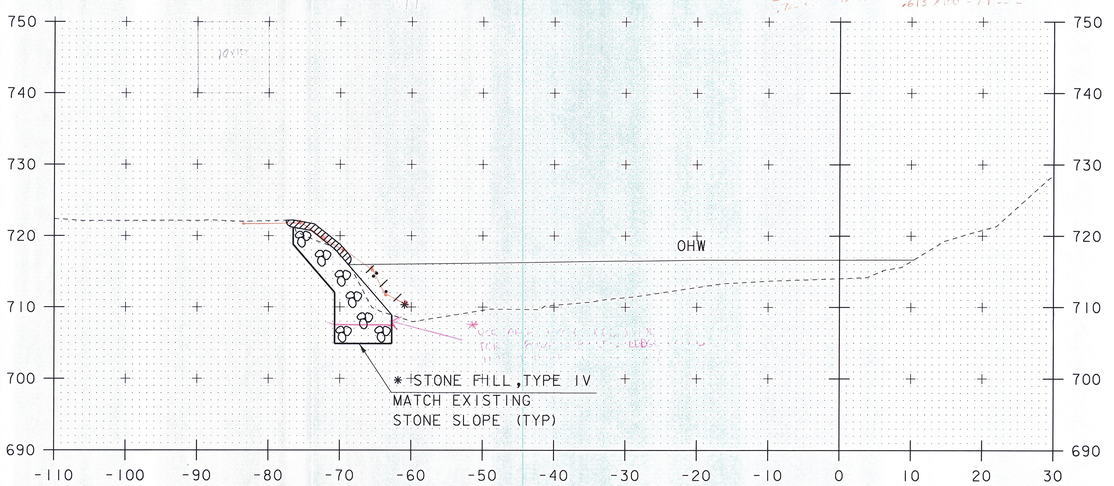

8+50

SCALE 1" = 10'-0"
10 0 10

STA 8+26.00 LT
BEGIN UNCLASSIFIED CHANNEL EXCAVATION
BEGIN GEOTEXTILE UNDER STONE FILL
BEGIN STONE FILL, TYPE IV
BEGIN GRUBBING MATERIAL

STA. 8+00 TO STA. 8+75

PROJECT NAME:	JAMAICA
PROJECT NUMBER:	ER-BRF 015-1(23)
FILE NAME: sllb316.xs.dgn	PLOT DATE: 07-DEC-2012
PROJECT LEADER: K. HIGGINS	DRAWN BY: K. FRIEDLAND
DESIGNED BY: G. LAROCHE	CHECKED BY: G. LAROCHE
CHANNEL SECTIONS 1	SHEET 70 OF 82

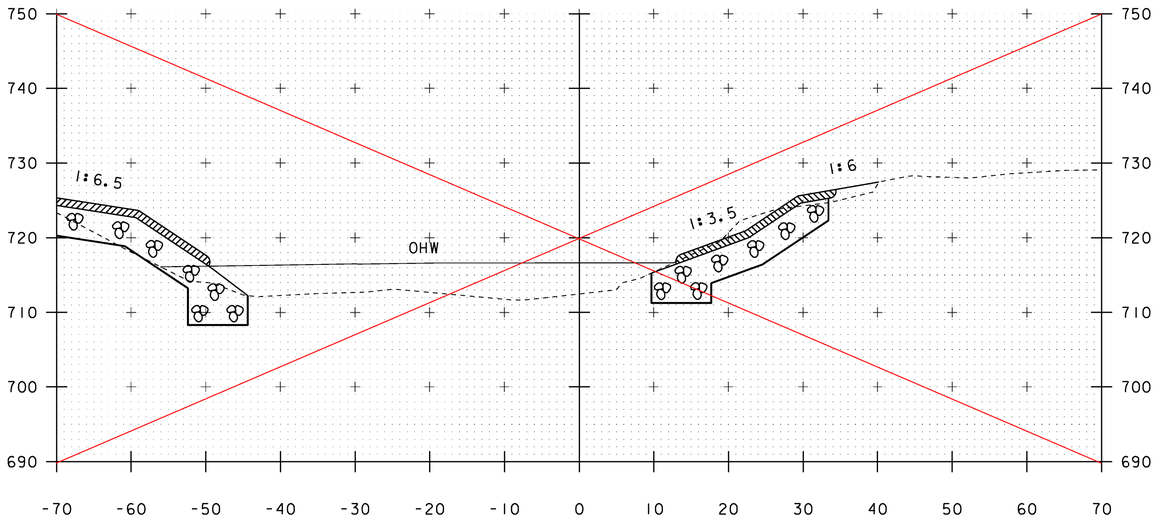

9+25 SEE ADDITIONAL CHANNEL SECTIONS SHEET 1OF 7.

STA 9+00.00 RT
BEGIN UNCLASSIFIED CHANNEL EXCAVATION
BEGIN GEOTEXTILE UNDER STONE FILL
BEGIN STONE FILL, TYPE IV
BEGIN GRUBBING MATERIAL

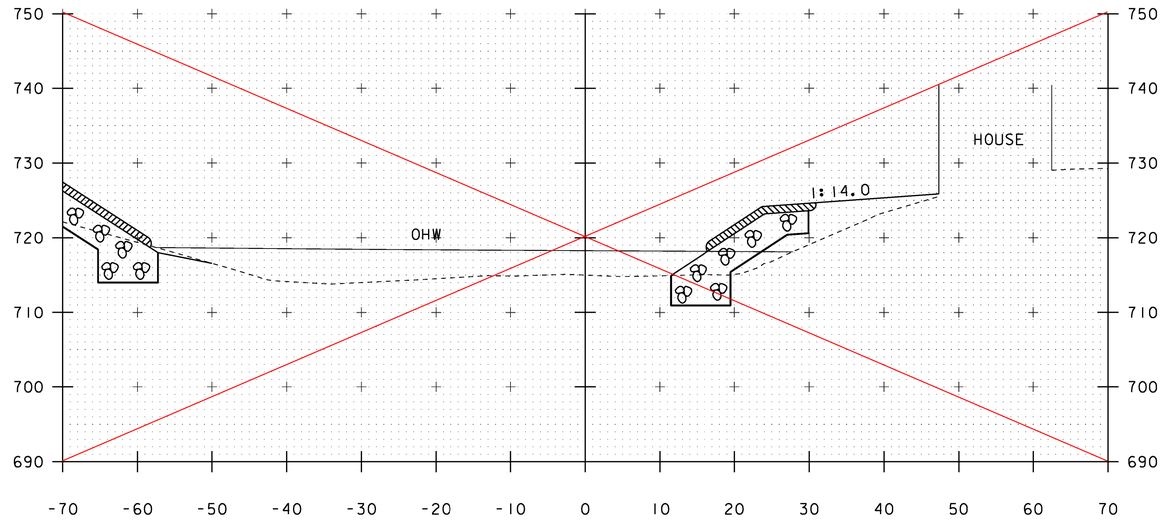

9+75 SEE ADDITIONAL CHANNEL SECTIONS SHEET 2 OF 7.

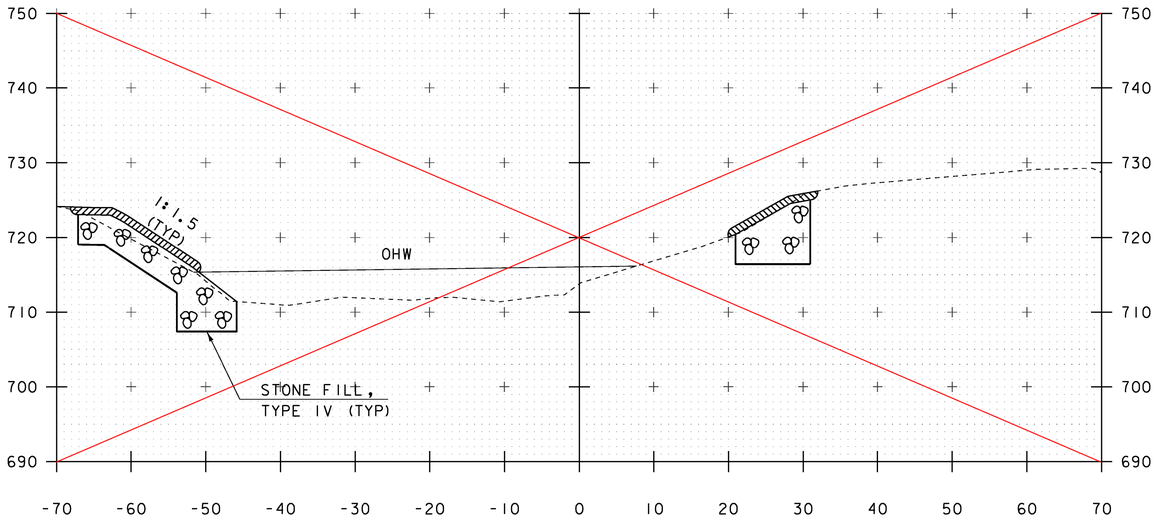

9+00 SEE ADDITIONAL CHANNEL SECTIONS SHEET 1OF 7.

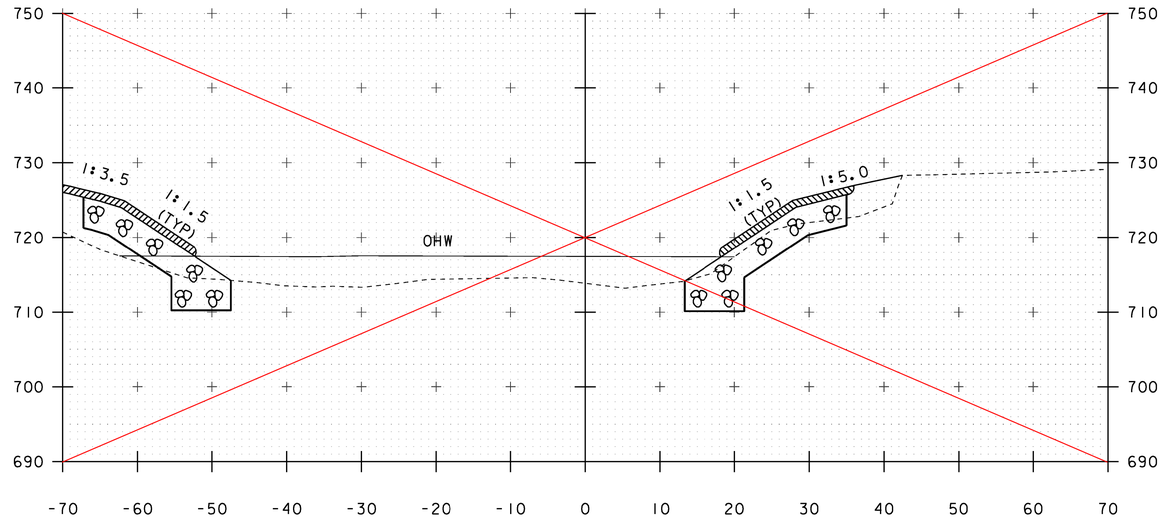

9+50 SEE ADDITIONAL CHANNEL SECTIONS SHEET 2 OF 7.

SCALE 1" = 10'-0"
10 0 10

STA. 9+00 TO STA. 9+75

PROJECT NAME: JAMAICA
PROJECT NUMBER: ER-BRF 015-1(23)

FILE NAME: sllb316.xs.dgn
PROJECT LEADER: K. HIGGINS
DESIGNED BY: G. LAROCHE
CHANNEL SECTIONS 2

PLOT DATE: 07-DEC-2012
DRAWN BY: K. FRIEDLAND
CHECKED BY: G. LAROCHE
SHEET 71 OF 82

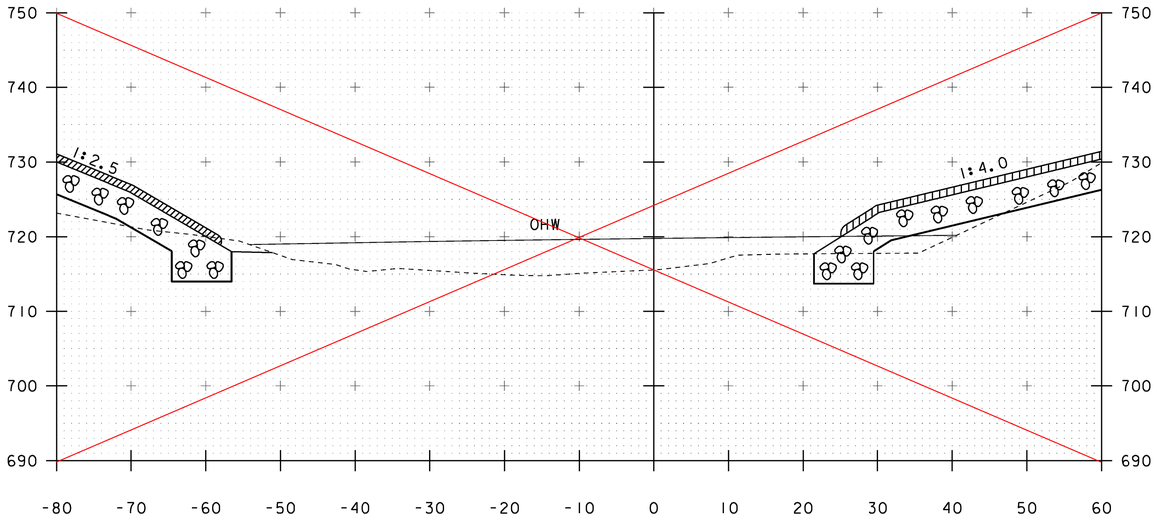

10+25 SEE ADDITIONAL CHANNEL SECTIONS SHEET 4 OF 7.

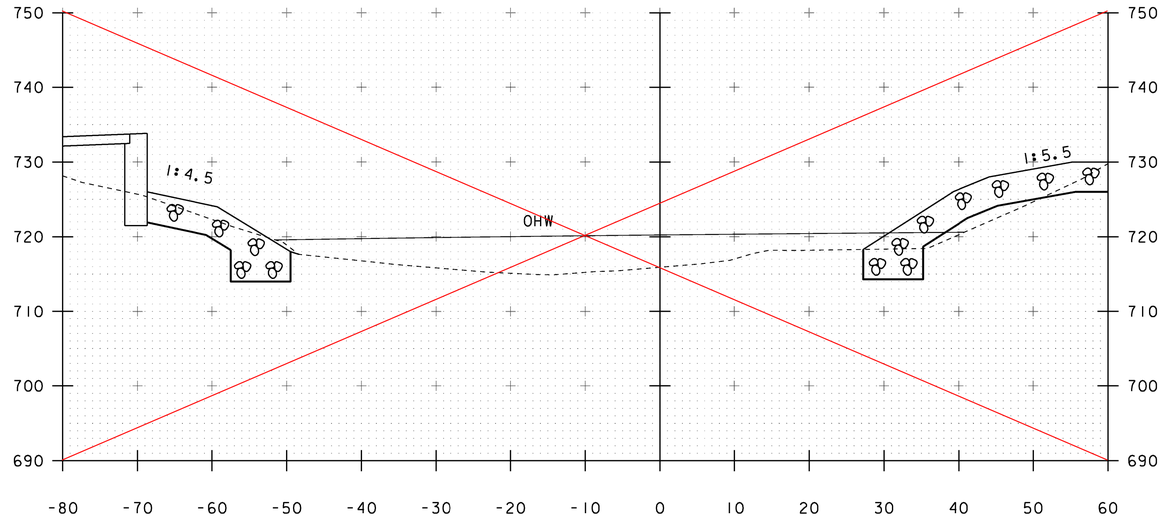

10+40 SEE ADDITIONAL CHANNEL SECTIONS SHEET 5 OF 7.

STA 10+31.50 LT
END GRUBBING MATERIAL

STA 10+30.00 RT
END GRUBBING MATERIAL

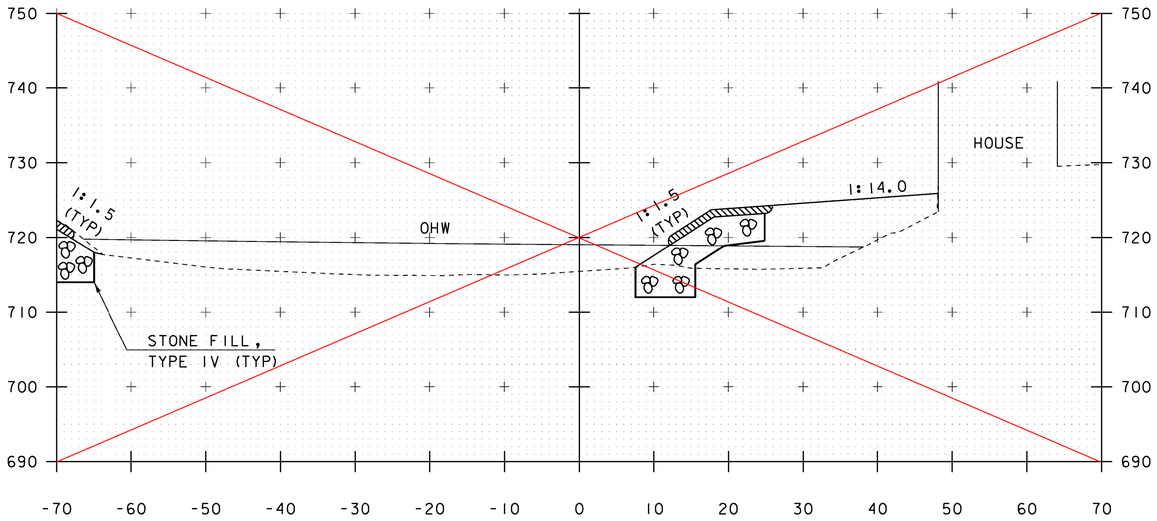

10+00 SEE ADDITIONAL CHANNEL SECTIONS SHEET 3 OF 7.

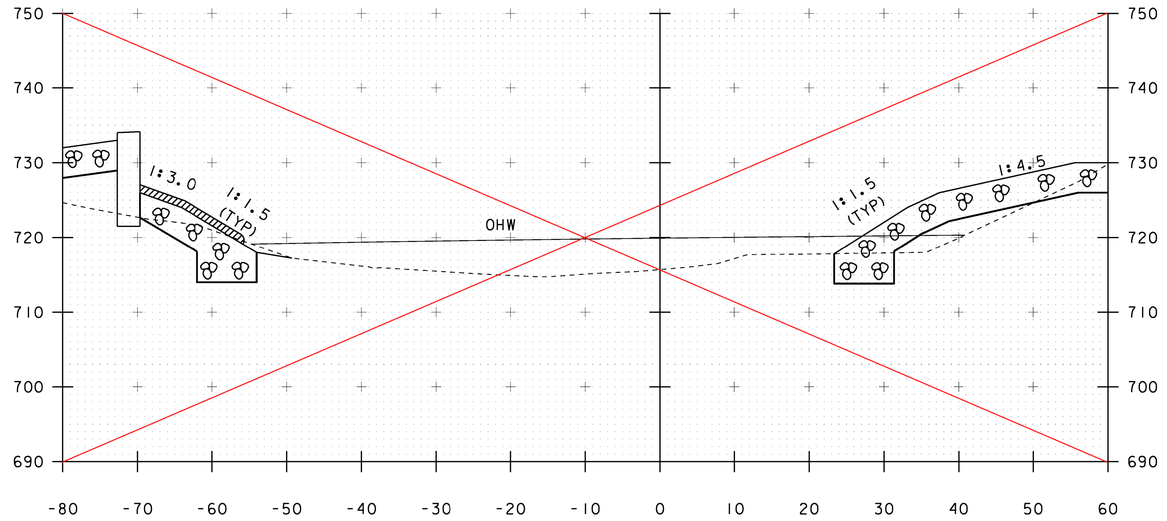

10+30 SEE ADDITIONAL CHANNEL SECTIONS SHEET 4 OF 7.

SCALE 1" = 10'-0"
10 0 10

STA. 10+00 TO STA. 10+40

PROJECT NAME: JAMAICA
PROJECT NUMBER: ER-BRF 015-1(23)

FILE NAME: sllb316.xs.dgn
PROJECT LEADER: K. HIGGINS
DESIGNED BY: G. LAROCHE
CHANNEL SECTIONS 3

PLOT DATE: 07-DEC-2012
DRAWN BY: K. FRIEDLAND
CHECKED BY: G. LAROCHE
SHEET 72 OF 82

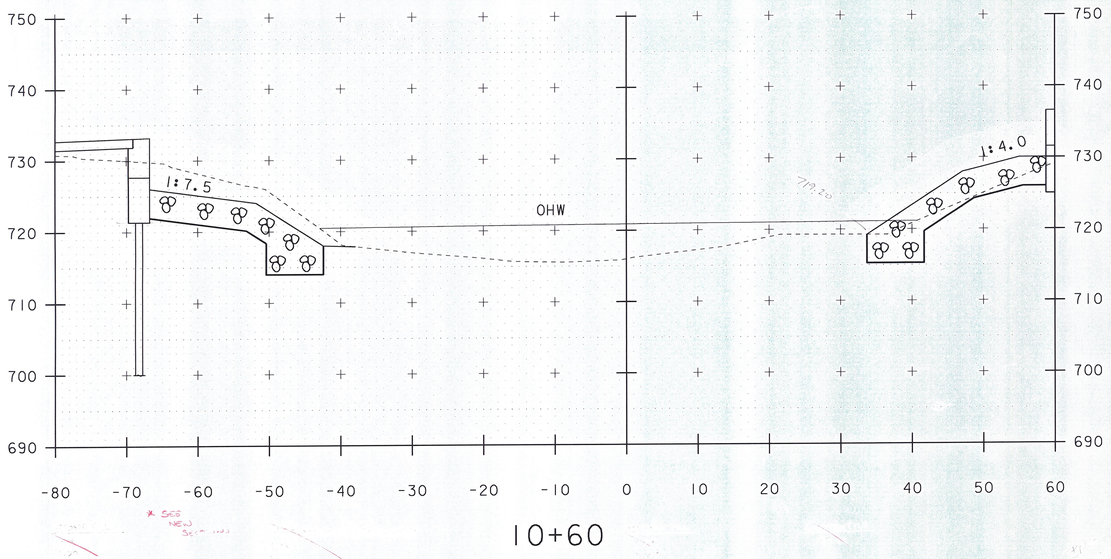

10+60

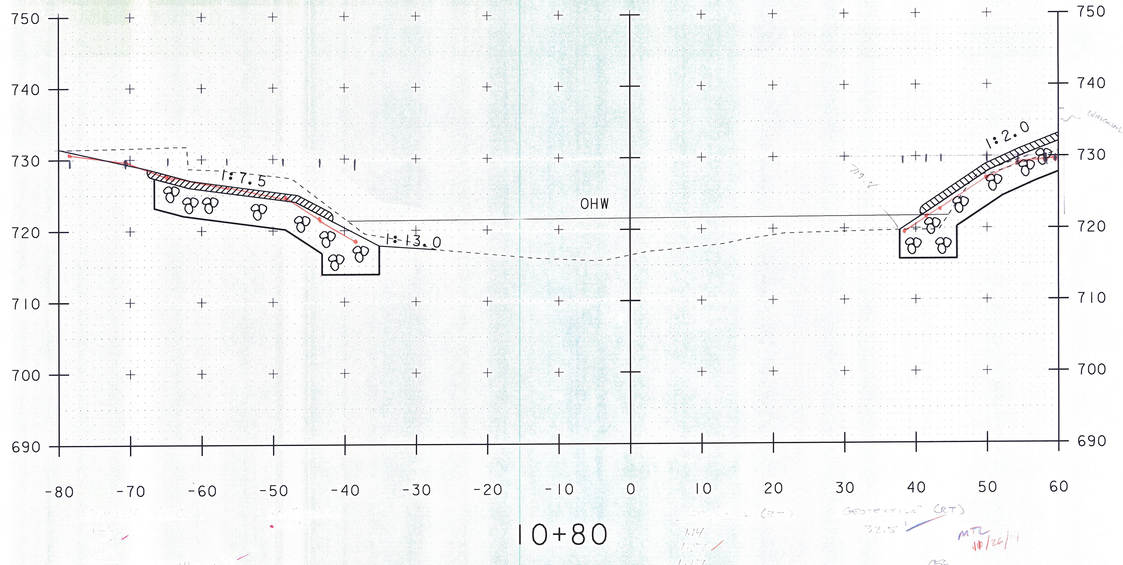

10+80

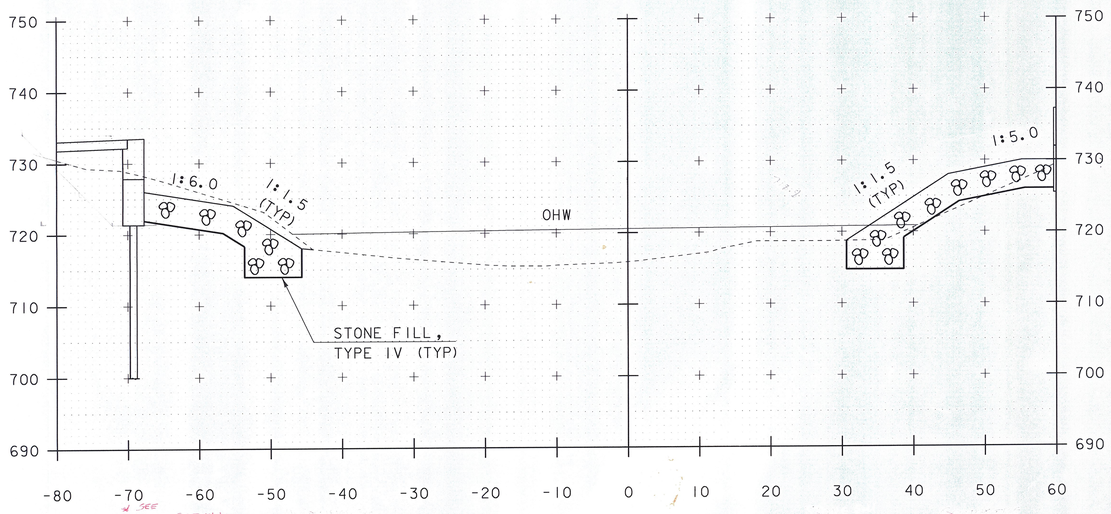

10+50

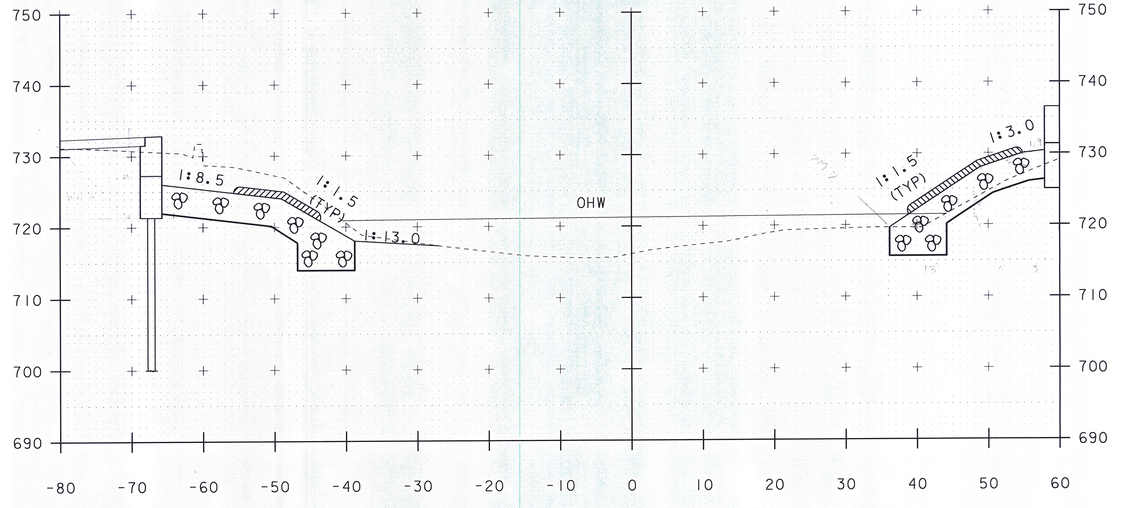

STA 10+69.00 LT
BEGIN GRUBBING MATERIAL

10+70

STA 10+69.00 RT
BEGIN GRUBBING MATERIAL

SCALE 1" = 10'-0"
10 0 10

STA. 10+50 TO STA. 10+80

PROJECT NAME:	JAMAICA
PROJECT NUMBER:	ER-BRF 015-1(23)
FILE NAME: sllb316.xs.dgn	PLOT DATE: 07-DEC-2012
PROJECT LEADER: K. HIGGINS	DRAWN BY: K. FRIEDLAND
DESIGNED BY: G. LAROCHE	CHECKED BY: G. LAROCHE
CHANNEL SECTIONS 4	SHEET 73 OF 82

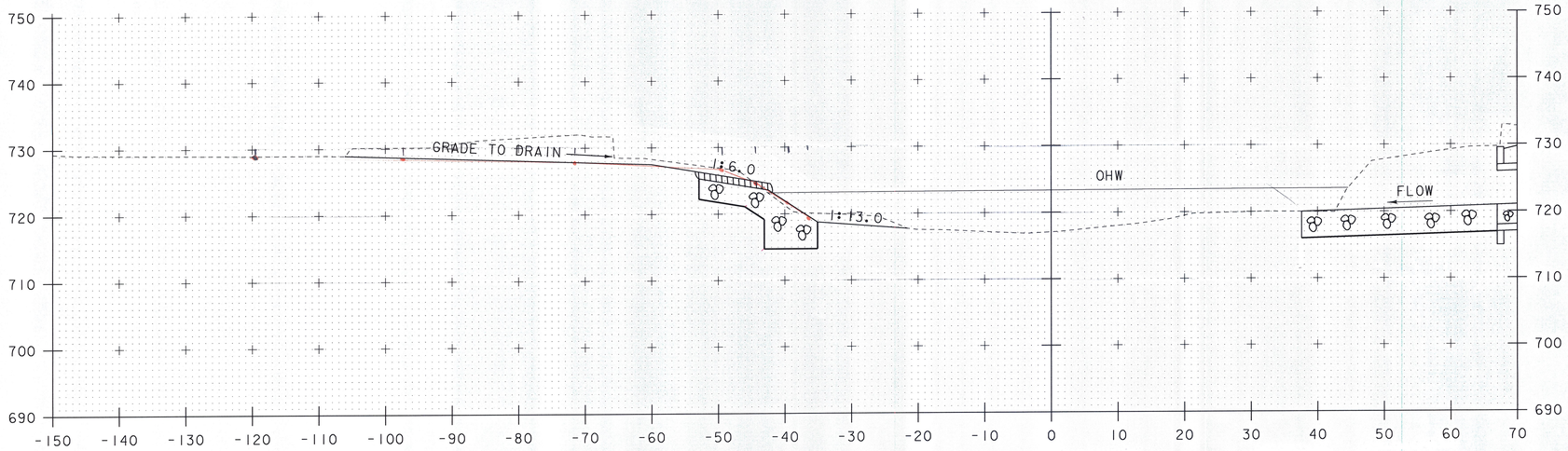

11+00

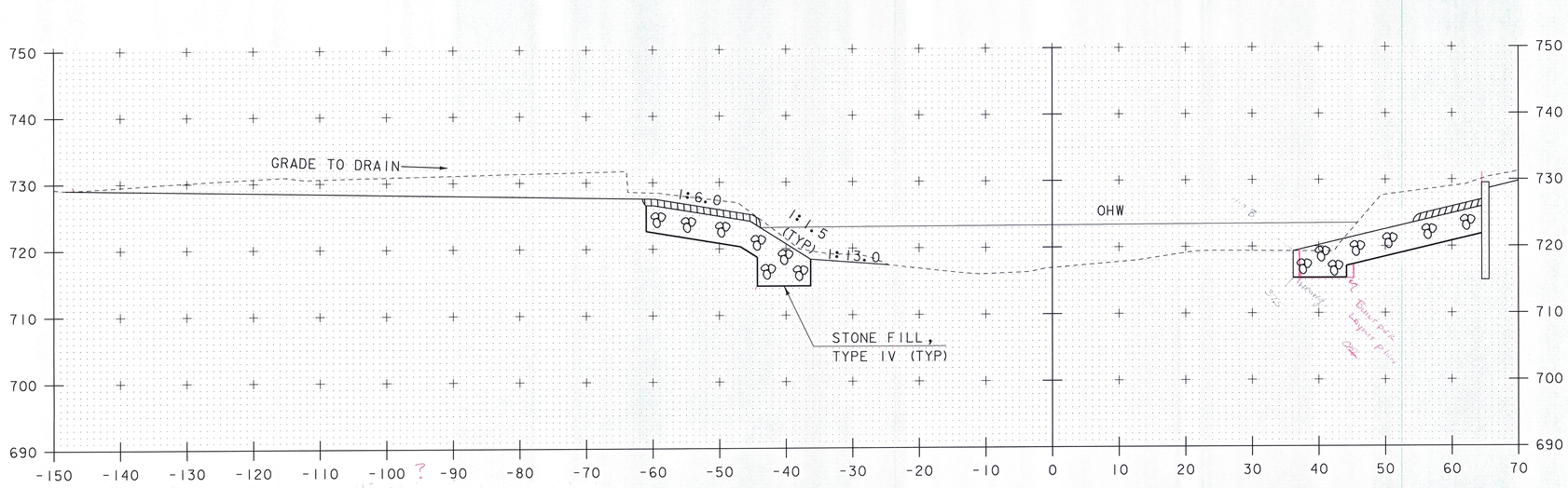

10+90

SCALE 1" = 10'-0"
10 0 10

STA. 10+90 TO STA. 11+00

PROJECT NAME:	JAMAICA
PROJECT NUMBER:	ER-BRF 015-1(23)
FILE NAME: sllb316.xs.dgn	PLOT DATE: 07-DEC-2012
PROJECT LEADER: K. HIGGINS	DRAWN BY: K. FRIEDLAND
DESIGNED BY: G. LAROCHE	CHECKED BY: G. LAROCHE
CHANNEL SECTIONS 5	SHEET 74 OF 82

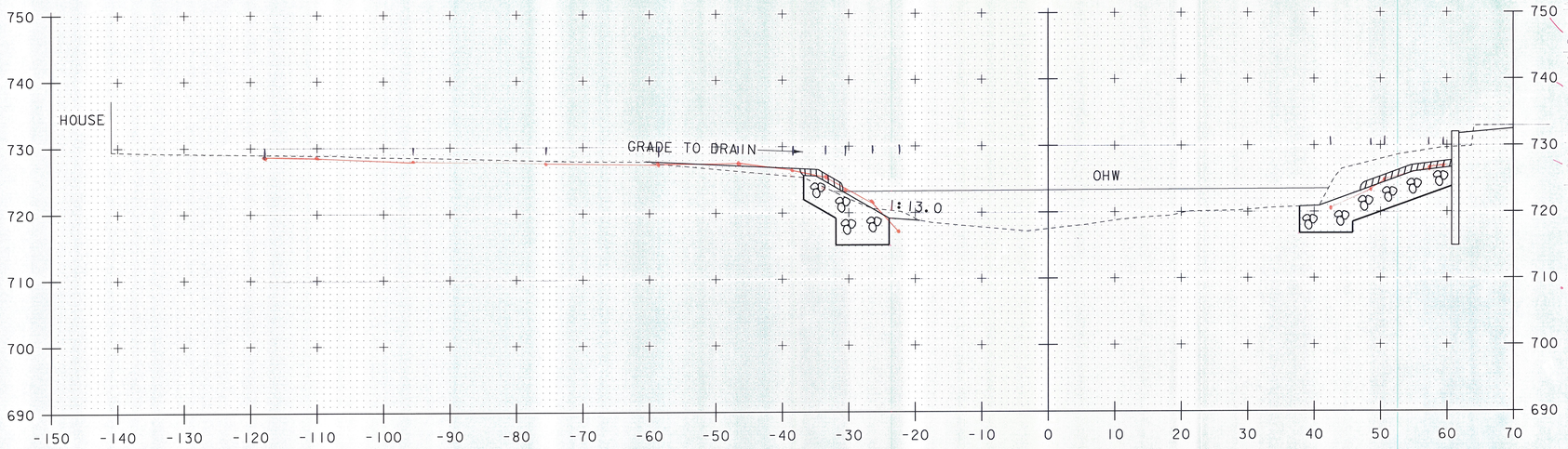

11+20

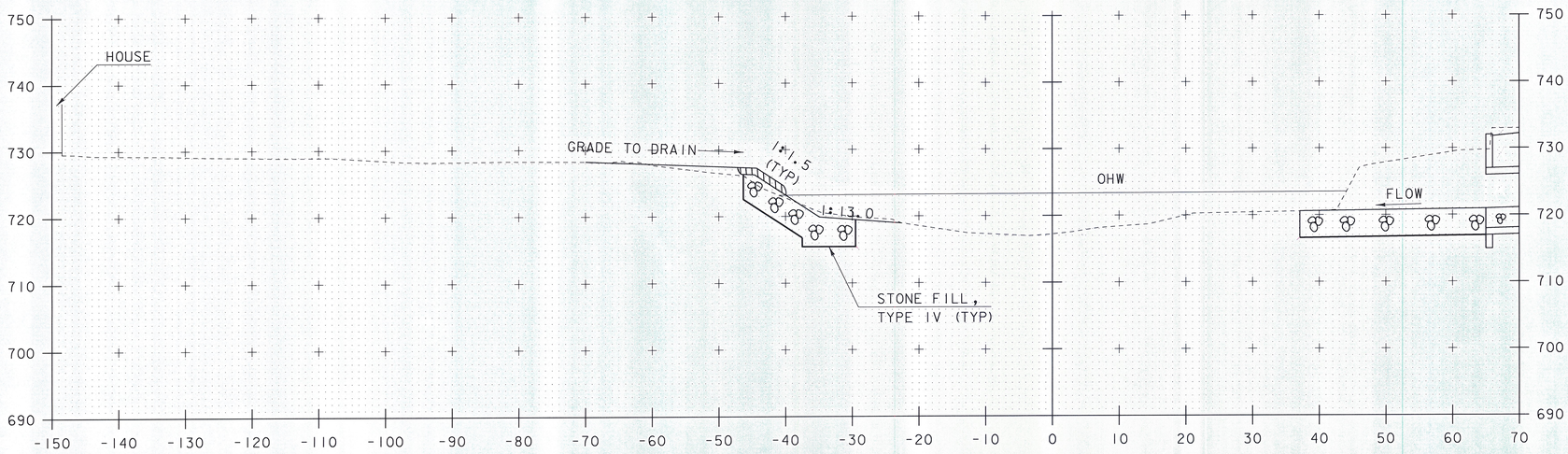

11+10

SCALE 1" = 10'-0"
10 0 10

STA. 11+10 TO STA. 11+20

PROJECT NAME:	JAMAICA
PROJECT NUMBER:	ER-BRF 015-1(23)
FILE NAME: sllb316.xs.dgn	PLOT DATE: 07-DEC-2012
PROJECT LEADER: K. HIGGINS	DRAWN BY: K. FRIEDLAND
DESIGNED BY: G. LAROCHE	CHECKED BY: G. LAROCHE
CHANNEL SECTIONS 6	SHEET 75 OF 82

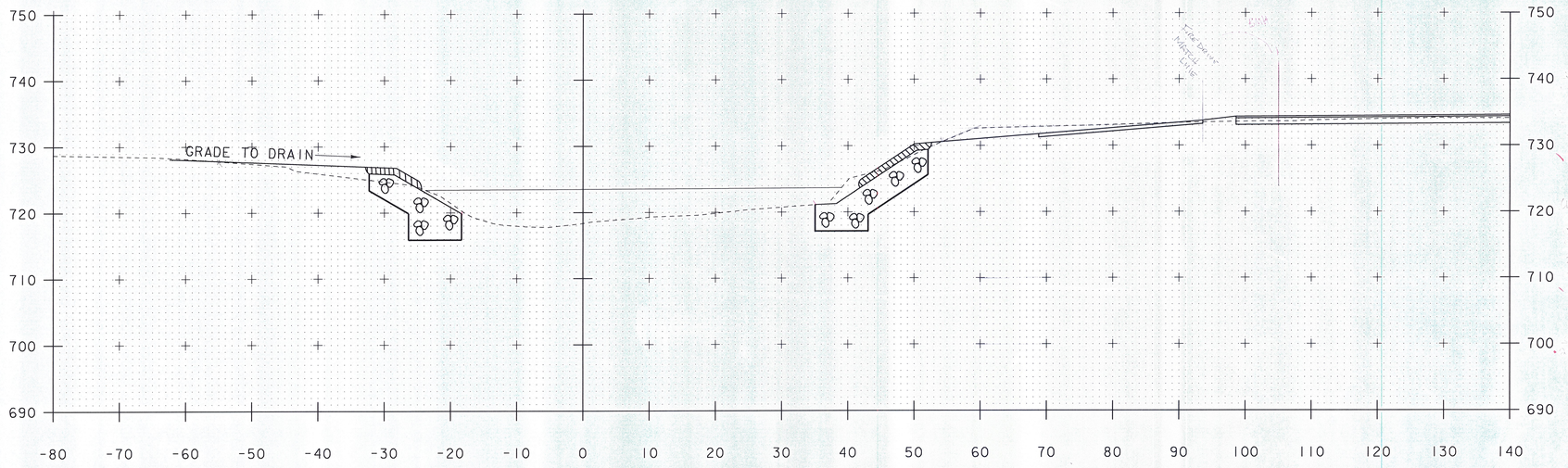

11+40

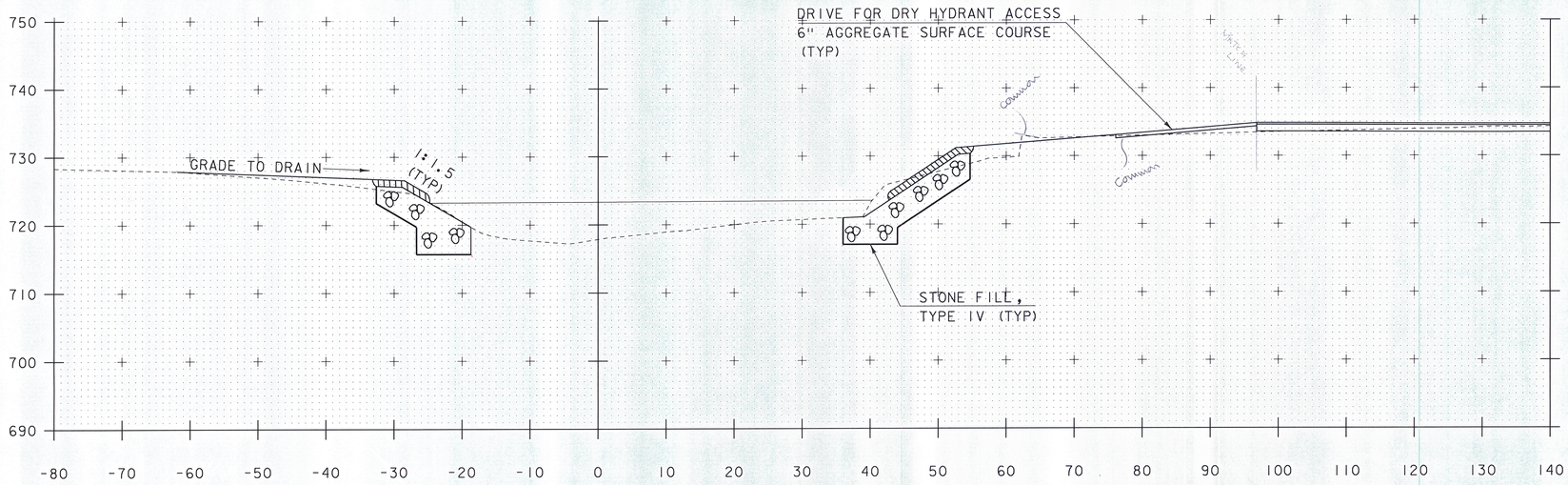

11+30

SCALE 1" = 10'-0"
10 0 10

STA. 11+30 TO STA. 11+40

PROJECT NAME:	JAMAICA
PROJECT NUMBER:	ER-BRF 015-1(23)
FILE NAME: sllb316.xs.dgn	PLOT DATE: 07-DEC-2012
PROJECT LEADER: K. HIGGINS	DRAWN BY: K. FRIEDLAND
DESIGNED BY: G. LAROCHE	CHECKED BY: G. LAROCHE
CHANNEL SECTIONS 7	SHEET 76 OF 82

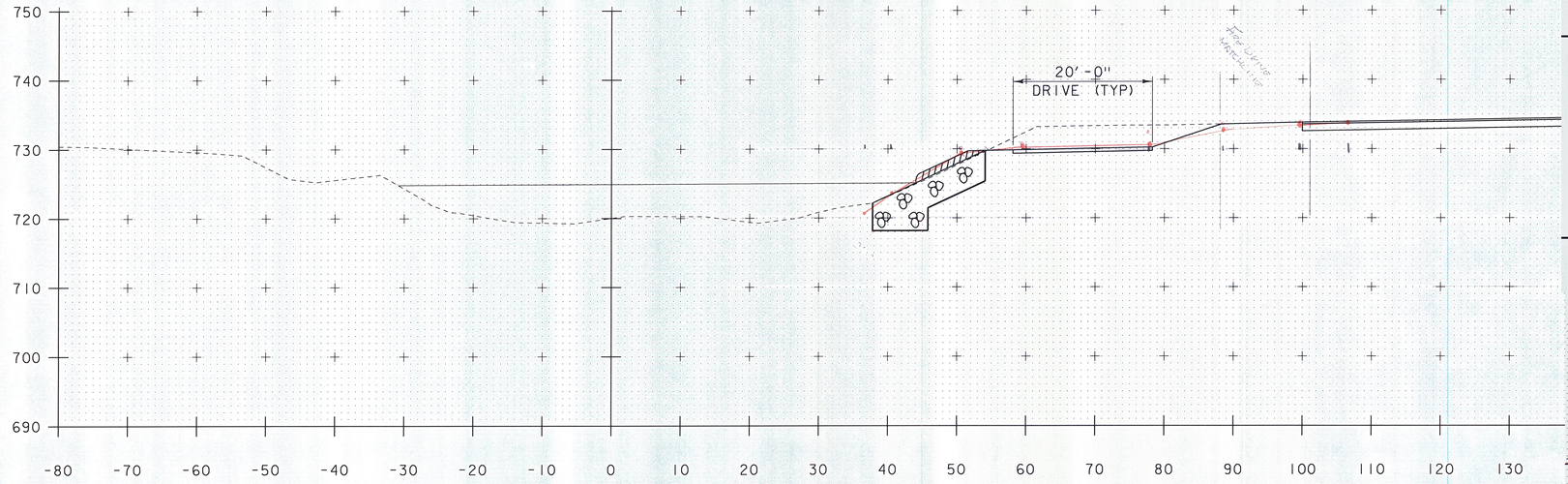

11+75

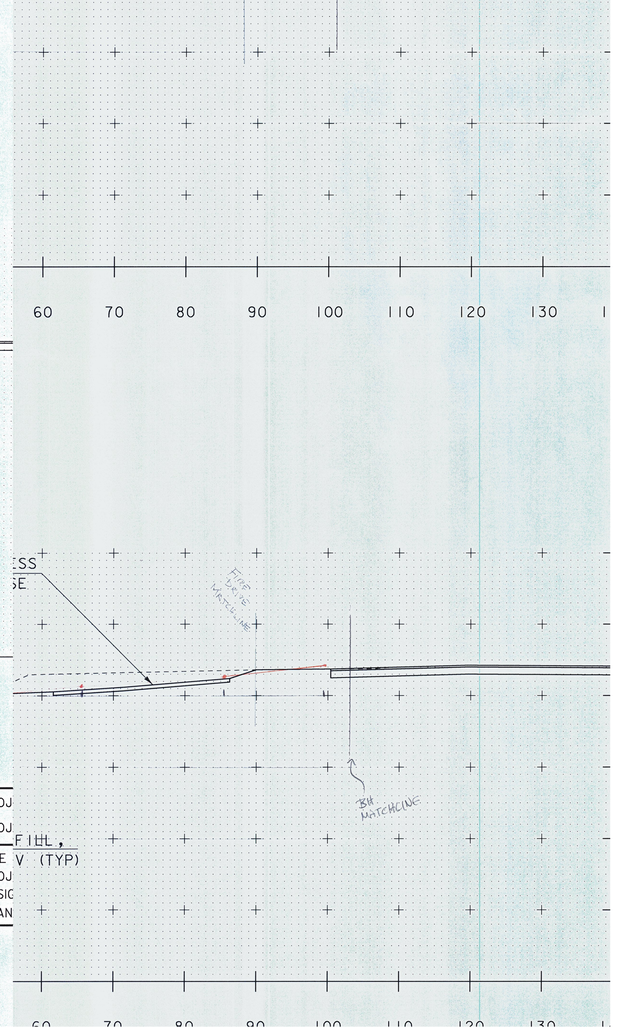

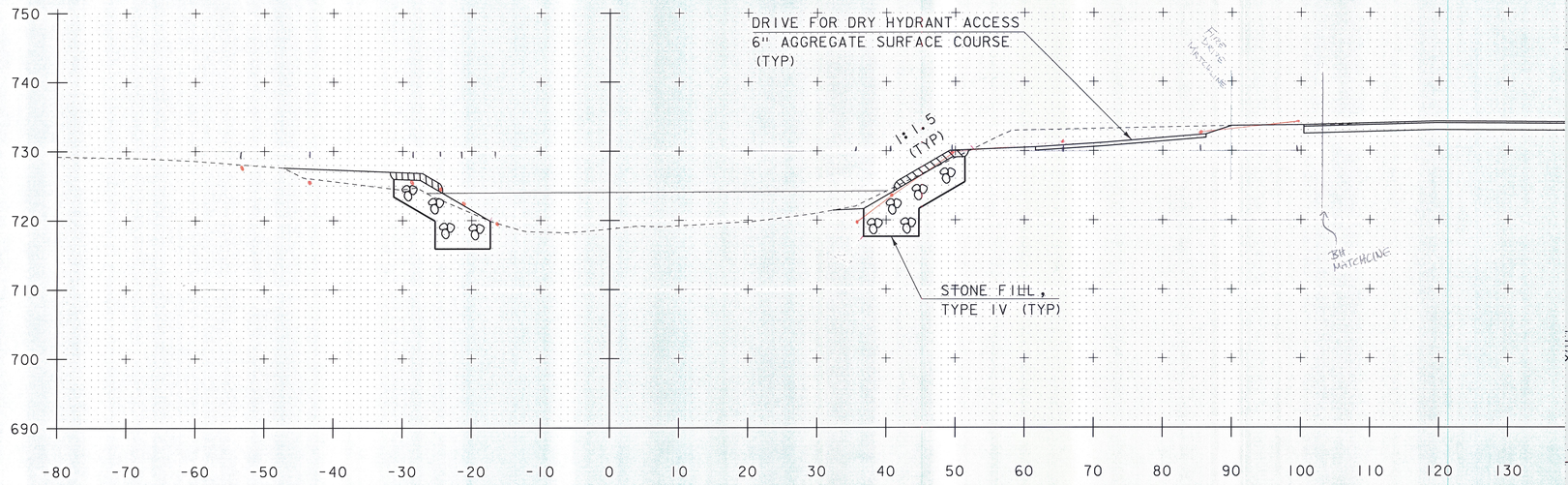

11+50

STA 11+55.00 LT
END UNCLASSIFIED CHANNEL EXCAVATION
END GEOTEXTILE UNDER STONE FILL
END STONE FILL, TYPE IV
END GRUBBING MATERIAL

SCALE 1" = 10'-0"
10 0 10

PROJEC
PROJEC
FILE NA
PROJEC
DESIGNE
CHANNE
STA. 11+50 TO STA. 11+75

PROJ
PROJ
FILL,
FILE V (TYP)
PROJ
DESIG
CHAN
STA. 11+50 TO STA. 11+75

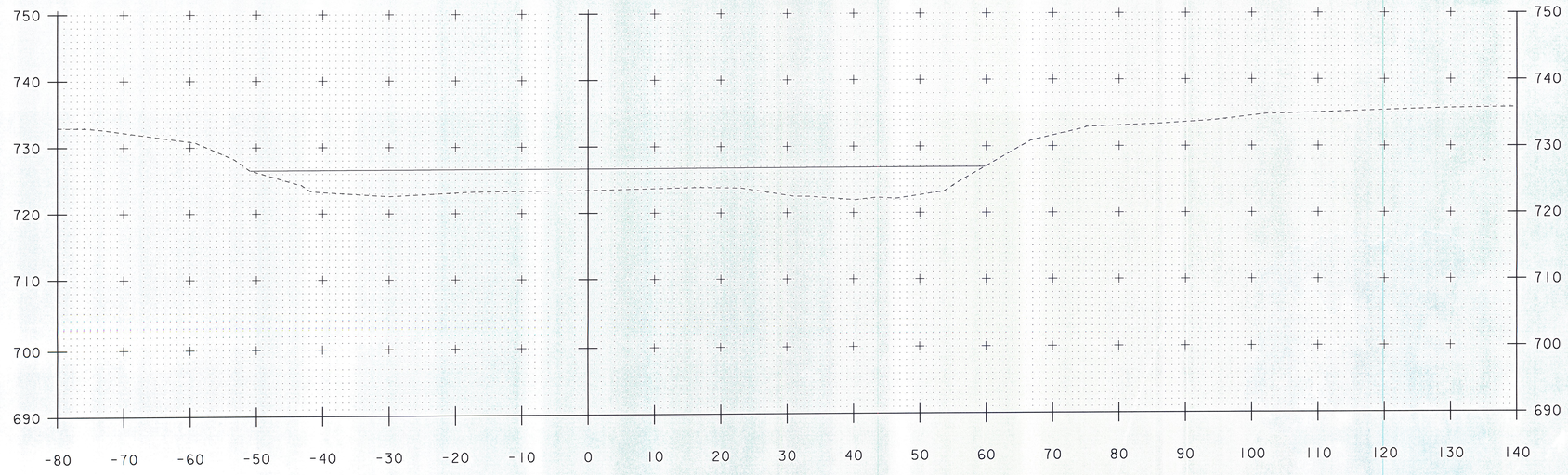

12+25

STA 12+25.00 RT
END UNCLASSIFIED CHANNEL EXCAVATION
END GEOTEXTILE UNDER STONE FILL
END STONE FILL, TYPE IV
END GRUBBING MATERIAL

CEG 3/28/14

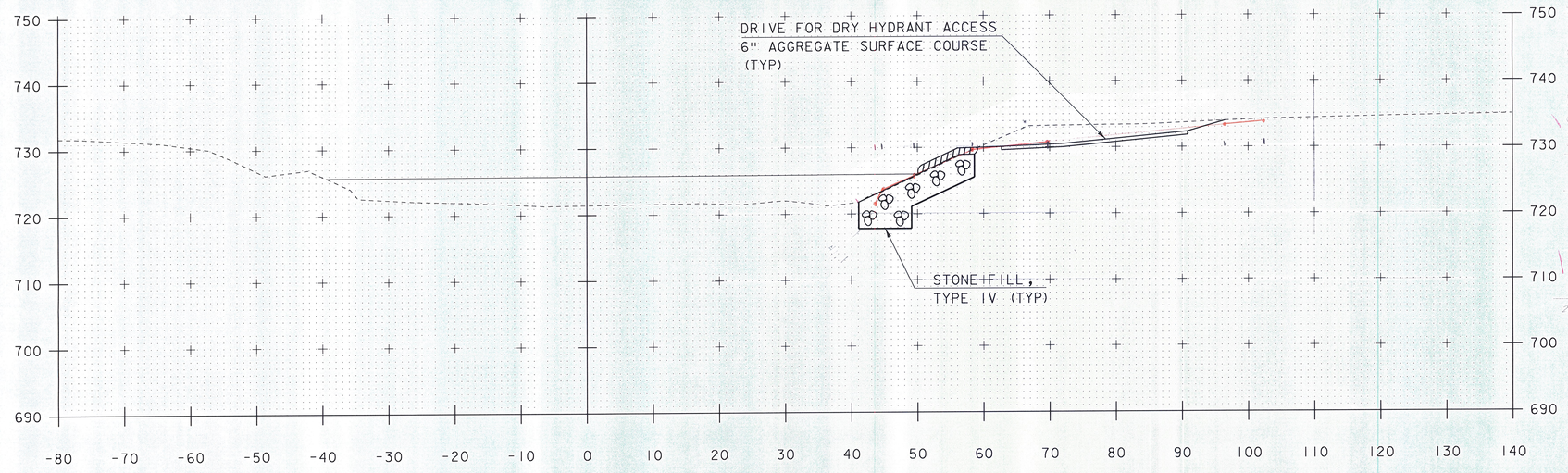

12+00

SCALE 1" = 10'-0"
10 0 10

STA. 12+00 TO STA. 12+25

PROJECT NAME:	JAMAICA
PROJECT NUMBER:	ER-BRF 015-1(23)
FILE NAME: sllb316.xs.dgn	PLOT DATE: 07-DEC-2012
PROJECT LEADER: K. HIGGINS	DRAWN BY: K. FRIEDLAND
DESIGNED BY: G. LAROCHE	CHECKED BY: G. LAROCHE
CHANNEL SECTIONS 9	SHEET 78 OF 82

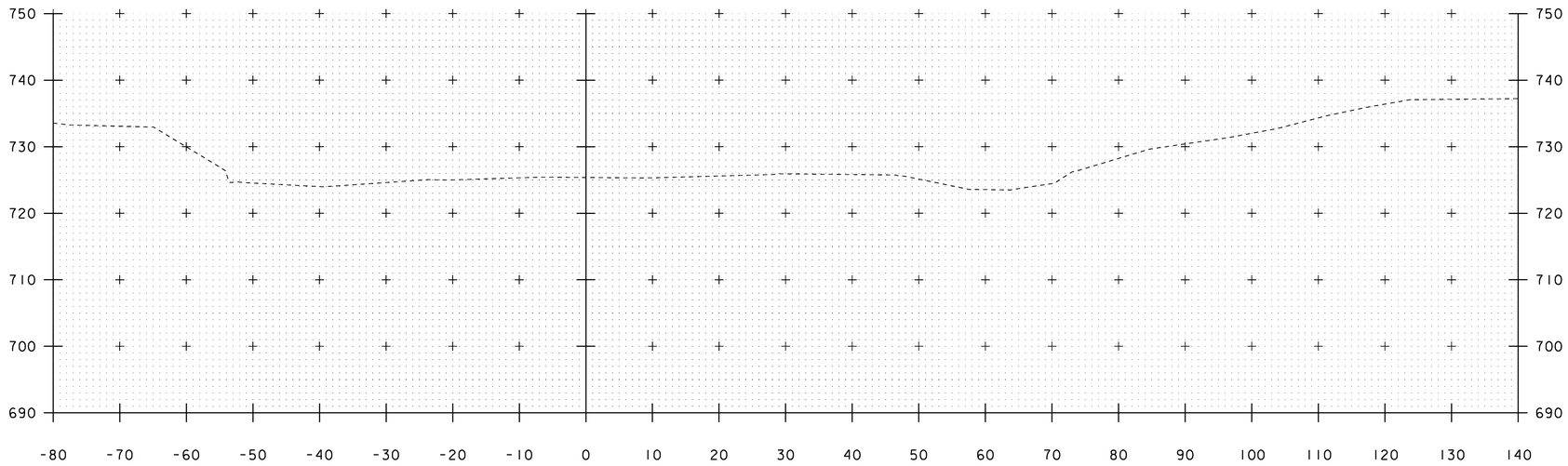

12+75

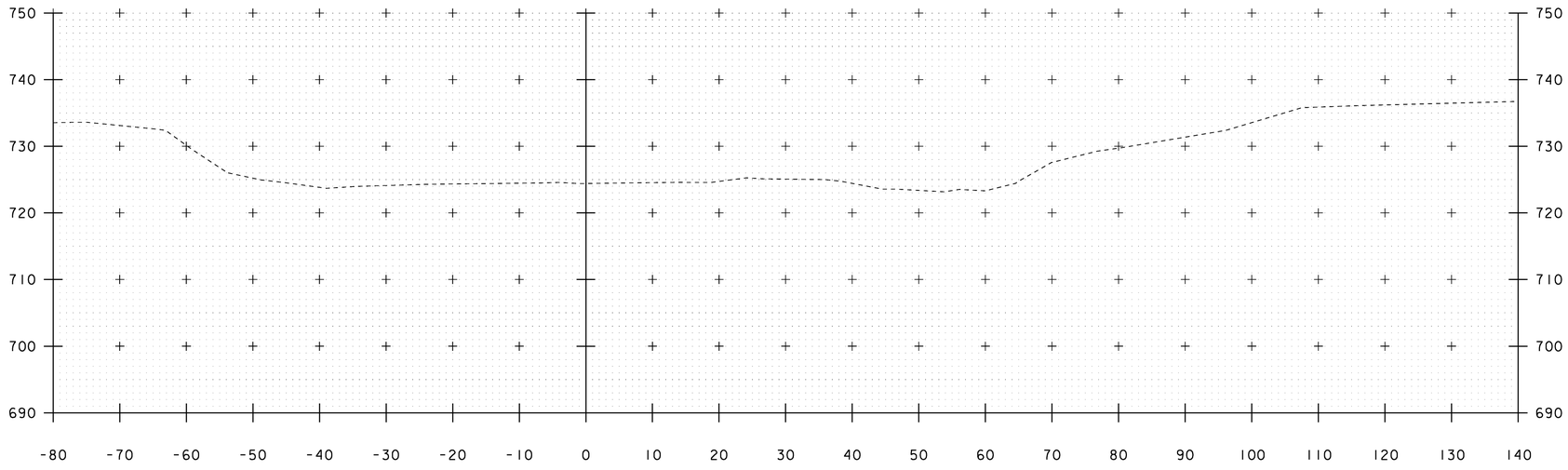

12+50

SCALE 1" = 10'-0"
10 0 10

STA. 12+50 TO STA. 12+75

PROJECT NAME:	JAMAICA
PROJECT NUMBER:	ER-BRF 015-1(23)
FILE NAME: sllb316.xs.dgn	PLOT DATE: 07-DEC-2012
PROJECT LEADER: K. HIGGINS	DRAWN BY: K. FRIEDLAND
DESIGNED BY: G. LAROCHE	CHECKED BY: G. LAROCHE
CHANNEL SECTIONS 10	SHEET 79 OF 82

STATE OF VERMONT
AGENCY OF TRANSPORTATION

RIGHT - OF - WAY DETAIL SHEET

TABLE OF PROPERTY ACQUISITION

PARCEL NO.	PROPERTY OWNER	SHEET NO.	BEGINNING STATION	ENDING STATION	TAKE	REMAINDER	RIGHT			RECORDING DATA					REMARKS
					AREA±	AREA±	TYPE	(T)/(P)	AREA ±	TITLE	DATE	TOWN / CITY	BOOK	PAGE	
1	BECKWITH, JOEL & ELAINE C.	3	208+96 LT	211+04 LT			UTILITY	(T)	0.11 A	GTR	09/17/12	JAMAICA	113	347-350	4,640 SF±, VALUE AS ER
			209+38 LT	211+03.03 LT			DETOUR	(T)	0.12 A						INCL. TEMP BRIDGE, CONCRETE WALL
															AND CHANNEL REPAIR WORK; 5,020 SF±,
															VALUE AS ER
			209+38 LT	210+86 LT			INSTALL	(T)	1,180 SF						BF & EC
			209+42 LT	210+64 LT			SLOPE	(T)	2,900 SF						INCL. EC
			209+53 LT												W-1 MONITOR WELL
			209+96 LT												S-1 MONITOR SEPTIC SYSTEM
			210+30 LT	210+80 LT			INSTALL	(T)	1,450 SF						STONE FILL FOR STREAMBANK
															STABILIZATION
2	JAMAICA VOLUNTEER FIRE & RESCUE, INC.	3, 4	210+76.85 LT	214+50.00 LT	0.39 A							JAMAICA			16,820 SF±
	joined by THE JAMAICA TIMBER COMPANY		210+77 LT	213+61 LT			DETOUR	(T)	0.26 A						INCL. TEMP BRIDGE, GUARDRAILS AND
															CHANNEL REPAIR WORK; 11,020 SF±;
															VALUE AS ER
			210+87 LT	214+18 LT			UTILITY	(T)	0.19 A						8,240 SF±; VALUE AS ER
			211+37 LT	212+37 LT			INSTALL	(T)	475 SF						BF & EC
			211+43 LT	211+95 LT			INSTALL	(T)	1,510 SF						STONE FILL FOR STREAMBANK
															STABILIZATION
			211+60 LT	212+17 LT			SLOPE	(T)	530 SF						INCL. EC
			211+68 LT	212+36 LT			DRIVE	(T)	2,020 SF						20' DRIVE FOR DRY HYDRANT ACCESS
			211+92 LT	212+32 LT			SLOPE	(T)	1,150 SF						
			212+13 LT	212+82 LT			DRIVE	(T)	570 SF						45' PAVED, MM 0404
			212+77 LT	214+37 LT			SLOPE	(T)	1,490 SF						
			212+78 LT	212+92 LT			INSTALL & MAINT	(P)							GUARDRAIL
			213+18 LT	214+42 LT			INSTALL	(T)	640 SF						BF
3A	TOWN OF JAMAICA	4	213+78 LT	214+81 LT			APPROACH	(T)		GTR	11/05/12	JAMAICA	113	540-541	INCL. REPLACING GUARDRAIL, INSTALLING
															STONE FILL, EC & BF, GRADING AND
															PAVING CASTLE HILL ROAD TH51
3B		3	211+43 RT	212+12 RT			APPROACH	(T)							INCL. INSTALLING PDF & EC, GRADING
															AND PAVING WATER STREET TH18
			210+62 RT	211+13 RT			INSTALL	(T)	320 SF						BF & EC
4	RYBOLT, RICHARD E. & ANITA L.	3	210+49 RT	211+11 RT			INSTALL	(T)	630 SF	CONDEM	10/09/12	JAMAICA	113	465-478	EC
			210+53 RT	211+37 RT			INSTALL	(T)	2,400 SF	HEARING EXAMINER'S REPORT					STONE FILL FOR STREAMBANK
										GTR	10/17/12	JAMAICA	113	510-511	STABILIZATION
			210+64 RT	211+57.25 RT			SLOPE	(T)	1,840 SF						
5	BLUMING, JOEL W.	3	208+83 RT	209+63 RT			INSTALL	(T)	60 SF						BF
			209+43 RT	210+44 RT			INSTALL	(T)	1,450 SF						BF & EC
			209+47 RT	210+39 RT			INSTALL	(T)	2,430 SF						STONE FILL FOR STREAMBANK
															STABILIZATION
			209+75 RT	209+85 RT			SLOPE	(T)	55 SF						
			209+77 RT	209+84 RT			REMOVE	(T)							GUARDRAIL

TABLE OF REVISIONS

REVISION NO.	SHEET NO.	DESCRIPTION	DATE
1	2	PARCEL 5 BLUMING - SLOPE (T) STA 209+75 RT - 209+85 RT 55 S	07/17/12
		ADDED TO DETAIL SHEET, LAYOUT SHEET OKAY.	
		COMPLETED BY: MT C.O. #9773 APPROVED BY: HP	
2	2, 3	PARCEL 2, JAMAICA VOLUNTEER FIRE & RESCUE - ADDED 20'	08/28/12
		DRIVE FOR DRY HYDRANT ACCESS.	
		COMPLETED BY: MT C.O. #9777 APPROVED BY: HP	

PLAN LEGEND

- EXISTING RIGHT-OF-WAY
- TAKING WITH ACCESS
- TAKING WITHOUT ACCESS
- CLEAR ZONE (CZ)
- PROPERTY LINE (PL)
- TOE OF SLOPE
- TOP OF CUT
- SLOPE RIGHT (SR (P))
- CONSTRUCTION RIGHT (CONST. (T))
- PROJECT DEMARCATION FENCE (PDF)

EC	-EROSION CONTROL
(P)	-PERMANENT
(T)	-TEMPORARY
DR.	-DRAINAGE RIGHT
DIT.	-DITCHING RIGHT
CH.	-CHANNEL RIGHT
DRIVE	-DRIVE RIGHT
CUL.	-CULVERT RIGHT
BND	-BOUND (PROPERTY MARKER)
SR	-SLOPE RIGHT
UE	-UTILITY EASEMENT

APPROVED: HARRY PETROVS DATE: 07-05-12
CHIEF, PLANS & TITLES

PROJECT NAME:	**JAMAICA**		
PROJECT NUMBER:	**ER-BRF 015-1(23)**		
FILE NAME:	**r11b316DetailSheet.xls**	PLOT DATE:	07-DEC-2012
PROJECT LEADER:	**K. HIGGINS**	DRAWN BY:	**M. TROTTIER**
DESIGNED BY:	**G. LAROCHE**	CHECKED BY:	**E. PIERCE**
R.O.W. DETAIL SHEET #1		SHEET 80 OF 82	

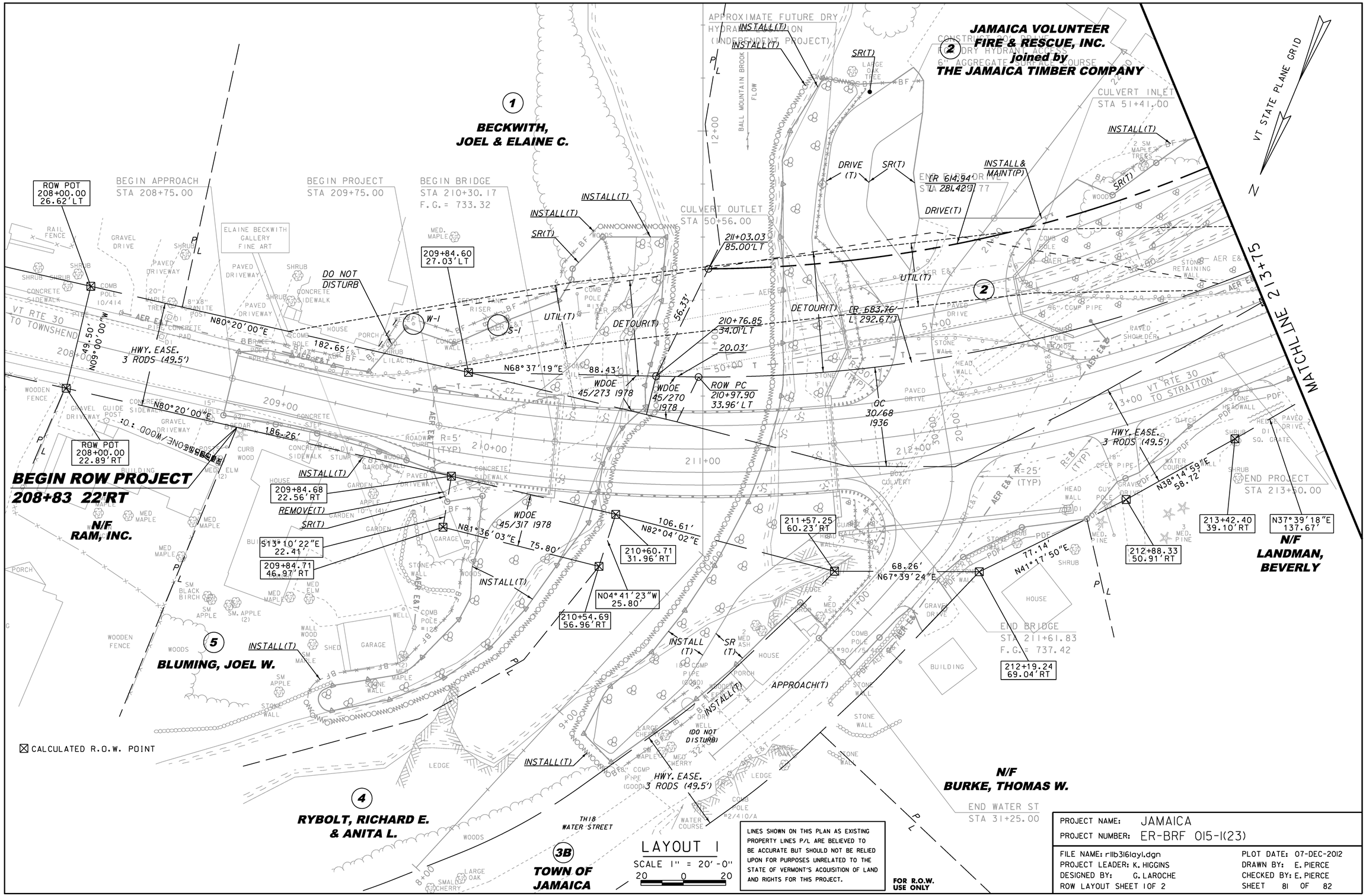

JAMAICA VOLUNTEER FIRE & RESCUE, INC.
joined by
THE JAMAICA TIMBER COMPANY
BECKWITH, JOEL & ELAINE C.
BEGIN ROW PROJECT
208+83 22'RT
N/F RAM, INC.
BLUMING, JOEL W.
RYBOLT, RICHARD E. & ANITA L.
TOWN OF JAMAICA
N/F BURKE, THOMAS W.
N/F LANDMAN, BEVERLY
MATCHLINE 213+75
VT STATE PLANE GRID
N
BEGIN APPROACH STA 208+75.00
BEGIN PROJECT STA 209+75.00
BEGIN BRIDGE STA 210+30.17 F.G.= 733.32
CULVERT OUTLET STA 50+56.00
CULVERT INLET STA 51+41.00
END PROJECT STA 213+50.00
END BRIDGE STA 211+61.83 F.G.= 737.42
END WATER ST STA 31+25.00
ROW POT 208+00.00 26.62'LT
ROW POT 208+00.00 22.89'RT
209+84.60 27.03'LT
209+84.68 22.56'RT
209+84.71 46.97'RT
211+03.03 85.00'LT
210+76.85 34.01'LT
210+60.71 31.96'RT
210+54.69 56.96'RT
211+57.25 60.23'RT
212+19.24 69.04'RT
212+88.33 50.91'RT
213+42.40 39.10'RT
ROW PC 210+97.90 33.96'LT
HWY. EASE. 3 RODS (49.5')
DO NOT DISTURB
DETOUR(T)
UTIL(T)
DRIVE(T)
INSTALL(T)
INSTALL & MAINT(P)
REMOVE(T)
APPROACH(T)
WDOE 45/273 1978
WDOE 45/270 1978
WDOE 45/317 1978
QC 30/68 1936
N80°20'00"E
N68°37'19"E
N81°36'03"E
N82°04'02"E
N04°41'23"W
N67°39'24"E
N41°17'50"E
N38°14'59"E
N37°39'18"E
S13°10'22"E
N09°00'00"W
VT RTE 30 TO TOWNSHEND
VT RTE 30 TO STRATTON
CALCULATED R.O.W. POINT
LAYOUT 1
SCALE 1" = 20'-0"
20 0 20
LINES SHOWN ON THIS PLAN AS EXISTING PROPERTY LINES P/L ARE BELIEVED TO BE ACCURATE BUT SHOULD NOT BE RELIED UPON FOR PURPOSES UNRELATED TO THE STATE OF VERMONT'S ACQUISITION OF LAND AND RIGHTS FOR THIS PROJECT.
FOR R.O.W. USE ONLY
PROJECT NAME: JAMAICA
PROJECT NUMBER: ER-BRF 015-1(23)
FILE NAME: r11b3161ay1.dgn
PROJECT LEADER: K. HIGGINS
DESIGNED BY: G. LAROCHE
ROW LAYOUT SHEET 1 OF 2
PLOT DATE: 07-DEC-2012
DRAWN BY: E. PIERCE
CHECKED BY: E. PIERCE
SHEET 81 OF 82

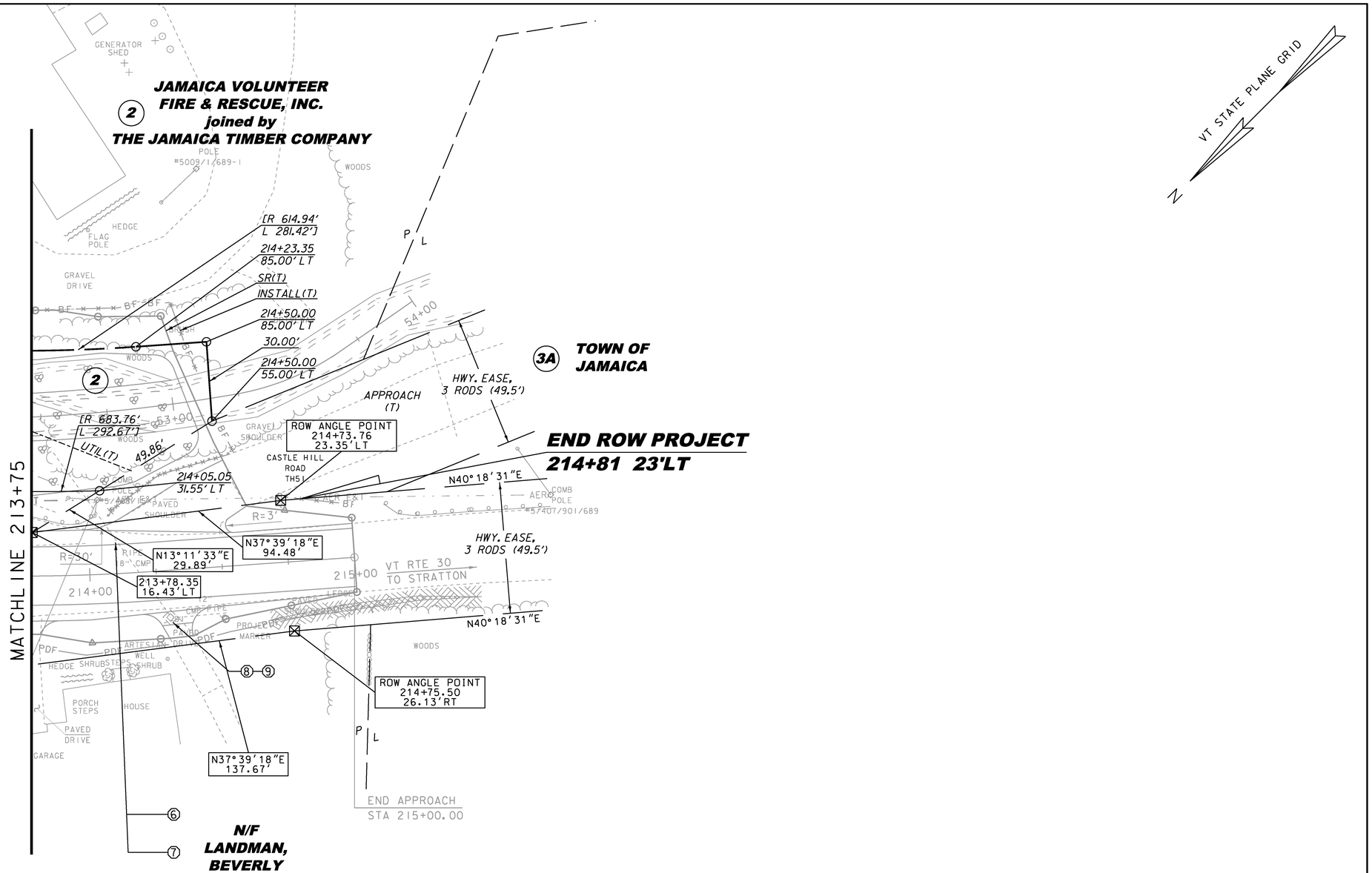

CONSTRUCT 10'-0" PAVED APRON
STA 214+19.48 - 214+42.00 RT

CULVERTS AND STORM DRAINS
(SEE DRAINAGE DETAIL SHEET)

⑥ STA 213+71.50 LT - 214+29.30 RT
⑦ STA 213+87.11 LT - 214+29.11 RT
⑧ STA 214+29.20 RT
⑨ STA 214+29.20 RT

☒ CALCULATED R.O.W. POINT

LAYOUT 2
SCALE 1" = 20'-0"
20 0 20

FOR R.O.W. USE ONLY

LINES SHOWN ON THIS PLAN AS EXISTING PROPERTY LINES P/L ARE BELIEVED TO BE ACCURATE BUT SHOULD NOT BE RELIED UPON FOR PURPOSES UNRELATED TO THE STATE OF VERMONT'S ACQUISITION OF LAND AND RIGHTS FOR THIS PROJECT.

PROJECT NAME: JAMAICA
PROJECT NUMBER: ER-BRF 015-1(23)

FILE NAME: r11b3161ay2.dgn
PROJECT LEADER: K. HIGGINS
DESIGNED BY: G. LAROCHE
ROW LAYOUT SHEET 2 OF 2

PLOT DATE: 07-DEC-2012
DRAWN BY: E. PIERCE
CHECKED BY: E. PIERCE
SHEET 82 OF 82

CONCRETE GENERAL NOTES

1. ALL EXPOSED EDGES OF CONCRETE SHALL BE CHAMFERED 1" x 1"

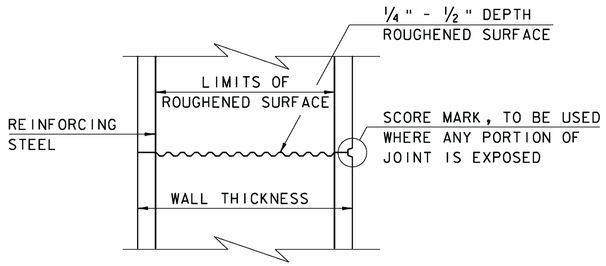

TYPICAL HORIZONTAL CONSTRUCTION JOINT
(NOT TO SCALE)

1. THE SURFACE OF THE CONCRETE CONSTRUCTION JOINTS SHALL BE CLEANED AND FREE OF LAITANCE.

2. IMMEDIATELY BEFORE NEW CONCRETE IS PLACED, ALL CONSTRUCTION JOINTS SHALL BE WETTED AND STANDING WATER REMOVED.

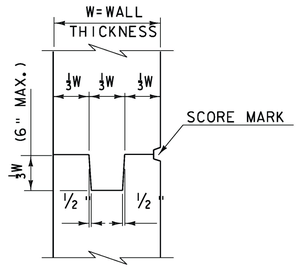

TYPICAL CONCRETE CONSTRUCTION JOINT
(NOT TO SCALE)

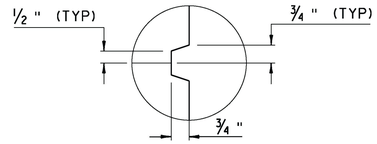

SCORE MARK DETAIL
(NOT TO SCALE)

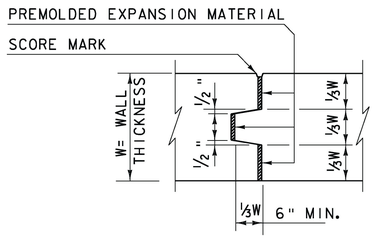

TYPICAL CONCRETE EXPANSION JOINT
(NOT TO SCALE)

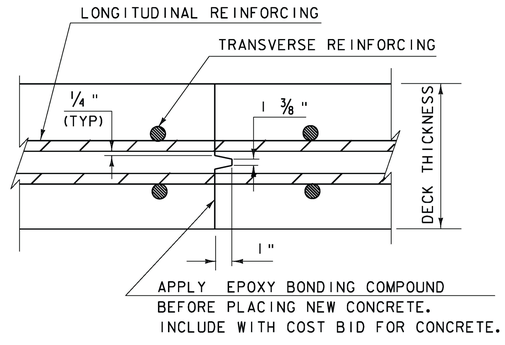

TRANSVERSE BRIDGE SLAB
CONSTRUCTION JOINT DETAILS
(NOT TO SCALE)

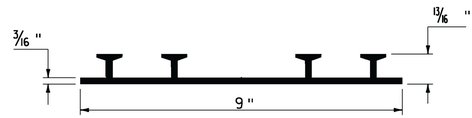

P.V.C. WATERSTOP FOR
CONSTRUCTION JOINTS
(NOT TO SCALE)

PAYMENT FOR THE P.V.C. WATERSTOP SHALL BE INCIDENTAL TO THE UNIT BID PRICE FOR THE ADJACENT CONCRETE.

OTHER CONFIGURATIONS OF WATERSTOP MAY BE USED UPON APPROVAL OF THE ENGINEER.

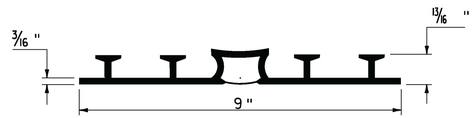

P.V.C. WATERSTOP FOR
EXPANSION JOINTS
(NOT TO SCALE)

PAYMENT FOR THE P.V.C. WATERSTOP SHALL BE INCIDENTAL TO THE UNIT BID PRICE FOR THE ADJACENT CONCRETE.

OTHER CONFIGURATIONS OF WATERSTOP MAY BE USED UPON APPROVAL OF THE ENGINEER.

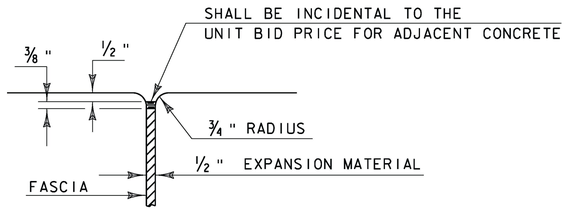

JOINT BETWEEN FASCIA
AND WINGWALL
(NOT TO SCALE)

REVISIONS	
MAY 7, 2010	APPROVED FOR USE BY VAOT STRUCTURES SECTION

CONCRETE DETAILS AND NOTES

VERMONT AGENCY OF TRANSPORTATION
STRUCTURES - SECTION

STRUCTURES DETAIL
SD-501.00

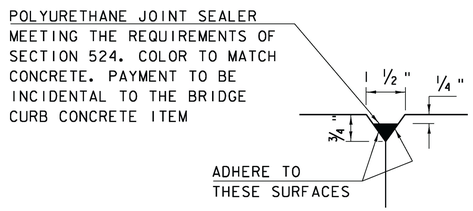

DETAIL "B"
(NOT TO SCALE)

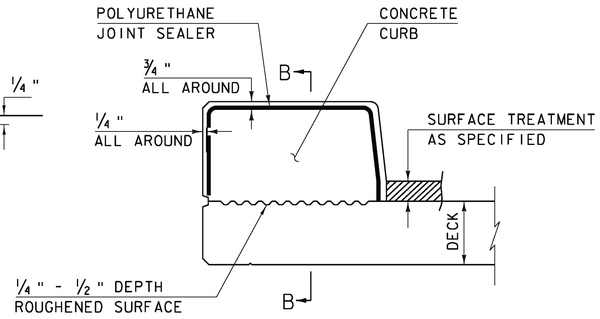

CONCRETE CURB JOINT SECTION
(NOT TO SCALE)

1. SEE TYPICAL HORIZONTAL CONSTRUCTION JOINT DETAIL FOR ADDITIONAL INFORMATION

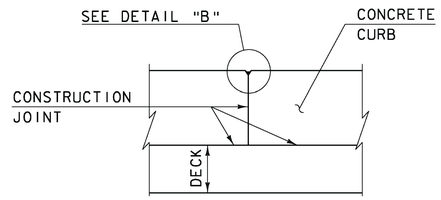

SECTION B - B
(NOT TO SCALE)

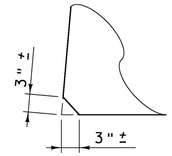

ACUTE ANGLE CLIP DETAIL
(NOT TO SCALE)

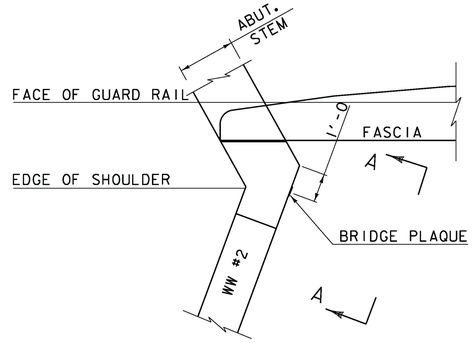

PLAN

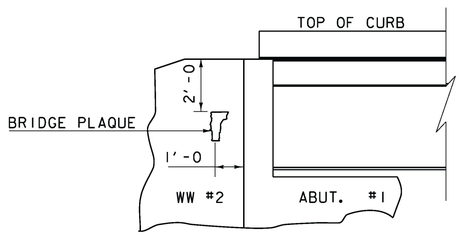

VIEW "A - A"

BRIDGE PLAQUE
(NOT TO SCALE)

THE BRIDGE PLAQUE WILL BE SUPPLIED BY THE AGENCY OF TRANSPORTATION AND SHALL BE INSTALLED BY THE CONTRACTOR AT ABUTMENT #1 ON THE RIGHT SIDE AS SHOWN OR AS DIRECTED BY THE ENGINEER.

PAYMENT FOR INSTALLATION OF THE BRIDGE PLAQUE SHALL BE INCIDENTAL TO THE ADJACENT CONCRETE.

CONCRETE CURB JOINT NOTES

1. CONCRETE CURBS MAY BE PLACED IN ONE CONTINUOUS OPERATION IF AN APPROVED SHRINKAGE REDUCING ADMIXTURE LISTED IN THE SPECIAL PROVISIONS IS USED WITH THE CONCRETE MIX DESIGN. PAYMENT FOR THE SHRINKAGE REDUCING ADMIXTURE WILL BE INCIDENTAL TO THE BRIDGE CURB CONCRETE ITEM.

2. IF THE CONTRACTOR CHOOSES NOT TO USE AN APPROVED SHRINKAGE REDUCING ADMIXTURE, THE CURBS SHALL BE CONSTRUCTED WITH CONSTRUCTION JOINTS SPACED AT A MAXIMUM OF 15'-0" CENTER TO CENTER AND 2'-0" MINIMUM FROM THE CENTER OF NEAREST BRIDGE RAILING POST.

3. ON MULTI-SPAN CONTINUOUS SUPERSTRUCTURES, REGARDLESS OF WHETHER APPROVED SHRINKAGE REDUCING ADMIXTURE IS USED, CURB JOINTS SHALL BE LOCATED OVER THE CENTERLINE OF PIERS AND 7'-0" EACH SIDE OF THE CENTERLINE OF EACH PIER.

4. WHEN CURB JOINTS ARE USED THE CURBS SHALL BE PLACED IN ALTERNATE SECTIONS WITH A MINIMUM OF 48 HOUR DELAY BETWEEN ADJACENT PLACEMENTS.

5. LONGITUDINAL REINFORCING SHALL BE CONTINUOUS THROUGH CURB CONSTRUCTION JOINTS. CURB STIRRUP BARS SHALL BE TURNED AS NECESSARY TO MAINTAIN COVER IN THE FLARED CURB ENDS.

6. THE JOINT SPACING AND DETAILS SHOWN SHALL APPLY TO SIDEWALKS WHEN SHOWN IN THE PLANS.

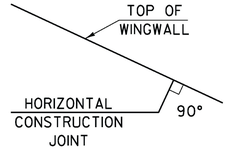

HORIZONTAL WINGWALL CONSTRUCTION JOINT
(NOT TO SCALE)

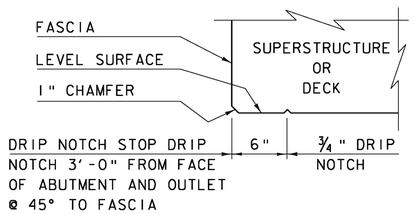

DRIP NOTCH DETAIL
(NOT TO SCALE)

REVISIONS	
MAY 7, 2010	APPROVED FOR USE BY VAOT STRUCTURES SECTION
JUNE 4, 2010	MODIFIED AND ADDED TWO DETAILS

CONCRETE DETAILS AND NOTES

VERMONT AGENCY OF TRANSPORTATION
STRUCTURES - SECTION

STRUCTURES DETAIL
SD-502.00

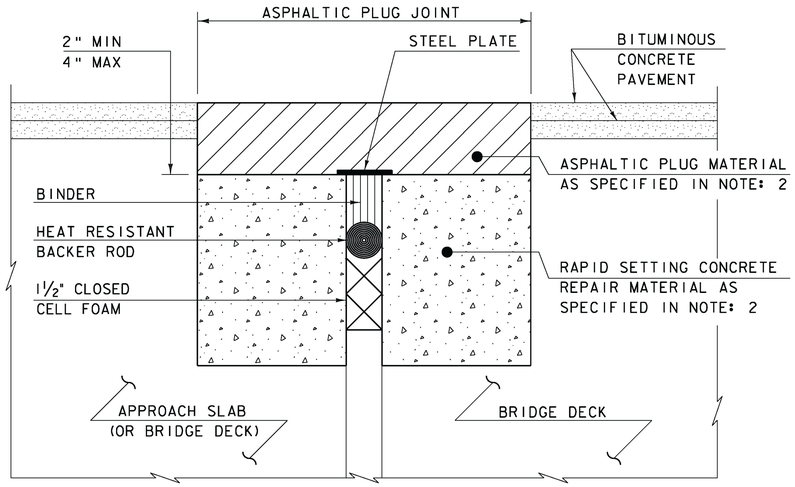

ASPHALTIC PLUG-TYPE JOINT DETAIL - REHAB

(NOT TO SCALE)

NOTES:

1. THE CONTRACTOR SHALL REMOVE ALL ASPHALTIC PLUG JOINT MATERIAL AND DETERIORATED CONCRETE AS DIRECTED BY THE ENGINEER. REMOVAL OF THE FIRST 4 INCHES OF MATERIAL SHALL BE INCLUDED IN THE BID PRICE FOR ITEM 516.10 BRIDGE EXPANSION JOINT, ASPHALTIC PLUG. ANY REMOVAL OF MATERIAL GREATER THAN 4 INCHES SHALL BE INCLUDED IN THE BID PRICE OF ITEM 580.20 RAPID SETTING CONCRETE REPAIR MATERIAL WITH COURSE AGGREGATE.

2. THE CONTRACTOR SHALL REPLACE REMOVED MATERIAL THAT IS LESS THAN 4" FROM FINISHED GRADE WITH ASPHALTIC PLUG JOINT MATERIAL MEETING THE REQUIREMENTS OF SUBSECTION 707.15. ALL REMOVED MATERIAL THAT IS GREATER THAN 4 INCHES FROM FINISHED GRADE SHALL BE REPLACED WITH RAPID SETTING CONCRETE REPAIR MATERIAL WITH COARSE AGGREGATE MEETING THE REQUIREMENTS OF SUBSECTION 780.04.

3. REINFORCING STEEL NOT SHOWN FOR CLARITY.

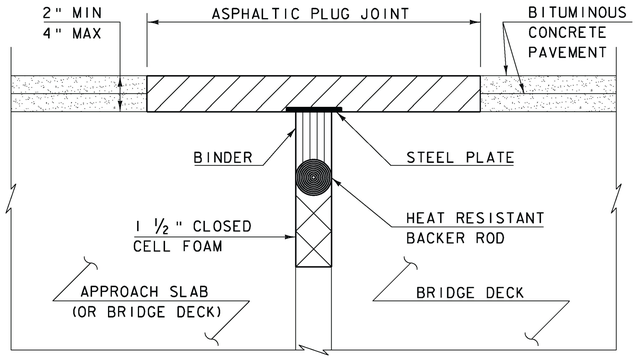

ASPHALTIC PLUG-TYPE JOINT DETAIL - NEW

(NOT TO SCALE)

ASPHALTIC PLUG JOINT NOTES

INSTALLATION:

1. LOCATE THE JOINT CENTRALLY OVER THE DECK OVERLAY EXPANSION GAP OR FIXED JOINT, MARKED OUT TO THE MANUFACTURER'S RECOMMENDED WIDTH.
2. REMOVE THE BITUMINOUS CONCRETE PAVEMENT FULL DEPTH AS SHOWN ON THE PLANS. THE PAVEMENT SHALL BE DRY AND SAW CUT TO THE LIMITS REQUIRED TO PLACE THE JOINT. A PNEUMATIC HAMMER AND CHISEL MAY BE USED ADJACENT TO THE CURB ONLY WHEN SAW CUTTING IS NOT POSSIBLE.
3. BLAST CLEAN THE JOINT AREA OF DEBRIS, ASPHALT AND SHEET MEMBRANE. THOROUGHLY DRY THE JOINT AREA WITH COMPRESSED AIR PRIOR TO APPLYING BINDER MATERIAL.
4. REPAIR MATERIAL GREATER THAN 4 INCHES FROM FINISHED GRADE WITH RAPID SETTING CONCRETE REPAIR MATERIAL WITH COARSE AGGREGATE MEETING THE REQUIREMENTS OF SUBSECTION 780.04.
5. PLACE PROPERLY SIZED HEAT RESISTANT BACKER ROD IN THE MOVEMENT GAP ALLOWING FOR 1" +/- OF BINDER ABOVE THE ROD.
6. HEAT AND PLACE THE BINDER MATERIAL AS RECOMMENDED BY THE MANUFACTURER.
7. PLACE 1/4" THICK BY 8" WIDE SECTIONS OF STEEL PLATE OVER THE CENTER OF THE MOVEMENT GAP. SECURE THE PLATES FROM MOVING BY INSERTING LOCATING PINS THROUGH THE PRE-STAMPED HOLES INTO BACKER ROD AND COVER WITH HOT BINDER. THE STEEL PLATES MAY BE OMITTED WHERE THE ENGINEER DETERMINES THAT THE APPROACH SLAB OR BRIDGE DECK WILL PROVIDE INADEQUATE SUPPORT AND WHERE VERTICAL MOVEMENT OF THE PLATES MIGHT OCCUR.
8. HEAT AND MIX THE BINDER MATERIAL AND AGGREGATE AS RECOMMENDED BY THE MANUFACTURER.
9. INSTALLATION OF MATERIAL, COMPACTION, AND TOP COATING SHALL BE AS RECOMMENDED BY THE MANUFACTURER.
10. IMMEDIATELY AFTER TOP COATING, CAST AN ANTI-SKID MATERIAL OVER THE JOINT TO REDUCE THE RISK OF TRACKING.
11. ONCE THE JOINT REACHES 82 DEG C (180 DEG F) +/-, WATER MAY BE USED TO EXPEDITE THE COOLING PROCESS.
12. PROTECT JOINT FROM TRAFFIC UNTIL THE MATERIAL HAS COOLED TO 51 DEG C (125 DEG F) +/-.

WEATHER LIMITATIONS

APPLY BINDER MATERIAL ONLY WHEN THE FOLLOWING CONDITIONS PREVAIL OR AS RECOMMENDED BY THE MANUFACTURER:

1. THE AMBIENT AIR TEMPERATURE IS AT LEAST 10 DEG C (50 DEG F) AND RISING.
2. THE ROAD SURFACE IS DRY.
3. WEATHER CONDITIONS OR OTHER CONDITIONS ARE FAVORABLE AND ARE EXPECTED TO REMAIN SO FOR THE PERFORMANCE OF SATISFACTORY WORK.

REVISIONS	
MAY 7, 2010	APPROVED FOR USE BY VAOT STRUCTURES SECTION

BRIDGE JOINT
ASPHALTIC PLUG

VERMONT AGENCY OF TRANSPORTATION
STRUCTURES - DIVISION

STRUCTURES DETAIL
SD-516.10

STRUCTURAL STEEL GENERAL NOTES:

1. ALL FIELD CONNECTIONS SHALL BE MADE WITH 7/8" DIAMETER HIGH-STRENGTH BOLTS IN 15/16" DIAMETER HOLES, PER SUBSECTION 506.19, UNLESS OTHERWISE SPECIFIED.
2. ALL HOLES IN THE WEBS OF THE FASCIA GIRDERS THAT ARE NOT OTHERWISE FILLED, SHALL BE FILLED WITH EITHER BUTTON HEAD OR HEX HEAD BOLTS. THESE BOLTS SHALL BE TIGHTENED IN ACCORDANCE WITH SUBSECTION 506.19.
3. ALL WELDING SHALL CONFORM TO THE PROVISIONS OF SUBSECTION 506.10.
4. ANY CONNECTIONS THAT ARE NOT DETAILED ON THE PLANS SHALL BE DETAILED BY THE FABRICATOR AND SUBMITTED TO THE STRUCTURES ENGINEER FOR APPROVAL.
5. STRUCTURAL STEEL MEMBERS DESIGNATED "CVN" IN THE PLANS SHALL BE CHARPY V-NOTCH TESTED IN ACCORDANCE WITH SUBSECTION 714.01 OF THE STANDARD SPECIFICATIONS.
6. ENDS OF GIRDERS ARE TO BE VERTICAL IN THEIR FINAL POSITION.
7. AFTER SUPERSTRUCTURE STEEL HAS BEEN ERECTED, ELEVATIONS ALONG THE TOP OF THE GIRDERS SHALL BE TAKEN AS DIRECTED BY THE RESIDENT ENGINEER FOR USE IN DETERMINING FINISHED GRADES.

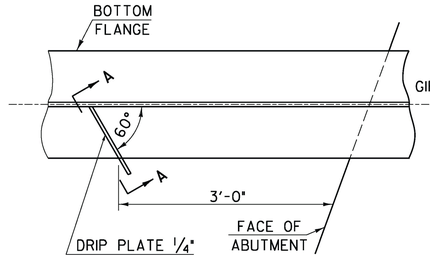

PLAN DRIP PLATE

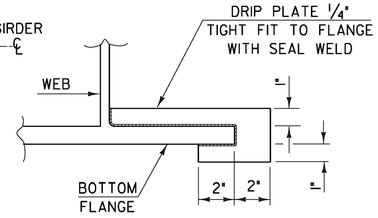

SECTION A - A

NOTE: DRIP PLATES SHALL BE PLACED ON OUTSIDE EDGE OF FASCIA GIRDERS ON THE HIGH SIDE OF ALL PIERS AND ABUTMENTS OR AS INDICATED ON PROJECT PLANS.

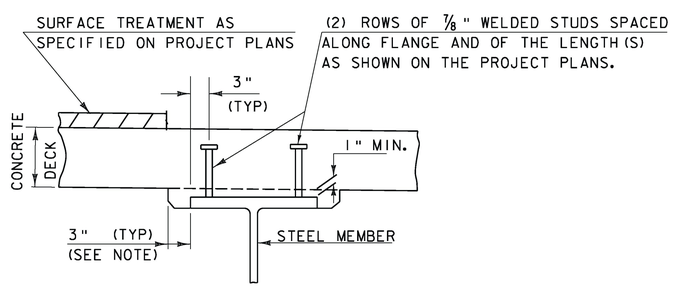

NOTE:
THE 3" HORIZONTAL SECTION MAY BE ELIMINATED FOR FORMING SYSTEMS DESIGNED FOR THE CONSTRUCTION OF VERTICAL HAUNCHES. ANY VOIDS RESULTING FROM FORMING SYSTEM ELEMENTS SHALL BE FILLED WITH JOINT SEALER, POLYURETHANE MEETING THE REQUIREMENTS OF SECTION 524. THE COST OF THE JOINT SEALER, POLYURETHANE SHALL BE INCIDENTAL TO THE ADJACENT CONCRETE.

HAUNCH AND SHEAR CONNECTOR DETAIL

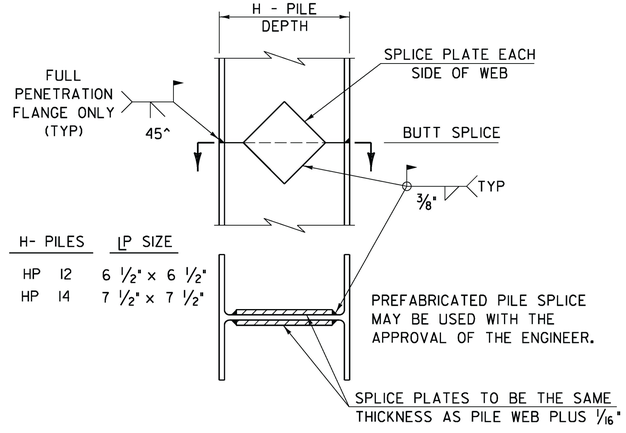

H- PILES	LP SIZE
HP 12	6 1/2" x 6 1/2"
HP 14	7 1/2" x 7 1/2"

DETAIL OF PILE SPLICE

DETAILS ON THIS SHEET ARE "NOT TO SCALE" UNLESS NOTED OTHERWISE.

REVISIONS	
MAY 7, 2010	APPROVED FOR USE BY VAOT STRUCTURES SECTION
JUNE 4, 2010	MODIFIED NOTES

STRUCTURAL STEEL DETAILS & NOTES

VERMONT AGENCY OF TRANSPORTATION
STRUCTURES - SECTION

STRUCTURES DETAIL
SD-601.00

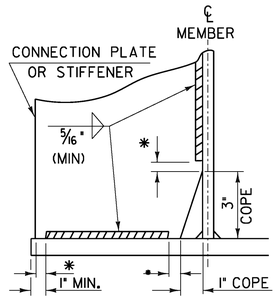

WELD TERMINATION AND COPING DETAILS FOR STEEL MEMBERS

*NO WELD FOR 3/8" MIN. 7/8" MAX. (EXCEPT MUST MAINTAIN 1" MINIMUM FROM EDGE OF FLANGE)

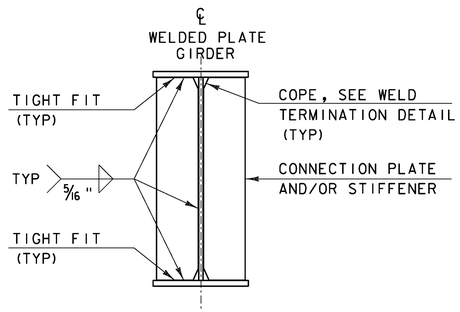

INTERMEDIATE CONNECTION PLATES AND/OR STIFFENERS FOR WELDED PLATE GIRDERS

INTERMEDIATE DETAIL IS ONLY USED WHEN PLATE DOES NOT OCCUR AT AN ABUTMENT OR PIER.

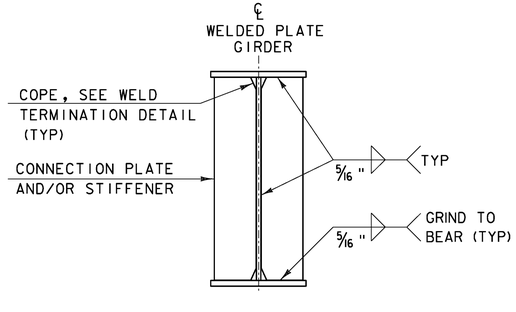

ABUTMENT BEARING STIFFENERS AND/OR CONNECTION PLATES FOR WELDED PLATE GIRDERS

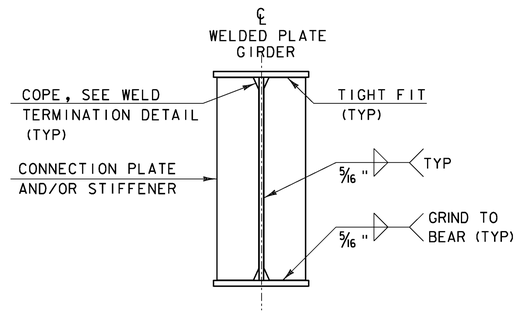

PIER BEARING STIFFENERS AND/OR CONNECTION PLATES FOR WELDED PLATE GIRDERS

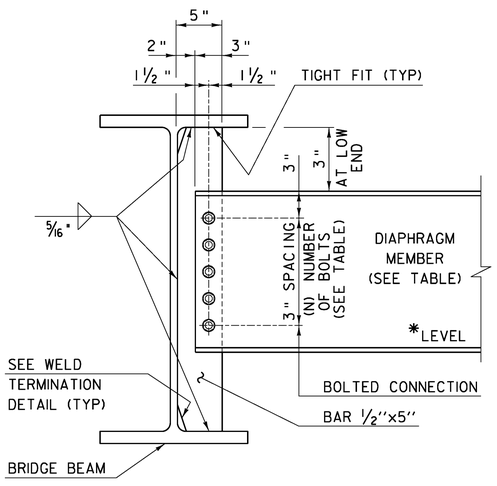

DEPTH		DIAPHRAGM MEMBER	(N) BOLTS
ROLLED BEAM	24" 30"	CI5x33.9	4
	31" 36"	MCI8x42.7	5
	37" 42"	W21x44	6
PLATE GIRDER WEB	31" 36"	W27x84	7
	37" 42"	W33x118	9
	43" 48"	W36x135	10

INTERMEDIATE DIAPHRAGMS FOR 24" TO 48" BRIDGE BEAMS

*IF CLEARANCE CANNOT BE MET, DIAPHRAGM MAY BE SLOPED.

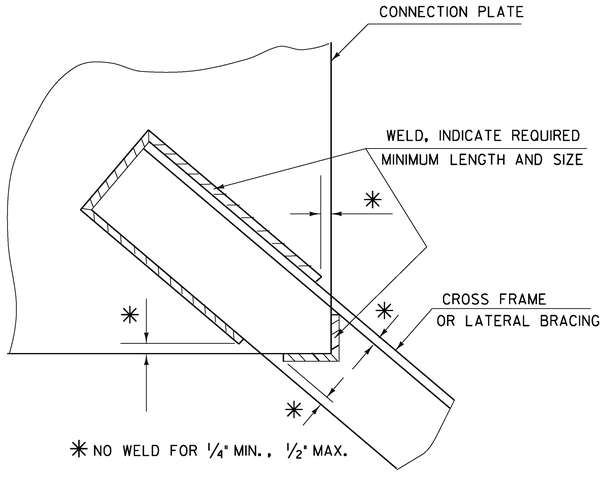

WELD LOCATION DETAIL AT CROSS FRAMES AND LATERAL BRACING

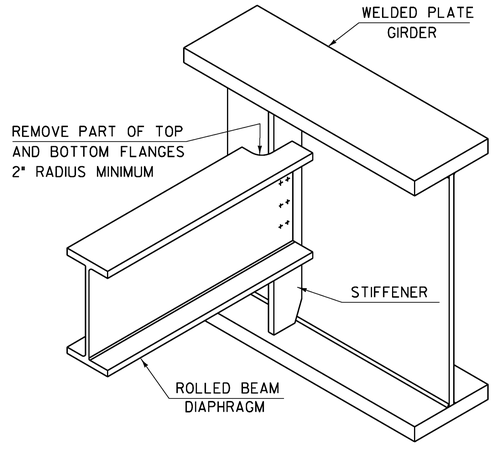

SEE CONTRACT DRAWINGS FOR SIZES OF MEMBERS AND CONNECTION DETAILS

ROLLED BEAM USED AS DIAPHRAGM

DETAILS ON THIS SHEET ARE "NOT TO SCALE" UNLESS NOTED OTHERWISE.

REVISIONS	
MAY 7, 2010	APPROVED FOR USE BY VAOT STRUCTURES SECTION
MAY 2, 2011	ADD INTERMEDIATE DIAPHRAGMS DETAIL & ADD NOT TO SCALE NOTE

STRUCTURAL STEEL PLATE GIRDER DETAILS AND NOTES

VERMONT AGENCY OF TRANSPORTATION
STRUCTURES - SECTION

STRUCTURES DETAIL
SD-602.00

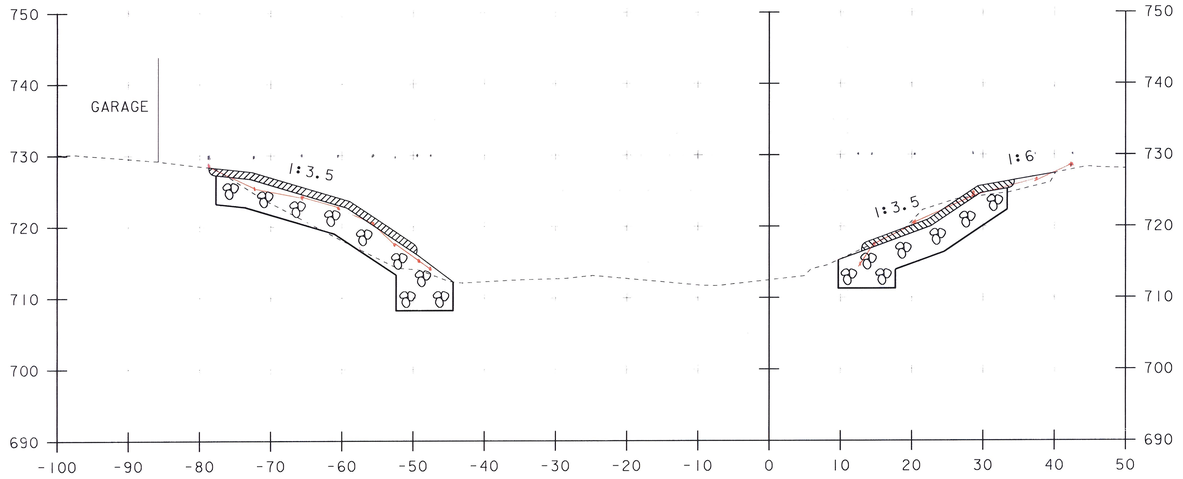

9+25

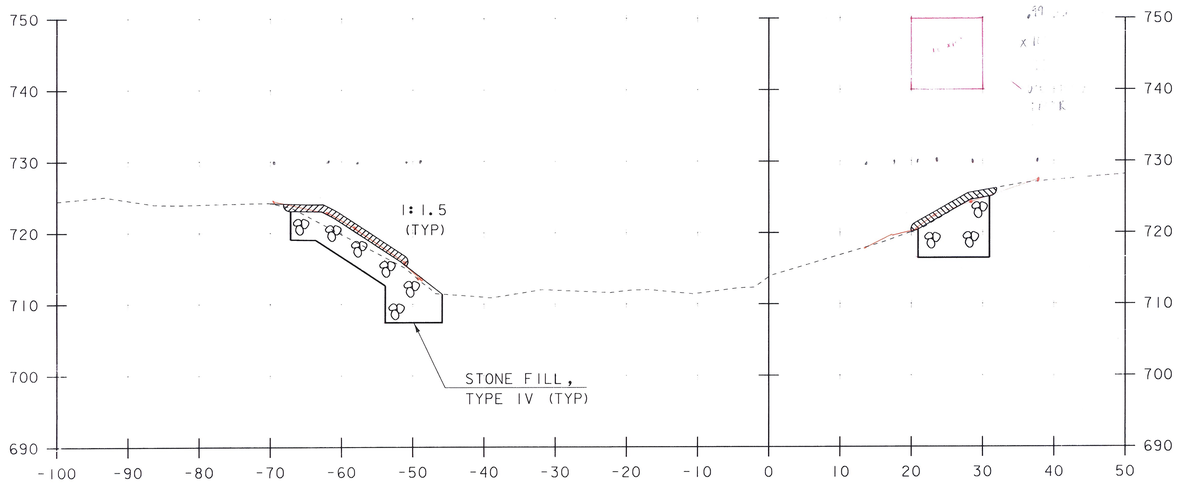

9+00

STA. 9+00 TO STA. 9+25

PROJECT NAME: JAMAICA	
PROJECT NUMBER: ER-BRF 015-1(23)	
FILE NAME: sllb316.xs.dgn	PLOT DATE: 13-AUG-2013
PROJECT LEADER: K. HIGGINS	DRAWN BY: J. SALVATORI
DESIGNED BY: -------	CHECKED BY: -------
ADDITIONAL CHANNEL SECTIONS	SHEET 1 OF 7

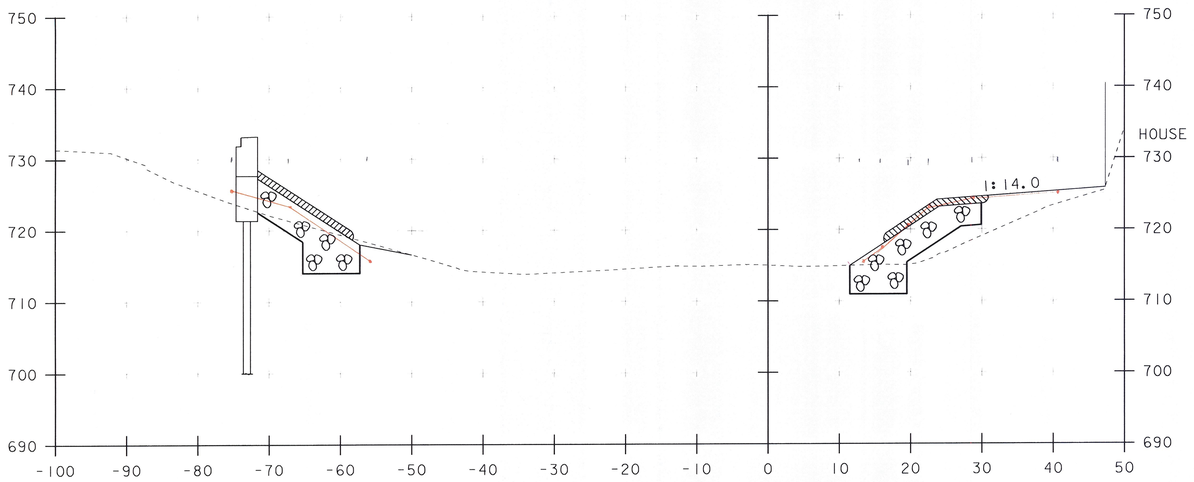

9+75

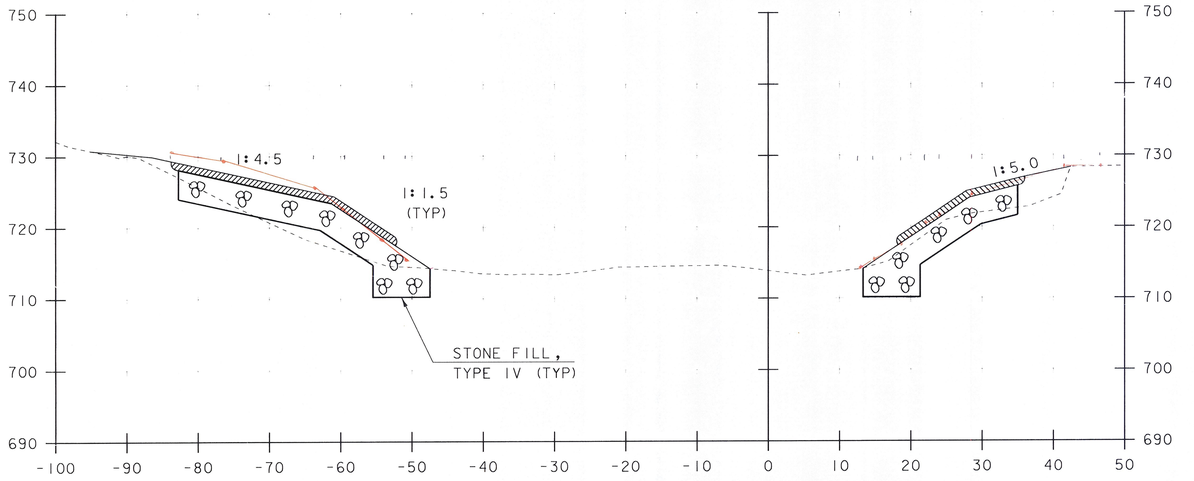

9+50

STA. 9+50 TO STA. 9+75

PROJECT NAME: JAMAICA	
PROJECT NUMBER: ER-BRF 015-1(23)	
FILE NAME: sllb316.xs.dgn	PLOT DATE: 13-AUG-2013
PROJECT LEADER: K. HIGGINS	DRAWN BY: J. SALVATORI
DESIGNED BY: -------	CHECKED BY: -------
ADDITIONAL CHANNEL SECTIONS	SHEET 2 OF 7

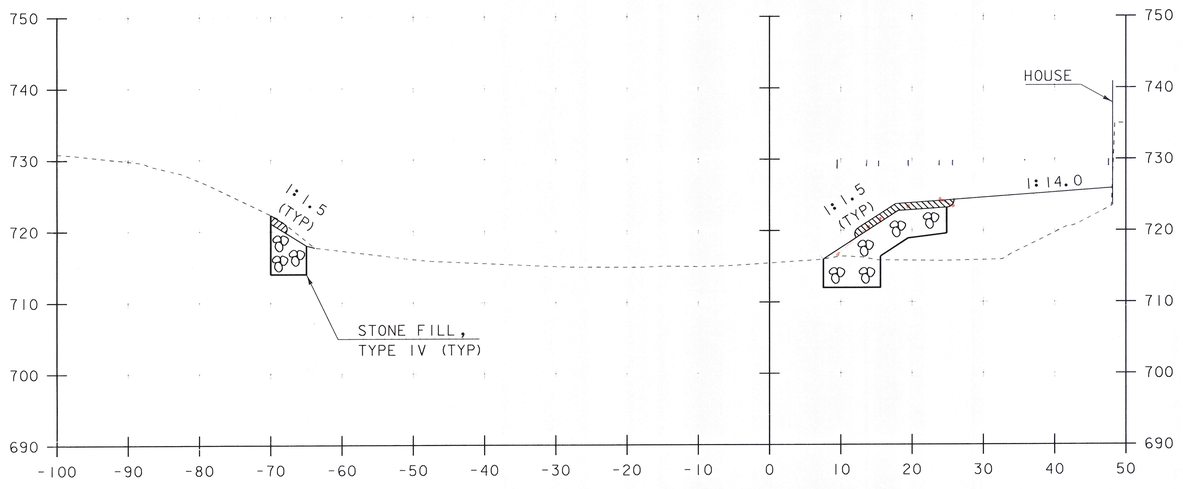

10+00

STA. 10+00 TO STA. 10+00

PROJECT NAME: JAMAICA	
PROJECT NUMBER: ER-BRF 015-1(23)	
FILE NAME: s11b316.xs.dgn	PLOT DATE: 13-AUG-2013
PROJECT LEADER: K. HIGGINS	DRAWN BY: J. SALVATORI
DESIGNED BY: -------	CHECKED BY: -------
ADDITIONAL CHANNEL SECTIONS	SHEET 3 OF 7

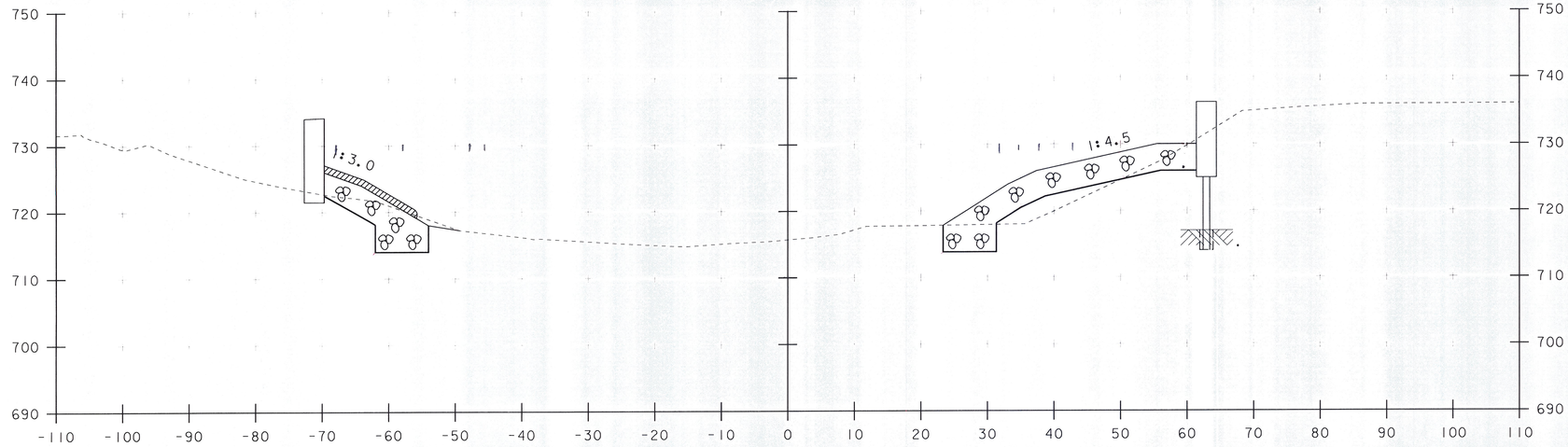

10+30

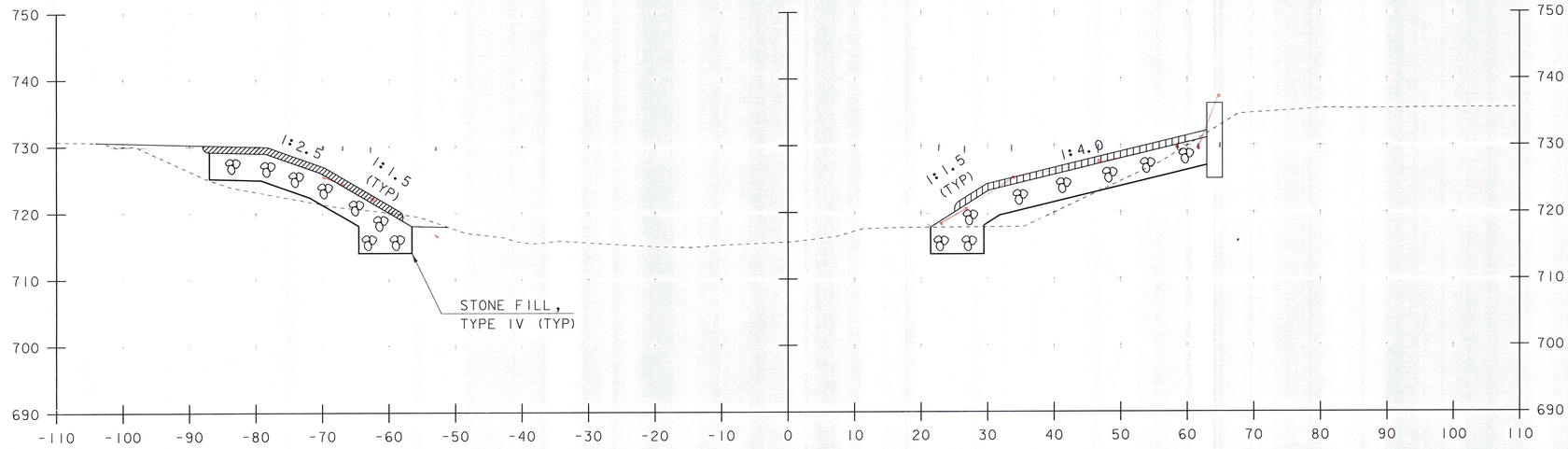

10+25

STA. 10+25 TO STA. 10+30

PROJECT NAME: JAMAICA	
PROJECT NUMBER: ER-BRF 015-1(23)	
FILE NAME: sllb316.xs.dgn	PLOT DATE: 13-AUG-2013
PROJECT LEADER: K. HIGGINS	DRAWN BY: K. FRIEDLAND
DESIGNED BY: -------	CHECKED BY: -------
ADDITIONAL CHANNEL SECTIONS	SHEET 4 OF 7

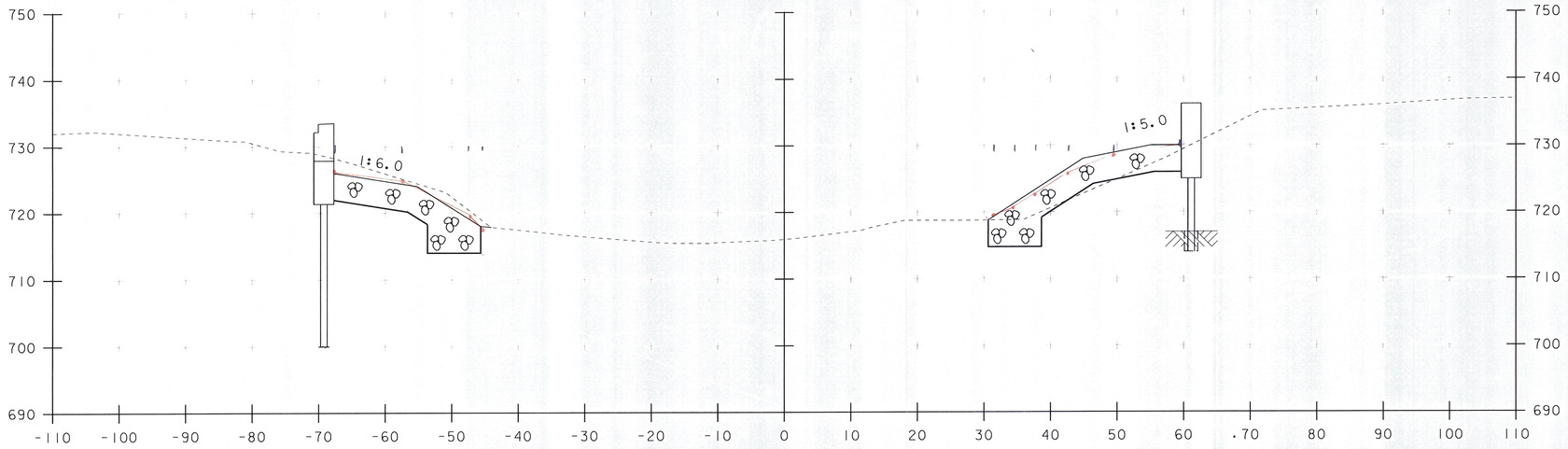

10+50

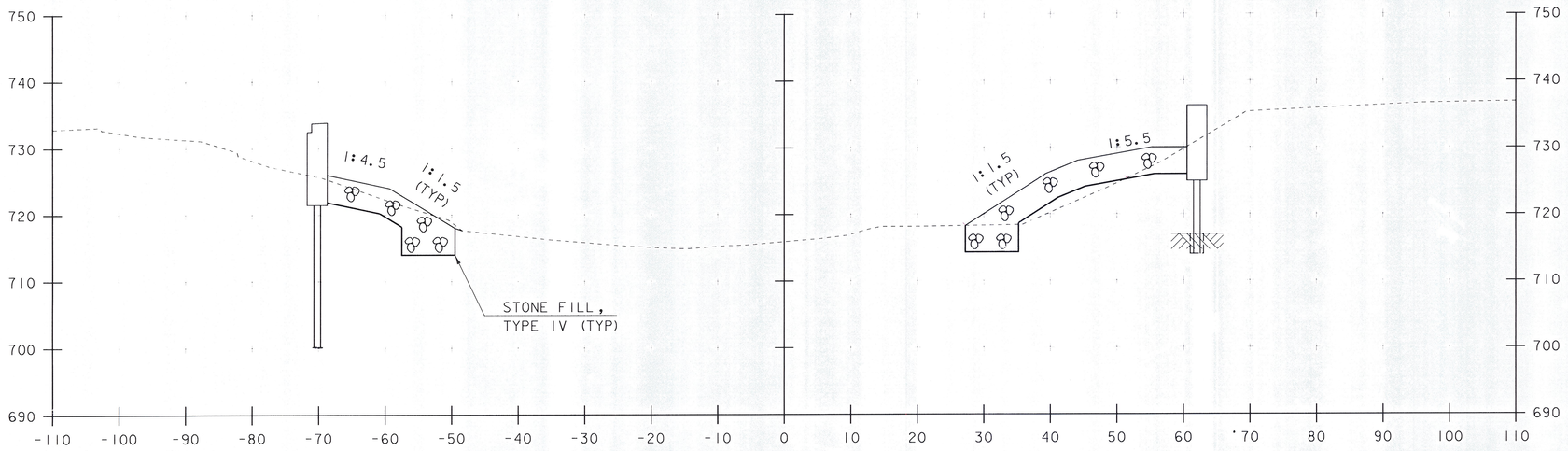

10+40

STA. 10+40 TO STA. 10+50

PROJECT NAME: JAMAICA
PROJECT NUMBER: ER-BRF 015-1(23)

FILE NAME: sllb316.xs.dgn
PROJECT LEADER: K. HIGGINS
DESIGNED BY: -------
ADDITIONAL CHANNEL SECTIONS

PLOT DATE: 13-AUG-2013
DRAWN BY: K. FRIEDLAND
CHECKED BY: -------
SHEET 5 OF 7

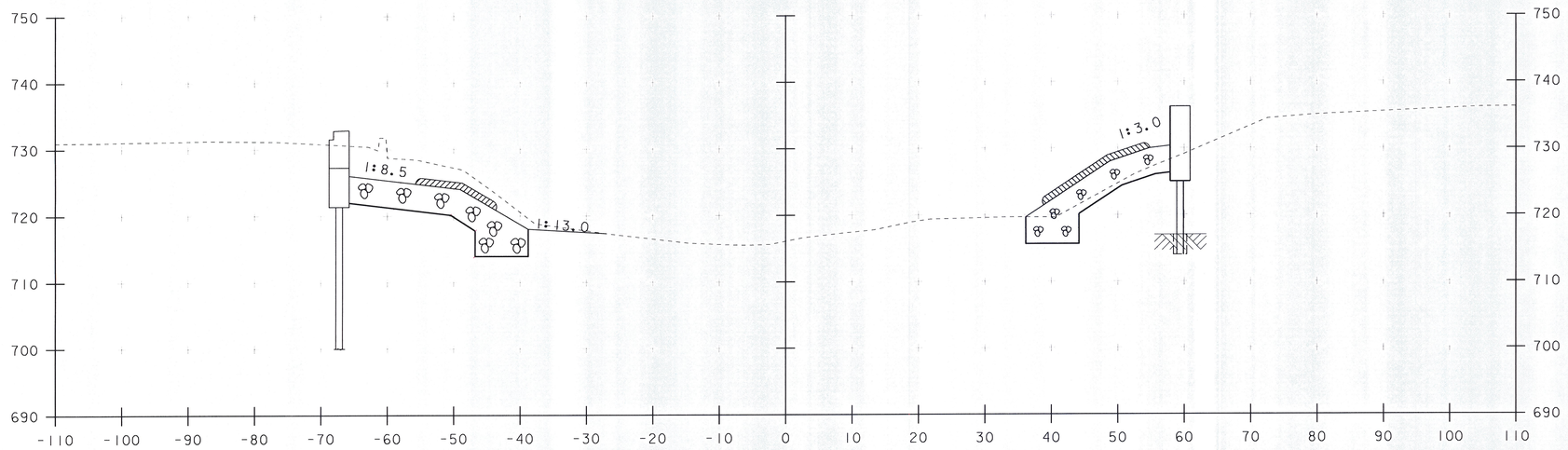

10+70

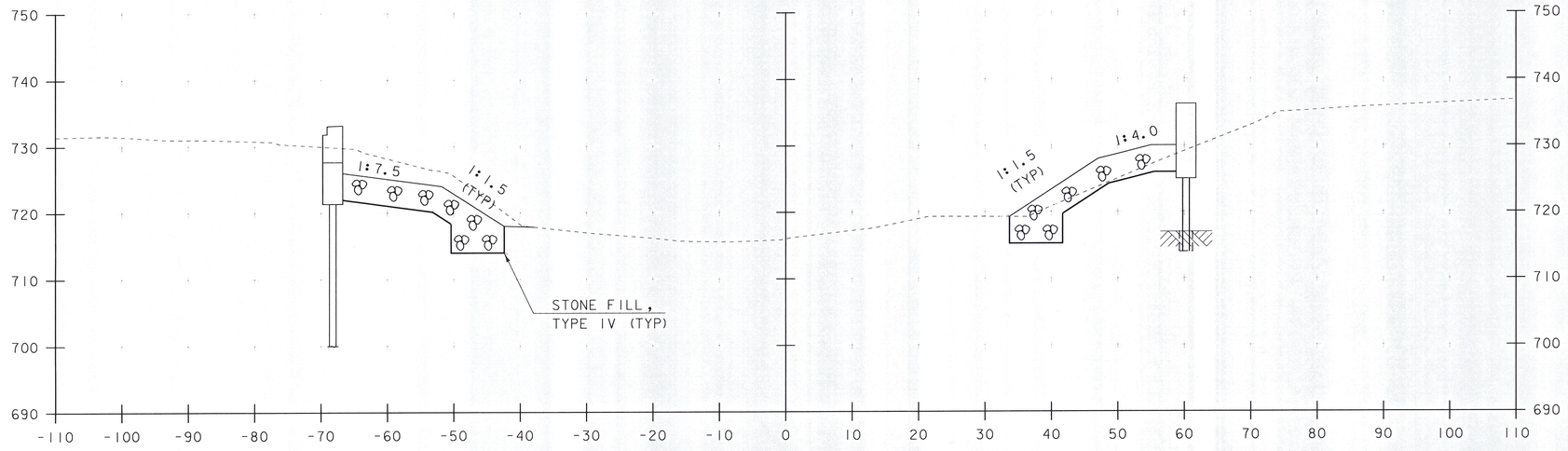

10+60

STA. 10+60 TO STA. 10+70

PROJECT NAME: JAMAICA	
PROJECT NUMBER: ER-BRF 015-1(23)	
FILE NAME: sllb316.xs.dgn	PLOT DATE: 13-AUG-2013
PROJECT LEADER: K. HIGGINS	DRAWN BY: K. FRIEDLAND
DESIGNED BY: -------	CHECKED BY: -------
ADDITIONAL CHANNEL SECTIONS	SHEET 6 OF 7

GENERAL NOTES

SHOP NOTES:

1. ALL BEARINGS SHALL CONFORM TO APPLICABLE SUBSECTIONS OF SECTIONS 506, 531, 714, 726 AND 731 OF THE 2011 VTAOT STANDARD SPECIFICATIONS AND SPECIAL PROVISIONS.

2. MATERIAL:
   ELASTOMER: 50 DUROMETER GR. 4 NATURAL RUBBER & WITH A SHEAR MODULUS OF 110psi +/– 15%

   ⚠1 SOLE PLATES: AASHTO M270 GR. 36 (ZINC METALLIZED & SEAL COATED)

   STEEL LAMINAE: ASTM A36, A1011 GR. 36 OR EQUAL

   ⚠1 SHIM PLATES: AASHTO M270 GR. 36 (ZINC METALLIZED & SEAL COATED)

3. SHOP TO MARK ⊗ HIGH–SIDE OF BEVELED SOLE PLATES AND AHEAD STATIONS AS SHOWN.

4. ALL STEEL BEARING PLATES SHALL BE BLAST CLEANED SSPC–SP6 (COMMERCIAL BLAST CLEANING) THEN GALVANIZED PER VTAOT STD. SPECIFICATIONS SUBSECTION 531.04(b).

5. ALL FREE EDGES OF PLATES TO BE COATED SHALL BE ROUNDED TO A 1/16" RADIUS OR SHALL HAVE THE EQUIV. FLAT SURFACE AT A SUITABLE ANGLE.

6. BEARING IS TO BE PROTECTED FROM MOISTURE AND DUST DURING SHIPMENT, STORAGE AND ERECTION.

7. PROTECT BEARING ASSEMBLIES FROM WELD SPATTER, DIRT AND OTHER FOREIGN MATTER.

8. WHEN WELDING THE SOLE PLATE TO THE GIRDER FLANGE, USE TEMPERATURE INDICATING WAX PEN OR OTHER SUITABLE MEANS TO INSURE OF THE BEARING AT THE ELASTOMER DOES NOT EXCEED 200°F. TEMPERATURES ABOVE THIS MAY DAMAGE THE ELASTOMER.

9. FIELD WELDING OF THE BEARING UNIT DURING THE INSTALLATION PHASE SHALL BE PERFORMED BY QUALIFIED WELDERS USING APPROVED PROCEDURES AND ELECTRODES.

10. ALL DIMENSIONS ARE IN INCHES.

11. COSMEC REPRESENTATIVE DEBBIE PLANTE: (508) 455–3290

Vermont Agency of Transportation
RECEIVED
CK'D BY GML/MDL OK'D BY JTS
March 12, 2013
RESUBMIT Approved
BY KMH DATE 03/13/13

REV.	DESCRIPTION	BY	DATE	CK'D	DATE
⚠1	REVISED STEEL GRADE & COATING REQUIRMENTS PER DESIGN CHANGE	ELS	3/11/13	JR	3/12/13

STATE OF VERMONT
AGENCY OF TRANSPORTATION
VT RTE 30 (MINOR ARTERIAL)
BRIDGE NO. 30
TOWN OF JAMAICA

STATE	COUNTY	CONTROL NO.
VT	WINDHAM	N/A

PROJ. NO.: ER–BRF 015–1 (23)

DYNAMIC RUBBER.: LAMINATED BEARING ASSEMBLIES

Cosmec
1501 ROCKY RIDGE ROAD
P.O. BOX 2159
ATHENS, TEXAS 75751

SCALE: NONE	DRAWN BY: ELS	CHECKED BY: SL
	DATE: 2/28/13	DATE: 3/1/13
SHEET GN1 OF 1	JOB NO.: 11880	
CUSTOMER: MILLER CONSTRUCTION INC.	DRAWING NUMBER: 11880–GN1	REV. 1

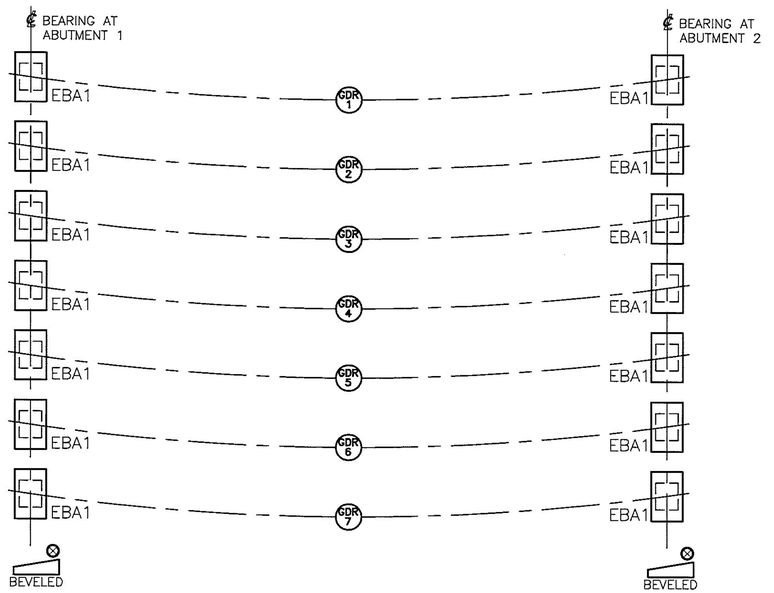

AHEAD STATION

ERECTION DIAGRAM

Vermont Agency of Transportation
RECEIVED
CK'D BY GML/MDL OK'D BY JTS
March 12, 2013
RESUBMIT Approved
BY KMH DATE 03/13/13

REV.	DESCRIPTION	BY	DATE	CK'D	DATE
1	.	.	.	.	.

STATE OF VERMONT
AGENCY OF TRANSPORTATION
VT RTE 30 (MINOR ARTERIAL)
BRIDGE NO. 30
TOWN OF JAMAICA

STATE	COUNTY	CONTROL NO.
VT	WINDHAM	N/A

PROJ. NO.: ER-BRF 015-1 (23)

DYNAMIC RUBBER.: LAMINATED BEARING ASSEMBLIES

Cosmec
1501 ROCKY RIDGE ROAD
P.O. BOX 2159
ATHENS, TEXAS 75751

SCALE: NONE	DRAWN BY: ELS	CHECKED BY: SL
	DATE: 3/1/13	DATE: 3/1/13
SHEET E1 OF 1	JOB NO.: 11880	
CUSTOMER: MILLER CONSTRUCTION INC.	DRAWING NUMBER 11880-E1	REV. 0

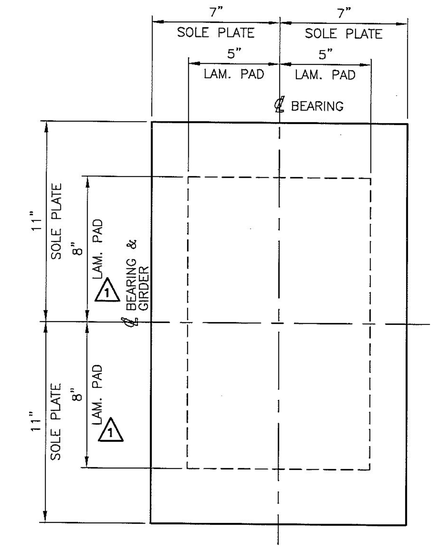

PLAN VIEW

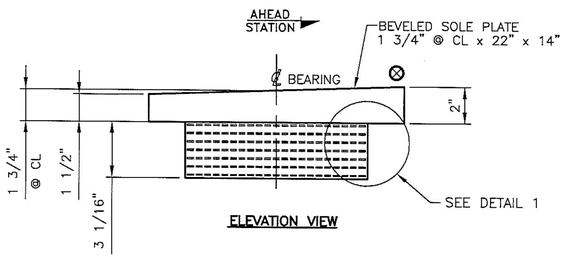

ELEVATION VIEW

EXPANSION ELASTOMERIC BEARING ASSEMBLY
EBA1
(7) LOCATED AT ABUT 1
(7) LOCATED AT ABUT 2
(14) TOTAL REQUIRED

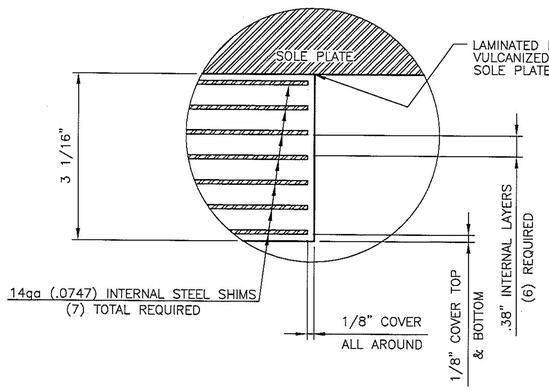

DETAIL 1
1 LAMINATED PAD
3 1/16" x 16" x 10"
50 DUROMETER GR. 4 NATURAL RUBBER
WITH A SHEAR MODULUS OF 110 PSI +/- 15%
(14) TOTAL REQUIRED

TEST PADS
1 LAMINATED PAD
3 1/16" x 16" x 10"
50 DUROMETER GR. 4 NATURAL RUBBER
WITH A SHEAR MODULUS OF 110 PSI +/- 15%
PAD ONLY – NO SOLE PLATE
(2) TOTAL REQUIRED

MAXIMUM DESIGN LOAD UNFACTORED (KIPS)	1
DL = 154.40 LL + I = 0.0	

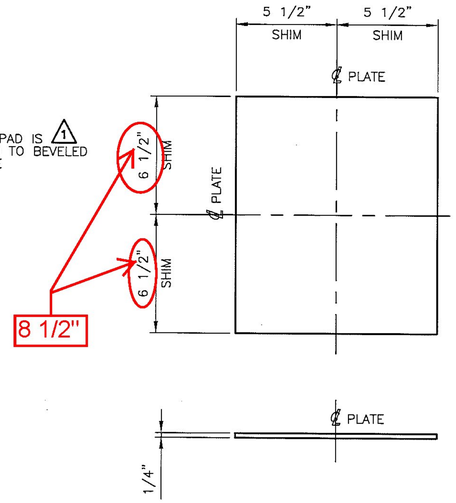

SHIM DETAIL
1 1/4" x 13" x 11" SHIM PLATE
1 AASHTO M270 GR. 36 (ZINC METALLIZED)
(16) REQUIRED

Vermont Agency of Transportation
RECEIVED
CK'D BY GML/WDL OK'D BY JTS
March 12, 2013
RESUBMIT Approved AsNoted
BY KMH DATE 03/13/13

REV.	DESCRIPTION	BY	DATE	CK'D	DATE
1	REVISED LAM. PAD SIZE, ADDED PAD IS VULCANIZED & SHIM STEEL GRADE & COATING PER DESIGN CHANGE.	ELS	3/11/13	JR	3/12/13

FOR GENERAL NOTES SEE SHEET GN1

STATE OF VERMONT
AGENCY OF TRANSPORTATION
VT RTE 30 (MINOR ARTERIAL)
BRIDGE NO. 30
TOWN OF JAMAICA

STATE	COUNTY	CONTROL NO.
VT	WINDHAM	N/A

PROJ. NO.: ER-BRF 015-1 (23)

DYNAMIC RUBBER.: LAMINATED BEARING ASSEMBLIES

Cosmec
1501 ROCKY RIDGE ROAD
P.O. BOX 2159
ATHENS, TEXAS 75751

SCALE: NONE	DRAWN BY: ELS	CHECKED BY: SL
	DATE: 2/28/13	DATE: 3/1/13
SHEET 1 OF 1	JOB NO.: 11880	
CUSTOMER: MILLER CONSTRUCTION INC.	DRAWING NUMBER: 11880-D1	REV. 1

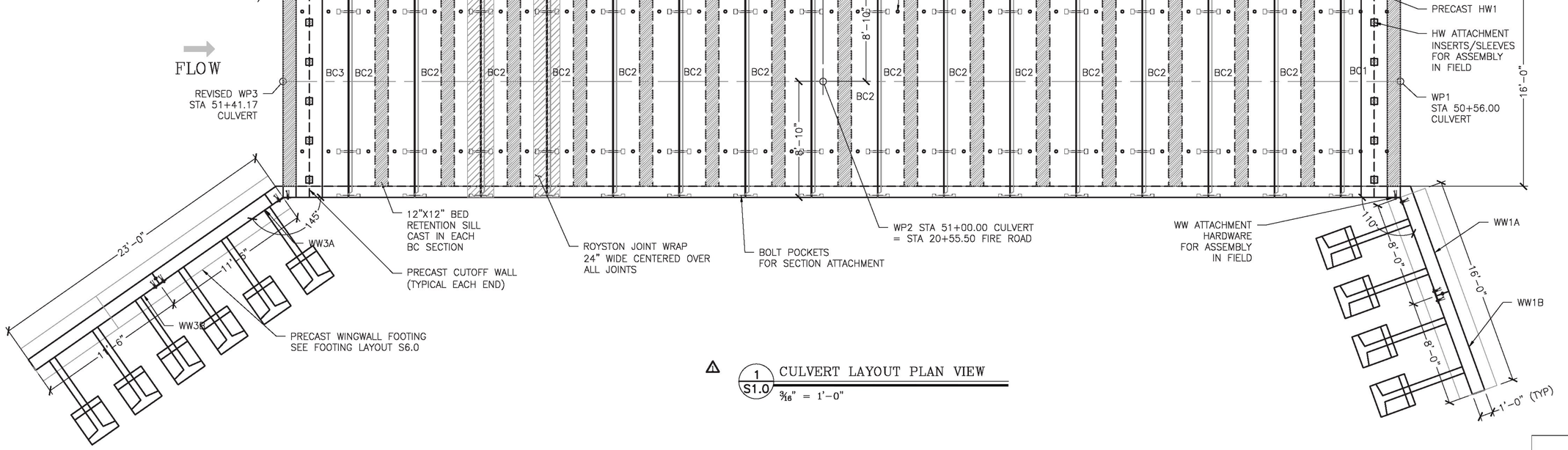

⚠ 1 S1.0 CULVERT LAYOUT PLAN VIEW

3/16" = 1'-0"

QTY	
156	5 TON UT
22	RL-24 8 T
42	1-8NC DO
880LF	1" CLOSE
1 GAL	RED ADH
6 GAL	VEXCON
14	1/2" MILD
4	1/2" MILD
2	1/2" MILD
2	1/2" MILD
600LF	24" ROYS
6 GAL	ROYBON
64	7/8"X18" C
256	1"d X 1 1/
128	7/8" GALV
88	1"X5" NC
88	1" DIA NU

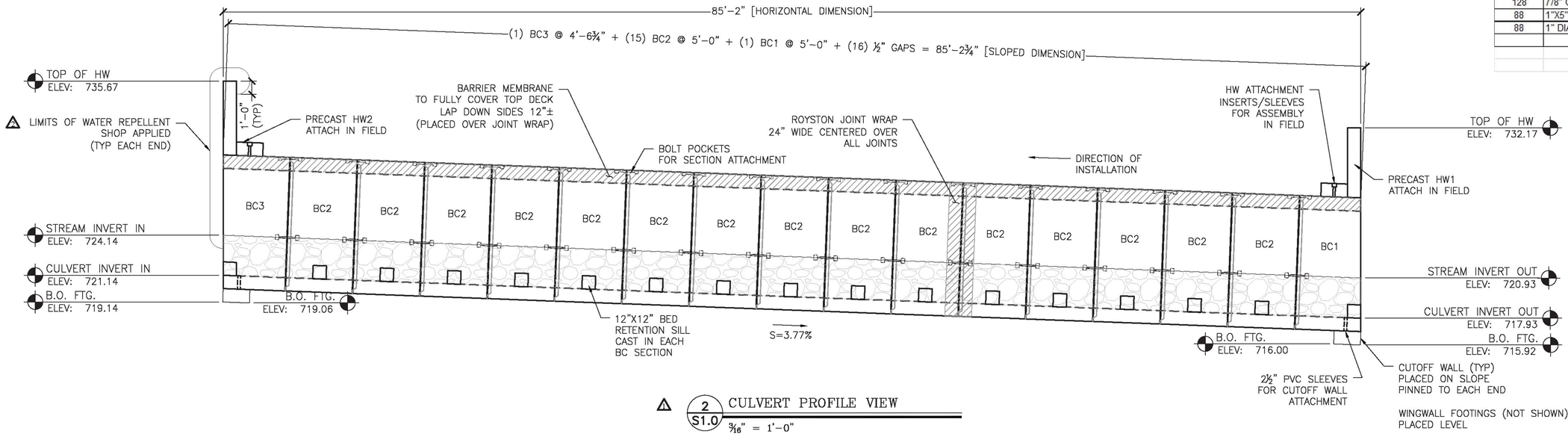

⚠ 2 S1.0 CULVERT PROFILE VIEW

3/16" = 1'-0"

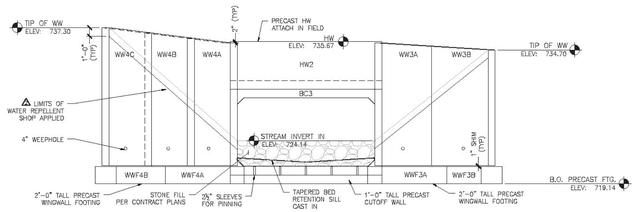

1 S2.0 UPSTREAM ELEVATION
3/16" = 1'-0"

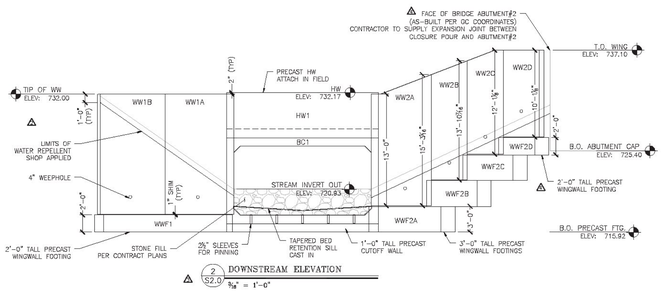

2 S2.0 DOWNSTREAM ELEVATION
3/16" = 1'-0"

GENERAL NOTES:

1. DO NOT SCALE FROM THE DRAWINGS. IF A REQUIRED DIMENSION IS NOT PROVIDED, CONSULT THE ENGINEER.

2. IF ANY OF THE WORK TO BE DONE AS SHOWN ON THE DRAWINGS DOES NOT CORRESPOND WITH THE EXISTING FIELD CONDITIONS, CONTACT THE ENGINEER PRIOR TO PROCEEDING WITH THE WORK IN QUESTION.

3. FIELD-VERIFY ALL ELEVATIONS PRIOR TO THE START OF CONSTRUCTION. IF THERE ARE ANY DISCREPANCIES, CONSULT THE ENGINEER PRIOR TO PROCEEDING WITH THE WORK IN QUESTION.

4. MAINTAIN MINIMUM 60 DEGREE SLING ANGLE WHEN HANDLING PRECAST COMPONENENTS.

△ 5. PRECAST COMPONENTS SHALL ACHIEVE MINIMUM DESIGN COMPRESSIVE STRENGTH PRIOR TO SHIPPING, UNLESS OTHERWISE APPROVED BY THE ENGINEER. STRIPPING STRENGTH SHALL BE 3,000PSI

△ 6. ALL HORIZONTAL SURFACE VOIDS SHALL BE FILLED WITH AN APPROVED NON-SHRINK GROUT. VERTICAL SURFACE VOIDS SHALL BE FILLED WITH FOAM SEALANT

7. SHOP DRAWINGS WERE DEVELOPED USING THE FOLLOWING RESOURCES FOR THE CONTRACT: PROPOSED IMPROVEMENT BRIDGE PROJECT, TOWN OF JAMAICA, COUNTY OF WINDHAM, DATED 12/3/2012. PREPARED BY STATE OF VERMONT AGENCY OF TRANSPORTATION.

8. IF THERE IS ADDITIONAL INFORMATION PERTINENT TO THE FABRICATION AND INSTALLATION OF THESE UNITS THAT IS NOT CONTAINED WITHIN THE RESOURCES LISTED ABOVE IT SHALL BE BROUGHT TO THE ATTENTION OF MICHIE CORPORATION. FAILURE TO MAKE SUCH ADDITIONAL INFORMATION AVAILABLE SHALL RELIEVE MICHIE CORPORATION OF ALL LIABILITIES ARISING FROM ERRORS OR OMISSIONS RELATED TO THE OMITTED INFORMATION.

BOX CULVERT NOTES

1. BOX CULVERT SECTIONS ARE DESIGNED IN ACCORDANCE WITH
   - AASHTO "LRFD BRIDGE DESIGN SPECIFICATIONS", 2012.
   - VTRANS 2011 "STANDARD SPECIFICATIONS FOR CONSTRUCTION".

2. THE FOLLOWING CRITERIA WAS USED FOR DESIGN:
LIVE LOAD: HL-93
EARTH COVER: 3'-7.5 FEET
BACKFILL SOIL UNIT WEIGHT: 140 PCF

△ NOMINAL BEARING RESISTANCE PER EMAIL CLARIFICATION 5/23/13 FOR EFFECTIVE FOOTING WIDTH OF 6FT:
6.2 KSF (SERVICE LIMIT STATE, RESISTANCE FACTOR = 1.0)
14.0 KSF (STRENGTH LIMIT STATE, RESISTANCE FACTOR = 0.45)
MIN LATERAL EARTH PRESSURE: 35 PSF
MAX LATERAL EARTH PRESSURE: 70 PSF

3. CONCRETE SHALL BE SELF-CONSOLIDATING CONFORMING TO ASTM C260 WITH A MINIMUM 28-DAY COMPRESSIVE STRENGTH OF 5,000 PSI. MIX DESIGN TO BE MICHIE #1953AX. AGGREGATE SHALL CONFORM TO ASTM C-33 WITH A MAXIMUM DIAMETER OF 3/4". CEMENT SHALL CONFORM TO ASTM C150.

4. REINFORCING IN BOX CULVERT SHALL BE GRADE 60 DEFORMED BLACK BARS CONFORMING TO ASTM A-615. ALL BARS SHALL BE BENT COLD.

5. ALL EXPOSED EDGES EXCEPT WHERE NOTED SHALL BE CHAMFERED 3/4".

△△ 6. EXPOSED SURFACES SHALL BE COATED WITH VTRANS APPROVED WATER REPELLENT PER CONTRACT DOCUMENTS (SHOP APPLIED).

7. UNLESS OTHERWISE SPECIFIED IN THE CONTRACT DOCUMENTS, BACKFILL MATERIAL SHALL CONFORM TO VTRANS SECTION 704.08 GRANULAR BACKFILL FOR STRUCTURES. BACKFILL SHALL EXTEND FOR A MINIMUM DISTANCE OF 3'-0" BEYOND THE HORIZONTAL LIMITS OF THE STRUCTURE. PLACEMENT SHALL CONFORM TO VTRANS SECTION 204.08.

9. EACH SECTION SHALL BE PROVIDED WITH BOLT POCKETS FOR ATTACHMENT TO ADJACENT SECTIONS. 7/8" DIA. GALV. THREADED ROD, WASHERS AND NUTS SHALL BE PROVIDED FOR ASSEMBLY IN THE FIELD. CLOSED-CELL NEOPRENE JOINT SEALANT SHALL BE USED IN ALL JOINTS UNLESS NOTED OTHERWISE.

10. ROYSTON JOINT WRAP WITH ADHESIVE PROVIDED BY MICHIE CORP, INSTALLED BY OTHERS. BARRIER MEMBRANE PER CONTRACT DOCUMENTS.

WING WALL FOOTING NOTES:

△ 1. CONCRETE SHALL BE SELF-CONSOLIDATING CONFORMING TO ASTM C260 WITH A MINIMUM 28-DAY COMPRESSIVE STRENGTH OF 5,000 PSI. MIX DESIGN TO BE MICHIE #1953CAX. AGGREGATE SHALL CONFORM TO ASTM C-33 WITH A MAXIMUM DIAMETER OF 3/4". CEMENT SHALL CONFORM TO ASTM C150.

2. REINFORCING SHALL BE GRADE 60 DEFORMED BLACK BARS CONFORMING TO ASTM A-615. ALL BARS SHALL BE BENT COLD.

3. ALL EXPOSED EDGES EXCEPT WHERE NOTED SHALL BE CHAMFERED 3/4".

4. UNLESS OTHERWISE SPECIFIED IN THE CONTRACT DOCUMENTS, SUBGRADE PREPARATION SHALL CONFORM TO VTRANS 204.07 BEDDING FOR STRUCTURES. FOOTINGS SHALL BE PLACED AT ELEVATIONS SHOWN ON A MINIMUM OF 1'-0" OF CRUSHED STONE CONFORMING TO VTRANS 704.05(A). ALL TOPSOIL, LOOSE FILL, AND DELETERIOUS MATERIALS SHALL BE REMOVED BEFORE PLACING BACKFILL.

5. UNLESS OTHERWISE SPECIFIED IN THE CONTRACT DOCUMENTS, BACKFILL MATERIAL SHALL CONFORM TO VTRANS SECTION 704.08 GRANULAR BACKFILL FOR STRUCTURES. PLACEMENT SHALL CONFORM TO VTRANS SECTION 204.08.

WING WALL PANEL AND ANCHOR NOTES:

△ 1. SECTIONS ARE DESIGNED IN ACCORDANCE WITH
   - AASHTO "LRFD BRIDGE DESIGN SPECIFICATIONS", 2012
   - VTRANS 2011 "STANDARD SPECIFICATIONS FOR CONSTRUCTION".

2. THE FOLLOWING PROPERTIES WERE USED IN THE DESIGN:

	SOIL WEIGHT [PCF]	FRICTION ANGLE [DEG]
RETAINED SOIL	140	34
FOUNDATION SOIL	140	35

△ 3. CONCRETE SHALL BE SELF-CONSOLIDATING CONFORMING TO ASTM C260 WITH A MINIMUM 28-DAY COMPRESSIVE STRENGTH OF 5,000 PSI. MIX DESIGN TO BE MICHIE #1953CAD WITH DCI CORROSION INHIBITOR. AGGREGATE SHALL CONFORM TO ASTM C-33 WITH A MAXIMUM DIAMETER OF 3/4". CEMENT SHALL CONFORM TO ASTM C150.

△ 4. REINFORCING IN WINGWALLS SHALL BE EPOXY COATED REINFORCING CONFORMING TO VTRANS SECTION 507. CHAIRS, SPACERS, AND TIES IN AREAS OF EPOXY COATEDREINFORCING SHALL BE PLASTIC OR EPOXY COATED. ALL BARS SHALL BE ALL BARS SHALL BE BENT COLD.

5. ALL EXPOSED EDGES EXCEPT WHERE NOTED SHALL BE CHAMFERED 3/4".

△ 6. UNLESS OTHERWISE SPECIFIED IN THE CONTRACT DOCUMENTS, BACKFILL MATERIAL SHALL CONFORM TO VTRANS SECTION 704.08 GRANULAR BACKFILL FOR STRUCTURES. PLACEMENT SHALL CONFORM TO VTRANS SECTION 204.08. SEE DETAIL 1/S10 FOR SELECT BACKFILL BEHIND WINGS FOR DRAINAGE.

△△ 7. EXPOSED SURFACES SHALL BE COATED WITH VTRANS APPROVED WATER REPELLENT PER CONTRACT DOCUMENTS (SHOP APPLIED).

HEADWALL NOTES:

1. PRECAST REINFORCED HEADWALLS ARE DESIGNED IN ACCORDANCE WITH AASHTO "LRFD BRIDGE DESIGN SPECIFICATIONS" 2012

2. THE FOLLOWING SOIL PROPERTIES WERE USED IN THE DESIGN:

	SOIL WEIGHT [PCF]	FRICTION ANGLE [DEG]
RETAINED SOIL	140	34
FOUNDATION		40

△ 3. HEADWALL CONCRETE SHALL BE SELF-CONSOLIDATING CONFORMING TO ASTM C260 WITH A MINIMUM 28-DAY COMPRESSIVE STRENGTH OF 5,000 PSI. MIX DESIGN TO BE MICHIE #1953CAD WITH DCI CORROSION INHIBITOR. AGGREGATE SHALL CONFORM TO ASTM C-33 WITH A MAXIMUM DIAMETER OF 3/4". CEMENT SHALL CONFORM TO ASTM C150.

△ 4. REINFORCING IN HEADWALLS SHALL BE EPOXY COATED REINFORCING CONFORMING TO VTRANS SECTION 507. CHAIRS, SPACERS, AND TIES IN AREAS OF EPOXY COATEDREINFORCING SHALL BE PLASTIC OR EPOXY COATED. ALL BARS SHALL BE BENT COLD.

5. ALL EXPOSED EDGES EXCEPT WHERE NOTED SHALL BE CHAMFERED 3/4".

6. UNLESS OTHERWISE SPECIFIED IN THE CONTRACT DOCUMENTS, BACKFILL MATERIAL SHALL CONFORM TO VTRANS SECTION 704.08 GRANULAR BACKFILL FOR STRUCTURES. PLACEMENT SHALL CONFORM TO VTRANS SECTION 204.08.

△△ 7. EXPOSED SURFACES SHALL BE COATED WITH VTRANS APPROVED WATER REPELLENT PER CONTRACT DOCUMENTS (SHOP APPLIED).

Vermont Agency of Transportation
RECEIVED
CK'D BY JW/JG OK'D BY JS
March 3, 2014
RESUBMIT NO Approved
BY KH DATE 3-10-2014

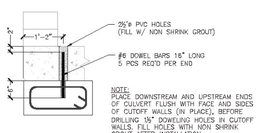

NOTE:
PLACE DOWNSTREAM AND UPSTREAM ENDS OF CULVERT FLUSH WITH FACE AND SIDES OF CUTOFF WALLS (IN PLACE), BEFORE DRILLING 1¾" DOWELING HOLES IN CUTOFF WALLS. FILL HOLES WITH NON SHRINK GROUT AFTER INSTALLATION.

3 S2.0 CUTOFF WALL CONNECTION
¾" = 1'

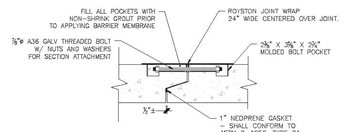

4 S2.0 BOX CULVERT JOINT CONNECTION DETAIL
1" = 1'-0"

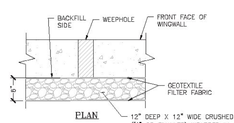

△ 5 S2.0 WEEPHOLE BACKFILL DETAIL
1" = 1'-0"

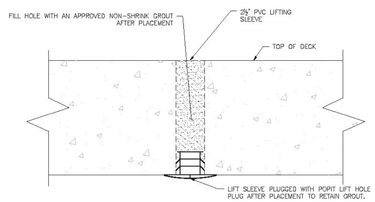

△ 4 S1.0 PLUG DETAIL FOR PVC LIFTING SLEEVES
3" = 1'-0"

MICHIE CORPORATION
APPROVED FOR
CONSTRUCTION
DATE: 9/4/2013
INITIAL: PJL

No.	Revision	Date	By
△			PJL
△			PJL
△			PJL
△			PJL
△			PJL
	DCR Comments		
	Revised VPSB		
	DCR Comments		
	DCR Comments		

STATE OF VERMONT
NO. 9877
PAUL J. LIBERTY
2/21/14

MICHIE CORPORATION, INC.
LEVERETT CIRCLE, P.O. BOX 1010
HEDNIKER, NH 03242
PHONE: 603-428-3245
FAX: 603-428-7426

Fire Drive off VT Rte. 30
VAOT #ER-BRF 015-1(23)
Jamaica, VT
16'x8' Box Culvert - Elevations & Connection Details
Project No. 3745
Designed by: PJL | Drawn by: RKR | Checked by: KAF | Scale: AS SHOWN

Prepared for:
Bazin Brothers Trucking
2425 Back Westminster Road
Westminster, VT 05158

DWG NO.
S2.0

BC2 REINFORCING SCHEDULE (COUNTS REFLECT 1 UNIT)

LOCATION	MARK	QTY	SIZE	SPACING	TYPE	CUT LENGTH	HORIZ. LEG	VERT. LEG
TOP SLAB (INT)	A100	10	#7	6"	STRAIGHT	17'-4"		
BOT. SLAB (INT)	A200	10	#7	6"	STRAIGHT	17'-4"		
TOP SLAB (EXT)	A300	5	#4	12"	STRAIGHT	17'-4"		
BOT. SLAB (EXT)	A400	5	#4	12"	STRAIGHT	17'-4"		
WALL (EXT)	A1	20	#6	6"	"L" BARS	18'-5" UNBENT		
WALL (INT)	B1	16	#5	8"	STRAIGHT	9'-8"		
LONGIT. TOP (EXT)	C1	18	#4	12"	STRAIGHT	4'-8½"		
LONGIT. TOP (INT)	C100	18	#4	12"	STRAIGHT	4'-8½"		
LONGIT. BOT. (INT)	C200	18	#4	12"	STRAIGHT	4'-8½"		
LONGIT. BOT (EXT)	C1	18	#4	12"	STRAIGHT	4'-8½"		
LONGIT. WALL (EXT)	C1	16	#4	12"	STRAIGHT	4'-8½"		
LONGIT. WALL (INT)	C1	16	#4	12"	STRAIGHT	4'-8½"		

BC1 REINFORCING SCHEDULE (COUNTS REFLECT 1 UNIT)

LOCATION	MARK	QTY	SIZE	SPACING	TYPE	CUT LENGTH	HORIZ. LEG	VERT. LEG
TOP SLAB (INT)	A100	10	#7	6"	STRAIGHT	17'-4"		
BOT. SLAB (INT)	A200	10	#7	6"	STRAIGHT	17'-4"		
TOP SLAB (EXT)	A300	5	#4	12"	STRAIGHT	17'-4"		
BOT. SLAB (EXT)	A400	5	#4	12"	STRAIGHT	17'-4"		
WALL (EXT)	A1	20	#6	6"	"L" BARS	18'-5" UNBENT		
WALL (INT)	B1	16	#5	8"	STRAIGHT	9'-8"		
LONGIT. TOP (EXT)	C1	18	#4	12"	STRAIGHT	4'-8½"		
LONGIT. TOP (INT)	C100	18	#4	12"	STRAIGHT	4'-0¾"		
LONGIT. BOT. (INT)	C200	18	#4	12"	STRAIGHT	4'-4⅝"		
LONGIT. BOT (EXT)	C1	18	#4	12"	STRAIGHT	4'-7⅜"		
LONGIT. WALL (EXT)	C1	16	#4	12"	STRAIGHT	VARIES 4'-2⅝" TO 4'-3½"		
LONGIT. WALL (INT)	C1	16	#4	12"	STRAIGHT	VARIES 4'-4⅝" TO 4'-5⅛"		

BC3 REINFORCING SCHEDULE (COUNTS REFLECT 1 UNIT)

LOCATION	MARK	QTY	SIZE	SPACING	TYPE	CUT LENGTH	HORIZ. LEG	VERT. LEG
TOP SLAB (INT)	A100	10	#7	6"	STRAIGHT	17'-4"		
BOT. SLAB (INT)	A200	10	#7	6"	STRAIGHT	17'-4"		
TOP SLAB (EXT)	A300	5	#4	12"	STRAIGHT	17'-4"		
BOT. SLAB (EXT)	A400	5	#4	12"	STRAIGHT	17'-4"		
WALL (EXT)	A1	20	#6	6"	"L" BARS	18'-5" UNBENT		
WALL (INT)	B1	16	#5	8	STRAIGHT	9'-8"		
LONGIT. TOP (EXT)	C1	18	#4	12"	STRAIGHT	4'-8½"		
LONGIT. TOP (INT)	C100	18	#4	12"	STRAIGHT	4'-1⅞"		
LONGIT. BOT. (INT)	C200	18	#4	12"	STRAIGHT	4'-7"		
LONGIT. BOT (EXT)	C1	18	#4	12"	STRAIGHT	4'-4"		
LONGIT. WALL (EXT)	C1	16	#4	12"	STRAIGHT	VARIES 4'-8½" TO 4'-9"		
LONGIT. WALL (INT)	C1	16	#4	12"	STRAIGHT	VARIES 4'-11⅜" TO 4'-7"		

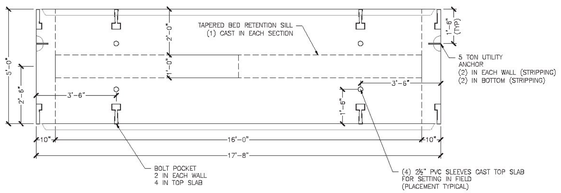

1 / S3.0 BC2 PLAN VIEW
3/8" = 1'-0"

15 REQUIRED
ITEM 281608
UNIT WEIGHT AND VOLUME:40,500#
BC: (9.22CY)
BAFFLE: (0.42CY)

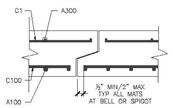

6 / S3.0 REINFORCING AT JOINT
1" = 1'-0"

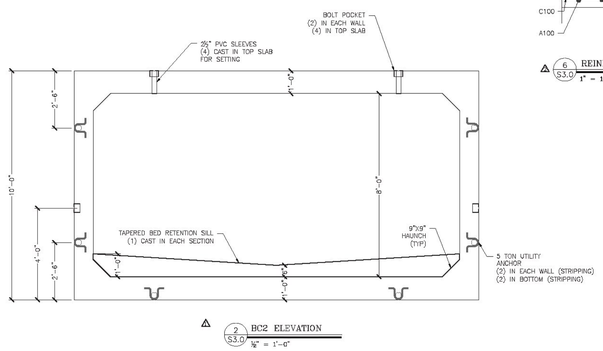

2 / S3.0 BC2 ELEVATION
3/8" = 1'-0"

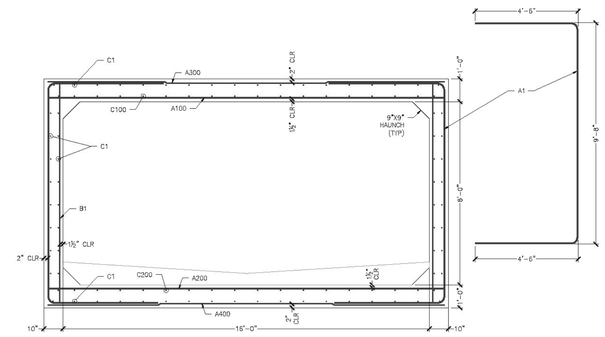

3 / S3.0 BC TYPICAL REINFORCING
3/8" = 1'-0"

BAFFLE REINFORCING SCHEDULE (COUNTS REFLECT 1 UNIT)

LOCATION	QTY	SIZE	SPACING	TYPE	CUT LENGTH	LAP
HORIZONTAL BAR	1	#4	–	STRAIGHT	14'-6"	18"
HORIZONTAL DOWELS	2	#4	–	STRAIGHT	38"	18"
VERTICAL DOWELS	10	#4	18"	STRAIGHT	7" TO 1'-0"	

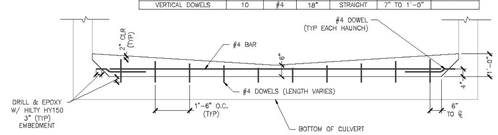

4 / S3.0 BED RETENTION SILL (ELEVATION VIEW)
3/8" = 1'-0"

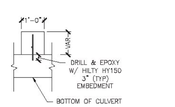

5 / S3.0 CROSS SECTION BED RETENTION SILL
1/2" = 1'

Vermont Agency of Transportation
RECEIVED
CK'D BY JW/JG OK'D BY JS
March 3, 2014
RESUBMIT NO Approved
BY KH DATE 3-10-2014

MICHIE CORPORATION
APPROVED FOR
CONSTRUCTION
DATE: 9/4/2013
INITIAL: PJL

No.	Date	Revision	By
3		BOX Comments	PJL
2		BOX Comments	PJL
1			

NO. 8011 — STATE OF VERMONT — REGISTERED PROFESSIONAL ENGINEER — 2/21/14

MICHIE CORPORATION, INC.
ENGINEERING & CONSULTING
HEBRON RD. 03242
HEBRON, NH
FAX: 603-428-7426

Fire Drive off VT Rte. 30
VAOT #ER-BRF 015-1(23)
Jamaica, VT
16'x8' Box Culvert - BC2 Details

Designed by PJL | Drawn by RSB | Checked by TAP | Scale: AS SHOWN

Project No. 3745

Prepared for:
Bazin Brothers Trucking
2425 Back Westminster Road
Westminster, VT 05158

DWG NO.
S3.0

NOTE:
ADJUST REINFORCING SPACING AS REQUIRED TO AVOID INSERTS

△ 1 S4.0 BC3 PLAN VIEW
½" = 1'-0"

1 REQUIRED
ITEM 281608 IO
UNIT WEIGHT AND VOLUME: 38,560#
BC: (8.76CY)
BAFFLE: (0.42CY)

△ 2 S4.0 BC3 ELEVATION
½" = 1'-0"

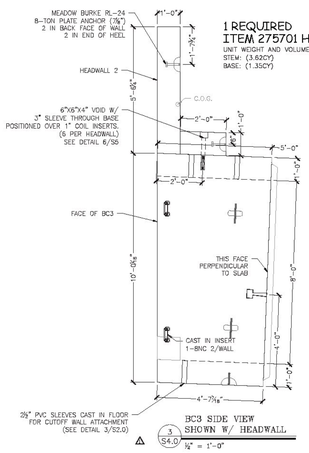

△ 3 S4.0 BC3 SIDE VIEW SHOWN W/ HEADWALL
½" = 1'-0"

1 REQUIRED
ITEM 275701 HW2
UNIT WEIGHT AND VOLUME: 20,875#
STEM: (3.62CY)
BASE: (1.35CY)

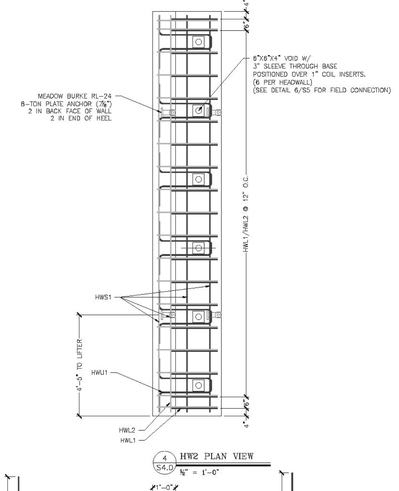

△ 4 S4.0 HW2 PLAN VIEW
½" = 1'-0"

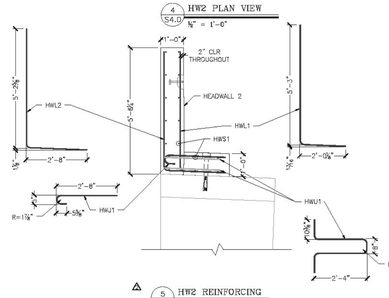

△ 5 S4.0 HW2 REINFORCING
½" = 1'-0"

△ ALL REINFORCING IN THIS DETAIL IS TO BE EPOXY COATED.
CHAIRS, SPACERS, AND TIES IN AREAS OF EPOXY COATED REINFORCING SHALL BE PLASTIC OR EPOXY COATED.

HEADWALL 3 REINFORCING SCHEDULE (COUNTS REFLECT 1 UNIT)

LOCATION	MARK	QTY	SIZE	SPACING	TYPE	CUT LENGTH
VERTICAL ISF	HWL1	19	#5	13"	"L"	7'-0⅝"
VERTICAL OSF	HWL2	19	#5	13"	"L"	7'-0⅝"
LONGITUDINAL (STEM)	HWS1	12	#5	13"	STRAIGHT	17'-4"
BASE TOP MAT	HWU1	19	#5	13"	"J"	3'-3⅝"
BASE AT SLEEVES	HWU1	6	#5	3'-0"	"U"	6'-3⅝"
LONGITUDINAL (BASE)	HWS1	4	#5	13"	STRAIGHT	17'-4"

Vermont Agency of Transportation
RECEIVED
CK'D BY JW/JG OK'D BY JS
March 3, 2014
RESUBMIT NO Approved
BY KH DATE 3-10-2014

MICHIE CORPORATION
APPROVED FOR CONSTRUCTION
DATE: 9/4/2013
INITIAL: PJL

No.	By	Date	Revision
1	PJL	2/21/14	EOR Comments
2	PJL		EOR Comments

STATE OF VERMONT — PAUL J. LEMIEUX — NO. 3837 — REGISTERED PROFESSIONAL ENGINEER — 2/21/14

MICHIE CORPORATION, INC.
CIVIL ENGINEERS & LAND SURVEYORS
HENNIKER, NH 03242
PHONE: 603-428-3999
FAX: 603-428-7426

Fire Drive off VT Rte. 30
VAOT #ER-BRF 015-1(23)
Jamaica, VT
16'x8' Box Culvert - BC3 & HW2 Details

Project No. 3745 | Designed by: PJL | Drawn by: RMB | Checked by: TAF | Scale: AS SHOWN

Prepared for:
Bazin Brothers Trucking
2425 Back Westminster Road
Westminster, VT 05158

DWG NO.
S4.0

NOTE:
ADJUST REINFORCING SPACING AS REQUIRED TO AVOID INSERTS

1 BC1 PLAN VIEW
S5.0 ⅜" = 1'-0"

1 REQUIRED
ITEM 281608
UNIT WEIGHT AND VOLUME: 38,560#
BC: (8.76CY)
BAFFLE: (0.42CY)

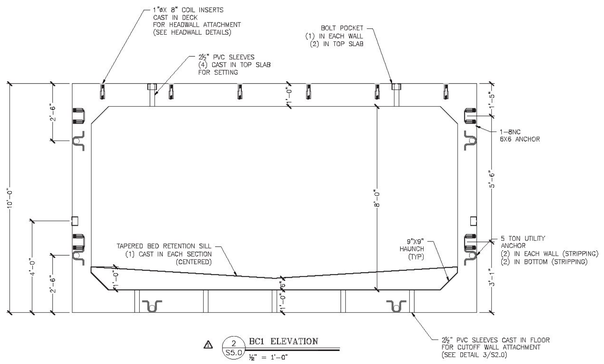

2 BC1 ELEVATION
S5.0 ⅜" = 1'-0"

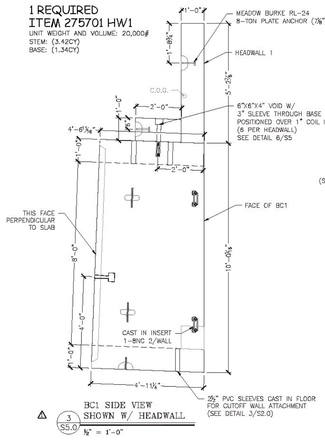

3 BC1 SIDE VIEW SHOWN W/ HEADWALL
S5.0 ⅜" = 1'-0"

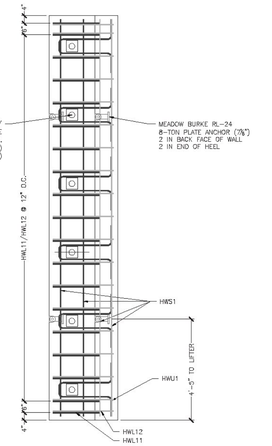

4 HW1 PLAN VIEW
S5.0 ⅜" = 1'-0"

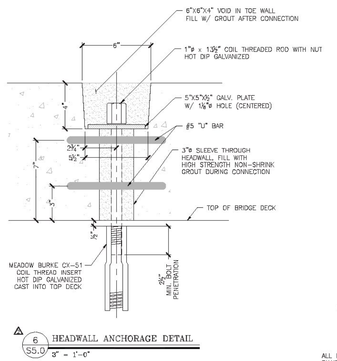

6 HEADWALL ANCHORAGE DETAIL
S5.0 3" = 1'-0"

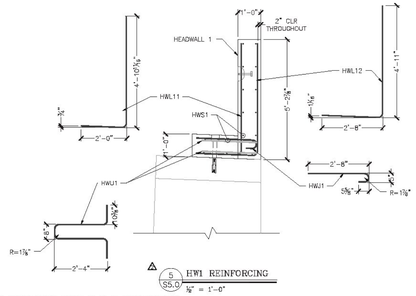

5 HW1 REINFORCING
S5.0 ⅜" = 1'-0"

ALL REINFORCING IN THIS DETAIL IS TO BE EPOXY COATED.
CHAIRS, SPACERS, AND TIES IN AREAS OF EPOXY COATED REINFORCING SHALL BE PLASTIC OR EPOXY COATED.

HEADWALL 1 REINFORCING SCHEDULE (COUNTS REFLECT 1 UNIT)

LOCATION	MARK	QTY	SIZE	SPACING	TYPE	CUT LENGTH
VERTICAL ISF	HWL11	18	#5	12"	"L"	8'-8⅝"
VERTICAL OSF	HWL12	18	#5	12"	"L"	7'-5⅜"
LONGITUDINAL (STEM)	HWS1	12	#5	12"	STRAIGHT	17'-4"
BASE TOP MAT	HWU1	19	#5	12"	"U"	3'-3⅝"
BASE AT SLEEVES	HWU1	6	#5	3'-0"	"U"	8'-3⅝"
LONGITUDINAL (BASE)	HWS1	4	#5	12"	STRAIGHT	17'-4"

Vermont Agency of Transportation
RECEIVED
CK'D BY JW/JG OK'D BY JS
March 3, 2014
RESUBMIT NO Approved
BY KH DATE 3-10-2014

MICHIE CORPORATION APPROVED FOR CONSTRUCTION
DATE: 9/4/2013
INITIAL: PJL

No.	Date	Revision	By
			PJL
		BDE Comments	PJL
		BDE Comments	By

STATE OF VERMONT — NO. 0871 — REGISTERED PROFESSIONAL ENGINEER — 2/21/14

MICHIE CORPORATION, INC
CIVIL ENGINEERS & LAND SURVEYORS
HEBRON, NH 03241
(603) 744-2212
FAX: 603-429-7426

Fire Drive off VT Rte. 30
VAOT #ER-BRF 015-1(23)
Jamaica, VT
16'x8' Box Culvert - BC1 & HW1 Details

Project No. 3745 | Designed by: PJL | Drawn by: RMB | Checked by: MJF | Scale: AS SHOWN

Prepared for:
Bazin Brothers Trucking
2425 Back Westminster Road
Westminster, VT 05158

DWG NO.
S5.0

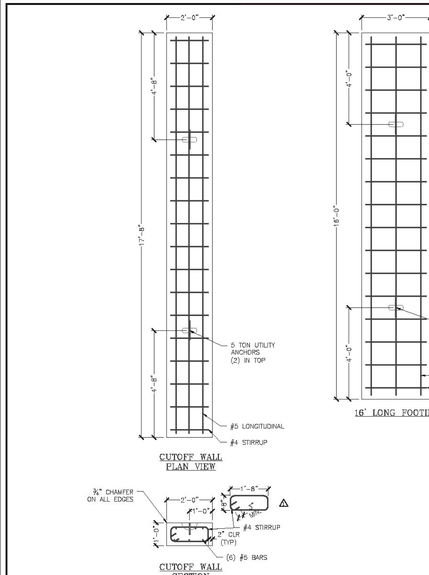

CUTOFF WALL PLAN VIEW

CUTOFF WALL SECTION

1 S6.0 1' CUTOFF WALL DETAILS ½" = 1'-0"

2 REQUIRED
ITEM 275800
UNIT WEIGHT AND VOLUME:
CUTOFF WALL: 5,500# (1.31CY)

CUTOFF WALL REINFORCING SCHEDULE (COUNTS REFLECT 1 UNIT)							
LOCATION	QTY	SIZE	SPACING	TYPE	CUT LENGTH		
#5 LONGITUDINAL	6	#5	12" MAX	STRAIGHT	17'-4"		
#4 STIRRUP	18	#4	12"	STIRRUP	4'-11⅞"		

16' LONG FOOTING

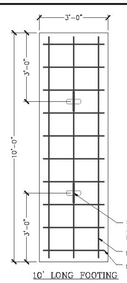

10' LONG FOOTING

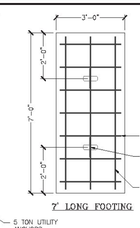

7' LONG FOOTING

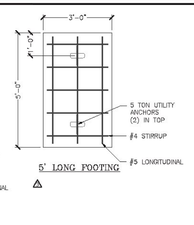

5' LONG FOOTING

2 S6.0 WINGWALL FOOTING DETAILS ½" = 1'-0"

2' TALL FOOTINGS
ITEM 382401
(3) 16' REQ'D - WWF1, WWF3A, WWF3A
(1) 10' REQUIRED - WWF4B
(1) 7' REQUIRED - WWF3B
⚠(1) 5' REQUIRED - WWF2D
UNIT WEIGHT AND VOLUME:
16': 14,935# (3.56CY)
10': 9,325# (2.22CY)
7': 6,430# (1.56CY)
5': 7,000# (1.67CY)

2'-0" TALL WW FOOTING SECTION

2' x 16' WINGWALL FOOTING REINFORCING SCHEDULE (COUNTS REFLECT 1 UNIT)							
LOCATION	QTY	SIZE	SPACING	TYPE	CUT LENGTH		
#4 LONGITUDINAL	6	#5	12" MAX	STRAIGHT	15'-8"		
#4 STIRRUP	16	#4	12"	STIRRUP	5'-0"		

2' x 10' WINGWALL FOOTING REINFORCING SCHEDULE (COUNTS REFLECT 1 UNIT)							
LOCATION	QTY	SIZE	SPACING	TYPE	CUT LENGTH		
#4 LONGITUDINAL	6	#5	12" MAX	STRAIGHT	9'-8"		
#4 STIRRUP	10	#4	12"	STIRRUP	9'-0"		

2' x 7' WINGWALL FOOTING REINFORCING SCHEDULE (COUNTS REFLECT 1 UNIT)							
LOCATION	QTY	SIZE	SPACING	TYPE	CUT LENGTH		
#4 LONGITUDINAL	6	#5	12" MAX	STRAIGHT	6'-8"		
#4 STIRRUP	7	#4	12"	STIRRUP	5'-0"		

2' x 5' WINGWALL FOOTING REINFORCING SCHEDULE (COUNTS REFLECT 1 UNIT)							
LOCATION	QTY	SIZE	SPACING	TYPE	CUT LENGTH		
#4 LONGITUDINAL	8	#5	12" MAX	STRAIGHT	4'-8"		
#4 STIRRUP	5	#4	12"	STIRRUP	9'-0"		

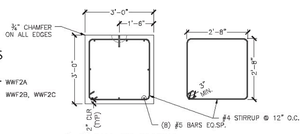

3'-0" TALL WW FOOTING SECTION

⚠ ⚠ 3' TALL FOOTINGS
ITEM 382401
(1) 10' REQUIRED - WWF2A
(2) 7' REQUIRED - WWF2B, WWF2C
UNIT WEIGHT AND VOLUME:
10': 14,000# (3.33CY)
7': 9,800# (2.33CY)

⚠ NOTE: 3'-0" TALL WINGWALL FOOTINGS UNDER WINGWALLS 2A, 2B, AND 2C ONLY

3' x 10' WINGWALL FOOTING REINFORCING SCHEDULE (COUNTS REFLECT 1 UNIT)							
LOCATION	QTY	SIZE	SPACING	TYPE	CUT LENGTH		
#4 LONGITUDINAL	8	#5	12" MAX	STRAIGHT	9'-8"		
#4 STIRRUP	10	#4	12"	STIRRUP	11'-0"		

3' x 7' WINGWALL FOOTING REINFORCING SCHEDULE (COUNTS REFLECT 1 UNIT)							
LOCATION	QTY	SIZE	SPACING	TYPE	CUT LENGTH		
#4 LONGITUDINAL	8	#5	12" MAX	STRAIGHT	6'-8"		
#4 STIRRUP	7	#4	12"	STIRRUP	11'-0"		

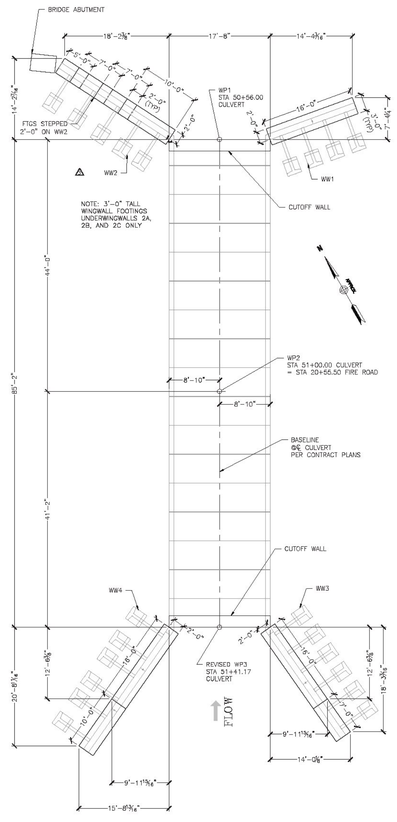

3 S6.0 FOOTING LAYOUT ⅛" = 1'-0"

Vermont Agency of Transportation
RECEIVED
CK'D BY JW/JG OK'D BY JS
March 3, 2014
RESUBMIT NO Approved
BY KH DATE 3-10-2014

MICHIE CORPORATION APPROVED FOR CONSTRUCTION
DATE: 9/4/2013
INITIAL: PJL

No.	Date	Revision	By
4		EOR Comments	PJL
3		Revised WP3	PJL
2		EOR Comments	PJL
1			By

STATE OF VERMONT — PAUL J. LEMIEUX — NO. 9881 — REGISTERED PROFESSIONAL ENGINEER — 2/21/14

MICHIE CORPORATION, INC.
ENGINEERING & LAND SURVEYING
HENNIKER, NH 03242
PHONE: 603-428-3999
FAX: 603-428-7426

Fire Drive off VT Rte. 30
VAOT #ER-BRF 015-1(23)
Jamaica, VT
16'x8' Box Culvert - Footing Details

Project No. 3745 | Designed by PJL | Drawn by RSR | Checked by TAP | Scale: AS SHOWN

Prepared for:
Bazin Brothers Trucking
2425 Back Westminster Road
Westminster, VT 05158

DWG NO. S0.0

Vermont Agency of Transportation

RECEIVED

CK'D BY JW/JG OK'D BY JS

March 3, 2014

RESUBMIT NO Approved

BY KH DATE 3-10-2014

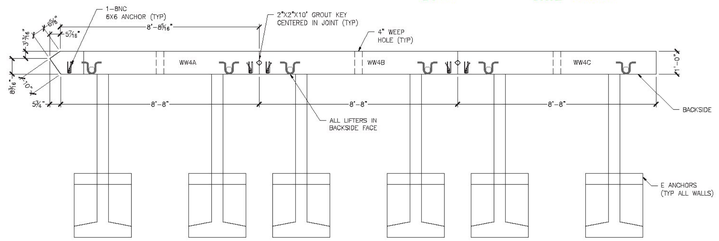

4 / S7.0 WW4A,B&C PLAN VIEW
3/8" = 1'-0"

△ ALL REINFORCING IN THIS DETAIL IS TO BE EPOXY COATED.
CHAIRS, SPACERS, AND TIES IN AREAS OF EPOXY COATED REINFORCING SHALL BE PLASTIC OR EPOXY COATED.

WW4A REINFORCING SCHEDULE (COUNTS REFLECT 1 UNIT)

BAR MARK	LOCATION	TYPE	SIZE/SPACING	CUT LENGTH	# OF PCS
VERTICAL	OSF	STRAIGHT	#5 @ 12"	VARIES 13'-11⅜" TO 14'-6"	9
VERTICAL	ISF	STRAIGHT	#6 @ 7"	VARIES 13'-11⅜" TO 14'-6"	15
HORIZONTAL	OSF	STRAIGHT	#4 @ 12"	8'-4"	15
HORIZONTAL	ISF	STRAIGHT	#4 @ 12"	8'-4"	15
DIAGONAL	FOLLOW SLOPE	STRAIGHT	#4	8'-4½"	2

WW4B REINFORCING SCHEDULE (COUNTS REFLECT 1 UNIT)

BAR MARK	LOCATION	TYPE	SIZE/SPACING	CUT LENGTH	# OF PCS
VERTICAL	OSF	STRAIGHT	#5 @ 12"	VARIES 14'-6" TO 15'-1½"	9
VERTICAL	ISF	STRAIGHT	#6 @ 7"	VARIES 14'-6" TO 15'-1½"	15
HORIZONTAL	OSF	STRAIGHT	#4 @ 12"	8'-4"	15
HORIZONTAL	ISF	STRAIGHT	#4 @ 12"	8'-4"	15
DIAGONAL	FOLLOW SLOPE	STRAIGHT	#4	8'-4½"	2

WW4C REINFORCING SCHEDULE (COUNTS REFLECT 1 UNIT)

BAR MARK	LOCATION	TYPE	SIZE/SPACING	CUT LENGTH	# OF PCS
VERTICAL	OSF	STRAIGHT	#5 @ 12"	VARIES 15'-1⅝" TO 15'-8"	9
VERTICAL	ISF	STRAIGHT	#6 @ 7"	VARIES 15'-1⅝" TO 15'-8"	15
HORIZONTAL	OSF	STRAIGHT	#4 @ 12"	8'-4"	15
HORIZONTAL	ISF	STRAIGHT	#4 @ 12"	8'-4"	15
DIAGONAL	FOLLOW SLOPE	STRAIGHT	#4	8'-4½"	2

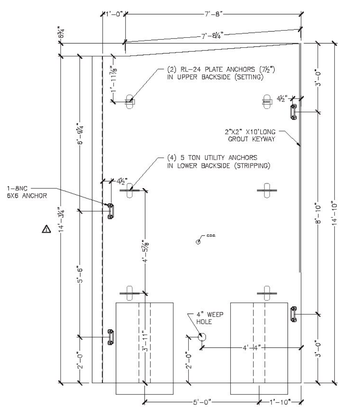

1 REQUIRED
ITEM 375602-4A
UNIT WEIGHT AND VOLUME: 25,750#
WALL: 4.91CY
E ANCHORS: 0.61CY

2 / S7.0 WW4A ELEVATION (LOOKING AT BACKSIDE)
3/8" = 1'-0"

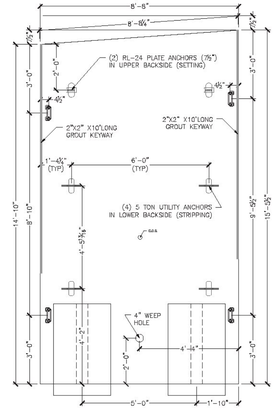

1 REQUIRED
ITEM 375602-4B
UNIT WEIGHT AND VOLUME: 25,520#
WALL: 4.86CY
E ANCHORS: 0.61CY

3 / S7.0 WW4B ELEVATION (LOOKING AT BACKSIDE)
3/8" = 1'-0"

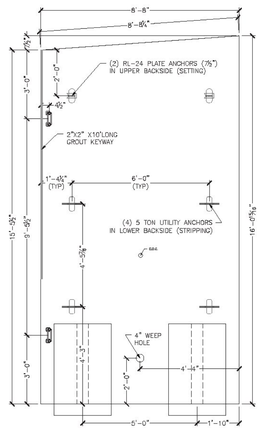

1 REQUIRED
ITEM 375602-4C
UNIT WEIGHT AND VOLUME: 26,380#
WALL: 5.08CY
E ANCHORS: 0.61CY

4 / S7.0 WW4C ELEVATION (LOOKING AT BACKSIDE)
3/8" = 1'-0"

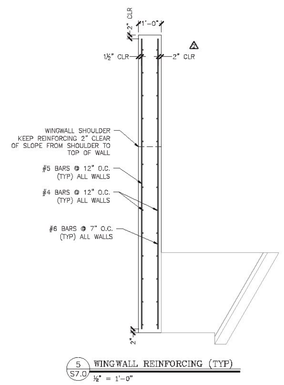

5 / S7.0 WINGWALL REINFORCING (TYP)
1/2" = 1'-0"

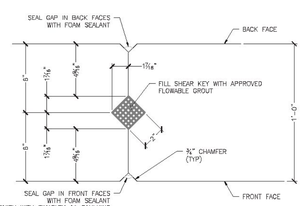

6 / S7.0 VERTICAL JOINT DETAIL
3" = 1'-0"

MICHIE CORPORATION
APPROVED FOR
CONSTRUCTION

DATE: 9/4/2013
INITIAL: PJL

By	Date	No.	Revision
PJL		1	ESR Comments
PJL		2	ESR Comments

2/21/14

MICHIE CORPORATION, INC.
1 EXECUTIVE PARK DRIVE, SUITE 201 (PO BOX 67)
HENNIKER, NH 03242
PHONE: 603-428-3199
FAX: 603-428-7426

Fire Drive off VT Rte. 30
VAOT #ER-BRF 015-1(23)
Jamaica, VT
16'x8' Box Culvert - Wingwall 4 Details

Project No. 3745 | Designed by: PJL | Drawn by: RSR | Checked by: TAF | State: AS SHOWN

Prepared for:
Bazin Brothers Trucking
2425 Back Westminster Road
Westminster, VT 05158

DWG NO.
S7.0

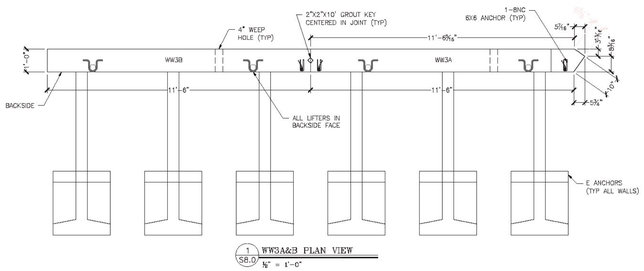

1 SB.0 WW3A&3 PLAN VIEW
⅜" = 1'-0"

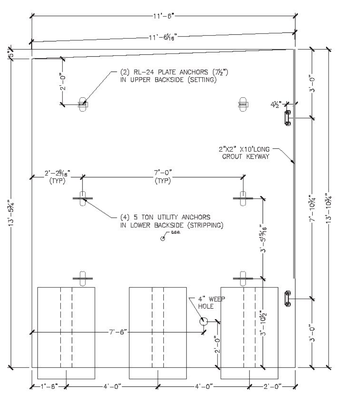

1 REQUIRED
ITEM 375602-3B
UNIT WEIGHT AND VOLUME: 32,150#
WALL: 5.83CY
E ANCHORS: 0.61CY

2 SB.0 WW3B ELEVATION (LOOKING AT BACKSIDE)
⅜" = 1'-0"

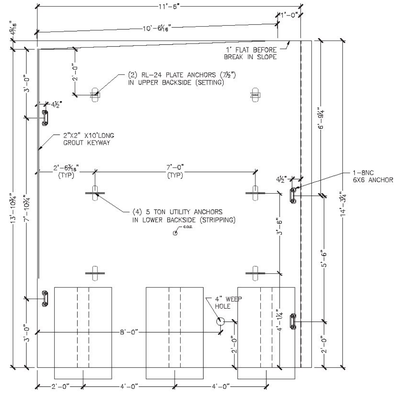

1 REQUIRED
ITEM 375602-3A
UNIT WEIGHT AND VOLUME: 34,120#
WALL: 6.30CY
E ANCHORS: 0.61CY

3 SB.0 WW3A ELEVATION (LOOKING AT BACKSIDE)
⅜" = 1'-0"

⚠ ALL REINFORCING IN THIS DETAIL IS TO BE EPOXY COATED.
CHAIRS, SPACERS, AND TIES IN AREAS OF EPOXY COATED REINFORCING SHALL BE PLASTIC OR EPOXY COATED.

WW3A REINFORCING SCHEDULE (COUNTS REFLECT 1 UNIT)					
BAR MARK	LOCATION	TYPE	SIZE/SPACING	CUT LENGTH	# OF PCS
VERTICAL	OSF	STRAIGHT	#5 @ 12"	VARIES 13'-6⅜" TO 13'-11⅞"	12
VERTICAL	ISF	STRAIGHT	#6 @ 7"	VARIES 13'-6⅜" TO 13'-11⅞"	20
HORIZONTAL	OSF	STRAIGHT	#4 @ 12"	8'-4"	14
HORIZONTAL	ISF	STRAIGHT	#4 @ 12"	8'-4"	14
DIAGONAL	FOLLOW SLOPE	STRAIGHT	#4	8'-4⅞"	2

WW3B REINFORCING SCHEDULE (COUNTS REFLECT 1 UNIT)					
BAR MARK	LOCATION	TYPE	SIZE/SPACING	CUT LENGTH	# OF PCS
VERTICAL	OSF	STRAIGHT	#5 @ 12"	VARIES 13'-1¾" TO 13'-6⅞"	12
VERTICAL	ISF	STRAIGHT	#6 @ 7"	VARIES 13'-1¾" TO 13'-6⅞"	20
HORIZONTAL	OSF	STRAIGHT	#4 @ 12"	8'-4"	14
HORIZONTAL	ISF	STRAIGHT	#4 @ 12"	8'-4"	14
DIAGONAL	FOLLOW SLOPE	STRAIGHT	#4	8'-4⅞"	2

4 SB.0 WINGWALL REINFORCING (TYP)
⅜" = 1'-0"

WW BRACKET
(14) 180° REQUIRED
(4) 145° REQUIRED
(2) 110° REQUIRED
(2) 123° REQUIRED

PLATES TO BE MADE OF ¾" MILD STEEL. PLASMA CUT, AND BENT AS REQUIRED. (HOT DIPPED GALVANIZED AFTER BENDING)

⚠ 5 SB.0 WINGWALL BRACKET DETAIL
1" = 1'-0"

Vermont Agency of Transportation
RECEIVED
CK'D BY JW/JG OK'D BY JS
March 3, 2014
RESUBMIT NO Approved
BY KH DATE 3-10-2014

No.	Date	Revision	By
⚠		EOR Comments	PEL
⚠		EOR Comments	PEL

MICHIE CORPORATION, INC
CIVIL ENGINEERING & LAND SURVEYING
HENNIKER, NH 03242
PHONE: 603-428-3228
FAX: 603-428-7426

Fire Drive off VT Rte. 30
VAOT #ER-BRF 015-1(23)
Jamaica, VT
16'x8' Box Culvert - Wingwall 3 Details

Project No. 3745 | Designed by PEL | Drawn by RKR | Checked by TAF | Scale: AS SHOWN

Prepared for:
Bazin Brothers Trucking
2425 Back Westminster Road
Westminster, VT 05158

DWG NO.
S8.0

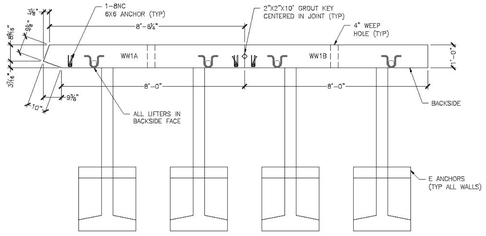

1 S9.0 WW1A&B PLAN VIEW
½" = 1'-0"

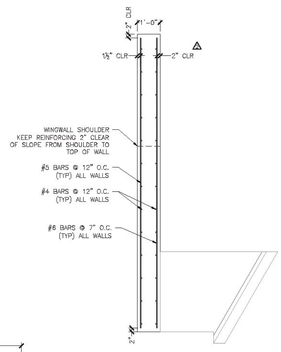

4 S9.0 WINGWALL REINFORCING (TYP)
½" = 1'-0"

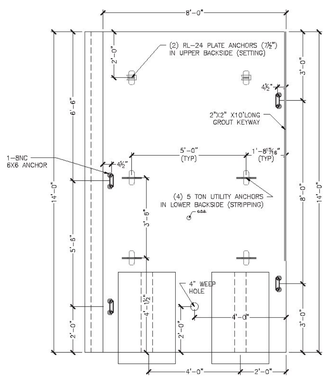

1 REQUIRED
ITEM 375602-1A
UNIT WEIGHT AND VOLUME: 24,070#
WALL: 4.51CY
E ANCHORS: 0.61CY

2 S9.0 WW1A ELEVATION (LOOKING AT BACKSIDE)
½" = 1'-0"

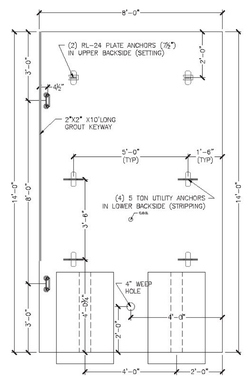

1 REQUIRED
ITEM 375602-1B
UNIT WEIGHT AND VOLUME: 22,725#
WALL: 4.19CY
E ANCHORS: 0.61CY

3 S9.0 WW1B ELEVATION (LOOKING AT BACKSIDE)
½" = 1'-0"

△ ALL REINFORCING IN THIS DETAIL IS TO BE EPOXY COATED.
CHAIRS, SPACERS, AND TIES IN AREAS OF EPOXY COATED REINFORCING SHALL BE PLASTIC OR EPOXY COATED.

WW1A REINFORCING SCHEDULE (COUNTS REFLECT 1 UNIT)					
BAR MARK	LOCATION	TYPE	SIZE/SPACING	CUT LENGTH	# OF PCS
VERTICAL	OSF	STRAIGHT	#5 @ 12"	13'-8"	8
VERTICAL	ISF	STRAIGHT	#6 @ 7"	13'-8"	14
HORIZONTAL	OSF	STRAIGHT	#4 @ 12"	8'-2¼"	14
HORIZONTAL	ISF	STRAIGHT	#4 @ 12"	8'-2¼"	14

WW1B REINFORCING SCHEDULE (COUNTS REFLECT 1 UNIT)					
BAR MARK	LOCATION	TYPE	SIZE/SPACING	CUT LENGTH	# OF PCS
VERTICAL	OSF	STRAIGHT	#5 @ 12"	13'-8"	8
VERTICAL	ISF	STRAIGHT	#6 @ 7"	13'-8"	14
HORIZONTAL	OSF	STRAIGHT	#4 @ 12"	7'-8"	14
HORIZONTAL	ISF	STRAIGHT	#4 @ 12"	7'-8"	14

△ SEE SHEET S11.0 FOR WW2 DETAILS

Vermont Agency of Transportation
RECEIVED
CK'D BY JW/JG OK'D BY JS
March 3, 2014
RESUBMIT NO Approved
BY KH DATE 3-10-2014

No.	Date	Revision	By
△		Revised WW2	PIL
△		EOR Comments	PIL
△		EOR Comments	PIL

STATE OF VERMONT
THOMAS A. FRANCO
NO. 8871
LICENSED PROFESSIONAL ENGINEER
2/21/14

MICHIE CORPORATION, INC.
173 BOUTON INDUSTRIAL DRIVE, PO BOX 870
HENNIKER, NH 03242
PHONE 603-428-3218
FAX 603-428-7426

Fire Drive off VT Rte. 30
VAOT #ER-BRF 015-1(23)
Jamaica, VT
16'x8' Box Culvert - Wingwall 1 Details

Project No. 3745 | Designed by: PIL | Drawn by: RHB | Checked by: TAF | Scale: AS SHOWN

Prepared for:
Bazin Brothers Trucking
2425 Back Westminster Road
Westminster, VT 05158

DWG NO.
S9.0

Vermont Agency of Transportation
RECEIVED
CK'D BY JW/JG OK'D BY JS
March 3, 2014
RESUBMIT NO Approved
BY KH DATE 3-10-2014

⚠ ALL REINFORCING IN THIS DETAIL IS TO BE EPOXY COATED. CHAIRS, SPACERS, AND TIES IN AREAS OF EPOXY COATED REINFORCING SHALL BE PLASTIC OR EPOXY COATED.

ANCHOR TYPE "B"		
CONCRETE QUANTITY	0.41 CY	
WEIGHT	1740 LB	
W1	1'-4"	
W2	3'-5⅝"	
X = 2'-0⅞"	Y= 1'-8⅛"	

BAR LIST

MARK	QTY	SIZE	L	TYPE	LENGTH
B501	1	#5	4'-4½"	1	10'-1½"
B502	1	#5	4'-0½"	1	9'-5"
B503	1	#5	3'-9⅝"	1	8'-9"
B504	1	#5	3'-0"	1	7'-4½"
B505	2	#5	3'-8⅝"	2	4'-7"
B506	2	#5	-----	Str.	3'-3"
B507	4	#5	-----	Str.	4'-4½"
B508	7	#5	-----	Str.	2'-3"
B509	2	#5	-----	Str.	3'-8"

ANCHOR TYPE "C"		
CONCRETE QUANTITY	0.48 CY	
WEIGHT	2010 LB	
W1	2'-4"	
W2	4'-5⅛"	
X = 2'-8⅝"	Y= 1'-8⅝"	

BAR LIST

MARK	QTY	SIZE	L	TYPE	LENGTH
B501	1	#5	5'-4½"	1	12'-1½"
B502	1	#5	5'-0½"	1	11'-5"
B503	1	#5	4'-9⅝"	1	10'-9"
B504	1	#5	4'-0"	1	9'-4½"
B505	2	#5	3'-8⅝"	2	4'-7"
B506	2	#5	-----	Str.	3'-3"
B507	4	#5	-----	Str.	4'-4½"
B508	7	#5	-----	Str.	2'-3"
B509	2	#5	-----	Str.	3'-8"

ANCHOR TYPE "D"		
CONCRETE QUANTITY	0.54 CY	
WEIGHT	2285 LB	
W1	3'-4"	
W2	5'-5⅛"	
X = 3'-5⅛"	Y= 1'-8⅝"	

BAR LIST

MARK	QTY	SIZE	L	TYPE	LENGTH
B501	1	#5	6'-4½"	1	14'-1½"
B502	1	#5	6'-0½"	1	13'-5"
B503	1	#5	5'-9⅝"	1	12'-9"
B504	1	#5	5'-0"	1	11'-4½"
B505	2	#5	3'-8⅝"	2	4'-7"
B506	2	#5	-----	Str.	3'-3"
B507	4	#5	-----	Str.	4'-4½"
B508	7	#5	-----	Str.	2'-3"
B509	2	#5	-----	Str.	3'-8"

ANCHOR TYPE "E"		
CONCRETE QUANTITY	0.61 CY	
WEIGHT	2550 LB	
W1	4'-4"	
W2	6'-5⅛"	
X = 4'-0"	Y= 1'-8⅝"	

BAR LIST

MARK	QTY	SIZE	L	TYPE	LENGTH
B501	1	#5	7'-4½"	1	16'-1½"
B502	1	#5	7'-0½"	1	15'-5"
B503	1	#5	6'-9⅝"	1	14'-9"
B504	1	#5	6'-0"	1	13'-4½"
B505	2	#5	3'-8⅝"	2	4'-7"
B506	8	#5	-----	Str.	3'-3"
B507	4	#5	-----	Str.	4'-4½"
B508	7	#5	-----	Str.	2'-3"
B509	2	#5	-----	Str.	3'-8"

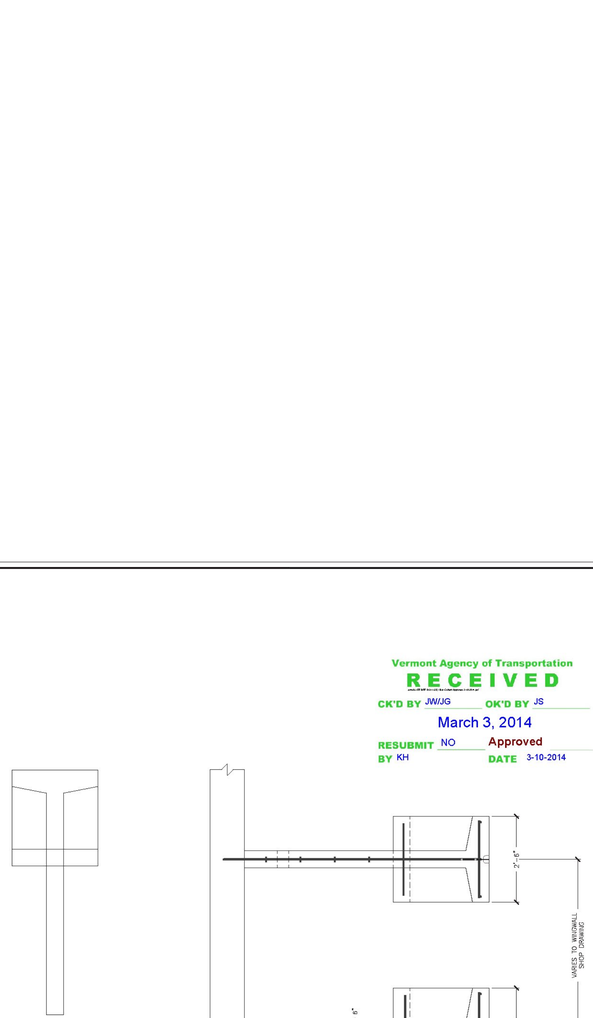

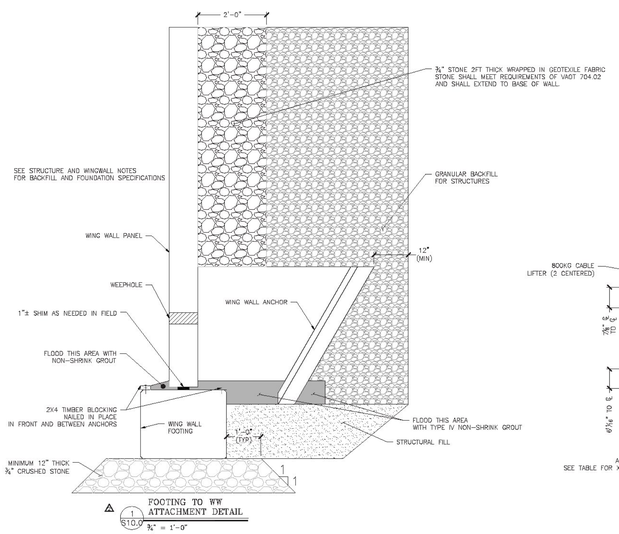

⚠ 1 S10.0 FOOTING TO WW ATTACHMENT DETAIL
¾" = 1'-0"

NOTE: REINFORCING SHOWN REPRESENTS "E" ANCHOR
OTHER ANCHOR REINFORCING SIMILAR
ALL REINFORCING IN THIS DETAIL TO BE EPOXY COATED

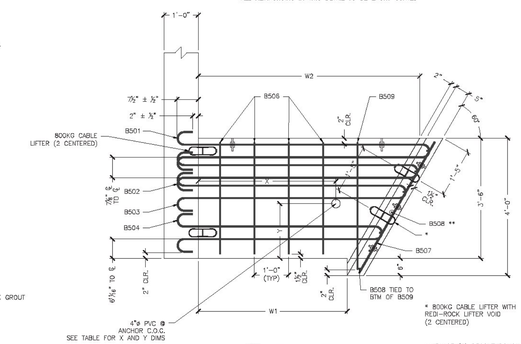

2 S10.0 ANCHOR DETAIL
¾" = 1'-0"

* BOOKG CABLE LIFTER WITH RECI-ROCK LIFTER VOID (2 CENTERED)

** PLACE (1) B508 THROUGH EACH HOOP BARS, (1) CENTERED BETWEEN HOOP BARS 503 & 504, AND (2) BELOW B504 HOOP BAR W/ BOTTOM B508 2" CLEAR FROM BOTTOM (7 TOTAL)

20 REQ'D

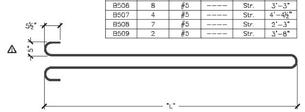

TYPE 1

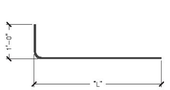

TYPE 2

No.	Date	Revision	By
⚠		EOR Comments	PEL
⚠		EOR Comments	PEL

MICHIE CORPORATION, INC
CIVIL ENGINEERS & LAND SURVEYORS
RENNER, NH 03242
PHONE: 603-429-9100
FAX: 603-429-7426

Fire Drive off VT Rte. 30
VAOT #ER-BRF 015-1(23)
Jamaica, VT
16'x8' Box Culvert - Wingwall Anchor Details
State: A.S.BROWN
Project No. 3745
Designed by: PEL | Drawn by: RKB | Checked by: KAF

Prepared for:
Bazin Brothers Trucking
2425 Back Westminster Road
Westminster, VT 05158

DWG NO.
S10.0

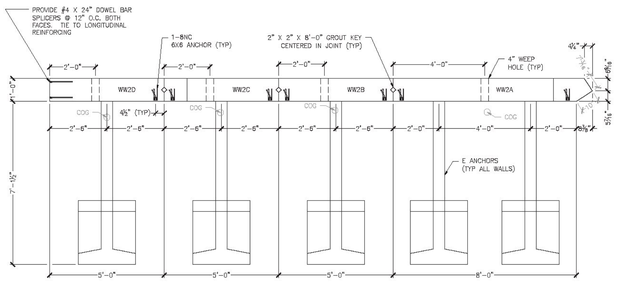

1 S11.0 WW2 PLAN VIEW
3/8" = 1'-0"

ALL REINFORCING IN THIS DETAIL IS TO BE EPOXY COATED.
CHAIRS, SPACERS, AND TIES IN AREAS OF EPOXY COATED REINFORCING SHALL BE PLASTIC OR EPOXY COATED.

WW2A REINFORCING SCHEDULE					
BAR MARK	LOCATION	TYPE	SIZE/SPACING	CUT LENGTH	# OF PCS
VERTICAL	OSF	STRAIGHT	#5 @ 12"	VARIES 15'-0" TO 12'-10"	9
VERTICAL	ISF	STRAIGHT	#6 @ 7"	VARIES 15'-0" TO 12'-10"	15
HORIZONTAL	OSF	STRAIGHT	#4 @ 12"	8'-0"	15
HORIZONTAL	ISF	STRAIGHT	#4 @ 12"	8'-0"	15
DIAGONAL	FOLLOW SLOPE	STRAIGHT	#4	7'-0"	2

WW2B REINFORCING SCHEDULE					
BAR MARK	LOCATION	TYPE	SIZE/SPACING	CUT LENGTH	# OF PCS
VERTICAL	OSF	STRAIGHT	#5 @ 12"	VARIES 13'-7" TO 12'-0"	5
VERTICAL	ISF	STRAIGHT	#6 @ 7"	VARIES 13'-7" TO 12'-0"	9
HORIZONTAL	OSF	STRAIGHT	#4 @ 12"	4'-8"	14
HORIZONTAL	ISF	STRAIGHT	#4 @ 12"	4'-8"	14
DIAGONAL	FOLLOW SLOPE	STRAIGHT	#4	4'-1 15/16"	2

WW2C REINFORCING SCHEDULE					
BAR MARK	LOCATION	TYPE	SIZE/SPACING	CUT LENGTH	# OF PCS
VERTICAL	OSF	STRAIGHT	#5 @ 12"	VARIES 11'-9" TO 10'-7"	5
VERTICAL	ISF	STRAIGHT	#6 @ 7"	VARIES 11'-9" TO 10'-7"	9
HORIZONTAL	OSF	STRAIGHT	#4 @ 12"	4'-8"	12
HORIZONTAL	ISF	STRAIGHT	#4 @ 12"	4'-8"	12
DIAGONAL	FOLLOW SLOPE	STRAIGHT	#4	3'-10"	2

WW2D REINFORCING SCHEDULE					
BAR MARK	LOCATION	TYPE	SIZE/SPACING	CUT LENGTH	# OF PCS
VERTICAL	OSF	STRAIGHT	#5 @ 12"	9'-9"	5
VERTICAL	ISF	STRAIGHT	#6 @ 7"	9'-9"	9
HORIZONTAL	OSF	STRAIGHT	#4 @ 12"	4'-8"	10
HORIZONTAL	ISF	STRAIGHT	#4 @ 12"	4'-8"	10
HORIZONTAL	ISF/OSF	DBS	#4 @ 12"	2'-0"	20

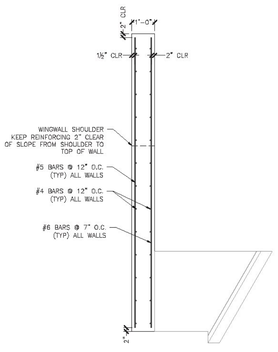

6 S11.0 WINGWALL REINFORCING (TYP)
3/8" = 1'-0"

1 REQUIRED
ITEM 375602-2D
UNIT WEIGHT AND VOLUME: 9,620#
WALL: 1.68CY
E ANCHORS: 0.61CY

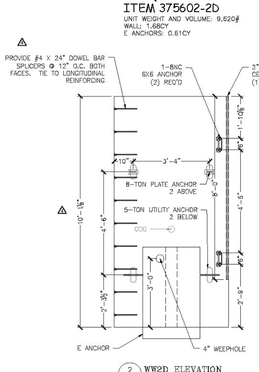

2 S11.0 WW2D ELEVATION
3/8" = 1'-0"

1 REQUIRED
ITEM 375602-2C
UNIT WEIGHT AND VOLUME: 11,590#
WALL: 2.15CY
E ANCHORS: 0.61CY

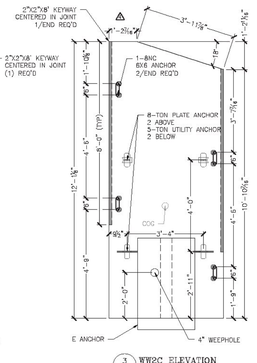

3 S11.0 WW2C ELEVATION
3/8" = 1'-0"

1 REQUIRED
ITEM 375602-2B
UNIT WEIGHT AND VOLUME: 12,770#
WALL: 2.43CY
E ANCHORS: 0.61CY

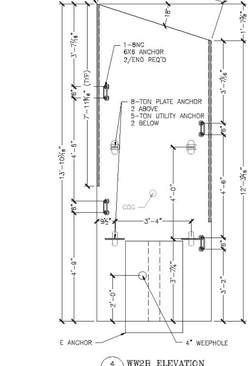

4 S11.0 WW2B ELEVATION
3/8" = 1'-0"

1 REQUIRED
ITEM 375602-2A
UNIT WEIGHT AND VOLUME: 23,800#
WALL: 5.66CY
E ANCHORS: 2 @ 0.61CY

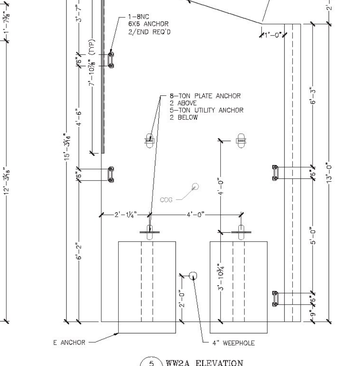

5 S11.0 WW2A ELEVATION
3/8" = 1'-0"

Vermont Agency of Transportation
RECEIVED
CK'D BY JW/JG OK'D BY JS
March 3, 2014
RESUBMIT NO Approved
BY KH DATE 3-10-2014

By	Date	No.
PTL	8/08 Comments	1
PTL	Revised VPSS	
PTL	8/08 Comments	2
PTL	8/08 Comments	3
PTL	Revision	4

STATE OF VERMONT
NO. 9811
PAUL T. LOMBARDO
2/21/14

MICHIE CORPORATION, INC
CIVIL ENGINEERS & LAND SURVEYORS
HEBNER, NH 03242
PHONE: 603-429-9425
FAX: 603-429-7426

Fire Drive off VT Rte. 30
VAOT #ER-BRF 015-1(23)
Jamaica, VT
16'x8' Box Culvert - Wingwall 2 Details
Project No. 3745
Designed by: PTL | Drawn by: RWB | Checked by: PMF
Scale: AS SHOWN

Prepared for:
Bazin Brothers Trucking
2425 Back Westminster Road
Westminster, VT 05158

DWG NO.
ST1.0

WELDING PROCEDURE SPECIFICATION (WPS) Yes ■
PREQUALIFIED ____ QUALIFIED BY TESTING ____
or PROCEDURE QUALIFICATION RECORDS (PQR) Yes ☐

Identification # 1
Revision 0 Date 4/19/13 By J. Ouelette
Authorized by E. Murphy Date 4/19/13
Type—Manual ☐ Semiautomatic ☐
Mechanized ☐ Automatic ☐

Company Name Miller Construction, Inc.
Welding Process(es) SMAW
Supporting PQR No.(s) N/A

JOINT DESIGN USED
Type:
Single ■ Double Weld ☐
Backing: Yes ☐ No ■
Backing Material:
Root Opening ____ Root Face Dimension ____
Groove Angle: 45 Radius (J–U) ____
Back Gouging: Yes ☐ No ■ Method ____

BASE METALS
Material Spec. HP 12 X 84
Type or Grade GR 50
Thickness: Groove 0.68 Fillet 0.75
Diameter (Pipe) ____

FILLER METALS
AWS Specification ~~AWS D1.1~~ A5.5
AWS Classification E7018

SHIELDING
Flux X Gas ____
Composition ____
Electrode-Flux (Class) ____ Flow Rate ____
Gas Cup Size ____

PREHEAT
Preheat Temp., Min. 70 F
Interpass Temp., Min. N/A Max. N/A

POSITION
Position of Groove: 2G Fillet: 1,2,3,4F
Vertical Progression: Up ■ Down ☐

ELECTRICAL CHARACTERISTICS
Transfer Mode (GMAW) E7018 Short-Circuiting ~~■~~ X
Globular ☐ Spray ☐
Current: AC ☐ DCEP ■ DCEN ☐ Pulsed ☐
Power Source: CC ☐ CV ☐
Other ____
Tungsten Electrode (GTAW)
Size: N/A
Type: ____

TECHNIQUE
Stringer or Weave Bead: Stringer
Multi-pass or Single Pass (per side) MULTI-PASS
Number of Electrodes ____
Electrode Spacing Longitudinal ____
Lateral ____
Angle ____
Contact Tube to Work Distance ____
Peening ____
Interpass Cleaning: ____

POSTWELD HEAT TREATMENT
Temp. N/A
Time ____

WELDING PROCEDURE

Pass or Weld Layer(s)	Process	Filler Metals		Current		Volts	Travel Speed	Joint Details
		Class	Diam.	Type & Polarity	Amps or Wire Feed Speed			
3 Layers	SMAW	E7018	1/8	DC	132	22/26	As Req.	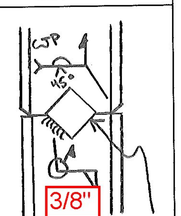

3/4"x8"x8"

Vermont Agency of Transportation
RECEIVED
Jamaica ER-BRF 0151 (23) - File Tip WPS Approved 4-22-2013.pdf
CK'D BY JWC OK'D BY JTS
April 19, 2013
RESUBMIT NO Approved AsNoted
BY KMH DATE 04/23/13

WELDING PROCEDURE SPECIFICATION (WPS) Yes ■
PREQUALIFIED ____ QUALIFIED BY TESTING ____
or PROCEDURE QUALIFICATION RECORDS (PQR) Yes ☐

Company Name Miller Construction, Inc.
Welding Process(es) SMAW
Supporting PQR No.(s) N/A

JOINT DESIGN USED
Type:
Single ■ Double Weld ☐
Backing: Yes ☐ No ■
Backing Material:
Root Opening ____ Root Face Dimension ____
Groove Angle: ____ Radius (J–U) ____
Back Gouging: Yes ☐ No ■ Method ____

BASE METALS
Material Spec. HP 12 X 84
Type or Grade GR 50
Thickness: Groove 0.68 Fillet 0.75
Diameter (Pipe) ____

FILLER METALS
AWS Specification ~~AWS D1.1~~ A5.5
AWS Classification E7018

SHIELDING
Flux X Gas ____
Composition ____
Electrode-Flux (Class) ____ Flow Rate ____
Gas Cup Size ____

PREHEAT
Preheat Temp., Min. 70 F
Interpass Temp., Min. N/A Max. N/A

Identification # 2
Revision 0 Date 4/19/13 By J. Ouelette
Authorized by E. Murphy Date 4/19/13
Type—Manual ☐ Semiautomatic ☐
Mechanized ☐ Automatic ☐

POSITION
Position of Groove: 2G Fillet: ____
Vertical Progression: Up ■ Down ☐

ELECTRICAL CHARACTERISTICS
Transfer Mode (GMAW) E7018 Short-Circuiting ■
Globular ☐ Spray ☐
Current: AC ☐ DCEP ■ DCEN ☐ Pulsed ☐
Power Source: CC ☐ CV ☐
Other ____
Tungsten Electrode (GTAW)
Size: N/A
Type: ____

TECHNIQUE
Stringer or Weave Bead: Stringer
Multi-pass or Single Pass (per side) MULTI-PASS
Number of Electrodes ____
Electrode Spacing Longitudinal ____
Lateral ____
Angle ____
Contact Tube to Work Distance ____
Peening ____
Interpass Cleaning: ____

POSTWELD HEAT TREATMENT
Temp. N/A
Time ____

WELDING PROCEDURE

Pass or Weld Layer(s)	Process	Filler Metals		Current		Volts	Travel Speed	Joint Details
		Class	Diam.	Type & Polarity	Amps or Wire Feed Speed			
3 Layers	SMAW	E7018	3/16	DC	185	22/26	As Req.	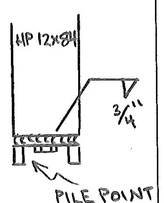

Vermont Agency of Transportation
RECEIVED
Jamaica BR BRF DR-1 (23) - Pile Tip WPS Approved 4-23-2013.pdf
CK'D BY JWC OK'D BY JTS
April 19, 2013
RESUBMIT NO Approved AsNoted
BY KMH DATE 04/23/13

Dimensions

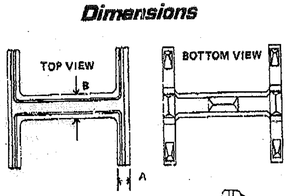

Material Cast Steel

	14"
A	1-1/4"
B	1-1/2"
C	2-3/4"

Installation Instructions

HARD-BITE POINT MODEL HP-77600-B

1. Fit point onto the end of a square cut pile end.
2. Weld point to the pile in either flat or vertical position using E60 or E70XX electrodes.
3. Weld across full width of flange following chart below for minimum size weld.

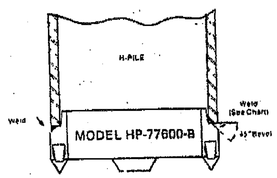

Pile Size	Flange Thickness	Min. Size Groove Weld
HP 14 x 117	.805	7/16
x 102	.705	3/8
x 89	.615	3/8
x 73	.505	5/16
HP 12 x 84	.685	3/8
x 74	.610	3/8
x 53	.515	5/16
x 53	.435	5/16
HP 10 x 57	.565	5/16
x 42	.420	5/16
HP 8 x 36	.445	5/16

Call toll free 800-526-9047

APF ASSOCIATED PILE & FITTING CORP.

BOX 1048, CLIFTON, N.J. 07014 ■ 201-773-8400

PILE TIP PAGE 3

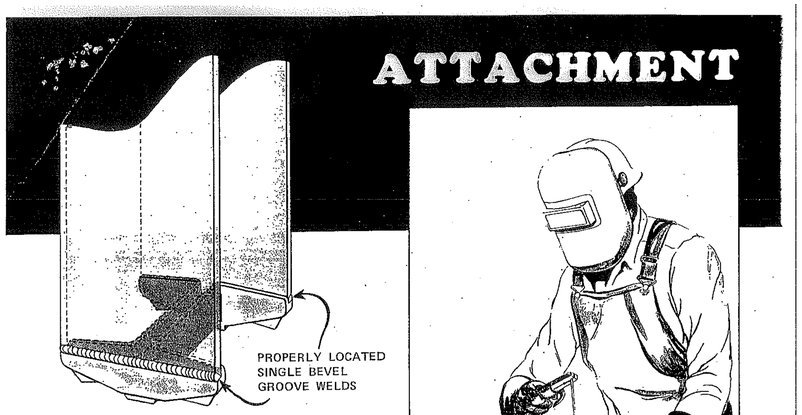

RELIABLE ATTACHMENT IS QUICK AND EASY

APF Cast Steel H-Pile Points are designed for ease of handling and attachment. The integrally cast back-ups for welding, position the point accurately on the pile. For proper load transfer, the points must be attached by a single bevel groove weld across the outside of each flange. With correct weld placement, the load transfers cleanly to the point. Welding along the inside of the flanges is not advisable as it creates a stress pattern which could prove detrimental to the integrity of the pile.

To facilitate attachment, stack the H-piles with webs horizontal and ends accessible. Use cribbing and/or stack with the ends staggered in and out, allowing welding at opposite ends of the stack simultaneously on the protruding piles.

Bevel for a partial groove weld along the outside of each flange of the H. Slip the APF point on the H and hold it in close contact against the pile. For most sizes (see table at right) make a 5/16 in. weld along each flange, being sure to get good penetration for the full width of the flange, not just the corners. E60 or E70 rod is suggested for manual welding. For the semi-automatic Squirt welder, Lincoln Electric Co. suggests AWS E 70 T-G (Lincoln NR 211) flux-cored wire. Total weld consists of a single pass across each flange. Loading and driving are all in compression on the square ledge of a cast steel APF point rather than in shear as with plate and angle reinforcement or weldments.

SIZE OF PILE	FLANGE THICKNESS (INCHES)	SIZE OF FLAME CUT 45° BEVEL	SIZE OF GROOVE WELD
HP 14 x 117	0.805	3/8"	7/16"
x 102	0.705	3/8"	3/8"
x 89	0.615	5/16"	5/16"
x 73	0.505	1/4"	5/16"
HP 13 x 100	0.755	3/8"	3/8"
x 87	0.665	5/16"	5/16"
x 73	0.565	5/16"	5/16"
x 60	0.460	1/4"	5/16"
HP 12 x 84	0.685	5/16"	5/16"
x 74	0.610	5/16"	5/16"
x 63	0.515	1/4"	5/16"
x 53	0.435	1/4"	5/16"
HP 10 x 57	0.565	5/16"	5/16"
x 42	0.420	1/4"	5/16"
HP 8 x 36	0.445	1/4"	5/16"

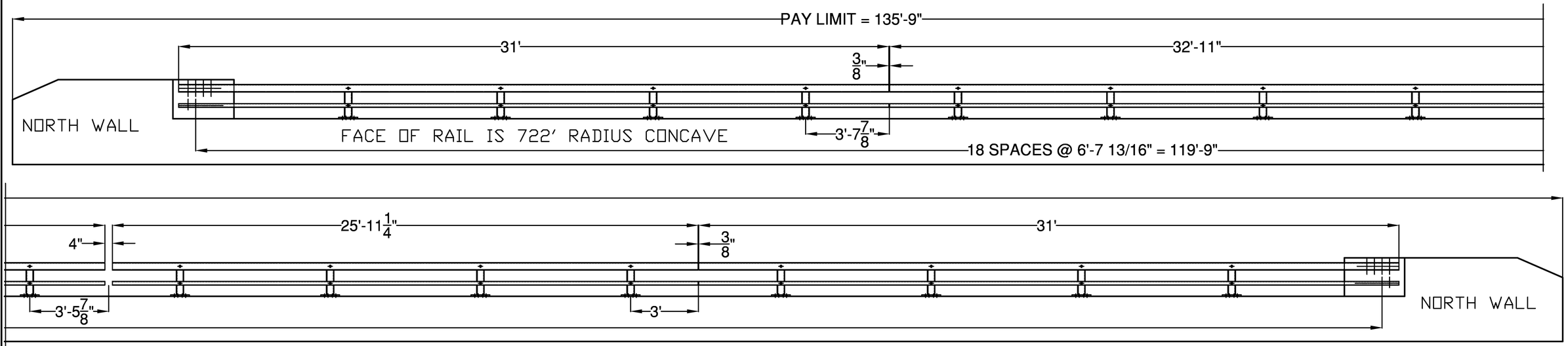

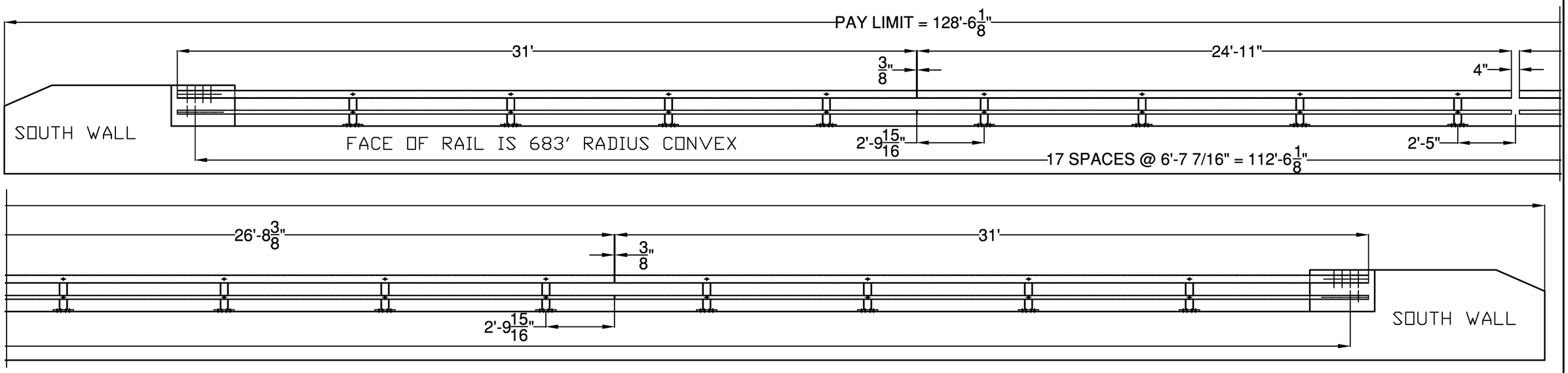

NOTE: NORTH RAIL TO BE SHOP CURVED W/ 722' CONCAVE RADIUS. SOUTH RAIL TO BE SHOP CURVED W/ 683' CONVEX RADIUS.

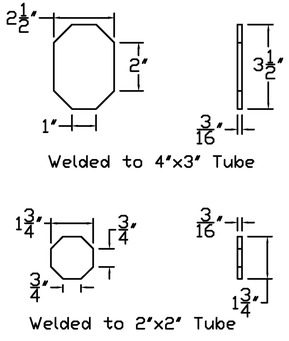

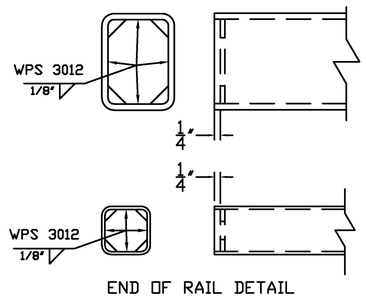

ITEM #: 525.45

APPROVED BY:

Vermont Agency of Transportation

RECEIVED

CK'D BY RK/JG/GL OK'D BY JS

July 25, 2013

RESUBMIT NO Approved

BY KH DATE 8-8-2013

FR Lafayette - JAMAICA, EM13-016

SHEET 1 OF 3

BRIDGE RAIL DETAILS SHEET

EM13-006, JAMAICA ER BRF 015-1 (23)

TOWN OF JAMAICA, WINDHAM COUNTY, VT RTE 30 (MINOR ARTERIAL), BRIDGE NO : 30

R	NO.	DATE	DESCRIPTION	BY
E	1	7/1/13	REVISE PER 6/28/13 EMAIL	E.P.
V	2	7/23/13	REVISE PER 7/23/13 EMAIL	E.P.

R	NO.	DATE	DESCRIPTION	BY
E				
V				

ELDERLEE, INC.
OAKS CORNERS, NEW YORK 14518
E-Mail: dlong@elderlee.com
Tel: 315-789-6670 Fax: 315-789-6615

DRAWN	E.P.	5/30/13
CHECKED	D.L.	5/31/13
APPROVED	.	.
SCALE	SCHEMATIC	
DRAWING NO.	FR LAFAYETTE - JAMAICA	

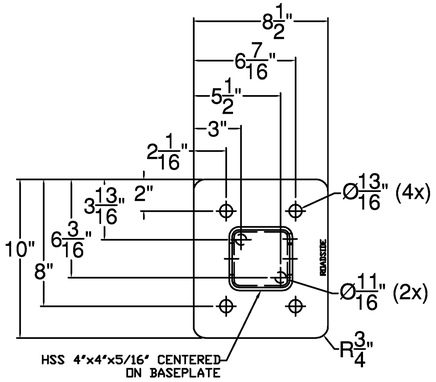

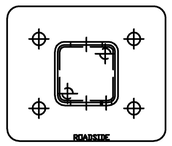

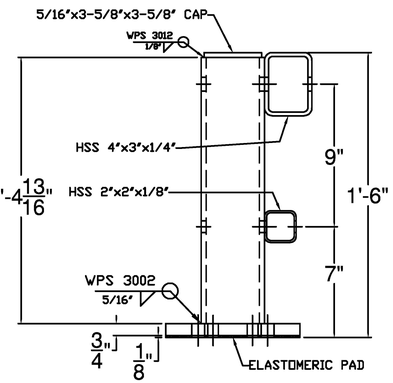

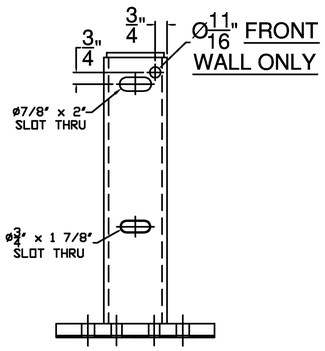

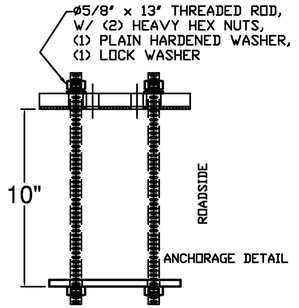

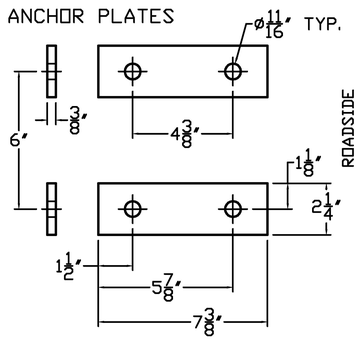

BILL OF MATERIAL		
QTY	DESCRIPTION	ASTM DESIGNATION
33	TWO RAIL POST & BASEPLATE ASSEMBLY	A572 Gr. 50 CVN
4	4" X 3" X 1/4" RAIL @ 31'-0"	A500 Gr. B
1	4" X 3" X 1/4" RAIL @ 32'-11"	A500 Gr. B
1	4" X 3" X 1/4" RAIL @ 25'-11 1/4"	A500 Gr. B
1	4" X 3" X 1/4" RAIL @ 24'-11"	A500 Gr. B
1	4" X 3" X 1/4" RAIL @ 26'-8 3/8"	A500 Gr. B
4	2" X 2" X 1/8" RAIL @ 31'-0"	A500 Gr. B
1	2" X 2" X 1/8" RAIL @ 32'-11"	A500 Gr. B
1	2" X 2" X 1/8" RAIL @ 25'-11 1/4"	A500 Gr. B
1	2" X 2" X 1/8" RAIL @ 24'-11"	A500 Gr. B
1	2" X 2" X 1/8" RAIL @ 26'-8 3/8"	A500 Gr. B
4	1-1/2" X 1-1/2" FIX. SPL BAR @ 2' 4"	A572 Gr. 50
2	1-1/2" X 1-1/2" EXP. SPL BAR @ 2' 4"	A572 Gr. 50
4	2-1/4" X 3-1/4" FIX. SPL. BAR @ 2' 4"	A572 Gr. 50
2	2-1/4" X 3-1/4" EXP. SPL. BAR @ 2' 4"	A572 Gr. 50
66	3/8" X 2 1/4" X 7 3/8" ANCHOR PLATES	A36
132	Ø 5/8" X 13" ANCHOR STUDS	A449 Gr. 1
264	Ø 5/8" HEAVY HEX NUTS & FLAT WASHERS	A563 & F436
33	Ø 5/8" X 7 1/2" ROUND HEAD BOLT, NUT, F.W., & L.W.	A325, A563, F436, & ASME B18.21.1
33	Ø 3/4" X 8 1/2" ROUND HEAD BOLT, NUT, F.W., & L.W.	A325, A563, F436, & ASME B18.21.1
24	Ø 5/8" X 3" HEX BOLT, NUT, F.W., & L.W.	A325, A563, F436, & ASME B18.21.1
24	Ø 7/8" X 5 1/2" HEX BOLT, NUT, F.W., & L.W.	A325, A563, F436, & ASME B18.21.1
8	Ø 5/8" X 13" SLOTTED, ROUND HEAD BOLT, NUT, F.W., & L.W.	A325, A563, F436, & ASME B18.21.1
16	Ø 7/8" X 14" SLOTTED, ROUND HEAD BOLT, NUT, F.W., & L.W.	A325, A563, F436, & ASME B18.21.1
10	Ø 5/8" X 5 1/2" HEX BOLT, NUT, F.W., & L.W.	A325, A563, F436, & ASME B18.21.1

10 - DELINEATORS - ALUMINUM
33 - 1/8" ELASTOMERIC PAD - D2240

NOTES:

1. ALL WORK AND MATERIALS SHALL CONFORM TO SECTION 525.
2. PRIOR TO GALVANIZING THE ASSEMBLED POST, GRIND ALL EDGES TO A MINIMUM RADIUS OF 1/16".
3. ALL POSTS SHALL BE SET NORMAL TO GRADE.
4. SECTIONS OF RAIL TUBE SHALL BE ATTACHED TO A MINIMUM OF TWO BRIDGE POSTS AND PREFERABLY TO AT LEAST 4 POSTS.
5. HOLES IN RAILS FOR TUBE ATTACHMENT, MAY BE FIELD-DRILLED. HOLES SHALL BE COATED WITH AN APPROVED ZINC-RICH PAINT PRIOR TO INSTALLATION.
6. BOLTS SHALL BE TORQUED SNUG TIGHT (APPROXIMATELY 100 FT-LB).
7. RAIL TUBES SHALL BE ATTACHED USING 3/4" FULL DIAMETER BODY ASTM A449 (TYPE I) ROUND HEAD BOLTS INSERTED THROUGH THE FACE OF THE TUBE.
8. SEE STANDARD DRAWING G-I FOR DETAILS OF DELINEATORS. A DELINEATOR SHALL BE INSTALLED AT 30 FOOT SPACING OR THE NEAREST POST. WHITE IS TO BE INSTALLED ON THE DRIVER'S RIGHT. FOR ONE WAY BRIDGES, YELLOW IS TO BE INSTALLED ON THE DRIVER'S LEFT. PAYMENT FOR DELINEATORS SHALL BE INCIDENTAL TO OTHER ITEMS.
9. AESTHETIC TREATMENT TYPE SHALL BE APPLIED AS SPECIFIED IN THE CONTRACT PLANS. IF NONE IS SPECIFIED IT SHALL NOT BE USED. AESTHETIC TREATMENT DETAILED ON THIS SHEET MAY ALSO BE APPLIED ON THE FASCIA SIDE OF THE RAIL, IF SPECIFIED IN THE CONTRACT PLANS.
10. BRIDGE RAILING SHALL HAVE A RUBBED FINISH IN ACCORDANCE WITH SECTION 501.
11. THIS RAILING MEETS THE REQUIREMENTS FOR A NCHRP REPORT 350 TL-4 SERVICE LEVEL.
12. HOLES FOR MOUNTING DELINEATORS TO BE FIELD DRILLED. HOLES SHALL BE COATED WITH AN APPROVED ZINC-RICH PAINT PRIOR TO INSTALLATION.

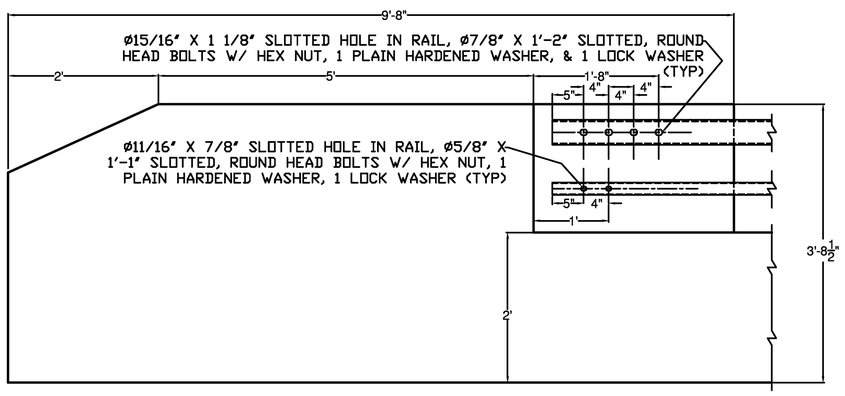

TYP. WINGWALL DETAIL

ITEM #: 525.45

FR Lafayette - JAMAICA, EM13-016

SHEET 2 OF 3

APPROVED BY:
Vermont Agency of Transportation
RECEIVED
CK'D BY RK/JG/GL OK'D BY JS
July 25, 2013
RESUBMIT NO Approved AsNoted
BY KH DATE 8-8-2013

BRIDGE RAIL DETAILS SHEET

EM13-006, JAMAICA ER BRF 015-1 (23)

TOWN OF JAMAICA, WINDHAM COUNTY, VT RTE 30 (MINOR ARTERIAL), BRIDGE NO : 30

R	NO.	DATE	DESCRIPTION	BY	R	NO.	DATE	DESCRIPTION	BY
E	1	7/1/13	REVISE PER 6/28/13 EMAIL	E.P.	E				
V	2	7/23/13	REVISE PER 7/23/13 EMAIL	E.P.	V				

ELDERLEE, INC.
OAKS CORNERS, NEW YORK 14518
E-Mail: dlong@elderlee.com
Tel: 315-789-6670 Fax: 315-789-6615

AISC CERTIFIED FABRICATOR

DRAWN	E.P.	5/30/13
CHECKED	D.L.	5/31/13
APPROVED	.	.
SCALE	SCHEMATIC	
DRAWING NO.	FR LAFAYETTE - JAMAICA	

Ø15/16" THRU TUBE & SPLICE BAR, Ø7/8"X5 1/2" HEX BOLT & NUT, W/ (1) PLAIN HARDENED WASHER & (1) LOCK WASHER (4 PLACES)

TOP RAIL FIXED SPLICE DETAIL

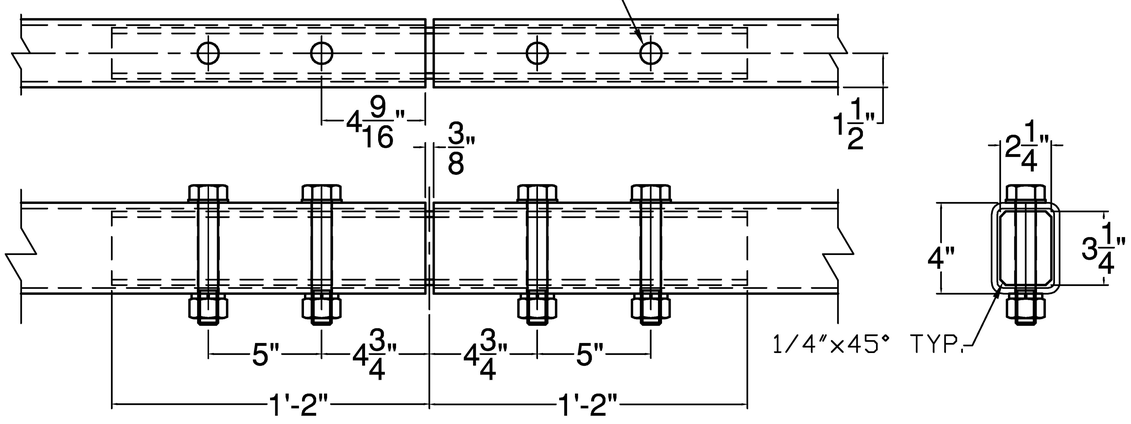

Ø11/16" THRU TUBE & SPLICE BAR, Ø5/8"X3" HEX BOLT & NUT, W/ (1) PLAIN HARDENED WASHER & (1) LOCK WASHER (4 PLACES)

BOTTOM RAIL FIXED SPLICE DETAIL

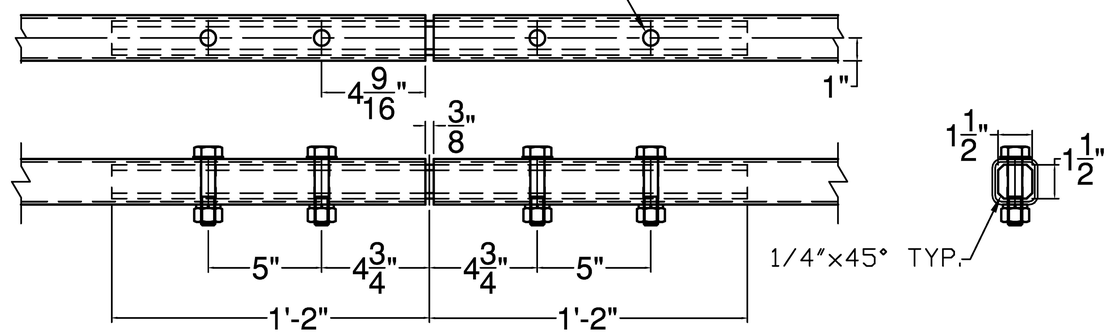

Ø15/16" THRU TUBE & Ø15/16" X 3" SLOT THRU SPLICE BAR, Ø7/8"X5 1/2" HEX BOLT & NUT, W/ (1) PLAIN HARDENED WASHER & (1) LOCK WASHER (4 PLACES)

TOP RAIL EXPANSION SPLICE DETAIL

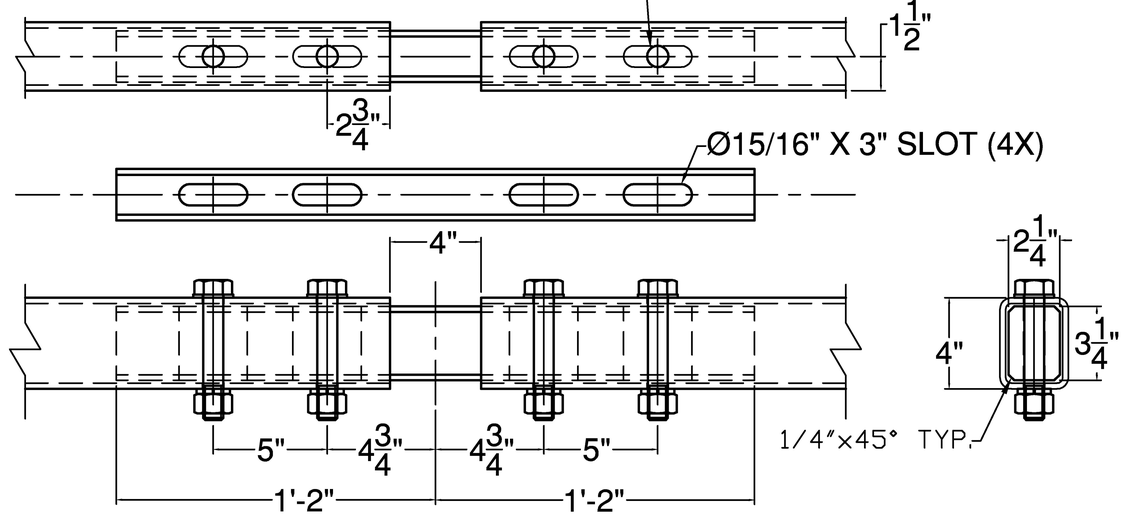

Ø11/16" THRU TUBE & Ø11/16" X 3" SLOT THRU SPLICE BAR, Ø5/8"X3" HEX BOLT & NUT,W/ (1) PLAIN HARDENED WASHER & (1) LOCK WASHER (4 PLACES)

BOTTOM RAIL EXPANSION SPLICE DETAIL

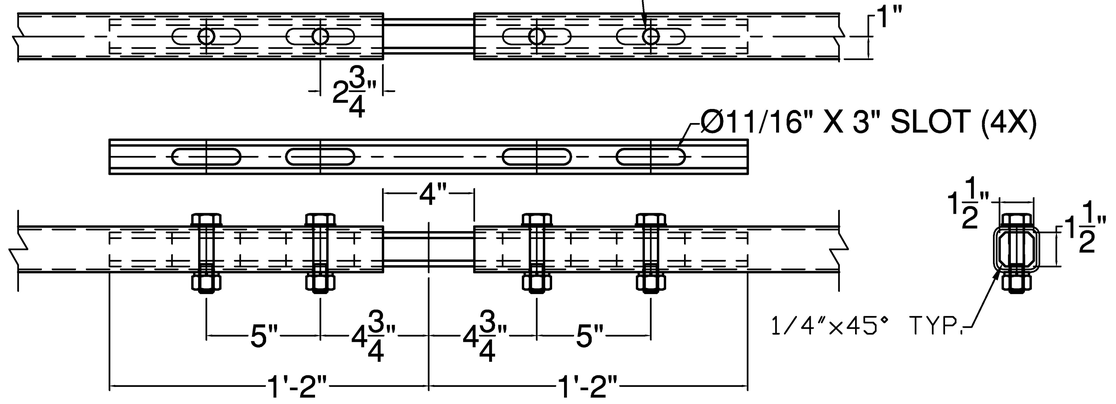

ITEM #: 525.45

FR Lafayette - JAMAICA, EM13-016

SHEET 3 OF 3

APPROVED BY:

Vermont Agency of Transportation

RECEIVED

CK'D BY RK/JG/GL OK'D BY JS

July 25, 2013

RESUBMIT NO Approved

BY KH DATE 8-8-2013

BRIDGE RAIL DETAILS SHEET

EM13-006, JAMAICA ER BRF 015-1 (23)

TOWN OF JAMAICA, WINDHAM COUNTY, VT RTE 30 (MINOR ARTERIAL), BRIDGE NO : 30

R	NO.	DATE	DESCRIPTION	BY
E	1	7/1/13	REVISE PER 6/28/13 EMAIL	E.P.
V	2	7/23/13	REVISE PER 7/23/13 EMAIL	E.P.

R	NO.	DATE	DESCRIPTION	BY
E				
V				

ELDERLEE, INC.
OAKS CORNERS, NEW YORK 14518
E-Mail: dlong@elderlee.com
Tel: 315-789-6670 Fax: 315-789-6615

CERTIFIED FABRICATOR

DRAWN	E.P.	5/30/13
CHECKED	D.L.	5/31/13
APPROVED	.	.
SCALE	SCHEMATIC	
DRAWING NO.	FR LAFAYETTE - JAMAICA	

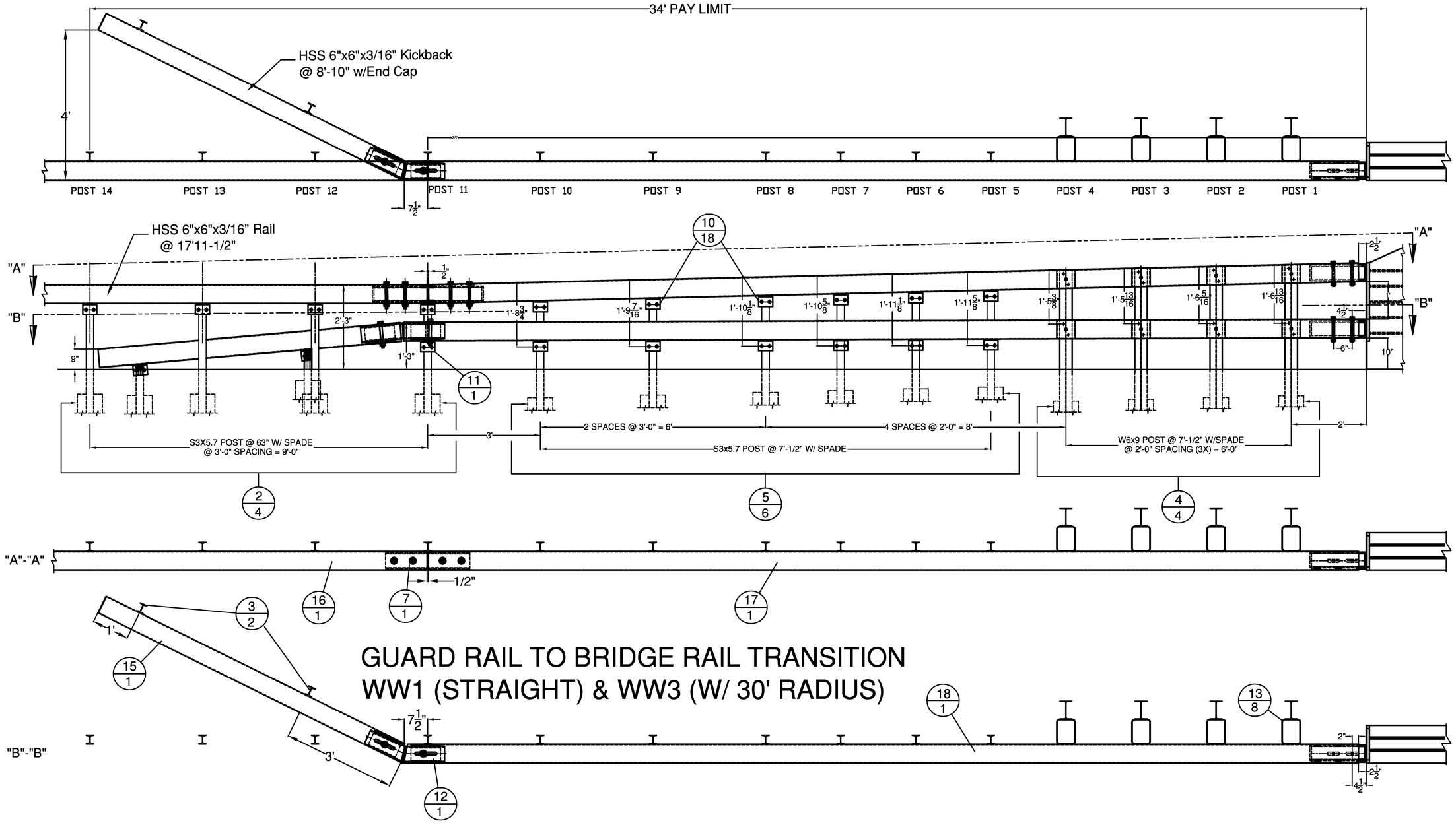

GUARD RAIL TO BRIDGE RAIL TRANSITION
WW1 (STRAIGHT) & WW3 (W/ 30' RADIUS)

RAIL BENDING PROCEDURE:
RADII GREATER THAN 16' TO BE CURVED ON A TUBE BENDING MACHINE, RADII LESS THAN 16' TO BE "PIE CUT" AND WELDED.

ITEM #: 900.620 (TRANSITION) FR Lafayette - JAMAICA, EM13-016

SHEET 1 OF 8

APPROVED BY:

Vermont Agency of Transportation

RECEIVED

CK'D BY RK/JG/GL OK'D BY JS

July 25, 2013

RESUBMIT NO Approved

BY KH DATE 8-8-2013

BRIDGE RAIL DETAILS SHEET

EM13-006, JAMAICA ER BRF 015-1 (23)

TOWN OF JAMAICA, WINDHAM COUNTY, VT RTE 30 (MINOR ARTERIAL), BRIDGE NO : 30

R	NO.	DATE	DESCRIPTION	BY
E	1	7/8/13	REVISED PER 6/28/13 MARK UP	E.P.
V	2	7/23/13	REVISE PER 7/23/13 EMAIL	E.P.

R	NO.	DATE	DESCRIPTION	BY
E				
V				

ELDERLEE, INC.
OAKS CORNERS, NEW YORK 14518
E-Mail: dlong@elderlee.com
Tel: 315-789-6670 Fax: 315-789-6615

AISC CERTIFIED FABRICATOR

DRAWN	E.P.	5/30/13
CHECKED	D.L.	5/31/13
APPROVED	.	.
SCALE	SCHEMATIC	
DRAWING NO.	FR LAFAYETTE - JAMAICA	

BILL OF MATERIALS, (EACH) WW1 & WW3 CORNERS

ITEM #	QTY.	DESCRIPTION	MATERIAL (ASTM)
2	3	3' I-POST, PUNCH 8', W/SPD @ 63' LG	A572 Gr. 50
2A	1	3' I-POST, PUNCH 8', & 20' W/SPD @ 63' LG	A572 Gr. 50
3	2	3' I-END POST W/SPD @ 3'-8' LG	A572 Gr. 50
4	4	W6X9 POST @ 7'-1/2' W/SPD & 5/8' HOLES (SPACING VARIES)	A572 Gr. 50
5	6	3' I-POST, HOLES 8' & VARIES', w/8X31 1/2' SPADE @7'-1/2'	A572 Gr. 50
7	1	HSS 5X5 TUBE SPLICE @27' LG w/ 1/4' SHIMS	A500 Gr. B / A572 Gr 50
10	18	REG BB SHELF ANGLES @ 4-1/2'	A572 Gr. 50
11	1	DWY BB SHELF ANGLES @ 4-1/2'	A572 Gr. 50
12	1	HSS 5X5 DBL BEND TUBE SPL @ 28' LG	A500 Gr. B / A572 Gr 50
13	8	HSS 6X8' TRANS. TUBE B/O @ 6' LG	A500 Gr. B
15	1	HSS 6X6' BB @ 8'-10' KICKBACK, w/ CAP	A500 Gr. B / A36
16	0.5	HSS 6X6' BB @ 17'-11 1/2', DRILL 3' CC	A500 Gr. B
17	1	HSS 6X6' BB TOP TRANS @ 24'-9 1/4' LG	A500 Gr. B
18	1	HSS 6X6' BB BTM TRANS @ 25'-5 3/16' LG	A500 Gr. B
19	17	3/8' X 7 1/2' BOLT, NUT, & 2 FW	A307, A563, F436
20	19	1/2' x 1-1/2' BOLT, NUT, & FW	A307, A563, F436
21	16	9/16' x 1-1/2' BOLT, NUT, 2 FW & LW	A307, A563, F436, ASME B18.21.1
23	8	3/4' X 7-1/2' BOLT, NUT, 2 FW & LW	A325, A563, F436, ASME B18.21.1
24	8	7/8' X 7 1/2' CARR BOLT, NUT, FW & LW	A307, A563, F436, ASME B18.21.1
25	2	3/4' X 7 1/2' BOLT, NUT, 2 FW, & LW	A325, A563, F436, ASME B18.21.1
26	1	PARAPET WALL CONNECTION	A572 Gr.50, A615 Gr.60, A500 Gr. B

NOTE: ITEMS 16, 17 & 18 TO HAVE 30' RADIUS FOR WINGWALL #3

HARDWARE NOTES

ITEM #	FUNCTION
19	BOLT RAIL TO SHELF ANGLE (ITEM #10)
20	BOLT SHELF ANGLE (ITEM #'S 10 & 11) TO POST
21	BOLT BLOCK-OUTS (ITEM # 13) TO HEAVY POST (ITEM # 4)
23	(4) PER SPLICE TUBING (ITEM # 7), & (4) PER PARAPET WALL CONNECTION (ITEM # 26)
24	BOLT RAIL (ITEMS #'S 17, & 18 TO BLOCK-OUTS (ITEM # 13) [WHERE FASTENED]
25	BOLT DOUBLE BEND SPLICE TUBE (ITEM #12) TO RAIL (ITEM #18) & KICKBACK (ITEM #15) & ITEM #11)

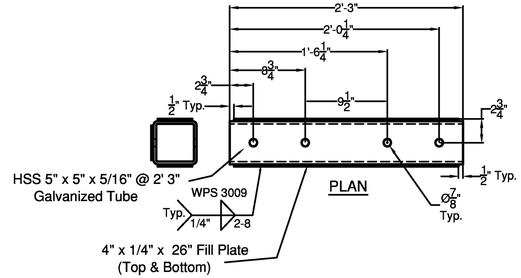

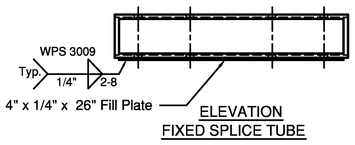

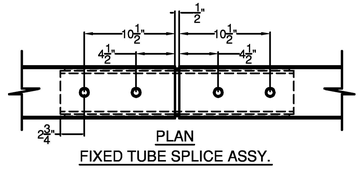

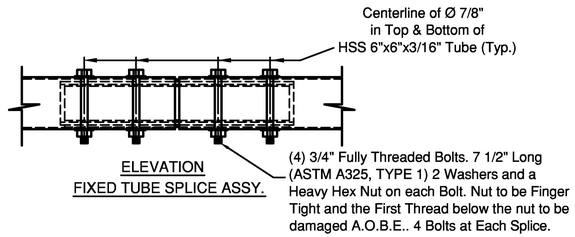

(ITEM # 7)

SPLICE TUBE - FIXED

BILL OF MATERIALS

ITEM #	QTY	DESCRIPTION	ASTM #
1	1	DBL TUBE WALL PLATE - 1' X 12' x 25'	ASTM A572 Gr. 50
2	10	RAW, Ø5/8' REBAR @ 36'	A615, Gr. 60
3	2	5' X 5' X 5/16' TUBE W/ SLOTS @ 18'	ASTM A500 Gr. B
4	2	SHIM PL 1/2' X 4' X 17' W/ SLOTS	ASTM A36(ASTM A709 Gr. 36)CVN
5	2	SHIM PL 1/2' X 4' X 17' (W/O SLOTS)	ASTM A36(ASTM A709 Gr. 36)CVN

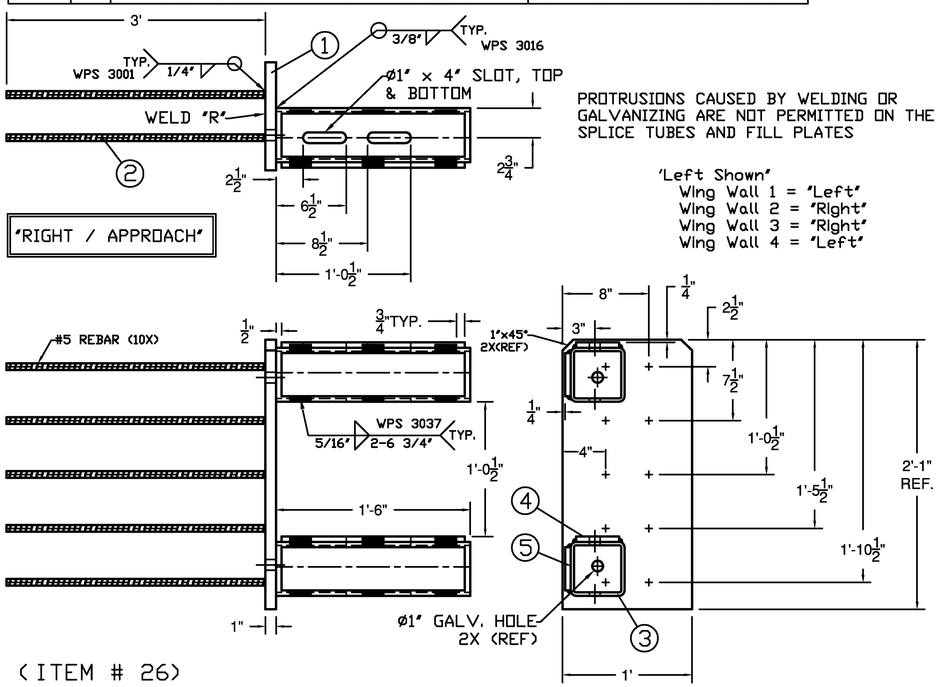

(ITEM # 26)

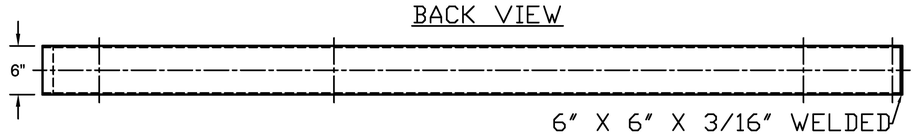

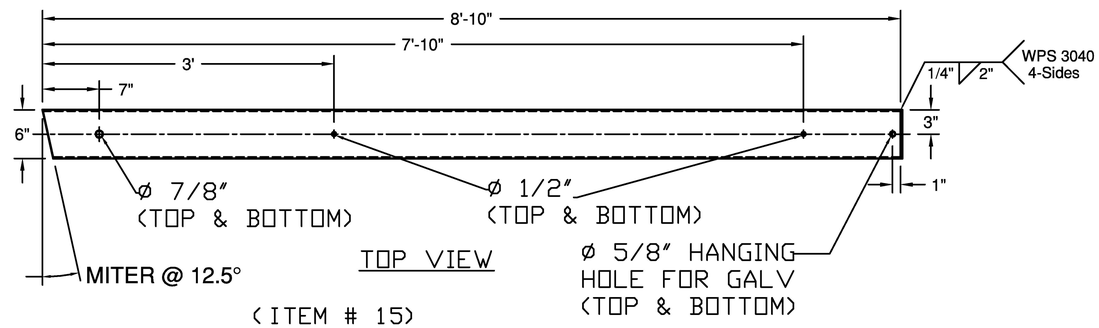

(ITEM # 15)

ITEM #: 900.620 (TRANSITION) FR Lafayette - JAMAICA, EM13-016

SHEET 2 OF 8

APPROVED BY:

Vermont Agency of Transportation

RECEIVED

CK'D BY RK/JG/GL OK'D BY JS

July 25, 2013

RESUBMIT NO Approved

BY KH DATE 8-8-2013

BRIDGE RAIL DETAILS SHEET

EM13-006, JAMAICA ER BRF 015-1 (23)

TOWN OF JAMAICA, WINDHAM COUNTY, VT RTE 30 (MINOR ARTERIAL), BRIDGE NO : 30

R	NO.	DATE	DESCRIPTION	BY	R	NO.	DATE	DESCRIPTION	BY
E	1	7/8/13	REVISED PER 6/28/13 MARK UP	E.P.	E				
V	2	7/23/13	REVISE PER 7/23/13 EMAIL	E.P.	V				

ELDERLEE, INC.
OAKS CORNERS, NEW YORK 14518
E-Mail: dlong@elderlee.com
Tel: 315-789-6670 Fax: 315-789-6615

DRAWN	E.P.	5/30/13
CHECKED	D.L.	5/31/13
APPROVED	.	.
SCALE	SCHEMATIC	
DRAWING NO.	FR LAFAYETTE - JAMAICA	

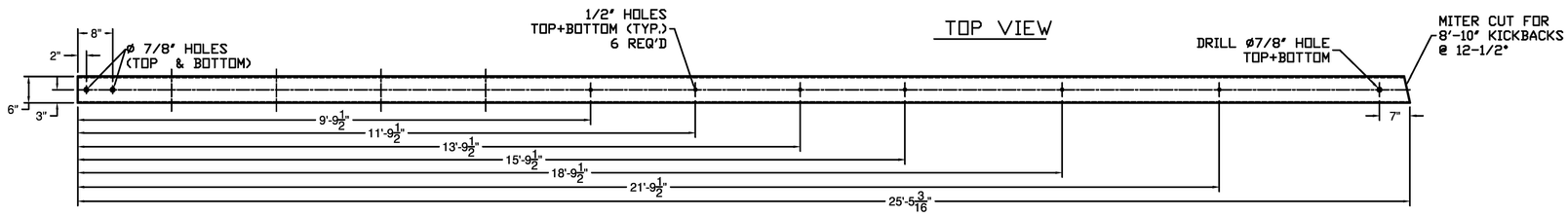

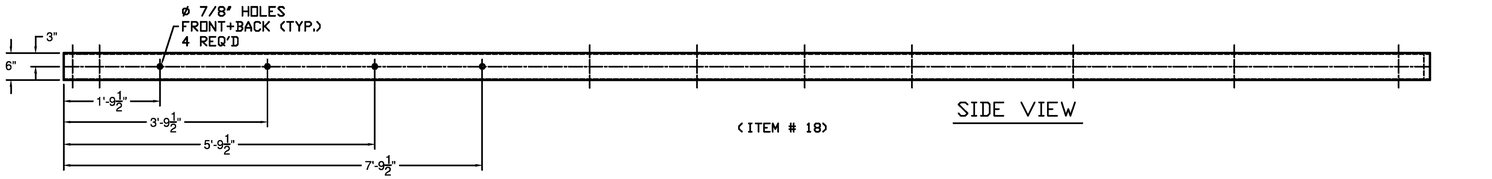

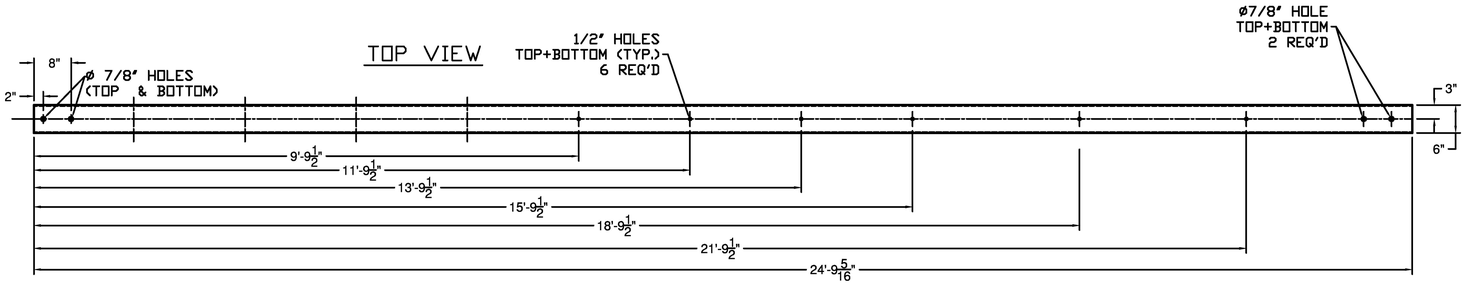

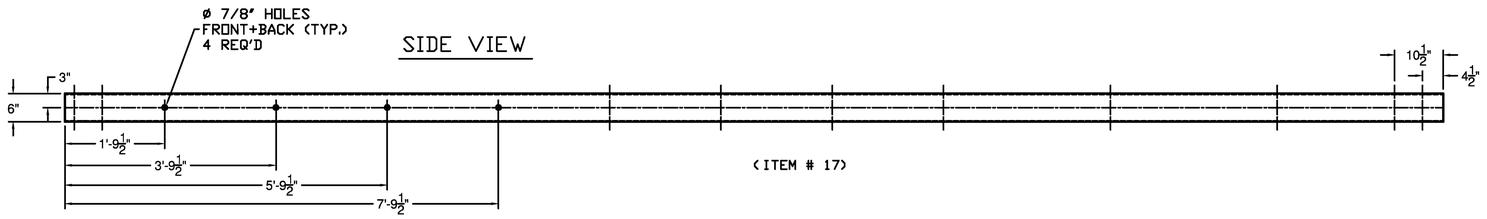

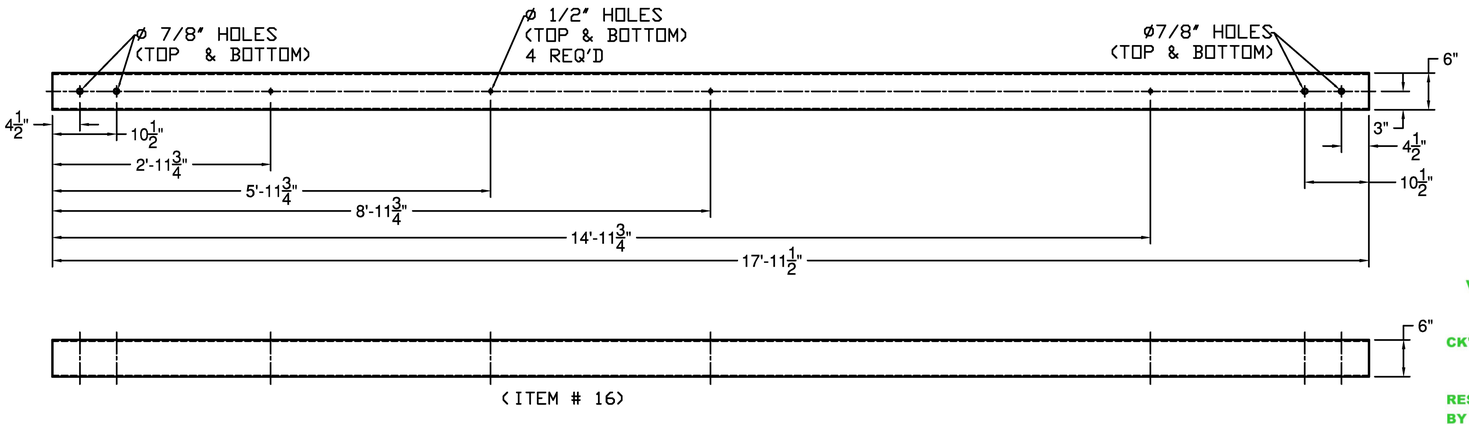

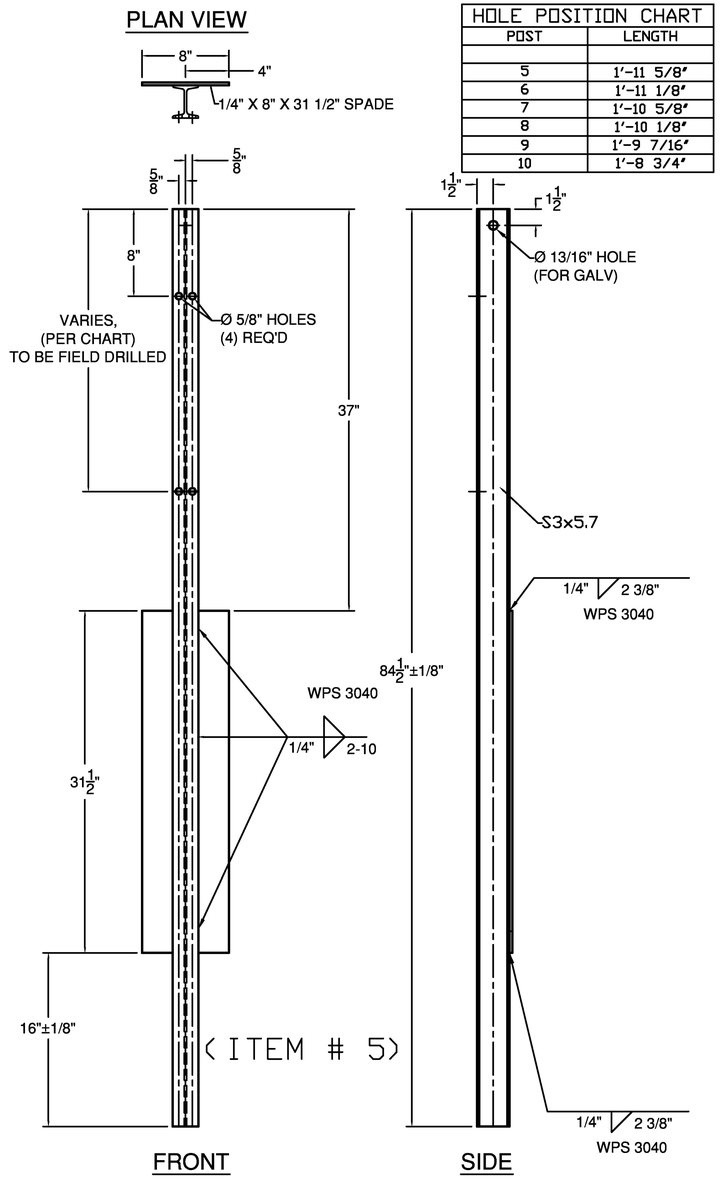

HOLE POSITION CHART	
POST	LENGTH
5	1'-11 5/8"
6	1'-11 1/8"
7	1'-10 5/8"
8	1'-10 1/8"
9	1'-9 7/16"
10	1'-8 3/4"

ITEM #: 900.620 (TRANSITION) FR Lafayette - JAMAICA, EM13-016

SHEET 3 OF 8

APPROVED BY:

Vermont Agency of Transportation

RECEIVED

CK'D BY RK/JG/GL OK'D BY JS

July 25, 2013

RESUBMIT NO Approved

BY KH DATE 8-8-2013

BRIDGE RAIL DETAILS SHEET

EM13-006, JAMAICA ER BRF 015-1 (23)

TOWN OF JAMAICA, WINDHAM COUNTY, VT RTE 30 (MINOR ARTERIAL), BRIDGE NO : 30

NO.	DATE	DESCRIPTION	BY	R
1	7/8/13	REVISED PER 6/28/13 MARK UP	E.P.	E
2	7/23/13	REVISE PER 7/23/13 EMAIL	E.P.	V

NO.	DATE	DESCRIPTION	BY

ELDERLEE, INC.
OAKS CORNERS, NEW YORK 14518
E-Mail: dlong@elderlee.com
Tel: 315-789-6670 Fax: 315-789-6615

CERTIFIED FABRICATOR

DRAWN	E.P.	5/30/13
CHECKED	D.L.	5/31/13
APPROVED	.	.
SCALE	SCHEMATIC	
DRAWING NO.	FR LAFAYETTE - JAMAICA	

PLAN VIEW

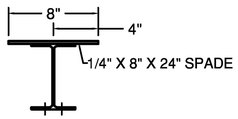

HOLE POSITION CHART	
POST	LENGTH
1	1'-6 13/16"
2	1'-6 5/16"
3	1'-5 13/16"
4	1'-5 5/16"

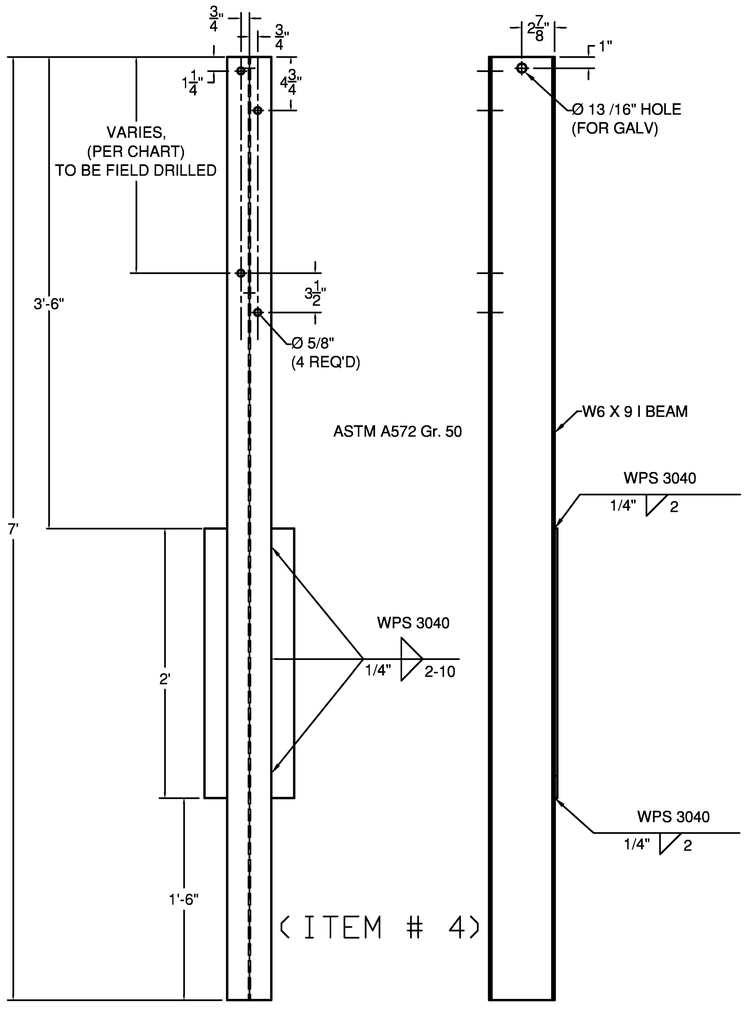

(ITEM # 4)

FRONT SIDE

PLAN VIEW

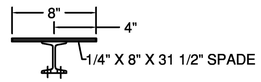

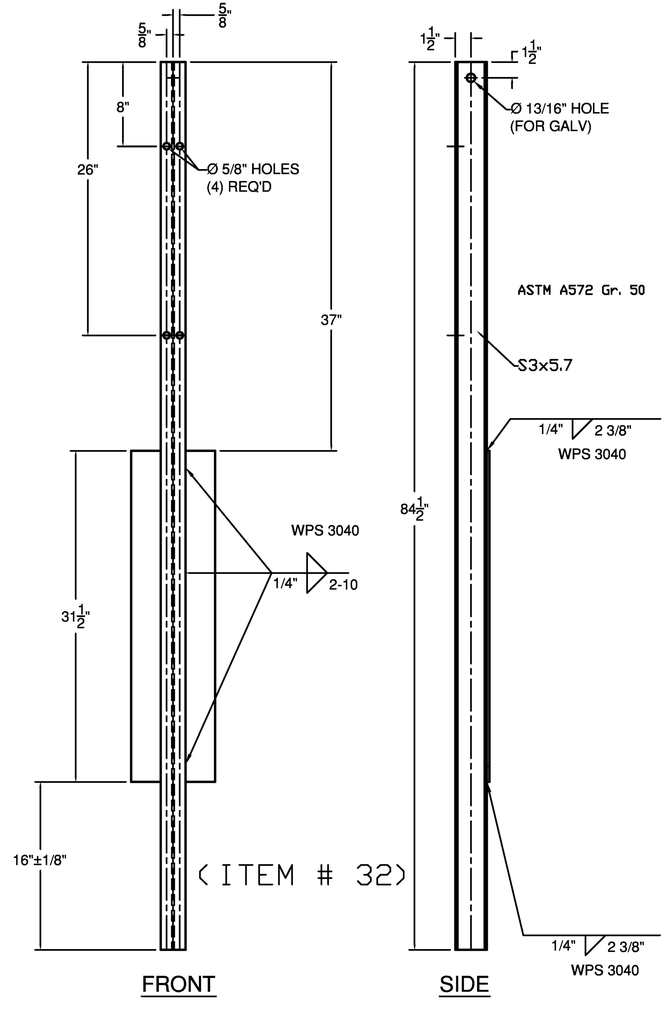

(ITEM # 32)

FRONT SIDE

PLAN VIEW

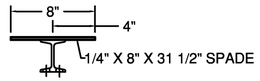

HOLE POSITION CHART	
POST	LENGTH
9	2'-0 15/16"
10	1'-11 11/16"
11	1'-10 7/16"
12	1'-9 3/16"

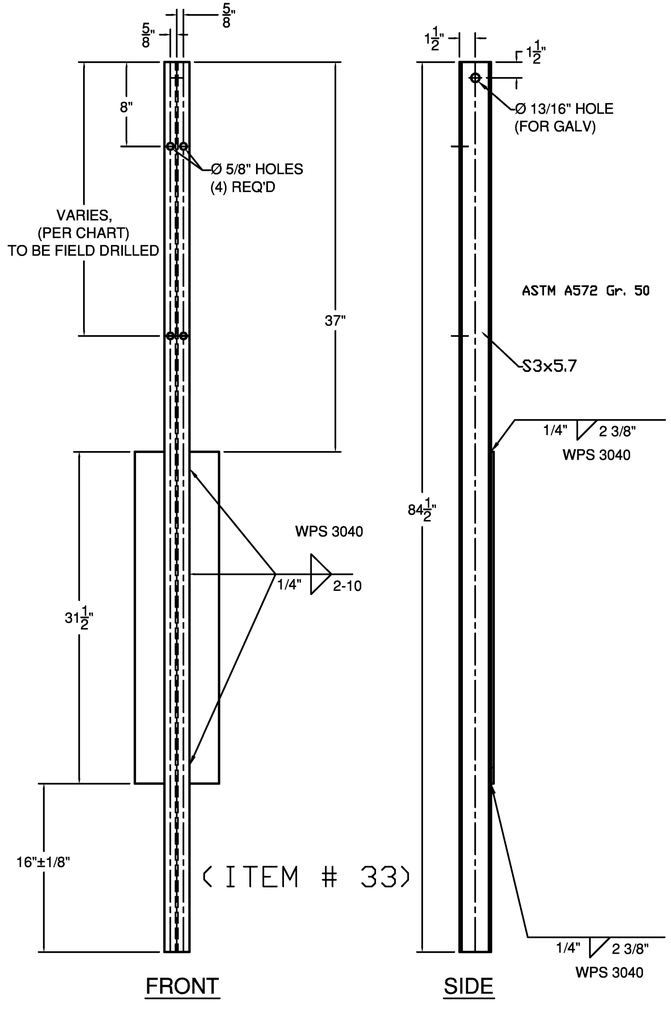

(ITEM # 33)

FRONT SIDE

ITEM #: 900.620 (TRANSITION) FR Lafayette - JAMAICA, EM13-016

SHEET 4 OF 8

APPROVED BY:

Vermont Agency of Transportation

RECEIVED

CK'D BY RK/JG/GL OK'D BY JS

July 25, 2013

RESUBMIT NO Approved

BY KH DATE 8-8-2013

BRIDGE RAIL DETAILS SHEET

EM13-006, JAMAICA ER BRF 015-1 (23)

TOWN OF JAMAICA, WINDHAM COUNTY, VT RTE 30 (MINOR ARTERIAL), BRIDGE NO : 30

R	NO.	DATE	DESCRIPTION	BY
E	1	7/8/13	REVISED PER 6/28/13 MARK UP	E.P.
V	2	7/23/13	REVISE PER 7/23/13 EMAIL	E.P.

R	NO.	DATE	DESCRIPTION	BY
E				
V				

ELDERLEE, INC.
OAKS CORNERS, NEW YORK 14518
E-Mail: dlong@elderlee.com
Tel: 315-789-6670 Fax: 315-789-6615

CERTIFIED FABRICATOR

DRAWN	E.P.	5/30/13
CHECKED	D.L.	5/31/13
APPROVED	.	.
SCALE	SCHEMATIC	
DRAWING NO.	FR LAFAYETTE - JAMAICA	

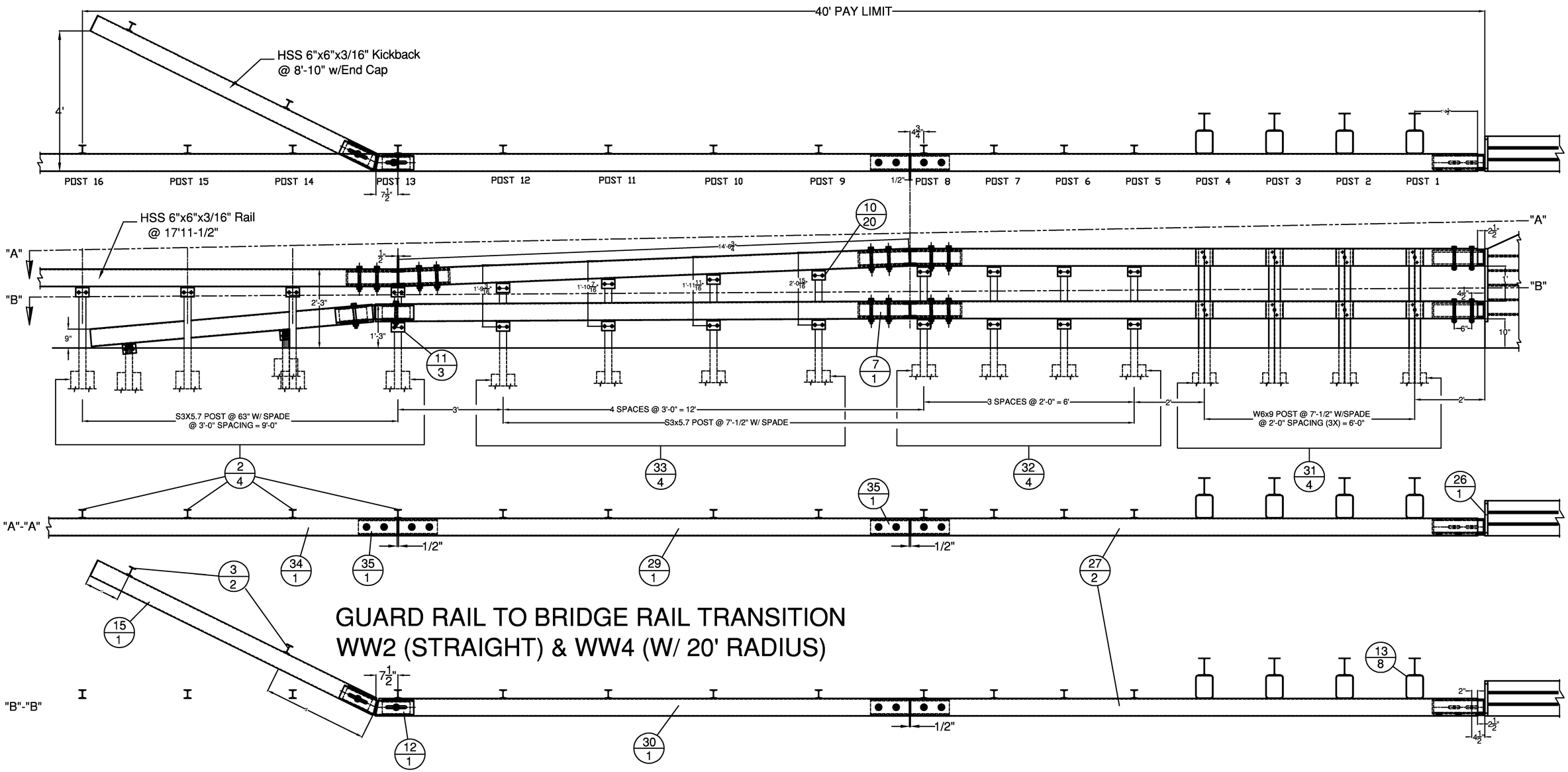

ITEM #: 900.620 (TRANSITION) FR Lafayette - JAMAICA, EM13-016

SHEET 5 OF 8

APPROVED BY:

Vermont Agency of Transportation

RECEIVED

CK'D BY RK/JG/GL OK'D BY JS

July 25, 2013

RESUBMIT NO Approved

BY KH DATE 8-8-2013

BRIDGE RAIL DETAILS SHEET

EM13-006, JAMAICA ER BRF 015-1 (23)

TOWN OF JAMAICA, WINDHAM COUNTY, VT RTE 30 (MINOR ARTERIAL), BRIDGE NO : 30

R	NO.	DATE	DESCRIPTION	BY	R	NO.	DATE	DESCRIPTION	BY
E	1	7/8/13	REVISED PER 6/28/13 MARK UP	E.P.	E				
V	2	7/23/13	REVISE PER 7/23/13 EMAIL	E.P.	V				

ELDERLEE, INC.
OAKS CORNERS, NEW YORK 14518
E-Mail: dlong@elderlee.com
Tel: 315-789-6670 Fax: 315-789-6615

CERTIFIED FABRICATOR

DRAWN	E.P.	5/30/13
CHECKED	D.L.	5/31/13
APPROVED	.	.
SCALE	SCHEMATIC	
DRAWING NO.	FR LAFAYETTE - JAMAICA	

BILL OF MATERIALS, (EACH) WW2 & WW4 CORNERS

ITEM #	QTY.	DESCRIPTION	MATERIAL (ASTM)
2	4	3' I-POST, PUNCH 8', & 20' W/SPD @ 63' LG	A572 Gr. 50
3	2	3' I-END POST W/SPD @ 3'-8" LG	A572 Gr. 50
7	1	HSS 5X5 TUBE SPLICE @27' LG W/ 1/4' SHIMS	A500 Gr. B / A572 Gr 50
10	20	REG BB SHELF ANGLES @ 4-1/2'	A572 Gr. 50
11	3	DWY BB SHELF ANGLES @ 4-1/2'	A572 Gr. 50
12	1	HSS 5X5 DBL BEND TUBE SPL @ 28' LG	A500 Gr. B / A572 Gr 50
13	8	HSS 6X8' TRANS. TUBE B/□ @ 6' LG	A500 Gr. B
15	1	HSS 6X6' BB @ 9'-0" KICKBACK, W/ CAP	A500 Gr. B / A36
19	19	3/8' X 7 1/2' BOLT, NUT, & 2 FW	A307, A563, F436
20	23	1/2' x 1-1/2' BOLT, NUT, & FW	A307, A563, F436
21	16	9/16' x 1-1/2' BOLT, NUT, 2 FW & LW	A307, A563, F436, ASME B18.21.1
23	16	3/4' X 7-1/2' BOLT, NUT, 2 FW & LW	A325, A563, F436, ASME B18.21.1
24	8	7/8' X 7-1/2' CARR BOLT, NUT, FW & LW	A307, A563, F436, ASME B18.21.1
25	2	3/4' X 7-1/2' BOLT, NUT, 2 FW, & LW	A325, A563, F436, ASME B18.21.1
26	1	PARAPET WALL CONNECTION	A572 Gr.50, A615 Gr.60, A500 Gr. B
27	2	HSS 6X6' BB EXT. RAIL @ 16'-2 1/16'	A500 Gr. B
29	1	HSS 6X6' BB TOP TRANS @ 14'-6 3/4' LG	A500 Gr. B
30	1	HSS 6X6' BB TOP TRANS @ 15'-2 11/16' LG	A500 Gr. B
31	4	W6X9 POST @ 7'-1/2' W/SPD & 5/8' HOLES	A572 Gr. 50
32	4	3' I-POST, PUNCH 8' & 26', W/8X31 1/2' SPADE @7'-1/2'	A572 Gr. 50
33	4	3' I-POST, PUNCH 8' & VARIES', W/8X31 1/2' SPADE @7'-1/2'	A572 Gr. 50
34	0.5	HSS 6X6' BB @ 17'-11 1/2', DRILL 3' CC	A500 Gr. B
35	2	HSS 5X5 2° BEND TUBE SPL @ 27' LG	PER BOM

HARDWARE NOTES

ITEM #	FUNCTION
19	BOLT RAIL TO SHELF ANGLE (ITEM #10)
20	BOLT SHELF ANGLE (ITEM #'S 10 & 11) TO POST
21	BOLT BLOCK-OUTS (ITEM # 13) TO HEAVY POST (ITEM # 31)
23	(4) PER SPLICE TUBING (ITEM # 7, & 35), & (4) PER PARAPET WALL CONNECTION (ITEM # 26)
24	BOLT RAIL (ITEMS # 27, TO BLOCK-OUTS (ITEM # 13)
25	BOLT DOUBLE BEND SPLICE TUBE (ITEM #12) TO RAIL (ITEM #30) & KICKBACK (ITEM #15) & ITEM #11)

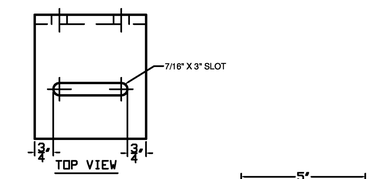

(ITEM # 10)

PLAN VIEW

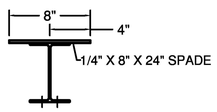

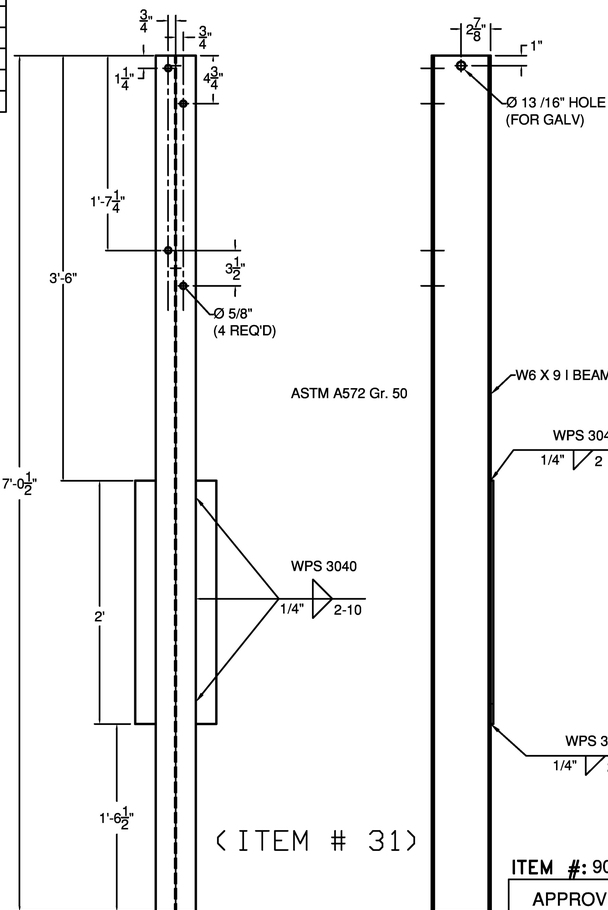

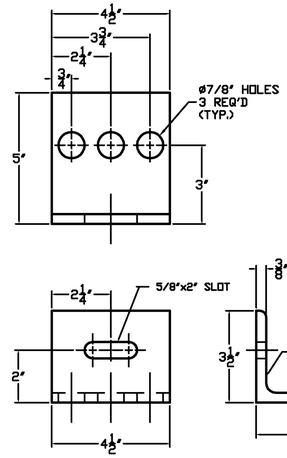

(ITEM # 11)

BILL OF MATERIALS

ITEM #	QTY	DESCRIPTION	ASTM
1	1	5x5x5/16' TUBE @ 27'	A500 Gr. B
2	2	SHIM PL 3/8x4 @ 9 1/2' W/ HOLES	A572 Gr. 50
3	2	SHIM PL 3/8x4 @ 9 1/2'	A572 Gr. 50
4	3	IN-PR BACKER, 3/16'x1'x4'	A36
5	1	FORMED BACKER PLATE 3/16'x1'x4'	A36

NOTE: PART IS SYMETRICAL

(ITEM # 35)

NOTE: REQUIRES ONE AS SHOWN, ONE WITH BEND IN OPPOSITE DIRECTION

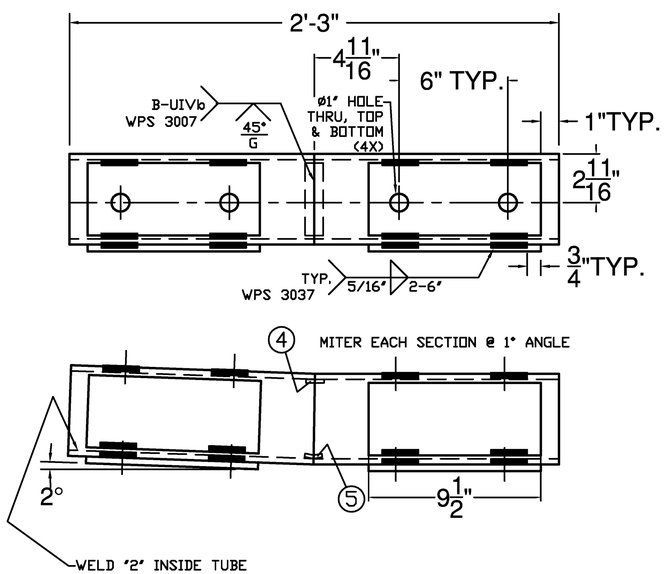

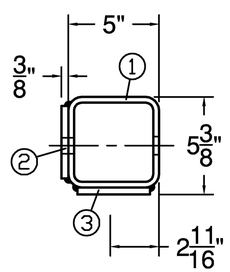

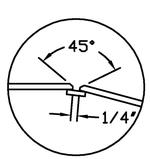

Welding Detail
WPS 3007

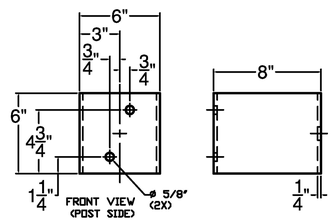

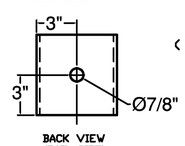

(ITEM # 13)

Vermont Agency of Transportation
RECEIVED
CK'D BY RK/JG/GL OK'D BY JS
July 25, 2013
RESUBMIT NO Approved
BY KH DATE 8-8-2013

ITEM #: 900.620 (TRANSITION) FR Lafayette - JAMAICA, EM13-016

SHEET 6 OF 8

APPROVED BY:

BRIDGE RAIL DETAILS SHEET

EM13-006, JAMAICA ER BRF 015-1 (23)

TOWN OF JAMAICA, WINDHAM COUNTY, VT RTE 30 (MINOR ARTERIAL), BRIDGE NO : 30

R	NO.	DATE	DESCRIPTION	BY	R	NO.	DATE	DESCRIPTION	BY
E	1	7/8/13	REVISED PER 6/28/13 MARK UP	E.P.	E				
V	2	7/23/13	REVISE PER 7/23/13 EMAIL	E.P.	V				

ELDERLEE, INC.
OAKS CORNERS, NEW YORK 14518
E-Mail: dlong@elderlee.com
Tel:315-789-6670 Fax:315-789-6615

CERTIFIED FABRICATOR

DRAWN	E.P.	5/30/13
CHECKED	D.L.	5/31/13
APPROVED	.	.
SCALE	SCHEMATIC	
DRAWING NO.	FR LAFAYETTE - JAMAICA	

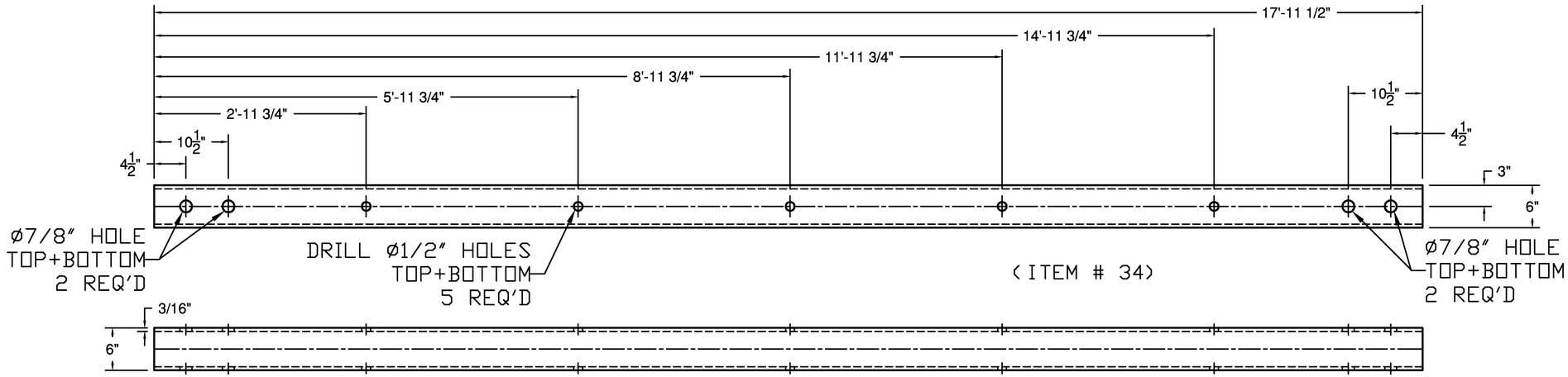

PLAN VIEW

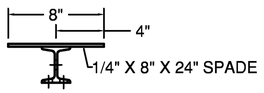

(ITEM # 2)

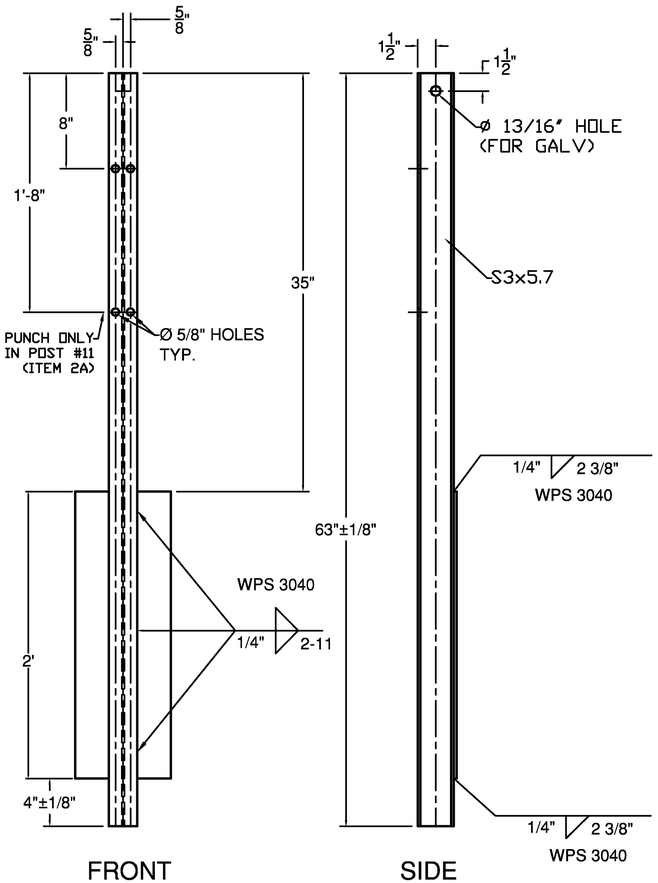

FRONT SIDE

PLAN VIEW

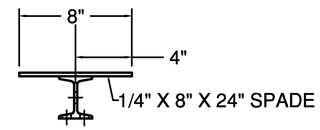

(ITEM # 3)

ASTM A572 Gr. 50

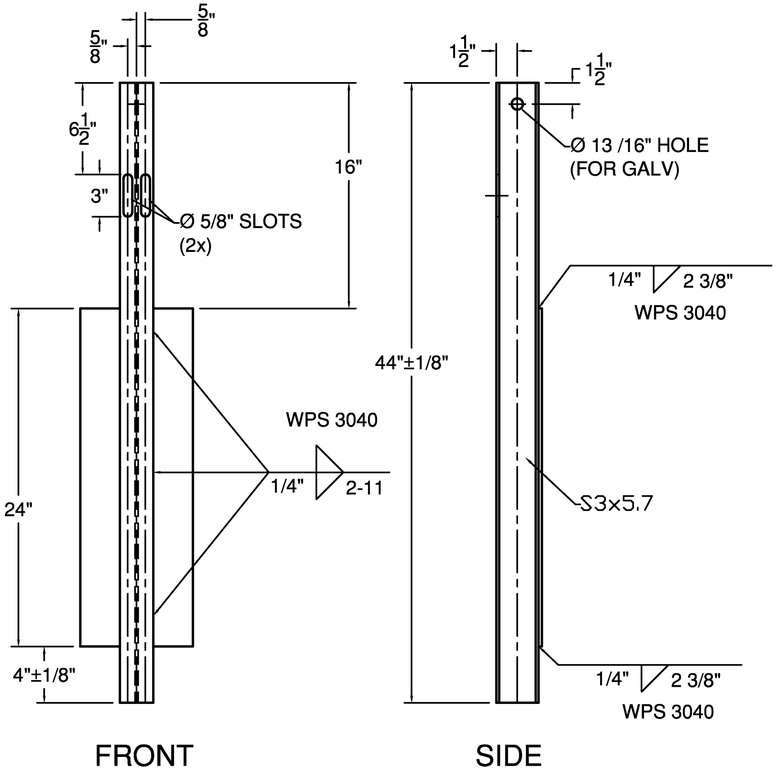

FRONT SIDE

Vermont Agency of Transportation

RECEIVED

CK'D BY RK/JG/GL OK'D BY JS

July 25, 2013

RESUBMIT NO Approved

BY KH DATE 8-8-2013

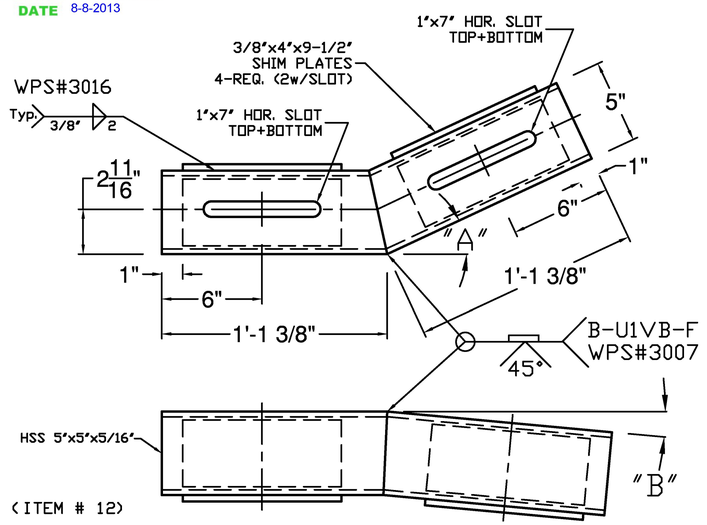

"A" - SEE PLAN FOR TURN BACK DISTANCE, SET ANGLE ACCORDINGLY.
"B" - TURN DOWN ANGLE SET BY THE 9" MEASURMENT AT THE END OF THE BOX BEAM.

ITEM #: 900.620 (TRANSITION) FR Lafayette - JAMAICA, EM13-016

SHEET 7 OF 8

APPROVED BY:

BRIDGE RAIL DETAILS SHEET

EM13-006, JAMAICA ER BRF 015-1 (23)

TOWN OF JAMAICA, WINDHAM COUNTY, VT RTE 30 (MINOR ARTERIAL), BRIDGE NO : 30

R	NO.	DATE	DESCRIPTION	BY
E	1	7/8/13	REVISED PER 6/28/13 MARK UP	E.P.
V	2	7/23/13	REVISE PER 7/23/13 EMAIL	E.P.

R	NO.	DATE	DESCRIPTION	BY
E				
V				

ELDERLEE, INC.
OAKS CORNERS, NEW YORK 14518
E-Mail: dlong@elderlee.com
Tel: 315-789-6670 Fax: 315-789-6615

CERTIFIED FABRICATOR

DRAWN	E.P.	5/30/13
CHECKED	D.L.	5/31/13
APPROVED	-	-
SCALE	SCHEMATIC	
DRAWING NO.	FR LAFAYETTE - JAMAICA	

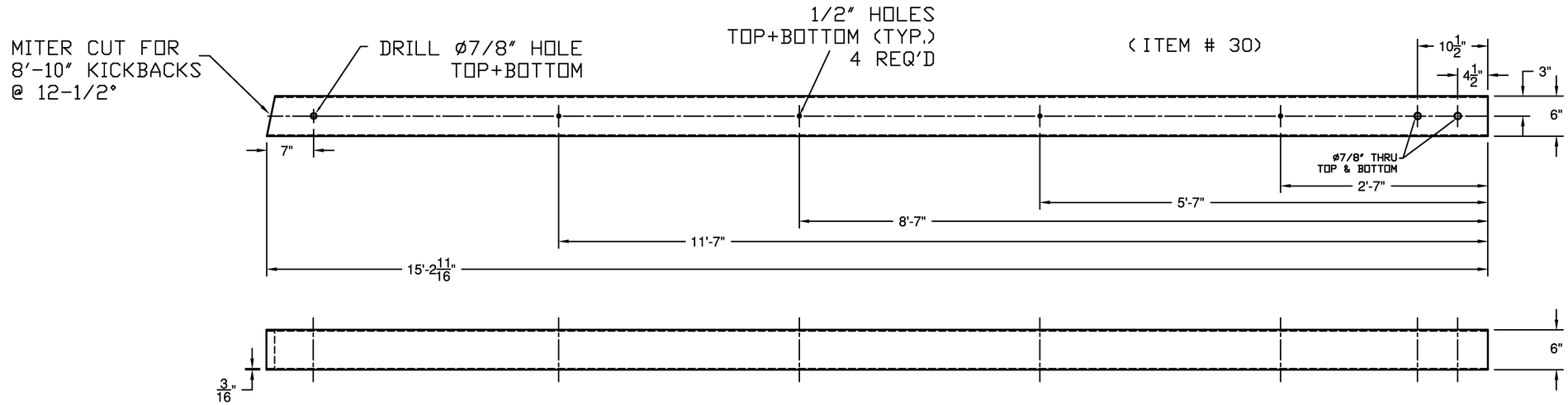

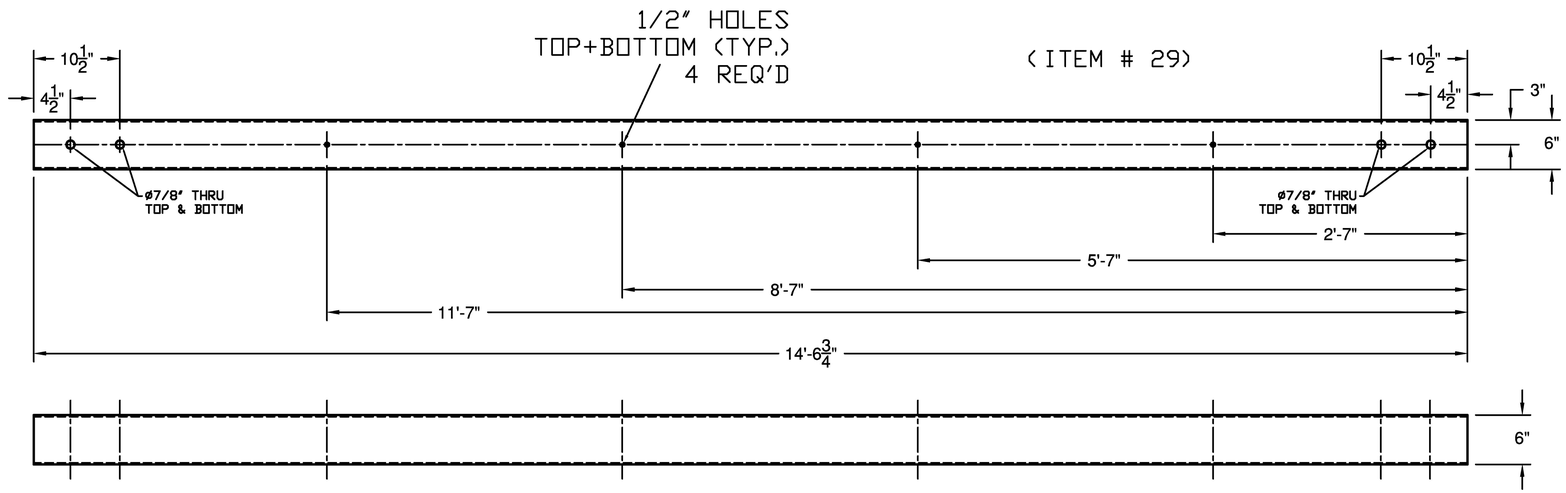

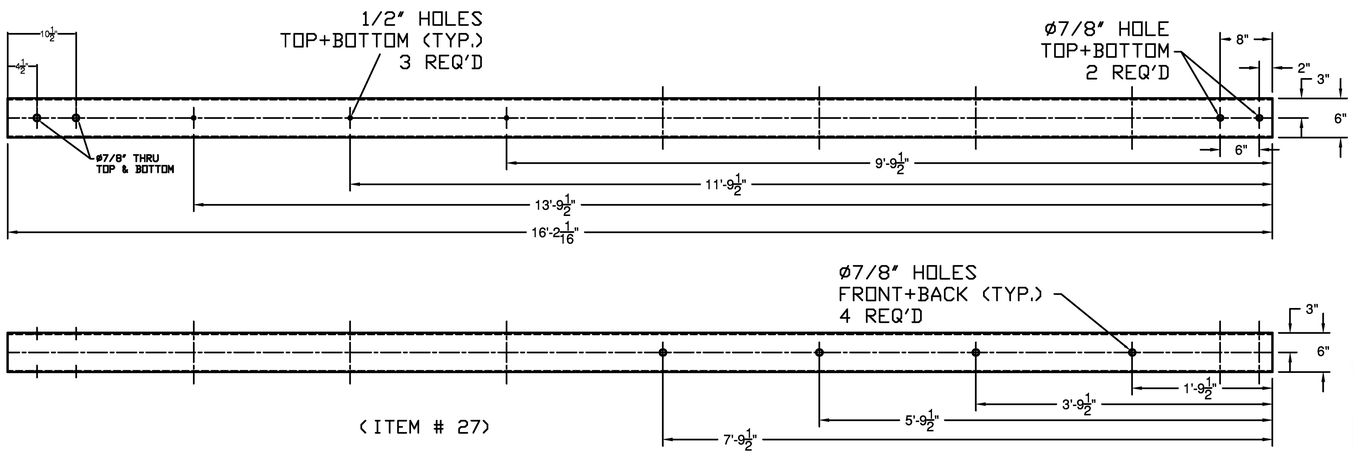

ITEM #: 900.620 (TRANSITION) FR Lafayette - JAMAICA, EM13-016

SHEET 8 OF 8

APPROVED BY:

Vermont Agency of Transportation

RECEIVED

CK'D BY RK/JG/GL OK'D BY JS

July 25, 2013

RESUBMIT NO Approved

BY KH DATE 8-8-2013

BRIDGE RAIL DETAILS SHEET

EM13-006, JAMAICA ER BRF 015-1 (23)

TOWN OF JAMAICA, WINDHAM COUNTY, VT RTE 30 (MINOR ARTERIAL), BRIDGE NO : 30

R	NO.	DATE	DESCRIPTION	BY
E	1	7/8/13	REVISED PER 6/28/13 MARK UP	E.P.
V	2	7/23/13	REVISE PER 7/23/13 EMAIL	E.P.

R	NO.	DATE	DESCRIPTION	BY
E				
V				

ELDERLEE, INC.
OAKS CORNERS, NEW YORK 14518
E-Mail: dlong@elderlee.com
Tel: 315-789-6670 Fax: 315-789-6615

AISC CERTIFIED FABRICATOR

DRAWN	E.P.	5/30/13
CHECKED	D.L.	5/31/13
APPROVED	.	
SCALE	SCHEMATIC	
DRAWING NO.	FR LAFAYETTE - JAMAICA	

WELDING PROCEDURE SPECIFICATION

Material Specification	A572 TO A572
Welding Process	FCAW
Manual or Machine	SEMAUTOMATIC
Position of Welding	FLAT
Filler Metal Specification	A5.20 - 95
Filler Metal Classification	E71T-1H8 E71T-9H8 LINCOLN ULTRACORE
Flux	N/A
Shielding Gas	CO 2 Dew Point -40DEG F Flow Rate 50CFH
Single or Multiple Pass	SINGLE
Single or Multiple Arc	SINGLE
Welding Current	DC
Polarity	REVERSE ELECTRODE POSITIVE
Welding Progression	STRINGER
Root Treatment	PER D1.5
Preheat and Interpass Temperature	PER D1.5
Postheat Temperature	NONE
Heat Input	Min _____ Max _____

WELDING PROCEDURE

Pass no.	Electrode size	Welding Current Amperes	Welding Current Volts	Travel speed	Joint detail
1	1/16	300	26	14	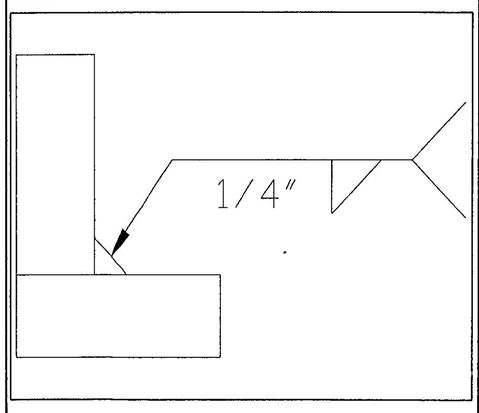
Variable	LIMITS	270 TO 330	24 TO 28	12.6 TO 15.4	

Vermont Agency of Transportation
RECEIVED
Jamaica ER BRF 015-1 (23) - Rail WPS APPROVED 6-5-2013.pdf
CK'D BY JWC OK'D BY JTS
June 5, 2013
RESUBMIT NO Approved
BY KMH DATE 6-12-2013

This procedure may vary due to fabrication sequence, fit-up, pass size, etc., within the limitation of variables given in Section 5.

Procedure No. 3001
Revision No. _____

Contractor Elderlee, Inc.
Authorized By RANDY SCOTT
Date 5/29/2013

WELDING PROCEDURE SPECIFICATION

Material Specification	A572 TO A572
Welding Process	FCAW
Manual or Machine	SEMAUTOMATIC
Position of Welding	FLAT
Filler Metal Specification	A5.20 - 95
Filler Metal Classification	E71T-1H8 E71T-9H8 LINCOLN ULTRACORE
Flux	N/A
Shielding Gas	CO 2 Dew Point -40DEG F Flow Rate 50CFH
Single or Multiple Pass	SINGLE
Single or Multiple Arc	SINGLE
Welding Current	DC ELECTRODE POSITIVE
Polarity	REVERSE
Welding Progression	STRINGER
Root Treatment	PER D1.5
Preheat and Interpass Temperature	PER D1.5
Postheat Temperature	NONE
Heat Input	Min _____ Max _____

WELDING PROCEDURE

Pass no.	Electrode size	Welding Current		Travel speed	Joint detail
		Amperes	Volts		
1	1/16	300	26	14	
Variable	LIMITS	270 TO 330	24 TO 28	12.6 TO 15.4	

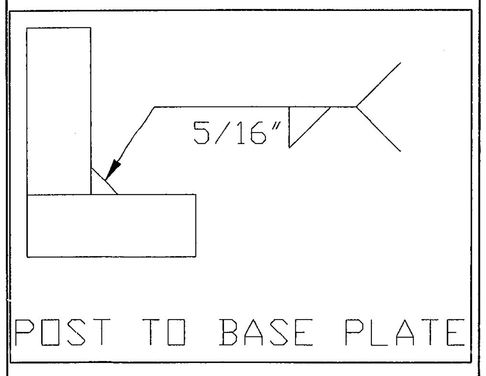

Vermont Agency of Transportation
RECEIVED
CK'D BY JWC OK'D BY JTS
June 5, 2013
RESUBMIT NO Approved
BY KMH DATE 6-12-2013

This procedure may vary due to fabrication sequence, fit-up, pass size, etc., within the limitation of variables given in Section 5.

Procedure No. 3002
Revision No. _____

Contractor Elderlee, Inc.
Authorized By RANDY SCOTT
Date 5/29/2013

WELDING PROCEDURE SPECIFICATION

Material Specification	A500 GR B
Welding Process	FCAW
Manual or Machine	SEMAUTOMATIC
Position of Welding	FLAT
Filler Metal Specification	A5.20 - 95
Filler Metal Classification	E71T-1H8 E71T-9H8 LINCOLN ULTRACORE
Flux	N/A
Shielding Gas	CO 2 Dew Point -40DEG F Flow Rate 50CFH
Single or Multiple Pass	SINGLE
Single or Multiple Arc	SINGLE
Welding Current	DC
Polarity	REVERSE ELECTRODE POSITIVE
Welding Progression	STRINGER
Root Treatment	PER D1.5
Preheat and Interpass Temperature	PER D1.5
Postheat Temperature	NONE
Heat Input	Min _____ Max _____

WELDING PROCEDURE

Pass no.	Electrode size	Welding Current Amperes	Welding Current Volts	Travel speed	Joint detail
1	1/16	300	26	14	
Variable	LIMITS	270 TO 330	24 TO 28	12.6 TO 15.4	

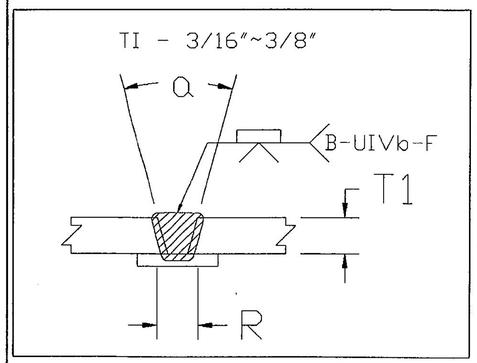

Vermont Agency of Transportation
RECEIVED
Jamaica ER BRF 0151(22) - Rail WPS APPROVED 6-6-2013.pdf
CK'D BY JWC OK'D BY JTS
June 5, 2013
RESUBMIT NO Approved
BY KMH DATE 6-12-2013

This procedure may vary due to fabrication sequence, fit-up, pass size, etc., within the limitation of variables given in Section 5.

Procedure No. 3007
Revision No. _____

Contractor Elderlee, Inc.
Authorized By RANDY SCOTT
Date 5/29/2013

Form III-2

Form III-2-Sample Welding Procedure Specification

WELDING PROCEDURE SPECIFICATION

Material Specification	A709 TO A500 GR B
Welding Process	FCAW
Manual or Machine	SEMAUTOMATIC
Position of Welding	FLAT
Filler Metal Specification	A5.20 - 95
Filler Metal Classification	E71T-1H8 E71T-9H8 LINCOLN ULTRACORE
Flux	N/A
Shielding Gas	CO 2 Dew Point -40DEG F Flow Rate 50CFH
Single or Multiple Pass	SINGLE
Single or Multiple Arc	SINGLE
Welding Current	DC
Polarity	REVERSE ELECTRODE POSITIVE
Welding Progression	STRINGER
Root Treatment	D1.5
Preheat and Interpass Temperature	D1.5
Postheat Temperature	NONE
Heat Input	Min _____ Max _____

WELDING PROCEDURE

Pass no.	Electrode size	Welding Current Amperes	Welding Current Volts	Travel speed	Joint detail
1	1/16	300	26	14	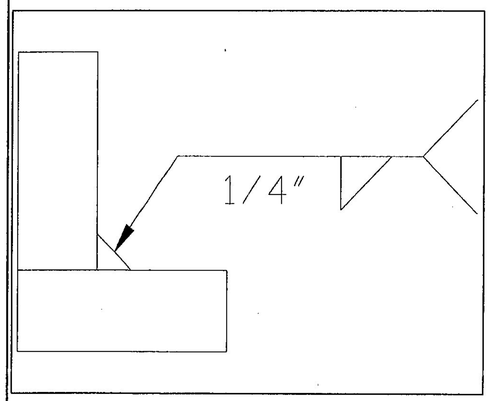
Variable	LIMITS	270 TO 330	24 TO 28	12.6 TO 15.4	

Vermont Agency of Transportation
RECEIVED
CK'D BY JWC OK'D BY JTS
June 5, 2013
RESUBMIT NO Approved
BY KMH DATE 6-12-2013

This procedure may vary due to fabrication sequence, fit-up, pass size, etc., within the limitation of variables given in Section 5.

Procedure No. 3009
Revision No. _____

Contractor Elderlee, Inc.
Authorized By RANDY SCOTT
Date 5/22/2013

Form III-2

WELDING PROCEDURE SPECIFICATION

Material Specification	ASTM-A500-A53-GRADE B TO A36
Welding Process	FCAW
Manual or Machine	SEMAUTOMATIC
Position of Welding	5G
Filler Metal Specification	A5.20
Filler Metal Classification	E71T-1/T-1M ESAB DUAL SHIELD 7000
Flux	N/A
Shielding Gas	CO 2 Dew Point -40DEG F FLOW RATE 50 CFH
Single or Multiple Pass	SINGLE
Single or Multiple Arc	SINGLE
Welding Current	DC
Polarity	REVERSE ELECTRODE POSITIVE
Welding Progression	STRINGER
Root Treatment	PER D1.1
Preheat and Interpass Temperature	PER D1.1
Postheat Temperature	NONE
Heat Input	Min _____ Max _____

WELDING PROCEDURE

Pass no.	Electrode size	Welding Current Amperes	Welding Current Volts	Travel speed
1	.035	110	21	6IPM
Variable	LIMITS	121 TO 99	23 TO 19	7 TO 5

Joint detail

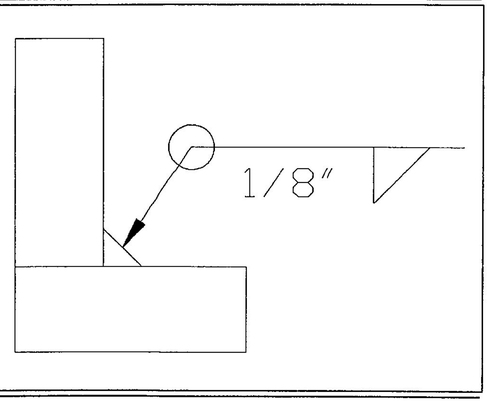

Vermont Agency of Transportation
RECEIVED
Jamaica ER BRF 015-1(23) - Rail MPS APPROVED 6-6-2013.pdf
CK'D BY JWC OK'D BY JTS
June 5, 2013
RESUBMIT NO Approved
BY KMH DATE 6-12-2013

This procedure may vary due to fabrication sequence, fit-up, pass size, etc., within the limitation of variables given in Section 5.

Procedure No. 3012
Revision No. _____

Contractor Elderlee, Inc.
Authorized By RANDY SCOTT
Date 6/21/2012

Form III-2

WELDING PROCEDURE SPECIFICATION

Material Specification	ASTM-A36 A709 GR 36 CVN
Welding Process	FCAW
Manual or Machine	SEMAUTOMATIC
Position of Welding	FLAT
Filler Metal Specification	A5.20- 95
Filler Metal Classification	E71T-1H8 E71T-9H8 LINCOLN ULTRACORE
Flux	N/A
Shielding Gas	CO 2 Dew Point -40DEG F Flow Rate 50CFH
Single or Multiple Pass	SINGLE
Single or Multiple Arc	SINGLE
Welding Current	DC
Polarity	REVERSE
Welding Progression	STRINGER
Root Treatment	PER D1.5
Preheat and Interpass Temperature	PER D1.5
Postheat Temperature	NONE
Heat Input	Min _____ Max _____

WELDING PROCEDURE

Pass no.	Electrode size	Welding Current Amperes	Welding Current Volts	Travel speed	Joint detail
1	1/16	300	26	14	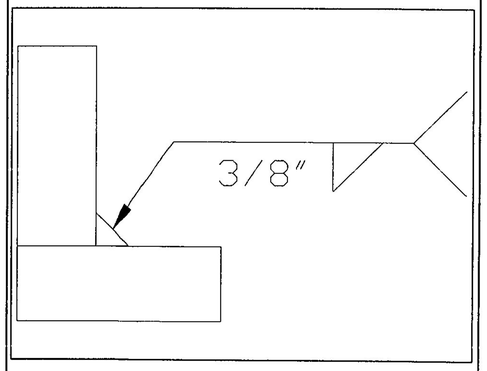
Variable	LIMITS	270 TO 330	24 TO 28	12.6 TO 15.4	

Vermont Agency of Transportation
RECEIVED
CK'D BY JWC OK'D BY JTS
June 5, 2013
RESUBMIT NO Approved
BY KMH DATE 6-12-2013

This procedure may vary due to fabrication sequence, fit-up, pass size, etc., within the limitation of variables given in Section 5.

Procedure No. 3016
Revision No. _____

Contractor Elderlee, Inc.
Authorized By RANDY SCOTT
Date 1/3/2013

Form III-2

WELDING PROCEDURE SPECIFICATION

Material Specification	ASTM A572 GR. 50 CVN	A500 GR B	
Welding Process	FCAW		
Manual or Machine	SEMAUTOMATIC		
Position of Welding	FLAT		
Filler Metal Specification	A5.20 - 95		
Filler Metal Classification	E71T-1H8 E71T-9H8 LINCOLN ULTRACORE		
Flux	N/A		
Shielding Gas	CO 2	Dew Point -40DEG F Flow Rate 50CFH	
Single or Multiple Pass	SINGLE		
Single or Multiple Arc	SINGLE		
Welding Current	DC		
Polarity	REVERSE ELECTRODE POSITIVE		
Welding Progression	STRINGER		
Root Treatment	PER D1.5		
Preheat and Interpass Temperature	PER D1.5		
Postheat Temperature	NONE		
Heat Input	Min	Max	

WELDING PROCEDURE

Pass no.	Electrode size	Welding Current Amperes	Welding Current Volts	Travel speed	Joint detail
1	1/16	300	26	14	
Variable	LIMITS	270 TO 330	24 TO 28	12.6 TO 15.4	

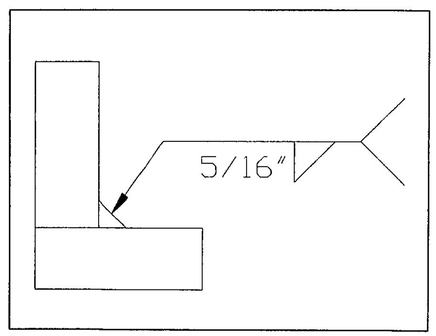

Vermont Agency of Transportation
RECEIVED
CK'D BY JWC OK'D BY JTS
June 5, 2013
RESUBMIT NO Approved
BY KMH DATE 6-12-2013

This procedure may vary due to fabrication sequence, fit-up, pass size, etc., within the limitation of variables given in Section 5.

Procedure No. 3037
Revision No.

Contractor Elderlee, Inc.
Authorized By RANDY SCOTT
Date 12/20/2011

WELDING PROCEDURE SPECIFICATION

Material Specification	A36		
Welding Process	GMAW		
Manual or Machine	SEMAUTOMATIC		
Position of Welding	FLAT		
Filler Metal Specification	A5.18		
Filler Metal Classification	L-50 .052 LINCOLN		
Flux	N/A		
Shielding Gas	90% ARGON /10% CO2	Dew Point -40DEG F Flow Rate 50 CFM	
Single or Multiple Pass	SINGLE		
Single or Multiple Arc	SINGLE		
Welding Current	DC		
Polarity	REVERSE		
Welding Progression	STRINGER		
Root Treatment	PER D1.5		
Preheat and Interpass Temperature	PER D1.5		
Postheat Temperature	NONE		
Heat Input	Min	Max	

WELDING PROCEDURE

Pass no.	Electrode size	Welding Current Amperes	Welding Current Volts	Travel speed	Joint detail
	.052	430	32	13	
Variable	LIMITS	387 TO 473	29 TO 34	12 TO 14	

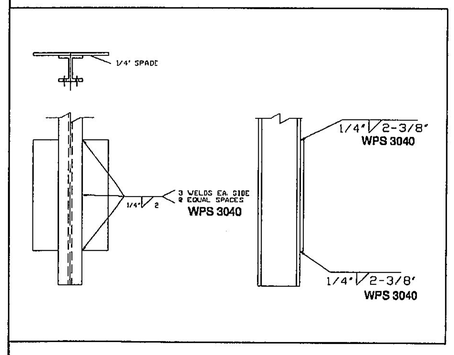

Vermont Agency of Transportation
RECEIVED
CK'D BY JWC OK'D BY JTS
June 5, 2013
RESUBMIT NO Approved
BY KMH DATE 6-12-2013

This procedure may vary due to fabrication sequence, fit-up, pass size, etc., within the limitation of variables given in Section 5.

Procedure No. 3040
Revision No.

Contractor Elderlee, Inc.
Authorized By RANDY SCOTT
Date 12/20/2011

Form III-2