RECORD PLANS

CONTRACTOR: ENGINEERS CONSTRUCTION, INC. - S. BURLINGTON, VT

RESIDENT ENGINEER: SANDY SCHMITT

CONSTRUCTION BEGAN: MAY 11, 2015

CONSTRUCTION COMPLETE: OCTOBER 9, 2015

RECORD PLANS BY: SANDY SCHMITT & CHIP PIERCE

I HEREBY CERTIFY THAT ALL THE CONSTRUCTION REQUIRED BY THIS SET OF DRAWINGS HAS BEEN ACCOMPLISHED AS INDICATED HEREIN.

BY Sandra L. Schmitt RESIDENT ENGINEER

DATE 03-13-17

NOTE: Any further information concerning final quantities, amounts or other details relative to this project may be found at Central Files in the electronic archives.

STATE OF VERMONT
AGENCY OF TRANSPORTATION

PROPOSED IMPROVEMENT
TOWN OF BERLIN
COUNTY OF WASHINGTON
VT ROUTE 62 - (PRINCIPAL ARTERIAL)

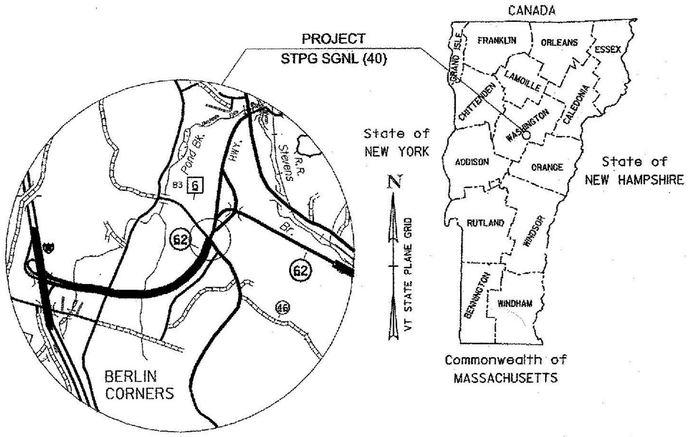

LOCATION MAP

0.5 0 0.5 1

SCALE IN MILES

BEGINNING IN THE TOWN OF BERLIN ON VT ROUTE 62 AT A POINT (MM 1.230) AND EXTENDING APPROXIMATELY 3,607 FEET EASTERLY ON VT 62 WITH APPROACHES 500 FEET NORTHERLY ON FISHER RD., 500 FEET SOUTHERLY ON AIRPORT RD., AND 650 FEET EASTERLY ON BERLIN STATE HIGHWAY.

LENGTH OF PROJECT: 3607.34 FEET = 0.683 MILES

THE PROJECT SHALL CONSIST OF THE INSTALLATION OF NEW TRAFFIC SIGNAL EQUIPMENT, RESURFACING, ADDITION OF A LEFT TURN LANE ON AIRPORT RD., REALIGNMENT OF BERLIN STATE HIGHWAY, LANE TAPER ON VT ROUTE 62, TRAFFIC SIGNS, SIGN BRIDGE, PAVEMENT MARKINGS, AND OTHER HIGHWAY RELATED ITEMS.

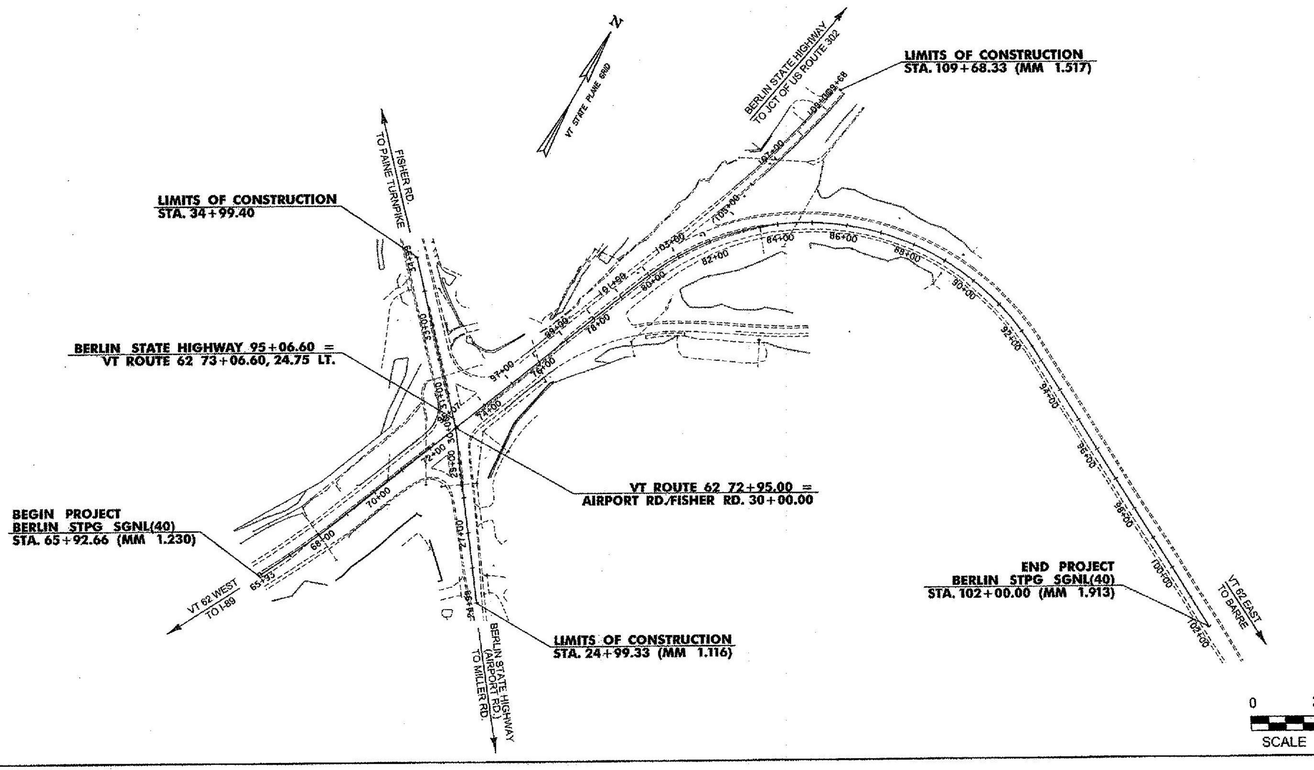

0 200 400

SCALE IN FEET

CONSTRUCTION IS TO BE CARRIED ON IN ACCORDANCE WITH THESE PLANS AND THE STANDARD SPECIFICATIONS FOR CONSTRUCTION DATED 2011, AS APPROVED BY THE FEDERAL HIGHWAY ADMINISTRATION ON JULY 20, 2011 FOR USE ON THIS PROJECT, INCLUDING ALL SUBSEQUENT REVISIONS AND SUCH REVISED SPECIFICATIONS AND SPECIAL PROVISIONS AS ARE INCORPORATED IN THESE PLANS.

QUALITY ASSURANCE PROGRAM: LEVEL 2

SURVEYED BY :	VTRANS
SURVEYED DATE :	4/25/11

DATUM

VERTICAL	NAVD88
HORIZONTAL	NAD83 (2007)

DIRECTOR OF PROJECT DELIVERY

APPROVED DATE 10/17/2014

PROJECT MANAGER : PATRICIA COBURN, P.E.

PROJECT NAME : BERLIN

PROJECT NUMBER : STPG SGNL (40)

SHEET 1 OF 123 SHEETS

STATE OF VERMONT
AGENCY OF TRANSPORTATION

PRELIMINARY INFORMATION SHEET

INDEX OF SHEETS

PLAN SHEETS

1	TITLE SHEET
2	PRELIMINARY INFO AND INDEX OF SHEETS
3	CONVENTIONAL SYMBOLOGY LEGEND SHEET
4-12	ALIGNMENT SHEETS
13-14	TYPICAL SECTIONS SHEETS
15-17	QUANTITY SHEETS
18	ITEM DETAIL SHEET
19	EARTHWORKS SUMMARY SHEET
20	DRAINAGE SUMMARY SHEET
21	TIE SHEET
22-30	PLAN SHEETS
31	PROFILE AND BANKING SHEET
32	DRAINAGE PROFILES SHEET
33	DRAINAGE DETAIL SHEET
34-35	TRAFFIC SIGNAL PLANS
36	TRAFFIC SIGNAL DETAIL SHEET
37	TRAFFIC SIGNAL SYSTEM NOTES
38	TRAFFIC SIGNAL GENERAL NOTES
39-40	TRAFFIC SIGNAL CROSS SECTIONS
41	STREET LIGHTING DETAILS SHEET
42	STREET LIGHTING GENERAL NOTES SHEET
43-44	BORING LOG SHEETS
45-53	PAVEMENT MARKING SHEETS
54-62	TRAFFIC SIGNING SHEETS
63-68	TRAFFIC SIGN SUMMARY SHEETS
69	GENERAL SIGN DETAIL SHEET
70	GUIDE SIGN DETAIL SHEET
71	SIGN BRIDGE DETAIL SHEET
72	EPSC NARRATIVE
73-75	EPSC DETAIL SHEETS
76-84	EPSC EXISTING CONDITIONS SHEETS
85-93	EPSC CONSTRUCTION SHEETS
94-102	EPSC FINAL CONDITIONS SHEETS
103	CONSTRUCTION APPROACH SIGNING SHEET
104-119	TRAFFI C CONTROL PLAN SHEETS
120	TRAFFIC CONTROL GENERAL NOTES
121-123	CROSS SECTION SHEETS

STANDARDS LIST

B-5	EMBANKMENT ON EARTH SLOPE	
C-10	CURBING	2/11/2008
D-20	HIGHWAY CROSSING FOR UNDERGROUND UTILITIES	3/3/2003
E-120	STANDARD SIGN PLACEMENT - EXPRESSWAY & FREEWAY	8/8/1995
E-121	STANDARD SIGN PLACEMENT - CONVENTIONAL ROAD	8/8/1995
E-123	GUIDE SIGN PLACEMENT - MISCELLANEOUS DETAILS	3/16/2004
E-135	INTERSTATE ROUTE MARKER SIGN DETAIL	8/18/1995
E-136A	U.S. ROUTE MARKER SIGN DETAILS	8/8/1995
E-136B	STATE ROUTE MARKER SIGN DETAILS	8/8/1995
E-142	REGULATORY SIGN DETAILS	9/20/1995
E-143	REGULATORY SIGN DETAILS	6/15/2004
E-144	REGULATORY SIGNS	3/29/1999
E-145A	REGULATORY SIGN DETAILS - LANE USE CONTROL SIGNS	12/23/1994
E-145B	REGULATORY SIGN DETAILS - LANE USE CONTROL SIGNS	12/23/1994
E-146	REGULATORY SIGN DETAILS	9/20/1995
E-150	WARNING SIGN DETAILS	5/1/2004
E-151	WARNING SIGN DETAILS	5/1/2004
E-171A	TRAFFIC CONTROL SIGNALS GENERAL NOTES & DETAILS	8/9/1995
E-171B	TRAFFIC CONTROL SIGNALS MISC. DETAILS	8/9/1995
E-171C	TRAFFIC CONTROL SIGNALS CANTILEVER MOUNTING DETAILS	8/9/1995
E-173	PULL BOXES AND JUNCTION BOXES	8/9/1995
E-175	POWER DROP STANCHIONS	6/8/2009
E-180A	STREET LIGHTING DETAILS	8/9/1995
E-180B	STREET LIGHTING DETAILS	8/9/1995
E-191	PAVEMENT MARKING DETAILS	2/1/1999
E-192	PAVEMENT MARKING DETAILS	10/12/2000
E-193	PAVEMENT MARKING DETAILS	8/18/1995
G-1	STEEL BEAM GUARDRAIL DETAILS (POST, DELINEATOR, TYPICALS)	1/3/2000
G-19	GENERIC GRADING PLANS FOR GUARDRAIL END TERMINALS	11/15/2002
T-1	TRAFFIC CONTROL GENERAL NOTES	8/6/2012
T-10	CONVENTIONAL ROAD CONSTRUCTION APPROACH SIGNING	8/6/2012
T-17	TRAFFIC CONTROL MISCELLANEOUS DETAILS	8/6/2012
T-21	TEMPORARY TRAFFIC CONTROL FOR THREE LANE ROADWAY CLOSURE	8/6/2012
T-28	CONSTRUCTION SIGN DETAILS	8/6/2012
T-29	CONSTRUCTION SIGN DETAILS	8/6/2012
T-30	CONSTRUCTION SIGN DETAILS	8/6/2012
T-31	CONSTRUCTION SIGN DETAILS	8/6/2012
T-35	CONSTRUCTION ZONE LONGITUDINAL DROP OFFS	8/6/2012
T-36	CONSTRUCTION ZONE LONGITUDINAL DROP OFFS FOR PAVING	8/6/2012
T-40	DELINEATORS AND MILEPOSTS	8/6/2012
T-43	FREEWAY / EXPRESSWAY - DELINEATOR PLACEMENT TYPICAL	8/6/2012
T-44	MILE MARKER DETAILS - STATE & TOWN HIGHWAYS	8/6/2012
T-45	SQUARE TUBE SIGN POST AND ANCHOR	1/2/2013

GENERAL NOTES

1. ALL MATERIALS AND CONSTRUCTION PRACTICES SHALL CONFORM TO THE STATE OF VERMONT AGENCY OF TRANSPORTATION'S 2011 STANDARD SPECIFICIATIONS FOR CONSTRUCTION AND ITS LATEST REVISIONS.
2. ANY DISCREPRENCIES BETWEEN THESE DRAWINGS AND ACTUAL FIELD CONDITIONS SHALL BE BROUGHT TO THE ATTENTION OF THE ENGINEER BEFORE PROCEEDING WITH THE WORK.
3. THE CONTRACTOR SHALL BE RESPONSIBLE FOR THE PROTECTION OF THE EXISTING UTILITIES WITHIN AND ADJACENT TO THE LIMITS OF WORK. IN THE EVENT OF DAMAGE TO THESE SYSTEMS, THE REPAIRS OR REPLACEMENT SHALL BE COMPLETED AT THE CONTRACTOR'S EXPENSE AS APPROVED BY THE ENGINEER. SEE THE UTILITY SPECIAL PROVISIONS FOR ADDITIONAL INFORMATION AND REQUIREMENTS.
4. THE EXISTING TRAFFIC SIGNAL EQUIPMENT SHALL NOT BE DEACTIVIATED AND REMOVED, NOR SHALL TRAFFIC BE SWITCHED TO THE PROPOSED PATTERNS, UNTIL THE PROPOSED TRAFFIC SIGNAL INFRASTRUCTURE IS INSTALLED AND OPERATIONAL. EXACTLY ONE TRAFFIC SIGNAL SYSTEM SHALL BE OPERATIONAL AT ANY GIVEN TIME.
5. ALL CONSTRUCTION EQUIPMENT SHALL BE MOVED OUTSIDE OF THE CLEAR ZONE OR PROTECTED BY APPROVED BARRIERS DURING NON-WORKING HOURS.
6. SAW CUTTING AND REMOVAL OF PAVEMENT FROM STA. 82+51, LT TO STA. 91+50, LT SHALL BE PAID FOR UNDER ITEM 203.28 - EXCAVATION OF SURFACES AND PAVEMENTS. ALL OTHER PAVEMENT REMOVAL SHALL BE INCIDENTAL TO OTHER ITEMS.

TRAFFIC DATA

TRAFFIC DATA

INTERSECTION APPROACH	AADT		DHV	ADTT	% T	% D	ESAL'S		SPEED LIMIT (MPH)
	2013	2033	2033	2033	2033	2033	2013 - 2033	2013 - 2053	
VT ROUTE 62 EAST LEG	10,600	10,700	1,200	2,100	17.1	55	8,736,00	18,073,000	50
VT ROUTE 62 WEST LEG	16,300	16,400	1,800	1,300	3.4	58	3,666,000	7,570,000	50
FISHER RD	8,400	8,500	950	440	6.1	57	2,103,000	4,240,000	35
AIRPORT RD	7,100	7,100	800	890	10.4	50	6,387,000	13,188,000	50
AIRPORT RD (TOWARD VT 62)	2,500	2,600	290	740	13.9	63	2,096,000	4,377,000	50
AIRPORT RD (TOWARD INDUSTRIAL LN)	7,100	7,100	800	890	10.4	50	6,387,000	13,188,000	50
GRANGER ROAD	5,000	5,000	560	640	3.2	59	2,732,000	6,237,000	35
BERLIN STATE HIGHWAY	5,700	6,200	720	780	N/A	N/A	2,341,000	5,072,000	50

BITUMINOUS CONCRETE PAVEMENT SUPERPAVE MIXTURE DESIGN

DESIGN LANE/LIFE ESALS (20 YEARS)	1,528,000
DESIGN NUMBER OF GYRATIONS	65

PROJECT NAME: BERLIN
PROJECT NUMBER: STPG SGNL(40)

FILE NAME: index01.dgn
PROJECT LEADER: P. COBURN
DESIGNED BY: T. SISSON
PRELIMINARY INFO AND INDEX OF SHEETS

PLOT DATE: 10/20/2014
DRAWN BY: T. SISSON
CHECKED BY: M. LACROIX
SHEET 2 OF 123

CONVENTIONAL SYMBOLS

COMMON TOPOGRAPHIC POINT SYMBOLS

POINT	CODE	DESCRIPTION
	APL	BOUND APPARENT LOCATION
	BM	BENCH MARK
	BND	BOUND
	CB	CATCH BASIN
	COMB	COMBINATION POLE
	DITHR	DROP INLET THROATED DNC
	EL	ELECTRIC POWER POLE
	FPOLE	FLAG POLE
	GASFIL	GAS FILLER
	GP	GUIDE POST
	GSO	GAS SHUT OFF
	GUY	GUY POLE
	GUYW	GUY WIRE
	GV	GATE VALUE
	H	TREE HARDWOOD
	HCTRL	CONTROL HORIZONTAL
	HVCTRL	CONTROL HORIZ. & VERTICAL
	HYD	HYDRANT
	IP	IRON PIN
	IPIPE	IRON PIPE
	LI	LIGHT - STREET OR YARD
	MB	MAIL BOX
	MH	MANHOLE (MH)
	MM	MILE MARKER
	PM	PARKING METER
	PMK	PROJECT MARKER
	POST	POST STONE/WOOD
	RRSIG	RAIL ROAD SIGNAL
	RRSL	RAIL ROAD SWITCH LEVER
	S	TREE SOFTWOOD
	SAT	SATELLITE DISH
	SHRUB	SHRUB
	SIGN	SIGN
	STUMP	STUMP
	TEL	TELEPHONE POLE
	TIE	TIE
	TSIGN	SIGN W/DOUBLE POST
	VCTRL	CONTROL VERTICAL
	WELL	WELL
	WSO	WATER SHUT OFF

THESE ARE COMMON VAOT SURVEY POINT SYMBOLS FOR EXISTING FEATURES, ALSO USED FOR PROPOSED FEATURES WITH HEAVIER LINEWEIGHT, IN COMBINATION WITH PROPOSED ANNOTATION.

ROW ABBREVIATIONS (CODES) & SYBMOLS

POINT	CODE	DESCRIPTION
	EC	EROSION CONTROL
	(P)	PERMANENT EASEMENT
	(T)	TEMPORARY EASEMENT
	DR	DRAINAGE EASEMENT
	DIT	DITCH EASEMENT
	CH	CHANNEL EASEMENT
	DRIVE	DRIVEWAY EASEMENT
	CLV	CULVERT EASEMENT
	UE	UTILITY EASEMENT
	BNDNS	BOUND TO BE SET
	IPNS	IRON PIN TO BE SET
	CRP	CALCULATED ROW POINT
[DISTANCE]		DISTANCE CARRIED ON NEXT SHEET

UTILITY SYMBOLOGY

UNDERGROUND UTILITIES

UT	TELEPHONE
UE	ELECTRIC
UC	CABLE (TV)
UEC	ELECTRIC+CABLE
UET	ELECTRIC+TELEPHONE
UCT	CABLE+TELEPHONE
UECT	ELECTRIC+CABLE+TELEP.
G	GAS LINE
W	WATER LINE
S	SANITARY SEWER (SEPTIC)

ABOVE GROUND UTILITIES (AERIAL)

T	TELEPHONE
E	ELECTRIC
C	CABLE (TV)
EC	ELECTRIC+CABLE
ET	ELECTRIC+TELEPHONE
AER E&T	ELECTRIC+TELEPHONE
CT	CABLE+TELEPHONE
ECT	ELECTRIC+CABLE+TELEP.
	UTILITY POLE GUY WIRE

PROJECT CONSTRUCTION SYMBOLOGY

PROJECT DESIGN & LAYOUT SYMBOLOGY

CZ	CLEAR ZONE
	PLAN LAYOUT MATCHLINE

PROJECT CONSTRUCTION FEATURES

	TOP OF CUT SLOPE
	TOE OF FILL SLOPE
	STONE FILL
	BOTTOM OF DITCH
	CULVERT PROPOSED
	STRUCTURE SUBSURFACE
PDF	DEMARCATION FENCE
BF	BARRIER FENCE
	PROTECTION FENCE (TPZ)
	STRIPING LINE REMOVAL
	SHEET PILES

PROPOSED GEOMETRY CODES

CODE	DESCRIPTION
PC	POINT OF CURVATURE
PI	POINT OF INTERSECTION
CC	CENTER OF CURVE
PT	POINT OF TANGENCY
PCC	POINT OF COMPOUND CURVE
PRC	POINT OF REVERSE CURVE
POB	POINT OF BEGINNING
POE	POINT OF ENDING
STA	STATION PREFIX
AH	AHEAD STATION SUFFIX
BK	BACK STATION SUFFIX
D	CURVE DEGREE OF (100FT)
R	CURVE RADIUS OF
T	CURVE TANGENT LENGTH
L	CURVE LENGTH OF
E	CURVE EXTERNAL DISTANCE

CONVENTIONAL BOUNDARY SYMBOLOGY

BOUNDARY LINES

TOWN LINE	TOWN BOUNDARY LINE
COUNTY LINE	COUNTY BOUNDARY LINE
STATE LINE	STATE BOUNDARY LINE
	TAKELINE WITHOUT ACCESS
	TAKELINE WITH ACCESS
	EXISTING STATE ROW
	EXISTING TOWN ROW
	PERMANENT EASEMENT LINE (P)
	TEMPORARY EASEMENT LINE (T)
	SURVEY LINE
P. P. P.	PROPERTY LINE (P/L)
SR SR SR	SLOPE RIGHTS
6F 6F	6F PROPERTY BOUNDARY
4F 4F	4F PROPERTY BOUNDARY
HAZ HAZ	HAZARDOUS WASTE

EPSC LAYOUT PLAN SYMBOLOGY

EPSC MEASURES

	FILTER CURTAIN
	SILT FENCE
	SILT FENCE WOVEN WIRE
	CHECK DAM
	DISTURBED AREAS REQUIRING RE-VEGETATION
	EROSION MATTING

ENVIRONMENTAL RESOURCES

	WETLAND BOUNDARY
	RIPARIAN BUFFER ZONE
	SOIL TYPE BOUNDARY
T&E	THREATENED & ENDANGERED SPECIES
HAZ HAZ	HAZARDOUS WASTE AREA
AG	AGRICULTURAL LAND
HABITAT	FISH & WILDLIFE HABITAT
FLOOD PLAIN	FLOOD PLAIN
	STORM WATER
	USDA FOREST SERVICE LANDS
	WILDLIFE HABITAT SUIT/CONN

ARCHEOLOGICAL & HISTORIC

ARCH	ARCHEOLOGICAL BOUNDARY
HISTORIC DIST	HISTORIC DISTRICT BOUNDARY
HISTORIC	HISTORIC AREA
H	HISTORIC STRUCTURE

CONVENTIONAL TOPOGRAPHIC SYMBOLOGY

EXISTING FEATURES

	ROAD EDGE PAVEMENT
	ROAD EDGE GRAVEL
	DRIVE WAY EDGE
	DITCH
	FOUNDATION
	FENCE (EXISTING)
	FENCE WOOD POST
	FENCE STEEL POST
	GARDEN
	ROAD GUARD RAIL
	RAIL ROAD TRACKS
	CULVERT (EXISTING)
	WALL STONE
	WALL
	WOOD LINE
	BRUSH LINE
	HEDGE
	BODY OF WATER EDGE
	LEDGE EXPOSED

SYMBOLOGY LEGEND NOTE

THE SYMBOLOGY ON THIS SHEET IS INTENDED TO COVER STANDARD CONVENTIONAL SYMBOLOGY. THE SYMBOLOGY IS USED FOR EXISTING & PROPOSED FEATURES WITH HEAVIER LINEWEIGHT, IN COMBINATION WITH PROJECT ANNOTATION, AS NOTED ON PROJECT PLAN SHEETS. THIS LEGEND SHEET COVERS THE BASICS. SYMBOLOGY ON PLANS MAY VARY, PLAN ANNOTATIONS AND NOTES SHOULD BE USED TO CLARIFY AS NEEDED.

PROJECT NAME: BERLIN
PROJECT NUMBER: STPG SGNL(40)

FILE NAME: sym01.dgn
PROJECT LEADER: P. COBURN
DESIGNED BY: T. SISSON
CONVENTIONAL SYMBOLOGY LEGEND SHEET

PLOT DATE: 10/20/2014
DRAWN BY: T. SISSON
CHECKED BY: M. LACROIX
SHEET 3 OF 123

VT ROUTE 62

Element:	Linear			
	POB	65+92.66	625698.2971	1624453.8098
	PC	66+98.88	625792.9349	1624502.0513
	Tangent Direction:	N 27°00'36.51" E		
	Tangent Length:	106.22		
Element:	Curve #1			
	PC	66+98.88	625792.9349	1624502.0513
	PI	66+12.32	625894.0007	1624553.5694
	CC		627028.2180	1622078.7321
	PT	69+25.63	625999.0052	1624596.4932
	Radius:	2720		
	Delta:	4°46'34.79"	Left	
	Degree of Curvature(Arc):	2°06'23.26"		
	Length:	226.75		
	Tangent:	113.44		
	Chord:	226.68		
	Middle Ordinate:	2.36		
	External:	2.36		
	Tangent Direction:	N 27°00'36.51" E		
	Radial Direction:	S 62°59'23.49" E		
	Chord Direction:	N 24°37'19.11" E		
	Radial Direction:	S 67°45'58.28" E		
	Tangent Direction:	N 22°14'01.72" E		
Element:	Linear			
	PT	69+25.63	625999.0052	1624596.4932
	PC	79+79.79	626974.7874	1624995.3744
	Tangent Direction:	N 22°14'01.72" E		
	Tangent Length:	1054.16		

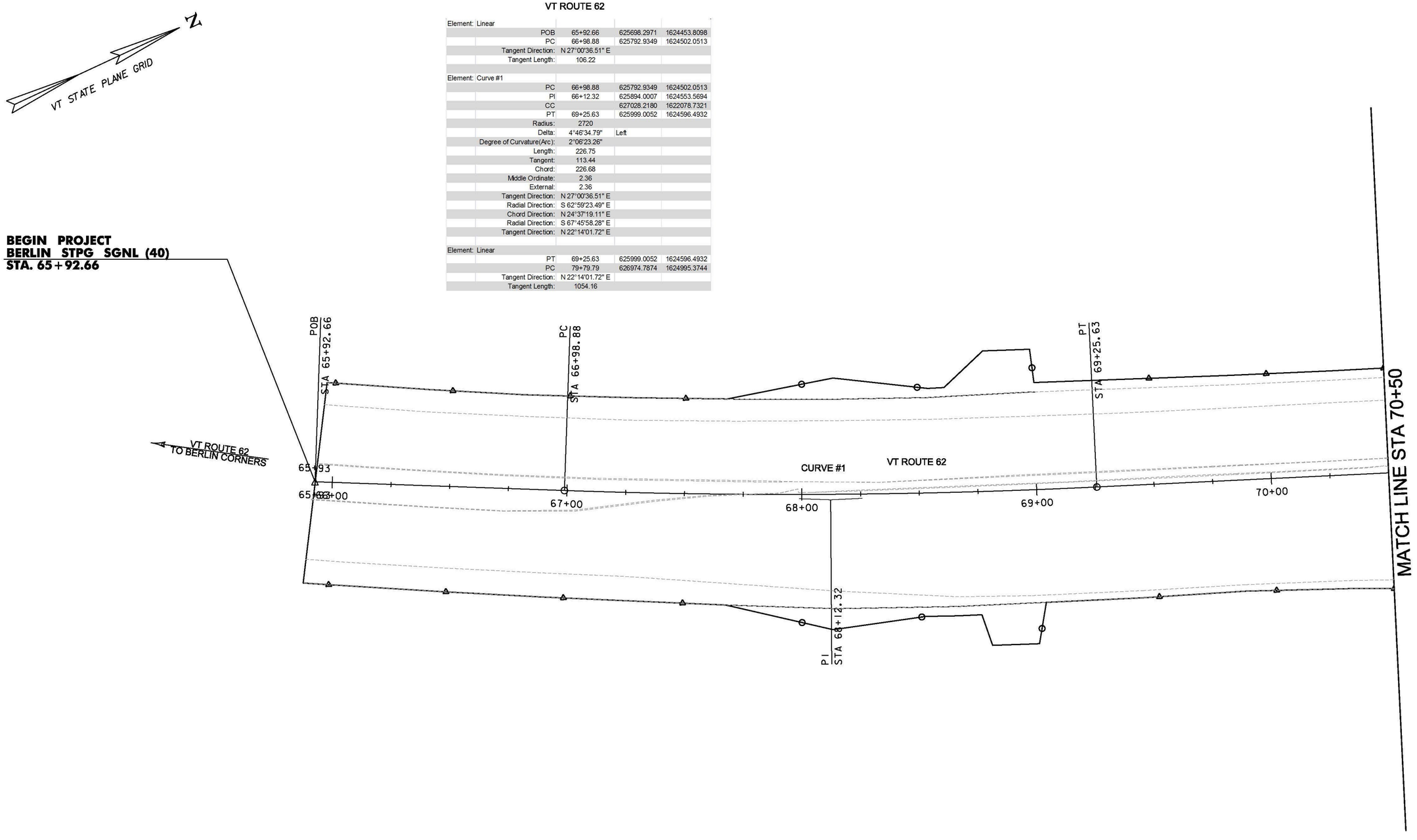

DATUM

VERTICAL	NAVD88
HORIZONTAL	NAD83(2007)

0 20 40
SCALE IN FEET

PROJECT NAME:	BERLIN
PROJECT NUMBER:	STPG SGNL(40)
FILE NAME: t11b358bdr.dgn	PLOT DATE: 10/20/2014
PROJECT LEADER: P. COBURN	DRAWN BY: T. SISSON
DESIGNED BY: T. SISSON	CHECKED BY: M. LACROIX
ALIGNMENT SHEET 1	SHEET 4 OF 123

N

VT STATE PLANE GRID

VT ROUTE 62

Element: Linear				
	PT	69+25.63	625999.0052	1624596.4932
	PC	79+79.79	626974.7874	1624995.3744
	Tangent Direction:	N 22°14'01.72" E		
	Tangent Length:	1054.16		

FISHER ROAD

Element: Linear				
	POB	24+99.43	625938.9603	1625034.5912
	PC	30+00.00	626340.9110	1624736.2578
	Tangent Direction:	N 36°34'59.97" W		
	Tangent Length:	500.57		

AIRPORT ROAD

Element: Linear				
	POB	30+00.00	626340.9110	1624736.2578
	PC	34+99.40	626708.1836	1624397.8618
	Tangent Direction:	N 42°39'24.15" W		
	Tangent Length:	499.40		

AIRPORT ROAD

Element: Linear				
	POB	95+06.60	626361.0124	1624717.7368
	PC	101+79.79	626984.1525	1624972.4646
	Tangent Direction:	N 22°14'01.72" E		
	Tangent Length:	673.19		

MATCH LINE STA 31+75

FISHER ROAD

31+00

BERLIN STATE HIGHWAY 95+06.60 =
VT ROUTE 62 STA. 73+06.60, 24.75 LT.

STA 30+00.00 PI

MATCH LINE STA 70+50

VT ROUTE 62

95+07 96+00 97+00 98

73+00

71+00 72+00 74+00 75+00 76

VT ROUTE 62

MATCH LINE STA 76+00

REMOVE EXISTING MEDIAN ISLAND

BERLIN STATE HIGHWAY (AIRPORT ROAD)

29+00

VT ROUTE 62 STA. 72+95.00 =
AIRPORT RD./FISHER RD. STA. 30+00.00

MATCH LINE STA 28+00

00

DATUM	
VERTICAL	NAVD88
HORIZONTAL	NAD83(2007)

0 20 40
SCALE IN FEET

PROJECT NAME:	BERLIN
PROJECT NUMBER:	STPG SGNL(40)
FILE NAME: t11b358bdr.dgn	PLOT DATE: 10/20/2014
PROJECT LEADER: P. COBURN	DRAWN BY: T. SISSON
DESIGNED BY: T. SISSON	CHECKED BY: M. LACROIX
ALIGNMENT SHEET 2	SHEET 5 OF 123

AIRPORT ROAD

		STATION	NORTHING	EASTING
Element: Linear				
	POB	24+99.43	625938.9603	1625034.5912
	PC	30+00.00	626340.9110	1624736.2578
	Tangent Direction:	N 36°34'59.97" W		
	Tangent Length:	500.57		

VT STATE PLANE GRID

N

LIMITS OF CONSTRUCTION
STA. 24+99.43

GRANGER ROAD

BERLIN STATE HIGHWAY (AIRPORT ROAD)

TO AIRPORT

25+00

26+00

27+00

28+00

MATCH LINE STA 28+00

PAVED DRIVE

DATUM

VERTICAL	NAVD88
HORIZONTAL	NAD83(2007)

0 20 40
SCALE IN FEET

PROJECT NAME:	BERLIN
PROJECT NUMBER:	STPG SGNL(40)
FILE NAME: t11b358bdr.dgn	PLOT DATE: 10/20/2014
PROJECT LEADER: P. COBURN	DRAWN BY: T. SISSON
DESIGNED BY: T. SISSON	CHECKED BY: M. LACROIX
ALIGNMENT SHEET 3	SHEET 6 OF 123

FISHER ROAD

Element: Linear				
	POB	30+00.00	626340.9110	1624736.2578
	PC	34+99.40	626708.1836	1624397.8618
	Tangent Direction:	N 42°39'24.15" W		
	Tangent Length:	499.40		

VT STATE PLANE GRID

N

LIMITS OF CONSTRUCTION
STA. 34+99.40

MATCH LINE STA 31+75

32+00 33+00 34+00 34+99

FISHER ROAD

DATUM

VERTICAL	NAVD88
HORIZONTAL	NAD83(2007)

0 20 40
SCALE IN FEET

PROJECT NAME:	BERLIN
PROJECT NUMBER:	STPG SGNL(40)

FILE NAME: t11b358bdr.dgn	PLOT DATE: 10/20/2014
PROJECT LEADER: P. COBURN	DRAWN BY: T. SISSON
DESIGNED BY: T. SISSON	CHECKED BY: M. LACROIX
ALIGNMENT SHEET 4	SHEET 7 OF 123

N

VT STATE PLANE GRID

VT ROUTE 62

Element:	Linear			
	PT	69+25.63	625999.0052	1624596.4932
	PC	79+79.79	626974.7874	1624995.3744
	Tangent Direction:	N 22°14'01.72" E		
	Tangent Length:	1054.16		
Element:	Curve #2			
	PC	79+79.79	626974.7874	1624995.3744
	PI	88+20.58	627753.0646	1625313.5193
	CC		626685.7223	1625702.5135
	PT	92+52.90	627294.9416	1625241.5838
	Radius:	763.94		
	Delta:	95°29'01.37"	Right	
	Degree of Curvature(Arc):	7°30'00.13"		
	Length:	1273.11		
	Tangent:	840.79		
	Chord:	1130.82		
	Middle Ordinate:	250.21		
	External:	372.08		
	Tangent Direction:	N 22°14'01.72" E		
	Radial Direction:	S 67°45'58.28" E		
	Chord Direction:	N 69°58'32.41" E		
	Radial Direction:	S 27°43'03.09" W		
	Tangent Direction:	S 62°16'56.91" E		

BERLIN STATE HIGHWAY

Element:	Linear			
	POB	95+06.60	626361.0124	1624717.7368
	PC	101+79.79	626984.1525	1624972.4646
	Tangent Direction:	N 22°14'01.72" E		
	Tangent Length:	673.19		
Element:	Curve #1			
	PC	101+79.79	626984.1525	1624972.4646
	PI	102+85.37	627081.8800	1625012.4138
	CC		626685.7223	1625702.5135
	PT	103+89.70	627165.6594	1625076.6603
	Radius:	788.69		
	Delta:	15°14'56.66"	Right	
	Degree of Curvature(Arc):	7°15'52.84"		
	Length:	209.91		
	Tangent:	105.58		
	Chord:	209.29		
	Middle Ordinate:	6.97		
	External:	7.04		
	Tangent Direction:	N 22°14'01.72" E		
	Radial Direction:	S 67°45'58.28" E		
	Chord Direction:	N 29°51'30.05" E		
	Radial Direction:	S 52°31'01.62" E		
	Tangent Direction:	N 37°28'58.38" E		

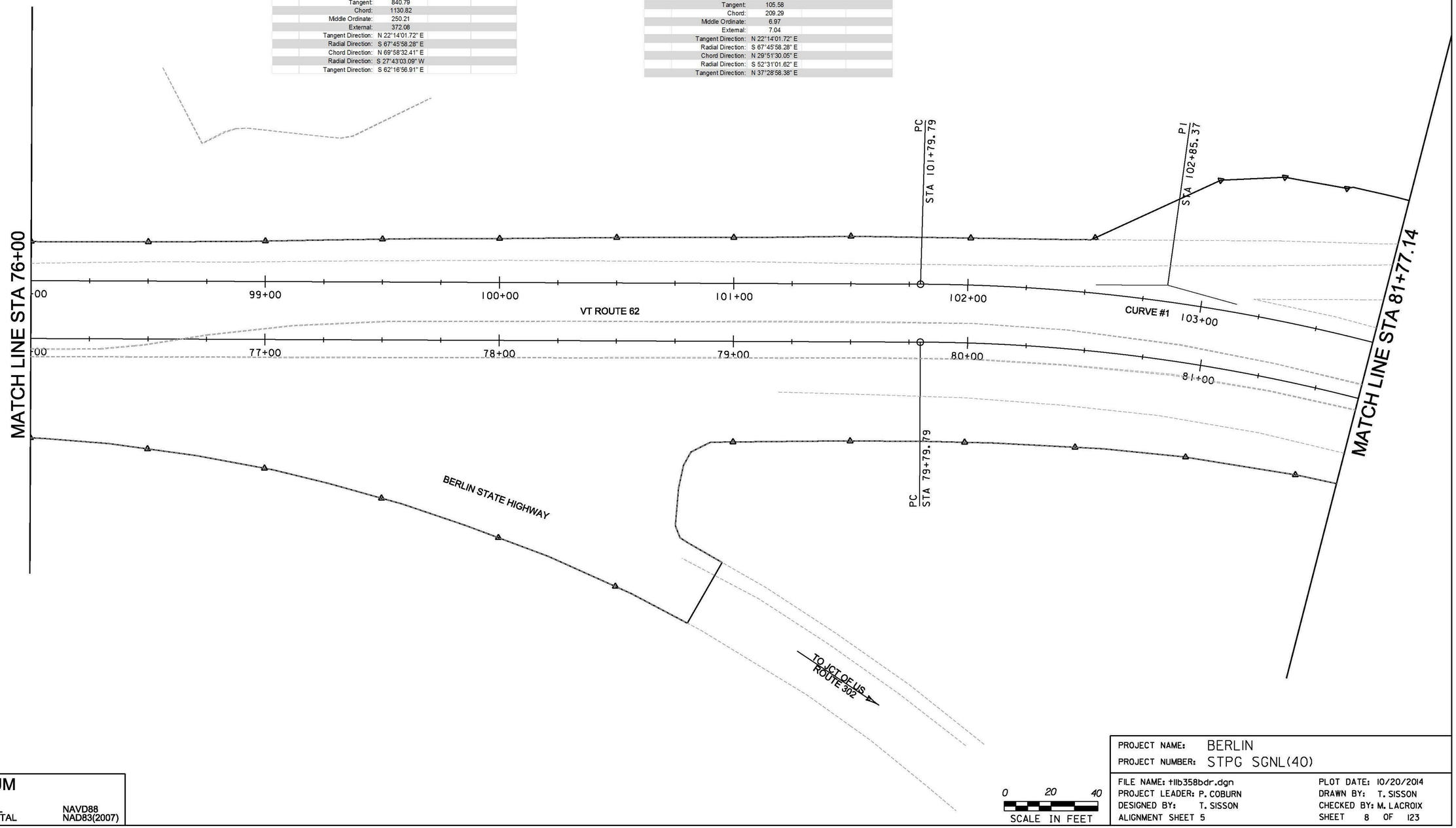

0 20 40
SCALE IN FEET

DATUM

VERTICAL	NAVD88
HORIZONTAL	NAD83(2007)

PROJECT NAME: BERLIN
PROJECT NUMBER: STPG SGNL(40)

FILE NAME: t11b358bdr.dgn
PROJECT LEADER: P. COBURN
DESIGNED BY: T. SISSON
ALIGNMENT SHEET 5

PLOT DATE: 10/20/2014
DRAWN BY: T. SISSON
CHECKED BY: M. LACROIX
SHEET 8 OF 123

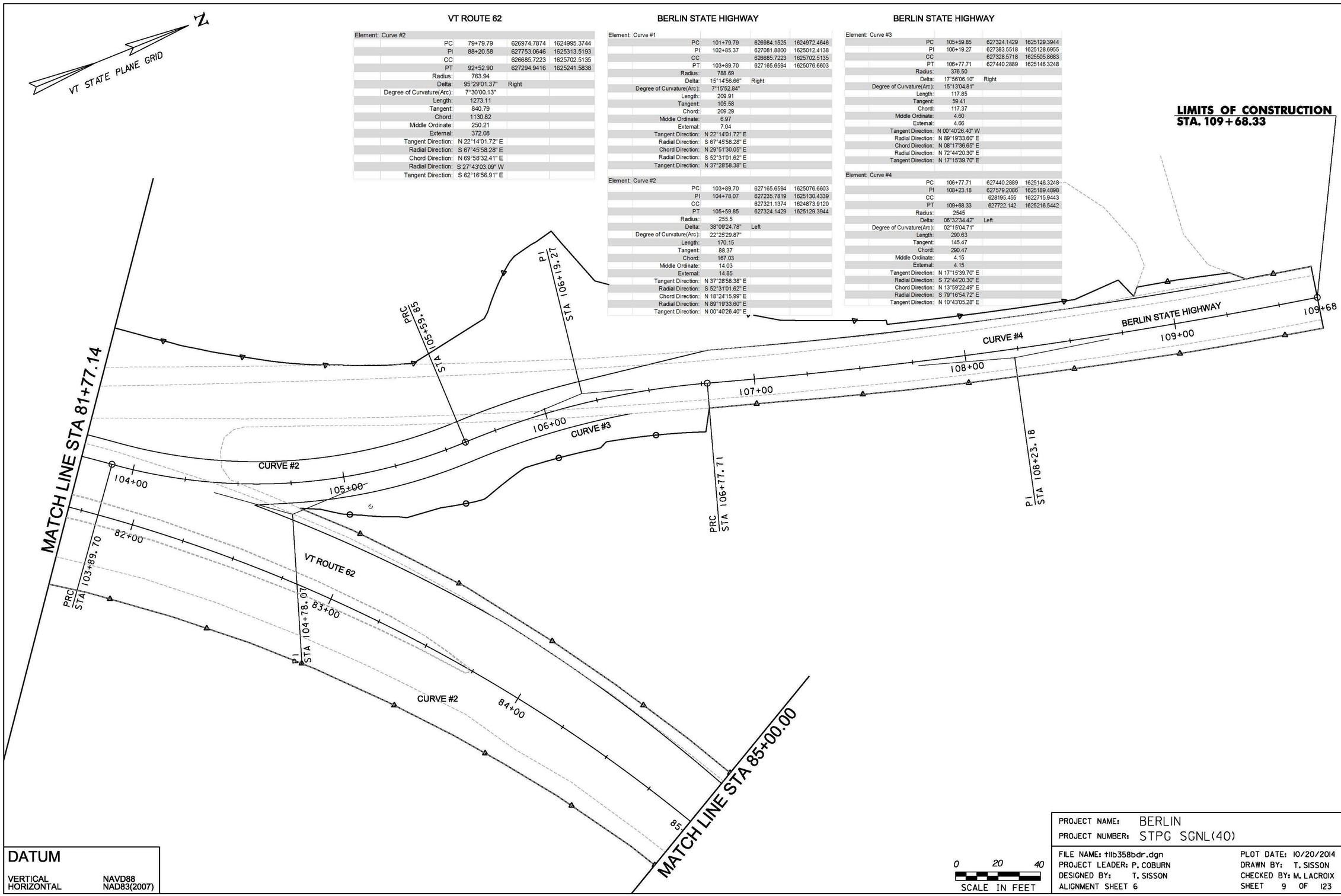

VT ROUTE 62

Element:	Curve #2		
PC	79+79.79	626974.7874	1624995.3744
PI	88+20.58	627753.0646	1625313.5193
CC		626685.7223	1625702.5135
PT	92+52.90	627294.9416	1625241.5838
Radius:	763.94		
Delta:	95°29'01.37"	Right	
Degree of Curvature(Arc):	7°30'00.13"		
Length:	1273.11		
Tangent:	840.79		
Chord:	1130.82		
Middle Ordinate:	250.21		
External:	372.08		
Tangent Direction:	N 22°14'01.72" E		
Radial Direction:	S 67°45'58.28" E		
Chord Direction:	N 69°58'32.41" E		
Radial Direction:	S 27°43'03.09" W		
Tangent Direction:	S 62°16'56.91" E		

BERLIN STATE HIGHWAY

Element:	Curve #1		
PC	101+79.79	626984.1525	1624972.4646
PI	102+85.37	627081.8800	1625012.4138
CC		626685.7223	1625702.5135
PT	103+89.70	627165.6594	1625076.6603
Radius:	788.69		
Delta:	15°14'56.86"	Right	
Degree of Curvature(Arc):	7°15'52.84"		
Length:	209.91		
Tangent:	105.58		
Chord:	209.29		
Middle Ordinate:	6.97		
External:	7.04		
Tangent Direction:	N 22°14'01.72" E		
Radial Direction:	S 67°45'58.28" E		
Chord Direction:	N 29°51'30.05" E		
Radial Direction:	S 52°31'01.62" E		
Tangent Direction:	N 37°28'58.38" E		

Element:	Curve #2		
PC	103+89.70	627165.6594	1625076.6603
PI	104+78.07	627235.7819	1625130.4339
CC		627321.1374	1624873.9120
PT	105+59.85	627324.1429	1625129.3944
Radius:	255.5		
Delta:	38°09'24.78"	Left	
Degree of Curvature(Arc):	22°25'29.87"		
Length:	170.15		
Tangent:	88.37		
Chord:	167.03		
Middle Ordinate:	14.03		
External:	14.85		
Tangent Direction:	N 37°28'58.38" E		
Radial Direction:	S 52°31'01.62" E		
Chord Direction:	N 18°24'15.99" E		
Radial Direction:	N 89°19'33.60" E		
Tangent Direction:	N 00°40'26.40" E		

BERLIN STATE HIGHWAY

Element:	Curve #3		
PC	105+59.85	627324.1429	1625129.3944
PI	106+19.27	627383.5518	1625128.6955
CC		627328.5718	1625505.8683
PT	106+77.71	627440.2889	1625146.3248
Radius:	376.50		
Delta:	17°56'06.10"	Right	
Degree of Curvature(Arc):	15°13'04.81"		
Length:	117.85		
Tangent:	59.41		
Chord:	117.37		
Middle Ordinate:	4.60		
External:	4.66		
Tangent Direction:	N 00°40'26.40" W		
Radial Direction:	N 89°19'33.60" E		
Chord Direction:	N 08°17'36.65" E		
Radial Direction:	N 72°44'20.30" E		
Tangent Direction:	N 17°15'39.70" E		

Element:	Curve #4		
PC	106+77.71	627440.2889	1625146.3248
PI	108+23.18	627579.2086	1625189.4898
CC		628195.455	1622715.9443
PT	109+68.33	627722.142	1625216.5442
Radius:	2545		
Delta:	06°32'34.42"	Left	
Degree of Curvature(Arc):	02°15'04.71"		
Length:	290.63		
Tangent:	145.47		
Chord:	290.47		
Middle Ordinate:	4.15		
External:	4.15		
Tangent Direction:	N 17°15'39.70" E		
Radial Direction:	S 72°44'20.30" E		
Chord Direction:	N 13°59'22.49" E		
Radial Direction:	S 79°16'54.72" E		
Tangent Direction:	N 10°43'05.28" E		

DATUM

VERTICAL	NAVD88
HORIZONTAL	NAD83(2007)

0 20 40
SCALE IN FEET

PROJECT NAME:	BERLIN
PROJECT NUMBER:	STPG SGNL(40)
FILE NAME: tllb358bdr.dgn	PLOT DATE: 10/20/2014
PROJECT LEADER: P. COBURN	DRAWN BY: T. SISSON
DESIGNED BY: T. SISSON	CHECKED BY: M. LACROIX
ALIGNMENT SHEET 6	SHEET 9 OF 123

VT ROUTE 62

Element:	Curve #2			
	PC	79+79.79	626974.7874	1624995.3744
	PI	88+20.58	627753.0646	1625313.5193
	CC		626685.7223	1625702.5135
	PT	92+52.90	627294.9416	1625241.5838
	Radius:	763.94		
	Delta:	95°29'01.37"	Right	
	Degree of Curvature(Arc):	7°30'00.13"		
	Length:	1273.11		
	Tangent:	840.79		
	Chord:	1130.82		
	Middle Ordinate:	250.21		
	External:	372.08		
	Tangent Direction:	N 22°14'01.72" E		
	Radial Direction:	S 67°45'58.28" E		
	Chord Direction:	N 69°58'32.41" E		
	Radial Direction:	S 27°43'03.09" W		
	Tangent Direction:	S 62°16'56.91" E		

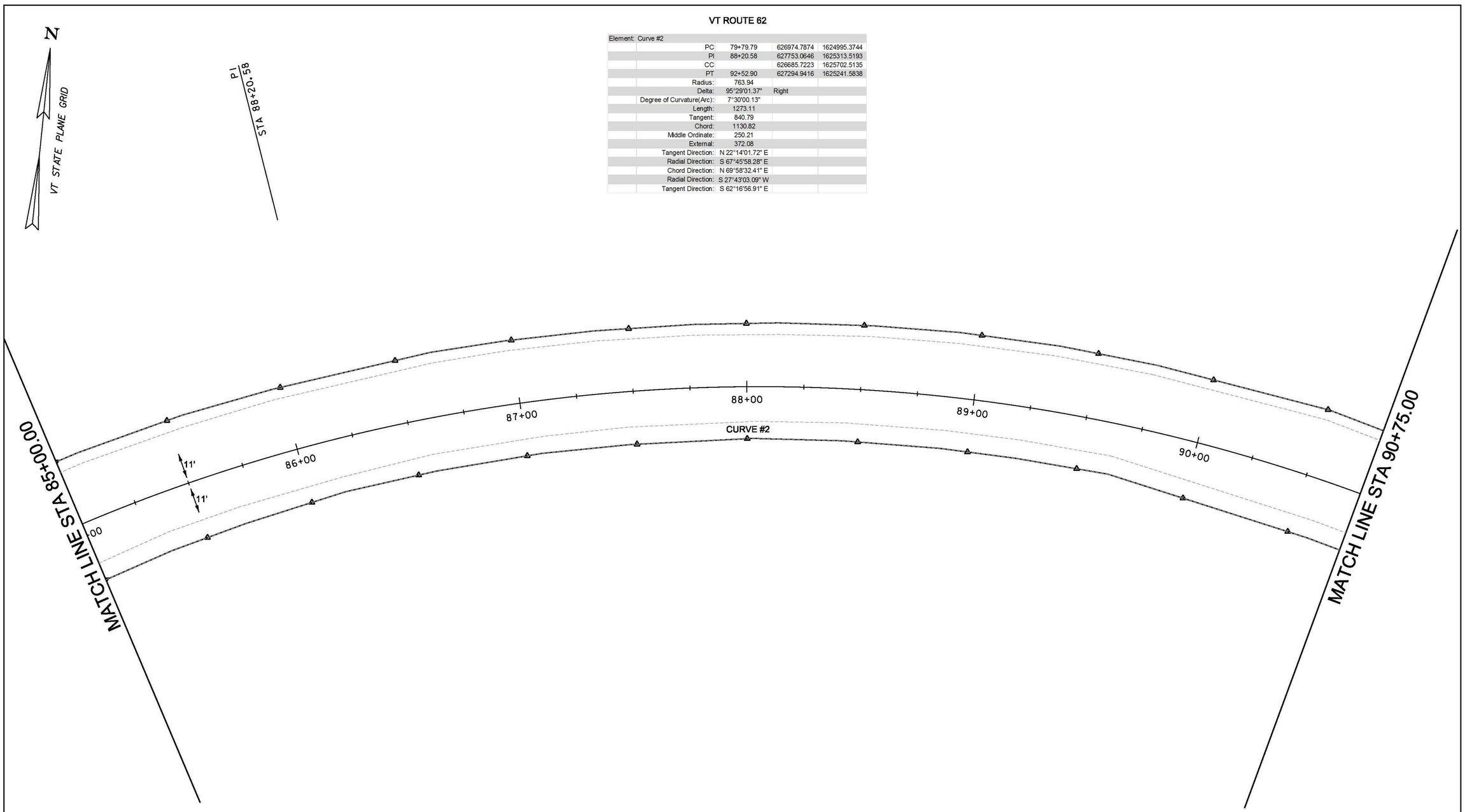

0 20 40
SCALE IN FEET

PROJECT NAME:	BERLIN
PROJECT NUMBER:	STPG SGNL(40)
FILE NAME: tllb358bdr.dgn	PLOT DATE: 10/20/2014
PROJECT LEADER: P. COBURN	DRAWN BY: T. SISSON
DESIGNED BY: T. SISSON	CHECKED BY: M. LACROIX
ALIGNMENT SHEET 7	SHEET 10 OF 123

VT ROUTE 62

Element:	Curve #2			
	PC	79+79.79	626974.7874	1624995.3744
	PI	88+20.58	627753.0646	1625313.5193
	CC		626685.7223	1625702.5135
	PT	92+52.90	627294.9416	1625241.5838
	Radius:	763.94		
	Delta:	95°29'01.37"	Right	
	Degree of Curvature(Arc):	7°30'00.13"		
EXISTING ROW	Length:	1273.11		
	Tangent:	840.79		
	Chord:	1130.82		
	Middle Ordinate:	250.21		
	External:	372.08		
	Tangent Direction:	N 22°14'01.72" E		
	Radial Direction:	S 67°45'58.28" E		
	Chord Direction:	N 69°58'32.41" E		
	Radial Direction:	S 27°43'03.09" W		
	Tangent Direction:	S 62°16'56.91" E		
Element	Linear			
	PT	92+52.90	627362.0013	1626057.8318
	POE	102+00.00	626921.4929	162896.2534
	Tangent Direction:	S 62°16'56.91" E		
	Tangent Length:	947.10		

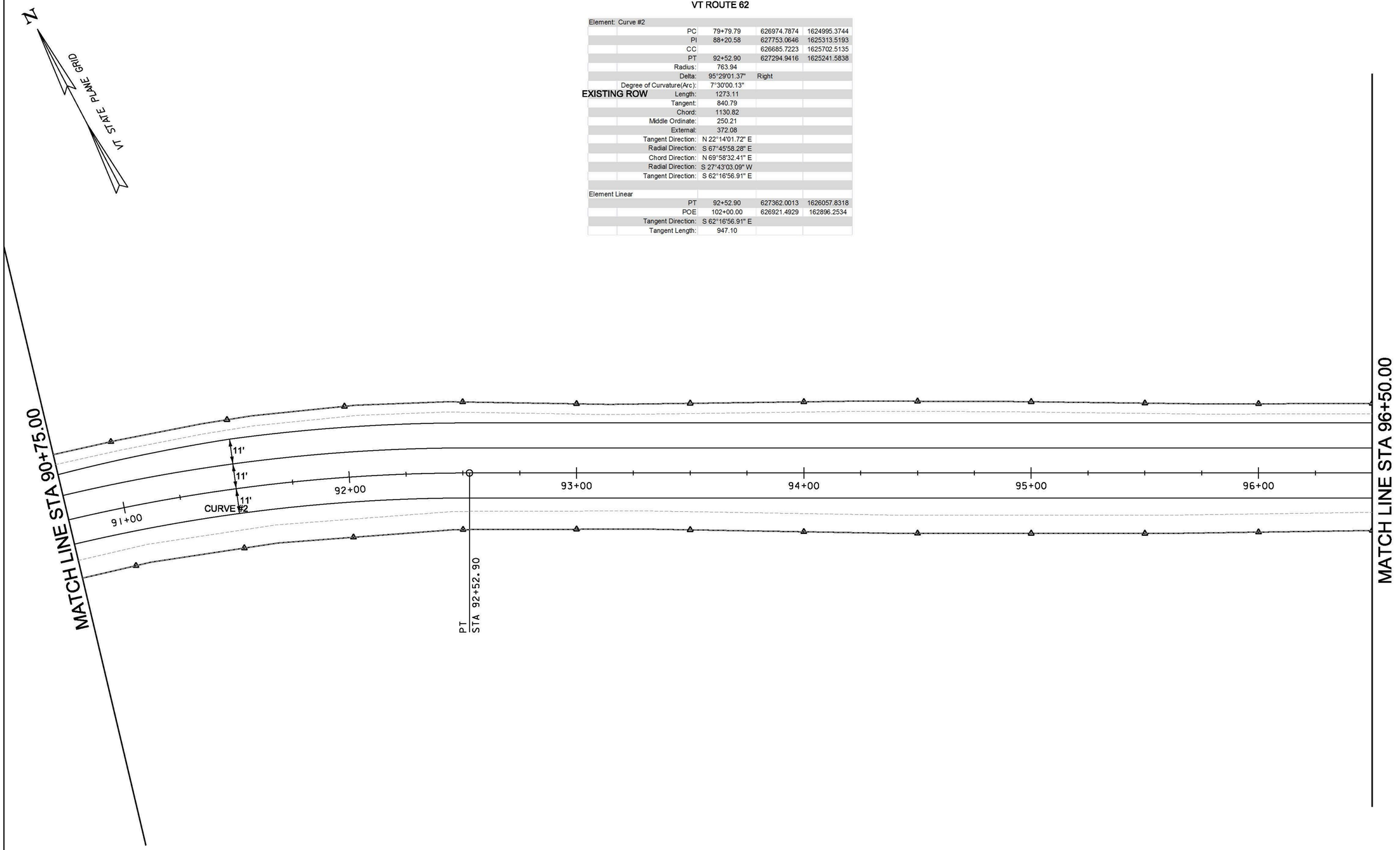

0 20 40
SCALE IN FEET

PROJECT NAME:	BERLIN
PROJECT NUMBER:	STPG SGNL(40)
FILE NAME: t11b358bdr.dgn	PLOT DATE: 10/20/2014
PROJECT LEADER: P. COBURN	DRAWN BY: T. SISSON
DESIGNED BY: T. SISSON	CHECKED BY: M. LACROIX
ALIGNMENT SHEET 8	SHEET 11 OF 123

VT ROUTE 62

Element Linear				
	PT	92+52.90	627362.0013	1626057.8318
	POE	102+00.00	626921.4929	162896.2534
	Tangent Direction:	S 62°16'56.91" E		
	Tangent Length:	947.10		

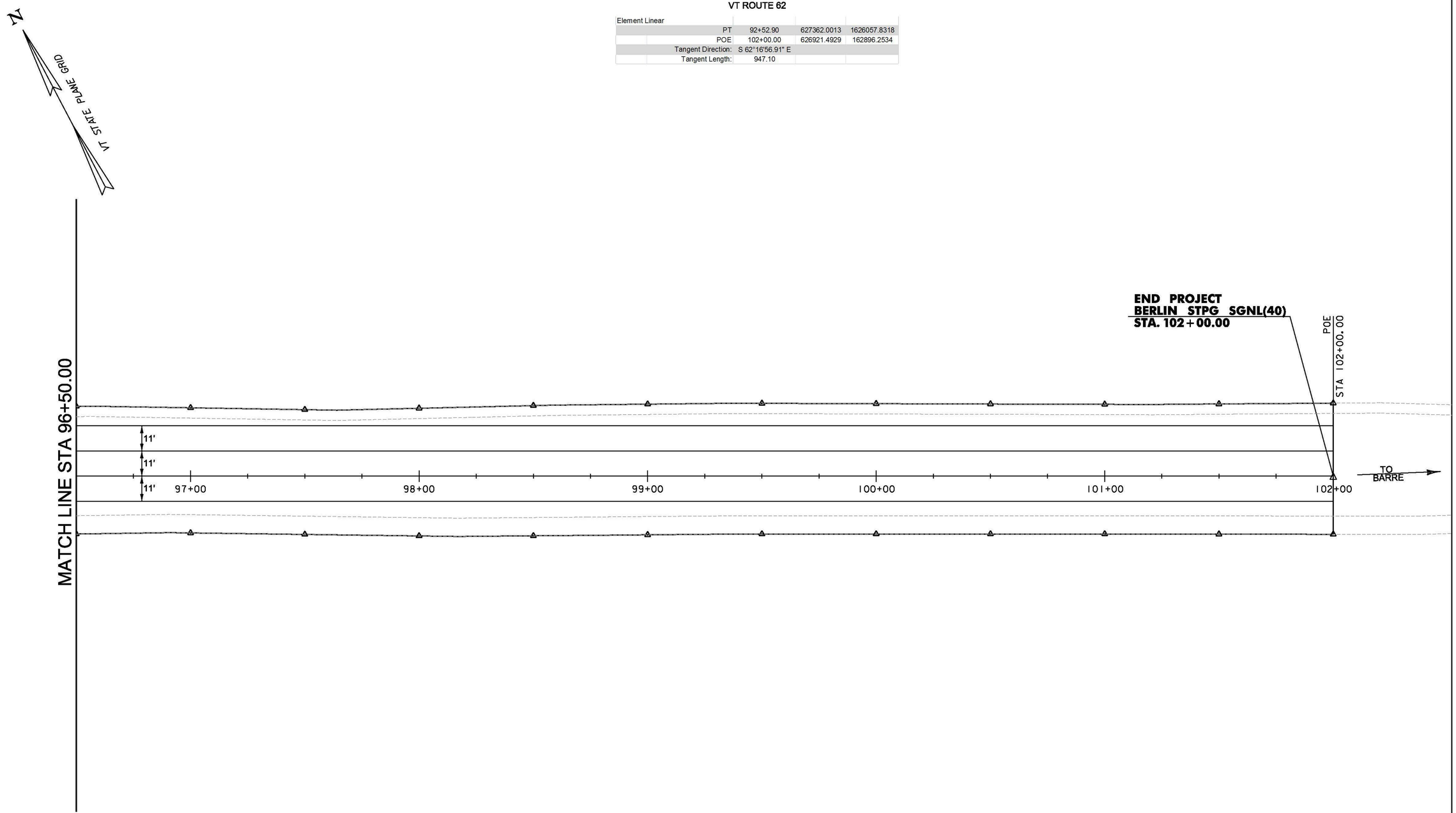

0 20 40
SCALE IN FEET

PROJECT NAME:	BERLIN
PROJECT NUMBER:	STPG SGNL(40)
FILE NAME: t11b358bdr.dgn	PLOT DATE: 10/20/2014
PROJECT LEADER: P. COBURN	DRAWN BY: T. SISSON
DESIGNED BY: T. SISSON	CHECKED BY: M. LACROIX
ALIGNMENT SHEET 9	SHEET 12 OF 123

TYPICAL SECTIONS

MATERIAL TOLERANCES

MATERIAL ITEM	THICKNESS TOLERANCE
PAVEMENT (TOTAL DEPTH)	± 1/4"
SUBBASE (TOTAL DEPTH)	± 1"
SAND BORROW (TOTAL DEPTH)	± 1"

NOTES

1. TACK COAT: EMULSIFIED ASPHALT IS TO BE APPLIED AT THE RATE OF 0.025 TO 0.040 GAL/SY TO ALL COLD PLANED SURFACES AND BETWEEN SUCCESSIVE COURSES OF PAVEMENT OR AS DIRECTED BY THE ENGINEER.
2. SLOPE ROUNDING: ALL CUT SLOPES TO BE ROUNDED IN ACCORDANCE WITH STANDARD B-5.
3. ANY DISCREPENCIES BETWEEN THESE DRAWINGS AND ACTUAL FIELD CONDITIONS SHALL BE BROUGHT TO THE ATTENTION OF THE ENGINEER BEFORE PROCEEDING WITH THE WORK.

VT ROUTE 62, AIRPORT ROAD AND FISHER ROAD
COLD PLANING: 2"
1 ½" TYPE IVS - WEARING COURSE
½" TYPE IVS - LEVELING COURSE

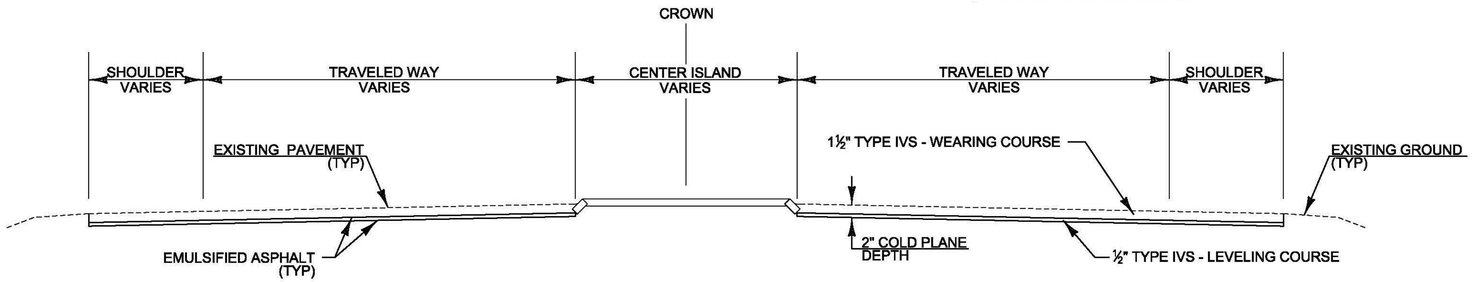

VT ROUTE 62 /FISHER ROAD – NORMAL SECTION

STA. 65+92.66 - STA. 76+40.70
STA. 80+00.00 - STA. 102+00.00
NOT TO SCALE

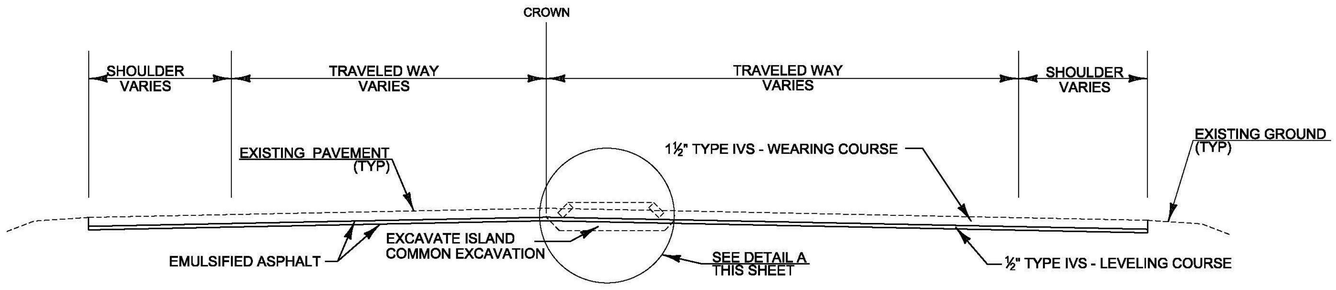

AIRPORT ROAD

NOT TO SCALE

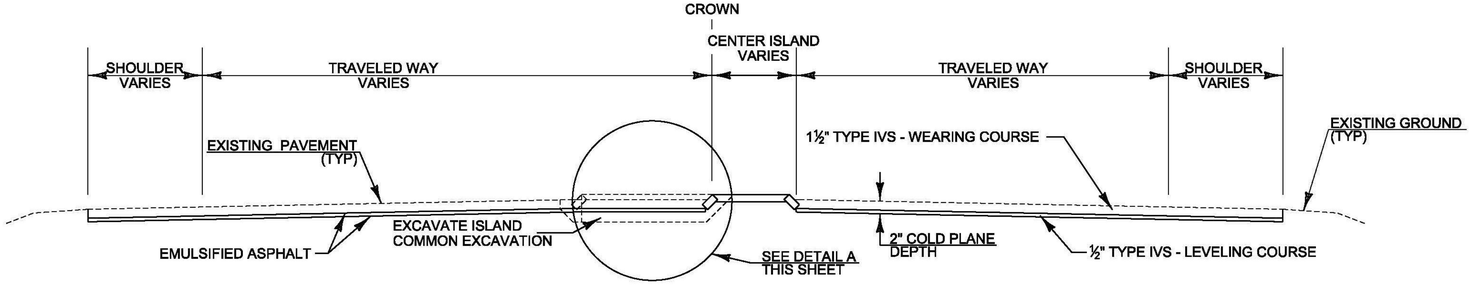

VT ROUTE 62 – NORMAL SECTION

STA. 76+40.70 - STA. 80+00.00
NOT TO SCALE

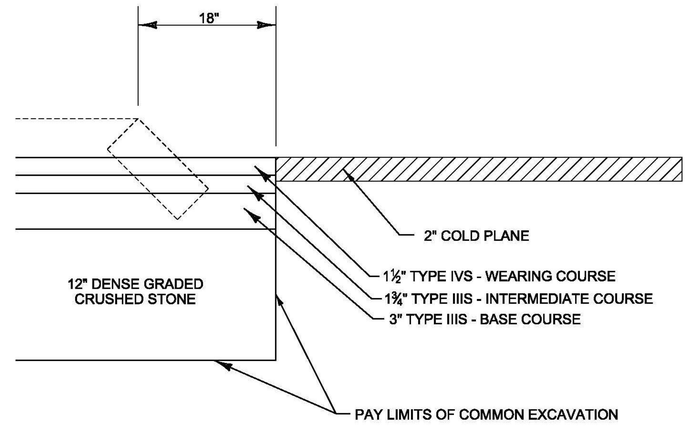

DETAIL A

NOT TO SCALE

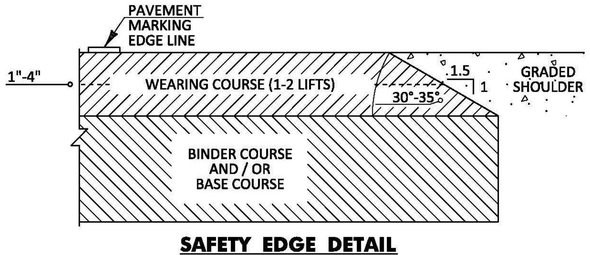

SAFETY EDGE DETAIL

SAFETY EDGE NOTE:

1. LEVELING COURSE MAY INCLUDE THE "SAFETY EDGE" AT THE CONTRACTOR'S CHOICE.

PROJECT NAME:	BERLIN
PROJECT NUMBER:	STPG SGNL(40)
FILE NAME: typ01.dgn	PLOT DATE: 10/20/2014
PROJECT LEADER: P. COBURN	DRAWN BY: T. SISSON
DESIGNED BY: T. SISSON	CHECKED BY: M. LACROIX
TYPICAL SECTIONS SHEET 1	SHEET 13 OF 123

TYPICAL SECTIONS

BERLIN STATE HIGHWAY

1½" TYPE IVS - WEARING COURSE
1¾" TYPE IIIS - INTERMEDIATE COURSE
3" TYPE IIIS - BASE COURSE
24" DENSE GRADED CRUSHED STONE
18" SAND BORROW

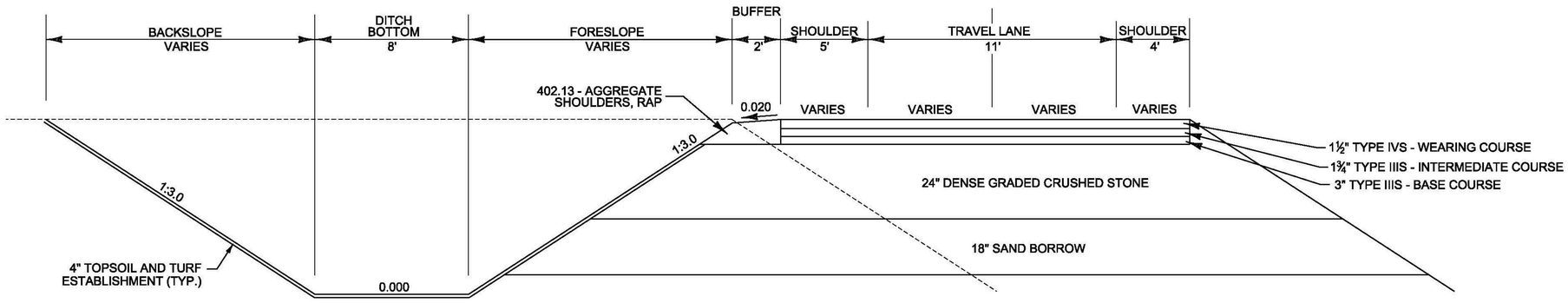

BERLIN STATE HIGHWAY
NOT TO SCALE

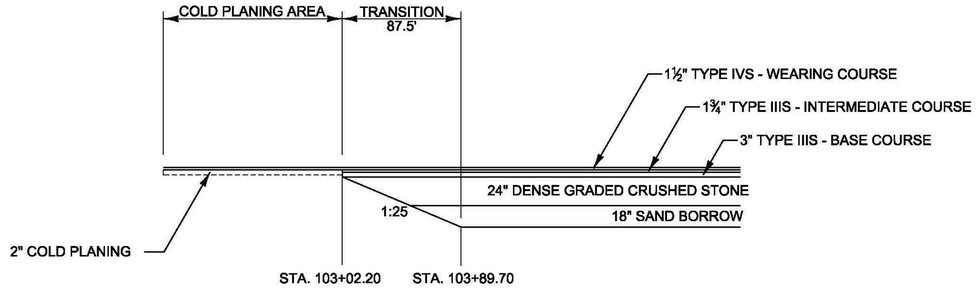

BERLIN STATE HIGHWAY MATERIAL TRANSITION BEGIN
NOT TO SCALE

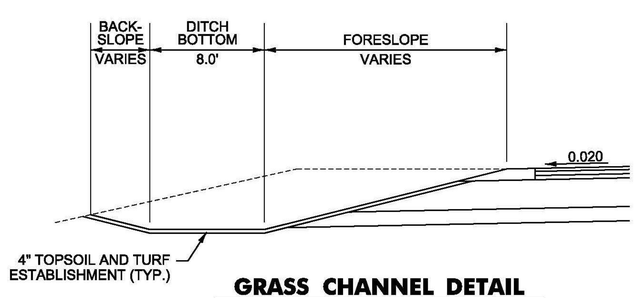

GRASS CHANNEL DETAIL
NOT TO SCALE

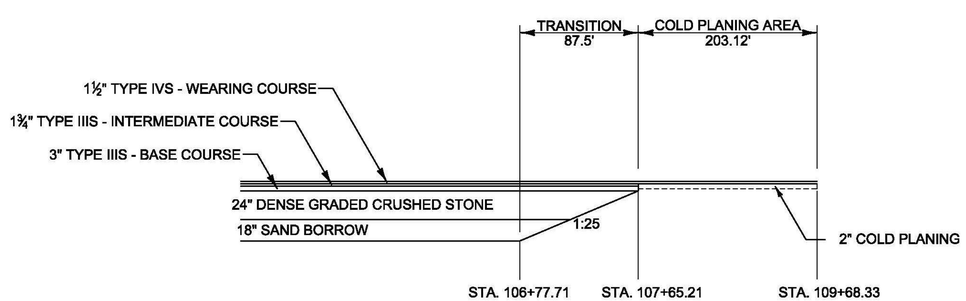

BERLIN STATE HIGHWAY MATERIAL TRANSITION END
NOT TO SCALE

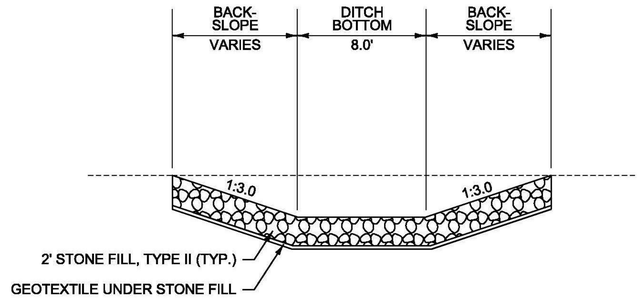

STONE CHANNEL DETAIL
NOT TO SCALE

PROJECT NAME:	BERLIN
PROJECT NUMBER:	STPG SGNL(40)
FILE NAME: typ02.dgn	PLOT DATE: 10/20/2014
PROJECT LEADER: P. COBURN	DRAWN BY: T. SISSON
DESIGNED BY: T. SISSON	CHECKED BY: M. LACROIX
TYPICAL SECTIONS SHEET 2	SHEET 14 OF 123

STATE OF VERMONT
AGENCY OF TRANSPORTATION

QUANTITY SHEET 1

SUMMARY OF ESTIMATED QUANTITIES			TOTALS		DESCRIPTIONS				DETAILED SUMMARY OF QUANTITIES		
ROADWAY	EROSION CONTROL	FULL C.E. ITEMS	GRAND TOTAL	FINAL	UNIT	ITEMS	ITEM NUMBER	ROUND	QUANTITIES	UNIT	ITEMS
1			1		LS	CLEARING AND GRUBBING, INCLUDING INDIVIDUAL TREES AND STUMPS	201.10	-			203.15 - COMMON EXCAVATION
3700			3700		CY	COMMON EXCAVATION	203.15	43	3279	CY	BERLIN STATE HIGHWAY
20			20		CY	SOLID ROCK EXCAVATION	203.16	EST.	378	CY	VT 62
									43	CY	ROUNDING
430			430		CY	EXCAVATION OF SURFACES AND PAVEMENTS	203.28	3	3700	CY	TOTAL - COMMON EXCAVATION
110			110		CY	EARTH BORROW	203.30	6			203.31 - SAND BORROW
600			600		CY	SAND BORROW	203.31	9	591	CY	BERLIN STATE HIGHWAY
									9	CY	ROUNDING
135			135		CY	TRENCH EXCAVATION OF EARTH	204.20	5	600	CY	TOTAL - SAND BORROW
1			1		CY	TRENCH EXCAVATION OF EARTH, EXPLORATORY (N.A.B.I.)	204.22	-			
45			45		CY	GRANULAR BACKFILL FOR STRUCTURES	204.30	3			301.35 - SUBBASE OF DENSE GRADED CRUSHED STONE
35000			35000		SY	COLD PLANING, BITUMINOUS PAVEMENT	210.10	283	827	CY	BERLIN STATE HIGHWAY
1040			1040		CY	SUBBASE OF DENSE GRADED CRUSHED STONE	301.35	13	200	CY	VT 62
									13	CY	ROUNDING
55			55		TON	AGGREGATE SHOULDERS, RAP	402.13	4	1040	CY	TOTAL - SUBBASE OF DENSE GRADED CRUSHED STONE
150			150		CWT	EMULSIFIED ASPHALT	404.65	31			490.30 - SUPERPAVE BITUMINOUS CONCRETE PAVEMENT
1			1		LU	PRICE ADJUSTMENT, ASPHALT CEMENT (N.A.B.I.)	406.50	-	311	TON	TYPE IIIS
									3955	TON	TYPE IVS
4300			4300		TON	SUPERPAVE BITUMINOUS CONCRETE PAVEMENT	490.30	34	34	TON	ROUNDING
1			1		LU	AIR VOIDS PAY ADJUSTMENT (N.A.B.I.)	490.31	-	4300	TON	TOTAL - SUPERPAVE BIT. CONCRETE PAVEMENT
1			1		LU	MAT DENSITY PAY ADJUSTMENT (N.A.B.I.)	490.32	-			
1			1		LU	SURFACE TOLERANCE PAY ADJUSTMENT (N.A.B.I.)	490.33	-			
100			100		LF	18" CPEP(SL)	601.2615	1			
1			1		EACH	18" CPEPES	601.7015	-			
1			1		EACH	PRECAST REINFORCED CONCRETE CATCH BASIN WITH CAST IRON GRATE	604.20	-			
1			1		EACH	18" CPEPES	601.7015	-			
1			1		EACH	PRECAST REINFORCED CONCRETE CATCH BASIN WITH CAST IRON GRATE	604.20	-			
1			1		EACH	PRECAST REINFORCED CONCRETE MANHOLE WITH CAST IRON COVER	604.21	-			
92			92		HR	ROADWAY PATROL MAINTENANCE	607.10	-			
1			1		HR	ALL PURPOSE EXCAVATOR RENTAL, TYPE I	608.25	-			
1			1		HR	POWER BROOM RENTAL, TYPE II	608.31	-			
1			1		HR	TRUCK RENTAL	608.37	-			
820			820		MGAL	DUST CONTROL WITH WATER	609.10	8			
6			6		TON	DUST AND ICE CONTROL WITH CALCIUM CHLORIDE	609.15	EST.			
180			180		CY	STONE FILL, TYPE II	613.11	7			
460			460		LF	GRANITE SLOPE EDGING	616.20	5			
870			870		LF	REMOVAL OF EXISTING CURB	616.41	15			
1			1		EACH	YIELDING MARKER POSTS	619.17	-			
850			850		LF	STEEL BEAM GUARDRAIL, GALVANIZED	621.20	18			
6			6		EACH	MANUFACTURED TERMINAL SECTION, FLARED	621.50	-			
200			200		LF	REMOVAL AND DISPOSAL OF GUARDRAIL	621.80	8			
150			150		LF	TEMPORARY TRAFFIC BARRIER	621.90	EST.			
140			140		LF	REMOVE AND RESET TEMPORARY TRAFFIC BARRIER	621.95	EST.			
400			400		HR	UNIFORMED TRAFFIC OFFICERS	630.10	EST.			
550			550		HR	FLAGGERS	630.15	EST.			
		1	1		LS	FIELD OFFICE, ENGINEERS	631.10	-			

PROJECT NAME: BERLIN
PROJECT NUMBER: STPG SGNL(40)

FILE NAME: t11b358frm.dgn
PROJECT LEADER: P. COBURN
DESIGNED BY: T. SISSON
QUANTITY SHEET 1

PLOT DATE: 10/20/2014
DRAWN BY: T. SISSON
CHECKED BY: M. LACROIX
SHEET 15 OF 123

STATE OF VERMONT
AGENCY OF TRANSPORTATION

QUANTITY SHEET 2

SUMMARY OF ESTIMATED QUANTITIES			TOTALS		DESCRIPTIONS				DETAILED SUMMARY OF QUANTITIES		
ROADWAY	EROSION CONTROL	FULL C.E. ITEMS	GRAND TOTAL	FINAL	UNIT	ITEMS	ITEM NUMBER	ROUND	QUANTITIES	UNIT	ITEMS
		1	1		LS	TESTING EQUIPMENT, CONCRETE	631.16	-			
		1	1		LS	TESTING EQUIPMENT, BITUMINOUS	631.17	-			
		3000	3000		DL	FIELD OFFICE TELEPHONE (N.A.B.I.)	631.26	-			
1			1		LS	MOBILIZATION/DEMOBILIZATION	635.11	-			
1			1		LS	TRAFFIC CONTROL	641.10	-			
5			5		EACH	PORTABLE CHANGEABLE MESSAGE SIGN	641.15	-			
3			3		EACH	PORTABLE ARROW BOARD	641.16	-			
17300			17300		LF	DURABLE 4 INCH WHITE LINE, RECESSED TYPE A TAPE	646.4071	196			
9450			9450		LF	DURABLE 4 INCH YELLOW LINE, RECESSED TYPE A TAPE	646.4171	81			
450			450		LF	DURABLE 6 INCH WHITE LINE, RECESSED TYPE A TAPE	646.4271	4			
250			250		LF	DURABLE 6 INCH YELLOW LINE, RECESSED TYPE A TAPE	646.4371	6			
300			300		LF	DURABLE 8 INCH YELLOW LINE, RECESSED TYPE A TAPE	646.4571	18			
1770			1770		LF	DURABLE 12 INCH WHITE LINE, RECESSED TYPE A TAPE	646.4671	18			
125			125		LF	DURABLE 24 INCH STOP BAR, RECESSED TYPE A TAPE	646.4871	4			
108			108		EACH	DURABLE LETTER OR SYMBOL, RECESSED TYPE A TAPE	646.4971	-			
17200			17200		LF	TEMPORARY 4 INCH WHITE LINE	646.600	188			
9450			9450		LF	TEMPORARY 4 INCH YELLOW LINE	646.610	82			
450			450		LF	TEMPORARY 6 INCH WHITE LINE	646.620	4			
250			250		LF	TEMPORARY 6 INCH YELLOW LINE	646.630	6			
240			240		LF	TEMPORARY 8 INCH YELLOW LINE	646.650	11			
740			740		LF	TEMPORARY 12 INCH WHITE LINE	646.660	7			
255			255		LF	TEMPORARY 24 INCH STOP BAR	646.680	5			
59			59		EACH	TEMPORARY LETTER OR SYMBOL	646.690	-			
455			455		EACH	LINE STRIPING TARGETS	646.76	-			
250			250		SY	GEOTEXTILE UNDER STONE FILL	649.31	24			
100			100		SY	GEOTEXTILE FOR SILT FENCE	649.51	3			
	35		35		LB	SEED	651.15	1			
	285		285		LB	FERTILIZER	651.18	5			
	1.15		1.15		TON	AGRICULTURAL LIMESTONE	651.20	-			
	1.15		1.15		TON	HAY MULCH	651.25	-			
305			305		CY	TOPSOIL	651.35	3			
	1		1		LS	EPSC PLAN	652.10	-			
	80		80		HR	MONITORING EPSC PLAN	652.20	EST.			
	1		1		LU	MAINTENANCE OF EPSC PLAN (N.A.B.I.)	652.30	-			
	2450		2450		SY	TEMPORARY EROSION MATTING	653.20	39			
	60		60		CY	TEMPORARY STONE CHECK DAM, TYPE I	653.25	4			
	15		15		CY	VEHICLE TRACKING PAD	653.35	EST.			
	17		17		EACH	INLET PROTECTION DEVICE, TYPE I	653.40	-			
	900		900		LF	PROJECT DEMARCATION FENCE	653.55	49			
430			430		SF	TRAFFIC SIGNS, TYPE A	675.20	16			

PROJECT NAME: BERLIN
PROJECT NUMBER: STPG SGNL(40)

FILE NAME: t11b358frm.dgn
PROJECT LEADER: P. COBURN
DESIGNED BY: T. SISSON
QUANTITY SHEET 2

PLOT DATE: 10/20/2014
DRAWN BY: T. SISSON
CHECKED BY: M. LACROIX
SHEET 16 OF 123

STATE OF VERMONT
AGENCY OF TRANSPORTATION

QUANTITY SHEET 3

SUMMARY OF ESTIMATED QUANTITIES

ROADWAY	EROSION CONTROL	FULL C.E. ITEMS
700		
870		
95		
5		
5		
1		
1		
1		
1700		
4		
4		
1		
4		
4		
270		
100		

TOTALS

GRAND TOTAL	FINAL
700	
870	
95	
5	
5	
1	
1	
1	
1700	
4	
4	
1	
4	
4	
270	
100	

DESCRIPTIONS

UNIT	ITEMS	ITEM NUMBER	ROUND
SF	TRAFFIC SIGNS, TYPE B	675.21	34
LF	SQUARE TUBE SIGN POST AND ANCHOR	675.341	-
EACH	REMOVING SIGNS (TYPE A)	675.50	-
EACH	REMOVING SIGNS (TYPE B)	675.50	-
EACH	DELINEATOR WITH STEEL POST	676.10	-
EACH	OVERHEAD TRAFFIC SIGN SUPPORT, MULTI-SUPPORT	677.13	-
EACH	REMOVE EXISTING OVERHEAD SIGN ASSEMBLY, MULTI-SUPPORT	677.35	-
EACH	TRAFFIC CONTROL SIGNAL SYSTEM, INTERSECTION	678.15	-
LF	WIRED CONDUIT (2")(PVC)(SCH. 80)	678.23	12
EACH	PULL BOX, STANDARD	678.25	-
EACH	BRACKET ARM	679.47	7
LU	PRICE ADJUSTMENT, FUEL (N.A.B.I.)	690.50	-
EACH	SPECIAL PROVISION (LUMINAIRE, LED)	900.620	-
EACH	SPECIAL PROVISION (REMOVE EXISTING LIGHT POLE)	900.620	-
LF	SPECIAL PROVISION (HORIZONTAL DIRECTION DRILLING) (10" CASING PIPE)	900.640	4
SY	SPECIAL PROVISION (HAND-PLACED BITUMINOUS CONCRETE MATERIAL, DRIVES)	900.675	3

DETAILED SUMMARY OF QUANTITIES

QUANTITIES	UNIT	ITEMS

PROJECT NAME: BERLIN
PROJECT NUMBER: STPG SGNL(40)

FILE NAME: t11b358frm.dgn
PROJECT LEADER: P. COBURN
DESIGNED BY: T. SISSON
QUANTITY SHEET 3

PLOT DATE: 10/20/2014
DRAWN BY: T. SISSON
CHECKED BY: M. LACROIX
SHEET 17 OF 123

STATE OF VERMONT
AGENCY OF TRANSPORTATION

ITEM DETAIL SHEET

GRANITE SLOPE EDGING (RUNS)

STATION		BEGIN LOCATION		END LOCATION		LENGTH	CURB ID
BEGIN	END	NORTHING	EASTING	NORTHING	EASTING	FT	
76+41	80+94	626659.74	1624869.92	627080.87	1625040.20	455	1

NOTE: STATIONS & LOCATIONS REPRESENT THE CURB AT THE GUTTER LINE.

GUARDRAIL

BEGIN STATION	END STATION	POSITION		END TREATMENT	
		LEFT LF	RIGHT LF	BEGIN EA	END EA
STEEL BEAM GUARDRAIL, GALVANIZED					
68+51	31+00	483		MTS	
68+49	68+98		50	MTS	
28+85	74+53		225	MTS	
105+60	106+36		74	MTS	
MANUFACTURED TERMINAL SECTION, FLARED					
68+12	68+51	1			
68+12	68+49		1		
28+47	28+85		1		
31+00	31+38	1			
105+24	105+60		1		
106+87	107+25	1			

PROJECT NAME: BERLIN
PROJECT NUMBER: STPG SGNL(40)

FILE NAME: t11b358frm.dgn
PROJECT LEADER: P. COBURN
DESIGNED BY: T. SISSON
ITEM DETAIL SHEET

PLOT DATE: 10/20/2014
DRAWN BY: T. SISSON
CHECKED BY: M. LACROIX
SHEET 18 OF 123

STATE OF VERMONT
AGENCY OF TRANSPORTATION

EARTHWORKS SUMMARY

		TOTAL EXCAVATION EARTH AND ROCK		ROCK EXCAVATION		EMBANKMENT			
STATION	DIST	AREA	VOLUME	AREA	VOLUME	AREA	VOLUME	AREA	VOLUME
	FT.	S.F.	C.Y.	S.F.	C.Y.	S.F.	C.Y.	S.F.	C.Y.
BERLIN									
95+07		0				0			
	0+43								
95+50		0				0			
	0+50								
96+00		0				0			
	0+50								
96+50		0				0			
	0+50								
97+00		0				0			
	0+50								
97+50		0				0			
	0+50								
98+00		0				0			
	0+50								
98+50		0				0			
	0+50								
99+00		0				0			
	0+50								
99+50		0				0			
	0+50								
100+00		0				0			
	0+50								
100+50		0				0			
	0+50								
101+00		0				0			
	0+50								
101+50		0				0			
	0+50								
102+00		0				0			
	0+50							CUT	3657
102+50		0				0		ROCK	0
	0+50							R.FAC	.495
103+00		0				0		FILL	105
	0+50		250					F.FAC	1.15
103+50		270				0		EX. C	3536
	0+50		571						
104+00		346				0			
	0+50		596				0		
104+50		297				0			
	0+50		473				3		
105+00		214				3			
	0+50		334				49		
105+50		146				50			
	0+50		387				49		
106+00		272				2			
	0+50		333				3		
106+50		88				1			
	0+50		149				1		
107+00		74				0			
	0+50		93						
107+50		27				0			
	0+50		25						
108+00		0				0			
	0+50								
108+50		0				0			
	0+50								
109+00		0				0			
	0+50								
109+50		0				0			
	0+18								
109+68		0				0			
AIRPORT RD		1836	68						
ISLAND									
VT 62		10201	378						
ISLAND									

		TOTAL EXCAVATION EARTH AND ROCK		ROCK EXCAVATION		EMBANKMENT			
STATION	DIST	AREA	VOLUME	AREA	VOLUME	AREA	VOLUME	AREA	VOLUME
	FT.	S.F.	C.Y.	S.F.	C.Y.	S.F.	C.Y.	S.F.	C.Y.

		TOTAL EXCAVATION EARTH AND ROCK		ROCK EXCAVATION		EMBANKMENT			
STATION	DIST	AREA	VOLUME	AREA	VOLUME	AREA	VOLUME	AREA	VOLUME
	FT.	S.F.	C.Y.	S.F.	C.Y.	S.F.	C.Y.	S.F.	C.Y.

SUMMARY AND BALANCES

STATION TO STATION	TOT EXC. EARTH & ROCK C.Y.	ROCK EXCAV C.Y.	EMBANK C.Y.	EXCESSES CUT	EXCESSES FILL	ACUMULATIVE EXCESSES CUT	ACUMULATIVE EXCESSES FILL
BERLIN ST HIGHWAY	3279		105	3158		3158	
VT 62	378		0	378		3536	
TOTALS	3657		105			3536	

REMARKS

EARTH AND ROCK EXCAVATION	3657	CY
SOLID ROCK EXCAVATION	0	CY
EARTH EXCAVATION	3657	CY
PLANIMETERED FILL	105	CY
LESS FACTORED SOLID ROCK (FACTOR = 0.495)	0	CY
LESS DISPLACEMENT OF ANY LARGE STRUCTURES	0	CY
NET PLANIMETERED FILL	105	CY
FACTOR	1.15	
PLANIMETERED FILL INCLUDING FACTOR	121	CY
MATERIALS AVAILABLE FOR FILLS		
EARTH EXCAVATION	3657	CY
CHANNEL EXCAVATION	0	CY
TRENCH EXCAVATION (EARTH AND ROCK X 60%)	0	CY
STRUCTURE EXCAVATION	0	CY
TOTAL MATERIAL AVAILABLE FOR FILL	3657	CY
TOTAL FILL INCLUDING FACTOR	121	CY
TOTAL MATERIAL FOR FILL	3657	CY
BORROW	0	CY
EXCESS EXCAVATION	3536	CY

PROJECT NAME: BERLIN
PROJECT NUMBER: STPG SGNL(40)

FILE NAME: t11b358frm.dgn
PROJECT LEADER: P. COBURN
DESIGNED BY: T. SISSON
EARTHWORKS SUMMARY SHEET

PLOT DATE: 10/28/2014
DRAWN BY: T. SISSON
CHECKED BY: M. LACROIX
SHEET 19 OF 123

STATE OF VERMONT
AGENCY OF TRANSPORTATION

DRAINAGE SUMMARY SHEET

STATION	STATION	POS.	PIPE NUMBER	INLET/OUTLET TYPE		DITCH		PIPE ARCH			PIPE		ALLOWABLE OPTIONS						PIPE ELBOW	ES	CB	PRCDI	DEPTH DI	CONC CLASS B	REINF STEEL	DI GRATE	CHAN ELEV	CRM	TRENCH EXCAVATION		COMM EXC	UNC CHAN EXC	STRUCT EXCAV	GRAN BKFILL STRUCT	GRAN BORR	EROS MATT	STONE FILL		MARKER POSTS				REMARKS
				INLET	OUTLET	IN	OUT	SPAN IN	RISE IN	L FT	D IN	L FT	PCCSP TH	CAAP TH	RCP CL	CSP TH	CPEP SL	PCCSP PI TH	NO. DEG.	EA	EA		FT	CY	LBS	TYPE	EA	CY	EARTH CY	ROCK CY	CY	CY	CY	CY	CY	CY	CY	TYPE	LT EA	RT EA			
102+67	103+11	RT - LT	1	CB-1	MH-2						18	84					X				1	7.54			D			113					33									INSTALL 4' DIA. CATCH BASIN AT INLET
103+11	103+25	LT	2	MH-2	ES						18	15					X			1		6.50						17					9					1				INSTALL 4' DIA. MANHOLE AT INLET

PROJECT NAME:	BERLIN
PROJECT NUMBER:	STPG SGNL(40)
FILE NAME: t11b358frm.dgn	PLOT DATE: 10/20/2014
PROJECT LEADER: P. COBURN	DRAWN BY: T. SISSON
DESIGNED BY: T. SISSON	CHECKED BY: M. LACROIX
DRAINAGE SUMMARY SHEET	SHEET 20 OF 123

GPS CONTROL POINTS

HVCTRL #1

MPV D

NORTH = 621349.620
EAST = 1623617.050
ELEV. = 1111.840

DESCRIBED BY WOOLPERT LLP 1998 (ARL) .
THE STATION IS LOCATED APPROXIMATELY 1.45 KM (0.90 MI) EAST OF BERLIN, AT THE EDWARD F.KNAPP STATE AIRPORT. OWNERSHIP--STATE OF VERMONT, EDWARD F.KNAPP STATE AIRPORT, RD 3 BARRE VT, AIRPORT MANAGER JOHN ROBETTI, PHONE 802-223-2221, VERMONT FLYING SERVICE. CONTACT THE AIRPORT MANAGER PRIOR TO ENTRY.
TO REACH THE STATION FROM THE INTERSECTION OF STATE HIGHWAY ROUTES 2 AND 302 IN MONTPELIER, PROCEED SOUTH 1.69 KM (1.05 MI) ALONG STATE ROUTE 302 TO THE INTERSECTION OF STATE ROUTE 302 AND THE INTERSTATE HIGHWAY 89 ACCESS ROAD CALLED BENJAMIN FALLS. TURN RIGHT AND PROCEED SOUTHWEST 1.61 KM (1.00 MI) ALONG BENJAMIN FALLS TO THE BERLIN STATE HIGHWAY (AIRPORT ROAD). TURN LEFT AND PROCEED SOUTHEAST 2.01 KM (1.25 MI) ALONG THE BERLIN STATE HIGHWAY TO THE EDWARD F.KNAPP STATE AIRPORT BUILDING ON THE LEFT. TURN LEFT AND PROCEED NORTHWEST TO THE GATE LOCATED ON THE NORTH SIDE OF THE TERMINAL BUILDING. PROCEED NORTHWEST 0.2 KM (0.10 MI) THROUGH THE GATE, ACROSS THE APRON, AND ALONG THE TAXI APPROACH TO THE JUNCTION OF THE TAXIWAY AND RUNWAY 5-23. PROCEED NORTHWEST DIRECTLY ACROSS RUNWAY 5-23, THEN TURN RIGHT AND PROCEED TO THE STATION SOUTH OF AN ACCESS ROAD LEADING FROM RUNWAY 5-23 TO THE GLIDE SLOPE ANTENNA.THE STATION IS A STANDARD NOS DISK STAMPED--MPV D 1990-- SET IN A ROUND CONCRETE MONUMENT 0.3 M (1.0 FT) IN DIAMETER, RECESSED 0.05 M.(0.16 FT).

HVCTRL #2

RUNWAY

NORTH = 624160.080
EAST = 1625387.270
ELEV. = 1085.610

THE STATION IS LOCATED 4.83 KM (3.00 MI) NORTHWEST OF BARRE, ABOUT 1.45 KM (0.90 MI) EAST OF BERLIN, AT THE KNAPP STATE AIRPORT, 60.96 M (200.00 FT) NORTH OF THE WEST CORNER OF RUNWAY 23 IN ROCK OUTCROP. OWNERSHIP--STATE OF VERMONT. NOTE--CONTACT MR JOHN ROBERTI, AIRPORT MANAGER, ONE DAY IN ADVANCE BEFORE OCCUPYING THE STATION, PHONE 802-223-2221.
TO REACH THE STATION FROM INTERSTATE HIGHWAY 89 (EXIT 7), ABOUT12.87 KM (8.00 MI)NORTHWEST OF BARRE, GO SOUTHEAST ON THE EXIT RAMP TO THE JUNCTION OF STATE HIGHWAY 62, GO EASTERLY ON HIGHWAY 62 FOR 2.1 KM (1.30 MI) TO THE JUNCTION OF AIRPORT ROAD ON THE RIGHT, TURN RIGHT, SOUTHERLY ON AIRPORT ROAD FOR 2.01 KM (1.25 MI) TO THE AIRPORT TERMINAL BUILDING AND GATE, PASS THRU THE GATE, BEAR RIGHT, NORTHERLY ON THE APRON FOR 0.08 KM (0.05 MI) TO THE TAXIWAY AND TO THE JUNCTION OF RUNWAY 23, TURN RIGHT, NORTHEAST ON RUNWAY 23 FOR 1.23 KM (0.75 MI) TO ITS END, BEAR LEFT NORTH AND UPHILL FOR ABOUT 60.96 M (200.00 FT) TO THE STATION IN ROCK OUTCROP ABOUT FLUSH WITH THE GROUND. THE STATION IS LOCATED 55.9 M (183.4 FT) NORTH OF A RAILROAD SPIKE SET IN THE NORTH CORNER OF THE RUNWAY, 51.82 M (170.01 FT) NORTHWEST OF THE EXTENDED CENTER LINE OF THE RUNWAY AND 1.1 M (3.6 FT) SOUTH OF A FIBERGLASS WITNESS POST.

TRAVERSE TIES

HVCTRL #3

NORTH = 624633.636
EAST = 1625433.482
ELEV. = 1098.116

NOT TIED

HVCTRL #4

NORTH = 625169.227
EAST = 1625613.418
ELEV. = 1062.966

NOT TIED

HVCTRL #5

NORTH = 625517.075
EAST = 1625376.333
ELEV. = 1044.613

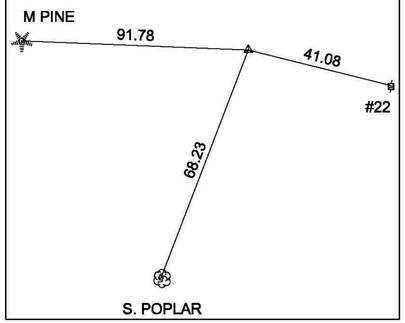

HVCTRL #6

NORTH = 626329.342
EAST = 1624825.041
ELEV. = 963.174

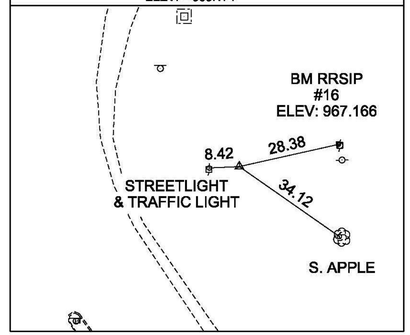

HVCTRL #7

NORTH = 627417.165
EAST = 1623735.278
ELEV. = 963.174

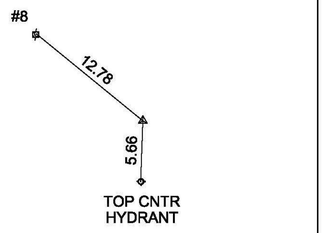

* MAIN TRAVERSE COMPLETED 4/25/2011 BY R.GILMAN P.C. & P.WINTERS

ALIGNMENT TIES

_____	_____	_____	_____	_____
NORTH = _____	NORTH = _____	NORTH = _____	NORTH = _____	NORTH = _____
EAST = _____	EAST = _____	EAST = _____	EAST = _____	EAST = _____
ELEV. = _____	ELEV. = _____	ELEV. = _____	ELEV. = _____	ELEV. = _____

DATUM
VERTICAL NADV 88
HORIZONTAL NAD 83 (07)
ADJUSTMENT COMPASS

PROJECT NAME: BERLIN
PROJECT NUMBER: STPG SGNL(40)

FILE NAME: tie01.dgn
PROJECT LEADER: P. COBURN
DESIGNED BY: T. SISSON
TIE SHEET

PLOT DATE: 10/20/2014
DRAWN BY: T. SISSON
CHECKED BY: M. LACROIX
SHEET 21 OF 123

STEEL BEAM GUARDRAIL, GALVANIZED
~~STA. 68+51, LT - STA. 70+50, LT (198')~~ STA 68+59.5 LT ~ STA 70+50 LT
STA. 68+49, RT - STA. ~~68+98, RT~~ (50') STA 69+74.5 RT

MANUFACTURED TERMINAL SECTION, FLARED
~~STA. 68+12, LT - STA. 68+51, LT~~ STA 68+22 LT ~ STA 68+59.5 LT
~~STA. 68+12, RT - STA. 68+49, RT~~ STA 69+74.5 RT ~ STA 70+12 RT

REMOVAL AND DISPOSAL OF GUARDRAIL
STA. 69+73, LT. - STA. 69+84, LT. (11')
STA. 68+65, RT. - STA. 68+98, RT. (33')

N

VT STATE PLANE GRID

BEGIN PROJECT
BERLIN STPG SGNL (40)
STA. 65+92.66
COLD PLANE
& OVERLAY

VT ROUTE 62
TO BERLIN CORNERS

EXISTING ROW

CZ

B-104

11'

65+93

67+00

68+00

69+00

70+00

MATCH LINE STA 70+50

PI STA 68+42.32

CONSTRUCT SIGN BRIDGE
SEE SIGNING PLANS

EXISTING ROW

EXISTING ROW

0 20 40
SCALE IN FEET

PROJECT NAME: BERLIN	
PROJECT NUMBER: STPG SGNL(40)	
FILE NAME: t11b358bdr.dgn	PLOT DATE: 10/28/2014
PROJECT LEADER: P. COBURN	DRAWN BY: T. SISSON
DESIGNED BY: T. SISSON	CHECKED BY: M. LACROIX
PLAN SHEET 1	SHEET 22 OF 123

STEEL BEAM GUARDRAIL, GALVANIZED
STA. 28+85, RT. - STA. ~~74+53, RT. (225')~~ STA 76+00 RT
STA. 70+50, LT. - STA. 31+00, LT. (285')

MANUFACTURED TERMINAL SECTION, FLARED
STA. 28+47, RT. - STA. 28+85, RT.
STA. 31+00, LT. - STA. 31+38, LT.
STA 75+75 LT ~ STA 76+12.5 LT

REMOVAL OF EXISTING CURB
STA. 28+19, LT. - STA. 29+33, RT.

N
VT STATE PLANE GRID

MATCH LINE STA 31+75

MATCH LINE STA 70+50

MATCH LINE STA 76+00

MATCH LINE STA 28+00

EXISTING ROW

TELEPHONE COMMUNICATIONS BOX 2

TELEPHONE JUNCTION BOX

BERLIN STATE HIGHWAY 95+06.60 =
VT ROUTE 62 STA. 73+06.60, 24.75 LT.

TRAFFIC SIGNAL SUPPORT POLE
CONTROLLER
B-101

B-102

STREETLIGHT

ELECTRICAL MH

CZ

11'

71+00

72+00

73+00

74+00

75+00

76

95+07

96+00

97+00

98

31+00

29+00

REMOVE EXISTING MEDIAN ISLAND

VT ROUTE 62 STA. 72+95.00 =
AIRPORT RD./FISHER RD. STA. 30+00.00

MOVED UP STATION 12 LF
DUE TO DRAINAGE ISSUE
AND OVERHEAD POWER LINES ISSUE

STREETLIGHT & TRAFFIC LIGHT

YARD

NOTE:
REMOVE EXISTING SLOPED GRANITE CURBING AND SALVAGE TO DISTRICT 6 GARAGE. CONTACT TOM ANDERSON AT 802-828-2687

0 20 40
SCALE IN FEET

PROJECT NAME:	BERLIN
PROJECT NUMBER:	STPG SGNL(40)
FILE NAME: tllb358bdr.dgn	PLOT DATE: 10/20/2014
PROJECT LEADER: P. COBURN	DRAWN BY: T. SISSON
DESIGNED BY: T. SISSON	CHECKED BY: M. LACROIX
PLAN SHEET 2	SHEET 23 OF 123

SPECIAL PROVISION (HAND-PLACED BITUMINOUS CONCRETE MATERIAL, DRIVES)
STA. 25+47, LT. (28')
STA. 25+50, RT. (49')
STA. 27+47, RT. (40')

VT STATE PLANE GRID

LIMITS OF CONSTRUCTION
STA. 24+99.43

EXISTING ROW

EXISTING ROW

GRANGER ROAD

R=14'

R=27'

CZ

CZ

11'

MATCH LINE STA 28+00

BERLIN STATE HIGHWAY (AIRPORT ROAD)

TO AIRPORT

25+00

26+00

11'

11'

27+00

28

R=5.0'

CZ

R=20'

CZ

R=20'

CZ

R=20'

EXISTING ROW

PAVED DRIVE

EXISTING ROW

0 20 40
SCALE IN FEET

PROJECT NAME:	BERLIN
PROJECT NUMBER:	STPG SGNL(40)
FILE NAME: t11b358bdr.dgn	PLOT DATE: 10/20/2014
PROJECT LEADER: P. COBURN	DRAWN BY: T. SISSON
DESIGNED BY: T. SISSON	CHECKED BY: M. LACROIX
PLAN SHEET 3	SHEET 24 OF 123

SPECIAL PROVISION (HAND-PLACED BITUMINOUS CONCRETE MATERIAL, DRIVES)
STA. 32+50, RT (20')
STA. 34+28, LT (20')

VT STATE PLANE GRID

N

LIMITS OF CONSTRUCTION
STA. 34+99.40

TOP OF BOLT AFTER ARROW

EXISTING ROW

CZ

R=5.6'

R=25'

11'

11'

11'

11'

32+00

33+00

34+00

34+99

MATCH LINE STA 31+75

FISHER ROAD

R=14'

R=10'

EXISTING ROW

0 20 40
SCALE IN FEET

PROJECT NAME: BERLIN	
PROJECT NUMBER: STPG SGNL(40)	
FILE NAME: t11b358bdr.dgn	PLOT DATE: 10/20/2014
PROJECT LEADER: P. COBURN	DRAWN BY: T. SISSON
DESIGNED BY: T. SISSON	CHECKED BY: M. LACROIX
PLAN SHEET 4	SHEET 25 OF 123

VT STATE PLANE GRID

GRANITE SLOPE EDGING
STA. 76+41, RT. - STA. 80+94, LT.

REMOVAL OF EXISTING CURB
STA. 76+44, RT - STA. 80+93, LT — 449 LF

MANUFACTURED TERMINAL SECTION FLARE
STA 76+18 RT ~ STA 76+55.5 RT
STA 77+12.5 LT ~ STA 77+50 LT

(1) STA. 102+67, 19.8' RT. - STA. 103+11, 51.0' LT.
INSTALL NEW 84' X 18" CPEP(SL)
INV. IN = 910.00', INV. OUT = 905.00'
INSTALL NEW 4' DIA. CATCH BASIN (CB-1) AT 102+67 RT.
RIM ELEV. = 917.37'; NEW CAST IRON GRATE, TYPE D

(2) STA. 103+11, 51.0' LT. - STA. 103+25, 50.9' LT.
INSTALL NEW 15' X 18" CPEP(SL)
INV. IN = 904.13', INV. OUT = 904.00'
INSTALL NEW 4' DIA. MANHOLE (MH-2) AT 103+11 RT.
RIM ELEV. = 909.13'; NEW CAST IRON COVER
INSTALL NEW END SECTION (CPEPES) AT OUTLET, 103+25 LT.

(GC1) STA. 103+25, LT - STA. 103+75, LT
CONSTRUCT 248' GRASS CHANNEL
AVERAGE LONGITUDINAL SLOPE = 3.6%

619.17 - YIELDING MARKER POST
STA. 103+11, LT (MH-2)

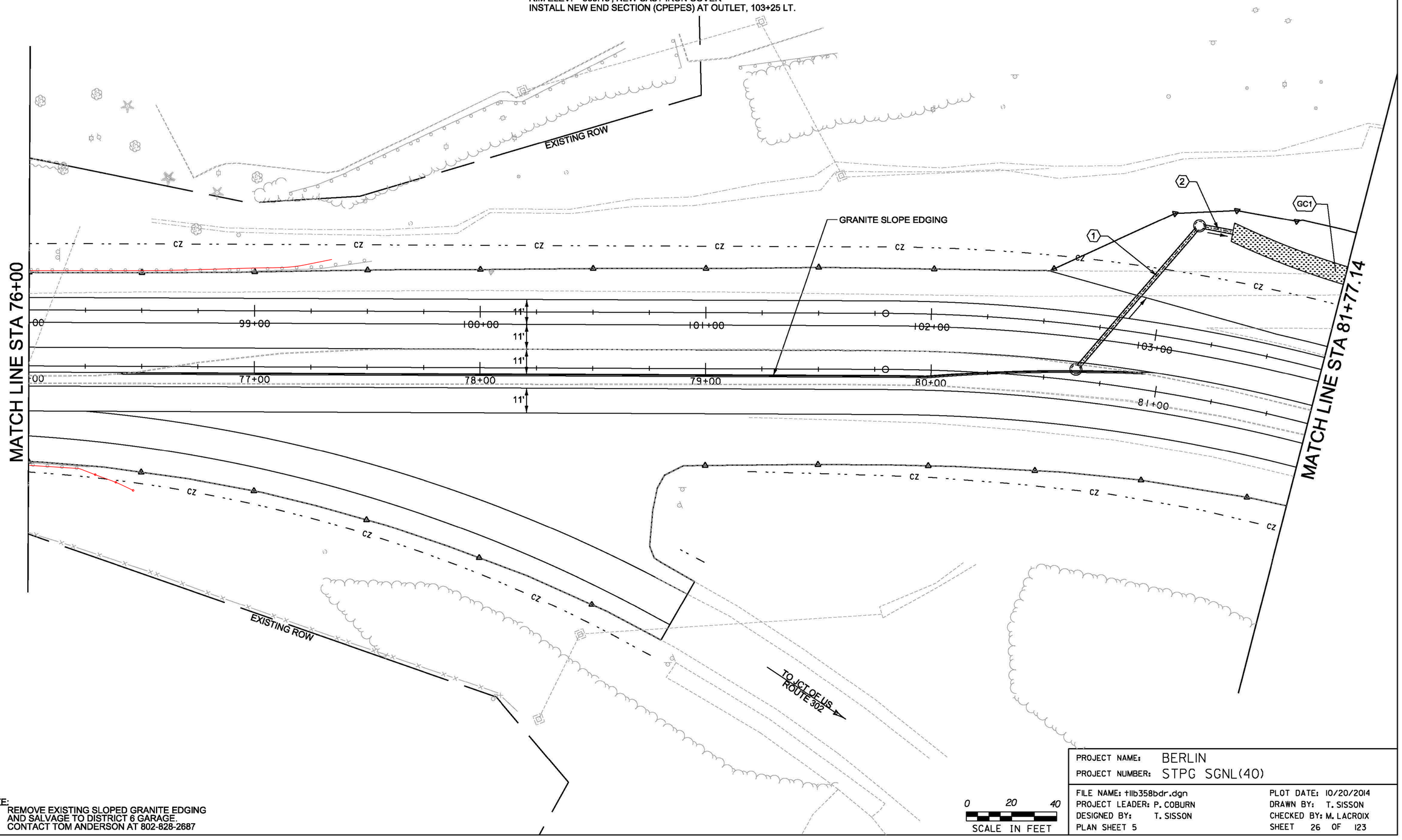

NOTE:
REMOVE EXISTING SLOPED GRANITE EDGING AND SALVAGE TO DISTRICT 6 GARAGE.
CONTACT TOM ANDERSON AT 802-828-2687

0 20 40
SCALE IN FEET

PROJECT NAME: BERLIN
PROJECT NUMBER: STPG SGNL(40)

FILE NAME: t11b358bdr.dgn
PROJECT LEADER: P. COBURN
DESIGNED BY: T. SISSON
PLAN SHEET 5

PLOT DATE: 10/20/2014
DRAWN BY: T. SISSON
CHECKED BY: M. LACROIX
SHEET 26 OF 123

VT STATE PLANE GRID

STEEL BEAM GUARDRAIL, GALVANIZED
STA. 105+60, RT. - STA. 106+36, RT. (74')
STA 106+25 LT ~ STA 107+25 LT

MANUFACTURED TERMINAL SECTION, FLARED
STA. 105+24, RT. - STA. 105+60, RT.
STA. ~~106+87, LT. - STA. 107+25, LT.~~
STA 105+87.5 LT ~ STA 106+25 LT

REMOVAL AND DISPOSAL OF GUARDRAIL
STA. 105+60, LT. - STA. 107+25, LT. (176')
STA. 106+07, RT. - STA. 106+36, RT. (29')

REMOVAL OF EXISTING CURB
STA. 105+60, LT. - STA. ~~107+25, LT.~~ 107+37 LT

EXCAVATION OF SURFACES AND PAVEMENTS
STA. 82+51, LT. - STA. 85+00, LT.

GC1 STA. 103+75, LT - STA. 105+90, LT
CONSTRUCT 248' TOTAL GRASS CHANNEL
AVERAGE LONGITUDINAL SLOPE = 3.6%

SC1 STA. 105+90, LT - STA. 10+24, LT
CONSTRUCT 72' TYPE I STONE CHANNEL
AVERAGE LONGITUDINAL SLOPE = 31.2%

LIMITS OF CONSTRUCTION
STA. 109+68.33

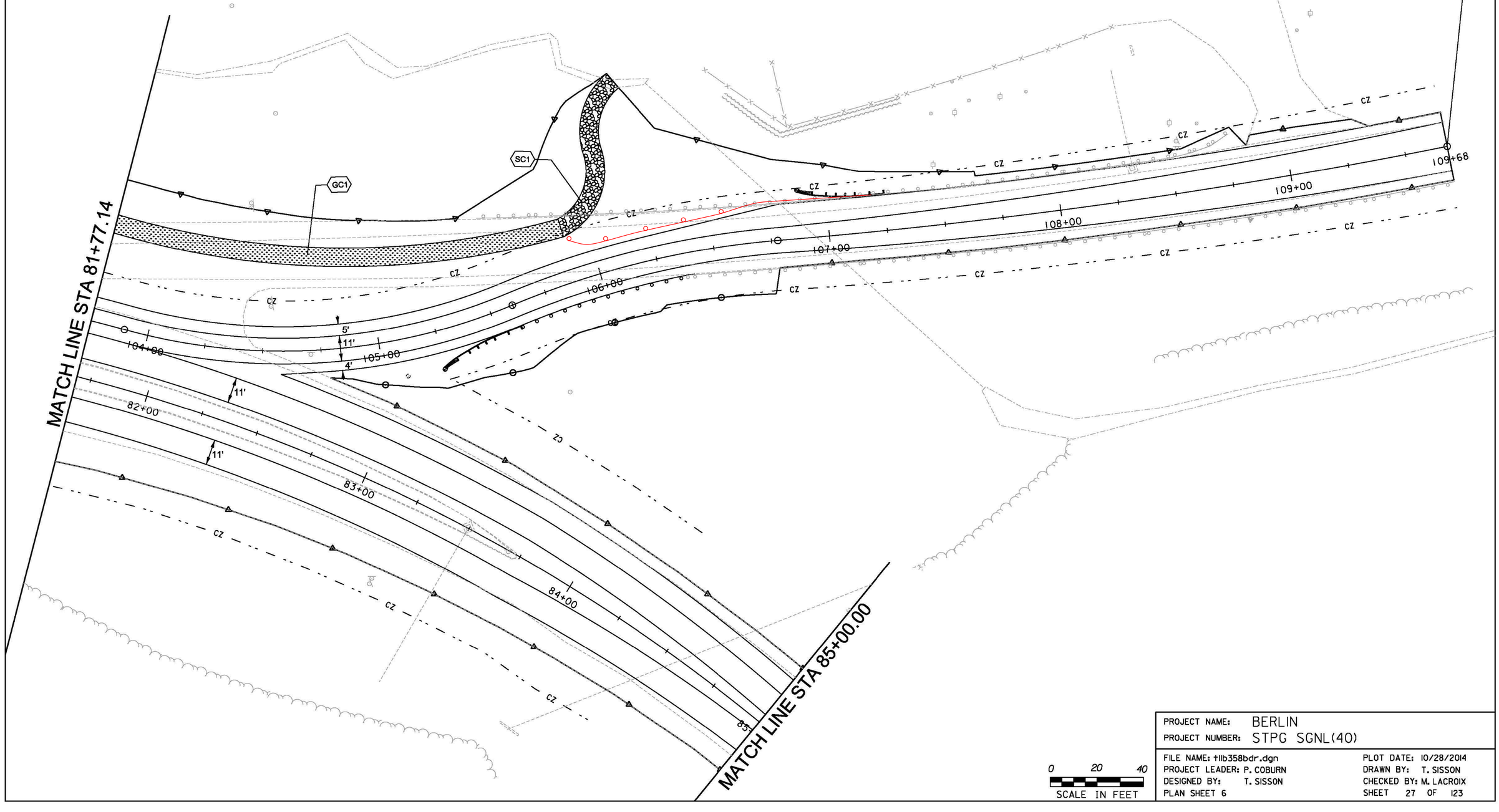

0 20 40
SCALE IN FEET

PROJECT NAME: BERLIN	
PROJECT NUMBER: STPG SGNL(40)	
FILE NAME: t11b358bdr.dgn	PLOT DATE: 10/28/2014
PROJECT LEADER: P. COBURN	DRAWN BY: T. SISSON
DESIGNED BY: T. SISSON	CHECKED BY: M. LACROIX
PLAN SHEET 6	SHEET 27 OF 123

EXCAVATION OF SURFACES AND PAVEMENTS
STA. 85+00, LT. - STA. 90+75, LT.

N

VT STATE PLANE GRID

DNC

DNC

MATCH LINE STA 85+00.00

MATCH LINE STA 90+75.00

86+00

87+00

88+00

89+00

90+00

11'

11'

0 20 40
SCALE IN FEET

PROJECT NAME: BERLIN	
PROJECT NUMBER: STPG SGNL(40)	
FILE NAME: t11b358bdr.dgn	PLOT DATE: 10/20/2014
PROJECT LEADER: P. COBURN	DRAWN BY: T. SISSON
DESIGNED BY: T. SISSON	CHECKED BY: M. LACROIX
PLAN SHEET 7	SHEET 28 OF 123

EXCAVATION OF SURFACES AND PAVEMENTS
STA. 90+75, LT. - STA. 91+50, LT.

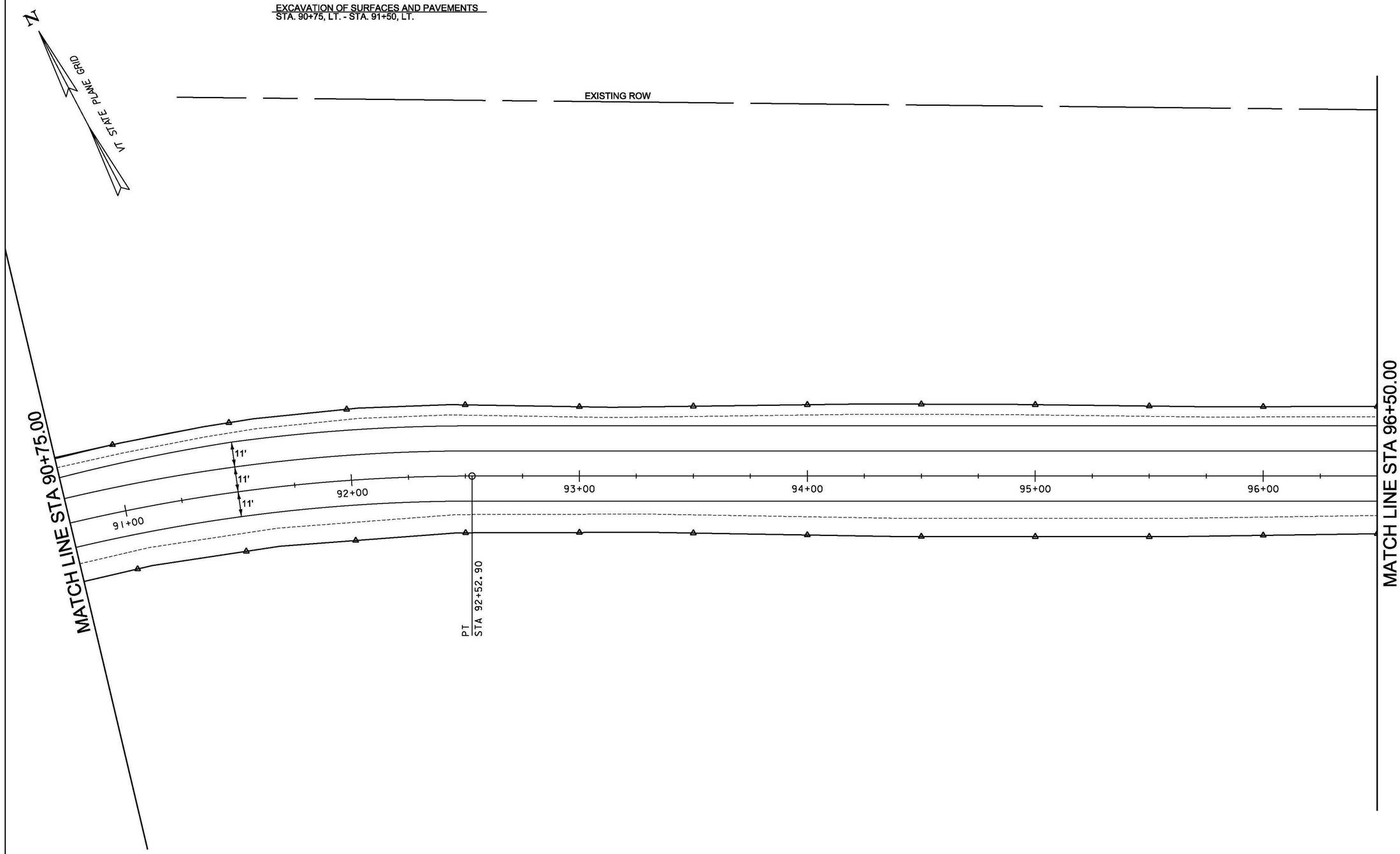

0 20 40
SCALE IN FEET

PROJECT NAME: BERLIN	
PROJECT NUMBER: STPG SGNL(40)	
FILE NAME: t11b358bdr.dgn	PLOT DATE: 10/20/2014
PROJECT LEADER: P. COBURN	DRAWN BY: T. SISSON
DESIGNED BY: T. SISSON	CHECKED BY: M. LACROIX
PLAN SHEET 8	SHEET 29 OF 123

N

VT STATE PLANE GRID

EXISTING ROW

MATCH LINE STA 96+50.00

11'

11'

11'

97+00

98+00

99+00

100+00

101+00

102+00

END PROJECT
BERLIN STPG SGNL(40)
STA. 102+00.00

POE
STA 102+00.00

TO
BARRE

0 20 40
SCALE IN FEET

PROJECT NAME: BERLIN	
PROJECT NUMBER: STPG SGNL(40)	
FILE NAME: t11b358bdr.dgn	PLOT DATE: 10/20/2014
PROJECT LEADER: P. COBURN	DRAWN BY: T. SISSON
DESIGNED BY: T. SISSON	CHECKED BY: M. LACROIX
PLAN SHEET 9	SHEET 30 OF 123

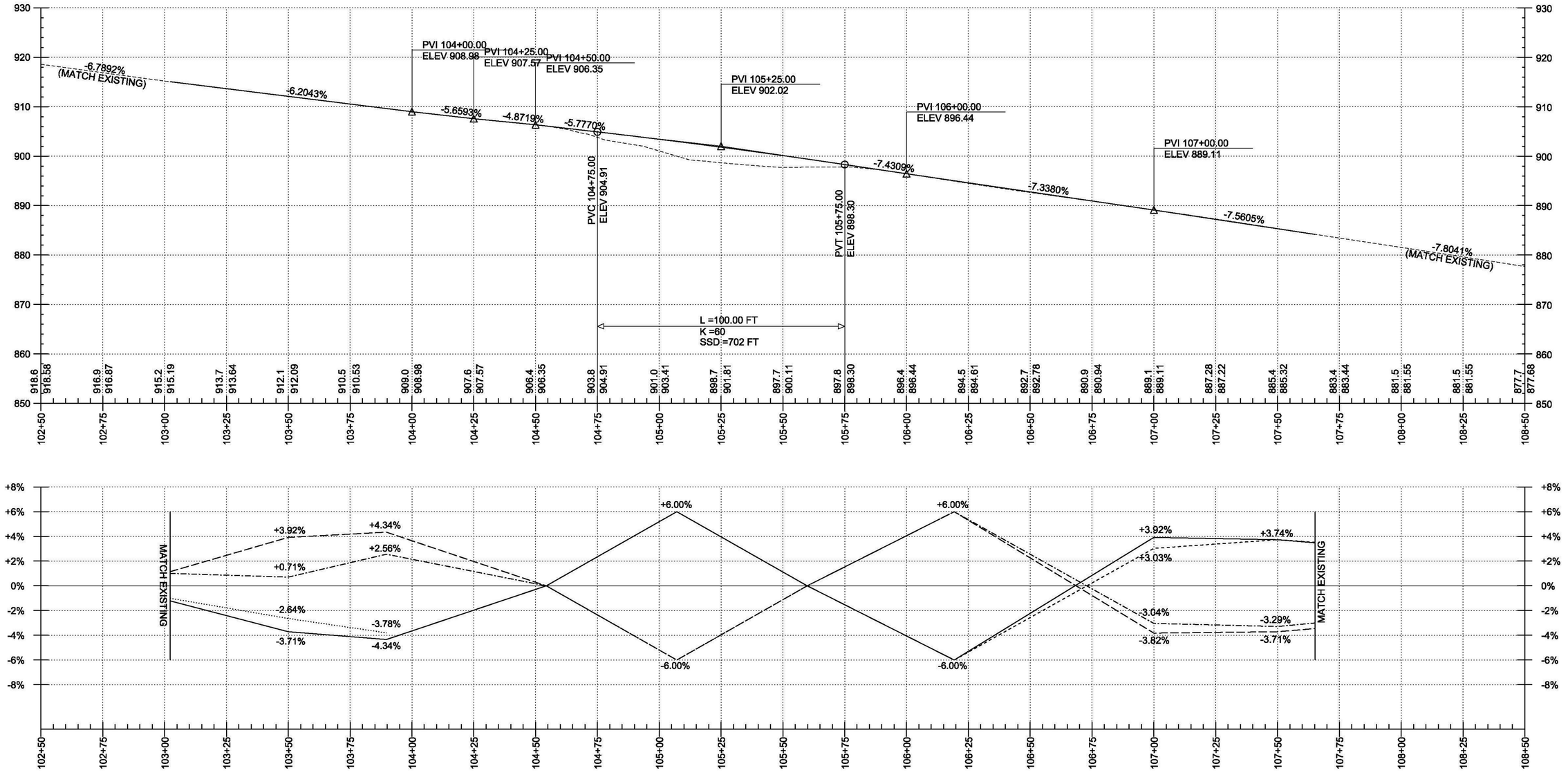

CROWN TO RT LANE 1
RT LANE 1 TO RT LANE 2
RT LANE 2 TO RT LANE 3
CROWN TO LT LANE

NOTES:
- GRADES SHOWN TO THE NEAREST TENTH ARE AT EXISTING GROUND ALONG CENTERLINE.
- GRADES SHOWN TO THE NEAREST HUNDREDTH ARE AT FINISHED GRADE ALONG CENTERLINE.

PROJECT NAME:	BERLIN
PROJECT NUMBER:	STPG SGNL(40)
FILE NAME: pro01.dgn	PLOT DATE: 10/20/2014
PROJECT LEADER: P. COBURN	DRAWN BY: T. SISSON
DESIGNED BY: T. SISSON	CHECKED BY: M. LACROIX
PROFILE AND BANKING SHEET	SHEET 31 OF 123

P1

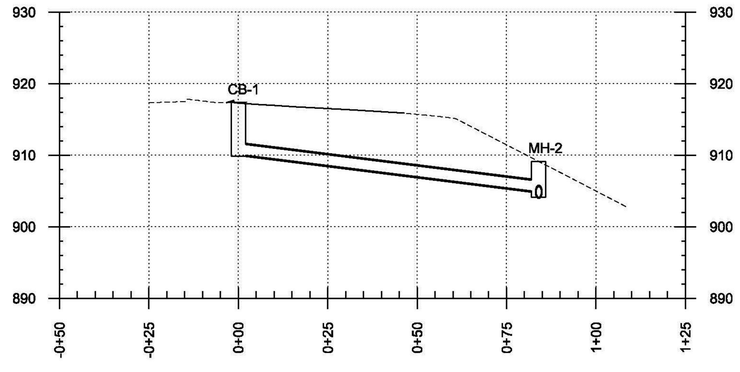

CB-1

GRATE = TYPE D
SIZE = 4' DIA.
RIM = 917.37'
SUMP = 0.00'
DEPTH = 7.54'

(1)

SLOPE = 6.25%
NEW PIPE
TYPE: CPEP(SL)
LENGTH = 84.00'
INV IN = 910.00'
INV OUT = 905.00'

P2

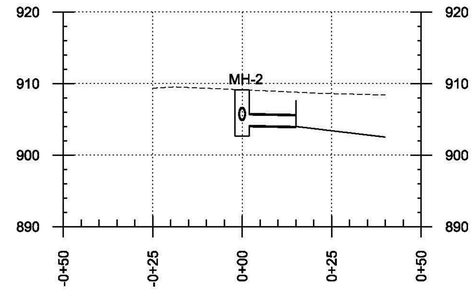

MH-2

CAST IRON COVER
SIZE = 4' DIA.
RIM = 909.13'
SUMP = 1.50'
DEPTH = 6.50'

(2)

SLOPE = 1.00%
NEW PIPE
TYPE: CPEP(SL)
LENGTH = 15.00'
INV IN = 904.13'
INV OUT = 904.00'

PROJECT NAME:	BERLIN
PROJECT NUMBER:	STPG SGNL(40)
FILE NAME: t11b358pro-drn.dgn	PLOT DATE: 10/20/2014
PROJECT LEADER: P. COBURN	DRAWN BY: T. SISSON
DESIGNED BY: T. SISSON	CHECKED BY: M. LACROIX
DRAINAGE PROFILES	SHEET 32 OF 123

DRAINAGE DETAILS

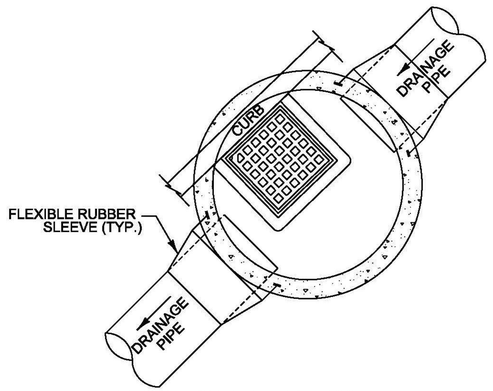

CATCH BASIN (PLAN) WITH UNDERDRAIN
NOT TO SCALE

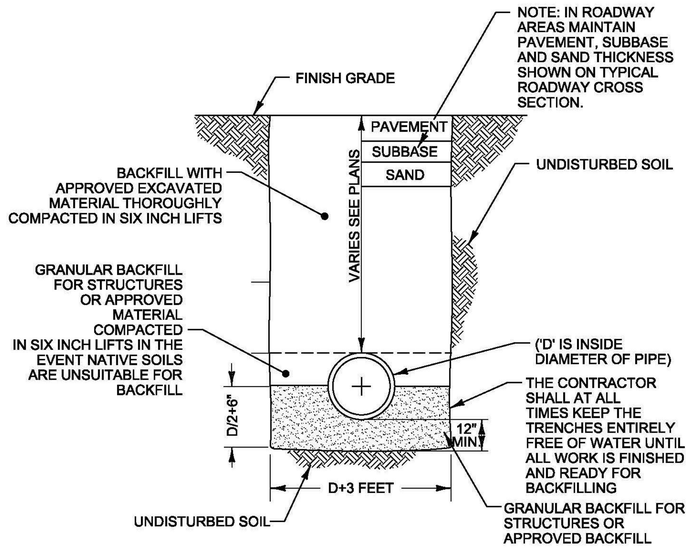

TYPICAL STORM DRAIN AND PIPE SLEEVE TRENCH
NOT TO SCALE

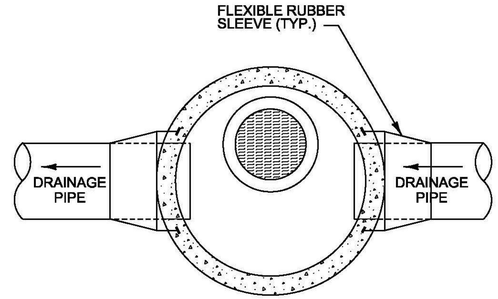

MANHOLE (PLAN)
NOT TO SCALE

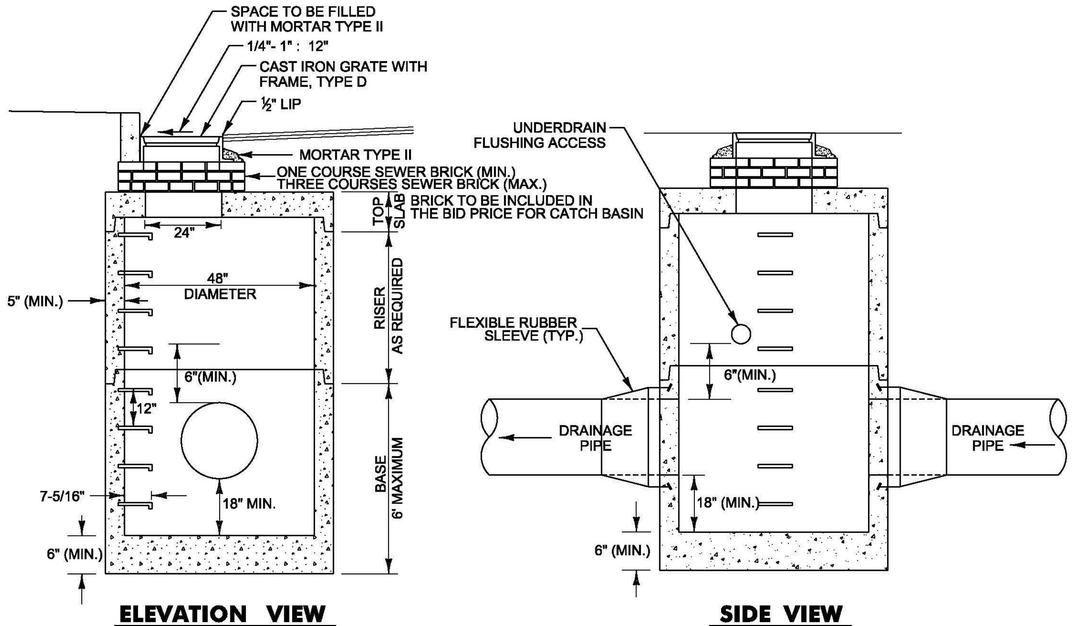

TYPICAL PRECAST CATCH BASIN OR MANHOLE WITH UNDERDRAIN FLUSHING ACCESS
NOT TO SCALE

PRECAST REINFORCED CONCRETE CATCH BASIN/MANHOLE NOTES:

1. PRECAST CONCRETE SECTIONS SHALL CONFORM TO SUBSECTION 705.04 OF THE STANDARD SPECIFICATIONS.
2. MINIMUM CONCRETE COMPRESSIVE STRENGTH: 5,000 PSI AT 28-DAYS.
3. STEEL REINFORCING SHALL CONFORM TO ASTM A185 OR A82 FOR HS-25 LOADING.
4. MANHOLE STEPS SHALL BE 14" WIDE STEEL REINFORCED COPOLYMER POLYPROPYLENE PLASTIC AND SHALL BE CAST INTO MANHOLE SECTIONS BY THE PRECAST CONCRETE MANUFACTURER. MANHOLE STEPS IN THE RISER SHALL ALIGN WITH THE MANHOLE STEPS IN BASE OF THE STRUCTURE.
5. FACE OF PIPE SHALL NOT PROJECT MORE THAN TWO INCHES OR LESS THAN 1 INCH FROM INSIDE WALL OF STRUCTURE.
6. ALL STRUCTURES WITH MULTIPLE PIPES SHALL HAVE A MINIMUM OF 12" OF OUTSIDE SURFACE BETWEEN HOLES, NO MORE THAN 75% OF A HORIZONTAL CROSS-SECTION SHALL BE HOLES, AND THERE SHALL BE NO HOLES CLOSER THAN THREE INCHES TO JOINTS.
7. FITTING FRAME TO FINAL GRADE MAY BE DONE WITH BRICK OR PRECAST CONCRETE GRADE RINGS OF APPROPRIATE THICKNESS (THREE COURSES MAX).
8. FLAT SLAB TOPS SHALL BE USED FOR ALL CATCH BASINS UNLESS OTHERWISE PERMITTED BY THE ENGINEER.
9. ALL PIPE INVERTS AND PENETRATION ANGLES SHALL BE FIELD VERIFIED PRIOR TO PRECASTING.
10. PRECAST SECTIONS SHALL HAVE A TONGUE AND GROOVE JOINT AND BE ASSEMBLED USING A BUTYL RUBBER OR APPROVED EQUAL SEALANT.
11. PROVIDE FLEXIBLE RUBBER SLEEVES CONFORMING TO ASTM C-923, RESILIENT, OF SIZE REQUIRED, FOR EACH PIPE CONNECTING TO STRUCTURE. SLEEVES SHALL BE CAST INTO PRECAST STUCTURE BY THE MANUFACTURER FOR ALL PIPE PENETRATIONS.
12. PAYMENT FOR INSTALLATION OF THE CATCH BASIN SHALL BE MADE UNDER THE PRECAST REINFORCED CONCRETE CATCH BASIN WITH CAST IRON GRATE ITEM (604.20).
13. PAYMENT FOR INSTALLATION OF THE MANHOLE SHALL BE MADE UNDER THE PRECAST REINFORCED CONCRETE MANHOLE WITH CAST IRON COVER ITEM (604.21).
14. DEPTH AS SHOWN ON THE DRAINAGE DETAIL SHEET AND DRAINAGE PROFILE SHEETS IS DEFINED AS THE VERTICAL DISTANCE BETWEEN RIM ELEVATION AND THE BOTTOM OF SUMP.

PROJECT NAME: BERLIN
PROJECT NUMBER: STPG SGNL(40)

FILE NAME: tllb358frm.dgn
PROJECT LEADER: P. COBURN
DESIGNED BY: T. SISSON
DRAINAGE DETAIL SHEET

PLOT DATE: 10/28/2014
DRAWN BY: T. SISSON
CHECKED BY: M. LACROIX
SHEET 33 OF 123

VT STATE PLANE GRID

678.15 - TRAFFIC CONTROL SIGNAL SYSTEM, INTERSECTION
SEE SIGNAL PLAN 2

MAST ARM POLES
STA. 72+45 LT. (55' LT.)
STA. 30+75 RT. (40' RT.)
STA. 29+15 LT. (40' LT.)
~~STA. 73+30 RT. (55' RT.)~~
STA 73+42 RT (55' RT)

CONTROLLER / CABINET
STA. 30+50 LT. (55' LT.)

POWER STANCHION
STA. 30+75.00 LT. (40.00' LT.)

678.25 - PULL BOX, STANDARD
STA. 30+60 LT. (45' LT.) STA 30+47 (55' LT) PB1
STA. 30+85 RT. (40' RT.) STA 30+86 (41' RT) PB2
STA. 72+55 LT. (55' LT.) STA 72+55 (60' LT) PB3
STA. 72+00 RT. (55' RT.) STA 72+00 (62' RT) PB4
STA. 29+50 RT. (45' RT.) STA 73+14 (55' RT) PB5

900.640 - SPECIAL PROVISION (HORIZONTAL DIRECTION DRILLING) (10" CASING PIPE)
(S1) STA. 30+62 LT. - STA. 30+84 RT. (74')
(S2) STA. 72+03 RT. - STA. 72+53 LT. (112')
(S3) STA. 29+12 LT. - STA. 29+47 RT. (80')

679.47 - BRACKET ARM
STA. 72+45 LT. (55' LT.)
STA. 30+75 RT. (40' RT.)
STA. 29+15 LT. (40' LT.)
STA. 73+30 RT. (55' RT.)

900.620 - SPECIAL PROVISION (LUMINAIRE, LED)
STA. 72+45 LT. (55' LT.)
STA. 30+75 RT. (40' RT.)
STA. 29+15 LT. (40' LT.)
STA. 73+30 RT. (55' RT.)

900.620 - SPECIAL PROVISION (REMOVE EXISTING LIGHT POLE)
STA. 71+54 LT. (46' LT.)
STA. 74+26 RT. (46' RT.)
STA. 74+31 LT. (85' LT.)
STA. 29+42 RT. (57' RT.)

BERLIN STATE HIGHWAY 95+06.60 =
VT ROUTE 62 STA. 73+06.60, 24.75 LT.

VT ROUTE 62 STA. 72+95.00 =
AIRPORT RD./FISHER RD. STA. 30+00.00

MA3 MOVED 12' DUE TO OVERHEAD UTILITIES

FISHER ROAD
BERLIN STATE HIGHWAY (AIRPORT ROAD)
VT ROUTE 62
STANCHION
CONTROLLER
REMOVE EXISTING MEDIAN ISLAND
PB 1
PB 2
PB 3
PB 4
PB 5
MA 1
MA 2
MA 3
MA 4
CZ
95+07
96+00
97+00
71+00
72+00
73+00
74+00
75+00
29+00
31+00

LEGEND

- MAST ARM & POLE
- CC — CONTROLLER CABINET
- JB PB — JUNCTION BOX / PULLBOX
- DPB — DOUBLE PULLBOX OR JUNCTION BOX
- PP — PEDESTAL POST
- SIGNAL HEAD WITH PHASE NO.
- PEDESTRIAN SIGNAL HEAD
- WIRED CONDUIT
- WIRED CONDUIT IN ELECTRICAL CONDUIT SLEEVE
- MAST ARM-MOUNTED SIGN
- VIDEO DETECTOR
- VIDEO DETECTION AREA
- PREEMPTION STROBE LIGHT
- PREEMPTION DETECTOR
- DILEMMA ZONE DETECTOR

NOTE:
1. REMOVAL OF EXISTING STRAIN POLES, SPAN WIRE AND STRAIN POLE MOUNTED STREETLIGHTS SHALL BE INCIDENTAL TO ITEM 678.15 - TRAFFIC CONTROL SIGNAL SYSTEM, INTERSECTION
2. LOCATION OF UNDERGROUND UTILITIES ARE APPROXIMATE. THE CONTRACTOR SHALL VERIFY LOCATIONS IN THE FIELD. SEE THE UTILITY SPECIAL PROVISIONS FOR ADDITIONAL INFORMATION AND REQUIREMENTS.
3. THE RESIDENT ENGINEER MAY CHANGE THE LOCATION OF PULLBOXES, CONDUIT AND CONDUIT SLEEVES IF FIELD CONDITIONS WARRANT.
4. THE CONTRACTOR SHALL FIELD CHECK THE VISIBILITY OF SIGNAL FACES AND ADJUST HEIGHTS TO MINIMIZE VISUAL OBSTRUCTION FROM AERIAL UTILITIES.

0 20 40
SCALE IN FEET

PROJECT NAME: BERLIN
PROJECT NUMBER: STPG SGNL(40)

FILE NAME: t11b358traf.dgn
PROJECT LEADER: P. COBURN
DESIGNED BY: T. SISSON
TRAFFIC SIGNAL PLAN 1

PLOT DATE: 10/20/2014
DRAWN BY: T. SISSON
CHECKED BY: M. LACROIX
SHEET 34 OF 123

SIGNAL FACE ARRANGEMENT

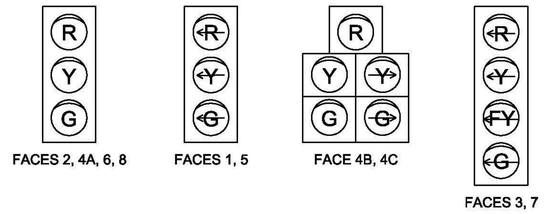

NOTE: FLASHING YELLOW ARROW SHALL NOT BE DISPLAYED WHEN OPERATING IN PROTECTED ONLY MODE.

PHASING DIAGRAM

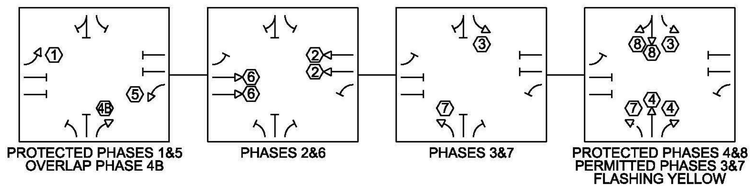

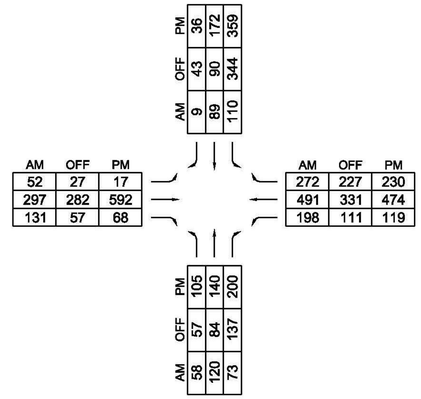

LIST OF MAJOR EQUIPMENT

EQUIPMENT ITEM 678.15 - TRAFFIC CONTROL SIGNAL SYSTEM, INTERSECTION	QUANTITY NEW	QUANTITY SALVAGED	REMARKS
FLAT BLACK PAINTED STEEL MAST ARM SIGNAL POLE	4	0	
FLAT BLACK PAINTED STEEL MAST ARMS	4	0	
POWER METER ON STANCHION	1	0	
TRAFFIC SIGNAL CONTROLLER (NEMA TS2)	0	1	SALVAGE AND REINSTALL EXISTING
NEW 12-INCH LED SIGNAL HEADS (ONE-WAY, 3-SECTION, VISORS, DISCONNECT HANGERS, BACKPLATES AND MOUNTING HARDWARE)	9	0	
NEW 12-INCH LED SIGNAL HEADS (ONE-WAY, 4-SECTION, VISORS, DISCONNECT HANGERS, BACKPLATES AND MOUNTING HARDWARE)	2	0	
NEW 12-INCH LED SIGNAL HEADS (ONE WAY, 5-SECTION, VISORS, DISCONNECT HANGERS, BACKPLATES AND MOUNTING HARDWARE)	2	0	
ASTRO-BRACKETS	13	0	
NEMA P44 BASE MOUNTED CONTROLLER CABINET WITH 15-INCH EXTENDED BASE ON A CONCRETE FOUNDATION, PAINTED FLAT BLACK WITH ANCILLARY EQUIPMENT	1	0	
CAMERA EXTENSION BRACKET	4	0	
CAMERA ASSEMBLY	0	4	SALVAGE AND REINSTALL EXISTING
VEHICLE DETECTION PROCESSOR (CARDS)	4	0	
OPTICAL PREEMPTION DETECTORS	3	1	SALVAGE AND REINSTALL ONE EXISTING
OPTICAL PREEMPTION SIGNAL PROCESSOR CARD & CAGE	4	1	SALVAGE AND REINSTALL EXISTING
PREEMPTION AC STROBE - RED	3	1	SALVAGE AND REINSTALL ONE EXISTING
*WAVETRONIX DILEMMA ZONE EQUIPMENT	0	1	SALVAGE AND REINSTALL EXISTING

*ADJUST DILEMA ZONE DETECTION AS NECESSARY TO PROVIDE DETECTION 200-400 FEET FROM SENSOR.

WIRED CONDUIT

EQUIPMENT ITEM 678.23 - WIRED CONDUIT (2")(PVC)(SCH. 80)	CONDUIT SIZE 2"	DESCRIPTION
POWER TO STANCHION	41'	POWER
STANCHION TO CONTROLLER	30'	POWER
CONTROLLER TO MAST ARM POLE 1	26'	SIGNAL\LIGHTING
CONTROLLER TO MAST ARM POLE 1	26'	VIDEO
CONTROLLER TO MAST ARM POLE 1	26'	FUTURE USE
CONTROLLER TO PULLBOX 1	15'	SIGNAL\LIGHTING
CONTROLLER TO PULLBOX 1	15'	VIDEO
CONTROLLER TO PULLBOX 1	15'	FUTURE USE
PULLBOX 1 TO PULLBOX 2	89'	SIGNAL\LIGHTING
PULLBOX 1 TO PULLBOX 2	89'	VIDEO
PULLBOX 1 TO PULLBOX 2	89'	FUTURE USE
PULLBOX 1 TO PULLBOX 2	89'	FUTURE USE
PULLBOX 2 TO MAST ARM POLE 2	10'	SIGNAL\LIGHTING
PULLBOX 2 TO MAST ARM POLE 2	10'	VIDEO
PULLBOX 2 TO MAST ARM POLE 2	10'	FUTURE USE
CONTROLLER TO PULLBOX 3	18'	SIGNAL\LIGHTING
CONTROLLER TO PULLBOX 3	18'	VIDEO
CONTROLLER TO PULLBOX 3	18'	FUTURE USE
PULLBOX 3 TO PULLBOX 4	123'	SIGNAL\LIGHTING
PULLBOX 3 TO PULLBOX 4	123'	VIDEO
PULLBOX 3 TO PULLBOX 4	123'	FUTURE USE
PULLBOX 3 TO PULLBOX 4	123'	FUTURE USE
PULLBOX 4 TO MAST ARM POLE 4	17'	SIGNAL\LIGHTING
PULLBOX 4 TO MAST ARM POLE 4	17'	VIDEO
PULLBOX 4 TO MAST ARM POLE 4	17'	FUTURE USE
PULLBOX 4 TO PULLBOX 5	109'	SIGNAL\LIGHTING
PULLBOX 4 TO PULLBOX 5	109'	VIDEO
PULLBOX 4 TO PULLBOX 5	109'	FUTURE USE
PULLBOX 4 TO PULLBOX 5	109'	FUTURE USE
PULLBOX 5 TO MAST ARM POLE 3	25'	SIGNAL\LIGHTING
PULLBOX 5 TO MAST ARM POLE 3	25'	VIDEO
PULLBOX 5 TO MAST ARM POLE 3	25'	FUTURE USE

CONTROLLER TIMING CHART

PHASE	1	2	3	4	5	6	7	8	9
IN USE	X	X	X	X	X	X	X	X	
TRAFFIC MOVEMENT	EBL	WBT	SBL	NBTR	WBL	EBT	NBL	SBTR	
MIN. GREEN	5	8	5	8	5	8	5	8	
MAX 2 - GREEN (AM)	11	24	11	14	16	19	11	14	
MAX 1 - GREEN (OFF)	11	22	13	14	13	20	11	16	
MAX 3 - GREEN (PM)	11	21	14	14	11	21	11	17	
YELLOW CLEARANCE	4.6	4.6	4.1	4.1	4.6	4.6	4.1	4.1	
ALL RED CLEARANCE	1.6	1.6	2.8	2.8	1.6	1.6	2.8	2.8	
VEHICLE EXTENSION	3	3	3	3	3	3	3	3	
RECALL MODE	NONE	SOFT	NONE	NONE	NONE	SOFT	NONE	NONE	

TIME OF DAY PROGRAM

	WEEKDAY TIMINGS		
MAX 2 - AM PEAK	5:00 AM	TO	9:00 AM
MAX 1 - OFF PEAK	9:00 AM	TO	3:00 PM
MAX 3 - PM PEAK	3:00 PM	TO	7:00 PM
MAX 1 - OFF PEAK	7:00 PM	TO	5:00 AM

PREEMPTION TIMINGS

	PREEMPTOR 1	2	3	4
DIRECTION	EB	WB	SB	NB
HOLD PHASE	1 & 6	2 & 5	3 & 8	4 & 7
DET. LOCK	YES	YES	YES	YES
DURATION TIME	12	12	12	12
MIN. GREEN	5	5	5	5
HOLD GREEN	12	12	12	12
HOLD YELLOW	4	4	4	4
HOLD RED	2	2	2	2

PROJECT NAME: BERLIN
PROJECT NUMBER: STPG SGNL(40)

FILE NAME: t11b358traf.dgn
PROJECT LEADER: P. COBURN
DESIGNED BY: T. SISSON
TRAFFIC SIGNAL PLAN 2

PLOT DATE: 10/20/2014
DRAWN BY: T. SISSON
CHECKED BY: M. LACROIX
SHEET 35 OF 123

MAST ARM, POLE & FOOTING DETAILS

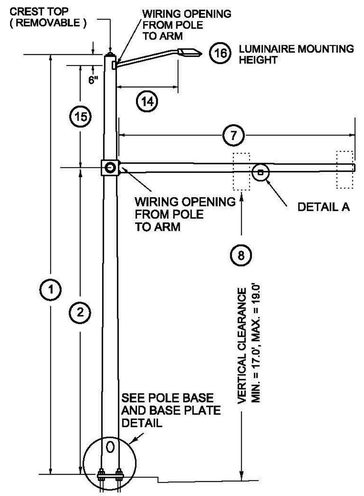

POLE BASE DIAMETER	(3)	ARM DIAMETER	(9)
POLE GAUGE	(4)	ARM GAUGE	(10)
POLE TAPER RATE	(5)	ARM TAPER RATE	(11)

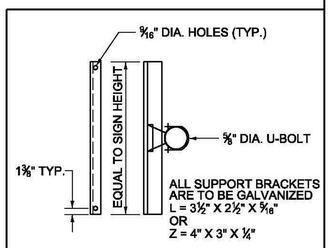

SIGN ON SINGLE MAST ARM

SIGN BRACKET DETAILS

ANCHOR BOLT DETAIL		
SIZE	L (in.)	T (in.)
1¼" x 48"	42	8
1½" x 60"	54	9
1¾" x 90"	84	9
2" x 96"	96	9

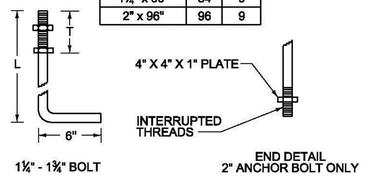

ANCHOR BOLT DETAIL

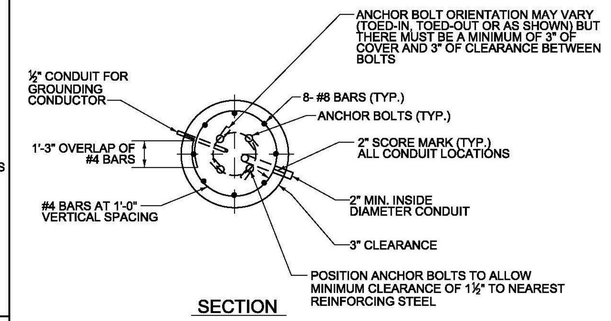

SECTION

MAST POLE FOOTING DETAIL
(SPREAD FOOTINGS OR PILES ARE OPTIONAL)

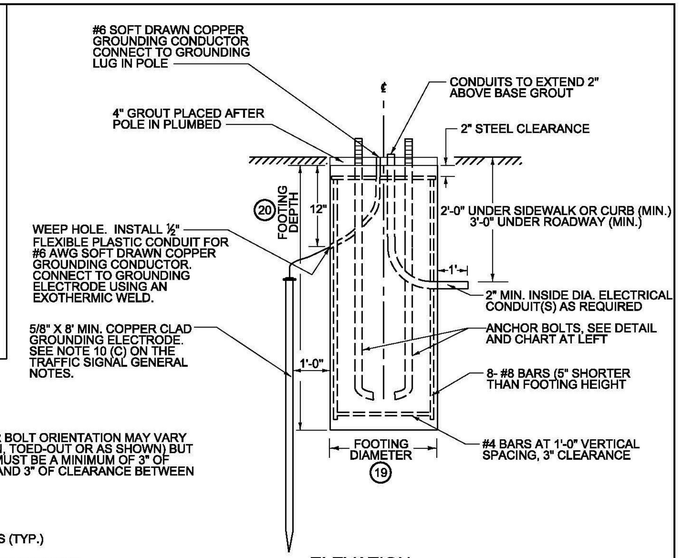

ELEVATION

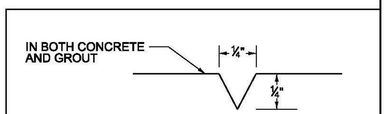

2" SCORE MARK DETAIL

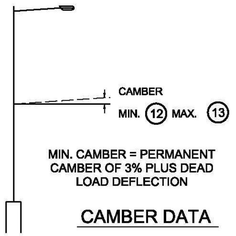

CAMBER DATA

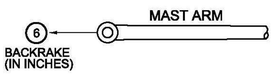

ARM ORIENTATION AND BACKRAKE DATA

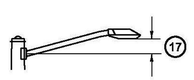

LUMINAIRE ARM RISE

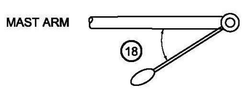

LUMINAIRE ORIENTATION

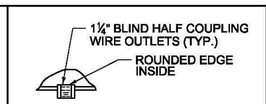

DETAIL "A"

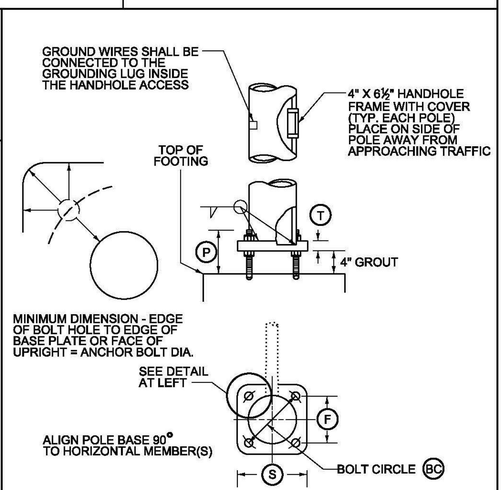

POLE BASE AND BASE PLATE DETAIL

STRUCTURE DIMENSIONS

POLE DATA								ARM DATA							LIGHTING DATA					FOOTING DATA		BASE PLATE / BOLT DATA						
POLE	TYPE	(1)	(2)	(3)	(4)	(5)	(6)	(7)	(8)	(9)	(10)	(11)	(12)	(13)	(14)	(15)	(16)	(17)	(18)	(19)	(20)	BC	F	S	T	P	ANCHOR BOLT SIZE
MAP1								55			–	–	–		12	9.5	30	6"	42								
MAP2								35			–	–	–		12	10.5	30	6"	68								
MAP3								55			–	–	–		12	10	30	6"	32								
MAP4								40			–	–	–		12	12	30	6"	68								

NOTES

1. SEE TRAFFIC SIGNAL GENERAL NOTES FOR ADDITIONAL INFORMATION.
2. MANUFACTURER TO DETERMINE TYPE OF STRUCTURE REQUIRED.
3. MONOTUBES SHALL NOT BE USED FOR SIGNS OVER 10' HIGH.
4. MINIMUM CLEARANCE FROM SIGNS TO ANY TRAVEL LANE SHALL BE 17'.
5. CONTRACTOR SHALL VERIFY ALL GROUND ELEVATIONS.
6. LUMINAIRES, ALL ASSOCIATED EQUIPMENT AND LABOR TO INSTALL SHALL BE PAID FOR UNDER CONTRACT ITEM NOS. 679.47 AND 900.620 - SPECIAL PROVISION (LUMINAIRE, LED).

PROJECT NAME: BERLIN
PROJECT NUMBER: STPG SGNL(40)

FILE NAME: sig_det01.dgn
PROJECT LEADER: P. COBURN
DESIGNED BY: T. SISSON
TRAFFIC SIGNAL DETAIL SHEET

PLOT DATE: 10/20/2014
DRAWN BY: T. SISSON
CHECKED BY: M. LACROIX
SHEET 36 OF 123

TRAFFIC SIGNAL SYSTEM NOTES

A. NEW SIGNAL EQUIPMENT

1. ALL SIGNAL HEADS SHALL BE 12" POLYCARBONATE. THE SIGNAL HEADS SHALL HAVE FLAT BLACK HOUSINGS AND VISORS.
2. ALL SIGNAL HEADS SHALL HAVE FLAT BLACK LOUVERED BACKPLATES.
3. THE TRAFFIC CONTROL CABINET SHALL BE NEMA P44 WITH A 15-INCH BASE EXTENSION INSTALLED AT THE LOCATION SHOWN ON THE PLANS. THE TRAFFIC CONTROL CABINET SHALL BE ORIENTED SUCH THAT THE DOOR DOES NOT FACE THE ROADWAY.
4. ALL SIGNAL HEADS SHALL HAVE RED, YELLOW AND GREEN L.E.D. SIGNALS WITH A VISIBLE BEAM SPREAD OF 80 DEGREES OFF AXIS.
5. ALL TRAFFIC SIGNAL EQUIPMENT SHALL BE PAINTED FLAT BLACK IN ACCORDANCE WITH THE SPECIAL PROVISIONS.
6. ALL TRAFFIC SIGNAL EQUIPMENT AND MAST ARM MOUNTED SIGNS SHALL HAVE SAFETY CABLES.
7. A DISCONNECT BREAKER FOR EACH CIRCUIT SHALL BE INSTALLED IN A RAINPROOF (NEMA 3R), LOCKED CABINET ON A STANCHION NEXT TO OR BELOW THE METER SOCKET.

B. SIGNAL OPERATION

1. SWITCH-OVER TO THE NEW TRAFFIC SIGNAL SYSTEM SHALL NOT OCCUR DURING PEAK TRAFFIC OPERATING PERIODS. UNIFORMED TRAFFIC OFFICERS SHALL CONTROL TRAFFIC DURING THE SWITCH-OVER.
2. ALL SIGNALS SHALL DWELL ON VT 62 UNLESS OTHERWISE NOTED.
3. THE VT 62 THRU PHASE SHALL BE USED FOR THE START-UP PHASE FOLLOWING FLASHING OPERATION.
4. SIGNAL TIMING SHOWN ON THE PLANS MAY REQUIRE ADJUSTMENT IN THE FIELD BASED ON TRAFFIC OBSERVATION AND/OR ADDITIONAL FIELD STUDIES.

C. PULLBOXES AND JUNCTION BOXES

1. PULLBOXES AND JUNCTION BOXES ARE DETAILED ON VTRANS STANDARD E-173. MINIMUM JUNCTION BOX SIZE SHALL BE 18" X 12" X 12", OR LARGER AS REQUIRED BY THE ELECTRICAL CODE.
2. THE LOGO ON PULLBOX AND JUNCTION BOX COVERS SHALL BE "TRAFFIC SIGNAL."
3. ALL PULLBOXES AND JUNCTION BOXES SHALL BE INSTALLED IN ACCORDANCE WITH SECTION 678.

D. TRAFFIC SIGNAL CONDUIT

1. ALL TRAFFIC SIGNAL CONDUIT SHALL BE SCHEDULE 80 PVC.
2. WHEN CONDUIT IS PLACED BELOW THE ROADWAY OR ACROSS SIDE ROADS, IT SHALL BE PLACED IN A STEEL SLEEVE, SIZE SHOWN ON THE PLANS.
3. ALL TRAFFIC SIGNAL CONDUIT WORK SHALL BE PERFORMED IN ACCORDANCE WITH SECTION 678.

E. VIDEO DETECTION EQUIPMENT

1. VIDEO VEHICLE DETECTORS SHALL BE PLACED SO THAT OCCLUSION IS MINIMIZED AND PHASE IS NOT AFFECTED.
2. VIDEO VEHICLE DETECTION AREAS SHALL EXTEND FIVE FEET PAST THE STOP BAR.
3. SEE THE PLANS AND/OR THE SPECIAL PROVISIONS FOR A DETAILED LIST OF EQUIPMENT.

G. MAST ARM FOUNDATIONS

1. FOUNDATIONS SHALL BE DESIGNED IN ACCORDANCE WITH VTRANS' MREI 10-01 GUIDELINES. THE CONTRACTOR SHALL BE RESPONSIBLE FOR SOIL BORINGS AND FOUNDATION DESIGN. IN ADDITION TO FABRICATION DRAWINGS, THE BORING LOGS, DESIGN CRITERIA, AND DESIGN CALCULATIONS SHALL BE SUBMITTED AS WORKING DRAWINGS IN ACCORDANCE WITH SUBSECTION 105.03.

K. GENERAL

1. A UNIFORMED TRAFFIC OFFICER WITH A BLUE LIGHT SHALL BE PRESENT DURING ALL LANE CLOSURES.
2. THE CONTRACTOR SHALL ACQUIRE ALL THE NECESSARY PERMITS AND MAKE ALL NECESSARY ARRANGEMENTS WITH THE UTILITY COMPANY TO PROVIDE A PERMANENT POWER SUPPLY TO THE TRAFFIC SIGNAL EQUIPMENT, IF APPLICABLE. THE ROUTING OF POWER TO THE INTERSECTION SHALL BE SUCH THAT THE STATE HAS FULL RESPONSIBILITY FROM THE TRANSFORMER THROUGH THE SIGNAL SYSTEM. NO INTERVENING OWNERSHIP/RESPONSIBILITY SHALL BE ALLOWED.
3. ALL ELECTRICAL WIRING SHALL BE PERFORMED BY A LICENSED ELECTRICIAN AND OVERSEEN BY A MASTER ELECTRICIAN.

TRAFFIC CONTROL NOTES FOR TRAFFIC SIGNAL SYSTEM WORK

1. THE FOLLOWING NOTES APPLY TO TRAFFIC CONTROL NECESSARY FOR THE INSTALLATION OR MODIFICATION OF THE TRAFFIC SIGNALS ONLY. FOR OVERALL PROJECT TRAFFIC CONTROL MANAGEMENT REQUIREMENTS REFER TO THE TRAFFIC CONTROL PLANS AND SECTION 641.
2. TWO-WAY TRAFFIC SHALL BE MAINTAINED AT NIGHT, ON WEEKENDS AND HOLIDAYS. DURING PEAK TRAFFIC AND DURING CONSTRUCTION. AT THE DISCRETION OF THE ENGINEER, UNIFORMED TRAFFIC OFFICERS SHALL DIRECT TRAFFIC, WHENEVER REQUIRED.
3. TRAFFIC CONTROL SIGNING AND CHANNELIZING DEVICES SHALL BE IN ACCORDANCE WITH THE APPROPRIATE STANDARD DRAWINGS (T-1, T-21, T-28, T-29) AND THE MANUAL ON UNIFORM TRAFFIC CONTROL DEVICES (MUTCD).
4. AFTER SIGNAL INSTALLATION, ALL HEADS MUST BE COVERED (TURNING SHALL NOT BE ALLOWED) UNTIL TURNED ON. THE METHOD OF COVERING SHALL BE AS FOLLOWS:
   - ALL NEW TRAFFIC AND PEDESTRIAN SIGNAL HEADS WHICH HAVE BEEN INSTALLED BUT NOT PLACED IN EITHER FLASHING OR FULL OPERATION SHALL BE COVERED. EXISTING SIGNAL HEADS WHICH ARE PLACED OUT OF SERVICE IN ORDER TO PERFORM WORK ON THE SIGNAL SYSTEM SHALL ALSO BE COVERED EXCEPT WHEN SUCH WORK CAN BE COMPLETED IN A RELATIVELY SHORT PERIOD OF TIME (SEVERAL HOURS) AND TRAFFIC CONTROL HAS BEEN PROVIDED FOR.
   - THE SIGNAL COVERS SHALL CONSIST OF A ONE-PIECE PLASTIC BAG HAVING A MINIMUM THICKNESS OF 4 MIL. THE BAG SHALL BE OPAQUE. THE COVER SHALL SLIP OVER THE ENTIRE SIGNAL HEAD AND SHALL BE SECURELY TIED AT THE OPENING WITH A ROPE OF SUFFICIENT SIZE AND STRENGTH TO SECURE THE COVER. AN INTERMEDIATE ROPE OF THE SAME MATERIAL SHALL BE DRAWN AROUND THE CENTER OF THE COVER TO PREVENT EXCESS FLAPPING IN THE WIND.
   - A DRAIN HOLE SHALL BE MADE AT THE BOTTOM OF THE BAG TO ALLOW THE ESCAPE OF MOISTURE. NO TAPE OR ADHESIVE WILL BE ALLOWED TO BE ATTACHED TO ANY SURFACE OF THE SIGNAL HOUSING OR LENSES. ALL COVERS SHALL BE PLACED IN A NEAT WORKMANLIKE MANNER. ANY COVER THAT IS TORN OR MISSING SHALL BE IMMEDIATELY REPLACED. PAYMENT FOR THE COVERS, THEIR REPLACEMENT, AND REMOVAL AND ALL INCIDENTALS FOR COMPLETION OF THE WORK SHALL BE CONSIDERED INCIDENTAL TO CONTRACT ITEM 678.15.
5. WHERE TWO-WAY TRAFFIC IS MAINTAINED DURING CONSTRUCTION, THE SIGN PACKAGE SHOWN ON STD. T-21 SHOULD BE USED. APPROACH CONSTRUCTION SIGNING SHALL REMAIN IN PLACE DURING THE ENTIRE CONSTRUCTION PERIOD. OTHER SIGNING SHALL BE REMOVED OR COVERED WHEN NOT APPLICABLE.
6. VARIATIONS IN THE SIGNING PACKAGES MAY BE DICTATED BY UNIQUE GEOMETRY AND/OR TRAFFIC CONDITIONS AND THE TRAFFIC CONTROL PLANS.
7. THE CONTRACTOR SHALL NOT WORK WITHIN THE HIGHWAY RIGHT-OF-WAY WITHOUT THE APPROPRIATE CONSTRUCTION SIGNING IN PLACE AS SHOWN ON STD. T-10.
8. AT LOCATIONS WHERE SIGNALS CURRENTLY EXIST, A WORKING SIGNAL SYSTEM SHALL BE IN PLACE AT THE END OF EACH DAY. IF THE SIGNAL SYSTEM IS NOT WORKING AT THE END OF THE DAY, THE CONTRACTOR SHALL PROVIDE UNIFORMED TRAFFIC OFFICERS TO CONTROL TRAFFIC UNTIL SUCH TIME THAT THE EXISTING OR NEW SIGNAL SYSTEM IS IN OPERATION.
9. "SIGNALS UNDER CONSTRUCTION" SIGN PANELS SHALL BE MOUNTED UNDER "ROAD WORK AHEAD" SIGNS ANYTIME SIGNAL SYSTEM WORK IS BEING PREFORMED. SEE SIGN DETAIL ON THIS SHEET.
10. TEMPORARY TRAFFIC BARRIER SHALL MEET THE REQUIREMENTS OF SECTION 621.

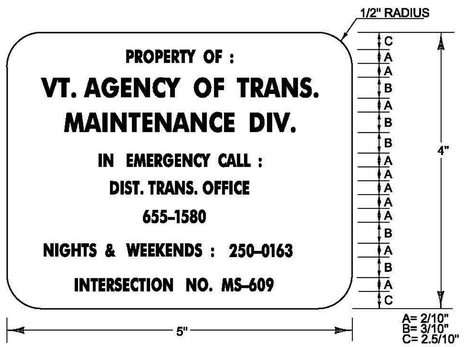

LEGEND: - BLACK (NON-REFL.) - STAMPED PRIOR TO PAINTING
BACKGROUND: NATURAL ALUMINUM OR BRASS SURFACE

NOTES:

1. THE PLAQUE SHALL BE MOUNTED ON ALL TRAFFIC SIGNAL CONTROLLER CABINETS. IT SHALL BE FASTENED TO THE CONTROLLER CABINET IN SUCH A MANNER AS TO BE NOT EASILY REMOVED, SUCH AS WELDED, RIVETED OR BOLTED WITH VANDAL PROOF BOLTS.
2. THE LETTERS SHALL BE PUNCHED OR STAMPED, SUCH STAMPING SHALL PENETRATE AT LEAST ½ THE BASE MATERIAL THICKNESS.
3. THE BASE MATERIAL FOR THE PLAQUE SHALL BE BRASS OR ALUMINUM WITH A MINIMUM THICKNESS OF 1/10".

CONTROLLER IDENTIFICATION PLAQUE
NOT TO SCALE

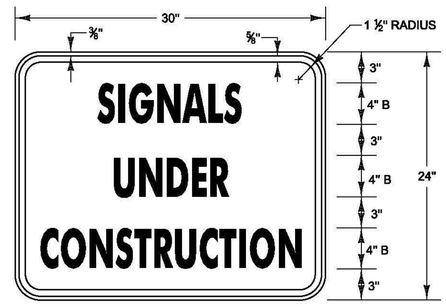

MATERIALS: SEE STD. E-144
COLORS: TEXT & BORDER - BLACK
BACKGROUND - ORANGE (RETROREFLECTIVE SHEETING)

CONSTRUCTION SIGN DETAIL
NOT TO SCALE
TO BE INSTALLED ON ROAD WORK AHEAD SIGN POSTS.

PROJECT NAME: BERLIN
PROJECT NUMBER: STPG SGNL(40)

FILE NAME: sig_notes01.dgn
PROJECT LEADER: P. COBURN
DESIGNED BY: T. SISSON
TRAFFIC SIGNAL SYSTEM NOTES

PLOT DATE: 10/28/2014
DRAWN BY: T. SISSON
CHECKED BY: M. LACROIX
SHEET 37 OF 123

TRAFFIC SIGNAL GENERAL NOTES

1. ALL MATERIALS AND CONSTRUCTION SHALL CONFORM TO VTRANS' "STANDARD SPECIFICATIONS FOR CONSTRUCTION", DATED 2011, WITH CURRENT MODIFICATIONS.

2. OVERHEAD SIGN/SIGNAL SUPPORTS SHALL CONFORM TO AASHTO'S "STANDARD SPECIFICATIONS FOR STRUCTURAL SUPPORTS FOR HIGHWAY SIGNS, LUMINAIRES, AND TRAFFIC SIGNALS", DATED 2013, AND IT'S LATEST REVISIONS.

3. THE DESIGN CALCULATIONS SHALL TAKE INTO ACCOUNT THE FOLLOWING CRITERIA:

   STRUCTURE CRITERIA

   - DESIGN LIFE: 50 YEARS
   - WIND LOAD: 90 M.P.H., UNLESS SPECIAL SITE CONDITIONS DICTATE ICE LOAD PER AASHTO'S PUBLICATION ENTITLED "STANDARD SPECIFICATIONS FOR STRUCTURAL SUPPORTS FOR HIGHWAYS SIGNS, LUMINAIRES, AND TRAFFIC SIGNALS", DATED 2013, AND IT'S LATEST REVISIONS

   FATIGUE CRITERIA

   - FATIGUE CATEGORY: 1 FOR MAST ARM SIGN STRUCTURES, 2 FOR SIGNAL MAST ARMS
   - VORTEX SHEDDING: INCLUDE
   - NATURAL WIND GUSTS: INCLUDE
   - TRUCK INDUCED WIND GUSTS: INCLUDE FOR ROADWAYS WHERE SPEED LIMIT IS 40 M.P.H. OR GREATER
   - GALLOPING: DO NOT INCLUDE IN DESIGN CALCULATIONS

   FOUNDATION CRITERIA

   - CONCRETE: CONCRETE, HIGH PERFORMANCE CLASS B, SECTION 501.
   - REINFORCING STEEL: VTRANS' "STANDARD SPECIFICATIONS FOR CONSTRUCTION", DATED 2011, SECTION 713.01
   - ALLOWABLE BEARING CAPACITY: TO BE DETERMINED
   - INTERNAL SOIL FRICTION ANGLE, ϕ : TO BE DETERMINED

4. ANCHOR BOLTS

   FOUR STAINLESS STEEL ANCHOR BOLTS WITH TWO HEXAGON NUTS, ONE WASHER AND ONE LOCK WASHER PER BOLT SHALL BE FURNISHED WITH EACH POLE. ANCHOR BOLT PLATES, WHEN USED, SHALL ALSO BE STAINLESS STEEL. SEE SUBSECTION 714.09.

5. FLANGE BOLTS

   ALL FLANGE BOLTS AND HEX NUTS SHALL BE HIGH STRENGTH STEEL AND SHALL CONFORM TO ASTM A325. THE FLANGE BOLTS SHALL BE CAPABLE OF RESISTING 133% OF THE FULL DESIGN STRESS OF THE TUBE AT ITS YIELD STRENGTH STRESS.

6. HORIZONTAL AND VERTICAL MEMBERS

   STEEL TUBES SHALL BE FORMED AND WELDED WITH ONE CONTINUOUS LONGITUDINAL WELD ONLY. AFTER FORMING AND WELDING THEY SHALL BE COLD ROLLED TO ENSURE UNIFORMITY OF SIZE AND SMOOTHNESS OF WELD. THEY SHALL HAVE A MINIMUM YIELD STRENGTH OF 55 KSI. THERE SHALL BE NO TRANSVERSE WELDING EXCEPT AT THE FLANGE CONNECTIONS AND POLE BASE PLATES, WHERE THE TUBES SHALL TELESCOPE THE FLANGES AND PLATES AND BE CONTINUOUSLY WELDED BOTH SIDES INSIDE AND OUT TO WITHSTAND THE FULL TRANSFER OF THE BENDING STRENGTH TO THE BOLTS. OPTIONALLY, THE MEMBERS MAY BE A SERIES OF TWO OR THREE DIFFERENT DIAMETER PIPES WELDED TOGETHER. STEEL TUBES SHALL BE CONSTRUCTED FROM MATERIALS CONFORMING TO SUBSECTION 752.02.

7. GALVANIZING

   ALL STEEL COMPONENTS, EXCEPT CONCRETE REINFORCING AND STAINLESS STEEL HARDWARE, ARE TO BE HOT DIPPED GALVANIZED AFTER FABRICATION. THE ASSEMBLIES SHALL BE DESIGNED AND FABRICATED TO PERMIT GALVANIZING ON ALL INTERIOR AND EXTERIOR SURFACES AND SHALL BE FREE OF POCKETS AND OTHER STRUCTURAL OBSTRUCTIONS THAT WILL NOT PERMIT PROPER DEPOSITION OF ZINC COATING. GALVANIZING SHALL BE IN ACCORDANCE WITH SUBSECTION 752.02.

8. WELDING

   A. ALL DESIGN DETAILS, WORKMANSHIP, PROCEDURES AND INSPECTION SHALL CONFORM WITH SUBSECTION 506.10.

   B. ALL WELDS SHALL BE AT LEAST AS STRONG AS THE MATERIAL(S) BEING WELDED.

9. FOUNDATIONS

   A. FOOTINGS SHALL BE DESIGNED IN ACCORDANCE WITH VTRANS' MATERIALS & RESEARCH ENGINEERING INSTRUCTIONS - GEOTECHNICAL DESIGN PROCEDURES FOR MAST ARM AND OVERHEAD SIGN SUPPORT FOUNDATIONS (MREI 10-01), DATED MARCH 9, 2010, A COPY OF WHICH CAN BE FOUND ON THE AGENCY'S WEBSITE.

   B. FOUNDATIONS SHALL BE CONSTRUCTED IN ACCORDANCE WITH THE FOLLOWING NOTES:

      1. A MINIMUM EMBEDMENT DEPTH OF FIVE FEET SHALL BE USED FOR ALL SPREAD FOOTING FOUNDATIONS; MEASURED FROM THE GROUND SURFACE ELEVATION TO THE BOTTOM OF THE FOOTING ELEVATION.

      2. EXCEPT FOR THE UPPERMOST TWO FEET OF SOIL, DRILLED SHAFT FOUNDATIONS SHALL BE POURED AGAINST UNDISTURBED MATERIAL; THE TOP TWO FEET OF SOIL SHALL BE NEGLECTED FOR DESIGN PURPOSES. A DISPOSABLE CIRCULAR CONCRETE FORM, IF USED, SHALL NOT BE PLACED DEEPER THAN TWO FEET, IN ORDER TO NOT REDUCE THE FRICTION BETWEEN THE SOIL AND THE CONCRETE.

      3. AS AN ALTERNATIVE TO THE DRILLED HOLES, FOOTINGS MAY BE POURED IN EXCAVATED HOLES USING THE PROPER FORMS, WHICH MUST BE REMOVED. THE EXCAVATED HOLES SHALL BE AT LEAST TWO FEET CLEAR OF THE FOUNDATION SIDES AND ONE FOOT DEEPER THAN THE FOUNDATION. CARE SHALL BE TAKEN TO AVOID EXCAVATING AROUND THE TOP OF THE FOUNDATION. THE BACKFILL MATERIAL SHALL BE COMPACTED AS DESCRIBED IN SUBSECTION 204.08. DESIGN LIMITS AS FOR AUGURED FOOTINGS APPLIES.

      4. ANY BACKFILL PLACED ADJACENT TO THE FOOTING SHALL BE GRANULAR MATERIAL MEETING THE REQUIREMENTS FOR GRANULAR BACKFILL FOR STRUCTURES, SUBSECTION 704.08 AND SHALL BE COMPACTED AS SPECIFIED IN SUBSECTION 204.08.

      5. IF DRILLED SHAFT FOUNDATIONS ARE REQUIRED, THE CONCRETE SPECIFICATIONS MAY NEED TO BE ADJUSTED FOR CONSTRUCTIBILITY ISSUES. HOWEVER, IF REQUIRED, THE CONTRACTOR SHALL SUBMIT ANY CHANGES TO THE CONCRETE SPECIFICATION FOR REVIEW BY THE VTRANS PROJECT MANAGER.

      6. WHEN THE DESIGN DEPTH OF A FOUNDATION CANNOT BE OBTAINED DUE TO UNFORSEEN FIELD CONDITIONS, THE CONTRACTOR SHALL NOTIFY THE ENGINEER FOR THE MANUFACTURER TO OBTAIN A REVISED FOUNDATION DESIGN. SUCH A REVISION SHALL BE SUBMITTED TO VTRANS PROJECT MANAGER AND MAY REQUIRE UP TO A FOUR WEEK REVIEW PERIOD BY VTRANS.

   C. SIGNALS/SIGNS SHALL BE INSTALLED AND LEVELED AND POLES SHALL BE PLUMB PRIOR TO PLACING GROUT UNDER POLE BASE. GROUT MATERIAL SHALL BE NON-SHRINKING MORTAR CONFORMING TO VTRANS' "STANDARD SPECIFICATIONS FOR CONSTRUCTION", DATED 2011, SUBSECTION 707.03, MORTAR TYPE IV.

10. EACH OVERHEAD TRAFFIC SIGNAL/SIGN SUPPORT SHALL BE GROUNDED. THE GROUND SHALL CONSIST OF THE FOLLOWING:

    A. AN INTERNAL GROUND LUG OPPOSITE THE HAND HOLE

    B. A #6 (MIN.) SOFT DRAWN COPPER GROUNDING ELECTRODE CONDUCTOR

    C. A $\frac{5}{8}$" X 8' (MIN.) COPPER CLAD GROUNDING ELECTRODE:

    THE RESISTANCE TO GROUND SHALL BE 25 OHMS OR LESS. ADDITIONAL GROUNDING ELECTRODES MAY BE REQUIRED (MINIMUM SPACING SHALL BE 6'). WHEN A POWER SERVICE, METER AND DISCONNECT ARE ATTACHED TO A POLE, THERE SHALL BE A CONTINUOUS GROUND WIRE FROM THE METER AND DISCONNECT WHICH MAY RUN INTERNAL TO THE UPRIGHT, THROUGH THE ½" FLEXIBLE TUBING IN THE CONCRETE BASE TO THE REQUIRED GROUNDING ELECTRODE(S). THE GROUND WIRE FROM THE POLE GROUNDING LUG, CONTROLLER CABINET AND/OR LUMINAIRE MAY ATTACH TO THE CONTINUOUS GROUNDING ELECTRODE CONDUCTOR FROM THE SERVICE METER AND DISCONNECT. THE CONTRACTOR SHALL PERFORM A RESISTANCE TO GROUND TEST ON THE CONTINUOUS GROUND ELECTRODE CONDUCTOR FROM THE SERVICE METER AND DISCONNECT. THE CONTRACTOR SHALL PROVIDE A WRITTEN STATEMENT TO THE AREA ELECTRICAL INSPECTOR THAT THE GROUNDING ELECTRODE CONDUCTOR IS CONTINUOUS FROM THE SERVICE METER AND DISCONNECT AND THE RESISTANCE TO GROUND IS 25 OHMS OR LESS.

11. HORIZONTAL MEMBERS SHALL BE CAMBERED AND THE VERTICAL POLES BACK RAKED, WHERE APPLICABLE, TO THE ANTICIPATED DEAD LOAD DEFLECTION PLUS THE CAMBER, IF ANY, SPECIFIED ON THE PLANS.

12. AN EQUIVALENT ALTERNATE DESIGN MAY BE SUBSTITUTED FOR THE DETAILS AND MATERIALS SHOWN.

13. THE DETAILS OF DESIGN FOR THE STRUCTURE AND FOUNDATION ARE TO BE SUPPLIED BY THE CONTRACTOR AND/OR BY THE MANUFACTURER. THE STRUCTURE SHALL BE DESIGNED TO RESIST THE MAXIMUM LOADING AS OUTLINED IN THE AASHTO STANDARD SPECIFICATIONS, SEE NOTE 2. ALL DESIGN CALCULATIONS FOR THE STRUCTURE AND THE FOUNDATION SHALL BE CHECKED AND STAMPED BY A LICENSED PROFESSIONAL ENGINEER REGISTERED IN THE STATE OF VERMONT PRIOR TO SUBMITTAL OF THE FABRICATION DRAWINGS TO VTRANS.

14. THE CONTRACTOR SHALL SUBMIT THREE COPIES (OR ONE DIGITAL VERSION) OF THE DESIGN CALCULATIONS TO VTRANS PROJECT MANAGER SHOWING THE FOLLOWING INFORMATION FOR EACH OF THE VERTICAL AND HORIZONTAL COMPONENTS OF THE STRUCTURE AND FOUNDATION:

    A. THE DESIGN AXIAL AND SHEAR FORCES AND BENDING AND TORSIONAL MOMENTS ACTING AT THE TOP OF THE FOUNDATION;

    B. THE DESIGN AXIAL, BENDING AND SHEAR STRESSES AND THE COMBINED STRESS RATIO;

    C. VIBRATION AND FATIGUE CALCULATIONS AS SET FORTH IN SECTION 11 OF THE AASHTO PUBLICATION REFERENCED IN NOTE 2;

    D. THE ALLOWABLE AXIAL, BENDING, AND SHEAR STRESSES;

    E. ITEMS A, B, AND D SHALL BE SHOWN FOR EACH OF THE GROUP LOADINGS (I, II, III) AND FOR THE BASIC WIND LOAD APPLIED TO THE TWO CASES OUTLINED IN THE AASHTO STANDARD SPECIFICATIONS (SEE NOTE 2), SECTION 1.2.5(D)(4);

    FAILURE TO SUPPLY THE PROPER DESIGN INFORMATION SHALL BE CAUSE FOR REJECTION OF THE STRUCTURE.

    A MINIMUM OF FOUR WEEKS SHALL BE REQUIRED FOR REVIEW BY VTRANS.

    EVERY MEMBER AND CONNECTION IN AN OVERHEAD TRAFFIC SIGNAL SUPPORT SHALL BE DESIGNED TO PROVIDE ADDITIONAL RESIDUAL CAPACITY FOR FUTURE MODIFICATION EQUIVALENT TO A 5-SECTION TRAFFIC SIGNAL HEAD WITH A 5-INCH LOUVERED BACKPLATE LOCATED ON THE OUTERMOST EXTENT OF THE MAST ARM.

15. FABRICATION DRAWINGS SHALL BE SUBMITTED TO VTRANS PROJECT MANAGER FOR APPROVAL PRIOR TO FABRICATION. THE FABRICATION DRAWINGS SHALL INCLUDE THE FOLLOWING INFORMATION:

    A. DETAILED DRAWING OF EACH COMPONENT OF THE STRUCTURE;

    B. MATERIAL SPECIFICATION FOR EACH COMPONENT OF THE STRUCTURE, EITHER BY COMPLETE SPECIFICATION OR REFERENCE TO APPLICABLE AASHTO/ASTM STANDARDS;

    C. NOTATION OF PROJECT NAME, PROJECT NUMBER, ROUTE NUMBER, AND STRUCTURE STATIONING TO BE INCLUDED ON EACH SHEET;

    D. DETAILS FOR LOCATION OF SIGNS/SIGNALS AND ATTACHMENT HARDWARE FOR THE SUPPORT STRUCTURE;

    E. ALL ELEVATIONS AND DIMENSIONS NECESSARY TO PROVIDE A COMPLETE SET OF RECORD PLANS;

    F. DEAD LOAD DEFLECTION AND CAMBER INFORMATION;

    G. WELDING DETAILS AND PROCEDURES ARE REQUIRED FOR ALL WELDS. PROCEDURES SHALL BE SUBMITTED FOR APPROVAL WITH REFERENCE TO EACH WELD IDENTIFIED ON THE FABRICATION DRAWINGS. SEE SUBSECTION 506.10.

16. THE TRAFFIC SIGNALS SHALL BE MOUNTED TO THE ARM OR POLE USING A FIXED MOUNT SYSTEM, UNLESS OTHERWISE NOTED ON THE CROSS SECTION SHEET. FOR SIGNALS MOUNTED ON A MAST ARM, THE MAST ARM AND MOUNTING POINT SHALL BE IN THE MIDDLE OF THE SIGNAL HEAD.

17. BASE PLATES SHALL BE STAMPED WITH THE VERTICAL POLE DIAMETER, HEIGHT, YIELD STRENGTH, GAUGE AND THE HORIZONTAL MEMBER DIAMETER, LENGTH, YIELD STRENGTH, AND GAUGE. ALTERNATELY, THE INFORMATION MAY BE STAMPED ON A METAL TAG RIVETED TO THE POLE NEAR THE HAND HOLE.

18. SEE STANDARD E-171A FOR ADDITIONAL NOTES.

19. CONTRACTOR SHALL SCHEDULE FINAL INSPECTION AND OBTAIN WRITTEN APPROVAL OF WORK FROM VTRANS TRAFFIC SIGNAL TECHNICIAN.

PROJECT NAME:	BERLIN
PROJECT NUMBER:	STPG SGNL(40)
FILE NAME: sig_notes02.dgn	PLOT DATE: 10/28/2014
PROJECT LEADER: P. COBURN	DRAWN BY: T. SISSON
DESIGNED BY: T. SISSON	CHECKED BY: M. LACROIX
TRAFFIC SIGNAL GENERAL NOTES	SHEET 38 OF 123

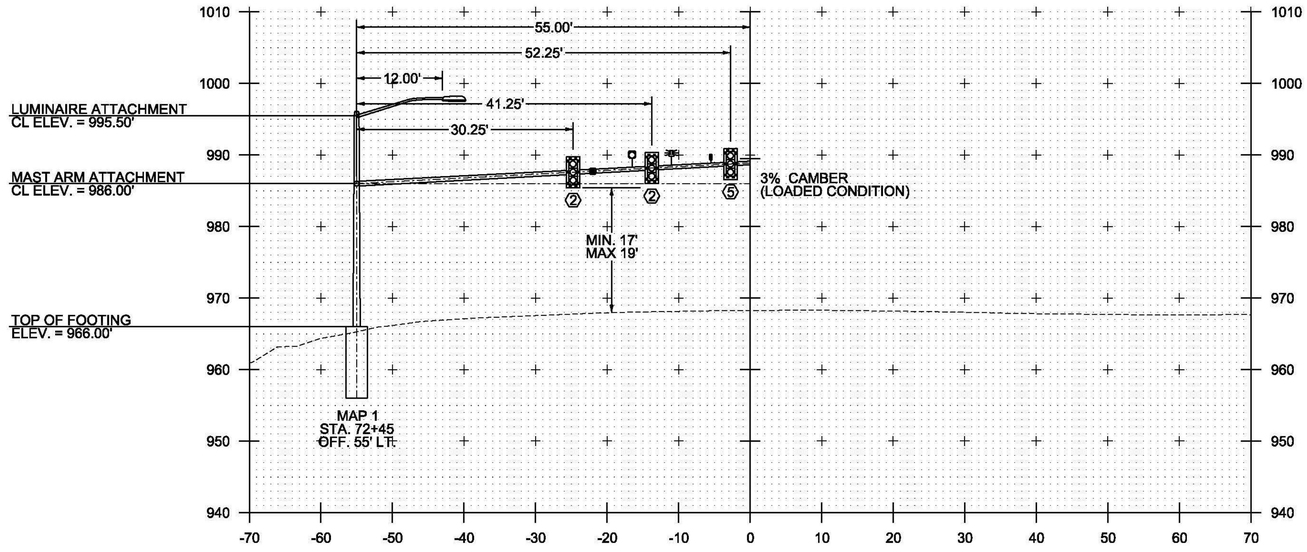

72+45
MAST ARM #1

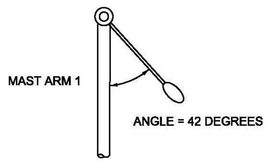

LUMINAIRE ORIENTATION

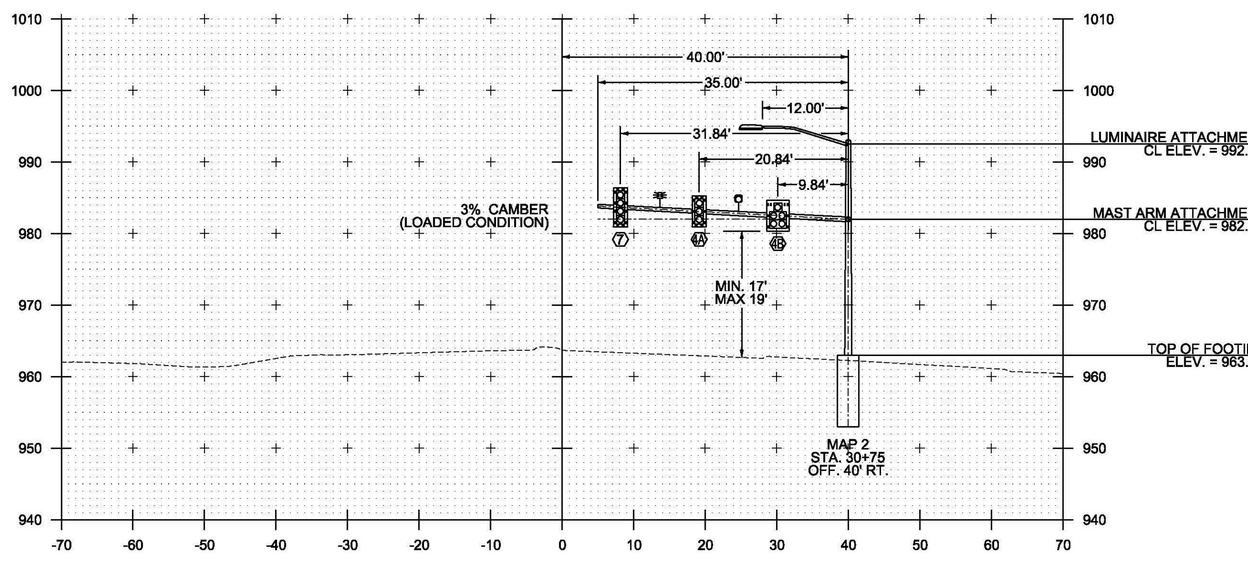

30+75
MAST ARM #2

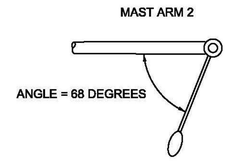

LUMINAIRE ORIENTATION

NOTES:

1. ALL MAST ARM FOOTINGS SHALL INCLUDE A FOUR INCH REVEAL. ELEVATIONS SHOWN IN CROSS-SECTIONS ARE APPROXIMATE FINAL GRADE ELEVATIONS FOR CONTRACTOR BIDDING PURPOSES ONLY. ACTUAL FOOTING ELEVATIONS SHALL BE DETERMINED BY THE CONTRACTOR PRIOR TO SUBMITTING WORKING DRAWINGS.
2. MAST ARM FOOTING SIZES ARE NOT TO SCALE. FOOTING DESIGNS SHALL BE DETERMINED BY THE CONTRACTOR IN ACCORDANCE WITH SOIL CONDITIONS AND ACTUAL MAST ARM LOADINGS TRANSMITTED TO THE TOP OF THE FOOTINGS.
3. REFER TO BORING LOG SHEETS FOR BORING INFORMATION.
4. SIGNAL HEADS SHALL BE MOUNTED ON THE VERTICAL CENTER OF THE MAST ARM.

LEGEND

- VIDEO DETECTION CAMERA
- PREEMPTION STROBE
- OPTICAL PREEMPTION DETECTOR
- OPTICAL PREEMPTION DETECTOR

0 10 20
SCALE

PROJECT NAME: BERLIN
PROJECT NUMBER: STPG SGNL(40)

FILE NAME: t11b358traf.dgn
PROJECT LEADER: P. COBURN
DESIGNED BY: T. SISSON
TRAFFIC SIGNAL CROSS SECTIONS SHEET 1

PLOT DATE: 10/28/2014
DRAWN BY: T. SISSON
CHECKED BY: M. LACROIX
SHEET 39 OF 123

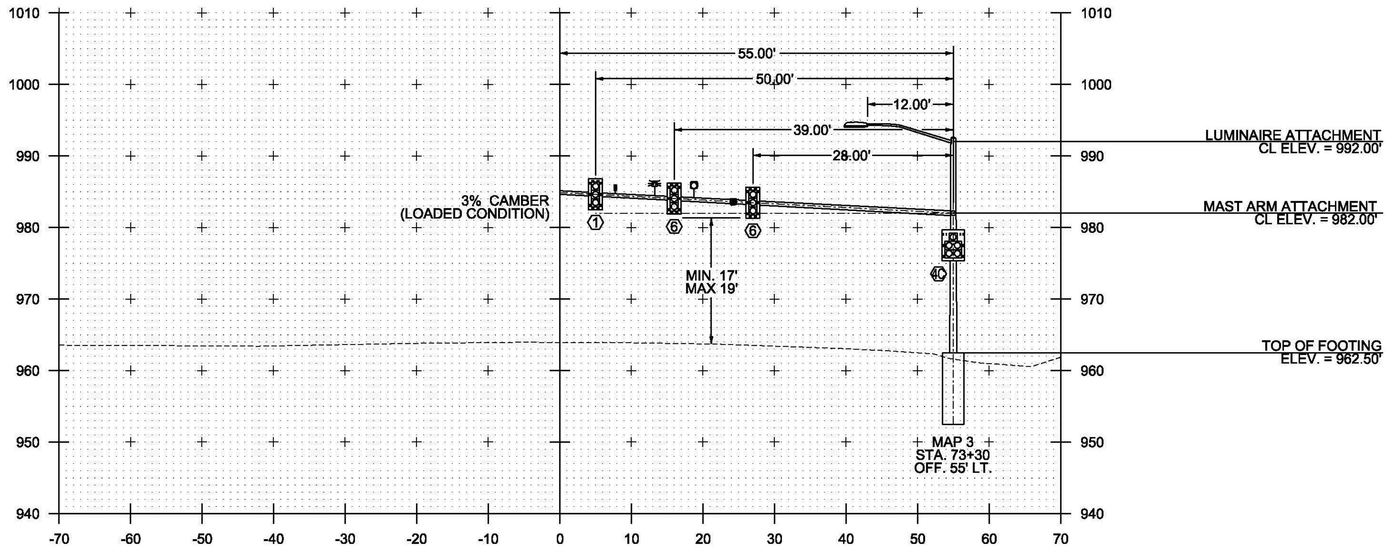

73+30
MAST ARM #3

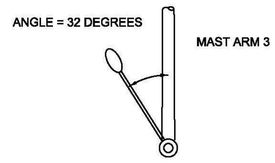

LUMINAIRE ORIENTATION

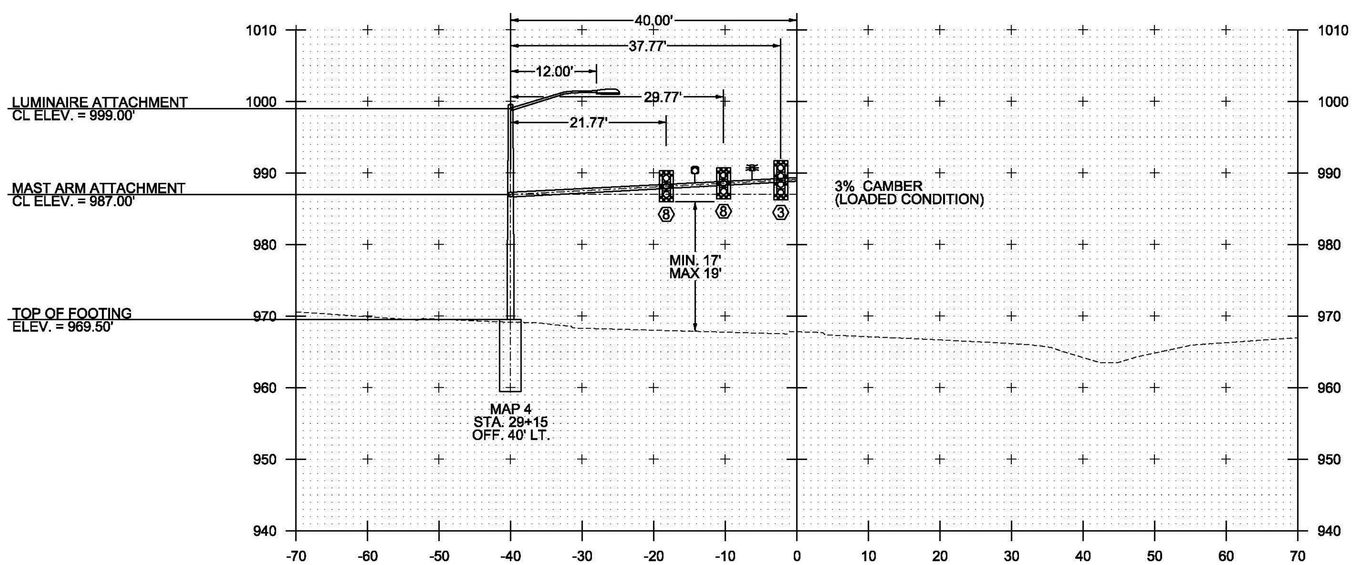

29+15
MAST ARM #4

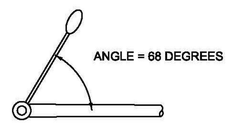

MAST ARM 4

LUMINAIRE ORIENTATION

LEGEND

- VIDEO DETECTION CAMERA
- PREEMPTION STROBE
- OPTICAL PREEMPTION DETECTOR
- OPTICAL PREEMPTION DETECTOR

NOTES:

1. ALL MAST ARM FOOTINGS SHALL INCLUDE A FOUR INCHES REVEAL. ELEVATIONS SHOWN IN CROSS-SECTIONS ARE APPROXIMATE FINAL GRADE ELEVATIONS FOR CONTRACTOR BIDDING PURPOSES ONLY. ACTUAL FOOTING ELEVATIONS SHALL BE DETERMINED BY THE CONTRACTOR PRIOR TO SUBMITTING WORKING DRAWINGS.
2. MAST ARM FOOTING SIZES ARE NOT TO SCALE. FOOTING DESIGNS SHALL BE DETERMINED BY THE CONTRACTOR IN ACCORDANCE WITH SOIL CONDITIONS AND ACTUAL MAST ARM LOADINGS TRANSMITTED TO THE TOP OF THE FOOTINGS.
3. REFER TO BORING LOG SHEETS FOR BORING INFORMATION.
4. SIGNAL HEADS SHALL BE MOUNTED ON THE VERTICAL CENTER OF THE MAST ARM.

PROJECT NAME: BERLIN	
PROJECT NUMBER: STPG SGNL(40)	
FILE NAME: t11b358traf.dgn	PLOT DATE: 10/28/2014
PROJECT LEADER: P. COBURN	DRAWN BY: T. SISSON
DESIGNED BY: T. SISSON	CHECKED BY: M. LACROIX
TRAFFIC SIGNAL CROSS SECTION SHEET 2	SHEET 40 OF 123

STREET LIGHTING DETAILS

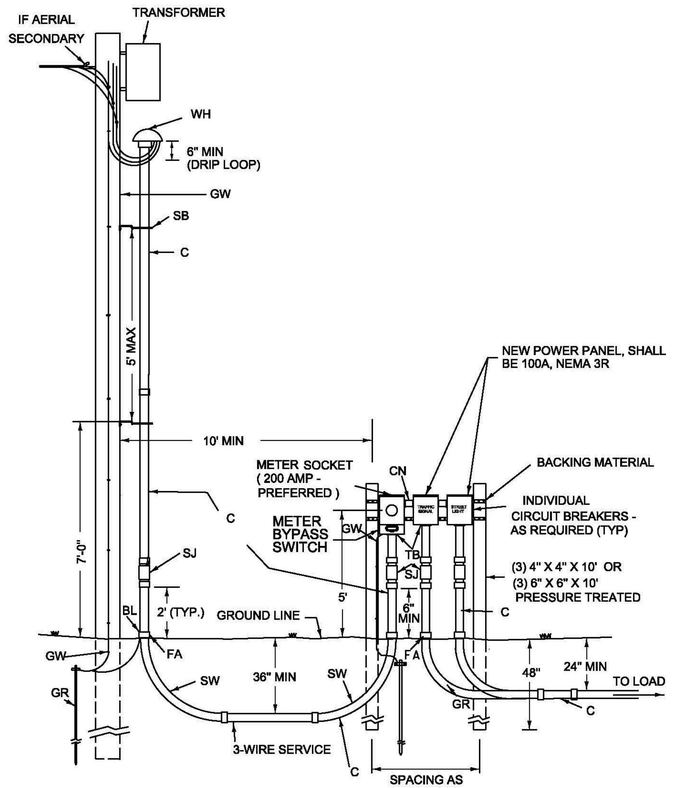

UTILITY POLE
NOT TO SCALE

STANCHION
NOT TO SCALE

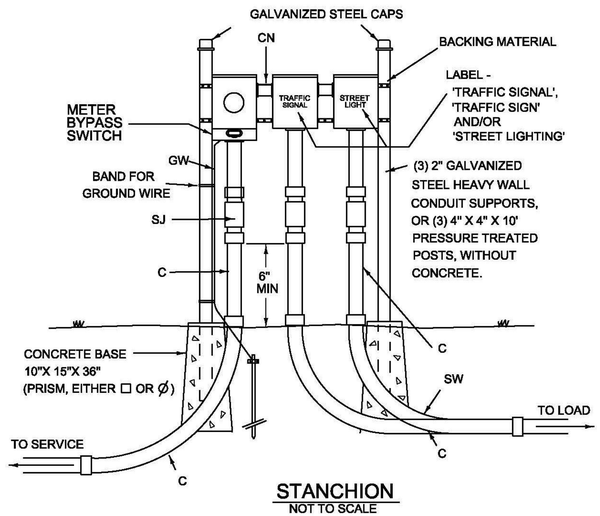

STANCHION
NOT TO SCALE

LEGEND	
ITEM	MATERIAL
BL	BONDING LUG (IF STEEL CONDUIT)
C	CONDUIT - PVC SCHEDULE 80 (2" MIN.)
CN	CONDUIT NIPPLE
FA	FEMALE ADAPTER OR COUPLINGS AS REQUIRED
GR	GROUND ELECTRODE, ⅝" X 8' (MIN) COPPER CLAD (2 REQ.)
GW	GROUND CONDUCTOR, #6 AWG CU (MIN)
SB	STANDOFF BRACKET (SEE DETAIL)
SJ	SLIP JOINT, INSTALL 2/3 OPEN
SSS	STAINLESS STEEL STRAP (1" MIN)
SW	90°SWEEPS, (PVC) 36" R. - SERVICE, 24" R. - LOAD
TB	THREADED BUSHING
WH	WEATHERHEAD OR CONDULATOR

PROJECT NAME: BERLIN
PROJECT NUMBER: STPG SGNL(40)

FILE NAME: light_det.dgn
PROJECT LEADER: P. COBURN
DESIGNED BY: T. SISSON
STREET LIGHTING DETAILS SHEET

PLOT DATE: 10/20/2014
DRAWN BY: T. SISSON
CHECKED BY: M. LACROIX
SHEET 41 OF 123

STREET LIGHTING GENERAL NOTES

CONCRETE BASES

WHEN CONCRETE BASES ARE INSTALLED IN SLOPING GROUND, THE GREATEST EXPOSED HEIGHT TO KEEP ALL OF THE TOP ABOVE GROUND MUST BE DOUBLED AND THEN ADDED TO THE MINIMUM DEPTH FOR THE TOTAL BASE DEPTH.

CARE SHOULD BE TAKEN WHERE CONCRETE BASES, DRAINAGE STRUCTURES OR UTILITIES ARE CLOSE TOGETHER.

THE OFFSET FOR CONCRETE BASES (FACE OF CURB OR EDGE OF PAVEMENT TO CENTER OF CONCRETE BASE) SHALL BE A MINIMUM OF 2'-6" OR AS OTHERWISE NOTED ON THE PLANS.

POLES, ANCHOR BASES AND ARM

ALL NEW STREET LIGHT POLES, POLE BASES AND LUMINAIRE ARMS SHOULD BE ALUMINUM, PAINTED FLAT BLACK TO MATCH THE TRAFFIC SIGNAL EQUIPMENT.

ALL STREET LIGHT POLES SHALL HAVE A FRANGIBLE OR BREAKAWAY DEVICE (TRANSFORMER BASE, UNLESS NOTED ON THE PLANS).

UTILIZE APPROVED DUAL-RATED PARALLEL TAP CONNECTOR WITH INSULATING COVER TO TAPS AT POLE BASES.

LUMINAIRES

LUMINAIRES SHALL BE L.E.D. TYPE.

POLE-MOUNTED LUMINAIRES SHALL BE ONE OF THE FOLLOWING:
-BETA LEDWAY IP SERIES
-HOLOPHANE LEDgends SERIES
-LRL LED SAT-96M SERIES
ALL POLE-MOUNTD LUMINAIRES SHALL BE SAME, A MIX OF FIXTURES WILL NOT BE ALLOWED.

NO LUMINAIRE SUBSTITUTIONS SHALL BE ALLOWED.

ALL POLE-MOUNTED LUMINAIRES MUST BE EQUIPPED WITH BIRD SPIKES ON THE TOP.

ALL LUMINAIRE HOUSINGS SHALL BE PAINTED FLAT BLACK.

CONDUIT SLEEVE

THE SLEEVE SHALL EXTEND TO WITHIN TWO FEET OF THE SIDE OF A CONCRETE BASE OR PULLBOX. WHERE NO CONCRETE BASE OR PULLBOX IS PRESENT, THE SLEEVE SHALL EXTEND FOUR FEET BEYOND THE OUTSIDE EDGE OF SHOULDER OR FACE OF CURB. BACKFILLING AROUND A SLEEVE SHALL BE IN ACCORDANCE WITH THE MANUFACTURER'S SPECIFICATIONS. THE SLEEVE SHALL BE SCHEDULE 80.

WIRE

ALL WIRING BETWEEN THE METER AND/OR POWER SOURCE AND THE FIRST POLE AND/OR PULLBOX AND BETWEEN POLES AND/OR PULLBOXES SHALL BE COPPER AND SIZE AS SPECIFIED ON THE PLANS. ALL WIRE SHALL HAVE TYPE XHHW INSULATION OR EQUIVALENT.

CIRCUIT CONDUCTORS SHALL BE CLEARLY IDENTIFIED BY CORROSION RESISTANT TAGS INDICATING CIRCUIT NUMBER AND PANEL SOURCES AT EVERY POLE BASE AND HANDHOLE.

GROUNDING

ALL CONDUIT MUST INCLUDE A GROUNDING CONDUCTOR. RIGID STEEL CONDUIT SHALL BE PROPERLY CONNECTED AT THE JOINTS SO AS TO BE WATERTIGHT AND MAINTAIN ELECTRICAL CONTINUITY AND HAVE GROUNDING BUSHINGS SO AS TO ACT AS A GROUNDING CONDUCTOR. ALUMINUM WIRE SHALL NOT BE USED FOR GROUND WIRE.

THE GROUNDING CONDUCTOR SHALL BE CONTINUOUS.

ALUMINUM WIRE SHALL NOT BE USED FOR GROUND WIRE.

PULLBOXES, HANDHOLES AND JUNCTION BOXES

POLYMER CONCRETE AND REINFORCED FIBERGLASS U.L. LISTED PULLBOXES, HANDHOLES SHALL BE INSTALLED WITH HEAVY DUTY COVERS.

ALL CONNECTIONS IN HANDHOLES SHALL BE MADE WITH INSULATED WATERPROOF MECHANICAL SCREW-TYPE CONNECTOR SUITABLE FOR DIRECT BURIAL. NO BARE OR COMPRESSION TYPE CONNECTORS MAY BE USED.

GENERAL

THE LOAD ON EACH BRANCH OF A THREE WIRE CIRCUIT SHALL BE AS BALANCED AS POSSIBLE. LOAD TO NEUTRAL.

THE LAST CONCRETE POLE BASE AT THE END OF EACH CIRCUIT AND SOME PULLBOXES SHALL HAVE A CONDUIT SWEEP WITH CAP INSTALLED FOR FUTURE USE.

THE CONTRACTOR SHALL ACQUIRE ALL NECESSARY PERMITS AND MAKE ALL NECESSARY ARRANGEMENTS WITH THE UTILITY COMPANY TO PROVIDE A PERMANENT POWER SUPPLY TO THE STREET LIGHTING SYSTEM. IF APPLICABLE, THE ROUTING OF POWER TO THE SYSTEM SHALL BE SUCH THAT THE AGENCY OF TRANSPORTATION HAS FULL RESPONSIBILITY FROM THE TRANSFORMER THROUGH THE LIGHTING SYSTEM. NO INTERVENING OWNERSHIP OR RESPONSIBILITY SHALL BE ALLOWED.

ALL CONNECTING HARDWARE (NUTS, BOLTS, ETC.) SHALL BE STAINLESS STEEL.

MATERIALS AND EQUIPMENT SHALL BE LISTED BY UNDERWRITERS' LABORATORIES AND SHALL BE INSTALLED IN ACCORDANCE WITH SUCH LISTINGS.

ALL MATERIALS AND INSTALLATION SHALL BE IN ACCORDANCE WITH THE LATEST EDITION OF THE NATIONAL ELECTRICAL CODE, AND ALL CODES, REGULATIONS AND REQUIREMENTS OF ALL MUNICIPAL, STATE, FEDERAL AND OTHER PUBLIC OR PRIVATE AUTHORITIES WHICH HAVE JURISDICTION. IN EACH CASE, CODES ARE MINIMUM REQUIREMENTS.

ILLUMINATION REQUIREMENTS

AT INTERSECTIONS, LIGHTING LEVELS AS MEASURED AT THE ROADWAY SURFACE SHALL HAVE AN AVERAGE MAINTAINED ILLUMINANCE OF 1.3 FOOT-CANDLES.



LEGEND: BLACK OR WHITE (NON-REFLECTIVE) - STAMPED PRIOR TO PRINTING/PAINTING.
BACKGROUND: NATURAL ALUMINUM OR FLAT BLACK SURFACE, THE SAME AS POLE FINISH.

NOTES:

1. THE TAG SHALL BE MOUNTED ON ALL STREET LIGHT POLES IN SUCH A MANNER AS NOT TO BE EASILY REMOVED, SUCH AS WELDED, RIVETED, OR BOLTED WITH VANDAL PROOF BOLTS.
2. THE LETTERS SHALL BE PUNCHED, STAMPED, ENGRAVED, OR PHOTO-ETCHED. PUNCHING, STAMPING OR ENGRAVING SHALL PENETRATE AT LEAST 1/2 THE BASE MATERIAL THICKNESS.
3. THE BASE MATERIAL FOR THE TAG SHALL BE ALUMINUM WITH A MINIMUM THICKNESS OF 0.10 INCHES.
4. THE TAG SHALL BE ATTACHED TO THE POLE ABOVE THE HANDHOLE, SIX INCHES MAXIMUM, IF THE POLE HAS A TRANSFORMER BASE, ATTACH TAG TO COVER.
5. FIXTURE TAG CHARACTER "X" SHALL BE THE DESIGNATED SL NUMBER AS SHOWN ON THE LIGHTING PLANS.
6. FIXTURE TAG CHARACTER "ZZ" SHALL BE THE WATTAGE OF THE LUMINAIRE.

DETAIL FOR TAGS ATTACHED TO STREET LIGHT POLES

NOT TO SCALE

PROJECT NAME:	BERLIN
PROJECT NUMBER:	STPG SGNL(40)
FILE NAME: light_notes.dgn	PLOT DATE: 10/20/2014
PROJECT LEADER: P. COBURN	DRAWN BY: T. SISSON
DESIGNED BY: T. SISSON	CHECKED BY: M. LACROIX
STREET LIGHTING GENERAL NOTES SHEET	SHEET 42 OF 123

BORING INFORMATION SHEET

SOIL CLASSIFICATION

AASHTO	
A1	Gravel and Sand
A3	Fine Sand
A2	Silty or Clayey Gravel and Sand
A4	Silty Soil - Low Compressibility
A5	Silty Soil - Highly Compressible
A6	Clayey Soil - Low Compressibility
A7	Clayey Soil - Highly Compressible

ROCK QUALITY DESIGNATION

R.Q.D. (%)	ROCK DESCRIPTION
<25	Very Poor
25 to 50	Poor
51 to 75	Fair
76 to 90	Good
>90	Excellent

SHEAR STRENGTH

UNDRAINED SHEAR STRENGTH IN P.S.F.	CONSISTENCY
<250	Very Soft
250-500	Soft
500-1000	Med. Stiff
1000-2000	Stiff
2000-4000	Very Stiff
>4000	Hard

CORRELATION GUIDE OF "N" TO DENSITY/CONSISTENCY

DENSITY (GRANULAR SOILS)		CONSISTENCY (COHESIVE SOILS)	
N	DESCRIPTIVE TERM	N	DESCRIPTIVE TERM
<5	Very Loose	<2	Very Soft
5-10	Loose	2-4	Soft
11-24	Med. Dense	5-8	Med. Soft
25-50	Dense	9-15	Stiff
>50	Very Dense	16-30	Very Stiff
		31-60	Hard
		>60	Very Hard

COLOR

blk	Black	pnk	Pink
bl	Blue	pu	Purple
brn	Brown	rd	Red
dk	Dark	tn	Tan
gry	Gray	wh	White
gn	Green	yel	Yellow
lt	Light	mltc	Multicolored
or	Orange		

COMMONLY USED SYMBOLS

▼	Water Elevation
⊗	Standard Penetration Boring
⊕	Auger Boring
⊙	Rod Sounding
S	Sample
N	Standard Penetration Test Blow Count Per Foot For: 2" O. D. Sampler 1 3/8" I. D. Sampler Hammer Weight Of 140 Lbs. Hammer Fall Of 30"
VS	Field Vane Shear Test
US	Undisturbed Soil Sample
B	Blast
DC	Diamond Core
MD	Mud Drill
WA	Wash Ahead
HSA	Hollow Stem Auger
AX	Core Size 1 1/8"
BX	Core Size 1 5/8"
NX	Core Size 2 1/8"
M	Double Tube Core Barrel Used
LL	Liquid Limit
PL	Plastic Limit
PI	Plasticity Index
NP	Non Plastic
w	Moisture Content (Dry Wgt. Basis)
D	Dry
M	Moist
MTW	Moist To Wet
W	Wet
Sat	Saturated
Bo	Boulder
Gr	Gravel
Sa	Sand
Si	Silt
Cl	Clay
HP	Hardpan
Le	Ledge
NLTD	No Ledge To Depth
CNPF	Can Not Penetrate Further
TLOB	Top of Ledge Or Boulder
NR	No Recovery
Rec.	Recovery
%Rec.	Percent Recovery
RQD	Rock Quality Designation
CBR	California Bearing Ratio
<	Less Than
>	Greater Than
R	Refusal (N > 100)
VTSPG	NAD83 - See Note 7

DEFINITIONS (AASHTO)

BEDROCK (LEDGE) - Rock in its native location of indefinite thickness.
BOULDER - A rock fragment with an average dimension of > 12 inches.
COBBLE - Rock fragments with an average dimension between 3 and 12 inches.
GRAVEL - Rounded particles of rock <3" and > 0.0787" (#10 sieve).
SAND - Particles of rock < 0.0787" (#10 sieve) and ? 0.0029" (#200 sieve).
SILT - Soil < 0.0029" (#200 sieve), non or slightly plastic and exhibits no strength when air-dried.
CLAY - Fine graded soil, exhibits plasticity when moist and considerable strength when air-dried.
VARVED - Alternate layers of silt and clay.
HARDPAN - Extremely dense soil, cemented layer, not softened when wet.
MUCK - Soft organic soil (containing > 10% organic material).
MOISTURE CONTENT - Weight of water divided by dry weight of soil.
FLOWING SAND - Granular soil so saturated (loose) that it flows into drill casing during extraction of wash rod.
STRIKE - Angle from magnetic north to line of intersection of bed with a horizontal plane.
DIP - Inclination of bed with a horizontal plane.

VTrans — Working to Get You There

STATE OF VERMONT
AGENCY OF TRANSPORTATION
MATERIALS & RESEARCH SECTION
SUBSURFACE INFORMATION

BORING LOG

BERLIN
STPG SGNL(40)
VT-62

Boring No.: **B-101**
Page No.: 1 of 1
Pin No.: 11B358
Checked By: MLM

Boring Crew: GARROW, JUDKINS, WHITLOCK
Date Started: 10/02/12 Date Finished: 10/02/12
VTSPG NAD83: N 626330.00 ft E 1624668.00 ft
Station: 72+70 Offset: -60.00
Ground Elevation: 964.0 ft

	Casing	Sampler
Type:	H.S.A.	SS
I.D.:	3.25 in	1.5 in
Hammer Wt:	N.A.	140 lb.
Hammer Fall:	N.A.	30 in.
Hammer/Rod Type:	Auto/AWJ	
Rig:	CME 55 TRACK	C_E = 1.46

Groundwater Observations

Date	Depth (ft)	Notes
10/02/12	7.0	While drilling.

Depth (ft)	Strata (1)	CLASSIFICATION OF MATERIALS (Description)	Blows/6" (N Value)	Moisture Content %	Gravel %	Sand %	Fines %	LL %	PI %
		Visual Description:, SaGr, brn, Moist, Rec. = 0.4 ft, Insufficient sample for testing.	3-5-6-5 (11)	5.0					
		A-4, GrSi, gry-brn, Moist, Rec. = 1.1 ft, Broken Rock & Asphalt Pavement were within sample.	1-4-13-9 (17)	17.5	38.4	14.0	47.6		
5		A-3, Sa, brn, Wet, Rec. = 0.8 ft, Small amounts of Asphalt Pavement were within sample.	6-3-3-3 (6)	18.7	16.3	73.3	10.4		
		A-4, SiSa, gry, Wet, Rec. = 1.5 ft, Broken Rock was within sample.	1-2-5-5 (7)	19.5	14.5	46.8	38.7	25	4
		A-4, Si, gry, Moist, Rec. = 1.4 ft	2-2-4-5 (6)	21.8	3.7	7.7	88.6	28	3
10		A-4, Si, gry, Moist, Rec. = 1.6 ft	4-7-10-12 (17)	18.9	5.0	7.4	87.6	29	4
		Visual Description:, Si with some Broken Rock, gry, Wet, Rec. = 1.6 ft, Material similar to 10-12 ft.	27-40-18-24 (58)	19.2					
15		Field Note:, Possible Boulder							
		A-4, Si, gry, Moist, Rec. = 1.4 ft	16-24-26-26 (50)	16.0	4.4	8.5	87.1		
20									
		A-4, Si, gry, MTW, Rec. = 1.3 ft	9-15-20-22 (35)	20.3		0.5	99.5		
25		Hole stopped @ 26.0 ft							
		Remarks: 1. Hole Collapsed around 2.0 ft.							
30									

Notes:
1. Stratification lines represent approximate boundary between material types. Transition may be gradual.
2. N Values have not been corrected for hammer energy. C_E is the hammer energy correction factor.
3. Water level readings have been made at times and under conditions stated. Fluctuations of groundwater may occur due to other factors than those present at the time measurements were made.

BORING LOG 2 BERLIN STPG SGNL(40).GPJ VERMONT AOT.GDT 1/8/13

VTrans — Working to Get You There

STATE OF VERMONT
AGENCY OF TRANSPORTATION
MATERIALS & RESEARCH SECTION
SUBSURFACE INFORMATION

BORING LOG

BERLIN
STPG SGNL(40)
VT-62

Boring No.: **B-102**
Page No.: 1 of 1
Pin No.: 11B358
Checked By: MLM

Boring Crew: GARROW, JUDKINS
Date Started: 10/05/12 Date Finished: 10/05/12
VTSPG NAD83: N 626347.00 ft E 1624799.00 ft
Station: 73+53 Offset: 55.00
Ground Elevation: 962.0 ft

	Casing	Sampler
Type:	H.S.A.	SS
I.D.:	3.25 in	1.5 in
Hammer Wt:	N.A.	140 lb.
Hammer Fall:	N.A.	30 in.
Hammer/Rod Type:	Auto/AWJ	
Rig:	CME 55 TRACK	C_E = 1.46

Groundwater Observations

Date	Depth (ft)	Notes
10/05/12		No water to depth.

Depth (ft)	Strata (1)	CLASSIFICATION OF MATERIALS (Description)	Blows/6" (N Value)	Moisture Content %	Gravel %	Sand %	Fines %	LL %	PI %
		A-1-b, SaGr, brn, Moist, Rec. = 0.9 ft	WH-5-7-7 (12)	10.5	48.1	38.9	13.0		
		A-4, GrSaSi (NP), brn, Moist, Rec. = 0.9 ft	4-2-1-1 (3)	16.0	22.0	28.9	49.1		
5		A-6, SiCl, brn-gry, Moist, Rec. = 1.8 ft, Shelby Tube sample U1		24.6				31	11
		A-4, Si, gry, Moist, Rec. = 2.0 ft	3-3-4-7 (7)	23.9	3.4	6.3	90.3	31	5
		A-4, Si, gry-brn, Moist, Rec. = 1.7 ft	4-7-8-10 (15)	19.0	8.7	8.1	83.2	28	3
10		Visual Description:, Si, gry, Moist, Rec. = 1.6 ft, Material similar to 8-10 ft.	6-7-10-9 (17)	18.8					
		A-4, Si (NP), gry, Moist, Rec. = 1.7 ft	8-11-15-17 (26)	20.9		0.7	99.3		
15									
		A-4, Si, gry, Moist, Rec. = 1.8 ft	6-11-13-16 (24)	23.0		3.8	96.2	33	5
20									
		Visual Description:, Si, gry, Moist, Rec. = 1.6 ft, Material similar to 20-22 ft.	6-12-13-14 (25)	26.2					
25		Hole stopped @ 27.0 ft							
		Remarks: 1. Hole Collapsed around 3.0 ft.							
30									

Notes:
1. Stratification lines represent approximate boundary between material types. Transition may be gradual.
2. N Values have not been corrected for hammer energy. C_E is the hammer energy correction factor.
3. Water level readings have been made at times and under conditions stated. Fluctuations of groundwater may occur due to other factors than those present at the time measurements were made.

BORING LOG 2 BERLIN STPG SGNL(40).GPJ VERMONT AOT.GDT 1/8/13

GENERAL NOTES

1. The subsurface explorations shown herein were made by the Agency of Transportation.
2. Soil and rock classifications, properties and descriptions are based on engineering interpretation from available subsurface information by the Agency and may not necessarily reflect actual variations in subsurface conditions that may be encountered between individual boring or sample locations.
3. Observed water levels and/or conditions indicated are as recorded at the time of exploration and may vary according to the prevailing rainfall, methods of exploration and other factors.
4. Engineering judgement was exercised in preparing the subsurface information presented herein. Analysis and interpretation of subsurface data was performed and interpreted for Agency design and estimating purposes. Presentation of the information in the Contract is intended to provide the Contractor access to the same data available to the Agency. The subsurface information is presented in good faith and is not intended as a substitute for personal investigation, independent interpretation, independent analysis or judgment by the Contractor.
5. Pictorial structure details shown on the boring plan layout or soils profiles are for illustrative purposes only and may not accurately portray final contract details.
6. Terminology used on the boring logs to describe the hardness, degree of weathering, and spacing of fractures, joints and other discontinuities in the bedrock is defined in the AASHTO Manual on Subsurface Investigations, 1988.
7. Northing and Easting coordinates are shown in Vermont State Plan Grid North American Datum 1983 in meters and survey feet

PROJECT NAME: BERLIN
PROJECT NUMBER: STPG SGNL(40)

FILE NAME: bor01.dgn
PROJECT LEADER: P. COBURN
DESIGNED BY: T. SISSON
BORING LOG SHEET 1

PLOT DATE: 10/20/2014
DRAWN BY: T. SISSON
CHECKED BY: M. LACROIX
SHEET 43 OF 123

STATE OF VERMONT
AGENCY OF TRANSPORTATION
MATERIALS & RESEARCH SECTION
SUBSURFACE INFORMATION

BORING LOG

BERLIN
STPG SGNL(40)
VT-62

Boring No.: **B-103**
Page No.: 1 of 1
Pin No.: 11B358
Checked By: MLM

Boring Crew: GARROW, JUDKINS
Date Started: 10/01/12 Date Finished: 10/01/12
VTSPG NAD83: N 625985.00 ft E 1624537.00 ft
Station: 69+00 Offset: -50.00
Ground Elevation: 979.0 ft

	Casing	Sampler
Type:	H.S.A.	SS
I.D.:	3.25 in	1.5 in
Hammer Wt:	N.A.	140 lb.
Hammer Fall:	N.A.	30 in.
Hammer/Rod Type:	Auto/AWJ	
Rig:	CME 55 TRACK	C_E = 1.46

Groundwater Observations

Date	Depth (ft)	Notes
10/01/12	21.7	While drilling.

Depth (ft)	Strata (1)	CLASSIFICATION OF MATERIALS (Description)	Blows/6" (N Value)	Moisture Content %	Gravel %	Sand %	Fines %	LL %	PI %
		A-2-4, SiSa, brn, Moist, Rec. = 0.6 ft	1-1-5-4 (6)	25.2	14.1	57.8	28.1		
		A-1-b, SaGr, brn, Moist, Rec. = 0.5 ft		10.2	53.2	28.0	18.8		
		A-2-4, GrSiSa, gry-brn, Moist, Rec. = 1.4 ft, Broken Rock was within sample.	1-2-4-11 (6)	22.4	29.7	35.3	35.0		
5		A-4, GrSaSi, brn, MTW, Rec. = 1.4 ft	8-12-10-7 (22)	14.8	21.6	31.3	47.1		
		A-4, Si (NP), gry-brn, Moist, Rec. = 1.4 ft, Very little Broken Rock.	4-5-5-6 (10)	20.8	11.1	12.0	76.9	26	4
		Field Note:, No Recovery	3-5-8-8 (13)						
10		A-4, Si, gry, Moist, Rec. = 1.6 ft, With some Broken Rock.	4-10-13-12 (23)	12.6	17.9	18.3	63.8		
15		A-4, Si, gry, Moist, Rec. = 1.4 ft	4-6-11-12 (17)	22.9	1.0	2.5	96.5		
20		A-4, SaSi, gry, MTW, Rec. = 1.5 ft	9-12-12-14 (24)	24.8		23.9	76.1		
25		A-4, Si, gry, MTW, Rec. = 1.9 ft	4-9-14-17 (23)	27.5	0.8	5.6	93.6		
		Hole stopped @ 26.0 ft							
30		Remarks: 1. Hole Collapsed around 2.5 ft.							

Notes:
1. Stratification lines represent approximate boundary between material types. Transition may be gradual.
2. N Values have not been corrected for hammer energy. C_E is the hammer energy correction factor.
3. Water level readings have been made at times and under conditions stated. Fluctuations of groundwater may occur due to other factors than those present at the time measurements were made.

BORING LOG 2 BERLIN STPG SGNL(40) GPJ VERMONT AOT.GDT 1/8/13

STATE OF VERMONT
AGENCY OF TRANSPORTATION
MATERIALS & RESEARCH SECTION
SUBSURFACE INFORMATION

BORING LOG

BERLIN
STPG SGNL(40)
VT-62

Boring No.: **B-104**
Page No.: 1 of 1
Pin No.: 11B358
Checked By: MLM

Boring Crew: GARROW, JUDKINS, WHITLOCK
Date Started: 10/02/12 Date Finished: 10/02/12
VTSPG NAD83: N 625943.00 ft E 1624633.00 ft
Station: 69+04 Offset: 55.51
Ground Elevation: 984.0 ft

	Casing	Sampler
Type:	H.S.A.	SS
I.D.:	3.25 in	1.5 in
Hammer Wt:	N.A.	140 lb.
Hammer Fall:	N.A.	30 in.
Hammer/Rod Type:	Auto/AWJ	
Rig:	CME 55 TRACK	C_E = 1.46

Groundwater Observations

Date	Depth (ft)	Notes
10/02/12		No water to depth.

Depth (ft)	Strata (1)	CLASSIFICATION OF MATERIALS (Description)	Blows/6" (N Value)	Moisture Content %	Gravel %	Sand %	Fines %	LL %	PI %
		A-1-b, SaGr, brn, Moist, Rec. = 0.5 ft, Broken Granite Rock was within sample.	1-2-2-2 (4)	8.8	43.7	42.9	13.4		
		A-2-4, SiSa, brn, Moist, Rec. = 0.8 ft	1-3-2-2 (5)	12.6	1.2	66.8	32.0		
		A-4, SaSi, gry, Moist, Rec. = 0.5 ft	5-4-4-11 (8)	18.7	18.6	36.4	45.0		
5		A-4, GrSaSi, gry-brn, Moist, Rec. = 1.1 ft, Found an unknown wire at 5.0 ft.	5-4-4-11 (8)	21.7	25.2	33.2	41.6		
		A-2-4, SiGr, gry, Moist, Rec. = 0.3 ft, Sample was mostly Broken Rock.	R@6.0"	14.5	56.8	17.6	25.6		
		Field Note:, No Recovery	10-8-7-7 (15)						
10		A-4, Si, brn-gry, Moist, Rec. = 1.4 ft	2-6-7-8 (13)	25.4	3.1	2.1	94.8	32	5
15		A-4, ClSi, gry, Moist, Rec. = 1.4 ft	2-4-9-9 (13)	24.6		0.6	99.4	35	8
20		Visual Description:, ClSi, gry, Moist, Rec. = 1.5 ft, Material was similar to 15-17 ft.	5-8-12-11 (20)	25.0					
25		A-7-6, SiCl, gry, Moist, Rec. = 1.8 ft	3-10-14-15 (24)	27.7		1.0	99.0	44	17
		Hole stopped @ 27.0 ft							
30		Remarks: 1. Hole Collapsed around 6.0 ft. 2. Located an Unknown Wire around 5.0 ft.							

Notes:
1. Stratification lines represent approximate boundary between material types. Transition may be gradual.
2. N Values have not been corrected for hammer energy. C_E is the hammer energy correction factor.
3. Water level readings have been made at times and under conditions stated. Fluctuations of groundwater may occur due to other factors than those present at the time measurements were made.

BORING LOG 2 BERLIN STPG SGNL(40) GPJ VERMONT AOT.GDT 1/8/13

PROJECT NAME: BERLIN
PROJECT NUMBER: STPG SGNL(40)

FILE NAME: bor02.dgn
PROJECT LEADER: P. COBURN
DESIGNED BY: T. SISSON
BORING LOG SHEET 2

PLOT DATE: 10/20/2014
DRAWN BY: T. SISSON
CHECKED BY: M. LACROIX
SHEET 44 OF 123

646.4071 - DURABLE 4 INCH WHITE LINE, RECESSSED TYPE A TAPE

A1 - STA. 65+92.66, LT - STA. 70+50.00, LT (SOLID) (452')
A2 - STA. 65+92.66, LT - STA. 70+50.00, LT (DASHED) (454')
A3 - STA. 67+00.00, RT - STA. 69+25.63, RT (DOTTED) (227')
A4 - STA. 69+25.63, RT - STA. 70+50.00, RT (SOLID) (125')
A5 - STA. 65+92.62 LT - STA. 69+25.63 LT (DASHED) (333')
A6 - STA. 67+00.00, RT - STA. 69+25.63, RT (DOTTED) (229')
A7 - STA. 69+25.63, RT - STA. 70+50.00, RT (SOLID) (125')
A8 - STA. 65+92.66, LT - STA. 70+50.00, LT (SOLID) (463')
A12 - STA. 69+25.63, LT - STA. 70+50.00, LT (SOLID) (124')

646.4171 - DURABLE 4 INCH YELLOW LINE, RECESSSED TYPE A TAPE

B1 - STA. 65+92.66, LT - STA. 70+50.00, LT (SOLID) (456')
B2 - STA. 65+92.66, RT - STA. 70+50.00, LT (SOLID) (460')

646.4971 - DURABLE LETTER OR SYMBOL, RECESSED TYPE A TAPE

STA. 69+29.63 RT
STA. 69+29.63 RT
STA. 69+29.63 RT
STA. 69+92.99 RT
STA. 69+98.79 RT
STA. 69+98.79 RT

N

VT STATE PLANE GRID

BEGIN PROJECT
BERLIN STPG SGNL (40)
STA. 65+92.66

VT ROUTE 62
TO BERLIN CORNERS

VT ROUTE 62

65+93
67+00
68+00
69+00
70+00

A1 A2 B1 A3 A3 A5 A5 A6 A4 A7 A12

11' 11' 11' 11' 11' 11'

MATCH LINE STA 70+50

0 20 40
SCALE IN FEET

PROJECT NAME: BERLIN	
PROJECT NUMBER: STPG SGNL(40)	
FILE NAME: t11b358bdr.dgn	PLOT DATE: 10/28/2014
PROJECT LEADER: P. COBURN	DRAWN BY: T. SISSON
DESIGNED BY: T. SISSON	CHECKED BY: M. LACROIX
PAVEMENT MARKING SHEET 1	SHEET 45 OF 123

N

VT STATE PLANE GRID

646.4071 - DURABLE 4 INCH WHITE LINE, RECESSSED TYPE A TAPE

A9 - STA. 70+50.00, LT - STA. 31+75.00, LT (SOLID) (368')
A10 - STA. 70+50.00, LT - STA. 72+14.01, LT (DASHED) (165')
A11 - STA. 70+50.00, RT - STA. 72+13.99, RT (SOLID) (164')
A12 - STA. 70+50.00, RT - STA. 72+13.99, RT (DASHED) (164')
A13 - STA. 70+50.00, RT - STA. 71+22.70, RT (SOLID) (73')
A14 - STA. 70+50.00, RT - STA. 28+00.00, LT (SOLID) (213')
A15 - STA. 28+00.00, LT - STA. 28+24.43, LT (SOLID) (25')
A16 - STA. 28+24.43, LT - STA. 29+14.43, LT (DOTTED) (90')
A17 - STA. 28+00.00, RT - STA. 28+24.43, RT (DOTTED) (25')
A18 - STA. 28+24.43, RT - STA. 29+14.43, RT (SOLID) (90')
A19 - STA. 28+00.00, RT - STA. 29+14.43, RT (SOLID) (115')
A20 - STA. 28+00.00, RT - STA. 76+00.00, RT (SOLID) (461')
A21 - STA. 73+68.99, RT - STA. 75+00.00, RT (DASHED) (131')
A22 - STA. 75+00.00, RT - STA. 76+00.00, RT (SOLID) (100')
A23 - STA. 73+68.99, RT - STA. 76+00.00, RT (DASHED) (181')
A24 - STA. 73+68.99, LT - STA. 76+00.00, LT (SOLID) (231')
A25 - STA. 75+12.02, LT - STA. 76+00.00, LT (DIAGONALS) (119')
A26 - STA. 32+14.55, RT - STA. 76+00.00, LT (SOLID) (264')
A27 - STA. 31+59.22, RT - STA. 31+75.00, RT (DASHED) (17')
A28 - STA. 30+84.39, LT - STA. 31+75.00, LT (SOLID) (91')

646.4171 - DURABLE 4 INCH YELLOW LINE, RECESSED TYPE A TAPE

B3 - STA. 70+50.00, LT - STA. 72+14.01, LT (SOLID) (165')
B4 - STA. 70+50.00, RT - STA. 72+14.01, RT (SOLID) (164')
B5 - STA. 28+00.00, LT - STA. 29+14.43, LT (DOUBLE) (230')
B6 - STA. 73+68.99, RT - STA. 76+00.00, RT (SOLID) (232')
B7 - STA. 73+68.99, RT - STA. 76+00.00, RT (SOLID) (232')
B8 - STA. 30+75.00, RT - STA. 31+75.00, RT (SOLID) (100')
B9 - STA. 30+84.39, LT - STA. 31+75.00, LT (SOLID) (91')

646.4671 - DURABLE 12 INCH WHITE LINE, RECESSED TYPE A TAPE

C1 - STA. 71+22.70, RT - STA. 72+43.19, RT (GORE DIAGONALS) (220')
C2 - STA. 73+26.85, LT - STA. 74+33.76, LT (GORE DIAGONALS) (172')

646.4271 - DURABLE 6 INCH WHITE LINE, RECESSED TYPE A TAPE

D1 - STA. 71+90.25, RT - STA. 72+43.19, RT (GORE OUTSIDE) (121')
D2 - STA. 28+47.19, LT - STA. 29+45.36, LT (GORE OUTSIDE) (99')
D3 - STA. 73+26.85, LT - STA. 73+87.59, LT (GORE OUTSIDE) (107')
D4 - STA. 30+40.90, RT - STA. 31+59.22, RT (GORE OUTSIDE) (119')

646.4371 - DURABLE 6 INCH YELLOW RECESSED TYPE A TAPE

E1 - STA. 71+22.70, RT- STA. 28+47.19, LT (GORE OUTSIDE) (118')
E2 - STA. 31+59.22, RT - STA. 74+33.76, LT (GORE OUTSIDE) (126')

MATCH LINE STA 31+75

MATCH LINE STA 70+50

MATCH LINE STA 76+00

MATCH LINE STA 28+00

646.4971 - DURABLE LETTER OR SYMBOL, RECESSED TYPE A TAPE

STA. 70+67.95 RT ("ONLY")
STA. 70+67.95 RT ("ONLY")
STA. 71+37.10 RT ("ONLY")
STA. 72+05.99 RT ("ONLY")
STA. 72+05.99 RT ("ONLY")
STA. 72+05.99 RT ("ONLY")
STA. 73+77.06 LT ("ONLY")
STA. 73+77.06 LT ("ONLY")
STA. 73+77.06 LT ("ONLY")
STA. 74+51.90 LT ("ONLY")
STA. 75+14.80 RT ("ONLY")
STA. 75+26.74 LT ("ONLY")
STA. 75+84.61 LT ("ONLY")
STA. 28+56.38 RT-LT ("▼") - YIELD AHEAD TRIANGLES (6)
STA. 31+25.02 RT-LT ("▼") - YIELD AHEAD TRIANGLES (12)
STA. 75+84.61 LT ("ONLY")
STA. 28+25.16 LT ("ONLY")
STA. 28+25.16 RT ("ONLY")
STA. 28+37.00 RT ("ONLY")
STA. 28+67.43 RT ("ONLY")
STA. 29+06.43 RT ("ONLY")
STA. 29+06.43 RT ("ONLY")
STA. 29+06.43 RT ("ONLY")
STA. 30+92.39 LT ("ONLY")
STA. 30+92.39 LT ("ONLY")
STA. 31+45.29 LT ("ONLY")

646.4871 - DURABLE 24" STOP BAR, TYPE A TAPE

STA. 29+14.43 RT (33')
STA. 30+84.39 LT (22')
STA. 72+13.99 RT (33')
STA. 73+68.99 LT (33')

0 20 40
SCALE IN FEET

PROJECT NAME: BERLIN	
PROJECT NUMBER: STPG SGNL(40)	
FILE NAME: tllb358bdr.dgn	PLOT DATE: 10/28/2014
PROJECT LEADER: P. COBURN	DRAWN BY: T. SISSON
DESIGNED BY: T. SISSON	CHECKED BY: M. LACROIX
PAVEMENT MARKING SHEET 2	SHEET 46 OF 123

646.4071 - DURABLE 4 INCH WHITE LINE, RECESSSED TYPE A TAPE

A34A - STA. 24+99.43, LT - STA. 25+26.76, LT (SOLID) (34')
A34B - STA. 25+66.37, LT - STA. 28+00.00, LT (SOLID) (242')
A35 - STA. 26+25.00, CL - STA. 28+00.00, RT (DOTTED) (176')
A36 - STA. 26+24.70, RT - STA. 28+00.00, RT (SOLID) (176')
A37 - STA. 24+99.43, RT - STA. 28+00.00, RT (SOLID) (302')
A38 - STA. 27+49.02, LT - STA. 28+00.00, LT (SOLID) (53')

646.4571 - DURABLE 8 INCH YELLOW LINE, RECESSED TYPE A TAPE

F1 - STA. 25+99.43, RT - STA. 27+16.97, LT (ISLAND DIAGONALS) (71')

646.4171 - DURABLE 4 INCH YELLOW LINE, RECESSED TYPE A TAPE

B12A - STA. 24+99.43, CL - STA. 25+00.00, CL (DOUBLE)(52')
B12B - STA. 25+75.00, CL - STA. 25+99.43, CL (DOUBLE)(48')
B13 - STA. 25+99.43, CL - STA. 27+16.97, LT (ISLAND OUTSIDE)(242')
B14 - STA. 27+74.42, LT - STA. 28+00.00, LT (DOUBLE)(52')

646.4971 - DURABLE LETTER OR SYMBOL, RECESSED TYPE A TAPE

STA. 26+28.70 RT
STA. 26+46.83 RT
STA. 26+98.70 RT
STA. 27+67.65 RT
STA. 27+83.18 LT

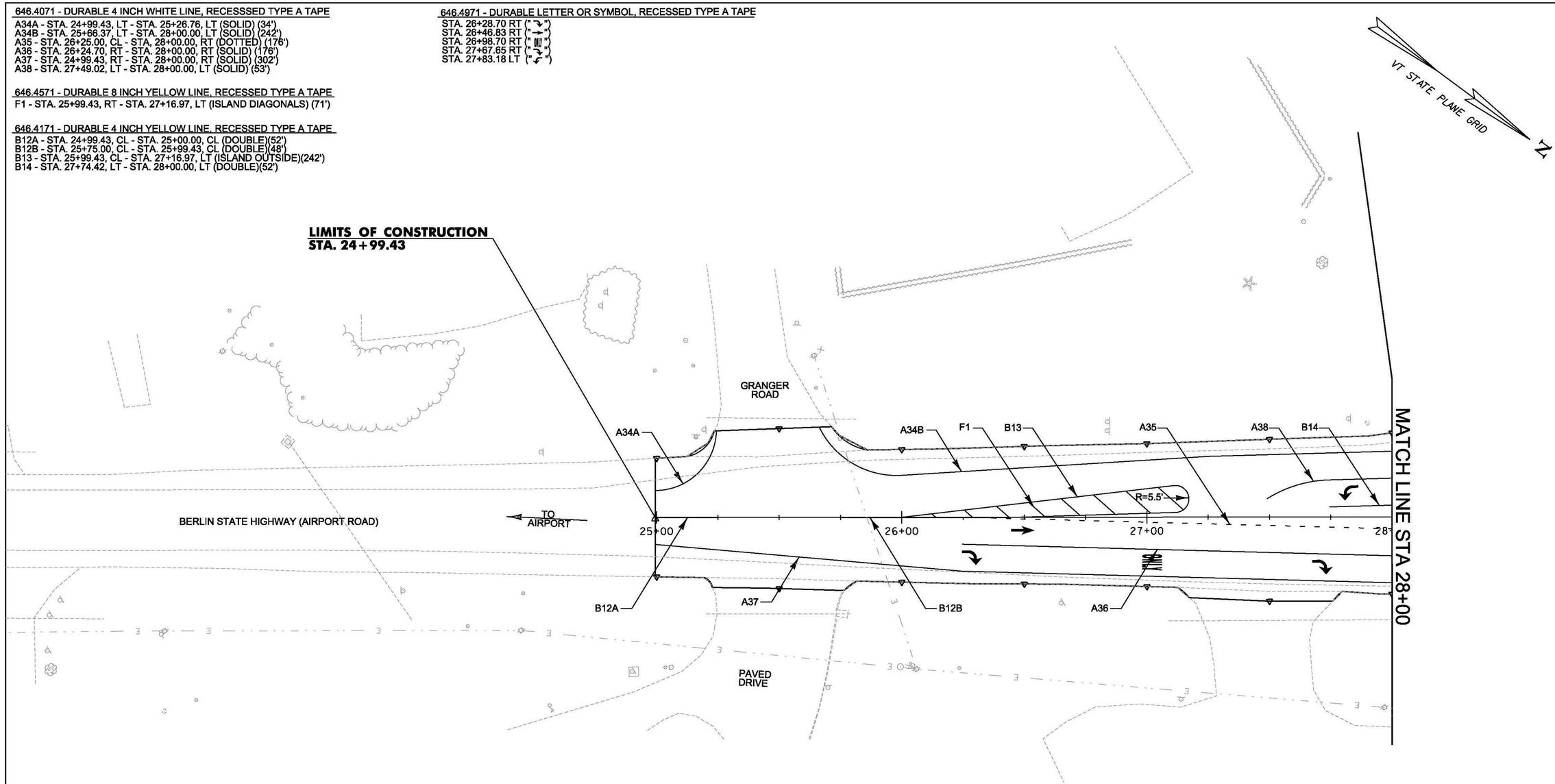

0 20 40
SCALE IN FEET

PROJECT NAME:	BERLIN
PROJECT NUMBER:	STPG SGNL(40)
FILE NAME: tllb358bdr.dgn	PLOT DATE: 10/28/2014
PROJECT LEADER: P. COBURN	DRAWN BY: T. SISSON
DESIGNED BY: T. SISSON	CHECKED BY: M. LACROIX
PAVEMENT MARKING SHEET 3	SHEET 47 OF 123

646.4071 - DURABLE 4 INCH WHITE LINE, RECESSSED TYPE A TAPE

A29 - STA. 31+75.00, LT - STA. 34+99.40, LT (SOLID) (325')
A30 - STA. 31+75.00, LT - STA. 33+00.00, LT (SOLID) (125')
A31 - STA. 33+00.00, LT - STA. 34+99.40, LT (DASHED) (200')
A32 - STA. 31+75.00, RT - STA. 34+99.40, RT (DASHED) (325')
A33 - STA. 31+75.00, RT - STA. 34+99.40, RT (SOLID) (326')

646.4171 - DURABLE 4 INCH YELLOW LINE, RECESSED TYPE A TAPE

B10 - STA. 31+75.00, LT - STA. 34+99.40, LT (SOLID) (325')
B11 - STA. 31+75.00, RT - STA. 34+99.40, RT (SOLID) (325')

646.4971 - DURABLE LETTER OR SYMBOL, RECESSED TYPE A TAPE

STA. 31+98.19, LT ("↑")
STA. 31+98.19, LT ("↱")
STA. 32+51.10 LT ("▣")
STA. 33+04.00 LT ("↑")
STA. 33+04.00 LT ("↰")

VT STATE PLANE GRID N

LIMITS OF CONSTRUCTION
STA. 34+99.40

MATCH LINE STA 31+75

A29 A30 A31 B10

32+00 33+00 34+00 34+99

A32 A33 B11

FISHER ROAD

0 20 40
SCALE IN FEET

PROJECT NAME: BERLIN	
PROJECT NUMBER: STPG SGNL(40)	
FILE NAME: t11b358bdr.dgn	PLOT DATE: 10/28/2014
PROJECT LEADER: P. COBURN	DRAWN BY: T. SISSON
DESIGNED BY: T. SISSON	CHECKED BY: M. LACROIX
PAVEMENT MARKING SHEET 4	SHEET 48 OF 123

VT STATE PLANE GRID

N

646.4071 - DURABLE 4 INCH WHITE LINE, RECESSSED TYPE A TAPE

A39 - STA. 76+00.00, LT - STA. 81+44.03, LT (DIAGONALS) (740')
A40 - STA. 76+00.00, LT - STA. 81+77.14, LT (SOLID) (577')
A41 - STA. 76+00.00, LT - STA. 81+77.14, LT (DASHED) (574')
A42 - STA. 76+00.00, LT - STA. 79+99.23, LT (SOLID) (400')
A43 - STA. 79+99.23, LT - STA. 81+00.00, LT (DOTTED) (102')
A44 - STA. 76+00.00, LT - STA. 76+25.18, LT (SOLID) (25')
A45 - STA. 79+00.00, RT - STA. 81+77.14, RT (SOLID) (264')
A46 - STA. 79+13.66, RT - STA. 81+77.14, RT (DIAGONALS) (550')
A47 - STA. 76+00.00, RT - STA. 78+84.68, RT (SOLID) (299')

646.4171 - DURABLE 4 INCH YELLOW LINE, RECESSED TYPE A TAPE

B15 - STA. 76+00.00, RT - STA. 81+77.14, RT (SOLID) (571')
B16 - STA. 76+00.00, RT - STA. 81+77.14, RT (SOLID) (567')

646.4671 - DURABLE 12 INCH WHITE LINE, RECESSED TYPE A TAPE

C3 - STA. 76+25.18, RT - STA. 79+00.00, RT (GORE OUTSIDE) (275')
C4 - STA. 76+25.18, RT - STA. 78+92.40, RT (GORE OUTSIDE) (281')
C5 - STA. 76+29.92, RT - STA. 78+99.65, RT (GORE DIAGONALS) (697')

646.4971 - DURABLE LETTER OR SYMBOL, RECESSED TYPE A TAPE

STA. 76+01.58, LT ("ONLY")
STA. 76+76.42, LT ("ONLY")
STA. 77+51.27, LT ("ONLY")
STA. 78+26.11, LT ("ONLY")
STA. 79+00.95, LT ("ONLY")
STA. 79+75.79, LT ("ONLY")

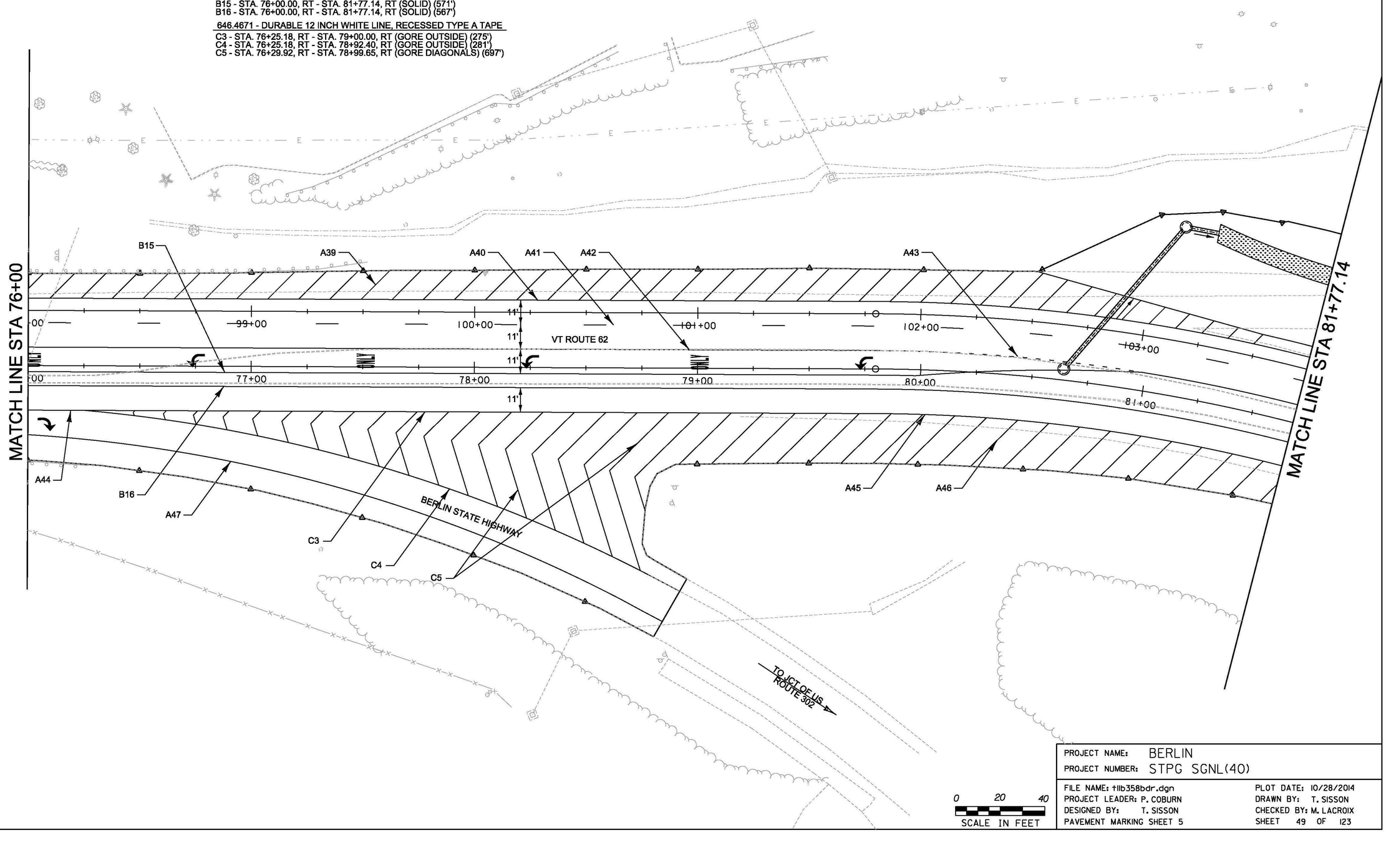

0 20 40
SCALE IN FEET

PROJECT NAME: BERLIN
PROJECT NUMBER: STPG SGNL(40)

FILE NAME: t11b358bdr.dgn
PROJECT LEADER: P. COBURN
DESIGNED BY: T. SISSON
PAVEMENT MARKING SHEET 5

PLOT DATE: 10/28/2014
DRAWN BY: T. SISSON
CHECKED BY: M. LACROIX
SHEET 49 OF 123

N

VT STATE PLANE GRID

646.4071 - DURABLE 4 INCH WHITE LINE, RECESSSED TYPE A TAPE

A48 - STA. 106+32.81, LT - STA. 109+68.00, LT (DIAGONALS) (242')
A49 - STA. 81+77.14, LT - STA. 109+68.00, LT (SOLID) (591')
A50 - STA. 82+64.99, LT - STA. 85+00.00, LT (SOLID) (241')
A51 - STA. 81+77.14, RT - STA. 85+00.00, RT (SOLID) (326')
A52 - STA. 81+77.14, RT - STA. 83+87.61, RT (DIAGONALS) (240')

646.4171 - DURABLE 4 INCH YELLOW LINE, RECESSED TYPE A TAPE

B17 - STA. 104+75.00, RT - STA. 109+68.00, RT (SOLID) (494')
B18 - STA. 81+77.14, LT - STA. 83+75.00, LT (SOLID) (208')
B19 - STA. 81+77.14, RT - STA. 83+75.00, RT (SOLID) (204')
B20 - STA. 83+75.00, LT - STA. 85+00.00, LT (DOUBLE) (252')
B21 - STA. 83+75.00, RT - STA. 85+00.00, RT (DOUBLE) (248')

646.4571 - DURABLE 8 INCH YELLOW LINE, RECESSED TYPE A TAPE

F2 - STA. 83+75.00, LT - STA. 85+00.00, LT (ISLAND DIAGONALS) (162')

646.4671 - DURABLE 12 INCH WHITE LINE, RECESSED TYPE A TAPE

C6 - STA. 103+89.70, RT - STA. 104+75.00, RT (GORE OUTSIDE) (88')
C7 - STA. 81+83.11, LT - STA. 82+64.72, LT (GORE OUTSIDE) (85')

646.4971 - DURABLE LETTER OR SYMBOL, RECESSED TYPE A TAPE

STA. 108+65.94, LT ("➶")
STA. 109+61.64, LT ("➶")

LIMITS OF CONSTRUCTION
STA. 109+68.33

MATCH LINE STA 81+77.14

MATCH LINE STA 85+00.00

A48 A49 A50 A51 A52
B17 B18 B19 B20 B21
C6 C7
F2

82+00 83+00 84+00 85+00
104+00 105+00 106+00 107+00 108+00 109+00 109+68

0 20 40
SCALE IN FEET

PROJECT NAME: BERLIN	
PROJECT NUMBER: STPG SGNL(40)	
FILE NAME: t11b358bdr.dgn	PLOT DATE: 10/28/2014
PROJECT LEADER: P. COBURN	DRAWN BY: T. SISSON
DESIGNED BY: T. SISSON	CHECKED BY: M. LACROIX
PAVEMENT MARKING SHEET 6	SHEET 50 OF 123

646.4071 - DURABLE 4 INCH WHITE LINE, RECESSSED TYPE A TAPE

A53 - STA. 85+00.00, RT - STA. 90+75.00, RT (SOLID) (587')
A54 - STA. 85+00.00, LT - STA. 90+75.00, LT (SOLID) (567')

646.4171 - DURABLE 4 INCH YELLOW LINE, RECESSED TYPE A TAPE

B22 - STA. 85+00.00, LT - STA. 86+25.00, LT (DOUBLE) (250')
B23 - STA. 85+00.00, RT - STA. 86+25.00, RT (DOUBLE) (250')
B24 - STA. 86+25.00, CL - STA. 90+75.00, CL (DOUBLE) (900')

646.4571 - DURABLE 8 INCH YELLOW LINE, RECESSED TYPE A TAPE

F2 - STA. 85+00.00, LT - STA. 86+25.00, (ISLAND DIAGONALS) (49')

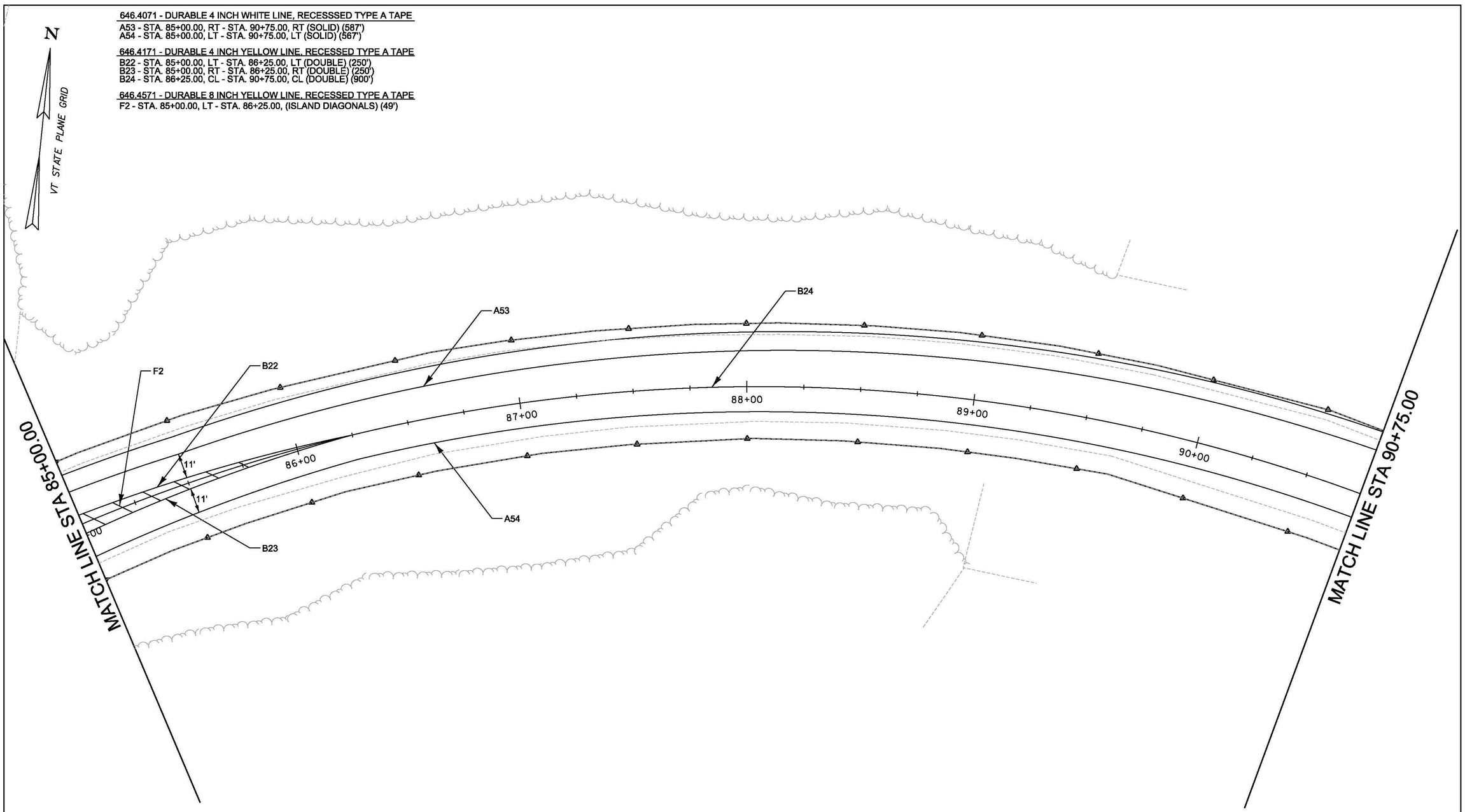

0 20 40
SCALE IN FEET

PROJECT NAME: BERLIN	
PROJECT NUMBER: STPG SGNL(40)	
FILE NAME: tilb358bdr.dgn	PLOT DATE: 10/28/2014
PROJECT LEADER: P. COBURN	DRAWN BY: T. SISSON
DESIGNED BY: T. SISSON	CHECKED BY: M. LACROIX
PAVEMENT MARKING SHEET 7	SHEET 51 OF 123

646.4071 - DURABLE 4 INCH WHITE LINE, RECESSSED TYPE A TAPE

A55 - STA. 90+75.00, LT - STA. 96+50.00, RT (SOLID) (580')
A56 - STA. 90+75.00, LT - STA. 96+50.00, LT (SOLID) (572')

646.4171 - DURABLE 4 INCH YELLOW LINE, RECESSED TYPE A TAPE

B25 - STA. 90+75.00, CL - STA. 96+50.00, CL (DOUBLE) (1150')

646.4971 - DURABLE LETTER OR SYMBOL, RECESSED TYPE A TAPE

STA. 94+40.00, LT ("↙")
STA. 96+20.00, LT ("↘")

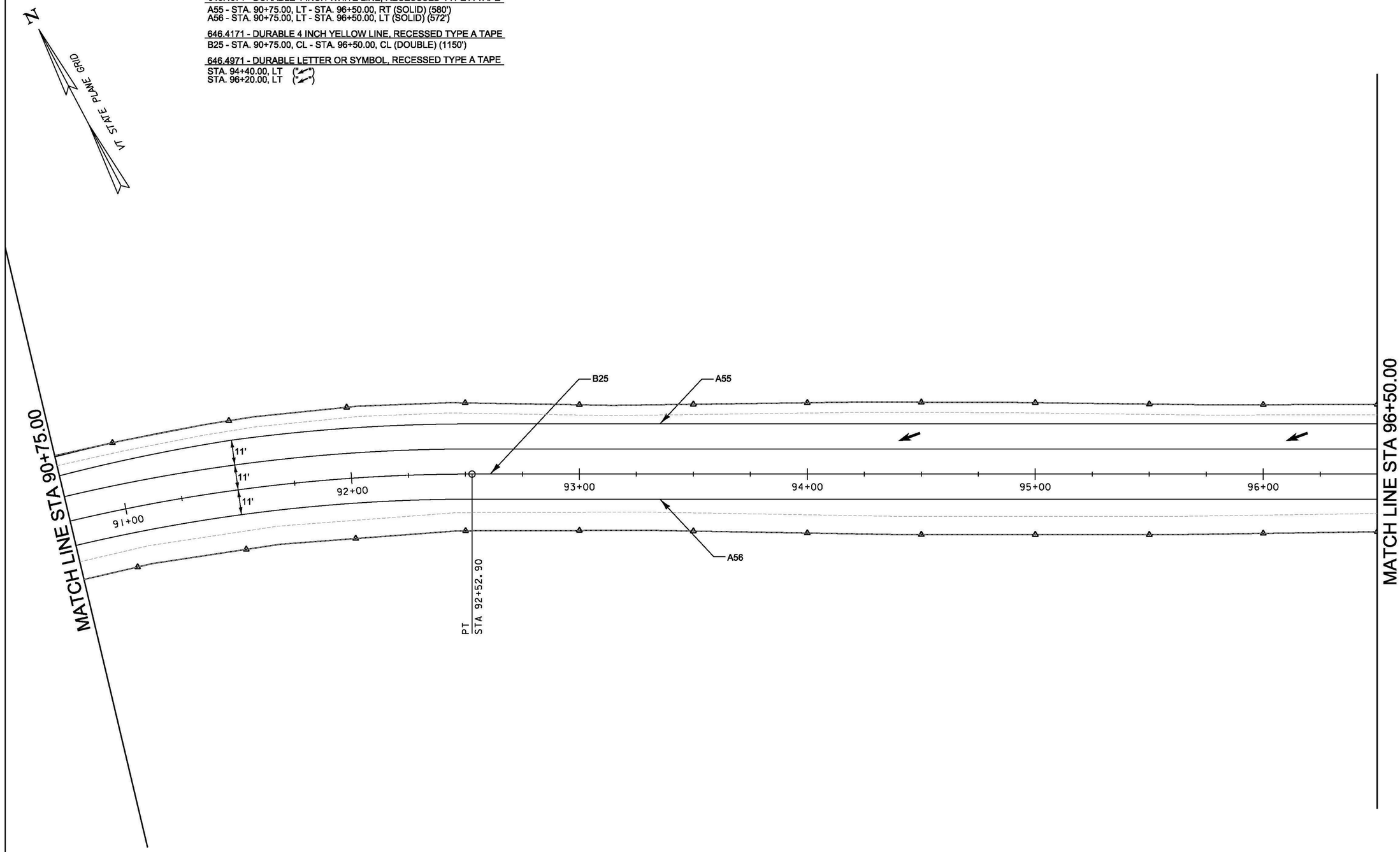

0 20 40
SCALE IN FEET

PROJECT NAME: BERLIN	
PROJECT NUMBER: STPG SGNL(40)	
FILE NAME: t11b358bdr.dgn	PLOT DATE: 10/28/2014
PROJECT LEADER: P. COBURN	DRAWN BY: T. SISSON
DESIGNED BY: T. SISSON	CHECKED BY: M. LACROIX
PAVEMENT MARKING SHEET 8	SHEET 52 OF 123

646.4071 - DURABLE 4 INCH WHITE LINE, RECESSSED TYPE A TAPE

A57 - STA. 90+75.00, LT - STA. 96+50.00, RT (SOLID) (550')
A58 - STA. 90+75.00, LT - STA. 96+50.00, LT (SOLID) (550')
A59 - STA. 98+13.75, LT - STA. 102+00.00, LT (DASHED) (326')

646.4171 - DURABLE 4 INCH YELLOW LINE, RECESSED TYPE A TAPE

B26 - STA. 96+50.00, CL - STA. 102+00.00, CL (DOUBLE) (1100')

646.4971 - DURABLE LETTER OR SYMBOL, RECESSED TYPE A TAPE

STA. 98+00.00, LT ("↙")

N

VA STATE PLANE GRID

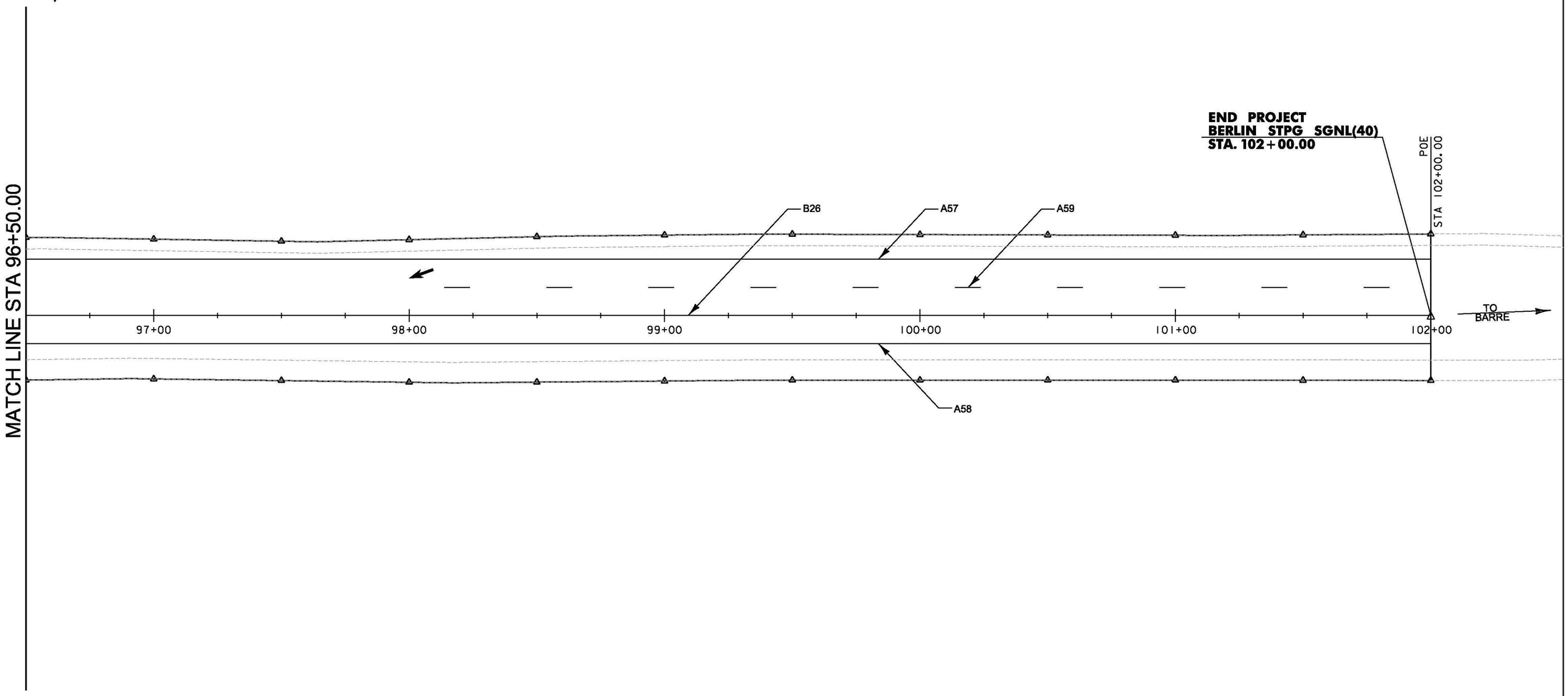

0 20 40
SCALE IN FEET

PROJECT NAME: BERLIN	
PROJECT NUMBER: STPG SGNL(40)	
FILE NAME: t11b358bdr.dgn	PLOT DATE: 10/28/2014
PROJECT LEADER: P. COBURN	DRAWN BY: T. SISSON
DESIGNED BY: T. SISSON	CHECKED BY: M. LACROIX
PAVEMENT MARKING SHEET 9	SHEET 53 OF 123

675.20 - TRAFFIC SIGNS, TYPE A
SEE TRAFFIC SUMMARY SHEETS

675.21 - TRAFFIC SIGNS, TYPE B
SEE TRAFFIC SUMMARY SHEETS

675.50 - REMOVING SIGNS (TYPE A)
AS SHOWN - 7

675.50 - REMOVING SIGNS (TYPE B)
AS SHOWN - 5

675.341 - SQUARE TUBE SIGN POST AND ANCHOR
SEE TRAFFIC SUMMARY SHEETS

677.13 - OVERHEAD TRAFFIC SIGN SUPPORT, MULTI-SUPPORT
STA. 68+88.96, RT - STA. 68+89.03, LT 1 EA

677.35 - REMOVE EXISTING OVERHEAD SIGN ASSEMBLY, MULTI-SUPPORT
STA. 69+99.26, LT - STA. 70+01.02, RT 1 EA

BEGIN PROJECT
BERLIN STPG SGNL (40)
STA. 65+92.66

VT ROUTE 62
TO BERLIN CORNERS

65+93
67+00
68+00
69+00
70+00

MATCH LINE STA 70+50

VT STATE PLANE GRID

STA. 70+35.88, LT

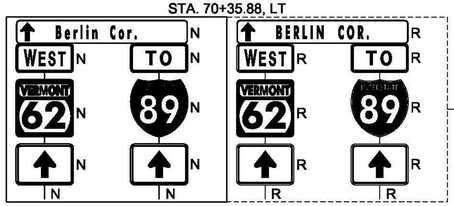

STA. 68+89.03, LT

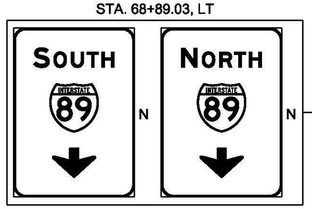

STA. 69+99.26, LT

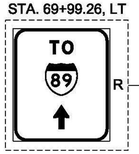

STA. 69+25.00, RT

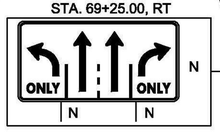

STA. 68+88.96, RT

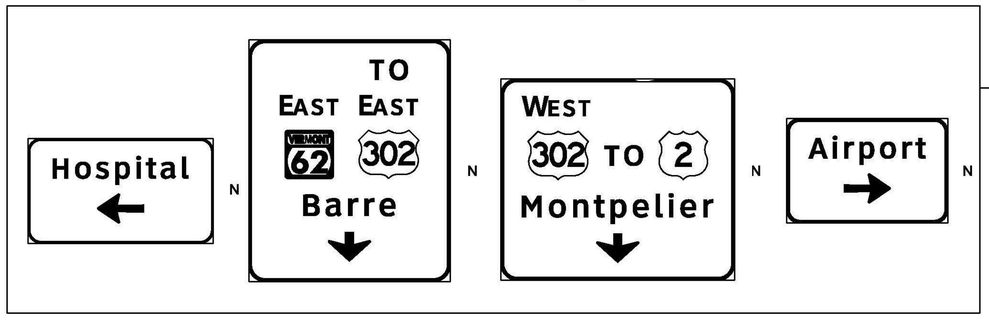

STA. 70+01.02, RT

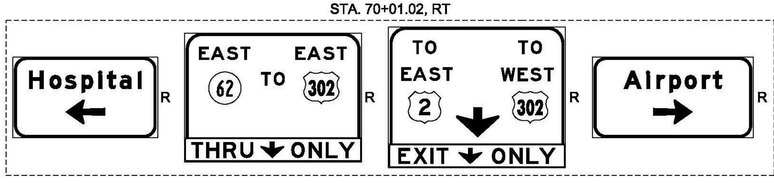

LEGEND
R = REMOVE
N = NEW
B-B = MOUNTED BACK TO BACK

0 20 40
SCALE IN FEET

PROJECT NAME: BERLIN	
PROJECT NUMBER: STPG SGNL(40)	
FILE NAME: t11b358bdr.dgn	PLOT DATE: 10/28/2014
PROJECT LEADER: P. COBURN	DRAWN BY: T. SISSON
DESIGNED BY: T. SISSON	CHECKED BY: M. LACROIX
TRAFFIC SIGNING SHEET 1	SHEET 54 OF 123

NOTE:
RETAIN SIGN BRIDGE AND OVERHEAD SIGNS AT STA. 75+99.49, LT-RT.

675.20 - TRAFFIC SIGNS, TYPE A
SEE TRAFFIC SUMMARY SHEETS

675.50 - REMOVING SIGNS (TYPE A)
AS SHOWN - 56

675.341 - SQUARE TUBE SIGN POST AND ANCHOR
SEE TRAFFIC SUMMARY SHEETS

VT STATE PLANE GRID

MATCH LINE STA 70+50

MATCH LINE STA 76+00

MATCH LINE STA 31+75

MATCH LINE STA 28+00

71+00 72+00 73+00 74+00 75+00 76+00

31+00 29+00 00

STA. 30+67.06, LT

STA. 30+72.47, LT

STA. 31+13.74, RT

STA. 31+55.76, RT

STA. 73+53.43, LT

STA. 73+63.16, LT

STA. 73+96.60, LT

STA. 74+23.69, RT

STA. 72+14.66, LT

STA. 71+78.12, RT

STA. 71+53.10, RT

STA. 72+14.23, RT

STA. 72+23.97, RT

STA. 29+30.33, RT

STA. 29+30.33, RT

STA. 28+21.34, RT

STA. 28+24.33, RT

STA. 28+05.53, RT

STA. 73+34.92, RT

STA. 74+19.34, RT

STA. 73+67.15, RT

RETAIN EXISTING SIGN ASSEMBLY

LEGEND

R = REMOVE
N = NEW
B-B = MOUNTED BACK TO BACK

0 20 40
SCALE IN FEET

PROJECT NAME:	BERLIN
PROJECT NUMBER:	STPG SGNL(40)
FILE NAME: t11b358bdr.dgn	PLOT DATE: 10/28/2014
PROJECT LEADER: P. COBURN	DRAWN BY: T. SISSON
DESIGNED BY: T. SISSON	CHECKED BY: M. LACROIX
TRAFFIC SIGNING SHEET 2	SHEET 55 OF 123

675.20 - TRAFFIC SIGNS, TYPE A
SEE TRAFFIC SUMMARY SHEETS

675.50 - REMOVING SIGNS (TYPE A)
AS SHOWN - 4

675.341 - SQUARE TUBE SIGN POST AND ANCHOR
SEE TRAFFIC SUMMARY SHEETS

VT STATE PLANE GRID

N

LIMITS OF CONSTRUCTION
STA. 24+99.43

GRANGER ROAD

TO AIRPORT

25+00 26+00 27+00 28+00

MATCH LINE STA 28+00

STA. 27+82.24, LT

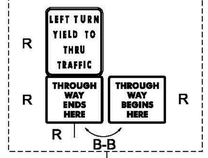

STA. 26+24.55, RT

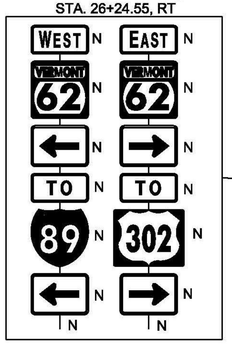

STA. 26+65.01, RT



LEGEND

R = REMOVE
N = NEW
B-B = MOUNTED BACK TO BACK

0 20 40
SCALE IN FEET

PROJECT NAME:	BERLIN
PROJECT NUMBER:	STPG SGNL(40)
FILE NAME: t11b358bdr.dgn	PLOT DATE: 10/20/2014
PROJECT LEADER: P. COBURN	DRAWN BY: T. SISSON
DESIGNED BY: T. SISSON	CHECKED BY: M. LACROIX
TRAFFIC SIGNING SHEET 3	SHEET 56 OF 123

675.20 - TRAFFIC SIGNS, TYPE A
SEE TRAFFIC SUMMARY SHEETS

675.50 - REMOVING SIGNS (TYPE A)
AS SHOWN - ~~6~~ (9)

675.341 - SQUARE TUBE SIGN POST AND ANCHOR
SEE TRAFFIC SUMMARY SHEETS

VT STATE PLANE GRID

N

STA. 33+53.32, RT

R X 2 + 2 X ◇ = 4
(4 SIGNS)

R

N
N
N N N
B-B

STA. 32+95.55, LT

ONLY N
N

ONLY R
R

STA. 33+95.94, LT

R
R
R

N
N
N

LIMITS OF CONSTRUCTION
STA. 34+99.40

MATCH LINE STA 31+75

32+00 33+00 34+00 34+99

STA. 33+56.17, RT

SPEED LIMIT 35 R
R

SPEED LIMIT 35 N
N

STA. 34+96.46, RT

ONLY R
R

ONLY N
N

LEGEND

R = REMOVE
N = NEW
B-B = MOUNTED BACK TO BACK

0 20 40
SCALE IN FEET

PROJECT NAME: BERLIN	
PROJECT NUMBER: STPG SGNL(40)	
FILE NAME: t11b358bdr.dgn	PLOT DATE: 10/20/2014
PROJECT LEADER: P. COBURN	DRAWN BY: T. SISSON
DESIGNED BY: T. SISSON	CHECKED BY: M. LACROIX
TRAFFIC SIGNING SHEET 4	SHEET 57 OF 123

675.20 - TRAFFIC SIGNS, TYPE A
SEE TRAFFIC SUMMARY SHEETS

675.50 - REMOVING SIGNS (TYPE A)
AS SHOWN - 1

675.341 - SQUARE TUBE SIGN POST AND ANCHOR
SEE TRAFFIC SUMMARY SHEETS

N
VT STATE PLANE GRID

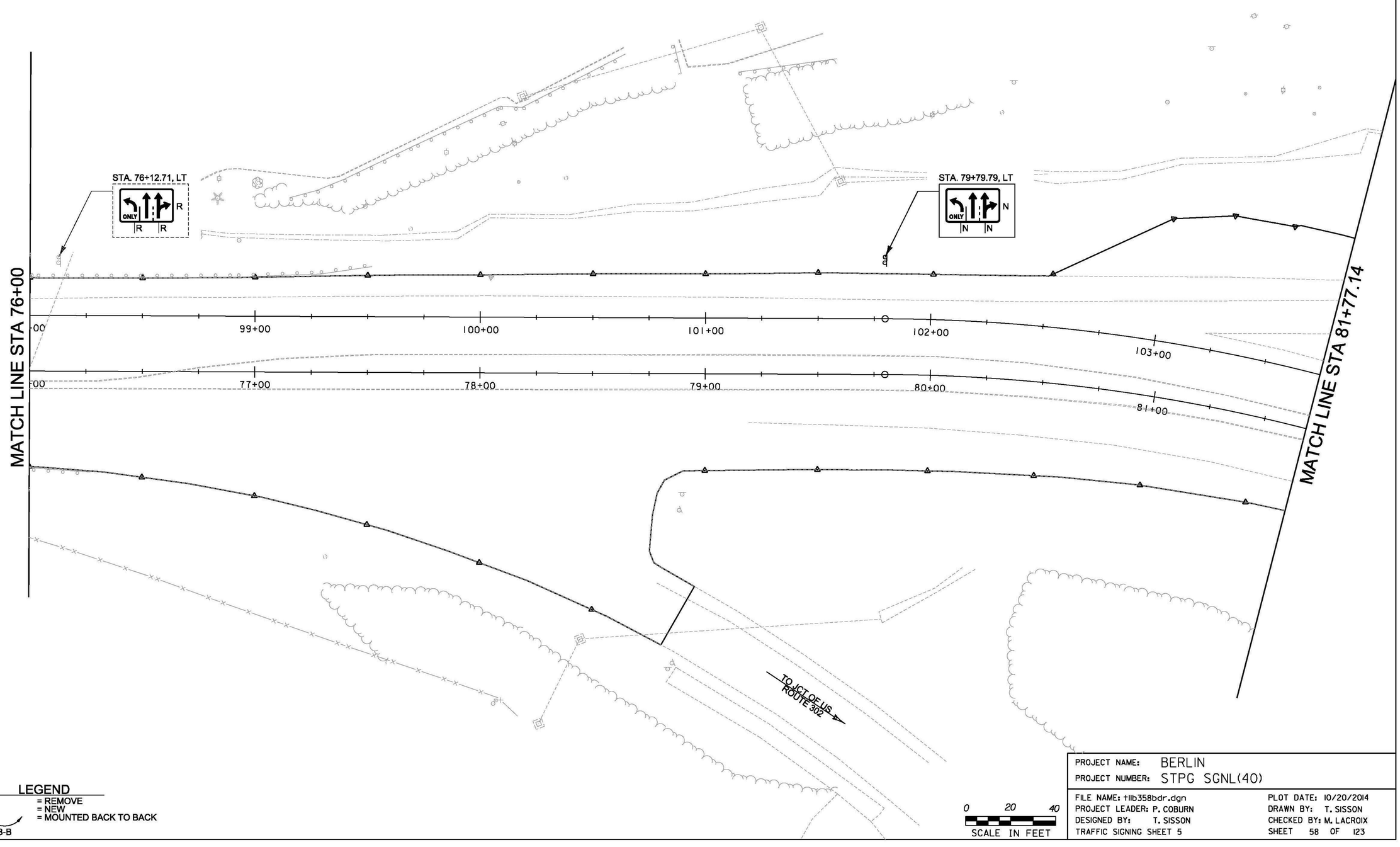

LEGEND
R = REMOVE
N = NEW
B-B = MOUNTED BACK TO BACK

0 20 40
SCALE IN FEET

PROJECT NAME: BERLIN
PROJECT NUMBER: STPG SGNL(40)

FILE NAME: t11b358bdr.dgn
PROJECT LEADER: P. COBURN
DESIGNED BY: T. SISSON
TRAFFIC SIGNING SHEET 5

PLOT DATE: 10/20/2014
DRAWN BY: T. SISSON
CHECKED BY: M. LACROIX
SHEET 58 OF 123

675.20 - TRAFFIC SIGNS, TYPE A
SEE TRAFFIC SUMMARY SHEETS

675.50 - REMOVING SIGNS (TYPE A)
AS SHOWN - ~~14~~ (12)

675.341 - SQUARE TUBE SIGN POST AND ANCHOR
SEE TRAFFIC SUMMARY SHEETS

676.10 - DELINEATOR WITH STEEL POST

STA. 105+56.97, 15.83' LT	1 EA
STA. 106+56.50, 18.83' LT	1 EA
STA. 107+59.04, 20.15' LT	1 EA
STA. 108+62.30, 20.58' LT	1 EA
STA. 109+66.45, 20.14' LT	1 EA

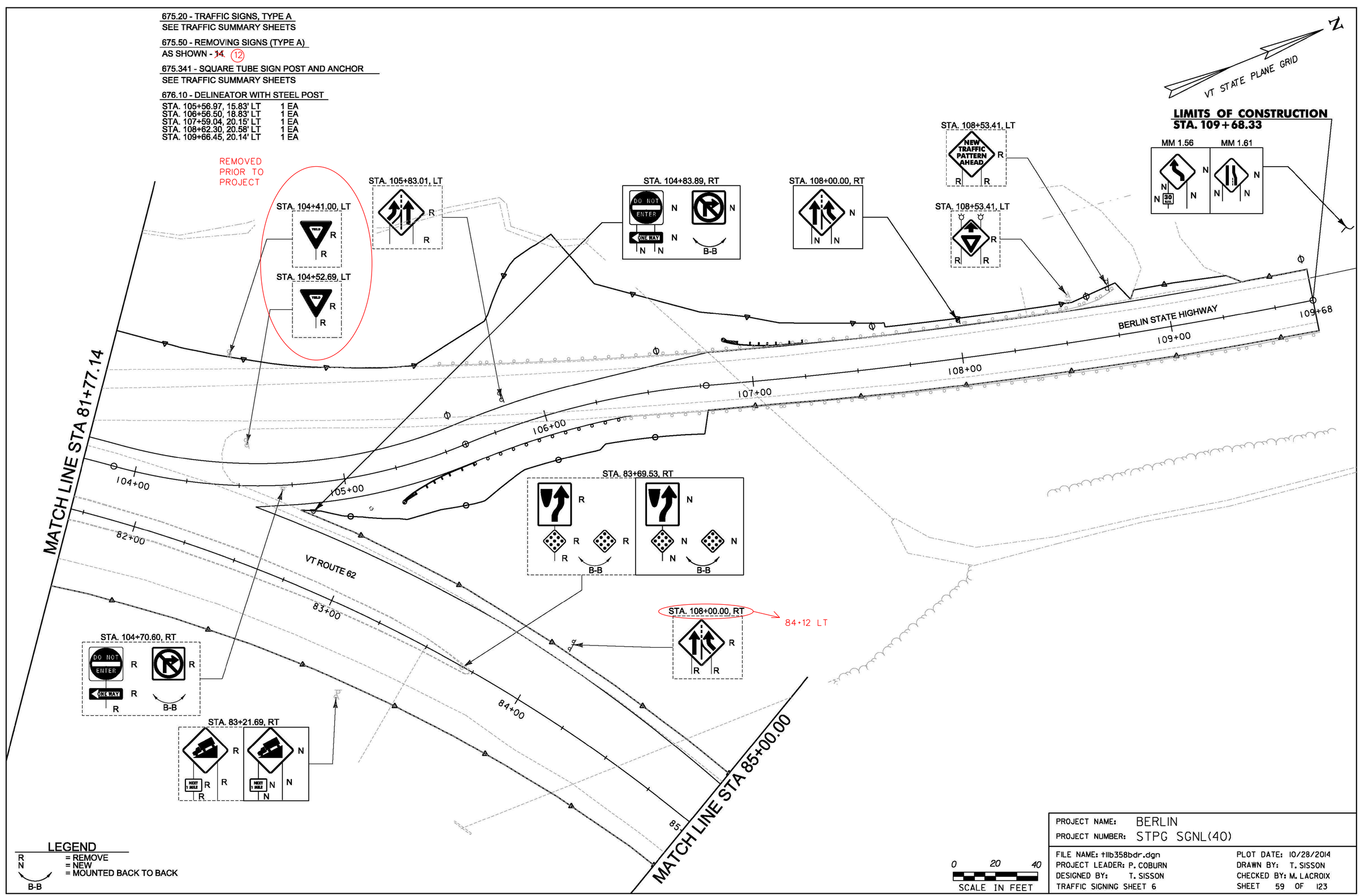

LEGEND

R	= REMOVE
N	= NEW
B-B	= MOUNTED BACK TO BACK

0 20 40
SCALE IN FEET

PROJECT NAME:	BERLIN
PROJECT NUMBER:	STPG SGNL(40)
FILE NAME: t11b358bdr.dgn	PLOT DATE: 10/28/2014
PROJECT LEADER: P. COBURN	DRAWN BY: T. SISSON
DESIGNED BY: T. SISSON	CHECKED BY: M. LACROIX
TRAFFIC SIGNING SHEET 6	SHEET 59 OF 123

675.20 - TRAFFIC SIGNS, TYPE A
SEE TRAFFIC SUMMARY SHEETS

675.50 - REMOVING SIGNS (TYPE A)
AS SHOWN - 3

675.341 - SQUARE TUBE SIGN POST AND ANCHOR
SEE TRAFFIC SUMMARY SHEETS

N

VT STATE PLANE GRID

MATCH LINE STA 85+00.00

MATCH LINE STA 90+75.00

86+00

87+00

88+00

89+00

90+00

STA. 87+48.30, LT

R

R

N

N

N

STA. 87+76.52, RT

EMERGENCY STOPPING ONLY

R

EMERGENCY STOPPING ONLY

N

R

N

STA. 85+41.31, RT

SPEED LIMIT 50

R

SPEED LIMIT 50

N

R

N

LEGEND

R = REMOVE
N = NEW
B-B = MOUNTED BACK TO BACK

0 20 40
SCALE IN FEET

PROJECT NAME: BERLIN
PROJECT NUMBER: STPG SGNL(40)

FILE NAME: t11b358bdr.dgn
PROJECT LEADER: P. COBURN
DESIGNED BY: T. SISSON
TRAFFIC SIGNING SHEET 7

PLOT DATE: 10/28/2014
DRAWN BY: T. SISSON
CHECKED BY: M. LACROIX
SHEET 60 OF 123

675.20 - TRAFFIC SIGNS, TYPE A
SEE TRAFFIC SUMMARY SHEETS

675.50 - REMOVING SIGNS (TYPE A)
AS SHOWN - 2

675.341 - SQUARE TUBE SIGN POST AND ANCHOR
SEE TRAFFIC SUMMARY SHEETS

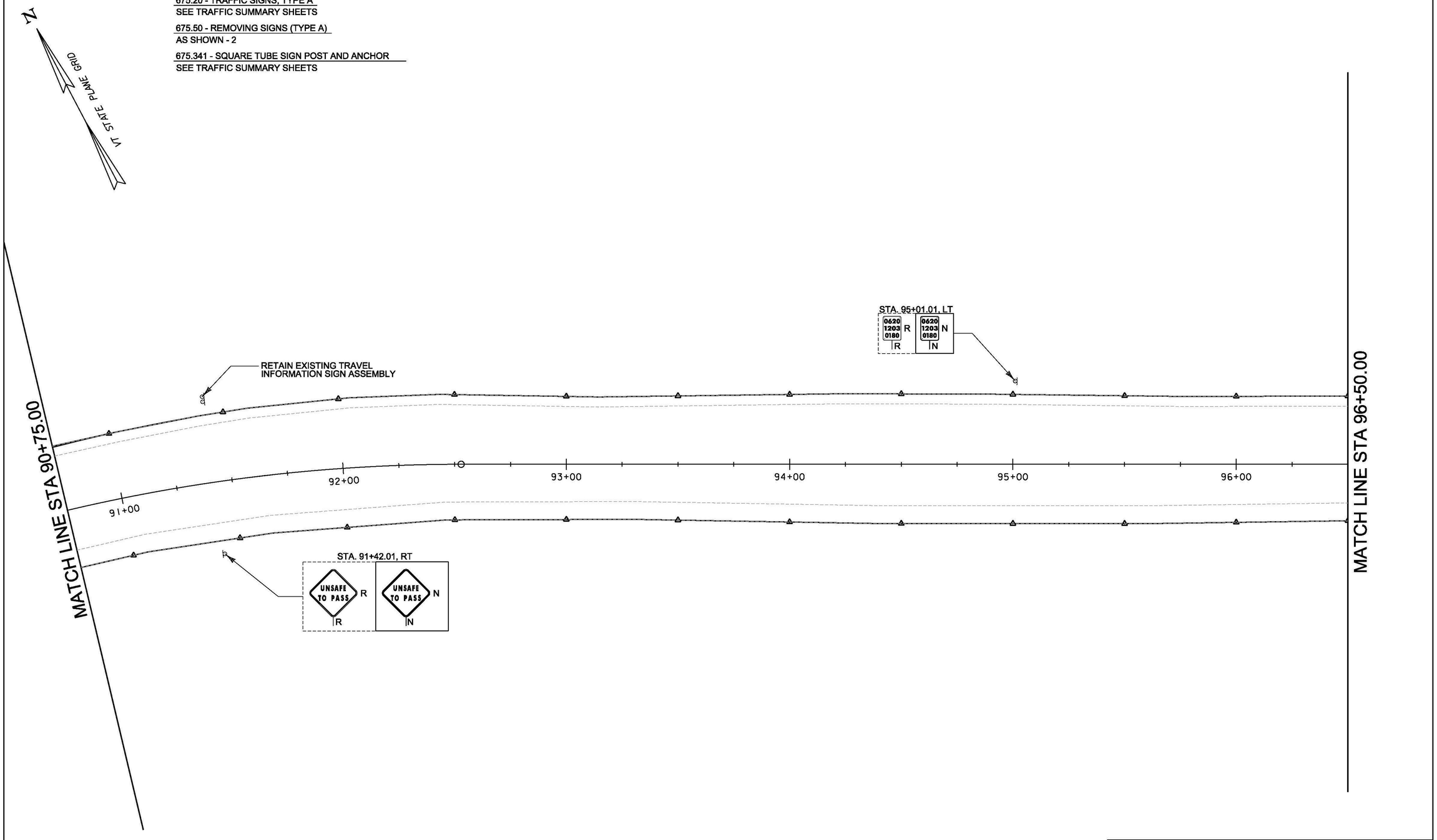

LEGEND

R = REMOVE
N = NEW
B-B = MOUNTED BACK TO BACK

0 20 40
SCALE IN FEET

PROJECT NAME: BERLIN	
PROJECT NUMBER: STPG SGNL(40)	
FILE NAME: t11b358bdr.dgn	PLOT DATE: 10/20/2014
PROJECT LEADER: P. COBURN	DRAWN BY: T. SISSON
DESIGNED BY: T. SISSON	CHECKED BY: M. LACROIX
TRAFFIC SIGNING SHEET 8	SHEET 61 OF 123

675.20 - TRAFFIC SIGNS, TYPE A
SEE TRAFFIC SUMMARY SHEETS

675.50 - REMOVING SIGNS (TYPE A)
AS SHOWN - ~~2~~ (1)

675.341 - SQUARE TUBE SIGN POST AND ANCHOR
SEE TRAFFIC SUMMARY SHEETS

N
VT STATE PLANE GRID

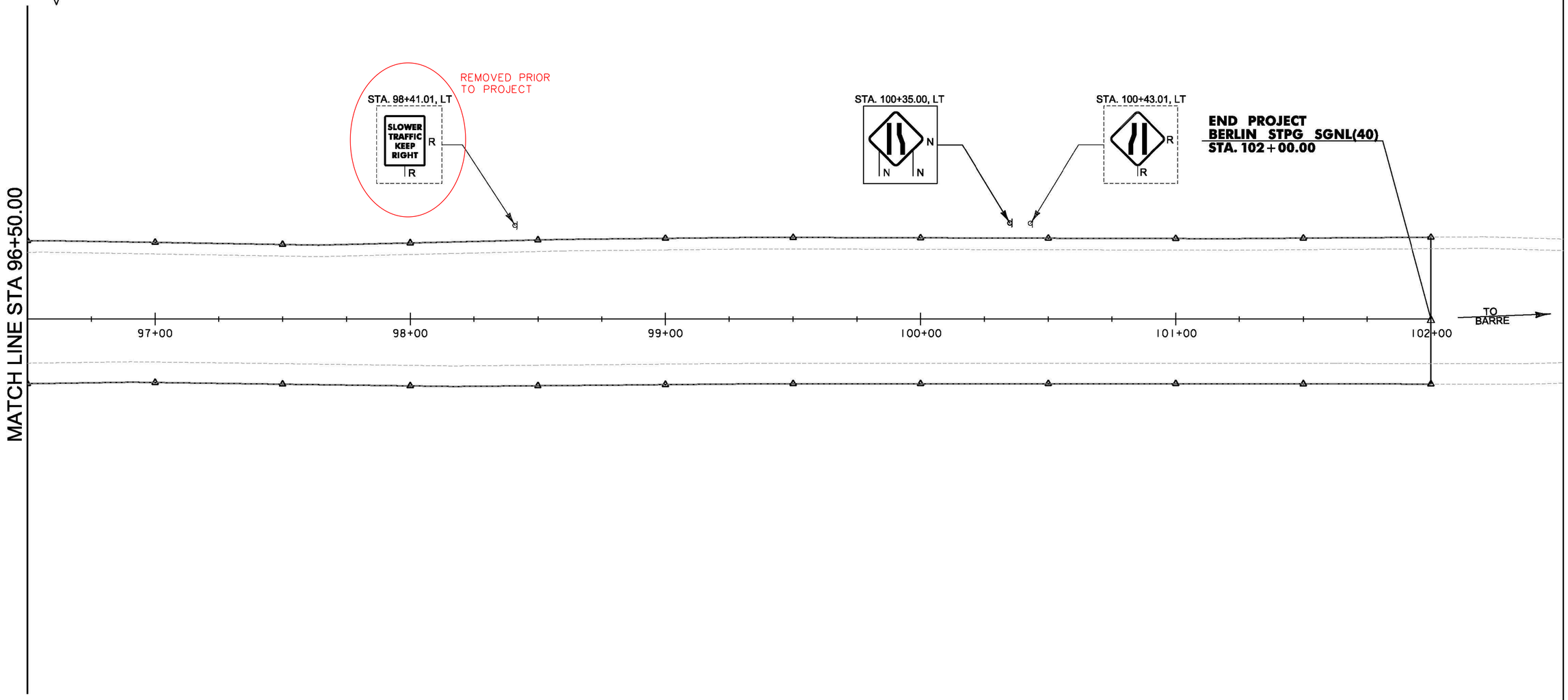

LEGEND
R = REMOVE
N = NEW
B-B = MOUNTED BACK TO BACK

0 20 40
SCALE IN FEET

PROJECT NAME:	BERLIN
PROJECT NUMBER:	STPG SGNL(40)
FILE NAME: t11b358bdr.dgn	PLOT DATE: 10/28/2014
PROJECT LEADER: P. COBURN	DRAWN BY: T. SISSON
DESIGNED BY: T. SISSON	CHECKED BY: M. LACROIX
TRAFFIC SIGNING SHEET 9	SHEET 62 OF 123

STATE OF VERMONT
AGENCY OF TRANSPORTATION

TRAFFIC SIGN SUMMARY SHEET 1

MILEMARKER, STATION, OR SIGN NUMBER	SIGN LEGEND	SIGN DIMENSIONS			NEW & SALVAGED SIGNS				EXIST POST		NEW SIGN POSTS																		REMARKS	SIGN DETAIL		
		EA	WIDTH (In)	HEIGHT (In)	"A"	"B"	SALV SIGN	SALV TIS	RETAIN	SALVAGE	NO. OF POSTS	FLANGED CHANNEL lb/ft			SQUARE STEEL (In) lb/ft			ANCHOR	SLEEVE	TUBULAR ALUMINUM Ø (In) lb/ft			TUBULAR STEEL Ø (In)					W-SHAPE STEEL				SIGN FRAME REQUIRED		SHSM	DETAIL ON SHEET NUMBER	STD. SHEET NUMBER
															2.0	2.0	2.5			3.0	4.0	4.0 MOD	FOUND-ATION	3.0	3.5	4.0	5.0	FTG. SIZE 24"	FTG. SIZE 30"	WEIGHT	POST SIZE					
												1.12	2.0	3.0	2.16	2.42	3.35			1.3	1.7	1.7		7.6	9.0	10.8	14.6									
		OPTION ITEMS																																		
STA. 68+88.96, RT		1	138	78		74.75																												GS-1		70	
STA. 68+88.96, RT		1	150	180		187.5																												GS-2		70	
STA. 68+88.96, RT		1	174	150		181.25																												GS-3		70	
STA. 68+88.86, RT		1	120	78		65																												GS-4		70	
STA. 68+89.03, LT		1	90	126		78.75																												GS-5		70	
STA. 68+89.03, LT		1	90	126		78.75																												GS-6		70	
SHEET TOTALS		SF	SF 666	EA	SF		FT	FT	FT	FT	FT	FT		EA	LB	LB	LB		LB	LB	LB	LB			EA	EA	LB								
							FT			FT					LB			EA	LB																

SHS = 2004 FHWA STANDARD HIGHWAY SIGNS & MARKINGS/2012 SUPP.
FYG = FLUORESCENT YELLOW GREEN

FINAL POST LENGTHS ARE TO BE DETERMINED IN THE FIELD. POST SIZES ARE COMPUTED BASED ON INFORMATION FURNISHED ON THE STANDARD SHEETS AND THE VTRANS "SIGN POST DESIGN GUIDELINE."

PROJECT NAME: BERLIN
PROJECT NUMBER: STPG SGNL(40)

FILE NAME: sign_sum_1.dgn
PROJECT LEADER: P. COBURN
DESIGNED BY: T. SISSON
TRAFFIC SIGN SUMMARY SHEET 1

PLOT DATE: 10/20/2014
DRAWN BY: T. SISSON
CHECKED BY: M. LACROIX

STATE OF VERMONT
AGENCY OF TRANSPORTATION

TRAFFIC SIGN SUMMARY SHEET 2

MILEMARKER, STATION, OR SIGN NUMBER	SIGN LEGEND	SIGN DIMENSIONS EA	WIDTH (In)	HEIGHT (In)	NEW & SALVAGED SIGNS "A"	"B"	SALV SIGN	SALV TIS	EXIST POST RETAIN	EXIST POST SALVAGE	NEW SIGN POSTS NO. OF POSTS	FLANGED CHANNEL lb/ft 1.12	2.0	3.0	SQUARE STEEL (In) 2.0 lb/ft 2.16	2.0 lb/ft 2.42	2.5 lb/ft 3.35	ANCHOR	SLEEVE	TUBULAR ALUMINUM Ø (In) 3.0 lb/ft 1.3	4.0 lb/ft 1.7	4.0 MOD lb/ft 1.7	FOUNDATION	TUBULAR STEEL Ø (In) 3.0 lb/ft 7.6	3.5 lb/ft 9.0	4.0 lb/ft 10.8	5.0 lb/ft 14.6	W-SHAPE STEEL FTG. SIZE 24"	30"	WEIGHT	POST SIZE	SIGN FRAME REQUIRED	REMARKS	SIGN DETAIL SHSM	DETAIL ON SHEET NUMBER	STD. SHEET NUMBER
												OPTION ITEMS																										
STA. 69+25.00, RT		1	60	30	12.50						2					14 X 15		X															VR-941		E-145A
STA. 70+35.88, LT		1 1 1 1 1 1 1	66 24 24 30 24 21 21	12 12 12 24 24 15 15	5.50 2.00 2.00 5.00 4.00 2.19 2.19						2					 	16 X 17	X													X	GREEN ON WHITE GREEN ON WHITE GREEN ON WHITE	D1-1 M3-4 M4-5 M1-5 M1-1 M6-3 M6-3		 E-136B E-136B E-136B
STA. 71+53.10, RT		1	36	36	9.00						1					14 X		X															R1-2		
STA. 71+78.12, RT		1 1	36 18	36 18	9.00 2.25						2					14 X 14		X															W12-1 OM-1		
STA. 72+14.66, LT		1 1 1 1	~~36~~ 24 24 18 18	~~36~~ 24 30 18 18	~~9.00~~ 4.00 5.00 2.25 2.25						2					12 X 12	12.5	X															R3-4 R4-7 OM-1 OM-1	70	
STA. 72+23.97, RT		1	30	30	6.25						1					14 X		X															VR-921L		E-145A
STA. 73+34.92, RT		1	36	36	9.00						2					14 X 15		X															VR-046		E-142
STA. 73+53.43, LT		1	18	18	2.25						1					9 X		X															OM-1		
STA. 73+63.16, LT	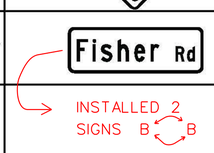	1	48	12	4.00						2					13 X 13		X															D3-1	70	

SHS = 2004 FHWA STANDARD HIGHWAY SIGNS & MARKINGS/2012 SUPP.
FYG = FLUORESCENT YELLOW GREEN

FINAL POST LENGTHS ARE TO BE DETERMINED IN THE FIELD. POST SIZES ARE COMPUTED BASED ON INFORMATION FURNISHED ON THE STANDARD SHEETS AND THE VTRANS "SIGN POST DESIGN GUIDELINE."

												FT	FT	FT	FT	FT 225	FT ~~255~~ 30		EA	LB	LB	LB		LB	LB	LB	LB									
SHEET TOTALS	SF ~~99.63~~ 94.63	SF	EA	SF								FT				FT ~~255~~ 218.5				LB			EA		LB			EA	EA	LB						

PROJECT NAME: BERLIN
PROJECT NUMBER: STPG SGNL(40)

FILE NAME: t11b358frm.dgn
PROJECT LEADER: P. COBURN
DESIGNED BY: T. SISSON
TRAFFIC SIGN SUMMARY SHEET 2

PLOT DATE: 10/28/2014
DRAWN BY: T. SISSON
CHECKED BY: M. LACROIX
SHEET 64 OF 123

STATE OF VERMONT
AGENCY OF TRANSPORTATION

TRAFFIC SIGN SUMMARY SHEET 3

MILEMARKER, STATION, OR SIGN NUMBER	SIGN LEGEND	SIGN DIMENSIONS EA	WIDTH (in)	HEIGHT (in)	NEW & SALVAGED SIGNS "A"	"B"	SALV SIGN	SALV TIS	EXIST POST RETAIN	EXIST POST SALVAGE	NO. OF POSTS	NEW SIGN POSTS: FLANGED CHANNEL lb/ft 1.12	2.0	3.0	SQUARE STEEL (in) 2.0 lb/ft 2.16	2.0 lb/ft 2.42	2.5 lb/ft 3.35	ANCHOR	SLEEVE	TUBULAR ALUMINUM Ø (in) 3.0 lb/ft 1.3	4.0 lb/ft 1.7	4.0 MOD lb/ft 1.7	FOUNDATION	TUBULAR STEEL Ø (in) 3.0 lb/ft 7.6	3.5 lb/ft 9.0	4.0 lb/ft 10.8	5.0 lb/ft 14.6	W-SHAPE STEEL FTG. SIZE 24"	30"	WEIGHT	POST SIZE	SIGN FRAME REQUIRED	REMARKS	SIGN DETAIL SHSM	DETAIL ON SHEET NUMBER	STD. SHEET NUMBER
												OPTION ITEMS																											
STA. 73+67.15, RT	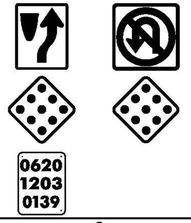	1	24	30	5.00						1					12		X																	R4-7		T-44
		1	~~36~~ 24	~~36~~ 24	~~9.00~~ 4.00																														R3-4		
		1	18	18	2.25											X																		OM-1		
	0620 1203 0139	1	18	18	2.25																														OM-1		
		1	6	10	0.42																																
STA. 73+96.60, LT	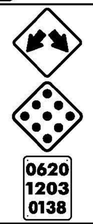	1	36	36	9.00						2					13		X																	W12-1		T-44
		1	18	18	2.25											X																		OM-1		
	0620 1203 0138	1	6	10	0.42											13.5																				
STA. 74+19.34, RT		1	30	30	6.25						1					X		X																	VR-921R		E-145A
																14																				
STA. 74+23.69, RT		1	30	30	6.25						1					13		X																	VR-921R		E-145A
																X																				
STA. 79+79.79, LT		1	48	30	10.00						2					14.5		X																	VR-934		E-145B
																X																				
																15.5																						
STA. 83+21.69, RT		1	36	36	9.00						2					16		X																	W7-1		
																X																				
	NEXT 1 MILE	1	24	18	3.00											17																		W7-3aP		
STA. 83+69.53, RT		1	24	30	5.00						1					13		X																	R4-7		
		1	18	18	2.25											X																		OM-1		
		1	18	18	2.25																														OM-1		
STA. 85+41.31, RT	SPEED LIMIT 50	1	30	36	7.50						1					15.5		X																	R2-1		
																X																				
SHEET TOTALS					SF ~~82.09~~ 77.09	SF	EA	SF				FT	FT	FT	FT	FT 165	FT ~~165~~ 157		EA	LB	LB	LB	EA	LB	LB	LB	LB	EA	EA	LB						

SHS = 2004 FHWA STANDARD HIGHWAY SIGNS & MARKINGS/2012 SUPP.
FYG = FLUORESCENT YELLOW GREEN

FINAL POST LENGTHS ARE TO BE DETERMINED IN THE FIELD. POST SIZES ARE COMPUTED BASED ON INFORMATION FURNISHED ON THE STANDARD SHEETS AND THE VTRANS "SIGN POST DESIGN GUIDELINE."

PROJECT NAME: BERLIN
PROJECT NUMBER: STPG SGNL(40)

FILE NAME: t11b358frm.dgn
PROJECT LEADER: P. COBURN
DESIGNED BY: T. SISSON
TRAFFIC SIGN SUMMARY SHEET 3

PLOT DATE: 10/20/2014
DRAWN BY: T. SISSON
CHECKED BY: M. LACROIX
SHEET 65 OF 123

STATE OF VERMONT
AGENCY OF TRANSPORTATION

TRAFFIC SIGN SUMMARY SHEET 4

MILEMARKER, STATION, OR SIGN NUMBER	SIGN LEGEND	SIGN DIMENSIONS EA	WIDTH (in)	HEIGHT (in)	NEW & SALVAGED SIGNS "A"	"B"	SALV SIGN	SALV TIS	EXIST POST RETAIN	EXIST POST SALVAGE	NO. OF POSTS	NEW SIGN POSTS: FLANGED CHANNEL lb/ft 1.12	2.0	3.0	SQUARE STEEL (in) 2.0 lb/ft 2.16	2.0 lb/ft 2.42	2.5 lb/ft 3.35	ANCHOR	SLEEVE	TUBULAR ALUMINUM Ø (in) 3.0 lb/ft 1.3	4.0 lb/ft 1.7	4.0 MOD lb/ft 1.7	TUBULAR STEEL Ø (in) FOUNDATION	3.0 lb/ft 7.6	3.5 lb/ft 9.0	4.0 lb/ft 10.8	5.0 lb/ft 14.6	W-SHAPE STEEL FTG. SIZE 24"	FTG. SIZE 30"	WEIGHT	POST SIZE	SIGN FRAME REQUIRED	REMARKS	SIGN DETAIL SHSM	DETAIL ON SHEET NUMBER	STD. SHEET NUMBER
												OPTION ITEMS																											
STA. 87+48.30, LT		1	36	36	9.00						2					13 X 14		X																		W-3		
STA. 87+76.52, RT	EMERGENCY STOPPING ONLY	1	30	24	5.00						1					15 X		X																		R8-7		
STA. 91+42.01, RT	UNSAFE TO PASS	1	30	30	6.25						1					15 X		X																		VW-092		
STA. 95+01.01, LT	0620 1203 0180	1	6	10	0.42						1					9 X		X																				T-44
STA. 100+35.00, LT		1	36	36	9.00						2					16.5 X 17.5		X																		W4-2		
STA. 26+24.55, RT	WEST VERMONT 62 / EAST VERMONT 62 / TO 89 / TO 302	1 1 1 1 1 1 1 1 1 1	24 24 24 24 21 21 21 24 30 21	12 12 24 24 15 15 15 12 24 15	2.00 2.00 2.00 4.00 4.00 2.19 2.19 2.19 2.00 5.00 2.19						2					19.5 X 20		X														X	GREEN ON WHITE GREEN ON WHITE GREEN ON WHITE GREEN ON WHITE	M3-4 M4-5 M3-2 M1-5 M1-1 M1-5 M6-1L M6-1L M6-1R M4-5 M1-5 M6-1R		E-136B E-136B E-136B E-136B E-136B
STA. 28+24.33, RT	ONLY ONLY	1	48	30	10.00						2					14 X 14		X																		VR-932		E-145B
STA. 29+30.33, RT	0620 1203 0138	1	6	10	0.42						1					8.5 X		X																				T-44
STA. 30+67.06, LT	EAST VERMONT 62 / WEST VERMONT 62 / TO 302 / TO 89	1 1 1 1 1 1 1 1 1 1 1	24 24 24 24 21 21 24 24 30 24 21	12 12 24 24 15 15 12 12 24 24 15	2.00 2.00 4.00 4.00 2.19 2.19 2.00 2.00 5.00 4.00 2.19						2					19 X 19.25		X														X	GREEN ON WHITE GREEN ON WHITE GREEN ON WHITE GREEN ON WHITE GREEN ON WHITE GREEN ON WHITE GREEN ON WHITE	M3-2 M3-4 M1-5 M1-5 M6-1L M6-1R M4-5 M4-5 M1-5 M1-1 M6-1L M6-1R		E-136B E-136B E-136B E-136B E-136B E-136B E-136B E-136B
SHEET TOTALS			SF 107.61	SF	EA	SF						FT	FT	FT	FT	FT 150	FT 60		EA	LB	LB	LB		LB	LB	LB	LB	EA	EA	LB						
																	~~210~~ 214.25																			

SHS = 2004 FHWA STANDARD HIGHWAY SIGNS & MARKINGS/2012 SUPP.
FYG = FLUORESCENT YELLOW GREEN

FINAL POST LENGTHS ARE TO BE DETERMINED IN THE FIELD. POST SIZES ARE COMPUTED BASED ON INFORMATION FURNISHED ON THE STANDARD SHEETS AND THE VTRANS "SIGN POST DESIGN GUIDELINE."

PROJECT NAME: BERLIN
PROJECT NUMBER: STPG SGNL(40)

FILE NAME: t11b358frm.dgn
PROJECT LEADER: P. COBURN
DESIGNED BY: T. SISSON
TRAFFIC SIGN SUMMARY SHEET 4

PLOT DATE: 10/20/2014
DRAWN BY: T. SISSON
CHECKED BY: M. LACROIX
SHEET 66 OF 123

STATE OF VERMONT
AGENCY OF TRANSPORTATION

TRAFFIC SIGN SUMMARY SHEET 5

MILEMARKER, STATION, OR SIGN NUMBER	SIGN LEGEND	NEW & SALVAGED SIGNS: EA	SIGN DIMENSIONS: WIDTH (in)	SIGN DIMENSIONS: HEIGHT (in)	NEW & SALVAGED SIGNS: "A"	NEW & SALVAGED SIGNS: "B"	NEW & SALVAGED SIGNS: SALV SIGN	NEW & SALVAGED SIGNS: SALV TIS	EXIST POST: RETAIN	EXIST POST: SALVAGE	NEW SIGN POSTS: NO. OF POSTS	FLANGED CHANNEL lb/ft: 1.12	FLANGED CHANNEL lb/ft: 2.0	FLANGED CHANNEL lb/ft: 3.0	SQUARE STEEL (in) lb/ft: 2.0 / 2.16	SQUARE STEEL (in) lb/ft: 2.0 / 2.42	SQUARE STEEL (in) lb/ft: 2.5 / 3.35	ANCHOR	SLEEVE	TUBULAR ALUMINUM Ø (in) lb/ft: 3.0 / 1.3	TUBULAR ALUMINUM Ø (in) lb/ft: 4.0 / 1.7	TUBULAR ALUMINUM Ø (in) lb/ft: 4.0 MOD / 1.7	FOUNDATION	TUBULAR STEEL Ø (in) lb/ft: 3.0 / 7.6	TUBULAR STEEL Ø (in) lb/ft: 3.5 / 9.0	TUBULAR STEEL Ø (in) lb/ft: 4.0 / 10.8	TUBULAR STEEL Ø (in) lb/ft: 5.0 / 14.6	W-SHAPE STEEL FTG. SIZE: 24"	W-SHAPE STEEL FTG. SIZE: 30"	W-SHAPE STEEL: WEIGHT	W-SHAPE STEEL: POST SIZE	SIGN FRAME REQUIRED	REMARKS	SIGN DETAIL: SHSM	SIGN DETAIL: DETAIL ON SHEET NUMBER	SIGN DETAIL: STD. SHEET NUMBER
											OPTION ITEMS																											
STA. 30+72.47, LT	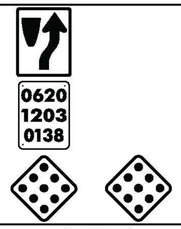	1	24	30	5.00						1					12.5 X		X																R4-7	X		
		1	6	10	0.42																															T-44
		1	18	18	2.25																													OM-1		
		1	18	18	2.25																													OM-1		
STA. 31+13.74, RT		1	30	30	6.25						1					12 X		X																R5-1		
STA. 31+55.76, RT		1	36	36	9.00						1					15 X		X																R1-2		
		1	30	30	6.25																													R5-1		
STA. 32+95.55, LT		1	36	30	7.50						2 1					14 15 X		X																VR-922L		E-145A
STA. 33+53.32, RT		1	24	30	5.00						1					12.5 X		X																R4-7	X		
STA. 33+56.17, RT		1	30	36	7.50						1					14 X		X																R2-1	X		
STA. 33+95.94, LT		1	24	24	4.00						1					15 X		X																I-5	X		
		1	21	15	2.19																													M6-3	X		
STA. 34+96.46, RT		1	30	30	6.25						1					13 X		X																VR-921R			E-145A
		1	18	18	2.25																													OM-1		
		1	18	18	2.25																													OM-1		
STA. 104+83.89, RT		1	36	36	9.00						2					14.5 X		X																R5-1	X		
		1	36	36	9.00																													R3-1	X		
		1	54	18	6.75											14.5																		R6-1	X		
107+00 STA. ~~108+00.00~~, RT		1	36	36	9.00						2					16 X 17		X																W4-3	X		
MM 1.56		1	36	36	16.00 ~~9.00~~						~~2~~					~~X~~		~~X~~																W1-4	X		
		1	24	24	4.00																													W13-1P	X		
MM 1.61		1	36	36	9.00						2					14.5 X 15		X																W4-2	X		
												FT	FT	FT	FT	FT 240	FT		EA	LB	LB	LB		LB	LB	LB	LB									
SHEET TOTALS		SF ~~124.11~~ 131.11	SF	EA	SF							FT			FT	~~240~~ 214.5				LB			EA	LB				EA	EA	LB						

SHS = 2004 FHWA STANDARD HIGHWAY SIGNS & MARKINGS/2012 SUPP.
FYG = FLUORESCENT YELLOW GREEN

FINAL POST LENGTHS ARE TO BE DETERMINED IN THE FIELD. POST SIZES ARE COMPUTED BASED ON INFORMATION FURNISHED ON THE STANDARD SHEETS AND THE VTRANS "SIGN POST DESIGN GUIDELINE."

SIGN MOVED TO FLASHING BEACON POST @ STA. 108+53.11

PROJECT NAME: BERLIN
PROJECT NUMBER: STPG SGNL(40)

FILE NAME: t11b358frm.dgn
PROJECT LEADER: P. COBURN
DESIGNED BY: T. SISSON
TRAFFIC SIGN SUMMARY SHEET 5

PLOT DATE: 10/20/2014
DRAWN BY: T. SISSON
CHECKED BY: M. LACROIX
SHEET 67 OF 123

STATE OF VERMONT
AGENCY OF TRANSPORTATION

TRAFFIC SIGN SUMMARY SHEET 6

MILEMARKER, STATION, OR SIGN NUMBER	SIGN LEGEND	SIGN DIMENSIONS			NEW & SALVAGED SIGNS				EXIST POST		NEW SIGN POSTS																				REMARKS	SIGN DETAIL		
		EA	WIDTH (In)	HEIGHT (In)	"A"	"B"	SALV SIGN	SALV TIS	RETAIN	SALVAGE	NO. OF POSTS	FLANGED CHANNEL lb/ft			SQUARE STEEL (In) lb/ft			ANCHOR	SLEEVE	TUBULAR ALUMINUM Ø (In) lb/ft			FOUND-ATION	TUBULAR STEEL Ø (In) lb/ft				W-SHAPE STEEL FTG. SIZE		WEIGHT	POST SIZE	SIGN FRAME REQUIRED		SHSM	DETAIL ON SHEET NUMBER	STD. SHEET NUMBER
															2.0	2.0	2.5			3.0	4.0	4.0 MOD		3.0	3.5	4.0	5.0									
												1.12	2.0	3.0	2.16	2.42	3.35			1.3	1.7	1.7		7.6	9.0	10.8	14.6	24"	30"							
												OPTION ITEMS																								
	TSS SHEET 1 TOTAL					666																														
	TSS SHEET 2 TOTAL				94.63 ~~99.63~~											218.5 ~~225~~	~~30~~																			
	TSS SHEET 3 TOTAL				77.09 ~~82.09~~											157 ~~165~~																			
	TSS SHEET 4 TOTAL				107.61											214.25 ~~150~~	~~60~~																			
	TSS SHEET 5 TOTAL				131.11 ~~124.11~~											214.5 ~~240~~																			
82+00 LT	→				8						2					13 X 13		X																	
105+43 LT	←				8						2					14 X 15.5		X																	

GENERAL SIGNING DETAILS

TYPE 1

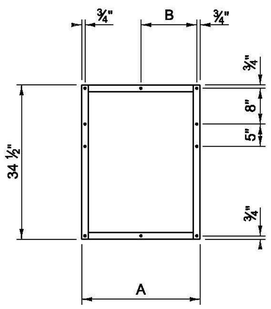

TYPE 2

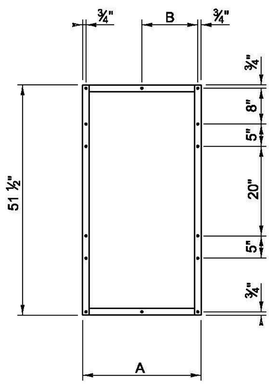

TYPE 3

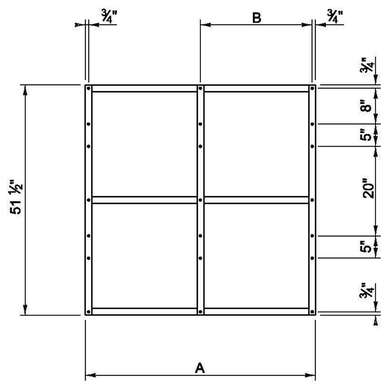

FRAME TYPE	A	B
1A	26 ½"	12 ½"
1B	29 ½"	15 ½"
1C	32 ½"	15 ½"

FRAME TYPE	A	B
2A	26 ½"	12 ½"
2B	29 ½"	15 ½"
2C	32 ½"	15 ½"

FRAME TYPE	A	B
3A	51 ½"	25"
3B	54 ½"	28"
3C	57 ½"	28"
3D	63 ½"	31"

ROUTE MARKER ASSEMBLY FRAMES

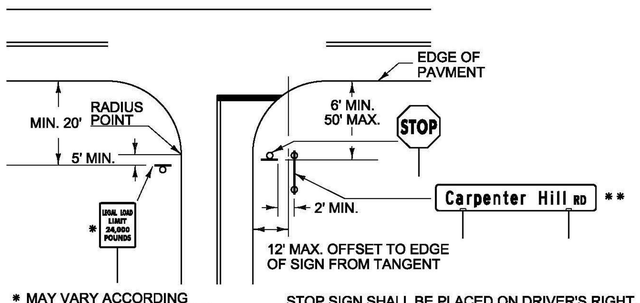

* MAY VARY ACCORDING TO ROADWAY CONDITIONS. SIDE ROAD SPEED LIMIT SIGN MAY BE INSTALLED BENEATH THIS SIGN AS REQUIRED.

STOP SIGN SHALL BE PLACED ON DRIVER'S RIGHT. MAINTAIN MAXIMUM VISIBILITY. THE STOP SIGN DOES NOT HAVE TO BE ADJACENT TO THE STOP BAR.

** STREET NAME SIGN MAY BE INSTALLED AT 90 DEGREES ON TOP OF THE STOP SIGN IF STREET NAME SIGN IS 48 INCHES OR LESS IN LENGTH. IF THE STREET NAME SIGN IS GREATER THAN 48 INCHES IN LENGTH THEN THE SIGN SHALL BE INSTALLED ON TWO SIGN POSTS TO THE RIGHT OF THE STOP SIGN AT A 2 FOOT MINIMUM LATERAL OFFSET, MAINTAINING MAXIMUM VISIBILITY AT THE INTERSECTION FOR THE STOPPED VEHICLE.

LEGAL LOAD LIMIT AND STOP SIGNS AT INTERSECTIONS WITH TOWN HIGHWAYS

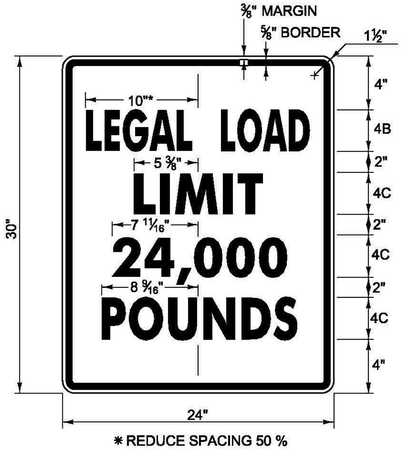

* REDUCE SPACING 50 %
LINE 3 ALTERNATE - **16,000**

1.500" RADIUS, 0.625" BORDER, 0.375" INDENT
COLORS: BLACK ON WHITE
TEXT STYLE: "LEGAL LOAD" B; "LIMIT" C;
"24,000" C; "POUNDS" C

VR-017

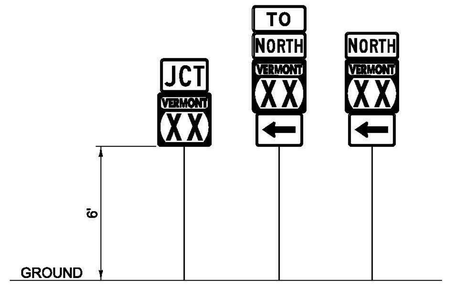

GUIDE SIGN PLACEMENT DETAIL

NOTES:

1. IN ALL URBAN AREAS AND IN RURAL AREAS WHERE PARKING OR PEDESTRIAN TRAFFIC WILL OCCUR IN THE IMMEDIATE VICINITY OF THESE SIGNS, MINIMUM VERTICAL CLEARANCE SHALL BE INCREASED TO 7 FEET.

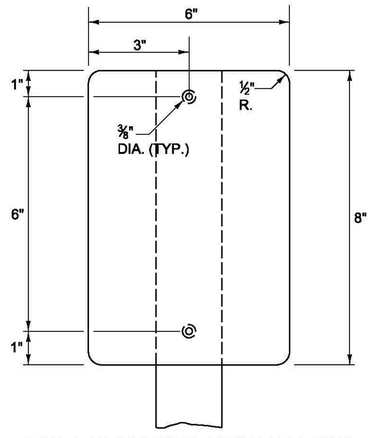

TYPE II (6"X8") DELINEATOR

DELINEATORS WITH RETROREFLECTIVE SHEETING

NOTES:

1. MATERIAL FOR RETROREFLECTIVE SHEETING FOR DELINEATORS SHALL BE A 0.063" ALUMINUM BACKING WITH A WHITE ASTM D 4956 TYPE III OR TYPE IV.
2. ALL TYPE II (6"X8") DELINEATOR POSTS SHALL BE 1.88 LB/FT SQUARE STEEL WITH A 12 GAUGE ANCHOR, WITH AN ANCHOR REVEAL OF 2 INCHES.
3. DELINEATOR POSTS SHALL HAVE A MINIMUM EMBEDMENT OF 2'-6" IN THE GROUND.
4. ALL WORK ASSOCIATED WITH TYPE II (6"X8") DELINEATORS SHALL BE PAID FOR UNDER ITEM 676.10.

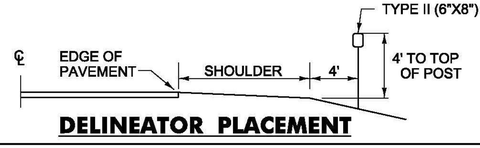

DELINEATOR PLACEMENT

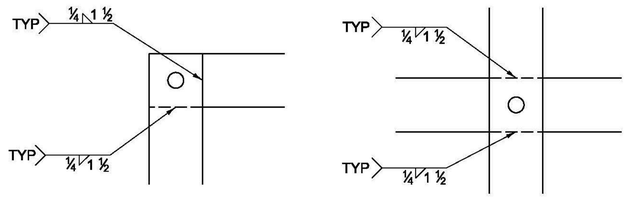

WELDING DETAILS

NOTES:

1. TYPE 1A FRAME ASSEMBLY TO BE USED WITH TWO 24 INCH WIDE SIGN COLUMNS.
2. TYPE 1B FRAME ASSEMBLY TO BE USED WITH ONE 24 INCH WIDE SIGN COLUMN AND ONE 30 INCH WIDE SIGN COLUMN.
3. TYPE 1C FRAME ASSEMBLY TO BE USED WITH TWO 30 INCH WIDE SIGN COLUMNS.
4. TYPE 2A FRAME ASSEMBLY TO BE USED WITH TWO 24 INCH WIDE SIGN COLUMNS.
5. TYPE 2B FRAME ASSEMBLY TO BE USED WITH ONE 24 INCH WIDE SIGN COLUMN AND ONE 30 INCH WIDE SIGN COLUMN.
6. TYPE 2C FRAME ASSEMBLY TO BE USED WITH TWO 30 INCH WIDE SIGN COLUMNS.
7. TYPE 3A FRAME ASSEMBLY TO BE USED WITH THREE 24 INCH WIDE SIGN COLUMNS.
8. TYPE 3B FRAME ASSEMBLY TO BE USED WITH TWO 24 INCH WIDE SIGN COLUMNS AND ONE 30 INCH WIDE SIGN COLUMN, WITH THE 30 INCH SIGN COLUMN IN AN OUTSIDE POSITION.
9. TYPE 3C FRAME ASSEMBLY TO BE USED WITH ONE 24 INCH WIDE SIGN COLUMN IN THE CENTER AND TWO 30 INCH SIGN COLUMNS ON THE OUTSIDE OR ONE 30 INCH SIGN COLUMN IN THE CENTER AND TWO 24 INCH SIGN COLUMNS ON THE OUTSIDE.
10. TYPE 3D FRAME ASSEMBLY TO BE USED WITH THREE 30 INCH WIDE SIGN COLUMNS.
11. ALL HOLES SHALL BE $\frac{7}{16}$ INCH DIAMETER.
12. FOR SIGN COMBINATIONS OTHER THAN ABOVE, THE FRAME DIMENSIONS AND HOLE SPACING SHALL BE MODIFIED AS NECESSARY.
13. STANDARD FRAMES SHALL BE CONSTRUCTED OF $\frac{5}{16}$ INCH BY 1 ½ INCH AASHTO M 270M/M 270, GRADE 250 (GRADE 36) STEEL.
14. SEE THE MANUAL ON UNIFORM TRAFFIC CONTROL DEVICES (MUTCD) SECTION 2D.29 FOR INSTALLATION SEQUENCE.
15. ALL DIMENSIONS SHOWN IN INCHES, UNLESS OTHERWISE NOTED.

PROJECT NAME: BERLIN
PROJECT NUMBER: STPG SGNL(40)

FILE NAME: t11b358frm.dgn
PROJECT LEADER: P. COBURN
DESIGNED BY: T. SISSON
GENERAL SIGN DETAIL SHEET

PLOT DATE: 10/20/2014
DRAWN BY: T. SISSON
CHECKED BY: M. LACROIX
SHEET 69 OF 123

GUIDE SIGN DETAILS

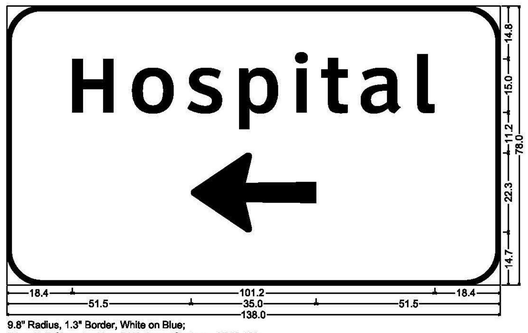

9.8" Radius, 1.3" Border, White on Blue;
"Hospital" ClearviewHwy-5-W; Arrow Custom - 35.0" 180;

GS–1

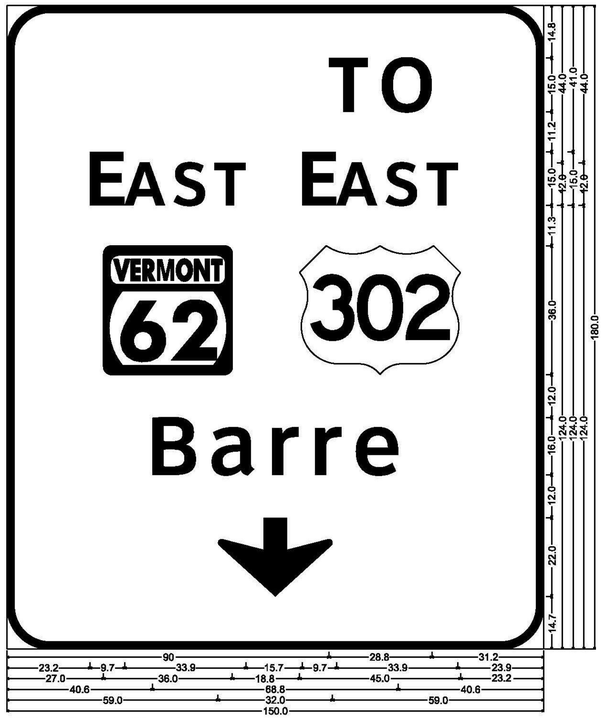

12.0" Radius, 2.0" Border, White on Green;
"TO" ClearviewHwy-5-W; "EAST" ClearviewHwy-5-W; "EAST" ClearviewHwy-5-W; "Barre" ClearviewHwy-5-W;
Down Arrow 22.0" 270 degree;

GS–2

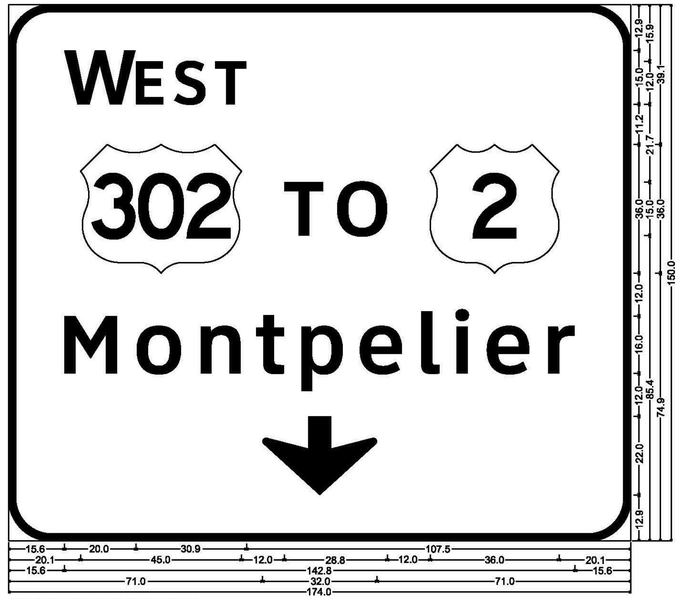

12.0" Radius, 2.0" Border, White on Green;
"WEST" ClearviewHwy-5-W; "TO" ClearviewHwy-5-W; "Montpelier" ClearviewHwy-5-W; Down Arrow 22.0" 270;

GS–3

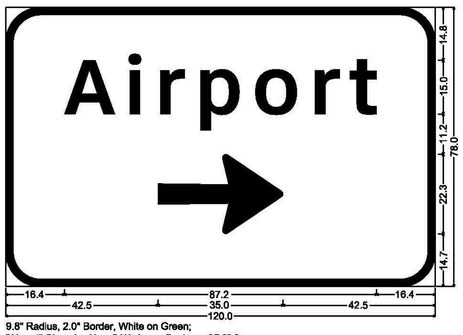

9.8" Radius, 2.0" Border, White on Green;
"Airport" ClearviewHwy-5-W; Arrow Custom - 35.0" 0;

GS–4



12.0" Radius, 2.0" Border, White on Green;
"SOUTH" ClearviewHwy-5-W; Intersate 89 M1-1; Down Arrow 22.0" 270;

GS–5

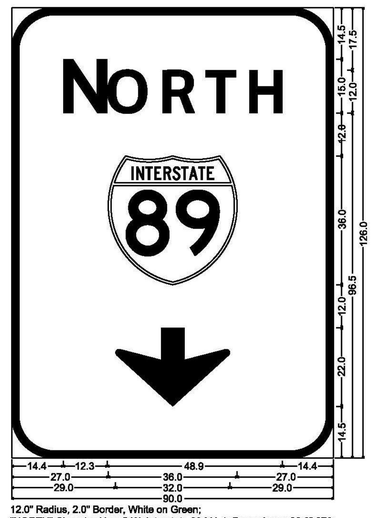

12.0" Radius, 2.0" Border, White on Green;
"NORTH" ClearviewHwy-5-W; Interstate 89 M1-1; Down Arrow 22.0" 270;

GS–6

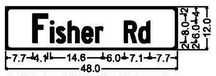

1.5" Radius, 0.5" Border, White on Green;
"Fisher Rd" C 2K;

D3–1
DOUBLE SIDED



1.5" Radius, 0.5" Border, White on Green;
Standard Arrow Custom 7.4" X 5.4" 90; "Berlin Cor." C 2K;

VD1–1



1.5" Radius, 0.5" Border, White on Green;
"Airport Rd" C 2K;

D3–1
DOUBLE SIDED

PROJECT NAME: BERLIN	
PROJECT NUMBER: STPG SGNL(40)	
FILE NAME: tllb358frm.dgn	PLOT DATE: 10/20/2014
PROJECT LEADER: P. COBURN	DRAWN BY: T. SISSON
DESIGNED BY: T. SISSON	CHECKED BY: M. LACROIX
GUIDE SIGN DETAIL SHEET	SHEET 70 OF 123

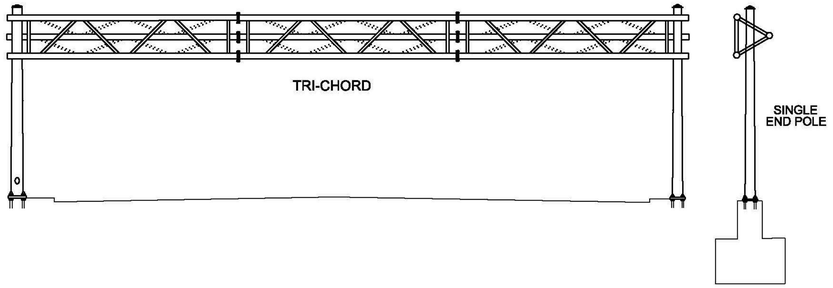

ANCHOR BOLT DETAIL		
SIZE	L (in.)	T (in.)
1¼" x 48"	42	8
1½" x 60"	54	9
1¾" x 90"	84	9
2" x 96"	96	9

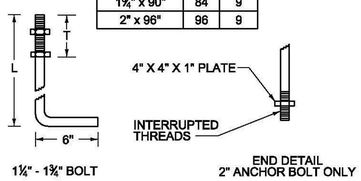

ANCHOR BOLT DETAIL

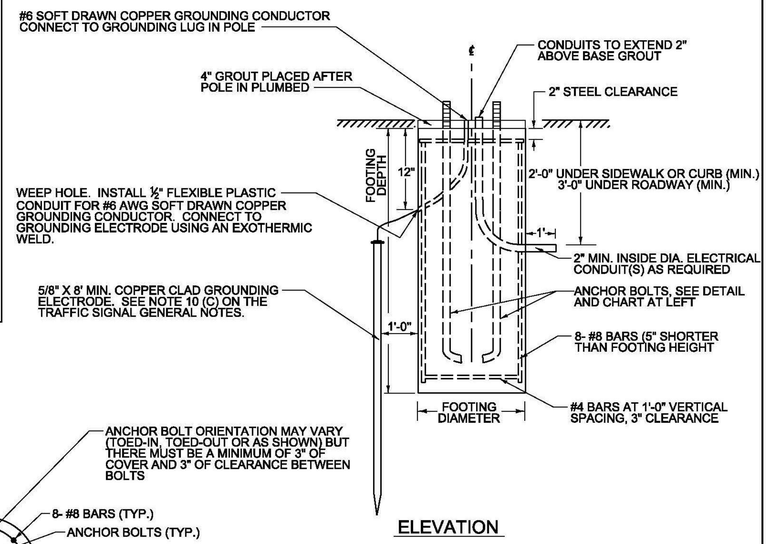

ELEVATION

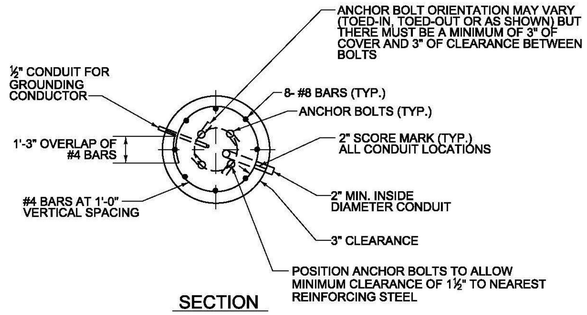

SECTION

OVERHEAD TRAFFIC SIGN BRIDGE FOOTING DETAIL
(SPREAD FOOTINGS OR PILES ARE OPTIONAL)

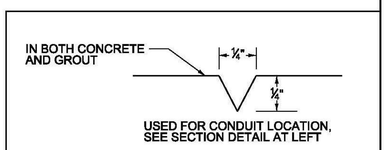

2" SCORE MARK DETAIL

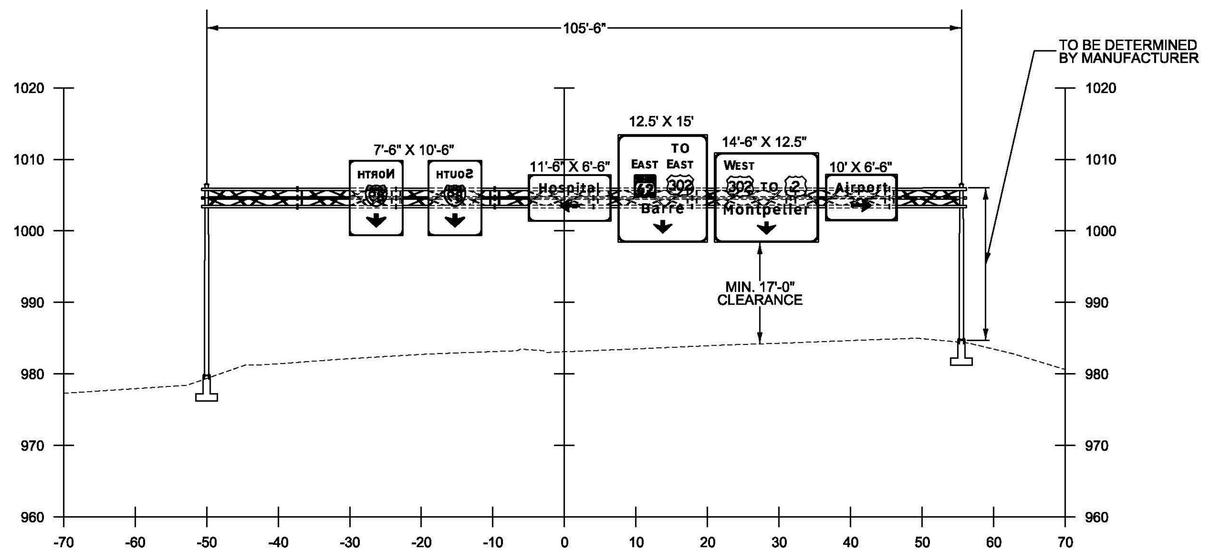

OVERHEAD TRAFFIC SIGN BRIDGE – STA. 68+88.96, RT – STA. 68+89.05, LT
CROSS SECTION FOR ILLUSTRATIVE PURPOSES ONLY - SEE NOTE 2.
NOT TO SCALE

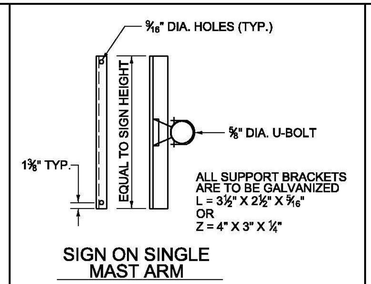

SIGN ON SINGLE MAST ARM

SIGN BRACKET DETAILS

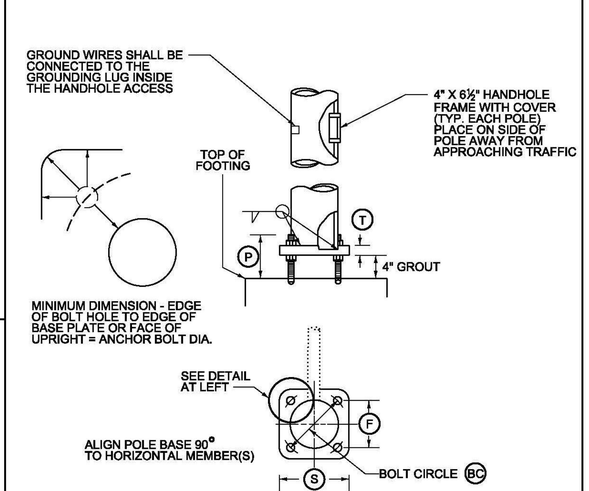

POLE BASE AND BASE PLATE DETAIL

NOTES

1. SEE TRAFFIC SIGNAL GENERAL NOTES FOR ADDITIONAL INFORMATION.
2. MANUFACTURER TO DETERMINE TYPE OF STRUCTURE REQUIRED.
3. MONOTUBES SHALL NOT BE USED FOR SIGNS OVER 10' HIGH.
4. MINIMUM CLEARANCE FROM SIGNS TO ANY TRAVEL LANE SHALL BE 17'.
5. CONTRACTOR SHALL VERIFY ALL GROUND ELEVATIONS.

PROJECT NAME: BERLIN
PROJECT NUMBER: STPG SGNL(40)

FILE NAME: sb_det01.dgn
PROJECT LEADER: P. COBURN
DESIGNED BY: T. SISSON
SIGN BRIDGE DETAIL SHEET

PLOT DATE: 10/20/2014
DRAWN BY: T. SISSON
CHECKED BY: M. LACROIX
SHEET 71 OF 123

EPSC PLAN NARRATIVE

1.1 PROJECT DESCRIPTION

THE PROJECT SHALL CONSIST OF THE INSTALLATION OF NEW TRAFFIC SIGNAL EQUIPMENT, RESURFACING, ADDITION OF A LEFT TURN LANE ON AIRPORT RD., REALIGNMENT OF BERLIN STATE HIGHWAY, TRAFFIC SIGNS, SIGN BRIDGE, PAVEMENT MARKINGS, AND OTHER RELATED ITEMS.

NOTE: AREA OF DISTURBANCE INCLUDES LIMITS OF EARTH DISTURBANCE WITHIN THE PROJECT AREA, AS WELL AS WASTE, BORROW AND STAGING AREAS, AND OTHER EARTH DISTURBING ACTIVITIES WITHIN OR DIRECTLY ADJACENT TO THE PROJECT LIMITS AS SHOWN ON THE ATTACHED EPSC PLAN.

TOTAL AREA OF DISTURBANCE AS SHOWN ON THE ATTACHED EPSC PLAN IS APPROXIMATELY 0.70 ACRES.

IT IS ANTICIPATED THAT THIS PROJECT WILL LAST ONE CONSTRUCTION SEASON.

1.2 SITE INVENTORY

1.2.1 TOPOGRAPHY

THE TOPOGRAPHY OF THE AREA IS SLOPED AND IS DEVELOPED WITH SOME OPEN AND WOODED AREAS. VT 62, AIRPORT ROAD, FISHER ROAD, GRANGER ROAD AND SEVERAL PAVED AND GRAVEL DRIVEWAYS ARE WITHIN THE PROJECT SITE. THERE IS A HOSPITAL ON THE NORTHERN QUADRANT OF THE INTERSECTION, TWO BUSINESSES ON THE EASTERN QUADRANT OF THE INTERSECTION, GRANGER ROAD AND ONE BUSINESS ON THE SOUTHERN QUADRANT OF THE INTERSECTION, AND THE WESTERN QUADRANT IS OPEN. THE AREA NORTH OF THE INTERSECTION ADJACENT TO BERLIN STATE HIGHWAY HAS MODERATE SLOPES WITH WOODS AND GRASS BUFFER.

1.2.2 DRAINAGE, WATERWAYS, BODIES OF WATER, AND PROXIMITY TO NATURAL OR MAN-MADE WATER FEATURES

THERE ARE NO WATERWAYS OR WATER COURSES WITHIN THE PROJECT LIMITS. THE WINOOSKI RIVER IS APPROXIMATELY 2000 FEET EAST AND AN UNNAMED TRIBUTARY IS APPROXIMATELY 2000 FEET NORTH OF THE PROJECT. THERE ARE SEVERAL DROP INLETS ON SITE DRAINING FROM THE ROADWAY DOWN SLOPE OFFSITE. THERE IS A SMALL CLASS III WETLAND 25 FEET OUTSIDE THE PROJECT LIMITS.

1.2.3 VEGETATION

THE VEGETATION IN THE PROJECT AREA CONSISTS OF HARDWOOD TREES, SOFTWOOD TREES AND UNDERGROWTH. THE IMPACT TO VEGETATION WILL BE LIMITED MAINLY TO THE UNDERGROWTH. DISTURBED VEGETATION WILL BE REESTABLISHED WITH STANDARD SEED AND MULCH PRACTICES.

1.2.4 SOILS

ALL SOIL DATA CAME FROM THE U.S. DEPARTMENT OF AGRICULTURE SOIL CONSERVATION SERVICE FOR THE COUNTY OF WASHINGTON, VERMONT. SOILS ON THE PROJECT SITE ARE CABOT SILT LOAM, 8% TO 15% SLOPES, “K FACTOR” = 0.32; CABOT SILT LOAM, 3% TO 8% SLOPES, “K FACTOR” = 0.32; STETSON LOAM, 8% TO 15% SLOPES, “K FACTOR” = 0.17; BUCKLAND SILT LOAM, 15% TO 35% SLOPES, VERY STONY, “K FACTOR” = 0.32. THE SOIL IS CONSIDERED MODERATELY ERODIBLE DUE TO SIGNIFICANT SLOPES.

NOTE: K-VALUES GENERALLY INDICATE THE FOLLOWING:
0.0-0.23 = LOW EROSION POTENTIAL
0.24-0.36 = MODERATE EROSION POTENTIAL
0.37 AND HIGHER = HIGH EROSION POTENTIAL

1.2.5 SENSITIVE RESOURCE AREAS

CRITICAL HABITATS: NO
HISTORICAL OR ARCHEOLOGICAL AREAS: NO
PRIME AGRICULTURAL LAND: NO
THREATENED AND ENDANGERED SPECIES: NO
WATER RESOURCE: NO
WETLANDS: NO

1.3 RISK EVALUATION

THIS PROJECT DOES NOT FALL UNDER THE JURISDICTION OF GENERAL PERMIT 3-9020 FOR STORMWATER RUNOFF FROM CONSTRUCTION SITES. SHOULD CHANGES PRIOR TO OR DURING CONSTRUCTION RESULT IN ONE OR MORE ACRES OF EARTH DISTURBANCE OR SHOULD THE PROJECT BECOME PART OF A LARGER PLAN OF DEVELOPMENT, THE CONTRACTOR WILL BE RESPONSIBLE FOR ANY ADDITIONAL PERMITTING.

1.4 EROSION PREVENTION AND SEDIMENT CONTROL

THE EROSION CONTROL PLANS ARE MEANT AS A GUIDELINE FOR PREVENTING EROSION AND CONTROLLING SEDIMENT TRANSPORT. THE PRINCIPLES OUTLINED IN THIS NARRATIVE CONSIST OF APPLYING MEASURES THROUGHOUT CONSTRUCTION OF THE PROJECT IN ORDER TO MINIMIZE SEDIMENT TRANSPORT TO THE RECEIVING WATERS. THE MEASURES INCLUDE STABILIZATION AND STRUCTURAL PRACTICES, STORM WATER CONTROLS AND OTHER POLLUTION PREVENTION PRACTICES. THEY HAVE BEEN PROPOSED BY THE DESIGNER AS A BASIS FOR PROTECTING RESOURCES AND WILL NEED TO BE BUILT UPON BASED ON THE SPECIFIC MEANS AND METHODS OF THE CONTRACTOR. REFER TO THE LOW RISK SITE HANDBOOK AND APPROPRIATE DETAIL SHEETS FOR SPECIFIC GUIDANCE AND CONSTRUCTION DETAILING.

ALL MEASURES SHALL BE REGULARLY MAINTAINED AND SHALL BE CHECKED FOR SEDIMENT BUILD-UP. SEDIMENT SHALL BE DISPOSED OF AT AN APPROVED SITE WHERE IT WILL NOT BE SUBJECT TO EROSION.

1.4.1 MARK SITE BOUNDARIES

SITE BOUNDARIES AND AREAS CONSTRUCTION EQUIPMENT CAN ACCESS SHALL BE DELINEATED.

PROJECT DEMARCATION FENCING (PDF) SHALL BE USED TO PHYSICALLY MARK SITE BOUNDARIES.

1.4.2 LIMIT DISTURBANCE AREA

PREVENTING INITIAL SOIL EROSION BY MINIMIZING THE EXPOSED AREA IS MUCH MORE EFFECTIVE THAN TREATING ERODED SEDIMENT. EARTH DISTURBANCE CAN BE MINIMIZED THROUGH CONSTRUCTION PHASING BY ONLY OPENING UP EARTH AS NECESSARY. THIS CAN LIMIT THE AREA THAT WILL BE DISTURBED AND EXPOSED TO EROSION. EMPLOY TEMPORARY CONSTRUCTION STABILIZATION PRACTICES IN INCREMENTAL STAGES AS PHASES CHANGE. FOR PROJECTS WHICH FALL UNDER THE CONSTRUCTION GENERAL PERMIT, ONLY THE ACREAGE LISTED ON THE PERMIT AUTHORIZATION MAY BE EXPOSED AT ANY GIVEN TIME.

MAINTAINING VEGETATED BUFFERS ALONG STREAM BANKS, WETLANDS OR OTHER SENSITIVE AREAS IS A CRUCIAL EROSION AND SEDIMENT CONTROL MEASURE THAT SHOULD BE ESTABLISHED WHEREVER POSSIBLE.

1.4.3 SITE ENTRANCE/EXIT STABILIZATION

TRACKING OF SEDIMENT ONTO PUBLIC HIGHWAYS SHALL BE MINIMIZED TO REDUCE THE POTENTIAL FOR RUNOFF ENTERING RECEIVING WATERS. INSTALLATION SHALL COINCIDE WITH THE CONTRACTOR’S PROGRESS SCHEDULE.

NO SPECIFIC LOCATION WAS DETERMINED FOR INSTALLATION OF THE CONSTRUCTION ENTRANCE(S). THE RESIDENT ENGINEER WILL DETERMINE THE LOCATION(S) AND QUANTITIES OF CONSTRUCTION ENTRANCE(S) IF DEEMED NECESSARY.

1.4.4 INSTALL SEDIMENT BARRIERS

SEDIMENT BARRIERS SHALL BE UTILIZED TO INTERCEPT RUNOFF AND ALLOW SUSPENDED SEDIMENT TO SETTLE OUT. THEY SHALL BE INSTALLED PRIOR TO ANY UP SLOPE WORK.

SILT FENCE, DROP INLET PROTECTION, AND PIPE INLET PROTECTION WILL BE INSTALLED AS PROPOSED ON THE EPSC PLAN.

1.4.5 DIVERT UPLAND RUNOFF

DIVERSIONARY MEASURES SHALL BE USED TO INTERCEPT RUNOFF FROM ABOVE THE CONSTRUCTION AND DIRECT IT AROUND THE DISTURBED AREA SO THAT CLEAN WATER DOES NOT BECOME MUDDIED WHILE TRAVELING OVER EXPOSED SOILS ON THE CONSTRUCITON SITE.

CONSTRUCT SWALES (STORM WATER FROM STREET COLLECTION DRAINAGE SYSTEM)

1.4.6 SLOW DOWN CHANNELIZED RUNOFF

CHECK STRUCTURES SHALL BE UTILIZED TO REDUCE THE VELOCITY, AND THUS THE EROSIVE POTENTIAL, OF CONCENTRATED FLOW IN CHANNELS.

STONE CHECK DAMS WILL BE INSTALLED AS PROPOSED ON THE EPSC PLAN, AT A MINIMUM.

1.4.7 CONSTRUCT PERMANENT CONTROLS

PERMANENT STORMWATER TREATMENT DEVICES SHALL BE INSTALLED AS SHOWN ON THE PLANS AND IN ACCORDANCE WITH PERMIT CONDITIONS.

CONSTRUCT GRASSED CHANNEL

1.4.8 STABILIZE EXPOSED SOILS DURING CONSTRUCTION

ALL AREAS OF DISTURBANCE MUST HAVE TEMPORARY STABILIZATION IN PLACE WITHIN 48 HOURS OF DISTURBANCE OR IN ACCORDANCE WITH THE CONSTRUCTION GENERAL PERMIT 3-9020 AUTHORIZATION.

TRACKING OF ALL EXPOSED SLOPES, COMBINED WITH TEMPORARY MULCHING, WILL BE UTILIZED ON A REGULAR BASIS. SLOPES SHALL BE STABILIZED WITHIN 48 HOURS OF FORECASTED RAIN.
SEEDING, MULCHING AND BIODEGRADABLE EROSION CONTROL MATTING OR AN EQUIVALENT SHALL BE USED TO STABILIZE ALL SLOPES STEEPER THAN 1:3. THESE SLOPES SHALL BE STABILIZED WITHIN 48 HOURS OF REACHING INTERMITTENT PHASES OF CONSTRUCTION.

1.4.9 WINTER STABILIZATION

VARIOUS MEASURES SPECIFIC TO WINTER MAY BE NECESSARY SHOULD THE PROJECT EXTEND INTO WINTER (OCTOBER 15 THROUGH APRIL 15). REFER TO THE LOW RISK SITE HANDBOOK FOR GUIDANCE.

1.4.10 STABILIZE SOIL AT FINAL GRADE

EXPOSED SOIL MUST BE STABILIZED WITHIN 48 HOURS OF REACHING FINAL GRADE.

SEED, MULCH, FERTILIZER AND LIME SHALL BE USED TO ESTABLISH PERMANENT VEGETATION. FOR SLOPES STEEPER THAN 1:3, BIODEGRADABLE EROSION CONTROL MATTING OR AN EQUIVALENT SHALL BE USED INSTEAD OF MULCH.

1.4.11 DE-WATERING ACTIVITIES

DISCHARGE FROM DEWATERING ACTIVITIES THAT FLOWS OFF OF THE CONSTRUCTION SITE MUST NOT CAUSE OR CONTRIBUTE TO A VIOLATION OF THE VERMONT WATER QUALITY STANDARDS.

NO DE-WATERING ACTIVITIES ARE ANTICIPATED ON THIS PROJECT.

1.4.12 INSPECT YOUR SITE

INSPECT THE PROJECT SITE BASED ON SPECIAL PROVISION REQUIREMENTS OR CONSTRUCTION GENERAL PERMIT AUTHORIZATION STIPULATIONS.

1.5 SEQUENCE AND STAGING

THIS SECTION WILL BE DEVELOPED BY THE CONTRACTOR USING THE GUIDANCE OUTLINED IN THE VTRANS EPSC PLAN CONTRACTOR CHECKLIST.

1.5.1 OFF-SITE ACTIVITIES

IN ADDITION TO THE CONTRACTOR CHECKLIST ANY ACTIVITIES OUTSIDE THE CONSTRUCTION LIMITS SHALL FOLLOW SUBSECTIONS 105.25- 105.29 OF THE STANDARD SPECIFICATIONS FOR CONSTRUCTION.

PROJECT NAME: BERLIN
PROJECT NUMBER: STPG SGNL(40)

FILE NAME: t11b358bdr.dgn
PROJECT LEADER: P. COBURN
DESIGNED BY: T. SISSON
EPSC NARRATIVE

PLOT DATE: 10/20/2014
DRAWN BY: T. SISSON
CHECKED BY: M. LACROIX

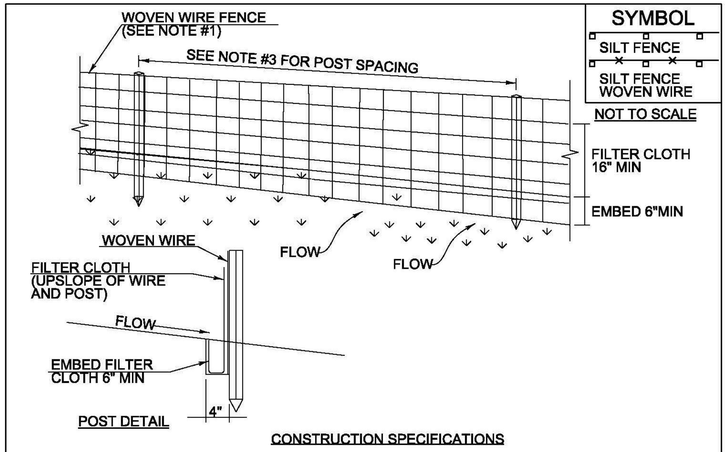

CONSTRUCTION SPECIFICATIONS

1. WOVEN WIRE REINFORCED FENCE IS REQUIRED WITHIN 100' UPSLOPE OF RECEIVING WATERS WHEN THE PROJECT FALLS UNDER A CONSTRUCTION STORMWATER PERMIT. WOVEN WIRE SHALL BE A MIN. 14 GAUGE WITH A SIX INCH MAX. MESH OPENING.
2. FILTER CLOTH SHALL BE EITHER FILTER X, MIRAF1100X, STABILINKA T140N OR APPROVED EQUIVALENT.
3. POST SPACING FOR WIRE-BACKED FENCE SHALL BE 10' MAXIMUM. FOR FILTER-CLOTH FENCE, WHEN ELONGATION IS >50%, POST SPACING SHALL NOT EXCEED 4' AND WHEN ELONGATION IS <50%, POST SPACING SHALL NOT EXCEED 6'.
4. WOVEN WIRE FENCE IS TO BE FASTENED SECURELY TO FENCE POSTS WITH WIRE TIES. FILTER CLOTH IS TO BE FASTENED SECURELY TO WOVEN WIRE FENCE WITH TIES SPACED EVERY 24" AT TOP AND MID SECTION.
5. WHEN TWO SECTIONS OF FILTER CLOTH ADJOIN EACH OTHER THEY SHALL BE OVER-LAPPED BY SIX INCH AND FOLDED.
6. PREFABRICATED UNITS SHALL BE GEOFAB, ENVIROFENCE, OR APPROVED EQUIVALENT.
7. MAINTENANCE SHALL BE PERFORMED AS NEEDED AND MATERIAL REMOVED WHEN SEDIMENT REACHES HALF OF FABRIC HEIGHT.

ADAPTED FROM DETAILS PROVIDED BY: NEW YORK STATE DEC ORIGINALLY DEVELOPED BY USDA-NRCS VERMONT DEPARTMENT OF ENVIRONMENTAL CONSERVATION	SILT FENCE

NOTES:
REFER TO "THE VERMONT STANDARDS & SPECIFICATIONS FOR EROSION PREVENTION & SEDIMENT CONTROL -2006- " FROM THE VT AGENCY OF NATURAL RESOURCES FOR ADDITIONAL GUIDANCE.

THIS WORK SHALL BE PERFORMED IN ACCORDANCE WITH SECTION 649 AND AS SHOWN IN THE PLANS FOR GEOTEXTILE FOR SILT FENCE (PAY ITEM 649.51) ~~OR GEOTEXTILE FOR SILT FENCE, WOVEN WIRE REINFORCED (PAY ITEM 649.515).~~

REVISIONS
MARCH 21, 2008 WHF
DECEMBER 11, 2008 WHF
JANUARY 13, 2009 WHF

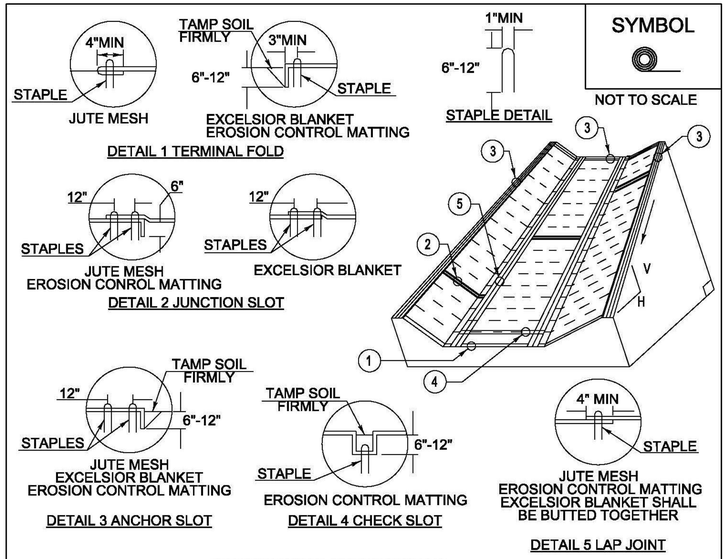

CONSTRUCTION SPECIFICATIONS

1. EROSION MATTING, CHECK SLOTS, SHALL BE SPACED IN DITCH CHANNEL SO THAT ONE OCCURS WITHIN EACH 50' ON SLOPES OF MORE THAN 4% AND LESS THAN 6%. ON SLOPES OF 6% OR MORE, THEY SHALL BE SPACED SO THAT ONE OCCURS WITHIN EACH 25'.
2. APPLY FERTILIZER, LIME SEED PRIOR TO PLACING MATTING.
3. STAPLES ARE TO BE PLACED ALTERNATELY, IN COLUMNS APPROXIMATELY TWO FEET APART AND IN ROWS APPROXIMATELY THREE FEET APART. APPROXIMATELY 175 STAPLES ARE REQUIRED PER 4'X225' ROLL OF MATERIAL AND 125 STAPLES ARE REQUIRED PER 4'X150' ROLL OF MATERIAL.
4. DISTURBED AREAS SHALL BE SMOOTHLY GRADED. EROSION CONTROL MATERIAL SHALL BE PLACED LOOSELY OVER GROUND SURFACE. DO NOT STRETCH.
5. ALL TERMINAL ENDS AND TRANSVERSE LAPS SHALL BE STAPLED AT APPROXIMATELY 12" INTERVALS.

ADAPTED FROM DETAILS PROVIDED BY: NEW YORK STATE DEC ORIGINALLY DEVELOPED BY USDA-NRCS VERMONT DEPARTMENT OF ENVIRONMENTAL CONSERVATION	ROLLED EROSION CONTROL PRODUCT (RECP) DITCH

NOTES:
REFER TO "THE VERMONT STANDARDS & SPECIFICATIONS FOR EROSION PREVENTION & SEDIMENT CONTROL -2006- " FROM THE VT AGENCY OF NATURAL RESOURCES FOR ADDITIONAL GUIDANCE.

THIS WORK SHALL BE PERFORMED IN ACCORDANCE WITH SECTION 653 AND AS SHOWN IN THE PLANS FOR TEMPORARY EROSION MATTING (PAY ITEM 653.20) ~~OR PERMANENT EROSION MATTING (PAY ITEM 653.21).~~

REVISIONS
MARCH 8, 2007 JMF
APRIL 16, 2007 WHF
JANUARY 13, 2009 WHF

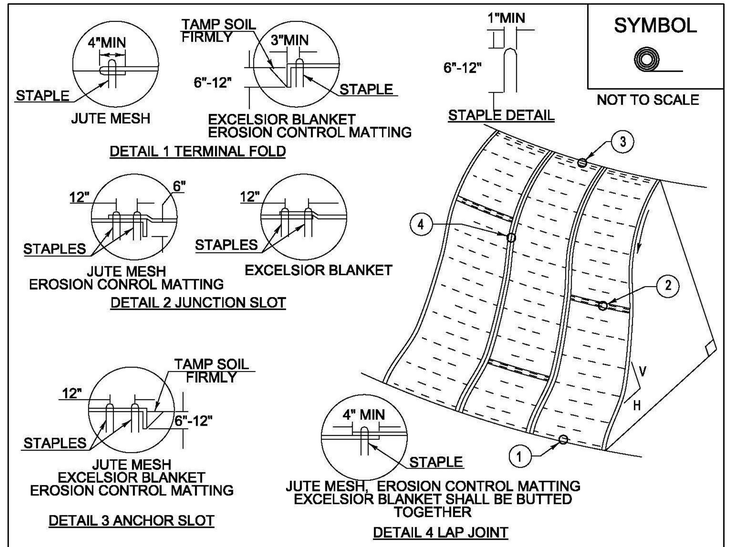

CONSTRUCTION SPECIFICATIONS

1. APPLY TO SLOPES GREATER THAN 3H:1V OR WHERE NECESSARY TO AID IN ESTABLISHING VEGETATION.
2. APPLY FERTILIZER, LIME SEED PRIOR TO PLACING MATTING.
3. STAPLES ARE TO BE PLACED ALTERNATELY, IN COLUMNS APPROXIMATELY TWO FEET APART AND IN ROWS APPROXIMATELY THREE FEET APART. APPROXIMATELY 175 STAPLES ARE REQUIRED PER 4'X225' ROLL OF MATERIAL AND 125 STAPLES ARE REQUIRED PER 4'X150' ROLL OF MATERIAL.
4. DISTURBED AREAS SHALL BE SMOOTHLY GRADED. EROSION CONTROL MATERIAL SHALL BE PLACED LOOSELY OVER GROUND SURFACE. DO NOT STRETCH.
5. ALL TERMINAL ENDS AND TRANSVERSE LAPS SHALL BE STAPLED AT APPROXIMATELY 12" INTERVALS.

ADAPTED FROM DETAILS PROVIDED BY: NEW YORK STATE DEC ORIGINALLY DEVELOPED BY USDA-NRCS VERMONT DEPARTMENT OF ENVIRONMENTAL CONSERVATION	ROLLED EROSION CONTROL PRODUCT (RECP) SIDE SLOPE

NOTES:
REFER TO "THE VERMONT STANDARDS & SPECIFICATIONS FOR EROSION PREVENTION & SEDIMENT CONTROL -2006- " FROM THE VT AGENCY OF NATURAL RESOURCES FOR ADDITIONAL GUIDANCE.

THIS WORK SHALL BE PERFORMED IN ACCORDANCE WITH SECTION 653 AND AS SHOWN IN THE PLANS FOR TEMPORARY EROSION MATTING (PAY ITEM 653.20) ~~OR PERMANENT EROSION MATTING (PAY ITEM 653.21).~~

REVISIONS
APRIL 16, 2007 JMF
JANUARY 13, 2009 WHF

PROJECT NAME: BERLIN
PROJECT NUMBER: STPG SGNL(40)

FILE NAME: tllb358ero.dgn
PROJECT LEADER: P. COBURN
DESIGNED BY: T. SISSON
EPSC DETAIL SHEET I

PLOT DATE: 10/20/2014
DRAWN BY: T. SISSON
CHECKED BY: M. LACROIX
SHEET 73 OF 123

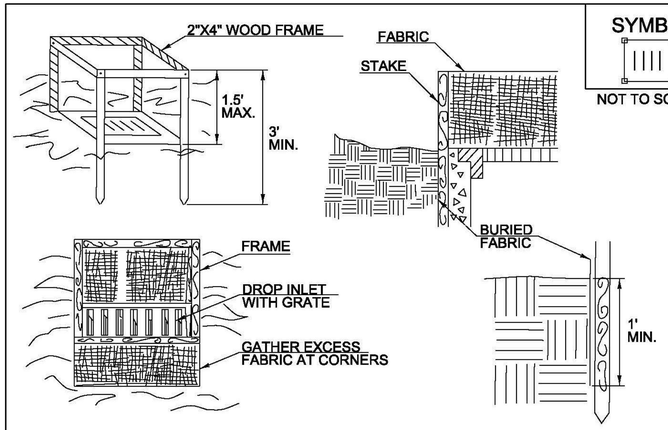

SYMBOL

NOT TO SCALE

CONSTRUCTION SPECIFICATIONS

1. FILTER FABRIC SHALL HAVE AN APPARENT OPENING SIZE OF 40-85. BURLAP MAY BE USED FOR SHORT TERM APPLICATIONS.
2. CUT FABRIC FROM A CONTINUOUS ROLL TO ELIMINATE JOINTS. IF JOINTS ARE NEEDED THEY WILL BE OVERLAPPED TO THE NEXT STAKE.
3. STAKE MATERIALS WILL BE STANDARD 2"x 4" WOOD OR EQUIVALENT METAL WITH A MINIMUM LENGTH OF THREE FEET.
4. SPACE STAKES EVENLY AROUND INLET THREE FEET APART AND DRIVE A MINIMUM 18" DEEP. SPANS GREATER THAN THREE FEET MAY BE BRIDGED WITH THE USE OF WIRE MESH BEHIND THE FILTER FABRIC FOR SUPPORT.
5. FABRIC SHALL BE EMBEDDED 1' MINIMUM BELOW GROUND AND BACKFILLED. IT SHALL BE SECURELY FASTENED TO THE STAKES AND FRAME.
6. A 2" x 4" WOOD FRAME SHALL BE COMPLETED AROUND THE CREST OF THE FABRIC FOR OVER FLOW STABILITY.
7. MAXIMUM DRAINAGE AREA ONE ACRE

ADAPTED FROM DETAILS PROVIDED BY: NEW YORK STATE DEC ORIGINALLY DEVELOPED BY USDA-NRCS VERMONT DEPARTMENT OF ENVIRONMENTAL CONSERVATION	FILTER FABRIC DROP INLET PROTECTION

NOTES:
REFER TO "THE VERMONT STANDARDS & SPECIFICATIONS FOR EROSION PREVENTION & SEDIMENT CONTROL -2006- " FROM THE VT AGENCY OF NATURAL RESOURCES FOR ADDITIONAL GUIDANCE.

THIS WORK SHALL BE PERFORMED IN ACCORDANCE WITH SECTION 653 FOR INLET PROTECTION DEVICE, TYPE I (PAY ITEM 653.40).

REVISIONS	
MARCH 7, 2008	WHF
JANUARY 13, 2009	WHF

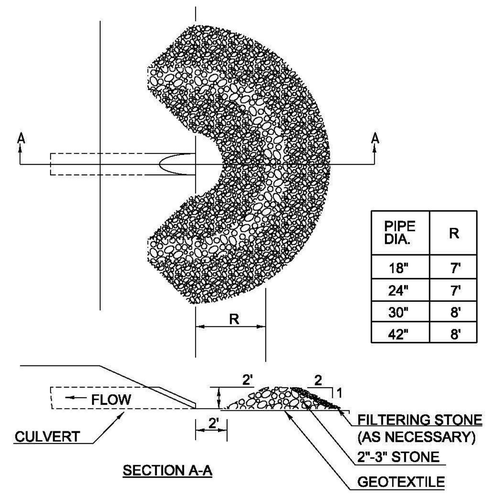

PIPE DIA.	R
18"	7'
24"	7'
30"	8'
42"	8'

SECTION A-A

SYMBOL

NOT TO SCALE

CONSTRUCTION SPECIFICATIONS

1. USE TWO INCH TO THREE INCH STONE. FILTERING STONE SHALL BE 3/4".
2. PLACE STONE OVER GEOTEXTILE.
3. ONCE THE AREAS UPSTREAM FROM THE CHECK DAM ARE STABILIZED WITH VEGETATION, THE SEDIMENT TRAPPED BEHIND THE DAM SHAL BE DISPOSED OF IN AN APPROVED WASTE AREA.
4. THE CHECK DAM(S) SHALL BE FLATTENED AND GRADED IN A MANNER WHICH PROTECTS THE AREA FROM EROSION AND CHANNEL BLOCKAGE . (GEOTEXTILE MUST BE REMOVED).
5. THE GEOTEXTILE MUST BE DISPOSED OF APPROPRIATELY.
6. THE AREA CONTRIBUTING TO THE CHECK DAM SHALL NOT EXCEED FOUR ACRES.

ADAPTED FROM DETAILS PROVIDED BY: ILLINOIS USDA-NRCS ORIGINALLY DEVELOPED BY USDA-NRCS	PIPE INLET PROTECTION

THIS WORK SHALL BE PERFORMED IN ACCORDANCE WITH SECTION 653 FOR INLET PROTECTION DEVICE, TYPE I (PAY ITEM 653.40).

REVISIONS	
MARCH 6, 2008	WHF
JANUARY 13, 2009	WHF

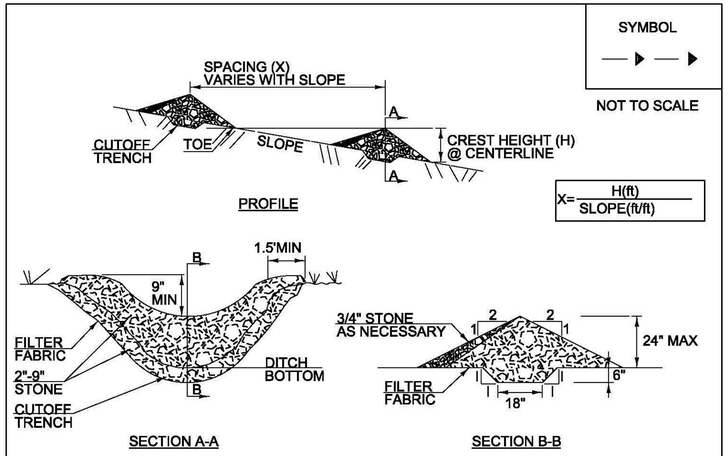

SYMBOL

NOT TO SCALE

CONSTRUCTION SPECIFICATIONS

1. STONE WILL BE PLACED ON A FILTER FABRIC FOUNDATION.
2. CHECK DAMS SHALL BE SPACED SO THAT THE ELEVATION OF THE CREST OFTHE DOWNSTREAM DAM IS AT THE SAME ELEVATION AS THE TOE OF THE UPSTREAM DAM.
3. 3/4" FILTERING STONE MAY BE ADDED TO THE FACE OF THE CHECK DAM AS NECESSARY.
4. EXTEND THE STONE A MINIMUM OF 1.5 FEET BEYOND THE DITCH BANKS TO PREVENT CUTTING AROUND THE DAM.
5. PROTECT CHANNEL DOWNSTREAM OF THE LOWEST CHECK DAM FROM SCOUR AND EROSION WITH STONE OR LINER AS APPROPRIATE.
6. ENSURE THAT CHANNEL APPURTENANCES SUCH AS CULVERT ENTRANCES BELOW CHECK DAMS ARE NOT SUBJECT TO DAMAGE OR BLOCKAGE FROM DISPLACED STONE.
7. MAXIMUM DRAINAGE AREA TWO ACRES.

ADAPTED FROM DETAILS PROVIDED BY: NEW YORK STATE DEC ORIGINALLY DEVELOPED BY USDA-NRCS VERMONT DEPARTMENT OF ENVIRONMENTAL CONSERVATION	CHECK DAM

NOTES:
REFER TO "THE VERMONT STANDARDS & SPECIFICATIONS FOR EROSION PREVENTION & SEDIMENT CONTROL -2006- " FROM THE VT AGENCY OF NATURAL RESOURCES FOR ADDITIONAL GUIDANCE.

THIS WORK SHALL BE PERFORMED IN ACCORDANCE WITH SECTION 653 FOR TEMPORARY STONE CHECK DAM, TYPE I (PAY ITEM 653.25)

REVISIONS	
MARCH 21, 2008	WHF
JANUARY 8, 2009	WHF

PROJECT NAME: BERLIN
PROJECT NUMBER: STPG SGNL(40)

FILE NAME: t11b358ero.dgn
PROJECT LEADER: P. COBURN
DESIGNED BY: T. SISSON
EPSC DETAIL SHEET 2

PLOT DATE: 10/20/2014
DRAWN BY: T. SISSON
CHECKED BY: M. LACROIX
SHEET 74 OF 123

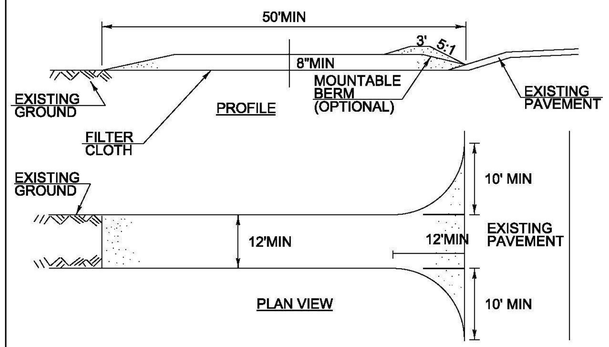

CONSTRUCTION SPECIFICATIONS

1. STONE SIZE- USE 1-4" STONE, RECLAIMED OR RECYCLED CONCRETE EQUIVALENT.
2. LENGTH- NOT LESS THAN 50' (EXCEPT ON A SINGLE RESIDENCE LOT WHERE A 30' MINIMUM LENGTH APPLIES).
3. THICKNESS- NOT LESS THAN EIGHT INCHES.
4. WIDTH- 12' MINIMUM, BUT NOT LESS THAN THE FULL WIDTH AT POINTS WHERE INGRESS OR EGRESS OCCURS. 24' IF SINGLE ENTRANCE TO SITE.
5. GEOTEXTILE MUST BE PLACED OVER THE ENTIRE AREA PRIOR TO PLACING STONE.
6. SURFACE WATER- ALL SURFACE WATER FLOWING OR DIVERTED TOWARD CONSTRUCTION ENTRANCES SHALL BE PIPED BENEATH THE ENTRANCE. IF PIPING IS IMPRACTICAL, A MOUNTABLE BERM WITH 5:1 SLOPES WILL BE PERMITTED.
7. MAINTENANCE- THE ENTRANCE SHALL BE MAINTAINED IN A CONDITION WHICH WILL PREVENT TRACKING OR FLOWING OF SEDIMENT ONTO PUBLIC RIGHTS-OF-WAY, ALL SEDIMENT SPILLED, DROPPED, WASHED OR TRACKED ONTO PUBLIC RIGHTS-OF-WAY MUST BE REMOVED IMMEDIATELY.
8. WHEN WASHING IS REQUIRED, IT SHALL BE DONE ON AN AREA STABILIZED WITH STONE AND WHICH DRAINS INTO AN APPROVED SEDIMENT TRAPPING DEVICE.
9. PERIODIC INSPECTION AND NEEDED MAINTENANCE SHALL BE PROVIDED ACCORDING TO PERMIT REQUIREMENTS.

ADAPTED FROM DETAILS PROVIDED BY: NEW YORK STATE DEC
ORIGINALLY DEVELOPED BY USDA-NRCS
VERMONT DEPARTMENT OF ENVIRONMENTAL CONSERVATION

STABILIZED CONSTRUCTION ENTRANCE

NOTES:
REFER TO "THE VERMONT STANDARDS & SPECIFICATIONS FOR EROSION PREVENTION & SEDIMENT CONTROL -2006- " FROM THE VT AGENCY OF NATURAL RESOURCES FOR ADDITIONAL GUIDANCE.

THIS WORK SHALL BE PERFORMED IN ACCORDANCE WITH SECTION 653 FOR VEHICLE TRACKING PAD (PAY ITEM 653.35) OR AS SPECIFIED IN THE CONTRACT.

REVISIONS	
MARCH 24, 2008	WHF
JANUARY 13, 2009	WHF

VAOT RURAL AREA SEED MIX

% WEIGHT	LBS/AC		NAME	GERM %	PURITY %
	BROADCAST	HYDROSEED			
37.50%	22.5	45	CREEPING RED FESCUE	85%	98%
37.50%	22.5	45	TALL FESCUE	90%	95%
5.00%	3	6	RED TOP	90%	95%
15.00%	9	18	BIRDSFOOT TREFOIL	85%	98%
5.00%	3	6	ANNUAL RYE GRASS	85%	95%
100.00%	60	120			

VAOT URBAN AREA SEED MIX

% WEIGHT	LBS/AC		NAME	GERM %	PURITY %
	BROADCAST	HYDROSEED			
42.50%	34	68	CREEPING RED FESCUE	85%	98%
10.00%	8	16	PERENNIAL RYE GRASS	90%	95%
42.50%	34	68	KENTUCKY BLUE GRASS	85%	85%
5.00%	4	8	ANNUAL RYE GRASS	85%	95%
100.00%	80	160			

GENERAL GUIDANCE

FERTILIZER		LIME	
BROADCAST	HYDROSEED	BROADCAST	HYDROSEED
10-20-10	19-19-19	PELLETIZED	LIQUID
500 LBS/AC	--	2 TONS/AC	4.4 GAL/AC

CONSTRUCTION GUIDANCE

1. RURAL SEED MIX: USE AS INDICATED IN THE PLANS AND/OR FOR ALL ESTABLISHED UPLAND (NON WETLAND) AREAS DISTURBED BY THE CONTRACTOR.
2. URBAN SEED MIX: USE AS INDICATED IN THE PLANS AND/OR FOR ALL ESTABLISHED LAWN AREAS DISTURBED BY THE CONTRACTOR.
3. ALL SEED MIXTURES: SHALL NOT HAVE A WEED CONTENT EXCEEDING 0.40% BY WEIGHT AND SHALL BE FREE OF ALL NOXIOUS SEED.
4. FERTILIZER AND LIMESTONE: SHALL BE PLACED AT THE RATE OF 500 LBS./ACRE AND TWO TONS/ACRE RESPECTIVELY OR AS DIRECTED BY THE ENGINEER.
5. HAY MULCH: TO BE PLACED ON EARTH SLOPES AT THE RATE OF TWO TONS/ACRE, ACHIEVE 90% GROUND COVER OR AS DIRECTED BY THE ENGINEER.
6. TOPSOIL: TO BE USED WITH SEED AS INDICATED ON THE PLANS, OR AS DIRECTED BY THE ENGINEER.
7. HYDROSEEDING: ALTHOUGH GUIDANCE IS GIVEN ABOVE THE SITE CONDITIONS AND THE TYPE OF HYDROSEED WILL ULTIMATELY DICTATE THE AMOUNTS AND TYPES OF SOIL AMENDMENTS TO BE APPLIED
8. TURF ESTABLISHMENT: PLACING SEED, FERTILIZER, LIME AND MULCH PRIOR TO SEPTEMBER 15 AND AFTER APRIL 15 CAN BETTER ENSURE A VIGOROUS GROWTH OF GRASS.
9. MOWING: RECOMMENDED EARLY MOWING ONCE OR TWICE WHEN GRASS REACHES SIX INCH MAXIMUM HEIGHT TO PREVENT BROADLEAF WEED COMPETITION DURING ESTABLISHMENT PERIOD.

TURF ESTABLISHMENT

VAOT SAND & GRAVEL SITE CONSERVATION SEED MIX

% WEIGHT	LBS/AC		NAME	GERM %	PURITY %
	BROADCAST	HYDROSEED			
32.00%	--	4	SWITCH GRASS	VARIES	VARIES
32.00%	--	4	BIG BLUESTEM	VARIES	VARIES
16.00%	--	2	LITTLE BLUESTEM	VARIES	VARIES
12.00%	--	2	SAND LOVEGRASS	VARIES	VARIES
8.00%	--	1	BLACKEYED SUSAN	VARIES	VARIES
100.00%	0	13			

CONSTRUCTION GUIDANCE

1. SEEDING SHALL BE COMPLETED BY THE USE OF A HYDROSEEDER AND DOZER COMBINATION.
2. USE DOZER TO TRACK THE SITE. SLOPES SHALL BE TRACKED UP AND DOWN, NOT SIDE TO SIDE.
3. ONLY CLEAN, WEED-FREE STRAW MULCH SHALL BE USED.
4. SEE TURF ESTABLISHMENT NOTES FOR MULCH, FERTILIZER AND LIMESTONE APPLICATION RATES.

GRASS CHANNEL SEEDING

PROJECT NAME: BERLIN
PROJECT NUMBER: STPG SGNL(40)

FILE NAME: tllb358ero.dgn
PROJECT LEADER: P. COBURN
DESIGNED BY: T. SISSON
EPSC DETAIL SHEET 3

PLOT DATE: 10/20/2014
DRAWN BY: T. SISSON
CHECKED BY: M. LACROIX
SHEET 75 OF 123

N

VT STATE PLANE GRID

CABOT SILT LOAM
3 TO 8 PERCENT SLOPES
HYDROGROUP = D
K FACTOR = 0.32

CLASS III WETLAND

VT ROUTE 62

CABOT SILT LOAM
8 TO 15 PERCENT SLOPES
HYDROGROUP = D
K FACTOR = 0.32

MATCH LINE STA 70+50

0 20 40
SCALE IN FEET

PROJECT NAME:	BERLIN
PROJECT NUMBER:	STPG SGNL(40)
FILE NAME: t11b358bdr.dgn	PLOT DATE: 10/20/2014
PROJECT LEADER: P. COBURN	DRAWN BY: T. SISSON
DESIGNED BY: T. SISSON	CHECKED BY: M. LACROIX
EPSC EXISTING CONDITIONS SHEET 1	SHEET 76 OF 123

N

VT STATE PLANE GRID

CABOT SILT LOAM
3 TO 8 PERCENT SLOPES
HYDROGROUP = D
K FACTOR = 0.32

CABOT SILT LOAM
8 TO 15 PERCENT SLOPES
HYDROGROUP = D
K FACTOR = 0.32

BUCKLAND SILT LOAM
8 TO 15 PERCENT SLOPES
HYDROGROUP = C
K FACTOR = 0.32

MATCH LINE STA 31+75

MATCH LINE STA 70+50

MATCH LINE STA 76+00

MATCH LINE STA 28+00

970 960 950

0 20 40
SCALE IN FEET

PROJECT NAME: BERLIN	
PROJECT NUMBER: STPG SGNL(40)	
FILE NAME: t11b358bdr.dgn	PLOT DATE: 10/20/2014
PROJECT LEADER: P. COBURN	DRAWN BY: T. SISSON
DESIGNED BY: T. SISSON	CHECKED BY: M. LACRIOX
EPSC EXISTING CONDITIONS SHEET 2	SHEET 77 OF 123

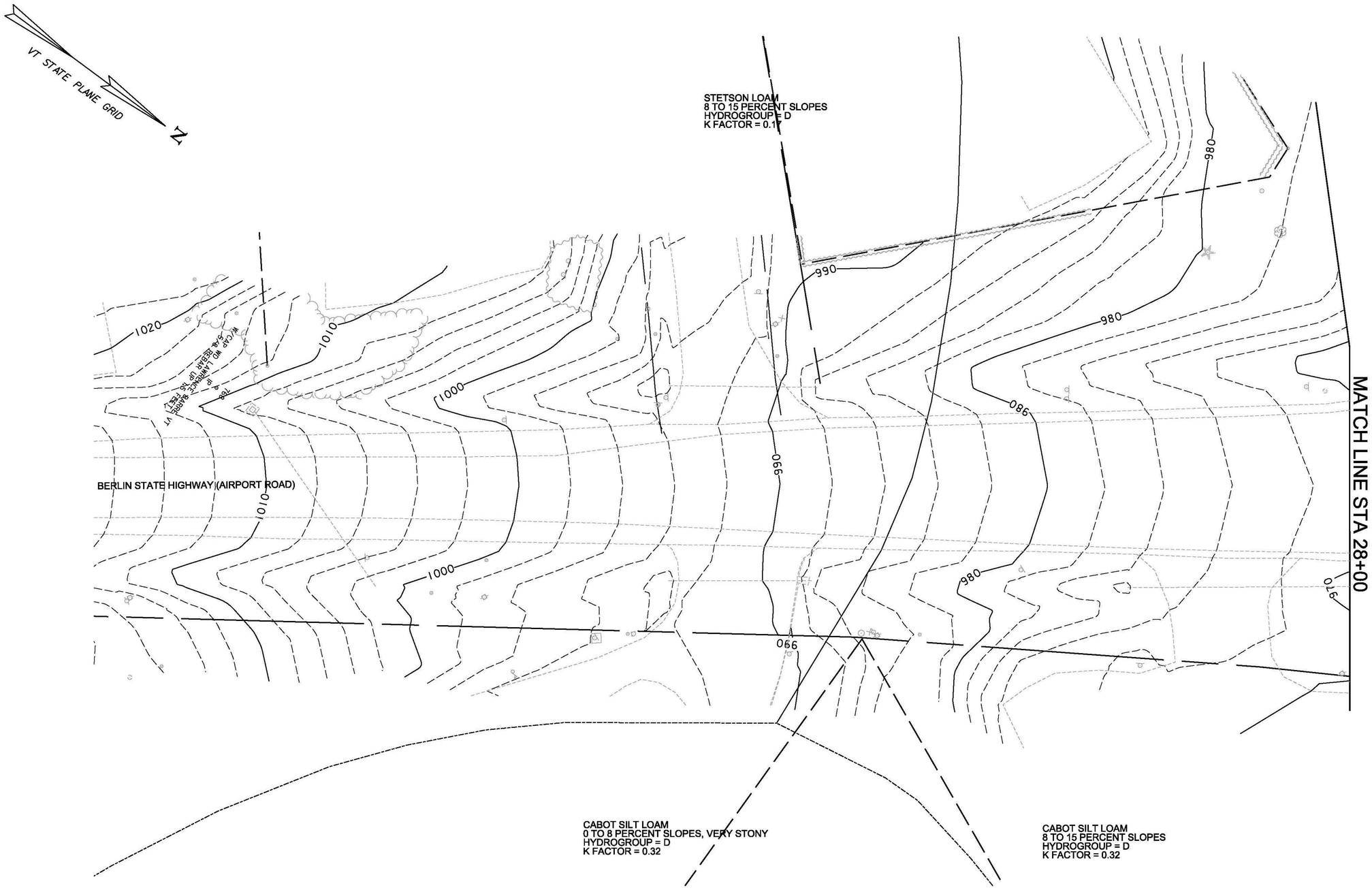

PROJECT NAME: BERLIN	
PROJECT NUMBER: STPG SGNL(40)	
FILE NAME: t11b358bdr.dgn	PLOT DATE: 10/20/2014
PROJECT LEADER: P. COBURN	DRAWN BY: T. SISSON
DESIGNED BY: T. SISSON	CHECKED BY: M. LACROIX
EPSC EXISTING CONDITIONS SHEET 3	SHEET 78 OF 123

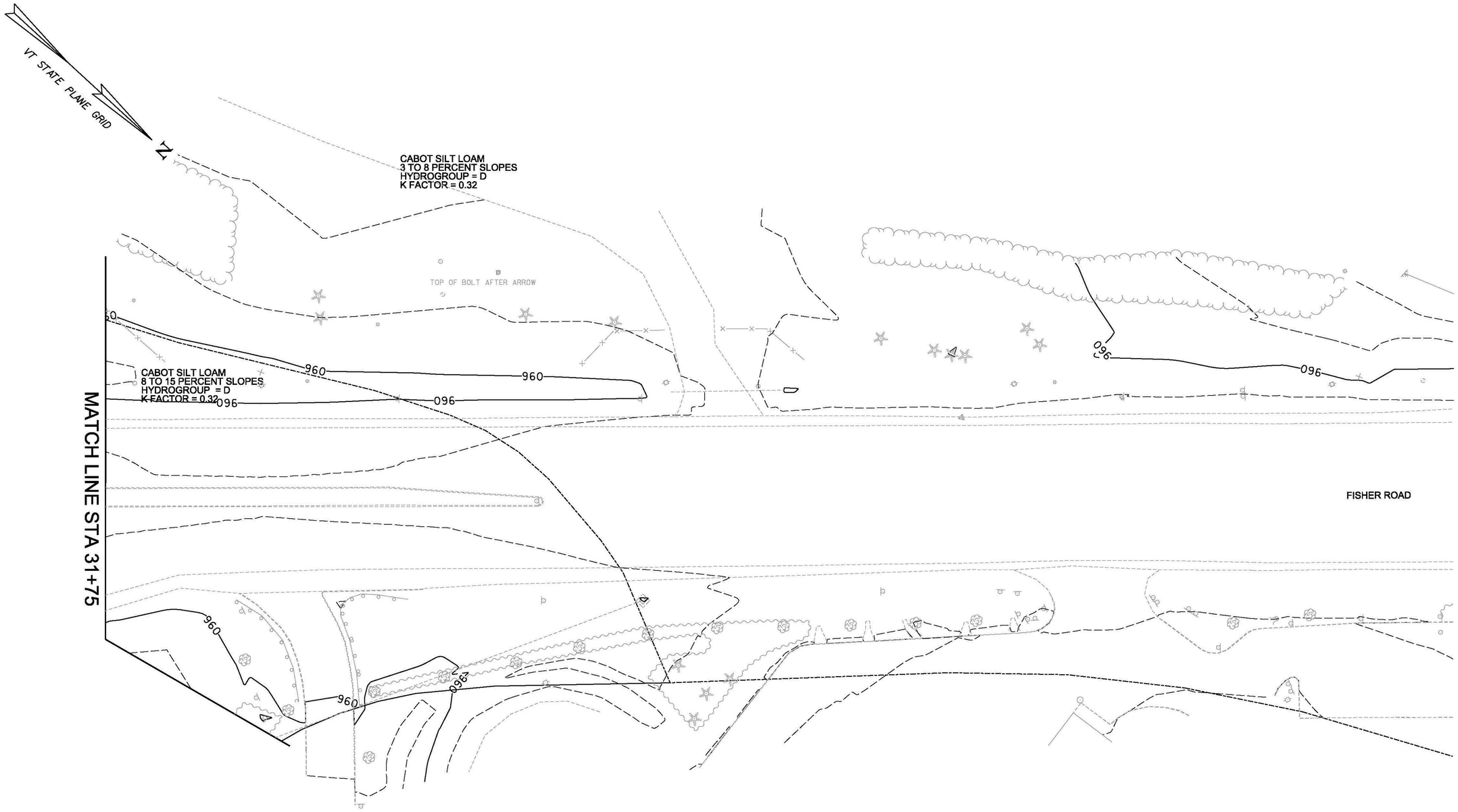

PROJECT NAME: BERLIN	
PROJECT NUMBER: STPG SGNL(40)	
FILE NAME: t11b358bdr.dgn	PLOT DATE: 10/20/2014
PROJECT LEADER: P. COBURN	DRAWN BY: T. SISSON
DESIGNED BY: T. SISSON	CHECKED BY: M. LACROIX
EPSC EXISTING CONDITIONS SHEET 4	SHEET 79 OF 123

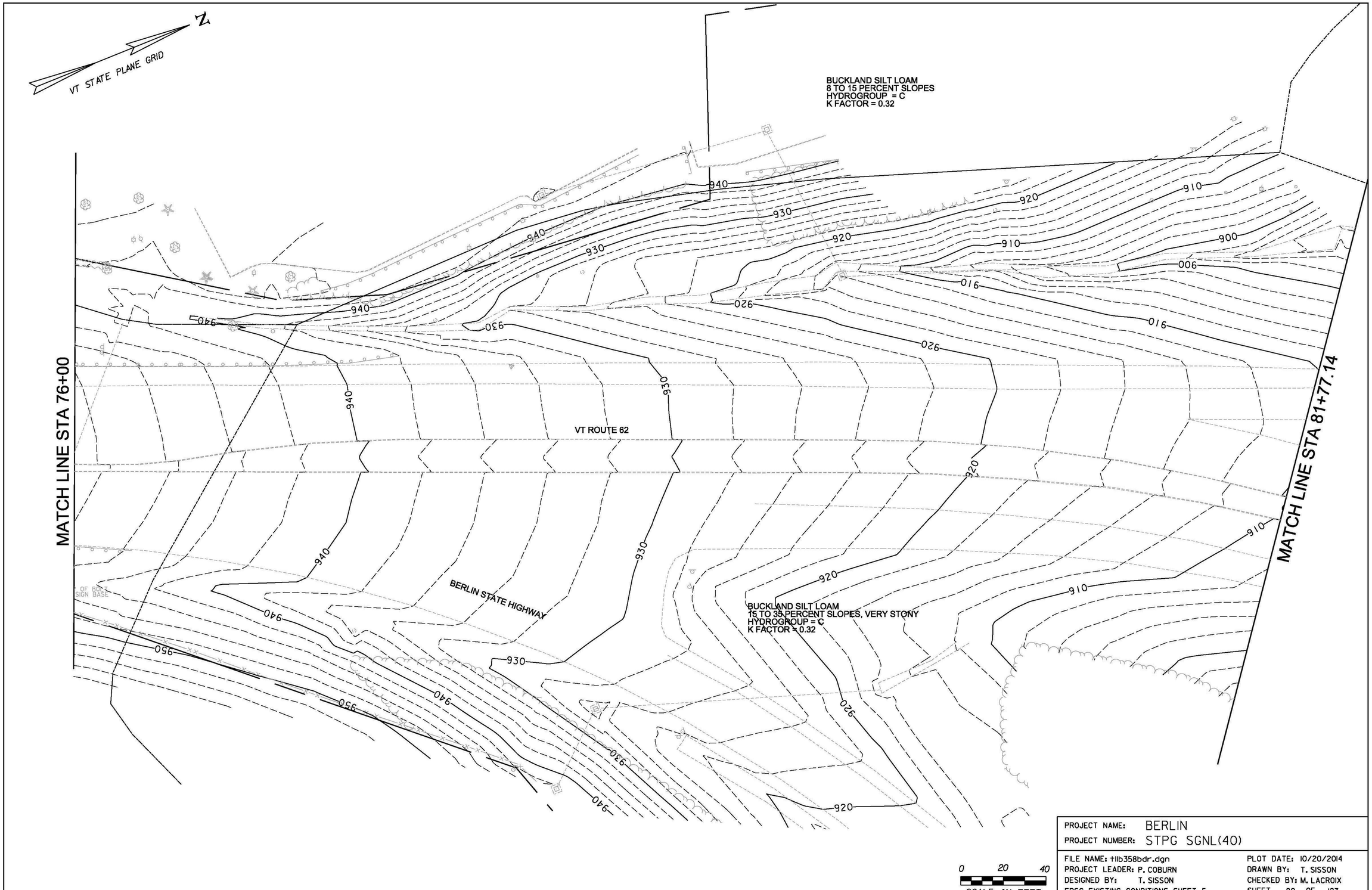

PROJECT NAME: BERLIN	
PROJECT NUMBER: STPG SGNL(40)	
FILE NAME: t11b358bdr.dgn	PLOT DATE: 10/20/2014
PROJECT LEADER: P. COBURN	DRAWN BY: T. SISSON
DESIGNED BY: T. SISSON	CHECKED BY: M. LACROIX
EPSC EXISTING CONDITIONS SHEET 5	SHEET 80 OF 123

N

VT STATE PLANE GRID

BUCKLAND SILT LOAM
15 TO 25 PERCENT SLOPES
HYDROGROUP = C
K FACTOR = 0.32

MATCH LINE STA 81+77.14

MATCH LINE STA 85+00.00

BERLIN STATE HIGHWAY

VT ROUTE 62

BUCKLAND SILT LOAM
15 TO 35 PERCENT SLOPES, VERY STONY
HYDROGROUP = C
K FACTOR = 0.32

0 20 40
SCALE IN FEET

PROJECT NAME: BERLIN	
PROJECT NUMBER: STPG SGNL(40)	
FILE NAME: t11b358bdr.dgn	PLOT DATE: 10/20/2014
PROJECT LEADER: P. COBURN	DRAWN BY: T. SISSON
DESIGNED BY: T. SISSON	CHECKED BY: M. LACROIX
EPSC EXISTING CONDITIONS SHEET 6	SHEET 81 OF 123

N

VT STATE PLANE GRID

CABOT SILT LOAM
8 TO 15 PERCENT SLOPES, VERY STONY
HYDROGROUP = D
K FACTOR = 0.32

MATCH LINE STA 85+00.00

MATCH LINE STA 90+75.00

BUCKLAND SILT LOAM
15 TO 35 PERCENT SLOPES, VERY STONY
HYDROGROUP = C
K FACTOR = 0.32

CABOT SILT LOAM
0 TO 8 PERCENT SLOPES, VERY STONY
HYDROGROUP = D
K FACTOR = 0.32

0 20 40
SCALE IN FEET

PROJECT NAME: BERLIN	
PROJECT NUMBER: STPG SGNL(40)	
FILE NAME: t11b358bdr.dgn	PLOT DATE: 10/20/2014
PROJECT LEADER: P. COBURN	DRAWN BY: T. SISSON
DESIGNED BY: T. SISSON	CHECKED BY: M. LACROIX
EPSC EXISTING CONDITIONS SHEET 7	SHEET 82 OF 123

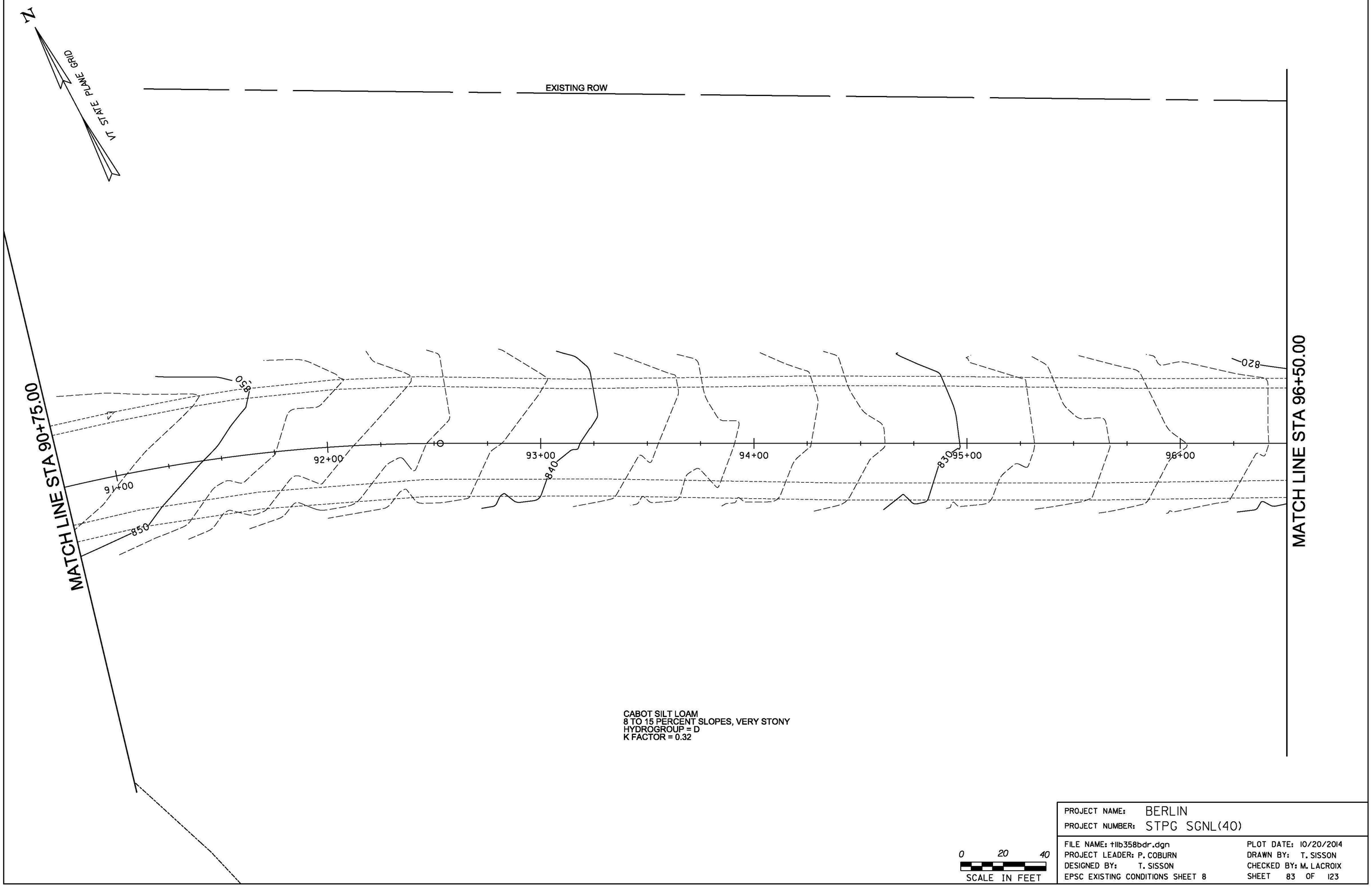

CABOT SILT LOAM
8 TO 15 PERCENT SLOPES, VERY STONY
HYDROGROUP = D
K FACTOR = 0.32

0 20 40
SCALE IN FEET

PROJECT NAME: BERLIN	
PROJECT NUMBER: STPG SGNL(40)	
FILE NAME: t11b358bdr.dgn	PLOT DATE: 10/20/2014
PROJECT LEADER: P. COBURN	DRAWN BY: T. SISSON
DESIGNED BY: T. SISSON	CHECKED BY: M. LACROIX
EPSC EXISTING CONDITIONS SHEET 8	SHEET 83 OF 123

N

VT STATE PLANE GRID

EXISTING ROW

MATCH LINE STA 96+50.00

97+00

98+00

99+00

00+00

01+00

02+00

TO BARRE

820

810

800

790

CABOT SILT LOAM
8 TO 15 PERCENT SLOPES, VERY STONY
HYDROGROUP = D
K FACTOR = 0.32

0 20 40
SCALE IN FEET

PROJECT NAME: BERLIN	
PROJECT NUMBER: STPG SGNL(40)	
FILE NAME: t11b358bdr.dgn	PLOT DATE: 10/20/2014
PROJECT LEADER: P. COBURN	DRAWN BY: T. SISSON
DESIGNED BY: T. SISSON	CHECKED BY: M. LACROIX
EPSC EXISTING CONDITIONS SHEET 9	SHEET 84 OF 123

653.40 - INLET PROTECTION DEVICE, TYPE I
STA. 68+00.70, LT.

VT STATE PLANE GRID

BEGIN PROJECT
BERLIN STPG SGNL (40)
STA. 65+92.66

NOTES:

1. THESE PLANS SHOW A CONCEPTUAL EROSION PLAN, THE CONTRACTOR MUST SUBMIT A TEMPORARY EROSION CONTROL PLAN FOR APPROVAL.
2. TEMPORARY EROSION CONTROL MEASURES ARE CONCEPTUALLY SHOWN. THE CONTRACTOR MAY RELOCATE TEMPORARY MEASURES TO IMPROVE EROSION CONTROL WITH APPROVAL OF THE RESIDENT ENGINEER AND ON SITE COORDINATOR. SILT FENCE SHALL NOT BE INSTALLED ACROSS CONTOURS.
3. THE CONTRACTOR SHALL USE OTHER TEMPORARY EROSION CONTROL MEASURES AS NECESSITATED BY THE SEQUENCE OF CONSTRUCTION OR AS DIRECTED BY THE RESIDENT ENGINEER AND ON SITE COORDINATOR.
4. REFER TO TEMPORARY EROSION CONTROL DETAIL SHEETS FOR ADDITIONAL DETAILS.

EPSC LEGEND

- TEMPORARY EROSION MATTING
- PDF — PROJECT DEMARCATION
- PREFABRICATED CHECK DAMS
- SILT FENCE
- INLET PROTECTION, TYPE I
- SOIL TYPE BOUNDARY
- LIMITS OF CONSTRUCTION (SOIL DISTURBANCE)
- PIPE INLET PROTECTION

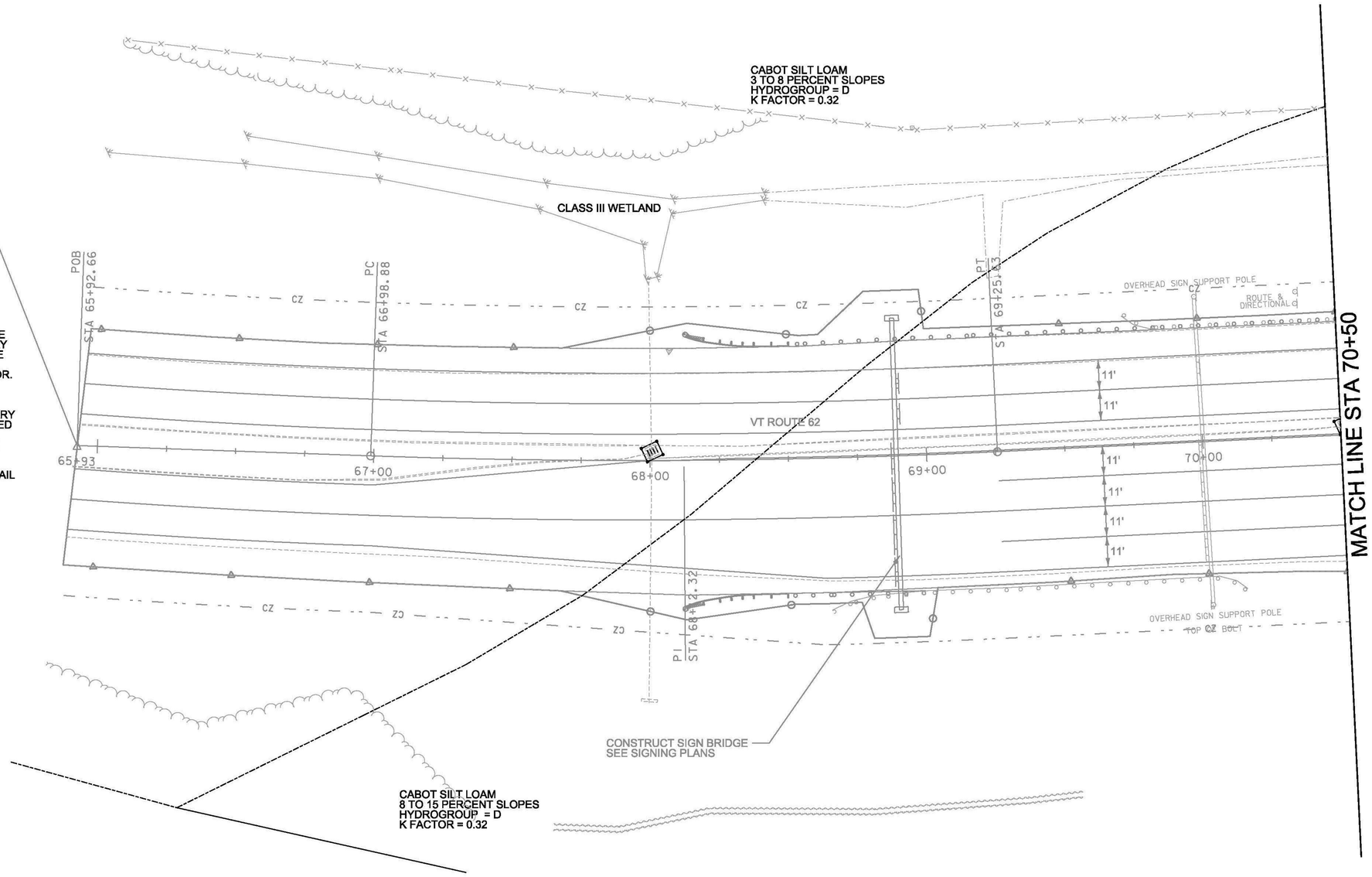

0 20 40
SCALE IN FEET

PROJECT NAME: BERLIN	
PROJECT NUMBER: STPG SGNL(40)	
FILE NAME: t11b358bdr.dgn	PLOT DATE: 10/28/2014
PROJECT LEADER: P. COBURN	DRAWN BY: T. SISSON
DESIGNED BY: T. SISSON	CHECKED BY: M. LACROIX
EPSC CONSTRUCTION SHEET 1	SHEET 85 OF 123

NOTES:

1. THESE PLANS SHOW A CONCEPTUAL EROSION PLAN, THE CONTRACTOR MUST SUBMIT A TEMPORARY EROSION CONTROL PLAN FOR APPROVAL.
2. TEMPORARY EROSION CONTROL MEASURES ARE CONCEPTUALLY SHOWN. THE CONTRACTOR MAY RELOCATE TEMPORARY MEASURES TO IMPROVE EROSION CONTROL WITH APPROVAL OF THE RESIDENT ENGINEER AND ON SITE COORDINATOR. SILT FENCE SHALL NOT BE INSTALLED ACROSS CONTOURS.
3. THE CONTRACTOR SHALL USE OTHER TEMPORARY EROSION CONTROL MEASURES AS NECESSITATED BY THE SEQUENCE OF CONSTRUCTION OR AS DIRECTED BY THE RESIDENT ENGINEER AND ON SITE COORDINATOR.
4. REFER TO TEMPORARY EROSION CONTROL DETAIL SHEETS FOR ADDITIONAL DETAILS.

N

VT STATE PLANE GRID

653.40 - INLET PROTECTION DEVICE, TYPE I
STA. 70+51.66, LT.
STA. 71+29.23, RT.
STA. 73+50.90, RT.
STA. 75+79.74, RT.
STA. 28+36.36, RT.
STA. 28+39.70, LT.

MATCH LINE STA 31+75

CABOT SILT LOAM
8 TO 15 PERCENT SLOPES
HYDROGROUP = D
K FACTOR = 0.32

BUCKLAND SILT LOAM
8 TO 15 PERCENT SLOPES
HYDROGROUP = C
K FACTOR = 0.32

CONTROLLER

STA 95+06.60

MATCH LINE STA 70+50

MATCH LINE STA 76+00

MATCH LINE STA 28+00

EPSC LEGEND

- TEMPORARY EROSION MATTING
- PDF — PROJECT DEMARCATION
- PREFABRICATED CHECK DAMS
- SILT FENCE
- INLET PROTECTION, TYPE I
- SOIL TYPE BOUNDARY
- LIMITS OF CONSTRUCTION (SOIL DISTURBANCE)
- PIPE INLET PROTECTION

0 20 40
SCALE IN FEET

PROJECT NAME: BERLIN
PROJECT NUMBER: STPG SGNL(40)

FILE NAME: t11b358bdr.dgn
PROJECT LEADER: P. COBURN
DESIGNED BY: T. SISSON
EPSC CONSTRUCTION SHEET 2

PLOT DATE: 10/20/2014
DRAWN BY: T. SISSON
CHECKED BY: M. LACROIX
SHEET 86 OF 123

VT STATE PLANE GRID

N

STETSON LOAM
8 TO 15 PERCENT SLOPES
HYDROGROUP = D
K FACTOR = 0.17

LIMITS OF CONSTRUCTION
STA. 24+99.43

GRANGER ROAD

BERLIN STATE HIGHWAY (AIRPORT ROAD)

TO AIRPORT

25+00

26+00

27+00

28+

MATCH LINE STA 28+00

PAVED DRIVE

CABOT SILT LOAM
0 TO 8 PERCENT SLOPES, VERY STONY
HYDROGROUP = D
K FACTOR = 0.32

CABOT SILT LOAM
8 TO 15 PERCENT SLOPES
HYDROGROUP = D
K FACTOR = 0.32

EPSC LEGEND

- TEMPORARY EROSION MATTING
- PDF — PROJECT DEMARCATION
- PREFABRICATED CHECK DAMS
- SILT FENCE
- INLET PROTECTION, TYPE I
- SOIL TYPE BOUNDARY
- LIMITS OF CONSTRUCTION (SOIL DISTURBANCE)
- PIPE INLET PROTECTION

NOTES:

1. THESE PLANS SHOW A CONCEPTUAL EROSION PLAN, THE CONTRACTOR MUST SUBMIT A TEMPORARY EROSION CONTROL PLAN FOR APPROVAL.
2. TEMPORARY EROSION CONTROL MEASURES ARE CONCEPTUALLY SHOWN. THE CONTRACTOR MAY RELOCATE TEMPORARY MEASURES TO IMPROVE EROSION CONTROL WITH APPROVAL OF THE RESIDENT ENGINEER AND ON SITE COORDINATOR. SILT FENCE SHALL NOT BE INSTALLED ACROSS CONTOURS.
3. THE CONTRACTOR SHALL USE OTHER TEMPORARY EROSION CONTROL MEASURES AS NECESSITATED BY THE SEQUENCE OF CONSTRUCTION OR AS DIRECTED BY THE RESIDENT ENGINEER AND ON SITE COORDINATOR.
4. REFER TO TEMPORARY EROSION CONTROL DETAIL SHEETS FOR ADDITIONAL DETAILS.

0 20 40
SCALE IN FEET

PROJECT NAME: BERLIN
PROJECT NUMBER: STPG SGNL(40)

FILE NAME: t11b358bdr.dgn
PROJECT LEADER: P. COBURN
DESIGNED BY: T. SISSON
EPSC CONSTRUCTION SHEET 3

PLOT DATE: 10/20/2014
DRAWN BY: T. SISSON
CHECKED BY: M. LACROIX
SHEET 87 OF 123

653.40 - INLET PROTECTION DEVICE, TYPE I
STA. 33+97.28, RT.

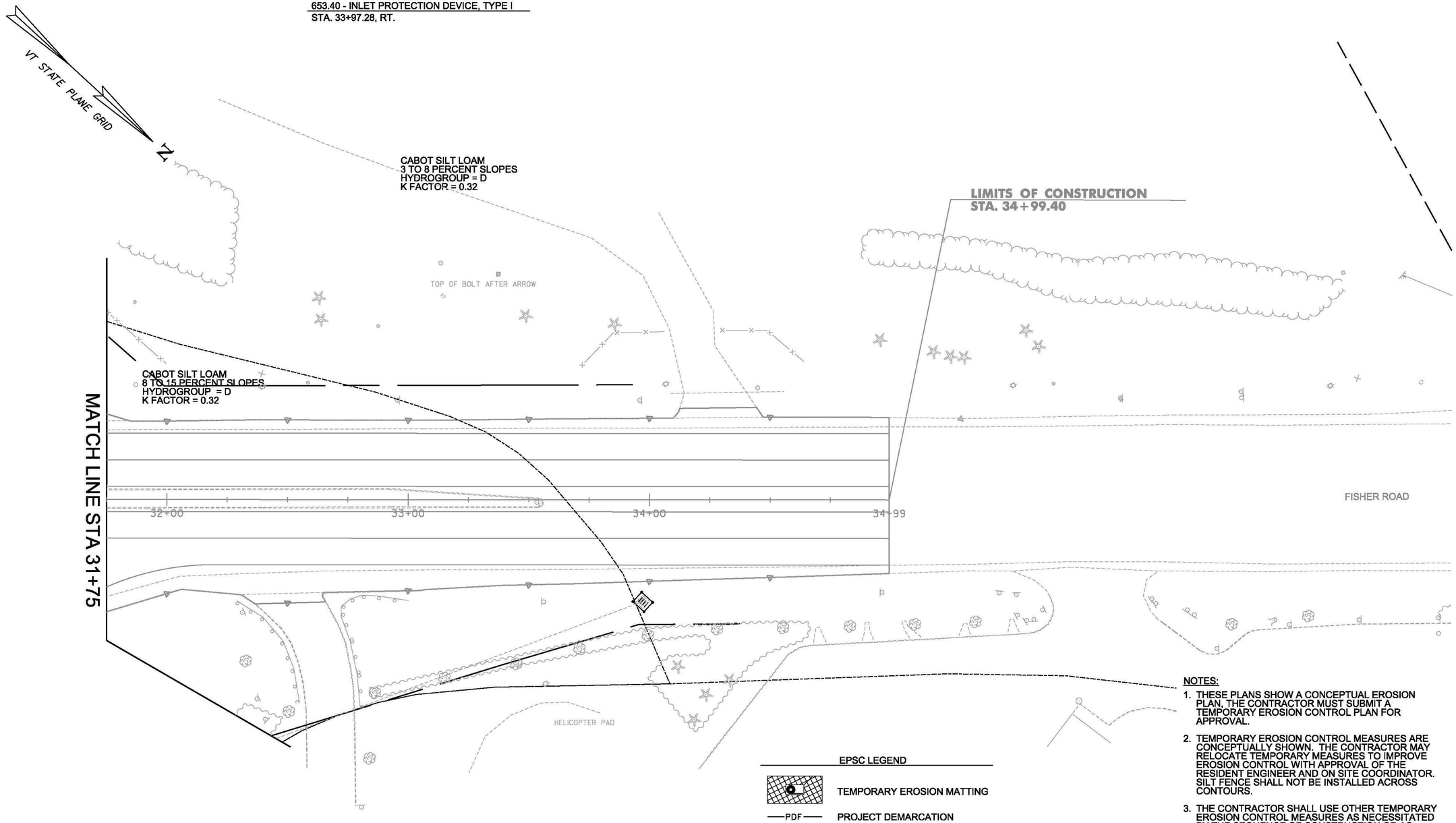

EPSC LEGEND

- TEMPORARY EROSION MATTING
- PDF — PROJECT DEMARCATION
- PREFABRICATED CHECK DAMS
- SILT FENCE
- INLET PROTECTION, TYPE I
- SOIL TYPE BOUNDARY
- LIMITS OF CONSTRUCTION (SOIL DISTURBANCE)
- PIPE INLET PROTECTION

BUCKLAND SILT LOAM
8 TO 15 PERCENT SLOPES
HYDROGROUP = C
K FACTOR = 0.32

NOTES:

1. THESE PLANS SHOW A CONCEPTUAL EROSION PLAN. THE CONTRACTOR MUST SUBMIT A TEMPORARY EROSION CONTROL PLAN FOR APPROVAL.
2. TEMPORARY EROSION CONTROL MEASURES ARE CONCEPTUALLY SHOWN. THE CONTRACTOR MAY RELOCATE TEMPORARY MEASURES TO IMPROVE EROSION CONTROL WITH APPROVAL OF THE RESIDENT ENGINEER AND ON SITE COORDINATOR. SILT FENCE SHALL NOT BE INSTALLED ACROSS CONTOURS.
3. THE CONTRACTOR SHALL USE OTHER TEMPORARY EROSION CONTROL MEASURES AS NECESSITATED BY THE SEQUENCE OF CONSTRUCTION OR AS DIRECTED BY THE RESIDENT ENGINEER AND ON SITE COORDINATOR.
4. REFER TO TEMPORARY EROSION CONTROL DETAIL SHEETS FOR ADDITIONAL DETAILS.

0 20 40
SCALE IN FEET

PROJECT NAME: BERLIN
PROJECT NUMBER: STPG SGNL(40)

FILE NAME: t11b358bdr.dgn
PROJECT LEADER: P. COBURN
DESIGNED BY: T. SISSON
EPSC CONSTRUCTION SHEET 4

PLOT DATE: 10/20/2014
DRAWN BY: T. SISSON
CHECKED BY: M. LACROIX
SHEET 88 OF 123

N

VT STATE PLANE GRID

653.25 - TEMPORARY STONE CHECK DAM, TYPE I
STA. 103+25.00, LT. - STA. 103+75.00, LT.

653.20 - TEMPORARY EROSION MATTING
STA. 102+50.00, LT. - STA. 103+75.00, LT.

653.40 - INLET PROTECTION DEVICE, TYPE I
STA. 78+44.92, LT.
STA. 79+59.80, RT.
STA. 80+53.78, LT.
STA. 81+06.79, LT.

653.55 - PROJECT DEMARCATION FENCE
STA. 102+43.44, LT. - 103+75.00, LT.

BUCKLAND SILT LOAM
8 TO 15 PERCENT SLOPES
HYDROGROUP = C
K FACTOR = 0.32

PDF PDF PDF PDF PDF PDF P

MATCH LINE STA 76+00

MATCH LINE STA 81+77.14

99+00 100+00 101+00 102+00 103+00

VT ROUTE 62

77+00 78+00 79+00 80+00 81+00

BERLIN STATE HIGHWAY

BUCKLAND SILT LOAM
15 TO 35 PERCENT SLOPES, VERY STONY
HYDROGROUP = C
K FACTOR = 0.32

TO JCT OF US ROUTE 302

EPSC LEGEND

- TEMPORARY EROSION MATTING
- PDF — PROJECT DEMARCATION
- PREFABRICATED CHECK DAMS
- SILT FENCE
- INLET PROTECTION, TYPE I
- SOIL TYPE BOUNDARY
- LIMITS OF CONSTRUCTION (SOIL DISTURBANCE)
- PIPE INLET PROTECTION

NOTES:

1. THESE PLANS SHOW A CONCEPTUAL EROSION PLAN. THE CONTRACTOR MUST SUBMIT A TEMPORARY EROSION CONTROL PLAN FOR APPROVAL.
2. TEMPORARY EROSION CONTROL MEASURES ARE CONCEPTUALLY SHOWN. THE CONTRACTOR MAY RELOCATE TEMPORARY MEASURES TO IMPROVE EROSION CONTROL WITH APPROVAL OF THE RESIDENT ENGINEER AND ON SITE COORDINATOR. SILT FENCE SHALL NOT BE INSTALLED ACROSS CONTOURS.
3. THE CONTRACTOR SHALL USE OTHER TEMPORARY EROSION CONTROL MEASURES AS NECESSITATED BY THE SEQUENCE OF CONSTRUCTION OR AS DIRECTED BY THE RESIDENT ENGINEER AND ON SITE COORDINATOR.
4. REFER TO TEMPORARY EROSION CONTROL DETAIL SHEETS FOR ADDITIONAL DETAILS.

0 20 40
SCALE IN FEET

PROJECT NAME: BERLIN
PROJECT NUMBER: STPG SGNL(40)

FILE NAME: t11b358bdr.dgn
PROJECT LEADER: P. COBURN
DESIGNED BY: T. SISSON
EPSC CONSTRUCTION SHEET 5

PLOT DATE: 10/20/2014
DRAWN BY: T. SISSON
CHECKED BY: M. LACROIX
SHEET 89 OF 123

N

VT STATE PLANE GRID

653.25 - TEMPORARY STONE CHECK DAM, TYPE I
STA. 103+75.00, LT. - STA. 105+90.00, LT.

653.40 - INLET PROTECTION DEVICE, TYPE I
STA. 83+49.48, LT.
STA. 106+34.95, LT.
STA. 108+32.97, LT.

653.55 - PROJECT DEMARCATION FENCE
STA. 103+75.00, LT. - 108+82.14, LT.
STA. 105+36.08, RT. - 106+92.24, RT.

649.51 - GEOTEXTILE FOR SILT FENCE
STA. 104+95.86, RT. - STA. 106+47.96, RT.

653.20 - TEMPORARY EROSION MATTING
STA. 104+64.60, RT. - STA. 106+77.71, RT.
STA. 103+75.00, LT. - STA. 108+83.04, LT.

BUCKLAND SILT LOAM
15 TO 25 PERCENT SLOPES
HYDROGROUP = C
K FACTOR = 0.32

LIMITS OF CONSTRUCTION
STA. 109+68.33

MATCH LINE STA 81+77.14

MATCH LINE STA 85+00.00

BERLIN STATE HIGHWAY

VT ROUTE 62

81+00 82+00 83+00 84+00 85+00 86+00 87+00 88+00 89+00 90+00 91+00 92+00 93+00 94+00 95+00 96+00 97+00 98+00 99+00 100+00 101+00 102+00 103+00 104+00 105+00 106+00 107+00 108+00 109+00 109+68

PDF

EPSC LEGEND

- TEMPORARY EROSION MATTING
- PDF — PROJECT DEMARCATION
- PREFABRICATED CHECK DAMS
- SILT FENCE
- INLET PROTECTION, TYPE I
- SOIL TYPE BOUNDARY
- LIMITS OF CONSTRUCTION (SOIL DISTURBANCE)
- PIPE INLET PROTECTION

BUCKLAND SILT LOAM
15 TO 35 PERCENT SLOPES, VERY STONY
HYDROGROUP = C
K FACTOR = 0.32

NOTES:

1. THESE PLANS SHOW A CONCEPTUAL EROSION PLAN. THE CONTRACTOR MUST SUBMIT A TEMPORARY EROSION CONTROL PLAN FOR APPROVAL.
2. TEMPORARY EROSION CONTROL MEASURES ARE CONCEPTUALLY SHOWN. THE CONTRACTOR MAY RELOCATE TEMPORARY MEASURES TO IMPROVE EROSION CONTROL WITH APPROVAL OF THE RESIDENT ENGINEER AND ON SITE COORDINATOR. SILT FENCE SHALL NOT BE INSTALLED ACROSS CONTOURS.
3. THE CONTRACTOR SHALL USE OTHER TEMPORARY EROSION CONTROL MEASURES AS NECESSITATED BY THE SEQUENCE OF CONSTRUCTION OR AS DIRECTED BY THE RESIDENT ENGINEER AND ON SITE COORDINATOR.
4. REFER TO TEMPORARY EROSION CONTROL DETAIL SHEETS FOR ADDITIONAL DETAILS.

EPSC

0 20 40
SCALE IN FEET

PROJECT NAME: BERLIN
PROJECT NUMBER: STPG SGNL(40)

FILE NAME: t11b358bdr.dgn
PROJECT LEADER:
DESIGNED BY:
EPSC CONSTRUCTION SHEET 6

PLOT DATE: 10/20/2014
DRAWN BY:
CHECKED BY:
SHEET 90 OF 123

653.40 - INLET PROTECTION DEVICE, TYPE I
STA. 89+09.48, RT
STA. 89+35.15, LT

N

VT STATE PLANE GRID



EPSC LEGEND

- TEMPORARY EROSION MATTING
- PDF — PROJECT DEMARCATION
- PREFABRICATED CHECK DAMS
- SILT FENCE
- INLET PROTECTION, TYPE I
- SOIL TYPE BOUNDARY
- LIMITS OF CONSTRUCTION (SOIL DISTURBANCE)
- PIPE INLET PROTECTION

NOTES:

1. THESE PLANS SHOW A CONCEPTUAL EROSION PLAN. THE CONTRACTOR MUST SUBMIT A TEMPORARY EROSION CONTROL PLAN FOR APPROVAL.
2. TEMPORARY EROSION CONTROL MEASURES ARE CONCEPTUALLY SHOWN. THE CONTRACTOR MAY RELOCATE TEMPORARY MEASURES TO IMPROVE EROSION CONTROL WITH APPROVAL OF THE RESIDENT ENGINEER AND ON SITE COORDINATOR. SILT FENCE SHALL NOT BE INSTALLED ACROSS CONTOURS.
3. THE CONTRACTOR SHALL USE OTHER TEMPORARY EROSION CONTROL MEASURES AS NECESSITATED BY THE SEQUENCE OF CONSTRUCTION OR AS DIRECTED BY THE RESIDENT ENGINEER AND ON SITE COORDINATOR.
4. REFER TO TEMPORARY EROSION CONTROL DETAIL SHEETS FOR ADDITIONAL DETAILS.

0 20 40
SCALE IN FEET

PROJECT NAME: BERLIN
PROJECT NUMBER: STPG SGNL(40)

FILE NAME: t11b358bdr.dgn
PROJECT LEADER: P. COBURN
DESIGNED BY: T. SISSON
EPSC CONSTRUCTION SHEET 7

PLOT DATE: 10/20/2014
DRAWN BY: T. SISSON
CHECKED BY: M. LACROIX
SHEET 91 OF 123

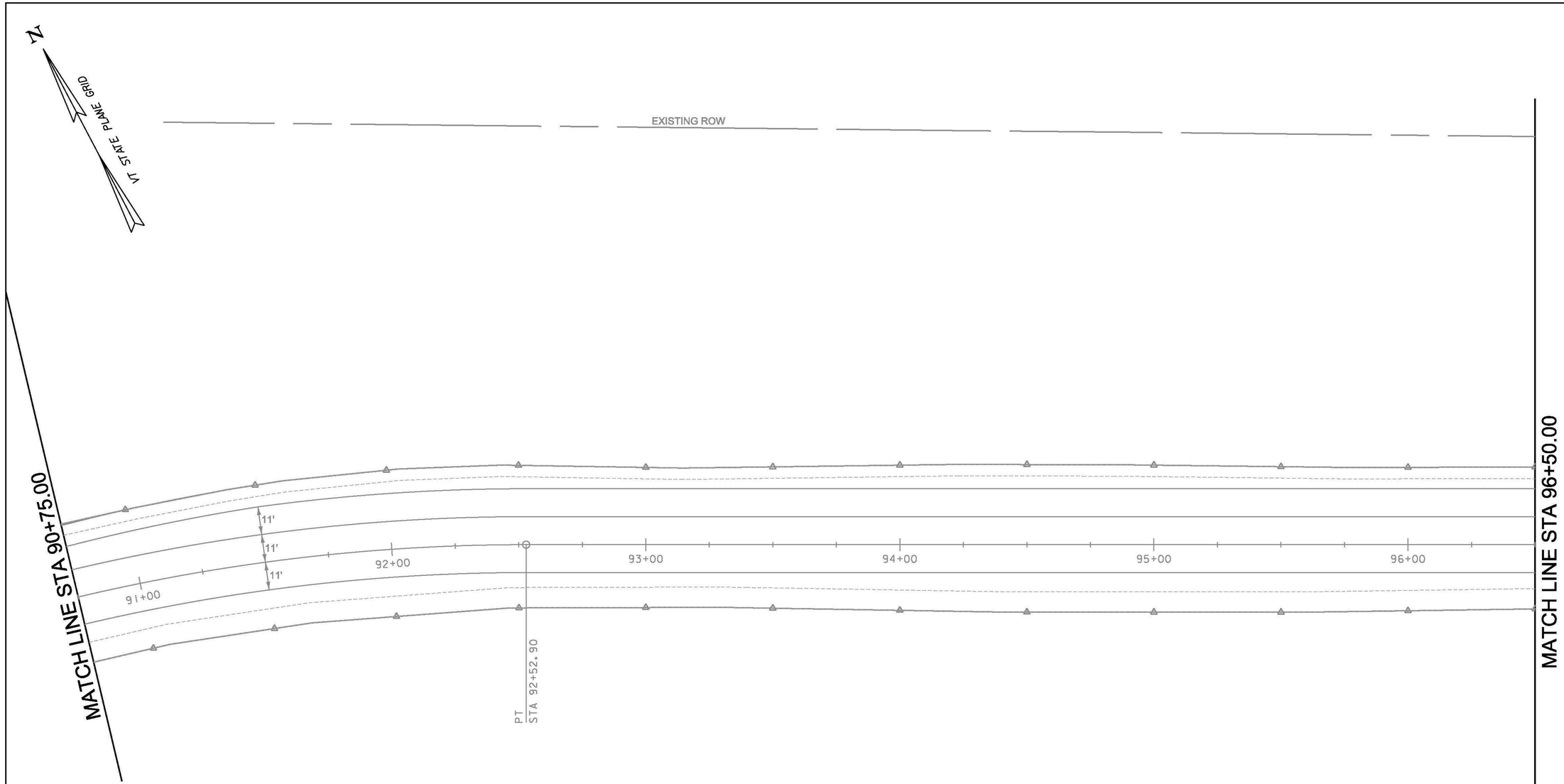

EPSC LEGEND

- TEMPORARY EROSION MATTING
- PDF — PROJECT DEMARCATION
- PREFABRICATED CHECK DAMS
- SILT FENCE
- INLET PROTECTION, TYPE I
- SOIL TYPE BOUNDARY
- LIMITS OF CONSTRUCTION (SOIL DISTURBANCE)
- PIPE INLET PROTECTION

NOTES:

1. THESE PLANS SHOW A CONCEPTUAL EROSION PLAN. THE CONTRACTOR MUST SUBMIT A TEMPORARY EROSION CONTROL PLAN FOR APPROVAL.
2. TEMPORARY EROSION CONTROL MEASURES ARE CONCEPTUALLY SHOWN. THE CONTRACTOR MAY RELOCATE TEMPORARY MEASURES TO IMPROVE EROSION CONTROL WITH APPROVAL OF THE RESIDENT ENGINEER AND ON SITE COORDINATOR. SILT FENCE SHALL NOT BE INSTALLED ACROSS CONTOURS.
3. THE CONTRACTOR SHALL USE OTHER TEMPORARY EROSION CONTROL MEASURES AS NECESSITATED BY THE SEQUENCE OF CONSTRUCTION OR AS DIRECTED BY THE RESIDENT ENGINEER AND ON SITE COORDINATOR.
4. REFER TO TEMPORARY EROSION CONTROL DETAIL SHEETS FOR ADDITIONAL DETAILS.

0 20 40
SCALE IN FEET

PROJECT NAME: BERLIN
PROJECT NUMBER: STPG SGNL(40)

FILE NAME: t11b358bdr.dgn
PROJECT LEADER: P. COBURN
DESIGNED BY: T. SISSON
EPSC CONSTRUCTION SHEET 8

PLOT DATE: 10/20/2014
DRAWN BY: T. SISSON
CHECKED BY: M. LACROIX
SHEET 92 OF 123

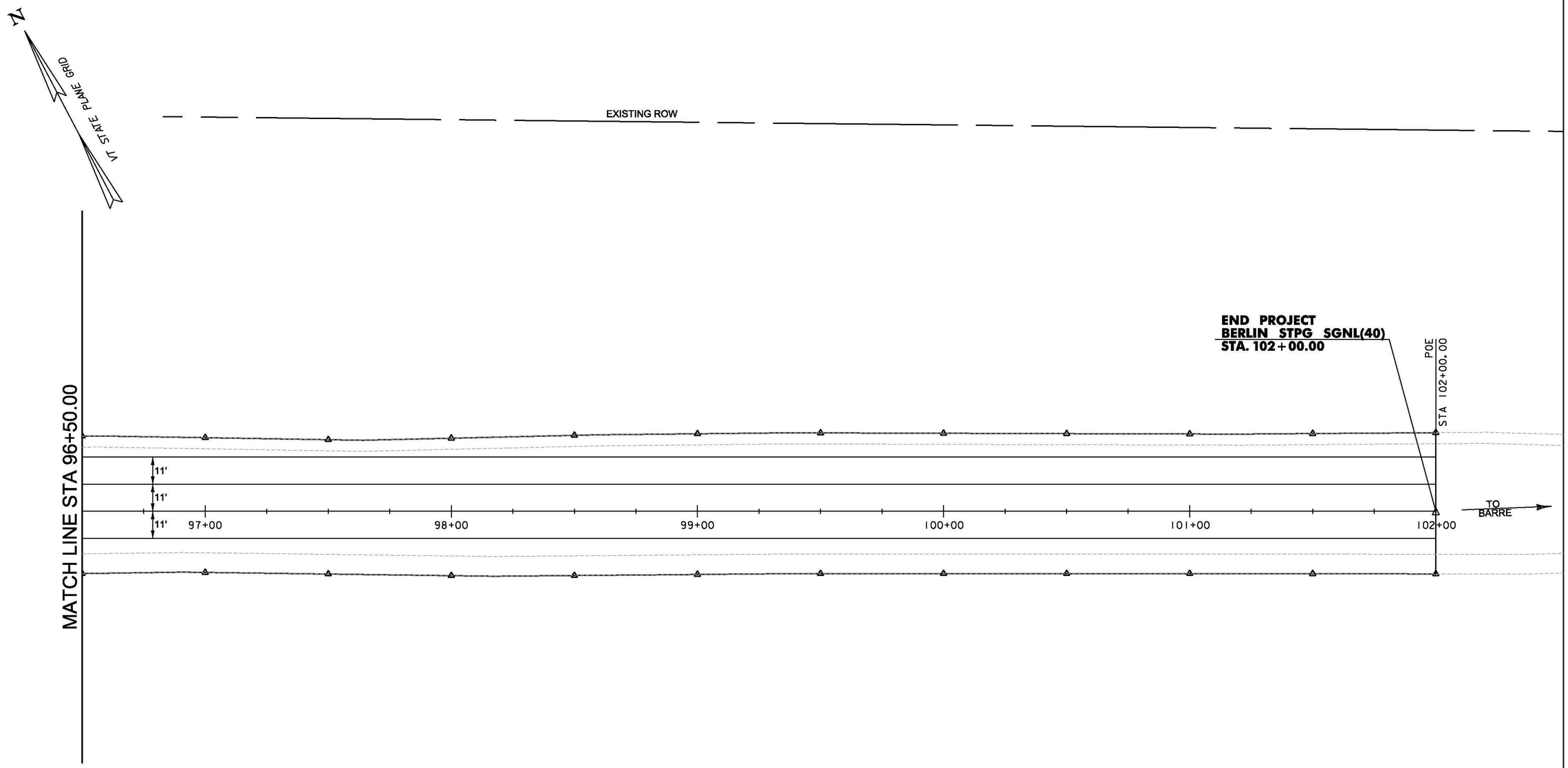

EPSC LEGEND

- TEMPORARY EROSION MATTING
- PDF — PROJECT DEMARCATION
- PREFABRICATED CHECK DAMS
- SILT FENCE
- INLET PROTECTION, TYPE I
- SOIL TYPE BOUNDARY
- LIMITS OF CONSTRUCTION (SOIL DISTURBANCE)
- PIPE INLET PROTECTION

NOTES:

1. THESE PLANS SHOW A CONCEPTUAL EROSION PLAN, THE CONTRACTOR MUST SUBMIT A TEMPORARY EROSION CONTROL PLAN FOR APPROVAL.
2. TEMPORARY EROSION CONTROL MEASURES ARE CONCEPTUALLY SHOWN. THE CONTRACTOR MAY RELOCATE TEMPORARY MEASURES TO IMPROVE EROSION CONTROL WITH APPROVAL OF THE RESIDENT ENGINEER AND ON SITE COORDINATOR. SILT FENCE SHALL NOT BE INSTALLED ACROSS CONTOURS.
3. THE CONTRACTOR SHALL USE OTHER TEMPORARY EROSION CONTROL MEASURES AS NECESSITATED BY THE SEQUENCE OF CONSTRUCTION OR AS DIRECTED BY THE RESIDENT ENGINEER AND ON SITE COORDINATOR.
4. REFER TO TEMPORARY EROSION CONTROL DETAIL SHEETS FOR ADDITIONAL DETAILS.

0 20 40
SCALE IN FEET

PROJECT NAME: BERLIN
PROJECT NUMBER: STPG SGNL(40)

FILE NAME: t11b358bdr.dgn
PROJECT LEADER: P. COBURN
DESIGNED BY: T. SISSON
EPSC CONSTRUCTION SHEET 9

PLOT DATE: 10/20/2014
DRAWN BY: T. SISSON
CHECKED BY: M. LACROIX
SHEET 93 OF 123

N

VT STATE PLANE GRID

BEGIN PROJECT
BERLIN STPG SGNL (40)
STA. 65+92.66

VT ROUTE 62
TO BERLIN CORNERS

CABOT SILT LOAM
3 TO 8 PERCENT SLOPES
HYDROGROUP = D
K FACTOR = 0.32

CLASS III WETLAND

CABOT SILT LOAM
8 TO 15 PERCENT SLOPES
HYDROGROUP = D
K FACTOR = 0.32

MATCH LINE STA 70+50

EPSC LEGEND

LIMITS OF SOIL DISTURBANCE

DISTURBED AREAS
REQUIRING RE-VEGETATION

0 20 40
SCALE IN FEET

PROJECT NAME: BERLIN	
PROJECT NUMBER: STPG SGNL(40)	
FILE NAME: t11b358bdr.dgn	PLOT DATE: 10/28/2014
PROJECT LEADER: P. COBURN	DRAWN BY: T. SISSON
DESIGNED BY: T. SISSON	CHECKED BY: M. LACROIX
EPSC FINAL CONDITIONS SHEET 1	SHEET 94 OF 123

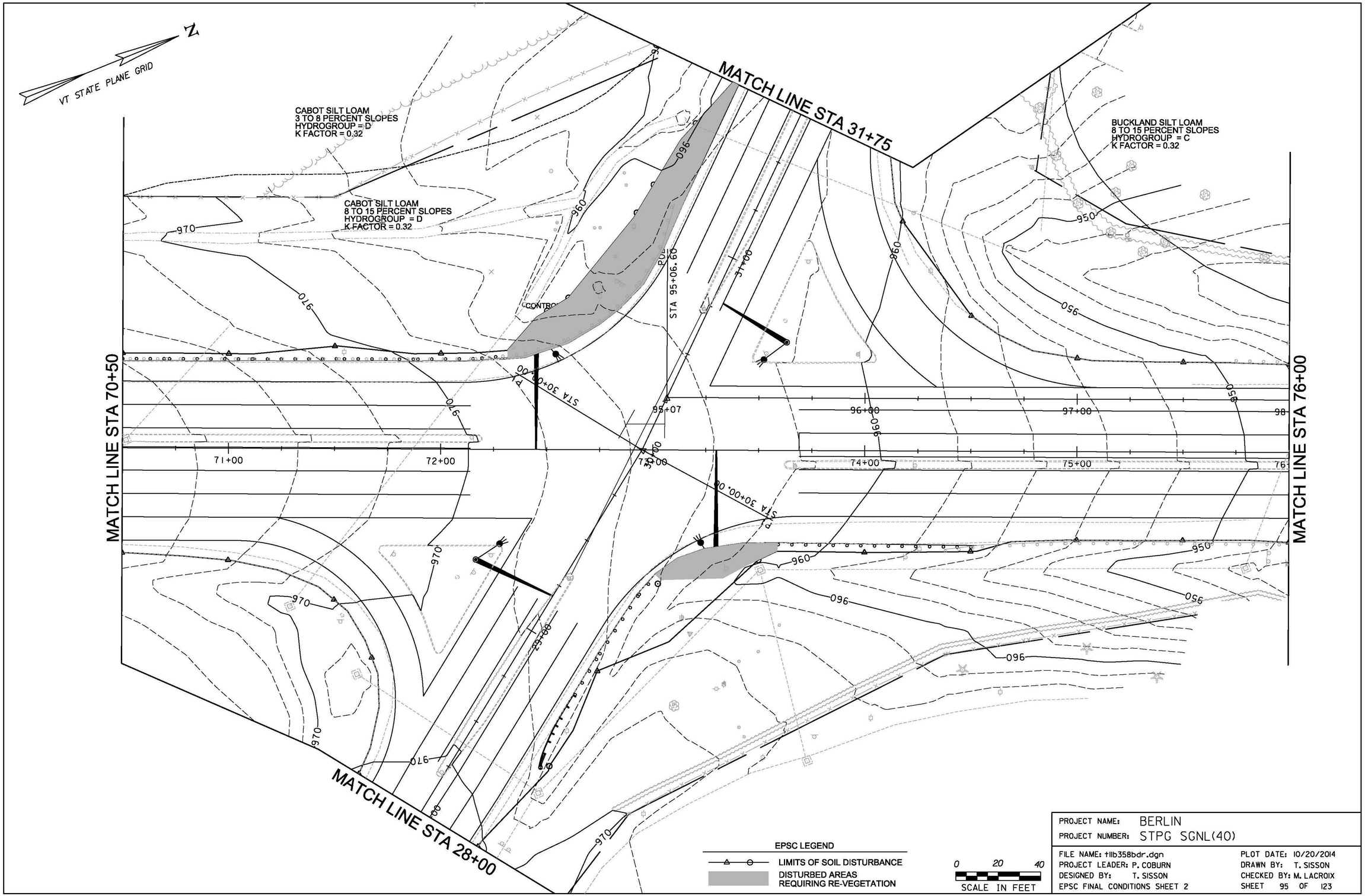

PROJECT NAME: BERLIN	
PROJECT NUMBER: STPG SGNL(40)	
FILE NAME: t11b358bdr.dgn	PLOT DATE: 10/20/2014
PROJECT LEADER: P. COBURN	DRAWN BY: T. SISSON
DESIGNED BY: T. SISSON	CHECKED BY: M. LACROIX
EPSC FINAL CONDITIONS SHEET 2	SHEET 95 OF 123

VT STATE PLANE GRID

N

LIMITS OF CONSTRUCTION
STA. 24+99.43

STETSON LOAM
8 TO 15 PERCENT SLOPES
HYDROGROUP = D
K FACTOR = 0.17

GRANGER ROAD

TO AIRPORT

PAVED DRIVE

1020
1010
1000
990
980
970
960

25+00
26+00
27+00
28+

MATCH LINE STA 28+00

CABOT SILT LOAM
0 TO 8 PERCENT SLOPES, VERY STONY
HYDROGROUP = D
K FACTOR = 0.32

CABOT SILT LOAM
8 TO 15 PERCENT SLOPES
HYDROGROUP = D
K FACTOR = 0.32

EPSC LEGEND

LIMITS OF SOIL DISTURBANCE

DISTURBED AREAS REQUIRING RE-VEGETATION

0 20 40
SCALE IN FEET

PROJECT NAME: BERLIN	
PROJECT NUMBER: STPG SGNL(40)	
FILE NAME: t11b358bdr.dgn	PLOT DATE: 10/20/2014
PROJECT LEADER: P. COBURN	DRAWN BY: T. SISSON
DESIGNED BY: T. SISSON	CHECKED BY: M. LACROIX
EPSC FINAL CONDITIONS SHEET 3	SHEET 96 OF 123

VT STATE PLANE GRID

N

CABOT SILT LOAM
3 TO 8 PERCENT SLOPES
HYDROGROUP = D
K FACTOR = 0.32

TOP OF BOLT AFTER ARROW

LIMITS OF CONSTRUCTION
STA. 34+99.40

OCEANSIDE CONCRETE
18" ABOVE GROUND WITH KE...

CABOT SILT LOAM
8 TO 15 PERCENT SLOPES
HYDROGROUP = D
K FACTOR = 0.32

960
960
960
960
960
960

MATCH LINE STA 31+75

32+00
33+00
34+00
34+99

BUCKLAND SILT LOAM
8 TO 15 PERCENT SLOPES
HYDROGROUP = C
K FACTOR = 0.32

EPSC LEGEND

LIMITS OF SOIL DISTURBANCE

DISTURBED AREAS
REQUIRING RE-VEGETATION

0 20 40
SCALE IN FEET

PROJECT NAME: BERLIN	
PROJECT NUMBER: STPG SGNL(40)	
FILE NAME: t11b358bdr.dgn	PLOT DATE: 10/20/2014
PROJECT LEADER: P. COBURN	DRAWN BY: T. SISSON
DESIGNED BY: T. SISSON	CHECKED BY: M. LACROIX
EPSC FINAL CONDITIONS SHEET 4	SHEET 97 OF 123

N

VT STATE PLANE GRID

BUCKLAND SILT LOAM
8 TO 15 PERCENT SLOPES
HYDROGROUP = C
K FACTOR = 0.32

MATCH LINE STA 76+00

MATCH LINE STA 81+77.14

BUCKLAND SILT LOAM
15 TO 35 PERCENT SLOPES, VERY STONY
HYDROGROUP = C
K FACTOR = 0.32

TO JCT OF US 7 ROUTE 302

EPSC LEGEND

LIMITS OF SOIL DISTURBANCE

DISTURBED AREAS REQUIRING RE-VEGETATION

0 20 40
SCALE IN FEET

PROJECT NAME:	BERLIN
PROJECT NUMBER:	STPG SGNL(40)
FILE NAME: t11b358bdr.dgn	PLOT DATE: 10/20/2014
PROJECT LEADER: P. COBURN	DRAWN BY: T. SISSON
DESIGNED BY: T. SISSON	CHECKED BY: M. LACROIX
EPSC FINAL CONDITIONS SHEET 5	SHEET 98 OF 123

VT STATE PLANE GRID

N

BUCKLAND SILT LOAM
15 TO 25 PERCENT SLOPES
HYDROGROUP = C
K FACTOR = 0.32

LIMITS OF CONSTRUCTION
STA. 109+68.33

MATCH LINE STA 81+77.14

MATCH LINE STA 85+00.00

BUCKLAND SILT LOAM
15 TO 35 PERCENT SLOPES, VERY STONY
HYDROGROUP = C
K FACTOR = 0.32

EXC.
STP

EPSC LEGEND

- LIMITS OF SOIL DISTURBANCE
- DISTURBED AREAS REQUIRING RE-VEGETATION

0 20 40
SCALE IN FEET

PROJECT NAME: BERLIN	
PROJECT NUMBER: STPG SGNL(40)	
FILE NAME: t11b358bdr.dgn	PLOT DATE: 10/20/2014
PROJECT LEADER: P. COBURN	DRAWN BY: T. SISSON
DESIGNED BY: T. SISSON	CHECKED BY: M. LACROIX
EPSC FINAL CONDITIONS SHEET 6	SHEET 99 OF 123

N

VT STATE PLANE GRID

CABOT SILT LOAM
8 TO 15 PERCENT SLOPES, VERY STONY
HYDROGROUP = D
K FACTOR = 0.32

MATCH LINE STA 85+00.00

MATCH LINE STA 90+75.00

BUCKLAND SILT LOAM
15 TO 35 PERCENT SLOPES, VERY STONY
HYDROGROUP = C
K FACTOR = 0.32

CABOT SILT LOAM
0 TO 8 PERCENT SLOPES, VERY STONY
HYDROGROUP = D
K FACTOR = 0.32

EPSC LEGEND

LIMITS OF SOIL DISTURBANCE

DISTURBED AREAS
REQUIRING RE-VEGETATION

0 20 40
SCALE IN FEET

PROJECT NAME: BERLIN	
PROJECT NUMBER: STPG SGNL(40)	
FILE NAME: t11b358bdr.dgn	PLOT DATE: 10/20/2014
PROJECT LEADER: P. COBURN	DRAWN BY: T. SISSON
DESIGNED BY: T. SISSON	CHECKED BY: M. LACROIX
EPSC FINAL CONDITIONS SHEET 7	SHEET 100 OF 123

N

VT STATE PLANE GRID

EXISTING ROW

MATCH LINE STA 90+75.00

MATCH LINE STA 96+50.00

11'

11'

11'

850

840

830

820

91+00

92+00

93+00

94+00

95+00

96+00

CABOT SILT LOAM
8 TO 15 PERCENT SLOPES, VERY STONY
HYDROGROUP = D
K FACTOR = 0.32

EPSC LEGEND

LIMITS OF SOIL DISTURBANCE

DISTURBED AREAS
REQUIRING RE-VEGETATION

0 20 40
SCALE IN FEET

PROJECT NAME: BERLIN
PROJECT NUMBER: STPG SGNL(40)

FILE NAME: t11b358bdr.dgn
PROJECT LEADER: P. COBURN
DESIGNED BY: T. SISSON
EPSC FINAL CONDITIONS SHEET 8

PLOT DATE: 10/20/2014
DRAWN BY: T. SISSON
CHECKED BY: M. LACROIX
SHEET 101 OF 123

N

VT STATE PLANE GRID

EXISTING ROW

MATCH LINE STA 96+50.00

END PROJECT
BERLIN STPG SGNL(40)
STA. 102+00.00

11'
11'
11'

97+00 98+00 99+00 100+00 101+00 102+00

TO BARRE

820 810 800 790

CABOT SILT LOAM
8 TO 15 PERCENT SLOPES, VERY STONY
HYDROGROUP = D
K FACTOR = 0.32

EPSC LEGEND

LIMITS OF SOIL DISTURBANCE

DISTURBED AREAS
REQUIRING RE-VEGETATION

0 20 40
SCALE IN FEET

PROJECT NAME: BERLIN
PROJECT NUMBER: STPG SGNL(40)

FILE NAME: t11b358bdr.dgn
PROJECT LEADER: P. COBURN
DESIGNED BY: T. SISSON
EPSC FINAL CONDITIONS SHEET 9

PLOT DATE: 10/20/2014
DRAWN BY: T. SISSON
CHECKED BY: M. LACROIX
SHEET 102 OF 123

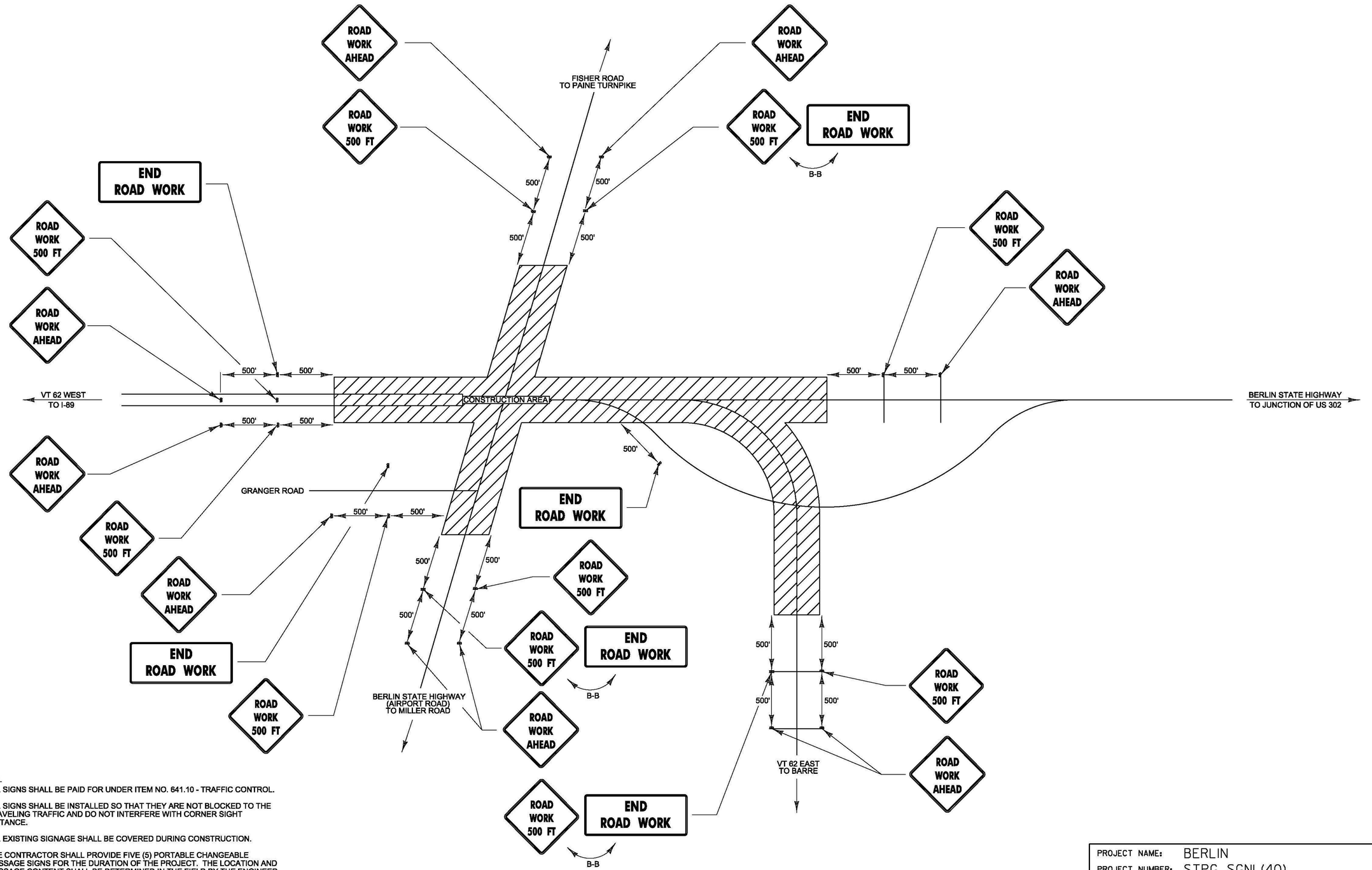

NOTES:

1. ALL SIGNS SHALL BE PAID FOR UNDER ITEM NO. 641.10 - TRAFFIC CONTROL.
2. ALL SIGNS SHALL BE INSTALLED SO THAT THEY ARE NOT BLOCKED TO THE TRAVELING TRAFFIC AND DO NOT INTERFERE WITH CORNER SIGHT DISTANCE.
3. ALL EXISTING SIGNAGE SHALL BE COVERED DURING CONSTRUCTION.
4. THE CONTRACTOR SHALL PROVIDE FIVE (5) PORTABLE CHANGEABLE MESSAGE SIGNS FOR THE DURATION OF THE PROJECT. THE LOCATION AND MESSAGE CONTENT SHALL BE DETERMINED IN THE FIELD BY THE ENGINEER.
5. ALL PERMANENT SIGNS THAT CONFLICT WITH TEMPORARY TRAFFIC CONTROL SHALL BE COMPLETELY COVERED DURING CONSTRUCTION.

CONSTRUCTION APPROACH SIGNING

NOT TO SCALE
SEE STD T-10 FOR SIGN PLACEMENT

PROJECT NAME:	BERLIN
PROJECT NUMBER:	STPG SGNL(40)
FILE NAME: t11b358frm.dgn	PLOT DATE: 10/28/2014
PROJECT LEADER: P. COBURN	DRAWN BY: T. SISSON
DESIGNED BY: T. SISSON	CHECKED BY: M. LACROIX
CONSTRUCTION APPROACH SIGNING SHEET	SHEET 103 OF 123

N

VT STATE PLANE GRID

MATCHLINE - STA. 31+75.00

MATCHLINE - STA. 70+50.00

MATCHLINE - STA. 76+00.00

MATCHLINE - STA. 28+00.00

BERLIN STATE HIGHWAY 95+06.60 =
VT ROUTE 62 STA. 73+06.60, 24.75 LT.

CONTROLLER

11'

31+00

95+07

96+00

97+00

98

70+00

71+00

72+00

73+00

74+00

75+00

76

REMOVE EXISTING MEDIAN ISLAND

VT ROUTE 62 STA. 72+95.00 =
AIRPORT RD./FISHER RD. STA. 30+00.00

TRAFFIC CONTROL LEGEND

- WORK AREA
- TEMPORARY TRAFFIC BARRIER
- TYPE III BARRICADES
- REFLECTORIZED PLASTIC DRUM
- TYPE 1 DELINEATOR (YELLOW)
- TYPE 1 DELINEATOR (WHITE)
- FLOW OF TRAFFIC
- FLAGGER
- SIGN
- PORTABLE CHANGEABLE MESSAGE SIGN

POTENTIAL ACTIVITIES ASSOCIATED WITH TRAFFIC CONTROL, PHASE 1

1. PRIOR TO THE COMMENCEMENT OF ANY WORK OR THE PLACEMENT OF EQUIPMENT ON THE ROADWAY THE CONTRACTOR SHALL PROVIDE ADVANCED WARNING SIGNS IN ACCORDANCE WITH THE CONSTRUCTION APPROACH SIGNING SHEET AND THE LATEST EDITION OF THE MANUAL ON UNIFORM TRAFFIC CONTROL DEVICES (MUTCD).
2. INSTALL AND MAINTAIN ANY EROSION CONTROL MEASURES IN ACCORDANCE WITH THE EROSION CONTROL PLANS AND DETAILS IN ADDITION TO THE VERMONT D.E.C.'S "LOW RISK SITE HANDBOOK FOR EROSION PREVENTION AND SEDIMENT CONTROL."
3. INSTALL ALL WARNING SIGNAGE, REFLECTORIZED DRUMS, TRAFFIC BARRIER, AND ANY OTHER TRAFFIC CONTROL DEVICES PER ACCEPTED TRAFFIC CONTROL PLANS OR AS DIRECTED BY THE RESIDENT ENGINEER.
4. INSTALL ANY STORMWATER TREATMENT PRACTICES AND DRAINAGE ELEMENTS AS SHOWN ON THEIR APPLICABLE PLANS.
5. CONSTRUCT PROPOSED LEFT TURN LANE EXTENSION AND NEW LEFT TURN LANE. REMOVE EXISTING CURBING AND ISLANDS. INSTALL NEW CURBING. FINISH ISLAND SURFACE.
6. PLACE LEVELING COURSE OF PAVEMENT AND INSTALL TEMPORARY PAVEMENT MARKINGS AND SIGNING AS REQUIRED.

0 20 40
SCALE IN FEET

NOTE:
1. SEE TRAFFIC CONTROL GENERAL NOTES SHEET FOR ADDITIONAL INFORMATION AND REQUIREMENTS.

PROJECT NAME: BERLIN
PROJECT NUMBER: STPG SGNL (40)

FILE NAME: t11b358tcp.dgn
PROJECT LEADER: P. COBURN
DESIGNED BY: M. LACROIX
TRAFFIC CONTROL PLAN - PHASE I PLAN I

PLOT DATE: 10/28/2014
DRAWN BY: I. DEGUTIS
CHECKED BY: M. LACROIX
SHEET 104 OF 123

N

VT STATE PLANE GRID

MATCHLINE - STA. 76+00.00

98+00 99+00 100+00 101+00 102+00 103+00

97+00 77+00 78+00 79+00 80+00 81+00

11' 11' 11' 11'

PI STA 102+85.37

PC STA 101+78.19

PC STA 79+79.19

MATCHLINE - STA. 81+77.14

TRAFFIC CONTROL LEGEND

- WORK AREA
- TEMPORARY TRAFFIC BARRIER
- TYPE III BARRICADES
- REFLECTORIZED PLASTIC DRUM
- TYPE 1 DELINEATOR (YELLOW)
- TYPE 1 DELINEATOR (WHITE)
- FLOW OF TRAFFIC
- FLAGGER
- SIGN
- PORTABLE CHANGEABLE MESSAGE SIGN

POTENTIAL ACTIVITIES ASSOCIATED WITH TRAFFIC CONTROL, PHASE 1

1. PRIOR TO THE COMMENCEMENT OF ANY WORK OR THE PLACEMENT OF EQUIPMENT ON THE ROADWAY THE CONTRACTOR SHALL PROVIDE ADVANCED WARNING SIGNS IN ACCORDANCE WITH THE CONSTRUCTION APPROACH SIGNING SHEET AND THE LATEST EDITION OF THE MANUAL ON UNIFORM TRAFFIC CONTROL DEVICES (MUTCD).
2. INSTALL AND MAINTAIN ANY EROSION CONTROL MEASURES IN ACCORDANCE WITH THE EROSION CONTROL PLANS AND DETAILS IN ADDITION TO THE VERMONT D.E.C.'S "LOW RISK SITE HANDBOOK FOR EROSION PREVENTION AND SEDIMENT CONTROL."
3. INSTALL ALL WARNING SIGNAGE, REFLECTORIZED DRUMS, TRAFFIC BARRIER, AND ANY OTHER TRAFFIC CONTROL DEVICES PER ACCEPTED TRAFFIC CONTROL PLANS OR AS DIRECTED BY THE RESIDENT ENGINEER.
4. INSTALL ANY STORMWATER TREATMENT PRACTICES AND DRAINAGE ELEMENTS AS SHOWN ON THEIR APPLICABLE PLANS.
5. CONSTRUCT PROPOSED LEFT TURN LANE EXTENSION AND NEW LEFT TURN LANE. REMOVE EXISTING CURBING AND ISLAND. INSTALL NEW CURBING. FINISH ISLAND SURFACE.
6. PLACE LEVELING COURSE OF PAVEMENT AND INSTALL TEMPORARY PAVEMENT MARKINGS AND SIGNING AS REQUIRED.

NOTE:

1. SEE TRAFFIC CONTROL GENERAL NOTES SHEET FOR ADDITIONAL INFORMATION AND REQUIREMENTS.

0 20 40

SCALE IN FEET

PROJECT NAME: BERLIN
PROJECT NUMBER: STPG SGNL (40)

FILE NAME: t11b358tcp.dgn
PROJECT LEADER: P. COBURN
DESIGNED BY: M. LACROIX
TRAFFIC CONTROL PLAN - PHASE 1PLAN 2

PLOT DATE: 10/28/2014
DRAWN BY: I. DEGUTIS
CHECKED BY: M. LACROIX
SHEET 105 OF 123

TRAFFIC CONTROL LEGEND

- WORK AREA
- TEMPORARY TRAFFIC BARRIER
- TYPE III BARRICADES
- REFLECTORIZED PLASTIC DRUM
- TYPE 1 DELINEATOR (YELLOW)
- TYPE 1 DELINEATOR (WHITE)
- FLOW OF TRAFFIC
- FLAGGER
- SIGN
- PORTABLE CHANGEABLE MESSAGE SIGN

VT STATE PLANE GRID

TEMPORARY 4 INCH WHITE LINE

STA. 65+92.66, LT - STA. 70+50.00, LT (SOLID) (452')
STA. 65+92.66, LT - STA. 70+50.00, LT (DASHED) (454')
STA. 67+00.00, RT - STA. 69+25.63, RT (DOTTED) (227')
STA. 69+25.63, RT - STA. 70+50.00, RT (SOLID) (125')
STA. 65+92.62 LT - STA. 70+50.00 LT (DASHED) (463')
STA. 67+00.00, RT - STA. 69+25.63, RT (DOTTED) (229')
STA. 69+25.63, RT - STA. 70+50.00, RT (SOLID) (125')
STA. 65+92.66, LT - STA. 70+50.00, LT (SOLID) (463')

TEMPORARY 4 INCH YELLOW LINE

STA. 65+92.66, LT - STA. 70+50.00, LT (SOLID) (456')
STA. 65+92.66, RT - STA. 70+50.00, LT (SOLID) (460')

TEMPORARY LETTER OR SYMBOL

STA. 69+92.99 RT
STA. 69+92.99 RT
STA. 69+92.99 RT
STA. 69+92.99 RT

BEGIN PROJECT
BERLIN STPG SGNL (40)
STA. 65+92.66

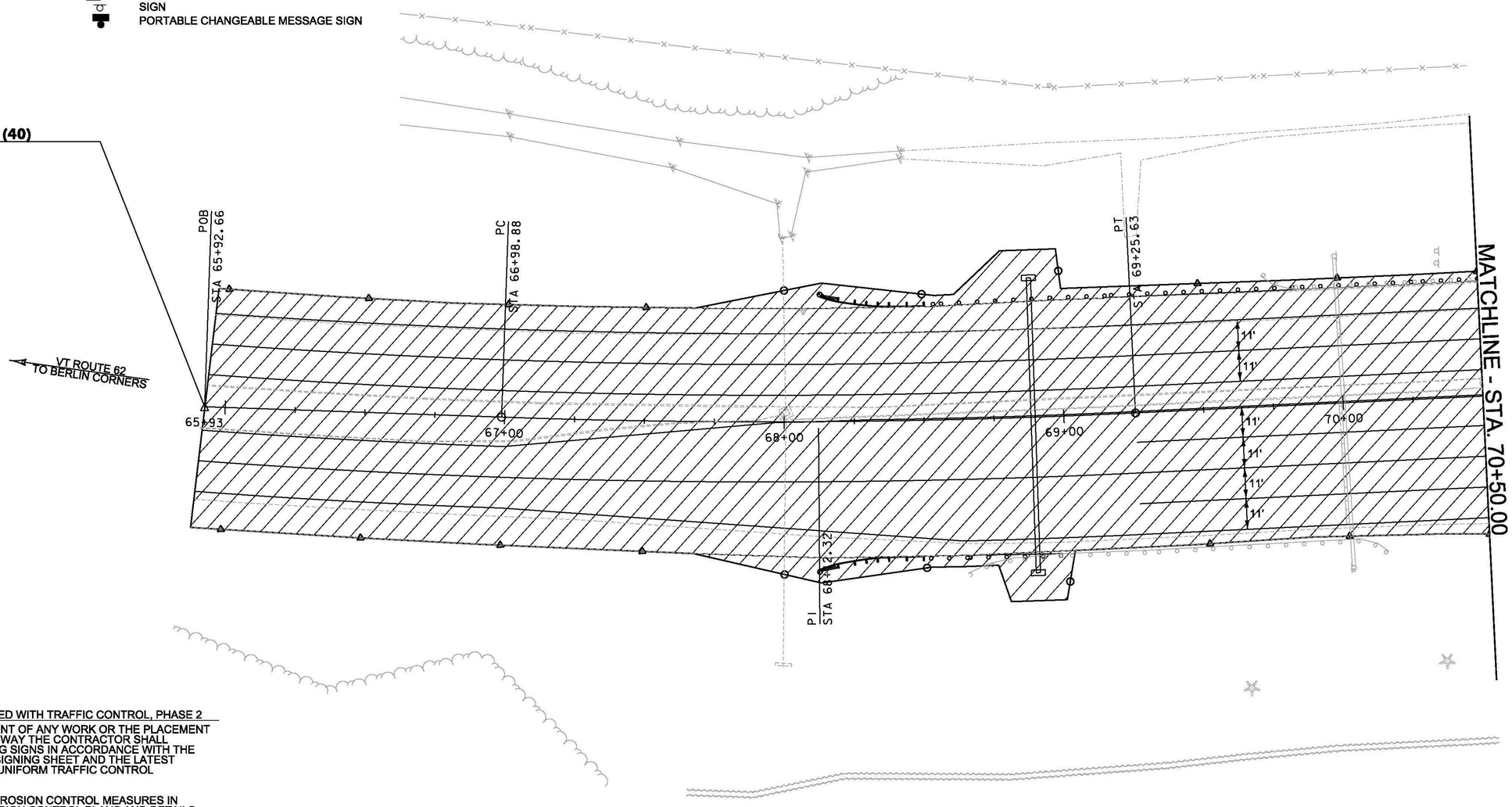

POTENTIAL ACTIVITIES ASSOCIATED WITH TRAFFIC CONTROL, PHASE 2

1. PRIOR TO THE COMMENCEMENT OF ANY WORK OR THE PLACEMENT OF EQUIPMENT ON THE ROADWAY THE CONTRACTOR SHALL PROVIDE ADVANCED WARNING SIGNS IN ACCORDANCE WITH THE CONSTRUCTION APPROACH SIGNING SHEET AND THE LATEST EDITION OF THE MANUAL ON UNIFORM TRAFFIC CONTROL DEVICES (MUTCD).
2. INSTALL AND MAINTAIN ANY EROSION CONTROL MEASURES IN ACCORDANCE WITH THE EROSION CONTROL PLANS AND DETAILS IN ADDITION TO THE VERMONT D.E.C.'S "LOW RISK SITE HANDBOOK FOR EROSION PREVENTION AND SEDIMENT CONTROL."
3. INSTALL ALL WARNING SIGNAGE, REFLECTORIZED DRUMS, TRAFFIC BARRIER, AND ANY OTHER TRAFFIC CONTROL DEVICES PER ACCEPTED TRAFFIC CONTROL PLANS OR AS DIRECTED BY THE RESIDENT ENGINEER.
4. INSTALL ANY STORMWATER TREATMENT PRACTICES AND DRAINAGE ELEMENTS AS SHOWN ON THEIR APPLICABLE PLANS.
5. COLD PLANE AND OVERLAY AS SHOWN ON THE PLANS. CONSTRUCT TRAFFIC SIGNAL AND SIGN BRIDGE AS SHOWN ON THE APPLICABLE PLANS.
6. PLACE LEVELING COURSE OF PAVEMENT AND INSTALL TEMPORARY PAVEMENT MARKINGS AND SIGNING.

NOTE:

1. SEE TRAFFIC CONTROL GENERAL NOTES SHEET FOR ADDITIONAL INFORMATION AND REQUIREMENTS.

0 20 40
SCALE IN FEET

PROJECT NAME:	BERLIN
PROJECT NUMBER:	STPG SGNL (40)
FILE NAME: t11b358tcp.dgn	PLOT DATE: 10/28/2014
PROJECT LEADER: P. COBURN	DRAWN BY: I. DEGUTIS
DESIGNED BY: M. LACROIX	CHECKED BY: M. LACROIX
TRAFFIC CONTROL PLAN - PHASE 2 PLAN 1	SHEET 106 OF 123

VT STATE PLANE GRID

N

TEMPORARY 4 INCH WHITE LINE

A9 - STA. 70+50.00, LT - STA. 31+75.00, LT (SOLID) (368')
A10 - STA. 70+50.00, LT - STA. 72+14.01, LT (DASHED) (165')
A11 - STA. 70+50.00, RT - STA. 72+13.99, RT (SOLID) (164')
A12 - STA. 70+50.00, RT - STA. 72+13.99, RT (DASHED) (164')
A13 - STA. 70+50.00, RT - STA. 71+22.70, RT (SOLID) (73')
A14 - STA. 70+50.00, RT - STA. 28+00.00, LT (SOLID) (213')
A15 - STA. 28+00.00, LT - STA. 28+24.43, LT (SOLID) (25')
A16 - STA. 28+24.43, LT - STA. 29+14.43, LT (DOTTED) (90')
A17 - STA. 28+00.00, RT - STA. 28+24.43, RT (DOTTED) (25')
A18 - STA. 28+24.43, RT - STA. 29+14.43, RT (SOLID) (90')
A19 - STA. 28+00.00, RT - STA. 29+14.43, RT (SOLID) (115')
A20 - STA. 28+00.00, RT - STA. 76+00.00, RT (SOLID) (461')
A21 - STA. 73+68.99, RT - STA. 75+49.80, RT (DASHED) (181')
A22 - STA. 75+49.80, RT - STA. 76+00.00, RT (SOLID) (51')
A23 - STA. 73+68.99, RT - STA. 76+00.00, RT (DASHED) (181')
A24 - STA. 73+68.99, LT - STA. 76+00.00, LT (SOLID) (231')
A26 - STA. 32+14.55, RT - STA. 76+00.00, LT (SOLID) (264')
A27 - STA. 31+59.22, RT - STA. 31+75.00, RT (DASHED) (17')
A28 - STA. 30+84.39, LT - STA. 31+75.00, LT (SOLID) (91')

TEMPORARY 4 INCH YELLOW LINE

B3 - STA. 70+50.00, LT - STA. 72+14.01, LT (SOLID) (165')
B4 - STA. 70+50.00, RT - STA. 72+14.01, RT (SOLID) (164')
B5 - STA. 28+00.00, LT - STA. 29+14.43, LT (DOUBLE) (230')
B6 - STA. 73+68.99, RT - STA. 76+00.00, RT (SOLID) (232')
B7 - STA. 73+68.99, RT - STA. 76+00.00, RT (SOLID) (232')
B8 - STA. 30+75.00, RT - STA. 31+75.00, RT (SOLID) (100')
B9 - STA. 30+84.39, LT - STA. 31+75.00, LT (SOLID) (91')

TEMPORARY 24" STOP BAR

STA. 29+14.43 RT (33')
STA. 30+84.39 LT (22')
STA. 72+13.99 RT (33')
STA. 73+68.99 LT (33')

TEMPORARY 6 INCH WHITE LINE

STA. 71+90.25, RT - STA. 72+43.19, RT (GORE OUTSIDE) (121')
STA. 28+47.19, LT - STA. 29+45.36, LT (GORE OUTSIDE) (99')
STA. 73+26.85, LT - STA. 73+87.59, LT (GORE OUTSIDE) (107')
STA. 30+40.90, RT - STA. 31+59.22, RT (GORE OUTSIDE) (119')

TEMPORARY 6 INCH YELLOW LINE

STA. 71+22.70, RT- STA. 28+47.19, LT (GORE OUTSIDE) (118')
STA. 31+59.22, RT - STA. 74+33.76, LT (GORE OUTSIDE) (126')

TEMPORARY LETTER OR SYMBOL

STA. 70+93.50 RT
STA. 70+93.50 RT
STA. 72+05.03 RT
STA. 72+05.03 RT
STA. 72+05.03 RT
STA. 73+77.14 LT
STA. 73+77.14 LT
STA. 73+77.14 LT
STA. 74+43.48 LT
STA. 75+14.80 RT
STA. 75+85.05 LT
STA. 75+85.05 LT
STA. 75+85.05 LT
STA. 76+08.42 RT
STA. 28+24.69 RT
STA. 28+24.69 RT
STA. 28+24.69 LT
STA. 28+66.42 RT
STA. 28+66.42 RT
STA. 29+04.59 RT
STA. 29+04.59 RT
STA. 29+04.59 RT
STA. 30+95.84 LT
STA. 30+95.84 LT

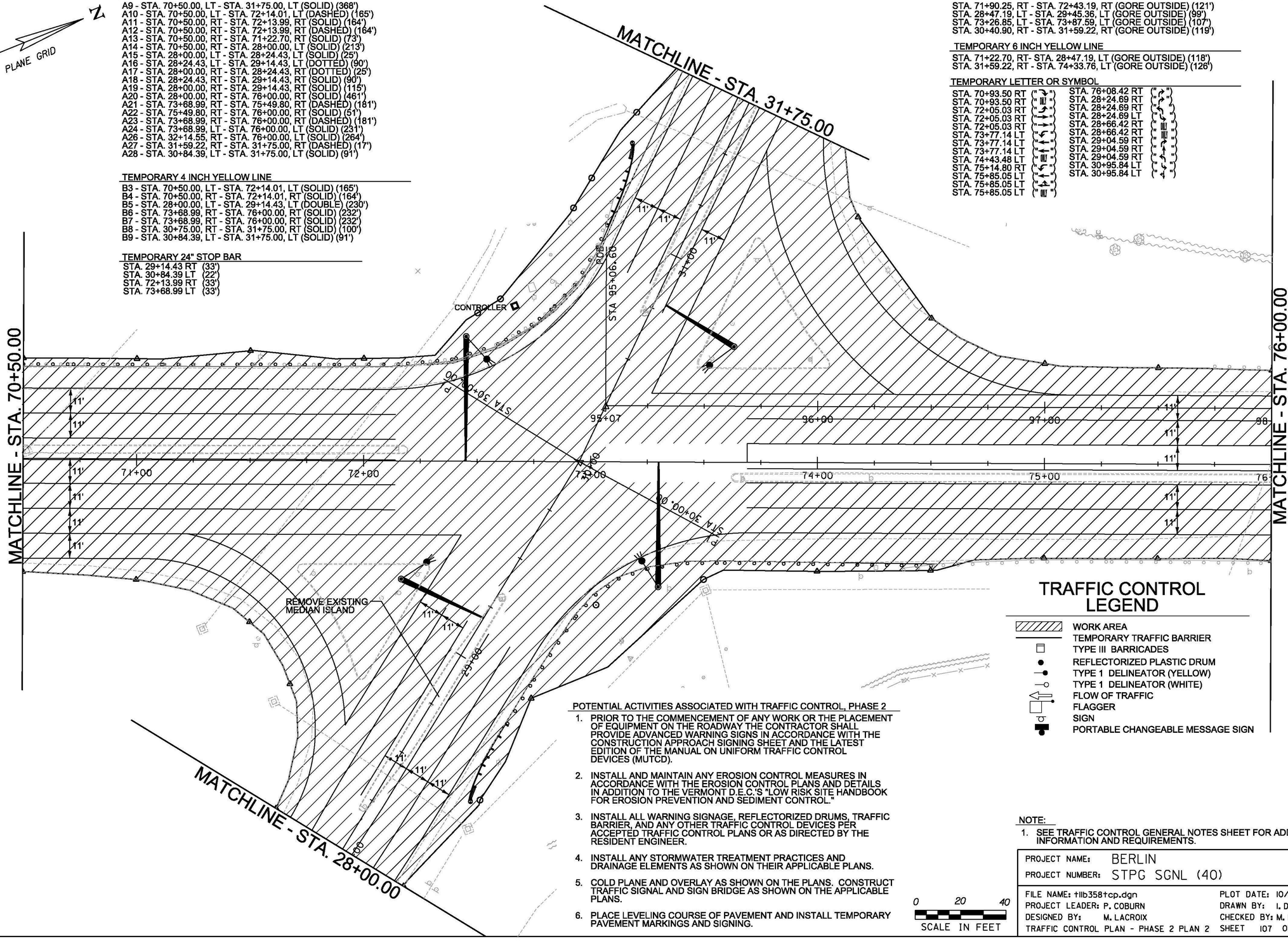

TRAFFIC CONTROL LEGEND

- WORK AREA
- TEMPORARY TRAFFIC BARRIER
- TYPE III BARRICADES
- REFLECTORIZED PLASTIC DRUM
- TYPE 1 DELINEATOR (YELLOW)
- TYPE 1 DELINEATOR (WHITE)
- FLOW OF TRAFFIC
- FLAGGER
- SIGN
- PORTABLE CHANGEABLE MESSAGE SIGN

POTENTIAL ACTIVITIES ASSOCIATED WITH TRAFFIC CONTROL, PHASE 2

1. PRIOR TO THE COMMENCEMENT OF ANY WORK OR THE PLACEMENT OF EQUIPMENT ON THE ROADWAY THE CONTRACTOR SHALL PROVIDE ADVANCED WARNING SIGNS IN ACCORDANCE WITH THE CONSTRUCTION APPROACH SIGNING SHEET AND THE LATEST EDITION OF THE MANUAL ON UNIFORM TRAFFIC CONTROL DEVICES (MUTCD).
2. INSTALL AND MAINTAIN ANY EROSION CONTROL MEASURES IN ACCORDANCE WITH THE EROSION CONTROL PLANS AND DETAILS IN ADDITION TO THE VERMONT D.E.C.'S "LOW RISK SITE HANDBOOK FOR EROSION PREVENTION AND SEDIMENT CONTROL."
3. INSTALL ALL WARNING SIGNAGE, REFLECTORIZED DRUMS, TRAFFIC BARRIER, AND ANY OTHER TRAFFIC CONTROL DEVICES PER ACCEPTED TRAFFIC CONTROL PLANS OR AS DIRECTED BY THE RESIDENT ENGINEER.
4. INSTALL ANY STORMWATER TREATMENT PRACTICES AND DRAINAGE ELEMENTS AS SHOWN ON THEIR APPLICABLE PLANS.
5. COLD PLANE AND OVERLAY AS SHOWN ON THE PLANS. CONSTRUCT TRAFFIC SIGNAL AND SIGN BRIDGE AS SHOWN ON THE APPLICABLE PLANS.
6. PLACE LEVELING COURSE OF PAVEMENT AND INSTALL TEMPORARY PAVEMENT MARKINGS AND SIGNING.

0 20 40
SCALE IN FEET

NOTE:
1. SEE TRAFFIC CONTROL GENERAL NOTES SHEET FOR ADDITIONAL INFORMATION AND REQUIREMENTS.

PROJECT NAME: BERLIN
PROJECT NUMBER: STPG SGNL (40)

FILE NAME: t11b358tcp.dgn
PROJECT LEADER: P. COBURN
DESIGNED BY: M. LACROIX
TRAFFIC CONTROL PLAN - PHASE 2 PLAN 2

PLOT DATE: 10/28/2014
DRAWN BY: I. DEGUTIS
CHECKED BY: M. LACROIX
SHEET 107 OF 123

TRAFFIC CONTROL LEGEND

- WORK AREA
- TEMPORARY TRAFFIC BARRIER
- TYPE III BARRICADES
- REFLECTORIZED PLASTIC DRUM
- TYPE 1 DELINEATOR (YELLOW)
- TYPE 1 DELINEATOR (WHITE)
- FLOW OF TRAFFIC
- FLAGGER
- SIGN
- PORTABLE CHANGEABLE MESSAGE SIGN

VT STATE PLANE GRID

N

TEMPORARY 4 INCH WHITE LINE

STA. 31+75.00, LT - STA. 34+99.40, LT (SOLID) (325')
STA. 31+75.00, LT - STA. 33+00.00, LT (SOLID) (125')
STA. 33+00.00, LT - STA. 34+99.40, LT (DASHED) (200')
STA. 31+75.00, RT - STA. 34+99.40, RT (DASHED) (325')
STA. 31+75.00, RT - STA. 34+99.40, RT (SOLID) (326')

TEMPORARY 4 INCH YELLOW LINE

STA. 31+75.00, LT - STA. 34+99.40, LT (SOLID) (325')
STA. 31+75.00, RT - STA. 34+99.40, RT (SOLID) (325')

TEMPORARY LETTER OR SYMBOL

STA. 31+96.19, LT ("")
STA. 31+96.19, LT ("")
STA. 32+95.25 LT ("")
STA. 32+95.25 LT ("")

POTENTIAL ACTIVITIES ASSOCIATED WITH TRAFFIC CONTROL, PHASE 2

1. PRIOR TO THE COMMENCEMENT OF ANY WORK OR THE PLACEMENT OF EQUIPMENT ON THE ROADWAY THE CONTRACTOR SHALL PROVIDE ADVANCED WARNING SIGNS IN ACCORDANCE WITH THE CONSTRUCTION APPROACH SIGNING SHEET AND THE LATEST EDITION OF THE MANUAL ON UNIFORM TRAFFIC CONTROL DEVICES (MUTCD).
2. INSTALL AND MAINTAIN ANY EROSION CONTROL MEASURES IN ACCORDANCE WITH THE EROSION CONTROL PLANS AND DETAILS IN ADDITION TO THE VERMONT D.E.C.'S "LOW RISK SITE HANDBOOK FOR EROSION PREVENTION AND SEDIMENT CONTROL."
3. INSTALL ALL WARNING SIGNAGE, REFLECTORIZED DRUMS, TRAFFIC BARRIER, AND ANY OTHER TRAFFIC CONTROL DEVICES PER ACCEPTED TRAFFIC CONTROL PLANS OR AS DIRECTED BY THE RESIDENT ENGINEER.
4. INSTALL ANY STORMWATER TREATMENT PRACTICES AND DRAINAGE ELEMENTS AS SHOWN ON THEIR APPLICABLE PLANS.
5. COLD PLANE AND OVERLAY AS SHOWN ON THE PLANS. CONSTRUCT TRAFFIC SIGNAL AND SIGN BRIDGE AS SHOWN ON THE APPLICABLE PLANS.
6. PLACE LEVELING COURSE OF PAVEMENT AND INSTALL TEMPORARY PAVEMENT MARKINGS AND SIGNING.

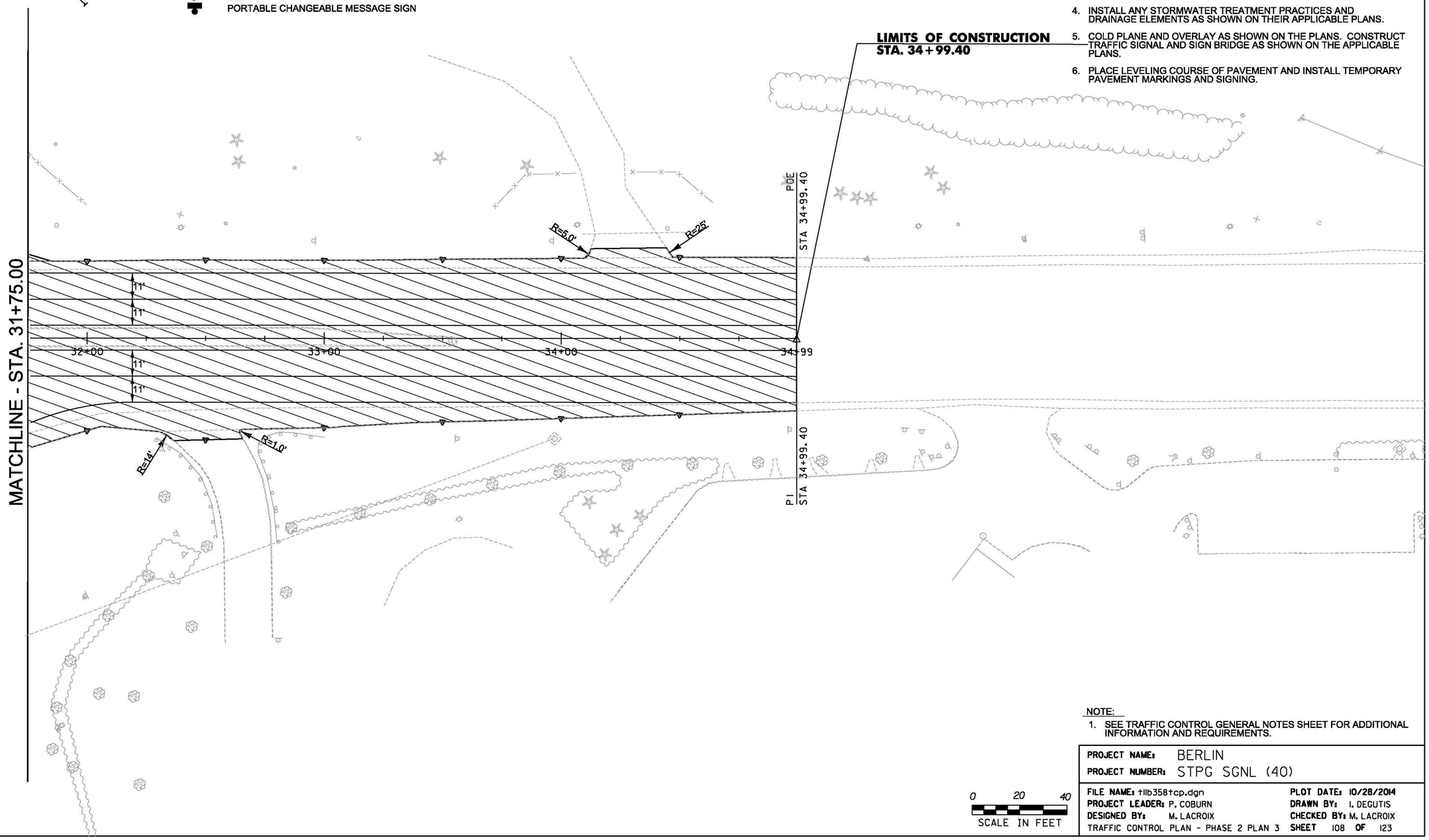

NOTE:

1. SEE TRAFFIC CONTROL GENERAL NOTES SHEET FOR ADDITIONAL INFORMATION AND REQUIREMENTS.

0 20 40
SCALE IN FEET

PROJECT NAME: BERLIN	
PROJECT NUMBER: STPG SGNL (40)	
FILE NAME: tllb358tcp.dgn	PLOT DATE: 10/28/2014
PROJECT LEADER: P. COBURN	DRAWN BY: I. DEGUTIS
DESIGNED BY: M. LACROIX	CHECKED BY: M. LACROIX
TRAFFIC CONTROL PLAN - PHASE 2 PLAN 3	SHEET 108 OF 123

TEMPORARY 4 INCH WHITE LINE

STA. 24+99.43, LT - STA. 28+00.00, LT (SOLID) (302')
STA. 26+25.00, CL - STA, 28+00.00, RT (DOTTED) (176')
STA. 26+24.70, RT - STA. 28+00.00, RT (SOLID) (176')
STA. 24+99.43, RT - STA. 28+00.00, RT (SOLID) (302')
STA. 27+49.02, LT - STA. 28+00.00, LT (SOLID) (53')

TEMPORARY 8 INCH YELLOW LINE

STA. 25+99.43, RT - STA. 27+16.97, LT (ISLAND DIAGONALS) (71')

TEMPORARY 4 INCH YELLOW LINE

B12A - STA. 24+99.43, CL - STA. 25+00.00, CL (DOUBLE)(52')
B12B - STA. 25+75.00, CL - STA. 25+99.43, CL (DOUBLE)(48')
B13 - STA. 25+99.43, CL - STA. 27+16.97, LT (ISLAND OUTSIDE)(242')
B14 - STA. 27+74.42, LT - STA. 28+00.00, LT (DOUBLE)(52')

TEMPORARY LETTER OR SYMBOL

STA. 26+46.83 RT ("→")
STA. 26+46.83 RT ("↘")
STA. 27+83.18 RT ("E")
STA. 27+83.18 LT ("3")

VT STATE PLANE GRID N

LIMITS OF CONSTRUCTION
STA. 24+99.43

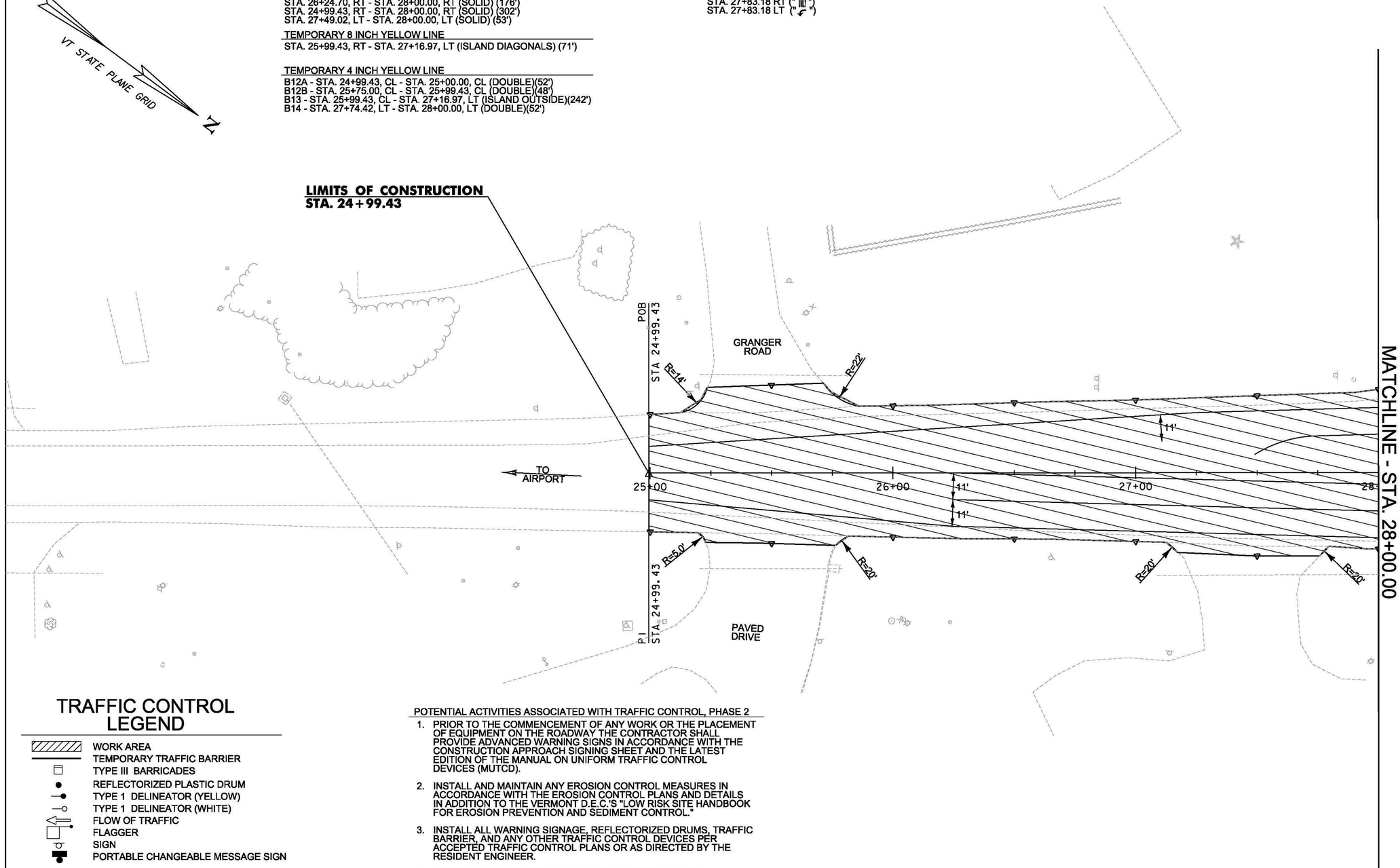

TRAFFIC CONTROL LEGEND

- WORK AREA
- TEMPORARY TRAFFIC BARRIER
- TYPE III BARRICADES
- REFLECTORIZED PLASTIC DRUM
- TYPE 1 DELINEATOR (YELLOW)
- TYPE 1 DELINEATOR (WHITE)
- FLOW OF TRAFFIC
- FLAGGER
- SIGN
- PORTABLE CHANGEABLE MESSAGE SIGN

POTENTIAL ACTIVITIES ASSOCIATED WITH TRAFFIC CONTROL, PHASE 2

1. PRIOR TO THE COMMENCEMENT OF ANY WORK OR THE PLACEMENT OF EQUIPMENT ON THE ROADWAY THE CONTRACTOR SHALL PROVIDE ADVANCED WARNING SIGNS IN ACCORDANCE WITH THE CONSTRUCTION APPROACH SIGNING SHEET AND THE LATEST EDITION OF THE MANUAL ON UNIFORM TRAFFIC CONTROL DEVICES (MUTCD).
2. INSTALL AND MAINTAIN ANY EROSION CONTROL MEASURES IN ACCORDANCE WITH THE EROSION CONTROL PLANS AND DETAILS IN ADDITION TO THE VERMONT D.E.C.'S "LOW RISK SITE HANDBOOK FOR EROSION PREVENTION AND SEDIMENT CONTROL."
3. INSTALL ALL WARNING SIGNAGE, REFLECTORIZED DRUMS, TRAFFIC BARRIER, AND ANY OTHER TRAFFIC CONTROL DEVICES PER ACCEPTED TRAFFIC CONTROL PLANS OR AS DIRECTED BY THE RESIDENT ENGINEER.
4. INSTALL ANY STORMWATER TREATMENT PRACTICES AND DRAINAGE ELEMENTS AS SHOWN ON THEIR APPLICABLE PLANS.
5. COLD PLANE AND OVERLAY AS SHOWN ON THE PLANS. CONSTRUCT TRAFFIC SIGNAL AND SIGN BRIDGE AS SHOWN ON THE APPLICABLE PLANS.
6. PLACE LEVELING COURSE OF PAVEMENT AND INSTALL TEMPORARY PAVEMENT MARKINGS AND SIGNING.

NOTE:

1. SEE TRAFFIC CONTROL GENERAL NOTES SHEET FOR ADDITIONAL INFORMATION AND REQUIREMENTS.

0 20 40
SCALE IN FEET

PROJECT NAME: BERLIN	
PROJECT NUMBER: STPG SGNL (40)	
FILE NAME: tllb358tcp.dgn	PLOT DATE: 10/28/2014
PROJECT LEADER: P. COBURN	DRAWN BY: I. DEGUTIS
DESIGNED BY: M. LACROIX	CHECKED BY: M. LACROIX
TRAFFIC CONTROL PLAN - PHASE 2 PLAN 4	SHEET 109 OF 123

N

VT STATE PLANE GRID

TEMPORARY 4 INCH WHITE LINE

STA. 76+00.00, LT - STA. 81+44.03, LT (DIAGONALS) (740')
STA. 76+00.00, LT - STA. 81+77.14, LT (SOLID) (577')
STA. 76+00.00, LT - STA. 81+77.14, LT (DASHED) (574')
STA. 76+00.00, LT - STA. 79+99.23, LT (SOLID) (400')
STA. 79+99.23, LT - STA. 81+00.00, LT (DOTTED) (102')
STA. 76+00.00, LT - STA. 76+25.18, LT (SOLID) (25')
STA. 79+00.00, RT - STA. 81+77.14, RT (SOLID) (264')
STA. 79+13.66, RT - STA. 81+77.14, RT (DIAGONALS) (550')
STA. 76+00.00, RT - STA. 78+84.68, RT (SOLID) (299')

TEMPORARY 4 INCH YELLOW LINE

STA. 76+00.00, RT - STA. 81+77.14, RT (SOLID) (571')
STA. 76+00.00, RT - STA. 81+77.14, RT (SOLID) (567')

TEMPORARY 12 INCH WHITE LINE

STA. 76+25.18, RT - STA. 79+00.00, RT (GORE OUTSIDE) (275')
STA. 76+25.18, RT - STA. 78+92.40, RT (GORE OUTSIDE) (281')

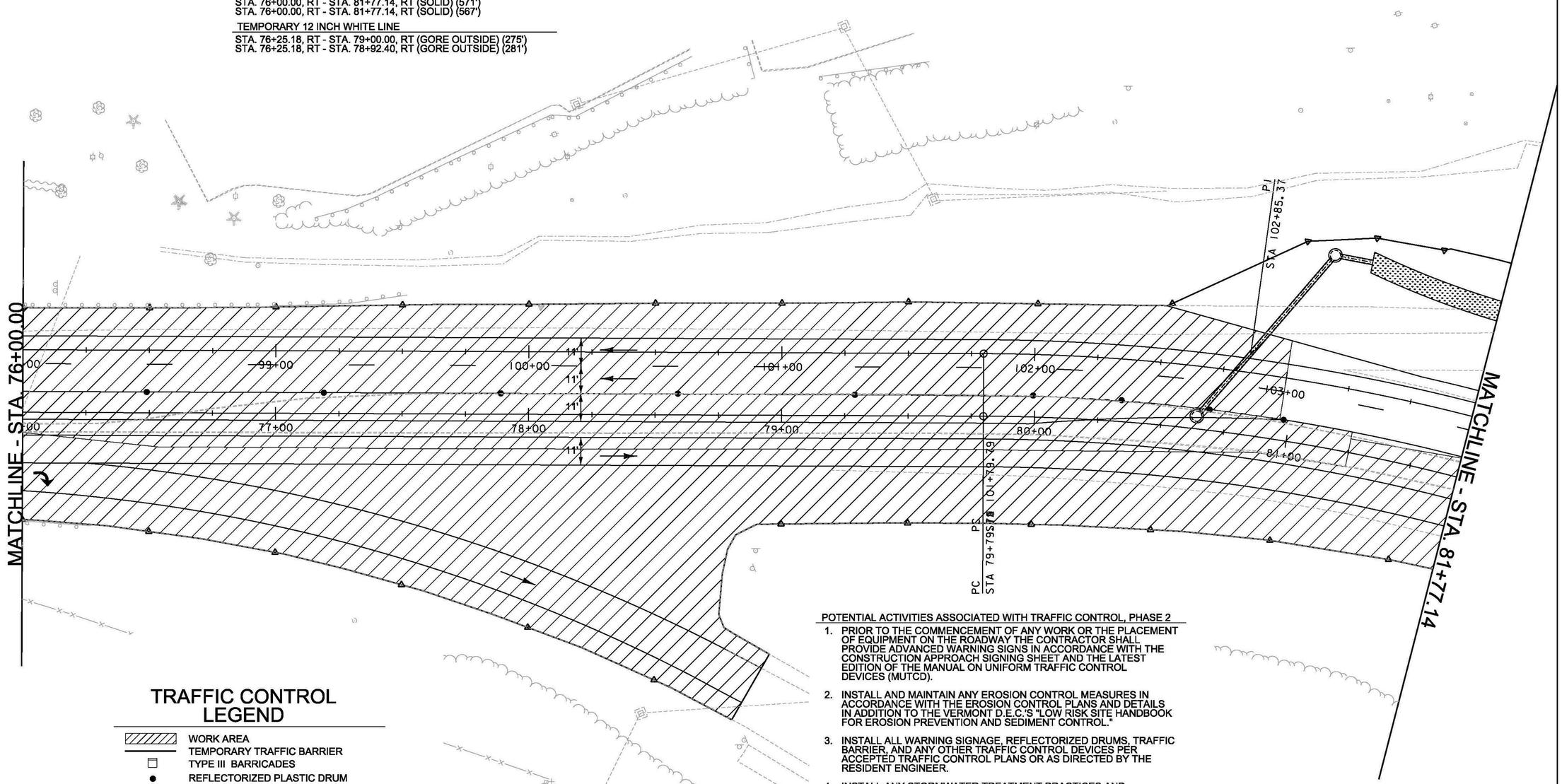

TRAFFIC CONTROL LEGEND

- WORK AREA
- TEMPORARY TRAFFIC BARRIER
- TYPE III BARRICADES
- REFLECTORIZED PLASTIC DRUM
- TYPE 1 DELINEATOR (YELLOW)
- TYPE 1 DELINEATOR (WHITE)
- FLOW OF TRAFFIC
- FLAGGER
- SIGN
- PORTABLE CHANGEABLE MESSAGE SIGN

POTENTIAL ACTIVITIES ASSOCIATED WITH TRAFFIC CONTROL, PHASE 2

1. PRIOR TO THE COMMENCEMENT OF ANY WORK OR THE PLACEMENT OF EQUIPMENT ON THE ROADWAY THE CONTRACTOR SHALL PROVIDE ADVANCED WARNING SIGNS IN ACCORDANCE WITH THE CONSTRUCTION APPROACH SIGNING SHEET AND THE LATEST EDITION OF THE MANUAL ON UNIFORM TRAFFIC CONTROL DEVICES (MUTCD).
2. INSTALL AND MAINTAIN ANY EROSION CONTROL MEASURES IN ACCORDANCE WITH THE EROSION CONTROL PLANS AND DETAILS IN ADDITION TO THE VERMONT D.E.C.'S "LOW RISK SITE HANDBOOK FOR EROSION PREVENTION AND SEDIMENT CONTROL."
3. INSTALL ALL WARNING SIGNAGE, REFLECTORIZED DRUMS, TRAFFIC BARRIER, AND ANY OTHER TRAFFIC CONTROL DEVICES PER ACCEPTED TRAFFIC CONTROL PLANS OR AS DIRECTED BY THE RESIDENT ENGINEER.
4. INSTALL ANY STORMWATER TREATMENT PRACTICES AND DRAINAGE ELEMENTS AS SHOWN ON THEIR APPLICABLE PLANS.
5. COLD PLANE AND OVERLAY AS SHOWN ON THE PLANS. CONSTRUCT TRAFFIC SIGNAL AND SIGN BRIDGE AS SHOWN ON THE APPLICABLE PLANS.
6. PLACE LEVELING COURSE OF PAVEMENT AND INSTALL TEMPORARY PAVEMENT MARKINGS AND SIGNING.

NOTE:

1. SEE TRAFFIC CONTROL GENERAL NOTES SHEET FOR ADDITIONAL INFORMATION AND REQUIREMENTS.

0 20 40
SCALE IN FEET

PROJECT NAME: BERLIN
PROJECT NUMBER: STPG SGNL (40)

FILE NAME: t11b358tcp.dgn
PROJECT LEADER: P. COBURN
DESIGNED BY: M. LACROIX
TRAFFIC CONTROL PLAN - PHASE 2 PLAN 5

PLOT DATE: 10/28/2014
DRAWN BY: I. DEGUTIS
CHECKED BY: M. LACROIX
SHEET 110 OF 123

N

VT STATE PLANE GRID

TEMPORARY 4 INCH WHITE LINE

STA. 106+32.81, LT - STA. 109+68.00, LT (DIAGONALS) (242')
STA. 81+77.14, LT - STA. 109+68.00, LT (SOLID) (591')
STA. 106+76.73, LT - STA. 109+68.00, LT (DOTTED) (292')
STA. 82+64.99, LT - STA. 85+00.00, LT (SOLID) (241')
STA. 81+77.14, RT - STA. 85+00.00, RT (SOLID) (326')
STA. 81+77.14, RT - STA. 83+87.61, RT (DIAGONALS) (240')

TEMPORARY 4 INCH YELLOW LINE

STA. 104+75.00, RT - STA. 109+68.00, RT (SOLID) (494')
STA. 81+77.14, LT - STA. 83+75.00, LT (SOLID) (208')
STA. 81+77.14, RT - STA. 83+75.00, RT (SOLID) (204')
STA. 83+75.00, LT - STA. 85+00.00, LT (DOUBLE) (252')
STA. 83+75.00, RT - STA. 85+00.00, RT (DOUBLE) (248')

TEMPORARY 8 INCH YELLOW LINE

STA. 83+75.00, LT - STA. 85+00.00, LT (ISLAND DIAGONALS) (162')

TEMPORARY 12 INCH WHITE LINE

STA. 103+89.70, RT - STA. 104+75.00, RT (GORE OUTSIDE) (88')
STA. 81+83.11, LT - STA. 82+64.72, LT (GORE OUTSIDE) (85')

TEMPORARY LETTER OR SYMBOL

STA. 108+65.94, LT ("↙")
STA. 109+61.64, LT ("↘")

LIMITS OF CONSTRUCTION
STA. 109+68.33

MATCHLINE - STA. 81+77.14

MATCH LINE STA 85+00.00

PRC STA 103+88.70

PRC STA 105+59.85

STA 106+19.

PRC STA 106+77.71

P.I. STA 108+23.18

PT STA 109+68.33

BERLIN STATE HIGHWAY

VT ROUTE 62

104+00 105+00 106+00 107+00 108+00 109+00

82+00 83+00 84+00 85

5' 11' 11' 11' 11'

TRAFFIC CONTROL LEGEND

- WORK AREA
- TEMPORARY TRAFFIC BARRIER
- TYPE III BARRICADES
- REFLECTORIZED PLASTIC DRUM
- TYPE 1 DELINEATOR (YELLOW)
- TYPE 1 DELINEATOR (WHITE)
- FLOW OF TRAFFIC
- FLAGGER
- SIGN
- PORTABLE CHANGEABLE MESSAGE SIGN

POTENTIAL ACTIVITIES ASSOCIATED WITH TRAFFIC CONTROL, PHASE 2

1. PRIOR TO THE COMMENCEMENT OF ANY WORK OR THE PLACEMENT OF EQUIPMENT ON THE ROADWAY THE CONTRACTOR SHALL PROVIDE ADVANCED WARNING SIGNS IN ACCORDANCE WITH THE CONSTRUCTION APPROACH SIGNING SHEET AND THE LATEST EDITION OF THE MANUAL ON UNIFORM TRAFFIC CONTROL DEVICES (MUTCD).
2. INSTALL AND MAINTAIN ANY EROSION CONTROL MEASURES IN ACCORDANCE WITH THE EROSION CONTROL PLANS AND DETAILS IN ADDITION TO THE VERMONT D.E.C.'S "LOW RISK SITE HANDBOOK FOR EROSION PREVENTION AND SEDIMENT CONTROL."
3. INSTALL ALL WARNING SIGNAGE, REFLECTORIZED DRUMS, TRAFFIC BARRIER, AND ANY OTHER TRAFFIC CONTROL DEVICES PER ACCEPTED TRAFFIC CONTROL PLANS OR AS DIRECTED BY THE RESIDENT ENGINEER.
4. INSTALL ANY STORMWATER TREATMENT PRACTICES AND DRAINAGE ELEMENTS AS SHOWN ON THEIR APPLICABLE PLANS.
5. COLD PLANE AND OVERLAY AS SHOWN ON THE PLANS. CONSTRUCT TRAFFIC SIGNAL AND SIGN BRIDGE AS SHOWN ON THE APPLICABLE PLANS.
6. PLACE LEVELING COURSE OF PAVEMENT AND INSTALL TEMPORARY PAVEMENT MARKINGS AND SIGNING.

NOTE:

1. SEE TRAFFIC CONTROL GENERAL NOTES SHEET FOR ADDITIONAL INFORMATION AND REQUIREMENTS.

0 20 40
SCALE IN FEET

PROJECT NAME:	BERLIN
PROJECT NUMBER:	STPG SGNL (40)
FILE NAME: †llb358tcp.dgn	PLOT DATE: 10/28/2014
PROJECT LEADER: P. COBURN	DRAWN BY: I. DEGUTIS
DESIGNED BY: M. LACROIX	CHECKED BY: M. LACROIX
TRAFFIC CONTROL PLAN - PHASE 2 PLAN 6	SHEET III OF 123

TEMPORARY 4 INCH WHITE LINE

STA. 85+00.00, RT - STA. 90+75.00, RT (SOLID) (587')
STA. 85+00.00, LT - STA. 90+75.00, LT (SOLID) (567')

TEMPORARY 4 INCH YELLOW LINE

STA. 85+00.00, LT - STA. 86+25.00, LT (DOUBLE) (250')
STA. 85+00.00, RT - STA. 86+25.00, RT (DOUBLE) (250')
STA. 86+25.00, CL - STA. 90+75.00, CL (DOUBLE) (900')

N

VT STATE PLANE GRID

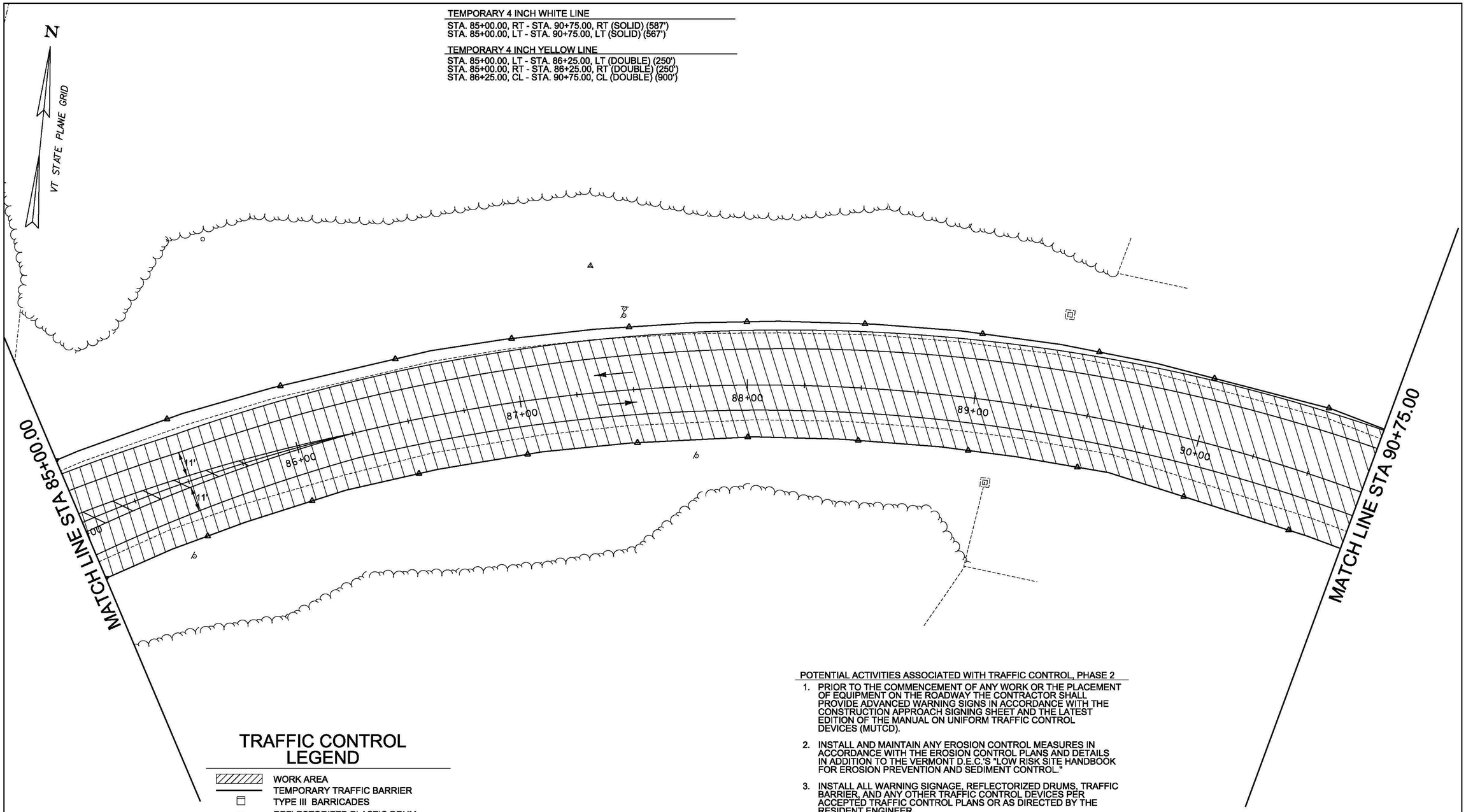

TRAFFIC CONTROL LEGEND

- WORK AREA
- TEMPORARY TRAFFIC BARRIER
- TYPE III BARRICADES
- REFLECTORIZED PLASTIC DRUM
- TYPE 1 DELINEATOR (YELLOW)
- TYPE 1 DELINEATOR (WHITE)
- FLOW OF TRAFFIC
- FLAGGER
- SIGN
- PORTABLE CHANGEABLE MESSAGE SIGN

POTENTIAL ACTIVITIES ASSOCIATED WITH TRAFFIC CONTROL, PHASE 2

1. PRIOR TO THE COMMENCEMENT OF ANY WORK OR THE PLACEMENT OF EQUIPMENT ON THE ROADWAY THE CONTRACTOR SHALL PROVIDE ADVANCED WARNING SIGNS IN ACCORDANCE WITH THE CONSTRUCTION APPROACH SIGNING SHEET AND THE LATEST EDITION OF THE MANUAL ON UNIFORM TRAFFIC CONTROL DEVICES (MUTCD).
2. INSTALL AND MAINTAIN ANY EROSION CONTROL MEASURES IN ACCORDANCE WITH THE EROSION CONTROL PLANS AND DETAILS IN ADDITION TO THE VERMONT D.E.C.'S "LOW RISK SITE HANDBOOK FOR EROSION PREVENTION AND SEDIMENT CONTROL."
3. INSTALL ALL WARNING SIGNAGE, REFLECTORIZED DRUMS, TRAFFIC BARRIER, AND ANY OTHER TRAFFIC CONTROL DEVICES PER ACCEPTED TRAFFIC CONTROL PLANS OR AS DIRECTED BY THE RESIDENT ENGINEER.
4. INSTALL ANY STORMWATER TREATMENT PRACTICES AND DRAINAGE ELEMENTS AS SHOWN ON THEIR APPLICABLE PLANS.
5. COLD PLANE AND OVERLAY AS SHOWN ON THE PLANS. CONSTRUCT TRAFFIC SIGNAL AND SIGN BRIDGE AS SHOWN ON THE APPLICABLE PLANS.
6. PLACE LEVELING COURSE OF PAVEMENT AND INSTALL TEMPORARY PAVEMENT MARKINGS AND SIGNING.

NOTE:

1. SEE TRAFFIC CONTROL GENERAL NOTES SHEET FOR ADDITIONAL INFORMATION AND REQUIREMENTS.

0 20 40
SCALE IN FEET

PROJECT NAME: BERLIN
PROJECT NUMBER: STPG SGNL(40)

FILE NAME: t11b358bdr.dgn
PROJECT LEADER: P. COBURN
DESIGNED BY: T. SISSON
PLOT DATE: 10/28/2014
DRAWN BY: T. SISSON
CHECKED BY: M. LACROIX
TRAFFIC CONTROL PLAN - PHASE 2 PLAN 7
SHEET 112 OF 123

TEMPORARY 4 INCH WHITE LINE

STA. 90+75.00, LT - STA. 96+50.00, RT (SOLID) (580')
STA. 90+75.00, LT - STA. 96+50.00, LT (SOLID) (572')

TEMPORARY 4 INCH YELLOW LINE

STA. 90+75.00, CL - STA. 96+50.00, CL (DOUBLE) (1150')

TEMPORARY LETTER OR SYMBOL

STA. 92+00.00, LT ("A")
STA. 94+00.00, LT ("B")
STA. 96+00.00, LT ("C")

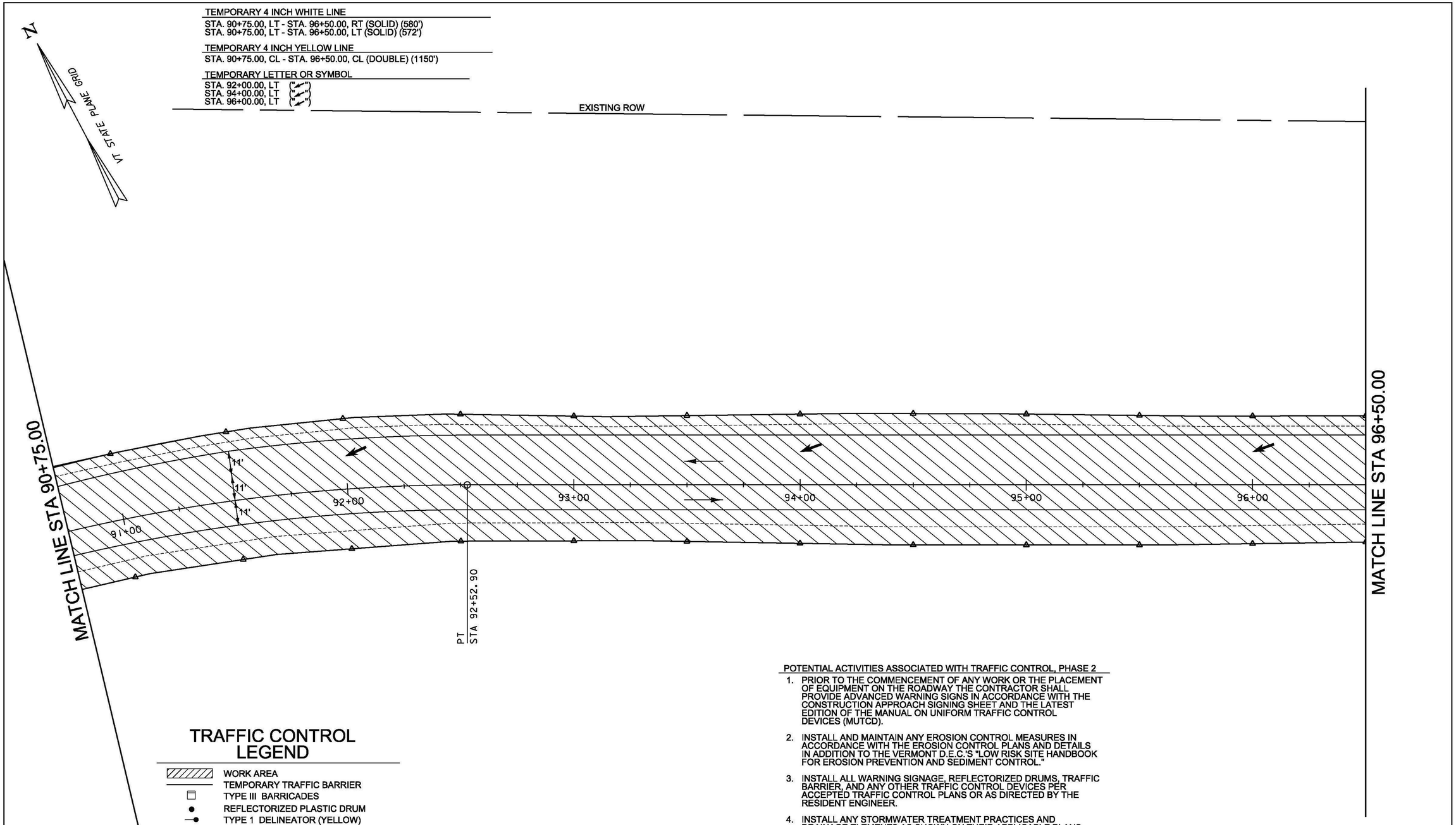

TRAFFIC CONTROL LEGEND

- WORK AREA
- TEMPORARY TRAFFIC BARRIER
- TYPE III BARRICADES
- REFLECTORIZED PLASTIC DRUM
- TYPE 1 DELINEATOR (YELLOW)
- TYPE 1 DELINEATOR (WHITE)
- FLOW OF TRAFFIC
- FLAGGER
- SIGN
- PORTABLE CHANGEABLE MESSAGE SIGN

POTENTIAL ACTIVITIES ASSOCIATED WITH TRAFFIC CONTROL, PHASE 2

1. PRIOR TO THE COMMENCEMENT OF ANY WORK OR THE PLACEMENT OF EQUIPMENT ON THE ROADWAY THE CONTRACTOR SHALL PROVIDE ADVANCED WARNING SIGNS IN ACCORDANCE WITH THE CONSTRUCTION APPROACH SIGNING SHEET AND THE LATEST EDITION OF THE MANUAL ON UNIFORM TRAFFIC CONTROL DEVICES (MUTCD).
2. INSTALL AND MAINTAIN ANY EROSION CONTROL MEASURES IN ACCORDANCE WITH THE EROSION CONTROL PLANS AND DETAILS IN ADDITION TO THE VERMONT D.E.C.'S "LOW RISK SITE HANDBOOK FOR EROSION PREVENTION AND SEDIMENT CONTROL."
3. INSTALL ALL WARNING SIGNAGE, REFLECTORIZED DRUMS, TRAFFIC BARRIER, AND ANY OTHER TRAFFIC CONTROL DEVICES PER ACCEPTED TRAFFIC CONTROL PLANS OR AS DIRECTED BY THE RESIDENT ENGINEER.
4. INSTALL ANY STORMWATER TREATMENT PRACTICES AND DRAINAGE ELEMENTS AS SHOWN ON THEIR APPLICABLE PLANS.
5. COLD PLANE AND OVERLAY AS SHOWN ON THE PLANS. CONSTRUCT TRAFFIC SIGNAL AND SIGN BRIDGE AS SHOWN ON THE APPLICABLE PLANS.
6. PLACE LEVELING COURSE OF PAVEMENT AND INSTALL TEMPORARY PAVEMENT MARKINGS AND SIGNING.

NOTE:

1. SEE TRAFFIC CONTROL GENERAL NOTES SHEET FOR ADDITIONAL INFORMATION AND REQUIREMENTS.

0 20 40
SCALE IN FEET

PROJECT NAME: BERLIN
PROJECT NUMBER: STPG SGNL(40)

FILE NAME: t11b358bdr.dgn
PROJECT LEADER: P. COBURN
DESIGNED BY: T. SISSON
TRAFFIC CONTROL PLAN - PHASE 2 PLAN 8

PLOT DATE: 10/28/2014
DRAWN BY: T. SISSON
CHECKED BY: M. LACROIX
SHEET 113 OF 123

TEMPORARY 4 INCH WHITE LINE

STA. 90+75.00, LT - STA. 96+50.00, RT (SOLID) (550')
STA. 90+75.00, LT - STA. 96+50.00, LT (SOLID) (550')
STA. 98+13.75, LT - STA. 102+00.00, LT (DASHED) (326')

TEMPORARY 4 INCH YELLOW LINE

STA. 96+50.00, CL - STA. 102+00.00, CL (DOUBLE) (1100')

TEMPORARY LETTER OR SYMBOL

STA. 98+00.00, LT ("↙")

N

VA STATE PLANE GRID

EXISTING ROW

MATCH LINE STA 96+50.00

11'
11'
11'

97+00 98+00 99+00 100+00 101+00 102+00

END PROJECT
BERLIN STPG SGNL(40)
STA. 102+00.00

POE
STA 102+00.00

TO BARRE

TRAFFIC CONTROL LEGEND

- WORK AREA
- TEMPORARY TRAFFIC BARRIER
- TYPE III BARRICADES
- REFLECTORIZED PLASTIC DRUM
- TYPE 1 DELINEATOR (YELLOW)
- TYPE 1 DELINEATOR (WHITE)
- FLOW OF TRAFFIC
- FLAGGER
- SIGN
- PORTABLE CHANGEABLE MESSAGE SIGN

POTENTIAL ACTIVITIES ASSOCIATED WITH TRAFFIC CONTROL, PHASE 2

1. PRIOR TO THE COMMENCEMENT OF ANY WORK OR THE PLACEMENT OF EQUIPMENT ON THE ROADWAY THE CONTRACTOR SHALL PROVIDE ADVANCED WARNING SIGNS IN ACCORDANCE WITH THE CONSTRUCTION APPROACH SIGNING SHEET AND THE LATEST EDITION OF THE MANUAL ON UNIFORM TRAFFIC CONTROL DEVICES (MUTCD).
2. INSTALL AND MAINTAIN ANY EROSION CONTROL MEASURES IN ACCORDANCE WITH THE EROSION CONTROL PLANS AND DETAILS IN ADDITION TO THE VERMONT D.E.C.'S "LOW RISK SITE HANDBOOK FOR EROSION PREVENTION AND SEDIMENT CONTROL."
3. INSTALL ALL WARNING SIGNAGE, REFLECTORIZED DRUMS, TRAFFIC BARRIER, AND ANY OTHER TRAFFIC CONTROL DEVICES PER ACCEPTED TRAFFIC CONTROL PLANS OR AS DIRECTED BY THE RESIDENT ENGINEER.
4. INSTALL ANY STORMWATER TREATMENT PRACTICES AND DRAINAGE ELEMENTS AS SHOWN ON THEIR APPLICABLE PLANS.
5. COLD PLANE AND OVERLAY AS SHOWN ON THE PLANS. CONSTRUCT TRAFFIC SIGNAL AND SIGN BRIDGE AS SHOWN ON THE APPLICABLE PLANS.
6. PLACE LEVELING COURSE OF PAVEMENT AND INSTALL TEMPORARY PAVEMENT MARKINGS AND SIGNING.

0 20 40
SCALE IN FEET

NOTE:

1. SEE TRAFFIC CONTROL GENERAL NOTES SHEET FOR ADDITIONAL INFORMATION AND REQUIREMENTS.

PROJECT NAME: BERLIN
PROJECT NUMBER: STPG SGNL(40)

FILE NAME: t11b358bdr.dgn PLOT DATE: 10/28/2014
PROJECT LEADER: P. COBURN DRAWN BY: T. SISSON
DESIGNED BY: T. SISSON CHECKED BY: M. LACROIX
TRAFFIC CONTROL PLAN - PHASE 2 PLAN 9 SHEET 114 OF 123

N

VT STATE PLANE GRID

TEMPORARY 4 INCH WHITE LINE

STA. 76+00.00, LT - STA. 81+44.03, LT (DIAGONALS) (740')
STA. 76+00.00, LT - STA. 81+77.14, LT (SOLID) (577')
STA. 76+00.00, LT - STA. 81+77.14, LT (DASHED) (574')
STA. 76+00.00, LT - STA. 79+99.23, LT (SOLID) (400')
STA. 79+99.23, LT - STA. 81+00.00, LT (DOTTED) (102')
STA. 76+00.00, LT - STA. 76+25.18, LT (SOLID) (25')
STA. 79+00.00, RT - STA. 81+77.14, RT (SOLID) (264')
STA. 79+13.66, RT - STA. 81+77.14, RT (DIAGONALS) (550')
STA. 76+00.00, RT - STA. 78+84.68, RT (SOLID) (299')

TEMPORARY 4 INCH YELLOW LINE

STA. 76+00.00, RT - STA. 81+77.14, RT (SOLID) (571')
STA. 76+00.00, RT - STA. 81+77.14, RT (SOLID) (567')

TEMPORARY 12 INCH WHITE LINE

STA. 76+25.18, RT - STA. 79+00.00, RT (GORE OUTSIDE) (275')
STA. 76+25.18, RT - STA. 78+92.40, RT (GORE OUTSIDE) (281')

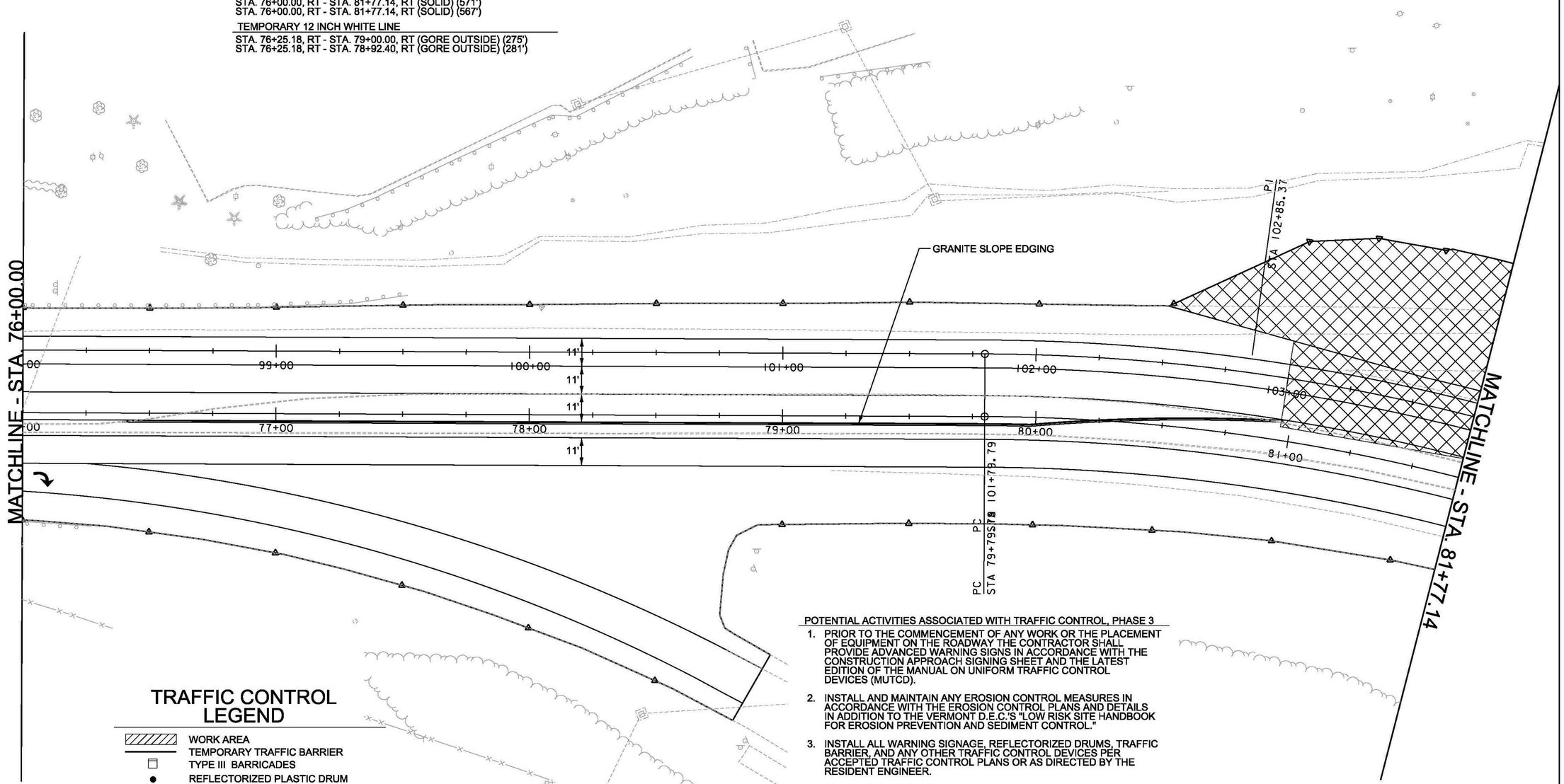

TRAFFIC CONTROL LEGEND

- WORK AREA
- TEMPORARY TRAFFIC BARRIER
- TYPE III BARRICADES
- REFLECTORIZED PLASTIC DRUM
- TYPE 1 DELINEATOR (YELLOW)
- TYPE 1 DELINEATOR (WHITE)
- FLOW OF TRAFFIC
- FLAGGER
- SIGN
- PORTABLE CHANGEABLE MESSAGE SIGN

NOTE:

1. SEE TRAFFIC CONTROL GENERAL NOTES SHEET FOR ADDITIONAL INFORMATION AND REQUIREMENTS.

POTENTIAL ACTIVITIES ASSOCIATED WITH TRAFFIC CONTROL, PHASE 3

1. PRIOR TO THE COMMENCEMENT OF ANY WORK OR THE PLACEMENT OF EQUIPMENT ON THE ROADWAY THE CONTRACTOR SHALL PROVIDE ADVANCED WARNING SIGNS IN ACCORDANCE WITH THE CONSTRUCTION APPROACH SIGNING SHEET AND THE LATEST EDITION OF THE MANUAL ON UNIFORM TRAFFIC CONTROL DEVICES (MUTCD).
2. INSTALL AND MAINTAIN ANY EROSION CONTROL MEASURES IN ACCORDANCE WITH THE EROSION CONTROL PLANS AND DETAILS IN ADDITION TO THE VERMONT D.E.C.'S "LOW RISK SITE HANDBOOK FOR EROSION PREVENTION AND SEDIMENT CONTROL."
3. INSTALL ALL WARNING SIGNAGE, REFLECTORIZED DRUMS, TRAFFIC BARRIER, AND ANY OTHER TRAFFIC CONTROL DEVICES PER ACCEPTED TRAFFIC CONTROL PLANS OR AS DIRECTED BY THE RESIDENT ENGINEER.
4. INSTALL ANY STORMWATER TREATMENT PRACTICES AND DRAINAGE ELEMENTS AS SHOWN ON THEIR APPLICABLE PLANS.
5. CONSTRUCT PROPOSED FILL SLOPE AND NEW ROADWAY SUBGRADE.
6. CONSTRUCT PROPOSED ROADWAY AND INSTALL GUARDRAIL. CONSTRUCT SUBGRAGE TRANSITION.
7. PLACE BASE COURSES OF PAVEMENT AND INSTALL TEMPORARY PAVEMENT MARKINGS AND SIGNING.

0 20 40
SCALE IN FEET

PROJECT NAME:	BERLIN
PROJECT NUMBER:	STPG SGNL (40)
FILE NAME: t11b358tcp.dgn	PLOT DATE: 10/28/2014
PROJECT LEADER: P. COBURN	DRAWN BY: I. DEGUTIS
DESIGNED BY: M. LACROIX	CHECKED BY: M. LACROIX
TRAFFIC CONTROL PLAN - PHASE 3 PLAN 1	SHEET 115 OF 123

N

VT STATE PLANE GRID

TEMPORARY 4 INCH WHITE LINE

STA. 106+32.81, LT - STA. 109+68.00, LT (DIAGONALS) (242')
STA. 81+77.14, LT - STA. 109+68.00, LT (SOLID) (591')
STA. 106+76.73, LT - STA. 109+68.00, LT (DOTTED) (292')
STA. 82+64.99, LT - STA. 85+00.00, LT (SOLID) (241')
STA. 81+77.14, RT - STA. 85+00.00, RT (SOLID) (326')
STA. 81+77.14, RT - STA. 83+87.61, RT (DIAGONALS) (240')

TEMPORARY 4 INCH YELLOW LINE

STA. 104+75.00, RT - STA. 109+68.00, RT (SOLID) (494')
STA. 81+77.14, LT - STA. 83+75.00, LT (SOLID) (208')
STA. 81+77.14, RT - STA. 83+75.00, RT (SOLID) (204')
STA. 83+75.00, LT - STA. 85+00.00, LT (DOUBLE) (252')
STA. 83+75.00, RT - STA. 85+00.00, RT (DOUBLE) (248')

TEMPORARY 8 INCH YELLOW LINE

STA. 83+75.00, LT - STA. 85+00.00, LT (ISLAND DIAGONALS) (162')

TEMPORARY 12 INCH WHITE LINE

STA. 103+89.70, RT - STA. 104+75.00, RT (GORE OUTSIDE) (88')
STA. 81+83.11, LT - STA. 82+64.72, LT (GORE OUTSIDE) (85')

TEMPORARY LETTER OR SYMBOL

STA. 108+65.94, LT ("↙")
STA. 109+61.64, LT ("↙")

LIMITS OF CONSTRUCTION
STA. 109+68.33

MATCHLINE - STA. 81+77.14

MATCH LINE STA 85+00.00

PRC STA 105+59.85

PRC STA 106+19.24

PRC STA 106+77.71

PI STA 108+23.18

PT STA 109+68.33

PRC STA 103+89.70

PI STA 104+78.07

81+00 82+00 83+00 84+00 85+00 86+00 87+00 88+00 89+00 90+00 91+00 92+00 93+00 94+00 95+00 96+00 97+00 98+00 99+00 100+00 101+00 102+00 103+00 104+00 105+00 106+00 107+00 108+00 109+00 109+68

11' 11' 11'

TEMPORARY 4 INCH WHITE LINE

STA. 85+00.00, RT - STA. 90+75.00, RT (SOLID) (587')
STA. 85+00.00, LT - STA. 90+75.00, LT (SOLID) (567')

TEMPORARY 4 INCH YELLOW LINE

STA. 85+00.00, LT - STA. 86+25.00, LT (DOUBLE) (250')
STA. 85+00.00, RT - STA. 86+25.00, RT (DOUBLE) (250')
STA. 86+25.00, CL - STA. 90+75.00, CL (DOUBLE) (900')

N

VT STATE PLANE GRID

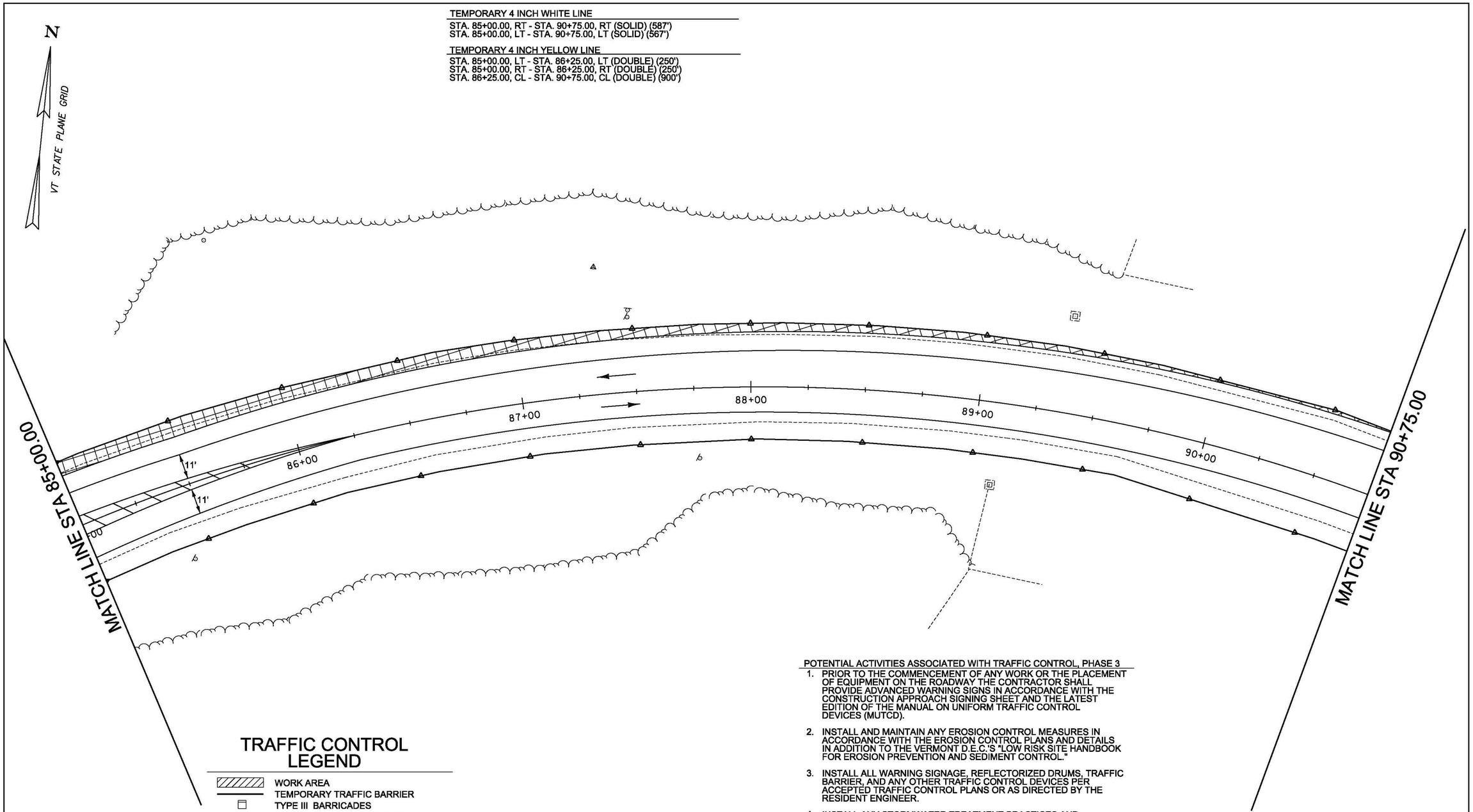

TRAFFIC CONTROL LEGEND

- WORK AREA
- TEMPORARY TRAFFIC BARRIER
- TYPE III BARRICADES
- REFLECTORIZED PLASTIC DRUM
- TYPE 1 DELINEATOR (YELLOW)
- TYPE 1 DELINEATOR (WHITE)
- FLOW OF TRAFFIC
- FLAGGER
- SIGN
- PORTABLE CHANGEABLE MESSAGE SIGN

NOTE:

1. SEE TRAFFIC CONTROL GENERAL NOTES SHEET FOR ADDITIONAL INFORMATION AND REQUIREMENTS.

POTENTIAL ACTIVITIES ASSOCIATED WITH TRAFFIC CONTROL, PHASE 3

1. PRIOR TO THE COMMENCEMENT OF ANY WORK OR THE PLACEMENT OF EQUIPMENT ON THE ROADWAY THE CONTRACTOR SHALL PROVIDE ADVANCED WARNING SIGNS IN ACCORDANCE WITH THE CONSTRUCTION APPROACH SIGNING SHEET AND THE LATEST EDITION OF THE MANUAL ON UNIFORM TRAFFIC CONTROL DEVICES (MUTCD).
2. INSTALL AND MAINTAIN ANY EROSION CONTROL MEASURES IN ACCORDANCE WITH THE EROSION CONTROL PLANS AND DETAILS IN ADDITION TO THE VERMONT D.E.C.'S "LOW RISK SITE HANDBOOK FOR EROSION PREVENTION AND SEDIMENT CONTROL."
3. INSTALL ALL WARNING SIGNAGE, REFLECTORIZED DRUMS, TRAFFIC BARRIER, AND ANY OTHER TRAFFIC CONTROL DEVICES PER ACCEPTED TRAFFIC CONTROL PLANS OR AS DIRECTED BY THE RESIDENT ENGINEER.
4. INSTALL ANY STORMWATER TREATMENT PRACTICES AND DRAINAGE ELEMENTS AS SHOWN ON THEIR APPLICABLE PLANS.
5. CONSTRUCT PROPOSED FILL SLOPE AND NEW ROADWAY SUBGRADE.
6. CONSTRUCT PROPOSED ROADWAY AND INSTALL GUARDRAIL. CONSTRUCT SUBGRAGE TRANSITION.
7. SAW CUT AND REMOVE PAVEMENT FROM EXISTING SHOULDER AS PART OF PROPOSED LANE TAPER.
8. PLACE BASE COURSES OF PAVEMENT AND INSTALL TEMPORARY PAVEMENT MARKINGS AND SIGNING.

0 20 40
SCALE IN FEET

PROJECT NAME: BERLIN
PROJECT NUMBER: STPG SGNL(40)

FILE NAME: t11b358bdr.dgn
PROJECT LEADER: P. COBURN
DESIGNED BY: T. SISSON
PLOT DATE: 10/28/2014
DRAWN BY: T. SISSON
CHECKED BY: M. LACROIX
TRAFFIC CONTROL PLAN - PHASE 3 PLAN 3
SHEET 117 OF 123

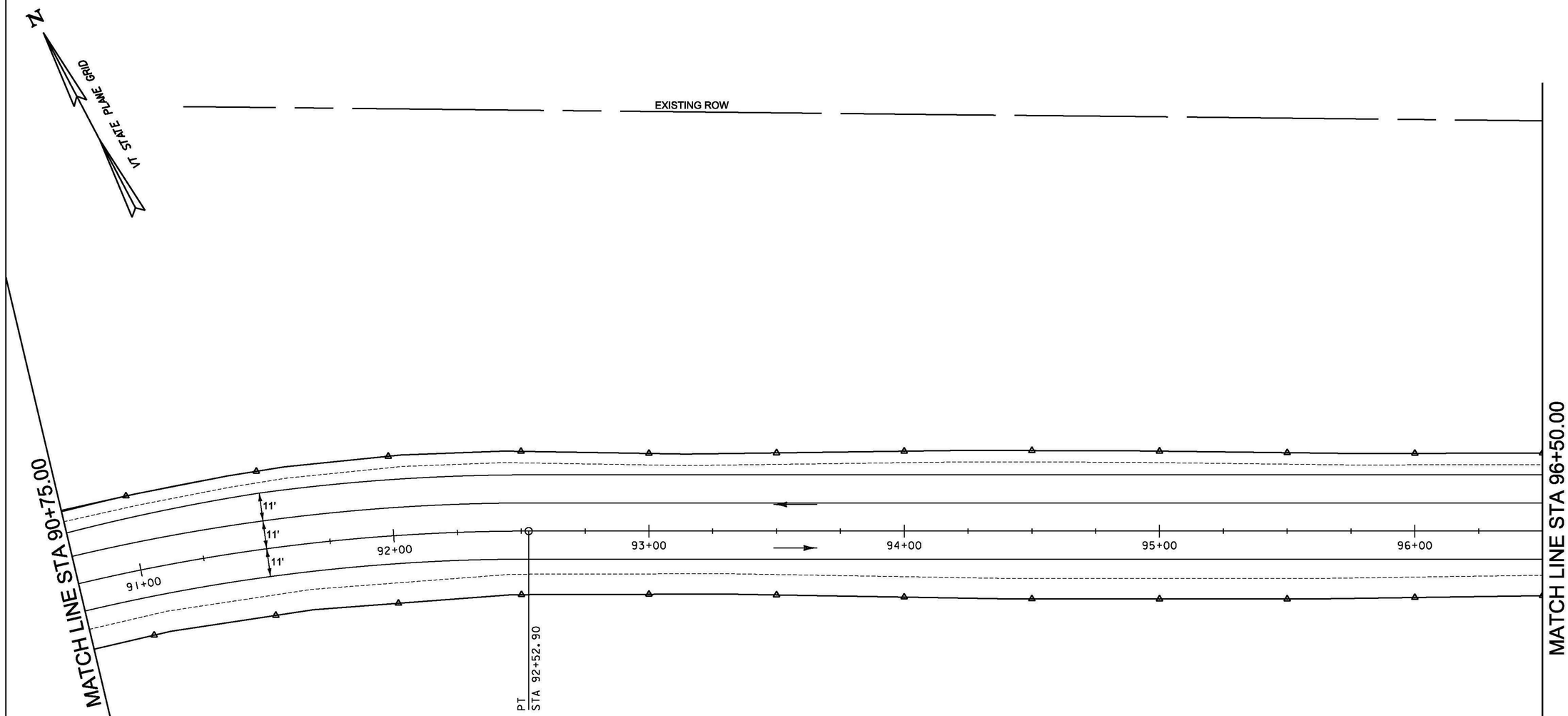

TRAFFIC CONTROL LEGEND

- WORK AREA
- TEMPORARY TRAFFIC BARRIER
- TYPE III BARRICADES
- REFLECTORIZED PLASTIC DRUM
- TYPE 1 DELINEATOR (YELLOW)
- TYPE 1 DELINEATOR (WHITE)
- FLOW OF TRAFFIC
- FLAGGER
- SIGN
- PORTABLE CHANGEABLE MESSAGE SIGN

POTENTIAL ACTIVITIES ASSOCIATED WITH TRAFFIC CONTROL, PHASE 3

1. PRIOR TO THE COMMENCEMENT OF ANY WORK OR THE PLACEMENT OF EQUIPMENT ON THE ROADWAY THE CONTRACTOR SHALL PROVIDE ADVANCED WARNING SIGNS IN ACCORDANCE WITH THE CONSTRUCTION APPROACH SIGNING SHEET AND THE LATEST EDITION OF THE MANUAL ON UNIFORM TRAFFIC CONTROL DEVICES (MUTCD).
2. INSTALL AND MAINTAIN ANY EROSION CONTROL MEASURES IN ACCORDANCE WITH THE EROSION CONTROL PLANS AND DETAILS IN ADDITION TO THE VERMONT D.E.C.'S "LOW RISK SITE HANDBOOK FOR EROSION PREVENTION AND SEDIMENT CONTROL."
3. INSTALL ALL WARNING SIGNAGE, REFLECTORIZED DRUMS, TRAFFIC BARRIER, AND ANY OTHER TRAFFIC CONTROL DEVICES PER ACCEPTED TRAFFIC CONTROL PLANS OR AS DIRECTED BY THE RESIDENT ENGINEER.
4. INSTALL ANY STORMWATER TREATMENT PRACTICES AND DRAINAGE ELEMENTS AS SHOWN ON THEIR APPLICABLE PLANS.
5. CONSTRUCT PROPOSED FILL SLOPE AND NEW ROADWAY SUBGRADE.
6. CONSTRUCT PROPOSED ROADWAY AND INSTALL GUARDRAIL. CONSTRUCT SUBGRADE TRANSITION.
7. SAW CUT AND REMOVE PAVEMENT FROM EXISTING SHOULDER AS PART OF PROPOSED LANE TAPER.
8. PLACE BASE COURSES OF PAVEMENT AND INSTALL TEMPORARY PAVEMENT MARKINGS AND SIGNING.

0 20 40
SCALE IN FEET

NOTE:

1. SEE TRAFFIC CONTROL GENERAL NOTES SHEET FOR ADDITIONAL INFORMATION AND REQUIREMENTS.

PROJECT NAME: BERLIN
PROJECT NUMBER: STPG SGNL(40)

FILE NAME: tllb358bdr.dgn
PROJECT LEADER: P. COBURN
DESIGNED BY: T. SISSON
TRAFFIC CONTROL PLAN - PHASE 3 PLAN 4

PLOT DATE: 10/28/2014
DRAWN BY: T. SISSON
CHECKED BY: M. LACROIX
SHEET 118 OF 123

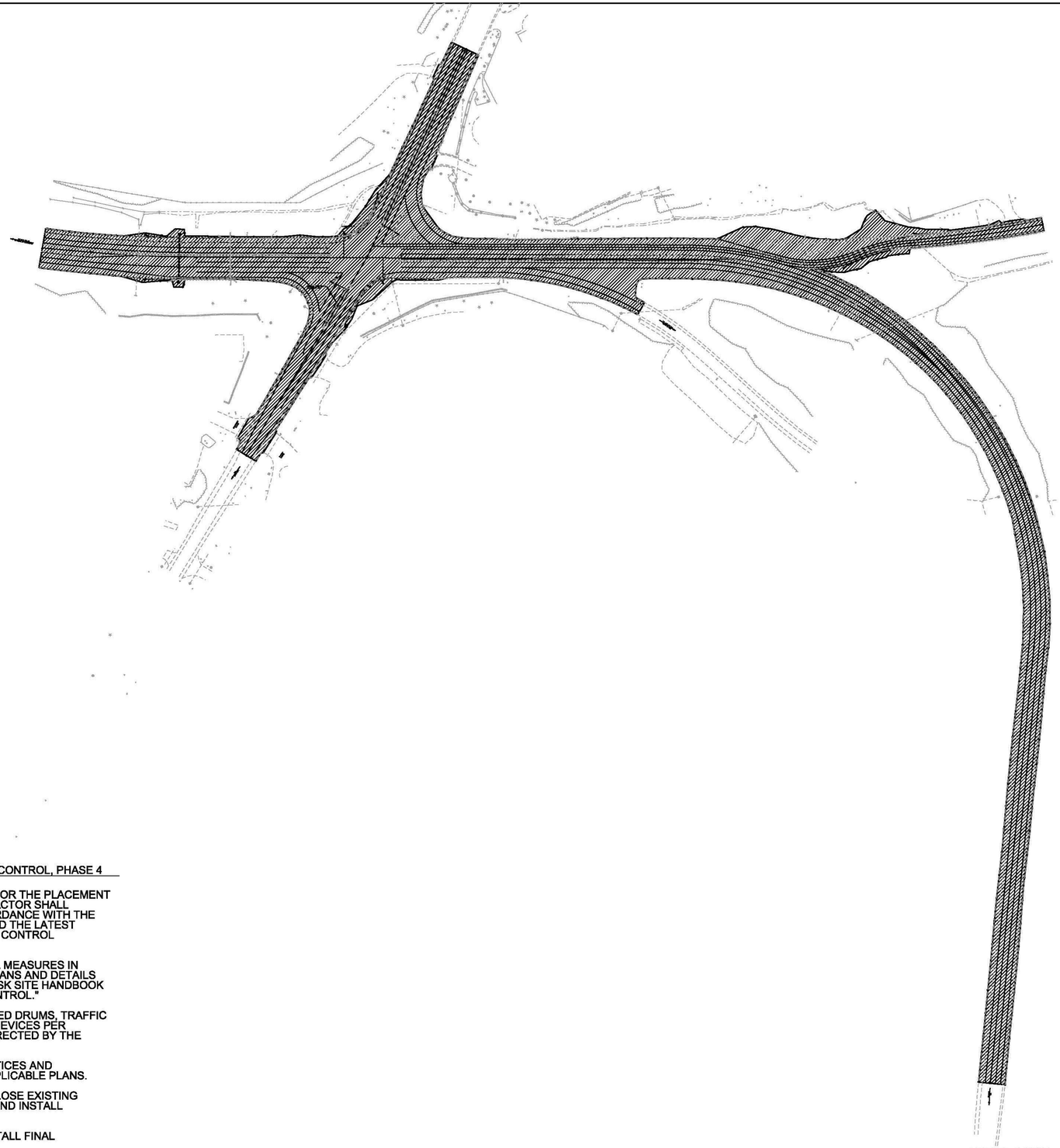

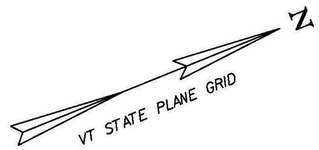

NOT TO SCALE

POTENTIAL ACTIVITIES ASSOCIATED WITH TRAFFIC CONTROL, PHASE 4

1. PRIOR TO THE COMMENCEMENT OF ANY WORK OR THE PLACEMENT OF EQUIPMENT ON THE ROADWAY THE CONTRACTOR SHALL PROVIDE ADVANCED WARNING SIGNS IN ACCORDANCE WITH THE CONSTRUCTION APPROACH SIGNING SHEET AND THE LATEST EDITION OF THE MANUAL ON UNIFORM TRAFFIC CONTROL DEVICES (MUTCD).
2. INSTALL AND MAINTAIN ANY EROSION CONTROL MEASURES IN ACCORDANCE WITH THE EROSION CONTROL PLANS AND DETAILS IN ADDITION TO THE VERMONT D.E.C.'S "LOW RISK SITE HANDBOOK FOR EROSION PREVENTION AND SEDIMENT CONTROL."
3. INSTALL ALL WARNING SIGNAGE, REFLECTORIZED DRUMS, TRAFFIC BARRIER, AND ANY OTHER TRAFFIC CONTROL DEVICES PER ACCEPTED TRAFFIC CONTROL PLANS OR AS DIRECTED BY THE RESIDENT ENGINEER.
4. INSTALL ANY STORMWATER TREATMENT PRACTICES AND DRAINAGE ELEMENTS AS SHOWN ON THEIR APPLICABLE PLANS.
5. SHIFT TRAFFIC INTO NEW TRAFFIC PATTERN. CLOSE EXISTING ROADWAY AND REMOVE EXISTING PAVEMENT AND INSTALL PROPOSED TURF ESTABLISHMENT PER PLANS.
6. PLACE FINAL COURSES OF PAVEMENT AND INSTALL FINAL PAVEMENT MARKINGS AND SIGNING.

PROJECT NAME:	BERLIN
PROJECT NUMBER:	STPG SGNL (40)
FILE NAME: t11b358tcp.dgn	PLOT DATE: 10/28/2014
PROJECT LEADER: P. COBURN	DRAWN BY: I. DEGUTIS
DESIGNED BY: T. SISSON	CHECKED BY: M. LACROIX
TRAFFIC CONTROL PLAN - PHASE 4 PLAN 1	SHEET 119 OF 123

TRAFFIC CONTROL GENERAL NOTES

1. THE TRAFFIC CONTROL PLAN HEREIN IS SUGGESTED FOR CONSTRUCTION PURPOSES. THE CONTRACTOR SHALL HAVE THE OPTION OF SUBMITTING A SEPARATE TRAFFIC CONTROL PLAN. APPLICABLE TRAFFIC MAINTENANCE PLANS FOR ALL TRANSITION WORK BETWEEN PHASES IS ALLOWED. THESE SHALL BE SUBMITTED TO THE RESIDENT ENGINEER FOR REVIEW AND APPROVAL.

2. REFER TO THE E-SERIES AND T-SERIES VERMONT STATE CONSTRUCTION STANDARDS AND THE LATEST EDITION OF THE MANUAL ON UNIFORM TRAFFIC CONTROL DEVICES (MUTCD) FOR DETAILED INFORMATION REGARDING CHANNELIZATION DEVICES, TAPER LENGTHS, BARRICADES, DETOURS, LONGITUDINAL DROP-OFFS AND MISCELLANEOUS TRAFFIC CONTROL DETAILS, IF APPLICABLE.

3. THE CONTRACTOR SHALL BE RESPONSIBLE FOR LOCATING CONSTRUCTION SIGNAGE SO AS NOT TO INTERFERE OR OBSTRUCT THE VIEW OF EXISTING TRAFFIC CONTROL DEVICES, STOPPING SIGHT DISTANCE AND CORNER SIGHT DISTANCE. EXISTING SIGNS SHALL BE COVERED OR REMOVED WHEN THEY CONFLICT WITH CONSTRUCTION TRAFFIC OPERATIONS.

4. THE CONTRACTOR SHALL MAINTAIN ACCESS TO ALL DRIVEWAYS AND BUSINESS ACCESSES DURING CONSTRUCTION 24 HOURS A DAY.

5. FURNISHING, INSTALLING, MAINTAINING, RELOCATING AND REMOVING REFLECTORIZED DRUMS, CONSTRUCTION SIGNING FOR TRAFFIC SHIFTS AND PEDESTRIAN BARRICADES AND SIGNAGE SHALL BE PAID FOR UNDER CONTRACT ITEM 641.10 - TRAFFIC CONTROL.

6. FURNISHING AND PERFORMING ORIGINAL INSTALLATION AND FINAL REMOVAL FROM THE PROJECT OF TEMPORARY TRAFFIC BARRIER SHALL BE PAID FOR UNDER CONTRACT ITEM 621.90. PAYMENT FOR INTERMITTENT REMOVING AND RESETTING OF TEMPORARY TRAFFIC BARRIER TO ACCOMODATE PHASED CONSTRUCTION, AS ALLOWED UNDER SUBSECTION 621.14, WILL BE MADE UNDER CONTRACT ITEM 621.95. TEMPORARY TRAFFIC BARRIERS SHALL BE DELINEATED IN ACCORDANCE WITH THE STANDARD SPECIFICATIONS FOR CONSTRUCTION AND THE LATEST EDITION OF THE MUTCD. DELINEATION OF TRAFFIC BARRIERS WILL BE CONSIDERED INCIDENTAL TO CONTRACT ITEM 621.90.

7. WHERE TEMPORARY TRAFFIC BARRIER IS USED, ELEVATION DIFFERENCES BETWEEN A PORTION OF ROADWAY OPENED FOR TRAFFIC AND A PORTION OF ROADWAY CONSTRUCTED SHALL NOT EXCEED 18" DURING NON-WORKING HOURS.

8. SPECIAL CARE SHALL BE TAKEN TO PROVIDE ACCESS THROUGH THE WORK ZONES FOR EMERGENCY VEHICLES. THE CONTRACTOR SHALL COORDINATE WITH BOTH POLICE AND FIRE DEPARTMENTS AND CENTRAL VERMONT MEDICAL CENTER TO DETERMINE THEIR MINIMUM ACCESS REQUIREMENTS BEFORE PROCEEDING TO THE NEXT PHASE OF CONSTRUCTION. THE CONTRACTOR SHALL ENSURE THAT ACCESS IS AVAILABLE TO ALL PROPERTIES AT ALL TIMES FOR EMERGENCY VEHICLES.

PROJECT NAME:	BERLIN
PROJECT NUMBER:	STPG SGNL (40)
FILE NAME: tllb358tcp.dgn	**PLOT DATE:** 10/20/2014
PROJECT LEADER: JLS	**DRAWN BY:** ISD
DESIGNED BY: MBL	**CHECKED BY:** MBL
TRAFFIC CONTROL GENERAL NOTES	**SHEET** 120 **OF** 123

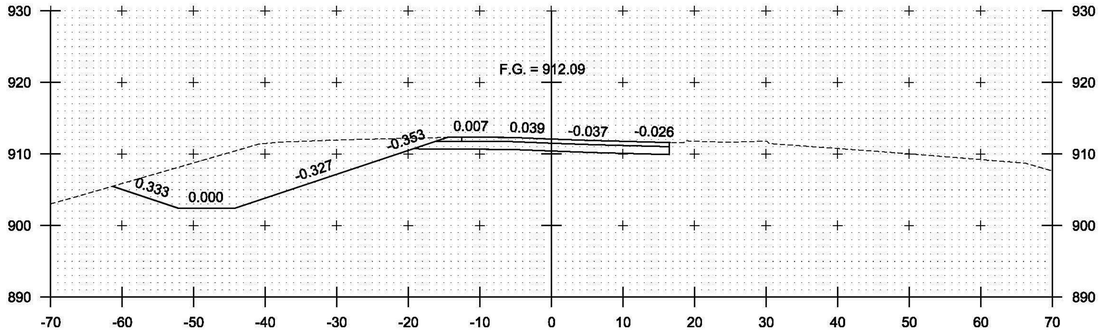

103+50

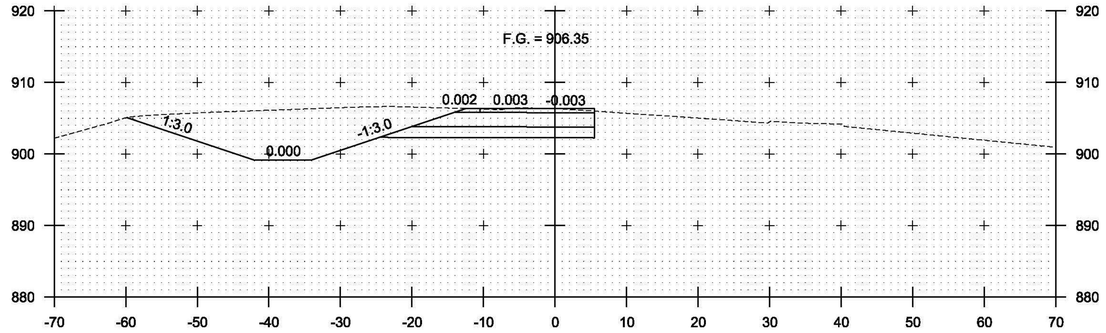

104+50

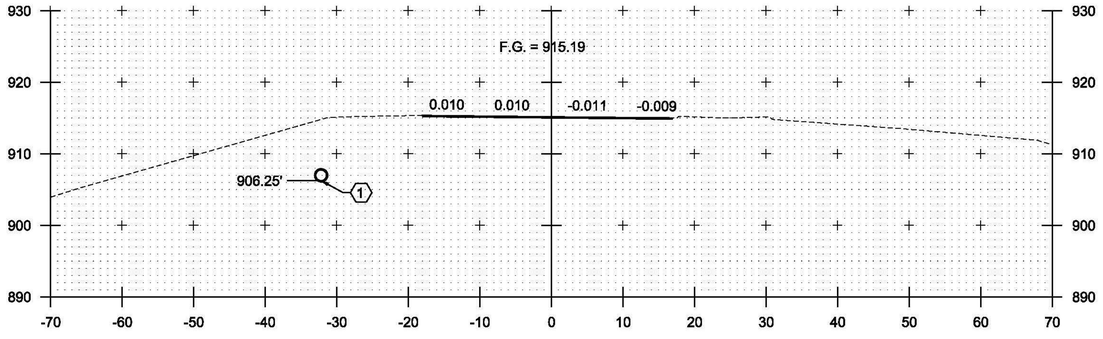

103+00

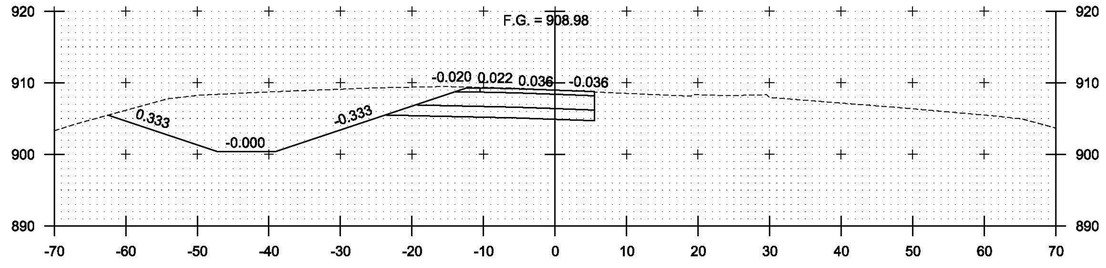

104+00

PROJECT NAME:	BERLIN
PROJECT NUMBER:	STPG SGNL(40)
FILE NAME: t11b358xsl.dgn	PLOT DATE: 10/20/2014
PROJECT LEADER: P. COBURN	DRAWN BY: T. SISSON
DESIGNED BY: T. SISSON	CHECKED BY: M. LACROIX
BERLIN STATE HWY CROSS SECTIONS SHEET 1	SHEET 121 OF 123

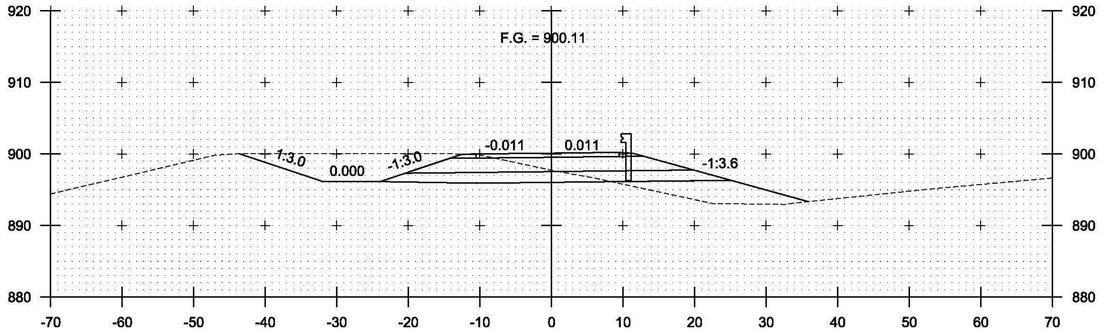

105+50

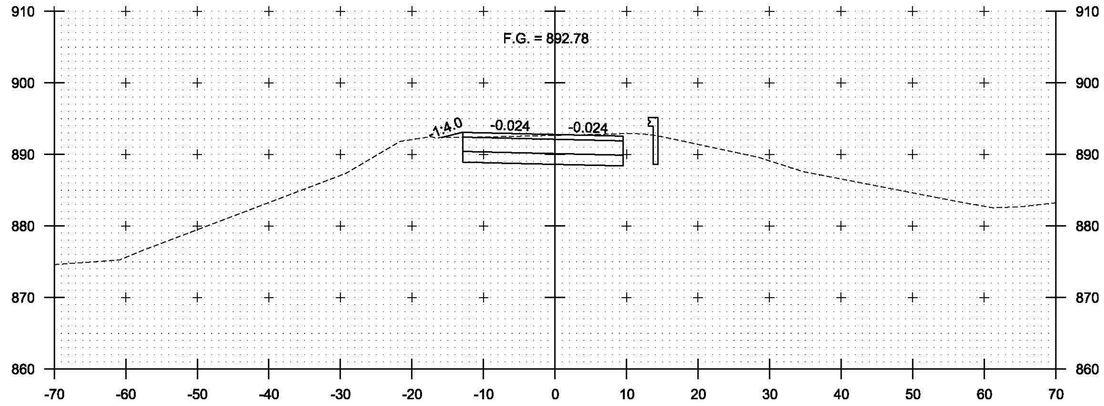

106+50

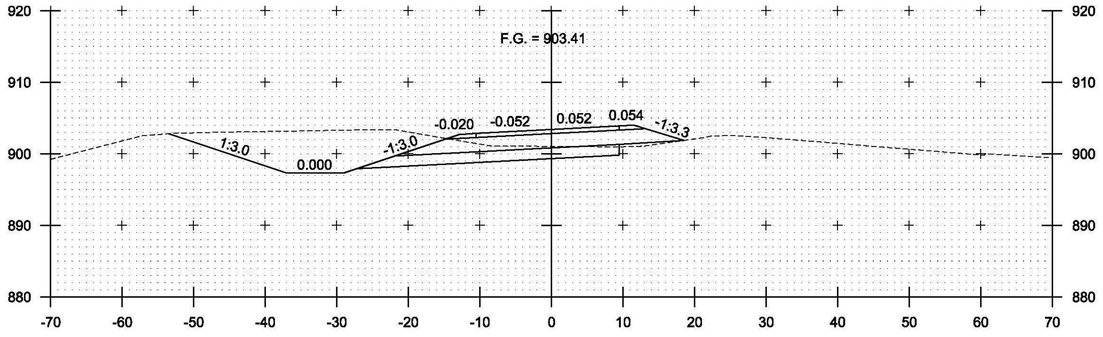

105+00

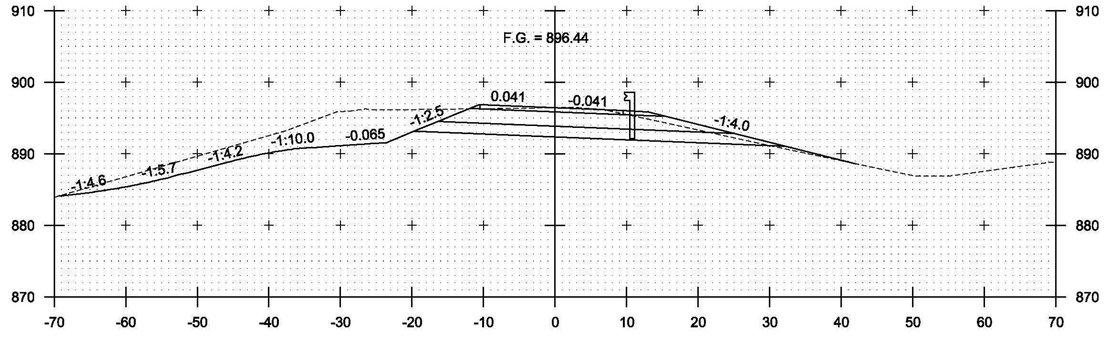

106+00

PROJECT NAME:	BERLIN
PROJECT NUMBER:	STPG SGNL(40)
FILE NAME: t11b358xsl.dgn	PLOT DATE: 10/20/2014
PROJECT LEADER: P. COBURN	DRAWN BY: T. SISSON
DESIGNED BY: T. SISSON	CHECKED BY: M. LACROIX
BERLIN STATE HWY CROSS SECTIONS SHEET 2	SHEET 122 OF 123

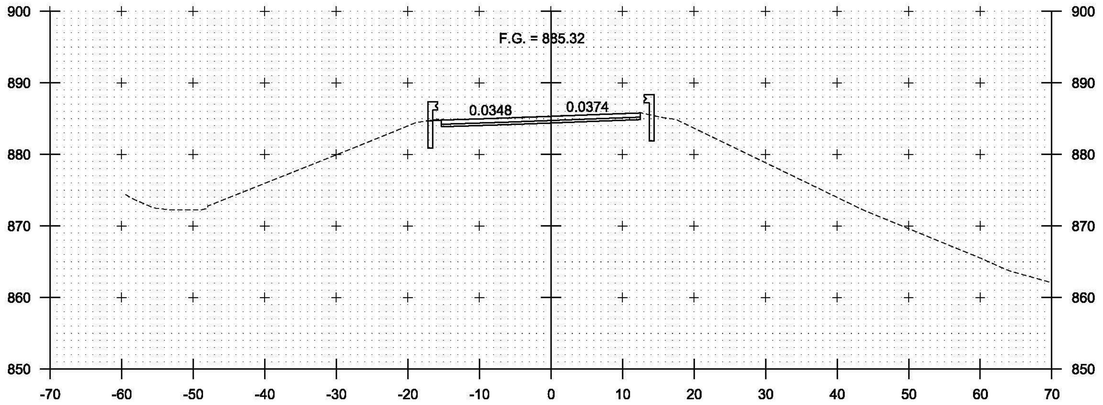

107+50

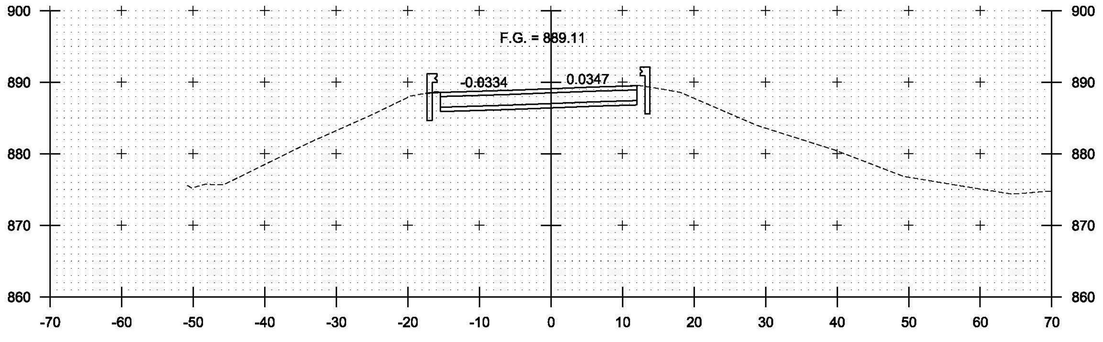

107+00

LIMITS OF CONSTRUCTION
109+68.33

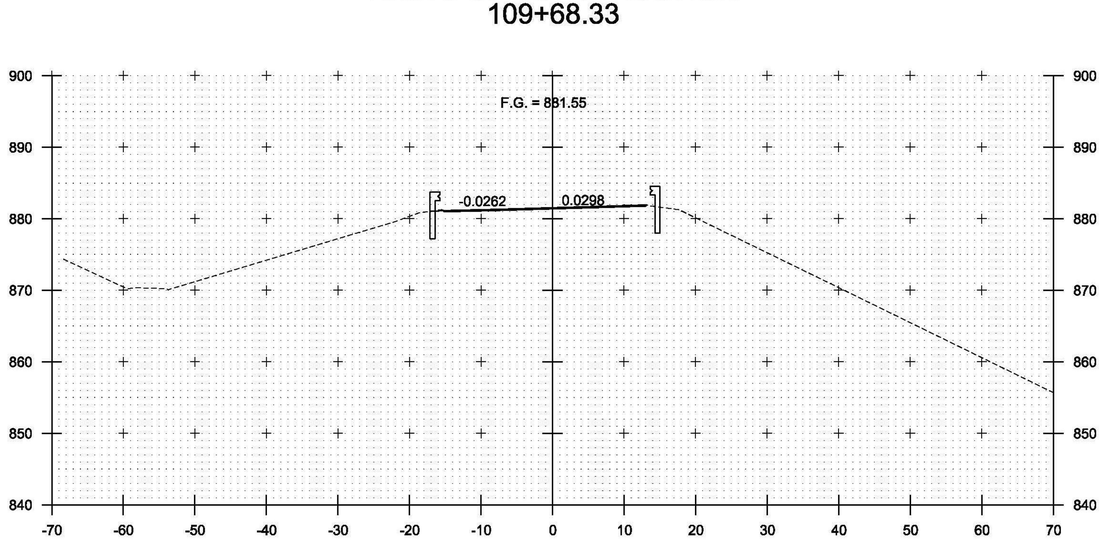

108+00

PROJECT NAME:	BERLIN
PROJECT NUMBER:	STPG SGNL(40)
FILE NAME: t11b358xsl.dgn	PLOT DATE: 10/20/2014
PROJECT LEADER: P. COBURN	DRAWN BY: T. SISSON
DESIGNED BY: T. SISSON	CHECKED BY: M. LACROIX
BERLIN STATE HWY CROSS SECTIONS SHEET 3	SHEET 123 OF 123

File 5.1.2

Contractor:	**Engineers Construction**		
Job Name:	**Berlin STPG SGNL(40)**		
Location:	**Berlin, Vt.**		
Job #	**046-15**	Date:	**3/24/2015**

CAMP Precast Concrete Products, Inc.
78 Precast Road, Milton, VT 05468
Phone (802) 893-2401 Fax (802) 893-

Product I.D. CB #1 Diameter: 48"

Invert: **No** Ladders: **Yes** Coating: **No** Access Size: **24" x 24"**

Cast Iron / Hatch: **Neenah Foundry R-3589 Frame & Type D Checkerboard Grate (3-flange)**

Rim:	**917.37**	Cone:		Riser#1:	**3'**	Riser#4:			
Inv. Out:	**910.00**	Cover:	**12"**	Riser#2:		Riser#5:			
Diff:	**7.37**	Base:	**4'**	Riser#3:		Riser#6:			
Sump:	**1.50**								
Gross V.F.:	**8.87**	Angle	**0**						
C.I. Height:	**0.67**	Boot:	**8022**						
Net V.F.:	**8.20**	Dist. Up:	**27" to Ctr.**						
Brick Space:	**0.20**	Pipe Type:	**HDPE**						
Actual V.F.	**8.00**	Pipe Size:	**18"**						

Quality Control

Prepour

Form Cleaning: Form Release:
Rein. Steel: **Std.** **Spec.** Form Closure:
Block Out: Rein. Size:
Comments: Q.C. by/date:

Postpour

Finish: Bricking:
Invert: Ladders:
Coating: Boots:
Comments: Q.C. by/date:

Special Info. / Comments: ****VT AOT specs, including 8" thick base****

Mold #: YDS³ Wt.

BASE

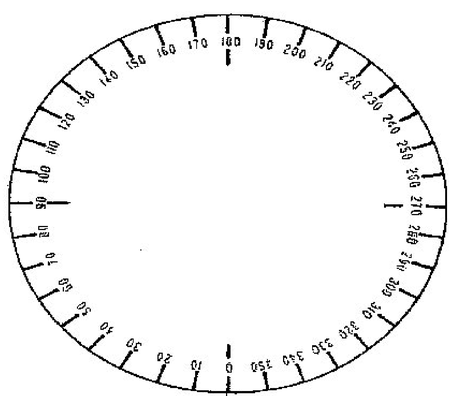

18" HDPE Up 27" to Ctr.
(elev. 910.00)

File 5.1.2

Contractor:	**Engineers Construction**		
Job Name:	**Berlin STPG SGNL(40)**		
Location:	**Berlin, Vt.**		
Job #	**046-15**	Date:	**3/24/2015**

CAMP Precast Concrete Products, Inc.
78 Precast Road, Milton, VT 05468
Phone (802) 893-2401 Fax (802) 893-

Product I.D. MH #2 Diameter: 48"

Invert: **No** Ladders: **Yes** Coating: **No** Access Size: **24" Round**

Cast Iron / Hatch: **Neenah Foundry R-1642 Frame & Cover "DRAIN"**

Rim:	**909.13**	Cone:		Riser#1:		Riser#4:			
Inv. Out:	**904.13**	Cover:	**18"**	Riser#2:		Riser#5:			
Diff:	**5.00**	Base:	**4'**	Riser#3:		Riser#6:			
Sump:	**1.50**								
Gross V.F.:	**6.50**	Angle	**0**	**120**					
C.I. Height:	**0.58**	Boot:	**8022**	**8022**					
Net V.F.:	**5.92**	Dist. Up:	**27" to Ctr.**	**36"**					
Brick Space:	**0.42**	Pipe Type:	**HDPE**	**HDPE**					
Actual V.F.	**5.50**	Pipe Size:	**18"**	**18"**					

Quality Control

Prepour

Form Cleaning: Form Release:
Rein. Steel: **Std. Spec.** Form Closure:
Block Out: Rein. Size:
Comments: Q.C. by/date:

Postpour

Finish: Bricking:
Invert: Ladders:
Coating: Boots:
Comments: Q.C. by/date:

Special Info. / Comments: ****VT AOT specs, including 8" thick base****

Mold #: | YDS³ | ****Ship a 4" Grade Ring**** | **Wt.**

BASE

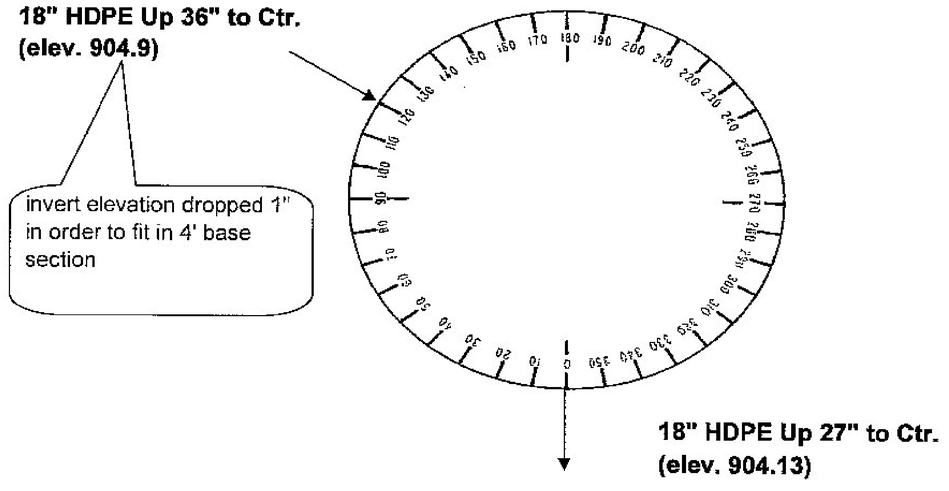

48" Diameter Manhole

94 Gal. / Vertical ft.

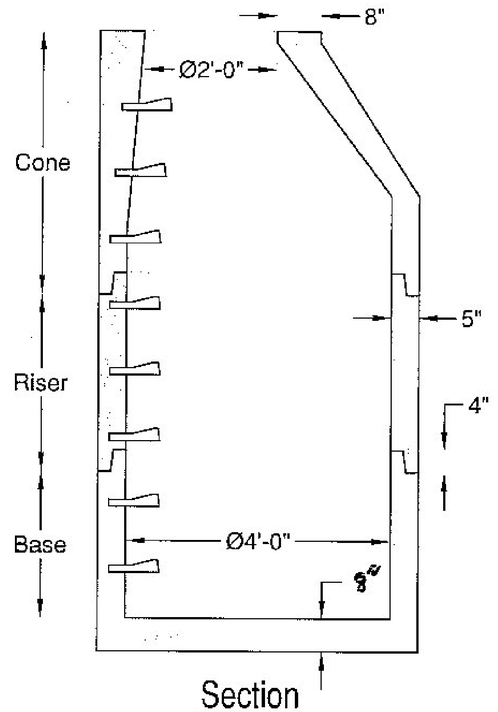

Section

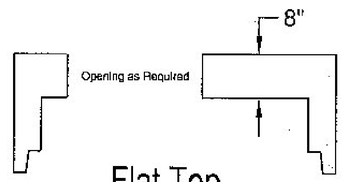

Flat Top

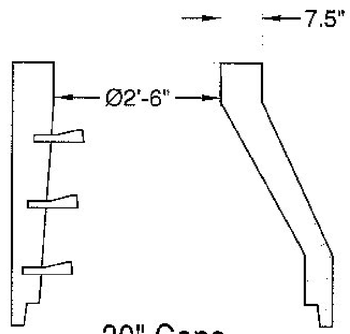

30" Cone

FLAT TOP SECTION

Height	Item #	Weight
1'-0"	MH48-12FT	1,650 lbs
1'-6"	MH48-18FT	2,080 lbs

Standard Heights Shown - Other Heights Available

RISER SECTION

Height	Item #	Weight
1'-0"	MH48-12R	860 lbs
2'-0"	MH48-24R	1,710 lbs
3'-0"	MH48-36R	2,570 lbs
4'-0"	MH48-48R	3,420 lbs

Standard Heights Shown - Other Heights Available

BASE SECTION

Height	Item #	Weight
2'-0"	MH48-24B	3,070 lbs
3'-0"	MH48-36B	3,880 lbs
4'-0"	MH48-48B	4,720 lbs
5'-0"	MH48-60B	5,560 lbs
6'-0"	MH48-72B	6,400 lbs

Standard Heights Shown - Other Heights Available

24" Cone

Height	Item #	Weight
3'-0"	MH48-24C36	2,680 lbs
3'-6"	MH48-24C42	3,120 lbs
4'-0"	MH48-24C48	3,560 lbs
4'-6"	MH48-24C54	4,000 lbs
5'-0"	MH48-24C60	4,440 lbs

30" Cone

Height	Item #	Weight
3'-0"	MH48-30C36	2,660 lbs
3'-6"	MH48-30C42	3,100 lbs
4'-0"	MH48-30C48	3,540 lbs
5'-0"	MH48-30C60	4,420 lbs

SPECIFICATIONS:

- Concrete Minimum Strength 5000psi @ 28 days
- Joints sealed with Butyl sealant
- Monolithic Construction
- Meets ASTM C478
- H-20 Loading
- Weights Subject to Variation

PRECAST CONCRETE PRODUCTS
76 PRECAST ROAD MILTON, VT 05468 • 802.893.2401
TOLL FREE 1.888.299.2401 FAX 802.893.1542

Concrete Grade Rings

24" Dia / 30" Dia. / 24"x24"

24" Dia.

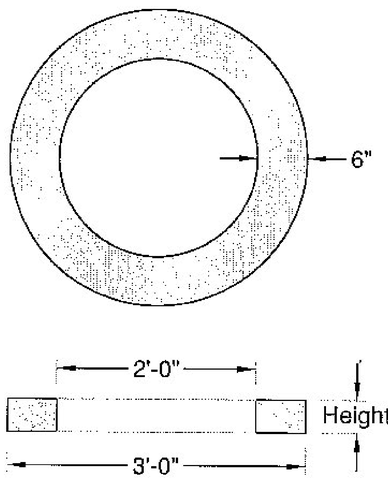

30" Dia.

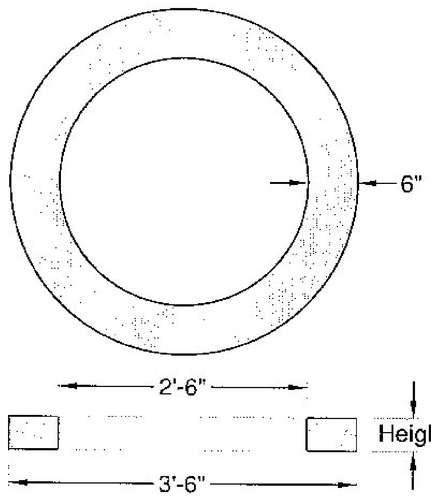

MH # 2

24" Dia.

Height	Item #	Weight
2"	GR24DIA-2	98 lbs
3"	GR24DIA-3	147 lbs
4"	GR24DIA-4	196 lbs
6"	GR24DIA-6	294 lbs

Standard Heights Shown - Other Heights Available

30" Dia.

Height	Item #	Weight
2"	GR30DIA-2	117 lbs
3"	GR30DIA-3	176 lbs
4"	GR30DIA-4	234 lbs
6"	GR30DIA-6	352 lbs
12"	GR30DIA-12	704 lbs

Standard Heights Shown - Other Heights Available

24" x 24"

Height	Item #	Weight
2"	GR24X24-2	124 lbs
3"	GR24X24-3	186 lbs
4"	GR24X24-4	248 lbs
6"	GR24X24-6	372 lbs

Standard Heights Shown - Other Heights Available

24"x 24"

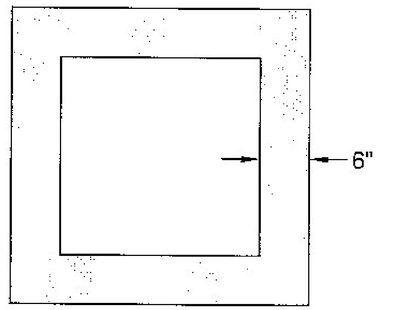

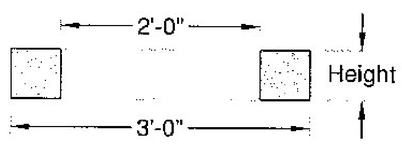

SPECIFICATIONS:

- Concrete Minimum Strength 5000psi @ 28 days
- Weights Subject to Variation

PRECAST CONCRETE PRODUCTS
76 PRECAST ROAD MILTON, VT 05468 •802.893.2401
TOLL FREE 1.888.299.2401 FAX 802.893.1542

The Company With Connections®

A BOOT STYLE CONNECTOR FOR CORRUGATED OR SMOOTH WALL PIPE

Z•LOK STM

Z•LOK STM

The **Z•LOK STM CONNECTOR** was designed by A-LOK Products, Inc. to address the need for a boot style connector for large diameter pipe. This makes it ideally suited for stormwater application. Available for 6"-102" pipes.

The **Z•LOK STM Pipe to Manhole Connector** is a flexible connector specifically engineered to produce a positive watertight seal for pipes entering precast concrete structures and the structure itself.

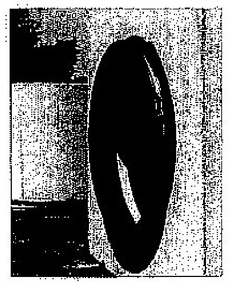

Z•LOK STM Connector cast into storm structure.

MATERIAL

The **Z•LOK STM CONNECTOR** is molded from an EPDM compound engineered to conform with the requirements of section 4.1.1 of ASTM C-923. Alternative compounds are available for unusual applications upon special order.

All stainless steel hardware is in compliance with section 4.2, *"Mechanical Devices"* of ASTM C-923.

FEATURES

The **Z•LOK STM CONNECTOR** assures a positive watertight connection and provides up to 15° of omnidirectional deflection and 1.50" of vertical or horizontal movement without loss of seal, providing greater flexibility in the design and installation of pipelines and structures. These design features of the **Z•LOK STM CONNECTOR** prevent infiltration due to shear caused by settlement or ground movement.

Once fastened, immediate backfilling is possible enhancing project safety and overcomes the normal problems encountered with water, running sand and other unstable trench conditions.

When casting the **Z•LOK STM CONNECTOR** into the structure, making it an integral part of the wall, 50% of the opportunity for infiltration is eliminated.

TEST REQUIREMENTS

A.) ASTM C-923
Resilient Connector Between Reinforced Concrete Manholes Structures, Pipe and Laterals.

B.) ASTM C-1478
Resilient Connectors Between Reinforced Concrete Storm Sewers Structures, Pipes and Laterals.

C.) ASTM C-1244
Standard Test Method For Concrete Sewer Manholes by the Negative Air Pressure (Vacuum) Test.

MEETS OR EXCEEDS STANDARDS

The **Z•LOK STM Connector** meets or exceeds all material and test requirements of ASTM C-923-00: *"Resilient Connectors Between Reinforced Concrete Manhole Structures, Pipes and Laterals"*.

See following chart:

RESILIENT TEST REQUIREMENTS OF A.S.T.M. C-923

TEST	RESULTS	ASTM METHOD
Chemical resistance 1 N Sulfuric acid 1 N Hydrochloric Acid	 no weight loss no weight loss	at 22°C for 48h
Tensile strength	1200 psi or 8.5 MPa, min	D 412
Elongation at break	350% min.	
Hardness	±5 from mfg's. specified hardness	D 2240 (Shore A durometer)
Accelerated oven-aging	decr. of 15%, max. of original tensile strength, decr. of 20% max. of elongation	D 573, 70±1°C for 7 days
Compression set	decr. of 25%, max. of original deflection	D 395, Method B, at 70°C for 22h
Water absorption	increase of 10%, max. of original by weight	D 471, immerse 0.75 by 2-in. or 19 by 25-mm Specimen in distilled water at 70°C for 48h
Ozone resistance	rating 0	D 1171
Low-temp brittle point	no fracture at -40°C	D 746
Tear resistance	200 lbf/in. or 34 kn/m	D 624, Method B

Copyright ASTM INTERNATIONAL. Reprinted with permission

A flexible pipe to manhole connector shall be used whenever a pipe penetrates into a precast concrete manhole or structure.

The connector shall be the **Z•LOK STM CONNECTOR** as manufactured by **A•LOK PRODUCTS, INC.**, Tullytown, PA, or approved equal.

The design of the connector shall provide a flexible, watertight seal between the pipe and concrete structure. The connector shall assure that a seal is made between:

(1) The connector and the structure wall by casting the connector integrally with the structure wall during the manufacturing process in a manner that it will not pull out during pipe coupling.

(2) The seal between the connector and the pipe shall be made by compressing the connector against the outside circumference of the smooth wall pipe or against the inside walls of the valley of the corrugated pipe by means of a stainless steel take-down clamp.

The connector shall be made from materials that conform to the physical and chemical requirements outlined in Section 4, *"Materials and Manufacture"* of ASTM C-923 *"Standard Specification for Resilient Connectors Between Reinforced Concrete Manhole Structures, Pipes, and Laterals"*, and the overall design will meet or exceed Section 7, *"Test Methods and Requirements"* of ASTM C-923 and ASTM C-1478.

The connector shall be sized specifically for the type of pipe being used and shall be installed in accordance with the recommendations of the manufacturer.

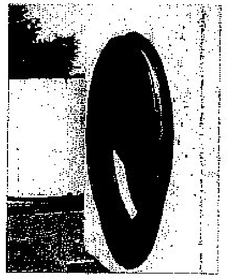

FIELD INSTALLATION

STEP 1:
Z•LOK STM Connector cast into storm structure.

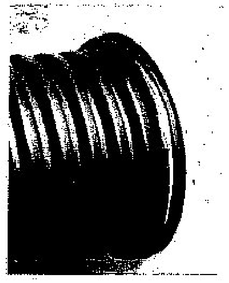

STEP 2:
Pipe is centered through the connector. The Stainless Steel Clamp is centered above the valley of pipe making sure the fastening points are positioned in the two cutout areas of the rubber connector.



STEP 3:
Stainless Steel Clamp is **tightened equally** about the take-up point to 60 in./lbs. This action compresses the rubber against the side walls of the pipe valley and a watertight connection is formed.

IMPORTANT: After groove of pipe is centered in gasket tighten stainless steel clamp equally to 60 in. lbs. with an A•LOK Torque Wrench.

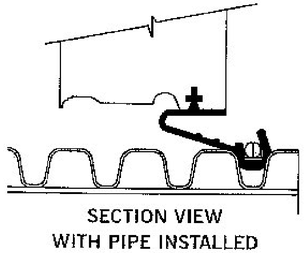

SECTION VIEW WITH PIPE INSTALLED

ONE-PIECE WEDGE KNOCKOUT
For 6" Flatwall

Pull connector over one-piece Wedge Knockout Hole Former as shown.

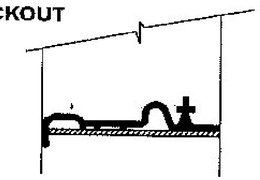

TWO-PIECE MANDREL
For 8" Flatwall and above

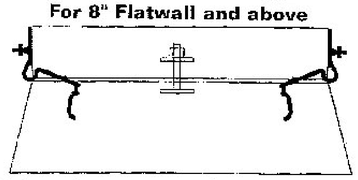

1. **Stretch gasket over outside mandrel half, with cut-outs positioned at 3 and 9 o'clock.**
2. **Force gasket down inside mandrel before installing in form.**
3. **Use coil nut to tighten gasket and mandrels together.**

TWO-PIECE MANDREL
For Round Manholes

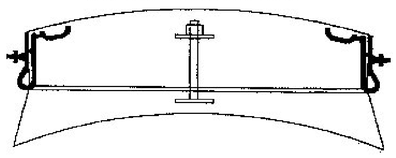

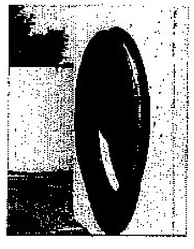

FIELD INSTALLATION

STEP 1:
Z•LOK STM Connector cast into storm structure.



STEP 2:
Pipe is inserted and centered within the connector to obtain proper mechanical seal.



STEP 3:
Stainless Steel Clamp is tightened equally about the take-up point to 60 in./lbs, insuring a watertight connection. This should be done prior to any pipe deflection or backfilling.

SECTION VIEW WITH PIPE INSTALLED

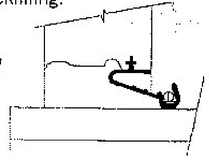

FLATWALL CONNECTORS ARE MARKED (C-F) ROUNDWALL CONNECTORS ARE MARKED (C-R)
CORRUGATED Z-LOK STM CONNECTORS HAVE NOTCHES LOCATED AT 3 & 9 FOR TAKE-DOWN CLAMP ADJUSTMENT.

18" HDPE →

Z-LOK STM PART #	PIPE SIZE	MAX. O.D.	Z-LOK STM MANDREL PART#	Z-LOK STM CLAMP SIZE
ZS-8016-C-F ZS-8016-C-R	12" CPP	15.00"	SM-8016-F SM-8016-R	CL-EV12L
ZS-8019-C-F ZS-8019-C-R	15" CPP	17.75"	SM-8019-F SM-8019-R	CL-EV15-18L
ZS-8022-C-F ZS-8022-C-R	18" CPP	21.47"	SM-8022-F SM-8022-R	CL-EV15-18L
ZS-8029-C-F ZS-8029-C-R	24" CPP	27.80"	SM-8029-F SM-8029-R	CL-EV24L
ZS-8031-C-F ZS-8031-C-R	24" HANCOR ONLY	28.40"	SM-8031-F SM-8031-R	CL-EV24H
ZS-8039-C-F ZS-8039SCR	30" CPP	35.50"	SM-8039-F SM-8039-R	CL-EV30H
ZS-8045-C-F ZS-8045-C-R	36" CPP	41.75"	SM-8045-F SM-8045-R	CL-EV36H

CORRUGATED POLYETHYLENE PIPE (CPP) NEEDS THE EV CLAMP DESIGN.

NOTE: NEED TO INDICATE WHEN ORDERING IF GASKETS ARE FOR ROUND OR FLATWALL

EXAMPLE: ZS-XXXX-C-F = CORRUGATED FOR FLATWALL STRUCTURES
ZS-XXXX-C-R = CORRUGATED FOR ROUND STRUCTURES

NOTE: ZS-8031 WOULD BE FOR 24" HANCOR PIPE BECAUSE OF THE LARGER VALLEY ON THE PIPE.

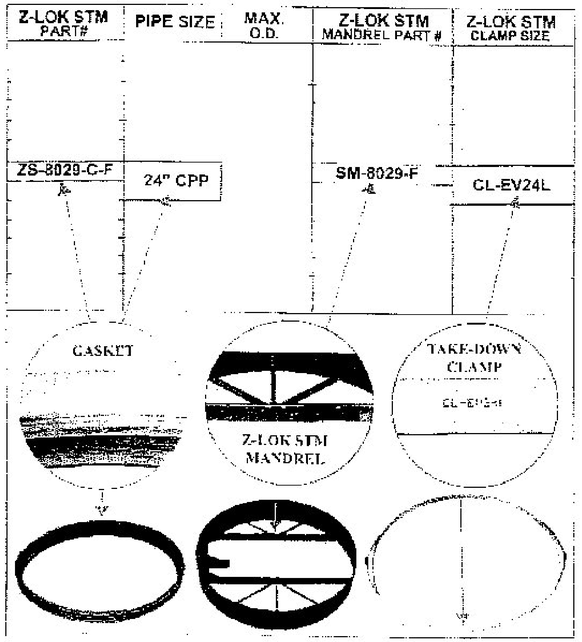

MANHOLE DIA.	MAX. O.D. PIPE
48" DIA. 5" WALL	28 IN.
60" DIA. 6" WALL	30 IN.
72" DIA. 7" WALL	37 IN.
84" DIA. 8" WALL	44 IN.
96" DIA. 9" WALL	51 IN.

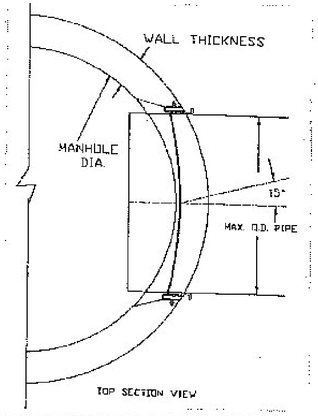

MANHOLE DIA.	MAX. O.D. PIPE
48" DIA. 5" WALL	28 IN.
60" DIA. 6" WALL	30 IN.
72" DIA. 7" WALL	37 IN.
84" DIA. 8" WALL	44 IN.
96" DIA. 9" WALL	51 IN.

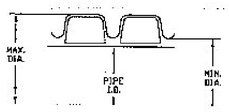

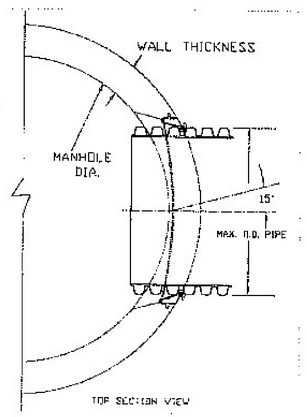

PS2-PFSL **Manhole Step**

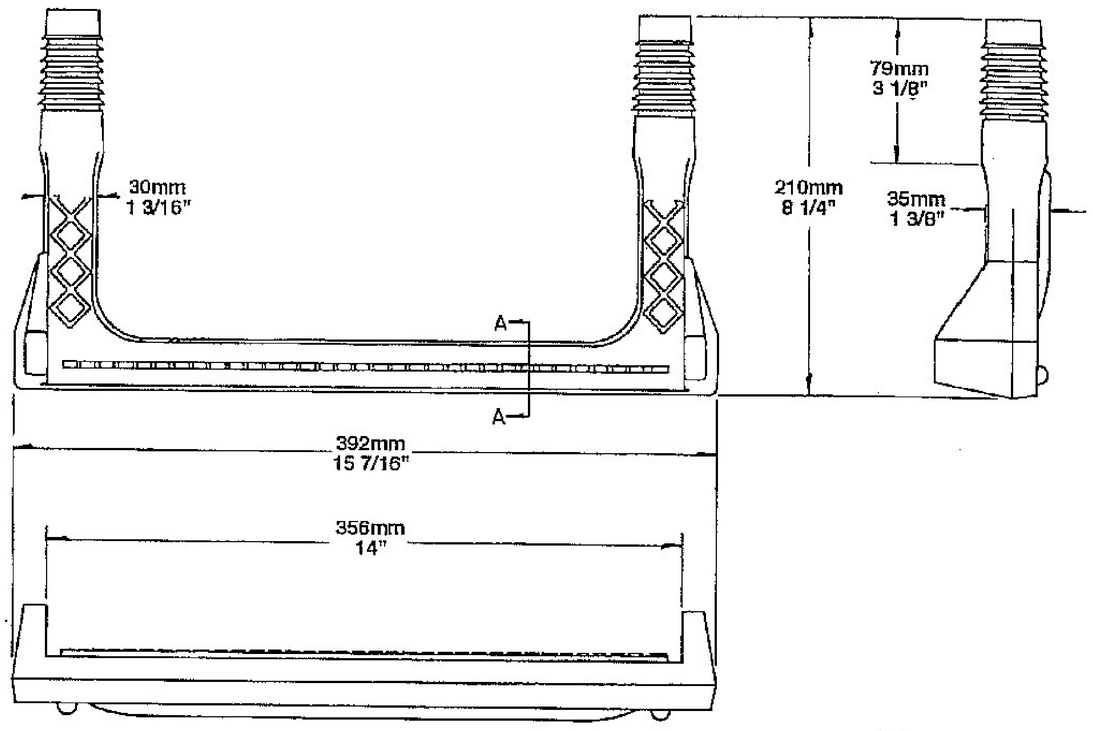

Copolymer Polypropylene Plastic

13mm 1/2" GRADE 60 STEEL REINFORCEMENT

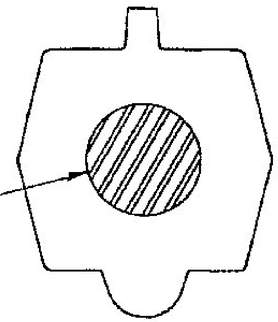

SECTION-A

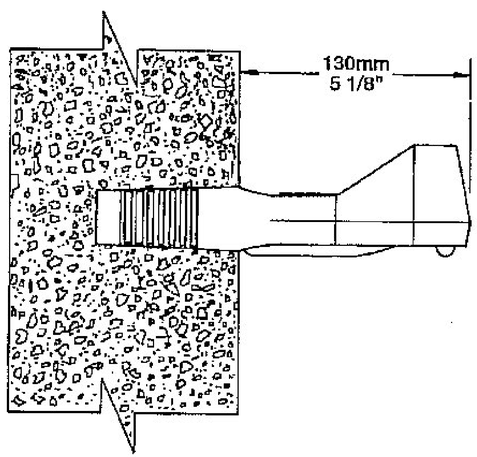

M.A. INDUSTRIES, INC.

P.O. Box 2322, 303 Dividend Dr. • Peachtree City, GA 30269 • Phone: (770) 487-7761 • Molding Sales Fax: (770) 487-1482 • Corporate Fax: (770) 631-4679

PRODUCT SPECIFICATIONS

ConSeal CS102

Concrete Sealants, Inc.

Butyl Rubber Sealant For All Precast Structures; Meets Specs.

APPLICATIONS

For self-sealing joints in: Manholes, Concrete Vaults, Septic Tanks, Concrete Pipe, Box Culverts, Utility Vaults, Burial Vaults, and Vertical Panel Structures.

SEALING PROPERTIES

- Provides permanently flexible watertight joints.
- Low to high temperature workability: 30°F to 120°F (-1°C to 48°C)
- Rugged service temperature: -30°F to +200°F (-34°C to +93°C)
- Excellent chemical and mechanical adhesion to clean, dry surfaces.
- Sealed Joints will not shrink, harden or oxide upon aging.
- No priming normally necessary. When confronted with difficult installation conditions, such as wet concrete or temperatures below 40°F (4°C), priming the concrete will improve the bonding action. Consult Concrete Sealants for the proper primer to meet your application.

HYDROSTATIC STRENGTH

ConSeal CS-102 meets the hydrostatic performance requirement as set forth In ASTM C-990 section 10.1 (Performance requirement: 10psi for 10 minutes in straight alignment – in plant, quality control test for joint materials.)

SPECIFICATIONS

ConSeal CS-102 meets or exceeds the requirements of Federal Specification SS-S-210 (210-A), AASHTO M-198B, and ASTM C-990-91.

P.O. Box 176, New Carlisle OH, 45344 • 937.845.8776 or 800.332.7325
FAX 937-845-3587 • www.conseal.com

PRODUCT SPECIFICATIONS

ConSeal CS102

Concrete Sealants INC.

Butyl Rubber Sealant For All Precast Structures; Meets Specs.

PHYSICAL PROPERTIES

	Spec	Required*	CS 102
Hydrocarbon blend content % by weight	ASTM D4 (mod.)	50% min.	51%
Inert mineral filler % by weight	AASHTO T111	30% min.	35%
Volatile Matter % by weight	ASTM D6	2% max.	1.2
Specific Gravity, 77°F	ASTM D71	1.15-1.50	1.25
Ductility, 77°F	ASTM D113	5.0 min.	10
Penetration, cone 77°F, 150 gm. 5 sec.	ASTM D217	50-100	55-60
Penetration, cone 32°F, 150 gm. 5 sec.	ASTM D217	40 mm	40-65
Flash Point, C.O.C., °F	ASTM D92	350°F min.	450°F
Fire point, C.O.C., °F	ASTM D92	375°F min.	475°F

IMMERSION TESTING

- 30-Day Immersion Testing: No visible deterioration when tested in 5% Caustic Potash, 5% Hydrochloric Acid, 5% Sulfuric Acid, and 5% saturated Hydrogen Sulfide. *
- One Year Immersion Testing: No visible deterioration when tested in 5% Formaldehyde, 5% Formic Acid, 5% Sulfuric Acid, 5% Hydrochloric Acid, 5% Sodium Hydroxide, 5% Hydrogen Sulfide and 5% Potassium Hydroxide.
- Requirements of ASTM C-990 Standard Specification for Joints for Concrete Pipe, Manholes, and Precast Box Sections Using Preformed Flexible Joint Sealants.

LIMITED WARRANTY
This information is presented in good faith, but we cannot anticipate all conditions under which this information and our products, or the products of other manufacturers in combination with our products, may be used. We accept no responsibility for results obtained by the application of this information or the safety and suitability of our products, either alone or in combination with other products. Users are advised to make their own tests to determine the safety and suitability of each such product or product combinations for their own purposes. It is the user's responsibility to satisfy himself as to the suitability and completeness of such information for this own particular use. We sell this product without warranty, and buyers and users assume all responsibility and liability for loss or damage arising from the handling and use of this product, whether used alone or in combination with other products.

P.O. Box 176, New Carlisle OH, 45344 • 937.845.8776 or 800.332.7325
FAX 937-845-3587 • www.conseal.com

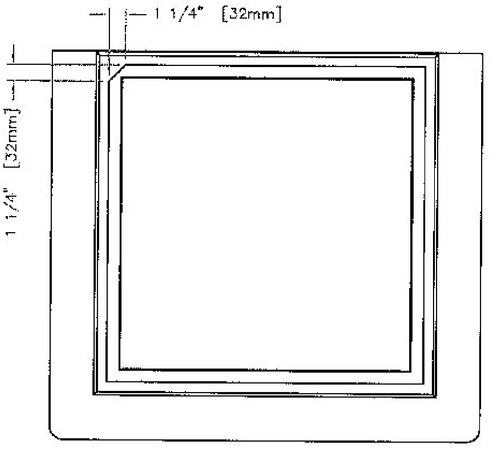

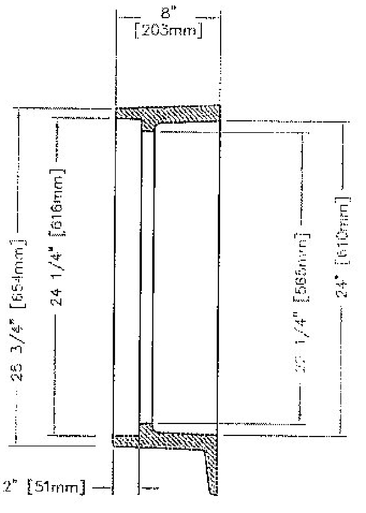

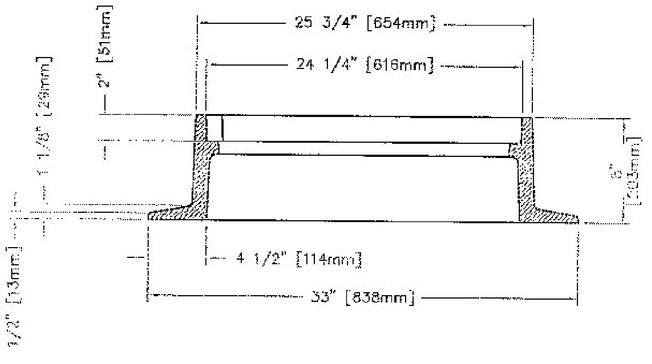

NOTE: ALL DIMENSIONS ARE SHOWN IN ENGLISH AND [METRIC].
FRAME SHALL NOT HAVE ANY MANUFACTURER IDENTIFICATION MARKS.
MATERIAL: CAST GRAY IRON ASTM A-48, CLASS 35B
FINISH: NOT PAINTED
WEIGHT: 250#

WAS NF-13745-A

DR. KMH	SCALE 1/8"=1"	TITLE: R-3589 FRAME	
CH.			
APP.	DIM CHK.	NEENAH FOUNDRY COMPANY NEENAH WISCONSIN 54956	NF-35890001 B
DATE 05-13-99			

CAD DWG. REF: 35890001.DWG- 1

NOTE: ALL DIMENSIONS SHOWN ARE IN ENGLISH AND [METRIC].

MATERIAL: CAST GRAY IRON ASTM A-48, CLASS 35B

FREE OPEN AREA: 1.2 SQ. FT.

FINISH: NO PAINT

WEIGHT: APPROX. 201#

CAD DWG. REF: 34053004.DWG— 2

DR. E. REMME	SCALE 1/8"=1"	TITLE: R-3405-A TYPE "A" GRATE			
CH.	DIM CHK.				
APP.					
DATE 11-29-99					
		NEENAH FOUNDRY COMPANY NEENAH, WISCONSIN, U.S.A.	NF- 34053004	B	

NO.	DATE	REVISION	BY	CHK'D	APP'D
A1	15-10-99	ADDED LETTERING			

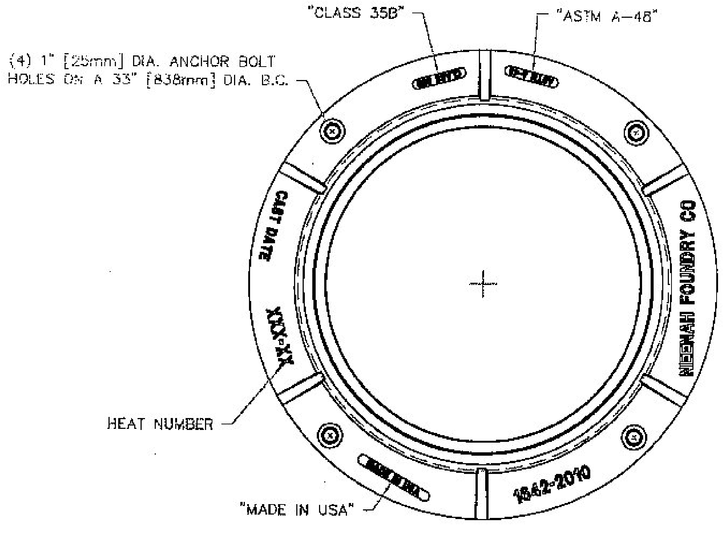

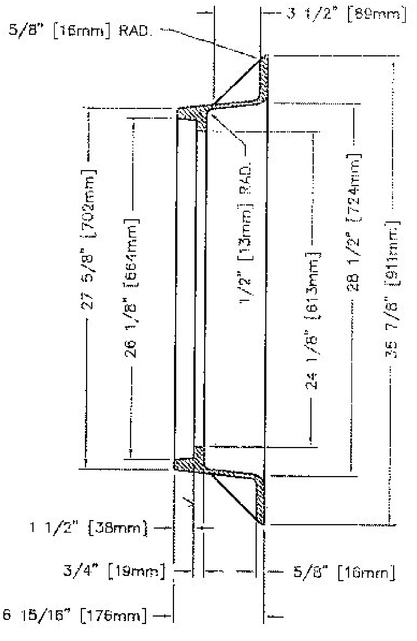

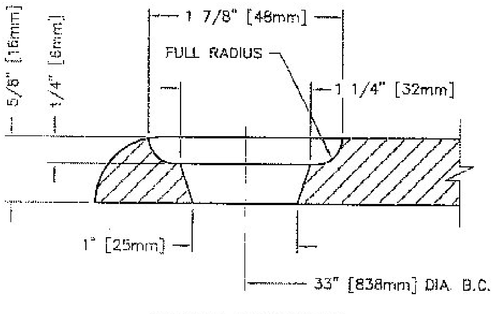

ANCHOR HOLE DETAIL
FULL SCALE

NOTE: ALL DIMENSIONS ARE SHOWN IN ENGLISH AND [METRIC].
SUITABLE FOR HS-25 LOADING
MATERIAL: CAST GRAY IRON ASTM A-48, CLASS 35B
FINISH: NOT PAINTED
WEIGHT: 147#
WAS COMPONENT NO. 1642-0001

10-14-2003	CORRECTED FILLETS	MAH	
09-09-2003	ADDED LETTERING ON FLANGE	ELA	
10-25-96	CHG. A-A DIM. FROM 28 3/8"	CMK	
DATE	REVISION	INT	

DR. E. REMME	SCALE 1/8"=1"	TITLE: R-1642 FRAME	
CH.			
APP.	DIM CHK.	NEENAH FOUNDRY COMPANY NEENAH WISCONSIN 54956	NF-16422010 B
DATE 2-10-96			

CAD DWG. REF: 16422010.DWG- 4

16425000— 5 B8

* Cover to read "DRAIN"

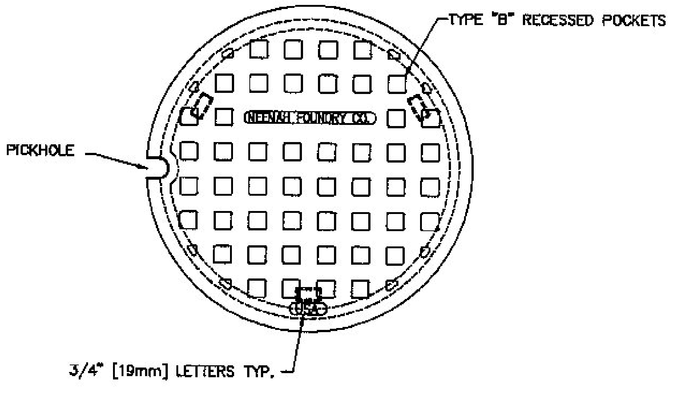

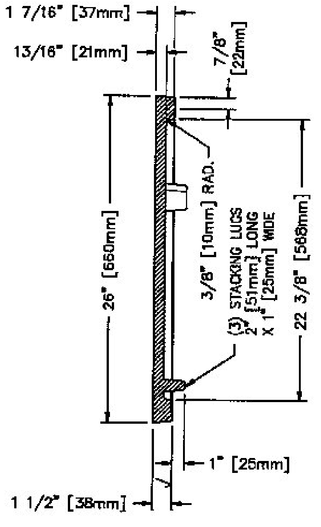

NOTE: ALL DIMENSIONS SHOWN ARE IN ENGLISH AND [METRIC].
MATERIAL: CAST GRAY IRON ASTM A-48, CLASS 35B
FINISH: NO PAINT
WEIGHT: 122#

DR. CSK	SCALE 3/8"=1"	TITLE: R-1642 TYPE "B" PLATEN LID	
CH.			
APP.	DW CHK.	NEENAH FOUNDRY COMPANY NEENAH WISCONSIN 54956	NF-16425000 B
DATE 01-18-95			

CAD DWG. REF: 16425000.DWG— 5

PDF created with pdfFactory trial version www.pdffactory.com

EAST COAST SIGNALS APPROVED FPR SUBMITTAL 5-26-15 MSF

STR-LWY-4M-HT-IP-02-06

LEDway® IP66 Street Light – Type IV Medium – Horizontal Tenon Mount – 20-60 LEDs

Product Description

Luminaire housing is all aluminum construction. Standard luminaire utilizes terminal block for power input suitable for #2-#14 AWG wire. Luminaire is designed to mount on a 2" (51mm) IP, 2.375" (60mm) O.D. horizontal tenon or 1.25" (32mm) IP, 1.66" (42mm) O.D. horizontal tenon when ordered with XA-XIL125IP accessory kit and is adjustable +/-5° to allow for luminaire leveling (two axis T-level included). Horizontal tenon must be minimium 8" (203mm) long.



APPROVED
By Taylor Sisson at 11:06 am, May 26, 2015

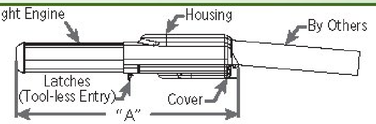

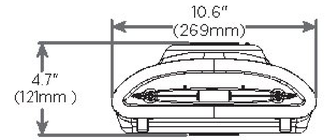

LED Count (x10)	Dimension	Measurements
02	"A"	17.5" (443mm)
03	"A"	17.5" (443mm)
04	"A"	22.0" (559mm)
05	"A"	22.0" (559mm)
06	"A"	22.0" (559mm)

Performance Summary

- Utilizes BetaLED® Technology
- Patented NanoOptic® Product Technology
- Made in the U.S.A. of U.S. and imported parts
- **CRI:** Minimum 70 CRI
- **CCT:** 5700K (+/- 500K) Standard, 4000K (+/- 300K)
- **Limited Warranty†:** 10 years on luminaire/10 years on Colorfast DeltaGuard® finish
- **EPA and Weight:** Reference EPA and Weight spec sheet

Please include

Accessories

Field Installed Accessories	
XA-BRDSPK30 (20-30 LEDs)	**XA-XSLBLS30 (20-30 LEDs)** External Backlight Shield
XA-BRDSPK60 (40-60 LEDs) Bird Spikes for Light Engine	**XA-XSLBLS60 (40-60 LEDs)** External Backlight Shield
XA-BRDSPKHSG Bird Spikes for Housing	**XA-XIL125IP** 1.25" (32mm) IP Pipe Sealing Kit

Ordering Information

Example: STR-LWY-4M-HT-02-E-UL-SV-525-IP-OPTIONS

STR-LWY	4M	HT		E				IP -
Product	**Optic**	**Mounting**	**LED Count (x10)**	**Version**	**Voltage**	**Color Options***	**Drive Current**	**Options**
STR-LWY	**4M** Type IV Medium	**HT** Horizontal Tenon	**02** **03** **04** **05** **06**	**E**	**UL** Universal 120-277V **UH** Universal 347-480V	**SV** Silver (Standard) **BK** Black **BZ** Bronze **PB** Platinum Bronze **WH** White	**525**** 525mA **700** 700mA	**IP IP66 Classification** **40K 4000K Color Temperature** - Color temperature per luminaire **DIM 0-10V Dimming** - Control by others - Refer to dimming spec sheet for details - Can't exceed specified drive current **F Fuse** - Not available with all ML options. Refer to ML spec sheet for availability with ML options - When code dictates fusing, use time delay fuse **HL HI/Low (175/350/525 Dual Circuit Input)** - Refer to ML spec sheet for details - Sensor not included **ML Multi-Level** - Refer to ML spec sheet for details **N No Quick Disconnect Harness or Leveling Bubble** - Standard product features unless N option is specified **PD Power Door** - All connections between door and luminaire are shipped unconnected from the factory; door release spring included to open door automatically when the latches are released **R NEMA Photocell Receptacle** - Not available with all ML options. Refer to ML spec sheet for availability with ML options - Photocell by others - Intended for downlight applications at 0° tilt **SC Door Safety Tether** - Stainless steel aircraft cable **UTL Utility** - Includes exterior wattage label that reflects watts for the drive current selected. The ability to exceed selected drive current will be disabled

Please note mounting height in plans.

† See www.cree.com/lighting/products/warranty for warranty terms.
* Light engine portion of extrusion is not painted and will remain natural aluminum regardless of color selection. ** Available on luminaires with 30-60 LEDs.

BetaLED TECHNOLOGY
www.cree.com/lighting
T (800) 236-6800 F (262) 504-5415

Rev. Date 03/21/2013

CREE®

EAST COAST SIGNALS APPROVED FPR SUBMITTAL 5-26-15 MSF

Product Specifications

CONSTRUCTION & MATERIALS

- Housing is all aluminum construction
- Terminal block for power input suitable for #2-#14 AWG wire
- Luminaire is designed to mount on a 2" (51mm) IP, 2.375" (60mm) O.D. horizontal tenon or 1.25" (32mm) IP, 1.66" (42mm) O.D. horizontal tenon when ordered with XA-XIL125IP accessory kit and is adjustable +/-5° to allow for luminaire leveling (two axis T-level included). Horizontal tenon must be minimum 8" (203mmm) long
- Exclusive Colorfast DeltaGuard® finish features an E-Coat epoxy primer with an ultra-durable powder topcoat, providing excellent resistance to corrosion, ultraviolet degradation and abrasion. Standard is silver. Bronze, black, white, and platinum bronze are also available

ELECTRICAL SYSTEM

- **Input Voltage:** 120-277V or 347-480V, 50/60Hz, Class 1 drivers
- **Power Factor:** > 0.9 at full load
- **Total Harmonic Distortion:** < 20% at full load
- Quick disconnect harness suitable for mate and break under load provided on power feed to driver for ease of maintenance
- Integral 10kV surge suppression protection standard
- To address inrush current, slow blow fuse or type C/D breaker should be used

REGULATORY & VOLUNTARY QUALIFICATIONS

- cULus Listed
- Suitable for wet locations
- Enclosure rated IP66 per IEC 60529 when ordered without R or ML options
- Consult factory for CE Certified products
- Meets CALTrans 611 Vibration testing and GR-63-CORE Section 4.4.1/5.4.2 Earthquake Zone 4
- Certified to ANSI C136.31-2001, 3G bridge and overpass vibration standards
- 10kV surge suppression protection tested in accordance with IEEE/ANSI C62.41.2
- Luminaire and finish are endurance tested to withstand 5,000 hours of elevated ambient salt fog as defined in ASTM Standard B 117
- Product qualified on the DesignLights Consortium ("DLC") Qualified Products List ("QPL") when ordered without full backlight control shield
- RoHS Compliant
- Meets Buy American requirements within ARRA

Photometry

All published luminaire photometric testing performed to IESNA LM-79-08 standards by a NVLAP certified laboratory.

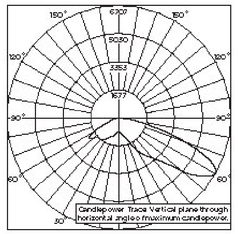

CESTL Test Report # 2013-0028
STR-LWY-4M-**-06-E-UL-700-40K
Initial Delivered Lumens: 11,036

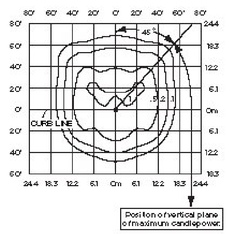

STR-LWY-4M-**-03-E-UL-700
Mounting Height: 25' (7.6m) A.F.G.
Initial Delivered Lumens: 5,907
Initial FC at grade

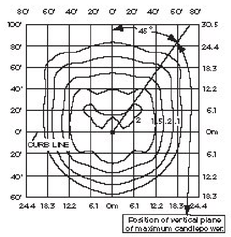

STR-LWY-4M-**-06-E-UL-700
Mounting Height: 25' (7.6m) A.F.G.
Initial Delivered Lumens: 11,683
Initial FC at grade

IES Files
To obtain an IES file specific to your project consult:
http://www.cree.com/lighting/tools-and-support/exterior-ies-configuration-tool

Lumen Output, Electrical, and Lumen Maintenance Data

Type IV Medium Distribution													
LED Count (x10)	5700K		4000K		System Watts 120-277V	System Watts 347-480V	TOTAL CURRENT						50K Hours Projected Lumen Maintenance Factor @ 15°C (59°F)**
	Initial Delivered Lumens	BUG Ratings* Per TM-15-11	Initial Delivered Lumens	BUG Ratings* Per TM-15-11			120V	208V	240V	277V	347V	480V	
525mA @ 25°C (77°F)													
03	4,725	B2 U0 G1	4,550	B2 U0 G1	53	55	0.45	0.26	0.23	0.21	0.16	0.13	93%
04	6,313	B2 U0 G1	6,079	B2 U0 G1	66	71	0.56	0.33	0.29	0.26	0.21	0.16	
05	7,839	B2 U0 G2	7,549	B2 U0 G2	86	87	0.72	0.42	0.37	0.33	0.25	0.19	
06	9,346	B2 U0 G2	9,000	B2 U0 G2	100	103	0.84	0.49	0.43	0.38	0.30	0.22	
700mA @ 25°C (77°F)													
02	3,977	B1 U0 G1	3,830	B1 U0 G1	47	51	0.39	0.23	0.21	0.19	0.15	0.12	91%
03	5,907	B2 U0 G1	5,688	B2 U0 G1	70	73	0.59	0.34	0.30	0.27	0.21	0.16	
04	7,891	B2 U0 G2	7,598	B2 U0 G2	91	93	0.77	0.45	0.39	0.35	0.27	0.20	
05	9,799	B2 U0 G2	9,436	B2 U0 G2	113	115	0.96	0.55	0.48	0.43	0.33	0.25	
06	11,683	B3 U0 G2	11,250	B2 U0 G2	134	135	1.13	0.65	0.57	0.50	0.39	0.29	

* For more information on the IES BUG (Backlight-Uplight-Glare) Rating visit www.iesna.org/PDF/Erratas/TM-15-11BugRatingsAddendum.pdf.
** For recommended lumen maintenance factor data see TD-13. Calculated L_{70} based on 10,000 hours LM-80-08 testing; > 150,000 hours in accordance with guidelines describing "successors to previously tested subcomponents" (Section 5) per Sep 9, 2011 ENERGY STAR guidelines.
See http://www.energystar.gov/ia/partners/prod_development/new_specs/downloads/luminaires/ENERGY_STAR_Final_Lumen_Maintenance_Guidance.pdf.

© 2013 Cree, Inc. All rights reserved. For informational purposes only. Content is subject to change. See www.cree.com/patents for patents that cover these products. Cree®, the Cree logo, LEDway®, BetaLED®, NanoOptic®, and Colorfast DeltaGuard® are registered trademarks, and the BetaLED Technology logo is a trademark of Cree, Inc.

www.cree.com/lighting T (800) 236-6800 F (262) 504-5415

Valmont Industries, Inc.
West Highway 275
P.O. Box 358
Valley, Nebraska 68064-0358 USA
(402) 359-2201

APPROVED
By Taylor Sisson at 11:00 am, May 26, 2015

A Light & Traffic Structure Proposal
for
VERMONT D.O.T.
BERLIN
STPG SGNL(40)

Valmont Order No.: 275846

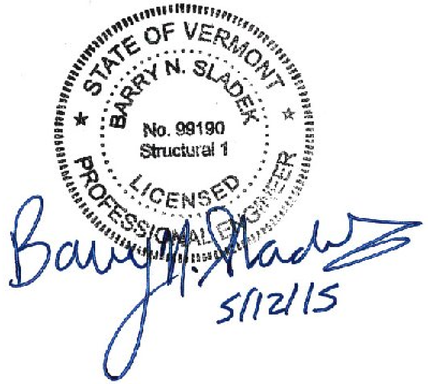

Prepared By:
Barry N. Sladek, P.E.
Senior Professonal Engineer
May 7, 2015

Revision A

Proprietary Information
These documents, drawings and/or calculations and all information related to them are the exclusive property and the proprietary information of Valmont Industries, Inc. and are furnished solely upon the conditions that they will be retained in strictest confidence and shall not be duplicated, used or disclosed in whole or in part for any purpose, in any way, without the prior written permission of Valmont Industries, Inc.

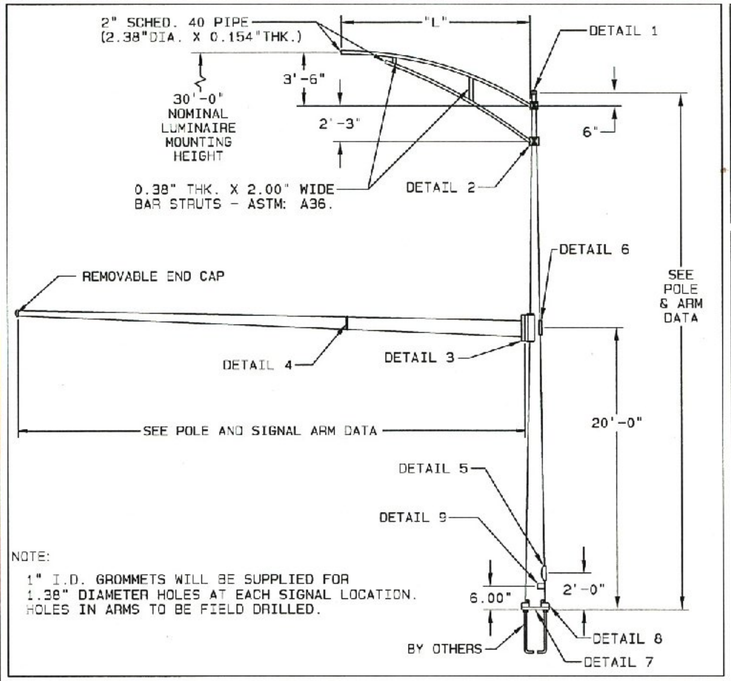

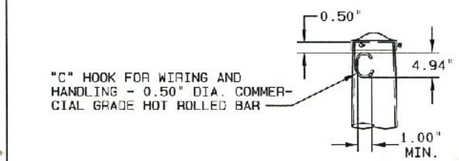

DETAIL 1 | POLE TOP

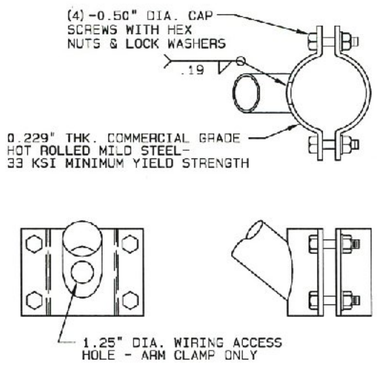

DETAIL 2 | LUMINAIRE ARM ATTACHMENT

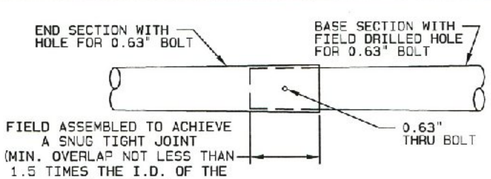

ARM SECTION DATA				
ARM LENGTH (FT)	BASE SECTION		END SECTION	
	LENGTH	GA. /THK.	LENGTH	GA. /THK.
55.00	19.42'	0.313"	38.15'	7

DETAIL 4 | SIGNAL ARM SLIP JOINT

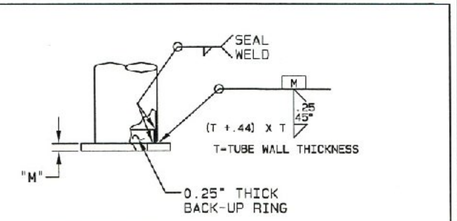

DETAIL 7 | POLE BASE

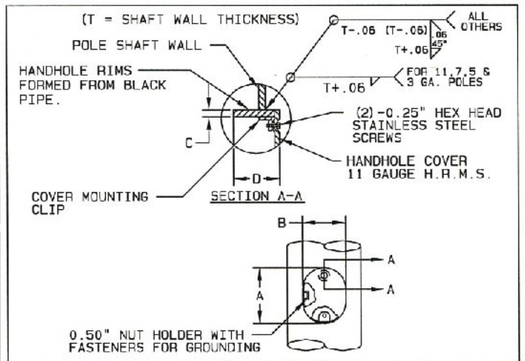

ITEM NUMBER	A	B	C	D
#1 & #2	7.31"	5.63"	0.430"	2.000"
#3 & #4	7.56"	5.50"	0.500"	2.000"

DETAIL 5 | HANDHOLE

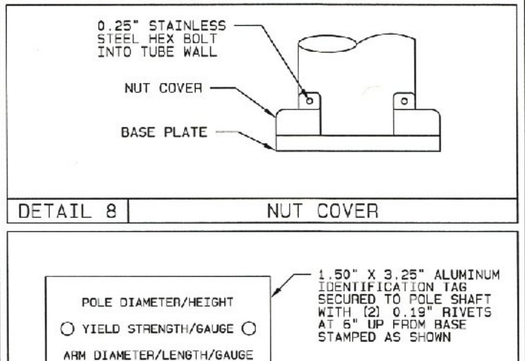

DETAIL 8 | NUT COVER

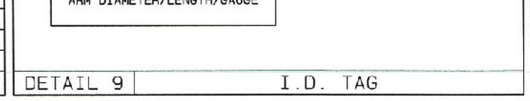

DETAIL 9 | I.D. TAG

MATERIAL DATA

COMPONENT	ASTM DESIGNATION	MIN. YIELD (KSI)	COMPONENT	ASTM DESIGNATION	MIN. YIELD (KSI)
TAPERED TUBES	A595 GR.A OR A572	55	GALVANIZING- STRUCTURE	A123	
			GALVANIZING- HARDWARE	A153	
POLE BASE	A36	36			
LUMINAIRE ARM PIPE		36			
SIGNAL ARM CONNECTION	A36	36			
SIGNAL ARM CONN. BOLTS	A325				

SYSTEM: FINISH PAINT/GALVANIZED (FPGV)
BASE COAT: HOT-DIP GALVANIZED TO ASTM A123
PRIME COAT: NONE
FINISH COAT: TGIC OR URETHANE POLYESTER POWDER
COLOR: BLACK
SPEC: F-283A

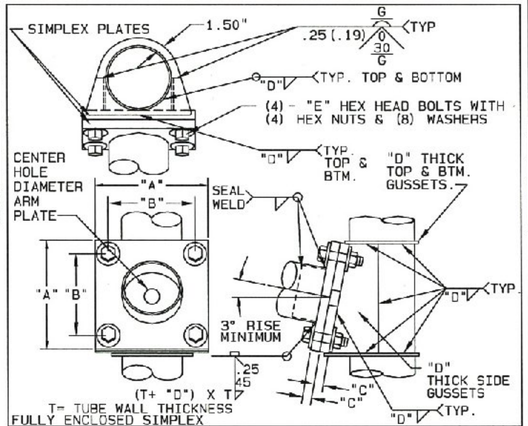

DETAIL 3 | SINGLE ARM ATTACHMENT

SIGNAL ARM ATTACHMENT DATA

MAST ARM LENGTH	"A"	"B"	"C"	CENTER HOLE DIA.	"D"	"E"
35.00'	17.25"	14.00"	2.000"	9.00"	0.375"	1.25" X 6.00"
40.00'	17.75"	14.50"	2.000"	9.75"	0.375"	1.25" X 6.00"
55.00'	21.25"	18.00"	2.000"	11.25"	0.500"	1.25" X 6.00"

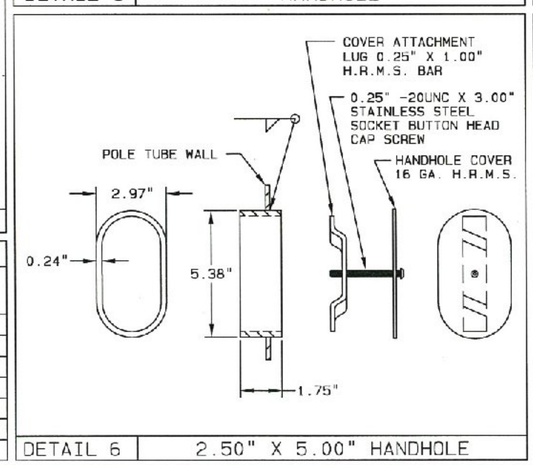

DETAIL 6 | 2.50" X 5.00" HANDHOLE

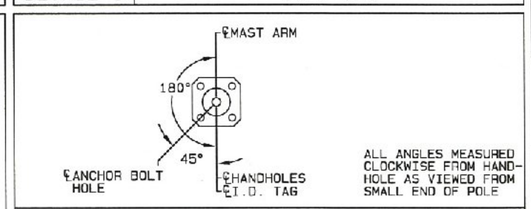

RADIAL INDEX - SINGLE MAST ARM

STATE OF VERMONT
BARRY N. SLADEK
No. 99190
Structural 1
LICENSED
PROFESSIONAL ENGINEER
5/12/15

REV	DRAWN BY-DATE	CHECK BY-DATE	DESCRIPTION
A	JTF 05/11/15	JTF 05/11/15	CHANGED 40' MA TO 35'MA
—	JTF 03/03/15	JTF 03/03/15	— — — — — — — — — — — — — — — — — — — —

SOLD TO: HIGHWAY TECH
SHIP TO: EAST COAST SIGNALS
P.O. #: 9547
AGENT: HIGHWAY TECH

JOB: VT D.O.T.
BERLIN, VT STPG SGNL(40)

TITLE: TRAFFIC SIGNAL STRUCTURES

VALMONT INDUSTRIES, INC. RESERVES THE RIGHT TO INSTALL VARIOUS, ENGINEER APPROVED, MATERIAL HANGING ACCOMMODATIONS TO FACILITATE THE MANUFACTURING PROCESS.

valmont
Valley, NE 68064
(402) 359-2201

ORDER NUMBER: 275846-P1
PAGE NUMBER: 1 OF 2
DRAWING NUMBER: VT275846P1
REV: A

POLE AND SIGNAL ARM DATA

ITEM	QTY.	POLE TUBE				POLE BASE					ANCHOR BOLT				SIGNAL ARM TUBE				LUMINAIRE ARM SPAN "L" (FT)
		BASE DIA. (IN)	TOP DIA. (IN)	LENGTH (FT)	GAUGE OR THK. (IN)	SQUARE "S" (IN)	CENTER HOLE DIA. (IN)	BOLT CIRCLE "Y" (IN)	THK. "M" (IN)	HOLE / SLOT "Z" (IN)	DIA. "K" (IN)	LENGTH "J" (IN)	HOOK "H" (IN)	THREAD LENGTH "U" (IN)	FIXED END DIA. (IN)	FREE END DIA. (IN)	GAUGE OR THICK (IN)	SPAN (FT)	
1	1	12.50	8.72	27.00	5	17.50	11.00	16.50	2.000	1.75	1.50	BY OTHERS			10.50	5.60	7	35.00	12.00
2	1	13.00	9.22	27.00	3	18.50	11.50	17.50	2.000	2.00	1.75	BY OTHERS			11.50	5.90	7	40.00	12.00
3	1	16.00	12.22	27.00	0.250	22.00	13.75	21.00	2.000	2.00	1.75	BY OTHERS			14.00	6.66	DET.4	55.00	12.00
4	1	16.00	12.22	27.00	0.250	22.00	13.75	21.00	2.000	2.00	1.75	BY OTHERS			14.00	6.66	DET.4	55.00	12.00

THE MAST ARM TRAFFIC STRUCTURES SHOWN ON THIS DRAWING HAVE BEEN DESIGNED IN ACCORDANCE WITH THE LOADING AND THE ALLOWABLE STRESS REQUIREMENTS OF THE 2013 AASHTO 'STANDARD SPECIFICATIONS FOR STRUCTURAL SUPPORTS FOR HIGHWAY SIGNS, LUMINAIRES AND TRAFFIC SIGNALS', SIXTH EDITION, LTS-6. THE WIND LOADS WERE CALCULATED FROM A BASIC WIND VELOCITY OF 90 MPH WITH A RECURRENCE INTERVAL OF 50 YEARS, AND A FATIGUE CATEGORY OF 2. THE FATIGUE LOADS WERE CALCULATED ON THE REQUIREMENTS OF SECTION 11 OF THE CODE, AND THE FOLLOWING DESIGN CONDITIONS:

- STRUCTURES ARE DESIGNED TO RESIST NATURAL WIND GUSTS BASED ON THE YEARLY MEAN WIND VELOCITY OF 11.2 MPH.
- STRUCTURES ARE NOT DESIGNED TO RESIST GALLOPING-INDUCED CYCLIC LOADS.
- STRUCTURES ARE DESIGNED FOR TRUCK-INDUCED GUST LOADS, AS REQUIRED BY THE OWNER OF THE STRUCTURES.

AASHTO 2013 SPECIFICATIONS

ALTHOUGH RARE, VIBRATIONS SEVERE ENOUGH TO CAUSE DAMAGE CAN OCCASIONALLY OCCUR IN STRUCTURES OF ALL TYPES. BECAUSE THEY ARE INFLUENCED BY MANY INTERACTING VARIABLES, VIBRATIONS ARE GENERALLY UNPREDICTABLE. THE USER'S MAINTENANCE PROGRAM SHOULD INCLUDE OBSERVATION FOR EXCESSIVE VIBRATION AND EXAMINATION FOR ANY STRUCTURAL DAMAGE OR BOLT LOOSENING. THE VALMONT WARRANTY SPECIFICALLY EXCLUDES FATIGUE FAILURE OR SIMILAR PHENOMENA RESULTING FROM INDUCED VIBRATION, HARMONIC OSCILLATION OR RESONANCE ASSOCIATED WITH MOVEMENT OF AIR CURRENTS AROUND THE PRODUCT.

VIBRATION NOTE

STATE OF VERMONT
BARRY N. SLADEK
No. 99190
Structural 1
LICENSED
PROFESSIONAL ENGINEER

Barry N. Sladek 5/12/15

JOB VT D.O.T.
BERLIN, VT STPG SGNL (40)

TITLE TRAFFIC SIGNAL STRUCTURES

VALMONT INDUSTRIES, INC. RESERVES THE RIGHT TO INSTALL VARIOUS, ENGINEER APPROVED, MATERIAL HANGING ACCOMMODATIONS TO FACILITATE THE MANUFACTURING PROCESS.

valmont
Valley, NE 68064
(402) 359-2201

ORDER NUMBER: 275846-P1
PAGE NUMBER: 2 OF 2
DRAWING NUMBER VT275846P1
REV A

APPROVED
By Taylor Sisson at 3:28 pm, May 15, 2015

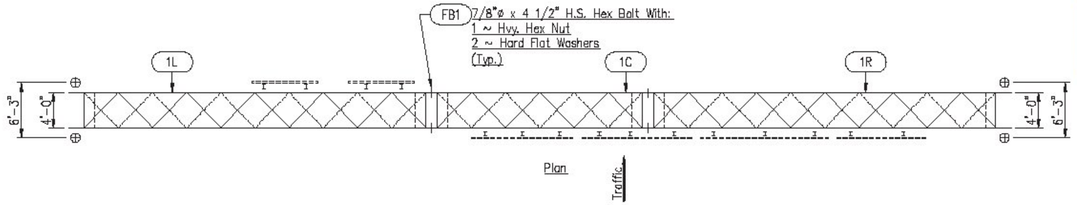

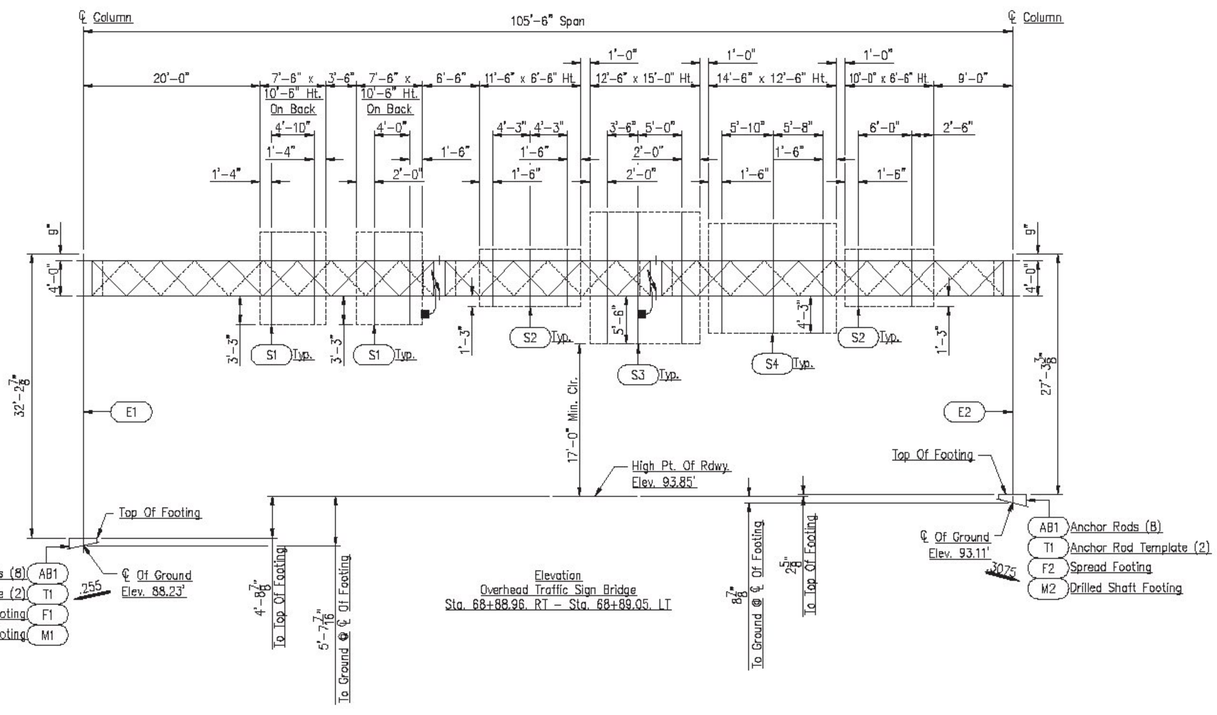

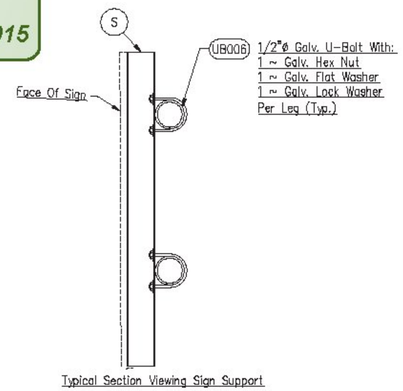

Typical Section Viewing Sign Support

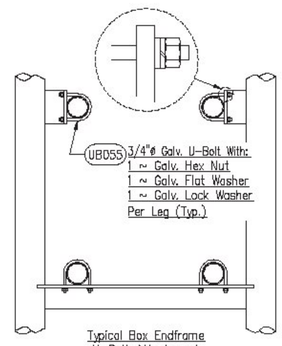

Typical Box Endframe
U-Bolt Attachment

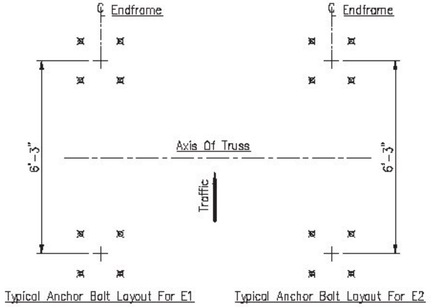

Typical Anchor Bolt Layout For E1 — Typical Anchor Bolt Layout For E2

NOTES:
Contractor To Verify Elevations.

■ The Truss Section Mk No's. Are Stamped On The Top Of The Bottom Front Flanges.

Wind Design Velocity = 90 MPH
Ice Loading = 3 PSF

Pay Item:
1 Ea. ~Overhead Traffic Sign Bridge Sta. 68+88.96, RT – Sta. 68+89.05, LT
Pay Item No: 677.13

STATE OF VERMONT
THOMAS S. LAM
NO. 08762
STRUCTURAL I
LICENSED
PROFESSIONAL ENGINEER
5/7/2015

PRINTS ISSUED						REVISIONS		
FOR	NO.	DATE	FOR	NO.	DATE	NO.	DATE	DESCRIPTION

Brookfield Fabricating Corp
P.O. Box 406– Brookfield, Missouri 64628– (660)258–2214

Customer: Lafayette Highway Specialties P.O. No: 29510

Project:
Project No: STPG SGNL(40)
Washington County, Vermont

Description:
Erection Details Of Box Truss Overhead Traffic Sign Bridge @
Sta. 68+88.96, RT – Sta. 68+89.05, LT

Sheet No: 1 of 9

Printed For:	Drawn By:	Date:	Checked By:	Date:	Job No:	Rev.
Vermont	JF	03/05/15	CR JL	03/19/15	VT-13675	

Y:\states\VT\13000-13999\13675\13675 Part A\1367501A.dwg

Bill Of Materials

Qty.	Mk	Description	Length	Remarks	Inventory No.
4	T1	PL 1/4" x 1'-9" Dia.	–	Black	PL252
16	AB1	1 1/2"ø S.S. Rod	4'-2"		ABSS12-400R72-38**
64	–	1 1/2"ø S.S. Hex Nut	–		NSS12
96	–	1 1/2"ø S.S. Flat Wa.	–		WSS12
16	–	1 1/2"ø S.S. Lock Wa.	–		LWSS12

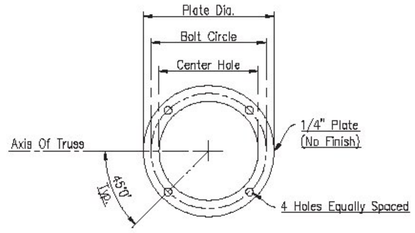

Anchor Rod Template
(4 Anchor Pattern)
Anchor Rod Template To Be Removed & Discarded After Concrete Cures

Qty.	Mk.	Plate Dia.	Center Hole	Bolt Circle	Hole Size
4	T1	1'-9"	13"	18"	1 9/16"

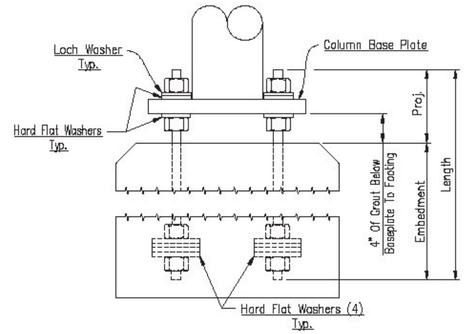

Anchor Rod Nut Tightening:
The Anchor Rods Shall Be Tightened Using The
VT Standard Specifications Installation Procedure.

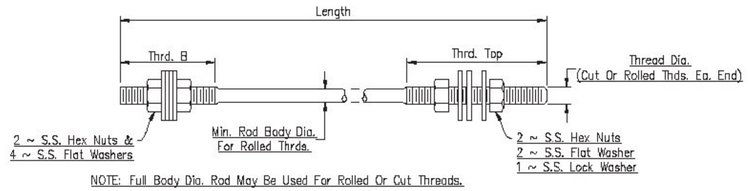

NOTE: Full Body Dia. Rod May Be Used For Rolled Or Cut Threads.

Anchor Rod Detail

Qty.	Mk.	Length	Thread Dia.	Rod Body Dia.	Thrd. Top	Thrd. B	Embedment	Projection
16	AB1	4'-2"	1 1/2"	1.3812"	9"	4 3/4"	3'-5 1/4"	8 3/4"

Material Specifications:
Steel Plates: A.S.T.M. A36 (No Finish)

Stainless Steel Anchor Rod And Washers Shall Be An Austenitic Grade Of Stainless Steel Conforming To The Chemistry Of A.S.T.M. A276, Type 304 With The Following Physical Properties:

Tensile Strength, Minimum:	550 MPa (80,000 psi)
Yeild Strength, Minimum:	380 MPa (55,000 psi)
Elongation In 50 mm (2 Inches), Minimum:	30 Percent
Rockwell B Hardness, Minimum:	86
Or	
Charpy V-Notch, Minimum:	20.5 Nem At 5°C
(AASHTO T243M/T243 Using "H" Frequency Testing)	(15 lbf ft At 40°F)

Stainless Steel Hvy. Structural Steel Nuts: A.S.T.M. A194, Gr. 8, Type 304
Stainless Steel Lock Washers: Type 304

PRINTS ISSUED						REVISIONS		
FOR	NO.	DATE	FOR	NO.	DATE	NO.	DATE	DESCRIPTION



5/7/2015

Brookfield Fabricating Corp

P.O. Box 406- Brookfield, Missouri 64628- (660)258-2214

Customer: Lafayette Highway Specialties P.O. No: 29510

Project:
Project No: STPG SGNL(40)
Washington County, Vermont

Description:
Fabrication Details Of Anchor Rods & Templates
Sta. 68+88.96, RT – Sta. 68+89.05, LT

Sht. No: 2 of 9

Printed For:	Drawn By:	Date:	Checked By:	Date:	Job No:	Rev.
Vermont	JF	03/05/15	CR JL	03/19/15	VT-13675	

Y:\states\VT\13000-13999\13675\13675 Part A\1367502A.dwg

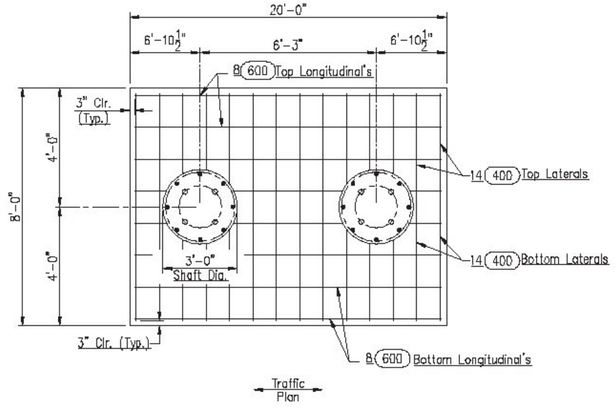

Note:
3.00 KSI Min. Bearing Pressure
120 PCF Min. Soil Density
13.5 Cubic Yds. Of Concrete
890 Lbs. Of Reinforcing Steel
1 1/2 "ø Anchor Bolts
18 " Bolt Circle
Water Table Level:
Water Level @ 21.7 Ft.

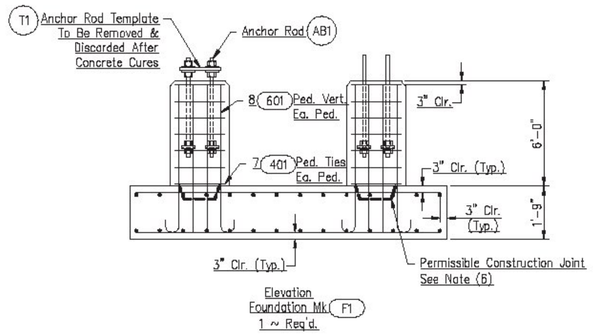

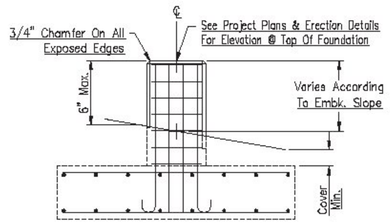

Fnd. Mk.	Cover
F1	4'-1 3/16"

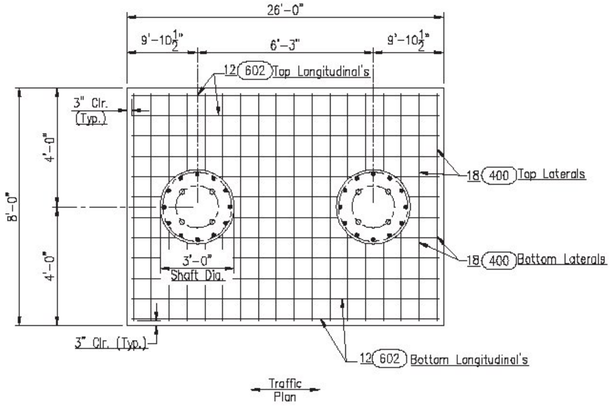

Note:
3.00 KSI Min. Bearing Pressure
120 PCF Min. Soil Density
17.1 Cubic Yds. Of Concrete
1527 Lbs. Of Reinforcing Steel
1 1/2 "ø Anchor Bolts
18 " Bolt Circle
Water Table Level:
No Water Shown In Soil Borings

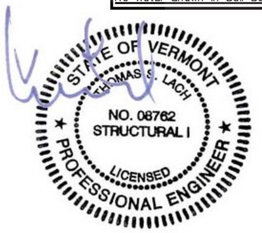

5/7/2015

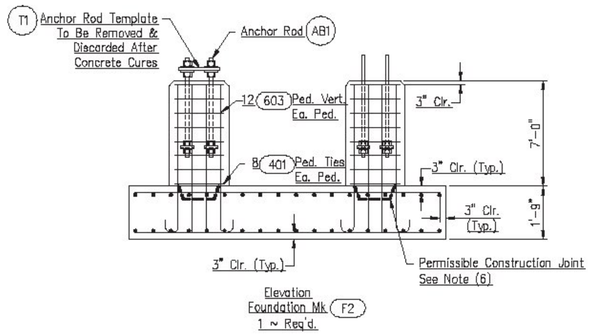

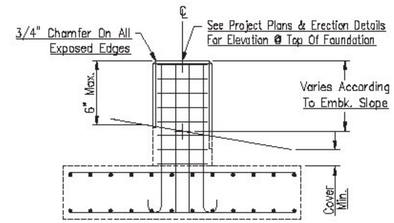

Fnd. Mk.	Cover
F2	3'-9 1/2"

Reinforcing Schedule
Steel Deformed Bars Shall Meet The Requirements Of A.S.T.M. A615, Gr.60

NOTES:
1. Fabricator Shall Furnish Anchor Rods & Templates Only. All Other Foundation Material Will Be Supplied By Others.
2. Foundations & Construction Methods Shall Meet Requirements Of VT. Standard Specifications.
3. Minimum Soil Density Req'd. For These Foundations Is Shown On Individual Foundation Details. Minimum Compressive Strength Of Concrete: 4KSI Steel Reinf. Bars Shall Meet Requirements Of A.S.T.M. A615, Gr. 60
4. Backfill Shall Be In Place & Compacted To Satisfaction Of The Engineer Before Erection Of End Column.
5. See Foundation Details For Possible Water Table. If Site Condition Varies From What Is Shown, Notify Designer.
6. When Permissible Construction Joint Is Used, A 12" x 12" x 6" Deep Shear Key Shall Be Used At The Center Of The Pedestal. The Area Shall Be Cleaned And A VT Standard Spec. Approved Bonding Agent Shall Be Applied To The Concrete Surface Of The Raft Prior To Pouring The New Concrete For The Pedestal.

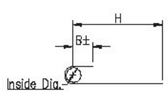

Pedestal Verticals

Qty.	Mk.	Bar Size	Inside Dia.	H	B	Length
16	601	#6	4 1/2"	7'-0"	6"	8'-3"
24	603	#6	4 1/2"	8'-0"	6"	9'-3"

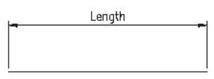

Straight
(Lateral & Longitudinal)

Qty.	Mk.	Bar Size	Length
64	400	#4	7'-6"
16	600	#6	19'-6"
24	602	#6	25'-6"

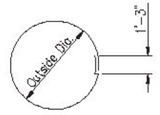

Circle
(Pedestal Ties)

Qty.	Mk.	Bar Size	Outside Dia.	Length (Before Bend)
30	401	#4	2'-6"	8'-11 11/16"

PRINTS ISSUED						REVISIONS		
FOR	NO.	DATE	FOR	NO.	DATE	NO.	DATE	DESCRIPTION

Brookfield Fabricating Corp
P.O. Box 406- Brookfield, Missouri 64628- (660)258-2214

Customer: Lafayette Highway Specialties P.O. No: 29510

Project:
Project No: STPG SGNL(40)
Washington County, Vermont

Description:
Foundation Details Of Spread Footings
Sta. 68+88.96, RT – Sta. 68+89.05, LT

Sht. No: 3 of 9

Printed For:	Drawn By:	Date:	Checked By:	Date:	Job No:	Rev.
Vermont	JF	03/05/15	CR JL	03/19/15	VT-13675	

Y:\states\VT\13000-13999\13675\13675 Part A\1367503A.dwg

Note: Qty.'s Are Per Shaft
5.8 Cubic Yds. Of Concrete
1185 Lbs. Of Reinforcing Steel
1 1/2 "ø Anchor Bolts
18 " Bolt Circle
Water Table Level:
Water Level @ 21.7 Ft.

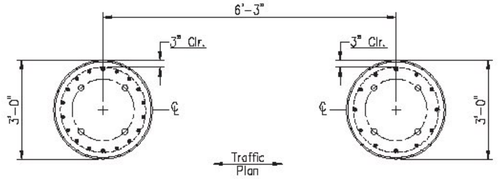

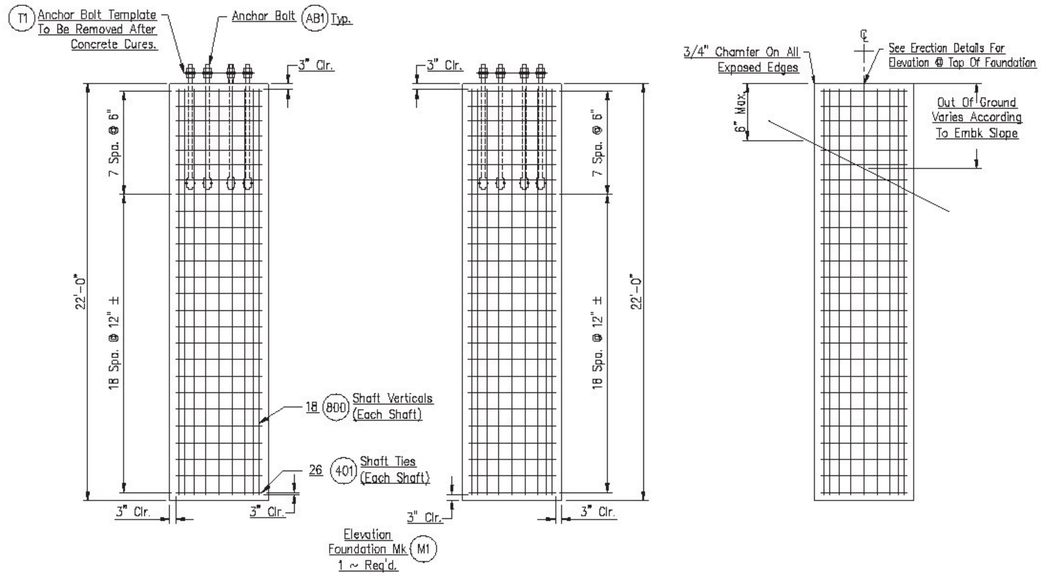

Note: Qty.'s Are Per Shaft
6.3 Cubic Yds. Of Concrete
1293 Lbs. Of Reinforcing Steel
1 1/2 "ø Anchor Bolts
18 " Bolt Circle
Water Table Level:
Water Level @ 21.7 Ft.

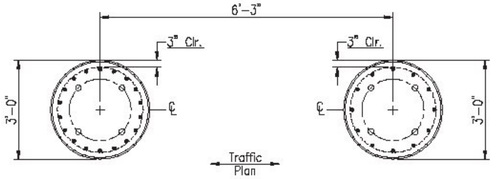

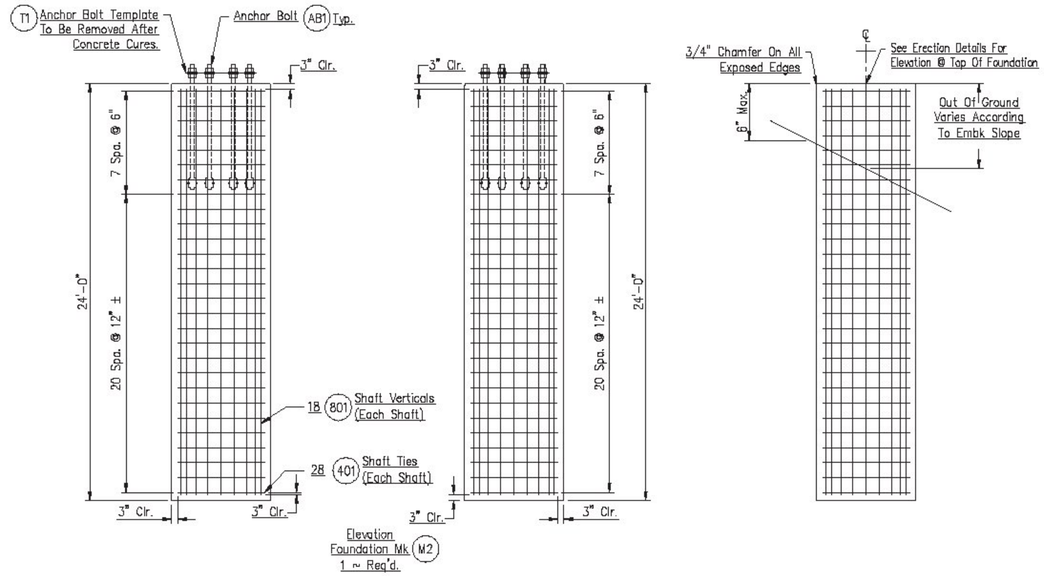

Reinforcing Schedule
Steel Deformed Bars Shall Meet The Requirements Of A.S.T.M. A615, Gr.60.

NOTES:
1. Fabricator Shall Furnish Anchor Rods & Templates Only. All Other Foundation Material Will Be Supplied By Others.
2. Foundations & Construction Methods Shall Meet Requirements Of V.T.D.O.T. Standard Specifications.
3. Minimum Soil Density Req'd. For These Foundations Is Shown On Individual Foundation Details. Minimum Compressive Strength Of Concrete: 4 KSI Steel Reinf. Bars Shall Meet Requirements Of A.S.T.M. A615, Gr. 60
4. Backfill Shall Be In Place & Compacted To Satisfaction Of The Engineer Before Erection Of End Column.
5. Assume Water Table Is Below Bottom Of Foundation. If Site Condition Vary From This Assumption, Notify Designer.

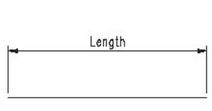

Straight
(Lateral & Longitudinal)

Qty.	Mk.	Bar Size	Length
36	800	#8	21'-6"
36	801	#8	23'-6"

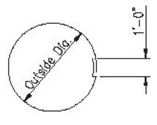

Circle
(Pedestal Ties)

Qty.	Mk.	Bar Size	Outside Dia.	Length (Before Bend)
108	401	#4	2'-6"	8'-11 11/16"



5/7/2015

PRINTS ISSUED						REVISIONS		
FOR	NO.	DATE	FOR	NO.	DATE	NO.	DATE	DESCRIPTION

Brookfield Fabricating Corp
P.O. Box 406- Brookfield, Missouri 64628- (660)258-2214

Customer: Lafayette Highway Specialties P.O. No: 29510

Project:
Project No: STPG SGNL(40)
Washington County, Vermont

Description:
Foundation Details Of Drilled Shaft Footings For
Sta. 68+88.96, RT – Sta. 68+89.05, LT

Sht. No: 4 of 9

Printed For:	Drawn By:	Date:	Checked By:	Date:	Job No:	Rev.
Vermont	JF	03/05/15	CR JL	03/19/15	VT-13675	

Y:\states\VT\13000-13999\13675\13675 Part A\1367504A.dwg

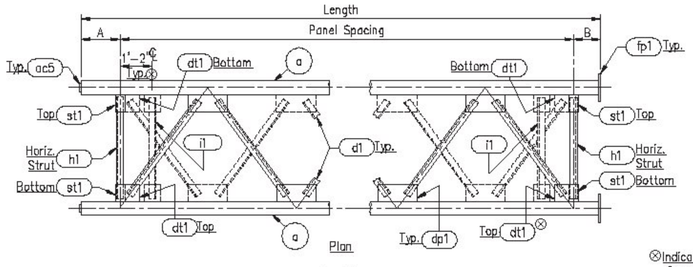

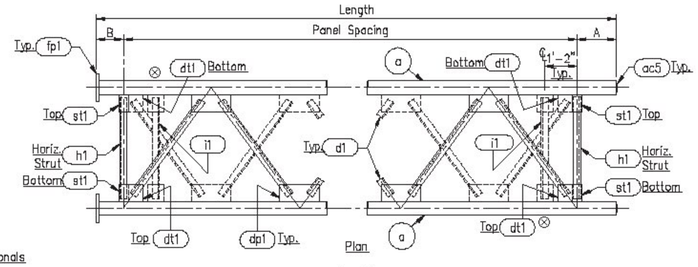

⊗Indicates Where Interior Diagonals Connect With Top Chord.

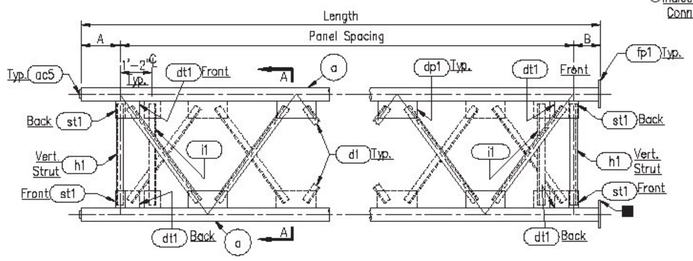

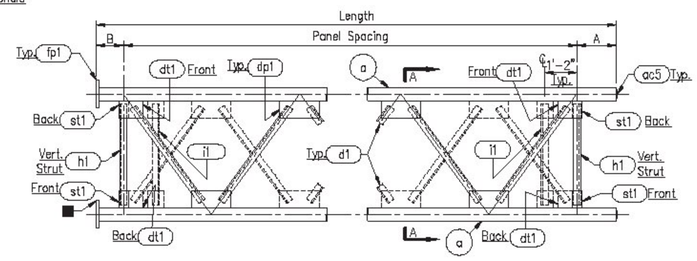

Elevation

Qty.	Mk.	Length	Panel Spacing	A	B
1	1L	41'-2 3/8"	10 Spa. @ 3'-10 9/16"- = 38'-9 3/8"	1'-9"	8"

Elevation

Qty.	Mk.	Length	Panel Spacing	A	B
1	1R	41'-2 3/8"	10 Spa. @ 3'-10 9/16"- = 38'-9 3/8"	1'-9"	8"

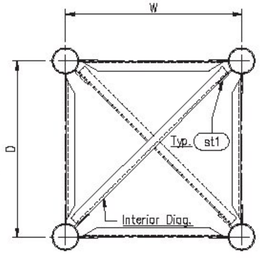

Section A-A

Truss Mk.	W	D
1L/1C/1R	4'-0"	4'-0"

NOTE: Interior Diagonals Alternate Direction @ Each End Of Truss Section.

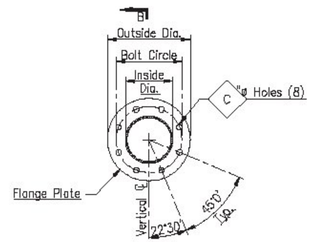

Flange Plate Detail
(8 Bolt Pattern)

Qty.	MK	Outside Dia.	Bolt Circle	Inside Dia.	Plate Thk.	C
16	fp1	1'-0"	9"	5 5/8"	1 1/2"	15/16"

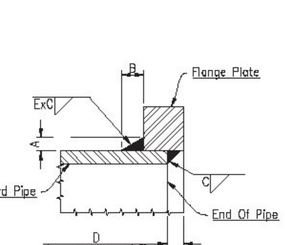

Section B
Unequal Weld Detail

A	B	C	D	E
1/4"	7/16"	1/4	3/8"	7/16

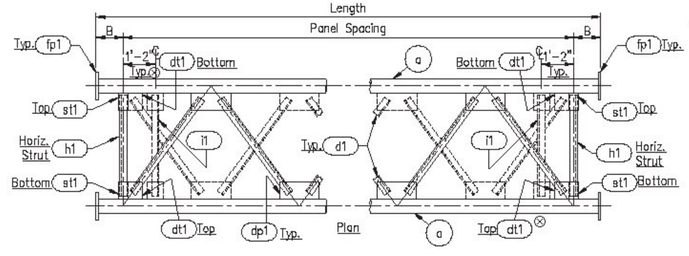

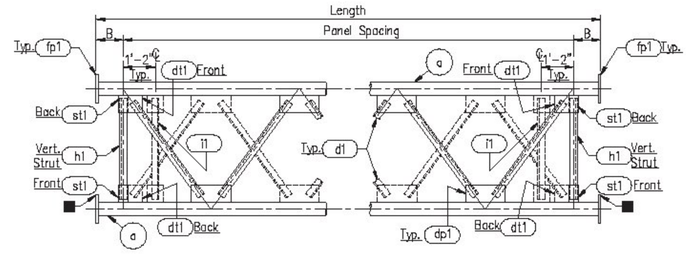

Elevation

Qty.	Mk.	Length	Panel Spacing	B
1	1C	24'-7 1/4"	6 Spa. @ 3'-10 9/16"- = 23'-3 1/4"	8"

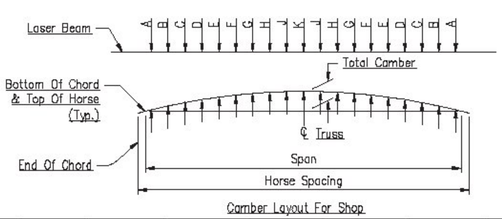

Camber Layout For Shop

Truss MK	Horse Spacing	Total Camber	Span	A	B	C	D	E	F	G	H	J	K
1L/1C/1R	9 Horses @ 10'-8 3/8"-	3 1/4"	105'-6"	1'-8 1/8"	1'-7 1/16'	1'-8 5/16"	1'-5 7/8"	–	–	–	–	–	1'-5 3/4"

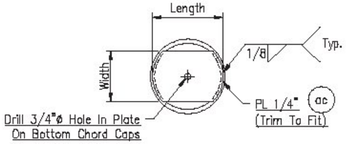

End Cap Detail

Qty.	Mk.	Length	Width	Chord O.D.
8	ac5	5 1/4"	3"	5.563" O.D.

Bill Of Materials

Qty.	Mk	Description	Length	Remarks	Inventory No.
4	1La	5.563" O.D. x .258" W. Pipe	41'-2"		P5.563X.258J
4	1Ra	do	41'-2"		P5.563X.258J
4	1Ca	do	24'-6 1/2"		P5.563X.258J
16	fp1	PL 1" x 1'-0" Dia.	–		PL1Z
8	ac5	PL 1/4" x 3"	0'-5 1/4"		ENDCAP-STRAP-5.563OD
64	FB1	7/8"ø Galv. H.S. Hex Bolt	4 1/2"		BSG074.63
64	–	7/8"ø Galv. Hvy. Hex Nut	–		NSG074
128	–	7/8"ø Galv. Hard Flat Washer	–		WSG073

STATE OF VERMONT
THOMAS S. LEACH
NO. 08762
STRUCTURAL I
LICENSED
PROFESSIONAL ENGINEER

5/7/2015

NOTE: The Truss Sections Shall Be Assembled Together With The Camber Built In.

■Stamp Truss Section Mk No.'s On The Top Of The Bottom Front Flanges.

See Sheet 7 Of 9 For Pc. Mk's. "dt", "dp", "st", "d", "h" & "v".

Prior To Galvanizing All Corners And Edges Of Steel Plates, Shapes, Etc., Shall Be Ground To A 1/16" Radius.

MATERIAL SPECIFICATIONS:
Steel Chord To Be 55 KSI Min. Yield Strength
API 5L X42 Or,
API 5L X52 Or,
A500 Gr. B Or C
Steel Plate & Flat Bar Shall Be A.S.T.M. A709 Gr. 36
All Steel To Be Galvanized Per A.S.T.M. A123

H.S. BoltsTo Be A.S.T.M. A325
Hvy. Hex Nuts To Be:
A.S.T.M. A563 Gr. DH (Lubricated & Dyed) Or
A.S.T.M. A194 Gr. 2H (Lubricated & Dyed)
Hard Flat Washers Shall Be A.S.T.M. F436
Galvanize Hardware Per A.S.T.M. A153

Welding Note: All Design Details, Workmanship, Procedures And Inspection Shall Conform With Subsection 506.10

PRINTS ISSUED						REVISIONS		
FOR	NO.	DATE	FOR	NO.	DATE	NO.	DATE	DESCRIPTION

Brookfield Fabricating Corp
P.O. Box 406- Brookfield, Missouri 64628- (660)258-2214

Customer: Lafayette Highway Specialties P.O. No: 29510

Project: Project No: STPG SGNL(40)
Washington County, Vermont

Description: Fabrication Details Of Box Truss Sections
Sta. 68+88.96, RT - Sta. 68+89.05, LT

Sheet No: 5 of 9

Printed For:	Drawn By:	Date:	Checked By:	Date:	Job No:	Rev.
Vermont	JF	03/05/15	CR JL	03/19/15	VT-13675	

Y:\states\VT\13000-13999\13675\13675 Part A\1367505A.dwg

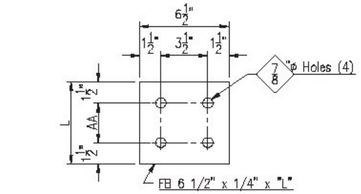

Shim Plate Detail

Qty.	Mk.	Dim. "L"	Dim. "AA"	Endframe Mk.
8	SH1	9 1/2"	6 1/2"	E1 & E2

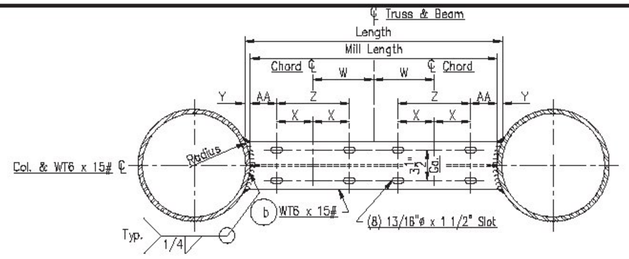

Section C-C

Bottom WT6 x 15# Support

Qty.	Mk.	Cut Length	Mill Length	W	X	Y	Z	AA	Post Rad.
2	b1	5'-4"	5'-2 1/4"	2'-0"	3 1/4"	7/8"	6 1/2"	3 7/8"	6 3/8"

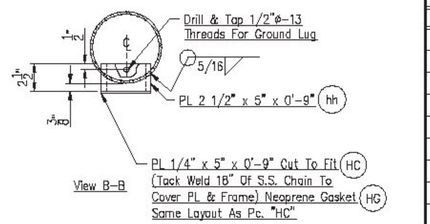

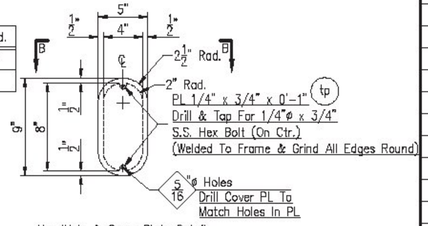

HandHole & Cover Plate Detail

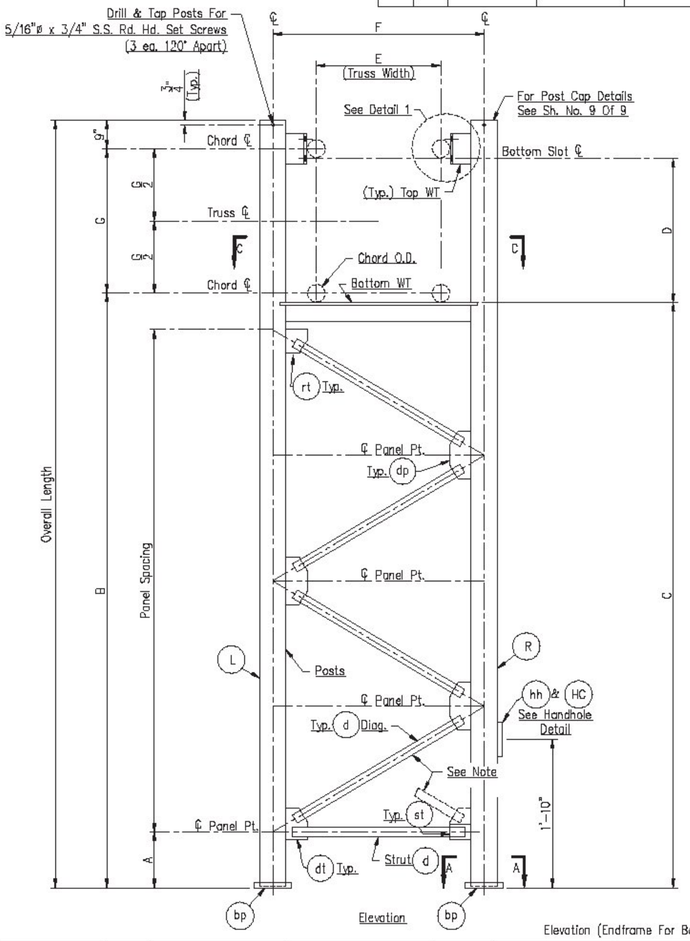

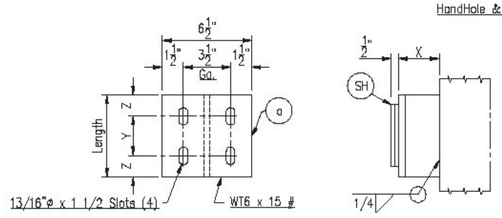

Detail 1

Qty.	Mk.	Length	Dim. "X"	Dim. "Y"	Dim. "Z"
4	a1	1'-0"	3 13/16"	6 1/2"	2 3/4"

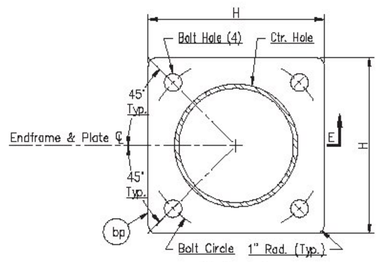

Section A-A

(Base Plate Detail)

Qty.	Base Plate Mk.	Plate Thk.	H	Bolt Hole	Ctr. Hole	Bolt Circle
4	bp1	2"	1'-5 1/2"	1 3/4"	12 7/8"	18"

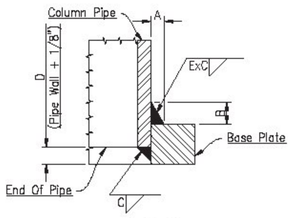

Section E

Unequal Weld Detail

A	B	C	D	E
3/8"	11/16"	3/8	1/2"	11/16

NOTE: Web Pattern Is Typical Of All End Frames From The Top Down. However, An Odd Number Of Panels Will Result In Bottom Diagonal Landing On Front Post. See Table For Number Of Panels.

Elevation (Endframe For Box Truss)

Sta.	Frame Mk.	Column Size	Overall Legnth	Chord O.D.	Panel Spacing	A	B	C	D	E	F	G	H	WT Mk.		Base Plate Mk.	Diag. MK "d"	Strut MK "d"	Gusset MK "dt"	Gusset MK "dp"	Gusset MK "st"	Gusset MK "rt"
68+88.96, RT / 68+89.05, LT	E1	12.75" O.D. x .375" W.	32'-2 7/8"	5.563"	4 @ 6'-1 1/2"	1'-11 7/8"	27'-5 7/8"	27'-3 1/16"	3'-11 9/16"	4'-0"	6'-3"	4'-0"	1'-0"	a1	b1	bp1	d2	d3	dt2	dp2	st2	rt1
	E2	12.75" O.D. x .375" W.	27'-3 3/8"	5.563"	3 @ 6'-6 1/8"	2'-0"	22'-6 3/8"	22'-3 9/16"	3'-11 9/16"	4'-0"	6'-3"	4'-0"	1'-0"	a1	b1	bp1	d4	d3	dt3	dp3	st2	rt2

Bill Of Materials

Qty.	Mk	Description	Length	Remarks	Inventory No.
1	E1L	12.75" O.D. x .375" W. Pipe	32'-2 3/8"		P12.75X.375H
1	E1R	do	32'-2 3/8"		P12.75X.375H
1	E2L	do	27'-2 7/8"		P12.75X.375H
1	E2R	do	27'-2 7/8"		P12.75X.375H
4	bp1	PL 2" x 1'-5 1/2"	1'-5 1/2"		PL2Z
4	a1	WT 6 x 15#	1'-0"	See Detail	W12X30E
2	b1	do	5'-4"	Mill To: 5'-2 1/4" @ 0°	W12X30E
8	SH1	FB 6 1/2" x 1/4"	0'-9 1/2"		FB6.5X.25Z
2	hh	PL 2 1/2" x 5"	0'-9"		HANDHOLE-5X9A
2	HC	PL 1/4" x 5"	0'-9"	Cut To Fit	HANDHOLE-COVER-5X9A
4	tp	PL 1/4" x 3/4"	0'-1"		HANDHOLE-TAB
2	HG	1/8" x 5"	0'-9"	Neoprene Gasket	1/8" NEOPRENE
4	B1	1/4"ø S.S. Hex Bolt	3/4"		BSS02.75
2	–	S.S. Chain	1'-6"		#12SS-CHAIN**

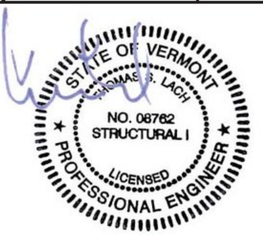

5/7/2015

Prior To Galvanizing All Corners And Edges Of Steel Plates, Shapes, Etc., Shall Be Ground To A 1/16" Radius

See Sheet 8 Of 9 For Tab Plates "dt", "dp", "st", "rt" & Bracing "d"

MATERIAL SPECIFICATIONS:
Steel Endframe Pipe To Be 55 KSI Min. Yield
API 5L X42 Gr.
API 5L X52 Gr.
A500 Gr. B Or C
Steel Plate & Structural Shapes To Be A.S.T.M. A709, Gr. 36
Galvanize All Steel After Fabrication Per A.S.T.M. A123

S.S. Screws: (AISI 300 Series) Passivated.

Welding Note: All Design Details, Workmanship, Procedures And Inspection Shall Conform With Subsection 506.10

PRINTS ISSUED						REVISIONS		
FOR	NO.	DATE	FOR	NO.	DATE	NO.	DATE	DESCRIPTION

Brookfield Fabricating Corp

P.O. Box 406– Brookfield, Missouri 64628– (660)258–2214

Customer: Lafayette Highway Specialties P.O. No: 29510

Project: Project No: STPG SGNL(40)
Washington County, Vermont

Description: Fabrication Details Of Endframes For Box Truss Sections
Sta. 68+88.96, RT – Sta. 68+89.05, LT

Sheet No: 6 of 9

Printed For:	Drawn By:	Date:	Checked By:	Date:	Job No:	Rev.
Vermont	JF	03/05/15	CR JL	03/19/15	VT-13675	

Y:\states\VT\13000-13999\13675\13675 Part A\1367506A.dwg

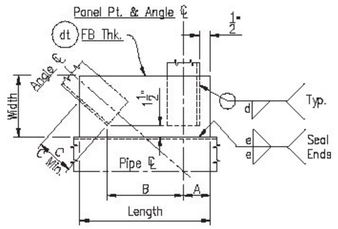

Diagonal & Tab Plate Detail

Qty.	Mk.	Length	Width	A	B	C	"C" Min.	FB Thk.	d	e
24	dt1	10 9/16"	6"	2"	6 1/4"	3 1/4"	3"	3/8"	3/16	3/16

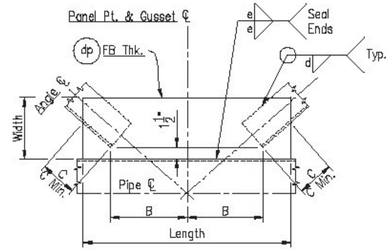

Diagonal & Tab Plate Detail

Qty.	Mk.	Length	Width	B	C	"C" Min.	FB Thk.	d	e
92	dp1	1'-5 1/16"	6"	6 1/4"	3 1/4"	3"	3/8"	3/16	3/16

Bill Of Materials

Qty.	Mk	Description	Length	Remarks	Inventory No.
104	d1	L 3" x 3" x 1/4"	4'-4"		L3X3X.252
6	i1	do	4'-11 5/16"		L3X3X.252
24	h1	do	3'-3 7/16"	Cut Both Ends @ 60°	L3X3X.252
24	dt1	F.B. 6" x 3/8"	0'-10 9/16"		FB6X.3752
92	dp1	do	1'-5 1/16"		FB6X.3752
36	st1	do	0'-4"		FB6X.3752

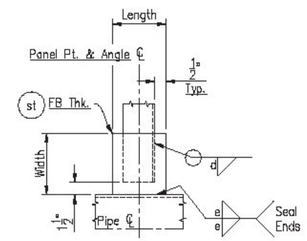

Interior Diagonal & Strut Tab Plate Detail

Qty.	MK	Length	Width	FB Thk.	d	e
36	st1	4"	6"	3/8"	3/16	3/16

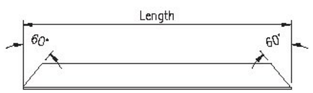

Bracing Detail

Qty.	MK	Length	Angle Size
24	h1	3'-3 7/16"	L 3" x 3" x 1/4"

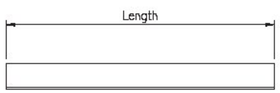

Diagonal Detail

Qty.	MK	Length	Angle Size
104	d1	4'-4"	L 3" x 3" x 1/4"
6	i1	4'-11 5/16"	do



5/7/2015

Prior To Galvanizing All Corners And Edges Of Steel Plates, Shapes, Etc., Shall Be Ground To A 1/16" Radius

MATERIAL SPECIFICATIONS:
Brace Angle Shall Have 36 KSI Min. Yield:
A.S.T.M. A709, Gr. 36
Steel Plate & Flat Bar Shall Be A.S.T.M. A709, Gr. 36
All Steel To Be Galv. Per A.S.T.M. A123

Welding Note: All Design Details, Workmanship, Procedures And Inspection Shall Conform With Subsection 506.10

PRINTS ISSUED						REVISIONS		
FOR	NO.	DATE	FOR	NO.	DATE	NO.	DATE	DESCRIPTION

Brookfield Fabricating Corp

P.O. Box 406- Brookfield, Missouri 64628- (660)258-2214

Customer: Lafayette Highway Specialties P.O. No: 29510

Project: Project No: STPG SGNL(40)
Washington County, Vermont

Description: Fabrication Details Of Tab Plates & Bracing For Box Truss Sections Sta. 68+88.96, RT – Sta. 68+89.05, LT

Sheet No: 7 of 9

Printed For:	Drawn By:	Date:	Checked By:	Date:	Job No:	Rev.
Vermont	JF	03/05/15	CR JL	03/19/15	VT-13675	

Y:\states\VT\13000-13999\13675\13675 Part A\1367507A.dwg

Bill Of Materials

Qty.	Mk	Description	Length	Remarks	Inventory No.
4	d2	4" O.D. x .226" W.	6'-7 1/16"		P4X.226H
2	d3	do	4'-11 1/4"		P4X.226H
3	d4	do	6'-9 3/8"		P4X.226H
1	dt2	PL 1/2" x 8"	1'-4 3/8"		PL.5Z
1	dt3	do	1'-5"		PL.5Z
3	dp2	do	2'-3 11/16"		PL.5Z
2	dp3	do	2'-5"		PL.5Z
1	rt1	do	1'-1 7/8"		PL.5Z
1	rt2	do	1'-2 1/2"		PL.5Z
2	st2	do	0'-5"		PL.5Z

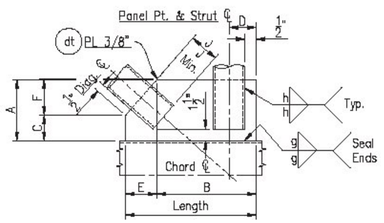

Diagonal & Strut Tab Plate Detail

Qty.	Mk.	Length	A	B	C	D	E	F	J	J Min.	PL Thk.	Weld Sizes g	Weld Sizes h
1	dt2	1'-4 3/8"	8"	1'-0 1/2"	4 3/16"	2 1/2"	3 7/8"	3 13/16"	4 1/4"	4"	1/2"	5/16	1/4
1	dt3	1'-5"	8"	1'-1 1/4"	4 1/16"	2 1/2"	3 3/4"	3 15/16"	4 1/4"	4"	1/2"	5/16	1/4

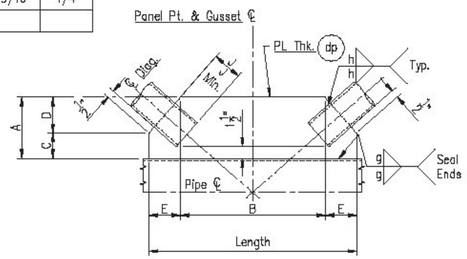

Diagonal Tab Plate Detail

Qty.	MK	Length	A	B	C	D	E	J	J Min.	Pl Thk.	Weld Sizes g	Weld Sizes h
3	dp2	2'-3 11/16"	8"	1'-7 15/16"	4 3/16"	3 13/16"	3 7/8"	4 1/4"	4"	1/2"	5/16	1/4
2	dp3	2'-5"	8"	1'-9 1/2"	4 1/16"	3 15/16"	3 3/4"	4 1/4"	4"	1/2"	5/16	1/4

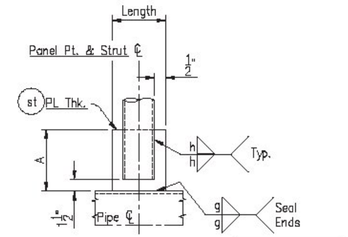

Interior Diagonal & Strut Tab Plate Detail

Qty.	MK	Length	A	PL Thk.	Weld Sizes g	Weld Sizes h
2	st2	5"	8"	1/2"	5/16	1/4

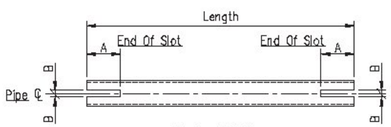

Bracing Detail

Qty.	MK	Length	A	B	Pipe Size
4	d2	6'-7 1/16"	4 1/4"	9/32"	4" O.D. x .226" W.
2	d3	4'-11 1/4"	6 1/2"	9/32"	do
3	d4	6'-9 3/8"	4 1/4"	9/32"	do

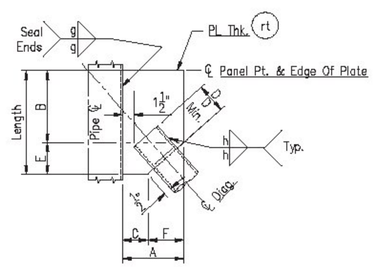

Diagonal & Tab Plate Detail

Qty.	Mk.	Length	A	B	C	D	D Min.	E	F	PL Thk.	Weld Sizes g	Weld Sizes h
1	rt1	1'-1 7/8"	8"	10"	4 3/16"	4 1/4"	4"	3 7/8"	3 13/16"	1/2"	5/16	1/4
1	rt2	1'-2 1/2"	8"	10 3/4"	4 1/16"	4 1/4"	4"	3 3/4"	3 15/16"	1/2"	5/16	1/4

MATERIAL SPECIFICATIONS:
Steel Pipe To Have 42 KSI Min Yield & To Be:
API 5L X42 Or,
API 5L X52 Or,
A500 Gr. B Or C
Steel Plate & Flat Bar Shall Be A.S.T.M. A709, Gr. 36
All Steel To Be Galvanized Per A.S.T.M. A123

Welding Note: All Design Details, Workmanship, Procedures And Inspection Shall Conform With Subsection 506.10

STATE OF VERMONT
THOMAS S. LACH
NO. 06762
STRUCTURAL I
LICENSED
PROFESSIONAL ENGINEER
5/7/2015

PRINTS ISSUED FOR	PRINTS ISSUED NO.	PRINTS ISSUED DATE	PRINTS ISSUED FOR	PRINTS ISSUED NO.	PRINTS ISSUED DATE	REVISIONS NO.	REVISIONS DATE	REVISIONS DESCRIPTION

Brookfield Fabricating Corp
P.O. Box 406- Brookfield, Missouri 64628- (660)258-2214

Customer: Lafayette Highway Specialties P.O. No: 29510

Project:
Project No: STPG SGNL(40)
Washington County, Vermont

Description:
Fabrication Details Of Tab Plates & Diagonals For Endframes
Sta. 68+88.96, RT – Sta. 68+89.05, LT

Sheet No: 8 of 9

Printed For:	Drawn By:	Date:	Checked By:	Date:	Job No:	Rev.
Vermont	JF	03/05/15	CR JL	03/19/15	VT-13675	

Y:\states\VT\13000-13999\13675\13675 Part A\1367508A.dwg

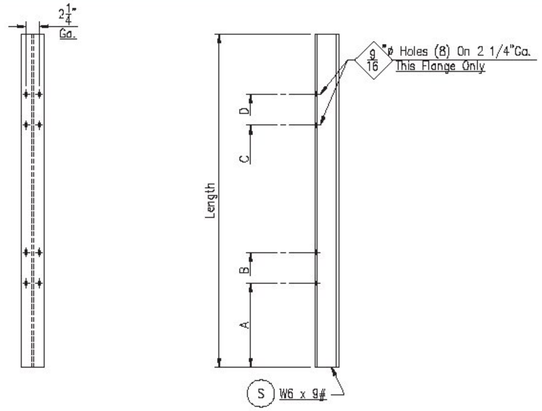

Sign Support Detail

Qty.	Mk.	Length	A	B	C	D
4	S1	10'-6"	2'-11 7/8"	3'-6 1/8"	6'-11 7/8"	7'-6 1/8"
5	S2	6'-6"	11 7/8"	1'-6 1/8"	4'-11 7/8"	5'-6 1/8"
3	S3	15'-0"	5'-2 7/8"	5'-9 1/8"	9'-2 7/8"	9'-9 1/8"
3	S4	12'-6"	3'-11 7/8"	4'-6 1/8"	7'-11 7/8"	8'-6 1/8"

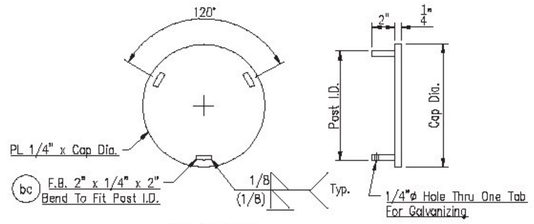

End Cap Detail

Qty.	Mk.	Cap Dia. (Post O.D.)	Post I.D.	Structure
4	EC1	12 3/4"	12"	E1 & E2

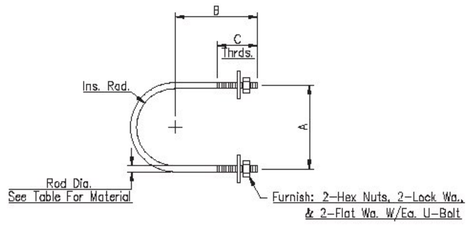

U-Bolt Detail

Qty.	MK	Rod Dia.	Length	A	B	C	Inside Radius	Remarks
60	UB006	1/2"	1'-6 9/16"	6 1/4"	4 3/8"	2"	2 7/8"	Sign Support To 5.563" O.D. Chord
16	UB055	3/4"	1'-8 11/16"	6 1/2"	5 1/4"	2 1/2"	2 7/8"	5.563" O.D. Chord To Endframe

Bill Of Materials

Qty.	Mk	Description	Length	Remarks	Inventory No.
4	S1	W6 x 9#	10'-6"		W6X9E
5	S2	do	6'-6"		W6X9E
3	S3	do	15'-0"		W6X9E
3	S4	do	12'-6"		W6X9E
4	EC1	PL 1/4" x 1'-0 3/4" Dia.	–		CIRCLE-12.75X.25A
12	bc	F.B. 2" x 1/4"	0'-2"		ENDCAP-TAB-2X2X.25A
12	EC8	5/16"ø S.S. Rd Hd Set Screws	3/4"		BSSO.312.75RH
60	UB006	1/2"ø Galv. Rod	1'-6 9/16"		RD.5A
120	–	1/2"ø Galv. Hex Nuts	–		NSGD42
120	–	1/2"ø Galv. Lock Washers	–		LWSG042
120	–	1/2"ø Galv. Flat Washers	–		WSGD42
16	UB055	3/4"ø Galv. Rod	1'-8 11/16"		RD.75A
32	–	3/4"ø Galv. Hex Nuts	–		NSGD62
32	–	3/4"ø Galv. Lock Washers	–		LWSG062
32	–	3/4"ø Galv. Hard Flat Washers	–		WSGD62
1	–	ID Tags	–	Purchased Item	VADOT-TAGS



5/7/2015

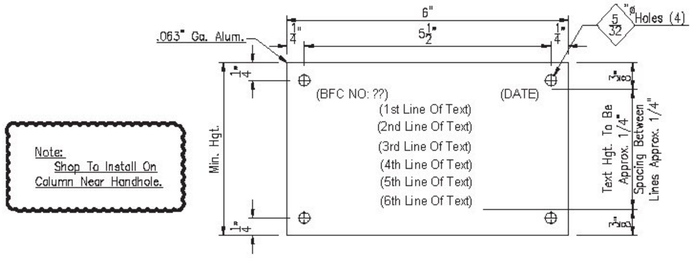

▲Note:
For Date Use Month And Year The Tag Is Manufactured.
Example (8/07)

Qty.	Height	BFC No.	Date	1st Line Of Text	2nd Line Of Text	3rd Line Of Text	4th Line Of Text	5th Line Of Text	6th Line Of Text
1	3"	VT-13675	▲	LT. Col. = 12.75" O.D. x .375 W. Pipe x 32'-2 7/8"	Vert. Pipe 55 KSI Min. Yield/Brace Pipe 42 KSI Min. Yield	RT. Col. = 12.75" O.D. x .375 W. Pipe x 27'-3 3/8"	Vert. Pipe 55 KSI Min. Yield/Brace Pipe 42 KSI Min. Yield	Chord ≈ 5.563" O.D. x .258 W. Pipe x 105'-6" 55 KSI Min. Yield	Truss Brace Angle 36 KSI Min. Yield

MATERIAL SPECIFICATIONS:

Structural Steel Shapes, Plate, & Flat Bar Shall To Be A.S.T.M. A709 Gr. 36
Galvanize All Steel After Fabrication Per A.S.T.M. A123
U-Bolts To Be A.S.T.M. A36
Nuts & Washers For U-Bolts To Be A.S.T.M. A307
Galvanize U-Bolts & Hardware Per A.S.T.M. A153

S.S. Screws: A.S.T.M. A320 (AISI 300 Series) Passivated.

PRINTS ISSUED						REVISIONS		
FOR	NO.	DATE	FOR	NO.	DATE	NO.	DATE	DESCRIPTION

Brookfield Fabricating Corp
P.O. Box 406- Brookfield, Missouri 64628- (660)258-2214

Customer: Lafayette Highway Specialties P.O. No: 29510

Project: Project No: STPG SGNL(40)
Washington County, Vermont

Description: Fabrication Details Of End Caps, U-Bolts & Misc. Hardware
Sta. 68+88.96, RT – Sta. 68+89.05, LT

Sheet No: 9 of 9

Printed For:	Drawn By:	Date:	Checked By:	Date:	Job No:	Rev.
Vermont	JF	03/05/15	CR JL	03/19/15	VT-13675	

Y:\states\VT\13000-13999\13675\13675 Part A\1367509A.dwg

VT Route 62
and
Airport Road/Fisher Road
Berlin, Vermont
* * * * * * * * * *
Design of Traffic Signal Foundations

Prepared
June 2015

By
CROSS CONSULTING ENGINEERS, P.C.
103 Fairfax Road
St. Albans, Vermont 05478-6271
Telephone: (802) 524-2113
Facsimile: (802) 524-9681
E-mail: dwoolridge@crossconsultingengineers.com

As Project Number 15034

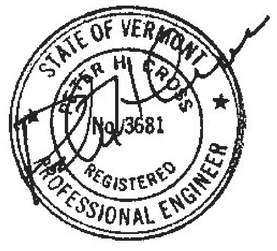

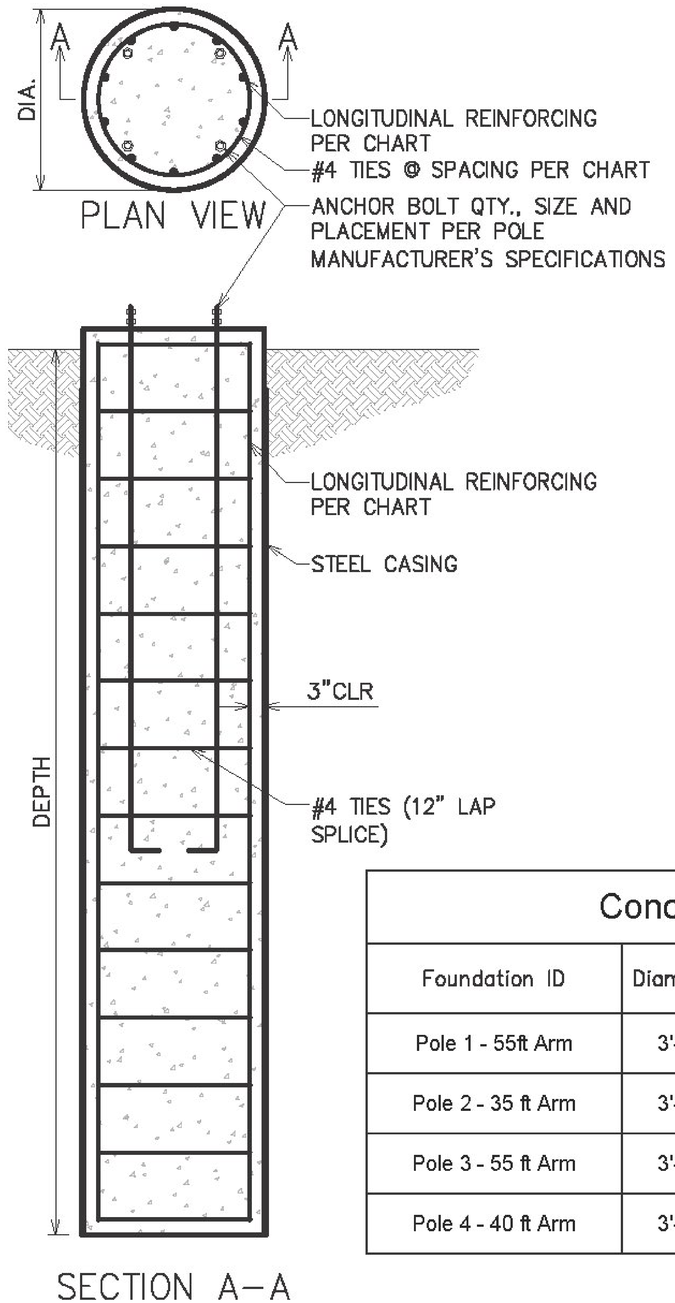

Notes:

1. Foundation soil properties area based on 57.6 pcf effective unit weight and ϕ=35° friction angle.
2. Min. concrete compressive strength: 3500 psi @ 28 days
3. Reinforcing: ASTM A615 Grade 60
4. Cast foundation against undisturbed earth or within a permanent steel casing.
5. Install conduit per Owner specification.
6. Extend foundation 4" above ground when in earth. Construct foundation flush when in concrete island or sidewalk.
7. The design of the foundation follows VTrans MREI 10–01.
8. Construct foundation in accordance with the current edition of the VTrans Standard Specifications for Construction.
9. Refer to the plans prepared by VTrans (Project No. STPG SGNL(40)) for the location of underground utilities.
10. Design Factors of Safety:
    - 10.1. Overturning: 3.0
    - 10.2. Bearing Capacity: 3.0
    - 10.3. Torsion: 1.1

Concrete Foundation Data

Foundation ID	Diameter	Depth	Long. Bars	Tie Spacing	Concrete Vol. (CY)
Pole 1 - 55ft Arm	3'-6"	13'-0"	16-#6	1'-0"	5.7
Pole 2 - 35 ft Arm	3'-6"	10'-0"	16-#6	1'-0"	4.6
Pole 3 - 55 ft Arm	3'-6"	13'-0"	16-#6	1'-0"	5.7
Pole 4 - 40 ft Arm	3'-6"	11'-0"	16-#6	1'-0"	5.0

Traffic Pole Foundation Design
Intersection of VT Route 62 and Airport Rd/Fisher Rd

PROJECT: 15034
DATE: 2015–06–18
DRAWN: DSW

EX–1

CROSS CONSULTING ENGINEERS, P.C.
Tel. 802–524–2113
Fax. 802–524–9681
103 Fairfax Rd.
St. Albans, Vermont 05478

© COPYRIGHT 2015
Cross Consulting Engineers, P.C.

NAZTEC, INC.

NEMA P-44 Traffic Control Cabinet

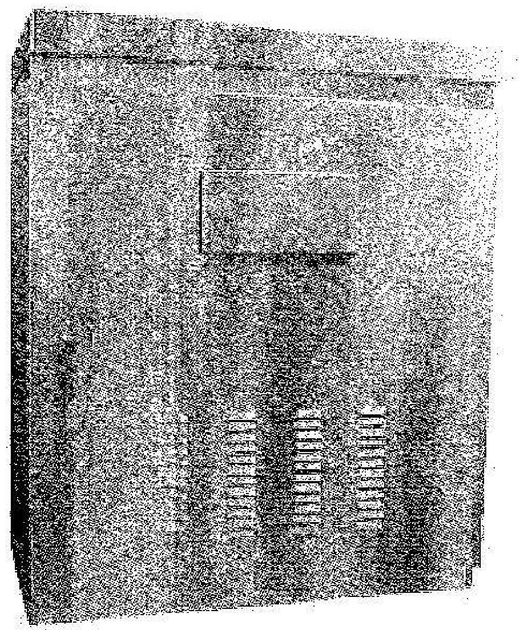

Features

- Meets NEMA standards
- Base mounted
- Constructed of 0.125" thick aluminum
- "C" mounting channels on side and back walls for mounting shelves and panels
- 3-point latching mechanism of zinc plated steel
- Stainless steel door handle designed for padlock
- Stainless steel door hinge
- Optional Lifting Ears

Highway Tech Signal Equipment Sales, Inc.
9 Gardiner Road / P.O. Box 1209
Sabattus, ME 04280
Tel. (207) 375-8248
Fax (207) 375-8279

APPROVED
By Taylor Sisson at 1:38 pm, Apr 01, 2015

SPECIFICATIONS:

Outside dimensions:	55" H x 44" W x 26" deep
Opening Dimensions:	53" H x 41" W
Mounting Pattern	40.50" W x 18.50" D
Material:	Aluminum (.125" thick)
Finish:	Bare or Painted
Mounting:	Base Mounted
Locking System:	3-point locking system with Corbin #2 lock
Door Stops:	Three position bar stop at bottom of door
Ventilation:	Pleated fiber filter in door, fan with thermostatic control
Light:	Incandescent or optional flourescent, door switch activated

Naztec, Inc.
ATMS Solutions

MMU 516L-E LCD MMU with Ethernet

APPROVED
By Taylor Sisson at 1:38 pm, Apr 01, 2015

FEATURES

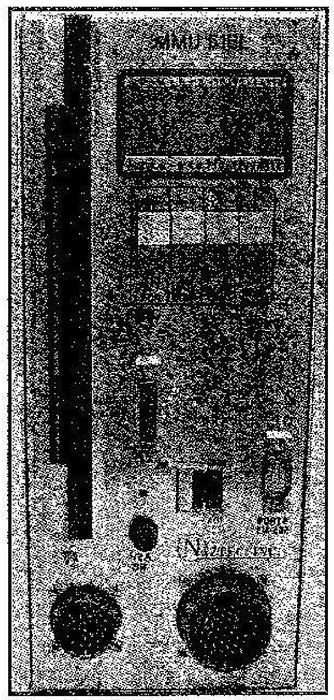

- Meets and exceeds all TS2 specifications
- High speed internal data transfer and communications via an SDLC port
- High speed external data transfer via an RS-232 or Ethernet port
- Full LCD Screen w/ Menu Driven Easy to Use Software
- LED indicator lamps for operation analysis
- Removable program card
- High performance machine tooled sockets for integrated circuit mounting

The Naztec Model MMU 516L-E Malfunction Management Unit is an enhanced MMU that monitors up to 16 traffic signal indications (channels) for conflict, improper sequencing, incorrect timing, and improper signal voltage levels. The MMU 516L-E is fully compliant with NEMA Standard TS2-2003. The MMU 516L-E is also capable of operating in older TS1 type cabinets, and is compatible with 12-channel Conflict Monitor Units conforming to the NEMA Standard TS1-1989.

All connectors, indicators and operator controls are located on the front panel of the MMU 516L-E. Channel and control input signals and relay output connections are made through two MIL-C-26482 connectors, and the SDLC Port is an A-size, 15 contact, D shell connector. The MMU 516L-E is equipped with a 10/100 Ethernet Port and a RS232 Port, which are excellent for tracking important phase output, status and logging data back to the controller or to a PC for logging. The programming card and the AC line fuse are easily accessed from the front panel.

The MMU 516L-E provides a Reset Timeout feature to prevent a broken switch or accidental wiring fault from holding the unit in the reset state for an extended period of time. LED indicators, in addition to the TS2 specified indicators, include Dual Indication Fault, Yellow+Red Clearance Fault, Programming Card Ajar, Field Check (active channels do not match SDLC message from controller) Fault, and LEDs for two +24VDC input faults and CVM input faults. Status indicators provided include: AC Line Power, Type 12 Indicator, SDLC Transmitter Active, and SDLC Msg Received.

For added safety, the MMU516L-E performs continuous diagnostic tests during all operating modes. All memory elements, the microprocessor, operating voltages, and critical circuitry are checked.

***The MMU 516L-E is now available with the new Protected/Permission Flashing Yellow monitoring.

820 Park Two Drive Sugar Land, TX 77478 (281) 240-7233
www.naztec.com naztec@naztec.com Additional Offices in Florida and Virginia

NAZTEC, INC.

Model BIU 130 Bus Interface Unit

APPROVED
By Taylor Sisson at 1:38 pm, Apr 01, 2015

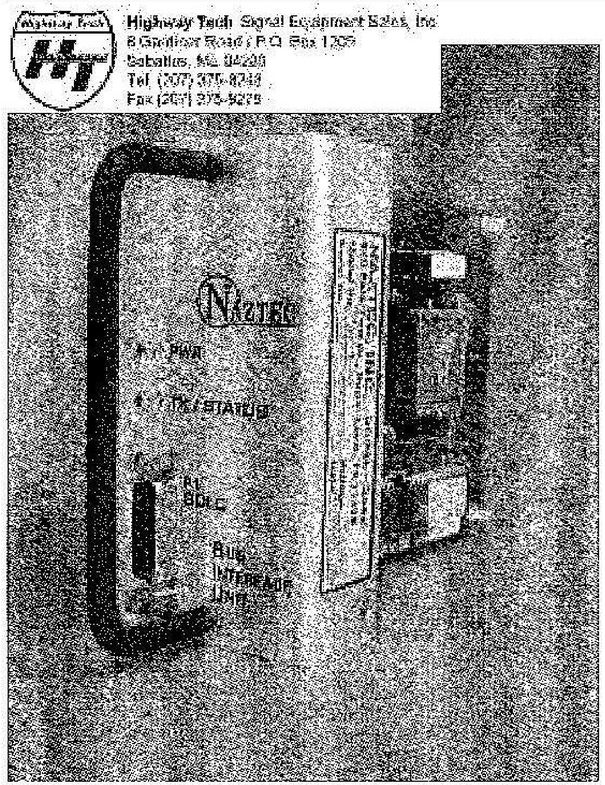

- Meets or Exceeds all NEMA TS-2 Standards
- Less than 50 mA Standby Current
- Designed for "Hot plugging"
- Socketed I/O Drivers for Easy Maintenance
- Heavy Duty 200 mA Output Drive Capability
- Power Brownout Indication
- 120 Hz Reference Failure Indication
- Optional RS-232C Port for Custom Applications

The Naztec Model BIU 130 Bus Interface Unit links the TS-2 Controller Unit to the Cabinet I/O. It is responsible for controlling load switches, providing dimming, receiving and isolating pedestrian calls, analyzing detector faults, time-stamping detector calls, and providing detector resets. By design, the BIU is free of operator contorls. The BIU performs its I/O functions based upon a pre-wired card rack address.

Power Specifications:
- 18-26 VDC
- 200 mA
- Less than 1.5 A Power-Up Surge
- Can be inserted with power applied

Input Specifications:
- 8 Dedicated Inputs
- 24 Configurable Inputs
- Low (True) Below 4 VDC
- High (False) Above 16 VDC
- Greater than 50 mA Sink Current

Port 1 Specifications:
- EIA-485 Standard Compliant
- 153.6 Kbps Data Rate
- SDLC Protocol

RS-232C Port Specifications
- RS-232 Standard Compliant
- Factory Customizable Interface

Opto-Input Specifications
- Less than 3 VRMS Active (True)
- Greater than 6 VRMS Inactive (False)
- 10 MΩ, 1000 VAC RMS Isolation

Power LED Indicator Details
- Short "Wink" Off Indicates 120 Hz Reference Failure
- Long Period On/Off Toggle Indicates Inadequate 24VDC Power Level
- Solid On Indicates Proper Power and Operation
- Solid Off Indicates No Power

Transmit LED Indicator Details
- Quick Blinking Indicates Proper Communications Activity
- Solid Off Indicates Communications Failure

Technology That Moves America

Naztec, Inc. • 820 Park Two Drive • Sugar Land, Texas 77478 • Phone (281) 240-7233 • Fax (281) 240-7238

Email: naztec@naztec.com • http://www.naztec.com

Rev. 9/99

Naztec, Inc.
ATMS Solutions

TS2 Power Supply w/ Test Jacks

APPROVED
By Taylor Sisson at 1:39 pm, Apr 01, 2015

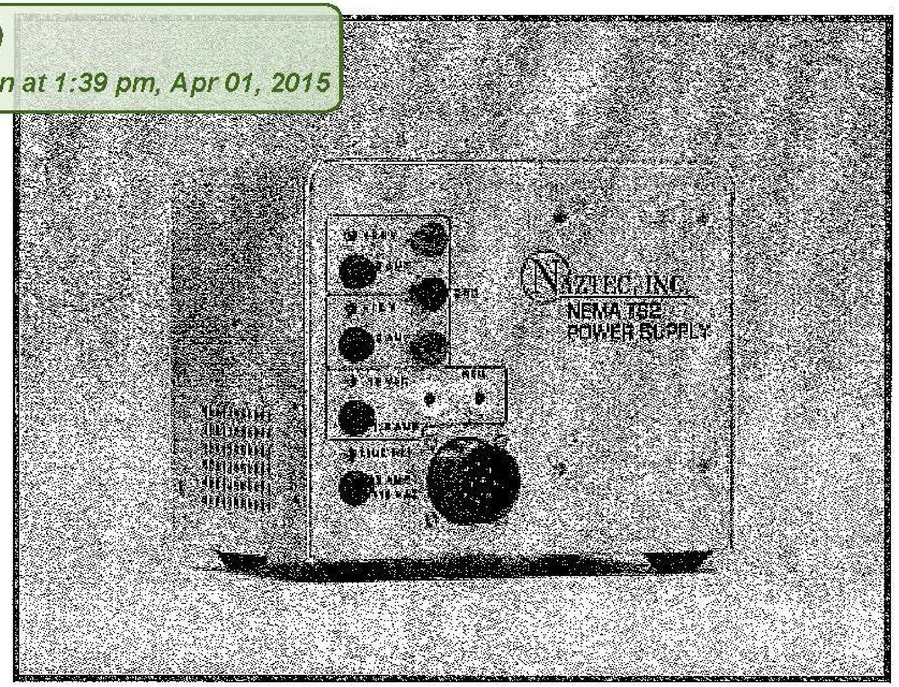

FEATURES

- 2 Amp Total Output Current at 24VDC
- 2 Amp Total Output Current at 12VDC
- .25 Amp Total Output Current at 12VAC
- 50 mA Line Reference Clock Output
- Shelf Mount Type with Rubber Feet
- Fuse for AC Line Input and Each Output
- Durable Aluminum Casing
- NEMA TS2 Pin Type Outputs
- Line Reference LED
- Test Jacks

Highway Tech Signal Equipment Sales, Inc.
6 Sabattus Road, P.O. Box 1209
Sabattus, ME 04280
Tel (207) 375-8248
Fax (207) 375-8279
info@highwaytech.com

Highway Tech

Automatic Generator Transfer Switch

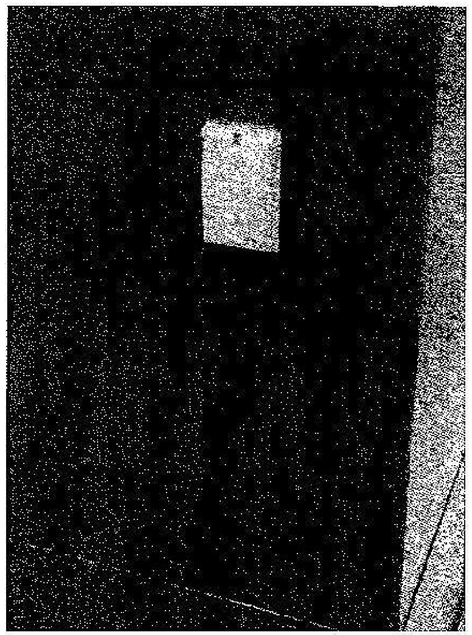

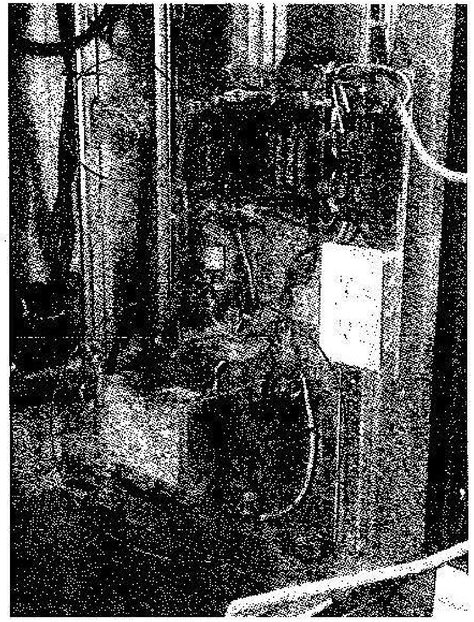

ATS Features

- Automatically Senses Generator Power and Switches Intersection Load to Generator.
- Smooth Power Transfer Regardless of Line Voltage Conditions.
- No Need to Open The Controller Cabinet or Flip Breakers
- Provides Overcurrent Protection on Both Generator Input and Line Input
- 20 Second Electronic Generator Time Delay Allows Generator to Stabilize and Protects Sensitive Traffic Control Equipment
- Chatter-Free Contact Operation Under Low Line Voltage Conditions
- 30 Amp, 120 Volt Rating
- 2-Year Warranty
- ETL Listed
- 50 Amp, 120/240 Volt ATS Also Available

Port Features

- Low Profile Generator Port
- Semi-Flush
- Hasp Lockable
- Small Footprint
- Compatible With All Generator Systems
- Other Generator Ports Available

APPROVED
By Taylor Sisson at 1:39 pm, Apr 01, 2015

Highway Tech Signal Equipment Sales, Inc.

6 Sabattus Road • P.O. Box 1209 • Sabattus, Maine 04280 • Phone (207) 375-8248 • Fax (866)-232-7014

Email: sales@highwaytech.com • http://www.highwaytech.com

Rev. 01/12/05

DATA SHEET
SSS-87IO

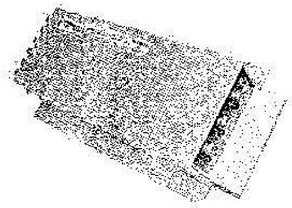

Solid State Loadswitch:

Description:

The PDC SSS-87I/O Loadswitch series is a tri-pack, modular, solid state relay designed specifically to meet NEMA specifications, as well as California and New York "Model 200" specifications. Each loadswitch contains 3 individually replaceable modules that are enclosed in a dust resistant, metal enclosure providing mechanical protection and excellent heat sinking for the modules. The modules are easily accessible with the use of a screwdriver. Each loadswitch also features a L.E.D. indicator on each output circuit.

Installation:

The switchpac inter mates with any standard NEMA loadbay or with the model 332 cabinet output file as well as with any NEMA loadbay. It is easily installed or removed by grasping the handle. Connector P1 pin outs are shown in FIG 1. The connector mates with a PDC BCS-12 or equal.

PIN	FUNCTION
1	+115VAC, 60 Hz
2	Chassis Ground
3	A Output (Red, Don't Walk)
4	Not Assigned
5	B Output (Yellow)
6	A Input (Red, Don't Walk)
7	C Output (Green, Walk)
8	B Input (Yellow)
9	+24 VDC
10	C Input (Green, Walk)
11	AC-
12	Not Assigned

FIG 1.

P1

(P1 as viewed from the outside of the product looking directly at the connector)

APPROVED
By Taylor Sisson at 1:39 pm, Apr 01, 2015

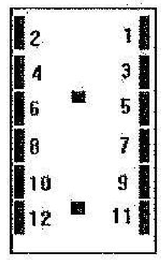

General Characteristics:

Model	SSS-87I/O Series	
Uses Module #	SSR-83-525 & SSR-87	
Meets Specs for	Nema, Caltrans, NY (model 200)	
Load	voltage	120 VAC
	current (max)	15.0 Amps
(Tungsten Filament Load)		
Control Signal	voltage	+24VDC
	current	20.0 MA (max)
Switching	1st alternation after signal is applied.	±10 Degrees of line voltage at the zero crossover point.
	Succeeding alterations	±5 Degrees of line voltage at the zero crossover point.
Off State	dv/dt	100 V per microsecond
	line to load resistance	15 K Ohms Min
	leakage current	less than 20 MA
Isolation	voltage	2500 VDC Min
	resistance	10 Meg Ohms Min
Surge Current	one cycle	175 Amps RMS Min
	one second	40 Amps RMS Min
Life	operations	30 million Min
Mechanical	lenght	8.40 inches
	width	1.74 inches
	height	4.185 inches
	weight	1.135 LBS

Guarantee: The SSS-87I/O series is fully guaranteed against all failures due to manufacturing defects for two years.

P.O. Box 7172 #205 Stateline, NV. 89449 • PH (925) 455-7711 • FAX (925) 455-7714

DATA SHEET
SSS-87IO

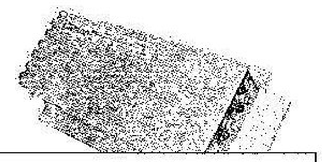

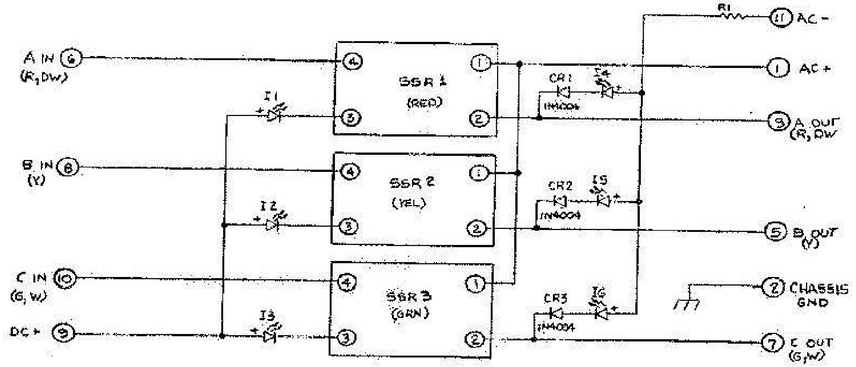

FIG. 2

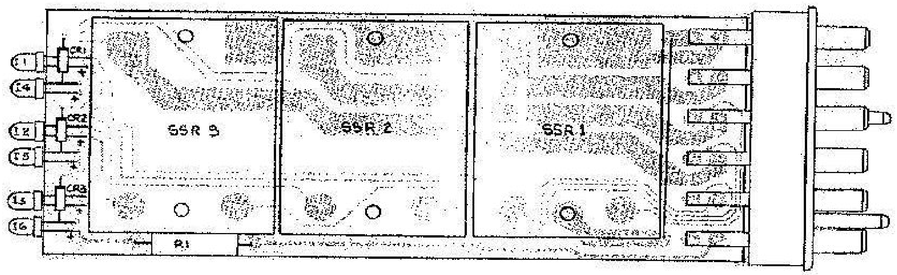

FIG. 3

	Qty	Description	PDC P/N	MFG	MFG P/N	REF DES
1	1	Label s/n	OOO43	PDC	OOO43	
2	3	Solid State Relay, SSR-87	OO144	PDC	OO144	SSR1,2,3
3	1	Chassis	OO204	PDC	OO204	
4	1	Cover	OO206	PDC	OO206	
5	1	Label, front panel	OO214-8	PDC	OO214-2	
6	1	P.C. Board fab.	OO284	PDC	OO284	
7	3	Diode, 1N4004	CR0001	PDC	CR0001	CR1,2,3
8	6	Screw,8-32 x 3/8 brass	HOO36			
9	6	screw,6-32 x 5/16	H0037			
10	6	Nut,keps 6-32	H0038			
11	1	Spacer	H0039			
12	4	Screw, #5 x 3/8	H0040			
13	8	Screw, 6-32 x 3/8	H0041			
14		Screw, 6-32 x 1 3/16	H0043			
15	1	Connector 12 pin	J0002	Beu	P5412-S	
16	3	L.E.D. Clear Red	LDOOO4	G.I.	MV5020	I1,2,3
17	3	L.E.D. Difused Red	LDOOO5	Litronics	RL2000	I4,5,6
18	3	Resistor 5.6K 3W	R0060	TRW	PW3-5.6KM	R1

P.O. Box 7172 #205 Stateline, NV. 89449 • PH (925) 455-7711 • FAX (925) 455-7714

DATA SHEET
SSF-87



APPROVED
By Taylor Sisson at 1:39 pm, Apr 01, 2015

Solid State Flasher With Replaceable Modules:

General Description:
The PDC model SSF-87 is a dual pack, modular, solid state flasher designed specifically to meet NEMA specifications as well as New York "Model 204" specifications. Each flasher contains two individually replaceable modules that are enclosed in a dust resistant, metal enclosure, providing mechanical protection, and excellent heatsinking for the modules. The modules are easily accessible with the use of a crew driver.

Installation:
The flasher intermates with the model 332 cabinet as well as with any NEMA loadbay. It is easily installed or removed by grasping the extruded handle. Connector pinouts are shown in FIG 1. The connector mates with a Beau S-5406-LAB or equivalent.

FIG 1.

Pin	Function
7	Lead #1
8	Lead #2
9	Chassis ground
10	AC-
11	AC+
12	Spare

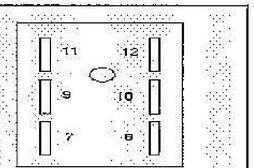

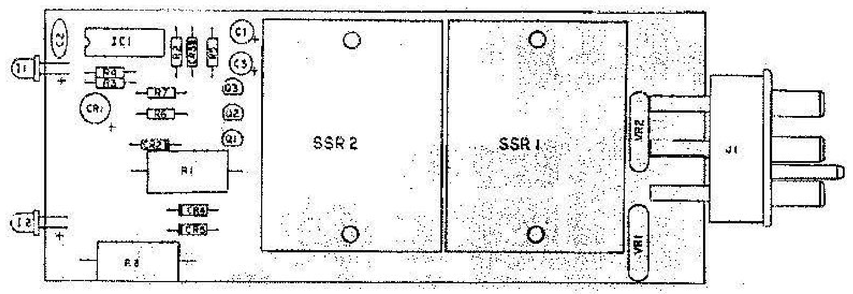

FIG 2

General Characteristics:

Load
- Voltage..... 120 VAC
- Current (max)..... 15.0 Amps
- (Tungsten filament load)

Off State
- dv/dt..... 100V per microsecond
- Line to load resistance... 15k Ohms min.
- Leakage current..... less than 20 mA

Surge Current
- One cycle..... 175 Amps RMS min.
- One second..... 40 Amps RMS min..

Life
- Operations..... 30 million min.

Flash Rate
- 50-60 cycles (flashes) per minute.

Mechanical
- Length..... 8.40 inches
- Width..... 1.70 inches
- Height..... 4.185 inches
- Weight..... 1.50 Lbs.

Operating Temperature -35 to +74 degrees C
Adjustments: The model SSF-86 flasher has no adjustment controls.
Guaranteed : The flasher is fully guaranteed against all failures due to manufacturing defects for two years.

Highway Tech Signal Equipment Sales, Inc.
6 Sabattus Road, P.O. Box 1209
Sabattus, ME 04280
Tel. (207) 375-8248
Fax (207) 375-8279
info@highwaytech.com

DATA SHEET
SSF-87

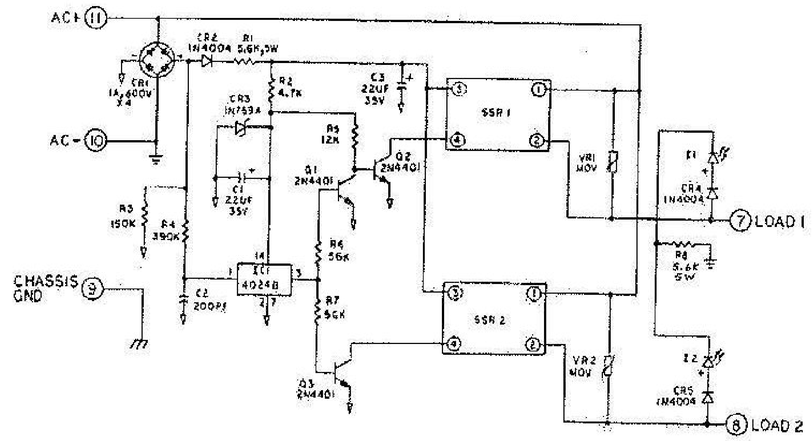

Fig. 3

Item	Qty	Description	PDC P/N	Mfg	Mfg P/N	Ref Des
1	1	Label S/N	00043	PDC	00043	
2	2	Solid State Relay, SSR-87	00144	PDC	00144	
3	1	Chassis	00204	PDC	00204	
4	1	Cover	00206	PDC	00206	
5	1	Label, Front Panel	00214-5	PDC	00214-5	
6	1	P.C. Board Fab.	00267	PDC	00267	
7	2	Cap. 22uf 35V	C0005	Sprague	503D	C1,3
8	1	Cap. 220 pf 50V	C0017	Dibar	220pf50V	C2
9	3	Diode, Power 1N4004	CR0001	Fairchild	1N4004	CR2,4,5
10	1	Diode Bridge, 1A 600V	CR0004	G.I.	WL06M	CR1
11	1	Diode, Zener 1N759A	CR0005	Fairchild	1N759A	
12	4	Screw PH BIN HD 8-32 x 3/8 BR	H0036			
13	4	Screw PH BIN HD 6-32 x 5/16	H0037			
14	4	Nut, Keps 6-32 BLK	H0038			
15	4	Screw PH Pan HD #5 x 3/8 S.T.	H0040			
16	2	Screw PH Pan HD 6-32 x 3/8	H0041			
17	1	I.C. CMOS 4024	IC0002	RCA	CD4024BE	IC1
18	1	Connector 6 Pin	J0001	Beau-Vernitron	P5406-S	J1
19	2	L.E.D. Clear Red	LD0004	G.I.	MV5020	I1,2
20	2	Res. 4.7K 1/4W	R0012	Dale		R2
21	1	Res. 12K 1/4W	R0014	Dale		R5
22	2	Res. 56K 1/4W	R0018	Dale		R6,7
23	1	Res. 150K 1/4W	R0020	Dale		R3
24	1	Res. 390K 1/4W	R0022	Dale		R4
25	2	Res. 5.6K 5W	R0048	TRW	PW5-5.6K	R1,8
26	3	Transistor 2N4401	Q0004	G.E.	2N4401	Q1,2,3
27	2	Varistor	VR0002	NEC	NV240D19	VR1,2

P.O. Box 7172 #205 Stateline, NV. 89449 • PH (925) 455-7711 • FAX (925) 455-7714

Cabinet Interface Device

The Click 650 provides streamlined communication for SmartSensor Matrix and Advance to traffic controllers in one compact case. This module communicates directly to the controller through SDLC, and supports contact closure devices as well. It also provides power, surge protection and Ethernet connectivity for all sensors.

Features

- Provides sensor detection data directly to controller through SDLC port
- Provides up to 64 detector channels
- Provides an Ethernet port for network connectivity.
- Can be used in place of Intersection Preassembled Backplates
- Provides DC power for up to 4 sensors
- Protects the sensor from surges
- Forwards detection data collected from the sensors to contact closure devices (not included)
- Has a power switch for each sensor, allowing you to turn sensors on and off individually
- Has multiple configuration connections for communicating from your computer to the connected sensors:
  - USB
  - RJ-11 jacks for RS-485
  - DB-9 connector for RS-232
  - T-bus port
- Can be used on a shelf or affixed to the cabinet wall

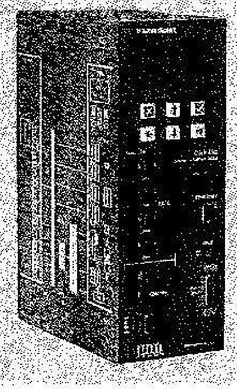

APPROVED
By Taylor Sisson at 1:39 pm, Apr 01, 2015

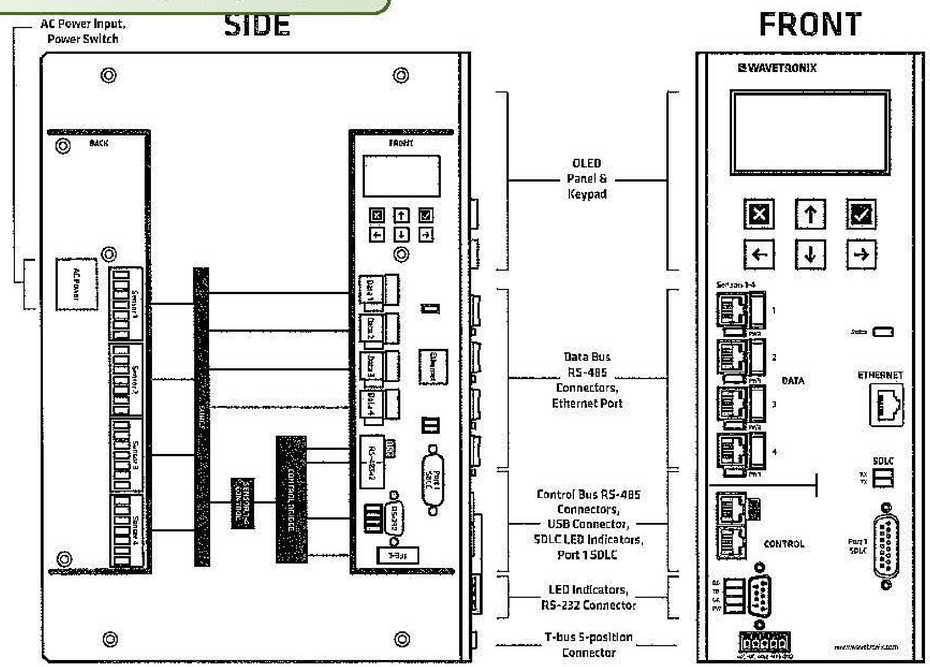

APPROVED
By Taylor Sisson at 1:39 pm, Apr 01, 2015

TRAFICON USA
TRAFFIC VIDEO DETECTION

VIP3D.xs

Vehicle Presence Detection & Data Collection

Single slot direct plug-in module for type 170, 2070, NEMA TS1 & TS2 and ATC controllers

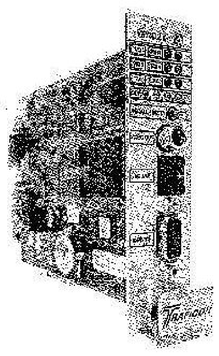

Single slot module VIP3D.2 s

VIP3D.xs is a video detection solution that provides vehicle presence information to the intersection controller. VIP3D.xs integrates vehicle presence detection and traffic data collection in one module and provides a cost-effective and powerful solution for intersection control.

As a single slot module, VIP3D.xs plugs into all standard cabinet racks. The VIP3D.xs module interfaces directly to the controller via cable-connected outputs.

Configuration of VIP3D.xs is straightforward, a PC is not required. The technician connects a video monitor for a user-friendly setup with visualization of zone positioning and detection.

Zones for stop bar or advance presence detection can be combined logically to the fail-safe outputs.

VIP3D.xs provides all relevant traffic data and distinguishes between 5 levels of service for flow monitoring. VIP3D.xs emulates traditional double or single loop detectors.

FEATURES

» Stop bar and advance vehicle presence detection for intersection control

» Up to 24 presence detection zones and 8 data collection zones for VIP3D.1s (up to 20 presence zones and 4 data zones per camera for VIP3D.2s)
» Presence call delay and/or extension
» Fail-safe outputs
» Up to 24 cable-connected outputs and 20 inputs via I/O expansion modules

» Traffic data collection
- ✔ Count
- ✔ Speed
- ✔ Classification
- ✔ Occupancy
- ✔ Density
- ✔ Headway
- ✔ Gap time

BENEFITS

» Single slot direct plug-in module, dual or single video input, rack space saving board
» Field-proven performance, presence detection and data collection identical to VIP3.x and VIP/D
» Easy to install, user-friendly setup, high mean time between failures (MTBF) and low mean time to repair (MTTR)

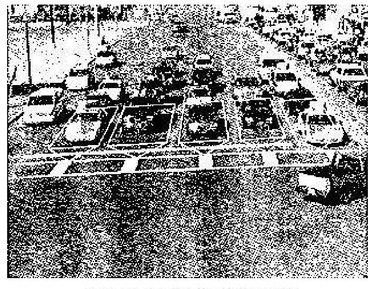

Stop bar vehicle detection

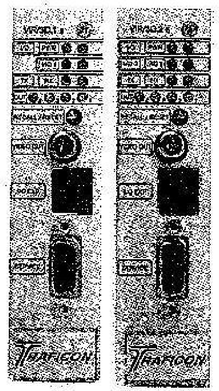

VIP3D.1s and VIP3D.2s

VIDEO DETECTION SOLUTION – SYSTEM ARCHITECTURE

In a typical installation, the VIP3D.xs detector modules (single or dual video input) are plugged into a standard cabinet rack.

A VIP 2I/Os or 4I/Os expansion module may provide extra inputs and outputs to the detector.

VIP3D.xs interfaces directly to the traffic controller via cable-connected outputs.

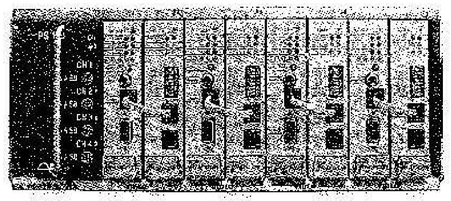

Rack with VIP3D.2s and 4I/Os expansion modules

PRODUCT SPECIFICATIONS

Dimensions
4.5 in H x 1.1 in W x 7.0 in L (114 mm x 28 mm x 178 mm)

Power
10.8v to 26.5 VDC
Consumption current
- 200 mA @24 V for VIP3D.2 s
- 160 mA @ 24 V for VIP3D.1 s

Video
In: 75Ω 1Vpp, PAL or NTSC
Out: via BNC connector - front

Outputs / Inputs
4 outputs (open collector, selectable active low or high)
Up to 24 outputs/20 inputs via expansion modules

Communication
Serial port - front for setup
RJ11 connector – front to the expansion modules
Double row 22 pins EDGE (NEMA TS2-1992) connector – back
Push button – front for reset/recall

Indicators
LED for connection to I/O Expansion modules
Power LED, Video in LED
LED for the communication status
LEDs for the outputs status

Environmental
-34°C to +74°C
0 to 95% relative humidity - non-condensing

PRESENCE DETECTION

- » Stop bar or advance detection on up to 24 presence zones (up to 20 zones per camera for VIP3D.2s)
- » Zones configurable with delay and extend time
- » Up to 24 fail-safe detector outputs
- » Up to 20 inputs
- » Combination of outputs and inputs with Boolean logic
- » Queue length measurement
- » Configuration scheduling

DATA COLLECTION

- » Count, speed, classification, occupancy, density, headway and gap time
- » Up to 8 data collection zones (up to 4 zones per camera for VIP3D.2s)
- » Traffic flow monitoring
- » Configurable on-board database
- » Loop emulation

Highway Tech Signal Equipment Sales, Inc.
8 Gardiner Road / P.O. Box 3160
Sabattus, ME 04280
Tel. (207) 375-8245
Fax (207) 375-8279

Data subject to alteration without notice or obligation

WESTERN USA: Kar-Gor Inc – 2769 19th Street, S.E. – Salem, OR 970302 – Phone: 503 315-9899 – E-mail: kargor@aol.com
TRAFICON USA: 10161 Park Run Drive, Suite 150 – Las Vegas, NV 89145 – Phone: 702 851-5880 – E-mail: traficon@traficonusa.com
EASTERN USA: Control Technologies Inc – 2776 South Financial Court – Sanford, FL 32773 – Phone: 407 330-2800 – E-mail: cttraffic@aol.com

APPROVED
By Taylor Sisson at 1:39 pm, Apr 01, 2015

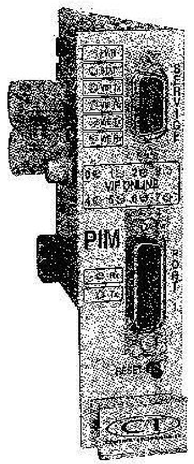

PIM

PORT-1 INTERFACE MODULE

The Port-1 Interface Module (PIM) provides a direct interface between the Traficon VIP3D.x series video detection solution and any NEMA TS-2 compliant Controller Unit. The PIM gathers presence data directly from the VIP3D units and does not require the use of the Viewcom/E MAX module. For systems that include a Viewcom/E MAX unit for remote monitoring, the PIM will communicate to the VIP3D.x units using the Viewcom/E MAX Service port.

The PIM completely eliminates the need for I/O expansion boards and occupies only a single width slot of the detector rack. The PIM is configured to emulate the operation of TS-2 Detector Bus Interface Units (BIU) 1 through 4 in any combination, providing up to 64 channels of detection.

The PIM is compatible with detection racks for NEMA TS-2, NEMA TS-1, and Caltrans 33X cabinets, when a TS-2 compliant Controller Unit is present.

PIM FEATURES

NEMA TS2 Standard:	The PIM interfaces to a NEMA TS-2 compliant Controller Unit via the Port 1 interface using standardized TS-2 Detector BIU frames.
Channel Capacity:	The PIM supports up to 64 channels of detection from up to eight VIP3D.x units.
User Interface:	The PIM requires minimal setup during installation and automatically identifies installed VIP3D.x units. Front panel displays include Power, VIP3D Online status, Status, VIP Rx/Tx communications activity, Viewcom/E Rx/Tx communications activity, and Port 1 Rx/Tx communications activity.
VIP3D.x Compatibility:	The PIM can operate with up to eight VIP3D.x units with or without a Viewcom/E MAX unit.
Controller Interface:	The PIM synchronizes the VIP3D.x real time clocks with the Controller Unit and passes controller phase colors to the VIP3D.x units. Failsafe mode transmits video fault conditions to the Controller Unit.
NEMA TS-2 Environmental:	The PIM meets the requirements of NEMA TS-2 Section 2 (Environmental Requirements) and operates over the full -34°C to +74°C temperature range.
PC Monitoring Tool:	The Windows PC based *PIMSnoop* program allows independent monitoring of the PIM operation; displaying detector channel calls, VIP3D online status, and channel fault status in real time.
DC Power:	The PIM is able to operate from 10.8 Vdc to 28.8 Vdc making it compatible with all rack types. The PIM is completely hot swappable.
Mechanical:	International Detector Card format 4.5"H (114.30mm) x 6.875"D (174.63mm) x 1.14"W (28.96mm), excluding handle, with 44 pin double sided edge connector.

Highway Tech
6 Seattle Road - P.O. Box 1309 - Sabattus, ME 04250
ME Office - Tel. (207) 375-8248 - Fax (866) 232-7014
NY Office - Tel. (607) 299-4604 - Fax (866) 350-3162
Tel: 407-330-2800
ISO 9001:2000 Registered

CONTROL TECHNOLOGIES
2776 South Financial Court
Sanford, Florida

061410
www.CTtraffic.com
ISO 14001:2004 Registered

APPROVED
By Taylor Sisson at 1:40 pm, Apr 01, 2015

CAMERA MOUNTINGS
Astro-Brac

pelco
PELCO PRODUCTS INC

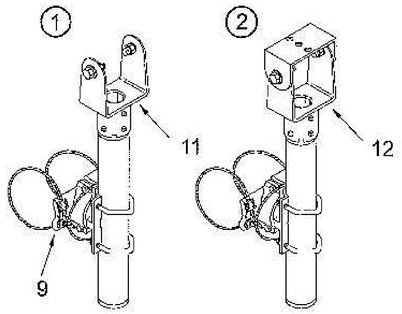

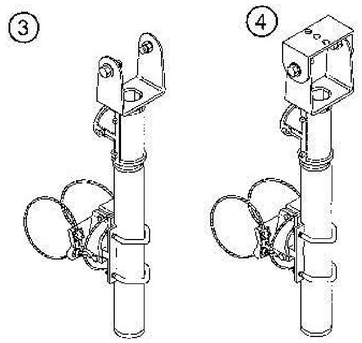

ITEM 1-4 OPTIONS
TUBE LENGTH:
23", 37", 46", or 74"
CABLE LENGTH:
62", 84", or 96"
PAINT

ITEM	DESCRIPTION	PART NO.
	VIDEO DETECTION CAMERA BRACKET	
	Extended Tilt & Pan, Stellar Series:	
(1)	Cable Mount, 1-Piece	AS-0175
(2)	Cable Mount, 2-Piece	AS-0169
(3)	Cable Mount w/ Service Wire Outlet, 1-Piece	AS-0166
(4)	Cable Mount w/ Service Wire Outlet, 2-Piece	AS-0164
(5)	Band Mount, 1-Piece	AS-0170
(6)	Band Mount, 2-Piece	AS-0172
(7)	Band Mount w/ Service Wire Outlet, 1-Piece	AS-0177
(8)	Band Mount w/ Service Wire Outlet, 2-Piece	AS-0173
	ASTRO-BRAC CLAMP KIT, Stellar Series:	
9	Cable Mount	AS-3009
10	Band Mount	AS-3004
	CAMERA MOUNTING BRACKET:	
11	1-Piece, Alum.	SH-0514
12	2-Piece, Alum.	SH-0515
(13)	1-Piece, Iteris Versicam, Alum.	SH-0537
(14)	Adjustable, 2.88" to 4.38", Alum.	SH-0538

Notes:

1. All assemblies are supplied standard with stainless steel fasteners. Stainless steel upgrade shall include stainless clamp screw kit where applicable.
2. 1-piece bracket for mounting Iteris, Odetics, or Econolite Solo Pro type cameras. 2-piece bracket for mounting Burle type cameras.
3. Please specify options when ordering.

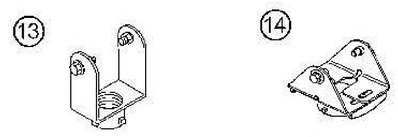

ITEM 13-14 OPTIONS
PAINT

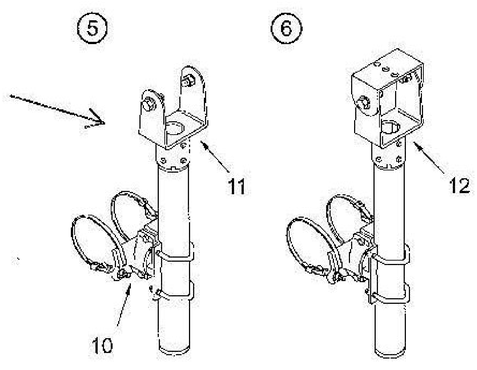

ITEM 5-8 OPTIONS
TUBE LENGTH:
23", 37", 46", or 74"
BAND LENGTH:
29", 36", 42", 48", or 56"
STAINLESS UPGRADE
PAINT

APPROVED
By Taylor Sisson at 1:40 pm, Apr 01, 2015

VIP Camera Interface Panel

CONTROL TECHNOLOGIES

For 1 to 6 cameras

The Traficon Camera Interface Panel (CIP) provides power and transient voltage suppression for the video detection system.

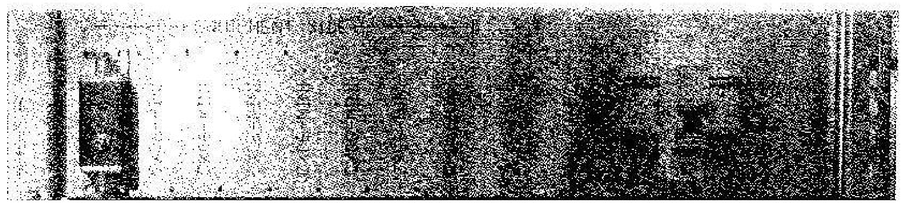

Pictured: 2285-121

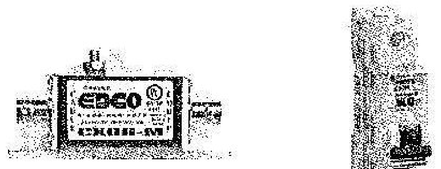

- **DIMENSIONS:** 170 CIP: 19" X 4" NEMA CIP: 14" X 6"
- **CONSTRUCTION:** 5052 Aluminum
- **POWER:** Multi 9 System (C60), Mini Circuit Breakers, 120 VAC, 3 amp/camera
- **VIDEO:** Edco CX06-M "Mini" Suppressor

Model	Description	Model	Description
2285-121	170 CIP for 1 Camera	2285-101	NEMA CIP for 1 Camera
2285-122	170 CIP for 2 Cameras	2285-102	NEMA CIP for 2 Cameras
2285-123	170 CIP for 3 Cameras	2285-103	NEMA CIP for 3 Cameras
2285-124	170 CIP for 4 Cameras	2285-104	NEMA CIP for 4 Cameras
2285-125	170 CIP for 5 Cameras	2285-105	NEMA CIP for 5 Cameras
2285-126	170 CIP for 6 Cameras	2285-106	NEMA CIP for 6 Cameras

Highway Tech Signal Equipment Sales, Inc.
6 Sabattus Road, P.O. Box 1209
Sabattus, ME 04280
Tel. (207) 375-8248
Fax (207) 375-8279
info@highwaytech.com

TRAFICON®
Video Detection Field proven, Easy to install.

DATA SHEET

APPROVED
By Taylor Sisson at 1:40 pm, Apr 01, 2015

VIP SET-UP KEYPAD

Ref. Nr. 10.0021

- ✓ *The SET-UP KEYPAD is designed to initialize VIP boards. It must be linked with the RS232C input connector to load the system commands into the VIP board memory.*
- ✓ *To initialize the VIP boards, the video out of the board is connected to the video in of the monitor. The keypad is connected to the service port of the VIP board.*

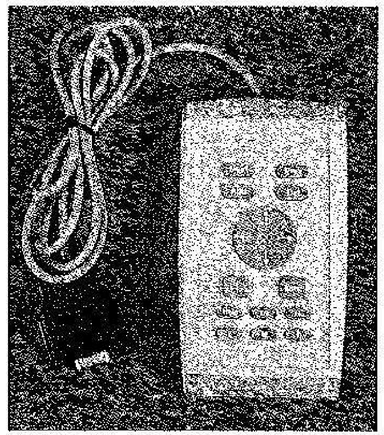

Specifications

Dimensions	• Width 75 mm • Depth 26 mm • Height 130 mm
Weight	• 0.37 Kg
Data format	• Serial data format RS232C Auto repeat 20 Hz after 0.5s delay
Power Supply	• Takes 3.3 - 5VDC from serial connector - 5mA (max)

Meensesteenweg 449/2, B-8501 Bissegem, Belgium – tel +32 (0)56 37.22.00 – fax +32 (0)56 37.21.96 – traficon@traficon.com – www.traficon.com

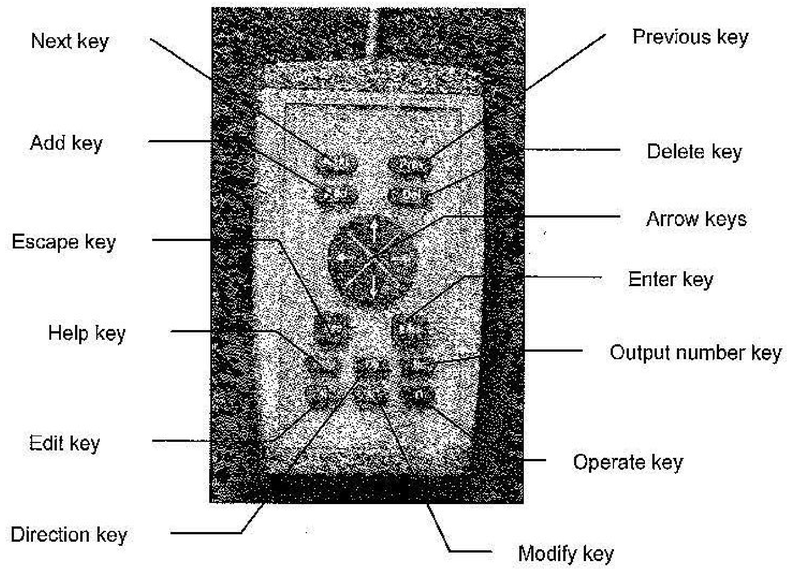

Functions	
Arrow keys	• To scroll through a menu. • To scroll through the values of a parameter. • To select a submenu.
Enter key	• To enter a menu, a submenu or an item within a submenu. • To edit a value for a parameter and confirm.
Escape key	• To exit the menu or submenu.
Next key	• To proceed to the next detection line or zone.
Previous key	• To move to the previous detection zone or line.
Add key	• To add a detection zone or line.
Del key	• To delete a detection zone or line.
Direction key	• To make a zone direction sensitive.
Help key	• To display help text for an item.
Output number key	• To assign an output number to a detection zone.
Operate key	• To put the board in operation mode.
Modify key	• To change settings while starting from the last saved settings for all parameters.
Edit key	• To change settings while starting from default values for all parameters.

Meensesteenweg 449/2, B-8501 Bissegem, Belgium – tel +32 (0)56 37.22.00 – fax +32 (0)56 37.21.96 – traficon@traficon.com – www.traficon.com

ViewZ
www.viewzusa.com

VZ-097RTC

PREMIUM LED CCTV MONITOR

APPROVED
By Taylor Sisson at 1:40 pm, Apr 01, 2015

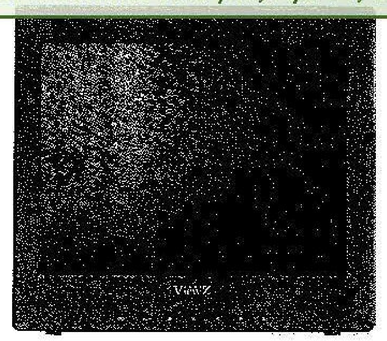

300 cd/m² | 600:1 | 1024 x 768 60Hz | 35ms | LED

MODEL #	VZ-097RTC
HIGHWAY	
Screen Size	9.7"
Max. Resolution	1024 x 768 @60Hz
Pixel Pitch	0.192mm x 0.192mm
Brightness	300cd/m² (Typical)
Contrast Ratio	600:1
Aspect Ratio	4:3
Viewing Angle (H/V)	178°/178°
Display Color	0.26 Million
Response Time	<35ms
Video System	NTSC / PAL
Frequency (H)	31~48Khz
Frequency (V)	56~60Hz
INTERFACE	
AV(Composite)1 In/ Out(BNC Type)	1/1
AV(Composite)2 In/ Out(RCA Type)	1/1
RGB In(15Pin D-Sub)	1
Trigger In	1
PC Stereo In	1
AUDIO	
Built in speaker	1 W x 2
SPECIAL FEATURES	
Filter Type	2D Comb filter / De interlace
LCD Protection Glass	Not Available
Video Resolution(Max)	520 TV Line
Multi-lingual Language	English, Spanish, French, German, Italian, Portuguese, Dutch
DIMENSIONS	
Outline Dimension (W x H x D)	9.25" x 8.31" x 1.71" (235mm x 211mm x 43.4mm)
Net Weight	2.73 lbs (1.24 kg)
MOUNTS	
VESA	75mm x 75mm, M4x10 Screws
OPTIONS	
Transmitter - IR Remote Control	Not Available
Power - Electrical Ratings	DC 12V, 0.68A(AC100 ~ 240V[50/60Hz])
- Consumption	8.2W
Warranty - Parts/ Labor	3 Year / 3 Year
- MTBF (Approx.)	30,000 Hours
Operating Temperature	32 - 104°F / 0 - 40°C
Regulations	CE, NRTL(=UL), FCC(A)
Compatible Mounts - WALL	VZ-WM05, VZ-WM10, VZ-WM31
- CEILING	VZ-CMK01, VZ-CMK02
- Rack	VZ-RMK08

VZ-097RTC ADVANTAGES:

- 9.7" LED CCTV Monitor
- 1024 x 768 Resolution
- BNC, RCA, VGA
- 2D Comb-filter, De-interlace, Built-in Speakers
- 3-Year Warranty

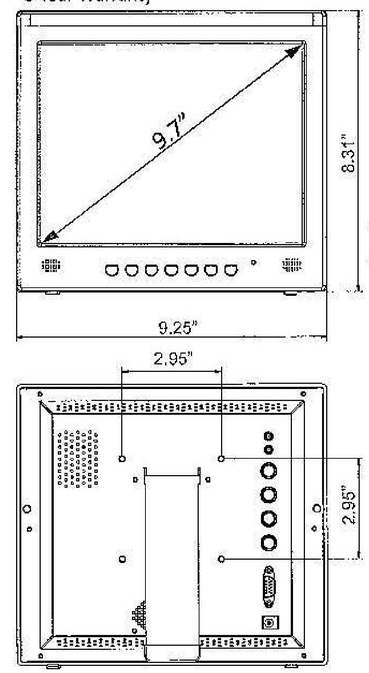

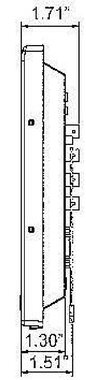

INTERFACE

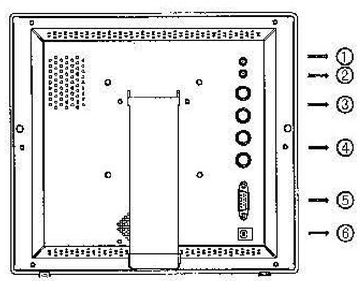

1. TRIGGER IN
2. PC STEREO IN
3. AV(composite)1 IN/OUT (BNC Type)
4. AV(composite)2 IN/OUT (RCA Type)
5. VGA IN
6. DC 12V IN

Highway Tech
6 Sabattus Road - P.O. Box 1209 - Sabattus, ME 04280
ME Office - Tel. (207) 375-8248 - Fax (866) 232-7014
NY Office - Tel. (607) 299-4604 - Fax (866) 350-3162

APPROVED
By Taylor Sisson at 1:40 pm, Apr 01, 2015

Terminal Compartment Assemblies

Designed to accommodate all traffic signals, with the exception of the optically programmed. The Astro-Brac features all-axis adjustability and is designed to facilitate the mounting of any size signal to any size of mast arm or pole.



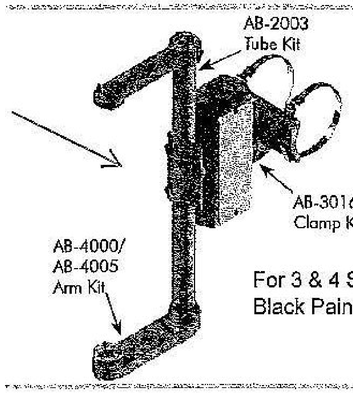

Astro-Brac Assy, Mark I Terminal Compartment, 1-Way Band Mount

AB-0140 - [Signal Section] - [Band Length] - [Coating]

Signal Section	Band Length	Coating
3=3 Sec	29=29" Band	PNC=Process No Color
4=4 Sec	36=36" Band	P__=Paint
5=5 Sec	42=42" Band	
	48=48" Band	
	56=56" Band	

For 3 & 4 Section Signals, Black Paint w Black Painted Bands

Note:
Stainless steel upgrade available: includes stainless clamp screw and slotted washer.
Specify by including -SS in the part number, i.e., AB-0140-3-29-SS-PNC.

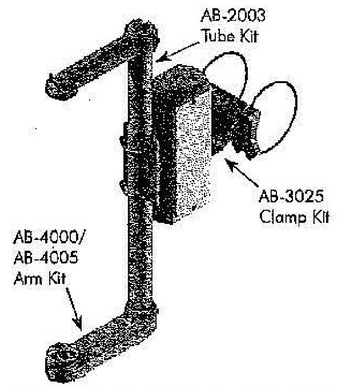

Astro-Brac Assy, Mark I Terminal Compartment, 1-Way Cable Mount

AB-0146 - [Signal Section] - [Cable Length] - [Coating]

Signal Section	Cable Length	Coating
3=3 Sec	62=62" Cable	PNC=Process No Color
4=4 Sec	84=84" Cable	P__=Paint
5=5 Sec	96=96" Cable	

Note:
Stainless steel upgrade available: includes stainless cable and slotted washer.
Specify by including -SS in the part number, i.e., AB-0146-3-62-SS-PNC.

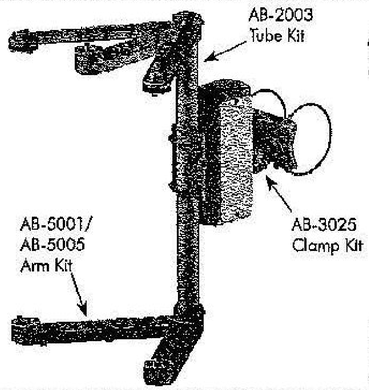

Astro-Brac Assy, Mark I Terminal Compartment, 5-Sec Cluster Cable Mount

AB-0147 - [Cable Length] - [Coating]

Cable Length	Coating
62=62" Cable	PNC=Process No Color
84=84" Cable	P__=Paint
96=96" Cable	

Note:
Stainless steel upgrade available: includes stainless cable and slotted washer.
Specify by including -SS in the part number, i.e., AB-0147-62-SS-PNC.

Note: 1. All assemblies are supplied standard with stainless steel fasteners.
2. See Reference Section for clamp kit pole diameters.
3. See Reference Section for available paint colors.

APPROVED
By Taylor Sisson at 1:40 pm, Apr 01, 2015

pelco
PELCO PRODUCTS, INC.

Astro-Brac®

TERMINAL COMPARTMENT BRACKETS

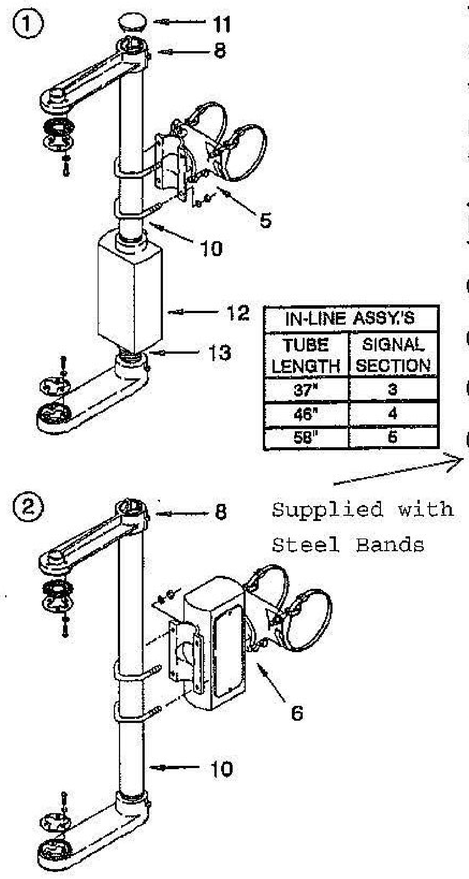

IN-LINE ASSY.'S	
TUBE LENGTH	SIGNAL SECTION
37"	3
46"	4
58"	5

Supplied with Steel Bands

The Astro-Brac in its various configurations is a truly universal system for mounting signals.

When the Astro-Brac is required to have a terminal compartment take your pick of in-line or integral clamp kit terminal compartments without sacrificing adjustability.

ITEM	DESCRIPTION	PART NO.
①	1-WAY BRACKET ASSEMBLY w/ In-Line Terminal Compartment, Band Mount	AB-0112-L-L
②	1-WAY BRACKET ASSEMBLY w/ Mark I Terminal Compartment, Band Mount	AB-0140-L-L
③	1-WAY BRACKET ASSEMBLY w/ Mark I Terminal Compartment, Cable Mount	AB-0146-L-L
④	5-SECTION CLUSTER ASSEMBLY w/ Mark I Terminal Compartment, Cable Mount	AB-0147-L-L
5	STANDARD ASTRO-BRAC ASSY., Band Mount	AB-3004-L
6	ASTRO-BRAC CLAMP KIT, w/ Mark I Terminal Compartment, Band Mount	AB-3016-L
7	ASTRO-BRAC CLAMP KIT, w/ Mark I Terminal Compartment, Cable Mount	AB-3025-L
8	ARM KIT, Standard 9"	AB-4000
9	ARM KIT, 5-Section Cluster	AB-5001
10	GUSSETED TUBE w/ Vinyl Insert	AB-2003-L
11	TUBE CAP	AB-0260
12	IN-LINE TERMINAL COMPARTMENT, Flat Back	SE-3101
13	ALLTHREAD NIPPLE, Alum., 1½" x 2-1/8"	SE-0309-02.13

NOTES:

1. PLEASE SPECIFY TUBE SECTION & BAND OR CABLE LENGTH REQUIRED, I.e., AB-0140-3-29 FOR A STANDARD 1-WAY 3 SECTION ASSEMBLY W/ 29" BANDS.
2. SEE ASTRO-BRAC CLAMP KIT BULLETINS FOR BAND & CABLE LENGTHS AVAILABLE.
3. SEE ASTRO-BRAC TUBE BULLETIN FOR TUBE LENGTHS.

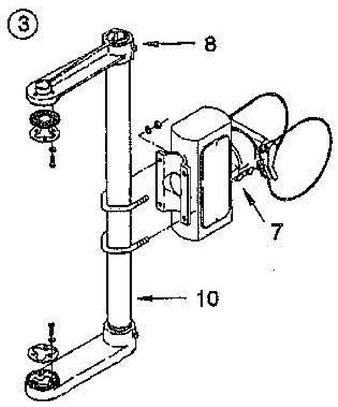

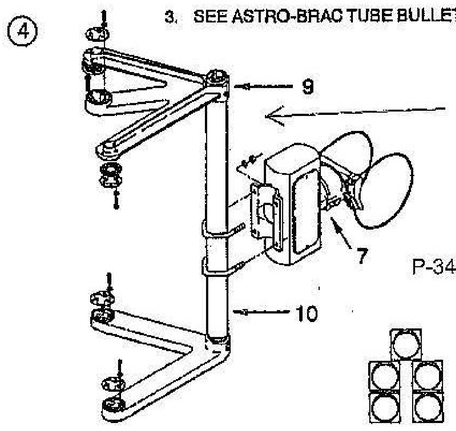

5-Section Astro-Brac supplied with AB Clamps with Black E-Coat Steel Bands

P-34 Black Finish

320 S.W. 18th St. • Edmond, Oklahoma 73013 • (405) 340-3434 • FAX: (405) 340-3435 • E-mail: pelco@pelcoinc.com

www.pelcoinc.com
EDMOND, OK 73013
405-340-3434
FAX: 405-340-3435

This drawing is for reference only. It is the property of Pelco and is not to be used in whole or in part without Pelco's permission.

ASSEMBLY SHEET

REF:	TITLE:	PART NO.:
Ocean State Lighting	Side-of-Pole Assy, 5-Section Cluster, 16-1/2" CTC, Iron	SP-5270

Part No
SP-5270-PXX

Process No Color=PNC
Paint=PXX

APPROVED
By Taylor Sisson at 1:40 pm, Apr 01, 2015

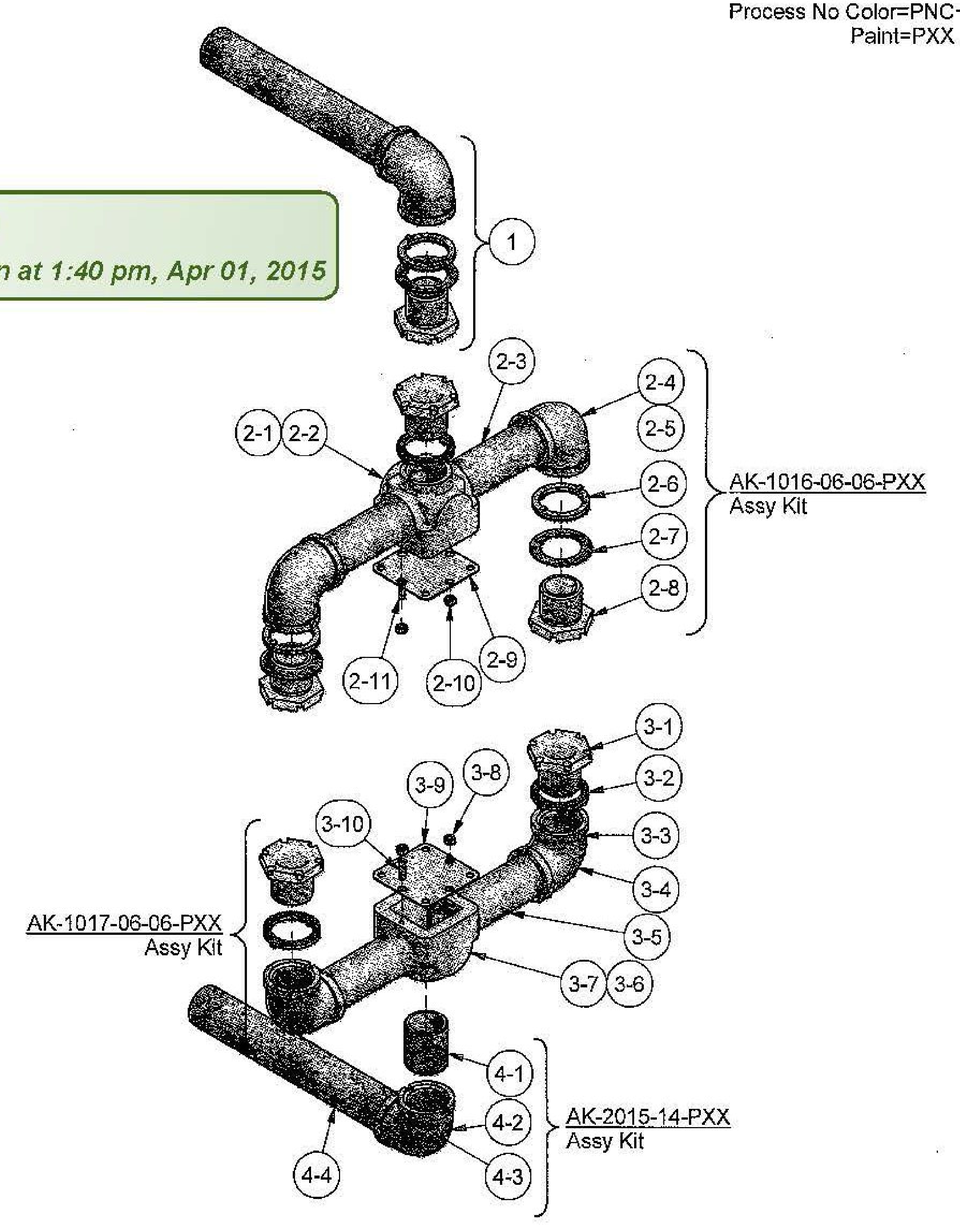

Supplied with Black Powdercoat Finish

Options
Paint P-34

DRAWN: L ACORD	DATE: 12/22/1997	CHK'D: KBM	DATE: 2/9/2007	REV. E-9/9/10 TH	REV CHK'D: KAK	DATE: 9/16/2010	SHEET 1 OF 2

By Taylor Sisson at 1:40 pm, Apr 01, 2015

COMPONENTS
Hubs and Mounting Brackets

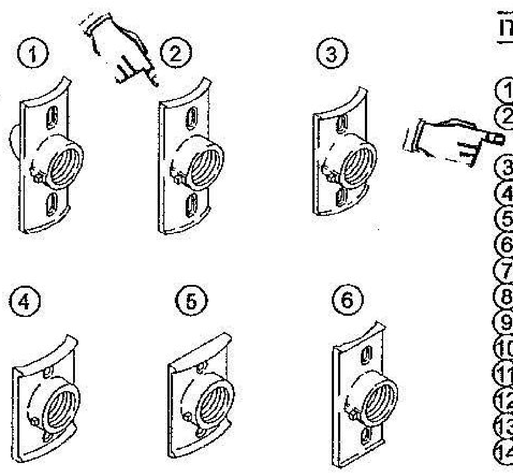

ITEM 1-6 OPTIONS
DOUBLE SET SCREWS
1¼" NPT THREADS
PAINT

Black Paint

ITEM	DESCRIPTION	PART NO.
	HUB PLATE:	
1	w/ Cable Guide, 1½" NPS, Alum	SE-0444
2	w/o Cable Guide, 1½" NPS, Alum	SE-0445
	w/o Cable Guide, 1½" NPS, Iron	SE-4124
3	4" Pipe, 1½" NPS, Alum	SE-0454
4	NPS Large Pole, 1½" NPS, Alum	SE-0357
5	Flat Back, 1½" NPS, Alum	SE-0415
6	Universal, 1½" NPS, 1½" Rear Opening, Alum	SE-4108
7	Universal, 1½" NPS, Alum	SE-4071
8	Universal, Alum	SE-4130
9	Extended, 1½" NPS, Alum	SE-0381
10	Extended Flat Back, 1½" NPS, Alum	SE-0465
11	Narrow, 1½" NPS, Alum	SE-4050
12	Single, 1½" NPS , Alum	SE-0111
13	Double, 1" NPT, Alum	SE-0112
14	Wood Pole, Horizontal, 1½" NPS, Alum	SE-4079

Notes:

1. All assemblies are supplied standard with stainless steel fasteners and natural aluminum alodine coating.
2. Please specify options when ordering.

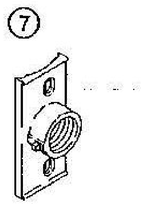

OPTIONS
DOUBLE SET SCREWS
REAR HOLE: 5/16" Dia. 3/4"-14 NPT
PAINT

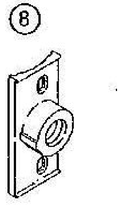

OPTIONS
THREADS: 3/4"-14 NPT 3/8"-16 NC
PAINT

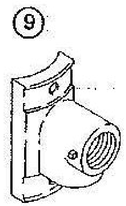

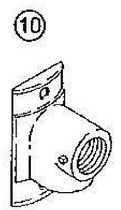

ITEM 9-10 OPTIONS
1¼" NPT DOWN HOLE
3/4" MOUNTING HOLES
PAINT



OPTIONS
DOUBLE SET SCREWS
1¼" NPT THREADS
REAR HOLE: 3/4" NPT or 15/16"
PAINT



OPTIONS
9/16" MOUNTING HOLES
DOUBLE SETSCREWS
1½" NPT THREADS
PAINT



OPTIONS
PAINT

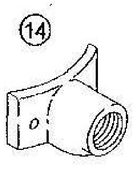

OPTIONS
1¼" NPT DOWN HOLE
PAINT

APPROVED
By Taylor Sisson at 1:41 pm, Apr 01, 2015

Traffic Signal Housing

Cabinets
Controllers
Signals
Signs
Software
Specialty

8" Diameter
12" Diameter
Aluminum
Polycarbonate

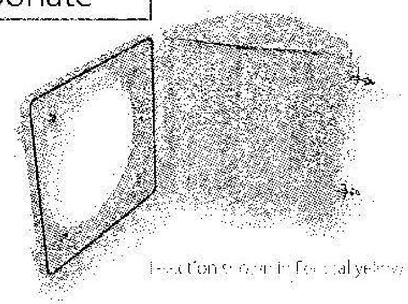

Section shown in federal yellow

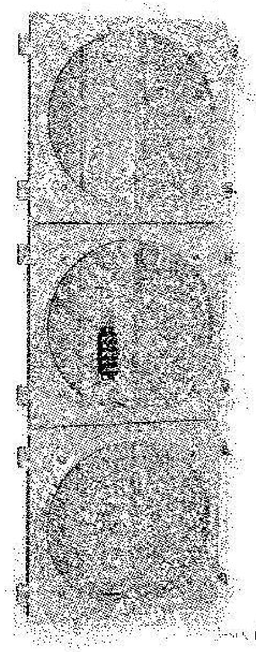

Section shown in federal yellow

McCain's Traffic Signal Housings, available in eight and twelve inch varieties, provide a durable and low-maintenance housing for standard LED modules as well as McCain incandescent optical assemblies. Manufactured from polycarbonate or aluminum, the housings are compliant with multiple agency standards including the Institute of Transportation Engineers (ITE), Caltrans, and most state Departments of Transportation (DOTs). An industry leader in signal manufacturing and supply, McCain offers an extensive range of materials, configurations, and accessories, including backplates, visors, and signal assemblies, to meet your traffic signal requirements.

Benefits

- Modular design promotes flexible configuration options: one to five sections, vertical, horizontal, and doghouse (5-section cluster)
- Fabricated from aluminum or polycarbonate with 10% fiberglass reinforcement (available without fiberglass reinforcement)
- 8" or 12" diameter
- Weathertight doors
- Custom hardware and terminal block location available

Product Description

The McCain Traffic Signal Housings are modular in design, allowing a multitude of signal housing configurations for standard LEDs as well as McCain incandescent optical assemblies.

Available in polycarbonate and aluminum, each section is injection molded or cast in one piece. Reinforcement ribs and serrated ports, both top and bottom, provide strength and positive locking with other sections and mounting hardware. Positive latching of doors is achieved with stainless steel eyebolts and wing nut assemblies, and the doors feature four metal threaded inserts for visor attachment. A positive seal is assured with an E.P.D.M. rubber gasket creating a moisture-free and dust-tight atmosphere.

Traffic Signal Housings are compatible with McCain backplates and visors, available in both aluminum and ABS. The top and bottom ports allow installation into many framework mounting assemblies.

Signals supplied will be black, 3, 4 & 5-Section with Tunnel visors

McCain®
www.mccain-inc.com

Traffic Signal Housing

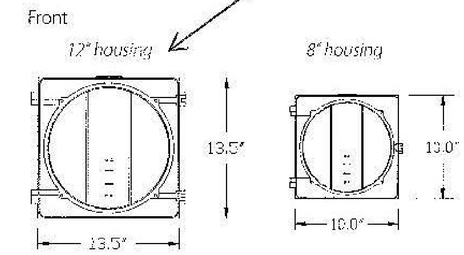

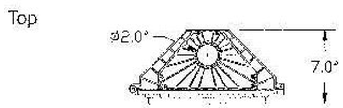

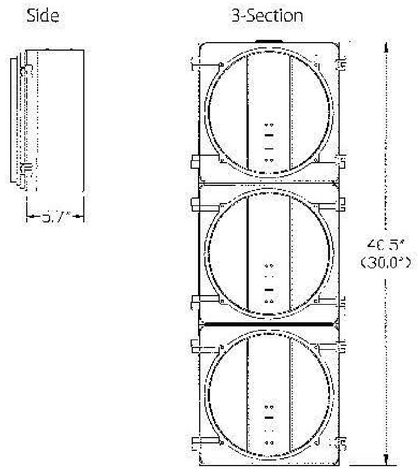

Dimensions are approximate and may vary.

3-section 12" housing shown as an example configuration. 3-section 8" housing height dimensions is listed in parentheses.

Depth for the 8" and 12" housings are approximately the same.

Minor differences between the 8" and 12" may not be shown.

Standard Features

- Modular sections, one-piece, injection molded or cast
- 72-tooth serrated boss and reinforcing ribs, top and bottom
- Brass threaded inserts for visor attachment (4)
- Housings have a cast boss for mounting a 5 or 6-position terminal block; one side of terminal block with fast-on terminals, the other side with screw terminals
- The words red, amber, and green are cast next to each boss to identify light source lead wires
- 5 or 6-position terminal block installed in center section (1) (alternate mounting is available)
- Stainless steel door roll pins and eye bolt/wing nut assemblies
- Integral lugs on the housing and doors with stainless steel roll pins provide effective door hinges
- Weathertight E.P.D.M. rubber door gasket
- Aluminum and polycarbonate, and 8" and 12" housings can be mixed in one signal head

General Specifications

Dimensions: (1-section)	8": 10.0"H x 10.0" W x 7.0"D 12": 13.5"H x 13.5"W x 7.0"D		
Material:	Polycarbonate: Ultraviolet and heat stabilized, flame retardant, permanently colored, 10% fiberglass reinforcement Aluminum: Type 360, reduced corrosion, increased powder coat adhesion		
Finish(es):	Polycarbonate: Colored resins integral to housing Aluminum: Powder coated		
Color(s):	Federal yellow, signal green, black, or custom colors		
Mounting:	2.0" hole top and bottom fits 1.5" NPT fittings		
Environmental:	Operating temperature: -37° C to +74° C Humidity: 0 to 95% (non-condensing)		
Shipping Weight: (empty, 1-section)	Polycarbonate:	8" - 2.1 lbs	12" - 4.2 lbs
	Aluminum:	8" - 4.0 lbs	12" - 7.8 lbs

Options

- Fiberglass-free polycarbonate
- Location, quantity, and type of terminal blocks
- Door mounting hardware: Push pin (removable) or roll pin (permanent)
- Visors
- Backplates
- Mounting: Various framework, orientation, and configurations
- Light Source: LED or incandescent
- High-performance (highly directional) signal version

Typical configurations

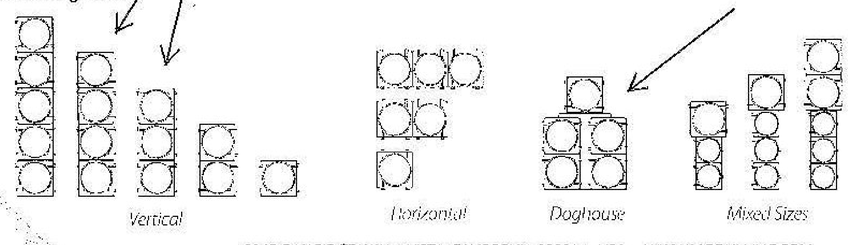

Highway Tech
Traffic Signal & ITS System Integrators
(207) 375-8248

To learn more about McCain's Integrated Traffic Solutions, please contact us or call

McCain®

2365 OAK RIDGE WAY · VISTA, CALIFORNIA 92081 / USA WWW.MCCAIN-INC.COM

© 2009 McCain Inc. Updated 01/27/09. McCain reserves the right to change product specifications without notice. For the most up-to-date information, please contact McCain.

APPROVED
By Taylor Sisson at 1:41 pm, Apr 01, 2015

McCain
The Power of Ingenuity

McCain
2365 Oak Ridge Way
Vista, California 92081
Phone (760) 727-8100
Fax (760) 727-8264
www.mccaintraffic.com

Backplates

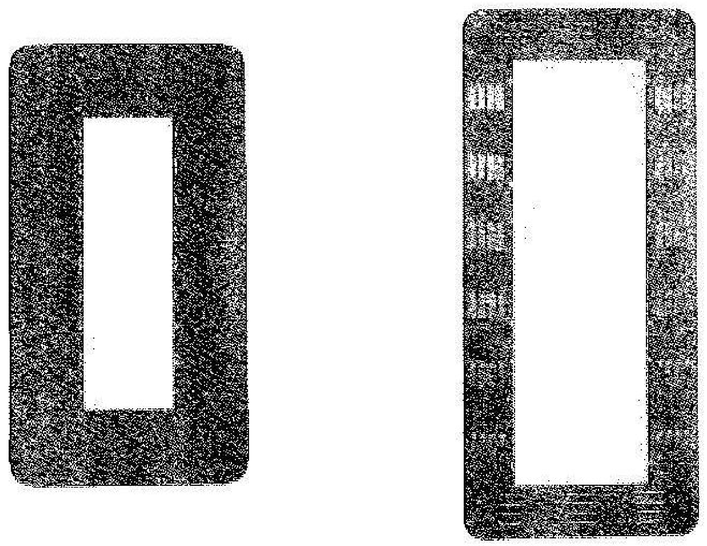

OPTIONS

Head Size	8 or 12 Inch, Combination
Material	Aluminum, ABS, ABS Vacuum Formed
Signal Face	1,2, 3, 4, or 5 Sections, Combination
Border Width	5 or 8 Inch
Color	Flat Black both sides, Flat Black Face/Green Back, or Yellow/Black
Mount	Elevator Plumbizer
Louvered	Aluminum only
Construction	Varies on configuration

Warranty

MTS Backplates are warranted against defects in materials and workmanship for a period of two (2) years from the date of original shipment.

Mission Statement

To serve our customers by providing the best quality of products and service the industry has to offer.

Highway Tech Signal Equipment Sales, Inc.
6 Sabattus Road, P.O. Box 1299.
Sabattus, ME 04280
Tel. (207) 375-6240
Fax (207) 375-8279
info@highwaytech.com

McCain reserves the right to change product specifications without notice. McCain 01/04

GE
Lighting Solutions

APPROVED
By Taylor Sisson at 1:41 pm, Apr 01, 2015

GTx™
LED Signal Modules
8 and 12 inch
Incandescent look (120V)

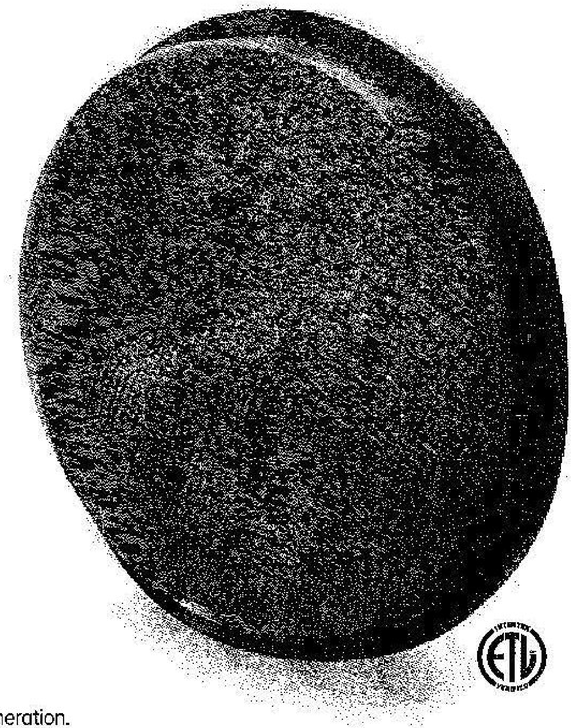

GE's 14th generation of LED signal, leveraging 15 years of experience & over 6,000,000 units sold worldwide

Outstanding Performance
- Consumes up to 15% less power than GE's previous signal generation.
- Intelligent controller measures usage and temperature. Will automatically adjust to compensate for light output degradation over time.*
- Over-molded electrical connectors prevent water wicking through wires.

Maximum Flexibility
- New micro-controlled power supply is packed with advanced functionality that can be unlocked and customized to fit your specific needs.
- Low profile module permits efficient installation into existing traffic housings.
- Power consumption levels allow compatibility with most controllers.
- Offers multiple dimming configurations for ultimate customization.**
- Mask compatible to fit your unique signaling needs.***

Meets Rigorous Certification & Testing Standards
- Intertek ETL Verified compliant.
- Compliant with ITE VTCSH LED Circular Signal Supplement dated June 27th 2005.
- CSA approved.

* Compensation levels vary depending on color.
** Customer controller and load switch compatibility testing may be required. Please contact you GE representative for details.
*** Sold separately. Refer to masks datasheet TRAF208.

imagination at work

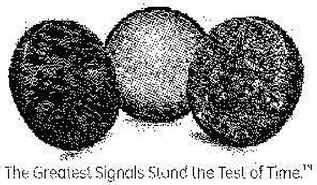

The Greatest Signals Stand the Test of Time.™

GE
Lighting Solutions

APPROVED
By Taylor Sisson at 1:41 pm, Apr 01, 2015

Incandescent look

GT1™ LED Arrow Signals

12 inch Red, Yellow, Green

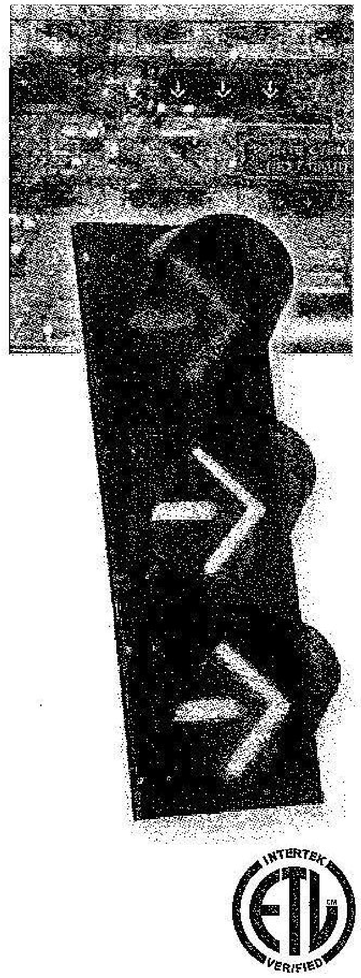

Excellent Appearance & Visibility

- Efficient optical design allows omnidirectional arrow placement with maximum light output and expanded view
- Expanded view for fixed and span wire applications meets new ITE requirements
- Excellent color uniformity creates an incandescent look for easy readability
- Improved luminous intensity uniformity exceeds new ITE requirements
- New or retrofit use

Outstanding Reliability & Robust Operation

- High efficiency and high-brightness LED light source
- Improved failed state impedance protection detects the loss of LED load
- Optimized thermal management for longer life
- O-ring gasket and over-molded electrical connector provide increased moisture and dust protection
- Provides performance under extreme field temperature conditions

Meets Rigorous Certification & Testing Standards

- Intertek ETL Verified compliant
- DOE compliant
- CSA approved
- Using MIL-STD-810F for environmental robustness, passed reliability and qualification testing including high temperature, high humidity cycling
- Compliant with the new ITE VTCSH LED Vehicle Arrow Traffic Signal Supplement dated July 1, 2007

imagination at work

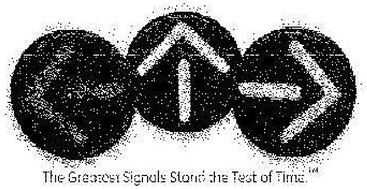

The Greatest Signals Stand the Test of Time.™

TOMAR Electronics, Inc.
Clearing the Way

APPROVED
By Taylor Sisson at 1:41 pm, Apr 01, 2015

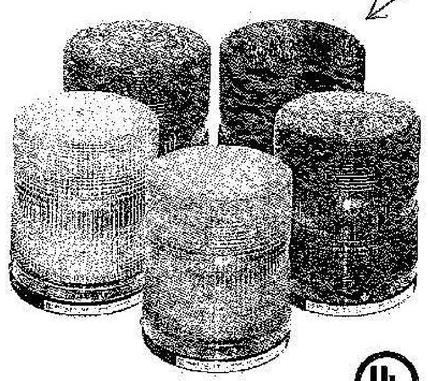

804 MAXI I™ STROBE

Medium Profile - Single Flash Strobe

- universal mounting
- built-in RFI filters
- solid state power supply
- xenon strobe lamp
- five year warranty on power supply
- one year warranty on lamp
- available in six lens colors
- UL listed (AC models only)

The model 804 family is a medium profile, single flash strobe light featuring universal mounting, full size 360° Lexan® lens, high efficiency regulated solid state power supply, and heavy duty xenon strobe lamp. All units are polarity protected and have built-in filters to protect against radio interference and spike voltages. The model 804 features a fully potted Lexan®, multi-purpose mounting base which is vibration and water resistant. The 804 also features a field replaceable plug-in strobe lamp and state of the art energy storage capacitor for increased intensity.

Ordering Information

Please specify lens colors and model number when ordering. Available colors are Amber, Blue, Clear, Green, Purple and Red.

Model No.	Description	Voltage; Frequency
804–110	AC strobe with 10" leads, UL listed	120VAC, 50/60Hz
804LC–110	AC strobe with AC cord set, UL listed	120VAC, 50/60Hz
804–240	AC strobe with 10" leads, UL listed	240VAC, 50/60Hz
804–1274	DC strobe with 10" leads	12 – 74VDC
804MB–1274	DC strobe, magnetic mount and 10' coil cord	12 – 74VDC
804MBSC–1274	DC strobe, magnetic mount and 10' straight cord	12 – 74VDC

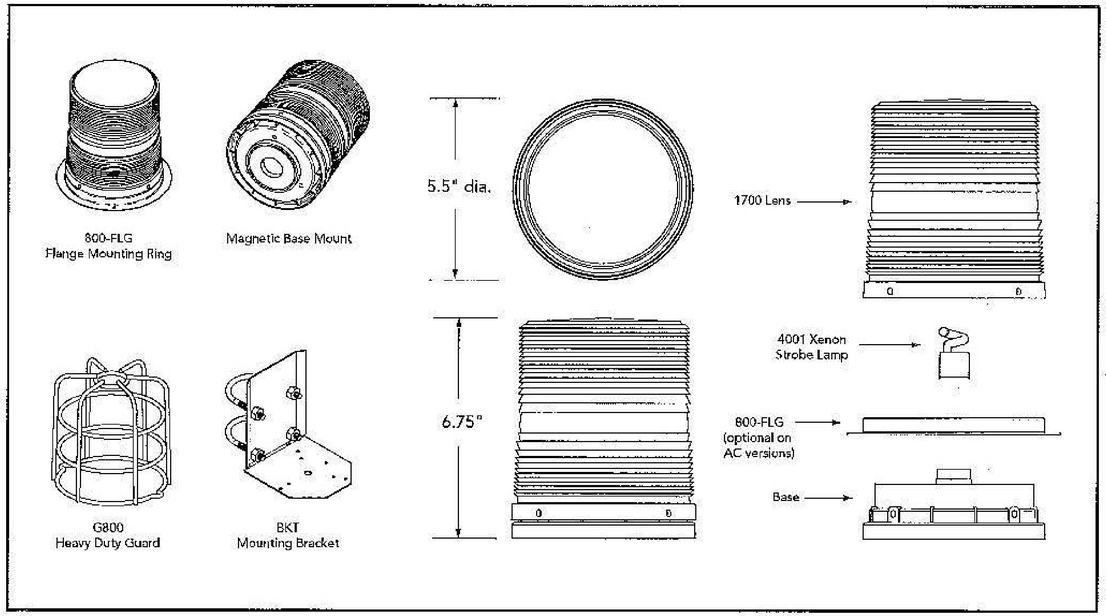

Specifications

Item	Description
Voltage and Amperage	12-74VDC draws 1.25A @ 12V tapering to 0.2A average @ 74V 120VAC draws 0.3A average 240VAC draws 0.3A average
Power Supply Output 11 Watts	8 joules per flash
Flash Rate	80 to 95 flashes per minute
Size and Weight	6.75" tall x 5.5" dia. x 2.2 lbs (171mm x 140mm x 1.0kg)

Available Options

NOTE: All "/" options are factory installed only.

Model No.	Description
BKT	Mounting bracket
/LBO–MAXI	Lens blackout segment 180°
800/1250–DC	Clear lens dust cover
G800	Heavy duty guard
TBO–MAXI	Top lens blackout
800–FLG	Chrome flange mounting ring (standard on DC versions, optional on AC versions)

Replacement Parts

Model No.	Description
4001	Xenon strobe lamp
1700	Color lens (please specify color) - RED
801–110–BASE	120VAC power supply
801LC–BASE	120VAC power supply with AC cord set
801MBSC–BASE	120VAC power supply with magnetic mount and straight cord
801–240–BASE	240VAC power supply
801–1274–BASE	12–74VDC power supply
801MB–BASE	12–74VDC power supply with magnetic mount and coil cord

TOMAR Electronics, Inc.

APPROVED
By Taylor Sisson at 1:41 pm, Apr 01, 2015

2140 OSP Card and Card Cage

STROBECOM II

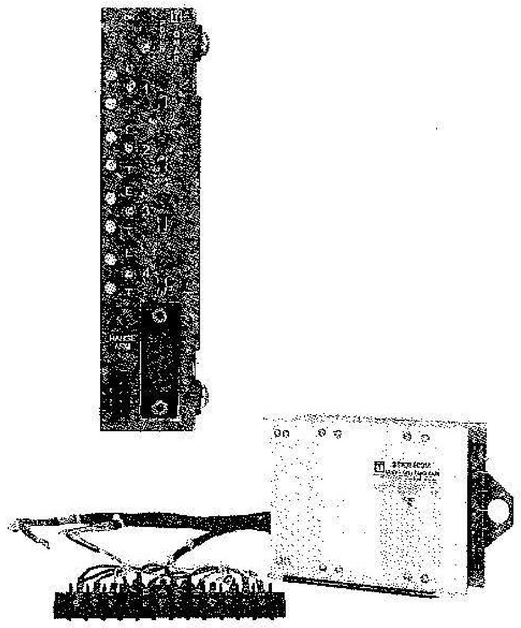

The model 2140 Optical Signal Processor (OSP) is the most advanced of the three 2000 Series OSP's offered by TOMAR. Installed inside the traffic cabinet, the 2140 provides power for 209X Optical Detectors, receives and decodes signals from the detectors, logs preemption and priority control activity, communicates with other traffic control devices, and optically isolates the preemption channels.

The 2140 is delivered default programmed to respond on a first-come, first-served basis to optical signals from vehicles within two signal bands. Emergency band signals are typically emitted by emergency vehicles to effect a preemption of normal traffic control timing and are given the highest priority to allow rapid emergency response with enhanced safety. Transit band signals are generally emitted by transit or other non-emergency municipal vehicles to effect a priority change for the vehicle's approach direction without necessarily interrupting traffic control timing. Up to 65,000 vehicles in each signal band can be individually identified and up to 15,000 events can be logged in non-volatile EEPROM memory.

Using a simple Windows-based configuration program, the user can define up to 16 additional classes within each signal band with different priorities, detection ranges, and choices of actions, from simple vehicle logging to full traffic preemption.

Equipped with a serial port and the ability to classify and announce the presence of multiple vehicles in real-time, the 2140 makes an excellent intelligent vehicle sensor for ITS applications.

Tri-color LED's and test switches on the front panel of the 2140 provide output status indication and diagnostic feedback to assist in troubleshooting.

The 2140 OSP is compatible with NEMA TS-1, TS-2, and CA/NY 170, and 2070 controllers and meets all NEMA and CalTrans environmental requirements. The 2140 plugs directly into a 170 input file without any additional hardware and does not use the internal 24VDC cabinet power. For NEMA cabinets without prewired preemption slots, the TOMAR model 1881 rack provides the necessary hardware and harnessing to allow simple connection to detector outputs and controller inputs.

TRUE 10 Year Warranty!
Covers the 2140 and all STROBECOM II components. Unlike other manufacturers, TOMAR's ten year warranty has NO fees or charges for warranty repairs after five years.

NOTICE:
The sale of these items are restricted to state and local governments and to authorized distributors only.

TOMAR Electronics, Inc.
Clearing the Way

APPROVED
By Taylor Sisson at 1:41 pm, Apr 01, 2015

2090/2091 Optical Preemption Detectors

STROBECOM II

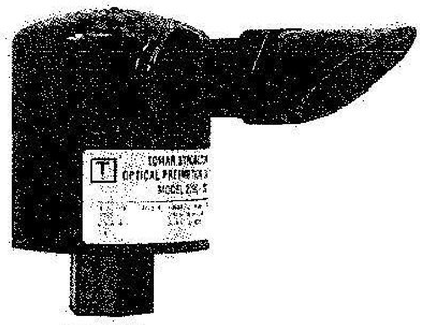

2090–SD Detector

The TOMAR 209X–SD Optical Preemption Detectors sense the optical pulses emitted by properly equipped emergency or transit vehicles. Mounted to observe the approaches of an intersection, 209X–SD Detectors are used with TOMAR 2000 Series Optical Signal Processors to inform the traffic control system of the presence of designated vehicles.

Using 209X–SD Detectors and STROBECOM II throughout your traffic control system reduces emergency response time, allows emergency vehicles to travel with greater safety, and improves transit vehicle timeliness.



2091–SD Detector

TRUE 10 Year Warranty!
10 year warranty covers the 209x-SD and all STROBECOM II components. Unlike other manufacturers, TOMAR's ten year warranty has NO fees or charges for warranty repairs after five years.

NOTICE:
The sale of these items are restricted to state and local governments and to authorized distributors only.

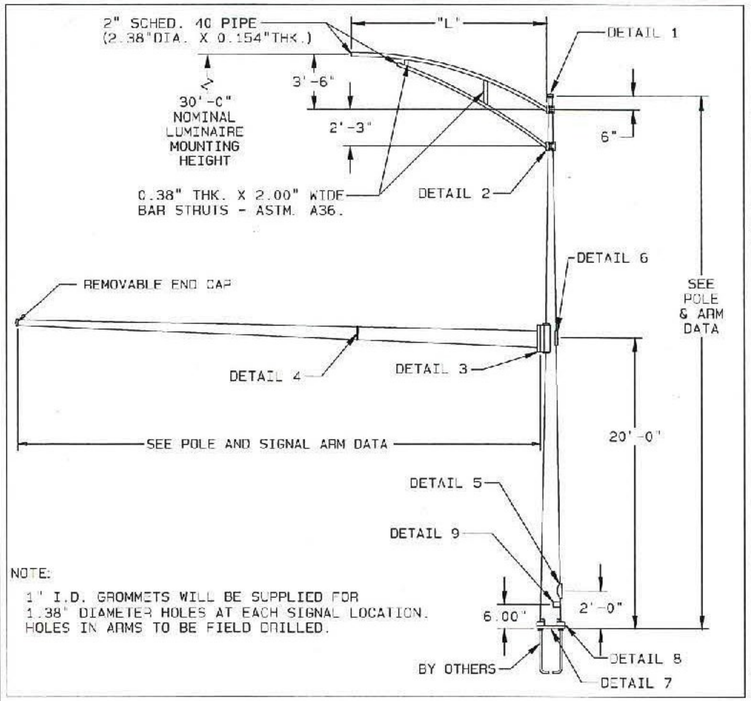

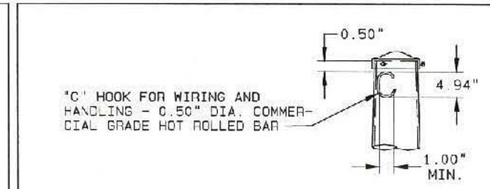

DETAIL 1 | POLE TOP

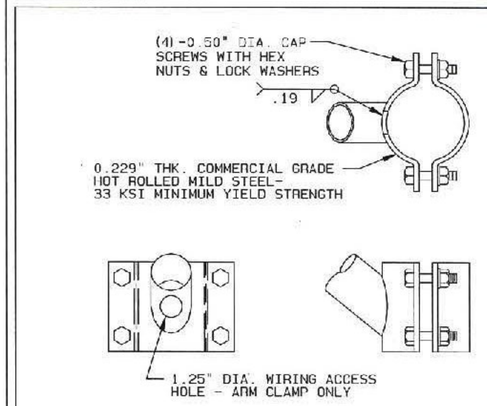

DETAIL 2 | LUMINAIRE ARM ATTACHMENT

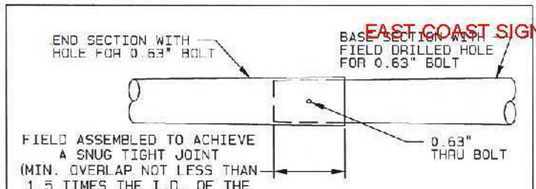

ARM SECTION DATA				
ARM LENGTH (FT)	BASE SECTION		END SECTION	
	LENGTH	GA. /THK.	LENGTH	GA. /THK.
55.00	19.42'	0.313"	38.15'	7

DETAIL 4 | SIGNAL ARM SLIP JOINT

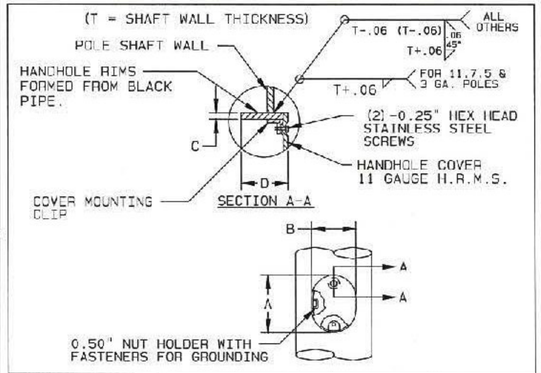

ITEM NUMBER	A	B	C	D
#1 & #2	7.31"	5.63"	0.430"	2.000"
#3 & #4	7.56"	5.50"	0.500"	2.000"

DETAIL 5 | HANDHOLE

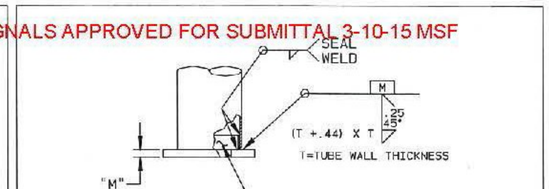

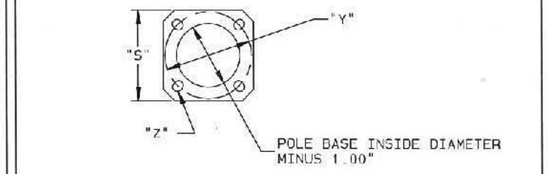

DETAIL 7 | POLE BASE

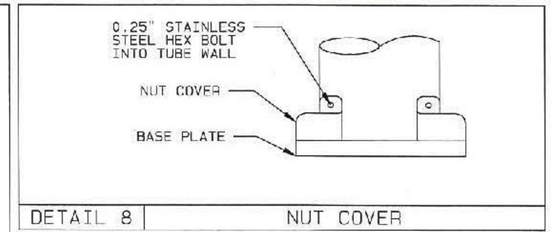

DETAIL 8 | NUT COVER

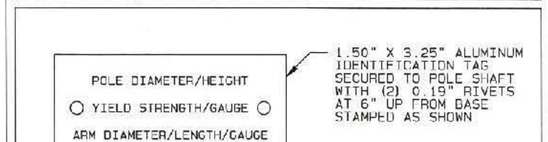

DETAIL 9 | I.D. TAG

MATERIAL DATA

COMPONENT	ASTM DESIGNATION	MIN. YIELD (KSI)	COMPONENT	ASTM DESIGNATION	MIN. YIELD (KSI)
TAPERED TUBES	A595 GR.A OR A572	55	GALVANIZING- STRUCTURE	A123	
			GALVANIZING- HARDWARE	A153	
POLE BASE	A36	36			
LUMINAIRE ARM PIPE		36			
SIGNAL ARM CONNECTION	A36	36			
SIGNAL ARM CONN. BOLTS	A325				

FINISH NOTE:

BASE COAT: HOT DIP GALVANIZE TO ASTM: A123.

FINISH COAT: TGIC OR URETHANE POLYESTER POWDER. BLACK IN COLOR. VALMONT SPEC. F283A.

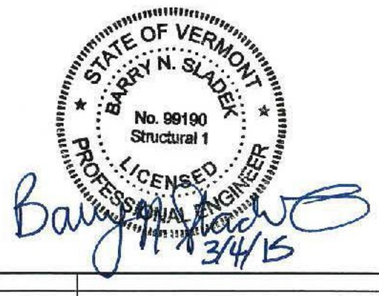

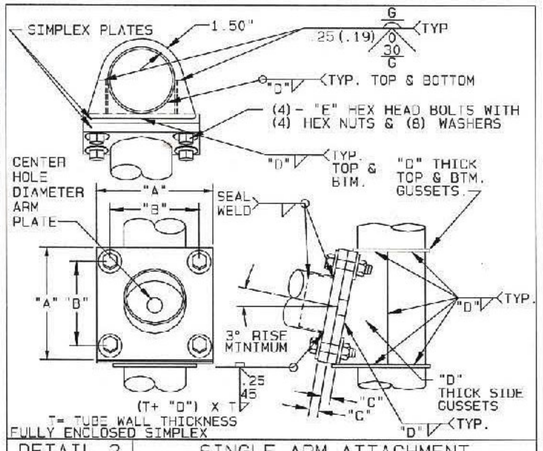

DETAIL 3 | SINGLE ARM ATTACHMENT

SIGNAL ARM ATTACHMENT DATA						
MAST ARM LENGTH	"A"	"B"	"C"	CENTER HOLE DIA.	"D"	"E"
40.00'	17.75"	14.50"	2.000"	9.75"	0.375"	1.25" X 6.00"
55.00'	21.25"	18.00"	2.000"	11.25"	0.500"	1.25" X 6.00"

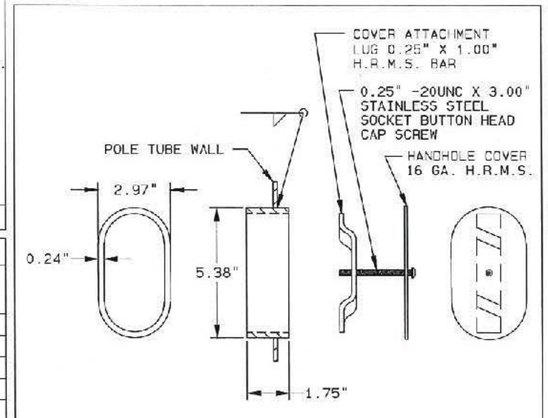

DETAIL 6 | 2.50" X 5.00" HANDHOLE

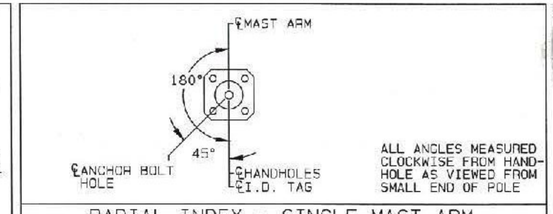

RADIAL INDEX - SINGLE MAST ARM

EAST COAST SIGNALS APPROVED FOR SUBMITTAL 3-10-15 MSF

REV	DRAWN BY-DATE	CHECK BY-DATE	DESCRIPTION
—	JTF 03/03/15	JTF 03/03/15	

SOLD TO: HIGHWAY TECH
SHIP TO: EAST COAST SIGNALS
P.O. #: 9547
AGENT: HIGHWAY TECH

JOB: VT D.O.T. BERLIN, VT SIPG SGNL(40)
TITLE: TRAFFIC SIGNAL STRUCTURES

VALMONT INDUSTRIES, INC. RESERVES THE RIGHT TO INSTALL VARIOUS, ENGINEER APPROVED, MATERIAL HANGING ACCOMMODATIONS TO FACILITATE THE MANUFACTURING PROCESS.

valmont
Valley,NE 68064
(402) 359-2201

ORDER NUMBER: 275846-P1
PAGE NUMBER: 1 OF 2
DRAWING NUMBER: VT275846P1
REV

EAST COAST SIGNALS APPROVED FOR SUBMITTAL 3-10-15 MSF

POLE AND SIGNAL ARM DATA

ITEM	QTY.	POLE TUBE				POLE BASE					ANCHOR BOLT				SIGNAL ARM TUBE				LUMINAIRE ARM SPAN "L" (FT)
		BASE DIA. (IN)	TOP DIA. (IN)	LENGTH (FT)	GAUGE OR THK. (IN)	SQUARE "S" (IN)	CENTER HOLE DIA. (IN)	BOLT CIRCLE "Y" (IN)	THK. "M" (IN)	HOLE / SLOT "Z" (IN)	DIA. "K" (IN)	LENGTH "J" (IN)	HOOK "H" (IN)	THREAD LENGTH "U" (IN)	FIXED END DIA. (IN)	FREE END DIA. (IN)	GAUGE OR THICK (IN)	SPAN (FT)	
1	1	13.00	9.22	27.00	3	18.50	11.50	17.50	2.000	2.00	1.75	BY OTHERS			11.50	5.90	7	40.00	12.00
2	1	13.00	9.22	27.00	3	18.50	11.50	17.50	2.000	2.00	1.75	BY OTHERS			11.50	5.90	7	40.00	12.00
3	1	16.00	12.22	27.00	0.250	22.00	13.75	21.00	2.000	2.00	1.75	BY OTHERS			14.00	6.66	DET.4	55.00	12.00
4	1	16.00	12.22	27.00	0.250	22.00	13.75	21.00	2.000	2.00	1.75	BY OTHERS			14.00	6.66	DET.4	55.00	12.00

THE MAST ARM TRAFFIC STRUCTURES SHOWN ON THIS DRAWING HAVE BEEN DESIGNED IN ACCORDANCE WITH THE LOADING AND THE ALLOWABLE STRESS REQUIREMENTS OF THE 2013 AASHTO "STANDARD SPECIFICATIONS FOR STRUCTURAL SUPPORTS FOR HIGHWAY SIGNS, LUMINAIRES AND TRAFFIC SIGNALS", SIXTH EDITION, LTS-6. THE WIND LOADS WERE CALCULATED FROM A BASIC WIND VELOCITY OF 90 MPH WITH A RECURRENCE INTERVAL OF 50 YEARS, AND A FATIGUE CATEGORY OF 2. THE FATIGUE LOADS WERE CALCULATED ON THE REQUIREMENTS OF SECTION 11 OF THE CODE, AND THE FOLLOWING DESIGN CONDITIONS:

- STRUCTURES ARE DESIGNED TO RESIST NATURAL WIND GUSTS BASED ON THE YEARLY MEAN WIND VELOCITY OF 11.2 MPH.
- STRUCTURES ARE NOT DESIGNED TO RESIST GALLOPING-INDUCED CYCLIC LOADS.
- STRUCTURES ARE DESIGNED FOR TRUCK-INDUCED GUST LOADS, AS REQUIRED BY THE OWNER OF THE STRUCTURES.

AASHTO 2013 SPECIFICATIONS

ALTHOUGH RARE, VIBRATIONS SEVERE ENOUGH TO CAUSE DAMAGE CAN OCCASIONALLY OCCUR IN STRUCTURES OF ALL TYPES. BECAUSE THEY ARE INFLUENCED BY MANY INTERACTING VARIABLES, VIBRATIONS ARE GENERALLY UNPREDICTABLE. THE USER'S MAINTENANCE PROGRAM SHOULD INCLUDE OBSERVATION FOR EXCESSIVE VIBRATION AND EXAMINATION FOR ANY STRUCTURAL DAMAGE OR BOLT LOOSENING. THE VALMONT WARRANTY SPECIFICALLY EXCLUDES FATIGUE FAILURE OR SIMILAR PHENOMENA RESULTING FROM INDUCED VIBRATION, HARMONIC OSCILLATION OR RESONANCE ASSOCIATED WITH MOVEMENT OF AIR CURRENTS AROUND THE PRODUCT.

VIBRATION NOTE

STATE OF VERMONT
BARRY N. SLADEK
No. 99190
Structural 1
LICENSED
PROFESSIONAL ENGINEER

3/4/15

JOB VT D.O.T.
BERLIN, VT STPG SGNL (40)

TITLE TRAFFIC SIGNAL STRUCTURES

VALMONT INDUSTRIES, INC. RESERVES THE RIGHT TO INSTALL VARIOUS, ENGINEER APPROVED, MATERIAL HANGING ACCOMMODATIONS TO FACILITATE THE MANUFACTURING PROCESS.

valmont
Valley, NE 68064
(402) 359-2201

ORDER NUMBER: 275846-P1
PAGE NUMBER: 2 OF 2
DRAWING NUMBER VT275846P1
REV