STATE OF VERMONT
AGENCY OF TRANSPORTATION

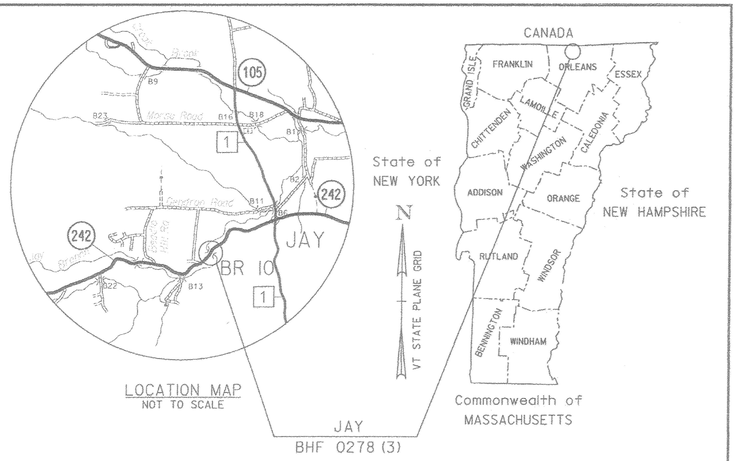

LOCATION MAP
NOT TO SCALE

RECORD PLANS

CONTRACTOR:	A.L. ST. ONGE CONTRACTOR, INC. – MONTGOMERY, VT
RESIDENT ENGINEER:	SETH HISMAN
CONSTRUCTION BEGAN:	APRIL 18, 2017
CONSTRUCTION COMPLETE:	OCTOBER 18, 2017
RECORD PLANS BY:	SETH HISMAN & AARON WEAVER

I HEREBY CERTIFY THAT ALL THE CONSTRUCTION REQUIRED BY THIS SET OF DRAWINGS HAS BEEN ACCOMPLISHED AS INDICATED HEREIN.

BY [signature] RESIDENT ENGINEER

DATE 5/25/18

NOTE: Any further information concerning final quantities, amounts or other details relative to this project may be found at Central Files in the electronic archives.

PROPOSED IMPROVEMENT
BRIDGE PROJECT

TOWN OF JAY
COUNTY OF ORLEANS
ROUTE NO: VT RTE 242, RURAL MAJOR COLLECTOR BRIDGE NO. 10

PROJECT LOCATION: 2.3 MILES WEST OF JUNCTION WITH VT ROUTE 101

PROJECT DESCRIPTION: REPLACEMENT OF EXISTING BRIDGE WITH A GALVANIZED STEEL BEAM AND CAST-IN-PLACE CONCRETE DECK SUPERSTRUCTURE AND A CONCRETE SUBSTRUCTURE, WITH RELATED ROADWAY AND CHANNEL WORK.

LENGTH OF STRUCTURE:	50.20 FEET
LENGTH OF ROADWAY:	108.14 FEET
LENGTH OF PROJECT:	158.34 FEET

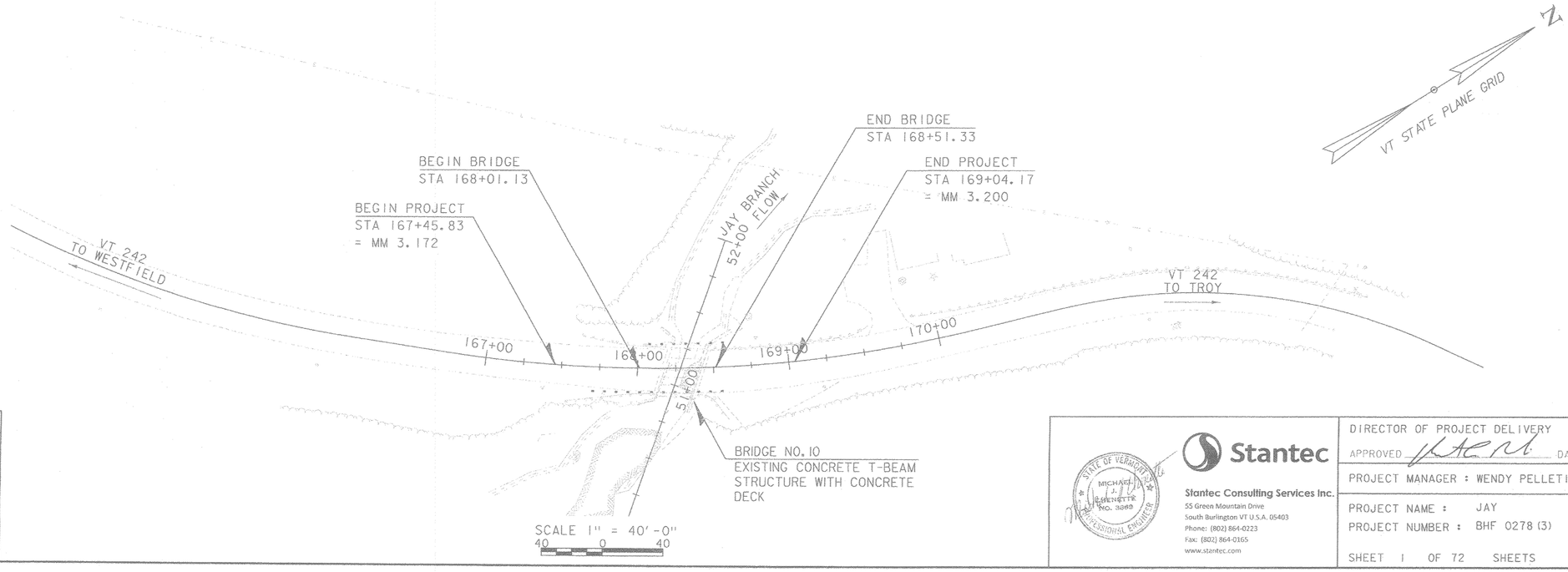

CONSTRUCTION IS TO BE CARRIED ON IN ACCORDANCE WITH THESE PLANS AND THE STANDARD SPECIFICATIONS FOR CONSTRUCTION DATED 2011, AS APPROVED BY THE FEDERAL HIGHWAY ADMINISTRATION ON JULY 20, 2011 FOR USE ON THIS PROJECT, INCLUDING ALL SUBSEQUENT REVISIONS AND SUCH REVISED SPECIFICATIONS AND SPECIAL PROVISIONS AS ARE INCORPORATED IN THESE PLANS.

QUALITY ASSURANCE PROGRAM : LEVEL 2

SURVEYED BY : R. GILMAN
SURVEYED DATE : 06-07-2012

DATUM
VERTICAL NAVD88
HORIZONTAL NAD83 (2007)

STATE OF VERMONT MICHAEL J. ELMENETTE NO. 3869 PROFESSIONAL ENGINEER

Stantec
Stantec Consulting Services Inc.
55 Green Mountain Drive
South Burlington VT U.S.A. 05403
Phone: (802) 864-0223
Fax: (802) 864-0165
www.stantec.com

DIRECTOR OF PROJECT DELIVERY
APPROVED [signature] DATE 8/4/2016

PROJECT MANAGER : WENDY PELLETIER, P.E.

PROJECT NAME : JAY
PROJECT NUMBER : BHF 0278 (3)

SHEET 1 OF 72 SHEETS

STATE OF VERMONT
AGENCY OF TRANSPORTATION

PRELIMINARY INFORMATION SHEET (BRIDGE)

Version
LRFD

INDEX OF SHEETS

PLAN SHEETS

1	TITLE SHEET
2	PRELIMINARY INFORMATION SHEET 1
3 - 4	TYPICAL SECTIONS - TYP 1-2
5	PROJECT NOTES
6 - 9	ROADWAY & BRIDGE QUANTITY SHEETS
10	CONVENTIONAL SYMBOLOGY LEGEND
11	TIE SHEET
12	LAYOUT SHEET
13	PROFILE & BANKING DIAGRAM SHEET
14	PHASING LAYOUT SHEET
15	PHASING TYPICAL SECTIONS AND NOTES
16	BORING PLAN
17 - 21	BORING LOGS 1-5
22	PLAN AND ELEVATION
23	FRAMING PLAN & DETAILS
24	DECK REINFORCEMENT
25	TYPICAL REINFORCEMENT SECTIONS
26	APPROACH SLAB DETAILS
27	BEARING DETAILS
28	ABUTMENT NO. 1 PLAN
29	ABUTMENT NO. 1 ELEVATION
30	ABUTMENT NO. 1 FOOTING REINFORCEMENT
31	ABUTMENT NO. 1 REINFORCEMENT ELEVATION
32	ABUTMENT NO. 1 REINFORCEMENT SECTIONS
33	ABUTMENT NO. 1 WINGWALL DETAILS
34	ABUTMENT NO. 2 PLAN
35	ABUTMENT NO. 2 ELEVATION
36	ABUTMENT NO. 2 FOOTING REINFORCEMENT
37	ABUTMENT NO. 2 REINFORCEMENT ELEVATION
38	ABUTMENT NO. 2 REINFORCEMENT SECTIONS
39	ABUTMENT NO. 2 WINGWALL DETAILS
40	BRIDGE RAIL LAYOUT
41 - 42	REINFORCEMENT SCHEDULE #1 & #2
43 - 47	ROADWAY CROSS SECTIONS - RXS 1-5
48 - 54	CHANNEL CROSS SECTIONS - CXS 1-7
55	EPSC NARRATIVE
56	EPSC EXISTING CONDITIONS SITE PLAN
57	EPSC CONSTRUCTION SITE PLAN
58	EPSC FINAL SITE PLAN
59 - 61	EPSC DETAILS 1-3
62	IMPACTS PLAN
63	GRAVITY SEWER PLAN, PROFILE AND DETAILS
64	R.O.W. DETAIL SHEET #1
65	LAYOUT SHEET - R.O.W.
66 - 72	REFERENCE PLANS - JAY 1222-494
1 **72A-72C**	**REFERENCE PLANS - JAY SEWER**

STANDARDS LIST

B-71	STANDARD FOR RESIDENTIAL AND COMMERCIAL DRIVES	07-08-2005
E-121	STANDARD SIGN PLACEMENT - CONVENTIONAL ROAD	08-08-1995
G-1BM	BOX BEAM GUARD RAIL	06-13-1997
J-3	MAIL BOX SUPPORT DETAILS	08-07-1995
S-364A	BRIDGE RAILING, GALVANIZED 3 RAIL BOX BEAM	02-10-2014
S-364B	GUARDRAIL APPROACH SECTION, GALVANIZED 3 RAIL BOX BEAM	02-10-2014
S-364C	GUARDRAIL APPROACH SECTION, GALVANIZED 3 RAIL BOX BEAM	02-10-2014
S-364D	GUARDRAIL APPROACH SECTION, GALVANIZED 3 RAIL BOX BEAM	04-23-2012
T-1	TRAFFIC CONTROL GENERAL NOTES	04-25-2016
T-2	TRAFFIC SIGN GENERAL NOTES	04-25-2016
T-10	CONVENTIONAL ROADS CONSTRUCTION APPROACH SIGNING	08-06-2012
T-28	CONSTRUCTION SIGN DETAILS	08-06-2012
T-30	CONSTRUCTION SIGN DETAILS	08-06-2012
T-35	CONSTRUCTION ZONE LONGITUDNAL DROP-OFFS	08-06-2012
T-36	CONSTRUCTION ZONE LONGITUDNAL DROP-OFFS FOR PAVING	08-06-2012
T-42	BRIDGE NUMBER PLAQUE	04-09-2014
T-45	SQUARE TUBE SIGN POST AND ANCHOR	01-02-2013

STRUCTURES DETAIL SHEETS

SD-501.00	CONCRETE DETAILS AND NOTES	02-09-2012
SD-502.00	CONCRETE DETAILS AND NOTES	10-10-2012
SD-516.10	BRIDGE JOINT ASPHALTIC PLUG	08-29-2011
SD-801.00	STRUCTURAL STEEL DETAILS & NOTES	06-04-2010
SD-602.00	STRUCTURAL STEEL PLATE GIRDER AND NOTES	05-02-2011

HIGHWAY SAFETY & DESIGN DETAIL SHEETS

HSD-400.01	SAFETY EDGE DETAILS	03-29-2016

FINAL HYDRAULIC REPORT

HYDROLOGIC DATA

Date: July 2015

DRAINAGE AREA : 9.2 sq. mi.
CHARACTER OF TERRAIN : Hilly to mountainous, mostly forested with some development
STREAM CHARACTERISTICS : Sinuous, semi-alluvial. Grade transition from steep to flatter.
NATURE OF STREAMBED : Sand, gravel, cobbles, boulders and ledge

PEAK FLOW DATA

Q 2.33 =	550 cfs	Q 50 =	1800 cfs
Q 10 =	1100 cfs	Q 100 =	2100 cfs
Q 25 =	1500 cfs	Q 500 =	3000 cfs

DATE OF FLOOD OF RECORD : Unknown
ESTIMATED DISCHARGE: Unknown
WATER SURFACE ELEV.: Unknown
NATURAL STREAM VELOCITY : @ Q50 = 14.7 fps
ICE CONDITIONS : Moderate
DEBRIS: Moderate
DOES THE STREAM REACH MAXIMUM HIGHWATER ELEV. RAPIDLY? Yes
IS ORDINARY RISE RAPID? Yes
IS STAGE AFFECTED BY UPSTREAM OR DOWNSTREAM CONDITIONS? No
IF YES, DESCRIBE:

WATERSHED STORAGE: < 1% HEADWATERS:
UNIFORM: X
IMMEDIATELY ABOVE SITE:

EXISTING STRUCTURE INFORMATION

STRUCTURE TYPE: Single span concrete T-beam bridge
YEAR BUILT: Built 1927, reconstructed 1964
CLEAR SPAN(NORMAL TO STREAM): 22'
VERTICAL CLEARANCE ABOVE STREAMBED: 8'
WATERWAY OF FULL OPENING: 175 sq. ft.
DISPOSITION OF STRUCTURE: Remove and replace with new bridge.
TYPE OF MATERIAL UNDER SUBSTRUCTURE: See boring logs.

WATER SURFACE ELEVATIONS AT:

Q2.33 =	1030.3'	VELOCITY =	9.8 fps
Q10 =	1032.5'	"	12.4 fps
Q25 =	1033.9'	"	13.8 fps
Q50 =	1035.0'	"	14.6 fps
Q100 =	1036.0'	"	15.1 fps

LONG TERM STREAMBED CHANGES: Scour hole through bridge and at outlet.

IS THE ROADWAY OVERTOPPED BELOW Q100: No
FREQUENCY: Above Q100
RELIEF ELEVATION: 1036.2'
DISCHARGE OVER ROAD @Q100: None

UPSTREAM STRUCTURE

TOWN:	Jay	DISTANCE:	2,100'
HIGHWAY # :	TH 23	STRUCTURE #:	13
CLEAR SPAN:	36'	CLEAR HEIGHT:	10'
YEAR BUILT:	1955, reconstructed 2008	FULL WATERWAY:	
STRUCTURE TYPE:	I-beam bridge		

DOWNSTREAM STRUCTURE

TOWN:	Jay	DISTANCE:	5,800'
HIGHWAY # :	TH 1	STRUCTURE #:	6
CLEAR SPAN:	41'	CLEAR HEIGHT:	8'
YEAR BUILT:	1971	FULL WATERWAY:	
STRUCTURE TYPE:	I-beam bridge		

LRFR LOAD RATING FACTORS

LOADING LEVELS	TRUCK						
	H-20	HL-93	3S2	6 AXLE	3A. STR.	4A. STR.	5A. SEMI
TONNAGE	20	36	36	66	30	34.5	38
INVENTORY	~~1.84~~	1.11					
POSTING	1.84						
OPERATING	~~2.39~~	1.44	~~2.53~~	~~1.33~~	~~1.76~~	~~1.60~~	~~2.01~~
COMMENTS:	2.39		2.53	1.33	1.76	1.60	2.01

LRFR LOAD RATINGS CHANGED
SEE REVISED LOAD RATINGS
SHEET 2B

PROPOSED STRUCTURE

STRUCTURE TYPE: Single span steel beam bridge with concrete deck

CLEAR SPAN(NORMAL TO STREAM): 40'
VERTICAL CLEARANCE ABOVE STREAMBED: 9'
WATERWAY OF FULL OPENING: 328 sq. ft.

WATER SURFACE ELEVATIONS AT:

Q2.33 =	1029.9'	VELOCITY=	9.8 fps
Q10 =	1031.0'	"	12.4 fps
Q25 =	1031.8'	"	13.8 fps
Q50 =	1032.5'	"	14.6 fps
Q100 =	1033.1'	"	15.1 fps

IS THE ROADWAY OVERTOPPED BELOW Q100: No
FREQUENCY: Above Q100
RELIEF ELEVATION: 1036.2'
DISCHARGE OVER ROAD @Q100: None

AVERAGE LOW ELEVATION OF SUPERSTRUCTURE: 1035.9' upstr., 1033.9' dnstr.
VERTICAL CLEARANCE: @ Q50 = 3.4' upstr. & 1.4' dnstr. above approach W.S.E.

SCOUR: 0' of contraction scour up to Q500.

REQUIRED CHANNEL PROTECTION: Stone Fill, Type IV

PERMIT INFORMATION

AVERAGE DAILY FLOW:	-	
ORDINARY LOW WATER:	-	DEPTH OR ELEVATION: -
ORDINARY HIGH WATER:	-	-

TEMPORARY BRIDGE REQUIREMENTS

STRUCTURE TYPE: No temporary bridge required. Use phased construction.
CLEAR SPAN (NORMAL TO STREAM):
VERTICAL CLEARANCE ABOVE STREAMBED:
WATERWAY AREA OF FULL OPENING:

ADDITIONAL INFORMATION

TRAFFIC MAINTENANCE NOTES

1. MAINTAIN ONE-WAY TRAFFIC ON THE EXISTING STRUCTURE.
2. INSTALL AND MAINTAIN TRAFFIC SIGNALS.
3. SIDEWALKS ARE NOT NECESSARY

DESIGN VALUES

1. DESIGN LIVE LOAD		HL-93
2. FUTURE PAVEMENT	d_p:	- - -
3. DESIGN SPAN	L:	45.41 FT
4. MIN. MID-SPAN POS. CAMBER @ RELEASE (PRESTRESSED UNITS)	Δ:	- - -
5. PRESTRESSING STRAND	f_y:	- - -
6. PRESTRESSED CONCRETE STRENGTH	f'_c:	- - -
7. PRESTRESSED CONCRETE RELEASE STRENGTH	f'_{ci}:	- - -
8. CONCRETE, HIGH PERFORMANCE CLASS AA	f'_c:	4.0 KSI
9. CONCRETE, HIGH PERFORMANCE CLASS A	f'_c:	4.0 KSI
10. CONCRETE, HIGH PERFORMANCE CLASS B	f'_c:	3.5 KSI
11. CONCRETE, CLASS C	f'_c:	3.0 KSI
12. REINFORCING STEEL	f_y:	60 KSI
13. STRUCTURAL STEEL AASHTO M270	f_y:	- - -
14. NOMINAL BEARING RESISTANCE OF SOIL	q_n:	- - -
15. SOIL BEARING RESISTANCE FACTOR (REFER TO AASHTO LRFD)	ϕ:	- - -
16. NOMINAL BEARING RESISTANCE OF ROCK	q_n:	150 KSF
17. ROCK BEARING RESISTANCE FACTOR (REFER TO AASHTO LRFD)	ϕ:	0.45
18. PILE RESISTANCE FACTOR	ϕ:	- - -
19. LATERAL PILE DEFLECTION	Δ:	- - -
20. BASIC WIND SPEED	V_{3s}:	- - -
21. MINIMUM GROUND SNOW LOAD	p_g:	- - -
22. SEISMIC DATA PGA: 0	S_s:	- - -
	S_1:	- - -
23.		- - -
24.		- - -
25.		- - -
26.		- - -

REVISIONS

1	09.27.16	UPDATED PLAN SHEETS LIST

AS BUILT "REBAR" DETAIL

LEVEL I	LEVEL II	LEVEL III
TYPE:	TYPE:	TYPE:
GRADE:	GRADE:	GRADE:

TRAFFIC DATA

YEAR	ADT	DHV	% D	% T	ADTT
2015	1400	290	62	11.6	170
2035	1500	300	62	15.6	240

20 year ESAL for flexible pavement from 2015 to 2035 : 478500
40 year ESAL for flexible pavement from 2015 to 2055 : 0
Design Speed : 40 mph

PROJECT NAME: **JAY**
PROJECT NUMBER: **BHF 0278(3)**

FILE NAME: **Jay PI sheet.xls**
PROJECT LEADER: **M. Chenette**
DESIGNED BY: **G. Bogue**
PRELIMINARY INFORMATION SHEET 1

PLOT DATE: 9/23/2016
DRAWN BY: **L. Buxton**
CHECKED BY: **M. Chenette**
SHEET 2A OF 72

STATE OF VERMONT
AGENCY OF TRANSPORTATION

PRELIMINARY INFORMATION SHEET (BRIDGE)

Version
LRFD

INDEX OF SHEETS

PLAN SHEETS

1	TITLE SHEET
2	PRELIMINARY INFORMATION SHEET 1
3 - 4	TYPICAL SECTIONS - TYP 1-2
5	PROJECT NOTES
6 - 9	ROADWAY & BRIDGE QUANTITY SHEETS
10	CONVENTIONAL SYMBOLOGY LEGEND
11	TIE SHEET
12	LAYOUT SHEET
13	PROFILE & BANKING DIAGRAM SHEET
14	PHASING LAYOUT SHEET
15	PHASING TYPICAL SECTIONS AND NOTES
16	BORING PLAN
17 - 21	BORING LOGS 1-5
22	PLAN AND ELEVATION
23	FRAMING PLAN & DETAILS
24	DECK REINFORCEMENT
25	TYPICAL REINFORCEMENT SECTIONS
26	APPROACH SLAB DETAILS
27	BEARING DETAILS
28	ABUTMENT NO. 1 PLAN
29	ABUTMENT NO. 1 ELEVATION
30	ABUTMENT NO. 1 FOOTING REINFORCEMENT
31	ABUTMENT NO. 1 REINFORCEMENT ELEVATION
32	ABUTMENT NO. 1 REINFORCEMENT SECTIONS
33	ABUTMENT NO. 1 WINGWALL DETAILS
34	ABUTMENT NO. 2 PLAN
35	ABUTMENT NO. 2 ELEVATION
36	ABUTMENT NO. 2 FOOTING REINFORCEMENT
37	ABUTMENT NO. 2 REINFORCEMENT ELEVATION
38	ABUTMENT NO. 2 REINFORCEMENT SECTIONS
39	ABUTMENT NO. 2 WINGWALL DETAILS
40	BRIDGE RAIL LAYOUT
41 - 42	REINFORCEMENT SCHEDULE #1 & #2
43 - 47	ROADWAY CROSS SECTIONS - RXS 1-5
48 - 54	CHANNEL CROSS SECTIONS - CXS 1-7
55	EPSC NARRATIVE
56	EPSC EXISTING CONDITIONS SITE PLAN
57	EPSC CONSTRUCTION SITE PLAN
58	EPSC FINAL SITE PLAN
59 - 61	EPSC DETAILS 1-3
62	IMPACTS PLAN
63	GRAVITY SEWER PLAN, PROFILE AND DETAILS
64	R.O.W. DETAIL SHEET #1
65	LAYOUT SHEET - R.O.W.
66 - 72	REFERENCE PLANS - JAY 1222-494
1 72A-72C	REFERENCE PLANS - JAY SEWER

STANDARDS LIST

B-71	STANDARD FOR RESIDENTIAL AND COMMERCIAL DRIVES	07-08-2005
E-121	STANDARD SIGN PLACEMENT - CONVENTIONAL ROAD	08-08-1995
G-1BM	BOX BEAM GUARD RAIL	06-13-1997
J-3	MAIL BOX SUPPORT DETAILS	08-07-1995
S-364A	BRIDGE RAILING, GALVANIZED 3 RAIL BOX BEAM	02-10-2014
S-364B	GUARDRAIL APPROACH SECTION, GALVANIZED 3 RAIL BOX BEAM	02-10-2014
S-364C	GUARDRAIL APPROACH SECTION, GALVANIZED 3 RAIL BOX BEAM	02-10-2014
S-364D	GUARDRAIL APPROACH SECTION, GALVANIZED 3 RAIL BOX BEAM	04-23-2012
T-1	TRAFFIC CONTROL GENERAL NOTES	04-25-2016
T-2	TRAFFIC SIGN GENERAL NOTES	04-25-2016
T-10	CONVENTIONAL ROADS CONSTRUCTION APPROACH SIGNING	08-06-2012
T-28	CONSTRUCTION SIGN DETAILS	08-06-2012
T-30	CONSTRUCTION SIGN DETAILS	08-06-2012
T-35	CONSTRUCTION ZONE LONGITUDINAL DROP-OFFS	08-06-2012
T-36	CONSTRUCTION ZONE LONGITUDINAL DROP-OFFS FOR PAVING	08-06-2012
T-42	BRIDGE NUMBER PLAQUE	04-09-2014
T-45	SQUARE TUBE SIGN POST AND ANCHOR	01-02-2013

STRUCTURES DETAIL SHEETS

SD-501.00	CONCRETE DETAILS AND NOTES	02-09-2012
SD-502.00	CONCRETE DETAILS AND NOTES	10-10-2012
SD-516.10	BRIDGE JOINT ASPHALTIC PLUG	08-29-2011
SD-601.00	STRUCTURAL STEEL DETAILS & NOTES	06-04-2010
SD-602.00	STRUCTURAL STEEL PLATE GIRDER AND NOTES	05-02-2011

HIGHWAY SAFETY & DESIGN DETAIL SHEETS

HSD-400.01	SAFETY EDGE DETAILS	03-29-2016

FINAL HYDRAULIC REPORT

HYDROLOGIC DATA

Date: July 2015

DRAINAGE AREA: 9.2 sq. mi.
CHARACTER OF TERRAIN: Hilly to mountainous, mostly forested with some development
STREAM CHARACTERISTICS: Sinuous, semi-alluvial. Grade transition from steep to flatter.
NATURE OF STREAMBED: Sand, gravel, cobbles, boulders and ledge

PEAK FLOW DATA

Q 2.33 =	550 cfs	Q 50 =	1800 cfs
Q 10 =	1100 cfs	Q 100 =	2100 cfs
Q 25 =	1500 cfs	Q 500 =	3000 cfs

DATE OF FLOOD OF RECORD: Unknown
ESTIMATED DISCHARGE: Unknown
WATER SURFACE ELEV.: Unknown
NATURAL STREAM VELOCITY: @ Q50 = 14.7 fps
ICE CONDITIONS: Moderate
DEBRIS: Moderate
DOES THE STREAM REACH MAXIMUM HIGHWATER ELEV. RAPIDLY? Yes
IS ORDINARY RISE RAPID? Yes
IS STAGE AFFECTED BY UPSTREAM OR DOWNSTREAM CONDITIONS? No
IF YES, DESCRIBE:

WATERSHED STORAGE: < 1% HEADWATERS:
UNIFORM: X
IMMEDIATELY ABOVE SITE:

EXISTING STRUCTURE INFORMATION

STRUCTURE TYPE: Single span concrete T-beam bridge
YEAR BUILT: Built 1927, reconstructed 1964
CLEAR SPAN(NORMAL TO STREAM): 22'
VERTICAL CLEARANCE ABOVE STREAMBED: 8'
WATERWAY OF FULL OPENING: 175 sq. ft.
DISPOSITION OF STRUCTURE: Remove and replace with new bridge.
TYPE OF MATERIAL UNDER SUBSTRUCTURE: See boring logs.

WATER SURFACE ELEVATIONS AT:

Q2.33 =	1030.3'	VELOCITY =	9.8 fps
Q10 =	1032.5'	"	12.4 fps
Q25 =	1033.9'	"	13.8 fps
Q50 =	1035.0'	"	14.6 fps
Q100 =	1036.0'	"	15.1 fps

LONG TERM STREAMBED CHANGES: Scour hole through bridge and at outlet.

IS THE ROADWAY OVERTOPPED BELOW Q100: No
FREQUENCY: Above Q100
RELIEF ELEVATION: 1036.2'
DISCHARGE OVER ROAD @Q100: None

UPSTREAM STRUCTURE

TOWN: Jay — DISTANCE: 2,100'
HIGHWAY #: TH 23 — STRUCTURE #: 13
CLEAR SPAN: 36' — CLEAR HEIGHT: 10'
YEAR BUILT: 1955, reconstructed 2008 — FULL WATERWAY:
STRUCTURE TYPE: I-beam bridge

DOWNSTREAM STRUCTURE

TOWN: Jay — DISTANCE: 5,800'
HIGHWAY #: TH 1 — STRUCTURE #: 6
CLEAR SPAN: 41' — CLEAR HEIGHT: 8'
YEAR BUILT: 1971 — FULL WATERWAY:
STRUCTURE TYPE: I-beam bridge

PROPOSED STRUCTURE

STRUCTURE TYPE: Single span steel beam bridge with concrete deck

CLEAR SPAN(NORMAL TO STREAM): 40'
VERTICAL CLEARANCE ABOVE STREAMBED: 9'
WATERWAY OF FULL OPENING: 328 sq. ft.

WATER SURFACE ELEVATIONS AT:

Q2.33 =	1029.9'	VELOCITY=	9.8 fps
Q10 =	1031.0'	"	12.4 fps
Q25 =	1031.8'	"	13.8 fps
Q50 =	1032.5'	"	14.6 fps
Q100 =	1033.1'	"	15.1 fps

IS THE ROADWAY OVERTOPPED BELOW Q100: No
FREQUENCY: Above Q100
RELIEF ELEVATION: 1036.2'
DISCHARGE OVER ROAD @Q100: None

AVERAGE LOW ELEVATION OF SUPERSTRUCTURE: 1035.9' upstr., 1033.9' dnstr.
VERTICAL CLEARANCE: @ Q50 = 3.4' upstr. & 1.4' dnstr. above approach W.S.E.

SCOUR: 0' of contraction scour up to Q500.

REQUIRED CHANNEL PROTECTION: Stone Fill, Type IV

PERMIT INFORMATION

		DEPTH OR ELEVATION:
AVERAGE DAILY FLOW:	-	
ORDINARY LOW WATER:	-	-
ORDINARY HIGH WATER:	-	-

TEMPORARY BRIDGE REQUIREMENTS

STRUCTURE TYPE: No temporary bridge required. Use phased construction.
CLEAR SPAN (NORMAL TO STREAM):
VERTICAL CLEARANCE ABOVE STREAMBED:
WATERWAY AREA OF FULL OPENING:

ADDITIONAL INFORMATION

TRAFFIC MAINTENANCE NOTES

1. MAINTAIN ONE-WAY TRAFFIC ON THE EXISTING STRUCTURE.
2. INSTALL AND MAINTAIN TRAFFIC SIGNALS.
3. SIDEWALKS ARE NOT NECESSARY

DESIGN VALUES

1. DESIGN LIVE LOAD		HL-93
2. FUTURE PAVEMENT	dp:	---
3. DESIGN SPAN	L:	45.41 FT
4. MIN. MID-SPAN POS. CAMBER @ RELEASE (PRESTRESSED UNITS)	Δ:	---
5. PRESTRESSING STRAND	fy:	---
6. PRESTRESSED CONCRETE STRENGTH	$f'c$:	---
7. PRESTRESSED CONCRETE RELEASE STRENGTH	$f'ci$:	---
8. CONCRETE, HIGH PERFORMANCE CLASS AA	$f'c$:	4.0 KSI
9. CONCRETE, HIGH PERFORMANCE CLASS A	$f'c$:	4.0 KSI
10. CONCRETE, HIGH PERFORMANCE CLASS B	$f'c$:	3.5 KSI
11. CONCRETE, CLASS C	$f'c$:	3.0 KSI
12. REINFORCING STEEL	fy:	60 KSI
13. STRUCTURAL STEEL AASHTO M270	fy:	---
14. NOMINAL BEARING RESISTANCE OF SOIL	qn:	---
15. SOIL BEARING RESISTANCE FACTOR (REFER TO AASHTO LRFD)	ϕ:	---
16. NOMINAL BEARING RESISTANCE OF ROCK	qn:	150 KSF
17. ROCK BEARING RESISTANCE FACTOR (REFER TO AASHTO LRFD)	ϕ:	0.45
18. PILE RESISTANCE FACTOR	ϕ:	---
19. LATERAL PILE DEFLECTION	Δ:	---
20. BASIC WIND SPEED	V_{3s}:	---
21. MINIMUM GROUND SNOW LOAD	p_g:	---
22. SEISMIC DATA PGA: 0	S_s:	---
	S_1:	---
23.		---
24.		---
25.		---
26.		---

LRFR LOAD RATING FACTORS

LOADING LEVELS	TRUCK H-20	HL-93	3S2	6 AXLE	3A STR.	4A STR.	5A SEMI
TONNAGE	20	36	36	66	30	34.5	38
INVENTORY 2	1.84	1.11					
POSTING							
OPERATING 2	2.39	1.44	2.53	1.33	1.76	1.60	2.01
COMMENTS:							

REVISED LOAD RATINGS

Sent 12/19/17

REVISIONS		
1	09.27.16	UPDATED PLAN SHEETS LIST
2	11.13.17	CORRECTED RATING FACTORS

AS BUILT "REBAR" DETAIL

LEVEL I	LEVEL II	LEVEL III
TYPE:	TYPE:	TYPE:
GRADE:	GRADE:	GRADE:

TRAFFIC DATA

YEAR	ADT	DHV	% D	% T	ADTT
2015	1400	290	62	11.6	170
2035	1500	300	62	15.6	240

20 year ESAL for flexible pavement from 2015 to 2035 : 478500
40 year ESAL for flexible pavement from 2015 to 2055 : 0
Design Speed : 40 mph

PROJECT NAME: JAY
PROJECT NUMBER: BHF 0278(3)

FILE NAME: Jay PI sheet.xls — PLOT DATE: 11/13/2017
PROJECT LEADER: M. Chenette — DRAWN BY: L. Buxton
DESIGNED BY: G. Bogue — CHECKED BY: M. Chenette
PRELIMINARY INFORMATION SHEET 1 — SHEET 2B OF 72

MATERIAL TOLERANCES

(IF USED ON PROJECT)

SURFACE	
- PAVEMENT (TOTAL THICKNESS)	+/- 1/4"
- AGGREGATE SURFACE COURSE	+/- 1/2"
SUBBASE	+/- 1"

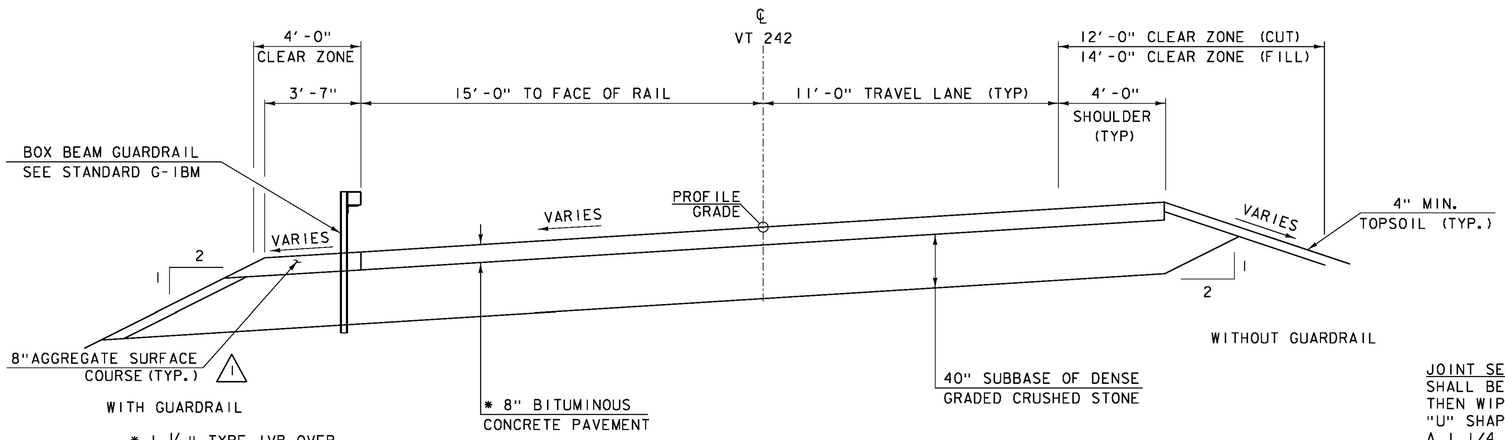

* 1 1/2" TYPE IVB OVER
1 1/2" TYPE IVB OVER
2 1/2" TYPE IIS OVER
2 1/2" TYPE IIS
EMULSIFIED ASPHALT
BETWEEN LAYERS (SEE NOTE 1)

VT 242 TYPICAL SECTION

SCALE 3/8" = 1'-0"

NOTE:
BITUMINOUS CONCRETE PAVEMENT TYPE IIS WILL BE PAID UNDER ITEM 490.30, SUPERPAVE BITUMINOUS CONCRETE PAVEMENT. BITUMINOUS CONCRETE PAVEMENT TYPE IVB WILL BE PAID UNDER SPECIAL PROVISION (BITUMINOUS CONCRETE PAVEMENT, TYPE IVB).

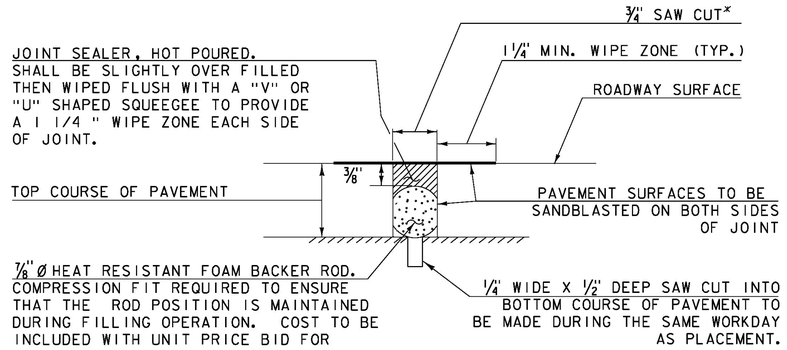

SAWED PAVEMENT JOINT DETAIL

NOT TO SCALE

*JOINT IS TO BE LOCATED ACCURATELY BY STRING LINING, OR OTHER MEANS, PRIOR TO PAVING, SO THAT THE SAW CUTS WILL BE MADE DIRECTLY OVER THE END OF CONCRETE DECK. JOINT SHALL BE CUT DRY IN A SINGLE PASS AND BE SEALED WITHIN 24 HOURS OR PRIOR TO EXPOSURE TO TRAFFIC. JOINT SHALL BE CLEANED PRIOR TO APPLYING THE JOINT SEALER.

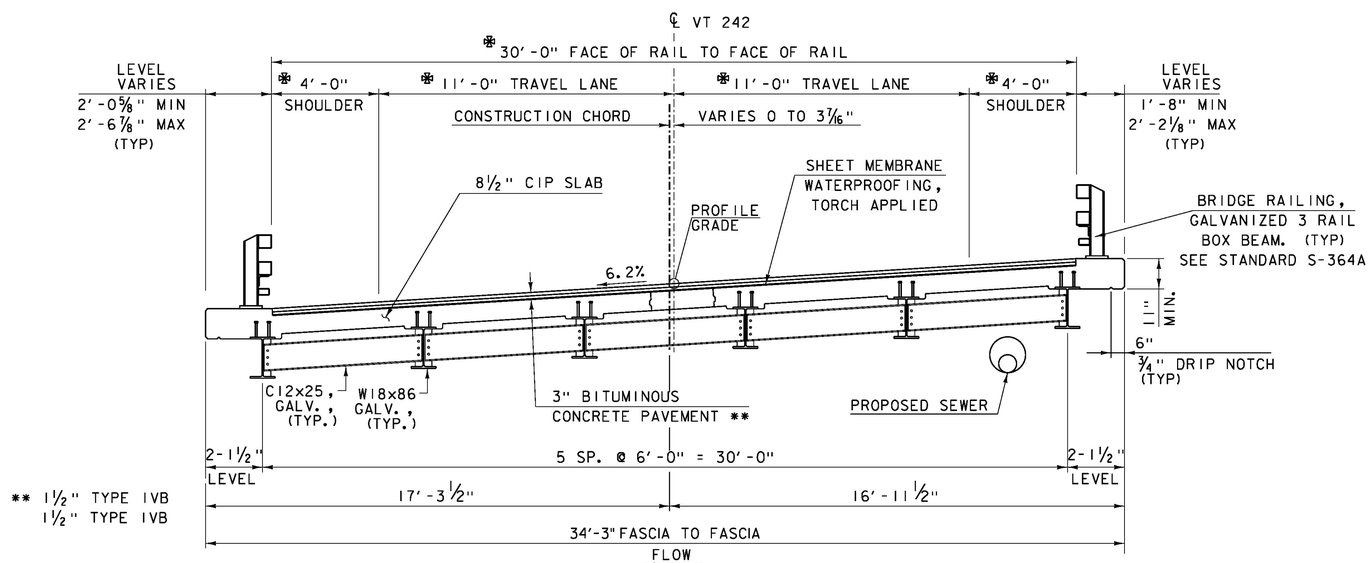

** 1 1/2" TYPE IVB
1 1/2" TYPE IVB

BRIDGE TYPICAL SECTION

SCALE 3/8" = 1'-0"

* INDICATES RADIAL DIMENSIONS

NOTES:
1. EMULSIFIED ASPHALT SHALL BE APPLIED ON COLD PLANED SURFACES AT THE RATE OF 0.08 GAL/SY AND BETWEEN PAVED LAYERS AT THE RATE OF 0.04 GAL/SY.

REVISIONS		
1	09.27.16	UPDATED AGGREGATE COURSE DESCRIPTION

PROJECT NAME: JAY
PROJECT NUMBER: BHF 0278(3)

FILE NAME: zl2cl54typ.dgn
PROJECT LEADER: M. CHENETTE
DESIGNED BY: N. TIRK
TYPICAL SECTIONS - TYP 1

PLOT DATE: 9/26/2016
DRAWN BY: L. BUXTON
CHECKED BY: M. CHENETTE
SHEET 3 OF 72

Stantec

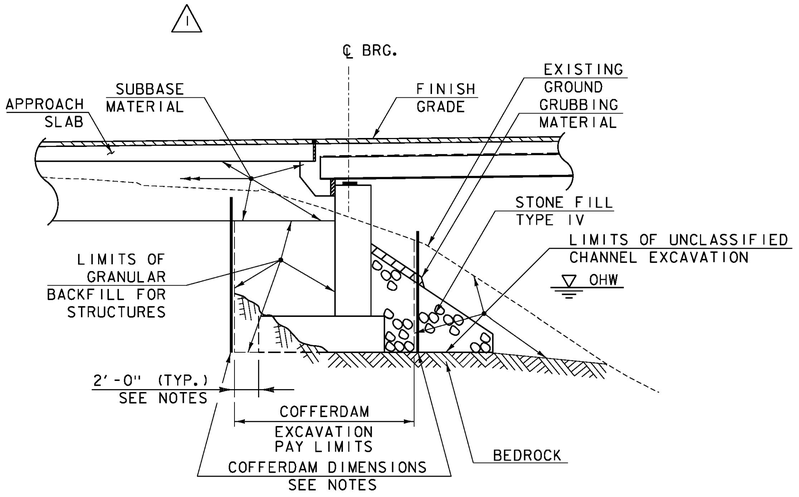

TYPICAL EARTHWORK SECTION

(NOT TO SCALE)

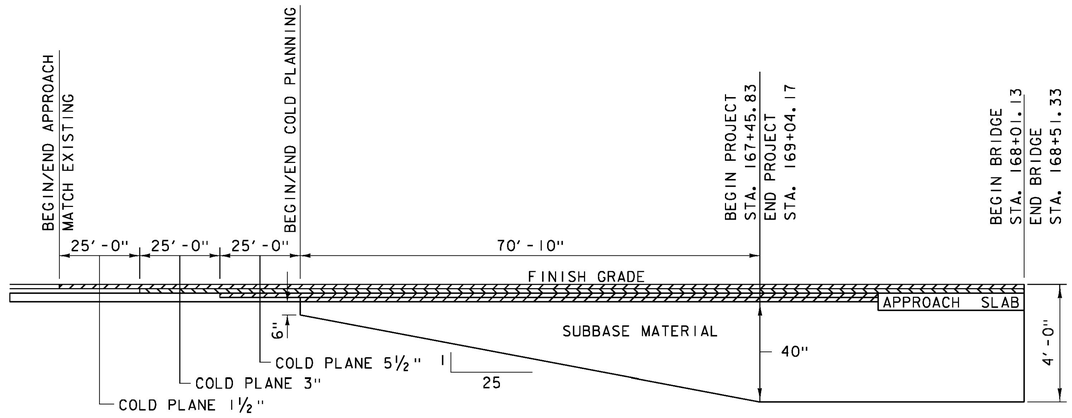

TYPICAL APPROACH SECTION

(ELEVATION IN CUT AND FILL)
(NOT TO SCALE)

COFFERDAM NOTES

1. COFFERDAM DIMENSIONS TO BE DETERMINED BY THE CONTRACTOR.
2. THE PAY LIMITS OF EITHER "COFFERDAM EXCAVATION, EARTH" OR "COFFERDAM EXCAVATION, ROCK" SHALL BE 2'-0" OUTSIDE THE PERIMETER OF THE FOOTING AND FROM THE BOTTOM OF EXCAVATION UP TO THE EXISTING GROUND OR BOTTOM OF SUBBASE, WHICHEVER IS LOWER.
3. IF A COFFERDAM IS CONSTRUCTED WHICH IS LARGER THAN THE INDICATED COFFERDAM EXCAVATION PAY LIMITS, PAYMENT FOR ALL UNCLASSIFIED CHANNEL EXCAVATION, INCLUDING THAT PORTION WHICH IS INSIDE THE COFFERDAM BUT OUTSIDE THE COFFERDAM PAY LIMITS, WILL BE MADE AT THE CONTRACT UNIT PRICE FOR UNCLASSIFIED CHANNEL EXCAVATION. NO MEASUREMENT AND PAYMENT WILL BE MADE FOR COFFERDAM EXCAVATION AND GRANULAR BACKFILL FOR STRUCTURES OUTSIDE THE PAY LIMITS DEFINED IN NOTE 2.

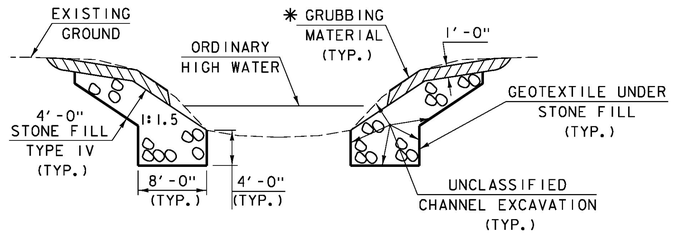

CHANNEL TYPICAL SECTION

NOT TO SCALE

✳ WHENEVER CHANNEL SLOPE INTERSECTS ROADWAY SUBBASE, GRUBBING MATERIAL SHALL BEGIN AT THE BOTTOM OF SUBBASE.

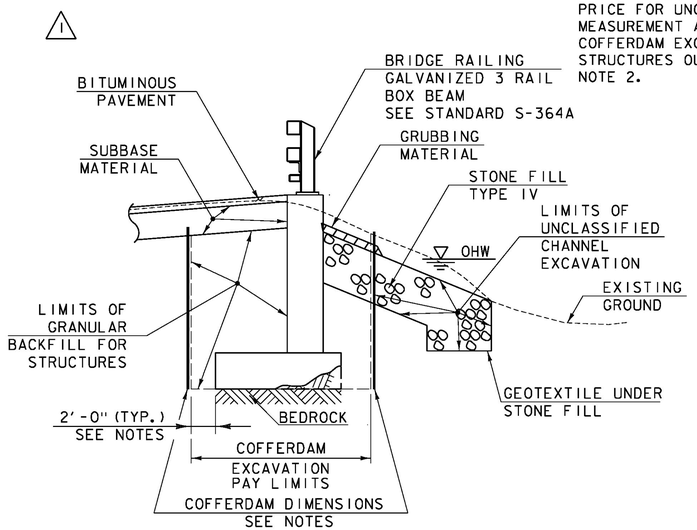

TYPICAL WINGWALL SECTION - UPSTREAM

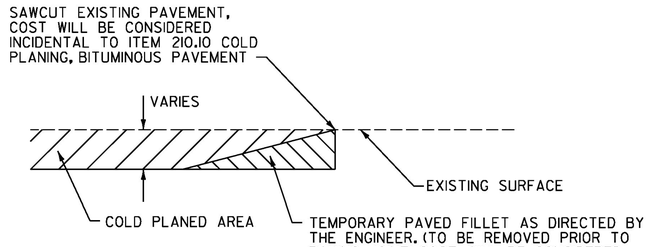

DETAIL AT VERTICAL COLD PLANE JOINTS

NOTE: THIS DETAIL SHALL BE USED AT THE LOCATIONS SHOWN ABOVE AS DIRECTED BY THE ENGINEER.

Stantec

REVISIONS		
1	09.27.16	REVISED TYPICAL EARTHWORK AND WINGWALL SECTIONS

PROJECT NAME: JAY
PROJECT NUMBER: BHF 0278(3)

FILE NAME: zl2cl54typ.dgn
PROJECT LEADER: M. CHENETTE
DESIGNED BY: N. TIRK
TYPICAL SECTIONS - TYP 2

PLOT DATE: 9/26/2016
DRAWN BY: L. BUXTON
CHECKED BY: M. CHENETTE
SHEET 4 OF 72

GENERAL PROJECT NOTES

1. ALL MATERIALS AND CONSTRUCTION SHALL CONFORM TO STATE OF VERMONT, AGENCY OF TRANSPORTATION STANDARD SPECIFICATIONS FOR CONSTRUCTION 2011, AND ITS LATEST REVISIONS, AND THE AASHTO LRFD BRIDGE DESIGN SPECIFICATIONS, SEVENTH EDITION DATED 2014, AND ITS LATEST REVISIONS.

2. THE BRIDGE IS DESIGNED FOR AN HL-93 LIVE LOAD.

3. ITEM 529.15 "REMOVAL OF STRUCTURE" IS FOR THE REMOVAL OF THE EXISTING STRUCTURE INCLUDING THE SUPERSTRUCTURE, ABANDONED UTILITIES AND APPURTENANCES AND ABUTMENTS INCLUDING THE FOOTING AND ANY PORTION OF THE SUBSTRUCTURE OUTSIDE THE LIMITS OF STRUCTURE EXCAVATION OR UNCLASSIFIED CHANNEL EXCAVATION.

4. ALL DIMENSIONS SHOWN IN THE PLANS ARE HORIZONTAL OR VERTICAL AT 68 DEGREES FAHRENHEIT, UNLESS NOTED OTHERWISE.

5. ALL CONSTRUCTION AND ACCESS SHALL BE WITHIN THE RIGHT OF WAY UNLESS SHOWN ON THE ROW PLANS OR APPROVED IN WRITING BY THE PROPERTY OWNER AND VTRANS ENVIRONMENTAL PERMITTING. THE CONTRACTOR SHALL COORDINATE DIRECTLY WITH THE PROPERTY OWNER(S) TO OBTAIN WRITTEN APPROVAL OF LAND USE OUTSIDE THE RIGHT OF WAY. THE CONTRACTOR SHALL SUBMIT COPIES OF THE WRITTEN PROPERTY AGREEMENTS TO THE RESIDENT ENGINEER.

CONCRETE AND REINFORCING STEEL

6. ITEM 514.10 WATER REPELLANT, SILANE SHALL BE APPLIED TO ALL EXPOSED CONCRETE SURFACES EXCEPT THE UNDERSIDE OF DECK BETWEEN DRIP BEADS.

7. ALL REINFORCEMENT IN THE SUPERSTRUCTURE (INCLUDING CURTAIN WALLS) SHALL PROVIDE LEVEL II CORROSION RESISTANCE. LEVEL I CORROSION RESISTANCE IS REQUIRED FOR THE SUBSTRUCTURE.

8. CONCRETE FOR THE DECK AND CURTAIN WALL SHALL BE ITEM 501.33, CONCRETE, HIGH PERFORMANCE CLASS A. CONCRETE FOR THE SUBSTRUCTURE SHALL BE HIGH PERFORMANCE CLASS B AND WILL BE PAID FOR UNDER ITEM 501.34, CONCRETE, HIGH PERFORMANCE CLASS B.

9. SURFACES OF BRIDGE SEATS UNDER BEARING DEVICES SHALL BE LEVEL. OTHER BRIDGE SEAT AREAS SHALL BE SLOPED 1/4 INCH PER FOOT. THE ABUTMENT SEATS SHALL BE SLOPED FULL WIDTH TOWARD MIDSPAN. THE ENTIRE BRIDGE SEAT SURFACE SHALL BE GIVEN A MAGNESIUM FLOAT FINISH. THE COST FOR FINISHING THE BRIDGE SEAT SURFACES WILL BE CONSIDERED INCIDENTAL TO ITEM 501.34, CONCRETE, HIGH PERFORMANCE CLASS B.

10. NO CONCRETE SHALL BE PLACED IN THE ABUTMENTS OR WINGWALLS ABOVE THE ADJACENT BEAM SEAT ELEVATIONS UNTIL THE BEAMS HAVE BEEN SET.

11. CLEAR COVER ON REINFORCING STEEL SHALL BE PER THE FOLLOWING LIST UNLESS NOTED OTHERWISE:

LOCATION	CLEAR COVER (INCHES
UNDERSIDE OF BRIDGE DECK	1.5
EXPOSED TO EARTH OR WEATHER	2
TOP OF PAVED BRIDGE DECK	2.5
DIRECT EXPOSURE TO DEICING SALTS (CURBS, DECK FASCIA AND EXPOSED FACES OF WALLS)	3
CAST AGAINST EARTH	3

STRUCTURAL STEEL

12. ALL STRUCTURAL STEEL SHALL CONFORM TO AASHTO M 270M/M 270 GRADE 50 AND WILL BE PAID FOR UNDER ITEM 506.50, "STRUCTURAL STEEL, ROLLED BEAM". ALL STRUCTURAL STEEL SHALL BE GALVANIZED IN ACCORDANCE WITH SECTION 726.08. GALVANIZING WILL BE PAID FOR UNDER ITEM 900.645, "SPECIAL PROVISION (GALVANIZING STRUCTURAL STEEL)". ALL WELDING TO THE STRUCTURAL STEEL SHALL BE COMPLETED PRIOR TO GALVANIZING.

13. AFTER THE SUPERSTRUCTURE STEEL HAS BEEN ERECTED, ELEVATIONS SHALL BE TAKEN ALONG THE TOP OF EACH GIRDER UNDER THE DIRECTION OF THE ENGINEER. THESE ELEVATIONS SHALL BE USED IN DETERMINING FINAL GRADE.

14. ALL CONNECTIONS USING 7/8 INCH DIAMETER BOLTS CONFORMING TO AASHTO M 164 TYPE I GALVANIZED. HOLES SHALL BE 15/16 INCH DIAMETER, UNLESS OTHERWISE NOTED. BOLTS THAT HAVE BEEN FULLY TIGHTENED SHALL NOT BE REUSED.

15. ANY HOLES IN THE FASCIA BEAMS NOT OTHERWISE FILLED SHALL BE FITTED WITH BUTTON HEAD OR HEX HEAD BOLTS CONFORMING TO TYPE 1 GALVANIZED. THE BOLTS SHALL BE TIGHTENED IN ACCORDANCE WITH SUBSECTION 506.19 OF THE STANDARD SPECIFICATIONS.

16. BEAMS ARE TO BE CHARPY-V NOTCH TESTED IN ACCORDANCE WITH SUBSECTION 714.01.

17. BEAM WEBS SHALL BE PLUMB IN THEIR FINAL POSITION.

18. WHERE GALVANIZING HAS BEEN REMOVED BY ANY MEANS FROM BRIDGE COMPONENTS INCLUDING ASSOCIATED HARDWARE, IT SHALL BE REPAIRED IN ACCORDANCE WITH SUBSECTION 726.08 OF THE SPECIFICATIONS. COSTS FOR THIS WORK SHALL BE INCIDENTAL TO THE ITEM UNDER WHICH THE GALVANIZED COMPONENT IS PROVIDED.

19. CONNECTIONS NOT DETAILED SHALL BE DETAILED BY THE FABRICATOR AND SUBMITTED TO THE ENGINEER FOR APPROVAL.

20. SHEAR STUDS SHALL BE INSTALLED IN THE SHOP, PRIOR TO GALVANIZING.

21. CONTRACTOR MAY SUBSTITUTE PLATE GIRDERS FOR ROLLED BEAMS AT NO ADDITIONAL COST TO THE STATE. CONTRACTOR MUST PROVIDE DRAWINGS AND CALCULATIONS STAMPED BY A PROFESSIONAL ENGINEER. THE PLATE GIRDER SHALL HAVE SECTION PROPERTIES THAT ARE EQUAL TO OR GREATER THAN THE SECTION PROPERTIES OF THE ROLLED BEAM AND THE OVERALL DEPTH SHALL BE EQUAL TO OR LESS THAN THE ROLLED BEAM DEPTH.

GEOTECHNICAL

22. BEDROCK ELEVATIONS MAY VARY AND ADJUSTMENTS IN BOTTOM OF FOOTING ELEVATION AND GEOMETRY ARE EXPECTED.

23. IN AREAS WHERE THE FOOTINGS WILL BEAR ON BEDROCK ALL SOIL, WEATHERED ROCK AND FRACTURED ROCK SHALL BE REMOVED FROM THE BEDROCK SURFACE PRIOR TO PLACING CONCRETE FOR THE FOOTING.

24. UPON COMPLETION OF THE EXCAVATION FOR SUBSTRUCTURES FOUNDED ON BEDROCK AND PRIOR TO PLACING FORMWORK, THE CONTRACTOR SHALL NOTIFY THE PROJECT MANAGER AND THE VTRANS GEOTECHNICAL ENGINEER. THE GEOTECHNICAL ENGINEER WILL DETERMINE IF THE BEDROCK IS COMPETENT TO OBTAIN THE NOMINAL BEARING RESISTANCE AS SHOWN ON THE PLANS. THE CONTRACTOR SHALL NOTIFY THE VTRANS GEOTECHNICAL ENGINEER 72 HOURS IN ADVANCE WHEN THE ANALYSIS WILL BE NEEDED.

25. A MAXIMUM OF 6" OVER BREAKAGE WILL BE REPLACED WITH "HIGH PERFORMANCE CLASS B CONCRETE. OVER BREAKAGE BEYOND 6" SHALL BE REPLACED WITH "HIGH PERFORMANCE CLASS B CONCRETE" AT THE EXPENSE OF THE CONTRACTOR.

26. THE ABUTMENTS HAVE BEEN DESIGNED FOR THE TOP OF THE FOOTING ELEVATIONS AS SHOWN ON PLANS. FOR ALL SUBSTRUCTURES, WHERE BEDROCK IS WITHIN ONE FOOT BELOW THE BOTTOM OF THE AS DESIGNED FOOTING, THE FOOTING MAY BE POURED TO THE TOP OF THE BEDROCK USING "CONCRETE, HIGH PERFORMANCE CLASS B". IF THE BEDROCK ELEVATION IS GREATER THAN 1'-0" BELOW THE DESIGN BOTTOM OF FOOTING, A SUB-FOOTING SHALL BE POURED SO THAT THE DESIGN TOP OF FOOTING IS AT THE REQUIRED ELEVATION, USING "CONCRETE, CLASS C". THE LIMITS OF THE SUBFOOTING SHALL BE 1'-0" OUTSIDE THE LIMITS OF THE FOOTING.

27. IN THE EVENT THAT A SUB-FOOTING IS REQUIRED, #8 DOWELS SPACED 4'-0" ON CENTER SHALL BE EMBEDDED A MINIMUM OF 1'-6" INTO THE FOOTING, THROUGH THE SUB-FOOTING, AND 2'-0" INTO BEDROCK. DOWEL REINFORCEMENT SHALL HAVE LEVEL 1 CORROSION RESISTANCE AND WILL BE PAID FOR UNDER ITEM 507.11, REINFORCING STEEL, LEVEL 1.

28. IF BEDROCK IS ABOVE THE DESIGN BOTTOM OF FOOTING, THE FOOTING MAY BE RAISED. BEFORE ANY UPWARD ADJUSTMENT IS MADE IN FOOTING ELEVATION, THE PROJECT MANAGER SHALL BE CONTACTED AND PROVIDED WITH A BEDROCK PROFILE. NO FURTHER WORK SHALL BE DONE UNTIL APPROVAL OF THE CONFIGURATION IS RECEIVED.

29. ABUTMENT AND WINGWALL FOOTINGS SHALL BEAR ON BEDROCK.

30. AN EXISTING 10" PRESSURE SEWER AND PIPE BRIDGE IS LOCATED NEAR THE UPSTREAM SIDE OF THE ROADWAY BRIDGE. THE CONTRACTOR SHALL PROTECT THE SEWER AND PIPE BRIDGE FROM DAMAGE DURING CONSTRUCTION, INCLUDING THE PIPE BRIDGE PIERS AND FOOTINGS. THE CONTRACTOR SHALL BE RESPONSIBLE FOR ALL REPAIR COSTS ASSOCIATED WITH ANY DAMAGE TO THE SEWER PIPE AND PIPE BRIDGE DURING CONSTRUCTION.

1. 31. IT HAS BEEN DETERMINED THAT THE SOILS IN THE AREA OF THE PROJECT HAVE NATURALLY OCCURRING ASBESTOS (NOA). THE CONTRACTOR IS REQUIRED TO PREPARE AND IMPLEMENT A NATURALLY OCCURRING ASBESTOS COMPLIANCE PLAN, AS INDICATED IN THE SPECIAL PROVISIONS.

REVISIONS		
1	09.27.16	ADDED NOTE 31.

PROJECT NAME: JAY
PROJECT NUMBER: BHF 0278(3)

FILE NAME: zl2C154gen_nts.dgn
PROJECT LEADER: M. CHENETTE
DESIGNED BY: T. KNIGHT
PROJECT NOTES

PLOT DATE: 9/26/2016
DRAWN BY: L. BUXTON
CHECKED BY: G. BOGUE
SHEET 5 OF 72

Stantec

STATE OF VERMONT
AGENCY OF TRANSPORTATION

QUANTITY SHEET 1

SUMMARY OF ESTIMATED QUANTITIES

ROADWAY	EROSION CONTROL	UTILITIES (NO FEDERAL PARTICIPATIO	BRIDGE NO. 10	FULL C.E. ITEMS
1				
900				
			~~21~~	
			570	
1				
			~~640~~	
			260	
			670	
			25	
			1	
			1	
400				
830				
15				
12				
1				
210				
1				
1				
			70	
			210	
			29400	
			19970	
			16800	
			140	
			214	
			1	
			10	
			64	
			170	
			64	
			142	
			1	
			12	
			1	
			1	

TOTALS

GRAND TOTAL	FINAL
1	
900	
~~21~~	
570	
1	
~~640~~	
260	
670	
25	
1	
1	
400	
830	
15	
12	
1	
210	
1	
1	
70	
210	
29400	
19970	
16800	
140	
214	
1	
10	
64	
170	
64	
142	
1	
12	
1	
1	

DESCRIPTIONS

UNIT	ITEMS	ITEM NUMBER	ROUND
LS	CLEARING AND GRUBBING, INCLUDING INDIVIDUAL TREES AND STUMPS	201.10	
CY	COMMON EXCAVATION	203.15	
CY	~~SOLID ROCK EXCAVATION~~ 2	~~203.16~~	
CY	UNCLASSIFIED CHANNEL EXCAVATION	203.27	
CY	TRENCH EXCAVATION OF EARTH, EXPLORATORY (N.A.B.I.)	204.22	
CY	~~STRUCTURE EXCAVATION~~ 2	~~204.25~~	
CY	GRANULAR BACKFILL FOR STRUCTURES 3	204.30	
CY	COFFERDAM EXCAVATION, EARTH 1	208.30	
CY	COFFERDAM EXCAVATION, ROCK 1	208.35	
LS	COFFERDAM (COFFERDAM, ABUT. 1)	208.40	
LS	COFFERDAM (COFFERDAM, ABUT. 2)	208.40	
SY	COLD PLANING, BITUMINOUS PAVEMENT	210.10	
CY	SUBBASE OF DENSE GRADED CRUSHED STONE	301.35	
CY	AGGREGATE SURFACE COURSE 1	401.10	
CWT	EMULSIFIED ASPHALT	404.65	
LU	PRICE ADJUSTMENT, ASPHALT CEMENT (N.A.B.I.)	406.50	
TON	SUPERPAVE BITUMINOUS CONCRETE PAVEMENT	490.30	
LU	AIR VOIDS PAY ADJUSTMENT (N.A.B.I.)	490.31	
LU	MAT DENSITY PAY ADJUSTMENT (N.A.B.I.)	490.32	
CY	CONCRETE, HIGH PERFORMANCE CLASS A	501.33	
CY	CONCRETE, HIGH PERFORMANCE CLASS B	501.34	
LB	STRUCTURAL STEEL, ROLLED BEAM	506.50	
LB	REINFORCING STEEL, LEVEL I	507.11	
LB	REINFORCING STEEL, LEVEL II	507.12	
LF	DRILLING AND GROUTING DOWELS 3	507.16	
EACH	MECHANICAL BAR CONNECTOR	507.19	
LS	SHEAR CONNECTORS (732- 7/8" DIAM. x 7")	508.15	
GAL	WATER REPELLENT, SILANE	514.10	
LF	BRIDGE EXPANSION JOINT, ASPHALTIC PLUG	516.10	
SY	SHEET MEMBRANE WATERPROOFING, TORCH APPLIED	519.20	
LF	JOINT SEALER, HOT POURED	524.11	
LF	BRIDGE RAILING, GALVANIZED 3 RAIL BOX BEAM	525.335	
EACH	REMOVAL OF STRUCTURE (REMOVAL OF BRIDGE #10)(952 SF-EST.)	529.15	
EACH	BEARING DEVICE ASSEMBLY, ELASTOMERIC PAD W/ EXT. LOAD PLATES	531.18	
	BEGIN OPTION BB		
LS	PRECAST CONCRETE STRUCTURE (APP SLAB 2)	540.10	
LS	SPECIAL PROVISION (CONTRACTOR-FABRICATED PRECAST CONCRETE STRUCTURE)(APP SLAB 2)	900.645	
	END OPTION BB		

DETAILED SUMMARY OF QUANTITIES

QUANTITIES	UNIT	ITEMS
3		**EARTHWORKS SUMMARY**
		FILL AVAILABLE
900	CY	COMMON EXCAVATION
570	CY	UNCLASSIFIED CHANNEL EXCAVATION
670	CY	COFFERDAM EXCAVATION, EARTH
25	CY	COFFERDAM EXCAVATION, ROCK
2165	**CY**	**TOTAL AVAILABLE FILL**
		FILL REQUIRED
20	CY	PLANIMETERED FILL
20	**CY**	**TOTAL FILL REQUIRED**
2145	**CY**	**TOTAL WASTE**

REVISIONS		
1	09.27.16	QUANTITY ITEM ADDED
2	09.27.16	QUANTITY ITEM DELETED
3	09.27.16	QUANTITY CHANGE

Stantec

PROJECT NAME: JAY
PROJECT NUMBER: BHF 0278(3)

FILE NAME: z12c154frm.dgn
PROJECT LEADER: M. CHENETTE
DESIGNED BY: I. MAYNARD
QUANTITY SHEET 1 OF 3

PLOT DATE: 9/26/2016
DRAWN BY: I. MAYNARD
CHECKED BY: G. SANTY
SHEET 6 OF 72

STATE OF VERMONT
AGENCY OF TRANSPORTATION

QUANTITY SHEET 2

SUMMARY OF ESTIMATED QUANTITIES						TOTALS		DESCRIPTIONS				DETAILED SUMMARY OF QUANTITIES		
ROADWAY	EROSION CONTROL	UTILITIES (NO FEDERAL PARTICIPATIO	BRIDGE NO. 10	FULL C.E. ITEMS		GRAND TOTAL	FINAL	UNIT	ITEMS	ITEM NUMBER	ROUND	QUANTITIES	UNIT	ITEMS
									BEGIN OPTION AA					
			1			1		LS	PRECAST CONCRETE STRUCTURE (APP SLAB 1)	540.10				
			1			1		LS	SPECIAL PROVISION (CONTRACTOR-FABRICATED PRECAST CONCRETE STRUCTURE)(APP SLAB 1)	900.645				
									END OPTION AA					
			60			60		CY	CONCRETE, CLASS C	541.30				
			500			500		CY	STONE FILL, TYPE IV	613.13				
1						1		EACH	RELOCATE MAILBOX, SINGLE SUPPORT	617.10				
100						100		LF	BOX BEAM GUARDRAIL	621.30				
2						2		EACH	MANUFACTURED TERMINAL SECTION, TANGENT	621.51				
4						4		EACH	GUARDRAIL APPROACH SECTION, GALVANIZED 3 RAIL BOX BEAM	621.725				
250						250		LF	REMOVAL AND DISPOSAL OF GUARDRAIL	621.80				
20						20		HR	UNIFORMED TRAFFIC OFFICERS	630.10				
1000						1000		HR	FLAGGERS	630.15				
				1		1		LS	FIELD OFFICE, ENGINEERS	631.10				
				1		1		LS	TESTING EQUIPMENT, CONCRETE	631.16				
				1		1		LS	TESTING EQUIPMENT, BITUMINOUS	631.17				
				1		1		DL	FIELD OFFICE TELEPHONE (N.A.B.I.)	631.26				
520						520		HR	EMPLOYEE TRAINEESHIP	634.10				
1						1		LS	MOBILIZATION/DEMOBILIZATION	635.11				
2						2		EACH	PORTABLE CHANGEABLE MESSAGE SIGN	641.15				
900						900		LF	DURABLE 4 INCH WHITE LINE, THERMOPLASTIC	646.402				
900						900		LF	DURABLE 4 INCH YELLOW LINE, THERMOPLASTIC	646.412				
			360			360		SY	GEOTEXTILE UNDER STONE FILL	649.31				
	45					45		SY	GEOTEXTILE FOR SILT FENCE	649.51				
	100					100		SY	GEOTEXTILE FOR FILTER CURTAIN △1	649.61				
	20					20		LB	SEED	651.15				
	120					120		LB	FERTILIZER	651.18				
	1					1		TON	AGRICULTURAL LIMESTONE	651.20				
	1					1		TON	HAY MULCH	651.25				
	65					65		CY	TOPSOIL	651.35				
	360					360		SY	GRUBBING MATERIAL	651.40				
	1					1		LS	EPSC PLAN	652.10				
	20					20		HR	MONITORING EPSC PLAN	652.20				
	1					1		LU	MAINTENANCE OF EPSC PLAN (N.A.B.I.)	652.30				
	360					360		SY	TEMPORARY EROSION MATTING	653.20				
	2					2		CY	TEMPORARY STONE CHECK DAM, TYPE I	653.25				
	40					40		CY	VEHICLE TRACKING PAD	653.35				
	2					2		EACH	FILTER BAG	653.45				
	310					310		LF	BARRIER FENCE	653.50				
	320					320		LF	PROJECT DEMARCATION FENCE	653.55				

REVISIONS		
△1	09.27.16	QUANTITY ITEM ADDED

Stantec

PROJECT NAME: JAY
PROJECT NUMBER: BHF 0278(3)

FILE NAME: z12c154frm.dgn
PROJECT LEADER: M. CHENETTE
DESIGNED BY: I. MAYNARD
QUANTITY SHEET 2 OF 3

PLOT DATE: 9/26/2016
DRAWN BY: I. MAYNARD
CHECKED BY: G. SANTY
SHEET 7 OF 72

STATE OF VERMONT
AGENCY OF TRANSPORTATION

QUANTITY SHEET 3

| SUMMARY OF ESTIMATED QUANTITIES | | |

STATE OF VERMONT
AGENCY OF TRANSPORTATION

BRIDGE QUANTITY SHEET 1

SUMMARY OF BRIDGE QUANTITIES					TOTALS	DESCRIPTIONS			DETAILED SUMMARY OF QUANTITIES		
APP SLAB 1	ABUTMENT 1	SUPER-STRUCTURE	ABUTMENT 2	APP SLAB 2	BRIDGE TOTAL	UNIT	ITEMS	ITEM NUMBER	QUANTITIES	UNIT	ITEMS
	~~6~~		~~15~~		~~21~~	~~CY~~	~~SOLID ROCK EXCAVATION~~ 2	~~203.16~~			
	390		180		570	CY	UNCLASSIFIED CHANNEL EXCAVATION	203.27			
	~~408~~		~~232~~		~~640~~	~~CY~~	~~STRUCTURE EXCAVATION~~ 2	~~204.25~~			
	185		75		260	CY	GRANULAR BACKFILL FOR STRUCTURES 3	204.30			
	425		245		670	CY	COFFERDAM EXCAVATION, EARTH 1	208.30			
	8		17		25	CY	COFFERDAM EXCAVATION, ROCK 1	208.35			
	1				1	LS	COFFERDAM (COFFERDAM, ABUT. 1)	208.40			
			1		1	LS	COFFERDAM (COFFERDAM, ABUT. 2)	208.40			
		70			70	CY	CONCRETE, HIGH PERFORMANCE CLASS A	501.33			
	130		80		210	CY	CONCRETE, HIGH PERFORMANCE CLASS B	501.34			
		29400			29400	LB	STRUCTURAL STEEL, ROLLED BEAM	506.50			
	12726		7244		19970	LB	REINFORCING STEEL, LEVEL I	507.11			
		16800			16800	LB	REINFORCING STEEL, LEVEL II	507.12			
	80		60		140	LF	DRILLING AND GROUTING DOWELS 3	507.16			
	12	190	12		214	EACH	MECHANICAL BAR CONNECTOR	507.19			
		1			1	LS	SHEAR CONNECTORS (732- 7/8" DIAM. x 7")	508.15			
	4	3	3		10	GAL	WATER REPELLENT, SILANE	514.10			
		64			64	LF	BRIDGE EXPANSION JOINT, ASPHALTIC PLUG	516.10			
		170			170	SY	SHEET MEMBRANE WATERPROOFING, TORCH APPLIED	519.20			
		64			64	LF	JOINT SEALER, HOT POURED	524.11			
		142			142	LF	BRIDGE RAILING, GALVANIZED 3 RAIL BOX BEAM	525.335			
		1			1	EACH	REMOVAL OF STRUCTURE (REMOVAL OF BRIDGE #10)(952 SF-EST.)	529.15			
	6		6		12	EACH	BEARING DEVICE ASSEMBLY, ELASTOMERIC PAD W/ EXT. LOAD PLATES	531.18			
							BEGIN OPTION BB				
				1	1	LS	PRECAST CONCRETE STRUCTURE (APP SLAB 2)	540.10			
				1	1	LS	SPECIAL PROVISION (CONTRACTOR-FABRICATED PRECAST CONCRETE STRUCTURE)(APP SLAB 2)	900.645			
							END OPTION BB				
							BEGIN OPTION AA				
1					1	LS	PRECAST CONCRETE STRUCTURE (APP SLAB 1)	540.10			
1					1	LS	SPECIAL PROVISION (CONTRACTOR-FABRICATED PRECAST CONCRETE STRUCTURE)(APP SLAB 1)	900.645			
							END OPTION AA				
	35		25		60	CY	CONCRETE, CLASS C	541.30			
	340		160		500	CY	STONE FILL, TYPE IV	613.13			
	245		115		360	SY	GEOTEXTILE UNDER STONE FILL	649.31			
2.5	2		1	2.5	8	CY	SPECIAL PROVISION (HIGH PERFORMANCE CONCRETE, RAPID SET)(FPQ)	900.608			
		1			1	LS	SPECIAL PROVISION (GALVANIZING STUCTURAL STEEL)	900.645			

REVISIONS		
1	09.27.16	QUANTITY ITEM ADDED
2	09.27.16	QUANTITY ITEM DELETED
3	09.27.16	QUANTITY CHANGE

Stantec

PROJECT NAME: JAY
PROJECT NUMBER: BHF 0278(3)

FILE NAME: z12c154frm.dgn
PROJECT LEADER: M. CHENETTE
DESIGNED BY: T. KNIGHT
BRIDGE QUANTITY SHEET 1

PLOT DATE: 9/26/2016
DRAWN BY: I. MAYNARD
CHECKED BY: M. CHENETTE
SHEET 9 OF 72

GENERAL INFORMATION

SYMBOLOGY LEGEND NOTE

THE SYMBOLOGY ON THIS SHEET IS INTENDED TO COVER STANDARD CONVENTIONAL SYMBOLOGY. THE SYMBOLOGY IS USED FOR EXISTING & PROPOSED FEATURES WITH HEAVIER LINEWEIGHT, IN COMBINATION WITH PROJECT ANNOTATION, AS NOTED ON PROJECT PLAN SHEETS. THIS LEGEND SHEET COVERS THE BASICS. SYMBOLOGY ON PLANS MAY VARY, PLAN ANNOTATIONS AND NOTES SHOULD BE USED TO CLARIFY AS NEEDED.

R.O.W. ABBREVIATIONS (CODES) & SYMBOLS

POINT	CODE	DESCRIPTION
	CH	CHANNEL EASEMENT
	CONST	CONSTRUCTION EASEMENT
	CUL	CULVERT EASEMENT
	D&C	DISCONNECT & CONNECT
	DIT	DITCH EASEMENT
	DR	DRAINAGE EASEMENT
	DRIVE	DRIVEWAY EASEMENT
	EC	EROSION CONTROL
	HWY	HIGHWAY EASEMENT
	I&M	INSTALL & MAINTAIN EASEMENT
	LAND	LANDSCAPE EASEMENT
	R&RES	REMOVE & RESET
	R&REP	REMOVE & REPLACE
	SR	SLOPE RIGHT
	UE	UTILITY EASEMENT
	(P)	PERMANENT EASEMENT
	(T)	TEMPORARY EASEMENT
■	BNDNS	BOUND SET
⧈	BNDNS	BOUND TO BE SET
●	IPNS	IRON PIN SET
◎	IPNS	IRON PIN TO BE SET
⊠	CALC	EXISTING ROW POINT
○	PROW	PROPOSED ROW POINT
[LENGTH]		LENGTH CARRIED ON NEXT SHEET

COMMON TOPOGRAPHIC POINT SYMBOLS

POINT	CODE	DESCRIPTION
	APL	BOUND APPARENT LOCATION
	BM	BENCHMARK
	BND	BOUND
	CB	CATCH BASIN
	COMB	COMBINATION POLE
	DITHR	DROP INLET THROATED DNC
	EL	ELECTRIC POWER POLE
	FPOLE	FLAGPOLE
	GASFIL	GAS FILLER
	GP	GUIDE POST
	GSO	GAS SHUT OFF
	GUY	GUY POLE
	GUYW	GUY WIRE
	GV	GATE VALUE
	H	TREE HARDWOOD
	HCTRL	CONTROL HORIZONTAL
	HVCTRL	CONTROL HORIZ. & VERTICAL
	HYD	HYDRANT
	IP	IRON PIN
	IPIPE	IRON PIPE
	LI	LIGHT - STREET OR YARD
	MB	MAILBOX
	MH	MANHOLE (MH)
	MM	MILE MARKER
	PM	PARKING METER
	PMK	PROJECT MARKER
	POST	POST STONE/WOOD
	RRSIG	RAILROAD SIGNAL
	RRSL	RAILROAD SWITCH LEVER
	S	TREE SOFTWOOD
	SAT	SATELLITE DISH
	SHRUB	SHRUB
	SIGN	SIGN
	STUMP	STUMP
	TEL	TELEPHONE POLE
	TIE	TIE
	TSIGN	SIGN W/DOUBLE POST
	VCTRL	CONTROL VERTICAL
	WELL	WELL
	WSO	WATER SHUT OFF

THESE ARE COMMON VAOT SURVEY POINT SYMBOLS FOR EXISTING FEATURES, ALSO USED FOR PROPOSED FEATURES WITH HEAVIER LINEWEIGHT, IN COMBINATION WITH PROPOSED ANNOTATION.

PROPOSED GEOMETRY CODES

CODE	DESCRIPTION
PC	POINT OF CURVATURE
PI	POINT OF INTERSECTION
CC	CENTER OF CURVE
PT	POINT OF TANGENCY
PCC	POINT OF COMPOUND CURVE
PRC	POINT OF REVERSE CURVE
POB	POINT OF BEGINNING
POE	POINT OF ENDING
STA	STATION PREFIX
AH	AHEAD STATION SUFFIX
BK	BACK STATION SUFFIX
D	CURVE DEGREE OF (100FT)
R	CURVE RADUIS OF
T	CURVE TANGENT LENGTH
L	CURVE LENGTH OF
E	CURVE EXTERNAL DISTANCE

UTILITY SYMBOLOGY

UNDERGROUND UTILITIES

- UGU — UTILITY (GENERIC-UNKNOWN)
- UT — TELEPHONE
- UE — ELECTRIC
- UC — CABLE (TV)
- UEC — ELECTRIC+CABLE
- UET — ELECTRIC+TELEPHONE
- UCT — CABLE+TELEPHONE
- UECT — ELECTRIC+CABLE+TELEP.
- G — GAS LINE
- W — WATER LINE
- S — SANITARY SEWER (SEPTIC)

ABOVE GROUND UTILITIES (AERIAL)

- AGU — UTILITY (GENERIC-UNKNOWN)
- T — TELEPHONE
- E — ELECTRIC
- C — CABLE (TV)
- EC — ELECTRIC+CABLE
- ET — ELECTRIC+TELEPHONE
- AER E&T — ELECTRIC+TELEPHONE
- CT — CABLE+TELEPHONE
- ECT — ELECTRIC+CABLE+TELEP.
- UTILITY POLE GUY WIRE

PROJECT CONSTRUCTION SYMBOLOGY

PROJECT DESIGN & LAYOUT SYMBOLOGY

- CZ — CLEAR ZONE
- PLAN LAYOUT MATCHLINE

PROJECT CONSTRUCTION FEATURES

- TOP OF CUT SLOPE
- TOE OF FILL SLOPE
- STONE FILL
- BOTTOM OF DITCH ℄
- CULVERT PROPOSED
- STRUCTURE SUBSURFACE
- PROJECT DEMARCATION FENCE
- BARRIER FENCE
- TREE PROTECTION ZONE (TPZ)
- STRIPING LINE REMOVAL
- SHEET PILES

CONVENTIONAL BOUNDARY SYMBOLOGY

BOUNDARY LINES

- TOWN BOUNDARY LINE
- COUNTY BOUNDARY LINE
- STATE BOUNDARY LINE
- PROPOSED STATE R.O.W. (LIMITED ACCESS)
- PROPOSED STATE R.O.W.
- STATE ROW (LIMITED ACCESS)
- STATE ROW
- TOWN ROW
- PERMANENT EASEMENT LINE (P)
- TEMPORARY EASEMENT LINE (T)
- SURVEY LINE
- PROPERTY LINE (P/L)
- SLOPE RIGHTS
- 6F PROPERTY BOUNDARY
- 4F PROPERTY BOUNDARY
- HAZARDOUS WASTE

EPSC LAYOUT PLAN SYMBOLOGY

EPSC MEASURES

- FILTER CURTAIN
- SILT FENCE
- SILT FENCE WOVEN WIRE
- CHECK DAM
- DISTURBED AREAS REQUIRING RE-VEGETATION
- EROSION MATTING

SEE EPSC DETAIL SHEETS FOR ADDITIONAL SYMBOLOGY

ENVIRONMENTAL RESOURCES

- WETLAND BOUNDARY
- RIPARIAN BUFFER ZONE
- WETLAND BUFFER ZONE
- SOIL TYPE BOUNDARY
- T&E — THREATENED & ENDANGERED SPECIES
- HAZ — HAZARDOUS WASTE AREA
- AG — AGRICULTURAL LAND
- HABITAT — FISH & WILDLIFE HABITAT
- FLOOD PLAIN — FLOOD PLAIN
- OHW — ORDINARY HIGH WATER (OHW)
- STORM WATER
- USDA FOREST SERVICE LANDS
- WILDLIFE HABITAT SUIT/CONN

ARCHEOLOGICAL & HISTORIC

- ARCH — ARCHEOLOGICAL BOUNDARY
- HISTORIC DIST — HISTORIC DISTRICT BOUNDARY
- HISTORIC — HISTORIC AREA
- Ⓗ HISTORIC STRUCTURE

CONVENTIONAL TOPOGRAPHIC SYMBOLOGY

EXISTING FEATURES

- ROAD EDGE PAVEMENT
- ROAD EDGE GRAVEL
- DRIVEWAY EDGE
- DITCH
- FOUNDATION
- FENCE (EXISTING)
- FENCE WOOD POST
- FENCE STEEL POST
- GARDEN
- ROAD GUARDRAIL
- RAILROAD TRACKS
- CULVERT (EXISTING)
- STONE WALL
- WALL
- WOOD LINE
- BRUSH LINE
- HEDGE
- BODY OF WATER EDGE
- LEDGE EXPOSED

Stantec

PROJECT NAME:	JAY
PROJECT NUMBER:	BHF 0278(3)
FILE NAME: z12c154legend.dgn	PLOT DATE: 8/16/2016
PROJECT LEADER: M. CHENETTE	DRAWN BY: VTRANS
DESIGNED BY: VTRANS	CHECKED BY: VTRANS
CONVENTIONAL SYMBOLOGY LEGEND	SHEET 10 OF 72

GPS CONTROL POINTS

HVCTRL #1

IRENE
NORTH = 886825.990
EAST = 1663654.360
ELEV. = 830.06

GENERAL LOCATION, TROY, VT.

TO REACH FROM THE INTERSECTION OF VT ROUTE 242 AND VT ROUTE 101 GO SOUTH ALONG VT ROUTE 101 FOR 1.0 MI (1.6 KM) TO THE SITE OF THE MARK ON THE RIGHT.

THE MARK IS SET 20 CM (8 INCHES) BELOW GROUND SURFACE IN THE TOP OF A FENO STYLE MONUMENT.

IT IS 7.2 M (23.6 FT) WEST OF AND ABOUT 0.4 M (1.3 FT) LOWER THAN THE CENTERLINE OF VT ROUTE 101, 28.9 M (94.8 FT) SOUTHEAST OF POLE NO 36E, 47.9 M (157.2 FT) WEST OF A 10 CM (4 INCH) DOUBLE-TRUNK WHITE BIRCH, 71.0 M (232.9 FT) NORTH OF THE CENTERLINE OF A CURB CUT FOR A WOODS ROAD ACCESS ON THE WEST SIDE OF VT ROUTE 101 AND 0.3 M (1.0 FT) EAST OF A FIBERGLASS WITNESS POST.

HVCTRL #2

MCDERMOT
NORTH = 891948.545
EAST = 1662740.181
ELEV. = 876.712

GENERAL LOCATION, TROY, VT. OWNERSHIP, IRENE MCDERMUT, CROSS ROAD, JAY, VT 05859.

TO REACH FROM THE INTERSECTION OF VT ROUTE 242 AND VT ROUTE 101 GO WEST ALONG VT ROUTE 242 FOR 0.05 MI (0.1 KM) TO THE SITE OF THE MARK ON THE LEFT.

THE MARK IS SET FLUSH WITH THE GROUND SURFACE IN THE TOP OF A 0.7 M (2.3 FT) X 0.5 M (1.6 FT) ROCK OUTCROP IN A LARGE FIELD.

IT IS 52.8 M (173.2 FT) SOUTH OF AND ABOUT 0.5 M (1.6 FT) LOWER THAN THE CENTERLINE OF VT ROUTE 242, 72.0 M (236.2 FT) SOUTHEAST OF POLE NO 3 10/5ISX AND 46.4 M (152.2 FT) SOUTH-SOUTHWEST OF POLE NO 10/5T AND A FIBERGLASS WITNESS POST.

TRAVERSE TIES

HVCTRL #13

NORTH = 890177.194
EAST = 1652666.718
ELEV. = 1038.232

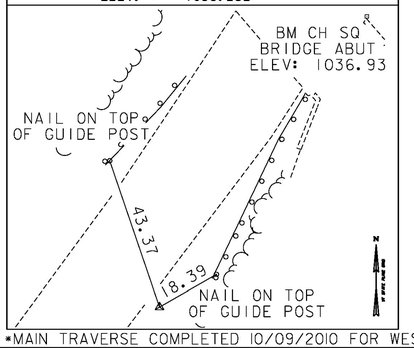

HVCTRL #15

NORTH = 889686.454
EAST = 1651823.579
ELEV. = 1070.967

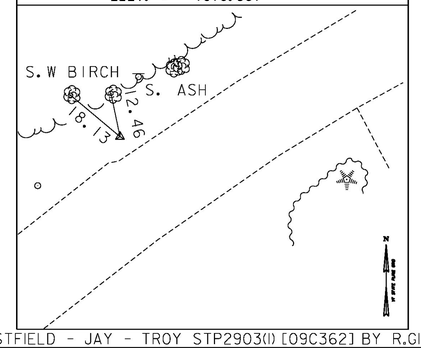

HVCTRL #16

NORTH = 889231.077
EAST = 1651405.178
ELEV. = 1090.080

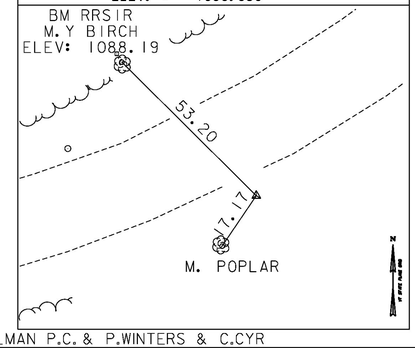

*MAIN TRAVERSE COMPLETED 10/09/2010 FOR WESTFIELD - JAY - TROY STP2903(I) [09C362] BY R.GILMAN P.C. & P.WINTERS & C.CYR

HVCTRL #14

SEWER
NORTH = 889902.639
EAST = 1652385.564
ELEV. = 1050.452

GENERAL LOCATION, JAY, VT.

TO REACH FROM THE INTERSECTION OF VT ROUTE 242 AND VT ROUTE 101 IN TROY GO WEST ALONG VT ROUTE 242 FOR 2.3 MI (3.7 KM) TO THE SITE OF THE MARK ON THE LEFT.

THE MARK IS A FENO DISK SET IN THE TOP OF THE EAST SIDE OF THE CONCRETE COPING FOR A SEWER MANHOLE.

IT IS 6.5 M (21.3 FT) SOUTH OF AND 0.1 M (0.3 FT) LOWER THAN THE CENTERLINE OF VT ROUTE 242, 27.1 M (88.9 FT) EAST-SOUTHEAST OF AND ACROSS THE ROAD FROM POLE NO 10B/16S AND 20.6 M (67.6 FT) EAST-SOUTHEAST OF AND ACROSS THE ROAD FROM ANOTHER SEWER MANHOLE.

ALIGNMENT TIES

PT, STA. 166+09.88

NORTH = 890086.53
EAST = 1652572.66
ELEV. =

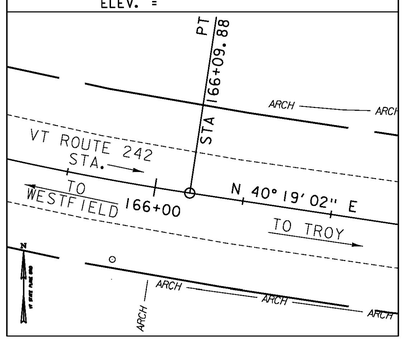

VT 242 STA. 168+28.08

NORTH = 890260.99
EAST = 1652703.09
ELEV. =

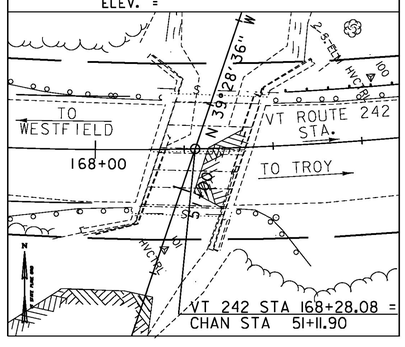

PT, STA. 170+25.79

NORTH = 890441.09
EAST = 1652783.69
ELEV. =

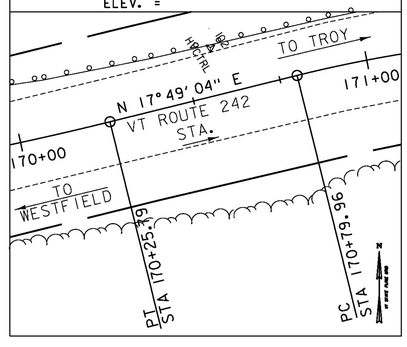

NORTH =
EAST =
ELEV. =

NORTH =
EAST =
ELEV. =

DATUM
VERTICAL NAVD 88
HORIZONTAL NAD 83 (2007)
ADJUSTMENT COMPASS

Stantec

PROJECT NAME: JAY
PROJECT NUMBER: BHF 0278(3)

FILE NAME: z12ci541.dgn
PROJECT LEADER: M. CHENETTE
DESIGNED BY: VTRANS
TIE SHEET

PLOT DATE: 8/16/2016
DRAWN BY: VTRANS
CHECKED BY: VTRANS/STANTEC
SHEET 11 OF 72

BOX BEAM GUARDRAIL
STA. 167+19.1 TO 167+37.1, RT
STA. 167+68.8 TO 167+73.6, LT
STA. 168+88.9 TO 168+93.7, RT
STA. 168+90.4 TO 169+26.4, LT

APPROACH SECTION, GALVANIZED 3 RAIL BOXBEAM
STA. 167+37.1 TO 167+69.1, RT
STA. 167+73.6 TO 168+05.6, LT
STA. 168+54.9 TO 168+88.9, RT
STA. 168+56.4 TO 168+90.4, LT

MANUFACTURED TERMINAL END SECTION, TANGENT
STA. 167+02.1 TO 167+19.1, RT
STA. 169+26.4 TO 169+43.4, LT

DURABLE 4 INCH YELLOW LINE
STA. 166+00.0 TO STA. 170+50.0, CL (DOUBLE)

DURABLE 4 INCH WHITE LINE
STA. 166+00.0 TO STA. 170+50.0, LT
STA. 166+00.0 TO STA. 170+50.0, RT

REMOVAL AND DISPOSAL OF GUARDRAIL
STA. 167+53.7 TO 168+10.5, RT
STA. 167+62.3 TO 168+18.6, LT
STA. 168+39.4 TO 168+59.0, RT
STA. 168+50.7 TO 169+54.9, LT

RELOCATE MAILBOX SINGLE SUPPORT
STA. 169+83.9, LT

CONSTRUCT DRIVE
STA. 169+67, LT (PAVED)

CURVE 1 DATA
PC = 162+40.92
DELTA = 27°48'56"
D = 7°32'20"
R = 760.00'
T = 188.19'
L = 368.96'
E = 22.95'

CURVE 2 DATA
DELTA = 22°29'57"
D = 6°21'58"
R = 900.00'
T = 179.02'
L = 353.42'
E = 17.63'

CURVE 3 DATA
PT = 173+33.55
DELTA = 38°14'08"
D = 15°04'40"
R = 380.00'
T = 131.72'
L = 253.59'
E = 22.18'

N
VT STATE PLANE GRID

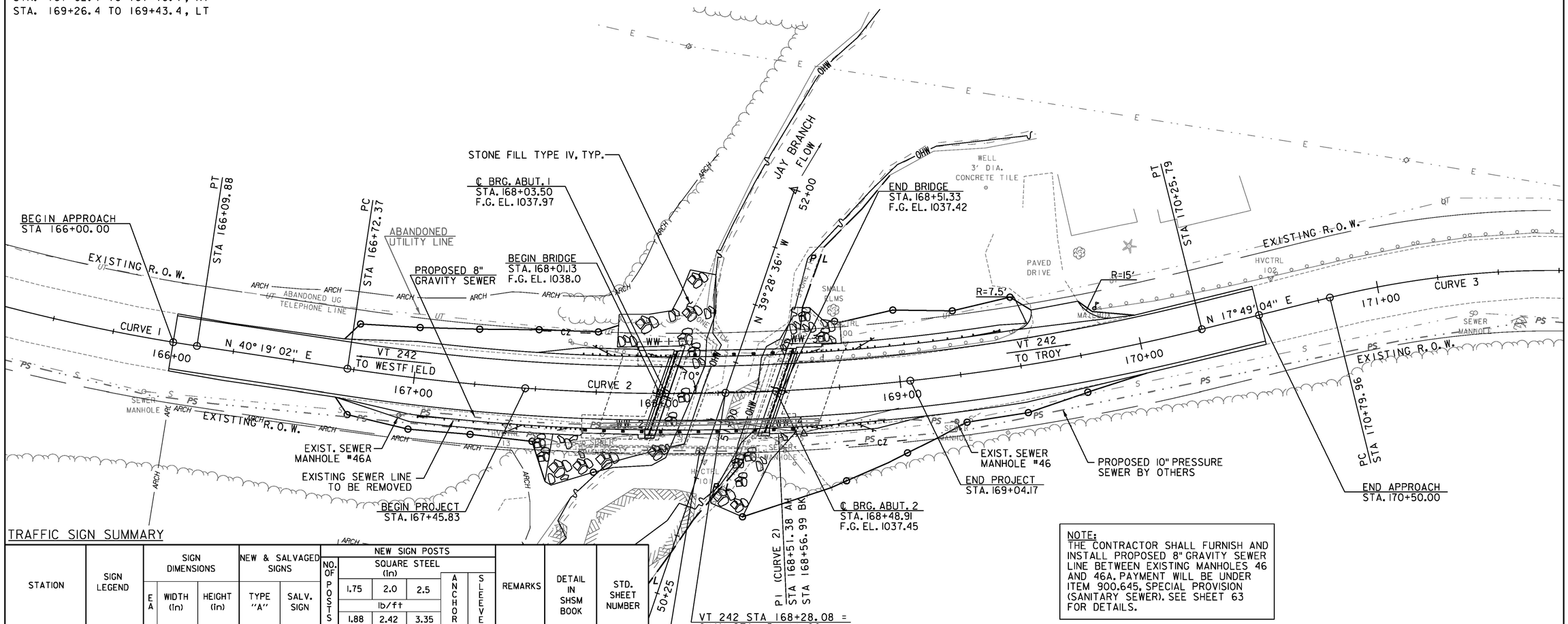

NOTE:
THE CONTRACTOR SHALL FURNISH AND INSTALL PROPOSED 8" GRAVITY SEWER LINE BETWEEN EXISTING MANHOLES 46 AND 46A. PAYMENT WILL BE UNDER ITEM 900.645, SPECIAL PROVISION (SANITARY SEWER). SEE SHEET 63 FOR DETAILS.

TRAFFIC SIGN SUMMARY

STATION	SIGN LEGEND	SIGN DIMENSIONS EA	WIDTH (in)	HEIGHT (in)	NEW & SALVAGED SIGNS TYPE "A"	SALV. SIGN	NEW SIGN POSTS NO. OF POSTS	SQUARE STEEL (in) 1.75 lb/ft 1.88	2.0 lb/ft 2.42	2.5 lb/ft 3.35	ANCHOR	SLEEVE	REMARKS	DETAIL IN SHSM BOOK	STD. SHEET NUMBER
167+95, RT	BRIDGE 10 VT-242	1	6	10	0.42		1	X			X		VR-701		T-42
168+62, LT	BRIDGE 47 VT-242	1	6	10	0.42		1	X			X		VR-701		T-42
168+30, LT	SPEED LIMIT 40	1	24	30		1	1		X		X		R2-1	X	
	TOTALS				SF 0.84	EA 1		FT 31							

FINAL POST LENGTHS ARE TO BE DETERMINED IN THE FIELD. POST SIZES ARE COMPUTED BASED ON INFORMATION FURNISHED ON THE STANDARD SHEETS AND THE VTRANS "SIGN POST DESIGN GUIDELINE."

LAYOUT
SCALE 1" = 20'-0"
20 0 20

EXISTING BRIDGE INFO
CONCRETE T-BEAM BRIDGE
28' SPAN, 34'-6" WIDE
BUILT 1927,
RECONSTRUCTED 1964

Stantec

PROJECT NAME: JAY
PROJECT NUMBER: BHF 0278(3)

FILE NAME: z12c154bdr.dgn
PROJECT LEADER: M. CHENETTE
DESIGNED BY: I. MAYNARD
LAYOUT SHEET

PLOT DATE: 8/16/2016
DRAWN BY: I. MAYNARD
CHECKED BY: M. CHENETTE
SHEET 12 OF 72

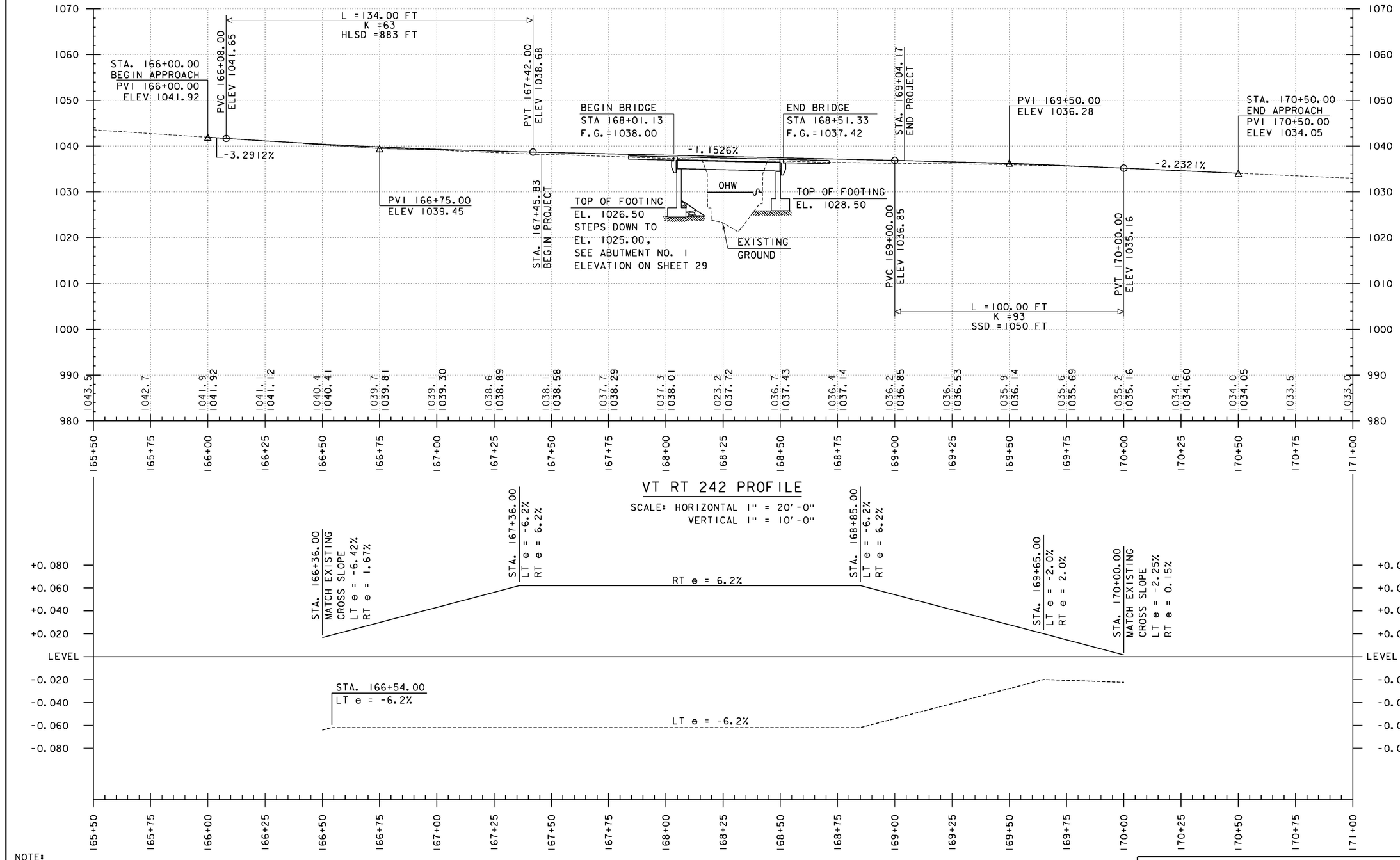

VT RT 242 PROFILE

SCALE: HORIZONTAL 1" = 20'-0"
VERTICAL 1" = 10'-0"

NOTE:

GRADES SHOWN TO THE NEAREST
TENTH ARE EXISTING GROUND ALONG ℄

GRADES SHOWN TO THE NEAREST
HUNDREDTH ARE FINISH GRADE ALONG ℄

VT RT 242 BANKING DIAGRAM

SCALE: HORIZONTAL 1" = 20'-0"
VERTICAL 1" = 4% SLOPE

Stantec

PROJECT NAME: JAY
PROJECT NUMBER: BHF 0278(3)

FILE NAME: z12cl54profile.dgn
PROJECT LEADER: M. CHENETTE
DESIGNED BY: I. MAYNARD
PROFILE & BANKING DIAGRAM SHEET

PLOT DATE: 8/16/2016
DRAWN BY: I. MAYNARD
CHECKED BY: M. CHENETTE
SHEET 13 OF 72

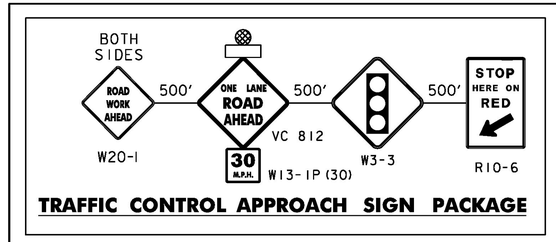

TRAFFIC CONTROL APPROACH SIGN PACKAGE

PHASE 1 LAYOUT

SCALE 1" = 20'-0"

20 0 20

NOTES:

1. SEE PHASING TYPICAL SECTIONS AND NOTES SHEET FOR GENERAL TRAFFIC CONTROL NOTES AND TEMPORARY SIGNAL NOTES.
2. REFER TO STANDARD T-10 FOR CONSTRUCTION APPROACH SIGNS CRITERIA.
4. CHANNELIZING DEVICE SPACING
   TANGENT SECTIONS: 60 FT. (2X DESIGN SPEED LIMIT)
   TAPER SECTIONS: 30 FT. (1X DESIGN SPEED LIMIT)
   DESIGN SPEED THROUGH CONSTRUCTION ZONE = 30MPH
5. ACCESS TO ALL EXISTING SIDE ROADS, DRIVES, AND PARKING AREAS SHALL BE MAINTAINED AT ALL TIMES DURING CONSTRUCTION.
6. TRAFFIC CONTROL SHALL ALLOW FOR A WB-67 DESIGN VEHICLE.
7. ATTENUATORS SHALL BE DESIGNED FOR POSTED SPEED OF 40 MPH.
8. CHANNELIZING DEVICES LEFT OVERNIGHT SHALL BE DRUMS.

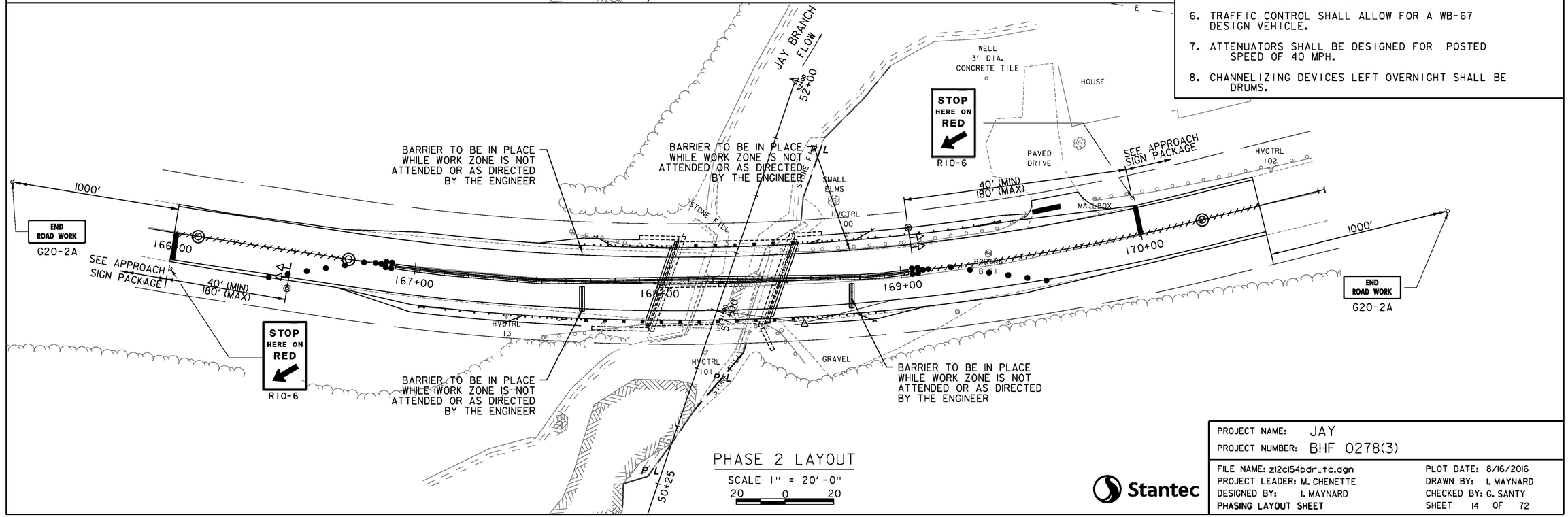

PHASE 2 LAYOUT

SCALE 1" = 20'-0"

20 0 20

Stantec

PROJECT NAME: JAY	
PROJECT NUMBER: BHF 0278(3)	
FILE NAME: z12c154bdr_tc.dgn	PLOT DATE: 8/16/2016
PROJECT LEADER: M. CHENETTE	DRAWN BY: I. MAYNARD
DESIGNED BY: I. MAYNARD	CHECKED BY: G. SANTY
PHASING LAYOUT SHEET	SHEET 14 OF 72

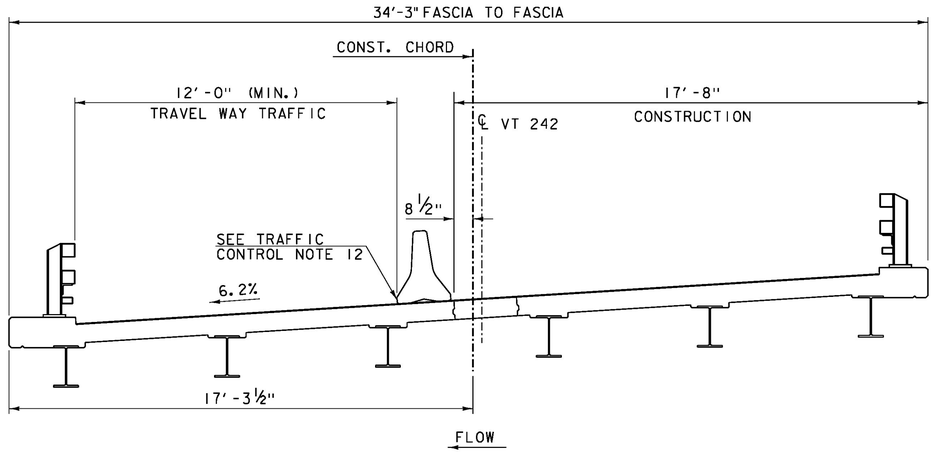

PHASE 2 BRIDGE TYPICAL SECTION

SCALE 3/8" = 1'-0"

DIMENSIONS ARE RADIAL UNLESS NOTED

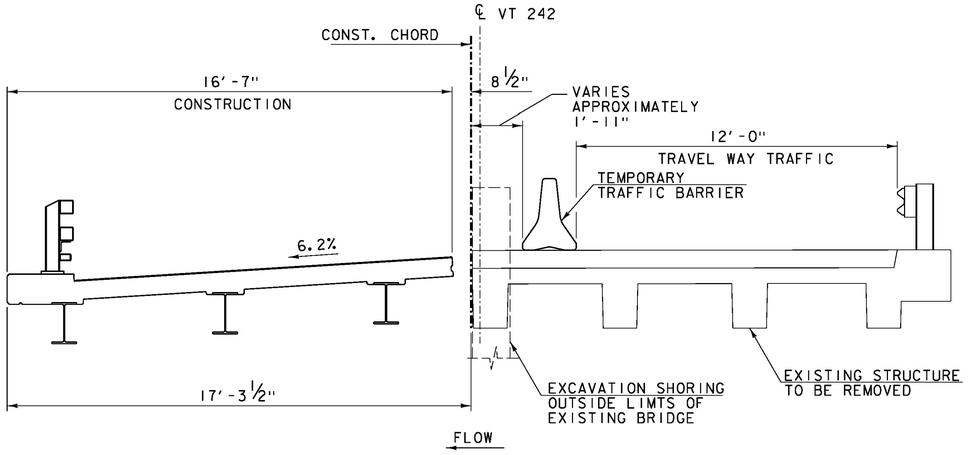

PHASE 1 BRIDGE TYPICAL SECTION

SCALE 3/8" = 1'-0"

DIMENSIONS ARE RADIAL UNLESS NOTED

TRAFFIC CONTROL

1. THE TRAFFIC CONTROL PLANS ARE SCHEMATIC ONLY AND SHOULD BE USED AS A REFERENCE. THE CONTRACTOR SHALL DEVELOP AND IMPLEMENT A SITE SPECIFIC TRAFFIC CONTROL PLAN FOR ONE LANE CLOSURES PER THE LATEST VERSION OF THE "MANUAL ON UNIFORM TRAFFIC CONTROL DEVICES" (MUTCD). THE CONTRACTOR SHALL ALLOW THE ENGINEER 14 CALENDAR DAYS TO REVIEW AND ACCEPT THE PROPOSED PLANS BEFORE THEY ARE TO BE IMPLEMENTED. NO WORK SHALL COMMENCE UNTIL THE TRAFFIC CONTROL PLAN HAS BEEN APPROVED. DEVELOPMENT AND IMPLEMENTATION OF TRAFFIC CONTROL PLAN SHALL BE IN ACCORDANCE WITH ITEM 900.645 SPECIAL PROVISION (TRAFFIC CONTROL ALL INCLUSIVE).
2. SIGNS SHALL BE INSTALLED SO AS NOT TO OBSTRUCT EXISTING SIGNS OR CORNER SIGHT DISTANCE FROM HIGHWAYS OR DRIVES.
3. ALL SIGNS SHALL BE IN ACCORDANCE WITH THE CURRENT EDITION OF THE "MANUAL ON UNIFORM TRAFFIC CONTROL DEVICES" (MUTCD) PUBLISHED BY THE FEDERAL HIGHWAY ADMINISTRATION (FHWA).
4. ORANGE SOLID SUBSTRATE CONSTRUCTION SIGNS SHALL HAVE RETROREFLECTIVE SHEETING EQUAL TO OR EXCEEDING "AMERICAN SOCIETY FOR TESTING AND MATERIALS" (ASTM) TYPE VII, VIII OR IX REQUIREMENTS, UNLESS OTHERWISE NOTED.
5. ROLL UP SIGNS SHALL HAVE RETROREFLECTIVE SHEETING EQUAL TO OR EXCEEDING ASTM TYPE VI.
6. SIGNS SHALL BE ERECTED BEFORE THE START OF ANY WORK AND SHALL BE COVERED UNTIL WORK COMMENCES, DURING PERIODS OF INACTIVITY OR UPON COMPLETION OF THE WORK. EACH SIGN SHALL BE ERECTED IN A NEAT AND WORKMANLIKE MANNER. SIGNS SHALL BE REMOVED UPON COMPLETION OF THE WORK AT THE DISCRETION OF THE ENGINEER.
7. FIXED SIGNS SHALL BE IN COMPLIANCE WITH VAOT CONSTRUCTION STANDARD E-121.
8. WHERE SIGN INSTALLATIONS ARE NOT PROTECTED BY GUARDRAIL OR OTHER APPROVED TRAFFIC BARRIERS, ALL SIGN STANDS AND POST INSTALLATIONS SHALL BE "NATIONAL COOPERATIVE HIGHWAY RESEARCH PROGRAM" (NCHRP) REPORT 350 COMPLIANT. NO SIGN POSTS SHALL EXTEND OVER THE TOP OF THE SIGN INSTALLED ON SAID POST(S). WHEN ANCHORS ARE INSTALLED, STUB SHALL NOT BE GREATER THAN FOUR INCHES ABOVE EXISTING GROUND.
9. THE NUMBER OF CHANNELIZING DEVICES AND OTHER TRAFFIC CONTROL DEVICES SHOWN ON THE TRAFFIC CONTROL PLANS ARE FOR ILLUSTRATIVE PURPOSES ONLY, THE ACTUAL NUMBER REQUIRED ARE TO BE DETERMINED BASED ON INDIVIDUAL DETOUR CONDITIONS (TAPERS, SPEED LIMITS, LENGTH OF DETOUR, CURVE, ETC.).
10. THE CONTRACTOR SHALL SHIFT TRAFFIC IN ACCORDANCE WITH AN APPROVED TRAFFIC CONTROL PLAN. ALL EQUIPMENT SHALL BE MOVED TO A LOCATION OUTSIDE OF THE CONSTRUCTION CLEAR ZONE (15')DURING NON-WORK PERIODS IF POSSIBLE. IF NOT POSSIBLE, EQUIPMENT SHALL BE OFF ROADWAY AND MARKED WITH CHANNELIZING DEVICES.
11. A 250 WATT MER/150 WATT HSP LUMINAIRE AND MAST ARM SHALL BE PROVIDED ON A POLE ON EACH APPROACH AT A MOUNTING HEIGHT OF 30 FEET ABOVE THE ROADWAY CENTERLINE. THE INTENT IS TO LIGHT UP THE AREA AROUND THE SIGNAL HEADS AND STOP BAR FOR INCREASED VISIBILITY. THE ENGINEER SHALL DETERMINE THE ADEQUACY OF THE LIGHTING AND DIRECT CHANGES IF THE LIGHTING IS INSUFFICIENT. LIGHTING SHALL BE PAID INCIDENTAL TO ITEM 678.40, TEMPORARY TRAFFIC SIGNAL SYSTEM.
12. THE TEMPORARY TRAFFIC BARRIER SHALL BE ADEQUATELY ANCHORED TO PREVENT MOVEMENT IF IMPACTED. ANCHORS SHALL BE LOCATED TO AVOID DECK REINFORCEMENT. ANCHOR INSERTS OR MATERIALS THAT WILL BE PERMANENTLY EMBEDDED IN THE DECK SHALL BE STAINLESS STEEL. FILL ANCHORAGE HOLES WITH AN APPROVED GROUT AFTER THE BARRIER IS REMOVED.
13. ALL ITEMS REQUIRED TO PREPARE, SUBMIT AND IMPLEMENT THE CONTRACTOR'S PLAN. INCLUDING ANY NECESSARY REVISIONS TO THE PLAN WILL BE INCLUDED IN THE BID UNIT PRICE FOR ITEM 900.645 SPECIAL PROVISION (TRAFFIC CONTROL, ALL-INCLUSIVE). THE PAY ITEM INCLUDES BUT IS NOT LIMITED TO THE FOLLOWING:

- -TRAFFIC CONTROL PLAN
- -TEMPORARY TRAFFIC BARRIER/ANCHORS
- -ENERGY ABSORPTION ATTENUATORS
- -BARRICADES
- -DRUMS/CONES
- -ON PROJECT CONSTRUCTION SIGNING
- -SAW CUTS
- -TEMPORARY PAVEMENT MARKINGS
- -TEMPORARY STEEL SHEET PILING

TRAFFIC CONTROL ITEMS NOT PAID FOR IN THE UNIT BID PRICE FOR ITEM 900.645 SPECIAL PROVISION (TRAFFIC CONTROL, ALL-INCLUSIVE) AND PAID SEPARATELY ARE THE FOLLOWING:

ITEM 630.10 UNIFORMED TRAFFIC OFFICERS
ITEM 630.15 FLAGGERS
ITEM 641.15 PORTABLE CHANGEABLE MESSAGE SIGN
ITEM 678.40 TEMPORARY TRAFFIC SIGNAL SYSTEM

TEMPORARY TRAFFIC SIGNALS:

1. TEMPORARY TRAFFIC SIGNAL SYSTEM SHALL BE IN ACCORDANCE WITH ITEM 678.40, "TEMPORARY TRAFFIC SIGNAL SYSTEM".
2. DESIGN OF THE SIGNAL SUPPORTS AND ANY REQUIRED GUYING IS THE RESPONSIBILITY OF THE CONTRACTOR.
3. SIGNAL PHASING/TIMING ADJUSTMENTS REQUESTED BY THE ENGINEER SHALL BE ACCOMPLISHED WITHIN A 48 HOUR PERIOD.
4. SIGNAL FACES SHALL BE LED AND CONSIST OF 12" LENSES. (RED, YELLOW, AND GREEN)
5. THE BOTTOM OF THE HOUSING OF A SIGNAL FACE SUSPENDED OVER A ROADWAY SHALL NOT BE LESS THAN 16.5 FEET NOR MORE THAN 19 FEET ABOVE THE PAVEMENT GRADE AT THE CENTER OF THE ROADWAY. THE BOTTOM OF A SIGNAL FACE NOT MOUNTED OVER A ROADWAY SHALL NOT BE LESS THAN 8 FEET NOR MORE THAN 15 FEET ABOVE THE GROUND. CAUTION SHOULD BE USED TO ENSURE COMPLIANCE WITH THE HEIGHT REQUIREMENTS IN THE EVENT THE NEW APPROACH GRADES DIFFER SIGNIFICANTLY FROM THE OLD ROAD GRADE.
6. SIGNAL FACES FOR ANY ONE APPROACH SHALL NOT BE LESS THAN 8 FEET APART MEASURED HORIZONTALLY BETWEEN CENTER FACES.
7. SIGNAL HEADS MAY BE HUNG ON A SPAN WIRE OR ON A CANTILEVER MAST ARM HOWEVER, THE USE OF PORTABLE SIGNALS IS ENCOURAGED. AT LEAST ONE SIGNAL HEAD SHALL BE UNMISTAKABLY IN LINE WITH THE CENTER OF APPROACHING TRAFFIC AT ALL TIMES. THE SECOND SIGNAL HEAD MAY BE POST MOUNTED, LOCATED AT A DISTANCE OF NO GREATER THAN 14.5 FEET FROM THE CENTER OF THE APPROACH LANE WHEN THE STOP BAR IS 40 FEET FROM THE SIGNAL HEAD. CONSULT THE CURRENT EDITION OF THE MUTCD FOR ADDITIONAL INFORMATION CONCERNING SIGNAL PLACEMENT.
8. SIGNAL HEAD PLACEMENT IS CRITICAL. HEADS SHALL BE ADJUSTED TO REFLECT LANE LOCATION CHANGES.
9. THE SIGNAL SYSTEM SHALL CONSIST OF POLES, SIGNS AND POSTS, WARNING SIGNS, FLASHING BEACONS, ASSOCIATED PAVEMENT MARKINGS, AND SIGNAL EQUIPMENT TO PROVIDE FOR AN ADEQUATE DESIGN. IT ALSO INCLUDES PERMITS AND COSTS ASSOCIATED WITH PROVIDING ELECTRICAL POWER.
10. INSTALL WIRING BETWEEN SIGNAL POLES TO PROVIDE FOR A SAFE INSTALLATION. ATTACHMENT TO UTILITY POLES TO BE COORDINATED BY THE CONTRACTOR WITH THE UTILITY COMPANY.
11. PLACE TEMPORARY POLES BEHIND GUARDRAIL OR OUTSIDE OF THE CLEAR ZONE.
12. POLES SUPPORTING SPAN WIRES AND/OR MAST ARMS SHALL BE ADEQUATELY BRACED OR GUYED AND SHALL NOT BE PLACED SO AS TO CREATE A HAZARD TO THE TRAVELING PUBLIC.
13. ALL TEMPORARY SIGNAL EQUIPMENT, SIGNS, ETC., SHALL BELONG TO THE CONTRACTOR AT THE END OF THE PROJECT AND THE CONTRACTOR SHALL BE RESPONSIBLE FOR THEIR REMOVAL INCLUDING ANY TEMPORARY PAVEMENT MARKINGS, UTILITY POLES, WIRES, ETC.

Stantec

PROJECT NAME: JAY	
PROJECT NUMBER: BHF 0278(3)	
FILE NAME: z12c154typ.dgn	PLOT DATE: 8/16/2016
PROJECT LEADER: M. CHENETTE	DRAWN BY: L. BUXTON
DESIGNED BY: N. TIRK	CHECKED BY: M. CHENETTE
PHASING TYPICAL SECTIONS AND NOTES	SHEET 15 OF 72

SOIL CLASSIFICATION

AASHTO	
A1	Gravel and Sand
A3	Fine Sand
A2	Silty or Clayey Gravel and Sand
A4	Silty Soil - Low Compressibility
A5	Silty Soil - Highly Compressible
A6	Clayey Soil - Low Compressibility
A7	Clayey Soil - Highly Compressible

ROCK QUALITY DESIGNATION

R.Q.D. (%)	ROCK DESCRIPTION
<25	Very Poor
25 to 50	Poor
51 to 75	Fair
76 to 90	Good
>90	Excellent

SHEAR STRENGTH

UNDRAINED SHEAR STRENGTH IN P.S.F.	CONSISTENCY
<250	Very Soft
250-500	Soft
500-1000	Med. Stiff
1000-2000	Stiff
2000-4000	Very Stiff
>4000	Hard

CORRELATION GUIDE OF "N" TO DENSITY/CONSISTENCY

DENSITY (GRANULAR SOILS)		CONSISTENCY (COHESIVE SOILS)	
N	DESCRIPTIVE TERM	N	DESCRIPTIVE TERM
<5	Very Loose	<2	Very Soft
5-10	Loose	2-4	Soft
11-24	Med. Dense	5-8	Med. Stiff
25-50	Dense	9-15	Stiff
>50	Very Dense	16-30	Very Stiff
		31-60	Hard
		>60	Very Hard

COMMONLY USED SYMBOLS

▼	Water Elevation
⊗	Standard Penetration Boring
⊕	Auger Boring
⊙	Rod Sounding
S	Sample
N	Standard Penetration Test Blow Count Per Foot For: 2" O.D. Sampler 1 3/8" I.D. Sampler Hammer Weight Of 140 Lbs. Hammer Fall Of 30"
VS	Field Vane Shear Test
US	Undisturbed Soil Sample
B	Blast
DC	Diamond Core
MD	Mud Drill
WA	Wash Ahead
HSA	Hollow Stem Auger
AX	Core Size 1 1/8"
BX	Core Size 1 5/8"
NX	Core Size 2 1/8"
M	Double Tube Core Barrel Used
LL	Liquid Limit
PL	Plastic Limit
PI	Plasticity Index
NP	Non Plastic
w	Moisture Content (Dry Wgt. Basis)
D	Dry
M	Moist
MTW	Moist To Wet
W	Wet
Sat	Saturated
Bo	Boulder
Gr	Gravel
Sa	Sand
Si	Silt
Cl	Clay
HP	Hardpan
Le	Ledge
NLTD	No Ledge To Depth
CNPF	Can Not Penetrate Further
TLOB	Top of Ledge Or Boulder
NR	No Recovery
Rec.	Recovery
%Rec.	Percent Recovery
RQD	Rock Quality Designation
CBR	California Bearing Ratio
<	Less Than
>	Greater Than
R	Refusal (N > 100)
VTSPG	NAD83 - See Note 7

COLOR

blk	Black	pnk	Pink
bl	Blue	pu	Purple
brn	Brown	rd	Red
dk	Dark	tn	Tan
gry	Gray	wh	White
gn	Green	yel	Yellow
lt	Light	mltc	Multicolored
or	Orange		

DEFINITIONS (AASHTO)

BEDROCK (LEDGE) - Rock in its native location of indefinite thickness.

BOULDER - A rock fragment with an average dimension > 12 inches.

COBBLE - Rock fragments with an average dimension between 3 and 12 inches.

GRAVEL - Rounded particles of rock < 3" and > 0.0787" (#10 sieve).

SAND - Particles of rock < 0.0787" (#10 sieve) and > 0.0029" (#200 sieve).

SILT - Soil < 0.0029" (#200 sieve), non or slightly plastic and exhibits no strength when air-dried.

CLAY - Fine grained soil, exhibits plasticity when moist and considerable strength when air-dried.

VARVED - Alternate layers of silt and clay.

HARDPAN - Extremely dense soil, cemented layer, not softened when wet.

MUCK - Soft organic soil (containing > 10% organic material.

MOISTURE CONTENT - Weight of water divided by dry weight of soil.

FLOWING SAND - Granular soil so saturated (loose) that it flows into drill casing during extraction of wash rod.

STRIKE - Angle from magnetic north to line of intersection of bed with a horizontal plane.

DIP - Inclination of bed with a horizontal plane.

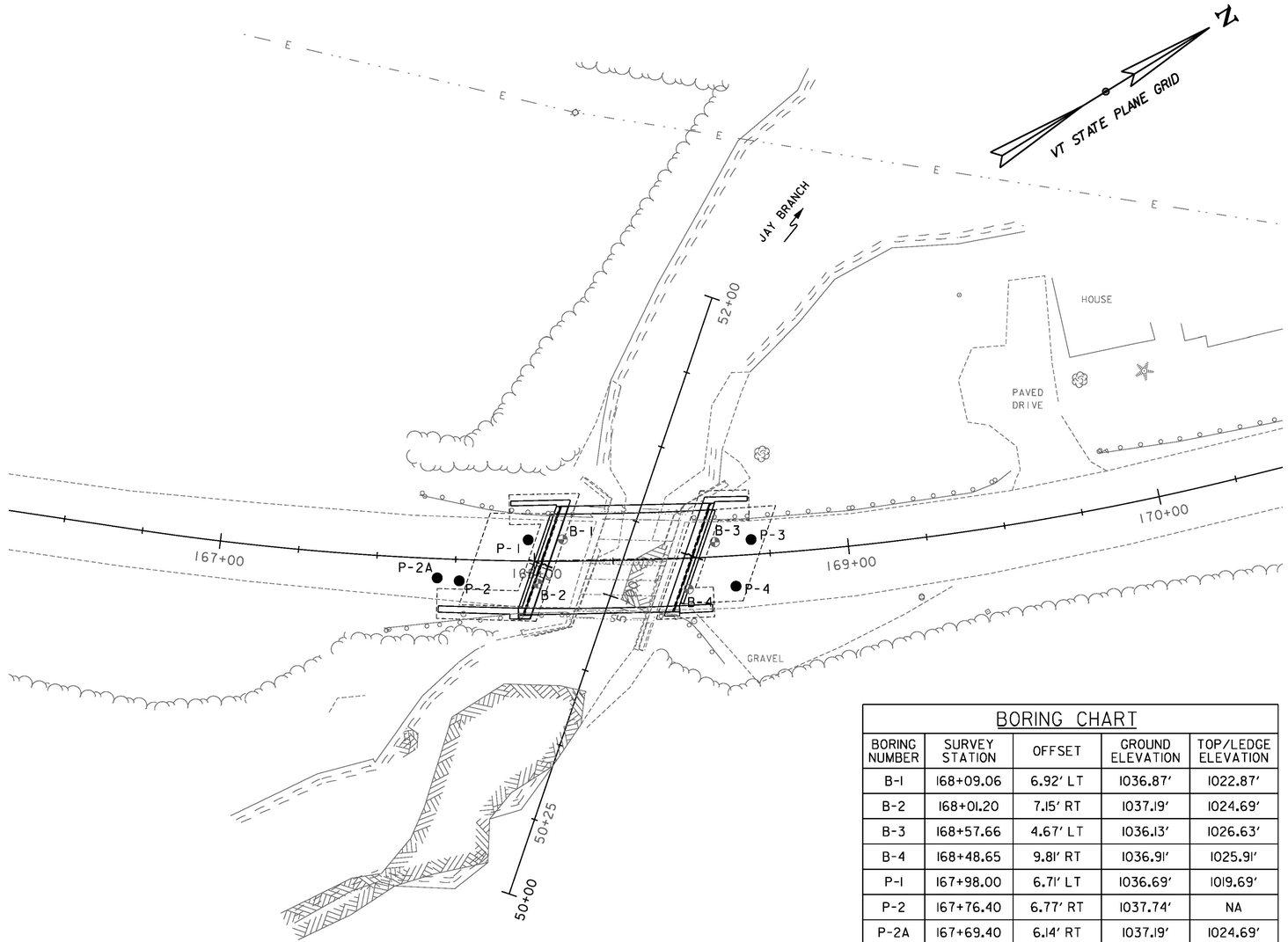

BORING PLAN

0 20 40

SCALE

BORING CHART

BORING NUMBER	SURVEY STATION	OFFSET	GROUND ELEVATION	TOP/LEDGE ELEVATION
B-1	168+09.06	6.92' LT	1036.87'	1022.87'
B-2	168+01.20	7.15' RT	1037.19'	1024.69'
B-3	168+57.66	4.67' LT	1036.13'	1026.63'
B-4	168+48.65	9.81' RT	1036.91'	1025.91'
P-1	167+98.00	6.71' LT	1036.69'	1019.69'
P-2	167+76.40	6.77' RT	1037.74'	NA
P-2A	167+69.40	6.14' RT	1037.19'	1024.69'
P-3	168+69.24	4.77' LT	1035.96'	1026.46'
P-4	168+63.52	9.69' RT	1036.75'	1027.25'

GENERAL NOTES

1. The subsurface explorations shown herein were made in April 2014 by NH Boring and Stantec Consulting Services, INC.
2. Soil and rock classifications, properties and descriptions are based on engineering interpretation from available subsurface information by the Agency and may not necessarily reflect actual variations in subsurface conditions that may be encountered between individual boring or sample locations.
3. Observed water levels and/or conditions indicated are as recorded at the time of exploration and may vary according to the prevailing rainfall, methods of exploration and other factors.
4. Engineering judgment was exercised in preparing the subsurface information presented herein. Analysis and interpretation of subsurface data was performed and interpreted for Agency design and estimating purposes. Presentation of the information in the Contract is intended to provide the Contractor access to the same data available to the Agency. The subsurface information is presented in good faith and is not intended as a substitute for personal investigation, independent interpretation, independent analysis or judgment by the Contractor.
5. Pictorial structure details shown on the boring plan layout or soils profile are for illustrative purposes only and may not accurately portray final contract details.
6. Terminology used on boring logs to describe the hardness, degree of weathering, and spacing of fractures, joints and other discontinuities in the bedrock is defined in the AASHTO Manual on Subsurface Investigations, 1988.
7. Northing and Easting coordinates are shown in Vermont State Plane Grid North American Datum 1983 in meters and survey feet.

Stantec

LEGEND:

- BRIDGE BORING
- PROBE

PROJECT NAME: JAY

PROJECT NUMBER: BHF 0278(3)

FILE NAME: z12cl54bdr_bor_pl.dgn
PROJECT LEADER: M. CHENETTE
DESIGNED BY: J. HUNGERFORD
BORING PLAN

PLOT DATE: 8/16/2016
DRAWN BY: L. BUXTON
CHECKED BY: M. CHENETTE

STATE OF VERMONT
AGENCY OF TRANSPORTATION
MATERIALS & RESEARCH SECTION
SUBSURFACE INFORMATION

BORING LOG

Jay
BHF 0278(3)
VT Rte 242, Bridge #10, Over Jay Branch

Boring No.: **B-1**
Page No.: 1 of 1
Pin No.: z12c154
Checked By: TAD

Boring Crew: NH Boring, Derry, NH, Burke (Stantec)
Date Started: 3/24/14 Date Finished: 3/24/14
VTSPG NAD83: N 890248.33 ft E 1652687.40 ft
Station: 168+09.06 Offset: 6.92 LT
Ground Elevation: 1036.87 ft

	Casing	Sampler
Type:	Wash Bore	SS
I.D.:	4 in	1.38 in
Hammer Wt:	N.A.	140
Hammer Fall:	N.A.	30
Hammer/Rod Type:	Safety/N	
Rig:	Diedrich D-50	C_e = 1

Groundwater Observations

Date	Depth (ft)	Notes

Depth (ft)	Strata (1)	CLASSIFICATION OF MATERIALS (Description)	Run (Dip deg.)	Core Rec. % (RQD %)	Drill Rate min/ft	Blows/6" (N Value)	Moisture Content %	Gravel %	Sand %	Fines %
		4 inches of Asphalt, 0.0 ft - 0.3 ft								
2.5		No Recovery, Rec. = 0.0 ft, 2.0 ft - 2.5 ft				100/4" (R)				
		A-1-a, Gr, brn, Wet, Rec. = 2.0 ft				100/5" (R)	6.5	87.0	12.0	1.0
5.0		A-1-a, SaGr, brn, Wet, Rec. = 4.0 ft				56-67-59-100/4" (126)	9.2	69.0	22.3	8.7
7.5										
10.0		A-1-b, SaGr, brn-gry, Wet, Rec. = 10.0 ft				10-7-18-26 (25)	15.2	61.0	23.0	16.0
TOP OF FOOTING EL. 1025.0		A-1-b, GrSa, brn-gry, Wet, Rec. = 14.0 ft				26-26-68-100/1" (92)	14.5	34.0	53.0	13.0
12.5										
15.0		14.0 ft - 19.0 ft, Gry, Schist, Moderately hard, Slightly weathered, Fair rock, NXDC, Joints are high angle rough, discolored and partly open. There is a highly fractured zone from 17.1 to 17.8 feet. RMR = 48	1 (80)	93 (77)	2.5 3 2.5 2 2.5	Top of Bedrock @ 14.0 ft				
17.5										
20.0		19.0 ft - 24.0 ft, Gry, Schist, Moderately hard, Slightly weathered, Fair rock, NXDC, Joints are high angle, rough, discolored and partly open. RMR = 58	2 (80)	100 (78)	2.5 2.5 3 3 2.5					
22.5										
		Hole stopped @ 24.0 ft								

Notes:
1. Stratification lines represent approximate boundary between material types. Transition may be gradual.
2. N Values have not been corrected for hammer energy. C_e is the hammer energy correction factor.
3. Water level readings have been made at times and under conditions stated. Fluctuations of groundwater may occur due to other factors than those present at the time measurements were made.

2010 COPY VTRANS_TEMPLATE_JAY VT.GPJ VERMONT AOT.GDT 5/1/14

STATE OF VERMONT
AGENCY OF TRANSPORTATION
MATERIALS & RESEARCH SECTION
SUBSURFACE INFORMATION

BORING LOG

Jay
BHF 0278(3)
VT Rte 242, Bridge #10, Over Jay Branch

Boring No.: **B-2**
Page No.: 1 of 1
Pin No.: z12c154
Checked By: TAD

Boring Crew: NH Boring, Derry, NH, Burke (Stantec)
Date Started: 3/25/14 Date Finished: 3/25/14
VTSPG NAD83: N 890234.22 ft E 1652695.20 ft
Station: 168+01.20 Offset: 7.15 RT
Ground Elevation: 1037.19 ft

	Casing	Sampler
Type:	H.S.A.	SS
I.D.:	4.25 in	1.38 in
Hammer Wt:	N.A.	140
Hammer Fall:	N.A.	30
Hammer/Rod Type:	Safety/N	
Rig:	Diedrich D-50	C_e = 1

Groundwater Observations

Date	Depth (ft)	Notes
03/25/14		Not Encountered

Depth (ft)	Strata (1)	CLASSIFICATION OF MATERIALS (Description)	Blows/6" (N Value)	Moisture Content %	Gravel %	Sand %	Fines %
		4 inches of Asphalt, 0.0 ft - 0.3 ft					
2.5		A-1-b, GrSa, brn, Moist, Rec. = 18.0 ft	38-27-12-18 (39)	10.0	35.0	51.0	14.0
5.0		A-1-a, SaGr, brn, Moist, Rec. = 16.0 ft	13-11-13-10 (24)	10.9	50.0	40.3	9.7
7.5							
TOP OF FOOTING EL. 1026.5		A-1-b, SaGr Trace roots, brn, Wet, Rec. = 2.0 ft	50-100/4" (R)	13.2	46.0	37.0	17.0
12.5		Hole stopped @ 12.5 ft	Top of Bedrock @ 12.5 ft				
15.0							
17.5							
20.0							
22.5							

Notes:
1. Stratification lines represent approximate boundary between material types. Transition may be gradual.
2. N Values have not been corrected for hammer energy. C_e is the hammer energy correction factor.
3. Water level readings have been made at times and under conditions stated. Fluctuations of groundwater may occur due to other factors than those present at the time measurements were made.

2010 COPY VTRANS_TEMPLATE_JAY VT.GPJ VERMONT AOT.GDT 5/1/14

Stantec

PROJECT NAME: JAY
PROJECT NUMBER: BHF 0278(3)

FILE NAME: z12c154bor_log.dgn
PROJECT LEADER: M. CHENETTE
DESIGNED BY: T DYKSTRA
BORING LOG 1

PLOT DATE: 8/16/2016
DRAWN BY: L. BUXTON
CHECKED BY: J. HUNGERFORD
SHEET 17 OF 72

STATE OF VERMONT
AGENCY OF TRANSPORTATION
MATERIALS & RESEARCH SECTION
SUBSURFACE INFORMATION

BORING LOG

Jay
BHF 0278(3)
VT Rte 242, Bridge #10, Over Jay Branch

Boring No.: **B-3**
Page No.: 1 of 1
Pin No.: z12c154
Checked By: TAD

Boring Crew: NH Boring, Derry, NH, Burke (Stantec)
Date Started: 3/25/14 Date Finished: 3/25/14
VTSPG NAD83: N 890288.98 ft E 1652713.53 ft
Station: 168+57.66 Offset: 4.67 LT
Ground Elevation: 1036.13 ft

	Casing	Sampler
Type:	H.S.A.	SS
I.D.:	4.25 in	1.38 in
Hammer Wt:	N.A.	140
Hammer Fall:	N.A.	30
Hammer/Rod Type:	Safety/N	
Rig:	Diedrich D-50	C_e = 1

Groundwater Observations		
Date	Depth (ft)	Notes
03/25/14		Not Encountered

Depth (ft)	Strata (1)	CLASSIFICATION OF MATERIALS (Description)	Blows/6" (N Value)	Moisture Content %	Gravel %	Sand %	Fines %
		4 inches of Asphalt, 0.0 ft - 0.2 ft					
2.5							
		A-2-4, SiSa, brn, Moist, Rec. = 18.0 ft	56-50-54-38 (104)	17.6	2.0	72.0	26.0
5.0		A-2-4, SiSa, brn, Moist, Rec. = 20.0 ft	16-13-5-4 (18)	17.1	7.0	63.0	30.0
		A-2-4, SiSa, brn, Moist		12.1	2.0	75.0	23.0
TOP OF FOOTING EL. 1028.5							
7.5							
10.0		Hole stopped @ 9.5 ft	Top of Bedrock @ 9.5 ft				
12.5							
15.0							
17.5							
20.0							
22.5							

Notes:
1. Stratification lines represent approximate boundary between material types. Transition may be gradual.
2. N Values have not been corrected for hammer energy. C_e is the hammer energy correction factor.
3. Water level readings have been made at times and under conditions stated. Fluctuations of groundwater may occur due to other factors than those present at the time measurements were made.

2010 COPY VTRANS_TEMPLATE_JAY VT.GPJ VERMONT AOT.GDT 5/1/14

STATE OF VERMONT
AGENCY OF TRANSPORTATION
MATERIALS & RESEARCH SECTION
SUBSURFACE INFORMATION

BORING LOG

Jay
BHF 0278(3)
VT Rte 242, Bridge #10, Over Jay Branch

Boring No.: **B-4**
Page No.: 1 of 1
Pin No.: z12c154
Checked By: TAD

Boring Crew: NH Boring, Derry, NH, Burke (Stantec)
Date Started: 3/24/14 Date Finished: 3/26/14
VTSPG NAD83: N 890274.08 ft E 1652721.87 ft
Station: 168+48.65 Offset: 9.81 RT
Ground Elevation: 1036.91 ft

	Casing	Sampler
Type:	Wash Bore	SS
I.D.:	4 in	1.38 in
Hammer Wt:	N.A.	140
Hammer Fall:	N.A.	30
Hammer/Rod Type:	Safety/N	
Rig:	Diedrich D-50	C_e = 1

Groundwater Observations		
Date	Depth (ft)	Notes

Depth (ft)	Strata (1)	CLASSIFICATION OF MATERIALS (Description)	Run (Dip deg.)	Core Rec. % (RQD %)	Drill Rate minutes/ft	Blows/6" (N Value)	Moisture Content %	Gravel %	Sand %	Fines %
		4 inches of Asphalt, 0.0 ft - 0.3 ft								
2.5										
		A-1-b, SaGr, gray, Wet, Rec. = 2.0 ft				78-100/3" (R)	95.8	57.0	29.0	14.0
5.0										
		No Recovery, Rec. = 0.0 ft, 7.0 ft - 7.5 ft				100/0" (R)				
TOP OF FOOTING EL. 1028.5										
7.5										
		A-1-a, SaGr, brn, Wet, Rec. = 6.0 ft				30-51-97-100/0" (148)	8.5	70.0	22.4	7.6
10.0										
		11.0 ft - 14.7 ft, Gry, Schist, Moderately hard, Fresh, Fair rock, NXDC, There are no joints from 11 to 114.7 feet. RMR = 51 (for entire core run)	1	90 (75)	3 3 4 5.5	Top of Bedrock @ 11.0 ft				
12.5										
15.0		14.7 ft - 16.0 ft, Dk/brn, Schist, Severely weathered, Highly fractured			5					
		Hole stopped @ 16.0 ft								
17.5										
		Remarks: Excess water from drilling process resulted in the high m.c. in the sample from 4 to 5 feet.								
20.0										
22.5										

Notes:
1. Stratification lines represent approximate boundary between material types. Transition may be gradual.
2. N Values have not been corrected for hammer energy. C_e is the hammer energy correction factor.
3. Water level readings have been made at times and under conditions stated. Fluctuations of groundwater may occur due to other factors than those present at the time measurements were made.

2010 COPY VTRANS_TEMPLATE_JAY VT.GPJ VERMONT AOT.GDT 5/1/14

Stantec

PROJECT NAME: JAY
PROJECT NUMBER: BHF 0278(3)

FILE NAME: z12c154bor_log.dgn
PROJECT LEADER: M. CHENETTE
DESIGNED BY: T. DYKSTRA
BORING LOG 2

PLOT DATE: 8/16/2016
DRAWN BY: L. BUXTON
CHECKED BY: J. HUNGERFORD
SHEET 18 OF 72

STATE OF VERMONT
AGENCY OF TRANSPORTATION
MATERIALS & RESEARCH SECTION
SUBSURFACE INFORMATION

BORING LOG

Jay
BHF 0278(3)
VT Rte 242, Bridge #10, Over Jay Branch

Boring No.: P-1
Page No.: 1 of 1
Pin No.: z12c154
Checked By: TAD

Boring Crew: NH Boring, Derry, NH, Burke (Stantec)
Date Started: 3/25/14 Date Finished: 3/25/14
VTSPG NAD83: N 890238.55 ft E 1652682.72 ft
Station: 167+98.00 Offset: 6.71 LT
Ground Elevation: 1036.69 ft

	Casing	Sampler
Type:	H.S.A.	
I.D.:	4.25 in	
Hammer Wt:	N.A.	N.A.
Hammer Fall:	N.A.	N.A.
Hammer/Rod Type:		
Rig: Diedrich D-50		C_e =

Groundwater Observations

Date	Depth (ft)	Notes

Depth (ft)	Strata (1)	CLASSIFICATION OF MATERIALS (Description)	Blows/6" (N Value)	Moisture Content %	Gravel %	Sand %	Fines %
2.5							
5.0							
7.5							
10.0							
TOP OF FOOTING EL. 1025.0							
12.5							
15.0							
17.5		Top of Bedrock @ 17.0 ft					
20.0							
22.5							

Remarks:
Advanced auger probe to refusal on probable bedrock at 17.0 feet below ground surface.

Notes:
1. Stratification lines represent approximate boundary between material types. Transition may be gradual.
2. N Values have not been corrected for hammer energy. C_e is the hammer energy correction factor.
3. Water level readings have been made at times and under conditions stated. Fluctuations of groundwater may occur due to other factors than those present at the time measurements were made.

2010 COPY VTRANS_TEMPLATE_JAY VT.GPJ VERMONT AOT.GDT 5/1/14

STATE OF VERMONT
AGENCY OF TRANSPORTATION
MATERIALS & RESEARCH SECTION
SUBSURFACE INFORMATION

BORING LOG

Jay
BHF 0278(3)
VT Rte 242, Bridge #10, Over Jay Branch

Boring No.: P-2
Page No.: 1 of 1
Pin No.: z12c154
Checked By: TAD

Boring Crew: NH Boring, Derry, NH, Burke (Stantec)
Date Started: 3/25/14 Date Finished: 3/25/14
VTSPG NAD83: N 890213.42 ft E 1652681.30 ft
Station: 167+76.40 Offset: 6.77 RT
Ground Elevation: 1037.74 ft

	Casing	Sampler
Type:	H.S.A.	
I.D.:	4.25 in	
Hammer Wt:	N.A.	N.A.
Hammer Fall:	N.A.	N.A.
Hammer/Rod Type:		
Rig: Diedrich D-50		C_e =

Groundwater Observations

Date	Depth (ft)	Notes

Depth (ft)	Strata (1)	CLASSIFICATION OF MATERIALS (Description)	Blows/6" (N Value)	Moisture Content %	Gravel %	Sand %	Fines %
2.5							
5.0							
7.5							
10.0							
TOP OF FOOTING EL. 1026.5							
12.5							
15.0							
17.5							
20.0							
22.5							

Remarks:
Auger probe encountered refusal 4.0 feet below ground surface on probable cobble or boulder. Relocated 7 feet south to P-2A.

Notes:
1. Stratification lines represent approximate boundary between material types. Transition may be gradual.
2. N Values have not been corrected for hammer energy. C_e is the hammer energy correction factor.
3. Water level readings have been made at times and under conditions stated. Fluctuations of groundwater may occur due to other factors than those present at the time measurements were made.

2010 COPY VTRANS_TEMPLATE_JAY VT.GPJ VERMONT AOT.GDT 5/1/14

Stantec

PROJECT NAME: JAY
PROJECT NUMBER: BHF 0278(3)

FILE NAME: z12c154bor_log.dgn
PROJECT LEADER: M. CHENETTE
DESIGNED BY: T. DYKSTRA
BORING LOG 3

PLOT DATE: 8/16/2016
DRAWN BY: L. BUXTON
CHECKED BY: J. HUNGERFORD
SHEET 19 OF 72

STATE OF VERMONT
AGENCY OF TRANSPORTATION
MATERIALS & RESEARCH SECTION
SUBSURFACE INFORMATION

BORING LOG

Jay
BHF 0278(3)
VT Rte 242, Bridge #10, Over Jay Branch

Boring No.: **P-2A**
Page No.: 1 of 1
Pin No.: z12c154
Checked By: TAD

Boring Crew: NH Boring, Derry, NH, Burke (Stantec)
Date Started: 3/25/14 Date Finished: 3/25/14
VTSPG NAD83: N 890207.95 ft E 1652676.84 ft
Station: 167+69.40 Offset: 6.14 RT
Ground Elevation: 1037.19 ft

	Casing	Sampler
Type:	H.S.A.	
I.D.:	4.25 in	
Hammer Wt:	N.A.	N.A.
Hammer Fall:	N.A.	N.A.
Hammer/Rod Type:		
Rig: Diedrich D-50		C_e =

Groundwater Observations

Date	Depth (ft)	Notes

TOP OF FOOTING
EL. 1026.5

Depth (ft)	Strata (1)	CLASSIFICATION OF MATERIALS (Description)	Blows/6" (N Value)	Moisture Content %	Gravel %	Sand %	Fines %
2.5							
5.0							
7.5							
10.0							
12.5		Top of Bedrock @ 12.5 ft					
15.0							
17.5							
20.0							
22.5							

Remarks:
Advanced auger probe to refusal on probable bedrock at 12.5 feet below ground surface.

Notes:
1. Stratification lines represent approximate boundary between material types. Transition may be gradual.
2. N Values have not been corrected for hammer energy. C_e is the hammer energy correction factor.
3. Water level readings have been made at times and under conditions stated. Fluctuations of groundwater may occur due to other factors than those present at the time measurements were made.

2010 COPY VTRANS_TEMPLATE_JAY VT.GPJ VERMONT AOT.GDT 5/1/14

STATE OF VERMONT
AGENCY OF TRANSPORTATION
MATERIALS & RESEARCH SECTION
SUBSURFACE INFORMATION

BORING LOG

Jay
BHF 0278(3)
VT Rte 242, Bridge #10, Over Jay Branch

Boring No.: **P-3**
Page No.: 1 of 1
Pin No.: z12c154
Checked By: TAD

Boring Crew: NH Boring, Derry, NH, Burke (Stantec)
Date Started: 3/25/14 Date Finished: 3/25/14
VTSPG NAD83: N 890299.19 ft E 1652718.89 ft
Station: 168+69.24 Offset: 4.77 LT
Ground Elevation: 1035.96 ft

	Casing	Sampler
Type:	H.S.A.	
I.D.:	4.25 in	
Hammer Wt:	N.A.	N.A.
Hammer Fall:	N.A.	N.A.
Hammer/Rod Type:		
Rig: Diedrich D-50		C_e =

Groundwater Observations

Date	Depth (ft)	Notes

TOP OF FOOTING
EL. 1028.5

Depth (ft)	Strata (1)	CLASSIFICATION OF MATERIALS (Description)	Blows/6" (N Value)	Moisture Content %	Gravel %	Sand %	Fines %
2.5							
5.0							
7.5							
10.0		Top of Bedrock @ 9.5 ft					
12.5							
15.0							
17.5							
20.0							
22.5							

Remarks:
Advanced auger probe to refusal on probable bedrock at 9.5 feet below ground surface.

Notes:
1. Stratification lines represent approximate boundary between material types. Transition may be gradual.
2. N Values have not been corrected for hammer energy. C_e is the hammer energy correction factor.
3. Water level readings have been made at times and under conditions stated. Fluctuations of groundwater may occur due to other factors than those present at the time measurements were made.

2010 COPY VTRANS_TEMPLATE_JAY VT.GPJ VERMONT AOT.GDT 5/1/14

Stantec

PROJECT NAME: JAY
PROJECT NUMBER: BHF 0278(3)

FILE NAME: z12c154bor_log.dgn
PROJECT LEADER: M. CHENETTE
DESIGNED BY: T. DYKSTRA
BORING LOG 4

PLOT DATE: 8/16/2016
DRAWN BY: L. BUXTON
CHECKED BY: J. HUNGERFORD
SHEET 20 OF 72

STATE OF VERMONT
AGENCY OF TRANSPORTATION
MATERIALS & RESEARCH SECTION
SUBSURFACE INFORMATION

BORING LOG

Jay
BHF 0278(3)
VT Rte 242, Bridge #10, Over Jay Branch

Boring No.: **P-4**
Page No.: 1 of 1
Pin No.: z12c154
Checked By: TAD

Boring Crew: NH Boring, Derry, NH, Burke (Stantec)
Date Started: 3/25/14 Date Finished: 3/25/14
VTSPG NAD83: N 890287.33 ft E 1652728.97 ft
Station: 168+63.52 Offset: 9.69 RT
Ground Elevation: 1036.75 ft

	Casing	Sampler
Type:	H.S.A.	
I.D.:	4.25 in	
Hammer Wt:	N.A.	N.A.
Hammer Fall:	N.A.	N.A.
Hammer/Rod Type:		
Rig: Diedrich D-50		C. =

Groundwater Observations

Date	Depth (ft)	Notes

TOP OF FOOTING
EL. 1028.5

Depth (ft)	Strata (1)	CLASSIFICATION OF MATERIALS (Description)	Blows/6" (N Value)	Moisture Content %	Gravel %	Sand %	Fines %
2.5							
5.0							
7.5							
10.0		Top of Bedrock @ 9.5 ft					
12.5		Remarks: Advanced auger probe to refusal on probable bedrock at 9.5 feet below ground surface.					
15.0							
17.5							
20.0							
22.5							

Notes:
1. Stratification lines represent approximate boundary between material types. Transition may be gradual.
2. N Values have not been corrected for hammer energy. C_e is the hammer energy correction factor.
3. Water level readings have been made at times and under conditions stated. Fluctuations of groundwater may occur due to other factors than those present at the time measurements were made.

2010 COPY VTRANS_TEMPLATE_JAY VT.GPJ VERMONT AOT.GDT 5/1/14

Stantec

PROJECT NAME: JAY
PROJECT NUMBER: BHF 0278(3)

FILE NAME: z12c154bor_log.dgn
PROJECT LEADER: M. CHENETTE
DESIGNED BY: T. DYKSTRA
BORING LOG 5

PLOT DATE: 8/16/2016
DRAWN BY: L. BUXTON
CHECKED BY: J. HUNGERFORD
SHEET 21 OF 72

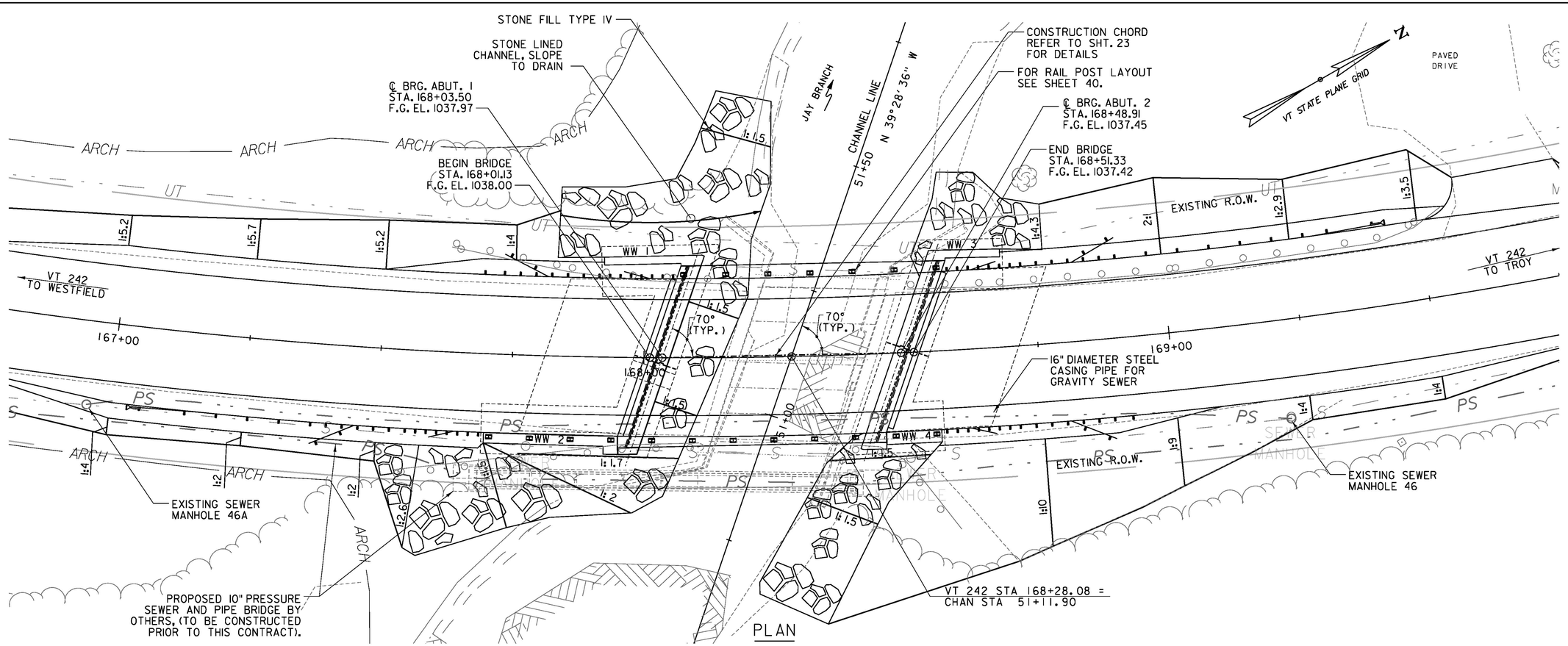

PLAN

SCALE: 1" = 10'-0"

0 10 20

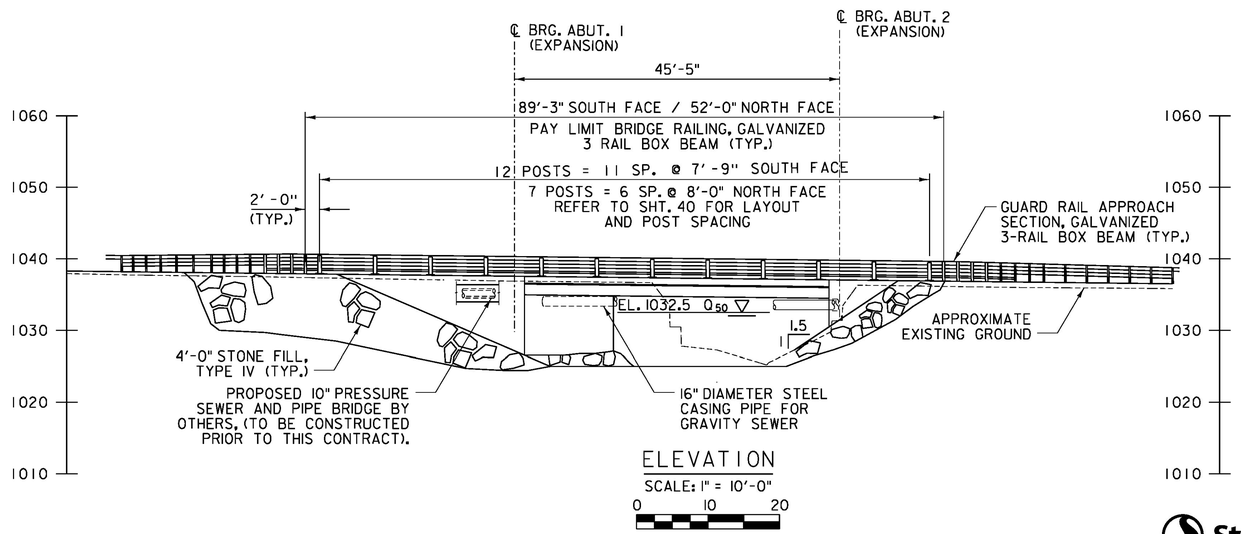

ELEVATION

SCALE: 1" = 10'-0"

0 10 20

Stantec

PROJECT NAME: JAY	
PROJECT NUMBER: BHF 0278(3)	
FILE NAME: zl2cl54bdr_pe.dgn	PLOT DATE: 8/16/2016
PROJECT LEADER: M. CHENETTE	DRAWN BY: L. BUXTON
DESIGNED BY: J. HUNGERFORD	CHECKED BY: T. KNIGHT
PLAN AND ELEVATION	SHEET 22 OF 72

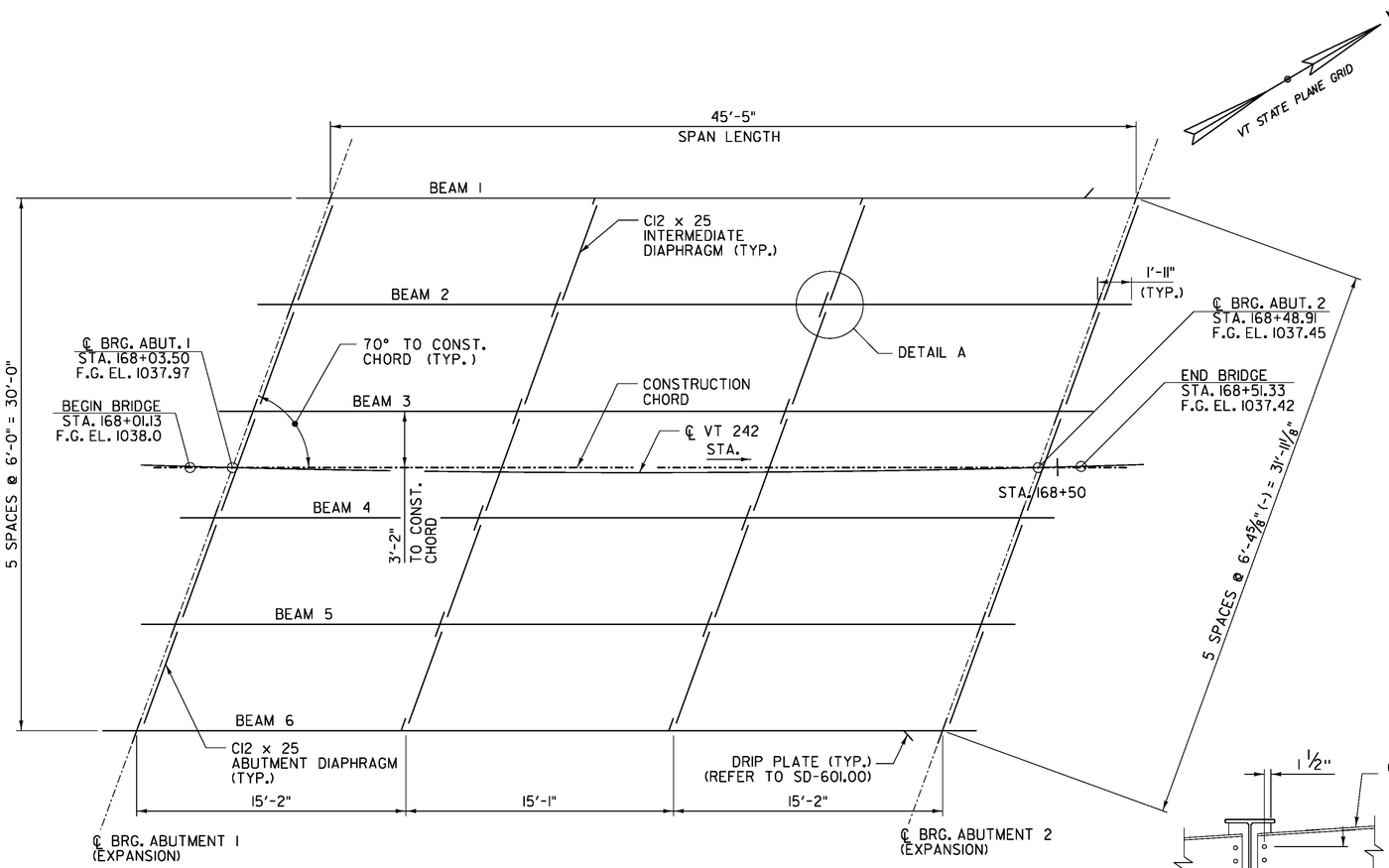

FRAMING PLAN
SCALE: 1/4" = 1'-0"

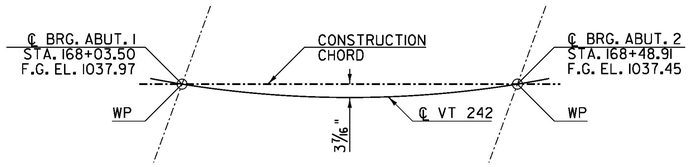

CONSTRUCTION CHORD LAYOUT
NOT TO SCALE

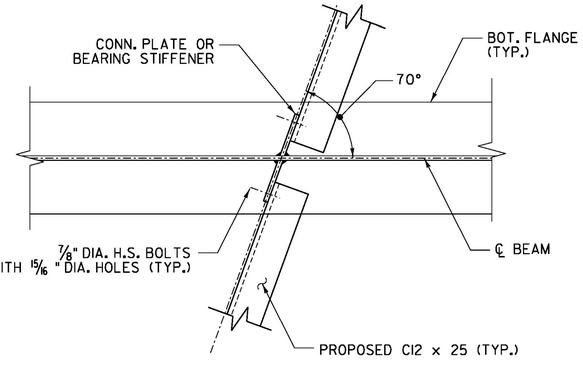

DETAIL A
NOT TO SCALE

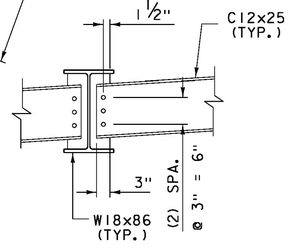

DIAPHRAGM DETAIL
SCALE 3/4" = 1'-0"

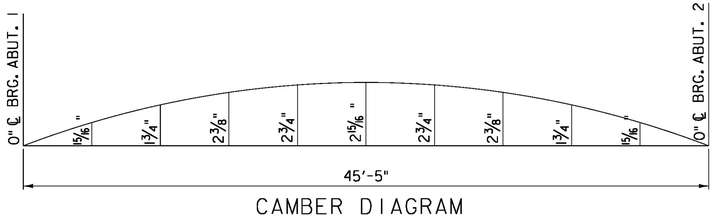

CAMBER DIAGRAM
SCALE 1"=1'-0"

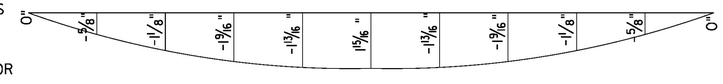

DEAD LOAD DEFLECTION
SCALE 1"=1'-0"

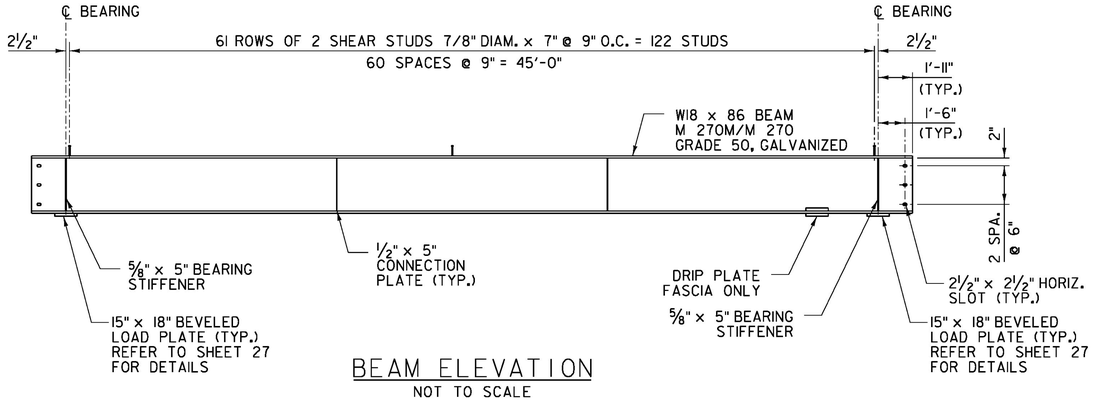

BEAM ELEVATION
NOT TO SCALE

NOTES:

1. CAMBER AND DEAD LOAD MEASUREMENTS ARE GIVEN IN INCHES AT SPAN TENTH POINTS.
2. DEAD LOAD DEFLECTIONS SHOWN ARE FOR ALL DEAD LOADS AND SUPERIMPOSED DEAD LOADS INCLUDING GIRDER AND DIAPHRAGM WEIGHTS. DESIGN DEAD LOAD DEFLECTIONS SHOWN ARE BASED ON THE AVERAGE OF BEAMS 1 THRU 6.
3. FOR DIAPHRAGM DETAILS REFER TO SD 602.00.
4. END OF BEAMS & BEARING STIFFENERS SHALL BE VERTICAL UNDER DEAD LOAD.

Stantec

PROJECT NAME: JAY	
PROJECT NUMBER: BHF 0278(3)	
FILE NAME: zl2cl54fra.dgn	PLOT DATE: 8/16/2016
PROJECT LEADER: M. CHENETTE	DRAWN BY: J. SOTER
DESIGNED BY: N. TIRK	CHECKED BY: T. KNIGHT
FRAMING PLAN & DETAILS	SHEET 23 OF 72

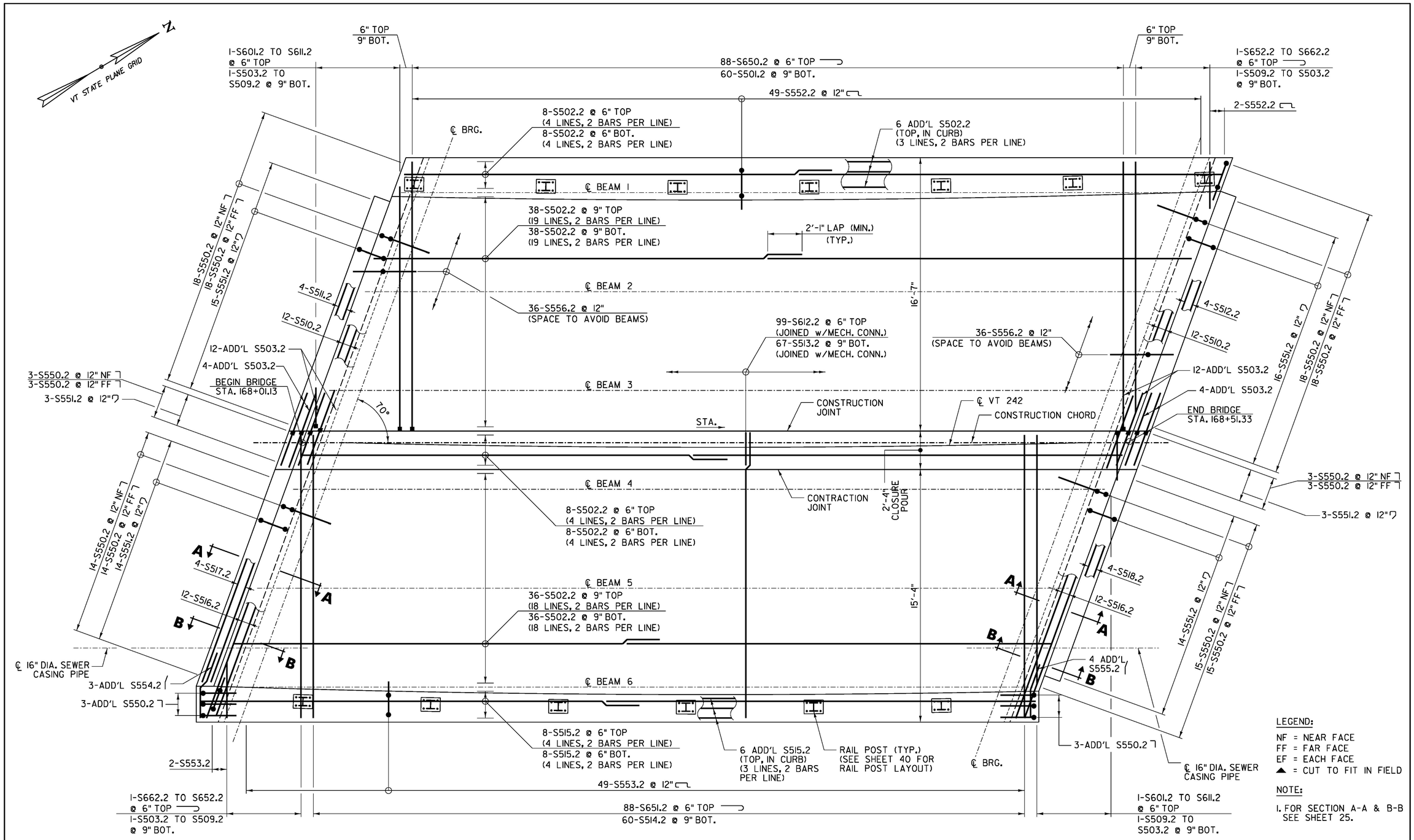

DECK REINFORCEMENT PLAN

SCALE: 3/8" = 1'-0"

Stantec

PROJECT NAME:	JAY
PROJECT NUMBER:	BHF 0278(3)
FILE NAME: zl2cl54deck_pl.dgn	PLOT DATE: 8/16/2016
PROJECT LEADER: M. CHENETTE	DRAWN BY: J. SOTER
DESIGNED BY: N. TIRK	CHECKED BY: T. KNIGHT
DECK REINFORCEMENT	SHEET 24 OF 72

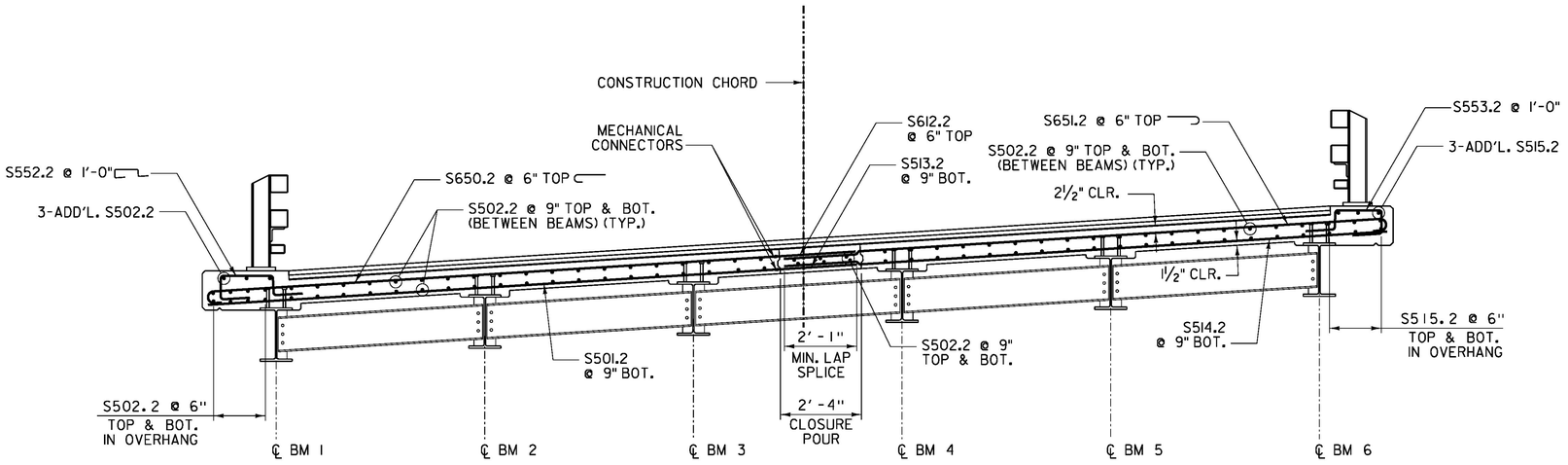

TYPICAL DECK REINFORCEMENT SECTION

SCALE: ½" = 1'-0"

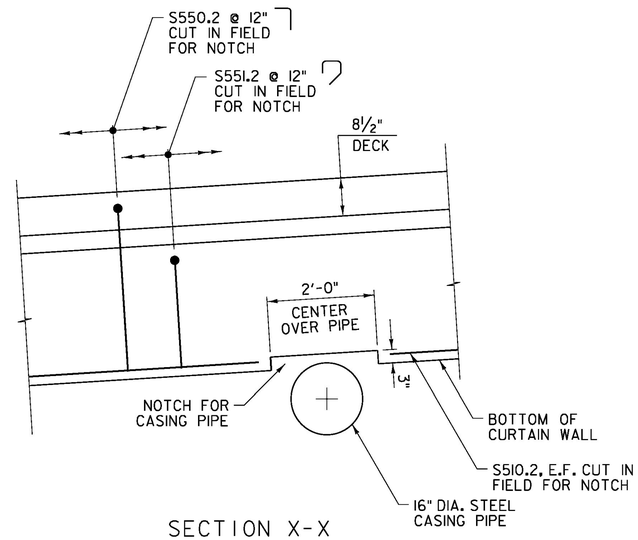

SECTION X-X

SCALE ¾" = 1'-0"

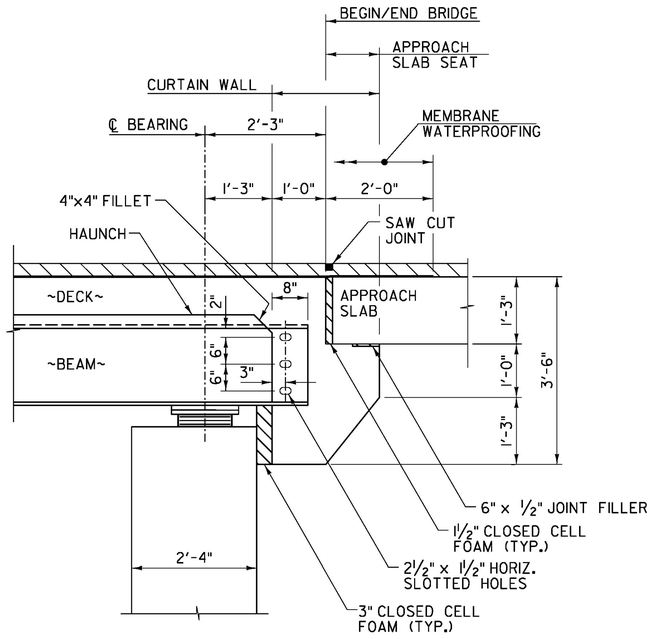

SECTION A-A MASONRY

SCALE ¾" = 1'-0"

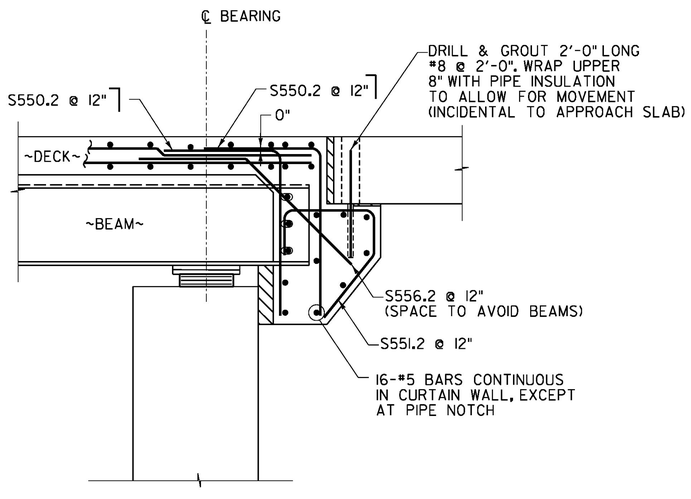

SECTION A-A REINFORCEMENT

SCALE ¾" = 1'-0"

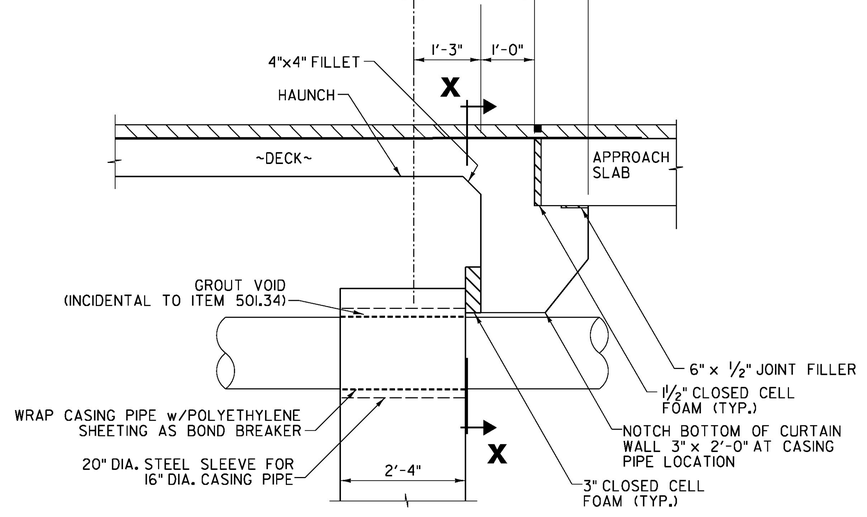

SECTION B-B MASONRY

SCALE ¾" = 1'-0"

LEGEND:

NF = NEAR FACE
FF = FAR FACE
EF = EACH FACE
▲ = CUT TO FIT IN FIELD

Stantec

PROJECT NAME: JAY	
PROJECT NUMBER: BHF 0278(3)	
FILE NAME: z12cl54deck_pi.dgn	PLOT DATE: 8/16/2016
PROJECT LEADER: M. CHENETTE	DRAWN BY: J. SOTER
DESIGNED BY: N. TIRK	CHECKED BY: G. BOGUE
TYPICAL REINFORCEMENT SECTIONS	SHEET 25 OF 72

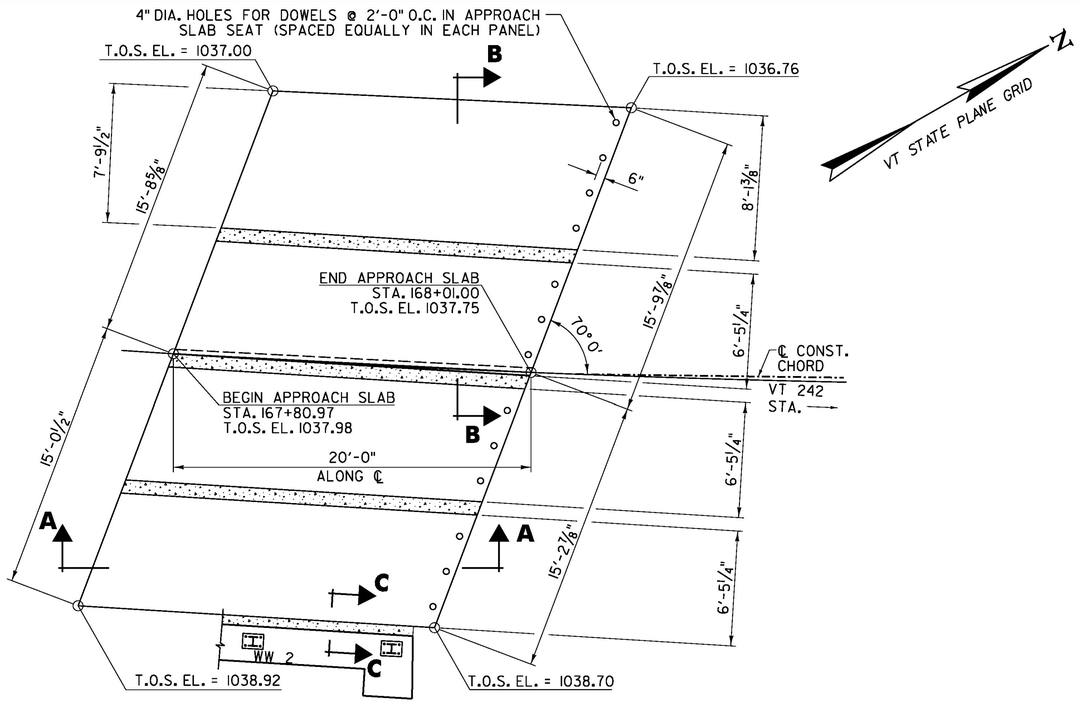

APPROACH SLAB NO. 1 PLAN
SCALE: ¼" = 1'-0"

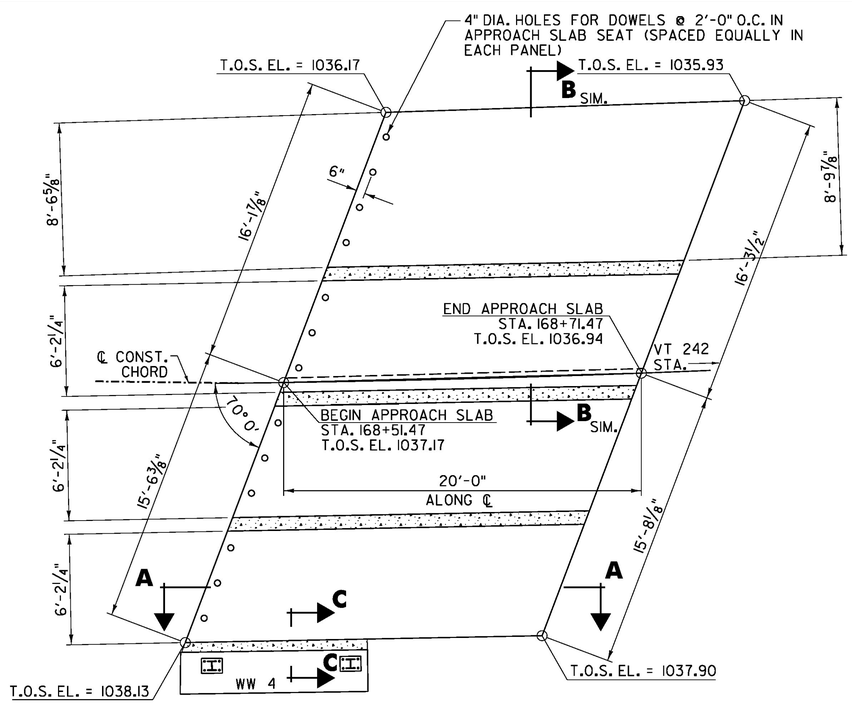

APPROACH SLAB NO. 2 PLAN
SCALE: ¼" = 1'-0"

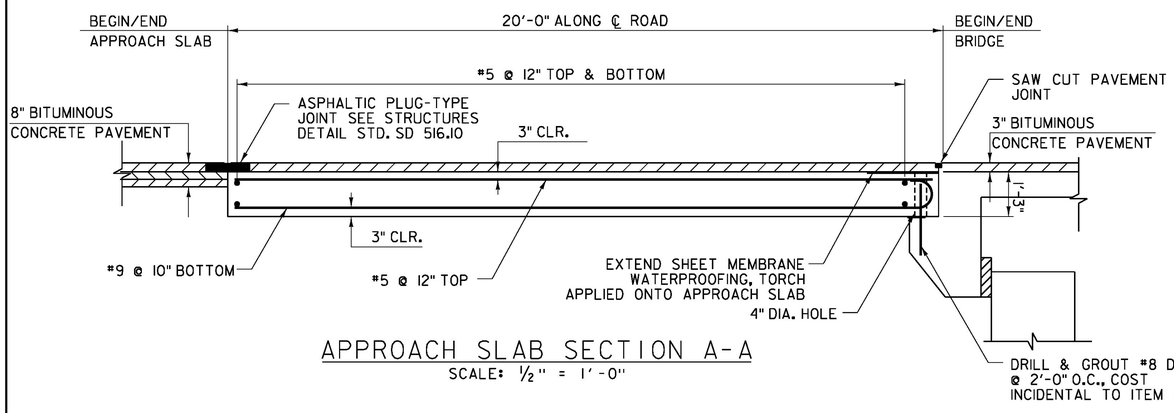

APPROACH SLAB SECTION A-A
SCALE: ½" = 1'-0"

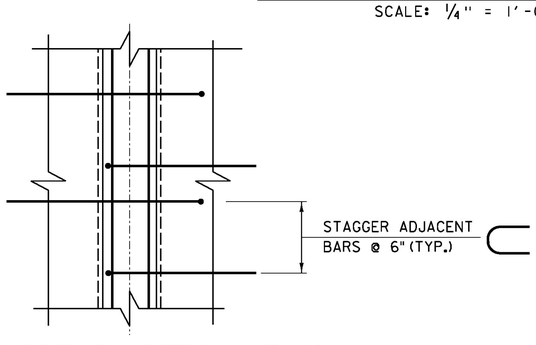

CONNECTION DETAIL PLAN
SCALE: 1" = 1'-0"

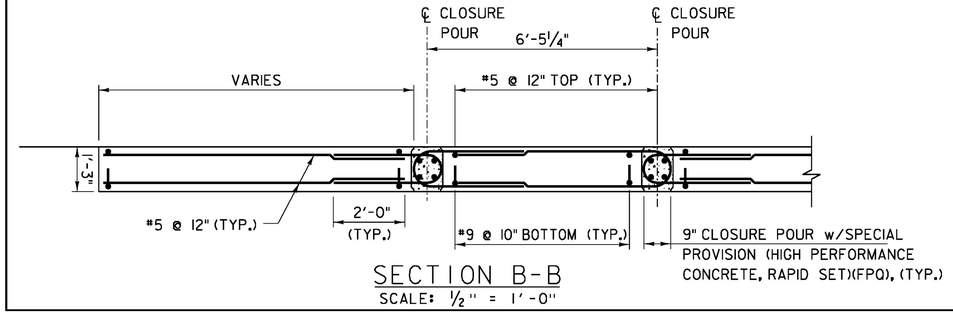

SECTION B-B
SCALE: ½" = 1'-0"

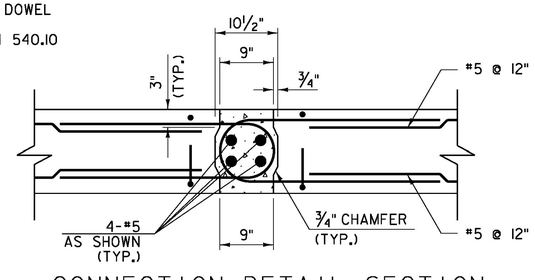

CONNECTION DETAIL SECTION
SCALE: 1" = 1'-0"

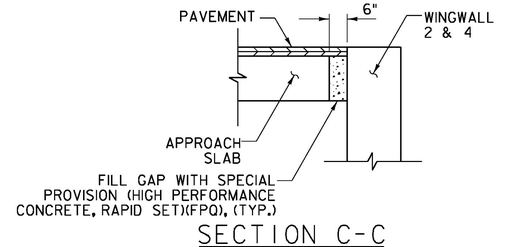

SECTION C-C
SCALE: ½" = 1'-0"

Stantec

PROJECT NAME: JAY	
PROJECT NUMBER: BHF 0278(3)	
FILE NAME: zl2cl54appslab.dgn	PLOT DATE: 8/16/2016
PROJECT LEADER: M. CHENETTE	DRAWN BY: L. BUXTON
DESIGNED BY: N. TIRK	CHECKED BY: T. KNIGHT
APPROACH SLAB DETAILS	SHEET 26 OF 72

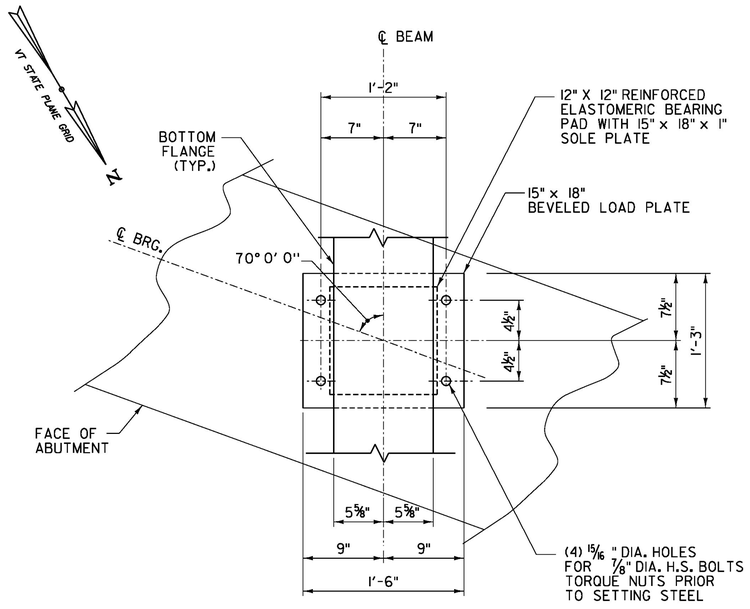

ELASTOMERIC BEARING PLAN

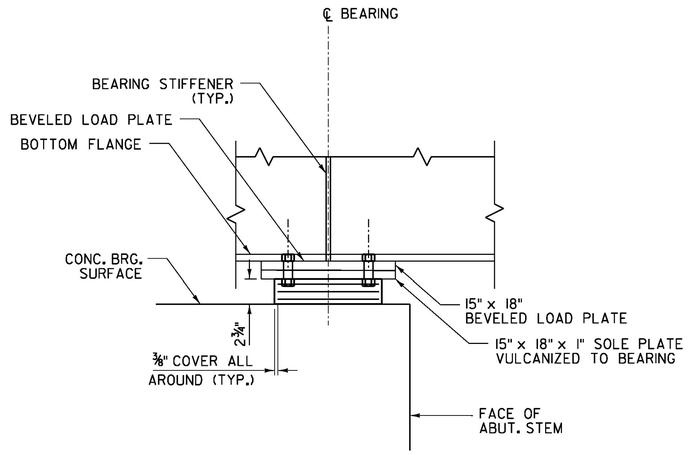

SIDE ELEVATION

BEARING NOTES:

1. BEARINGS SHALL CONFORM TO APPLICABLE SUBSECTIONS OF THE STANDARD SPECIFICATION SECTIONS 531 AND 731.
2. ELASOTMERIC BEARINGS AND SOLE PLATE SHALL BE PAID FOR UNDER ITEM 531.18. LOAD PLATE AND CONNECTION HARDWARE ARE TO BE PAID FOR AS STRUCTURAL STEEL.
3. FABRICATION DRAWINGS INCLUDING BONDING AND VULCANIZING PROCEDURES SHALL BE SUBMITTED IN ACCORDANCE WITH SUBSECTION 531.03.
4. THE CONCRETE SURFACE UNDER THE BEARING DEVICE SHALL BE LEVEL.
5. DECK POUR ADJUSTMENT:
   THE BOTTOM FLANGE IS ANTICIPATED TO ELONGATE LESS THAN ¼" DUE TO PLACEMENT OF THE CONCRETE DECK AND THE BEARINGS ARE DESIGNED TO ACCOMODATE THIS MOVEMENT. THE TEMPERATURE SETTING RANGE FOR INSTALLATION OF THE ELASTOMERIC BEARINGS WITHOUT THE NEED FOR ADJUSTMENT IS 20 TO 70 DEGREES F.
6. THE SHEAR MODULUS OF THE ELASTOMER SHALL BE BETWEEN 130 AND 175 psi.
7. VULCANIZING ELASTOMER TO STEEL PLATES SHALL BE DONE DURING PRIMARY MOLD PROCESS.
8. AN ⅛" GAP SHALL BE LEFT BELOW THE NUT. THE ANCHOR BOLT THREADS SHALL BE BURRED TO PREVENT REMOVAL OF THE NUTS (TYP.)
9. STEEL REINFORCED ELASTOMERIC BEARINGS WERE DESIGNED PER METHOD = A.

   ELASTOMERIC BEARING DESIGN CRITERIA:

   ABUTMENT 1 AND 2 BEARINGS - SERVICE LOADS
   A. DESIGN DEAD LOAD REACTION = 22.9 KIPS/BEARING
   B. DESIGN LIVE LOAD REACTION = 38.0 KIPS/BEARING
   C. ROTATION CAPACITY = 0.015 RADIANS
10. ALL STEEL IN BEARING DEVICES SHALL BE AASHTO M 270M/M 270, (ASTM A-709) GRADE 36 (MIN.).

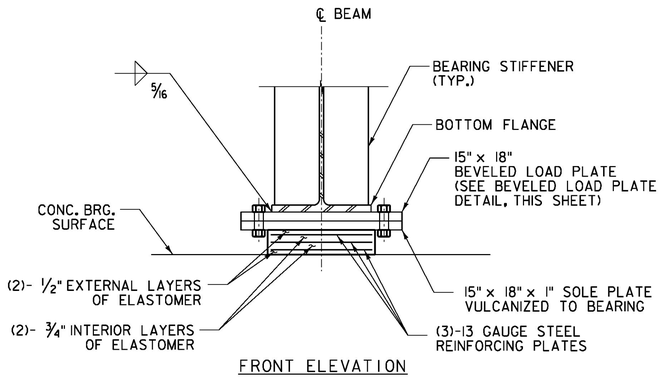

FRONT ELEVATION

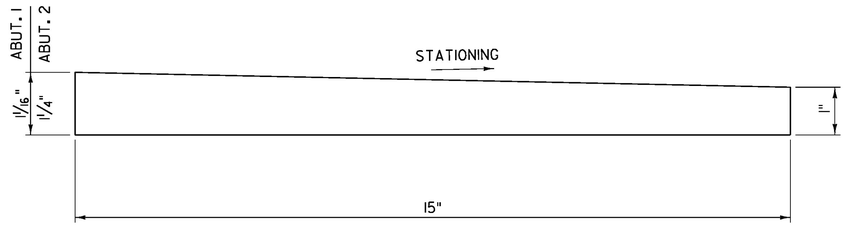

BEVELED LOAD PLATE

NOT TO SCALE

NOTE:
NO BEVEL IN TRANSVERSE DIRECTION

ELASTOMERIC BEARING ASSEMBLY

SCALE 1½" = 1'-0"

PROJECT NAME: JAY	
PROJECT NUMBER: BHF 0278(3)	
FILE NAME: z12c154brg_det.dgn	PLOT DATE: 8/16/2016
PROJECT LEADER: M. CHENETTE	DRAWN BY: L. BUXTON
DESIGNED BY: N. TIRK	CHECKED BY: T. KNIGHT
BEARING DETAILS	SHEET 27 OF 72

Stantec

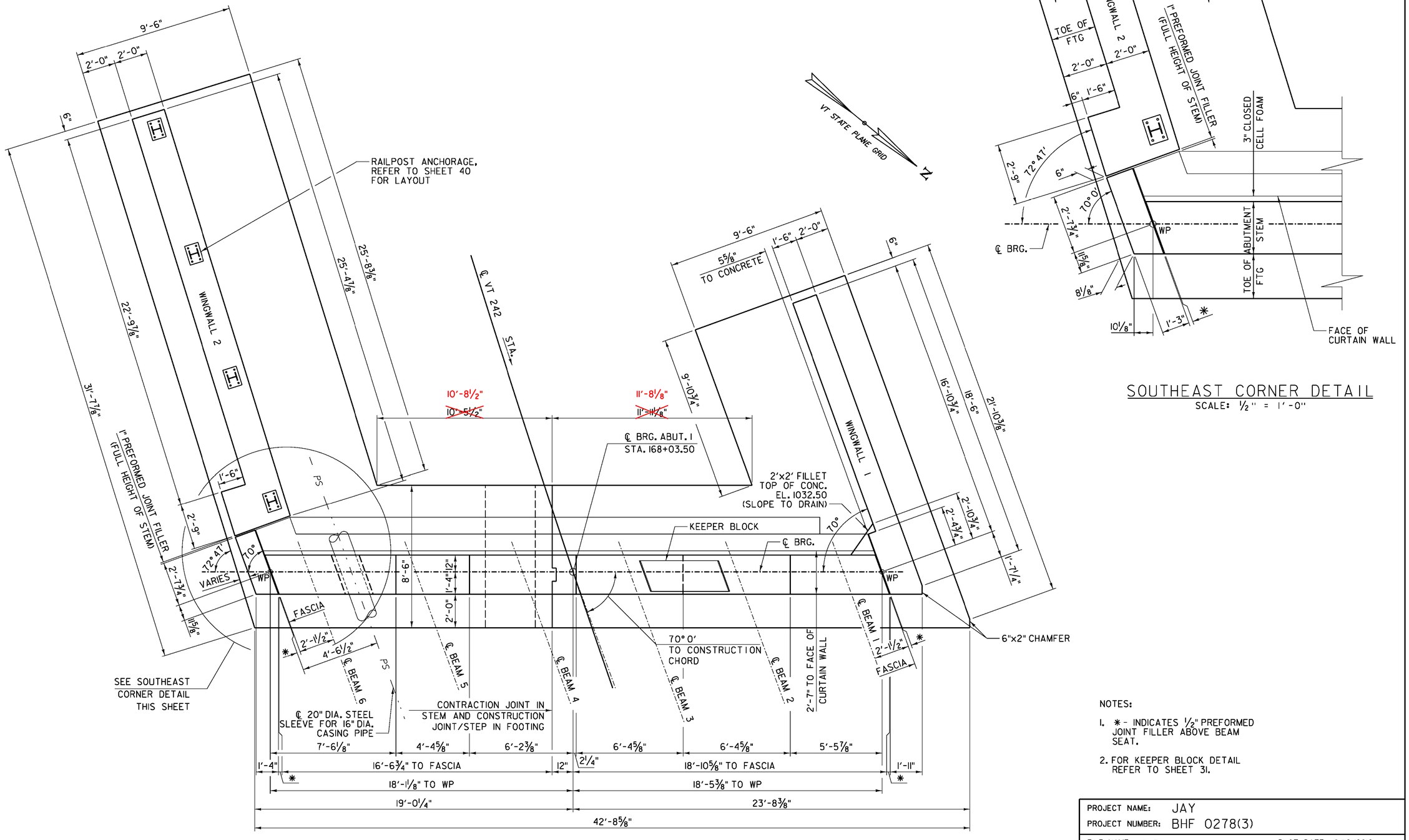

ABUTMENT NO. 1 PLAN

SCALE: 3/8" = 1'-0"

SOUTHEAST CORNER DETAIL

SCALE: 1/2" = 1'-0"

NOTES:

1. * - INDICATES 1/2" PREFORMED JOINT FILLER ABOVE BEAM SEAT.
2. FOR KEEPER BLOCK DETAIL REFER TO SHEET 31.

Stantec

PROJECT NAME:	JAY
PROJECT NUMBER:	BHF 0278(3)
FILE NAME: z12c154abuts.dgn	PLOT DATE: 8/16/2016
PROJECT LEADER: M. CHENETTE	DRAWN BY: J. SOTER
DESIGNED BY: N. TIRK	CHECKED BY: T. KNIGHT
ABUTMENT NO. 1 PLAN	SHEET 28 OF 72

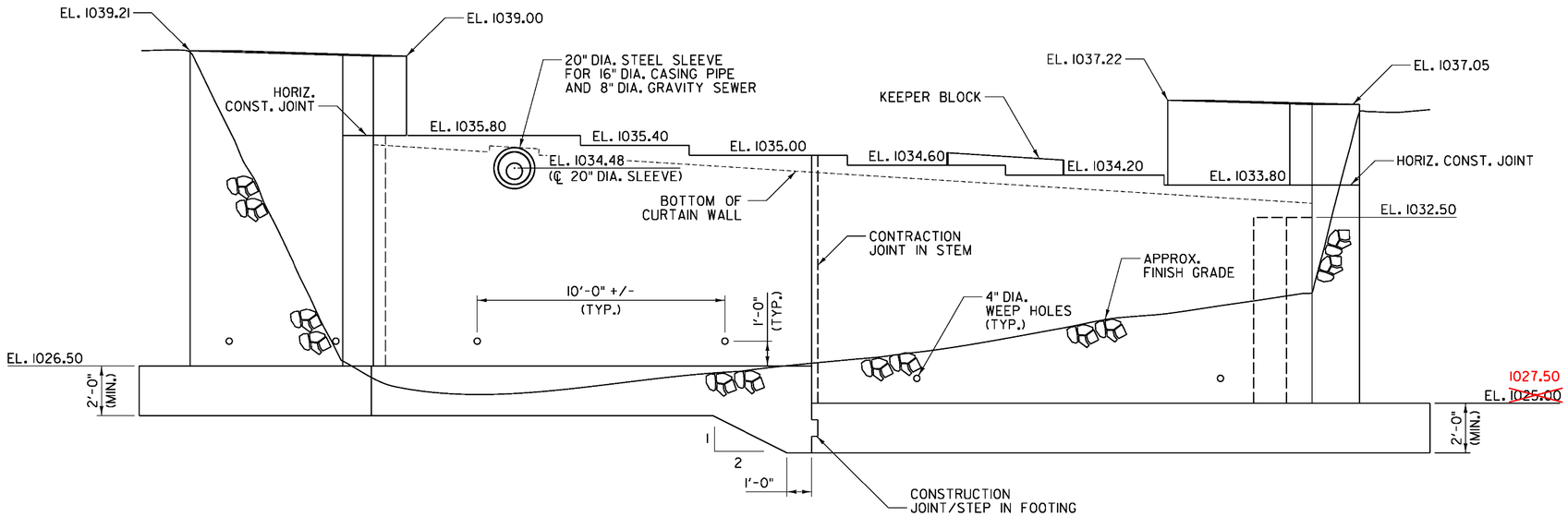

ABUTMENT NO. 1 ELEVATION

SCALE: 3/8" = 1'-0"

NOTE: FOR KEEPER BLOCK DETAIL REFER TO SHEET 31.

Stantec

PROJECT NAME: JAY	
PROJECT NUMBER: BHF 0278(3)	
FILE NAME: z12c154abuts.dgn	PLOT DATE: 8/16/2016
PROJECT LEADER: M. CHENETTE	DRAWN BY: J. SOTER
DESIGNED BY: N. TIRK	CHECKED BY: T. KNIGHT
ABUTMENT NO. 1 ELEVATION	SHEET 29 OF 72

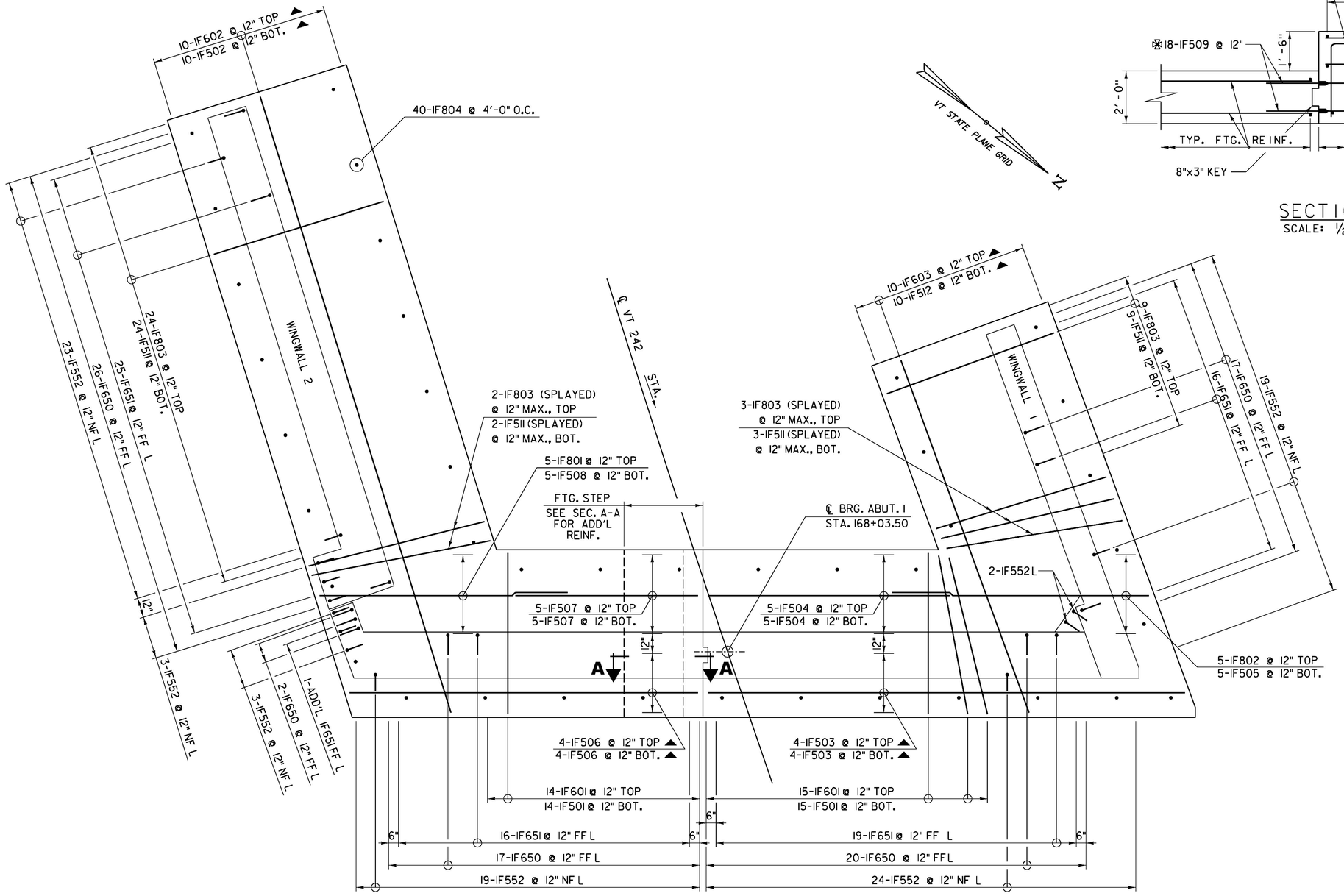

ABUTMENT NO. 1 FOOTING REINFORCEMENT

SCALE: 3/8" = 1'-0"

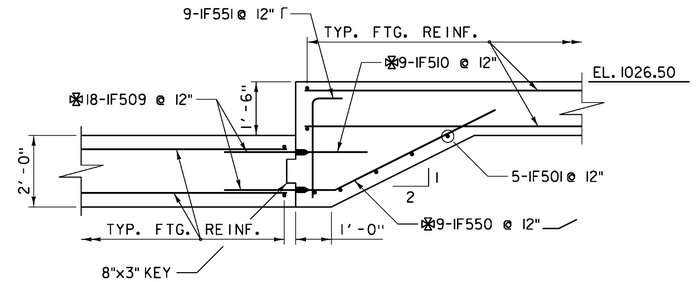

SECTION A-A

SCALE: 1/2" = 1'-0"

LEGEND:

NF = NEAR FACE
FF = FAR FACE
EF = EACH FACE
▲ = CUT TO FIT IN FIELD
⊠ = INDICATES BAR JOINED WITH MECHANICAL CONNECTOR
ALL SPLICES 2'-0" UNLESS NOTED OTHERWISE.

Stantec

PROJECT NAME:	JAY
PROJECT NUMBER:	BHF 0278(3)
FILE NAME: z12c154abuts.dgn	PLOT DATE: 8/16/2016
PROJECT LEADER: M. CHENETTE	DRAWN BY: J. SOTER
DESIGNED BY: N. TIRK	CHECKED BY: T. KNIGHT
ABUTMENT NO. 1 FOOTING REINFORCEMENT	SHEET 30 OF 72

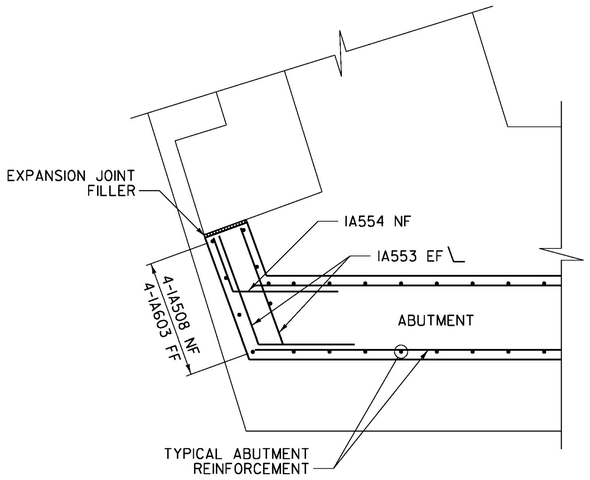

SOUTHEAST CORNER REINFORCEMENT (BELOW BEAM SEAT)

SCALE: 1/2" = 1'-0"

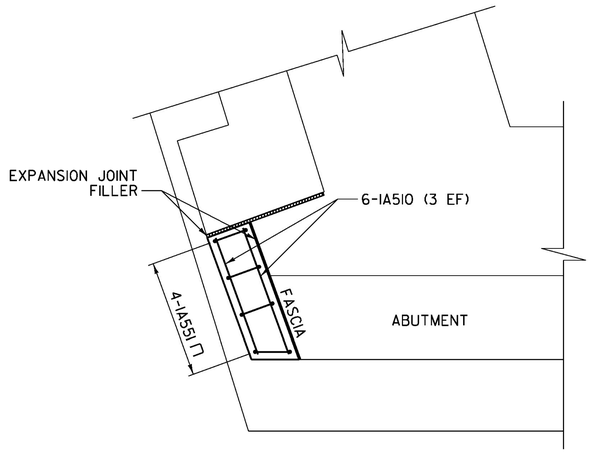

SOUTHEAST CORNER REINFORCEMENT (ABOVE BEAM SEAT)

SCALE: 1/2" = 1'-0"

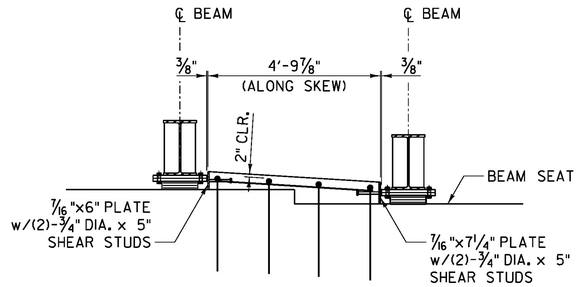

SECTION A-A

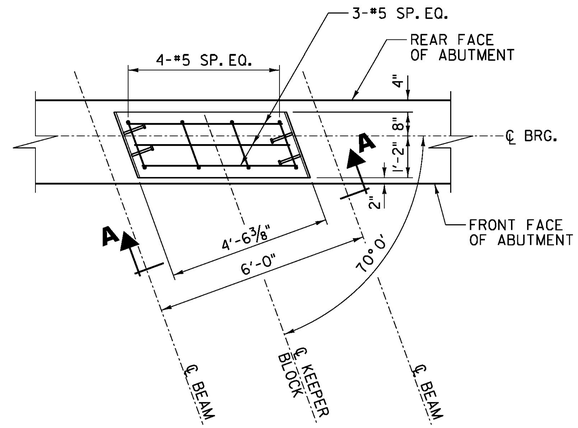

TYPICAL KEEPER BLOCK DETAIL

SCALE: 1/2" = 1'-0"

NOTE:
STRUCTURAL STEEL PLATES ARE TO BE GRADE 36 AND GALVANIZED. COST SHALL BE CONSIDERED INCIDENTAL TO THE CONCRETE.

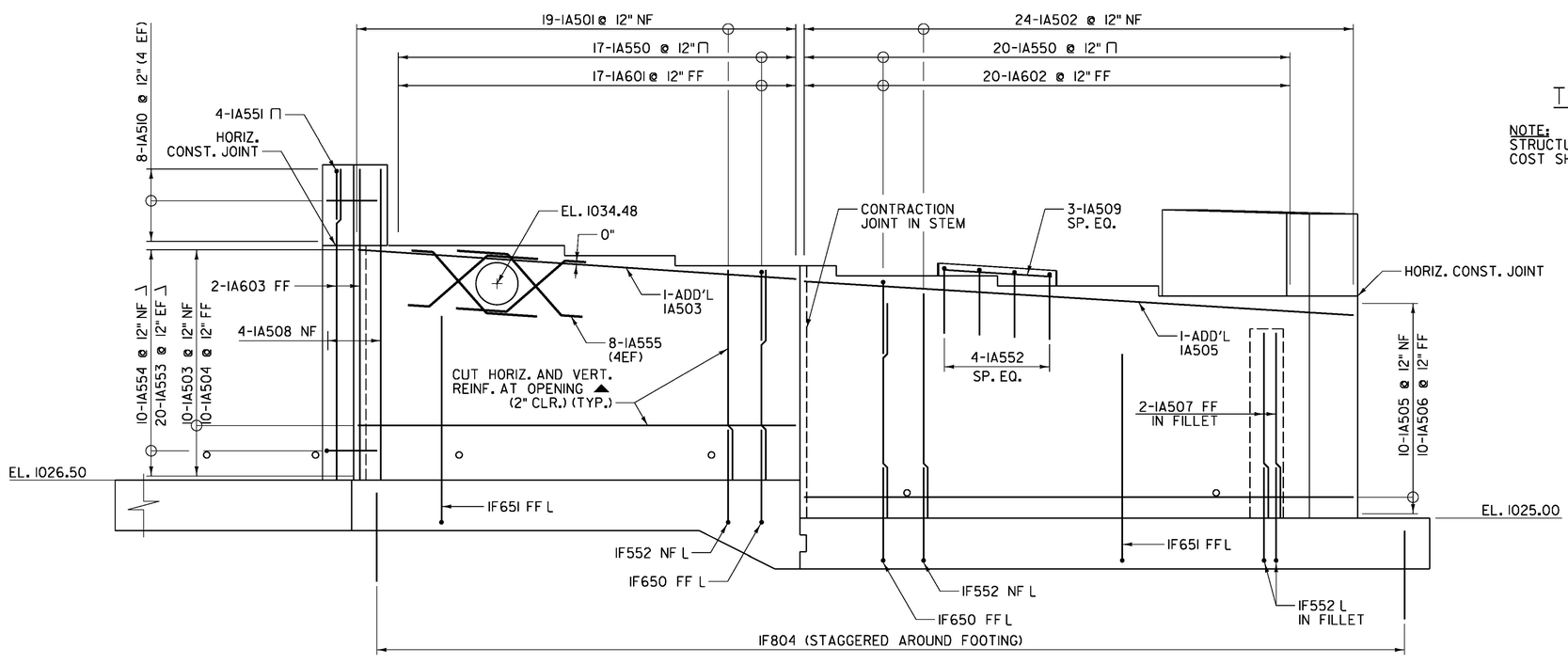

ABUTMENT NO. 1 REINFORCEMENT ELEVATION

SCALE: 3/8" = 1'-0"

LEGEND:

NF = NEAR FACE
FF = FAR FACE
EF = EACH FACE
▲ = CUT TO FIT IN FIELD

ALL SPLICES 2'-0" UNLESS NOTED OTHERWISE.

Stantec

PROJECT NAME: JAY	
PROJECT NUMBER: BHF 0278(3)	
FILE NAME: z12c154abuts.dgn	PLOT DATE: 8/16/2016
PROJECT LEADER: M. CHENETTE	DRAWN BY: J. SOTER
DESIGNED BY: N. TIRK	CHECKED BY: T. KNIGHT
ABUTMENT NO. 1 REINFORCEMENT ELEVATION	SHEET 31 OF 72

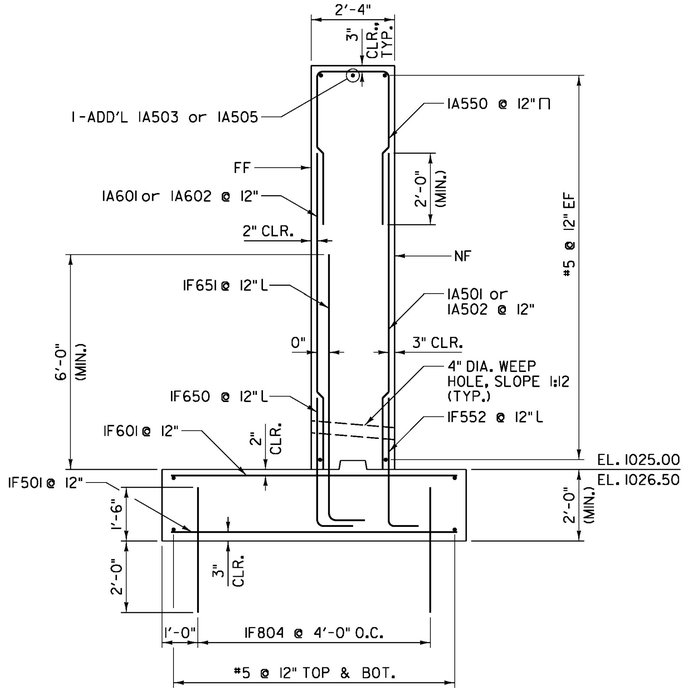

ABUTMENT NO. 1 REINFORCEMENT

SCALE: ½" = 1'-0"

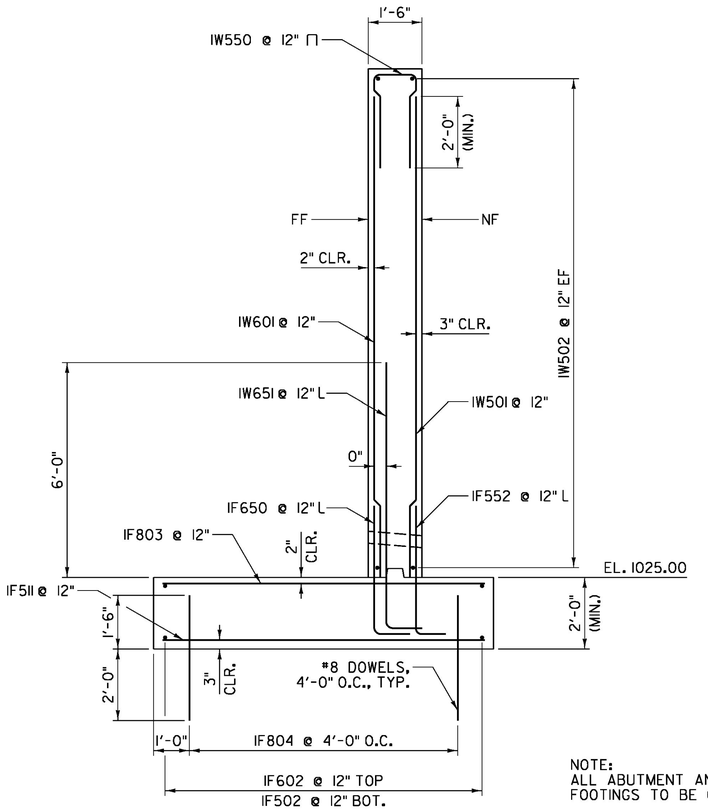

WINGWALL 1 REINFORCEMENT

SCALE: ½" = 1'-0"

NOTE:
ALL ABUTMENT AND WINGWALL FOOTINGS TO BE ON BEDROCK.

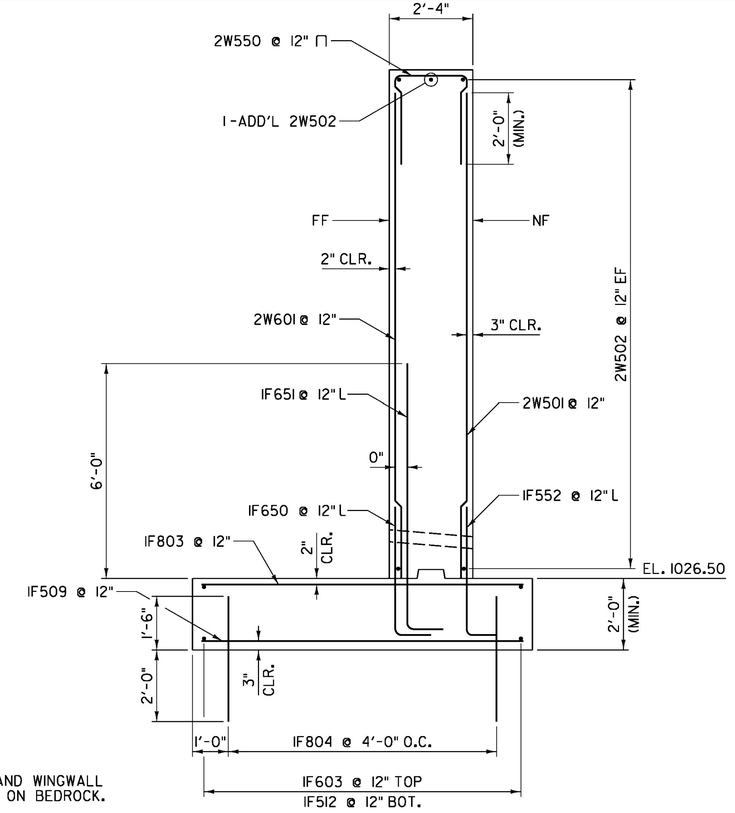

WINGWALL 2 REINFORCEMENT

SCALE: ½" = 1'-0"

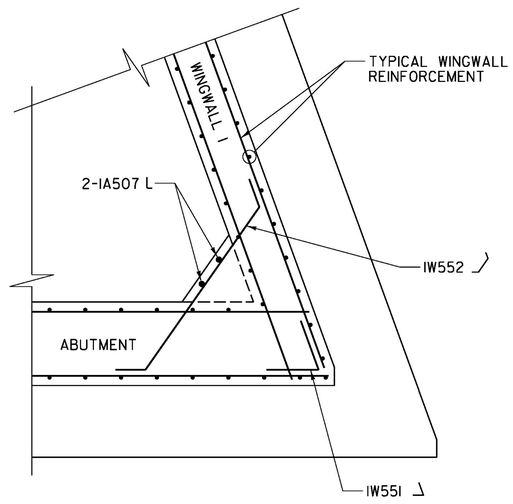

WINGWALL 1 CORNER REINFORCEMENT (BELOW FILLET)

SCALE: ½" = 1'-0"

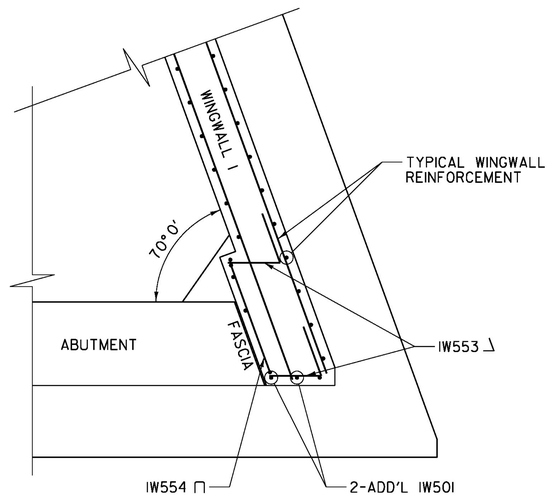

WINGWALL 1 CORNER REINFORCEMENT (ABOVE FILLET)

SCALE: ½" = 1'-0"

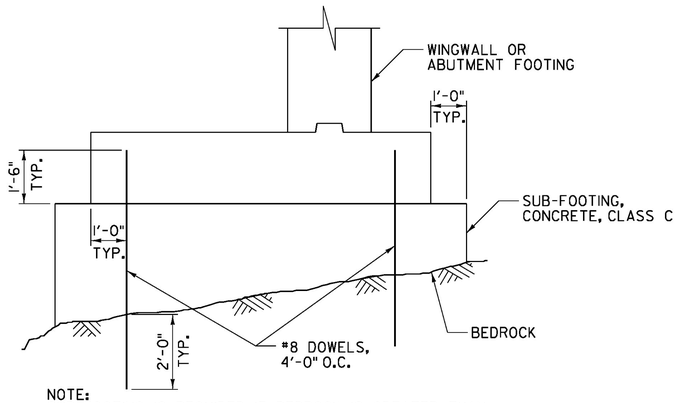

NOTE:
SUB-FOOTING IS REQUIRED IF BEDROCK IS GREATER THAN 1'-0" BELOW THE DESIGN BOTTOM OF FOOTING ELEVATION.

DETAIL TYPICAL SUB-FOOTING

NOT TO SCALE

LEGEND:

NF = NEAR FACE
FF = FAR FACE
EF = EACH FACE
▲ = CUT TO FIT IN FIELD

ALL SPLICES 2'-0" UNLESS NOTED OTHERWISE.

Stantec

PROJECT NAME: JAY	
PROJECT NUMBER: BHF 0278(3)	
FILE NAME: z12cl54abuts.dgn	PLOT DATE: 8/16/2016
PROJECT LEADER: M. CHENETTE	DRAWN BY: J. SOTER
DESIGNED BY: N. TIRK	CHECKED BY: T. KNIGHT
ABUTMENT NO. 1 REINFORCEMENT SECTIONS	SHEET 32 OF 72

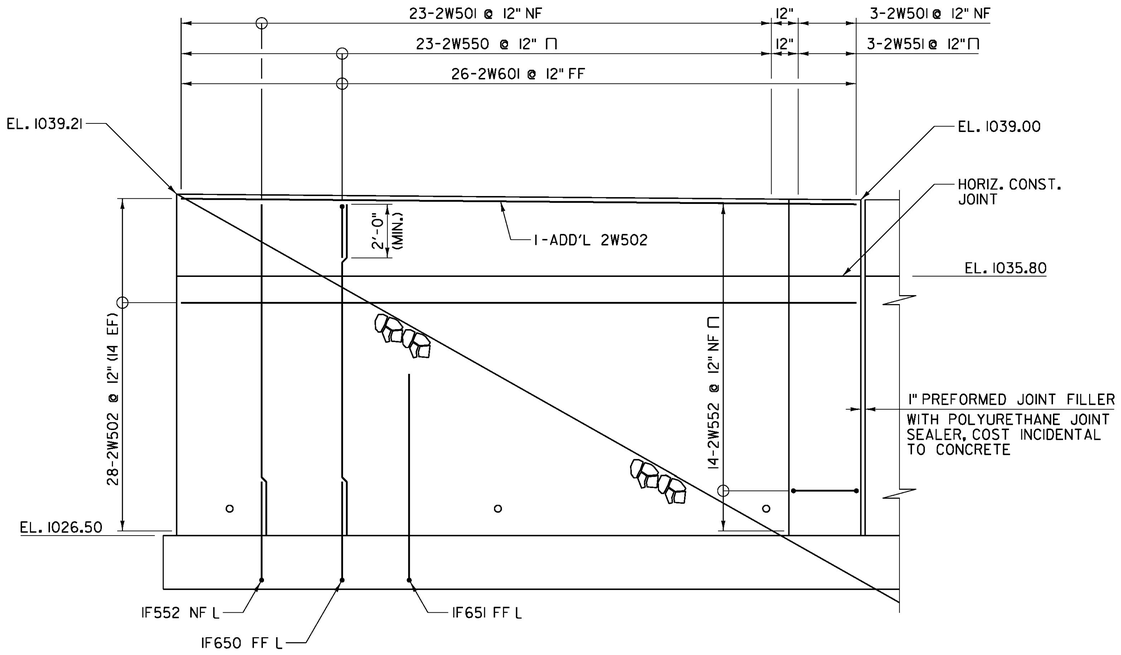

WINGWALL 2 REINFORCEMENT

SCALE: 3/8" = 1'-0"

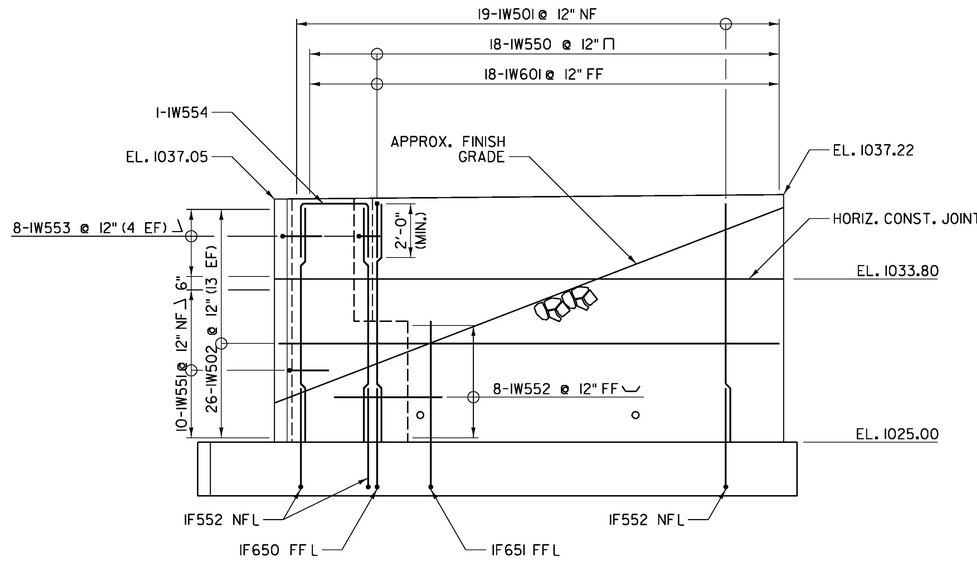

WINGWALL 1 REINFORCEMENT

SCALE: 3/8" = 1'-0"

LEGEND:

NF = NEAR FACE
FF = FAR FACE
EF = EACH FACE
▲ = CUT TO FIT IN FIELD

ALL SPLICES 2'-0" UNLESS NOTED OTHERWISE.

Stantec

PROJECT NAME: JAY	
PROJECT NUMBER: BHF 0278(3)	
FILE NAME: z12ci54abuts.dgn	PLOT DATE: 8/16/2016
PROJECT LEADER: M. CHENETTE	DRAWN BY: J. SOTER
DESIGNED BY: N. TIRK	CHECKED BY: T. KNIGHT
ABUTMENT NO. 1 WINGWALL DETAILS	SHEET 33 OF 72

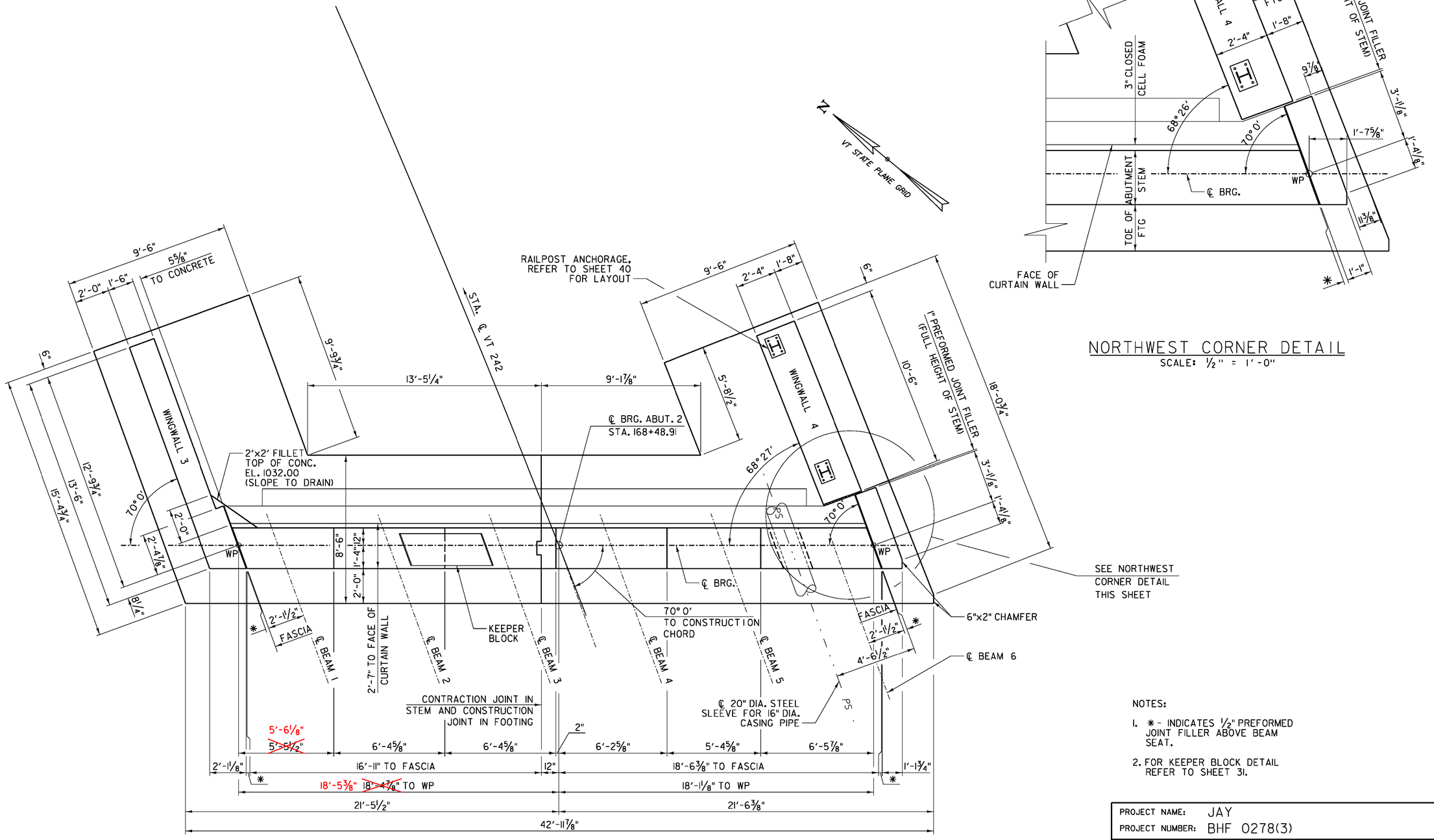

NORTHWEST CORNER DETAIL

SCALE: ½" = 1'-0"

ABUTMENT NO. 2 PLAN

SCALE: ⅜" = 1'-0"

NOTES:

1. ✱ - INDICATES ½" PREFORMED JOINT FILLER ABOVE BEAM SEAT.
2. FOR KEEPER BLOCK DETAIL REFER TO SHEET 31.

Stantec

PROJECT NAME:	JAY
PROJECT NUMBER:	BHF 0278(3)
FILE NAME: z12cl54abuts.dgn	PLOT DATE: 8/16/2016
PROJECT LEADER: M. CHENETTE	DRAWN BY: J. SOTER
DESIGNED BY: N. TIRK	CHECKED BY: T. KNIGHT
ABUTMENT NO. 2 PLAN	SHEET 34 OF 72

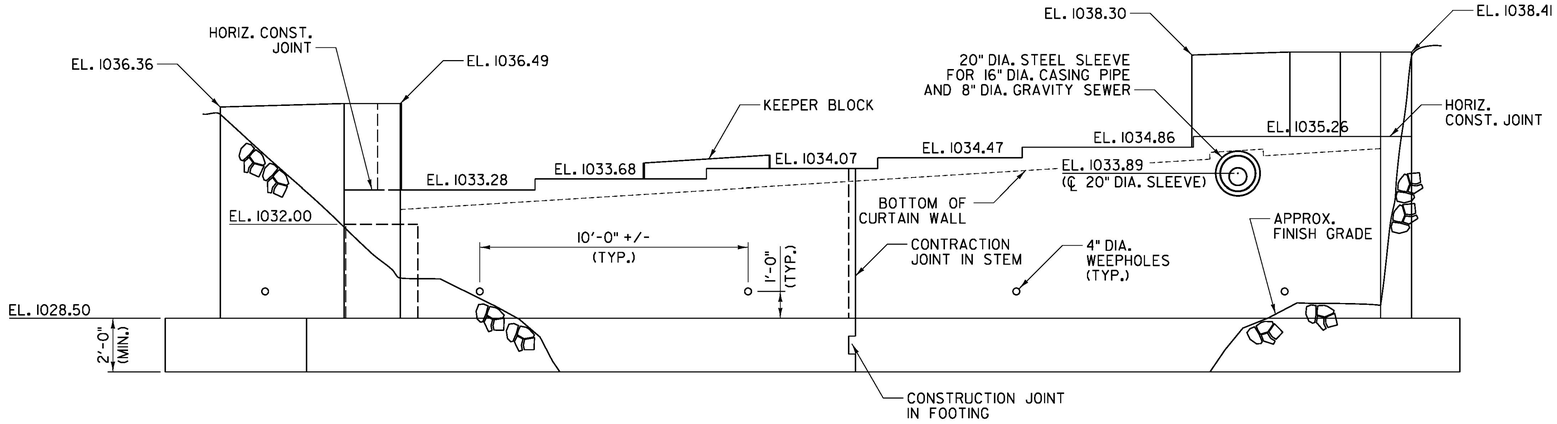

ABUTMENT NO. 2 ELEVATION

SCALE: 3/8" = 1'-0"

NOTE: FOR KEEPER BLOCK DETAIL REFER TO SHEET 31.

Stantec

PROJECT NAME: JAY	
PROJECT NUMBER: BHF 0278(3)	
FILE NAME: z12c154abuts.dgn	PLOT DATE: 8/16/2016
PROJECT LEADER: M. CHENETTE	DRAWN BY: J. SOTER
DESIGNED BY: N. TIRK	CHECKED BY: T. KNIGHT
ABUTMENT NO. 2 ELEVATION	SHEET 35 OF 72

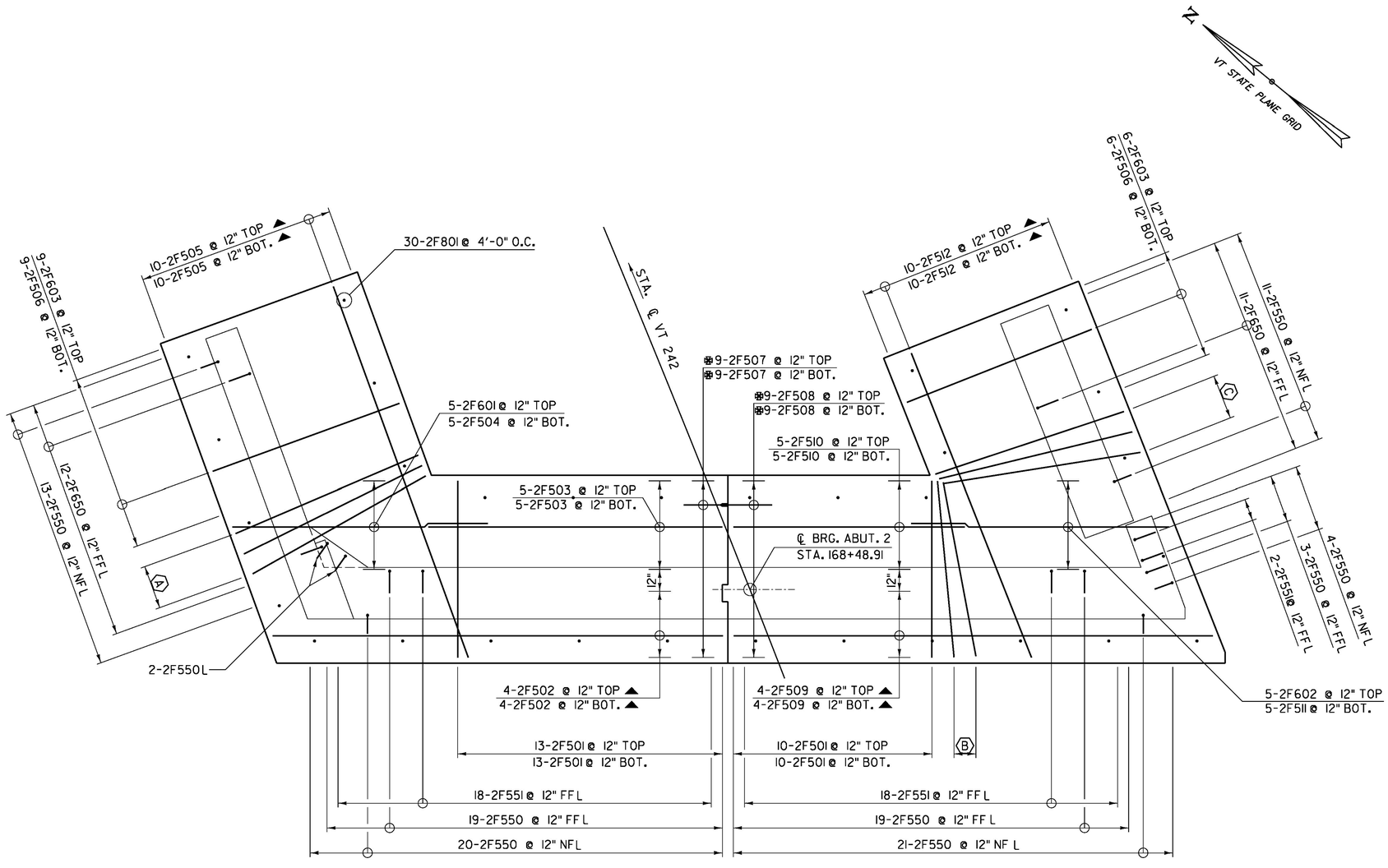

ABUTMENT NO. 2 FOOTING REINFORCEMENT

SCALE: 3/8" = 1'-0"

LEGEND

(A) 3-2F603 (SPLAYED) @ 12" MAX. BEHIND STEM, TOP
3-2F506 (SPLAYED) @ 12" MAX. BEHIND STEM, BOT.

(B) 2-2F501(SPLAYED) @ 12" MAX. BEHIND STEM, TOP
2-2F501(SPLAYED) @ 12" MAX. BEHIND STEM, BOT.

(C) 3-2F603 (SPLAYED) @ 12" MAX. BEHIND STEM, TOP
3-2F506 (SPLAYED) @ 12" MAX. BEHIND STEM, BOT.

LEGEND:

NF = NEAR FACE
FF = FAR FACE
EF = EACH FACE
▲ = CUT TO FIT IN FIELD
⊠ = INDICATES BAR JOINED WITH MECHANICAL CONNECTOR

ALL SPLICES 2'-0" UNLESS NOTED OTHERWISE.

Stantec

PROJECT NAME:	JAY
PROJECT NUMBER:	BHF 0278(3)
FILE NAME: zl2cl54abuts.dgn	PLOT DATE: 8/16/2016
PROJECT LEADER: M. CHENETTE	DRAWN BY: J. SOTER
DESIGNED BY: N. TIRK	CHECKED BY: T. KNIGHT
ABUTMENT NO. 2 FOOTING REINFORCEMENT	SHEET 36 OF 72

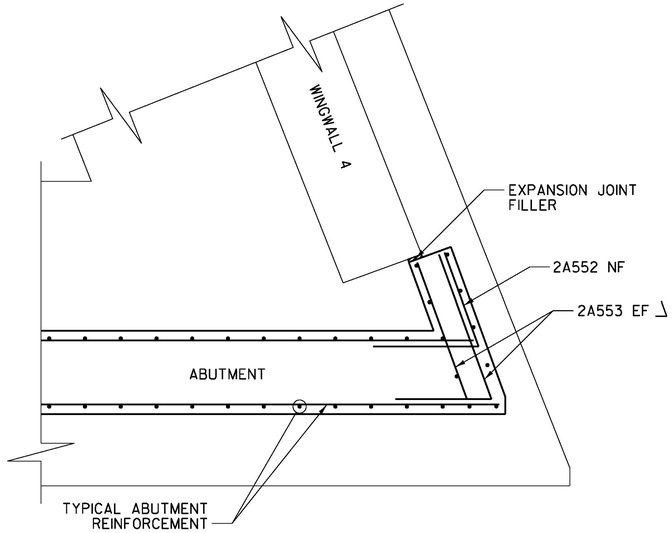

NORTHWEST CORNER REINFORCEMENT
(BELOW BEAM SEAT)
SCALE: ½" = 1'-0"

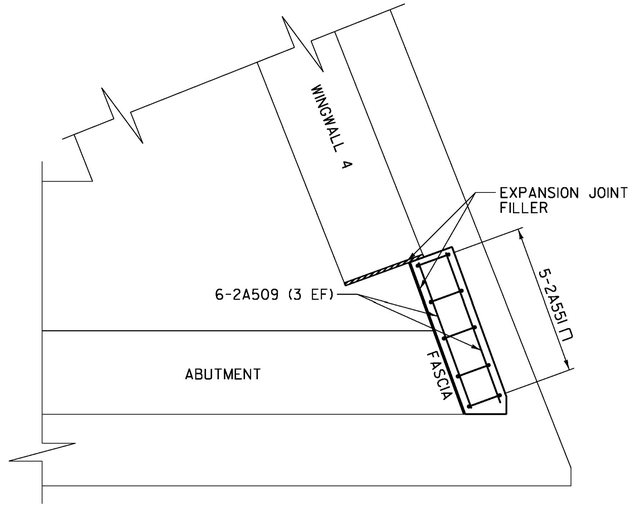

NORTHWEST CORNER REINFORCEMENT
(ABOVE BEAM SEAT)
SCALE: ½" = 1'-0"

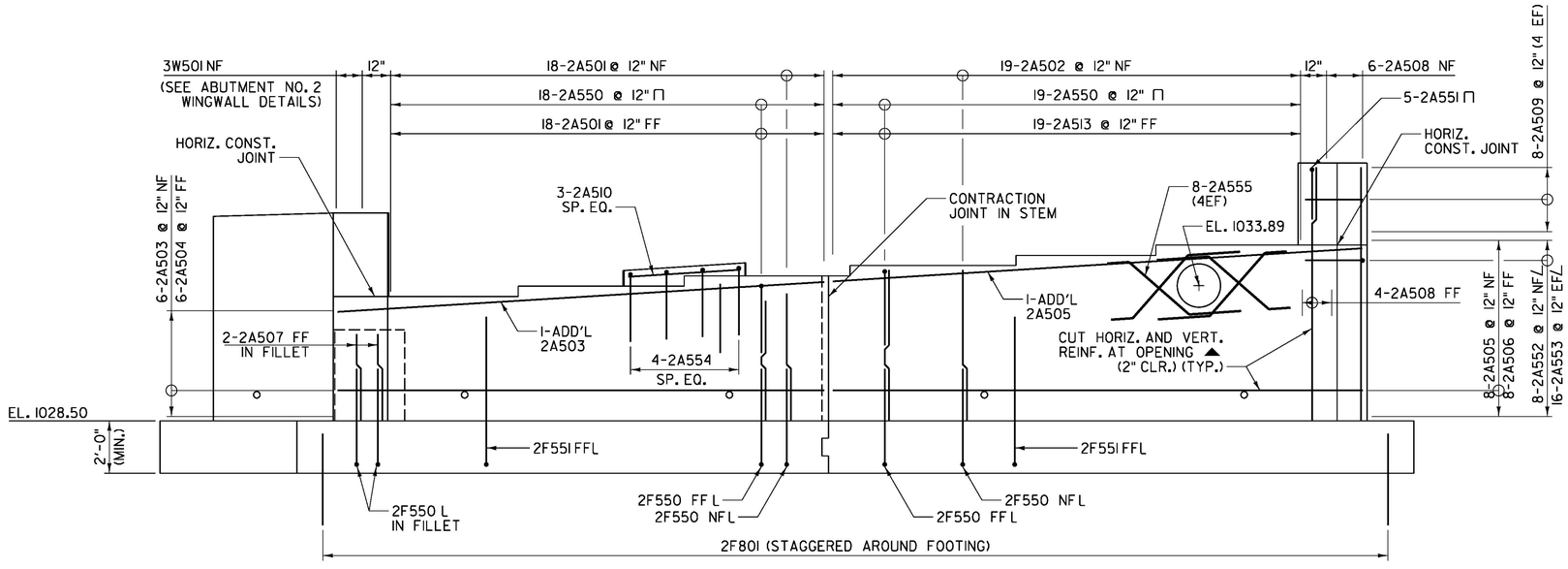

ABUTMENT NO. 2 REINFORCEMENT ELEVATION
SCALE: ⅜" = 1'-0"

LEGEND:

NF = NEAR FACE
FF = FAR FACE
EF = EACH FACE
▲ = CUT TO FIT IN FIELD

NOTES:

1. FOR TYPICAL KEEPER BLOCK DETAIL SEE SHEET 31.

ALL SPLICES 2'-0" UNLESS NOTED OTHERWISE.

Stantec

PROJECT NAME:	JAY
PROJECT NUMBER:	BHF 0278(3)
FILE NAME: z12c154abuts.dgn	PLOT DATE: 8/16/2016
PROJECT LEADER: M. CHENETTE	DRAWN BY: J. SOTER
DESIGNED BY: N. TIRK	CHECKED BY: T. KNIGHT
ABUTMENT NO. 2 REINFORCEMENT ELEVATION	SHEET 37 OF 72

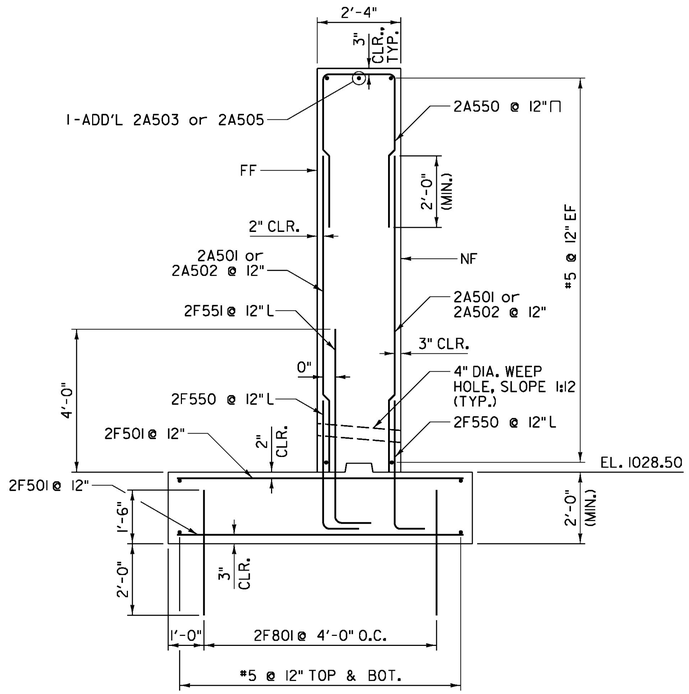

ABUTMENT NO. 2 REINFORCEMENT

SCALE: ½" = 1'-0"

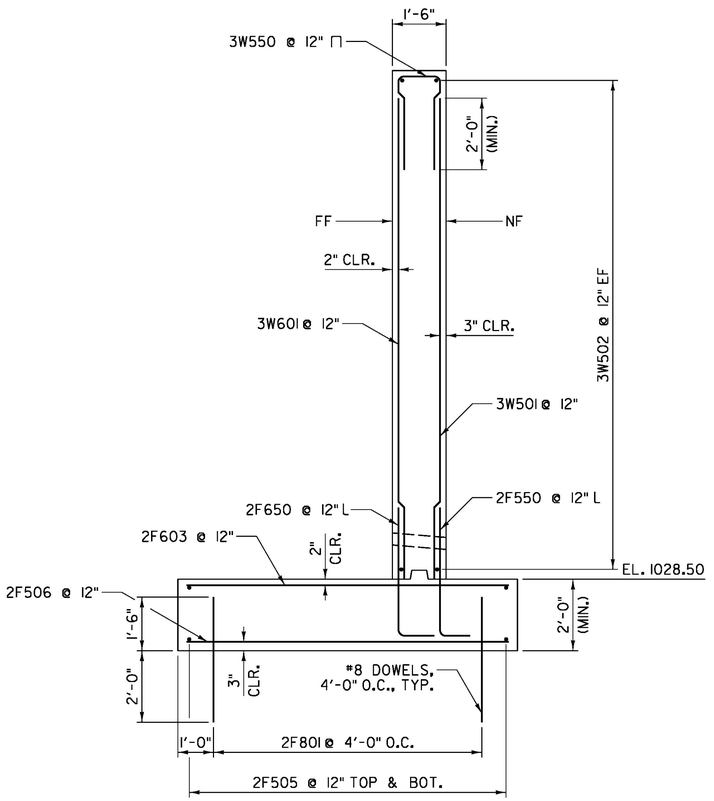

WINGWALL 3 REINFORCEMENT

SCALE: ½" = 1'-0"

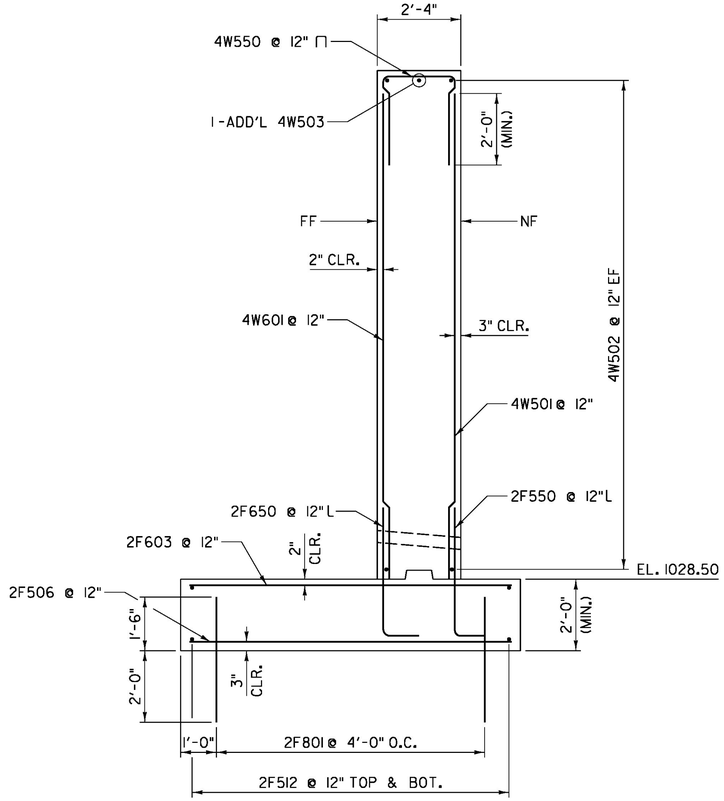

WINGWALL 4 REINFORCEMENT

SCALE: ½" = 1'-0"

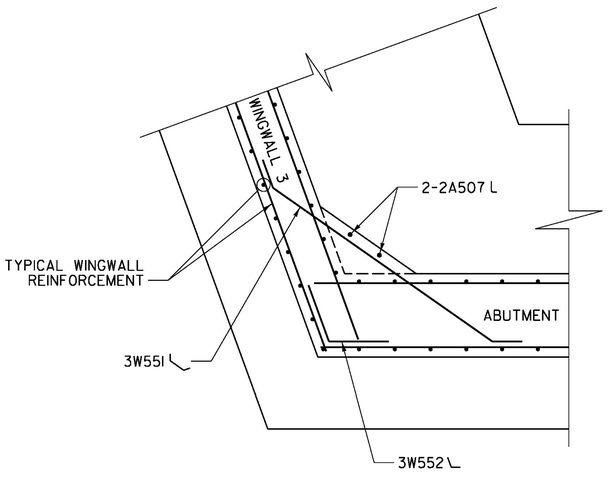

WINGWALL 3 CORNER REINFORCEMENT (BELOW FILLET)

SCALE: ½" = 1'-0"

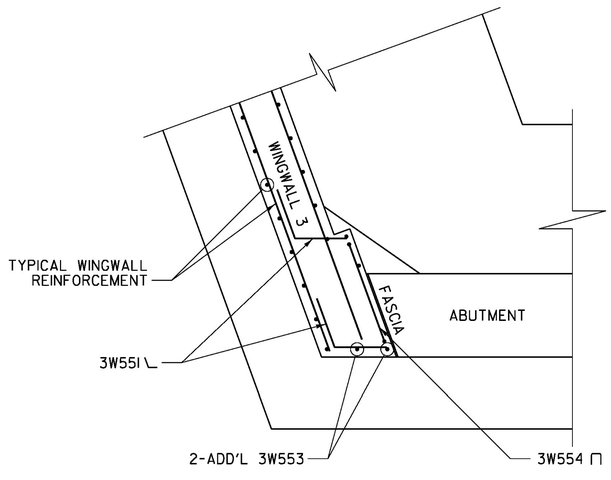

WINGWALL 3 CORNER REINFORCEMENT (BELOW FILLET)

SCALE: ½" = 1'-0"

LEGEND:

NF = NEAR FACE
FF = FAR FACE
EF = EACH FACE
▲ = CUT TO FIT IN FIELD

ALL SPLICES 2'-0" UNLESS NOTED OTHERWISE.

Stantec

PROJECT NAME: JAY	
PROJECT NUMBER: BHF 0278(3)	
FILE NAME: z12cl54abuts.dgn	PLOT DATE: 8/16/2016
PROJECT LEADER: M. CHENETTE	DRAWN BY: J. SOTER
DESIGNED BY: N. TIRK	CHECKED BY: T. KNIGHT
ABUTMENT NO. 2 REINFORCEMENT SECTIONS	SHEET 38 OF 72

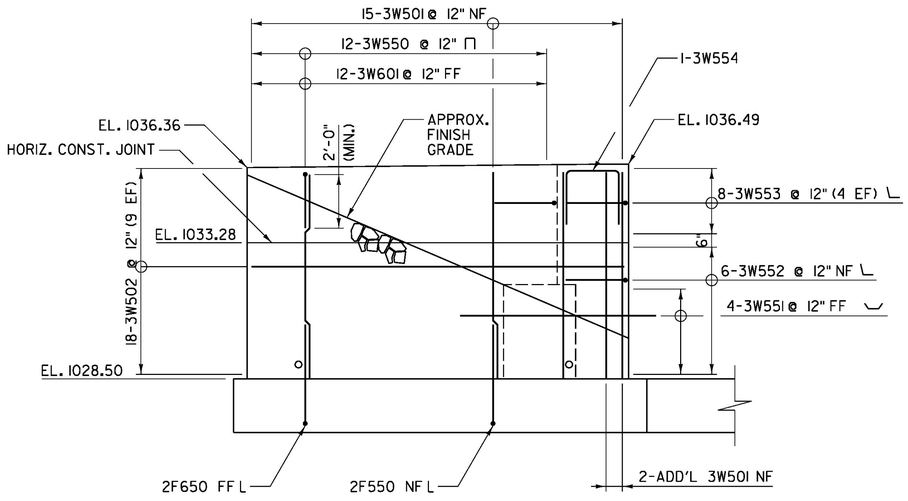

WINGWALL 3 REINFORCEMENT
SCALE: 3/8" = 1'-0"

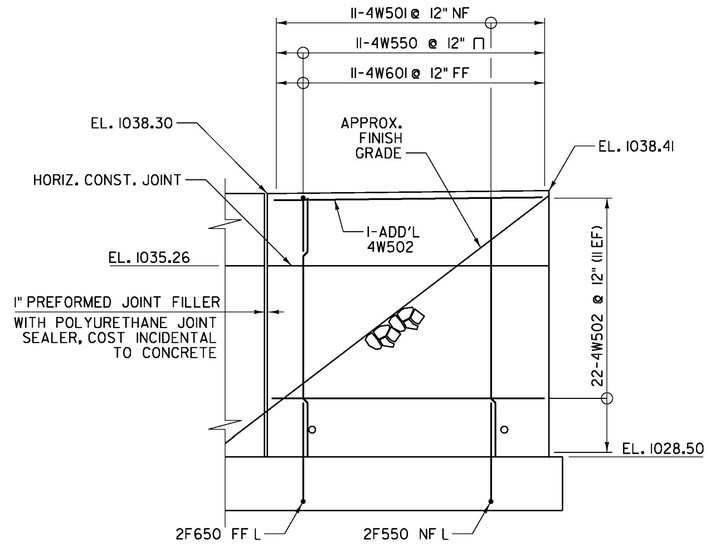

WINGWALL 4 REINFORCEMENT
SCALE: 3/8" = 1'-0"

NOTE:

1. FOR WINGWALL 3 CORNER REINFORCEMENT DETAILS REFER TO SHEET 38.

LEGEND:

NF = NEAR FACE
FF = FAR FACE
EF = EACH FACE
▲ = CUT TO FIT IN FIELD

ALL SPLICES 2'-0" UNLESS NOTED OTHERWISE.

Stantec

PROJECT NAME: JAY	
PROJECT NUMBER: BHF 0278(3)	
FILE NAME: zl2cl54abuts.dgn	PLOT DATE: 8/16/2016
PROJECT LEADER: M. CHENETTE	DRAWN BY: J. SOTER
DESIGNED BY: N. TIRK	CHECKED BY: T. KNIGHT
ABUTMENT NO. 2 WINGWALL DETAILS	SHEET 39 OF 72

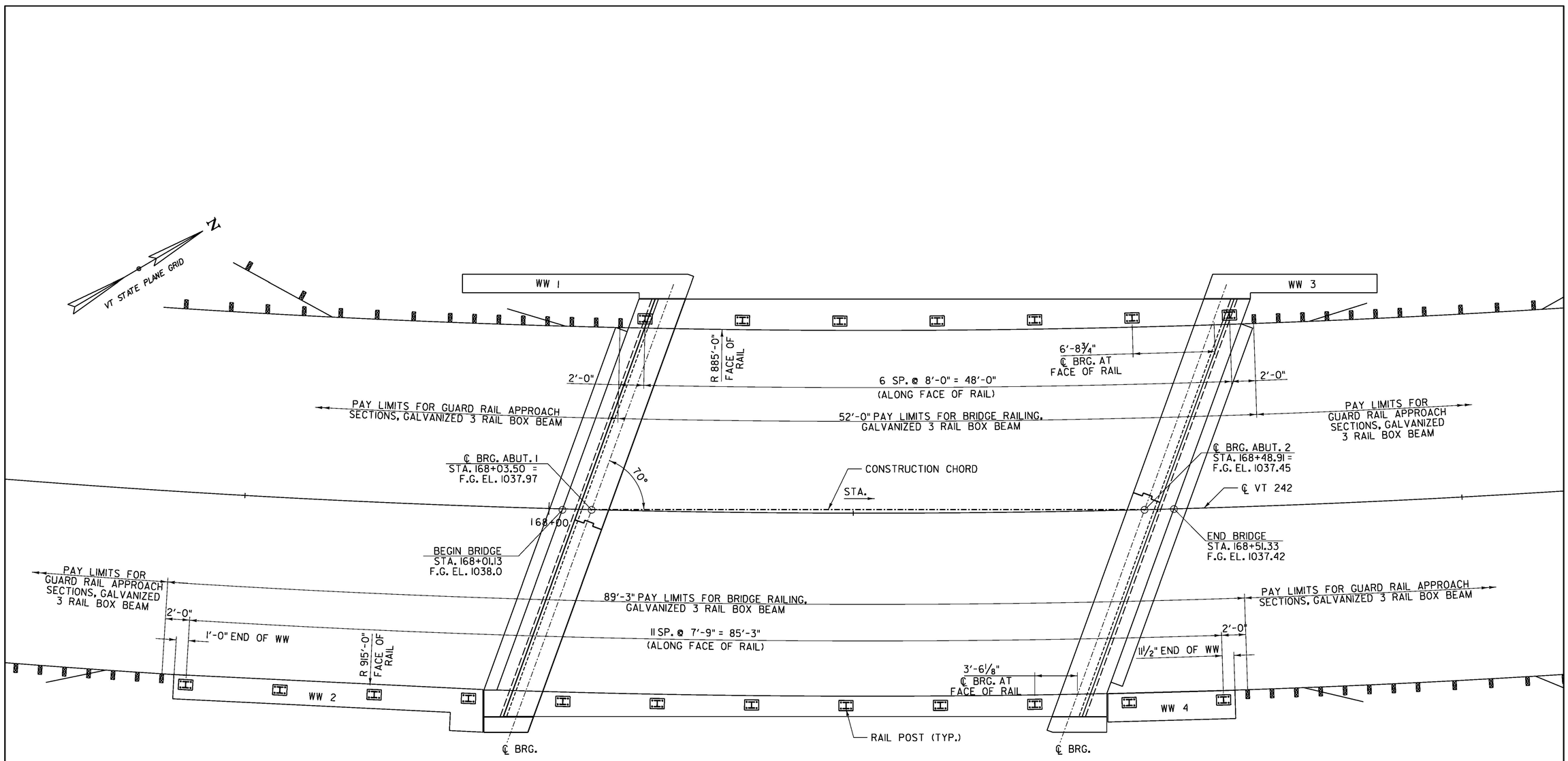

BRIDGE RAIL LAYOUT

SCALE: ¼" = 1'-0"

Stantec

PROJECT NAME: JAY	
PROJECT NUMBER: BHF 0278(3)	
FILE NAME: z12c154bdr_brail.dgn	PLOT DATE: 8/16/2016
PROJECT LEADER: M. CHENETTE	DRAWN BY: J. SOTER
DESIGNED BY: N. TIRK	CHECKED BY: T. KNIGHT
BRIDGE RAIL LAYOUT	SHEET 40 OF 72

STATE OF VERMONT
AGENCY OF TRANSPORTATION

REINFORCING STEEL SCHEDULE

ITEM	EACH	SIZE	LENGTH	MARK	TYPE	A	B	C	D	E	F	G	H	J	K	R	O
ABUTMENT NO. 1 SUBFOOTING																	
▲	10	8	8'- 0"	1SF801	STR												
ABUTMENT NO. 1 FOOTING																	
	34	5	8'- 0"	1F501	STR												
▲	10	5	34'- 0"	1F502	STR												
▲	8	5	23'- 1"	1F503	STR												
	10	5	16'- 0"	1F504	STR												
	5	5	11'- 9"	1F505	STR												
▲	8	5	18'- 7"	1F506	STR												
	10	5	10'- 3"	1F507	STR												
	5	5	11'- 6"	1F508	STR												
	18	5	2'- 0"	1F509	STR												
	9	5	2'- 0"	1F510	STR												
	38	5	9'- 0"	1F511	STR												
▲	10	5	21'- 10"	1F512	STR												
✳	30	6	8'- 0"	1F601	STR												
▲	10	6	34'- 0"	1F602	STR												
	10	6	21'- 10"	1F603	STR												
✳	6	8	11'- 9"	1F801	STR												
	5	8	13'- 0"	1F802	STR												
✳	39	8	9'- 0"	1F803	STR												
▲	40	8	4'- 6"	1F804	STR												
	9	5	5'- 4"	1F550	22		0'- 10"	4'- 6"	---				0'- 4"	---	0'- 9"	---	
	9	5	3'- 11"	1F551	17		0'- 10"	3'- 1"	---								
	93	5	4'- 7"	1F552	17		3'- 9"	0'- 10"	---								
	82	6	4'- 9"	1F650	17		3'- 9"	1'- 0"	---								
	77	6	8'- 9"	1F651	17		7'- 9"	1'- 0"	---								
ABUTMENT NO. 1 STEM																	
✳	20	5	8'- 3"	1A501	STR												
	24	5	8'- 6"	1A502	STR												
	11	5	17'- 4"	1A503	STR												
	10	5	18'- 0"	1A504	STR												
	11	5	21'- 9"	1A505	STR												
	10	5	21'- 1"	1A506	STR												
✳	3	5	7'- 3"	1A507	STR												
	4	5	12'- 3"	1A508	STR												
	3	5	4'- 4"	1A509	STR												
	8	5	3'- 4"	1A510	STR												
	17	6	8'- 3"	1A601	STR												
	20	6	8'- 6"	1A602	STR												
	3	6	12'- 3"	1A603	STR												
	37	5	7'- 9"	1A550	17		2'- 11"	1'- 11"	2'- 11"								
	4	5	4'- 9"	1A551	17		2'- 0"	0'- 9"	2'- 0"								
	4	5	5'- 10"	1A552	17		2'- 2"	1'- 6"	2'- 2"								
	20	5	5'- 4"	1A553	22		---	3'- 4"	2'- 0"				---	1'- 11"	---	0'- 8"	
	10	5	4'- 2"	1A554	22		1'- 2"	3'- 0"	---				1'- 2"	---	0'- 5"	---	
	8	5	5'- 11"	1A555	4	---	0'- 10"	3'- 1"	2'- 0"	---	---	---	2'- 2"		2'- 2"		5'- 0"
WINGWALL 1																	
	21	5	11'- 10"	1W501	STR												
	26	5	18'- 1"	1W502	STR												
✳	19	6	11'- 10"	1W601	STR												
	18	5	5'- 8"	1W550	17		2'- 4"	1'- 0"	2'- 4"								
	10	5	4'- 0"	1W551	27		2'- 0"	2'- 0"					1'- 4"		0'- 6"		
	8	5	8'- 0"	1W552	22		0'- 10"	6'- 4"	0'- 10"				0'- 8"	0'- 8"	0'- 6"	0'- 6"	
	8	5	3'- 5"	1W553	22		1'- 5"	2'- 0"	---				1'- 4"	---	0'- 6"	---	
	1	5	7'- 4"	1W554	17		2'- 0"	3'- 4"	2'- 0"								
WINGWALL 2																	
	26	5	12'- 3"	2W501	STR												
	28	5	25'- 0"	2W502	STR												
	26	6	12'- 3"	2W601	STR												
	23	5	6'- 5"	2W550	17		2'- 3"	1'- 11"	2'- 3"								
	3	5	13'- 9"	2W551	17		2'- 3"	3'- 0"	2'- 3"								
	14	5	8'- 5"	2W552	17		3'- 0"	2'- 5"	3'- 0"								
ABUTMENT NO. 2 SUBFOOTING																	
▲	8	8	8'- 0"	2SF801	STR												
ABUTMENT NO. 2 FOOTING																	
✳	51	5	8'- 0"	2F501	STR												
	8	5	21'- 6"	2F502	STR												
	10	5	13'- 4"	2F503	STR												
	5	5	11'- 6"	2F504	STR												
	20	5	18'- 3"	2F505	STR												
	21	5	9'- 0"	2F506	STR												
	18	5	2'- 0"	2F507	STR												
	18	5	2'- 0"	2F508	STR												
	8	5	22'- 2"	2F509	STR												
	10	5	10'- 6"	2F510	STR												
	5	5	11'- 8"	2F511	STR												
	20	5	18'- 0"	2F512	STR												

ITEM	EACH	SIZE	LENGTH	MARK	TYPE	A	B	C	D	E	F	G	H	J	K	R	O
	5	6	11'- 6"	2F601	STR												
	5	6	11'- 8"	2F602	STR												
✳	22	6	9'- 0"	2F603	STR												
▲	30	8	4'- 6"	2F801	STR												
	112	5	4'- 7"	2F550	17		3'- 9"	0'- 10"	---								
✳	39	5	6'- 9"	2F551	17		5'- 9"	1'- 0"	---								
	23	6	4'- 9"	2F650	17		3'- 9"	1'- 0"	---								
ABUTMENT NO. 2 STEM																	
	35	5	4'- 6"	2A501	STR												
✳	38	5	5'- 4"	2A502	STR												
	7	5	18'- 9"	2A503	STR												
	6	5	19'- 6"	2A504	STR												
	9	5	20'- 5"	2A505	STR												
	8	5	19'- 7"	2A506	STR												
	2	5	3'- 3"	2A507	STR												
	6	5	9'- 8"	2A508	STR												
	8	5	4'- 1"	2A509	STR												
	3	5	4'- 4"	2A510	STR												
NOT USED				2A511													
	19	5	4'- 10"	2A512	STR												
	19	5	5'- 4"	2A513	STR												
	36	5	7'- 11"	2A550	17		3'- 0"	1'- 11"	3'- 0"								
	5	5	4'- 9"	2A551	17		2'- 0"	0'- 9"	2'- 0"								
	8	5	5'- 5"	2A552	27		2'- 5"	3'- 0"						2'- 3"		0'- 10"	
	16	5	6'- 1"	2A553	27		2'- 0"	4'- 1"						1'- 11"		0'- 8"	
	4	5	5'- 10"	2A554	17		2'- 2"	1'- 6"	2'- 2"								
	8	5	5'- 11"	2A555	4	---	0'- 10"	3'- 1"	2'- 0"	---	---	---	2'- 2"		2'- 2"		5'- 0"
WINGWALL 3																	
	15	5	7'- 7"	3W501	STR												
	18	5	13'- 0"	3W502	STR												
✳	13	6	7'- 7"	3W601	STR												
	12	5	5'- 4"	3W550	17		2'- 2"	1'- 0"	2'- 2"								
	4	5	10'- 6"	3W551	22		0'- 10"	8'- 10"	0'- 10"					0'- 6"	0'- 6"	0'- 8"	0'- 8"
	6	5	4'- 0"	3W552	22		2'- 0"	2'- 0"	---					1'- 11"	---	0'- 8"	---
	8	5	3'- 7"	3W553	22		---	2'- 0"	1'- 7"					---	1'- 8"	---	0'- 7"
	1	5	7'- 2"	3W554	17		2'- 0"	3'- 2"	2'- 0"								
WINGWALL 4																	
	11	5	9'- 6"	4W501	STR												
	23	5	10'- 0"	4W502	STR												
✳	12	6	9'- 6"	4W601	STR												
	11	5	6'- 3"	4W550	17		2'- 2"	1'- 11"	2'- 2"								
DECK																	
	60	5	16'- 4"	S501.2	STR												
	186	5	26'- 1"	S502.2	STR												
	36	5	1'- 10"	S503.2	STR												
	4	5	3'- 10"	S504.2	STR												
✳	5	5	5'- 11"	S505.2	STR												
✳	5	5	8'- 0"	S506.2	STR												
	4	5	10'- 0"	S507.2	STR												
	4	5	12'- 2"	S508.2	STR												
	4	5	14'- 2"	S509.2	STR												
	24	5	17'- 4"	S510.2	STR												
	4	5	14'- 10"	S511.2	STR												
	4	5	14'- 10"	S512.2	STR												
	67	5	2'- 3"	S513.2	STR												
	60	5	17'- 2"	S514.2	STR												
	22	5	26'- 5"	S515.2	STR												
	24	5	18'- 6"	S516.2	STR												
	4	5	15'- 10"	S517.2	STR												
	4	5	15'- 11"	S518.2	STR												
	2	6	1'- 1"	S601.2	STR												
	2	6	2'- 6"	S602.2	STR												
	2	6	3'- 10"	S603.2	STR												
✳	3	6	5'- 3"	S604.2	STR												
✳	3	6	6'- 8"	S605.2	STR												
	2	6	8'- 0"	S606.2	STR												
	2	6	9'- 4"	S607.2	STR												
	2	6	10'- 9"	S608.2	STR												
	2	6	12'- 2"	S609.2	STR												
	2	6	13'- 6"	S610.2	STR												
	2	6	14'- 10"	S611.2	STR												
	99	6	2'- 3"	S612.2	STR												
	148	5	5'- 0"	S550.2	17		2'- 0"	3'- 0"	---								
	65	5	4'- 2"	S551.2	16	0'- 10"	1'- 6"	0'- 6"	1'- 4"					1'- 1"		0'- 11"	
	51	5	4'- 6"	S552.2	S5	0'- 10"	0'- 7"	1'- 8"	0'- 7"			0'- 10"					
	51	5	4'- 4"	S553.2	S5	0'- 10"	0'- 7"	1'- 6"	0'- 7"			0'- 10"					
	3	5	3'- 11"	S554.2	22		2'- 1"	1'- 10"	---					0'- 8"	---	1'- 11"	---
	4	5	3'- 9"	S555.2	22		2'- 1"	1'- 8"	---					0'- 8"	---	1'- 11"	---
	72	5	5'- 0"	S556.2	19		2'- 0"	3'- 0"	---					1'- 5"		1'- 5"		4'- 5"

~ NOTES ~

1. UNLESS OTHERWISE DESIGNATED, ALL BAR REINFORCEMENT FOR CONCRETE IN SIZES UP TO AND INCLUDING NO. 18 SHALL CONFORM TO THE REQUIREMENTS OF THE "SPECIFICATIONS FOR DEFORMED BILLET-STEEL BARS FOR CONCRETE REINFORCEMENT", AASHTO M 31 (ASTM A 615-SI). ALL BARS SHALL BE GRADE 60, UNLESS OTHERWISE DESIGNATED.
2. FOR TYPICAL BENDING DETAILS, RECOMMENDED PIN DIAMETER "D" OF BENDS AND HOOKS, AND OTHER STANDARD PRACTICE, SEE CURRENT CONCRETE REINFORCING STEEL INSTITUTE "MANUAL OF STANDARD PRACTICE".
3. BARS WHICH REQUIRE MORE ACCURATE BENDING THAN STANDARD PRACTICES SHOULD HAVE LIMITS INDICATED.
4. ALL DIMENSIONS ARE OUT TO OUT OF BAR EXCEPT "A" AND "G" ON STANDARD 180 DEGREE AND 135 DEGREE HOOKS.
5. "J" DIMENSION ON 180 DEGREE HOOKS TO BE SHOWN ONLY WHERE NECESSARY TO RESTRICT HOOK SIZE. OTHERWISE, STANDARD HOOKS ARE TO BE USED.
6. "H" DIMENSION ON STIRRUPS TO BE SHOWN ONLY WHEN NECESSARY TO MAINTAIN CLEARANCES.
7. WHERE SLOPE DIFFERS FROM 45 DEGREES, DIMENSIONS "H" AND "K" MUST BE SHOWN.
8. ▲ DENOTES BARS TO BE CUT IN FIELD.
9. ✳ DENOTES ONE EXTRA BAR ADDED FOR TESTING PURPOSES.
10. △ DENOTES TWO EXTRA BARS ADDED FOR TESTING PURPOSES.
11. E IN BAR MARK PREFIX DENOTES EPOXY COATED REINFORCING STEEL.

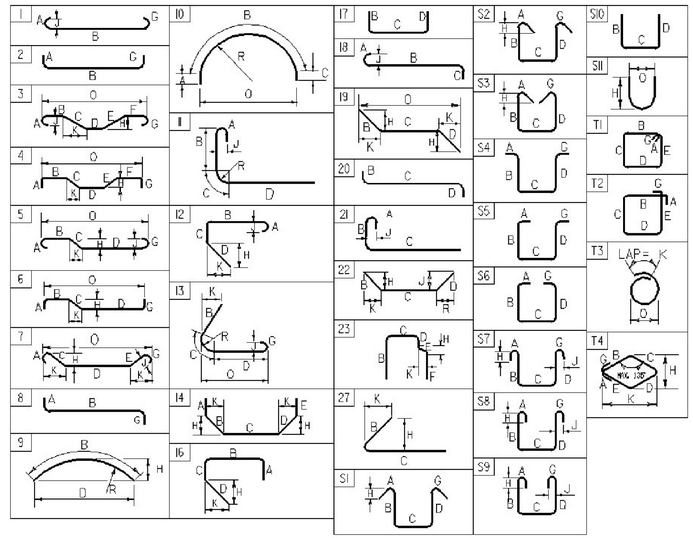

ASTM STANDARD REINFORCING BARS

BAR SIZE DESIGNATION	WEIGHT POUNDS PER FOOT	NOMINAL DIMENSIONS ROUND SECTION		
		DIAMETER INCHES	AREA INCHES ^{2}	PERIMETER INCHES
#3	0.376	0.375	0.11	1.178
#4	0.668	0.500	0.20	1.571
#5	1.043	0.625	0.31	1.963
#6	1.502	0.750	0.44	2.356
#7	2.044	0.875	0.60	2.749
#8	2.670	1.000	0.79	3.142
#9	3.400	1.128	1.00	3.544
#10	4.303	1.270	1.27	3.990
#11	5.313	1.410	1.56	4.430
#14	7.65	1.693	2.25	5.32
#18	13.60	2.257	4.00	7.09

PROJECT NAME: JAY
PROJECT NUMBER: BHF 0278(3)

FILE NAME:
PROJECT MANAGER: M. CHENETTE
DESIGNED BY: N. TIRK
REINFORCING STEEL SCHEDULE SHEET #1

PLOT DATE: 3/17/2016
DRAWN BY: J. SOTER
CHECKED BY: T. KNIGHT
SHEET 41 OF 72

STATE OF VERMONT
AGENCY OF TRANSPORTATION

REINFORCING STEEL SCHEDULE

ITEM	EACH	SIZE	LENGTH	MARK	TYPE	A	B	C	D	E	F	G	H	J	K	R	O
DECK (continued)																	
	88	6	17'- 0"	S650.2	18	0'- 8"	16'- 4"	---						0'- 5"			
	88	6	18'- 0"	S651.2	18	0'- 8"	17'- 4"	---						0'- 5"			
	2	6	15'- 6"	S652.2	18	0'- 8"	14'- 10"	---						0'- 5"			
	2	6	14'- 1"	S653.2	18	0'- 8"	13'- 5"	---						0'- 5"			
	2	6	12'- 10"	S654.2	18	0'- 8"	12'- 2"	---						0'- 5"			
	2	6	11'- 5"	S655.2	18	0'- 8"	10'- 9"	---						0'- 5"			
	2	6	10'- 0"	S656.2	18	0'- 8"	9'- 4"	---						0'- 5"			
	2	6	8'- 8"	S657.2	18	0'- 8"	8'- 0"	---						0'- 5"			
	2	6	7'- 4"	S658.2	18	0'- 8"	6'- 8"	---						0'- 5"			
	2	6	5'- 11"	S659.2	18	0'- 8"	5'- 3"	---						0'- 5"			
	2	6	4'- 6"	S660.2	18	0'- 8"	3'- 10"	---						0'- 5"			
	2	6	3'- 2"	S661.2	18	0'- 8"	2'- 6"	---						0'- 5"			
	2	6	1'- 9"	S662.2	18	0'- 8"	1'- 1"	---						0'- 5"			

ITEM	EACH	SIZE	LENGTH	MARK	TYPE	A	B	C	D	E	F	G	H	J	K	R	O

~ NOTES ~

1. UNLESS OTHERWISE DESIGNATED, ALL BAR REINFORCEMENT FOR CONCRETE IN SIZES UP TO AND INCLUDING NO. 18 SHALL CONFORM TO THE REQUIREMENTS OF THE "SPECIFICATIONS FOR DEFORMED BILLET-STEEL BARS FOR CONCRETE REINFORCEMENT", AASHTO M 31 (ASTM A 615-SI). ALL BARS SHALL BE GRADE 60, UNLESS OTHERWISE DESIGNATED.
2. FOR TYPICAL BENDING DETAILS, RECOMMENDED PIN DIAMETER "D" OF BENDS AND HOOKS, AND OTHER STANDARD PRACTICE, SEE CURRENT CONCRETE REINFORCING STEEL INSTITUTE "MANUAL OF STANDARD PRACTICE".
3. BARS WHICH REQUIRE MORE ACCURATE BENDING THAN STANDARD PRACTICES SHOULD HAVE LIMITS INDICATED.
4. ALL DIMENSIONS ARE OUT TO OUT OF BAR EXCEPT "A" AND "G" ON STANDARD 180 DEGREE AND 135 DEGREE HOOKS.
5. "J" DIMENSION ON 180 DEGREE HOOKS TO BE SHOWN ONLY WHERE NECESSARY TO RESTRICT HOOK SIZE. OTHERWISE, STANDARD HOOKS ARE TO BE USED.
6. "H" DIMENSION ON STIRRUPS TO BE SHOWN ONLY WHEN NECESSARY TO MAINTAIN CLEARANCES.
7. WHERE SLOPE DIFFERS FROM 45 DEGREES, DIMENSIONS "H" AND "K" MUST BE SHOWN.
8. ▲ DENOTES BARS TO BE CUT IN FIELD.
9. ✳ DENOTES ONE EXTRA BAR ADDED FOR TESTING PURPOSES.
10. △ DENOTES TWO EXTRA BARS ADDED FOR TESTING PURPOSES.
11. E DENOTES EPOXY COATED REINFORCING STEEL.

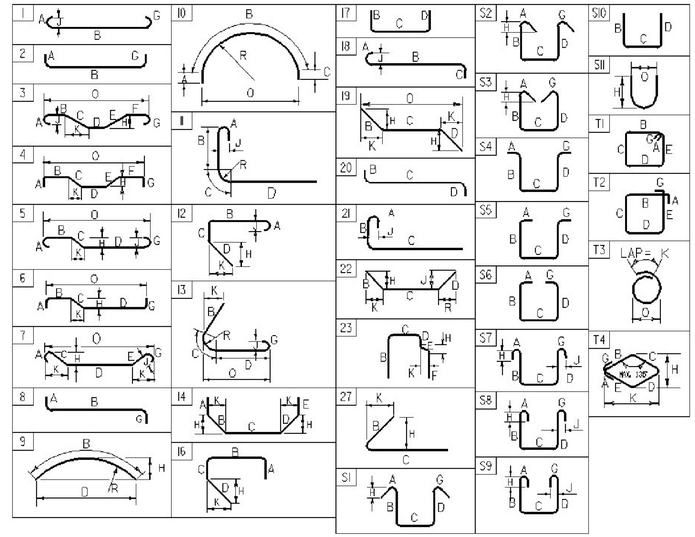

ASTM STANDARD REINFORCING BARS

BAR SIZE DESIGNATION	WEIGHT POUNDS PER FOOT	NOMINAL DIMENSIONS ROUND SECTION		
		DIAMETER INCHES	AREA INCHES ^{2}	PERIMETER INCHES
#3	0.376	0.375	0.11	1.178
#4	0.668	0.500	0.20	1.571
#5	1.043	0.625	0.31	1.963
#6	1.502	0.750	0.44	2.356
#7	2.044	0.875	0.60	2.749
#8	2.670	1.000	0.79	3.142
#9	3.400	1.128	1.00	3.544
#10	4.303	1.270	1.27	3.990
#11	5.313	1.410	1.56	4.430
#14	7.65	1.693	2.25	5.32
#18	13.60	2.257	4.00	7.09

PROJECT NAME: **JAY**
PROJECT NUMBER: **BHF 0278(3)**

FILE NAME:
PROJECT MANAGER: **M. CHENETTE**
DESIGNED BY: **N. TIRK**
REINFORCING STEEL SCHEDULE SHEET #2

PLOT DATE: **3/17/2016**
DRAWN BY: **J. SOTER**
CHECKED BY: **T. KNIGHT**
SHEET **42** OF **72**

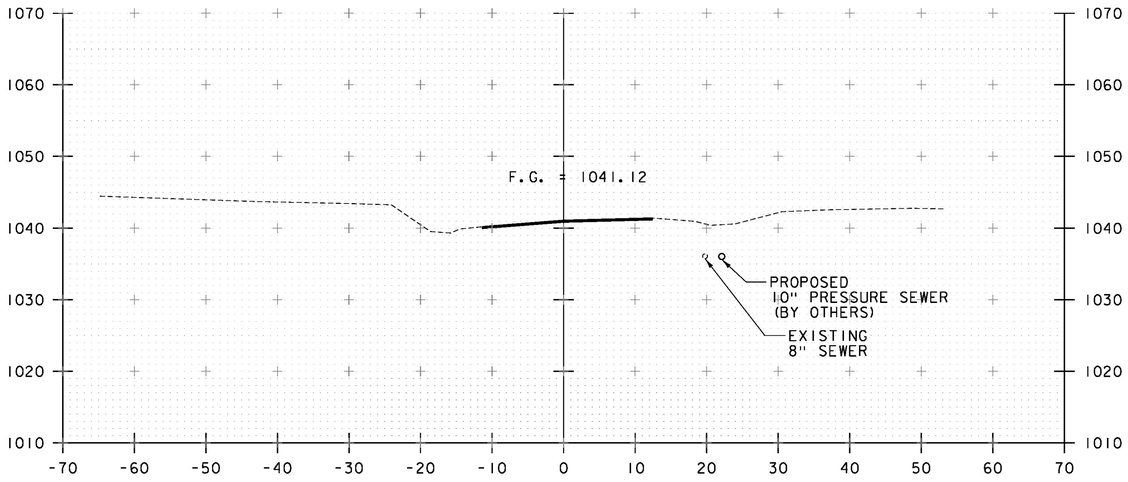

166+25

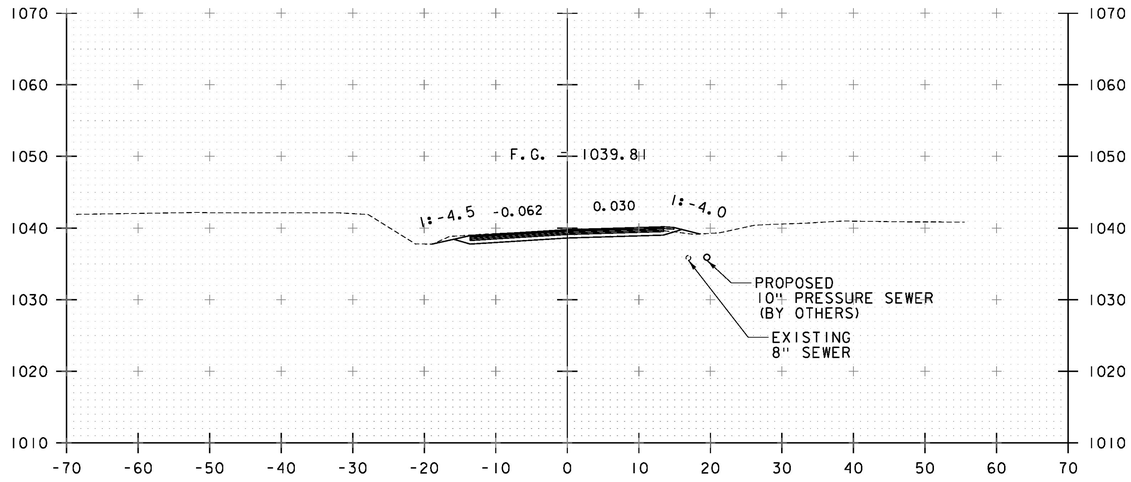

166+75

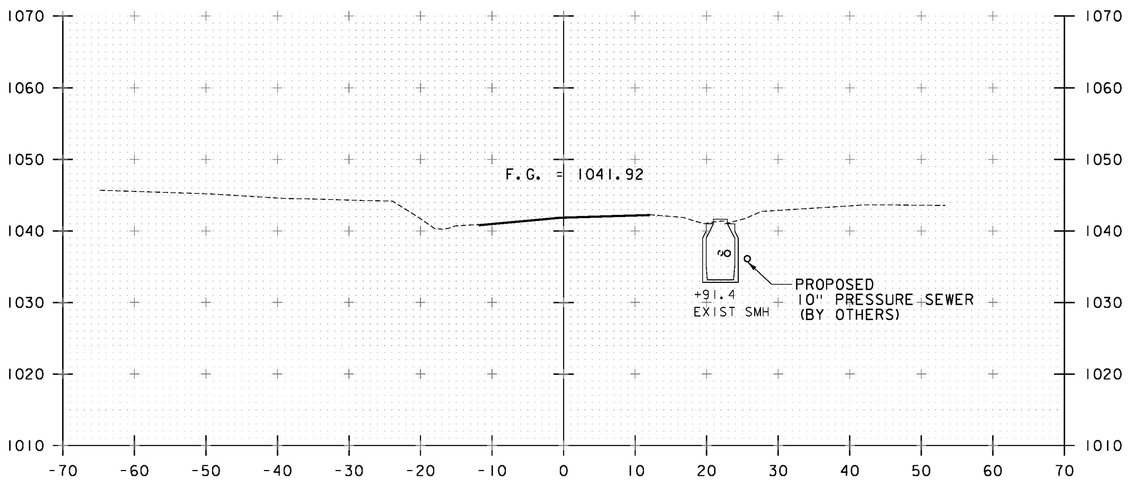

166+00
BEGIN APPROACH

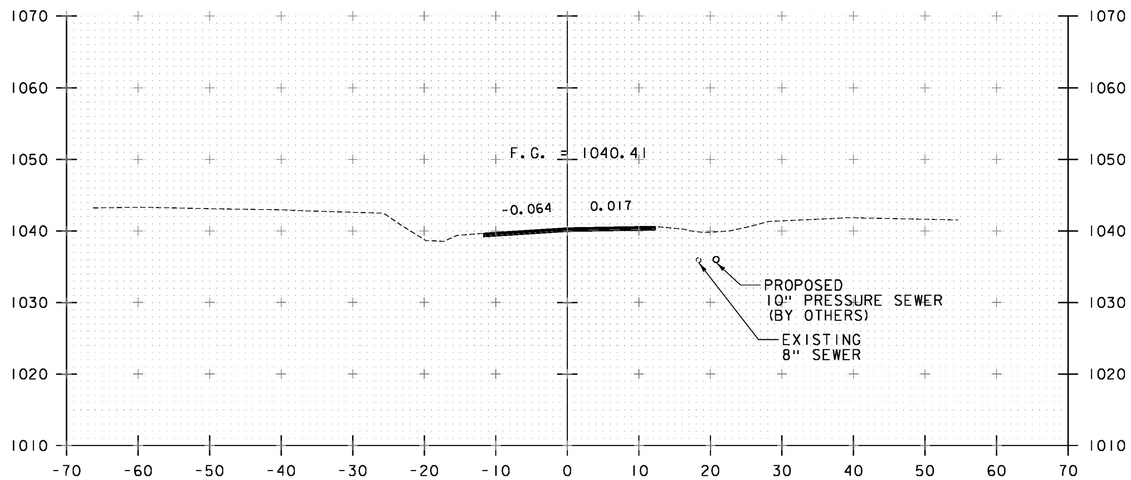

166+50

STA. 166+00 TO STA. 166+75

0 10 20
SCALE: 1" = 10'

Stantec

PROJECT NAME: JAY
PROJECT NUMBER: BHF 0278(3)

FILE NAME: z12c154xs1.dgn
PROJECT LEADER: M. CHENETTE
DESIGNED BY: I. MAYNARD
ROADWAY CROSS SECTIONS - RXS 1

PLOT DATE: 8/16/2016
DRAWN BY: I. MAYNARD
CHECKED BY: G. SANTY
SHEET 43 OF 72

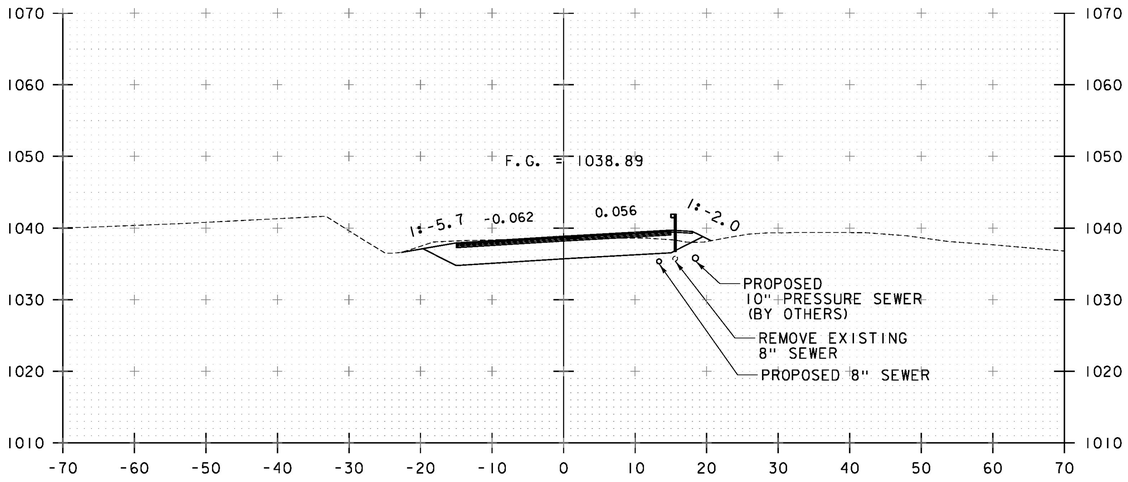

167+25

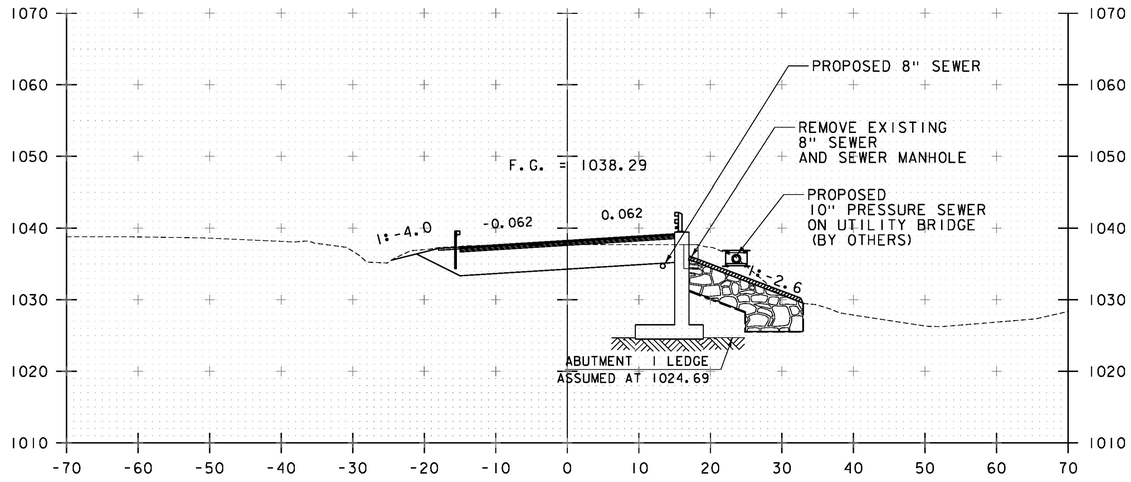

167+75

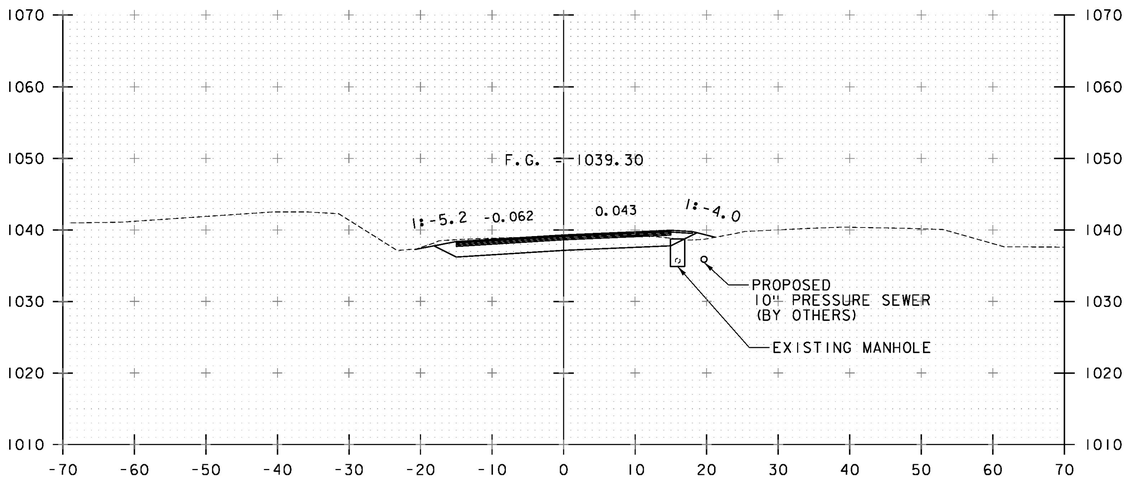

167+00

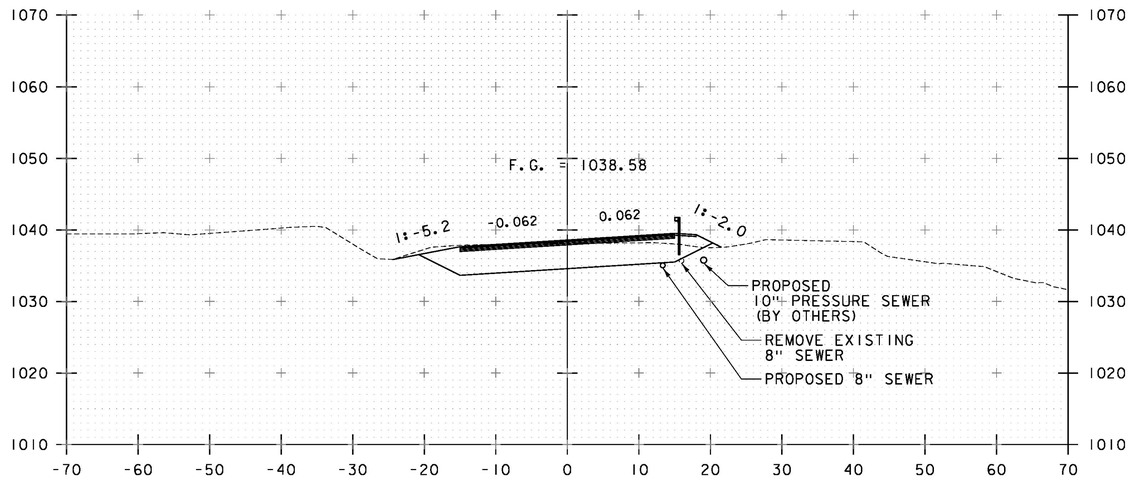

167+50

167+45.83
BEGIN PROJECT

STA. 167+00 TO STA. 167+75

0 10 20
SCALE: 1" = 10'

Stantec

PROJECT NAME: JAY
PROJECT NUMBER: BHF 0278(3)

FILE NAME: z12c154xsl.dgn
PROJECT LEADER: M. CHENETTE
DESIGNED BY: I. MAYNARD
ROADWAY CROSS SECTIONS - RXS 2

PLOT DATE: 8/16/2016
DRAWN BY: I. MAYNARD
CHECKED BY: G. SANTY
SHEET 44 OF 72

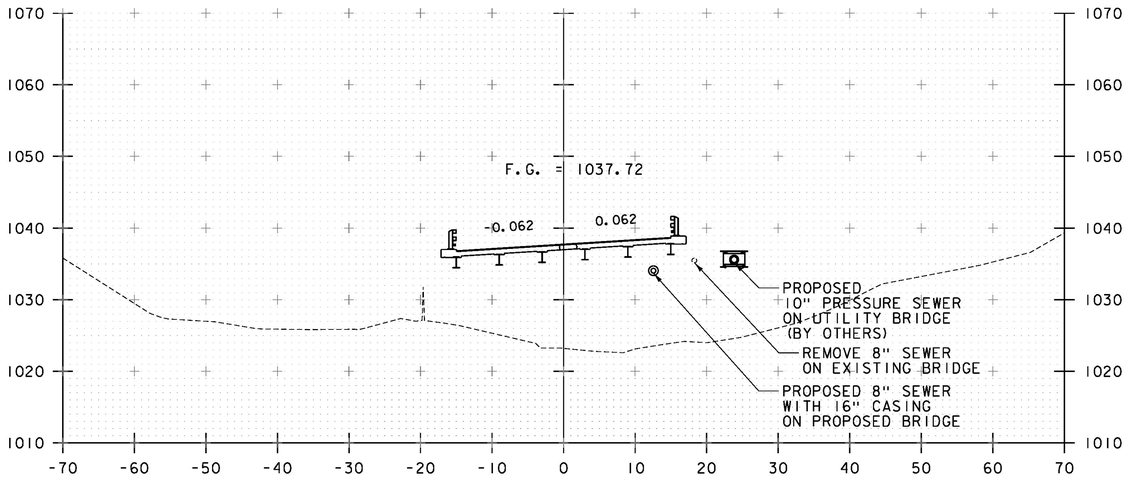

168+25
168+01.13
BEGIN BRIDGE

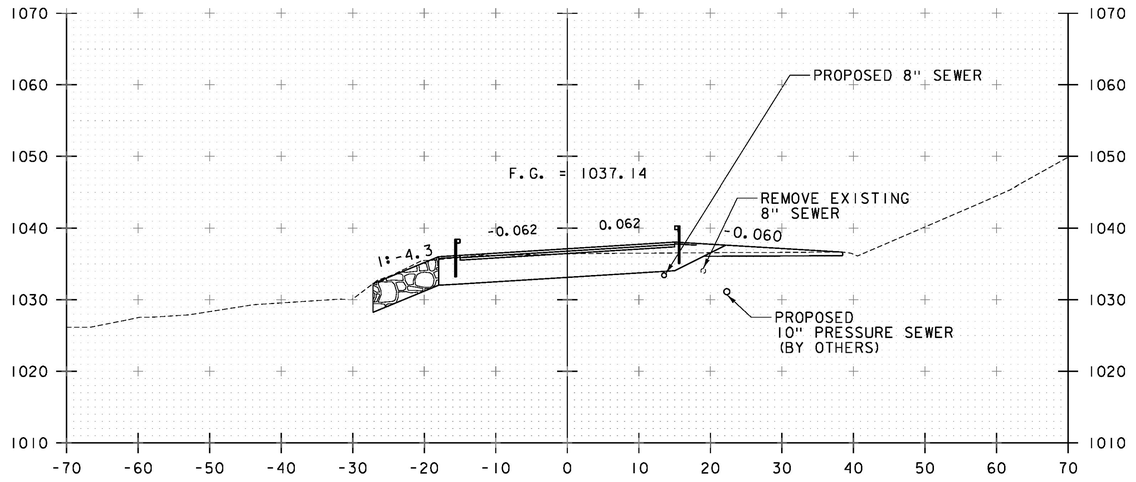

168+75
168+51.33
END BRIDGE

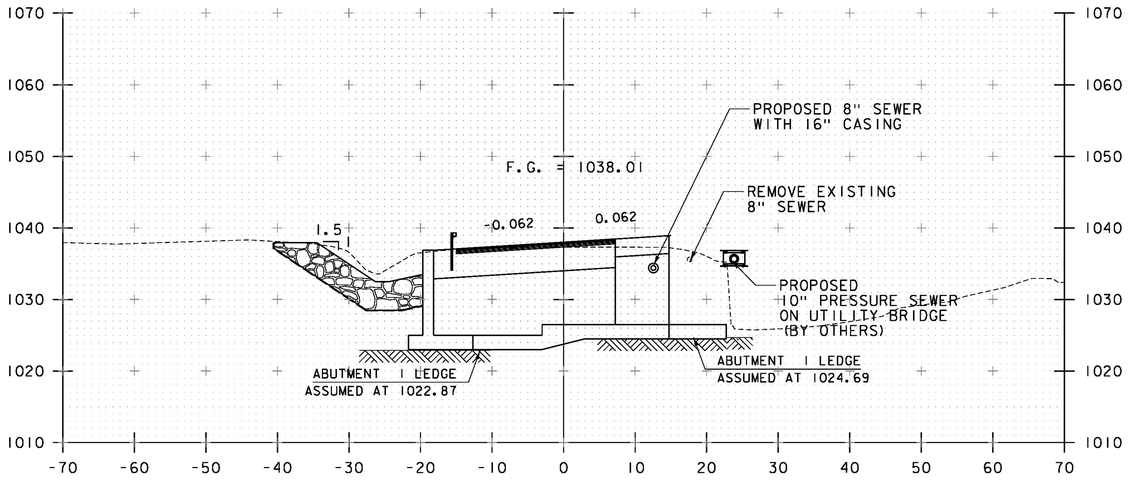

168+00

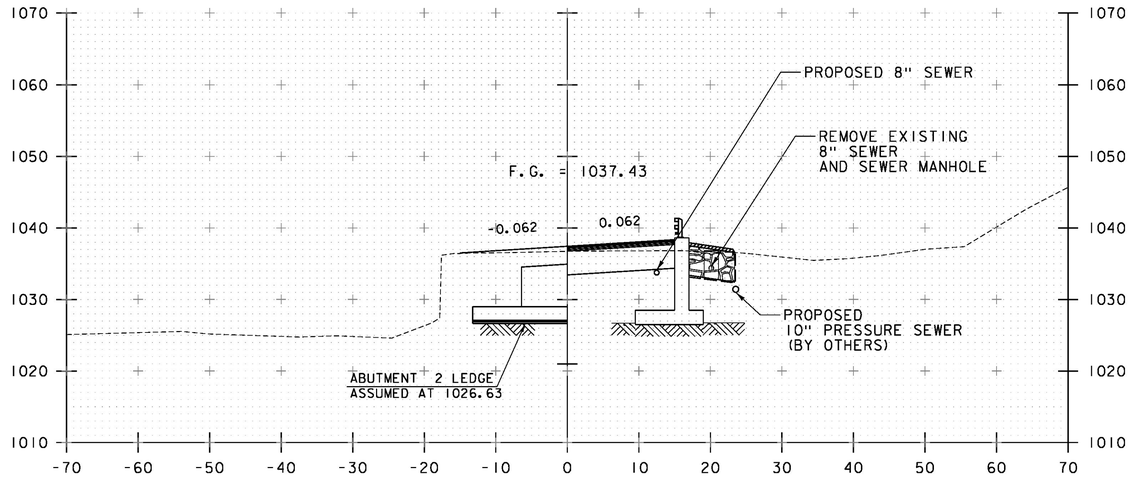

168+50

STA. 168+00 TO STA. 168+75

0 10 20
SCALE: 1" = 10'

Stantec

PROJECT NAME: JAY
PROJECT NUMBER: BHF 0278(3)

FILE NAME: z12c154xsl.dgn
PROJECT LEADER: M. CHENETTE
DESIGNED BY: I. MAYNARD
ROADWAY CROSS SECTIONS - RXS 3

PLOT DATE: 8/16/2016
DRAWN BY: I. MAYNARD
CHECKED BY: G. SANTY
SHEET 45 OF 72

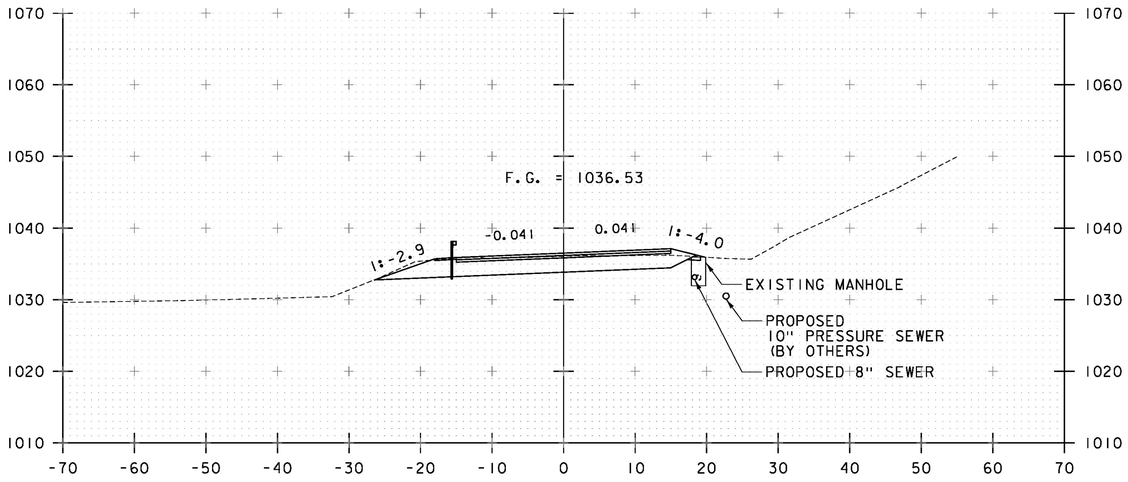

169+25

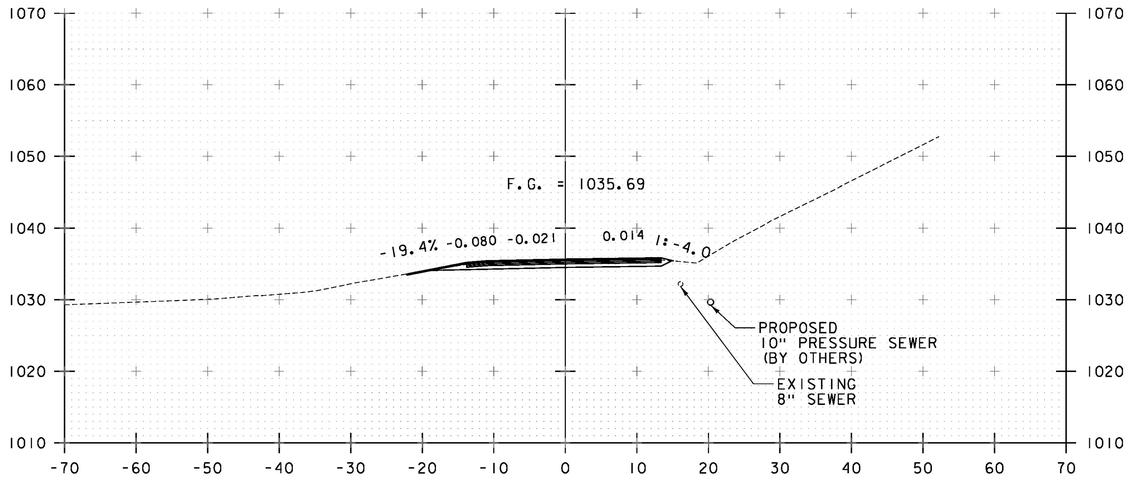

169+75

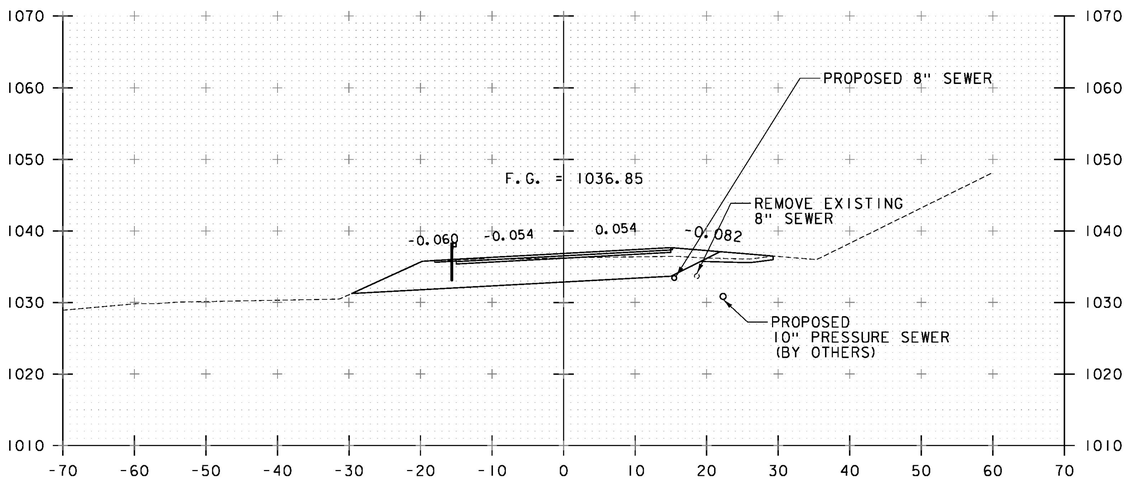

169+00
169+04.17
END PROJECT

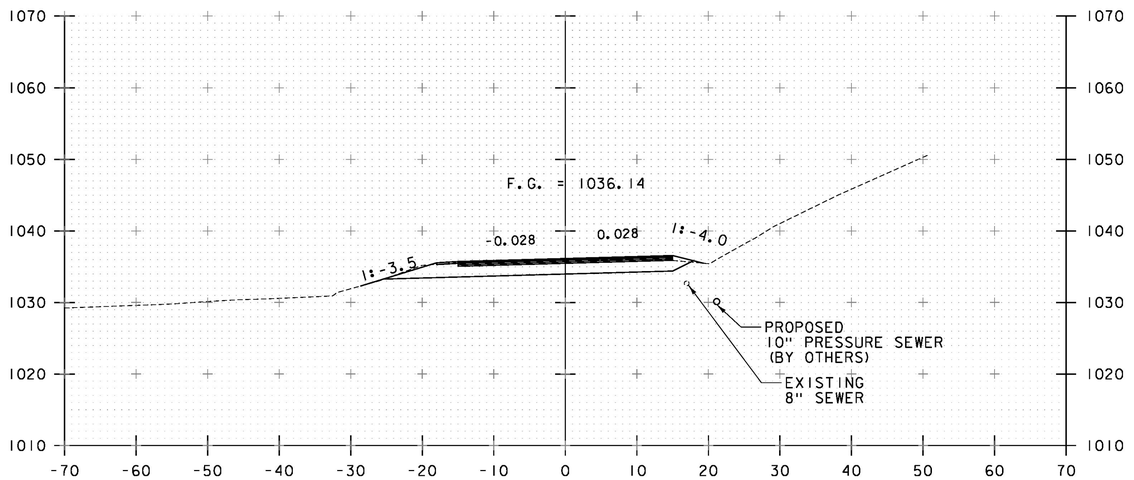

169+50

STA. 169+00 TO STA. 169+75

0 10 20
SCALE: 1" = 10'

Stantec

PROJECT NAME: JAY
PROJECT NUMBER: BHF 0278(3)

FILE NAME: z12c154xs1.dgn
PROJECT LEADER: M. CHENETTE
DESIGNED BY: I. MAYNARD
ROADWAY CROSS SECTIONS - RXS 4

PLOT DATE: 8/16/2016
DRAWN BY: I. MAYNARD
CHECKED BY: G. SANTY
SHEET 46 OF 72

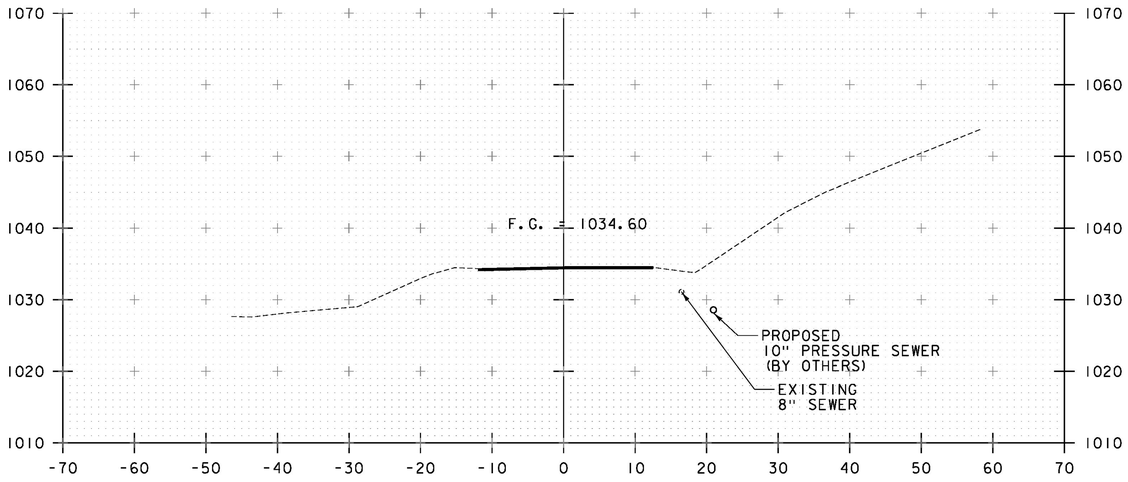

170+25

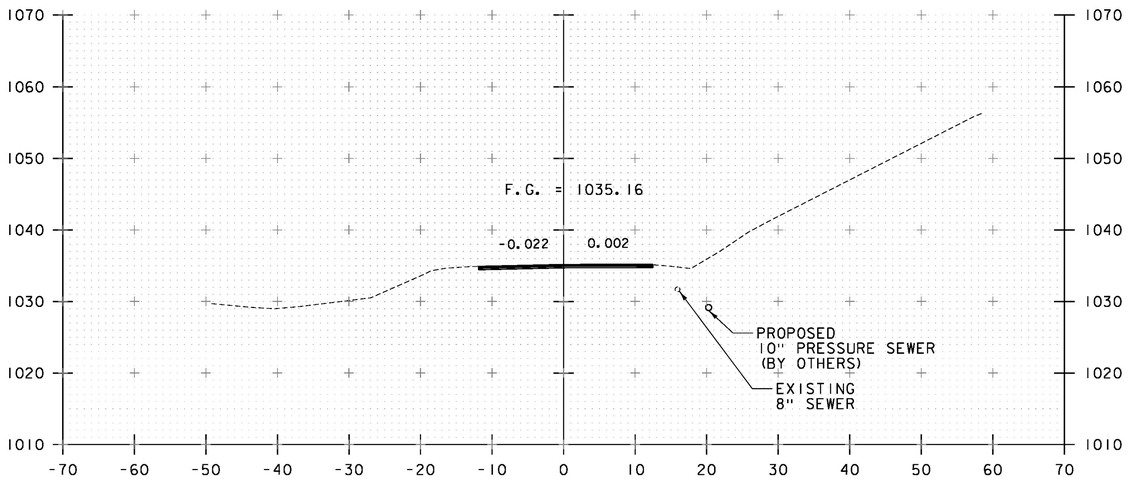

170+00

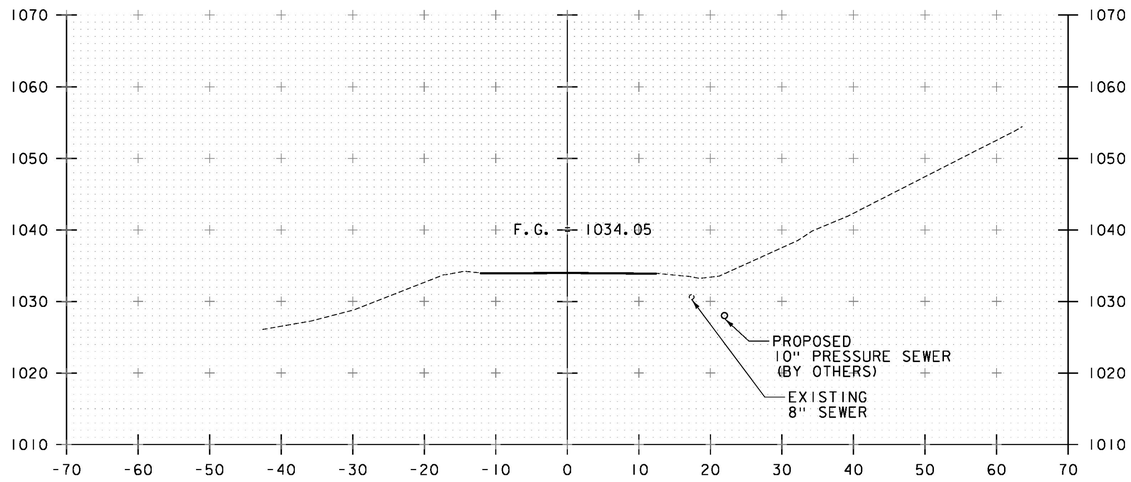

170+50
END APPROACH

STA. 170+00 TO STA. 170+50

0 10 20
SCALE: 1" = 10'

Stantec

PROJECT NAME: JAY
PROJECT NUMBER: BHF 0278(3)

FILE NAME: z12c154xs1.dgn
PROJECT LEADER: M. CHENETTE
DESIGNED BY: I. MAYNARD
ROADWAY CROSS SECTIONS - RXS 5

PLOT DATE: 8/16/2016
DRAWN BY: I. MAYNARD
CHECKED BY: G. SANTY
SHEET 47 OF 72

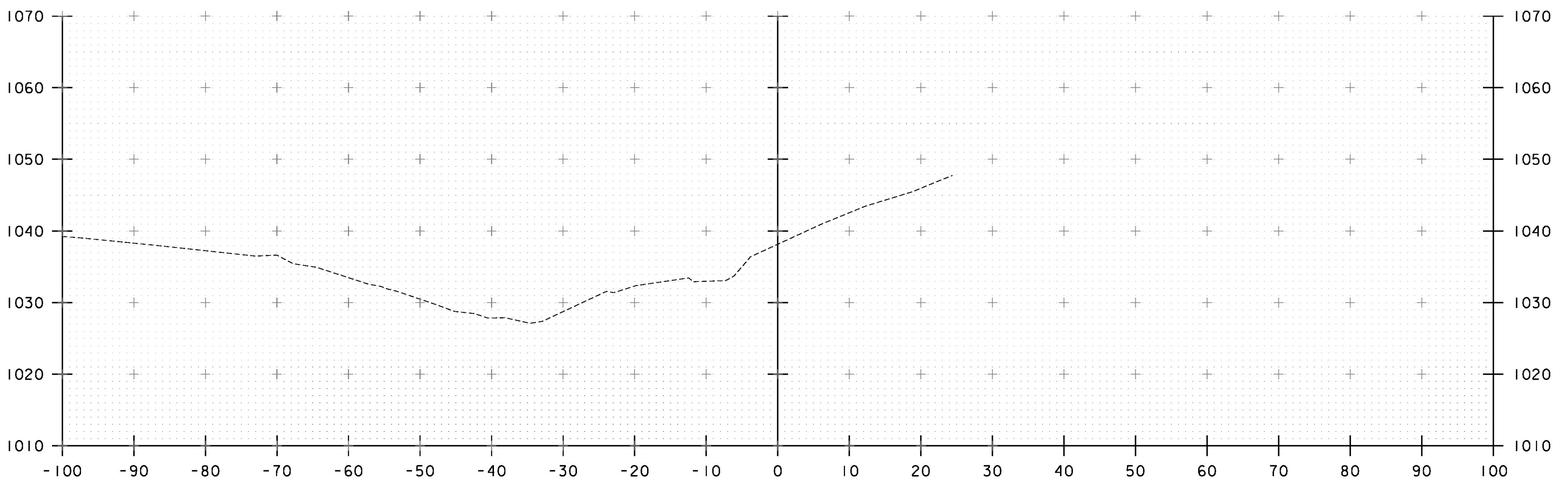

50+25

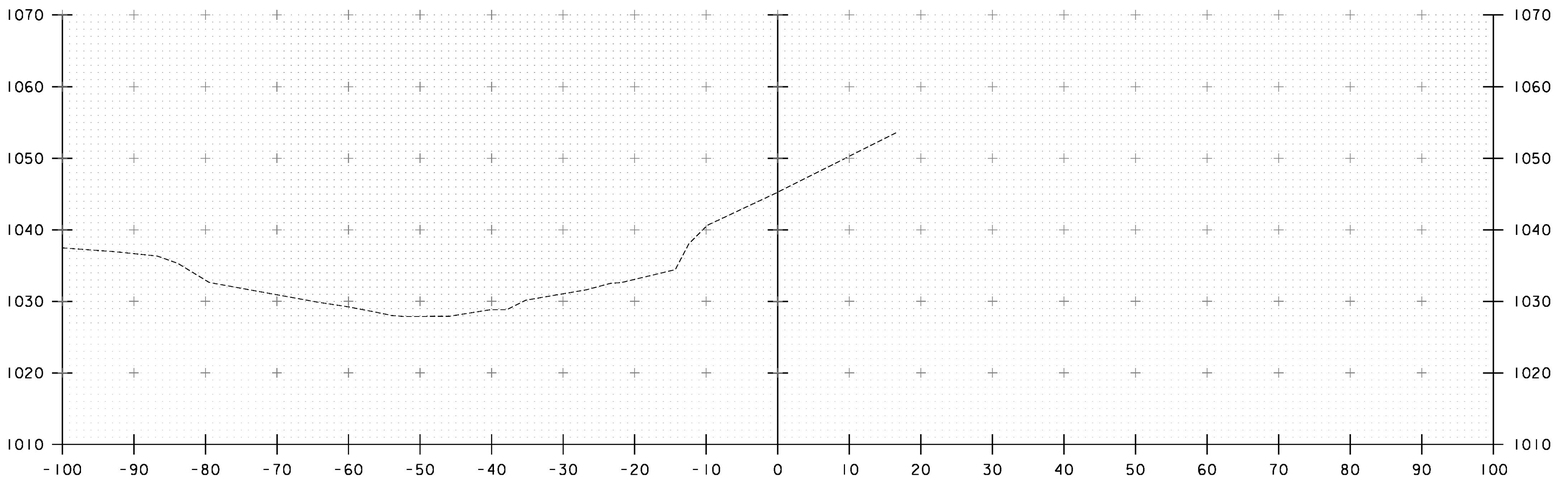

50+00

STA. 50+00 TO STA. 50+25

SCALE: 1" = 10'

Stantec

PROJECT NAME: JAY
PROJECT NUMBER: BHF 0278(3)

FILE NAME: z12cl54xsl.dgn
PROJECT LEADER: M. CHENETTE
DESIGNED BY: J. HUNGERFORD
CHANNEL CROSS SECTIONS - CXS 1

PLOT DATE: 8/16/2016
DRAWN BY: L. BUXTON
CHECKED BY: M. CHENETTE
SHEET 48 OF 72

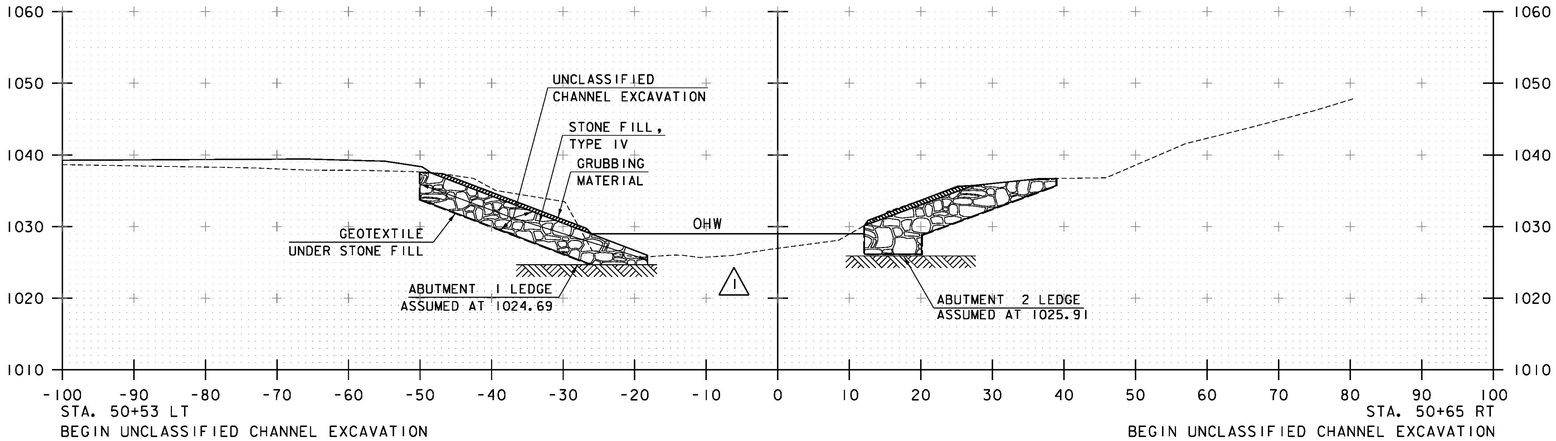

STA. 50+53 LT
BEGIN UNCLASSIFIED CHANNEL EXCAVATION
STONE FILL, TYPE IV
GEOTEXTILE UNDER STONE FILL
GRUBBING MATERIAL

STA. 50+65 RT
BEGIN UNCLASSIFIED CHANNEL EXCAVATION
STONE FILL, TYPE IV
GEOTEXTILE UNDER STONE FILL
GRUBBING MATERIAL

50+75

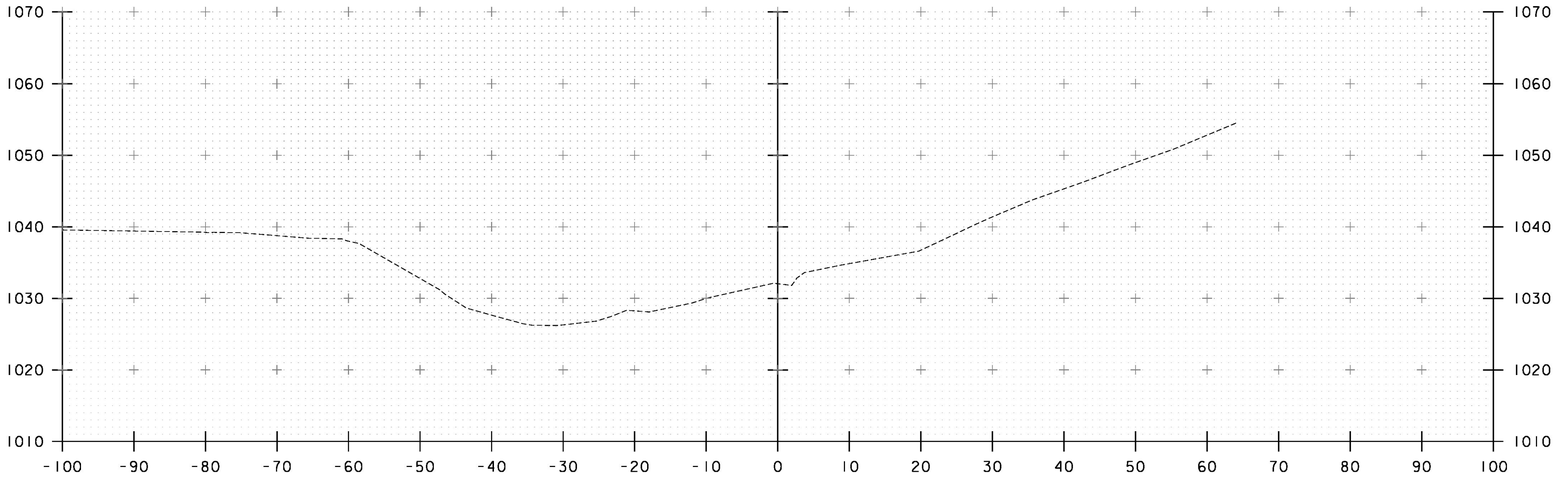

50+50

0 10 20
SCALE: 1" = 10'

Stantec

STA. 50+50 TO STA. 50+75

REVISIONS		
1	09.27.16	REMOVE SAND BAG SYMBOLS

PROJECT NAME: JAY
PROJECT NUMBER: BHF 0278(3)

FILE NAME: z12c154xs1.dgn
PROJECT LEADER: M. CHENETTE
DESIGNED BY: J. HUNGERFORD
CHANNEL CROSS SECTIONS - CXS 2

PLOT DATE: 9/26/2016
DRAWN BY: L. BUXTON
CHECKED BY: M. CHENETTE
SHEET 49 OF 72

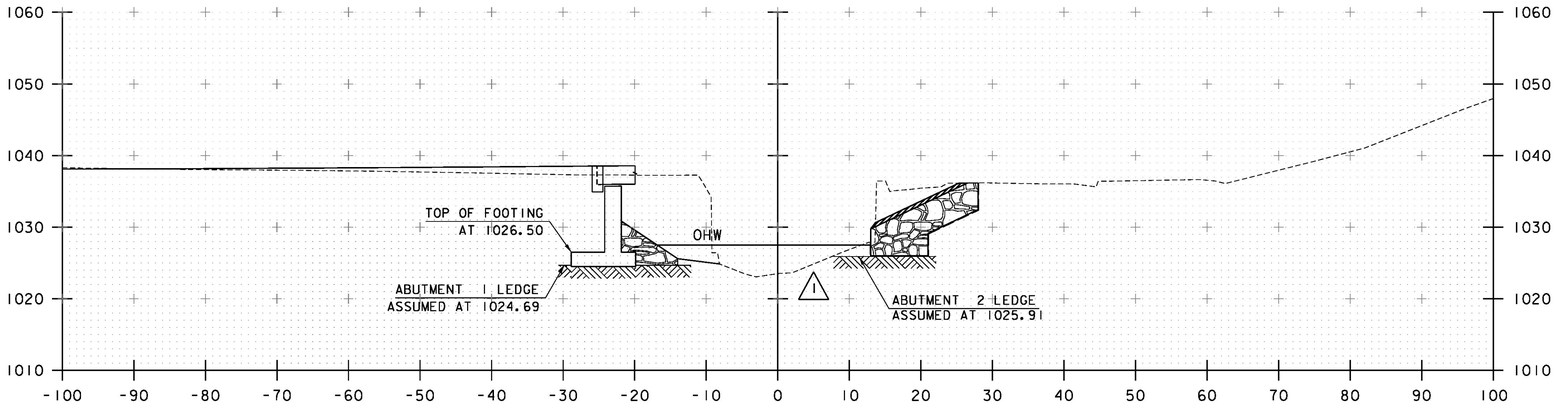

STA. 50+86 LT
END GRUBBING MATERIAL

50+94

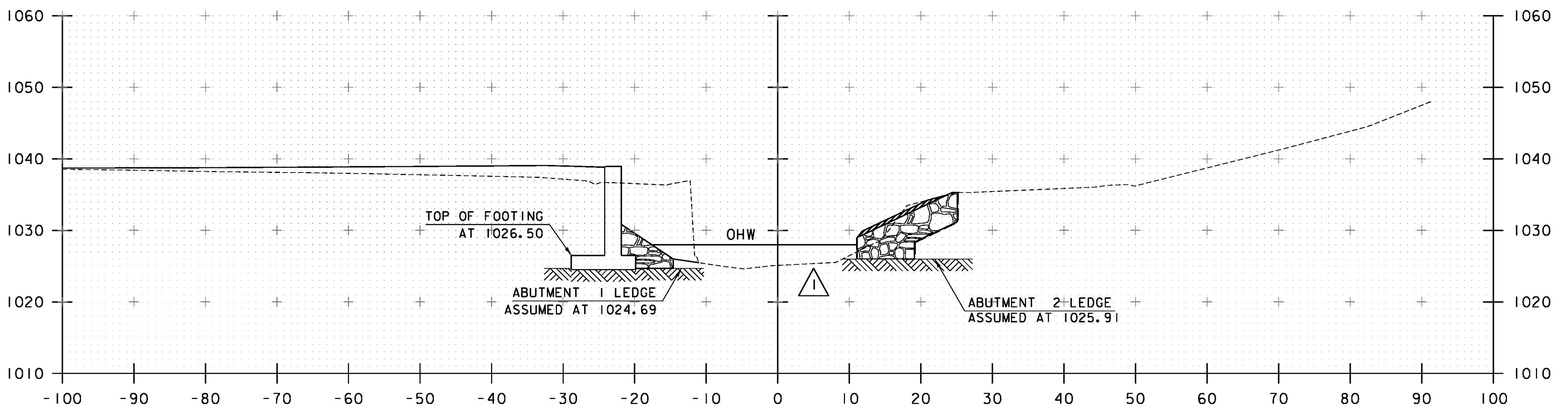

50+85

0 10 20
SCALE: 1" = 10'

Stantec

STA. 50+85 TO STA. 50+94

REVISIONS		
1	09.27.16	REMOVE SAND BAG SYMBOLS

PROJECT NAME: JAY
PROJECT NUMBER: BHF 0278(3)

FILE NAME: z12c154xs1.dgn
PROJECT LEADER: M. CHENETTE
DESIGNED BY: J. HUNGERFORD
CHANNEL CROSS SECTIONS - CXS 3

PLOT DATE: 9/26/2016
DRAWN BY: L. BUXTON
CHECKED BY: M. CHENETTE
SHEET 50 OF 72

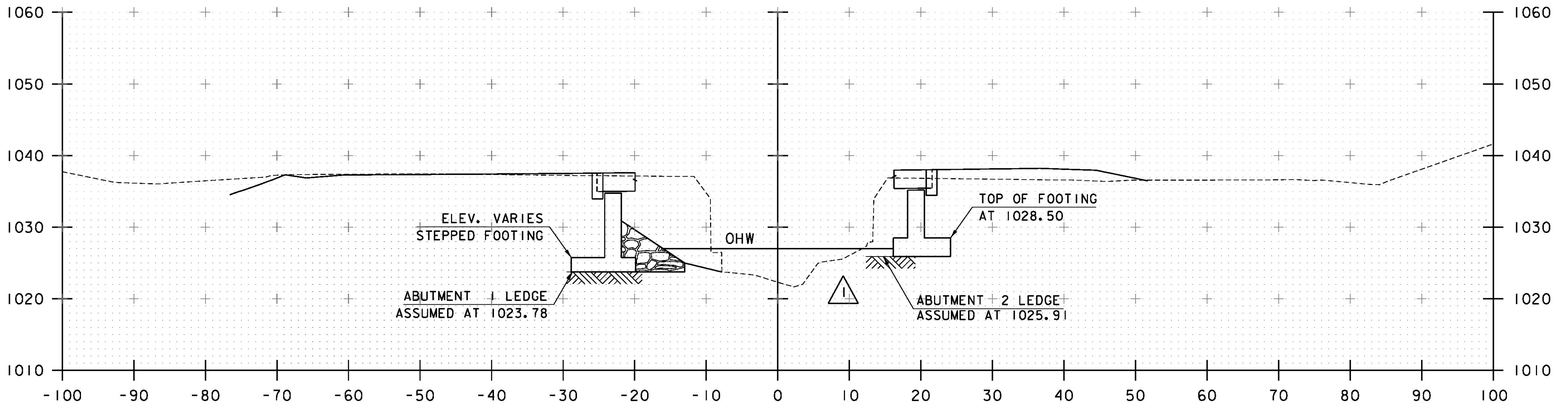

51+10

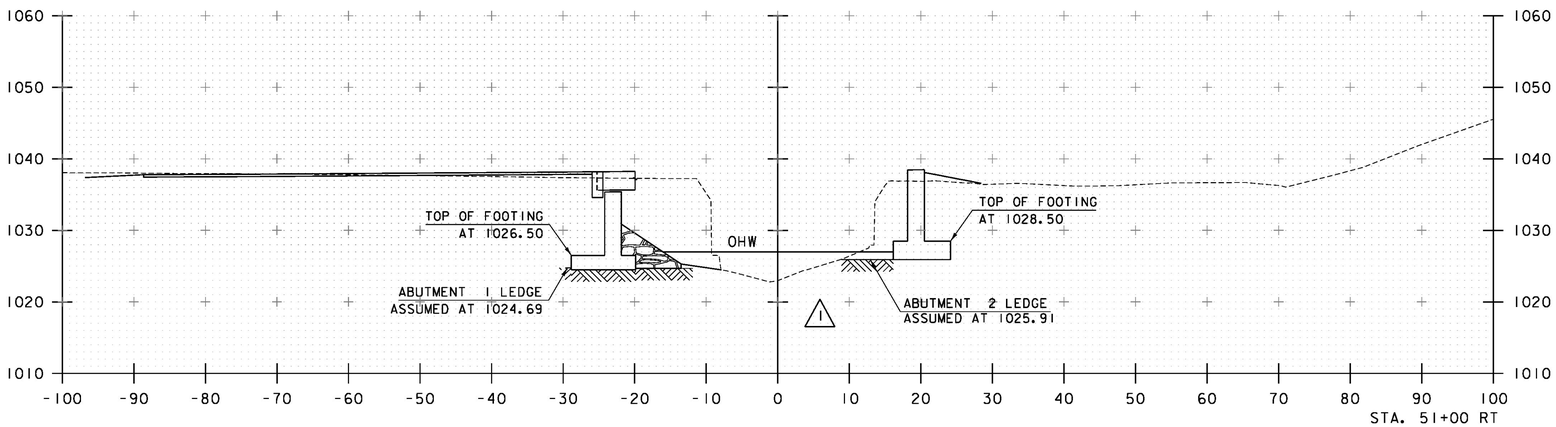

STA. 51+00 RT
END UNCLASSIFIED CHANNEL EXCAVATION
STONE FILL, TYPE IV
GEOTEXTILE UNDER STONE FILL
GRUBBING MATERIAL

51+00

STA. 51+00 TO STA. 51+10

REVISIONS		
1	09.27.16	REMOVE SAND BAG SYMBOLS

PROJECT NAME: JAY
PROJECT NUMBER: BHF 0278(3)

FILE NAME: z12c154xs1.dgn
PROJECT LEADER: M. CHENETTE
DESIGNED BY: J. HUNGERFORD
CHANNEL CROSS SECTIONS - CXS 4

PLOT DATE: 9/26/2016
DRAWN BY: L. BUXTON
CHECKED BY: M. CHENETTE
SHEET 51 OF 72

0 10 20
SCALE: 1" = 10'

Stantec

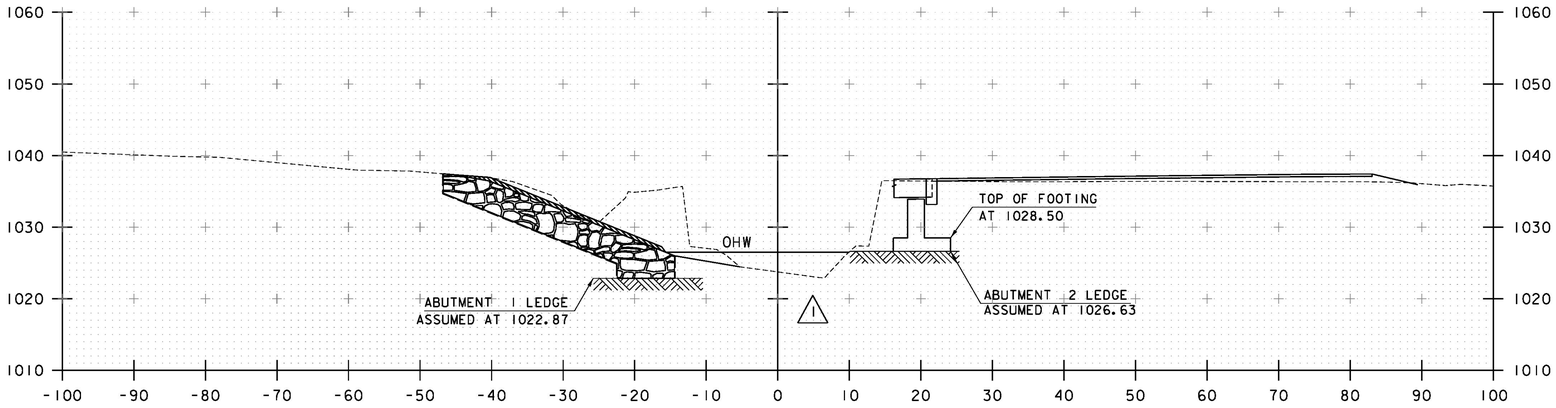

STA. 51+20.50 LT
BEGIN GRUBBING MATERIAL

51+30

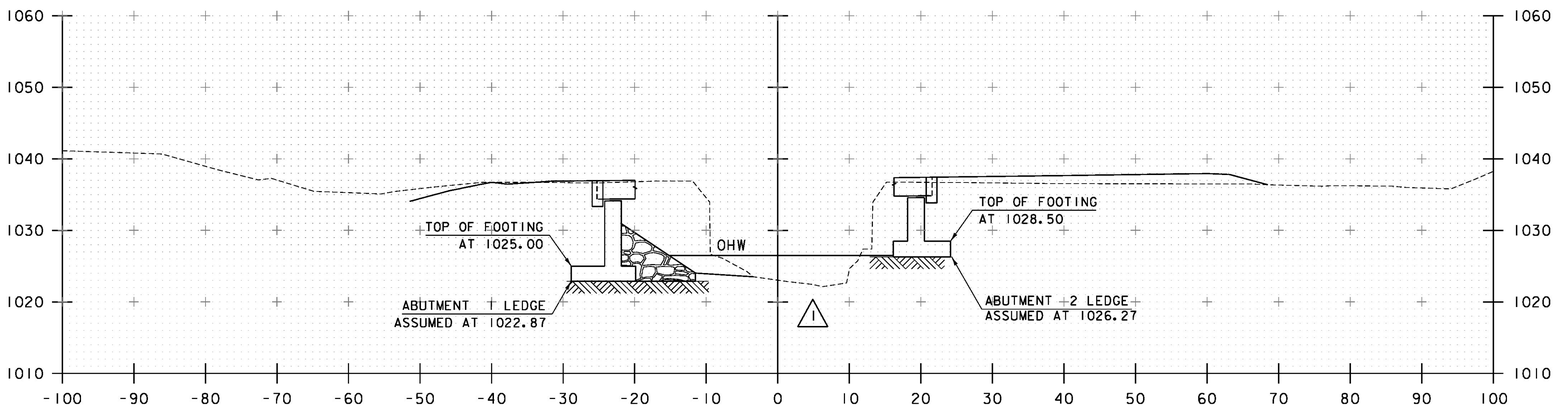

51+20

0 10 20
SCALE: 1" = 10'

Stantec

STA. 51+20 TO STA. 51+30

REVISIONS		
1	09.27.16	REMOVE SAND BAG SYMBOLS

PROJECT NAME: JAY
PROJECT NUMBER: BHF 0278(3)

FILE NAME: z12c154xs1.dgn
PROJECT LEADER: M. CHENETTE
DESIGNED BY: J. HUNGERFORD
CHANNEL CROSS SECTIONS - CXS 5

PLOT DATE: 9/26/2016
DRAWN BY: L. BUXTON
CHECKED BY: M. CHENETTE
SHEET 52 OF 72

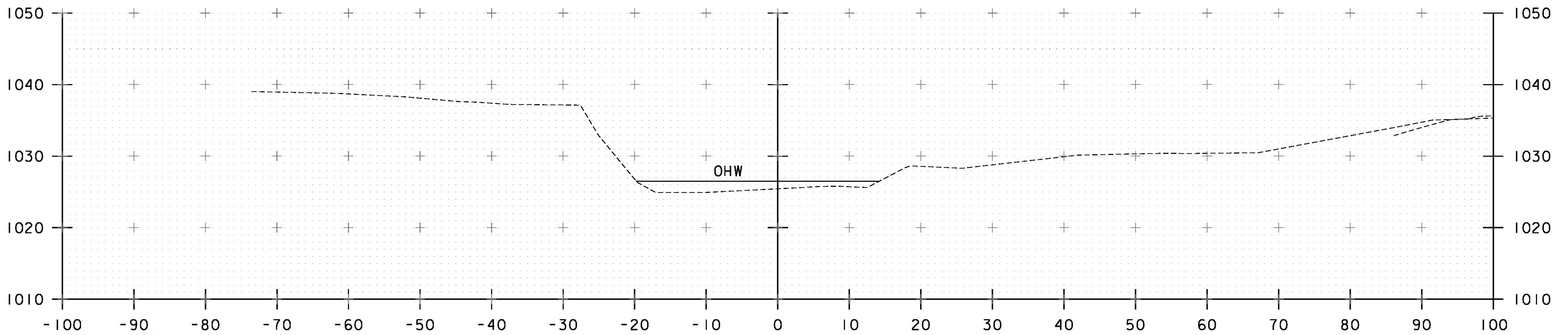

STA. 51+56 LT
END UNCLASSIFIED CHANNEL EXCAVATION
STONE FILL, TYPE IV
GEOTEXTILE UNDER STONE FILL
GRUBBING MATERIAL

STA. 51+53 RT
END UNCLASSIFIED CHANNEL EXCAVATION
STONE FILL, TYPE IV
GEOTEXTILE UNDER STONE FILL
GRUBBING MATERIAL

51+75

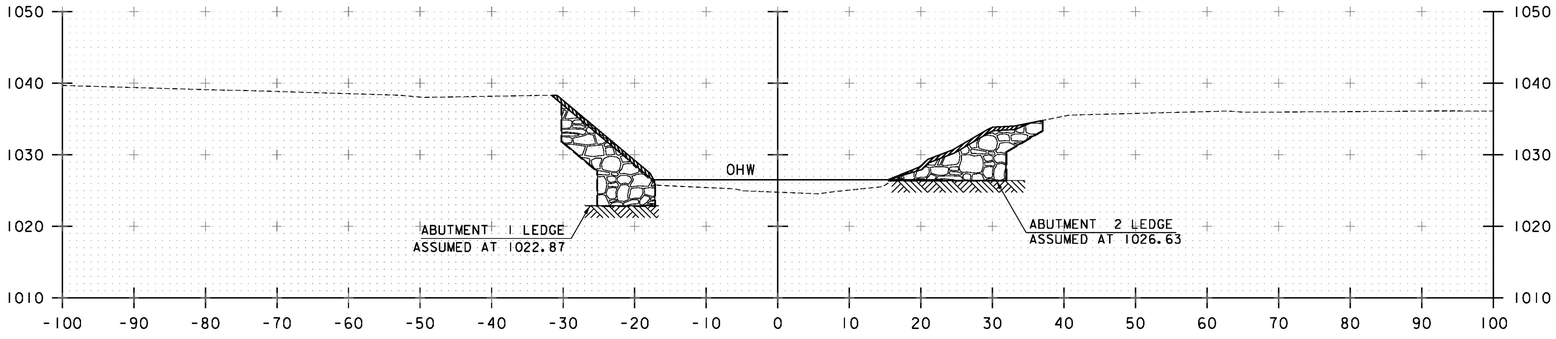

51+50

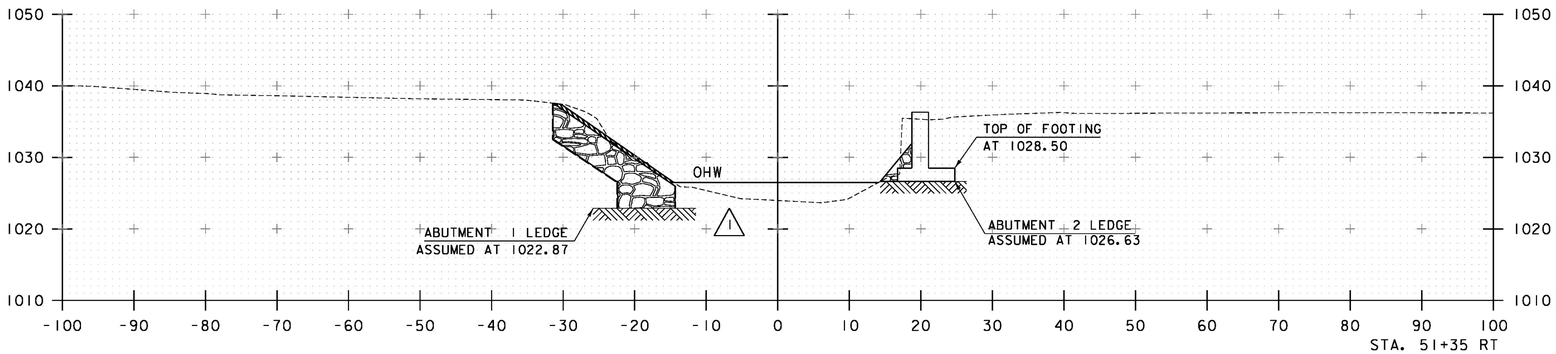

STA. 51+35 RT
BEGIN UNCLASSIFIED CHANNEL EXCAVATION
STONE FILL, TYPE IV
GEOTEXTILE UNDER STONE FILL
GRUBBING MATERIAL

51+40

0 10 20
SCALE: 1" = 10'

Stantec

STA. 51+40 TO STA. 51+75

REVISIONS		
1	09.27.16	REMOVE SAND BAG SYMBOLS

PROJECT NAME: JAY
PROJECT NUMBER: BHF 0278(3)

FILE NAME: z12c154xsl.dgn
PROJECT LEADER: M. CHENETTE
DESIGNED BY: J. HUNGERFORD
CHANNEL CROSS SECTIONS - CXS 6

PLOT DATE: 9/26/2016
DRAWN BY: L. BUXTON
CHECKED BY: M. CHENETTE
SHEET 53 OF 72

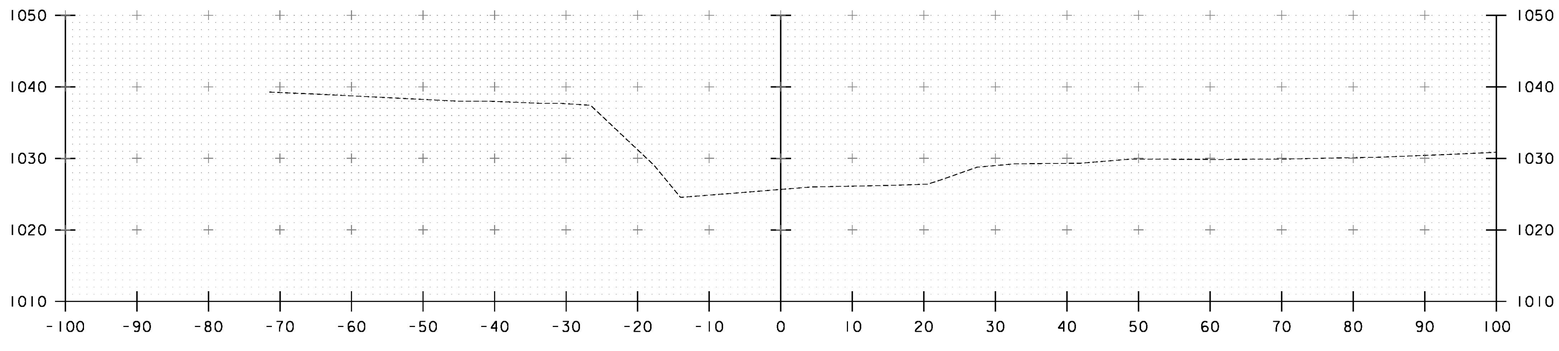

51+99

STA. 51+99 TO STA. 51+99

PROJECT NAME: JAY
PROJECT NUMBER: BHF 0278(3)

FILE NAME: z12c154xs1.dgn
PROJECT LEADER: M. CHENETTE
DESIGNED BY: J. HUNGERFORD
CHANNEL CROSS SECTIONS - CXS 7

PLOT DATE: 8/16/2016
DRAWN BY: L. BUXTON
CHECKED BY: M. CHENETTE
SHEET 54 OF 72

0 10 20
SCALE: 1" = 10'

Stantec

EPSC PLAN NARRATIVE

1.1 PROJECT DESCRIPTION

THIS PROJECT INVOLVES THE REPLACEMENT OF BRIDGE #10, RELATED CHANNEL WORK AND INCIDENTALS. BRIDGE #10 IS LOCATED IN THE TOWN OF JAY, VT ROUTE 242, 2.3 MILES WEST OF THE JUNCTION WITH VT ROUTE 101. THE LENGTH OF THE BRIDGE WILL BE INCREASED TO 50.20 FEET.

NOTE: AREA OF DISTURBANCE INCLUDES LIMITS OF EARTH DISTURBANCE WITHIN THE PROJECT AREA, AS WELL AS WASTE, BORROW AND STAGING AREAS, AND OTHER EARTH DISTURBING ACTIVITIES WITHIN OR DIRECTLY ADJACENT TO THE PROJECT LIMITS AS SHOWN ON THE ATTACHED EPSC PLAN.

TOTAL AREA OF DISTURBANCE AS SHOWN ON THE ATTACHED EPSC PLAN IS APPROXIMATELY 0.48 ACRES.

IT IS ANTICIPATED THAT THIS PROJECT WILL LAST ONE CONSTRUCTION SEASON.

1.2 SITE INVENTORY

1.2.1 TOPOGRAPHY

THE TOPOGRAPHY OF THE IMMEDIATE PROJECT AREA IS HILLY TO MOUNTAINOUS AND FEATURES A MIXTURE OF FORESTED AND OPEN LAND COVER. THERE IS ONE HOUSE ADJACENT TO THE SITE.

1.2.2 DRAINAGE, WATERWAYS, BODIES OF WATER, AND PROXIMITY TO NATURAL OR MAN-MADE WATER FEATURES

JAY BRANCH IS THE ONLY WATER SOURCE ON THE PROJECT SITE. THE JAY BRANCH IS CLASSIFIED AS STRAIGHT, WITH SOME ARMORED BANKS. THE STREAM BED CONSISTS OF BOULDERS, BED ROCK AND SOME STONES. DUE TO THE NATURE OF THE SURROUNDING TERRAIN THE PROJECT SITE COULD RECEIVE RUNOFF WATER FROM NEARBY SLOPES.

1.2.3 VEGETATION

THE VEGETATION IN THE PROJECT AREA CONSISTS OF OPEN GRASSED AREAS, HARDWOOD TREES AND UNDERGROWTH. THERE WILL BE MINOR CLEARING ASSOCIATED WITH ABUTMENT EXCAVATION.. DISTURBED VEGETATION WILL BE REESTABLISHED WITH STANDARD SEED AND MULCH PRACTICES.

1.2.4 SOILS

ALL SOIL DATA CAME FROM THE U.S. DEPARTMENT OF AGRICULTURE SOIL CONSERVATION SERVICE FOR THE COUNTY OF ORLEANS, VERMONT. SOILS ON THE PROJECT SITE ARE AS FOLLOWS:

SHEEPSCOT GRAVELLY FINE SANDY LOAM, 3 TO 8% SLOPES, "K FACTOR" = 0.17. THE SOIL IS CONSIDERED TO HAVE LOW EROSION POTENTIAL.

NOTE: K-VALUES GENERALLY INDICATE THE FOLLOWING:
0.0-0.23 = LOW EROSION POTENTIAL
0.24-0.36 = MODERATE EROSION POTENTIAL
0.37 AND HIGHER = HIGH EROSION POTENTIAL

1.2.5 SENSITIVE RESOURCE AREAS

CRITICAL HABITATS: COLD WATER STREAM
HISTORICAL OR ARCHEOLOGICAL AREAS: YES, SOUTH OF BRIDGE BOTH SIDES
PRIME AGRICULTURAL LAND: NO
THREATENED AND ENDANGERED SPECIES: YES, NLEB (NORTHERN LONG EARRED BAT)
WATER RESOURCE: JAY BRANCH
WETLANDS: NO

1.3 RISK EVALUATION

THIS PROJECT DOES NOT FALL UNDER THE JURISDICTION OF GENERAL PERMIT 3-9020 FOR STORMWATER RUNOFF FROM CONSTRUCTION SITES. SHOULD CHANGES PRIOR TO OR DURING CONSTRUCTION RESULT IN ONE OR MORE ACRES OF EARTH DISTURBANCE OR SHOULD THE PROJECT BECOME PART OF A LARGER PLAN OF DEVELOPMENT, THE CONTRACTOR WILL BE RESPONSIBLE FOR ANY ADDITIONAL PERMITTING.

1.4 EROSION PREVENTION AND SEDIMENT CONTROL

THE EROSION CONTROL PLANS ARE MEANT AS A GUIDELINE FOR PREVENTING EROSION AND CONTROLLING SEDIMENT TRANSPORT. THE PRINCIPLES OUTLINED IN THIS NARRATIVE CONSIST OF APPLYING MEASURES THROUGHOUT CONSTRUCTION OF THE PROJECT IN ORDER TO MINIMIZE SEDIMENT TRANSPORT TO THE RECEIVING WATERS. THE MEASURES INCLUDE STABILIZATION AND STRUCTURAL PRACTICES, STORM WATER CONTROLS AND OTHER POLLUTION PREVENTION PRACTICES. THEY HAVE BEEN PROPOSED BY THE DESIGNER AS A BASIS FOR PROTECTING RESOURCES AND WILL NEED TO BE BUILT UPON BASED ON THE SPECIFIC MEANS AND METHODS OF THE CONTRACTOR. REFER TO THE LOW RISK SITE HANDBOOK AND APPROPRIATE DETAIL SHEETS FOR SPECIFIC GUIDANCE AND CONSTRUCTION DETAILING.

ALL MEASURES SHALL BE REGULARLY MAINTAINED AND SHALL BE CHECKED FOR SEDIMENT BUILD-UP. SEDIMENT SHALL BE DISPOSED OF AT AN APPPROVED SITE WHERE IT WILL NOT BE SUBJECT TO EROSION.

1.4.1 MARK SITE BOUNDARIES

SITE BOUNDARIES AND AREAS CONSTRUCTION EQUIPMENT CAN ACCESS SHALL BE DELINEATED.

PROJECT DEMARCATION FENCING (PDF) AND/OR BARRIER FENCE (BF) SHALL BE USED TO PHYSICALLY MARK SITE BOUNDARIES.

1.4.2 LIMIT DISTURBANCE AREA

PREVENTING INITIAL SOIL EROSION BY MINIMIZING THE EXPOSED AREA IS MUCH MORE EFFECTIVE THAN TREATING ERODED SEDIMENT. EARTH DISTURBANCE CAN BE MINIMIZED THROUGH CONSTRUCTION PHASING BY ONLY OPENING UP EARTH AS NECESSARY. THIS CAN LIMIT THE AREA THAT WILL BE DISTURBED AND EXPOSED TO EROSION. EMPLOY TEMPORARY CONSTRUCTION STABILIZATION PRACTICES IN INCREMENTAL STAGES AS PHASES CHANGE. FOR PROJECTS WHICH FALL UNDER THE CONSTRUCTION GENERAL PERMIT, ONLY THE ACREAGE LISTED ON THE PERMIT AUTHORIZATION MAY BE EXPOSED AT ANY GIVEN TIME.

MAINTAINING VEGETATED BUFFERS ALONG STREAM BANKS, WETLANDS OR OTHER SENSITIVE AREAS IS A CRUCIAL EROSION AND SEDIMENT CONTROL MEASURE THAT SHOULD BE ESTABLISHED WHEREVER POSSIBLE.

1.4.3 SITE ENTRANCE/EXIT STABILIZATION

TRACKING OF SEDIMENT ONTO PUBLIC HIGHWAYS SHALL BE MNIMIZED TO REDUCE THE POTENTIAL FOR RUNOFF ENTERING RECEIVING WATERS. INSTALLATION SHALL COINCIDE WITH THE CONTRACTORS PROGRESS SCHEDULE.

STABILIZED CONSTRUCTION ENTRANCES SHALL BE INSTALLED AS PROPOSED ON THE EPSC PLAN AND ANYWHERE EQUIPMENT WILL BE GOING FROM AREAS OF EXPOSED SOILS TO PAVED SURFACES.

1.4.4 INSTALL SEDIMENT BARRIERS

SEDIMENT BARRIERS SHALL BE UTILIZED TO INTERCEPT RUNOFF AND ALLOW SUSPENDED SEDIMENT TO SETTLE OUT. THEY SHALL BE INSTALLED PRIOR TO ANY UP SLOPE WORK.

1.4.5 DIVERT UPLAND RUNOFF

DIVERSIONARY MEASURES SHALL BE USED TO INTERCEPT RUNOFF FROM ABOVE THE CONSTRUCTION AND DIRECT IT AROUND THE DISTURBED AREA SO THAT CLEAN WATER DOES NOT BECOME MUDDIED WHILE TRAVELING OVER EXPOSED SOILS ON THE CONSTRUCTION SITE.

THE PROJECT AREA IS RELATIVELY FLAT WITH MINIMAL OFF-SITE RUNOFF FLOWING THROUGH THE SITE. THERFORE DIVERSION MEASURES WILL NOT BE NECESSARY.

1.4.6 SLOW DOWN CHANNELIZED RUNOFF

CHECK STRUCTURES SHALL BE UTILIZED TO REDUCE THE VELOCITY, AND THUS THE EROSIVE POTENTIAL, OF CONCENTRATED FLOW IN CHANNELS.

CHECK DAMS TO BE INSTALLED AT THE LOCATIONS SHOWN ON THE EPSC PLAN.

1.4.7 CONSTRUCT PERMANENT CONTROLS

THERE ARE NO PERMANENT STORMWATER TREATMENT DEVICES TO BE INSTALLED WITH THIS PROJECT.

1.4.8 STABILIZE EXPOSED SOILS DURING CONSTRUCTION

ALL AREAS OF DISTURBANCE MUST HAVE TEMPORARY STABILIZATION IN PLACE WITHIN 48 HOURS OF DISTURBANCE OR IN ACCORDANCE WITH THE CONSTRUCTION GENERAL PERMIT 3-9020 AUTHORIZATION.

SURFACE ROUGHENING OF ALL EXPOSED SLOPES, COMBINED WITH TEMPORARY MULCHING, SHALL BE UTILIZED ON A REGULAR BASIS. BIODEGRADABLE EROSION CONTROL MATTING OR AN EQUIVALENT SHALL BE USED TO STABILIZE ALL SLOPES STEEPER THAN 1:3.

THE FORECAST OF RAINFALL EVENTS SHALL TRIGGER IMMEDIATE PROTECTION OF EXPOSED SOILS.

1.4.9 WINTER STABILIZATION

VARIOUS MEASURES SPECIFIC TO WINTER MAY BE NECESSARY SHOULD THE PROJECT EXTEND INTO WINTER (OCTOBER 15 THROUGH APRIL 15). REFER TO THE LOW RISK SITE HANDBOOK FOR GUIDANCE.

1.4.10 STABILIZE SOIL AT FINAL GRADE

EXPOSED SOIL MUST BE STABILIZED WITHIN 48 HOURS OF REACHING FINAL GRADE.

SEED, MULCH, FERTILIZER AND LIME SHALL BE USED TO ESTABLISH PERMANENT VEGETATION. FOR SLOPES STEEPER THAN 1:3, BIODEGRADABLE EROSION CONTROL MATTING OR AN EQUIVALENT SHALL BE USED INSTEAD OF MULCH.

1.4.11 DE-WATERING ACTIVITIES

DISCHARGE FROM DEWATERING ACTIVITIES THAT FLOWS OFF OF THE CONSTRUCTION SITE MUST NOT CAUSE OR CONTRIBUTE TO A VIOLATION OF THE VERMONT WATER QUALITY STANDARDS.

SEDIMENT CONTAINMENT BAGS (FILTER BAGS) WILL BE USED AS NECESSARY AND AS DIRECTED BY THE ENGINEEER. SEE SHEET 60 FOR DETAIL.

1.4.12 INSPECT YOUR SITE

INSPECT THE PROJECT SITE BASED ON SPECIAL PROVISION REQUIREMENTS.

1.5 SEQUENCE AND STAGING

THIS SECTION WILL BE DEVELOPED BY THE CONTRACTOR USING THE GUIDANCE OUTLINED IN THE VTRANS EPSC PLAN CONTRACTOR CHECKLIST.

1.5.1 CONSTRUCTION SEQUENCE

1.5.2 OFF-SITE ACTIVITIES

IN ADDITION TO THE CONTRACTOR CHECKLIST ANY ACTIVITIES OUTSIDE THE CONSTRUCTION LIMITS SHALL FOLLOW SPECIFICATION 105.25- 105.29 OF THE STANDARD SPECIFICATIONS FOR CONSTRUCTION.

1.5.3 UPDATES

Stantec

PROJECT NAME: JAY
PROJECT NUMBER: BHF 0278(3)

FILE NAME: zl2ci54frm.dgn
PROJECT LEADER: M. CHENETTE
DESIGNED BY: I. MAYNARD
EPSC NARRATIVE

PLOT DATE: 8/16/2016
DRAWN BY: D. BARNES
CHECKED BY: G. SANTY
SHEET 55 OF 72

SOIL CONDITIONS
SHEEPSCOT GRAVELLY FINE SANDY LOAM
3%-8% SLOPES
LOW EROSION POTENTIAL
K = 0.17

N

VT STATE PLANE GRID

SOIL CONDITIONS
DIXFIELD SANDY LOAM
VERY STONY
35%-60% SLOPES
MODERATE EROSION POTENTIAL
K = 0.28

0 20 40
SCALE: 1" = 20'-0"

Stantec

PROJECT NAME: JAY	
PROJECT NUMBER: BHF 0278(3)	
FILE NAME: z12c154bdr_ero.dgn	PLOT DATE: 8/16/2016
PROJECT LEADER: M. CHENETTE	DRAWN BY: D. BARNES
DESIGNED BY: I. MAYNARD	CHECKED BY: G. SANTY
EPSC EXISTING CONDITIONS SITE PLAN	SHEET 56 OF 72

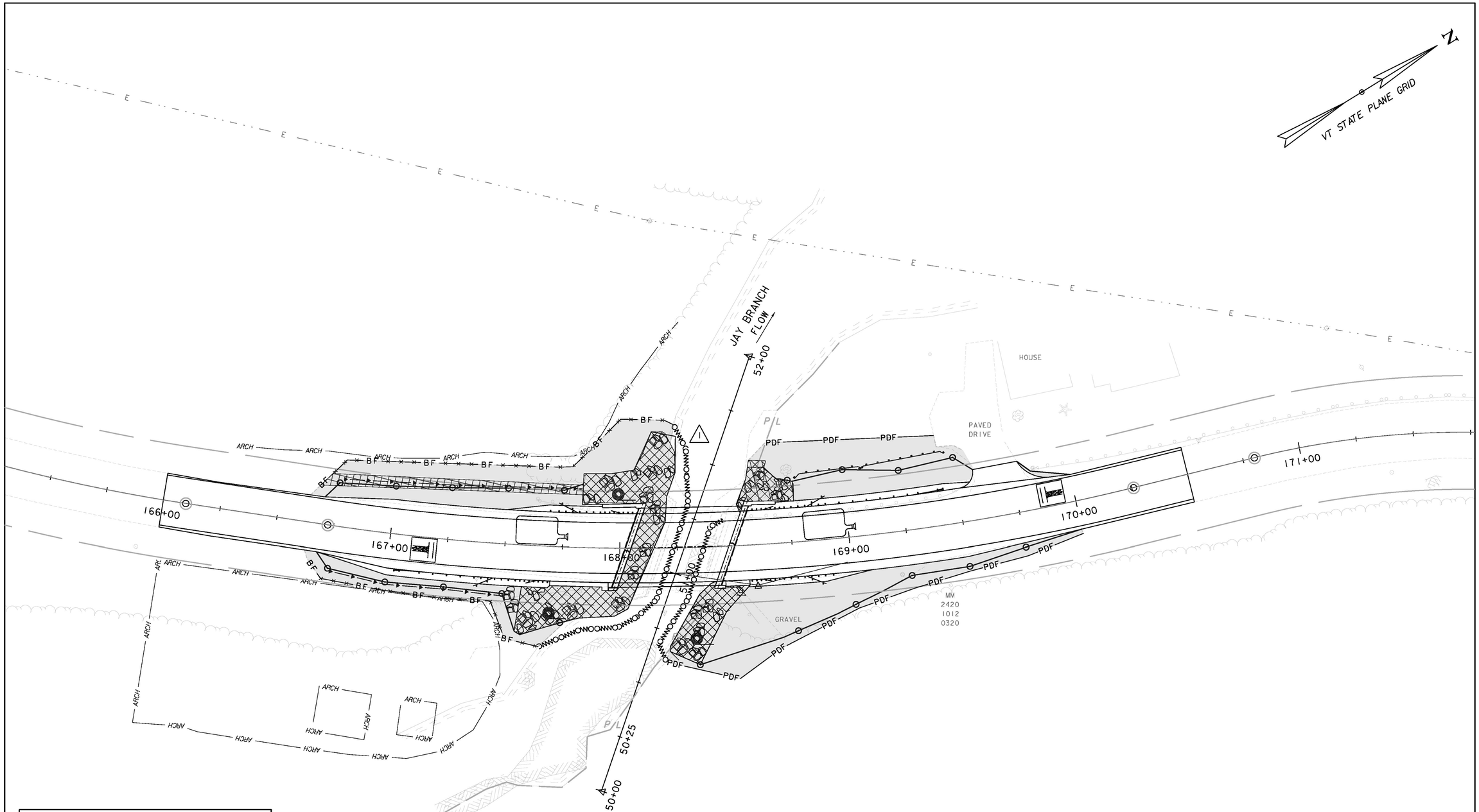

LEGEND

VEHICLE TRACKING PAD

FILTER BAG

FILTER CURTAIN

FOR ADDITIONAL INFORMATION, SEE CONVENTIONAL SYMBOLOGY LEGEND SHEET

0 20 40

SCALE: 1" = 20'-0"

Stantec

REVISIONS		
1	09.27.16	CHANGED COFFERDAM SYMBOL TO FILTER CURTAIN SYMBOL

PROJECT NAME: JAY

PROJECT NUMBER: BHF 0278(3)

FILE NAME: z12c154bdr_ero.dgn
PROJECT LEADER: M. CHENETTE
DESIGNED BY: I. MAYNARD
EPSC CONSTRUCTION SITE PLAN

PLOT DATE: 9/26/2016
DRAWN BY: D. BARNES
CHECKED BY: G. SANTY
SHEET 57 OF 72

N

VT STATE PLANE GRID

E

ARCH

JAY BRANCH FLOW

52+00

STONE FILL

HOUSE

PAVED DRIVE

HVCTRL 102

HVCTRL 100

171+00

166+00

167+00

168+00

169+00

170+00

HVCTRL 103

HVCTRL 101

51+00

GRAVEL

MM 2420 1012 0320

P/L

50+25

50+00

0 20 40

SCALE: 1" = 20'-0"

Stantec

PROJECT NAME: JAY	
PROJECT NUMBER: BHF 0278(3)	
FILE NAME: z12cl54bdr_ero.dgn	PLOT DATE: 8/16/2016
PROJECT LEADER: M. CHENETTE	DRAWN BY: D. BARNES
DESIGNED BY: I. MAYNARD	CHECKED BY: G. SANTY
EPSC FINAL SITE PLAN	SHEET 58 OF 72

SYMBOL

NOT TO SCALE

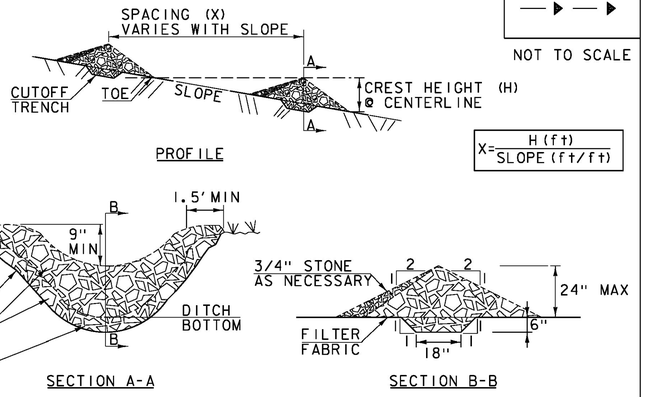

CONSTRUCTION SPECIFICATIONS

1. STONE WILL BE PLACED ON A FILTER FABRIC FOUNDATION.
2. CHECK DAMS SHALL BE SPACED SO THAT THE ELEVATION OF THE CREST OFTHE DOWNSTREAM DAM IS AT THE SAME ELEVATION AS THE TOE OF THE UPSTREAM DAM.
3. 3/4" FILTERING STONE MAY BE ADDED TO THE FACE OF THE CHECK DAM AS NECESSARY.
4. EXTEND THE STONE A MINIMUM OF 1.5' BEYOND THE DITCH BANKS TO PREVENT CUTTING AROUND THE DAM.
5. PROTECT CHANNEL DOWNSTREAM OF THE LOWEST CHECK DAM FROM SCOUR AND EROSION WITH STONE OR LINER AS APPROPRIATE.
6. ENSURE THAT CHANNEL APPURTENANCES SUCH AS CULVERT ENTRANCES BELOW CHECK DAMS ARE NOT SUBJECT TO DAMAGE OR BLOCKAGE FROM DISPLACED STONE.
7. MAXIMUM DRAINAGE AREA 2 ACRES.

ADAPTED FROM DETAILS PROVIDED BY: NEW YORK STATE DEC
ORIGINALLY DEVELOPED BY USDA-NRCS
VERMONT DEPARTMENT OF ENVIRONMENTAL CONSERVATION

CHECK DAM

NOTES:
REFER TO "THE VERMONT STANDARDS & SPECIFICATIONS FOR EROSION PREVENTION & SEDIMENT CONTROL -2006- "FROM THE VT AGENCY OF NATURAL RESOURCES FOR ADDITIONAL GUIDANCE.

THIS WORK SHALL BE PERFORMED IN ACCORDANCE WITH SECTION 653 FOR TEMPORARY STONE CHECK DAM, TYPE I (PAY ITEM 653.25)

REVISIONS	
MARCH 21, 2008	WHF
JANUARY 8, 2009	WHF

SYMBOL

NOT TO SCALE

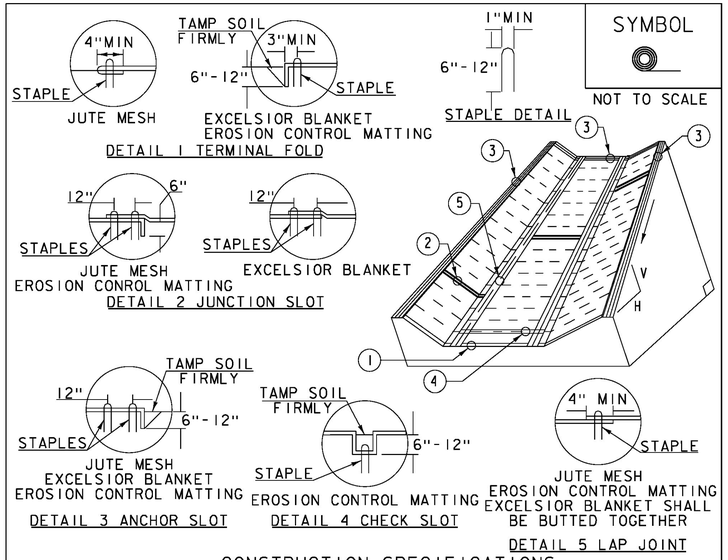

CONSTRUCTION SPECIFICATIONS

1. EROSION MATTING, CHECK SLOTS, SHALL BE SPACED IN DITCH CHANNEL SO THAT ONE OCCURS WITHIN EACH 50' ON SLOPES OF MORE THAN 4% AND LESS THAN 6%. ON SLOPES OF 6% OR MORE, THEY SHALL BE SPACED SO THAT ONE OCCURS WITHIN EACH 25'.
2. APPLY FERTILIZER, LIME SEED PRIOR TO PLACING MATTING.
3. STAPLES ARE TO BE PLACED ALTERNATELY, IN COLUMNS APPROXIMATELY 2' APART AND IN ROWS APPROXIMATELY 3' APART. APPROXIMATELY 175 STAPLES ARE REQUIRED PER 4'X225' ROLL OF MATERIAL AND 125 STAPLES ARE REQUIRED PER 4'X150' ROLL OF MATERIAL.
4. DISTURBED AREAS SHALL BE SMOOTHLY GRADED. EROSION CONTROL MATERIAL SHALL BE PLACED LOOSELY OVER GROUND SURFACE. DO NOT STRETCH.
5. ALL TERMINAL ENDS AND TRANSVERSE LAPS SHALL BE STAPLED AT APPROXIMATELY 12" INTERVALS.

ADAPTED FROM DETAILS PROVIDED BY: NEW YORK STATE DEC
ORIGINALLY DEVELOPED BY USDA-NRCS
VERMONT DEPARTMENT OF ENVIRONMENTAL CONSERVATION

ROLLED EROSION CONTROL PRODUCT (RECP) DITCH

NOTES:
REFER TO "THE VERMONT STANDARDS & SPECIFICATIONS FOR EROSION PREVENTION & SEDIMENT CONTROL -2006- "FROM THE VT AGENCY OF NATURAL RESOURCES FOR ADDITIONAL GUIDANCE.
THIS WORK SHALL BE PERFORMED IN ACCORDANCE WITH SECTION 653 AND AS SHOWN IN THE PLANS FOR TEMPORARY EROSION MATTING (PAY ITEM 653.20) ~~OR PERMANENT EROSION MATTING (PAY ITEM 653.21).~~

REVISIONS	
MARCH 8, 2007	JMF
APRIL 16, 2007	WHF
JANUARY 13, 2009	WHF

SYMBOL

NOT TO SCALE

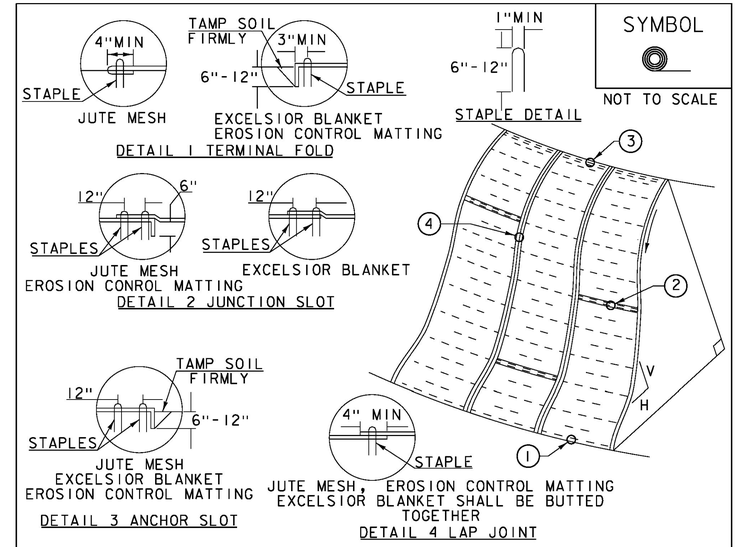

CONSTRUCTION SPECIFICATIONS

1. APPLY TO SLOPES GREATER THAN 3H:1V OR WHERE NECESSARY TO AID IN ESTABLISHING VEGETATION.
2. APPLY FERTILIZER, LIME SEED PRIOR TO PLACING MATTING.
3. STAPLES ARE TO BE PLACED ALTERNATELY, IN COLUMNS APPROXIMATELY 2' APART AND IN ROWS APPROXIMATELY 3' APART. APPROXIMATELY 175 STAPLES ARE REQUIRED PER 4'X225' ROLL OF MATERIAL AND 125 STAPLES ARE REQUIRED PER 4'X150' ROLL OF MATERIAL.
4. DISTURBED AREAS SHALL BE SMOOTHLY GRADED. EROSION CONTROL MATERIAL SHALL BE PLACED LOOSELY OVER GROUND SURFACE. DO NOT STRETCH.
5. ALL TERMINAL ENDS AND TRANSVERSE LAPS SHALL BE STAPLED AT APPROXIMATELY 12" INTERVALS.

ADAPTED FROM DETAILS PROVIDED BY: NEW YORK STATE DEC
ORIGINALLY DEVELOPED BY USDA-NRCS
VERMONT DEPARTMENT OF ENVIRONMENTAL CONSERVATION

ROLLED EROSION CONTROL PRODUCT (RECP) SIDE SLOPE

NOTES:
REFER TO "THE VERMONT STANDARDS & SPECIFICATIONS FOR EROSION PREVENTION & SEDIMENT CONTROL -2006- "FROM THE VT AGENCY OF NATURAL RESOURCES FOR ADDITIONAL GUIDANCE.
THIS WORK SHALL BE PERFORMED IN ACCORDANCE WITH SECTION 653 AND AS SHOWN IN THE PLANS FOR TEMPORARY EROSION MATTING (PAY ITEM 653.20) ~~OR PERMANENT EROSION MATTING (PAY ITEM 653.21).~~

REVISIONS	
APRIL 16, 2007	JMF
JANUARY 13, 2009	WHF

PROJECT NAME: JAY
PROJECT NUMBER: BHF 0278(3)

FILE NAME: z12cl54ero_dets.dgn
PROJECT LEADER: M. CHENETTE
DESIGNED BY: VAOT
EPSC DETAILS I

PLOT DATE: 8/16/2016
DRAWN BY: VAOT
CHECKED BY: VAOT
SHEET 59 OF 72

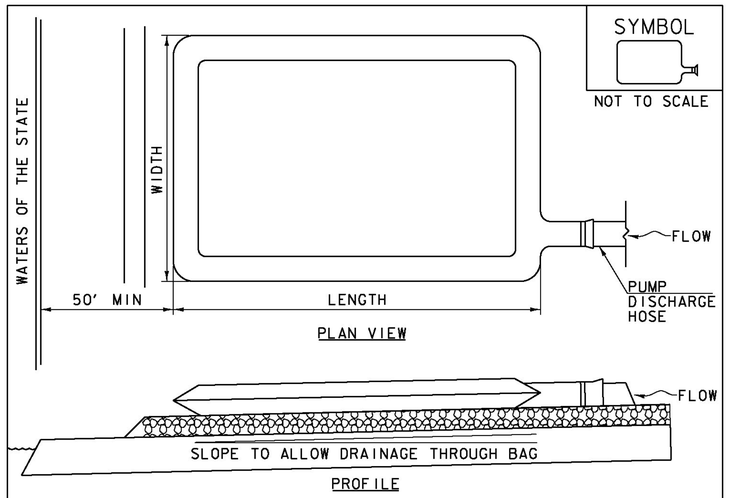

CONSTRUCTION SPECIFICATIONS

1. THE PRIMARY PURPOSE OF FILTER BAG IS TO RETAIN SILT, SAND, AND FINES DURING DEWATERING OPERATIONS.
2. FILTER BAGS SHALL BE INSTALLED ON A VEGETATED SLOPE GRADED TO ALLOW INCOMING WATER TO FLOW THROUGH THE BAG.
3. FILTER BAGS MAY ALSO BE PLACED ON COARSE AGGREGATE, STONE, OR HAYBALES TO INCREASE FILTRATION EFFICIENCY.
4. FILTER BAGS SHALL BE LOCATED A MINIMUM OF 50' FROM WATERS OF THE STATE UNLESS OTHERWISE APPROVED BY THE ENGINEER.
5. THE NECK OF THE FILTER BAG SHALL BE STRAPPED TIGHTLY TO THE DISCHARGE HOSE.
6. A FILTER BAG IS FULL WHEN IT NO LONGER CAN EFFICIENTLY FILTER SEDIMENT OR ALLOW WATER TO PASS AT A REASONABLE RATE.
7. FILTER BAG SHALL BE DISPOSED OF AS APPROVED IN THE EPSC PLAN OR AS DIRECTED BY THE ENGINEER.

FILTER BAG

NOTES:
REFER TO "THE VERMONT STANDARDS & SPECIFICATIONS FOR EROSION PREVENTION & SEDIMENT CONTROL -2006- "FROM THE VT AGENCY OF NATURAL RESOURCES FOR ADDITIONAL GUIDANCE.

THIS WORK SHALL BE PERFORMED IN ACCORDANCE WITH SECTION 653 FOR FILTER BAG (PAY ITEM 653.45) AND AS SPECIFIED IN THE CONTRACT.

REVISIONS	
MARCH 24, 2008	WHF
JANUARY 13, 2009	WHF

VAOT LOW GROW/FINE FESCUE MIX

LBS/AC						
WEIGHT	BROADCAST	HYDROSEED	NAME	LATIN NAME	GERM	PURITY
38%	57	95	CREEPING RED FESCUE	FESTUCA RUBRA VAR. RUBRA	90%	98%
29%	43.5	72.5	HARD FESCUE	FESTUCA LONGIFOLIA	85%	95%
15%	22.5	37.5	CHEWINGS FESCUE	FESTUCA RUBRA VAR. COMMUTATA	87%	95%
15%	22.5	37.5	ANNUAL RYEGRASS	LOLIUM MULTIFLORUM	90%	95%
3%	4.5	7.5	INERTS			
100%	150	250				

VAOT RURAL AREA MIX

LBS/AC						
WEIGHT	BROADCAST	HYDROSEED	NAME	LATIN NAME	GERM	PURITY
37.5%	22.5	45	CREEPING RED FESCUE	FESTUCA RUBRA VAR. RUBRA	85%	98%
37.5%	22.5	45	TALL FESCUE	FESTUCA ARUNDINACEA	90%	95%
5.0%	3	6	RED TOP	AGROSTIS GIGANTEA	90%	95%
15.0%	9	18	WHITE FIELD CLOVER	TRIFOLIUM REPENS	85%	98%
5.0%	3	6	ANNUAL RYE GRASS	LOLIUM MULTIFLORUM	85%	95%
100%	60	120				

GENERAL AMENDMENT GUIDANCE		
FERTILIZER	LIME	
10/20/10	AG LIME	PELLITIZED
500 LBS/AC	2 TONS/AC	1 TONS/AC

CONSTRUCTION GUIDANCE

1. SEED MIX: THE CONTRACTOR SHALL COORDINATE WITH THE RESIDENT ENGINEER ON WHICH SEED MIX TO USE.
2. SEED MIX: USE AS INDICATED IN THE PLANS AND/OR FOR ALL ESTABLISHED UPLAND (NON WETLAND) AREAS DISTURBED BY THE CONTRACTOR.
3. ALL SEED MIXTURES: SHALL NOT HAVE A WEED CONTENT EXCEEDING 0.40% BY WEIGHT AND SHALL BE FREE OF ALL NOXIOUS SEED.
4. FERTILIZER AND LIMESTONE: SHALL FOLLOW RATES SHOWN ON PLAN OR AS DIRECTED BY THE ENGINEER.
5. HAY MULCH: TO BE PLACED ON EARTH SLOPES AT THE RATE OF 2 TONS/ACRE, ACHIEVE 90% GROUND COVER OR AS DIRECTED BY THE ENGINEER.
6. HYDROSEEDING: ALTHOUGH GUIDANCE IS GIVEN ABOVE THE SITE CONDITIONS AND THE TYPE OF HYDROSEED PROPOSED FOR USE WILL ULTIMATELY DICTATE THE AMOUNTS AND TYPES OF SOIL AMENDMENTS TO BE APPLIED.
7. TURF ESTABLISHMENT: PLACING SEED, FERTILIZER, LIME AND MULCH PRIOR TO SEPTEMBER 15 AND AFTER APRIL 15 CAN BETTER ENSURE A VIGOROUS GROWTH OF GRASS.

ADAPTED FROM VTRANS TECHNICAL LANDSCAPE MANUAL FOR ROADWAYS AND TRANSPORTATION FACILITIES

TURF ESTABLISHMENT

THIS WORK SHALL BE PERFORMED IN ACCORDANCE WITH SECTION 651 FOR SEED (PAY ITEM 651.15)

REVISIONS	
JANUARY 12, 2015	WHF

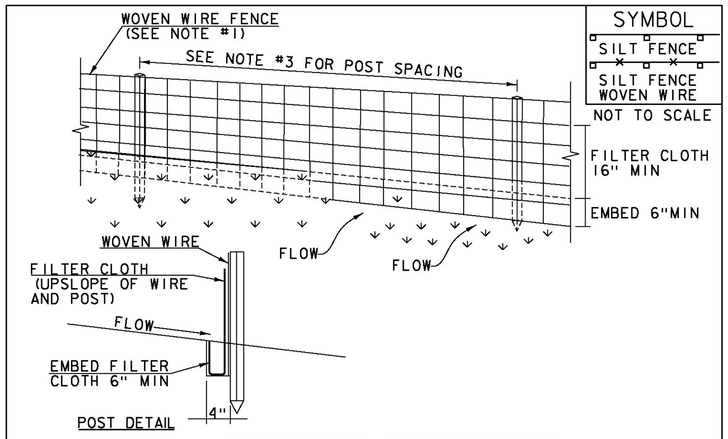

CONSTRUCTION SPECIFICATIONS

1. WOVEN WIRE REINFORCED FENCE IS REQUIRED WITHIN 100' UPSLOPE OF RECEIVING WATERS WHEN THE PROJECT FALLS UNDER A CONSTRUCTION STORMWATER PERMIT. WOVEN WIRE SHALL BE A MIN. 14 GAUGE WITH A 6" MAX. MESH OPENING.
2. FILTER CLOTH SHALL BE EITHER FILTER X, MIRAFI100X, STABILINKA T140N OR APPROVED EQUIVALENT.
3. POST SPACING FOR WIRE-BACKED FENCE SHALL BE 10' MAXIMUM. FOR FILTER-CLOTH FENCE, WHEN ELONGATION IS >50%, POST SPACING SHALL NOT EXCEED 4' AND WHEN ELONGATION IS <50%, POST SPACING SHALL NOT EXCEED 6'.
4. WOVEN WIRE FENCE IS TO BE FASTENED SECURELY TO FENCE POSTS WITH WIRE TIES. FILTER CLOTH IS TO BE FASTENED SECURELY TO WOVEN WIRE FENCE WITH TIES SPACED EVERY 24" AT TOP AND MID SECTION.
5. WHEN TWO SECTIONS OF FILTER CLOTH ADJOIN EACH OTHER THEY SHALL BE OVER-LAPPED BY 6" AND FOLDED.
6. MAINTENANCE SHALL BE PERFORMED AS NEEDED AND MATERIAL REMOVED WHEN SEDIMENT REACHES HALF OF FABRIC HEIGHT.

ADAPTED FROM DETAILS PROVIDED BY: NEW YORK STATE DEC ORIGINALLY DEVELOPED BY USDA-NRCS VERMONT DEPARTMENT OF ENVIRONMENTAL CONSERVATION

SILT FENCE

NOTES:
REFER TO "THE VERMONT STANDARDS & SPECIFICATIONS FOR EROSION PREVENTION & SEDIMENT CONTROL -2006- "FROM THE VT AGENCY OF NATURAL RESOURCES FOR ADDITIONAL GUIDANCE.

THIS WORK SHALL BE PERFORMED IN ACCORDANCE WITH SECTION 649 AND AS SHOWN IN THE PLANS FOR GEOTEXTILE FOR SILT FENCE (PAY ITEM 649.51) ~~OR GEOTEXTILE FOR SILT FENCE, WOVEN WIRE REINFORCED (PAY ITEM 649.515).~~

REVISIONS	
MARCH 21, 2008	WHF
DECEMBER 11, 2008	WHF
JANUARY 13, 2009	WHF

PROJECT NAME: JAY
PROJECT NUMBER: BHF 0278(3)

FILE NAME: z12ci54ero_dets.dgn
PROJECT LEADER: M. CHENETTE
DESIGNED BY: VAOT
EPSC DETAILS 2

PLOT DATE: 8/16/2016
DRAWN BY: VAOT
CHECKED BY: VAOT
SHEET 60 OF 72

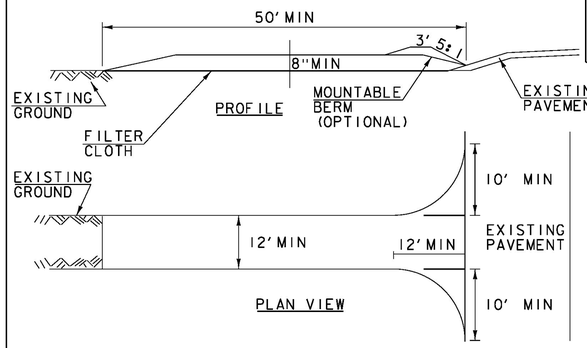

SYMBOL

NOT TO SCALE

CONSTRUCTION SPECIFICATIONS

1. STONE SIZE- USE 1-4" STONE, RECLAIMED OR RECYCLED CONCRETE EQUIVALENT.
2. LENGTH- NOT LESS THAN 50' (EXCEPT ON A SINGLE RESIDENCE LOT WHERE A 30' MINIMUM LENGTH APPLIES).
3. THICKNESS- NOT LESS THAN 8".
4. WIDTH- 12' MINIMUM, BUT NOT LESS THAN THE FULL WIDTH AT POINTS WHERE INGRESS OR EGRESS OCCURS. 24' IF SINGLE ENTRANCE TO SITE.
5. GEOTEXTILE MUST BE PLACED OVER THE ENTIRE AREA PRIOR TO PLACING STONE.
6. SURFACE WATER- ALL SURFACE WATER FLOWING OR DIVERTED TOWARD CONSTRUCTION ENTRANCES SHALL BE PIPED BENEATH THE ENTRANCE. IF PIPING IS IMPRACTICAL, A MOUNTABLE BERM WITH 5:1 SLOPES WILL BE PERMITTED.
7. MAINTENANCE- THE ENTRANCE SHALL BE MAINTAINED IN A CONDITION WHICH WILL PREVENT TRACKING OR FLOWING OF SEDIMENT ONTO PUBLIC RIGHTS-OF-WAY, ALL SEDIMENT SPILLED, DROPPED, WASHED OR TRACKED ONTO PUBLIC RIGHTS-OF-WAY MUST BE REMOVED IMMEDIATELY.
8. WHEN WASHING IS REQUIRED, IT SHALL BE DONE ON AN AREA STABILIZED WITH STONE AND WHICH DRAINS INTO AN APPROVED SEDIMENT TRAPPING DEVICE.
9. PERIODIC INSPECTION AND NEEDED MAINTENANCE SHALL BE PROVIDED ACCORDING TO PERMIT REQUIREMENTS.

ADAPTED FROM DETAILS PROVIDED BY: NEW YORK STATE DEC ORIGINALLY DEVELOPED BY USDA-NRCS VERMONT DEPARTMENT OF ENVIRONMENTAL CONSERVATION

STABILIZED CONSTRUCTION ENTRANCE

NOTES:
REFER TO "THE VERMONT STANDARDS & SPECIFICATIONS FOR EROSION PREVENTION & SEDIMENT CONTROL -2006- " FROM THE VT AGENCY OF NATURAL RESOURCES FOR ADDITIONAL GUIDANCE.

THIS WORK SHALL BE PERFORMED IN ACCORDANCE WITH SECTION 653 FOR VEHICLE TRACKING PAD (PAY ITEM 653.35) OR AS SPECIFIED IN THE CONTRACT.

REVISIONS	
MARCH 24, 2008	WHF
JANUARY 13, 2009	WHF

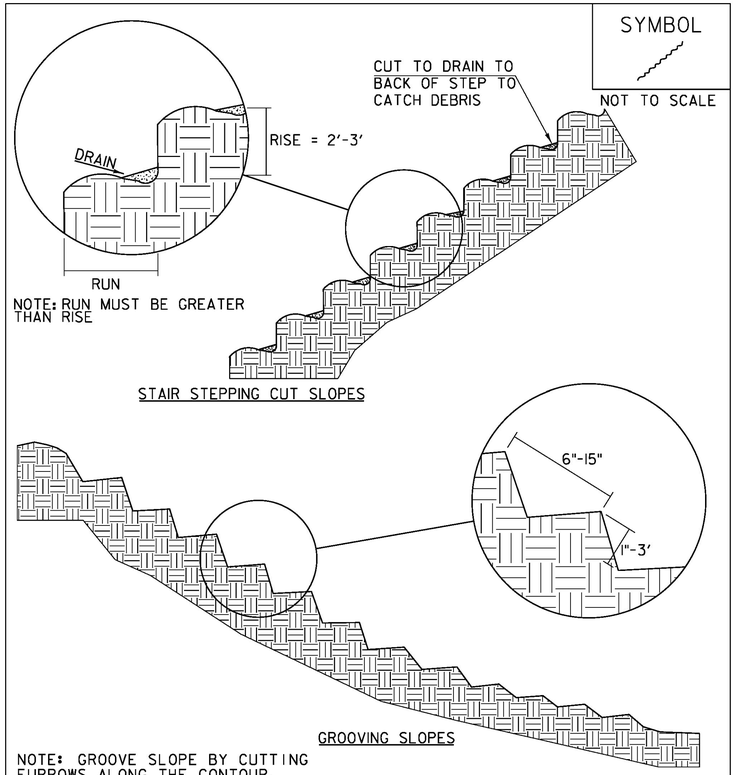

SYMBOL

NOT TO SCALE

NOTE: RUN MUST BE GREATER THAN RISE

STAIR STEPPING CUT SLOPES

GROOVING SLOPES

NOTE: GROOVE SLOPE BY CUTTING FURROWS ALONG THE CONTOUR. IRREGULARITIES IN THE SOIL SURFACE CATCH RAINWATER AND RETAIN LIME, FERTILIZER AND SEED.

ADAPTED FROM DETAILS PROVIDED BY: NEW YORK STATE DEC ORIGINALLY DEVELOPED BY USDA-NRCS VERMONT DEPARTMENT OF ENVIRONMENTAL CONSERVATION

SURFACE ROUGHENING

NOTES:
REFER TO "THE VERMONT STANDARDS & SPECIFICATIONS FOR EROSION PREVENTION & SEDIMENT CONTROL -2006- " FROM THE VT AGENCY OF NATURAL RESOURCES FOR ADDITIONAL GUIDANCE.

THIS WORK SHALL BE CONSIDERED INCIDENTAL TO THE CONTRACT

REVISIONS	
APRIL 1, 2008	WHF
JANUARY 13, 2009	WHF

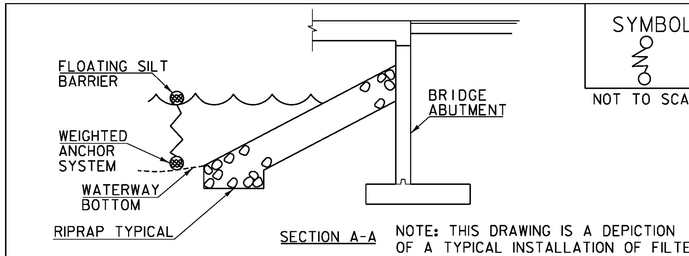

SYMBOL

NOT TO SCALE

SECTION A-A

NOTE: THIS DRAWING IS A DEPICTION OF A TYPICAL INSTALLATION OF FILTER CURTAIN. IT IN NO WAY DEFINES THE TYPE OR USE OF COFFERDAM IF USED.

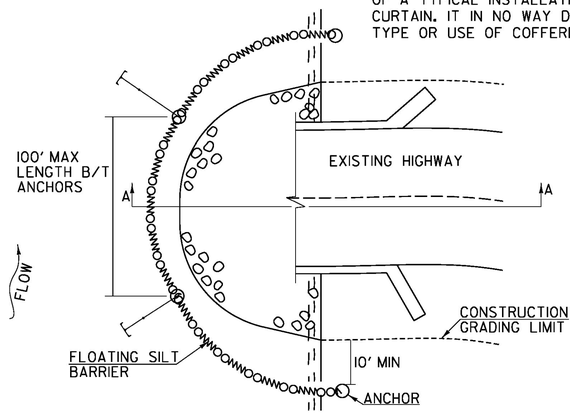

CONSTRUCTION SPECIFICATIONS

1. FILTER CURTAIN SHALL NOT BE PLACED ACROSS A FLOWING WATERWAY, OR IN A WATERWAY WITH STREAM VELOCITIES GREATER THAN 1.5 FEET/SECOND.
2. MAXIMUM 100' LENGTH BETWEEN ANCHORS.
3. LAST SECTION SHALL TERMINATE A MINIMUM OF 10' BEYOND LIMIT OF DISTURBANCE.
4. THE WEIGHTED ANCHOR SYSTEM SHALL BE A TYPE WHICH ALLOWS THE CURTAIN TO CONFORM TO THE BOTTOM OF THE WATERWAY.
5. THE CURTAIN SHALL BE REMOVED BY SLOWLY PULLING TOWARD THE SHORE MINIMIZING THE ESCAPE OF SEDIMENTS INTO WATERWAY.

FILTER CURTAIN

THIS WORK SHALL BE PERFORMED IN ACCORDANCE WITH SECTION 649 FOR GEOTEXTILE FOR FILTER CURTAIN (PAY ITEM 649.61).

REVISIONS	
APRIL 1, 2008	WHF
JANUARY 13, 2009	WHF
SEPTEMBER 4, 2009	WHF

REVISIONS		
1	09.27.16	ADDED FILTER CURTAIN DETAIL

PROJECT NAME: JAY
PROJECT NUMBER: BHF 0278(3)

FILE NAME: zl2cl54ero_dets.dgn
PROJECT LEADER: M. CHENETTE
DESIGNED BY: VAOT
EPSC DETAILS 3

PLOT DATE: 9/26/2016
DRAWN BY: VAOT
CHECKED BY: VAOT
SHEET 61 OF 72

IMPACTS BELOW ORDINARY HIGH WATER

TEMPORARY IMPACTS BELOW OHW:	818 SF
PERMANENT IMPACTS BELOW OHW:	136 SF
TOTAL IMPACTS:	954 SF

ABANDONED UTILITY LINE

JAY BROOK FLOW

N 39° 28' 36" W

52+00

167+00

168+00

169+00

VT STATE PLANE GRID

= STONE FILL, TYPE IV

SCALE 1" = 10'-0"

10 0 10

Stantec

REVISIONS		
1	09.27.16	UPDATED SAND BAG COFFERDAM TO FILTER CURTAIN

PROJECT NAME: JAY
PROJECT NUMBER: BHF 0278(3)

FILE NAME: z12c154bdr.dgn
PROJECT LEADER: M. CHENETTE
DESIGNED BY: I. MAYNARD
IMPACTS PLAN

PLOT DATE: 9/26/2016
DRAWN BY: I. MAYNARD
CHECKED BY: M. CHENETTE
SHEET 62 OF 72

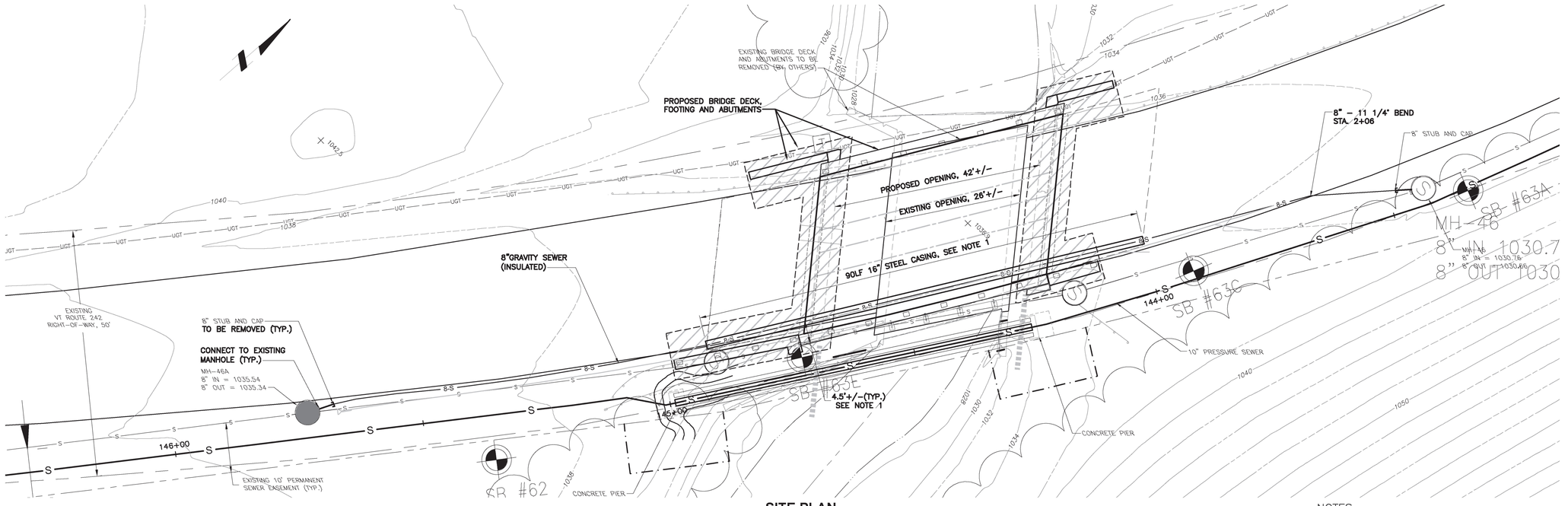

SITE PLAN
SCALE: 1" = 10'

NOTES
1. A 20-INCH STEEL CASING WILL BE CAST IN TO THE ABUTMENTS TO ACCOMMODATE INSTALLATION OF THE 16-INCH STEEL CASING.
2. PLUG EXISTING SEWER INSIDE MH-46A AND MH-46B WITH NON-SHRINK GROUT AFTER NEW SEWER INSTALLED AND PLACED INTO SERVICE.

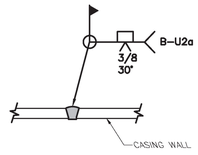

NOTES
1. WELDING SHALL COMPLY WITH AWWA STANDARD C206 AND AWS D1.1. ALL WELDING SHALL BE PERFORMED BY A WELDER CERTIFIED FOR POSITION AND PROCESS UTILIZED.
2. NO WELDS PERMITTED IN THE MIDDLE THIRD OF THE SPAN BETWEEN ABUTMENTS, STA. 0+69 TO 0+84.

TYPICAL CASING SPLICE WELD
NOT TO SCALE

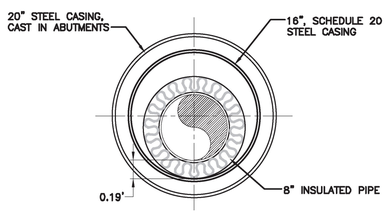

TYPICAL CASING SECTION
NOT TO SCALE

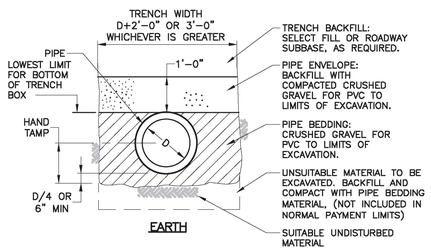

TRENCH SECTIONS
NOT TO SCALE

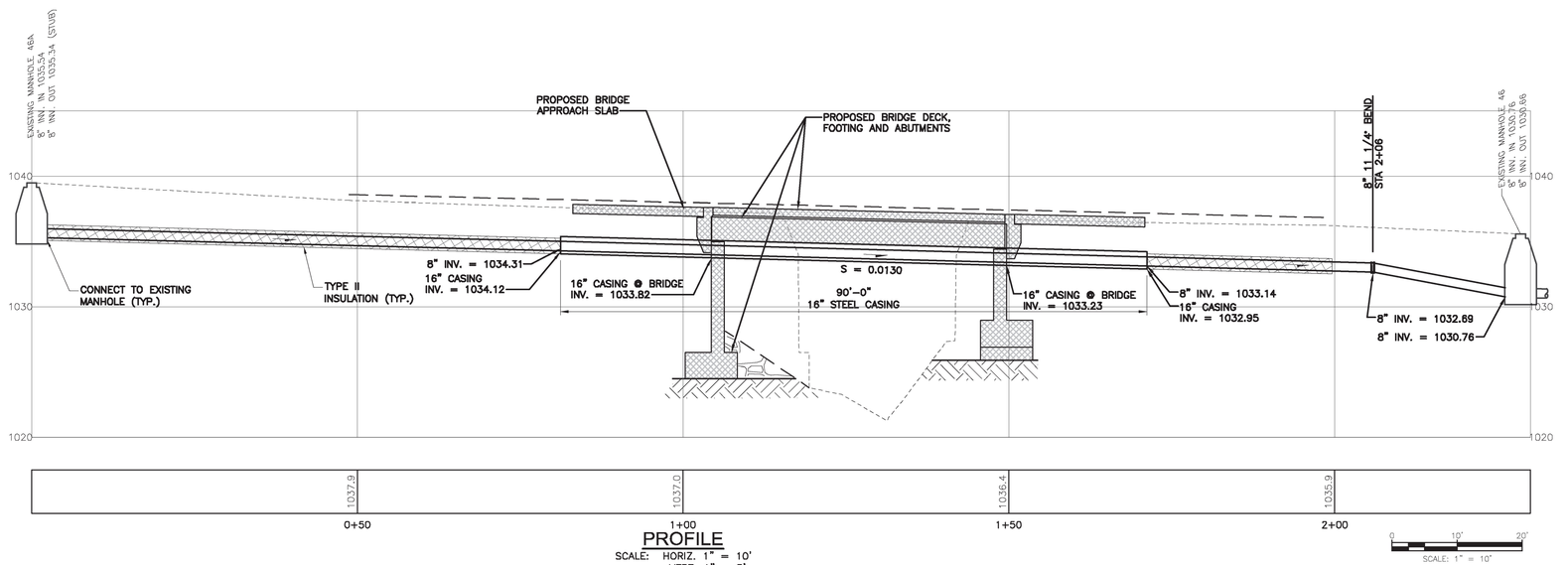

PROFILE
SCALE: HORIZ. 1" = 10'
VERT. 1" = 5'

SCALE: 1" = 10'

Rev.	Date	Description
D	3/15/14	FOR BID
C	7/3/13	FOR REVIEW
B	2/8/13	FOR APPROVAL
A	5/11/12	90% PERMIT REVIEW SET

TOWNS OF TROY AND AND JAY VERMONT
WASTEWATER COLLECTION SYSTEM (CONTRACT #4)

Drawn By: CDM | Designed By: | Checked By: KIT | Approved By: GAL

GRAVITY SEWER PLAN, PROFILE AND DETAILS

THIS DRAWING IS THE PROPERTY OF TATA & HOWARD, INC. AND ITS SUBMITTAL, REPRODUCTION OR MODIFICATION WITHOUT WRITTEN CONSENT IS PROHIBITED.

REVIEW SUBMITTAL NOT FOR CONSTRUCTION

TATA & HOWARD

T&H NO.: 3452
DATE: 03/2015
SCALE: AS NOTED

C29.1

J:\1953\active\195010931\file_transfer\incoming\v4_6_LS Sewer revised from tpb and Howard\ACAD-TOWNSWR 04_C29.dwg 4/7/2015 2:37 PM CHARLIE

STATE OF VERMONT
AGENCY OF TRANSPORTATION

RIGHT - OF - WAY DETAIL SHEET

TABLE OF PROPERTY ACQUISITION

PARCEL NO.	PROPERTY OWNER	ROW LAYOUT NO.	BEGINNING STATION	ENDING STATION	TAKE	REMAINDER	RIGHT			RECORDING DATA					REMARKS
					AREA±	AREA±	TYPE	T / P	AREA ±	TITLE TAKEN	DATE	TOWN / CITY	BOOK	PAGE	
1A	CURRIER, COLBY CLARENCE JR.	1	166+72.37 LT	167+79 LT			CONSTRUCTION	T	762 SF						INCL. BF & EC
			167+68.69 LT	168+66.31 LT			CHANNEL	P	2243 SF						INCL. STONE FILL & TEMP EC, INCL. REMOVAL OF EXISTING WINGWALL & FOOTING
1B		1	167+00 RT	167+45 RT			CONSTRUCTION	T	24 SF						INCL. BF
			167+45.11 RT	168+35.50 RT			CHANNEL	P	1859 SF						INCL. STONE FILL & TEMP EC
2	BASEE INVESTMENTS INCORPORATED	1	168+12.55 RT	168+58.44 RT			CHANNEL	P	923 SF						INCL. STONE FILL & TEMP EC, INCL. REMOVAL OF EX. G. RAIL
			168+42 RT	169+28 RT			CONSTRUCTION	T	383 SF						INCL. PDF
			168+46 RT	169+12 RT			SLOPE	T	670 SF						
3	MATTSON, JOHN F.	1	168+60.31 LT	168+88.83 LT			CHANNEL	P	348 SF						INCL. STONE FILL & TEMP EC
			168+66.31 LT	169+51 LT			CONSTRUCTION	T	792 SF						INCL. PDF
			168+88.83 LT	169+54.64 LT			SLOPE	P	328 SF						
			169+50.00 LT	169+76.91 LT			ACCESS	T	288 SF						INCL. REPAIR TO DRIVEWAY IF NECESSARY
			169+67 LT												20' PAVED DRIVE, MM 0321
4	TOWN OF TROY-JAY SEWER BOARD	1	166+72.37 LT	169+76.91 LT											UTILITY

TABLE OF REVISIONS

REVISION NO.	ROW SET SHEET #	DESCRIPTION	DATE

APPROVED: RYAN CLOUTIER DATE: XX-XX-XX
CHIEF, PLANS & TITLES

PROJECT NAME: **JAY**
PROJECT NUMBER: **BHF 0278(3)**

FILE NAME: **z12c154rowdetailsheet**
PROJECT LEADER: **MIKE CHENETTE**
DESIGNED BY: **H. PETROVS**
R.O.W. DETAIL SHEET #1

PLOT DATE:
DRAWN BY: **L. BUXTON**
CHECKED BY: **M. CHENETTE**
SHEET **64** OF **72**

BOX BEAM GUARDRAIL
STA. 167+19.4 TO 167+40.4, RT
STA. 167+69.1 TO 167+73.3, LT
STA. 168+85.6 TO 168+89.8, RT
STA. 168+90.1 TO 169+35.1, LT

APPROACH SECTION, GALVANIZED 3 RAIL BOXBEAM
STA. 167+40.4 TO 167+72.4, RT
STA. 167+73.3 TO 168+05.3, LT
STA. 168+53.6 TO 168+85.6, RT
STA. 168+58.1 TO 168+90.1, LT

MANUFACTURED TERMINAL END SECTION, TANGENT
STA. 167+05.4 TO 167+19.4, RT
STA. 169+35.1 TO 169+49.1, LT

DURABLE 4 INCH YELLOW LINE
STA. 166+00.0 TO STA. 170+50.0, CL (DOUBLE)

DURABLE 4 INCH WHITE LINE
STA. 166+00.0 TO STA. 170+50.0, LT
STA. 166+00.0 TO STA. 170+50.0, RT

REMOVAL AND DISPOSAL OF GUARDRAIL
STA. 167+53.7 TO 168+10.5, RT
STA. 167+62.3 TO 168+18.6, LT
STA. 168+39.4 TO 168+59.0, RT
STA. 168+50.7 TO 169+54.9, LT

RELOCATE MAILBOX SINGLE SUPPORT
STA. 169+83.9, LT

CONSTRUCT DRIVE
STA. 169+67, LT (PAVED)

PLAN REFERENCES
- HIGHWAY PROJECT JAY SK4 (1959)
- SURVEY FOR BASEE INVESTMENTS, INC., BY GEORGE W. RUMERY, DATED 6/2008.

CURVE 1 DATA
PC = 162+40.92
DELTA = 27°48'56"
D = 7°32'20"
R = 760.00'
T = 188.19'
L = 368.96'
E = 22.95'

CURVE 2 DATA
DELTA = 22°29'57"
D = 6°21'58"
R = 900.00'
T = 179.02'
L = 353.42'
E = 17.63'

CURVE 3 DATA
PT = 173+33.55
DELTA = 38°14'08"
D = 15°04'40"
R = 380.00'
T = 131.72'
L = 253.59'
E = 22.18'

N
VT STATE PLANE GRID

1A
CURRIER, COLBY CLARENCE, JR.

BEGIN ROW PROJECT
JAY BHF 0278(3)
STA. 166+72.37 24.75' LT

END ROW PROJECT
JAY BHF 0278(3)
STA. 169+76.91 24.75' LT

3
MATTSON, JOHN F.

BEGIN APPROACH STA 166+00.00
EXISTING R.O.W.
N 890150.19
E 1652594.22
166+72.37 24.75' LT
STA 166+09.88 PT
STA 166+72.37 PC
ABANDONED UTILITY LINE
STONE FILL TYPE IV, TYP.
℄ BRG. ABUT. 1
STA. 168+03.50
F.G. EL. 1037.97
PROPOSED 8" GRAVITY SEWER
BEGIN BRIDGE
STA. 168+01.13
F.G. EL. 1038.0
JAY BRANCH FLOW
APPROXIMATE TOP OF BANK
END BRIDGE
STA. 168+51.33
F.G. EL. 1037.42
HOUSE
STA 170+25.79 PT
N 890448.67
E 1652760.13
170+25.79 24.75' LT
EXISTING R.O.W.
CURVE 1
CURVE 2
CURVE 3
N 40° 19' 02" E
N 39° 28' 36" W
N 17° 49' 04" E
VT 242 TO WESTFIELD
R = 875.25'
R = 924.75'
R = 760.00'
49.50'
CONST(T)
SLOPE(P)
ACCESS (T)
CH(P)
P/L
SEWER MANHOLE
EXIST. SEWER MANHOLE #46A
EXISTING SEWER LINE TO BE REMOVED
EXIST. SEWER MANHOLE #46
END PROJECT STA. 169+04.17
PROPOSED 10" PRESSURE SEWER BY OTHERS
END APPROACH STA. 170+50.00
N 890433.52
E 1652807.26
170+25.79 24.75' RT
PC STA 170+19.99
BEGIN PROJECT STA. 167+45.83
℄ BRG. ABUT. 2
STA. 168+48.91
F.G. EL. 1037.45
VT 242 STA 168+28.08 = CHAN STA 51+11.90
APPROXIMATE TOP OF BANK
PROPOSED 10" PRESSURE SEWER AND PIPE BRIDGE BY OTHERS (TO BE CONSTRUCTED PRIOR TO THIS CONTRACT)

167+99.90 56.14' LT	168+47.04 54.28' LT	168+66.31 44.04' LT	168+88.83 30.98' LT CONST(T)
167+68.69 24.75' LT	168+88.83 24.75' LT	169+54.64 24.75' LT	169+50.00 28.62' LT
168+60.31 24.75' LT	168+35.50 24.75' RT	168+58.44 24.75' RT	167+45.11 24.75' RT
167+52.20 40.97' RT	168+38.66 62.18' RT	168+12.55 54.73' RT	

L = 93.68'	L = 89.09'	L = 27.74'	L = 64.00'
L = 69.18'	L = 74.75'	L = 92.87'	L = 23.58'
L = 171.95'			

A	L = 43.29' N 13°17'25" W	H	L = 5.94' N 63°09'08" E
B	L = 44.28' N 23°06'47" E	I	L = 42.78' S 31°54'37" E
C	L = 20.90' N 57°54'18" E	J	L = 28.78' S 45°32'03" W
D	L = 20.14' S 45°10'07" E	K	L = 38.38' N 20°43'08" W
E	L = 25.23' N 58°26'28" E	L	L = 65.02' S 45°32'03" W
F	L = 6.23' N 63°27'26" W	M	L = 17.81' N 78°54'54" W
G	L = 59.18' N 26°52'24" E		

NOTE:
THE CONTRACTOR SHALL FURNISH AND INSTALL PROPOSED GRAVITY SEWER LINE BETWEEN EXISTING MANHOLES #46 AND 46A. PAYMENT WILL BE UNDER ITEM 900.60 SPECIAL PROVISION (SANITARY SEWER) SEE SHEET 63 FOR DETAILS.

1B
CURRIER, COLBY CLARENCE, JR.

2
BASEE INVESTMENTS, INC.

EXISTING BRIDGE INFO
CONCRETE T-BEAM BRIDGE
28' SPAN, 34'-6" WIDE
BUILT 1927,
RECONSTRUCTED 1964

LINES SHOWN ON THIS PLAN AS EXISTING PROPERTY LINES (P/L) ARE BELIEVED TO BE ACCURATE BUT SHOULD NOT BE RELIED UPON FOR PURPOSES UNRELATED TO THE STATE OF VERMONT'S ACQUISITION OF LAND AND RIGHTS FOR THIS PROJECT.

LAYOUT
SCALE 1" = 20'-0"
20 0 20

FOR R.O.W. USE ONLY

Stantec

PROJECT NAME: JAY
PROJECT NUMBER: BHF 0278(3)

FILE NAME: z12cl54bdr_ROW.dgn
PROJECT LEADER: M. CHENETTE
DESIGNED BY: H. PETROVS
LAYOUT SHEET - R.O.W.

PLOT DATE: 8/16/2016
DRAWN BY: L. BUXTON
CHECKED BY: M. CHENETTE
SHEET 65 OF 72

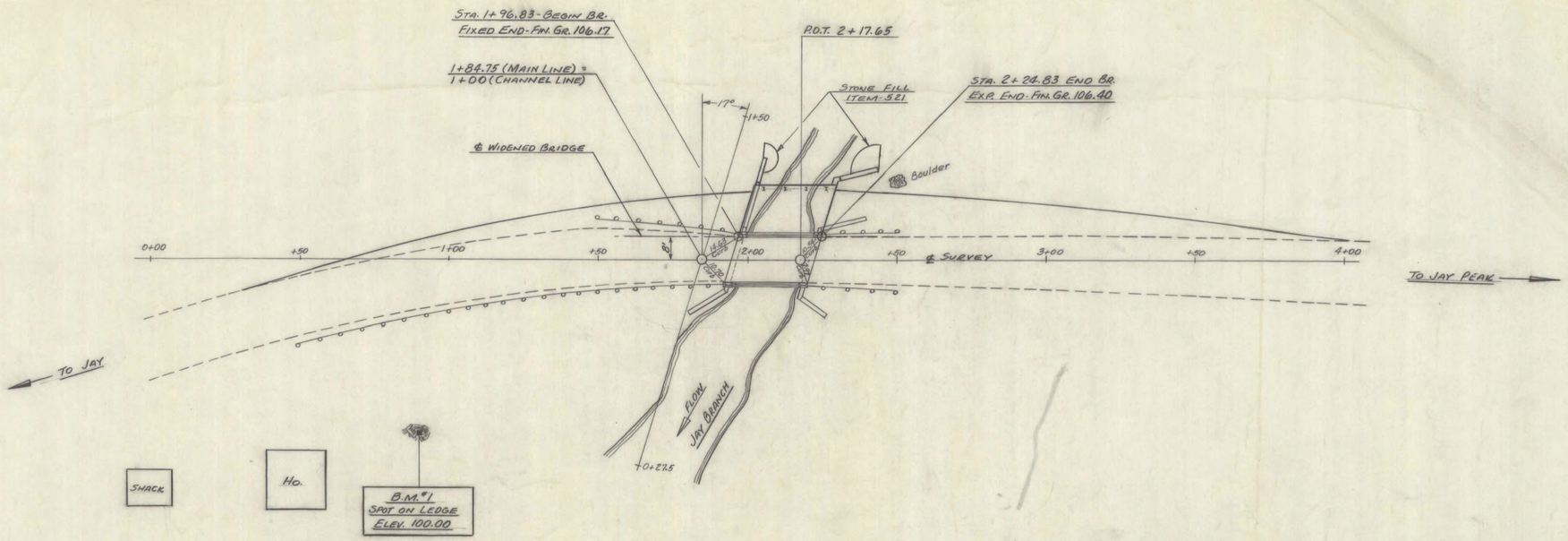

TWO CABLE GUARD RAIL

STA. TO STA.		LIN. FT.	ANCHORS
1+50 Lt.	1+98 Lt.	48	1
2+29 Lt.	2+69 Lt.	40	1
	TOTALS	88	2

~SUMMARY OF QUANTITIES~

ITEM NO.	ITEM	UNIT	TOTAL	FINAL
101-B	SOLID ROCK EXCAVATION	C.Y.	10	
107	STRUCTUREE EXCAVATION	C.Y.	48	
204A	SUB-BASE OF GRAVEL (MOD.)	C.Y.	18	
317	SINGLE TACK COAT OF REFINED TAR & BLADE MIX PEA STONE SEAL WITH CUTBACK ASPHALT	GAL.	1258	
401-AA	CONCRETE CLASS AA (MOD.)	C.Y.	26	
401-B	CONCRETE CLASS B (MOD.)	C.Y.	51	
402	REINFORCING STEEL	LB.	7996	
521	STONE FILL (HEAVY TYPE)	C.Y.	9	
542	TWO CABLE GUARD RAIL	L.F.	88	
543	THREE CABLE GUARD RAIL WITH STEEL POSTS (MOD.)	L.F.	56	
545	ANCHORS FOR TWO CABLE GUARD RAIL	EA.	2	
574	PREPARING SUPERSTRUCTURE FOR WIDENING	L.S.	1	
102	BORROW	C.Y.	213	

RECOMMENDED FOR APPROVAL	DISTRICT ENGINEER	APR. 3. 1963 DATE
RECOMMENDED FOR APPROVAL	BRIDGE ENGINEER	7/30/63 DATE
RECOMMENDED FOR APPROVAL	ASSISTANT CHIEF ENGINEER	7/31/63 DATE
APPROVED BY	CHIEF ENGINEER	7/31/63 DATE

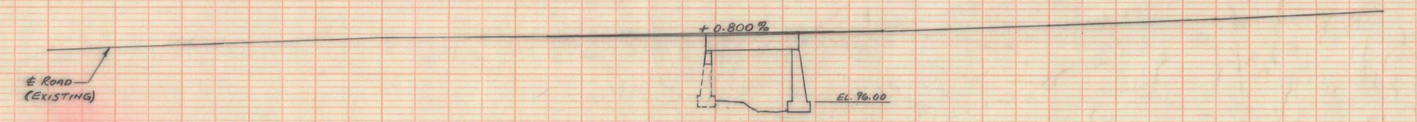

~LIST OF SHEETS~

1	PLAN & PROFILE
2	DETAILS OF ABUTMENT NO. 1
3	" " " NO. 2
4	SUPERSTRUCTURE DETAILS
5	REINFORCING STEEL DETAILS
6-7	CHANNEL SECTIONS
8	ROADWAY SECTIONS
9	STANDARD DWG. G-3
10	" " SCB-06-62
11	" " E-2
12	" " G-2a

JAY-BHF 0278(3)
SHEET 66 OF 72
FOR REFERENCE ONLY

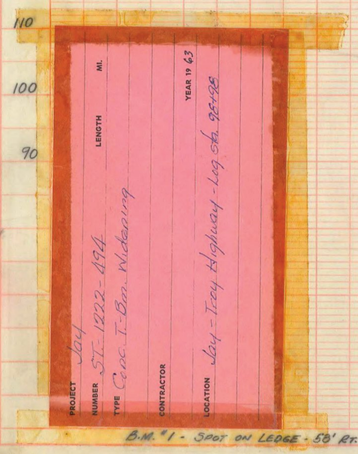

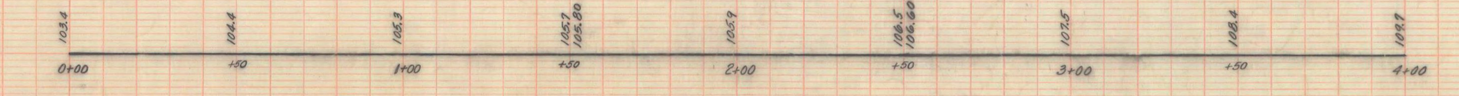

B.M. #1 - SPOT ON LEDGE - 58' RT. STA. 0+90

JAY
JAY PEAK BRIDGE
STATE MAINTENANCE
1222-494

SHEET 1 OF 12

PLATE 1 - PLAN - PROFILE. O. P. R. & R. E. STANDARD
KEUFFEL & ESSER CO., NEW YORK.

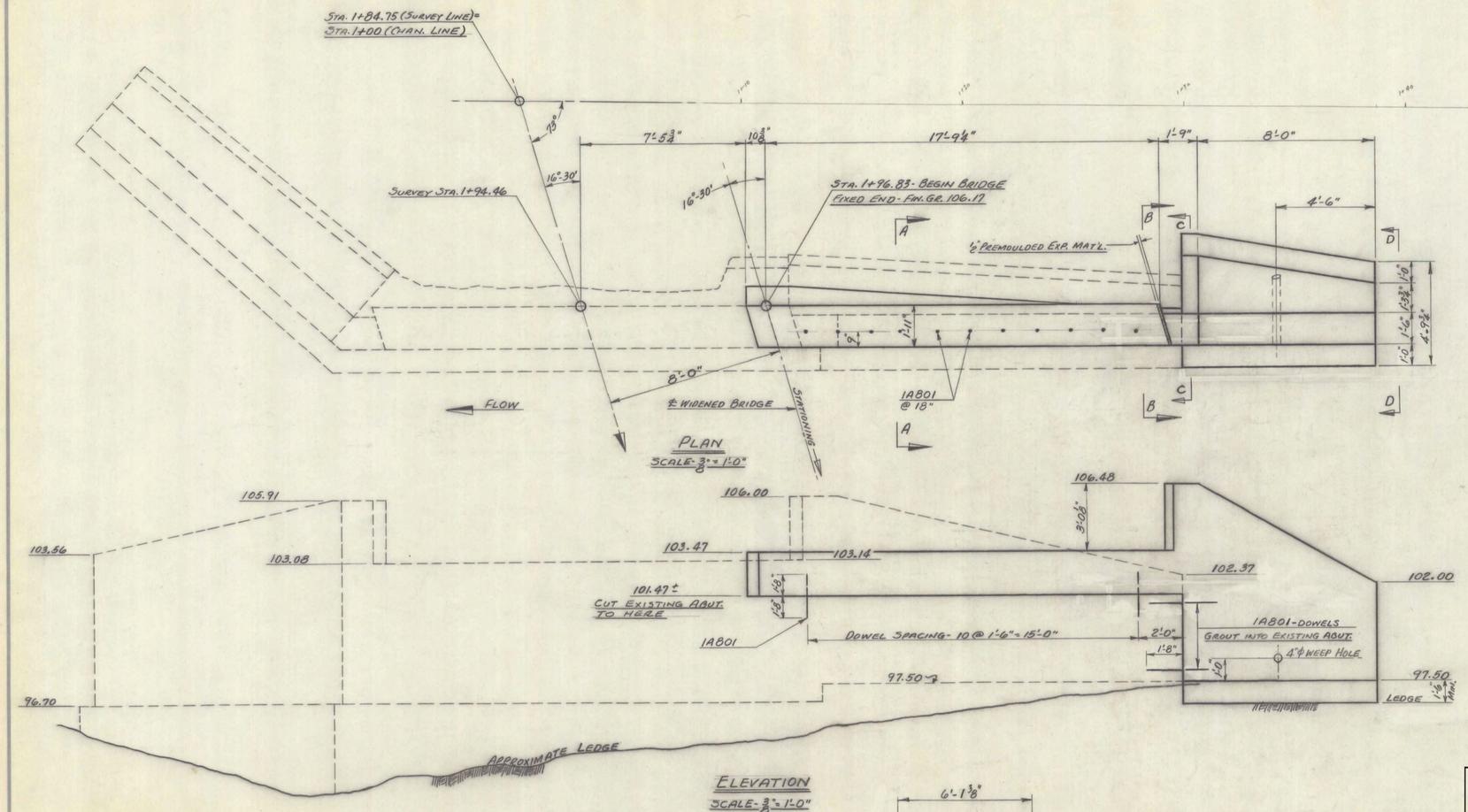

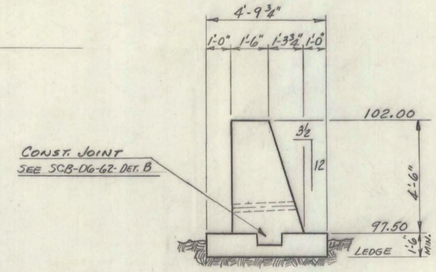

VIEW D-D
SCALE-⅜"=1'-0"

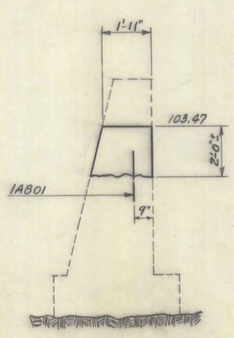

SECTION A-A
SCALE-⅜"=1'-0"

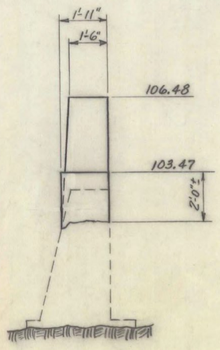

SECTION B-B
SCALE-⅜"=1'-0"

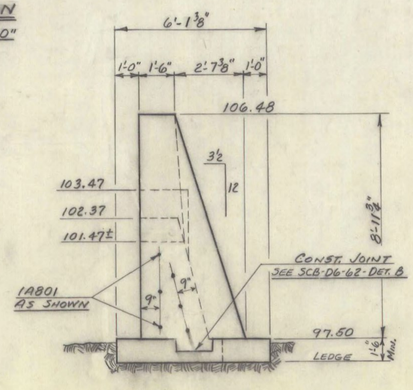

SECTION C-C
SCALE-⅜"=1'-0"

JAY-BHF 0278(3)
SHEET 67 OF 72
FOR REFERENCE ONLY

ITEM NO.	ITEM	UNIT	NET	OVERRUN	TOTAL	FINAL
106-A	CHAN. EXCAV. OF EARTH	C.Y.				
106-B	CHAN. EXCAV. OF ROCK	C.Y.				
106-C	UNCLASS. CHAN. EXCAV.	C.Y.				
107	STRUCT. EXCAV.	C.Y.			9	
401-B	CONC. CLASS B (MOD.)	C.Y.			12	
402	REINF. STEEL (SEE REINF. STEEL DETS.)	LBS.				
407	ASPHALTIC-ASB. COATING	S.Y.				
502-B	TREATED TIMBER PILING	L.F.				
503	SPLICES FOR STEEL PILING	EA.				
504	STEEL PILING	L.F.				
502-A	UNTREATED TIMBER PILING	L.F.				
101-B	SOLID ROCK EXCAVATION	C.Y.			4	
521	STONE FILL (HEAVY TYPE)	C.Y.			3	

STATE OF VERMONT
DEPARTMENT OF HIGHWAYS

TOWN OF JAY
ROUTE NO. JAY-TROY HIGHWAY LOG STA. 98+98
DETAILS OF ABUTMENT NO. 1
JAY PEAK BRIDGE
SCALE ⅜"=1'-0"
SURVEYED BY BURLEY
DRAWN BY RTC 3/63 CHECKED BY RND
PROJECT NO. STATE MAINT. 1222-444
SHEET 2 OF 12

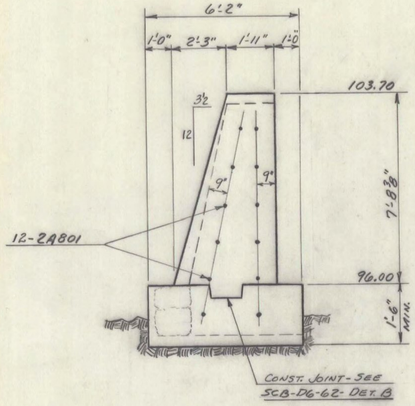

SECTION B-B

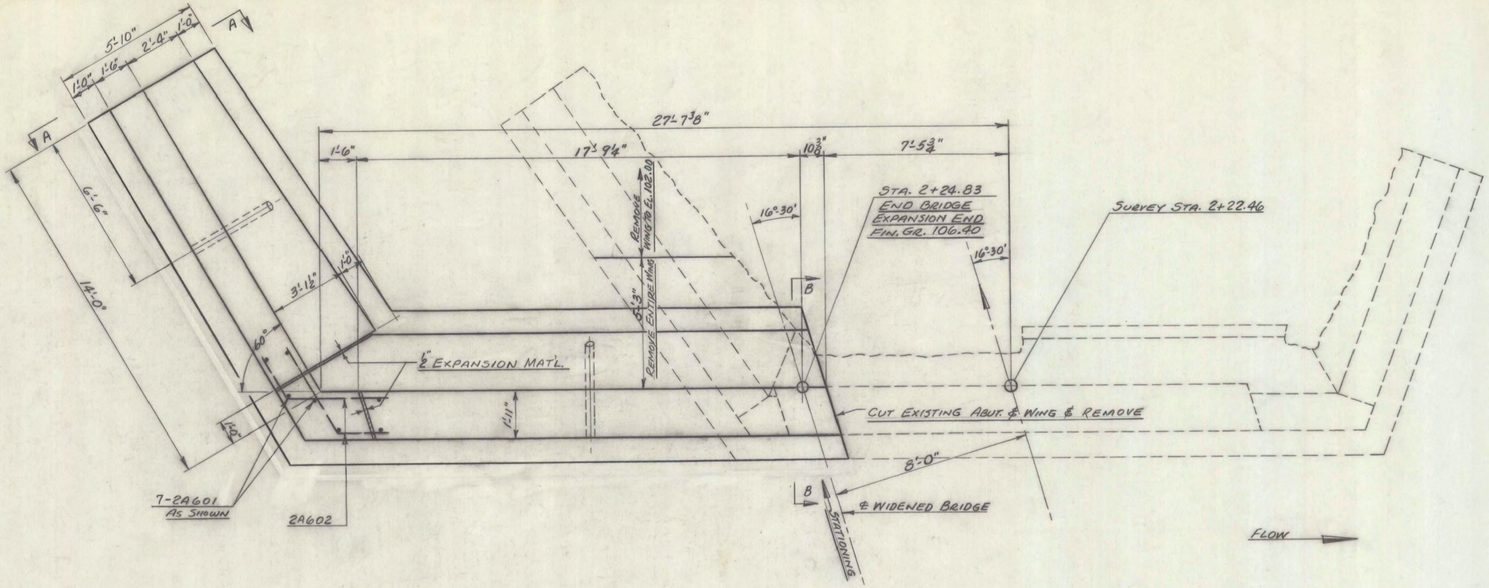

PLAN

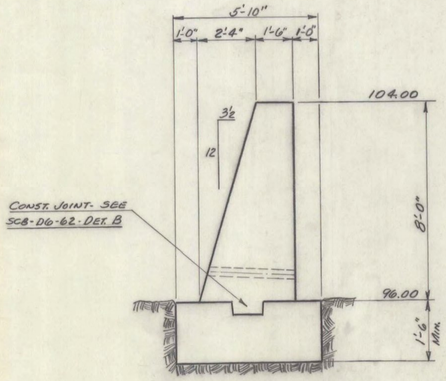

VIEW A-A

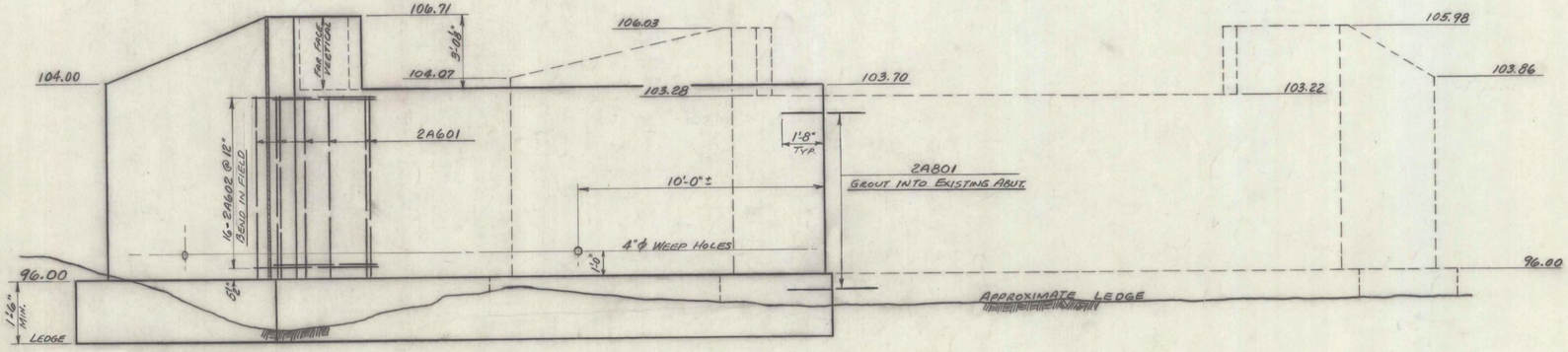

ELEVATION

ITEM NO.	ITEM	UNIT	NET	OVERRUN	TOTAL	FINAL
106-A	CHAN. EXCAV. OF EARTH	C.Y.				
106-B	CHAN. EXCAV. OF ROCK	C.Y.				
106-C	UNCLASS. CHAN. EXCAV.	C.Y.				
107	STRUCT. EXCAV.	C.Y.			39	
401-B	CONC. CLASS B (MOD.)	C.Y.			39	
402	REINF. STEEL (SEE REINF. STEEL DETS.)	LBS.				
407	ASPHALTIC-ASB. COATING	S.Y.				
502-B	TREATED TIMBER PILING	L.F.				
503	SPLICES FOR STEEL PILING	EA.				
504	STEEL PILING	L.F.				
502-A	UNTREATED TIMBER PILING	L.F.				
101-B	SOLID ROCK EXCAVATION	C.Y.			6	
521	STONE FILL (HEAVY TYPE)	C.Y.			6	

JAY-BHF 0278(3)
SHEET 68 OF 72
FOR REFERENCE ONLY

STATE OF VERMONT
DEPARTMENT OF HIGHWAYS

TOWN OF JAY
ROUTE NO. JAY-TROY HIGHWAY LOG STA. 98+98
DETAILS OF ABUTMENT NO. 2
JAY PEAK BRIDGE
SCALE ⅜" = 1'-0"
SURVEYED BY BWELEY
DRAWN BY RTB 2/63 CHECKED BY RND
PROJECT NO. STATE MAINT. 1222-498
SHEET 3 OF 12

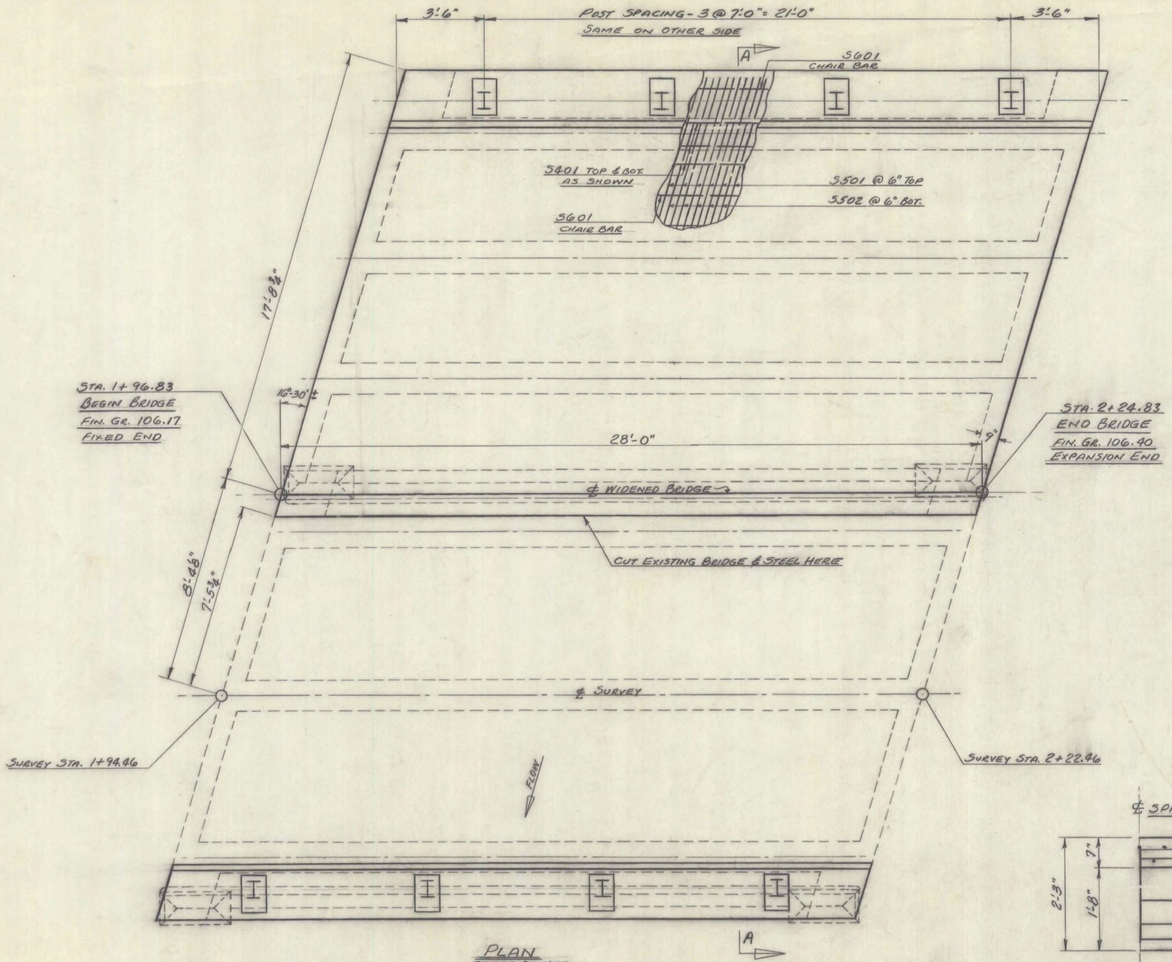

PLAN
SCALE - ⅜" = 1'-0"

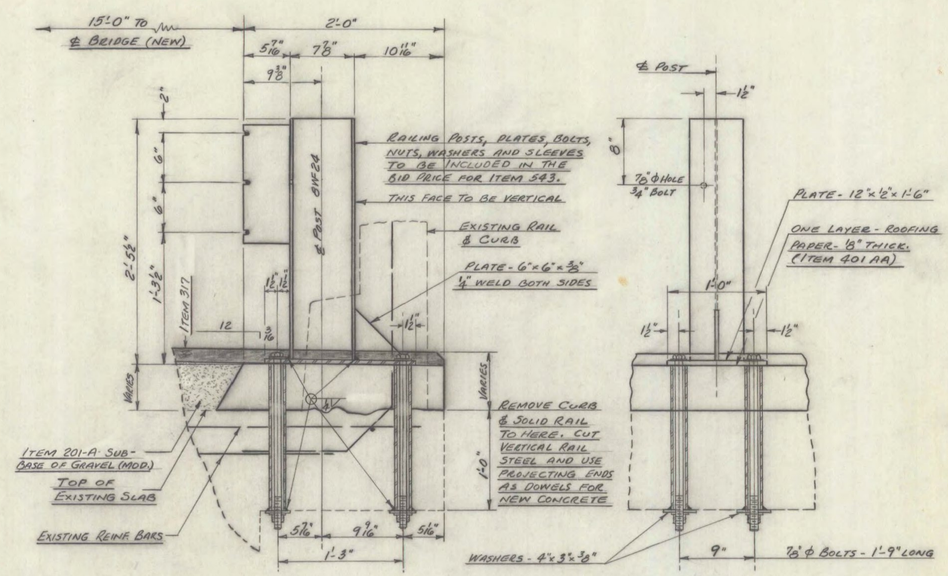

DETAIL OF GUARD RAIL POST (DOWNSTREAM)
SCALE - 1½" = 1'-0"
(UPSTREAM POSTS SIMILAR)

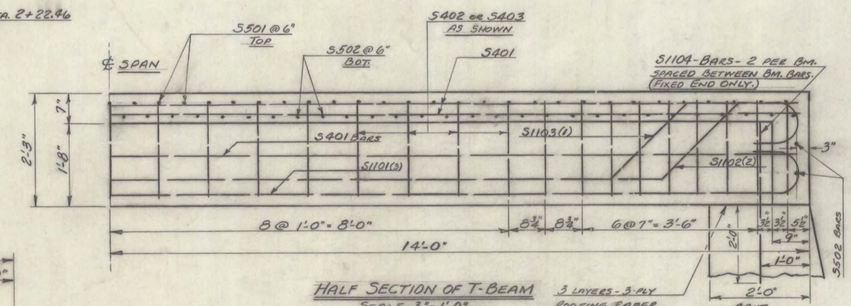

HALF SECTION OF T-BEAM
SCALE - ¾" = 1'-0"

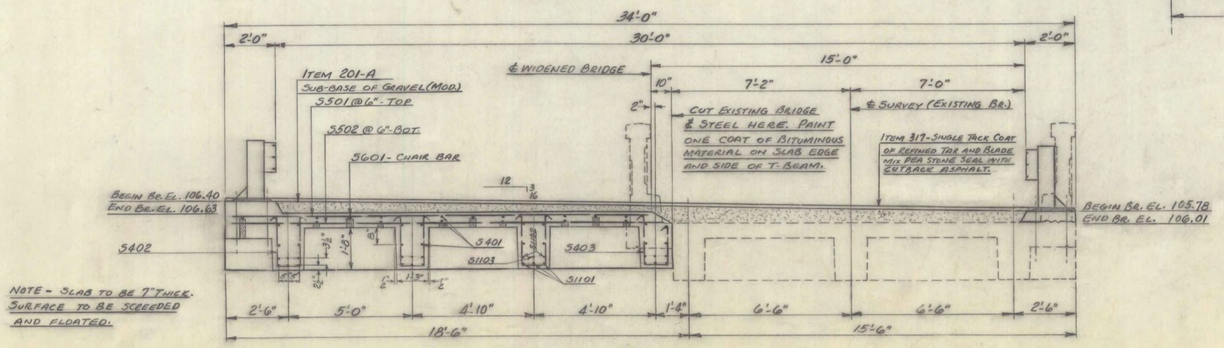

SECTION A-A
SCALE - ⅜" = 1'-0"

~NOTES~

1. FOR ADDITIONAL RAILING DETAILS SEE STD. DWG. G-3. RAILING POSTS TO BE NORMAL TO GRADE.
2. RAIL POSTS, AND ALL RELATED HARDWARE, TO BE GALVANIZED.

JAY-BHF 0278(3)
SHEET 69 OF 72
FOR REFERENCE ONLY

ITEM NO.	ITEM	UNIT	NET	OVERRUN	TOTAL	FINAL
106-A	CHAN. EXCAV. OF EARTH	C.Y.				
106-B	CHAN. EXCAV. OF ROCK	C.Y.				
106-C	UNCLASS. CHAN. EXCAV.	C.Y.				
107	STRUCT. EXCAV.	C.Y.				
401-AA	CONC. CLASS AA (MOD.)	C.Y.			26	
402	REINF. STEEL (SEE REINF. STEEL DETS)	LBS.				
407	ASPHALTIC-ASB. COATING	S.Y.				
502-B	TREATED TIMBER PILING	L.F.				
503	SPLICES FOR STEEL PILING	EA.				
504	STEEL PILING	L.F.				
502-A	UNTREATED TIMBER PILING	L.F.				
201-A	SUB-BASE OF GRAVEL (MOD.)	C.Y.			18	
317	SINGLE TACK COAT OF REF. TAR & BLADE MIX PEA STONE SEAL WITH CUTBACK ASPHALT	GAL.	BRIDGE - 127 ROADWAY - 1131		1258	
543	THREE CABLE GUARD RAIL WITH STEEL POSTS (HBP)	L.F.			56	
574	PREPARING SUPERSTRUCTURE FOR WIDENING	L.S.			1	

STATE OF VERMONT
DEPARTMENT OF HIGHWAYS

TOWN OF JAY
ROUTE NO. JAY - TROY HIGHWAY LOG STA. 98+98
SUPERSTRUCTURE DETAILS
JAY PEAK BRIDGE
SCALE AS NOTED
SURVEYED BY BURLEY
DRAWN BY RTB 3/62 CHECKED BY RND
STATE MAINT.
PROJECT NO. 1222-494
SHEET 4 OF 12

Item	No. Pieces	Size	Length	Mark	Type	A	B	C	D	E	F	G	H	J	K	R	O
1																	
2																	
3																	
4																	
5																	
6																	
7																	
8																	
9																	
10																	
11																	
12																	
13																	
14																	
15																	
16																	
17																	
18																	
19																	
20																	
21																	
22																	
23																	
24																	
25																	
26																	
27																	
28																	
29																	
30																	
31																	
32																	
33																	
34																	
35																	
36																	
37																	
38																	
39																	
40																	
41																	
42																	
43																	
44																	
45																	
46																	
47																	
48																	
49																	
50																	
51																	
52																	
53																	
54																	
55																	
56																	
57																	
58																	
59																	
60																	
61																	
62																	
63																	
64																	
65																	
66																	
67																	
68																	
69																	
70																	
71																	
72																	
73																	
74																	
75																	
76																	
77																	
78																	
79																	
80																	
81																	

Item	No. Pieces	Size	Length	Mark	Type	A	B	C	D	E	F	G	H	J	K	R	O
82																	
83																	
84																	
85																	
86																	
87																	
88																	
89																	
90																	
91																	
92																	
93																	
94																	
95																	
96																	
97																	
98																	
99																	
100																	
101																	
102																	
103																	
104																	
105																	
106																	
107																	
108																	
109																	
110																	
111																	
112																	
113																	
114																	
115																	
116																	
117																	
118																	
119																	
120																	
121																	
122																	
123																	
124																	
125																	
126																	
127																	
128																	
129																	
130																	
131																	
132																	
133																	
134																	
135																	
136																	
137																	
138																	
139																	
140																	
141																	
142																	
143																	
144																	
145																	
146																	
147																	
148																	
149																	
150																	
151																	
152																	
153																	
154																	
155																	
156																	
157																	
158																	
159																	
160																	
161																	
162																	

TYPICAL BAR BENDS

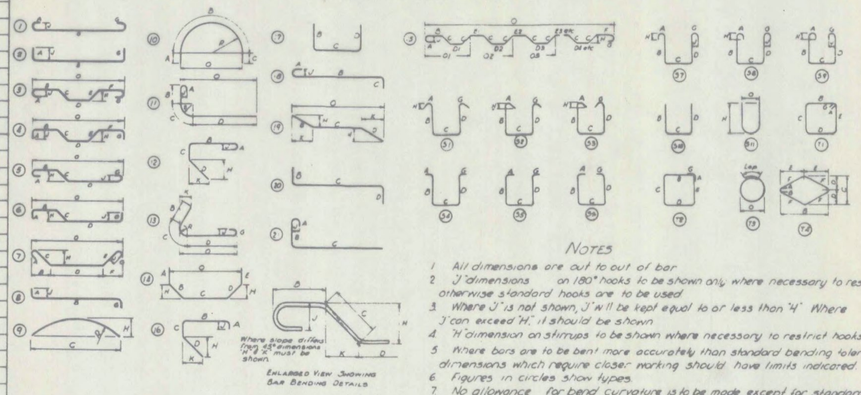

ENLARGED VIEW SHOWING BAR BENDING DETAILS

NOTES

1. All dimensions are out to out of bar.
2. 'J' dimensions on 180° hooks to be shown only where necessary to restrict hook size, otherwise standard hooks are to be used.
3. Where 'J' is not shown, 'J' will be kept equal to or less than 'H'. Where 'J' can exceed 'H', it should be shown.
4. 'H' dimension on stirrups to be shown where necessary to restrict hooks.
5. Where bars are to be bent more accurately than standard bending tolerances, bending dimensions which require closer working should have limits indicated.
6. Figures in circles show types.
7. No allowance for bend curvature is to be made except for standard hook & radii in excess of same.

Item	No. Pieces	Size	Length	Mark	Type	A	B	C	D	E	F	G	H	J	K	R	O
163				ABUTMENT NO. 1													
164	17	8	3-4	1A801	STR.												
165																	
166																	
167				ABUTMENT NO. 2													
168	16	6	6-0	2A602	STR.	(BEND IN FIELD)											
169	7	6	7-6	2A601	STR.												
170	12	8	3-4	2A801	STR.												
171																	
172																	
173				SUPERSTRUCTURE													
174																	
175	35	4	27-6	5401	STR.												
176	55	5	17-3	5501	STR.												
177	60	5	18-0	5502	STR.												
178	4	6	27-6	5601	STR.												
179	8	11	4-0	S1104	STR.												
180																	
181	35	4	5-5	5403	S1	0-5	2-0	1-0	1-7			0-5					
182	105	4	5-10	5402	S1	0-5	2-0	1-0	2-0			0-5					
183	12	11	29-10	S1101	1	1-2	27-6					1-2		0-10			
184	8	11	31-1	S1102	3	1-2	1-3	2-1½	22-0	2-1½	1-3	1-2	1-6	0-10			27-6
185	4	11	31-1	S1103	3	1-2	2-3	2-1½	20-0	2-1½	2-3	1-2	1-6	0-10			27-6
186																	
187																	
188																	
189																	
190																	

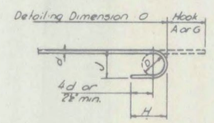

STANDARD HOOK DETAIL

BAR SIZES

Equivalent Size	Present (Numbers)
¼" ø	#2
⅜" ø	#3
½" ø	#4
⅝" ø	#5
¾" ø	#6
⅞" ø	#7
1" ø	#8
1 ⅛" ø	#9
1 ¼" ø	#10
1 ⅜" ø	#11

8. Bar reinforcement metal shall conform to the requirements of the Standard Specifications for new Billet-Steel Concrete Reinforcement Bars (Intermediate Grade) Serial Designation A.A.S.H.O. M31-49 or its latest revision. All bars shall be deformed to conform with A.S.T.M. Specifications A305-49.

-NOTE-

MINIMUM BENDS TO BE AS FOLLOWS: STIRRUPS AND TIE BARS SHALL BE BENT AROUND A PIN HAVING A DIAMETER NOT LESS THAN TWO TIMES THE MINIMUM THICKNESS OF THE BAR. BENDS FOR OTHER BARS SHALL BE MADE AROUND A PIN HAVING A DIAMETER NOT LESS THAN SIX TIMES THE MINIMUM THICKNESS EXCEPT FOR BARS LARGER THAN 1 INCH, IN WHICH CASE THE BENDS SHALL BE MADE AROUND A PIN OF EIGHT BAR DIAMETERS.

JAY-BHF 0278(3)
SHEET 70 OF 72
FOR REFERENCE ONLY

ESTIMATED QUANTITIES

Location	Pounds
ABUTMENT NO. 1	152
ABUTMENT NO. 2	330
SUPERSTRUCTURE	7514
TOTAL	7996

JAY

JAY-TROY HIGHWAY

JAY PEAK BRIDGE

STATE MAINTENANCE-1222-494

REINFORCING STEEL DETAILS

DRAWN BY- RTS.
CHECKED BY- RND

SHEET 5 OF 12

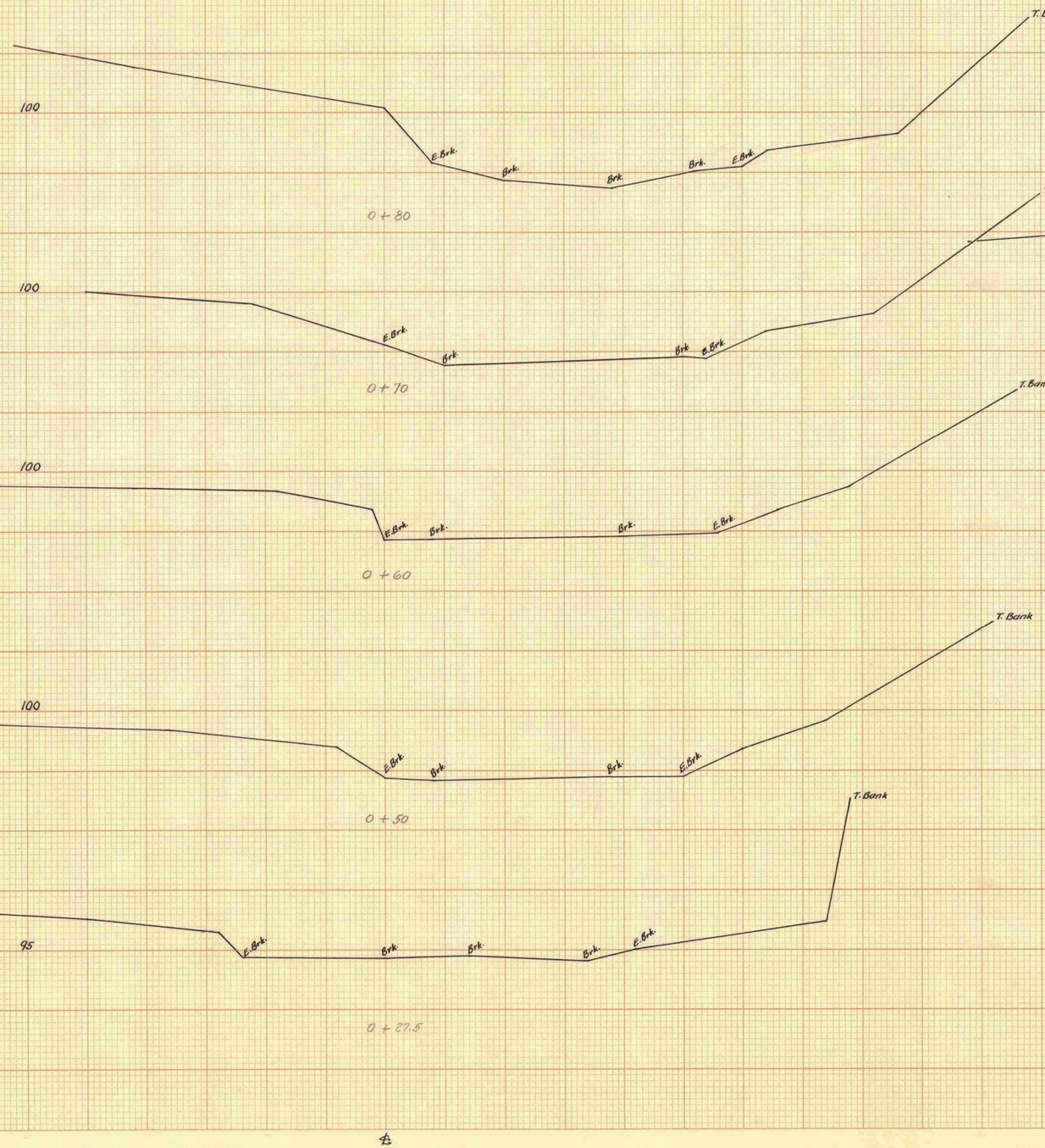

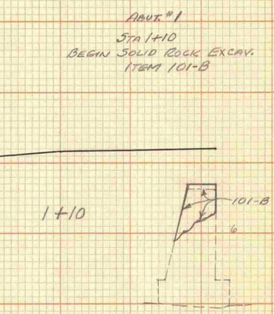

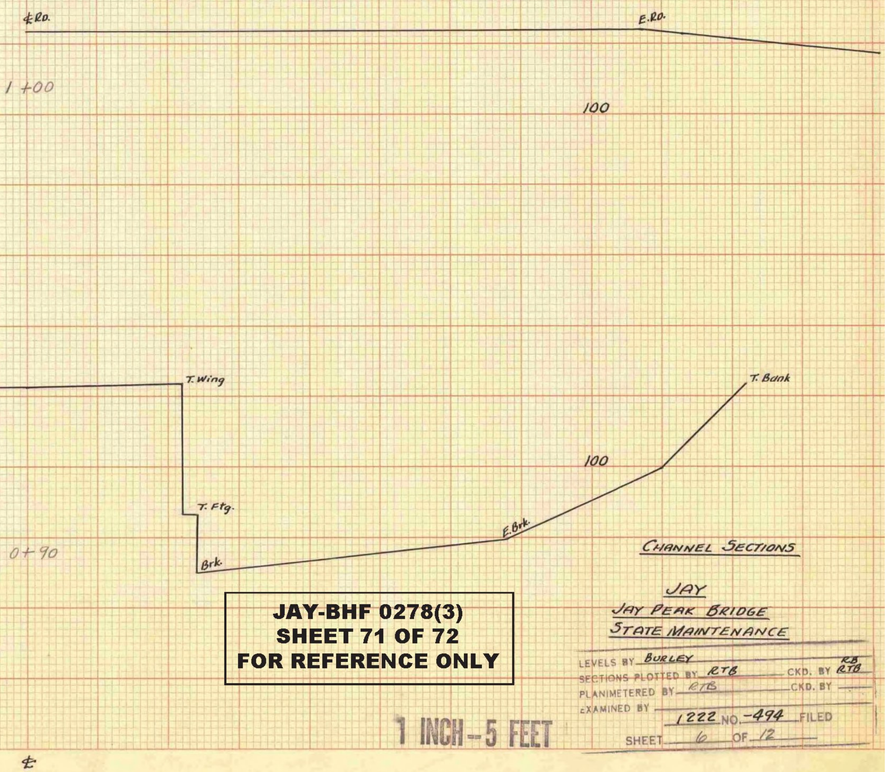

JAY-BHF 0278(3)
SHEET 71 OF 72
FOR REFERENCE ONLY

1 INCH = 5 FEET

CHANNEL SECTIONS

JAY
JAY PEAK BRIDGE
STATE MAINTENANCE

LEVELS BY BURLEY
SECTIONS PLOTTED BY RTB CKD. BY RTB
PLANIMETERED BY RTB CKD. BY
EXAMINED BY
1222 NO. -494 FILED
SHEET 10 OF 12

"PERFECT" CROSS SECTION
10 x 10 = ONE INCH
EUGENE DIETZGEN CO.
PRINTED IN U.S.A.
ON 100% RAG PAPER MADE IN U.S.A.
"PERFECT" CROSS SECTION
10 x 10 = ONE INCH
EUGENE DIETZGEN CO.
PRINTED IN U.S.A.
ON 100% RAG PAPER MADE IN U.S.A.

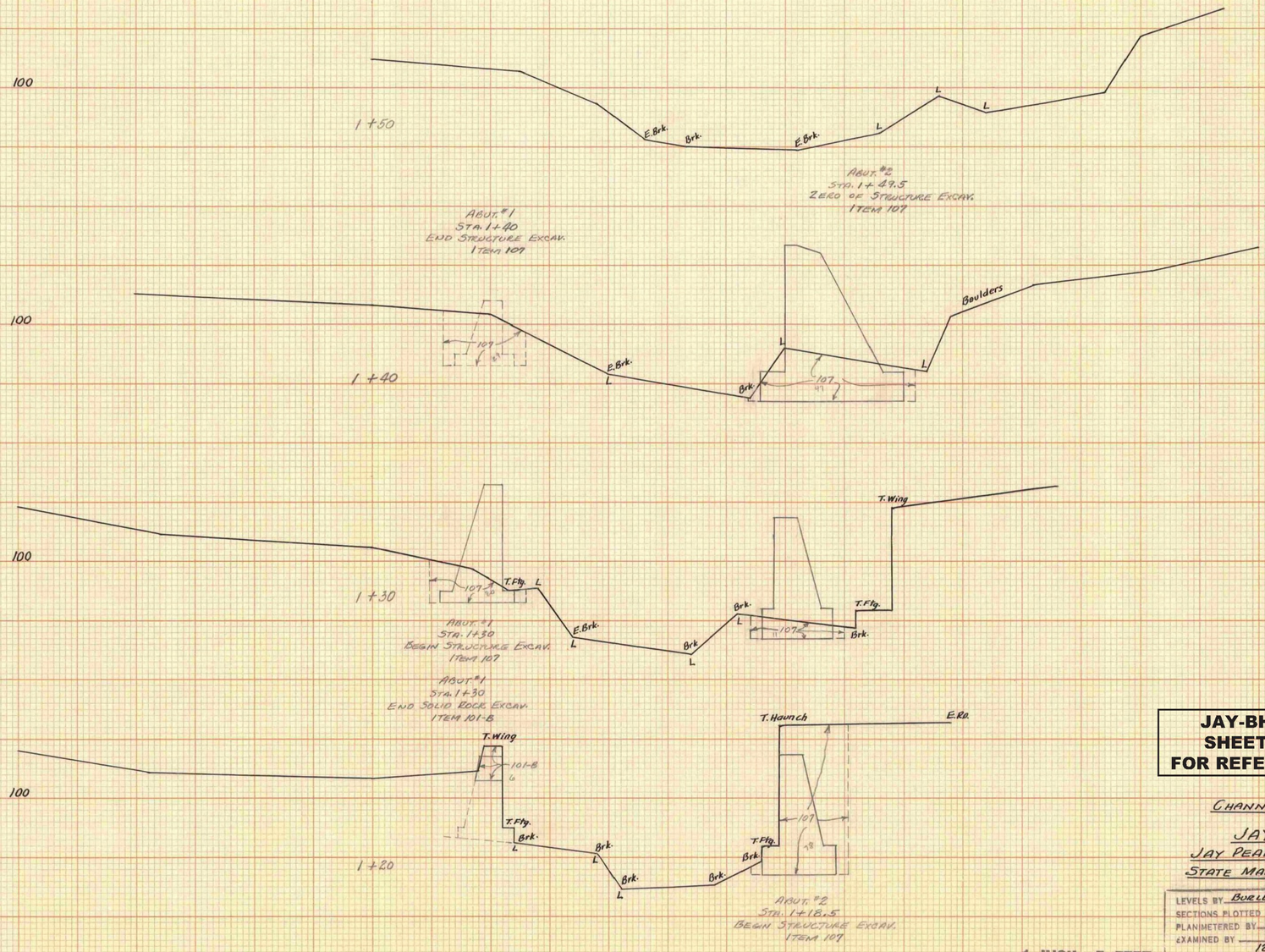

JAY-BHF 0278(3)
SHEET 72 OF 72
FOR REFERENCE ONLY

CHANNEL SECTIONS

JAY
JAY PEAK BRIDGE
STATE MAINTENANCE

LEVELS BY BURLEY
SECTIONS PLOTTED BY RTB CKD. BY RTB
PLANIMETERED BY RTB CKD. BY
EXAMINED BY
1222 NO. 494 FILED
SHEET 7 OF 12

1 INCH = 5 FEET

"PERFECT" CROSS SECTION 10 X 10 = ONE INCH EUGENE DIETZGEN CO.
PRINTED IN U.S.A. ON 100% RAG PAPER MADE IN U.S.A.
"PERFECT" CROSS SECTION 10 X 10 = ONE INCH EUGENE DIETZGEN CO.
PRINTED IN U.S.A. ON 100% RAG PAPER MADE IN U.S.A.

WCD No.5, CO No.5 - Revisions and changes to Bridge #10. Changes included additional manholes, guardrail, location of Bridge, safety barrier, additional insulation, modifications to bridge piers and other associated items.

Associated Drawings include: C-29, C-29.1, and SK-1 attached to these RECORD DRAWINGS.

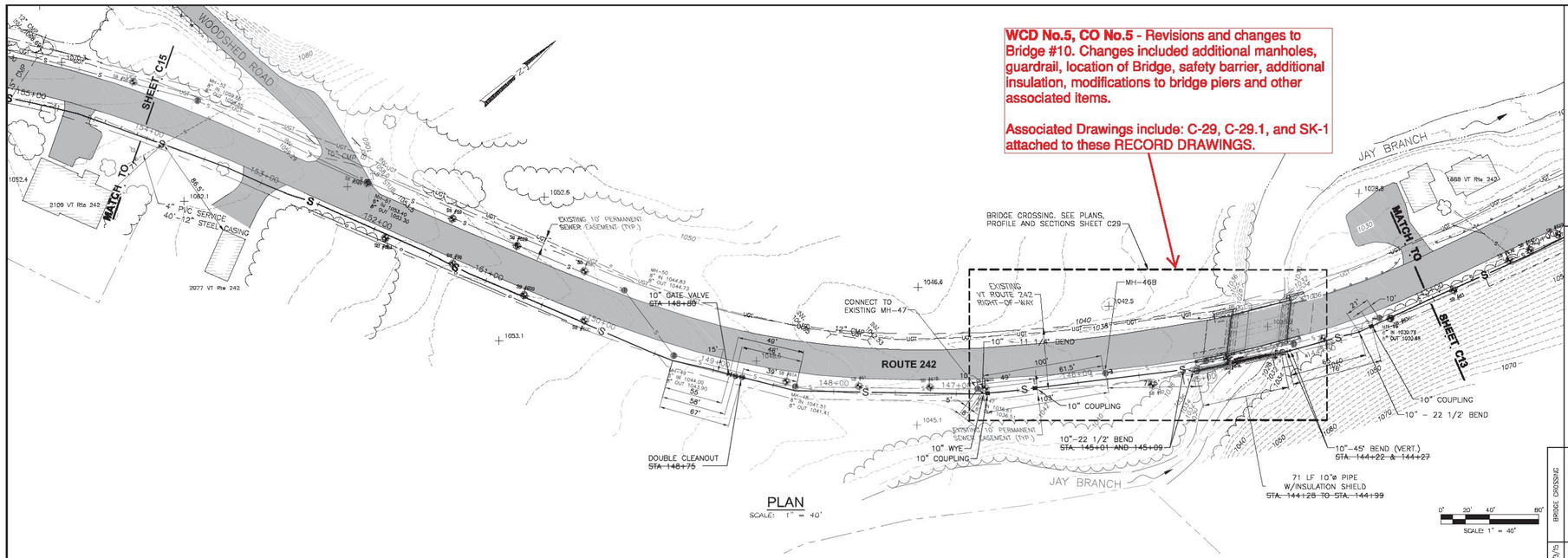

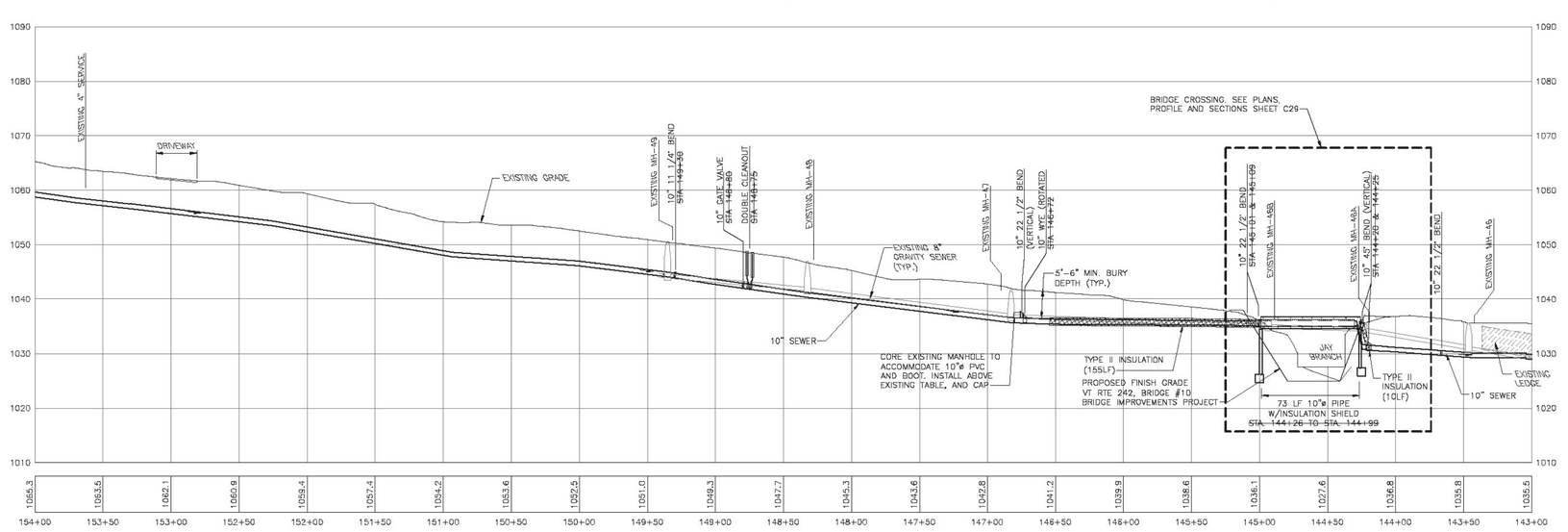

PROFILE
HORIZONTAL SCALE: 1" = 40'
VERTICAL SCALE: 1" = 10'

RECORD DRAWING
RECORD DRAWINGS PREPARED FROM CONTRACTOR PROVIDED INFORMATION

HORIZ. 0' 20' 40' 60'
VERT. 0' 10' 20'
SCALE: HORIZ – 1" = 40'
VERT – 1" = 10'

REVISIONS		
1	9.27.16	ADDED REFERENCE SHEET

TOWNS OF TROY AND AND JAY VERMONT

WASTEWATER COLLECTION SYSTEM (CONTRACT #4)

PLAN AND PROFILE
STA 143+00 TO 154+00

Rev.	Date	Description	Drawn By DPB	Designed By	Checked By KIT	Approved By GAL
2	1/3/15	BRIDGE CROSSING				
1	1/20/14	Removed Air Release MH-A & D				
D	3/14/13	FOR BID				
C	7/3/13	FOR REVIEW				
B	2/8/13	FOR APPROVAL				
A	8/1/12	80% PERMIT REVIEW SET				

THIS DOCUMENT IS THE PROPERTY OF T&H TROY, INC. AND IS NOT TO BE USED IN WHOLE OR IN PART FOR ANY PROJECT WITHOUT THE WRITTEN AUTHORIZATION OF T&H TROY, INC.

TATA & HOWARD

T&H NO.: 3452
DATE: 01-07-2014
SCALE: AS NOTED

C14

JAY SEWER PLANS
SHEET 72A
FOR REFERENCE ONLY

I:\Projects_Files\Vermont\Projects\Troy 3452 (01 and 02)\CAD\Civil\Working\C4_C11-13.dwg 12/23/2015 1:39 PM GRAHAM

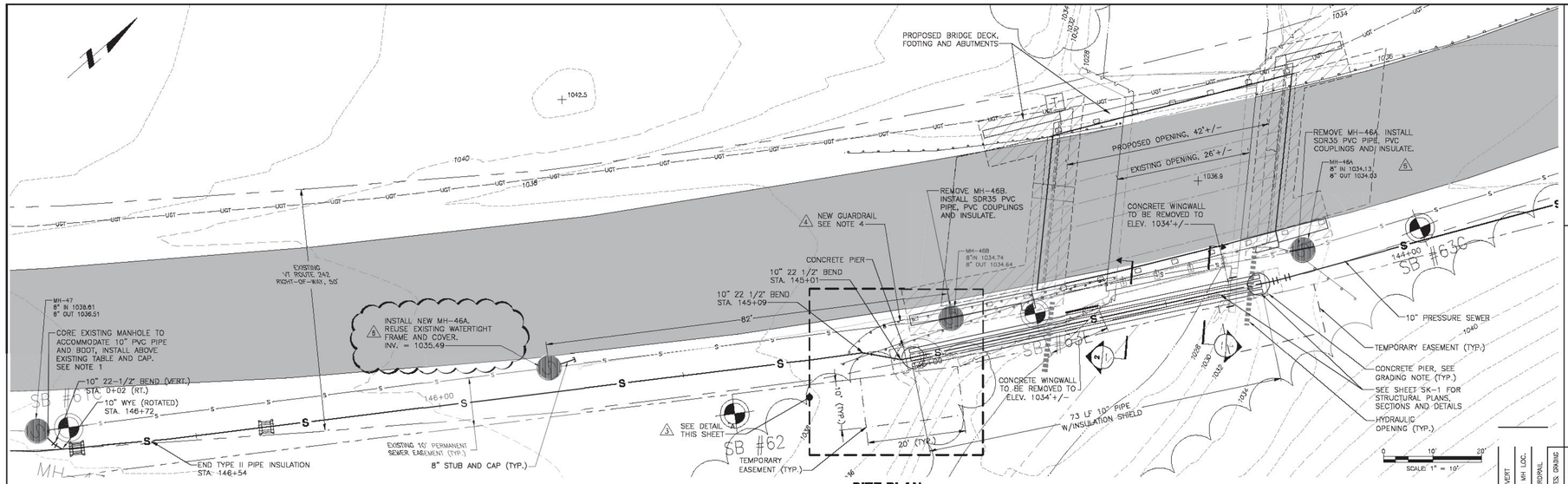

SITE PLAN

GRADING NOTE

PROTECT ALL DISTURBED AREAS WITH 1'-0" OF 6" CRUSHED STONE ON FILTER FABRIC.

NOTES

1. BOOT SHALL BE PSX: DIRECT DRIVE BY PRESS-SEAL GASKET CORP., FORT WAYNE, INDIANA, OR APPROVED EQUAL.
2. TYPE II INSULATION TO BE PROTECTED WITH ALUMINUM ROLL CLADDING WITH A 3 MIL POLYSURLYN MOISTURE BARRIER. CLADDING SHALL BE 0.020 INCH MINIMUM THICKNESS WITH A STUCCO EMBOSSED FINISH. PROVIDE ALUMINUM BANDS @ 5' ON CENTER. CLADDING SHALL BE ASTM C1729, TYPE I, BY ITW INSULATION SYSTEMS OR APPROVED EQUAL. (3)
3. INSTALL INSULATION PROTECTION SHIELDS AT EACH CROSS MEMBER. SHIM TO PROVIDE SLOPE REQUIRED AND WELD TO CROSS MEMBER. TOUCH UP PAINT AFTER WELDING. INSULATION PROTECTION SHIELD SHALL BE FIG 170 NO. 20 TYPE B BY PHD MANUFACTURING OR APPROVED EQUAL.
4. PROVIDE NEW GUARDRAIL IN ACCORDANCE WITH VTRANS STANDARD SPECIFICATIONS LATEST EDITION, AND VTRANS STANDARDS G-1 AND G-1D (4)
5. MH-46, SHEET C14. CORE DRILL MH-46 AND PROVIDE AN 8" STUB AND CAP, INVERT=1030.76. MODIFY CHANNEL AND TABLE AS REQUIRED. (5)

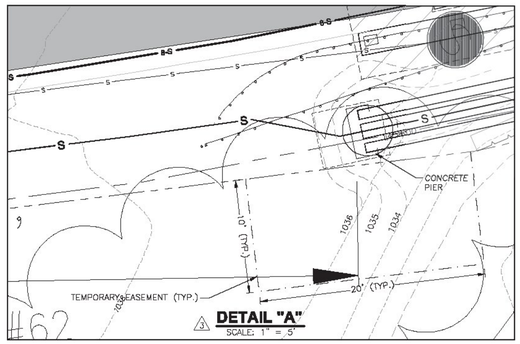

DETAIL "A"
SCALE: 1" = 5'

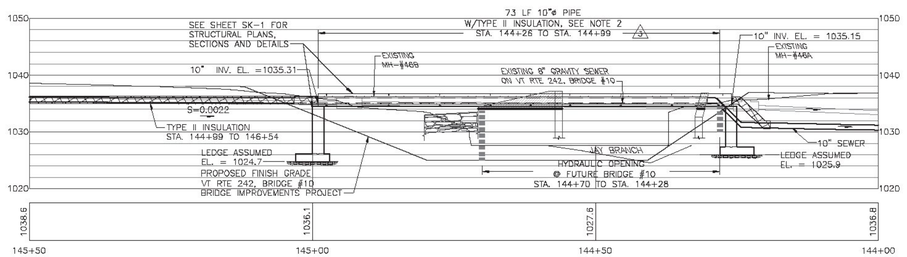

PROFILE
SCALE: 1" = 10'

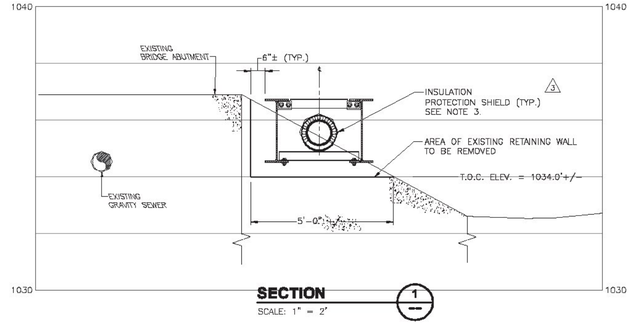

SECTION 1
SCALE: 1" = 2'

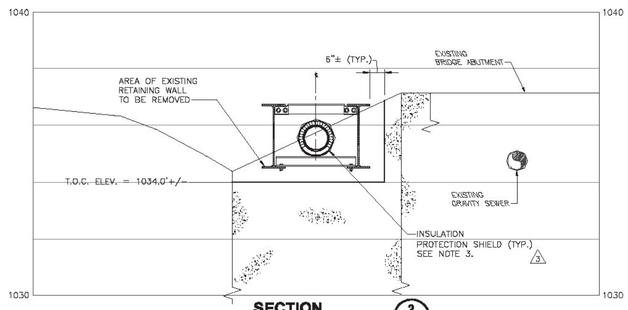

SECTION 2
SCALE: 1" = 2'

RECORD DRAWING

RECORD DRAWINGS PREPARED FROM CONTRACTOR PROVIDED INFORMATION

No.	Date	Description
6	5/17/16	MH-46A INVERT
5	4/3/15	GRAVITY SEWER MH LOC.
4	1/21/15	REVISED GUARDRAIL
3	3/20/14	PIPE INSULATION NOTES, GRADING
2	11/26/14	PIPE SUPPORT AND MANHOLES
D	8/16/14	FOR BID
C	7/3/13	FOR REVIEW
B	2/8/13	FOR APPROVAL
A	5/17/12	80% PERMIT REVIEW SET

TOWNS OF TROY AND AND JAY VERMONT

WASTEWATER COLLECTION SYSTEM (CONTRACT #4)

Drawn By: CGM | Designed By: | Checked By: KIT | Approved By: GAL

REVISED BRIDGE PLANS, PROFILE AND SECTIONS

THIS DOCUMENT IS THE PROPERTY OF TATA & HOWARD, INC. AND IS NOT TO BE USED IN WHOLE OR IN PART FOR ANY PROJECT WITHOUT THE EXPRESS WRITTEN CONSENT OF TATA & HOWARD, INC.

TATA & HOWARD

T&H NO.: 3452
DATE: 01-07-2014
SCALE: AS NOTED

C29

REVISIONS		
1	9.27.16	ADDED REFERENCE SHEET

JAY SEWER PLANS
SHEET 72B
FOR REFERENCE ONLY

H:\Projects_Files\Vermont\Projects\13888 (SRF JET and FSR)\CAD\Civil\13888SRF_C3_ESPS.dwg, 1/8/2016 10:01 AM, ESHELLE

PROVIDE 7/8" DIA. x 1-1/2" SLOTTED HOLES IN BOTTOM FLANGE FOR ANCHOR BOLTS, SEE CONCRETE SUPPORT PARTIAL PLAN FOR LOCATIONS. (WEST END ONLY)

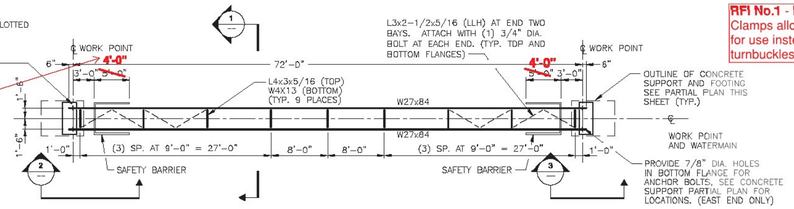

L3x2-1/2x5/16 (LLH) AT END TWO BAYS. ATTACH WITH (1) 3/4" DIA. BOLT AT EACH END. (TYP. TOP AND BOTTOM FLANGES)

℄ WORK POINT

4'-0"

3'-0"

6"

OUTLINE OF CONCRETE SUPPORT AND FOOTING SEE PARTIAL PLAN THIS SHEET (TYP.)

℄

WORK POINT AND WATERMAIN

PROVIDE 7/8" DIA. HOLES IN BOTTOM FLANGE FOR ANCHOR BOLTS, SEE CONCRETE SUPPORT PARTIAL PLAN FOR LOCATIONS. (EAST END ONLY)

STRUCTURAL STEEL FRAMING PLAN

SCALE: 1/8" = 1'-0"

RFI No.1 - Pipe Clamps allowed for use instead of turnbuckles.

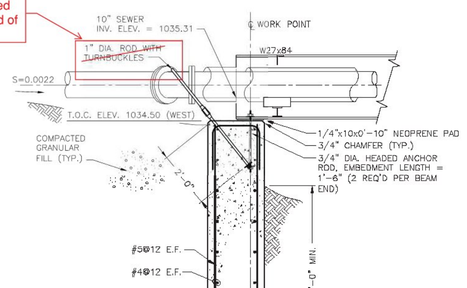

SECTION 2

SCALE: 1/2" = 1'-0"

GENERAL NOTES

1. IT SHALL BE THE RESPONSIBILITY OF THE CONTRACTOR TO DETERMINE THE ERECTION PROCEDURE AND SEQUENCE AND PROVIDE ADEQUATE TEMPORARY SUPPORTS AND BRACING NECESSARY TO INSURE THE SAFETY OF THE STRUCTURE DURING CONSTRUCTION.
2. THE CONTRACTOR SHALL VERIFY ALL DIMENSIONS AND CONDITIONS AT THE SITE AND REPORT ANY DISCREPANCIES TO THE PROJECT ENGINEER.
3. ALL SHOP DRAWINGS SHALL BE SUBMITTED TO THE ENGINEER FOR APPROVAL BEFORE FABRICATION. FABRICATION OF ANY ITEMS PRIOR TO FINAL REVIEW OF SHOP DRAWINGS WILL BE ENTIRELY AT THE RISK OF THE CONTRACTOR.
4. ALL DIMENSIONS AND ELEVATIONS NOTED ON STRUCTURAL DRAWINGS ARE TO BE COORDINATED BY THE CONTRACTOR WITH THE CIVIL DRAWINGS. ANY DISCREPANCIES SHALL BE BROUGHT TO THE ATTENTION OF THE CIVIL ENGINEER BEFORE PROCEEDING.
5. SCALE INDICATED ON DRAWINGS IS FOR CONVENIENCE ONLY. IT IS NOT INTENDED THAT INFORMATION BE DETERMINED BY SCALING THE DRAWING SINCE SOME ITEMS MAY NOT BE TO THE SCALE SHOWN AS THE RESULT OF REVISIONS.

CONCRETE NOTES

1. CONCRETE SHALL HAVE A MINIMUM 28 DAY COMPRESSIVE STRENGTH OF 4,500 PSI. EXTERIOR CONCRETE SHALL BE AIR ENTRAINED FOR EXPOSURE CLASS F2 PER ACI 318.
2. CONCRETE MIX SHALL BE IN ACCORDANCE WITH ACI CRITERIA. THE CONTRACTOR SHALL SUBMIT A MIX DESIGN BASED ON TRIAL BATCH OR FIELD EXPERIENCE METHODS OR PROVIDE MAXIMUM WATER CEMENT RATIOS AS FOLLOWS:
   a. EXTERIOR CONCRETE W/C = .35
   b. INTERIOR CONCRETE W/C = .44
3. NO CONCRETE SHALL BE PLACED ON FROZEN GROUND.
4. DURING COLD WEATHER, CONCRETING PROCEDURES SHALL CONFORM TO ACI 306, COLD WEATHER CONCRETE PRACTICES. MAINTAIN CONCRETE CONTINUOUSLY MOIST WITH TEMPERATURE ABOVE 50 DEGREES F FOR 7 DAYS AFTER PLACEMENT.
5. DURING HOT WEATHER, CONCRETING PROCEDURES SHALL CONFORM TO ACI 305, HOT WEATHER CONCRETE PRACTICES.
6. ALL REINFORCEMENT SHALL CONFORM TO ASTM A615, GRADE 60.
7. REINFORCEMENT SHALL HAVE THE FOLLOWING MINIMUM CONCRETE COVER UNLESS OTHERWISE NOTED:
   a. CONCRETE DEPOSITED ON THE GROUND 3"
   b. CONCRETE EXPOSED TO THE GROUND OR WEATHER 2"
   c. CONCRETE NOT EXPOSED TO THE GROUND OR WEATHER 1"
8. ALL REINFORCEMENT SHALL BE DETAILED, FABRICATED AND PLACED IN ACCORDANCE WITH THE "ACI MANUAL OF STANDARD PRACTICE" (ACI-315).
9. ALL LAP SPLICES SHALL BE CONSIDERED CLASS B TENSION LAP SPLICES UNLESS OTHERWISE NOTED.
10. ANCHOR RODS SHALL CONFORM TO ASTM F1554, GRADE 36.

STEEL NOTES

1. ALL STRUCTURAL STEEL SHALL BE DETAILED, FABRICATED AND ERECTED IN ACCORDANCE WITH THE LATEST EDITION OF THE AISC "SPECIFICATION FOR THE DESIGN, FABRICATION AND ERECTION OF STRUCTURAL STEEL FOR BUILDINGS".
2. HOT ROLLED STEEL BEAMS SHALL CONFORM TO ASTM A709, GRADE 50. ANGLES AND PLATES SHALL CONFORM TO ASTM A709, GRADE 36.
3. SHOP CONNECTIONS SHALL BE BOLTED OR WELDED. BOLTS SHALL BE 3/4" DIAMETER. WELDING SHALL CONFORM TO THE AMERICAN WELDING SOCIETY'S "BRIDGE WELDING CODE", AWS D1.5, LATEST EDITION.
4. FIELD CONNECTIONS SHALL BE BOLTED USING A325 HIGH STRENGTH BOLTS. BOLTS SHALL BE TIGHTENED IN ACCORDANCE WITH AISC'S SPECIFICATION FOR "STRUCTURAL JOINTS USING HIGH STRENGTH BOLTS". AS AN ALTERNATIVE, DIRECT TENSION INDICATOR WASHERS IN ACCORDANCE WITH ASTM F959 MAY BE USED. FIELD WELDING WILL NOT BE PERMITTED UNLESS SPECIFICALLY INDICATED ON THE DRAWINGS.
5. WELDS SHALL BE MADE WITH E7018 ELECTRODES.

PAINTING NOTES

1. SUBMITTALS:
   a. MANUFACTURER'S WRITTEN VERIFICATION THAT SUBMITTED MATERIAL IS SUITABLE FOR THE INTENDED USE.
   b. MANUFACTURER'S WRITTEN INSTRUCTIONS AND SPECIAL DETAILS FOR APPLYING EACH TYPE OF PAINT.
2. CLEANING:
   a. NEAR-WHITE BLAST CLEANING (SP-10): REMOVAL OF VISIBLE OIL, GREASE, DUST, DIRT, MILL SCALE, RUST, COATINGS, OXIDES, CORROSION PRODUCTS, AND OTHER FOREIGN MATTER, EXCEPT FOR RANDOM STAINING LIMITED TO NO MORE THAN 5 PERCENT OF EACH UNIT AREA OF SURFACE WHICH MAY CONSIST OF LIGHT SHADOWS, SLIGHT STREAKS, OR MINOR DISCOLORATIONS CAUSED BY STAINS OF RUST, STAINS OF MILL SCALE, OR STAINS OF PREVIOUSLY APPLIED COATINGS. PRIMER MUST BE APPLIED WITHIN 8 HOURS OF BLAST CLEANING
3. FILM THICKNESS AND COVERAGE:
   a. NUMBER OF COATS: MINIMUM REQUIRED WITHOUT REGARD TO COATING THICKNESS. ADDITIONAL COATS MAY BE REQUIRED TO OBTAIN MINIMUM REQUIRED PAINT THICKNESS, DEPENDING ON METHOD OF APPLICATION, DIFFERENCES IN MANUFACTURERS' PRODUCTS, AND ATMOSPHERIC CONDITIONS.
   b. APPLICATION THICKNESS: DO NOT EXCEED COATING MANUFACTURER'S RECOMMENDATIONS. MEASURE USING A WET FILM THICKNESS GAUGE TO ENSURE PROPER COATING THICKNESS DURING APPLICATION.
   c. VISUALLY INSPECT SURFACES TO ENSURE PROPER AND COMPLETE COVERAGE HAS BEEN ATTAINED.
4. MATERIALS AND COVERAGE:
   a. ALL PAINTS SHALL BE IN CONFORMANCE WITH THE STATE OF VERMONT'S APPROVED PRODUCT LIST.

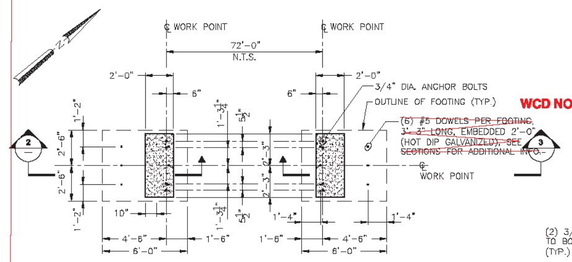

CONCRETE SUPPORT PARTIAL PLAN

SCALE: 1/4" = 1'-0"

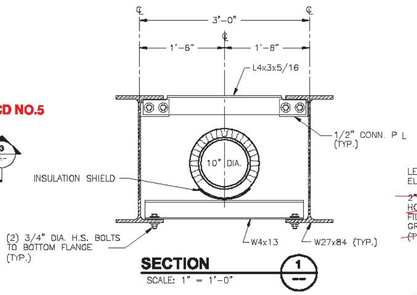

SECTION 1

SCALE: 1" = 1'-0"

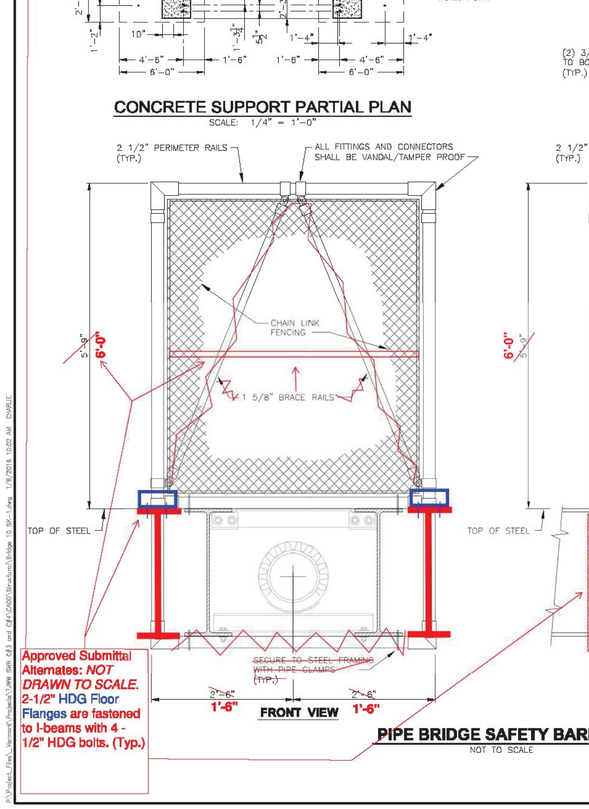

Approved Submittal Alternates: *NOT DRAWN TO SCALE.* 2-1/2" HDG Floor Flanges are fastened to I-beams with 4 - 1/2" HDG bolts. (Typ.)

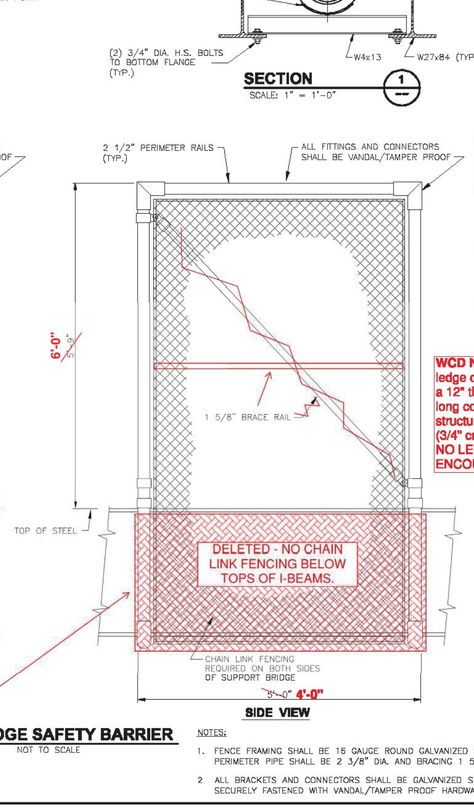

PIPE BRIDGE SAFETY BARRIER

NOT TO SCALE

NOTES:

1. FENCE FRAMING SHALL BE 16 GAUGE ROUND GALVANIZED STEEL PIPE. PERIMETER PIPE SHALL BE 2 3/8" DIA. AND BRACING 1 5/8" DIA.
2. ALL BRACKETS AND CONNECTORS SHALL BE GALVANIZED STEEL AND SECURELY FASTENED WITH VANDAL/TAMPER PROOF HARDWARE.

WCD No.5 - Eliminate ledge dowels and install a 12" thick, 7'W X 8" long compacted structural fill base mat (3/4" crushed stone). NO LEDGE WAS ENCOUNTERED.

RFI No.1 - Pipe Clamps allowed for use instead of turnbuckles.

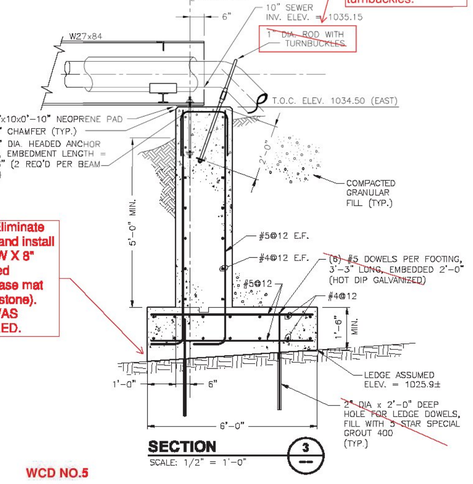

SECTION 3

SCALE: 1/2" = 1'-0"

WCD NO.5

LEDGE DOWEL NOTES

1. CLEAN HOLES WITH COMPRESSED AIR BEFORE INSTALLING BARS.
2. FILL HOLES WITH WATER AND LEAVE WATER STANDING FOR A MINIMUM OF 8 HOURS PRIOR TO GROUT PLACEMENT.
3. IF WATER SEEPS FROM A HOLE, SEAL THE HOLE WITH GROUT PASTE AND RETEST.
4. REMOVE STANDING WATER IMMEDIATELY PRIOR TO REINFORCEMENT INSTALLATION AND GROUTING.
5. SET REINFORCING STEEL WITH CENTERING POSITIONERS TO ALLOW GROUT PLACEMENT SURROUNDING BAR.
6. MIX AND PLACE GROUT TO A FLUID CONSISTENCY PER MANUFACTURERS SPECIFICATIONS.

REVISIONS		
1	9.27.16	ADDED REFERENCE SHEET

JAY SEWER PLANS
SHEET 72C
FOR REFERENCE ONLY

TOWNS OF TROY AND JAY VERMONT

BRIDGE #10 CROSSING

STRUCTURAL
PRELIMINARY PLANS
PIPE CROSSING DETAILS

THIS DOCUMENT IS THE PROPERTY OF TATA & HOWARD, INC. AND IS NOT TO BE USED IN WHOLE OR IN PART FOR ANY PURPOSE WITHOUT THE EXPRESS WRITTEN CONSENT OF TATA & HOWARD, INC.

No.	Date	Description
3	1/7/15	REVISED NOTES
2	1/5/15	ADDED LEDGE DOWELS & NOTES
1	12/16/14	REVISED ELEV. AND DIM'S

Drawn By: DPB | Designed By: MC | Checked By: MC | Approved By: KIT

TATA & HOWARD

T&H NO.: 3452
DATE: 12/10/14
SCALE: AS NOTED

SK-1

P:\Projects\Files_Vermont\Projects\13466 BMP 483 and 484\CAD\Worksheets\Bridge 10 SK-1.dwg 1/8/2015 10:02 AM DWREE

CONCRETE GENERAL NOTES

1. ALL EXPOSED EDGES OF CONCRETE SHALL BE CHAMFERED 1" x 1"
2. REINFORCING STEEL SIZE AND SPACING SHOWN IN THE PLANS IS BASED ON 60 KSI STEEL, UNLESS NOTED OTHERWISE. WITH THE ENGINEER'S PERMISSION, BAR SIZE AND SPACING MAY BE MODIFIED ACCORDING TO THE LATEST AASHTO LRFD BRIDGE DESIGN SPECIFICATION AND STRUCTURES DESIGN MANUAL WHEN USING HIGHER STRENGTH STEEL.

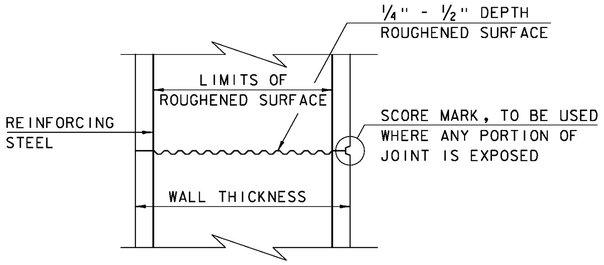

TYPICAL HORIZONTAL CONSTRUCTION JOINT
(NOT TO SCALE)

1. THE SURFACE OF THE CONCRETE CONSTRUCTION JOINTS SHALL BE CLEANED AND FREE OF LAITANCE.
2. IMMEDIATELY BEFORE NEW CONCRETE IS PLACED, ALL CONSTRUCTION JOINTS SHALL BE WETTED AND STANDING WATER REMOVED.

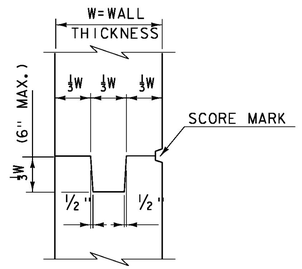

TYPICAL CONCRETE CONSTRUCTION JOINT
(NOT TO SCALE)

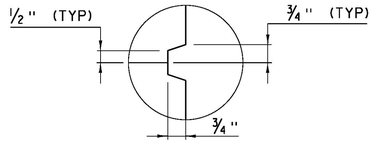

SCORE MARK DETAIL
(NOT TO SCALE)

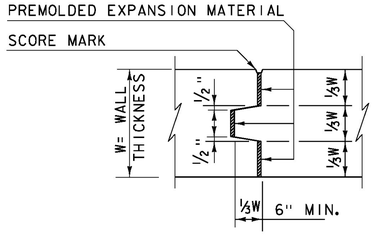

TYPICAL CONCRETE EXPANSION JOINT
(NOT TO SCALE)

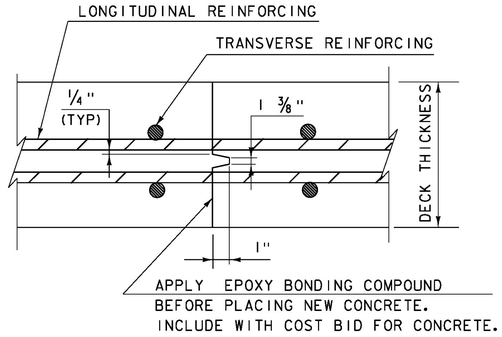

TRANSVERSE BRIDGE SLAB CONSTRUCTION JOINT DETAILS
(NOT TO SCALE)

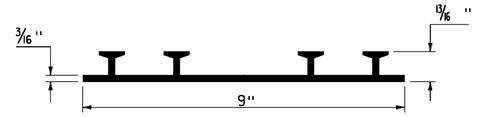

P.V.C. WATERSTOP FOR CONSTRUCTION JOINTS
(NOT TO SCALE)

PAYMENT FOR THE P.V.C. WATERSTOP SHALL BE INCIDENTAL TO THE UNIT BID PRICE FOR THE ADJACENT CONCRETE.

OTHER CONFIGURATIONS OF WATERSTOP MAY BE USED UPON APPROVAL OF THE ENGINEER.

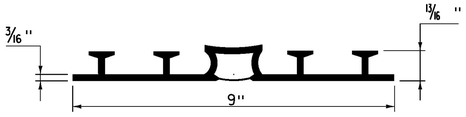

P.V.C. WATERSTOP FOR EXPANSION JOINTS
(NOT TO SCALE)

PAYMENT FOR THE P.V.C. WATERSTOP SHALL BE INCIDENTAL TO THE UNIT BID PRICE FOR THE ADJACENT CONCRETE.

OTHER CONFIGURATIONS OF WATERSTOP MAY BE USED UPON APPROVAL OF THE ENGINEER.

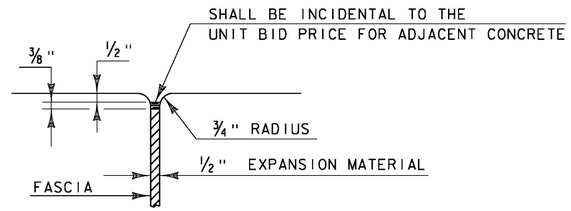

JOINT BETWEEN FASCIA AND WINGWALL
(NOT TO SCALE)

REVISIONS	
MAY 7, 2010	APPROVED FOR USE BY VAOT STRUCTURES SECTION
FEBRUARY 9, 2012	REBAR SUBSTITUTION ALLOWANCE ADDED TO CONCRETE GENERAL NOTES.

CONCRETE DETAILS AND NOTES

VERMONT AGENCY OF TRANSPORTATION
STRUCTURES SECTION

STRUCTURES DETAIL
SD-501.00

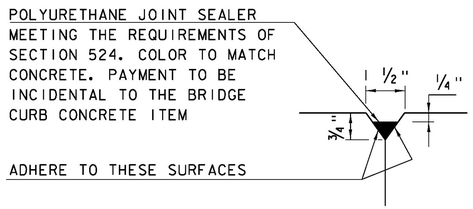

DETAIL "B"
(NOT TO SCALE)

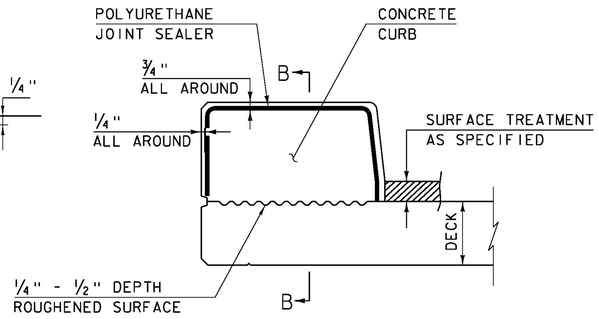

CONCRETE CURB JOINT SECTION
(NOT TO SCALE)

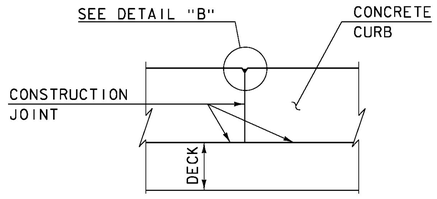

SECTION B - B
(NOT TO SCALE)

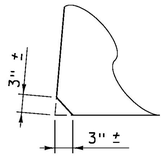

ACUTE ANGLE CLIP DETAIL
(NOT TO SCALE)

1. SEE TYPICAL HORIZONTAL CONSTRUCTION JOINT DETAIL FOR ADDITIONAL INFORMATION

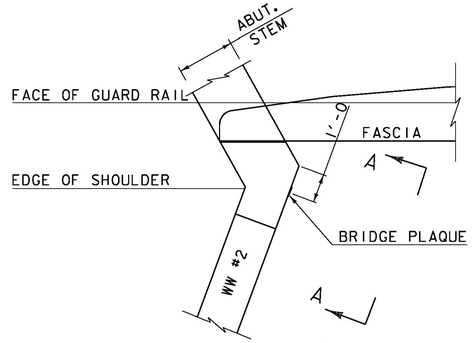

PLAN

CONCRETE CURB JOINT NOTES

1. CONCRETE CURBS MAY BE PLACED IN ONE CONTINUOUS OPERATION IF AN APPROVED SHRINKAGE REDUCING ADMIXTURE LISTED IN THE SPECIAL PROVISIONS IS USED WITH THE CONCRETE MIX DESIGN. PAYMENT FOR THE SHRINKAGE REDUCING ADMIXTURE WILL BE INCIDENTAL TO THE BRIDGE CURB CONCRETE ITEM.

2. IF THE CONTRACTOR CHOOSES NOT TO USE AN APPROVED SHRINKAGE REDUCING ADMIXTURE, THE CURBS SHALL BE CONSTRUCTED WITH CONSTRUCTION JOINTS SPACED AT A MAXIMUM OF 15'-0" CENTER TO CENTER AND 2'-0" MINIMUM FROM THE CENTER OF NEAREST BRIDGE RAILING POST.

3. ON MULTI-SPAN CONTINUOUS SUPERSTRUCTURES, REGARDLESS OF WHETHER APPROVED SHRINKAGE REDUCING ADMIXTURE IS USED, CURB JOINTS SHALL BE LOCATED OVER THE CENTERLINE OF PIERS AND 7'-0" EACH SIDE OF THE CENTERLINE OF EACH PIER.

4. WHEN CURB JOINTS ARE USED THE CURBS SHALL BE PLACED IN ALTERNATE SECTIONS WITH A MINIMUM OF 48 HOUR DELAY BETWEEN ADJACENT PLACEMENTS.

5. LONGITUDINAL REINFORCING SHALL BE CONTINUOUS THROUGH CURB CONSTRUCTION JOINTS. CURB STIRRUP BARS SHALL BE TURNED AS NECESSARY TO MAINTAIN COVER IN THE FLARED CURB ENDS.

6. THE JOINT SPACING AND DETAILS SHOWN SHALL APPLY TO SIDEWALKS WHEN SHOWN IN THE PLANS.

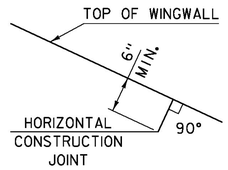

HORIZONTAL WINGWALL CONSTRUCTION JOINT
(NOT TO SCALE)

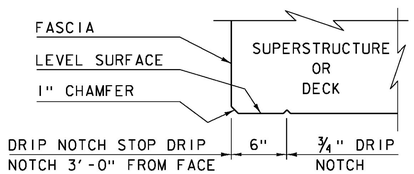

DRIP NOTCH DETAIL
(NOT TO SCALE)

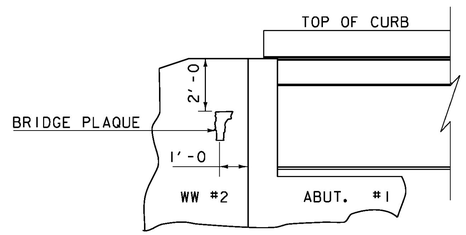

VIEW "A - A"

BRIDGE PLAQUE
(NOT TO SCALE)

THE BRIDGE PLAQUE WILL BE SUPPLIED BY THE AGENCY OF TRANSPORTATION AND SHALL BE INSTALLED BY THE CONTRACTOR AT ABUTMENT #1 ON THE RIGHT SIDE AS SHOWN OR AS DIRECTED BY THE ENGINEER.

PAYMENT FOR INSTALLATION OF THE BRIDGE PLAQUE SHALL BE INCIDENTAL TO THE ADJACENT CONCRETE.

REVISIONS	
MAY 7, 2010	APPROVED FOR USE BY VAOT STRUCTURES SECTION
JUNE 4, 2010	MODIFIED AND ADDED TWO DETAILS
OCTOBER 10, 2012	MODIFIED HORZ. JOINT WINGWALL ADD 6" MIN. DIMENSION

CONCRETE DETAILS AND NOTES

VERMONT AGENCY OF TRANSPORTATION
STRUCTURES - SECTION

STRUCTURES DETAIL
SD-502.00

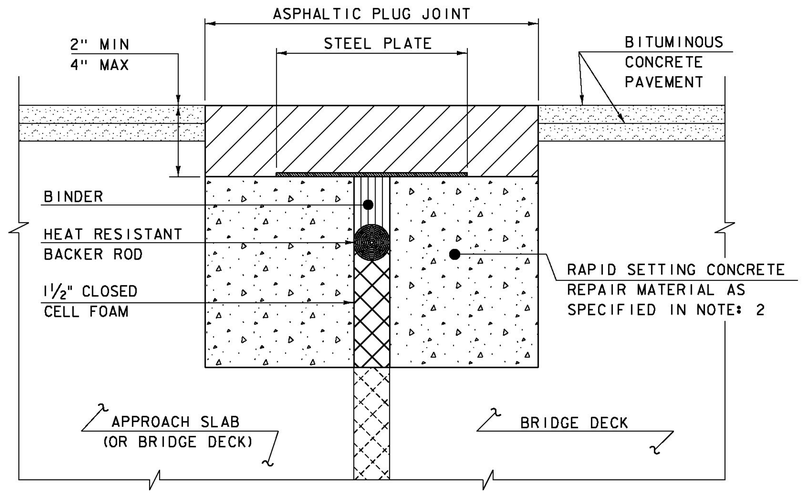

ASPHALTIC PLUG JOINT DETAIL - REHAB

NOTES:

1. THE CONTRACTOR SHALL REMOVE ALL ASPHALTIC PLUG JOINT MATERIAL AND DETERIORATED CONCRETE AS DIRECTED BY THE ENGINEER. REMOVAL OF THE FIRST 4 INCHES OF MATERIAL SHALL BE INCLUDED IN THE BID PRICE FOR ITEM 516.10 BRIDGE EXPANSION JOINT, ASPHALTIC PLUG. ANY REMOVAL OF MATERIAL GREATER THAN 4 INCHES SHALL BE INCLUDED IN THE BID PRICE OF ITEM 580.20 RAPID SETTING CONCRETE REPAIR MATERIAL WITH COARSE AGGREGATE.

2. THE CONTRACTOR SHALL REPLACE REMOVED MATERIAL THAT IS LESS THAN 4" FROM FINISHED GRADE WITH ASPHALTIC PLUG JOINT MATERIAL MEETING THE REQUIREMENTS OF SUBSECTION 707.15. ALL REMOVED MATERIAL THAT IS GREATER THAN 4 INCHES FROM FINISHED GRADE SHALL BE REPLACED WITH RAPID SETTING CONCRETE REPAIR MATERIAL WITH COARSE AGGREGATE MEETING THE REQUIREMENTS OF SUBSECTION 780.04.

3. REINFORCING STEEL NOT SHOWN FOR CLARITY.

4. PLACE 1/4" THICK BY 8" WIDE SECTIONS OF STEEL PLATE OVER THE CENTER OF THE MOVEMENT GAP. SECURE THE PLATES FROM MOVING BY INSERTING LOCATING PINS THROUGH THE PRE-STAMPED HOLES INTO BACKER ROD AND COVER WITH HOT BINDER. THE STEEL PLATES MAY BE OMITTED WHERE THE ENGINEER DETERMINES THAT THE APPROACH SLAB OR BRIDGE DECK WILL PROVIDE INADEQUATE SUPPORT AND WHERE VERTICAL MOVEMENT OF THE PLATES MIGHT OCCUR.

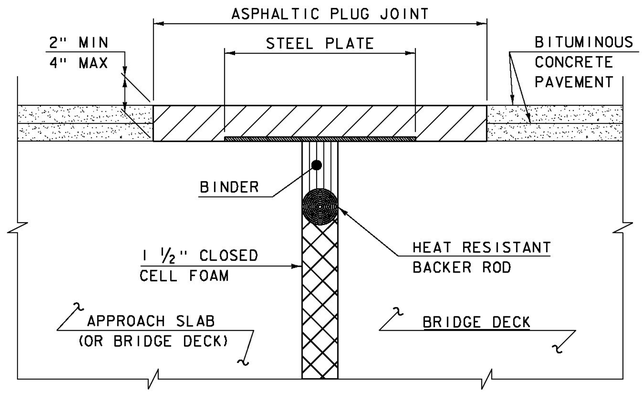

ASPHALTIC PLUG JOINT DETAIL "A" - NEW

NOTE:
PLACE 1/4" THICK BY 8" WIDE SECTIONS OF STEEL PLATE OVER THE CENTER OF THE MOVEMENT GAP. SECURE THE PLATES FROM MOVING BY INSERTING LOCATING PINS THROUGH THE PRE-STAMPED HOLES INTO BACKER ROD AND COVER WITH HOT BINDER.

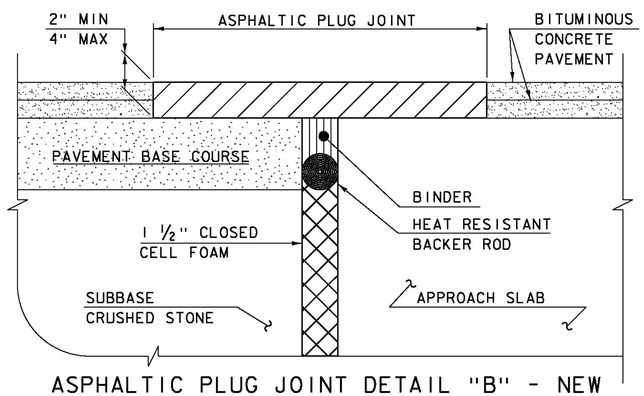

ASPHALTIC PLUG JOINT DETAIL "B" - NEW

ASPHALTIC PLUG JOINT NOTES

INSTALLATION:

1. LOCATE THE JOINT CENTRALLY OVER THE DECK OVERLAY EXPANSION GAP OR FIXED JOINT, MARKED OUT TO THE MANUFACTURER'S RECOMMENDED WIDTH.
2. REMOVE THE BITUMINOUS CONCRETE PAVEMENT FULL DEPTH AS SHOWN ON THE PLANS. THE PAVEMENT SHALL BE DRY AND SAW CUT TO THE LIMITS REQUIRED TO PLACE THE JOINT. A PNEUMATIC HAMMER AND CHISEL MAY BE USED ADJACENT TO THE CURB ONLY WHEN SAW CUTTING IS NOT POSSIBLE.
3. BLAST CLEAN THE JOINT AREA OF DEBRIS, ASPHALT AND SHEET MEMBRANE. THOROUGHLY DRY THE JOINT AREA WITH COMPRESSED AIR PRIOR TO APPLYING BINDER MATERIAL.
4. PLACE PROPERLY SIZED HEAT RESISTANT BACKER ROD IN THE MOVEMENT GAP ALLOWING FOR 1" +/- OF BINDER ABOVE THE ROD.
5. HEAT AND PLACE THE BINDER MATERIAL AS RECOMMENDED BY THE MANUFACTURER.
6. IMMEDIATELY AFTER TOP COATING, CAST AN ANTI-SKID MATERIAL OVER THE JOINT TO REDUCE THE RISK OF TRACKING.

WEATHER LIMITATIONS

APPLY BINDER MATERIAL ONLY WHEN THE FOLLOWING CONDITIONS PREVAIL OR AS RECOMMENDED BY THE MANUFACTURER:

1. THE AMBIENT AIR TEMPERATURE IS AT LEAST 10 DEG C (50 DEG F) AND RISING.
2. THE ROAD SURFACE IS DRY.
3. WEATHER CONDITIONS OR OTHER CONDITIONS ARE FAVORABLE AND ARE EXPECTED TO REMAIN SO FOR THE PERFORMANCE OF SATISFACTORY WORK.

DETAILS ON THIS SHEET ARE NOT TO SCALE.

REVISIONS	
MAY 7, 2010	APPROVED FOR USE BY VAOT STRUCTURES SECTION
AUGUST 29, 2011	ADD DETAIL "B" AND REV. NOTES

BRIDGE JOINT
ASPHALTIC PLUG

VERMONT AGENCY OF TRANSPORTATION
STRUCTURES - DIVISION

STRUCTURES DETAIL
SD-516.10

STRUCTURAL STEEL GENERAL NOTES:

1. ALL FIELD CONNECTIONS SHALL BE MADE WITH 7/8" DIAMETER HIGH-STRENGTH BOLTS IN 15/16" DIAMETER HOLES, PER SUBSECTION 506.19, UNLESS OTHERWISE SPECIFIED.
2. ALL HOLES IN THE WEBS OF THE FASCIA GIRDERS THAT ARE NOT OTHERWISE FILLED, SHALL BE FILLED WITH EITHER BUTTON HEAD OR HEX HEAD BOLTS. THESE BOLTS SHALL BE TIGHTENED IN ACCORDANCE WITH SUBSECTION 506.19.
3. ALL WELDING SHALL CONFORM TO THE PROVISIONS OF SUBSECTION 506.10.
4. ANY CONNECTIONS THAT ARE NOT DETAILED ON THE PLANS SHALL BE DETAILED BY THE FABRICATOR AND SUBMITTED TO THE STRUCTURES ENGINEER FOR APPROVAL.
5. STRUCTURAL STEEL MEMBERS DESIGNATED "CVN" IN THE PLANS SHALL BE CHARPY V-NOTCH TESTED IN ACCORDANCE WITH SUBSECTION 714.01 OF THE STANDARD SPECIFICATIONS.
6. ENDS OF GIRDERS ARE TO BE VERTICAL IN THEIR FINAL POSITION.
7. AFTER SUPERSTRUCTURE STEEL HAS BEEN ERECTED, ELEVATIONS ALONG THE TOP OF THE GIRDERS SHALL BE TAKEN AS DIRECTED BY THE RESIDENT ENGINEER FOR USE IN DETERMINING FINISHED GRADES.

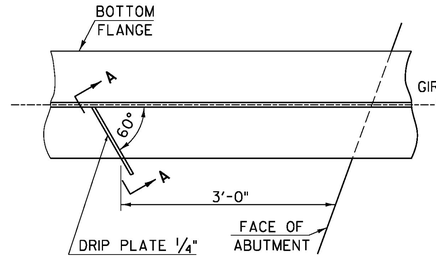

PLAN DRIP PLATE

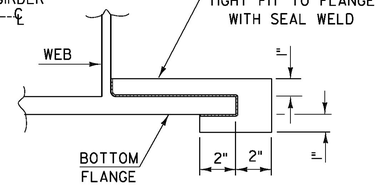

SECTION A - A

NOTE: DRIP PLATES SHALL BE PLACED ON OUTSIDE EDGE OF FASCIA GIRDERS ON THE HIGH SIDE OF ALL PIERS AND ABUTMENTS OR AS INDICATED ON PROJECT PLANS.

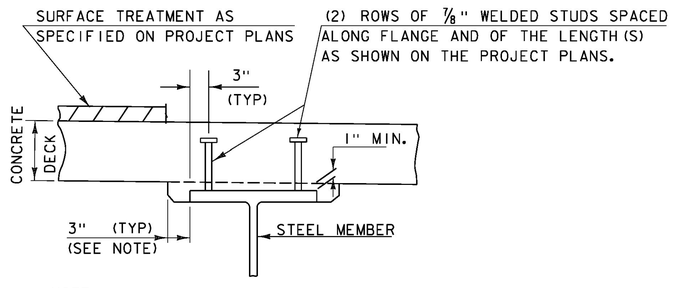

NOTE:
THE 3" HORIZONTAL SECTION MAY BE ELIMINATED FOR FORMING SYSTEMS DESIGNED FOR THE CONSTRUCTION OF VERTICAL HAUNCHES. ANY VOIDS RESULTING FROM FORMING SYSTEM ELEMENTS SHALL BE FILLED WITH JOINT SEALER, POLYURETHANE MEETING THE REQUIREMENTS OF SECTION 524. THE COST OF THE JOINT SEALER, POLYURETHANE SHALL BE INCIDENTAL TO THE ADJACENT CONCRETE.

HAUNCH AND SHEAR CONNECTOR DETAIL

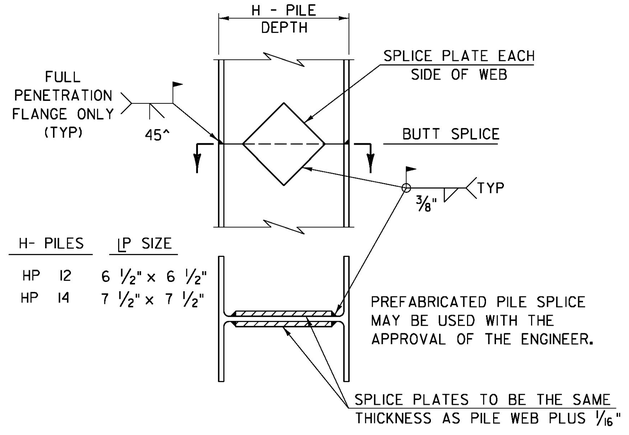

DETAIL OF PILE SPLICE

DETAILS ON THIS SHEET ARE "NOT TO SCALE" UNLESS NOTED OTHERWISE.

REVISIONS	
MAY 7, 2010	APPROVED FOR USE BY VAOT STRUCTURES SECTION
JUNE 4, 2010	MODIFIED NOTES

STRUCTURAL STEEL DETAILS & NOTES

VERMONT AGENCY OF TRANSPORTATION
STRUCTURES - SECTION

STRUCTURES DETAIL
SD-601.00

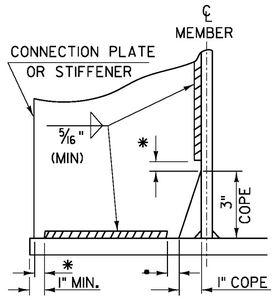

WELD TERMINATION AND COPING DETAILS FOR STEEL MEMBERS

*NO WELD FOR 3/8" MIN. 7/8" MAX. (EXCEPT MUST MAINTAIN 1" MINIMUM FROM EDGE OF FLANGE)

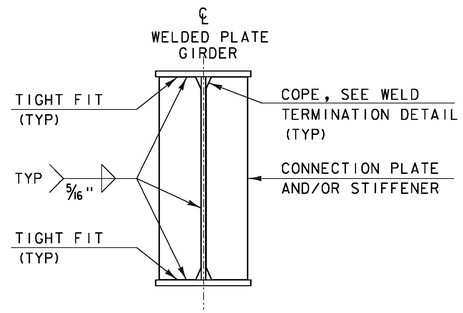

INTERMEDIATE CONNECTION PLATES AND/OR STIFFENERS FOR WELDED PLATE GIRDERS

INTERMEDIATE DETAIL IS ONLY USED WHEN PLATE DOES NOT OCCUR AT AN ABUTMENT OR PIER.

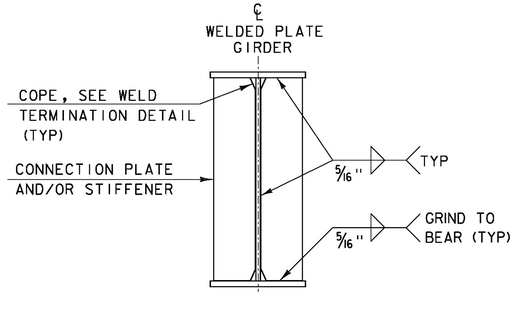

ABUTMENT BEARING STIFFENERS AND/OR CONNECTION PLATES FOR WELDED PLATE GIRDERS

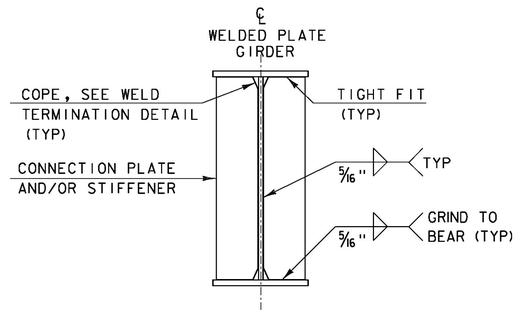

PIER BEARING STIFFENERS AND/OR CONNECTION PLATES FOR WELDED PLATE GIRDERS

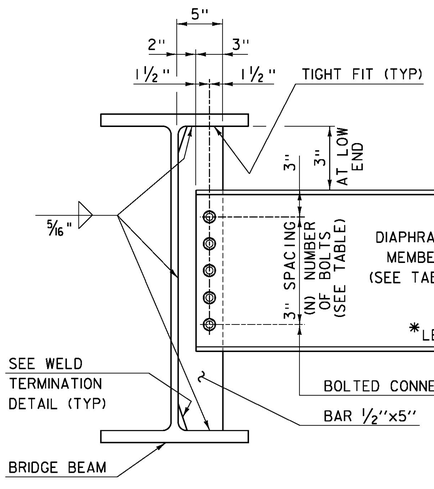

DEPTH		DIAPHRAGM MEMBER	(N) BOLTS
ROLLED BEAM	24" 30"	C15x33.9	4
	31" 36"	MC18x42.7	5
	37" 42"	W21x44	6
PLATE GIRDER WEB	31" 36"	W27x84	7
	37" 42"	W33x118	9
	43" 48"	W36x135	10

INTERMEDIATE DIAPHRAGMS FOR 24" TO 48" BRIDGE BEAMS

*IF CLEARANCE CANNOT BE MET, DIAPHRAGM MAY BE SLOPED.

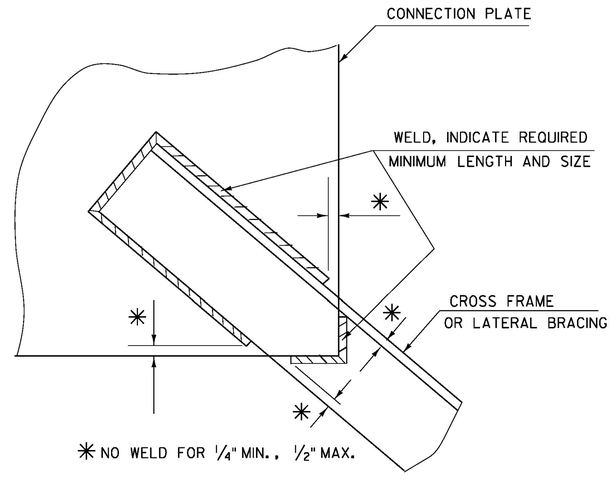

WELD LOCATION DETAIL AT CROSS FRAMES AND LATERAL BRACING

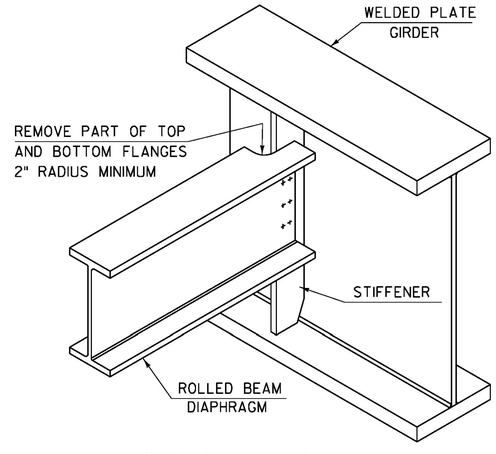

SEE CONTRACT DRAWINGS FOR SIZES OF MEMBERS AND CONNECTION DETAILS

ROLLED BEAM USED AS DIAPHRAGM

DETAILS ON THIS SHEET ARE "NOT TO SCALE" UNLESS NOTED OTHERWISE.

REVISIONS	
MAY 7, 2010	APPROVED FOR USE BY VAOT STRUCTURES SECTION
MAY 2, 2011	ADD INTERMEDIATE DIAPHRAGMS DETAIL & ADD NOT TO SCALE NOTE

STRUCTURAL STEEL PLATE GIRDER DETAILS AND NOTES

VERMONT AGENCY OF TRANSPORTATION
STRUCTURES - SECTION

STRUCTURES DETAIL
SD-602.00

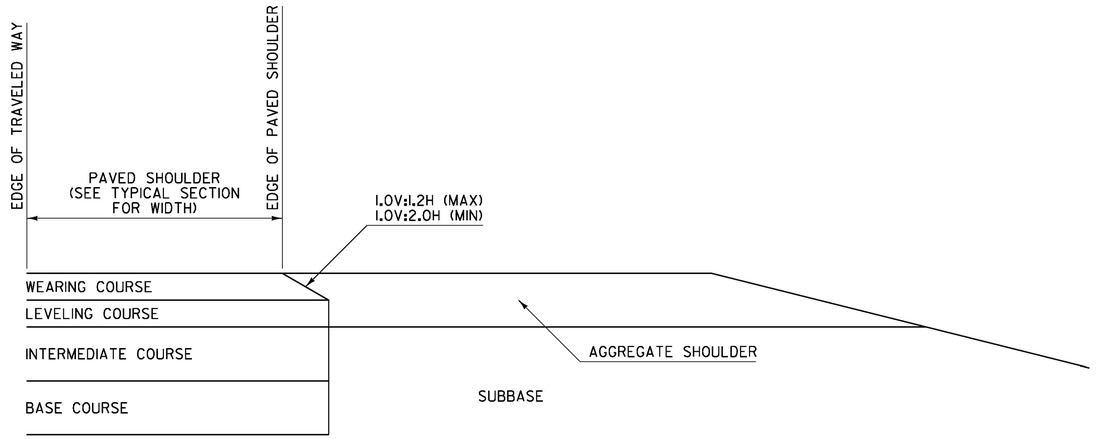

SAFETY EDGE DETAIL
FOR PAVING BELOW WEARING COURSE

NOTES:

1. THIS DETAIL IS INTENDED FOR WHEN PAVING EXTENDS BELOW THE WEARING COURSE.
2. PRIOR TO PLACEMENT OF THE LEVELING AND/OR WEARING COURSE, THE SUBBASE LOCATED BENEATH THE AGGREGATE SHOULDER SHALL BE PREPARED FLUSH WITH THE BOTTOM OF THE LEVELING COURSE.
3. BASE COURSE LIMITS MAY VARY, SEE TYPICAL SECTIONS FOR WIDTH.

SAFETY EDGE WIDTH BASED ON WEARING COURSE THICKNESS AND A 1V:1.6H SLOPE	
WEARING COURSE THICKNESS (INCHES)	NOMINAL SAFETY EDGE WIDTH (INCHES)
1.25	2.000
1.50	2.375
1.75	2.750
2.00	3.125
2.25	3.500
2.50	4.000

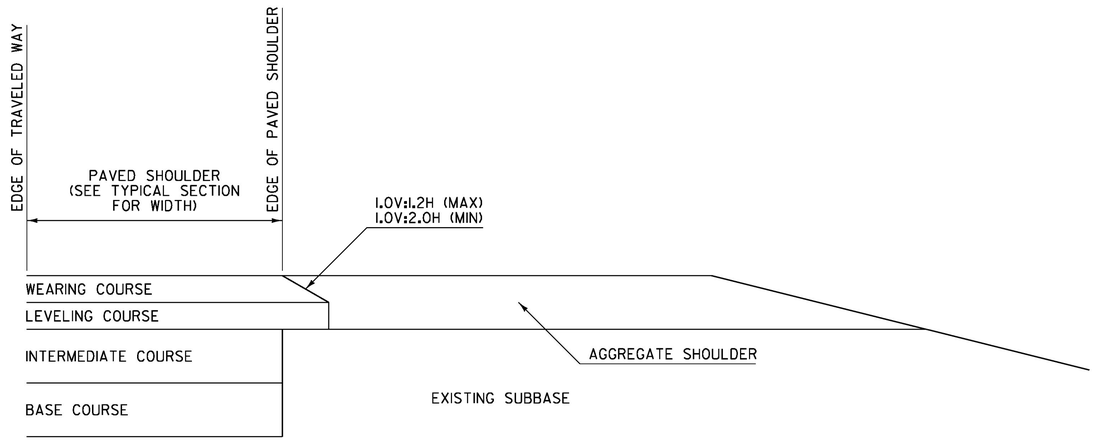

SAFETY EDGE DETAIL
FOR PAVING WEARING COURSE ONLY

NOTES:

1. THIS DETAIL IS INTENDED FOR WHEN ONLY THE LEVELING AND/OR WEARING COURSE IS TO BE PLACED.
2. PAVEMENT COURSES MAY VARY, SEE TYPICAL SECTIONS FOR ACTUAL PAVEMENT COURSES REQUIRED.

GENERAL NOTES:

1. PLACEMENT OF THE WEARING COURSE SHALL INCLUDE THE SAFETY EDGE, UNLESS THE FOLLOWING APPLIES:
   - A. THE ADJACENT SLOPE IS STEEPER THAN THE SAFETY EDGE.
   - B. THE EDGE OF PAVEMENT BEING PLACED ABUTS BOUND MATERIAL.
   - C. VEHICLES ARE RESTRICTED FROM LEAVING THE PAVED SURFACE (EXAMPLE: GUARDRAIL).
2. THE SAFETY EDGE SHALL BE FORMED IN SUCH A WAY THAT THE BITUMINOUS CONCRETE PAVEMENT IS EXTRUDED OR COMPRESSED TO FORM THE SLOPE. DEVICES THAT SIMPLY STRIKE-OFF THE MIX WITHOUT PROVIDING ANY COMPACTIVE EFFORT WILL NOT BE ALLOWED.
3. THE SAFETY EDGE SHALL NOT BE CONSIDERED PART OF THE PAVED SHOULDER.
4. THIS WORK SHALL BE INCIDENTAL TO THE RESPECTIVE BITUMINOUS CONCRETE PAVEMENT ITEM.

REV.	DATE	DESCRIPTION
0	MAR. 29, 2016	ORIGINAL APPROVAL

OTHER DETAILS REQUIRED: NONE

DETAILS APPROVED FOR USE BY HIGHWAY SAFETY & DESIGN

SAFETY EDGE DETAILS

VTrans Working to Get You There — VERMONT AGENCY OF TRANSPORTATION

HIGHWAY SAFETY & DESIGN DETAIL

HSD-400.01

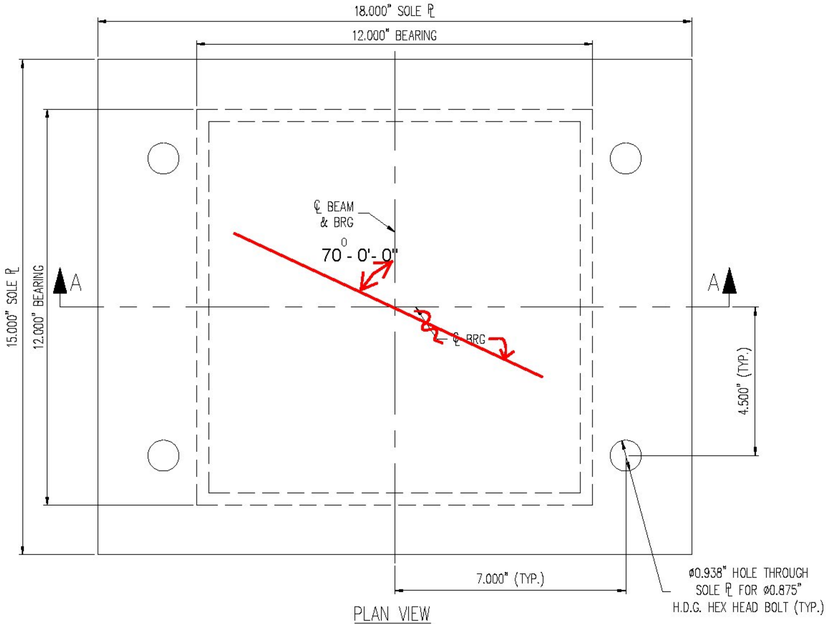

PLAN VIEW

ELASTOMERIC BEARING
(6) REQ'D @ ABUT. 1
(6) REQ'D @ ABUT. 2
(2) REQ'D SAMPLES W/O EXTERNAL STEEL

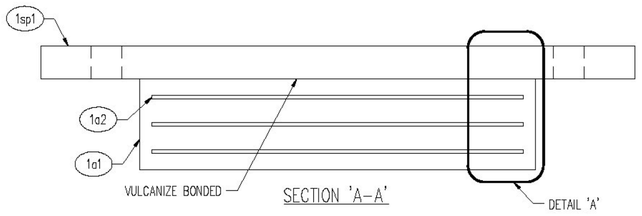

SECTION 'A-A'

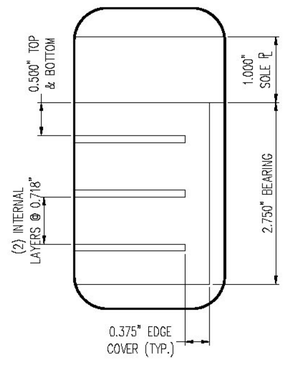

DETAIL 'A'

GENERAL NOTES:

1. MATERIALS SHALL CONFORM TO STATE OF VERMONT, AGENCY OF TRANSPORTATION STANDARD SPECIFICATIONS FOR CONSTRUCTION, DATED 2011 AND ITS THE LATEST REVISIONS, CONTRACT PLANS, AND THE SPECIAL PROVISIONS. GENERAL SHOP PRACTICES, STRUCTURAL FABRICATION, WELDING AND ASSEMBLY SHALL BE GOVERNED BY ANSI/AASHTO/AWS D1.5 BRIDGE WELDING CODE.

2. THIS SHOP DRAWING WAS PREPARED IN ACCORDANCE WITH THE CONTRACT PLANS AND SPECIFICATIONS. THE D.S. BROWN COMPANY DOES NOT ACCEPT LIABILITY FOR THE DESIGN OF THE PRODUCTS DETAILED IN THIS SHOP DRAWING.

3. THE D.S. BROWN COMPANY TO SUPPLY ONLY THE PARTS SHOWN ON THIS SHOP DRAWING.

4. THE BEARINGS SHALL BE SUBJECT TO RANDOM IN-HOUSE ELASTOMER TESTING AND IN-HOUSE PROOF LOAD TESTING IN ACCORDANCE WITH AASHTO LRFD BRIDGE DESIGN SPECIFICATIONS, SECTION 14 (METHOD 'A') AND AASHTO LRFD CONSTRUCTION SPECIFICATIONS SECTION 18.

5. IN ACCORDANCE WITH STANDARD SPECIFICATION, FABRICATOR MAY USE NATURAL RUBBER FOR THE ELASTOMER.

6. ALL STEEL SHALL BE PRODUCED IN THE UNITED STATES OF AMERICA.

7. ALL CORNERS AND EDGES OF STEEL PLATES SHALL BE GROUND TO A 1/16" RADIUS FOR GALVANIZING.

8. ALL EXTERNAL STEEL SHALL BE GALVANIZED IN ACCORDANCE WITH ASTM A123 SPECIFICATIONS. IN ACCORDANCE WITH SECTION 726.08 OF THE STANDARD SPECIFICATIONS, REPAIR DAMAGED GALVANIZING PER ASTM A780, ANNEX A2. THE PAINT USED IN THE REPAIR SHALL BE ORGANIC-ZINC, CONTAINING 92% MINIMUM ZINC BY WEIGHT IN THE DRY FILM. THE PAINT SHALL BE APPLIED PER MANUFACTURER'S RECOMMENDATIONS TO A THICKNESS EQUIVALENT TO THE SURROUNDING GALVANIZING.

9. GALVANIZATION LIFTING DEVICES MAY BE WELDED TO PARTS IF NECESSARY. WHEN THEIR USE IS COMPLETE, REMOVE AND GRIND FLUSH ALL CONNECTION LOCATIONS. REPAIR AREA PER ASTM A780, ANNEX A2.

10. HOLES FOR BOLTED CONNECTION MAY BE THERMALLY CUT.

11. BEARING MANUFACTURING FACILITY AND REPRESENTATIVE FOR COORDINATING PRODUCTION:
THE D.S. BROWN COMPANY
300 EAST CHERRY STREET
NORTH BALTIMORE, OHIO 45872
CSR - ERIC JOHNSON - (419) 257-3561

MARKING NOTES:

1. EACH BEARING SHALL BE PERMANENTLY MARKED. THE MARKING SHALL CONSIST OF THE ORDER NUMBER, LOT NUMBER, PAD IDENTIFICATION NUMBER, AND ELASTOMER TYPE AND GRADE. WHERE POSSIBLE, THE MARKING SHALL BE ON A FACE WHICH IS VISIBLE AFTER ERECTION OF THE STRUCTURE.

2. IF APPLICABLE, MARK THE THICKER EDGE OF THE BEVELED PLATE FOR IDENTIFICATION IN THE FIELD.

CONTRACTOR NOTES:

1. WELDING PROCEDURES SHALL BE ESTABLISHED BY THE CONTRACTOR TO RESTRICT THE TEMPERATURE TO A MAXIMUM OF 200°F (93°C) FOR SURFACES IN CONTACT WITH THE ELASTOMER. TEMPERATURES SHALL BE DETERMINED BY TEMPERATURE INDICATING WAX PENCILS OR OTHER SUITABLE MEANS.

TESTING NOTES:

1. THE BEARING SHALL BE SAMPLED AND TESTED IN ACCORDANCE WITH AASHTO M251, APPENDIX X1.

MK	QTY	DESCRIPTION	MATERIAL	LENGTH	REMARKS	WT*	REV
1A	12	ELASTOMERIC BEARING	51781.1104.1			104	
1a1	12	2.750" X 12.000"	NATURAL RUBBER	12.000"	130-175 PSI; GRADE 4	16	
1a2	36	12 GA. X 11.250"	A1011 GR 36	11.250"	PLAIN	4	
1sp1	12	1.000" X 18.000"	M270 GR 36 (A709)	15.000"	A123-HDG	77	
1B	51	HEX HEAD BOLT	51781.1104.1			< 1	
1hb1	51	Ø0.875" X 3.750" HEX HEAD BOLT	M164 (A325)		M232-HDG (A153); ROCAP	< 1	
1C	102	FLAT WASHER	51781.1104.1			< 1	
1fw1	102	Ø0.875" FLAT WASHER	M293 (F436)		M232-HDG (A153); ROCAP	< 1	
1D	51	HEAVY HEX NUT	51781.1104.1			< 1	
1hn1	51	Ø0.875" HEX NUT	M291-DH OR M292-2H (A563 OR A194) HEAVY HEX		M232-HDG (A153), DRY LUBE & DYE; ROCAP	< 1	
1F	2	ELASTOMERIC BEARING SAMPLES	51781.1103.1			27	
1a1	2	2.750" X 12.000"	NATURAL RUBBER	12.000"	130-175 PSI; GRADE 4	16	
1a2	6	12 GA. X 11.250"	A1011 GR 36	11.250"	PLAIN	4	
		*Approx. Gross Wt. Lbs Per Single Unit			2/9/17 8:20:15 AM		

TOLERANCE TABLE	
DESCRIPTION	TOLERANCE (INCHES U.N.O.)
ELASTOMERIC BEARING DESIGN THICKNESS ≤ 1.250"	-0, +0.1181
ELASTOMERIC BEARING DESIGN THICKNESS > 1.250"	-0, +0.2362
ELASTOMERIC BEARING PLAN DIMENSIONS ≤ 36"	-0, +0.2362
ELASTOMERIC BEARING PLAN DIMENSIONS > 36"	-0, +0.4724
THICKNESS OF INDIVIDUAL LAYERS OF ELASTOMER (LAMINATED BEARINGS ONLY) AT ANY POINT WITHIN THE BEARING	±0.1181
VARIATION FROM A PLANE PARALLEL TO THE THEORETICAL SURFACE (AS DETERMINED BY MEASUREMENTS AT THE EDGE OF THE BEARINGS) (PARALLELISM):	
TOP & BOTTOM	±0.005 RAD
SIDES	±0.2362
POSITION OF EXPOSED CONNECTION MEMBERS	±0.1181
ELASTOMERIC EDGE COVER	-0, +0.1181
ELASTOMERIC BEARING HOLE OR SLOT SIZE	±0.1181
ELASTOMERIC BEARING HOLE OR SLOT LOCATION	±0.1181
STEEL PLATE THICKNESS	±0.063
STEEL PLATE PLAN DIMENSIONS ≤ 30"	±0.250
STEEL PLATE PLAN DIMENSIONS > 30"	±0.250
STEEL PLATE FLATNESS IN CONTACT WITH BEARING	0.001 X NOM. DIMENSION
STEEL PLATE FLATNESS: GROUT OR CONCRETE SIDE	0.005 X NOM. DIMENSION
STEEL PLATE FLATNESS: STEEL GIRDER SIDE	0.002 X NOM. DIMENSION
STEEL PLATE FLATNESS: STEEL PLATE SIDE	0.001 X NOM. DIMENSION
STEEL PLATE SURFACE FINISH IN CONTACT WITH BEARING	125 μ" RMS
BEVEL SLOPE	±0.002 RAD
CONNECTION HOLE OR SLOT SIZE	-0, +0.03125
CONNECTION HOLE OR SLOT LOCATION	±0.03125
NOTE: SURFACE FINISH & FLATNESS TOLERANCES ARE PRIOR TO COATING.	

Vermont Agency of Transportation
RECEIVED
Stainless4c_Bearing_Assembly_Shop_Drawing_Review_2-11-17_.pdf
CK'D BY chenette OK'D BY WBP
February 13, 2017
RESUBMIT NO Approved AsNoted
BY WPELLETIER DATE 02/17/2017

APPROVED: Approval of drawings and/or procedures indicates concurrence with the information presented and does not relieve the Contractor or Fabricator of compliance with all specifications and code requirements		Stantec
APPROVED AS NOTED	X	
REVISE AND RESUBMIT		
NOT REVIEWED		
Date: 02/17/17		
By: Michael J. Chenette		

This review by Stantec Consulting Services Inc. is for the sole purpose of ascertaining conformance with the general design concept. This review shall not mean that Stantec Consulting Services Inc approves the detail design inherent in the shop drawings, responsibility for which shall remain with the Contractor. Submitting same, and such review shall not relieve the Contractor of his responsibility for errors or omissions in the shop drawing or of his responsibility for meeting all requirements of the Contract Documents. The contractor is responsible for dimensions to be confirmed and correlated at the job site, for information that pertains solely to the fabrication processes or to techniques of construction and installation and for coordination of the work of all subtrades.

REV.	DESCRIPTION	DATE	DET.	CKD.

D.S. BROWN
A GIBRALTAR INDUSTRIES COMPANY
THE D.S. BROWN COMPANY
300 E. CHERRY STREET
NORTH BALTIMORE, OHIO 45872
419.257.3561
FAX: 419.257.0332
WWW.DSBROWN.COM

	ITEM	QUANTITY
LOCATION — ROUTE NO: VT RTE 242, RURAL MAJOR COLLECTOR BRIDGE	–	–
BRIDGE — NO. 10	–	–
PROJECT — BHF 0278 (3)	–	–
PROJECT NAME — JAY	–	–
P.O. NO. — 2016-0512	–	–
DESIGNER — STANTEC	–	–
CUSTOMER — A.L. ST. ONGE CONTRACTOR, INC.	–	–
	–	–

DESCRIPTION: VERSIFLEX ELASTOMERIC BEARING
ORLEANS CO., VT

SCALE:	DRAWN BY:	CHECKED BY:	DATE:	
N.T.S.	DA	ECW	2/17	–
PROJECT NUMBER	PRODUCT CODE	RELEASE	SHEET	
51781	1104	1	01	

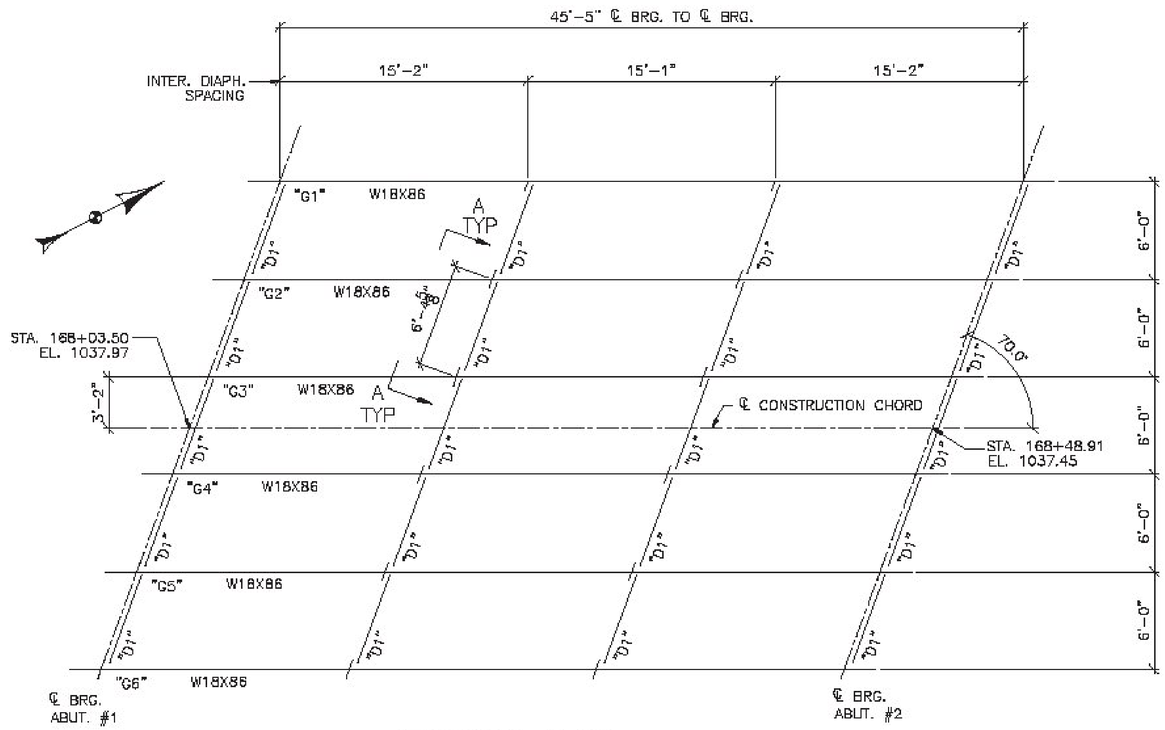

FRAMING PLAN

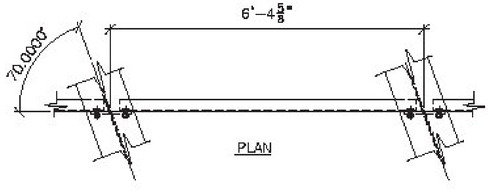

PLAN

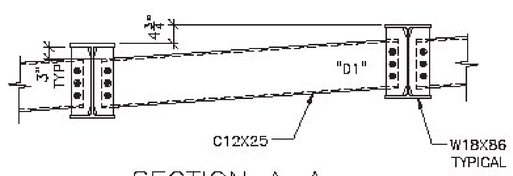

SECTION A–A

GENERAL NOTES:

ALL MATERIALS AND CONSTRUCTION SHALL CONFORM TO STATE OF VERMONT AGENCY OF TRANSPORTATION'S STANDARD SPECIFICATIONS FOR CONSTRUCTION, DATED 2011, AND IT'S LATEST REVISIONS, AND THE AASHTO LRFD BRIDGE DESIGN SPECIFICATIONS, 7TH EDITION AND IT'S LATEST REVISIONS.

ALL MATERIAL SHALL CONFORM TO AASHTO M270 (ASTM A709) GRADE 50. ALL MATERIAL NOTED "CVN" SHALL MEET THE CHARPY V-NOTCH TESTING REQUIREMENTS OF ZONE 2, H FREQUENCY: 15 FT.-LB AT 40° F. NDT MUST BE ACCORDING TO ANSI/AASHTO/AWS D1.5, SECTION 6

ALL BOLTS SHALL BE 7/8"ø IN 15/16"ø HOLES AND CONFORMING TO ASTM A325, TYPE 1 WITH RO-CAP TESTING AND MECHANICALLY GALVANIZED. INCLUDING ADDITIONAL BOLT TESTING PER VTRANS SUBSECTION 714.05

ALL STEEL SHALL BE GALVANIZED IN ACCORDANCE WITH VTRANS SUBSECTION 726.08 AFTER FABRICATION.

PLEASE NOTE THAT THE SHEAR STUDS NEED TO BE INSTALLED ON THE BEAMS PRIOR TO GALVANIZING

FIELD BOLT LIST

MARK	QTY.	DESCRIPTION	LOCATION
FB3	120	7/8"øX2 1/4	DIAPH. TO CONN. ℙ
	120	DIRECT TENSION INDICATORS + THREE (3) TEST ASSEMBLIES	

Vermont Agency of Transportation
RECEIVED
CK'D BY rfoster OK'D BY WBP
April 20, 2017
RESUBMIT NO Approved
BY WPELLETIER DATE 04/20/2017

APPROVED: Approval of drawings and/or procedures indicates consurrence with the information presented and does not relieve the Contractor or Fabricator of compliance with all specifications and code requirements

APPROVED AS NOTED

REVISE AND RESUBMIT

NOT RECEIVED

Date: 04/20/17

By: Michael J. Chenette

This review by Stantec Consulting Services Inc. is for the sole purpose of ascertaining conformance with the general design concept. This review shall not mean that Stantec Consulting Services Inc. approves the detail design inherent in the shop drawings, responsibility for which shall remain with the Contractor. Submitting same, and such review shall not relieve the Contractor of his responsibility for errors or omissions in the shop drawings or of his responsibility for meeting all requirements of the Contract Documents. The contractor is responsible for dimensions to be confirmed and correlated at the job site, for information that pertains solely to the fabrication processes or to techniques of construction and installation and for coordination of the work of all subtrades.

Stantec

FINISH					
MATERIAL	SEE DETAIL SHEETS				
HOLES					
ELECTRODES					
WELDS	PER WPS				
SURFACE PREP		1	4/18/17	PER APPROVAL	JAC
		NO	DATE	DESCRIPTION	BY

REVISIONS

ARC
ADVANCED RESOURCES & CONST. ENTERPRISES, INCORPORATED
P.O. BOX 120 KINGFIELD, ME. 04947
PHONE: (207) 265-2646 – FAX: (207) 265-4024

DRAFTER JAC	FRAMING PLAN	PROJECT NO. 18-185	
DATE 3/8/17	TOWN OF JAY, VT RTE. 242 (RURAL MAJOR COLLECTOR) PROJECT NUMBER BHF 0278(3)	DWG. NO. 1	
CHECKED JS			
DATE 3/9/17	AL ST. DNGE CONTRACTOR, INC.		

J.A.C. DRAFTING/S85818/1

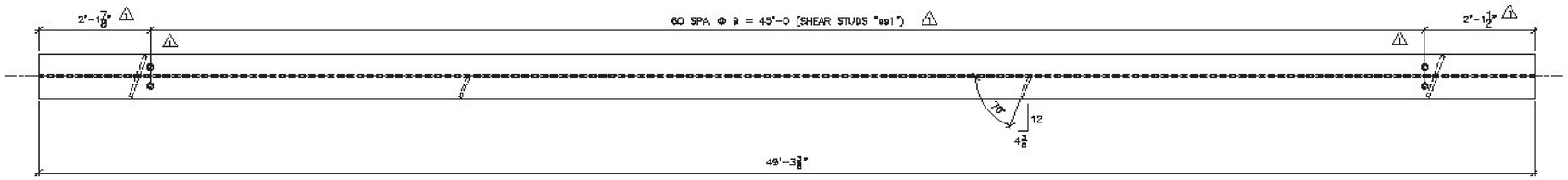

TOP VIEW

SHOP NOTE:
SEE DRAWING M1 FOR RUNNING DIMENSIONS DETAIL

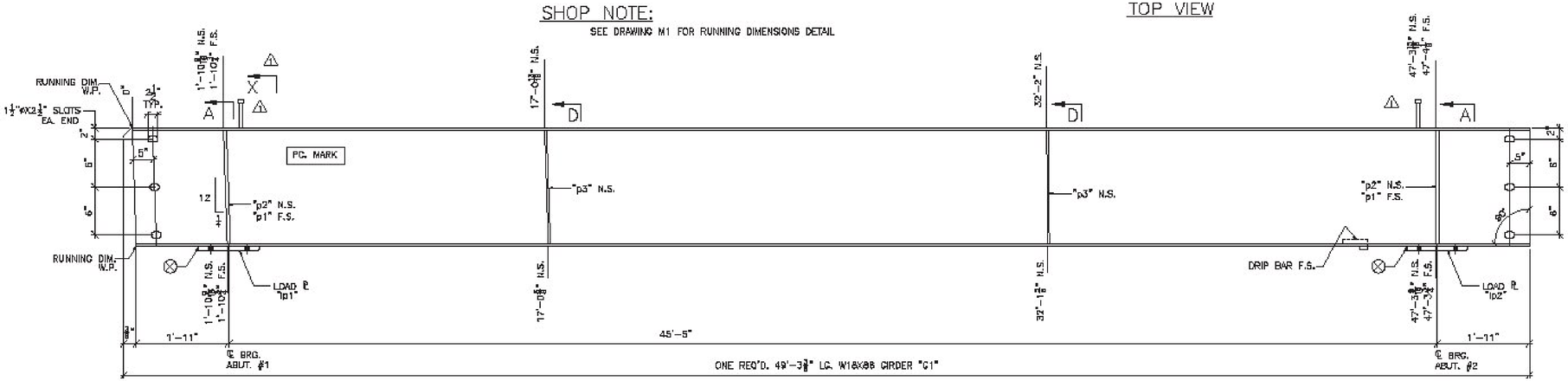

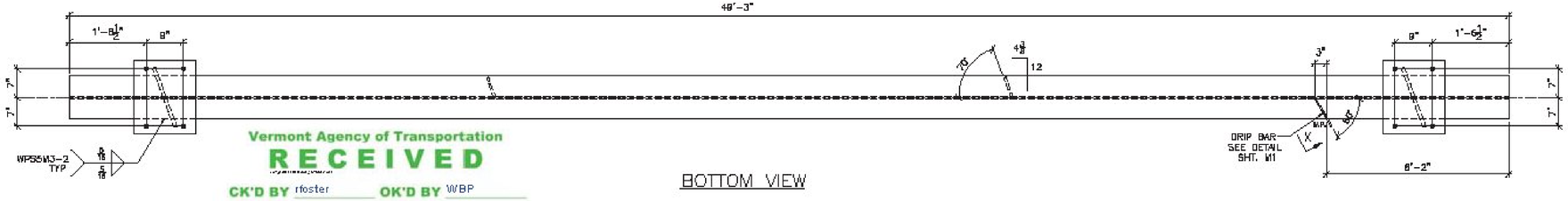

BOTTOM VIEW

Vermont Agency of Transportation
RECEIVED
CK'D BY rfoster OK'D BY WBP
April 20, 2017
RESUBMIT NO Approved
BY WPELLETIER DATE 04/20/2017

BILL OF MATERIAL

SHP	SHIP MARK	NO. PCS.	PIECE MARK	DESCRIPTION	LENGTH	REMARKS	WT.
1	G1			GIRDER			4484
		1		W18X88	49'-3 3/8"	CVN	4239
		2	p1	SEE SHT. M1			
		2	p2	SEE SHT. M1			
		2	p3	SEE SHT. M1			
		1	dp1	1/2" THK. DRIP BAR SEE SHT. M1			
		1	lp1	1 1/8" LOAD PLATE SEE SHT. M1			
		1	lp2	1 1/2" LOAD PLATE SEE SHT. M1			
	⚠						
		122	ss1	7/8"ø SHEAR STUDS	0'-7		

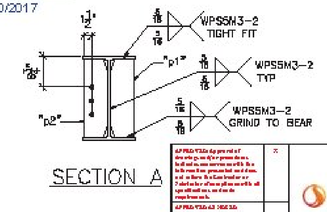

SECTION A

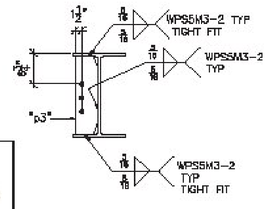

SECTION D

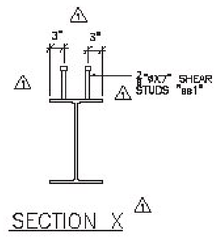

SECTION X

SHOP NOTE:
ENTIRE TOP FLANGE IS IN COMPRESSION
ENTIRE BOTT FLANGE IS IN TENSION

FINISH	GALVANIZED			
MATERIAL	AASHTO M270 (ASTM A709) GR. 50 U.O.N.			
HOLES	15/16"ø U.O.N.			
ELECTRODES				
WELDS	PER WPS			
SURFACE PREP	SSPC SP6	⚠1	4/18/17	ADDED SHEAR STUDS
		NO	DATE	DESCRIPTION
		REVISIONS		

Stantec

ARC
ADVANCED RESOURCES & CONST. ENTERPRISES, INCORPORATED
P.O. BOX 120 KINGFIELD, ME. 04947
PHONE: (207) 265-2546 – FAX: (207) 265-4054

DRAFTER	JAC
DATE	3/8/17
CHECKED	JS
DATE	3/9/17

STRINGER DETAILS, G1
TOWN OF JAY, VT RTE 242 (RURAL MAJOR COLLECTOR)
PROJECT NUMBER BHF 0276(3)
S.C. AL ST. ONGE CONTRACTOR INC.

PROJECT NO. 16-165
DWG. NO. 2

SEE SHEET M1 FOR CAMBER AND SECTIONS & DETAILS NOT SHOWN

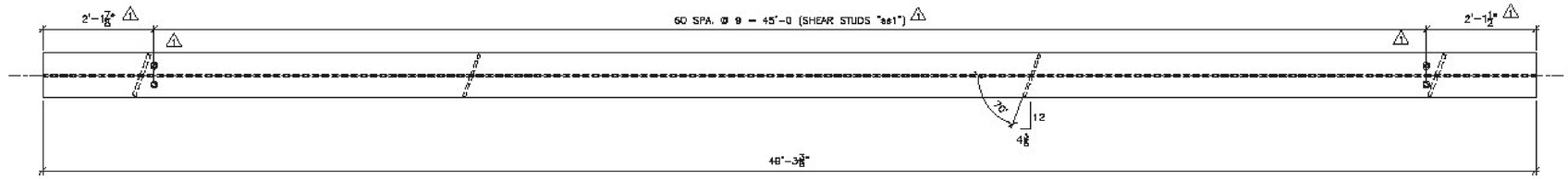

TOP VIEW

SHOP NOTE:
SEE DRAWING M1 FOR RUNNING DIMENSIONS DETAIL

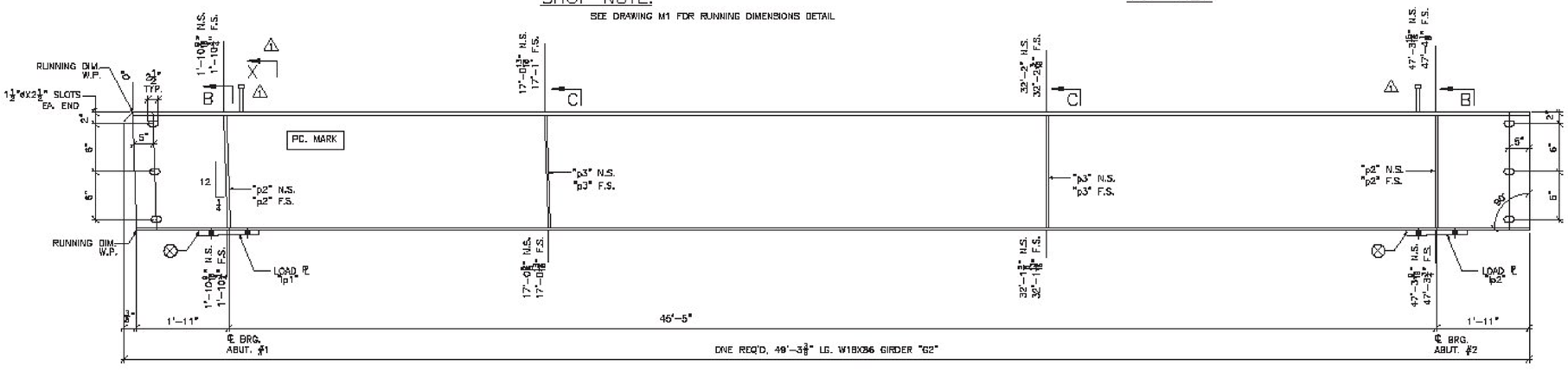

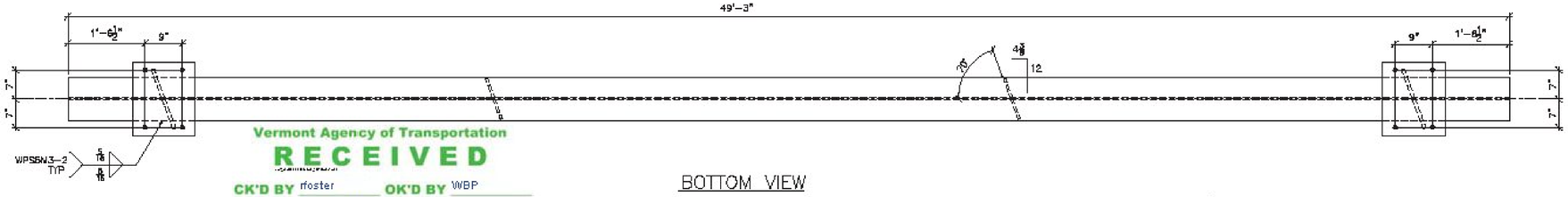

BOTTOM VIEW

Vermont Agency of Transportation
RECEIVED
CK'D BY rfoster OK'D BY WBP
April 20, 2017
RESUBMIT NO Approved
BY WPELLETIER DATE 04/20/2017

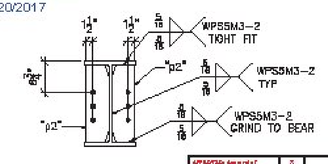

SECTION B

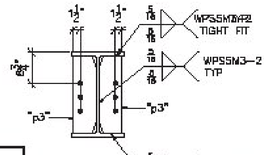

SECTION C

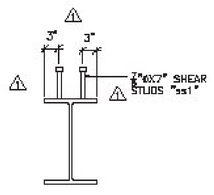

SECTION X

SHOP NOTE:
ENTIRE TOP FLANGE IS IN COMPRESSION
ENTIRE BOTT FLANGE IS IN TENSION

BILL OF MATERIAL

SHIP	SHIP MARK	NO. PCS.	PIECE MARK	DESCRIPTION	LENGTH	REMARKS	WT.
1	G2			GIRDER			4506
		1		W18X86	48'-3 3/8"	CVN	4236
		4	p2	SEE SHT. M1			
		4	p3	SEE SHT. M1			
		1	p1	1 1/16" LOAD PLATE SEE	SHT. M1		
		1	p2	1 1/2" LOAD PLATE SEE	SHT. M1		
	⚠	122	ss1	7/8"ø SHEAR STUDS	0'-7		

FINISH	GALVANIZED		
MATERIAL	AASHTO M270 (ASTM A709) GR. 50 U.O.N.		
HOLES	13/16"ø U.O.N.		
ELECTRODES			
WELDS	PER WPS		
SURFACE PREP	SSPC SP6	⚠ 4/18/17	ADDED SHEAR STUDS
		NO DATE	DESCRIPTION BY
		REVISIONS	

ARC
ADVANCED RESOURCES & CONST. ENTERPRISES, INCORPORATED
P.O. BOX 128 KINGFIELD, ME. 04947
PHONES: (207) 265-2646 - FAX: (207) 265-4054

DRAFTER	JAC	STRINGER DETAILS, G2	PROJECT NO. 16-165
DATE	3/8/17	TOWN OF JAY, VT RTE. 242 (RURAL MAJOR COLLECTOR) PROJECT NUMBER BHF 0278(3)	
CHECKED	JS	AL ST. ONGE CONTRACTOR INC.	DWG. NO. 3
DATE	3/8/17		

Stantec

SEE SHEET M1 FOR CAMBER AND SECTIONS & DETAILS NOT SHOWN

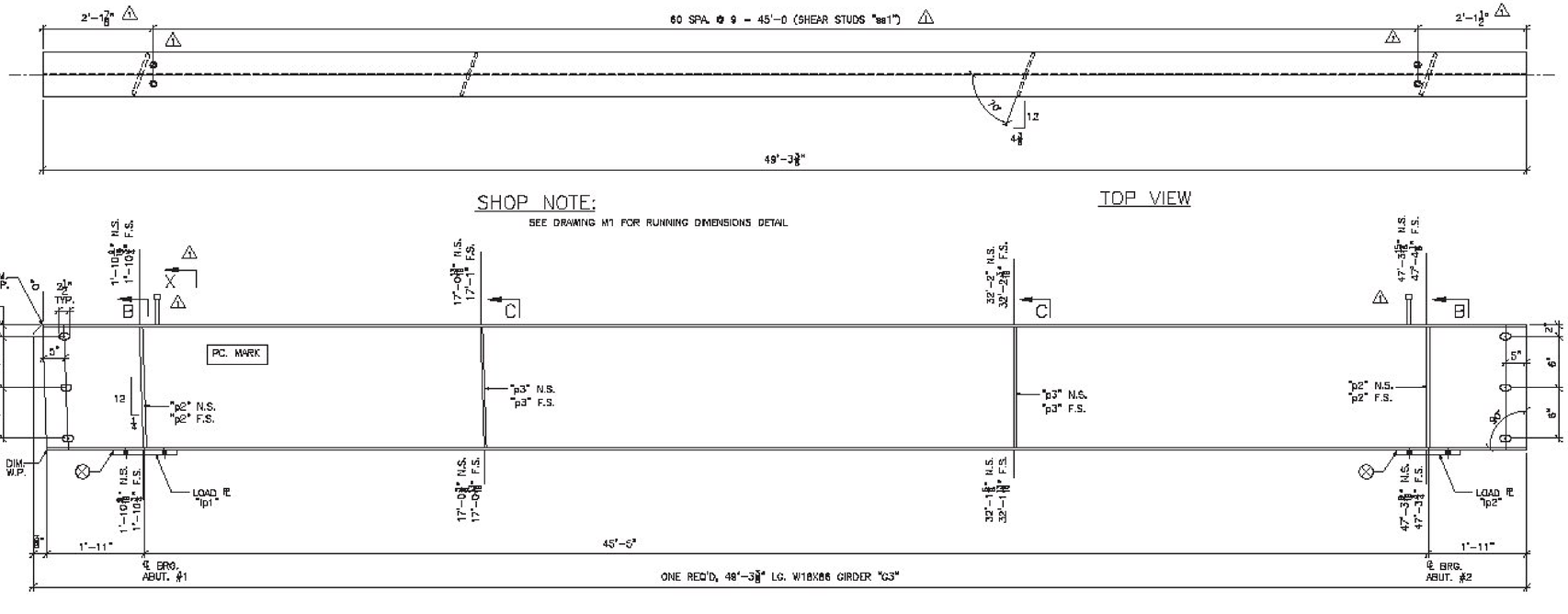

Vermont Agency of Transportation

RECEIVED

CK'D BY rfoster **OK'D BY** WBP

April 20, 2017

RESUBMIT NO **Approved**

BY WPELLETIER **DATE** 04/20/2017

BILL OF MATERIAL

SHIP	SHIP MARK	NO. PCS.	PIECE MARK	DESCRIPTION	LENGTH	REMARKS	WT.
1	G3			GIRDER			4506
		1		W18X86	48'-3 3/8"	CVN	4238
		4	p2	SEE SHT. M1			
		4	p3	SEE SHT. M1			
		1	lp1	1 1/8" LOAD PLATE SEE SHT. M1			
		1	lp2	1 1/4" LOAD PLATE SEE SHT. M1			
	⚠	122	ss1	3/4"ø SHEAR STUDS	0'-7		

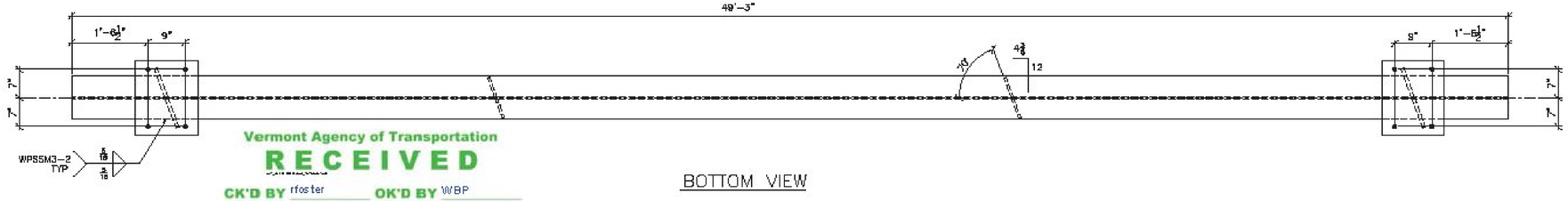

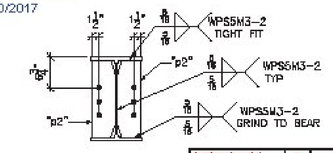

SECTION B

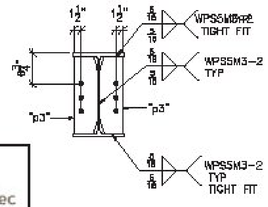

SECTION C

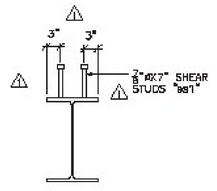

SECTION X

SEE SHEET M1 FOR CAMBER AND SECTIONS & DETAILS NOT SHOWN

SHOP NOTE:
ENTIRE TOP FLANGE IS IN COMPRESSION
ENTIRE BOTT FLANGE IS IN TENSION

FINISH	GALVANIZED			
MATERIAL	AASHTO M270 (ASTM A709) GR. 50 U.O.N.			
HOLES	11/16"ø U.O.N.			
ELECTRODES				
WELDS	PER WPS			
SURFACE PREP	SSPC SP6	⚠ 4	4/18/17	ADDED SHEAR STUDS JMC
		NO.	DATE	DESCRIPTION BY
		REVISIONS		

ARC ENTERPRISES, INC.

ADVANCED RESOURCES & CONST. ENTERPRISES, INCORPORATED
P.O. BOX 130 KINGFIELD, ME. 04947
PHONE: (207) 265-2548 – FAX: (207) 265-4064

DRAFTER	JMC	STRINGER DETAILS, G3	PROJECT NO. 16-165
DATE	3/8/17	TOWN OF JAY, VT RTE. 5/2 (RURAL MAJOR COLLECTOR) PROJECT NUMBER BHF 0278(3)	
CHECKED	JS	G.C. AL ST. ONGE CONTRACTOR INC.	DWG. NO. 4
DATE	3/8/17		

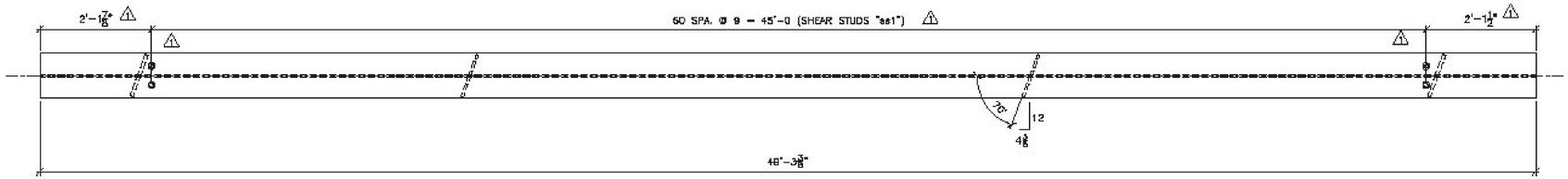

TOP VIEW

SHOP NOTE:
SEE DRAWING M1 FOR RUNNING DIMENSIONS DETAIL

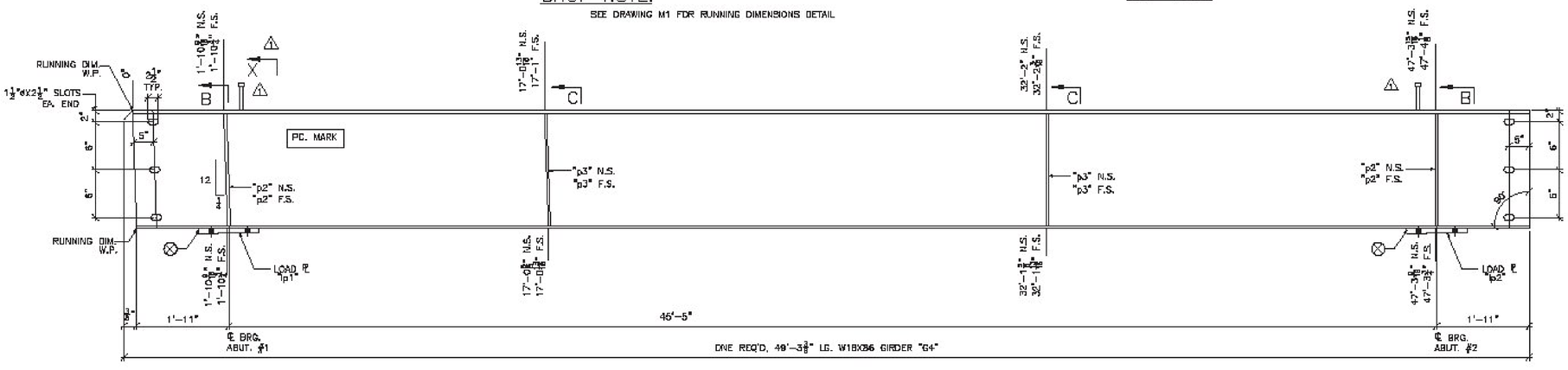

BOTTOM VIEW

Vermont Agency of Transportation
RECEIVED
CK'D BY rfoster OK'D BY WBP
April 20, 2017
RESUBMIT NO **Approved**
BY WPELLETIER DATE 04/20/2017

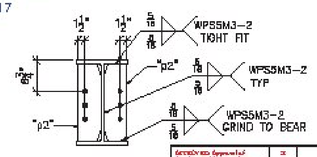

SECTION B

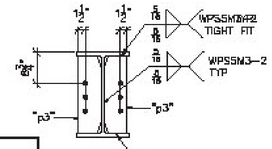

SECTION C

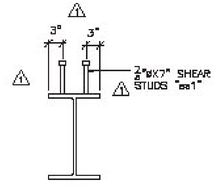

SECTION X

SHOP NOTE:
ENTIRE TOP FLANGE IS IN COMPRESSION
ENTIRE BOTT FLANGE IS IN TENSION

BILL OF MATERIAL

SHIP	SHIP MARK	NO. PCS.	PIECE MARK	DESCRIPTION	LENGTH	REMARKS	WT.
1	G4			GIRDER			4506
		1		W18X86	48'-3 3/8"	CVN	4236
		4	a2	SEE SHT. M1			
		4	p3	SEE SHT. M1			
		1	b1	1 1/16" LOAD PLATE SEE	SHT. M1		
		1	b2	1 1/2" LOAD PLATE SEE	SHT. M1		
	⚠	122	as1	7/8"ø SHEAR STUDS	0'-7		

DISCLAIMER: Approval of the drawings and/or preparation of submittals for construction with the information presented, and those with or from the Contractor or Fabricator for all components which will be utilized in and made a part of the work, and/or implementation.

Approved as Noted

Approved As Corrected

Revise and Resubmit

Rejected

Date: 04/20/17

By: Michael J. Chaves

This review/approval by Stantec Consulting Services Inc. is for the sole purpose of determining conformance with the general design concept. This review shall not relieve the Fabricator, Supplier, Engineer of Record or their sub-consultants, agents or employees of any responsibility for errors or omissions in the shop drawing or in the fabrication of the components. Stantec Consulting Services Inc. does not assume responsibility for field measurements, dimensions, quantities, procedures, construction means, methods, techniques, sequences or operations or for coordination of the work with other trades or for the safety precautions and programs in connection with the work. The review by Stantec Consulting Services Inc. does not relieve the Fabricator, Supplier, Engineer of Record or their sub-consultants, agents or employees of any responsibility for errors or omissions in the shop drawings or for deviations from the requirements of the Contract Documents. The review by Stantec Consulting Services Inc. does not relieve the Fabricator, Supplier, Engineer of Record or their sub-consultants, agents or employees of any responsibility for the accuracy of dimensions and quantities which are to be confirmed and correlated at the job site; for information that pertains solely to the fabrication processes or to techniques of assembly used by the Fabricator, Supplier, Engineer of Record or their sub-consultants, agents or employees; or for the satisfactory performance of the work. The review by Stantec Consulting Services Inc. does not relieve the Fabricator, Supplier, Engineer of Record or their sub-consultants, agents or employees of any responsibility for compliance with the requirements of the Contract Documents. The review by Stantec Consulting Services Inc. does not relieve the Fabricator, Supplier, Engineer of Record or their sub-consultants, agents or employees of any responsibility for the safety precautions and programs in connection with the work. The review by Stantec Consulting Services Inc. does not relieve the Fabricator, Supplier, Engineer of Record or their sub-consultants, agents or employees of any responsibility for compliance with the requirements of the Contract Documents.

SEE SHEET M1 FOR CAMBER AND SECTIONS & DETAILS NOT SHOWN

FINISH	GALVANIZED			
MATERIAL	AASHTO M270 (ASTM A709) GR. 50 U.O.N.			
HOLES	13/16"ø U.O.N.			
ELECTRODES				
WELDS	PER WPS			
SURFACE PREP	SSPC SP6	⚠ 4/18/17	ADDED SHEAR STUDS	JAC
		NO DATE	DESCRIPTION	BY
		REVISIONS		

ARC — ADVANCED RESOURCES & CONST. ENTERPRISES, INCORPORATED
P.O. BOX 128 KINGFIELD, ME. 04947
PHONES: (207) 265-2646 – FAX: (207) 265-4054

DRAFTER	JAC	STRINGER DETAILS, G4	PROJECT NO. 16-165
DATE	3/8/17	TOWN OF JAY, VT RTE. 242 (RURAL MAJOR COLLECTOR) PROJECT NUMBER BHF 0278(3)	
CHECKED	JS	G.C. AL ST. ONGE CONTRACTOR INC.	DWG. NO. 5
DATE	3/8/17		

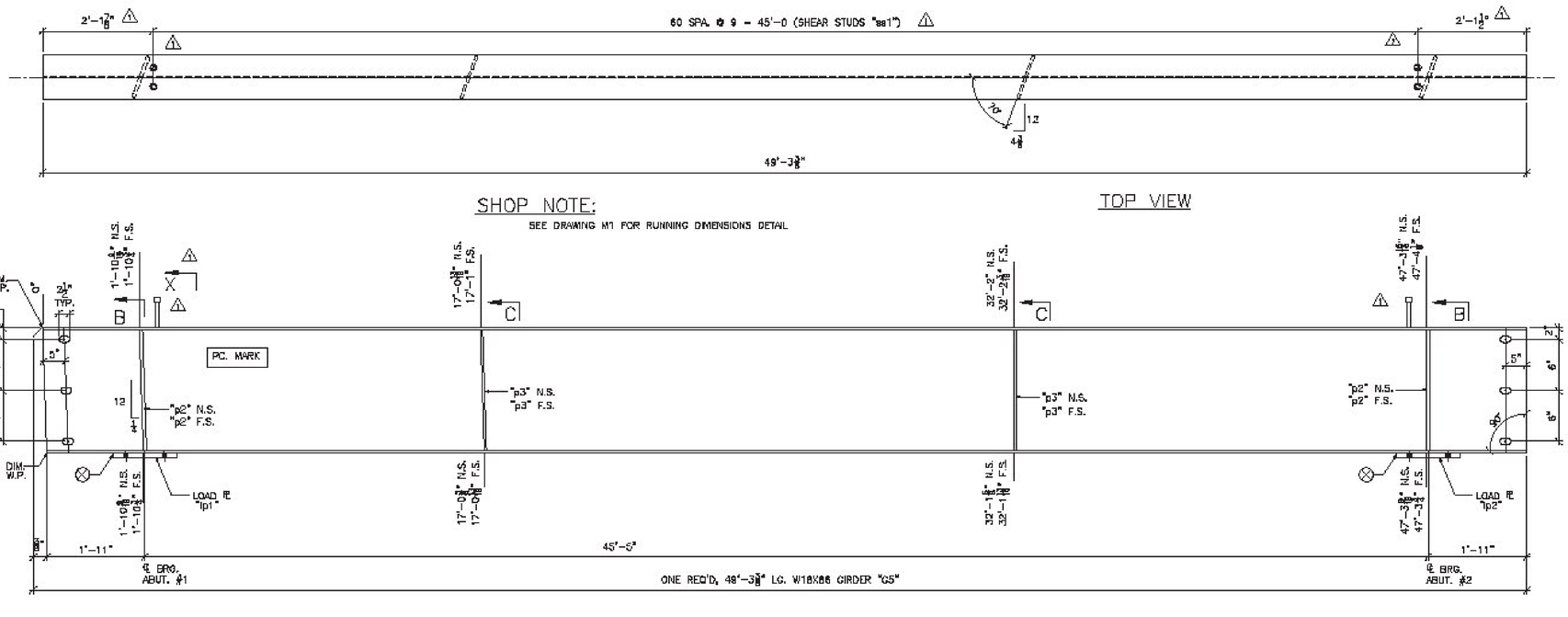

Vermont Agency of Transportation

RECEIVED

CK'D BY rfoster OK'D BY WBP

April 20, 2017

RESUBMIT NO Approved

BY WPELLETIER DATE 04/20/2017

BILL OF MATERIAL

SHIP	SHIP MARK	NO. PCS.	PIECE MARK	DESCRIPTION	LENGTH	REMARKS	WT.
1	G5			GIRDER			4506
		1		W18X86	48'-3 3/8"	CVN	4238
		4	p2	SEE SHT. M1			
		4	p3	SEE SHT. M1			
		1	lp1	1 1/8" LOAD PLATE SEE SHT. M1			
		1	lp2	1 1/2" LOAD PLATE SEE SHT. M1			
	⚠	122	ss1	3/4"ø SHEAR STUDS	0'-7		

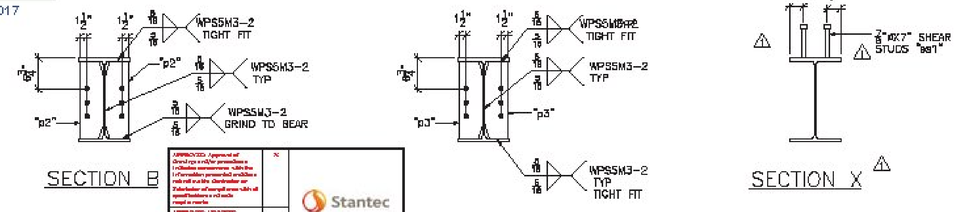

Stantec

SEE SHEET M1 FOR CAMBER AND SECTIONS & DETAILS NOT SHOWN

SHOP NOTE:
ENTIRE TOP FLANGE IS IN COMPRESSION
ENTIRE BOTT FLANGE IS IN TENSION

FINISH	GALVANIZED			
MATERIAL	AASHTO M270 (ASTM A709) GR. 50 U.O.N.			
HOLES	11/16"ø U.O.N.			
ELECTRODES				
WELDS	PER WPS			
SURFACE PREP	SSPC SP6	⚠ 4	4/18/17	ADDED SHEAR STUDS JAC
		NO.	DATE	DESCRIPTION BY
		REVISIONS		

ARC ENTERPRISES, INC.

ADVANCED RESOURCES & CONST. ENTERPRISES, INCORPORATED
P.O. BOX 130 KINGFIELD, ME. 04947
PHONE: (207) 265-2648 – FAX: (207) 265-4064

DRAFTER	JAC	STRINGER DETAILS, G5	PROJECT NO. 16-165
DATE	3/8/17	TOWN OF JAY, VT RTE. 242 (RURAL MAJOR COLLECTOR) PROJECT NUMBER BHF 0278(3)	
CHECKED	JS	C.O. AL ST. ONGE CONTRACTOR INC.	DWG. NO. 6
DATE	3/8/17		

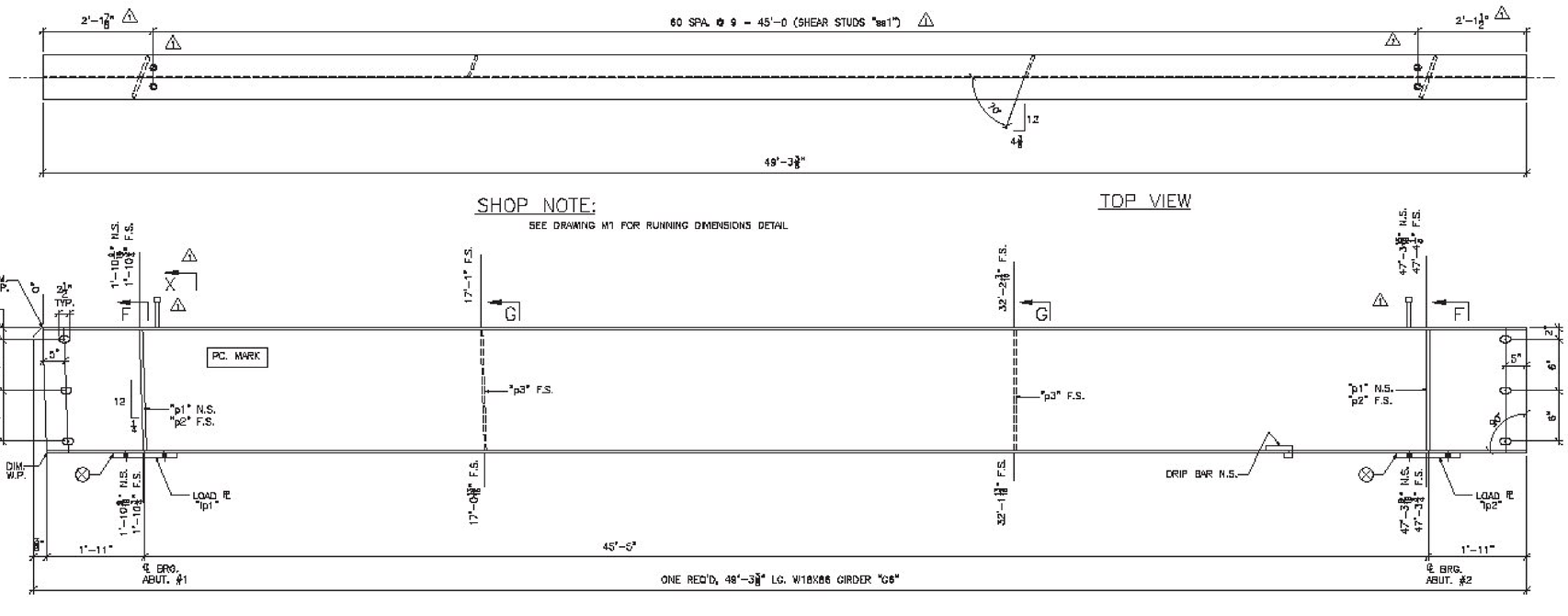

Vermont Agency of Transportation

RECEIVED

CK'D BY tfoster OK'D BY WBP

April 20, 2017

RESUBMIT NO Approved

BY WPELLETIER DATE 04/20/2017

BILL OF MATERIAL

SHIP	SHIP MARK	NO. PCS.	PIECE MARK	DESCRIPTION	LENGTH	REMARKS	WT.
1	G6			GIRDER			4484
		1		W18X86	48'-3 3/8"	CVN	4238
		8	p1	SEE SHT. M1			
		2	p2	SEE SHT. M1			
		2	p3	SEE SHT. M1			
		1	dp1	1/2" THK. DRIP BAR SEE SHT. M1			
		1	lp1	1 1/8" LOAD PLATE SEE SHT. M1			
		1	lp2	1 1/2" LOAD PLATE SEE SHT. M1			
	⚠	122	ss1	3/4"ø SHEAR STUDS	0'-7		

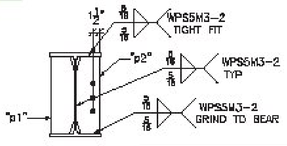

SECTION F

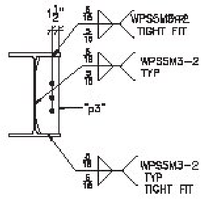

SECTION G

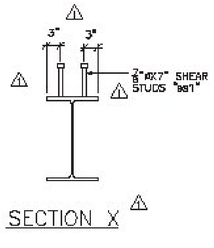

SECTION X

SHOP NOTE:
ENTIRE TOP FLANGE IS IN COMPRESSION
ENTIRE BOTT FLANGE IS IN TENSION

FINISH	GALVANIZED			
MATERIAL	AASHTO M270 (ASTM A709) GR. 50 U.O.N.			
HOLES	13/16"ø U.O.N.			
ELECTRODES				
WELDS	PER WPS			
SURFACE PREP	SSPC SP6	⚠ 4	4/18/17	ADDED SHEAR STUDS JMC
		NO.	DATE	DESCRIPTION BY
		REVISIONS		

Stantec

ARC ENTERPRISES, INC.

ADVANCED RESOURCES & CONST. ENTERPRISES, INCORPORATED
P.O. BOX 130 KINGFIELD, ME. 04947
PHONE: (207) 265-2548 – FAX: (207) 265-4064

DRAFTER	JMC	STRINGER DETAILS, G6	PROJECT NO. 16-165
DATE	3/8/17	TOWN OF JAY, VT RTE. 242 (RURAL MAJOR COLLECTOR) PROJECT NUMBER BHF 0278(3)	
CHECKED	JS	G.C. AL ST. ONGE CONTRACTOR INC.	DWG. NO. 7
DATE	3/8/17		

SEE SHEET M1 FOR CAMBER AND SECTIONS & DETAILS NOT SHOWN

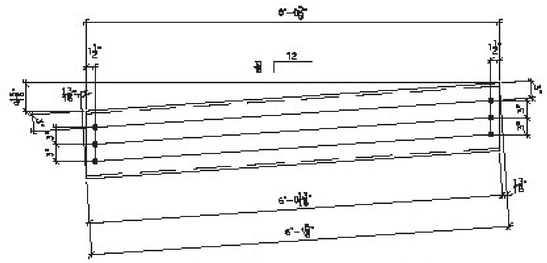

20 REQ'D. C12X25 DIAPHRAGM, MARK "D1"

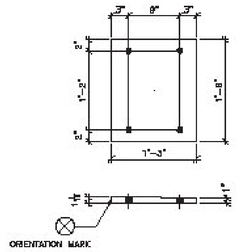

8 REQ'D. LOAD PLATE, MARK "lp1"

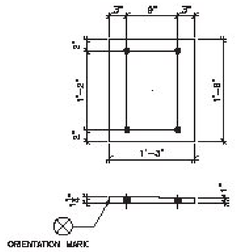

8 REQ'D. LOAD PLATE, MARK "lp2"

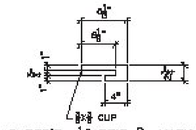

2 REQ'D. 1" DRIP PL, MARK "dp1"

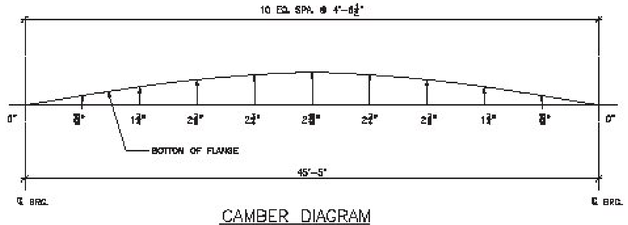

CAMBER DIAGRAM

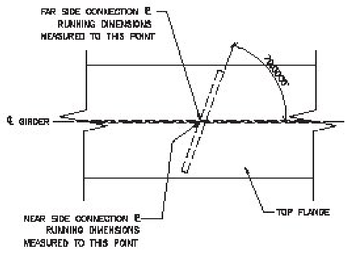

RUNNING DIMENSIONS DETAIL

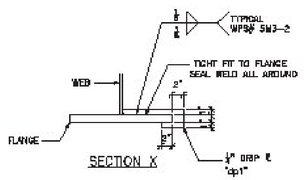

SECTION X

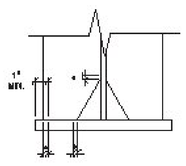

WELD TERMINATION DETAIL

* NO WELD FOR ⅜" MIN. ⅜" MAX.

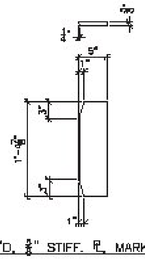

4 REQ'D. ⅜" STIFF. PL, MARK "p1"

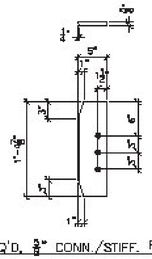

16 REQ'D. ⅜" CONN./STIFF. PL, MARK "p2"

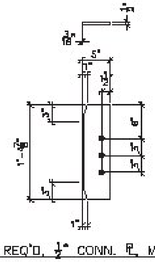

20 REQ'D. ½" CONN. PL, MARK "p3"

BILL OF MATERIAL

SHIP	SHIP MARK	NO. PCS.	PIECE MARK	DESCRIPTION	LENGTH	REMARKS	WT.
		4	p1	PL ⅜X15	1'-4⅞		57
		16	p2	PL ⅜X5	1'-4⅞		228
		20	p3	PL ½X5	1'-4⅞		230
		2	dp1	PL ½X2¾	0'-8½		2
	01	20		C12X25	5'-1⅝		3033
		8	lp1	PL 1¼X15	1'-6		474
		6	lp2	PL 1½X15	1'-6		516

Vermont Agency of Transportation
RECEIVED
CK'D BY rfoster OK'D BY WBP
April 20, 2017
RESUBMIT NO Approved
BY WPELLETIER DATE 04/20/2017

APPROVED: Approval of drawings and/or procedures indicates non-conformance with the information presented and does not relieve the Contractor or Fabricator of compliance with all specifications and code requirements

APPROVED AS NOTED

REVISE AND RESUBMIT

NOT APPROVED

Date: 04/20/17

By: Mitchell J. Chevrette

This review by Stantec Consulting Services Inc. is for the sole purpose of ascertaining conformance with the general design concept. This review shall not relieve the Stantec Consulting Services Inc. approved the detail design inherent in the shop drawings, responsibility for which shall remain with the Contractor. Submittal of same, and such review shall not relieve the Contractor of his responsibility for errors or omissions in the shop drawings or of his responsibility for meeting all requirements of the Contract Documents. The Contractor is responsible for dimensions to be confirmed and correlated at the job site, for information that pertains solely to the fabrication processes or to techniques of construction and installation and for coordination of the work of all subcontractors.

Stantec

FINISH	GALVANIZED
MATERIAL	ASTM A709 GRADE 50 U.O.N.
HOLES	15/16"ø U.O.N.
ELECTRODES	
WELDS	PER WPS
SURFACE PREP	SSPC SP6

NO	DATE	DESCRIPTION	BY
		REVISIONS	

ARC
ADVANCED RESOURCES & CONST. ENTERPRISES, INCORPORATED
P.O. BOX 120 KINGFIELD, ME. 04947
PHONE: (207) 265-2948 - FAX: (207) 265-4054

DRAFTER	JAC
DATE	3/8/17
CHECKED	JS
DATE	3/8/17

MISC. DETAILS
TOWN OF JAY, VT RTE. 242 (RURAL MAJOR COLLECTOR)
PROJECT NUMBER BHF 0279(3)
CUSTOMER: AL ST. ONGE CONTRACTOR, INC.

PROJECT NO. 16-165
DWG. NO. M1

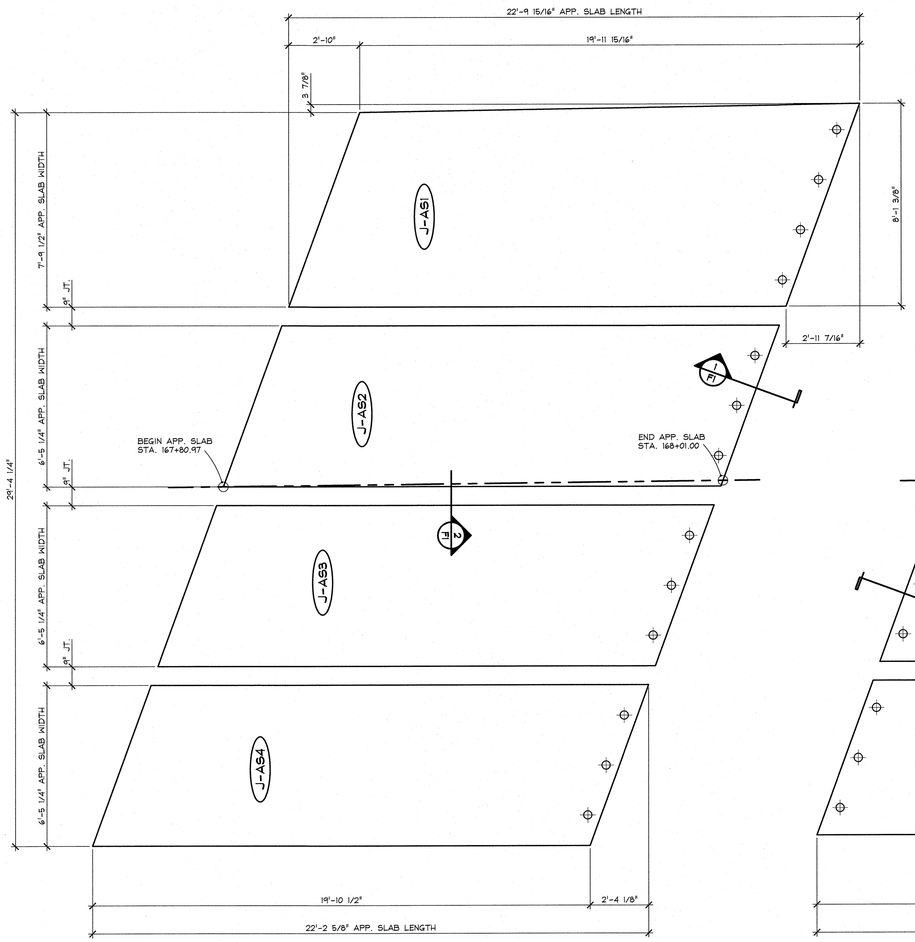

A F1 APPROACH SLAB NO. 1 PLAN LAYOUT

3/8" = 1'-0"

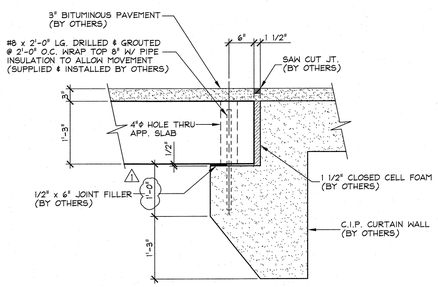

1 F1 APPROACH SLAB BEARING DETAIL

3/4" = 1'-0"

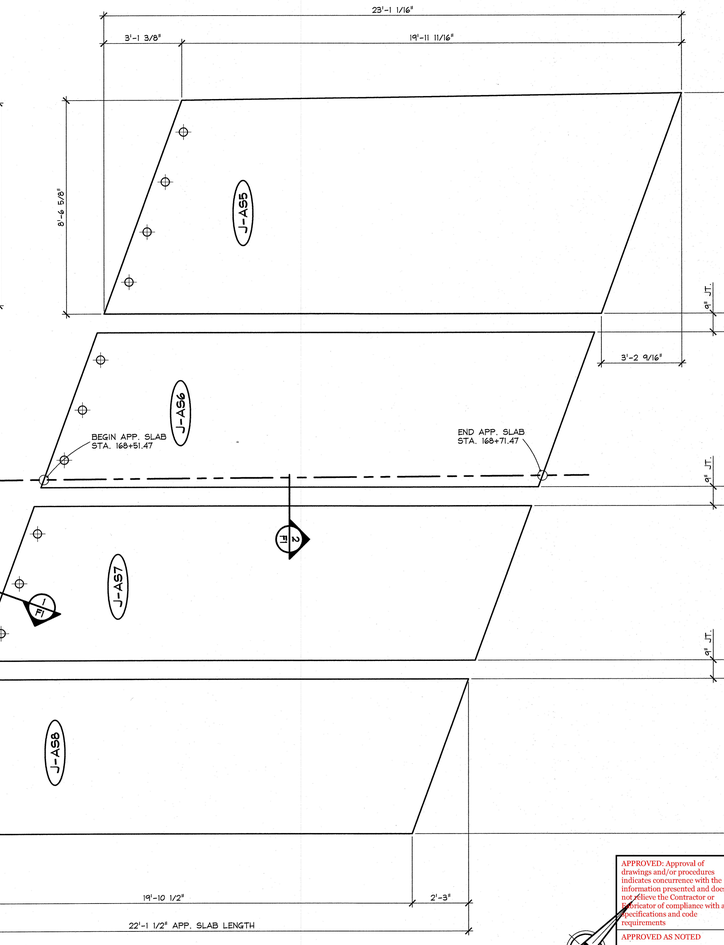

B F1 APPROACH SLAB NO. 2 PLAN LAYOUT

3/8" = 1'-0"

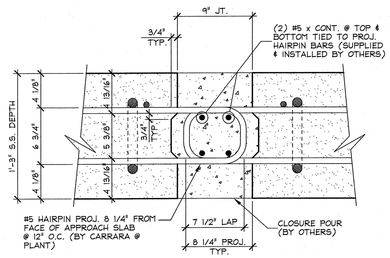

2 F1 APPROACH SLAB CLOSURE POUR

1 1/2" = 1'-0"

2	12/6/16	REVISED AS PER ENGINEERS COMM. T.D.
1	11/21/16	REVISED AS PER ENGINEERS COMM. T.D.

APPROVAL STAMP:

J.P.

2464 CASE STR

STA

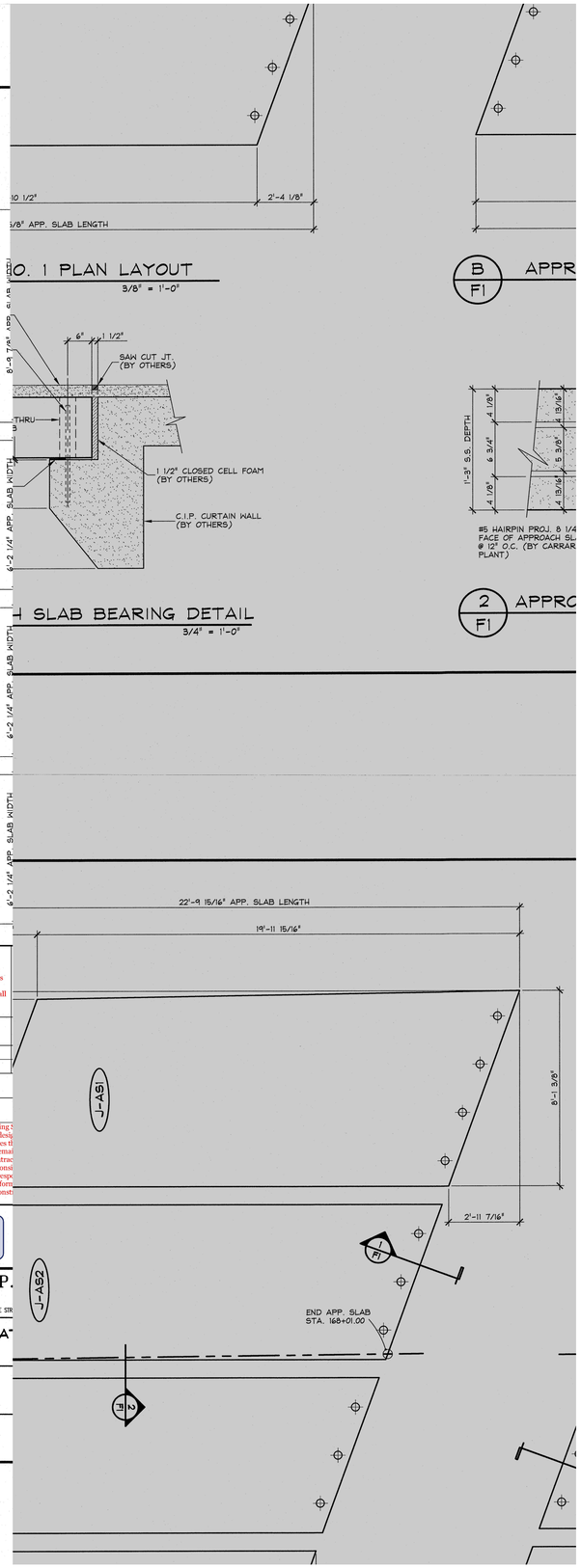

APPROVED: Approval of drawings and/or procedures indicates concurrence with the information presented and does not relieve the Contractor or Fabricator of compliance with all specifications and code requirements

APPROVED AS NOTED

REVISE AND RESUBMIT

NOT REVIEWED

Date: 12/12/16

By: Michael J. Chenette

This review by Stantec Consulting S conformance with the general desig Consulting Services Inc approves th responsibility for which shall remai review shall not relieve the Contrac the shop drawing or of his responsi Documents. The contractor is respo correlated at the job site, for inform processes or to techniques of constr work of all subtrades.

REVIEWED

By Nick Van Den Berg (nick.vandenberg@vermont.gov) at 8:30 pm, Dec 08, 2016

F:\VT-Bridges\23500-16 Jay Approach slabs\23500-F1.dwg, 12/6/2016 12:03:20 PM

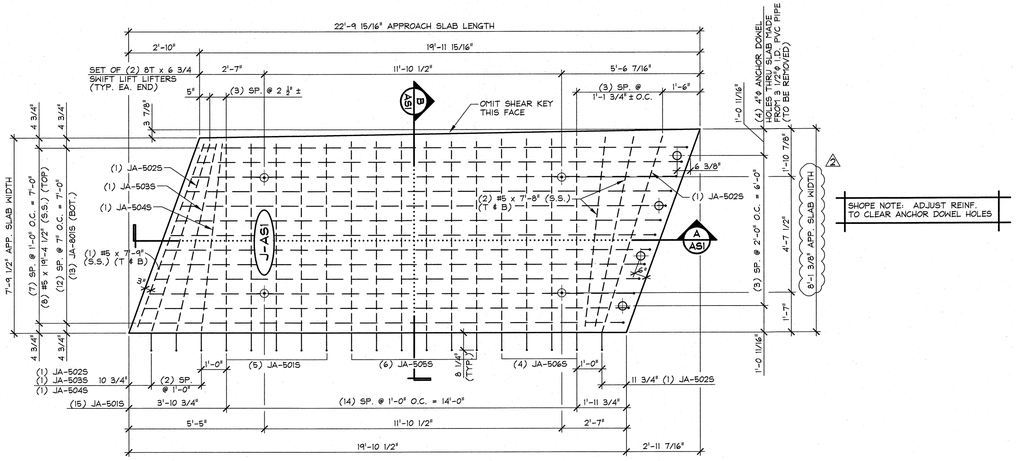

SHOPE NOTE: ADJUST REINF. TO CLEAR ANCHOR DOWEL HOLES

1 / AS1 PLAN VIEW IN FORM

3/8" = 1'-0"

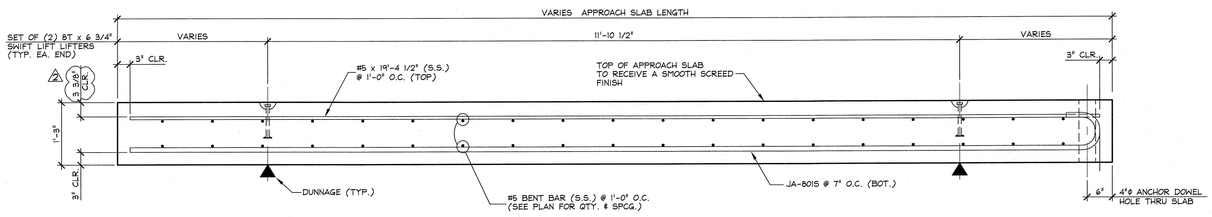

A / AS1 LONGITUDINAL SECTION

3/4" = 1'-0"

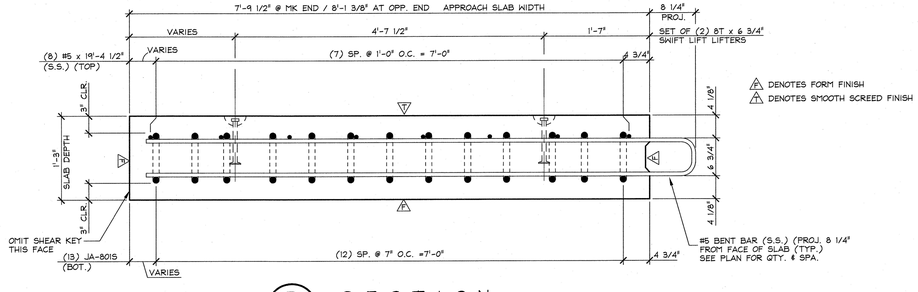

DENOTES FORM FINISH

DENOTES SMOOTH SCREED FINISH

B / AS1 SECTION

1" = 1'-0"

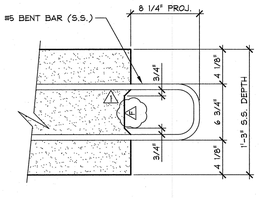

SHEAR KEY DETAIL

1 1/2" = 1'-0"

APPROVED: Approval of drawings and/or procedures indicates concurrence with the information presented and does not relieve the Contractor or Fabricator of compliance with all specifications and code requirements	X	Stantec
APPROVED AS NOTED		
REVISE AND RESUBMIT		
NOT REVIEWED		
Date: 12/12/16		
By: Michael J. Chenette		
This review by Stantec Consulting Services Inc. is for the sole purpose of ascertaining conformance with the general design concept. This review shall not mean that Stantec Consulting Services Inc approves the detail design inherent in the shop drawings, responsibility for which shall remain with the Contractor. Submitting same, and such review shall not relieve the Contractor of his responsibility for errors or omissions in the shop drawing or of his responsibility for meeting all requirements of the Contract Documents. The contractor is responsible for dimensions to be confirmed and correlated at the job site, for information that pertains solely to the fabrication processes or to techniques of construction and installation and for coordination of the work of all subtrades.		

SUBMITTED

DEC 6 2016

J. P. CARRARA & SONS, INC.
MIDDLEBURY, VT 05753

SHOP NOTE:
F'c = 5,000 PSI
F'ci = 3,000 PSI
MIX #448MSCC

MARK: J-AS1	QTY.: 1	WT.: 14.78 T	VOL.: 7.29 cy

MATERIAL LIST / APPROACH SLAB

ITEM	MARK	DESCRIPTION	QTY.
1	JA-5015	#5 BENT BAR (STAINLESS STEEL)	5
2	JA-5025	#5 BENT BAR (STAINLESS STEEL)	2
3	JA-5035	#5 BENT BAR (STAINLESS STEEL)	1
4	JA-5045	#5 BENT BAR (STAINLESS STEEL)	1
5	JA-5055	#5 BENT BAR (STAINLESS STEEL)	6
6	JA-5065	#5 BENT BAR (STAINLESS STEEL)	4
7			
8	JA-8015	#8 BENT BAR (STAINLESS STEEL)	13
9			
10		#5 x 19'-4 1/2" (STAINLESS STEEL)	8
11		#5 x 7'-8" (STAINLESS STEEL)	4
12		#5 x 7'-8" (STAINLESS STEEL)	2
13			
14		DAYTON 8T x 6 3/4" SWIFT LIFT (DOMESTIC)	4
15			

APPROVAL STAMP:

J.P. CARRARA & SONS INC.
Precast & Prestress Manufacturer
2464 CASE STR., MIDDLEBURY, VERMONT 05753 Phone:(802)388-6361 Fax:(802)388-9010

A.L. St. Onge
CONTRACTOR
MONTGOMERY, VERMONT

STATE OF VERMONT AGENCY OF TRANSPORTATION
COUNTY OF ORLEANS

DATE: OCT. 14, 2016
SCALE: NOTED
CHKD: DFTM: T.D.

TOWN OF JAY
VT. RTE 242, RURAL MAJOR COLLECTOR
BRIDGE NO.: 10 PROJECT NO.: BHF 0278 (3)

JOB NO: 23500-016

APPROACH SLAB DETAILS

DWG. NO: AS1

12/6/16 REVISED AS PER ENGINEERS COMM. T.D.
11/21/16 REVISED AS PER ENGINEERS COMM. T.D.

F:\VT-Bridges\23500-16 Jay Approach slabs\23500-AS1.dwg, 12/6/2016 12:02:10 PM

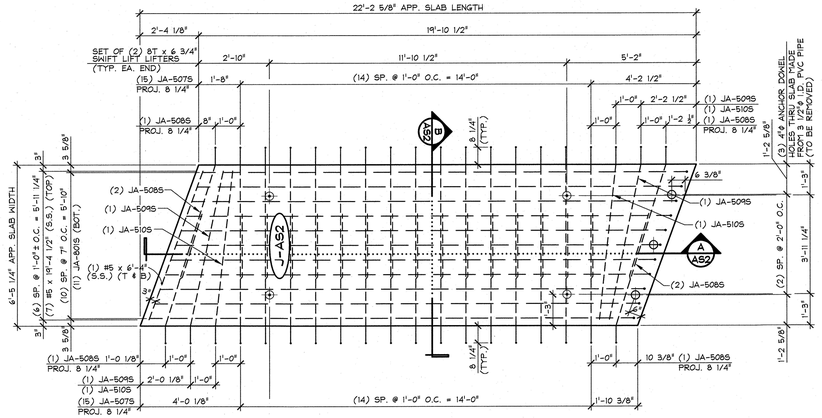

1 / AS2 PLAN VIEW IN FORM

3/8" = 1'-0"

SHOPE NOTE: ADJUST REINF. TO CLEAR ANCHOR DOWEL HOLES

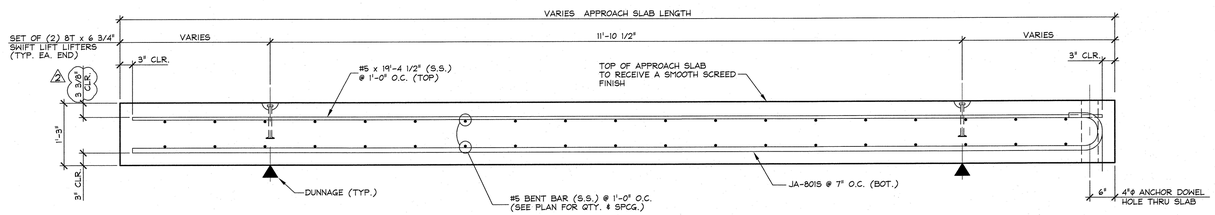

A / AS2 LONGITUDINAL SECTION

3/4" = 1'-0"

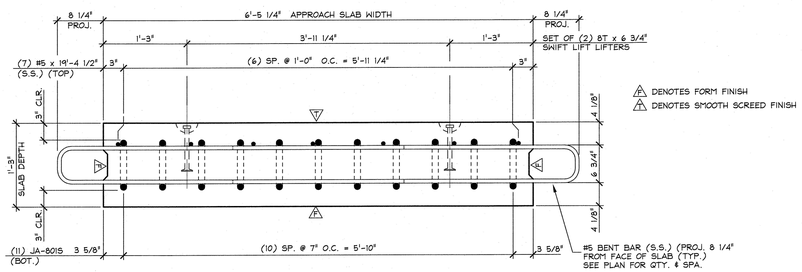

B / AS2 SECTION

1" = 1'-0"

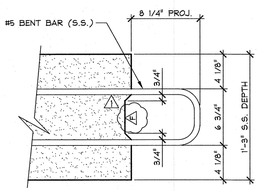

SHEAR KEY DETAIL

1 1/2" = 1'-0"

APPROVED: Approval of drawings and/or procedures indicates concurrence with the information presented and does not relieve the Contractor or Fabricator of compliance with all specifications and code requirements	X	Stantec
APPROVED AS NOTED		
REVISE AND RESUBMIT		
NOT REVIEWED		
Date: 12/12/16		
By: Michael J. Chenette		
This review by Stantec Consulting Services Inc. is for the sole purpose of ascertaining conformance with the general design concept. This review shall not mean that Stantec Consulting Services Inc approves the detail design inherent in the shop drawings, responsibility for which shall remain with the Contractor. Submitting same, and such review shall not relieve the Contractor of his responsibility for errors or omissions in the shop drawing or of his responsibility for meeting all requirements of the Contract Documents. The contractor is responsible for dimensions to be confirmed and correlated at the job site, for information that pertains solely to the fabrication processes or to techniques of construction and installation and for coordination of the work of all subtrades.		

SUBMITTED

DEC 6 2016

J. P. CARRARA & SONS, INC.
MIDDLEBURY, VT 05753

SHOP NOTE:
F'c = 5,000 PSI
F'ci = 3,000 PSI
MIX #448MSCC

MARK: J-AS2	QTY.: 1	WT.: 11.92 T	VOL.: 5.88 cy

MATERIAL LIST / APPROACH SLAB

ITEM	MARK	DESCRIPTION	QTY.
1	JA-5075	#5 BENT BAR (STAINLESS STEEL)	30
2	JA-5085	#5 BENT BAR (STAINLESS STEEL)	4
3	JA-5095	#5 BENT BAR (STAINLESS STEEL)	2
4	JA-5105	#5 BENT BAR (STAINLESS STEEL)	2
5			
6			
7	JA-8015	#8 BENT BAR (STAINLESS STEEL)	11
8			
9		#5 x 19'-4 1/2" (STAINLESS STEEL)	7
10		#5 x 6'-4" (STAINLESS STEEL)	2
11			
12			
13			
14		DAYTON 8T x 6 3/4" SWIFT LIFT (DOMESTIC)	4
15			

APPROVAL STAMP:

J.P. CARRARA & SONS INC.
Precast & Prestress Manufacturer
2464 CASE STR, MIDDLEBURY, VERMONT 05753 Phone:(802)388-6361 Fax:(802)388-9010

A.L. St. Onge
CONTRACTOR
MONTGOMERY, VERMONT

STATE OF VERMONT AGENCY OF TRANSPORTATION
COUNTY OF ORLEANS

DATE: OCT. 14, 2016
SCALE: NOTED
CHKD: DFTM: T.D.
JOB NO: 23500-016

TOWN OF JAY
VT. RTE 242, RURAL MAJOR COLLECTOR
BRIDGE NO.: 10 PROJECT NO.: BHF 0278 (3)

APPROACH SLAB DETAILS

DWG. NO: AS2

12/6/16 REVISED AS PER ENGINEERS COMM. T.D.
11/21/16 REVISED AS PER ENGINEERS COMM. T.D.

F:\VT-Bridges\23500-16 Jay Approach slabs\23500-AS1.dwg, 12/6/2016 12:01:41 PM

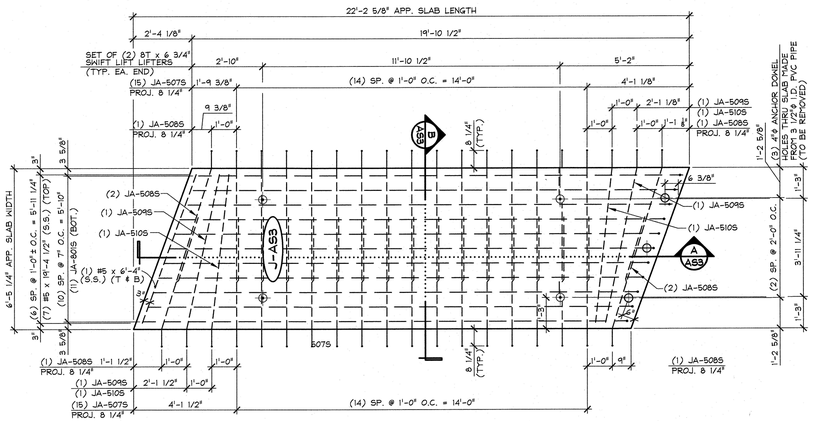

1 AS3 PLAN VIEW IN FORM

3/8" = 1'-0"

SHOPE NOTE: ADJUST REINF. TO CLEAR ANCHOR DOWEL HOLES

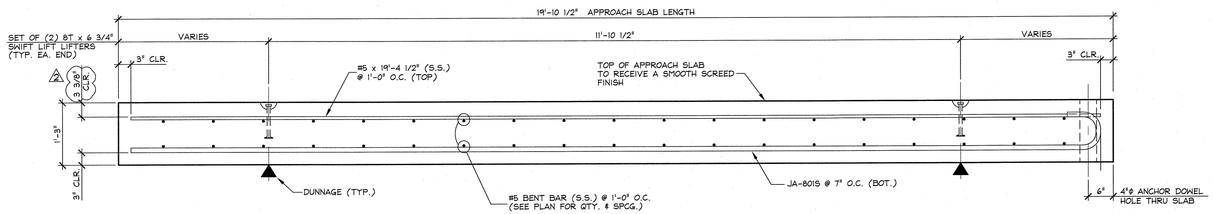

A AS3 LONGITUDINAL SECTION

3/4" = 1'-0"

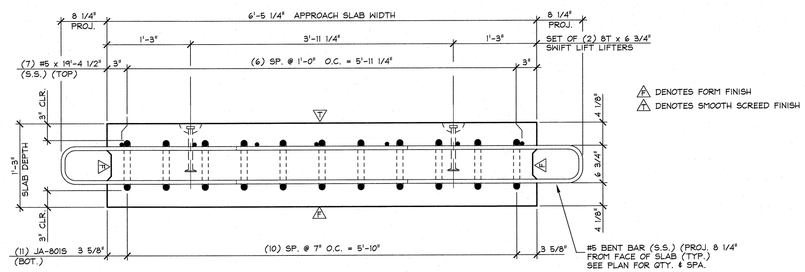

DENOTES FORM FINISH

DENOTES SMOOTH SCREED FINISH

B AS3 SECTION

1" = 1'-0"

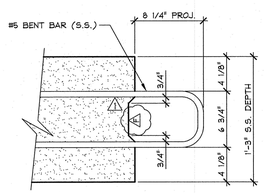

SHEAR KEY DETAIL

1 1/2" = 1'-0"

APPROVED: Approval of drawings and/or procedures indicates concurrence with the information presented and does not relieve the Contractor or Fabricator of compliance with all specifications and code requirements	X	Stantec
APPROVED AS NOTED		
REVISE AND RESUBMIT		
NOT REVIEWED		
Date: 12/12/16		
By: Michael J. Chenette		
This review by Stantec Consulting Services Inc. is for the sole purpose of ascertaining conformance with the general design concept. This review shall not mean that Stantec Consulting Services Inc approves the detail design inherent in the shop drawings, responsibility for which shall remain with the Contractor. Submitting same, and such review shall not relieve the Contractor of his responsibility for errors or omissions in the shop drawing or of his responsibility for meeting all requirements of the Contract Documents. The contractor is responsible for dimensions to be confirmed and correlated at the job site, for information that pertains solely to the fabrication processes or to techniques of construction and installation and for coordination of the work of all subtrades.		

SUBMITTED

DEC 6 2016

J. P. CARRARA & SONS, INC.
MIDDLEBURY, VT 05753

SHOP NOTE:
f'c = 5,000 PSI
f'ci = 3,000 PSI
MIX #445MSCC

MARK: J-AS3	QTY.: 1	WT.: 11.92 T	VOL.: 5.88 cy

MATERIAL LIST / APPROACH SLAB

ITEM	MARK	DESCRIPTION	QTY.
1	JA-507S	#5 BENT BAR (STAINLESS STEEL)	30
2	JA-508S	#5 BENT BAR (STAINLESS STEEL)	4
3	JA-509S	#5 BENT BAR (STAINLESS STEEL)	2
4	JA-510S	#5 BENT BAR (STAINLESS STEEL)	2
5			
6			
7	JA-801S	#5 BENT BAR (STAINLESS STEEL)	11
8			
9		#5 x 19'-4 1/2" (STAINLESS STEEL)	7
10		#5 x 6'-4" (STAINLESS STEEL)	2
11			
12			
13			
14		DAYTON 8T x 6 3/4" SWIFT LIFT (DOMESTIC)	4
15			

APPROVAL STAMP:

J.P. CARRARA & SONS INC.
Precast & Prestress Manufacturer
2484 CASE STR., MIDDLEBURY, VERMONT 05753 Phone:(802)388-6361 Fax:(802)388-9010

A.L. St. Onge
CONTRACTOR
MONTGOMERY, VERMONT

STATE OF VERMONT AGENCY OF TRANSPORTATION
COUNTY OF ORLEANS

TOWN OF JAY
VT. RTE 242, RURAL MAJOR COLLECTOR
BRIDGE NO.: 10 PROJECT NO.: BHF 0278 (3)

APPROACH SLAB DETAILS

DATE: OCT. 14, 2016
SCALE: NOTED
CHKD: DFTM: T.D.
JOB NO: 23500-016
DWG. NO: AS3

12/6/16 REVISED AS PER ENGINEERS COMM. T.D.
11/21/16 REVISED AS PER ENGINEERS COMM. T.D.

F:\VT-Bridges\23500-16 Jay Approach slabs\23500-AS1.dwg 12/6/2016 12:01:09 PM

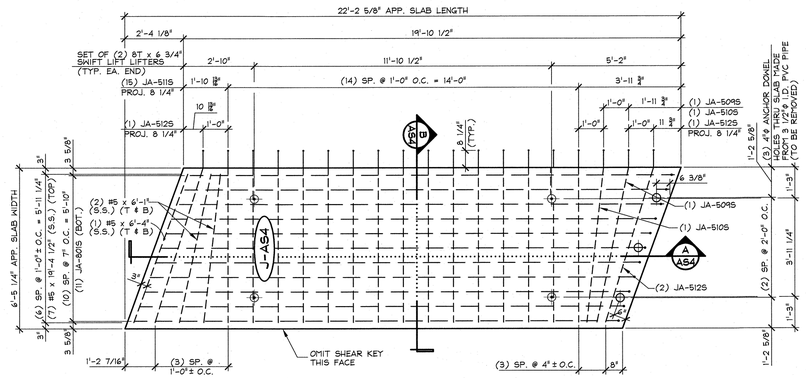

1 AS4 PLAN VIEW IN FORM

3/8" = 1'-0"

SHOPE NOTE: ADJUST REINF. TO CLEAR ANCHOR DOWEL HOLES

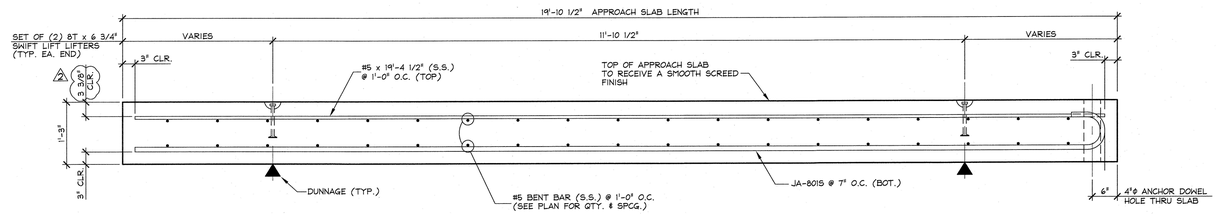

A AS4 LONGITUDINAL SECTION

3/4" = 1'-0"

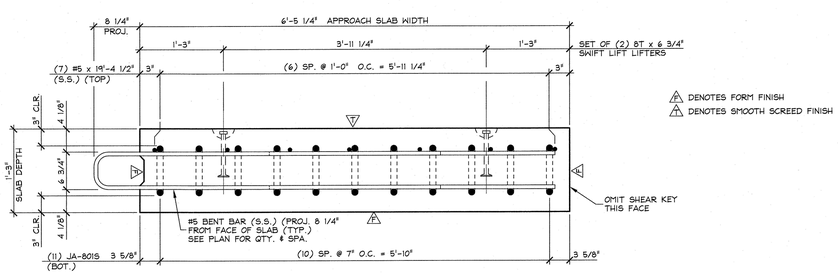

A DENOTES FORM FINISH

B DENOTES SMOOTH SCREED FINISH

B AS4 SECTION

1" = 1'-0"

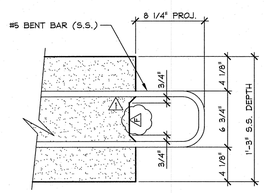

SHEAR KEY DETAIL

1 1/2" = 1'-0"

2	12/6/16	REVISED AS PER ENGINEERS COMM. T.D.
1	11/21/16	REVISED AS PER ENGINEERS COMM. T.D.

APPROVED: Approval of drawings and/or procedures indicates concurrence with the information presented and does not relieve the Contractor or Fabricator of compliance with all specifications and code requirements — X

APPROVED AS NOTED

REVISE AND RESUBMIT

NOT REVIEWED

Date: 12/12/16

By: Michael J. Chenette

This review by Stantec Consulting Services Inc. is for the sole purpose of ascertaining conformance with the general design concept. This review shall not mean that Stantec Consulting Services Inc approves the detail design inherent in the shop drawings, responsibility for which shall remain with the Contractor. Submitting same, and such review shall not relieve the Contractor of his responsibility for errors or omissions in the shop drawing or of his responsibility for meeting all requirements of the Contract Documents. The contractor is responsible for dimensions to be confirmed and correlated at the job site, for information that pertains solely to the fabrication processes or to techniques of construction and installation and for coordination of the work of all subtrades.

SUBMITTED

DEC 6 2016

J. P. CARRARA & SONS, INC.
MIDDLEBURY, VT 05753

SHOP NOTE.
Fc = 5,000 PSI
Fci = 3,000 PSI
MIX #448MSCC

MARK: J-AS4 | QTY.: 1 | WT.: 11.92 T | VOL.: 5.88 cy

MATERIAL LIST / APPROACH SLAB

ITEM	MARK	DESCRIPTION	QTY.
1	JA-5115	#5 BENT BAR (STAINLESS STEEL)	15
2	JA-5125	#5 BENT BAR (STAINLESS STEEL)	2
3	JA-5095	#5 BENT BAR (STAINLESS STEEL)	1
4	JA-5105	#5 BENT BAR (STAINLESS STEEL)	1
5			
6			
7	JA-8015	#5 BENT BAR (STAINLESS STEEL)	11
8			
9		#5 x 19'-4 1/2" (STAINLESS STEEL)	7
10		#5 x 6'-4" (STAINLESS STEEL)	2
11		#5 x 6'-1" (STAINLESS STEEL)	4
12			
13			
14		DAYTON 8T x 6 3/4" SWIFT LIFT (DOMESTIC)	4
15			

APPROVAL STAMP:

J.P. CARRARA & SONS INC.
Precast & Prestress Manufacturer
2464 CASE STR., MIDDLEBURY, VERMONT 05753 Phone:(802)388-6361 Fax:(802)388-9010

A.L. St. Onge
CONTRACTOR
MONTGOMERY, VERMONT

STATE OF VERMONT AGENCY OF TRANSPORTATION
COUNTY OF ORLEANS

TOWN OF JAY
VT. RTE 242, RURAL MAJOR COLLECTOR
BRIDGE NO.: 10 PROJECT NO.: BHF 0278 (3)

APPROACH SLAB DETAILS

DATE: OCT. 14, 2016
SCALE: NOTED
CHKD: DFTM: T.D.
JOB NO: 23500-016
DWG. NO: AS4

F:\VT-Bridges\23500-16 Jay Approach slabs\23500-AS1.dwg, 12/6/2016 12:00:45 PM

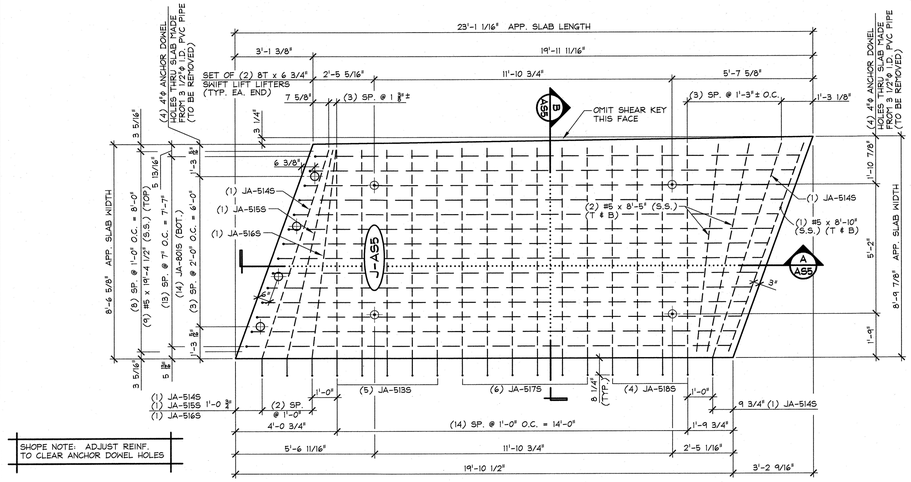

1 AS5 PLAN VIEW IN FORM
3/8" = 1'-0"

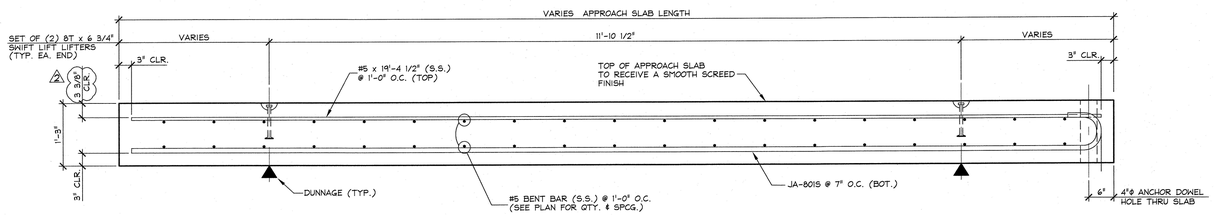

A AS5 LONGITUDINAL SECTION
3/4" = 1'-0"

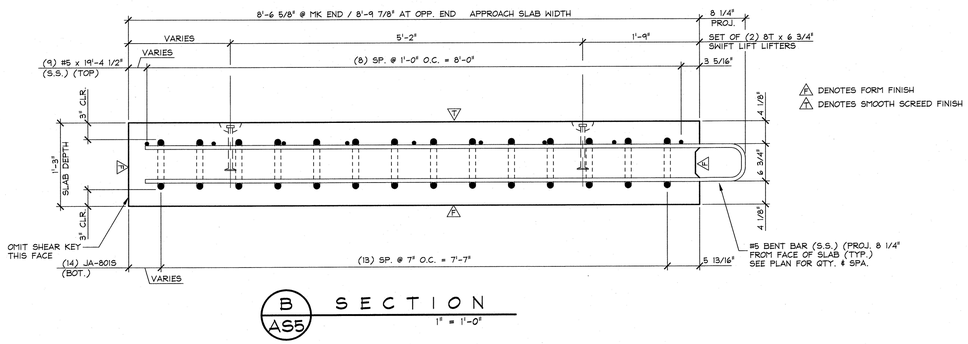

B AS5 SECTION
1" = 1'-0"

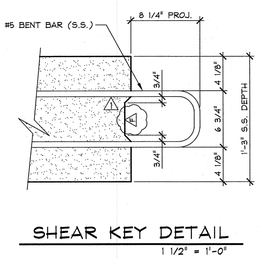

SHEAR KEY DETAIL
1 1/2" = 1'-0"

2	12/6/16	REVISED AS PER ENGINEERS COMM. T.D.
1	11/21/16	REVISED AS PER ENGINEERS COMM. T.D.

APPROVED: Approval of drawings and/or procedures indicates concurrence with the information presented and does not relieve the Contractor or Fabricator of compliance with all specifications and code requirements	X	Stantec
APPROVED AS NOTED		
REVISE AND RESUBMIT		
NOT REVIEWED		
Date: 12/12/16		
By: Michael J. Chenette		
This review by Stantec Consulting Services Inc. is for the sole purpose of ascertaining conformance with the general design concept. This review shall not mean that Stantec Consulting Services Inc approves the detail design inherent in the shop drawings, responsibility for which shall remain with the Contractor. Submitting same, and such review shall not relieve the Contractor of his responsibility for errors or omissions in the shop drawing or of his responsibility for meeting all requirements of the Contract Documents. The contractor is responsible for dimensions to be confirmed and correlated at the job site, for information that pertains solely to the fabrication processes or to techniques of construction and installation and for coordination of the work of all subtrades.		

SUBMITTED
DEC 6 2016
J. P. CARRARA & SONS, INC.
MIDDLEBURY, VT 05753

SHOP NOTE:
f'c = 5,000 PSI
f'ci = 3,000 PSI
MIX #445MSCC

MARK: J-AS5	QTY.: 1	WT.: 16.17 T	VOL.: 7.98 cy

MATERIAL LIST / APPROACH SLAB

ITEM	MARK	DESCRIPTION	QTY.
1	JA-5135	#5 BENT BAR (STAINLESS STEEL)	5
2	JA-5145	#5 BENT BAR (STAINLESS STEEL)	2
3	JA-5155	#5 BENT BAR (STAINLESS STEEL)	1
4	JA-5165	#5 BENT BAR (STAINLESS STEEL)	1
5	JA-5175	#5 BENT BAR (STAINLESS STEEL)	6
6	JA-5185	#5 BENT BAR (STAINLESS STEEL)	4
7			
8	JA-8015	#8 BENT BAR (STAINLESS STEEL)	14
9			
10		#5 x 19'-4 1/2" (STAINLESS STEEL)	9
11		#5 x 8'-5" (STAINLESS STEEL)	4
12		#5 x 8'-10" (STAINLESS STEEL)	2
13			
14		DAYTON 8T x 6 3/4" SWIFT LIFT (DOMESTIC)	4
15			

APPROVAL STAMP:

J.P. CARRARA & SONS INC.
Precast & Prestress Manufacturer
2464 CASE STR., MIDDLEBURY, VERMONT 05753 Phone:(802)388-6361 Fax:(802)388-9010

A.L. St. Onge
CONTRACTOR
MONTGOMERY, VERMONT

STATE OF VERMONT AGENCY OF TRANSPORTATION
COUNTY OF ORLEANS

TOWN OF JAY
VT. RTE 242, RURAL MAJOR COLLECTOR
BRIDGE NO.: 10 PROJECT NO.: BHF 0278 (3)

APPROACH SLAB DETAILS

DATE: OCT. 14, 2016
SCALE: NOTED
CHKD: DFTM: T.D.
JOB NO: 23500-016
DWG. NO: AS5

F:\VT-Bridges\23500-16 Jay Approach slabs\23500-AS1.dwg, 12/6/2016 12:00:20 PM

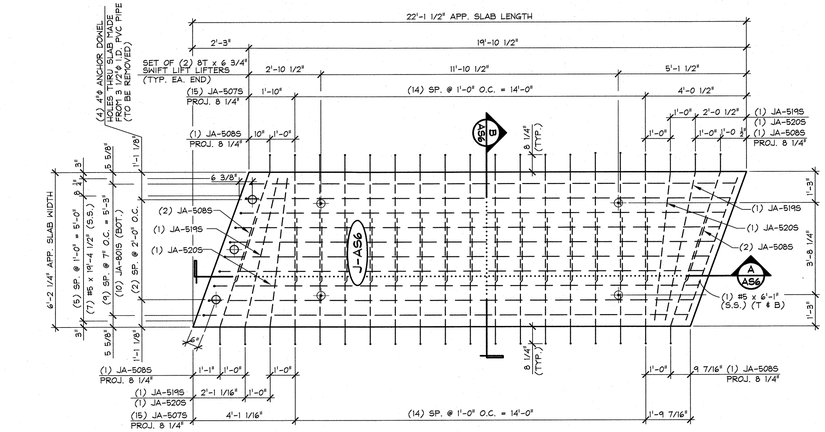

SHOPE NOTE: ADJUST REINF. TO CLEAR ANCHOR DOWEL HOLES

1 / AS6 PLAN VIEW IN FORM

3/8" = 1'-0"

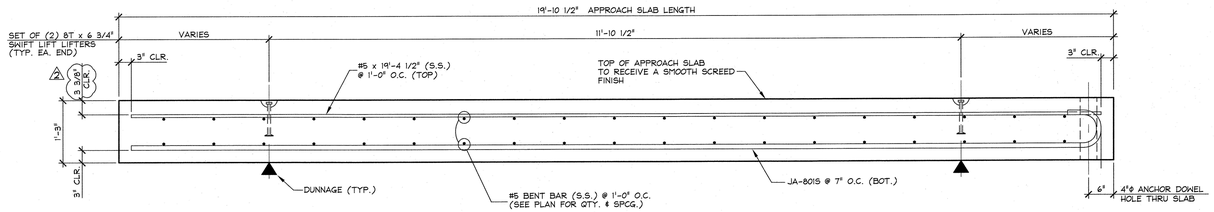

A / AS6 LONGITUDINAL SECTION

3/4" = 1'-0"

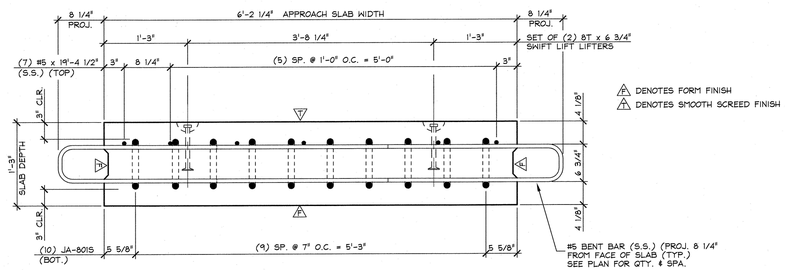

A DENOTES FORM FINISH

A DENOTES SMOOTH SCREED FINISH

B / AS6 SECTION

1" = 1'-0"

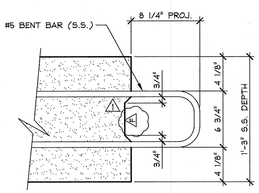

SHEAR KEY DETAIL

1 1/2" = 1'-0"

APPROVED: Approval of drawings and/or procedures indicates concurrence with the information presented and does not relieve the Contractor or Fabricator of compliance with all specifications and code requirements	X	Stantec
APPROVED AS NOTED		
REVISE AND RESUBMIT		
NOT REVIEWED		
Date: 12/12/16		
By: Michael J. Chenette		

This review by Stantec Consulting Services Inc. is for the sole purpose of ascertaining conformance with the general design concept. This review shall not mean that Stantec Consulting Services Inc approves the detail design inherent in the shop drawings, responsibility for which shall remain with the Contractor. Submitting same, and such review shall not relieve the Contractor of his responsibility for errors or omissions in the shop drawing or of his responsibility for meeting all requirements of the Contract Documents. The contractor is responsible for dimensions to be confirmed and correlated at the job site, for information that pertains solely to the fabrication processes or to techniques of construction and installation and for coordination of the work of all subtrades.

SUBMITTED

DEC 6 2016

J. P. CARRARA & SONS, INC.
MIDDLEBURY, VT 05753

SHOP NOTE:
F'c = 5,000 PSI
F'ci = 3,000 PSI
MIX #445MSCC

MARK: J-AS6	QTY.: 1	WT.: 11.48 T	VOL.: 5.67 cy

MATERIAL LIST / APPROACH SLAB

ITEM	MARK	DESCRIPTION	QTY.
1	JA-507S	#5 BENT BAR (STAINLESS STEEL)	30
2	JA-508S	#5 BENT BAR (STAINLESS STEEL)	4
3	JA-519S	#5 BENT BAR (STAINLESS STEEL)	2
4	JA-520S	#5 BENT BAR (STAINLESS STEEL)	2
5			
6			
7	JA-801S	#8 BENT BAR (STAINLESS STEEL)	10
8			
9		#5 x 19'-4 1/2" (STAINLESS STEEL)	7
10		#5 x 6'-1" (STAINLESS STEEL)	2
11			
12			
13			
14		DAYTON 8T x 6 3/4" SWIFT LIFT (DOMESTIC)	4
15			

2 12/6/16 REVISED AS PER ENGINEERS COMM. T.D.
1 11/21/16 REVISED AS PER ENGINEERS COMM. T.D.

APPROVAL STAMP:

J.P. CARRARA & SONS INC.
Precast & Prestress Manufacturer
2464 CASE STR., MIDDLEBURY, VERMONT 05753 Phone:(802)388-6361 Fax:(802)388-9010

A.L. St. Onge
CONTRACTOR
MONTGOMERY, VERMONT

STATE OF VERMONT AGENCY OF TRANSPORTATION
COUNTY OF ORLEANS

TOWN OF JAY
VT. RTE 242, RURAL MAJOR COLLECTOR
BRIDGE NO.: 10 PROJECT NO.: BHF 0278 (3)

APPROACH SLAB DETAILS

DATE: OCT. 14, 2016
SCALE: NOTED
CHKD: DFTM: T.D.
JOB NO: 23500-016
DWG. NO: AS6

F:\VT-Bridges\23500-16 Jay Approach slabs\23500-AS1.dwg, 12/6/2016 11:59:57 AM

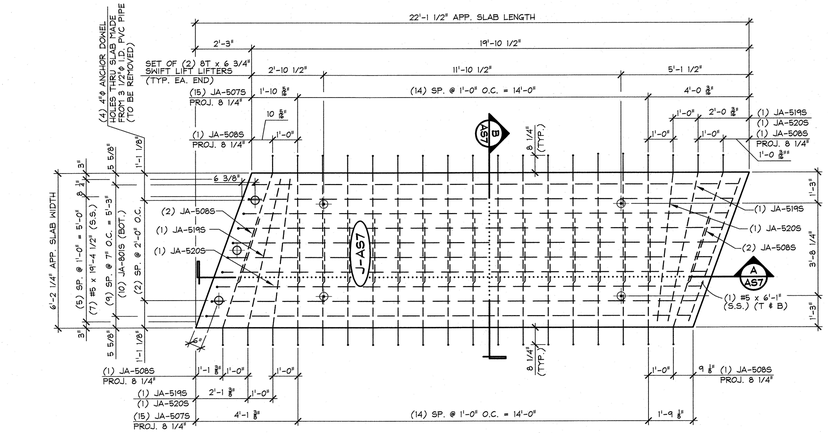

SHOPE NOTE: ADJUST REINF. TO CLEAR ANCHOR DOWEL HOLES

1 / AS7 PLAN VIEW IN FORM

3/8" = 1'-0"

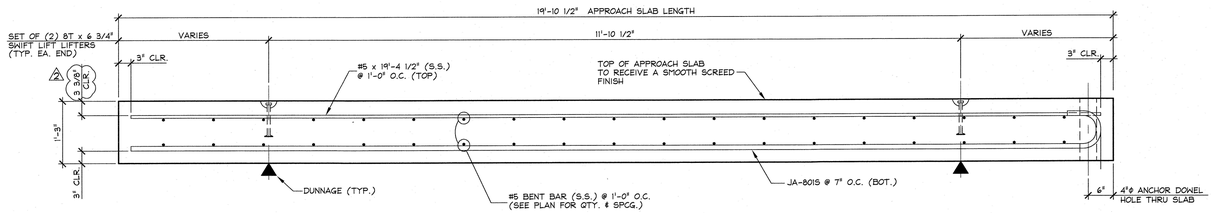

A / AS7 LONGITUDINAL SECTION

3/4" = 1'-0"

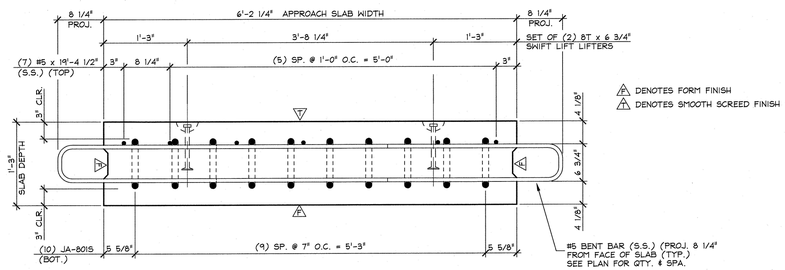

B / AS7 SECTION

1" = 1'-0"

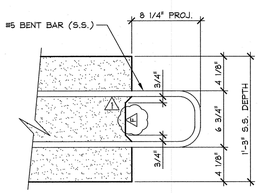

SHEAR KEY DETAIL

1 1/2" = 1'-0"

APPROVED: Approval of drawings and/or procedures indicates concurrence with the information presented and does not relieve the Contractor or Fabricator of compliance with all specifications and code requirements	X	Stantec
APPROVED AS NOTED		
REVISE AND RESUBMIT		
NOT REVIEWED		
Date: 12/12/16		
By: Michael J. Chenette		
This review by Stantec Consulting Services Inc. is for the sole purpose of ascertaining conformance with the general design concept. This review shall not mean that Stantec Consulting Services Inc approves the detail design inherent in the shop drawings, responsibility for which shall remain with the Contractor. Submitting same, and such review shall not relieve the Contractor of his responsibility for errors or omissions in the shop drawing or of his responsibility for meeting all requirements of the Contract Documents. The contractor is responsible for dimensions to be confirmed and correlated at the job site, for information that pertains solely to the fabrication processes or to techniques of construction and installation and for coordination of the work of all subtrades.		

SUBMITTED

DEC 6 2016

J. P. CARRARA & SONS, INC.
MIDDLEBURY, VT 05753

SHOP NOTE:
F'c = 5,000 PSI
F'ci = 3,000 PSI
MIX #44SMSCC

MARK: J-AS7	QTY.: 1	WT.: 11.48 T	VOL.: 5.67 cy

MATERIAL LIST / APPROACH SLAB

ITEM	MARK	DESCRIPTION	QTY.
1	JA-507S	#5 BENT BAR (STAINLESS STEEL)	30
2	JA-508S	#5 BENT BAR (STAINLESS STEEL)	4
3	JA-519S	#5 BENT BAR (STAINLESS STEEL)	2
4	JA-520S	#5 BENT BAR (STAINLESS STEEL)	2
5			
6			
7	JA-801S	#5 BENT BAR (STAINLESS STEEL)	10
8			
9		#5 x 19'-4 1/2" (STAINLESS STEEL)	7
10		#5 x 6'-1" (STAINLESS STEEL)	2
11			
12			
13			
14		DAYTON 8T x 6 3/4" SKIFT LIFT (DOMESTIC)	4
15			

APPROVAL STAMP:

J.P. CARRARA & SONS INC.
Precast & Prestress Manufacturer
2484 CASE STR., MIDDLEBURY, VERMONT 05753 Phone:(802)388-6361 Fax:(802)388-9010

A.L. St. Onge
CONTRACTOR
MONTGOMERY, VERMONT

STATE OF VERMONT AGENCY OF TRANSPORTATION
COUNTY OF ORLEANS

TOWN OF JAY
VT. RTE 242, RURAL MAJOR COLLECTOR
BRIDGE NO.: 10 PROJECT NO.: BHF 0278 (3)

APPROACH SLAB DETAILS

DATE: OCT. 14, 2016
SCALE: NOTED
CHKD: DFTM: T.D.
JOB NO: 23500-016
DWG. NO: AS7

12/6/16 REVISED AS PER ENGINEERS COMM. T.D.
11/21/16 REVISED AS PER ENGINEERS COMM. T.D.

F:\VT-Bridges\23500-16 Jay Approach slabs\23500-AS1.dwg, 12/6/2016 11:59:26 AM

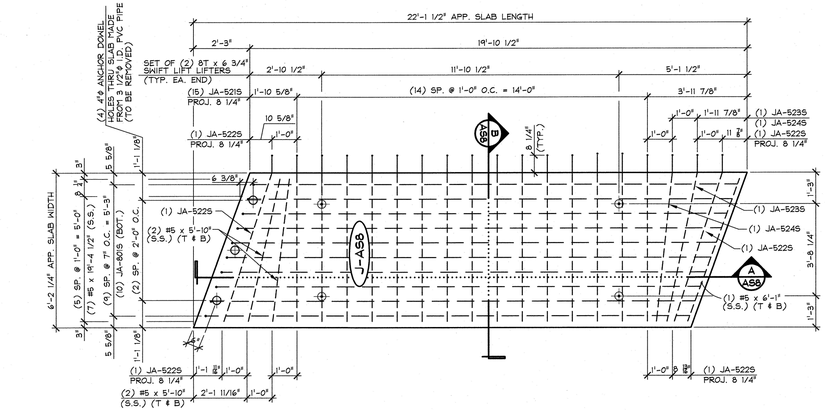

SHOPE NOTE: ADJUST REINF. TO CLEAR ANCHOR DOWEL HOLES

1 / AS8 PLAN VIEW IN FORM

3/8" = 1'-0"

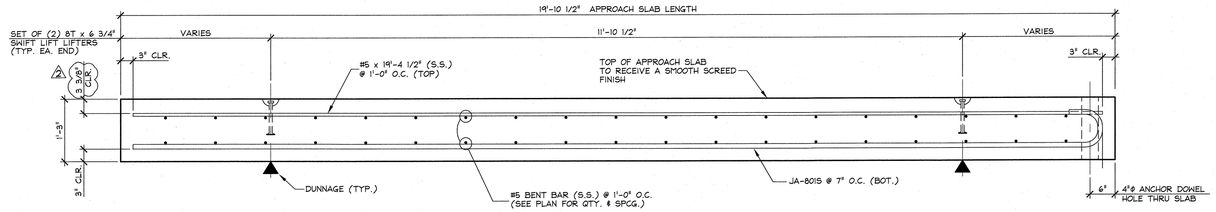

A / AS8 LONGITUDINAL SECTION

3/4" = 1'-0"

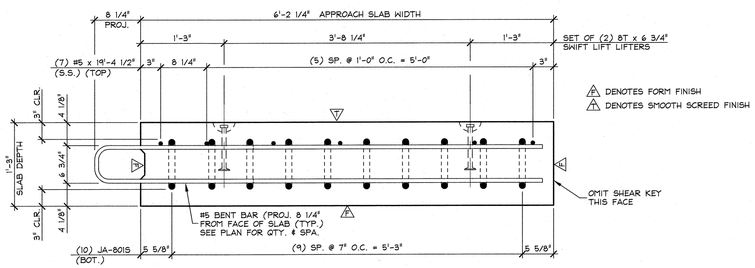

B / AS8 SECTION

1" = 1'-0"

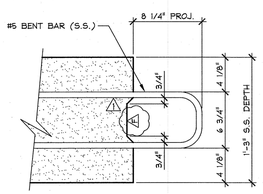

SHEAR KEY DETAIL

1 1/2" = 1'-0"

2	12/6/16	REVISED AS PER ENGINEERS COMM. T.D.
1	11/21/16	REVISED AS PER ENGINEERS COMM. T.D.

APPROVED: Approval of drawings and/or procedures indicates concurrence with the information presented and does not relieve the Contractor or Fabricator of compliance with all specifications and code requirements	X	Stantec
APPROVED AS NOTED		
REVISE AND RESUBMIT		
NOT REVIEWED		
Date: 12/12/16		
By: Michael J. Chenette		

This review by Stantec Consulting Services Inc. is for the sole purpose of ascertaining conformance with the general design concept. This review shall not mean that Stantec Consulting Services Inc approves the detail design inherent in the shop drawings, responsibility for which shall remain with the Contractor. Submitting same, and such review shall not relieve the Contractor of his responsibility for errors or omissions in the shop drawing or of his responsibility for meeting all requirements of the Contract Documents. The contractor is responsible for dimensions to be confirmed and correlated at the job site, for information that pertains solely to the fabrication processes or to techniques of construction and installation and for coordination of the work of all subtrades.

SUBMITTED

DEC 6 2016

J. P. CARRARA & SONS, INC.
MIDDLEBURY, VT 05753

SHOP NOTE:
F'c = 5,000 PSI
F'ci = 3,000 PSI
MIX #445M§CC

MARK: J-AS8	QTY.: 1	WT.: 11.48 T	VOL.: 5.67 cy

MATERIAL LIST / APPROACH SLAB

ITEM	MARK	DESCRIPTION	QTY.
1	JA-5215	#5 BENT BAR (STAINLESS STEEL)	15
2	JA-5225	#5 BENT BAR (STAINLESS STEEL)	2
3	JA-5235	#5 BENT BAR (STAINLESS STEEL)	1
4	JA-5245	#5 BENT BAR (STAINLESS STEEL)	1
5			
6			
7	JA-8015	#5 BENT BAR (STAINLESS STEEL)	10
8			
9		#5 x 19'-4 1/2" (STAINLESS STEEL)	7
10		#5 x 6'-1" (STAINLESS STEEL)	2
11		#5 x 5'-10" (STAINLESS STEEL)	4
12			
13			
14		DAYTON 8T x 6 3/4" SWIFT LIFT (DOMESTIC)	4
15			

APPROVAL STAMP:

J.P. CARRARA & SONS INC.
Precast & Prestress Manufacturer
2464 CASE STR., MIDDLEBURY, VERMONT 05753 Phone:(802)388-6361 Fax:(802)388-9010

A.L. St. Onge
CONTRACTOR
MONTGOMERY, VERMONT

STATE OF VERMONT AGENCY OF TRANSPORTATION
COUNTY OF ORLEANS

TOWN OF JAY
VT. RTE 242, RURAL MAJOR COLLECTOR
BRIDGE NO.: 10 PROJECT NO.: BHF 0278 (3)

APPROACH SLAB DETAILS

DATE: OCT. 14, 2016
SCALE: NOTED
CHKD: DFTM: T.D.
JOB NO: 23500-016
DWG. NO: AS8

F:\VT-Bridges\23500-16 Jay Approach slabs\23500-AS1.dwg, 12/6/2016 11:58:59 AM

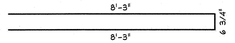

JA-501S
#5 BENT BAR
(STAINLESS STEEL)
USE 3 3/4"ø PIN
(5) REQ'D.

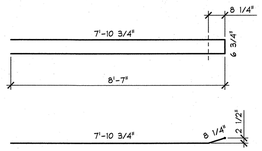

JA-502S
#5 BENT BAR
(STAINLESS STEEL)
USE 3 3/4"ø PIN
(2) REQ'D.

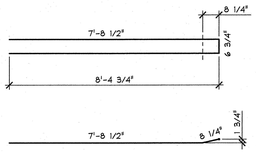

JA-503S
#5 BENT BAR
(STAINLESS STEEL)
USE 3 3/4"ø PIN
(1) REQ'D.

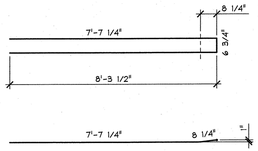

JA-504S
#5 BENT BAR
(STAINLESS STEEL)
USE 3 3/4"ø PIN
(1) REQ'D.

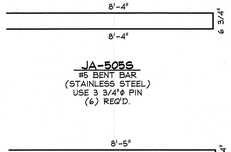

JA-505S
#5 BENT BAR
(STAINLESS STEEL)
USE 3 3/4"ø PIN
(6) REQ'D.

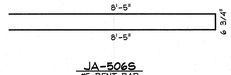

JA-506S
#5 BENT BAR
(STAINLESS STEEL)
USE 3 3/4"ø PIN
(4) REQ'D.

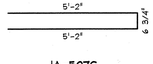

JA-507S
#5 BENT BAR
(STAINLESS STEEL)
USE 3 3/4"ø PIN
(120) REQ'D.

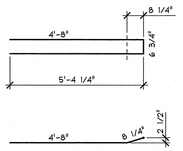

JA-508S
#5 BENT BAR
(STAINLESS STEEL)
USE 3 3/4"ø PIN
(16) REQ'D.

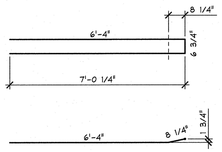

JA-509S
#5 BENT BAR
(STAINLESS STEEL)
USE 3 3/4"ø PIN
(5) REQ'D.

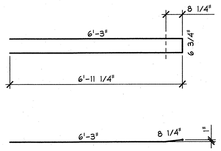

JA-510S
#5 BENT BAR
(STAINLESS STEEL)
USE 3 3/4"ø PIN
(5) REQ'D.

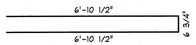

JA-511S
#5 BENT BAR
(STAINLESS STEEL)
USE 3 3/4"ø PIN
(15) REQ'D.

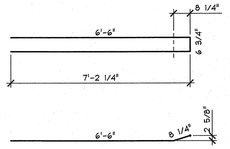

JA-512S
#5 BENT BAR
(STAINLESS STEEL)
USE 3 3/4"ø PIN
(2) REQ'D.

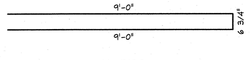

JA-513S
#5 BENT BAR
(STAINLESS STEEL)
USE 3 3/4"ø PIN
(5) REQ'D.

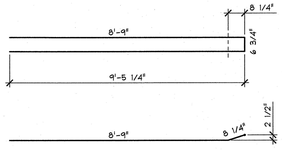

JA-514S
#5 BENT BAR
(STAINLESS STEEL)
USE 3 3/4"ø PIN
(2) REQ'D.

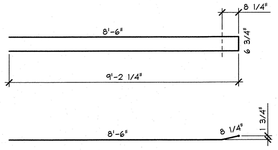

JA-515S
#5 BENT BAR
(STAINLESS STEEL)
USE 3 3/4"ø PIN
(1) REQ'D.

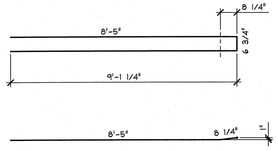

JA-516S
#5 BENT BAR
(STAINLESS STEEL)
USE 3 3/4"ø PIN
(1) REQ'D.

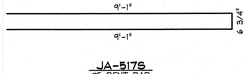

JA-517S
#5 BENT BAR
(STAINLESS STEEL)
USE 3 3/4"ø PIN
(6) REQ'D.

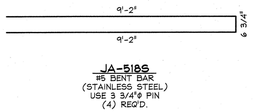

JA-518S
#5 BENT BAR
(STAINLESS STEEL)
USE 3 3/4"ø PIN
(4) REQ'D.

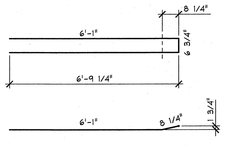

JA-519S
#5 BENT BAR
(STAINLESS STEEL)
USE 3 3/4"ø PIN
(4) REQ'D.

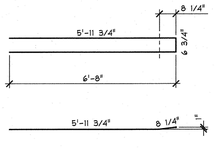

JA-520S
#5 BENT BAR
(STAINLESS STEEL)
USE 3 3/4"ø PIN
(4) REQ'D.

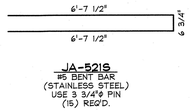

JA-521S
#5 BENT BAR
(STAINLESS STEEL)
USE 3 3/4"ø PIN
(15) REQ'D.

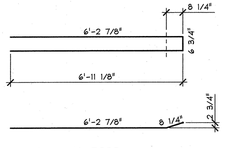

JA-522S
#5 BENT BAR
(STAINLESS STEEL)
USE 3 3/4"ø PIN
(2) REQ'D.

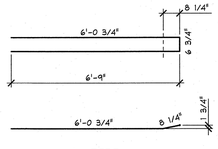

JA-523S
#5 BENT BAR
(STAINLESS STEEL)
USE 3 3/4"ø PIN
(1) REQ'D.

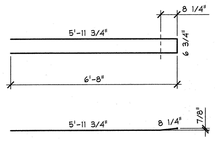

JA-524S
#5 BENT BAR
(STAINLESS STEEL)
USE 3 3/4"ø PIN
(1) REQ'D.

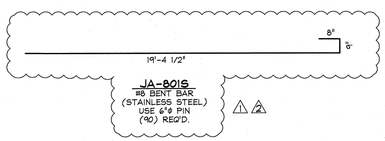

JA-801S
#8 BENT BAR
(STAINLESS STEEL)
USE 6"ø PIN
(90) REQ'D.

MISCELLANEOUS MATERIALS

ITEM	MARK	QTY.	DESCRIPTION	REMARKS
1	JA-501S	5	#5 BENT BAR (STAINLESS STEEL)	
2	JA-502S	2	#5 BENT BAR (STAINLESS STEEL)	
3	JA-503S	1	#5 BENT BAR (STAINLESS STEEL)	
4	JA-504S	1	#5 BENT BAR (STAINLESS STEEL)	
5	JA-505S	6	#5 BENT BAR (STAINLESS STEEL)	
6	JA-506S	4	#5 BENT BAR (STAINLESS STEEL)	
7	JA-507S	120	#5 BENT BAR (STAINLESS STEEL)	
8	JA-508S	16	#5 BENT BAR (STAINLESS STEEL)	
9	JA-509S	5	#5 BENT BAR (STAINLESS STEEL)	
10	JA-510S	5	#5 BENT BAR (STAINLESS STEEL)	
11	JA-511S	15	#5 BENT BAR (STAINLESS STEEL)	
12	JA-512S	2	#5 BENT BAR (STAINLESS STEEL)	
13	JA-513S	5	#5 BENT BAR (STAINLESS STEEL)	
14	JA-514S	2	#5 BENT BAR (STAINLESS STEEL)	
15	JA-515S	1	#5 BENT BAR (STAINLESS STEEL)	
16	JA-516S	1	#5 BENT BAR (STAINLESS STEEL)	
17	JA-517S	6	#5 BENT BAR (STAINLESS STEEL)	
18	JA-518S	4	#5 BENT BAR (STAINLESS STEEL)	
19	JA-519S	4	#5 BENT BAR (STAINLESS STEEL)	
20	JA-520S	4	#5 BENT BAR (STAINLESS STEEL)	
21	JA-521S	15	#5 BENT BAR (STAINLESS STEEL)	
22	JA-522S	2	#5 BENT BAR (STAINLESS STEEL)	
23	JA-523S	1	#5 BENT BAR (STAINLESS STEEL)	
24	JA-524S	1	#5 BENT BAR (STAINLESS STEEL)	
25	JA-801S	90	#8 BENT BAR (STAINLESS STEEL) ⚠1	⚠2
26		2	#8 x 3'-0" (STAINLESS STEEL)	FOR SAMPLING
27		54	#5 x 19'-4 1/2" (STAINLESS STEEL)	
28		4	#5 x 7'-8" (STAINLESS STEEL)	
29		2	#5 x 7'-9" (STAINLESS STEEL)	
30		7	#5 x 6'-4" (STAINLESS STEEL)	(1) FOR SAMPLING
31		10	#5 x 6'-1" (STAINLESS STEEL)	
32		4	#5 x 8'-5" (STAINLESS STEEL)	
33		2	#5 x 8'-10" (STAINLESS STEEL)	
34		4	#5 x 5'-10" (STAINLESS STEEL)	
35		32	DAYTON 8T x 6 3/4" SWIFT LIFT (DOMESTIC)	

APPROVED: Approval of drawings and/or procedures indicates concurrence with the information presented and does not relieve the Contractor or Fabricator of compliance with all specifications and code requirements	X
APPROVED AS NOTED	
REVISE AND RESUBMIT	
NOT REVIEWED	
Date: 12/12/16	
By: Michael J. Chenette	

This review by Stantec Consulting Services Inc. is for the sole purpose of ascertaining conformance with the general design concept. This review shall not mean that Stantec Consulting Services Inc approves the detail design inherent in the shop drawings, responsibility for which shall remain with the Contractor. Submitting same, and such review shall not relieve the Contractor of his responsibility for errors or omissions in the shop drawing or of his responsibility for meeting all requirements of the Contract Documents. The contractor is responsible for dimensions to be confirmed and correlated at the job site, for information that pertains solely to the fabrication processes or to techniques of construction and installation and for coordination of the work of all subtrades.

SUBMITTED
DEC 6 2016
J. P. CARRARA & SONS, INC.
MIDDLEBURY, VT 05753

APPROVAL STAMP:

J.P. CARRARA & SONS INC.
Precast & Prestress Manufacturer
2464 CASE STR., MIDDLEBURY, VERMONT 05753 Phone:(802)388-6361 Fax:(802)388-9010
A.L. St. Onge
CONTRACTOR
MONTGOMERY, VERMONT

STATE OF VERMONT AGENCY OF TRANSPORTATION
COUNTY OF ORLEANS

TOWN OF JAY
VT. RTE 242, RURAL MAJOR COLLECTOR
BRIDGE NO.: 10 PROJECT NO.: BHF 0278 (3)

MISCELLANEOUS MATERIALS

DATE: OCT. 14, 2016
SCALE: NOTED
CHKD: DFTM: T.D.
JOB NO: 23500-016
DWG. NO: M1

⚠2 12/6/16 REVISED AS PER ENGINEERS COMM. T.D.
⚠1 11/21/16 REVISED AS PER ENGINEERS COMM. T.D.

F:\VT-Bridges\23500-16 Jay Approach slabs\23500-M1.dwg, 12/6/2016 2:33:31 PM

32' - PAY LIMIT FOR TRANSITION - BRIDGE RAILING TO BOX BEAM GUIDE RAIL

ELEVATION VIEW

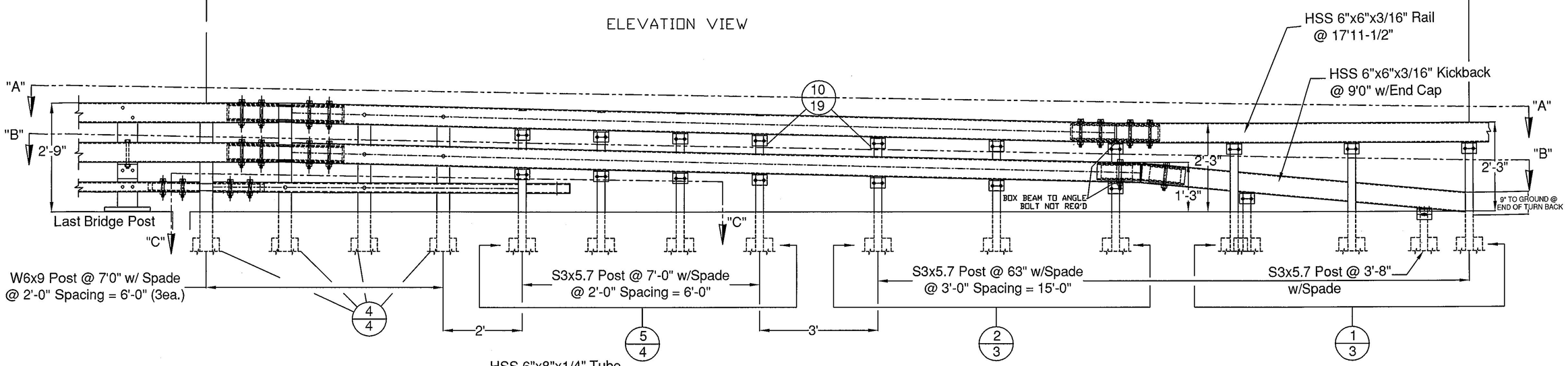

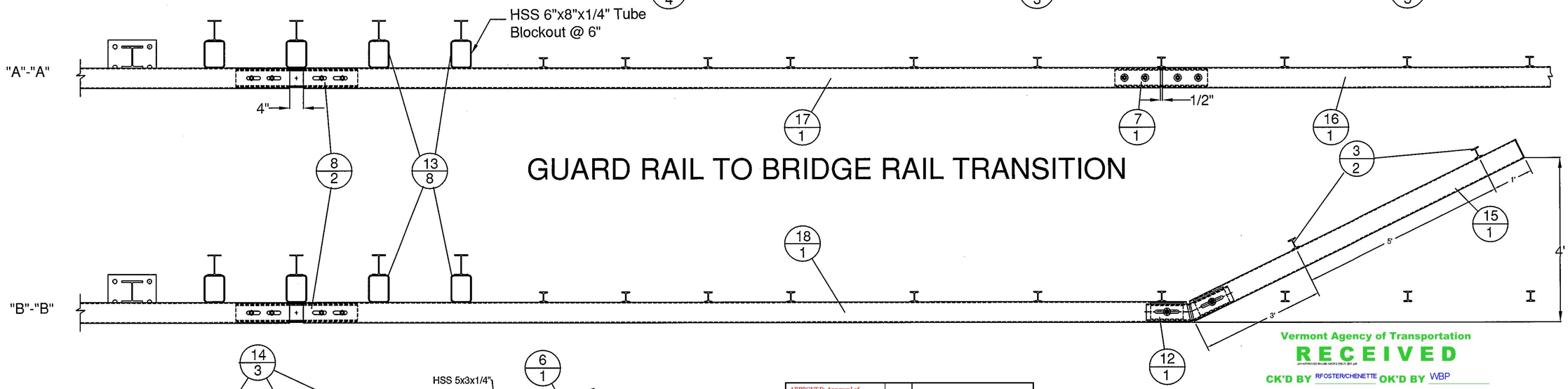

GUARD RAIL TO BRIDGE RAIL TRANSITION

APPROVED: Approval of drawings and/or procedures indicates concurrence with the information presented and does not relieve the Contractor or Fabricator of compliance with all specifications and code requirements		Stantec
APPROVED AS NOTED	X	
REVISE AND RESUBMIT		
NOT REVIEWED		
Date: 02/21/17		
By: Michael J. Chenette		

This review by Stantec Consulting Services Inc. is for the sole purpose of ascertaining conformance with the general design concept. This review shall not mean that Stantec Consulting Services Inc approves the detail design inherent in the shop drawings, responsibility for which shall remain with the Contractor. Submitting same, and such review shall not relieve the Contractor of his responsibility for errors or omissions in the shop drawing or of his responsibility for meeting all requirements of the Contract Documents. The contractor is responsible for dimensions to be confirmed and correlated at the job site, for information that pertains solely to the fabrication processes or to techniques of construction and installation and for coordination of the work of all subtrades.

Vermont Agency of Transportation

RECEIVED

CK'D BY RFOSTER/CHENETTE OK'D BY WBP

February 15, 2017

RESUBMIT NO Approved AsNoted

BY WPELLETIER DATE 02/21/2017

ITEM #: 621.725

STRUCTURAL STEEL TO COMPLY W/ ASTM A6

TOLERANCE UNLESS OTHERWISE NOTED:
FRACTIONS = ± 1/16"
ANGLES = ± 1/2°
DIAMETERS = ± 1/32"

SHEET 1 OF 5

GUARD RAIL TO BRIDGE RAIL TRANSITION DETAILS SHEET

VT ROUTE 242 (RURAL MAJOR COLLECTOR) BRIDGE # 10

TOWN OF JAY, COUNTY OF ORLEANS, VT.

R	NO.	DATE	DESCRIPTION	BY
E	1	2/8/17	REVISED PER 12/22/16 MARK-UP	D.K.
V				

R	NO.	DATE	DESCRIPTION	BY
E				
V				

ELDERLEE, INC.
OAKS CORNERS, NEW YORK 14518
email: dlong@elderlee.com / epeek@elderlee.com
Tel: 315-789-6670 Fax: 315-789-6615

CERTIFIED FABRICATOR

ORTHOGRAPHIC PROJECTION

DRAWN	D.K.	12/7/16
CHECKED	E.P.	12/7/16
APPROVED	D.L.	12/9/16
SCALE	SCHEMATIC	
DRAWING NO.	F.R. LaFAYETTE-JAY T	

Vermont Agency of Transportation
RECEIVED
CK'D BY RFOSTER/CHENETTE OK'D BY WBP
February 15, 2017
RESUBMIT NO Approved AsNoted
BY WPELLETIER DATE 02/21/2017

PLAN VIEW

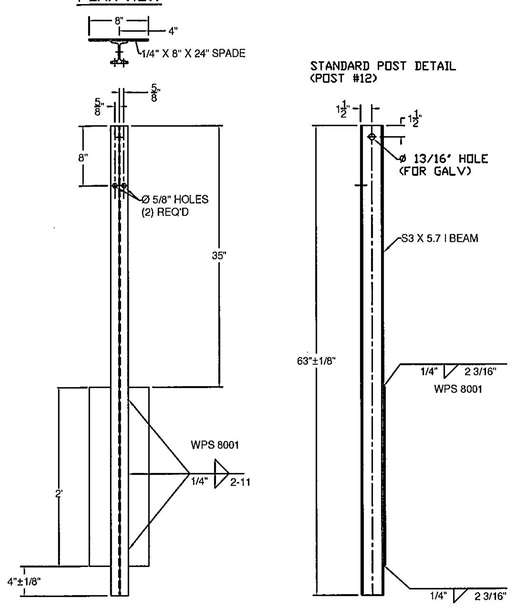

FRONT (ITEM # 1) SIDE

PLAN VIEW

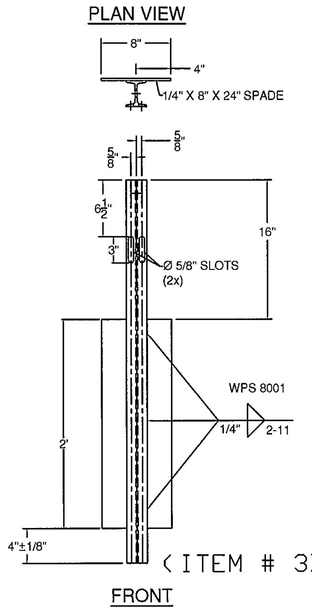

(ITEM # 3)

FRONT

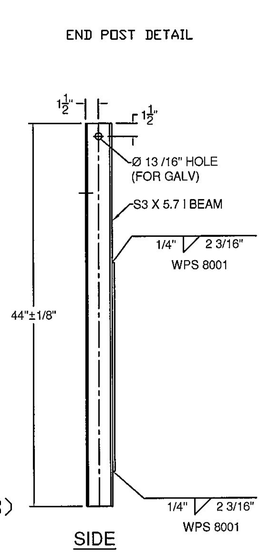

SIDE

PLAN VIEW

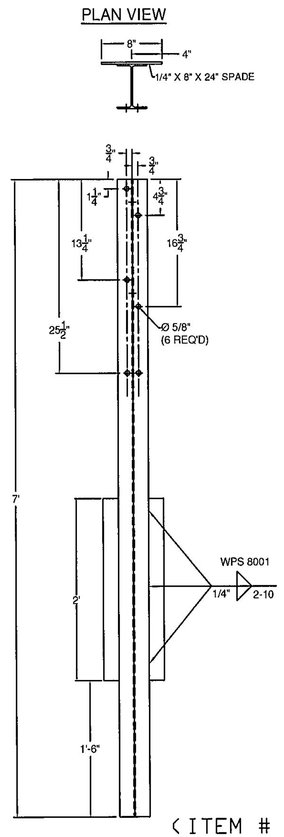

(ITEM # 4)

FRONT

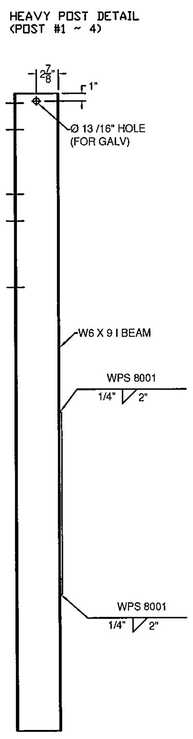

SIDE

PLAN VIEW

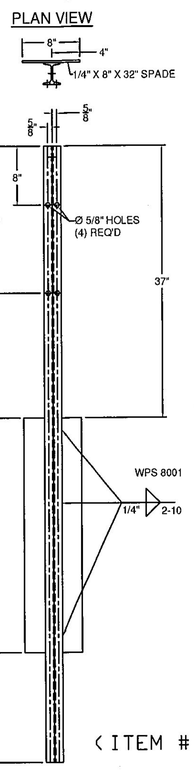

(ITEM # 5)

FRONT

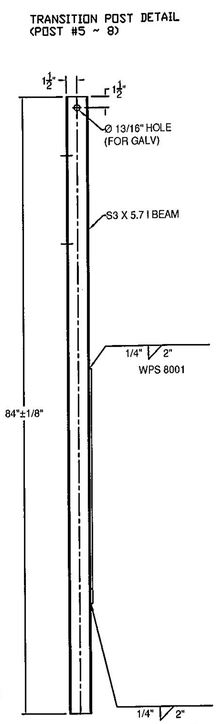

SIDE

PLAN VIEW

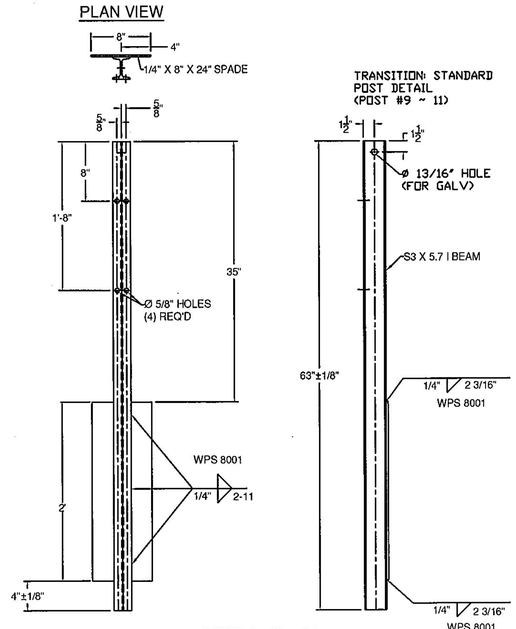

FRONT (ITEM # 2)

SIDE

GENERAL NOTES:

1) ALL RAILING IS TO BE FABRICATED AND ERECTED ACCORDING TO SECTION 621 OF THE STANDARD SPECIFICATIONS.
2) BOLTS SHALL BE TORQUED SNUG TIGHT (APPROXIMATELY 100 FT-LB).
3) PROTRUSIONS CAUSED BY WELDING OR GALVANIZING ARE NOT PERMITTED ON THE ADJOINING SURFACES OF THE BOX BEAM RAILS, SPLICE TUBES AND FILL PLATES.
4) BOX BEAM TUBE AND STEEL POST MATERIALS, DIMENSION SIZES AND NOTES SHALL BE THE SAME AS THOSE OF THE BRIDGE RAIL, UNLESS OTHERWISE NOTED.
5) ANY BENDING OF RAIL SHALL BE DONE AT THE FABRICATION PLANT. RADII GREATER THAN 16' TO BE CURVED ON A TUBE BENDING MACHINE, RADII EQUAL OR LESS THAN 16' TO BE "PIE CUT" AND WELDED. CURVED RAILING WIIL HAVE AN 18" LENGTH ON EACH END STRAIGHT TO ACCOMADATE SPLICES. "PIE CUTS ARE LOCATED SO AS TO NOT CONFLICT WITH POST FASTENING HOLES. PIE CUTS WILL BE WELDED ACCORDING TO PROCEDURE WPS-8003.

BILL OF MATERIALS (EACH CORNER)

ITEM #	QTY.	COMPONENT #	DESCRIPTION	MATERIAL (ASTM)
1	3	0013.57021	S3 X 5.7 POST, PUNCH 8' W/SPD @ 63' LG	ASTM A572 Gr. 50
2	3	0013.57025	S3 X 5.7 POST, PUNCH 8', & 20' W/SPD @ 63' LG	ASTM A572 Gr. 50
3	2	0013.57060	S3 X 5.7 END POST W/SPD @ 3'-8' LG	ASTM A572 Gr. 50
4	4	0013.09001	W6 X 9 POST @ 7' W/SPD & 5/8" HOLES	ASTM A572 Gr. 50
5	4	0013.57010	S3 X 5.7 POST, PUNCH 8' & 20', W/8X32" SPADE @7'	ASTM A572 Gr. 50
6	1	0033.80403	3 X 5' BTM TRANS RAIL W/5'-0" KB, EXP END	A500 Gr. B
7	1	0033.00640	HSS 5X5 TUBE SPLICE @27' LG W/ 1/4' SHIMS	A500 Gr. B / A572 Gr 50
8	2	0033.00730	HSS 5x5 EXP TUBE SPLICE @ 36' LG W/ 1/4' SHIMS	A500 Gr. B / A572 Gr 50
9	1	0033.00930	BR EXP BAR SPLICE 2-1/8' X 4-1/4' @ 36' LG	ASTM A36
10	19	0054.00050	REG BB SHELF ANGLES @ 4-1/2'	ASTM A36
12	1	0054.00074	HSS 5 X 5 X 5/16' DBL BEND TUBE SPL @ 27' LG,	A500 Gr. B / A572 Gr 50
13	8	0054.00563	6 X 8 X 1/4' TRANS. TUBE B/O @ 6' LG	A500 Gr. B
14	3	0054.00565	6 X 8 X 1/4' TRANS. TUBE B/O @ 3' LG	A500 Gr. B
15	1	0054.09000	6 X 6 x 3/16' BB @ 9'-0' KICKBACK, W/ CAP, & 13° MITER	A500 Gr. B / A36
16	1/2	0054.18000	6 X 6 x 3/16' BB @ (9'-0' THIS PAY ITEM), DRILL 3' CC	A500 Gr. B
17	1	0054.90092	6 X 6 x 3/16' BB TOP TRANS @ 20'-9 5/8' LG W/EXP END	A500 Gr. B
18	1	0054.90093	6 X 6 x 3/16' BB BTM TRANS @ 21'-4 5/8' LG W/EXP END	A500 Gr. B
19	17	0080.03355	3/8' X 7 1/2' BOLT, NUT, & 2 FW	A307, A563 DH, F436
20	19	0080.04100	1/2' x 1-1/2' BOLT, NUT, & FW	A307, A563 DH, F436
21	22	0080.04120	1/2' x 1-1/2' BOLT, NUT, 2 FW & LW	A307, A563 DH, F436
22	4	0080.06255	3/4' X 4-1/2' BOLT, NUT, 2 FW	A325, A563 DH, F436
23	14	0080.06340	3/4' X 7-1/2' BOLT, NUT, 2 FW	A325, A563 DH, F436
24	6	0080.06370	3/4' X 8' CARR BOLT, NUT, FW & LW	A307, A563 DH, F436

HARDWARE NOTES

ITEM #	FUNCTION
19	BOLT RAIL (ITEMS #'S 16, 17, & 18) TO SHELF ANGLE (ITEM #10)
20	BOLT SHELF ANGLE (ITEM #'S 10 & 11) TO POST #'S 1, 2, 3, & 5
21	BOLT BLOCK-OUTS (ITEM #'S 13 & 14) TO HEAVY POST
22	(4) PER SPLICE BAR (ITEM #9), & (2) PER ITEM #12
23	(4) PER SPLICE TUBING (ITEM #'S 7 & 8)
24	BOLT RAIL (ITEMS #'S 6,17, & 18 TO BLOCK-OUTS (ITEM #'S 13 & 14) [WHERE FASTENED]

APPLICABLE NOTES IN THE BRIDGE RAIL DRAWING SHALL ALSO BE APPLICABLE ON THESE DRAWINGS

APPROVED Approval of this review indicates only that the submission general conforms with the information presented and does not relieve the Contractor or Fabricator of compliance with all contract requirements and ends requirements.

APPROVED AS NOTED	X
REVISE AND RESUBMIT	
NOT REVIEWED	

Date: 02/21/17

By: Michael J. Chenette

This review by Stantec Consulting Services Inc. is for the sole purpose of ascertaining conformance with the general design concept. This review by Stantec Consulting Services Inc. does not relieve the Contractor from responsibility for any errors or omissions in the shop drawing or of his responsibility for meeting all requirements of the Contract Documents. The Contractor is responsible for dimensions to be confirmed and correlated at the jobsite, for information that pertains solely to the fabrication processes or to techniques of erection and installation and for coordination of the work of all subtrades.

Stantec

ITEM #: 621.725

STRUCTURAL STEEL TO COMPLY W/ ASTM A6

TOLERANCE UNLESS OTHERWISE NOTED:
FRACTIONS = ± 1/16"
ANGLES = ± 1/2°
DIAMETERS = ± 1/32"

SHEET 2 OF 5

GUARD RAIL TO BRIDGE RAIL TRANSITION DETAILS SHEET

VT ROUTE 242 (RURAL MAJOR COLLECTOR) BRIDGE # 10
TOWN OF JAY, COUNTY OF ORLEANS, VT.

R	NO.	DATE	DESCRIPTION	BY	R	NO.	DATE	DESCRIPTION	BY
E	1	2/8/17	REVISED PER 12/22/16 MARK-UP	D.K.	E				
V					V				

ELDERLEE, INC.
OAKS CORNERS, NEW YORK 14518
email: dlong@elderlee.com / epeek@elderlee.com
Tel: 315-789-6670 Fax: 315-789-6615

CERTIFIED FABRICATOR

ORTHOGRAPHIC PROJECTION

DRAWN	D.K.	12/7/16
CHECKED	E.P.	12/7/16
APPROVED	D.L.	12/9/16
SCALE	SCHEMATIC	
DRAWING NO.	F.R. LaFAYETTE-JAY T	

(ITEM # 6)

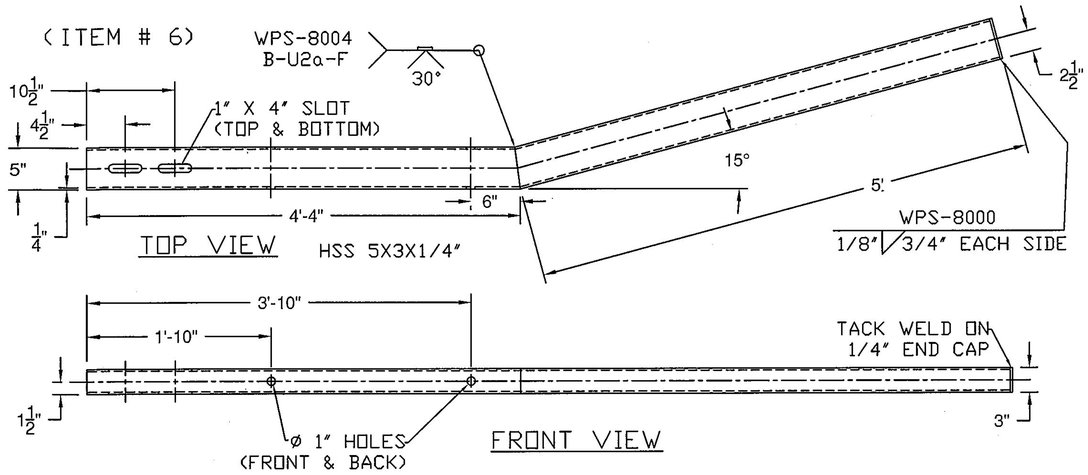

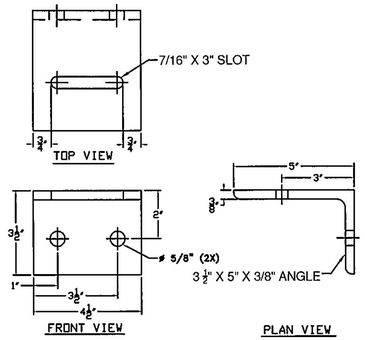

(ITEM # 10)

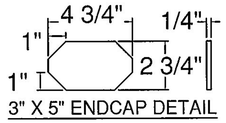

3" X 5" ENDCAP DETAIL

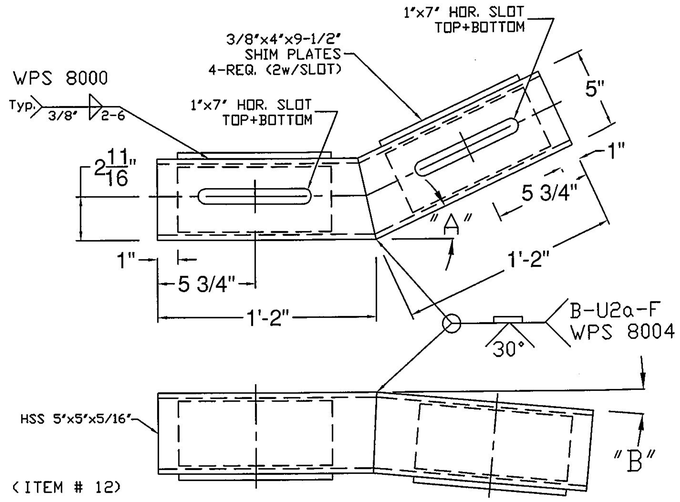

HARDWARE PER SHEET 2, HARDWARE NOTES

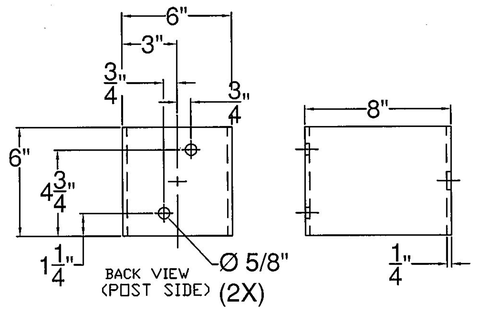

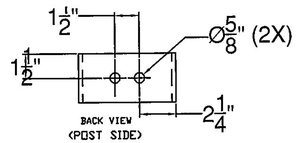

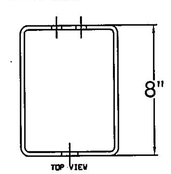

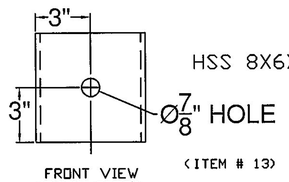

(ITEM # 13)

HSS 8X6X1/4"

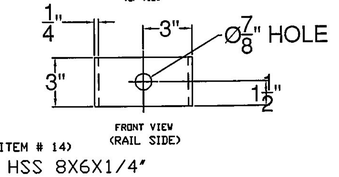

(ITEM # 14)

HSS 8X6X1/4"

Vermont Agency of Transportation

RECEIVED

JAY-APPROVED RAILING SHOPS FEB 21 2017.pdf

CK'D BY RFOSTER/CHENETTE OK'D BY WBP

February 15, 2017

RESUBMIT NO Approved AsNoted

BY WPELLETIER DATE 02/21/2017

BACK VIEW HSS 6X6X3/16"

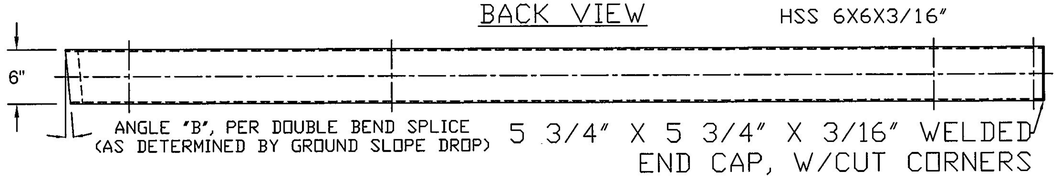

TOP VIEW

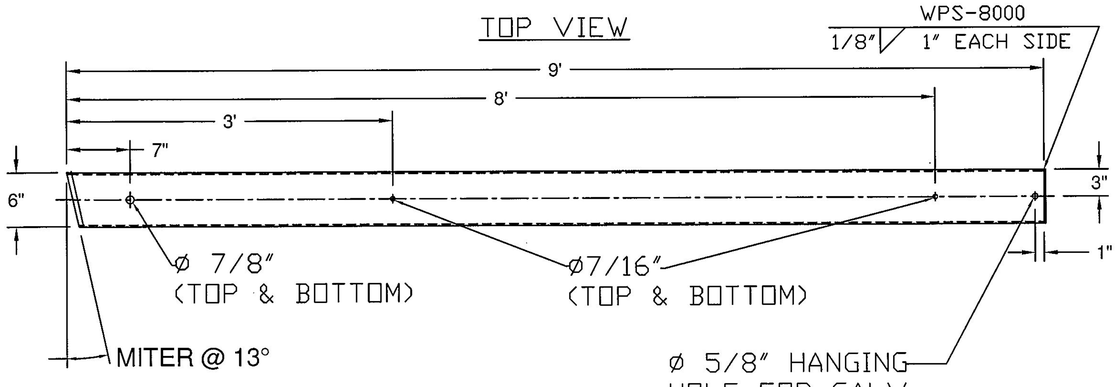

(ITEM # 15)

APPROVED: Approval of drawings and/or procedures indicates concurrence with the information presented and does not relieve the Contractor or Fabricator of compliance with all specifications and code requirements	
APPROVED AS NOTED	X
REVISE AND RESUBMIT	
NOT REVIEWED	
Date: 02/21/17	
By: Michael J. Chenette	

Stantec

This review by Stantec Consulting Services Inc. is for the sole purpose of ascertaining conformance with the general design concept. This review shall not mean that Stantec Consulting Services Inc approves the detail design inherent in the shop drawings, responsibility for which shall remain with the Contractor. Submitting same, and such review shall not relieve the Contractor of his responsibility for errors or omissions in the shop drawing or of his responsibility for meeting all requirements of the Contract Documents. The contractor is responsible for dimensions to be confirmed and correlated at the job site, for information that pertains solely to the fabrication processes or to techniques of construction and installation and for coordination of the work of all subtrades.

END CAP FOR ITEM #15

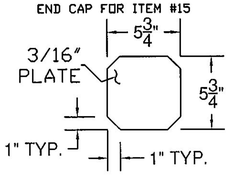

ITEM #: 621.725

STRUCTURAL STEEL TO COMPLY W/ ASTM A6

TOLERANCE UNLESS OTHERWISE NOTED:
FRACTIONS = ± 1/16"
ANGLES = ± 1/2°
DIAMETERS = ± 1/32"

SHEET 3 OF 5

GUARD RAIL TO BRIDGE RAIL TRANSITION DETAILS SHEET

VT ROUTE 242 (RURAL MAJOR COLLECTOR) BRIDGE # 10
TOWN OF JAY, COUNTY OF ORLEANS, VT.

R E V	NO.	DATE	DESCRIPTION	BY
	1	2/8/17	REVISED PER 12/22/16 MARK-UP	D.K.

R E V	NO.	DATE	DESCRIPTION	BY

ELDERLEE, INC.
OAKS CORNERS, NEW YORK 14518
email: dlong@elderlee.com / epeek@elderlee.com
Tel: 315-789-6670 Fax: 315-789-6615

CERTIFIED FABRICATOR

ORTHOGRAPHIC PROJECTION

DRAWN	D.K.	12/7/16
CHECKED	E.P.	12/7/16
APPROVED	D.L.	12/9/16
SCALE	SCHEMATIC	
DRAWING NO.	F.R. LaFAYETTE-JAY T	

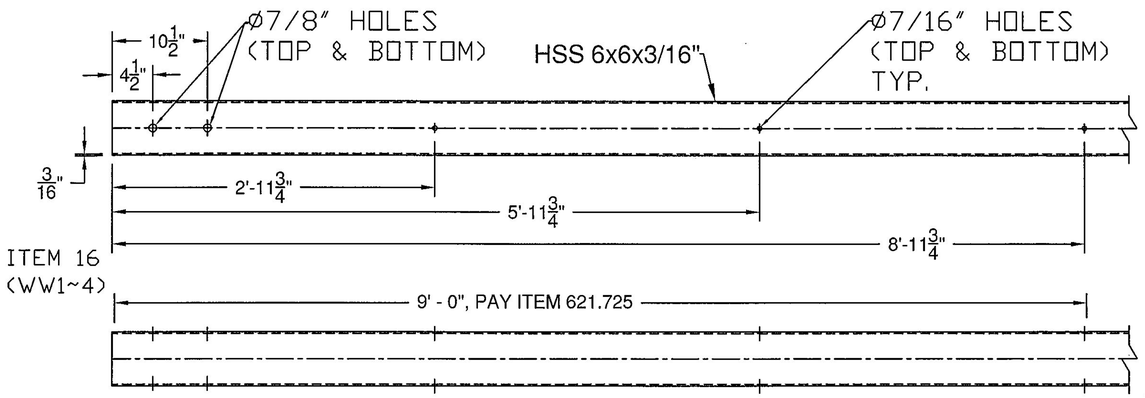

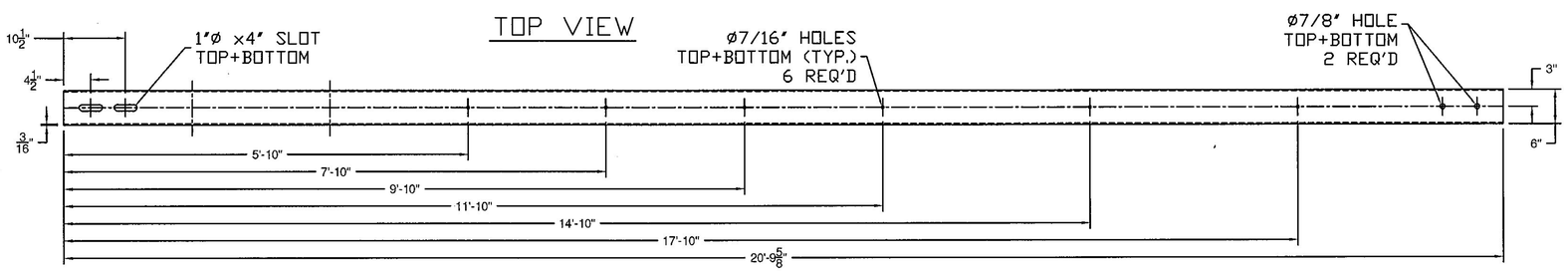

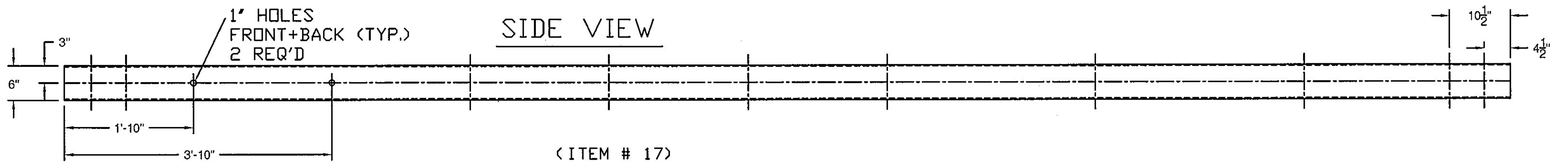

(ITEM # 17)

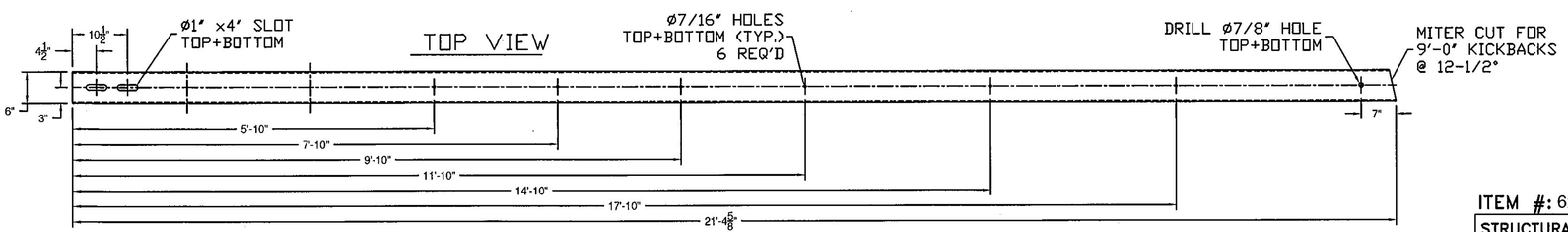

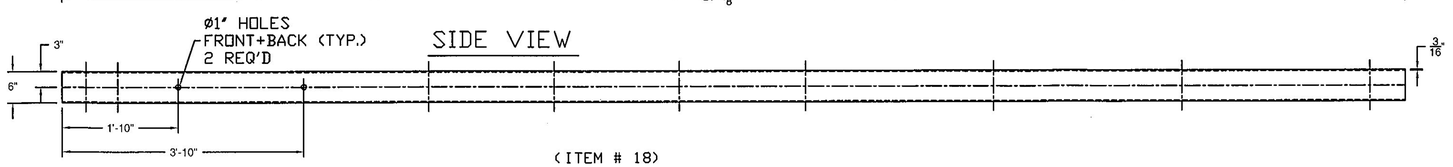

(ITEM # 18)

Vermont Agency of Transportation
RECEIVED
CK'D BY RFOSTER/CHENETTE OK'D BY WPELLETIER
February 15, 2017
RESUBMIT NO — Approved AsNoted
BY WPELLETIER — DATE 02/21/2017

APPROVED: Approval of drawings and/or procedures indicates concurrence with the information presented and does not relieve the Contractor or Fabricator of compliance with all specifications and code requirements		Stantec
APPROVED AS NOTED	X	
REVISE AND RESUBMIT		
NOT REVIEWED		
Date: 02/21/17		
By: Michael J. Chenette		
This review by Stantec Consulting Services Inc. is for the sole purpose of ascertaining conformance with the general design concept. This review shall not mean that Stantec Consulting Services Inc approves the detail design inherent in the shop drawings, responsibility for which shall remain with the Contractor. Submitting same, and such review shall not relieve the Contractor of his responsibility for errors or omissions in the shop drawing or of his responsibility for meeting all requirements of the Contract Documents. The contractor is responsible for dimensions to be confirmed and correlated at the job site, for information that pertains solely to the fabrication processes or to techniques of construction and installation and for coordination of the work of all subtrades.		

ITEM #: 621.725

SHEET 4 OF 5

STRUCTURAL STEEL TO COMPLY W/ ASTM A6

TOLERANCE UNLESS OTHERWISE NOTED:
FRACTIONS = ± 1/16"
ANGLES = ± 1/2°
DIAMETERS = ± 1/32"

GUARD RAIL TO BRIDGE RAIL TRANSITION DETAILS SHEET

VT ROUTE 242 (RURAL MAJOR COLLECTOR) BRIDGE # 10
TOWN OF JAY, COUNTY OF ORLEANS, VT.

REV	NO.	DATE	DESCRIPTION	BY
E	1	2/8/17	REVISED PER 12/22/16 MARK-UP	D.K.
V				

REV	NO.	DATE	DESCRIPTION	BY
E				
V				

ELDERLEE, INC.
CERTIFIED FABRICATOR
OAKS CORNERS, NEW YORK 14518
email: dlong@elderlee.com / epeek@elderlee.com
Tel: 315-789-6670 Fax: 315-789-6615

ORTHOGRAPHIC PROJECTION

DRAWN	D.K.	12/7/16
CHECKED	E.P.	12/7/16
APPROVED	D.L.	12/9/16
SCALE	SCHEMATIC	
DRAWING NO.	F.R. LaFAYETTE-JAY T	

SPLICE BAR - EXPANSION

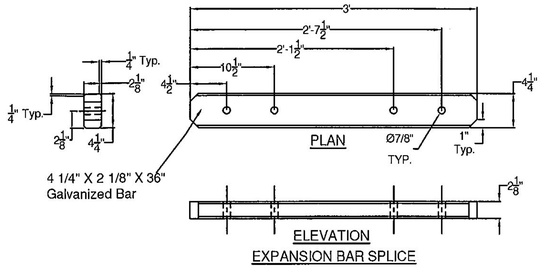

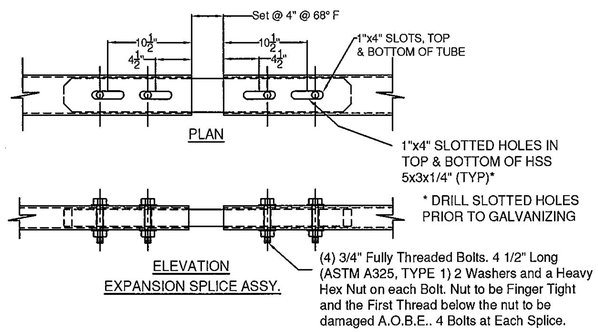

‹ITEM # 9›

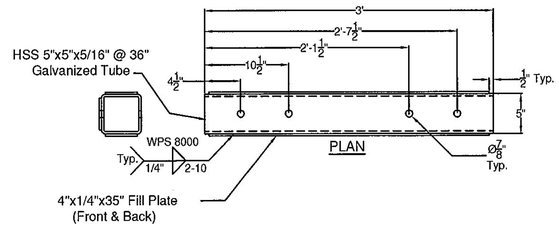

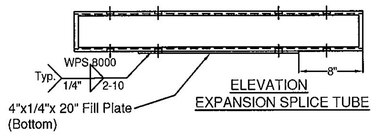

SPLICE TUBE - EXPANSION

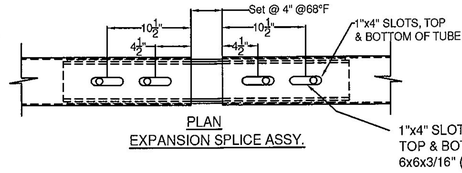

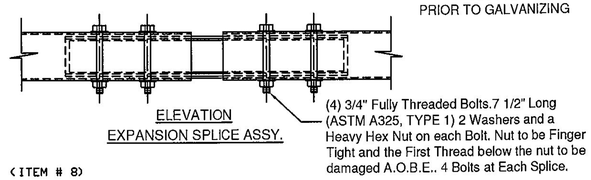

‹ITEM # 8›

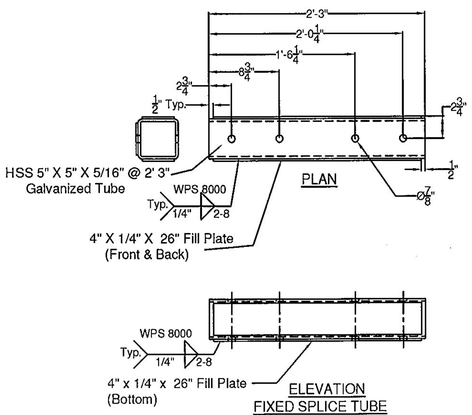

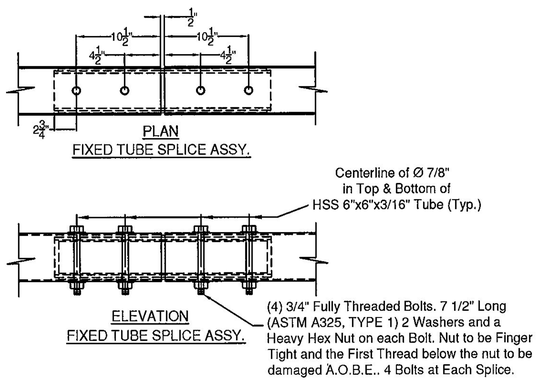

‹ITEM # 7›

SPLICE TUBE - FIXED

APPROVED: Approval of drawings and/or procedures indicates concurrence with the information presented and does not relieve the Contractor or Fabricator of compliance with all specifications and code requirements		Stantec
APPROVED AS NOTED	X	
REVISE AND RESUBMIT		
NOT REVIEWED		
Date: 02/21/17		
By: Michael J. Chenette		

This review by Stantec Consulting Services Inc. is for the sole purpose of ascertaining conformance with the general design concept. This review shall not mean that Stantec Consulting Services Inc approves the detail design inherent in the shop drawings, responsibility for which shall remain with the Contractor. Submitting same, and such review shall not relieve the Contractor of his responsibility for errors or omissions in the shop drawing or of his responsibility for meeting all requirements of the Contract Documents. The contractor is responsible for dimensions to be confirmed and correlated at the job site, for information that pertains solely to the fabrication processes or to techniques of construction and installation and for coordination of the work of all subtrades.

Vermont Agency of Transportation
RECEIVED
CK'D BY RFOSTER/CHENETTE OK'D BY WBP
February 15, 2017
RESUBMIT NO Approved AsNoted
BY WPELLETIER DATE 02/21/2017

ITEM #: 621.725

SHEET 5 OF 5

STRUCTURAL STEEL TO COMPLY W/ ASTM A6

TOLERANCE UNLESS OTHERWISE NOTED:
FRACTIONS = ± 1/16"
ANGLES = ± 1/2°
DIAMETERS = ± 1/32"

GUARD RAIL TO BRIDGE RAIL TRANSITION DETAILS SHEET

VT ROUTE 242 (RURAL MAJOR COLLECTOR) BRIDGE # 10
TOWN OF JAY, COUNTY OF ORLEANS, VT.

R E V	NO.	DATE	DESCRIPTION	BY
	1	2/8/17	REVISED PER 12/22/16 MARK-UP	D.K.

R E V	NO.	DATE	DESCRIPTION	BY

ELDERLEE, INC.
OAKS CORNERS, NEW YORK 14518
email: dlong@elderlee.com / epeek@elderlee.com
Tel: 315-789-6670 Fax: 315-789-6615

CERTIFIED FABRICATOR

ORTHOGRAPHIC PROJECTION

DRAWN	D.K.	12/7/16
CHECKED	E.P.	12/7/16
APPROVED	D.L.	12/9/16
SCALE	SCHEMATIC	

DRAWING NO. F.R. LaFAYETTE-JAY T

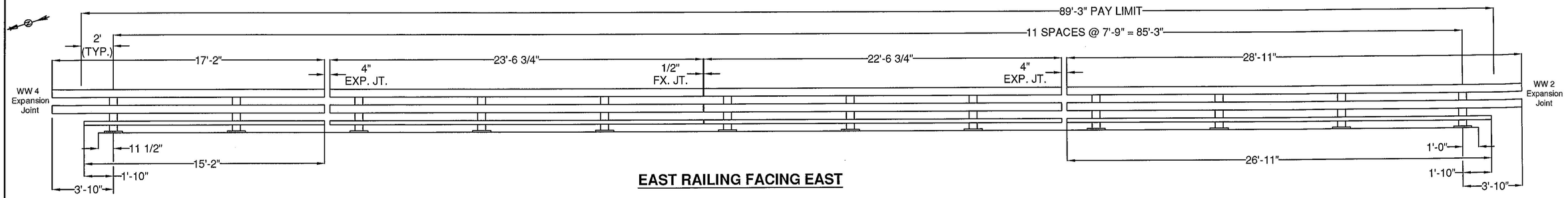

EAST RAILING FACING EAST

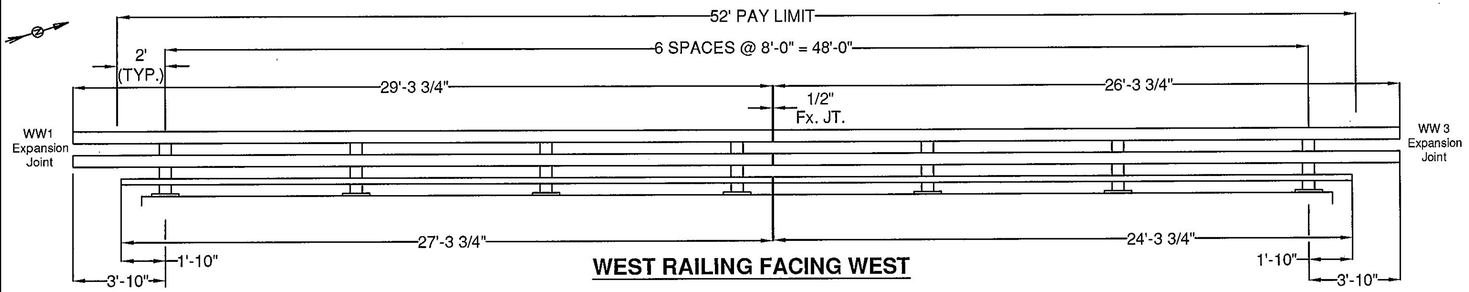

WEST RAILING FACING WEST

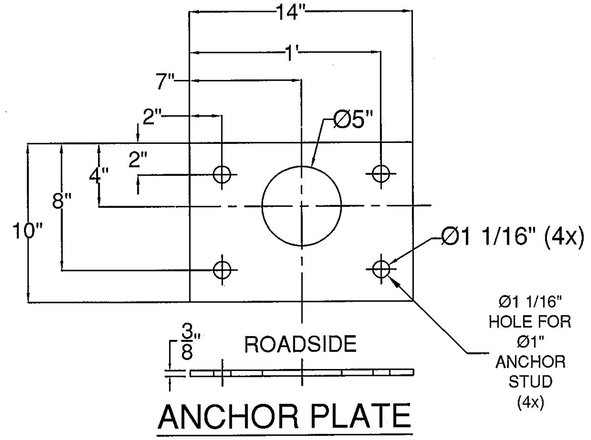

ANCHOR PLATE

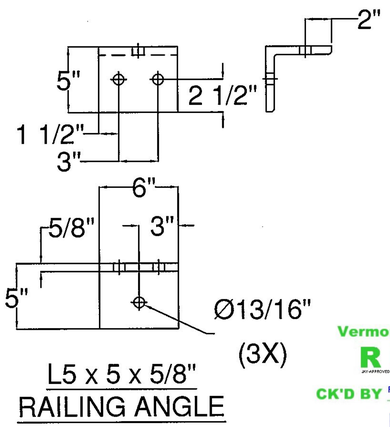

L5 x 5 x 5/8" RAILING ANGLE

APPROVED: Approval of drawings and/or procedures indicates concurrence with the information presented and does not relieve the Contractor or Fabricator of compliance with all specifications and code requirements

APPROVED AS NOTED	X
REVISE AND RESUBMIT	
NOT REVIEWED	

Date: 02/21/17

By: Michael J. Chenette

This review by Stantec Consulting Services Inc. is for the sole purpose of ascertaining conformance with the general design concept. This review shall not mean that Stantec Consulting Services Inc approves the detail design inherent in the shop drawings, responsibility for which shall remain with the Contractor. Submitting same, and such review shall not relieve the Contractor of his responsibility for errors or omissions in the shop drawing or of his responsibility for meeting all requirements of the Contract Documents. The contractor is responsible for dimensions to be confirmed and correlated at the job site, for information that pertains solely to the fabrication processes or to techniques of construction and installation and for coordination of the work of all subtrades.

Stantec

Vermont Agency of Transportation

RECEIVED

JAY APPROVED RAILING SHOPS FEB 21 2017 pm

CK'D BY RFOSTER/CHENETTE OK'D BY WBP

February 15, 2017

RESUBMIT NO Approved AsNoted

BY WPELLETIER DATE 02/21/2017

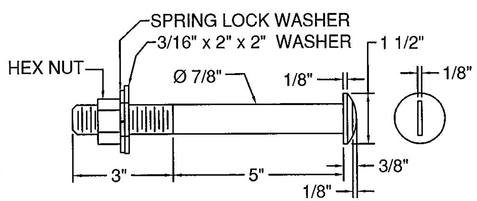

SLOTTED ROUND HEAD BOLT

BILL OF MATERIAL

ITEM #	QTY	PART #	DESCRIPTION	ASTM DESIGNATION
1	19	0033.03610	W6x25, THREE RAIL POST @ 2'-9" OA ON 1 1/4x10x1'-2" B.P.	A572 Gr. 50
2	1	TBD	HSS 3" X 5" X 1/4" RAIL @ 27'-3 3/4"	A500 Gr. B
3	1	TBD	HSS 3" X 5" X 1/4" RAIL @ 24'-3 3/4"	A500 Gr. B
4	1	TBD	HSS 3" X 5" X 1/4" RAIL @ 15'-2"	A500 Gr. B
5	1	TBD	HSS 3" X 5" X 1/4" RAIL @ 23'-6 3/4"	A500 Gr. B
6	1	TBD	HSS 3" X 5" X 1/4" RAIL @ 22'-6 3/4"	A500 Gr. B
7	1	TBD	HSS 3" X 5" X 1/4" RAIL @ 26'-11"	A500 Gr. B
8	2	TBD	HSS 6" X 6" X 3/16" RAIL @ 29'-3 3/4"	A500 Gr. B
9	2	TBD	HSS 6" X 6" X 3/16" RAIL @ 26'-3 3/4"	A500 Gr. B
10	2	TBD	HSS 6" X 6" X 3/16" RAIL @ 17'-2"	A500 Gr. B
11	2	TBD	HSS 6" X 6" X 3/16" RAIL @ 23'-6 3/4"	A500 Gr. B
12	2	TBD	HSS 6" X 6" X 3/16" RAIL @ 22'-6 3/4"	A500 Gr. B
13	2	TBD	HSS 6" X 6" X 3/16" RAIL @ 28'-11"	A500 Gr. B
14	2	0033.00840	2-1/8" X 4-1/4" FIX. SPLICE BAR @ 2'-3"	A572 Gr. 50
15	2	0033.00930	BR EXP BAR SPLICE 2-1/8" X 4-1/4" @ 36" LG	ASTM A36
16	4	0033.00640	HSS 5" X 5" X 5/16" FIX. SPLICE TUBE @ 2'-3"	A500 Gr. B, A572 Gr. 50
17	4	0033.00730	HSS 5x5 EXP TUBE SPLICE @ 36" LG W/ 1/4" SHIMS	A500 Gr. B, A572 Gr. 50
18	19	0033.00220	3/8" X 10" X 14" ANCHOR PLATES	A572 Gr. 50
19	19	0033.00050	1/8" X 10" X 14" FABRIC PAD	AASHTO M251
20	78*	0042.21013	Ø 1" X 13" ANCHOR STUDS, W/ 2 1/4" THD. EACH END	A449
21	154*	0080.18901	Ø 1" HEAVY HEX NUTS	A563 DH
22	76	0080.18911	Ø 1" FLAT WASHERS	F436
23	76	0080.18905	Ø 1" HEX JAM NUTS	A563 DH
24	76	0080.07500	Ø 7/8" X 8" ROUND HEAD BOLT, NUT, SQ. WASHER, L.W.	A449, A563 DH, F436, ASME D18.2
25	19	0080.06400	Ø 3/4" X 8" HEX BOLT, NUT, (2) F.W., & L.W.	A325, A563 DH, F436, & ASME D18.2
26	38	0080.06140	Ø 3/4" X 2-3/4" HEX BOLT, NUT, (2) F.W., & L.W.	A325, A563 DH, F436, & ASME D18.2
27	32	0080.06340	Ø 3/4" X 7-1/2" HEX BOLT, NUT, & (2) F.W.	A325, A563 DH, & F436
28	16	0080.06255	Ø 3/4" X 4-1/2" HEX BOLT, NUT, & (2) F.W.	A325, A563 DH, & F436
29	19	0033.00500	L5" X 5" X 5/8" RAILING ANGLE @ 6'	A572 Gr. 50
30	-	--	DELINEATORS	(** - SUPPLIED BY CUSTOMER)

*-2 EXTRA FOR VDOT TESTING

**-CONTRACTOR TO SUPPLY DELINEATOR / REFLECTOR DETAILS

HARDWARE NOTES

ITEM #	FUNCTION
20	ANCHOR STUDS, (4) PER POST ON BASE (ITEM #1)
21	(2) PER ANCHOR STUD
22	(1) PER ANCHOR STUD
23	(1) PER ANCHOR STUD
24	BOLT TOP & BOTTOM RAIL TO PAST (ITEM #1), (4) PER POST
25	BOLT CENTER RAIL TO SHELF ANGLES (ITEM #21)
26	BOLT RAILING ANGLE (ITEM #21) TO POST (ITEM #1)
27	BOLT THRU RAILING & TUBE SPLICES (ITEM #9)
28	BOLT THRU RAILING & BAR SPLICES (ITEM #8)

GENERAL NOTES:

1) ALL RAILING IS TO BE FABRICATED AND ERECTED ACCORDING TO SECTION 525 OF THE STANDARD SPECIFICATIONS.
2) PRIOR TO GALVANIZING THE ASSEMBLED POST, GRIND ALL EDGES TO A MINIMUM RADIUS OF 1/16".
3) ALL POST SHALL BE SET NORMAL TO GRADE. THE MAXIMUM CENTER TO CENTER SPACING OF BRIDGE RAIL POST IS 8' 3".
4) SECTIONS OF RAIL TUBE SHALL BE ATTACHED TO A MINIMUM OF TWO BRIDGE POSTS AND PREFERABLY TO AT LEAST 4 POSTS.
5) RAIL TUBE EXPANSION JOINTS SHALL BE PROVIDED IN ANY RAIL BAY SPANNING THE END OF AN INTEGRAL ABUTMENT BRIDGE AND AT ALL SUPER STRUCTURE EXPANSION JOINTS. EXPANSION JOINT WIDTH SHALL BE 4"@ 68°F AND WILL BE ADJUSTED IN THE FIELD BY THE ENGINEER FOR OTHER TEMPERATURES.
6) STD. SPLICE HOLES ONLY IN BRIDGE RAIL TUBES. REST TO BE DRILLED BY CUSTOMER. FIELD DRILLED HOLES TO BE COATED WITH AN APPROVED ZINC-RICH PAINT PRIOR TO INSTALLATION.
7) BOLTS SHALL BE TORQUED SNUG TIGHT (APPROXIMATELY 100 FT-LB).
8) SEE STANDARD DRAWING G-Ib FOR DETAILS OF DELINEATORS. A DELINEATOR SHALL BE INSTALLED AT 30 FOOT SPACING OR THE NEAREST POST. WHITE IS TO BE INSTALLED ON THE DRIVER'S RIGHT. FOR ONE WAY BRIDGES, YELLOW IS TO BE INSTALLED ON THE DRIVER'S LEFT. PAYMENT FOR DELINEATORS SHALL BE INCIDENTAL TO OTHER ITEMS.
9) ANY BENDING OF RAIL SHALL BE DONE AT THE FABRICATION PLANT ACCORDING TO A PROCEDURE PROVIDED BY THE FABRICATOR.
10) THE MINIMUM DISTANCE FROM THE POST TO AN EXPANSION JOINT SHALL BE DETERMINED BY THE MINIMUM EDGE DISTANCE OF 5" FROM ANY ANCHOR STUD TO THE END OF THE SLAB, OR THE EXPANSION JOINT RECESS POUR, IF ONE IS USED.
11) PROTRUSIONS CAUSED BY WELDING OR GALVANIZING ARE NOT PERMITTED ON THE ADJOINING SURFACES OF THE BOX BEAM RAILS, SPLICE TUBES AND FILL PLATES.
12) THIS RAILING MEETS THE REQUIREMENTS FOR A TL-4 SERVICE LEVEL.

ITEM #: 525.335

SHEET 1 OF 3

STRUCTURAL STEEL TO COMPLY W/ ASTM A6

TOLERANCE UNLESS OTHERWISE NOTED:
FRACTIONS = ± 1/16"
ANGLES = ± 1/2°
DIAMETERS = ± 1/32"

BRIDGE RAIL DETAILS SHEET

VT ROUTE 242 (RURAL MAJOR COLLECTOR) BRIDGE # 10

TOWN OF JAY, COUNTY OF ORLEANS, VT.

R E V	NO.	DATE	DESCRIPTION	BY
	1	2/8/17	REVISED PER 12/22/17 MARKUP	D.K.

R E V	NO.	DATE	DESCRIPTION	BY

ELDERLEE, INC.
OAKS CORNERS, NEW YORK 14518
email: dlong@elderlee.com / epeek@elderlee.com
Tel: 315-789-6670 Fax: 315-789-6615

CERTIFIED FABRICATOR

ORTHOGRAPHIC PROJECTION

DRAWN	D.K.	12/7/16
CHECKED	E.P.	12/7/16
APPROVED	D.L.	12/9/16
SCALE	SCHEMATIC	
DRAWING NO.	F.R. LaFAYETTE-JAY	

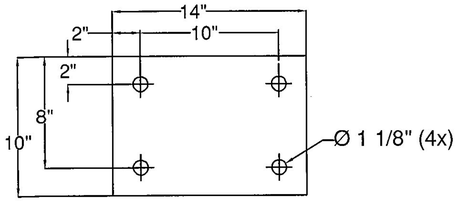

1/8" FABRIC PAD

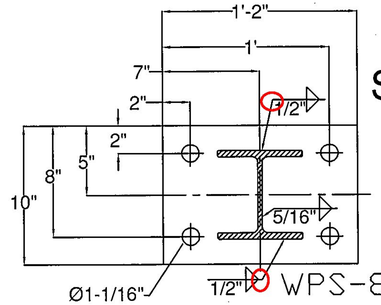

SECTION A-A

WPS-8007

℄ OF POST

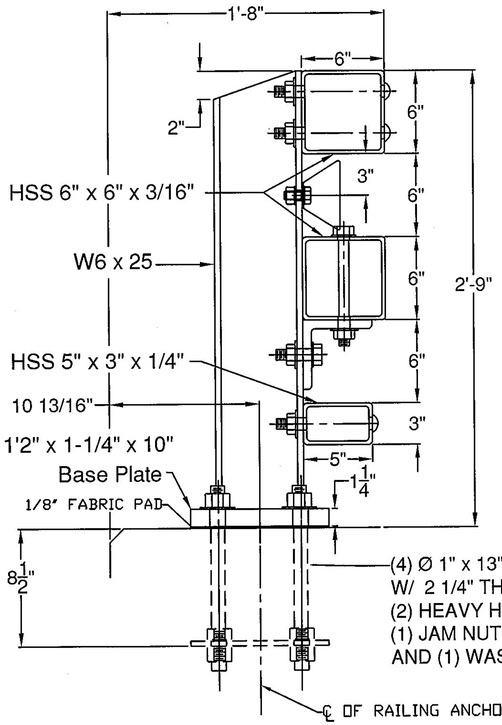

SECTION

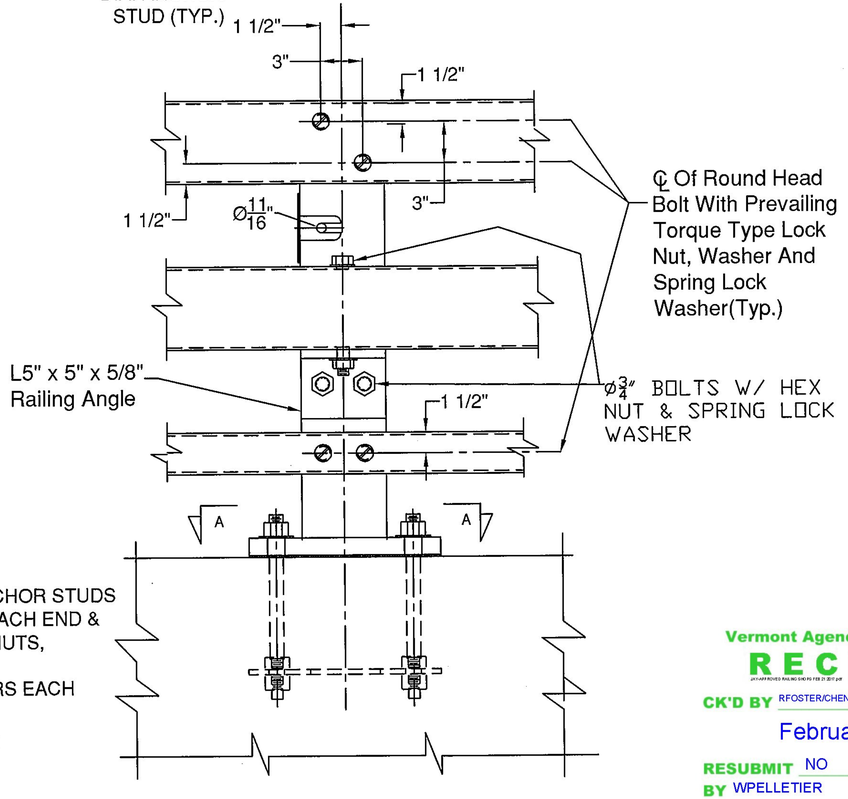

ELEVATION

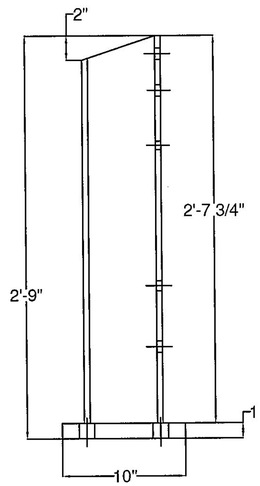

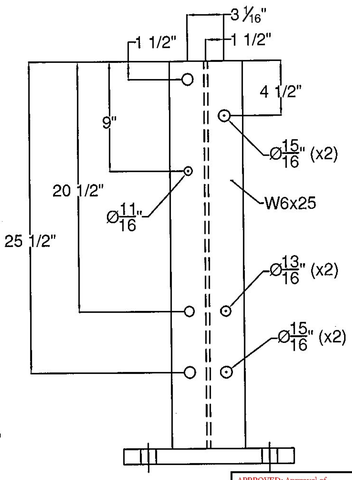

BRIDGE POST DETAIL

Vermont Agency of Transportation

RECEIVED

CK'D BY RFOSTER/CHENETTE OK'D BY WBP

February 15, 2017

RESUBMIT NO Approved AsNoted

BY WPELLETIER DATE 02/21/2017

APPROVED: Approval of drawings and/or procedures indicates concurrence with the information presented and does not relieve the Contractor or Fabricator of compliance with all specifications and code requirements

APPROVED AS NOTED	X
REVISE AND RESUBMIT	
NOT REVIEWED	

Stantec

Date: 02/21/17

By: Michael J. Chenette

This review by Stantec Consulting Services Inc. is for the sole purpose of ascertaining conformance with the general design concept. This review shall not mean that Stantec Consulting Services Inc approves the detail design inherent in the shop drawings, responsibility for which shall remain with the Contractor. Submitting same, and such review shall not relieve the Contractor of his responsibility for errors or omissions in the shop drawing or of his responsibility for meeting all requirements of the Contract Documents. The contractor is responsible for dimensions to be confirmed and correlated at the job site, for information that pertains solely to the fabrication processes or to techniques of construction and installation and for coordination of the work of all subtrades.

STEEL BRIDGE RAILING DETAIL

ITEM #: 525.335

SHEET 2 OF 3

STRUCTURAL STEEL TO COMPLY W/ ASTM A6

TOLERANCE UNLESS OTHERWISE NOTED:
FRACTIONS = ± 1/16"
ANGLES = ± 1/2°
DIAMETERS = ± 1/32"

BRIDGE RAIL DETAILS SHEET

VT ROUTE 242 (RURAL MAJOR COLLECTOR) BRIDGE # 10
TOWN OF JAY, COUNTY OF ORLEANS, VT.

REV	NO.	DATE	DESCRIPTION	BY
REV	1	2/8/17	REVISED PER 12/22/17 MARKUP	D.K.

DRAWN	D.K.	12/7/16
CHECKED	E.P.	12/7/16
APPROVED	D.L.	12/9/16
SCALE	SCHEMATIC	
DRAWING NO.	F.R. LaFAYETTE-JAY	

ELDERLEE, INC.
OAKS CORNERS, NEW YORK 14518
email: dlong@elderlee.com / epeck@elderlee.com
Tel: 315-789-6670 Fax: 315-789-6615

CERTIFIED FABRICATOR

ORTHOGRAPHIC PROJECTION

SPLICE BAR - EXPANSION

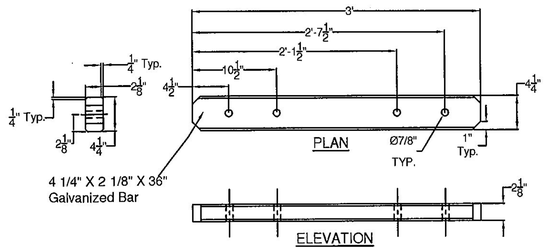

4 1/4" X 2 1/8" X 36" Galvanized Bar

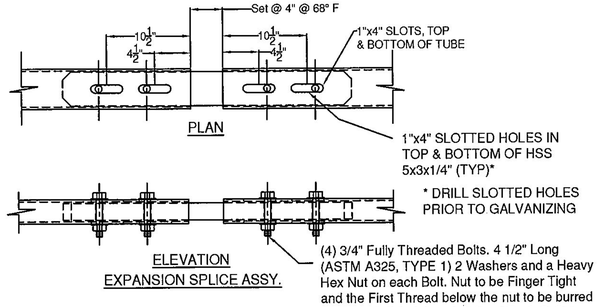

(4) 3/4" Fully Threaded Bolts. 4 1/2" Long (ASTM A325, TYPE 1) 2 Washers and a Heavy Hex Nut on each Bolt. Nut to be Finger Tight and the First Thread below the nut to be burred to prevent dislodging. 4 Bolts at Each Splice.

SPLICE BAR - FIXED

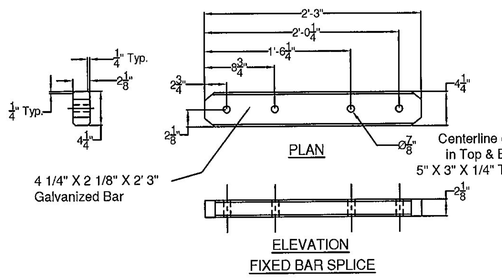

4 1/4" X 2 1/8" X 2' 3" Galvanized Bar

Centerline of Holes in Top & Bottom of 5" X 3" X 1/4" Tube (Typ.)

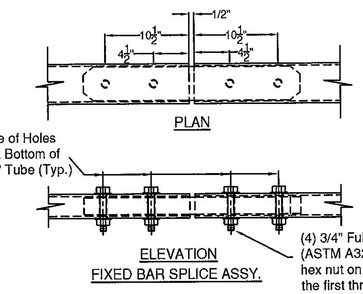

(4) 3/4" Fully Threaded Bolts. 4 1/2" Long (ASTM A325, TYPE 1) 2 washers and a heavy hex nut on each bolt. Nut to be finger tight and the first thread below the nut to be burred to prevent dislodging. 4 bolts at each splice.

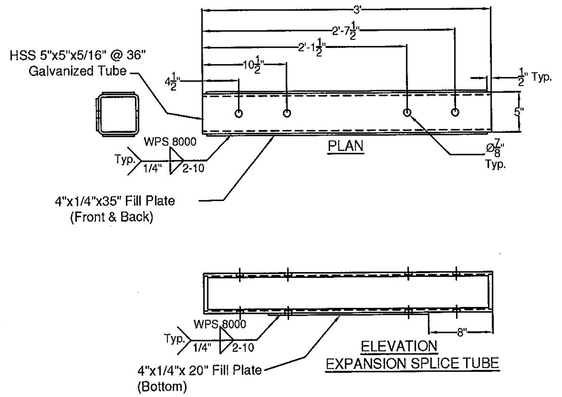

SPLICE TUBE - EXPANSION

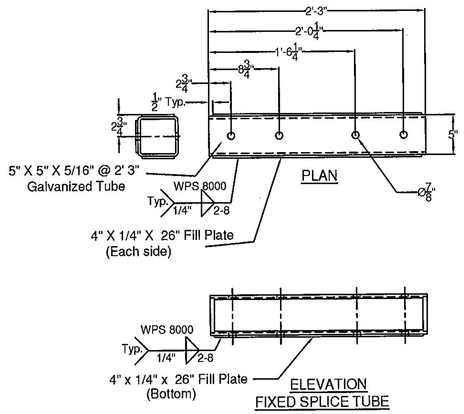

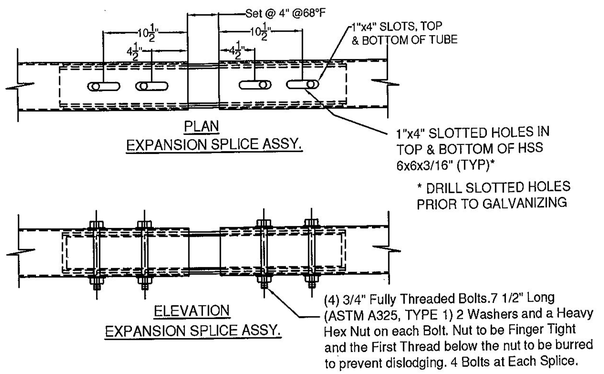

(4) 3/4" Fully Threaded Bolts.7 1/2" Long (ASTM A325, TYPE 1) 2 Washers and a Heavy Hex Nut on each Bolt. Nut to be Finger Tight and the First Thread below the nut to be burred to prevent dislodging. 4 Bolts at Each Splice.

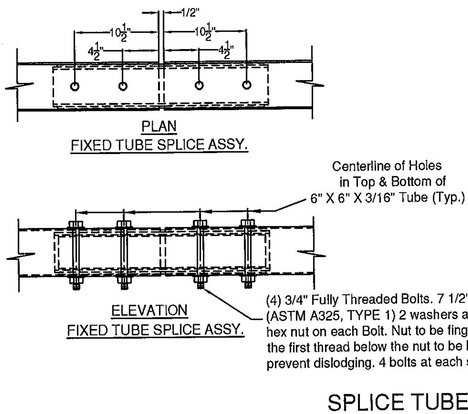

(4) 3/4" Fully Threaded Bolts. 7 1/2" Long (ASTM A325, TYPE 1) 2 washers and a heavy hex nut on each Bolt. Nut to be finger tight and the first thread below the nut to be burred to prevent dislodging. 4 bolts at each splice.

SPLICE TUBE - FIXED

Vermont Agency of Transportation

RECEIVED

JAY APPROVED RAILING SHOPS FEB 21 2017.pdf

CK'D BY RFOSTER/CHENETTE OK'D BY WBP

February 15, 2017

RESUBMIT NO Approved AsNoted

BY WPELLETIER DATE 02/21/2017

APPROVED: Approval of drawings and/or procedures indicates concurrence with the information presented and does not relieve the Contractor or Fabricator of compliance with all specifications and code requirements		Stantec
APPROVED AS NOTED	X	
REVISE AND RESUBMIT		
NOT REVIEWED		
Date: 02/21/17		
By: Michael J. Chenette		

This review by Stantec Consulting Services Inc. is for the sole purpose of ascertaining conformance with the general design concept. This review shall not mean that Stantec Consulting Services Inc approves the detail design inherent in the shop drawings, responsibility for which shall remain with the Contractor. Submitting same, and such review shall not relieve the Contractor of his responsibility for errors or omissions in the shop drawing or of his responsibility for meeting all requirements of the Contract Documents. The contractor is responsible for dimensions to be confirmed and correlated at the job site, for information that pertains solely to the fabrication processes or to techniques of construction and installation and for coordination of the work of all subtrades.

ITEM #: 525.335

STRUCTURAL STEEL TO COMPLY W/ ASTM A6

TOLERANCE UNLESS OTHERWISE NOTED:
FRACTIONS = ± 1/16"
ANGLES = ± 1/2°
DIAMETERS = ± 1/32"

BRIDGE RAIL DETAILS SHEET

VT ROUTE 242 (RURAL MAJOR COLLECTOR) BRIDGE # 10
TOWN OF JAY, COUNTY OF ORLEANS, VT.

R	NO.	DATE	DESCRIPTION	BY
E	1	2/8/17	REVISED PER 12/22/17 MARKUP	D.K.
V				

R	NO.	DATE	DESCRIPTION	BY
E				
V				

ELDERLEE, INC.
OAKS CORNERS, NEW YORK 14518
email: dlong@elderlee.com / epeek@elderlee.com
Tel: 315-789-6670 Fax: 315-789-6615

CERTIFIED FABRICATOR

ORTHOGRAPHIC PROJECTION

DRAWN	D.K.	12/7/16
CHECKED	E.P.	12/7/16
APPROVED	D.L.	12/9/16
SCALE	SCHEMATIC	
DRAWING NO.	F.R. LaFAYETTE-JAY	

WELDING PROCEDURE SPECIFICATION

PQR ELDERLEE # 3

Material Specification	A36/A500GR.B/A53/A572GR.36/50/A709GR.36/50/A108 / A307/A325/A563/A449
Welding Process	FCAW
Manual or Machine	SEMAUTOMATIC
Position of Welding	FLAT/HORIZONTAL
Filler Metal Specification	A5.29
Filler Metal Classification	E81T1-NI1C-JH4 LINCOLN ULTERCORE 81i1C-H
Flux	N/A
Shielding Gas	CO 2 Dew Point -40DEG F Flow Rate 50CFH (45 TO 63 CFH)
Single or Multiple Pass	SINGLE
Single or Multiple Arc	SINGLE
Welding Current	DC
Polarity	REVERSE ELECTRODE POSITIVE CTWD 3/4"
Welding Progression	STRINGER
Root Treatment	ROOT SHALL BE CLEAN AND FREE OF FOREIGN MATTER
Preheat and Interpass Temperature	MIN PREHEAT 50 DEG ≤ 0.75" 70 DEG > 0.75" MAX INTERPASS 400 DEG
Postheat Temperature	NONE
Heat Input	Min 33.92 Max 50.42

WELDING PROCEDURE

Pass no.	Electrode size	Welding Current Amperes	Welding Current Volts	Travel speed	Joint detail
1	1/16	310 320 TO 285	25 26 TO 24	11 12.1 TO 9.9	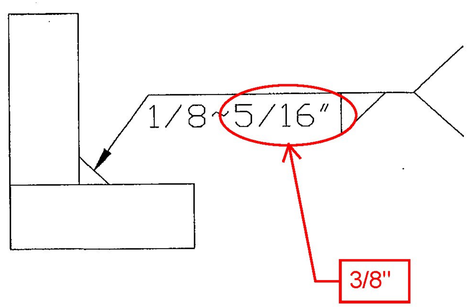

This procedure may vary due to fabrication sequence, fit-up, pass size, etc., within the limitation of variables given in Section 5.

Procedure No. 8000

Revision No. 1

Contractor Elderlee, Inc.

Authorized By RANDY SCOTT

Date 2/7/2017

Form III-2

Vermont Agency of Transportation

RECEIVED

CK'D BY RFOSTER/CHENETTE OK'D BY WBP

February 15, 2017

RESUBMIT NO Approved AsNoted

BY WPELLETIER DATE 02/21/2017

APPROVED: Approval of drawings and/or procedures indicates concurrence with the information presented and does not relieve the Contractor or Fabricator of compliance with all specifications and code requirements		Stantec
APPROVED AS NOTED	X	
REVISE AND RESUBMIT		
NOT REVIEWED		
Date: 02/21/17		
By: Michael J. Chenette		

This review by Stantec Consulting Services Inc. is for the sole purpose of ascertaining conformance with the general design concept. This review shall not mean that Stantec Consulting Services Inc approves the detail design inherent in the shop drawings, responsibility for which shall remain with the Contractor. Submitting same, and such review shall not relieve the Contractor of his responsibility for errors or omissions in the shop drawing or of his responsibility for meeting all requirements of the Contract Documents. The contractor is responsible for dimensions to be confirmed and correlated at the job site, for information that pertains solely to the fabrication processes or to techniques of construction and installation and for coordination of the work of all subtrades.

WELDING PROCEDURE SPECIFICATION

PQR ELDERLEE #4

Material Specification	A36/A572 GR. 36 / 50 / A709 GR. 36 / 50
Welding Process	GMAW
Manual or Machine	SEMAUTOMATIC ROBOTIC
Position of Welding	FLAT
Filler Metal Specification	A5.18
Filler Metal Classification	L-56 ER70S-6 LINCOLN
Flux	N/A
Shielding Gas	90% ARGON / 10% CO2 Dew Point -40DEG F Flow Rate 45CFH
Single or Multiple Pass	SINGLE
Single or Multiple Arc	SINGLE
Welding Current	DC
Polarity	REVERSE ELECTRODE POSITIVE CTWD 3/4"
Welding Progression	STRINGER
Root Treatment	ROOT SHALL BE CLEAN AND FREE OF FOREIGN MATTER
Preheat and Interpass Temperature	MIN PREHEAT 50 DEG ≤ 0.75" 70 DEG > 0.75" MAX INTERPASS 400 DEG
Postheat Temperature	NONE
Heat Input	Min 10.56 Max 15.84

WELDING PROCEDURE

Pass no.	Electrode size	Welding Current		Travel speed	Joint detail
		Amperes	Volts		
1	.045	190	22	19	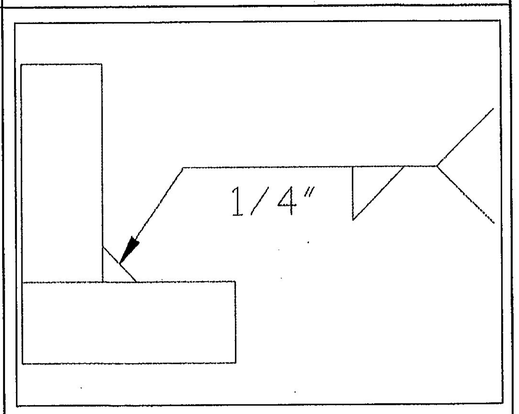
		171 TO 200	20 TO 23	18 TO 21	

This procedure may vary due to fabrication sequence, fit-up, pass size, etc., within the limitation of variables given in Section 5.

Procedure No. 8001
Revision No. 1

Contractor Elderlee, Inc.
Authorized By RANDY SCOTT
Date 2/7/2017

Form III-2

Vermont Agency of Transportation
RECEIVED
JAN APPROVED RAILING SHOP S FEB 21 2017.pdf
CK'D BY RFOSTER/CHENETTE OK'D BY WBP
February 15, 2017
RESUBMIT NO Approved AsNoted
BY WPELLETIER DATE 02/21/2017

APPROVED: Approval of drawings and/or procedures indicates concurrence with the information presented and does not relieve the Contractor or Fabricator of compliance with all specifications and code requirements		Stantec
APPROVED AS NOTED	X	
REVISE AND RESUBMIT		
NOT REVIEWED		
Date: 02/21/17		
By: Michael J. Chenette		

This review by Stantec Consulting Services Inc. is for the sole purpose of ascertaining conformance with the general design concept. This review shall not mean that Stantec Consulting Services Inc approves the detail design inherent in the shop drawings, responsibility for which shall remain with the Contractor. Submitting same, and such review shall not relieve the Contractor of his responsibility for errors or omissions in the shop drawing or of his responsibility for meeting all requirements of the Contract Documents. The contractor is responsible for dimensions to be confirmed and correlated at the job site, for information that pertains solely to the fabrication processes or to techniques of construction and installation and for coordination of the work of all subtrades.

WELDING PROCEDURE SPECIFICATION

PQR ELDERLEE #3

Material Specification	A36/A500GR.B/A53/A572GR.36/50/A709GR.36/50/A108
Welding Process	FCAW
Manual or Machine	SEMAUTOMATIC
Position of Welding	FLAT
Filler Metal Specification	A5.29
Filler Metal Classification	E81T1-NI1C-JH4 LINCOLN ULTERCORE 81i1C-H
Flux	N/A
Shielding Gas	CO 2 Dew Point -40DEG F Flow Rate 50CFH (45 TO 63 CFH)
Single or Multiple Pass	SINGLE
Single or Multiple Arc	SINGLE
Welding Current	DC
Polarity	REVERSE ELECTRODE POSITIVE CTWD 3/4"
Welding Progression	STRINGER
Root Treatment	ROOT SHALL BE CLEAN AND FREE OF FOREIGN MATTER
Preheat and Interpass Temperature	MIN PREHEAT 50 DEG ≤ 0.75" 70 DEG > 0.75" MAX INTERPASS 400 DEG
Postheat Temperature	NONE
Heat Input	Min 33.92 Max 50.42

WELDING PROCEDURE

Pass no.	Electrode size	Welding Current Amperes	Welding Current Volts	Travel speed	Joint detail
1	1/16	310 320 TO 285	25 26 TO 24	11 12.1 TO 9.9	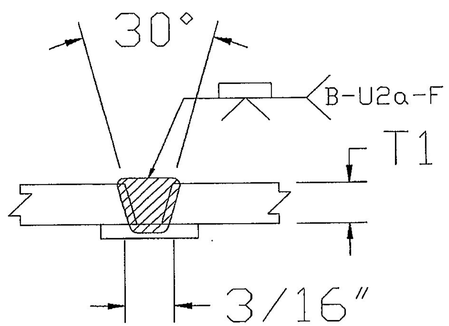

This procedure may vary due to fabrication sequence, fit-up, pass size, etc., within the limitation of variables given in Section 5.

Procedure No. 8004
Revision No. 1

Contractor Elderlee, Inc.
Authorized By RANDY SCOTT
Date 2/7/2017

Form III-2

Vermont Agency of Transportation
RECEIVED
CK'D BY ROSTER/CHENETTE OK'D BY WBP
February 15, 2017
RESUBMIT Approved AsNoted
BY WPELLETIER DATE 02/21/2017

APPROVED: Approval of drawings and/or procedures indicates concurrence with the information presented and does not relieve the Contractor or Fabricator of compliance with all specifications and code requirements		Stantec
APPROVED AS NOTED	X	
REVISE AND RESUBMIT		
NOT REVIEWED		
Date: 02/21/17		
By: Michael J. Chenette		

This review by Stantec Consulting Services Inc. is for the sole purpose of ascertaining conformance with the general design concept. This review shall not mean that Stantec Consulting Services Inc approves the detail design inherent in the shop drawings, responsibility for which shall remain with the Contractor. Submitting same, and such review shall not relieve the Contractor of his responsibility for errors or omissions in the shop drawing or of his responsibility for meeting all requirements of the Contract Documents. The contractor is responsible for dimensions to be confirmed and correlated at the job site, for information that pertains solely to the fabrication processes or to techniques of construction and installation and for coordination of the work of all subtrades.

WELDING PROCEDURE SPECIFICATION

Material Specification	ASTM A36 / A572 / A709 GR. 36 / 50			
Welding Process	FCAW			
Manual or Machine	SEMI AUTOMATIC			
Position of Welding	FLAT			
Filler Metal Specification	A5.20			
Filler Metal Classification	E70 LINCOLN OUTERSHEILD	E70T-1		
Flux	N/A			
Shielding Gas	CO 2	Dew Point -40DEG F	Flow Rate 50 CFM	(45 TO 63 CFH)
Single or Multiple Pass	SINGLE			
Single or Multiple Arc	N/A			
Welding Current	DC			
Polarity	DCEP CTWD 3/4"			
Welding Progression	STRINGER			
Root Treatment	ROOT SHALL BE CLEAN AND FREE OF FOREIGN MATTER			
Preheat and Interpass Temperature	MIN PREHEAT 50 DEG ≤ 0.75" 70 DEG > 0.75" MAX INTERPASS 400 DEG			
Postheat Temperature	NONE			
Heat Input	Min 42		Max 63.84	

WELDING PROCEDURE

Pass no.	Electrode size	Welding Current Amperes	Welding Current Volts	Travel speed	Joint detail
1	3/32	390	27	12	
		350 TO 418	26 TO 28	11 TO 13	

This procedure may vary due to fabrication sequence, fit-up, pass size, etc., within the limitation of variables given in Section 5.

Procedure No. 8007
Revision No. 1

Contractor Elderlee, Inc.
Authorized By RANDY SCOTT
Date 2/8/2017

Vermont Agency of Transportation

RECEIVED

CK'D BY RFoster/Chenette OK'D BY WBP

February 15, 2017

RESUBMIT NO Approved AsNoted

BY WPELLETIER DATE 02/21/2017

APPROVED: Approval of drawings and/or procedures indicates concurrence with the information presented and does not relieve the Contractor or Fabricator of compliance with all specifications and code requirements		Stantec
APPROVED AS NOTED	X	
REVISE AND RESUBMIT		
NOT REVIEWED		
Date: 02/21/17		
By: Michael J. Chenette		

This review by Stantec Consulting Services Inc. is for the sole purpose of ascertaining conformance with the general design concept. This review shall not mean that Stantec Consulting Services Inc approves the detail design inherent in the shop drawings, responsibility for which shall remain with the Contractor. Submitting same, and such review shall not relieve the Contractor of his responsibility for errors or omissions in the shop drawing or of his responsibility for meeting all requirements of the Contract Documents. The contractor is responsible for dimensions to be confirmed and correlated at the job site, for information that pertains solely to the fabrication processes or to techniques of construction and installation and for coordination of the work of all subtrades.