Record Plans
Contractor: THE BELDEN COMPANY, INC.
Resident Engineer: JACE CURTIS
Construction Began: APRIL 9, 2018
Construction Complete: NOVEMBER 14, 2018
Record Plans By: ROSS PEIRCE

I hereby certify that all construction required by this set of drawings has been accomplished as indicated herein.

BY: E-SIGNED by Jace Curtis on 2019-01-08 12:08:06 UTC Resident Engineer

Date: January 08, 2019

NOTE: Any further information concerning final quantities, amounts or other details relative to this project may be found at Central Files in the electronic archives.

STATE OF VERMONT
AGENCY OF TRANSPORTATION

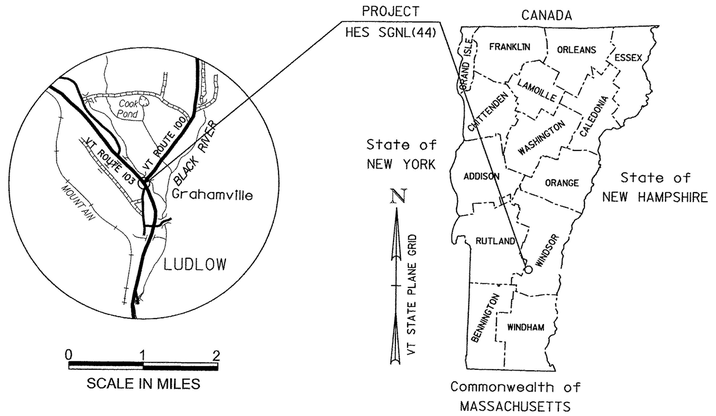

PROPOSED IMPROVEMENT
TOWN OF LUDLOW
COUNTY OF WINDSOR
VT ROUTE 103 (PRINCIPAL ARTERIAL) (NHS)

BEGINNING IN THE TOWN OF LUDLOW ON VT ROUTE 103 AT MM 4.267 AND EXTENDING 1331.37 FEET (0.252 MILES) SOUTH EASTERLY TO MM 4.015.

LENGTH OF PROJECT = 1331.37 FEET = 0.252 MILES

THE PROJECT SHALL CONSIST OF A NEW TRAFFIC SIGNAL SYSTEM, CURBING, PAVEMENT MARKINGS, SIGNING, STREET LIGHTING, AND OTHER HIGHWAY RELATED ITEMS.

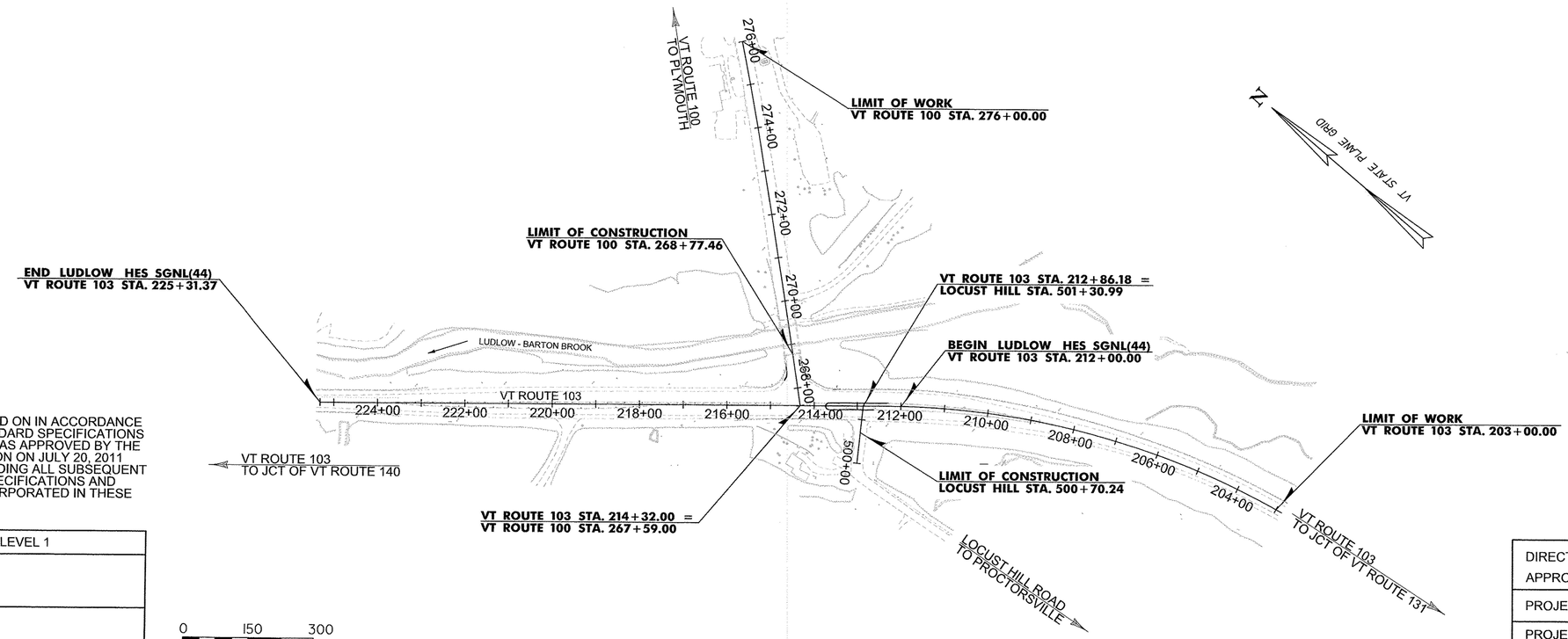

CONSTRUCTION IS TO BE CARRIED ON IN ACCORDANCE WITH THESE PLANS AND THE STANDARD SPECIFICATIONS FOR CONSTRUCTION DATED 2011, AS APPROVED BY THE FEDERAL HIGHWAY ADMINISTRATION ON JULY 20, 2011 FOR USE ON THIS PROJECT, INCLUDING ALL SUBSEQUENT REVISIONS AND SUCH REVISED SPECIFICATIONS AND SPECIAL PROVISIONS AS ARE INCORPORATED IN THESE PLANS.

QUALITY ASSURANCE PROGRAM : LEVEL 1	
SURVEYED BY :	VTRANS
SURVEYED DATE :	2013
DATUM	
VERTICAL:	NAVD 88
HORIZONTAL:	NAD 83(1996)

DIRECTOR OF PROJECT DELIVERY
APPROVED _____ DATE 4/6/2017

PROJECT MANAGER : PATRICIA COBURN, P.E.

PROJECT NAME : LUDLOW
PROJECT NUMBER : HES SGNL(44)

SHEET 1 OF 43 SHEETS

STATE OF VERMONT
AGENCY OF TRANSPORTATION

PRELIMINARY INFORMATION SHEET

PLAN SHEETS

1	TITLE SHEET
2	PRELIMINARY INFORMATION SHEET
3	CONVENTIONAL SYMBOLOGY LEGEND SHEET
4	TYPICAL SECTIONS SHEET
5	TIE SHEET
6	ALIGNMENT SHEET
7	BORING INFORMATION SHEET
8-9	BORING LOG SHEETS
10-11	QUANTITY SUMMARY SHEETS
12-14	PLAN SHEETS
15	EPSC NARRATIVE
16-18	EPSC DETAIL SHEETS
19-21	EPSC EXISTING CONDITIONS SHEETS
22-24	EPSC CONSTRUCTION CONDITIONS SHEETS
25-27	EPSC FINAL CONDITIONS SHEETS
28-30	SIGNS AND PAVEMENT MARKINGS SHEETS
31-33	TRAFFIC SIGN SUMMARY SHEETS
34	TRAFFIC SIGN DETAIL SHEET
35	TRAFFIC SIGNAL PLAN SHEET
36	TRAFFIC SIGNAL SYSTEM NOTES SHEET
37	TRAFFIC SIGNAL GENERAL NOTES SHEET
38	MAST ARM AND POLE DETAILS SHEET
39	MAST ARM CROSS SECTION SHEET
40	HEAVY DUTY JUNCTION BOX DETAIL SHEET
41	STREET LIGHTING GENERAL NOTES SHEET
42	STREET LIGHTING DETAILS SHEET
43	CONSTRUCTION APPROACH SIGNING SHEET

STANDARDS LIST

C-10	CURBING	2/11/2008
E-121	STANDARD SIGN PLACEMENT - CONVENTIONAL ROAD	8/8/1995
E-127	ROUTE MARKINGS AND RURAL INTERSECTIONS	8/8/1995
E-136B	STATE ROUTE MARKER SIGN DETAILS	8/8/1995
E-145A	REGULATORY SIGN DETAILS - LANE USE CONTROL SIGNS	12/23/1994
E-171A	TRAFFIC CONTROL SIGNALS GENERAL NOTES AND DETAILS	8/9/1995
E-171B	TRAFFIC CONTROL SIGNALS MISC. DETAILS	8/9/1995
E-171C	TRAFFIC CONTROL SIGNALS CANTILEVER MOUNTING DETAILS	8/9/1995
E-173	PULL BOXES AND JUNCTION BOXES	8/9/1995
E-175	POWER DROP STANCHIONS	6/8/2009
E-191	PAVEMENT MARKING DETAILS	2/1/1999
E-192	PAVEMENT MARKING DETAILS	10/12/2000
E-193	PAVEMENT MARKING DETAILS	8/18/1995
T-1	TRAFFIC CONTROL GENERAL NOTES	4/25/2016
T-10	CONVENTIONAL ROADS CONSTRUCTIONN APPROACH SIGNING	8/6/2012
T-11	CONSTRUCTION APPROACH SIGNING DIVIDED HIGHWAY ONE LANE CLOSED	8/6/2012
T-12	TRAFFIC CONTROL DIVIDED HIGHWAY ONE LANE CLOSED	8/6/2012
T-17	TRAFFIC CONTROL MISCELLANEOUS DETAILS	8/6/2012
T-21	TEMPORARY TRAFFIC CONTROL FOR THREE LANE ROADWAY CLOSURE	8/6/2012
T-28	CONSTRUCTION SIGN DETAILS	8/6/2012
T-29	CONSTRUCTION SIGN DETAILS	8/6/2012
T-30	COSNTRUCTION SIGN DETAILS	8/6/2012
T-31	CONSTRUCTION SIGN DETAILS	8/6/2012
T-33	MISCELLANEOUS SIGN DETAILS	8/6/2012
T-36	CONSTRUCTION ZONE LONGITUDINAL DROP-OFFS FOR PAVING	8/6/2012
T-45	SQUARE TUBE SIGN POST AND ANCHOR	1/2/2013
T-70	VERMONT REGULATORY SIGN DETAILS	4/25/2016
T-92	ROUTE MARKER FRAME DETAILS	10/26/2015
T-93	DESTINATION SIGN DETAILS	10/26/2015
T-133	LIGHT POLE FOUNDATION DETAILS	7/25/2016
T-134	LIGHT POLE & TRANSFORMER BASE DETAILS	3/10/2017

VT AOT HIGHWAY SAFETY AND DESIGN STANDARDS

HSD 621.01	POST AND BLOCKOUT DETAILS FOR STEEL BEAM GUARDRAIL, GALVANIZED	6/9/2015
HSD 621.05	STEEL BEAM GUARDRAIL, GALVANIZED/35 FOOT RADIUS	6/9/2015
HSD 621.06	GUARDRAIL TERMINAL LABEL DETAIL	2/27/2017

GENERAL NOTES

1. ANY DISCREPRENCIES BETWEEN THESE DRAWINGS AND ACTUAL FIELD CONDITIONS SHALL BE BROUGHT TO THE ATTENTION OF THE ENGINEER BEFORE PROCEEDING WITH THE WORK.
2. THE CONTRACTOR SHALL BE RESPONSIBLE FOR THE PROTECTION OF THE EXISTING UTILITIES WITHIN AND ADJACENT TO THE LIMITS OF WORK. IN THE EVENT OF DAMAGE TO THESE SYSTEMS AS A RESULT OF THE CONTRACTORS OPERATIONS, THE REPAIRS OR REPLACEMENT SHALL BE COMPLETED AT THE CONTRACTOR'S EXPENSE AS APPROVED BY THE ENGINEER.

PAVEMENT DESIGN MIXTURE CRITERIA

BITUMINOUS CONCRETE PAVEMENT SUPERPAVE MIXTURE DESIGN CRITERIA	
DESIGN LIFE ESAL'S (DESIGN LANE)	2,955,680
DESIGN NUMBER OF GYRATIONS	65
PERFORMANCE GRADED ASPHALT BINDER	58/28

TRAFFIC DATA

TRAFFIC DATA

VT 103 / VT 100 NORTH

APPROACH	AADT		DHV		% T		% D		ADTT		ESALs	
	2013	2033	2013	2033	2013	2033	2013	2033	2013	2033	2013-2033	2013-2053
VT 103 West Leg	4,700	5,000	520	560	9	11	57	57	480	680	4,391,000	9,525,000
VT 100 North	3,000	3,200	420	450	2	3	51	51	160	290	1,219,000	2,989,000
VT 103 East Leg	8,000	8,500	1,100	1,100	12	19	52	52	1,100	1,800	5,684,000	12,807,000
Locust Hill Road	60	62	5	5	34	44	67	67	1	2	12,000	27,000

PROJECT NAME: LUDLOW
PROJECT NUMBER: HES SGNL(44)

FILE NAME: t13b020_frm.dgn
PROJECT LEADER: P. COBURN
DESIGNED BY: M. BOGACZYK
PRELIMINARY INFORMATION SHEET

PLOT DATE: 4/19/2017
DRAWN BY: M. BOGACZYK
CHECKED BY: P. COBURN
SHEET 2 OF 43

GENERAL INFORMATION

SYMBOLOGY LEGEND NOTE

THE SYMBOLOGY ON THIS SHEET IS INTENDED TO COVER STANDARD CONVENTIONAL SYMBOLOGY. THE SYMBOLOGY IS USED FOR EXISTING & PROPOSED FEATURES WITH HEAVIER LINEWEIGHT, IN COMBINATION WITH PROJECT ANNOTATION, AS NOTED ON PROJECT PLAN SHEETS. THIS LEGEND SHEET COVERS THE BASICS. SYMBOLOGY ON PLANS MAY VARY, PLAN ANNOTATIONS AND NOTES SHOULD BE USED TO CLARIFY AS NEEDED.

R.O.W. ABBREVIATIONS (CODES) & SYMBOLS

POINT	CODE	DESCRIPTION
	CH	CHANNEL EASEMENT
	CONST	CONSTRUCTION EASEMENT
	CUL	CULVERT EASEMENT
	D&C	DISCONNECT & CONNECT
	DIT	DITCH EASEMENT
	DR	DRAINAGE EASEMENT
	DRIVE	DRIVEWAY EASEMENT
	EC	EROSION CONTROL
	HWY	HIGHWAY EASEMENT
	I&M	INSTALL & MAINTAIN EASEMENT
	LAND	LANDSCAPE EASEMENT
	R&RES	REMOVE & RESET
	R&REP	REMOVE & REPLACE
	SR	SLOPE RIGHT
	UE	UTILITY EASEMENT
	(P)	PERMANENT EASEMENT
	(T)	TEMPORARY EASEMENT
■	BNDNS	BOUND SET
⊡	BNDNS	BOUND TO BE SET
◎	IPNF	IRON PIN FOUND
●	IPNS	IRON PIN TO BE SET
⊠	CALC	EXISTING ROW POINT
○	PROW	PROPOSED ROW POINT
[LENGTH]		LENGTH CARRIED ON NEXT SHEET

COMMON TOPOGRAPHIC POINT SYMBOLS

POINT	CODE	DESCRIPTION
	APL	BOUND APPARENT LOCATION
	BM	BENCHMARK
	BND	BOUND
	CB	CATCH BASIN
	COMB	COMBINATION POLE
	DITHR	DROP INLET THROATED DNC
	EL	ELECTRIC POWER POLE
	FPOLE	FLAGPOLE
	GASFIL	GAS FILLER
	GP	GUIDE POST
	GSO	GAS SHUT OFF
	GUY	GUY POLE
	GUYW	GUY WIRE
	GV	GATE VALVE
	H	TREE HARDWOOD
	HCTRL	CONTROL HORIZONTAL
	HVCTRL	CONTROL HORIZ. & VERTICAL
	HYD	HYDRANT
	IP	IRON PIN
	IPIPE	IRON PIPE
	LI	LIGHT - STREET OR YARD
	MB	MAILBOX
	MH	MANHOLE (MH)
	MM	MILE MARKER
	PM	PARKING METER
	PMK	PROJECT MARKER
	POST	POST STONE/WOOD
	RRSIG	RAILROAD SIGNAL
	RRSL	RAILROAD SWITCH LEVER
	S	TREE SOFTWOOD
	SAT	SATELLITE DISH
	SHRUB	SHRUB
	SIGN	SIGN
	STUMP	STUMP
	TEL	TELEPHONE POLE
	TIE	TIE
	TSIGN	SIGN W/DOUBLE POST
	VCTRL	CONTROL VERTICAL
	WELL	WELL
	WSO	WATER SHUT OFF

THESE ARE COMMON VAOT SURVEY POINT SYMBOLS FOR EXISTING FEATURES, ALSO USED FOR PROPOSED FEATURES WITH HEAVIER LINEWEIGHT, IN COMBINATION WITH PROPOSED ANNOTATION.

PROPOSED GEOMETRY CODES

CODE	DESCRIPTION
PC	POINT OF CURVATURE
PI	POINT OF INTERSECTION
CC	CENTER OF CURVE
PT	POINT OF TANGENCY
PCC	POINT OF COMPOUND CURVE
PRC	POINT OF REVERSE CURVE
POB	POINT OF BEGINNING
POE	POINT OF ENDING
STA	STATION PREFIX
AH	AHEAD STATION SUFFIX
BK	BACK STATION SUFFIX
D	CURVE DEGREE OF (100FT)
R	CURVE RADUIS OF
T	CURVE TANGENT LENGTH
L	CURVE LENGTH OF
E	CURVE EXTERNAL DISTANCE

UTILITY SYMBOLOGY

UNDERGROUND UTILITIES

- UGU — UTILITY (GENERIC-UNKNOWN)
- UT — TELEPHONE
- UE — ELECTRIC
- UC — CABLE (TV)
- UEC — ELECTRIC+CABLE
- UET — ELECTRIC+TELEPHONE
- UCT — CABLE+TELEPHONE
- UECT — ELECTRIC+CABLE+TELEP.
- G — GAS LINE
- W — WATER LINE
- S — SANITARY SEWER (SEPTIC)

ABOVE GROUND UTILITIES (AERIAL)

- AGU — UTILITY (GENERIC-UNKNOWN)
- T — TELEPHONE
- E — ELECTRIC
- C — CABLE (TV)
- EC — ELECTRIC+CABLE
- ET — ELECTRIC+TELEPHONE
- AER E&T — ELECTRIC+TELEPHONE
- CT — CABLE+TELEPHONE
- ECT — ELECTRIC+CABLE+TELEP.
- UTILITY POLE GUY WIRE

PROJECT CONSTRUCTION SYMBOLOGY

PROJECT DESIGN & LAYOUT SYMBOLOGY

- CZ — CLEAR ZONE
- PLAN LAYOUT MATCHLINE

PROJECT CONSTRUCTION FEATURES

- TOP OF CUT SLOPE
- TOE OF FILL SLOPE
- STONE FILL
- BOTTOM OF DITCH ℄
- CULVERT PROPOSED
- STRUCTURE SUBSURFACE
- PROJECT DEMARCATION FENCE (PDF)
- BARRIER FENCE (BF)
- TREE PROTECTION ZONE (TPZ)
- STRIPING LINE REMOVAL
- SHEET PILES

CONVENTIONAL BOUNDARY SYMBOLOGY

BOUNDARY LINES

- TOWN LINE — TOWN BOUNDARY LINE
- COUNTY LINE — COUNTY BOUNDARY LINE
- STATE LINE — STATE BOUNDARY LINE
- PROPOSED STATE R.O.W. (LIMITED ACCESS)
- PROPOSED STATE R.O.W.
- STATE ROW (LIMITED ACCESS)
- STATE ROW
- TOWN ROW
- PERMANENT EASEMENT LINE (P)
- TEMPORARY EASEMENT LINE (T)
- SURVEY LINE
- P/L — PROPERTY LINE (P/L)
- SR SR SR — SLOPE RIGHTS
- 6f — 6F PROPERTY BOUNDARY
- 4f — 4F PROPERTY BOUNDARY
- HAZ — HAZARDOUS WASTE

EPSC LAYOUT PLAN SYMBOLOGY

EPSC MEASURES

- FILTER CURTAIN
- SILT FENCE
- SILT FENCE WOVEN WIRE
- CHECK DAM
- DISTURBED AREAS REQUIRING RE-VEGETATION
- EROSION MATTING

SEE EPSC DETAIL SHEETS FOR ADDITIONAL SYMBOLOGY

ENVIRONMENTAL RESOURCES

- WETLAND BOUNDARY
- RIPARIAN BUFFER ZONE
- WETLAND BUFFER ZONE
- SOIL TYPE BOUNDARY
- T&E — THREATENED & ENDANGERED SPECIES
- HAZ — HAZ — HAZARDOUS WASTE AREA
- AG — AGRICULTURAL LAND
- HABITAT — FISH & WILDLIFE HABITAT
- FLOOD PLAIN — FLOOD PLAIN
- OHW — ORDINARY HIGH WATER (OHW)
- STORM WATER
- USDA FOREST SERVICE LANDS
- WILDLIFE HABITAT SUIT/CONN

ARCHEOLOGICAL & HISTORIC

- ARCH — ARCHEOLOGICAL BOUNDARY
- HISTORIC DIST — HISTORIC DISTRICT BOUNDARY
- HISTORIC — HISTORIC AREA
- (H) — HISTORIC STRUCTURE

CONVENTIONAL TOPOGRAPHIC SYMBOLOGY

EXISTING FEATURES

- ROAD EDGE PAVEMENT
- ROAD EDGE GRAVEL
- DRIVEWAY EDGE
- DITCH
- FOUNDATION
- FENCE (EXISTING)
- FENCE WOOD POST
- FENCE STEEL POST
- GARDEN
- ROAD GUARDRAIL
- RAILROAD TRACKS
- CULVERT (EXISTING)
- STONE WALL
- WALL
- WOOD LINE
- BRUSH LINE
- HEDGE
- BODY OF WATER EDGE
- LEDGE EXPOSED

PROJECT NAME: LUDLOW
PROJECT NUMBER: HES SGNL(44)

FILE NAME: t13b020frm.dgn
PROJECT LEADER: P. COBURN
DESIGNED BY: M. BOGACZYK
CONVENTIONAL SYMBOLOGY LEGEND SHEET

PLOT DATE: 4/19/2017
DRAWN BY: M. BOGACZYK
CHECKED BY: P. COBURN
SHEET 3 OF 43

TYPICAL SECTIONS

MATERIAL TOLERANCES

PAVEMENT (TOTAL DEPTH ALL LAYERS)	+/_ ¼"
BASE COURSE	+/_ ½"
SUBBASE	+/_ 1"
SAND	+/_ 1"

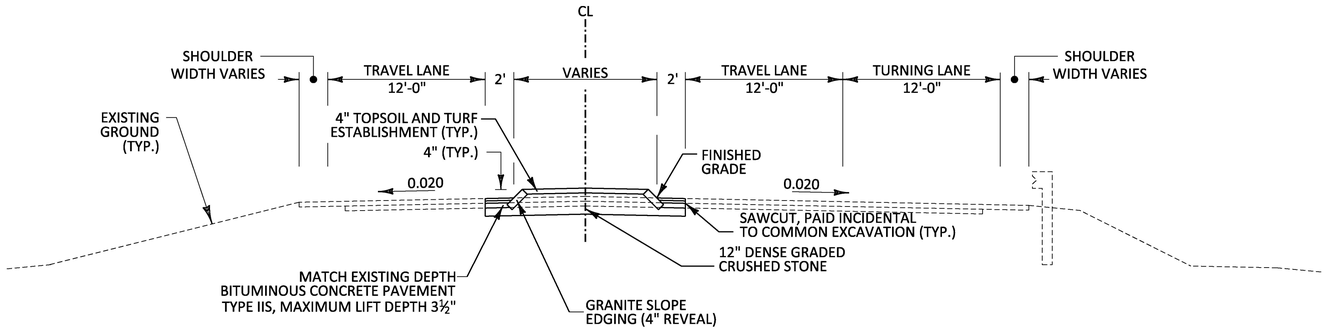

VT ROUTE 103 – GRANITE SLOPE EDGE INSTALLATION

STA. 212+28.69, RT 6.57' - STA. 213+65.96, RT 6.58'
STA. 213+65.96, RT 6.58' - STA. 213+66.25, LT 8.92'
STA. 212+62.41, LT 8.72' - STA. 213+66.25, LT 8.92'

SEEDING FORMULA

1. SEE EPSC DETAIL SHEET 2 TYPICAL FOR THE SEEDING FORMULA.

GENERAL NOTES

1. TACK COAT: EMULSIFIED ASPHALT IS TO BE APPLIED AT THE RATE OF 0.025 GAL/SY BETWEEN SUCCESSIVE COURSES OF PAVEMENT AND 0.080 GAL/SY ON COLD PLANED SURFACES, OR AS DIRECTED BY THE ENGINEER.
2. SLOPED GRANITE CURB TO BE INSTALLED WITH A 4 INCH REVEAL. WHERE CURB IS TO TIE INTO EXISTING CURB, MATCH THE EXISTING REVEAL.

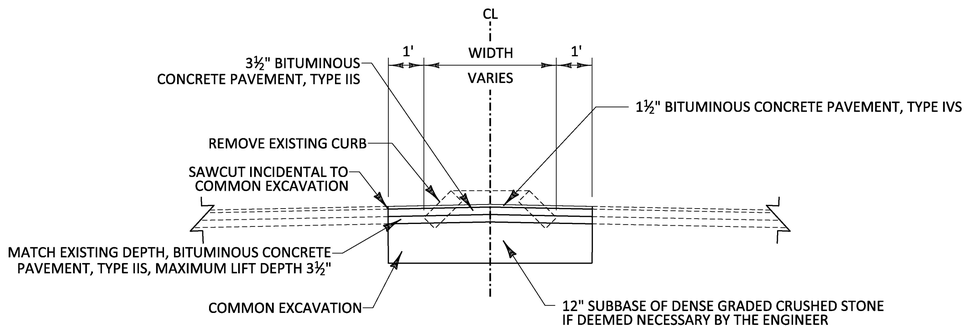

CURB REMOVAL DETAIL

STA 213+65.96, RT 6.58' - STA. 214+17.60, RT 3.40'
STA 213+66.25, LT 8.92' - STA. 214+17.60, RT 3.40'

NOTE: REMOVAL OF EXISTING GRANITE CURB AT ROADWAY WIDENING TO BE PAID UNDER ITEM 203.15 COMMON EXCAVATION

NOT TO SCALE

PROJECT NAME:	LUDLOW
PROJECT NUMBER:	HES SGNL(44)
FILE NAME: t13b020_typ.dgn	PLOT DATE: 4/19/2017
PROJECT LEADER: P. COBURN	DRAWN BY: M. BOGACZYK
DESIGNED BY: M. BOGACZYK	CHECKED BY: P. COBURN
TYPICAL SECTIONS SHEET 1	SHEET 4 OF 43

GPS CONTROL POINTS

___HVCTRL__#1___

BRIGADE AZ MK (2006)

NORTH = 326083.603
EAST = 1591965.727
ELEV. = 882.413

GENERAL LOCATION, LUDLOW, VT. TO REACH FROM THE INTERSECTION OF VT ROUTE 100 SOUTH (ANDOVER STREET) AND VT ROUTE 103 EAST (MAIN STREET) GO EAST ALONG MAIN STREET FOR 1.0 MI (1.61 KM) TO THE SITE OF THE MARK ON THE RIGHT, OPPOSITE THE LAWN ON THE NORTHWEST SIDE OF SAMS STEAKHOUSE. THE MARK IS SET 3 CM (1 INCH) BELOW GROUND SURFACE IN THE TOP OF A 30 CM (12 INCH) DIAMETER CONCRETE MONUMENT ON THE NORTH EDGE OF THE SMALL FIELD BETWEEN THE TIMBER INN MOTEL AND THE BROOKHAVEN RESORT CONDOMINIUMS. IT IS 7.1 M (23.3 FT) SOUTHWEST OF AND ABOUT 0.3 M (1.0 FT) LOWER THAN THE CENTERLINE OF MAIN STREET, 21.5 M (70.5 FT) SOUTHEAST OF POLE NO 7/24/3000/1 WITH GUY, 14.9 M (48.9 FT) NORTHWEST OF POLE NO 7/25/2, 14.1 M (46.3 FT) EAST OF A 4 CM DIAMETER IRON PIPE WHICH PROJECTS 0.5 M (1.6 FT) ABOVE GROUND SURFACE, 26.2 M (86.0 FT) EAST NORTHEAST OF THE NORTHEAST CORNER OF A WOODEN FENCE ENCLOSURE FOR A TENNIS COURT, AND 0.3 M (1.0 FT) NORTHEAST OF A FIBERGLASS WITNESS POST.

___HVCTRL__#2___

BRIGADE

NORTH = 326830.100
EAST = 1590300.130
ELEV. = 900.560

GENERAL LOCATION, LUDLOW, VT. TO REACH FROM THE INTERSECTION OF VT ROUTE 100 SOUTH (ANDOVER STREET) AND VT ROUTE 103 EAST (MAIN STREET) GO EAST ALONG MAIN STREET FOR 0.7 MI (1.13 KM) TO THE SITE OF THE MARK ON THE LEFT. THE MARK IS A CHISELED CROSS CUT IN THE TOP OF THE WEST SIDE OF THE RIM FOR A 60 CM (24 INCH) DIAMETER MANHOLE, IN THE CONCRETE SIDEWALK SOUTHWEST OF BLACK RIVER HIGH SCHOOL. IT IS 5.7 M (18.7 FT) NORTHEAST OF AND ABOUT 0.2 M (0.7 FT) HIGHER THAN THE CENTERLINE OF MAIN STREET, 0.7 M (2.3 FT) NORTHEAST OF THE SOUTHWEST EDGE OF THE SIDEWALK CURB, 9.1 M (29.9 FT) SOUTHEAST OF POLE NO 9S/2300/185 WITH GUY, 15.9 M (52.2 FT) SOUTH OF THE SOUTHEAST CORNER OF A BRICK PLANTER WITH MARBLE BLACK RIVER HIGH SCHOOL SIGN, 36.8 M (120.7 FT) WEST NORTHWEST OF THE CENTERLINE OF THE SCHOOL EXIT DRIVE, 49.6 M (162.7 FT) EAST OF THE CENTERLINE OF THE SCHOOL ENTRANCE DRIVE, AND 30.4 M (99.7 FT) WEST OF A 60 CM (24 INCH) MAPLE.

TRAVERSE TIES

HVCTRL #30

NORTH = 336193.774
EAST = 1584707.302
ELEV. = 1043.720

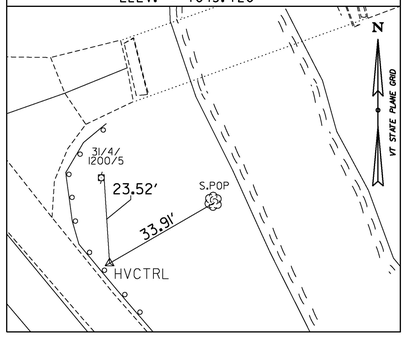

HVCTRL #15

NORTH = 334957.987
EAST = 1585686.457
ELEV. = 1033.100

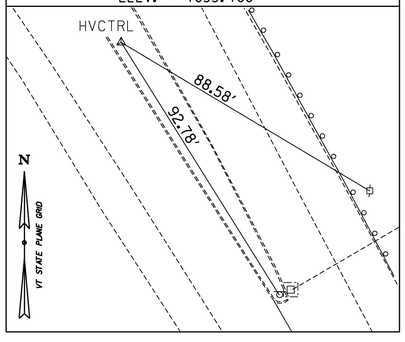

_____

NORTH = _____
EAST = _____
ELEV. = _____

_____

NORTH = _____
EAST = _____
ELEV. = _____

_____

NORTH = _____
EAST = _____
ELEV. = _____

ALIGNMENT TIES

_____

NORTH = _____
EAST = _____
ELEV. = _____

_____

NORTH = _____
EAST = _____
ELEV. = _____

_____

NORTH = _____
EAST = _____
ELEV. = _____

_____

NORTH = _____
EAST = _____
ELEV. = _____

_____

NORTH = _____
EAST = _____
ELEV. = _____

DATUM

VERTICAL NAVD 88
HORIZONTAL NAD 83(1996)
ADJUSTMENT COMPASS

PROJECT NAME: LUDLOW
PROJECT NUMBER: HES SGNL(44)

FILE NAME: 13b020_tie01.dgn
PROJECT LEADER: P. COBURN
DESIGNED BY: M. BOGACZYK
TIE SHEET

PLOT DATE: 4/19/2017
DRAWN BY: S. DONOVAN
CHECKED BY: P. BEYOR
SHEET 5 OF 43

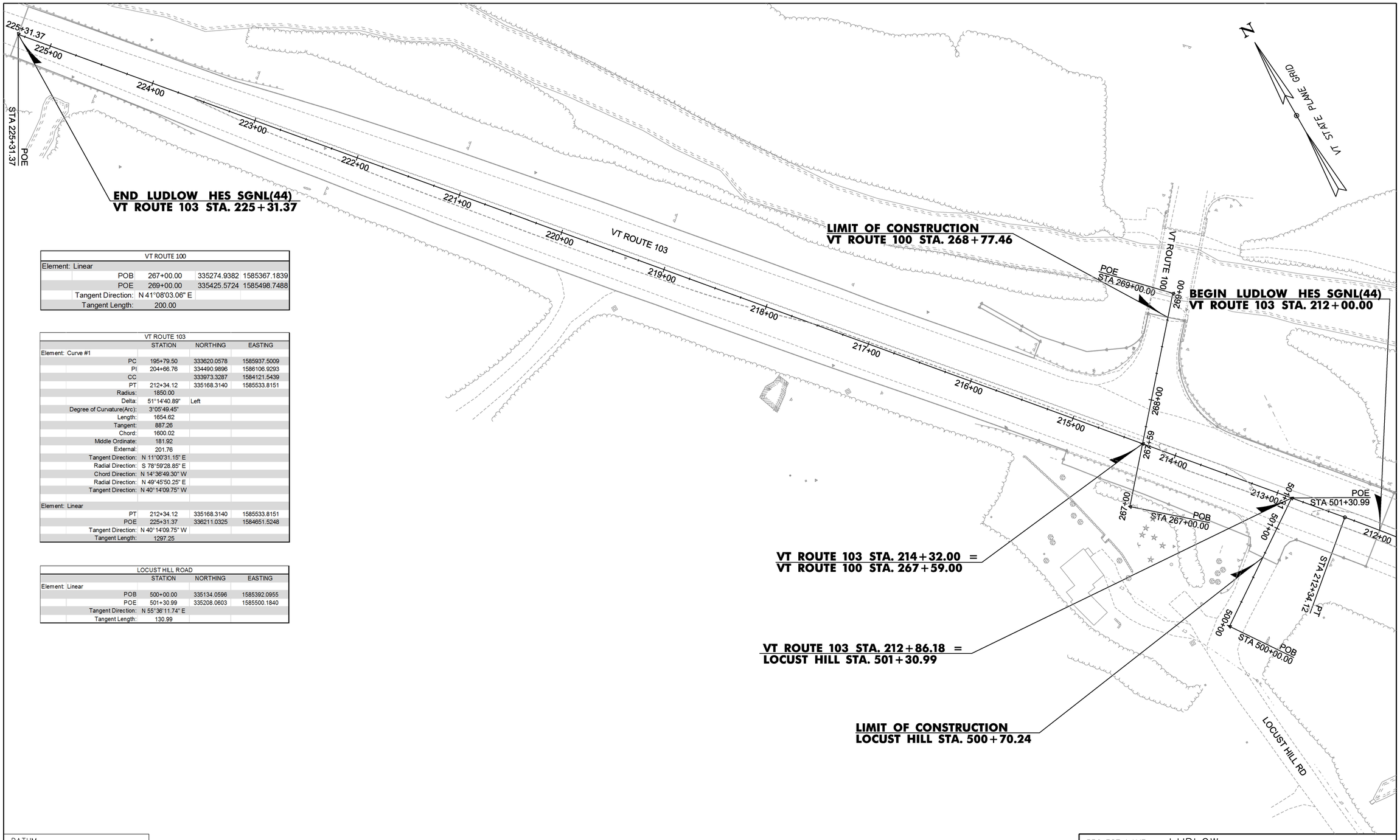

VT ROUTE 100				
Element: Linear				
	POB	267+00.00	335274.9382	1585367.1839
	POE	269+00.00	335425.5724	1585498.7488
	Tangent Direction:	N 41°08'03.06" E		
	Tangent Length:	200.00		

VT ROUTE 103		STATION	NORTHING	EASTING
Element: Curve #1				
	PC	195+79.50	333620.0578	1585937.5009
	PI	204+66.76	334490.9896	1586106.9293
	CC		333973.3287	1584121.5439
	PT	212+34.12	335168.3140	1585533.8151
	Radius:	1850.00		
	Delta:	51°14'40.89"	Left	
	Degree of Curvature(Arc):	3°05'49.45"		
	Length:	1654.62		
	Tangent:	887.26		
	Chord:	1600.02		
	Middle Ordinate:	181.92		
	External:	201.76		
	Tangent Direction:	N 11°00'31.15" E		
	Radial Direction:	S 78°59'28.85" E		
	Chord Direction:	N 14°36'49.30" W		
	Radial Direction:	N 49°45'50.25" E		
	Tangent Direction:	N 40°14'09.75" W		
Element: Linear				
	PT	212+34.12	335168.3140	1585533.8151
	POE	225+31.37	336211.0325	1584651.5248
	Tangent Direction:	N 40°14'09.75" W		
	Tangent Length:	1297.25		

LOCUST HILL ROAD		STATION	NORTHING	EASTING
Element: Linear				
	POB	500+00.00	335134.0596	1585392.0955
	POE	501+30.99	335208.0603	1585500.1840
	Tangent Direction:	N 55°36'11.74" E		
	Tangent Length:	130.99		

DATUM

VERTICAL NAVD 88

HORIZONTAL NAD 83(1996)

ADJUSTMENT COMPASS

0 40 80

SCALE IN FEET

PROJECT NAME: LUDLOW

PROJECT NUMBER: HES SGNL(44)

FILE NAME: t13b020a11.dgn
PROJECT LEADER: P. COBURN
DESIGNED BY: M. BOGACZYK
ALIGNMENT SHEET

PLOT DATE: 4/19/2017
DRAWN BY: M. BOGACZYK
CHECKED BY: P. COBURN
SHEET 6 OF 43

BORING INFORMATION SHEET

SOIL CLASSIFICATION

AASHTO	
A1	Gravel and Sand
A3	Fine Sand
A2	Silty or Clayey Gravel and Sand
A4	Silty Soil - Low Compressibility
A5	Silty Soil - Highly Compressible
A6	Clayey Soil - Low Compressibility
A7	Clayey Soil - Highly Compressible

ROCK QUALITY DESIGNATION

R.Q.D. (%)	ROCK DESCRIPTION
<25	Very Poor
25 to 50	Poor
51 to 75	Fair
76 to 90	Good
>90	Excellent

SHEAR STRENGTH

UNDRAINED SHEAR STRENGTH IN P.S.F.	CONSISTENCY
<250	Very Soft
250-500	Soft
500-1000	Med. Stiff
1000-2000	Stiff
2000-4000	Very Stiff
>4000	Hard

CORRELATION GUIDE OF "N" TO DENSITY/CONSISTENCY

DENSITY (GRANULAR SOILS)		CONSISTENCY (COHESIVE SOILS)	
N	DESCRIPTIVE TERM	N	DESCRIPTIVE TERM
<5	Very Loose	<2	Very Soft
5-10	Loose	2-4	Soft
11-24	Med. Dense	5-8	Med. Soft
25-50	Dense	9-15	Stiff
>50	Very Dense	16-30	Very Stiff
		31-60	Hard
		>60	Very Hard

COLOR			
blk	Black	pnk	Pink
bl	Blue	pu	Purple
brn	Brown	rd	Red
dk	Dark	tn	Tan
gry	Gray	wh	White
gn	Green	yel	Yellow
lt	Light	mltc	Multicolored
or	Orange		

COMMONLY USED SYMBOLS

▼	Water Elevation
⊘	Standard Penetration Boring
⊕	Auger Boring
⊙	Rod Sounding
S	Sample
N	Standard Penetration Test Blow Count Per Foot For: 2" O. D. Sampler 1 3/8" I. D. Sampler Hammer Weight Of 140 Lbs. Hammer Fall Of 30"
VS	Field Vane Shear Test
US	Undisturbed Soil Sample
B	Blast
DC	Diamond Core
MD	Mud Drill
WA	Wash Ahead
HSA	Hollow Stem Auger
AX	Core Size 1 1/8"
BX	Core Size 1 5/8"
NX	Core Size 2 1/8"
M	Double Tube Core Barrel Used
LL	Liquid Limit
PL	Plastic Limit
PI	Plasticity Index
NP	Non Plastic
w	Moisture Content (Dry Wgt. Basis)
D	Dry
M	Moist
MTW	Moist To Wet
W	Wet
Sat	Saturated
Bo	Boulder
Gr	Gravel
Sa	Sand
Si	Silt
Cl	Clay
HP	Hardpan
Le	Ledge
NLTD	No Ledge To Depth
CNPF	Can Not Penetrate Further
TLOB	Top of Ledge Or Boulder
NR	No Recovery
Rec.	Recovery
%Rec.	Percent Recovery
RQD	Rock Quality Designation
CBR	California Bearing Ratio
<	Less Than
>	Greater Than
R	Refusal (N > 100)
VTSPG	NAD83 - See Note 7

GENERAL NOTES

1. The subsurface explorations shown herein were made by the Agency of Transportation.
2. Soil and rock classifications, properties and descriptions are based on engineering interpretation from available subsurface information by the Agency and may not necessarily reflect actual variations in subsurface conditions that may be encountered between individual boring or sample locations.
3. Observed water levels and/or conditions indicated are as recorded at the time of exploration and may vary according to the prevailing rainfall, methods of exploration and other factors.
4. Engineering judgement was exercised in preparing the subsurface information presented herein. Analysis and interpretation of subsurface data was performed and interpreted for Agency design and estimating purposes. Presentation of the information in the Contract is intended to provide the Contractor access to the same data available to the Agency. The subsurface information is presented in good faith and is not intended as a substitute for personal investigation, independent interpretation, independent analysis or judgment by the Contractor.
5. Pictorial structure details shown on the boring plan layout or soils profiles are for illustrative purposes only and may not accurately portray final contract details.
6. Terminology used on the boring logs to describe the hardness, degree of weathering, and spacing of fractures, joints and other discontinuities in the bedrock is defined in the AASHTO Manual on Subsurface Investigations, 1988.
7. Northing and Easting coordinates are shown in Vermont State Plan Grid North American Datum 1983 in meters and survey feet.

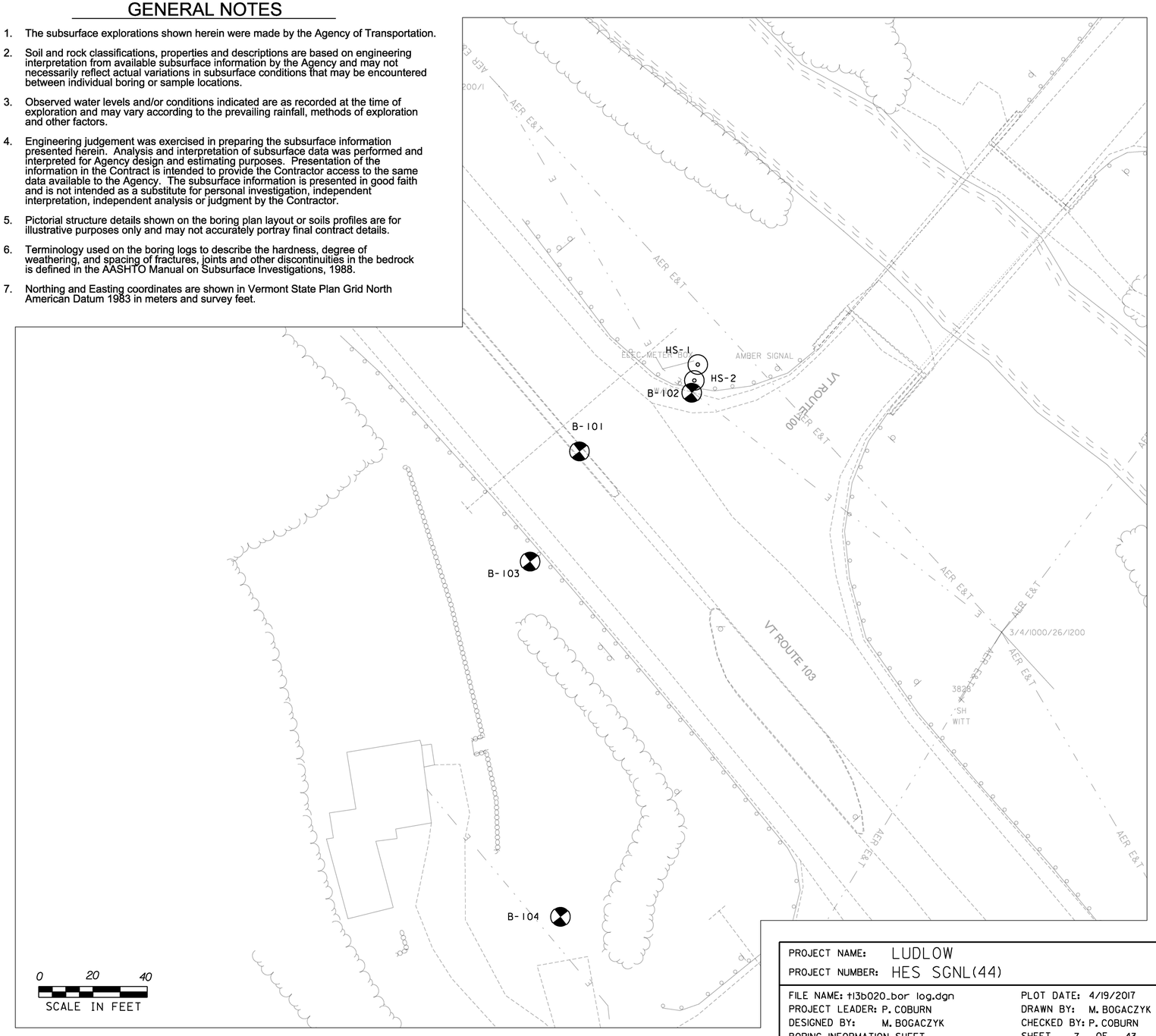

DEFINITIONS (AASHTO)

BEDROCK (LEDGE) - Rock in its native location of indefinite thickness.
BOULDER - A rock fragment with an average dimension of > 12 inches.
COBBLE - Rock fragments with an average dimension between 3 and 12 inches.
GRAVEL - Rounded particles of rock <3" and > 0.0787" (#10 sieve).
SAND - Particles of rock < 0.0787" (#10 sieve) and ? 0.0029" (#200 sieve).
SILT - Soil < 0.0029" (#200 sieve), non or slightly plastic and exhibits no strength when air-dried.
CLAY - Fine graded soil, exhibits plasticity when moist and considerable strength when air-dried.
VARVED - Alternate layers of silt and clay.
HARDPAN - Extremely dense soil, cemented layer, not softened when wet.
MUCK - Soft organic soil (containing > 10% organic material).
MOISTURE CONTENT - Weight of water divided by dry weight of soil.
FLOWING SAND - Granular soil so saturated (loose) that it flows into drill casing during extraction of wash rod.
STRIKE - Angle from magnetic north to line of intersection of bed with a horizontal plane.
DIP - Inclination of bed with a horizontal plane.

PROJECT NAME: LUDLOW
PROJECT NUMBER: HES SGNL(44)

FILE NAME: t13b020_bor log.dgn
PROJECT LEADER: P. COBURN
DESIGNED BY: M. BOGACZYK
BORING INFORMATION SHEET

PLOT DATE: 4/19/2017
DRAWN BY: M. BOGACZYK
CHECKED BY: P. COBURN
SHEET 7 OF 43

STATE OF VERMONT
AGENCY OF TRANSPORTATION
CONSTRUCTION AND
MATERIALS BUREAU
CENTRAL LABORATORY

BORING LOG

LUDLOW
HES SGNL(44)
VT-100, VT-103 TRAFFIC SIGNAL

Boring No.: **B-101**
Page No.: 1 of 1
Pin No.: 13B020
Checked By: MLM

Boring Crew: DAIGNEAULT, GARROW, NIETO
Date Started: 5/21/15 Date Finished: 5/21/15
VTSPG NAD83: N 335369.08 ft E 1585369.64 ft
Station: 266+71 Offset: -1.70
Ground Elevation: 1036.0 ft

	Casing	Sampler
Type:	WB	SS
I.D.:	4 in	1.5 in
Hammer Wt:	N.A.	140 lb.
Hammer Fall:	N.A.	30 in.
Hammer/Rod Type:		Auto/AWJ
Rig:	CME 45C TRACK	C. = 1.34

Groundwater Observations

Date	Depth (ft)	Notes
		No water to depth.

Depth (ft)	Strata (1)	CLASSIFICATION OF MATERIALS (Description)	Blows/6" (N Value)	Moisture Content %	Gravel %	Sand %	Fines %
		Asphalt Pavement, 0.0 ft - 0.2 ft					
		A-1-b, GrSa, brn, Moist, Rec. = 0.7 ft	6-18-22-21 (40)	8.3	40.5	50.3	9.2
		A-2-4, GrSa, brn, Moist, Rec. = 1.6 ft	10-10-12-14 (23)	5.4	26.5	58.3	15.2
5		A-1-b, SaGr, brn, Moist, Rec. = 1.5 ft, Lab Note: Broken Rock was within sample.	12-12-13-16 (25)	4.5	47.4	41.1	11.5
		Hole stopped @ 6.0 ft					
10							
15							
20							
25							
30							
35							

Notes:
1. Stratification lines represent approximate boundary between material types. Transition may be gradual.
2. N Values have not been corrected for hammer energy. C is the hammer energy correction factor.
3. Water level readings have been made at times and under conditions stated. Fluctuations may occur due to other factors than those present at the time measurements were made.

BORING LOG 2 LUDLOW HES SGNL(44).GPJ VERMONT AOT.GDT 6/15/15

STATE OF VERMONT
AGENCY OF TRANSPORTATION
CONSTRUCTION AND
MATERIALS BUREAU
CENTRAL LABORATORY

BORING LOG

LUDLOW
HES SGNL(44)
VT-100, VT-103 TRAFFIC SIGNAL

Boring No.: **B-102**
Page No.: 1 of 1
Pin No.: 13B020
Checked By: MLM

Boring Crew: DAIGNEAULT, GARROW, NIETO
Date Started: 5/21/15 Date Finished: 5/26/15
VTSPG NAD83: N 335390.71 ft E 1585411.02 ft
Station: 266+60 Offset: 43.80
Ground Elevation: 1034.5 ft

	Casing	Sampler
Type:	WB	SS
I.D.:	4 in	1.5 in
Hammer Wt:	N.A.	140 lb.
Hammer Fall:	N.A.	30 in.
Hammer/Rod Type:		Auto/AWJ
Rig:	CME 45C TRACK	C. = 1.34

Groundwater Observations

Date	Depth (ft)	Notes
		No water to depth.

Depth (ft)	Strata (1)	CLASSIFICATION OF MATERIALS (Description)	Blows/6" (N Value)	Moisture Content %	Gravel %	Sand %	Fines %
		Asphalt Pavement, 0.0 ft - 0.6 ft					
		A-1-a, SaGr, brn, Moist, Rec. = 1.1 ft, Lab Note: Broken Rock was within sample.	23-28-15-12 (43)	3.1	54.4	34.6	11.0
		A-2-4, Sa, brn, Moist, Rec. = 1.4 ft, Lab Note: Broken Rock was within sample.	10-13-16-19 (29)	10.6	19.3	63.8	16.9
5		A-1-b, SaGr, brn, Moist, Rec. = 1.3 ft, Cleaned out casing. Lab Note: Broken Rock was within sample.	11-11-22-19 (33)	9.0	42.3	42.2	15.5
		A-1-b, SaGr, brn, MTW, Rec. = 1.2 ft, Cleaned out casing. Lab Note: Broken Rock was within sample.	13-13-19-13 (32)	10.9	50.2	35.5	14.3
10		A-1-b, SaGr, brn, MTW, Rec. = 1.4 ft, Cleaned out casing. Lab Note: Broken Rock & Weathered Rock were within sample.	11-14-23-14 (37)	11.0	43.0	39.2	17.8
		Field Note:, No Recovery	R@3.5" (R)				
		Field Note:, Concrete, Cleaned out casing.					
15		Field Note:, No Recovery	R@0.0" (R)				
		Field Note:, Pulled casing and changed bit at 16.0 ft.					
20		Field Note:, Cobbles, Cleaned out casing.					
		Visual Description:, Broken Rock, gry, Moist, Rec. = 0.3 ft	R@6.0" (R)				
25		A-1-b, SiSaGr, brn, Moist, Rec. = 1.1 ft, Lab Note: Weathered Rock was within sample and broke down during gradation.	9-14-14-17 (28)	12.8	43.8	34.3	21.9
		Hole stopped @ 27.0 ft					
30		Remarks: Hole collapsed at 15.0 ft.					
35							

Notes:
1. Stratification lines represent approximate boundary between material types. Transition may be gradual.
2. N Values have not been corrected for hammer energy. C is the hammer energy correction factor.
3. Water level readings have been made at times and under conditions stated. Fluctuations may occur due to other factors than those present at the time measurements were made.

BORING LOG 2 LUDLOW HES SGNL(44).GPJ VERMONT AOT.GDT 6/15/15

PROJECT NAME: LUDLOW
PROJECT NUMBER: HES SGNL(44)

FILE NAME: t13b020_bor log.dgn
PROJECT LEADER: P. COBURN
DESIGNED BY: M. BOGACZYK
BORING LOG SHEET 1

PLOT DATE: 4/19/2017
DRAWN BY: M. BOGACZYK
CHECKED BY: P. COBURN
SHEET 8 OF 43

STATE OF VERMONT
AGENCY OF TRANSPORTATION
CONSTRUCTION AND
MATERIALS BUREAU
CENTRAL LABORATORY

BORING LOG

LUDLOW
HES SGNL(44)
VT-100, VT-103 TRAFFIC SIGNAL

Boring No.: **B-103**
Page No.: 1 of 1
Pin No.: 13B020
Checked By: MLM

Boring Crew: GARROW, NIETO
Date Started: 5/27/15 Date Finished: 5/27/15
VTSPG NAD83: N 335328.46 ft E 1585351.46 ft
Station: 266+52 Offset: -42.20
Ground Elevation: 1033.6 ft

	Casing	Sampler
Type:	WB	SS
I.D.:	4 in	1.5 in
Hammer Wt:	N.A.	140 lb.
Hammer Fall:	N.A.	30 in.
Hammer/Rod Type:		Auto/AWJ
Rig:	CME 45C TRACK	C. = 1.34

Groundwater Observations

Date	Depth (ft)	Notes
05/27/15	8.1	After drilling.

Depth (ft)	Strata (1)	CLASSIFICATION OF MATERIALS (Description)	Blows/6" (N Value)	Moisture Content %	Gravel %	Sand %	Fines %
		A-2-4, Sa, Lt/brn, Moist, Rec. = 1.3 ft	WH-WH-1-3 (1)	7.8	12.5	71.6	15.9
		A-2-4, Sa, Lt/brn, Moist, Rec. = 1.7 ft	2-5-4-5 (9)	9.4	15.8	68.3	15.9
5		A-1-b, GrSa, brn, Moist, Rec. = 1.6 ft, Lab Note: Burnt Coal (Cinders) were within sample.	5-6-6-9 (12)	16.6	27.6	53.2	19.2
		A-2-4, SiGrSa, brn, Moist, Rec. = 1.3 ft	5-5-5-7 (10)	20.3	28.5	47.4	24.1
		A-2-4, SiGrSa, Lt/brn, Moist, Rec. = 1.6 ft, NXDC, Cleaned out casing. Lab Note: Broken Rock & some Weathered Rock were within sample.	7-6-7-6 (13)	11.2	35.3	35.5	29.2
10		A-1-b, SiSaGr, Lt/brn, Moist, Rec. = 1.3 ft, Lab Note: Weathered Rock & Broken Rock were within sample.	4-7-9-24 (16)	10.6	43.4	32.7	23.9
		Field Note:, NXDC, Cleaned out casing					
15		Visual Description:, Severely Weathered Rock, Lt/brn, Moist, Rec. = 1.4 ft	18-22-26-26 (48)	12.4			
		Field Note:, NXDC, Cleaned out casing					
20		Visual Description:, Severely Weathered Rock, brn-Lt/brn, Moist, Rec. = 0.7 ft	30-R@2.5" (R)	12.7			
25		Visual Description:, Small Broken Rock pieces, Dk/gry, Moist, Rec. = 0.3 ft	5-R@1.0" (R)				
		Hole stopped @ 25.6 ft					
30							
35							

Remarks:
Hole collapsed at 14.6 ft.

Notes:
1. Stratification lines represent approximate boundary between material types. Transition may be gradual.
2. N Values have not been corrected for hammer energy. C is the hammer energy correction factor.
3. Water level readings have been made at times and under conditions stated. Fluctuations may occur due to other factors than those present at the time measurements were made.

BORING LOG 2 LUDLOW HES SGNL(44).GPJ VERMONT AOT.GDT 6/15/15

STATE OF VERMONT
AGENCY OF TRANSPORTATION
CONSTRUCTION AND
MATERIALS BUREAU
CENTRAL LABORATORY

BORING LOG

LUDLOW
HES SGNL(44)
VT-100, VT-103 TRAFFIC SIGNAL

Boring No.: **B-104**
Page No.: 1 of 1
Pin No.: 13B020
Checked By: MLM

Boring Crew: DAIGNEAULT, GARROW, NIETO
Date Started: 5/20/15 Date Finished: 5/21/15
VTSPG NAD83: N 335197.58 ft E 1585362.64 ft
Station: 31+35 Offset: 0.00
Ground Elevation: 1034.4 ft

	Casing	Sampler
Type:	WB	SS
I.D.:	4 in	1.5 in
Hammer Wt:	N.A.	140 lb.
Hammer Fall:	N.A.	30 in.
Hammer/Rod Type:		Auto/AWJ
Rig:	CME 45C TRACK	C. = 1.34

Groundwater Observations

Date	Depth (ft)	Notes
05/21/15	9.8	While drilling.

Depth (ft)	Strata (1)	CLASSIFICATION OF MATERIALS (Description)	Run (Dip deg.)	Core Rec. % (RQD %)	Drill Rate minutes/ft	Blows/6" (N Value)	Moisture Content %	Gravel %	Sand %	Fines %
		A-1-b, GrSa, Dk/brn, Moist, Rec. = 1.2 ft				2-4-6-8 (10)	7.4	36.0	48.5	15.5
		A-1-b, GrSa, brn, Moist, Rec. = 1.5 ft, Cleaned out casing.				4-8-11-19 (19)	8.3	30.0	53.0	17.0
5		A-1-b, GrSa, gry, MTW, Rec. = 0.5 ft Field Note:, Cobbles				35-R@2.5" (R)	16.1	26.1	66.6	7.3
		Visual Description:, Severely Weathered Rock, brn, Moist, Rec. = 1.8 ft				11-14-16-17 (30)	13.1			
		Lab Note, Broken Rock & Weathered Rock were within sample., brn, Moist, Rec. = 1.7 ft				9-9-10-11 (19)	15.6	39.0	36.6	24.4
10		Lab Note, Lots of Severely Weathered Rock was within sample., brn, Moist, Rec. = 1.3 ft				7-7-10-10 (17)	14.5	28.5	45.7	25.8
15		Visual Description:, Mostly Broken Rock, Rec. = 0.4 ft				R@5.0" (R)	10.7	52.7	29.5	17.8
20		20.0 ft - 25.0 ft, Gray, mica-SCHIST, with quartz veins. Strongly foliated. Some brown staining on joints. Moderately hard, Very slightly weathered, Good rock, NXMDC, RMR = 64	1 (40)	88 (85)	2 3 3 4 3	Top of Bedrock @ 20.0 ft				
25		25.0 ft - 29.7 ft, Gray, mica-SCHIST, with quartz veins. Strongly foliated. Some brown staining on joints throughout core. Moderately hard, Very slightly weathered, Good rock, NXMDC, RMR = 61	2 (35-40)	94 (75)	3 3 3 4 6					
30		29.7 ft - 30.0 ft, Light brown, mica-SCHIST, Very soft, Severely weathered								
		Hole stopped @ 30.0 ft								
35										

Remarks:
Hole collapsed at 20.3 ft.

Notes:
1. Stratification lines represent approximate boundary between material types. Transition may be gradual.
2. N Values have not been corrected for hammer energy. C is the hammer energy correction factor.
3. Water level readings have been made at times and under conditions stated. Fluctuations may occur due to other factors than those present at the time measurements were made.

BORING LOG 2 LUDLOW HES SGNL(44).GPJ VERMONT AOT.GDT 6/16/15

PROJECT NAME: LUDLOW
PROJECT NUMBER: HES SGNL(44)

FILE NAME: t13b020_bor log.dgn
PROJECT LEADER: P. COBURN
DESIGNED BY: M. BOGACZYK
BORING LOG SHEET 2

PLOT DATE: 4/19/2017
DRAWN BY: M. BOGACZYK
CHECKED BY: P. COBURN
SHEET 9 OF 43

STATE OF VERMONT
AGENCY OF TRANSPORTATION

QUANTITY SHEET 1

SUMMARY OF ESTIMATED QUANTITIES			TOTALS		DESCRIPTIONS				DETAILED SUMMARY OF QUANTITIES		
ROADWAY	EROSION CONTROL	FULL C.E. ITEMS	GRAND TOTAL	FINAL	UNIT	ITEMS	ITEM NUMBER	ROUND	QUANTITIES	UNIT	ITEMS
25			25		CY	COMMON EXCAVATION	203.15	5			
355			355		CY	EXCAVATION OF SURFACES AND PAVEMENTS	203.28	8			
1			1		CY	TRENCH EXCAVATION OF EARTH, EXPLORATORY (N.A.B.I.)	204.22	--			
90			90		CY	SUBBASE OF DENSE GRADED CRUSHED STONE	301.35	10			
0.3			0.3		CWT	EMULSIFIED ASPHALT	404.65	0.05			
1			1		LU	PRICE ADJUSTMENT, ASPHALT CEMENT (N.A.B.I.)	406.50	--			
1			1		MGAL	DUST CONTROL WITH WATER	609.10	EST.			
270			270		LF	GRANITE SLOPE EDGING	616.20	4			
100			100		LF	STEEL BEAM GUARDRAIL, GALVANIZED	621.20	15			
2			2		EACH	ANCHOR FOR STEEL BEAM RAIL	621.60	--			
75			75		LF	REMOVAL AND DISPOSAL OF GUARDRAIL	621.80	5			
320			320		HR	UNIFORMED TRAFFIC OFFICERS	630.10	EST.			
480			480		HR	FLAGGERS	630.15	EST.			
		1	1		LS	FIELD OFFICE, ENGINEERS	631.10	--			
		1	1		LS	TESTING EQUIPMENT, CONCRETE	631.16	--			
		1	1		LS	TESTING EQUIPMENT, BITUMINOUS	631.17	--			
		3000	3000		DL	FIELD OFFICE TELEPHONE (N.A.B.I.)	631.26	--			
1			1		LS	MOBILIZATION/DEMOBILIZATION	635.11	--			
3			3		EACH	PORTABLE CHANGEABLE MESSAGE SIGN	641.15	--			
1450			1450		LF	4 INCH WHITE LINE, WATERBORNE PAINT	646.201	14			
420			420		LF	4 INCH YELLOW LINE, WATERBORNE PAINT	646.2111	6			
360			360		LF	8 INCH WHITE LINE, WATERBORNE PAINT	646.221	8			
80			80		LF	24 INCH STOP BAR, WATERBORNE PAINT	646.261	5			
2			2		EACH	LETTER OR SYMBOL, WATERBORNE PAINT	646.301	--			
270			270		LF	PAINTED CURB	646.81	4			
450			450		SF	REMOVAL OF EXISTING PAVEMENT MARKINGS	646.85	12			
	20		20		LB	SEED	651.15	3			
	170		170		LB	FERTILIZER	651.18	24			
	0.75		0.75		TON	AGRICULTURAL LIMESTONE	651.20	0.17			
	0.75		0.75		TON	HAY MULCH	651.25	0.17			
160			160		CY	TOPSOIL	651.35	3			
	1		1		LS	EPSC PLAN	652.10	--			
	10		10		HR	MONITORING EPSC PLAN	652.20	EST.			
	1		1		LU	MAINTENANCE OF EPSC PLAN (N.A.B.I.)	652.30	--			
	1440		1440		SY	TEMPORARY EROSION MATTING	653.20	28			
	45		45		CY	VEHICLE TRACKING PAD	653.35	6			
	1		1		EACH	INLET PROTECTION DEVICE, TYPE II	653.41	--			
	1400		1400		LF	BARRIER FENCE	653.50	14			
	1210		1210		LF	PROJECT DEMARCATION FENCE	653.55	14			
225			225		SF	TRAFFIC SIGNS, TYPE A	675.20	15			

PROJECT NAME: LUDLOW
PROJECT NUMBER: HES SGNL(44)

FILE NAME: t13b020_frm.dgn
PROJECT LEADER: P. COBURN
DESIGNED BY: M. BOGACZYK
QUANTITY SUMMARY SHEET 1

PLOT DATE: 4/19/2017
DRAWN BY: M. BOGACZYK
CHECKED BY: P. COBURN
SHEET 10 OF 43

STATE OF VERMONT
AGENCY OF TRANSPORTATION

QUANTITY SHEET 2

SUMMARY OF ESTIMATED QUANTITIES									TOTALS		DESCRIPTIONS				DETAILED SUMMARY OF QUANTITIES		
							ROADWAY	EROSION CONTROL	FULL C.E. ITEMS	GRAND TOTAL	FINAL	UNIT	ITEMS	ITEM NUMBER	ROUND	QUANTITIES	UNIT	ITEMS
							480			480		LF	SQUARE TUBE SIGN POST AND ANCHOR	675.341	15			
							44			44		EACH	REMOVING SIGNS	675.50	–			
							1			1		EACH	TRAFFIC CONTROL SIGNAL SYSTEM, INTERSECTION (VT ROUTE 100 & VT ROUTE 103)	678.15	–			
							430			430		LF	ELECTRICAL CONDUIT (2" PVC)(SCHEDULE 80)	678.21	22			
							690			690		LF	WIRED CONDUIT (2" PVC)(SCHEDULE 80)	678.23	25			
							1			1		EACH	STREET LIGHT ASSEMBLY	679.46	–			
							2			2		EACH	BRACKET ARM	679.47	–			
							2			2		EACH	LUMINAIRE	679.50	–			
							1			1		EACH	STREET LIGHT CONTROL DEVICE	679.54	–			
							4			4		EACH	SPECIAL PROVISION (JUNCTION BOX, HEAVY DUTY)	900.620	–			
							4			4		EACH	SPECIAL PROVISION (SOIL BEARING SLIP BASE)(2 1/2")	900.620	–			
							175			175		LF	SPECIAL PROVISION (HORIZONTAL DIRECTIONAL DRILLING, 12" CASING PIPE)	900.640	18			
							1			1		LS	SPECIAL PROVISION (ELECTRIC DEMOLITION)	900.645	–			
							1			1		LS	SPECIAL PROVISION (TRAFFIC CONTROL, ALL-INCLUSIVE)	900.645	–			
							1			1		LU	SPECIAL PROVISION (MAT DENSITY PAY ADJUSTMENT, SMALL QUANTITY) (N.A.B.I.)	900.650	–			
							1			1		LU	SPECIAL PROVISION (MIXTURE PAY ADJUSTMENT) (N.A.B.I.)	900.650	–			
							35			35		TON	SPECIAL PROVISION (BITUMINOUS CONCRETE PAVEMENT, SMALL QUANTITY)	900.680	7			

PROJECT NAME:	LUDLOW
PROJECT NUMBER:	HES SGNL(44)
FILE NAME: t13b020_frm.dgn	PLOT DATE: 4/19/2017
PROJECT LEADER: P. COBURN	DRAWN BY: M. BOGACZYK
DESIGNED BY: M. BOGACZYK	CHECKED BY: P. COBURN
QUANTITY SUMMARY SHEET 2	SHEET II OF 43

EXCAVATION OF SURFACES AND PAVEMENTS

STA. 221+50.00, RT - STA. 223+30.87, RT

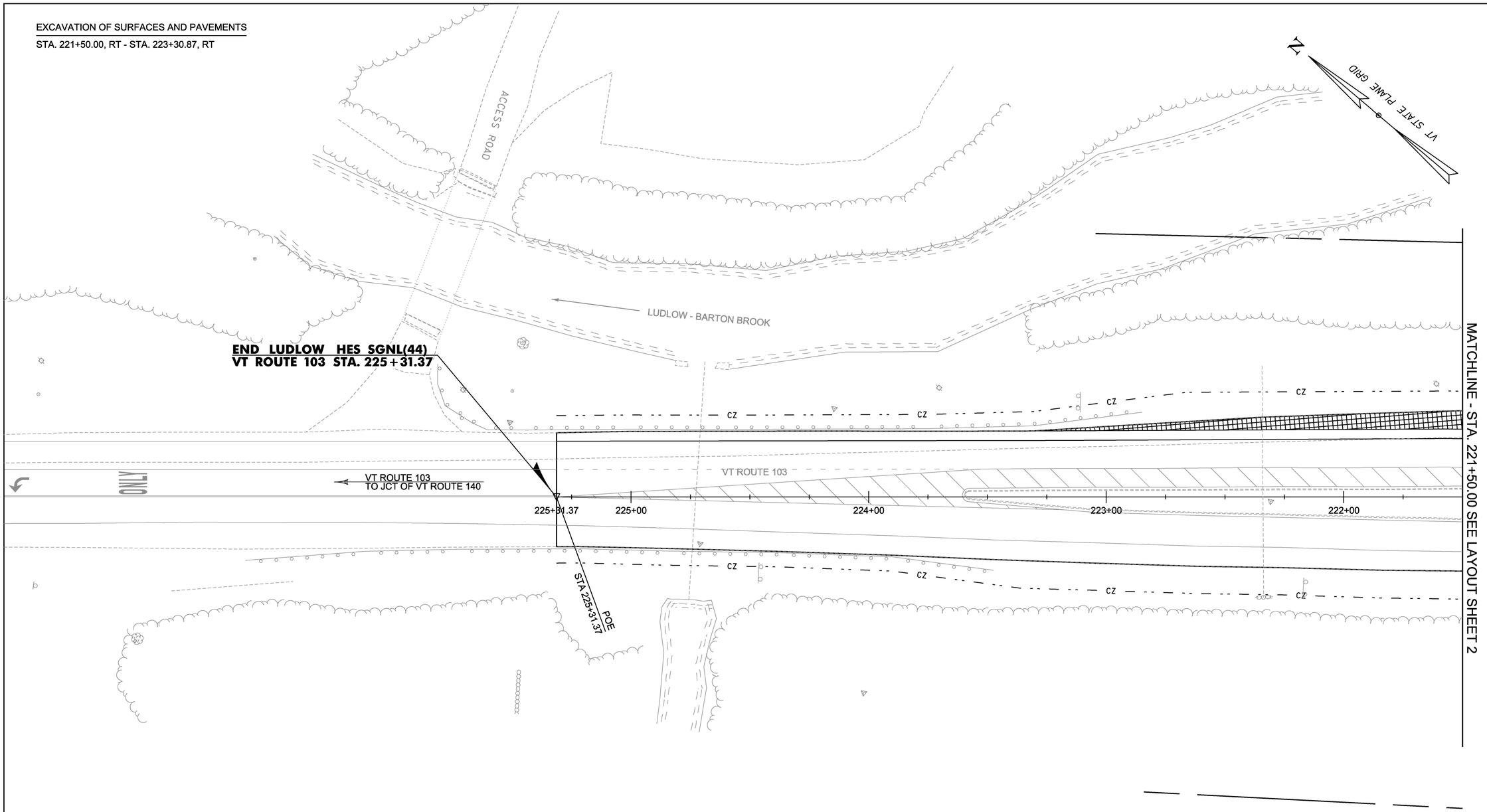

LEGEND

= EXCAVATION OF SURFACES AND PAVEMENTS

0 20 40

SCALE IN FEET

PROJECT NAME:	LUDLOW
PROJECT NUMBER:	HES SGNL(44)
FILE NAME: t13b020_nul.dgn	PLOT DATE: 4/19/2017
PROJECT LEADER: P. COBURN	DRAWN BY: M. BOGACZYK
DESIGNED BY: M. BOGACZYK	CHECKED BY: P. COBURN
PLAN SHEET 1	SHEET 12 OF 43

EXCAVATION OF SURFACES AND PAVEMENTS

STA. 216+50.00, RT - STA. 221+50.00, RT

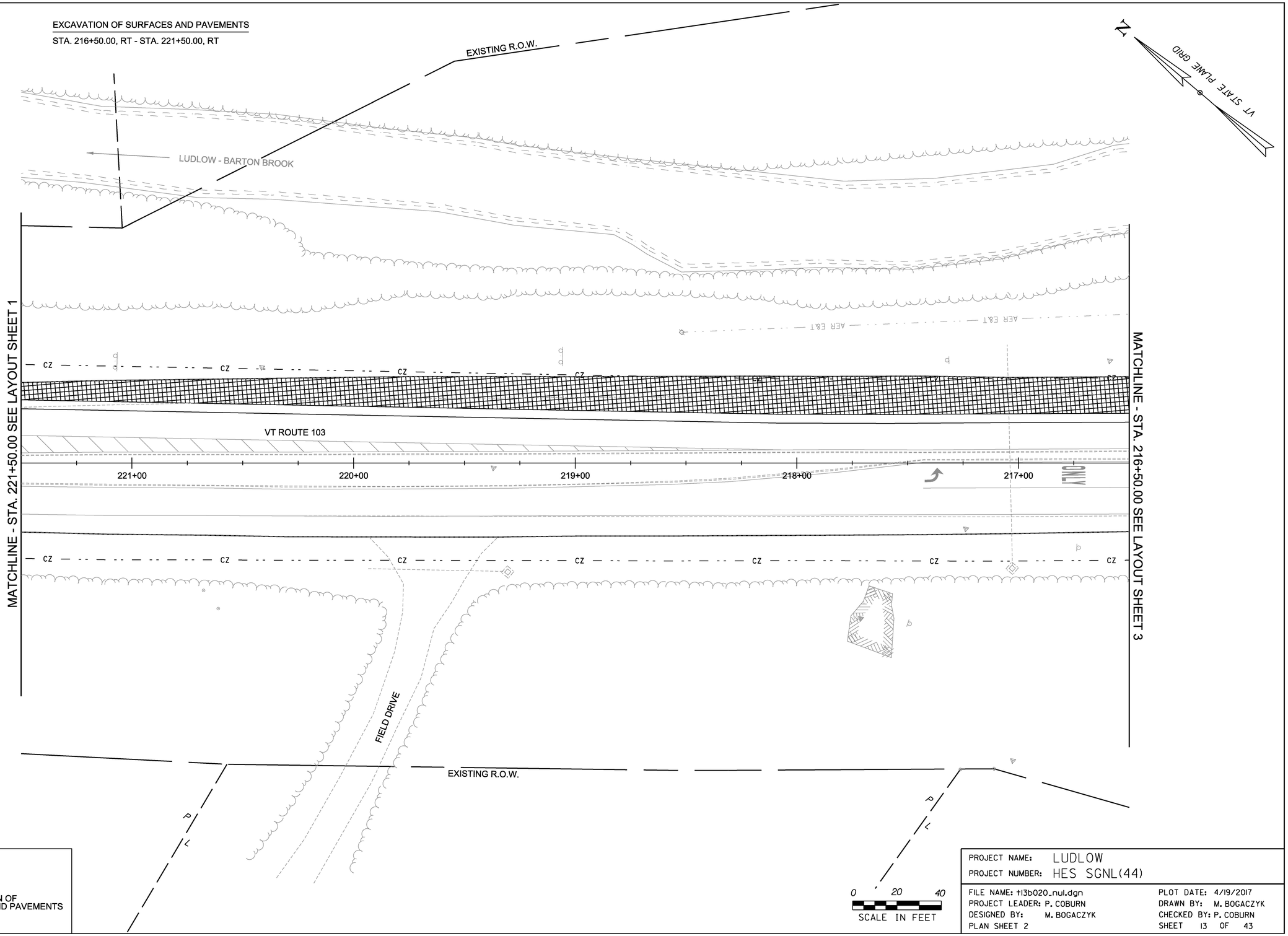

LEGEND

= EXCAVATION OF SURFACES AND PAVEMENTS

PROJECT NAME:	LUDLOW
PROJECT NUMBER:	HES SGNL(44)
FILE NAME: t13b020_nul.dgn	PLOT DATE: 4/19/2017
PROJECT LEADER: P. COBURN	DRAWN BY: M. BOGACZYK
DESIGNED BY: M. BOGACZYK	CHECKED BY: P. COBURN
PLAN SHEET 2	SHEET 13 OF 43

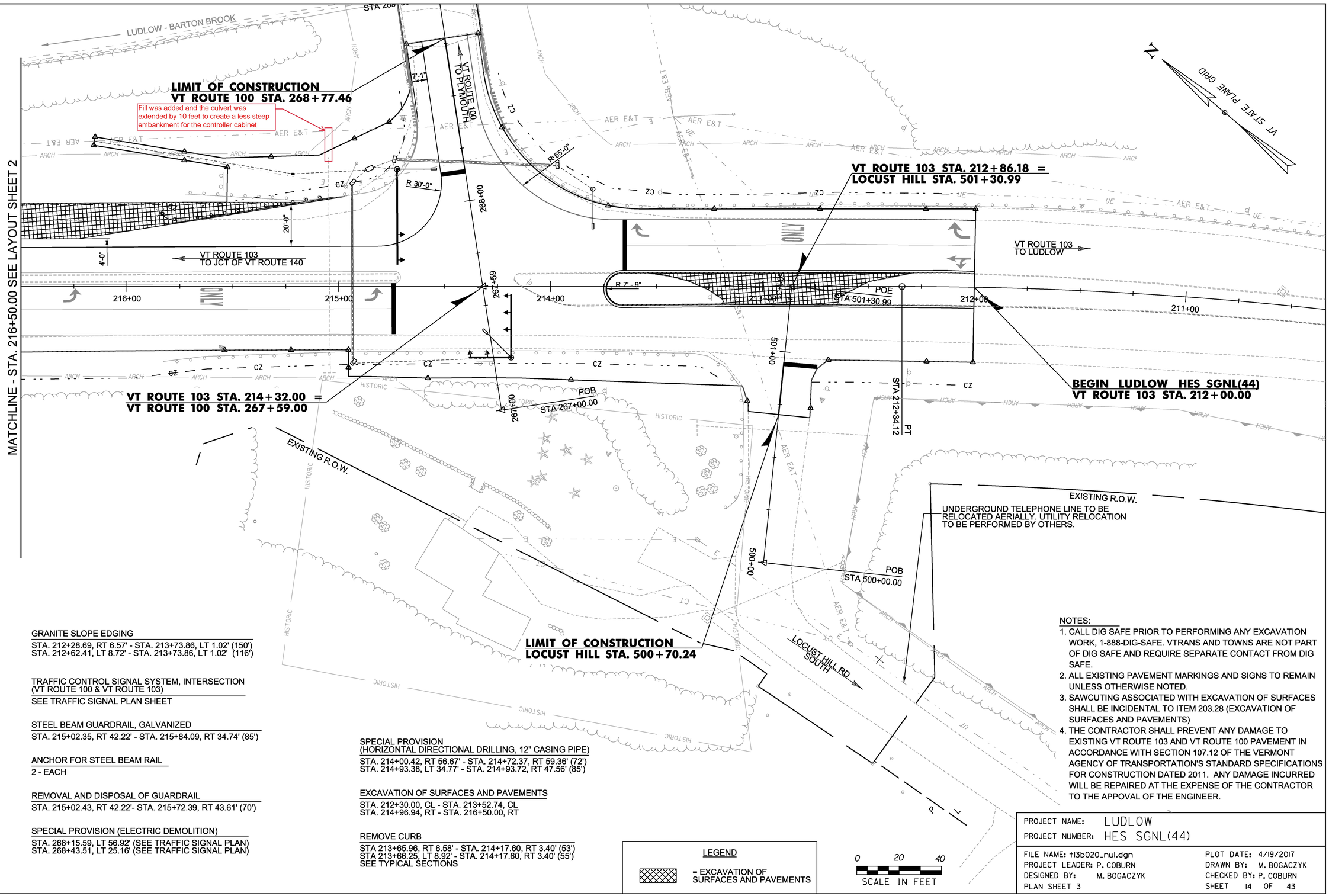

GRANITE SLOPE EDGING

STA. 212+28.69, RT 6.57' - STA. 213+73.86, LT 1.02' (150')
STA. 212+62.41, LT 8.72' - STA. 213+73.86, LT 1.02' (116')

TRAFFIC CONTROL SIGNAL SYSTEM, INTERSECTION (VT ROUTE 100 & VT ROUTE 103)

SEE TRAFFIC SIGNAL PLAN SHEET

STEEL BEAM GUARDRAIL, GALVANIZED

STA. 215+02.35, RT 42.22' - STA. 215+84.09, RT 34.74' (85')

ANCHOR FOR STEEL BEAM RAIL

2 - EACH

REMOVAL AND DISPOSAL OF GUARDRAIL

STA. 215+02.43, RT 42.22'- STA. 215+72.39, RT 43.61' (70')

SPECIAL PROVISION (ELECTRIC DEMOLITION)

STA. 268+15.59, LT 56.92' (SEE TRAFFIC SIGNAL PLAN)
STA. 268+43.51, LT 25.16' (SEE TRAFFIC SIGNAL PLAN)

SPECIAL PROVISION (HORIZONTAL DIRECTIONAL DRILLING, 12" CASING PIPE)

STA. 214+00.42, RT 56.67' - STA. 214+72.37, RT 59.36' (72')
STA. 214+93.38, LT 34.77' - STA. 214+93.72, RT 47.56' (85')

EXCAVATION OF SURFACES AND PAVEMENTS

STA. 212+30.00, CL - STA. 213+52.74, CL
STA. 214+96.94, RT - STA. 216+50.00, RT

REMOVE CURB

STA 213+65.96, RT 6.58' - STA. 214+17.60, RT 3.40' (53')
STA 213+66.25, LT 8.92' - STA. 214+17.60, RT 3.40' (55')
SEE TYPICAL SECTIONS

LEGEND

= EXCAVATION OF SURFACES AND PAVEMENTS

NOTES:

1. CALL DIG SAFE PRIOR TO PERFORMING ANY EXCAVATION WORK, 1-888-DIG-SAFE. VTRANS AND TOWNS ARE NOT PART OF DIG SAFE AND REQUIRE SEPARATE CONTACT FROM DIG SAFE.
2. ALL EXISTING PAVEMENT MARKINGS AND SIGNS TO REMAIN UNLESS OTHERWISE NOTED.
3. SAWCUTING ASSOCIATED WITH EXCAVATION OF SURFACES SHALL BE INCIDENTAL TO ITEM 203.28 (EXCAVATION OF SURFACES AND PAVEMENTS)
4. THE CONTRACTOR SHALL PREVENT ANY DAMAGE TO EXISTING VT ROUTE 103 AND VT ROUTE 100 PAVEMENT IN ACCORDANCE WITH SECTION 107.12 OF THE VERMONT AGENCY OF TRANSPORTATION'S STANDARD SPECIFICATIONS FOR CONSTRUCTION DATED 2011. ANY DAMAGE INCURRED WILL BE REPAIRED AT THE EXPENSE OF THE CONTRACTOR TO THE APPOVAL OF THE ENGINEER.

PROJECT NAME: LUDLOW
PROJECT NUMBER: HES SGNL(44)

FILE NAME: t13b020_nul.dgn
PROJECT LEADER: P. COBURN
DESIGNED BY: M. BOGACZYK
PLAN SHEET 3

PLOT DATE: 4/19/2017
DRAWN BY: M. BOGACZYK
CHECKED BY: P. COBURN
SHEET 14 OF 43

EPSC PLAN NARRATIVE

1.1 PROJECT DESCRIPTION

THIS PROJECT INCLUDES THE INSTALLATION OF A NEW TRAFFIC SIGNAL SYSTEM, AS WELL AS MINOR NEW PAVEMENT AND CURBING.

NOTE: AREA OF DISTURBANCE INCLUDES LIMITS OF EARTH DISTURBANCE WITHIN THE PROJECT AREA, AS WELL AS WASTE, BORROW AND STAGING AREAS, AND OTHER EARTH DISTURBING ACTIVITIES WITHIN OR DIRECTLY ADJACENT TO THE PROJECT LIMITS AS SHOWN ON THE ATTACHED EPSC PLAN.

TOTAL AREA OF DISTURBANCE AS SHOWN ON THE ATTACHED EPSC PLAN IS APPROXIMATELY 0.782 ACRES.

IT IS ANTICIPATED THAT THIS PROJECT WILL LAST ONE CONSTRUCTION SEASON.

1.2 SITE INVENTORY

1.2.1 TOPOGRAPHY

THE TOPOGRAPHY OF THE AREA IS GENERALLY FLAT AND IS MOSTLY WELL ESTABLISHED FOREST WITH OCCASIONAL OPEN AREAS. VT ROUTE 100, VT ROUTE 103, LOCUST HILL RD, AND A GRAVEL DRIVEWAY ARE WITHIN THE PROJECT SITE. THERE IS A RESIDENCE TO THE SOUTH WEST SIDE OF THE INTERSECTION.

1.2.2 DRAINAGE, WATERWAYS, BODIES OF WATER, AND PROXIMITY TO NATURAL OR MAN-MADE WATER FEATURES

THE LUDLOW-BARTON BROOK IS THE ONLY WATER SOURCE ON THE PROJECT SITE. THE BROOK IS CLASSIFIED AS FLAT AND SLOW MOVING. THE STREAM BED CONSISTS OF GRAVEL, COBBLES AND BOULDERS. THE TRIBUTARY AREA AT THE STREAM CROSSING (BRIDGE) IS 15.8 MILES^2. THERE ARE A NUMBER OF DROP INLETS ADJACENT TO THE CONSTRUCTION SITE DRAINING FROM THE EXISTING DRAINAGE DITCH OF THE ROADWAY TO THE BROOK.

1.2.3 VEGETATION

THE VEGETATION IN THE PROJECT AREA CONSISTS OF HARDWOOD AND SOFTWOOD TREES AND UNDERGROWTH. THE IMPACT TO VEGETATION WILL BE LIMITED TO THAT WHICH IS DIRECTLY AFFECTED BY REALIGNMENT OF LOCUST HILL RD. DISTURBED VEGETATION WILL BE REESTABLISHED WITH STANDARD SEED AND MULCH PRACTICES.

1.2.4 SOILS

ALL SOIL DATA CAME FROM THE U.S. DEPARTMENT OF AGRICULTURE SOIL CONSERVATION SERVICE FOR THE COUNTY OF WINDSOR, VERMONT. SOILS ON THE PROJECT SITE ARE SHEEPSCOT AND CROGHAN FINE SANDY LOAM, COLTON FINE SANDY LOAM AND RUMNEY FINE SANDY LOAM. SLOPES IN THE AREA RANGE FROM 0 TO 25%. MOST OF THE SOIL IS CONSIDERED HIGHLY ERODIBLE, OTHER SOILS IN THE AREA ARE FREQUENTLY FLOODED.

NOTE: K-VALUES GENERALLY INDICATE THE FOLLOWING:
0.0-0.23 = LOW EROSION POTENTIAL
0.24-0.36 = MODERATE EROSION POTENTIAL
0.37 AND HIGHER = HIGH EROSION POTENTIAL

1.2.5 SENSITIVE RESOURCE AREAS

CRITICAL HABITATS: NO
HISTORICAL OR ARCHEOLOGICAL AREAS: YES, PROPERTY SOUTH WEST OF THE INTERSECTION OF VT ROUTE 100 AND VT ROUTE 103
PRIME AGRICULTURAL LAND: NO
THREATENED AND ENDANGERED SPECIES: YES, NORTHERN LONG-EARED BAT
WATER RESOURCE: LUDLOW-BARTON BROOK
WETLANDS: YES, WETLAND COMPLEX IN THE SOUTHWEST QUADRANT

1.3 RISK EVALUATION

THIS PROJECT DOES NOT FALL UNDER THE JURISDICTION OF GENERAL PERMIT 3-9020 FOR STORMWATER RUNOFF FROM CONSTRUCTION SITES. SHOULD CHANGES PRIOR TO OR DURING CONSTRUCTION RESULT IN ONE OR MORE ACRES OF EARTH DISTURBANCE OR SHOULD THE PROJECT BECOME PART OF A LARGER PLAN OF DEVELOPMENT, THE CONTRACTOR WILL BE RESPONSIBLE FOR ANY ADDITIONAL PERMITTING.

1.4 EROSION PREVENTION AND SEDIMENT CONTROL

THE EROSION CONTROL PLANS ARE MEANT AS A GUIDELINE FOR PREVENTING EROSION AND CONTROLLING SEDIMENT TRANSPORT. THE PRINCIPLES OUTLINED IN THIS NARRATIVE CONSIST OF APPLYING MEASURES THROUGHOUT CONSTRUCTION OF THE PROJECT IN ORDER TO MINIMIZE SEDIMENT TRANSPORT TO THE RECEIVING WATERS. THE MEASURES INCLUDE STABILIZATION AND STRUCTURAL PRACTICES, STORM WATER CONTROLS AND OTHER POLLUTION PREVENTION PRACTICES. THEY HAVE BEEN PROPOSED BY THE DESIGNER AS A BASIS FOR PROTECTING RESOURCES AND WILL NEED TO BE BUILT UPON BASED ON THE SPECIFIC MEANS AND METHODS OF THE CONTRACTOR. REFER TO THE LOW RISK SITE HANDBOOK AND APPROPRIATE DETAIL SHEETS FOR SPECIFIC GUIDANCE AND CONSTRUCTION DETAILING.

ALL MEASURES SHALL BE REGULARLY MAINTAINED AND SHALL BE CHECKED FOR SEDIMENT BUILD-UP. SEDIMENT SHALL BE DISPOSED OF AT AN APPROVED SITE WHERE IT WILL NOT BE SUBJECT TO EROSION.

1.4.1 MARK SITE BOUNDARIES

SITE BOUNDARIES AND AREAS CONSTRUCTION EQUIPMENT CAN ACCESS SHALL BE DELINEATED.

PROJECT DEMARCATION FENCING (PDF) SHALL BE USED TO PHYSICALLY MARK SITE BOUNDARIES.

1.4.2 LIMIT DISTURBANCE AREA

PREVENTING INITIAL SOIL EROSION BY MINIMIZING THE EXPOSED AREA IS MUCH MORE EFFECTIVE THAN TREATING ERODED SEDIMENT. EARTH DISTURBANCE CAN BE MINIMIZED THROUGH CONSTRUCTION PHASING BY ONLY OPENING UP EARTH AS NECESSARY. THIS CAN LIMIT THE AREA THAT WILL BE DISTURBED AND EXPOSED TO EROSION. EMPLOY TEMPORARY CONSTRUCTION STABILIZATION PRACTICES IN INCREMENTAL STAGES AS PHASES CHANGE. FOR PROJECTS WHICH FALL UNDER THE CONSTRUCTION GENERAL PERMIT, ONLY THE ACREAGE LISTED ON THE PERMIT AUTHORIZATION MAY BE EXPOSED AT ANY GIVEN TIME.

MAINTAINING VEGETATED BUFFERS ALONG STREAM BANKS, WETLANDS OR OTHER SENSITIVE AREAS IS A CRUCIAL EROSION AND SEDIMENT CONTROL MEASURE THAT SHOULD BE ESTABLISHED WHEREVER POSSIBLE.

1.4.3 SITE ENTRANCE/EXIT STABILIZATION

TRACKING OF SEDIMENT ONTO PUBLIC HIGHWAYS SHALL BE MINIMIZED TO REDUCE THE POTENTIAL FOR RUNOFF ENTERING RECEIVING WATERS. INSTALLATION SHALL COINCIDE WITH THE CONTRACTORS PROGRESS SCHEDULE.

STABILIZED CONSTRUCTION ENTRANCES SHALL BE INSTALLED AS PROPOSED ON BY THE ENGINEER AND/OR ANYWHERE EQUIPMENT WILL BE GOING FROM AREAS OF EXPOSED SOILS TO PAVED SURFACES.

IT IS ANTICIPATED THAT ONE STABILIZED CONSTRUCTION ENTRANCE WILL BE REQUIRED FOR THIS PROJECT. THE LOCATION ANTICIPATED IS SHOWN IN THE PLANS. CONSTRUCTION OF THE STABILIZED CONSTRUCTION ENTRANCE SHALL OCCUR AS NEEDED.

1.4.4 INSTALL SEDIMENT BARRIERS

SEDIMENT BARRIERS SHALL BE UTILIZED TO INTERCEPT RUNOFF AND ALLOW SUSPENDED SEDIMENT TO SETTLE OUT. THEY SHALL BE INSTALLED PRIOR TO ANY UPSLOPE WORK.

SILT FENCE AND FILTER FABRIC DROP INLET PROTECTION WILL BE INSTALLED AS PROPOSED ON THE EPSC PLAN.

1.4.5 DIVERT UPLAND RUNOFF

DIVERSIONARY MEASURES SHALL BE USED TO INTERCEPT RUNOFF FROM ABOVE THE CONSTRUCTION AND DIRECT IT AROUND THE DISTURBED AREA SO THAT CLEAN WATER DOES NOT BECOME MUDDIED WHILE TRAVELING OVER EXPOSED SOILS ON THE CONSTRUCTION SITE.

THE PROJECT AREA IS RELATIVELY FLAT, THEREFORE IT IS NOT ANTICIPATED THAT DIVERSION MEASURES WILL BE NECESSARY.

1.4.6 SLOW DOWN CHANNELIZED RUNOFF

CHECK STRUCTURES SHALL BE UTILIZED TO REDUCE THE VELOCITY, AND THUS THE EROSIVE POTENTIAL, OF CONCENTRATED FLOW IN CHANNELS.

STONE CHECK DAMS ARE NOT ANTICIPATED ON THIS PROJECT, HOWEVER MAY BE INSTALLED AT THE DIRECTION OF THE ENGINEER.

1.4.7 CONSTRUCT PERMANENT CONTROLS

PERMANENT STORMWATER TREATMENT DEVICES SHALL BE INSTALLED AS SHOWN ON THE PLANS AND IN ACCORDANCE WITH PERMIT CONDITIONS. IT IS NOT ANTICIPATED THAT PERMANENT CONTROLS ARE TO BE CONSTRUCTED ON THIS PROJECT.

1.4.8 STABILIZE EXPOSED SOILS DURING CONSTRUCTION

ALL AREAS OF DISTURBANCE MUST HAVE TEMPORARY STABILIZATION IN PLACE WITHIN 48 HOURS OF DISTURBANCE OR IN ACCORDANCE WITH THE CONSTRUCTION GENERAL PERMIT 3-9020 AUTHORIZATION.

SURFACE ROUGHENING OF ALL EXPOSED SLOPES, COMBINED WITH TEMPORARY MULCHING, SHALL BE UTILIZED ON A REGULAR BASIS. BIODEGRADABLE EROSION CONTROL MATTING OR AN EQUIVALENT SHALL BE USED TO STABILIZE ALL SLOPES STEEPER THAN 1:3.

THE FORECAST OF RAINFALL EVENTS SHALL TRIGGER IMMEDIATE PROTECTION OF EXPOSED SOILS.

1.4.9 WINTER STABILIZATION

VARIOUS MEASURES SPECIFIC TO WINTER MAY BE NECESSARY SHOULD THE PROJECT EXTEND INTO WINTER (OCTOBER 15 THROUGH APRIL 15). REFER TO THE LOW RISK SITE HANDBOOK FOR GUIDANCE.

IT IS NOT ANTICIPATED THAT THIS PROJECT WILL ENTER INTO THE WINTER CONSTRUCTION SEASON.

1.4.10 STABILIZE SOIL AT FINAL GRADE

EXPOSED SOIL MUST BE STABILIZED WITHIN 48 HOURS OF REACHING FINAL GRADE.

SEED, MULCH, FERTILIZER AND LIME SHALL BE USED TO ESTABLISH PERMANENT VEGETATION. FOR SLOPES STEEPER THAN 1:3, BIODEGRADABLE EROSION CONTROL MATTING OR AN EQUIVALENT SHALL BE USED INSTEAD OF MULCH.

1.4.11 DE-WATERING ACTIVITIES

DISCHARGE FROM DEWATERING ACTIVITIES THAT FLOWS OFF OF THE CONSTRUCTION SITE MUST NOT CAUSE OR CONTRIBUTE TO A VIOLATION OF THE VERMONT WATER QUALITY STANDARDS.

IT IS NOT ANTICIPATED THAT DE-WATERING ACTIVITIES WILL BE NECESSARY FOR THIS PROJECT.

1.4.12 INSPECT YOUR SITE

INSPECT THE PROJECT SITE BASED ON SPECIAL PROVISION REQUIREMENTS OR CONSTRUCTION GENERAL PERMIT AUTHORIZATION STIPULATIONS.

1.5 SEQUENCE AND STAGING

THIS SECTION WILL BE DEVELOPED BY THE CONTRACTOR USING THE GUIDANCE OUTLINED IN THE VTRANS EPSC PLAN CONTRACTOR CHECKLIST.

1.5.1 OFF-SITE ACTIVITIES

IN ADDITION TO THE CONTRACTOR CHECKLIST ANY ACTIVITIES OUTSIDE THE CONSTRUCTION LIMITS SHALL FOLLOW SPECIFICATION 105.25- 105.29 OF THE STANDARD SPECIFICATIONS FOR CONSTRUCTION.

PROJECT NAME:	LUDLOW
PROJECT NUMBER:	HES SGNL(44)

FILE NAME: t13b020frm.dgn	PLOT DATE: 4/25/2017
PROJECT LEADER: P. COBURN	DRAWN BY: M. BOGACZYK
DESIGNED BY: M. BOGACZYK	CHECKED BY: P. COBURN
EPSC NARRATIVE SHEET	SHEET 15 OF 43

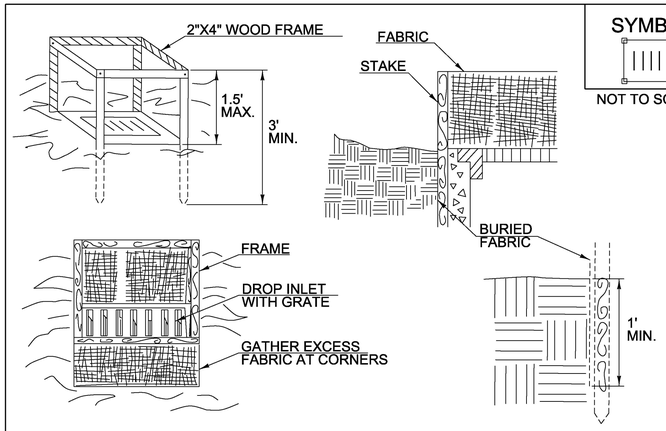

SYMBOL

NOT TO SCALE

CONSTRUCTION SPECIFICATIONS

1. FILTER FABRIC SHALL HAVE AN APPARENT OPENING SIZE OF 40-85. BURLAP MAY BE USED FOR SHORT TERM APPLICATIONS.
2. CUT FABRIC FROM A CONTINUOUS ROLL TO ELIMINATE JOINTS. IF JOINTS ARE NEEDED THEY WILL BE OVERLAPPED TO THE NEXT STAKE.
3. STAKE MATERIALS WILL BE STANDARD 2"x 4" WOOD OR EQUIVALENT METAL WITH A MINIMUM LENGTH OF 3'.
4. SPACE STAKES EVENLY AROUND INLET 3' APART AND DRIVE A MINIMUM 18" DEEP. SPANS GREATER THAN 3' MAY BE BRIDGED WITH THE USE OF WIRE MESH BEHIND THE FILTER FABRIC FOR SUPPORT.
5. FABRIC SHALL BE EMBEDDED 1' MINIMUM BELOW GROUND AND BACKFILLED. IT SHALL BE SECURELY FASTENED TO THE STAKES AND FRAME.
6. A 2" x 4" WOOD FRAME SHALL BE COMPLETED AROUND THE CREST OF THE FABRIC FOR OVER FLOW STABILITY.
7. MAXIMUM DRAINAGE AREA 1 ACRE

ADAPTED FROM DETAILS PROVIDED BY: NEW YORK STATE DEC
ORIGINALLY DEVELOPED BY USDA-NRCS
VERMONT DEPARTMENT OF ENVIRONMENTAL CONSERVATION

FILTER FABRIC DROP INLET PROTECTION

NOTES:
REFER TO "THE VERMONT STANDARDS & SPECIFICATIONS FOR EROSION PREVENTION & SEDIMENT CONTROL -2006- " FROM THE VT AGENCY OF NATURAL RESOURCES FOR ADDITIONAL GUIDANCE.

THIS WORK SHALL BE PERFORMED IN ACCORDANCE WITH SECTION 653 FOR INLET PROTECTION DEVICE, TYPE I (PAY ITEM 653.40).

REVISIONS
MARCH 7, 2008 WHF
JANUARY 13, 2009 WHF

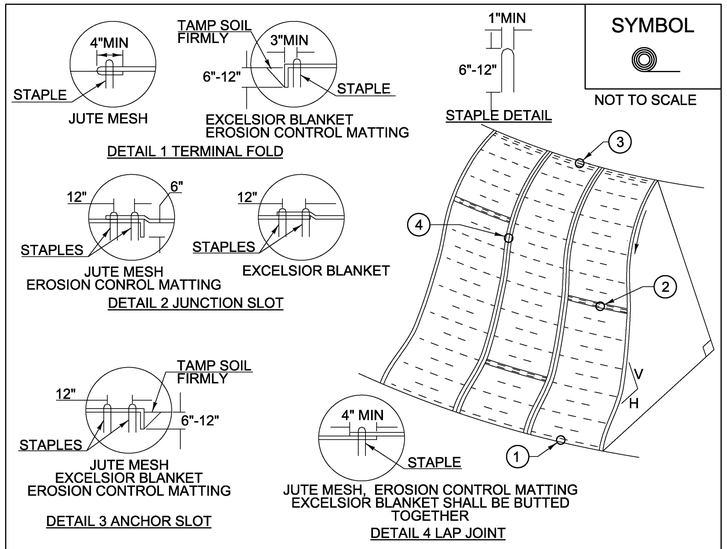

SYMBOL

NOT TO SCALE

CONSTRUCTION SPECIFICATIONS

1. APPLY TO SLOPES GREATER THAN 3H:1V OR WHERE NECESSARY TO AID IN ESTABLISHING VEGETATION.
2. APPLY FERTILIZER, LIME SEED PRIOR TO PLACING MATTING.
3. STAPLES ARE TO BE PLACED ALTERNATELY, IN COLUMNS APPROXIMATELY 2' APART AND IN ROWS APPROXIMATELY 3' APART. APPROXIMATELY 175 STAPLES ARE REQUIRED PER 4'X225' ROLL OF MATERIAL AND 125 STAPLES ARE REQUIRED PER 4'X150' ROLL OF MATERIAL.
4. DISTURBED AREAS SHALL BE SMOOTHLY GRADED. EROSION CONTROL MATERIAL SHALL BE PLACED LOOSELY OVER GROUND SURFACE. DO NOT STRETCH.
5. ALL TERMINAL ENDS AND TRANSVERSE LAPS SHALL BE STAPLED AT APPROXIMATELY 12" INTERVALS.

ADAPTED FROM DETAILS PROVIDED BY: NEW YORK STATE DEC
ORIGINALLY DEVELOPED BY USDA-NRCS
VERMONT DEPARTMENT OF ENVIRONMENTAL CONSERVATION

ROLLED EROSION CONTROL PRODUCT (RECP) SIDE SLOPE

NOTES:
REFER TO "THE VERMONT STANDARDS & SPECIFICATIONS FOR EROSION PREVENTION & SEDIMENT CONTROL -2006- " FROM THE VT AGENCY OF NATURAL RESOURCES FOR ADDITIONAL GUIDANCE.

THIS WORK SHALL BE PERFORMED IN ACCORDANCE WITH SECTION 653 AND AS SHOWN IN THE PLANS FOR TEMPORARY EROSION MATTING (PAY ITEM 653.20) ~~OR PERMANENT EROSION MATTING (PAY ITEM 653.21).~~

REVISIONS
APRIL 16, 2007 JMF
JANUARY 13, 2009 WHF

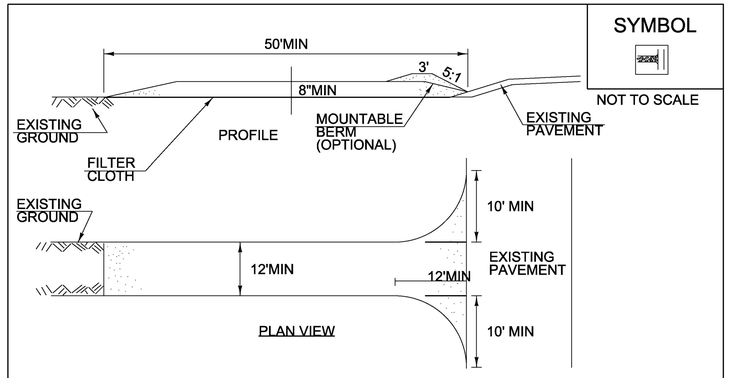

SYMBOL

NOT TO SCALE

CONSTRUCTION SPECIFICATIONS

1. STONE SIZE- USE 1-4" STONE, RECLAIMED OR RECYCLED CONCRETE EQUIVALENT.
2. LENGTH- NOT LESS THAN 50' (EXCEPT ON A SINGLE RESIDENCE LOT WHERE A 30' MINIMUM LENGTH APPLIES).
3. THICKNESS- NOT LESS THAN 8".
4. WIDTH- 12' MINIMUM, BUT NOT LESS THAN THE FULL WIDTH AT POINTS WHERE INGRESS OR EGRESS OCCURS. 24' IF SINGLE ENTRANCE TO SITE.
5. GEOTEXTILE MUST BE PLACED OVER THE ENTIRE AREA PRIOR TO PLACING STONE.
6. SURFACE WATER- ALL SURFACE WATER FLOWING OR DIVERTED TOWARD CONSTRUCTION ENTRANCES SHALL BE PIPED BENEATH THE ENTRANCE. IF PIPING IS IMPRACTICAL, A MOUNTABLE BERM WITH 5:1 SLOPES WILL BE PERMITTED.
7. MAINTENANCE- THE ENTRANCE SHALL BE MAINTAINED IN A CONDITION WHICH WILL PREVENT TRACKING OR FLOWING OF SEDIMENT ONTO PUBLIC RIGHTS-OF-WAY, ALL SEDIMENT SPILLED, DROPPED, WASHED OR TRACKED ONTO PUBLIC RIGHTS-OF-WAY MUST BE REMOVED IMMEDIATELY.
8. WHEN WASHING IS REQUIRED, IT SHALL BE DONE ON AN AREA STABILIZED WITH STONE AND WHICH DRAINS INTO AN APPROVED SEDIMENT TRAPPING DEVICE.
9. PERIODIC INSPECTION AND NEEDED MAINTENANCE SHALL BE PROVIDED ACCORDING TO PERMIT REQUIREMENTS.

ADAPTED FROM DETAILS PROVIDED BY: NEW YORK STATE DEC
ORIGINALLY DEVELOPED BY USDA-NRCS
VERMONT DEPARTMENT OF ENVIRONMENTAL CONSERVATION

STABILIZED CONSTRUCTION ENTRANCE

NOTES:
REFER TO "THE VERMONT STANDARDS & SPECIFICATIONS FOR EROSION PREVENTION & SEDIMENT CONTROL -2006- " FROM THE VT AGENCY OF NATURAL RESOURCES FOR ADDITIONAL GUIDANCE.

THIS WORK SHALL BE PERFORMED IN ACCORDANCE WITH SECTION 653 FOR VEHICLE TRACKING PAD (PAY ITEM 653.35) OR AS SPECIFIED IN THE CONTRACT.

REVISIONS
MARCH 24, 2008 WHF
JANUARY 13, 2009 WHF

PROJECT NAME: LUDLOW
PROJECT NUMBER: HES SGNL(44)

FILE NAME: t13b020_frm.dgn
PROJECT LEADER: P. COBURN
DESIGNED BY: M. BOGACZYK
EPSC DETAIL SHEET I

PLOT DATE: 4/19/2017
DRAWN BY: M. BOGACZYK
CHECKED BY: P. COBURN
SHEET 16 OF 43

VAOT RURAL AREA MIX						
	LBS/AC					
WEIGHT	BROADCAST	HYDROSEED	NAME	LATIN NAME	GERM	PURITY
37.5%	22.5	45	CREEPING RED FESCUE	FESTUCA RUBRA VAR. RUBRA	85%	98%
37.5%	22.5	45	TALL FESCUE	FESTUCA ARUNDINACEA	90%	95%
5.0%	3	6	RED TOP	AGROSTIS GIGANTEA	90%	95%
15.0%	9	18	WHITE FIELD CLOVER	TRIFOLIUM REPENS	85%	98%
5.0%	3	6	ANNUAL RYE GRASS	LOLIUM MULTIFLORUM	85%	95%
100%	60	120				

VAOT URBAN LAWN MIX						
	LBS/AC					
WEIGHT	BROADCAST	HYDROSEED	NAME	LATIN NAME	GERM	PURITY
42.5%	34	68	CREEPING RED FESCUE	FESTUCA RUBRA X RUBRA	85%	98%
20.0%	16	32	PERENNIAL RYE GRASS	LOLIUM PERENNE	90%	95%
32.5%	26	52	KENTUCKY BLUE GRASS	POA PRATENSIS	85%	85%
5.0%	4	8	ANNUAL RYE GRASS	LOLIUM MULTIFLORUM	85%	95%
100%	80	160				

GENERAL AMENDMENT GUIDANCE		
FERTILIZER	LIME	
10/20/10	AG LIME	PELLITIZED
500 LBS/AC	2 TONS/AC	1 TONS/AC

CONSTRUCTION GUIDANCE

1. RURAL SEED MIX: USE AS INDICATED IN THE PLANS AND/OR FOR ALL ESTABLISHED UPLAND (NON WETLAND) AREAS DISTURBED BY THE CONTRACTOR.
2. URBAN SEED MIX: USE AS INDICATED IN THE PLANS AND/OR FOR ALL ESTABLISHED LAWN AREAS DISTURBED BY THE CONTRACTOR.
3. ALL SEED MIXTURES: SHALL NOT HAVE A WEED CONTENT EXCEEDING 0.40% BY WEIGHT AND SHALL BE FREE OF ALL NOXIOUS SEED.
4. FERTILIZER AND LIMESTONE: SHALL FOLLOW RATES SHOWN ON PLAN OR AS DIRECTED BY THE ENGINEER
5. HAY MULCH: TO BE PLACED ON EARTH SLOPES AT THE RATE OF 2 TONS/ACRE, ACHIEVE 90% GROUND COVER OR AS DIRECTED BY THE ENGINEER.
6. TOPSOIL: TO BE USED WITH SEED AS INDICATED ON THE PLANS, OR AS DIRECTED BY THE ENGINEER.
7. HYDROSEEDING: ALTHOUGH GUIDANCE IS GIVEN ABOVE THE SITE CONDITIONS AND THE TYPE OF HYDROSEED WILL ULTIMATELY DICTATE THE AMOUNTS AND TYPES OF SOIL AMENDMENTS TO BE APPLIED
8. TURF ESTABLISHMENT: PLACING SEED, FERTILIZER, LIME AND MULCH PRIOR TO SEPTEMBER 15 AND AFTER APRIL 15 CAN BETTER ENSURE A VIGOROUS GROWTH OF GRASS.

SEED

THIS WORK SHALL BE PERFORMED IN ACCORDANCE WITH SECTION 651 FOR SEED (PAY ITEM 651.15)

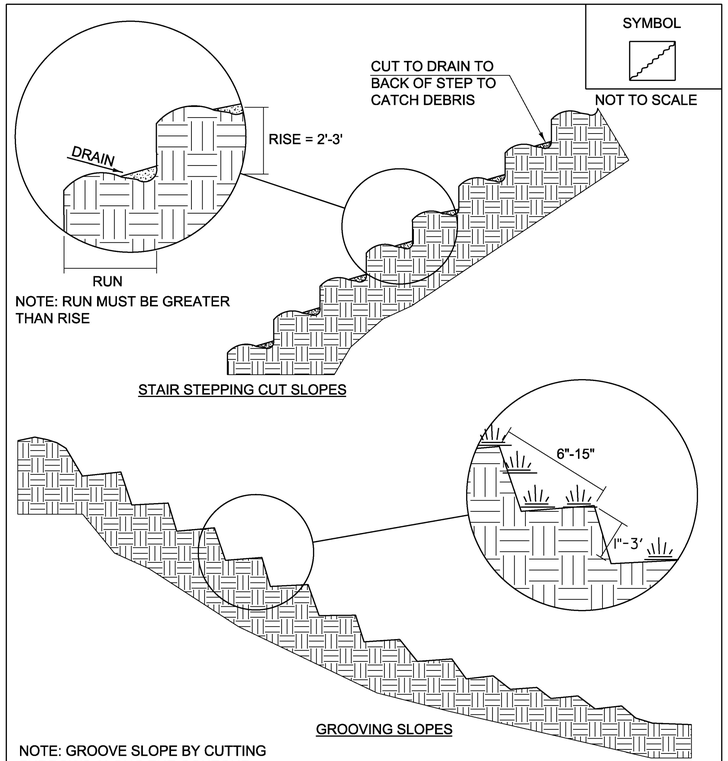

NOTE: GROOVE SLOPE BY CUTTING FURROWS ALONG THE CONTOUR. IRREGULARITIES IN THE SOIL SURFACE CATCH RAINWATER AND RETAIN LIME, FERTILIZER AND SEED.

ADAPTED FROM DETAILS PROVIDED BY: NEW YORK STATE DEC
ORIGINALLY DEVELOPED BY USDA-NRCS
VERMONT DEPARTMENT OF ENVIRONMENTAL CONSERVATION

SURFACE ROUGHENING

NOTES:
REFER TO "THE VERMONT STANDARDS & SPECIFICATIONS FOR EROSION PREVENTION & SEDIMENT CONTROL -2006- " FROM THE VT AGENCY OF NATURAL RESOURCES FOR ADDITIONAL GUIDANCE.

THIS WORK WILL BE CONSIDERED INCIDENTAL TO THE CONTRACT.

REVISIONS	
APRIL 1, 2008	WHF
JANUARY 13, 2009	WHF

VAOT SAND & GRAVEL SITE CONSERVATION SEED MIX					
% WEIGHT	LBS/AC		NAME	GERM %	PURITY %
	BROADCAST	HYDROSEED			
32.00%	--	4	SWITCH GRASS	VARIES	VARIES
32.00%	--	4	BIG BLUESTEM	VARIES	VARIES
16.00%	--	2	LITTLE BLUESTEM	VARIES	VARIES
12.00%	--	2	SAND LOVEGRASS	VARIES	VARIES
8.00%	--	1	BLACKEYED SUSAN	VARIES	VARIES
100.00%	0	13			

CONSTRUCTION GUIDANCE

1. SEEDING SHALL BE COMPLETED BY THE USE OF A HYDROSEEDER AND DOZER COMBINATION.
2. USE DOZER TO TRACK THE SITE. SLOPES SHALL BE TRACKED UP AND DOWN, NOT SIDE TO SIDE.
3. ONLY CLEAN, WEED-FREE STRAW MULCH SHALL BE USED.
4. SEE TURF ESTABLISHMENT NOTES FOR MULCH, FERTILIZER AND LIMESTONE APPLICATION RATES.

GRASS CHANNEL SEEDING

PROJECT NAME: LUDLOW
PROJECT NUMBER: HES SGNL(44)

FILE NAME: t13b020_frm.dgn
PROJECT LEADER: P. COBURN
DESIGNED BY: M. BOGACZYK
EPSC DETAIL SHEET 2

PLOT DATE: 4/19/2017
DRAWN BY: M. BOGACZYK
CHECKED BY: P. COBURN
SHEET 17 OF 43

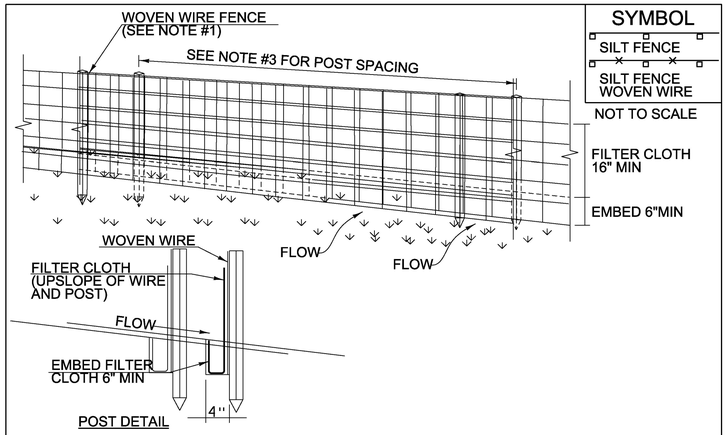

SYMBOL

SILT FENCE

SILT FENCE WOVEN WIRE

NOT TO SCALE

FILTER CLOTH 16" MIN

EMBED 6"MIN

CONSTRUCTION SPECIFICATIONS

1. WOVEN WIRE REINFORCED FENCE IS REQUIRED WITHIN 100' UPSLOPE OF RECEIVING WATERS WHEN THE PROJECT FALLS UNDER A CONSTRUCTION STORMWATER PERMIT. WOVEN WIRE SHALL BE A MIN. 14 GAUGE WITH A 6" MAX. MESH OPENING.
2. FILTER CLOTH SHALL BE EITHER FILTER X, MIRAF1100X, STABILINKA T140N OR APPROVED EQUIVALENT.
3. POST SPACING FOR WIRE-BACKED FENCE SHALL BE 10' MAXIMUM. FOR FILTER-CLOTH FENCE, WHEN ELONGATION IS >50%, POST SPACING SHALL NOT EXCEED 4' AND WHEN ELONGATION IS <50%, POST SPACING SHALL NOT EXCEED 6'.
4. WOVEN WIRE FENCE IS TO BE FASTENED SECURELY TO FENCE POSTS WITH WIRE TIES. FILTER CLOTH IS TO BE FASTENED SECURELY TO WOVEN WIRE FENCE WITH TIES SPACED EVERY 24" AT TOP AND MID SECTION.
5. WHEN TWO SECTIONS OF FILTER CLOTH ADJOIN EACH OTHER THEY SHALL BE OVER-LAPPED BY 6" AND FOLDED.
6. MAINTENANCE SHALL BE PERFORMED AS NEEDED AND MATERIAL REMOVED WHEN SEDIMENT REACHES HALF OF FABRIC HEIGHT.

ADAPTED FROM DETAILS PROVIDED BY: NEW YORK STATE DEC
ORIGINALLY DEVELOPED BY USDA-NRCS
VERMONT DEPARTMENT OF ENVIRONMENTAL CONSERVATION

SILT FENCE

NOTES:
REFER TO "THE VERMONT STANDARDS & SPECIFICATIONS FOR EROSION PREVENTION & SEDIMENT CONTROL -2006- " FROM THE VT AGENCY OF NATURAL RESOURCES FOR ADDITIONAL GUIDANCE.

THIS WORK SHALL BE PERFORMED IN ACCORDANCE WITH SECTION 649 AND AS SHOWN IN THE PLANS FOR GEOTEXTILE FOR SILT FENCE (PAY ITEM 649.51) OR GEOTEXTILE FOR SILT FENCE, WOVEN WIRE REINFORCED (PAY ITEM 649.515).

REVISIONS
MARCH 21, 2008 WHF
DECEMBER 11, 2008 WHF
JANUARY 13, 2009 WHF

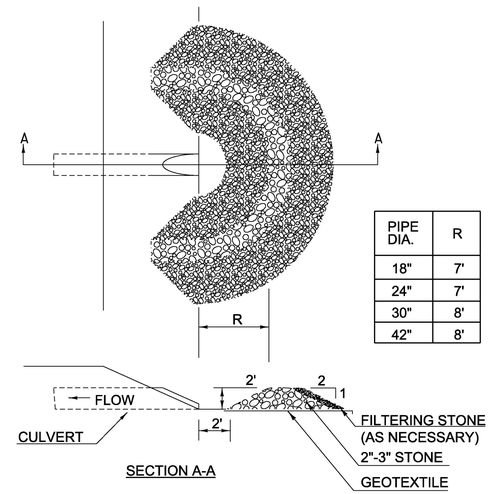

PIPE DIA.	R
18"	7'
24"	7'
30"	8'
42"	8'

SYMBOL

NOT TO SCALE

CONSTRUCTION SPECIFICATIONS

1. USE TWO INCH TO THREE INCH STONE. FILTERING STONE SHALL BE 3/4".
2. PLACE STONE OVER GEOTEXTILE.
3. ONCE THE AREAS UPSTREAM FROM THE CHECK DAM ARE STABILIZED WITH VEGETATION, THE SEDIMENT TRAPPED BEHIND THE DAM SHAL BE DISPOSED OF IN AN APPROVED WASTE AREA.
4. THE CHECK DAM(S) SHALL BE FLATTENED AND GRADED IN A MANNER WHICH PROTECTS THE AREA FROM EROSION AND CHANNEL BLOCKAGE . (GEOTEXTILE MUST BE REMOVED).
5. THE GEOTEXTILE MUST BE DISPOSED OF APPROPRIATELY.
6. THE AREA CONTRIBUTING TO THE CHECK DAM SHALL NOT EXCEED FOUR ACRES.

ADAPTED FROM DETAILS PROVIDED BY: ILLINOIS USDA-NRCS
ORIGINALLY DEVELOPED BY USDA-NRCS

PIPE INLET PROTECTION

THIS WORK SHALL BE PERFORMED IN ACCORDANCE WITH SECTION 653 FOR INLET PROTECTION DEVICE, TYPE I (PAY ITEM 653.40).

REVISIONS
MARCH 6, 2008 WHF
JANUARY 13, 2009 WHF

PROJECT NAME: LUDLOW
PROJECT NUMBER: HES SGNL(44)

FILE NAME: t13b020_frm.dgn
PROJECT LEADER: P. COBURN
DESIGNED BY: M. BOGACZYK
EPSC DETAIL SHEET 3

PLOT DATE: 4/19/2017
DRAWN BY: M. BOGACZYK
CHECKED BY: P. COBURN
SHEET 18 OF 43

NOTES:

1. THESE PLANS SHOW A CONCEPTUAL EROSION CONTROL PLAN, THE CONTRACTOR MUST SUBMIT A TEMPORARY EROSION CONTROL PLAN FOR APPROVAL.
2. WHEN NECESSITATED BY THE SEQUENCE OF CONSTRUCTION OR AS DIRECTED BY THE ENGINEER, THE CONTRACTOR SHALL INSTALL ADDITIONAL EROSION CONTROL MEASURES THAN THOSE CALLED FOR IN THE APPROVED EROSION CONTROL PLAN.
3. REFER TO TEMPORARY EROSION CONTROL DETAIL SHEETS FOR ADDITIONAL DETAILS.
4. SILT FENCE SHALL NOT BE INSTALLED ACROSS CONTOURS.

SOIL CLASSIFICATION
PITS, SAND/PITS, GRAVEL

SOIL BOUNDARY

SOIL CLASSIFICATION
SHEEPSCOT & CROGHAN FINE SANDY LOAM 0 - 8% SLOPES "K FACTOR" 0.17 NOT HIGHLY ERODIBLE

N

VT STATE PLANE GRID

ACCESS ROAD

LUDLOW - BARTON BROOK

END LUDLOW HES SGNL(44)
VT ROUTE 103 STA. 225+31.37

VT ROUTE 103
TO JCT OF VT ROUTE 140

VT ROUTE 103

225+31.37 225+00 224+00 223+00 222+00

MATCHLINE - STA. 221+50.00 SEE LAYOUT SHEET 2

SOIL CLASSIFICATION
COLTON FINE SANDY LOAM 15 - 25% SLOPES "K FACTOR" 0.24 HIGHLY ERODIBLE

0 20 40
SCALE IN FEET

PROJECT NAME: LUDLOW	
PROJECT NUMBER: HES SGNL(44)	
FILE NAME: t13b020_nul.dgn	PLOT DATE: 4/19/2017
PROJECT LEADER: P. COBURN	DRAWN BY: M. BOGACZYK
DESIGNED BY: M. BOGACZYK	CHECKED BY: P. COBURN
EPSC EXISTING CONDITIONS SHEET 1	SHEET 19 OF 43

NOTES:

1. THESE PLANS SHOW A CONCEPTUAL EROSION CONTROL PLAN, THE CONTRACTOR MUST SUBMIT A TEMPORARY EROSION CONTROL PLAN FOR APPROVAL.
2. WHEN NECESSITATED BY THE SEQUENCE OF CONSTRUCTION OR AS DIRECTED BY THE ENGINEER, THE CONTRACTOR SHALL INSTALL ADDITIONAL EROSION CONTROL MEASURES THAN THOSE CALLED FOR IN THE APPROVED EROSION CONTROL PLAN.
3. REFER TO TEMPORARY EROSION CONTROL DETAIL SHEETS FOR ADDITIONAL DETAILS.
4. SILT FENCE SHALL NOT BE INSTALLED ACROSS CONTOURS.

SOIL CLASSIFICATION
SHEEPSCOT & CROGHAN FINE SANDY LOAM 0 - 8% SLOPES "K FACTOR" 0.17 NOT HIGHLY ERODIBLE

SOIL CLASSIFICATION
COLTON FINE SANDY LOAM 15 - 25% SLOPES "K FACTOR" 0.24 HIGHLY ERODIBLE

EXISTING R.O.W.

VT STATE PLANE GRID

MATCHLINE - STA. 221+50.00 SEE LAYOUT SHEET 1

MATCHLINE - STA. 216+50.00 SEE LAYOUT SHEET 3

VT ROUTE 103

221+00 220+00 219+00 218+00 217+00

SOIL BOUNDARY

FIELD DRIVE

EXISTING R.O.W.

1020 1030 1040 1050 1060 1070

AER EXT ARCH

0 20 40
SCALE IN FEET

PROJECT NAME: LUDLOW	
PROJECT NUMBER: HES SGNL(44)	
FILE NAME: t13b020_nul.dgn	PLOT DATE: 4/19/2017
PROJECT LEADER: P. COBURN	DRAWN BY: M. BOGACZYK
DESIGNED BY: M. BOGACZYK	CHECKED BY: P. COBURN
EPSC EXISTING CONDITIONS SHEET 2	SHEET 20 OF 43

MATCHLINE - STA. 216+50.00 SEE LAYOUT SHEET 2

SOIL CLASSIFICATION

SHEEPSCOT & CROGHAN
FINE SANDY LOAM
0 - 8% SLOPES
"K FACTOR" 0.17
NOT HIGHLY ERODIBLE

LIMIT OF CONSTRUCTION
VT ROUTE 100 STA. 268+77.46

127 SF

BUFFER IMPACT

VT ROUTE 100
TO PLYMOUTH

268+00

VT ROUTE 103
TO JCT OF VT ROUTE 140

267+59

216+00

215+00

214+00

213+00

212+00

211+00

501+31

501+00

500+00

VT ROUTE 103 STA. 214+32.00 =
VT ROUTE 100 STA. 267+59.00

267+00

SOIL BOUNDARY

EXISTING R.O.W.

LIMIT OF CONSTRUCTION
LOCUST HILL STA. 500+70.24

SOIL BOUNDARY

SOIL CLASSIFICATION

RUMNEY
FINE SANDY LOAM
0 - 2% SLOPES
"K FACTOR" 0.24
NOT HIGHLY ERODIBLE
FREQUENTLY FLOODED

VT ROUTE 103 STA. 212+86.18 =
LOCUST HILL STA. 501+30.99

VT STATE PLANE GRID N

VT ROUTE 103
TO LUDLOW

BEGIN LUDLOW HES SGNL(44)
VT ROUTE 103 STA. 212+00.00

EXISTING R.O.W.

SOIL CLASSIFICATION

COLTON
FINE SANDY LOAM
15 - 25% SLOPES
"K FACTOR" 0.24
HIGHLY ERODIBLE

NOTES:

1. THESE PLANS SHOW A CONCEPTUAL EROSION CONTROL PLAN, THE CONTRACTOR MUST SUBMIT A TEMPORARY EROSION CONTROL PLAN FOR APPROVAL.
2. WHEN NECESSITATED BY THE SEQUENCE OF CONSTRUCTION OR AS DIRECTED BY THE ENGINEER, THE CONTRACTOR SHALL INSTALL ADDITIONAL EROSION CONTROL MEASURES THAN THOSE CALLED FOR IN THE APPROVED EROSION CONTROL PLAN.
3. REFER TO TEMPORARY EROSION CONTROL DETAIL SHEETS FOR ADDITIONAL DETAILS.
4. SILT FENCE SHALL NOT BE INSTALLED ACROSS CONTOURS.
5. STABILIZED CONSTRUCTION ENTRANCE TO BE INSTALLED IF DEEMED NECESSARY BY THE ENGINEER.

0 20 40
SCALE IN FEET

PROJECT NAME: LUDLOW
PROJECT NUMBER: HES SGNL(44)

FILE NAME: t13b020_nul.dgn
PROJECT LEADER: P. COBURN
DESIGNED BY: M. BOGACZYK
EPSC EXISTING CONDITIONS SHEET 3

PLOT DATE: 4/19/2017
DRAWN BY: M. BOGACZYK
CHECKED BY: P. COBURN
SHEET 21 OF 43

NOTES:

1. THESE PLANS SHOW A CONCEPTUAL EROSION CONTROL PLAN, THE CONTRACTOR MUST SUBMIT A TEMPORARY EROSION CONTROL PLAN FOR APPROVAL.
2. WHEN NECESSITATED BY THE SEQUENCE OF CONSTRUCTION OR AS DIRECTED BY THE ENGINEER, THE CONTRACTOR SHALL INSTALL ADDITIONAL EROSION CONTROL MEASURES THAN THOSE CALLED FOR IN THE APPROVED EROSION CONTROL PLAN.
3. REFER TO TEMPORARY EROSION CONTROL DETAIL SHEETS FOR ADDITIONAL DETAILS.
4. SILT FENCE SHALL NOT BE INSTALLED ACROSS CONTOURS.

SOIL CLASSIFICATION
PITS, SAND/PITS, GRAVEL

SOIL BOUNDARY

SOIL CLASSIFICATION
SHEEPSCOT & CROGHAN FINE SANDY LOAM 0 - 8% SLOPES "K FACTOR" 0.17 NOT HIGHLY ERODIBLE

N

VT STATE PLANE GRID

ACCESS ROAD

LUDLOW - BARTON BROOK

END LUDLOW HES SGNL(44)
VT ROUTE 103 STA. 225+31.37

VT ROUTE 103
TO JCT OF VT ROUTE 140

VT ROUTE 103

225+31.37 225+00 224+00 223+00 222+00

MATCHLINE - STA. 221+50.00 SEE LAYOUT SHEET 2

SOIL CLASSIFICATION
COLTON FINE SANDY LOAM 15 - 25% SLOPES "K FACTOR" 0.24 HIGHLY ERODIBLE

BARRIER FENCE
STA. 221+50.00, RT 46.34' - STA. 225+31.37, RT 36.95' (382')

TEMPORARY EROSION MATTING
STA. 221+50.00, RT - STA. 223+30.87, RT

LEGEND

- SILT FENCE
- LIMITS OF SOIL DISTURBANCE
- EROSION MATTING
- BF BARRIER FENCE
- PDF PROJECT DEMARCATION FENCE
- FABRIC DROP INLET PROTECTION

0 20 40
SCALE IN FEET

PROJECT NAME: LUDLOW	
PROJECT NUMBER: HES SGNL(44)	
FILE NAME: t13b020_nul.dgn	**PLOT DATE:** 4/25/2017
PROJECT LEADER: P. COBURN	**DRAWN BY:** M. BOGACZYK
DESIGNED BY: M. BOGACZYK	**CHECKED BY:** P. COBURN
EPSC CONSTRUCTION CONDITIONS SHEET 1	**SHEET** 22 **OF** 43

NOTES:

1. THESE PLANS SHOW A CONCEPTUAL EROSION CONTROL PLAN, THE CONTRACTOR MUST SUBMIT A TEMPORARY EROSION CONTROL PLAN FOR APPROVAL.
2. WHEN NECESSITATED BY THE SEQUENCE OF CONSTRUCTION OR AS DIRECTED BY THE ENGINEER, THE CONTRACTOR SHALL INSTALL ADDITIONAL EROSION CONTROL MEASURES THAN THOSE CALLED FOR IN THE APPROVED EROSION CONTROL PLAN.
3. REFER TO TEMPORARY EROSION CONTROL DETAIL SHEETS FOR ADDITIONAL DETAILS.
4. SILT FENCE SHALL NOT BE INSTALLED ACROSS CONTOURS.

TEMPORARY EROSION MATTING
STA. 216+50.00, RT - STA. 221+50.00, RT

BARRIER FENCE
STA. 216+50.00, RT 52.99' - STA. 221+50.00, RT 46.34' (501')

N

VT STATE PLANE GRID

EXISTING R.O.W.

SOIL CLASSIFICATION
SHEEPSCOT & CROGHAN FINE SANDY LOAM 0 - 8% SLOPES "K FACTOR" 0.17 NOT HIGHLY ERODIBLE

MATCHLINE - STA. 221+50.00 SEE LAYOUT SHEET 1

MATCHLINE - STA. 216+50.00 SEE LAYOUT SHEET 3

VT ROUTE 103

221+00 220+00 219+00 218+00 217+00

SOIL BOUNDARY

FIELD DRIVE

EXISTING R.O.W.

SOIL CLASSIFICATION
COLTON FINE SANDY LOAM 15 - 25% SLOPES "K FACTOR" 0.24 HIGHLY ERODIBLE

LEGEND

- SILT FENCE
- LIMITS OF SOIL DISTURBANCE
- EROSION MATTING
- BF BARRIER FENCE
- PDF PROJECT DEMARCATION FENCE
- FABRIC DROP INLET PROTECTION

0 20 40
SCALE IN FEET

PROJECT NAME: LUDLOW
PROJECT NUMBER: HES SGNL(44)

FILE NAME: t13b020_nul.dgn
PROJECT LEADER: P. COBURN
DESIGNED BY: M. BOGACZYK
EPSC CONSTRUCTION CONDITIONS SHEET 2

PLOT DATE: 4/25/2017
DRAWN BY: M. BOGACZYK
CHECKED BY: P. COBURN
SHEET 23 OF 43

MATCHLINE - STA. 216+50.00 SEE LAYOUT SHEET 2

SOIL CLASSIFICATION
SHEEPSCOT & CROGHAN FINE SANDY LOAM 0 - 8% SLOPES "K FACTOR" 0.17 NOT HIGHLY ERODIBLE

LIMIT OF CONSTRUCTION
VT ROUTE 100 STA. 268+77.46

BUFFER IMPACT

VT ROUTE 100
TO PLYMOUTH

VT ROUTE 103
TO JCT OF VT ROUTE 140

SOIL BOUNDARY

SOIL CLASSIFICATION
RUMNEY FINE SANDY LOAM 0 - 2% SLOPES "K FACTOR" 0.24 NOT HIGHLY ERODIBLE FREQUENTLY FLOODED

VT STATE PLANE GRID

VT ROUTE 103 STA. 212+86.18 =
LOCUST HILL STA. 501+30.99

VT ROUTE 103
TO LUDLOW

BEGIN LUDLOW HES SGNL(44)
VT ROUTE 103 STA. 212+00.00

VT ROUTE 103 STA. 214+32.00 =
VT ROUTE 100 STA. 267+59.00

SOIL BOUNDARY

EXISTING R.O.W.

LIMIT OF CONSTRUCTION
LOCUST HILL STA. 500+70.24

EXISTING R.O.W.

GEOTEXTILE FOR SILT FENCE
STA 266+57.7 RT - 267+11.26 RT
STA 266+98.59 RT - 267+98.43 RT
STA 265+02.31 LT - 265+14.05 LT
STA 265+07.44 LT - 265+26.87 LT
STA 265+26.53 LT - 265+39.85 LT

TEMPORARY EROSION MATTING
STA. 212+28.69, CL - STA. 213+54.78, CL
STA. 214+74.63, RT - STA. 216+15.28, RT
STA. 214+96.94, RT - STA. 216+50.00, RT
STA. 213+74.03, LT - STA. 214+95.37, LT

INLET PROTECTION, TYPE I
STA. 601+55.53, LT 13.39'

INLET PROTECTION, TYPE II
STA. 602+12.73, RT 57.38'

BARRIER FENCE
STA. 212+00.00, RT 46.87' - STA. 268+77.46, RT 25.67' (270')
STA. 268+77.53, LT 28.48' - STA. 216+50.00, RT 52.99' (233')

PROJECT DEMARCATION FENCE
STA. 213+08.68, LT 56.94' - 215+82.85, LT 35.39' (276')

STONE FILL, TYPE I
STABILIZED CONSTRUCTION ENTRANCE - 2 AS SHOWN

LEGEND

- STABILIZED CONSTRUCTION ENTRANCE
- SILT FENCE
- LIMITS OF SOIL DISTURBANCE
- EROSION MATTING
- BF — BARRIER FENCE
- PDF — PROJECT DEMARCATION FENCE

SOIL CLASSIFICATION
COLTON FINE SANDY LOAM 15 - 25% SLOPES "K FACTOR" 0.24 HIGHLY ERODIBLE

NOTES:

1. THESE PLANS SHOW A CONCEPTUAL EROSION CONTROL PLAN, THE CONTRACTOR MUST SUBMIT A TEMPORARY EROSION CONTROL PLAN FOR APPROVAL.
2. WHEN NECESSITATED BY THE SEQUENCE OF CONSTRUCTION OR AS DIRECTED BY THE ENGINEER, THE CONTRACTOR SHALL INSTALL ADDITIONAL EROSION CONTROL MEASURES THAN THOSE CALLED FOR IN THE APPROVED EROSION CONTROL PLAN.
3. REFER TO TEMPORARY EROSION CONTROL DETAIL SHEETS FOR ADDITIONAL DETAILS.
4. SILT FENCE SHALL NOT BE INSTALLED ACROSS CONTOURS.
5. STABILIZED CONSTRUCTION ENTRANCE TO BE INSTALLED IF DEEMED NECESSARY BY THE ENGINEER.

0 20 40
SCALE IN FEET

PROJECT NAME: LUDLOW
PROJECT NUMBER: HES SGNL(44)

FILE NAME: t13b020_nul.dgn
PROJECT LEADER: P. COBURN
DESIGNED BY: M. BOGACZYK
EPSC CONSTRUCTION CONDITIONS SHEET 3

PLOT DATE: 4/25/2017
DRAWN BY: M. BOGACZYK
CHECKED BY: P. COBURN
SHEET 24 OF 43

NOTES:

1. THESE PLANS SHOW A CONCEPTUAL EROSION CONTROL PLAN, THE CONTRACTOR MUST SUBMIT A TEMPORARY EROSION CONTROL PLAN FOR APPROVAL.
2. WHEN NECESSITATED BY THE SEQUENCE OF CONSTRUCTION OR AS DIRECTED BY THE ENGINEER, THE CONTRACTOR SHALL INSTALL ADDITIONAL EROSION CONTROL MEASURES THAN THOSE CALLED FOR IN THE APPROVED EROSION CONTROL PLAN.
3. REFER TO TEMPORARY EROSION CONTROL DETAIL SHEETS FOR ADDITIONAL DETAILS.
4. SILT FENCE SHALL NOT BE INSTALLED ACROSS CONTOURS.

SOIL CLASSIFICATION
PITS, SAND/PITS, GRAVEL

SOIL BOUNDARY

SOIL CLASSIFICATION
SHEEPSCOT & CROGHAN FINE SANDY LOAM 0 - 8% SLOPES "K FACTOR" 0.17 NOT HIGHLY ERODIBLE

N

VT STATE PLANE GRID

ACCESS ROAD

LUDLOW - BARTON BROOK

END LUDLOW HES SGNL(44)
VT ROUTE 103 STA. 225+31.37

VT ROUTE 103
TO JCT OF VT ROUTE 140

VT ROUTE 103

225+31.37 225+00 224+00 223+00 222+00

MATCHLINE - STA. 221+50.00 SEE LAYOUT SHEET 2

SOIL CLASSIFICATION
COLTON FINE SANDY LOAM 15 - 25% SLOPES "K FACTOR" 0.24 HIGHLY ERODIBLE

LEGEND

AREA REQUIRING REVEGETATION

0 20 40
SCALE IN FEET

PROJECT NAME: LUDLOW	
PROJECT NUMBER: HES SGNL(44)	
FILE NAME: t13b020_nul.dgn	**PLOT DATE:** 4/19/2017
PROJECT LEADER: P. COBURN	**DRAWN BY:** M. BOGACZYK
DESIGNED BY: M. BOGACZYK	**CHECKED BY:** P. COBURN
EPSC FINAL CONDITIONS SHEET 1	**SHEET** 25 **OF** 43

NOTES:

1. THESE PLANS SHOW A CONCEPTUAL EROSION CONTROL PLAN, THE CONTRACTOR MUST SUBMIT A TEMPORARY EROSION CONTROL PLAN FOR APPROVAL.
2. WHEN NECESSITATED BY THE SEQUENCE OF CONSTRUCTION OR AS DIRECTED BY THE ENGINEER, THE CONTRACTOR SHALL INSTALL ADDITIONAL EROSION CONTROL MEASURES THAN THOSE CALLED FOR IN THE APPROVED EROSION CONTROL PLAN.
3. REFER TO TEMPORARY EROSION CONTROL DETAIL SHEETS FOR ADDITIONAL DETAILS.
4. SILT FENCE SHALL NOT BE INSTALLED ACROSS CONTOURS.

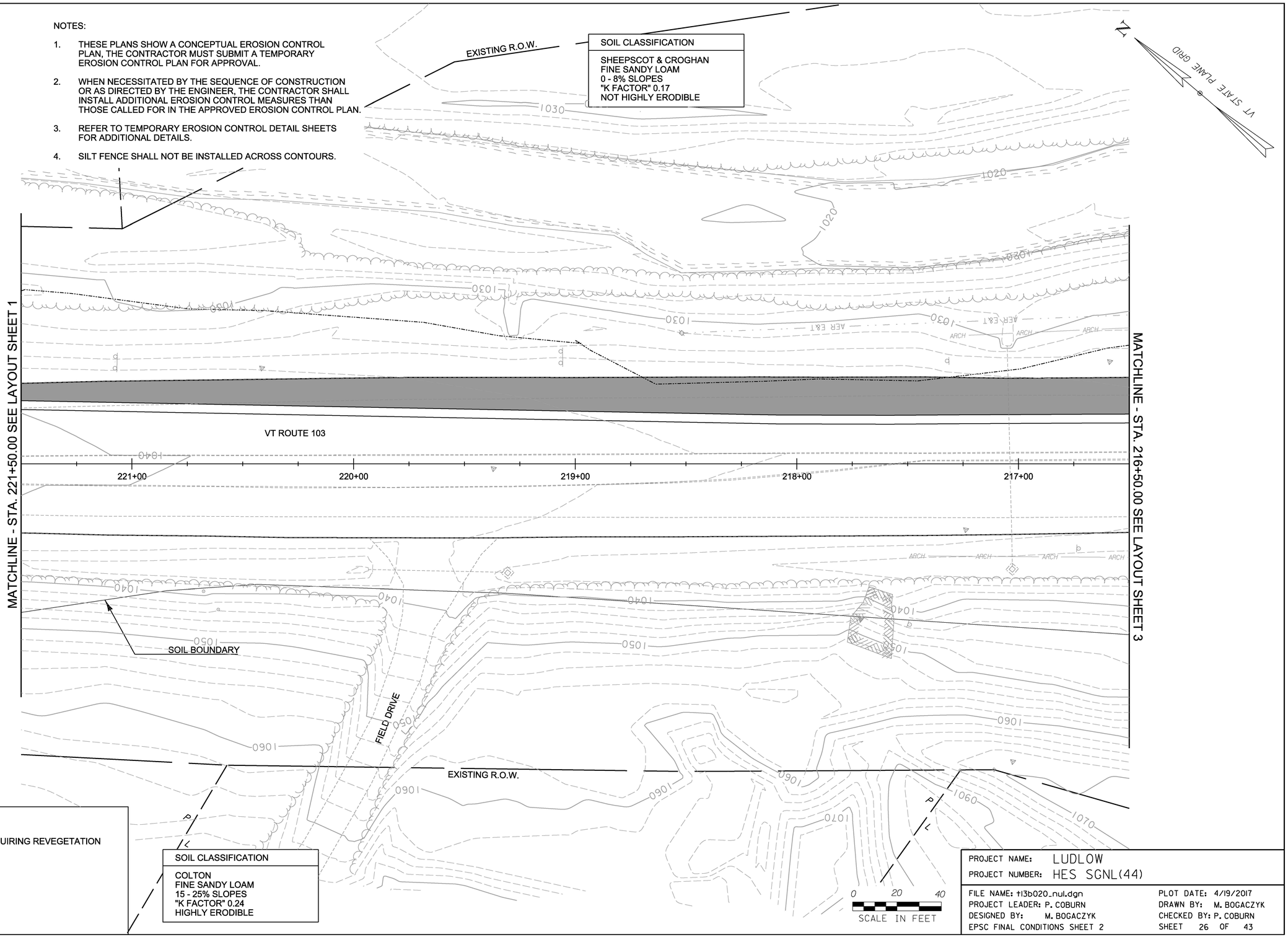

LEGEND

AREA REQUIRING REVEGETATION

PROJECT NAME:	LUDLOW
PROJECT NUMBER:	HES SGNL(44)
FILE NAME: t13b020_nul.dgn	PLOT DATE: 4/19/2017
PROJECT LEADER: P. COBURN	DRAWN BY: M. BOGACZYK
DESIGNED BY: M. BOGACZYK	CHECKED BY: P. COBURN
EPSC FINAL CONDITIONS SHEET 2	SHEET 26 OF 43

MATCHLINE - STA. 216+50.00 SEE LAYOUT SHEET 2

SOIL CLASSIFICATION

SHEEPSCOT & CROGHAN
FINE SANDY LOAM
0 - 8% SLOPES
"K FACTOR" 0.17
NOT HIGHLY ERODIBLE

LIMIT OF CONSTRUCTION
VT ROUTE 100 STA. 268+77.46

127 SF

BUFFER IMPACT

7'-1"

VT ROUTE 100
TO PLYMOUTH

R 30'-0"

R 65'-0"

268+00

20'-0"

4'-0"

VT ROUTE 103
TO JCT OF VT ROUTE 140

SOIL BOUNDARY

SOIL CLASSIFICATION

RUMNEY
FINE SANDY LOAM
0 - 2% SLOPES
"K FACTOR" 0.24
NOT HIGHLY ERODIBLE
FREQUENTLY FLOODED

VT STATE PLANE GRID N

VT ROUTE 103 STA. 212+86.18 =
LOCUST HILL STA. 501+30.99

216+00 215+00 214+00 213+00 212+00 211+00

267+59

R 7'-9"

501+31

VT ROUTE 103
TO LUDLOW

501+00

BEGIN LUDLOW HES SGNL(44)
VT ROUTE 103 STA. 212+00.00

VT ROUTE 103 STA. 214+32.00 =
VT ROUTE 100 STA. 267+59.00

267+00

SOIL BOUNDARY

EXISTING R.O.W.

500+00

EXISTING R.O.W.

LIMIT OF CONSTRUCTION
LOCUST HILL STA. 500+70.24

NOTES:

1. THESE PLANS SHOW A CONCEPTUAL EROSION CONTROL PLAN, THE CONTRACTOR MUST SUBMIT A TEMPORARY EROSION CONTROL PLAN FOR APPROVAL.
2. WHEN NECESSITATED BY THE SEQUENCE OF CONSTRUCTION OR AS DIRECTED BY THE ENGINEER, THE CONTRACTOR SHALL INSTALL ADDITIONAL EROSION CONTROL MEASURES THAN THOSE CALLED FOR IN THE APPROVED EROSION CONTROL PLAN.
3. REFER TO TEMPORARY EROSION CONTROL DETAIL SHEETS FOR ADDITIONAL DETAILS.
4. SILT FENCE SHALL NOT BE INSTALLED ACROSS CONTOURS.
5. STABILIZED CONSTRUCTION ENTRANCE TO BE INSTALLED IF DEEMED NECESSARY BY THE ENGINEER.

LEGEND

AREA REQUIRING REVEGETATION

SOIL CLASSIFICATION

COLTON
FINE SANDY LOAM
15 - 25% SLOPES
"K FACTOR" 0.24
HIGHLY ERODIBLE

0 20 40
SCALE IN FEET

PROJECT NAME: LUDLOW
PROJECT NUMBER: HES SGNL(44)

FILE NAME: t13b020_nul.dgn
PROJECT LEADER: P. COBURN
DESIGNED BY: M. BOGACZYK
EPSC FINAL CONDITIONS SHEET 3

PLOT DATE: 4/19/2017
DRAWN BY: M. BOGACZYK
CHECKED BY: P. COBURN
SHEET 27 OF 43

4 INCH WHITE LINE, WATERBORNE PAINT

STA. 221+50.00, RT 24.52' - STA. 225+31.37, RT 23.49' (SOLID)(381')

REMOVING SIGNS

6 - AS SHOWN

TRAFFIC SIGN, TYPE A

7 - SEE TRAFFIC SIGN SUMMARY SHEET

N

VT STATE PLANE GRID

ACCESS ROAD

LUDLOW - BARTON BROOK

END LUDLOW HES SGNL(44)
VT ROUTE 103 STA. 225+31.37

4" WHITE LINE WATERBORNE PAINT (SOLID)

CZ

12'

12'

VT ROUTE 103

ONLY

VT ROUTE 103
TO JCT OF VT ROUTE 140

225+31.37

225+00

224+00

223+00

222+00

STA 225+31.37 POE

MATCHLINE - STA. 221+50.00 SEE TRAFFIC SIGNS & MARKINGS SHEET 2

↑ OKEMO MTN SKI AREA	2	R		↑ Ludlow	2	N
↑ LUDLOW	2	R		↑ Okemo Mtn SKI AREA	2	N
← TYSON	4	R		← Tyson	4	N
← PLYMOUTH	9	R		← Plymouth	9	N
R		R		N		N

STA. 224+45.41, LT 32.27'

N
N

STA. 226+05.41, LT 31.50'

R
R
R

N
N
N

STA. 223+57.48, RT 0.80'

0 20 40
SCALE IN FEET

SIGN LEGEND	
R	= REMOVE
S	= SALVAGE
N	= NEW
SS	= SET SALVAGED
B-B	= BACK TO BACK
EXISTING	= – – – – –
NEW	= ————

PROJECT NAME: LUDLOW
PROJECT NUMBER: HES SGNL(44)

FILE NAME: t13b020_tsi.dgn
PROJECT LEADER: P. COBURN
DESIGNED BY: M. BOGACZYK
SIGNS & PAVEMENT MARKINGS SHEET 1

PLOT DATE: 4/19/2017
DRAWN BY: M. BOGACZYK
CHECKED BY: P. COBURN
SHEET 28 OF 43

4 INCH WHITE LINE, WATERBORNE PAINT

STA. 216+50.00, RT 18.48' - STA. 221+50.00, RT 24.52' (SOLID)(500')

REMOVING SIGNS

17 - AS SHOWN

TRAFFIC SIGN, TYPE A

16 - SEE TRAFFIC SIGN SUMMARY SHEET

VT STATE PLANE GRID

EXISTING R.O.W.

LUDLOW - BARTON BROOK

← Okemo Ridge Rd
Buttermilk Falls Rd →

STA. 221+07.62, RT 46.05'

E. WALLINGFORD 9
RUTLAND 23

E. Wallingford 9
Rutland 23

STA. 219+06.57, RT 48.38'

NORTH VERMONT 103

STA. 217+32.18, RT 46.45'

MATCHLINE - STA. 221+50.00 SEE TRAFFIC SIGNS & MARKINGS SHEET 1

4" WHITE LINE WATERBORNE PAINT (SOLID)

CZ

AER E&T

VT ROUTE 103

12'

221+00 220+00 219+00 218+00 217+00

NORTH SOUTH SOUTH VERMONT 100 103 100

STA. 219+14.21, LT 40.44'

FIELD DRIVE

EXISTING R.O.W.

ONLY

STA. 217+34.45, LT 38.74'

ONLY

STA. 216+72.84, LT 38.18'

MATCHLINE - STA. 216+50.00 SEE TRAFFIC SIGNS & MARKINGS SHEET 3

0 20 40
SCALE IN FEET

SIGN LEGEND

R	= REMOVE
S	= SALVAGE
N	= NEW
SS	= SET SALVAGED
B-B	= BACK TO BACK
EXISTING	= ———
NEW	= ———

PROJECT NAME: LUDLOW
PROJECT NUMBER: HES SGNL(44)

FILE NAME: t13b020_tsl.dgn
PROJECT LEADER: P. COBURN
DESIGNED BY: M. BOGACZYK
SIGNS & PAVEMENT MARKINGS SHEET 2

PLOT DATE: 4/19/2017
DRAWN BY: M. BOGACZYK
CHECKED BY: P. COBURN
SHEET 29 OF 43

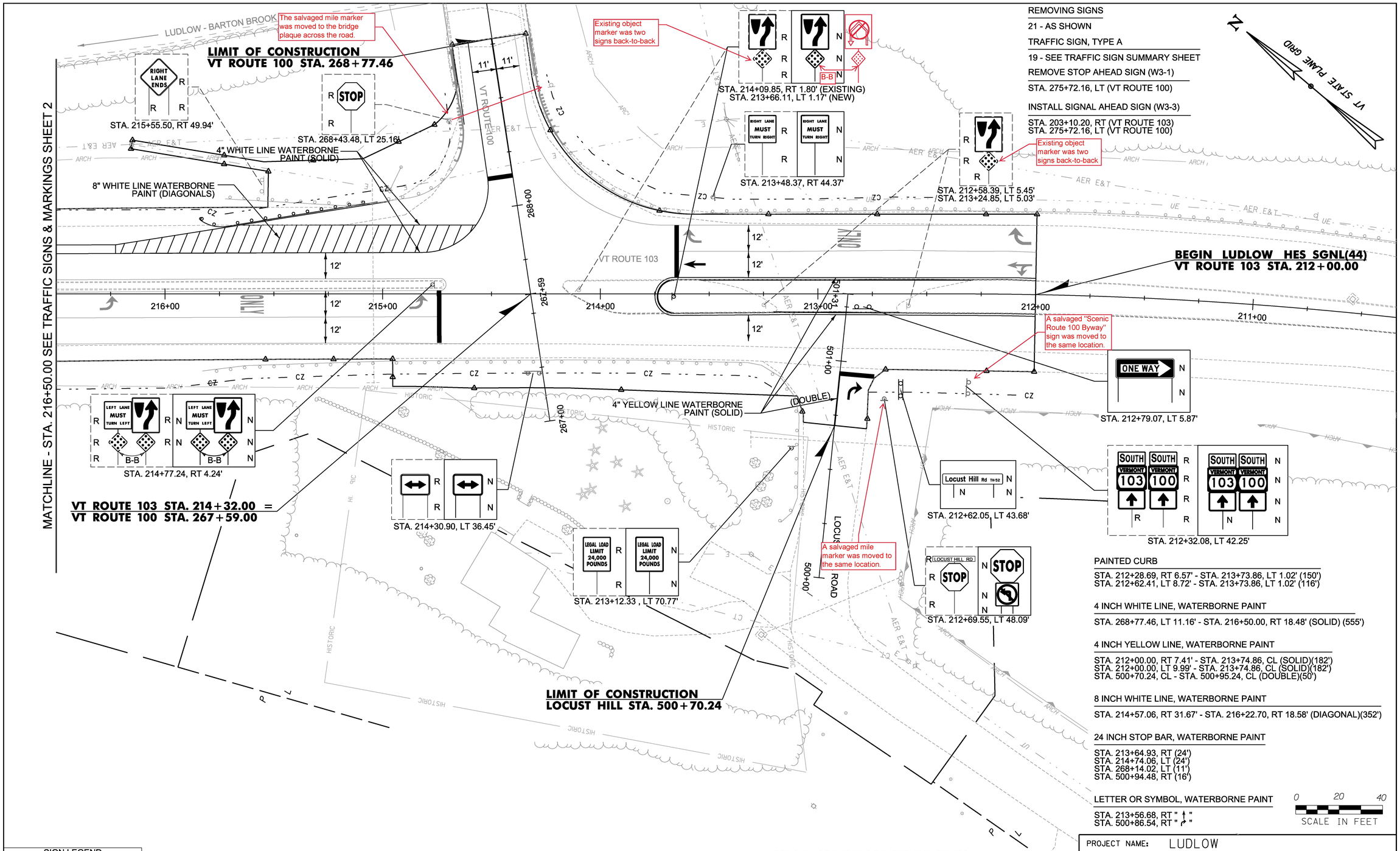

REMOVING SIGNS

21 - AS SHOWN

TRAFFIC SIGN, TYPE A

19 - SEE TRAFFIC SIGN SUMMARY SHEET

REMOVE STOP AHEAD SIGN (W3-1)

STA. 275+72.16, LT (VT ROUTE 100)

INSTALL SIGNAL AHEAD SIGN (W3-3)

STA. 203+10.20, RT (VT ROUTE 103)
STA. 275+72.16, LT (VT ROUTE 100)

PAINTED CURB

STA. 212+28.69, RT 6.57' - STA. 213+73.86, LT 1.02' (150')
STA. 212+62.41, LT 8.72' - STA. 213+73.86, LT 1.02' (116')

4 INCH WHITE LINE, WATERBORNE PAINT

STA. 268+77.46, LT 11.16' - STA. 216+50.00, RT 18.48' (SOLID) (555')

4 INCH YELLOW LINE, WATERBORNE PAINT

STA. 212+00.00, RT 7.41' - STA. 213+74.86, CL (SOLID)(182')
STA. 212+00.00, LT 9.99' - STA. 213+74.86, CL (SOLID)(182')
STA. 500+70.24, CL - STA. 500+95.24, CL (DOUBLE)(50')

8 INCH WHITE LINE, WATERBORNE PAINT

STA. 214+57.06, RT 31.67' - STA. 216+22.70, RT 18.58' (DIAGONAL)(352')

24 INCH STOP BAR, WATERBORNE PAINT

STA. 213+64.93, RT (24')
STA. 214+74.06, LT (24')
STA. 268+14.02, LT (11')
STA. 500+94.48, RT (16')

LETTER OR SYMBOL, WATERBORNE PAINT

STA. 213+56.68, RT " ↑ "
STA. 500+86.54, RT " ↱ "

0 20 40
SCALE IN FEET

REMOVAL OF EXISTING PAVEMENT MARKINGS

STA. 268+16.68, LT 8.33' "STOP"
STA. 268+06.59, LT 1.10' - STA. 268+10.62, LT 27.09' (STOP BAR)
STA. 268+77.46, LT 11.16' - STA. 216+22.70, RT 18.58' (4" WHITE LINE)
STA. 275+75.00, LT "STOP AHEAD"
STA. 212+06.08, RT " ↲ "

SIGN LEGEND

R	= REMOVE
S	= SALVAGE
N	= NEW
SS	= SET SALVAGED
B-B	= BACK TO BACK
EXISTING	= — — — — —
NEW	= ————

PROJECT NAME: LUDLOW
PROJECT NUMBER: HES SGNL(44)

FILE NAME: t13b020_tsl.dgn
PROJECT LEADER: P. COBURN
DESIGNED BY: M. BOGACZYK
SIGNS & PAVEMENT MARKINGS SHEET 3

PLOT DATE: 4/19/2017
DRAWN BY: M. BOGACZYK
CHECKED BY: P. COBURN
SHEET 30 OF 43

STATE OF VERMONT
AGENCY OF TRANSPORTATION

TRAFFIC SIGN SUMMARY SHEET 1

MILEMARKER, STATION, OR SIGN NUMBER	SIGN LEGEND	SIGN DIMENSIONS EA	WIDTH (in)	HEIGHT (in)	NEW & SALVAGED SIGNS "A"	"B"	SALV SIGN	SALV TIS	EXIST POST RETAIN	EXIST POST SALVAGE	NEW SIGN POSTS NO. OF POSTS	FLANGED CHANNEL lb/ft 1.12	2.0	3.0	SQUARE STEEL (in) lb/ft 1.75 1.88	2.0 2.42	2.5 3.35	ANCHOR	SLEEVE	TUBULAR ALUMINUM Ø (in) lb/ft 3.0 1.3	4.0 1.7	4.0 MOD 1.7	FOUND-ATION	TUBULAR STEEL Ø (in) lb/ft 3.0 7.6	3.5 9.0	4.0 10.8	5.0 14.6	W-SHAPE STEEL FTG. SIZE 24"	30"	WEIGHT	POST SIZE	SIGN FRAME REQUIRED	REMARKS	SIGN DETAIL SHSM	DETAIL ON SHEET NUMBER	STD. SHEET NUMBER
												OPTION ITEMS																										
STA. 203+10.20, RT 31.81'		1	36	36	9.00						2					X		X																W3-3		
											Signs and posts installed 5/17/18. 13' post assembly (4' anchor), 14' post assembly (4' anchor).																												
STA. 212+32.08, LT 42.25'	SOUTH	1	24	12	2.00						2					X		X														X T-92 2C	M3-3 GREEN ON WHITE			
	VERMONT 103	1	30	24	5.00																												M1-5 GREEN ON WHITE			
		1	21	15	2.19																												M6-3 GREEN ON WHITE			
	SOUTH	1	24	12	2.00																												M3-3 GREEN ON WHITE			
	VERMONT 100	1	30	24	5.00																												M1-5 GREEN ON WHITE			
		1	21	15	2.19		1																										M6-3 GREEN ON WHITE			
																																	Salvaged "Scenic Rte 100 Byway" to same location.			
STA. 212+62.05, LT 43.68'	Locust Hill Rd TH-52	1	67	12	5.58						2	Signs and posts installed 5/17/18. 10' post assembly (4' anchor), 10.25' post assembly (4' anchor).				X		X															D3-1 DOUBLE SIDED		44	
																																	Salvaged mile marker to same location.			
STA. 212+69.55, LT 48.09'	STOP	1	36	36	9.00						2	Signs and posts installed 5/17/18. 14.5' post assembly (4' anchor), 14.75' post assembly (4' anchor).				X		X															MOUNT ON SAME SIGN POSTS (STACKED)	R1-1		
		1	24	24	4.00																													R3-2		
STA. 212+79.07, LT 5.87'	ONE WAY	1	36	12	3.00						~~2~~ 1	Sign and post installed 5/17/18. 9.5' post assembly (3.5' anchor).				X		X															One post used instead of two due to low risk location.	R6-1R		
STA. 213+12.33, LT 70.77'	LEGAL LOAD LIMIT 24,000 POUNDS	1	24	30	5.00						1	Sign and post installed 5/18/18. 12.5' post assembly (4' anchor).				X		X															VR-017			T-70
STA. 213+48.37, RT 44.37'	RIGHT LANE MUST TURN RIGHT	1	30	30	6.25						1	Sign and post installed 5/17/18. 11' post assembly (3' anchor).				X		X																R3-7R		
STA. 213+66.11, LT 1.17'		1	24	30	5.00						1	Sign and post installed 5/18/18. 11.5' post assembly (3' anchor).				X		X																R4-7		
		1	18	18	2.25																													OM1-1		
STA. 214+30.90, LT 36.45'		1	48	24	8.00						2	Sign and posts installed 5/22/18. 12.75' post assembly (4' anchor), 12.75' post assembly (4' anchor).				X		X																W1-7		
SHEET TOTALS		SF 209.78	SF	EA	SF							FT			FT 465					EA	LB			EA	LB				EA	EA	LB					
		SF 75.46										FT	FT	FT	FT	FT 195	FT 30		EA	LB	LB	LB		LB	LB	LB	LB									

SHSM = 2004 FHWA STANDARD HIGHWAY SIGNS & MARKINGS/2012 SUPP.
FYG = FLUORESCENT YELLOW GREEN

FINAL POST LENGTHS ARE TO BE DETERMINED IN THE FIELD. POST SIZES ARE COMPUTED BASED ON INFORMATION FURNISHED ON THE STANDARD SHEETS AND THE TRAFFIC & SAFETY DIVISION'S "SIGN POST DESIGN GUIDELINE."

PROJECT NAME: LUDLOW
PROJECT NUMBER: HES SGNL(44)

FILE NAME: t13b020_frm.dgn
PROJECT LEADER: P. COBURN
DESIGNED BY: M. BOGACZYK
TRAFFIC SIGN SUMMARY SHEET 1

PLOT DATE: 4/19/2017
DRAWN BY: M. BOGACZYK
CHECKED BY: P.COBURN
SHEET 31 OF 43

STATE OF VERMONT
AGENCY OF TRANSPORTATION

TRAFFIC SIGN SUMMARY SHEET 2

MILEMARKER, STATION, OR SIGN NUMBER	SIGN LEGEND	SIGN DIMENSIONS			NEW & SALVAGED SIGNS				EXIST POST		NEW SIGN POSTS																	REMARKS	SIGN DETAIL		
		EA	WIDTH (in)	HEIGHT (in)	"A"	"B"	SALV SIGN	SALV TIS	RETAIN	SALVAGE	NO. OF POSTS	FLANGED CHANNEL lb/ft			SQUARE STEEL (in) lb/ft			ANCHOR	SLEEVE	TUBULAR ALUMINUM Ø (in) lb/ft			FOUND-ATION	TUBULAR STEEL Ø (in) lb/ft				W-SHAPE STEEL FTG. SIZE		WEIGHT	POST SIZE	SIGN FRAME REQUIRED		SHSM	DETAIL ON SHEET NUMBER	STD. SHEET NUMBER
												1.12	2.0	3.0	1.75 1.88	2.0 2.42	2.5 3.35			3.0 1.3	4.0 1.7	4.0 MOD 1.7		3.0 7.6	3.5 9.0	4.0 10.8	5.0 14.6	24"	30"						
											OPTION ITEMS																									
STA. 214+77.24, RT 4.24'		1	24	30	5.00						1	Signs and post installed 5/18/18. 12.5' post assembly (4' anchor).				X		X															BACK TO BACK MOUNT	R3-7L		
		1	18	18	2.25																												OM1-1		
	LEFT LANE MUST TURN LEFT	1	30	30	6.25																												R4-7		
		1	18	18	2.25																												OM1-1		
STA. 217+32.18, RT 46.45	NORTH	1	24	12	2.00						1	Signs and post installed 5/18/18. 11' post assembly (2.25' anchor).				X		X															M3-1 GREEN ON WHITE Anchor was cut short due to great amounts of rock and sturdiness of anchor.			E-136B
	VERMONT 103	1	30	24	5.00																												M1-6B GREEN ON WHITE			E-136B
STA. 217+34.45, LT 38.74'	ONLY	1	36	30	7.50						1	Sign and post installed 5/18/18. 12.5' post assembly (4' anchor).				X		X															VR-921			E-145A
STA. 219+06.57, RT 48.38'	E. Wallingford 9	1	72	12	6.00						2	Signs and posts installed 5/22/18. 12' post assembly (4' anchor), 11.75' post assembly (4' anchor).				X		X															VD2-1			T-93
	Rutland 23	1	72	12	6.00																												VD2-1			T-93
STA. 219+14.21, LT 40.44'	NORTH	1	24	12	2.00						2	Signs and posts installed 5/18/18. 2 slip bases installed, 10.5' post, 11.25' post.					X	X													X T-92 3D	M3-1 GREEN ON WHITE			E-136B
	VERMONT 100	1	30	24	5.00																												M1-5 GREEN ON WHITE			E-136B
		1	21	15	2.19																												M6-1L GREEN ON WHITE			E-136B
	SOUTH	1	24	12	2.00																												M3-3 GREEN ON WHITE			E-136B
	VERMONT 103	1	30	24	5.00																												M1-5 GREEN ON WHITE			E-136B
		1	21	15	2.19																												M6-3 GREEN ON WHITE			E-136B
	SOUTH	1	24	12	2.00																												M3-3 GREEN ON WHITE			E-136B
		SF										FT	FT	FT	FT	FT 75	FT 30		EA	LB	LB	LB		LB	LB	LB	LB							
		62.63																																		
SHEET TOTALS		SF 209.78	SF	EA	SF							FT			FT 465					LB			EA	LB				EA	EA	LB					

SHSM = 2004 FHWA STANDARD HIGHWAY SIGNS & MARKINGS/2012 SUPP.
FYG = FLUORESCENT YELLOW GREEN

FINAL POST LENGTHS ARE TO BE DETERMINED IN THE FIELD. POST SIZES ARE COMPUTED BASED ON INFORMATION FURNISHED ON THE STANDARD SHEETS AND THE TRAFFIC & SAFETY DIVISION'S "SIGN POST DESIGN GUIDELINE."

PROJECT NAME: LUDLOW
PROJECT NUMBER: HES SGNL(44)

FILE NAME: t13b020_frm.dgn
PROJECT LEADER: P. COBURN
DESIGNED BY: M. BOGACZYK
TRAFFIC SIGN SUMMARY SHEET 2

PLOT DATE: 4/19/2017
DRAWN BY: M. BOGACZYK
CHECKED BY: P. COBURN
SHEET 32 OF 43

STATE OF VERMONT
AGENCY OF TRANSPORTATION

TRAFFIC SIGN SUMMARY SHEET 3

MILEMARKER, STATION, OR SIGN NUMBER	SIGN LEGEND	SIGN DIMENSIONS EA	WIDTH (in)	HEIGHT (in)	NEW & SALVAGED SIGNS "A"	"B"	SALV SIGN	SALV TIS	EXIST POST RETAIN	SALVAGE	NEW SIGN POSTS NO. OF POSTS	FLANGED CHANNEL lb/ft 1.12	2.0	3.0	SQUARE STEEL (in) lb/ft 1.75 1.88	2.0 2.42	2.5 3.35	ANCHOR	SLEEVE	TUBULAR ALUMINUM Ø (in) lb/ft 3.0 1.3	4.0 1.7	4.0 MOD 1.7	FOUND-ATION	TUBULAR STEEL Ø (in) lb/ft 3.0 7.6	3.5 9.0	4.0 10.8	5.0 14.6	W-SHAPE STEEL FTG. SIZE 24"	30"	WEIGHT	POST SIZE	SIGN FRAME REQUIRED	REMARKS	SIGN DETAIL SHSM	DETAIL ON SHEET NUMBER	STD. SHEET NUMBER
												OPTION ITEMS																										
STA. 219+14.21, LT 40.44' (CONTINUED)	VERMONT 100	1	30	24	5.00																													M1-5 GREEN ON WHITE			E-136B
		1	21	15	2.19																													M6-3 GREEN ON WHITE			E-136B
STA. 221+07.62, RT 46.05'	← Okemo Ridge Rd / Buttermilk Falls Rd →	1	36	36	9.00						2	Signs and posts installed 5/22/18. 12.75' post assembly (2.5' anchor), 14.25' post assembly (4' anchor).					X		X															W2-7L BLACK ON YELLOW			
		1	60	15	6.25																													W16-8aP BLACK ON YELLOW		44	
STA. 223+57.48, RT 0.80'		1	24	30	5.00						1	Signs and post installed 5/22/18. 14.25' post assembly (3' anchor).					X		X																R4-7		
		1	18	18	2.25																													OM1-1		
STA. 224+45.41, LT 32.27'	↑ Okemo Mtn SKI AREA 2	1	72	12	6.00						2	Signs and posts installed 5/17/18. 14' post assembly (4' anchor), 15' post assembly (4' anchor).					X		X															VD1-1A			T-93
	↑ Ludlow 2	1	72	12	6.00																													VD1-1A			T-93
	← Tyson 4	1	72	12	6.00																													VD1-1A			T-93
	← Plymouth 9	1	72	12	6.00																													VD1-1A			T-93
STA. 226+05.41, LT 31.50'		1	36	36	9.00						2	Signs and posts installed 5/17/18. 13.75' post assembly (4' anchor), 14.75' post assembly (4' anchor).					X		X															Moved to STA 227+07 LT to better make the directional signs at STA 224+45.41 LT visible.	W3-3		
STA. 275+72.16, LT		1	36	36	9.00				1		2	Signs and posts installed 5/17/18. 13.75' post assembly (4' anchor).					X		X															Moved to (VT-100) STA 277+15 LT to replace "Stop Ahead" sign.	W3-3		
(VT-100) STA 268+42.48 RT	MM 0408								1																									Salvaged to bridge plaque post at (VT-100) STA 268+45 LT.			
SHEET TOTALS		SF 209.78	SF	EA	SF						FT				FT 465				EA	LB			EA	LB					EA	EA	LB						

SHSM = 2004 FHWA STANDARD HIGHWAY SIGNS & MARKINGS/2012 SUPP.
FYG = FLUORESCENT YELLOW GREEN

FINAL POST LENGTHS ARE TO BE DETERMINED IN THE FIELD. POST SIZES ARE COMPUTED BASED ON INFORMATION FURNISHED ON THE STANDARD SHEETS AND THE TRAFFIC & SAFETY DIVISION'S "SIGN POST DESIGN GUIDELINE."

PROJECT NAME: LUDLOW
PROJECT NUMBER: HES SGNL(44)

FILE NAME: t13b020_frm.dgn
PROJECT LEADER: P. COBURN
DESIGNED BY: M. BOGACZYK
TRAFFIC SIGN SUMMARY SHEET 3

PLOT DATE: 4/19/2017
DRAWN BY: M. BOGACZYK
CHECKED BY: P. COBURN
SHEET 33 OF 43

TRAFFIC SIGN DETAILS

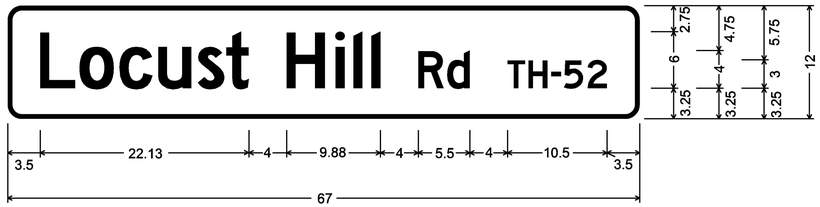

1.50" Radius, 0.50" Border, White on Green;
[Locust] D 2K 80% spacing;
[Hill] D 2K 80% spacing; [Rd] D 2K 80% spacing;
[TH-52] D 2K 80% spacing;

D3-1
NOT TO SCALE

STA. 602+91.29, RT 44.64'

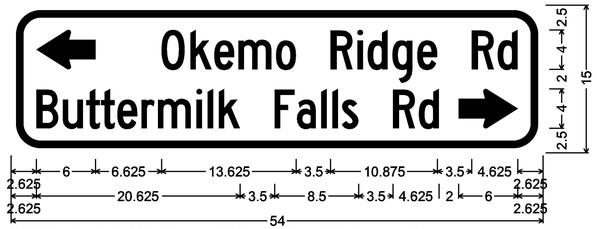

W16-8a_48x15; 3.000" Radius, 0.750" Border, 0.500" Indent, Black on Yellow;
Standard Arrow Custom 6.000" X 4.000" 180°;
[Okemo Ridge Rd] C 2K 80% spacing;
[Buttermilk Falls Rd] C 2K 80% spacing;
Standard Arrow Custom 6.000" X 4.000" 0°;

W16-8aP
NOT TO SCALE

STA. 221+07.62, RT 46.05'

ITEM 900.620 SPECIAL PROVISION
2-½" SOIL BEARING SLIP BASE LOCATIONS

ROUTE:	DIRECTION:	STATION:	NO. REQ:
VT 103	SB	212+32.08, LT 42.25'	2
VT 103	SB	219+14.21, LT 40.44'	2

1. THE LOCATIONS SHOWN IN THE TABLE ABOVE WILL REQUIRE THAT EACH 2-½" SQUARE STEEL SIGN POST, AS SPECIFIED ON THE APPLICABLE SIGN SUMMARY SHEET, BE INSTALLED USING A SOIL BEARING SLIP BASE WITH ANCHOR. AT THESE SPECIFIED LOCATIONS THE 2-½" POSTS ARE NOT PROTECTED BY GUARDRAIL OR CURBING, THUS REQUIRING THE USE OF SOIL BEARING SLIP BASES FOR THIS POST SIZE.

2. PAYMENT FOR SOIL BEARING SLIP BASE (EACH) WILL BE MADE UNDER CONTRACT ITEM 900.620 SPECIAL PROVISION (SOIL BEARING SLIP BASE) (2-½").

STREET NAME SIGNS NOTES:

1. THE SIGN BASE MATERIALS USED FOR THE STREET SIGNS MAY BE EITHER OF THE FOLLOWING:

   A - EXTRUDED ALUMINUM BLADES
   B - FLAT ALUMINUM BLADES

   THE MATERIAL FOR THE BLADES SHALL BE EITHER EXTRUDED ALUMINUM WITH A 0.25 INCH FLANGE THICKNESS AND A 0.090 INCH WEB (MIN.) OR FLAT SHEET ALUMINUM WITH A MINIMUM THICKNESS OF 0.125 INCH. THE PREFERRED MOUNTING METHOD FOR STREET SIGNS IS POST TOP MOUNTING BRACKETS. 12' BRACKETS SHALL BE USED IF TOP MOUNTED. HARDWARE FOR MOUNTING SIGNS TO POST SHALL BE INCIDENTAL TO OTHER ITEMS. MOUNTING METHOD WILL BE AS SHOWN ON THE PLANS. FOR POST TOP MOUNTINGS SIGNS SHALL HAVE TEXT ON BOTH SIDES.

2. ALL STREET NAME SIGN BASE MATERIAL ON THIS SHEET SHALL HAVE WHITE RETROREFLECTIVE ASTM TYPE III (MINIMUM) TEXT ON A GREEN RETROREFLECTIVE ASTM TYPE III (MINIMUM) BACKGROUND.

PROJECT NAME: LUDLOW
PROJECT NUMBER: HES SGNL(44)

FILE NAME: t13b020_frm.dgn
PROJECT LEADER: P. COBURN
DESIGNED BY: K. YELINEK
TRAFFIC SIGN DETAILS SHEET

PLOT DATE: 4/19/2017
DRAWN BY: K. YELINEK
CHECKED BY: P. COBURN
SHEET 34 OF 43

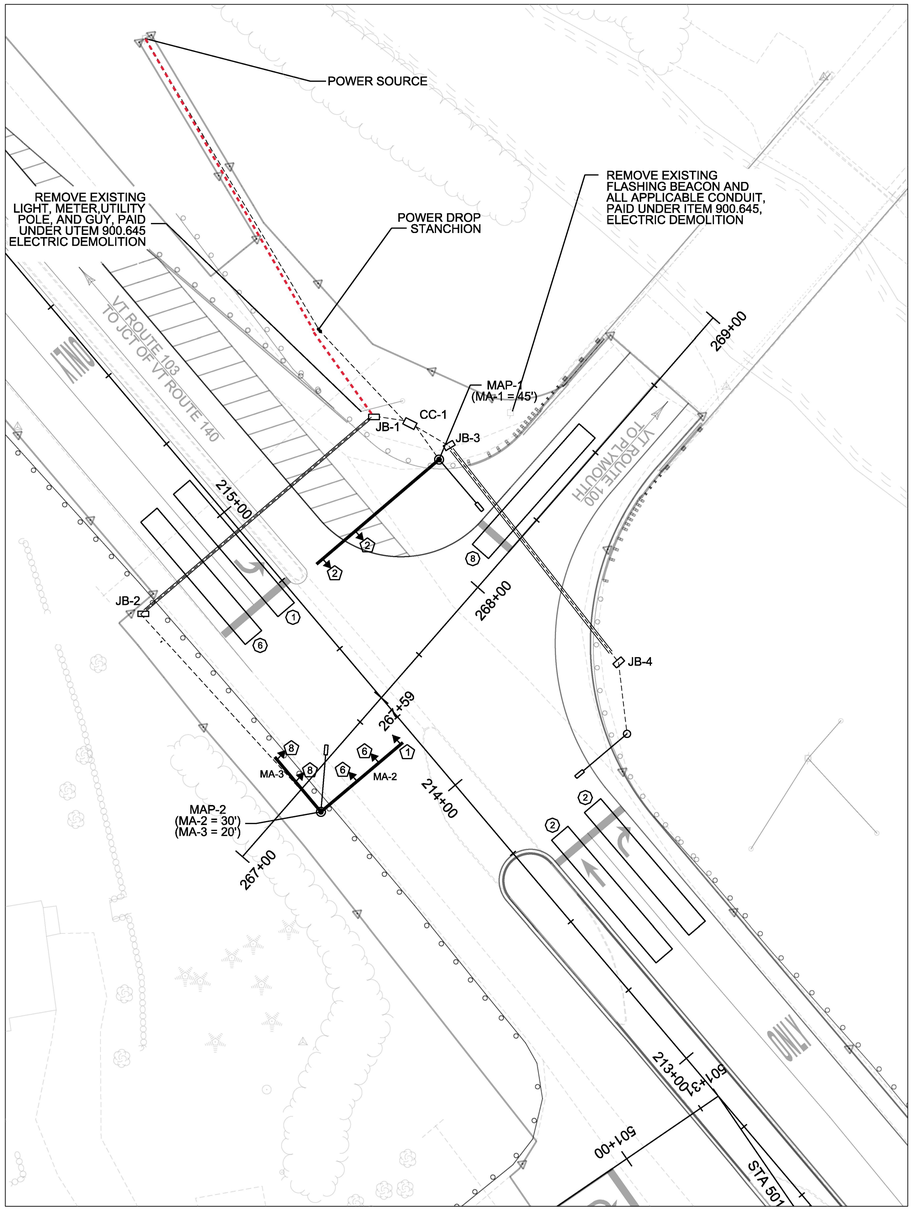

678.15 - TRAFFIC CONTROL SIGNAL SYSTEM, INTERSECTION (VT ROUTE 100 &VT ROUTE 103)
SEE LIST OF MAJOR EQUIPMENT, THIS SHEET

CONSTRUCT MAST ARM POLES
STA. 214+77.47, RT 55.36' (MAP-1)
STA. 267+23.89, RT 8.21' (MAP-2)

CONSTRUCT CONTROLLER CABINET (BASE-MOUNTED)
STA. 214+85.00, RT 54.62' (CC-1)

DILEMMA ZONE DETECTION SYSTEM
STA. 214+77.47, RT 55.36' (DZD-1)
STA. 267+23.89, RT 8.21' (DZD-2)

CONSTRUCT POWER STANCHION
STA. 215+21.60, RT 53.14'

678.23 - WIRED CONDUIT
SEE CHART, THIS SHEET

678.21 - ELECTRICAL CONDUIT
SEE CHART, THIS SHEET

900.640 - SPECIAL PROVISION (HORIZONTAL DIRECTIONAL DRILLING, 12" CASING PIPE)
STA. 214+93.38, LT 34.77' - STA. 214+93.72, RT 47.56' (85')
STA. 214+00.42, RT 56.67' - STA. 214+72.37, RT 59.36' (72')

679.46 - STREET LIGHT ASSEMBLY
STA. 213+80.00, RT 45.93' (16')(SL-3)

679.47 - BRACKET ARM
STA. 214+77.47, RT 55.36' (16')(SL-1)
STA. 267+23.89, RT 8.21' (16')(SL-2)

N

VT STATE PLANE GRID

WIRED CONDUIT	WIRED 2"	SPARE 2"	DESCRIPTION
POLE TO JB-1		133'	FUTURE USE
POLE TO STANCHION	110'		POWER
STANCHION TO CC-1	35'		POWER
CC-1 TO JB-1	13'		SIGNAL & LIGHTING
CC-1 TO JB-1	13'		DETECTOR
CC-1 TO JB-1		13'	FUTURE USE
CC-1 TO MAP-1	18'		SIGNAL & LIGHTING
CC-1 TO MAP-1	18'		DETECTOR
CC-1 TO MAP-1		18'	FUTURE USE
JB-1 TO JB-2	85'		SIGNAL & LIGHTING
JB-1 TO JB-2	85'		DETECTOR
JB-1 TO JB-2		85'	FUTURE USE
JB-1 TO JB-2		85'	FUTURE USE
JB2 TO MAP2	81'		SIGNAL & LIGHTING
JB2 TO MAP2	81'		DETECTOR
JB2 TO MAP2		81'	FUTURE USE
CC-1 TO JB-3	17'		LIGHTING
CC-1 TO JB-3		17'	FUTURE USE
JB-3 TO JB-4	83'		LIGHTING
JB-3 TO JB-4	83'	83'	DETECTOR
JB-4 TO SL-3	26'		LIGHTING
JB-4 TO SL-3		26'	FUTURE USE
SUBTOTAL	665'	408'	
ROUNDING	25'	22'	
TOTALS	690'	430'	

PHASING DIAGRAM

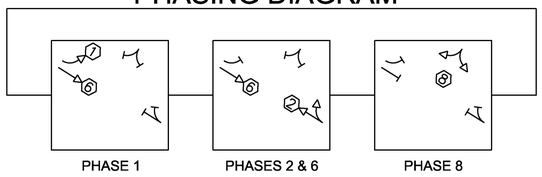

PROPOSED SIGNAL FACE ARRANGEMENTS

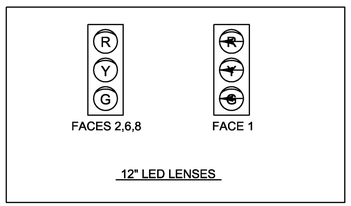

NOTES:

1. ANY OTHER MISC. EQUIPMENT NECESSARY TO PROVIDE FULLY FUNCTIONAL DILEMMA ZONE & VEHICLE DETECTION SYSTEMS SHALL BE INCIDENTAL TO ITEM 678.15 TRAFFIC CONTROL SIGNAL SYSTEM, INTERSECTION (VT ROUTE 100 & VT ROUTE 103).
2. VEHICLE ADVANCE DETECTOR SHALL PROVIDE DETECTION OF RANGE, SPEED, AND ETA OF APPROACHING VEHICLES IN A CONTINUOUS RANGE OF 600 FEET FROM THE SENSOR.
3. A SENSOR DETECTION SHALL EXTEND THE GREEN TIME BY 3 SECONDS.
4. VEHICLE DETECTORS SHALL BE PLACED SO THAT OCCLUSION IS MINIMIZED AND PHASING IS NOT AFFECTED.
5. CONDUIT NOTED AS SPARE WILL BE PAID AS ELECTRICAL CONDUIT. ALL WIRED CONDUIT, REGARDLESS OF TYPE, WILL BE PAID AS WIRED CONDUIT.
6. AN ASTRONOMICAL CLOCK SHALL BE INSTALLED INTO THE STREET LIGHTING SYSTEM AND WILL BE PAID FOR UNDER ITEM NUMBER 679.54, STREET LIGHT CONTROL DEVICE.
7. ITEMS LISTED ARE APPROXIMATE LOCATIONS AND MAY BE MODIFIED BY THE ENGINEER IN THE FIELD.

679.50 - LUMINAIRE
STA. 214+61.03, RT 44.17' (SL-1)
STA. 267+33.38, RT 21.09' (SL-2)

679.54 - STREET LIGHT CONTROL DEVICE
STA. 215+21.60, RT 53.14'

900.620 SPECIAL PROVISION (JUNCTION BOX, HEAVY DUTY)
STA. 214+93.75, RT 48.57' (JB-1)
STA. 214+93.37, LT 36.23' (JB-2)
STA. 214+73.61, RT 59.91' (JB-3)
STA. 213+96.83, RT 57.04' (JB-4)

CONTROLLER TIMING CHART

PHASE	1	2	3	4	5	6	7	8	9
IN USE	X	X				X		X	
TRAFFIC MOVEMENT									
MIN. GREEN	5	8				8		8	
MAX 1 - GREEN (OFF)	5	18				30		16	
MAX 2 - GREEN (AM)	7	22				36		10	
MAX 3 - GREEN (PM)	7	22				36		10	
YELLOW CLEARANCE	5.0	5.0				5.0		4.5	
ALL RED CLEARANCE	2.0	2.0				2.0		2.0	
VEHICLE EXTENSION	3.0	3.0				3.0		3.0	
DELAY GREEN									

LIST OF MAJOR EQUIPMENT

EQUIPMENT ITEM 678.15 - (VT ROUTE 100 & VT ROUTE 103)	QUANTITY	REMARKS
STEEL SIGNAL POLE AND MAST ARM (45') (MA-1)	1	POWDER COAT FLAT BLACK (MAP-1)
STEEL SIGNAL POLE AND MAST ARM (30') (MA-2)	1	POWDER COAT FLAT BLACK (MAP-2)
STEEL MAST ARM (20') (MA-3)	1	POWDER COAT FLAT BLACK (MAP-2)
POWER METER ON STANCHION	1	
SIGNAL CONTROLLER	1	ECONOLITE COBALT, NEMA TS2 TYPE 2
NEW 12-INCH LED SIGNAL HEADS (ONE-WAY, 3-SECTION, VISORS, DISCONNECT HANGERS, BACKPLATES AND MOUNTING HARDWARE	7	FLAT BLACK IN COLOR, 2" RETRROREFLECTIVE TAPE BORDER ON BACK PLATES
SIGNAL HEAD BRACKETS	7	
NEMA P44 BASE MOUNTED CONTROLLER CABINET WITH 15-INCH EXTENDED BASE ON A CONCRETE FOUNDATION, WITH ANCILLARY EQUIPMENT	1	POWDER COAT FLAT BLACK
VEHICLE DETECTOR EXTENSION BRACKET	5	
STOP BAR DETECTOR ASSEMBLY	3	WAVETRONIX SMARTSENSOR MATRIX
ADVANCE DETECTOR ASSEMBLY	2	WAVETRONIX SMARTSENSOR ADVANCE
VEHICLE DETECTION PROCESSOR	2	
NETWORK ROUTER	1	
NETWORK SWITCH	1	
GPS TIME CLOCK	1	

TIME OF DAY PROGRAM

	WEEKDAY TIMINGS		
MAX 1 - OFF PEAK	12:00 AM	TO	6:00 AM
MAX 2 - AM PEAK	6:00 AM	TO	9:00 AM
MAX 1 - OFF PEAK	9:00 AM	TO	4:00 PM
MAX 3 - PM PEAK	4:00 PM	TO	6:00 PM
MAX 1 - OFF PEAK	6:00 PM	TO	12:00 AM

LEGEND

- MAST ARM & POLE
- CC — CONTROLLER CABINET
- JB — HEAVY DUTY JUNCTION BOX
- PP — PEDESTAL POST
- (2) — SIGNAL HEAD WITH PHASE NO.
- (P) — PEDESTRIAN SIGNAL HEAD
- WIRED CONDUIT
- WIRED CONDUIT IN ELECTRICAL CONDUIT SLEEVE
- (A) — MAST ARM-MOUNTED SIGN
- (2) — DETECTION AREA

0 20 40
SCALE IN FEET

PROJECT NAME: LUDLOW
PROJECT NUMBER: HES SGNL(44)

FILE NAME: t13b020_sig.dgn
PROJECT LEADER: P. COBURN
DESIGNED BY: M. BOGACZYK
TRAFFIC SIGNAL PLAN SHEET

PLOT DATE: 4/19/2017
DRAWN BY: M. BOGACZYK
CHECKED BY: P. COBURN
SHEET 35 OF 43

TRAFFIC SIGNAL SYSTEM NOTES

A. NEW SIGNAL EQUIPMENT

1. ALL SIGNAL HEADS SHALL BE 12" POLYCARBONATE. THE SIGNAL HEADS SHALL HAVE FLAT BLACK HOUSINGS AND VISORS.
2. ALL SIGNAL HEADS SHALL HAVE FLAT BLACK LOUVERED BACKPLATES WITH 2" RETROREFLECTIVE BORDERS.
3. THE CONTROLLER SHALL BE AN ECONOLITE COBALT (NEMA TS2 TYPE 2) IN A NEMA P44 TRAFFIC CONTROL CABINET WITH A 15-INCH BASE EXTENSION INSTALLED AT THE LOCATION SHOWN ON THE PLANS. THE TRAFFIC CONTROL CABINET SHALL BE ORIENTED SUCH THAT THE DOOR DOES NOT FACE THE ROADWAY.
4. ALL SIGNAL HEADS SHALL HAVE RED, YELLOW AND GREEN L.E.D. SIGNALS WITH A VISIBLE BEAM SPREAD OF 80 DEGREES OFF AXIS.
5. ALL TRAFFIC SIGNAL EQUIPMENT SHALL BE PAINTED FLAT BLACK IN ACCORDANCE WITH THE SPECIAL PROVISIONS.
6. ALL TRAFFIC SIGNAL EQUIPMENT AND MAST ARM MOUNTED SIGNS SHALL HAVE SAFETY CABLES.
7. A DISCONNECT BREAKER FOR EACH CIRCUIT SHALL BE INSTALLED IN A RAINPROOF (NEMA 3R), LOCKED CABINET ON A STANCHION NEXT TO OR BELOW THE METER SOCKET.

B. TRAFFIC SIGNAL OPERATIONS

1. SWITCH-OVER TO THE INSTALLED TRAFFIC SIGNAL SYSTEM SHALL OCCUR ONLY DURING OFF PEAK TRAFFIC OPERATING HOURS (9:00AM - 4:00PM). UNIFORMED TRAFFIC OFFICERS SHALL CONTROL TRAFFIC DURING THE SWITCH-OVER.
2. ALL SIGNALS SHALL DWELL ON VT ROUTE 103 UNLESS OTHERWISE NOTED.
3. THE VT ROUTE 103 THRU PHASE SHALL BE USED FOR THE START-UP PHASE FOLLOWING FLASHING OPERATION.
4. SIGNAL TIMINGS SHOWN ON THE PLANS MAY REQUIRE FINE-TUNING IN THE FIELD BASED ON TRAFFIC OBSERVATION AND/OR ADDITIONAL FIELD STUDIES.

C. VEHICLE DETECTION

1. STOP BAR AND ADVANCE VEHICLE DETECTOR LOCATIONS SHALL BE DETERMINED BY THE CONTRACTOR IN ACCORDANCE WITH THE MANUFACTURER'S GUIDANCE FOR THE TYPE OF DETECTOR SUPPLIED. THE CONTRACTOR SHALL SUBMIT PROPOSED MOUNTING LOCATIONS AND DOCUMENTATION OF CONFORMANCE WITH THE MANUFACTURER'S GUIDANCE TO THE ENGINEER.
2. STOP BAR VEHICLE DETECTION ZONES SHALL EXTEND FIVE FEET PAST THE FINAL, PERMANENT STOP BAR.
3. THERE SHALL BE NO WIRING SPLICES BETWEEN THE VEHICLE DETECTORS AND THE TRAFFIC SIGNAL CONTROLLER EQUIPMENT.
4. THE NEW STOP BAR DETECTION SYSTEM SHALL BE A WAVETRONIX SMARTSENSOR MATRIX.
5. THE NEW ADVANCE DETECTION SYSTEM SHALL BE A WAVETRONIX SMARTSENSOR ADVANCE.
6. SEE THE PLANS AND/OR THE SPECIAL PROVISIONS FOR A DETAILED LIST OF EQUIPMENT.

D. MAST ARM POLE FOUNDATIONS

1. THE CONTRACTOR SHALL BE RESPONSIBLE FOR THE FOUNDATION DESIGN. FOUNDATIONS SALL BE DESIGNED IN ACCORDANCE WITH THE MREI 10-01 GUIDELINES. IN ADDITION TO FABRICATION DRAWINGS, THE BORING LOGS, DESIGN CRITERIA, AND DESIGN CALCULATIONS SHALL BE SUBMITTED AS WORKING DRAWINGS IN ACCORDANCE WITH SECTION 105.03. ADDITIONAL REQUIREMENTS CA BE FOUND IN THE TRAFFIC SIGNAL GENERAL NOTES IN THIS PLAN SET.

E. JUNCTION BOXES

1. THE LOGO ON JUNCTION BOX COVERS SHALL BE "TRAFFIC SIGNAL."

F. TRAFFIC SIGNAL CONDUIT

1. ALL TRAFFIC SIGNAL CONDUIT SHALL BE SCHEDULE 80 PVC.
2. WHEN CONDUIT IS PLACED BELOW THE ROADWAY OR ACROSS SIDE ROADS, IT SHALL BE PLACED IN A STEEL OR HDPE SLEEVE, SIZE SHOWN ON THE PLANS.
3. ALL UNUSED CONDUIT SHALL BE FILLED WITH STEEL WOOL PRIOR TO BEING CAPPED.
4. ALL TRAFFIC SIGNAL CONDUIT WORK SHALL BE PERFORMED IN ACCORDANCE WITH VTRANS' "STANDARD SPECIFICATIONS FOR CONSTRUCTION", DATED 2011, SECTION 678.

G. COMMUNICATIONS

1. THE CONTRACTOR SHALL CONTACT THE VTRANS TRAFFIC SIGNAL OPERATIONS ENGINEER, DEREK LYMAN (802-249-5079) TO DETERMINE WHICH TELECOMMUNICATIONS SERVICE PROVIDER TO CONTACT TO ESTABLISH A TELECOMMUNICATION DROP FOR THE TRAFFIC SIGNAL SYSTEM.
2. THE CONTRACTOR SHALL COORDINATE WITH THE VTRANS INFORMATION TECHNOLOGY SECTION TO SET UP AN ACCOUNT WITH THE PREFERRED TELECOMMUNICATIONS PROVIDER FOR BROADBAND COMMUNICATIONS. JIM WOOD (802-828-2739) OF THE VTRANS INFORMATION TECHNOLOGY SECTION TO SUPPLY AND CONFIGURE ROUTER FOR INSTALLATION AFTER 30 DAY TEST PERIOD HAS CONCLUDED AND THE AGENCY HAS TAKEN OWNERSHIP OF THE TRAFFIC SIGNAL SYSTEM.
3. THE CONTRACTOR SHALL BE RESPOSIBLE FOR WIRING THE BROADBAND CONNECTION INTO THE CONTROLLER CABINET FROM THE NEAREST POSSIBLE SOURCE OF THE SELECTED UTILITY TRANSMISSION.

H. GENERAL

1. A UNIFORMED TRAFFIC OFFICER WITH A BLUE LIGHT SHALL BE PRESENT DURING ALL LANE CLOSURES.
2. THE CONTRACTOR SHALL ACQUIRE ALL THE NECESSARY PERMITS AND MAKE ALL NECESSARY ARRANGEMENTS WITH THE UTILITY COMPANY TO PROVIDE A PERMANENT POWER SUPPLY TO THE TRAFFIC SIGNAL EQUIPMENT, IF APPLICABLE. THE ROUTING OF POWER TO THE INTERSECTION SHALL BE SUCH THAT THE AGENCY OF TRANSPORTATION HAS FULL RESPONSIBILITY FROM THE TRANSFORMER THROUGH THE SIGNAL SYSTEM. NO INTERVENING OWNERSHIP/RESPONSIBILITY SHALL BE ALLOWED.

TRAFFIC CONTROL NOTES FOR TRAFFIC SIGNAL SYSTEM WORK

1. THE FOLLOWING NOTES APPLY TO TRAFFIC CONTROL NECESSARY FOR THE INSTALLATION OR MODIFICATION OF THE TRAFFIC SIGNALS ONLY. FOR OVERALL PROJECT TRAFFIC CONTROL MANAGEMENT REQUIREMENTS REFER TO THE TRAFFIC CONTROL PLANS AND SECTION 641 OF VTRANS "STANDARD SPECIFICATIONS FOR CONSTRUCTION" DATED 2011.
2. DURING CONSTRUCTION, TWO-WAY TRAFFIC SHALL BE MAINTAINED AT ALL TIMES ON US ROUTE 103. TWO-WAY TRAFFIC SHALL BE MAINTAINED AT NIGHT, ON WEEKENDS AND HOLIDAYS. DURING PEAK TRAFFIC AND DURING CONSTRUCTION. AT THE DISCRETION OF THE ENGINEER, UNIFORMED TRAFFIC OFFICERS SHALL DIRECT TRAFFIC, WHENEVER REQUIRED.
3. TRAFFIC CONTROL SIGNING AND CHANNELIZING DEVICES SHALL BE IN ACCORDANCE WITH THE APPROPRIATE STANDARD DRAWINGS (T-1, T-10, T-11, T-12, T-17, T-21, T-28, T-29, T-30, T-31, T-33) AND THE MANUAL ON UNIFORM TRAFFIC CONTROL DEVICES (MUTCD).
4. AFTER SIGNAL INSTALLATION, ALL HEADS MUST BE COVERED (TURNING SHALL NOT BE ALLOWED) UNTIL TURNED ON. THE METHOD OF COVERING SHALL BE AS FOLLOWS:
   - THE SIGNAL COVERS SHALL CONSIST OF A ONE-PIECE PLASTIC BAG HAVING A MINIMUM THICKNESS OF FOUR MIL. THE BAG SHALL BE OPAQUE. THE COVER SHALL SLIP OVER THE ENTIRE SIGNAL HEAD AND SHALL BE SECURELY TIED AT THE OPENING WITH A ROPE OF SUFFICIENT SIZE AND STRENGTH TO SECURE THE COVER. AN INTERMEDIATE ROPE OF THE SAME MATERIAL SHALL BE DRAWN AROUND THE CENTER OF THE COVER TO PREVENT EXCESS FLAPPING IN THE WIND.
   - A DRAIN HOLE SHALL BE MADE AT THE BOTTOM OF THE BAG TO ALLOW THE ESCAPE OF MOISTURE. NO TAPE OR ADHESIVE WILL BE ALLOWED TO BE ATTACHED TO ANY SURFACE OF THE SIGNAL HOUSING OR LENSES. ALL COVERS SHALL BE PLACED IN A NEAT WORKMANLIKE MANNER, ANY COVER WHICH IS TORN OR MISSING SHALL BE IMMEDIATELY REPLACED. PAYMENT FOR THE COVERS, THEIR REPLACEMENT, AND REMOVAL AND ALL INCIDENTALS FOR COMPLETION OF THE WORK SHALL BE CONSIDERED INCIDENTAL TO THE INSTALLATION OF THE TRAFFIC SIGNAL.
5. WHERE TWO-WAY TRAFFIC IS MAINTAINED DURING CONSTRUCTION, THE SIGN PACKAGE SHOWN ON STD. T-21 SHOULD BE USED. APPROACH CONSTRUCTION SIGNING SHALL REMAIN IN PLACE DURING THE ENTIRE CONSTRUCTION PERIOD. OTHER SIGNING SHALL BE REMOVED OR COVERED WHEN NOT APPLICABLE.
6. VARIATIONS IN THE SIGNING PACKAGES MAY BE DICTATED BY UNIQUE GEOMETRY AND/OR TRAFFIC CONDITIONS AND THE TRAFFIC CONTROL PLANS.
7. THE CONTRACTOR SHALL NOT WORK WITHIN THE HIGHWAY RIGHT-OF-WAY WITHOUT THE APPROPRIATE CONSTRUCTION SIGNING IN PLACE AS SHOWN ON STD. T-10.
8. AT LOCATIONS WHERE SIGNALS CURRENTLY EXIST, A WORKING SIGNAL SYSTEM SHALL BE IN PLACE AT THE END OF EACH DAY. IF THE SIGNAL SYSTEM IS NOT WORKING AT THE END OF THE DAY, THE CONTRACTOR SHALL PROVIDE UNIFORMED TRAFFIC OFFICERS TO CONTROL TRAFFIC UNTIL SUCH TIME THAT THE EXISTING OR NEW SIGNAL SYSTEM IS IN OPERATION AT NO COST TO THE STATE OF VERMONT.
9. "SIGNALS UNDER CONSTRUCTION" SIGN PANELS SHALL BE MOUNTED UNDER "ROAD WORK AHEAD" SIGNS ANYTIME SIGNAL SYSTEM WORK IS BEING PREFORMED. SEE SIGN DETAIL ON THIS SHEET.
10. THE TYPE OF TEMPORARY TRAFFIC BARRIER USED ON THIS PROJECT SHALL COMPLY WITH NCHRP REPORT 350 TEST LEVEL THREE (TL-3). TEMPORARY TRAFFIC BARRIER MEETING THIS REQUIREMENT CAN BE FOUND ON THE FHWA WEBSITE.

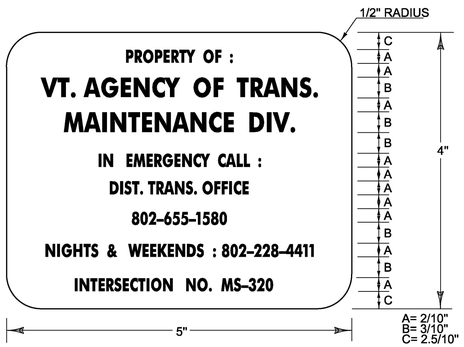

LEGEND: - BLACK (NON-REFL.) - STAMPED PRIOR TO PAINTING
BACKGROUND: NATURAL ALUMINUM OR BRASS SURFACE

NOTES:

1. THE PLAQUE SHALL BE MOUNTED ON ALL TRAFFIC SIGNAL CONTROLLER CABINETS. IT SHALL BE FASTENED TO THE CONTROLLER CABINET IN SUCH A MANNER AS TO BE NOT EASILY REMOVED, SUCH AS WELDED, RIVETED OR BOLTED WITH VANDAL PROOF BOLTS.
2. THE LETTERS SHALL BE PUNCHED OR STAMPTED, SUCH STAMPING SHALL PENETRATE AT LEAST ½ THE BASE MATERIAL THICKNESS.
3. THE BASE MATERIAL FOR THE PLAQUE SHALL BE BRASS OR ALUMINUM WITH A MINIMUM THICKNESS OF 1/10".
4. THE CONTRACTOR SHALL CONTACT THE VTRANS TRAFFIC SIGNAL ENGINEER TO GET THE PROPER MS NUMBERS FOR THE PLAQUES.

CONTROLLER IDENTIFICATION PLAQUE

NOT TO SCALE

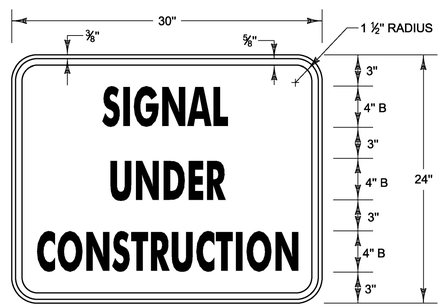

MATERIALS: SEE STD. E-144
COLORS: TEXT & BORDER - BLACK
BACKGROUND - ORANGE (RETROREFLECTIVE SHEETING)

CONSTRUCTION SIGN DETAIL

NOT TO SCALE
TO BE INSTALLED ON ROAD WORK AHEAD SIGN POSTS.

PROJECT NAME: LUDLOW
PROJECT NUMBER: HES SGNL(44)

FILE NAME: tl3b020_frm.dgn
PROJECT LEADER: P. COBURN
DESIGNED BY: M. BOGACZYK
TRAFFIC SIGNAL SYSTEM NOTES SHEET

PLOT DATE: 4/19/2017
DRAWN BY: M. BOGACZYK
CHECKED BY: P. COBURN
SHEET 36 OF 43

TRAFFIC SIGNAL GENERAL NOTES

1. OVERHEAD SIGN/SIGNAL SUPPORTS SHALL CONFORM TO AASHTO'S "SPECIFICATIONS FOR STRUCTURAL SUPPORTS FOR HIGHWAY SIGNS, LUMINAIRES, AND TRAFFIC SIGNALS", DATED 2013 AND ITS LATEST REVISIONS.

2. THE DESIGN CALCULATIONS SHALL TAKE INTO ACCOUNT THE FOLLOWING CRITERIA:
   - STRUCTURE CRITERIA
     - DESIGN LIFE AND RECURRENCERECURRANCE INTERVAL: 50 YEARS
     - WIND LOAD: 90 M.P.H.
   - FATIGUE CRITERIA
     - FATIGUE CATEGORY: 2 FOR STRUCTURES ON ROADWAYS WITH A SPEED LIMIT GREATER THAN 35 MPH, 3 FOR STRUCTURES ON ROADWAYS WITH A SPEED LIMIT LESS THAN OR EQUAL TO 35 MPH.
     - VORTEX SHEDDING: NOT REQUIRED
     - NATURAL WIND GUSTS: INCLUDE
     - TRUCK INDUCED WIND GUSTS: INCLUDE FOR ROADWAYS WHERE SPEED LIMIT IS 40 M.P.H. OR GREATER
     - GALLOPING: NOT REQUIRED
   - FOUNDATION CRITERIA
     - CONCRETE: CONCRETE, CLASS B, VTrans' "STANDARD SPECIFICATIONS FOR CONSTRUCTION", DATED 2011, SECTION 541.
     - REINFORCING STEEL: REINFORCING STEEL, LEVEL I VTrans' "STANDARD SPECIFICATIONS FOR CONSTRUCTION", DATED 2011, SECTION 507.
     - GEOTECHNICAL SOIL RESISTANCES TO BE DETERMINED BY CONTRACTOR. GEOTECHNICAL DATA REPORT SUMMARIZING SUBSURFACE INVESTIGATION INCLUDED IN CONTRACT DOCUMENTS

3. ANCHOR BOLTS

   A) GALVANIZED ANCHOR BOLTS WITH TWO HEXAGON NUTS AND TWO WASHERS PER BOLT SHALL BE FURNISHED WITH EACH POLE. ANCHOR BOLT PLATES, WHEN USED, SHALL ALSO BE GALVANIZED. SEE SECTION 714.09. AFTER INSTALLATION, A MINIMUM OF TWO THREADS ON THE BOLT SHOULD BE EXPOSED ABOVE THE NUT.

   B) A MINIMUM OF 6 ANCHOR BOLTS SHALL BE PROVIDED AT EACH SINGLE UPRIGHT POST FOUNDATIONS.

   C) PROCEDURE FOR TIGHTENING DOUBLE-NUT ANCHOR BOLT CONNECTIONS:

   1. VERIFY THAT THE NUTS CAN BE TURNED ONTO THE BOLTS PAST THE ELEVATION CORRESPONDING TO THE BOTTOM OF EACH IN-PLACE LEVELING NUT AND BE BACKED OFF BY THE EFFORT OF ONE PERSON ON A 12-IN. LONG WRENCH OR EQUIVALENT (I.E., WITHOUT EMPLOYING A PIPE EXTENSION ON THE WRENCH HANDLE).
   2. CLEAN AND LUBRICATE THE EXPOSED THREADS OF ALL ANCHOR BOLTS. CLEAN AND LUBRICATE THE THREADS AND BEARING SURFACES OF ALL LEVELING NUTS. RE-LUBRICATE THE EXPOSED THREADS OF THE ANCHOR BOLTS AND THE THREADS OF THE LEVELING NUTS IF MORE THAN 24 HOURS HAS ELAPSED SINCE EARLIER LUBRICATION, OR IF THE ANCHOR BOLTS AND LEVELING NUTS HAVE BECOME WET SINCE THEY WERE FIRST LUBRICATED.
   3. TURN THE LEVELING NUTS ONTO THE ANCHOR BOLTS AND ALIGN THE NUTS TO THE SAME ELEVATION.
   4. PLACE STRUCTURAL WASHERS ON TOP OF THE LEVELING NUTS (ONE WASHER CORRESPONDING TO EACH ANCHOR BOLT).
   5. INSTALL THE BASE PLATE ATOP THE LEVELING NUTS, PLACE STRUCTURAL WASHERS ON TOP OF THE BASE PLATE (ONE WASHER CORRESPONDING TO EACH ANCHOR BOLT), AND TURN THE TOP NUTS ONTO THE ANCHOR BOLTS.
   6. TIGHTEN TOP NUTS TO A SNUG-TIGHT CONDITION IN A STAR PATTERN. SNUG-TIGHT IS DEFINED AS THE MAXIMUM NUT ROTATION RESULTING FROM THE FULL EFFORT OF ONE PERSON ON A 12-IN. LONG WRENCH OR EQUIVALENT. A STAR TIGHTENING PATTERN IS ONE IN WHICH THE NUTS ON OPPOSITE OR NEAR-OPPOSITE SIDES OF THE BOLT CIRCLE ARE SUCCESSIVELY TIGHTENED IN A PATTERN RESEMBLING A STAR. (FOR EXAMPLE, FOR AN 8-BOLT CIRCLE WITH BOLTS SEQUENTIALLY NUMBERED 1 TO 8, TIGHTEN NUTS IN THE FOLLOWING BOLT ORDER: 1, 5, 7, 3, 8, 4, 6, 2.)
   7. TIGHTEN LEVELING NUTS TO A SNUG-TIGHT CONDITION IN A STAR PATTERN.
   8. BEFORE FINAL TIGHTENING OF THE TOP NUTS, MARK THE REFERENCE POSITION OF EACH TOP NUT IN A SNUG-TIGHT CONDITION WITH A SUITABLE MARKING ON ONE FLAT WITH A CORRESPONDING REFERENCE MARK ON THE BASE PLATE AT EACH BOLT. THEN INCREMENTALLY TURN THE TOP NUTS USING A STAR PATTERN UNTIL ACHIEVING THE REQUIRED NUT ROTATION SPECIFIED BELOW. TURN THE NUTS IN AT LEAST TWO FULL TIGHTENING CYCLES (PASSES). AFTER TIGHTENING, VERIFY THE NUT ROTATION.
   9. TOP NUTS FOR ASTM F1554 GRADE 55 ANCHOR BOLTS SHALL BE TIGHTENED TO 1/3 TURN BEYOND SNUG TIGHT CONDITION FOR BOLTS LESS THAN OR EQUAL TO 1 ½" DIAMETER AND 1/6 TURN BEYOND SNUG TIGHT CONDITION FOR BOLTS GREATER THAN 1 ½" DIAMETER. THE TOLERANCE FOR NUT ROTATION IS PLUS 20 DEGREES. USE A BEVELED WASHER IF THE NUT IS NOT IN FIRM CONTACT WITH THE BASE PLATE OR THE OUTER FACE OF THE BASE PLATE IS SLOPED MORE THAN 1:40.

4. FLANGE BOLTS

   ALL FLANGE BOLTS, HEX NUTS, AND WASHERS SHALL CONFORM TO SUBSECTION 714.05. THE FLANGE BOLTS SHALL BE CAPABLE OF RESISTING 133% OF THE FULL DESIGN STRESS OF THE TUBE AT ITS YIELD STRENGTH STRESS. FLANGE BOLTS SHALL TENSIONED IN ACCORDANCE WITH SUBSECTION 506.19. DIRECT TENSION INDICATORS ARE REQUIRED.

5. U-BOLTS

   U-BOLTS AND ASSOCIATED HARDWARE SHALL CONFORM TO SUBSECTION 714.04.

6. STEEL FOR SIGN AND SIGNAL STRUCTURES

   A) ALL MATERIAL GREATER THAN 1/2" THICK SHALL MEET THE CHARPY V-NOTCH IMPACT REQUIREMENTS FOR THE SPECIFIED MATERIAL. TESTING AND SAMPLING SHALL BE IN ACCORDANCE WITH AASHTO T 243.

   B) PIPE AND TUBES SHALL MEET THE REQUIREMENTS OF ONE OF THE FOLLOWING SPECIFICATIONS:

   CANTILEVER MAST ARM STRUCTURE:

ASTM A595, GRADE A	WELDED, ROUND, TAPERED STEEL TUBE
ASTM A1011, GRADE 50	WELDED, ROUND, TAPERED STEEL TUBE

   NON-CANTILEVERED OVERHEAD SIGN AND SIGNAL STRUCTURES:

ASTM 1500, GRADE B	WELDED AND SEAMLESS STEEL PIPE (ROUNDS ONLY)
API 5L GRADE X42	AMERICAN PETROLIUM INSTITUTE SPECIFICATION 5L

7. GALVANIZING

   ALL STEEL COMPONENTS, EXCEPT CONCRETE REINFORCING, ARE TO BE HOT DIPPED GALVANIZED AFTER FABRICATION. THE ASSEMBLIES SHALL BE DESIGNED AND FABRICATED TO PERMIT GALVANIZING ON ALL INTERIOR AND EXTERIOR SURFACES AND SHALL BE FREE OF POCKETS AND OTHER STRUCTURAL OBSTRUCTIONS THAT WILL NOT PERMIT PROPER DEPOSITION OF ZINC COATING. GALVANIZING SHALL BE IN ACCORDANCE WITH SECTION 752.02.

8. WELDING

   A) ALL WELDING SHALL BE PERFORMED PER SECTION 506.10

   B) ALL WELDS SHALL BE AT LEAST AS STRONG AS THE MATERIAL(S) BEING WELDED

9. FOUNDATIONS

   A) FOOTINGS SHALL BE DESIGNED IN ACCORDANCE WITH VTrans' MATERIALS & RESEARCH ENGINEERING INSTRUCTIONS GEOTECHNICAL DESIGN PROCEDURES FOR MAST ARM AND OVERHEAD SIGN SUPPORT FOUNDATIONS (MREI 10-01), DATED MARCH 9, 2010, A COPY OF WHICH CAN BE FOUND ON THE AGENCY'S WEBSITE: WWW.VTRANS.VERMONT.GOV.

   B) FOUNDATIONS SHALL BE CONSTRUCTED IN ACCORDANCE WITH THE FOLLOWING NOTES:
   1. A MINIMUM EMBEDMENT DEPTH OF FIVE FEET SHALL BE USED FOR ALL SPREAD FOOTING FOUNDATIONS; MEASURED FROM THE GROUND SURFACE ELEVATION TO THE BOTTOM OF THE FOOTING ELEVATION.
   2. FOR DRILLED SHAFT FOUNDATIONS, CONCRETE SHALL BE POURED AGAINST UNDISTURBED SOIL UNLESS A PERMANENT CASING IS DESIGNED FOR AND APPROPRIATE SUPPORTING CALCULATIONS ARE PROVIDED. THE TOP TWO FEET OF SOIL SHALL BE NEGLECTED FOR DESIGN PURPOSES. A DISPOSABLE CIRCULAR CONCRETE FORM, IF USED, SHALL NOT BE PLACED DEEPER THAN TWO FEET, IN ORDER NOT TO REDUCE THE FRICTION BETWEEN THE SOIL AND THE CONCRETE.
   3. AS AN ALTERNATIVE TO THE DRILLED HOLES, FOOTINGS MAY BE POURED IN EXCAVATED HOLES USING THE PROPER FORMS, WHICH MUST BE REMOVED. THE EXCAVATED HOLES SHALL BE AT LEAST TWO FEET CLEAR OF THE FOUNDATION SIDES AND ONE FOOT DEEPER THAN THE FOUNDATION. CARE SHALL BE TAKEN TO AVOID EXCAVATING AROUND THE TOP OF THE FOUNDATION. THE BACKFILL MATERIAL SHALL BE COMPACTED AS DESCRIBED IN SECTION 204.08. DESIGN LIMITS AS FOR AUGURED FOOTINGS APPLIES.
   4. ANY BACKFILL PLACED ADJACENT TO THE FOOTING SHALL BE GRANULAR MATERIAL MEETING THE REQUIREMENTS FOR GRANULAR BACKFILL FOR STRUCTURES, SECTION 704.08. IT SHALL BE COMPACTED AS DESCRIBED IN SECTION 204.08.
   5. CONCRETE FOR THE FOUNDATION SHALL CONFORM TO THE REQUIREMENTS OF CONCRETE, SECTION 541 STRUCTURAL CONCRETE. IF DRILLED SHAFT FOUNDATIONS ARE REQUIRED, THE CONCRETE SPECIFICATIONS MAY NEED TO BE ADJUSTED FOR CONSTRUCTABILITY ISSUES. HOWEVER, IF REQUIRED, THE CONTRACTOR SHALL SUBMIT ANY CHANGES TO THE CONCRETE SPECIFICATION FOR REVIEW BY THE VTrans PROJECT MANAGER.
   6. STEEL PILING, IF USED, SHALL MEET THE REQUIREMENTS OF SECTION 505.
   7. WHEN THE DESIGN DEPTH OF A FOUNDATION CANNOT BE OBTAINED DUE TO UNFORSEEN FIELD CONDITIONS, THE CONTRACTOR SHALL NOTIFY THE ENGINEER FOR THE MANUFACTURER TO OBTAIN A REVISED FOUNDATION DESIGN. SUCH A REVISION SHALL BE SUBMITTED TO THE VTrans PROJECT MANAGER AND MAY REQUIRE UP TO A FOUR WEEK REVIEW PERIOD BY VTrans.

   C) SIGNALS/SIGNS SHALL BE INSTALLED AND LEVELED AND POLES SHALL BE PLUMB PRIOR TO PLACING GROUT UNDER POLE BASE. GROUT MATERIAL SHALL BE NON-SHRINKING MORTAR CONFORMING TO SECTION 707.03, MORTAR TYPE IV.

10. EACH OVERHEAD TRAFFIC SIGNAL/SIGN SUPPORT SHALL BE GROUNDED. THE GROUND SHALL CONSIST OF THE FOLLOWING:

    A) AN INTERNAL GROUND LUG OPPOSITE THE HAND HOLE

    B) A #6 (MIN.) SOFT DRAWN COPPER GROUNDING ELECTRODE CONDUCTOR

    C) A 5/8" X 8' (MIN.) COPPER CLAD GROUNDING ELECTRODE THE RESISTANCE TO GROUND SHALL BE 25 OHMS OR LESS. ADDITIONAL GROUNDING ELECTRODES MAY BE REQUIRED (MINIMUM SPACING SHALL BE 6'). WHEN A POWER SERVICE, METER AND DISCONNECT ARE ATTACHED TO A POLE, THERE SHALL BE A CONTINUOUS GROUND WIRE FROM THE METER AND DISCONNECT WITH MAY RUN INTERNAL TO THE UPRIGHT, THROUGH THE ½" FLEXIBLE TUBING IN THE CONCRETE BASE TO THE REQUIRED GROUNDING ELECTRODE(S). THE GROUND WIRE FROM THE POLE GROUNDING LUG, CONTROLLER CABINET AND/OR LUMINAIRE MAY ATTACH TO THIS CONTINUOUS GROUNDING ELECTRODE CONDUCTOR FROM THE SERVICE METER AND DISCONNECT. THE CONTRACTOR SHALL PERFORM A RESISTANCE TO GROUND TEST ON THE CONTINUOUS GROUNDING ELECTRODE CONDUCTOR FROM THE SERVICE METER AND DISCONNECT AND PROVIDE A WRITTEN STATEMENT TO THE AREA ELECTRICAL INSPECTOR THAT THE GROUNDING ELECTRODE CONDUCTOR IS CONTINUOUS FROM THE SERVICE METER AND DISCONNECT AND THE RESISTANCE TO GROUND IS 25 OHMS OR LESS.

11. HORIZONTAL MEMBERS SHALL BE CAMBERED AND THE VERTICAL POLES BACK RAKED, WHERE APPLICABLE, TO THE ANTICIPATED DEAD LOAD DEFLECTION PLUS THE CAMBER, IF ANY, SPECIFIED ON THE PLANS.

12. AN EQUIVALENT ALTERNATE DESIGN MAY BE SUBSTITUED FOR THE DETAILS AND MATERIALS SHOWN.

13. THE DETAILS OF DESIGN FOR THE STRUCTURE AND FOUNDATION ARE TO BE SUPPLIED BY THE CONTRACTOR AND/OR BY THE MANUFACTURER, THE STRUCTURE SHALL BE DESIGNED TO RESIST THE MAXIMUM LOADING AS OUTLINED IN THE AASHTO STANDARD SPECIFICATIONS, SEE NOTE 2. ALL DESIGN CALCULATIONS FOR THE STRUCTURE AND THE FOUNDATION SHALL BE CHECKED AND STAMPED BY A LICENSED PROFESSIONAL ENGINEER REGISTERED IN THE STATE OF VERMONT PRIOR TO SUBMITTAL OF THE FABRICATION DRAWINGS TO VTRANS.

14. THE CONTRACTOR SHALL SUBMIT ONE DIGITAL VERSION OF THE DESIGN CALCULATIONS TO VTRANS PROJECT MANAGER SHOWING THE FOLLOWING INFORMATION FOR EACH OF THE VERTICAL AND HORIZONTAL COMPONENTS OF THE STRUCTURE AND FOUNDATION:

    A) THE DESIGN AXIAL AND SHEAR FORCES AND BENDING AND TORSIONAL MOMENTS ACTING AT THE TOP OF THE FOUNDATION.

    B) THE DESIGN AXIAL, BENDING AND SHEAR STRESSES AND THE COMBINED STRESS RATIO.

    C) VIBRATION AND FATIGUE CALCULATIONS AS SET FORTH IN SECTION 11 OF THE AASHTO PUBLICATION REFERENCED IN NOTE 2.

    D) THE ALLOWABLE AXIAL, BENDING, AND SHEAR STRESSES.

    E) ITEMS A, B, AND D SHALL BE SHOWN FOR EACH OF THE GROUP LOADINGS (I, II, III) AND FOR THE BASIC WIND LOAD APPLIED TO THE TWO CASES OUTLINED IN THE AASHTO STANDARD SPECIFICATIONS (SEE NOTE 2), SECTION 1.2.5(D)(4).

    F) FAILURE TO SUPPLY THE PROPER DESIGN INFORMATION SHALL BE CAUSE FOR REJECTION OF THE STRUCTURE.

    G) A MINIMUM OF TWO WEEKS SHALL BE REQUIRED FOR REVIEW BY VTRANS.

    H) EVERY MEMBER AND CONNECTION IN A CANTILEVERED OVERHEAD TRAFFIC SIGNAL SUPPORT SHALL BE DESIGNED TO PROVIDE ADDITIONAL RESIDUAL CAPACITY FOR FUTURE MODIFICATION EQUIVALENT TO A 5-SECTION TRAFFIC SIGNAL HEAD WITH A 5-INCH LOUVERED BACKPLATE LOCATED ON THE OUTERMOST EXTENT OF THE MAST ARM.OVERHEAD SIGN STRUCTURES AND NON-CANTILEVERED TRAFFIC SIGNAL STRUCTURES SHALL BE DESIGNED TO A MAXIMUM DESIGN RATIO OF 85% FOR EVERY MEMBER AND CONNECTION.

15. FABRICATION DRAWINGS IN A DIGITAL FORMAT SHALL BE SUBMITTED TO VTrans PROJECT MANAGER FOR APPROVAL PRIOR TO FABRICATION. THE FABRICATION DRAWINGS SHALL INCLUDE THE FOLLOWING INFORMATION:

    A) DETAILED DRAWING OF EACH COMPONENT OF THE STRUCTURE.

    B) MATERIAL SPECIFICATION FOR EACH COMPONENT OF THE STRUCTURE, EITHER BY COMPLETE SPECIFICATION OR REFERENCE TO APPLICABLE ASTM STANDARDS.

    C) NOTATION OF PROJECT NAME, PROJECT NUMBER, ROUTE NUMBER, AND STRUCTURE STATIONING TO BE INCLUDED ON EACH SHEET.

    D) DETAILS FOR LOCATION OF SIGNS/SIGNALS AND ATTACHMENT HARDWARE FOR THE SUPPORT STRUCTURE.

    E) ALL ELEVATIONS AND DIMENSIONS NECESSARY TO PROVIDE A COMPLETE SET OF RECORD PLANS.

    F) DEAD LOAD DEFLECTION AND CAMBER INFORMATION.

    G) WELDING DETAILS AND PROCEDURES ARE REQUIRED FOR ALL WELDS. PROCEDURES SHALL BE SUBMITTED FOR APPROVAL WITH REFERENCE TO EACH WELD IDENTIFIED ON THE FABRICATION DRAWINGS. SEE SECTION 506.10.

    H) BOLT TENSIONING REQUIREMENTS

16. THE TRAFFIC SIGNALS SHALL BE MOUNTED TO THE ARM OR POLE USING A FIXED MOUNT SYSTEM, UNLESS OTHERWISE NOTED ON THE CROSS SECTION SHEET. FOR SIGNALS MOUNTED ON A MAST ARM, THE MAST ARM AND MOUNTING POINT SHALL BE IN THE MIDDLE OF THE SIGNAL HEAD.

17. BASE PLATES SHALL BE STAMPED WITH POLE INFORMATION INCLUDING: POLE DIAMETER, HEIGHT, YIELD STRENGTH, AND GAUGE; ARM INFORMATION SHALL INCLUDE: HORIZONTAL MEMBER DIAMETER, LENGTH, YIELD STRENGTH, AND GAUGE. THE INFORMATION SHALL BE STAMPED ON A METAL TAG RIVETED TO THE POLE NEAR THE HAND HOLE.

18. SEE STANDARD E-171A FOR ADDITIONAL NOTES.

PROJECT NAME: LUDLOW
PROJECT NUMBER: HES SGNL(44)

FILE NAME: t13b020_frm.dgn	PLOT DATE: 4/25/2017
PROJECT LEADER: P. COBURN	DRAWN BY: M. BOGACZYK
DESIGNED BY: M. BOGACZYK	CHECKED BY: P. COBURN
TRAFFIC SIGNAL GENERAL NOTES SHEET	SHEET 37 OF 43

MAST ARM, POLE & FOOTING DETAILS

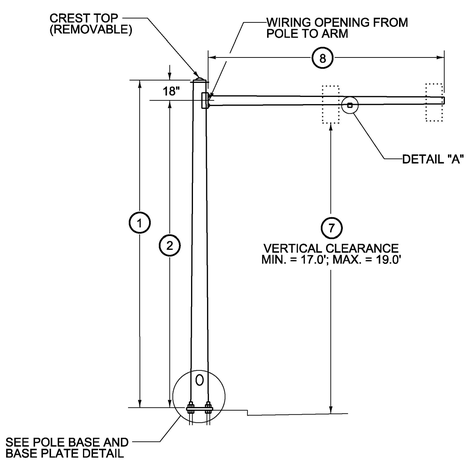

TYPE A MAST POLE & ARM

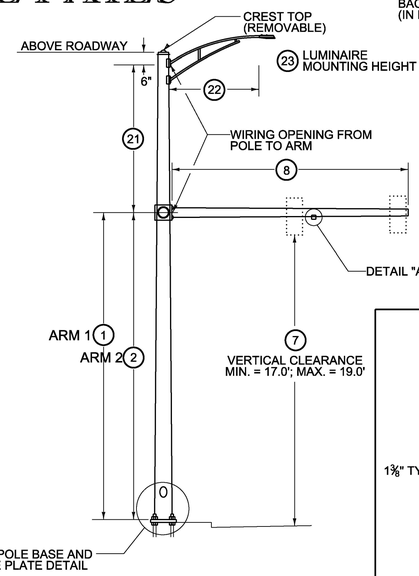

TYPE B MAST POLE & ARM

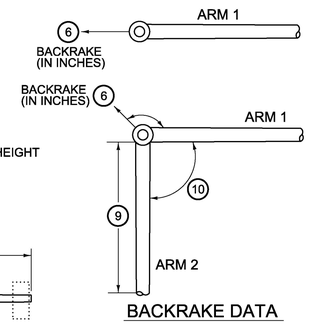

BACKRAKE DATA

ANCHOR BOLT DETAIL		
SIZE	L (in.)	T (in.)
1¼" x 48"	42	8
1½" x 60"	54	9
1¾" x 90"	84	9
2" x 96"	96	9

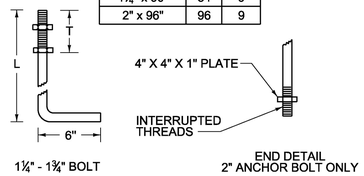

ANCHOR BOLT DETAIL

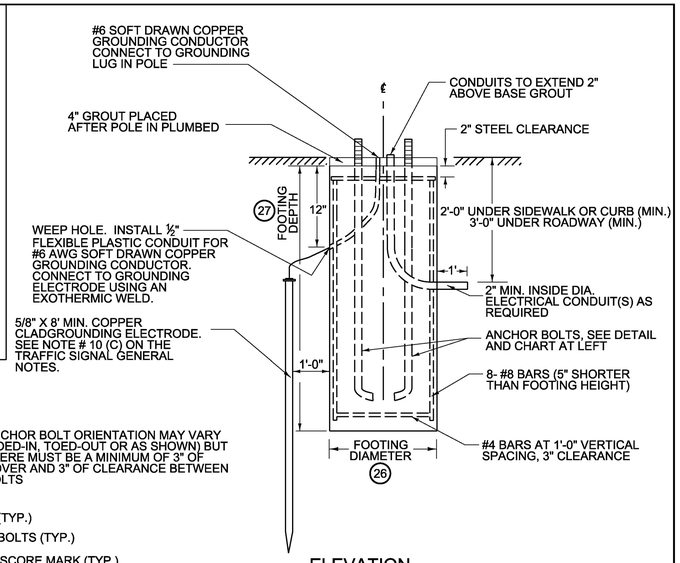

ELEVATION

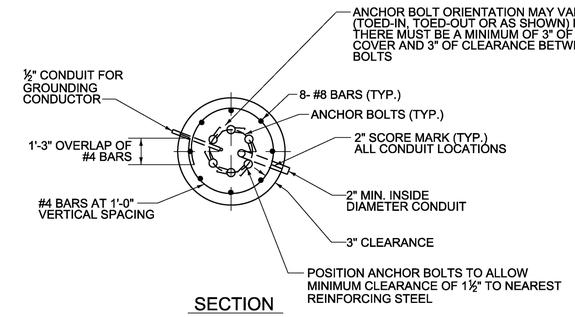

SECTION

MAST POLE FOOTING DETAIL
(SPREAD FOOTINGS OR PILES ARE OPTIONAL)

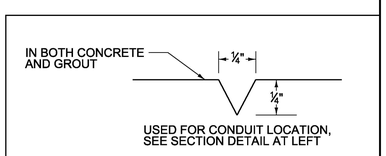

2" SCORE MARK DETAIL

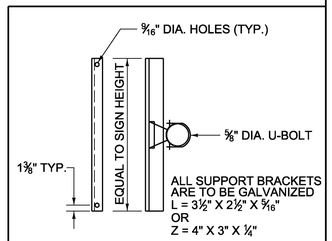

SIGN ON SINGLE MAST ARM

SIGN BRACKET DETAILS

NOTES
1. SEE TRAFFIC SIGNAL GENERAL NOTES FOR ADDITIONAL INFORMATION.
2. MANUFACTURER TO DETERMINE TYPE OF STRUCTURE REQUIRED.
3. MONOTUBES SHALL NOT BE USED FOR SIGNS OVER 10' HIGH.
4. MINIMUM CLEARANCE FROM SIGNS TO ANY TRAVEL LANE SHALL BE 17'.
5. CONTRACTOR SHALL VERIFY ALL GROUND ELEVATIONS.
6. LUMINAIRES, ALL ASSOCIATED EQUIPMENT AND LABOR TO INSTALL SHALL BE PAID FOR UNDER CONTRACT ITEM NOS. 679.45, 679.47 AND 679.50.
7. LUMINAIRES SHALL BE MOUNTED 30' ABOVE THE ROAD SURFACE.

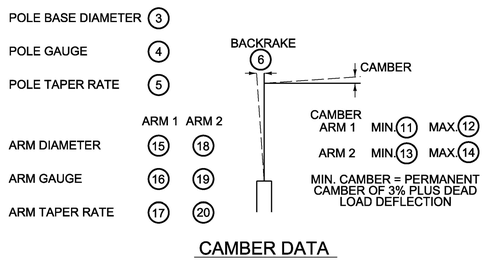

CAMBER DATA

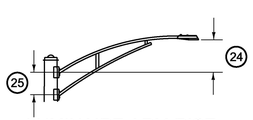

LUMINAIRE ARM RISE

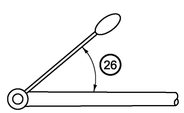

LUMINAIRE ORIENTATION

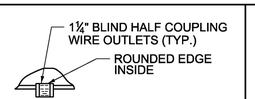

DETAIL "A"

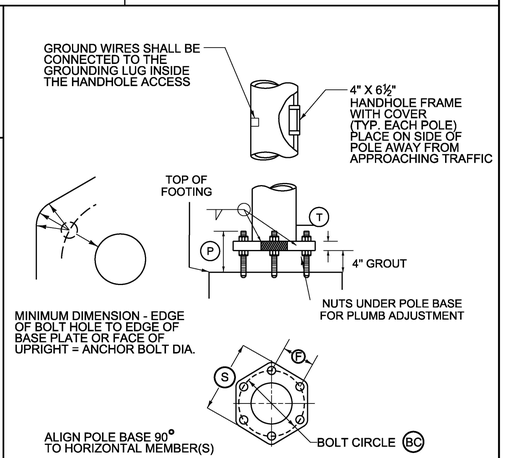

POLE BASE AND BASE PLATE DETAIL

STRUCTURE DIMENSIONS

POLE DATA									ARM DATA													LIGHTING DATA						FOOTING DATA		BASE PLATE / BOLT DATA					
POLE	TYPE	1	2	3	4	5	6	7	8	9	10	11	12	13	14	15	16	17	18	19	20	21	22	23	24	25	26	27	28	BC	F	S	T	P	ANCHOR BOLT SIZE
MAP1	B	20'	20'					18'	50'			3°		3°								MAN	12'	MAN	MAN	MAN	45°								
MAP2	B	20'	20'					18'	30'	20'	90°	3°		3°								MAN	12'	MAN	MAN	MAN	45°								

MAN = TO BE DETERMINED BY MANUFACTURER

PROJECT NAME:	LUDLOW
PROJECT NUMBER:	HES SGNL(44)
FILE NAME: t13b020_frm.dgn	PLOT DATE: 4/19/2017
PROJECT LEADER: P. COBURN	DRAWN BY: M. BOGACZYK
DESIGNED BY: M. BOGACZYK	CHECKED BY: P. COBURN
MAST ARM & POLE DETAILS SHEET	SHEET 38 OF 43

NOTES :

1. ALL MAST ARM FOUNDATIONS SHALL INCLUDE A 4" REVEAL. ELEVATIONS SHOWN IN CROSS-SECTIONS ARE APPROXIMATE, FINAL GRADE ELEVATIONS FOR CONTRACTOR BIDDING PURPOSES ONLY. ACTUAL FOUNDATION ELEVATIONS SHALL BE DETERMINED BY THE CONTRACTOR PRIOR TO SUBMITTING WORKING DRAWINGS.
2. MAST ARM FOUNDATION SIZES ARE NOT TO SCALE. FOUNDATION DESIGNS SHALL BE DETERMINED BY THE CONTRACTOR IN ACCORDANCE WITH SOIL CONDITIONS AND ACTUAL MAST ARM LOADINGS TRANSMITTED TO THE TOP OF THE FOUNDATION.
3. REFER TO BORING LOG SHEET 1-2 FOR BORING INFORMATION.
4. SIGNAL HEADS SHALL BE MOUNTED ON THE VERTICAL CENTER OF THE MAST ARM.

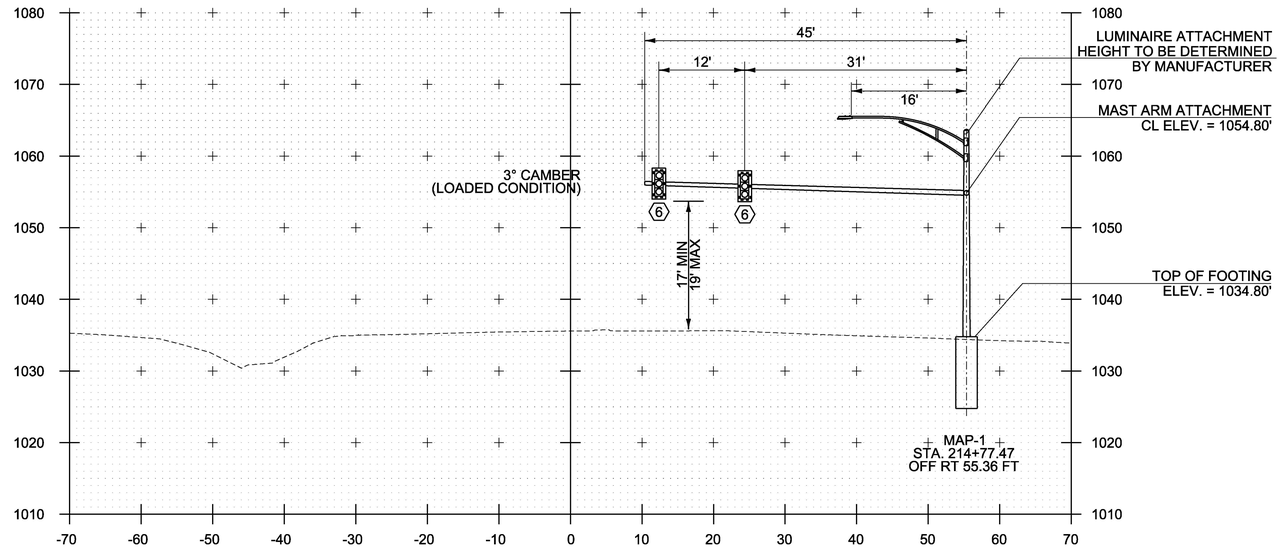

MAP-1: 214+77.47, RT 55.36'
MA-1: 45'

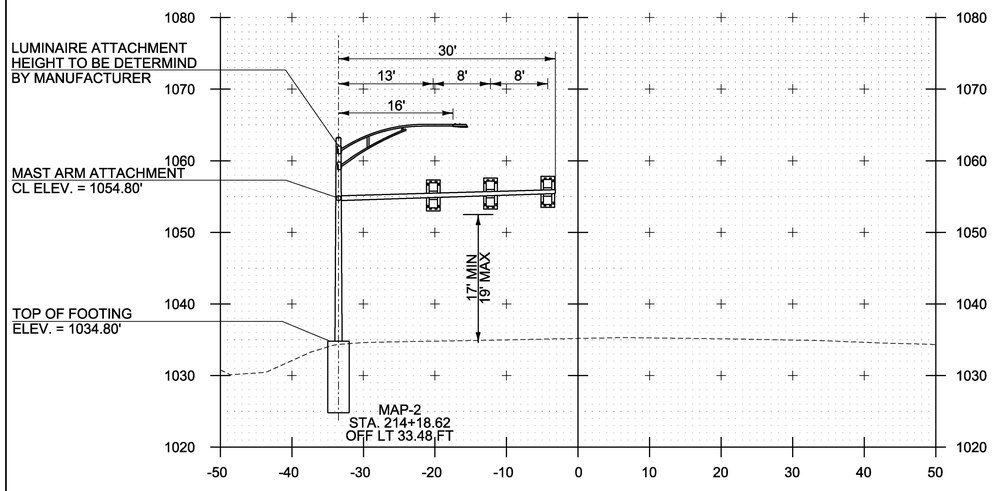

MAP-2: 214+18.62, LT 33.48'
MA-2: 30'

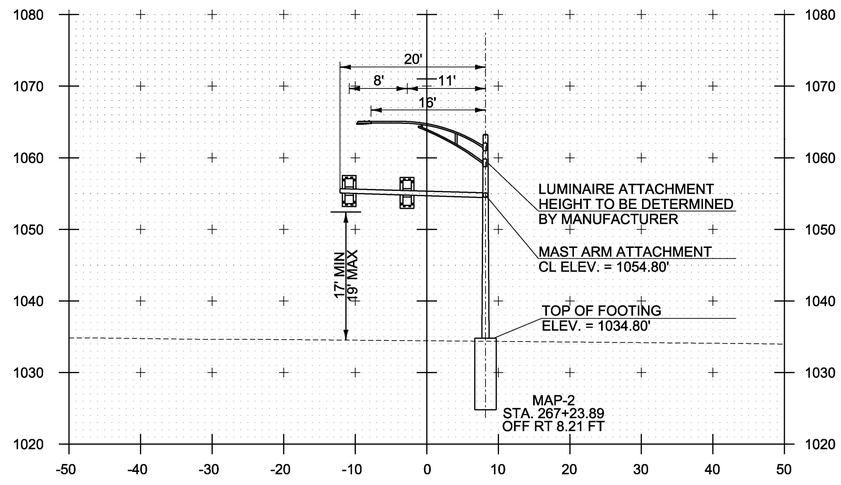

MAP-2: 267+23.89, RT 8.21'
MA-3: 20', SKEWED 8.77°

STA. 214+25 AND STA. 214+84

PROJECT NAME: LUDLOW	
PROJECT NUMBER: HES SGNL(44)	
FILE NAME: t13b020xsl.dgn	PLOT DATE: 4/19/2017
PROJECT LEADER: P. COBURN	DRAWN BY: M. BOGACZYK
DESIGNED BY: M. BOGACZYK	CHECKED BY: I. DEGUTIS
MAST ARM CROSS SECTION SHEET	SHEET 39 OF 43

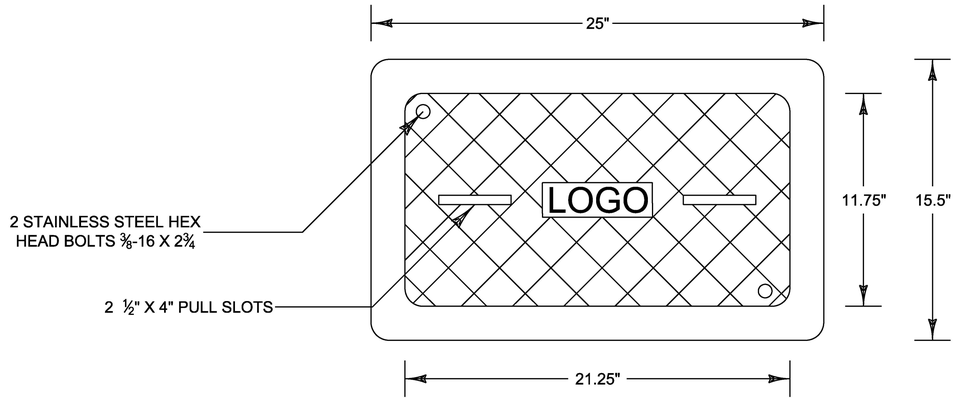

PLAN VIEW
NOT TO SCALE

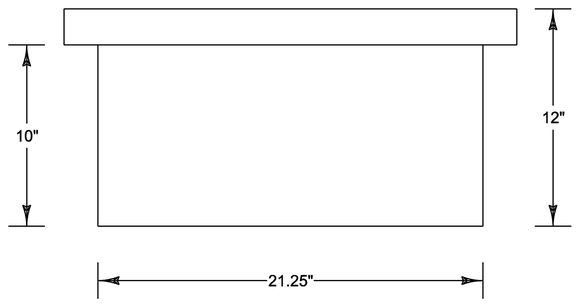

ELEVATION VIEW
NOT TO SCALE

JUNCTION BOX NOTES:

1. JUNCTION BOX SHALL BE CONSTRUCTED WITH PRECAST MONOLITHIC POLYMER CONCRETE.
2. CONDUIT SIZE SHALL BE AS SHOWN ON THE PLANS.
3. EXCAVATION FOR JUNCTION BOX SHALL INCLUDE EXCAVATION OF AN AREA ONE FOOT OUTSIDE AND EXTENDING ONE FOOT BELOW THE FINISH GRADE OF THE BOTTOM OF THE JUNCTION BOX. ONE FOOT OF GRANULAR MATERIAL THAT MEETS THE REQUIREMENTS OF SUBSECTION 703.04, SHALL BE PLACED IN THE EXCAVATED AREA AND PROPERLY COMPACTED PRIOR TO INSTALLATION. COMPACTION SHALL MEET REQUIREMENTS OF SUBSECTION 301.06. WHERE NECESSARY AND AT THE DISCRETION OF THE ENGINEER, A DRAINAGE PIPE (MINIMUM 3" PERFORATED PVC) SHALL BE PROVIDED FROM THE JUNCTION BOX TO THE NEAREST APPROPRIATE OUTLET. ANY EXCAVATION AND DRAINAGE SHALL BE INCIDENTAL TO 900.620 SPECIAL PROVISION (JUNCTION BOX, HEAVY DUTY).
4. ALL EXPOSED METAL HARDWARE, INCLUDING PULLBOX COVERS, FRAMES AND ANGLES, SHALL BE STAINLESS STEEL.
5. A SUFFICIENT COVER GASKET SHALL BE PROVIDED TO REDUCE THE INFLOW OF FLUIDS. THE COVER GAPS SHALL BE FILLED WITH CAULKING JUST PRIOR TO PROJECT COMPLETION.
6. WHEN INSTALLING ON SLOPES, JUNCTION BOXES SHALL BE TIPPED TO MATCH THE EXISTING SLOPE UP TO A 1 ON 4 SLOPE. EXCAVATED MATERIAL SHALL BE USED TO SHAPE AROUND THE LOW SIDE OF THE BOX TO THE SATISFACTION OF THE ENGINEER AND SHALL BE MOW-ABLE. IF SUFFICIENT MATERIAL IS NOT AVAILABLE, MATERIAL MEETING THE REQUIREMENTS OF EARTH BORROW (SUBSECTION 703.02) SHALL BE USED. PAYMENT SHALL BE CONSIDERED INCIDENTAL TO 900.620 SPECIAL PROVISION (JUNCTION BOX, HEAVY DUTY).
7. ALL COVERS SHALL BE FLUSH WITH THE BOXES AND FRAMES.
8. ALL CONDUIT ENTERING THE JUNCTION BOX THROUGH A CUTOUT SHALL HAVE BUSHINGS TO PROTECT THE CABLES.
9. ALL JUNCTION BOX COVERS SHALL BE SKID RESISTANT.
10. ALL COVERS SHALL HAVE THE LOGO PUNCHED, FORMED OR STAMPED INTO A FLAT RECTANGULAR AREA IN ACCORDANCE WITH STANDARD E-173. MINIMUM LETTER HEIGHT IS ½". MINIMUM DEPTH IS 1/16".
11. DIMENSIONS SHOWN ARE MINIMUM SIZE REQUIRED. EQUIVALENT JUNCTION BOX OF LARGER DIMENSIONS MAY BE USED.
12. LOAD RATING SHALL BE NO LESS THAN 15,000 LBS.

PROJECT NAME: LUDLOW	
PROJECT NUMBER: HES SGNL(44)	
FILE NAME: t13b020frm.dgn	PLOT DATE: 4/19/2017
PROJECT LEADER: P. COBURN	DRAWN BY: K. RECORD
DESIGNED BY: K. RECORD	CHECKED BY: P. COBURN
HEAVY DUTY JUNCTION BOX DETAIL SHEET	SHEET 40 OF 43

STREET LIGHTING GENERAL NOTES

1. BRACKET ARMS SHALL BE TRUSS-STYLE TYPE AND SHALL BE DESIGNED IN ACCORDANCE WITH THE 2013 AASHTO STANDARD SPECIFICATIONS FOR STRUCTURALSUPPORTS FOR HIGHWAY SIGNS, LUMINAIRES AND TRAFFIC SIGNALS AND ITS LATEST REVISIONS.
2. STREET LIGHT ASSEMBLIES SHALL BE PAINTED FLAT BLACK AND HAVE FLAT BLACK HOUSINGS. FINISHES SHALL BE PER SECTION 679 OF THE LATEST SPECIFICATIONS FOR CONSTRUCTION.
3. LUMINAIRES
   - A. LUMINAIRES SHALL BE ONE OF THE FOLLOWING OR APPROVED EQUAL:
     1. BETA LEDWAY IP-SERIES
     2. HOLOPHANE LEDGENDS SERIES
     3. LRL LED SAT-96M SERIES
   - B. ALL LUMINAIRE HOUSINGS SHALL BE EQUIPPED WITH BIRD SPIKES.
4. WIRING AND GROUNDING
   - A. CIRCUIT CONDUCTORS SHALL BE CLEARLY INDENTIFIED BY CORROSION RESISTANT TAGS INDICATING CIRCUIT NUMBER AND PANEL SOURCES AT EVERY LIGHT POLE AND HANDHOLE.
   - B. ALL CONDUIT MUST INCLUDE A GROUNDING CONDUCTOR. RIGID STEEL CONDUIT SHALL BE PROPERLY CONNECTED AT THE JOINTS SO AS TO BE WATERTIGHT AND MAINTAIN ELECTRICAL CONTINUITY AND HAVE GROUNDING BUSHINGS SO AS TO ACT AS A GROUNDING CONDUCTOR.
   - C. THE GROUNDING CONDUCTOR SHALL BE CONTINUOUS.
   - D. ALUMINUM WIRE SHALL NOT BE USED FOR GROUND WIRE.
5. STREET LIGHTING CONTROL DEVICE
   - A. ASTRONOMICAL CLOCKS SHALL BE ONE OF THE FOLLOWING OR APPROVED EQUAL:
     1. TORK EWZ SERIES
     2. INTERMATIC ET 800 SERIES
     3. PARAGON EC SERIES
   - B. STREET LIGHTING EQUIPMENT SHALL BE WIRED SUCH THAT ONE CONTROL DEVICE COMMANDS THE FUNCTIONS ASSOCIATED WITH POWERING UP AND DOWN ALL LUMINAIRES.
6. SEE STANDARD DRAWINGS T-133 AND T-134 FOR ADDITIONAL INFORMATION.

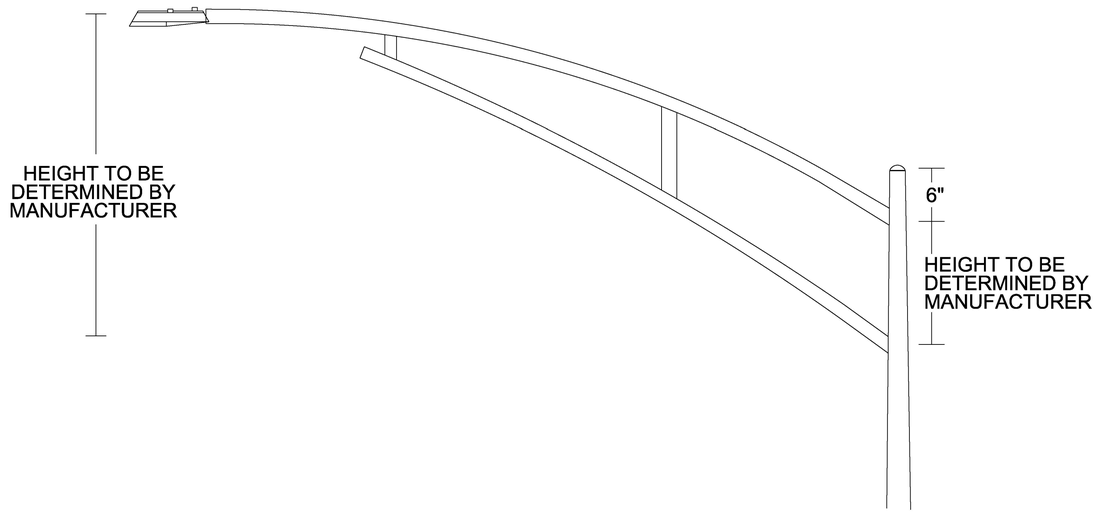

LUMINAIRE BRACKET ARM DETAIL

PROJECT NAME:	LUDLOW
PROJECT NUMBER:	HES SGNL(44)
FILE NAME: t13b020_frm.dgn	PLOT DATE: 4/19/2017
PROJECT LEADER: P. COBURN	DRAWN BY: M. BOGACZYK
DESIGNED BY: M. BOGACZYK	CHECKED BY: P. COBURN
STREET LIGHTING GENERAL NOTES SHEET	SHEET 41 OF 43

STREET LIGHTING DETAILS

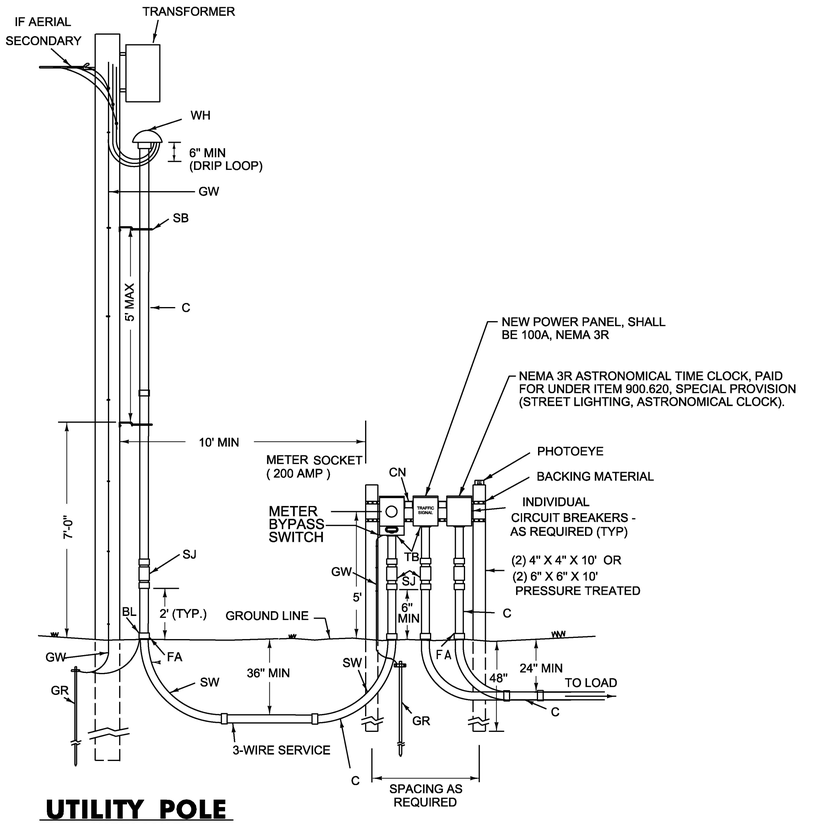

UTILITY POLE
NOT TO SCALE

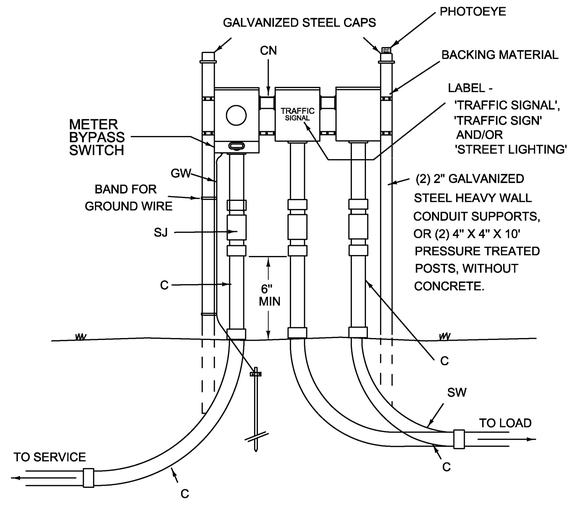

STANCHION
NOT TO SCALE

NOTE:

1. CLOCK SHALL BE PAID FOR UNDER ITEM NUMBER 679.54 - STREET LIGHT CONTROL DEVICE

LEGEND	
ITEM	MATERIAL
BL	BONDING LUG (IF STEEL CONDUIT)
C	CONDUIT - PVC SCHEDULE 80 (2" MIN.)
CN	CONDUIT NIPPLE
FA	FEMALE ADAPTER OR COUPLINGS AS REQUIRED
GR	GROUND ELECTRODE, ⅝" X 8' (MIN) COPPER CLAD (2 REQ.)
GW	GROUND CONDUCTOR, #6 AWG CU (MIN)
SB	STANDOFF BRACKET (SEE DETAIL)
SJ	SLIP JOINT, INSTALL 2/3 OPEN
SSS	STAINLESS STEEL STRAP (1" MIN)
SW	90°SWEEPS, (PVC) 36" R. - SERVICE, 24" R. - LOAD
TB	THREADED BUSHING
WH	WEATHERHEAD OR CONDULATOR

PROJECT NAME: LUDLOW
PROJECT NUMBER: HES SGNL(44)

FILE NAME: t13b020_frm.dgn
PROJECT LEADER: P. COBURN
DESIGNED BY: M. BOGACZYK
STREET LIGHTING DETAILS SHEET

PLOT DATE: 4/19/2017
DRAWN BY: M. BOGACZYK
CHECKED BY: P. COBURN
SHEET 42 OF 43

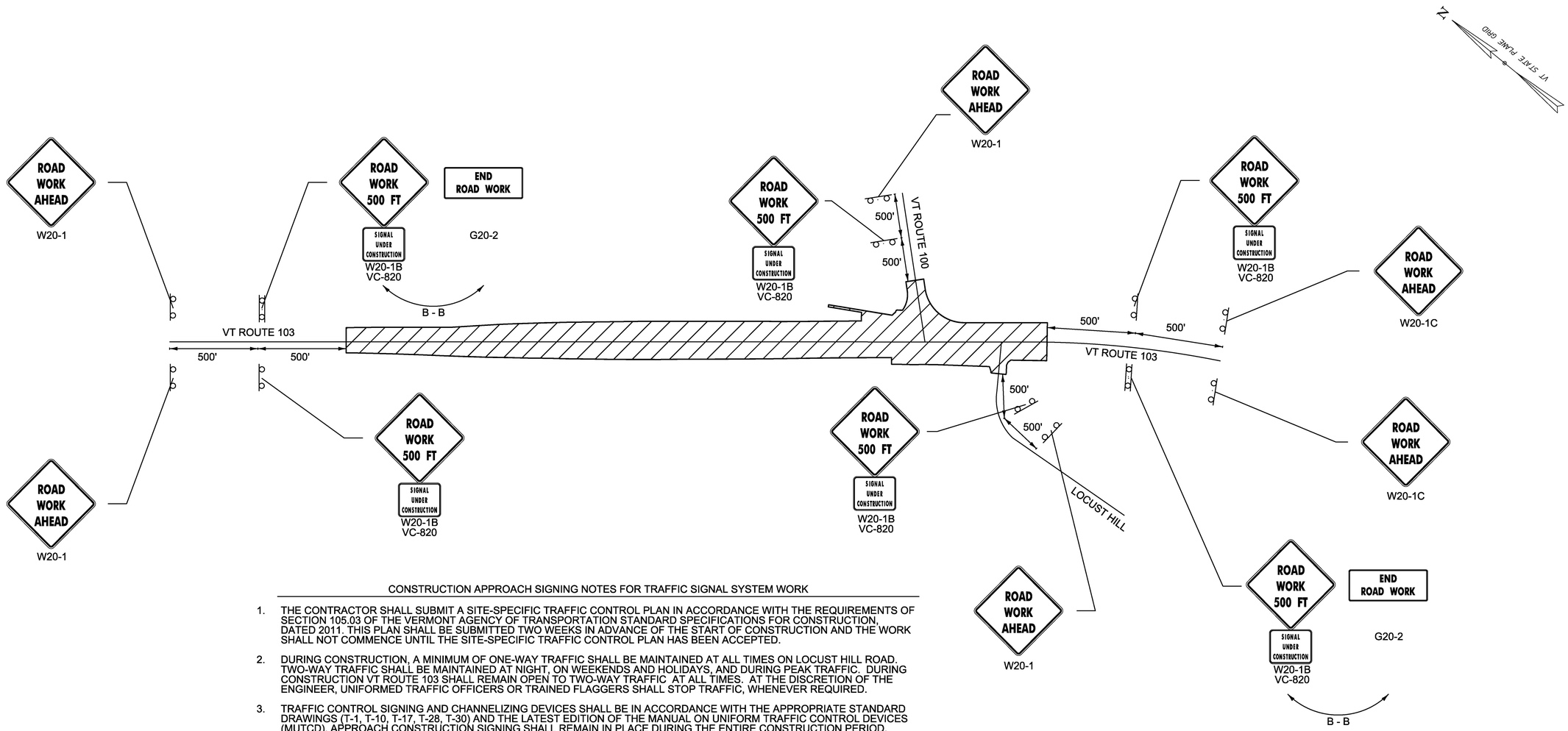

CONSTRUCTION APPROACH SIGNING NOTES FOR TRAFFIC SIGNAL SYSTEM WORK

1. THE CONTRACTOR SHALL SUBMIT A SITE-SPECIFIC TRAFFIC CONTROL PLAN IN ACCORDANCE WITH THE REQUIREMENTS OF SECTION 105.03 OF THE VERMONT AGENCY OF TRANSPORTATION STANDARD SPECIFICATIONS FOR CONSTRUCTION, DATED 2011. THIS PLAN SHALL BE SUBMITTED TWO WEEKS IN ADVANCE OF THE START OF CONSTRUCTION AND THE WORK SHALL NOT COMMENCE UNTIL THE SITE-SPECIFIC TRAFFIC CONTROL PLAN HAS BEEN ACCEPTED.
2. DURING CONSTRUCTION, A MINIMUM OF ONE-WAY TRAFFIC SHALL BE MAINTAINED AT ALL TIMES ON LOCUST HILL ROAD. TWO-WAY TRAFFIC SHALL BE MAINTAINED AT NIGHT, ON WEEKENDS AND HOLIDAYS, AND DURING PEAK TRAFFIC. DURING CONSTRUCTION VT ROUTE 103 SHALL REMAIN OPEN TO TWO-WAY TRAFFIC AT ALL TIMES. AT THE DISCRETION OF THE ENGINEER, UNIFORMED TRAFFIC OFFICERS OR TRAINED FLAGGERS SHALL STOP TRAFFIC, WHENEVER REQUIRED.
3. TRAFFIC CONTROL SIGNING AND CHANNELIZING DEVICES SHALL BE IN ACCORDANCE WITH THE APPROPRIATE STANDARD DRAWINGS (T-1, T-10, T-17, T-28, T-30) AND THE LATEST EDITION OF THE MANUAL ON UNIFORM TRAFFIC CONTROL DEVICES (MUTCD). APPROACH CONSTRUCTION SIGNING SHALL REMAIN IN PLACE DURING THE ENTIRE CONSTRUCTION PERIOD. TEMPORARY TRAFFIC CONTROL SIGNS SHALL BE INSTALLED SO AS NOT TO INTERFERE WITH EXISTING TRAFFIC CONTROL DEVICES OR SIGHT DISTANCES. EXISTING SIGNS THAT CONFLICT WITH TEMPORARY TRAFFIC CONTROL SHALL BE COMPLETELY COVERED OR REMOVED.
4. AFTER SIGNAL INSTALLATION, ALL HEADS SHALL BE COVERED (TURNING SHALL NOT BE ALLOWED) UNTIL TURNED ON IN ACCORDANCE WITH SECTION 678.10.
5. PRIOR TO THE COMMENCEMENT OF ANY WORK OR THE PLACEMENT OF EQUIPMENT ON THE ROADWAY THE CONTRACTOR SHALL PROVIDE ADVANCED WARNING SIGNS IN ACCORDANCE WITH THE CONSTRUCTION APPROACH SIGNING SHEET AND THE LATEST EDITION OF THE MANUAL FOR UNIFORM TRAFFIC CONTROL DEVICES (MUTCD).
6. THREE PORTABLE CHANGEABLE MESSAGE SIGNS HAVE BEEN INCLUDED IN THIS CONTRACT FOR PLACEMENT ON VT ROUTE 103 NORTH BOUND, VT ROUTE 103 SOUTH BOUND AND VT ROUTE 100 SOUTH BOUND APPROACHES FOR ADVANCED WARNING. THE CONTRACTOR SHALL BE RESPONSIBLE FOR DETERMINING THE EXACT LOCATIONS. THE PORTABLE CHANGEABLE MESSAGE SIGNS (PCMS) AND THE MESSAGE IT DISPLAYS SHOULD NOT REPLACE ANY OF THE SIGNING DETAILED IN THE MUTCD AND SHOULD NOT BE USED IF STANDARD TRAFFIC CONTROL DEVICES ADEQUATELY PROVIDE THE INFORMATION THE MOTORISTS NEED TO TRAVERSE THE WORK ZONE SAFELY. THE PCMS SHALL CONSIST OF EITHER ONE OR TWO PHASES OF UP TO THREE LINES OF EIGHT CHARACTERS PER LINE. THE PCMS SHOULD BE USED AS A SUPPLEMENT AND NOT A SUBSTITUTE FOR CONVENTIONAL STATIC SIGNS AND PAVEMENT MARKINGS. THE MESSAGE TO BE DISPLAYED SHALL BE APPROVED BY THE ENGINEER.
7. TEMPORARY SHOULDER CLOSURES ON VT ROUTE 103 AND TEMPORARY LANE CLOSURES ON LOCUST HILL ROAD SHALL BE ALLOWED DURING WORKING HOURS. ALL ROADS SHALL BE RESTORED TO FULL CAPACITY AT THE CLOSE OF DAILY CONSTRUCTION ACTIVITIES.
8. THE CONTRACTOR SHALL PROVIDE ACCESS THROUGH THE WORK ZONE FOR EMERGENCY VEHICLES AT ALL TIMES.
9. FLAGGER PERSONNEL WILL BE USED ONLY TO HOLD AND RELEASE TRAFFIC. FLAGGING PERSONNEL WILL HAVE RECEIVED 4 HOURS OF TRAINING AND SHALL BE CERTIFIED PRIOR TO PERFORMING WORK ON THE PROJECT AND SHALL USE MUTCD COMPLIANT HIGH VISIBILITY APPAREL, SIGN PADDLES, AND TWO-WAY RADIOS FOR COMMUNICATION.
10. ALL TRAFFIC CONTROL DEVICES SHALL BE NATIONAL COOPERATIVE HIGHWAY RESEARCH PROGRAM 350 (NCHRP) AND/OR AASHTO MANUAL FOR ASSESSING SAFETY HARDWARE (MASH) COMPLIANT.

TRAFFIC CONTROL LEGEND

- WORK AREA
- SIGN
- MOUNT BACK TO BACK (B - B)

NOT TO SCALE

PROJECT NAME:	LUDLOW
PROJECT NUMBER:	HES SGNL(44)
FILE NAME: t13b020_frm.dgn	PLOT DATE: 4/19/2017
PROJECT LEADER: P. COBURN	DRAWN BY: M. BOGACZYK
DESIGNED BY: M. BOGACZYK	CHECKED BY: P. COBURN
CONSTRUCTION APPROACH SIGNING SHEET	SHEET 43 OF 43

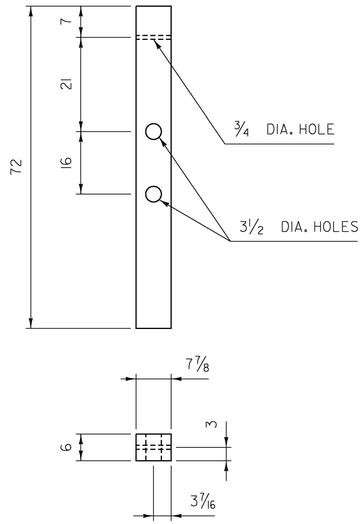

CONTROLLED RELEASING TERMINAL (CRT) TIMBER POST (PDE09)

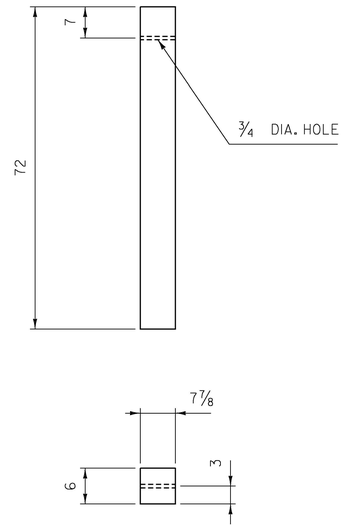

TIMBER GUARDRAIL POST (PDE07)

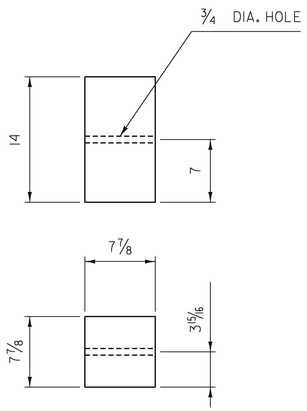

TRANSITION SPACER BLOCKOUTS (PDB07)

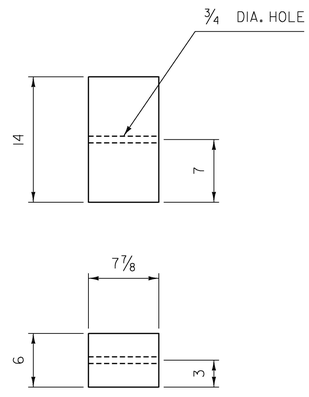

W-BEAM TIMBER BLOCKOUT (PDB01)

GENERAL NOTES:

1. ALL MATERIAL DESIGNATIONS ARE AS IDENTIFIED IN "A GUIDE TO STANDARDIZED HIGHWAY BARRIER HARDWARE" AS PUBLISHED BY THE "AMERICAN ASSOCIATION OF STATE AND HIGHWAY TRANSPORTATION OFFICIALS" (AASHTO), ASSOCIATED GENERAL CONTRACTORS OF AMERICA (AGC) AND THE AMERICAN ROAD AND TRANSPORTATION BUILDERS ASSOCIATION (ARTBA).
2. CRT TIMBER POSTS SHALL BE INSTALLED SO THAT THE CENTER OF THE TOP 3 1/2 INCH HOLE IS AT GROUND LEVEL.
3. ALL TIMBER SHALL RECEIVE A PRESERVATION TREATMENT IN ACCORDANCE WITH AASHTO M133 AFTER ALL HOLES ARE DRILLED AND END CUTS ARE MADE.
4. ALL DIMENSIONS IN INCHES.

REV.	DATE	DESCRIPTION
0	JUN. 9, 2015	ORIGINAL APPROVAL

OTHER DETAILS REQUIRED: NONE

DETAILS APPROVED FOR USE BY HIGHWAY SAFETY & DESIGN

POST AND BLOCKOUT DETAILS FOR STEEL BEAM GUARDRAIL, GALVANIZED

VTrans Working to Get You There — VERMONT AGENCY OF TRANSPORTATION

HIGHWAY SAFETY & DESIGN DETAIL

HSD-621.01

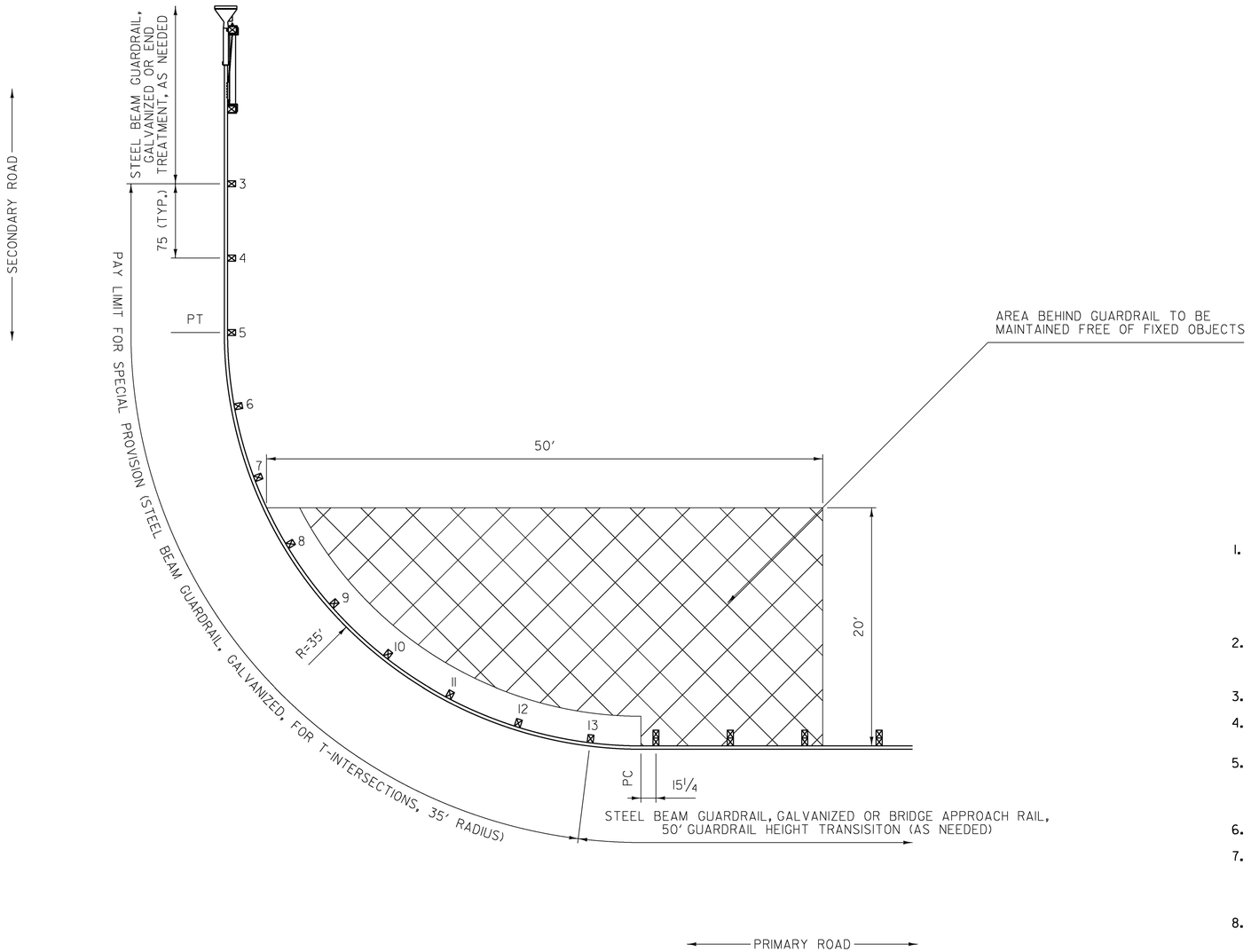

GENERAL NOTES:

1. ALL MATERIAL DESIGNATIONS ARE AS IDENTIFIED IN "A GUIDE TO STANDARDIZED HIGHWAY BARRIER HARDWARE" AS PUBLISHED BY THE "AMERICAN ASSOCIATION OF STATE AND HIGHWAY TRANSPORTATION OFFICIALS" (AASHTO), ASSOCIATED GENERAL CONTRACTORS OF AMERICA (AGC) AND THE AMERICAN ROAD AND TRANSPORTATION BUILDERS ASSOCIATION (ARTBA).
2. GUARDRAIL WITHIN THE PAY LIMITS OF SPECIAL PROVISION (STEEL BEAM GUARDRAIL, GALVANIZED/35 FOOT RADIUS) SHALL BE INSTALLED AT A HEIGHT OF 27 INCHES TO THE TOP OF RAIL.
3. POSTS 3 THROUGH 13 SHALL BE CRT TIMBER POSTS, PDE09.
4. POSTS 3 THROUGH 13 SHALL HAVE GUARDRAIL BOLTS AND RECESSED NUTS, FBB03.
5. ALL GUARDRAIL PANELS WITHIN THE PAY LIMITS FOR SPECIAL PROVISION (STEEL BEAM GUARDRAIL, GALVANIZED/35 FOOT RADIUS) SHALL BE W-BEAM GUARDRAIL, RWM02A AND SHALL BE SHOP BENT, WHERE APPLICABLE.
6. END TREATMENT SHOWN FOR REFERENCE ONLY.
7. WHEN STANDARD DRAWING G-ID IS USED FOR AN END TREATMENT ON THE SECONDARY ROAD IT SHALL BEGIN A MINIMUM OF 75 INCHES BEYOND THE PAY LIMITS FOR SPECIAL PROVISION (STEEL BEAM GUARDRAIL, GALVANIZED/35 FOOT RADIUS).
8. BASED ON DETAILS IN FHWA'S TECHNICAL ADVISORY T 5040.32, APRIL 13, 1992 (FOR REFERENCE ONLY).
9. PAYMENT SHALL BE MADE UNDER SPECIAL PROVISION (STEEL BEAM GUARDRAIL, GALVANIZED/35 FOOT RADIUS).
10. GUARDRAIL SHALL BE LAPPED IN THE DIRECTION OF THE NEAREST TRAVEL LANE.
11. ALL DIMENSIONS IN INCHES, UNLESS OTHERWISE NOTED.

REV.	DATE	DESCRIPTION
0	JUN. 9, 2015	ORIGINAL APPROVAL

OTHER DETAILS REQUIRED: HSD 621.01

DETAILS APPROVED FOR USE BY HIGHWAY SAFETY & DESIGN

STEEL BEAM GUARDRAIL, GALVANIZED/35 FOOT RADIUS

VTrans Working to Get You There — VERMONT AGENCY OF TRANSPORTATION

HIGHWAY SAFETY & DESIGN DETAIL

HSD-621.05

GUARDRAIL DELINEATOR DETAIL

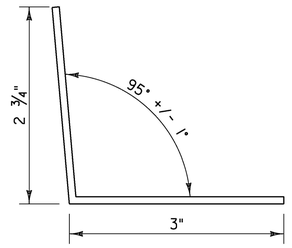

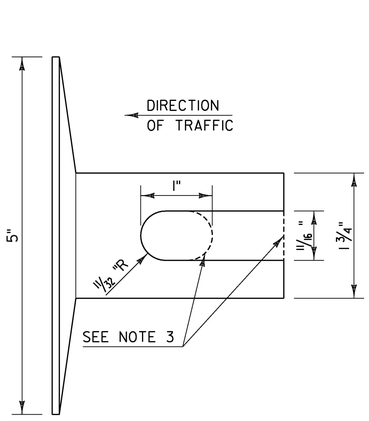

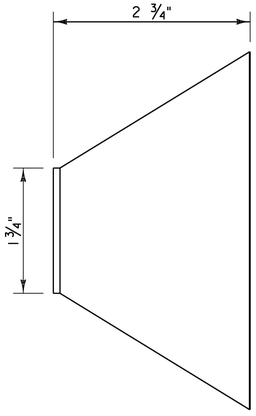

NOTES:

1. GUARDRAIL DELINEATOR BASE MATERIAL SHALL BE 0.10 INCH THICK ALUMINUM IN ACCORDANCE WITH SUBSECTION 728.04 DELINEATION DEVICES.
2. GUARDRAIL DELINEATORS SHALL HAVE WHITE RETROREFLECTIVE SHEETING, EQUAL TO OR EXCEEDING TYPE III IN ACCORDANCE WITH SUBSECTION 750.08(B)(3) ON THE RIGHT SIDE OF THE TRAVELED WAY AND YELLOW RETROREFLECTIVE SHEETING EQUAL TO OR EXCEEDING TYPE VII IN ACCORDANCE WITH SUBSECTION 750.08(B)(7) ON THE LEFT SIDE OF THE TRAVELED WAY IN RESPECT TO APPROACHING TRAFFIC. ON ONE DIRECTIONAL ROADWAYS RETROREFLECTIVE SHEETING MAY BE OMITTED ON FACES WHERE THERE WILL BE NO APPROACHING TRAFFIC.
3. HOLE MAY BE USED IN PLACE OF SLOT.

GUARDRAIL TERMINAL LABEL DETAIL



NOTES:

1. LINE ONE SHALL INDICATE THE INSTALLATION YEAR (YYYY).
2. LINE TWO SHALL INDICATE THE MODEL AS IDENTIFIED ON THE APPROVED PRODUCTS LIST. FOR GENERIC INSTALLATIONS THE STANDARD DRAWING DESIGNATION OR NAME AS IDENTIFIED IN THE FHWA ELIGIBILITY LETTER SHALL BE USED.
3. LINE THREE SHALL SHALL INDICATE ADDITIONAL MODEL INFORMATION IF NECESSARY.
4. LINE FOUR SHALL INDICATE FLARED (FLRD) OR TANGENT (TANG).
5. LEGEND SHALL BE SIZE 3/4 INCH ARIEL FONT.
6. LEGEND SHALL BE BLACK ON A WHITE BACKGROUND, LEGEND AND BACKGROUND SHALL NOT BE REFLECTIVE.
7. SUITABLE MATERIAL SHALL BE USED SO AS TO NOT DETERIORATE DURING EXPOSURE TO WEATHER.
8. LABELS SHALL BE APPLIED IN SUCH A WAY THAT THEY REMAIN INTACT DURING THE LIFE OF THE TERMINAL.
9. FOR W-BEAM GUARDRAIL, LABEL SHALL BE PLACED ON THE TOP OF POST ONE FACING AWAY FROM TRAFFIC.
10. FOR BOX BEAM GUARDRAIL, LABEL SHALL BE PLACED ON THE BOX BEAM ADJACENT TO POST ONE FACING AWAY FROM TRAFFIC.
11. PAYMENT SHALL BE INCIDENTAL TO OTHER TRAFFIC BARRIER ITEMS.

REV.	DATE	DESCRIPTION
0	NOV. 3, 2015	ORIGINAL APPROVAL
1	FEB. 27, 2017	UPDATED NAME, MINOR CORRECTIONS AND ADDED GUARDRAIL DELINEATOR DETAIL

OTHER DETAILS REQUIRED: NONE

DETAILS APPROVED FOR USE BY HIGHWAY SAFETY & DESIGN

MISCELLANEOUS GUARDRAIL DETAILS

VTrans Working to Get You There
VERMONT AGENCY OF TRANSPORTATION

HIGHWAY SAFETY & DESIGN DETAIL

HSD-621.06

FRITZ BROTHERS ENGINEERING, LTD.

JULY 30, 2017

STRUCTURAL CALCULATIONS & DRAWINGS

FOR

TRAFFIC SIGNAL POLE FOUNDATIONS

LUDLOW, VERMONT

PROJECT NO. HES SGNL (44)

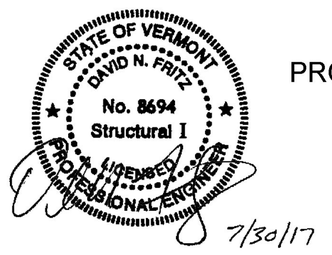

2013 AASHTO SPECIFICATION
VTRANS MREI 10-01
VTRANS STANDARD SPECIFICATIONS FOR CONSTRUCTION

PROPRIETARY INFORMATION
THESE DOCUMENTS, DRAWINGS AND CALCULATIONS AND ALL INFORMATION RELATED TO THEM ARE THE EXCLUSIVE PROPERTY AND THE PROPRIETARY INFORMATION OF FRITZ BROTHERS ENGINEERING, LTD. AND ARE FURNISHED SOLELY UPON THE CONDITIONS THAT THEY WILL BE RETAINED IN THE STRICTEST CONFIDENCE AND SHALL NOT BE DUPLICATED, USED OR DISCLOSED IN WHOLE OR IN PART FOR ANY PURPOSE, IN ANY WAY, WITHOUT THE PRIOR WRITTEN PERMISSION OF FRITZ BROTHERS ENGINEERING, LTD.

2800 POSSUM HOLLOW RD. SE, NEW PHILADELPHIA OHIO 44663-7322
PHONE: 330-844-0994 • FAX: 330-308-5461

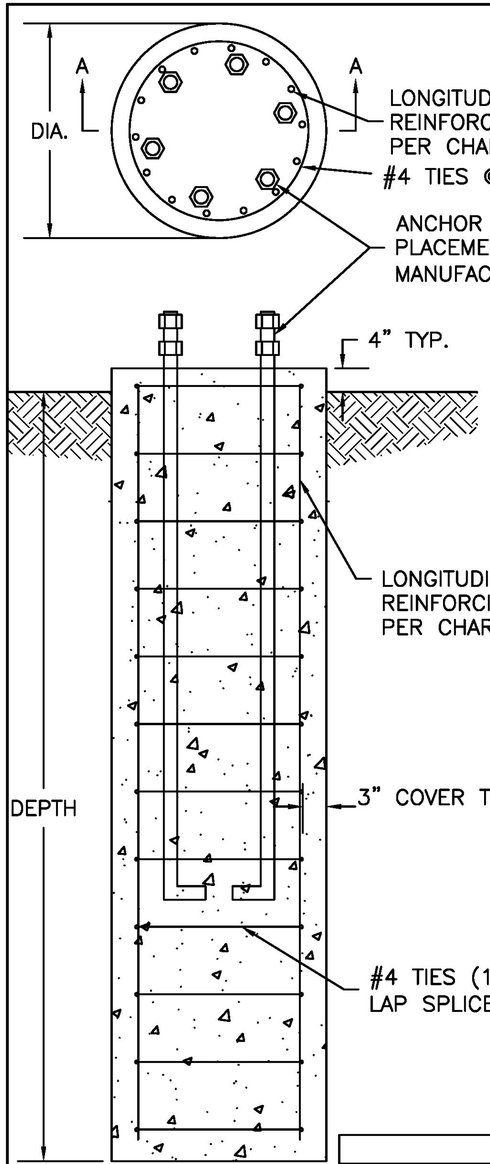

SECTION A–A

STATE OF VERMONT
DAVID N. FRITZ
No. 8694
Structural I
LICENSED
PROFESSIONAL ENGINEER

7/30/17

NOTES:
1. FOUNDATION SOIL PROPERTIES ARE BASED ON SOIL BORINGS PROVIDED BY VTRANS DATED 5/21/15 THRU 5/27/15.
2. DESIGN GROUNDWATER ELEVATION PER WET SOIL LAYER DESCRIPTION PER SOIL BORINGS.
3. GROUND SURFACE PER CROSS SECTIONS.
4. IF ACTUAL SITE CONDITIONS VARY FROM ABOVE ASSUMPTION, FOUNDATION REDESIGN IS REQUIRED.
5. MIN. CONCRETE COMPRESSIVE STRENGTH OF 3,500 PSI @ 28 DAYS.
REINFORCING: ASTM A615 GR. 60.
6. FOUNDATION SHALL BE CAST AGAINST UNDISTURBED EARTH
7. IF REQUIRED, INSTALL CONDUIT PER OWNER SPECIFICATIONS.
8. TOP OF FOUNDATION ELEVATION PER PROJECT PLANS.
9. ALL WORK SHALL CONFORM TO VTRANS STANDARD SPECIFICATIONS FOR CONSTRUCTION.

CONCRETE FOUNDATION DATA					
FOUNDATION ID	DIAMETER	DEPTH	LONG. BARS	TIE SPA.	CONCRETE VOL. (C.Y.)
MAP–1, 45', B–102	3'–0"	9'–0"	8–#8	12"	3
MAP–2, 30'/20',B–103	3'–0"	10'–0"	8–#8	12"	3

TRAFFIC POLE FOUNDATION DESIGN
LUDLOW, VERMONT
PROJECT NO. HES SGNL(44)
Drawing No. 073017

Drawing Sheet : R01					BAR LIST										
Bar Mark	Qty	Size	Total Length	Type	'A'	'B'	'C'	'D'	'E'	'F'	'G'	'H'	'J'	'K'	'O'	'R'
4A01	21	#4	9'-1"	T3			7'-10 ¼"				1'-3"				2'-6"	

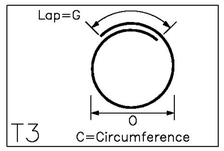

ALL MATERIAL ON THIS DRAWING SHALL BE ASTM A615 GRADE 60 U.N.O.

PLACING DRAWING APPROVAL AUTHORITY: VERIFICATION OF DIMENSIONS, DETAILS, ETC ARE REQUESTED WHERE INDICATED. IF EACH VERIFICATION IS NOT NOTED OTHERWISE, IT WILL BE ASSUMED TO BE CORRECT AS SHOWN.

TEST BARS

2-#8x5'-0"
2-#4x5'-0"

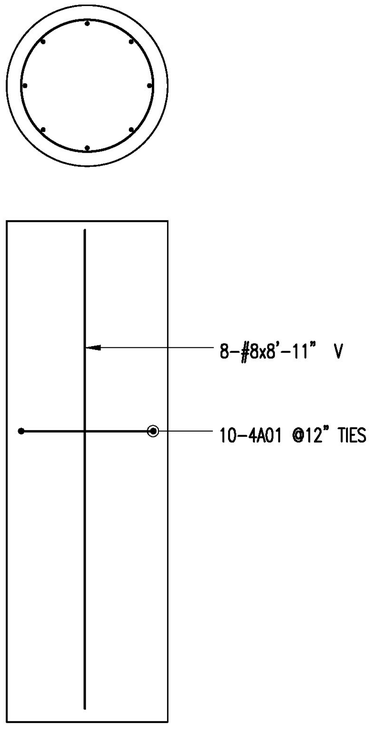

B-102 POLE BASE

(1) REQUIRED

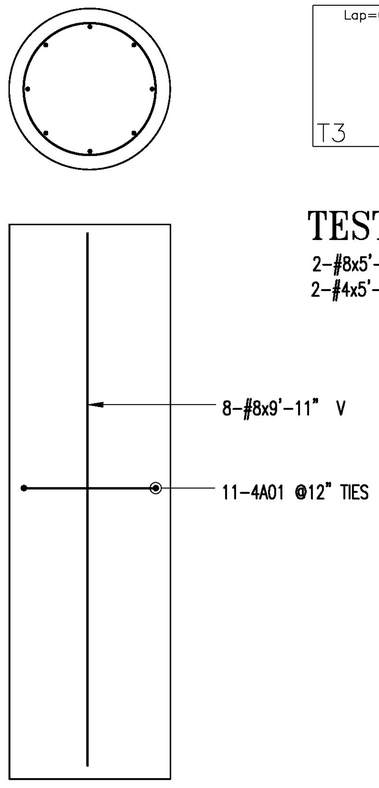

B-103 POLE BASE

(1) REQUIRED

HarrisRebar Barker Steel
National Strength. Local Service.

DETAILED AT:
CANAAN
NEW HAMPSHIRE

THIS DRAWING IS NOT TO BE SCALED.

Notes/Revisions
APPROVAL PRINT
RECORD PRINT

Project: HES SIGNAL (44)
LUDLOW VT

Drawing: POLE BASES
REINFORCEMENT

Customer: THE BELDEN COMPANY
Engineer: DAVID N. FRITZ
Refer to Release:

Date	Drawn	Chkd.	JOB No.	Dwg. No.
10/02/17	CPS		33506506	R01

W:\csample\Projects\33506506\Placing Drawings\DWGs\R01.dwg

QTY	POLE ID	UMC DESIGN NUMBER	MAST ARM DATA						MAST ARM FLANGE CONNECTION DATA									POLE TUBE SIZE	POLE BASE CONNECTION DATA						
			SPAN	TUBE SIZE	JOINT	MTG HGT	RISE ∠	ORIENT	BOLT ø	X	Y	W	H	øCA	APL	PPL	G		B.C.	S	F	øCB	P	T	ANCHOR BOLT SIZE
1	1	50400-B790-Y1	45'-0"	3E-10.50x8.12x17'-0" 7E-8.76x4.60x29'-9"	21"	20'-0"	3°	180°	1 1/2	8 1/2	14	14	18 1/2	8 1/2	2	1 1/2	1/4	3E-13.50x9.86x26'-0"	18	19 1/2	9	10 1/2	6	2	1 1/4 x 42 x 6
1	2	50400-B790-Y2	30'-0"	7E-9.25x5.05x30'-0"	–	20'-0"	3°	180°	1 1/4	8	12	13	16	7	2	1 1/4	3/16	7E-13.00x9.36x26'-0"	18	19 1/2	9	10 1/2	6	2	1 1/4 x 42 x 6
			20'-0"	7E-8.00x5.20x20'-0"	–	20'-0"	3°	90°	1 1/4	8	12	13	16	6	2	1 1/4	3/16								

7 GA = 0.179" WALL THICKNESS
3 GA = 0.250" WALL THICKNESS
E = ROUND TAPERED STEEL TUBE @ 0.14 in/ft TAPER

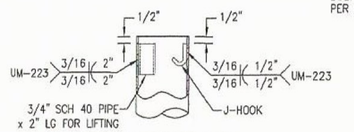

TOP OF POLE DETAIL
ORIENTATION OF PIPE & J-HOOK AS REQUIRED

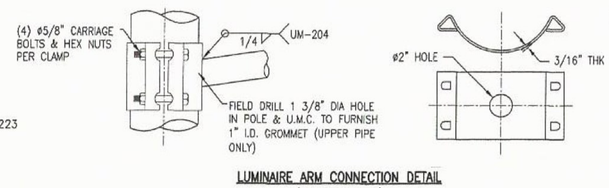

LUMINAIRE ARM CONNECTION DETAIL
(REF B85 SERIES)

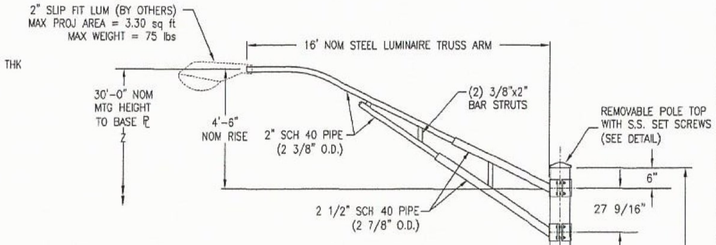

DESIGN CRITERIA:

1. DESIGNED IN ACCORDANCE WITH THE 2013 AASHTO, "STANDARD SPECIFICATIONS FOR STRUCTURAL SUPPORTS FOR HIGHWAY SIGNS, LUMINAIRES AND TRAFFIC SIGNALS" FOR 90 M.P.H. WIND ZONE. THE DESIGN PARAMETERS INCLUDE:
   50 YEAR STRUCTURE DESIGN LIFE
   FATIGUE CATEGORY II CONSIDERATION FOR:
   NATURAL WIND GUST
   TRUCK INDUCED GUST (65 MPH)
2. ANCHOR BOLTS ANALYZED FOR STEEL STRENGTH ONLY. THE ANCHOR BOLT EMBEDMENT LENGTH SHOWN ON THIS DRAWING SHALL BE VERIFIED BY THE FOUNDATION ENGINEER.
3. THE EXPOSED LENGTH OF THE ANCHOR BOLT BETWEEN THE TOP OF THE FOUNDATION AND THE BOTTOM OF THE LEVELING NUT SHOULD NOT EXCEED ONE BOLT DIAMETER.
4. PER AASHTO THE MINIMUM LENGTH OF ANY TELESCOPIC FIELD JOINT SHALL BE 1.5 TIMES THE INSIDE DIAMETER OF THE END OF THE FEMALE SECTION.
5. VIBRATION IS MORE LIKELY TO OCCUR WHEN STRUCTURES ARE INSTALLED WITHOUT ATTACHING THE SIGNALS AND OR SIGNS. THEREFORE, THE INTENDED EQUIPMENT OR DAMPENING DEVICES MUST BE INSTALLED AT THE TIME OF ERECTION. BECAUSE VIBRATION IS GENERALLY UNPREDICTABLE, A MAINTENANCE PROGRAM SHOULD INCLUDE INSPECTION FOR INDICATIONS OF EXCESSIVE VIBRATION OR FATIGUE AND EXAMINATION FOR ANY STRUCTURAL DAMAGE OR BOLT LOOSENING.
6. **CUSTOMER TO CONFIRM ALL DIMENSIONS & ORIENTATIONS BEFORE RELEASING ORDER FOR MANUFACTURING.**

MATERIAL SPECIFICATIONS	
TAPERED TUBE	ASTM A595 GR A
PLATE	ASTM A36
BAR HANDHOLE FRAME	ASTM A529 GR 50 or ASTM A572 GR 50 or ASTM A709 GR 50
HANDHOLE COVER	ASTM A36 or A1011
ANCHOR BOLTS	ASTM F1554 GR 55
ANCHOR BOLT NUTS	ASTM A563 GR A
FLAT WASHERS	ASTM F436
ARM CONNECTION BOLTS	ASTM A325
DTI WASHERS	ASTM F959
ARM JOINT STUD	ASTM A36
"ANCO" LOCK NUTS	ASTM A563 GR DH
POLE TOP/ARM END CAP	ASTM B26 (356.0 F) or A1011
S.S. HARDWARE	AISI-300 SERIES (18-8)
STRUCTURE FINISH	HD GALV TO ASTM A123 & POWDER COAT BLACK (#27038)
HARDWARE FINISH	HD GALV TO ASTM A153

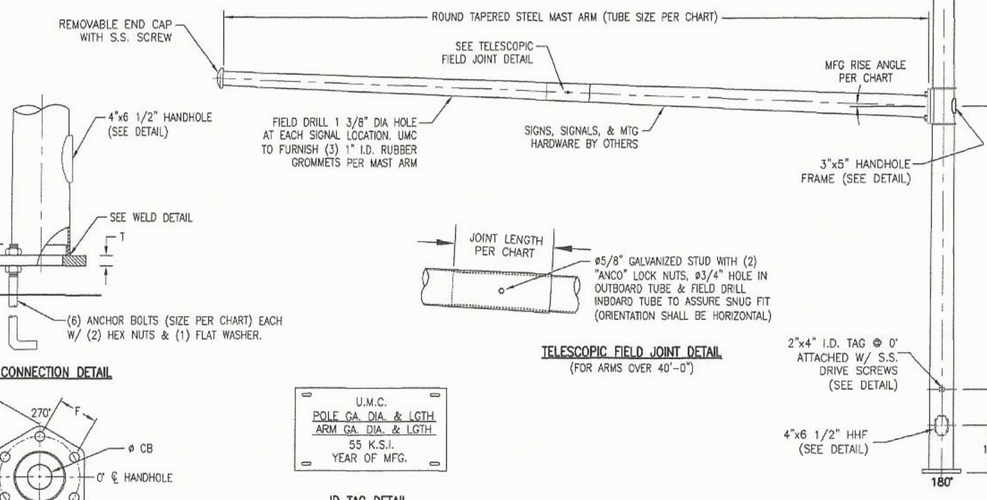

BASE CONNECTION DETAIL

TELESCOPIC FIELD JOINT DETAIL
(FOR ARMS OVER 40'-0")

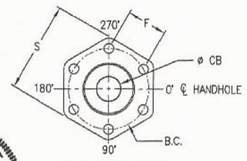

BASE PLATE DETAIL

U.M.C.
POLE GA. DIA. & LGTH
ARM GA. DIA. & LGTH
55 K.S.I.
YEAR OF MFG.

ID TAG DETAIL

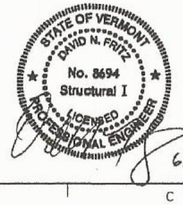

STATE: VT	REQ# / SO# : DVT-0608A-1	REV	DESCRIPTION	DATE	BY	CK BY
PROJECT NAME: TOWN OF LUDLOW, HES SGNL(44) / RT 103		REVISIONS				

ROUND TAPERED STEEL TRAFFFIC CONTROL STRUCTURE
WINDSOR COUNTY, VERMONT

Union Metal Corporation

This document and the contents herein are proprietary and the property of Union Metal Corporation. This document is not to be, copied, reproduced, or used for any reason except for the purposes which it was issued without the express written consent of Union Metal Corporation. Furthermore Union Metal Corporation reserves the right to recall this document and all copies at any time for any reason.

DESIGNED BY	CHECKED BY	DATE	SCALE	ENG REF
JEF	Jdf	6/19/17	NTS	50400-SERIES
50400-B790			REVISION R0	SHEET 1 OF 2

Reproduction of this document or any part thereof is not permitted without written authorization from Union Metal Corporation. Unauthorized use of this document may violate applicable laws. Union Metal Corporation will pursue all available legal remedies. Union Metal Corporation reserves the right to revise this document at any time. Recipient is responsible to assure that this document reflects the current revision established in digital format, unless for a single invoice and protected by edit restrictions. Use of this document for reference only. Those using this document do so at their own risk. All provisions available to ensure that this document reflects the current revision established in digital format, unless for a single invoice and protected by edit restrictions.

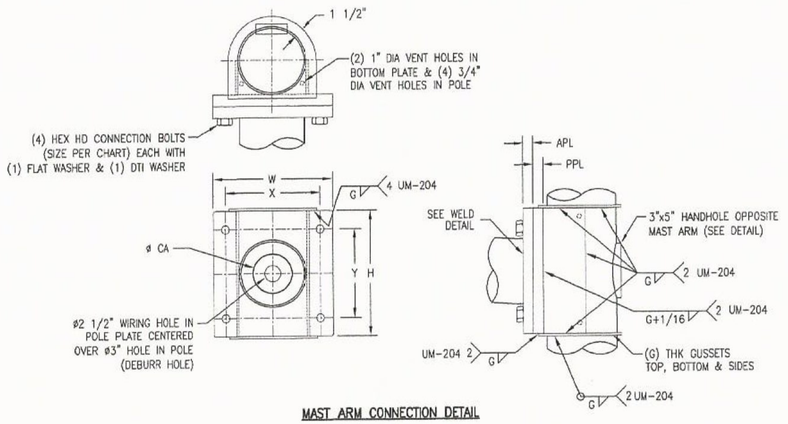

MAST ARM CONNECTION DETAIL

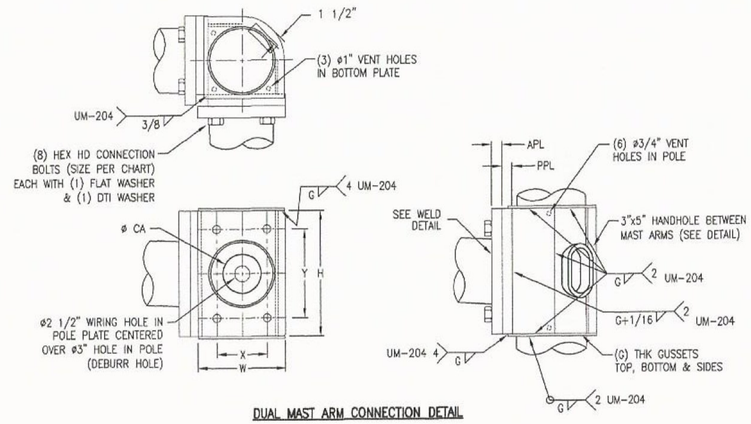

DUAL MAST ARM CONNECTION DETAIL

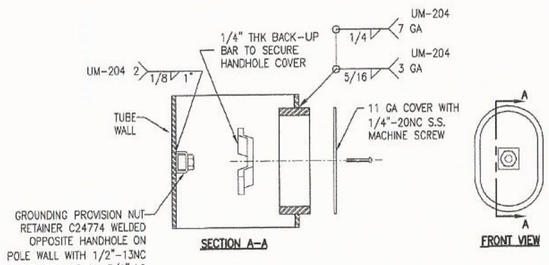

4" x 6 1/2" HANDHOLE FRAME DETAIL

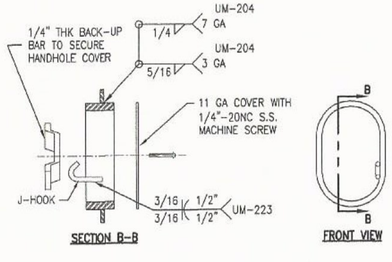

3" x 5" HANDHOLE FRAME DETAIL

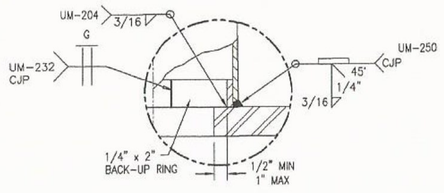

POLE BASE & ARM FLANGE WELD DETAIL

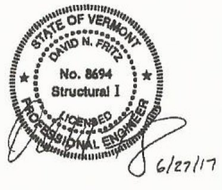

STATE: VT	REQ# / SO# : DVT-0608A-1	REV	DESCRIPTION	DATE	REV BY	CHK BY
PROJECT NAME: TOWN OF LUDLOW, HES SGNL(44) / RT 103		REVISIONS				

ROUND TAPERED STEEL TRAFFFIC CONTROL STRUCTURE
WINDSOR COUNTY, VERMONT

Union Metal Corporation

This document and the contents herein are proprietary and the property of Union Metal Corporation. This document is not to be, copied, reproduced, or used for any reason except for the purposes which it was issued without the express written consent of Union Metal Corporation. Furthermore Union Metal Corporation reserves the right to recall this document and all copies at any time for any reason.

DESIGNED BY	CHECKED BY	DATE	SCALE	ENG REF
JEF	JdF	6/19/17	NTS	50400-SERIES

50400-B790

REVISION	SHEET
R0	2 OF 2

Hardcopies of this document are considered uncontrolled and are to be used for reference only. Those using this document for reference must take all precautions available to ensure that this document matches the current revision maintained in digital format, within but a single source and protected by edit restrictions.

QTY	UMC DESIGN NUMBER	POLE TUBE SIZE	CLAMP-ON LUMINAIRE ARM DATA			BASE TYPE
			SPAN	UPPER ARM TUBE	LOWER ARM TUBE	
1	756-B147-Y1	0.250W-8.00x6.00x26'-0"	16'-0"	0.125W-4.00x2.40	0.125W-4.00x2.40	SHOE

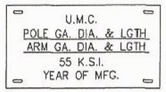

ID TAG DETAIL

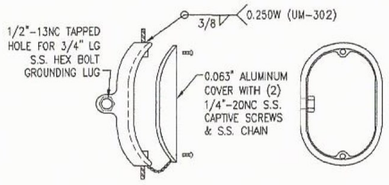

4"x8" HANDHOLE FRAME DETAIL

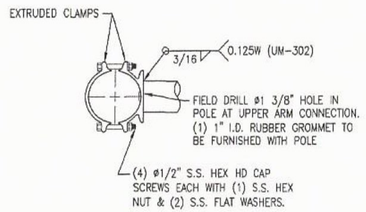

LUMINAIRE ARM CONNECTION DETAIL

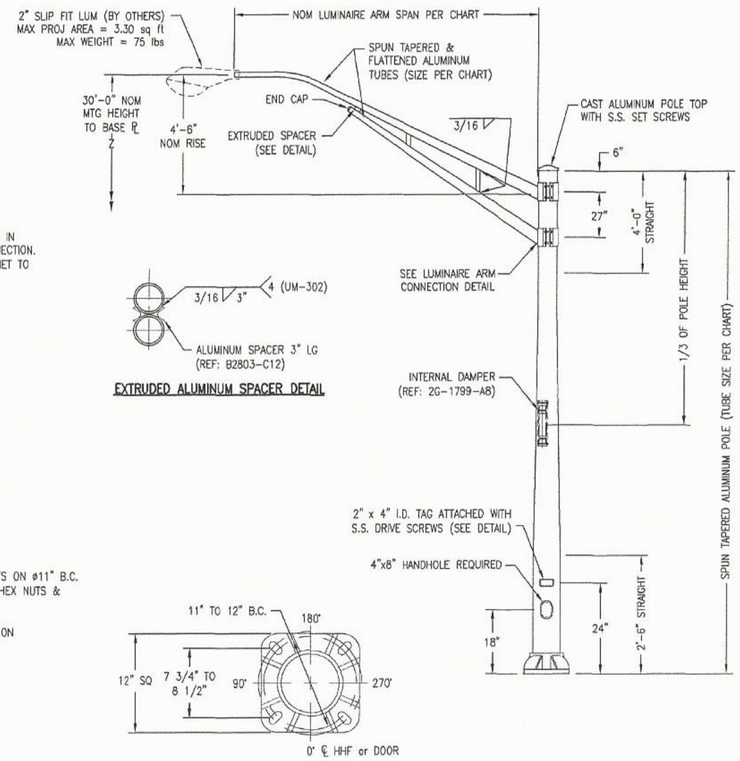

EXTRUDED ALUMINUM SPACER DETAIL

DESIGN CRITERIA:

1. DESIGNED IN ACCORDANCE WITH 2013 AASHTO "STANDARD SPECIFICATIONS FOR STRUCTURAL SUPPORTS FOR HIGHWAY SIGNS, LUMINAIRES, AND TRAFFIC SIGNALS" FOR 100 MPH WIND ZONE.
2. ANCHOR BOLTS ANALYZED FOR STEEL STRENGTH ONLY. THE ANCHOR BOLT EMBEDMENT LENGTH SHOWN ON THIS DRAWING SHALL BE VERIFIED BY THE FOUNDATION ENGINEER.
3. WELDED ASSEMBLIES HEAT TREATED TO T6 TEMPER.
4. **CUSTOMER TO CONFIRM ALL DIMENSIONS & ORIENTATIONS BEFORE RELEASING ORDER FOR MANUFACTURING.**

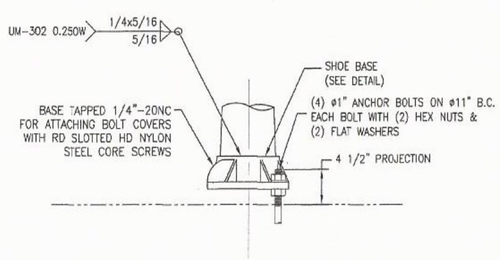

SHOE BASE DETAIL
(8-1992)

MATERIAL SPECIFICATIONS	
TAPERED TUBE	ASTM B210, B221, B241 or B429 (6063-T6)
TRUSS ARM TUBES	ASTM 6063-T6
CAST HANDHOLE FRAME	ASTM B108 (356-T6)
HANDHOLE COVER	ASTM B209 (3003)
ANCHOR BOLTS	ASTM F1554 GR 55
ANCHOR BOLT NUTS	ASTM A563 GR A
FLAT WASHERS	ASTM F436
BOLT COVERS	ASTM B26 (319F or 356F)
SHOE BASE	ASTM B108 (356.0 T6)
EXTRUSIONS	ASTM B308 (6061 or 6063-T6)
POLE TOP	ASTM B26 (356.0F)
S.S. HARDWARE	AISI-300 SERIES (18-8)
STRUCTURE FINISH	POWDER COAT # 27038 SEMI GLOSS BLACK.
HARDWARE FINISH	HD GALV TO ASTM A153



STATE: VT	REQ# / SO# : DVT-0608A-1
PROJECT NAME: TOWN OF LUDLOW, HES SGNL(44) / RT 103	

REV	DESCRIPTION	DATE	REV BY	CHK BY
	REVISIONS			

ROUND ALUMINUM LIGHTING POLES
WINDSOR COUNTY, VERMONT

Union Metal Corporation

This document and the contents herein are proprietary and the property of Union Metal Corporation. This document is not to be, copied, reproduced, or used for any reason except for the purposes which it was issued without the express written consent of Union Metal Corporation. Furthermore Union Metal Corporation reserves the right to recall this document and all copies at any time for any reason.

DESIGNED BY	CHECKED BY	DATE	SCALE	ENG REF
JEF	JEF	6/20/17	NTS	756-SERIES

	REVISION	SHEET
756-B147	R0	1 OF 1

Blankproject of this document are considered representational and are to be used for reference only. Those using this document for reference must take all precautions available to ensure that this document matches the current revision established in digital format, whether that a single source and protected by audit procedures.

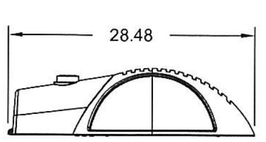

Weight = 28lbs
EPA = .62

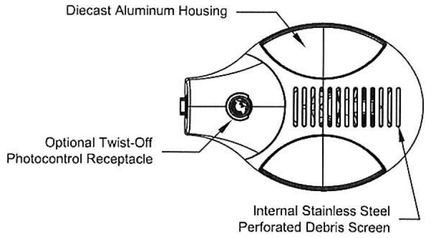

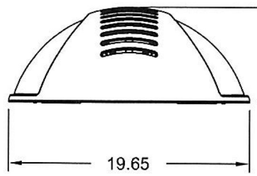

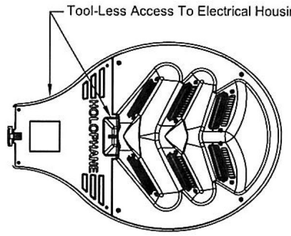

LEDGEND™
LED Roadway Lighting

Functional
Outdoor

Customer Preferred: (Most Frequently Ordered Catalog Numbers)

LEDG 120 35 4K AS G L1 R F1
K L2
W

ORDERING INFORMATION:

LEDG	096	35	5K
Series	Number of LED'S	Drive Current	Color Temperature
LEDgend LED Roadway	120 = 120 LED'S 108 = 108 LED'S 096 = 96 LED'S 084 = 84 LED'S 072 = 72 LED'S 060 = 60 LED'S 048 = 48 LED'S [3]036 = 36 LED'S	35 = 350mA Driver 53 = 525mA Driver [4]70 = 700mA Driver	4K = 4,000 K CCT +/- 250K 5K = 5,000 K CCT +/- 250K

AS	G	L2
Voltage	Housing Color	Optics
AS = Auto-Sensing Voltage (120 thru 277) [2]AH = Auto-Sensing Voltage (347 thru 480)	A = As Specified G = Gray H = Graphite K = Black N = Green W = White Z = Bronze	L1 = Type I, Narrow Asymmetric L2 = Type II, Medium Asymmetric L3 = Type III, Wide Asymmetric L4 = Type IV, Forward Throw

Options

OPTIONS
B = Constant Lumen Output, Bi-Level Dimming
C = Constant Lumen Output
DE = ROAM CONCIERGE Dimming Control
VE = ROAMVIEW Dimming Control
EL = Extended Life - Driver
PCS = DTL Solid-State Lighting Photocontrol 120-277V
P34 = DTL Twist-Off Photocontrol 347V
P48 = DTL Twist-Off Photocontrol 480V
PSC = Shorting Cap
R = NEMA Twist-Off Photocontrol Receptacle
SP = Single Pack For UPS

Accessories

ACCESSORIES
F1 = Single Fusing (120, 240, 277, 347V)
F2 = Double Fusing (208, 240, 480V)
BR-1055-XX = P2 Tenon Adapter
LEDGHSS = House Side Shield

NOTES:
[2]Not available with 36 LED's with 35 or 53 drive currents or with options B, C, DE, VE, EL or PCS
[3]Not available with B, C, DE or VE options with 53 drive current
[4]Not available with 120 LED's

HOLOPHANE®
LEADER IN LIGHTING SOLUTIONS
An AcuityBrandsCompany

© 2010 Acuity Brands Lighting, Inc. All Rights Reserved

THIS DRAWING, WHEN APPROVED, SHALL BECOME THE COMPLETE SPECIFICATION FOR THE MATERIAL TO BE FURNISHED BY HOLOPHANE. DUTIES OF CONSTRUCTION, ADDITIONS, ALTERATIONS SHALL NOT BE SUPPLIED, BUT ONLY AFTER APPROVAL BY THE CUSTOMER IN WRITING. ON POLE ORDERS AN ANCHOR BOLT TEMPLATE PRINT WILL BE SUPPLIED. ELECTRICAL CONNECTIONS SHALL BE MADE AT THE POLE PROVIDED. THIS PRINT IS THE PROPERTY OF HOLOPHANE AND IS LOANED SUBJECT TO RETURN UPON DEMAND AND UPON EXPRESS CONDITION THAT THE INFORMATION HEREON SHALL NOT BE USED IN ANY WAY DETRIMENTAL TO OUR INTERESTS, AND ONLY IN CONNECTION WITH MATERIAL FURNISHED BY HOLOPHANE.

ORDER #:
TYPE:
DRAWN: JRM
DATE: 10/31/12
DWG #: LUM_LEDG

Specifications

General Construction

Rugged die cast aluminum housing, low copper aluminum, allow for corrosion resistance and long life. Horizontal arm mount with +/-6 degrees vertical adjustment. Four bolt mast arm provides easy, secure installation and adjustability for arms 1-1/4 & 2 inch pipe (1.66" & 2.38" O.D.) Trigger latch disengages for easy access to four bolt mounting, terminal block, surge protection module, LED drivers, and electronic transfer switch. An optimized maintained thermal management system is achieved by combining a robust heat sink utilizing both convection and conduction methodology with a mechanical design that provides maximum airflow ensuring a minimum of 50,000 hours L70 at 25C operating ambient. Internal perforated stainless steel cover protects the luminaire against dirt and foliage build up while maintaining the integrity of the airflow requirement. Solar guard technology isolates top cover of luminaire from thermal heat sink through four touch points providing protection from solar loading while not in operation.

Environmental

Luminaire design and tested to comply with ANSI C136:31 2001 for 100,000 cycles at 3G acceleration for normal road and bridge applications. The range of luminaire operation is -40C to +50C.

Six sealed LED light engines meet dust and moisture rating of IP-66 per IEC 60068-2-3 1987 ensures long component life and protection from the environment.

The luminaire is finished with polyester paint applied after a pretreatment process to ensure maximum durability. The finish shall pass the 1000 hour salt fog test per ASTM B117 and D1654 standard.

The luminaire passed Humidity testing per IEC 60068-2-3 1987 and passed Temperature-Voltage Cycling and Condensing Humidity testing per Acuity Brands Validation Test Specification 902-00007-001

Regulatory

The luminaire is safety listed to CSA-C22.2 number 250, wet location. See chart below for model rating based on drive current and led combination.

Series	Drive Current	Number of LED'S	CSA Ambient Listing
LEDG	350 mA	36,60,72,84,96,108,120	40C
LEDG	525 mA	36,48,60,72,84,96,108,120	40C
LEDG	700 mA	72,60,48,36	40C
LEDG	700 mA	84	35C
LEDG	700 mA	96	30C
LEDG	700 mA	108	25C

The luminaire is ROHS compliant. Luminaire meets EMI compliance per FCC Title 47 CFR Part 15, Class A.

Electrical

The surge protection is tested to ANSI/IEEEC62.41-2002 specification. For the AS voltage option (120-277), the device meets category C high (20kV, 10kA). For AH voltage rating (347-480), the protection level is category C low. (6kV, 3kA) The surge protection module (SPD) protects all downstream electronics such as led drivers, transfer switch, and relays for the purpose of protecting from electrical disturbances such as nearby lightning strikes.

Extended life driver option (EL 350 mA only) provides both main and auxiliary driver system extending system driver to 200,000 hours minimum. The control in EL option constantly monitors an output current of the Main Driver. In the event of a Main driver failure (no output current), the control switches power to the Auxiliary driver. The Auxiliary driver is not energized during normal operation.

The photocontrol receptacle is adjustable without tools and is ROAM compatible.

The luminaire is designed to conform to ANSI C82.77:2002 for Maximum Total Harmonic Distortion (THD) -20%. Inrush current complies with NEMA410:2004 table B-2 and line Fluctuations and Ramp input voltage per UL 991:2004.

The luminaire conforms to Electromagnetic compatibility tests for Electrostatic Discharge (ESD) per IEC 61000-4-2:2001, Level 4.

Optical

Environmentally friendly, zero uplight luminaire reduces light pollution. Glass optics provides minimal dirt depreciation and will not discolor or become brittle over time. The permanence of glass results in less dirt depreciation and more maintained lumens on the intended space. The luminaire is available with narrow, medium, and wide asymmetric distributions designed to maximize pole spacing and reduce energy usage resulting in a lower total cost of ownership. The highly engineered light engine is designed to restrict direct view of individual LED's increasing visual comfort within the field of view. The luminaire is available with LED color temperatures of 4000K and 5000K. The minimum color rendering index (CRI) is 70.

Reference www.Holophane.com for individual photometric tests on LEDgend LED luminaire that are tested per LM79 guidelines. Consult factory for LM80 data as that varies per LED chip manufacturer.

LEDGEND™
LED Roadway Lighting

Functional
Outdoor

HOLOPHANE®
LEADER IN LIGHTING SOLUTIONS
An AcuityBrandsCompany

© 2010 Acuity Brands Lighting, Inc. All Rights Reserved

THIS DRAWING, WHEN APPROVED, SHALL BECOME THE COMPLETE SPECIFICATION FOR THE MATERIAL TO BE FURNISHED BY HOLOPHANE ON THE ORDER NOTED ABOVE. A UNIT OF SIMILAR DESIGN MAY BE SUPPLIED, BUT NO SUBSTITUTIONS WILL BE MADE EXCEPTH AS SUPPLIED IN WRITING. ON POLE ORDERS AN ANCHOR BOLT TEMPLATE PRINT WILL BE SUPPLIED WITH EACH ANCHOR BOLT ORDER TO MATCH THE POLE PURCHASED. THIS PRINT IS TO BE FOLLOWED EXACTLY AS THE POLE LOADS SUBJECT TO RETURN UPON DEMAND AND UPON EXPRESS CONDITION THAT IT WILL NOT BE USED DIRECTLY OR INDIRECTLY IN ANY WAY DETRIMENTAL TO THE INTERESTS OF HOLOPHANE CONNECTION WITH MATERIAL FURNISHED BY HOLOPHANE.

ORDER #:
TYPE:
DRAWN: LJS
DATE: 10/6/11
DWG #: LUM_LEDG

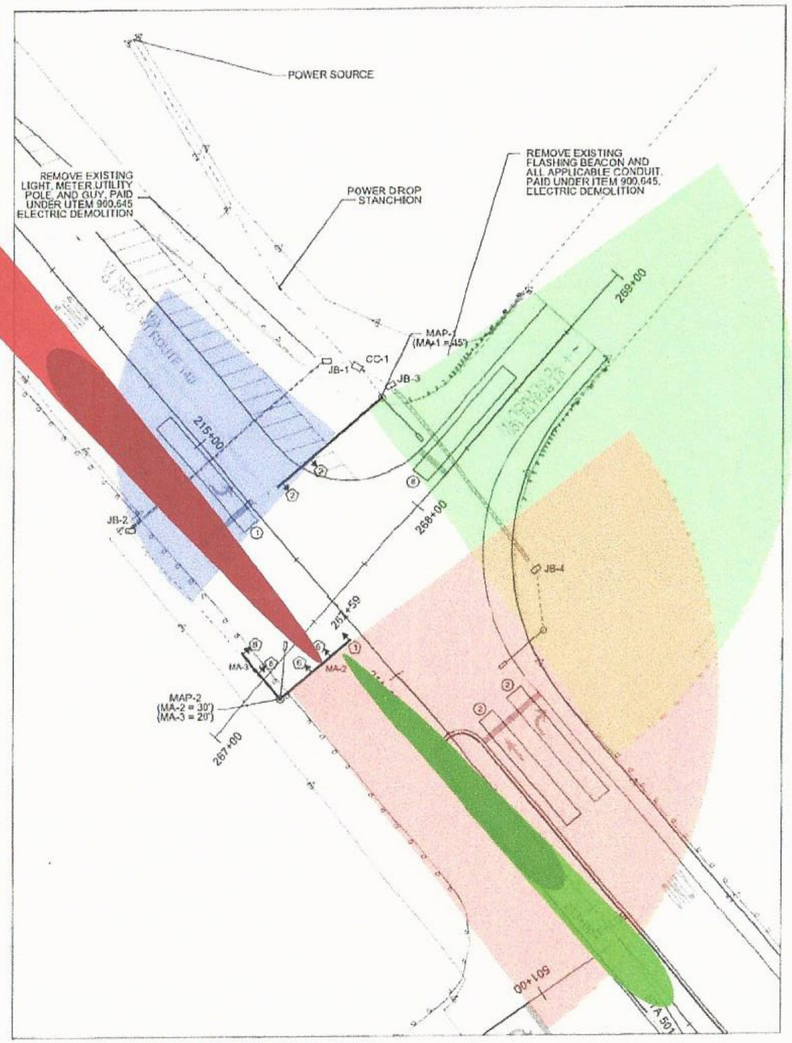

678.15 - TRAFFIC CONTROL SIGNAL SYSTEM, INTERSECTION (VT ROUTE 100 &VT ROUTE 103)
SEE LIST OF MAJOR EQUIPMENT, THIS SHEET

CONSTRUCT MAST ARM POLES
STA. 214+77.47, RT 55.36' (MAP-1)
STA. 267+23.89, RT 8.21' (MAP-2)

CONSTRUCT CONTROLLER CABINET (BASE-MOUNTED)
STA. 214+85.00, RT 54.62' (CC-1)

DILEMMA ZONE DETECTION SYSTEM
STA. 214+77.47, RT 55.36' (DZD-1)
STA. 267+23.89, RT 8.21' (DZD-2)

CONSTRUCT POWER STANCHION
STA. 215+21.60, RT 53.14'

678.23 - WIRED CONDUIT
SEE CHART, THIS SHEET

678.21 - ELECTRICAL CONDUIT
SEE CHART, THIS SHEET

900.640 - SPECIAL PROVISION (HORIZONTAL DIRECTIONAL DRILLING, 12" CASING PIPE)
STA. 214+93.38, LT 34.77' - STA. 214+93.72, RT 47.56' (85')
STA. 214+00.42, RT 56.67' - STA. 214+72.37, RT 59.36' (72')

679.46 - STREET LIGHT ASSEMBLY
STA. 213+80.00, RT 45.93' (16')(SL-3)

679.47 - BRACKET ARM
STA. 214+77.47, RT 55.36' (16')(SL-1)
STA. 267+23.89, RT 8.21' (16')(SL-2)

N
VT STATE PLANE GRID

WIRED CONDUIT	WIRED	SPARE	DESCRIPTION
	2"	2"	
POLE TO STANCHION	110'		POWER
STANCHION TO CC-1	35'		POWER
CC-1 TO JB-1	13'		SIGNAL & LIGHTING
CC-1 TO JB-1	13'		DETECTOR
CC-1 TO JB-1		13'	FUTURE USE
CC-1 TO MAP-1	18'		SIGNAL & LIGHTING
CC-1 TO MAP-1	16'		DETECTOR
CC-1 TO MAP-1		18'	FUTURE USE
JB-1 TO JB-2	85'		SIGNAL & LIGHTING
JB-1 TO JB-2	85'		DETECTOR
JB-1 TO JB-2		85'	FUTURE USE
JB-1 TO JB-2		85'	FUTURE USE
JB2 TO MAP2	81'		SIGNAL & LIGHTING
JB2 TO MAP2	81'		DETECTOR
JB2 TO MAP2		81'	FUTURE USE
CC-1 TO JB-3	17'		LIGHTING
CC-1 TO JB-3		17'	FUTURE USE
JB-3 TO JB-4	83'		LIGHTING
JB-3 TO JB-4		83'	FUTURE USE
JB-4 TO SL-3	26'		LIGHTING
JB-4 TO SL-3		26'	FUTURE USE
SUBTOTAL	665'	408'	
ROUNDING	25'	22'	
TOTALS	690'	430'	

PHASING DIAGRAM

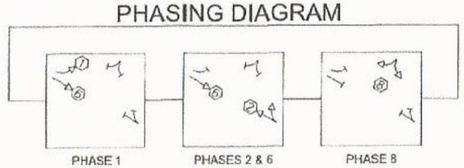

PROPOSED SIGNAL FACE ARRANGEMENTS

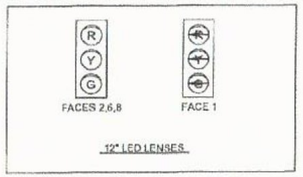

NOTES:
1. ANY OTHER MISC. EQUIPMENT NECESSARY TO PROVIDE FULLY FUNCTIONAL DILEMMA ZONE & VEHICLE DETECTION SYSTEMS SHALL BE INCIDENTAL TO ITEM 678.15 TRAFFIC CONTROL SIGNAL SYSTEM, INTERSECTION (VT ROUTE 100 & VT ROUTE 103).
2. VEHICLE ADVANCE DETECTOR SHALL PROVIDE DETECTION OF RANGE, SPEED, AND ETA OF APPROACHING VEHICLES IN A CONTINUOUS RANGE OF 600 FEET FROM THE SENSOR.
3. A SENSOR DETECTION SHALL EXTEND THE GREEN TIME BY 3 SECONDS.
4. VEHICLE DETECTORS SHALL BE PLACED SO THAT OCCLUSION IS MINIMIZED AND PHASING IS NOT AFFECTED.
5. CONDUIT NOTED AS SPARE WILL BE PAID AS ELECTRICAL CONDUIT, ALL WIRED CONDUIT, REGARDLESS OF TYPE, WILL BE PAID AS WIRED CONDUIT.
6. AN ASTRONOMICAL CLOCK SHALL BE INSTALLED INTO THE STREET LIGHTING SYSTEM AND WILL BE PAID FOR UNDER ITEM NUMBER 679.54, STREET LIGHT CONTROL DEVICE.
7. ITEMS LISTED ARE APPROXIMATE LOCATIONS AND MAY BE MODIFIED BY THE ENGINEER IN THE FIELD.

679.50 - LUMINAIRE
STA. 214+61.03, RT 44.17' (SL-1)
STA. 267+33.38, RT 21.09' (SL-2)

679.54 - STREET LIGHT CONTROL DEVICE
STA. 215+21.60, RT 53.14'

900.620 SPECIAL PROVISION (JUNCTION BOX, HEAVY DUTY)
STA. 214+93.75, RT 48.57' (JB-1)
STA. 214+93.37, LT 36.23' (JB-2)
STA. 214+73.61, RT 59.91' (JB-3)
STA. 213+96.83, RT 57.04' (JB-4)

CONTROLLER TIMING CHART

PHASE	1	2	3	4	5	6	7	8	9
IN USE	X	X				X		X	
TRAFFIC MOVEMENT									
MIN. GREEN	5	8				8		8	
MAX 1 - GREEN (OFF)	5	16				30		16	
MAX 2 - GREEN (AM)	7	22				36		10	
MAX 3 - GREEN (PM)	7	22				36		10	
YELLOW CLEARANCE	5.0	5.0				5.0		4.5	
ALL RED CLEARANCE	2.0	2.0				2.0		2.0	
VEHICLE EXTENSION	3.0	3.0				3.0		3.0	
DELAY GREEN									

LIST OF MAJOR EQUIPMENT

EQUIPMENT ITEM 678.15 - (VT ROUTE 100 & VT ROUTE 103)	QUANTITY	REMARKS
STEEL SIGNAL POLE AND MAST ARM (45') (MA-1)	1	POWDER COAT FLAT BLACK (MAP-1)
STEEL SIGNAL POLE AND MAST ARM (30') (MA-2)	1	POWDER COAT FLAT BLACK (MAP-2)
STEEL MAST ARM (20') (MA-3)	1	POWDER COAT FLAT BLACK (MAP-2)
POWER METER ON STANCHION	1	
SIGNAL CONTROLLER	1	ECONOLITE COBALT, NEMA TS2 TYPE 2
NEW 12-INCH LED SIGNAL HEADS (ONE-WAY, 3-SECTION, VISORS, DISCONNECT HANGERS, BACKPLATES AND MOUNTING HARDWARE	7	FLAT BLACK IN COLOR, 2" RETROREFLECTIVE TAPE BORDER ON BACK PLATES
SIGNAL HEAD BRACKETS	7	
NEMA P44 BASE MOUNTED CONTROLLER CABINET WITH 15-INCH EXTENDED BASE ON A CONCRETE FOUNDATION, WITH ANCILLARY EQUIPMENT	1	POWDER COAT FLAT BLACK
VEHICLE DETECTOR EXTENSION BRACKET	5	
STOP BAR DETECTOR ASSEMBLY	3	WAVETRONIX SMARTSENSOR MATRIX
ADVANCE DETECTOR ASSEMBLY	2	WAVETRONIX SMARTSENSOR ADVANCE
VEHICLE DETECTION PROCESSOR	2	
NETWORK ROUTER	1	
NETWORK SWITCH	1	
GPS TIME CLOCK	1	

TIME OF DAY PROGRAM

	WEEKDAY TIMINGS		
MAX 1 - OFF PEAK	12:00 AM	TO	6:00 AM
MAX 2 - AM PEAK	6:00 AM	TO	9:00 AM
MAX 1 - OFF PEAK	9:00 AM	TO	4:00 PM
MAX 3 - PM PEAK	4:00 PM	TO	6:00 PM
MAX 1 - OFF PEAK	6:00 PM	TO	12:00 AM

LEGEND

- MAST ARM & POLE
- CC CONTROLLER CABINET
- JB HEAVY DUTY JUNCTION BOX
- PP PEDESTAL POST
- (2) SIGNAL HEAD WITH PHASE NO.
- (P) PEDESTRIAN SIGNAL HEAD
- WIRED CONDUIT
- WIRED CONDUIT IN ELECTRICAL CONDUIT SLEEVE
- (A) MAST ARM-MOUNTED SIGN
- (2) DETECTION AREA

0 20 40
SCALE IN FEET

PROJECT NAME: LUDLOW
PROJECT NUMBER: HES SGNL(44)

FILE NAME: t13b020_sig.dgn
PROJECT LEADER: P. COBURN
DESIGNED BY: M. BOGACZYK
TRAFFIC SIGNAL PLAN SHEET

PLOT DATE: 4/19/2017
DRAWN BY: M. BOGACZYK
CHECKED BY: P. COBURN
SHEET 35 OF 43

11/6/8 0000

DATASHEET

Serial GPS for Cobalt, ASC/3 Controller or ASC/2M Master

About GPS

We provide two different assemblies for serial connection of GPS to ASC/3, CobaltTM controllers and ASC/2M masters. Both include a fused connection to the cabinet 24VDC, a cable to connect to the Garmin antenna, a mounting plate and gaskets for the antenna and a cable to connect to either a 9 pin or 25 pin serial connector.

For clarification, our direct serial interface provides the physical cable connection between the GPS antenna and controller as well as a fused 2-wire lead to power the GPS antenna from the controller cabinet. The serial cable can be provided with a DB9 or DB25 connector and pinned as required for compatibility with the controller. The data communicated through the serial interface to the controller is purely a function of the GPS antenna (Garmin• -34.6°F to +165°F (-37°C to +74°C) a default baud rate of 4800 (adjustable if necessary), 8 data bits, and no parity. The data interface protocol is based on the National Marine Electronics Associations (NMEA) 0183 ASCII interface specification. The standard is fully defined in NMEA 0183, Version 3.0 and may be obtained at www.nmea.org/ Details for the Garmin GPS antenna are available at http://static.garmincdn.com/pumac/GPS16HVS_TechnicalSpecifications.pdf.

Part Number and Description

- 171-1369-501 - GPS 16X with DB9 Cable Assembly
- 171-1369-502 - GPS 16X with DB25 Cable Assembly



Basic Specifications

- Temperature
  - -34.6°F to +165°F (-37°C to +74°C)

ECONOLITE

3360 E La Palma Avenue, Anaheim, CA 92806 · 714-630-3700 · sales@econolite.com · www.econolite.com

© 2016 Econolite Control Products, Inc. All rights reserved. Econolite Control Products, Inc. is an Econolite Group, Inc. company certified to ISO 9001:2008, and reserves the right to change or update these specifications at any time without prior notification.





MMU-16LE

MMU-16LEip

MMU-16LE *SmartMonitor*™
MMU-16LEip *SmartMonitor*™

Description

The *MMU-16LEip SmartMonitor*™, now has the added option of a 10/100Mbps Ethernet communications port to the new industry standard for both NEMA TS-2 and TS-1 users.

The use of Ethernet to communicate with the SmartMonitor makes remote diagnostics even easier to accomplish. By furnishing the monitor with an IP address, the unit can be integrated into a wide area network (WAN). Communications may originate from a remote Traffic Management Center, local Controller Unit, or a direct connection to a laptop PC network adaptor.

ECcom™ software provides a user with the capability to retrieve, display, store, and print realtime status and historical data, as well as multiple Signal Sequence logs providing a graphical view of the signal states for up to 30 seconds prior to a fault event.

Built-In, Set-Up and Diagnostic Wizard

The *MMU-16LEip SmartMonitor* includes a built-in set-up Wizard to quickly and accurately configure the monitor parameters simply by answering a short series of questions related to the intersection geometry and cabinet wiring. The built-in context sensitive HELP System and Diagnostic Wizard then automatically pinpoints faulty signals, thus providing technicians with an unprecedented amount of assistance and data feedback quickly with a push of the Help button. The *MMU-16LEip SmartMonitor* menu driven operation presents signal voltages, data logs and vital cabinet information displayed directly on the *MMU-16LEip SmartMonitor* front panel displays.

The advanced capabilities of the *MMU-16LEip SmartMonitor* increase the operational level of safety of the intersection and enhances the diagnostic features available.

Features

- Meets NEMA TS2-2003 MMU Standard
- Full intersection LCD back-lighted signal display
- Built-in Set up Wizard automatically configures enhanced parameters
- Built-in Diagnostic Wizard automatically pinpoints faulty inputs
- Full event logging capabilities including five Signal Sequence logs
- Compatible with any TS2 Type 1 or Type 2 cabinet
- Downward compatible with TS1 CMU, including new Type 12 with SDLC mode
- The MMU-16LEip model replaces the standard EIA-232 port with a 10/100 Mbps Ethernet port for remote communications with a Traffic Management Center
- A key component for safer traffic control

ISO 9001 REGISTERED

ECONOLITE®
www.econolite.com

MMU-16LE SmartMonitor
Enhanced Functions

- The *MMU-16LE SmartMonitor* meets all specifications of the Nema Standard TS2-2003 while maintaining downward compatibility with existing Nema TS1-1989 Traffic Control Assemblies.
- Real-time SDLC communications with the Controller Unit exchanges field input status, Controller Unit output status, fault status, MMU programming, and time and date.
- Two high-contrast, large-area Liquid Crystal Displays (LCD) continuously show full RYG(W) intersection status. A separate graphic LCD provides a menu driven user interface to status, signal voltages, configuration, event logs, and the Help system.
- A time-stamped, nonvolatile event log records the complete intersection status, as well as AC Line events, configuration changes, monitor resets, temperature and true RMS voltages.
- Use the built-in Setup Wizard to configure the Nema Enhanced settings of the *SmartMonitor* by answering a short series of questions regarding intersection design and operation.
- The Diagnostic Wizard automatically pinpoints faulty signals and offers trouble-shooting guidance. The integrated Help System provides context sensitive operational assistance.
- The *MMU-16LE* can be configured to operate with the Port 1 SDLC function and Diagnostic Wizard enabled in a TS-1 twelve channel cabinet with no cabinet wiring changes.
- Enhanced settings of the *MMU-16LE* are stored in nonvolatile memory on the EDI Program Card. Moving the Program Card to another *MMU-16LE* automatically transfers all settings.
- The five Signal Sequence History logs stored in nonvolatile memory graphically display up to 30 seconds of signal status prior to each fault event.
- Innovative signal thresholding technique can be used to increase the level of monitoring protection when using LED-based signal heads.
- A DSP coprocessor converts AC input measurements to True RMS voltages, virtually eliminating false sensing due to changes in frequency, phase, or sine wave distortion.
- Access to the *MMU-16LE* data is provided by the industry standard EDI ECcom Windows-based software for status, event log retrieval, configuration, and data archival.
- The *SmartMonitor* supports MUTCD Flashing Yellow Arrow PPLT operation with two different modes for either TS-2 or TS-1 cabinet configurations.

© 2012 Econolite Control Products, Inc. All rights reserved. Econolite Control Products, Inc. reserves the right to change or update these specifications at any time without prior notification

3360 E. La Palma, Anaheim, CA 92806-2856
Tel: (714) 630-3700 • Fax: (714) 630-6349
E-mail: sales@econolite.com
38302E1008-6

ECONOLITE®
An Econolite Group Company

PS-200 TS2

Cabinet Power Supply

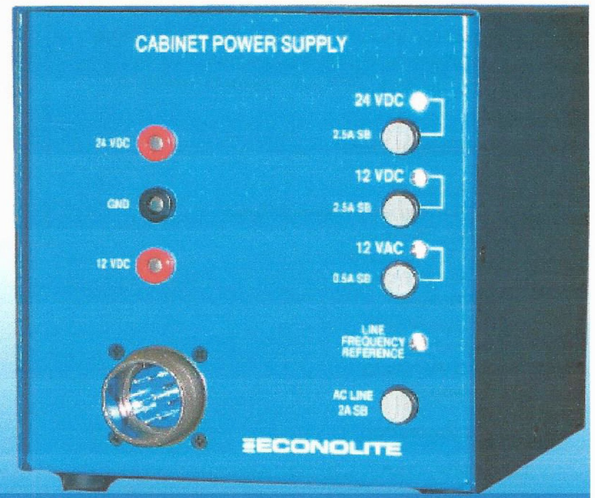

The PS-200 unit, which supplies regulated DC power, unregulated AC power, and a line frequency reference for the Detector Rack, BIUs, load switches, and other auxiliary equipment.

About the PS-200

The PS-200 cabinet power supply is a shelfmounted unit, which supplies regulated DC power, unregulated AC power, and a line frequency reference for the detector rack, BIUs, load switches, and other auxiliary equipment. The PS-200 meets all requirements of the NEMA TS2-2003 standard.

All TS-2 Type 1 cabinet assemblies require the use of this unit, as well as any TS-2 Type 2 cabinet assemblies that utilize Bus Interface Units (BIU).

Each PS-200 cabinet power supply is put through a rigorous quality program and tested under the extreme environmental conditions experienced on the street.

At A Glance

- **The PS-200 provides four outputs rated over the full -30°F to 165°F (-34°C to +74°C) NEMA operating temperature range:**
  - +12 VDC rated at 2 Amps
  - +24 VDC rated at 2 Amps
  - 12 VAC rated at 0.25 Amps
  - 60 Hz Line Frequency Reference rated at 50 mAmps
  - Input Voltage Operating Range is 89 VAC to 135 VAC at 60 Hz

ECONOLITE®

Display Indicators

A separate LED indicator is provided to display output status and fuse integrity for the three supply outputs. The Line Frequency Reference LED indicator pulses to show 60 Hz activity.

Input / Output Pins

A	AC Neutral
B	Line Frequency Reference Output
C	AC Line Input
D	+12 VDC Output
E	+24 VDC Output
F	Reserved
G	Logic Ground
H	Earth Ground
I	12 VAC Output
J	Reserved

Output Protection

The +12 VDC, +24VDC, and 12 VAC outputs are fused for over-current protection. Each output is protected against voltage transients by a 1500 Watt suppressor.

Test Points

Individual test jacks are provided for the +12 VDC output, +24 VDC output, and Logic Ground reference.

Basic Specifications

- Dimensions
  - 6" H x 5.8" W x 8.3" D

ECONOLITE

3360 E La Palma Avenue, Anaheim, CA 92806 · 714-630-3700 · sales@econolite.com · www.econolite.com

385-10021016-5

© 2017 Econolite Control Products, Inc. All rights reserved. Econolite Control Products, Inc. is an Econolite Group, Inc. company, and reserves the right to change or update these specifications at any time without prior notification.

Bus Interface Unit (BIU)

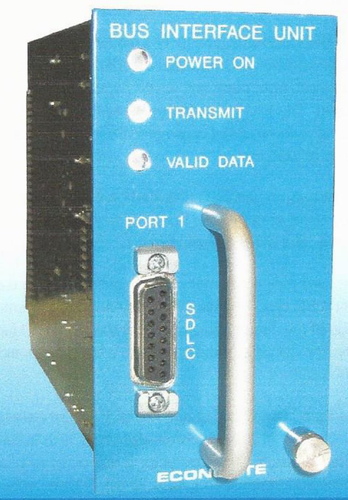

The BIU-64 is a rack module which interfaces 24V logic I/O signals to the Synchronous Data Link Control (SDLC) serial bus of TS2 Type-1 cabinets.

About BIU

It is required in all TS2 Type-1 cabinets and in TS2 Type-2 cabinets when controller I/O interface is through the SDLC bus, not via TS1 MS-A, B, and C connectors.

Physically, the BIU-64 consists of a circuit board and a front panel. A male 64-pin DIN 41612 type-B series connector provides the connection to the backplane of the rack. A female 15-pin metal shell D subminiature connector with latching blocks provides the connection to the SDLC cable. The front panel provides separate indicator lights for Power, Transmit, and Valid Data. It also provides a handle for easy removal of the unit from the rack. A separate TS2 cabinet power supply provides the required 24 VDC power plus a 60 Hz line-timing reference.

At A Glance

- Exceeds BIU requirements of NEMA TS2-2002
- Interfaces detectors, load switches, and 24V signals to TS2 Port-1 SDLC bus
- Used in all TS2 Type-1 cabinets for Terminal and Facilities plus Detector Racks
- Used in TS2 Type-2 for Detector Racks
- Fully hot-swappable
- Separate Power, Transmit, and Valid Data LED indicators display DC power and port status

ECONOLITE

Hardware

The BIU measures 2.34 in. W x 4.50 in. H x 6.60 in. D. Low-profile components are used in order to facilitate an optional half-width front plate unit which measures 1.17 in. x 4.5 in. x 6.60 in. The BIU will slide freely into two rack card-guides having a nominal slot width of 0.075 in. and a maximum slot width of 0.125 in.

An aluminum handle is provided on the front panel to allow easy removal of the BIU from the rack. Nominal outer dimensions of the handle shall be 1 in. x 2½ in.

The card rack connector on back of the BIU is a male 64-pin DIN 41612 type-B series. The connector is centered at the edge of the circuit board and oriented with Pin 1 located on top. The circuit board edges align with the connector per DIN 41612.

The Port-1 SDLC bus connector on the front panel of the BIU is a 15-pin metal shell subminiature type with female gold plated contacts. The connector is equipped with latching blocks and mates with a male 15-pin D-type cable connector that is equipped with spring latches (Amp part number 745012-1 or equivalent).

The front panel made of 0.090 in. sheet aluminum and is finished with a durable protective coating. Two indicator lamps are provided on the front panel, as specified by the TS2 Standard, for Power and Transmit. In addition, the front panel provides a Valid Data indicator, which lights whenever a Valid Data frame is received. The Power light flashes during absence of Line Frequency Reference (LFR) from the cabinet power supply. The BIU operates with internally generated 60 Hz reference in the absence of the LFR signal.

Pin Assignments

- **Port-1 (SDLC bus) pin assignments shall be as specified in Section 8.6.2.1 of the TS2 Standard:**
  - 1 - Rx Data
  - 2 - Logic Ground
  - 3 - Rx Clock +
  - 4 - Logic Ground
  - 5 - Tx Data
  - 6 - Logic Ground
  - 7 - Tx Clock +
  - 8 - Logic Ground
  - 9 - Rx Data -
  - 10 - Not Used
  - 11 - Rx Clock -
  - 12 - Earth Ground
  - 13 - Tx Data -
  - 14 - Reserved
  - 15 - Tx Clock -

© 2017 Econolite Control Products, Inc. All rights reserved. Econolite Control Products, Inc. is an Econolite Group, Inc. company, and reserves the right to change or update these specifications at any time without prior notification.

Quazite®

SPECIFICATIONS/DATA

13" x 24" PG Style (Stackable) Assembly

Covers (Blank unless logo is specified)

DESCRIPTION	PART NO.	WEIGHT #	DESIGN/TEST LOAD #	ANSI TIER
W/2 Bolts	PG1324CA00	32 (14.5 kg)	8,000 / 12,000	8
Gasketed w/2 Bolts	PG1324CG00	32 (14.5 kg)	8,000 / 12,000	8
No Bolts	PG1324WA00	32 (14.5 kg)	8,000 / 12,000	8
Heavy Duty w/2 Bolts	PG1324HA00	49 (22.2 kg)	15,000 / 22,500	15
Gasketed Heavy Duty w/2 Bolts	PG1324HG00	49 (22.2 kg)	15,000 / 22,500	15
Extra Heavy Duty w/ 2 Bolts	PG1324HH00	49 (22.2 kg)	22,500 / 33,750	15*

- Covers with meter lids available upon request.
- Gasketed covers and bolt grommets must be used with a gasketed box. Gaskets reduce the inflow of fluids but do not make the enclosure water tight.

*Loadings for HH covers comply with all test provisions of ANSI/SCTE 77 except that the vertical design load is 22,500 lbs. with a test load of 33,750 lbs. over a 10" x 20" plate.

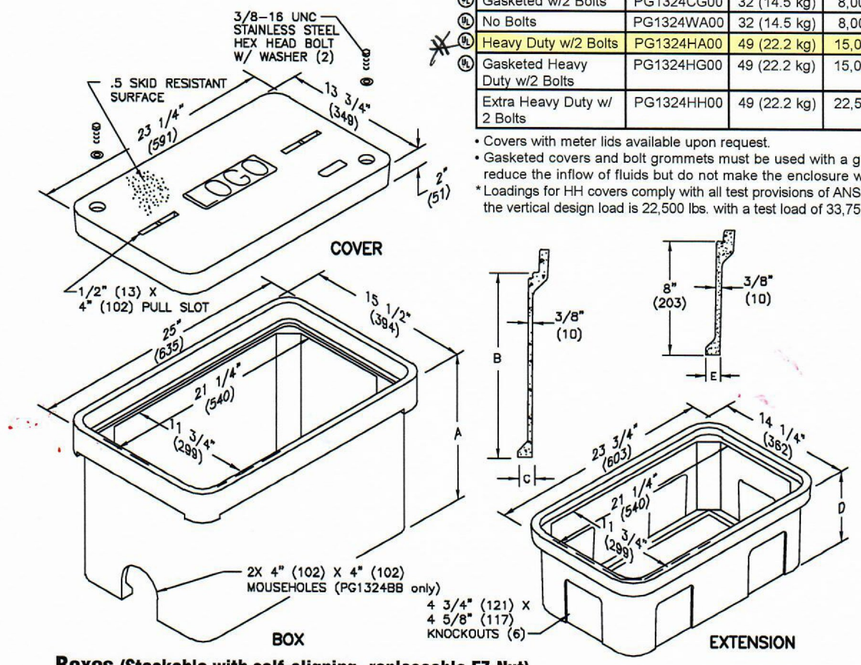

Boxes (Stackable with self-aligning, replaceable EZ-Nut)

DESCRIPTION	PART NO.	WEIGHT #	DIMENSION A	DIMENSION B	DIMENSION C	DESIGN/TEST LOAD #	ANSI TIER
Open Bottom	PG1324BA12	53 (24.0 kg)	12" (305 mm)	10" (254 mm)	1 1/4" (32 mm)	22,500 / 33,750	15*
	PG1324BA18	72 (33 kg)	18" (457 mm)	16" (406 mm)	1 1/4" (32 mm)	22,500 / 33,750	15*
Open Bottom w/ Gasket	PG1324BG12	53 (24.0 kg)	12" (305 mm)	10" (254 mm)	1 1/4" (32 mm)	22,500 / 33,750	15*
	PG1324BG18	72 (33 kg)	18" (457 mm)	16" (406 mm)	1 1/4" (32 mm)	22,500 / 33,750	15*
Open Bottom w/ 2 Mouseholes	PG1324BB12	53 (24.0 kg)	12" (305 mm)	10" (254 mm)	1 1/4" (32 mm)	22,500 / 33,750	15*
	PG1324BB18	72 (33.0 kg)	18" (457 mm)	16" (406 mm)	1 1/4" (32 mm)	22,500 / 33,750	15*
Solid Bottom	PG1324DA12	63 (28.6 kg)	12 1/2" (318mm)	10" (254 mm)	N/A	22,500 / 33,750	15*
	PG1324DA18	85 (39 kg)	18 1/2" (470 mm)	16" (406 mm)	N/A	22,500 / 33,750	15*
Solid Bottom w/ Gasket	PG1324DG12	63 (28.6 kg)	12 1/2" (318mm)	10" (254 mm)	N/A	22,500 / 33,750	15*
	PG1324DG18	85 (39 kg)	18 1/2" (470 mm)	16" (406 mm)	N/A	22,500 / 33,750	15*

* Loadings comply with ANSI/SCTE 77. These boxes meet and exceed ANSI Tier 15 test provisions.

Extensions (For use under box only, one per box. For grade adjustable extension see page 44.)

DESCRIPTION	PART NO.	WEIGHT #	DIMENSION D	DIMENSION E	DESIGN/TEST LOAD #	ANSI TIER
Open Bottom	PG1324EA08	25 (11.3 kg)	8 3/4" (222 mm)	1" (25 mm)	22,500 / 33,750	15*
Solid Bottom	PG1324RA08	35 (15.9 kg)	9 1/4" (235 mm)	N/A	22,500 / 33,750	15*

* Loadings comply with ANSI/SCTE 77. These extensions meet and exceed ANSI Tier 15 test provisions.
Dimensions & weights in parentheses are metric equivalent.

NEMA Cabinet Comparison



One of the most extensive lines of weatherproof NEMA traffic cabinets designed for ultimateease in configuration and installation.

About NEMA Cabinets

Often the first interactions that motorists, pedestrians, and bicyclists have with ITS take place at signalized intersections – where the signals and cabinets represent the front lines of signalized roadways. Econolite offers an extensive, high quality line of NEMA TS1 and TS2 cabinets, built specifically for traffic applications.

Econolite's line of traffic control cabinets are designed and manufactured for rigid pole base or pedestal mounting - zero flex and completely weather proof. Econolite cabinets are manufactured from high-quality, 5052-H32 aluminum.

The design incorporates a door opening that is 80 percent of the front surface for easy access to the traffic controllers and racks. Econolite also accommodates a specified painted finish with a minimum 2 mm thickness powder coating process for extreme durability.

At A Glance

- Plug-N-Go "Power Bus" assembly centralizes power terminations with plug-in connectors simplifying installation and providing flexibility for future expansion with virtually no rewiring
- Modular design and components for ease of maintenance and field upgrades
- Door openings are 80 percent of front surface for greater access to equipment, reducing maintenance time and simplifying diagnostics

ECONOLITE®

DATASHEET

								
Cabinet	**Super P44**	**36 in. G**	**49 in. M**	**60 in. M**	**55 in. P44**	**55 in. P38**	**77 in. R**	**67 in. O**
Dimensions	57.25 in. H x 61 in. W x 28.65 in. D	40 in. H x 24.50 in. W x 17.25 in. D (OD)	49.00 in. H x 30.25 in. W x 16.88 in. D (OD)	60.00 in. H x 30.25 in. W x 16.88 in. D (OD)	55.00 in. H x 44.25 in. W x 26.00 in. D (OD)	55.00 in. H x 38.25 in. W x 26.00 in. D (OD)	76.75 in. H x 44.25 in. W x 26.00 in. D (OD)	67.00 in. H x 30.25 in. W x 24.75 in. D (OD)
Material	Aluminum 0.125 in.							
Finish	Natural, Powder Coat Paint, West Spray Paint							
Access	1-full size door or 2-full size doors (front and back of cabinet)							
Ventilation	Pleated media fiber filter in door 100 Cubic Feet per Minute (CFM) with thermostatic control							
Locking System	Three-point locking system with choice of locks							
Handles	Stainless steel with padlock feature							
Door Stops	Three-position locking stops on bottom of each door							
Detector Rack Assembly	Shelf-mount detector rack assembly							
Configuration	Eight vehicle phases, four pedestrian phases, and four overlaps (optional)							
Police Door	Signal on/off and flash/auto switches and auto/manuals with with police cord (optional)							
Lighting	Incandescent, Fluorescent or LED							
Shelf Drawer	Slide-out shelf/drawer storage unit (optional)							
Flasher	One slot for two-circuit flasher (optional second slot and flasher)							
Flash Transfer Relay	Receptacles for up to 6 flash transfer relatys (optional 8 FTR's)							



Base P38

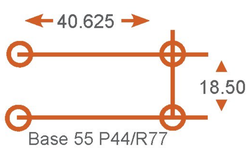

Base 55 P44/R77

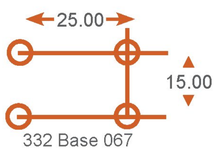

332 Base 067



Standard Base M

ECONOLITE®

3360 E La Palma Avenue, Anaheim, CA 92806 · 714-630-3700 · sales@econolite.com · www.econolite.com

222240214-3

© 2016 Econolite Control Products, Inc. All rights reserved. Econolite Control Products, Inc. is an Econolite Group, Inc. company, certified to ISO 9001:2008, and reserves the right to change or update these specifications at any time without prior notification.