STATE OF VERMONT
AGENCY OF TRANSPORTATION



PROPOSED IMPROVEMENT
TOWN OF MENDON
COUNTY OF RUTLAND
US ROUTE 4 (PRINCIPAL ARTERIAL) (NHS)

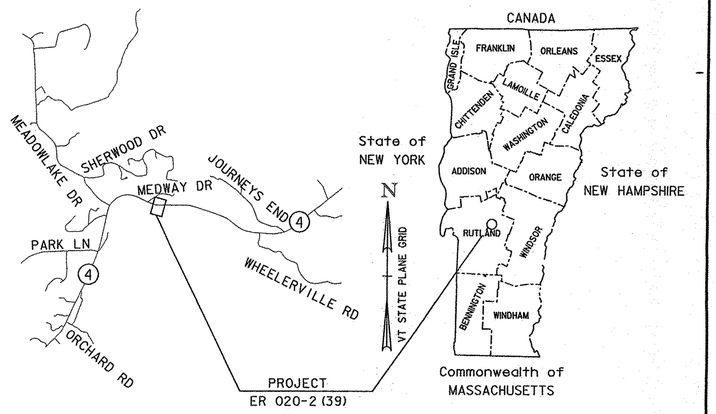

PROJECT LOCATION: BEGINNING IN THE TOWN OF MENDON ALONG US ROUTE 4 AT STATION 23+71.05 (MM 1.622±) EXTENDING EASTERLY APPROXIMATELY 61 FEET (MM 0.011) TO APPROXIMATELY STATION 24+31.64 (MM 1.632±)

LENGTH OF PROJECT ROADWAY = 60.59 FEET (0.011 MILES)

PROJECT DESCRIPTION: WORK TO BE PERFORMED INCLUDES INSTALLATION OF A NEW CULVERT, STABILIZATION OF A RAVINE, CHANNEL WORK AND OTHER HIGHWAY RELATED ITEMS.

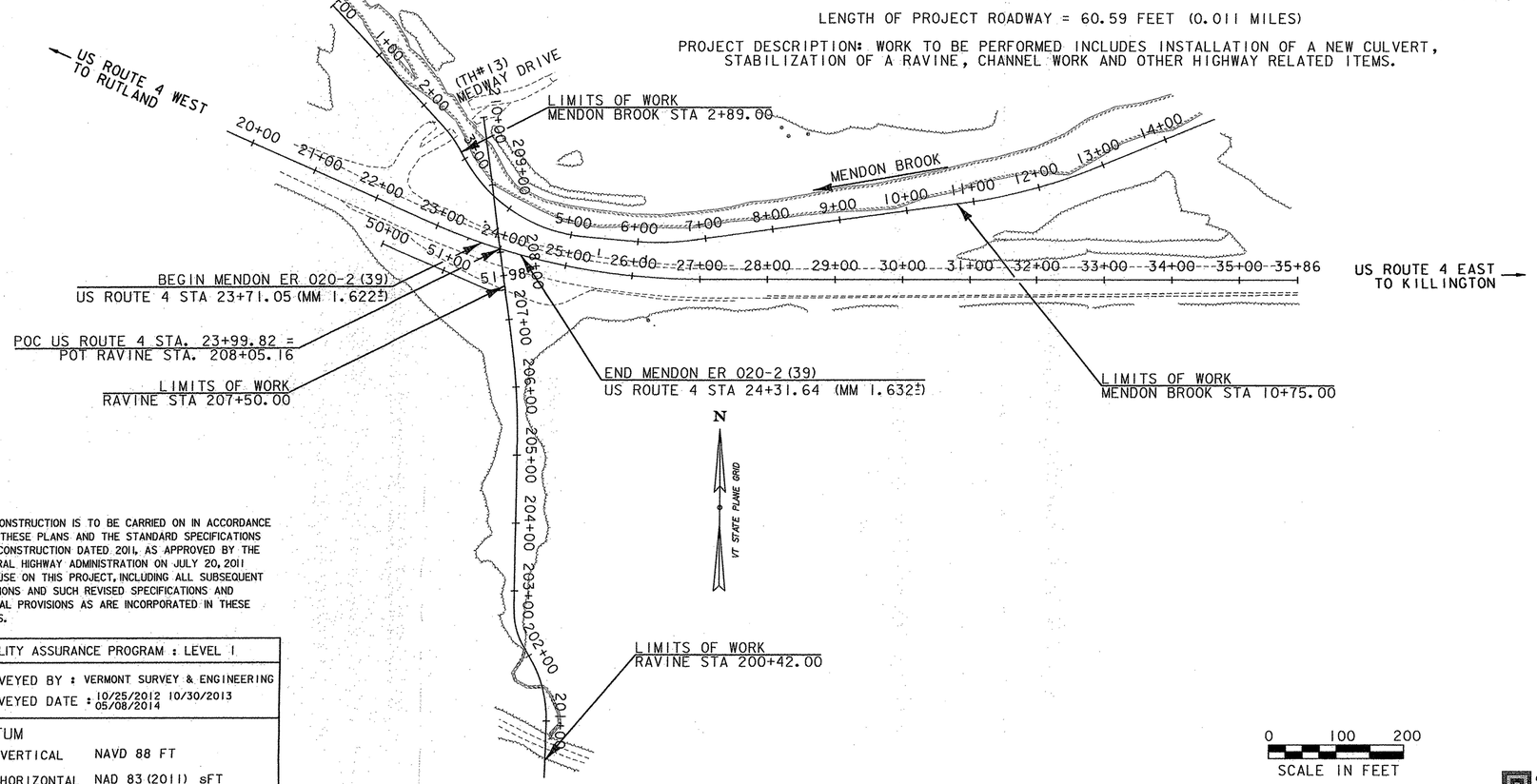

RECORD PLANS

CONTRACTOR: J. A. MCDONALD INC. – LYNDON CENTER, VT

RESIDENT ENGINEER: TIM POCKETTE

CONSTRUCTION BEGAN: MAY 23, 2016

CONSTRUCTION COMPLETE: AUGUST 24, 2017

RECORD PLANS BY: TIM POCKETTE & JESSE IVES

I HEREBY CERTIFY THAT ALL THE CONSTRUCTION REQUIRED BY THIS SET OF DRAWINGS HAS BEEN ACCOMPLISHED AS INDICATED HEREIN.

BY _____ RESIDENT ENGINEER

DATE Nov 2, 2018

NOTE: Any further information concerning final quantities, amounts or other details relative to this project may be found at Central Files in the electronic archives.

CONSTRUCTION IS TO BE CARRIED ON IN ACCORDANCE WITH THESE PLANS AND THE STANDARD SPECIFICATIONS FOR CONSTRUCTION DATED 2011, AS APPROVED BY THE FEDERAL HIGHWAY ADMINISTRATION ON JULY 20, 2011 FOR USE ON THIS PROJECT, INCLUDING ALL SUBSEQUENT REVISIONS AND SUCH REVISED SPECIFICATIONS AND SPECIAL PROVISIONS AS ARE INCORPORATED IN THESE PLANS.

QUALITY ASSURANCE PROGRAM : LEVEL I

SURVEYED BY : VERMONT SURVEY & ENGINEERING

SURVEYED DATE : 10/25/2012 10/30/2013 05/08/2014

DATUM

VERTICAL NAVD 88 FT

HORIZONTAL NAD 83 (2011) sFT

DIRECTOR OF PROJECT DELIVERY

APPROVED _____ DATE 11/16/2015

PROJECT MANAGER : BRUCE MARTIN

PROJECT NAME : MENDON

PROJECT NUMBER : ER 020-2 (39)

SHEET 1 OF 72 SHEETS

GREEN INTERNATIONAL AFFILIATES, INC.
CIVIL AND STRUCTURAL ENGINEERS

STATE OF VERMONT
AGENCY OF TRANSPORTATION

PRELIMINARY INFORMATION SHEET (CULVERT)

Version 2013.11.25.09

INDEX OF SHEETS

PLAN SHEETS

1	TITLE SHEET
2	PRELIMINARY INFORMATION SHEET
3	CONVENTIONAL SYMBOLOGY LEGEND SHEET
4	PROJECT NOTES SHEET
5 - 10	TYPICAL SECTIONS SHEETS
11 - 14	DETAIL SHEETS
15	REINFORCING STEEL SCHEDULE
16 - 19	TIE SHEETS
20 - 22	ALIGNMENT SHEETS
23 - 24	BORING SHEETS
25 - 26	QUANTITY SHEETS
27	ITEM DETAIL AND DRAINAGE SHEET
28	EARTHWORKS SHEET
29	R.O.W. DETAIL SHEET
30 - 32	R.O.W. PLAN SHEETS
33 - 35	PLAN SHEETS
36 - 38	PROFILE SHEETS
39 - 51	EPSC SHEETS
52	UTILITY SHEET
53 - 69	CROSS SECTIONS SHEETS
70 - 72	TRAFFIC CONTROL SHEETS

STANDARDS LIST

B-5	SLOPE GRADING, EMBANKMENTS, MUCK	06-01-1994
D-16	DRAINAGE DETAILS INCLUDING DROP INLETS, IRON GRATE TYPE B&C, CONC END SECTIONS. ETC.	06-01-1994
D-22	SANITARY SEWER SYSTEMS	03-10-1995
F-2	CHAIN LINK FENCE, TYPE I DETAILS	06-01-1994
G-1	STEEL BEAM GUARDRAIL DETAILS (POST, DELINEATOR, TYPICALS)	11-10-2015
G-19	GENERIC GRADING PLANS FOR GUARDRAIL END TERMINALS	11-15-2002
T-1	TRAFFIC CONTROL GENERAL NOTES	08-06-2012
T-10	CONVENTIONAL ROADS CONSTRUCTION APPROACH SIGNING	08-06-2012
T-17	TRAFFIC CONTROL MISCELLANEOUS DETAILS	08-06-2012
T-28	CONSTRUCTION SIGN DETAILS	08-06-2012
T-29	CONSTRUCTION SIGN DETAILS	08-06-2012
T-30	CONSTRUCTION SIGN DETAILS	08-06-2012
T-31	CONSTRUCTION SIGN DETAILS	08-06-2012
T-36	CONSTRUCTION ZONE LONGITUDNAL DROP-OFFS FOR PAVING	08-06-2012

STRUCTURES DETAIL SHEETS

SD-366.00	LONGSPAN STEEL BEAM GUARDRAIL, GALVANIZED	1/3/2014

US ROUTE 4 TRAFFIC DATA

YEAR	ADT	DHV	%D	%T	ADTT
2014	8,600	1,100	57	8.9	960
2034	9,100	1,200	57	13.1	1500

20 year ESAL for flexible pavement from 2014 to 2034 : 5,314,000

40 year ESAL for flexible pavement from 2014 to 2054 : 11,856,000

Design Speed: 50 mph

FINAL HYDRAULIC REPORT

HYDROLOGIC DATA

Date: June 2014

DRAINAGE AREA : 33.29 acres
CHARACTER OF TERRAIN : Mountainous, forested, steep
STREAM CHARACTERISTICS : Alluvial and sinuous
NATURE OF STREAMBED : Large gravel, cobbles and boulders

PEAK FLOW DATA

Q 2.33 =	17.0 cfs	Q 50 =	46.7 cfs
Q 10 =	29.8 cfs	Q 100 =	55.1 cfs
Q 25 =	38.6 cfs	Q 500 =	-

DATE OF FLOOD OF RECORD : 2011
ESTIMATED DISCHARGE: Unknown
WATER SURFACE ELEV.: Unknown
NATURAL STREAM VELOCITY : Unknown
ICE CONDITIONS : Moderate
DEBRIS: Moderate
DOES THE STREAM REACH MAXIMUM HIGHWATER ELEV. RAPIDLY? No
IS ORDINARY RISE RAPID? Yes
IS STAGE AFFECTED BY UPSTREAM OR DOWNSTREAM CONDITIONS? No
IF YES, DESCRIBE:

WATERSHED STORAGE: 1% HEADWATERS:
UNIFORM: X
IMMEDIATELY ABOVE SITE:

EXISTING STRUCTURE INFORMATION

STRUCTURE TYPE: Corrugated Polyethelene Pipe
YEAR BUILT: 2011
CLEAR SPAN(NORMAL TO STREAM): 4'
VERTICAL CLEARANCE ABOVE STREAMBED: 4'
WATERWAY OF FULL OPENING: 12.57 sq. ft.
DISPOSITION OF STRUCTURE: Retain and Protect
TYPE OF MATERIAL UNDER SUBSTRUCTURE: See boring B-234

WATER SURFACE ELEVATIONS AT:

Q2.33 =	-	VELOCITY =	-
Q10 =	-	"	-
Q25 =	-	"	-
Q50 =	-	"	-
Q100 =	-	"	-

LONG TERM STREAMBED CHANGES: None noted

IS THE ROADWAY OVERTOPPED BELOW Q100: No
FREQUENCY: N/A
RELIEF ELEVATION: N/A
DISCHARGE OVER ROAD @Q100: N/A

UPSTREAM STRUCTURE

TOWN: Mendon DISTANCE: 690'
HIGHWAY # : x STRUCTURE #: N/A
CLEAR SPAN: 2' CLEAR HEIGHT: 2'
YEAR BUILT: N/A FULL WATERWAY: 3.14 sq. ft.
STRUCTURE TYPE: 24" CPEP Culvert

DOWNSTRUCTURE STRUCTURE

TOWN: Mendon DISTANCE: 49'
HIGHWAY # : STRUCTURE #:
CLEAR SPAN: CLEAR HEIGHT:
YEAR BUILT: FULL WATERWAY:
STRUCTURE TYPE: Confluence with Mendon Brook

LRFR LOAD RATING FACTORS

LOADING LEVELS	TRUCK						
	H-20	HL-93	3S2	6 AXLE	3A. STR.	4A. STR.	5A. SEMI
TONNAGE							
INVENTORY							
POSTING							
OPERATING							
COMMENTS:	TABLE TO BE COMPLETED BY CONTRACTORS DESIGNER						

1.) PROPOSED CULVERT IS A 57" X 38" PIPE OPTION
2.) CULVERT ENDS ARE NOT SKEWED.
3.) CULVERT WILL BE SET AT A SLOPE OF 1.62 IN. ON 90 FT.
4.) CULVERT WILL NOT REQUIRE FISH PASSAGE.
5.) CULVERT CONSTRUCTION WILL NOT REQUIRE A TEMPORARY PIPE.

PROPOSED STRUCTURE

STRUCTURE TYPE: Corrugated Metal Pipe Arch

CLEAR SPAN(NORMAL TO STREAM): 57"
VERTICAL CLEARANCE ABOVE STREAMBED: 38"
WATERWAY OF FULL OPENING: 11.6 sq. ft.

WATER SURFACE ELEVATIONS AT:

Q2.33 =	1070.5 ft	VELOCITY=	5.8 fps
Q10 =	1071.1 ft	"	6.9 fps
Q25 =	1071.4 ft	"	7.4 fps
Q50 =	1071.7 ft	"	7.8 fps
Q100 =	1072.0 ft	"	8.2 fps

IS THE ROADWAY OVERTOPPED BELOW Q100: No
FREQUENCY: -
RELIEF ELEVATION: 1071.7 ft
DISCHARGE OVER ROAD @Q100: N/A

AVERAGE LOW ELEVATION OF SUPERSTRUCTURE: 1072.3'
VERTICAL CLEARANCE: @ Q50 = 0.63'

SCOUR: N/A

REQUIRED CHANNEL PROTECTION: Stone Fill, Type II

PERMIT INFORMATION

AVERAGE DAILY FLOW:	1 cfs	DEPTH OR ELEVATION:
ORDINARY LOW WATER:	0.5 cfs	<0.5'
ORDINARY HIGH WATER:	17 cfs	~1.33'

TEMPORARY BRIDGE REQUIREMENTS

STRUCTURE TYPE: None
CLEAR SPAN (NORMAL TO STREAM): -
VERTICAL CLEARANCE ABOVE STREAMBED: -
WATERWAY AREA OF FULL OPENING: -

ADDITIONAL INFORMATION

The existing culvert will remain in place and an overflow swale has been designed. Flows over the Q50 will continue to discharge through the proposed culvert, but will also discharge down the swale and through the existing culvert to remain.

TRAFFIC MAINTENANCE NOTES

1. TWO-WAY TRAFFIC WILL BE MAINTAINED USING A LANE SHIFT ON US ROUTE 4

DESIGN VALUES

1. DESIGN LIVE LOAD		HL-93
2. FUTURE PAVEMENT	d_p:	7.0 INCH
3. DESIGN SPAN	L:	57"
4. MIN. MID-SPAN POS. CAMBER @ RELEASE (PRESTRESSED UNITS)	Δ:	
5. PRESTRESSING STRAND	f_y:	
6. PRESTRESSED CONCRETE STRENGTH	f'_c:	
7. PRESTRESSED CONCRETE RELEASE STRENGTH	f'_{ci}:	
8. CONCRETE, HIGH PERFORMANCE CLASS AA	f'_c:	
9. CONCRETE, HIGH PERFORMANCE CLASS A	f'_c:	
10. CONCRETE, HIGH PERFORMANCE CLASS B	f'_c:	3500 PSI
11. CONCRETE, CLASS C	f'_c:	
12. REINFORCING STEEL (LEVEL II)	f_y:	
13. STRUCTURAL STEEL AASHTO M270	f_y:	
14. NOMINAL BEARING RESISTANCE OF SOIL	q_n:	
15. SOIL BEARING RESISTANCE FACTOR (REFER TO AASHTO LRFD)	ϕ:	
16. NOMINAL BEARING RESISTANCE OF ROCK	q_n:	
17. ROCK BEARING RESISTANCE FACTOR (REFER TO AASHTO LRFD)	ϕ:	
18. PILE RESISTANCE FACTOR	ϕ:	
19. LATERAL PILE DEFLECTION	Δ:	
20. BASIC WIND SPEED	V_{3s}:	
21. MINIMUM GROUND SNOW LOAD	p_g:	
22. SEISMIC DATA PGA: 0	S_s:	
	S_1:	
23.		
24.		
25.		
26.		

GREEN INTERNATIONAL AFFILIATES, INC.
CIVIL AND STRUCTURAL ENGINEERS

PROJECT NAME: MENDON
PROJECT NUMBER: ER 020-2(39)

FILE NAME: z13b188pi.dgn
PROJECT LEADER: E. ATKINS
DESIGNED BY: M. BRADLEY
PRELIMINARY INFORMATION SHEET

PLOT DATE: 11/24/2015
DRAWN BY: M. BURACZYNSKI
CHECKED BY: E. ATKINS
SHEET 2 OF 72

GENERAL INFORMATION

SYMBOLOGY LEGEND NOTE

THE SYMBOLOGY ON THIS SHEET IS INTENDED TO COVER STANDARD CONVENTIONAL SYMBOLOGY. THE SYMBOLOGY IS USED FOR EXISTING & PROPOSED FEATURES WITH HEAVIER LINEWEIGHT, IN COMBINATION WITH PROJECT ANNOTATION, AS NOTED ON PROJECT PLAN SHEETS. THIS LEGEND SHEET COVERS THE BASICS. SYMBOLOGY ON PLANS MAY VARY, PLAN ANNOTATIONS AND NOTES SHOULD BE USED TO CLARIFY AS NEEDED.

R.O.W. ABBREVIATIONS (CODES) & SYMBOLS

POINT	CODE	DESCRIPTION
	CH	CHANNEL EASEMENT
	CONST	CONSTRUCTION EASEMENT
	CUL	CULVERT EASEMENT
	D&C	DISCONNECT & CONNECT
	DIT	DITCH EASEMENT
	DR	DRAINAGE EASEMENT
	DRIVE	DRIVEWAY EASEMENT
	EC	EROSION CONTROL
	HWY	HIGHWAY EASEMENT
	I&M	INSTALL & MAINTAIN EASEMENT
	LAND	LANDSCAPE EASEMENT
	R&RES	REMOVE & RESET
	R&REP	REMOVE & REPLACE
	SR	SLOPE RIGHT
	UE	UTILITY EASEMENT
	(P)	PERMANENT EASEMENT
	(T)	TEMPORARY EASEMENT
■	BNDNS	BOUND SET
⧈	BNDNS	BOUND TO BE SET
●	IPNS	IRON PIN SET
◎	IPNS	IRON PIN TO BE SET
⊠	CALC	EXISTING ROW POINT
○	PROW	PROPOSED ROW POINT
[LENGTH]		LENGTH CARRIED ON NEXT SHEET

COMMON TOPOGRAPHIC POINT SYMBOLS

POINT	CODE	DESCRIPTION
	APL	BOUND APPARENT LOCATION
	BM	BENCHMARK
	BND	BOUND
	CB	CATCH BASIN
	COMB	COMBINATION POLE
	DITHR	DROP INLET THROATED DNC
	EL	ELECTRIC POWER POLE
	FPOLE	FLAGPOLE
	GASFIL	GAS FILLER
	GP	GUIDE POST
	GSO	GAS SHUT OFF
	GUY	GUY POLE
	GUYW	GUY WIRE
	GV	GATE VALUE
	H	TREE HARDWOOD
	HCTRL	CONTROL HORIZONTAL
	HVCTRL	CONTROL HORIZ. & VERTICAL
	HYD	HYDRANT
	IP	IRON PIN
	IPIPE	IRON PIPE
	LI	LIGHT - STREET OR YARD
	MB	MAILBOX
	MH	MANHOLE (MH)
	MM	MILE MARKER
	PM	PARKING METER
	PMK	PROJECT MARKER
	POST	POST STONE/WOOD
	RRSIG	RAILROAD SIGNAL
	RRSL	RAILROAD SWITCH LEVER
	S	TREE SOFTWOOD
	SAT	SATELLITE DISH
	SHRUB	SHRUB
	SIGN	SIGN
	STUMP	STUMP
	TEL	TELEPHONE POLE
	TIE	TIE
	TSIGN	SIGN W/DOUBLE POST
	VCTRL	CONTROL VERTICAL
	WELL	WELL
	WSO	WATER SHUT OFF

THESE ARE COMMON VAOT SURVEY POINT SYMBOLS FOR EXISTING FEATURES, ALSO USED FOR PROPOSED FEATURES WITH HEAVIER LINEWEIGHT, IN COMBINATION WITH PROPOSED ANNOTATION.

PROPOSED GEOMETRY CODES

CODE	DESCRIPTION
PC	POINT OF CURVATURE
PI	POINT OF INTERSECTION
CC	CENTER OF CURVE
PT	POINT OF TANGENCY
PCC	POINT OF COMPOUND CURVE
PRC	POINT OF REVERSE CURVE
POB	POINT OF BEGINNING
POE	POINT OF ENDING
STA	STATION PREFIX
AH	AHEAD STATION SUFFIX
BK	BACK STATION SUFFIX
D	CURVE DEGREE OF (100FT)
R	CURVE RADUIS OF
T	CURVE TANGENT LENGTH
L	CURVE LENGTH OF
E	CURVE EXTERNAL DISTANCE

UTILITY SYMBOLOGY

UNDERGROUND UTILITIES

- UGU — UTILITY (GENERIC-UNKNOWN)
- UT — TELEPHONE
- UE — ELECTRIC
- UC — CABLE (TV)
- UEC — ELECTRIC+CABLE
- UET — ELECTRIC+TELEPHONE
- UCT — CABLE+TELEPHONE
- UECT — ELECTRIC+CABLE+TELEP.
- G — GAS LINE
- W — WATER LINE
- S — SANITARY SEWER (SEPTIC)

ABOVE GROUND UTILITIES (AERIAL)

- AGU — UTILITY (GENERIC-UNKNOWN)
- T — TELEPHONE
- E — ELECTRIC
- C — CABLE (TV)
- EC — ELECTRIC+CABLE
- ET — ELECTRIC+TELEPHONE
- AER E&T — ELECTRIC+TELEPHONE
- CT — CABLE+TELEPHONE
- ECT — ELECTRIC+CABLE+TELEP.
- UTILITY POLE GUY WIRE

PROJECT CONSTRUCTION SYMBOLOGY

PROJECT DESIGN & LAYOUT SYMBOLOGY

- CLEAR ZONE (CZ)
- PLAN LAYOUT MATCHLINE

PROJECT CONSTRUCTION FEATURES

- TOP OF CUT SLOPE
- TOE OF FILL SLOPE
- STONE FILL
- BOTTOM OF DITCH ℄
- CULVERT PROPOSED
- STRUCTURE SUBSURFACE
- PROJECT DEMARCATION FENCE (PDF)
- BARRIER FENCE (BF)
- TREE PROTECTION ZONE (TPZ)
- STRIPING LINE REMOVAL
- SHEET PILES

CONVENTIONAL BOUNDARY SYMBOLOGY

BOUNDARY LINES

- TOWN BOUNDARY LINE
- COUNTY BOUNDARY LINE
- STATE BOUNDARY LINE
- PROPOSED STATE R.O.W. (LIMITED ACCESS)
- PROPOSED STATE R.O.W.
- STATE ROW (LIMITED ACCESS)
- STATE ROW
- TOWN ROW
- PERMANENT EASEMENT LINE (P)
- TEMPORARY EASEMENT LINE (T)
- SURVEY LINE
- PROPERTY LINE (P/L)
- SLOPE RIGHTS (SR)
- 6F PROPERTY BOUNDARY
- 4F PROPERTY BOUNDARY
- HAZ — HAZARDOUS WASTE

EPSC LAYOUT PLAN SYMBOLOGY

EPSC MEASURES

- FILTER CURTAIN
- SILT FENCE
- SILT FENCE WOVEN WIRE
- CHECK DAM
- DISTURBED AREAS REQUIRING RE-VEGETATION
- EROSION MATTING

SEE EPSC DETAIL SHEETS FOR ADDITIONAL SYMBOLOGY

ENVIRONMENTAL RESOURCES

- WETLAND BOUNDARY
- RIPARIAN BUFFER ZONE
- WETLAND BUFFER ZONE
- SOIL TYPE BOUNDARY
- T&E — THREATENED & ENDANGERED SPECIES
- HAZ — HAZARDOUS WASTE AREA
- AG — AGRICULTURAL LAND
- HABITAT — FISH & WILDLIFE HABITAT
- FLOOD PLAIN — FLOOD PLAIN
- OHW — ORDINARY HIGH WATER (OHW)
- STORM WATER
- USDA FOREST SERVICE LANDS
- WILDLIFE HABITAT SUIT/CONN

ARCHEOLOGICAL & HISTORIC

- ARCH — ARCHEOLOGICAL BOUNDARY
- HISTORIC DIST — HISTORIC DISTRICT BOUNDARY
- HISTORIC — HISTORIC AREA
- (H) HISTORIC STRUCTURE

CONVENTIONAL TOPOGRAPHIC SYMBOLOGY

EXISTING FEATURES

- ROAD EDGE PAVEMENT
- ROAD EDGE GRAVEL
- DRIVEWAY EDGE
- DITCH
- FOUNDATION
- FENCE (EXISTING)
- FENCE WOOD POST
- FENCE STEEL POST
- GARDEN
- ROAD GUARDRAIL
- RAILROAD TRACKS
- CULVERT (EXISTING)
- STONE WALL
- WALL
- WOOD LINE
- BRUSH LINE
- HEDGE
- BODY OF WATER EDGE
- LEDGE EXPOSED

GREEN INTERNATIONAL AFFILIATES, INC.
CIVIL AND STRUCTURAL ENGINEERS

PROJECT NAME: MENDON
PROJECT NUMBER: ER 020-2(39)

FILE NAME: z13b188lgnd.dgn
PROJECT LEADER: E. ATKINS
DESIGNED BY: M. BRADLEY
CONVENTIONAL SYMBOLOGY LEGEND SHEET

PLOT DATE: 11/13/2015
DRAWN BY: M. BRADLEY
CHECKED BY: E. ATKINS
SHEET 3 OF 72

CAST-IN PLACE CONCRETE HEADWALL, AND FOOTING NOTES

GENERAL:

1. ALL MATERIALS AND CONSTRUCTION SHALL CONFORM TO THE STATE OF VERMONT AGENCY OF TRANSPORTATION STANDARD SPECIFICATIONS FOR CONSTRUCTION DATED 2011, AND ITS LATEST REVISIONS, AND THE AASHTO LRFD BRIDGE DESIGN SPECIFICATIONS, DATED 2014, AND ITS LATEST REVISIONS.

2. DESIGN VEHICLE: HL-93

3. ALL DIMENSIONS ARE HORIZONTAL OR VERTICAL, AND ARE GIVEN AT 68 DEGREES FAHRENHEIT, UNLESS NOTED OTHERWISE.

4. WHERE LEDGE IS ABOVE THE MINIMUM BOTTOM OF FOOTING ELEVATION, THE LEDGE SHALL BE EXCAVATED DOWN TO 2'-6" MINIMUM BELOW THE TOP OF THE HEADWALL FOOTING ELEVATION. ALL OVER BREAKAGE BELOW THIS ELEVATION SHALL BE REPLACED WITH ITEM 501.34 CONCRETE, HIGH PERFORMANCE CLASS B. A MAXIMUM OF SIX INCHES AVERAGE DEPTH WILL BE PAID FOR AS ITEM 501.34 CONCRETE, HIGH PERFORMANCE CLASS B. ANY ADDITIONAL CONCRETE OR EXCAVATION WILL BE AT THE CONTRACTOR'S EXPENSE.

CONCRETE:

1. JOINTS AND SCORE MARKS IN CONCRETE SHALL BE CONSTRUCTED AS INDICATED ON THE PLANS OR AS DIRECTED BY THE ENGINEER.

2. THE KEY IN CONSTRUCTION JOINTS SHALL BE MONOLITHIC AND CONTINUOUS FOR THE FULL LENGTH OF THE JOINT.

3. WATER REPELLENT, SILANE SHALL BE FURNISHED IN ACCORDANCE WITH SECTION 514. WATER REPELLENT, SILANE AND SHALL BE APPLIED TO ALL EXPOSED CONCRETE ON THE STRUCTURE AND SUBSTRUCTURE.

4. ALL EXPOSED EDGES ON CONCRETE SHALL BE CHAMFERED 1" X 1".

5. MINIMUM CLEAR COVER FOR REINFORCING STEEL SHALL BE AS FOLLOWS:
   ALONG BACK FACES OF WALLS AGAINST EARTH - 2 INCH
   ELSEWHERE UNLESS OTHERWISE INDICATED - 3 INCH

6. DESIGN VALUES
   a. CONCRETE, HIGH PERFORMANCE CLASS B COMPRESSIVE STRENGTH: f'c = 3500 PSI.

REINFORCING STEEL:

1. ALL REINFORCING STEEL SHALL BE DETAILED AND FABRICATED USING PROCEDURES AND TOLERANCES IN ACCORDANCE WITH APPLICABLE PUBLICATIONS OF THE "CONCRETE REINFORCING STEEL INSTITUTE".

2. REINFORCING PLACEMENT TOLERANCES SHALL BE:
   SPACING: +/- 1 INCH
   CLEARANCES: +/- 1/4 INCH

3. REINFORCING STEEL IN THE SUBSTRUCTURE SHALL MEET THE REQUIREMENTS OF SECTION 507 FOR UNCOATED LEVEL 1 REINFORCING STEEL AND WILL BE PAID FOR UNDER CONTRACT PAY ITEM 507.11.

UTILITIES:

UNLESS OTHERWISE NOTED ON THE PLANS, ALL UTILITIES HAVE BEEN PLOTTED TO QUALITY LEVEL "C"; SEE BELOW.

UTILITY QUALITY LEVEL INFORMATION INDEX (SEE ASCE/CI 38-02):

UTILITY QUALITY LEVEL (QL-A):
PRECISE HORIZONTAL AND VERTICAL LOCATION OF UTILITIES OBTAINED BY THE ACTUAL EXPOSURE (OR VERIFICATION OF PREVIOUSLY EXPOSED AND SURVEYED UTILITIES) AND SUBSEQUENT MEASUREMENT OF SUBSURFACE UTILITIES, USUALLY AT A SPECIFIC POINT. MINIMALLY INTRUSIVE EXCAVATION EQUIPMENT IS TYPICALLY USED TO MINIMIZE THE POTENTIAL FOR UTILITY DAMAGE. A PRECISE HORIZONTAL AND VERTICAL LOCATION, AS WELL AS OTHER UTILITY ATTRIBUTES, IS SHOWN ON PLAN DOCUMENTS. ACCURACY IS TYPICALLY SET TO 0.05 FEET (15-MM) VERTICAL AND TO APPLICABLE HORIZONTAL SURVEY AND MAPPING ACCURACY AS DEFINED OR EXPECTED BY THE PROJECT OWNER. INFORMATION IS ONLY VALID WITHIN THE VISIBLE LIMITS OF THE TEST HOLE.

UTILITY QUALITY LEVEL (QL-B):
INFORMATION OBTAINED THROUGH THE APPLICATION OF APPROPRIATE SURFACE GEOPHYSICAL METHODS TO DETERMINE THE EXISTENCE AND APPROXIMATE HORIZONTAL POSITION OF SUBSURFACE UTILITIES. QUALITY LEVEL B DATA SHOULD BE REPRODUCIBLE BY SURFACE GEOPHYSICS AT ANY POINT OF THEIR DEPICTION. THIS INFORMATION IS SURVEYED TO APPLICABLE TOLERANCES DEFINED BY THE PROJECT AND REDUCED ONTO PLAN DOCUMENTS.

UTILITY QUALITY LEVEL (QL-C):
INFORMATION OBTAINED BY SURVEYING AND PLOTTING VISIBLE ABOVE-GROUND UTILITY FEATURES AND BY USING PROFESSIONAL JUDGEMENT IN CORRELATING THIS INFORMATION TO QUALITY LEVEL D INFORMATION.

UTILITY QUALITY LEVEL (QL-D):
INFORMATION DERIVED FROM EXISTING RECORDS OR ORAL RECOLLECTIONS.

STONE FILL NOTES

1. PRIOR TO PLACING MATERIALS, PREPARE SLOPE AND SUBGRADE AS FOLLOWS:
   A. CUT OFF TREES AND EXISTING STUMPS TO GROUND LEVEL.
      LEAVE STUMPS & ROOTS BELOW GRADE IN PLACE.
   B. EXCAVATE VEGETATION (EXCEPT STUMPS) AND ORGANIC SOILS FROM SURFACE OF SLOPE.
   C. COMPACT SURFACE OF SLOPE (COMPACTION WITH EXCAVATOR BUCKET ACCEPTABLE).
   D. PLACE MATERIALS AS SHOWN ON THE DETAILS.

2. PLACEMENT OF STONE SHALL BE IN ACCORDANCE WITH THE FOLLOWING:
   A. STONE FILL SHALL BE CAREFULLY PLACED ON SLOPES AND INTERLOCKED TO CREATE A STABLE AND WELL-GRADED MIXTURE OF LARGE STONES AND SMALLER STONES WITHOUT LARGE VOIDS IN BETWEEN. VOIDS SHALL BE CHOKED WITH SMALLER STONES TO CREATE A MASS FREE OF LARGE VOIDS.
   B. DUMPING OF STONE FILL AT THE TOP OF THE SLOPES AND ROLLING OR PUSHING INTO PLACE SHALL NOT BE PERMITTED.
   C. PLATE COMPACTORS SHALL NOT BE USED IN THE PLACEMENT OF ITEM 900.608 SPECIAL PROVISION (STONE FILL, CHANNEL ARMORING) OR THE NATIVE RIVERBED MATERIAL.
   D. NATIVE RIVER BED MATERIAL SHALL BE EXISTING RIVERBED MATERIAL EXCAVATED DURING THE WORK UNDER THIS PROJECT AND SHALL BE PLACED TO MIMIC THE NATURAL COBBLE RIVER BOTTOM AND ROUGHNESS THROUGHOUT THE PROJECT TO THE SATISFACTION OF THE ENGINEER. THE MATERIAL SHALL BE STOCKPILED AND REUSED AS SHOWN ON THE PLANS AND AS DIRECTED BY THE ENGINEER.
   E. THE COST OF THIS NATIVE RIVERBED MATERIAL WILL BE CONSIDERED INCIDENTAL TO ITEM 203.27 UNCLASSIFIED CHANNEL EXCAVATION.

3. ALL EXCAVATION WILL BE PAID FOR UNDER ITEM 203.15, COMMON EXCAVATION OR 203.27 UNCLASSIFIED CHANNEL EXCAVATION. IF ENCOUNTERED IN AREAS OF COMMON EXCAVATION, PAYMENT FOR THE REMOVAL OF ROCK MEETING THE REQUIREMENTS OF 203.01 (b) WILL BE MADE UNDER ITEM 203.16, SOLID ROCK EXCAVATION WHEN APPROVED BY THE ENGINEER.

4. COST FOR TEMPORARY SUPPORT OF EXCAVATION, WHEN REQUIRED, OR WHEN DIRECTED BY THE ENGINEER WILL BE CONSIDERED INCIDENTAL TO ITEM NUMBER 203.17 UNCLASSIFIED EXCAVATION. NO PAYMENT WILL BE MADE FOR EXCAVATION OUTSIDE THE LIMITS SHOWN.

5. ITEM 649.31 GEOTEXTILE FABRIC UNDER STONE FILL WILL EXTEND ALONG ANY VERTICAL CUT FACE AND CONTINUE AT LEAST 4 FEET ALONG THE UPSLOPE AND DOWNSLOPE, ADJACENT TO THE CUT FACE.

TRAFFIC NOTES:

1. THESE PLANS ARE NOT INTENDED TO LIMIT THE CONTRACTORS APPROACH TO SCHEDULE THE WORK BUT TO OUTLINE ONE WAY OF PROGRESSING. THE CONTRACTOR IS EXPECTED TO USE KNOWLEDGE AND EXPERIENCE TO PERFORM THE WORK IN THE MOST EFFICIENT AND SAFE MANNER IN COMPLIANCE WITH THE LATEST EDITION OF "MANUAL ON UNIFORM TRAFFIC CONTROL DEVICES" (MUTCD) AND VTRANS STANDARDS. THE CONTRACTOR SHALL PREPARE A SITE SPECIFIC TRAFFIC CONTROL PLAN AND SUBMIT THE PLAN FOR THE ENGINEER'S APPROVAL. THE COST OF PREPARING THE SITE SPECIFIC TRAFFIC CONTROL PLAN SHALL BE CONSIDERED INCIDENTAL TO ITEM 900.645 SPECIAL PROVISION (TRAFFIC CONTROL, ALL-INCLUSIVE).

2. ALL ITEMS ASSOCIATED WITH INSTALLATION AND REMOVAL OF TEMPORARY WIDENING AND TRAFFIC DIVERSION, WITH THE EXCEPTION OF TEMPORARY TRAFFIC BARRIER, WILL BE CONSIDERED INCIDENTAL TO ITEM 900.645 SPECIAL PROVISION (TRAFFIC CONTROL ALL - INCLUSIVE), INCLUDING BUT NOT LIMITED TO: TRAFFIC SIGNS, COMMON EXCAVATION, SUBBASE OF DENSE GRADED CRUSHED STONE, TRAFFIC CONES, PORTABLE CHANGEABLE MESSAGE SIGN, TEMPORARY 4 INCH WHITE LINE, TEMPORARY 4 INCH YELLOW LINE, PAVEMENT MARKING MASK, AND BITUMINOUS CONCRETE PAVEMENT.

3. CONTRACTOR SHALL RELOCATE OR COVER ALL EXISTING SIGNS WHERE THEY WOULD CONFLICT WITH CONSTRUCTION SIGNAGE. ALL EXISTING SIGNS THAT NEED TO BE RELOCATED OR COVERED SHALL BE RESTORED AFTER THE COMPLETION OF WORK. THE COST WILL BE CONSIDERED INCIDENTAL TO ITEM 900.645 SPECIAL PROVISION (TRAFFIC CONTROL, ALL-INCLUSIVE).

4. THE CONTRACTOR SHALL BE RESPONSIBLE FOR LOCATING CONSTRUCTION SIGNAGE SO AS NOT TO INTERFERE OR OBSTRUCT THE VIEW OF EXISTING TRAFFIC CONTROL DEVICES, STOPPING SIGHT DISTANCE AND CORNER SIGHT DISTANCE. THE COST WILL BE CONSIDERED INCIDENTAL TO ITEM 900.645 SPECIAL PROVISION (TRAFFIC CONTROL, ALL-INCLUSIVE).

5. ALL TEMPORARY TRAFFIC BARRIERS SHALL BE DELINEATED IN ACCORDANCE WITH THE STANDARD SPECIFICATIONS AND THE LATEST EDITION OF "MANUAL ON UNIFORM TRAFFIC CONTROL DEVICES" (MUTCD).

6. PAYMENT FOR FURNISHING AND PLACING TEMPORARY TRAFFIC SIGNS AND REMOVING AND RELOCATING TEMPORARY TRAFFIC SIGNS WILL BE CONSIDERED INCIDENTAL TO ITEM 900.645 SPECIAL PROVISION (TRAFFIC CONTROL, ALL-INCLUSIVE).

7. PAYMENT FOR REMOVING AND RESETTING TEMPORARY TRAFFIC BARRIER WILL BE MADE UNDER ITEM 621.95 REMOVE AND RESET TEMPORARY TRAFFIC BARRIER.

8. THE CONTRACTOR SHALL REMOVE THE EXISTING STEEL BEAM GUARDRAIL AND POSTS AS REQUIRED TO ALLOW THE INSTALLATION OF THE TEMPORARY TRAFFIC BARRIER. THE STEEL BEAM RAIL AND POSTS SHALL BE STORED ON THE PROJECT IN A LOCATION ACCEPTABLE TO THE ENGINEER. WHEN THE TEMPORARY TRAFFIC BARRIER IS REMOVED, THE CONTRACTOR SHALL REINSTALL THE EXISTING STEEL BEAM GUARDRAIL AND POSTS. ANY POSTS, BEAM RAIL OR OTHER PARTS THAT ARE NOT SALVAGED SHALL BE REPLACED WITH THE NEW PARTS. THE WORK REQUIRED TO REMOVE AND RESET THE GUARDRAIL WILL BE PAID UNDER ITEM 621.75 REMOVE AND RESET GUARDRAIL.

9. THE CONTRACTOR SHALL FURNISH, INSTALL AND MAINTAIN CORRUGATED REFLECTIVE METAL STRIPS (ALTERNATING ORANGE AND WHITE) ON TEMPORARY TRAFFIC BARRIER. STRIPS SHALL BE INSTALLED ON TRAFFIC SIDE FACE OF BARRIER PER MANUFACTURERS RECOMMENDATIONS AND AS APPROVED BY THE ENGINEER. THIS WORK WILL BE CONSIDERED INCIDENTAL TO ITEM 900.645 SPECIAL PROVISION (TRAFFIC CONTROL, ALL-INCLUSIVE).

10. LOCATIONS OF SIGNS AND PCMS ARE APPROXIMATE AND MAY BE ADJUSTED BASE ON FIELD CONDITIONS WITH THE DIRECTION AND APPROVAL OF ENGINEER ON SITE. INSTALL PCMS IN THE MOST VISIBLE LOCATION POSSIBLE SO THAT APPROACHING DRIVERS CAN READ EACH MESSAGE A MINIMUM OF TWO TIMES BEFORE PASSING IT.

11. ANY CHANGES TO THE PCMS MESSAGE DISPLAYS SHALL BE APPROVED BY THE ENGINEER.

GREEN INTERNATIONAL AFFILIATES, INC.
CIVIL AND STRUCTURAL ENGINEERS

PROJECT NAME: MENDON	
PROJECT NUMBER: ER 020-2(39)	
FILE NAME: z13bl88det.dgn	PLOT DATE: 11/24/2015
PROJECT LEADER: E. ATKINS	DRAWN BY: Y. WANG
DESIGNED BY: B. KHALIFA	CHECKED BY: B. KHALIFA
PROJECT NOTES SHEET	SHEET 4 OF 72

TYPICAL SECTIONS
MENDON BROOK

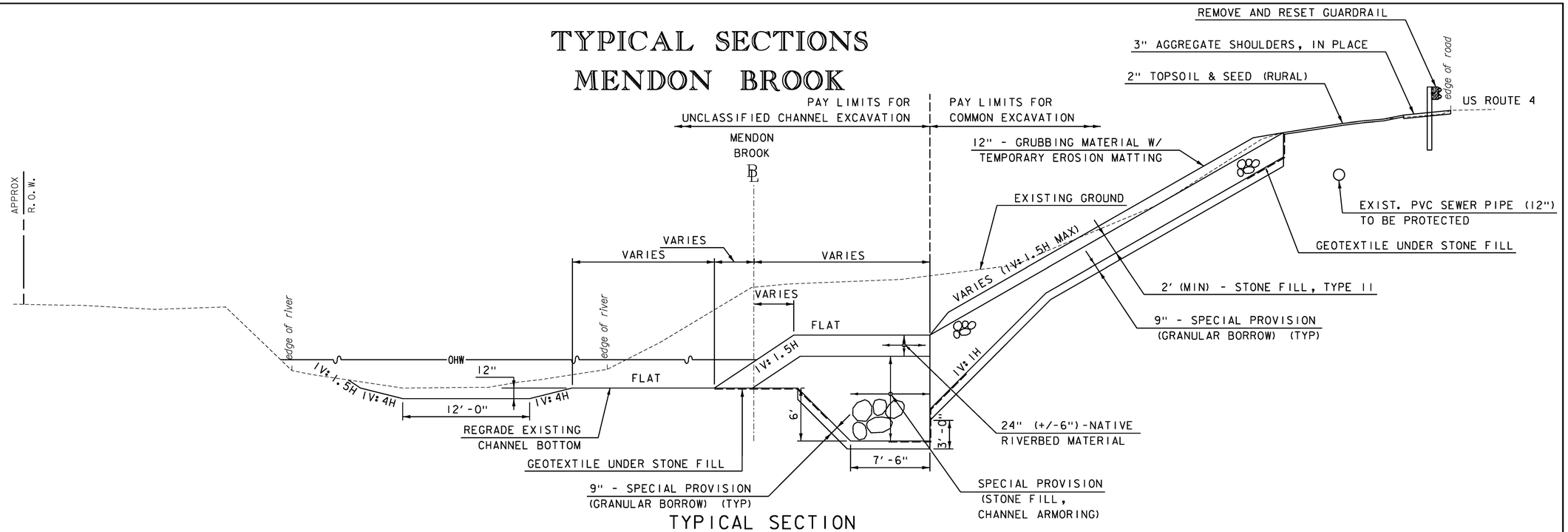

TYPICAL SECTION
STA. 8+00.00 - STA. 8+75.00
NOT TO SCALE

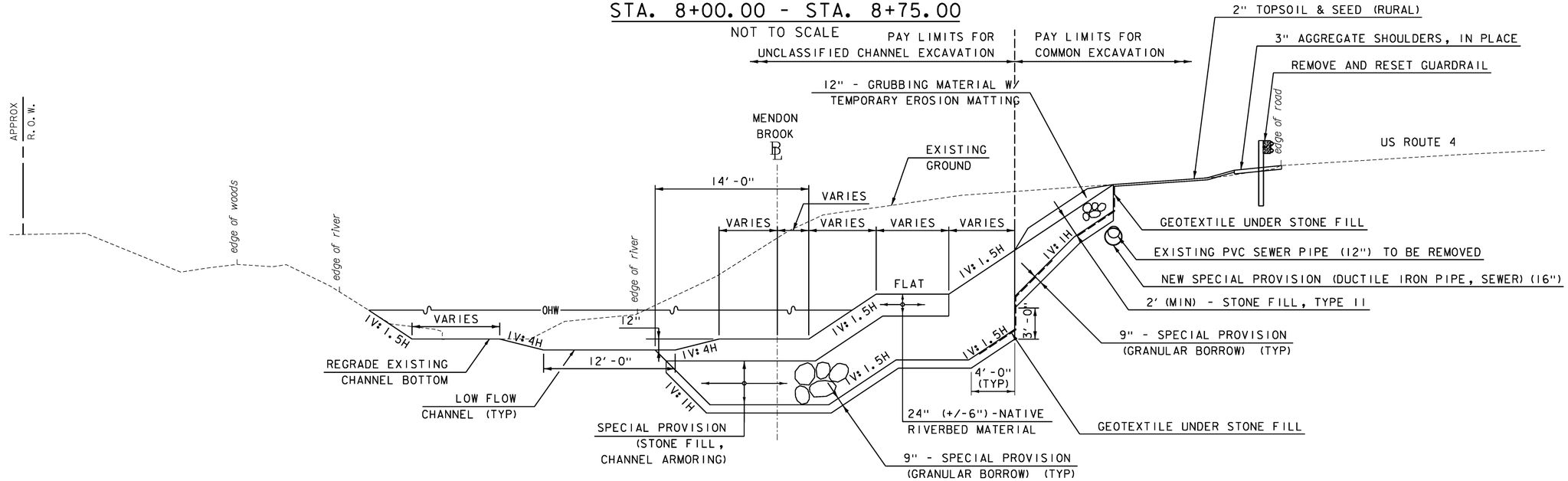

TYPICAL SECTION
STA. 3+00.00-8+00.00
NOT TO SCALE

* REFER TO SHEET 4 FOR PROJECT NOTES.

GREEN INTERNATIONAL AFFILIATES, INC.
CIVIL AND STRUCTURAL ENGINEERS

PROJECT NAME:	MENDON
PROJECT NUMBER:	ER 020-2(39)
FILE NAME: z13b188typ.dgn	PLOT DATE: 11/13/2015
PROJECT LEADER: E. ATKINS	DRAWN BY: M. BRADLEY
DESIGNED BY: M. BRADLEY	CHECKED BY: E. ATKINS
TYPICAL SECTIONS SHEET 1	SHEET 5 OF 72

TYPICAL SECTIONS
MENDON BROOK

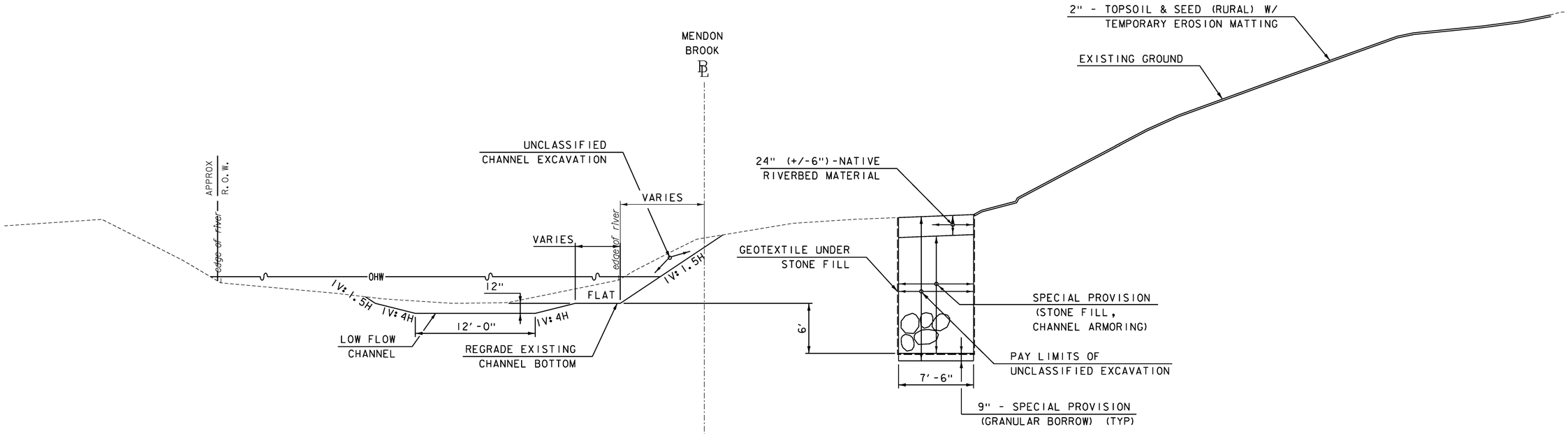

TYPICAL SECTION
STA. 8+75.00 - STA. 10+75.00
NOT TO SCALE

REFER TO SHEET 4 FOR PROJECT NOTES.

GREEN INTERNATIONAL AFFILIATES, INC.
CIVIL AND STRUCTURAL ENGINEERS

PROJECT NAME:	MENDON
PROJECT NUMBER:	ER 020-2(39)

FILE NAME: z13b188typ.dgn	PLOT DATE: 11/13/2015
PROJECT LEADER: E. ATKINS	DRAWN BY: M. BRADLEY
DESIGNED BY: M. BRADLEY	CHECKED BY: E. ATKINS
TYPICAL SECTIONS SHEET 2	SHEET 6 OF 72

MATERIAL ITEM	THICKNESS TOLERANCE
PAVEMENT (TOTAL DEPTH ALL LAYERS)	+/- 1/4"
SUBBASE (TOTAL DEPTH ALL LAYERS)	+/- 1"

TYPICAL SECTIONS
US ROUTE 4

US ROUTE 4 FULL DEPTH RECONSTRUCTION:

1 1/2" TYPE IVS - WEARING COURSE

3 1/2" TYPE IIS - INTERMEDIATE COURSE

3 1/2" TYPE IIS - BASE COURSE

24" SUBBASE OF DENSE GRADED CRUSHED STONE

* ALL PERMANENT PAVEMENT WILL BE PAID UNDER ITEM 900.608 SPECIAL PROVISION (BITUMINOUS CONCRETE PAVEMENT, SMALL QUANTITY)

TACK COAT: EMULSIFIED ASPHALT IS TO BE APPLIED AT THE RATE OF 0.025 GAL/SY BETWEEN SUCCESSIVE COURSES OF PAVEMENT, AND COLD PLANED SURFACES AS DIRECTED BY THE ENGINEER.

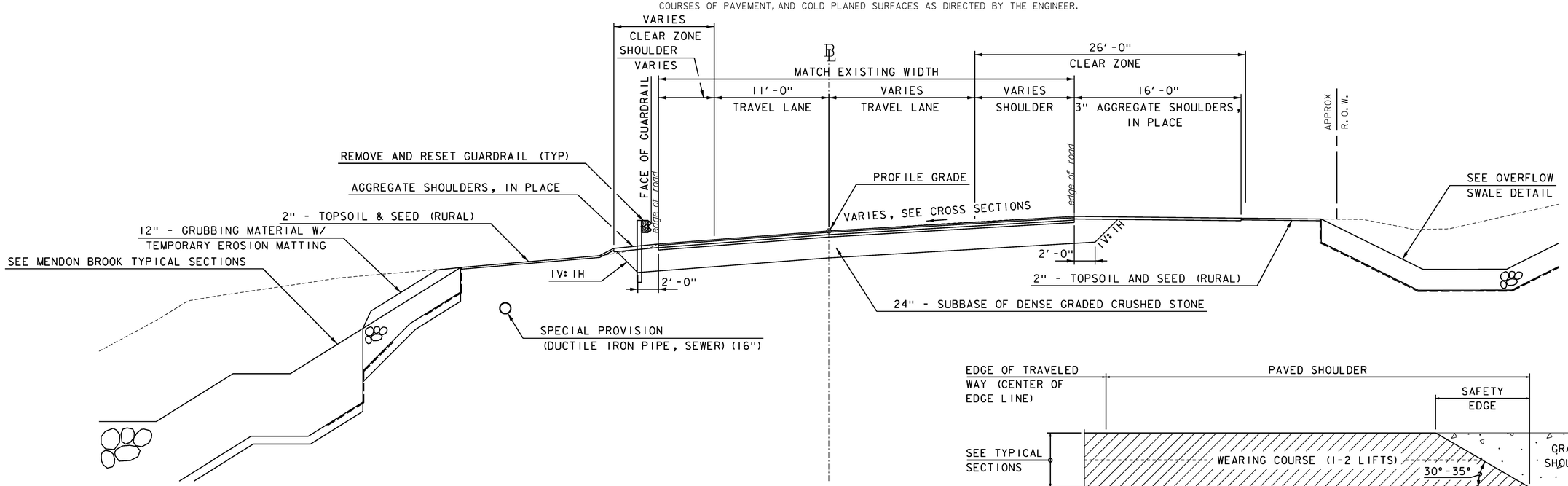

TYPICAL SECTION
STA. 23+71.05 - STA. 24+31.64
(MAX BANK 0.083)

NOT TO SCALE

SAFETY EDGE DETAIL

NOT TO SCALE

1. THE EDGE OF PAVEMENT SHALL BE FORMED IN SUCH A WAY THAT THE BITUMINOUS CONCRETE PAVEMENT IS EXTRUDED OR COMPRESSED TO FORM THE 30 TO 35 DEGREE ANGLE. DEVICES THAT SIMPLY STRIKE-OFF THE MIX WITHOUT PROVIDING ANY COMPACTIVE EFFORT WILL NOT BE ALLOWED.

2. THE PAVED SHOULDER EXTENDS FROM THE EDGE OF TRAVELED WAY TO THE EDGE OF THE WEARING COURSE, INCLUDING THE "SAFETY EDGE".

NOTE: THE CONTRACTOR SHALL MATCH EXISTING PROFILE, GRADES AND WIDTH.

REFER TO SHEET 4 FOR PROJECT NOTES.

GREEN INTERNATIONAL AFFILIATES, INC.
CIVIL AND STRUCTURAL ENGINEERS

PROJECT NAME: MENDON
PROJECT NUMBER: ER 020-2(39)

FILE NAME: z13bl88typ.dgn
PROJECT LEADER: E. ATKINS
DESIGNED BY: M. BRADLEY
TYPICAL SECTIONS SHEET 3

PLOT DATE: 11/24/2015
DRAWN BY: M. BRADLEY
CHECKED BY: E. ATKINS
SHEET 7 OF 72

TYPICAL SECTIONS
RAVINE

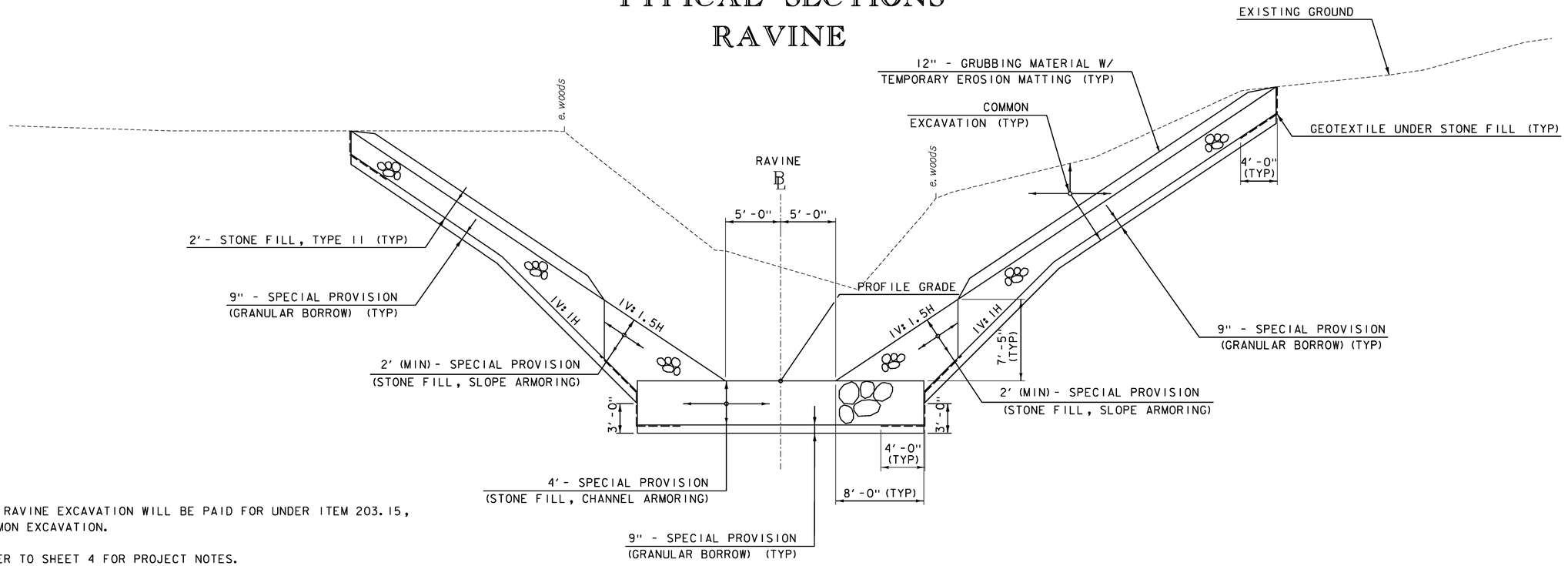

TYPICAL SECTION
STA. 201+75.00-203+25.00
NOT TO SCALE

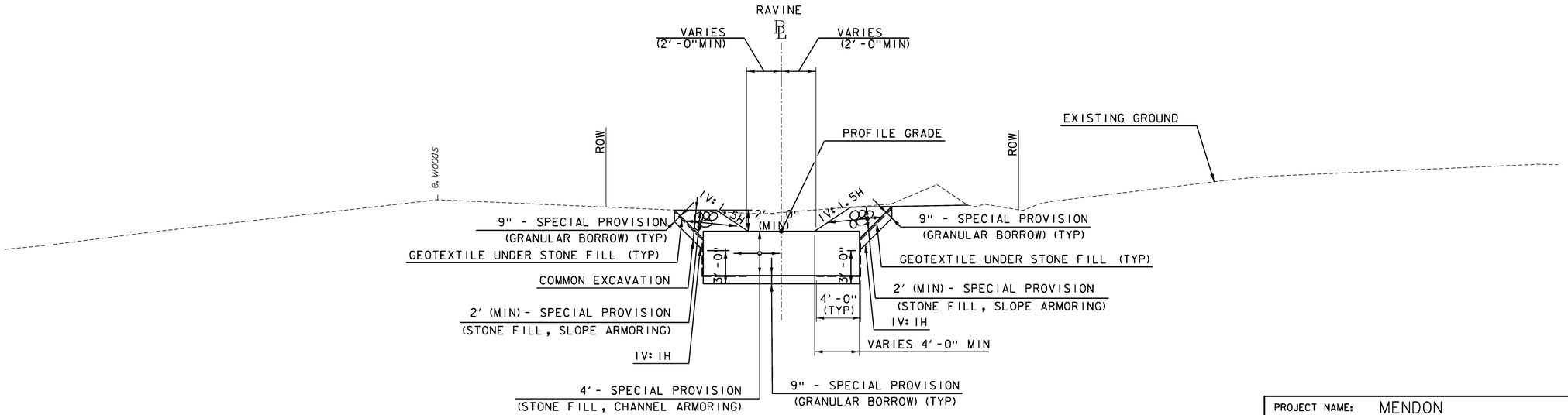

TYPICAL SECTION
STA. 200+75.00-201+75.00
NOT TO SCALE

NOTES:

1. ALL RAVINE EXCAVATION WILL BE PAID FOR UNDER ITEM 203.15, COMMON EXCAVATION.
2. REFER TO SHEET 4 FOR PROJECT NOTES.

GREEN INTERNATIONAL AFFILIATES, INC.
CIVIL AND STRUCTURAL ENGINEERS

PROJECT NAME: MENDON	
PROJECT NUMBER: ER 020-2(39)	
FILE NAME: z13bl88typ.dgn	PLOT DATE: 11/13/2015
PROJECT LEADER: E. ATKINS	DRAWN BY: M. BRADLEY
DESIGNED BY: M. BRADLEY	CHECKED BY: E. ATKINS
TYPICAL SECTIONS SHEET 4	SHEET 8 OF 72

TYPICAL SECTIONS
RAVINE

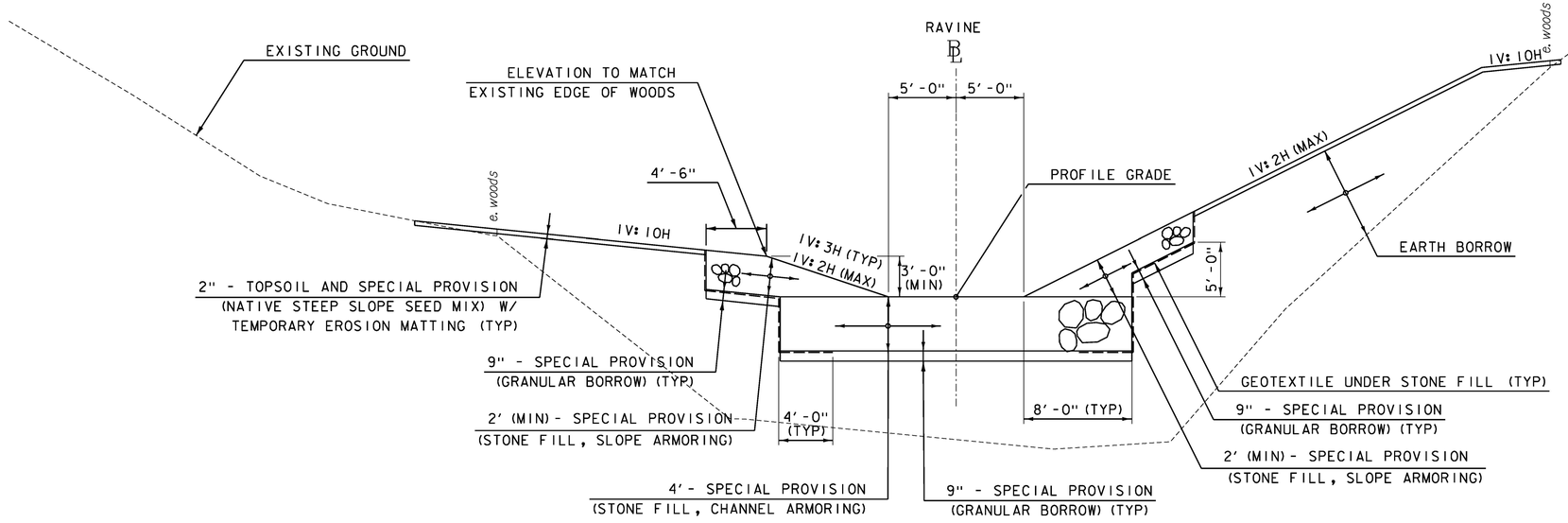

TYPICAL SECTION
STA. 204+25.00-205+75.00
NOT TO SCALE

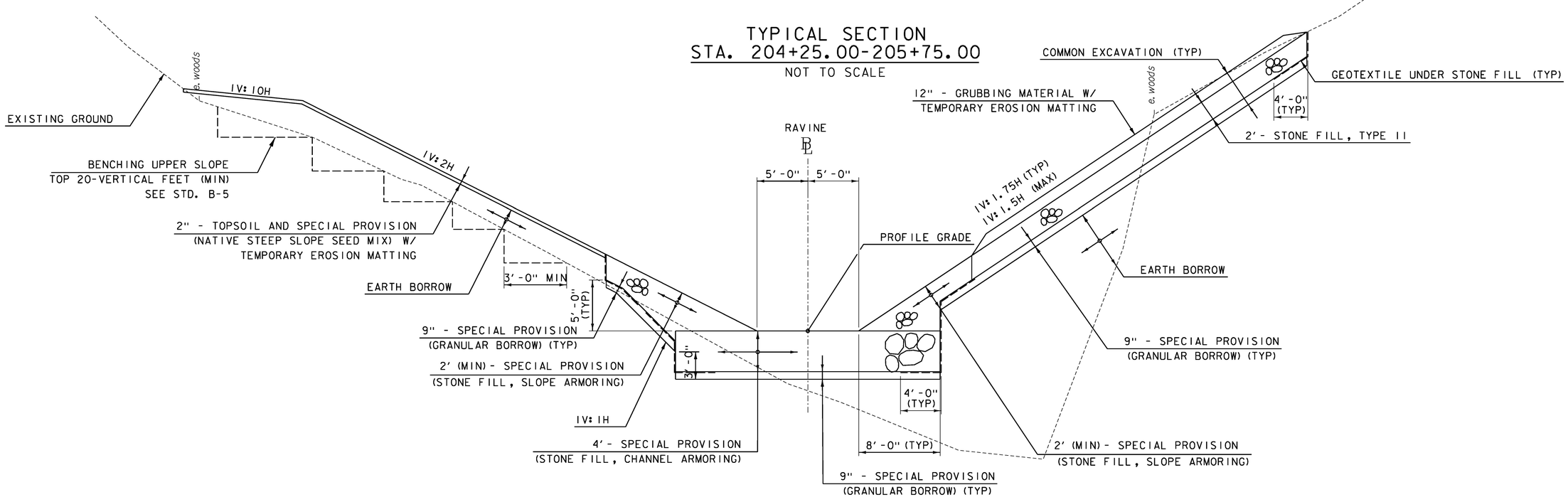

TYPICAL SECTION
STA. 203+25.00-204+25.00
NOT TO SCALE

REFER TO SHEET 4 FOR PROJECT NOTES.

GREEN INTERNATIONAL AFFILIATES, INC.
CIVIL AND STRUCTURAL ENGINEERS

PROJECT NAME: MENDON	
PROJECT NUMBER: ER 020-2(39)	
FILE NAME: zl3bl88typ.dgn	PLOT DATE: 11/13/2015
PROJECT LEADER: E. ATKINS	DRAWN BY: M. BRADLEY
DESIGNED BY: M. BRADLEY	CHECKED BY: E. ATKINS
TYPICAL SECTIONS SHEET 5	SHEET 9 OF 72

TYPICAL SECTIONS

RAVINE

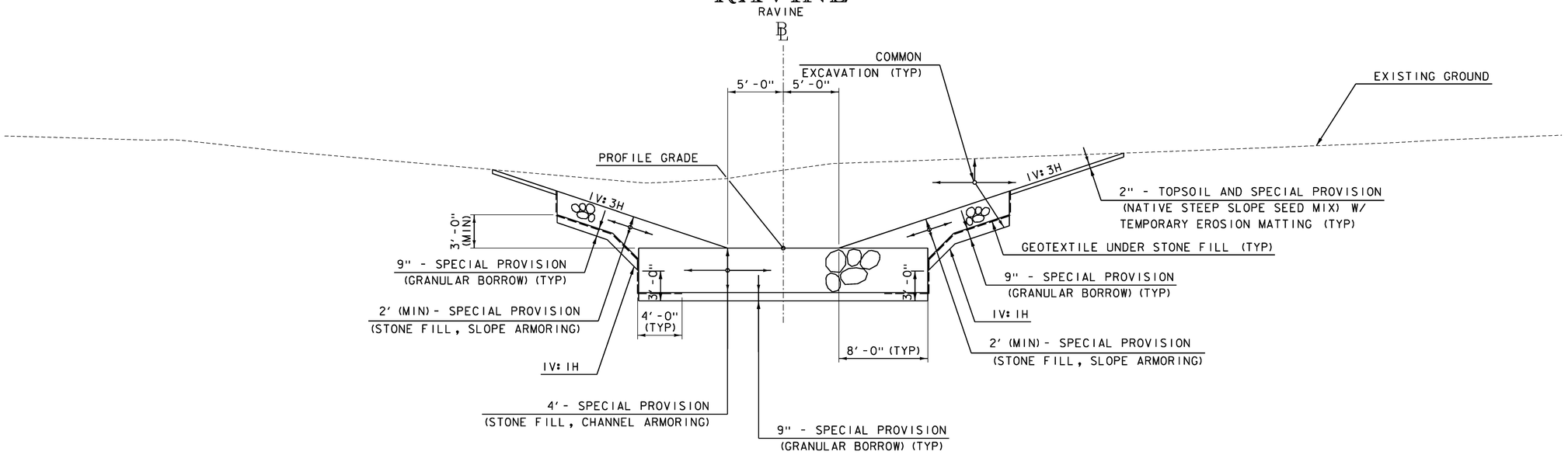

TYPICAL SECTION
STA. 206+75.00-207+50.00
NOT TO SCALE

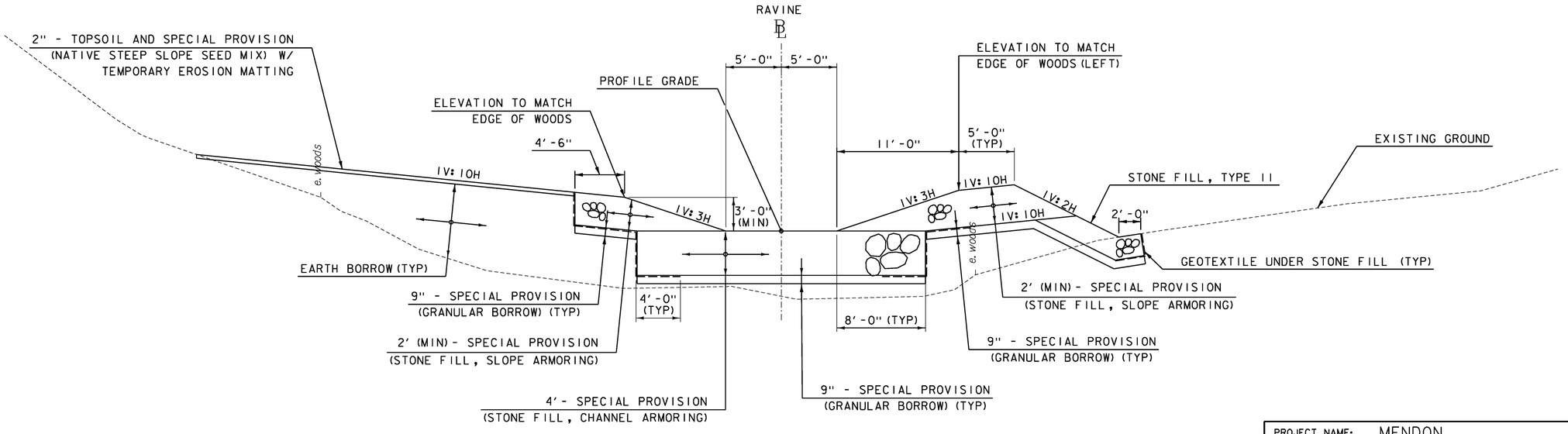

TYPICAL SECTION
STA. 205+75.00-206+75.00
NOT TO SCALE

REFER TO SHEET 4 FOR PROJECT NOTES.

GREEN INTERNATIONAL AFFILIATES, INC.
CIVIL AND STRUCTURAL ENGINEERS

PROJECT NAME: MENDON	
PROJECT NUMBER: ER 020-2(39)	
FILE NAME: z13b188typ.dgn	PLOT DATE: 11/13/2015
PROJECT LEADER: E. ATKINS	DRAWN BY: M. BRADLEY
DESIGNED BY: M. BRADLEY	CHECKED BY: E. ATKINS
TYPICAL SECTIONS SHEET 6	SHEET 10 OF 72

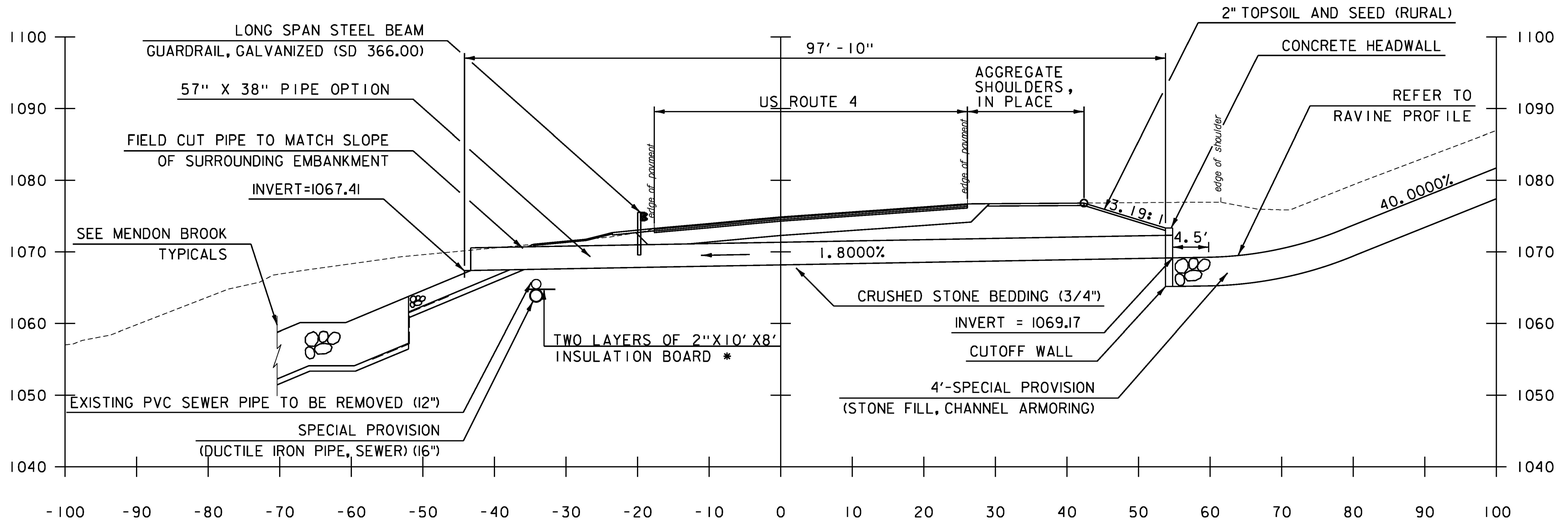

US ROUTE 4 STA. 23+99.82
SKEWED AT 65°22'59.88" RT
57" X 38" PIPE OPTION

0 10 20
SCALE IN FEET

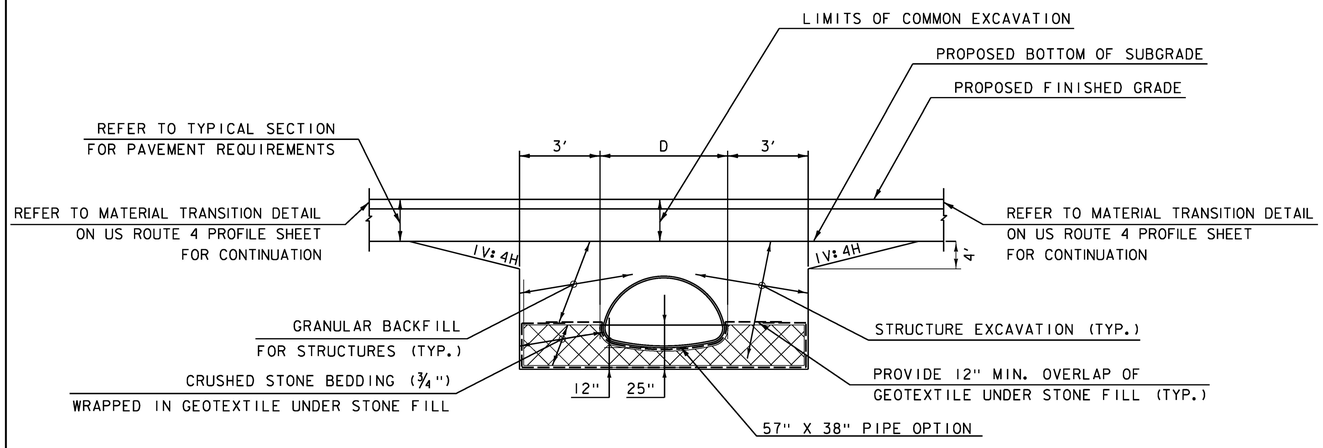

TYPICAL
57" X 38" PIPE OPTION
TRENCH DETAIL

NOT TO SCALE

* COST OF THE INSULATION BOARD WILL BE CONSIDERED INCIDENTAL TO ITEM 900.640 SPECIAL PROVISION (DUCTILE IRON PIPE, SEWER) (16")

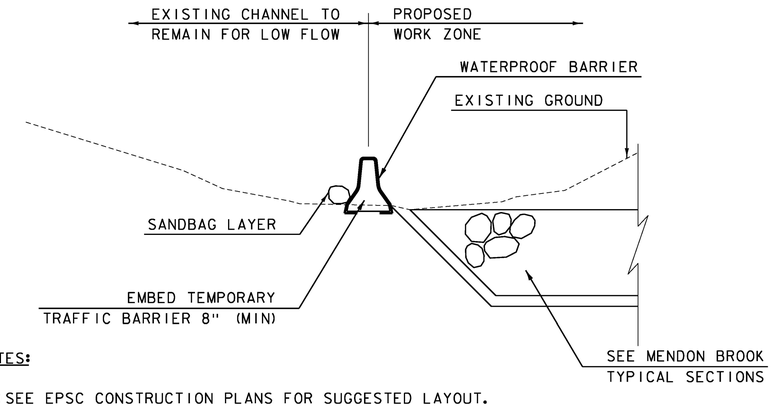

NOTES:

1.) SEE EPSC CONSTRUCTION PLANS FOR SUGGESTED LAYOUT.

SPECIAL PROVISION
(TEMPORARY WATER DIVERSION BARRIER) DETAIL

NOT TO SCALE

GREEN INTERNATIONAL AFFILIATES, INC.
CIVIL AND STRUCTURAL ENGINEERS

PROJECT NAME: MENDON
PROJECT NUMBER: ER 020-2(39)

FILE NAME: zl3bl88det.dgn
PROJECT LEADER: E. ATKINS
DESIGNED BY: M. BRADLEY
DETAIL SHEET I

PLOT DATE: 11/24/2015
DRAWN BY: M. BRADLEY
CHECKED BY: E. ATKINS
SHEET 11 OF 72

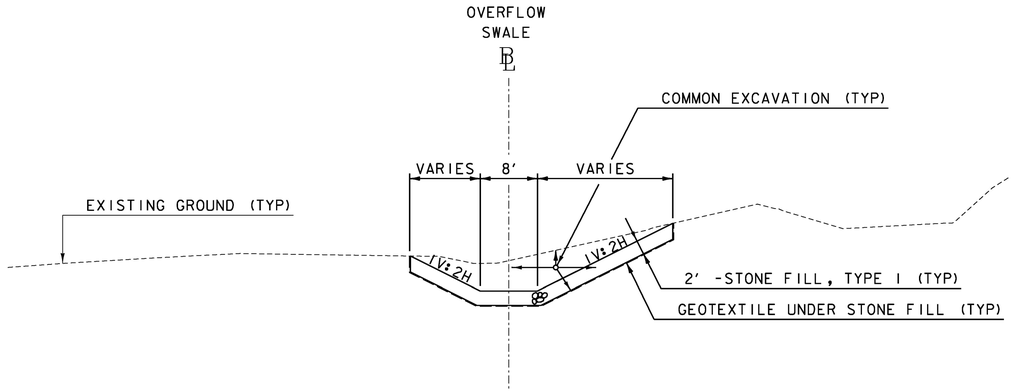

TYPICAL OVERFLOW SWALE SECTION

NOT TO SCALE

OVERFLOW SWALE PROFILE

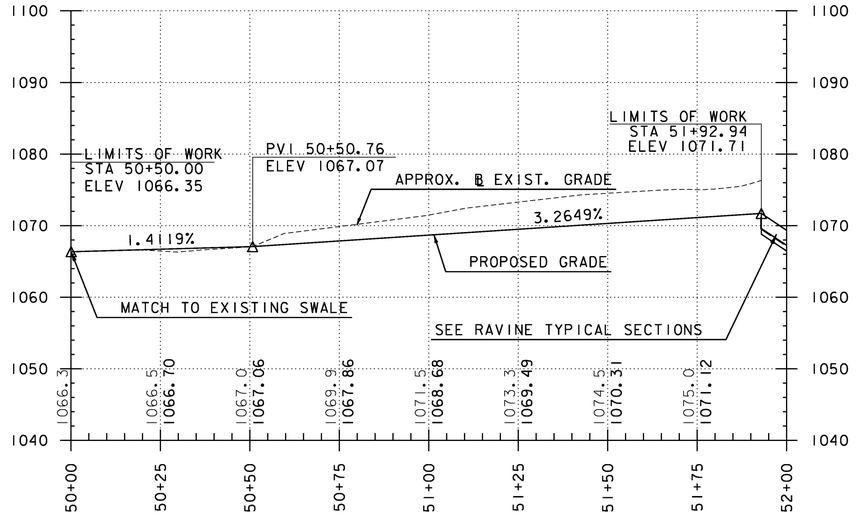

ALL STATIONS AND ELEVATIONS ARE SHOWN IN FEET.

GREEN INTERNATIONAL AFFILIATES, INC.
CIVIL AND STRUCTURAL ENGINEERS

PROJECT NAME:	MENDON
PROJECT NUMBER:	ER 020-2(39)
FILE NAME: zl3bl88det.dgn	PLOT DATE: 11/13/2015
PROJECT LEADER: E. ATKINS	DRAWN BY: M. BRADLEY
DESIGNED BY: M. BRADLEY	CHECKED BY: E. ATKINS
DETAIL SHEET 2	SHEET 12 OF 72

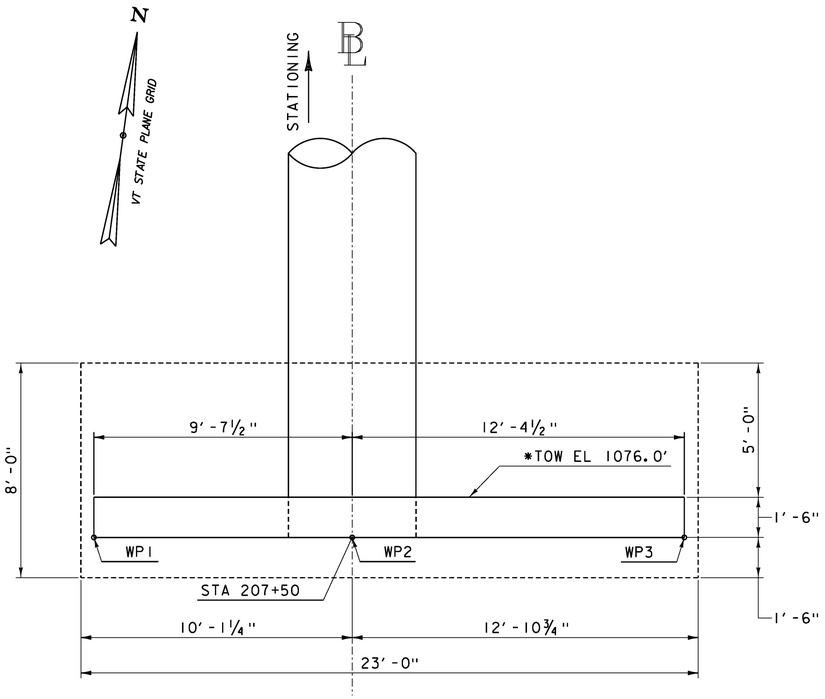

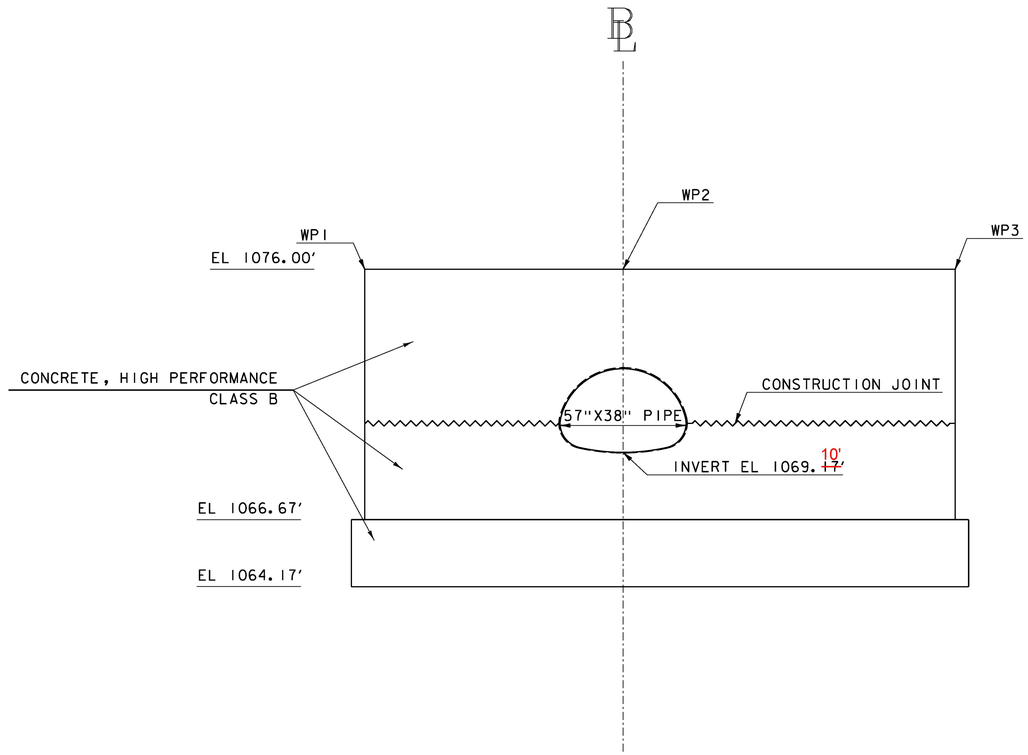

WORK POINTS
WP1 - STA 207+50.00 9.625 LT
WP2 - STA 207+50.00 0.0
WP3 - STA 207+50.00 12.375 RT

* TOW = TOP OF WALL

HEADWALL PLAN VIEW
SCALE ⅜″ = 1′

HEADWALL ELEVATION VIEW
SCALE ⅜″ = 1′

WALL AND FOOTING DETAILS

GREEN INTERNATIONAL AFFILIATES, INC.
CIVIL AND STRUCTURAL ENGINEERS

PROJECT NAME:	MENDON
PROJECT NUMBER:	ER 020-2(39)
FILE NAME: z13bl88det.dgn	PLOT DATE: 11/13/2015
PROJECT LEADER: E. ATKINS	DRAWN BY: Y. WANG
DESIGNED BY: B. KHALIFA	CHECKED BY: B. KHALIFA
DETAIL SHEET 3	SHEET 13 OF 72

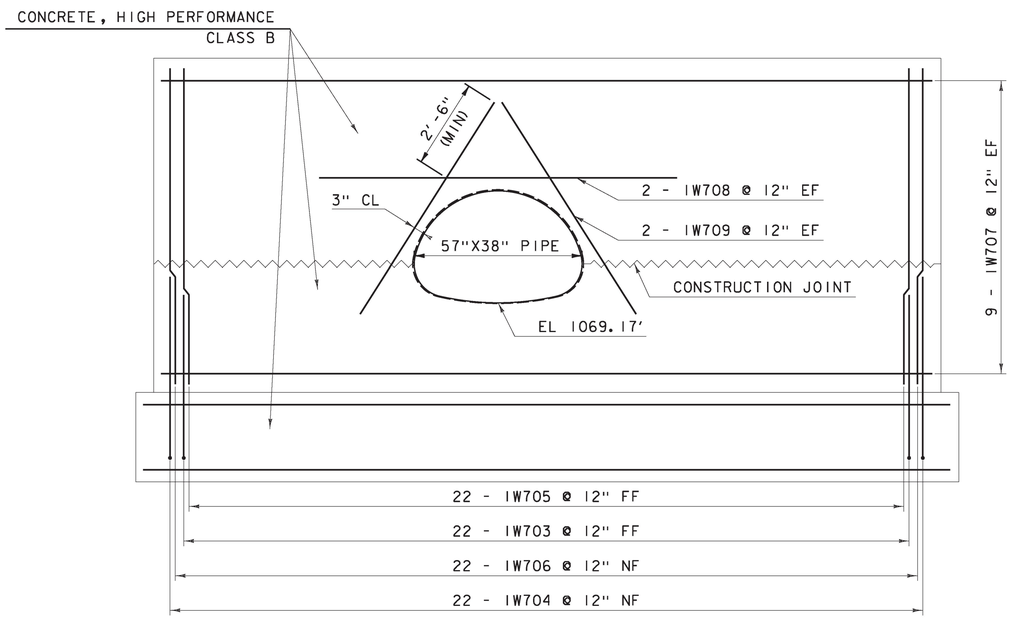

HEADWALL ELEVATION
SCALE 1/2"=1'

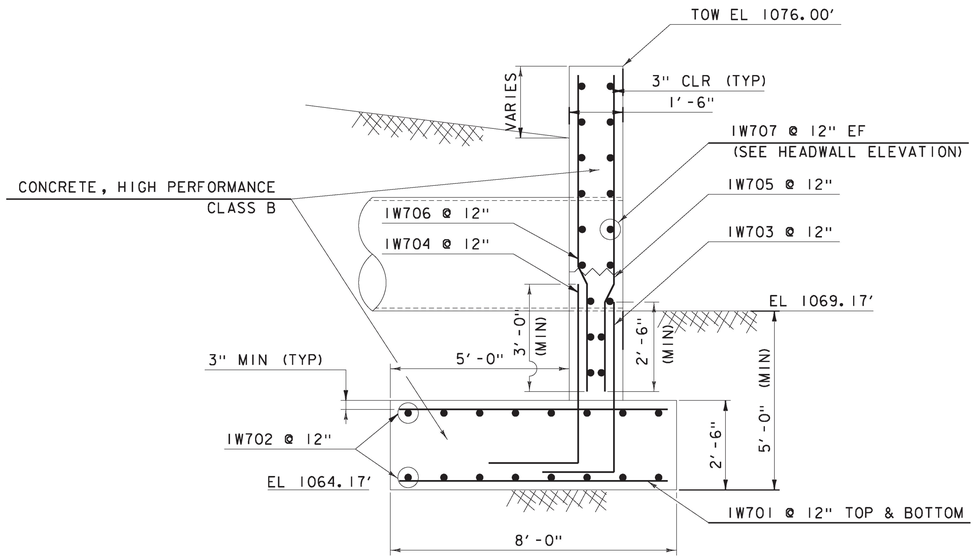

HEADWALL SECTION
SCALE 1/2"=1'

NOTE:
NF = NEAR FACE
FF = FAR FACE
EF = EACH FACE
TOW = TOP OF WALL
3" CLEAR, UNLESS OTHERWISE SPECIFIED ON THE PLANS.
2'-2" BAR LAP UNLESS OTHERWISE SPECIFIED ON THE PLANS.

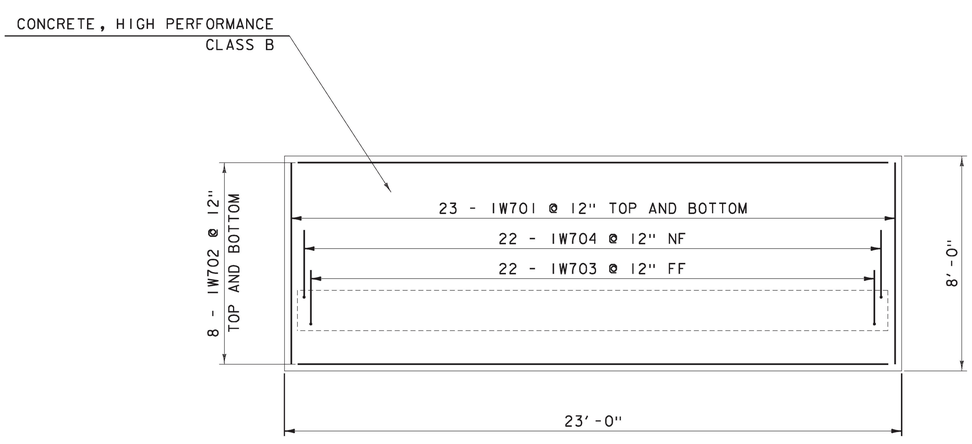

FOOTING PLAN
SCALE 3/8" = 1'

WALL AND FOOTING REINFORCING DETAILS

GREEN INTERNATIONAL AFFILIATES, INC.
CIVIL AND STRUCTURAL ENGINEERS

PROJECT NAME: MENDON	
PROJECT NUMBER: ER 020-2(39)	
FILE NAME: z13bl88det.dgn	PLOT DATE: 11/24/2015
PROJECT LEADER: E. ATKINS	DRAWN BY: Y. WANG
DESIGNED BY: B. KHALIFA	CHECKED BY: B. KHALIFA
DETAIL SHEET 4	SHEET 14 OF 72

STATE OF VERMONT
AGENCY OF TRANSPORTATION

REINFORCING STEEL SCHEDULE

ITEM	EACH	SIZE	LENGTH	MARK	TYPE	A	B	C	D	E	F	G	H	J	K	R	O
	HEADWALL																
	46	7	7'- 6"	1W701	STR												
✳	17	7	22'- 6"	1W702	STR												
	22	7	6'- 0"	1W703	17		4'- 7"	2'- 0"									
✳	23	7	7'- 6"	1W704	17		5'- 1"	2'- 6"									
	22	7	9'- 1"	1W705	STR												
	22	7	9'- 1"	1W706	STR												
	18	7	21'- 5"	1W707	STR												
	4	7	10'- 0"	1W708	STR												
	4	7	6'- 0"	1W709	STR												

ITEM	EACH	SIZE	LENGTH	MARK	TYPE	A	B	C	D	E	F	G	H	J	K	R	O

~ NOTES ~

1. UNLESS OTHERWISE DESIGNATED, ALL BAR REINFORCEMENT FOR CONCRETE IN SIZES UP TO AND INCLUDING NO. 18 SHALL CONFORM TO THE REQUIREMENTS OF THE "SPECIFICATIONS FOR DEFORMED BILLET-STEEL BARS FOR CONCRETE REINFORCEMENT", AASHTO M 31 (ASTM A 615-SI). ALL BARS SHALL BE GRADE 60, UNLESS OTHERWISE DESIGNATED.
2. FOR TYPICAL BENDING DETAILS, RECOMMENDED PIN DIAMETER "D" OF BENDS AND HOOKS, AND OTHER STANDARD PRACTICE, SEE CURRENT CONCRETE REINFORCING STEEL INSTITUTE "MANUAL OF STANDARD PRACTICE".
3. BARS WHICH REQUIRE MORE ACCURATE BENDING THAN STANDARD PRACTICES SHOULD HAVE LIMITS INDICATED.
4. ALL DIMENSIONS ARE OUT TO OUT OF BAR EXCEPT "A" AND "G" ON STANDARD 180 DEGREE AND 135 DEGREE HOOKS.
5. "J" DIMENSION ON 180 DEGREE HOOKS TO BE SHOWN ONLY WHERE NECESSARY TO RESTRICT HOOK SIZE. OTHERWISE, STANDARD HOOKS ARE TO BE USED.
6. "H" DIMENSION ON STIRRUPS TO BE SHOWN ONLY WHEN NECESSARY TO MAINTAIN CLEARANCES.
7. WHERE SLOPE DIFFERS FROM 45 DEGREES, DIMENSIONS "H" AND "K" MUST BE SHOWN.
8. ▲ DENOTES BARS TO BE CUT IN FIELD.
9. ✳ DENOTES ONE EXTRA BAR ADDED FOR TESTING PURPOSES.
10. △ DENOTES TWO EXTRA BARS ADDED FOR TESTING PURPOSES.
11. E IN BAR MARK PREFIX DENOTES EPOXY COATED REINFORCING STEEL.

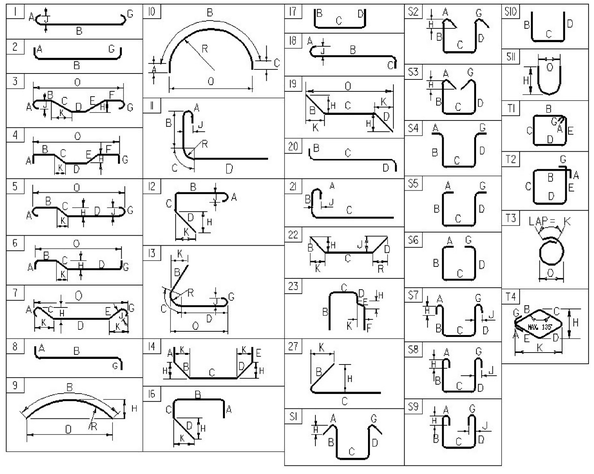

ASTM STANDARD REINFORCING BARS

BAR SIZE DESIGNATION	WEIGHT POUNDS PER FOOT	NOMINAL DIMENSIONS ROUND SECTION DIAMETER INCHES	AREA INCHES^2	PERIMETER INCHES
#3	0.376	0.375	0.11	1.178
#4	0.668	0.500	0.20	1.571
#5	1.043	0.625	0.31	1.963
#6	1.502	0.750	0.44	2.356
#7	2.044	0.875	0.60	2.749
#8	2.670	1.000	0.79	3.142
#9	3.400	1.128	1.00	3.544
#10	4.303	1.270	1.27	3.990
#11	5.313	1.410	1.56	4.430
#14	7.65	1.693	2.25	5.32
#18	13.60	2.257	4.00	7.09

GREEN INTERNATIONAL AFFILIATES, INC.
CIVIL AND STRUCTURAL ENGINEERS

PROJECT NAME: MENDON
PROJECT NUMBER: ER 020-2(39)

FILE NAME: z13b188rss.dgn
PROJECT LEADER: E. ATKINS
DESIGNED BY: B. KHALIFA
REINFORCING STEEL SCHEDULE

PLOT DATE: 11/13/2015
DRAWN BY: Y. WANG
CHECKED BY: B. KHALIFA
SHEET 15 OF 72

GPS/NGS CONTROL POINTS

VTGS DISK B94008

PID AA8755
N = 419737.42
E = 1531026.68
ELEV = 1166.28

GENERAL LOCATION, MENDON, ABOUT 4.5 MI (7.2 KM) EAST OF RUTLAND. TO REACH FROM THE INTERSECTION OF U.S. ROUTE 7 AND U.S. ROUTE 4 EAST (WOODSTOCK AVENUE) IN RUTLAND, GO EAST ALONG U.S. ROUTE 4 FOR 4.4 MI (7.1 KM) TO THE MARK ON THE RIGHT AT THE EAST END OF A GRAVEL PULLOUT, IN THE TOP OF A 30-CM DIAMETER CONCRETE MONUMENT ABOUT 5-CM BELOW GROUND SURFACE. THE MARK IS 6.8 M (22.3 FT) SOUTH OF AND ABOUT 0.2 M (0.7 FT) LOWER THAN THE SOUTH EDGE OF PAVEMENT OF U.S. ROUTE 4, 6.3 M (20.7 FT) WEST OF POLE NO. 78/148 (WITH TELEPHONE BOXES), AND 0.4 M (1.3 FT) NORTH OF A FIBERGLASS WITNESS POST.

VTGS DISK B94009

PID AA8756
N = 418824.31
E = 1533031.90
ELEV = 1245.65

GENERAL LOCATION, MENDON, ABOUT 5 MI (8.0 KM) EAST OF RUTLAND. TO REACH FROM THE INTERSECTION OF U.S. ROUTE 7 AND U.S. ROUTE 4 EAST (WOODSTOCK AVENUE) IN RUTLAND, GO EAST ALONG U.S. ROUTE 4 FOR 4.8 MI (7.7 KM) TO THE EAST END OF THE U.S. ROUTE 4 BRIDGE OVER MENDON BROOK AND THE MARK ON THE RIGHT IN THE TOP OF THE ABUTMENT AT THE SOUTHEAST CORNER OF THE BRIDGE.

TRAVERSE TIES

HVCTRL #80 — 5/8"REBAR SET FLUSH W/ VSE CONTROL CAP

NORTH = 420126.28
EAST = 1528918.69
ELEV. = 1060.44

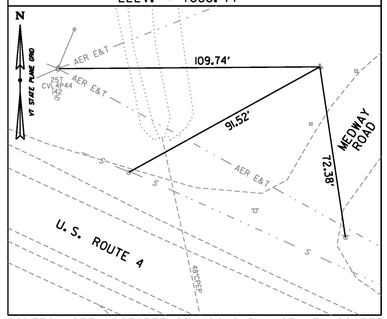

HVCTRL#81 — 5/8"REBAR SET FLUSH W/ VSE CONTROL CAP

NORTH = 419947.68
EAST = 1529297.10
ELEV. = 1083.20

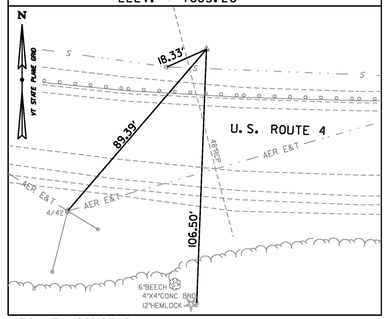

HVCTRL #84 — 8"MAGHUB SET FLUSH

NORTH = 419720.26
EAST = 1531329.31
ELEV. = 1176.10

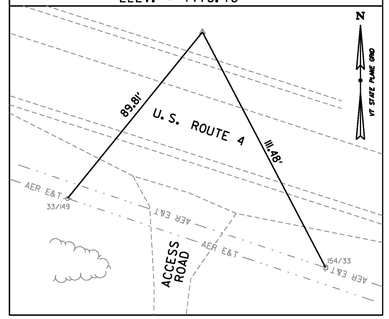

CONTROL SET: OCTOBER 25, 2012 BY VSE, T. SCARZELLO, PC, T. COMSTOCK

ALIGNMENT TIES

US ROUTE 4 PC STA. 22+80.62

NORTH = 419996.48
EAST = 1528952.76

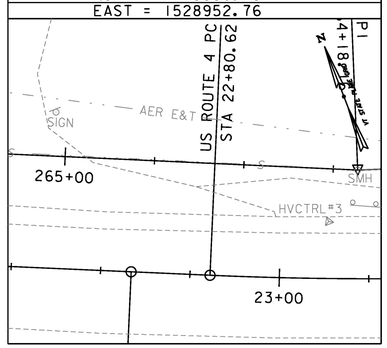

US ROUTE 4 POC STA. 23+71.05

NORTH = 419963.40
EAST = 1529036.89

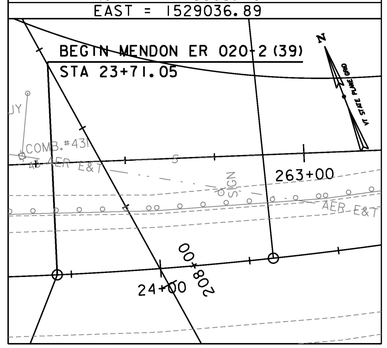

US ROUTE 4 POC STA. 23+99.82= RAVINE POT STA. 208+05.16

NORTH = 419954.49
EAST = 1529064.23

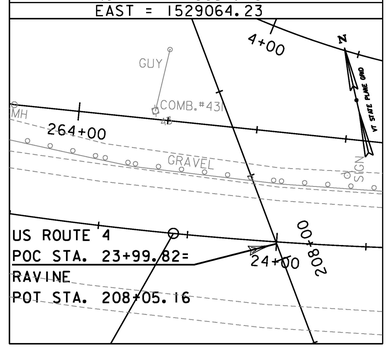

US ROUTE 4 POC STA. 24+31.64

NORTH = 419945.54
EAST = 1529094.79

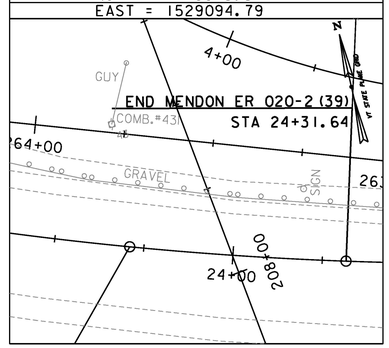

US ROUTE 4 POB STA. 25+44.14

NORTH = 419921.82
EAST = 1529204.68

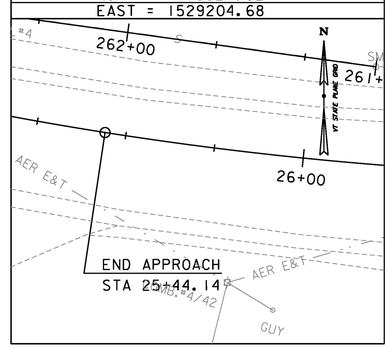

ALIGNMENT TIES

US ROUTE 4 POT STA. 22+58.55

NORTH = 420005.48
EAST = 1528932.60

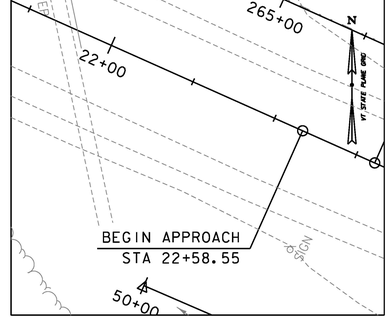

DATUM	
VERTICAL	NAVD 88 FT
HORIZONTAL	NAD 83(2011) sFT
ADJUSTMENT	LSQ

NOT TO SCALE

GREEN INTERNATIONAL AFFILIATES, INC.
CIVIL AND STRUCTURAL ENGINEERS

PROJECT NAME:	MENDON
PROJECT NUMBER:	ER 020-2(39)

FILE NAME: z13b188t1.dgn	PLOT DATE: 11/13/2015
PROJECT LEADER: E. ATKINS	DRAWN BY: C. MORIN
DESIGNED BY: C. MORIN	CHECKED BY: E. ATKINS
TIE SHEET 1	SHEET 16 OF 72

ALIGNMENT TIES

US ROUTE 4 PT STA. 26+98.93
NORTH = 419909.62
EAST = 1529358.84

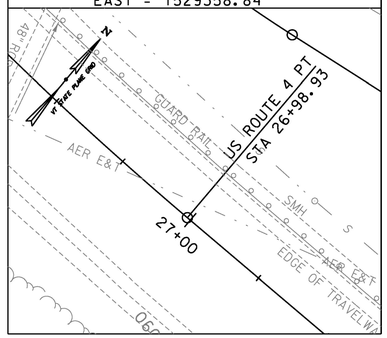

US ROUTE 4 POE STA. 35+85.98
NORTH = 419908.21
EAST = 1530245.88

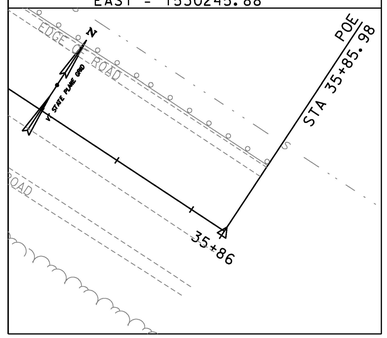

MENDON BROOK POB STA. 00+00.00
NORTH = 420312.64
EAST = 1528814.51

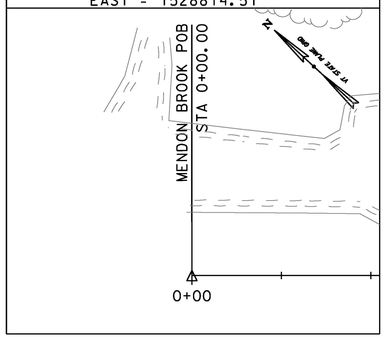

MENDON BROOK PC STA. 2+42.65
NORTH = 420134.30
EAST = 1528979.05

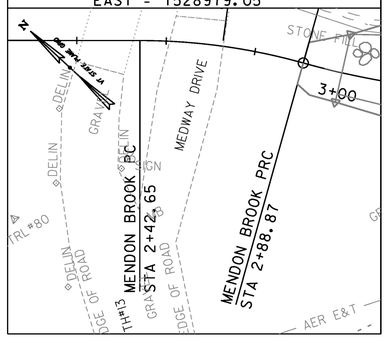

MENDON BROOK PRC STA. 2+88.87
NORTH = 420096.51
EAST = 1529005.41

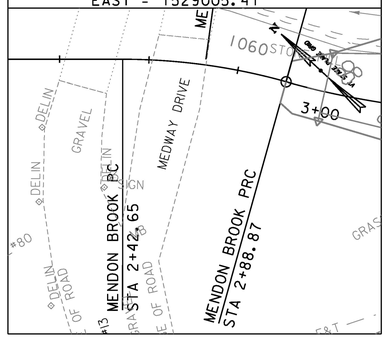

MENDON BROOK POT STA. 2+89.00
NORTH = 420096.40
EAST = 1529005.47

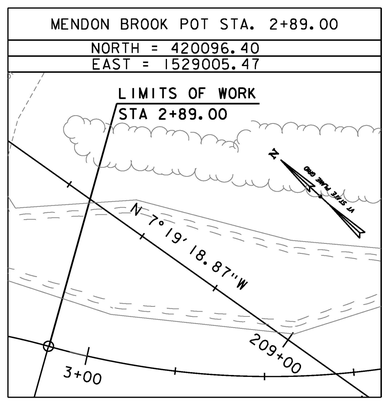

MENDON BROOK POC STA. 3+70.01 = RAVINE POT STA 208+83.64
NORTH = 420032.24
EAST = 1529054.24

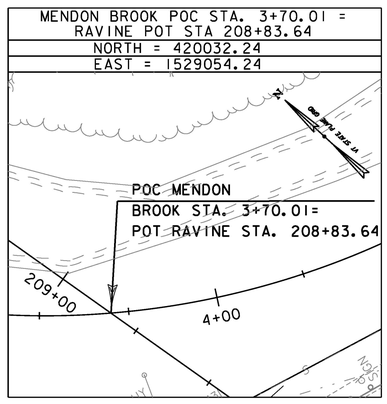

MENDON BROOK PT STA. 5+20.37
NORTH = 419972.30
EAST = 1529189.23

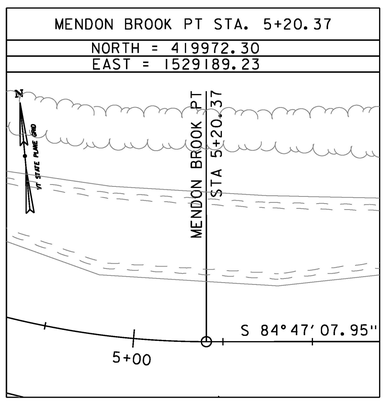

MENDON BROOK PC STA. 5+93.95
NORTH = 419965.61
EAST = 1529262.51

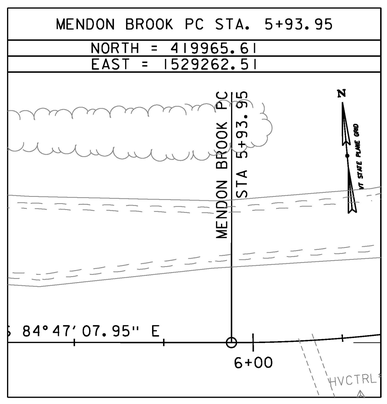

MENDON BROOK PT STA. 6+79.91
NORTH = 419967.51
EAST = 1529348.26

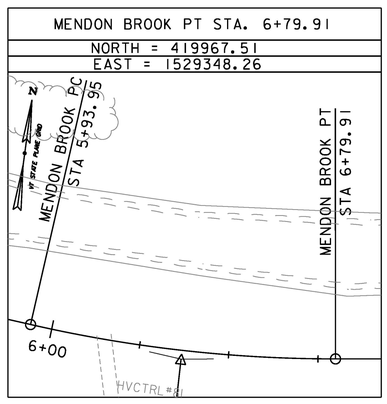

ALIGNMENT TIES

MENDON BROOK PC STA. 10+89.79
NORTH = 420022.75
EAST = 1529754.40

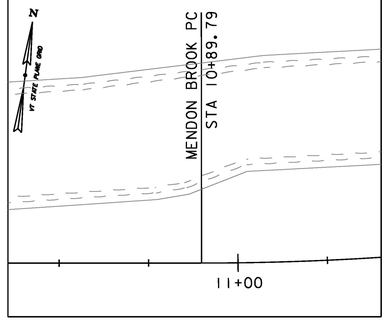

MENDON BROOK POT STA. 10+75.00
NORTH = 420020.76
EAST = 1529739.75

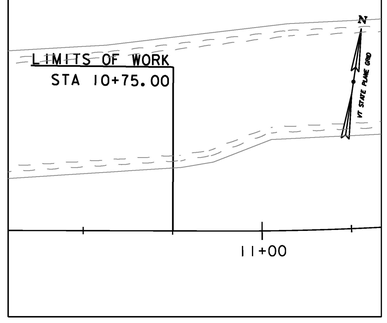

MENDON BROOK PT STA. 12+89.24
NORTH = 420073.87
EAST = 1529946.66

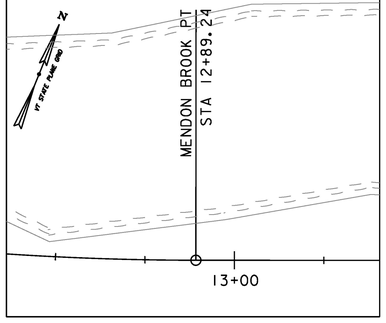

RAVINE POB STA. 200+42.00
NORTH = 419202.67
EAST = 1529134.59

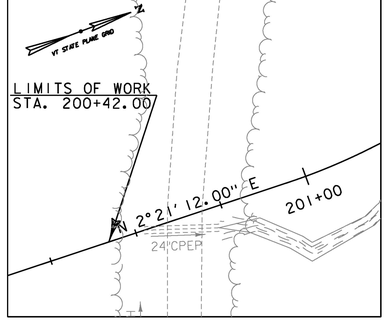

RAVINE PC STA. 200+61.61
NORTH = 419255.19
EAST = 1529136.75

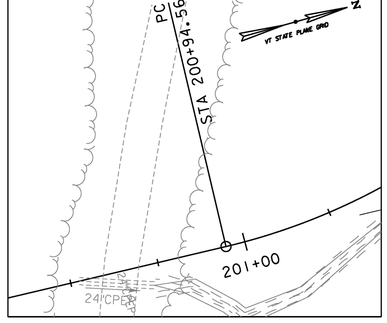

DATUM

VERTICAL NAVD 88 FT

HORIZONTAL NAD 83(2011) sFT

ADJUSTMENT LSQ

NOT TO SCALE

GREEN INTERNATIONAL AFFILIATES, INC.
CIVIL AND STRUCTURAL ENGINEERS

PROJECT NAME: MENDON
PROJECT NUMBER: ER 020-2(39)

FILE NAME: z13bl88t1.dgn
PROJECT LEADER: E. ATKINS
DESIGNED BY: C. MORIN
TIE SHEET 2

PLOT DATE: 11/13/2015
DRAWN BY: C. MORIN
CHECKED BY: E. ATKINS
SHEET 17 OF 72

ALIGNMENT TIES

RAVINE PRC STA. 200+79.02
NORTH = 419350.55
EAST = 1529113.06

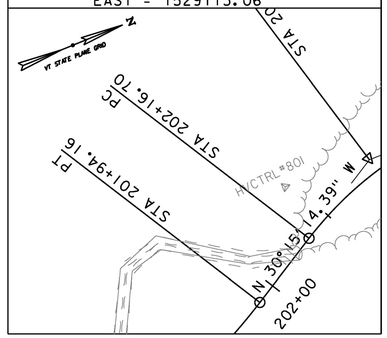

RAVINE PC STA. 202+16.70
NORTH = 419370.02
EAST = 1529101.70

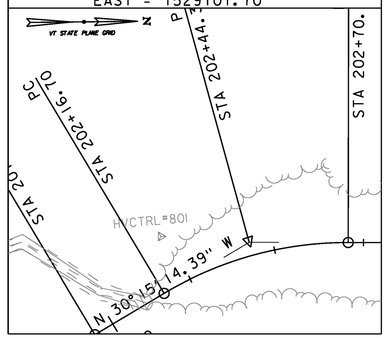

RAVINE PT STA. 202+70.72
NORTH = 419421.62
EAST = 1529088.09

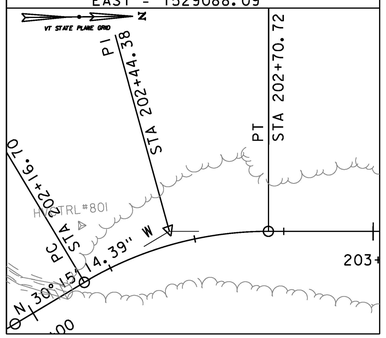

RAVINE PC STA. 205+19.50
NORTH = 419670.38
EAST = 1529091.12

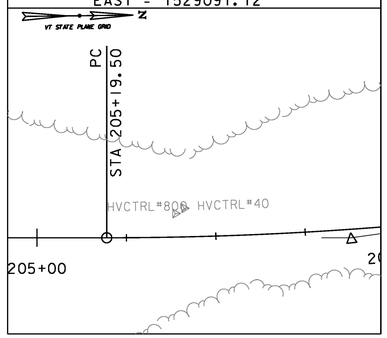

RAVINE PT STA. 206+55.98
NORTH = 419806.53
EAST = 1529083.24

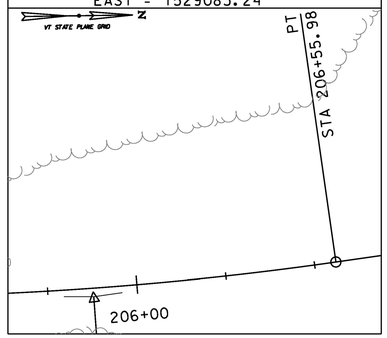

ALIGNMENT TIES

RAVINE POC STA. 207+44.00 = SWALE STA 51+97.94
NORTH = 419893.82
EAST = 1529072.03

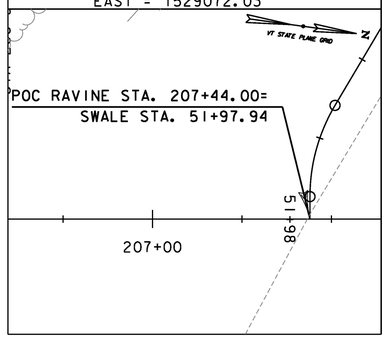

RAVINE POT STA. 207+50.00
NORTH = 419899.78
EAST = 1529071.26

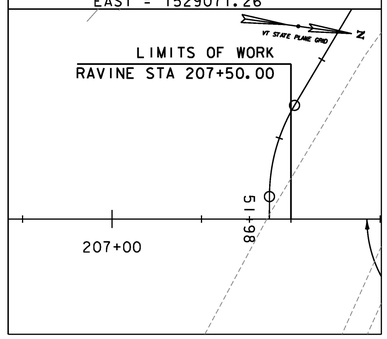

RAVINE POE STA. 210+00.00
NORTH = 420147.74
EAST = 1529039.40

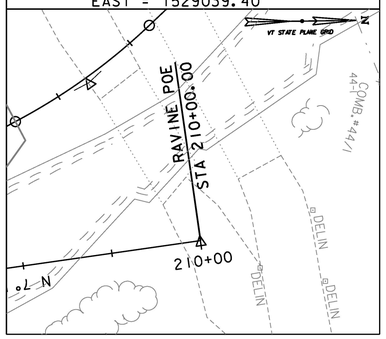

SWALE POB STA. 50+00.00
NORTH = 419962.17
EAST = 1528888.26

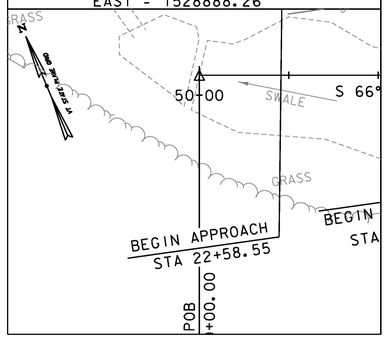

SWALE PC STA. 51+64.90
NORTH = 419896.73
EAST = 1529039.62

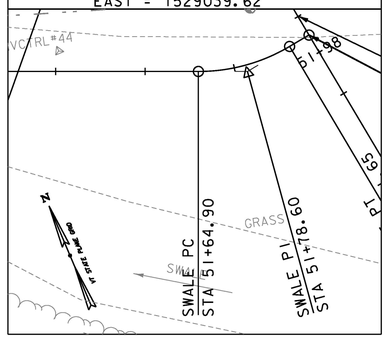

ALIGNMENT TIES

SWALE PT STA. 51+91.65
NORTH = 419893.02
EAST = 1529065.79

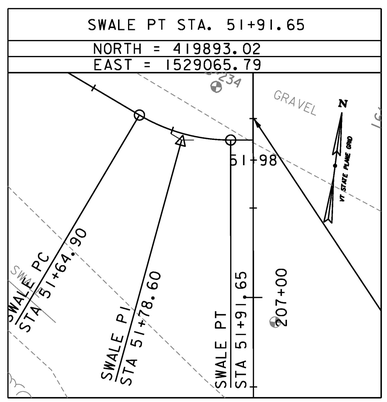

SWALE POE STA. 51+97.94
NORTH = 419893.82
EAST = 1529072.03

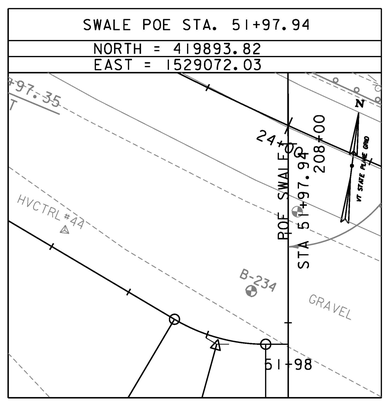

SEWER POB STA. 261+30.00
NORTH = 419940.18
EAST = 1529280.38

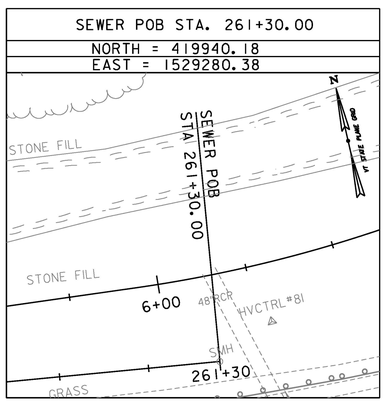

SEWER PI STA. 262+67.61
NORTH = 419959.01
EAST = 1529144.06

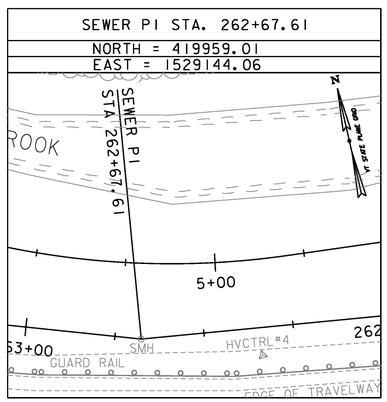

SEWER POT STA. 263+48.76
NORTH = 419985.68
EAST = 1529067.42

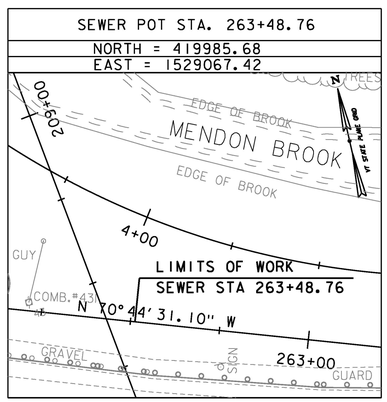

DATUM

VERTICAL NAVD 88 FT

HORIZONTAL NAD 83(2011) sFT

ADJUSTMENT LSQ

NOT TO SCALE

GREEN INTERNATIONAL AFFILIATES, INC.
CIVIL AND STRUCTURAL ENGINEERS

PROJECT NAME: MENDON
PROJECT NUMBER: ER 020-2(39)

FILE NAME: z13bi88t1.dgn
PROJECT LEADER: E. ATKINS
DESIGNED BY: C. MORIN
TIE SHEET 3

PLOT DATE: 11/13/2015
DRAWN BY: C. MORIN
CHECKED BY: E. ATKINS
SHEET 18 OF 72

ALIGNMENT TIES

SEWER PI STA. 264+18.16
NORTH = 420008.67
EAST = 1529001.94

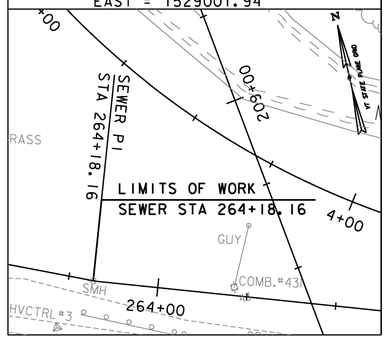

SEWER PI STA. 265+97.26
NORTH = 420082.05
EAST = 1528838.56

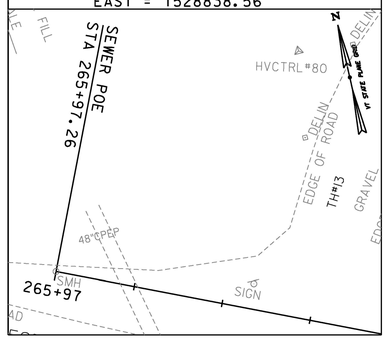

ALIGNMENT TIES

ALIGNMENT TIES

DATUM
VERTICAL NAVD 88 FT
HORIZONTAL NAD 83(2011) sFT
ADJUSTMENT LSQ

NOT TO SCALE

GREEN INTERNATIONAL AFFILIATES, INC.
CIVIL AND STRUCTURAL ENGINEERS

PROJECT NAME: MENDON
PROJECT NUMBER: ER 020-2(39)

FILE NAME: zl3bl88t1.dgn
PROJECT LEADER: E. ATKINS
DESIGNED BY: C. MORIN
TIE SHEET 4

PLOT DATE: 11/13/2015
DRAWN BY: C. MORIN
CHECKED BY: E. ATKINS
SHEET 19 OF 72

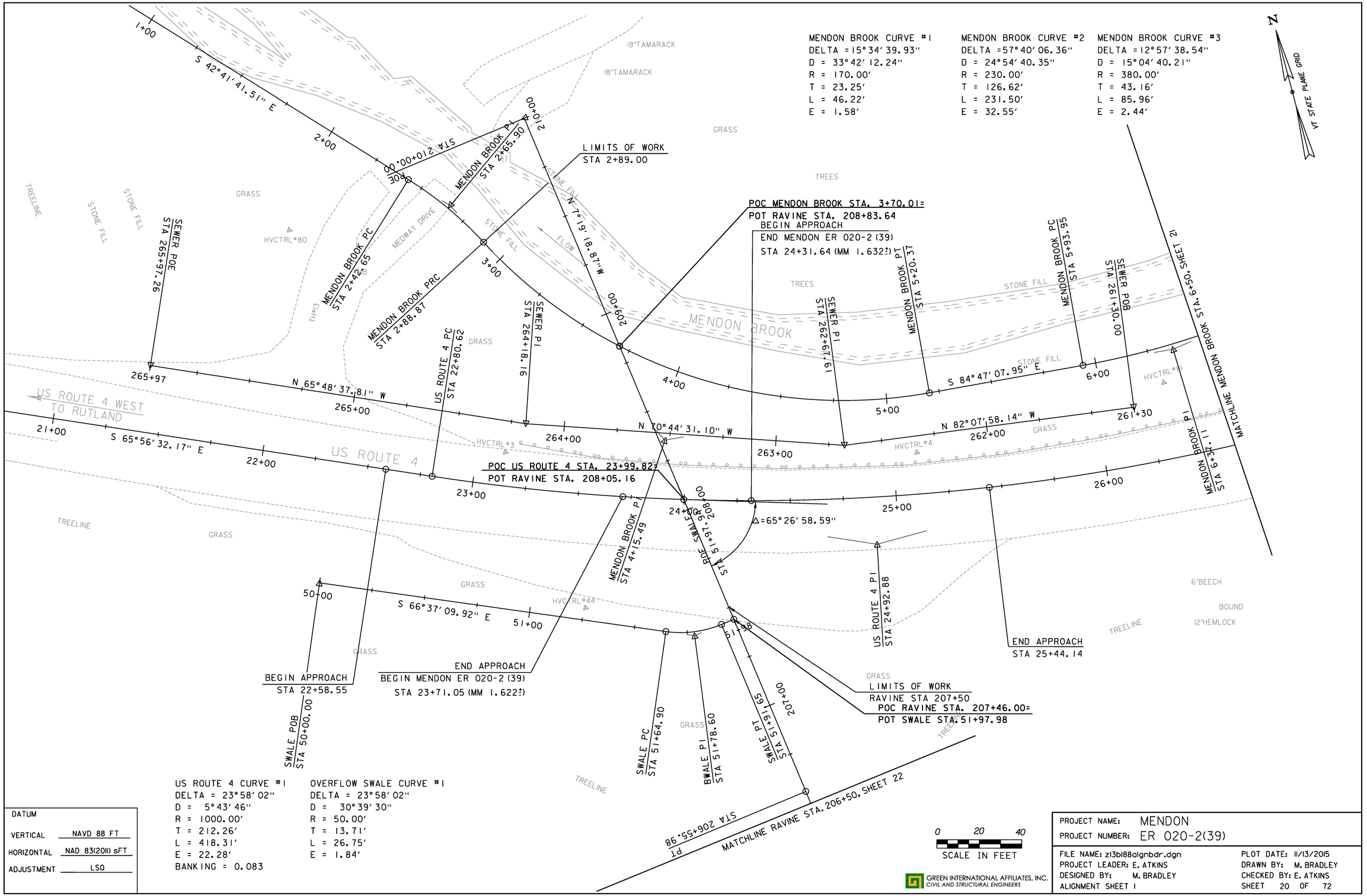
MENDON BROOK CURVE #1
DELTA = 15°34'39.93"
D = 33°42'12.24"
R = 170.00'
T = 23.25'
L = 46.22'
E = 1.58'
MENDON BROOK CURVE #2
DELTA = 57°40'06.36"
D = 24°54'40.35"
R = 230.00'
T = 126.62'
L = 231.50'
E = 32.55'
MENDON BROOK CURVE #3
DELTA = 12°57'38.54"
D = 15°04'40.21"
R = 380.00'
T = 43.16'
L = 85.96'
E = 2.44'
VT STATE PLANE GRID
MENDON BROOK
US ROUTE 4
US ROUTE 4 WEST TO RUTLAND
MEDWAY DRIVE
TH#13
HVCTRL#80
HVCTRL#3
HVCTRL#4
HVCTRL#44
TREELINE
STONE FILL
GRASS
TREES
FLOW
18"TAMARACK
6"BEECH
12"HEMLOCK
BOUND
1+00
2+00
3+00
4+00
5+00
6+00
21+00
22+00
23+00
24+00
25+00
26+00
50+00
51+00
265+00
264+00
263+00
262+00
261+30
209+00
208+00
207+00
S 42°41'41.51" E
S 65°56'32.17" E
N 65°48'37.81" W
N 70°44'31.10" W
N 82°07'58.14" W
S 84°47'07.95" E
S 66°37'09.92" E
N 7°19'18.87" W
STA 210+00.00 BOE
MENDON BROOK PT STA 2+65.90
MENDON BROOK PC STA 2+42.65
MENDON BROOK PRC STA 2+88.87
SEWER POE STA 265+97.26
SEWER PI STA 264+18.16
US ROUTE 4 PC STA 22+80.62
LIMITS OF WORK STA 2+89.00
POC US ROUTE 4 STA. 23+99.82=
POT RAVINE STA. 208+05.16
POC MENDON BROOK STA. 3+70.01=
POT RAVINE STA. 208+83.64
BEGIN APPROACH
END MENDON ER 020-2(39)
STA 24+31.64 (MM 1.632±)
SEWER PI STA 262+67.61
MENDON BROOK PT STA 5+20.37
MENDON BROOK PC STA 5+93.95
SEWER POB STA 261+30.00
MATCHLINE MENDON BROOK STA. 6+50, SHEET 21
MENDON BROOK PI STA 6+37.11
△=65°26'58.59"
MENDON BROOK PI STA 4+15.49
SWALE POE STA 208+91.49
US ROUTE 4 PI STA 24+92.88
END APPROACH STA 25+44.14
BEGIN APPROACH STA 22+58.55
SWALE POB STA 50+00.00
END APPROACH
BEGIN MENDON ER 020-2(39)
STA 23+71.05 (MM 1.622±)
SWALE PC STA 51+64.90
SWALE PI STA 51+78.60
SWALE PT STA 51+91.95
LIMITS OF WORK
RAVINE STA 207+50
POC RAVINE STA. 207+46.00=
POT SWALE STA. 51+97.98
PT STA 206+55.98
MATCHLINE RAVINE STA. 206+50, SHEET 22
US ROUTE 4 CURVE #1
DELTA = 23°58'02"
D = 5°43'46"
R = 1000.00'
T = 212.26'
L = 418.31'
E = 22.28'
BANKING = 0.083
OVERFLOW SWALE CURVE #1
DELTA = 23°58'02"
D = 30°39'30"
R = 50.00'
T = 13.71'
L = 26.75'
E = 1.84'
DATUM
VERTICAL NAVD 88 FT
HORIZONTAL NAD 83(2011) sFT
ADJUSTMENT LSQ
0 20 40
SCALE IN FEET
GREEN INTERNATIONAL AFFILIATES, INC.
CIVIL AND STRUCTURAL ENGINEERS
PROJECT NAME: MENDON
PROJECT NUMBER: ER 020-2(39)
FILE NAME: zl3bl88alignbdr.dgn
PROJECT LEADER: E. ATKINS
DESIGNED BY: M. BRADLEY
ALIGNMENT SHEET 1
PLOT DATE: 11/13/2015
DRAWN BY: M. BRADLEY
CHECKED BY: E. ATKINS
SHEET 20 OF 72

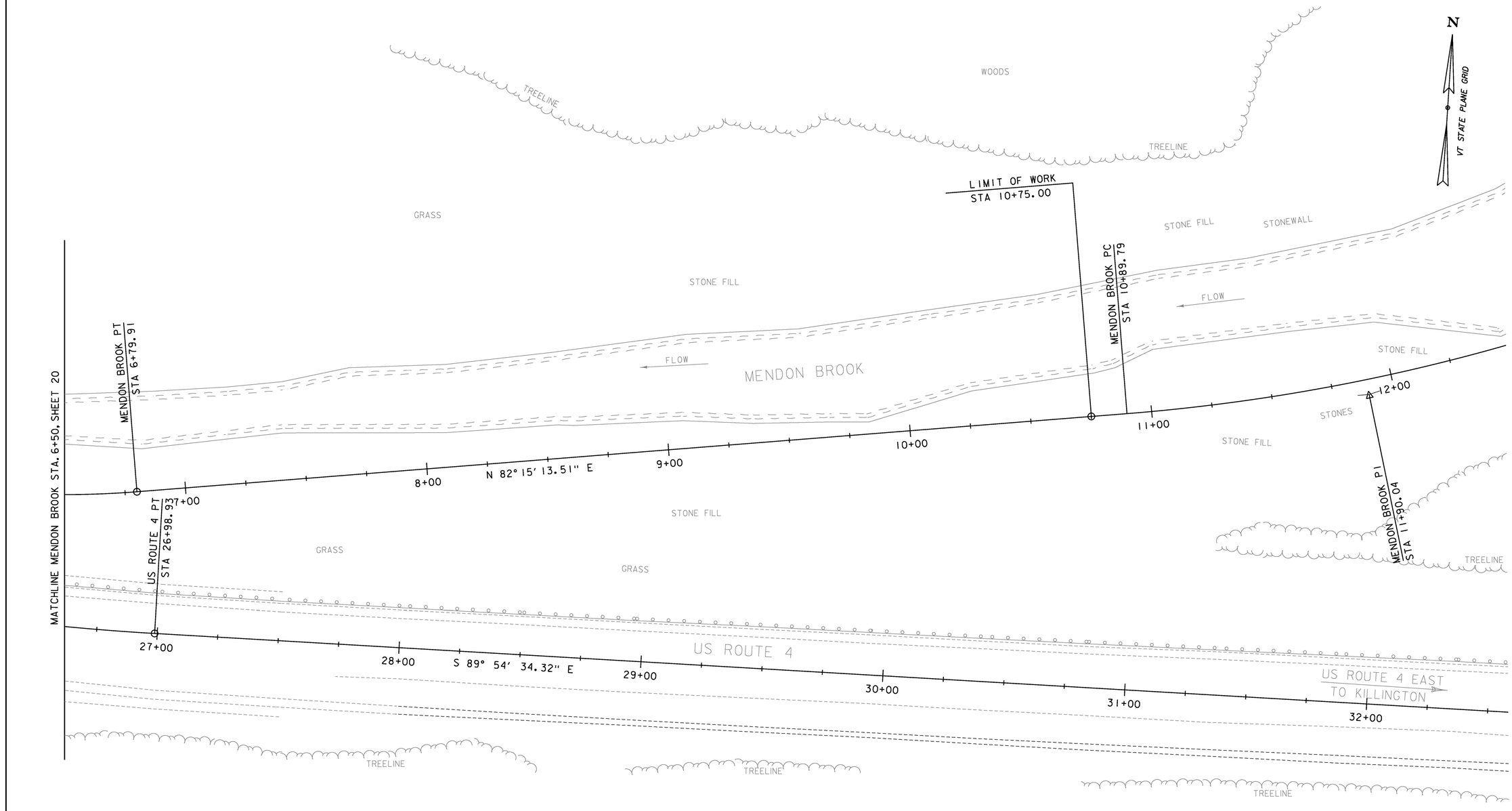

DATUM

VERTICAL	NAVD 88 FT
HORIZONTAL	NAD 83(2011) sFT
ADJUSTMENT	LSQ

MENDON BROOK CURVE #3
DELTA = 12° 57' 38.54"
D = 15° 04' 40.21"
R = 380.00'
T = 43.16'
L = 85.96'
E = 2.44'

MENDON BROOK CURVE #4
DELTA = 14° 17' 05"
D = 7° 09' 43"
R = 800.00'
T = 100.25'
L = 199.45'
E = 6.26'

US ROUTE 4 CURVE #1
DELTA = 23° 58' 02"
D = 5° 43' 46"
R = 1000.00'
T = 212.26'
L = 418.31'
E = 22.28'
BANKING = 0.083

0 20 40
SCALE IN FEET

GREEN INTERNATIONAL AFFILIATES, INC.
CIVIL AND STRUCTURAL ENGINEERS

PROJECT NAME: MENDON
PROJECT NUMBER: ER 020-2(39)

FILE NAME: z13b188algnbdr.dgn
PROJECT LEADER: E. ATKINS
DESIGNED BY: M. BRADLEY
ALIGNMENT SHEET 2

PLOT DATE: 11/13/2015
DRAWN BY: M. BRADLEY
CHECKED BY: E. ATKINS
SHEET 21 OF 72

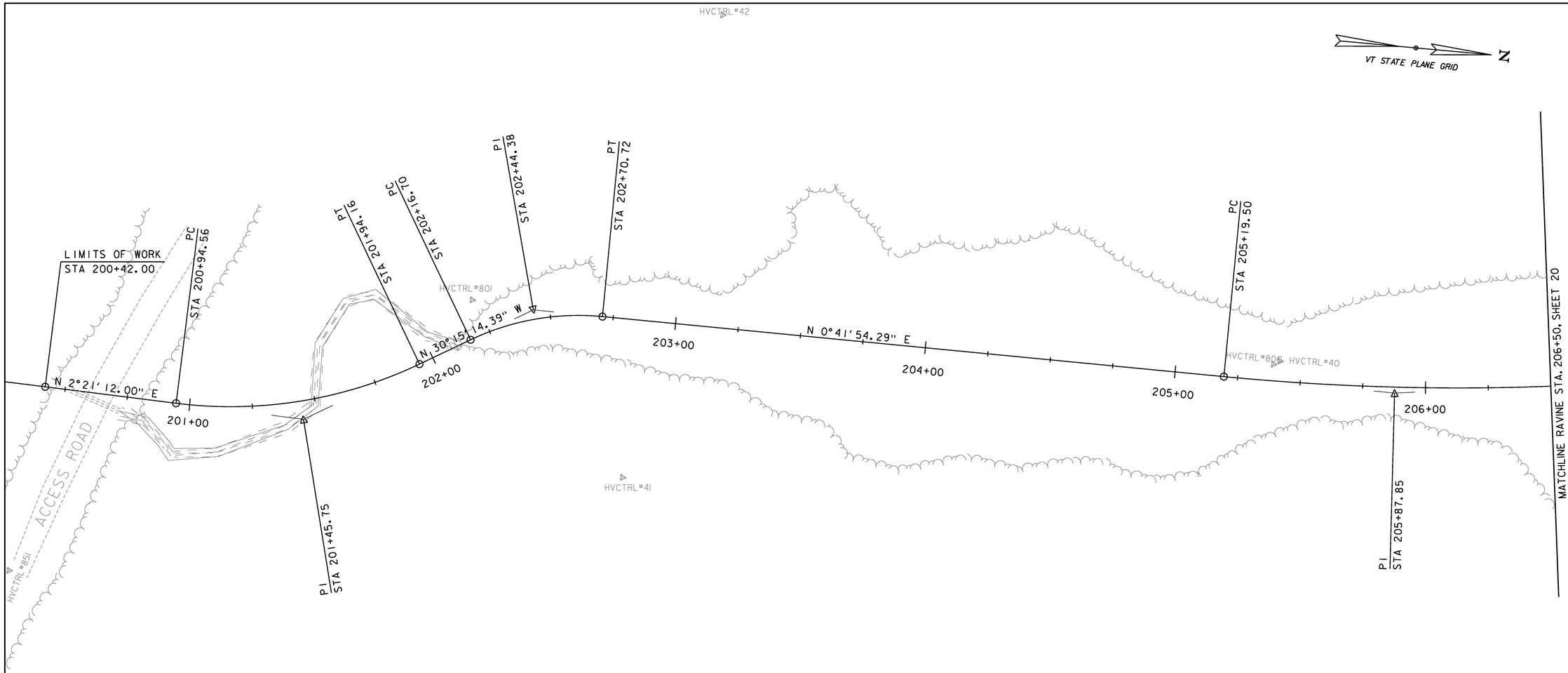

RAVINE CURVE #1
DELTA = 32°36'26.40"
D = 32°44'25.60"
R = 175.00'
T = 51.19'
L = 99.59'
E = 7.33'

RAVINE CURVE #2
DELTA =30°57'08.68"
D = 57°17'44.81"
R = 100.00'
T = 27.69'
L = 54.02'
E = 3.76'

RAVINE CURVE #3
DELTA =8°01'13.16"
D = 5°52'35.36"
R = 975.00'
T = 68.35'
L = 136.48'
E = 2.39'

DATUM
VERTICAL NAVD 88 FT
HORIZONTAL NAD 83(2011) sFT
ADJUSTMENT LSQ

0 20 40
SCALE IN FEET

GREEN INTERNATIONAL AFFILIATES, INC.
CIVIL AND STRUCTURAL ENGINEERS

PROJECT NAME: MENDON
PROJECT NUMBER: ER 020-2(39)

FILE NAME: zl3bl88alignbdr.dgn
PROJECT LEADER: E. ATKINS
DESIGNED BY: M. BRADLEY
ALIGNMENT SHEET 3

PLOT DATE: 11/13/2015
DRAWN BY: M. BRADLEY
CHECKED BY: E. ATKINS
SHEET 22 OF 72

SOIL CLASSIFICATION

AASHTO	
A1	Gravel and Sand
A3	Fine Sand
A2	Silty or Clayey Gravel and Sand
A4	Silty Soil - Low Compressibility
A5	Silty Soil - Highly Compressible
A6	Clayey Soil - Low Compressibility
A7	Clayey Soil - Highly Compressible

ROCK QUALITY DESIGNATION

R.Q.D. (%)	ROCK DESCRIPTION
<25	Very Poor
25 to 50	Poor
51 to 75	Fair
76 to 90	Good
>90	Excellent

SHEAR STRENGTH

UNDRAINED SHEAR STRENGTH IN kPa	CONSISTENCY
<12	Very Soft
12-24	Soft
24-48	Med. Stiff
48-96	Stiff
96-192	Very Stiff
>192	Hard

CORRELATION GUIDE OF "N" TO DENSITY/CONSISTENCY

DENSITY (GRANULAR SOILS)		CONSISTENCY (COHESIVE SOILS)	
N	DESCRIPTIVE TERM	N	DESCRIPTIVE TERM
<5	Very Loose	<2	Very Soft
5-10	Loose	2-4	Soft
11-24	Med. Dense	5-8	Med. Stiff
25-50	Dense	9-15	Stiff
>50	Very Dense	16-30	Very Stiff
		31-60	Hard
		>60	Very Hard

COMMONLY USED SYMBOLS

▼	Water Elevation
⊗	Standard Penetration Boring
⊕	Auger Boring
⊙	Rod Sounding
S	Sample
N	Standard Penetration Test Blow Count Per 300 mm For: 50.8 mm O.D. Sampler 35.0 mm I.D. Sampler Hammer Weight Of 63.5 kg. Hammer Fall Of 762 mm
VS	Field Vane Shear Test
US	Undisturbed Soil Sample
B	Blast
DC	Diamond Core
MD	Mud Drill
WA	Wash Ahead
HSA	Hollow Stem Auger
AX	Core Size 30.1mm
BX	Core Size 42.0 mm
NX	Core Size 54.7 mm
M	Double Tube Core Barrel Used
LL	Liquid Limit
PL	Plastic Limit
PI	Plasticity Index
NP	Non Plastic
w	Moisture Content (Dry Wgt. Basis)
D	Dry
M	Moist
MTW	Moist To Wet
W	Wet
Sat	Saturated
Bo	Boulder
Gr	Gravel
Sa	Sand
Si	Silt
Cl	Clay
HP	Hardpan
Le	Ledge
NLTD	No Ledge To Depth
CNPF	Can Not Penetrate Further
TLOB	To Ledge Or Boulder
NR	No Recovery
Rec.	Recovery
%Rec.	Percent Recovery
RQD	Rock Quality Designation
CBR	California Bearing Ratio
<	Less Than
>	Greater Than
R	Refusal (N > 100)
OW	Indicates a temporary observation well installed

COLOR			
blk	Black	pnk	Pink
bl	Blue	pu	Purple
brn	Brown	rd	Red
dk	Dark	tn	Tan
gry	Gray	wh	White
gn	Green	yel	Yellow
lt	Light	mltc	Multicolored
or	Orange		

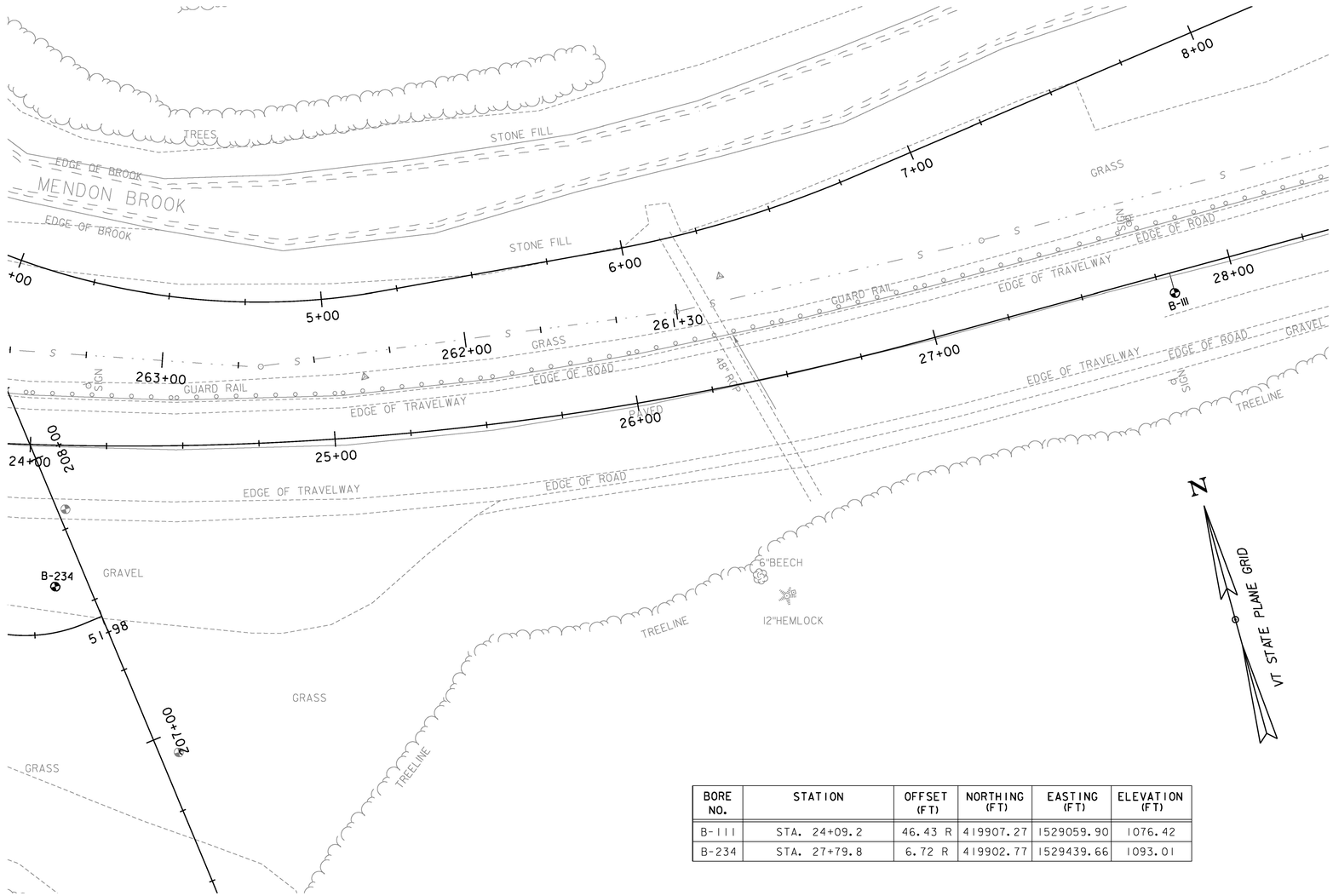

BORE NO.	STATION	OFFSET (FT)	NORTHING (FT)	EASTING (FT)	ELEVATION (FT)
B-111	STA. 24+09.2	46.43 R	419907.27	1529059.90	1076.42
B-234	STA. 27+79.8	6.72 R	419902.77	1529439.66	1093.01

DEFINITIONS (AASHTO)

BEDROCK (LEDGE) - Rock in its native location of indefinite thickness.

BOULDER - A rock fragment with an average dimension > 304.8 mm.

COBBLE - Rock fragments with an average dimension between 76.2 and 304.8 mm.

GRAVEL - Rounded particles of rock < 76.2 mm and > 2 mm (#10 sieve).

SAND - Particles of rock < 2 mm (#10 sieve) and > 75 μm (#200 sieve).

SILT - Soil < 75 μm (#200 sieve), non or slightly plastic and exhibits no strength when air-dried.

CLAY - Fine grained soil, exhibits plasticity when moist and considerable strength when air-dried.

VARVED - Alternate layers of silt and clay.

HARDPAN - Extremely dense soil, cemented layer, not softened when wet.

MUCK - Soft organic soil (containing > 10% organic material.

MOISTURE CONTENT - Weight of water divided by dry weight of soil.

FLOWING SAND - Granular soil so saturated (loose) that it flows into drill casing during extraction of wash rod.

STRIKE - Angle from magnetic north to line of intersection of bed with a horizontal plane.

DIP - Inclination of bed with a horizontal plane.

GENERAL NOTES

1. The test borings shown herein were drilled by the Agency between 5/7/2013, 5/13/2013 and 5/14/2013.

2. Soil and rock classifications, properties and descriptions are based on engineering interpretation from available subsurface information by the Agency and may not necessarily reflect actual variations in subsurface conditions that may be encountered between individual boring or sample locations.

3. Observed water levels and/or conditions indicated are as recorded at the time of exploration and may vary according to the prevailing rainfall, methods of exploration and other factors.

4. Engineering judgement was exercised in preparing the subsurface information presented herein. Analysis and interpretation of subsurface data was performed and interpreted for Agency design and estimating purposes. Presentation of the information in the Contract is intended to provide the Contractor access to the same data available to the Agency. The subsurface information is presented in good faith and is not intended as a substitute for personal investigation, independent interpretation, independent analysis or judgement by the Contractor.

5. Pictorial structure details shown on the boring plan layout or soils profile are for illustrative purposes only and may not accurately portray final contract details.

6. Terminology used on boring logs to describe the hardness, degree of weathering, and spacing of fractures, joints and other discontinuities in the bedrock is defined in the AASHTO Manual on Subsurface Investigations, 1988.

0 20 40

SCALE IN FEET

GREEN INTERNATIONAL AFFILIATES, INC.
CIVIL AND STRUCTURAL ENGINEERS

PROJECT NAME: MENDON
PROJECT NUMBER: ER 020-2(39)

FILE NAME: z13b188bor.dgn
PROJECT LEADER: E. ATKINS
DESIGNED BY: T. BIGELOW
BORING LAYOUT SHEET 1

PLOT DATE: 11/13/2015
DRAWN BY: T. BIGELOW
CHECKED BY: E. ATKINS
SHEET 23 OF 72

STATE OF VERMONT
AGENCY OF TRANSPORTATION
MATERIALS & RESEARCH SECTION
SUBSURFACE INFORMATION

BORING LOG

RUTLAND-HARTFORD
NH 020-2(35)
US-4

Boring No.: **B-234**
Page No.: 1 of 1
Pin No.: 12B188
Checked By: _____

Boring Crew: SALISBURY, JUDKINS, DAIGNEAULT
Date Started: 5/13/13 Date Finished: 5/14/13
VTSPG NAD83: N 419907.27 ft E 1529059.90 ft
Station: MM 1.65 Offset: 41.10
Ground Elevation: 1076.42 ft

	Casing	Sampler
Type:	WB	SS
I.D.:	4 in	1.5 in
Hammer Wt:	N.A.	140 lb.
Hammer Fall:	N.A.	30 in.
Hammer/Rod Type:	Auto/AWJ	
Rig:	CME 45C SKID	C_E = 1.33

Groundwater Observations		
Date	Depth (ft)	Notes
05/14/13	16.5	While drilling.

Depth (ft)	Strata (1)	CLASSIFICATION OF MATERIALS (Description)	Blows/6" (N Value)	Moisture Content %	Gravel %	Sand %	Fines %
		A-1-a, SaGr, brn, Moist, Rec. = 0.8 ft, Broken Rock was within sample.	21-38-R@5.0" (R)	3.5	58.9	28.8	12.3
		A-2-4, SiSa, brn, Moist, Rec. = 1.1 ft	16-13-8-8 (21)	22.0	7.5	57.8	34.7
5		A-4, SiSa, brn, Moist, Rec. = 1.1 ft	6-4-5-6 (9)	23.5	15.3	47.9	36.8
		Visual Description:, Broken Rock (Cobbles), gry, Moist, Rec. = 0.1 ft	4-11-16-11 (27)				
		A-1-b, SiGrSa, brn, Moist, Rec. = 0.8 ft, Broken (Cobbles) Rock was within sample.	16-24-19-16 (43)	12.1	37.3	38.2	24.5
10		A-1-a, SaGr, brn, MTW, Rec. = 1.0 ft, Lots of Broken (Cobbles) Rock was within sample.	16-15-11-20 (26)	7.6	66.6	24.1	9.3
		Visual Description:, SaGr with Broken (Cobbles) Rock, brn, MTW, Rec. = 0.2 ft, Insufficient sample for testing.	R@2.5" (R)				
		Field Note:, NXDC, Boulder					
15		Field Note:, No Recovery	26-24-15-15 (39)				
		Field Note:, Lost water return					
		Field Note:, NXDC, Cobbles					
20		Field Note:, No Recovery	32-32-R@0.0" (R)				
		Field Note:, NXDC, Cobbles					
25		A-1-b, SiGrSa, brn, Moist, Rec. = 0.6 ft, Some Broken (Cobbles) Rock was within sample.	27-31-R@5.0" (R)	13.3	34.4	45.2	20.4
		Hole stopped @ 26.4 ft					

Remarks:
Hole collapsed at 15.8 ft.

Notes:
1. Stratification lines represent approximate boundary between material types. Transition may be gradual.
2. N Values have not been corrected for hammer energy, C_E is the hammer energy correction factor.
3. Water level readings have been made at times and under conditions stated. Fluctuations may occur due to other factors than those present at the time measurements were made.

BORING LOG 2 RUTLAND-HARTFORD NH 020-2(35) GPJ VERMONT AOT.GDT 8/1/13

STATE OF VERMONT
AGENCY OF TRANSPORTATION
MATERIALS & RESEARCH SECTION
SOILS & FOUNDATION UNIT
DRILLING NOTES

PROJECT NAME: Rutland- Hartford **PROJECT NUMBER:** NH020-2(35)SC **SITE:** US-4 **DATE:** 4/5 - 5/8/2013
BORING CREW: Daigneault, Salisbury, Judkins **TESTED BY:** J.Touchette, J. Staab **REVIEWED BY:** C. Ewald

BORING No.	DATE DRILLED	MILE MARKER	OFFSET (FT)	DEPTH (FT)	SAMPLE TYPE	FIELD DESCRIPTION: SOIL TYPE, COLOR, MOISTURE	LABORATORY RESULTS: % MOISTURE	AASHTO CLASS.	SOIL DES.	% GRAVEL	% SAND	% FINES	LIQUID LIMIT	PLASTIC LIMIT
B-111	05/07/13	1.7	2.5 R	0.85	A	Asphalt Pavement								
				0.85-5.0	A	Gr Si Sa, Br, Moist	5.6	A-4	Si Sa	19.4	40.3	40.3		
				NLTD										

GREEN INTERNATIONAL AFFILIATES, INC.
CIVIL AND STRUCTURAL ENGINEERS

PROJECT NAME: MENDON
PROJECT NUMBER: ER 020-2(39)

FILE NAME: z13b188bor.dgn
PROJECT LEADER: E. ATKINS
DESIGNED BY: T. BIGELOW
BORING LOG SHEET 1

PLOT DATE: 11/13/2015
DRAWN BY: T. BIGELOW
CHECKED BY: E. ATKINS
SHEET 24 OF 72

STATE OF VERMONT
AGENCY OF TRANSPORTATION

QUANTITY SHEET 1

SUMMARY OF ESTIMATED QUANTITIES

ROADWAY	ROADWAY (NO FEDERAL/STATE	TRAINING	EROSION CONTROL	FULL C.E. ITEMS	GRAND TOTAL	FINAL	UNIT	ITEMS	ITEM NUMBER	ROUND
1					1		LS	CLEARING AND GRUBBING, INCLUDING INDIVIDUAL TREES AND STUMPS	201.10	-
12000					12000		CY	COMMON EXCAVATION	203.15	426
600					600		CY	SOLID ROCK EXCAVATION	203.16	EST
800					800		CY	UNCLASSIFIED EXCAVATION	203.17	33
9500					9500		CY	UNCLASSIFIED CHANNEL EXCAVATION	203.27	215
5000					5000		CY	EARTH BORROW	203.30	49
35	50				85		CY	TRENCH EXCAVATION OF EARTH	204.20	6
1					1		CY	TRENCH EXCAVATION OF EARTH, EXPLORATORY (N.A.B.I.)	204.22	-
620					620		CY	STRUCTURE EXCAVATION	204.25	9
160					160		CY	GRANULAR BACKFILL FOR STRUCTURES	204.30	4
675					675		SY	COLD PLANING, BITUMINOUS PAVEMENT	210.10	11
400					400		CY	SUBBASE OF DENSE GRADED CRUSHED STONE	301.35	28
60					60		CY	AGGREGATE SHOULDERS, IN PLACE	402.10	5
6					6		CWT	EMULSIFIED ASPHALT	404.65	0.6
1					1		LU	PRICE ADJUSTMENT, ASPHALT CEMENT (N.A.B.I.)	406.50	-
30					30		CY	CONCRETE, HIGH PERFORMANCE CLASS B	501.34	2
3900					3900		LB	REINFORCING STEEL, LEVEL I	507.11	25
2					2		GAL	WATER REPELLENT, SILANE	514.10	0.2
2					2		LF	24" CPEP	601.0920	0.4
								BEGIN OPTION AA		
100					100		LF	57 X 38 CAAPA 0.135 (2-2/3 X 1/2)	601.3258	1
100					100		LF	57 X 38 PCCSPA 0.109 (2-2/3 X 1/2)	601.3457	1
								END OPTION AA		
22					22		LF	RE-LAYING PIPE CULVERTS (24")	601.99	-
	1				1		EACH	SANITARY SEWER MANHO LE	604.22	-
	1				1		EACH	REHAB. DROP INLETS, CATCH BASINS, OR MANHOLES, CLASS II	604.415	-
	4				4		EACH	CHANGING ELEVATION OF SEWER MANHOLES	604.42	-
			40		40		MGAL	DUST CONTROL WITH WATER	609.10	2
			4.5		4.5		TON	DUST AND ICE CONTROL WITH CALCIUM CHLORIDE	609.15	0.1
			500		500		CY	STONE FILL, TYPE I	613.10	12
			2200		2200		CY	STONE FILL, TYPE II	613.11	57
7					7		EACH	YIELDING MARKER POSTS	619.17	-
62.5					62.5		LF	STEEL BEAM GUARDRAIL, GALVANIZED	621.20	EST
100					100		LF	STEEL BEAM GUARDRAIL, GALVANIZED/NESTED	621.206	-
575					575		LF	REMOVE AND RESET GUARDRAIL	621.75	12.5
100					100		LF	REMOVAL AND DISPOSAL OF GUARDRAIL	621.80	-
725					725		LF	TEMPORARY TRAFFIC BARRIER	621.90	23
1300					1300		LF	REMOVE AND RESET TEMPORARY TRAFFIC BARRIER	621.95	28
	1				1		LS	TRANSFER TO NEW SYSTEM, SANITARY SEWER	628.42	-
125	25				150		TON	CRUSHED STONE BEDDING	629.54	6
240					240		HR	UNIFORMED TRAFFIC OFFICERS	630.10	EST

DETAILED SUMMARY OF QUANTITIES

QUANTITIES	UNIT	ITEMS
COMMON EXCAVATION		
582	CY	US ROUTE 4
3030	CY	MENDON BROOK
664	CY	OVERFLOW SWALE
7058	CY	RAVINE
240	CY	SEDIMENTATION BASIN
426	CY	ROUNDING
12000	CY	TOTAL
UNCLASSIFIED EXCAVATION		
767	CY	MENDON BROOK
33	CY	ROUNDING
800	CY	TOTAL
UNCLASSIFIED CHANNEL EXCAVATION		
9285	CY	MENDON BROOK
215	CY	ROUNDING
9500	CY	TOTAL
TRENCH EXCAVATION OF EARTH		
48	CY	SPECIAL PROVISION (DUCTILE IRON PIPE, SEWER) (16")
31	CY	24" CPEP
6	CY	ROUNDING
85	CY	TOTAL
STRUCTURE EXCAVATION		
457	CY	57" X 38" PIPE OPTION
154	CY	HEADWALL
9	CY	ROUNDING
620	CY	TOTAL
GRANULAR BACKFILL FOR STRUCTURES		
56	CY	57" X 38" PIPE OPTION
100	CY	HEADWALL
4	CY	ROUNDING
160	CY	TOTAL
SUBBASE OF DENSE GRADED CRUSHED STONE		
372	CY	US ROUTE 4
28	CY	ROUNDING
400	CY	TOTAL
PERMANENT EROSION CONTROL		
500	CY	STONE FILL TYPE I
2200	CY	STONE FILL TYPE II
6200	SY	GEOTEXTILE UNDER STONE FILL
100	LB	SEED
3200	SY	GRUBBING MATERIAL
50	LB	SPECIAL PROVISION (NATIVE STEEP SLOPE SEED MIX)
CRUSHED STONE BEDDING		
22	CY	PVC SEWER PIPE (15")
122	CY	57" X 38" PIPE OPTION
6	CY	ROUNDING
150	CY	TOTAL

GREEN INTERNATIONAL AFFILIATES, INC.
CIVIL AND STRUCTURAL ENGINEERS

PROJECT NAME: MENDON
PROJECT NUMBER: ER 020-2(39)

FILE NAME: z13b188qty.dgn
PROJECT LEADER: E. ATKINS
DESIGNED BY: T. BIGELOW
QUANTITY SHEET 1

PLOT DATE: 11/24/2015
DRAWN BY: T. BIGELOW
CHECKED BY: E. ATKINS
SHEET 25 OF 72

STATE OF VERMONT
AGENCY OF TRANSPORTATION

QUANTITY SHEET 2

SUMMARY OF ESTIMATED QUANTITIES

ROADWAY	ROADWAY (NO FEDERAL/STATE	TRAINING	EROSION CONTROL	FULL. C.E. ITEMS	GRAND TOTAL	FINAL	UNIT	ITEMS	ITEM NUMBER	ROUND
1250					1250		HR	FLAGGERS	630.15	EST
				1	1		LS	FIELD OFFICE, ENGINEERS	631.10	-
				1	1		LS	TESTING EQUIPMENT, CONCRETE	631.16	-
				1	1		LS	TESTING EQUIPMENT, BITUMINOUS	631.17	-
				3000	3000		DL	FIELD OFFICE TELEPHONE (N.A.B.I.)	631.26	-
		520			520		HR	EMPLOYEE TRAINEESHIP	634.10	-
1					1		LS	MOBILIZATION/DEMOBILIZATION	635.11	-
600					600		LF	4 INCH WHITE LINE	646.20	29
600					600		LF	4 INCH YELLOW LINE	646.21	29
1750					1750		LF	TEMPORARY 4 INCH WHITE LINE	646.600	36
1750					1750		LF	TEMPORARY 4 INCH YELLOW LINE	646.610	36
			6200		6200		SY	GEOTEXTILE UNDER STONE FILL	649.31	143
			100		100		SY	GEOTEXTILE FOR SILT FENCE, WOVEN WIRE REINFORCED	649.515	10
			100		100		LB	SEED	651.15	47
			150		150		LB	SEED, WINTER RYE	651.17	44
			450		450		LB	FERTILIZER	651.18	8
			1.8		1.8		TON	AGRICULTURAL LIMESTONE	651.20	0.03
			1.8		1.8		TON	HAY MULCH	651.25	0.03
240					240		CY	TOPSOIL	651.35	2
			3200		3200		SY	GRUBBING MATERIAL	651.40	134
			1		1		LS	EPSC PLAN	652.10	-
			200		200		HR	MONITORING EPSC PLAN	652.20	EST
			1		1		LU	MAINTENANCE OF EPSC PLAN (N.A.B.I.)	652.30	-
			6100		6100		SY	TEMPORARY EROSION MATTING	653.20	123
			50		50		CY	TEMPORARY STONE CHECK DAM, TYPE I	653.25	10
			70		70		CY	VEHICLE TRACKING PAD	653.35	11
			2		2		EACH	INLET PROTECTION DEVICE, TYPE I	653.40	-
			340		340		LF	BARRIER FENCE	653.50	10
			2000		2000		LF	PROJECT DEMARCATION FENCE	653.55	72
1					1		LU	PRICE ADJUSTMENT, FUEL (N.A.B.I.)	690.50	-
			2100		2100		CY	SPECIAL PROVISION (GRANULAR BORROW)	900.608	100
			5800		5800		CY	SPECIAL PROVISION (STONE FILL, CHANNEL ARMORING)	900.608	105
			1800		1800		CY	SPECIAL PROVISION (STONE FILL, SLOPE ARMORING)	900.608	113
			50		50		LB	SPECIAL PROVISION (NATIVE STEEP SLOPE SEED MIX)	900.635	17
	90				90		LF	SPECIAL PROVISION (DUCTILE IRON PIPE, SEWER) (16")	900.640	7
			800		800		LF	SPECIAL PROVISION (TEMPORARY WATER DIVERSION BARRIER)	900.640	30
			1		1		LS	SPECIAL PROVISION (TEMPORARY RELOCATION OF STREAM)	900.645	-
1					1		LS	SPECIAL PROVISION (TRAFFIC CONTROL, ALL-INCLUSIVE)	900.645	-
1					1		LU	SPECIAL PROVISION (MAT DENSITY PAY ADJUSTMENT, SMALL QUANTITY) (N.A.B.I.)	900.650	-
1					1		LU	SPECIAL PROVISION (MIXTURE PAY ADJUSTMENT) (N.A.B.I.)	900.650	-
480					480		TON	SPECIAL PROVISION (BITUMINOUS CONCRETE PAVEMENT, SMALL QUANTITY)	900.680	9

DETAILED SUMMARY OF QUANTITIES

QUANTITIES	UNIT	ITEMS
TEMPORARY EROSION CONTROL		
100	SY	GEOTEXTILE FOR SILT FENCE, WOVEN WIRE REINFORCED
150	LB	SEED, WINTER RYE
450	LB	FERTILIZER
1.8	TON	AGRICULTURAL LIMESTONE
1.8	TON	HAY MULCH
6100	SY	TEMPORARY EROSION MATTING, TYPE I
50	CY	TEMPORARY STONE CHECK DAM
70	CY	VEHICLE TRACKING PAD
2	EACH	INLET PROTECTION DEVICE, TYPE I
340	LF	BARRIER FENCE
SPECIAL PROVISION (STONE FILL, CHANNEL ARMORING)		
3091	CY	MENDON BROOK
2604	CY	RAVINE
105	CY	ROUNDING
5800	CY	TOTAL
SPECIAL PROVISION (STONE FILL, SLOPE ARMORING)		
1687	CY	RAVINE
113	CY	ROUNDING
1800	CY	TOTAL
SPECIAL PROVISION (BITUMINOUS CONCRETE PAVMENT, SMALL QUANTITY)		
		US ROUTE 4
106	TON	TYPE IV
365	TON	TYPE II
9	TON	ROUNDING
480	TON	TOTAL

GREEN INTERNATIONAL AFFILIATES, INC.
CIVIL AND STRUCTURAL ENGINEERS

PROJECT NAME: MENDON
PROJECT NUMBER: ER 020-2(39)

FILE NAME: z13b188qty.dgn
PROJECT LEADER: E. ATKINS
DESIGNED BY: T. BIGELOW
QUANTITY SHEET 2

PLOT DATE: 11/24/2015
DRAWN BY: T. BIGELOW
CHECKED BY: E. ATKINS
SHEET 26 OF 72

STATE OF VERMONT
AGENCY OF TRANSPORTATION

ITEM DETAIL AND DRAINAGE SHEET

STATION	STATION	POS.	ASKEW	INLET/OUTLET TYPE		PIPE		ALLOWABLE OPTIONS			PIPE ELBOW	ES	CB	DEPTH DI	CONC CLASS B	REINF STEEL	DI GRATE	CHAN ELEV	CRM	STR. EXC.	TRENCH EXCAVATION		GRAN BKFILL STRUCT	EROS MATT	STONE FILL		MARKER POSTS		REMARKS
			NO. DEG.	INLET	OUTLET	D IN	L FT	PCCSPA TH	CAAPA TH	CPEP SL	NO. DEG.	EA	EA	FT	CY	LBS	TYPE	EA	CY	CY	EARTH CY	ROCK CY	CY	SY	CY	TYPE	LT EA	RT EA	
EXISTING DRAINAGE																													
Mendon Brook																													
1 22+20.6	21+46.5	RT-LT	-	PIPE	PIPE	48	120																					1	RETAIN 48" CPEP PIPE
2 26+52.3	26+16.9	RT-LT	-	PIPE	PIPE	48	100																				1	1	REMOVE ONE SECTION OF PIPE FROM DOWNSTREAM END OF 48" RCP
3 28+72.5	28+72.5	RT-LT	-	PIPE	PIPE	24	92																				1		RETAIN 24" CMP PIPE
4 30+39.9	30+40.5	RT-LT	-	PIPE	PIPE	18	95																				1		RETAIN 18" CMP PIPE
5 200+52.4	200+72.8	BL-RT	-	PIPE	PIPE	24	21																						RELAYING PIPE CULVERTS AND EXTEND 1.6'
NEW DRAINAGE																													
Mendon Brook																													
1 24+21.6	23+80.9	RT-LT	65.5	SHW	PIPE	57"X38"	99	.109	.135						28	3875				611			156				1	1	57" X 38" PIPE OPTION AND CONSTRUCT NEW HEADWALL
2 200+52.4	200+75.0	BL-BL	-	PIPE	PIPE	24	1.6														31								RELAYING PIPE CULVERTS AND EXTEND 1.6'
NEW SEWER																													
1 263+35.2	264+18.2	BL-BL	-	MH	MH	16"	83														48								CONSTRUCT NEW INLINE SANITARY SEWER MANHOLE (4') AND INSTALL 83' OF NEW SPECIAL PROVISION (DUCTILE IRON PIPE, SEWER)(16"). CONNECT TO EXISTING MANHOLE AND REHAB AS NECESSARY.
TOTALS						57"X38"	99	57" X 38" PIPE OPTION							28	3875				611	79		156				4	3	
						24"	1.6	24"CPEP																					
						16"	83	SPECIAL PROVISION (DUCTILE IRON PIPE, SEWER)(16")																					

GUARDRAIL					
BEGIN STATION	END STATION	POSITION LEFT FT	POSITION RIGHT FT	END TREATMENT LEFT FT	END TREATMENT RIGHT FT
US ROUTE 4					
REMOVE AND RESET GUARDRAIL					
23+07.2	23+44.7	-	-	37.5	-
24+44.7	29+69.7	525	-	-	-
GALVANIZED/NESTED					
23+44.7	24+44.7	100	-	-	-
TOTAL REMOVE AND RESET		525		37.5	
TOTAL GALVANIZED/NESTED		100			

UNDERDRAIN										
BEGIN STATION	END STATION	POSITION	TYPE	DIA IN.	LENGTH FT	TRENCH EARTH CY.	TRENCH ROCK CY.	GRAN BKFILL CF	FB EA	MRK. POST EA
TOTALS										

GREEN INTERNATIONAL AFFILIATES, INC.
CIVIL AND STRUCTURAL ENGINEERS

PROJECT NAME: MENDON	
PROJECT NUMBER: ER 020-2(39)	
FILE NAME: z13b188itemdet.dgn	PLOT DATE: 11/13/2015
PROJECT LEADER: E. ATKINS	DRAWN BY: T. BIGELOW
DESIGNED BY: M. BRADLEY	CHECKED BY: E. ATKINS
ITEM DETAIL & DRAINAGE SHEET	SHEET 27 OF 72

STATE OF VERMONT
AGENCY OF TRANSPORTATION

EARTHWORKS

STATION	DIST FT.	TOTAL COMMON EXCAVATION AREA S.F.	TOTAL COMMON EXCAVATION VOLUME C.Y.	UNCLASSIFIED EXCAVATION AREA S.F.	UNCLASSIFIED EXCAVATION VOLUME C.Y.	EMBANKMENT AREA S.F.	EMBANKMENT VOLUME C.Y.		
US ROUTE 4									
22+50		0				0			
	9		1				0		
22+59		4				0			
	41		7				0		
23+00		6				0			
	50		70				0		
23+50		70				0			
	21		76				0		
23+71		124				0			
	29		132				0	CUT	582
24+00		122				0		ROCK	0
	32		144				0	R.FAC	0.495
24+32		121				0		FILL	0
	18		63				0	F.FAC	1.15
24+50		69				0		EX. C	582
	50		75				0		
25+00		12				0			
	44		14				0		
25+44		5				0			
	6		1				0		
25+50		0				0			
MENDON BROOK									
3+00		10				0			
	50		36				0		
3+50		29				0			
	50		87				0	CUT	3797
4+00		65				0		ROCK	0
	50		142				0	R.FAC	.495
4+50		88				0		FILL	0
	50		173				0	F.FAC	1.15
5+00		98				0		EX. C	3797
	20		75				0		
5+20		104				0			
	30		119				0		
5+50		110				0			
	44		195				0		
5+94		130				0			
	6		30				0		
6+00		142				0			
	50		258				0		
6+50		136				0			
	30		154				0		
6+80		140				0			
	20		109				0		
7+00		155				0			
	50		293				0		
7+50		162				0			
	50		375				0		
8+00		243				0			
	50		390				0		
8+50		178		0		0			
	50		273		82		0		
9+00		116		88		0			
	50		215		170		0		
9+50		116		96		0			
	50		107		189		0		
10+00		0		109		0			
	50		0		213		0		
10+50		0		122		0			
	50		0		113		0		
11+00		0		0		0			
OVERFLOW SWALE									
50+00		0				0			
	50		79				0		
50+50		85				0		CUT	664
	50		176				0	ROCK	0
51+00		105				0		R.FAC	0.495
	50		265				0	FILL	0
51+50		182				0		F.FAC	1.15
	43		145				0	EX. C	664
51+93		0				0			

STATION	DIST FT.	TOTAL COMMON EXCAVATION AREA S.F.	TOTAL COMMON EXCAVATION VOLUME C.Y.	ROCK EXCAVATION AREA S.F.	ROCK EXCAVATION VOLUME C.Y.	EMBANKMENT AREA S.F.	EMBANKMENT VOLUME C.Y.		
RAVINE									
200+75		79				7			
	25		89				3		
201+00		113				0			
	50		423				0		
201+50		344				0			
	50		998				0	CUT	7058
202+00		734				0		ROCK	0
	50		1580				0	R.FAC	0.495
202+50		972				0		FILL	6275
	50		1706				0	F.FAC	1.15
203+00		871				0		EX. C	157
	50		903				410		
203+50		105				443			
	50		121				1106		
204+00		26				751			
	50		24				1545		
204+50		0				917			
	50		0				1353		
205+00		0				544			
	50		59				724		
205+50		63				238			
	50		70				448		
206+00		13				246			
	50		75				456		
206+50		69				247			
	50		355				229		
207+00		315				0			
	50		655				0		
207+50		392				0			
SEDIMENTATION BASIN									
22+58			240						
								CUT	240
								ROCK	0
								R.FAC	0.495
								FILL	0
								F.FAC	1.15
								EX. C	240

STATION	DIST FT.	TOTAL COMMON EXCAVATION AREA S.F.	TOTAL COMMON EXCAVATION VOLUME C.Y.	ROCK EXCAVATION AREA S.F.	ROCK EXCAVATION VOLUME C.Y.	EMBANKMENT AREA S.F.	EMBANKMENT VOLUME C.Y.		

SUMMARY AND BALANCES

STATION TO STATION		TOT EXC. EARTH & ROCK C.Y.	ROCK EXCAV C.Y.	EMBANK C.Y.	EXCESSES CUT	EXCESSES FILL	ACUMULATIVE EXCESSES CUT	ACUMULATIVE EXCESSES FILL	
MENDON ER 020-2(39)									
205+50	207+50	1155	0	1303		148		148	SEE NOTE*
203+00	205+50	1107	0	5910		4803		4951	SEE NOTE*
200+75	203+00	4796	0	3	4793			158	SEE NOTE*
23+50	0+00	582	0	0	582		424		
3+00	11+50	3797	0	0	3797		4221		
50+00	51+93	664	0	0	664		4885		
22+58		240	0	0	240		5125		
5% CONTINGENCY			579	0	579		5704		
	SUB-TOTAL	12341	579	7216	5704				
	TOTAL	12341	579	7216	5704				

*NOTE: BORROW IS ANTICIPATED TO BE REQUIRED TO CONSTRUCT THE IMPROVEMENTS AT THE RAVINE. THIS WORK IS ANTICIPATED TO BE COMPLETED FROM DOWNSTREAM TO UPSTREAM AND PRIOR TO OTHER FILL

REMARKS

EARTH AND ROCK EXCAVATION		12920
SOLID ROCK EXCAVATION		579
EARTH EXCAVATION		12341
BACKFILL FOR TRENCH EXCAVATION (CB AND PIPES)		
PLANIMETERED FILL		6275
LESS FACTORED SOLID ROCK		-
LESS DISPLACEMENT OF ANY LARGE STRUCTURES		-
NET PLANIMETERED FILL		6275
FACTOR		1.15
PLANIMETERED FILL INCLUDING FACTOR		7216
MATERIALS AVAILABLE FOR FILLS		
EARTH EXCAVATION		12341
CHANNEL EXCAVATION		9285
UNDERDRAIN EXCAVATION		-
STRUCTURE EXCAVATION		611
TRENCH EXCAVATION FOR DRAINAGE		79
TRENCH EXCAVATION OF ROCK		-
TOTAL MATERIAL AVAILABLE FOR FILL		22316
TOTAL FILL INCLUDING FACTOR		7216
TOTAL MATERIAL FOR FILL		22316
BORROW		4951 SEE NOTE*
EXCESS EXCAVATION		20052

PROJECT NAME: MENDON
PROJECT NUMBER: ER 020-2(39)

FILE NAME: z13b188ewqty.dgn
PROJECT LEADER: E. ATKINS
DESIGNED BY: M. BRADLEY
EARTHWORKS SHEET

PLOT DATE: 11/24/2015
DRAWN BY: M. BRADLEY
CHECKED BY: E. ATKINS
SHEET 28 OF 72

GREEN INTERNATIONAL AFFILIATES, INC.
CIVIL AND STRUCTURAL ENGINEERS

STATE OF VERMONT
AGENCY OF TRANSPORTATION

RIGHT - OF - WAY DETAIL SHEET

TABLE OF PROPERTY ACQUISITION

PARCEL NO.	PROPERTY OWNER	ROW LAYOUT NO.	BEGINNING STATION	ENDING STATION	TAKE	REMAINDER	RIGHT			RECORDING DATA					REMARKS
					AREA±	AREA±	TYPE	T / P	AREA ±	TITLE	DATE	TOWN / CITY	BOOK	PAGE	
1	CHIMAYO, LLC	1, 3	22+20.90 RT	26+37.48 RT	2.8 A	56.7 A				WD	07/30/15	MENDON	98	847-849	122,522 SF±
			22+20.90 RT	23+07 RT			CONSTRUCTION	T	663 SF						INCL. PDF
			24+00 RT	24+13 RT			CONSTRUCTION	T	273 SF						INCL. PDF
			24+47 RT	24+54 RT			CONSTRUCTION	T	115 SF						INCL. PDF
			24+63 RT	25+39 RT			CONSTRUCTION	T	1,733 SF						INCL. PDF
			25+43 RT	25+76.58 RT			CONSTRUCTION	T	1,553 SF						INCL. PDF
			25+67 RT	25+71 RT			REMOVE & RESET	T							EXISTING CULVERT
2	DELETED														
3	GREEN MOUNTAIN POWER CORPORATION		22+20.90 RT	26+37.48 RT											UTILITY
4	ALPINE PIPELINE COMPANY		22+20.90 RT	26+37.48 RT											UTILITY
5	TELEPHONE OPERATING COMPANY OF VERMONT, LLC		22+20.90 RT	26+37.48 RT											UTILITY
6	COMCAST OF CONNECTICUT/GEORGIA/ MASSACHUSETTS/NEW HAMPSHIRE/ NEW YORK/NORTH CAROLINA/ VERMONT, LLC		22+20.90 RT	26+37.48 RT											UTILITY

APPROVED: RYAN CLOUTIER DATE: 12-16-14
CHIEF, PLANS & TITLES

TABLE OF REVISIONS

REVISION NO.	ROW SET SHEET #	DESCRIPTION	DATE
1	3, 4, 6	PARCEL 1, CHIMAYO - REVISED	05/06/15
		CONSTRUCTION EASEMENTS	
		STATIONS AND AREA.	
		REV. BY: MT C.O. 9995 APPR. BY: RC	
2	3, 4, 6	PARCEL 2, SKYBROOKE - DELETED	05/06/15
		REV. BY: MT C.O. 9996 APPR. BY: RC	

PROJECT NAME: MENDON
PROJECT NUMBER: ER 020-2(39)

FILE NAME: z13b188rowbdr.dgn
PROJECT LEADER: E. ATKINS
DESIGNED BY: A. EGIZI
R.O.W. DETAIL SHEET

PLOT DATE: 11/13/2015
DRAWN BY: M. TROTTIER
CHECKED BY: R. CLOUTTIER
SHEET 29 OF 72

CLEARING AND GRUBBING, INCLUDING INDIVIDUAL TREES AND SHRUBS
3+00.0 LT-RT - 6+50.0 LT-RT
50+00.0 LT-RT - 51+93.0 LT-RT
206+50.0 LT-RT - 207+50.0 LT-RT

COLD PLANING, BITUMINOUS CONCRETE
~~22+58.6 - 23+33.6~~ 22+95.0 - 24+63.0
~~24+69.1 - 25+44.1~~

AGGREGATE SHOULDERS, IN PLACE
22+68.7 RT - 25+51.5 RT

STONE FILL, TYPE I
50+00.0 LT-RT - 51+93.0 LT-RT

STONE FILL, TYPE II
~~3+00.0 LT~~ RT - 6+50.0 ~~LT~~ RT
2+89.0

STEEL BEAM GUARDRAIL, GALVANIZED/NESTED
~~23+44.7 LT - 24+44.7 LT~~

REMOVE AND RESET GUARDRAIL
~~23+07.2 LT - 23+44.7 LT (MANUFACTURED TERMINAL END SECTION)~~
~~24+44.7 LT - 26+61.6 LT~~

REMOVAL AND DISPOSAL OF GUARDRAIL
~~23+44.7 LT - 24+44.7 LT~~
23+07.0 LT - 29+57.0 LT

TEMPORARY TRAFFIC BARRIER
23+00.0 LT - 26+61.1 LT
- TO FACILITATE EMBANKMENT WORK

4 INCH WHITE LINE
~~22+58.0 LT - 25+44.1~~ LT (EDGE LINE) 22+40.0 - 24+80.0
~~22+58.0 RT - 25+44.1~~ RT (EDGE LINE) 22+37.0-24+80.0

4 INCH YELLOW LINE
~~22+58.0 - 25+44.1~~ (DOUBLE CENTER LINE)
22+96.0 - 24+82.0 CL

GRUBBING MATERIAL
3+00.0 RT - 6+50.0 RT

SPECIAL PROVISION
(STONE FILL, SLOPE ARMORING)
206+50.0 LT-RT - 207+50.0 LT-RT

SPECIAL PROVISION
(STONE FILL, CHANNEL ARMORING)
206+50.0 LT-RT - 207+50.0 LT-RT
~~3+00.0 LT~~ RT - 6+50.0 ~~LT~~ RT
2+89.0

N
VT STATE PLANE GRID

STEEL BEAM GUARDRAIL, GALV./NESTED
23+40.5 LT - 23+53.0 LT
24+40.5 LT - 29+90.5 LT
29+90.5 LT - 30+03.0 LT

STEEL BEAM GUARDRAIL, GALV.
23+40.5 LT - 23+53.0 LT
24+40.5 LT - 30+03.0 LT

MANUFACTURED TERMINAL END SECTION
22+90.5 LT - 23+40.5 LT

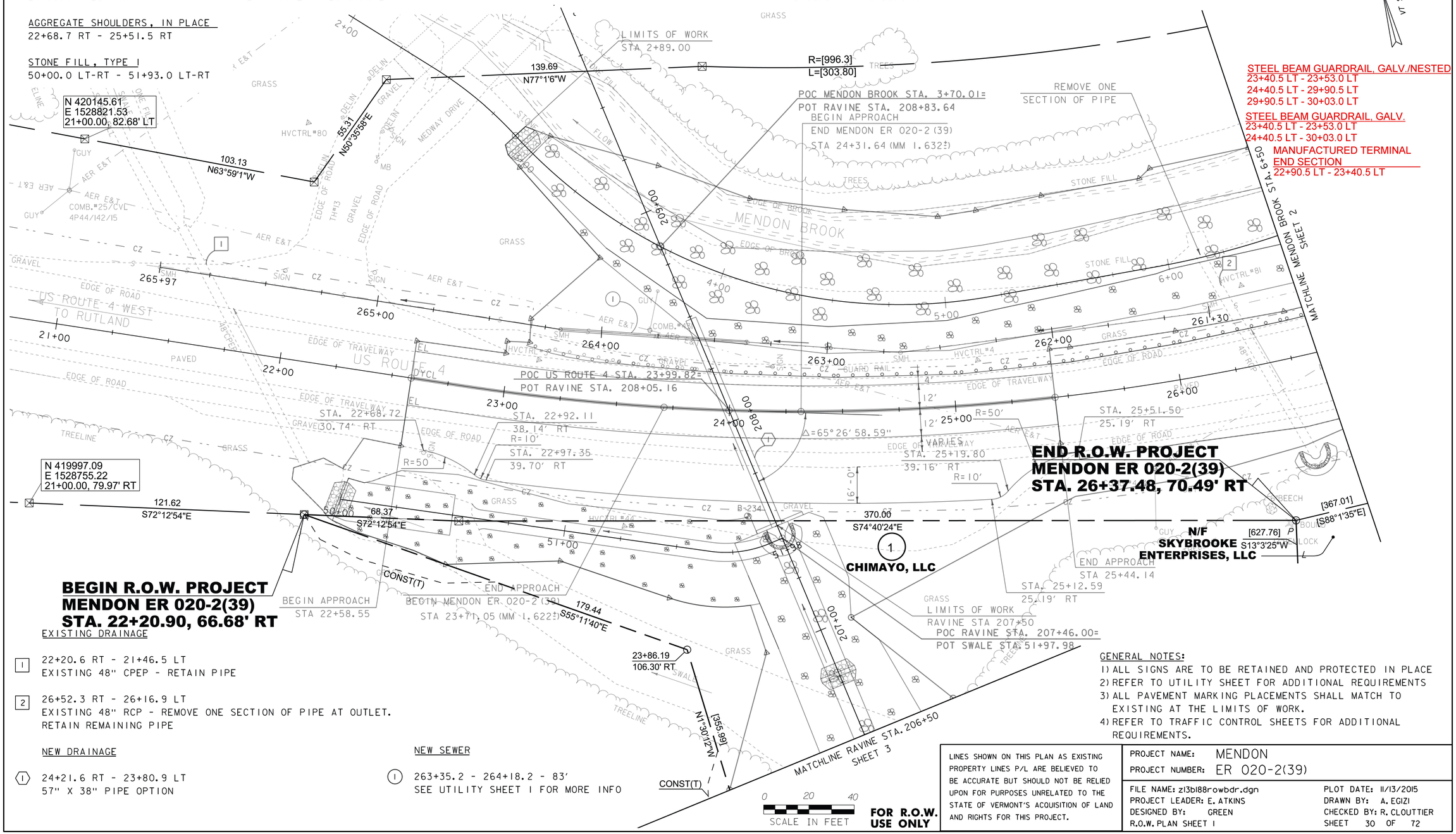

EXISTING DRAINAGE

[1] 22+20.6 RT - 21+46.5 LT
EXISTING 48" CPEP - RETAIN PIPE

[2] 26+52.3 RT - 26+16.9 LT
EXISTING 48" RCP - REMOVE ONE SECTION OF PIPE AT OUTLET.
RETAIN REMAINING PIPE

NEW DRAINAGE

<1> 24+21.6 RT - 23+80.9 LT
57" X 38" PIPE OPTION

NEW SEWER

(1) 263+35.2 - 264+18.2 - 83'
SEE UTILITY SHEET 1 FOR MORE INFO

GENERAL NOTES:
1) ALL SIGNS ARE TO BE RETAINED AND PROTECTED IN PLACE
2) REFER TO UTILITY SHEET FOR ADDITIONAL REQUIREMENTS
3) ALL PAVEMENT MARKING PLACEMENTS SHALL MATCH TO EXISTING AT THE LIMITS OF WORK.
4) REFER TO TRAFFIC CONTROL SHEETS FOR ADDITIONAL REQUIREMENTS.

FOR R.O.W. USE ONLY

LINES SHOWN ON THIS PLAN AS EXISTING PROPERTY LINES P/L ARE BELIEVED TO BE ACCURATE BUT SHOULD NOT BE RELIED UPON FOR PURPOSES UNRELATED TO THE STATE OF VERMONT'S ACQUISITION OF LAND AND RIGHTS FOR THIS PROJECT.

PROJECT NAME: MENDON
PROJECT NUMBER: ER 020-2(39)

FILE NAME: z13b188rowbdr.dgn
PROJECT LEADER: E. ATKINS
DESIGNED BY: GREEN
R.O.W. PLAN SHEET 1

PLOT DATE: 11/13/2015
DRAWN BY: A. EGIZI
CHECKED BY: R. CLOUTTIER
SHEET 30 OF 72

CLEARING AND GRUBBING, INCLUDING INDIVIDUAL TREES AND SHRUBS
6+50.0 LT-RT - 10+75.0 RT

STONE FILL, TYPE II
6+50.0 RT - 8+75.0 RT

GRUBBING MATERIAL
6+50.0 RT - 8+75.0 RT

REMOVE AND RESET GUARDRAIL
26+61.6 LT - 29+69.7 LT

TEMPORARY TRAFFIC BARRIER
26+61.6 LT - 29+69.7 LT

SPECIAL PROVISION
(STONE FILL, TYPE IV STREAM BED MATERIAL)
6+50.0 LT-RT - 7+75.0 LT-RT
7+75.0 RT - 10+75.0 RT

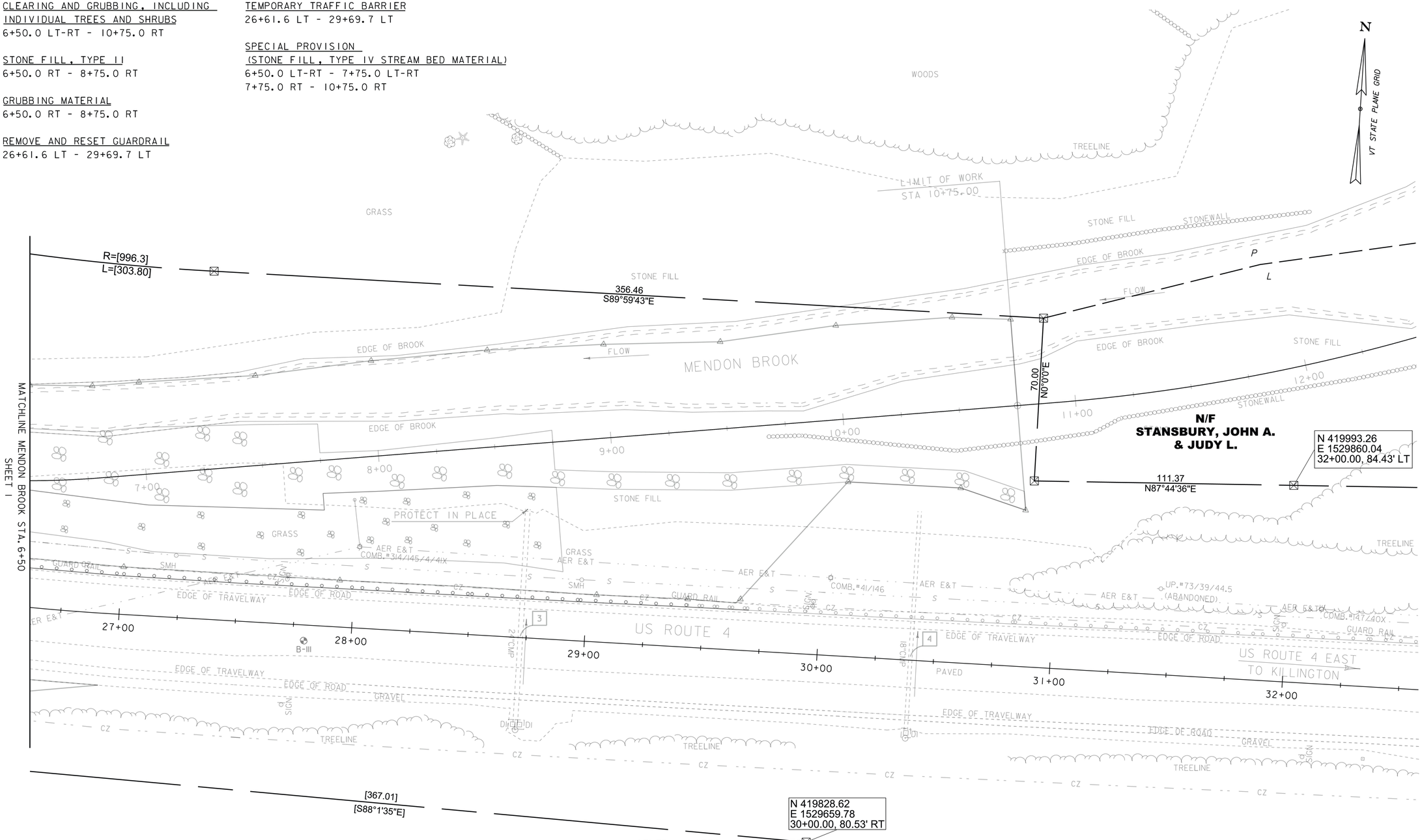

EXISTING DRAINAGE

3 28+72.5 RT - 28+72.5 LT
EXISTING 24" CMP - RETAIN PIPE

4 30+39.9 RT - 30+40.5 LT
EXISTING 18" CMP - RETAIN PIPE

LINES SHOWN ON THIS PLAN AS EXISTING PROPERTY LINES P/L ARE BELIEVED TO BE ACCURATE BUT SHOULD NOT BE RELIED UPON FOR PURPOSES UNRELATED TO THE STATE OF VERMONT'S ACQUISITION OF LAND AND RIGHTS FOR THIS PROJECT.

FOR R.O.W. USE ONLY

GENERAL NOTES:
1) ALL SIGNS ARE TO BE RETAINED AND PROTECTED IN PLACE
2) REFER TO UTILITY SHEET FOR ADDITIONAL REQUIREMENTS
3) ALL PAVEMENT MARKINGS PLACEMENTS SHALL MATCH TO EXISTING AT THE LIMITS OF WORK.
4) REFER TO TRAFFIC CONTROL SHEETS FOR ADDITIONAL REQUIREMENTS.

0 20 40
SCALE IN FEET

PROJECT NAME: MENDON
PROJECT NUMBER: ER 020-2(39)

FILE NAME: z13b188rowbdr.dgn
PROJECT LEADER: E. ATKINS
DESIGNED BY: GREEN
R.O.W. PLAN SHEET 2

PLOT DATE: 11/13/2015
DRAWN BY: A. EGIZI
CHECKED BY: R. CLOUTTIER
SHEET 31 OF 72

CLEARING AND GRUBBING, INCLUDING INDIVIDUAL TREES AND SHRUBS
200+42.0 LT-RT - 206+50.0 LT-RT

STONE FILL, TYPE II
201+55.0 LT - 203+50.0 LT
201+60.0 RT - 204+50.0 LT

GRUBBING MATERIAL
201+55.0 LT - 203+50.0 LT
201+60.0 RT - 204+50.0 LT

SPECIAL PROVISION
(STONE FILL, SLOPE ARMORING)
200+75.0 LT-RT - 206+50.0 LT-RT

SPECIAL PROVISION
(STONE FILL, CHANNEL ARMORING)
200+75.0 LT-RT - 206+50.0 LT-RT

EXISTING DRAINAGE

[5] 200+52.2 - 200+72.8 RT
24" CPEP - RELAYING PIPE CULVERTS, AND EXTEND

NEW DRAINAGE

(2) 200+52.4 - 200+75.0
24" CPEP - RELAYING PIPE CULVERTS, AND EXTEND 24" CPEP 1.6'
INVERT IN : 1328.14, INVERT OUT: 1327.60
*OLD PIPE LOCATION AND THE NEW PIPE SHALL BE BACKFILLED WITH SUITABLE FILL.

VT STATE PLANE GRID N

24+68.47
446.75' RT

25+00.22
546.88' RT

110.83
N13°0'29"W

[355.99]
N1°30'12"W

25+66.13
689.29' RT

177.83
N27°14'57"W

REMOVE & RESET(T)
18.04
N71°9'31"W

25+76.58
692.87' RT

[627.76]
S13°3'25"W

CONST(T)

LIMIT OF CUT AND FILL (TYP.)

LIMITS OF WORK
STA 200+42.00

ACCESS ROAD

UNNAMED BROOK

FLOW

HVCTRL#80I

HVCTRL#80C

HVCTRL#40

HVCTRL#4I

HVCTRL#88SI

TREELINE

WOODS

DIRT & GRAVEL

STONE FILL

201+00

202+00

203+00

204+00

205+00

206+00

MATCHLINE RAVINE STA. 206+50
SHEET I

N/F
SKYBROOKE ENTERPRISES, LLC

1
CHIMAYO, LLC

GLENCOCK

LINES SHOWN ON THIS PLAN AS EXISTING PROPERTY LINES P/L ARE BELIEVED TO BE ACCURATE BUT SHOULD NOT BE RELIED UPON FOR PURPOSES UNRELATED TO THE STATE OF VERMONT'S ACQUISITION OF LAND AND RIGHTS FOR THIS PROJECT.

FOR R.O.W. USE ONLY

0 20 40
SCALE IN FEET

PROJECT NAME: MENDON
PROJECT NUMBER: ER 020-2(39)

FILE NAME: z13b188rowbdr.dgn
PROJECT LEADER: E. ATKINS
DESIGNED BY: GREEN
R.O.W. PLAN SHEET 3

PLOT DATE: 11/13/2015
DRAWN BY: A. EGIZI
CHECKED BY: R. CLOUTTIER
SHEET 32 OF 72

CLEARING AND GRUBBING, INCLUDING INDIVIDUAL TREES AND STUMPS
3+00.0 LT-RT - 6+50.0 LT-RT
50+00.0 LT-RT - 51+93.0 LT-RT
206+50.0 LT-RT - 207+50.0 LT-RT

COLD PLANING, BITUMINOUS CONCRETE
~~22+58.6 - 23+33.6~~
~~24+69.1 - 25+44.1~~

AGGREGATE SHOULDERS, IN PLACE
22+68.7 RT - 25+51.5 RT

STONE FILL, TYPE I
50+00.0 LT-RT - 51+93.0 LT-RT

STONE FILL, TYPE II
~~3+00.0 LT~~ RT - 6+50.0 ~~LT~~ RT
2+89.0

STEEL BEAM GUARDRAIL, GALVANIZED/NESTED
~~23+44.7 LT - 24+44.7 LT~~

REMOVE AND RESET GUARDRAIL
~~23+07.2 LT - 23+44.7 LT (MANUFACTURED TERMINAL END SECTION)~~
~~24+44.7 LT - 26+61.6 LT~~

REMOVAL AND DISPOSAL OF GUARDRAIL
~~23+44.7 LT - 24+44.7 LT~~
23+07.0 LT - 29+57.0 LT

TEMPORARY TRAFFIC BARRIER
23+00.0 LT - 26+61.1 LT
- TO FACILITATE EMBANKMENT WORK

~~4 INCH WHITE LINE~~
~~TEMPORARY 4 INCH WHITE LINE~~
~~22+58.0 LT - 25+44.1 LT (EDGE LINE)~~
~~22+58.0 RT - 25+44.1 RT (EDGE LINE)~~

~~4 INCH YELLOW LINE~~
~~TEMPORARY 4 INCH YELLOW LINE~~
~~22+58.0 - 25+44.1 (DOUBLE CENTER LINE)~~

GRUBBING MATERIAL
3+00.0 RT - 6+50.0 RT

SPECIAL PROVISION
(STONE FILL, SLOPE ARMORING)
206+50.0 LT-RT - 207+50.0 LT-RT

SPECIAL PROVISION
(STONE FILL, CHANNEL ARMORING)
206+50.0 LT-RT - 207+50.0 LT-RT
~~3+00.0 LT~~ RT - 6+50.0 ~~LT~~ RT
2+89.0

STEEL BEAM GUARDRAIL, GALV./NESTED
23+53.0 LT - 23+78.0 LT
23+78.0 LT - 23+90.5 LT
23+90.5 LT - 24+40.5 LT

STEEL BEAM GUARDRAIL, GALV.
23+40.5 LT - 23+53.0 LT
24+40.5 LT - 30+03.0 LT

MANUFACTURED TERMINAL END SECTION
22+90.5 LT - 23+40.5 LT

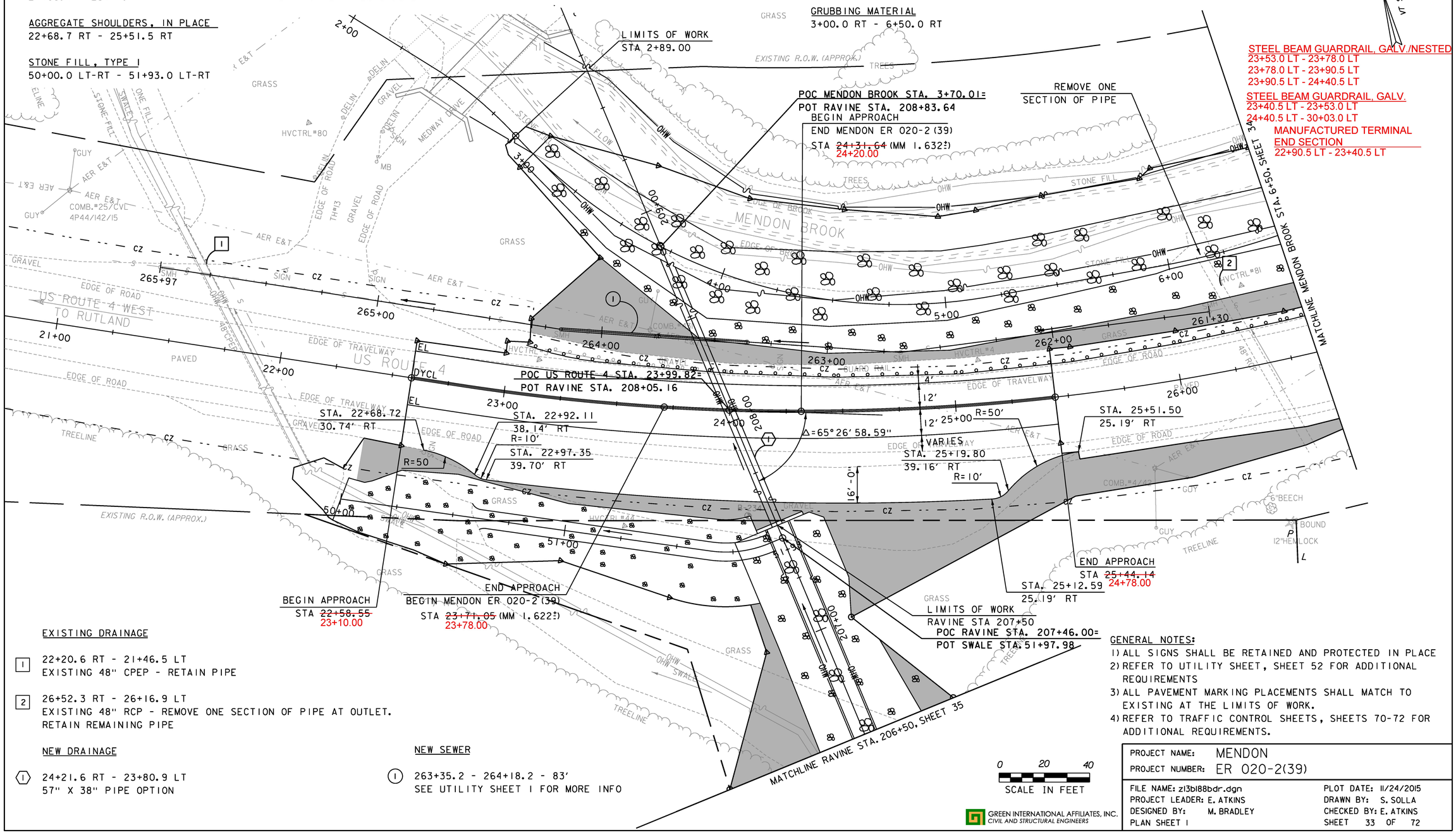

EXISTING DRAINAGE

[1] 22+20.6 RT - 21+46.5 LT
EXISTING 48" CPEP - RETAIN PIPE

[2] 26+52.3 RT - 26+16.9 LT
EXISTING 48" RCP - REMOVE ONE SECTION OF PIPE AT OUTLET.
RETAIN REMAINING PIPE

NEW DRAINAGE

(1) 24+21.6 RT - 23+80.9 LT
57" X 38" PIPE OPTION

NEW SEWER

(1) 263+35.2 - 264+18.2 - 83'
SEE UTILITY SHEET 1 FOR MORE INFO

GENERAL NOTES:
1) ALL SIGNS SHALL BE RETAINED AND PROTECTED IN PLACE
2) REFER TO UTILITY SHEET, SHEET 52 FOR ADDITIONAL REQUIREMENTS
3) ALL PAVEMENT MARKING PLACEMENTS SHALL MATCH TO EXISTING AT THE LIMITS OF WORK.
4) REFER TO TRAFFIC CONTROL SHEETS, SHEETS 70-72 FOR ADDITIONAL REQUIREMENTS.

0 20 40
SCALE IN FEET

GREEN INTERNATIONAL AFFILIATES, INC.
CIVIL AND STRUCTURAL ENGINEERS

PROJECT NAME: MENDON
PROJECT NUMBER: ER 020-2(39)

FILE NAME: z13bl88bdr.dgn
PROJECT LEADER: E. ATKINS
DESIGNED BY: M. BRADLEY
PLAN SHEET 1
PLOT DATE: 11/24/2015
DRAWN BY: S. SOLLA
CHECKED BY: E. ATKINS
SHEET 33 OF 72

CLEARING AND GRUBBING, INCLUDING INDIVIDUAL TREES AND STUMPS
6+50.0 LT-RT - 10+75.0 RT

STONE FILL, TYPE II
6+50.0 RT - 8+75.0 RT

GRUBBING MATERIAL
6+50.0 RT - 8+75.0 RT

~~REMOVE AND RESET GUARDRAIL~~
~~26+61.6 LT - 29+69.7 LT~~

TEMPORARY TRAFFIC BARRIER
26+61.6 LT - 29+69.7 LT

SPECIAL PROVISION
(STONE FILL, CHANNEL ARMORING)
6+50.0 LT-RT - 7+75.0 LT-RT
7+75.0 RT - 10+75.0 RT

EXISTING DRAINAGE

[3] 28+72.5 RT - 28+72.5 LT
EXISTING 24" CMP - RETAIN PIPE

[4] 30+39.9 RT - 30+40.5 LT
EXISTING 18" CMP - RETAIN PIPE

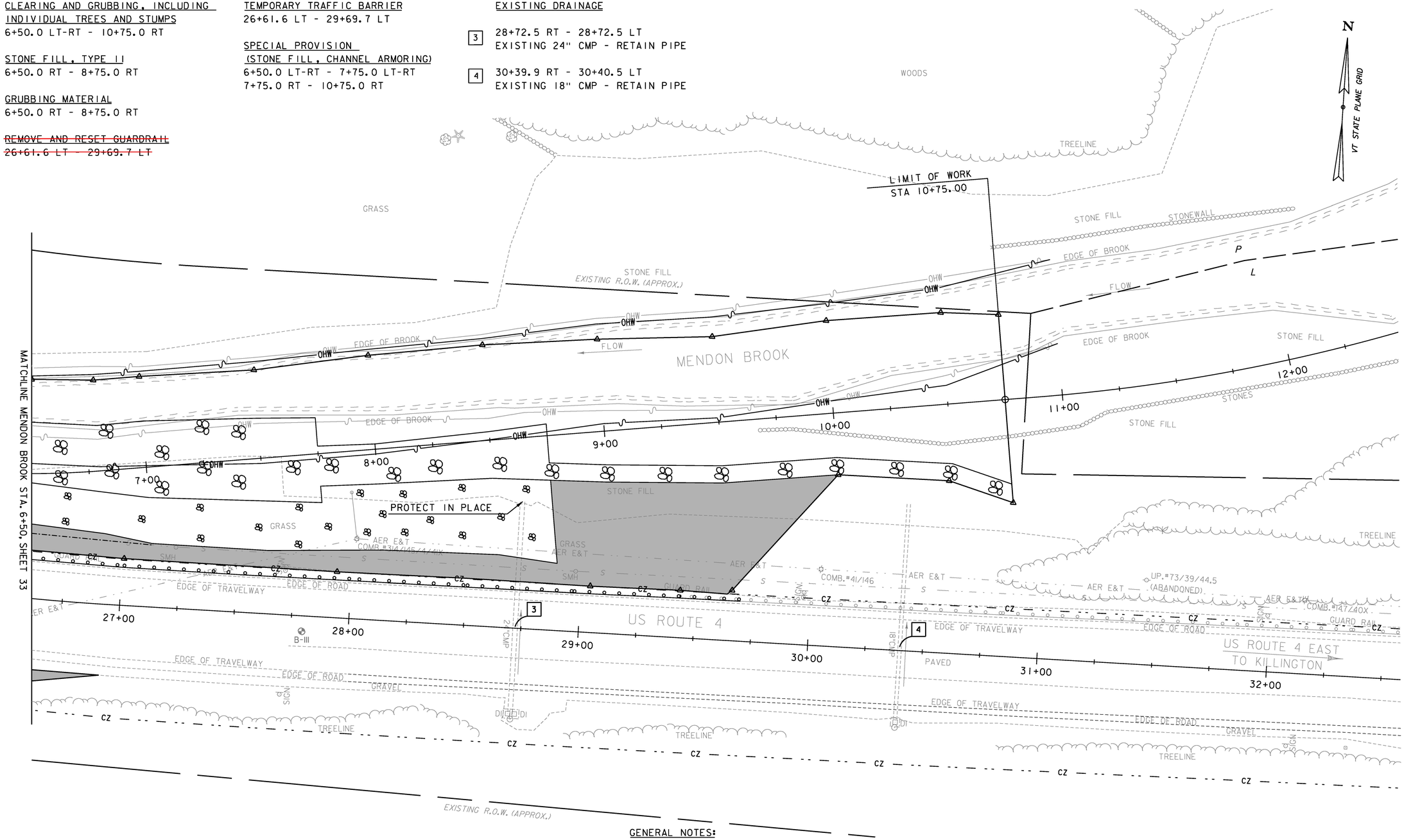

GENERAL NOTES:
1) ALL SIGNS SHALL BE RETAINED AND PROTECTED IN PLACE
2) REFER TO UTILITY SHEET, SHEET 52 FOR ADDITIONAL REQUIREMENTS
3) ALL PAVEMENT MARKINGS PLACEMENTS SHALL MATCH TO EXISTING AT THE LIMITS OF WORK.
4) REFER TO TRAFFIC CONTROL SHEETS, SHEETS 70-72 FOR ADDITIONAL REQUIREMENTS.

0 20 40
SCALE IN FEET

GREEN INTERNATIONAL AFFILIATES, INC.
CIVIL AND STRUCTURAL ENGINEERS

PROJECT NAME: MENDON
PROJECT NUMBER: ER 020-2(39)

FILE NAME: z13b188bdr.dgn
PROJECT LEADER: E. ATKINS
DESIGNED BY: M. BRADLEY
PLAN SHEET 2

PLOT DATE: 11/24/2015
DRAWN BY: S. SOLLA
CHECKED BY: E. ATKINS
SHEET 34 OF 72

CLEARING AND GRUBBING, INCLUDING INDIVIDUAL TREES AND STUMPS
200+42.0 LT-RT - 206+50.0 LT-RT

STONE FILL, TYPE II
201+55.0 LT - 203+50.0 LT
201+60.0 RT - 204+50.0 RT

GRUBBING MATERIAL
201+55.0 LT - 203+50.0 LT
201+60.0 RT - 204+50.0 RT

SPECIAL PROVISION
(STONE FILL, SLOPE ARMORING)
200+75.0 LT-RT - 206+50.0 LT-RT

SPECIAL PROVISION
(STONE FILL, CHANNEL ARMORING)
200+75.0 LT-RT - 206+50.0 LT-RT

EXISTING DRAINAGE

[5] 200+52.2 - 200+72.8 RT
24" CPEP - RELAYING PIPE CULVERTS, AND EXTEND

NEW DRAINAGE

⟨2⟩ ~~200+52.4~~ 200+52.0 - ~~200+75.0~~ 200+72.0
24" CPEP - RELAYING PIPE CULVERTS, AND EXTEND 24" CPEP 1.6'
INVERT IN : 1328.14, INVERT OUT: 1327.60
NOTE: OLD PIPE LOCATION AND THE NEW PIPE SHALL BE BACKFILLED WITH SUITABLE FILL.

VT STATE PLANE GRID N

LIMIT OF CUT AND FILL (TYP.)

LIMITS OF WORK
STA 200+42.00

WOODS
UNNAMED BROOK
FLOW
HVCTRL #801
OHW
TREELINE
201+00
202+00
203+00
204+00
205+00
206+00
DIRT & GRAVEL
STONE FILL
HVCTRL #806
HVCTRL #40
TREELINE DITCH
ACCESS ROAD
HVCTRL #851
HVCTRL #41
6 HEMLOCK

LIMIT OF CUT AND FILL (TYP.)

MATCHLINE RAVINE STA. 206+50, SHEET 33

P
L

0 20 40
SCALE IN FEET

GREEN INTERNATIONAL AFFILIATES, INC.
CIVIL AND STRUCTURAL ENGINEERS

PROJECT NAME:	MENDON
PROJECT NUMBER:	ER 020-2(39)
FILE NAME: z13b188bdr.dgn	PLOT DATE: 11/24/2015
PROJECT LEADER: E. ATKINS	DRAWN BY: S. SOLLA
DESIGNED BY: M.BRADLEY	CHECKED BY: E. ATKINS
PLAN SHEET 3	SHEET 35 OF 72

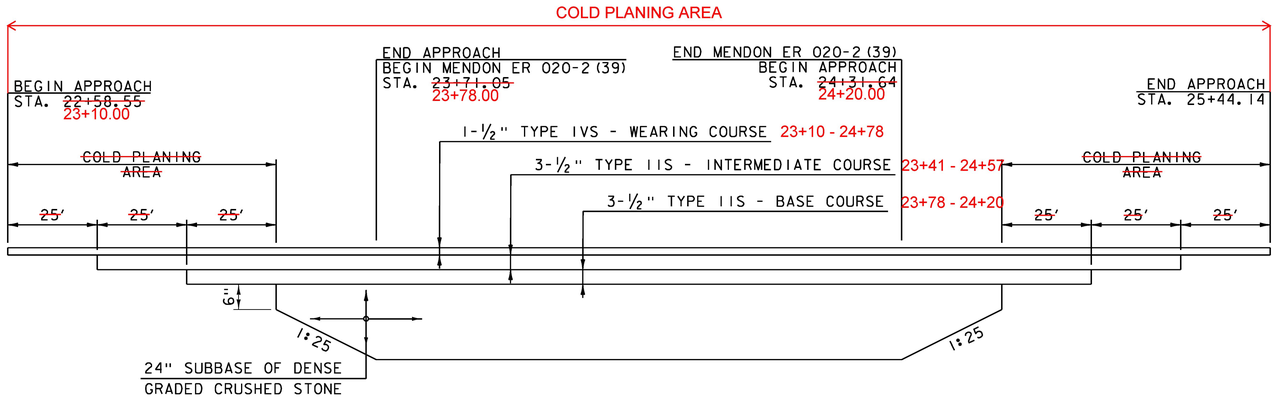

REFER TO DETAIL SHEET 1 FOR TRENCH REQUIREMENTS

MATERIAL TRANSITION DETAIL

NOT TO SCALE

US ROUTE 4

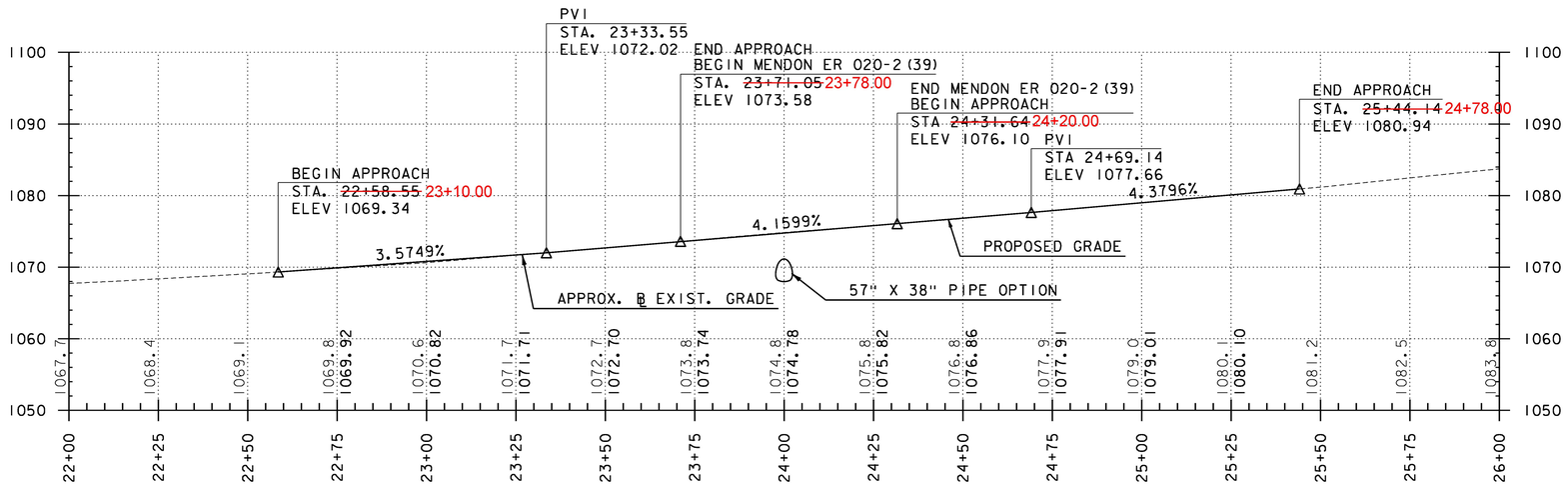

THE GRADES SHOWN TO THE NEAREST TENTH ARE THE ORIGINAL GROUND APPROXIMATE ELEVATIONS ALONG THE PROPOSED ALIGNMENT. THE GRADES SHOWN TO THE NEAREST HUNDREDTH ARE THE PROPOSED PROFILE GRADES FOR THE NEW ALIGNMENT.

NOTES:
1. ALL STATIONS AND ELEVATIONS ARE SHOWN IN FEET.
2. THE PROFILE IS PROVIDED FOR INFORMATION ONLY, THE CONTRACTOR SHALL MATCH TO EXISTING PROFILES GRADES

GREEN INTERNATIONAL AFFILIATES, INC.
CIVIL AND STRUCTURAL ENGINEERS

PROJECT NAME: MENDON
PROJECT NUMBER: ER 020-2(39)

FILE NAME: z13b188xsl.dgn
PROJECT LEADER: E. ATKINS
DESIGNED BY: M. BRADLEY
US ROUTE 4 PROFILE SHEET 1

PLOT DATE: 11/13/2015
DRAWN BY: M. BRADLEY
CHECKED BY: E. ATKINS
SHEET 36 OF 72

RAVINE

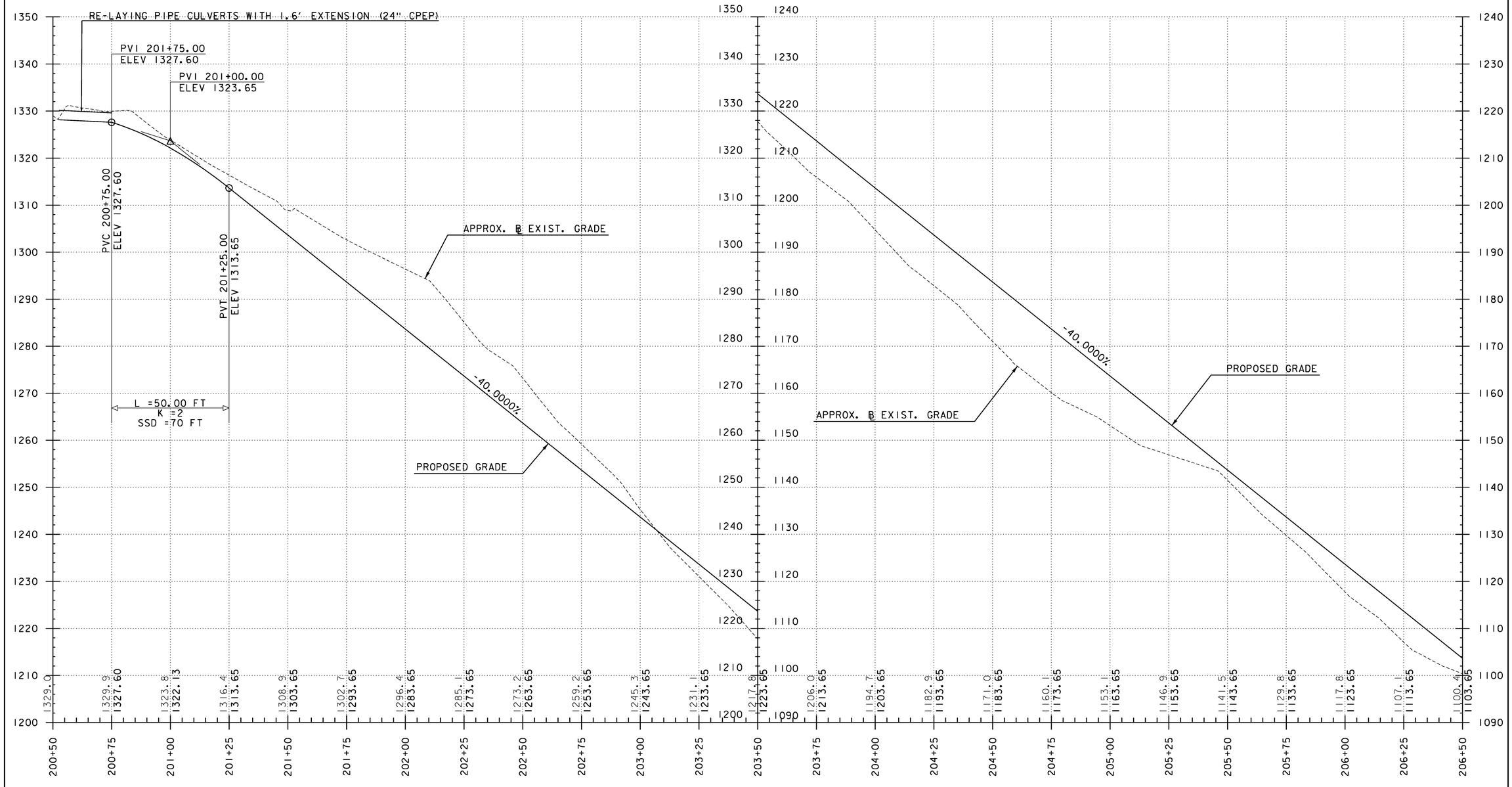

THE GRADES SHOWN TO THE TENTH HUNDREDTH ARE THE EXISTING GROUND ELEVATIONS ALONG THE NEW ALIGNMENT. THE GRADES SHOWN TO THE NEAREST HUNDREDTH ARE THE PROPOSED GRADES FOR THE NEW ALIGNMENT.

NOTE:
1. ALL STATIONS AND ELEVATIONS ARE SHOWN IN FEET.

GREEN INTERNATIONAL AFFILIATES, INC.
CIVIL AND STRUCTURAL ENGINEERS

PROJECT NAME: MENDON
PROJECT NUMBER: ER 020-2(39)

FILE NAME: z13b188xsl.dgn
PROJECT LEADER: E. ATKINS
DESIGNED BY: M. BRADLEY
RAVINE PROFILE SHEET 1

PLOT DATE: 11/13/2015
DRAWN BY: S. SOLLA
CHECKED BY: E. ATKINS
SHEET 37 OF 72

RAVINE

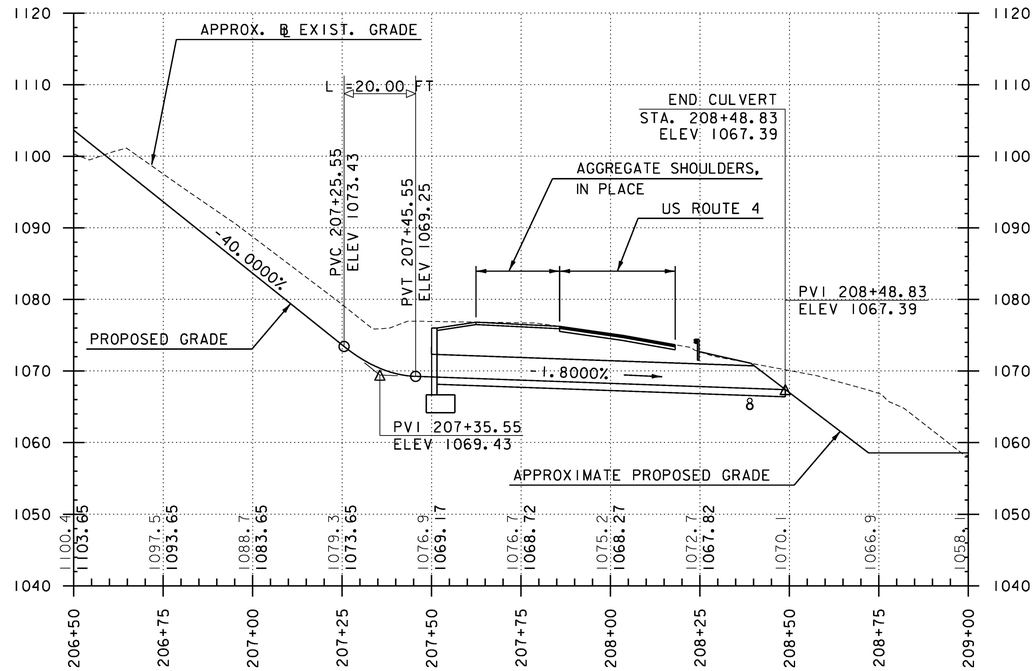

THE GRADES SHOWN TO THE TENTH HUNDREDTH ARE THE EXISTING GROUND ELEVATIONS ALONG THE NEW ALIGNMENT. THE GRADES SHOWN TO THE NEAREST HUNDREDTH ARE THE PROPOSED GRADES FOR THE NEW ALIGNMENT.

NOTE:
1. ALL STATIONS AND ELEVATIONS ARE SHOWN IN FEET.

GREEN INTERNATIONAL AFFILIATES, INC.
CIVIL AND STRUCTURAL ENGINEERS

PROJECT NAME: MENDON
PROJECT NUMBER: ER 020-2(39)

FILE NAME: z13b188xsl.dgn
PROJECT LEADER: E. ATKINS
DESIGNED BY: M. BRADLEY
RAVINE PROFILE SHEET 2

PLOT DATE: 11/13/2015
DRAWN BY: S. SOLLA
CHECKED BY: E. ATKINS
SHEET 38 OF 72

EPSC PLAN NARRATIVE

1. PROJECT DESCRIPTION

THIS PROJECT INVOLVES THE RECONSTRUCTION OF APPROXIMATELY 750-FEET OF RIVER EMBANKMENT, RECONSTRUCTION OF APPROXIMATELY 690-FEET OF RAVINE, INSTALLATION OF A NEW CROSS CULVERT AND APURTENANT ROADWAY WORK. THE EMBANKMENT WILL BE RECONSTRUCTED WITH SUBBASE OF DENSE GRADED CRUSHED STONE AND STONE FILL ARMORING. THE RAVINE WILL BE ARMORED WITH TYPE IV STONE AND THE VOIDS WILL BE FILLED WITH NATIVE COBBLE MATERIAL THAT IS WASHED IN. THE NEW CULVERT WILL BE A 38" RISE BY 57" SPAN CORRUGATED METAL PIPE ARCH. THE PROJECT IS LOCATED IN THE TOWN OF MENDON, NEAR THE INTERSECTION OF US ROUTE 4 AND MEDWAY DRIVE.

2. AREA OF DISTURBANCE

NOTE: AREA OF DISTURBANCE INCLUDES LIMITS OF EARTH DISTURBANCE WITHIN THE PROJECT AREA, AS WELL AS WASTE, BORROW AND STAGING AREAS, AND OTHER EARTH DISTURBING ACTIVITIES WITHIN OR DIRECTLY ADJACENT TO THE PROJECT LIMITS AS SHOWN ON THE ATTACHED EPSC PLAN.

TOTAL AREA OF DISTURBANCE AS SHOWN ON THE ATTACHED EPSC PLAN IS APPROXIMATELY 3.81 ACRES.

IT IS ANTICIPATED THAT THIS PROJECT WILL LAST ONE CONSTRUCTION SEASON.

3. CONSTRUCTION SEQUENCE

THE CONTRACTOR SHALL SEQUENCE CONSTRUCTION ACTIVITIES TO MINIMIZE THE EXTENT OF DISTURBED SOILS LEFT OPEN TO EROSION AT ANY GIVEN TIME. AT NO TIME SHALL THE TOTAL CONCURRENT EARTH DISTURBANCE EXCEED 2 ACRES. A SUGGESTED GENERAL SEQUENCE FOR EACH OF THE MAJOR CONSTRUCTION ACTIVITIES IS AS FOLLOWS:

- **MENDON BROOK EMBANKMENT RECONSTRUCTION**
  1) THIS WORK SHALL TAKE PLACE DURING THE LOW FLOW SEASON, BETWEEN JULY 15TH AND OCTOBER 1ST OR AS OTHERWISE RESTRICTED BY THE CGP-9020.
  2) ESTABLISH PERIMETER CONTROLS AND MARK BOUNDARIES FOR SENSITIVE RESOURCE AREAS.
  3) INSTALL WATER DIVERSION BARRIER TO CONTROL FLOW FROM WORK ZONE AND ALLOW FOR AQUATIC ORGANISM PASSAGE, AS SHOWN ON PLANS.
  4) INSTALL SEDIMENT CONTROL MEASURES AT DOWNSTREAM END OF PROJECT.
  5) BEGIN CUT & FILL OPERATIONS, BEGINNING AT THE UPSTREAM END AND WORKING DOWNSTREAM, LIMIT AREA OF DISTURBANCE TO < 2 ACRES AT ANY ONE TIME. ALL DISTURBED AREAS SHALL BE STABILIZED WITHIN 7-DAYS OF DISTURBANCE.
  6) CONCURRENTLY INSTALL TEMPORARY AND PERMANENT STABILIZATION AND EPSC MEASURES AS WORK PROGRESSES SO THAT EMBANKMENT IS STABILIZED PRIOR TO ALLOWING RUNOFF TO DISCHARGE TO IT.
  7) WASH NATIVE SAND, GRAVEL, AND COBBLE MATERIAL INTO THE STONE FILL TO FILL VOIDS AND PREVENT UNDERFLOW ALLOWING FOR AQUATIC ORGANISM PASSAGE.

- **INSTALLATION OF CULVERT AND HEADWALL**
  1) ESTABLISH PERIMETER CONTROLS AND MARK BOUNDARIES FOR SENSITIVE RESOURCE AREAS.
  2) INSTALL SEDIMENT CONTROL MEASURES AS SHOWN ON PLANS.
  3) BEGIN CUT/FILL OPERATIONS AND CULVERT INSTALLATION PROCESS WORKING DOWNSTREAM TO UPSTREAM.
  4) CONCURRENTLY INSTALL TEMPORARY AND PERMANENT STABILIZATION AND EPSC MEASURES AS WORK PROGRESSES SO THAT EMBANKMENT IS STABILIZED AROUND HEADWALL.
  5) COLD PLANE EXISTING PAVEMENT IN AREAS TO RECEIVE PAVEMENT OVERLAY.
  6) PLACE SUBBASE MATERIAL FOR AREAS DISTURBED BY TRENCH EXCAVATION.
  7) PAVE BASE COURSE AS SHOWN IN MATERIAL TRANSITION DIAGRAM.

- **RAVINE RECONSTRUCTION**
  1) ESTABLISH PERIMETER CONTROLS AND MARK BOUNDARIES FOR SENSITIVE RESOURCE AREAS.
  2) INSTALL INLET PROTECTION DEVICES, AS SHOWN ON PLANS.
  3) CONSTRUCT SEDIMENT BASIN WHERE SHOWN ON PLANS. DIVERT ALL FLOWS TO THE SEDIMENT BASIN DURING CONSTRUCTION USING SPECIAL PROVISIN (TEMPORARY RELOCATION OF STREAM). PROVIDE 204 CY OF STORAGE IN BASIN. INSPECT SEDIMENT BASIN AND CONTINUE TO INSPECT DAILY AND MAINTAIN AS NECESSARY.
  4) BEGIN CUT & FILL OPERATIONS, WORKING FROM DOWNSTREAM TO UPSTREAM, LIMIT AREA OF DISTURBANCE TO < 2 ACRES AT ANY ONE TIME. ALL DISTURBED AREAS SHALL BE STABILIZED WITHIN 7-DAYS OF DISTURBANCE.
  5) CONCURRENTLY INSTALL TEMPORARY AND PERMANENT STABILIZATION AND EPSC MEASURES AS WORK PROGRESSES SO THAT RAVINE IS STABILIZED PRIOR TO ALLOWING RUNOFF TO DISCHARGE TO IT.
  6) WASH NATIVE SAND, GRAVEL, AND COBBLE MATERIAL INTO THE STONE FILL AS WORK PROGRESSES UPSTREAM.
  7) COMPLETE WORK AND DISCONTINUE USE OF SEDIMENT BASIN. RESTORE AREA TO FINAL CONDITIONS.

4. STABILIZATION OF EXPOSED SOILS

- SEED AND MULCH WILL BE USED FOR BOTH PERMANENT AND TEMPORARY STABILIZATION MEASURES. MULCH IS TO BE APPLIED AT A MINIMUM APPLICATION RATE AS SHOWN ON THE EPSC DETAILS, UNLESS DIRECTED OTHERWISE BY THE ENGINEER.
- DISTURBED AREAS AND SOIL STOCKPILES THAT WILL NOT BE WORKED FOR MORE THAN 7 DAYS SHALL BE TEMPORARILY STABILIZED WITH MULCH/RECP WITHIN 48 HOURS.
- EXPOSED AREAS THAT HAVE ACHIEVED FINAL GRADE SHALL BE PERMANENTLY STABILIZED WITHIN 48 HOURS.
- IN AREAS WHERE VEGETATIVE COVER WILL PROVIDE PERMANENT STABILIZATION, SEEDING TO BE COMPLETED BETWEEN APRIL 15 AND SEPTEMBER 15.

5. DRAINAGE AREAS AND DISCHARGE POINTS

- **DRAINAGE AREA 1**
  THE DRAINAGE AREA CONSISTS OF THE RAVINE TO THE SOUTH OF US ROUTE 4 AND THE EMBANKMENT ON THE NORTH SIDE OF US ROUTE 4. THE ASSOCIATED AREA OF DISTURBANCE IS 3.81 ACRES. THE RAVINE TO THE SOUTH COLLECTS 33.29 ACRES AND CONVEYS IT TO A 48-INCH CPEP CULVERT. AS PART OF THIS PROJECT A NEW CORRUGATED METAL PIPE ARCH CULVERT WILL BE INSTALLED AND THE EXISTING CPEP CULVERT WILL BE USED AS AN OVER FLOW.

DRAINAGE AREA SUMMARY

DRAINAGE AREA	TOTAL DISTURB. (ACRES)	LIMIT OF CONCURRENT DISTURBANCE	RECEIVING WATER
1	3.82	2.0 ACRES	MENDON BROOK

6. WASTE, BORROW, AND STAGING AREAS

- EXCEPT AS OTHERWISE SPECIFIED IN THE CONTRACT DOCUMENTS, OFF-SITE WASTE AND BORROW AREAS HAVE NOT BEEN IDENTIFIED FOR THIS PROJECT. IT SHALL BE THE CONTRACTOR'S RESPONSIBILITY TO IDENTIFY AND PERMIT, AS NECESSARY, ANY OFF-SITE WASTE AND BORROW AREAS THAT ARE NEEDED. ALL EROSION PREVENTION AND SEDIMENT CONTROL MEASURES NECESSARY FOR WASTE, BORROW, AND STAGING AREAS OUTSIDE THE PROJECT LIMITS SHALL BE PAID FOR PER SUBSECTION 105.29 OF THE STANDARD SPECIFICATIONS FOR CONSTRUCTION.
- THE CONTRACTOR SHALL LOCATE ADDITIONAL AREAS FOR DISPOSAL OF STUMPS, EXCESS SOILS AND COLLECTED SEDIMENT, IF NECESSARY. DISPOSE OF THESE MATERIALS IN A MANNER THAT WILL NOT RESULT IN SEDIMENTS ENTERING WATERS OF THE STATE.
- DISPOSAL/WASTE SITES SHALL BE APPROVED BY THE AGENCY TO RECEIVE THESE MATERIALS. THE CONTRACTOR SHALL SUBMIT TO THE AGENCY, FOR REVIEW AND APPROVAL, A "WASTE BORROW STAGING REVIEW SHEET" FOR EACH DISPOSAL SITE(S) HE/SHE WISHES TO USE FOR THIS PROJECT. ANY ADDITIONAL PERMITTING REQUIRED FOR THE DISPOSAL SITES OR PROOF OF COMPLIANCE FOR THESE WASTE SITES MUST BE FURNISHED BY THE CONTRACTOR PRIOR TO USE.
- IT IS ANTICIPATED THAT CONSTRUCTION STAGING CAN BE ACCOMPLISHED WITHIN THE EXISTING LIMITS OF WORK. VEHICLE AND EQUIPMENT STORAGE AREAS OR AREAS ADJACENT TO CONSTRUCTION TRAILERS OR OTHER HIGH TRAFFIC AREAS SHALL BE COVERED WITH GEOTEXTILE FABRIC AND 12 INCHES OF GRAVEL. FOLLOWING COMPLETION OF CONSTRUCTION, ALL NON-NATIVE MATERIALS SHALL BE REMOVED FROM THE STAGING AREA. COMPACTED, RUTTED, OR OTHERWISE DISTURBED SOILS SHALL BE TILLED, RAKED, SEEDED AND MULCHED.
- ERODIBLE MATERIALS STOCKPILED WITHIN THE MATERIAL STORAGE AREAS SHALL BE ISOLATED WITH SILT FENCE OR OTHER ACCEPTABLE SEDIMENT BARRIER. SOIL STOCKPILED ON THE SITE SHALL BE SEEDED AND MULCHED.
- ALL MATERIAL HANDLING AND DISPOSAL WORK SHALL BE IN ACCORDANCE WITH SECTION 105 OF THE STANDARD SPECIFICATIONS AND THE VERMONT AGENCY OF NATURAL RESOURCES (VANR) REQUIREMENTS. WHEREVER POSSIBLE, EXCAVATED SOIL MATERIAL SHALL BE RE-USED WHEN APPROVED BY AND AT THE DISCRETION OF THE ENGINEER TO FORM EMBANKMENTS AND AS OTHER BORROW MATERIALS.
- TEMPORARY AND PERMANENT STABILIZATION OF ALL STAGING AREAS AND WASTE DISPOSAL AREAS SHALL BE IN ACCORDANCE WITH SECTION 105 OF THE STANDARD SPECIFICATIONS AND IN ACCORDANCE WITH THE CGP-9020 AND VANR REQUIREMENTS.

7. WINTER CONSTRUCTION REQUIREMENTS

IF ACTIVITIES ARE ON-GOING BETWEEN OCTOBER 15 AND APRIL 15, THE CONTRACTOR SHALL FOLLOW REQUIREMENTS FOR WINTER CONSTRUCTION, AS DEFINED IN SPECIFIC PERMIT CONDITIONS AND AS FOLLOWS:

- ENLARGED ACCESS POINTS, STABILIZED TO PROVIDE FOR SNOW STOCKPILING.
- LIMITS OF DISTURBANCE MOVED OR REPLACED TO REFLECT BOUNDARY OF WINTER WORK.
- DEVELOPMENT OF A SNOW MANAGEMENT PLAN THAT INCLUDES:
  - ADEQUATE STORAGE AND CONTROL OF MELT-WATER
  - STORAGE OF CLEARED SNOW TO BE PLACED DOWN SLOPE OF DISTURBED AREAS AND OUT OF STORMWATER TREATMENT STRUCTURES
- A MINIMUM 25-FOOT BUFFER SHALL BE MAINTAINED FROM PERIMETER CONTROLS.
- DRAINAGE STRUCTURES MUST BE KEPT OPEN AND FREE OF SNOW AND ICE DAMS.
- SILT FENCE AND OTHER PRACTICES REQUIRING EARTH DISTURBANCE MUST BE INSTALLED PRIOR TO THE GROUND FREEZING.
- MULCH TO BE APPLIED AT TWICE THE REGULAR RATE, AS SHOWN ON THE EPSC DETAILS, UNLESS DIRECTED OTHERWISE BY THE ENGINEER.
- AREAS OF DISTURBED SOILS MUST BE STABILIZED AT THE END OF EACH WORK DAY, WITH THE FOLLOWING EXCEPTIONS:
  - IF NO PRECIPITATION WITHIN 24 HOURS IS FORECAST AND WORK WILL RESUME IN THE SAME AREA WITHIN 24 HOURS.
  - DISTURBED AREAS THAT COLLECT AND RETAIN RUNOFF, SUCH AS OPEN UTILITY TRENCHES, MUST BE STABILIZED AT THE END OF EACH WORK WEEK.

PRIOR TO STABILIZATION, SNOW OR ICE MUST BE REMOVED TO LESS THAN 1" (25MM) THICKNESS.

CONTRACTOR RESPONSIBILITIES, LIMITATIONS & PROHIBITIONS

1. GENERAL NOTES

- IT SHALL BE THE RESPONSIBILITY OF THE CONTRACTOR TO AMEND/UPDATE ALL PLANS AND EXISTING PERMITS WHEN ADDING DETAILED CONSTRUCTION PHASING OR ANYTHING ELSE THAT MAY DEVIATE FROM THE APPROVED PLANS AS DIRECTED BY THE RESIDENT ENGINEER.
- OTHER THAN THOSE SHOWN ON THE PLANS ALL LAND DISTURBANCES WITHIN 50 FT OF ALL WATER BODIES, MEASURED FROM THE TOP OF BANK, AND WETLANDS, ARE PROHIBITED WITHOUT FURTHER REGULATORY REVIEW.
- CONTRACTOR TO MAINTAIN ALL EXISTING STREAMS AND RIPARIAN BUFFER ZONES IN THEIR NATURAL CONDITION.
- OFF-SITE DISCHARGES OF ANY MATERIAL OTHER THAN STORMWATER, SUCH AS VEHICLE AND EQUIPMENT MAINTENANCE SPILLS, FUELS, WASH WATER, CONSTRUCTION DEBRIS, OIL, WET CONCRETE (INCLUDING WASHOUT WATER FROM CONCRETE BATCH TRUCKS OR EQUIPMENT USED TO MIX CONCRETE), AND OTHER SUBSTANCES, ARE PROHIBITED.
- THE FAILURE TO PROMPTLY ABATE THE DISCHARGE OF SEDIMENT OR ANY OTHER WASTE WHICH CAUSES A VISIBLE DISCOLORATION OF SURFACE WATERS (INCLUDING WETLANDS), OR IS FOUND TO BE VIOLATING WATER QUALITY STANDARDS BASED ON MONITORING, IS PROHIBITED. ANY CORRECTIVE ACTION UNDERTAKEN TO REMOVE SEDIMENT FROM A WETLAND IS ALSO PROHIBITED.
- WEATHER CONDITIONS WILL BE MONITORED DURING THE CONSTRUCTION SEASON. IF AN EXTENDED RAIN PERIOD OR HEAVY RAIN IS PREDICTED, EXPOSED SOIL AREAS SHALL BE MULCHED PRIOR TO AND DAILY DURING THE RAIN EVENT. IF DETERMINED NECESSARY BY THE RESIDENT ENGINEER, WORK MAY BE SUSPENDED OR LIMITED DURING THE STORM.

2. INSPECTION & MONITORING NOTES

- THE CONTRACTOR IS RESPONSIBLE FOR INSPECTING AND MAINTAINING EROSION PREVENTION AND SEDIMENT CONTROLS THAT MINIMIZE OR ELIMINATE POLLUTANTS IN THE DISCHARGE IN ACCORDANCE WITH THE REQUIREMENTS OF THE GP 3-9020.
- INSPECTIONS SHALL BE CONDUCTED AT LEAST ONCE EVERY SEVEN (7) CALENDAR DAYS AND AS REQUIRED IN SUBPART 6.3.A OF THE GP 3-9020.
- DURING THE WINTER CONSTRUCTION SEASON (OCTOBER 15TH THROUGH APRIL 15TH), DAILY INSPECTIONS SHALL BE CONDUCTED OF AREAS THAT HAVE BEEN DISTURBED AND ARE NOT YET FINALLY STABILIZED.
- INSPECTION FREQUENCY MAY BE REDUCED TO NOT LESS THAN ONE (1) PER MONTH IF THE ENTIRE SITE IS TEMPORARILY STABILIZED. INSPECTIONS MAY BE POSTPONED INDEFINITELY IF THE ENTIRE SITE IS PERMANENTLY STABILIZED.
- INSPECTIONS SHALL BE CONDUCTED BY, OR UNDER THE DIRECTION OF THE ON-SITE PLAN COORDINATOR.
- INSPECTIONS SHALL INCLUDE ALL AREAS OF THE SITE DISTURBED BY THE CONSTRUCTION ACTIVITY AND ALL DISCHARGE LOCATIONS, INCLUDING AREAS WITH TEMPORARY STABILIZATION.
- AN INSPECTION REPORT SHALL BE COMPLETED FOR EACH INSPECTION AND SIGNED BY THE ONSITE PLAN COORDINATOR OR THE PERSON ACTING UNDER THE DIRECTION OF THE ON-SITE COORDINATOR. AT A MINIMUM, EACH INSPECTION REPORT SHALL INCLUDE THE INFORMATION DESCRIBED IN SUBSECTIONS 6.2.G.1 THROUGH 6.2.G.12 OF THE GP 3-9020.
- A RECORD OF EACH INSPECTION REPORT AND OF ANY ACTIONS TAKEN IN ACCORDANCE WITH THIS SUBPART SHALL BE MAINTAINED ON-SITE WITH THE EPSC PLAN AND SHALL BE MADE AVAILABLE UPON REQUEST BY DEC REPRESENTATIVES.
- ALL INSPECTIONS, MONITORING AND REPORTING SHALL MEET, AT A MINIMUM, THE REQUIREMENTS OF PART SIX (6) FROM THE GP 3-9020.

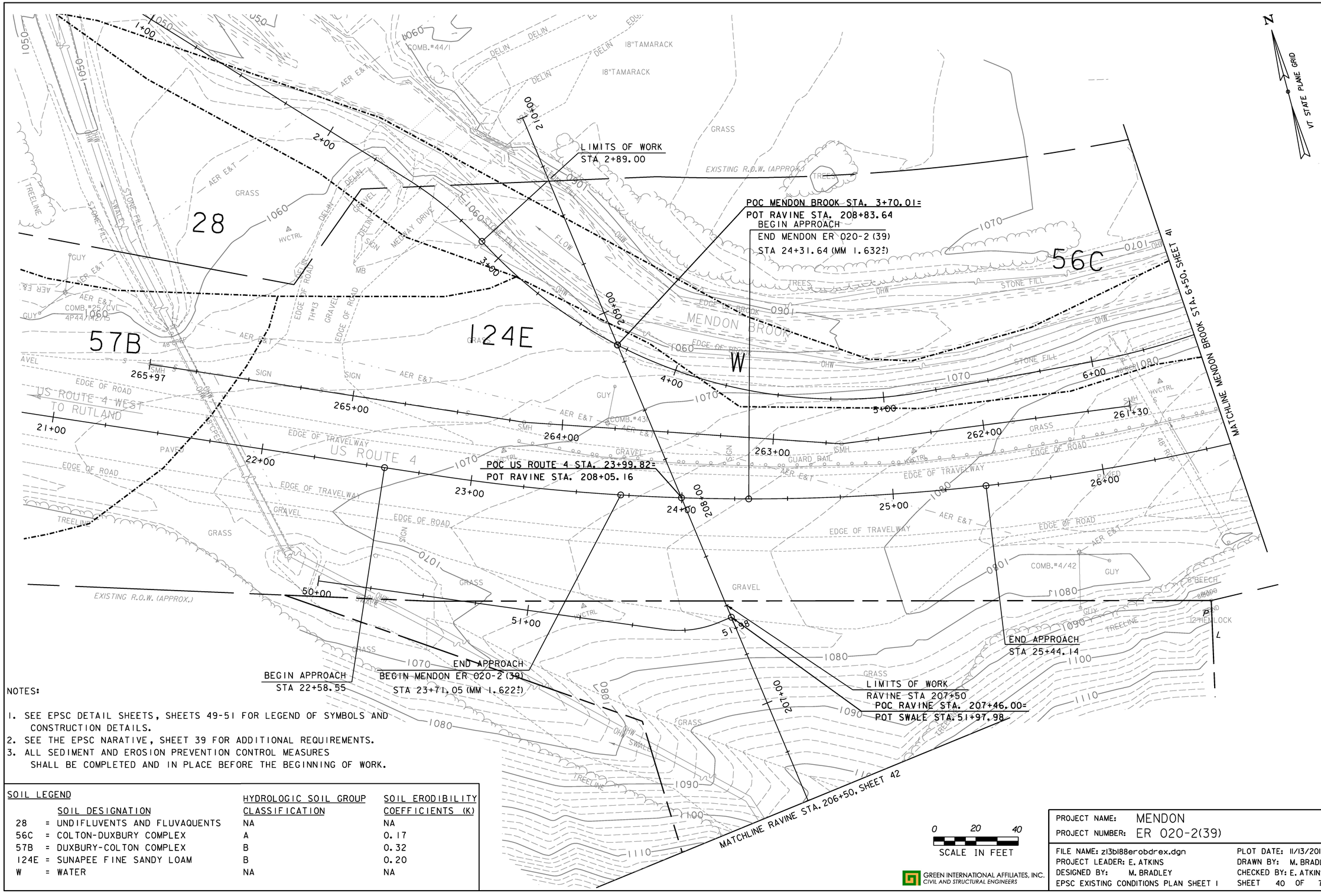

NOTES:

1. SEE EPSC DETAIL SHEETS, SHEETS 49-51 FOR LEGEND OF SYMBOLS AND CONSTRUCTION DETAILS.
2. SEE THE EPSC NARATIVE, SHEET 39 FOR ADDITIONAL REQUIREMENTS.
3. ALL SEDIMENT AND EROSION PREVENTION CONTROL MEASURES SHALL BE COMPLETED AND IN PLACE BEFORE THE BEGINNING OF WORK.

SOIL LEGEND

	SOIL DESIGNATION	HYDROLOGIC SOIL GROUP CLASSIFICATION	SOIL ERODIBILITY COEFFICIENTS (K)
28	= UNDIFLUVENTS AND FLUVAQUENTS	NA	NA
56C	= COLTON-DUXBURY COMPLEX	A	0.17
57B	= DUXBURY-COLTON COMPLEX	B	0.32
124E	= SUNAPEE FINE SANDY LOAM	B	0.20
W	= WATER	NA	NA

0 20 40
SCALE IN FEET

GREEN INTERNATIONAL AFFILIATES, INC.
CIVIL AND STRUCTURAL ENGINEERS

PROJECT NAME: MENDON
PROJECT NUMBER: ER 020-2(39)

FILE NAME: z13bl88erobdrex.dgn
PROJECT LEADER: E. ATKINS
DESIGNED BY: M. BRADLEY
EPSC EXISTING CONDITIONS PLAN SHEET 1

PLOT DATE: 11/13/2015
DRAWN BY: M. BRADLEY
CHECKED BY: E. ATKINS
SHEET 40 OF 72

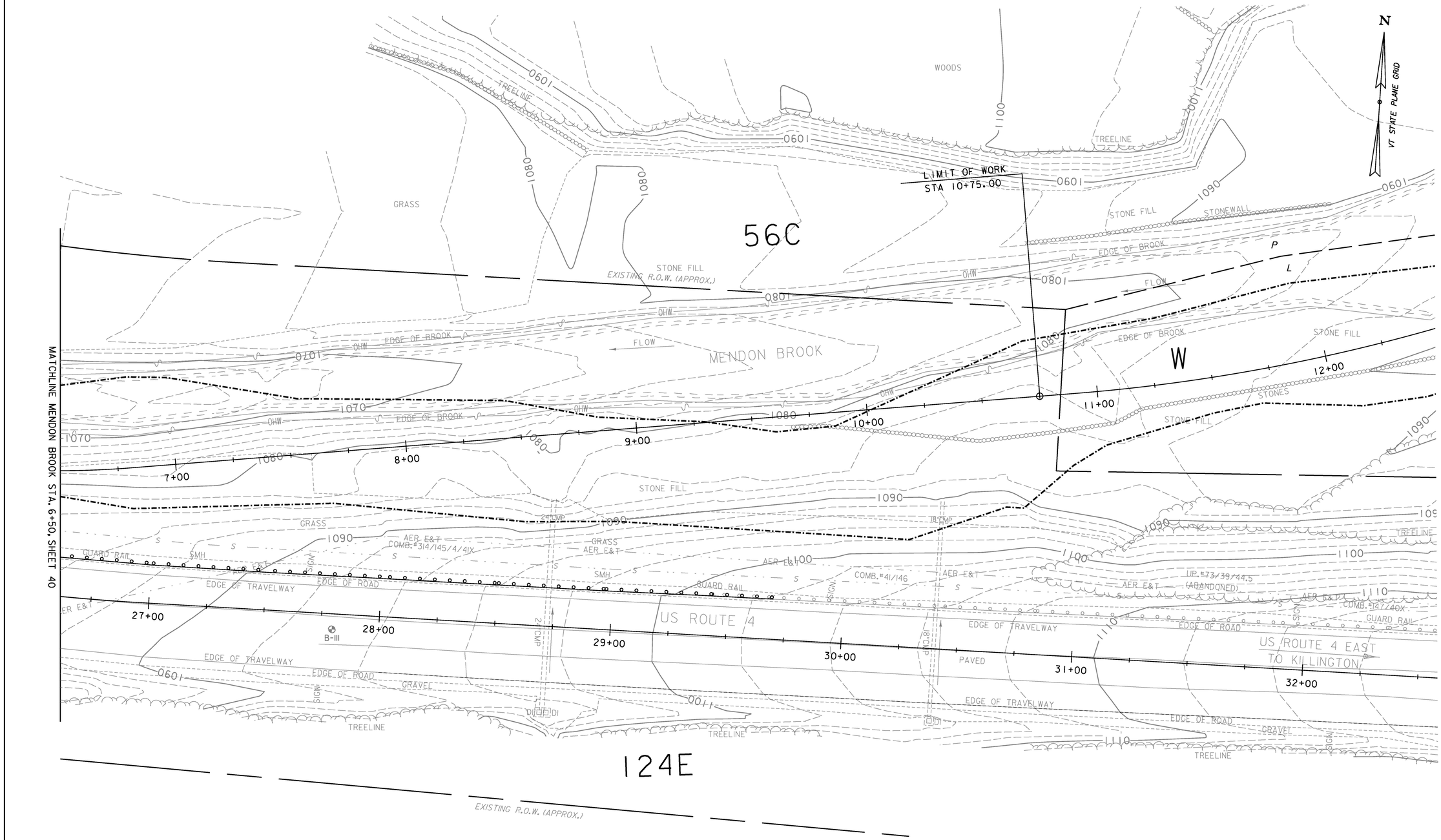

SOIL LEGEND	HYDROLOGIC SOIL GROUP	SOIL ERODIBILITY
SOIL DESIGNATION	CLASSIFICATION	COEFFICIENTS (K)
56C = COLTON-DUXBURY COMPLEX	A	0.17
124E = SUNAPEE FINE SANDY LOAM	B	0.20
W = WATER	NA	NA

0 20 40
SCALE IN FEET

GREEN INTERNATIONAL AFFILIATES, INC.
CIVIL AND STRUCTURAL ENGINEERS

PROJECT NAME: MENDON
PROJECT NUMBER: ER 020-2(39)

FILE NAME: z13b188erobdrex.dgn
PROJECT LEADER: E. ATKINS
DESIGNED BY: M. BRADLEY
EPSC EXISTING CONDITIONS PLAN SHEET 2

PLOT DATE: 11/13/2015
DRAWN BY: M. BRADLEY
CHECKED BY: E. ATKINS
SHEET 41 OF 72

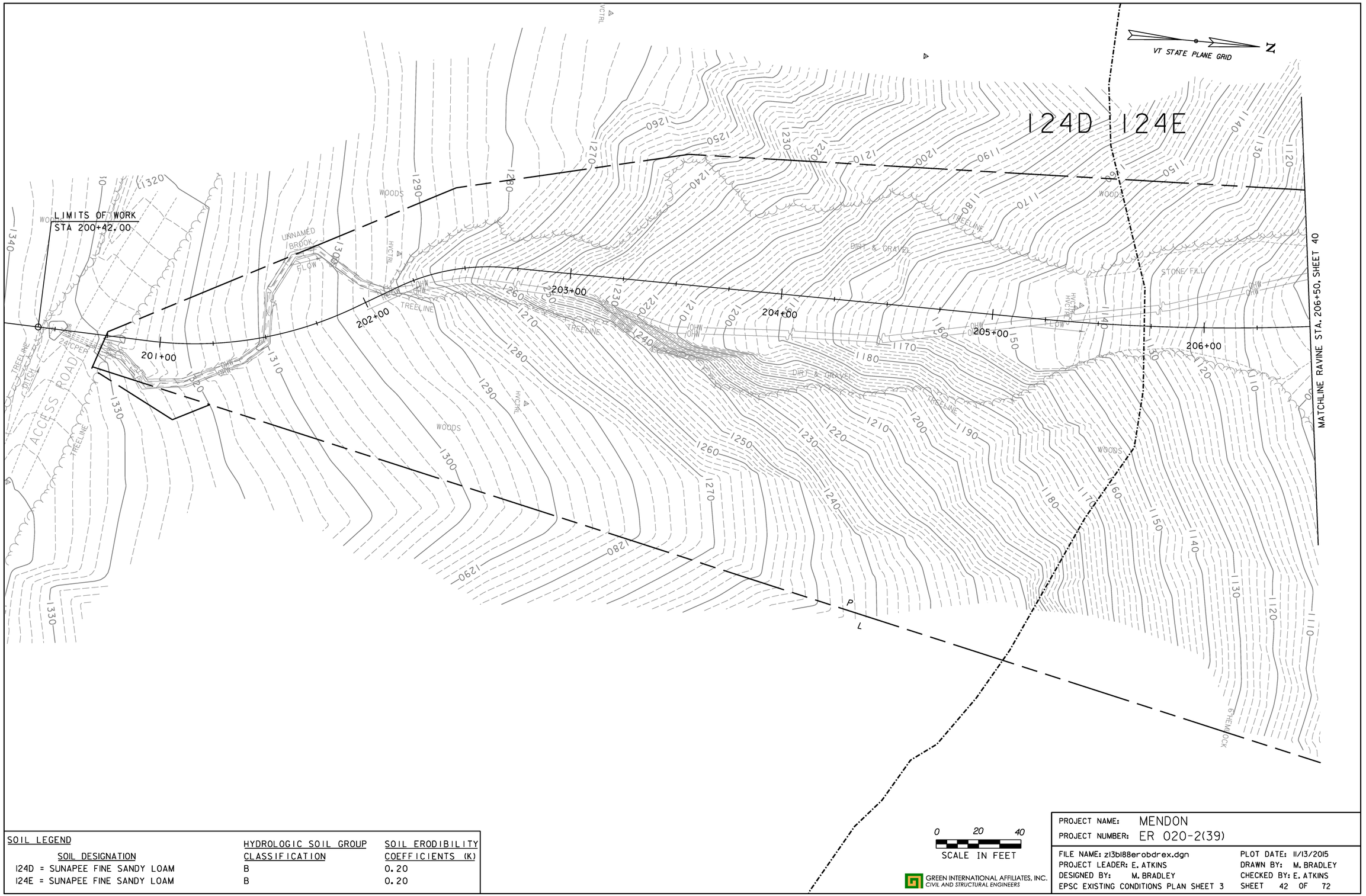

SOIL LEGEND		
SOIL DESIGNATION	HYDROLOGIC SOIL GROUP CLASSIFICATION	SOIL ERODIBILITY COEFFICIENTS (K)
124D = SUNAPEE FINE SANDY LOAM	B	0.20
124E = SUNAPEE FINE SANDY LOAM	B	0.20

0 20 40
SCALE IN FEET

GREEN INTERNATIONAL AFFILIATES, INC.
CIVIL AND STRUCTURAL ENGINEERS

PROJECT NAME: MENDON
PROJECT NUMBER: ER 020-2(39)

FILE NAME: z13b188erobdrex.dgn
PROJECT LEADER: E. ATKINS
DESIGNED BY: M. BRADLEY
EPSC EXISTING CONDITIONS PLAN SHEET 3

PLOT DATE: 11/13/2015
DRAWN BY: M. BRADLEY
CHECKED BY: E. ATKINS
SHEET 42 OF 72

SEED
22+36.0 RT - 26+61.6 RT (RURAL)
3+52.7 RT - 6+50.00 RT (RURAL)

SEED, WINTER RYE
22+36.0 RT - 26+61.6 RT
206+50.0 LT - 207+22.0 LT
206+50.0 RT - 206+86.0 RT
3+52.7 RT - 6+50.00 RT

FERTILIZER
22+36.0 RT - 26+61.6 RT
206+50.0 LT - 207+22.0 LT
206+50.0 RT - 206+86.0 RT
3+52.7 RT - 6+50.00 RT

AGRICULTURAL LIMESTONE
22+36.0 RT - 26+61.6 RT
206+50.0 LT - 207+22.0 LT
206+50.0 RT - 206+86.0 RT
3+52.7 RT - 6+50.00 RT

HAY MULCH
22+36.0 RT - 26+61.6 RT
206+50.0 LT - 207+22.0 LT
206+50.0 RT - 206+86.0 RT
3+52.7 RT - 6+50.00 RT

TOP SOIL
22+36.0 RT - 26+61.6 RT
206+50.0 LT - 207+22.0 LT
206+50.0 RT - 206+86.0 RT
3+52.7 RT - 6+50.00 RT

TEMPORARY EROSION MATTING
3+00.0 - 6+50.0 RT
206+50 - 207+50 RT

TEMPORARY STONE CHECK DAM, TYPE I
2+88.9 RT - 2+99.2 RT
23+29.5 RT - 22+41.9 RT
206+74.0 RT - 206+87.0 RT

INLET PROTECTION DEVICE, TYPE I
207+50.0 LT-RT
26+50.0 RT

BARRIER FENCE
2+88.9 RT - 3+70.5 RT

PROJECT DEMARCATION FENCE
21+92.2 RT - 206+50.0 LT
206+50 RT - 206+61.6 LT

SPECIAL PROVISION
(NATIVE STEEP SLOPE SEED MIX)
206+50.0 LT - 207+22.0 LT
206+50.0 RT - 206+86.0 RT

SPECIAL PROVISION
(TEMPORARY WATER DIVERSION BARRIER)
2+88.9 LT - 6+50.0 LT

SPECIAL PROVISION
(TEMPORARY RELOCATION OF STREAM)
206+50.0 LT - 50+00.0 LT

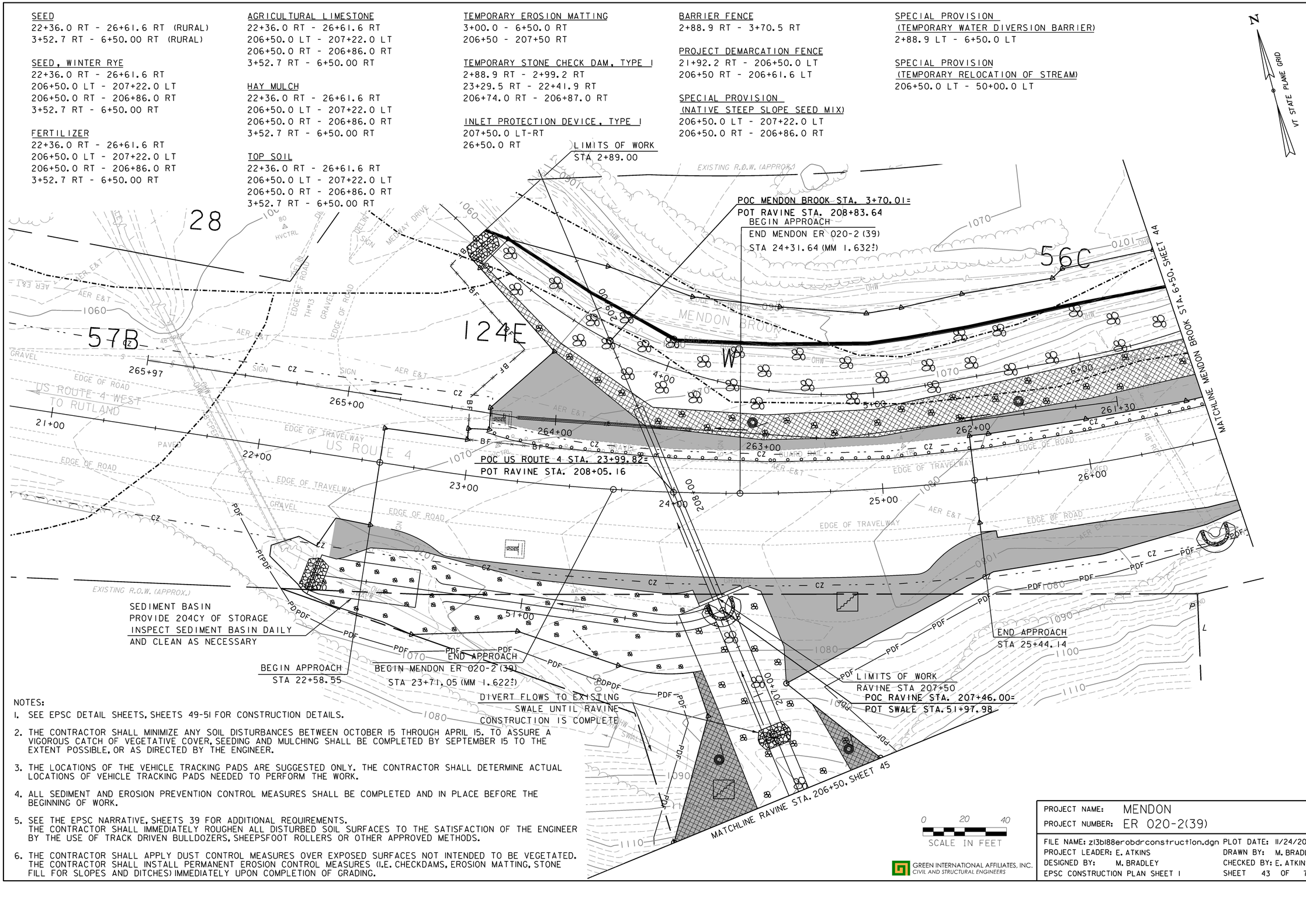

NOTES:

1. SEE EPSC DETAIL SHEETS, SHEETS 49-51 FOR CONSTRUCTION DETAILS.
2. THE CONTRACTOR SHALL MINIMIZE ANY SOIL DISTURBANCES BETWEEN OCTOBER 15 THROUGH APRIL 15. TO ASSURE A VIGOROUS CATCH OF VEGETATIVE COVER, SEEDING AND MULCHING SHALL BE COMPLETED BY SEPTEMBER 15 TO THE EXTENT POSSIBLE, OR AS DIRECTED BY THE ENGINEER.
3. THE LOCATIONS OF THE VEHICLE TRACKING PADS ARE SUGGESTED ONLY. THE CONTRACTOR SHALL DETERMINE ACTUAL LOCATIONS OF VEHICLE TRACKING PADS NEEDED TO PERFORM THE WORK.
4. ALL SEDIMENT AND EROSION PREVENTION CONTROL MEASURES SHALL BE COMPLETED AND IN PLACE BEFORE THE BEGINNING OF WORK.
5. SEE THE EPSC NARRATIVE, SHEETS 39 FOR ADDITIONAL REQUIREMENTS. THE CONTRACTOR SHALL IMMEDIATELY ROUGHEN ALL DISTURBED SOIL SURFACES TO THE SATISFACTION OF THE ENGINEER BY THE USE OF TRACK DRIVEN BULLDOZERS, SHEEPSFOOT ROLLERS OR OTHER APPROVED METHODS.
6. THE CONTRACTOR SHALL APPLY DUST CONTROL MEASURES OVER EXPOSED SURFACES NOT INTENDED TO BE VEGETATED. THE CONTRACTOR SHALL INSTALL PERMANENT EROSION CONTROL MEASURES (I.E. CHECKDAMS, EROSION MATTING, STONE FILL FOR SLOPES AND DITCHES) IMMEDIATELY UPON COMPLETION OF GRADING.

GREEN INTERNATIONAL AFFILIATES, INC.
CIVIL AND STRUCTURAL ENGINEERS

PROJECT NAME: MENDON
PROJECT NUMBER: ER 020-2(39)

FILE NAME: z13b188erobdrconstruction.dgn PLOT DATE: 11/24/2015
PROJECT LEADER: E. ATKINS DRAWN BY: M. BRADLEY
DESIGNED BY: M. BRADLEY CHECKED BY: E. ATKINS
EPSC CONSTRUCTION PLAN SHEET 1 SHEET 43 OF 72

GEOTEXTILE FOR SILT FENCE,
WOVEN WIRE REINFORCED
6+50.0 RT - 10+00.0 RT

SEED
6+50.0 RT - 10+00.0 RT (RURAL)
26+61.6 RT - 26+93.0 RT (RURAL)

SEED, WINTER RYE
6+50.0 RT - 10+00.0 RT
26+61.6 RT - 26+93.0 RT

FERTILIZER
6+50.0 RT - 10+00.0 RT
26+61.6 RT - 26+93.0 RT

AGRICULTURAL LIMESTONE
6+50.0 RT - 10+00.0 RT
26+61.6 RT - 26+93.0 RT

HAY MULCH
6+50.0 RT - 10+00.0 RT
26+62.0 RT - 26+93.0 RT

TOP SOIL
6+50.0 RT - 10+00.0 RT
26+61.6 RT - 26+93.0 RT

TEMPORARY EROSION MATTING
6+50.0 RT - 10+00.0 RT

BARRIER FENCE
10+00.0 RT - 10+88.2 RT

SPECIAL PROVISION
(TEMPORARY WATER DIVERSION BARRIER)
6+50.0 LT - 10+75.0 LT

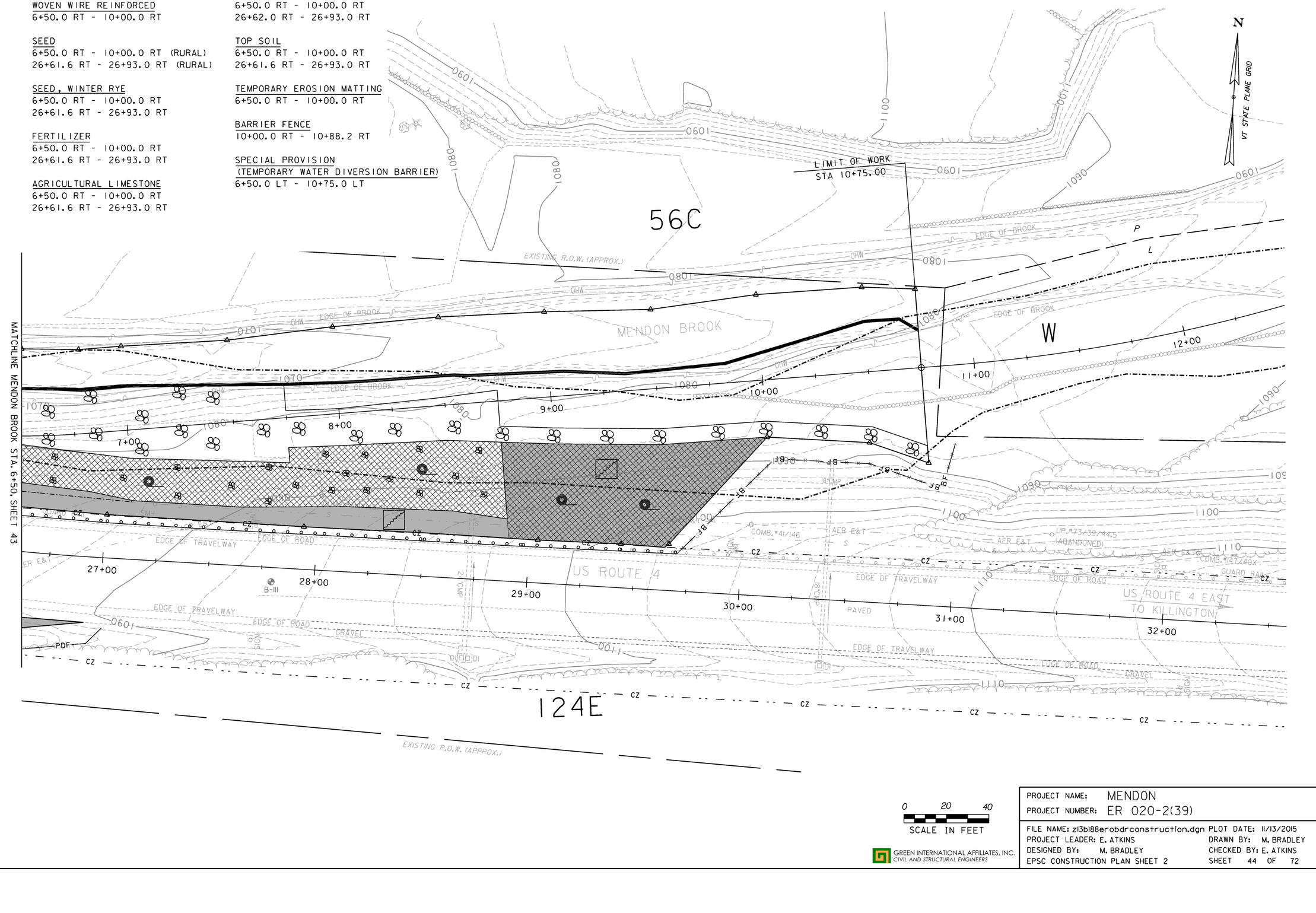

0 20 40
SCALE IN FEET

GREEN INTERNATIONAL AFFILIATES, INC.
CIVIL AND STRUCTURAL ENGINEERS

PROJECT NAME:	MENDON
PROJECT NUMBER:	ER 020-2(39)
FILE NAME: z13b188erobdrconstruction.dgn	PLOT DATE: 11/13/2015
PROJECT LEADER: E. ATKINS	DRAWN BY: M. BRADLEY
DESIGNED BY: M. BRADLEY	CHECKED BY: E. ATKINS
EPSC CONSTRUCTION PLAN SHEET 2	SHEET 44 OF 72

SEED, WINTER RYE
200+66.2 RT - 201+50.0 RT
203+00.0 LT - 206+50.0 RT
204+00.0 RT - 206+50.0 RT

FERTILIZER
200+66.2 RT - 201+50.0 RT
203+00.0 LT - 206+50.0 RT
204+00.0 RT - 206+50.0 RT

AGRICULTURAL LIMESTONE
200+66.2 RT - 201+50.0 RT
203+00.0 LT - 206+50.0 RT
204+00.0 RT - 206+50.0 RT

HAY MULCH
200+66.2 RT - 201+50.0 RT
203+00.0 LT - 206+50.0 RT
204+00.0 RT - 206+50.0 RT

TOP SOIL
200+66.2 RT - 201+50.0 RT
203+00.0 LT - 206+50.0 RT
204+00.0 RT - 206+50.0 RT

TEMPORARY EROSION MATTING
200+66.2 RT - 206+50.0 RT
201+50.0 LT - 206+50.0 RT

PROJECT DEMARCATION FENCE
200+31.6 LT - 206+50.0 LT
200+31.6 RT - 206+50.0 RT

SPECIAL PROVISION
(NATIVE STEEP SLOPE SEED MIX)
200+66.2 RT - 201+50.0 RT
203+00.0 LT - 206+50.0 RT
204+00.0 RT - 206+50.0 RT

SPECIAL PROVISION
(TEMPORARY RELOCATION OF STREAM)
200+50.0 LT - 206+50.0 LT

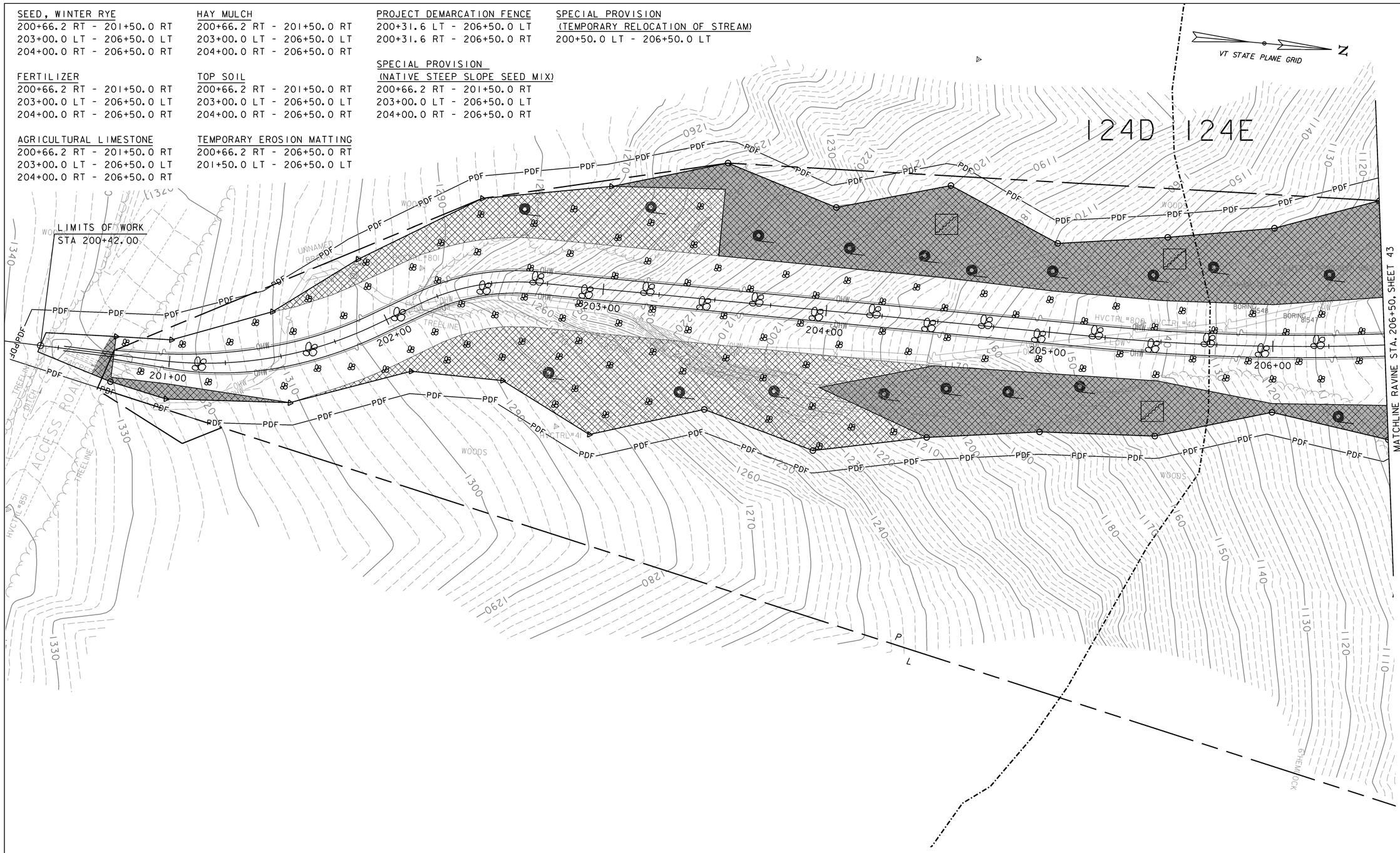

0 20 40
SCALE IN FEET

GREEN INTERNATIONAL AFFILIATES, INC.
CIVIL AND STRUCTURAL ENGINEERS

PROJECT NAME: MENDON
PROJECT NUMBER: ER 020-2(39)

FILE NAME: z13b188erobdrconstruction.dgn PLOT DATE: 11/13/2015
PROJECT LEADER: E. ATKINS DRAWN BY: M. BRADLEY
DESIGNED BY: M. BRADLEY CHECKED BY: E. ATKINS
EPSC CONSTRUCTION PLAN SHEET 3 SHEET 45 OF 72

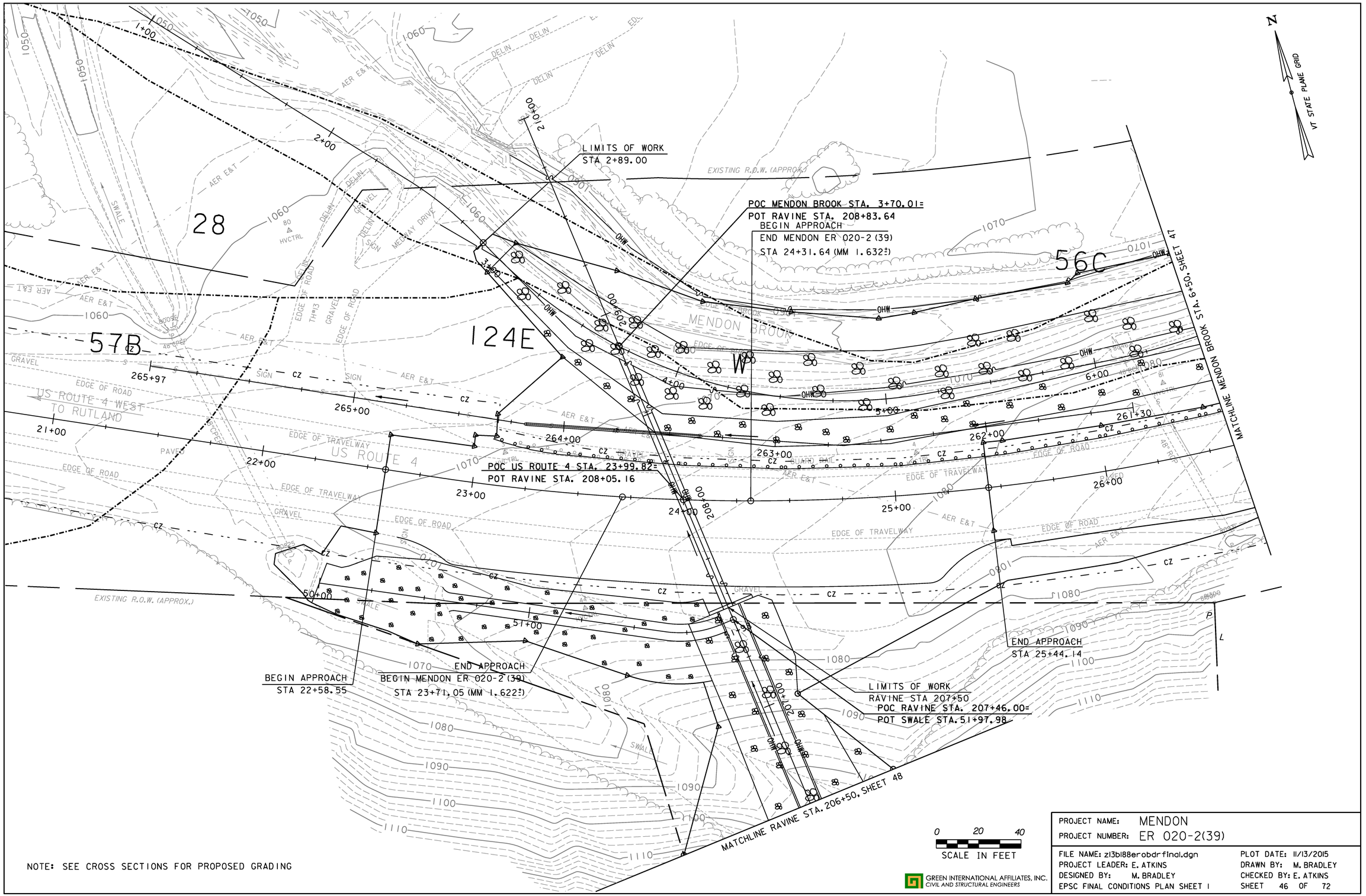

NOTE: SEE CROSS SECTIONS FOR PROPOSED GRADING

GREEN INTERNATIONAL AFFILIATES, INC.
CIVIL AND STRUCTURAL ENGINEERS

PROJECT NAME: MENDON	
PROJECT NUMBER: ER 020-2(39)	
FILE NAME: zl3bl88erobdr-final.dgn	PLOT DATE: 11/13/2015
PROJECT LEADER: E. ATKINS	DRAWN BY: M. BRADLEY
DESIGNED BY: M. BRADLEY	CHECKED BY: E. ATKINS
EPSC FINAL CONDITIONS PLAN SHEET 1	SHEET 46 OF 72

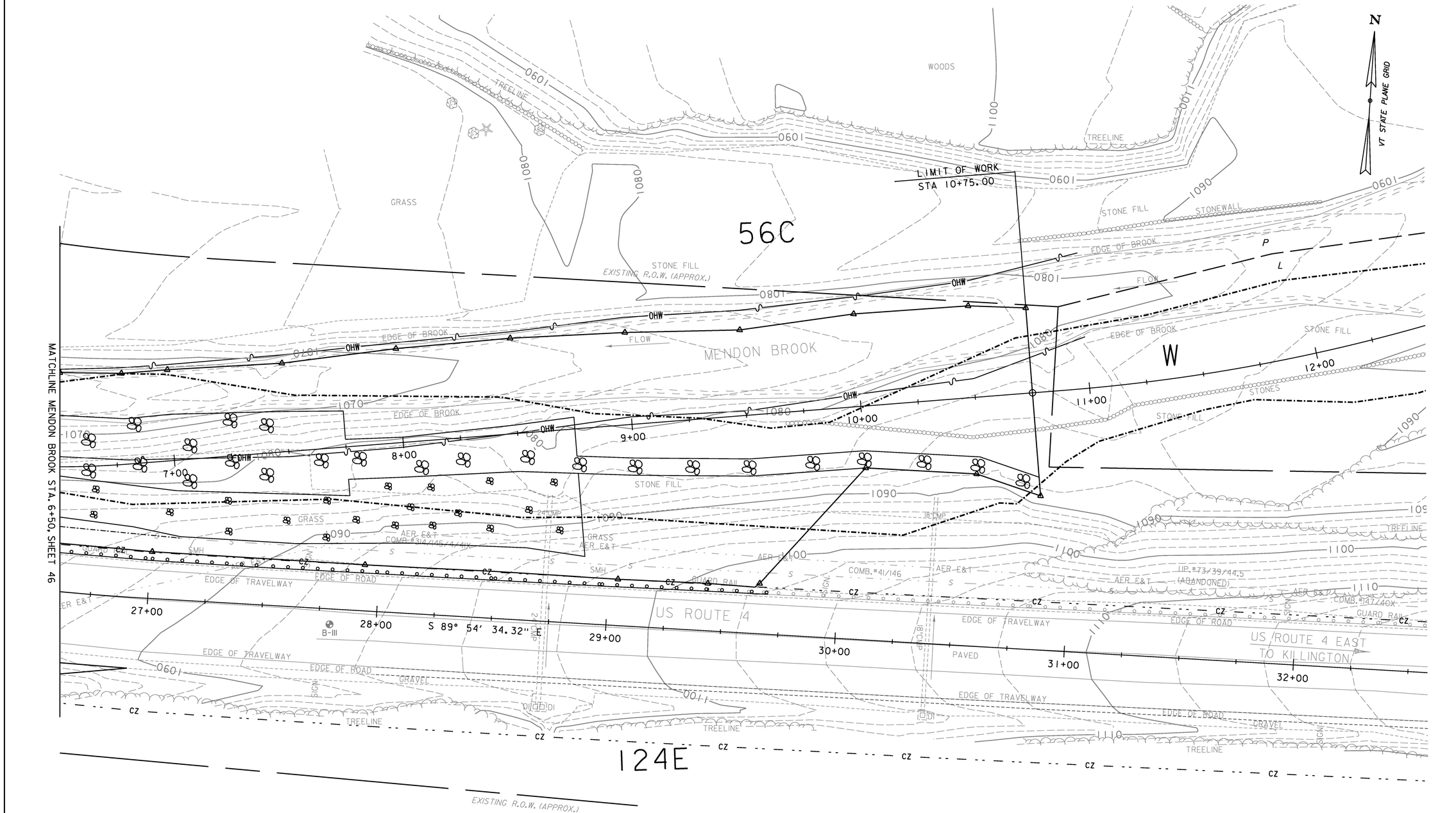

NOTE: SEE CROSS SECTIONS FOR PROPOSED GRADING

0 20 40
SCALE IN FEET

GREEN INTERNATIONAL AFFILIATES, INC.
CIVIL AND STRUCTURAL ENGINEERS

PROJECT NAME:	MENDON
PROJECT NUMBER:	ER 020-2(39)
FILE NAME: zl3bl88erobdrfinal.dgn	PLOT DATE: 11/13/2015
PROJECT LEADER: E. ATKINS	DRAWN BY: M. BRADLEY
DESIGNED BY: M. BRADLEY	CHECKED BY: E. ATKINS
EPSC FINAL CONDITIONS PLAN SHEET 2	SHEET 47 OF 72

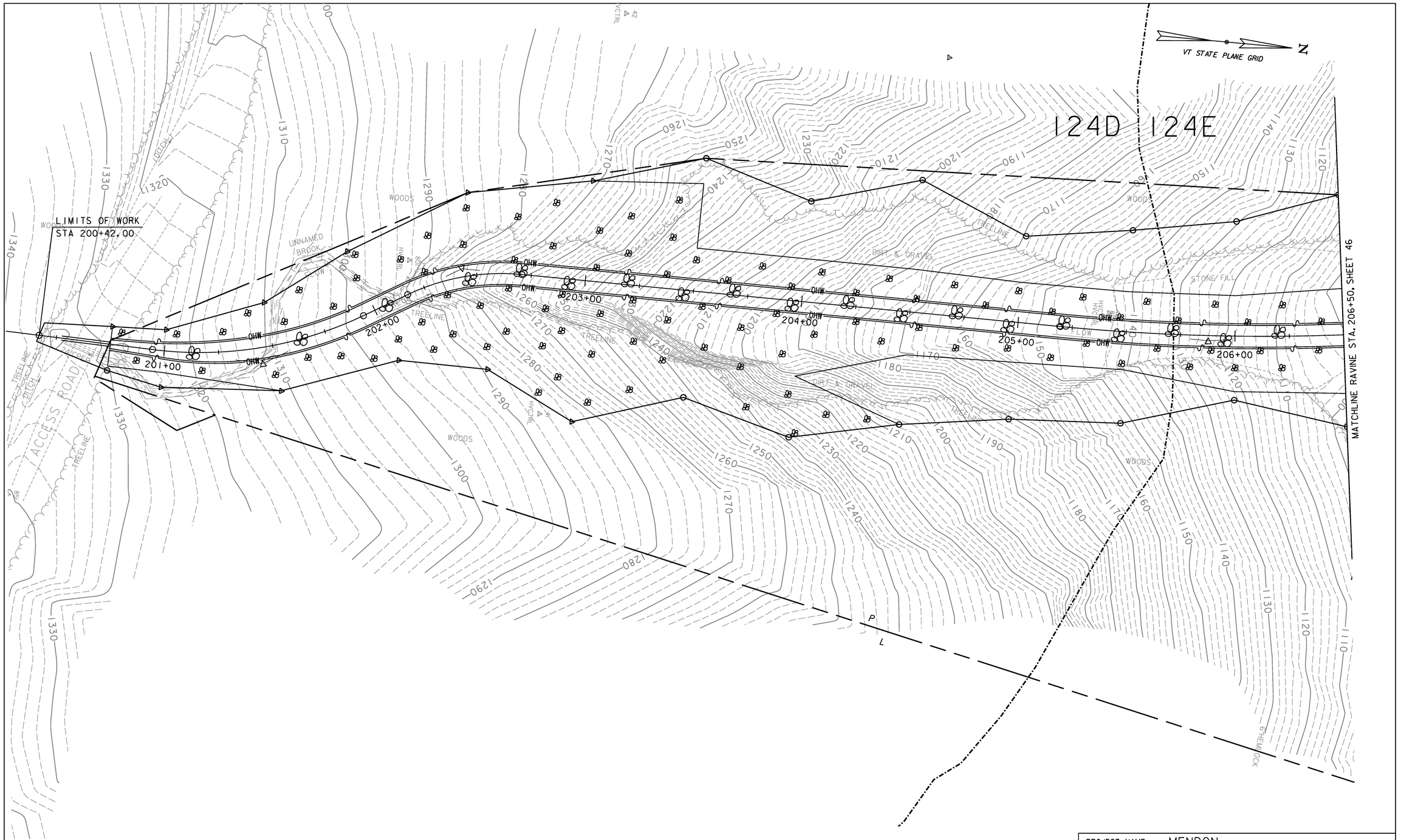

NOTE: SEE CROSS SECTIONS FOR PROPOSED GRADING

0 20 40
SCALE IN FEET

GREEN INTERNATIONAL AFFILIATES, INC.
CIVIL AND STRUCTURAL ENGINEERS

PROJECT NAME: MENDON	
PROJECT NUMBER: ER 020-2(39)	
FILE NAME: zl3bl88erobdrfinal.dgn	PLOT DATE: 11/13/2015
PROJECT LEADER: E. ATKINS	DRAWN BY: M. BRADLEY
DESIGNED BY: M. BRADLEY	CHECKED BY: E. ATKINS
EPSC FINAL CONDITIONS PLAN SHEET 3	SHEET 48 OF 72

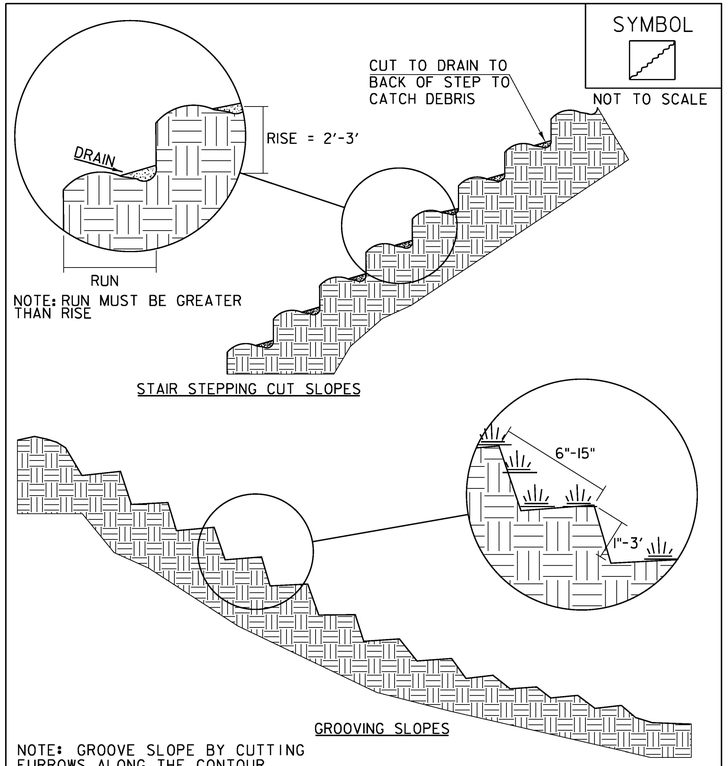

NOTE: GROOVE SLOPE BY CUTTING FURROWS ALONG THE CONTOUR. IRREGULARITIES IN THE SOIL SURFACE CATCH RAINWATER AND RETAIN LIME, FERTILIZER AND SEED.

ADAPTED FROM DETAILS PROVIDED BY: NEW YORK STATE DEC ORIGINALLY DEVELOPED BY USDA-NRCS VERMONT DEPARTMENT OF ENVIRONMENTAL CONSERVATION	SURFACE ROUGHENING

NOTES:
REFER TO "THE VERMONT STANDARDS & SPECIFICATIONS FOR EROSION PREVENTION & SEDIMENT CONTROL -2006- " FROM THE VT AGENCY OF NATURAL RESOURCES FOR ADDITIONAL GUIDANCE.

THIS WORK SHALL BE CONSIDERED INCIDENTAL TO THE CONTRACT

REVISIONS	
APRIL 1, 2008	WHF
JANUARY 13, 2009	WHF

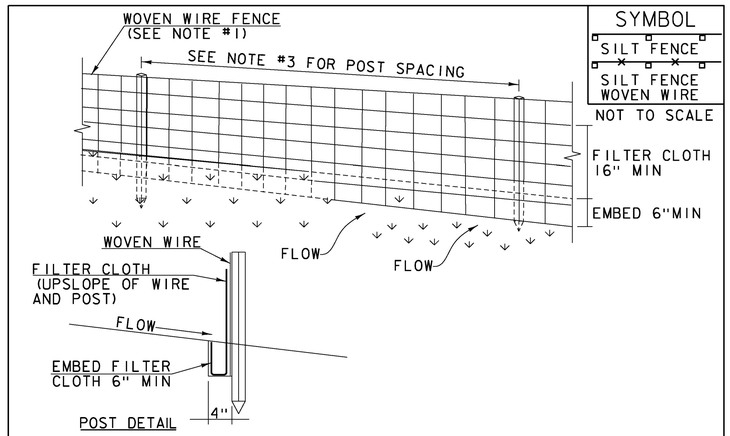

CONSTRUCTION SPECIFICATIONS

1. WOVEN WIRE REINFORCED FENCE IS REQUIRED WITHIN 100' UPSLOPE OF RECEIVING WATERS WHEN THE PROJECT FALLS UNDER A CONSTRUCTION STORMWATER PERMIT. WOVEN WIRE SHALL BE A MIN. 14 GAUGE WITH A 6" MAX. MESH OPENING.
2. FILTER CLOTH SHALL BE EITHER FILTER X, MIRAFI100X, STABILINKA T140N OR APPROVED EQUIVALENT.
3. POST SPACING FOR WIRE-BACKED FENCE SHALL BE 10' MAXIMUM. FOR FILTER-CLOTH FENCE, WHEN ELONGATION IS >50%, POST SPACING SHALL NOT EXCEED 4' AND WHEN ELONGATION IS <50%, POST SPACING SHALL NOT EXCEED 6'.
4. WOVEN WIRE FENCE IS TO BE FASTENED SECURELY TO FENCE POSTS WITH WIRE TIES. FILTER CLOTH IS TO BE FASTENED SECURELY TO WOVEN WIRE FENCE WITH TIES SPACED EVERY 24" AT TOP AND MID SECTION.
5. WHEN TWO SECTIONS OF FILTER CLOTH ADJOIN EACH OTHER THEY SHALL BE OVER-LAPPED BY 6" AND FOLDED.
6. MAINTENANCE SHALL BE PERFORMED AS NEEDED AND MATERIAL REMOVED WHEN SEDIMENT REACHES HALF OF FABRIC HEIGHT.

ADAPTED FROM DETAILS PROVIDED BY: NEW YORK STATE DEC ORIGINALLY DEVELOPED BY USDA-NRCS VERMONT DEPARTMENT OF ENVIRONMENTAL CONSERVATION	SILT FENCE

NOTES:
REFER TO "THE VERMONT STANDARDS & SPECIFICATIONS FOR EROSION PREVENTION & SEDIMENT CONTROL -2006- " FROM THE VT AGENCY OF NATURAL RESOURCES FOR ADDITIONAL GUIDANCE.

THIS WORK SHALL BE PERFORMED IN ACCORDANCE WITH SECTION 649 AND AS SHOWN IN THE PLANS FOR ~~GEOTEXTILE FOR SILT FENCE (PAY ITEM 649.51) OR~~ GEOTEXTILE FOR SILT FENCE, WOVEN WIRE REINFORCED (PAY ITEM 649.515).

REVISIONS	
MARCH 21, 2008	WHF
DECEMBER 11, 2008	WHF
JANUARY 13, 2009	WHF

VAOT LOW GROW/FINE FESCUE MIX

LBS/AC						
WEIGHT	BROADCAST	HYDROSEED	NAME	LATIN NAME	GERM	PURITY
38%	57	95	CREEPING RED FESCUE	FESTUCA RUBRA VAR. RUBRA	90%	98%
29%	43.5	72.5	HARD FESCUE	FESTUCA LONGIFOLIA	85%	95%
15%	22.5	37.5	CHEWINGS FESCUE	FESTUCA RUBRA VAR. COMMUTATA	87%	95%
15%	22.5	37.5	ANNUAL RYEGRASS	LOLIUM MULTIFLORUM	90%	95%
3%	4.5	7.5	INERTS			
100%	150	250				

VAOT RURAL AREA MIX

LBS/AC						
WEIGHT	BROADCAST	HYDROSEED	NAME	LATIN NAME	GERM	PURITY
37.5%	22.5	45	CREEPING RED FESCUE	FESTUCA RUBRA VAR. RUBRA	85%	98%
37.5%	22.5	45	TALL FESCUE	FESTUCA ARUNDINACEA	90%	95%
5.0%	3	6	RED TOP	AGROSTIS GIGANTEA	90%	95%
15.0%	9	18	WHITE FIELD CLOVER	TRIFOLIUM REPENS	85%	98%
5.0%	3	6	ANNUAL RYE GRASS	LOLIUM MULTIFLORUM	85%	95%
100%	60	120				

GENERAL AMENDMENT GUIDANCE

FERTILIZER	LIME	
10/20/10	AG LIME	PELLITIZED
500 LBS/AC	2 TONS/AC	1 TONS/AC

CONSTRUCTION GUIDANCE

~~1. SEED MIX: THE CONTRACTOR SHALL COORDINATE WITH THE RESIDENT ENGINEER ON WHICH SEED MIX TO USE.~~

2. SEED MIX: USE AS INDICATED IN THE PLANS AND/OR FOR ALL ESTABLISHED UPLAND (NON WETLAND) AREAS DISTURBED BY THE CONTRACTOR.
3. ALL SEED MIXTURES: SHALL NOT HAVE A WEED CONTENT EXCEEDING 0.40% BY WEIGHT AND SHALL BE FREE OF ALL NOXIOUS SEED.
4. FERTILIZER AND LIMESTONE: SHALL FOLLOW RATES SHOWN ON PLAN OR AS DIRECTED BY THE ENGINEER.
5. HAY MULCH: TO BE PLACED ON EARTH SLOPES AT THE RATE OF 2 TONS/ACRE, ACHIEVE 90% GROUND COVER OR AS DIRECTED BY THE ENGINEER.
6. HYDROSEEDING: ALTHOUGH GUIDANCE IS GIVEN ABOVE THE SITE CONDITIONS AND THE TYPE OF HYDROSEED PROPOSED FOR USE WILL ULTIMATELY DICTATE THE AMOUNTS AND TYPES OF SOIL AMENDMENTS TO BE APPLIED.
7. TURF ESTABLISHMENT: PLACING SEED, FERTILIZER, LIME AND MULCH PRIOR TO SEPTEMBER 15 AND AFTER APRIL 15 CAN BETTER ENSURE A VIGOROUS GROWTH OF GRASS.

ADAPTED FROM VTRANS TECHNICAL LANDSCAPE MANUAL FOR ROADWAYS AND TRANSPORTATION FACILITIES	TURF ESTABLISHMENT

THIS WORK SHALL BE PERFORMED IN ACCORDANCE WITH SECTION 651 FOR SEED (PAY ITEM 651.15)

REVISIONS	
JANUARY 12, 2015	WHF

GREEN INTERNATIONAL AFFILIATES, INC.
CIVIL AND STRUCTURAL ENGINEERS

PROJECT NAME: MENDON
PROJECT NUMBER: ER 020-2(39)

FILE NAME: z13b188erodet.dgn
PROJECT LEADER: E. ATKINS
DESIGNED BY: M. BRADLEY
EPSC DETAIL SHEET 1

PLOT DATE: 11/13/2015
DRAWN BY: M. BRADLEY
CHECKED BY: E. ATKINS
SHEET 49 OF 72

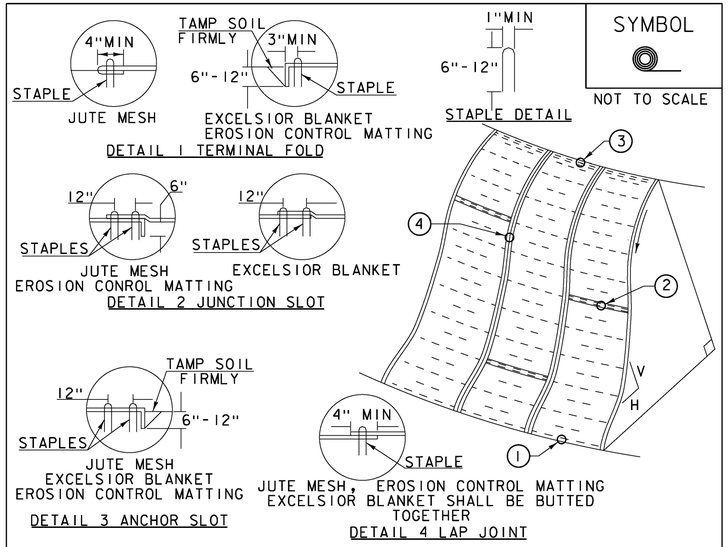

SYMBOL

NOT TO SCALE

CONSTRUCTION SPECIFICATIONS

1. APPLY TO SLOPES GREATER THAN 3H: IV OR WHERE NECESSARY TO AID IN ESTABLISHING VEGETATION.
2. APPLY FERTILIZER, LIME SEED PRIOR TO PLACING MATTING.
3. STAPLES ARE TO BE PLACED ALTERNATELY, IN COLUMNS APPROXIMATELY 2' APART AND IN ROWS APPROXIMATELY 3' APART. APPROXIMATELY 175 STAPLES ARE REQUIRED PER 4'X225' ROLL OF MATERIAL AND 125 STAPLES ARE REQUIRED PER 4'X150' ROLL OF MATERIAL.
4. DISTURBED AREAS SHALL BE SMOOTHLY GRADED. EROSION CONTROL MATERIAL SHALL BE PLACED LOOSELY OVER GROUND SURFACE. DO NOT STRETCH.
5. ALL TERMINAL ENDS AND TRANSVERSE LAPS SHALL BE STAPLED AT APPROXIMATELY 12" INTERVALS.

ADAPTED FROM DETAILS PROVIDED BY: NEW YORK STATE DEC ORIGINALLY DEVELOPED BY USDA-NRCS VERMONT DEPARTMENT OF ENVIRONMENTAL CONSERVATION

ROLLED EROSION CONTROL PRODUCT (RECP) SIDE SLOPE

NOTES:
REFER TO "THE VERMONT STANDARDS & SPECIFICATIONS FOR EROSION PREVENTION & SEDIMENT CONTROL -2006- "FROM THE VT AGENCY OF NATURAL RESOURCES FOR ADDITIONAL GUIDANCE.
THIS WORK SHALL BE PERFORMED IN ACCORDANCE WITH SECTION 653 AND AS SHOWN IN THE PLANS FOR TEMPORARY EROSION MATTING (PAY ITEM 653.20) ~~OR PERMANENT EROSION MATTING (PAY ITEM 653.21).~~

REVISIONS		
APRIL 16, 2007	JMF
JANUARY 13, 2009	WHF

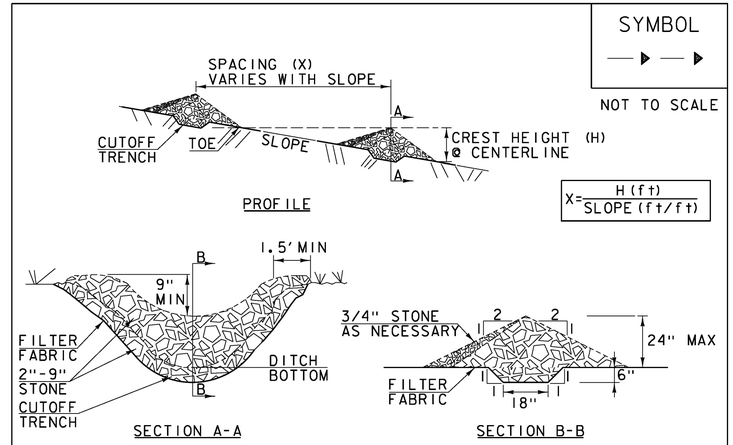

SYMBOL

NOT TO SCALE

CONSTRUCTION SPECIFICATIONS

1. STONE WILL BE PLACED ON A FILTER FABRIC FOUNDATION.
2. CHECK DAMS SHALL BE SPACED SO THAT THE ELEVATION OF THE CREST OF THE DOWNSTREAM DAM IS AT THE SAME ELEVATION AS THE TOE OF THE UPSTREAM DAM.
3. 3/4" FILTERING STONE MAY BE ADDED TO THE FACE OF THE CHECK DAM AS NECESSARY.
4. EXTEND THE STONE A MINIMUM OF 1.5' BEYOND THE DITCH BANKS TO PREVENT CUTTING AROUND THE DAM.
5. PROTECT CHANNEL DOWNSTREAM OF THE LOWEST CHECK DAM FROM SCOUR AND EROSION WITH STONE OR LINER AS APPROPRIATE.
6. ENSURE THAT CHANNEL APPURTENANCES SUCH AS CULVERT ENTRANCES BELOW CHECK DAMS ARE NOT SUBJECT TO DAMAGE OR BLOCKAGE FROM DISPLACED STONE.
7. MAXIMUM DRAINAGE AREA 2 ACRES.

ADAPTED FROM DETAILS PROVIDED BY: NEW YORK STATE DEC ORIGINALLY DEVELOPED BY USDA-NRCS VERMONT DEPARTMENT OF ENVIRONMENTAL CONSERVATION

CHECK DAM

NOTES:
REFER TO "THE VERMONT STANDARDS & SPECIFICATIONS FOR EROSION PREVENTION & SEDIMENT CONTROL -2006- "FROM THE VT AGENCY OF NATURAL RESOURCES FOR ADDITIONAL GUIDANCE.

THIS WORK SHALL BE PERFORMED IN ACCORDANCE WITH SECTION 653 FOR TEMPORARY STONE CHECK DAM, TYPE I (PAY ITEM 653.25)

REVISIONS		
MARCH 21, 2008	WHF
JANUARY 8, 2009	WHF

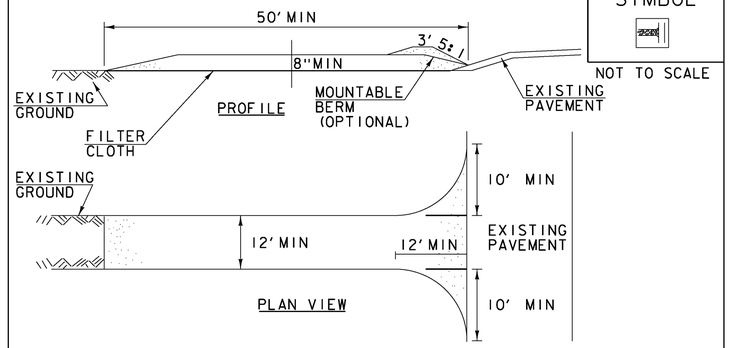

SYMBOL

NOT TO SCALE

CONSTRUCTION SPECIFICATIONS

1. STONE SIZE- USE 1-4" STONE, RECLAIMED OR RECYCLED CONCRETE EQUIVALENT.
2. LENGTH- NOT LESS THAN 50' (EXCEPT ON A SINGLE RESIDENCE LOT WHERE A 30' MINIMUM LENGTH APPLIES).
3. THICKNESS- NOT LESS THAN 8".
4. WIDTH- 12' MINIMUM, BUT NOT LESS THAN THE FULL WIDTH AT POINTS WHERE INGRESS OR EGRESS OCCURS. 24' IF SINGLE ENTRANCE TO SITE.
5. GEOTEXTILE MUST BE PLACED OVER THE ENTIRE AREA PRIOR TO PLACING STONE.
6. SURFACE WATER- ALL SURFACE WATER FLOWING OR DIVERTED TOWARD CONSTRUCTION ENTRANCES SHALL BE PIPED BENEATH THE ENTRANCE. IF PIPING IS IMPRACTICAL, A MOUNTABLE BERM WITH 5:1 SLOPES WILL BE PERMITTED.
7. MAINTENANCE- THE ENTRANCE SHALL BE MAINTAINED IN A CONDITION WHICH WILL PREVENT TRACKING OR FLOWING OF SEDIMENT ONTO PUBLIC RIGHTS-OF-WAY, ALL SEDIMENT SPILLED, DROPPED, WASHED OR TRACKED ONTO PUBLIC RIGHTS-OF-WAY MUST BE REMOVED IMMEDIATELY.
8. WHEN WASHING IS REQUIRED, IT SHALL BE DONE ON AN AREA STABILIZED WITH STONE AND WHICH DRAINS INTO AN APPROVED SEDIMENT TRAPPING DEVICE.
9. PERIODIC INSPECTION AND NEEDED MAINTENANCE SHALL BE PROVIDED ACCORDING TO PERMIT REQUIREMENTS.

ADAPTED FROM DETAILS PROVIDED BY: NEW YORK STATE DEC ORIGINALLY DEVELOPED BY USDA-NRCS VERMONT DEPARTMENT OF ENVIRONMENTAL CONSERVATION

STABILIZED CONSTRUCTION ENTRANCE

NOTES:
REFER TO "THE VERMONT STANDARDS & SPECIFICATIONS FOR EROSION PREVENTION & SEDIMENT CONTROL -2006- "FROM THE VT AGENCY OF NATURAL RESOURCES FOR ADDITIONAL GUIDANCE.

THIS WORK SHALL BE PERFORMED IN ACCORDANCE WITH SECTION 653 FOR VEHICLE TRACKING PAD (PAY ITEM 653.35) OR AS SPECIFIED IN THE CONTRACT.

REVISIONS		
MARCH 24, 2008	WHF
JANUARY 13, 2009	WHF

PROJECT NAME: MENDON
PROJECT NUMBER: ER 020-2(39)

FILE NAME: zl3bl88erodet.dgn
PROJECT LEADER: E. ATKINS
DESIGNED BY: M. BRADLEY
EPSC DETAIL SHEET 2

PLOT DATE: 11/13/2015
DRAWN BY: M. BRADLEY
CHECKED BY: E. ATKINS
SHEET 50 OF 72

GREEN INTERNATIONAL AFFILIATES, INC.
CIVIL AND STRUCTURAL ENGINEERS

SYMBOL

NOT TO SCALE

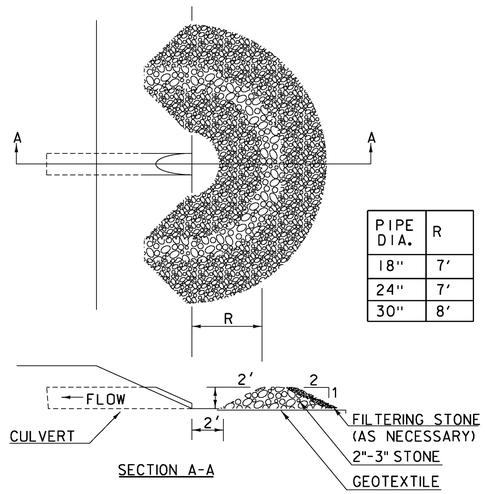

PIPE DIA.	R
18"	7'
24"	7'
30"	8'

CONSTRUCTION SPECIFICATIONS

1. USE 2" TO 3" STONE. FILTERING STONE SHALL BE 3/4".
2. PLACE STONE OVER GEOTEXTILE.
3. ONCE THE AREAS UPSTREAM FROM THE CHECK DAM ARE STABILIZED WITH VEGETATION, THE SEDIMENT TRAPPED BEHIND THE DAM SHALL BE DISPOSED OF IN AN APPROVED WASTE AREA.
4. THE CHECK DAM(S) SHALL BE FLATTENED AND GRADED IN A MANNER WHICH PROTECTS THE AREA FROM EROSION AND CHANNEL BLOCKAGE . (GEOTEXTILE MUST BE REMOVED).
5. THE GEOTEXTILE MUST BE DISPOSED OF APPROPRIATELY.
6. THE AREA CONTRIBUTING TO THE CHECK DAM SHALL NOT EXCEED 4 ACRES.

ADAPTED FROM DETAILS PROVIDED BY: ILLINOIS USDA-NRCS
ORIGINALLY DEVELOPED BY USDA-NRCS

PIPE INLET PROTECTION

THIS WORK SHALL BE PERFORMED IN ACCORDANCE WITH SECTION 653 FOR INLET PROTECTION DEVICE, TYPE I (PAY ITEM 653.40).

REVISIONS	
MARCH 6, 2008	WHF
JANUARY 13, 2009	WHF

SPECIAL PROVISION (NATIVE STEEP SLOPE SEED MIX)

Seeding Rate: 75b per acre

SPECIES LIST

40% Grain Rye (Secale Cereale)
24% Indiangrass (Sorghastrum nutans)
10% Virginia Wildrye (Elymus virginicus)
4% Candada Wildry (Elymuc cadadensis)
3% Autumn Bentgrass (Agrostis perennans)
3% Big Bluestem (Andropogon gerardiie)
3% Rough Bentgrass (Agrostis scabra)
2% Purple Coneflower (Echinacea purpurea)
2% Partridge Pea (Chamaecrista fasciculata)
2% Switchgrass 'Shawnee' (Panicum virgatum)
1.5% Lanceleaf Coreopsis (Coreopsis lanceolata)
1% Blackeyed Susan (Rudbeckia hirta)
1% Oxeye Sunflower (Heliopsis helianthoides)
1% Purpletop (Tridens flavus)
1% Slender Bushclover (Lespedeza virginica)
0.75% Blazing Star (Liatris spicata)
0.75% Wild Bergamot (Monarda fistulosa)

GREEN INTERNATIONAL AFFILIATES, INC.
CIVIL AND STRUCTURAL ENGINEERS

PROJECT NAME:	MENDON
PROJECT NUMBER:	ER 020-2(39)
FILE NAME: z13b188erodet.dgn	PLOT DATE: 11/13/2015
PROJECT LEADER: E. ATKINS	DRAWN BY: M. BRADLEY
DESIGNED BY: M. BRADLEY	CHECKED BY: E. ATKINS
EPSC DETAIL SHEET 3	SHEET 51 OF 72

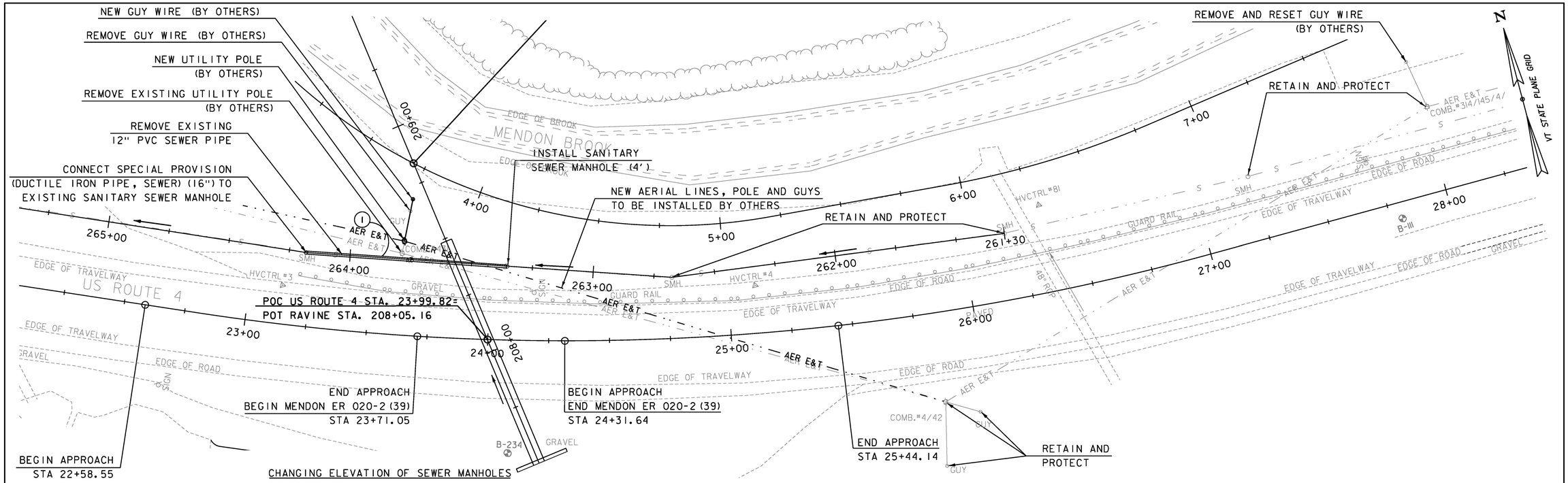

CHANGING ELEVATION OF SEWER MANHOLES
24+76.73 LT
26+18.13 LT
27+23.07 LT
28+97.39 LT (REFER TO LAYOUT SHEET FOR LOCATION)

SANITARY SEWER MANHOLE (4')
263+35.2

REHAB. DROP INLETS, CATCH BASINS, OR MANHOLES, CLASS II
264+18.2

NEW SEWER
① 263+35.2 - 264+18.2
83' OF SPECIAL PROVISION (DUCTILE IRON PIPE, SEWER) (16")
CONNECT TO NEW MANHOLE AND REHAB EXISTING MANHOLE

NOTES:

1.) THE SEWER LINE IS ACTIVE AND THE CONTRACTOR SHALL BYPASS FLOWS DURING INSTALLATION OF NEW SPECIAL PROVISION (DUCTILE IRON PIPE, SEWER) (16"). BYPASS SHALL BE PERFORMED IN ACCORDANCE WITH SECTION 626.12 OF THE STANDARD SPECIFICATIONS. ALL WORK SHALL BE COORDINATED WITH AND APPROVED BY OTTER CREEK ENGINEERING AND VTRANS, SEE NOTE 6 FOR OTTER CREEK ENGINEERING CONTACT INFORMATION. BYPASS SHALL BE PAID FOR UNDER ITEM 628.42, TRANSFER TO NEW SYSTEM, SANITARY SEWER.

2.) NEW SPECIAL PROVISION (DUCTILE IRON PIPE, SEWER) (16") SHALL BE INSTALLED IN PLACE OF THE BYPASSED SYSTEM AND APPROVED BEFORE THE INSTALLATION OF THE PCCSPA/CAAPA CULVERT. TWO LAYERS OF 2"X10'X8' - INSULATION BOARD MEETING THE REQUIREMENTS OF SECTION 622 OF THE STANDARD SPECIFICATIONS SHALL BE PLACED BETWEEN THE SPECIAL PROVISION (DUCTILE IRON PIPE, SEWER) (16") AND 57" X 38" PIPE OPTION. COST OF THE INSULATION BOARD WILL BE CONSIDERED INCIDENTAL TO ITEM 900.640, SPECIAL PROVISION (DUCTILE IRON PIPE, SEWER) (16").

3.) THE SEWER MAIN SHALL BE BEDDED, AND HAVE A PIPE ENVELOPE CONSISTING OF CRUSHED STONE BEDDING FROM 6" BELOW THE INVERT OF THE SEWER UP TO THE BOTTOM OF THE CULVERT. THIS DETAIL SHALL BE INSTALLED ALONG THE SEWER MAIN 10' ON EITHER SIDE OF THE CULVERT CROSSING AND ALONG THE CULVERT PIPE 5' ON EITHER SIDE OF THE CROSSING.

4.) BASELINE AND STATIONING OF THE SEWER LINE SHOULD BE CONSIDERED APPROXIMATE AND IS BASED ON RECORD INFORMATION AND PROVIDED FOR INFORMATION ONLY.

5.) THE MANHOLES SHOWN IN THE PROFILE ARE PICTORIAL ONLY AND DO NOT REPRESENT THE ACTUAL SHAPE OR SIZE OF THE PROPOSED OR EXISTING STRUCTURES.

6.) CONTRACTOR SHALL CONTACT MARK YOUNGSTROM OF OTTER CREEK ENGINEERING AT (802)747-3080 AT LEAST 48 HOURS IN ADVANCE OF ANY SEWER WORK FOR OBSERVATION.

REFER TO PLAN SHEET 1, SHEET 33 FOR ADDITIONAL REQUIREMENTS

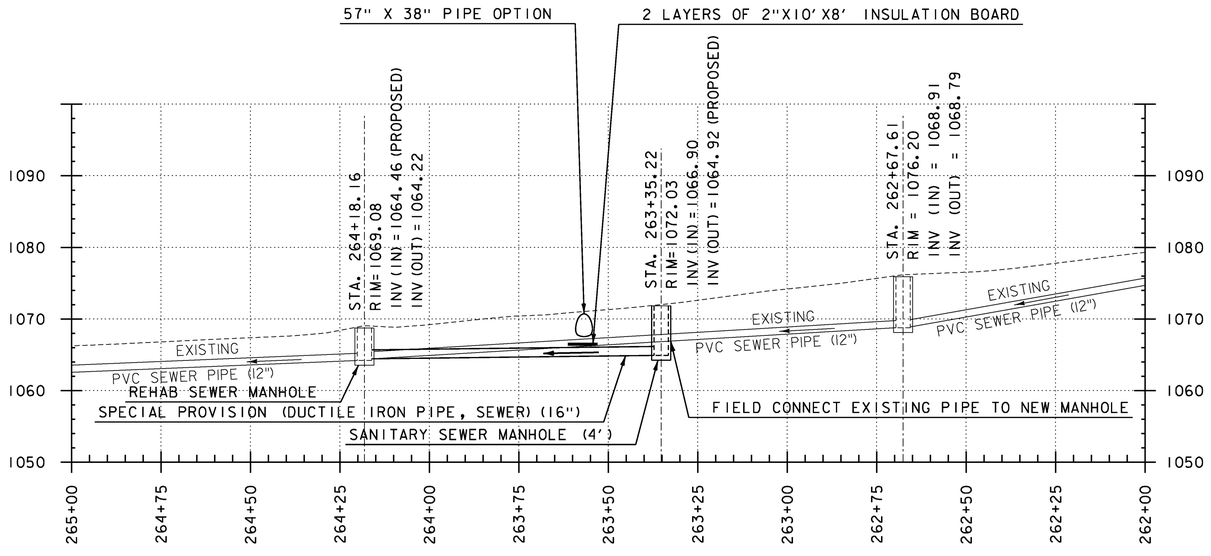

SEWER PROFILE

0 20 40
SCALE IN FEET

GREEN INTERNATIONAL AFFILIATES, INC.
CIVIL AND STRUCTURAL ENGINEERS

PROJECT NAME: MENDON
PROJECT NUMBER: ER 020-2(39)

FILE NAME: z13bl88utilbdr.dgn
PROJECT LEADER: E. ATKINS
DESIGNED BY: M. BRADLEY
UTILITY SHEET 1

PLOT DATE: 11/13/2015
DRAWN BY: S. SOLLA
CHECKED BY: E. ATKINS
SHEET 52 OF 72

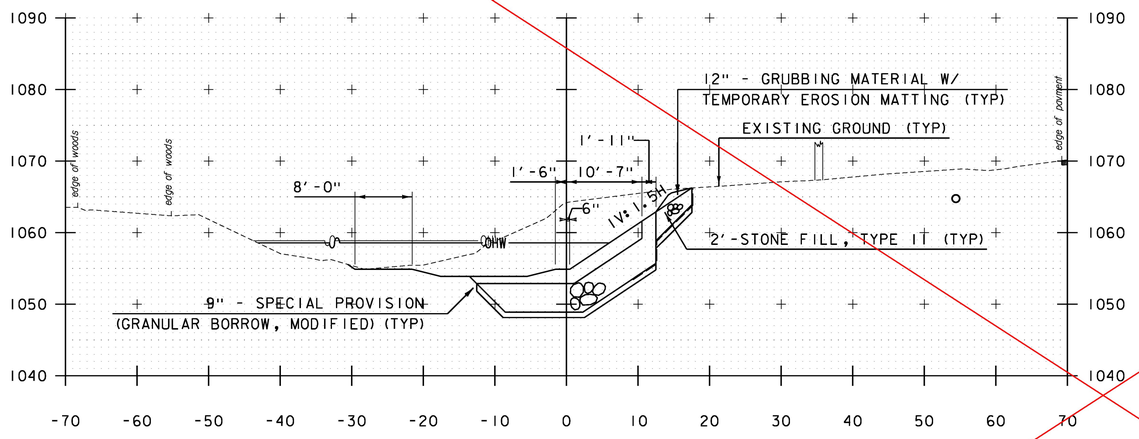

3+50.00

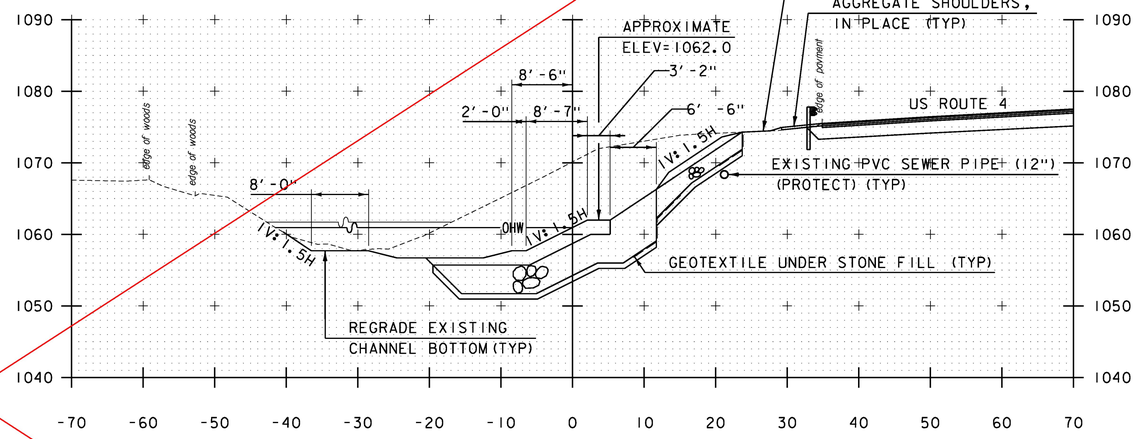

4+50.00

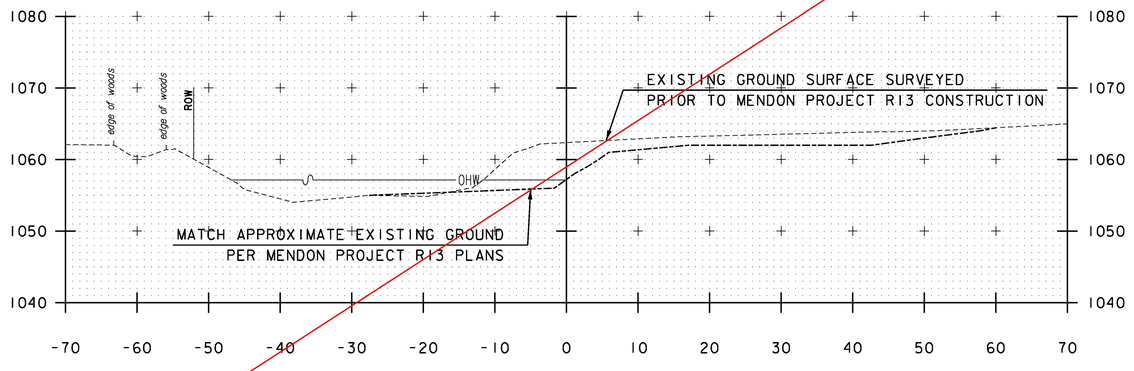

3+00.00

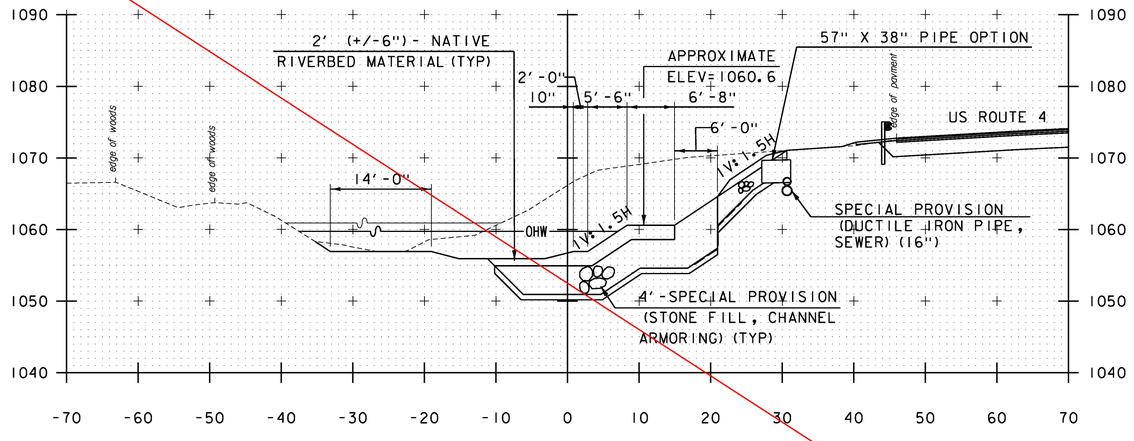

4+00.00

2+89.00 LIMIT OF WORK

STA. 2+89 TO STA. 4+50

SEE REVISED SECTIONS (SHEETS 53A - 60A)

NOTE: STATIONS AND ELEVATIONS ARE IN FEET

GREEN INTERNATIONAL AFFILIATES, INC.
CIVIL AND STRUCTURAL ENGINEERS

PROJECT NAME:	MENDON
PROJECT NUMBER:	ER 020-2(39)
FILE NAME: z13b188xsl.dgn	PLOT DATE: 11/13/2015
PROJECT LEADER: E. ATKINS	DRAWN BY: S. SOLLA
DESIGNED BY: M. BRADLEY	CHECKED BY: E. ATKINS
CROSS SECTION SHEET 1	SHEET 53 OF 72

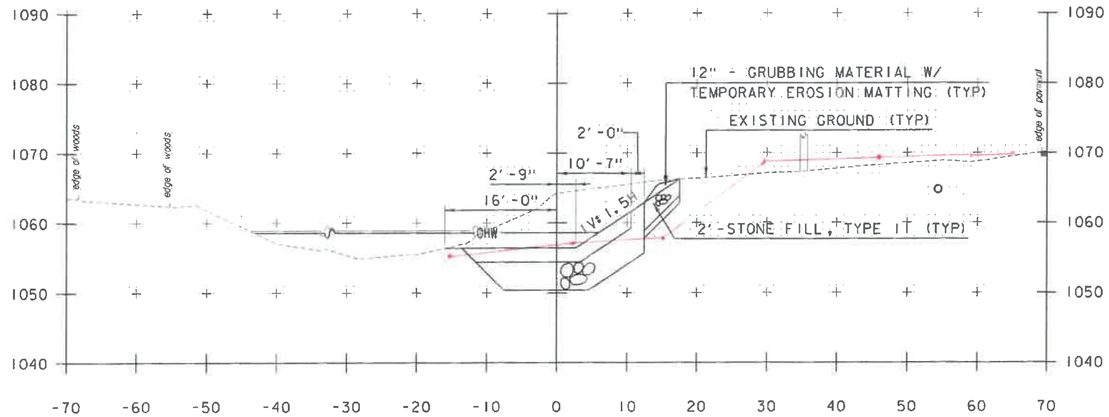

3+50.00

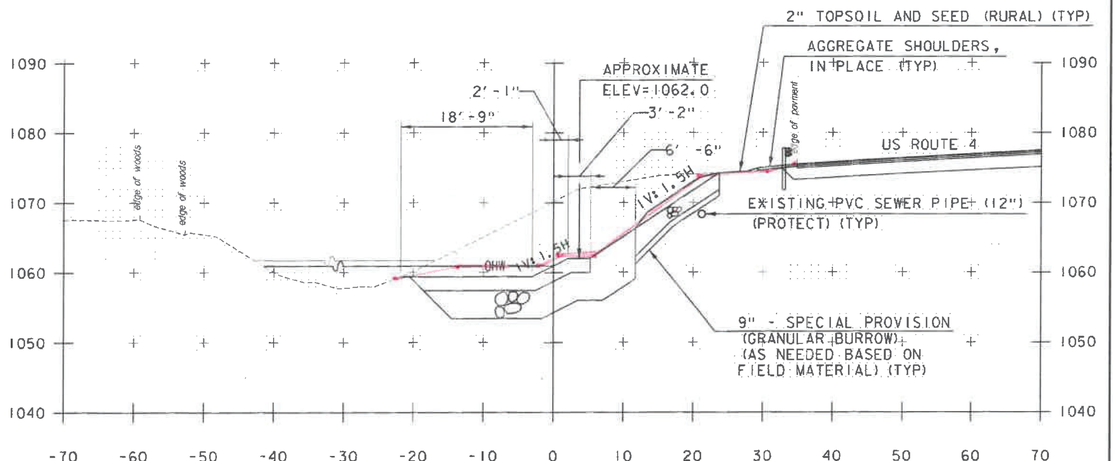

4+50.00

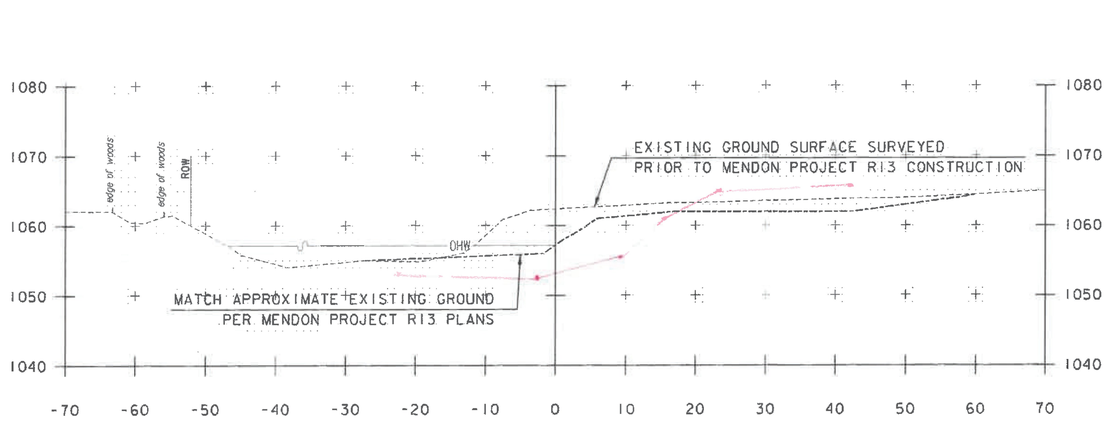

3+00.00

2+89.00 LIMIT OF WORK

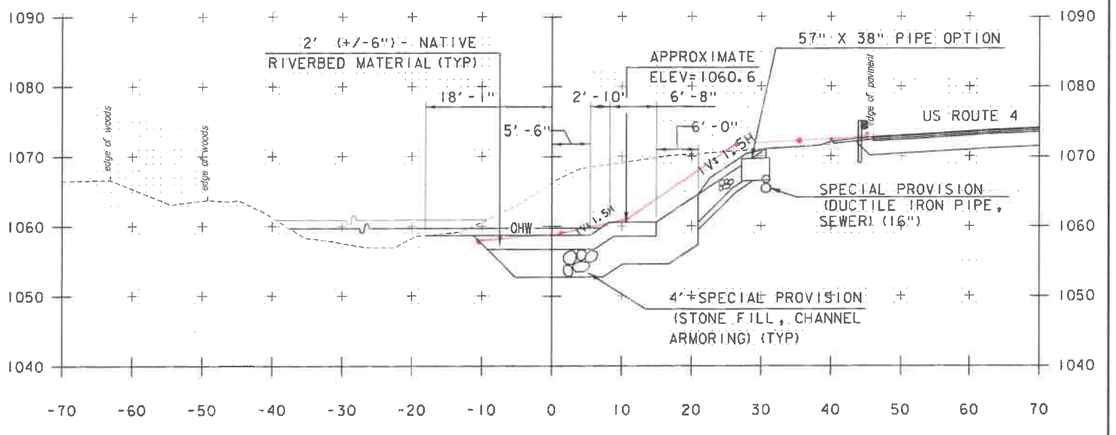

4+00.00

STA. 2+89 TO STA. 4+50

RECEIVED
JUL 12 2016
BY: .....

NOTE: STATIONS AND ELEVATIONS ARE IN FEET

GREEN INTERNATIONAL AFFILIATES, INC.
CIVIL AND STRUCTURAL ENGINEERS

PROJECT NAME:	MENDON
PROJECT NUMBER:	ER 020-2(39)
FILE NAME: z13b188xsl.dgn	PLOT DATE: 11/24/2015
PROJECT LEADER: E. ATKINS	DRAWN BY: S. SOLLA
DESIGNED BY: M. BRADLEY	CHECKED BY: E. ATKINS
CROSS SECTION SHEET 1	SHEET 53A OF 72

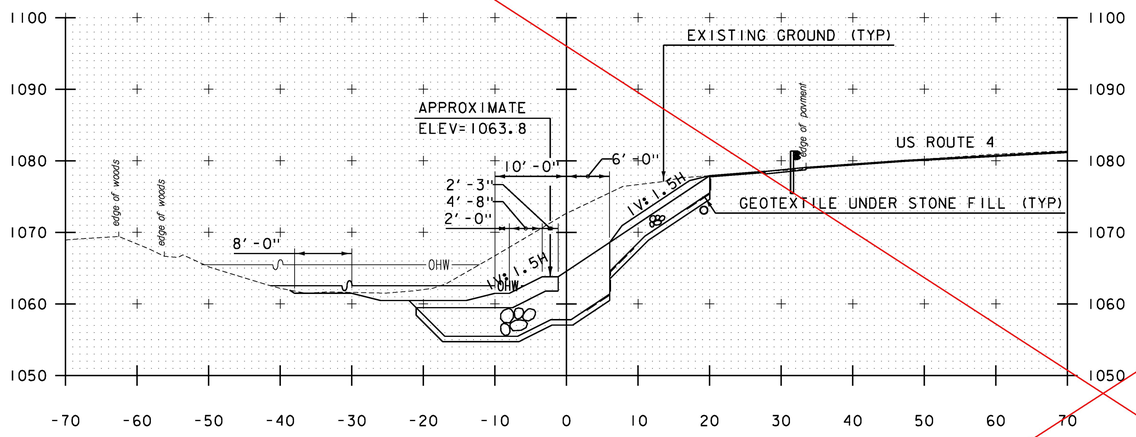

5+20.37 PT

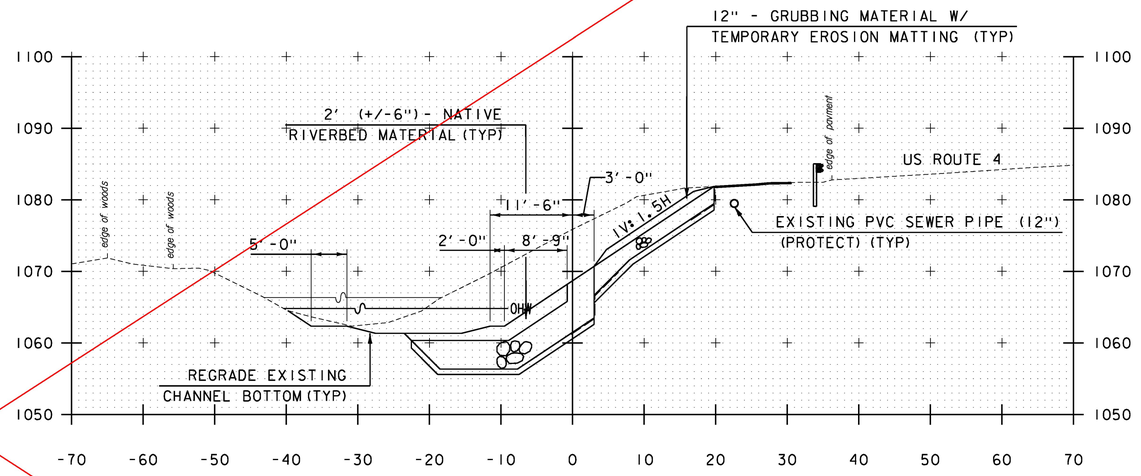

5+93.95 PC

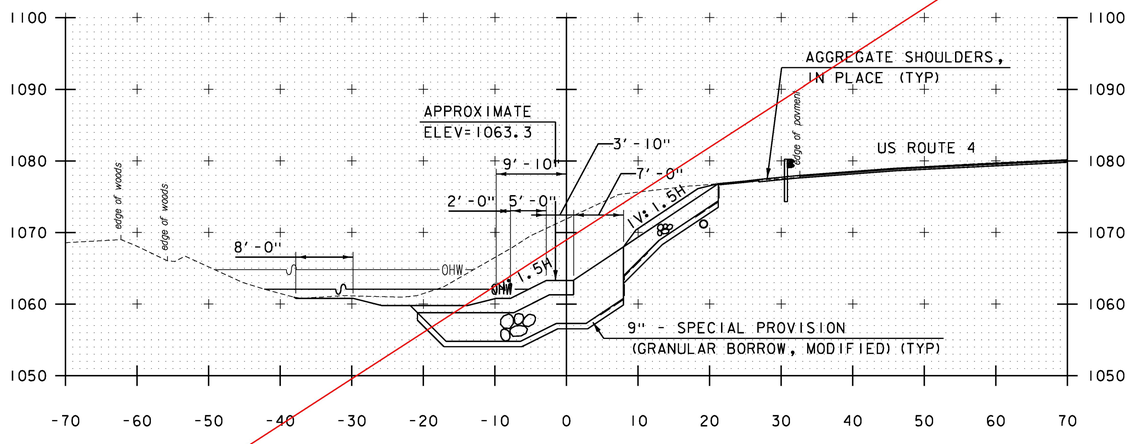

5+00.00

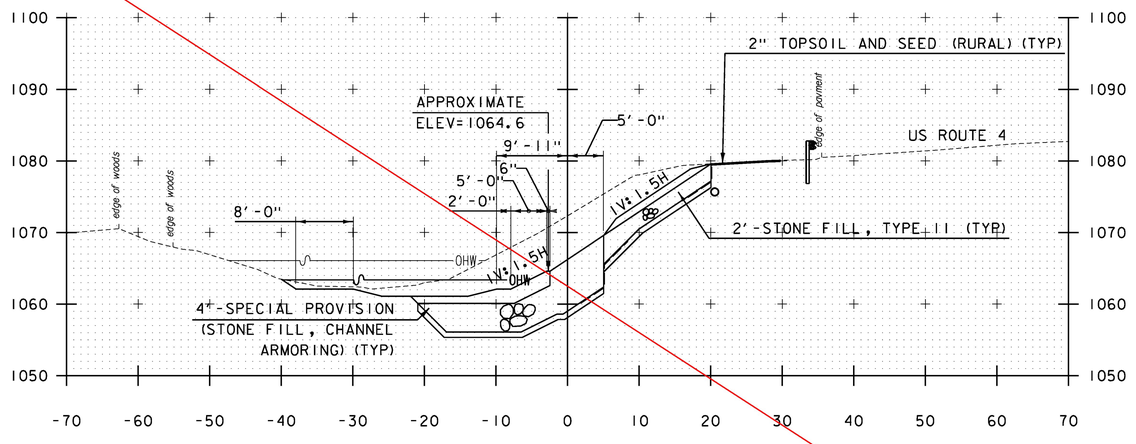

5+50.00

STA. 5+00 TO STA. 5+93.95

SEE REVISED SECTIONS (SHEETS 53A - 60A)

NOTE: STATIONS AND ELEVATIONS ARE IN FEET

GREEN INTERNATIONAL AFFILIATES, INC.
CIVIL AND STRUCTURAL ENGINEERS

PROJECT NAME: MENDON
PROJECT NUMBER: ER 020-2(39)

FILE NAME: z13b188xsl.dgn
PROJECT LEADER: E. ATKINS
DESIGNED BY: M. BRADLEY
CROSS SECTION SHEET 2

PLOT DATE: 11/13/2015
DRAWN BY: S. SOLLA
CHECKED BY: E. ATKINS
SHEET 54 OF 72

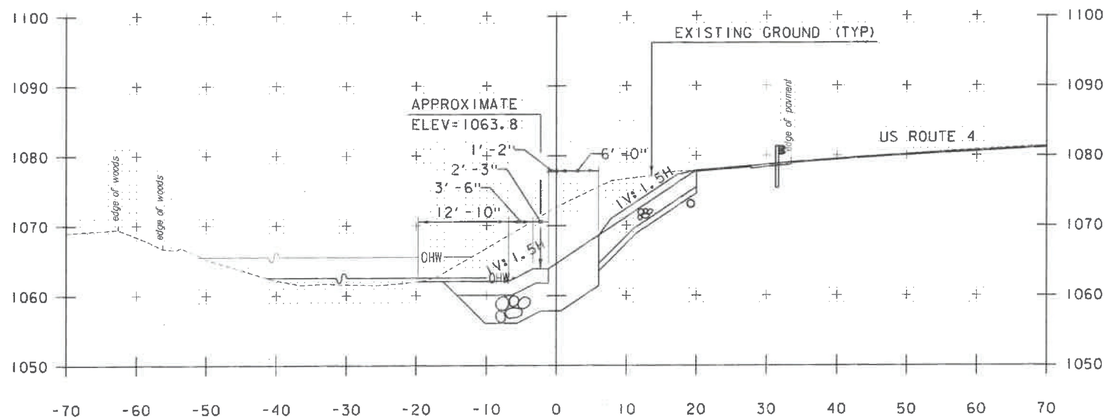

5+20.37 PT

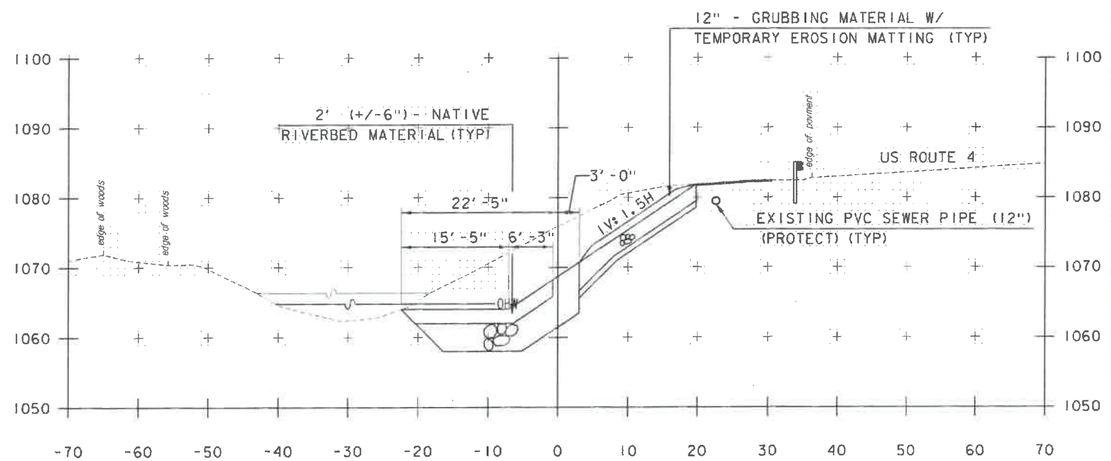

5+93.95 PC

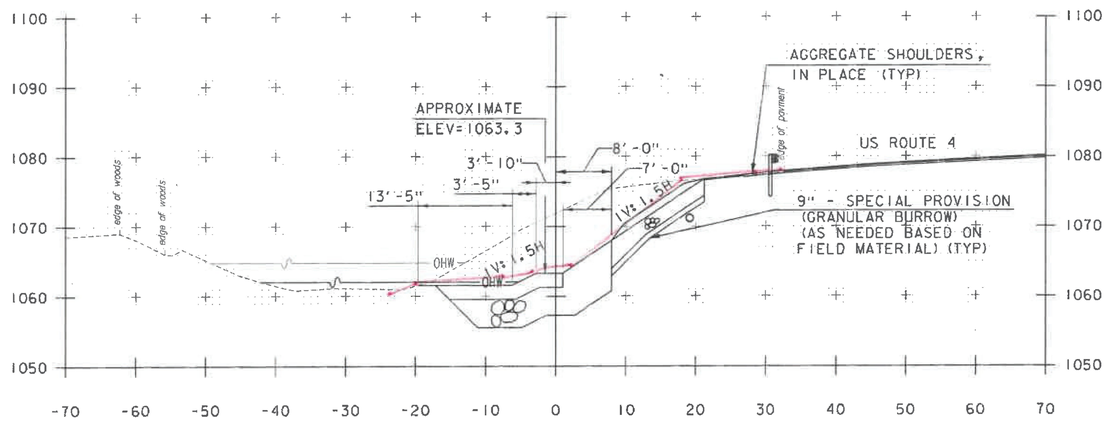

5+00.00

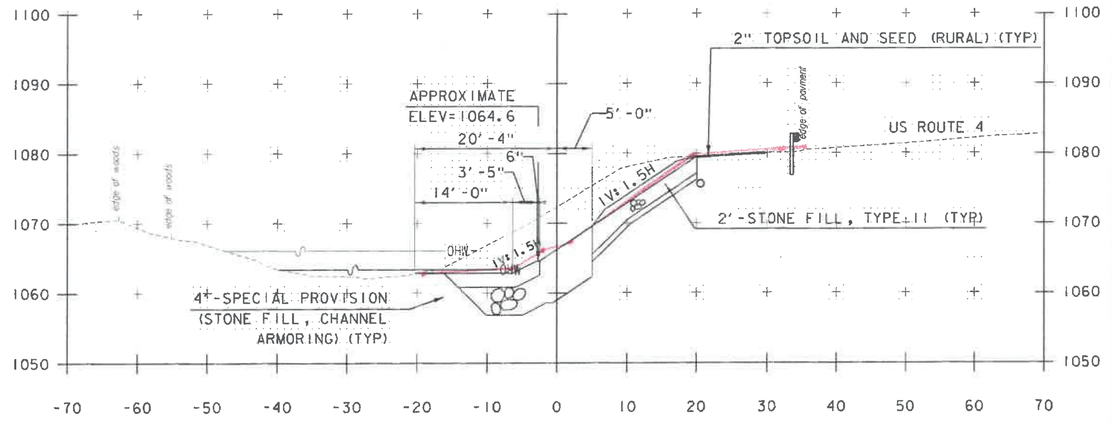

5+50.00

STA. 5+00 TO STA. 5+93.95

RECEIVED
JUL 12 2016
BY:.....

NOTE: STATIONS AND ELEVATIONS ARE IN FEET

GREEN INTERNATIONAL AFFILIATES, INC.
CIVIL AND STRUCTURAL ENGINEERS

PROJECT NAME: MENDON	
PROJECT NUMBER: ER 020-2(39)	
FILE NAME: z13b188xsl.dgn	PLOT DATE: 11/24/2015
PROJECT LEADER: E. ATKINS	DRAWN BY: S. SOLLA
DESIGNED BY: M. BRADLEY	CHECKED BY: E. ATKINS
CROSS SECTION SHEET 2	SHEET 54A OF 72

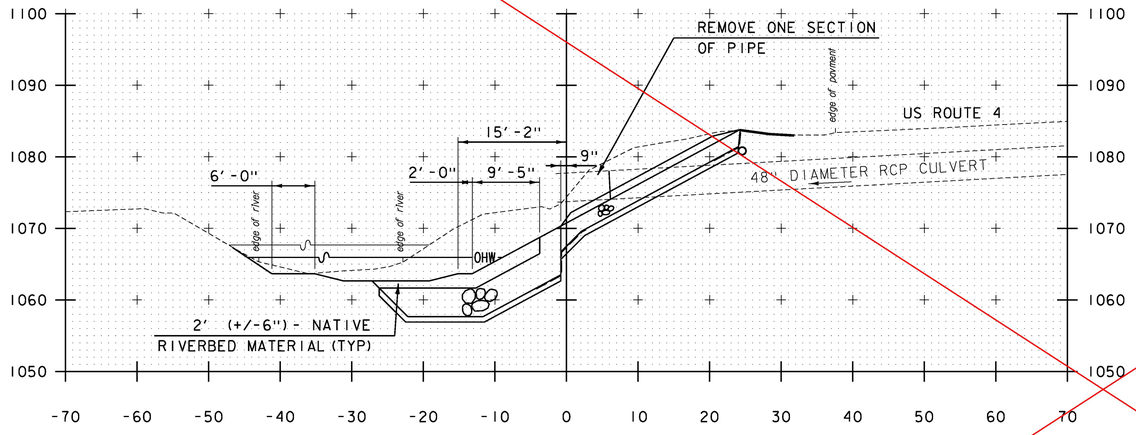

6+15.03, 48" DIA. RCP CULVERT
SKEWED AT 73°31'15.96"

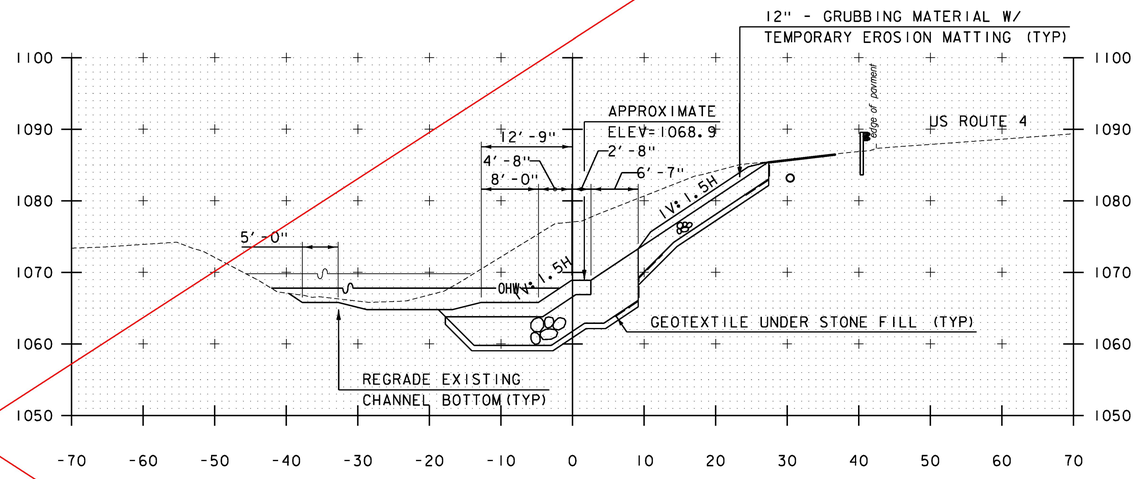

6+79.91 PT

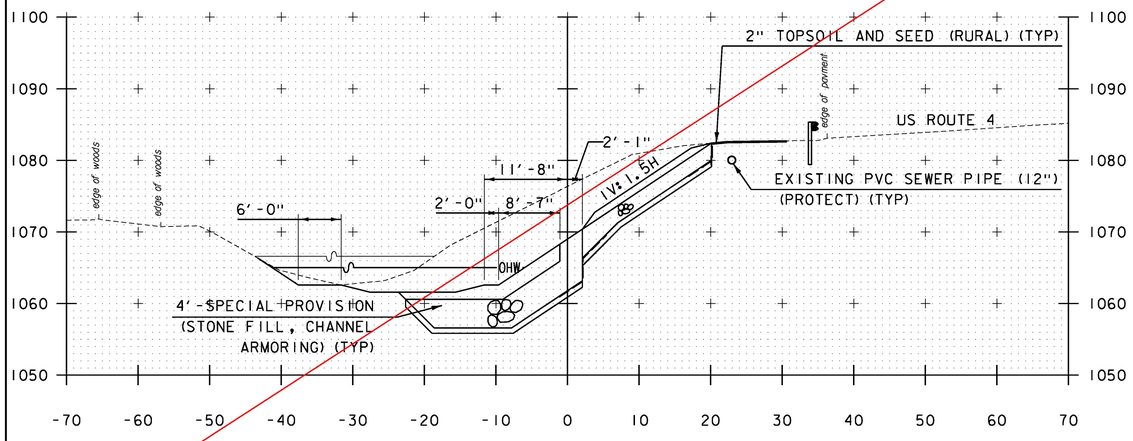

6+00.00

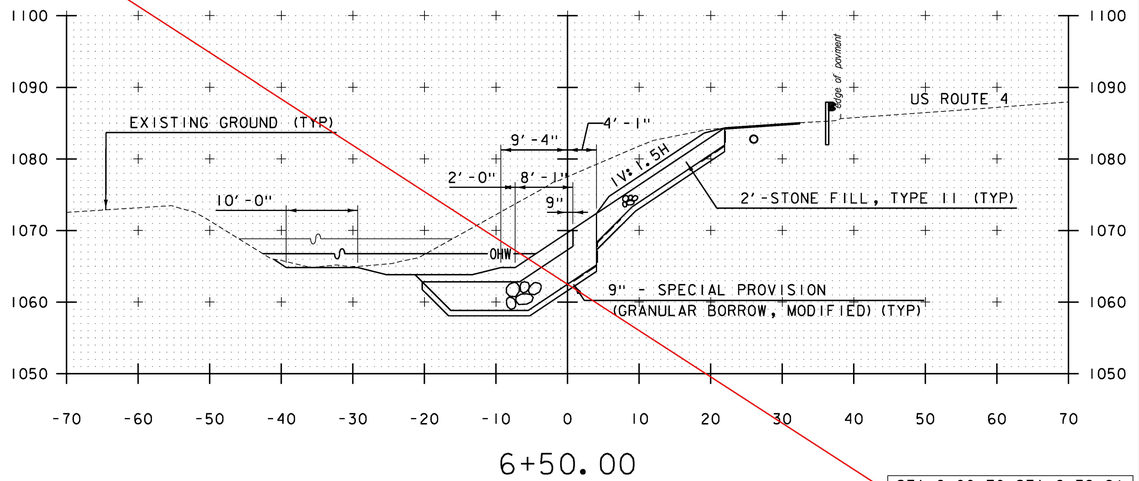

6+50.00

STA. 6+00 TO STA. 6+79.91

SEE REVISED SECTIONS (SHEETS 53A - 60A)

NOTE: STATIONS AND ELEVATIONS ARE IN FEET

GREEN INTERNATIONAL AFFILIATES, INC.
CIVIL AND STRUCTURAL ENGINEERS

PROJECT NAME: MENDON
PROJECT NUMBER: ER 020-2(39)

FILE NAME: z13b188xsl.dgn
PROJECT LEADER: E. ATKINS
DESIGNED BY: M. BRADLEY
CROSS SECTION SHEET 3

PLOT DATE: 11/13/2015
DRAWN BY: S. SOLLA
CHECKED BY: E. ATKINS
SHEET 55 OF 72

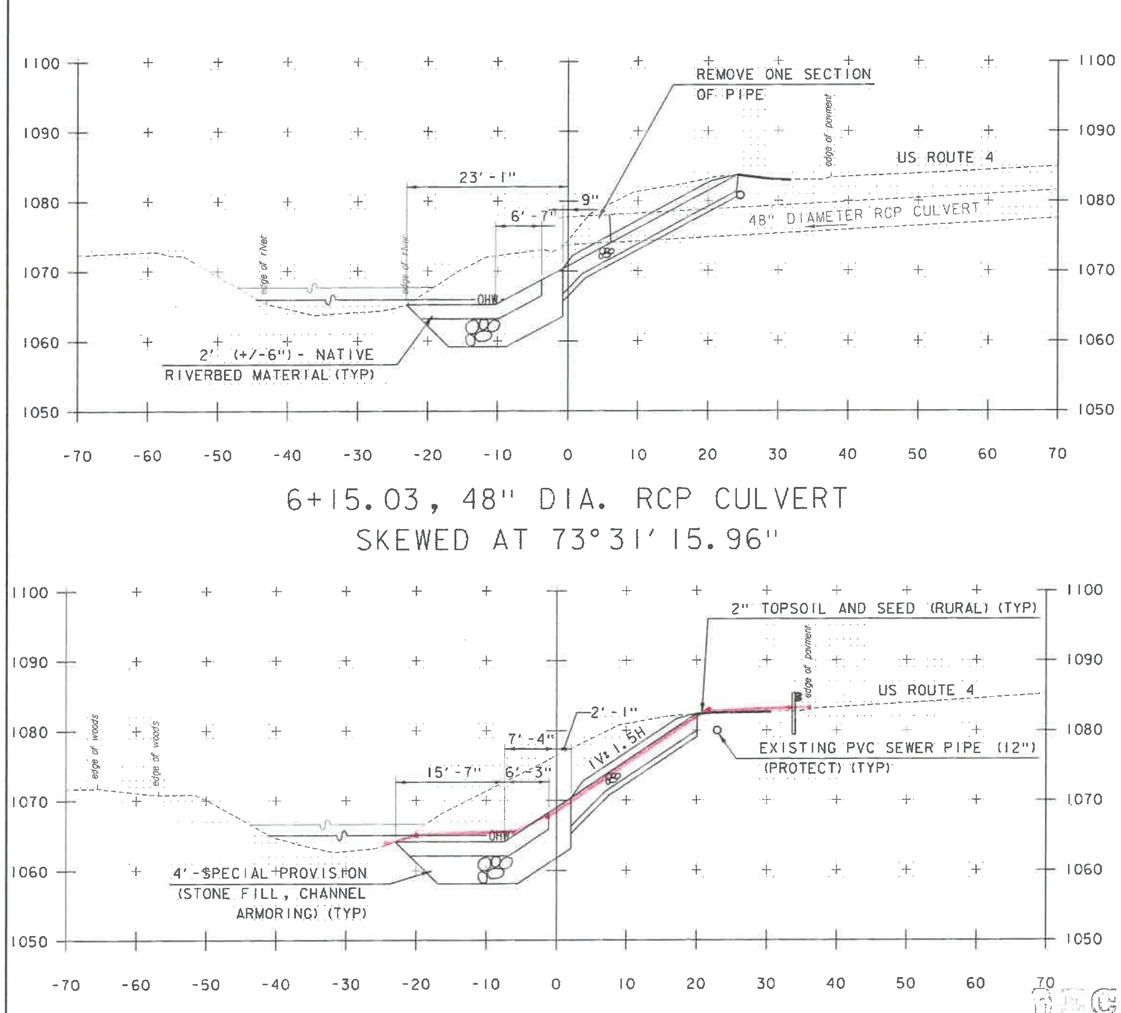

6+15.03, 48" DIA. RCP CULVERT
SKEWED AT 73°31'15.96"

6+00.00

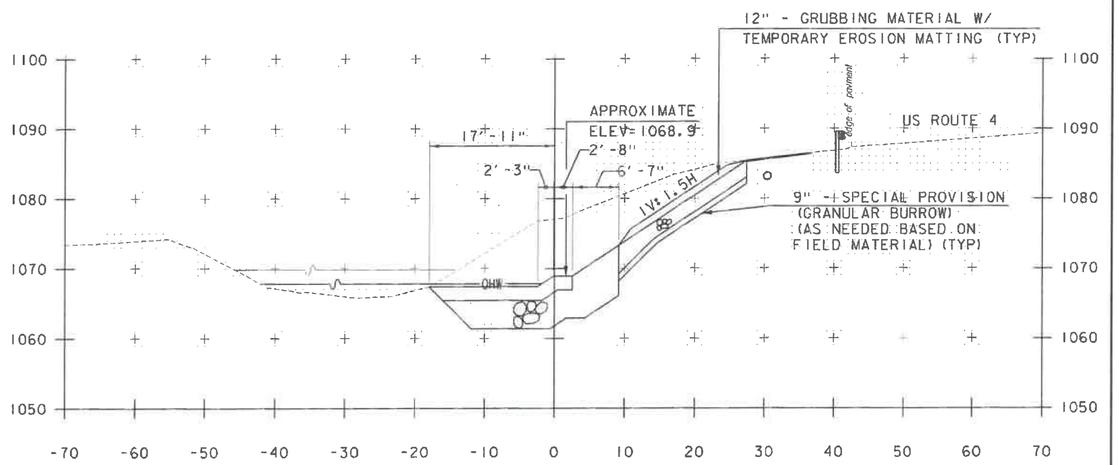

6+79.91 PT

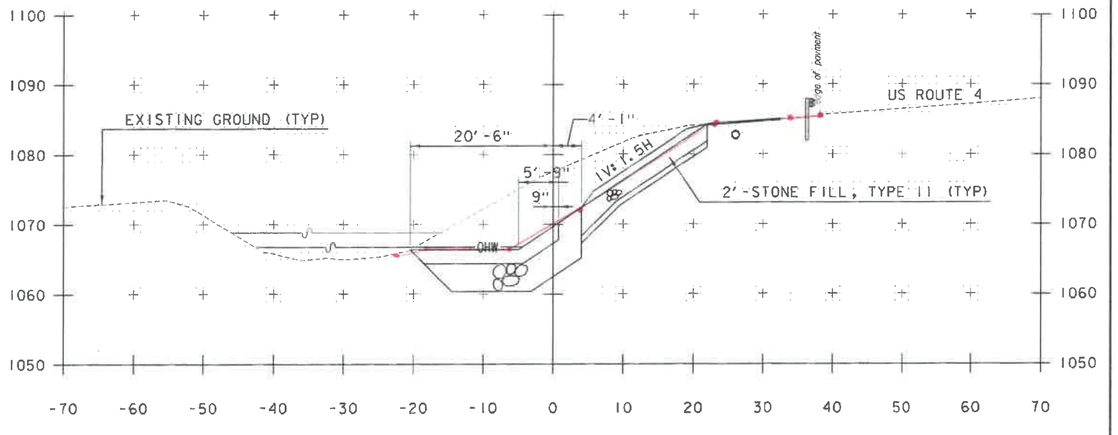

6+50.00

RECEIVED
JUL 12 2016
BY:.....

STA. 6+00 TO STA. 6+79.91

NOTE: STATIONS AND ELEVATIONS ARE IN FEET

GREEN INTERNATIONAL AFFILIATES, INC.
CIVIL AND STRUCTURAL ENGINEERS

PROJECT NAME: MENDON	
PROJECT NUMBER: ER 020-2(39)	
FILE NAME: z13b188xsl.dgn	PLOT DATE: 11/24/2015
PROJECT LEADER: E. ATKINS	DRAWN BY: S. SOLLA
DESIGNED BY: M. BRADLEY	CHECKED BY: E. ATKINS
CROSS SECTION SHEET 3	SHEET 55A OF 72

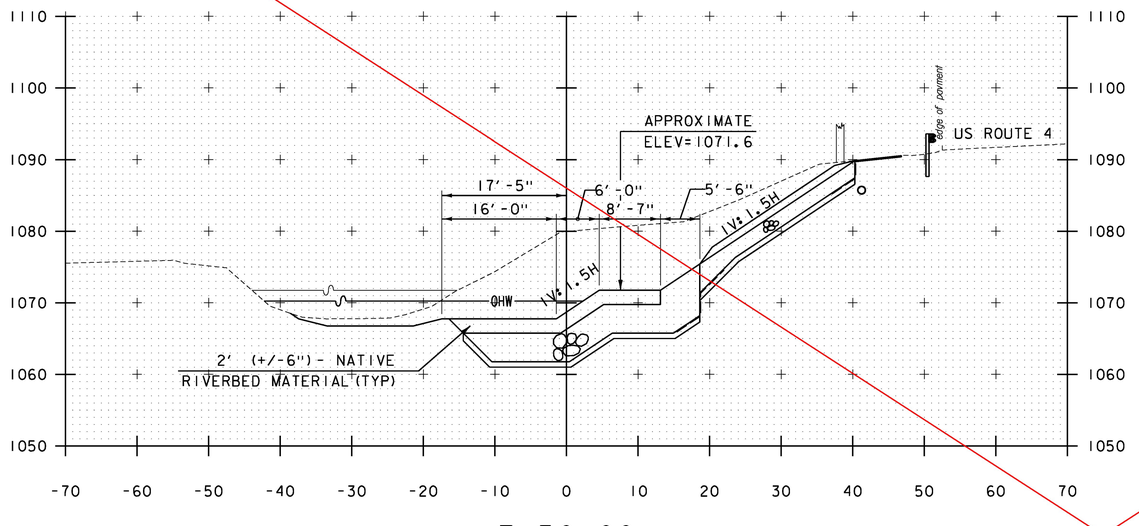

7+50.00

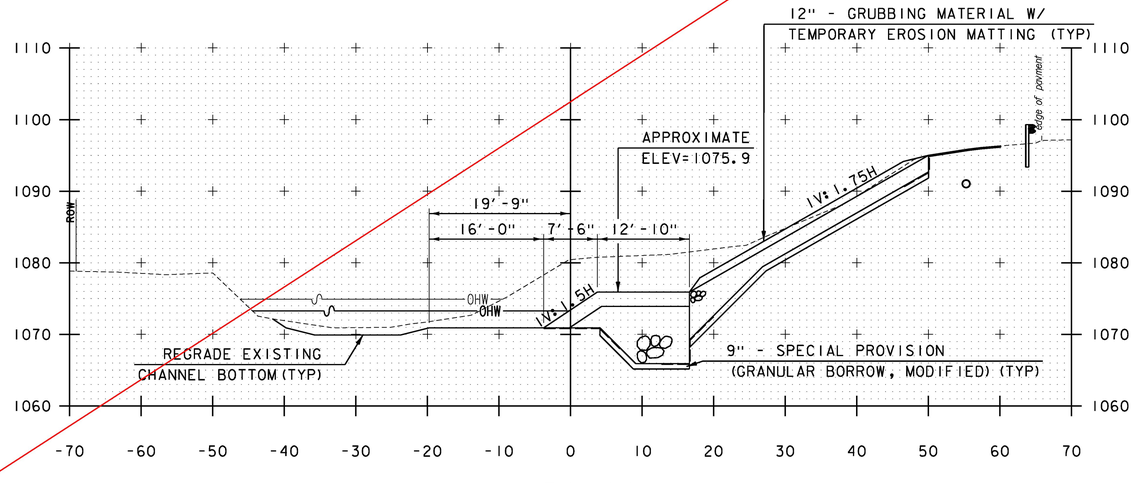

8+50.00

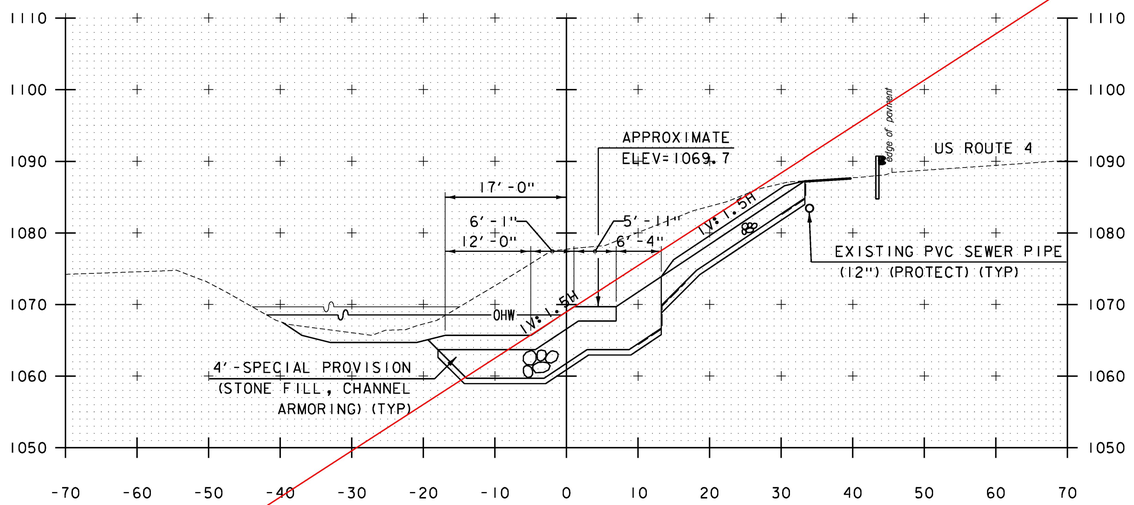

7+00.00

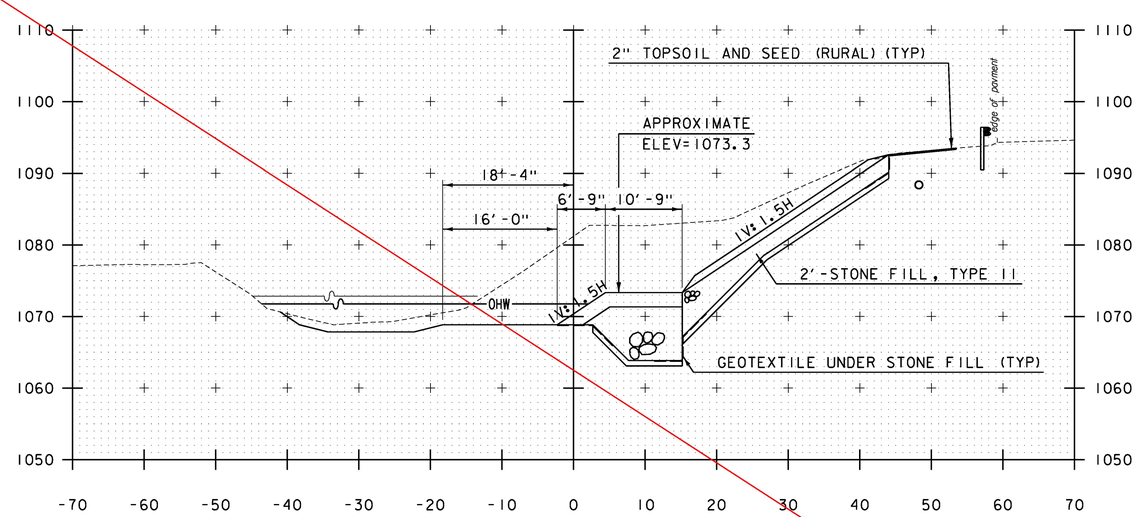

8+00.00

STA. 7+00 TO STA. 8+50

NOTE: STATIONS AND ELEVATIONS ARE IN FEET

SEE REVISED SECTIONS (SHEETS 53A - 60A)

GREEN INTERNATIONAL AFFILIATES, INC.
CIVIL AND STRUCTURAL ENGINEERS

PROJECT NAME: MENDON
PROJECT NUMBER: ER 020-2(39)

FILE NAME: z13b188xsl.dgn
PROJECT LEADER: E. ATKINS
DESIGNED BY: M. BRADLEY
CROSS SECTION SHEET 4

PLOT DATE: 11/13/2015
DRAWN BY: S. SOLLA
CHECKED BY: E. ATKINS
SHEET 56 OF 72

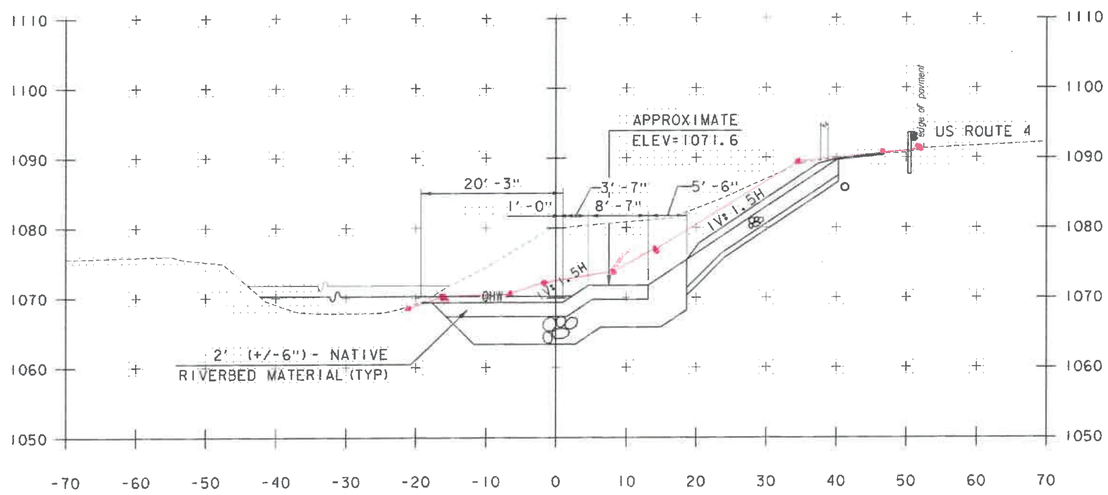

7+50.00

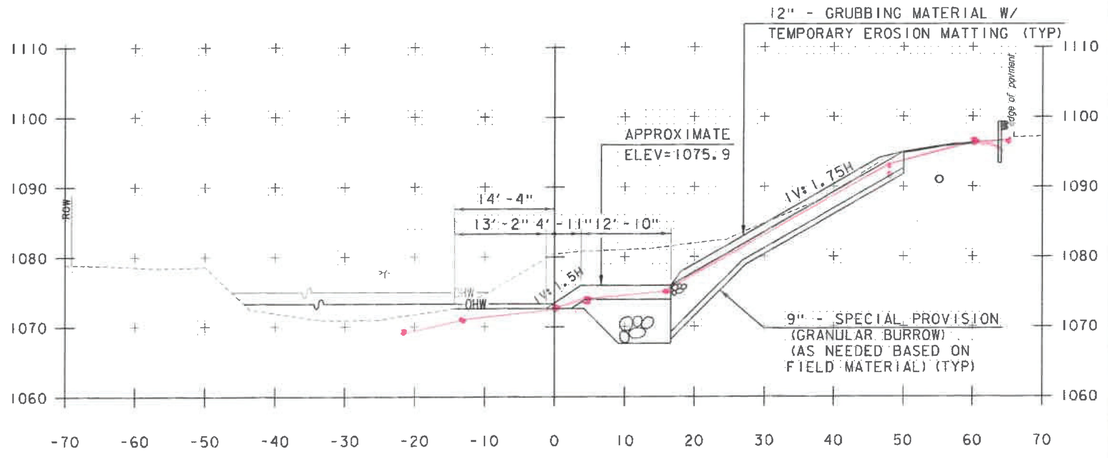

8+50.00

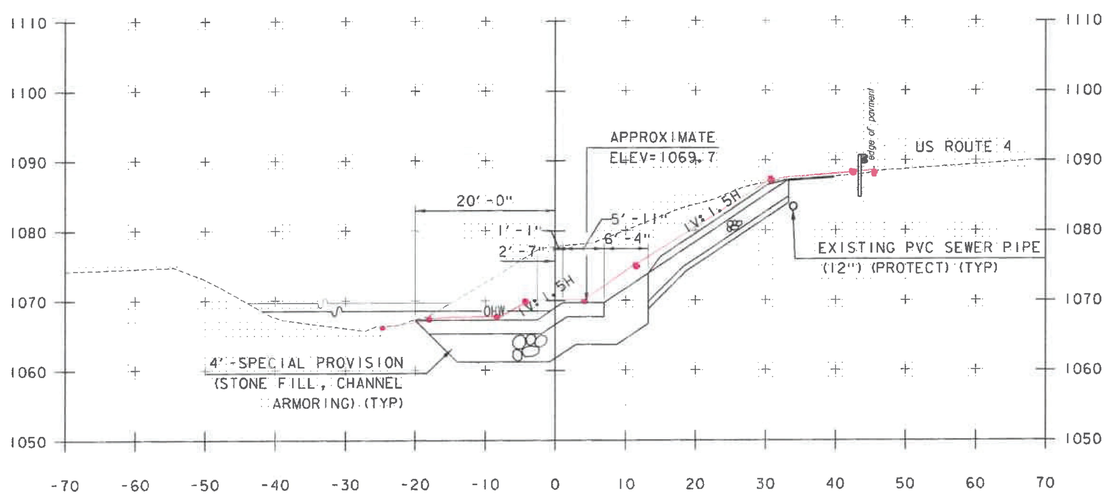

7+00.00

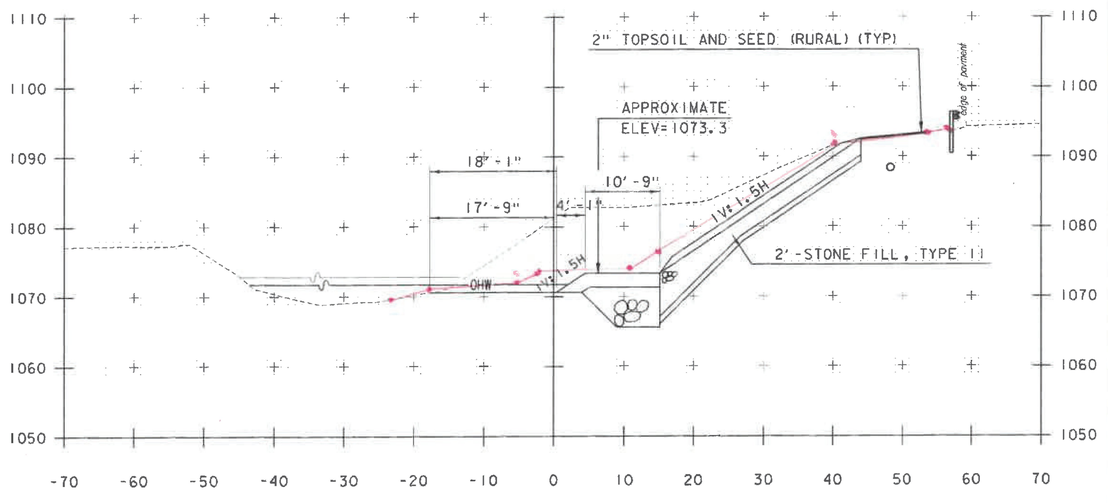

8+00.00

RECEIVED
JUL 12 2016
BY:.....

STA. 7+00 TO STA. 8+50

NOTE: STATIONS AND ELEVATIONS ARE IN FEET

GREEN INTERNATIONAL AFFILIATES, INC.
CIVIL AND STRUCTURAL ENGINEERS

PROJECT NAME: MENDON	
PROJECT NUMBER: ER 020-2(39)	
FILE NAME: z13bi88xsl.dgn	PLOT DATE: 11/24/2015
PROJECT LEADER: E. ATKINS	DRAWN BY: S. SOLLA
DESIGNED BY: M. BRADLEY	CHECKED BY: E. ATKINS
CROSS SECTION SHEET 4	SHEET 56A OF 72

NOTE:
* CONTRACTOR SHALL DESIGN AND PROVIDE TEMPORARY SUPPORT OF EXCAVATION UNLESS OTHERWISE DIRECTED BY THE ENGINEER. COST ASSOCIATED WITH TEMPORARY SUPPORT WILL BE CONSIDERED INCIDENTAL TO ITEM 203.17 UNCLASSIFIED EXCAVATION.

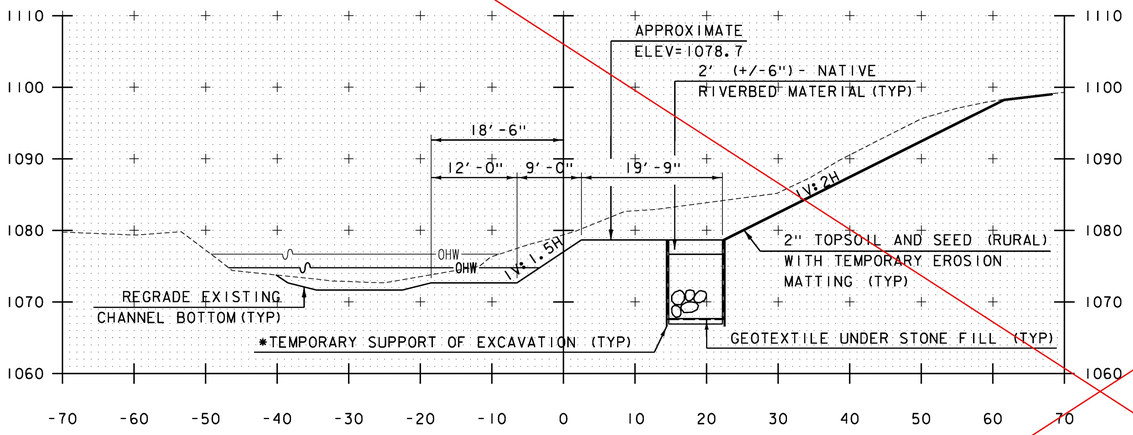

9+00.00

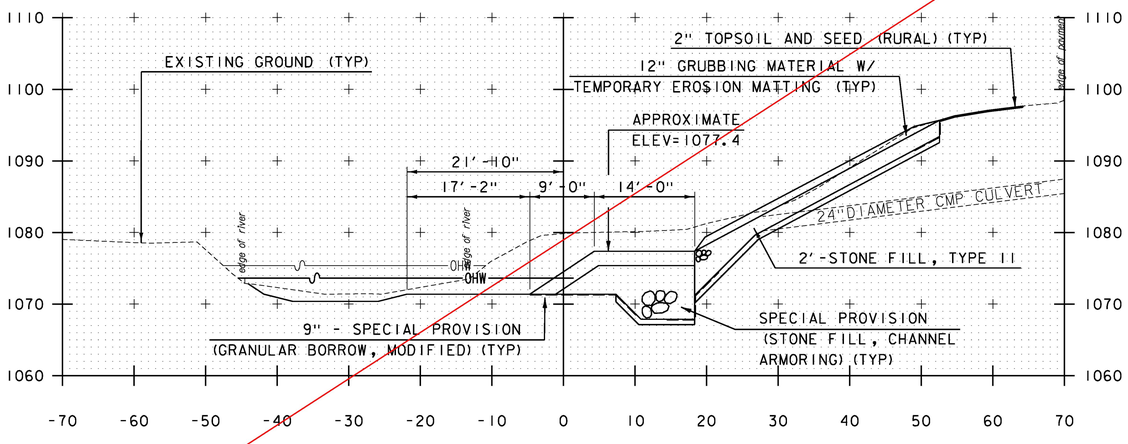

8+65.65, 24" DIA. CMP CULVERT
82°06'33.48"

SEE REVISED SECTIONS (SHEETS 53A - 60A)

NOTE: STATIONS AND ELEVATIONS ARE IN FEET

STA. 8+65.65 TO STA. 9+00

PROJECT NAME: MENDON
PROJECT NUMBER: ER 020-2(39)

FILE NAME: z13b188xsl.dgn
PROJECT LEADER: E. ATKINS
DESIGNED BY: M. BRADLEY
CROSS SECTION SHEET 5

PLOT DATE: 11/13/2015
DRAWN BY: S. SOLLA
CHECKED BY: E. ATKINS
SHEET 57 OF 72

GREEN INTERNATIONAL AFFILIATES, INC.
CIVIL AND STRUCTURAL ENGINEERS

NOTE:
* CONTRACTOR SHALL DESIGN AND PROVIDE TEMPORARY SUPPORT OF EXCAVATION UNLESS OTHERWISE DIRECTED BY THE ENGINEER. COST ASSOCIATED WITH TEMPORARY SUPPORT WILL BE CONSIDERED INCIDENTAL TO ITEM 203.17 UNCLASSIFIED EXCAVATION.

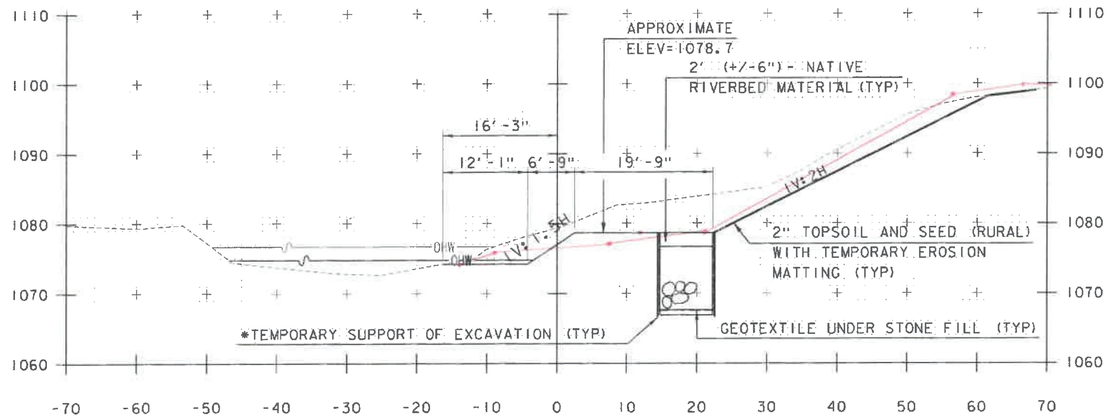

9+00.00

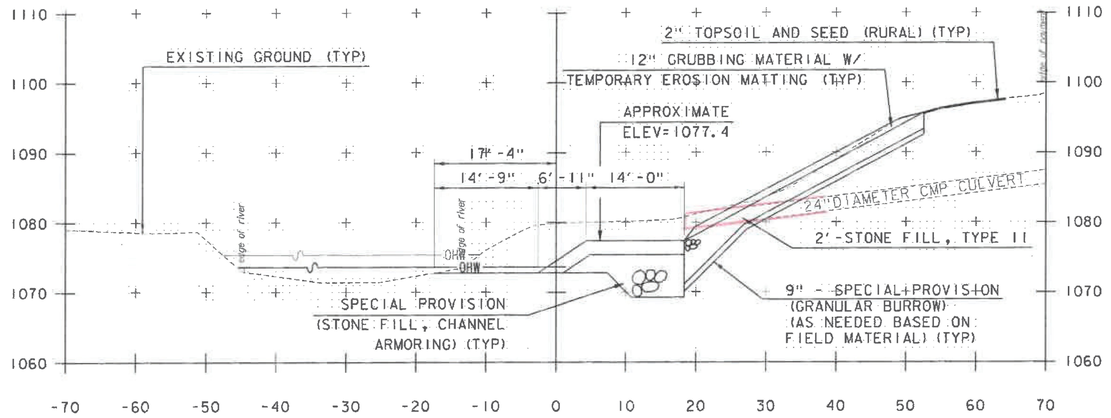

8+65.65, 24" DIA. CMP CULVERT
82°06'33.48"

RECEIVED
JUL 12 2016
BY:.....

NOTE: STATIONS AND ELEVATIONS ARE IN FEET

STA. 8+65.65 TO STA. 9+00

PROJECT NAME: MENDON
PROJECT NUMBER: ER 020-2(39)

FILE NAME: z13b188xsl.dgn
PROJECT LEADER: E. ATKINS
DESIGNED BY: M. BRADLEY
CROSS SECTION SHEET 5

PLOT DATE: 11/24/2015
DRAWN BY: S. SOLLA
CHECKED BY: E. ATKINS
SHEET 57A OF 72

GREEN INTERNATIONAL AFFILIATES, INC.
CIVIL AND STRUCTURAL ENGINEERS

NOTE:
* CONTRACTOR SHALL DESIGN AND PROVIDE TEMPORARY SUPPORT OF EXCAVATION UNLESS OTHERWISE DIRECTED BY THE ENGINEER. COST ASSOCIATED WITH TEMPORARY SUPPORT WILL BE CONSIDERED INCIDENTAL TO ITEM 203.17 UNCLASSIFIED EXCAVATION.

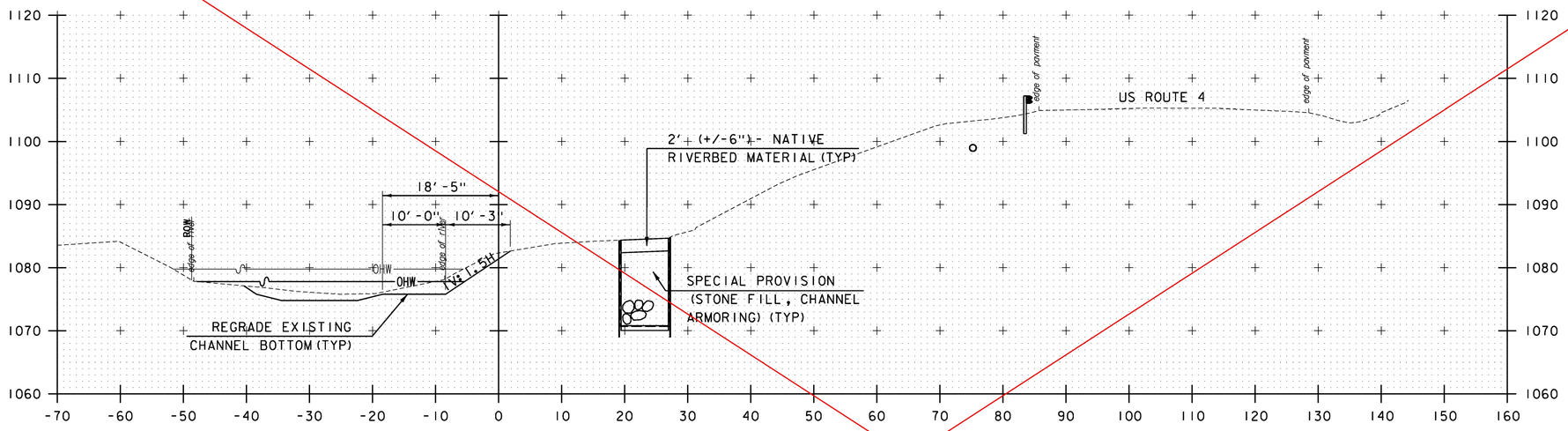

10+00.00

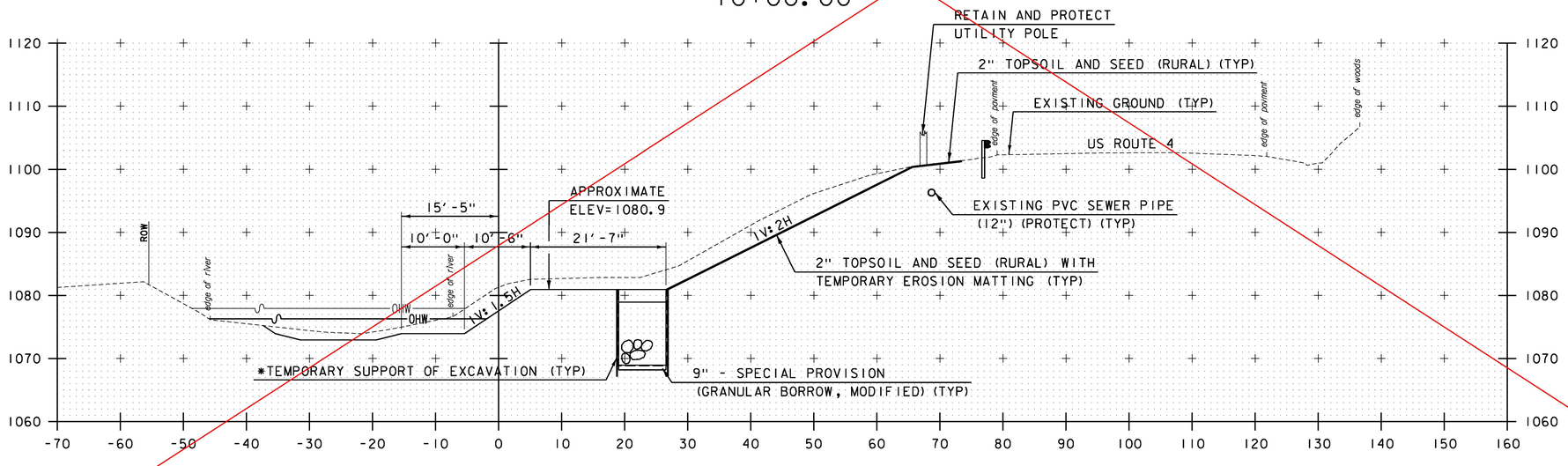

9+50.00

STA. 9+50 TO STA. 10+00

SEE REVISED SECTIONS (SHEETS 53A - 60A)

NOTE: STATIONS AND ELEVATIONS ARE IN FEET

GREEN INTERNATIONAL AFFILIATES, INC.
CIVIL AND STRUCTURAL ENGINEERS

PROJECT NAME: MENDON	
PROJECT NUMBER: ER 020-2(39)	
FILE NAME: z13b188xsl.dgn	PLOT DATE: 11/13/2015
PROJECT LEADER: E. ATKINS	DRAWN BY: S. SOLLA
DESIGNED BY: M. BRADLEY	CHECKED BY: E. ATKINS
CROSS SECTION SHEET 6	SHEET 58 OF 72

NOTE:
* CONTRACTOR SHALL DESIGN AND PROVIDE TEMPORARY SUPPORT OF EXCAVATION UNLESS OTHERWISE DIRECTED BY THE ENGINEER. COST ASSOCIATED WITH TEMPORARY SUPPORT WILL BE CONSIDERED INCIDENTAL TO ITEM 203.17 UNCLASSIFIED EXCAVATION.

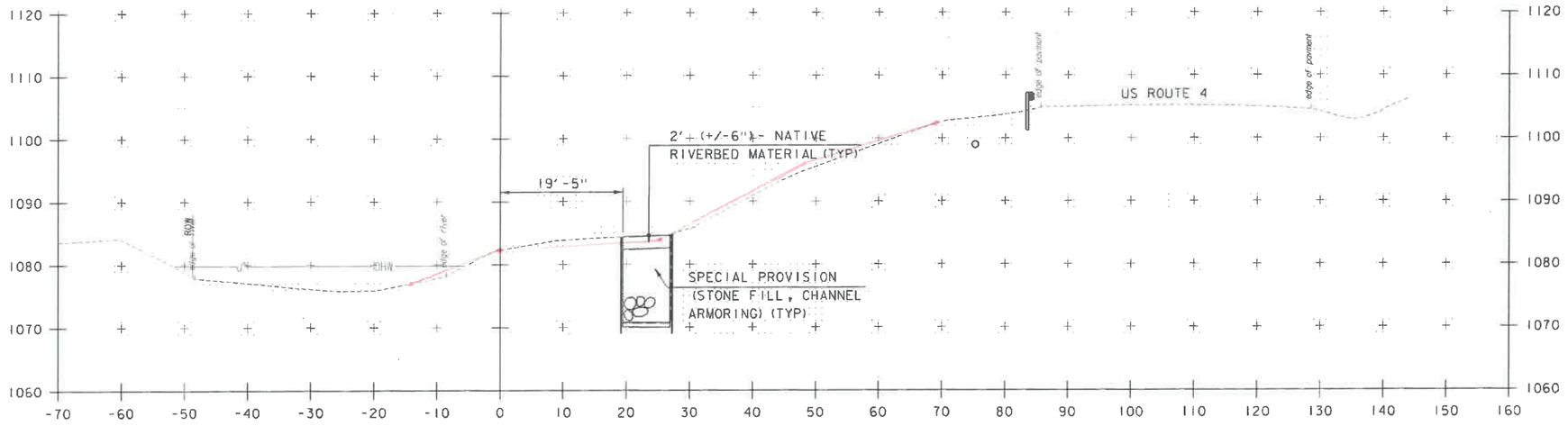

10+00.00

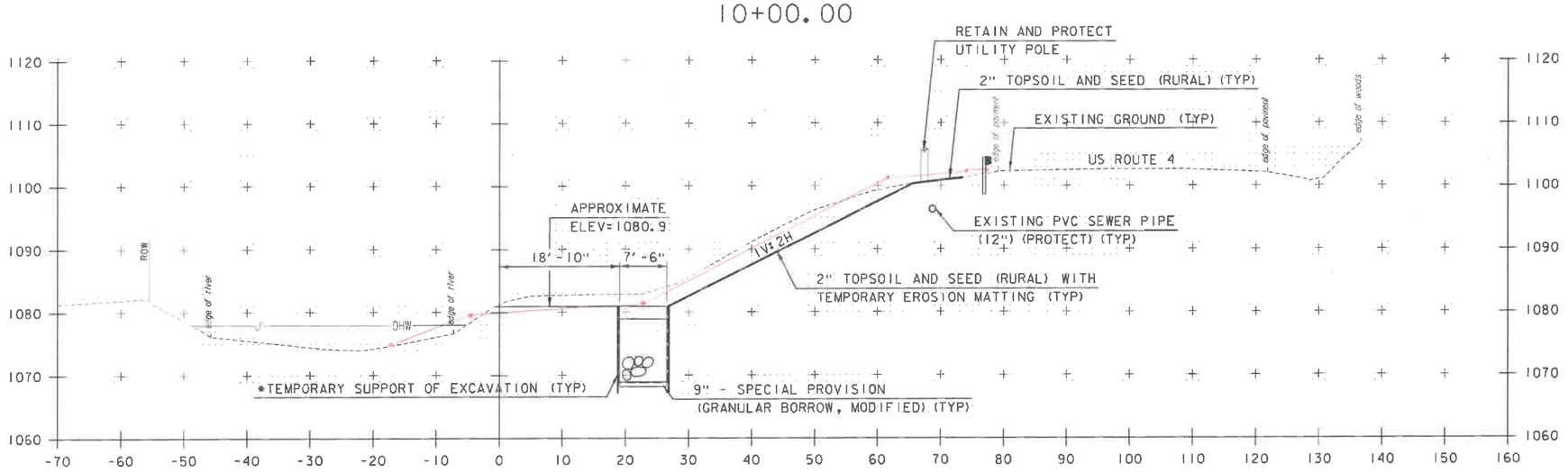

9+50.00

RECEIVED
JUL 26 2015
BY: .....

NOTE: STATIONS AND ELEVATIONS ARE IN FEET

GREEN INTERNATIONAL AFFILIATES, INC.
CIVIL AND STRUCTURAL ENGINEERS

STA. 9+50 TO STA. 10+00

PROJECT NAME: MENDON
PROJECT NUMBER: ER 020-2(39)

FILE NAME: z13b188xsl.dgn
PROJECT LEADER: E. ATKINS
DESIGNED BY: M. BRADLEY
CROSS SECTION SHEET 6

PLOT DATE: 11/24/2015
DRAWN BY: S. SOLLA
CHECKED BY: E. ATKINS
SHEET 58A OF 72

NOTE:
* CONTRACTOR SHALL DESIGN AND PROVIDE TEMPORARY SUPPORT OF EXCAVATION UNLESS OTHERWISE DIRECTED BY THE ENGINEER. COST ASSOCIATED WITH TEMPORARY SUPPORT WILL BE CONSIDERED INCIDENTAL TO ITEM 203.17 UNCLASSIFIED EXCAVATION.

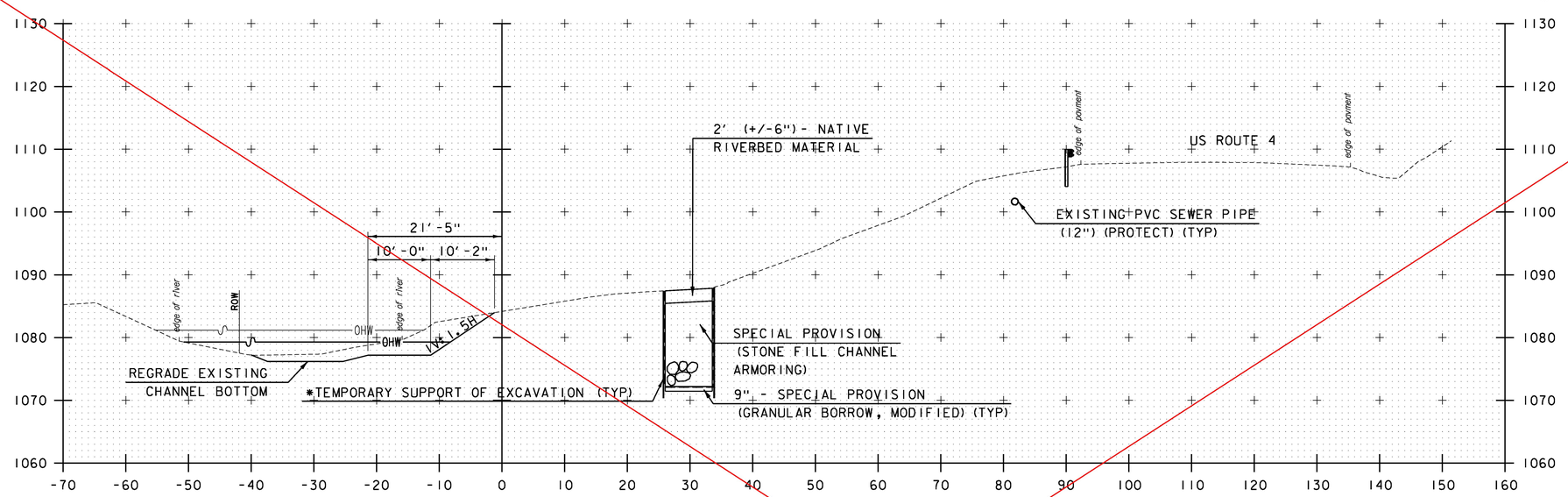

10+50.00

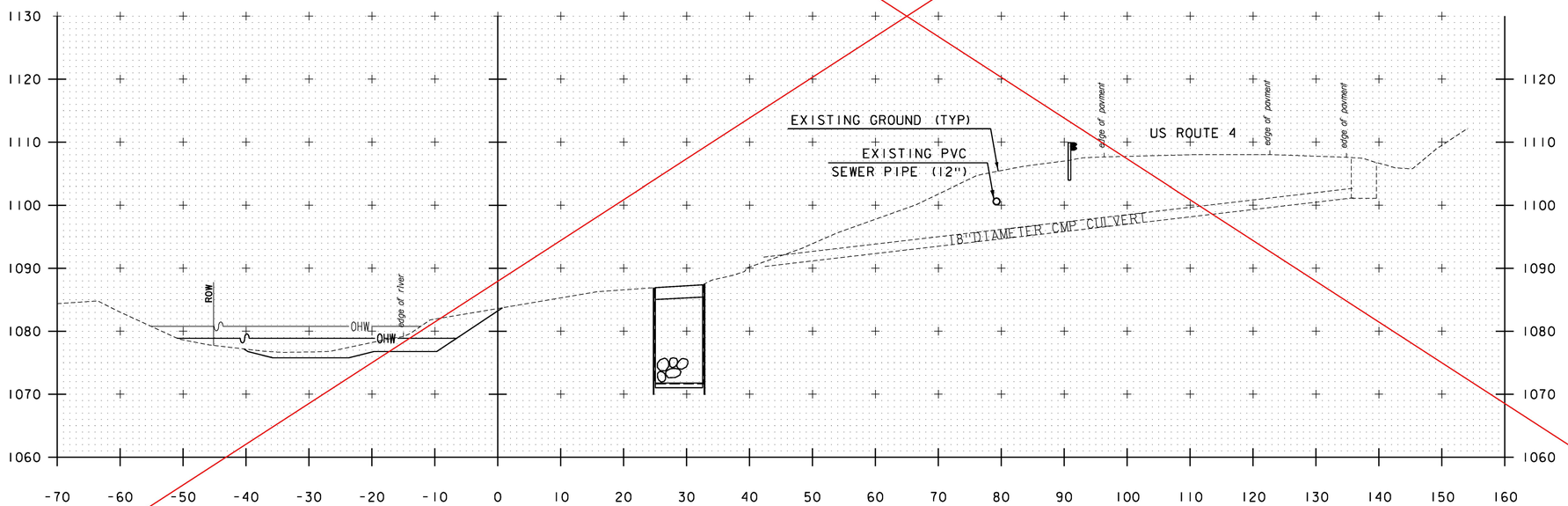

10+35.68, 18" DIA. 18" CMP CULVERT SKEWED AT 81°49'14.88"

SEE REVISED SECTIONS (SHEETS 53A - 60A)

STA. 10+35.68 TO STA. 10+50

NOTE: STATIONS AND ELEVATIONS ARE IN FEET

GREEN INTERNATIONAL AFFILIATES, INC.
CIVIL AND STRUCTURAL ENGINEERS

PROJECT NAME: MENDON
PROJECT NUMBER: ER 020-2(39)

FILE NAME: zl3bl88xsl.dgn
PROJECT LEADER: E. ATKINS
DESIGNED BY: M. BRADLEY
CROSS SECTION SHEET 7

PLOT DATE: 11/13/2015
DRAWN BY: S. SOLLA
CHECKED BY: E. ATKINS
SHEET 59 OF 72

NOTE:
* CONTRACTOR SHALL DESIGN AND PROVIDE TEMPORARY SUPPORT OF EXCAVATION UNLESS OTHERWISE DIRECTED BY THE ENGINEER. COST ASSOCIATED WITH TEMPORARY SUPPORT WILL BE CONSIDERED INCIDENTAL TO ITEM 203.17 UNCLASSIFIED EXCAVATION.

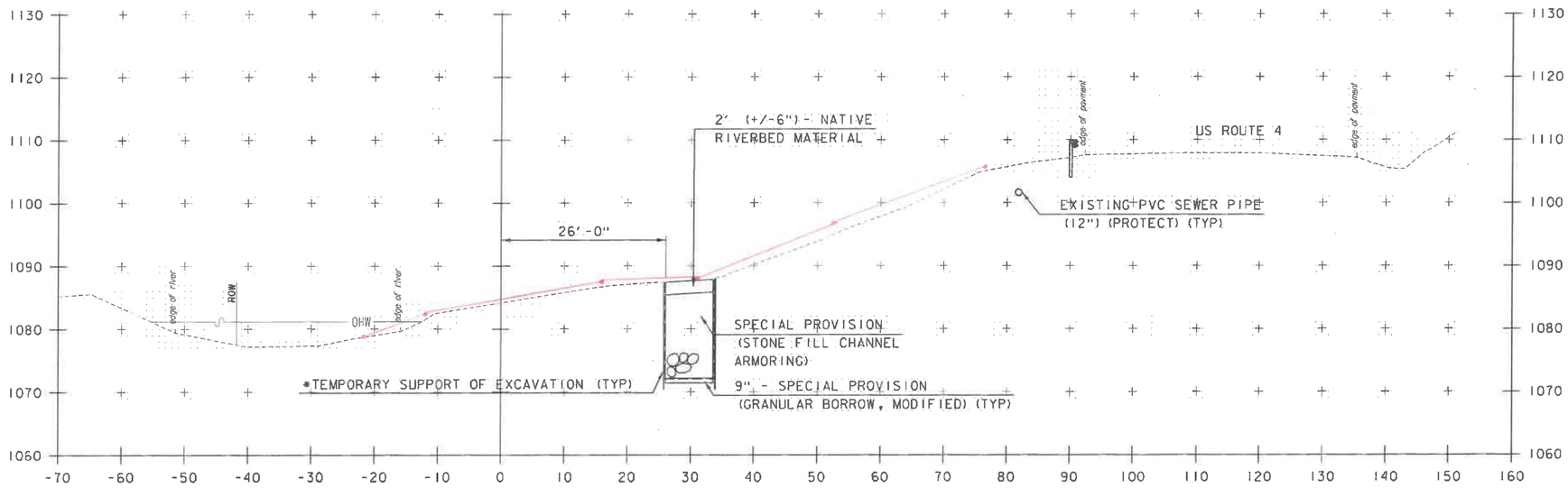

10+50.00

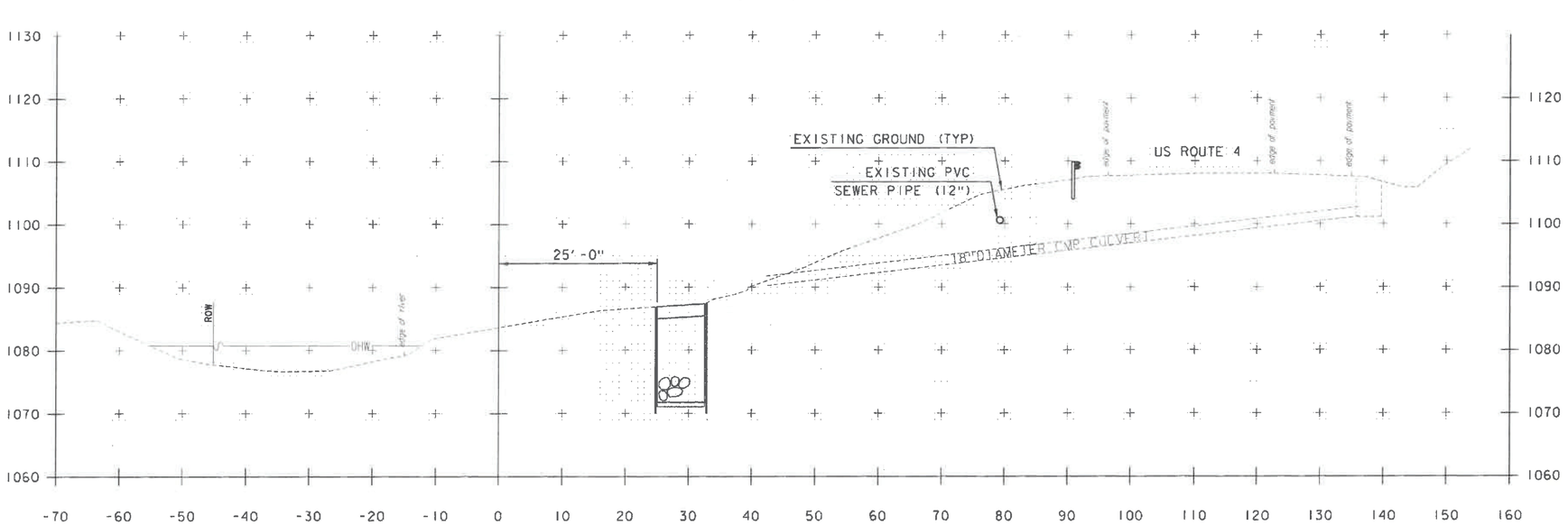

10+35.68, 18" DIA. 18" CMP CULVERT
SKEWED AT 81° 49' 14.88"

RECEIVED
JUL 26 2016
BY: .....

STA. 10+35.68 TO STA. 10+50

NOTE: STATIONS AND ELEVATIONS ARE IN FEET

GREEN INTERNATIONAL AFFILIATES, INC.
CIVIL AND STRUCTURAL ENGINEERS

PROJECT NAME: MENDON	
PROJECT NUMBER: ER 020-2(39)	
FILE NAME: z13bi88xsl.dgn	PLOT DATE: 11/24/2015
PROJECT LEADER: E. ATKINS	DRAWN BY: S. SOLLA
DESIGNED BY: M. BRADLEY	CHECKED BY: E. ATKINS
CROSS SECTION SHEET 7	SHEET 59A OF 72

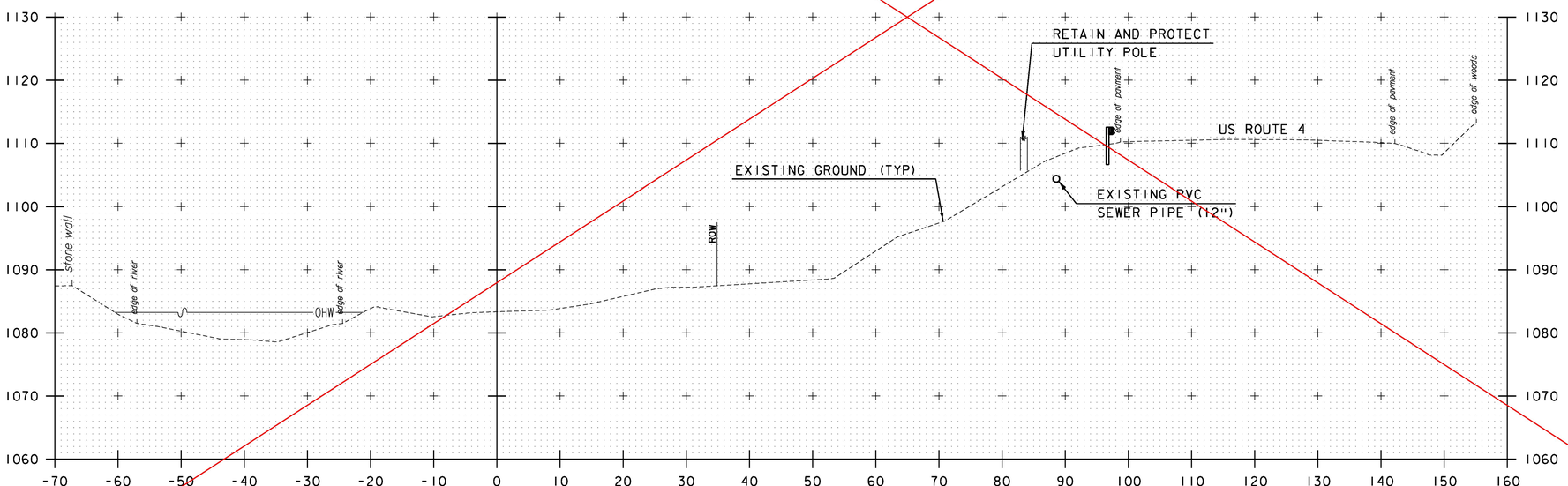

11+00.00

10+75.00 LIMIT OF WORK

SEE REVISED SECTIONS (SHEETS 53A - 60A)

NOTE: STATIONS AND ELEVATIONS ARE IN FEET

GREEN INTERNATIONAL AFFILIATES, INC.
CIVIL AND STRUCTURAL ENGINEERS

STA. 10+75 TO 11+00

PROJECT NAME: MENDON
PROJECT NUMBER: ER 020-2(39)

FILE NAME: z13b188xsl.dgn
PROJECT LEADER: E. ATKINS
DESIGNED BY: M. BRADLEY
CROSS SECTION SHEET 8

PLOT DATE: 11/13/2015
DRAWN BY: S. SOLLA
CHECKED BY: E. ATKINS
SHEET 60 OF 72

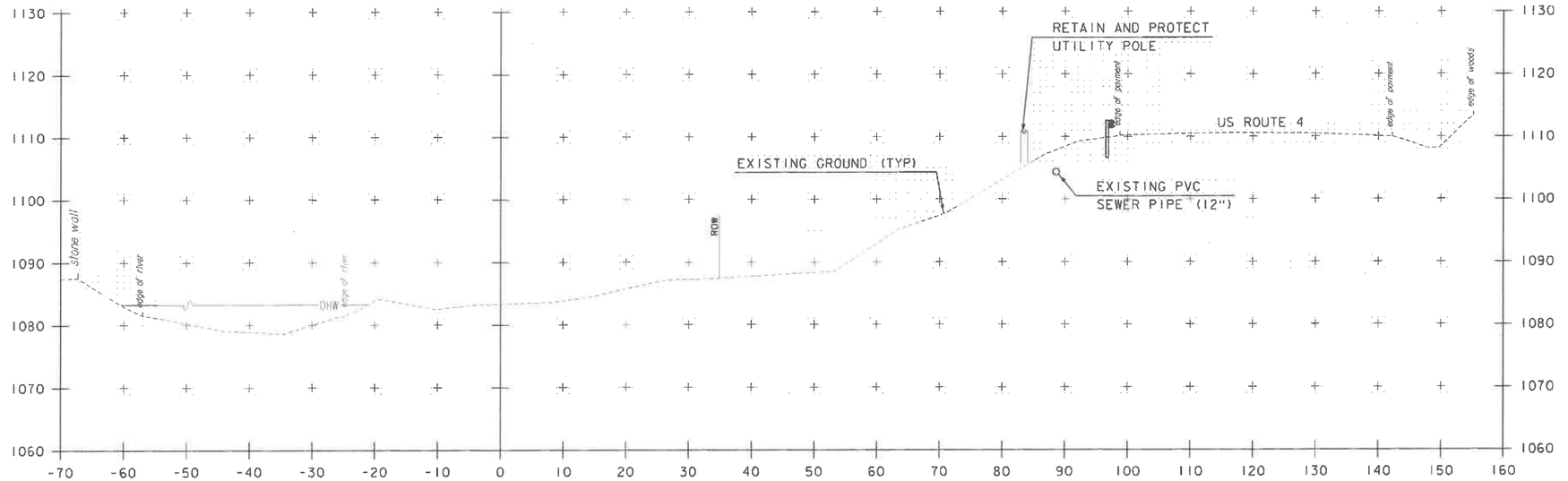

11+00.00

10+75.00 LIMIT OF WORK

RECEIVED
JUL 26 2016
BY:.....

NOTE: STATIONS AND ELEVATIONS ARE IN FEET

GREEN INTERNATIONAL AFFILIATES, INC.
CIVIL AND STRUCTURAL ENGINEERS

STA. 10+75 TO 11+00

PROJECT NAME: MENDON
PROJECT NUMBER: ER 020-2(39)

FILE NAME: z13b188xsl.dgn
PROJECT LEADER: E. ATKINS
DESIGNED BY: M. BRADLEY
CROSS SECTION SHEET 8

PLOT DATE: 11/24/2015
DRAWN BY: S. SOLLA
CHECKED BY: E. ATKINS
SHEET 60A OF 72

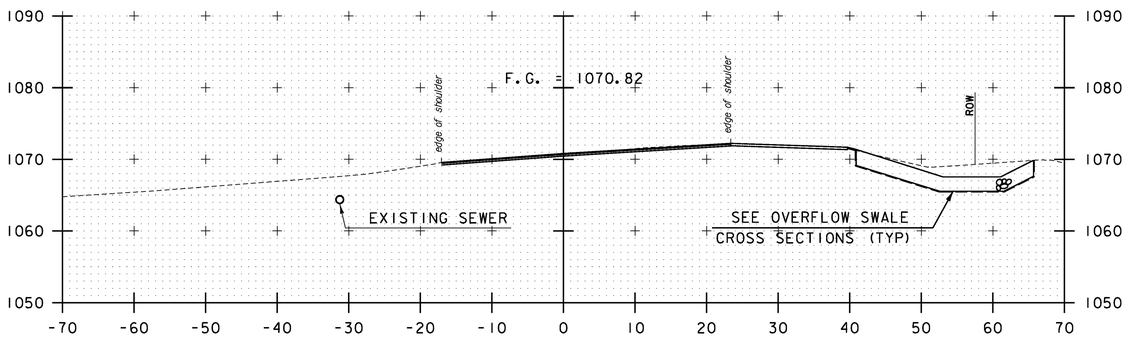

23+00.00

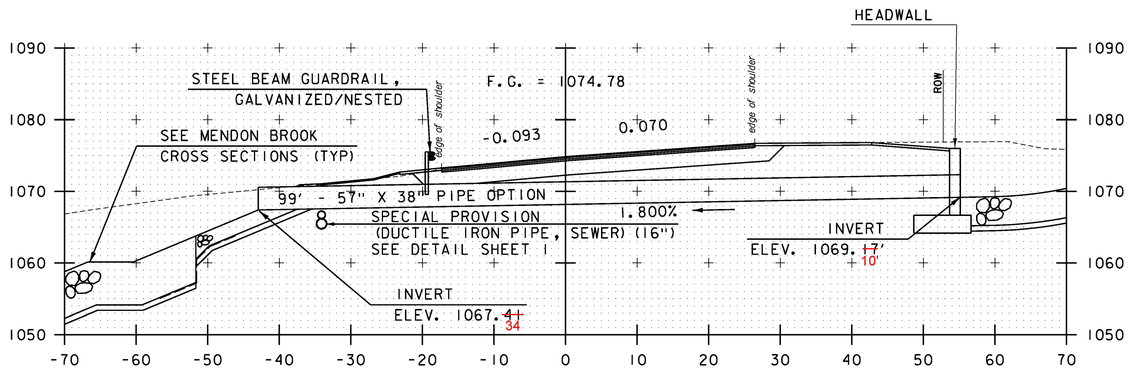

23+99.82, 57" X 38" PIPE OPTION
SKEWED 65°26'58.59"RT

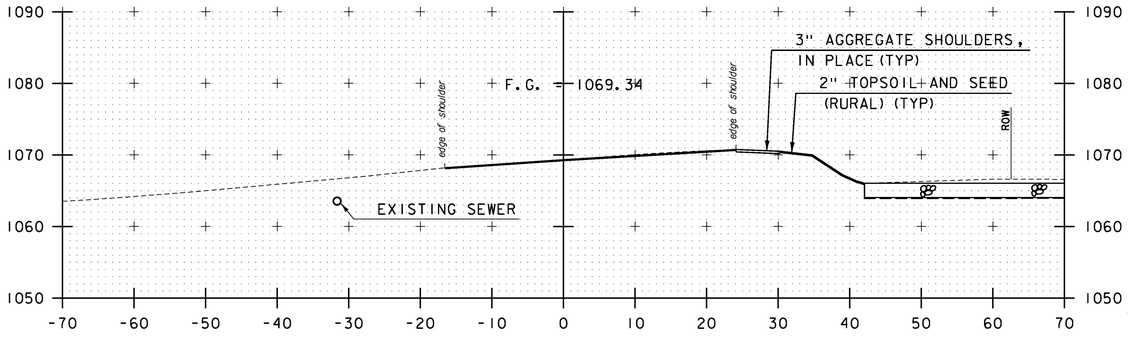

22+58.55 BEGIN APPROACH

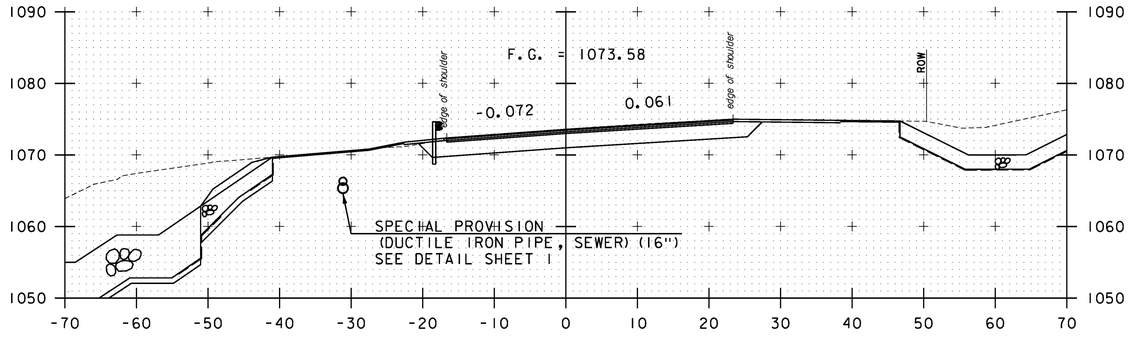

23+71.05 END APPROACH
BEGIN MENDON ER 020-2(39)

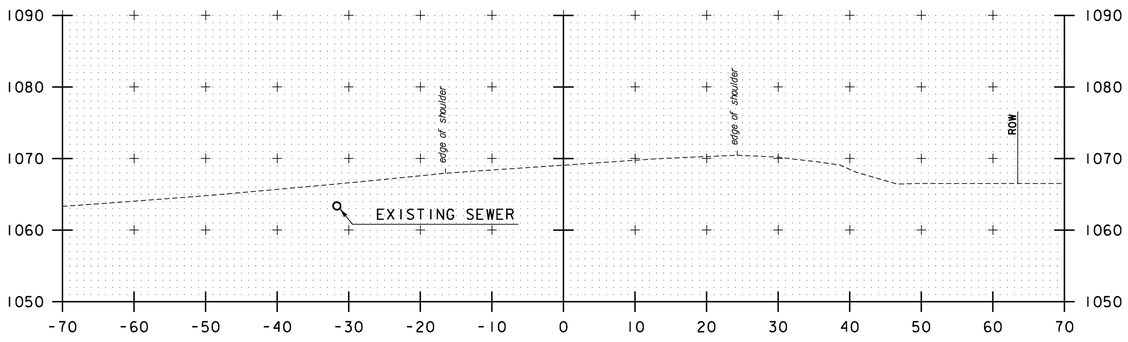

22+50.00

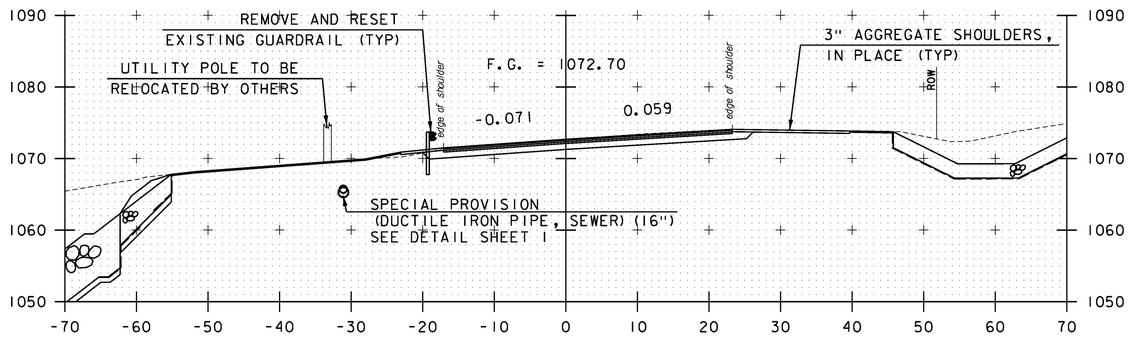

23+50.00

STA. 22+50 TO STA. 23+99.82

NOTES: ALL ROADWAY CROSS SLOPES ARE PROVIDED FOR INFORMATION ONLY
ALL ROADWAY CROSS SLOPES SHALL MATCH EXISTING
STATIONS AND ELEVATIONS ARE IN FEET

GREEN INTERNATIONAL AFFILIATES, INC.
CIVIL AND STRUCTURAL ENGINEERS

PROJECT NAME:	MENDON
PROJECT NUMBER:	ER 020-2(39)
FILE NAME: z13bl88xsl.dgn	PLOT DATE: 11/13/2015
PROJECT LEADER: E. ATKINS	DRAWN BY: S. SOLLA
DESIGNED BY: M. BRADLEY	CHECKED BY: E. ATKINS
CROSS SECTION SHEET 9	SHEET 61 OF 72

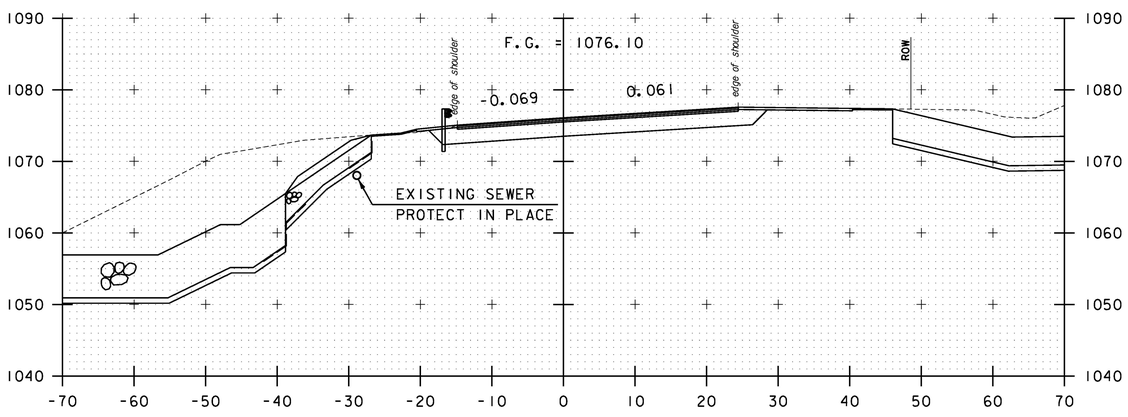

24+31.64 END MENDON ER 020-2(39)
BEGIN APPROACH

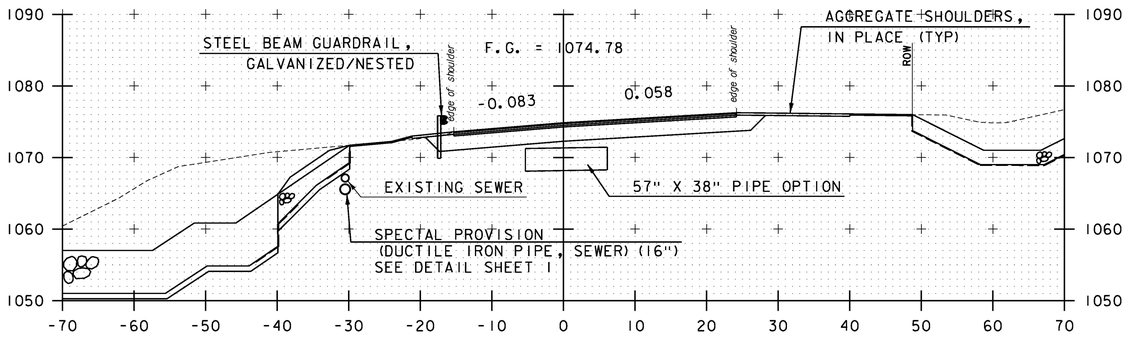

24+00.00

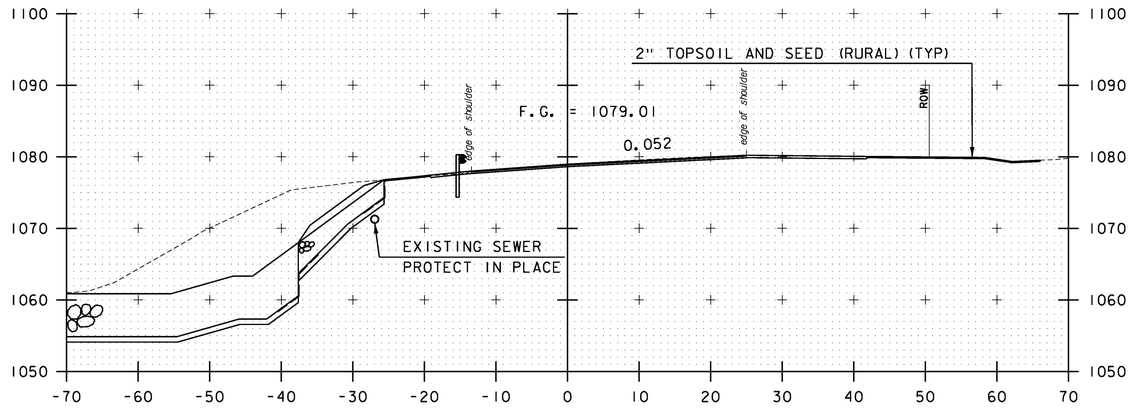

25+00.00

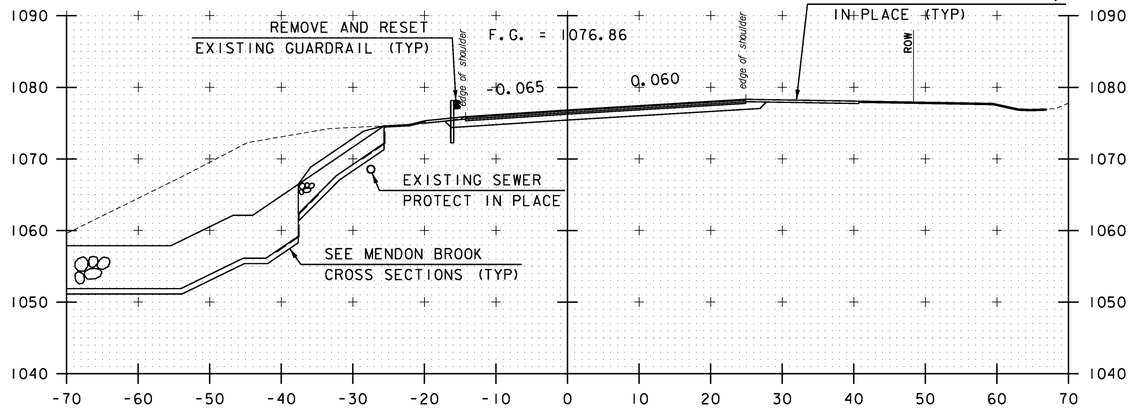

24+50.00

STA. 24+00 TO STA. 25+00

NOTES: ALL ROADWAY CROSS SLOPES ARE PROVIDED FOR INFORMATION ONLY
ALL ROADWAY CROSS SLOPES SHALL MATCH EXISTING
STATIONS AND ELEVATIONS ARE IN FEET

GREEN INTERNATIONAL AFFILIATES, INC.
CIVIL AND STRUCTURAL ENGINEERS

PROJECT NAME: MENDON
PROJECT NUMBER: ER 020-2(39)

FILE NAME: z13b188xsl.dgn
PROJECT LEADER: E. ATKINS
DESIGNED BY: M. BRADLEY
CROSS SECTION SHEET 10

PLOT DATE: 11/13/2015
DRAWN BY: S. SOLLA
CHECKED BY: E. ATKINS
SHEET 62 OF 72

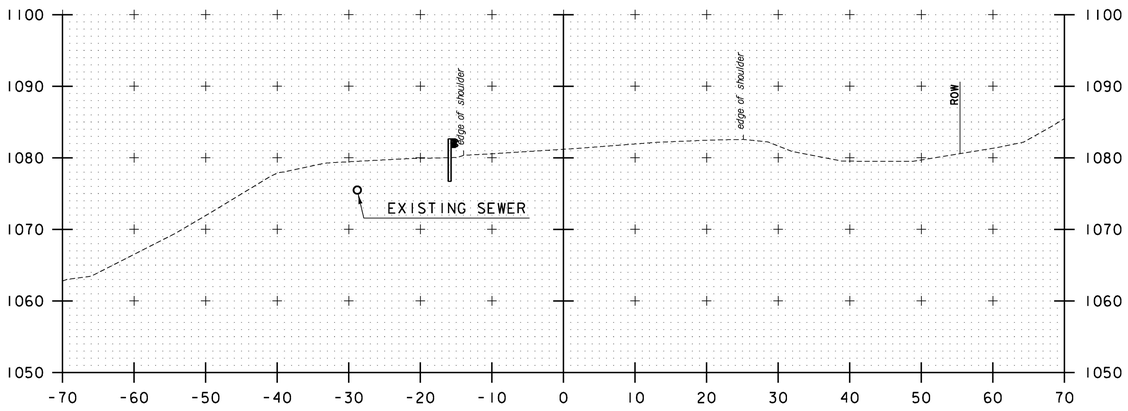

25+50

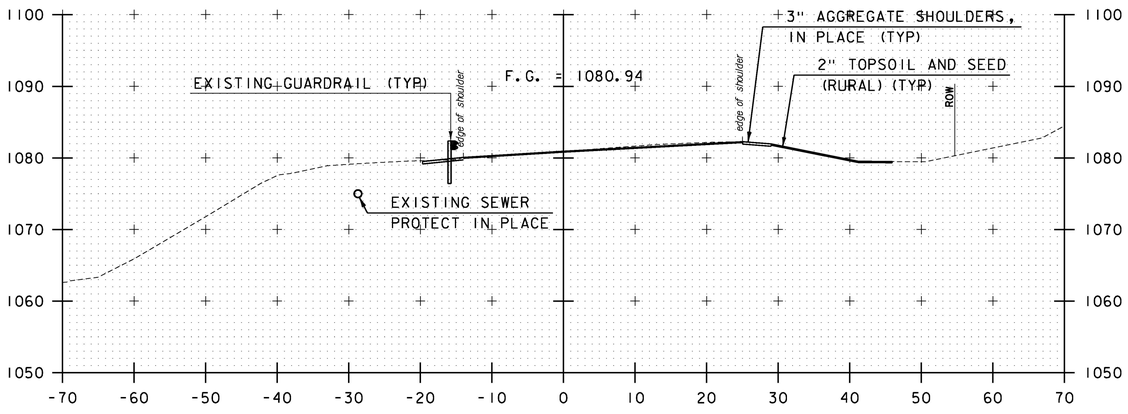

25+44.14 END APPROACH

NOTES: ALL ROADWAY CROSS SLOPES ARE PROVIDED FOR INFORMATION ONLY
ALL ROADWAY CROSS SLOPES SHALL MATCH EXISTING
STATIONS AND ELEVATIONS ARE IN FEET

STA. 25+44.14 TO STA. 25+50

PROJECT NAME: MENDON
PROJECT NUMBER: ER 020-2(39)

FILE NAME: z13b188xsl.dgn
PROJECT LEADER: E. ATKINS
DESIGNED BY: M. BRADLEY
CROSS SECTION SHEET 11

PLOT DATE: 11/13/2015
DRAWN BY: S. SOLLA
CHECKED BY: E. ATKINS
SHEET 63 OF 72

GREEN INTERNATIONAL AFFILIATES, INC.
CIVIL AND STRUCTURAL ENGINEERS

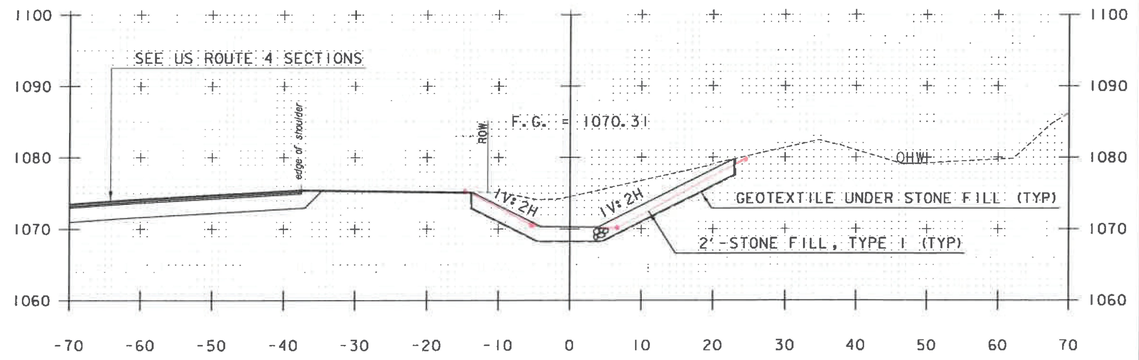

51+50

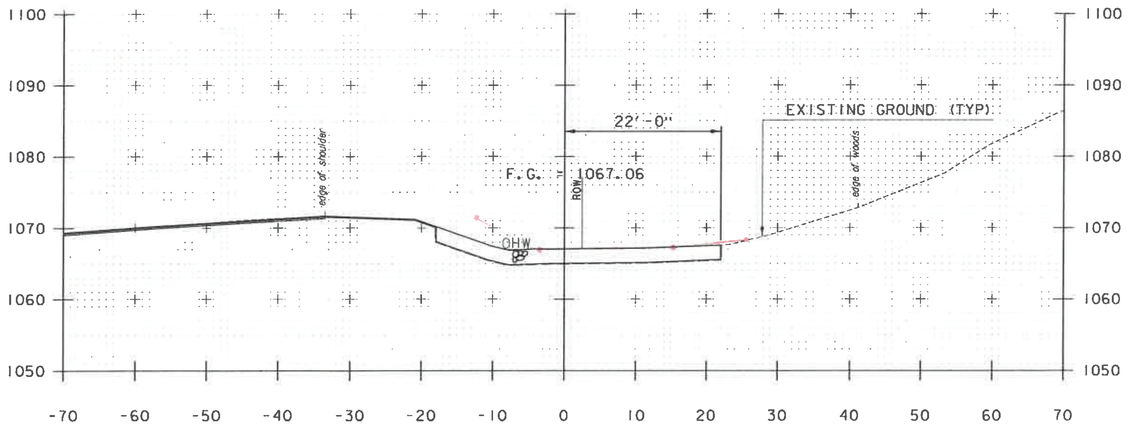

50+50

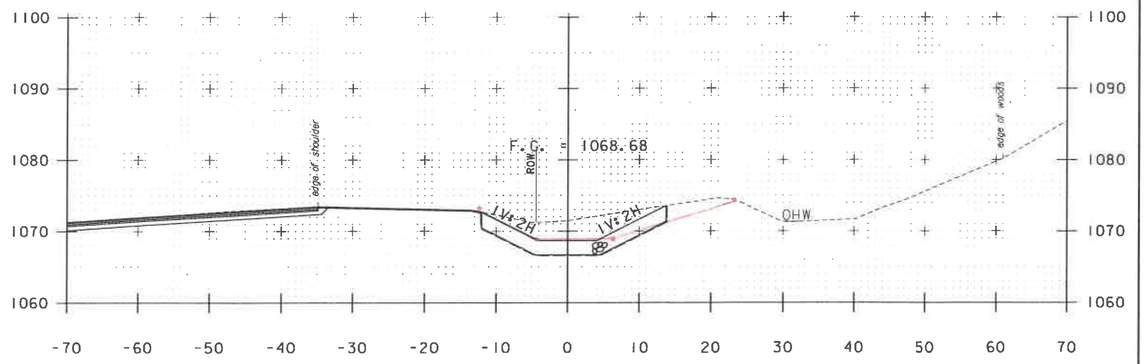

51+00

NOTE: STATIONS AND ELEVATIONS ARE IN FEET

GREEN INTERNATIONAL AFFILIATES, INC.
CIVIL AND STRUCTURAL ENGINEERS

STA. 50+50 TO STA. 51+50

PROJECT NAME:	MENDON
PROJECT NUMBER:	ER 020-2(39)
FILE NAME: z13b188xsl.dgn	PLOT DATE: 11/13/2015
PROJECT LEADER: E. ATKINS	DRAWN BY: S. SOLLA
DESIGNED BY: M. BRADLEY	CHECKED BY: E. ATKINS
CROSS SECTION SHEET 12	SHEET 64 OF 72

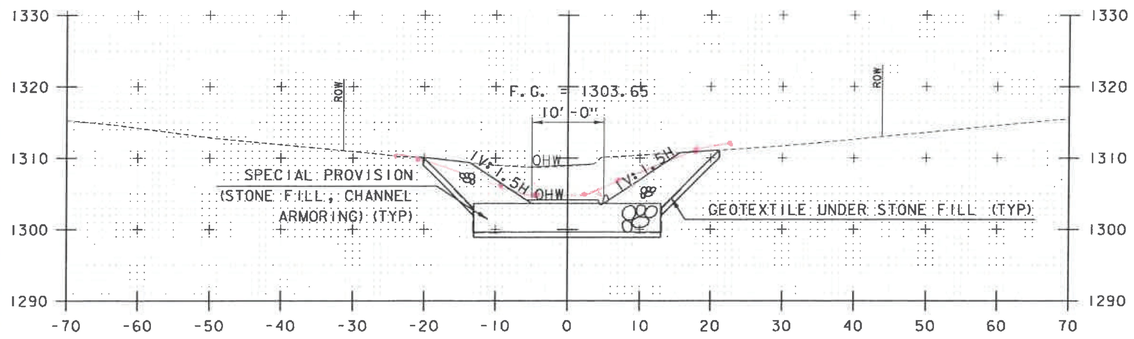

201+50

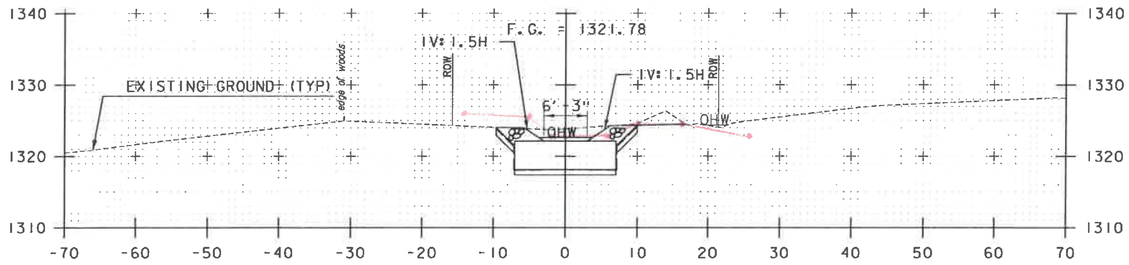

201+00

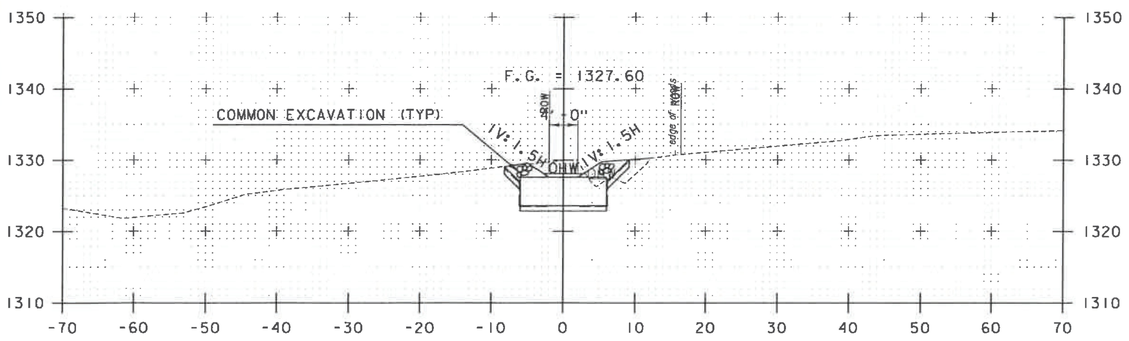

200+75

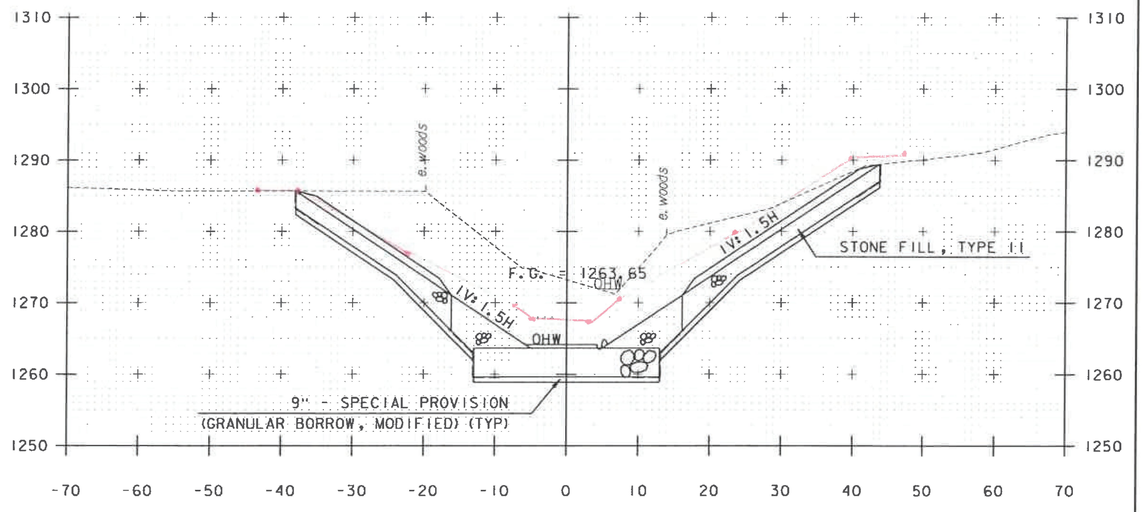

202+50

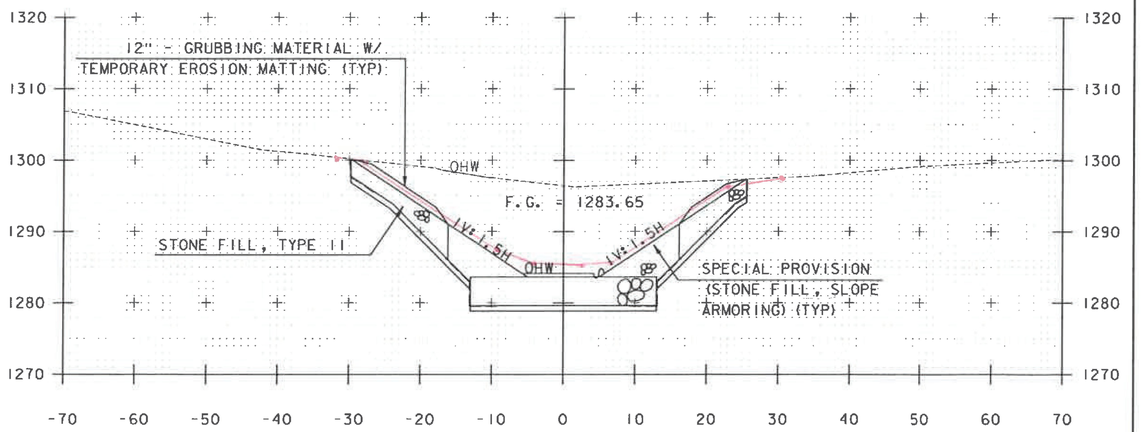

202+00

STA. 200+73.39 TO STA. 202+50

NOTE: STATIONS AND ELEVATIONS ARE IN FEET

GREEN INTERNATIONAL AFFILIATES, INC.
CIVIL AND STRUCTURAL ENGINEERS

PROJECT NAME: MENDON
PROJECT NUMBER: ER 020-2(39)

FILE NAME: z13b188xsl.dgn
PROJECT LEADER: E. ATKINS
DESIGNED BY: M. BRADLEY
CROSS SECTION SHEET 13

PLOT DATE: 11/13/2015
DRAWN BY: S. SOLLA
CHECKED BY: E. ATKINS
SHEET 65 OF 72

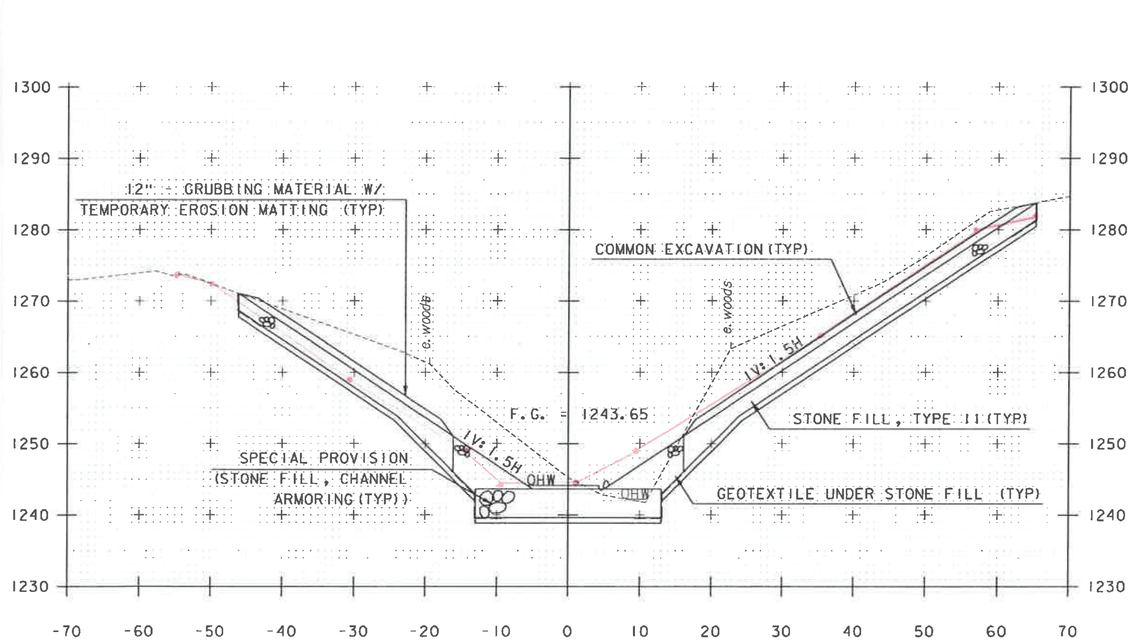

203+00

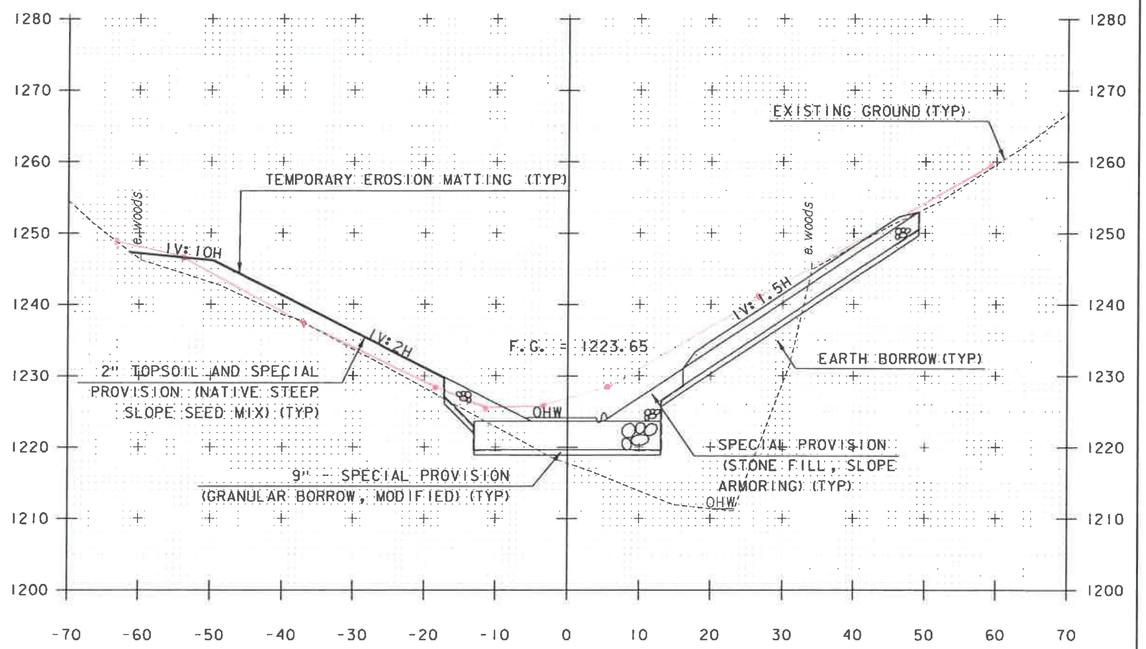

203+50

STA. 203+00 TO STA. 203+50

NOTE: STATIONS AND ELEVATIONS ARE IN FEET

GREEN INTERNATIONAL AFFILIATES, INC.
CIVIL AND STRUCTURAL ENGINEERS

PROJECT NAME: MENDON
PROJECT NUMBER: ER 020-2(39)

FILE NAME: z13b188xsl.dgn
PROJECT LEADER: E. ATKINS
DESIGNED BY: M. BRADLEY
CROSS SECTION SHEET 14

PLOT DATE: 11/13/2015
DRAWN BY: S. SOLLA
CHECKED BY: E. ATKINS
SHEET 66 OF 72

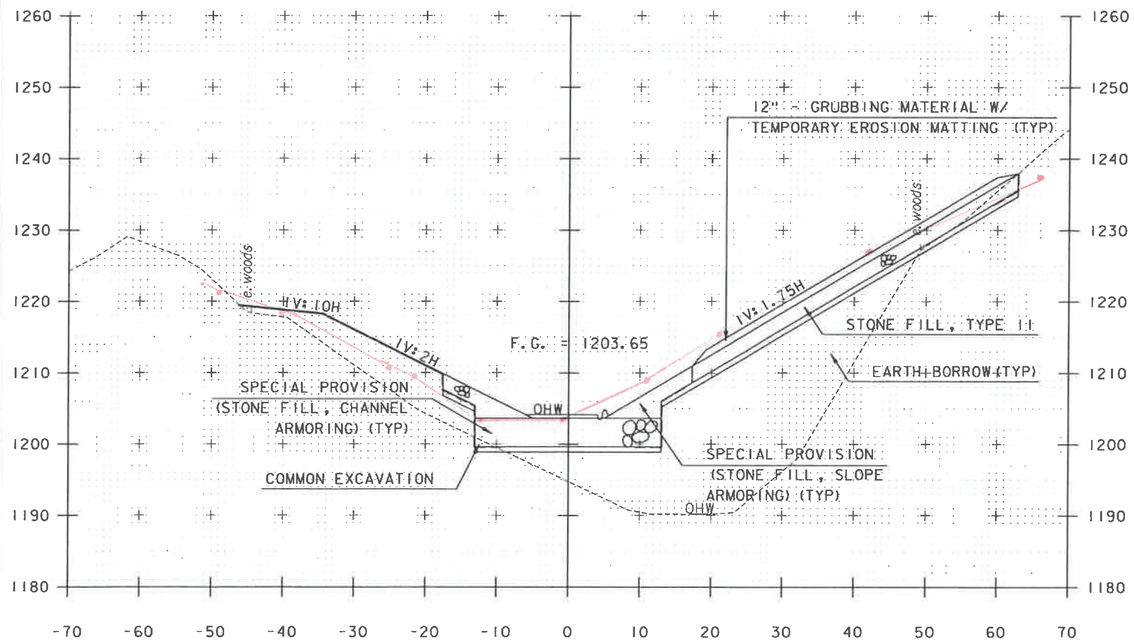

204+00

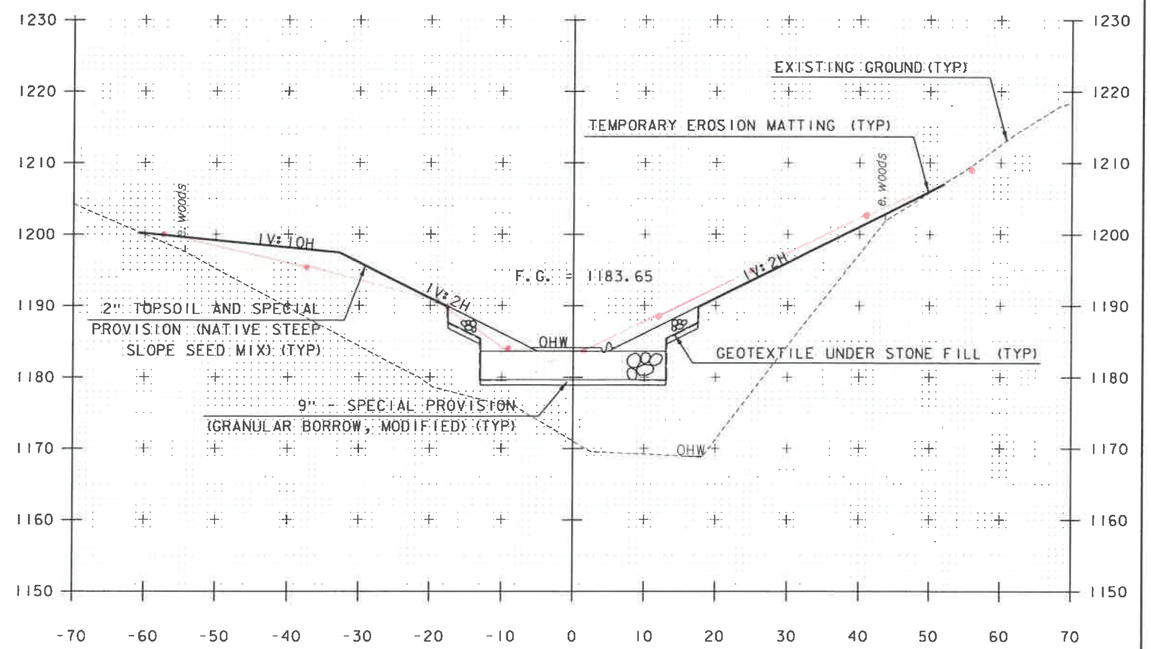

204+50

STA. 204+00 TO STA. 204+50

NOTE: STATIONS AND ELEVATIONS ARE IN FEET

GREEN INTERNATIONAL AFFILIATES, INC.
CIVIL AND STRUCTURAL ENGINEERS

PROJECT NAME: MENDON
PROJECT NUMBER: ER 020-2(39)

FILE NAME: z13b188xsl.dgn
PROJECT LEADER: E. ATKINS
DESIGNED BY: M. BRADLEY
CROSS SECTION SHEET 15

PLOT DATE: 11/13/2015
DRAWN BY: S. SOLLA
CHECKED BY: E. ATKINS
SHEET 67 OF 72

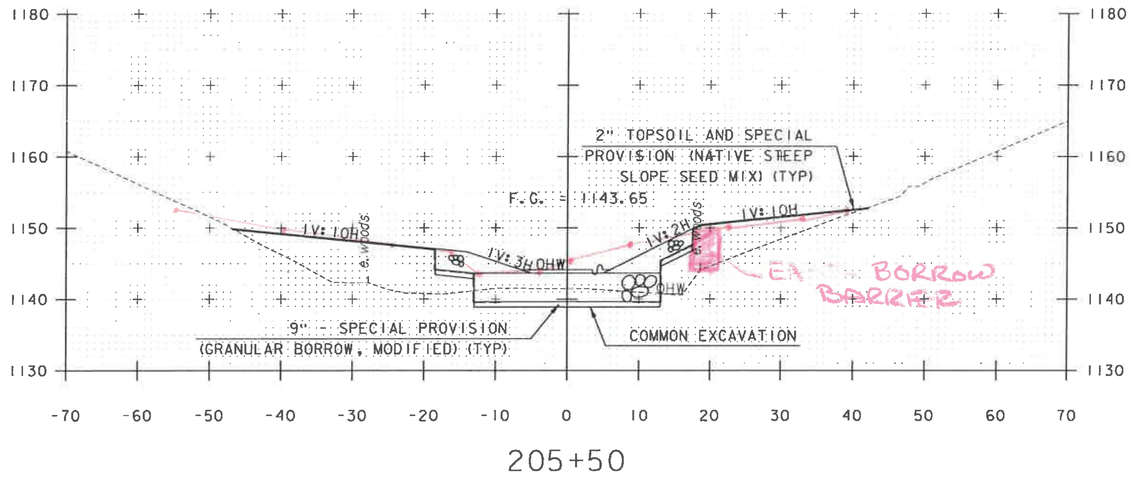

205+50

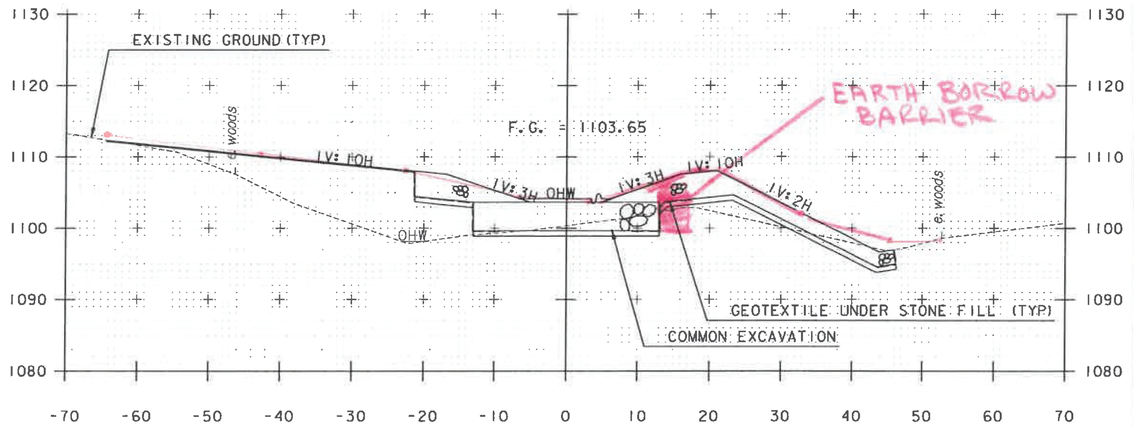

206+50

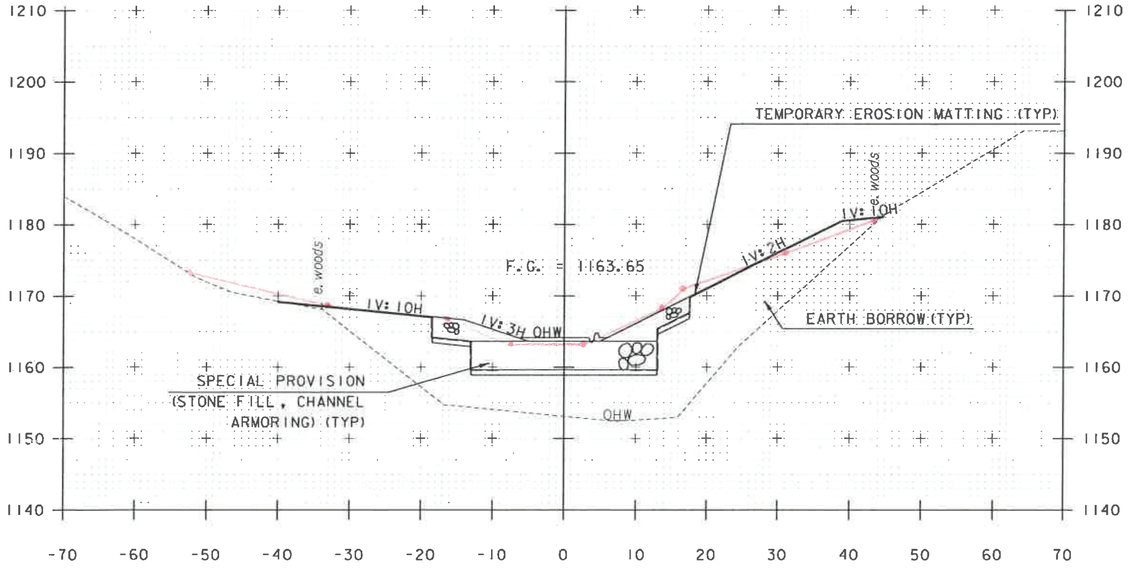

205+00

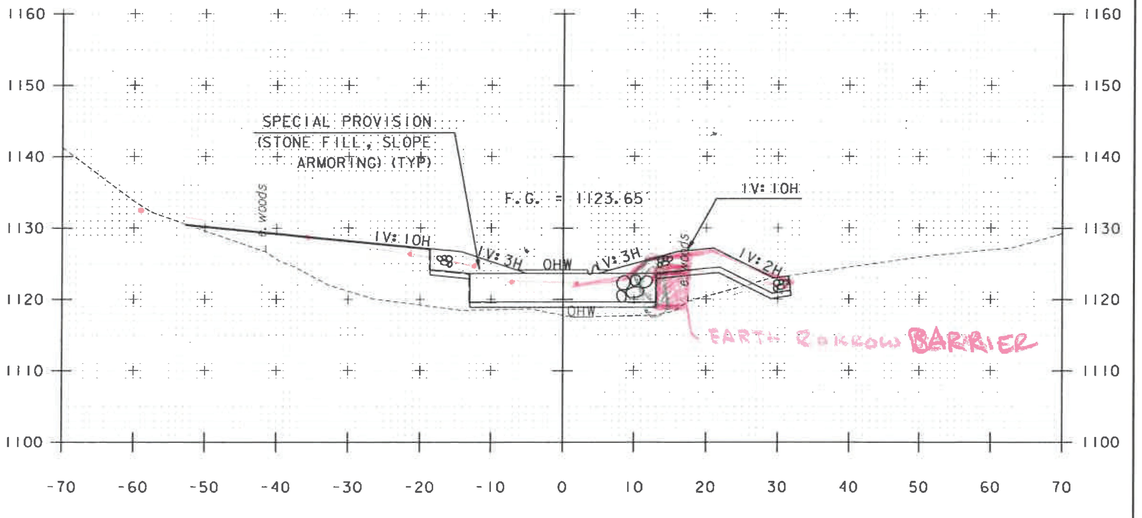

206+00

STA. 205+00 TO STA. 206+50

NOTE: STATIONS AND ELEVATIONS ARE IN FEET

GREEN INTERNATIONAL AFFILIATES, INC.
CIVIL AND STRUCTURAL ENGINEERS

PROJECT NAME: MENDON	
PROJECT NUMBER: ER 020-2(39)	
FILE NAME: z13b188xsl.dgn	PLOT DATE: 11/13/2015
PROJECT LEADER: E. ATKINS	DRAWN BY: S. SOLLA
DESIGNED BY: M. BRADLEY	CHECKED BY: E. ATKINS
CROSS SECTION SHEET 16	SHEET 68 OF 72

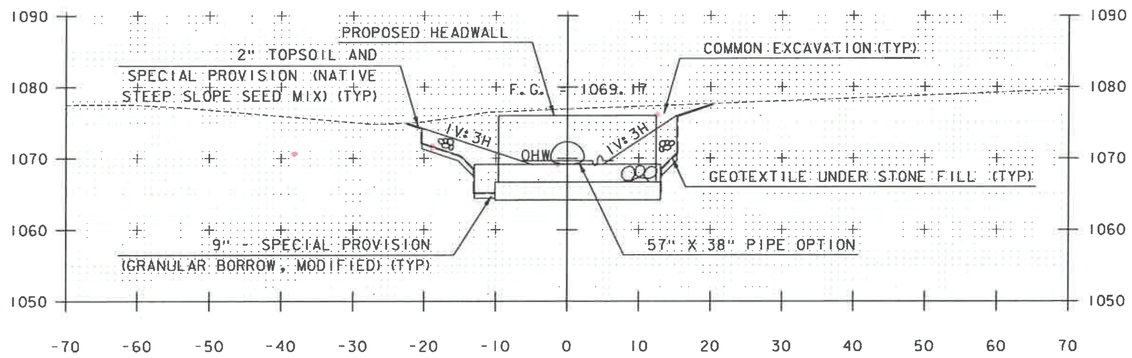

207+50

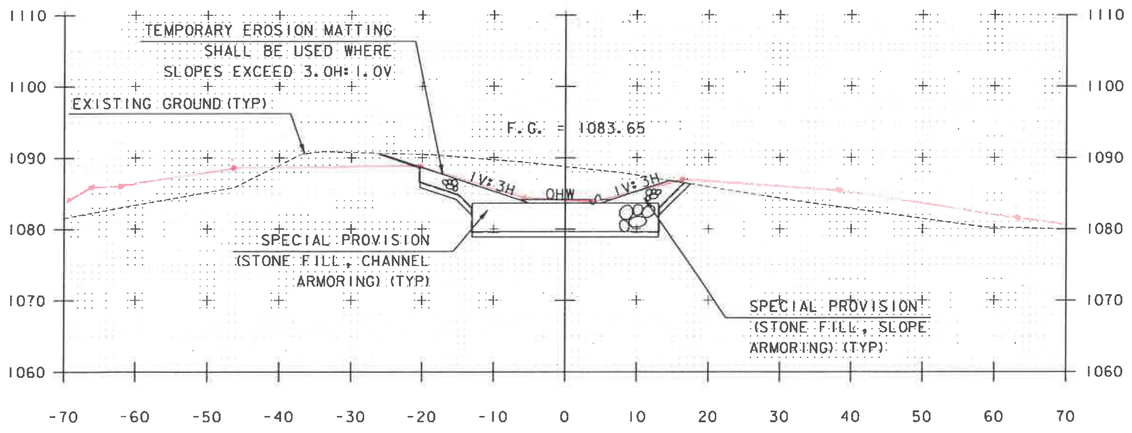

207+00

NOTE: STATIONS AND ELEVATIONS ARE IN FEET

STA. 207+00 TO STA. 207+50

PROJECT NAME: MENDON
PROJECT NUMBER: ER 020-2(39)

FILE NAME: z13b188xsl.dgn
PROJECT LEADER: E. ATKINS
DESIGNED BY: M. BRADLEY
CROSS SECTION SHEET 17

PLOT DATE: 11/13/2015
DRAWN BY: S. SOLLA
CHECKED BY: E. ATKINS
SHEET 69 OF 72

GREEN INTERNATIONAL AFFILIATES, INC.
CIVIL AND STRUCTURAL ENGINEERS

TRAFFIC CONTROL- PHASE I

LEGEND
- ② CONSTRUCTION SIGN ASSEMBLY I.D.
- TEMPORARY TRAFFIC BARRIER
- REFLECTORIZED PLASTIC DRUM
- SIGN
- DYCL TEMP 4" DOUBLE YELLOW CENTER LINE
- EL TEMP 4" WHITE EDGE LINE
- FLOW OF TRAFFIC
- PORTABLE CHANGEABLE MESSAGE SIGN (PMCS)
- WORK ZONE
- LIMIT OF TEMPORARY PAVEMENT

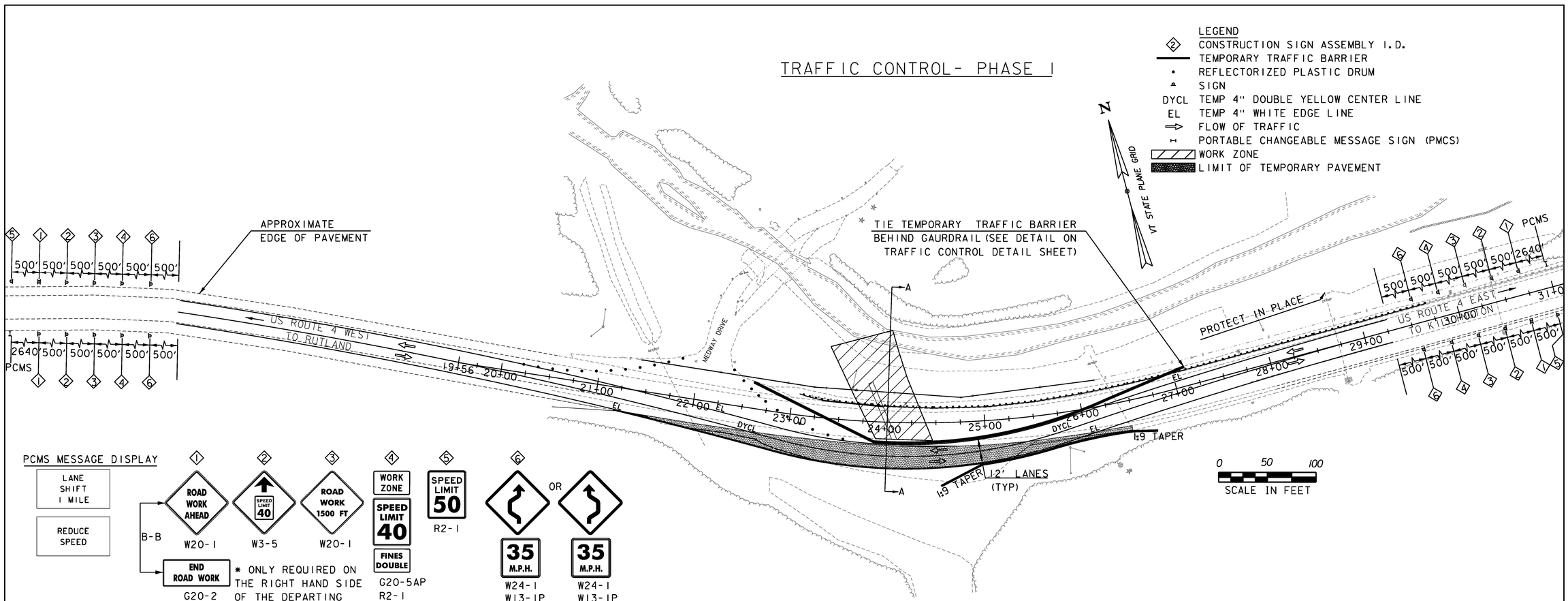

PCMS MESSAGE DISPLAY

LANE SHIFT 1 MILE

REDUCE SPEED

①	②	③	④	⑤	⑥
ROAD WORK AHEAD	SPEED LIMIT 40	ROAD WORK 1500 FT	WORK ZONE / SPEED LIMIT 40 / FINES DOUBLE	SPEED LIMIT 50	35 M.P.H. OR 35 M.P.H.
W20-1	W3-5	W20-1	G20-5AP, R2-1, R2-6AP	R2-1	W24-1, W13-1P

B-B: END ROAD WORK G20-2

* ONLY REQUIRED ON THE RIGHT HAND SIDE OF THE DEPARTING TRAFFIC.

PHASE I NOTES:

1) INSTALL TEMPORARY PAVEMENT NECESSARY TO DIVERT TRAFFIC AS SHOWN ON THIS PLAN. THE COST OF BITUMINOUS CONCRETE PAVEMENT AND SUBBASE OF DENSE GRADED CRUSHED STONE REQUIRED FOR TEMPORARY PAVEMENT WILL BE CONSIDERED INCIDENTAL TO ITEM 900.645, SPECIAL PROVISION (TRAFFIC CONTROL, ALL-INCLUSIVE).
2) THE CROSS SLOPE OF THE TEMPORARY WIDENING SHALL MATCH THE CORRESPONDING SUPERELEVATION OF THE EXISTING ROADWAY. THE DETOUR ALIGNMENT SHOWN ON THIS PLAN IS DESIGNED FOR 40 MPH.
3) THE CONTRACTOR WILL MAINTAIN THE EXISTING DRAINAGE PATTERNS. THE CONTRACTOR MAY MODIFY THE EXISTING DITCHES TO MAINTAIN THE EXISTING DRAINAGE AS REQUIRED. THE COST OF MAINTAINING DRAINAGE PATTERNS WILL BE CONSIDERED INCIDENTAL TO THE COST FOR ITEM 900.645, SPECIAL PROVISION (TRAFFIC CONTROL, ALL-INCLUSIVE).
4) REMOVE GUARDRAIL TO ACCEPT TEMPORARY TRAFFIC BARRIER, COST FOR REMOVING GUARDRAIL WILL BE PAID FOR UNDER ITEM 621.75, REMOVE AND RESET GUARDRAIL.
5) INSTALL TEMPORARY TRAFFIC SIGNAGE, TEMPORARY PAVEMENT MARKINGS, MESSAGE BOARDS, AND INSTALL TEMPORARY BARRIERS AS SHOWN ON THE PLAN TO DIVERT TRAFFIC. THE COST FOR THIS WORK, EXCEPT FOR TEMPORARY TRAFFIC BARRIER, WILL BE CONSIDERED INCIDENTAL TO ITEM 900.645 SPECIAL PROVISION (TRAFFIC CONTROL, ALL-INCLUSIVE). TEMPORARY TRAFFIC BARRIERS WILL BE PAID FOR UNDER ITEM 621.90.
6) RESTORE PAVEMENT AND PAVEMENT MARKINGS ON ROUTE 4, RESTORE EXISTING DRAINAGE DITCHES AS REQUIRED AND REMOVE TEMPORARY TRAFFIC BARRIER AFTER THE COMPLETION OF CULVERT INSTALLATION. THE COST FOR THIS WORK, EXCEPT FOR TEMPORARY TRAFFIC BARRIER, WILL BE CONSIDERED INCIDENTAL TO ITEM 900.645 SPECIAL PROVISION (TRAFFIC CONTROL, ALL INCLUSIVE. THE REMOVAL AND RESETTING OF TEMPORARY TRAFFIC BARRIER WILL BE PAID FOR UNDER ITEM 621.95.
7) RESET GUARDRAIL UPON REMOVING TEMPORARY TRAFFIC BARRIER, COST OF RESETTING GUARDRAIL WILL BE PAID FOR UNDER ITEM 621.75 REMOVE AND RESET GUARDRAIL.
8) RESET SIGNS AS REQUIRED FOR PHASE 2, COST FOR RESETTING SIGNS WILL BE CONSIDERED INCIDENTAL TO ITEM 900.645 SPECIAL PROVISION (TRAFFIC CONTROL, ALL-INCLUSIVE).

REFER TO PROJECT NOTES ON SHEET 4 FOR ADDITIONAL REQUIREMENTS.

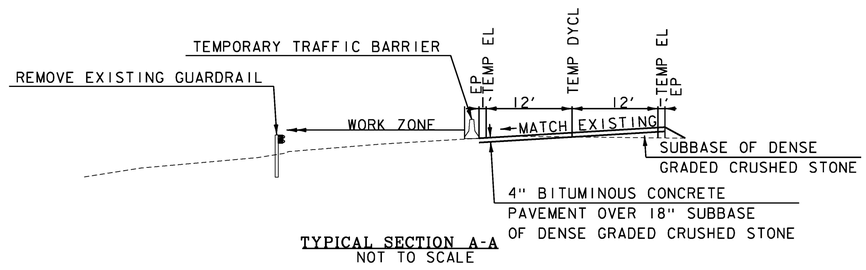

TYPICAL SECTION A-A
NOT TO SCALE

PROJECT NAME:	MENDON
PROJECT NUMBER:	ER 020-2(39)
FILE NAME: zl3bl88tmpbdr.dgn	PLOT DATE: 11/24/2015
PROJECT LEADER: E. ATKINS	DRAWN BY: S. SOLLA
DESIGNED BY: A. ACHARYA	CHECKED BY: E. ATKINS
TRAFFIC CONTROL SHEET 1	SHEET 70 OF 72

GREEN INTERNATIONAL AFFILIATES, INC.
CIVIL AND STRUCTURAL ENGINEERS

TRAFFIC CONTROL- PHASE 2

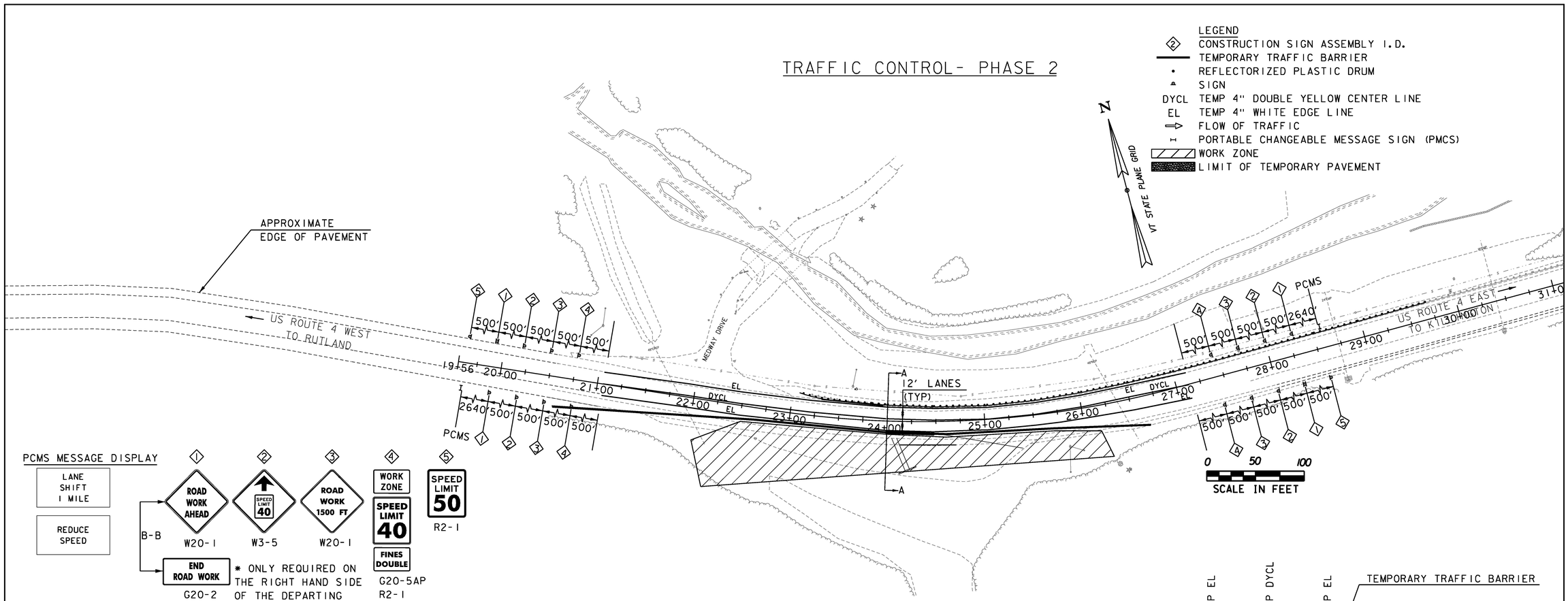

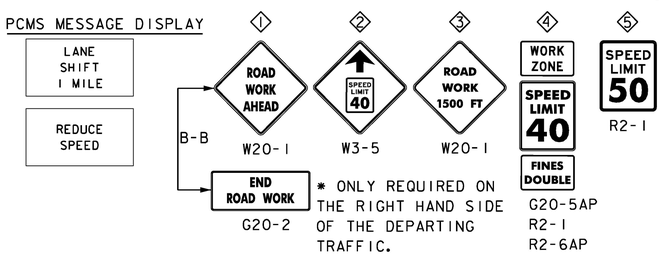

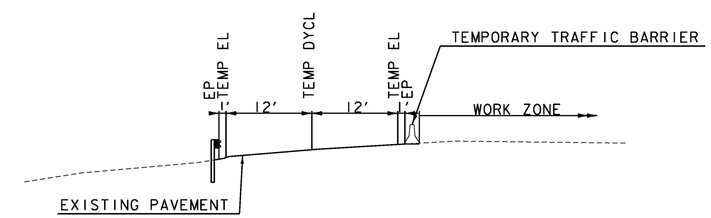

TYPICAL SECTION A-A
NOT TO SCALE

PHASE 2 NOTES

1) AFTER COMPLETION OF PHASE 1 WORK, RESET THE TEMPORARY TRAFFIC BARRIER AND INSTALL THE TEMPORARY PAVEMENT MARKINGS AS SHOWN ON THIS PLAN. THE COST FOR THIS WORK WILL BE CONSIDERED INCIDENTAL TO ITEM 900.645 SPECIAL PROVISION (TRAFFIC CONTROL, ALL-INCLUSIVE)
3) REMOVE TEMPORARY PAVEMENT AND ROADWAY WIDENING. THE COST FOR THIS WORK WILL BE CONSIDERED INCIDENTAL TO ITEM 900.645 SPECIAL PROVISION (TRAFFIC CONTROL, ALL-INCLUSIVE)
2) INSTALL DRAINAGE CULVERT AND HEADWALL AS SHOWN IN THE LAYOUT PLAN. THE COST FOR THIS WORK WILL BE PAID FOR UNDER THEIR RELATED PAY ITEMS.
3) RESTORE THE PAVEMENT AND GRAVEL TURNOUT AS SHOWN ON PLAN SHEET 1 AFTER COMPLETION OF CULVERT INSTALLATION. THE COST FOR THIS WORK WILL BE CONSIDERED INCIDENTAL TO ITEM 900.645 SPECIAL PROVISION (TRAFFIC CONTROL, ALL-INCLUSIVE)
4) REMOVE TEMPORARY CONCRETE BARRIER, TEMPORARY PAVEMENT MARKINGS AND CONSTRUCTION SIGNING AFTER THE COMPLETION OF PHASE 2 WORK. THE COST FOR THIS WORK, EXCEPT FOR THE REMOVAL OF THE TRAFFIC BARRIER, WILL BE CONSIDERED INCIDENTAL TO ITEM 900.645 SPECIAL PROVISION (TRAFFIC CONTROL, ALL-INCLUSIVE. THE REMOVAL OF THE TRAFFIC BARRIER WILL BE PAID FOR UNDER ITEM 621.90.
5) PERFORM FINAL PAVING ALONG US ROUTE 4. THE COST FOR THIS WORK WILL BE PAID UNDER ITEM 900.680 SPECIAL PROVISION (BITUMINOUS CONCRETE PAVEMENT, SMALL QUANTITY)

REFER TO PROJECT NOTES ON SHEET 4 FOR ADDITIONAL REQUIREMENTS.

GREEN INTERNATIONAL AFFILIATES, INC.
CIVIL AND STRUCTURAL ENGINEERS

PROJECT NAME: MENDON	
PROJECT NUMBER: ER 020-2(39)	
FILE NAME: z13b188tmpbdr.dgn	PLOT DATE: 11/24/2015
PROJECT LEADER: E. ATKINS	DRAWN BY: S. SOLLA
DESIGNED BY: A. ACHARYA	CHECKED BY: E. ATKINS
TRAFFIC CONTROL SHEET 2	SHEET 71 OF 72

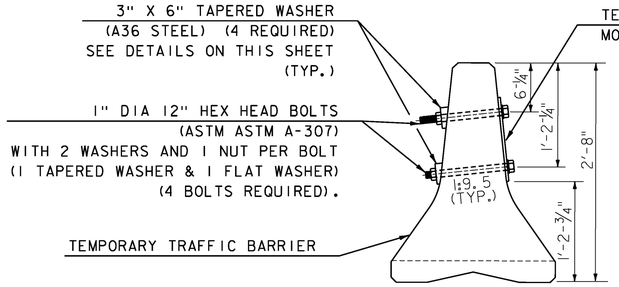

SECTION A-A

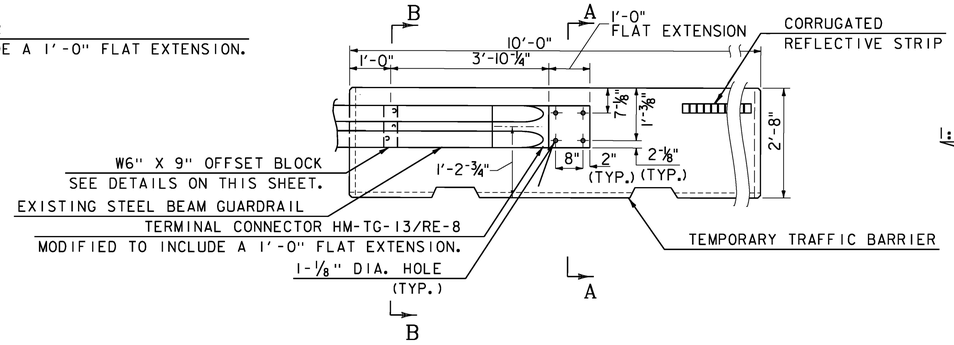

ELEVATION VIEW SHOWING POSITIVE CONNECTION BETWEEN TEMPORARY TRAFFIC BARRIER AND EXISTING GUARDRAIL

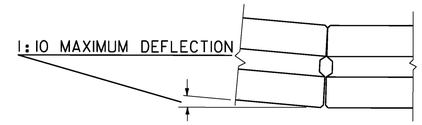

TEMPORARY TRAFFIC BARRIER
DEFLECTION DETAIL

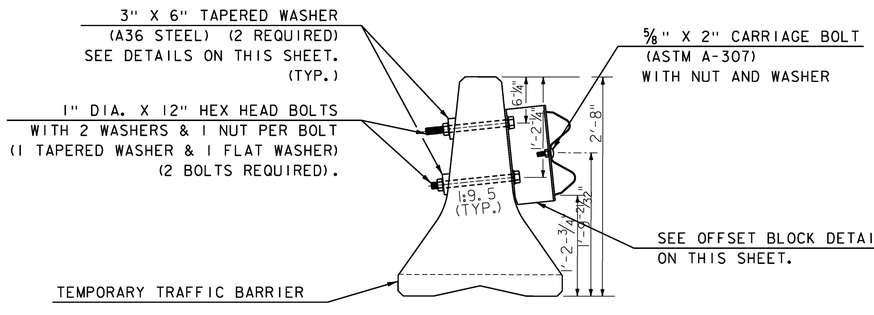

SECTION B-B

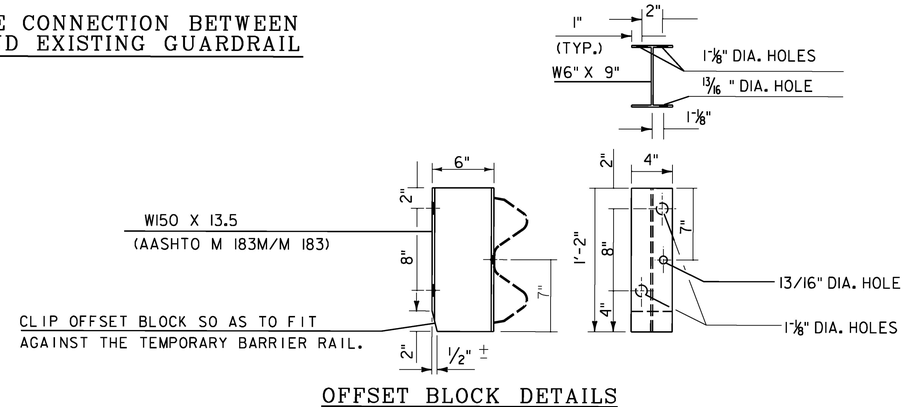

OFFSET BLOCK DETAILS

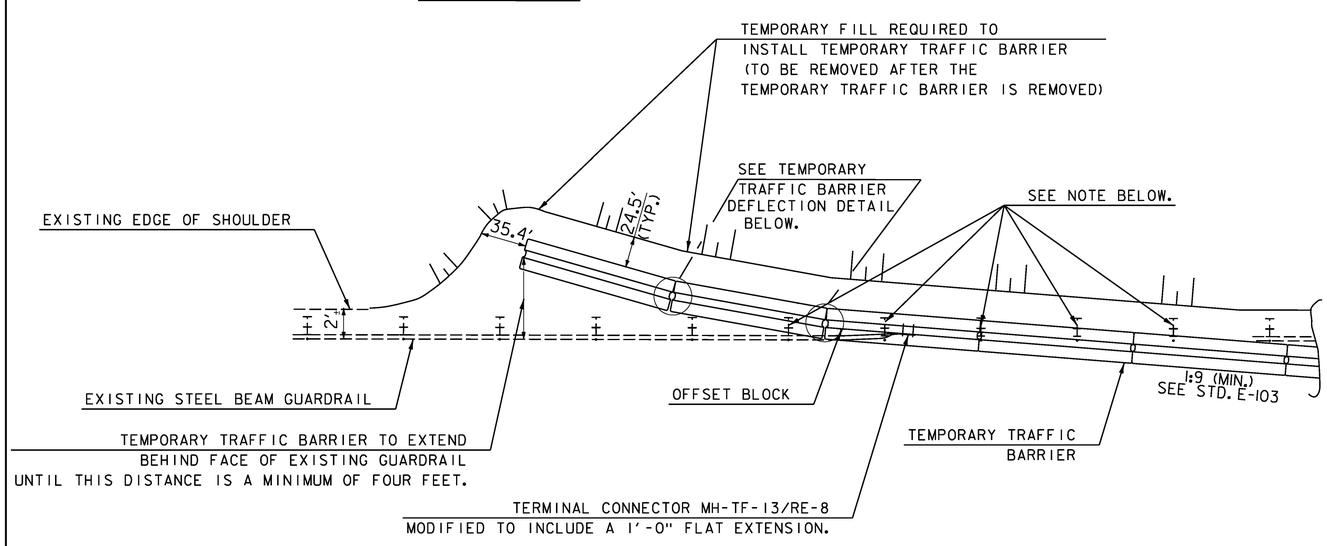

NOTE: THE COST OF FURNISHING, PLACING AND REMOVING THE TEMPORARY FILL MATERIAL, TOGETHER WITH TEMPORARILY EXTENDING ANY EXISTING DRAINAGE FACILITIES, WILL BE CONSIDERED INCIDENTAL TO ITEM 621. 90, TEMPORARY TRAFFIC BARRIER.

PLAN VIEW SHOWING POSITIVE CONNECTION BETWEEN TEMPORARY TRAFFIC BARRIER AND EXISTING GUARDRAIL

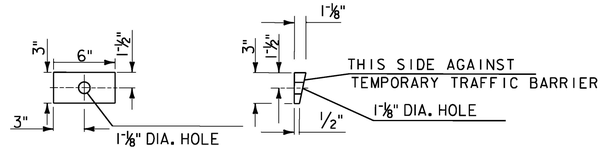

TAPERED WASHER DETAILS

GREEN INTERNATIONAL AFFILIATES, INC.
CIVIL AND STRUCTURAL ENGINEERS

PROJECT NAME: MENDON	
PROJECT NUMBER: ER 020-2(39)	
FILE NAME: z13b188tmpdet.dgn	PLOT DATE: 11/13/2015
PROJECT LEADER: E. ATKINS	DRAWN BY: A. ACHARYA
DESIGNED BY: A. ACHARYA	CHECKED BY: E. ATKINS
TRAFFIC CONTROL DETAILS SHEET	SHEET 72 OF 72

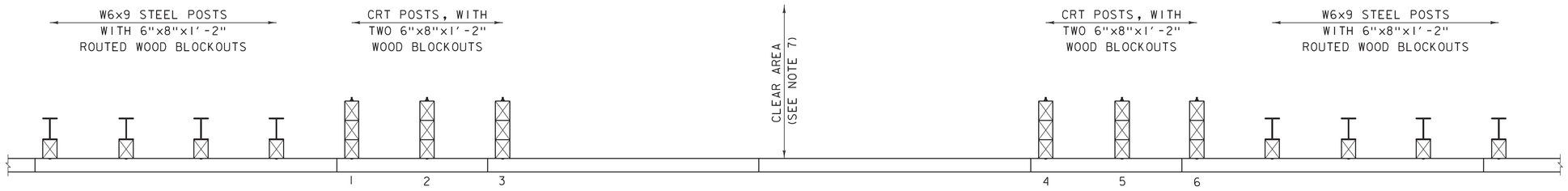

LONGSPAN STEEL BEAM GUARDRAIL PLAN

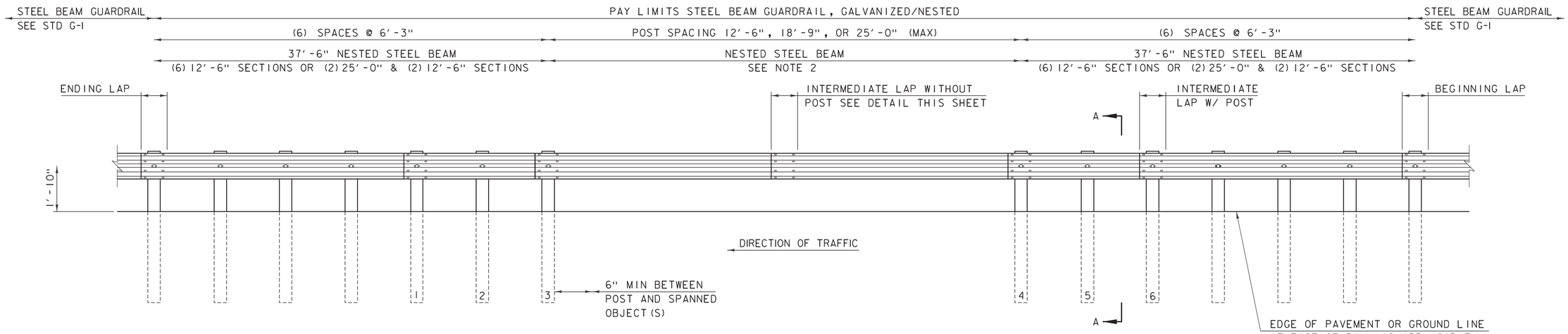

LONGSPAN STEEL BEAM GUARDRAIL ELEVATION

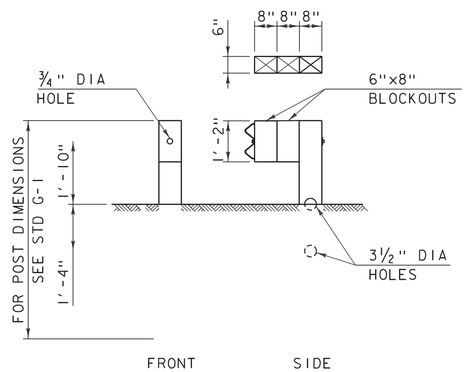

SECTION A-A

SECTION A-A TYPICAL FOR POST 1-6.
SEE NOTES 3 AND 4

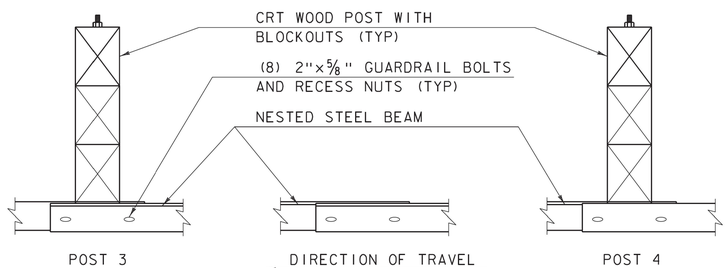

INTERMEDIATE LAP WITHOUT POST

NOTES:

1. RAIL MEETS TEST LEVEL 3 REQUIREMENTS OF NCHRP REPORT 350.
2. THERE SHALL BE NO MORE THAN ONE SPLICE IN THE LONGSPAN LOCATION.
3. POSTS 1THRU 6 ARE BREAKAWAY CONTROLLED RELEASING TERMINAL (CRT) POSTS.
4. POSTS 1THRU 6 HAVE TWO 6"x8" BLOCKOUTS.
5. ON POSTS 1THRU 6, GUARDRAIL BOLT "D", AS SHOWN ON STD GI, SHALL BE 26" LONG.
6. ON ALL POSTS WHERE THE RAIL IS NESTED GUARDRAIL BOLT "A", AS SHOWN ON STD GI, SHALL BE 2" LONG.
7. CLEAR AREA BEHIND BACK OF RAIL SHALL BE:
   5'-0" MINIMUM FOR OBSTRUCTIONS LESS THAN OR EQUAL TO THE HEIGHT OF RAIL.
   6'-0" FOR OBSTRUCTIONS TALLER THAN THE TOP OF RAIL.
8. W6x9 STEEL POST MAY BE REPLACED WITH CRT WOOD POST WITH THE APPROVAL OF THE ENGINEER.
9. ALL MATERIALS NECCISSARY FOR THE ASSEMBLY OF THE RAIL MUST MEET THE REQUIREMENTS OF STD G-1 UNLESS OTHERWISE NOTED.
10. GUARDRAIL SECTIONS SHALL BE LAPPED IN THE DIRECTION OF TRAFFIC FLOW FOR THE LANE NEAREST THE GUARDRAIL.

REVISIONS	
NOVEMBER 25, 2013	APPROVED FOR USE BY VAOT STRUCTURES SECTION
JANUARY 3, 2014	APPROVED FOR USE BY VAOT STRUCTURES SECTION

LONGSPAN STEEL BEAM GUARDRAIL, GALVANIZED

VERMONT AGENCY OF TRANSPORTATION
STRUCTURES - SECTION

STRUCTURES DETAIL SD-366.00