STATE OF VERMONT
AGENCY OF TRANSPORTATION

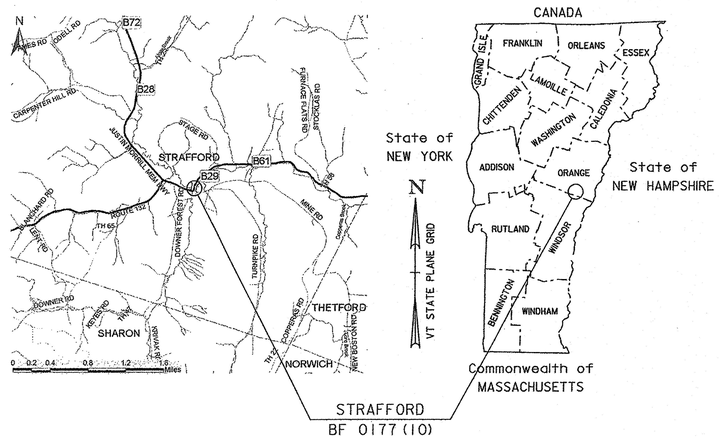

PROPOSED IMPROVEMENT
BRIDGE PROJECT

TOWN OF STRAFFORD
COUNTY OF ORANGE

ROUTE NO : FAS 0177 (TH 1), RURAL MAJOR COLLECTOR, CLASS 2 TOWN HIGHWAY BRIDGE NO : 29

PROJECT LOCATION: APPROXIMATELY 0.04 MILES NORTH OF THE INTERSECTION OF TOWN HIGHWAY 1 (FAS 0177) AND TOWN HIGHWAY 4.

PROJECT DESCRIPTION: REMOVAL OF THE EXISTING STRUCTURE AND REPLACEMENT WITH A NEW STRUCTURE.

LENGTH OF STRUCTURE: 60.56 FEET
LENGTH OF ROADWAY: 239.44 FEET
LENGTH OF PROJECT: 300.00 FEET

RECORD PLANS

CONTRACTOR: MILLER CONSTRUCTION, INC – WINDSOR, VT

RESIDENT ENGINEER: TOM CHASE

CONSTRUCTION BEGAN: JULY 10, 2017

CONSTRUCTION COMPLETE: SEPTEMBER 22, 2017

RECORD PLANS BY: TOM CHASE & AARON WEAVER

I HEREBY CERTIFY THAT ALL THE CONSTRUCTION REQUIRED BY THIS SET OF DRAWINGS HAS BEEN ACCOMPLISHED AS INDICATED HEREIN.

BY Thomas A. Chase RESIDENT ENGINEER

DATE 04/10/18

NOTE: Any further information concerning final quantities, amounts or other details relative to this project may be found at Central Files in the electronic archives.

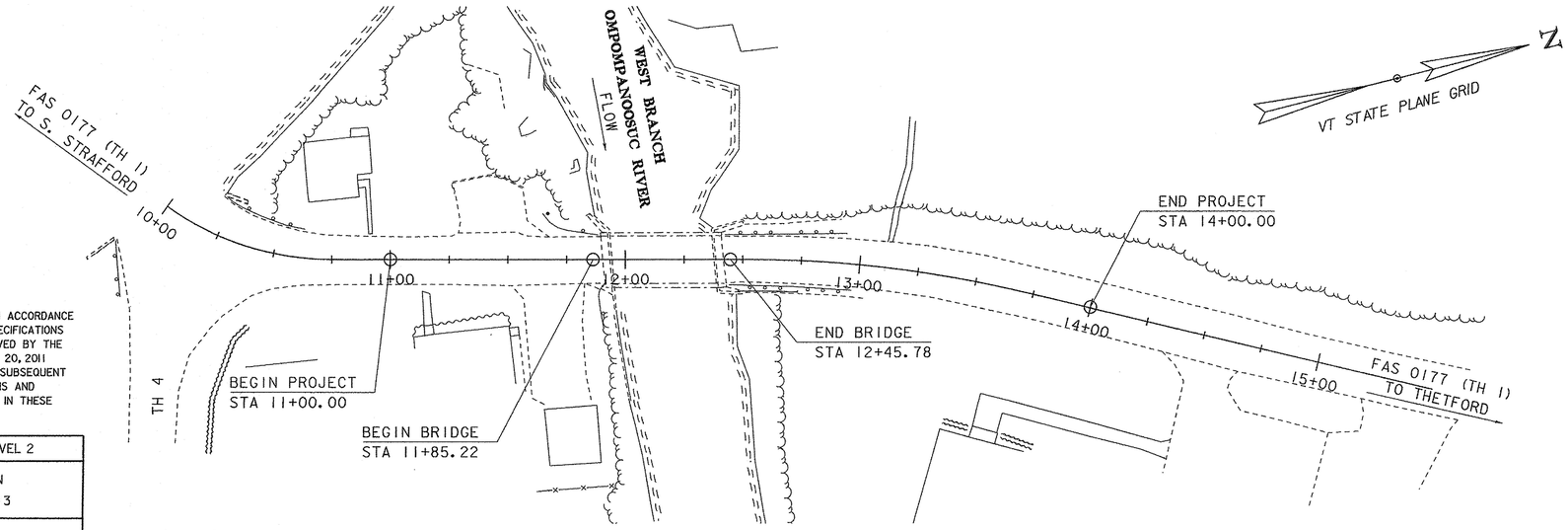

CONSTRUCTION IS TO BE CARRIED ON IN ACCORDANCE WITH THESE PLANS AND THE STANDARD SPECIFICATIONS FOR CONSTRUCTION DATED 2011, AS APPROVED BY THE FEDERAL HIGHWAY ADMINISTRATION ON JULY 20, 2011 FOR USE ON THIS PROJECT, INCLUDING ALL SUBSEQUENT REVISIONS AND SUCH REVISED SPECIFICATIONS AND SPECIAL PROVISIONS AS ARE INCORPORATED IN THESE PLANS.

QUALITY ASSURANCE PROGRAM : LEVEL 2	
SURVEYED BY :	R. GILMAN
SURVEYED DATE :	04/18/2013
DATUM	
VERTICAL	NAVD88
HORIZONTAL	NAD 83 (2011)

DIRECTOR OF PROJECT DELIVERY
APPROVED [signature] DATE 9/6/2016

PROJECT MANAGER : KRISTIN HIGGINS, P.E.

PROJECT NAME : STRAFFORD
PROJECT NUMBER : BF 0177(10)

SHEET 1 OF 52 SHEETS

STATE OF VERMONT
AGENCY OF TRANSPORTATION

PRELIMINARY INFORMATION SHEET (BRIDGE)

Version
LRFD

INDEX OF SHEETS

PLAN SHEETS

1	TITLE SHEET
2	PRELIMINARY INFORMATION SHEET
3 - 4	PROJECT NOTES
5 - 7	QUANTITY SHEETS
8 - 9	TYPICAL SECTIONS
10	LEGEND SHEET
11	TIE SHEET
12	EXISTING CONDITIONS
13	LAYOUT SHEET
14	MAINLINE PROFILE & BANKING DIAGRAM
15	TRAFFIC CONTROL PLAN
16	DRAINAGE LAYOUT SHEET
17	UTILITY LAYOUT SHEET
18	BORING LAYOUT SHEET
19 - 20	BORING LOGS
21	RAIL LAYOUT SHEET
22	BRIDGE RAIL DETAILS SHEET
23	TRANSITION RAIL DETAILS SHEET
24	FRAMING PLAN SHEET
25 - 26	PBU DETAIL SHEETS
27	PBU AND BEARING DETAILS SHEET
28	ABUTMENT TYPICALS SHEET
29	ABUTMENT 1 PLAN SHEET
30	ABUTMENT 2 PLAN SHEET
31	ABUTMENT 1 REINFORCING SHEET
32	ABUTMENT 2 REINFORCING SHEET
33	CLOSURE POUR SHEET
34	WING WALL DETAILS SHEET
35	APPROACH SLAB DETAILS SHEET
36 - 41	MAINLINE SECTIONS
42 - 47	CHANNEL SECTIONS
48	EPSC NARRATIVE
49	EPSC PLAN SHEET
50	EPSC DETAILS SHEET
51	ROW LAYOUT SHEET
52	ROW DETAIL SHEET

STANDARDS LIST

B-71	STANDARD FOR RESIDENTIAL AND COMMERCIAL DRIVES	07-08-2005
C-10	CURBING	02-11-2008
D-1	PRECAST REINFORCED CONCRETE DROP INLET DETAILS	06-01-1994
D-15	PRECAST REINF CONC. MH-GRATES, CAST IRON GRATE WITH FRAME, TYPE D & E	06-01-1994
E-193	PAVEMENT MARKING DETAILS	08-18-1995
G-1	STEEL BEAM GUARDRAIL DETAILS (POST, DELINEATOR, TYPICALS)	11-10-2015
G-1D	STEEL BEAM GUARDRAIL DETAILS (END TERMINAL, ANCHOR, MEDIAN)	02-10-2014
G-4	PLANK RAIL, GUIDE POSTS, MARKER POSTS	06-01-1994
G-19	GENERIC GRADING PLANS FOR GUARDRAIL END TERMINALS	11-15-2002
T-1	TRAFFIC CONTROL GENERAL NOTES	04-25-2016
T-10	CONVENTIONAL ROADS CONSTRUCTION APPROACH SIGNING	08-06-2012
T-17	TRAFFIC CONTROL MISCELLANEOUS DETAILS	08-06-2012
T-24	TRAFFIC CONTROL FOR MAINTENANCE PAVEMENT MARKING OPERATION	08-06-2012
T-28	CONSTRUCTION SIGN DETAILS	08-06-2012
T-29	CONSTRUCTION SIGN DETAILS	08-06-2012
T-30	CONSTRUCTION SIGN DETAILS	08-06-2012
T-31	CONSTRUCTION SIGN DETAILS	08-06-2012
T-40	DELINEATORS AND MILEPOSTS	01-02-2013
T-42	BRIDGE NUMBER PLAQUE	04-09-2014
T-45	SQUARE TUBE SIGN POST AND ANCHOR	01-02-2013

DETAIL SHEETS

SD-501.00	CONCRETE DETAILS AND NOTES	2/9/2012
SD-502.00	CONCRETE DETAILS AND NOTES	10/10/2012
SD-516.10	BRIDGE JOINT ASHPALTIC PLUG	8/29/2011
SD-601.00	STRUCTURAL STEEL DETAILS AND NOTES	6/4/2010
SD-602.00	STRUCTURAL STEEL PLATE GIRDER DETAILS AND NOTES	5/2/2011
HSD-400.01	SAFETY EDGE DETAILS	3/29/2016
HSD-621.06	GUARDRAIL TERMINAL LABEL DETAIL	11/3/2015

TRAFFIC DATA

YEAR	ADT	DHV	% D	% T	ADTT
2016	1400	180	55	3.7	65
2036	1500	190	55	6	110

20 year ESAL for flexible pavement from 2016 to 2036 : 228000

40 year ESAL for flexible pavement from 2016 to 2056 : 542000

Design Speed : 25 mph

AS BUILT "REBAR" DETAIL

LEVEL I	LEVEL II	LEVEL III
TYPE:	TYPE:	TYPE:
GRADE:	GRADE:	GRADE:

FINAL HYDRAULIC REPORT

HYDROLOGIC DATA

Date: April 2015

DRAINAGE AREA : 34.7 sq. mi.
CHARACTER OF TERRAIN : Mostly forested, small ponds, rural
STREAM CHARACTERISTICS : Sinuous and alluvial
NATURE OF STREAMBED : Cobbles, gravel, and sand

PEAK FLOW DATA

Q 2.33 =	1125 cfs	Q 50 =	3900 cfs
Q 10 =	2350 cfs	Q 100 =	4700 cfs
Q 25 =	3150 cfs	Q 500 =	6500 cfs

DATE OF FLOOD OF RECORD : Unknown
ESTIMATED DISCHARGE: Unknown
WATER SURFACE ELEV.: Unknown
NATURAL STREAM VELOCITY : @ Q50 = 8.4 fps
ICE CONDITIONS : Moderate
DEBRIS: Light to moderate
DOES THE STREAM REACH MAXIMUM HIGHWATER ELEV. RAPIDLY? No
IS ORDINARY RISE RAPID? No
IS STAGE AFFECTED BY UPSTREAM OR DOWNSTREAM CONDITIONS? No
IF YES, DESCRIBE:

WATERSHED STORAGE: <1% HEADWATERS:
UNIFORM: X
IMMEDIATELY ABOVE SITE:

EXISTING STRUCTURE INFORMATION

STRUCTURE TYPE: Single span concrete t-beam
YEAR BUILT: 1923
CLEAR SPAN(NORMAL TO STREAM): 43'
VERTICAL CLEARANCE ABOVE STREAMBED: ~10'
WATERWAY OF FULL OPENING: 425 sq. ft.
DISPOSITION OF STRUCTURE: Remove and replace
TYPE OF MATERIAL UNDER SUBSTRUCTURE: See borings

WATER SURFACE ELEVATIONS AT:

Q2.33 =	879.8'	VELOCITY =	5.2 fps
Q10 =	882.3'	"	7.5 fps
Q25 =	883.3'	"	9.5 fps
Q50 =	885.9'	"	9.5 fps
Q100 =	886.5'	"	11.2 fps

LONG TERM STREAMBED CHANGES: None noted

IS THE ROADWAY OVERTOPPED BELOW Q100: Yes
FREQUENCY: Below Q50
RELIEF ELEVATION: 884.7'
DISCHARGE OVER ROAD @Q100: 645 cfs

UPSTREAM STRUCTURE

TOWN:	Strafford	DISTANCE:	8600'
HIGHWAY # :	TH 2	STRUCTURE #:	28
CLEAR SPAN:	26'	CLEAR HEIGHT:	
YEAR BUILT:	1919	FULL WATERWAY:	
STRUCTURE TYPE:	Concrete t-beam		

DOWNSTREAM STRUCTURE

TOWN:	Strattford	DISTANCE:	4040'
HIGHWAY # :	TH 39	STRUCTURE #:	61
CLEAR SPAN:	62'	CLEAR HEIGHT:	
YEAR BUILT:	1919, Reconstructed in 1971	FULL WATERWAY:	
STRUCTURE TYPE:	Rolled beam		

LRFR LOAD RATING FACTORS

LOADING LEVELS	TRUCK						
	H-20	HL-93	3S2	6 AXLE	3A. STR.	4A. STR.	5A. SEMI
TONNAGE	**20**	**36**	**36**	**66**	**30**	**34.5**	**38**
INVENTORY	2.1	1.15					
POSTING							
OPERATING	2.73	1.49	2.46	1.51	1.96	1.76	2.03
COMMENTS:							

PROPOSED STRUCTURE

STRUCTURE TYPE: Single span steel beam

CLEAR SPAN(NORMAL TO STREAM): 53'
VERTICAL CLEARANCE ABOVE STREAMBED: ~11.5'
WATERWAY OF FULL OPENING: 565 sq. ft.

WATER SURFACE ELEVATIONS AT:

Q2.33 =	879.4'	VELOCITY=	5.2 fps
Q10 =	882.0'	"	7.0 fps
Q25 =	883.1'	"	8.3 fps
Q50 =	884.0'	"	9.6 fps
Q100 =	884.8'	"	11.4 fps

IS THE ROADWAY OVERTOPPED BELOW Q100: No
FREQUENCY: N/A
RELIEF ELEVATION: 884.7'
DISCHARGE OVER ROAD @Q100: N/A

AVERAGE LOW ELEVATION OF SUPERSTRUCTURE: 885.0'
VERTICAL CLEARANCE: @ Q50 = 1.0'

SCOUR: 4' of contraction scour up to Q200
Piles should be freestanding up to 6' below streambed elevation.
REQUIRED CHANNEL PROTECTION: Stone Fill Type III

PERMIT INFORMATION

AVERAGE DAILY FLOW:		DEPTH OR ELEVATION:
ORDINARY LOW WATER:		
ORDINARY HIGH WATER:		

TEMPORARY BRIDGE REQUIREMENTS

STRUCTURE TYPE: None required
CLEAR SPAN (NORMAL TO STREAM):
VERTICAL CLEARANCE ABOVE STREAMBED:
WATERWAY AREA OF FULL OPENING:

ADDITIONAL INFORMATION

TRAFFIC MAINTENANCE NOTES

1. MAINTAIN TRAFFIC ON AN OFF SITE DETOUR.
2. TRAFFIC SIGNALS ARE NOT NECESSARY.
3. SIDEWALKS ARE NOT NECESSARY

DESIGN VALUES

1. DESIGN LIVE LOAD		HL-93
2. FUTURE PAVEMENT	dp:	0.0 INCH
3. DESIGN SPAN	L:	57.00 FT
4. MIN. MID-SPAN POS. CAMBER @ RELEASE (PRESTRESSED UNITS)	Δ:	- - -
5. PRESTRESSING STRAND	fy:	- - -
6. PRESTRESSED CONCRETE STRENGTH	$f'c$:	- - -
7. PRESTRESSED CONCRETE RELEASE STRENGTH	$f'ci$:	- - -
8. CONCRETE, HIGH PERFORMANCE CLASS AA	$f'c$:	- - -
9. CONCRETE, HIGH PERFORMANCE CLASS A	$f'c$:	- - -
10. CONCRETE, HIGH PERFORMANCE CLASS B	$f'c$:	- - -
11. CONCRETE, CLASS C	$f'c$:	- - -
12. REINFORCING STEEL	fy:	60 KSI
13. STRUCTURAL STEEL AASHTO M270(GALVANIZED OR METALLIZED)	fy:	50 KSI
14. NOMINAL BEARING RESISTANCE OF SOIL	qn:	4.0 KSF
15. SOIL BEARING RESISTANCE FACTOR (REFER TO AASHTO LRFD)	ϕ:	- - -
16. NOMINAL BEARING RESISTANCE OF ROCK	qn:	10.0 KSF
17. ROCK BEARING RESISTANCE FACTOR (REFER TO AASHTO LRFD)	ϕ:	- - -
18. PILE RESISTANCE FACTOR	ϕ:	0.65
19. LATERAL PILE DEFLECTION	Δ:	- - -
20. BASIC WIND SPEED	$V3s$:	- - -
21. MINIMUM GROUND SNOW LOAD	pg:	- - -
22. SEISMIC DATA PGA: 0.65	Ss:	- - -
	$S1$:	- - -
23.		
24.		- - -
25.		- - -
26.		- - -

PROJECT NAME: **STRAFFORD**
PROJECT NUMBER: **BF 0177(10)**

FILE NAME: **s13j088excel.dgn**
PROJECT LEADER: **K. HIGGINS**
DESIGNED BY: **J. GRIGAS**
PRELIMINARY INFORMATION SHEET

PLOT DATE: 3/10/2016
DRAWN BY: **T. MATTHEWS**
CHECKED BY: **J. GRIGAS**
SHEET 2 OF 52

GENERAL

1. ALL MATERIALS AND CONSTRUCTION SHALL CONFORM TO THE VERMONT AGENCY OF TRANSPORTATION 2011 STANDARD SPECIFICATIONS FOR CONSTRUCTION, THE 2014 AASHTO LRFD BRIDGE DESIGN SPECIFICATIONS, AND THEIR LATEST REVISIONS.

2. CONTRACTOR SHALL BE RESPONSIBLE FOR COORDINATING CONSISTENCY BETWEEN THE FABRICATOR'S SHOP DRAWINGS AND ENSURING THAT ALL PRECAST AND RAIL COMPONENTS FIT TOGETHER.

3. ALL DIMENSIONS ARE HORIZONTAL OR VERTICAL, AND ARE GIVEN AT 68 DEGREES FAHRENHEIT, UNLESS NOTED OTHERWISE.

4. NO ADJUSTMENTS TO THE BITUMINOUS WEARING SURFACE ON THE BRIDGE SHALL BE MADE TO ACCOUNT FOR THE DIFFERENCE BETWEEN BEAM CAMBER AND THE THEORETICAL ROADWAY PROFILE.

5. THE REMOVAL OF EXISTING STRUCTURE WILL BE PAID FOR UNDER ITEM 529.15, "REMOVAL OF STRUCTURE". THIS WORK SHALL INCLUDE REMOVAL OF THE ENTIRE SUPERSTRUCTURE AND ANY PORTIONS OF THE EXISTING ABUTMENTS THAT FALL OUTSIDE THE LIMITS OF STRUCTURE EXCAVATION OR UNCLASSIFIED CHANNEL EXCAVATION.

TRAFFIC CONTROL

6. THE CONTRACTOR SHALL BE RESPONSIBLE FOR THE DESIGN AND IMPLEMENTATION OF A SITE SPECIFIC TRAFFIC CONTROL PLAN FOR ALL STAGES OF CONSTRUCTION. THE PLAN SHALL CLEARLY DETAIL HOW TRAFFIC WILL BE MAINTAINED. THE PLAN SHALL SPECIFY ALL CONSTRUCTION ACTIVITIES REQUIRING ALTERNATING ONE WAY TRAFFIC, RELATE THOSE ACTIVITIES TO THE CONSTRUCTION SCHEDULE, AND SHOW APPROPRIATE TEMPORARY TRAFFIC CONTROL. ALL COSTS WILL BE INCLUDED IN ITEM 900.645 "SPECIAL PROVISION (TRAFFIC CONTROL, ALL-INCLUSIVE)".

7. INSTALLATION OF TEMPORARY TRAFFIC CONTROL SIGNS SHALL NOT BLOCK ANY EXISTING TRAFFIC CONTROL SIGN ASSEMBLIES. THE CONTRACTOR SHALL TRY TO MAINTAIN AT LEAST 200 FEET BETWEEN SIGN ASSEMBLIES.

8. TH1, IN PROXIMITY OF THE PROJECT, WILL BE CLOSED DURING THE BRIDGE CLOSURE PERIOD. IF THE TOWN ELECTS TO SIGN A LOCAL DETOUR, THEN NO SIGNS WILL BE PERMITTED IN A STATE HIGHWAY RIGHT OF WAY WITHOUT ACQUIRING A VSA, TITLE 19, SECTION 1111 PERMIT. ANY DETOUR SIGNED IS THE SOLE RESPONSIBILITY OF THE TOWN OF STRAFFORD.

CONCRETE

9. ALL LIFTING POINTS IN THE SUPERSTRUCTURE SHALL BE REMOVABLE TO THE MINIMUM CLEAR COVER FOR REINFORCING STEEL SPECIFIED IN THE PLANS. THE LIFTING POINTS SHALL BE DETAILED IN THE APPROPRIATE FABRICATION DRAWING. PAYMENT FOR THIS WORK WILL BE CONSIDERED INCIDENTAL TO ITEM "900.640 SPECIAL PROVISION (PREFABRICATED BRIDGE UNIT SUPERSTRUCTURE) (FPQ)".

10. ALL RECESSED LIFTING POINTS AND BLOCK OUTS SHALL BE FILLED WITH A TYPE IV MORTAR PER SUBSECTION 707.03. PAYMENT WILL BE CONSIDERED INCIDENTAL TO THE APPROPRIATE PRECAST ITEM.

11. THE METHOD OF FORMING FOR SUBSEQUENT POURS AFTER PLACING THE PREFABRICATED BRIDGE UNIT SUPERSTRUCTURE SHALL BE DETERMINED BY THE CONTRACTOR. THE CONTRACTOR IS ENCOURAGED TO WORK WITH THE FABRICATOR IF ADDITIONAL SUPPORTS ARE REQUIRED. IN NO CASE SHALL THE CONTRACTOR ATTACH ADDITIONAL FORM OR SCREED SUPPORTS BY DRILLING OR SIMILAR MEANS INTO ANY PRECAST SUPERSTRUCTURE UNIT.

12. BRIDGE RAIL SHALL NOT BE POURED UNTIL THE CONCRETE IN THE LONGITUDINAL CLOSURE POUR BETWEEN THE BEAMS HAS REACHED A MINIMUM STRENGTH OF 4,000 PSI.

13. THE EFFECTIVE CURE TIME OF THE BRIDGE RAIL MAY BE REDUCED TO A MINIMUM OF (7) SEVEN DAYS PROVIDED THAT THE CONCRETE HAS REACHED 85% OF THE 28-DAY COMPRESSIVE STRENGTH. THE BRIDGE RAIL CONCRETE SHALL MEET ALL OTHER SPECIFICATIONS OF SECTION 501 OF THE STANDARD SPECIFICATIONS.

14. WATER REPELLENT, SILANE SHALL BE APPLIED TO ALL EXPOSED CONCRETE SURFACES, EXCEPT THE UNDERSIDE OF THE DECK BETWEEN DRIP NOTCHES.

15. THE BRIDGE RAIL AND APPROACH SLAB CONCRETE SHALL OBTAIN 85 PERCENT OF THE SPECIFIED 28 DAY COMPRESSIVE STRENGTH PRIOR TO ANY VEHICULAR LOADING.

REINFORCING STEEL

16. TEST BARS SHALL BE PROVIDED IN ACCORDANCE WITH THE "VERMONT AGENCY OF TRANSPORTATION MATERIAL SAMPLING MANUAL" AVAILABLE ON THE AGENCY WEBSITE. A MINIMUM OF TWO TEST SECTIONS ARE REQUIRED FOR EACH SIZE, BRAND, AND GRADE OR TYPE OF REINFORCING. SEE THE MANUAL FOR ACCEPTABLE DIMENSIONS OF TEST SECTIONS. ALL COSTS ASSOCIATED WITH PROVIDING BARS FOR TESTING WILL BE INCLUDED IN THE UNIT PRICE BID FOR THE APPROPRIATE PRECAST ITEM.

17. MINIMUM CLEAR COVER FOR REINFORCING STEEL SHALL BE AS FOLLOWS:

ALONG BACK FACES OF WALLS AGAINST EARTH	2 INCH
ALONG TOP SURFACE OF DECK SLAB:	2 ½ INCH
ALONG BOTTOM SURFACE OF PBU:	1 ½ INCH
ELSEWHERE UNLESS OTHERWISE INDICATED:	3 INCH

PRECAST ABUTMENTS AND POST-TENSIONING

18. IF A VERTICAL CONSTRUCTION JOINT IS REQUIRED BY THE CONTRACTOR FOR SHIPMENT OF THE ABUTMENTS, THE SECTIONS SHALL BE KEYED AND MATCH CAST. A JOINT DETAIL SHALL BE SHOWN ON THE FABRICATION DRAWINGS. EACH JOINT SHALL NOT BE LOCATED CLOSER THAN 1'-0" AWAY FROM THE EDGE OF PILE CAVITY. NO LESS THAN TWO PILES SHALL SUPPORT EACH PRECAST ABUTMENT SECTION.

19. EPOXY BONDING COMPOUND SHALL BE APPLIED TO ALL VERTICAL MATCH CAST CONSTRUCTION JOINTS. SEE AGENCY WEBSITE FOR A LIST OF APPROVED EPOXY BONDING COMPOUNDS. PAYMENT FOR EPOXY WILL BE INCLUDED IN THE UNIT PRICE BID FOR THE APPROPRIATE PRECAST ITEM.

20. POST-TENSIONING AND ASSOCIATED ITEMS ARE ONLY REQUIRED IF THE PILE CAP IS CONSTRUCTED OF MORE THAN ONE UNIT. POST-TENSIONING STRANDS SHALL BE COVERED WITH SEAMLESS POLYPROPYLENE SHEATH (WITH CORROSION INHIBITOR GREASE BETWEEN SHEATH AND STRAND) FOR THE LENGTH OF THE STRAND, EXCEPT AT ANCHORAGE LOCATIONS. ANY POST-TENSIONING STRANDS AND CONDUITS SHALL ADHERE TO THE REQUIREMENTS OF SECTION 510 – PRESTRESSED CONCRETE. GALVANIZED ANCHOR ASSEMBLIES, CONDUIT, POLYPROPYLENE SHEATH, AND POST-TENSIONING STRANDS WILL BE INCLUDED IN THE UNIT PRICE BID FOR THE APPROPRIATE PRECAST ITEM.

21. POST-TENSIONING SHALL BE COMPLETED PRIOR TO POURING THE PILE CAVITY CLOSURE POUR.

	CONCRETE		REINFORCING STEEL	
STRUCTURAL ELEMENT	TO MEET THE REQUIREMENTS FOR:	PAYMENT TO BE INCLUDED IN:	TO MEET THE REQUIREMENTS FOR:	PAYMENT TO BE INCLUDED IN:
PREFABRICATED BRIDGE UNITS (INCLUDES REINFORCING STEEL LABELED SR2-SR6 AND ER1-ER5)	900.640 "SPECIAL PROVISION (PREFABRICATED BRIDGE UNIT SUPERSTRUCTURE)"	ITEM 900.640 "SPECIAL PROVISION (PREFABRICATED BRIDGE UNIT SUPERSTRUCTURE) (FPQ)"	507.11 "REINFORCING STEEL, LEVEL I (EPOXY COATED)"	ITEM 900.640 "SPECIAL PROVISION (PREFABRICATED BRIDGE UNIT SUPERSTRUCTURE) (FPQ)"
SUPERSTRUCTURE LONGITUDINAL CLOSURE POURS (INCLUDES REINFORCING STEEL LABELED SR1)	900.608 "SPECIAL PROVISION (HIGH PERFORMANCE CONCRETE, RAPID SET)"	900.608 "SPECIAL PROVISION (HIGH PERFORMANCE CONCRETE, RAPID SET) (FPQ)"	507.11 "REINFORCING STEEL, LEVEL I (EPOXY COATED)"	507.11 "REINFORCING STEEL, LEVEL I (EPOXY COATED) (FPQ)"
PCU 1 (INCLUDES REINFORCING STEEL LABELED A1-A10)	540.10 "PRECAST CONCRETE STRUCTURE" OR 900.645 "SPECIAL PROVISION (CONTRACTOR FABRICATED PRECAST CONCRETE STRUCTURE)"	ITEM 540.10 "PRECAST CONCRETE STRUCTURE (ABUTMENT #1)" OR ITEM 900.645 "SPECIAL PROVISION (CONTRACTOR FABRICATED PRECAST CONCRETE STRUCTURE) (ABUTMENT #1)"	507.11 "REINFORCING STEEL, LEVEL I" FOR REINFORCING COMPLETELY BELOW BRIDGE SEAT. 507.11 "REINFORCING STEEL, LEVEL I (EPOXY COATED)" FOR REINFORCING STEEL EXTENDING ABOVE BRIDGE SEAT.	ITEM 540.10 "PRECAST CONCRETE STRUCTURE (ABUTMENT #1)" OR ITEM 900.645 "SPECIAL PROVISION (CONTRACTOR FABRICATED PRECAST CONCRETE STRUCTURE) (ABUTMENT #1)"
PCU 2 (INCLUDES REINFORCING STEEL LABELED A1, A3-A6, AND A8-A10)	540.10 "PRECAST CONCRETE STRUCTURE" OR 900.645 "SPECIAL PROVISION (CONTRACTOR FABRICATED PRECAST CONCRETE STRUCTURE)"	ITEM 540.10 "PRECAST CONCRETE STRUCTURE (ABUTMENT #2)" OR ITEM 900.645 "SPECIAL PROVISION (CONTRACTOR FABRICATED PRECAST CONCRETE STRUCTURE) (ABUTMENT #2)"	507.11 "REINFORCING STEEL, LEVEL I" FOR REINFORCING COMPLETELY BELOW BRIDGE SEAT. 507.11 "REINFORCING STEEL, LEVEL I (EPOXY COATED)" FOR REINFORCING STEEL EXTENDING ABOVE BRIDGE SEAT.	ITEM 540.10 "PRECAST CONCRETE STRUCTURE (ABUTMENT #2)" OR ITEM 900.645 "SPECIAL PROVISION (CONTRACTOR FABRICATED PRECAST CONCRETE STRUCTURE) (ABUTMENT #2)"
PCU 3 (INCLUDES REINFORCING STEEL LABELED WR1-WR3)	540.10 "PRECAST CONCRETE STRUCTURE" OR 900.645 "SPECIAL PROVISION (CONTRACTOR FABRICATED PRECAST CONCRETE STRUCTURE)"	ITEM 540.10 "PRECAST CONCRETE STRUCTURE (ABUTMENT #1)" OR ITEM 900.645 "SPECIAL PROVISION (CONTRACTOR FABRICATED PRECAST CONCRETE STRUCTURE) (ABUTMENT #1)"	507.11 "REINFORCING STEEL, LEVEL I" FOR REINFORCING COMPLETELY BELOW BRIDGE SEAT. 507.11 "REINFORCING STEEL, LEVEL I (EPOXY COATED)" FOR REINFORCING STEEL EXTENDING ABOVE BRIDGE SEAT.	ITEM 540.10 "PRECAST CONCRETE STRUCTURE (ABUTMENT #1)" OR ITEM 900.645 "SPECIAL PROVISION (CONTRACTOR FABRICATED PRECAST CONCRETE STRUCTURE) (ABUTMENT #1)"
PCU 4-5 (INCLUDES REINFORCING STEEL LABELED WR1-WR3)	540.10 "PRECAST CONCRETE STRUCTURE" OR 900.645 "SPECIAL PROVISION (CONTRACTOR FABRICATED PRECAST CONCRETE STRUCTURE)"	ITEM 540.10 "PRECAST CONCRETE STRUCTURE (ABUTMENT #2)" OR ITEM 900.645 "SPECIAL PROVISION (CONTRACTOR FABRICATED PRECAST CONCRETE STRUCTURE) (ABUTMENT #2)"	507.11 "REINFORCING STEEL, LEVEL I" FOR REINFORCING COMPLETELY BELOW BRIDGE SEAT. 507.11 "REINFORCING STEEL, LEVEL I (EPOXY COATED)" FOR REINFORCING STEEL EXTENDING ABOVE BRIDGE SEAT.	ITEM 540.10 "PRECAST CONCRETE STRUCTURE (ABUTMENT #2)" OR ITEM 900.645 "SPECIAL PROVISION (CONTRACTOR FABRICATED PRECAST CONCRETE STRUCTURE) (ABUTMENT #2)"
ABUTMENT PILE CAVITIES	900.608 "SPECIAL PROVISION (HIGH PERFORMANCE CONCRETE, RAPID SET)"	ITEM 900.608 "SPECIAL PROVISION (HIGH PERFORMANCE CONCRETE, RAPID SET) (FPQ)"	N/A	N/A
ABUTMENT CLOSURE/END DIAPHRAGM CLOSURE POUR (INCLUDES REINFORCING STEEL LABELED C1-C7)	900.608 "SPECIAL PROVISION (HIGH PERFORMANCE CONCRETE, RAPID SET)"	ITEM 900.608 "SPECIAL PROVISION (HIGH PERFORMANCE CONCRETE, RAPID SET) (FPQ)"	507.11 "REINFORCING STEEL, LEVEL I (EPOXY COATED)"	507.11 "REINFORCING STEEL, LEVEL I (EPOXY COATED) (FPQ)"
CAST-IN-PLACE APPROACH SLABS (INCLUDES REINFORCING STEEL DETAILED IN APPROACH SLAB DETAILS SHEET)	501.34 "CONCRETE, HIGH PERFORMANCE CLASS B"	ITEM "501.34 CONCRETE, HIGH PERFORMANCE CLASS B (FPQ)"	507.11 "REINFORCING STEEL, LEVEL I (EPOXY COATED)"	507.11 "REINFORCING STEEL, LEVEL I (EPOXY COATED) (FPQ)"
TEXAS STYLE BRIDGE RAIL (INCLUDES REINFORCING STEEL LABELED BR1-BR3)	501.34 "CONCRETE, HIGH PERFORMANCE CLASS A"	ITEM 900.640 "SPECIAL PROVISION (BRIDGE RAILING, TEXAS)"	507.11 "REINFORCING STEEL, LEVEL I (EPOXY COATED)"	ITEM 900.640 "SPECIAL PROVISION (BRIDGE RAILING, TEXAS)"

PROJECT NAME: STRAFFORD
PROJECT NUMBER: BF 0177(10)

FILE NAME: s13j088gen.dgn
PROJECT LEADER: K. HIGGINS
DESIGNED BY: J. GRIGAS
PROJECT NOTES 1

PLOT DATE: 03-OCT-2016
DRAWN BY: J. GRIGAS
CHECKED BY: G. LAROCHE

22. GALVANIZE ANCHOR ASSEMBLIES AFTER FABRICATION ACCORDING TO AASHTO M232M/M 232.

23. DESIGN VALUES
    a. CONCRETE COMPRESSIVE STRENGTH: f'c = 5,000 PSI.
    b. POST-TENSIONING STRANDS: 0.5 INCH DIAMETER, 270 KSI, LOW RELAXATION 7-WIRE STRANDS.
    c. ASSUMED MODULUS OF ELASTICITY IS 28,500 KSI.
    d. THERE SHALL BE 2 STRANDS PER CONDUIT.
    e. THE JACKING FORCE PER STRAND = 32 KIPS

24. THE CORRUGATED STEEL PIPE SHALL MEET THE REQUIREMENTS OF SUBSECTION 711.01 AND SHALL BE GALVANIZED PER SUBSECTION 726.08 OF THE STANDARD SPECIFICATIONS. ALL COSTS ASSOCIATED WITH PLACING THE CORRUGATED STEEL PIPE, WILL BE INCLUDED IN THE UNIT PRICE BID FOR THE APPROPRIATE PRECAST ABUTMENT ITEM.

25. WING WALLS SHALL NOT BE BACKFILLED UNTIL THE GROUT FOR THE MECHANICAL SPLICE CONNECTORS HAS REACHED 85% OF THE MANUFACTURER SPECIFIED DESIGN STRENGTH.

PREFABRICATED BRIDGE UNITS (PBU)

26. STRUCTURAL STEEL MEMBERS DESIGNATED "CVN" IN THE PLANS SHALL BE CHARPY V-NOTCH TESTED IN ACCORDANCE WITH SUBSECTION 714.01.

27. ALL PERMANENT STRUCTURAL STEEL SHALL BE GALVANIZED OR METALLIZED AND MEET THE REQUIREMENTS OF SECTION 506 OF THE STANDARD SPECIFICATIONS.

28. TEMPORARY DIAPHRAGMS SHALL ONLY BE REQUIRED DURING THE CASTING AND CURING OF THE PBU DECK. THE TEMPORARY DIAPHRAGMS SHALL CONFORM TO AASHTO M270M/M 270 GRADE 345 (GRADE 50). PAYMENT FOR TEMPORARY DIAPHRAGMS WILL BE INCLUDED IN ITEM 900.640 "SPECIAL PROVISION (PREFABRICATED BRIDGE UNIT SUPERSTRUCTURE) (FPQ)".

29. THE DECK FOR THE PREFABRICATED BRIDGE UNITS SHALL BE CAST SIMULTANEOUSLY.

30. ANY HOLES IN THE WEBS OF THE FASCIA BEAMS NOT OTHERWISE FILLED OR IN THE DIAPHRAGM STIFFENER PLATES AFTER REMOVAL OF THE TEMPORARY DIAPHRAGMS SHALL BE FILLED WITH BUTTON HEAD BOLTS. THESE BOLTS SHALL BE TIGHTENED IN ACCORDANCE WITH SUBSECTION 506.19.

31. ANY CONNECTIONS NOT DETAILED ON THE PLANS SHALL BE DETAILED BY THE FABRICATOR AND SUBMITTED TO THE PROJECT MANAGER FOR APPROVAL.

32. ALL FIELD CONNECTIONS SHALL BE MADE WITH 7/8" DIAMETER HIGH STRENGTH BOLTS IN 15/16" DIAMETER HOLES, PER SECTION 506 UNLESS OTHERWISE NOTED.

33. FLEMING BRACKETS OR SIMILAR FALSE WORK SHALL BE PLACED AT A MAXIMUM SPACING OF 4 FEET. THE BRACKETS SHALL BEAR NEAR THE BOTTOM FLANGE AND IN NO CASE SHALL THEY BEAR ABOVE THE BOTTOM QUARTER WEB.

34. AFTER THE SUPERSTRUCTURE STEEL HAS BEEN ERECTED AT THE DECK CASTING SITE, AND BEFORE ANY FORMWORK OR OTHER LOADS ARE ADDED TO THE GIRDERS, BEAM PROFILES SHALL BE TAKEN AS DIRECTED BY THE RESIDENT ENGINEER FOR USE IN DETERMINING DECK FORMWORK ELEVATIONS.

35. BEAM WEBS AND CROSS FRAMES SHALL BE PLUMB IN FINAL POSITION.

36. ALL WELDING TO THE STRUCTURAL STEEL SHALL BE COMPLETED PRIOR TO GALVANIZING OR METALLIZING.

37. DUE TO STABILITY CONCERNS, THE CONTRACTOR SHALL SUBMIT THE ERECTION PLAN A MINIMUM OF 30 CALENDAR DAYS PRIOR TO THE BRIDGE CLOSURE PERIOD. UNDER NO CIRCUMSTANCES SHALL A BRIDGE CLOSURE PERIOD BEGIN PRIOR TO HAVING AN ACCEPTED ERECTION PLAN.

38. THE FABRICATOR MAY ALTER THE DESIGN AS DETAILED IN THESE PLANS TO ACCOMMODATE THEIR SPECIFIC OPERATION. THIS ALTERATION SHALL BE DESIGNED BY A PROFESSIONAL ENGINEER LICENSED IN STATE OF VERMONT TO MEET SPECIFIED CRITERIA AND SHALL BE APPROVED BY THE PROJECT MANAGER.

SUPERSTRUCTURE LONGITUDINAL CLOSURE POURS

39. THE CONCRETE EDGES ALONG THE LONGITUDINAL CLOSURE POURS SHALL BE TREATED TO PROVIDE A ROUGHENED/ EXPOSED COURSE AGGREGATE SURFACE. THE AMPLITUDE OF THE EXPOSED COURSE AGGREGATE SHALL BE A MINIMUM OF 1/8" AND BE COMPLETED PRIOR TO ERECTION OF THE BEAMS. THE FABRICATOR SHALL INDICATE THE METHOD USED TO ACHIEVE THIS PROFILE ON THE FABRICATION DRAWINGS AND METHOD USED TO PROTECT THE REINFORCING STEEL.

40. PRIOR TO THE CONCRETE PLACEMENT OF THE LONGITUDINAL CLOSURE POUR, THE JOINT SHALL BE SATURATED WITH WATER IN ACCORDANCE WITH SECTION 501 OF THE STANDARD SPECIFICATIONS.

ABUTMENT CLOSURE/END DIAPHRAGM

41. AFTER THE CONCRETE HAS BEEN PLACED AND THE FINISHING OPERATIONS CONCLUDED IT SHALL NOT BE WALKED ON OR DISTURBED IN ANY MANNER, INCLUDING THE REMOVAL OF FORMS FOR 12 HOURS.

H-PILES

42. THE PILES SHALL BE HP 12X63.

43. TO PREVENT DAMAGE TO THE PILES, PILE SHOES ARE REQUIRED AND SHALL CONFORM TO SUBSECTION 505.04 (f).

44. THE CONTRACTOR MAY DRIVE THE PILES IN THE 14 DAY PERIOD PRIOR TO THE BRIDGE CLOSURE PERIOD. THIS WORK SHALL BE DONE DURING DAILY LANE CLOSURES.

45. PILES SHALL BE DRIVEN TO A NOMINAL PILE DRIVING RESISTANCE (R_{NDR}) OF 255 KIPS, PROVIDED A MINIMUM PENETRATION OF 18 FEET BELOW THE BOTTOM OF PILE CAP HAS BEEN REACHED.

46. A MINIMUM OF ONE DYNAMIC PILE TESTS SHALL BE CONDUCTED AT EACH ABUTMENT. PAYMENT WILL BE MADE UNDER ITEM 505.45, "DYNAMIC PILE LOADING TEST".

47. FOR ESTIMATING PURPOSES, THE PILE TIP ELEVATIONS WERE ASSUMED AS SHOWN ON THE BORING LOGS. THE ACTUAL IN PLACE LENGTHS MAY VARY.

48. THE TOPS OF THE PILES SHALL NOT VARY FROM THE POSITION SHOWN ON THE PLANS BY MORE THAN 3 INCHES. THE PILE ORIENTATION SHALL NOT VARY BY MORE THAN 5 DEGREES. THE CONTRACTOR SHALL DEMONSTRATE TO THE SATISFACTION OF THE ENGINEER HOW THE TOLERANCES WILL BE MET. THESE MEASURES SHALL BE DEMONSTRATED IN A SUBMITTAL TO BE ACCEPTED BEFORE PILE PLACEMENT COMMENCES.

MISCELLANEOUS

49. THE "STONE FILL, TYPE III" UNDER THE BRIDGE AS SHOWN IN THE PLANS SHALL BE PLACED BEFORE THE NEW BEAMS ARE SET.

50. IT IS ANTICIPATED THAT DEWATERING ACTIVITIES WILL BE REQUIRED DURING ABUTMENT EXCAVATION, PLACEMENT, AND BACKFILLING. THE CONTRACTOR'S ATTENTION IS DIRECTED TOWARDS SUBSECTION 204.10 OF THE STANDARD SPECIFICATIONS FOR PROPERLY CONSTRUCTING, IN THE DRY, A FOUNDATION OR STRUCTURAL COMPONENT.

51. EPSC EXISTING CONDITIONS SHEET AND EPSC PLAN SHEET HAVE BEEN INCLUDED AS A REFERENCE FOR SUBMITTALS.

52. ITEM 404.65 "EMULSIFIED ASPHALT" IS TO BE APPLIED AT A RATE OF 0.025 GAL/SY BETWEEN SUCCESSIVE COURSES OF PAVEMENT AND AT A RATE OF 0.080 GAL/SY ON ALL COLD PLANED SURFACES OR AS DIRECTED BY THE ENGINEER.

53. ITEM 520.10, "MEMBRANE WATERPROOFING, SPRAY APPLIED" SHALL BE APPLIED TO THE BRIDGE DECK AS PER THE MANUFACTURER'S INSTRUCTIONS AND EXTEND ONTO THE APPROACH SLABS 2 FEET BEYOND THE BEGIN BRIDGE/END OF BRIDGE ALONG WITH 2 INCHES VERTICALLY ONTO THE SURFACE OF THE BRIDGE RAIL.

△1 **54. THE FABRICATOR MAY ALTER THE LOCATION OF THE HORIZONTAL CONSTRUCTION JOINT AS DETAILED IN THESE PLANS TO ACCOMMODATE THEIR SPECIFIC OPERATION. THIS ALTERATION SHALL BE SUBMITTED TO AND APPROVED BY THE PROJECT MANAGER. ALL ASSOCIATED COSTS WILL BE INCLUDED IN THE UNIT PRICE BID FOR THE APPROPRIATE PRECAST ITEM.**

REVISION	DATE	DESCIPTION
△1	10/17/2016	PROJECT NOTE 54 ADDED

PROJECT NAME: STRAFFORD
PROJECT NUMBER: BF 0177(10)

FILE NAME: sl3j088gen.dgn
PROJECT LEADER: K. HIGGINS
DESIGNED BY: J. GRIGAS
PROJECT NOTES 2

PLOT DATE: 17-OCT-2016
DRAWN BY: J. GRIGAS
CHECKED BY: C. LAROCHE
SHEET 4 OF 52

STATE OF VERMONT
AGENCY OF TRANSPORTATION

QUANTITY SHEET 1

SUMMARY OF ESTIMATED QUANTITIES					TOTALS		DESCRIPTIONS				DETAILED SUMMARY OF QUANTITIES		
ROADWAY	ROADWAY (NO FEDERAL/STATE	EROSION CONTROL	BRIDGE	FULL C.E. ITEMS	GRAND TOTAL	FINAL	UNIT	ITEMS	ITEM NUMBER	ROUND	QUANTITIES	UNIT	ITEMS
1					1		LS	CLEARING AND GRUBBING, INCLUDING INDIVIDUAL TREES AND STUMPS	201.10				EARTHWORK SUMMARY
1000					1000		CY	COMMON EXCAVATION	203.15				FILL AVAILABLE
10					10		CY	SOLID ROCK EXCAVATION	203.16		1000	CY	COMMON EXCAVATION (1000 x 1.0)
			275		275		CY	UNCLASSIFIED CHANNEL EXCAVATION	203.27		82.5	CY	CHANNEL EXCAVATION (275 x 0.3)
40					40		CY	GRANULAR BORROW	203.32		97.5	CY	STRUCTURE EXCAVATION (325 x 0.3)
55	125				180		CY	TRENCH EXCAVATION OF EARTH	204.20		162	CY	TRENCH EXCAVATION (180x 0.9)
2					2		CY	TRENCH EXCAVATION OF ROCK	204.21		8	CY	ROUNDING
1					1		CY	TRENCH EXCAVATION OF EARTH, EXPLORATORY (N.A.B.I.)	204.22		1350	CY	TOTAL FILL AVAILABLE
			325		325		CY	STRUCTURE EXCAVATION	204.25				FILL REQUIRED
55	75		175		305		CY	GRANULAR BACKFILL FOR STRUCTURES	204.30		0	CY	FILL (0 CY EARTH)
325					325		SY	COLD PLANING, BITUMINOUS PAVEMENT	210.10		0	CY	FACTORED FILL (x1.15)
925					925		CY	SUBBASE OF CRUSHED GRAVEL, COARSE GRADED	301.25		0	CY	ROUNDING
5					5		CY	AGGREGATE SURFACE COURSE	401.10		0	CY	TOTAL FILL REQUIRED
45					45		TON	AGGREGATE SHOULDERS	402.12		1350	CY	TOTAL WASTE
15					15		CWT	EMULSIFIED ASPHALT	404.65				
1					1		LU	PRICE ADJUSTMENT, ASPHALT CEMENT (N.A.B.I.)	406.50				SUPERPAVE BITUMINOUS CONCRETE PAVEMENT
85					85		TON	SUPERPAVE BITUMINOUS CONCRETE PAVEMENT	490.30		77	TONS	TYPE IIIS
1					1		LU	AIR VOIDS PAY ADJUSTMENT (N.A.B.I.)	490.31		8	TONS	ROUNDING
1					1		LU	MAT DENSITY PAY ADJUSTMENT (N.A.B.I.)	490.32		85	TONS	TOTAL
			50		50		CY	CONCRETE, HIGH PERFORMANCE CLASS B (FPQ)	501.34				
			1		1		LS	FURNISHING EQUIPMENT FOR DRIVING PILING	504.10				
			450		450		LF	STEEL PILING, HP 12 X 63	505.155				
			2		2		EACH	DYNAMIC PILE LOADING TEST	505.45				
			9070		9070		LB	REINFORCING STEEL, LEVEL I (EPOXY COATED) (FPQ)	507.11				
			15		15		GAL	WATER REPELLENT, SILANE	514.10				
			53		53		LF	BRIDGE EXPANSION JOINT, ASPHALTIC PLUG	516.10				
			190		190		SY	MEMBRANE WATERPROOFING, SPRAY APPLIED	520.10				
			73		73		LF	JOINT SEALER, HOT POURED	524.11				
			1		1		EACH	REMOVAL OF STRUCTURE (1210 SF - EST.)	529.15				
			15		15		CY	REMOVAL OF CONCRETE OR MASONRY	529.25				
								BEGIN OPTION AA					
			1		1		LS	PRECAST CONCRETE STRUCTURE (ABUTMENT #1)	540.10				
			1		1		LS	SPECIAL PROVISION (CONTRACTOR-FABRICATED PRECAST CONCRETE STRUCTURES)(ABUTMENT #1)	900.645				
								END OPTION AA					
								BEGIN OPTION BB					
			1		1		LS	PRECAST CONCRETE STRUCTURE (ABUTMENT #2)	540.10				
			1		1		LS	SPECIAL PROVISION (CONTRACTOR-FABRICATED PRECAST CONCRETE STRUCTURES)(ABUTMENT #2)	900.645				
								END OPTION BB					

PROJECT NAME: STRAFFORD
PROJECT NUMBER: BF 0177(10)

FILE NAME: sl3j088qs.dgn
PROJECT LEADER: K. HIGGINS
DESIGNED BY: J. GRIGAS
QUANTITY SHEET 1

PLOT DATE: 29-SEP-2016
DRAWN BY: T. MATTHEWS
CHECKED BY: J. GRIGAS
SHEET 5 OF 52

STATE OF VERMONT
AGENCY OF TRANSPORTATION

QUANTITY SHEET 2

SUMMARY OF ESTIMATED QUANTITIES					TOTALS		DESCRIPTIONS			
ROADWAY	ROADWAY (NO FEDERAL/STATE	EROSION CONTROL	BRIDGE	FULL C.E. ITEMS	GRAND TOTAL	FINAL	UNIT	ITEMS	ITEM NUMBER	ROUND
								BEGIN OPTION CC		
60	90				150		LF	18" CSP .064 (2-2/3 X 1/2)	601.0015	
60	90				150		LF	18" CAAP .060 (2-2/3 X 1/2)	601.0215	
60	90				150		LF	18" PCCSP .079 (2-2/3 X 1/2)	601.0416	
60	90				150		LF	18" RCP CLASS III	601.0815	
60	90				150		LF	18" CPEP	601.0915	
60	90				150		LF	18" CPPP (SL)	601.2815	
								END OPTION CC		
2	1				3		EACH	PRECAST REINFORCED CONCRETE DROP INLET WITH CAST IRON GRATE	604.18	
		1			1		MGAL	DUST CONTROL WITH WATER	609.10	
90					90		CY	STONE FILL, TYPE I	613.10	
			225		225		CY	STONE FILL, TYPE III	613.12	
30					30		LF	CAST-IN-PLACE CONCRETE CURB, TYPE B	616.28	
2					2		EACH	WOOD MARKER POSTS	619.15	
1					1		EACH	REMOVING AND RESETTING PROPERTY MARKERS	619.20	
95					95		LF	HD STEEL BEAM GUARDRAIL, GALVANIZED	621.21	
1					1		EACH	MANUFACTURED TERMINAL SECTION, TANGENT	621.51	
1					1		EACH	ANCHOR FOR STEEL BEAM RAIL	621.60	
4					4		EACH	GUARDRAIL APPROACH SECTION TO CONCRETE BRIDGE RAILING, TL-2	621.746	
150					150		LF	REMOVAL AND DISPOSAL OF GUARDRAIL	621.80	
20					20		HR	UNIFORMED TRAFFIC OFFICERS	630.10	
500					500		HR	FLAGGERS	630.15	
				1	1		LS	FIELD OFFICE, ENGINEERS	631.10	
				1	1		LS	TESTING EQUIPMENT, CONCRETE	631.16	
				1	1		LS	TESTING EQUIPMENT, BITUMINOUS	631.17	
				3000	3000		DL	FIELD OFFICE TELEPHONE (N.A.B.I.)	631.26	
1					1		LS	MOBILIZATION/DEMOBILIZATION	635.11	
6					6		EACH	PORTABLE CHANGEABLE MESSAGE SIGN	641.15	
925					925		LF	4 INCH WHITE LINE	646.20	
900					900		LF	4 INCH YELLOW LINE	646.21	
1250					1250		SY	GEOTEXTILE FOR ROADBED SEPARATOR	649.11	
325			300		625		SY	GEOTEXTILE UNDER STONE FILL	649.31	
		175			175		SY	GEOTEXTILE FOR SILT FENCE	649.51	
		75			75		SY	GEOTEXTILE FOR FILTER CURTAIN	649.61	
		20			20		LB	SEED	651.15	
		40			40		LB	FERTILIZER	651.18	
		1			1		TON	AGRICULTURAL LIMESTONE	651.20	
		1			1		TON	HAY MULCH	651.25	
		45			45		CY	TOPSOIL	651.35	
			120		120		SY	GRUBBING MATERIAL	651.40	

DETAILED SUMMARY OF QUANTITIES		
QUANTITIES	UNIT	ITEMS

PROJECT NAME: STRAFFORD
PROJECT NUMBER: BF 0177(10)

FILE NAME: sl3j088qs.dgn
PROJECT LEADER: K. HIGGINS
DESIGNED BY: J. GRIGAS
QUANTITY SHEET 2

PLOT DATE: 29-SEP-2016
DRAWN BY: T. MATTHEWS
CHECKED BY: J. GRIGAS
SHEET 6 OF 52

STATE OF VERMONT
AGENCY OF TRANSPORTATION

QUANTITY SHEET 3

SUMMARY OF ESTIMATED QUANTITIES					TOTALS		DESCRIPTIONS			
ROADWAY	ROADWAY (NO FEDERAL/STATE	EROSION CONTROL	BRIDGE	FULL C.E. ITEMS	GRAND TOTAL	FINAL	UNIT	ITEMS	ITEM NUMBER	ROUND
		1			1		LS	EPSC PLAN	652.10	
		40			40		HR	MONITORING EPSC PLAN	652.20	
		1			1		LU	MAINTENANCE OF EPSC PLAN (N.A.B.I.)	652.30	
		225			225		SY	TEMPORARY EROSION MATTING	653.20	
		36			36		CY	VEHICLE TRACKING PAD	653.35	
		3			3		EACH	INLET PROTECTION DEVICE, TYPE I	653.40	
		650			650		LF	BARRIER FENCE	653.50	
		650			650		LF	PROJECT DEMARCATION FENCE	653.55	
0.66					0.66		SF	TRAFFIC SIGNS, TYPE A	675.20	
35					35		LF	SQUARE TUBE SIGN POST AND ANCHOR	675.341	
1					1		EACH	REMOVING SIGNS	675.50	
1					1		EACH	ERECTING SALVAGED SIGNS	675.60	
2					2		EACH	DELINEATOR WITH STEEL POST	676.10	
			50		50		CY	SPECIAL PROVISION (HIGH PERFORMANCE CONCRETE, RAPID SET) (FPQ)	900.608	
36000					36000		DL	SPECIAL PROVISION (INCENTIVE/DISINCENTIVE) (N.A.B.I.)	900.615	
5					5		EACH	SPECIAL PROVISION (CPM SCHEDULE)	900.620	
			118		118		LF	SPECIAL PROVISION (BRIDGE RAILING, TEXAS)(FPQ)	900.640	
			174		174		LF	SPECIAL PROVISION (PREFABRICATED BRIDGE UNIT SUPERSTRUCTURE)(FPQ)	900.640	
1					1		LS	SPECIAL PROVISION (TRAFFIC CONTROL, ALL-INCLUSIVE)	900.645	
1					1		LU	SPECIAL PROVISION (MAT DENSITY PAY ADJUSTMENT, TYPE IVB) (N.A.B.I)	900.650	
225					225		TON	SPECIAL PROVISION (BITUMINOUS CONCRETE PAVEMENT, TYPE IVB)	900.680	

DETAILED SUMMARY OF QUANTITIES		
QUANTITIES	UNIT	ITEMS

PROJECT NAME: STRAFFORD
PROJECT NUMBER: BF 0177(10)

FILE NAME: sl3j088qs.dgn
PROJECT LEADER: K. HIGGINS
DESIGNED BY: J. GRIGAS
QUANTITY SHEET 3

PLOT DATE: 29-SEP-2016
DRAWN BY: T. MATTHEWS
CHECKED BY: J. GRIGAS
SHEET 7 OF 52

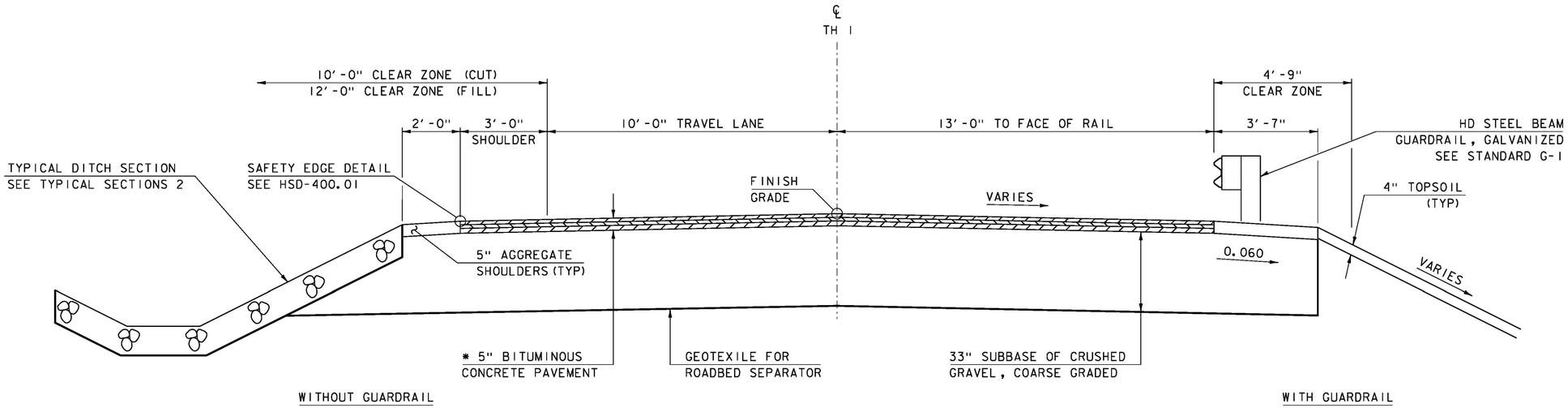

* 1½" SPECIAL PROVISION (BITUMINOUS CONCRETE PAVEMENT TYPE IVB), OVER
1½" SPECIAL PROVISION (BITUMINOUS CONCRETE PAVEMENT TYPE IVB), OVER
2" SUPERPAVE BITUMINOUS CONCRETE PAVEMENT TYPE IIIS

ROADWAY TYPICAL SECTION

SCALE ½" = 1'-0"

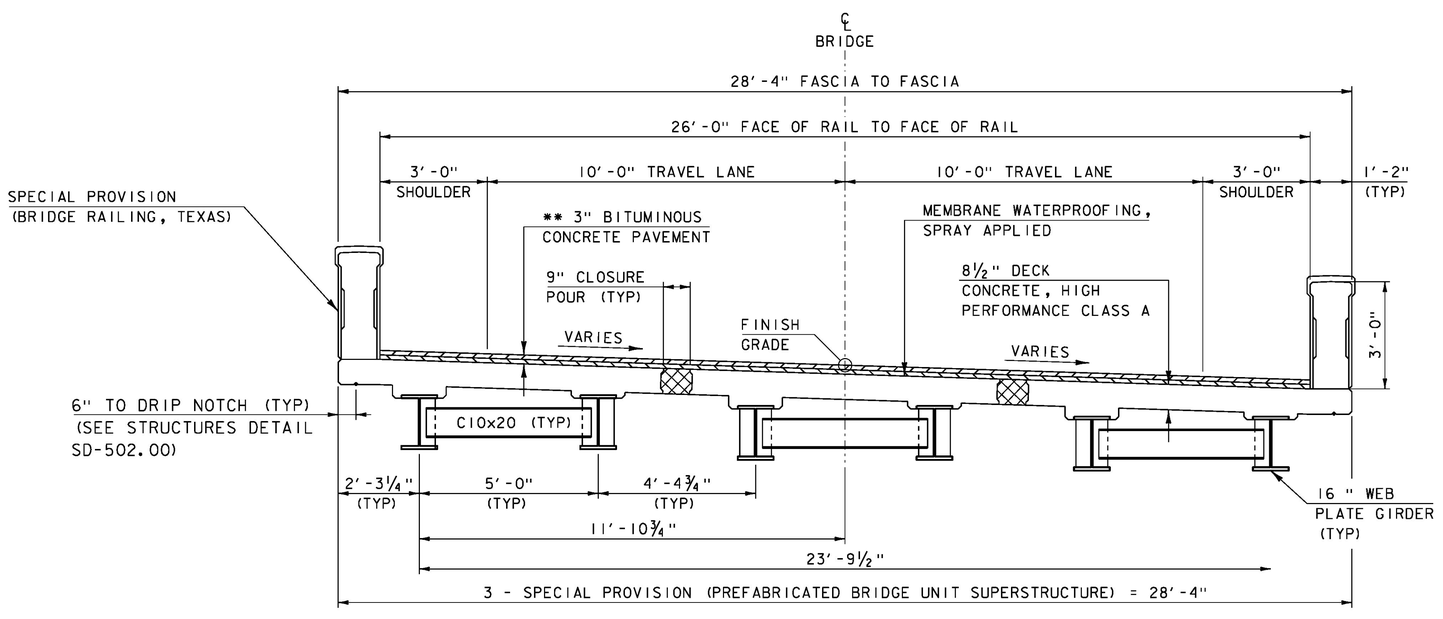

** 1½" SPECIAL PROVISION (BITUMINOUS CONCRETE PAVEMENT TYPE IVB), OVER
1½" SPECIAL PROVISION (BITUMINOUS CONCRETE PAVEMENT TYPE IVB

BRIDGE TYPICAL SECTION

SCALE ½" = 1'-0"

MATERIAL TOLERANCES
(IF USED ON PROJECT)

SURFACE	
- PAVEMENT (TOTAL THICKNESS)	+/- ¼"
- AGGREGATE SURFACE COURSE	+/- ½"
SUBBASE OF CRUSHED GRAVEL, COARSE GRADED	+/- 1"

PROJECT NAME: STRAFFORD
PROJECT NUMBER: BF 0177(10)

FILE NAME: sl3j088typ.dgn
PROJECT LEADER: K. HIGGINS
DESIGNED BY: J. GRIGAS
TYPICAL SECTIONS 1

PLOT DATE: 31-AUG-2016
DRAWN BY: J. GRIGAS
CHECKED BY: G. LAROCHE
SHEET 8 OF 52

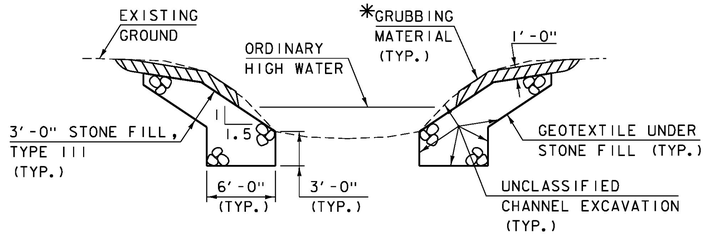

TYPICAL CHANNEL SECTION

(NOT TO SCALE)

*GRUBBING MATERIAL SHALL NOT BE PLACED ON THE STONE FILL IN THE AREA UNDER THE BRIDGE. WHENEVER CHANNEL SLOPE INTERSECTS ROADWAY SUBBASE, GRUBBING MATERIAL SHALL BEGIN AT THE BOTTOM OF SUBBASE.

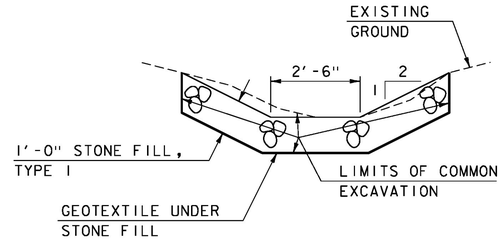

TYPICAL DITCH SECTION

(NOT TO SCALE)

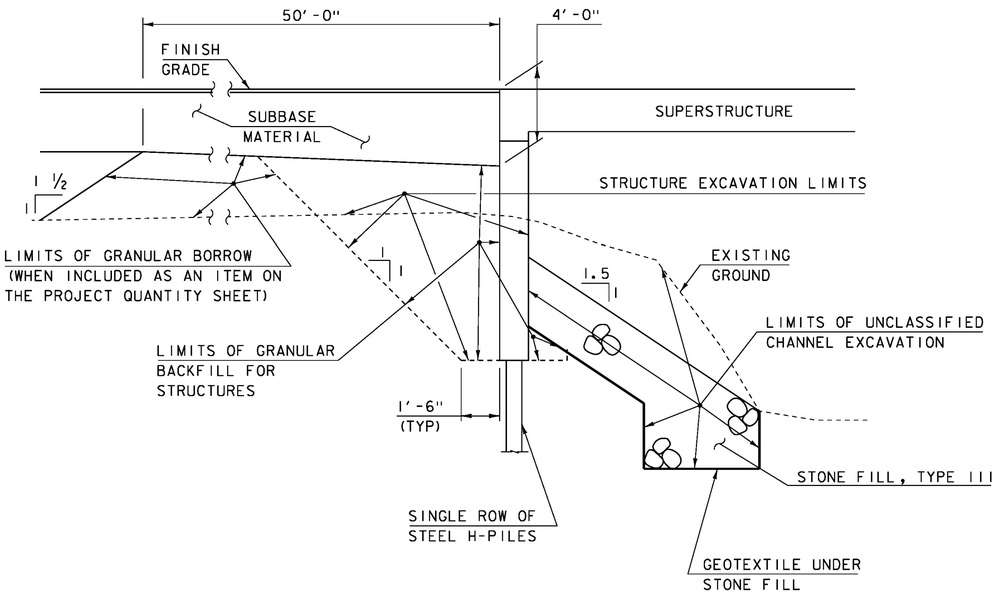

TYPICAL INTEGRAL ABUTMENT SECTION

NOT TO SCALE

ACTUAL LIMITS OF STRUCTURE EXCAVATION SHALL BE DETERMINED BY THE CONTRACTOR. HOWEVER, ONLY EXCAVATION BETWEEN THE LIMITS SHOWN WILL BE PAID FOR UNDER ITEM 204.25 "STRUCTURE EXCAVATION". EXCAVATION BY THE CONTRACTOR OUTSIDE OF THESE LIMITS WILL BE AT THE EXPENSE OF THE CONTRACTOR.

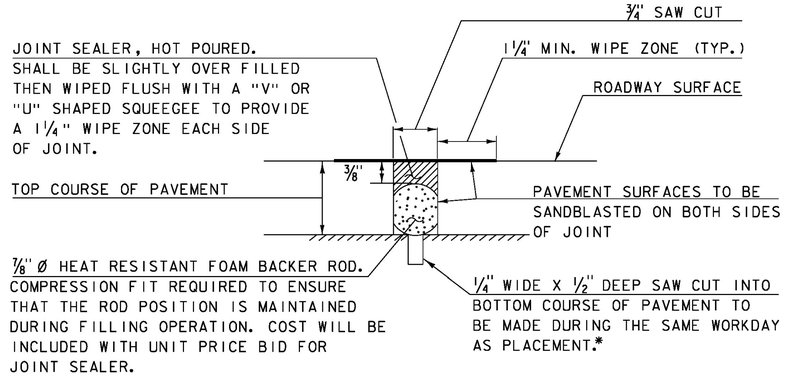

SAWED PAVEMENT JOINT DETAIL

(NOT TO SCALE)

1. JOINT SHALL BE LOCATED ACCURATELY BY STRING LINING, OR OTHER MEANS, PRIOR TO PAVING, SO THAT THE SAW CUTS WILL BE MADE DIRECTLY OVER THE END OF CONCRETE DECK. JOINT SHALL BE CUT DRY IN A SINGLE PASS AND BE SEALED WITHIN 24 HOURS OR PRIOR TO EXPOSURE TO TRAFFIC. JOINT SHALL BE CLEANED PRIOR TO APPLYING THE JOINT SEALER.

2. SAWED PAVEMENT JOINTS SHALL BE LOCATED BETWEEN THE APPROACH SLABS AND EACH END OF THE BRIDGE AND BETWEEN THE APPROACH SLABS AND ANY PAVED APRONS FOR DRIVES.

* SAWED PAVEMENT JOINT AT APRON SHALL BE CUT TO FULL PAVEMENT DEPTH.

PROJECT NAME:	STRAFFORD
PROJECT NUMBER:	BF 0177(10)
FILE NAME: sl3j088typ.dgn	PLOT DATE: 31-AUG-2016
PROJECT LEADER: K. HIGGINS	DRAWN BY: J. GRIGAS
DESIGNED BY: J. GRIGAS	CHECKED BY: G. LAROCHE
TYPICAL SECTIONS 2	SHEET 9 OF 52

GENERAL INFORMATION

SYMBOLOGY LEGEND NOTE

THE SYMBOLOGY ON THIS SHEET IS INTENDED TO COVER STANDARD CONVENTIONAL SYMBOLOGY. THE SYMBOLOGY IS USED FOR EXISTING & PROPOSED FEATURES WITH HEAVIER LINEWEIGHT, IN COMBINATION WITH PROJECT ANNOTATION, AS NOTED ON PROJECT PLAN SHEETS. THIS LEGEND SHEET COVERS THE BASICS. SYMBOLOGY ON PLANS MAY VARY, PLAN ANNOTATIONS AND NOTES SHOULD BE USED TO CLARIFY AS NEEDED.

R.O.W. ABBREVIATIONS (CODES) & SYMBOLS

POINT	CODE	DESCRIPTION
	CH	CHANNEL EASEMENT
	CONST	CONSTRUCTION EASEMENT
	CUL	CULVERT EASEMENT
	D&C	DISCONNECT & CONNECT
	DIT	DITCH EASEMENT
	DR	DRAINAGE EASEMENT
	DRIVE	DRIVEWAY EASEMENT
	EC	EROSION CONTROL
	HWY	HIGHWAY EASEMENT
	I&M	INSTALL & MAINTAIN EASEMENT
	LAND	LANDSCAPE EASEMENT
	R&RES	REMOVE & RESET
	R&REP	REMOVE & REPLACE
	SR	SLOPE RIGHT
	UE	UTILITY EASEMENT
	(P)	PERMANENT EASEMENT
	(T)	TEMPORARY EASEMENT
■	BNDNS	BOUND SET
⧈	BNDNS	BOUND TO BE SET
●	IPNS	IRON PIN SET
◎	IPNS	IRON PIN TO BE SET
⊠	CALC	EXISTING ROW POINT
○	PROW	PROPOSED ROW POINT
[LENGTH]		LENGTH CARRIED ON NEXT SHEET

COMMON TOPOGRAPHIC POINT SYMBOLS

POINT	CODE	DESCRIPTION
	APL	BOUND APPARENT LOCATION
	BM	BENCHMARK
	BND	BOUND
	CB	CATCH BASIN
	COMB	COMBINATION POLE
	DITHR	DROP INLET THROATED DNC
	EL	ELECTRIC POWER POLE
	FPOLE	FLAGPOLE
	GASFIL	GAS FILLER
	GP	GUIDE POST
	GSO	GAS SHUT OFF
	GUY	GUY POLE
	GUYW	GUY WIRE
	GV	GATE VALUE
	H	TREE HARDWOOD
	HCTRL	CONTROL HORIZONTAL
	HVCTRL	CONTROL HORIZ. & VERTICAL
	HYD	HYDRANT
	IP	IRON PIN
	IPIPE	IRON PIPE
	LI	LIGHT - STREET OR YARD
	MB	MAILBOX
	MH	MANHOLE (MH)
	MM	MILE MARKER
	PM	PARKING METER
	PMK	PROJECT MARKER
	POST	POST STONE/WOOD
	RRSIG	RAILROAD SIGNAL
	RRSL	RAILROAD SWITCH LEVER
	S	TREE SOFTWOOD
	SAT	SATELLITE DISH
	SHRUB	SHRUB
	SIGN	SIGN
	STUMP	STUMP
	TEL	TELEPHONE POLE
	TIE	TIE
	TSIGN	SIGN W/DOUBLE POST
	VCTRL	CONTROL VERTICAL
	WELL	WELL
	WSO	WATER SHUT OFF

THESE ARE COMMON VAOT SURVEY POINT SYMBOLS FOR EXISTING FEATURES, ALSO USED FOR PROPOSED FEATURES WITH HEAVIER LINEWEIGHT, IN COMBINATION WITH PROPOSED ANNOTATION.

PROPOSED GEOMETRY CODES

CODE	DESCRIPTION
PC	POINT OF CURVATURE
PI	POINT OF INTERSECTION
CC	CENTER OF CURVE
PT	POINT OF TANGENCY
PCC	POINT OF COMPOUND CURVE
PRC	POINT OF REVERSE CURVE
POB	POINT OF BEGINNING
POE	POINT OF ENDING
STA	STATION PREFIX
AH	AHEAD STATION SUFFIX
BK	BACK STATION SUFFIX
D	CURVE DEGREE OF (100FT)
R	CURVE RADUIS OF
T	CURVE TANGENT LENGTH
L	CURVE LENGTH OF
E	CURVE EXTERNAL DISTANCE

UTILITY SYMBOLOGY

UNDERGROUND UTILITIES

- UGU — UTILITY (GENERIC-UNKNOWN)
- UT — TELEPHONE
- UE — ELECTRIC
- UC — CABLE (TV)
- UEC — ELECTRIC+CABLE
- UET — ELECTRIC+TELEPHONE
- UCT — CABLE+TELEPHONE
- UECT — ELECTRIC+CABLE+TELEP.
- G — GAS LINE
- W — WATER LINE
- S — SANITARY SEWER (SEPTIC)

ABOVE GROUND UTILITIES (AERIAL)

- AGU — UTILITY (GENERIC-UNKNOWN)
- T — TELEPHONE
- E — ELECTRIC
- C — CABLE (TV)
- EC — ELECTRIC+CABLE
- ET — ELECTRIC+TELEPHONE
- AER E&T — ELECTRIC+TELEPHONE
- CT — CABLE+TELEPHONE
- ECT — ELECTRIC+CABLE+TELEP.
- UTILITY POLE GUY WIRE

PROJECT CONSTRUCTION SYMBOLOGY

PROJECT DESIGN & LAYOUT SYMBOLOGY

- CZ — CLEAR ZONE
- PLAN LAYOUT MATCHLINE

PROJECT CONSTRUCTION FEATURES

- TOP OF CUT SLOPE
- TOE OF FILL SLOPE
- STONE FILL
- BOTTOM OF DITCH ℄
- CULVERT PROPOSED
- STRUCTURE SUBSURFACE
- PDF — PROJECT DEMARCATION FENCE
- BF — BARRIER FENCE
- TREE PROTECTION ZONE (TPZ)
- STRIPING LINE REMOVAL
- SHEET PILES

CONVENTIONAL BOUNDARY SYMBOLOGY

BOUNDARY LINES

- TOWN LINE — TOWN BOUNDARY LINE
- COUNTY LINE — COUNTY BOUNDARY LINE
- STATE LINE — STATE BOUNDARY LINE
- PROPOSED STATE R.O.W. (LIMITED ACCESS)
- PROPOSED STATE R.O.W.
- STATE ROW (LIMITED ACCESS)
- STATE ROW
- TOWN ROW
- PERMANENT EASEMENT LINE (P)
- TEMPORARY EASEMENT LINE (T)
- SURVEY LINE
- P/L — PROPERTY LINE (P/L)
- SR SR SR — SLOPE RIGHTS
- 6F — 6F PROPERTY BOUNDARY
- 4F — 4F PROPERTY BOUNDARY
- HAZ — HAZ HAZARDOUS WASTE

EPSC LAYOUT PLAN SYMBOLOGY

EPSC MEASURES

- FILTER CURTAIN
- SILT FENCE
- SILT FENCE WOVEN WIRE
- CHECK DAM
- DISTURBED AREAS REQUIRING RE-VEGETATION
- EROSION MATTING

SEE EPSC DETAIL SHEETS FOR ADDITIONAL SYMBOLOGY

ENVIRONMENTAL RESOURCES

- WETLAND BOUNDARY
- RIPARIAN BUFFER ZONE
- WETLAND BUFFER ZONE
- SOIL TYPE BOUNDARY
- T&E — THREATENED & ENDANGERED SPECIES
- HAZ — HAZ HAZARDOUS WASTE AREA
- AG — AGRICULTURAL LAND
- HABITAT — FISH & WILDLIFE HABITAT
- FLOOD PLAIN — FLOOD PLAIN
- OHW — ORDINARY HIGH WATER (OHW)
- STORM WATER
- USDA FOREST SERVICE LANDS
- WILDLIFE HABITAT SUIT/CONN

ARCHEOLOGICAL & HISTORIC

- ARCH — ARCHEOLOGICAL BOUNDARY
- HISTORIC DIST — HISTORIC DISTRICT BOUNDARY
- HISTORIC — HISTORIC AREA
- Ⓗ HISTORIC STRUCTURE

CONVENTIONAL TOPOGRAPHIC SYMBOLOGY

EXISTING FEATURES

- ROAD EDGE PAVEMENT
- ROAD EDGE GRAVEL
- DRIVEWAY EDGE
- DITCH
- FOUNDATION
- FENCE (EXISTING)
- FENCE WOOD POST
- FENCE STEEL POST
- GARDEN
- ROAD GUARDRAIL
- RAILROAD TRACKS
- CULVERT (EXISTING)
- STONE WALL
- WALL
- WOOD LINE
- BRUSH LINE
- HEDGE
- BODY OF WATER EDGE
- LEDGE EXPOSED

PROJECT NAME: STRAFFORD
PROJECT NUMBER: BF 0177(10)

FILE NAME: sl3j088excel.dgn
PROJECT LEADER: K. HIGGINS
DESIGNED BY: J. GRIGAS
LEGEND SHEET

PLOT DATE: 31-AUG-2016
DRAWN BY: M. LONGSTREET
CHECKED BY: J. GRIGAS
SHEET 10 OF 52

GPS CONTROL POINTS

HVCTRL #1

S STRAFFORD BR 25

NORTH = 486206.940
EAST = 1677367.840
ELEV. = 894.930

GENERAL LOCATION SOUTH STRAFFORD, VT.
THE MARK IS SET IN THE TOP OF THE ABUTMENT AT THE SOUTHWEST CORNER OF A BRIDGE OVER A STREAM FEEDING THE WEST BRANCH OF THE OMPOMPANOOSUC RIVER. IT IS ABOUT 100 M SOUTHWEST OF THE BARRETT MEMORIAL BRIDGE OVER THE WEST BRANCH.
IT IS 15 CM EAST OF THE WEST EDGE OF THE ABUTMENT, 15 CM WEST OF THE EAST EDGE OF THE ABUTMENT, 0.3 M SOUTH-SOUTHWEST OF THE SOUTH TIP OF THE BRIDGE RAIL, 0.8 M NORTH OF THE ABUTMENT VERTICAL ANGLE POINT AND 5.3 M NORTHWEST OF POLE NO 3.

HVCTRL #10

JB 1

NORTH = 486660.580
EAST = 1684339.340
ELEV. = 829.260

GENERAL LOCATION, SOUTH STRAFFORD, VT.
1.6 MI (2.6 KM) EAST OF, AT DESERTED VILLAGE OF COPPER FLAT, 25 FT (7.6 M) SOUTHWEST OF CENTER OFROAD, 250 FT (76.2 M) NORTHWEST JUNCTION OF DISCONTINUED ROAD SOUTHWEST, IN EMBEDDED BOULDER.

TRAVERSE TIES

HVCTRL #2

NORTH = 486849.771
EAST = 1677602.196
ELEV. = 885.802

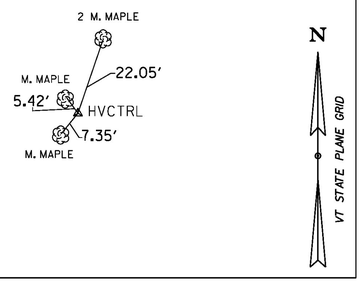

DATUM

VERTICAL	NAVD 88
HORIZONTAL	NAD 83(2011)
ADJUSTMENT	COMPASS

PROJECT NAME:	STRAFFORD
PROJECT NUMBER:	BF 0177(10)
FILE NAME: sl3j088t1.dgn	PLOT DATE: 31-AUG-2016
PROJECT LEADER: K. HIGGINS	DRAWN BY: S. DONOVAN
DESIGNED BY: J. GRIGAS	CHECKED BY: J. GRIGAS
TIE SHEET	SHEET 11 OF 52

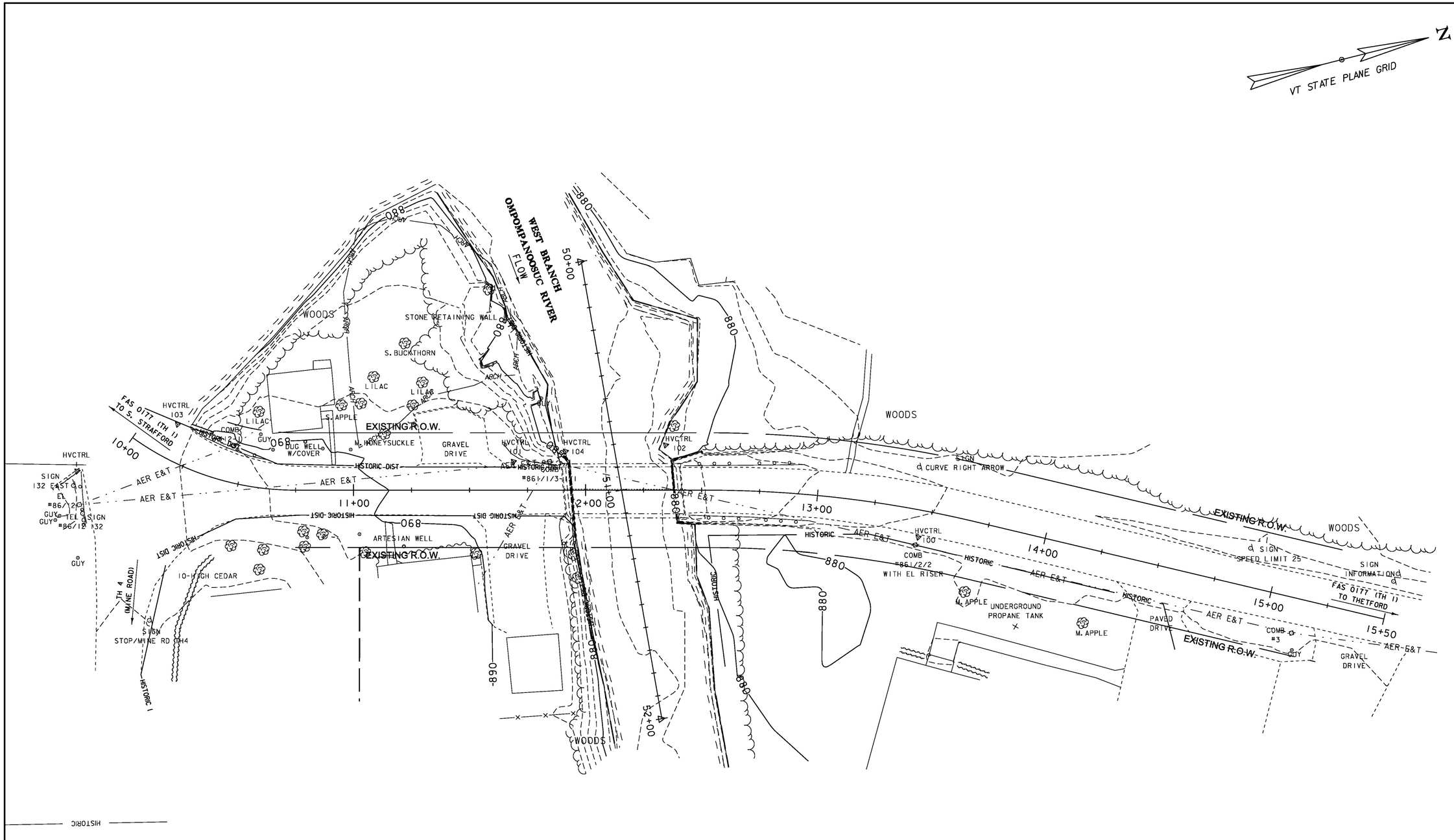
N
VT STATE PLANE GRID
WEST BRANCH OMPOMPANOOSUC RIVER
FLOW
WOODS
STONE RETAINING WALL
S. BUCKTHORN
LILAC
S. APPLE
EXISTING R.O.W.
GRAVEL DRIVE
HVCTRL 101
HVCTRL 102
HVCTRL 103
HVCTRL 104
COMB #86/1/3-1/1
COMB #86/2/2
WITH EL RISER
BUG WELL W/COVER
ARTESIAN WELL
10-INCH CEDAR
M. HONEYSUCKLE
M. APPLE
UNDERGROUND PROPANE TANK
PAVED DRIVE
SIGN 132 EAST
SIGN STOP/MINE RD TH 4
SIGN SPEED LIMIT 25
SIGN INFORMATIONAL
SIGN CURVE RIGHT ARROW
TEL SIGN
GUY
FAS 0177 (TH 1) TO S. STRAFFORD
FAS 0177 (TH 1) TO THETFORD
TH 4 (MINE ROAD)
HISTORIC DIST
AER E&T
10+00
11+00
12+00
13+00
14+00
15+00
15+50
50+00
51+00
52+00
880
880
880

MAINLINE CURVE #1:
DELTA = 35°47'00"
D = 47°44'47"
R = 120.00'
T = 38.74'
L = 74.94'
E = 6.10'

MAINLINE CURVE #2:
DELTA = 13°22'00"
D = 11°27'33"
R = 500.00'
T = 58.59'
L = 116.65'
E = 3.42'

CONSTRUCT DRIVE W/5'-0" PAVED APRON AND 3" AGGREGATE SURFACE COURSE BEYOND APRON
STA 11+24.65 - 11+62.99 LT
STA 11+51.96 - 11+87.03 RT

CONSTRUCT 5'-0" PAVED APRON
STA 14+36.73 - 14+69.72 RT

4" YELLOW LINE (DOUBLE)
STA 10+25 - 14+75 ℄

4" WHITE LINE
STA 10+25 - 14+75 LT
STA 10+25 - 14+75 RT

STONE FILL, TYPE I DITCH
STA 13+25 - 14+20 LT

REMOVAL OF CONCRETE OR MASONRY
STA 12+50 - 13+03 RT
STA 12+51 - 12+91 LT

REMOVAL AND DISPOSAL OF GUARDRAIL
STA 11+65 - 11+88 LT
STA 11+89 - 11+91 RT
STA 12+43 - 12+93 LT
STA 12+44 - 12+97 RT

SAWED PAVEMENT JOINT ALONG APPROACH SLAB EDGE
STA 11+67.53 - 11+87.03 RT

CONCRETE CURB, TYPE B
STA 12+48 - 12+74 RT

REMOVING AND RESETTING PROPERTY MARKERS (GRANITE BOLLARD)
STA 11+65 LT
RELOCATE TO STA 11+67 LT
E = 1677402.4105
N = 486390.2366

VT STATE PLANE GRID

RETAINING WALL
GRANITE (COD #3)
STA 11+13 - 11+48 RT

FULL DEPTH OF DRIVE PAVED
NO AGGREGATE SURFACE

PAVED TO ROW, AGGREGATE SURFACE FULL DEPTH

MAINLINE PT #1
STA 10+74.94
N = 486296.1699
E = 1677398.8689

MAINLINE POB/PC #1
STA 10+00.00
N = 486233.7153
E = 1677359.6785

BEGIN APPROACH
STA 10+25.00
MATCH EXISTING

CHANNEL POB
STA 50+00.00
N = 486439.7737
E = 1677333.6585

MAINLINE PC #2
STA 12+52.02
N = 486467.8201
E = 1677442.3562

MAINLINE PI #2
STA 13+10.61 BK=
STA 13+10.07 AHD
N = 486524.6148
E = 1677456.7451

MAINLINE PT #2
STA 13+68.66
N = 486576.5446
E = 1677483.8740

STA 13+10 LT

STA 11+87 RT
STA 12+54 LT

STONE FILL, TYPE III (TYP)

STONE FILL, TYPE I (TYP)

END PROJECT
STA 14+00.00
FG = 883.17

END APPROACH
STA 14+75.00
MATCH EXISTING

MAINLINE POE
STA 15+50.00
N = 486737.2697
E = 1677567.8396

BEGIN PROJECT
STA 11+00.00
FG = 890.48

MAINLINE PI #1
STA 10+38.74 BK=
STA 10+36.20 AHD
N = 486258.6167
E = 1677389.3548

BEGIN BRIDGE
STA 11+85.22
FG = 888.74

℄ BEARING
STA 11+87.00
FG = 888.72

END BRIDGE
STA 12+45.78
FG = 887.68

℄ BEARING
STA 12+44.00
FG = 887.73

ML STA 12+15.50 =
CH STA 51+00.00
Δ = 180°00'00" RT

CHANNEL POE
STA 52+00.00
N = 486425.0680
E = 1677533.1172

BENCHMARK
CH. SQ. BOT STEP
ELEV. 732.78

SIGN LEGEND

N = NEW
R = REMOVE
S = SALVAGE

MILEMARKER, STATION, OR SIGN NUMBER	SIGN LEGEND	SIGN DIMENSIONS WIDTH (In)	SIGN DIMENSIONS HEIGHT (In)	NEW & SALVAGED SIGN "A"	NEW & SALVAGED SIGN SALV SIGN	EXIST POST RETAIN	EXIST POST SALVAGE	NO. OF POSTS	NEW SIGN POSTS SQUARE STEEL (In) 1.75 lb/ft 1.88	2.0 lb/ft 2.42	2.5 lb/ft 3.35	ANCHOR	SLEEVE	REMARKS	SIGN DETAIL DETAIL ON SHEET NUMBER	SIGN DETAIL STD. SHEET NUMBER
11+87 RT	BRIDGE 29	6	8	0.33				1	8			X		VD-701		T-42
12+54 LT	BRIDGE 29	6	8	0.33				1	8			X		VD-701		T-42
13+10 LT					X			1		15		X		WI-2		
FINAL POST LENGTHS ARE TO BE DETERMINED IN THE FIELD. POST SIZES ARE COMPUTED BASED ON INFORMATION FURNISHED ON THE STANDARD SHEETS AND THE VTRANS "SIGN POST DESIGN GUIDELINE."									FT 16	FT 15	FT		EA			
TOTALS				SF 0.66	EACH 1					FT 31				SHS = STANDARD HIGHWAY SIGNS (MUTCD)		

LAYOUT SHEET

SCALE 1" = 20'-0"
20 0 20

NOTE:
ADJUST NEW CENTERLINE AND EDGE LINES TO MATCH EXISTING LINES AT BEGIN/END APPROACH

PROJECT NAME: STRAFFORD
PROJECT NUMBER: BF 0177(10)

FILE NAME: sl3j088bdr.dgn
PROJECT LEADER: K. HIGGINS
DESIGNED BY: J. GRIGAS
LAYOUT SHEET
PLOT DATE: 31-AUG-2016
DRAWN BY: J. GRIGAS
CHECKED BY: G. LAROCHE
SHEET 13 OF 52

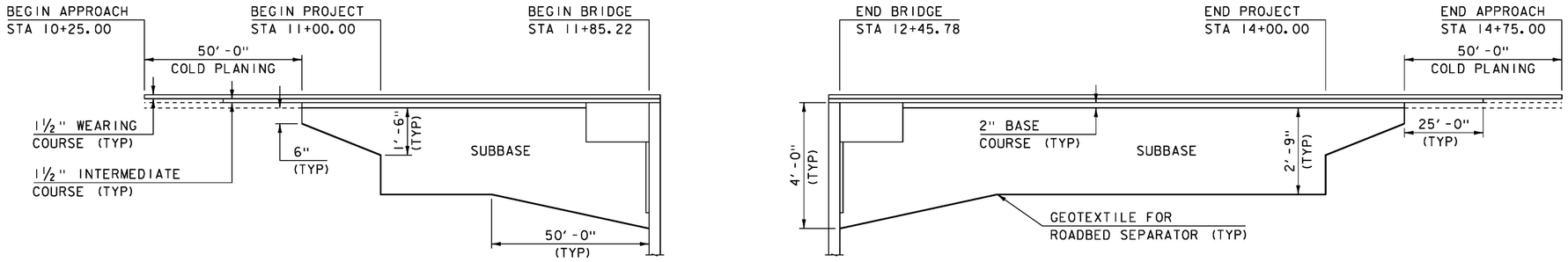

MATERIAL TRANSITION

SCALE: HORIZONTAL: 1"=20'-0"
NO VERTICAL SCALE

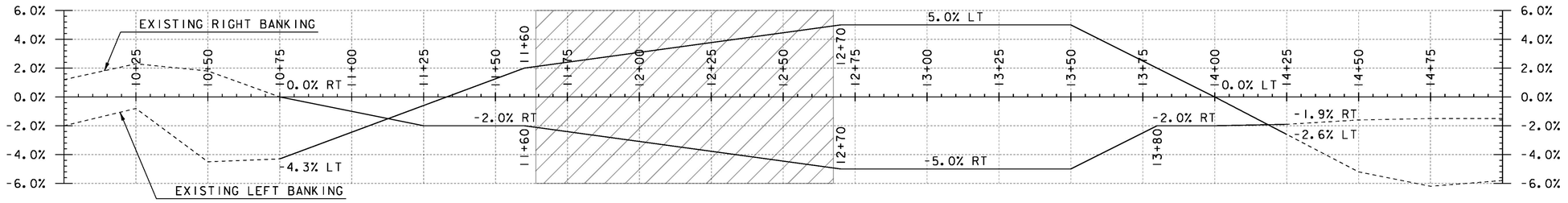

BANKING DIAGRAM

SCALE: HORIZONTAL: 1"=20'-0"
VERTICAL: 1"=1.0%

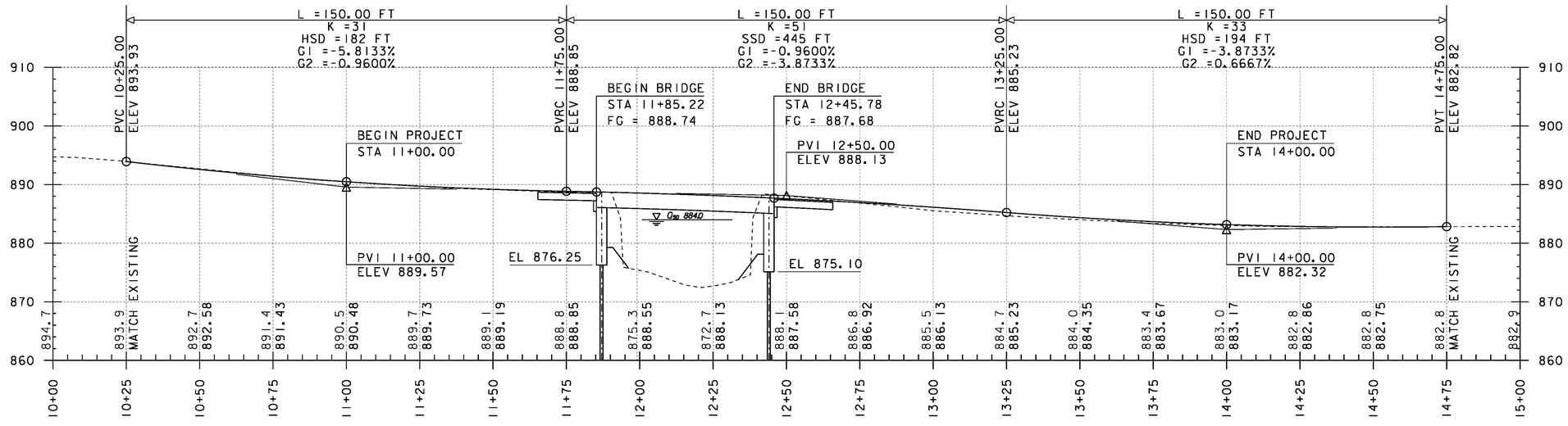

MAINLINE PROFILE

SCALE: HORIZONTAL: 1"=20'-0"
VERTICAL: 1"=10'-0"

THE GRADES SHOWN TO THE TENTH ARE THE EXISTING GROUND ELEVATIONS ALONG THE PROPOSED ALIGNMENT.

THE GRADES SHOWN TO THE NEAREST HUNDREDTH ARE THE FINISH GRADES ALONG THE PROPOSED ALIGNMENT.

PROJECT NAME: STRAFFORD
PROJECT NUMBER: BF 0177(10)

FILE NAME: s13j088pro.dgn
PROJECT LEADER: K. HIGGINS
DESIGNED BY: J. GRIGAS
MAINLINE PROFILE & BANKING DIAGRAM

PLOT DATE: 31-AUG-2016
DRAWN BY: J. GRIGAS
CHECKED BY: G. LAROCHE
SHEET 14 OF 52

RT 132
CLOSED

PHASE 1

EAST OF
SOUTH
STRAFFRD

PHASE 2

DAY M/DD *
6PM- DAY
*M/DD 6AM

PHASE 3

(S-1) * DAY=DAY OF THE WEEK
M=MONTH
DD=DAY

RT 132
CLOSED

PHASE 1

WEST OF
THETFORD

PHASE 2

DAY M/DD *
6PM- DAY
*M/DD 6AM

PHASE 3

(S-2) * DAY=DAY OF THE WEEK
M=MONTH
DD=DAY

LEGEND:

PROJECT THROUGH ROUTE

PCMS PORTABLE CHANGEABLE MESSAGE SIGN

NOTES:

1. THE PORTABLE CHANGEABLE MESSAGE SIGNS SHALL BE OPERATIONAL A MINIMUM OF TWO WEEKS PRIOR TO THE BRIDGE CLOSURE.

2. DURING THE BRIDGE CLOSURE PERIOD, ELIMINATE PHASE 3 ONLY.

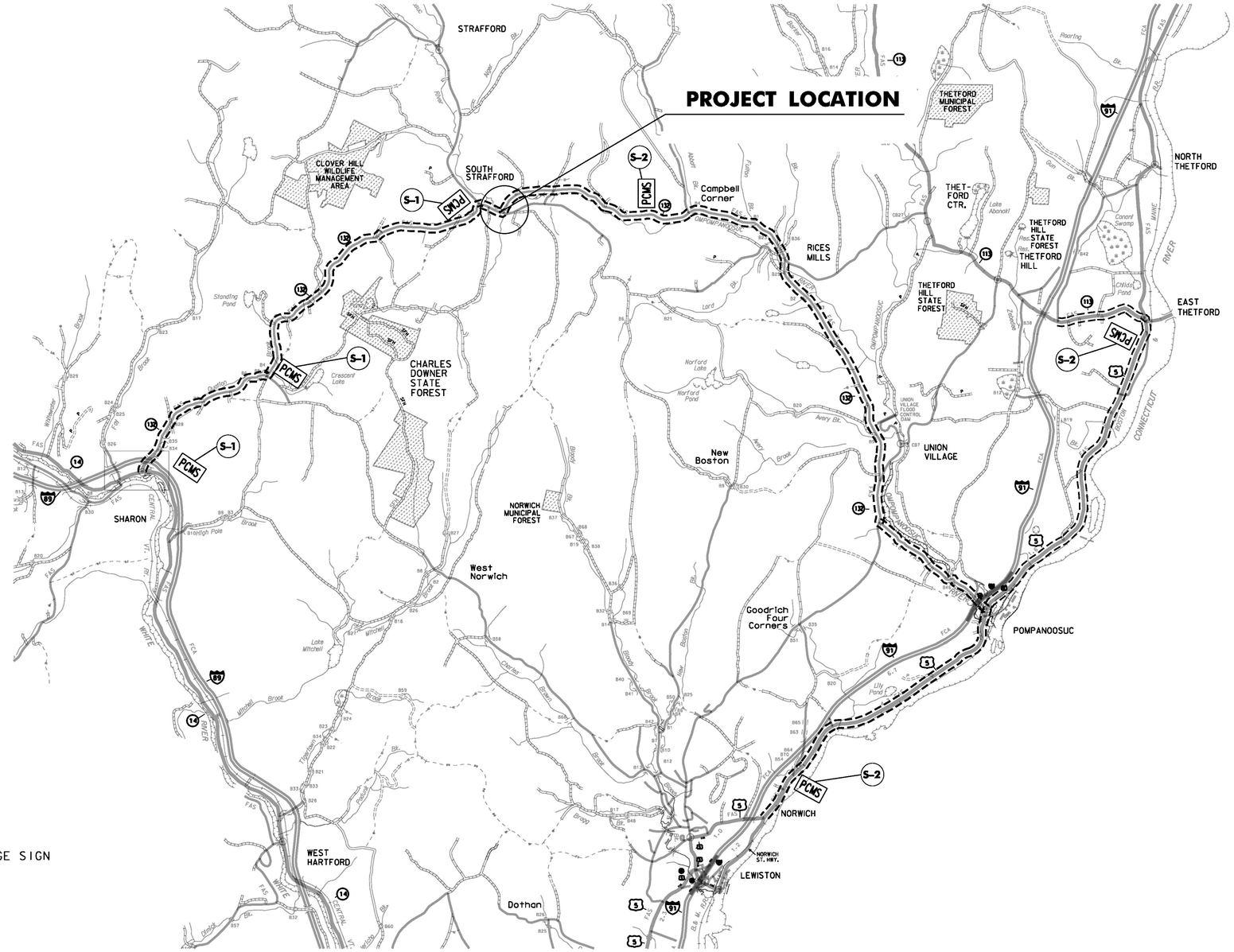

SCALE = NOT TO SCALE

PROJECT NAME: STRAFORD	
PROJECT NUMBER: BF 0177(10)	
FILE NAME: s12j088detour.dgn	PLOT DATE: 31-AUG-2016
PROJECT LEADER: K. HIGGINS	DRAWN BY: M. LONGSTREET
DESIGNED BY: M. LONGSTREET	CHECKED BY: J. GRIGAS
TRAFFIC CONTROL PLAN	SHEET 15 OF 52

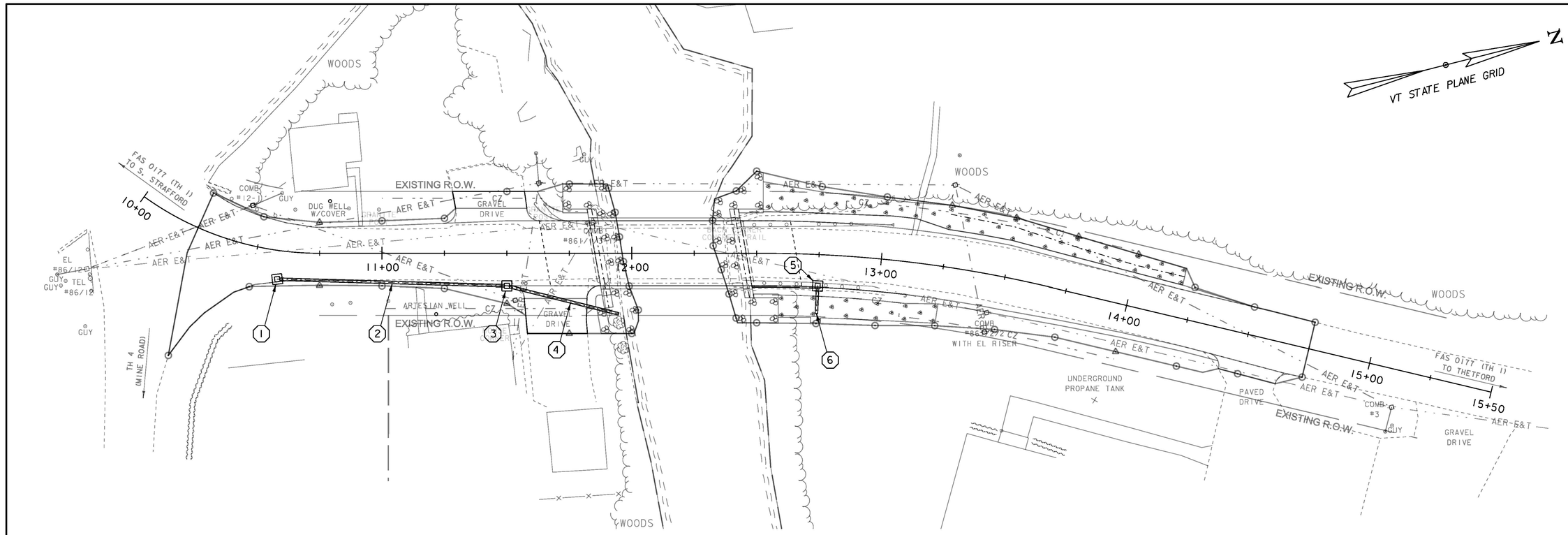

DRAINAGE LAYOUT

SCALE 1" = 20'-0"
20 0 20

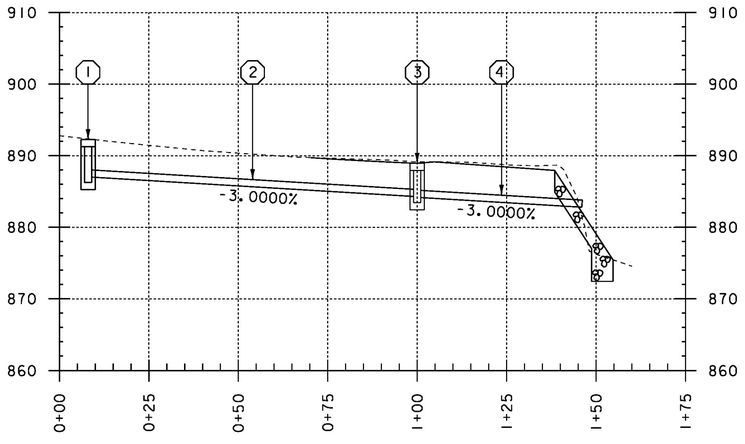

DRAINAGE PROFILE #1

HOR. SCALE 1" = 20'-0"
VER. SCALE 1" = 10'-0"

(1) NEW PRECAST REINFORCED CONCRETE DROP INLET
WITH CAST IRON GRATE, TYPE D
PTOG EL 892.25
SUMP EL 886.25

(2) NEW 18" x 90' OPTION PIPE
INLET EL 887.00
OUTLET EL 884.30

(3) NEW PRECAST REINFORCED CONCRETE DROP INLET
WITH CAST IRON GRATE, TYPE D
PTOG EL 888.90
SUMP EL 883.40

(4) NEW 18" x 45' OPTION PIPE
INLET EL 884.15
OUTLET EL 882.80

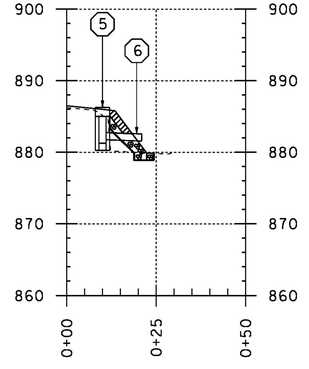

DRAINAGE PROFILE #2

HOR. SCALE 1" = 20'-0"
VER. SCALE 1" = 10'-0"

(5) NEW PRECAST REINFORCED CONCRETE DROP INLET
WITH CAST IRON GRATE, TYPE E
PTOG EL 886.25
SUMP EL 881.25

(6) NEW 18" x 10' OPTION PIPE WITH
4' WIDE x 2 LONG' STONE FILL, TYPE I PAD
INLET EL 881.75
OUTLET EL 881.50

PROJECT NAME:	STRAFFORD
PROJECT NUMBER:	BF 0177(10)

FILE NAME: s13J088bdr_drain.dgn	PLOT DATE: 31-AUG-2016
PROJECT LEADER: K. HIGGINS	DRAWN BY: T. MATTHEWS
DESIGNED BY: J. GRIGAS	CHECKED BY: J. GRIGAS
DRAINAGE LAYOUT SHEET	SHEET 16 OF 52

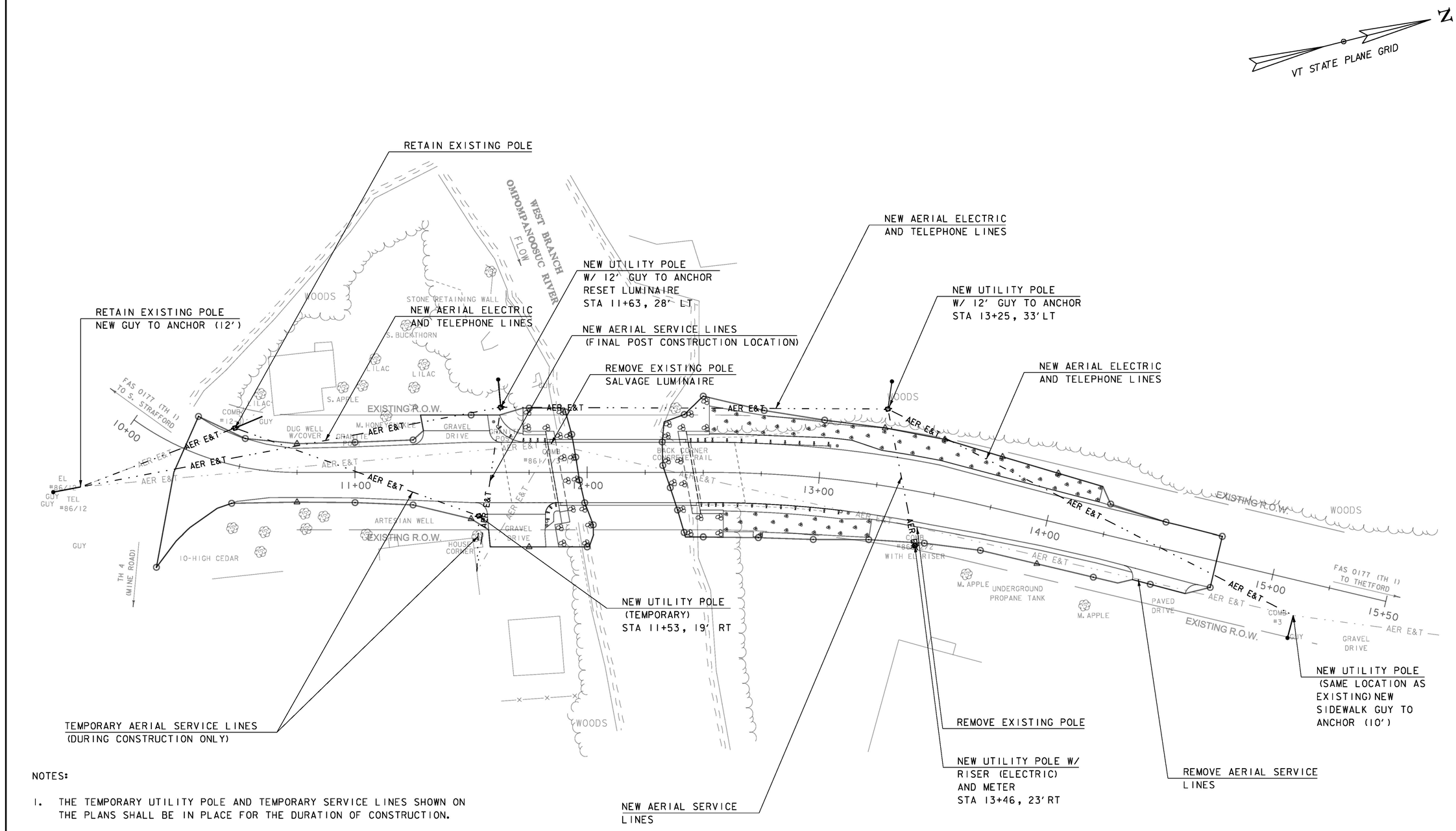

NOTES:

1. THE TEMPORARY UTILITY POLE AND TEMPORARY SERVICE LINES SHOWN ON THE PLANS SHALL BE IN PLACE FOR THE DURATION OF CONSTRUCTION.
2. ALL TEMPORARY UTILITY WORKS SHALL BE REMOVED NO LATER THAN 90 DAYS AFTER FINAL INSPECTION OF THE PROJECT.
3. UTILITY WORK TO BE DONE BY OTHERS.

UTILITY LAYOUT SHEET

SCALE 1" = 20'-0"
20 0 20

PROJECT NAME:	STRAFFORD
PROJECT NUMBER:	BF 0177(10)
FILE NAME: sl3j088u+11.dgn	PLOT DATE: 31-AUG-2016
PROJECT LEADER: K. HIGGINS	DRAWN BY: J. GRIGAS
DESIGNED BY: J. GRIGAS	CHECKED BY: T. MATTHEWS
UTILITY LAYOUT SHEET	SHEET 17 OF 52

SOIL CLASSIFICATION

AASHTO	
A1	Gravel and Sand
A3	Fine Sand
A2	Silty or Clayey Gravel and Sand
A4	Silty Soil - Low Compressibility
A5	Silty Soil - Highly Compressible
A6	Clayey Soil - Low Compressibility
A7	Clayey Soil - Highly Compressible

ROCK QUALITY DESIGNATION

R.Q.D. (%)	ROCK DESCRIPTION
<25	Very Poor
25 to 50	Poor
51 to 75	Fair
76 to 90	Good
>90	Excellent

SHEAR STRENGTH

UNDRAINED SHEAR STRENGTH IN P.S.F.	CONSISTENCY
<250	Very Soft
250-500	Soft
500-1000	Med. Stiff
1000-2000	Stiff
2000-4000	Very Stiff
>4000	Hard

CORRELATION GUIDE OF "N" TO DENSITY/CONSISTENCY

DENSITY (GRANULAR SOILS)		CONSISTENCY (COHESIVE SOILS)	
N	DESCRIPTIVE TERM	N	DESCRIPTIVE TERM
<5	Very Loose	<2	Very Soft
5-10	Loose	2-4	Soft
11-24	Med. Dense	5-8	Med. Stiff
25-50	Dense	9-15	Stiff
>50	Very Dense	16-30	Very Stiff
		31-60	Hard
		>60	Very Hard

COMMONLY USED SYMBOLS

▼	Water Elevation
⊗	Standard Penetration Boring
⊕	Auger Boring
⊙	Rod Sounding
S	Sample
N	Standard Penetration Test Blow Count Per Foot For: 2" O.D. Sampler 1 3/8" I.D. Sampler Hammer Weight Of 140 Lbs. Hammer Fall Of 30"
VS	Field Vane Shear Test
US	Undisturbed Soil Sample
B	Blast
DC	Diamond Core
MD	Mud Drill
WA	Wash Ahead
HSA	Hollow Stem Auger
AX	Core Size 1 1/8"
BX	Core Size 1 5/8"
NX	Core Size 2 1/8"
M	Double Tube Core Barrel Used
LL	Liquid Limit
PL	Plastic Limit
PI	Plasticity Index
NP	Non Plastic
w	Moisture Content (Dry Wgt. Basis)
D	Dry
M	Moist
MTW	Moist To Wet
W	Wet
Sat	Saturated
Bo	Boulder
Gr	Gravel
Sa	Sand
Si	Silt
Cl	Clay
HP	Hardpan
Le	Ledge
NLTD	No Ledge To Depth
CNPF	Can Not Penetrate Further
TLOB	Top of Ledge Or Boulder
NR	No Recovery
Rec.	Recovery
%Rec.	Percent Recovery
RQD	Rock Quality Designation
CBR	California Bearing Ratio
<	Less Than
>	Greater Than
R	Refusal (N > 100)
VTSPG	NAD83 - See Note 7

COLOR

blk	Black	pnk	Pink
bl	Blue	pu	Purple
brn	Brown	rd	Red
dk	Dark	tn	Tan
gry	Gray	wh	White
gn	Green	yel	Yellow
lt	Light	mltc	Multicolored
or	Orange		

DEFINITIONS (AASHTO)

BEDROCK (LEDGE) - Rock in its native location of indefinite thickness.

BOULDER - A rock fragment with an average dimension > 12 inches.

COBBLE - Rock fragments with an average dimension between 3 and 12 inches.

GRAVEL - Rounded particles of rock < 3" and > 0.0787" (#10 sieve).

SAND - Particles of rock < 0.0787" (#10 sieve) and > 0.0029" (#200 sieve).

SILT - Soil < 0.0029" (#200 sieve), non or slightly plastic and exhibits no strength when air-dried.

CLAY - Fine grained soil, exhibits plasticity when moist and considerable strength when air-dried.

VARVED - Alternate layers of silt and clay.

HARDPAN - Extremely dense soil, cemented layer, not softened when wet.

MUCK - Soft organic soil (containing > 10% organic material.

MOISTURE CONTENT - Weight of water divided by dry weight of soil.

FLOWING SAND - Granular soil so saturated (loose) that it flows into drill casing during extraction of wash rod.

STRIKE - Angle from magnetic north to line of intersection of bed with a horizontal plane.

DIP - Inclination of bed with a horizontal plane.

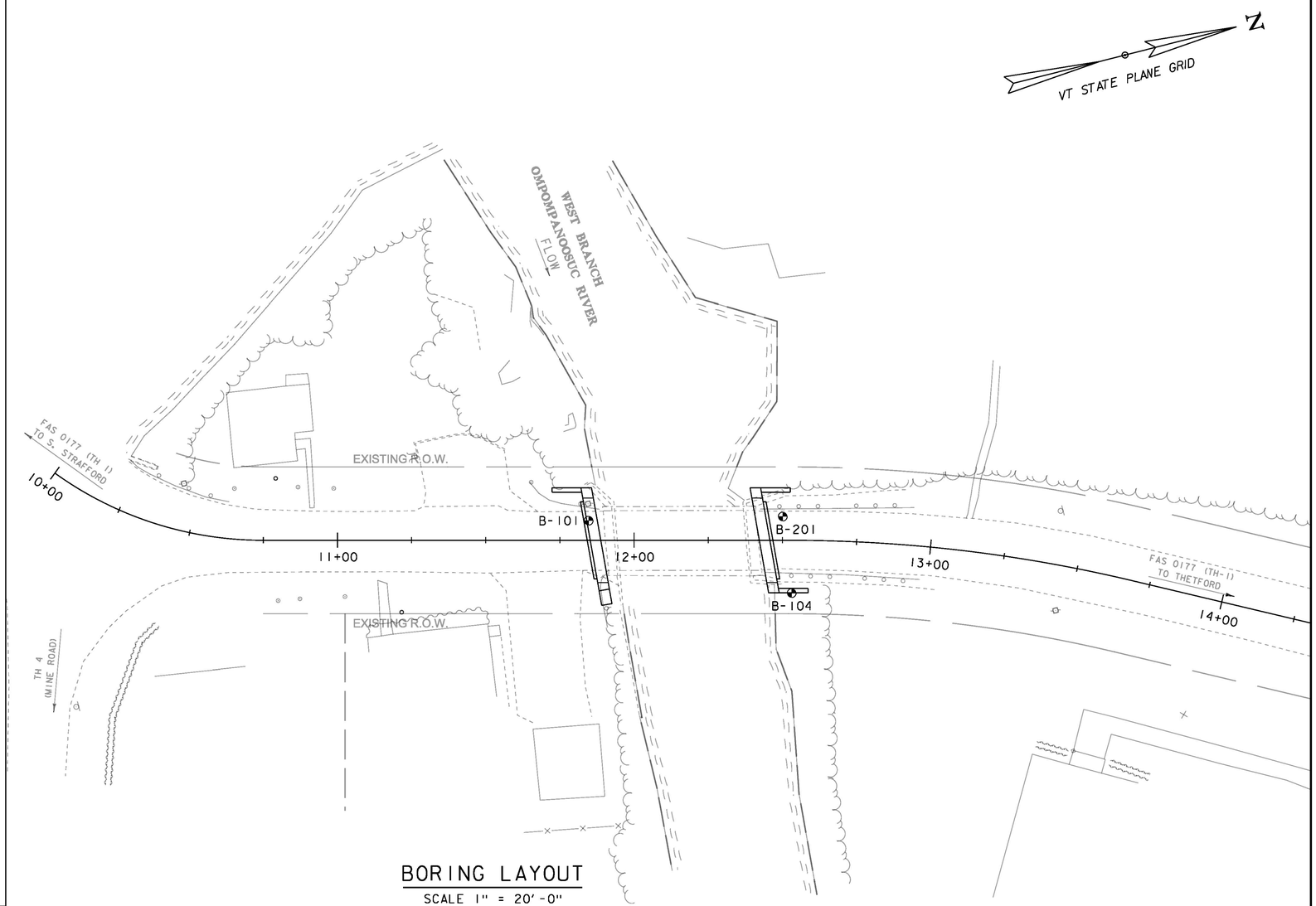

BORING LAYOUT

SCALE 1" = 20'-0"

20 0 20

GENERAL NOTES

1. The subsurface explorations shown herein were made between 12/12/2013 and 01/16/2014 by the Agency.
2. Soil and rock classifications, properties and descriptions are based on engineering interpretation from available subsurface information by the Agency and may not necessarily reflect actual variations in subsurface conditions that may be encountered between individual boring or sample locations.
3. Observed water levels and/or conditions indicated are as recorded at the time of exploration and may vary according to the prevailing rainfall, methods of exploration and other factors.
4. Engineering judgment was exercised in preparing the subsurface information presented herein. Analysis and interpretation of subsurface data was performed and interpreted for Agency design and estimating purposes. Presentation of the information in the Contract is intended to provide the Contractor access to the same data available to the Agency. The subsurface information is presented in good faith and is not intended as a substitute for personal investigation, independent interpretation, independent analysis or judgment by the Contractor.
5. Pictorial structure details shown on the boring plan layout or soils profile are for illustrative purposes only and may not accurately portray final contract details.
6. Terminology used on boring logs to describe the hardness, degree of weathering, and spacing of fractures, joints and other discontinuities in the bedrock is defined in the AASHTO Manual on Subsurface Investigations, 1988.
7. Northing and Easting coordinates are shown in Vermont State Plane Grid North American Datum 1983 in meters and survey feet.

PROJECT NAME: STRAFFORD

PROJECT NUMBER: BF 0177(10)

FILE NAME: sl3j088boring.dgn	PLOT DATE: 31-AUG-2016
PROJECT LEADER: K. HIGGINS	DRAWN BY: J. GRIGAS
DESIGNED BY: J. GRIGAS	CHECKED BY: T. MATTHEWS
BORING LAYOUT SHEET	SHEET 18 OF 52

STATE OF VERMONT
AGENCY OF TRANSPORTATION
MATERIALS & RESEARCH SECTION
SUBSURFACE INFORMATION

BORING LOG

STRAFFORD
BF 0177(10)
VT-132 BR-29

Boring No.: **B-101**
Page No.: 1 of 2
Pin No.: 13J088
Checked By: CEE

Boring Crew: GARROW, HOOK, DAIGNEAULT
Date Started: 12/12/13 Date Finished: 1/10/14
VTSPG NAD83: N 486404.17 ft E 1677419.41 ft
Station: 11+85 Offset: -7.00
Ground Elevation: 888.0 ft

	Casing	Sampler
Type:	WB	SPLIT BARREL
I.D.:	4 in	1.5 in
Hammer Wt:	N.A.	140 lb.
Hammer Fall:	N.A.	30 in.
Hammer/Rod Type:	Auto/AWJ	
Rig:	CME 45C SKID	C_E = 1.33

Groundwater Observations		
Date	Depth (ft)	Notes
12/23/13	12.9	After 10 days.
01/09/14	9.6	AM
01/14/14	12.6	AM

Depth (ft)	Strata (1)	CLASSIFICATION OF MATERIALS (Description)	Run (Dip deg.)	Core Rec. % (RQD %)	Drill Rate minutes/ft	Blows/6" (N Value)	Moisture Content %	Gravel %	Sand %	Fines %
		Asphalt Pavement, 0.0 ft - 1.15 ft								
		A-2-4, GrSa, Lt/brn, Moist, Rec. = 1.2 ft, Cleaned out with roller cone.				10-6-4-6 (10)	13.5	24.7	56.7	18.6
5		A-2-4, Sa, brn, Moist, Rec. = 0.8 ft				5-3-4-6 (7)	17.6	18.7	61.5	19.8
		Field Note:, No Recovery				R@5.0"				
		Field Note:, NXDC, Cleaned out casing.								
		A-1-b, SaGr, brn, Moist, Rec. = 0.3 ft, Lab Note: Lots of Broken Rock was within sample.				44-R@1.0"	9.3	56.0	30.7	13.3
10		Field Note:, NXDC, Cleaned out casing.				R@1.0"				
		Field Note:, No Recovery								
		Field Note:, NXDC, Cleaned out casing.								
		A-2-4, SiSa, gry-brn, MTW, Rec. = 0.5 ft, NXDC, Cleaned out casing.				10-2-1-3 (3)	39.8	8.4	67.9	23.7
15		A-1-a, SaGr, gry-brn, MTW, Rec. = 0.3 ft, Lab Note: Sample was mostly Broken Rock.				12-10-8-12 (18)	10.7	60.3	29.1	10.6
		A-1-b, GrSa, brn, Moist, Rec. = 1.2 ft				14-22-20-22 (42)	12.0	32.2	49.7	18.1
		A-1-b, GrSa, brn, Moist, Rec. = 1.0 ft				17-15-13-13 (28)	13.1	25.5	60.6	13.9
20		A-1-b, GrSa, brn, Moist, Rec. = 0.9 ft				24-15-13-R@5.0" (28)	12.5	36.9	50.5	12.6
		Field Note:, NXDC, Cleaned out casing.								
25		A-1-b, GrSa, brn, Moist, Rec. = 0.8 ft, Lab Note: Broken Rock was within sample.				4-12-17-31 (29)	13.5	20.1	66.5	13.4
30		Visual Description:, Broken Rock, gry, Moist, Rec. = 0.3 ft				3-R@3.5"	11.4			
		Field Note:, Pulled casing and changed bit								
		Field Note:, NXDC, Cleaned out casing.								
35		A-2-4, GrSa, brn, Moist, Rec. = 1.0 ft, Lab Note: Broken Rock was within sample.				29-44-R@2.5" (R)	13.9	32.6	49.4	18.0

ABUT 1 BTM.
EL 876.25

Notes:
1. Stratification lines represent approximate boundary between material types. Transition may be gradual.
2. N Values have not been corrected for hammer energy. C_E is the hammer energy correction factor.
3. Water level readings have been made at times and under conditions stated. Fluctuations may occur due to other factors than those present at the time measurements were made.

BORING LOG 2 STRAFFORD BF 0177(10).GPJ VERMONT AOT.GDT 1/21/14

STATE OF VERMONT
AGENCY OF TRANSPORTATION
MATERIALS & RESEARCH SECTION
SUBSURFACE INFORMATION

BORING LOG

STRAFFORD
BF 0177(10)
VT-132 BR-29

Boring No.: **B-101**
Page No.: 2 of 2
Pin No.: 13J088
Checked By: CEE

Boring Crew: GARROW, HOOK, DAIGNEAULT
Date Started: 12/12/13 Date Finished: 1/10/14
VTSPG NAD83: N 486404.17 ft E 1677419.41 ft
Station: 11+85 Offset: -7.00
Ground Elevation: 888.0 ft

	Casing	Sampler
Type:	WB	SPLIT BARREL
I.D.:	4 in	1.5 in
Hammer Wt:	N.A.	140 lb.
Hammer Fall:	N.A.	30 in.
Hammer/Rod Type:	Auto/AWJ	
Rig:	CME 45C SKID	C_E = 1.33

Groundwater Observations		
Date	Depth (ft)	Notes
12/23/13	12.9	After 10 days.
01/09/14	9.6	AM
01/14/14	12.6	AM

Depth (ft)	Strata (1)	CLASSIFICATION OF MATERIALS (Description)	Run (Dip deg.)	Core Rec. % (RQD %)	Drill Rate minutes/ft	Blows/6" (N Value)	Moisture Content %	Gravel %	Sand %	Fines %
		Field Note:, NXDC, Cleaned out casing.								
40		A-2-4, Sa, brn, Moist, Rec. = 1.1 ft				26-34-R@2.5" (R)	17.8	7.4	74.6	18.0
45		A-1-b, GrSa, Dk/brn, Moist, Rec. = 1.1 ft				16-8-22-R@2.5" (30)	18.2	27.8	52.8	19.4
		Field Note:, NXDC, Cleaned out casing.								
50		A-1-b, GrSa, Dk/brn, Moist, Rec. = 1.0 ft				39-43-R@2.5" (R)	14.9	30.3	53.9	15.8
		Field Note:, NXDC, Cleaned out casing.								
55		Field Note:, No Recovery				R@6.0"				
		57.1 ft - 59.1 ft, Gray, Micaceous quartz-rich Limestone, Hard, Unweathered, Fair rock, NXDC, RMR = 57	1 (60)	65 (0)	5 5	Top of Bedrock @ 57.1 ft				
60		59.1 ft - 63.1 ft, Gray, Micaceous quartz-rich Limestone, Hard, Unweathered, Good rock, NXMDC, RMR = 65	2 (60)	90 (50)	11 13 7 6					
65		63.1 ft - 67.1 ft, Gray, Micaceous quartz-rich Limestone, Hard, Unweathered, Good rock, NXMDC, RMR = 74	3 (60)	100 (93)	10 7 8 7					
70		Hole stopped @ 67.1 ft								
75		Remarks: 1. Inclement weathered hindered the days able to drill within the start and finish date. 2. Hole collapsed at 16.3 ft. (01/14/14)								

EST. PILE TIP
EL 830.9

Notes:
1. Stratification lines represent approximate boundary between material types. Transition may be gradual.
2. N Values have not been corrected for hammer energy. C_E is the hammer energy correction factor.
3. Water level readings have been made at times and under conditions stated. Fluctuations may occur due to other factors than those present at the time measurements were made.

BORING LOG 2 STRAFFORD BF 0177(10).GPJ VERMONT AOT.GDT 1/21/14

PROJECT NAME: STRAFFORD
PROJECT NUMBER: BF 0177(10)

FILE NAME: sl3j088boring.dgn
PROJECT LEADER: K. HIGGINS
DESIGNED BY: J. GRIGAS
BORING LOGS 1

PLOT DATE: 31-AUG-2016
DRAWN BY: J. GRIGAS
CHECKED BY: T. MATTHEWS
SHEET 19 OF 52

STATE OF VERMONT
AGENCY OF TRANSPORTATION
MATERIALS & RESEARCH SECTION
SUBSURFACE INFORMATION

BORING LOG

STRAFFORD
BF 0177(10)
VT-132 BR-29

Boring No.: **B-104**
Page No.: 1 of 1
Pin No.: 13J088
Checked By: CEE

Boring Crew: HOOK, DAIGNEAULT
Date Started: 1/15/14 Date Finished: 1/16/14
VTSPG NAD83: N 486464.52 ft E 1677459.89 ft
Station: 12+52 Offset: 17.50
Ground Elevation: 881.0 ft

	Casing	Sampler
Type:	WB	SS
I.D.:	4 in	1.5 in
Hammer Wt:	N.A.	140 lb.
Hammer Fall:	N.A.	30 in.
Hammer/Rod Type:	Auto/AWJ	
Rig:	CME 45C TRACK	C_E = 1.34

Groundwater Observations		
Date	Depth (ft)	Notes
01/16/14	7.5	AM
01/16/14	5.3	Casing removed.

ABUT 2 BTM.
EL 875.10

EST. PILE TIP
EL 851.0

Depth (ft)	Strata (1)	CLASSIFICATION OF MATERIALS (Description)	Run (Dip deg.)	Core Rec. % (RQD %)	Drill Rate minutes/ft	Blows/6" (N Value)	Moisture Content %	Gravel %	Sand %	Fines %
		A-3, Sa, brn, Moist, Rec. = 0.2 ft				2-1-WH-1 (1)	38.4	5.5	86.9	7.6
		A-2-4, Sa, brn, Moist, Rec. = 1.1 ft, Lab Note: Wood chunks were within sample.				1-2-2-3 (4)	19.9	11.7	76.6	11.7
5		A-1-b, SaGr, Lt/brn, Moist, Rec. = 0.5 ft, Lab Note: Broken Rock was within sample.				2-5-10-7 (15)	9.0	50.0	43.3	6.7
		A-1-b, GrSa, gry-brn, MTW, Rec. = 1.5 ft, Lab Note: Broken Rock was within sample.				5-8-9-7 (17)	16.5	34.0	56.7	9.3
		A-1-b, GrSa, brn, Wet, Rec. = 2.0 ft, Cleaned out with roller cone.				6-6-8-9 (14)	18.7	25.5	65.3	9.2
10		A-2-4, GrSa, brn, Moist, Rec. = 0.9 ft, Cleaned out with roller cone.				5-7-7-11 (14)	15.8	25.4	56.6	18.0
		A-1-b, GrSa, brn, Moist, Rec. = 1.1 ft, Cleaned out with roller cone.				12-15-27-23 (42)	12.2	30.5	54.8	14.7
		A-1-b, GrSa, brn, Moist, Rec. = 1.1 ft, Lab Note: Broken Rock was within sample.				9-21-31-R@1.0" (52)	10.9	38.6	46.1	15.3
15		Field Note:, NXDC, Cleaned out casing.								
		A-2-4, GrSa, brn, Moist, Rec. = 1.2 ft, NXDC, Cleaned out casing.				15-14-22-20 (36)	13.5	32.6	51.5	15.9
		A-1-b, GrSa, brn, Moist, Rec. = 1.1 ft, Lab Note: Broken Rock was within sample.				12-11-16-28 (27)	12.7	34.5	52.3	13.2
20										
		Field Note:, NXDC, Cleaned out casing.								
25		A-2-4, SiGrSa, brn, Moist, Rec. = 0.9 ft				45-R@6.0" (R)	15.5	28.1	51.4	20.5
		Field Note:, Cobble/Hardpan, NXDC, Cleaned out casing.								
30		30.0 ft - 32.0 ft, Gray, Micaceous quartz-rich Limestone, Hard, Unweathered, Fair rock, NXDC, RMR = 57	1 (60)	100 (0)	6 5	Top of Bedrock @ 30.0 ft				
		32.0 ft - 35.0 ft, Gray, Micaceous quartz-rich Limestone, Hard, Unweathered, Good rock, NXMDC, RMR = 71	2 (60)	100 (87)	7 8 7					
35		35.0 ft - 40.0 ft, Gray, Micaceous quartz-rich Limestone, Hard, Unweathered, Good rock, NXMDC, RMR = 71	3 (60)	86 (80)	6 7 5 6 5					
40		Hole stopped @ 40.0 ft								
		Remarks: Hole collapsed at 7.6 ft.								

Notes:
1. Stratification lines represent approximate boundary between material types. Transition may be gradual.
2. N Values have not been corrected for hammer energy. C_E is the hammer energy correction factor.
3. Water level readings have been made at times and under conditions stated. Fluctuations may occur due to other factors than those present at the time measurements were made.

BORING LOG 2 STRAFFORD BF 0177(10).GPJ VERMONT AOT.GDT 1/21/14

STATE OF VERMONT
AGENCY OF TRANSPORTATION
CONSTRUCTION AND
MATERIALS BUREAU
CENTRAL LABORATORY

BORING LOG

STRAFFORD
BF 0177(10)
VT-132 BR-29

Boring No.: **B-201**
Page No.: 1 of 1
Pin No.: 13J088
Checked By: MLM

Boring Crew: GARROW, JUDKINS, COLETTI
Date Started: 6/02/16 Date Finished: 6/03/16
VTSPG NAD83: N 486467.83 ft E 1677434.11 ft
Station: 12+50 Offset: -8.00
Ground Elevation: 888.3 ft

	Casing	Sampler
Type:	WB	SS
I.D.:	4 in	1.5 in
Hammer Wt:	N.A.	140 lb.
Hammer Fall:	N.A.	30 in.
Hammer/Rod Type:	Auto/AWJ	
Rig:	CME 45C SKID	C_E = 1.42

Groundwater Observations		
Date	Depth (ft)	Notes
06/03/16	10.5	W.T. during drilling
06/03/16	13.1	W.T. before drilling

ABUT 2 BTM.
EL 875.10

EST. PILE TIP
EL 844.8

Depth (ft)	Strata (1)	CLASSIFICATION OF MATERIALS (Description)	Run (Dip deg.)	Core Rec. % (RQD %)	Drill Rate minutes/ft	Blows/6" (N Value)	Moisture Content %	Gravel %	Sand %	Fines %
		Asphalt Pavement, 0.0 ft - 0.7 ft								
		Field Note:, NXDC, Cleaned out casing, Cobbles, Lost water return at 6.0 feet								
10										
		Field Note:, NXDC, Cleaned out casing, cobbles and boulders								
20										
		Field Note:, NXDC, Cleaned out casing, Cobbles								
		Field Note:, Changed to 3.0 inch casing, Started mud drilling with bentonite due to sand								
30										
40										
		Field Note:, NXDC, Cleaned out casing								
		43.5 ft - 48.5 ft, Gray, Phyllitic muscovite-biotite-quartz META-LIMESTONE, with rare pyrite. Hard, Unweathered, Good rock, BX, RMR=66	1 (60)	94 (80)	11 9 8 7 8	Top of Bedrock @ 43.5 ft				
50		48.5 ft - 53.5 ft, Gray, Phyllitic muscovite-biotite-quartz META-LIMESTONE, with rare pyrite. Some joint surfaces are brown, rust stained, and slightly vuggy. Hard, Very slightly weathered, Fair rock, BX, RMR=52	2 (60)	98 (47)	8 7 7 5 7					
		Hole stopped @ 53.5 ft								
		Remarks: Hole Collapsed at 16.9 feet.								

Notes:
1. Stratification lines represent approximate boundary between material types. Transition may be gradual.
2. N Values have not been corrected for hammer energy. C_E is the hammer energy correction factor.
3. Water level readings have been made at times and under conditions stated. Fluctuations may occur due to other factors than those present at the time measurements were made.

BORING LOG 2 STRAFFORD BF 0177(10).GPJ VERMONT AOT.GDT 6/13/16

PROJECT NAME: STRAFFORD
PROJECT NUMBER: BF 0177(10)

FILE NAME: sl3j088boring.dgn
PROJECT LEADER: K. HIGGINS
DESIGNED BY: J. GRIGAS
BORING LOGS 2

PLOT DATE: 31-AUG-2016
DRAWN BY: J. GRIGAS
CHECKED BY: T. MATTHEWS
SHEET 20 OF 52

WOOD MARKER POSTS
STA 11+59 LT
~~STA 11+82 RT~~

DELINEATOR WITH STEEL POST
STA 13+20 LT (BLUE)
STA 13+35 RT (GREEN)

ANCHOR FOR STEEL BEAM GUARDRAIL
STA 12+97 RT

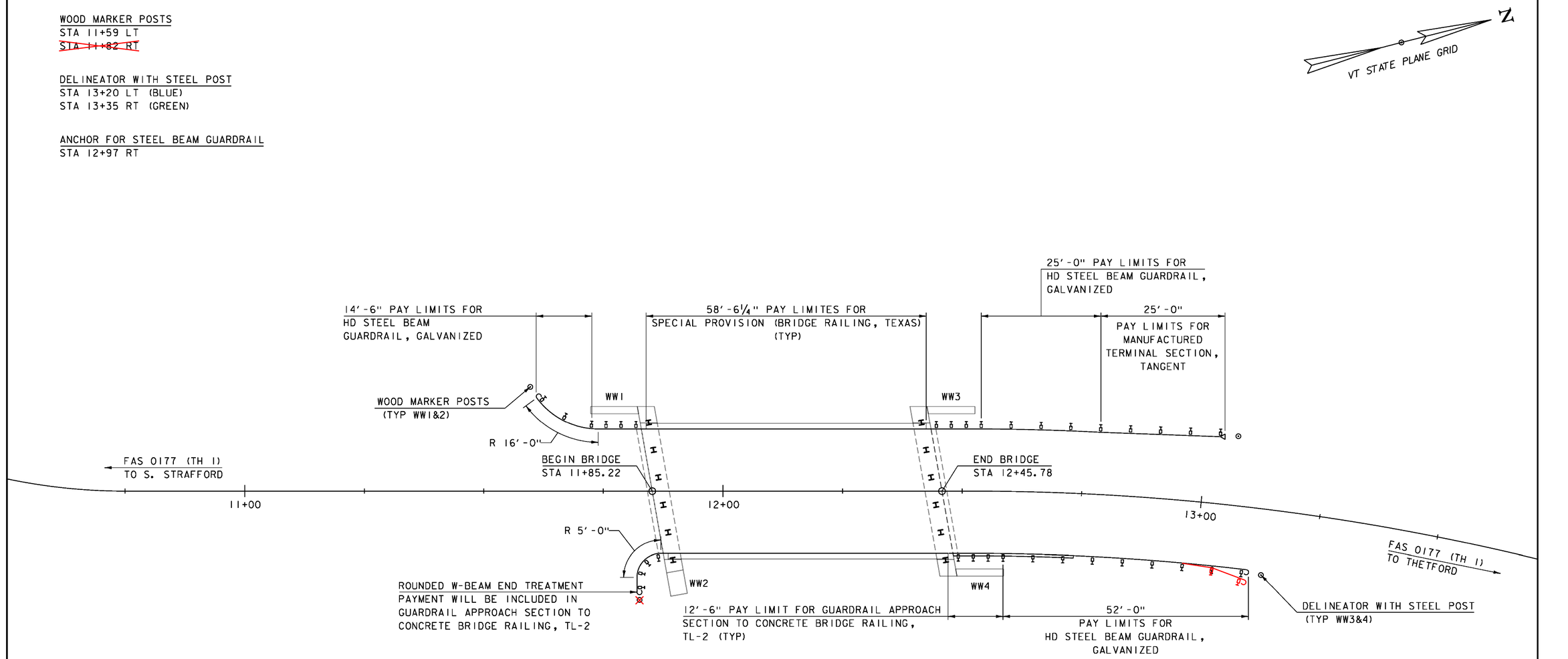

RAIL LAYOUT SHEET

SCALE 1" = 10'-0"
10 0 10

NOTES:

1) SEE STANDARDS G-1, G-1D, G-4, G-19, T-40, T-45, AND SHEETS 22-23 FOR ADDITIONAL DETAILS.

PROJECT NAME:	STRAFFORD
PROJECT NUMBER:	BF 0177(10)

FILE NAME: sl3j088rail.dgn	PLOT DATE: 03-OCT-2016
PROJECT LEADER: K. HIGGINS	DRAWN BY: S. COLEY
DESIGNED BY: J. GRIGAS	CHECKED BY: J. GRIGAS
RAIL LAYOUT SHEET	SHEET 21 OF 52

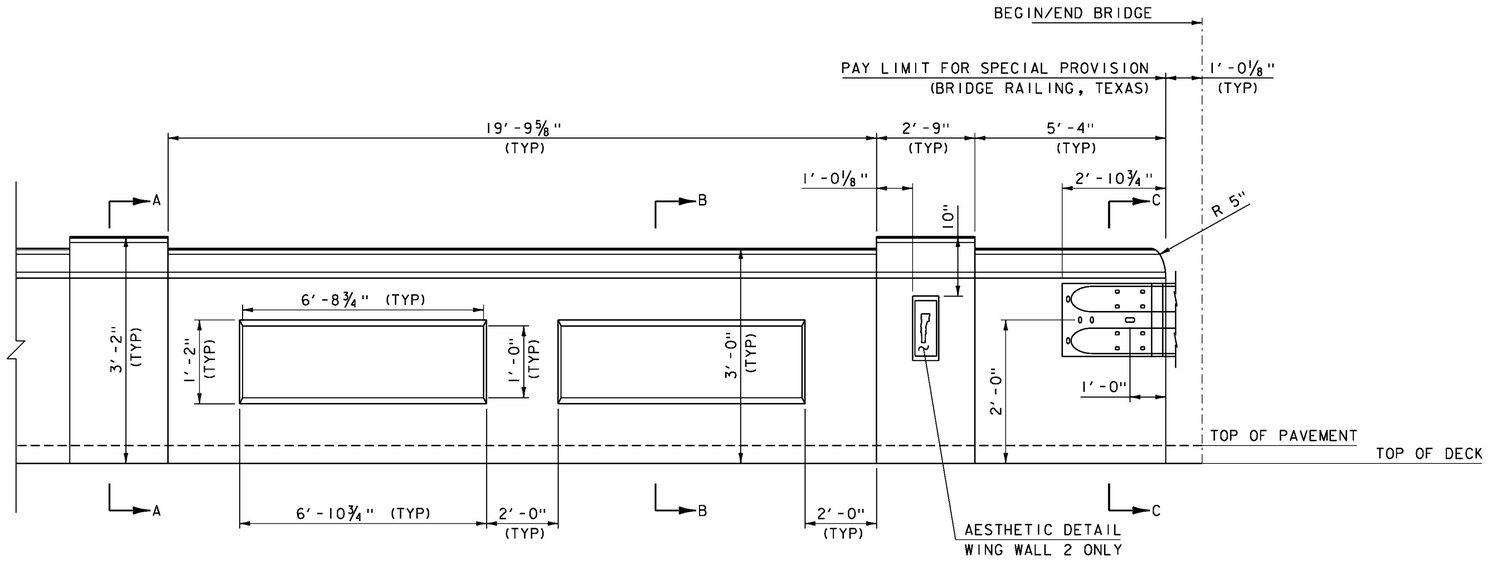

ROADWAY ELEVATION OF RAIL

SCALE: VERTICAL: 1" = 1'-0"
HORIZONTAL: ½" = 1'-0"

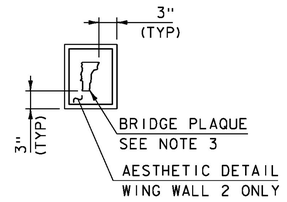

BRIDGE PLAQUE

SCALE 1" = 1'-0"

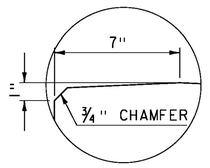

DETAIL "A"

SCALE 3" = 1'-0"

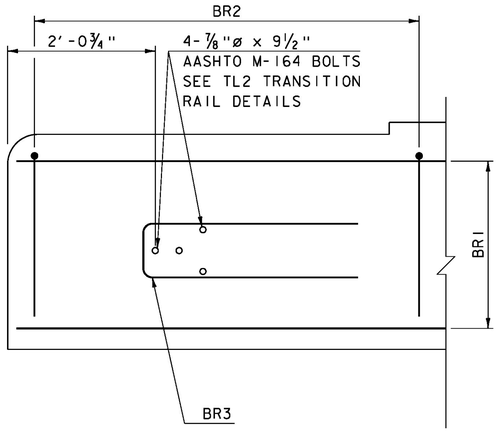

TYPICAL REINFORCING PLACEMENT

SCALE 1" = 1'-0"

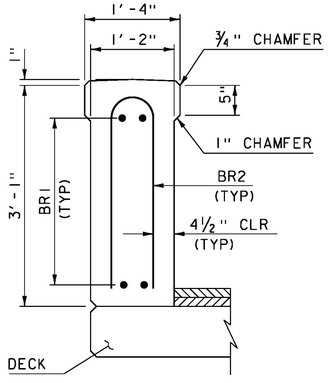

SECTION A-A

SCALE 1" = 1'-0"

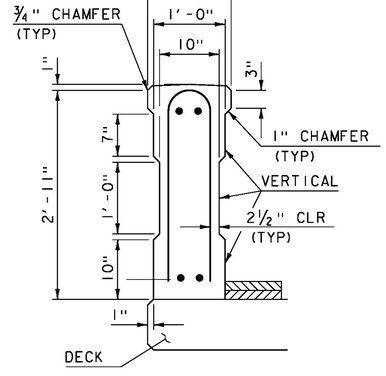

SECTION B-B

SCALE 1" = 1'-0"

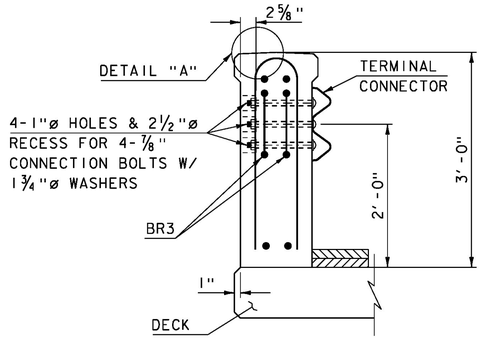

SECTION C-C

SCALE 1" = 1'-0"

HOLES AND RECESSES ARE TO BE FORMED OR CORED, PERCUSSION DRILLING IS NOT PERMITTED.

BRIDGE RAIL REINFORCING CHART

BAR	SIZE	SPACING	TYPE
BR1	4	10"	STR
BR2	4	8"	2
BR3	4	AS SHOWN	2

NOTES:

1. 2'-1" NUMBER 4 BAR LAP LENGTH.
2. SUPERSTRUCTURE BRIDGE RAIL CONNECTION REINFORCING STEEL OMITTED FOR CLARITY.
3. BRIDGE PLAQUE IS TO BE PLACED ON THE PARAPET OFF OF WINGWALL 2. A BRIDGE PLAQUE AS SHOWN IN SD 502.00 WILL NOT BE REQUIRED. THE BRIDGE PLAQUE WILL BE SUPPLIED BY THE AGENCY OF TRANSPORTATION AND WILL BE CONSIDERED INCIDENTAL TO SPECIAL PROVISION BRIDGE RAIL.
4. BRIDGE PLAQUE TO HAVE A 3" BORDER FOR THE AESTHETIC DETAIL.

PROJECT NAME: STRAFFORD
PROJECT NUMBER: BF 0177(10)

FILE NAME: sl3088raildet.dgn
PROJECT LEADER: K. HIGGINS
DESIGNED BY: S. COLEY
BRIDGE RAIL DETAIL SHEET

PLOT DATE: 31-AUG-2016
DRAWN BY: S. COLEY
CHECKED BY: J. GRIGAS
SHEET 22 OF 52

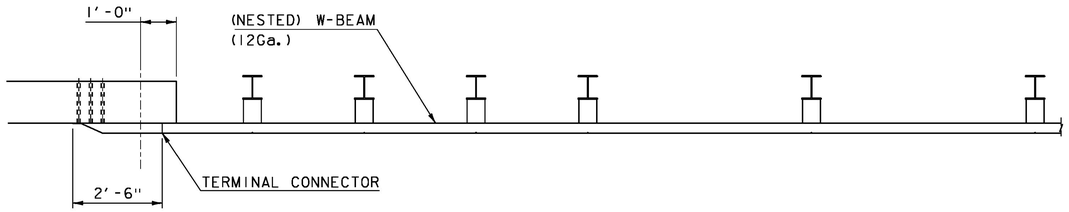

TYPICAL PLAN VIEW

SCALE 1/2" = 1'-0"

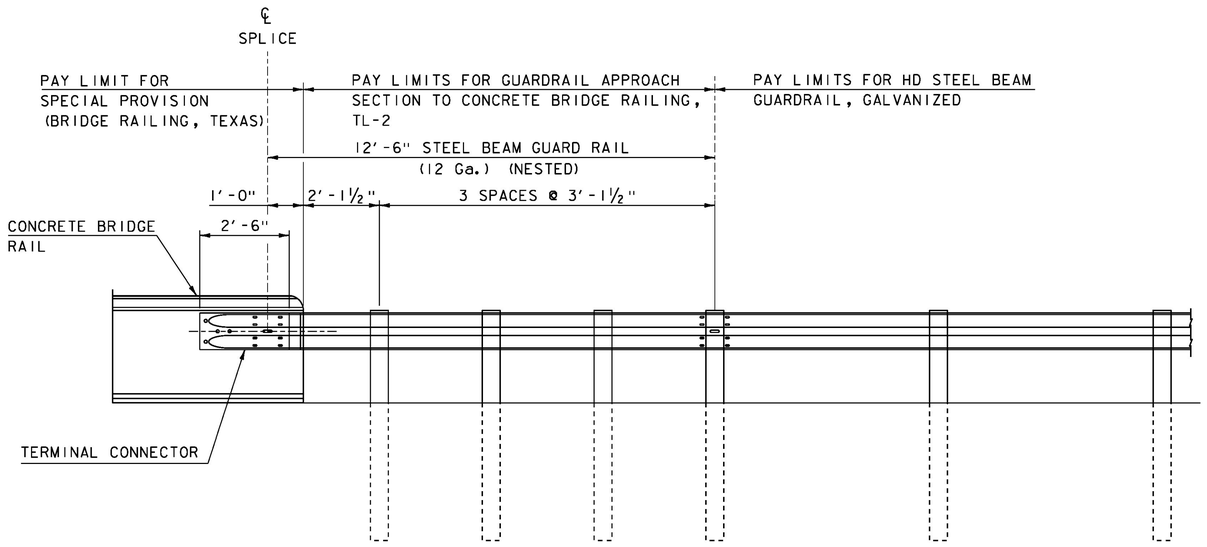

TYPICAL ELEVATION VIEW

SCALE 1/2" = 1'-0"

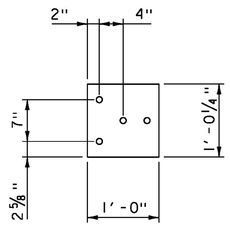

CONNECTION PLATE

DETAIL - ELEVATION

SCALE 1" = 1'-0"

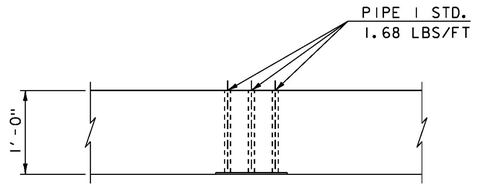

CONNECTION PLATE

DETAIL - PLAN

SCALE 1" = 1'-0"

GENERAL NOTES

1. A COMPOSITE MATERIAL POST AND/ OR BLOCKOUT FROM THE AGENCY'S APPROVED PRODUCTS LIST MAY BE SUBSTITUTED FOR A POST AND/ OR BLOCKOUT OF SIMILAR DIMENSIONS
2. REFER TO STANDARD DRAWINGS G-1 AND G-1D FOR ADDITIONAL DETAILS.
3. THE TERMINAL CONNECTOR WILL BE INCLUDED IN THE BID PRICE FOR ITEM 621.746 "GUARDRAIL APPROACH SECTION TO CONCRETE BRIDGE RAILING, TL-2". THE CONNECTION PLATE WILL BE INCLUDED IN THE BID PRICE FOR ITEM 900.640 "SPECIAL PROVISION (BRIDGE RAILING TEXAS)".

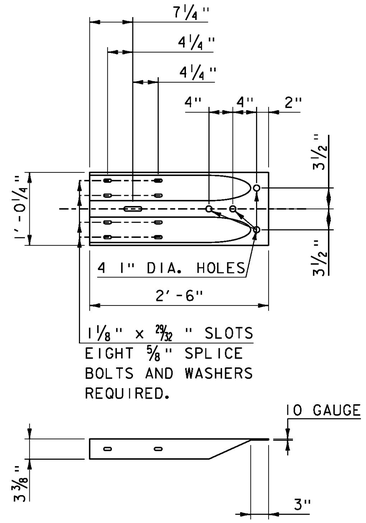

TERMINAL CONNECTOR

SCALE 1" = 1'-0"

PROJECT NAME:	STRAFFORD
PROJECT NUMBER:	BF 0177(10)
FILE NAME: sl3088raildet	PLOT DATE: 31-AUG-2016
PROJECT LEADER: K. HIGGINS	DRAWN BY: S. COLEY
DESIGNED BY: J. GRIGAS	CHECKED BY: J. GRIGAS
TRANSITION RAIL DETAILS SHEET	SHEET 23 OF 52

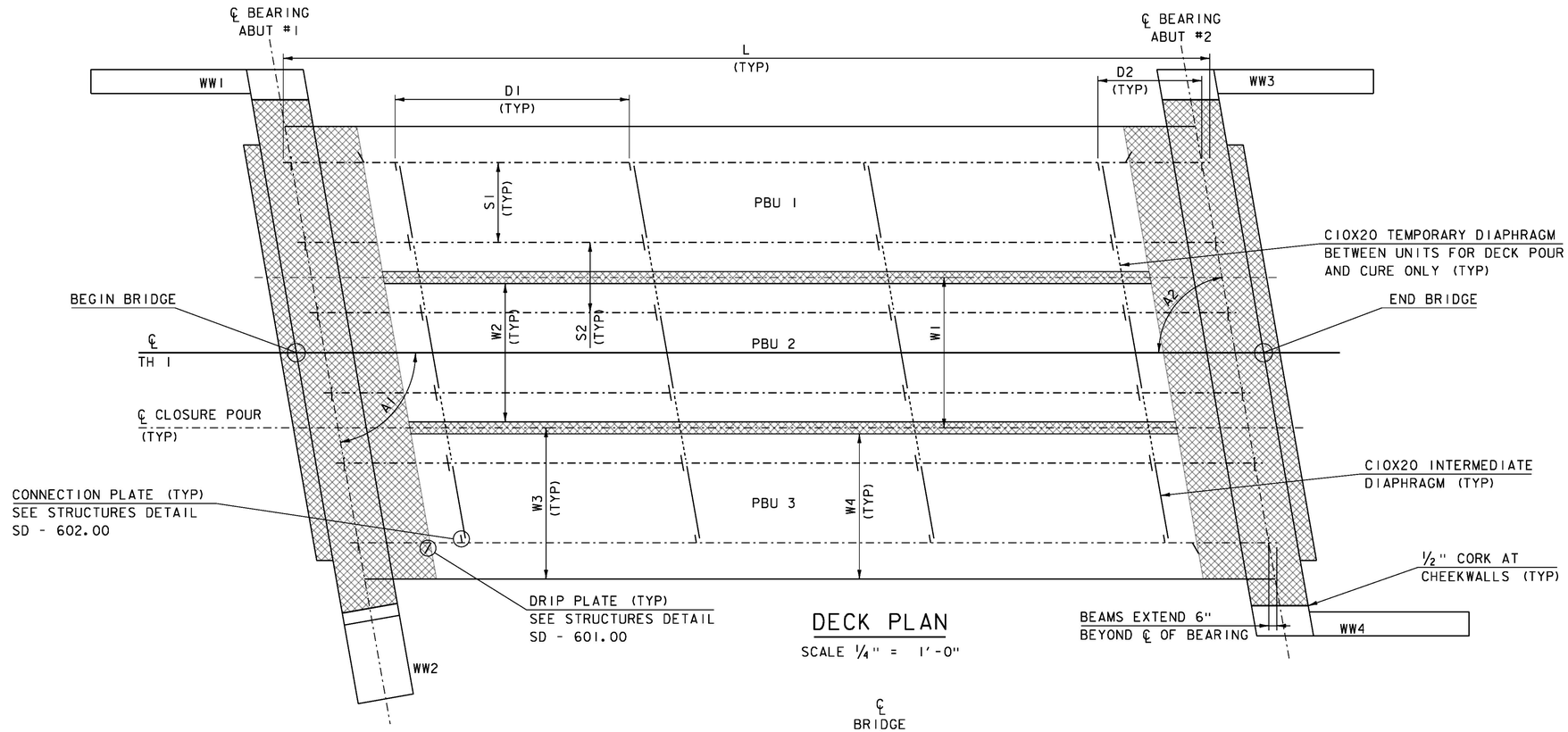

DECK PLAN

SCALE 1/4" = 1'-0"

L	58' - 0"
W1	9' - 4 3/4"
W2	8' - 7 3/4"
W3	9' - 5 5/8"
W4	9' - 1 1/8"
S1	5' - 0"
S2	4' - 4 3/4"
D1	14' - 8"
D2	6' - 6"

SKEW	A1	80°
	A2	80°

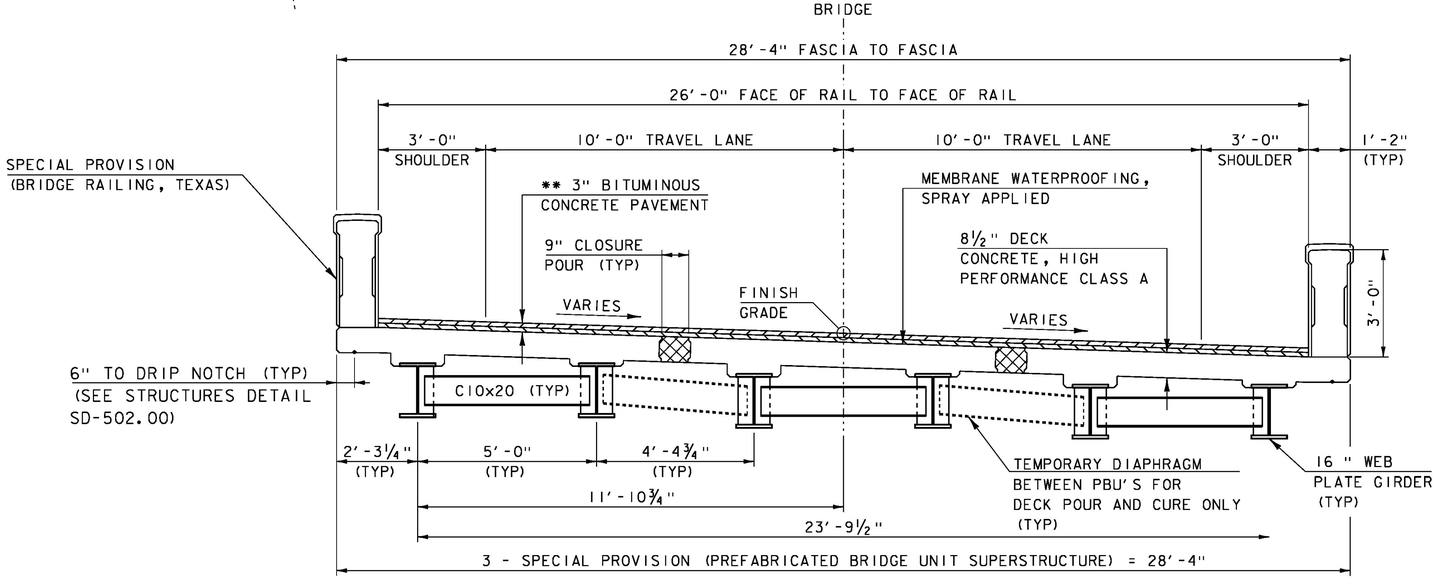

BRIDGE TYPICAL SECTION

SCALE 1/2" = 1'-0"

SPECIAL PROVISION (HIGH PERFORMANCE CONCRETE, RAPID SET)

SPECIAL PROVISION (BITUMINOUS CONCRETE PAVEMENT, TYPE IVB)*

NOTE:

*BITUMINOUS CONCRETE PAVEMENT IN DECK PLAN VIEW IS OMITTED FOR CLARITY

** 1 1/2" SPECIAL PROVISION (BITUMINOUS CONCRETE PAVEMENT TYPE IVB), OVER 1 1/2" SPECIAL PROVISION (BITUMINOUS CONCRETE PAVEMENT TYPE IVB

PROJECT NAME: STRAFFORD
PROJECT NUMBER: BF 0177(10)

FILE NAME: sl3088sup.dgn
PROJECT LEADER: K. HIGGINS
DESIGNED BY: T. MATTHEWS
FRAMING PLAN SHEET

PLOT DATE: 31-AUG-2016
DRAWN BY: T. MATTHEWS
CHECKED BY: J. GRIGAS
SHEET 24 OF 52

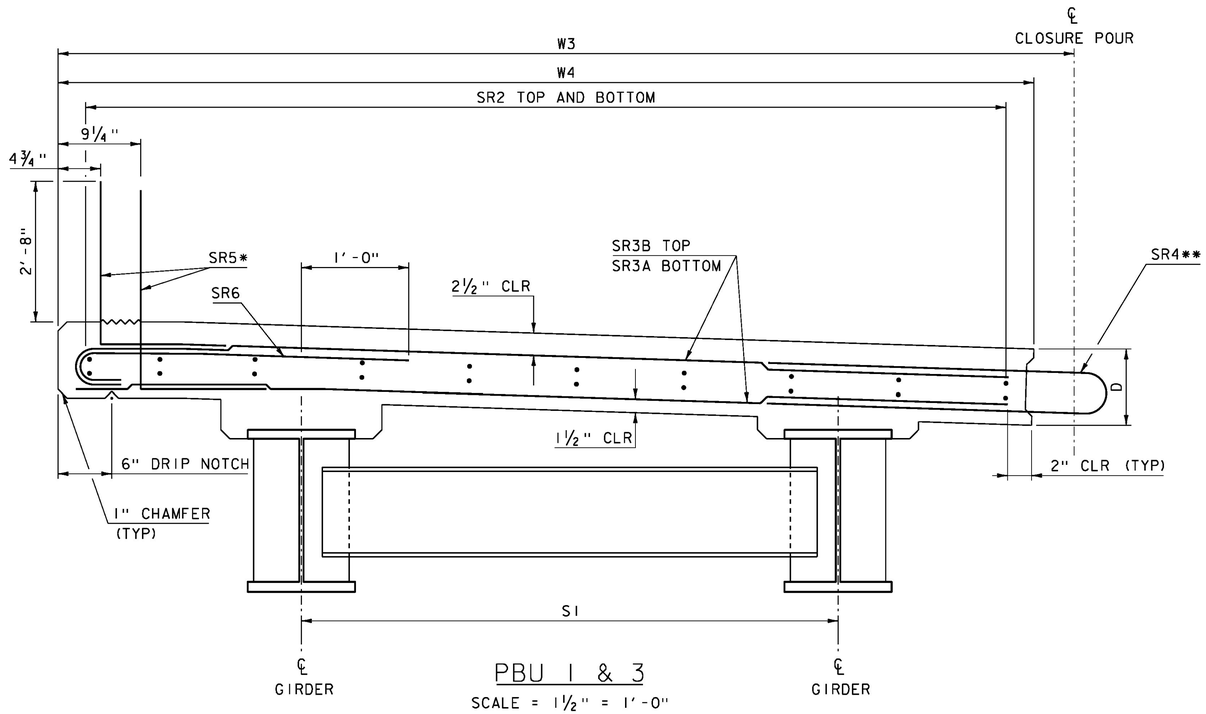

PBU 1 & 3

SCALE = 1½" = 1'-0"

NOTE:

1. PBU 1 SHOWN, PBU 3 IS SIMILAR

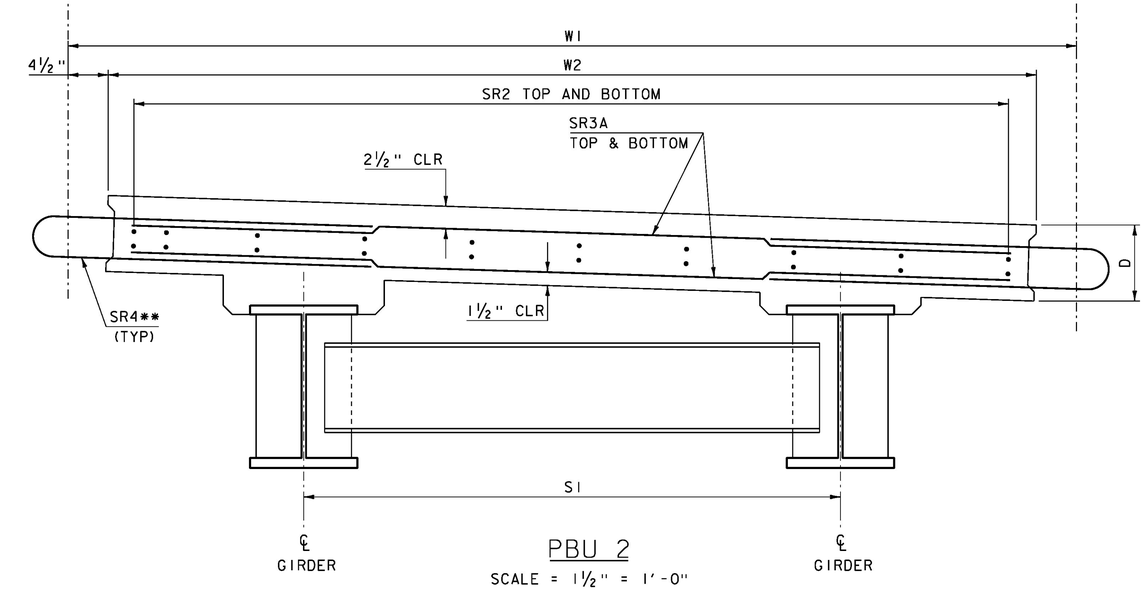

PBU 2

SCALE = 1½" = 1'-0"

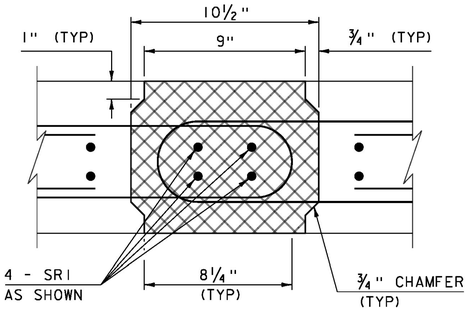

CONNECTION DETAIL SECTION

NOT TO SCALE

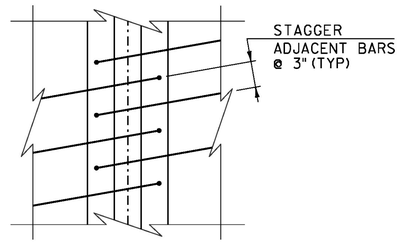

CONNECTION DETAIL PLAN

NOT TO SCALE

PBU BEAM REINFORCING CHART

BAR	SIZE	SPACING	TYPE
SR1	4	AS SHOWN	STR
SR2	5	9"	STR
SR3A	4	6"	STR
SR3B	4	6"	1
SR4	4	6"	S11
SR5	4	8"	2
SR6	4	6"	1

PBU BEAM DIMENSIONS

D	8½"
W1	9'-4¾"
W2	8'-7¾"
W3	9'-5⅝"
W4	9'-1⅛"
S1	5'-0"

NOTE:

* VERTICAL LEGS TO BE SET PLUM IN FINAL CONDITION
** TO BE STAGGERED WITH ADJACENT BEAM
3" CLEAR, UNLESS OTHERWISE SPECIFIED ON THE PLANS
2' - 7" #5 BAR LAP LENGTH
2' - 1" #4 BAR LAP LENGTH

PROJECT NAME: STRAFFORD
PROJECT NUMBER: BF 0177(10)

FILE NAME: sl3j088sup.dgn
PROJECT LEADER: K. HIGGINS
DESIGNED BY: T. MATTHEWS
PBU DETAILS SHEET 1

PLOT DATE: 31-AUG-2016
DRAWN BY: T. MATTHEWS
CHECKED BY: J. GRIGAS
SHEET 25 OF 52

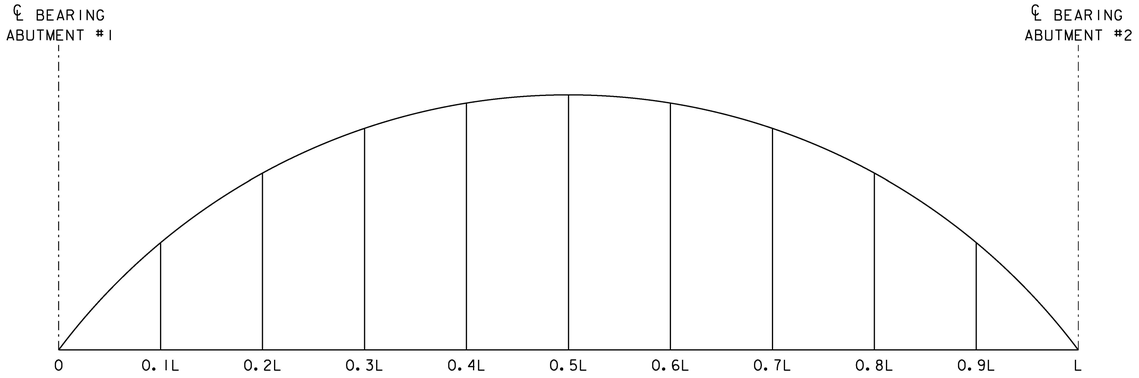

CAMBER DIAGRAM

NOT TO SCALE
SEE TABLES BELOW

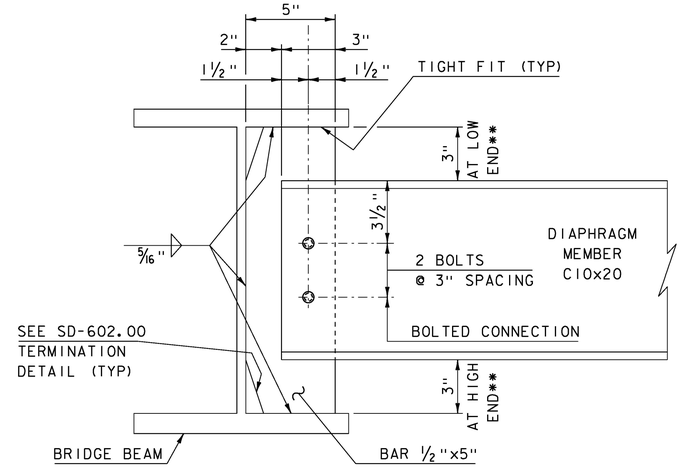

DIAPHRAGM DETAIL

SCALE 3" = 1'-0"

	0	0.1L	0.2L	0.3L	0.4L	0.5L	0.6L	0.7L	0.8L	0.9L	L
Steel Deflection	0	3/16	5/16	7/16	1/2	1/2	1/2	7/16	5/16	3/16	0
Slab & Super Deflection	0	13/16	1 1/2	2 1/16	2 3/8	2 1/2	2 3/8	2 1/16	1 1/2	13/16	0
Total Deflection	0	15/16	1 13/16	2 1/2	2 7/8	3 1/16	2 7/8	2 1/2	1 13/16	15/16	0
Residual Camber	0	3/8	5/8	13/16	15/16	1	15/16	13/16	5/8	3/8	0
Total Camber	0	1 5/16	2 7/16	3 5/16	3 7/8	4 1/16	3 7/8	3 5/16	2 7/16	1 5/16	0

WELDED SHEAR STUD CONNECTOR TABLE (S)

GIRDER	SIZE	SPACING
G1	7/8" X 9"	10"
G2	7/8" X 7"	10"
G3	7/8" X 9"	10"
G4	7/8" X 7"	10"
G5	7/8" X 9"	10"
G6	7/8" X 7"	10"

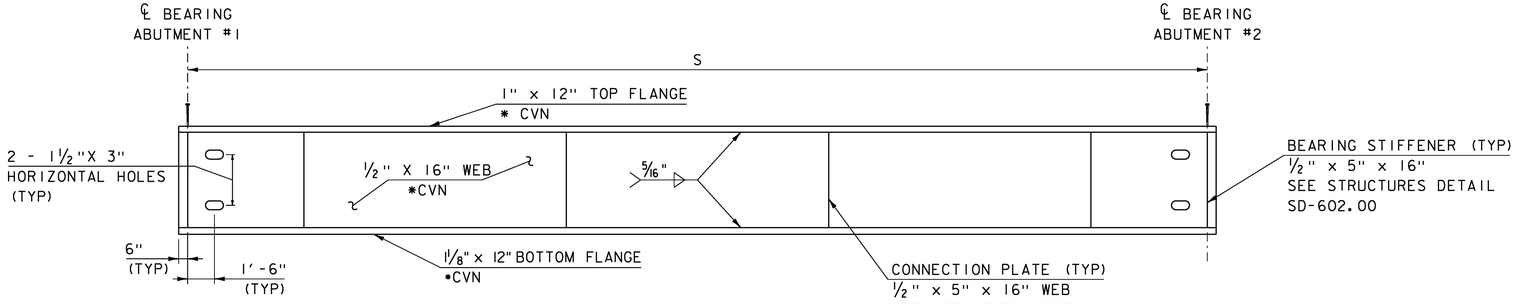

GIRDER ELEVATION

SCALE: HORIZ: ¼" = 1'-0"
VERT: 1" = 1'-0"

* CVN DENOTES THAT CHARPY V-NOTCH TEST IS REQUIRED

** TEMPORARY DIAPHRAGMS TO BE SLOPED IN ORDER TO MAINTAIN CLEARANCE

PROJECT NAME: STRAFFORD
PROJECT NUMBER: BF 0177(10)

FILE NAME: sl3j088sup.dgn
PROJECT LEADER: K. HIGGINS
DESIGNED BY: T. MATTHEWS
PBU DETAILS SHEET 2

PLOT DATE: 31-AUG-2016
DRAWN BY: T. MATTHEWS
CHECKED BY: J. GRIGAS
SHEET 26 OF 52

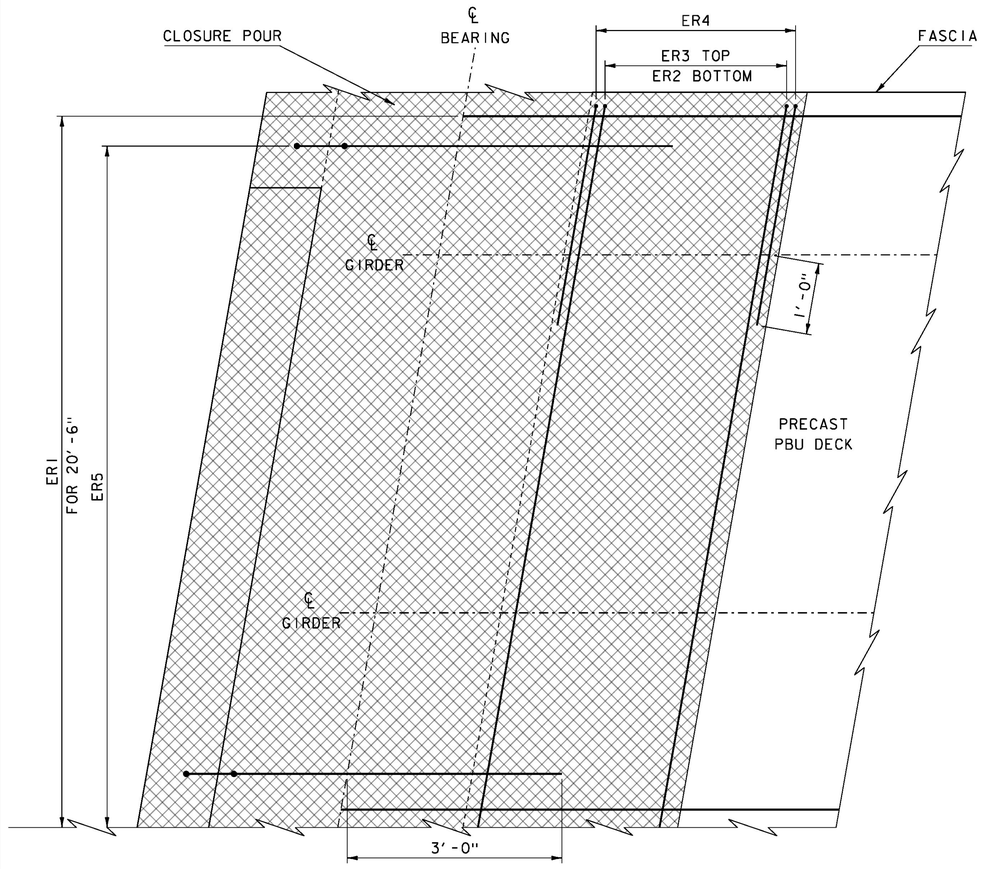

ADDITIONAL END REINFORCING PLAN VIEW

SCALE 1"= 1'-0"

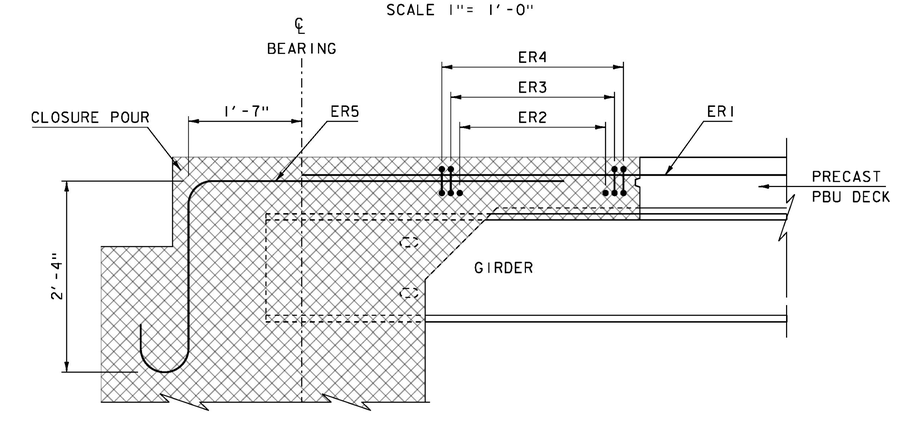

ADDITIONAL END REINFORCING ELEVATION VIEW

SCALE 1"= 1'-0"

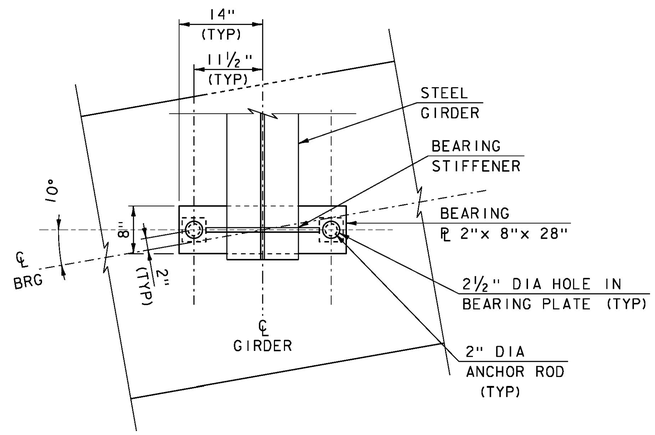

TEMPORARY BEARING ASSEMBLY PLAN

SCALE 1"= 1'-0"

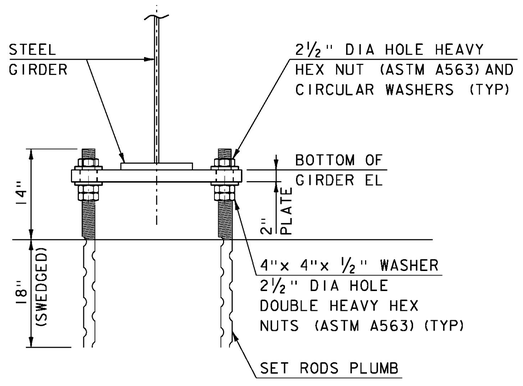

TEMPORARY BEARING ASSEMBLY ELEVATION

SCALE 1"= 1'-0"

ADDITIONAL END REINFORCING CHART

BAR	SIZE	SPACING	TYPE
ER1	5	9"	STR
ER2	4	6"	STR
ER3	4	6"	1
ER4	4	6"	1
ER5	8	6"	18

* BAR LABELED SR2 IS OMITTED FOR CLARITY ALONG WITH BARS DETAILED IN PBU ABUTMENT REINFORCING SHEET AND PBU CLOSURE POUR REINFORCING SHEET.

TEMPORARY BEARING NOTES

1. PAYMENT FOR TEMPORARY BEARING ASSEMBLIES WILL BE CONSIDERED INCIDENTAL TO THE APPROPRIATE PRECAST CONCRETE ABUTMENT ITEMS.
2. BEARING PLATES SHALL BE LEVEL PRIOR TO SETTING PREFABRICATED BRIDGE UNITS. ELEVATIONS SHALL BE ADJUSTED TO WITHIN 0.01FT OF ELEVATIONS NOTED DURING OFF-SITE FABRICATION OF THE UNITS.
3. BEARING PLATE STEEL SHALL CONFORM TO SUBSECTION 714.03. ANCHOR RODS SHALL MEET THE REQUIREMENTS OF SUBSECTION 714.08, AND SHALL BE GRADE 55.

BOTTOM OF GIRDER ELEVATIONS		
GIRDER	ABUTMENT #1	ABUTMENT #2
G1	886.28	885.39
G2	886.28	885.39
G3	886.00	884.95
G4	886.00	884.95
G5	885.72	884.50
G6	885.72	884.50

SPECIAL PROVISION (HIGH PERFORMANCE CONCRETE, RAPID SET)

NOTE:

NF = NEAR FACE
FF = FAR FACE
EF = EACH FACE
3" CLEAR, UNLESS OTHERWISE SPECIFIED ON THE PLANS.
2'-7" BAR LAP UNLESS OTHERWISE SPECIFIED ON THE PLANS.

PROJECT NAME: STRAFFORD
PROJECT NUMBER: 0177(10)

FILE NAME: sl3j088sup.dgn
PROJECT LEADER: K. HIGGINS
DESIGNED BY: T. MATTHEWS
PBU AND BEARING DETAILS SHEET

PLOT DATE: 31-AUG-2016
DRAWN BY: T. MATTHEWS
CHECKED BY: J. GRIGAS
SHEET 27 OF 52

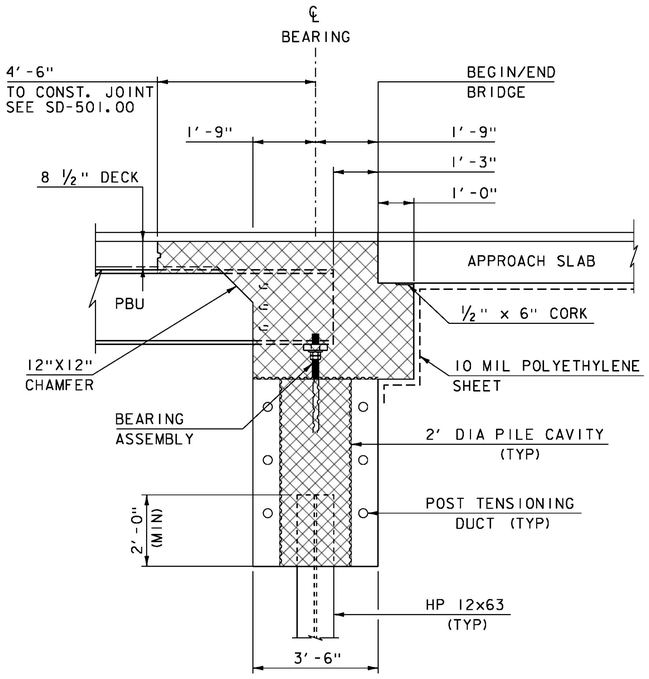

ABUTMENT TYPICAL
NOT TO SCALE

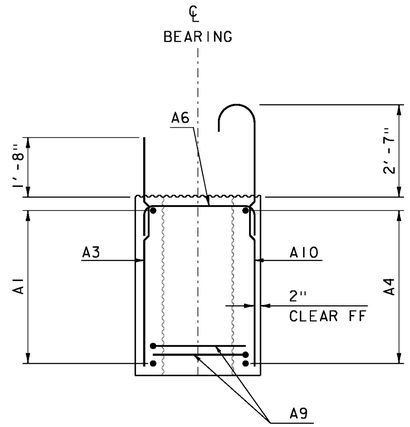

ABUTMENT REINFORCING
AT BRIDGE SEAT
NOT TO SCALE

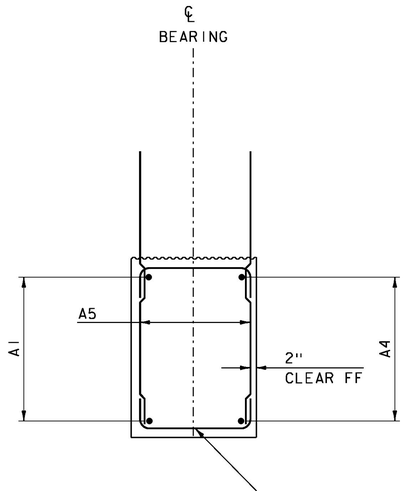

ABUTMENT REINFORCING
AT CAST IN PLACE CHEEK WALL
NOT TO SCALE

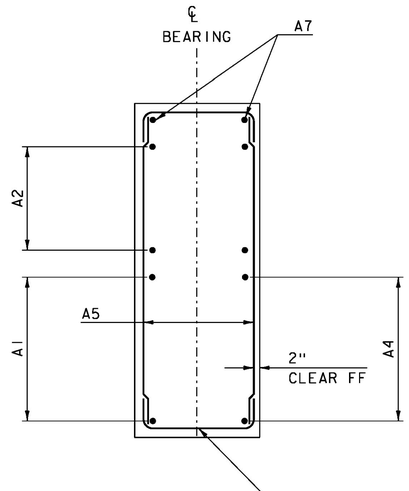

ABUTMENT REINFORCING
AT PRECAST CHEEK WALL
NOT TO SCALE

NOTE:

1. SEE ABUTMENT REINFORCING SHEET FOR REINFORCING TABLE.
2. 10 MIL POLYETHYLENE SHEET WILL BE CONSIDERED INCIDENTAL TO PAY ITEM 501.34 "HIGH PERFORMANCE CONCRETE, CLASS B (FPQ)"

NOTE:

NF = NEAR FACE
FF = FAR FACE
EF = EACH FACE
3" CLEAR, UNLESS OTHERWISE
SPECIFIED ON THE PLANS.

SPECIAL PROVISION (HIGH PERFORMANCE CONCRETE, RAPID SET)

PROJECT NAME: STRAFFORD
PROJECT NUMBER: BF 0177(10)

FILE NAME: sl3l088subl.dgn
PROJECT LEADER: K. HIGGINS
DESIGNED BY: J. GRIGAS
ABUTMENT TYPICALS SHEET

PLOT DATE: 31-AUG-2016
DRAWN BY: J. GRIGAS
CHECKED BY: G. LAROCHE
SHEET 28 OF 52

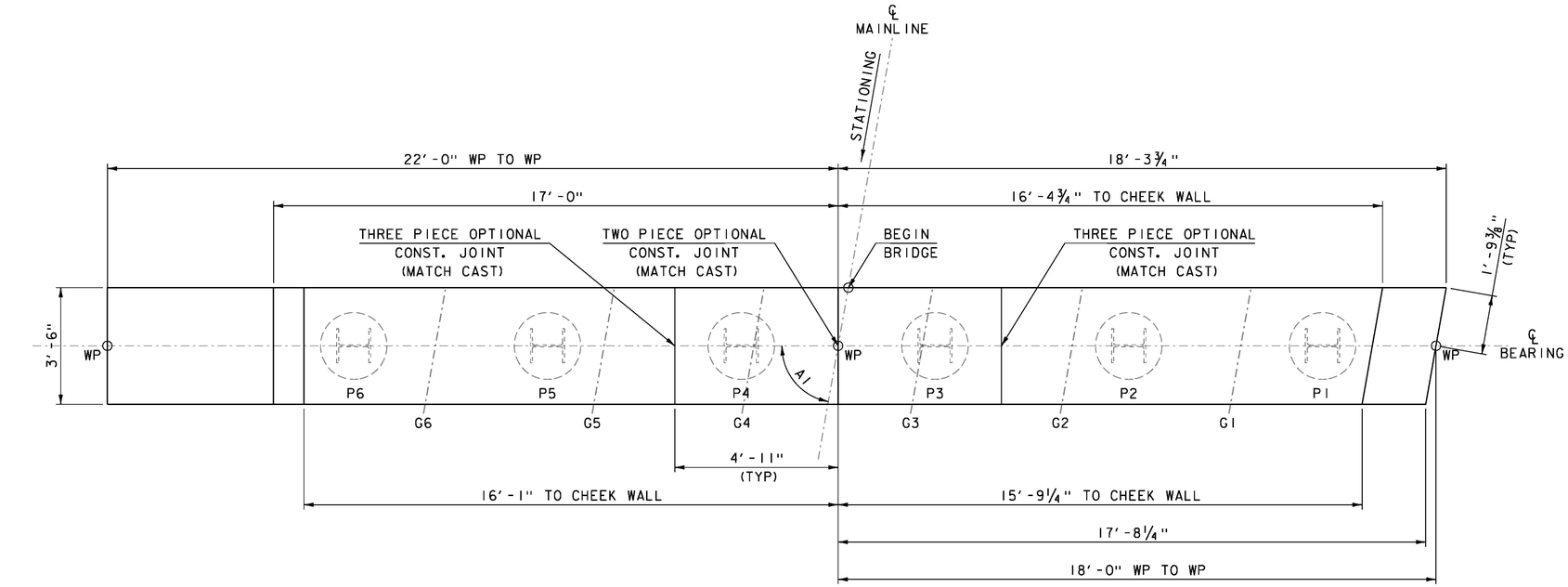

ABUTMENT I PLAN (PCU 1)

SCALE ½" = 1′-0

ABUTMENT ELEVATIONS

	AB 1
ANGLE "A1"	80°
ELEV "A"	889.25
ELEV "B"	888.50
ELEV "C"	886.25
ELEV "D"	885.61
ELEV "E"	885.33
ELEV "F"	885.05
ELEV "G"	876.25

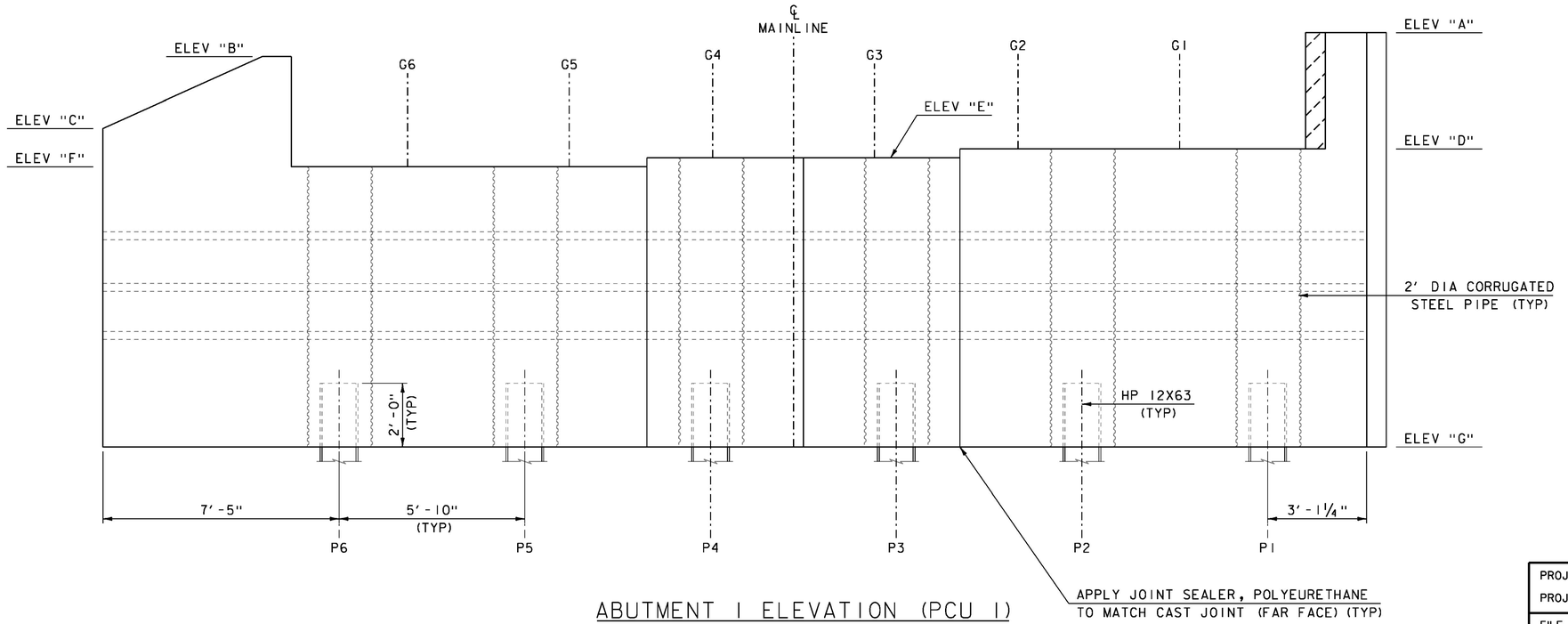

ABUTMENT 1 ELEVATION (PCU 1)

SCALE ½" = 1′-0

PROJECT NAME:	STRAFFORD
PROJECT NUMBER:	BF 0177(10)
FILE NAME: s13j088subl.dgn	PLOT DATE: 31-AUG-2016
PROJECT LEADER: K. HIGGINS	DRAWN BY: J. GRIGAS
DESIGNED BY: J. GRIGAS	CHECKED BY: G. LAROCHE
ABUTMENT 1 PLAN SHEET	SHEET 29 OF 52

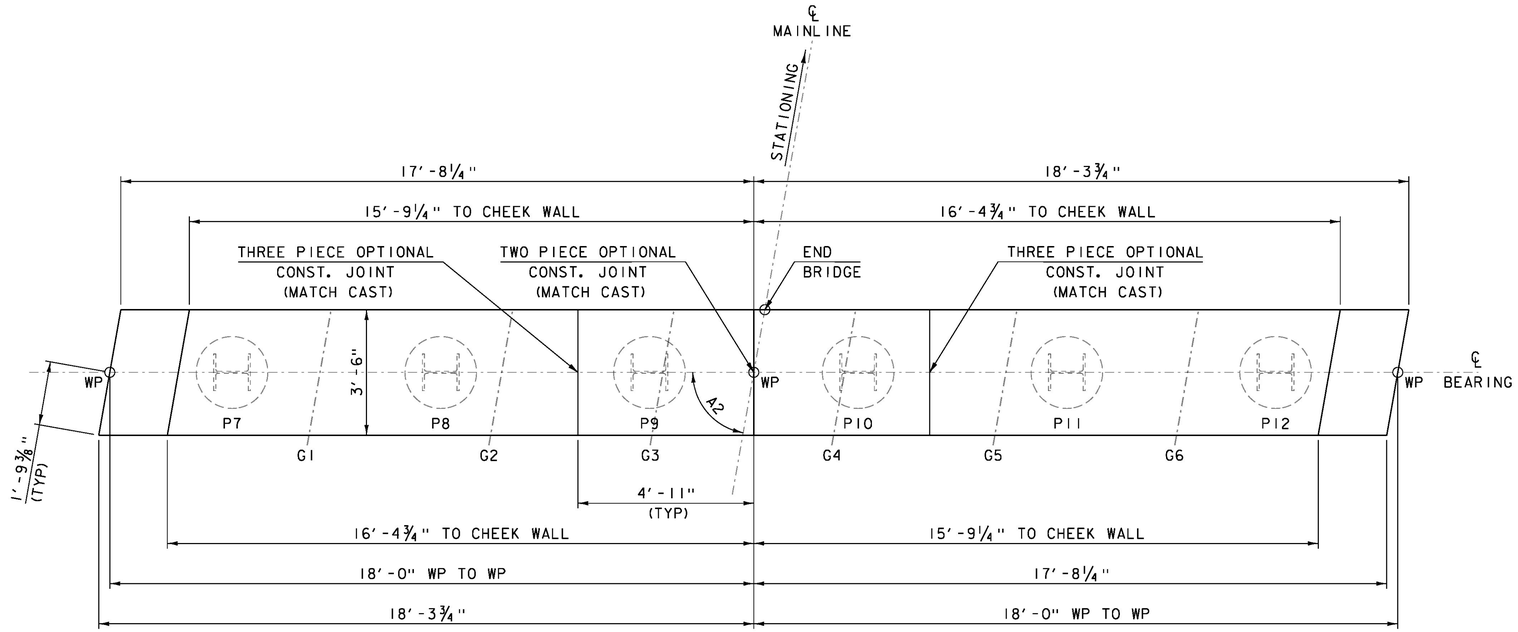

ABUTMENT 2 PLAN (PCU 2)

SCALE ½" = 1'-0

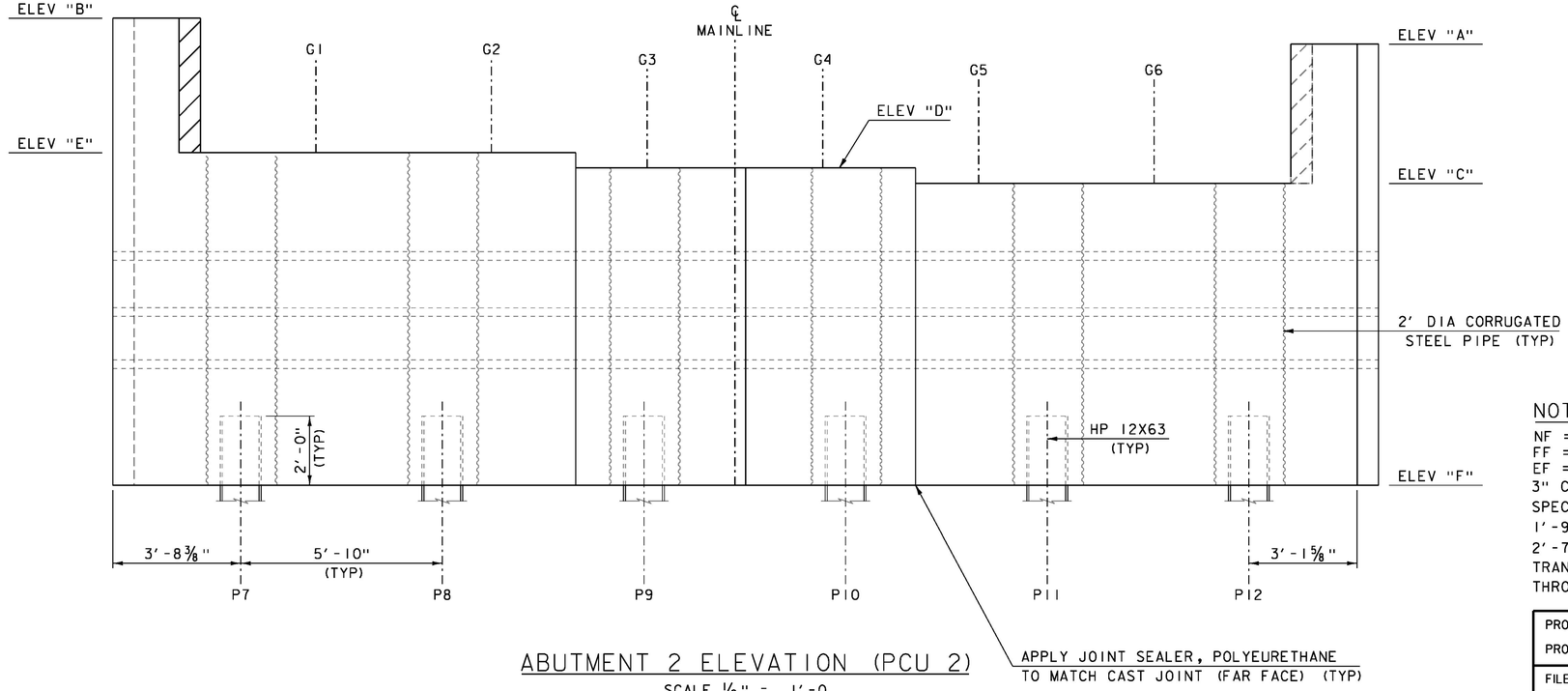

ABUTMENT 2 ELEVATION (PCU 2)

SCALE ½" = 1'-0

ABUTMENT ELEVATIONS

	AB 2
ANGLE "A2"	80°
ELEV "A"	887.85
ELEV "B"	888.60
ELEV "C"	883.83
ELEV "D"	884.28
ELEV "E"	884.72
ELEV "F"	875.10

NOTE:

NF = NEAR FACE
FF = FAR FACE
EF = EACH FACE
3" CLEAR, UNLESS OTHERWISE SPECIFIED ON THE PLANS.
1'-9" A6 LEG LENGTH
2'-7" #5 LAP LENGTH
TRANSVERSE BARS SHALL NOT EXTEND THROUGH VERTICAL CONSTRUCTION JOINTS

PROJECT NAME: STRAFFORD
PROJECT NUMBER: BF 0177(10)

FILE NAME: sl3j088sub2.dgn
PROJECT LEADER: K. HIGGINS
DESIGNED BY: J. GRIGAS
ABUTMENT 2 PLAN SHEET

PLOT DATE: 31-AUG-2016
DRAWN BY: J. GRIGAS
CHECKED BY: G. LAROCHE
SHEET 30 OF 52

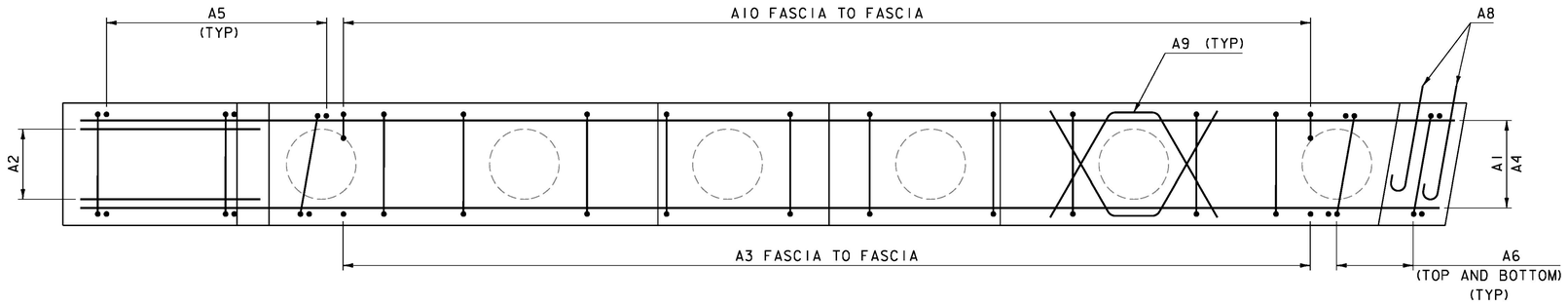

ABUTMENT 1 REINFORCING PLAN (PCU 1)

SCALE ½" = 1'-0

ABUTMENT REINFORCING

BAR	SIZE	SPACING	FACE	TYPE
A1	5	9"	NF	STR
A2	5	9"	EF	STR
A3	5	9"	NF	STR
A4	5	9"	FF	STR
A5	5	9"	EF	STR
A6	5	9"	---	S10
A7	5	AS SHOWN	EF	19
A8	5	9"	EF	1
A9	6	AS SHOWN	EF	14
A10	8	6	FF	1

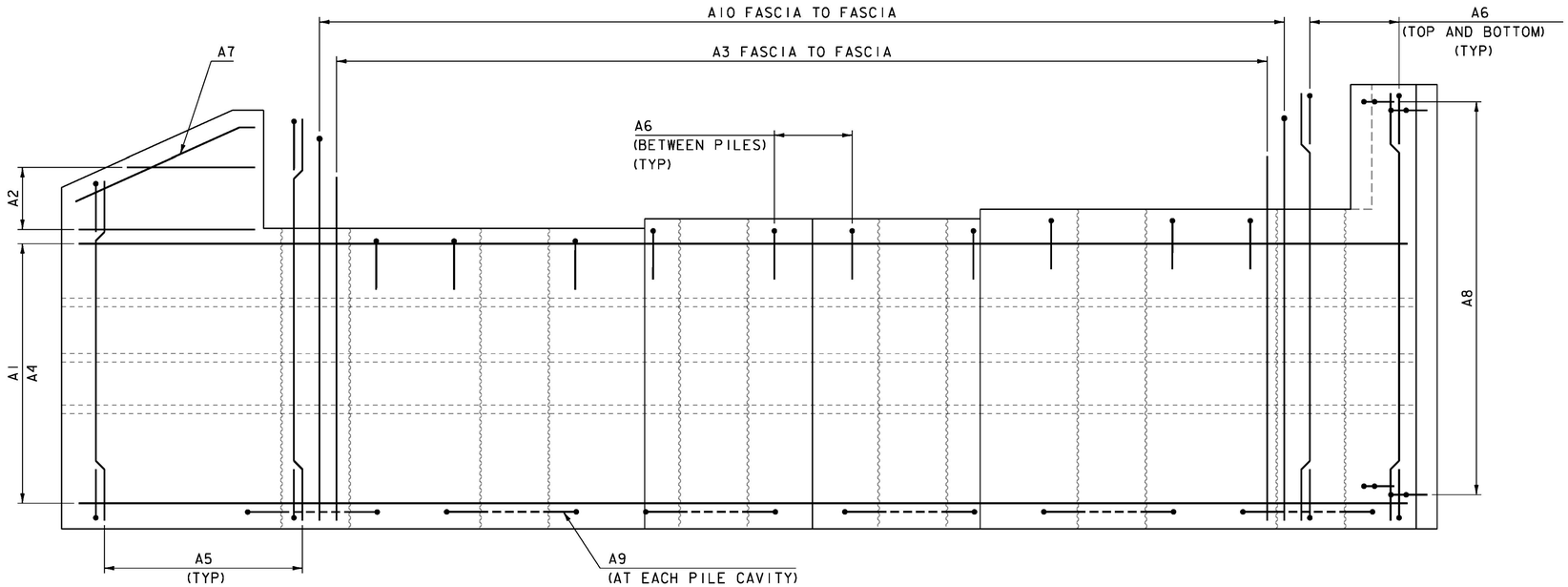

ABUTMENT 1 REINFORCING ELEVATION (PCU 1)

SCALE ½" = 1'-0

NOTE:

NF = NEAR FACE
FF = FAR FACE
EF = EACH FACE
3" CLEAR, UNLESS OTHERWISE SPECIFIED ON THE PLANS.
1'-9" A6 LEG LENGTH
2'-7" #5 LAP LENGTH
TRANSVERSE BARS SHALL NOT EXTEND THROUGH VERTICAL CONSTRUCTION JOINTS

PROJECT NAME: STRAFFORD
PROJECT NUMBER: BF 0177(10)

FILE NAME: sl3088subl.dgn
PROJECT LEADER: K. HIGGINS
DESIGNED BY: J. GRIGAS
ABUTMENT 1 REINFORCING SHEET

PLOT DATE: 31-AUG-2016
DRAWN BY: J. GRIGAS
CHECKED BY: G. LAROCHE
SHEET 31 OF 52

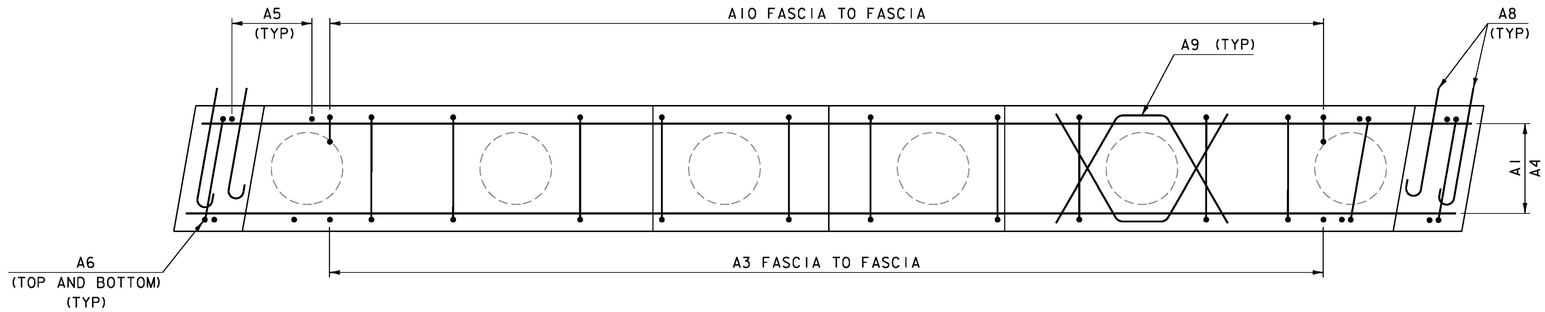

ABUTMENT 2 REINFORCING PLAN (PCU 1)

SCALE ½" = 1'-0

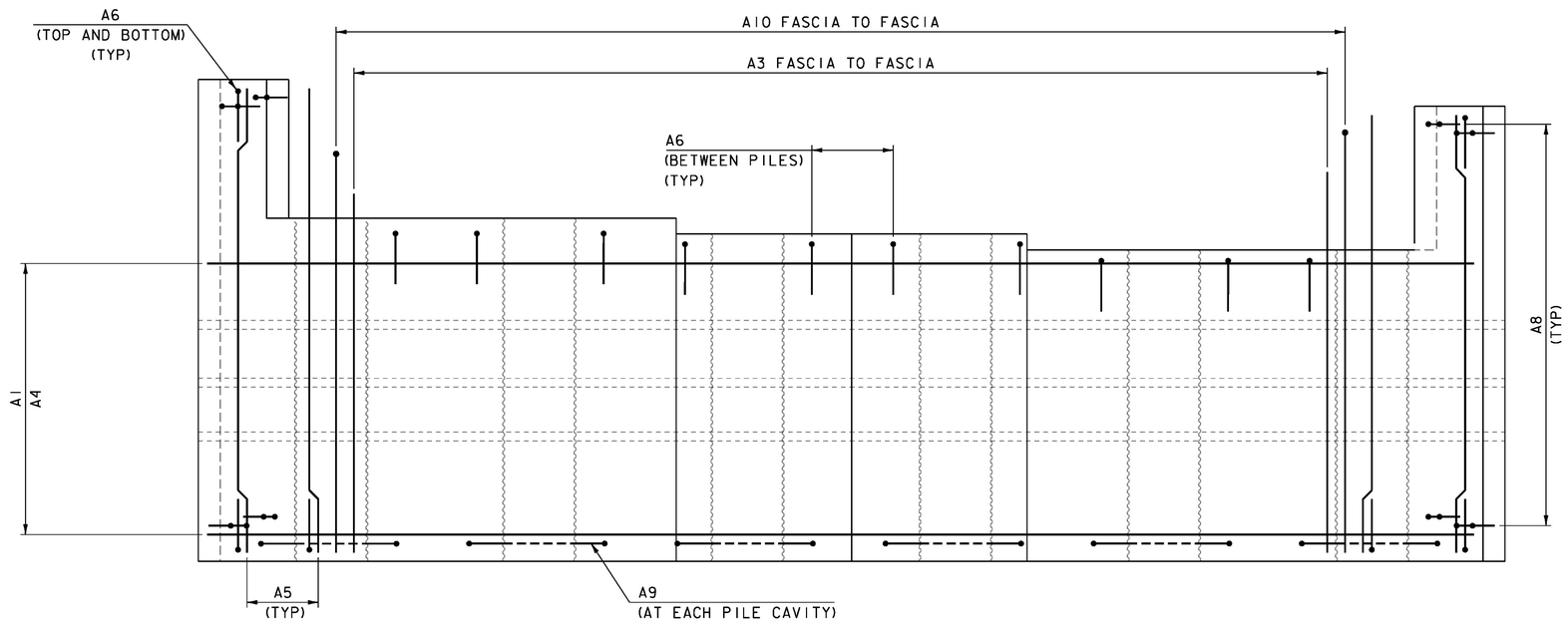

ABUTMENT 2 REINFORCING ELEVATION (PCU 2)

SCALE ½" = 1'-0

PROJECT NAME:	STRAFFORD
PROJECT NUMBER:	BF 0177(10)
FILE NAME: sl3j088sub2.dgn	PLOT DATE: 31-AUG-2016
PROJECT LEADER: K. HIGGINS	DRAWN BY: J. GRIGAS
DESIGNED BY: J. GRIGAS	CHECKED BY: G. LAROCHE
ABUTMENT 2 REINFORCING SHEET	SHEET 32 OF 52

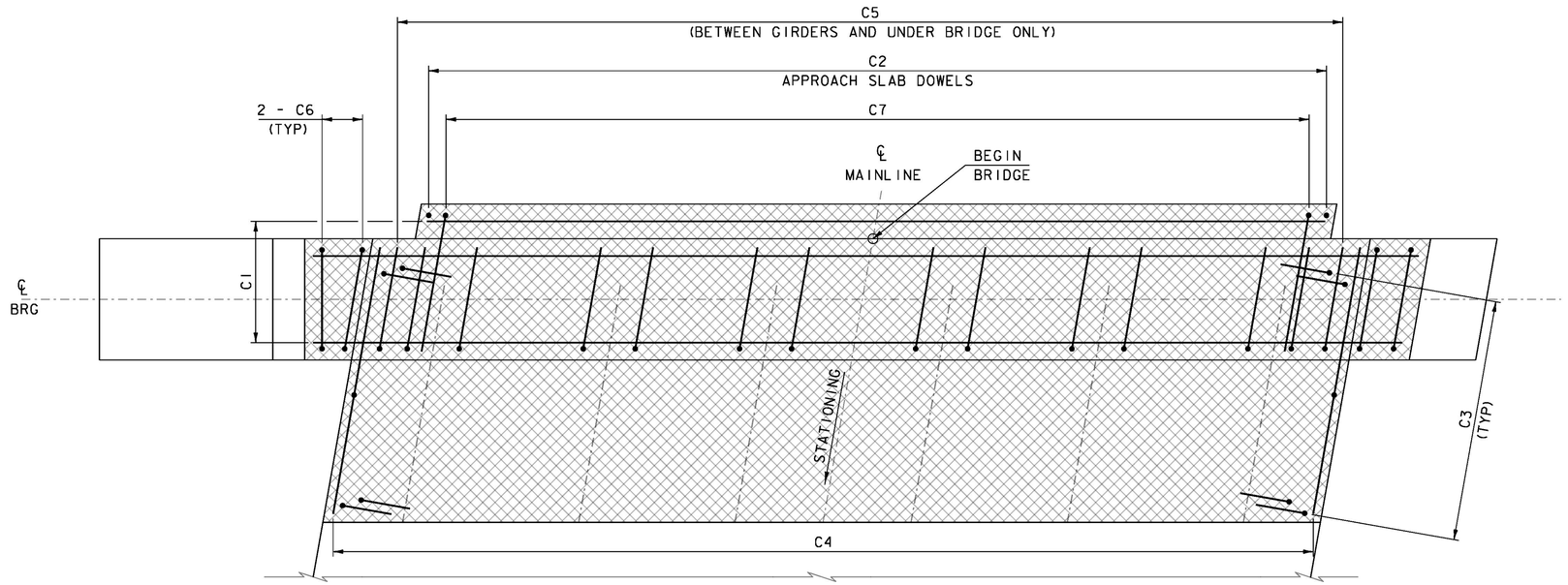

DECK CLOSURE POUR REINFORCING PLAN

SCALE ½" = 1'-0

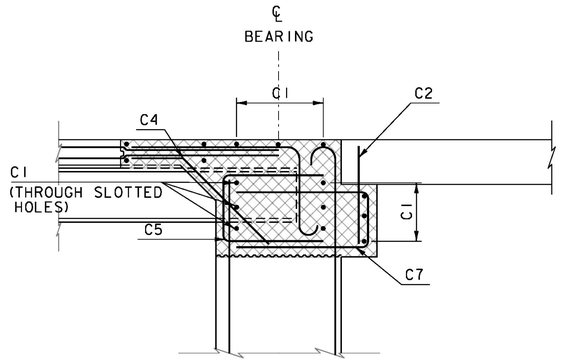

ABUTMENT ELEVATION AT BRIDGE

SCALE ½" = 1'-0

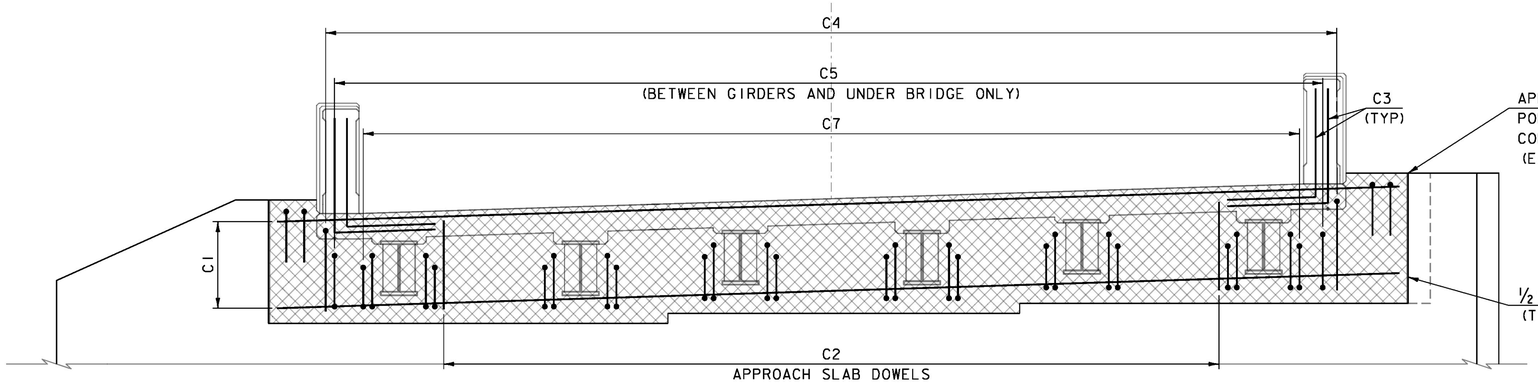

CLOSURE POUR REINFORCING

BAR	SIZE	SPACING	FACE	TYPE
C1	5	AS SHOWN	EF	STR
C2	5	12"	FF	STR
C3	4	8"	---	20
C4	5	9"	---	19
C5	5	12"	---	S10
C6	5	9"	---	S10
C7	6	9"	---	S10

DECK CLOSURE POUR REINFORCING ELEVATION

SCALE ½" = 1'-0

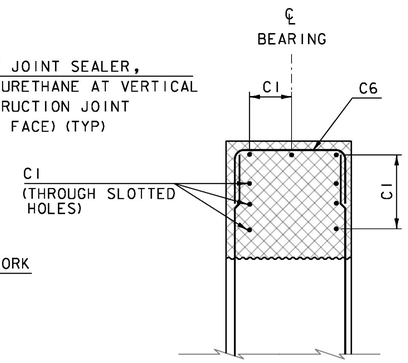

ABUTMENT ELEVATION AT CHEEKWALL

SCALE ½" = 1'-0

NOTE:

NF = NEAR FACE
FF = FAR FACE
EF = EACH FACE
3" CLEAR, UNLESS OTHERWISE SPECIFIED ON THE PLANS.
2'-7" #5 LAP LENGTH
1'-9" C6 LEG LENGTH

PROJECT NAME: STRAFFORD
PROJECT NUMBER: BF 0177(10)

FILE NAME: sl3j088closurepour.dgn
PROJECT LEADER: K. HIGGINS
DESIGNED BY: J. GRIGAS
CLOSURE POUR SHEET

PLOT DATE: 31-AUG-2016
DRAWN BY: J. GRIGAS
CHECKED BY: G. LAROCHE
SHEET 33 OF 52

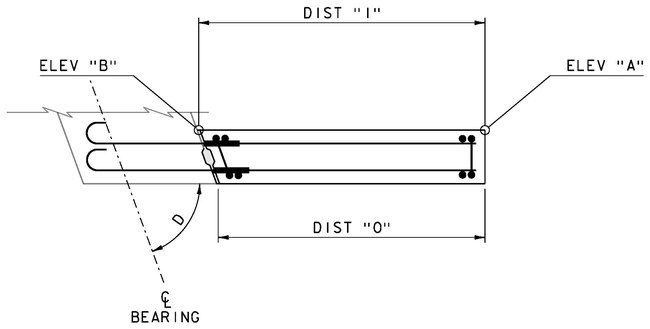

WING WALL PLAN

SCALE ½" = 1'-0"

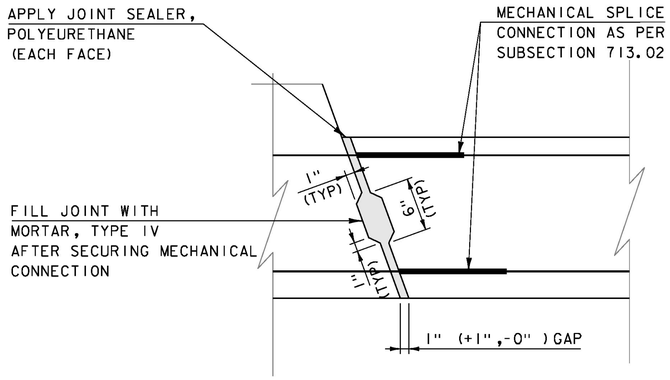

WING WALL CONNECTION DETAIL

SCALE ½" = 1'-0"

PCU 3-5 ELEVATIONS

	WW1 (PCU 3)	WW3 (PCU 4)	WW4 (PCU 5)
ELEV "A"	889.25	888.10	887.35
ELEV "B"	889.25	888.60	887.85
ELEV "C"	876.25	875.10	875.10
DIST "W"	1'-6"	1'-6"	1'-6"
DIST "I"	9'-11"	9'-7⅞"	9'-11"
DIST "O"	9'-7⅞"	9'-11"	9'-7⅞"
ANGLE "D"	80°	100°	80°

WING WALL REINFORCING

BAR	SIZE	SPACING	FACE	TYPE
WR1	5	9"	EF	STR
WR2	5	9"	EF	S10
WR3	5	9"	EF	STR

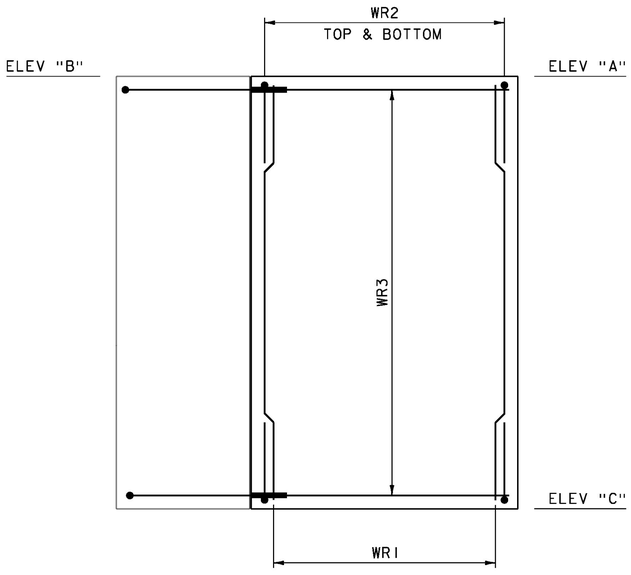

WING WALL ELEVATION

SCALE ½" = 1'-0"

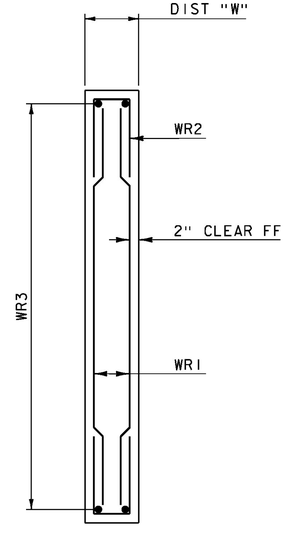

WING WALL TYPICAL

SCALE ½" = 1'-0"

MORTAR, TYPE IV*

* PAYMENT FOR MORTAR, TYPE IV WILL BE INCLUDED IN THE APPROPRIATE PRECAST BID ITEM

NOTE:

NF = NEAR FACE
FF = FAR FACE
EF = EACH FACE
▲ = CUT TO FIT IN FIELD
3" CLEAR, UNLESS OTHERWISE SPECIFIED ON THE PLANS.
2'-7" BAR LAP UNLESS OTHERWISE SPECIFIED ON THE PLANS.

PROJECT NAME: STRAFFORD
PROJECT NUMBER: BF 0177(10)

FILE NAME: sl3j088ww.dgn
PROJECT LEADER: K. HIGGINS
DESIGNED BY: J. GRIGAS
WING WALL DETAILS SHEET

PLOT DATE: 31-AUG-2016
DRAWN BY: J. GRIGAS
CHECKED BY: G. LAROCHE

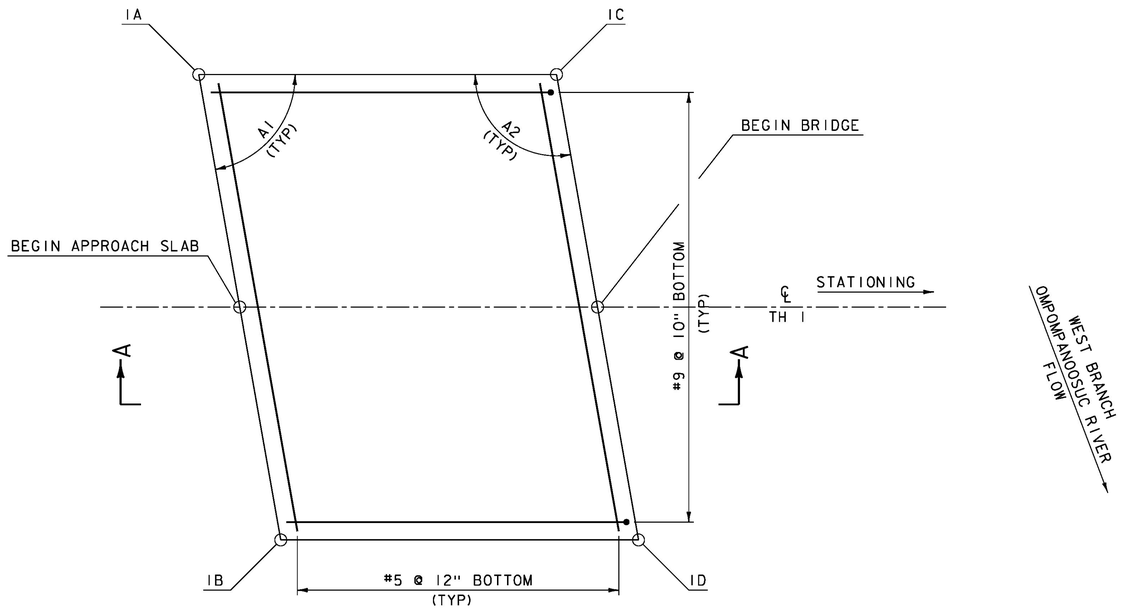

WEST BRANCH OMPOMPANOOSUC RIVER FLOW

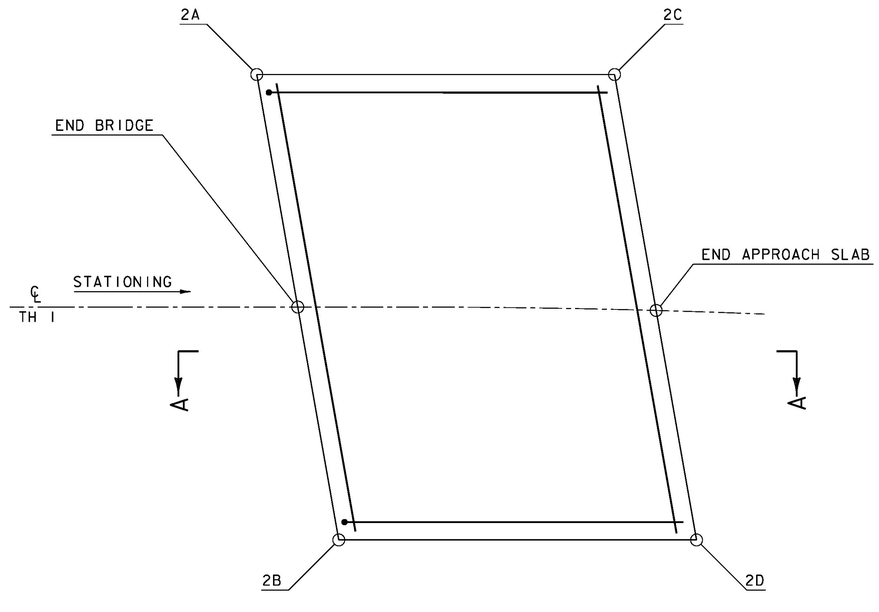

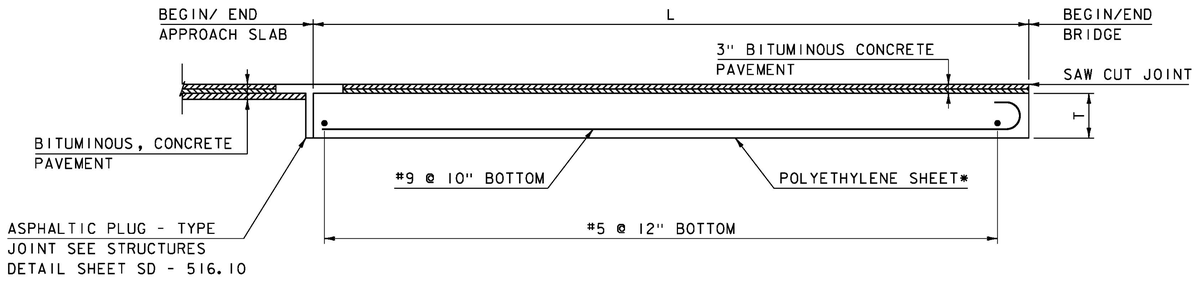

CAST-IN-PLACE APPROACH SLAB ELEVATION VIEW

SCALE ½" = 1'-0"

* POLYETHYLENE SHEET WILL BE CONSIDERED INCIDENTAL TO PAY ITEM 501.34 "CONCRETE, HIGH PERFORMANCE CLASS B (FPQ)"

ABUTMENT CLOSURE POUR REINFORCING "C2" NOT SHOWN FOR CLARITY

APPROACH SLAB #1			
	STATION	OFFSET	ELEVATION
1A	11+62.93	13'-0" LT	889.01
BEGIN AS #1	11+65.22	℄	888.71
1B	11+67.52	13'-0" RT	888.39
1C	11+82.93	13'-0" LT	888.86
END AS #1	11+85.22	℄	888.49
1D	11+87.51	13'-0" RT	888.10
APPROACH SLAB #2			
	STATION	OFFSET	ELEVATION
2A	12+43.48	13'-0" LT	888.05
BEGIN AS #2	12+45.78	℄	887.43
2B	12+48.07	13'-0" RT	886.81
2C	12+63.19	13'-1½" LT	887.63
END AS #2	12+65.81	℄	886.93
2D	12+68.49	12'-8⅞" RT	886.22

TOP OF SLAB ELEVATIONS

A1	80°
A2	100°
L	20'-0"
T	1'-3"

APPROACH SLAB DIMENSIONS

NOTES:
NF = NEAR FACE
FF = FAR FACE
EF = EACH FACE
3" CLEAR, UNLESS OTHERWISE SPECIFIED ON PLANS.

PROJECT NAME: STRAFFORD
PROJECT NUMBER: BF 0177(10)

FILE NAME: sl3j088appslab.dgn
PROJECT LEADER: K. HIGGINS
DESIGNED BY: S. COLEY
APPROACH SLAB DETAILS SHEET

PLOT DATE: 03-OCT-2016
DRAWN BY: J. GRIGAS
CHECKED BY: G. LAROCHE
SHEET 35 OF 52

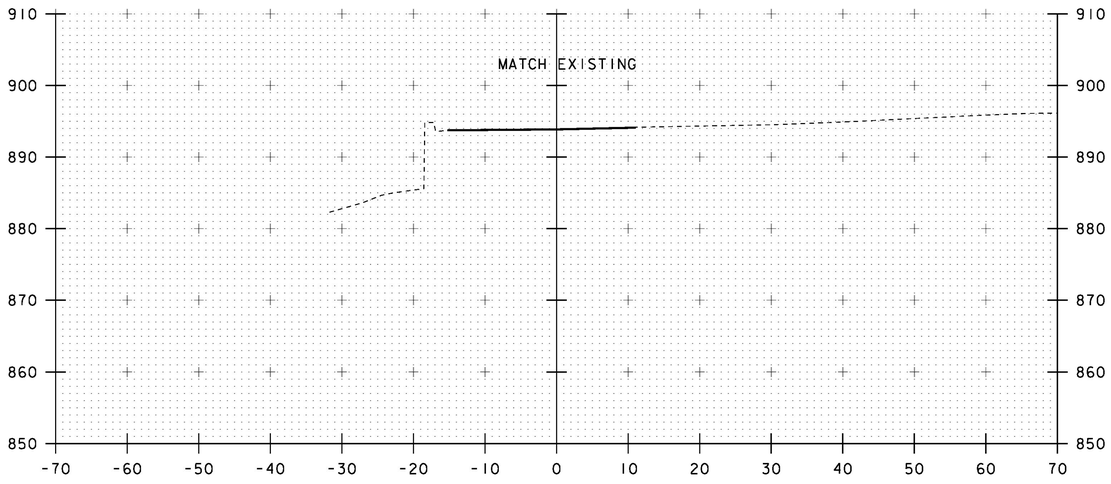

10+25
BEGIN APPROACH

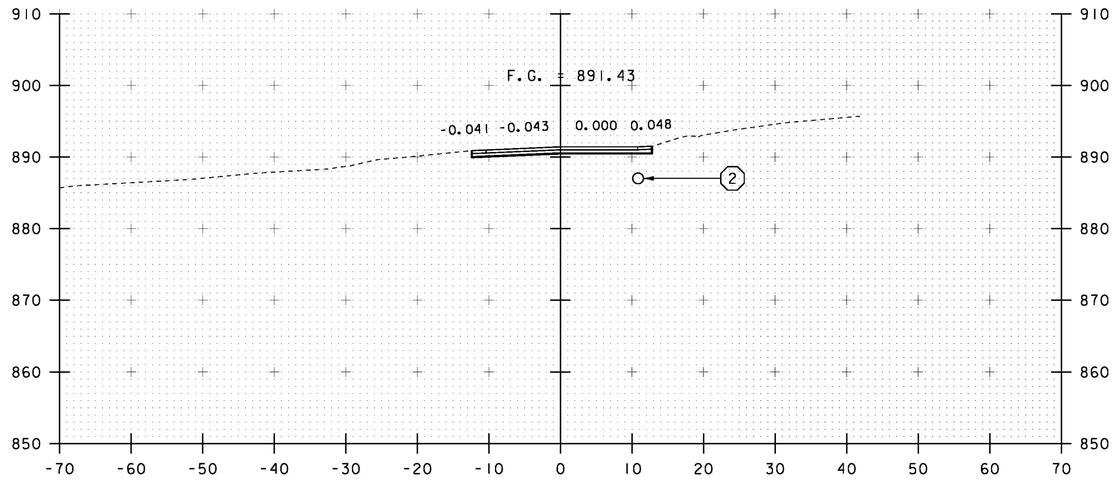

10+75

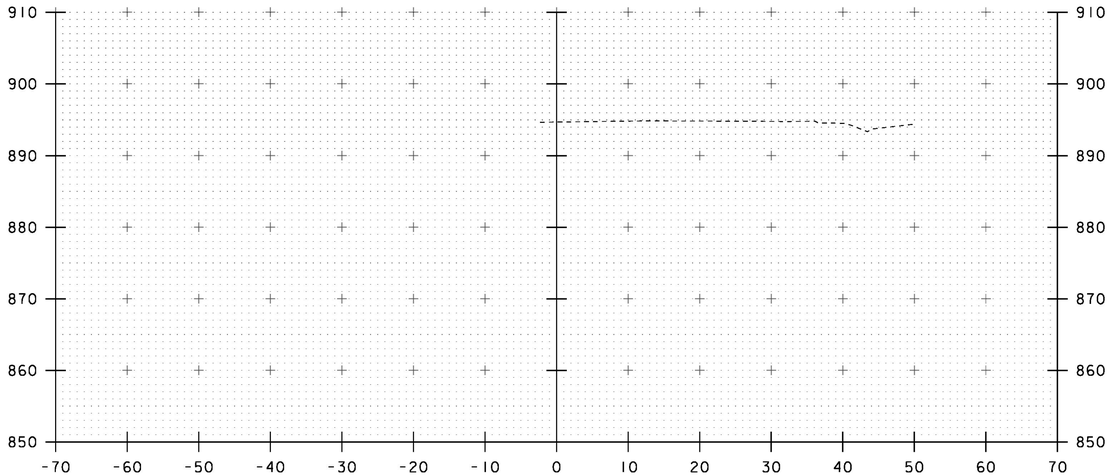

10+00

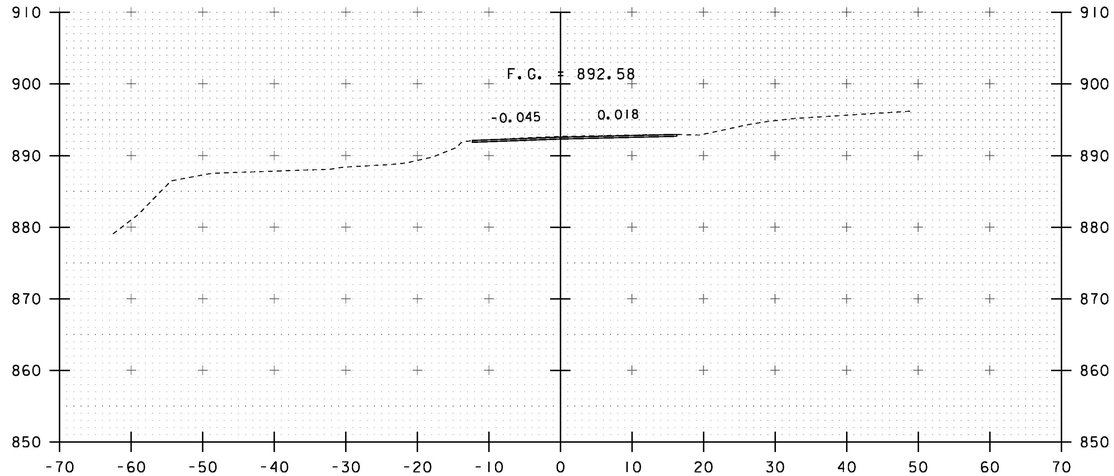

10+50

STA. 10+00 TO STA. 10+75

PROJECT NAME: STRAFFORD	
PROJECT NUMBER: BF 0177(10)	
FILE NAME: sl3j088xsl.dgn	PLOT DATE: 31-AUG-2016
PROJECT LEADER: K. HIGGINS	DRAWN BY: J. GRIGAS
DESIGNED BY: J. GRIGAS	CHECKED BY: T. MATTHEWS
MAINLINE SECTIONS 1	SHEET 36 OF 52

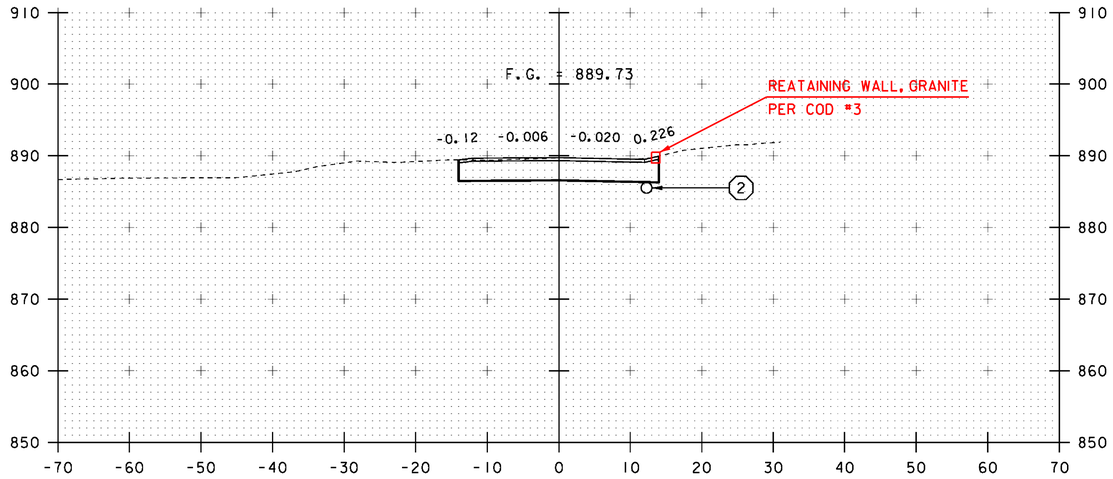

11+25

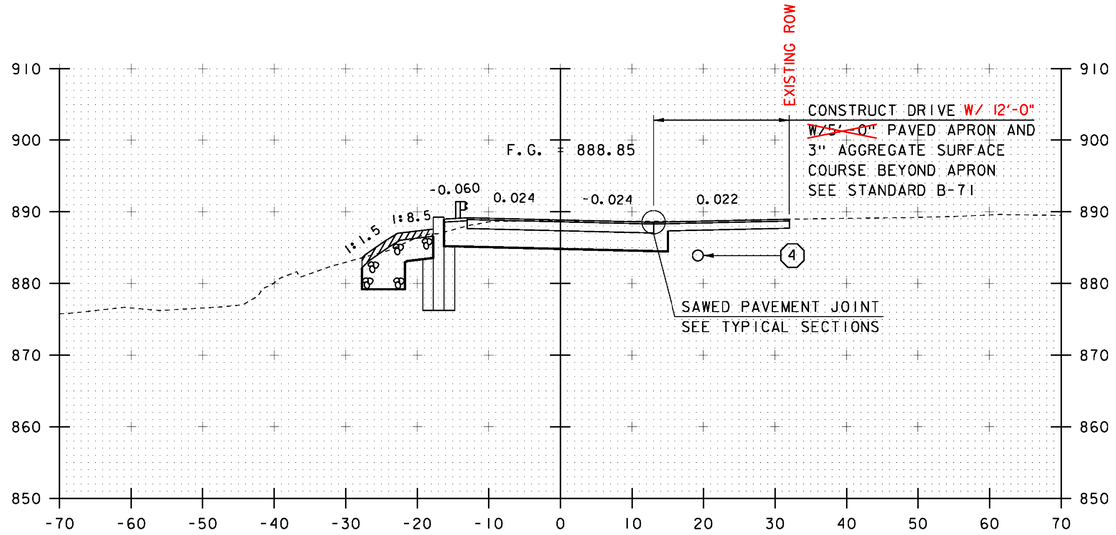

11+75
BEGIN BRIDGE STA 11+85.22

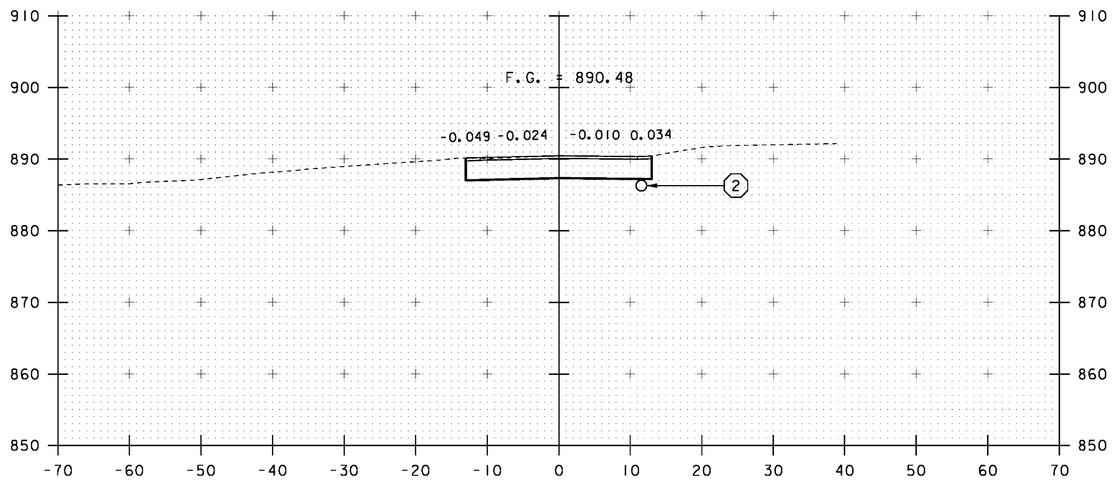

11+00
BEGIN PROJECT

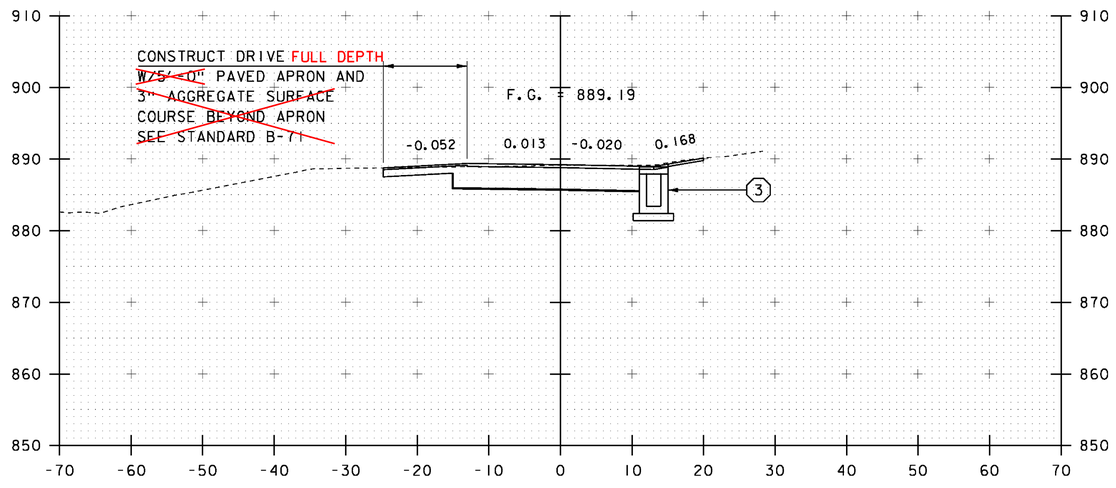

11+50

STA. 11+00 TO STA. 11+75

PROJECT NAME: STRAFFORD
PROJECT NUMBER: BF 0177(10)

FILE NAME: sl3j088xsl.dgn
PROJECT LEADER: K. HIGGINS
DESIGNED BY: J. GRIGAS
MAINLINE SECTIONS 2

PLOT DATE: 31-AUG-2016
DRAWN BY: J. GRIGAS
CHECKED BY: T. MATTHEWS
SHEET 37 OF 52

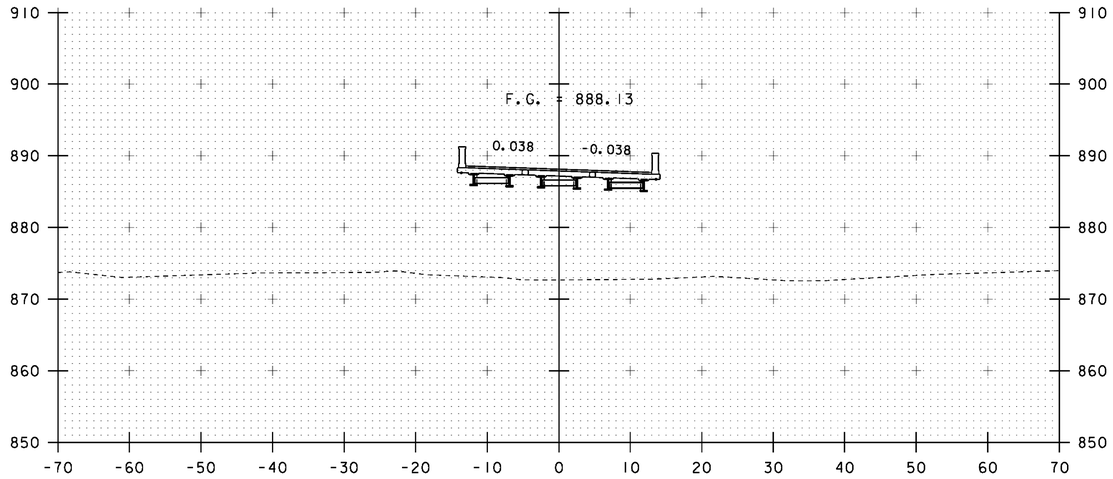

12+25
END BRIDGE STA 12+45.78

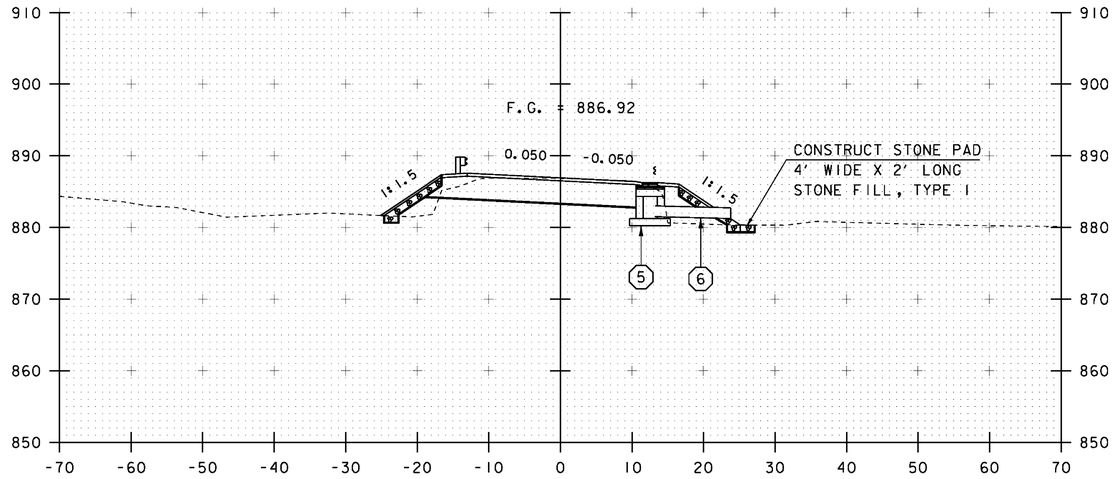

STA 12+53 LT
BEGIN STONE FILL, TYPE I
GEOTEXTILE UNDER STONE FILL

12+75

STA 12+59 RT
BEGIN STONE FILL, TYPE I
GEOTEXTILE UNDER STONE FILL

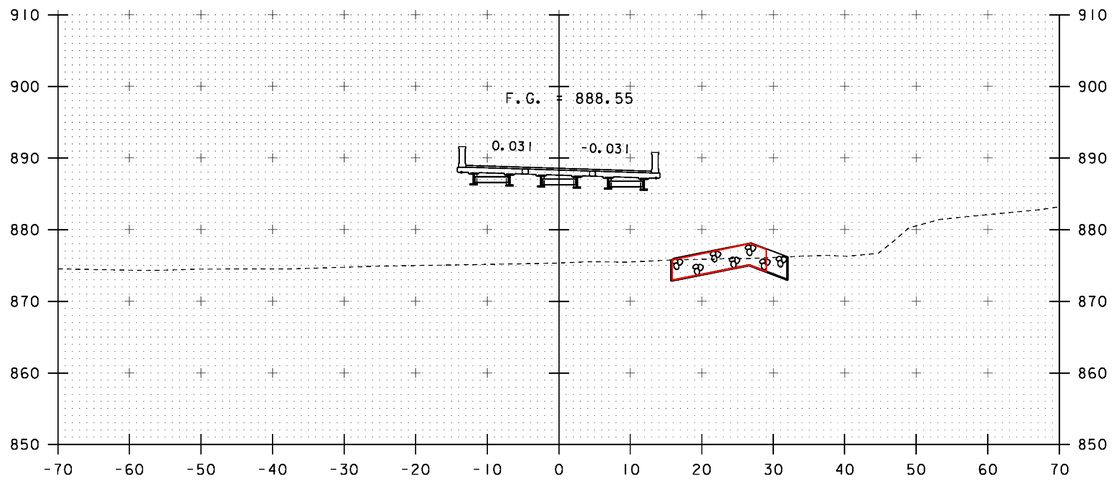

12+00

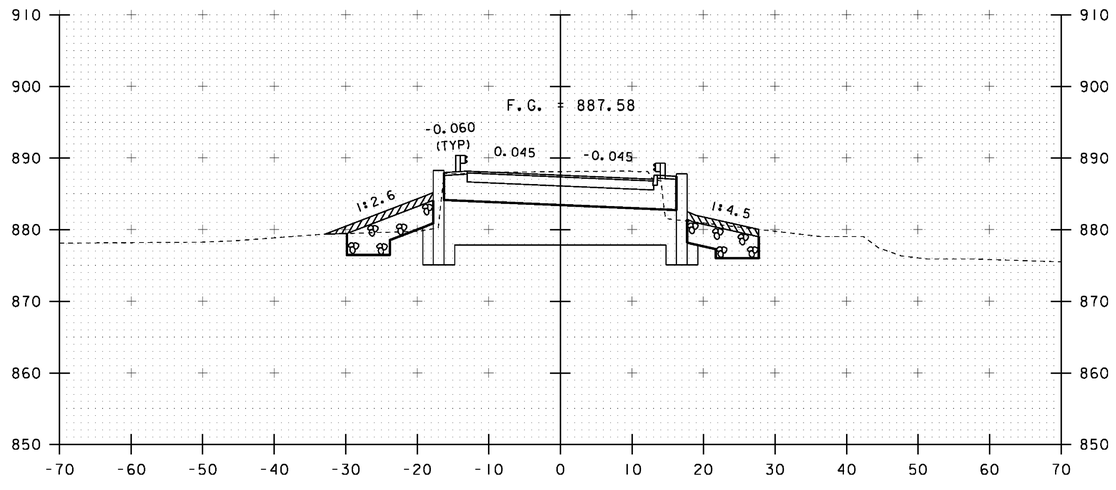

12+50

STA. 12+00 TO STA. 12+75

PROJECT NAME:	STRAFFORD
PROJECT NUMBER:	BF 0177(10)
FILE NAME: sl3j088xsl.dgn	PLOT DATE: 31-AUG-2016
PROJECT LEADER: K. HIGGINS	DRAWN BY: J. GRIGAS
DESIGNED BY: J. GRIGAS	CHECKED BY: T. MATTHEWS
MAINLINE SECTIONS 3	SHEET 38 OF 52

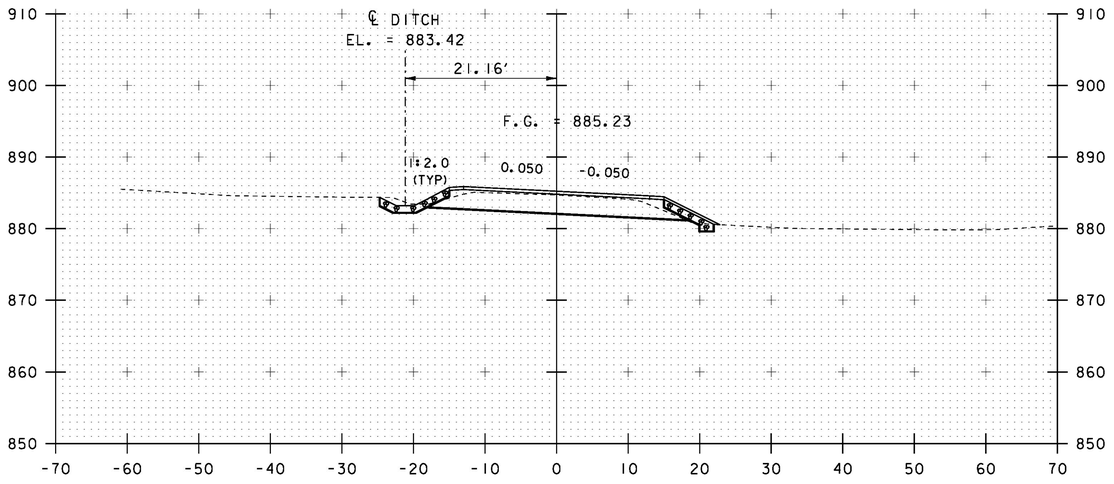

13+25

STA 13+25 RT
END STONE FILL, TYPE I
GEOTEXTILE UNDER STONE FILL

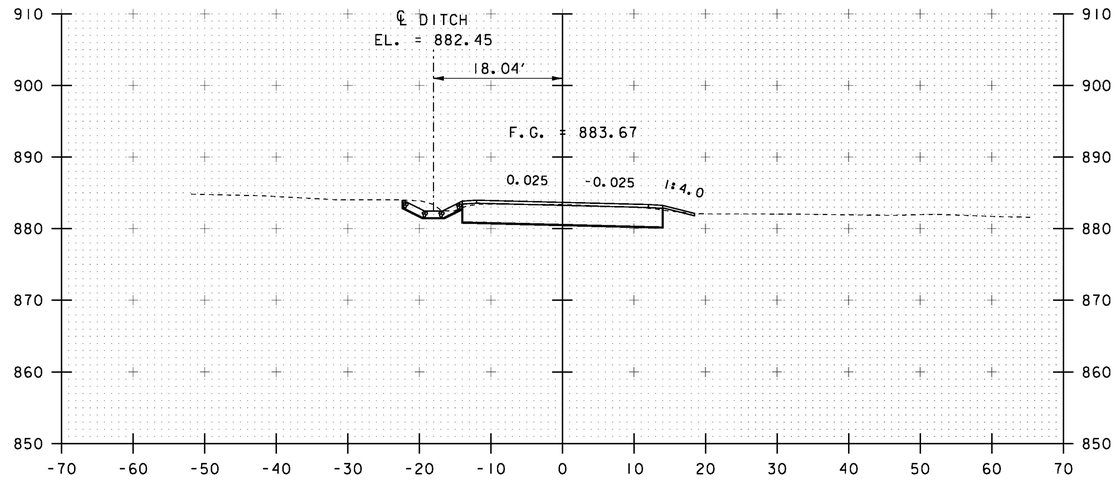

13+75

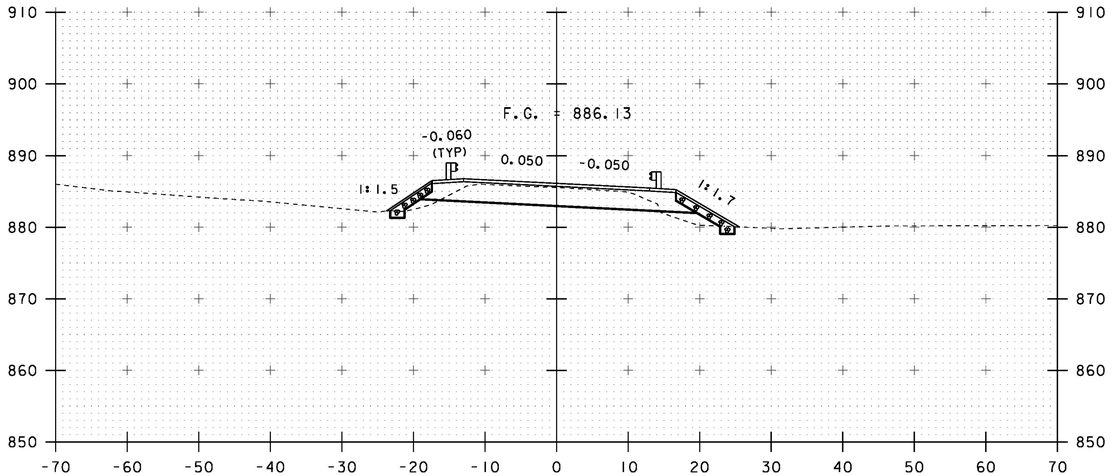

13+00

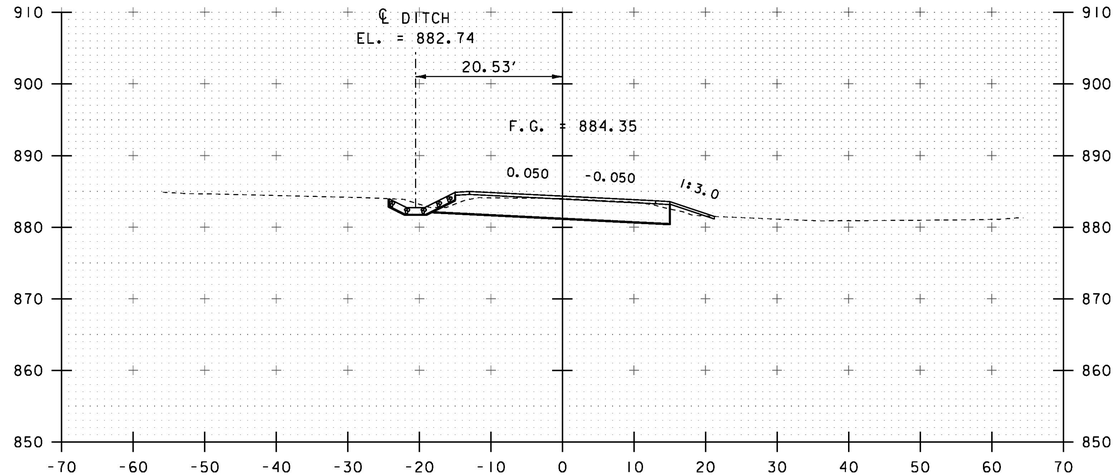

13+50

STA. 13+00 TO STA. 13+75

PROJECT NAME:	STRAFFORD
PROJECT NUMBER:	BF 0177(10)

FILE NAME: sl3j088xsl.dgn	PLOT DATE: 31-AUG-2016
PROJECT LEADER: K. HIGGINS	DRAWN BY: J. GRIGAS
DESIGNED BY: J. GRIGAS	CHECKED BY: T. MATTHEWS
MAINLINE SECTIONS 4	SHEET 39 OF 52

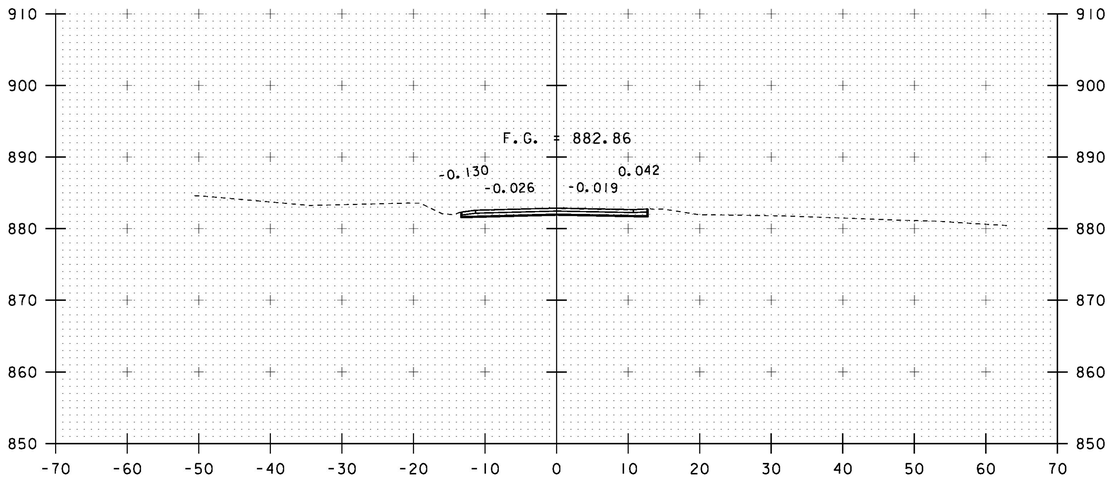

14+25

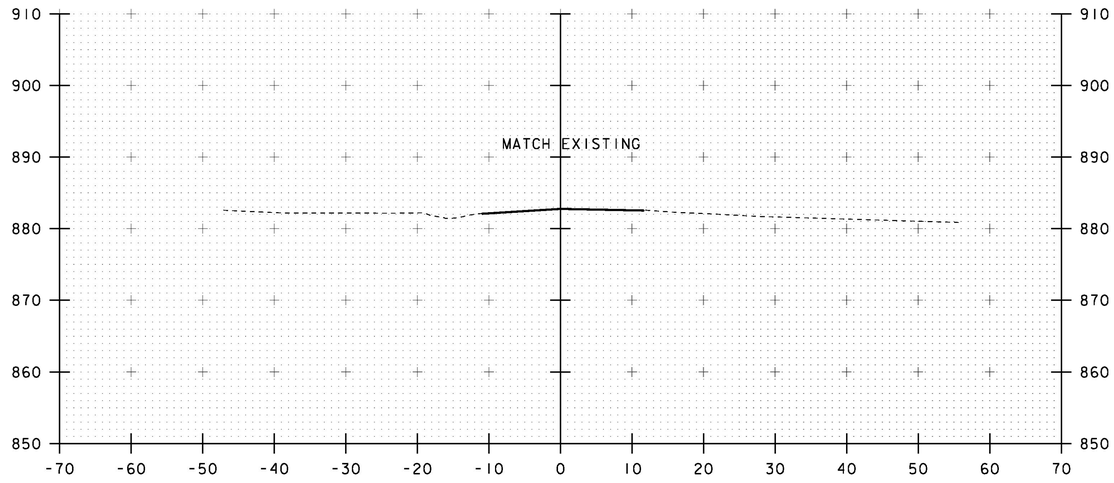

14+75
END APPROACH

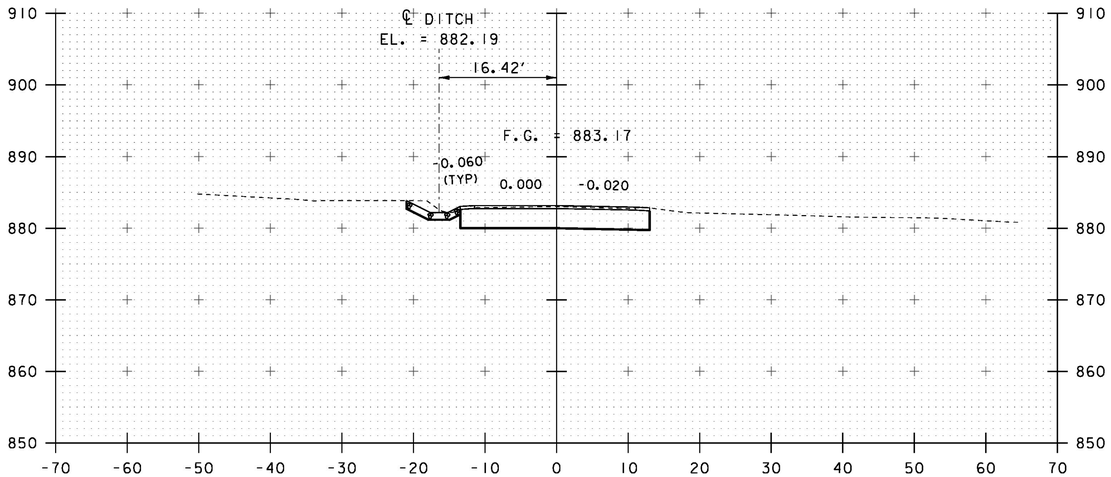

STA 14+20.00 LT
END STONE FILL, TYPE I
GEOTEXTILE UNDER STONE FILL

14+00
END PROJECT

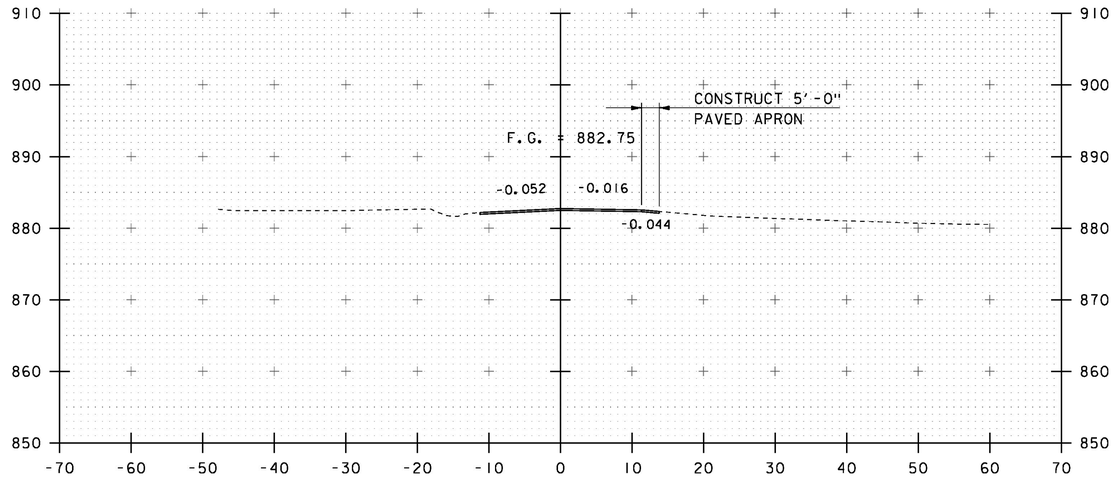

14+50

STA. 14+00 TO STA. 14+75

PROJECT NAME:	STRAFFORD
PROJECT NUMBER:	BF 0177(10)

FILE NAME: sl3j088xsl.dgn	PLOT DATE: 31-AUG-2016
PROJECT LEADER: K. HIGGINS	DRAWN BY: J. GRIGAS
DESIGNED BY: J. GRIGAS	CHECKED BY: T. MATTHEWS
MAINLINE SECTIONS 5	SHEET 40 OF 52

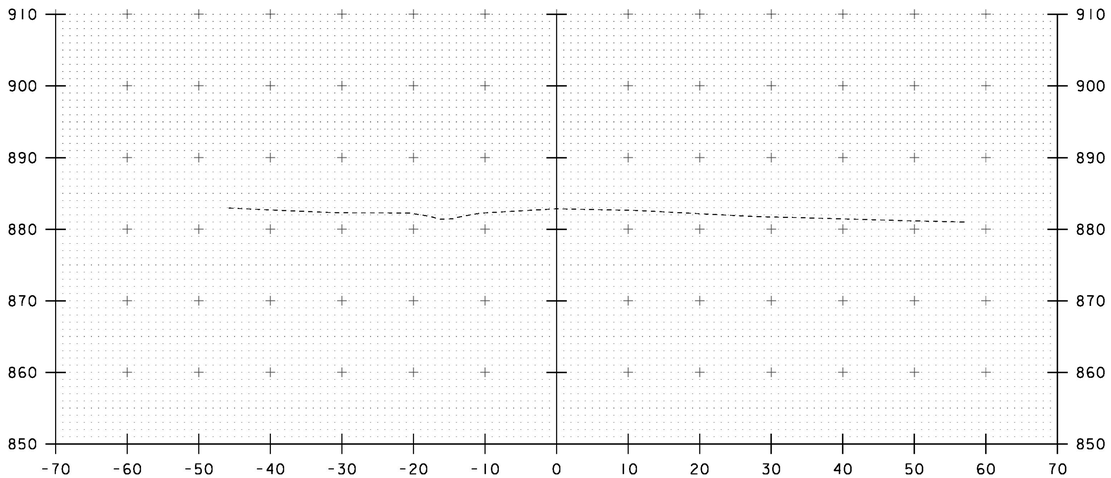

15+00

STA. 15+00 TO STA. 15+00

PROJECT NAME: STRAFFORD
PROJECT NUMBER: BF 0177(10)

FILE NAME: sl3088xsl.dgn
PROJECT LEADER: K. HIGGINS
DESIGNED BY: J. GRIGAS
MAINLINE SECTIONS 6

PLOT DATE: 31-AUG-2016
DRAWN BY: J. GRIGAS
CHECKED BY: T. MATTHEWS
SHEET 41 OF 52

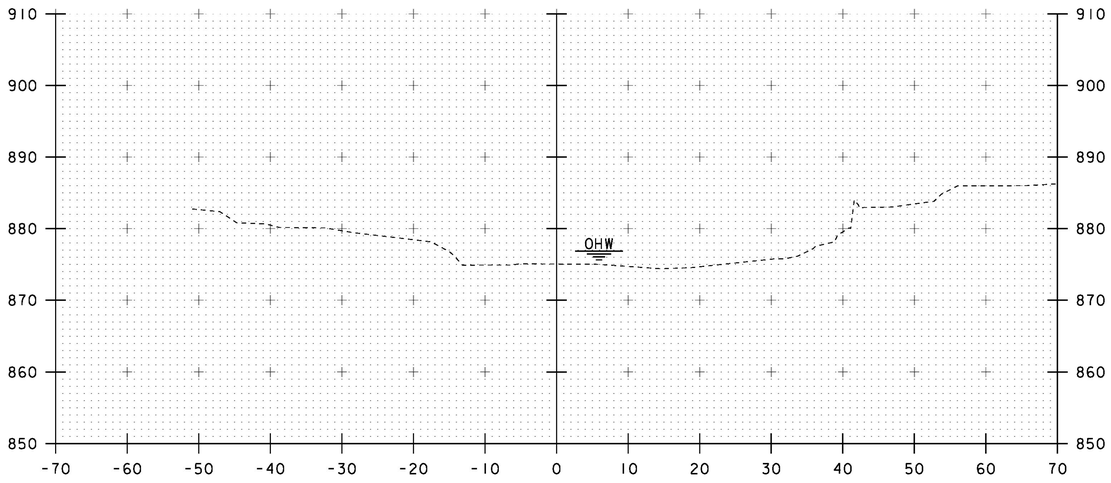

50+10

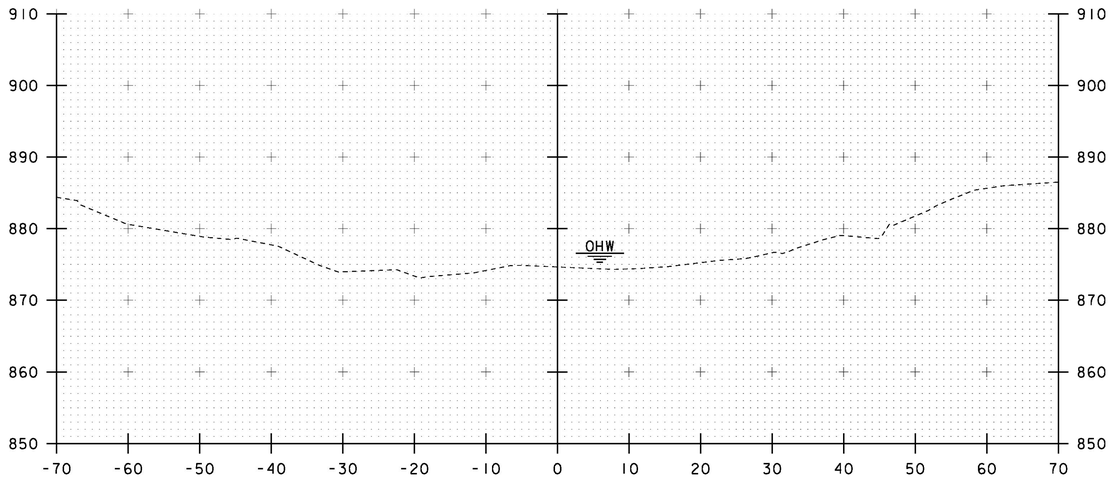

50+30

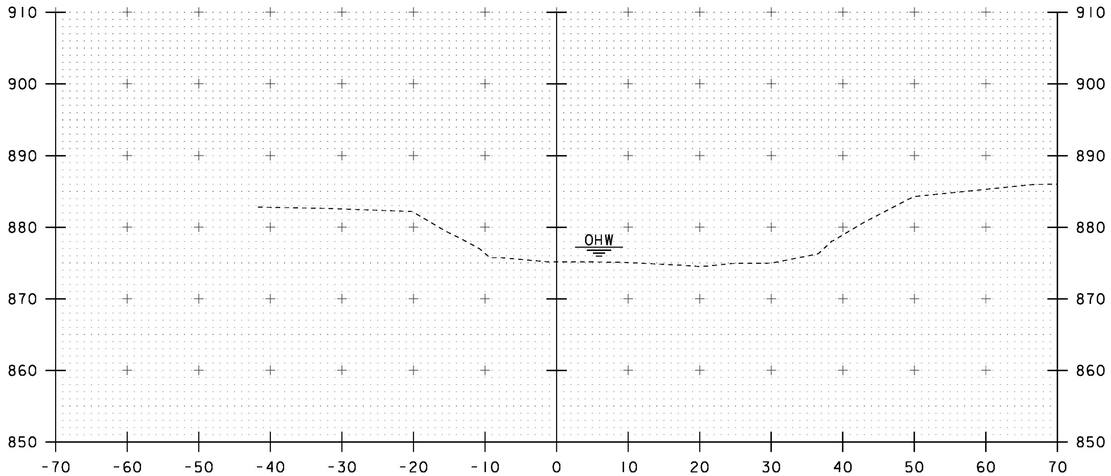

50+00

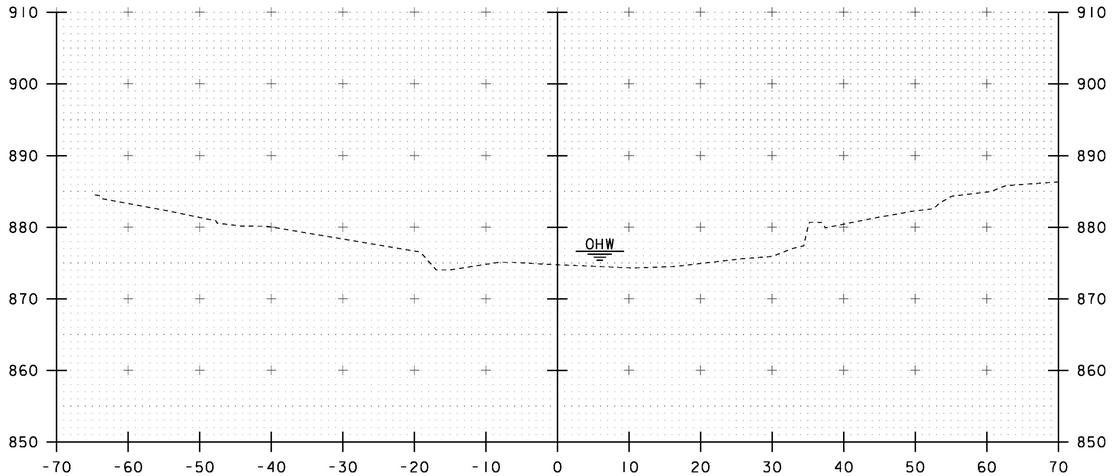

50+20

STA. 50+00 TO STA. 50+30

PROJECT NAME: STRAFFORD
PROJECT NUMBER: BF 0177(10)

FILE NAME: sl3j088xsl.dgn
PROJECT LEADER: K. HIGGINS
DESIGNED BY: J. GRIGAS
CHANNEL SECTIONS 1

PLOT DATE: 31-AUG-2016
DRAWN BY: J. GRIGAS
CHECKED BY: T. MATTHEWS
SHEET 42 OF 52

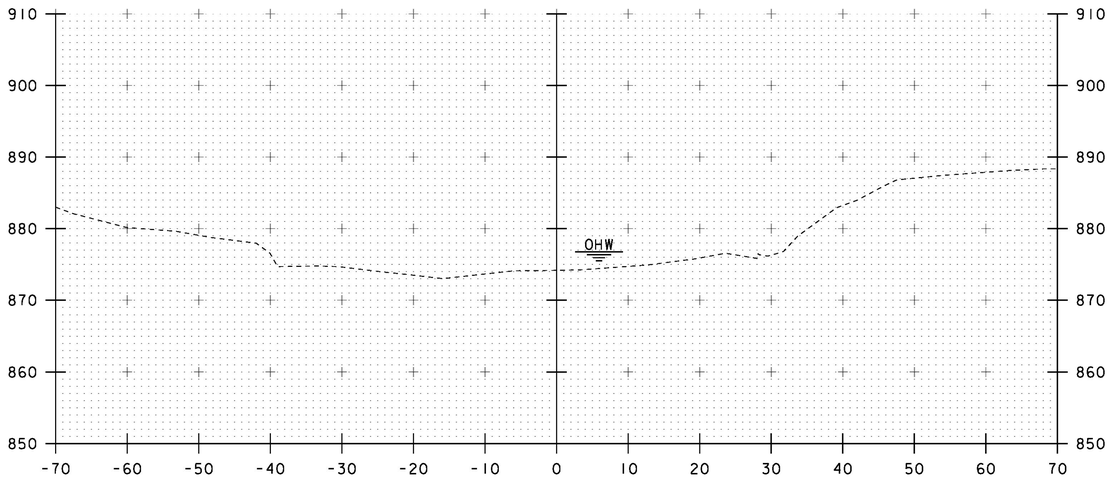

50+50

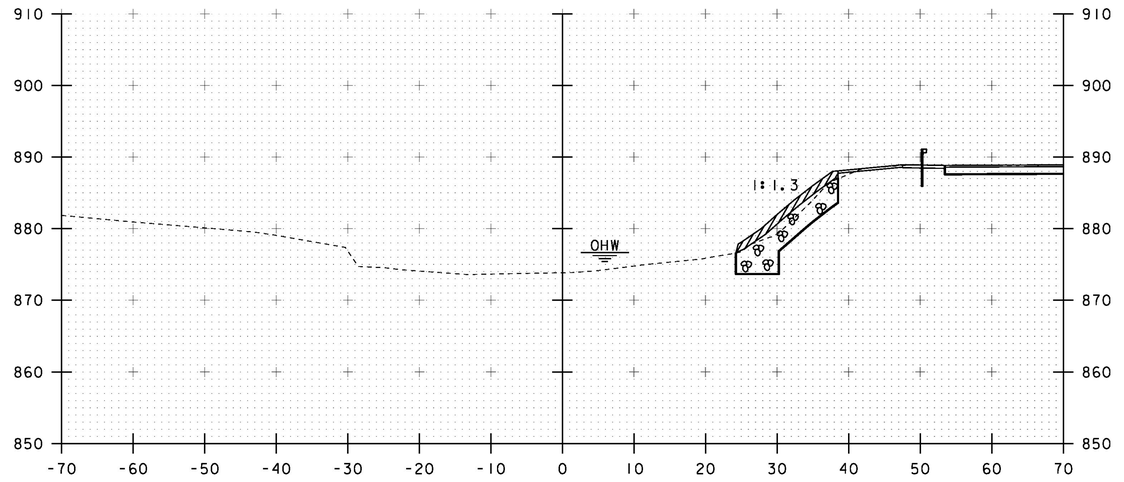

50+70

STA 50+76.00 LT
BEGIN STONE FILL, TYPE III
GEOTEXTILE UNDER STONE FILL
GRUBBING MATERIAL
UNCLASSIFIED CHANNEL EXCAVATION

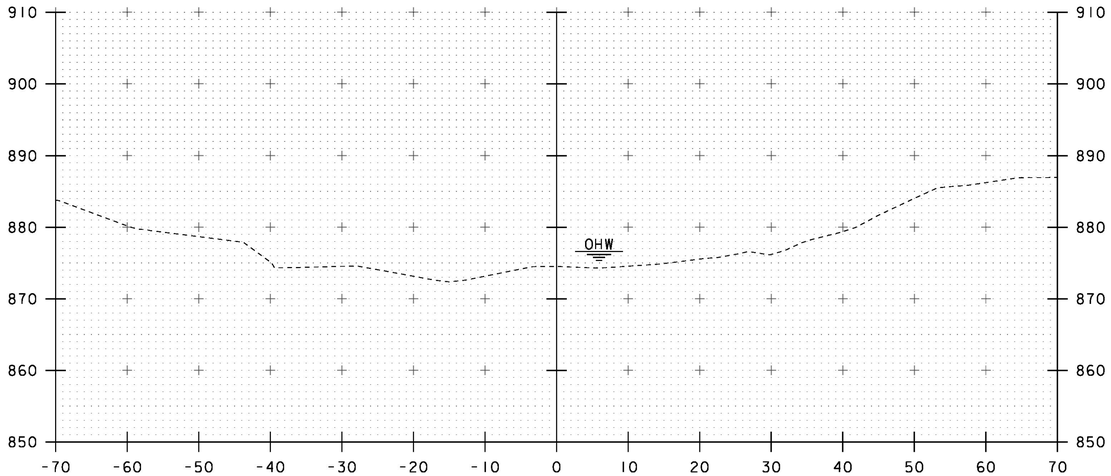

50+40

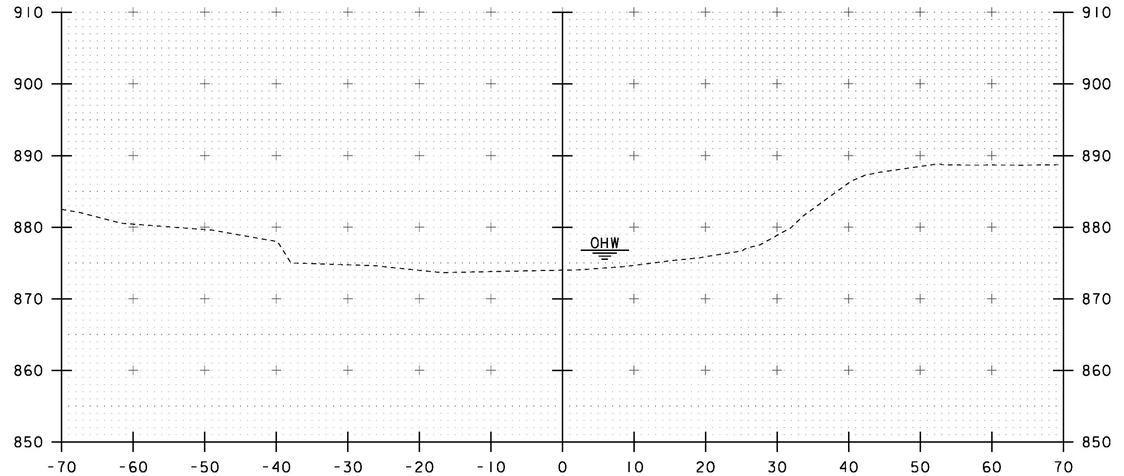

50+60

STA 50+65.00 RT
BEGIN STONE FILL, TYPE III
GEOTEXTILE UNDER STONE FILL
GRUBBING MATERIAL
UNCLASSIFIED CHANNEL EXCAVATION

STA. 50+40 TO STA. 50+70

PROJECT NAME: STRAFFORD
PROJECT NUMBER: BF 0177(10)

FILE NAME: sl3j088xsl.dgn
PROJECT LEADER: K. HIGGINS
DESIGNED BY: J. GRIGAS
CHANNEL SECTIONS 2

PLOT DATE: 31-AUG-2016
DRAWN BY: J. GRIGAS
CHECKED BY: T. MATTHEWS
SHEET 43 OF 52

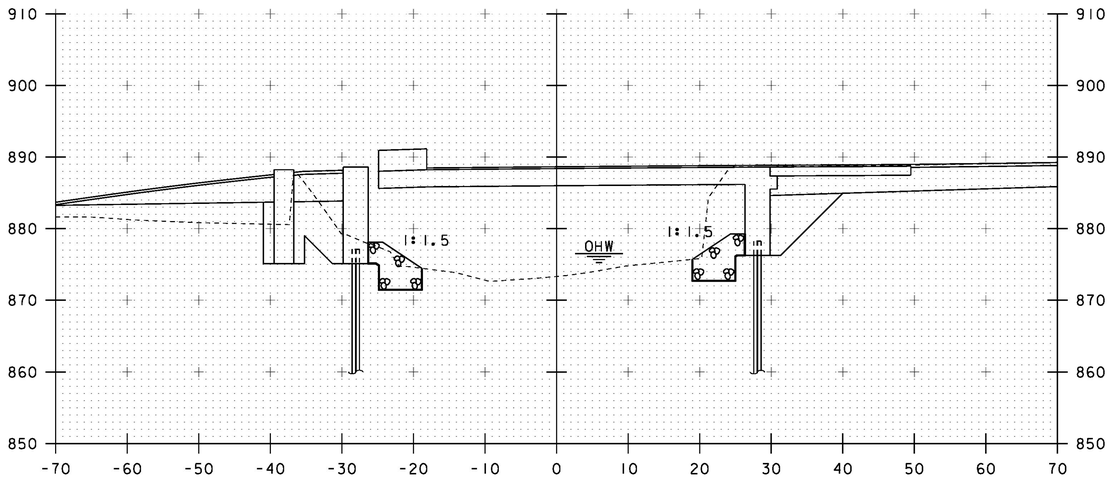

STA 50+89.00 LT
END GRUBBING MATERIAL

STA 50+83.00 RT
END GRUBBING MATERIAL

50+90

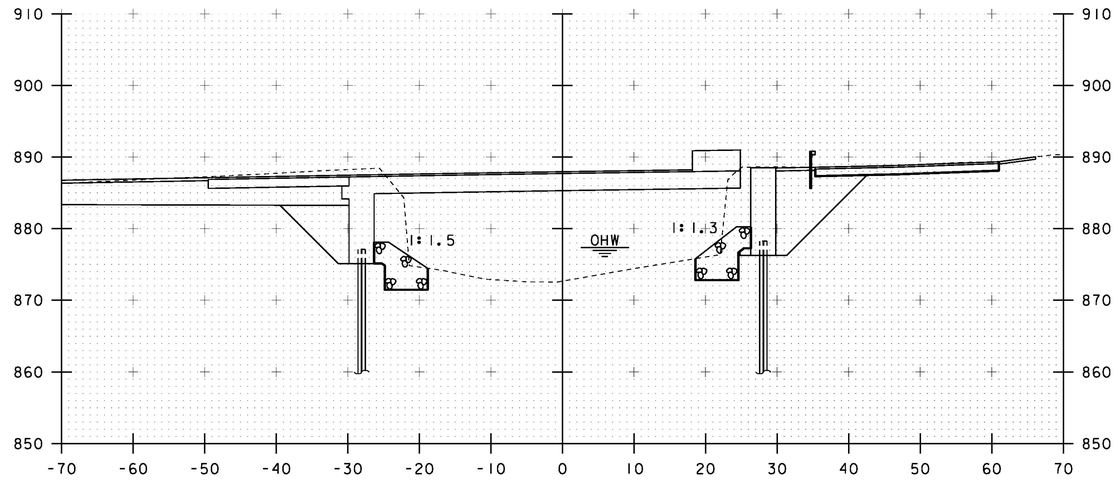

51+10

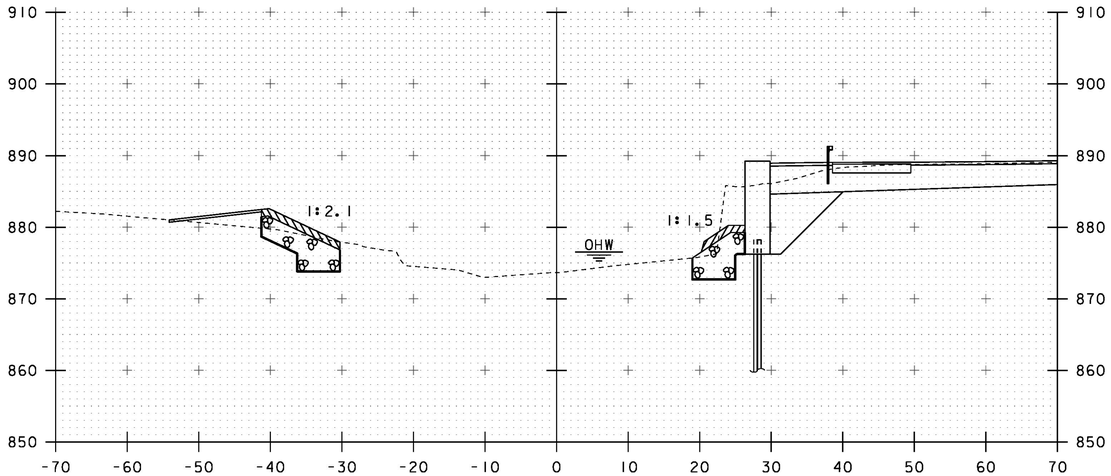

50+80

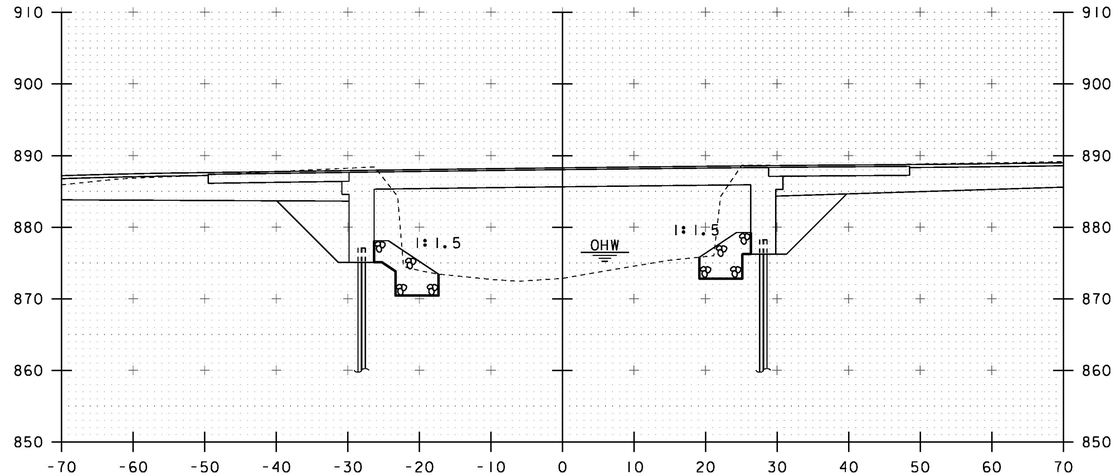

51+00

PROJECT NAME:	STRAFFORD
PROJECT NUMBER:	BF 0177(10)
FILE NAME: sl3j088xsl.dgn	PLOT DATE: 31-AUG-2016
PROJECT LEADER: K. HIGGINS	DRAWN BY: J. GRIGAS
DESIGNED BY: J. GRIGAS	CHECKED BY: T. MATTHEWS
CHANNEL SECTIONS 3	SHEET 44 OF 52

STA. 50+80 TO STA. 51+10

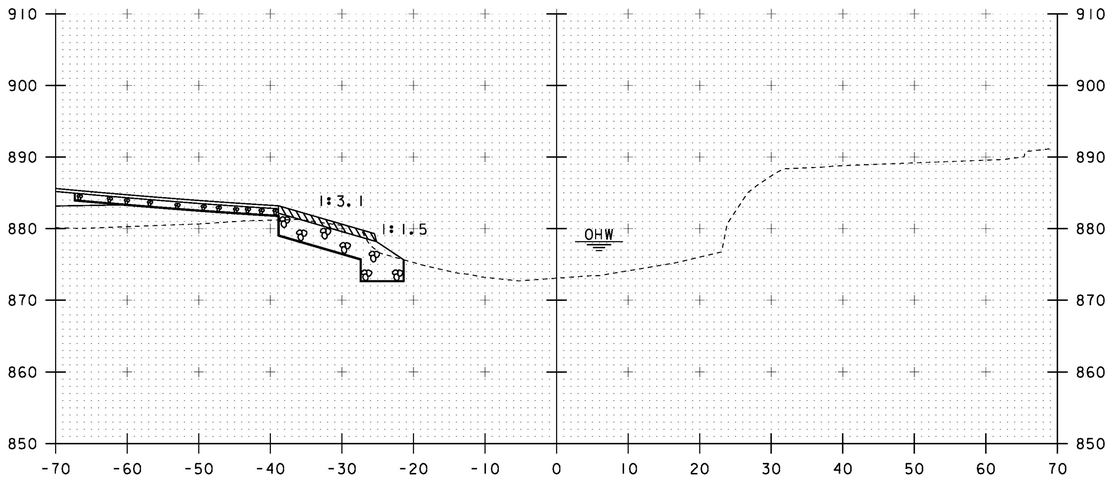

STA 51+35.00 LT
END STONE FILL, TYPE III
GEOTEXTILE UNDER STONE FILL
GRUBBING MATERIAL
UNCLASSIFIED CHANNEL EXCAVATION

51+30

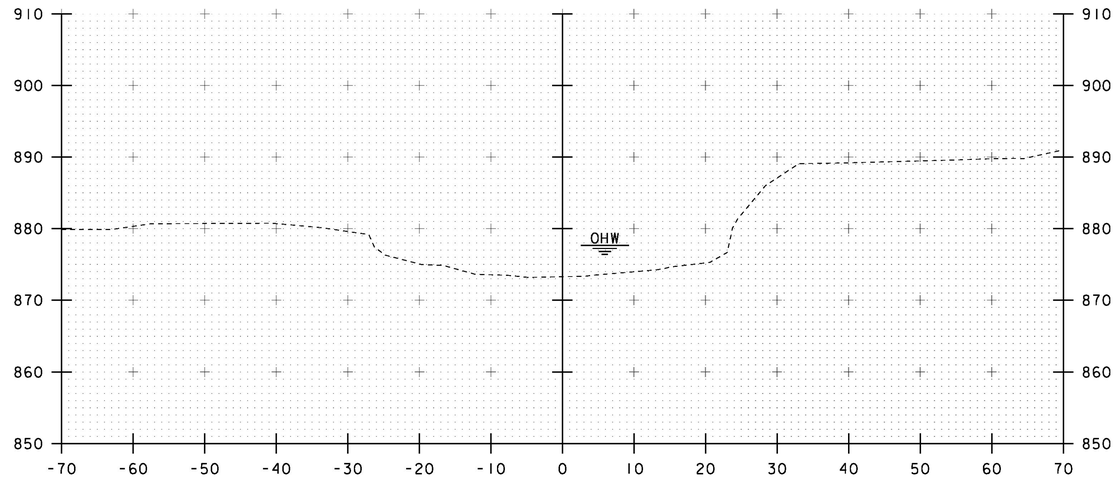

51+50

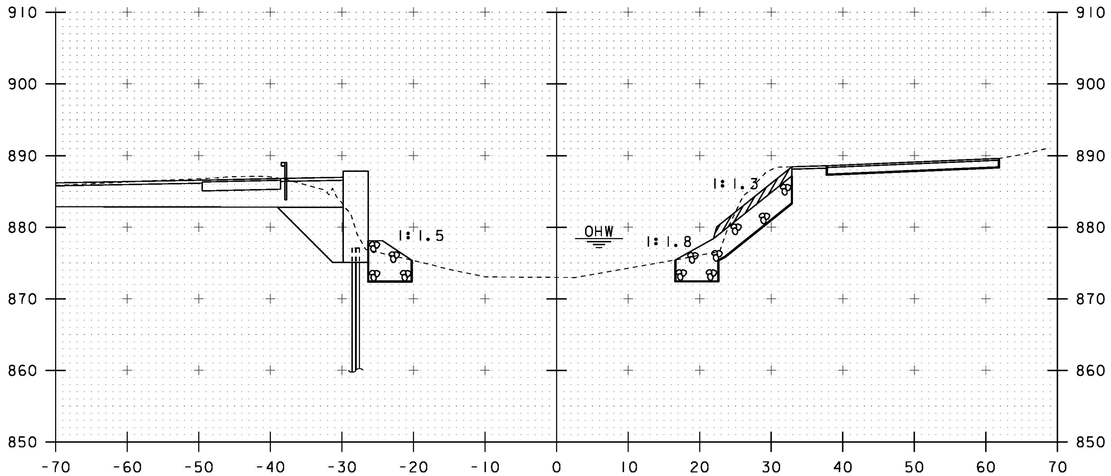

STA 51+18.00 LT
BEGIN GRUBBING MATERIAL

51+20

STA 51+11.00 RT
BEGIN GRUBBING MATERIAL

STA 51+29.00 RT
END STONE FILL, TYPE III
GEOTEXTILE UNDER STONE FILL
GRUBBING MATERIAL
UNCLASSIFIED CHANNEL EXCAVATION

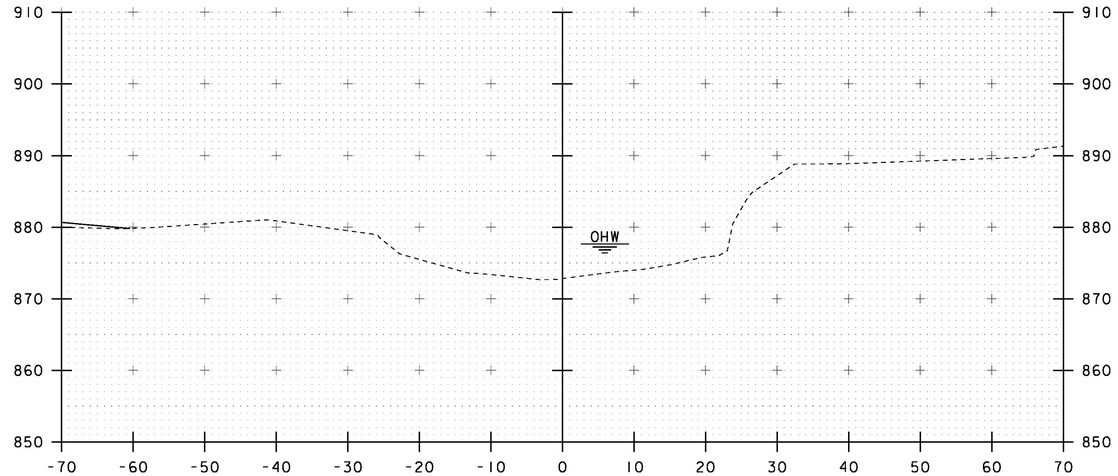

51+40

STA. 51+20 TO STA. 51+50

PROJECT NAME: STRAFFORD
PROJECT NUMBER: BF 0177(10)

FILE NAME: sl3j088xsl.dgn
PROJECT LEADER: K. HIGGINS
DESIGNED BY: J. GRIGAS
CHANNEL SECTIONS 4

PLOT DATE: 31-AUG-2016
DRAWN BY: J. GRIGAS
CHECKED BY: T. MATTHEWS
SHEET 45 OF 52

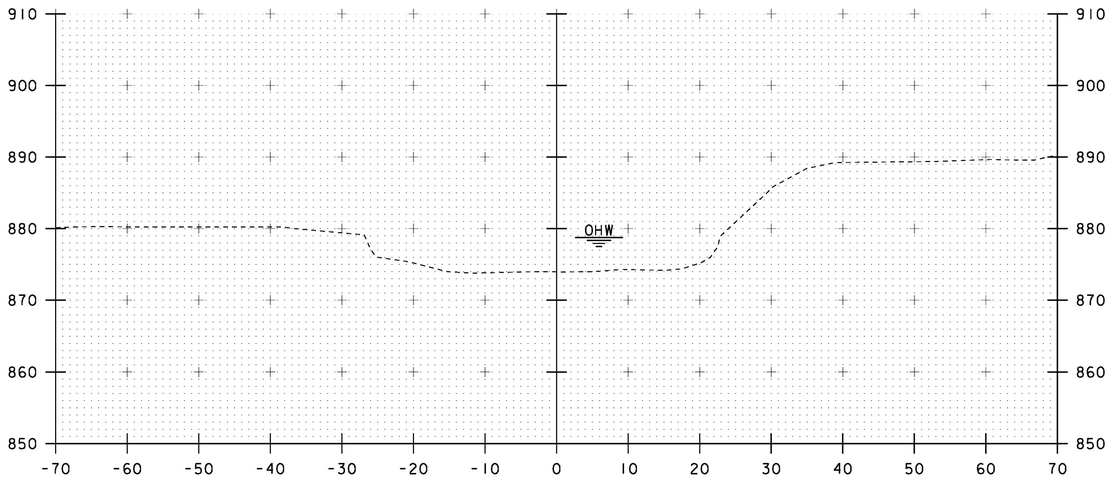

51+70

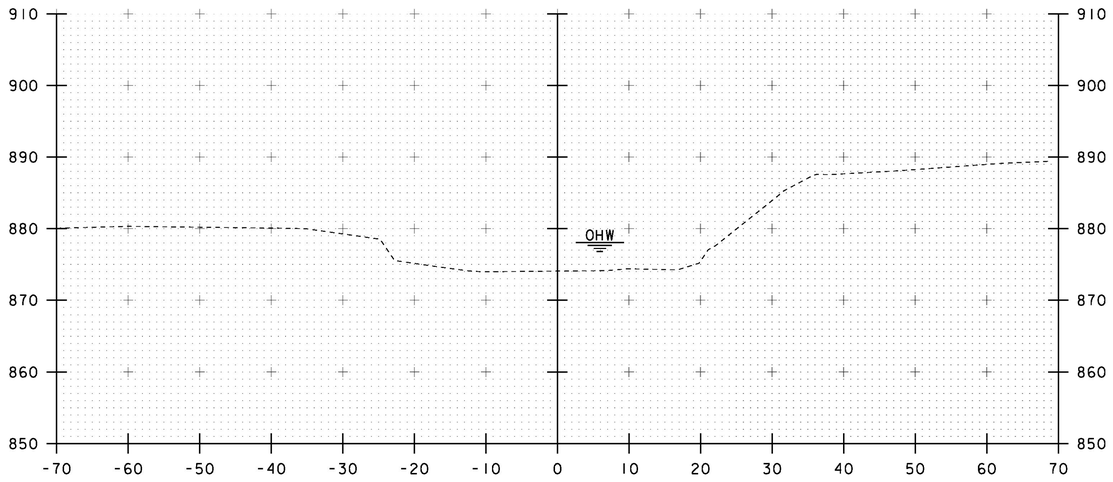

51+90

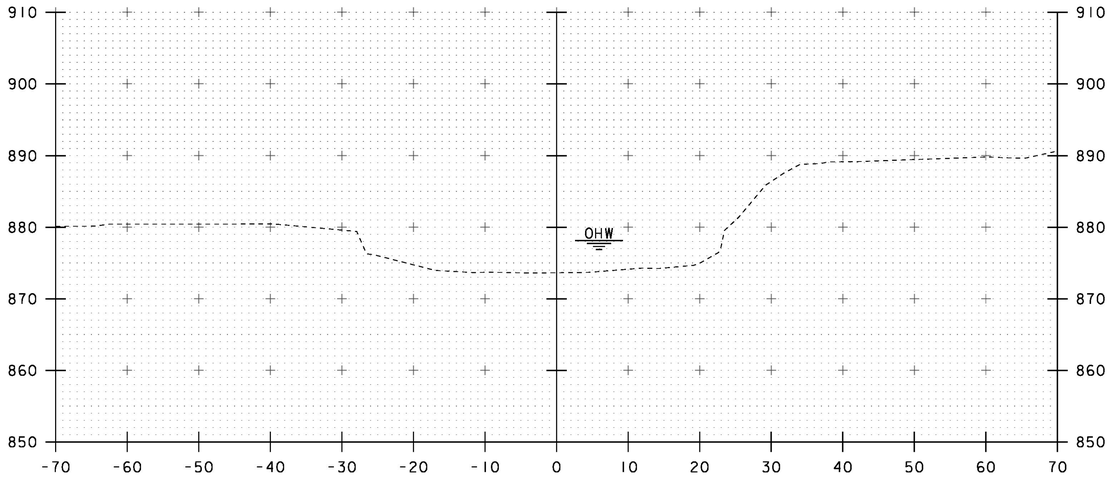

51+60

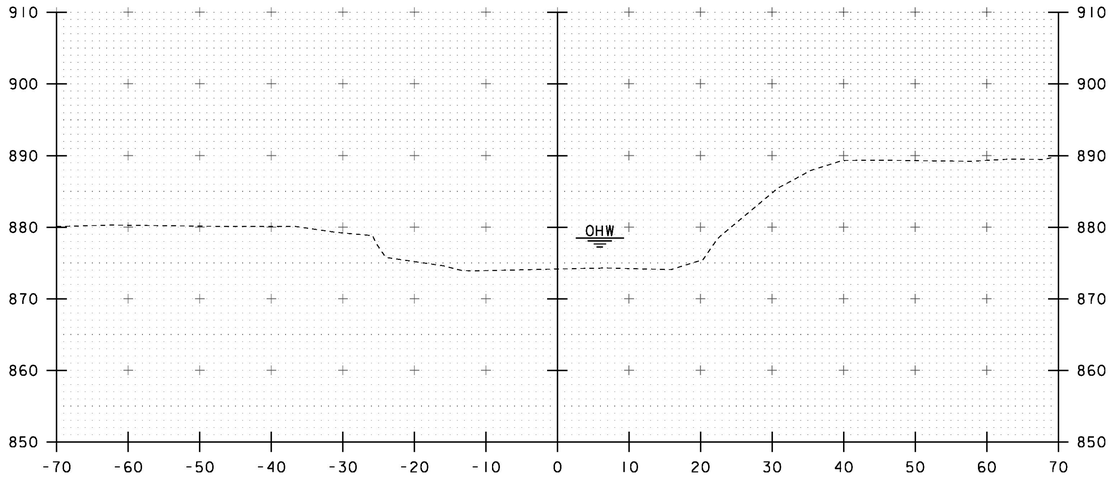

51+80

STA. 51+60 TO STA. 51+90

PROJECT NAME: STRAFFORD
PROJECT NUMBER: BF 0177(10)

FILE NAME: sl3j088xsl.dgn
PROJECT LEADER: K. HIGGINS
DESIGNED BY: J. GRIGAS
CHANNEL SECTIONS 5

PLOT DATE: 31-AUG-2016
DRAWN BY: J. GRIGAS
CHECKED BY: T. MATTHEWS
SHEET 46 OF 52

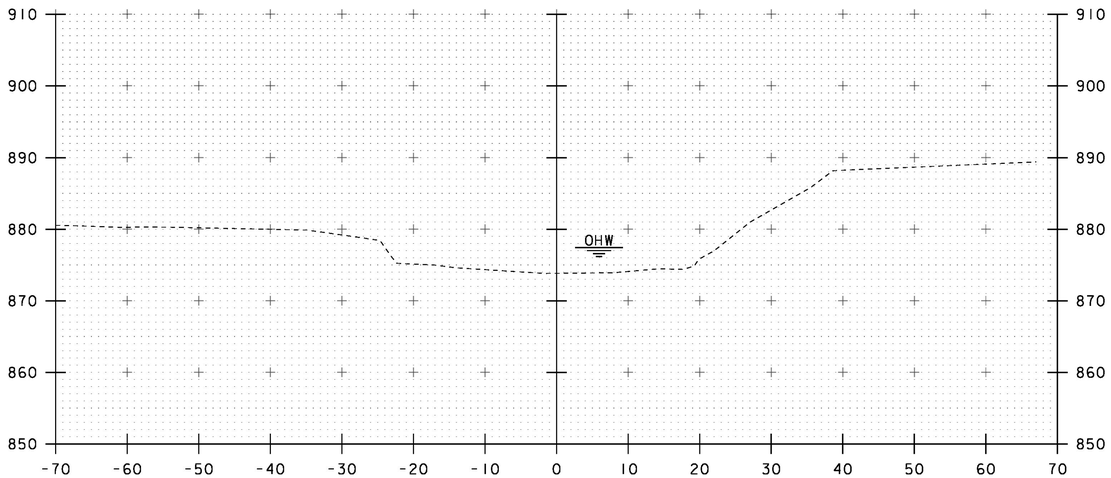

52+00

STA. 52+00 TO STA. 52+00

PROJECT NAME:	STRAFFORD
PROJECT NUMBER:	BF 0177(10)

FILE NAME: sl3088xsl.dgn	PLOT DATE: 31-AUG-2016
PROJECT LEADER: K. HIGGINS	DRAWN BY: J. GRIGAS
DESIGNED BY: J. GRIGAS	CHECKED BY: T. MATTHEWS
CHANNEL SECTIONS 6	SHEET 47 OF 52

EPSC PLAN NARRATIVE

1.1 PROJECT DESCRIPTION

THIS PROJECT INVOLVES THE REMOVAL OF BRIDGE 29 IN ITS ENTIRETY. BRIDGE 29 WILL BE REPLACED WITH A NEW STRUCTURE, SPANNING 53 FEET OVER THE WEST BRANCH OMPOMPANOOSUC RIVER, ON NEW ABUTMENTS ALONG THE EXISTING ALIGNMENT. BRIDGE 29 IS LOCATED IN THE TOWN OF STRAFFORD, ON TOWN HIGHWAY 1 (FAS 0177), APPROXIMATELY 0.04 MILES NORTH OF THE INTERSECTION OF TOWN HIGHWAY 1 AND TOWN HIGHWAY 4.

NOTE: AREA OF DISTURBANCE INCLUDES LIMITS OF EARTH DISTURBANCE WITHIN THE PROJECT AREA, AS WELL AS WASTE, BORROW AND STAGING AREAS, AND OTHER EARTH DISTURBING ACTIVITIES WITHIN OR DIRECTLY ADJACENT TO THE PROJECT LIMITS AS SHOWN ON THE ATTACHED EPSC PLAN.

TOTAL AREA OF DISTURBANCE AS SHOWN ON THE ATTACHED EPSC PLAN IS APPROXIMATELY 0.45 ACRES.

IT IS ANTICIPATED THAT THIS PROJECT WILL LAST ONE CONSTRUCTION SEASON.

1.2 SITE INVENTORY

1.2.1 TOPOGRAPHY

THE TOPOGRAPHY OF THE AREA INCLUDES FORESTED ROLLING HILLS WITH OCCASIONAL OPEN AREAS FOR RESIDENTIAL AND AGRICULTURAL USE. TOWN HIGHWAY 1 (FAS 0177), MINE ROAD (TH4), AND THREE DRIVEWAYS ARE WITHIN THE PROJECT SITE. THERE ARE TWO RESIDENCES ON THE SOUTH SIDE OF THE PROJECT AND A CHURCH ON THE NORTH SIDE OF THE PROJECT.

1.2.2 DRAINAGE, WATERWAYS, BODIES OF WATER, AND PROXIMITY TO NATURAL OR MAN-MADE WATER FEATURES

THE WEST BRANCH OMPOMPANOOSUC RIVER AND AN UNNAMED TRIBUTARY THAT CROSSES BENEATH TOWN HIGHWAY 1 TO THE SOUTH OF THE PROJECT ARE THE ONLY WATER SOURCES ON THE PROJECT SITE. THE WEST BRANCH OMPOMPANOOSUC RIVER IS CLASSIFIED AS SINUOUS AND ALLUVIAL. THE STREAM BED CONSISTS OF COBBLES, GRAVEL, AND SAND. THE TRIBUTARY AREA AT THE BRIDGE CROSSING IS 34.7 MILES^2.

1.2.3 VEGETATION

THE VEGETATION IN THE PROJECT AREA CONSISTS OF HARDWOOD AND SOFTWOOD TREES AND UNDERGROWTH. THE IMPACT TO VEGETATION WILL BE LIMITED TO THAT WHICH IS DIRECTLY AFFECTED BY REPLACEMENT OF THE EXISTING BRIDGE. UPON PROJECT COMPLETION, THE CHANNEL WILL BE ARMORED WITH STONE FILL TYPE III AS SPECIFIED ON THE PLANS. DISTURBED VEGETATION WILL BE REESTABLISHED WITH STANDARD SEED AND MULCH PRACTICES.

1.2.4 SOILS

ALL SOIL DATA CAME FROM THE U.S. DEPARTMENT OF AGRICULTURE SOIL CONSERVATION SERVICE FOR THE COUNTY OF ORANGE, VERMONT. SOILS ON THE PROJECT SITE ARE BUCKLAND LOAM, 3% TO 8% SLOPES, “K FACTOR” = 0.32 AND WINOOSKI VERY FINE SANDY LOAM, “K FACTOR” = 0.37. BOTH OF THESE SOILS ARE CONSIDERED TO HAVE MODERATE TO HIGH EROSION POTENTIAL.

NOTE: K-VALUES GENERALLY INDICATE THE FOLLOWING:
0.0-0.23 = LOW EROSION POTENTIAL
0.24-0.36 = MODERATE EROSION POTENTIAL
0.37 AND HIGHER = HIGH EROSION POTENTIAL

1.2.5 SENSITIVE RESOURCE AREAS

CRITICAL HABITATS: NO
HISTORICAL OR ARCHEOLOGICAL AREAS: YES, HISTORICAL AREA ON SOUTH SIDE OF PROJECT AND ARCHAEOLOGICAL AREA IN SOUTHWEST QUADRANT.
PRIME AGRICULTURAL LAND: NO
THREATENED AND ENDANGERED SPECIES: NORTHERN LONG-EARED BAT
WATER RESOURCE: WEST BRANCH OMPOMPANOOSUC RIVER
WETLANDS: NO

1.3 RISK EVALUATION

THIS PROJECT DOES NOT FALL UNDER THE JURISDICTION OF GENERAL PERMIT 3-9020 FOR STORMWATER RUNOFF FROM CONSTRUCTION SITES. SHOULD CHANGES PRIOR TO OR DURING CONSTRUCTION RESULT IN ONE OR MORE ACRES OF EARTH DISTURBANCE OR SHOULD THE PROJECT BECOME PART OF A LARGER PLAN OF DEVELOPMENT, THE CONTRACTOR WILL BE RESPONSIBLE FOR ANY ADDITIONAL PERMITTING.

1.4 EROSION PREVENTION AND SEDIMENT CONTROL

THE EROSION CONTROL PLANS ARE MEANT AS A GUIDELINE FOR PREVENTING EROSION AND CONTROLLING SEDIMENT TRANSPORT. THE PRINCIPLES OUTLINED IN THIS NARRATIVE CONSIST OF APPLYING MEASURES THROUGHOUT CONSTRUCTION OF THE PROJECT IN ORDER TO MINIMIZE SEDIMENT TRANSPORT TO THE RECEIVING WATERS. THE MEASURES INCLUDE STABILIZATION AND STRUCTURAL PRACTICES, STORM WATER CONTROLS AND OTHER POLLUTION PREVENTION PRACTICES. THEY HAVE BEEN PROPOSED BY THE DESIGNER AS A BASIS FOR PROTECTING RESOURCES AND WILL NEED TO BE BUILT UPON BASED ON THE SPECIFIC MEANS AND METHODS OF THE CONTRACTOR. REFER TO THE LOW RISK SITE HANDBOOK AND APPROPRIATE DETAIL SHEETS FOR SPECIFIC GUIDANCE AND CONSTRUCTION DETAILING.

ALL MEASURES SHALL BE REGULARLY MAINTAINED AND SHALL BE CHECKED FOR SEDIMENT BUILD-UP. SEDIMENT SHALL BE DISPOSED OF AT AN APPROVED SITE WHERE IT WILL NOT BE SUBJECT TO EROSION.

1.4.1 MARK SITE BOUNDARIES

SITE BOUNDARIES AND AREAS CONSTRUCTION EQUIPMENT CAN ACCESS SHALL BE DELINEATED.

BARRIER FENCE (BF) SHALL BE USED TO PHYSICALLY MARK SITE BOUNDARIES AS PROPOSED ON THE EPSC PLAN.

PROJECT DEMARCATION FENCE SHALL BE PLACED TO VISIBLY DEPICT LIMITS OF CLEARING. THE PROJECT DEMARCATION FENCE MUST BE PLACED AND APPROVED BY THE RESIDENT ENGINEER PRIOR TO ANY CLEARING ACTIVITIES.

1.4.2 LIMIT DISTURBANCE AREA

PREVENTING INITIAL SOIL EROSION BY MINIMIZING THE EXPOSED AREA IS MUCH MORE EFFECTIVE THAN TREATING ERODED SEDIMENT. EARTH DISTURBANCE CAN BE MINIMIZED THROUGH CONSTRUCTION PHASING BY ONLY OPENING UP EARTH AS NECESSARY. THIS CAN LIMIT THE AREA THAT WILL BE DISTURBED AND EXPOSED TO EROSION. EMPLOY TEMPORARY CONSTRUCTION STABILIZATION PRACTICES IN INCREMENTAL STAGES AS PHASES CHANGE. FOR PROJECTS WHICH FALL UNDER THE CONSTRUCTION GENERAL PERMIT, ONLY THE ACREAGE LISTED ON THE PERMIT AUTHORIZATION MAY BE EXPOSED AT ANY GIVEN TIME.

MAINTAINING VEGETATED BUFFERS ALONG STREAM BANKS, WETLANDS OR OTHER SENSITIVE AREAS IS A CRUCIAL EROSION AND SEDIMENT CONTROL MEASURE THAT SHOULD BE ESTABLISHED WHEREVER POSSIBLE.

1.4.3 SITE ENTRANCE/EXIT STABILIZATION

TRACKING OF SEDIMENT ONTO PUBLIC HIGHWAYS SHALL BE MINIMIZED TO REDUCE THE POTENTIAL FOR RUNOFF ENTERING RECEIVING WATERS. INSTALLATION SHALL COINCIDE WITH THE CONTRACTORS PROGRESS SCHEDULE.

STABILIZED CONSTRUCTION ENTRANCES SHALL BE INSTALLED AS PROPOSED ON THE EPSC PLAN AND ANYWHERE EQUIPMENT WILL BE GOING FROM AREAS OF EXPOSED SOILS TO PAVED SURFACES.

1.4.4 INSTALL SEDIMENT BARRIERS

SEDIMENT BARRIERS SHALL BE UTILIZED TO INTERCEPT RUNOFF AND ALLOW SUSPENDED SEDIMENT TO SETTLE OUT. THEY SHALL BE INSTALLED PRIOR TO ANY UP SLOPE WORK.

SILT FENCE WILL BE INSTALLED AS PROPOSED ON THE EPSC PLAN.

FILTER CURTAIN WILL BE INSTALLED AS PROPOSED ON THE EPSC PLAN.

FILTER FABRIC DROP INLET PROTECTION WILL BE INSTALLED AS PROPOSED ON THE EPSC PLAN.

1.4.5 DIVERT UPLAND RUNOFF

DIVERSIONARY MEASURES SHALL BE USED TO INTERCEPT RUNOFF FROM ABOVE THE CONSTRUCTION AND DIRECT IT AROUND THE DISTURBED AREA SO THAT CLEAN WATER DOES NOT BECOME MUDDIED WHILE TRAVELING OVER EXPOSED SOILS ON THE CONSTRUCTION SITE.

NO DIVERSIONARY MEASURES ARE ANTICIPATED ON THIS PROJECT.

1.4.6 SLOW DOWN CHANNELIZED RUNOFF

CHECK STRUCTURES SHALL BE UTILIZED TO REDUCE THE VELOCITY, AND THUS THE EROSIVE POTENTIAL, OF CONCENTRATED FLOW IN CHANNELS.

NO CHECK STRUCTURES ARE ANTICIPATED ON THIS PROJECT.

1.4.7 CONSTRUCT PERMANENT CONTROLS

DROP INLETS, OPTION PIPES AND STONE LINED DITCHES SHALL BE INSTALLED AS SHOWN ON THE PLANS AND IN ACCORDANCE WITH PERMIT CONDITIONS.

1.4.8 STABILIZE EXPOSED SOILS DURING CONSTRUCTION

ALL AREAS OF DISTURBANCE MUST HAVE TEMPORARY STABILIZATION IN PLACE WITHIN 48 HOURS OF DISTURBANCE OR IN ACCORDANCE WITH THE CONSTRUCTION GENERAL PERMIT 3-9020 AUTHORIZATION.

SURFACE ROUGHENING OF ALL EXPOSED SLOPES, COMBINED WITH TEMPORARY MULCHING, SHALL BE UTILIZED ON A REGULAR BASIS. BIODEGRADABLE EROSION CONTROL MATTING OR AN EQUIVALENT SHALL BE USED TO STABILIZE ALL SLOPES STEEPER THAN 1:3.

THE FORECAST OF RAINFALL EVENTS SHALL TRIGGER IMMEDIATE PROTECTION OF EXPOSED SOILS.

1.4.9 WINTER STABILIZATION

VARIOUS MEASURES SPECIFIC TO WINTER MAY BE NECESSARY SHOULD THE PROJECT EXTEND INTO WINTER (OCTOBER 15 THROUGH APRIL 15). REFER TO THE LOW RISK SITE HANDBOOK FOR GUIDANCE.

1.4.10 STABILIZE SOIL AT FINAL GRADE

EXPOSED SOIL MUST BE STABILIZED WITHIN 48 HOURS OF REACHING FINAL GRADE.

SEED, MULCH, FERTILIZER AND LIME SHALL BE USED TO ESTABLISH PERMANENT VEGETATION. FOR SLOPES STEEPER THAN 1:3, BIODEGRADABLE EROSION CONTROL MATTING OR AN EQUIVALENT SHALL BE USED INSTEAD OF MULCH.

BIODEGRADABLE EROSION CONTROL SHALL BE INSTALLED AS PROPOSED ON THE EPSC PLAN.

1.4.11 DE-WATERING ACTIVITIES

DISCHARGE FROM DEWATERING ACTIVITIES THAT FLOWS OFF OF THE CONSTRUCTION SITE MUST NOT CAUSE OR CONTRIBUTE TO A VIOLATION OF THE VERMONT WATER QUALITY STANDARDS.

TREATMENT OF DEWATERING COFFERDAM IS NOT ANTICIPATED.

1.4.12 INSPECT YOUR SITE

INSPECT THE PROJECT SITE BASED ON SPECIAL PROVISION REQUIREMENTS OR CONSTRUCTION GENERAL PERMIT AUTHORIZATION STIPULATIONS.

1.5 SEQUENCE AND STAGING

THIS SECTION WILL BE DEVELOPED BY THE CONTRACTOR USING THE GUIDANCE OUTLINED IN THE VTRANS EPSC PLAN CONTRACTOR CHECKLIST.

1.5.1 CONSTRUCTION SEQUENCE

1.5.2 OFF-SITE ACTIVITIES

IN ADDITION TO THE CONTRACTOR CHECKLIST ANY ACTIVITIES OUTSIDE THE CONSTRUCTION LIMITS SHALL FOLLOW SUBSECTIONS 105.25- 105.29 OF THE STANDARD SPECIFICATIONS FOR CONSTRUCTION.

PROJECT NAME: STRAFFORD
PROJECT NUMBER: BF 0177(10)

FILE NAME: si3j088ero_narrative.dgn
PROJECT LEADER: K. HIGGINS
DESIGNED BY: J. GRIGAS
EPSC NARRATIVE

PLOT DATE: 03-OCT-2016
DRAWN BY: J. GRIGAS
CHECKED BY: T. MATTHEWS
SHEET 48 OF 52

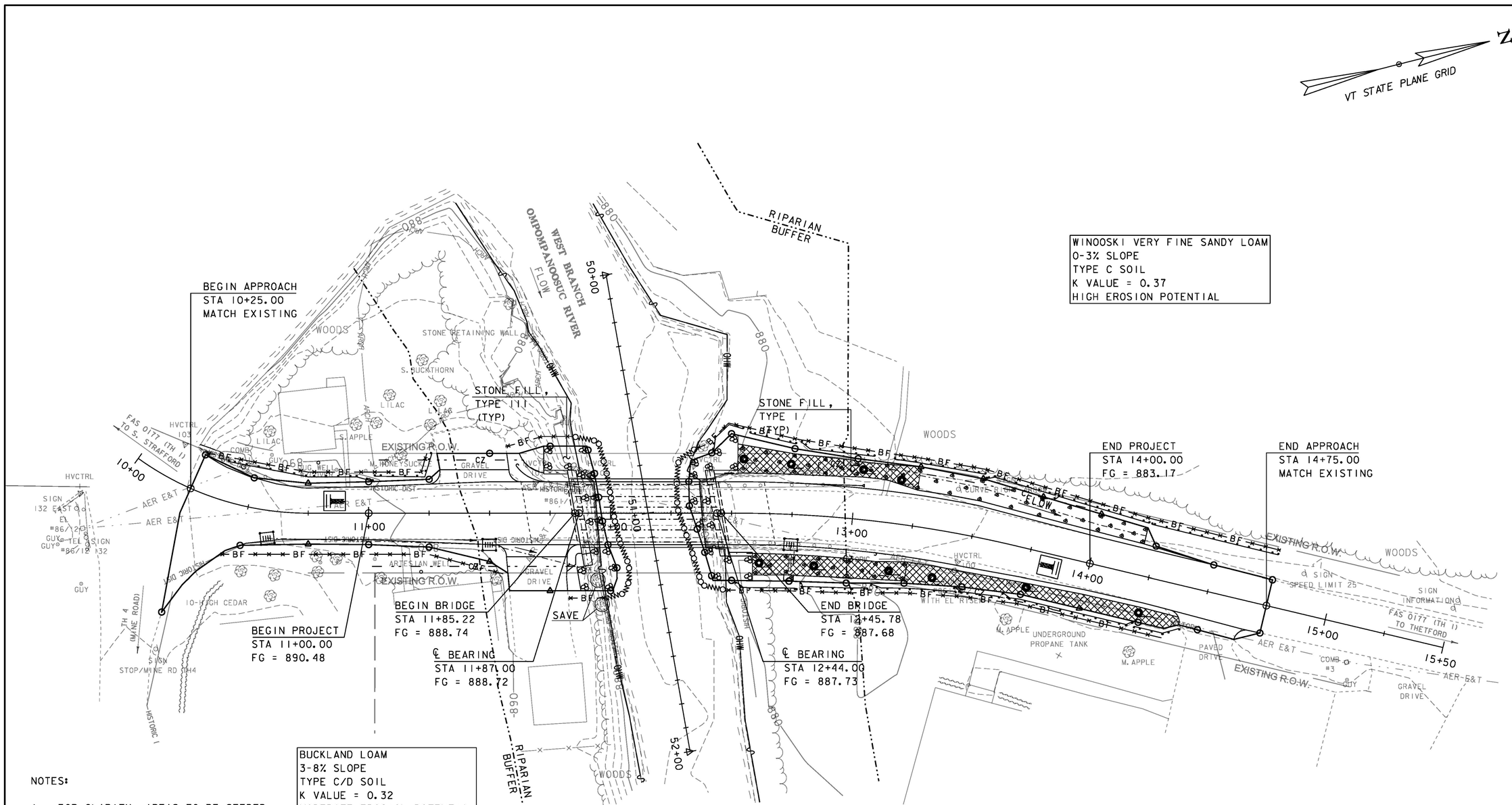

NOTES:

1. FOR CLARITY, AREAS TO BE SEEDED AND MULCHED ARE NOT SHOWN; HOWEVER, ALL DISTURBED AREAS SHALL BE SEEDED AND MULCHED AS APPLICABLE.

2. EXISTING CONTOURS ARE SHOWN. SEE CROSS SECTIONS FOR FINAL CONTOURS.

3. THESE PLANS SHOW A CONCEPTUAL EROSION CONTROL PLAN, THE CONTRACTOR MUST SUBMIT A TERMPORARY EROSION CONTROL PLAN FOR APPROVAL.

4. THE CONTRACTOR SHALL USE OTHER EROSION CONTROL MEASURES AS NECESSITATED BY THE SEQUENCE OF CONSTRUCTION OR AS DIRECTED BY THE RESIDENT ENGINEER AND ON-SITE COORDINATOR.

EPSC PLAN

SCALE 1" = 20'-0"
20 0 20

PROJECT NAME: STRAFFORD
PROJECT NUMBER: BF 0177(10)

FILE NAME: sl3j088bdr_ero.dgn
PROJECT LEADER: K. HIGGINS
DESIGNED BY: J. GRIGAS
EPSC PLAN SHEET

PLOT DATE: 31-AUG-2016
DRAWN BY: J. GRIGAS
CHECKED BY: T. MATTHEWS
SHEET 49 OF 52

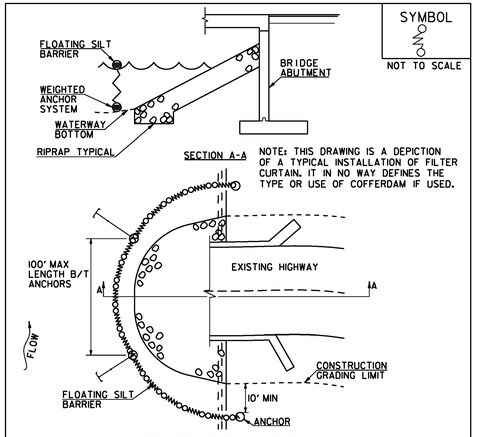

CONSTRUCTION SPECIFICATIONS

1. FILTER CURTAIN SHALL NOT BE PLACED ACROSS A FLOWING WATERWAY, OR IN A WATERWAY WITH STREAM VELOCITIES GREATER THAN 1.5 FEET/SECOND.
2. MAXIMUM 100' LENGTH BETWEEN ANCHORS.
3. LAST SECTION SHALL TERMINATE A MINIMUM OF 10' BEYOND LIMIT OF DISTURBANCE.
4. THE WEIGHTED ANCHOR SYSTEM SHALL BE A TYPE WHICH ALLOWS THE CURTAIN TO CONFORM TO THE BOTTOM OF THE WATERWAY.
5. THE CURTAIN SHALL BE REMOVED BY SLOWLY PULLING TOWARD THE SHORE MINIMIZING THE ESCAPE OF SEDIMENTS INTO WATERWAY.

FILTER CURTAIN

THIS WORK SHALL BE PERFORMED IN ACCORDANCE WITH SECTION 649 FOR GEOTEXTILE FOR FILTER CURTAIN (PAY ITEM 649.61).

REVISIONS	
APRIL 1, 2008	WHF
JANUARY 13, 2009	WHF
SEPTEMBER 4, 2009	WHF

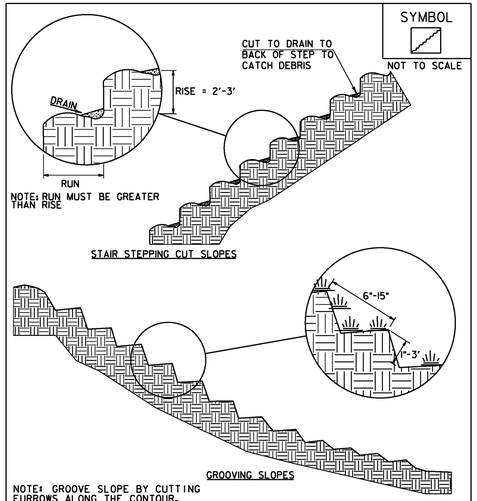

NOTE: GROOVE SLOPE BY CUTTING FURROWS ALONG THE CONTOUR. IRREGULARITIES IN THE SOIL SURFACE CATCH RAINWATER AND RETAIN LIME, FERTILIZER AND SEED.

ADAPTED FROM DETAILS PROVIDED BY: NEW YORK STATE DEC ORIGINALLY DEVELOPED BY USDA-NRCS VERMONT DEPARTMENT OF ENVIRONMENTAL CONSERVATION

SURFACE ROUGHENING

NOTES:
REFER TO "THE VERMONT STANDARDS & SPECIFICATIONS FOR EROSION PREVENTION & SEDIMENT CONTROL -2006- "FROM THE VT AGENCY OF NATURAL RESOURCES FOR ADDITIONAL GUIDANCE.

THIS WORK WILL BE CONSIDERED INCIDENTAL TO THE CONTRACT

REVISIONS	
APRIL 1, 2008	WHF
JANUARY 13, 2009	WHF

VAOT LOW GROW/FINE FESCUE MIX						
	LBS/AC					
WEIGHT	BROADCAST	HYDROSEED	NAME	LATIN NAME	GERM	PURITY
38%	57	95	CREEPING RED FESCUE	FESTUCA RUBRA VAR. RUBRA	90%	98%
29%	43.5	72.5	HARD FESCUE	FESTUCA LONGIFOLIA	85%	95%
15%	22.5	37.5	CHEWINGS FESCUE	FESTUCA RUBRA VAR. COMMUTATA	87%	95%
15%	22.5	37.5	ANNUAL RYEGRASS	LOLIUM MULTIFLORUM	90%	95%
3%	4.5	7.5	INERTS			
100%	150	250				

VAOT RURAL AREA MIX						
	LBS/AC					
WEIGHT	BROADCAST	HYDROSEED	NAME	LATIN NAME	GERM	PURITY
37.5%	22.5	45	CREEPING RED FESCUE	FESTUCA RUBRA VAR. RUBRA	85%	98%
37.5%	22.5	45	TALL FESCUE	FESTUCA ARUNDINACEA	90%	95%
5.0%	3	6	RED TOP	AGROSTIS GIGANTEA	90%	95%
15.0%	9	18	WHITE FIELD CLOVER	TRIFOLIUM REPENS	85%	98%
5.0%	3	6	ANNUAL RYE GRASS	LOLIUM MULTIFLORUM	85%	95%
100%	60	120				

GENERAL AMENDMENT GUIDANCE		
FERTILIZER	LIME	
10/20/10	AG LIME	PELLITIZED
500 LBS/AC	2 TONS/AC	1 TONS/AC

CONSTRUCTION GUIDANCE

1. SEED MIX: THE CONTRACTOR SHALL COORDINATE WITH THE RESIDENT ENGINEER ON WHICH SEED MIX TO USE.
2. SEED MIX: USE AS INDICATED IN THE PLANS AND/OR FOR ALL ESTABLISHED UPLAND (NON WETLAND) AREAS DISTURBED BY THE CONTRACTOR.
3. ALL SEED MIXTURES: SHALL NOT HAVE A WEED CONTENT EXCEEDING 0.40% BY WEIGHT AND SHALL BE FREE OF ALL NOXIOUS SEED.
4. FERTILIZER AND LIMESTONE: SHALL FOLLOW RATES SHOWN ON PLAN OR AS DIRECTED BY THE ENGINEER.
5. HAY MULCH: TO BE PLACED ON EARTH SLOPES AT THE RATE OF 2 TONS/ACRE, ACHIEVE 90% GROUND COVER OR AS DIRECTED BY THE ENGINEER.
6. HYDROSEEDING: ALTHOUGH GUIDANCE IS GIVEN ABOVE THE SITE CONDITIONS AND THE TYPE OF HYDROSEED PROPOSED FOR USE WILL ULTIMATELY DICTATE THE AMOUNTS AND TYPES OF SOIL AMENDMENTS TO BE APPLIED.
7. TURF ESTABLISHMENT: PLACING SEED, FERTILIZER, LIME AND MULCH PRIOR TO SEPTEMBER 15 AND AFTER APRIL 15 CAN BETTER ENSURE A VIGOROUS GROWTH OF GRASS.

ADAPTED FROM VTRANS TECHNICAL LANDSCAPE MANUAL FOR ROADWAYS AND TRANSPORTATION FACILITIES

TURF ESTABLISHMENT

THIS WORK SHALL BE PERFORMED IN ACCORDANCE WITH SECTION 651 FOR SEED (PAY ITEM 651.15)

REVISIONS	
JANUARY 12, 2015	WHF

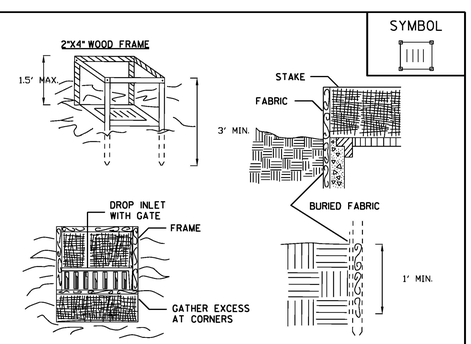

CONSTRUCTION SPECIFICATIONS

1. FILTER FABRIC SHALL HAVE AN EOS OF 40-85. BURLAP MAY BE USED FOR SHORT TERM APPLICATIONS.
2. CUT FABRIC FROM A CONTINUOUS ROLL TO ELIMINATE JOINTS. IF JOINTS ARE NEEDED THEY WILL BE OVERLAPPED TO THE NEXT STAKE.
3. STAKE MATERIALS WILL BE STANDARD 2" x 4" WOOD OR EQUIVALENT METAL WITH A MINIMUM LENGTH OF 3 FEET.
4. SPACE STAKES EVENLY AROUND INLET 3 FEET APART AND DRIVE A MINIMUM 8 INCHES DEEP. SPANS GREATER THAN 3 FEET MAY BE BRIDGED WITH THE USE OF WIRE MESH BEHIND THE FILTER FABRIC FOR SUPPORT.
5. FABRIC SHALL BE EMBEDDED 1FOOT MINIMUM BELOW GROUND AND BACKFILLED. IT SHALL BE SECURELY FASTENED TO THE STAKES AND FRAME.
6. A 2" x 4" WOOD FRAME SHALL BE COMPLETED AROUND THE CREST OF THE FABRIC FOR OVER FLOW STABILITY.

MAXIMUM DRAINAGE AREA 1ACRE

ADAPTED FROM DETAILS PROVIDED BY: NEW YORK STATE DEC ORIGINALLY DEVELOPED BY USDA-NRCS VERMONT DEPARTMENT OF ENVIRONMENTAL CONSERVATION

FILTER FABRIC DROP INLET PROTECTION

NOTES:
REFER TO "THE VERMONT STANDARDS & SPECIFICATIONS FOR EROSION PREVENTION & SEDIMENT CONTROL -2006- "FROM THE VT AGENCY OF NATURAL RESOURCES FOR ADDITIONAL GUIDANCE.

THIS ITEM SHALL BE PAID FOR UNDER ITEM 653.40 INLET PROTECTION DEVICE, TYPE I

REVISIONS	
MARCH 8, 2007	JMF

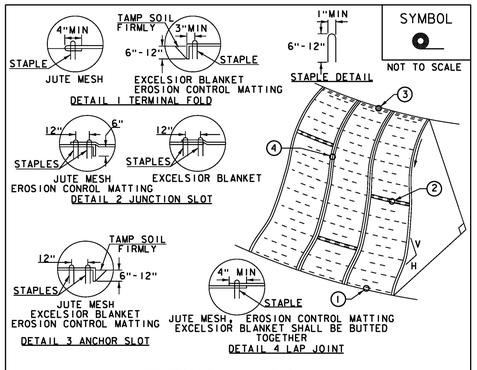

CONSTRUCTION SPECIFICATIONS

1. APPLY TO SLOPES GREATER THAN 3H: 1V OR WHERE NECESSARY TO AID IN ESTABLISHING VEGETATION.
2. APPLY FERTILIZER, LIME SEED PRIOR TO PLACING MATTING.
3. STAPLES ARE TO BE PLACED ALTERNATELY, IN COLUMNS APPROXIMATELY 2' APART AND IN ROWS APPROXIMATELY 3' APART. APPROXIMATELY 175 STAPLES ARE REQUIRED PER 4'X225' ROLL OF MATERIAL AND 125 STAPLES ARE REQUIRED PER 4'X150' ROLL OF MATERIAL.
4. DISTURBED AREAS SHALL BE SMOOTHLY GRADED. EROSION CONTROL MATERIAL SHALL BE PLACED LOOSELY OVER GROUND SURFACE. DO NOT STRETCH.
5. ALL TERMINAL ENDS AND TRANSVERSE LAPS SHALL BE STAPLED AT APPROXIMATELY 12" INTERVALS.

ADAPTED FROM DETAILS PROVIDED BY: NEW YORK STATE DEC ORIGINALLY DEVELOPED BY USDA-NRCS VERMONT DEPARTMENT OF ENVIRONMENTAL CONSERVATION

ROLLED EROSION CONTROL PRODUCT (RECP) SIDE SLOPE

NOTES:
REFER TO "THE VERMONT STANDARDS & SPECIFICATIONS FOR EROSION PREVENTION & SEDIMENT CONTROL -2006- "FROM THE VT AGENCY OF NATURAL RESOURCES FOR ADDITIONAL GUIDANCE.
THIS WORK SHALL BE PERFORMED IN ACCORDANCE WITH SECTION 653 AND AS SHOWN IN THE PLANS FOR TEMPORARY EROSION MATTING (PAY ITEM 653.20) ~~OR PERMANENT EROSION MATTING (PAY ITEM 653.21).~~

REVISIONS	
APRIL 16, 2007	JMF
JANUARY 13, 2009	WHF

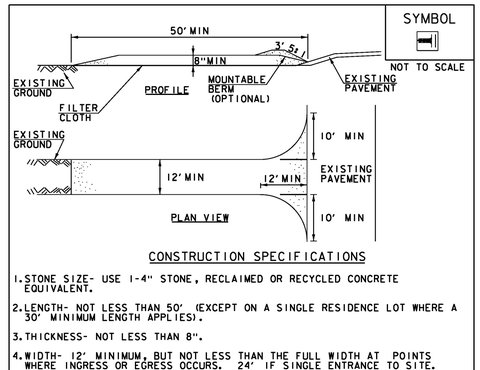

CONSTRUCTION SPECIFICATIONS

1. STONE SIZE- USE 1-4" STONE, RECLAIMED OR RECYCLED CONCRETE EQUIVALENT.
2. LENGTH- NOT LESS THAN 50' (EXCEPT ON A SINGLE RESIDENCE LOT WHERE A 30' MINIMUM LENGTH APPLIES).
3. THICKNESS- NOT LESS THAN 8".
4. WIDTH- 12' MINIMUM, BUT NOT LESS THAN THE FULL WIDTH AT POINTS WHERE INGRESS OR EGRESS OCCURS. 24' IF SINGLE ENTRANCE TO SITE.
5. GEOTEXTILE MUST BE PLACED OVER THE ENTIRE AREA PRIOR TO PLACING STONE.
6. SURFACE WATER- ALL SURFACE WATER FLOWING OR DIVERTED TOWARD CONSTRUCTION ENTRANCES SHALL BE PIPED BENEATH THE ENTRANCE. IF PIPING IS IMPRACTICAL, A MOUNTABLE BERM WITH 5:1 SLOPES WILL BE PERMITTED.
7. MAINTENANCE- THE ENTRANCE SHALL BE MAINTAINED IN A CONDITION WHICH WILL PREVENT TRACKING OR FLOWING OF SEDIMENT ONTO PUBLIC RIGHTS-OF-WAY, ALL SEDIMENT SPILLED, DROPPED, WASHED OR TRACKED ONTO PUBLIC RIGHTS-OF-WAY MUST BE REMOVED IMMEDIATELY.
8. WHEN WASHING IS REQUIRED, IT SHALL BE DONE ON AN AREA STABILIZED WITH STONE AND WHICH DRAINS INTO AN APPROVED SEDIMENT TRAPPING DEVICE.
9. PERIODIC INSPECTION AND NEEDED MAINTENANCE SHALL BE PROVIDED ACCORDING TO PERMIT REQUIREMENTS.

ADAPTED FROM DETAILS PROVIDED BY: NEW YORK STATE DEC ORIGINALLY DEVELOPED BY USDA-NRCS VERMONT DEPARTMENT OF ENVIRONMENTAL CONSERVATION

STABILIZED CONSTRUCTION ENTRANCE

NOTES:
REFER TO "THE VERMONT STANDARDS & SPECIFICATIONS FOR EROSION PREVENTION & SEDIMENT CONTROL -2006- "FROM THE VT AGENCY OF NATURAL RESOURCES FOR ADDITIONAL GUIDANCE.

THIS WORK SHALL BE PERFORMED IN ACCORDANCE WITH SECTION 653 FOR VEHICLE TRACKING PAD (PAY ITEM 653.35) OR AS SPECIFIED IN THE CONTRACT.

REVISIONS	
MARCH 24, 2008	WHF
JANUARY 13, 2009	WHF

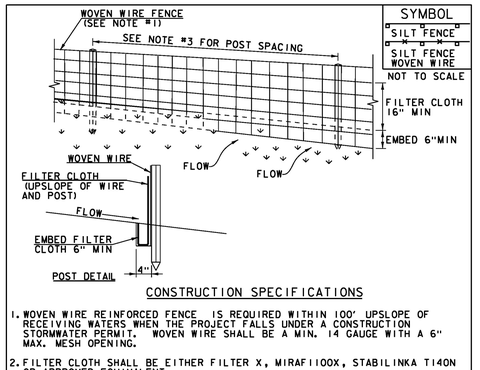

CONSTRUCTION SPECIFICATIONS

1. WOVEN WIRE REINFORCED FENCE IS REQUIRED WITHIN 100' UPSLOPE OF RECEIVING WATERS WHEN THE PROJECT FALLS UNDER A CONSTRUCTION STORMWATER PERMIT. WOVEN WIRE SHALL BE A MIN. 14 GAUGE WITH A 6" MAX. MESH OPENING.
2. FILTER CLOTH SHALL BE EITHER FILTER X, MIRAFI100X, STABILINKA T140N OR APPROVED EQUIVALENT.
3. POST SPACING FOR WIRE-BACKED FENCE SHALL BE 10' MAXIMUM. FOR FILTER-CLOTH FENCE, WHEN ELONGATION IS >50%, POST SPACING SHALL NOT EXCEED 4' AND WHEN ELONGATION IS <50%, POST SPACING SHALL NOT EXCEED 6'.
4. WOVEN WIRE FENCE IS TO BE FASTENED SECURELY TO FENCE POSTS WITH WIRE TIES. FILTER CLOTH IS TO BE FASTENED SECURELY TO WOVEN WIRE FENCE WITH TIES SPACED EVERY 24" AT TOP AND MID SECTION.
5. WHEN TWO SECTIONS OF FILTER CLOTH ADJOIN EACH OTHER THEY SHALL BE OVER-LAPPED BY 6" AND FOLDED.
6. MAINTENANCE SHALL BE PERFORMED AS NEEDED AND MATERIAL REMOVED WHEN SEDIMENT REACHES HALF OF FABRIC HEIGHT.

ADAPTED FROM DETAILS PROVIDED BY: NEW YORK STATE DEC ORIGINALLY DEVELOPED BY USDA-NRCS VERMONT DEPARTMENT OF ENVIRONMENTAL CONSERVATION

SILT FENCE

NOTES:
REFER TO "THE VERMONT STANDARDS & SPECIFICATIONS FOR EROSION PREVENTION & SEDIMENT CONTROL -2006- "FROM THE VT AGENCY OF NATURAL RESOURCES FOR ADDITIONAL GUIDANCE.

THIS WORK SHALL BE PERFORMED IN ACCORDANCE WITH SECTION 649 AND AS SHOWN IN THE PLANS FOR GEOTEXTILE FOR SILT FENCE (PAY ITEM 649.5) ~~OR GEOTEXTILE FOR SILT FENCE, WOVEN WIRE REINFORCED (PAY ITEM 649.515).~~

REVISIONS	
MARCH 21, 2008	WHF
DECEMBER 11, 2008	WHF
JANUARY 13, 2009	WHF

PROJECT NAME: STRAFFORD
PROJECT NUMBER: BF 0177(10)

FILE NAME: sl3j088ero_details.dgn
PROJECT LEADER: K. HIGGINS
DESIGNED BY: J. GRIGAS
EPSC DETAILS SHEET

PLOT DATE: 03-OCT-2016
DRAWN BY: T. MATTHEWS
CHECKED BY: J. GRIGAS
SHEET 50 OF 52

BEGIN R.O.W. PROJECT
STRAFFORD BF 0177(10)
STA. 10+91.52, 24.75' LT

MAINLINE PT #1
STA 10+74.94
N = 486296.1699
E = 1677398.8689

MAINLINE POB/PC #1
STA 10+00.00
N = 486233.7153
E = 1677359.6785

BEGIN APPROACH
STA 10+25.00
MATCH EXISTING

MAINLINE CURVE #1:
DELTA = 35°47'00"
D = 47°44'47"
R = 120.00'
T = 38.74'
L = 74.94'
E = 6.10'

MAINLINE CURVE #2:
DELTA = 13°22'00"
D = 11°27'33"
R = 500.00'
T = 58.59'
L = 116.65'
E = 3.42'

CONSTRUCT DRIVE W/5'-0" PAVED APRON AND 3" AGGREGATE SURFACE COURSE BEYOND APRON
STA 11+24.65 - 11+62.99 LT
STA 11+51.96 - 11+87.03 RT

CONSTRUCT 5'-0" PAVED APRON
STA 14+36.73 - 14+69.72 RT

4" YELLOW LINE (DOUBLE)
STA 10+25 - 14+75 ℄

4" WHITE LINE
STA 10+25 - 14+75 LT
STA 10+25 - 14+75 RT

STONE FILL, TYPE I DITCH
STA 13+25 - 14+20 LT

REMOVAL OF CONCRETE OR MASONRY
STA 12+50 - 13+03 RT
STA 12+51 - 12+91 LT

REMOVAL AND DISPOSAL OF GUARDRAIL
STA 11+65 - 11+88 LT
STA 11+89 - 11+91 RT
STA 12+43 - 12+93 LT
STA 12+44 - 12+97 RT

SAWED PAVEMENT JOINT ALONG APPROACH SLAB EDGE
STA 11+67.53 - 11+87.03 RT

CONCRETE CURB, TYPE B
STA 12+48 - 12+74 RT

REMOVING AND RESETTING PROPERTY MARKERS (GRANITE BOLLARD)
STA 11+65 LT
RELOCATE TO STA 11+67 LT
N=1677402.4105
E=486390.2366

VT STATE PLANE GRID

MAINLINE PC #2
STA 12+52.02
N = 486467.8201
E = 1677442.3562

MAINLINE PI #2
STA 13+10.61 BK=
STA 13+10.07 AHD
N = 486524.6148
E = 1677456.7451

MAINLINE PT #2
STA 13+68.66
N = 486576.5446
E = 1677483.8740

END PROJECT
STA 14+00.00
FG = 883.17

END APPROACH
STA 14+75.00
MATCH EXISTING

MAINLINE POE
STA 15+50.00
N = 486737.2697
E = 1677567.8396

BEGIN PROJECT
STA 11+00.00
FG = 890.48

MAINLINE PI #1
STA 10+38.74 BK=
STA 10+36.20 AHD
N = 486258.6167
E = 1677389.3548

BEGIN BRIDGE
STA 11+85.22
FG = 888.74

℄ BEARING
STA 11+87.00
FG = 888.72

END BRIDGE
STA 12+45.78
FG = 887.68

℄ BEARING
STA 12+44.00
FG = 887.73

ML STA 12+15.50 =
CH STA 51+00.00
Δ = 180°00'00" RT

1 **RUTLEDGE, BARTLEY W.**

2 **ESTATE OF BRINTON D. SHOEMAKER**

3 **FINN, ROSALIND E.**

4 **CHRISTOPHER J. COYNE TRUSTEE OF THE OUR LADY OF LIGHT PARISH CHARITABLE TRUST**

STATE OF VERMONT

STATE OF VERMONT

N/F WYLIE, ALLAN & JANICE

WEST BRANCH OMPOMPANOOSUC RIVER FLOW

N 14° 13' 00.00" E

N 27° 35' 00.00" E

REMOVE(T) 11+72.36 27.73' LT
11+72.36 24.75' LT I&M(P)
11+61.84 38.10' LT
10+91.52 24.75' LT UE(P)
EXISTING R.O.W.
W-1
11+61.66 24.75 LT
R&R (T)
11+83± 38'± LT CH(P)
11+85± 28'± LT
11+86± 24.75' LT
12+35± 24.75' LT
12+45± 42.72' LT CH(P)
12+41.29 24.75' LT
SR(P) CONST(T)
12+50.00 32.87' LT
12+52.61 32.21' LT
12+52.62 24.75' LT UE(P)
SR(T)
13+26.29 48.35' LT
13+24.34 24.75' LT
CONST(T)
14+11.67 24.75' LT
W-2
12+48± 24.75' RT
11+97± 24.75' LT
DRIVE(T) 11+86.48 24.75' RT
11+87.76 32.00' RT
CONST(T) CH(P)
11+98± 32'± RT
12+48± 28'± RT
12+82.90 24.75' RT
12+87.11 24.75' RT
SR(T) CONST(T)
12+58.98 24.74' RT
12+59.03 27.79' RT
12+87.12 27.23' RT
12+82.89 27.37' RT
DIT & DR(P)
EXISTING R.O.W.
I&M(P)
END R.O.W. PROJECT
STRAFFORD BF 0177(10)
STA. 15+12.43, 25.11' RT

LINES SHOWN ON THIS PLAN AS EXISTING PROPERTY LINES P/L ARE BELIEVED TO BE ACCURATE BUT SHOULD NOT BE RELIED UPON FOR PURPOSES UNRELATED TO THE TOWN OF STRAFFORD'S ACQUISITION OF LAND AND RIGHTS FOR THIS PROJECT.

FOR R.O.W. USE ONLY

LAYOUT SHEET

SCALE 1" = 20'-0"
20 0 20

NOTE:
ADJUST NEW CENTERLINE AND EDGE LINES TO MATCH EXISTING LINES AT BEGIN/END APPROACH

PROJECT NAME:	STRAFFORD
PROJECT NUMBER:	BF 0177(10)
FILE NAME: r13j088lay.dgn	PLOT DATE: 31-AUG-2016
PROJECT LEADER: K. HIGGINS, P.E.	DRAWN BY: A. EGIZI
DESIGNED BY: R. KLINEFELTER	CHECKED BY: R. CLOUTIER
R.O.W. LAYOUT SHEET 1OF 1	SHEET 51 OF 52

STATE OF VERMONT
AGENCY OF TRANSPORTATION

RIGHT - OF - WAY DETAIL SHEET

TABLE OF PROPERTY ACQUISITION

PARCEL NO.	PROPERTY OWNER	ROW LAYOUT NO.	BEGINNING STATION	ENDING STATION	TAKE	REMAINDER	RIGHT			RECORDING DATA					REMARKS
					AREA±	AREA±	TYPE	T / P	AREA ±	TITLE TAKEN	DATE	TOWN / CITY	BOOK	PAGE	
1	RUTLEDGE, BARTLEY W.	1	10+91.52 LT	11+86± LT			UTILITY	P	771 SF	WDOE	12/28/15	STRAFFORD	90	241-243	
			10+79 LT												W-1 MONITOR WELL
			11+57 LT	11+85± LT			CONSTRUCTION	T	111 SF						INCL. BF
			11+61 LT	11+63 LT			INSTALL & MAINTAIN	P							GUYWIRE & ANCHOR
			11+61.66 LT	11+72.36 LT			SLOPE	P	16 SF						
			11+65 LT				REMOVE & RESET	T							GRANITE BOLLARD
			11+72.36 LT	11+86± LT			CHANNEL	P	39 SF						INCL. STONE FILL
			11+81 LT				REMOVE	T							GUYWIRE & ANCHOR
2	ESTATE OF BRINTON DAWSON	1	12+35± LT	14+11.67 LT			UTILITY	P	2,769 SF	WD	06/06/16	STRAFFORD	90	532-534	
	SHOEMAKER		12+35± LT	14+04 LT			CONSTRUCTION	T	538 SF						INCL. BF & EC
			12+41.29 LT	12+52.62 LT			CHANNEL	P	56 SF						INCL. STONE FILL
			12+52.61 LT	13+04 LT			SLOPE	T	148 SF						
3	FINN, ROSALIND E.	1	11+22 RT							WDOE	12/14/15	STRAFFORD	38	224-225	W-2 MONITOR WELL
			11+58 RT	11+82 RT			DRIVE	T	212 SF						25' WIDE PAVED; MM 0257
			11+82 RT	11+98 RT			CONSTRUCTION	T	84 SF						INCL. BF
			11+86.48 RT	11+98± RT			CHANNEL	P	73 SF						INCL. STONE FILL
4	CHRISTOPHER J. COYNE TRUSTEE	1	12+48± RT	12+59.03 RT			CHANNEL	P	33 SF	WDOE	06/20/16	STRAFFORD	90	572-574	INCL. STONE FILL
	OF THE OUR LADY OF LIGHT		12+48 RT	13+59 RT			CONSTRUCTION	T	347 SF						INCL. BF & EC
	PARISH CHARITABLE TRUST		12+58.98 RT	12+82.90 RT			SLOPE	T	65 SF						
			12+87.11 RT	13+18 RT			SLOPE	T	43 SF						
			15+12.43 RT				INSTALL & MAINTAIN	P							GUY WIRE & ANCHOR
			12+82.89 RT	12+87.12 RT			DITCH & DRAINAGE	P	10 SF						INCL. STONE FILL
5	GREEN MOUNTAIN POWER CORPORATION		10+91.52 LT	15+12.43 RT											UTILITY
6	ECFIBER		10+91.52 LT	15+12.43 RT											UTILITY
7	TELEPHONE OPERATING COMPANY OF		10+91.52 LT	15+12.43 RT											UTILITY
	VERMONT LLC														

TABLE OF REVISIONS

REVISION NO.	ROW SET SHEET #	DESCRIPTION	DATE

APPROVED: RYAN CLOUTIER DATE: 09-10-15
CHIEF, PLANS & TITLES

PROJECT NAME: **Strafford**
PROJECT NUMBER: **BF 0177(10)**

FILE NAME: **r13j088detail.xls**
PROJECT LEADER: **K. Higgins, P.E.**
DESIGNED BY: **A. Egizi**
R.O.W. DETAIL SHEET #1

PLOT DATE: 31-AUG-2016
DRAWN BY: **M. Trottier**
CHECKED BY: **R. Cloutier**
SHEET 52 OF 52

CONCRETE GENERAL NOTES

1. ALL EXPOSED EDGES OF CONCRETE SHALL BE CHAMFERED 1" x 1"
2. REINFORCING STEEL SIZE AND SPACING SHOWN IN THE PLANS IS BASED ON 60 KSI STEEL, UNLESS NOTED OTHERWISE. WITH THE ENGINEER'S PERMISSION, BAR SIZE AND SPACING MAY BE MODIFIED ACCORDING TO THE LATEST AASHTO LRFD BRIDGE DESIGN SPECIFICATION AND STRUCTURES DESIGN MANUAL WHEN USING HIGHER STRENGTH STEEL.

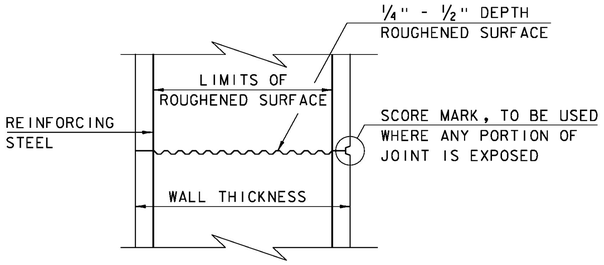

TYPICAL HORIZONTAL CONSTRUCTION JOINT
(NOT TO SCALE)

1. THE SURFACE OF THE CONCRETE CONSTRUCTION JOINTS SHALL BE CLEANED AND FREE OF LAITANCE.
2. IMMEDIATELY BEFORE NEW CONCRETE IS PLACED, ALL CONSTRUCTION JOINTS SHALL BE WETTED AND STANDING WATER REMOVED.

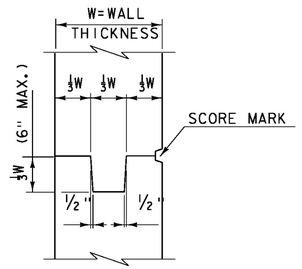

TYPICAL CONCRETE CONSTRUCTION JOINT
(NOT TO SCALE)

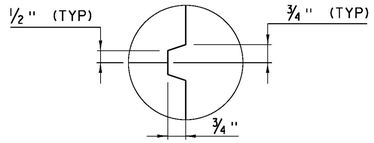

SCORE MARK DETAIL
(NOT TO SCALE)

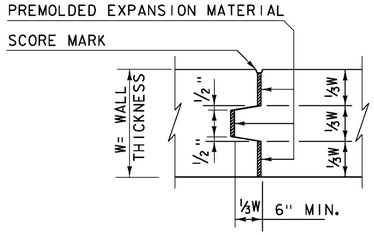

TYPICAL CONCRETE EXPANSION JOINT
(NOT TO SCALE)

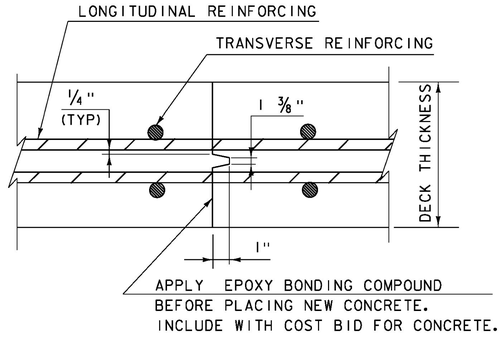

TRANSVERSE BRIDGE SLAB CONSTRUCTION JOINT DETAILS
(NOT TO SCALE)

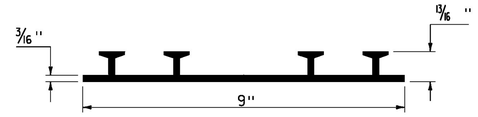

P.V.C. WATERSTOP FOR CONSTRUCTION JOINTS
(NOT TO SCALE)

PAYMENT FOR THE P.V.C. WATERSTOP SHALL BE INCIDENTAL TO THE UNIT BID PRICE FOR THE ADJACENT CONCRETE.

OTHER CONFIGURATIONS OF WATERSTOP MAY BE USED UPON APPROVAL OF THE ENGINEER.

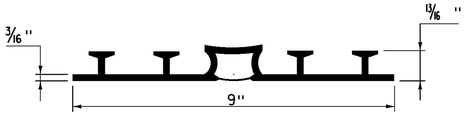

P.V.C. WATERSTOP FOR EXPANSION JOINTS
(NOT TO SCALE)

PAYMENT FOR THE P.V.C. WATERSTOP SHALL BE INCIDENTAL TO THE UNIT BID PRICE FOR THE ADJACENT CONCRETE.

OTHER CONFIGURATIONS OF WATERSTOP MAY BE USED UPON APPROVAL OF THE ENGINEER.

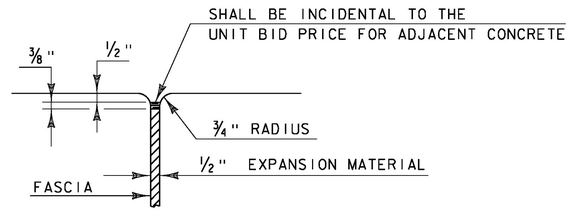

JOINT BETWEEN FASCIA AND WINGWALL
(NOT TO SCALE)

REVISIONS	
MAY 7, 2010	APPROVED FOR USE BY VAOT STRUCTURES SECTION
FEBRUARY 9, 2012	REBAR SUBSTITUTION ALLOWANCE ADDED TO CONCRETE GENERAL NOTES.

CONCRETE DETAILS AND NOTES

VERMONT AGENCY OF TRANSPORTATION
STRUCTURES SECTION

STRUCTURES DETAIL
SD-501.00

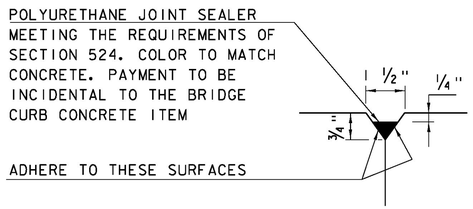

DETAIL "B"
(NOT TO SCALE)

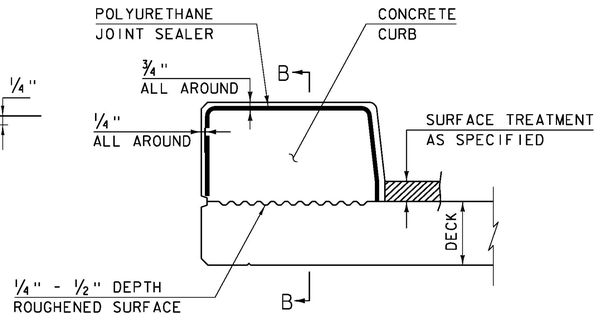

CONCRETE CURB JOINT SECTION
(NOT TO SCALE)

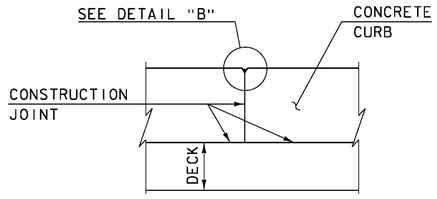

SECTION B - B
(NOT TO SCALE)

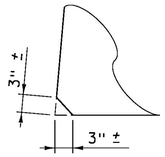

ACUTE ANGLE CLIP DETAIL
(NOT TO SCALE)

1. SEE TYPICAL HORIZONTAL CONSTRUCTION JOINT DETAIL FOR ADDITIONAL INFORMATION

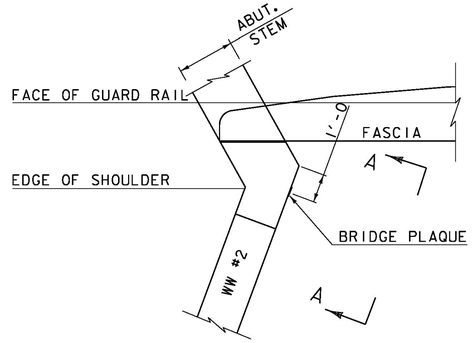

PLAN

CONCRETE CURB JOINT NOTES

1. CONCRETE CURBS MAY BE PLACED IN ONE CONTINUOUS OPERATION IF AN APPROVED SHRINKAGE REDUCING ADMIXTURE LISTED IN THE SPECIAL PROVISIONS IS USED WITH THE CONCRETE MIX DESIGN. PAYMENT FOR THE SHRINKAGE REDUCING ADMIXTURE WILL BE INCIDENTAL TO THE BRIDGE CURB CONCRETE ITEM.

2. IF THE CONTRACTOR CHOOSES NOT TO USE AN APPROVED SHRINKAGE REDUCING ADMIXTURE, THE CURBS SHALL BE CONSTRUCTED WITH CONSTRUCTION JOINTS SPACED AT A MAXIMUM OF 15'-0" CENTER TO CENTER AND 2'-0" MINIMUM FROM THE CENTER OF NEAREST BRIDGE RAILING POST.

3. ON MULTI-SPAN CONTINUOUS SUPERSTRUCTURES, REGARDLESS OF WHETHER APPROVED SHRINKAGE REDUCING ADMIXTURE IS USED, CURB JOINTS SHALL BE LOCATED OVER THE CENTERLINE OF PIERS AND 7'-0" EACH SIDE OF THE CENTERLINE OF EACH PIER.

4. WHEN CURB JOINTS ARE USED THE CURBS SHALL BE PLACED IN ALTERNATE SECTIONS WITH A MINIMUM OF 48 HOUR DELAY BETWEEN ADJACENT PLACEMENTS.

5. LONGITUDINAL REINFORCING SHALL BE CONTINUOUS THROUGH CURB CONSTRUCTION JOINTS. CURB STIRRUP BARS SHALL BE TURNED AS NECESSARY TO MAINTAIN COVER IN THE FLARED CURB ENDS.

6. THE JOINT SPACING AND DETAILS SHOWN SHALL APPLY TO SIDEWALKS WHEN SHOWN IN THE PLANS.

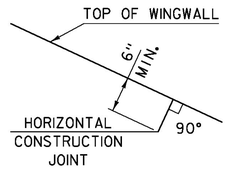

HORIZONTAL WINGWALL CONSTRUCTION JOINT
(NOT TO SCALE)

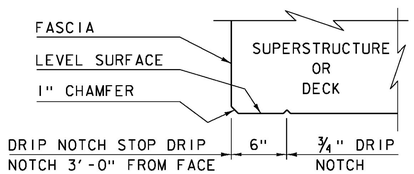

DRIP NOTCH DETAIL
(NOT TO SCALE)

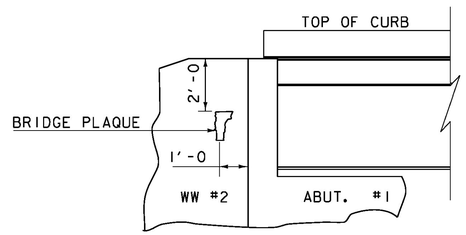

VIEW "A - A"

BRIDGE PLAQUE
(NOT TO SCALE)

THE BRIDGE PLAQUE WILL BE SUPPLIED BY THE AGENCY OF TRANSPORTATION AND SHALL BE INSTALLED BY THE CONTRACTOR AT ABUTMENT #1 ON THE RIGHT SIDE AS SHOWN OR AS DIRECTED BY THE ENGINEER.

PAYMENT FOR INSTALLATION OF THE BRIDGE PLAQUE SHALL BE INCIDENTAL TO THE ADJACENT CONCRETE.

REVISIONS	
MAY 7, 2010	APPROVED FOR USE BY VAOT STRUCTURES SECTION
JUNE 4, 2010	MODIFIED AND ADDED TWO DETAILS
OCTOBER 10, 2012	MODIFIED HORZ. JOINT WINGWALL ADD 6" MIN. DIMENSION

CONCRETE DETAILS AND NOTES

VERMONT AGENCY OF TRANSPORTATION
STRUCTURES - SECTION

STRUCTURES DETAIL
SD-502.00

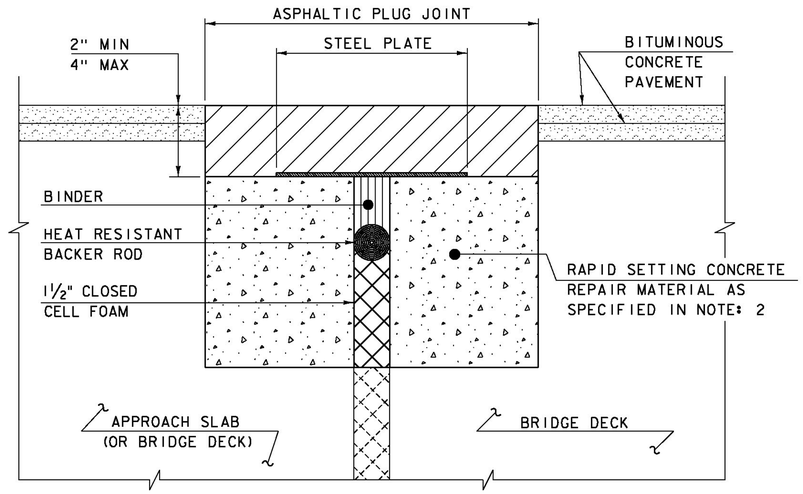

ASPHALTIC PLUG JOINT DETAIL - REHAB

NOTES:

1. THE CONTRACTOR SHALL REMOVE ALL ASPHALTIC PLUG JOINT MATERIAL AND DETERIORATED CONCRETE AS DIRECTED BY THE ENGINEER. REMOVAL OF THE FIRST 4 INCHES OF MATERIAL SHALL BE INCLUDED IN THE BID PRICE FOR ITEM 516.10 BRIDGE EXPANSION JOINT, ASPHALTIC PLUG. ANY REMOVAL OF MATERIAL GREATER THAN 4 INCHES SHALL BE INCLUDED IN THE BID PRICE OF ITEM 580.20 RAPID SETTING CONCRETE REPAIR MATERIAL WITH COARSE AGGREGATE.

2. THE CONTRACTOR SHALL REPLACE REMOVED MATERIAL THAT IS LESS THAN 4" FROM FINISHED GRADE WITH ASPHALTIC PLUG JOINT MATERIAL MEETING THE REQUIREMENTS OF SUBSECTION 707.15. ALL REMOVED MATERIAL THAT IS GREATER THAN 4 INCHES FROM FINISHED GRADE SHALL BE REPLACED WITH RAPID SETTING CONCRETE REPAIR MATERIAL WITH COARSE AGGREGATE MEETING THE REQUIREMENTS OF SUBSECTION 780.04.

3. REINFORCING STEEL NOT SHOWN FOR CLARITY.

4. PLACE 1/4" THICK BY 8" WIDE SECTIONS OF STEEL PLATE OVER THE CENTER OF THE MOVEMENT GAP. SECURE THE PLATES FROM MOVING BY INSERTING LOCATING PINS THROUGH THE PRE-STAMPED HOLES INTO BACKER ROD AND COVER WITH HOT BINDER. THE STEEL PLATES MAY BE OMITTED WHERE THE ENGINEER DETERMINES THAT THE APPROACH SLAB OR BRIDGE DECK WILL PROVIDE INADEQUATE SUPPORT AND WHERE VERTICAL MOVEMENT OF THE PLATES MIGHT OCCUR.

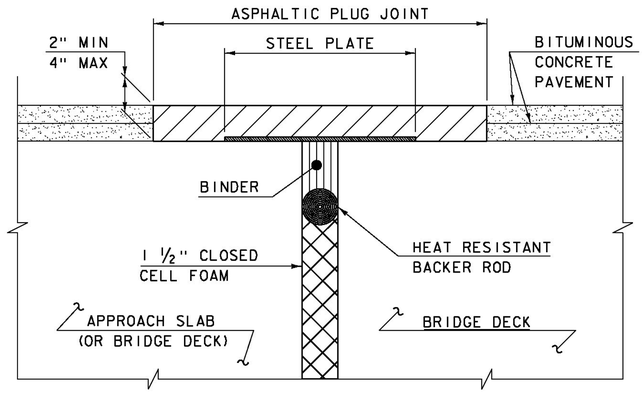

ASPHALTIC PLUG JOINT DETAIL "A" - NEW

NOTE:
PLACE 1/4" THICK BY 8" WIDE SECTIONS OF STEEL PLATE OVER THE CENTER OF THE MOVEMENT GAP. SECURE THE PLATES FROM MOVING BY INSERTING LOCATING PINS THROUGH THE PRE-STAMPED HOLES INTO BACKER ROD AND COVER WITH HOT BINDER.

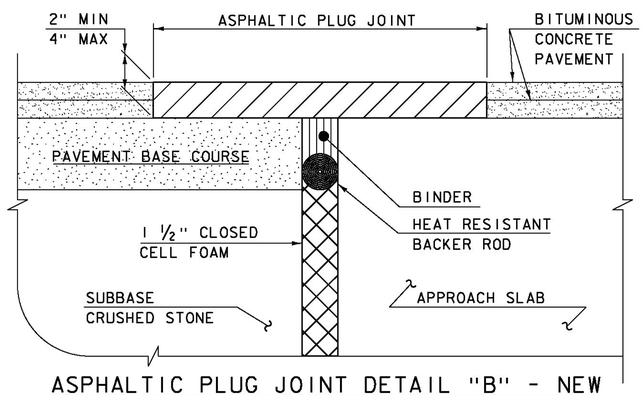

ASPHALTIC PLUG JOINT DETAIL "B" - NEW

ASPHALTIC PLUG JOINT NOTES

INSTALLATION:

1. LOCATE THE JOINT CENTRALLY OVER THE DECK OVERLAY EXPANSION GAP OR FIXED JOINT, MARKED OUT TO THE MANUFACTURER'S RECOMMENDED WIDTH.
2. REMOVE THE BITUMINOUS CONCRETE PAVEMENT FULL DEPTH AS SHOWN ON THE PLANS. THE PAVEMENT SHALL BE DRY AND SAW CUT TO THE LIMITS REQUIRED TO PLACE THE JOINT. A PNEUMATIC HAMMER AND CHISEL MAY BE USED ADJACENT TO THE CURB ONLY WHEN SAW CUTTING IS NOT POSSIBLE.
3. BLAST CLEAN THE JOINT AREA OF DEBRIS, ASPHALT AND SHEET MEMBRANE. THOROUGHLY DRY THE JOINT AREA WITH COMPRESSED AIR PRIOR TO APPLYING BINDER MATERIAL.
4. PLACE PROPERLY SIZED HEAT RESISTANT BACKER ROD IN THE MOVEMENT GAP ALLOWING FOR 1" +/- OF BINDER ABOVE THE ROD.
5. HEAT AND PLACE THE BINDER MATERIAL AS RECOMMENDED BY THE MANUFACTURER.
6. IMMEDIATELY AFTER TOP COATING, CAST AN ANTI-SKID MATERIAL OVER THE JOINT TO REDUCE THE RISK OF TRACKING.

WEATHER LIMITATIONS

APPLY BINDER MATERIAL ONLY WHEN THE FOLLOWING CONDITIONS PREVAIL OR AS RECOMMENDED BY THE MANUFACTURER:

1. THE AMBIENT AIR TEMPERATURE IS AT LEAST 10 DEG C (50 DEG F) AND RISING.
2. THE ROAD SURFACE IS DRY.
3. WEATHER CONDITIONS OR OTHER CONDITIONS ARE FAVORABLE AND ARE EXPECTED TO REMAIN SO FOR THE PERFORMANCE OF SATISFACTORY WORK.

DETAILS ON THIS SHEET ARE NOT TO SCALE.

REVISIONS	
MAY 7, 2010	APPROVED FOR USE BY VAOT STRUCTURES SECTION
AUGUST 29, 2011	ADD DETAIL "B" AND REV. NOTES

BRIDGE JOINT
ASPHALTIC PLUG

VERMONT AGENCY OF TRANSPORTATION
STRUCTURES - DIVISION

STRUCTURES DETAIL
SD-516.10

STRUCTURAL STEEL GENERAL NOTES:

1. ALL FIELD CONNECTIONS SHALL BE MADE WITH 7/8" DIAMETER HIGH-STRENGTH BOLTS IN 15/16" DIAMETER HOLES, PER SUBSECTION 506.19, UNLESS OTHERWISE SPECIFIED.
2. ALL HOLES IN THE WEBS OF THE FASCIA GIRDERS THAT ARE NOT OTHERWISE FILLED, SHALL BE FILLED WITH EITHER BUTTON HEAD OR HEX HEAD BOLTS. THESE BOLTS SHALL BE TIGHTENED IN ACCORDANCE WITH SUBSECTION 506.19.
3. ALL WELDING SHALL CONFORM TO THE PROVISIONS OF SUBSECTION 506.10.
4. ANY CONNECTIONS THAT ARE NOT DETAILED ON THE PLANS SHALL BE DETAILED BY THE FABRICATOR AND SUBMITTED TO THE STRUCTURES ENGINEER FOR APPROVAL.
5. STRUCTURAL STEEL MEMBERS DESIGNATED "CVN" IN THE PLANS SHALL BE CHARPY V-NOTCH TESTED IN ACCORDANCE WITH SUBSECTION 714.01 OF THE STANDARD SPECIFICATIONS.
6. ENDS OF GIRDERS ARE TO BE VERTICAL IN THEIR FINAL POSITION.
7. AFTER SUPERSTRUCTURE STEEL HAS BEEN ERECTED, ELEVATIONS ALONG THE TOP OF THE GIRDERS SHALL BE TAKEN AS DIRECTED BY THE RESIDENT ENGINEER FOR USE IN DETERMINING FINISHED GRADES.

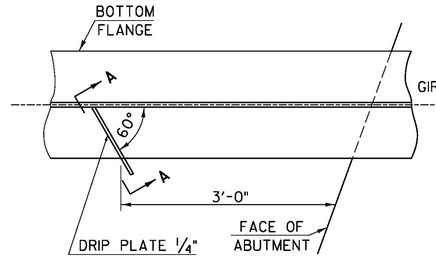

PLAN DRIP PLATE

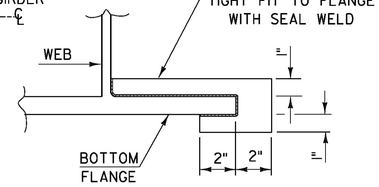

SECTION A - A

NOTE: DRIP PLATES SHALL BE PLACED ON OUTSIDE EDGE OF FASCIA GIRDERS ON THE HIGH SIDE OF ALL PIERS AND ABUTMENTS OR AS INDICATED ON PROJECT PLANS.

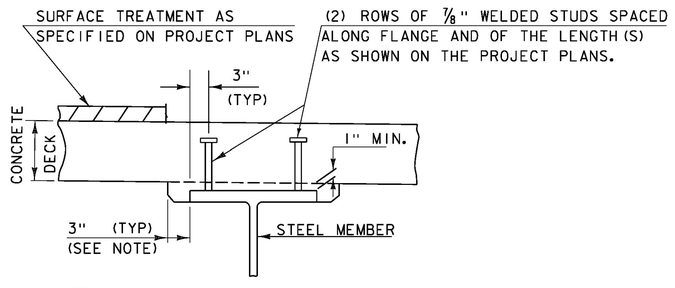

NOTE:
THE 3" HORIZONTAL SECTION MAY BE ELIMINATED FOR FORMING SYSTEMS DESIGNED FOR THE CONSTRUCTION OF VERTICAL HAUNCHES. ANY VOIDS RESULTING FROM FORMING SYSTEM ELEMENTS SHALL BE FILLED WITH JOINT SEALER, POLYURETHANE MEETING THE REQUIREMENTS OF SECTION 524. THE COST OF THE JOINT SEALER, POLYURETHANE SHALL BE INCIDENTAL TO THE ADJACENT CONCRETE.

HAUNCH AND SHEAR CONNECTOR DETAIL

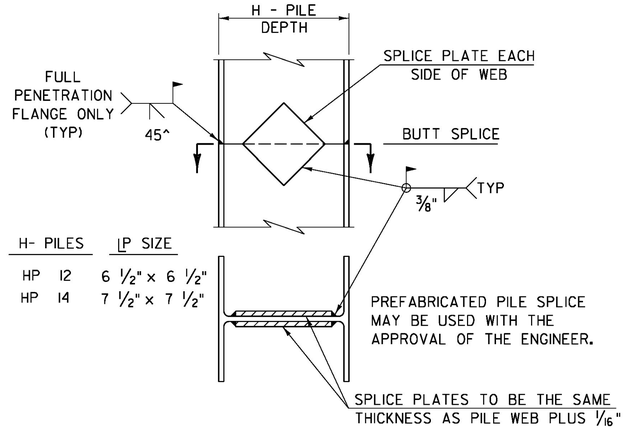

DETAIL OF PILE SPLICE

DETAILS ON THIS SHEET ARE "NOT TO SCALE" UNLESS NOTED OTHERWISE.

REVISIONS	
MAY 7, 2010	APPROVED FOR USE BY VAOT STRUCTURES SECTION
JUNE 4, 2010	MODIFIED NOTES

STRUCTURAL STEEL DETAILS & NOTES

VERMONT AGENCY OF TRANSPORTATION
STRUCTURES - SECTION

STRUCTURES DETAIL
SD-601.00

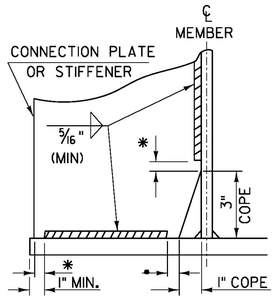

WELD TERMINATION AND COPING DETAILS FOR STEEL MEMBERS

*NO WELD FOR 3/8" MIN. 7/8" MAX. (EXCEPT MUST MAINTAIN 1" MINIMUM FROM EDGE OF FLANGE)

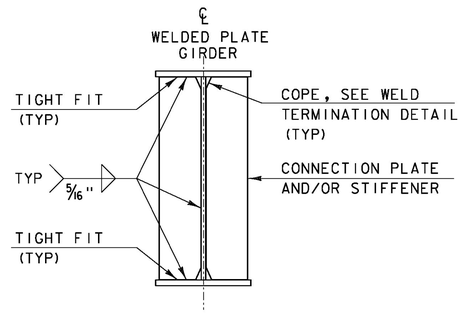

INTERMEDIATE CONNECTION PLATES AND/OR STIFFENERS FOR WELDED PLATE GIRDERS

INTERMEDIATE DETAIL IS ONLY USED WHEN PLATE DOES NOT OCCUR AT AN ABUTMENT OR PIER.

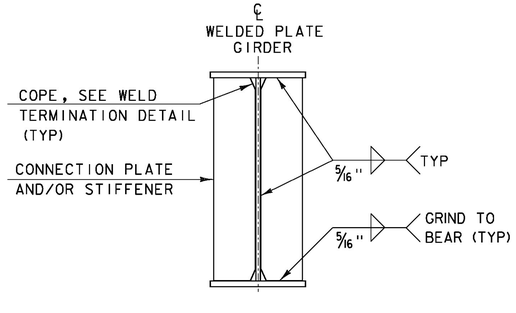

ABUTMENT BEARING STIFFENERS AND/OR CONNECTION PLATES FOR WELDED PLATE GIRDERS

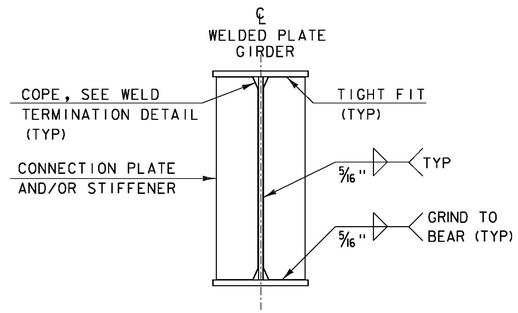

PIER BEARING STIFFENERS AND/OR CONNECTION PLATES FOR WELDED PLATE GIRDERS

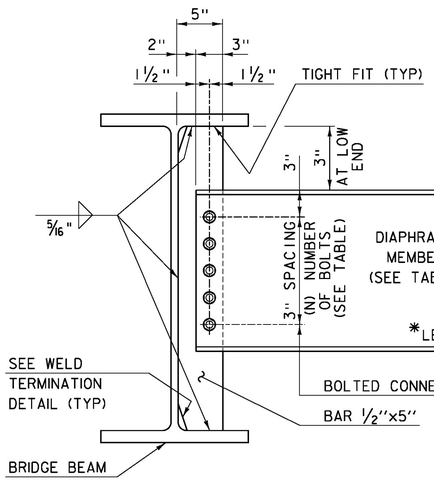

DEPTH		DIAPHRAGM MEMBER	(N) BOLTS
ROLLED BEAM	24" 30"	C15x33.9	4
	31" 36"	MC18x42.7	5
	37" 42"	W21x44	6
PLATE GIRDER WEB	31" 36"	W27x84	7
	37" 42"	W33x118	9
	43" 48"	W36x135	10

INTERMEDIATE DIAPHRAGMS FOR 24" TO 48" BRIDGE BEAMS

*IF CLEARANCE CANNOT BE MET, DIAPHRAGM MAY BE SLOPED.

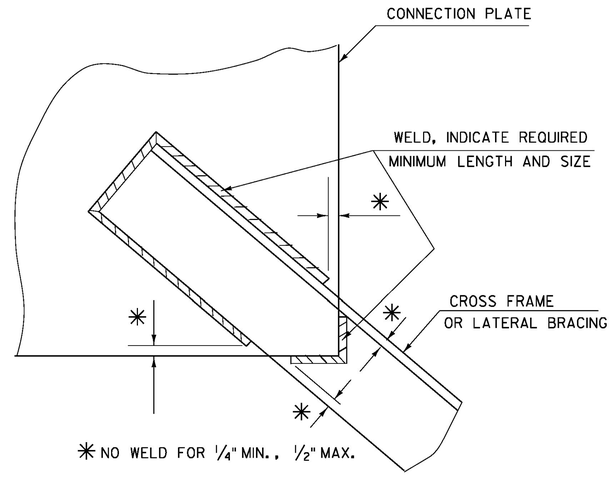

WELD LOCATION DETAIL AT CROSS FRAMES AND LATERAL BRACING

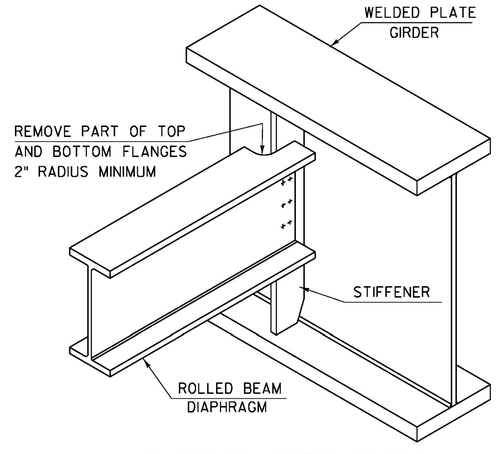

SEE CONTRACT DRAWINGS FOR SIZES OF MEMBERS AND CONNECTION DETAILS

ROLLED BEAM USED AS DIAPHRAGM

DETAILS ON THIS SHEET ARE "NOT TO SCALE" UNLESS NOTED OTHERWISE.

REVISIONS	
MAY 7, 2010	APPROVED FOR USE BY VAOT STRUCTURES SECTION
MAY 2, 2011	ADD INTERMEDIATE DIAPHRAGMS DETAIL & ADD NOT TO SCALE NOTE

STRUCTURAL STEEL PLATE GIRDER DETAILS AND NOTES

VERMONT AGENCY OF TRANSPORTATION
STRUCTURES - SECTION

STRUCTURES DETAIL
SD-602.00

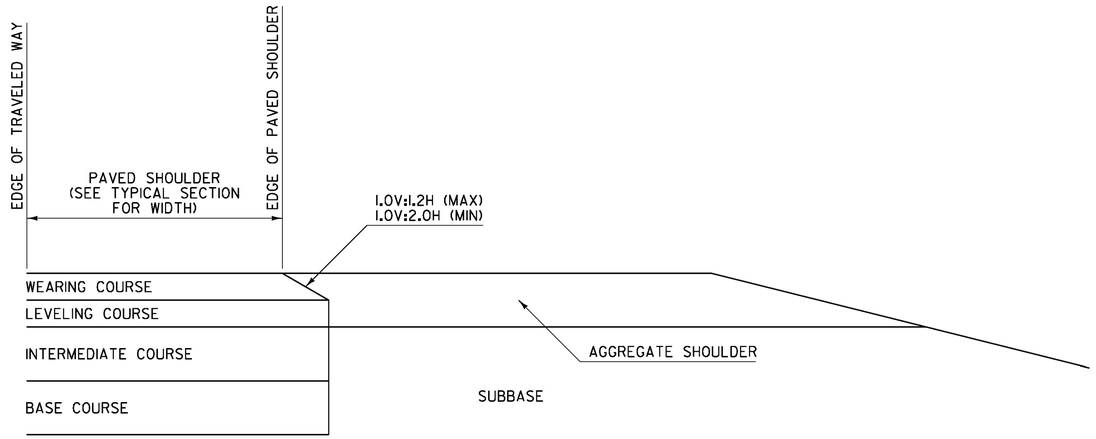

SAFETY EDGE DETAIL
FOR PAVING BELOW WEARING COURSE

NOTES:

1. THIS DETAIL IS INTENDED FOR WHEN PAVING EXTENDS BELOW THE WEARING COURSE.
2. PRIOR TO PLACEMENT OF THE LEVELING AND/OR WEARING COURSE, THE SUBBASE LOCATED BENEATH THE AGGREGATE SHOULDER SHALL BE PREPARED FLUSH WITH THE BOTTOM OF THE LEVELING COURSE.
3. BASE COURSE LIMITS MAY VARY, SEE TYPICAL SECTIONS FOR WIDTH.

SAFETY EDGE WIDTH BASED ON WEARING COURSE THICKNESS AND A 1V:1.6H SLOPE	
WEARING COURSE THICKNESS (INCHES)	NOMINAL SAFETY EDGE WIDTH (INCHES)
1.25	2.000
1.50	2.375
1.75	2.750
2.00	3.125
2.25	3.500
2.50	4.000

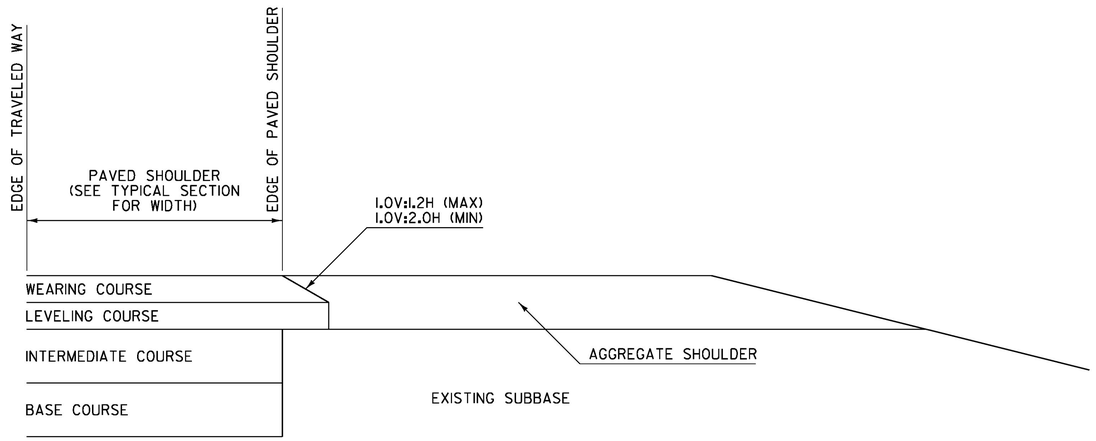

SAFETY EDGE DETAIL
FOR PAVING WEARING COURSE ONLY

NOTES:

1. THIS DETAIL IS INTENDED FOR WHEN ONLY THE LEVELING AND/OR WEARING COURSE IS TO BE PLACED.
2. PAVEMENT COURSES MAY VARY, SEE TYPICAL SECTIONS FOR ACTUAL PAVEMENT COURSES REQUIRED.

GENERAL NOTES:

1. PLACEMENT OF THE WEARING COURSE SHALL INCLUDE THE SAFETY EDGE, UNLESS THE FOLLOWING APPLIES:
   - A. THE ADJACENT SLOPE IS STEEPER THAN THE SAFETY EDGE.
   - B. THE EDGE OF PAVEMENT BEING PLACED ABUTS BOUND MATERIAL.
   - C. VEHICLES ARE RESTRICTED FROM LEAVING THE PAVED SURFACE (EXAMPLE: GUARDRAIL).
2. THE SAFETY EDGE SHALL BE FORMED IN SUCH A WAY THAT THE BITUMINOUS CONCRETE PAVEMENT IS EXTRUDED OR COMPRESSED TO FORM THE SLOPE. DEVICES THAT SIMPLY STRIKE-OFF THE MIX WITHOUT PROVIDING ANY COMPACTIVE EFFORT WILL NOT BE ALLOWED.
3. THE SAFETY EDGE SHALL NOT BE CONSIDERED PART OF THE PAVED SHOULDER.
4. THIS WORK SHALL BE INCIDENTAL TO THE RESPECTIVE BITUMINOUS CONCRETE PAVEMENT ITEM.

REV.	DATE	DESCRIPTION
0	MAR. 29, 2016	ORIGINAL APPROVAL

OTHER DETAILS REQUIRED: NONE

DETAILS APPROVED FOR USE BY HIGHWAY SAFETY & DESIGN

SAFETY EDGE DETAILS

VTrans Working to Get You There — VERMONT AGENCY OF TRANSPORTATION

HIGHWAY SAFETY & DESIGN DETAIL

HSD-400.01

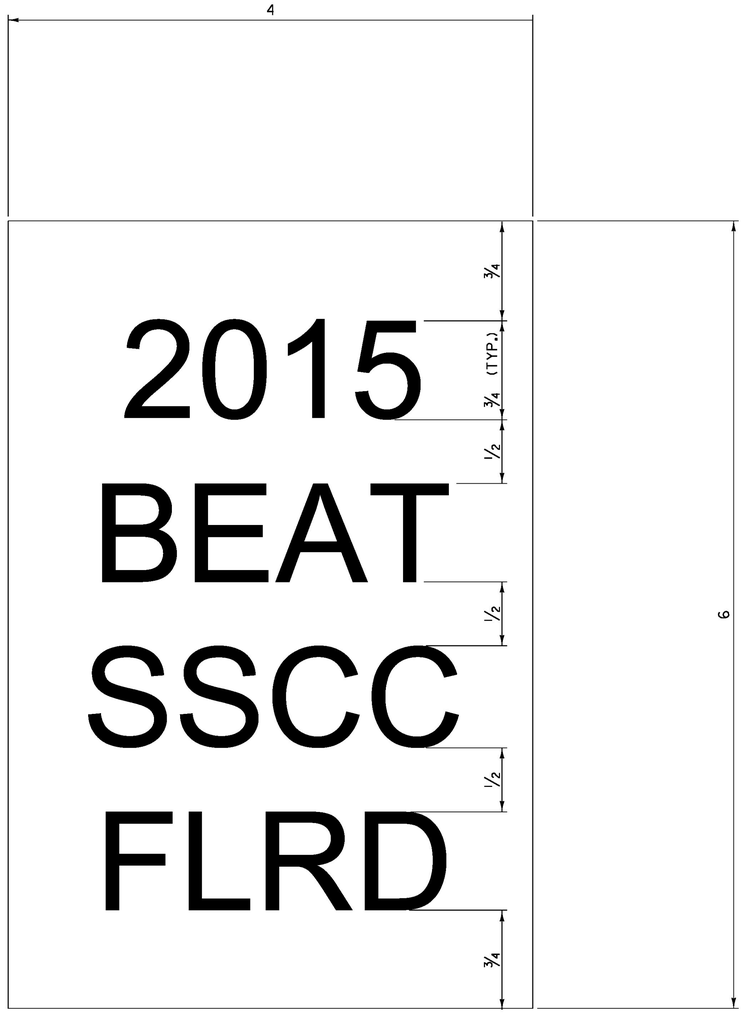

GENERAL NOTES:

1. LINE ONE SHALL INDICATE THE INSTALLATION YEAR (YYYY).
2. LINE TWO SHALL INDICATE THE MODEL AS IDENTIFIED ON THE APPROVED PRODUCTS LIST. FOR GENERIC INSTALLATIONS THE STANDARD DRAWING DESIGNATION OR NAME AS IDENTIFIED IN THE FHWA ELIGIBILITY LETTER SHALL BE USED.
3. LINE THREE SHALL SHALL INDICATE ADDITIONIAL MODEL INFORMATION IF NECESSARY.
4. LINE FOUR SHALL INDICATE FLARED (FLRD) OR TANGENT (TANG).
5. LEGEND SHALL BE ONE ARIEL FONT.
6. LEGEND SHALL BE BLACK ON A WHITE BACKGROUND, LENGEND AND BACKGROUND SHALL NOT BE REFLECTIVE.
7. SUITABLE MATERIAL SHALL BE USED SO AS TO NOT DETERIORATE DURING EXPOSURE TO WEATHER.
8. LABELS SHALL BE APPLIED IN SUCH A WAY THAT THEY REMAIN INTACT DURING THE LIFE OF THE TERMINAL.
9. FOR W-BEAM GUARDRAIL, LABEL SHALL BE PLACED ON THE TOP OF POST ONE FACING AWAY FROM TRAFFIC.
10. FOR BOX BEAM GUARDRAIL, LABEL SHALL BE PLACED ON THE BOX BEAM ADJACENT TO POST ONE FACING AWAY FROM TRAFFIC.
11. PAYMENT SHALL BE INCIDENTAL TO OTHER TRAFFIC BARRIER ITEMS.
12. ALL DIMENSIONS IN INCHES.

REV.	DATE	DESCRIPTION
0	NOV. 3, 2015	ORIGINAL APPROVAL

OTHER DETAILS REQUIRED: NONE

DETAILS APPROVED FOR USE BY HIGHWAY SAFETY & DESIGN

GUARDRAIL TERMINAL LABEL DETAIL

VTrans Working to Get You There — VERMONT AGENCY OF TRANSPORTATION

HIGHWAY SAFETY & DESIGN DETAIL

HSD-621.06

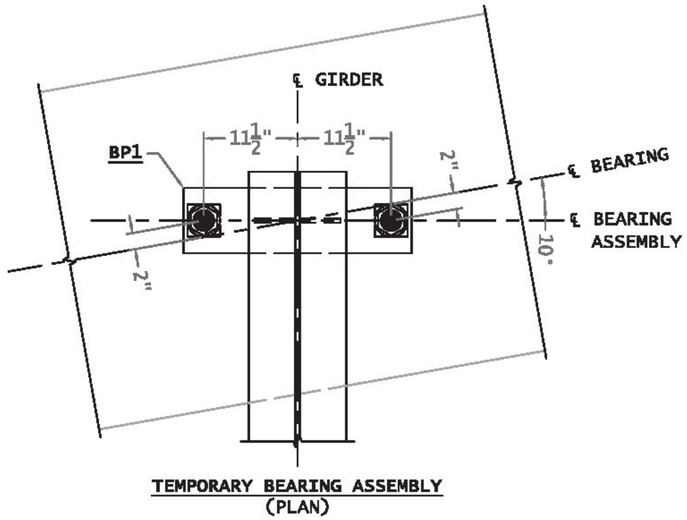

TEMPORARY BEARING ASSEMBLY
(PLAN)

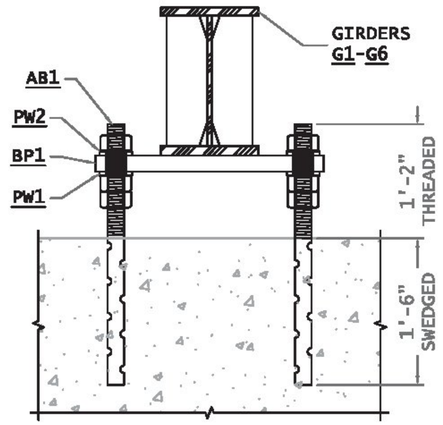

TEMPORARY BEARING ASSEMBLY
(ELEVATION)

BILL OF MATERIALS								
SHIP MARK	SHIP QTY	PIECE MARK	PC. QTY	DESCRIPTION	LENGTH Ft.	LENGTH In.	WT. lbs. ea.	WT. lbs. tot.	MAT'L
		BP1	12	PL 2 " x 8 "	2	4	127.0	1524.1	
		PW1	24	PL 1/2 " x 4 "	0	4	2.3	54.4	
		PW2	24	PL 1/2 " x 4" DIA			1.8	43.2	
		AB1	24	2" DIA. SWEDGED ANCHOR	2	8			
			72	2" HEAVY HEX NUT					
							TOTAL WEIGHT =	1621.7	

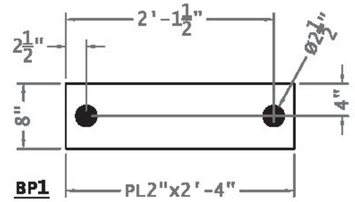

BP1

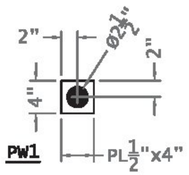

PW1

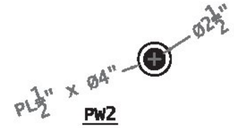

PW2

Vermont Agency of Transportation

RECEIVED

Stamped BF 0177(10) - Bearings Submitted 3-21-17 per

CK'D BY RMK OK'D BY JDG

March 21, 2017

RESUBMIT No Approved

BY K. Higgins DATE 04/04/17

GENERAL NOTES:

MATERIAL SPECIFICATIONS

1. ALL MATERIALS AND CONSTRUCTION SHALL CONFORM TO THE VERMONT AGENCY OF TRANSPORTATION 2011 STANDARD SPECIFICATIONS FOR CONSTRUCTION, THE 2014 AASHTO LRFD BRIDGE DESIGN SPECIFICATIONS AND THEIR LATEST REVISIONS
2. BEARING PLATE & PLATE WASHERS SHALL BE ASTM A572 GR.50 U.N.O.
3. ALL MATERIAL DENOTED "CVN" IN THE BILL OF MATERIAL SHALL MEET THE CHARPY V-NOTCH TESTING REQUIREMENTS OF ZONE 2, H FREQUENCY: 15 FT-LB AT 40 ° (UP TO 2" WELDED)
4. ANCHOR RODS SHALL BE ASTM F1554 GR.55 - HEAVY HEX NUTS ASTM A563 GRADE DH - HARDENED WASHERS ASTM F436 TYPE 1 - DTI WASHERS ASTM F-959

FABRICATION

5. DIE STAMPING IS ALLOWED IN SPECIFIC LOCATIONS WITH THE APPROVAL OF THE ENGINEER.
6. ALL SHARP CORNERS OR EDGES SHALL BE ROUNDED TO A MINIMUM RADIUS OF 1/16" PER STANDARD SPEC. 506.14(b)
7. ALL PLATE MEMBERS SHALL BE CUT SO THAT THE PRIMARY DIRECTION OF ROLLING IS PARALLEL TO THE MAIN TENSILE OR COMPRESSIVE STRESS PER STANDARD SPEC. 506.08
8. FLANGE PLATE MATERIAL SHALL HAVE AN EDGE HARDNESS NOT GREATER THAN HRc 30 PER STANDARD SPEC. 506.09
9. ALL WELDING PROCEDURES SHALL BE IN ACCORDANCE WITH SUBSECTION 506.10
10. NON DESTRUCTIVE TESTING OF WELDS SHALL BE IN ACCORDANCE WITH ANSI/AASHTO/AWS D1.5 - SECTION 6.

INSTALLATION

11. BEARING PLATES SHALL BE LEVEL PRIOR TO SETTING PBUs. ELEVATIONS SHALL BE ADJUSTED TO WITHIN 0.01' OF ELEVATIONS NOTED DURING OFF-SITE FABRICATION OF THE UNITS
12. ALL ERECTION MARKS, MATCH MARKS & WEIGHT MARKS MUST NOT BE EXPOSED IN THE FINISHED STRUCTURE.

COATINGS & FINISH

13. ALL STEEL IS TO BE HOT-DIP GALVANIZED IN ACCORDANCE WITH SUBSECTION 726.08.
14. ALL HARDWARE IS TO BE MECHANICALLY GALVANIZED IN ACCORDANCE WITH AASHTO M298, CLASS 50, TYPE 1.

FINISH:	HOT-DIP GALVANIZED			
MATERIAL:	ASTM A572 GR.50			
HOLES:	Ø2½" U.N.O			
ELECTRODES:	PER WELD PROCEDURE			
WELDS:	PER WELD PROCEDURE	0	ISSUED FOR APPROVAL	3/17/17
SURFACE PREP:	SSPC-SP6	No.	Revision	Date

Fabricator: ARC ENTERPRISES INC.	detailer: DRAFTWORKS DETAILING 11 CHESTNUT ST. AMESBURY, MA	
Job Number: 16-181	TEMP. BEARING ASSEMBLY	Sheet No.: 1 OF 1
Original Submittal Date: 3/17/17	VTRANS, STRAFFORD VT BRIDGE REPLACEMENT PROJ# BF 0177 (10)	Drawing No.: BA-1
Drawn By: DAP / Checked By: DAP	GC: MILLER CONSTRUCTION	

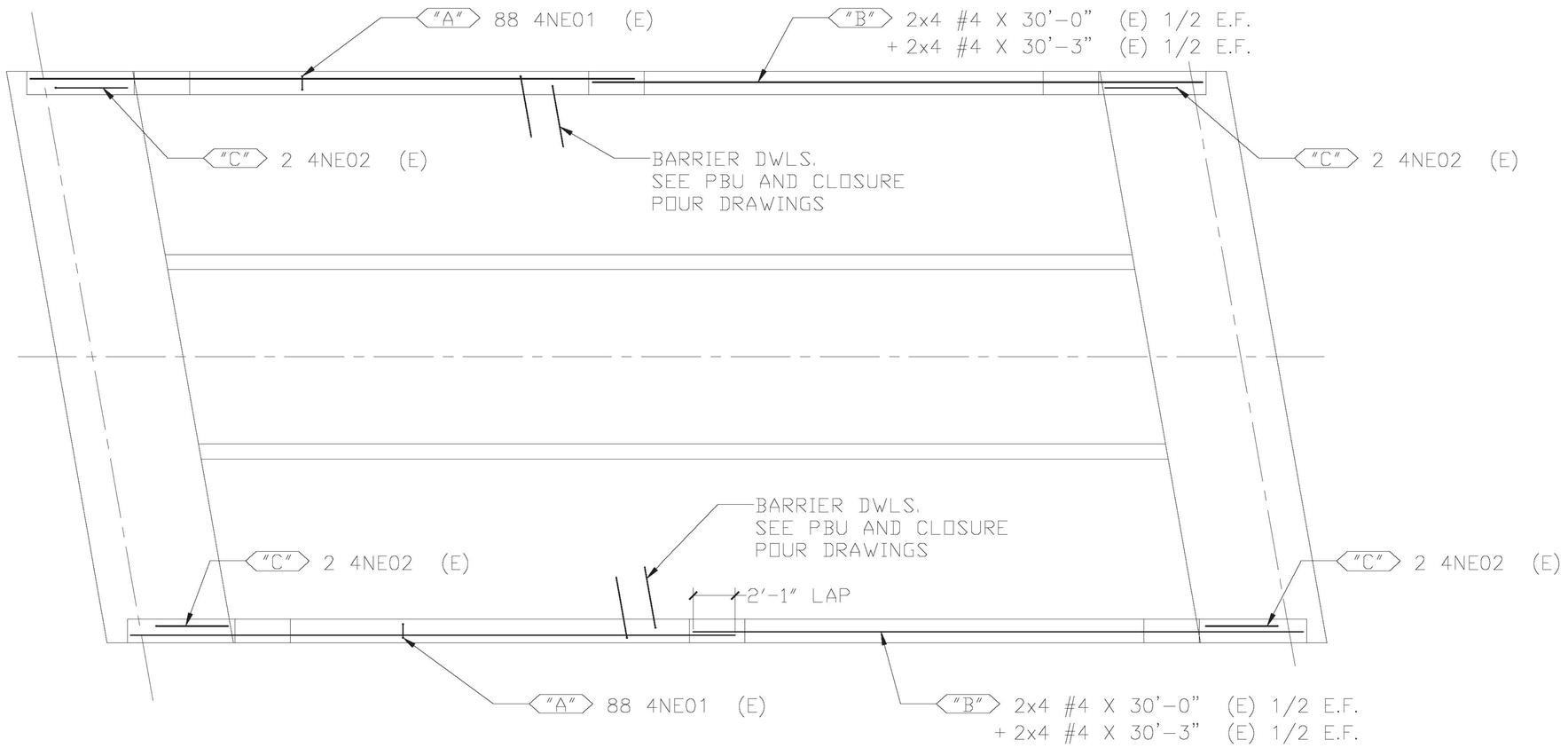

BRIDGE BARRIER PLAN

CONTRACT DWG. REF. 22 OF 52

FOR APPROVAL

WORK THIS DRAWING WITH
DRAWING N1 & N2

LEGEND:

CONT.-CONTINUOUS	E.E.-EACH END
TRANS.-TRANSVERSE	E.F.-EACH FACE
DWLS.-DOWELS	N.F.-NEAR FACE
VERTS.-VERTICAL	F.F.-FAR FACE
HORIZ.-HORIZONTAL	E.W.-EACH WAY
T&B -TOP & BOTTOM	O.C.-ON CENTER
I.F.-INNER FACE	L.W.-LONG WAY
O.F.-OUTER FACE	S.W.-SHORT WAY

EPOXY REINF. BARS ASTM A615
GRADE 60, MARKED (E).
EPOXY COATING TO MEET AASHTO
M284/ASTM A775. 1

REINF. BARS ASTM A615 GRADE 60

ELEVATIONS & DIMENSIONS SHOWN
ON THIS DWG. ARE FOR REINF.
DETAILING PURPOSES ONLY AND ARE
NOT INTENDED FOR DIMENSIONAL
CONSTRUCTION.

VERIFICATION OF UNCLEAR INFORMATION
MAY BE REQUESTED ON THIS DRAWING.
SHOULD VERIFICATION BE LEFT
UN-ADDRESSED IT WILL REMAIN AS
SHOWN AND ASSUME TO BE CORRECT.

Vermont Agency of Transportation
RECEIVED
Strafford BF 0177(10) CIP Reinforcing Submittal 2-13-2017.pdf
CK'D BY TAM OK'D BY JDG
February 13, 2017
RESUBMIT No Approved
BY K. Higgins DATE 02/24/2017

6			
5			
4			
3	1/24/17	–	NO CHANGE / REV. 1 FOR APPROVAL
2	1/4/17	1	REVISED PER APPROVAL / FOR APPROVAL
1	12/16/16	–	FOR APPROVAL
	DATE	REV.#	SENT FOR

DIMENSION
DIMENSION FABRICATORS INC.
2000 7TH STREET
SCOTIA, N.Y. 12302
PH: (518) 374-1936
FAX (518) 374-4830
www.dimensionfabricators.com

STRUCTURE	VTAOT STRAFFORD BF0177(10)
LOCATION	TOWN OF STRAFFORD, ORANGE COUNTY, VT
ARCHITECT	
ENGINEER	
CUSTOMER	MILLER CONSTRUCTION

DRAWN BY	DATE	DFI #
CMB	12/15/16	10098

DRAWING COVERS	DRAWING #
BRIDGE BARRIER	N

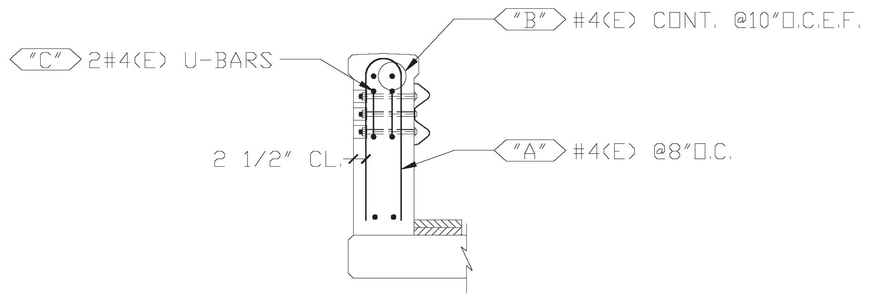

SECTION C

CONTRACT DWG. REF. C-C / 22 OF 52

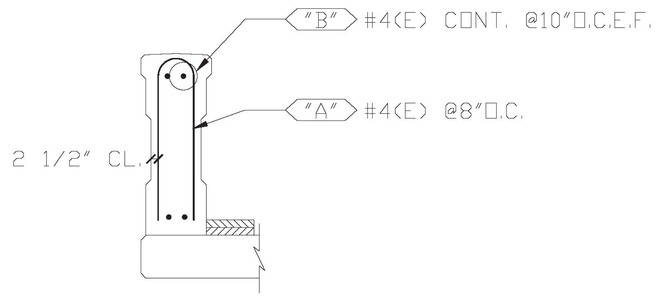

SECTION B

CONTRACT DWG. REF. B-B / 22 OF 52

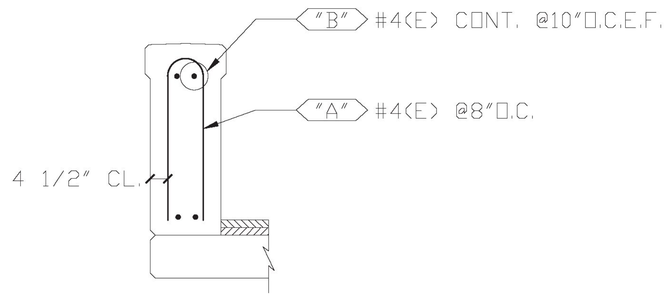

SECTION A

CONTRACT DWG. REF. A-A / 22 OF 52

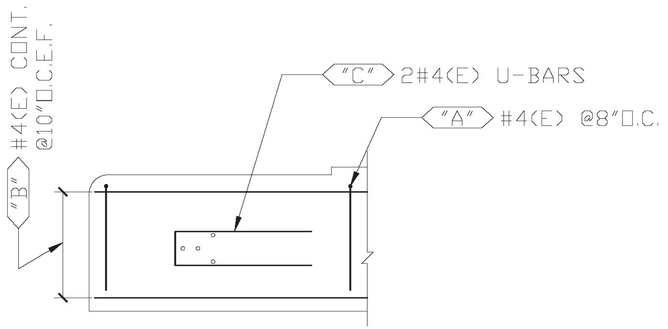

TYPICAL REINFORCING PLACMENT

CONTRACT DWG. REF. 22 OF 52

FOR APPROVAL

WORK THIS DRAWING WITH DRAWING N & N2

EPOXY REINF. BARS ASTM A615 GRADE 60, MARKED (E). EPOXY COATING TO MEET AASHTO M284/ASTM A775. 1

REINF. BARS ASTM A615 GRADE 60

VERIFICATION OF UNCLEAR INFORMATION MAY BE REQUESTED ON THIS DRAWING. SHOULD VERIFICATION BE LEFT UN-ADDRESSED IT WILL REMAIN AS SHOWN AND ASSUME TO BE CORRECT.

LEGEND:

CONT.-CONTINUOUS	E.E.-EACH END
TRANS.-TRANSVERSE	E.F.-EACH FACE
DWLS.-DOWELS	N.F.-NEAR FACE
VERTS.-VERTICAL	F.F.-FAR FACE
HORIZ.-HORIZONTAL	E.W.-EACH WAY
T&B -TOP & BOTTOM	O.C.-ON CENTER
I.F.-INNER FACE	L.W.-LONG WAY
O.F.-OUTER FACE	S.W.-SHORT WAY

ELEVATIONS & DIMENSIONS SHOWN ON THIS DWG. ARE FOR REINF. DETAILING PURPOSES ONLY AND ARE NOT INTENDED FOR DIMENSIONAL CONSTRUCTION.

Vermont Agency of Transportation

RECEIVED

Stratford BF 0177(10) CIP Reinforcing Submittal 2-13-2017.pdf

CK'D BY TAM OK'D BY JDG

February 13, 2017

RESUBMIT No Approved

BY K. Higgins DATE 02/24/2017

6			
5			
4			
3	1/24/17	–	NO CHANGE / REV. 1 FOR APPROVAL
2	1/4/17	1	REVISED PER APPROVAL / FOR APPROVAL
1	12/16/16	–	FOR APPROVAL
	DATE	REV.#	SENT FOR

DIMENSION
DIMENSION FABRICATORS INC.
2000 7TH STREET
SCOTIA, N.Y. 12302
PH: (518) 374-1936
FAX (518) 374-4830
www.dimensionfabricators.com

STRUCTURE	VTAOT STRAFFORD BF0177(10)
LOCATION	TOWN OF STRAFFORD, ORANGE COUNTY, VT
ARCHITECT	
ENGINEER	
CUSTOMER	MILLER CONSTRUCTION

DRAWN BY	DATE	DFI #
CMB	12/15/16	10098

DRAWING COVERS	DRAWING #
BRIDGE BARRIER	N1

Release Number:

BAR LIST

Bar Mark	Qty	Size	Total Length	Type	'A'	'B'	'C'	'D'	'E'	'F'	'G'	'H'	'J'	'K'	'O'	'R'
4NE01	176	#4	5'-2 ¾"	10	2'-3 ½"	0'-7 ¾"	2'-3 ½"								0'-5"	0'-2 ½"
4NE02	8	#4	6'-11"	17		3'-1"	0'-9"	3'-1"								

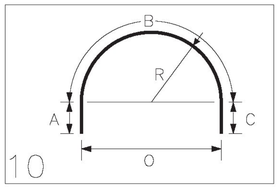

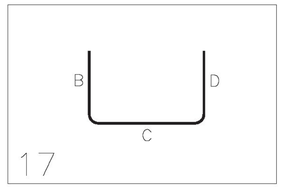

FOR APPROVAL

WORK THIS DRAWING WITH DRAWING N & N1

LEGEND:

CONT.-CONTINUOUS	E.E.-EACH END
TRANS.-TRANSVERSE	E.F.-EACH FACE
DWLS.-DOWELS	N.F.-NEAR FACE
VERTS.-VERTICAL	F.F.-FAR FACE
HORIZ.-HORIZONTAL	E.W.-EACH WAY
T&B -TOP & BOTTOM	O.C.-ON CENTER
I.F.-INNER FACE	L.W.-LONG WAY
O.F.-OUTER FACE	S.W.-SHORT WAY

EPOXY REINF. BARS ASTM A615 GRADE 60, MARKED (E). EPOXY COATING TO MEET AASHTO M284/ASTM A775. 1

REINF. BARS ASTM A615 GRADE 60

ELEVATIONS & DIMENSIONS SHOWN ON THIS DWG. ARE FOR REINF. DETAILING PURPOSES ONLY AND ARE NOT INTENDED FOR DIMENSIONAL CONSTRUCTION.

VERIFICATION OF UNCLEAR INFORMATION MAY BE REQUESTED ON THIS DRAWING. SHOULD VERIFICATION BE LEFT UN-ADDRESSED IT WILL REMAIN AS SHOWN AND ASSUME TO BE CORRECT.

Vermont Agency of Transportation

RECEIVED

Strafford BF 0177(10) CIP Reinforcing Submittal 2-13-2017.pdf

CK'D BY TAM OK'D BY JDG

February 13, 2017

RESUBMIT No Approved

BY K. Higgins DATE 02/24/2017

6			
5			
4			
3	1/24/17	–	NO CHANGE / REV. 1 FOR APPROVAL
2	1/4/17	1	REVISED PER APPROVAL / FOR APPROVAL
1	12/16/16	–	FOR APPROVAL
	DATE	REV.#	SENT FOR

DIMENSION
DIMENSION FABRICATORS INC.
2000 7TH STREET
SCOTIA, N.Y. 12302
PH: (518) 374-1936
FAX (518) 374-4830
www.dimensionfabricators.com

STRUCTURE	VTAOT STRAFFORD BF0177(10)
LOCATION	TOWN OF STRAFFORD, ORANGE COUNTY, VT
ARCHITECT	
ENGINEER	
CUSTOMER	MILLER CONSTRUCTION

DRAWN BY	DATE	DFI #
CMB	12/15/16	10098

DRAWING COVERS	DRAWING #
BRIDGE BARRIER	N2

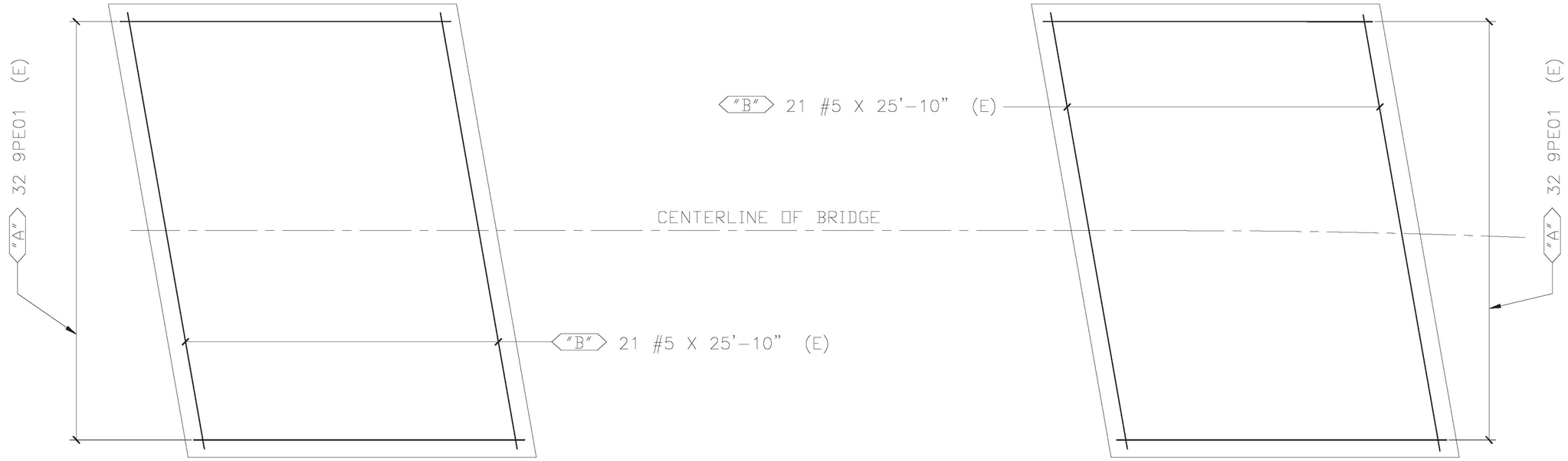

BEGIN APPROACH

END APPROACH

APPROACH SLAB PLAN

CONTRACT DWG. REF. 35 OF 52

FOR APPROVAL

LEGEND:

CONT.-CONTINUOUS	E.E.-EACH END
TRANS.-TRANSVERSE	E.F.-EACH FACE
DWLS.-DOWELS	N.F.-NEAR FACE
VERTS.-VERTICAL	F.F.-FAR FACE
HORIZ.-HORIZONTAL	E.W.-EACH WAY
T&B -TOP & BOTTOM	O.C.-ON CENTER
I.F.-INNER FACE	L.W.-LONG WAY
O.F.-OUTER FACE	S.W.-SHORT WAY

WORK THIS DRAWING WITH DRAWING P1

EPOXY REINF. BARS ASTM A615 GRADE 60, MARKED (E). EPOXY COATING TO MEET AASHTO M284/ASTM A775. 1

REINF. BARS ASTM A615 GRADE 60

ELEVATIONS & DIMENSIONS SHOWN ON THIS DWG. ARE FOR REINF. DETAILING PURPOSES ONLY AND ARE NOT INTENDED FOR DIMENSIONAL CONSTRUCTION.

VERIFICATION OF UNCLEAR INFORMATION MAY BE REQUESTED ON THIS DRAWING. SHOULD VERIFICATION BE LEFT UN-ADDRESSED IT WILL REMAIN AS SHOWN AND ASSUME TO BE CORRECT.

Vermont Agency of Transportation

RECEIVED

Strafford BF 0177(10) CIP Reinforcing Submittal 2-13-2017.pdf

CK'D BY TAM OK'D BY JDG

February 13, 2017

RESUBMIT No Approved

BY K. Higgins DATE 02/24/2017

6			
5			
4			
3	1/24/17	–	NO CHANGE / REV. 1 FOR APPROVAL
2	1/4/17	1	REVISED PER APPROVAL / FOR APPROVAL
1	12/16/16	–	FOR APPROVAL
	DATE	REV.#	SENT FOR

DIMENSION
DIMENSION FABRICATORS INC.
2000 7TH STREET
SCOTIA, N.Y. 12302
PH: (518) 374-1936
FAX (518) 374-4830
www.dimensionfabricators.com

STRUCTURE	VTAOT STRAFFORD BF0177(10)
LOCATION	TOWN OF STRAFFORD, ORANGE COUNTY, VT
ARCHITECT	
ENGINEER	
CUSTOMER	MILLER CONSTRUCTION

DRAWN BY	DATE	DFI #
CMB	12/15/16	10098

DRAWING COVERS	DRAWING #
APPROACH SLABS	P

Release Number:

BAR LIST

Bar Mark	Qty	Size	Total Length	Type	'A'	'B'	'C'	'D'	'E'	'F'	'G'	'H'	'J'	'K'	'O'	'R'
9PE01	64	#9	20'-9"	1	1'-3"	19'-6"							0'-11 ¾"			

1 Hook G optional

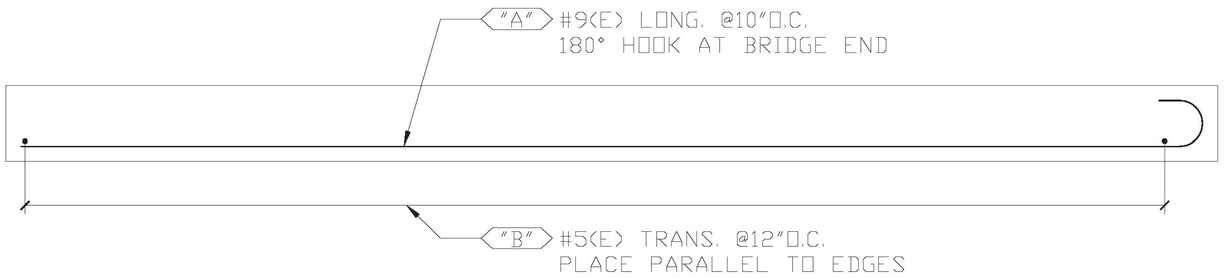

CAST-IN-PLACE APPROACH SLAB ELEVATION VIEW

CONTRACT DWG. REF. 35 OF 52

FOR APPROVAL

WORK THIS DRAWING WITH DRAWING P

LEGEND:

CONT.-CONTINUOUS	E.E.-EACH END
TRANS.-TRANSVERSE	E.F.-EACH FACE
DWLS.-DOWELS	N.F.-NEAR FACE
VERTS.-VERTICAL	F.F.-FAR FACE
HORIZ.-HORIZONTAL	E.W.-EACH WAY
T&B -TOP & BOTTOM	O.C.-ON CENTER
I.F.-INNER FACE	L.W.-LONG WAY
O.F.-OUTER FACE	S.W.-SHORT WAY

EPOXY REINF. BARS ASTM A615 GRADE 60, MARKED (E). EPOXY COATING TO MEET AASHTO M284/ASTM A775. 1

REINF. BARS ASTM A615 GRADE 60

ELEVATIONS & DIMENSIONS SHOWN ON THIS DWG. ARE FOR REINF. DETAILING PURPOSES ONLY AND ARE NOT INTENDED FOR DIMENSIONAL CONSTRUCTION.

VERIFICATION OF UNCLEAR INFORMATION MAY BE REQUESTED ON THIS DRAWING. SHOULD VERIFICATION BE LEFT UN-ADDRESSED IT WILL REMAIN AS SHOWN AND ASSUME TO BE CORRECT.

Vermont Agency of Transportation

RECEIVED

Strafford BF 0177(10) CIP Reinforcing Submittal 2-13-2017.pdf

CK'D BY TAM OK'D BY JDG

February 13, 2017

RESUBMIT No Approved

BY K. Higgins DATE 02/24/2017

6			
5			
4			
3	1/24/17	–	NO CHANGE / REV. 1 FOR APPROVAL
2	1/4/17	1	REVISED PER APPROVAL / FOR APPROVAL
1	12/16/16	–	FOR APPROVAL
	DATE	REV.#	SENT FOR

DIMENSION
DIMENSION FABRICATORS INC.
2000 7TH STREET
SCOTIA, N.Y. 12302
PH: (518) 374-1936
FAX (518) 374-4830
www.dimensionfabricators.com

STRUCTURE	VTAOT STRAFFORD BF0177(10)
LOCATION	TOWN OF STRAFFORD, ORANGE COUNTY, VT
ARCHITECT	
ENGINEER	
CUSTOMER	MILLER CONSTRUCTION

DRAWN BY	DATE	DFI #
CMB	12/15/16	10098

DRAWING COVERS	DRAWING #
APPROACH SLABS	P1

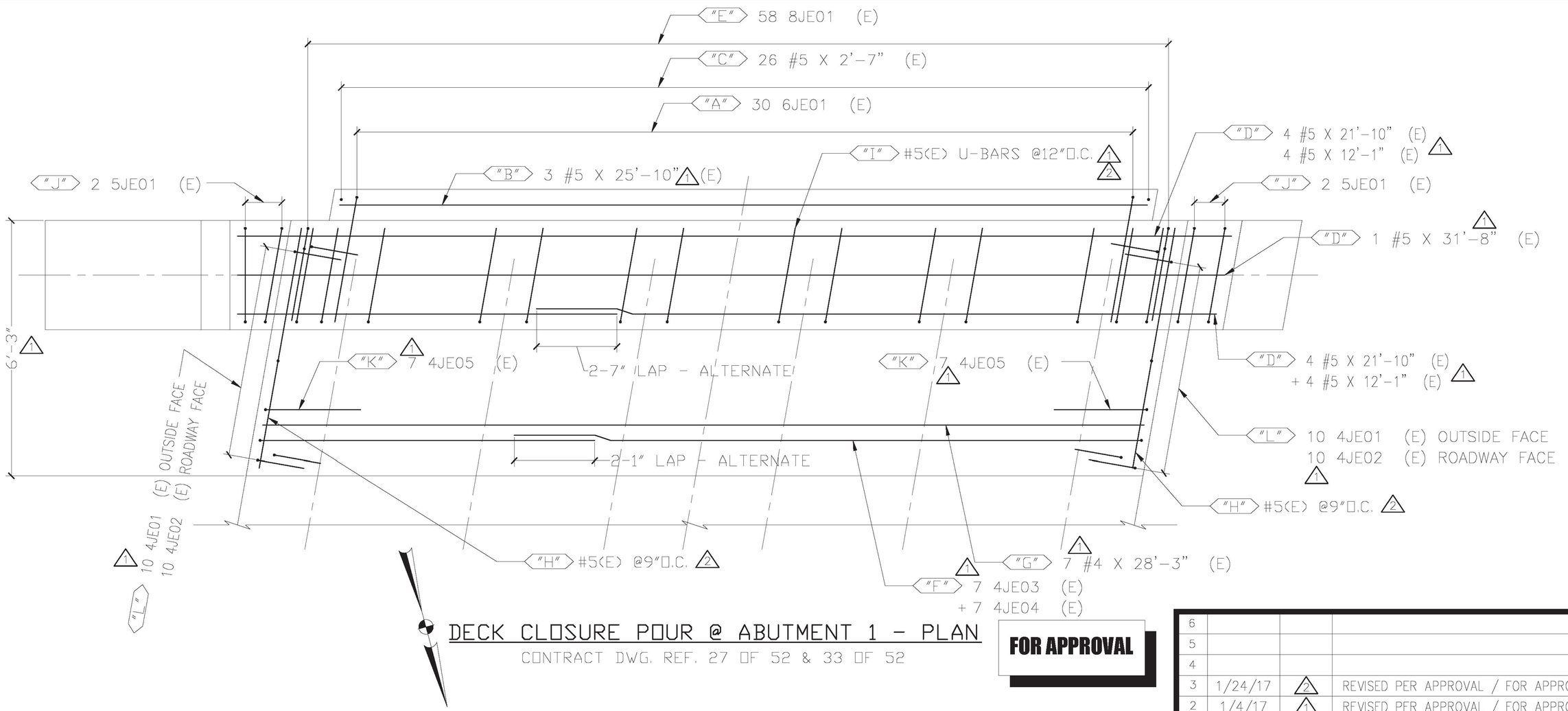

DECK CLOSURE POUR @ ABUTMENT 1 - PLAN

CONTRACT DWG. REF. 27 OF 52 & 33 OF 52

FOR APPROVAL

WORK THIS DRAWING WITH DRAWINGS J1, J2, & J3

LEGEND:

CONT.-CONTINUOUS	E.E.-EACH END
TRANS.-TRANSVERSE	E.F.-EACH FACE
DWLS.-DOWELS	N.F.-NEAR FACE
VERTS.-VERTICAL	F.F.-FAR FACE
HORIZ.-HORIZONTAL	E.W.-EACH WAY
T&B -TOP & BOTTOM	O.C.-ON CENTER
I.F.-INNER FACE	L.W.-LONG WAY
O.F.-OUTER FACE	S.W.-SHORT WAY

EPOXY REINF. BARS ASTM A615 GRADE 60, MARKED (E). EPOXY COATING TO MEET AASHTO M284/ASTM A775. 1

REINF. BARS ASTM A615 GRADE 60

ELEVATIONS & DIMENSIONS SHOWN ON THIS DWG. ARE FOR REINF. DETAILING PURPOSES ONLY AND ARE NOT INTENDED FOR DIMENSIONAL CONSTRUCTION.

VERIFICATION OF UNCLEAR INFORMATION MAY BE REQUESTED ON THIS DRAWING. SHOULD VERIFICATION BE LEFT UN-ADDRESSED IT WILL REMAIN AS SHOWN AND ASSUME TO BE CORRECT.

Vermont Agency of Transportation

RECEIVED

Stratford BF 0177(10) CIP Reinforcing Submittal 2-13-2017.pdf

CK'D BY TAM OK'D BY JDG

February 13, 2017

RESUBMIT No Approved

BY K. Higgins DATE 02/24/2017

6			
5			
4			
3	1/24/17	2	REVISED PER APPROVAL / FOR APPROVAL
2	1/4/17	1	REVISED PER APPROVAL / FOR APPROVAL
1	12/16/16	–	FOR APPROVAL
	DATE	REV.#	SENT FOR

DIMENSION
DIMENSION FABRICATORS INC.
2000 7TH STREET
SCOTIA, N.Y. 12302
PH: (518) 374-1936
FAX (518) 374-4830
www.dimensionfabricators.com

STRUCTURE	VTAOT STRAFFORD BF0177(10)
LOCATION	TOWN OF STRAFFORD, ORANGE COUNTY, VT
ARCHITECT	
ENGINEER	
CUSTOMER	MILLER CONSTRUCTION

DRAWN BY	DATE	DFI #
CMB	12/14/16	10098

DRAWING COVERS	DRAWING #
ABUTMENT 1 - DECK CLOSURE POUR	J

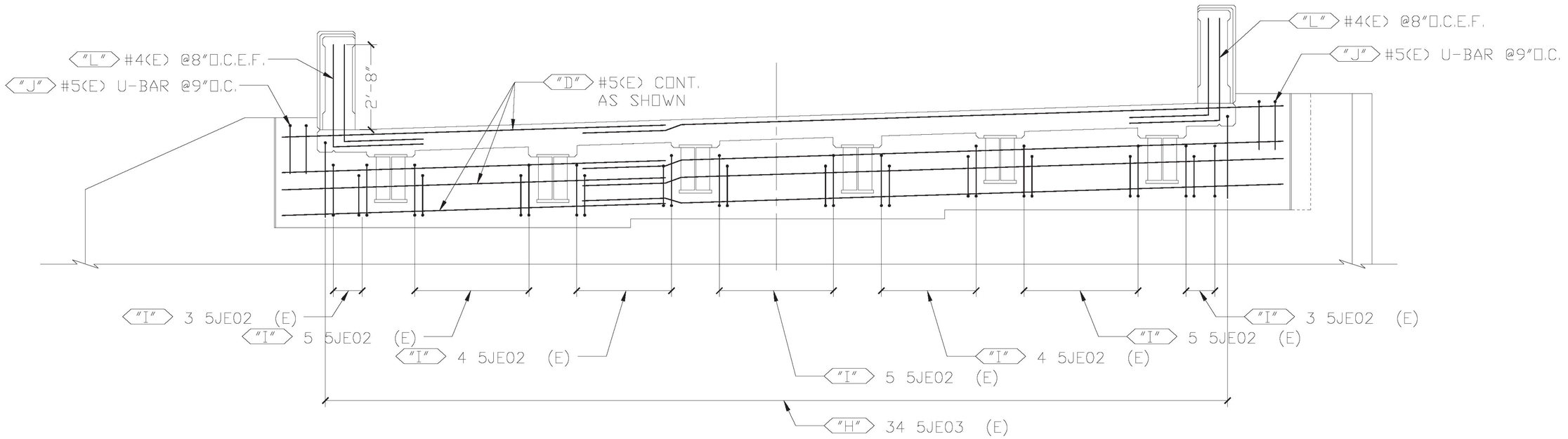

DECK CLOSURE POUR @ ABUTMENT 1 - ELEVATION

CONTRACT DWG. REF. 27 OF 52 & 33 OF 52

FOR APPROVAL

WORK THIS DRAWING WITH DRAWINGS J, J2, & J3

LEGEND:

CONT.-CONTINUOUS	E.E.-EACH END
TRANS.-TRANSVERSE	E.F.-EACH FACE
DWLS.-DOWELS	N.F.-NEAR FACE
VERTS.-VERTICAL	F.F.-FAR FACE
HORIZ.-HORIZONTAL	E.W.-EACH WAY
T&B -TOP & BOTTOM	O.C.-ON CENTER
I.F.-INNER FACE	L.W.-LONG WAY
O.F.-OUTER FACE	S.W.-SHORT WAY

EPOXY REINF. BARS ASTM A615 GRADE 60, MARKED (E). EPOXY COATING TO MEET AASHTO M284/ASTM A775. 1

REINF. BARS ASTM A615 GRADE 60

ELEVATIONS & DIMENSIONS SHOWN ON THIS DWG. ARE FOR REINF. DETAILING PURPOSES ONLY AND ARE NOT INTENDED FOR DIMENSIONAL CONSTRUCTION.

VERIFICATION OF UNCLEAR INFORMATION MAY BE REQUESTED ON THIS DRAWING. SHOULD VERIFICATION BE LEFT UN-ADDRESSED IT WILL REMAIN AS SHOWN AND ASSUME TO BE CORRECT.

Vermont Agency of Transportation

RECEIVED

Strafford BF 0177(10) CIP Reinforcing Submittal 2-13-2017.pdf

CK'D BY TAM OK'D BY JDG

February 13, 2017

RESUBMIT No Approved

BY K. Higgins DATE 02/24/2017

6			
5			
4			
3	1/24/17	–	NO CHANGE / REV. 1 FOR APPROVAL
2	1/4/17	1	REVISED PER APPROVAL / FOR APPROVAL
1	12/16/16	–	FOR APPROVAL
	DATE	REV.#	SENT FOR

DIMENSION
DIMENSION FABRICATORS INC.
2000 7TH STREET
SCOTIA, N.Y. 12302
PH: (518) 374-1936
FAX (518) 374-4830
www.dimensionfabricators.com

STRUCTURE	VTAOT STRAFFORD BF0177(10)
LOCATION	TOWN OF STRAFFORD, ORANGE COUNTY, VT
ARCHITECT	
ENGINEER	
CUSTOMER	MILLER CONSTRUCTION

DRAWN BY	DATE	DFI #
CMB	12/14/16	10098

DRAWING COVERS	DRAWING #
ABUTMENT 1 - DECK CLOSURE POUR	J1

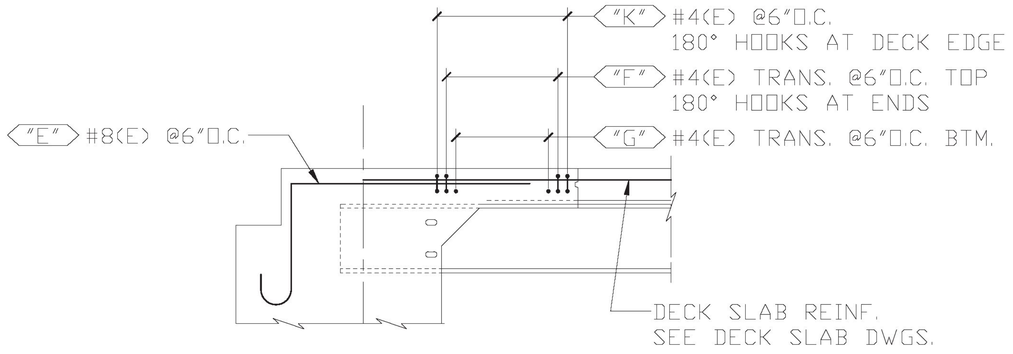

ADDITIONAL END REINF. - ELEVATION VIEW

CONTRACT DWG. REF. 27 OF 52

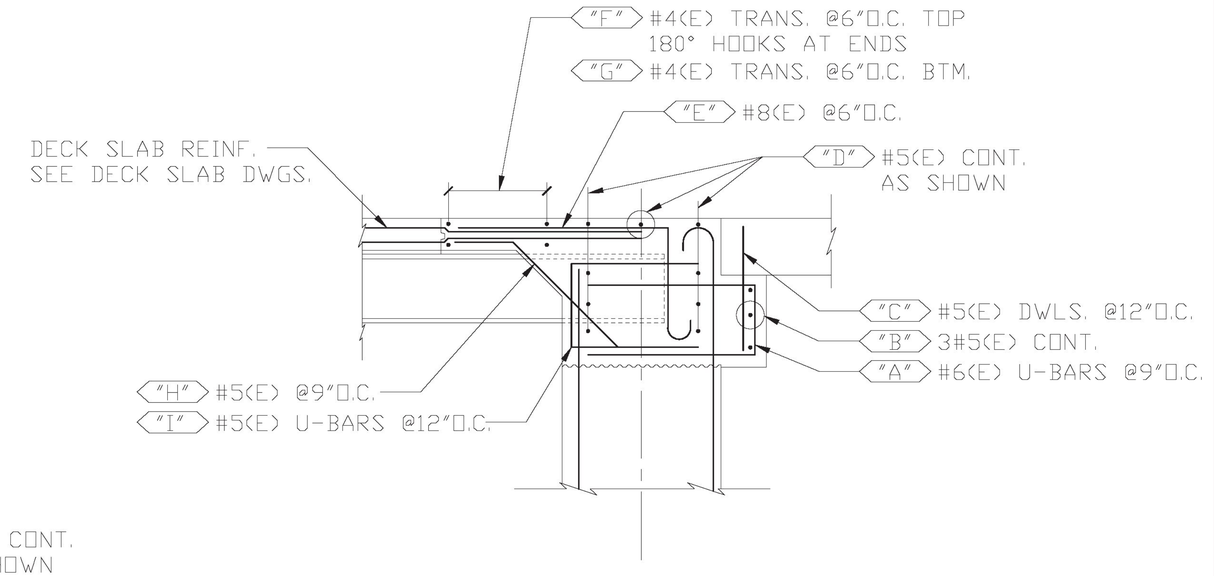

ABUTMENT ELEVATION @ BRIDGE

CONTRACT DWG. REF. 27 OF 52 & 33 OF 52

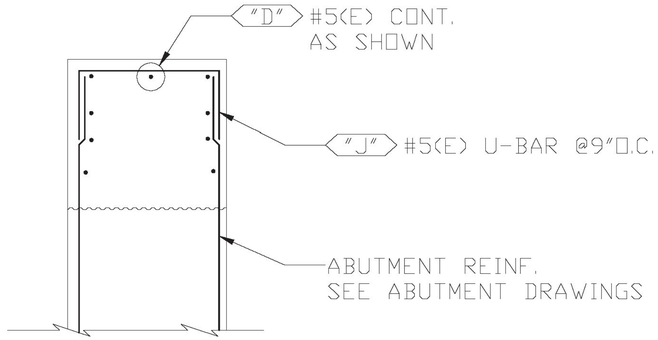

ABUTMENT ELEVATION @ CHEEKWALL

CONTRACT DWG. REF. 33 OF 52

FOR APPROVAL

WORK THIS DRAWING WITH DRAWINGS J, J1, & J3

LEGEND:

CONT.-CONTINUOUS	E.E.-EACH END
TRANS.-TRANSVERSE	E.F.-EACH FACE
DWLS.-DOWELS	N.F.-NEAR FACE
VERTS.-VERTICAL	F.F.-FAR FACE
HORIZ.-HORIZONTAL	E.W.-EACH WAY
T&B -TOP & BOTTOM	O.C.-ON CENTER
I.F.-INNER FACE	L.W.-LONG WAY
O.F.-OUTER FACE	S.W.-SHORT WAY

EPOXY REINF. BARS ASTM A615 GRADE 60, MARKED (E). EPOXY COATING TO MEET AASHTO M284/ASTM A775. 1

REINF. BARS ASTM A615 GRADE 60

ELEVATIONS & DIMENSIONS SHOWN ON THIS DWG. ARE FOR REINF. DETAILING PURPOSES ONLY AND ARE NOT INTENDED FOR DIMENSIONAL CONSTRUCTION.

VERIFICATION OF UNCLEAR INFORMATION MAY BE REQUESTED ON THIS DRAWING. SHOULD VERIFICATION BE LEFT UN-ADDRESSED IT WILL REMAIN AS SHOWN AND ASSUME TO BE CORRECT.

Vermont Agency of Transportation

RECEIVED

Strafford BF 0177(10) CIP Reinforcing Submittal 2-13-2017.pdf

CK'D BY TAM OK'D BY JDG

February 13, 2017

RESUBMIT No Approved

BY K. Higgins DATE 02/24/2017

6			
5			
4			
3	1/24/17	–	NO CHANGE / REV. 1 FOR APPROVAL
2	1/4/17	1	REVISED PER APPROVAL / FOR APPROVAL
1	12/16/16	–	FOR APPROVAL
	DATE	REV.#	SENT FOR

DIMENSION
DIMENSION FABRICATORS INC.
2000 7TH STREET
SCOTIA, N.Y. 12302
PH: (518) 374-1936
FAX (518) 374-4830
www.dimensionfabricators.com

STRUCTURE	VTAOT STRAFFORD BF0177(10)
LOCATION	TOWN OF STRAFFORD, ORANGE COUNTY, VT
ARCHITECT	
ENGINEER	
CUSTOMER	MILLER CONSTRUCTION

DRAWN BY	DATE	DFI #
CMB	12/14/16	10098

DRAWING COVERS	DRAWING #
ABUTMENT 1 - DECK CLOSURE POUR	J2

Release Number:					BAR LIST											
Bar Mark	Qty	Size	Total Length	Type	'A'	'B'	'C'	'D'	'E'	'F'	'G'	'H'	'J'	'K'	'O'	'R'
4JE01	20	#4	5'-2"	17		2'-3"	2'-11"									
4JE02	20	#4	5'-6"	17		2'-3"	3'-3"									
4JE03	7	#4	20'-6"	1	0'-6"	20'-0"							0'-4"			
4JE04	7	#4	10'-11"	1	0'-6"	10'-5"							0'-4"			
4JE05	14	#4	3'-7"	1	0'-6"	3'-1"							0'-4"			
5JE01	4	#5	6'-7"	17		1'-9"	3'-1"	1'-9"								
5JE02	29	#5	7'-10"	17		3'-0"	1'-10"	3'-0"								
5JE03	34	#5	4'-10"	3		3'-4"	1'-6"					1'-0 ¾"		1'-0 ¾"	4'-4 ¾"	
6JE01	30	#6	9'-4"	17		4'-0"	1'-4"	4'-0"								
8JE01	58	#8	7'-10"	18	0'-11"	2'-4"	4'-7"						0'-8"			

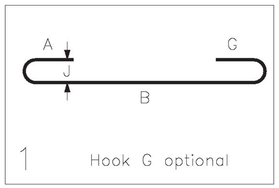

1 Hook G optional

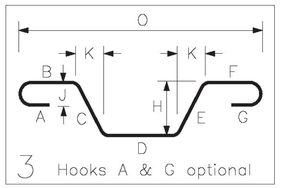

3 Hooks A & G optional

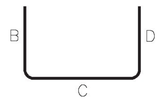

17

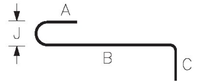

18

FOR APPROVAL

WORK THIS DRAWING WITH DRAWINGS J, J1, & J2

EPOXY REINF. BARS ASTM A615 GRADE 60, MARKED (E). EPOXY COATING TO MEET AASHTO M284/ASTM A775. 1

REINF. BARS ASTM A615 GRADE 60

VERIFICATION OF UNCLEAR INFORMATION MAY BE REQUESTED ON THIS DRAWING. SHOULD VERIFICATION BE LEFT UN-ADDRESSED IT WILL REMAIN AS SHOWN AND ASSUME TO BE CORRECT.

LEGEND:

CONT.-CONTINUOUS	E.E.-EACH END
TRANS.-TRANSVERSE	E.F.-EACH FACE
DWLS.-DOWELS	N.F.-NEAR FACE
VERTS.-VERTICAL	F.F.-FAR FACE
HORIZ.-HORIZONTAL	E.W.-EACH WAY
T&B -TOP & BOTTOM	O.C.-ON CENTER
I.F.-INNER FACE	L.W.-LONG WAY
O.F.-OUTER FACE	S.W.-SHORT WAY

ELEVATIONS & DIMENSIONS SHOWN ON THIS DWG. ARE FOR REINF. DETAILING PURPOSES ONLY AND ARE NOT INTENDED FOR DIMENSIONAL CONSTRUCTION.

Vermont Agency of Transportation

RECEIVED

Strafford BF 0177(10) CIP Reinforcing Submittal 2-13-2017.pdf

CK'D BY TAM OK'D BY JDG

February 13, 2017

RESUBMIT No Approved

BY K. Higgins DATE 02/24/2017

6			
5			
4			
3	1/24/17	–	NO CHANGE / REV. 1 FOR APPROVAL
2	1/4/17	1	REVISED PER APPROVAL / FOR APPROVAL
1	12/16/16	–	FOR APPROVAL
	DATE	REV.#	SENT FOR

DIMENSION
DIMENSION FABRICATORS INC.
2000 7TH STREET
SCOTIA, N.Y. 12302
PH: (518) 374-1936
FAX (518) 374-4830
www.dimensionfabricators.com

STRUCTURE	VTAOT STRAFFORD BF0177(10)
LOCATION	TOWN OF STRAFFORD, ORANGE COUNTY, VT
ARCHITECT	
ENGINEER	
CUSTOMER	MILLER CONSTRUCTION

DRAWN BY	DATE	DFI #
CMB	12/14/16	10098

DRAWING COVERS	DRAWING #
ABUTMENT 1 - DECK CLOSURE POUR	J3

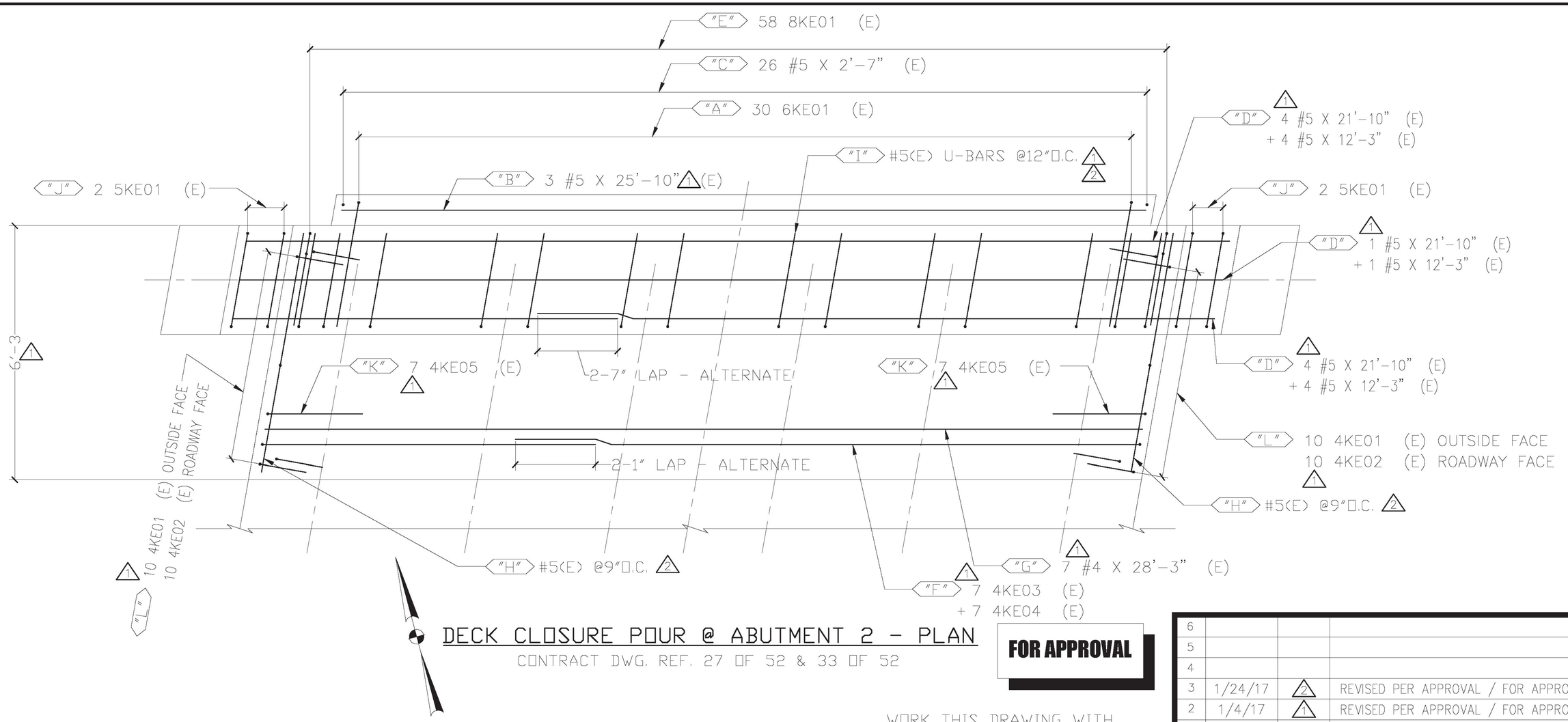

DECK CLOSURE POUR @ ABUTMENT 2 - PLAN

CONTRACT DWG. REF. 27 OF 52 & 33 OF 52

FOR APPROVAL

LEGEND:

CONT.-CONTINUOUS	E.E.-EACH END
TRANS.-TRANSVERSE	E.F.-EACH FACE
DWLS.-DOWELS	N.F.-NEAR FACE
VERTS.-VERTICAL	F.F.-FAR FACE
HORIZ.-HORIZONTAL	E.W.-EACH WAY
T&B -TOP & BOTTOM	O.C.-ON CENTER
I.F.-INNER FACE	L.W.-LONG WAY
O.F.-OUTER FACE	S.W.-SHORT WAY

ELEVATIONS & DIMENSIONS SHOWN ON THIS DWG. ARE FOR REINF. DETAILING PURPOSES ONLY AND ARE NOT INTENDED FOR DIMENSIONAL CONSTRUCTION.

WORK THIS DRAWING WITH DRAWINGS K1, K2, & K3

EPOXY REINF. BARS ASTM A615 GRADE 60, MARKED (E). EPOXY COATING TO MEET AASHTO M284/ASTM A775. 1

REINF. BARS ASTM A615 GRADE 60

VERIFICATION OF UNCLEAR INFORMATION MAY BE REQUESTED ON THIS DRAWING. SHOULD VERIFICATION BE LEFT UN-ADDRESSED IT WILL REMAIN AS SHOWN AND ASSUME TO BE CORRECT.

Vermont Agency of Transportation

RECEIVED

Stratford BF 017(10) GP Reinforcing Submittal 2-13-2017.pdf

CK'D BY TAM OK'D BY JDG

February 13, 2017

RESUBMIT No Approved

BY K. Higgins DATE 02/24/2017

6			
5			
4			
3	1/24/17	2	REVISED PER APPROVAL / FOR APPROVAL
2	1/4/17	1	REVISED PER APPROVAL / FOR APPROVAL
1	12/16/16	–	FOR APPROVAL
	DATE	REV.#	SENT FOR

DIMENSION
DIMENSION FABRICATORS INC.
2000 7TH STREET
SCOTIA, N.Y. 12302
PH: (518) 374-1936
FAX (518) 374-4830
www.dimensionfabricators.com

STRUCTURE	VTAOT STRAFFORD BF0177(10)
LOCATION	TOWN OF STRAFFORD, ORANGE COUNTY, VT
ARCHITECT	
ENGINEER	
CUSTOMER	MILLER CONSTRUCTION

DRAWN BY	DATE	DFI #
CMB	12/14/16	10098

DRAWING COVERS	DRAWING #
ABUTMENT 2 - DECK CLOSURE POUR	K

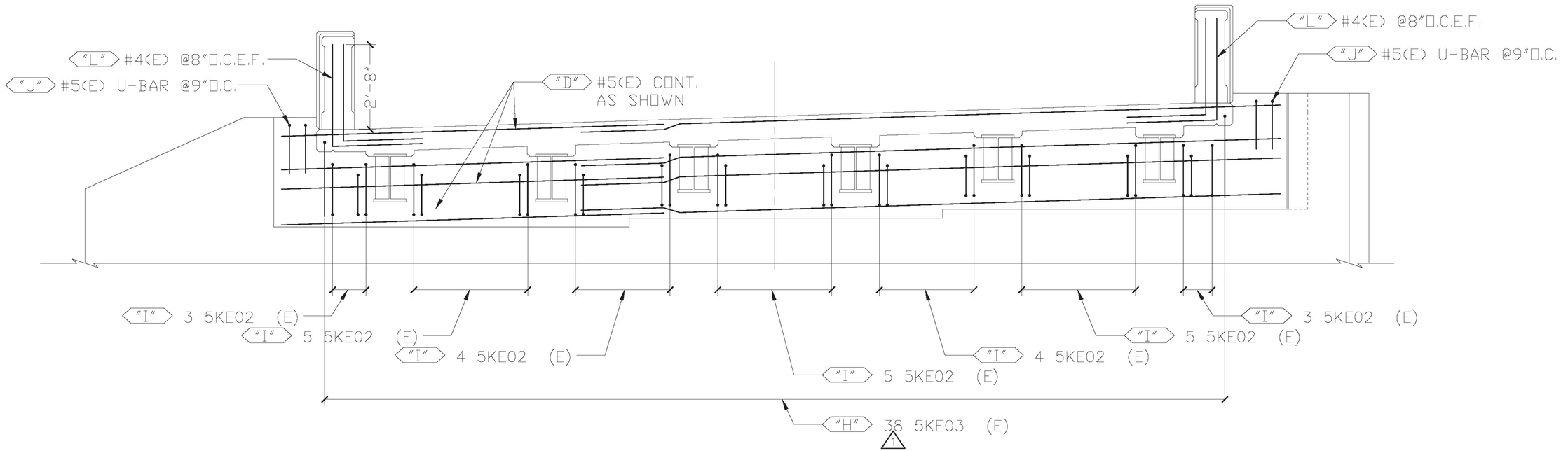

DECK CLOSURE POUR @ ABUTMENT 2 - ELEVATION

CONTRACT DWG. REF. 27 OF 52 & 33 OF 52

FOR APPROVAL

WORK THIS DRAWING WITH DRAWINGS K, K2, & K3

LEGEND:

CONT.-CONTINUOUS	E.E.-EACH END
TRANS.-TRANSVERSE	E.F.-EACH FACE
DWLS.-DOWELS	N.F.-NEAR FACE
VERTS.-VERTICAL	F.F.-FAR FACE
HORIZ.-HORIZONTAL	E.W.-EACH WAY
T&B -TOP & BOTTOM	O.C.-ON CENTER
I.F.-INNER FACE	L.W.-LONG WAY
O.F.-OUTER FACE	S.W.-SHORT WAY

EPOXY REINF. BARS ASTM A615 GRADE 60, MARKED (E). EPOXY COATING TO MEET AASHTO M284/ASTM A775. 1

REINF. BARS ASTM A615 GRADE 60

ELEVATIONS & DIMENSIONS SHOWN ON THIS DWG. ARE FOR REINF. DETAILING PURPOSES ONLY AND ARE NOT INTENDED FOR DIMENSIONAL CONSTRUCTION.

VERIFICATION OF UNCLEAR INFORMATION MAY BE REQUESTED ON THIS DRAWING. SHOULD VERIFICATION BE LEFT UN-ADDRESSED IT WILL REMAIN AS SHOWN AND ASSUME TO BE CORRECT.

Vermont Agency of Transportation

RECEIVED

Strafford BF 0177(10) CIP Reinforcing Submittal 2-13-2017.pdf

CK'D BY TAM OK'D BY JDG

February 13, 2017

RESUBMIT No Approved

BY K. Higgins DATE 02/24/2017

6			
5			
4			
3	1/24/17	–	NO CHANGE / REV. 1 FOR APPROVAL
2	1/4/17	1	REVISED PER APPROVAL / FOR APPROVAL
1	12/16/16	–	FOR APPROVAL
	DATE	REV.#	SENT FOR

DIMENSION
DIMENSION FABRICATORS INC.
2000 7TH STREET
SCOTIA, N.Y. 12302
PH: (518) 374-1936
FAX (518) 374-4830
www.dimensionfabricators.com

STRUCTURE	VTAOT STRAFFORD BF0177(10)
LOCATION	TOWN OF STRAFFORD, ORANGE COUNTY, VT
ARCHITECT	
ENGINEER	
CUSTOMER	MILLER CONSTRUCTION

DRAWN BY	DATE	DFI #
CMB	12/14/16	10098

DRAWING COVERS	DRAWING #
ABUTMENT 2 - DECK CLOSURE POUR	K1

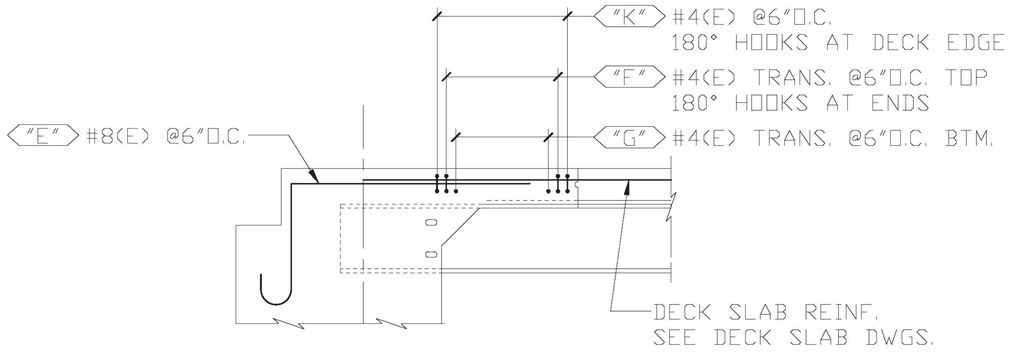

ADDITIONAL END REINF. - ELEVATION VIEW

CONTRACT DWG. REF. 27 OF 52

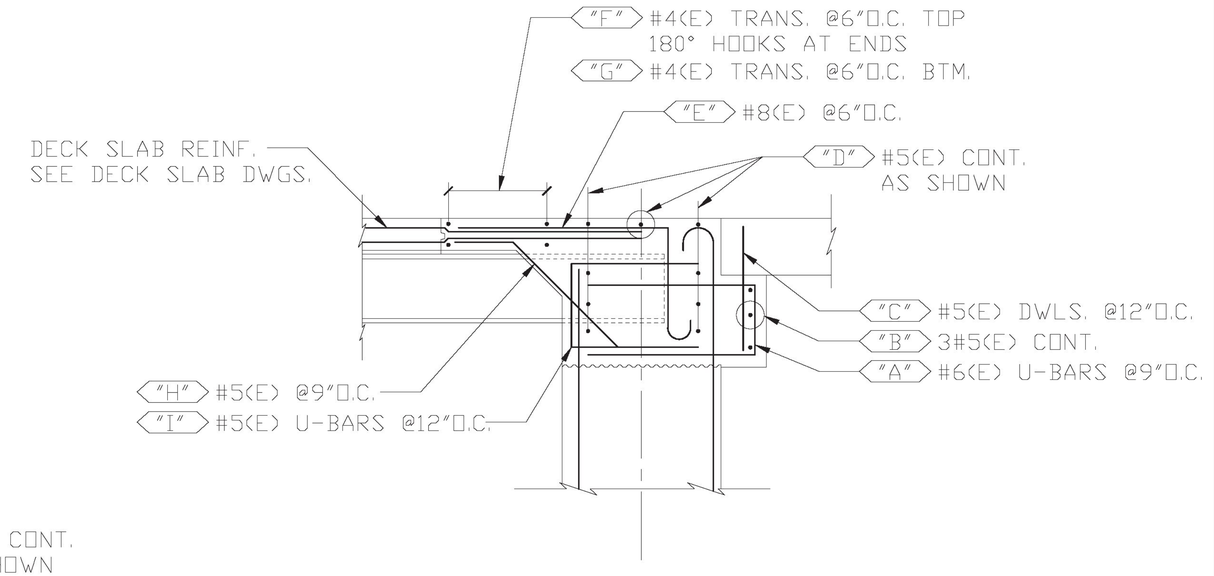

ABUTMENT ELEVATION @ BRIDGE

CONTRACT DWG. REF. 27 OF 52 & 33 OF 52

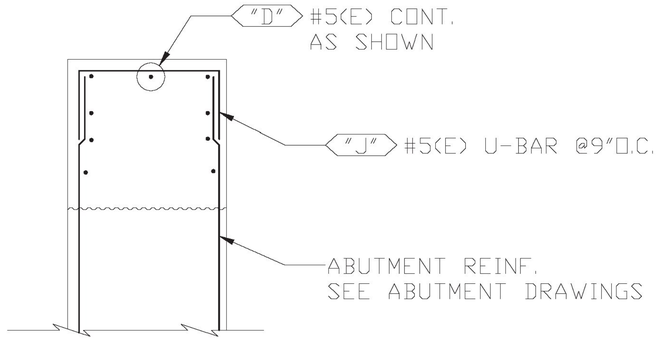

ABUTMENT ELEVATION @ CHEEKWALL

CONTRACT DWG. REF. 33 OF 52

FOR APPROVAL

WORK THIS DRAWING WITH
DRAWINGS K, K1, & K3

LEGEND:

CONT.-CONTINUOUS	E.E.-EACH END
TRANS.-TRANSVERSE	E.F.-EACH FACE
DWLS.-DOWELS	N.F.-NEAR FACE
VERTS.-VERTICAL	F.F.-FAR FACE
HORIZ.-HORIZONTAL	E.W.-EACH WAY
T&B -TOP & BOTTOM	O.C.-ON CENTER
I.F.-INNER FACE	L.W.-LONG WAY
O.F.-OUTER FACE	S.W.-SHORT WAY

EPOXY REINF. BARS ASTM A615
GRADE 60, MARKED (E).
EPOXY COATING TO MEET AASHTO
M284/ASTM A775. 1

REINF. BARS ASTM A615 GRADE 60

ELEVATIONS & DIMENSIONS SHOWN ON THIS DWG. ARE FOR REINF. DETAILING PURPOSES ONLY AND ARE NOT INTENDED FOR DIMENSIONAL CONSTRUCTION.

VERIFICATION OF UNCLEAR INFORMATION MAY BE REQUESTED ON THIS DRAWING. SHOULD VERIFICATION BE LEFT UN-ADDRESSED IT WILL REMAIN AS SHOWN AND ASSUME TO BE CORRECT.

Vermont Agency of Transportation
RECEIVED
Strafford BF 0177(10) CIP Reinforcing Submittal 2-13-2017.pdf
CK'D BY TAM OK'D BY JDG
February 13, 2017
RESUBMIT No Approved
BY K. Higgins DATE 02/24/2017

6			
5			
4			
3	1/24/17	–	NO CHANGE / REV. 1 FOR APPROVAL
2	1/4/17	1	REVISED PER APPROVAL / FOR APPROVAL
1	12/16/16	–	FOR APPROVAL
	DATE	REV.#	SENT FOR

DIMENSION
DIMENSION FABRICATORS INC.
2000 7TH STREET
SCOTIA, N.Y. 12302
PH: (518) 374-1936
FAX (518) 374-4830
www.dimensionfabricators.com

STRUCTURE	VTAOT STRAFFORD BF0177(10)
LOCATION	TOWN OF STRAFFORD, ORANGE COUNTY, VT
ARCHITECT	
ENGINEER	
CUSTOMER	MILLER CONSTRUCTION

DRAWN BY CMB | DATE 12/14/16 | DFI # 10098

DRAWING COVERS: ABUTMENT 2 - DECK CLOSURE POUR

DRAWING # K2

Release Number:

BAR LIST

Bar Mark	Qty	Size	Total Length	Type	'A'	'B'	'C'	'D'	'E'	'F'	'G'	'H'	'J'	'K'	'O'	'R'
4KE01	20	#4	5'-2"	17		2'-3"	2'-11"									
4KE02	20	#4	5'-6"	17		2'-3"	3'-3"									
4KE03	7	#4	20'-6"	1	0'-6"	20'-0"							0'-4"			
4KE04	7	#4	10'-11"	1	0'-6"	10'-5"							0'-4"			
4KE05	14	#4	3'-7"	1	0'-6"	3'-1"							0'-4"			
5KE01	4	#5	6'-7"	17		1'-9"	3'-1"	1'-9"								
5KE02	29	#5	7'-10"	17		3'-0"	1'-10"	3'-0"								
5KE03	38	#5	4'-10"	3		3'-4"	1'-6"					1'-0 ¾"		1'-0 ¾"	4'-4 ¾"	
6KE01	30	#6	9'-4"	17		4'-0"	1'-4"	4'-0"								
8KE01	58	#8	7'-10"	18	0'-11"	2'-4"	4'-7"						0'-8"			

1 Hook G optional

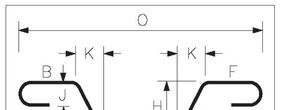

3 Hooks A & G optional

17

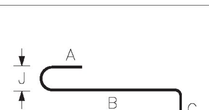

18

Vermont Agency of Transportation

RECEIVED

Strafford BF 0177(10) CIP Reinforcing Submittal 2-13-2017.pdf

CK'D BY TAM OK'D BY JDG

February 13, 2017

RESUBMIT No Approved

BY K. Higgins DATE 02/24/2017

LEGEND:

CONT.-CONTINUOUS	E.E.-EACH END
TRANS.-TRANSVERSE	E.F.-EACH FACE
DWLS.-DOWELS	N.F.-NEAR FACE
VERTS.-VERTICAL	F.F.-FAR FACE
HORIZ.-HORIZONTAL	E.W.-EACH WAY
T&B -TOP & BOTTOM	O.C.-ON CENTER
I.F.-INNER FACE	L.W.-LONG WAY
O.F.-OUTER FACE	S.W.-SHORT WAY

ELEVATIONS & DIMENSIONS SHOWN ON THIS DWG. ARE FOR REINF. DETAILING PURPOSES ONLY AND ARE NOT INTENDED FOR DIMENSIONAL CONSTRUCTION.

FOR APPROVAL

WORK THIS DRAWING WITH DRAWINGS K, K1, & K2

EPOXY REINF. BARS ASTM A615 GRADE 60, MARKED (E). EPOXY COATING TO MEET AASHTO M284/ASTM A775. 1

REINF. BARS ASTM A615 GRADE 60

VERIFICATION OF UNCLEAR INFORMATION MAY BE REQUESTED ON THIS DRAWING. SHOULD VERIFICATION BE LEFT UN-ADDRESSED IT WILL REMAIN AS SHOWN AND ASSUME TO BE CORRECT.

6			
5			
4			
3	1/24/17	–	NO CHANGE / REV. 1 FOR APPROVAL
2	1/4/17	1	REVISED PER APPROVAL / FOR APPROVAL
1	12/16/16	–	FOR APPROVAL
	DATE	REV.#	SENT FOR

DIMENSION
DIMENSION FABRICATORS INC.
2000 7TH STREET
SCOTIA, N.Y. 12302
PH: (518) 374-1936
FAX (518) 374-4830
www.dimensionfabricators.com

STRUCTURE	VTAOT STRAFFORD BF0177(10)
LOCATION	TOWN OF STRAFFORD, ORANGE COUNTY, VT
ARCHITECT	
ENGINEER	
CUSTOMER	MILLER CONSTRUCTION

DRAWN BY	DATE	DFI #
CMB	12/14/16	10098

DRAWING COVERS	DRAWING #
ABUTMENT 2 - DECK CLOSURE POUR	K3

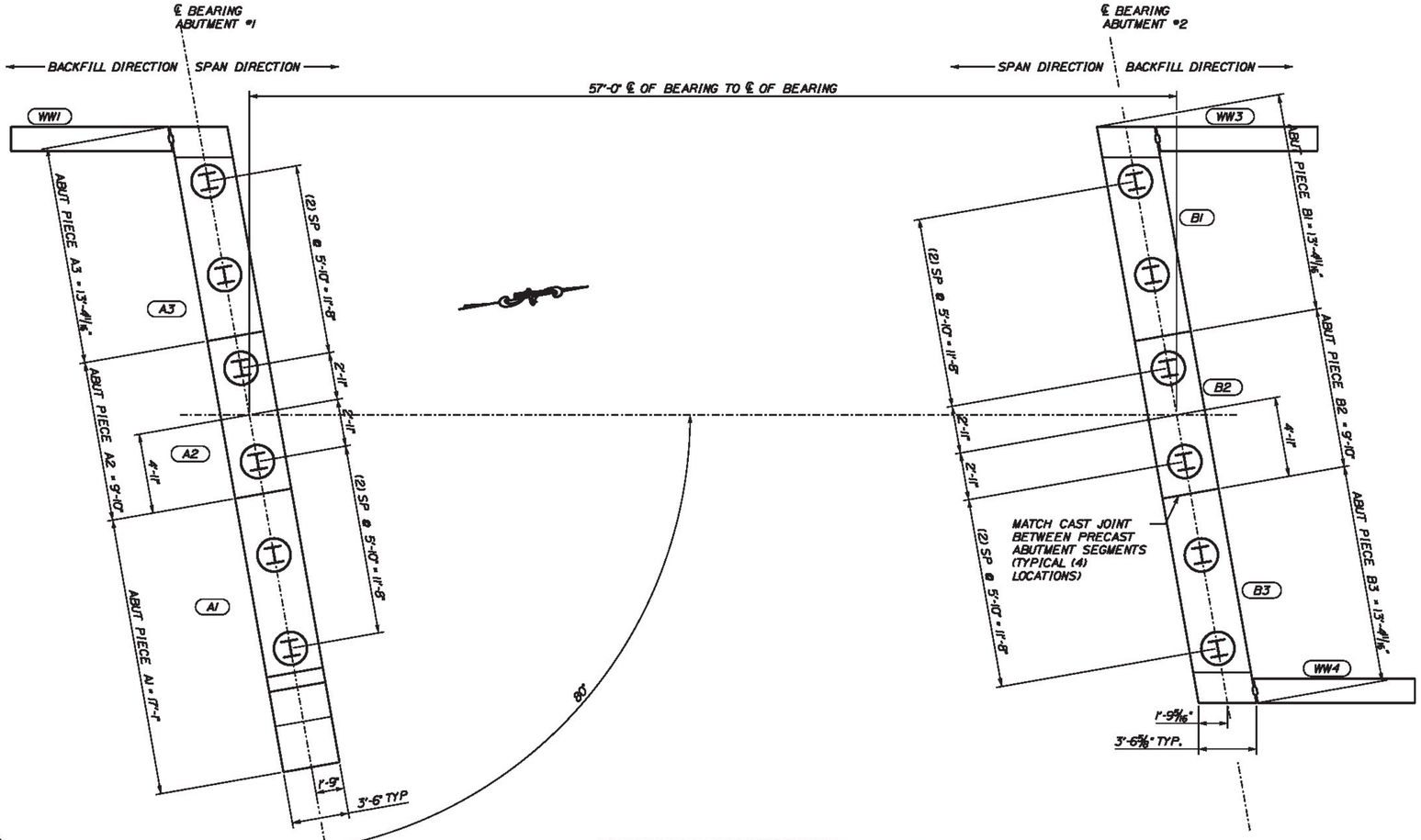

PRECAST ABUTMENT LAYOUT DETAIL

SCALE: 1/2" = 1'-0"

GENERAL NOTES:

1. CONCRETE MIX DESIGN TO BE 5,000 PSI AS PER MIX DESIGN SUBMITTAL - PRECAST ABUTMENT SEGMENTS SHALL NOT BE LIFTED UNTIL A MINIMUM 4500 PSI HAS BEEN ACHIEVED
2. QUALITY ASSURANCE INSPECTION TO BE PERFORMED BY VTRANS OR DESIGNATED REPRESENTATIVE.
3. THE PE STAMP ON THESE DRAWINGS INDICATES THAT THESE DRAWINGS WERE PREPARED UNDER THE DIRECT SUPERVISION OF A REGISTERED PROFESSIONAL ENGINEER AND COMPLY WITH THE DESIGN AND DETAILS SHOWN ON THE CONTRACT DRAWINGS.
4. TYPICAL CHAMFERS AT ALL PRECAST CORNERS VISIBLE IN THE FINISHED CONSTRUCTION TO BE 3/4"x3/4". (IE CORNERS THAT ARE BACKFILLED OR ARE BURIED MAY BE FINISHED WITHOUT THE CHAMFER AT THE CONTRACTOR'S SOLE DISCRETION)
5. REINFORCING STEEL SHALL HAVE A MINIMUM CLEAR COVER OF 3" AT EVERY LOCATION EXCEPT THAT BACKFILLED FACES SHALL HAVE A MINIMUM CLEAR COVER OF 2"
6. TOLERANCE FOR REINFORCING STEEL SHALL BE 1/4" ± FOR COVER AND 1" ± FOR SPACING AS PER STANDARD SPECIFICATION SECTION 507.05
7. SEE SHEET 2 FOR DUNNAGE LOCATIONS FOR SHIPPING AND STORAGE.
8. WHEN LIFTING ANY COMPONENT - MINIMUM SLING ANGLE FROM THE HORIZONTAL SHALL BE 60°.
9. REFERENCE REINFORCING DRAWINGS FOR REINFORCING DETAILS.
10. ABUTMENT AND WING REINFORCEMENT IN THE LOCATION OF WRA-160 LIFTERS EXCEEDS THE MINIMUM REINFORCING MESH REQUIREMENTS FROM THE TECHNICAL DETAILS AND THEREFOR NO ADDITIONAL REINFORCMENT NEED BE ADDED FOR THE LIFTING DEVICES TO PERFORM AS DESIGNED.

Vermont Agency of Transportation

RECEIVED

CK'D BY NVDB, JW, KM, TM OK'D BY JG

March 21, 2017

RESUBMIT No Approved

BY K. Higgins DATE 03/23/2017

CALDERWOOD ENGINEERING, ETC.
STRUCTURAL ENGINEERING • DETAILING SERVICES
222 RIVER RD. RICHMOND, ME 04357 PH/FX. (207)737-2007 / 737-2006

PREPARED FOR: MILLER CONSTRUCTION

STRAFFORD BF 0177(10)

STATE OF VERMONT — ERIC T. CALDERWOOD — NO. 87... — Structural — LICENSED PROFESSIONAL ENGINEER

P.E. NUMBER

DATE

	BY	DATE
DESIGN-DETAILED	ETC	JAN 2017
CHECKED-REVIEWED		
REVISIONS 1	ETC	FEB 2017
REVISIONS 2	ETC	MAR 2017
REVISIONS 3		
REVISIONS 4		
FIELD CHANGES		

REVISIONS 1: ADDRESS VTRANS COMMENTS
REVISIONS 2: ADDRESS VTRANS COMMENTS

STRAFFORD VERMONT
ABUTMENT SHOP DETAILS

PIECE MARKS AND ABUTMENT SEGMENT LAYOUT SHEET

SHEET NUMBER

1

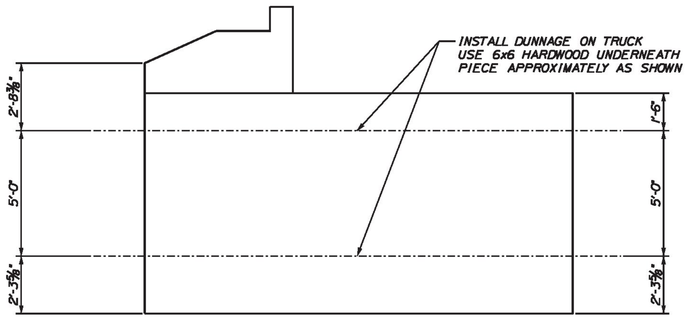

SEGMENT A1 SHIPPING & STORAGE SUPPORT

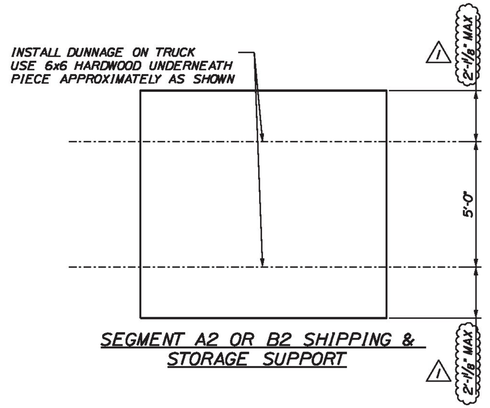

SEGMENT A2 OR B2 SHIPPING & STORAGE SUPPORT

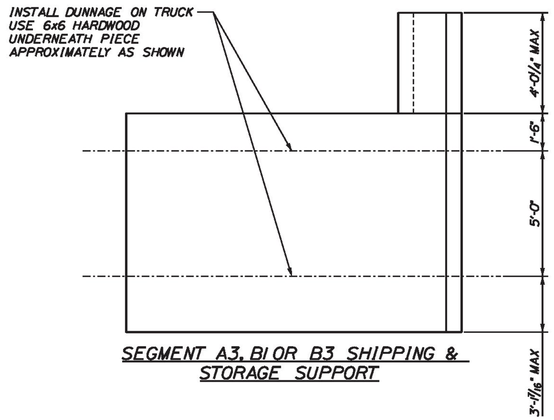

SEGMENT A3, B1 OR B3 SHIPPING & STORAGE SUPPORT

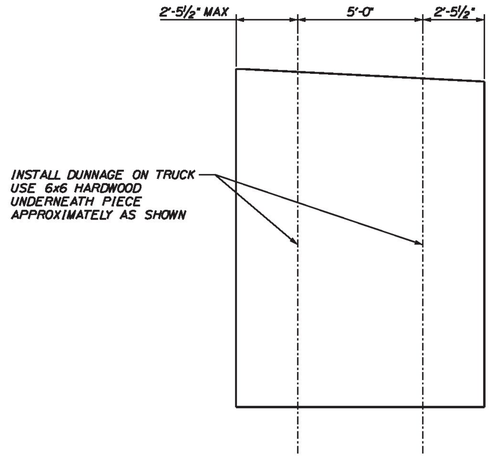

WING WALL SHIPPING & STORAGE SUPPORT (TYPICAL)

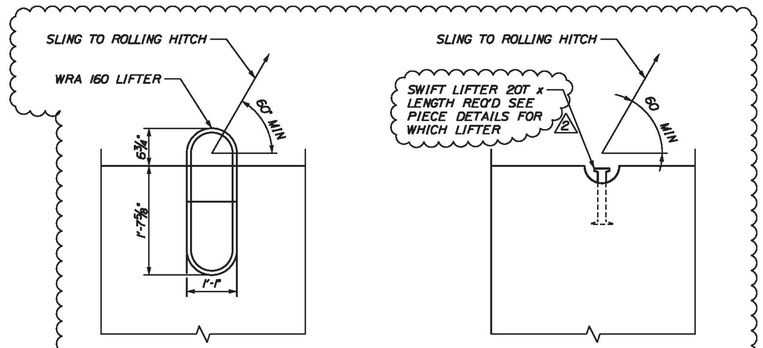

WRA 160 LIFTING DETAIL

SWIFT LIFT LIFTING DETAIL

LIFTING DETAILS FOR LIFTERS 1

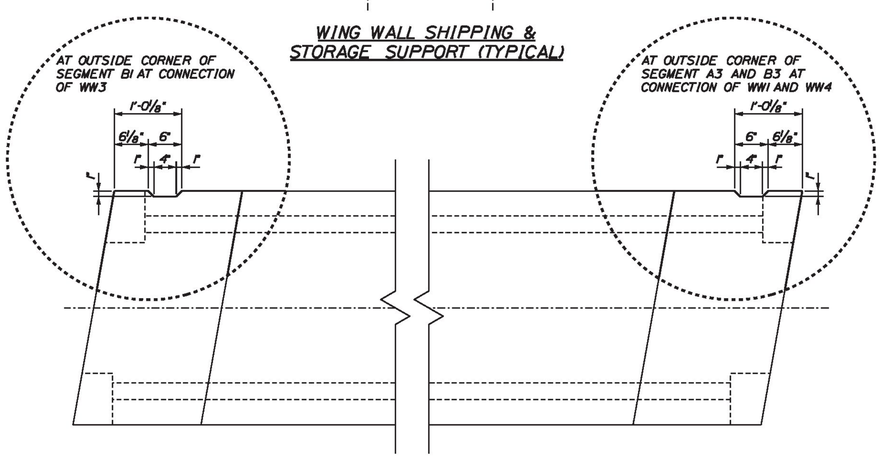

SHEAR KEY GEOMETRY AT WING WALL CONNECTIONS

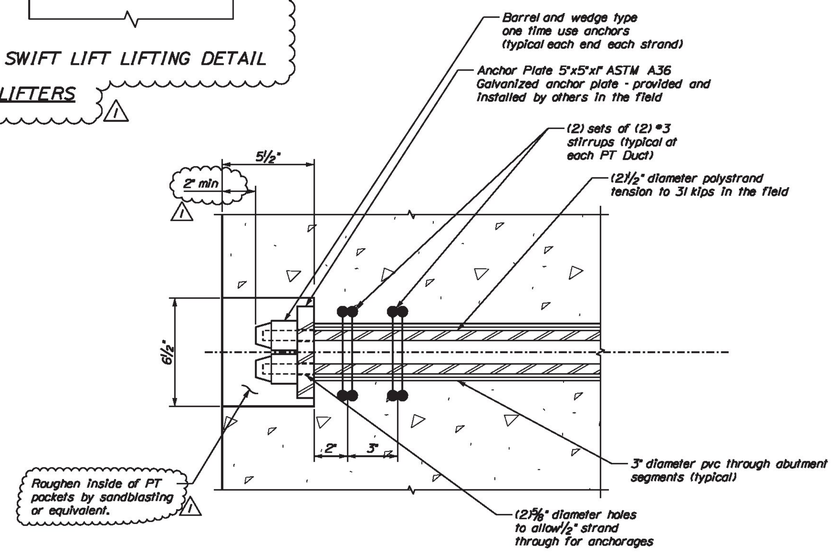

POST TENSIONING POCKET TYPICAL SECTION

Vermont Agency of Transportation
RECEIVED
CK'D BY NVDB, JW, KM, TM OK'D BY JG
March 21, 2017
RESUBMIT No Approved
BY K. Higgins DATE 03/23/2017

CALDERWOOD ENGINEERING, ETC.
STRUCTURAL ENGINEERING • DETAILING SERVICES
222 RIVER RD, RICHMOND, ME 04357 PH/FX (207)737-2007 / 737-2008

PREPARED FOR:
MILLER CONSTRUCTION

STRAFFORD BF 0177(10)

STATE OF VERMONT ERIC T. CALDERWOOD NO. 82 Structural LICENSED PROFESSIONAL ENGINEER

P.E. NUMBER

DATE

BY	DATE	
ETC	JAN 2017	
	FEB 2017	ADDRESS VTRANS COMMENTS 1
	MAR 2017	ADDRESS VTRANS COMMENTS 2
		REVISIONS 3
		REVISIONS 4
		FIELD CHANGES

DESIGN-DETAILED
CHECKED-REVIEWED

STRAFFORD VERMONT
ABUTMENT SHOP DETAILS

MISCELLANEOUS DETAILS

SHEET NUMBER
2

1 USE A SINGLE SHEET OF POLY TO ACT AS A BOND BREAKER BETWEEN MATCH CAST JOINTS. REMOVE POLY AS SOON AS PIECES ARE MOVED.

DRILL AND ANCHOR ANCHOR RODS FOR TEMPORARY BEARINGS IN THE FIELD

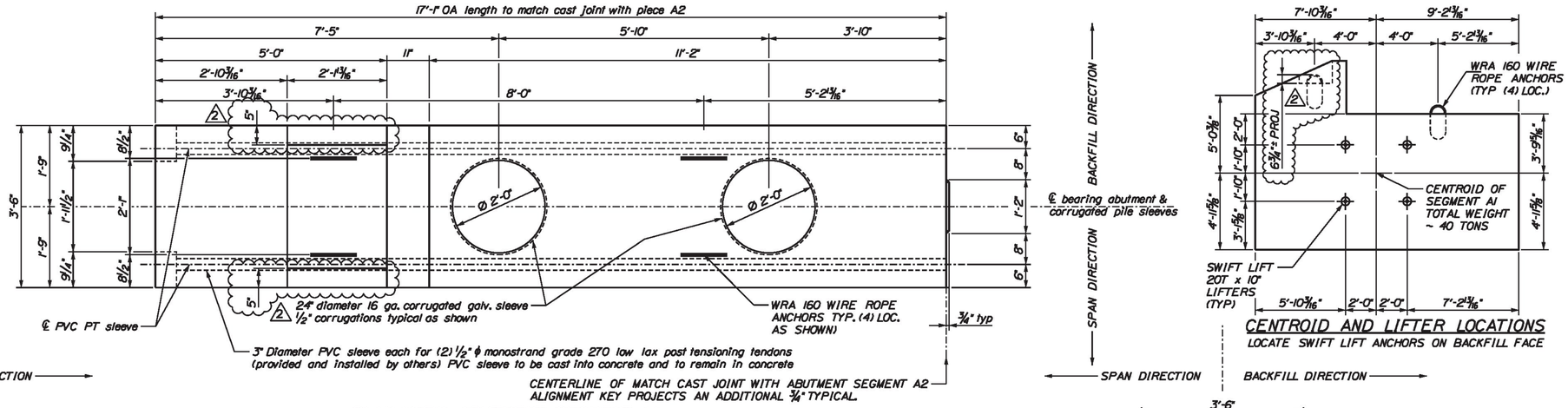

PLAN VIEW ABUTMENT SEGMENT A1

SCALE 3/4" = 1'-0"

CENTROID AND LIFTER LOCATIONS

LOCATE SWIFT LIFT ANCHORS ON BACKFILL FACE

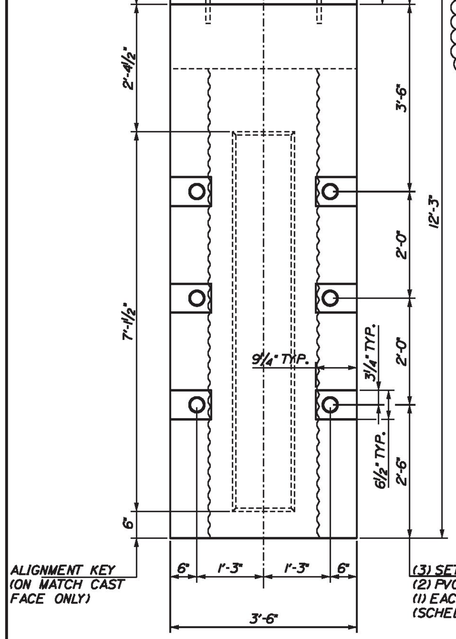

(3) SETS OF (2) PVC PT SLEEVES (1) EACH FACE (SCHED 40 3" PVC)

ALIGNMENT KEY (ON MATCH CAST FACE ONLY)

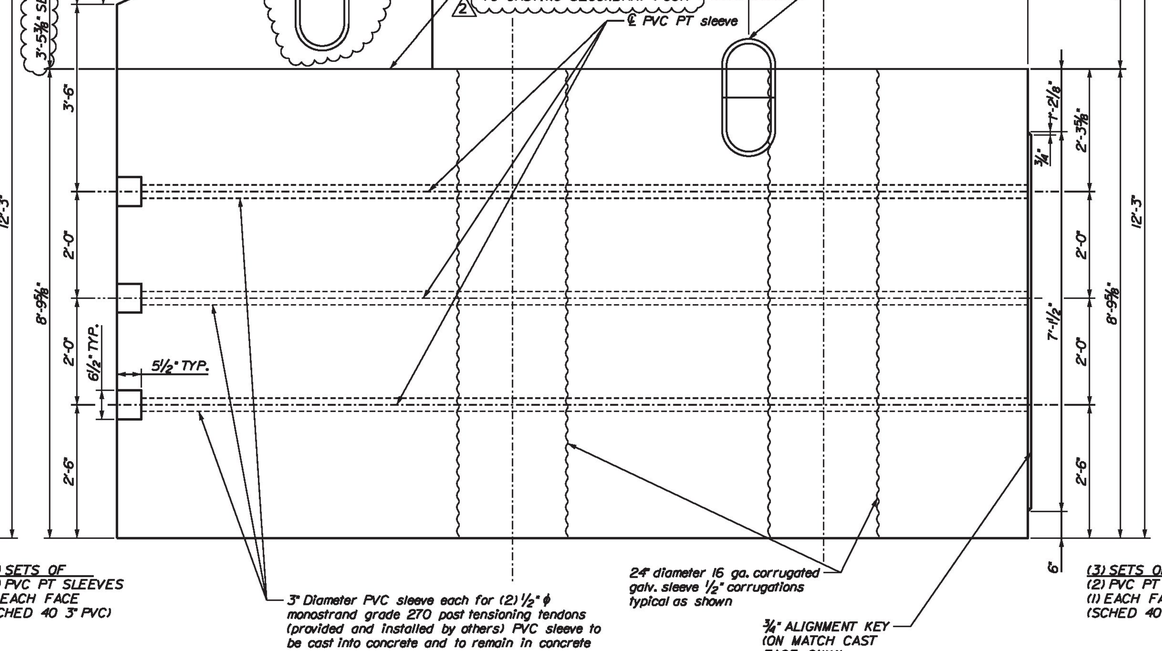

3" Diameter PVC sleeve each for (2) 1/2" ϕ monostrand grade 270 post tensioning tendons (provided and installed by others) PVC sleeve to be cast into concrete and to remain in concrete

24" diameter 16 ga. corrugated galv. sleeve 1/2" corrugations typical as shown

3/4" ALIGNMENT KEY (ON MATCH CAST FACE ONLY)

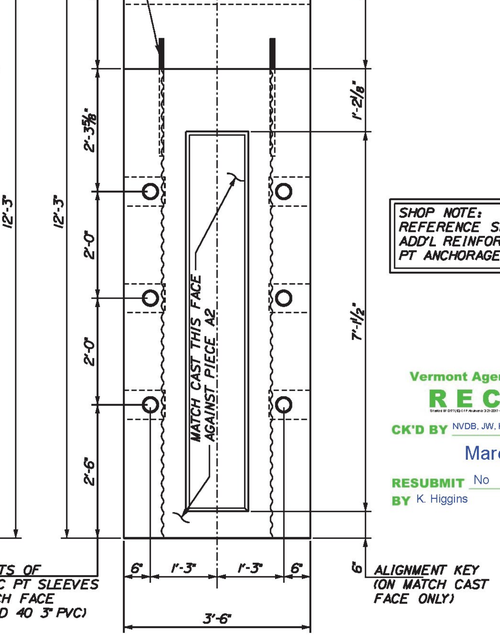

(3) SETS OF (2) PVC PT SLEEVES (1) EACH FACE (SCHED 40 3" PVC)

ALIGNMENT KEY (ON MATCH CAST FACE ONLY)

SHOP NOTE: REFERENCE SHEET 2 FOR ADD'L REINFORCING AT PT ANCHORAGE

Vermont Agency of Transportation
RECEIVED
CK'D BY NVDB, JW, KM, TM OK'D BY JG
March 21, 2017
RESUBMIT No Approved
BY K. Higgins DATE 03/23/2017

LEFT ELEVATION ABUTMENT SEGMENT A1

SCALE 3/4" = 1'-0"

FRONT ELEVATION ABUTMENT SEGMENT A1

SCALE 3/4" = 1'-0" (LOOKING BACKSTATION)

1 ADJUST REBAR IN ORDER TO CLEAR LIFTERS (TYPICAL AS REQUIRED)

RIGHT ELEVATION ABUTMENT SEGMENT A1

SCALE 3/4" = 1'-0"

CALDERWOOD ENGINEERING, ETC.
STRUCTURAL ENGINEERING • DETAILING SERVICES
222 RIVER RD, RICHMOND, ME 04357 PH/FX (207)737-2007 / 737-2008

PREPARED FOR: MILLER CONSTRUCTION

STRAFFORD BF 0177(10)

STATE OF VERMONT ENG'R. CALDERWOOD DAVID NO. 9742 Structural LICENSED PROFESSIONAL ENGINEER

P.E. NUMBER

DATE

	BY	DATE
DESIGN-DETAILED	ETC	JAN 2017
CHECKED-REVIEWED		
REVISIONS 1	ADDRESS VTRANS COMMENTS	FEB 2017
REVISIONS 2	ADDRESS VTRANS COMMENTS	MAR 2017
REVISIONS 3		
REVISIONS 4		
FIELD CHANGES		

STRAFFORD VERMONT
ABUTMENT SHOP DETAILS

SEGMENT A1 GEOMETRIC DETAILS

SHEET NUMBER

3

CALDERWOOD ENGINEERING, ETC. 222 River Road RICHMOND, ME 04357 PH. (207) 737-2007 FAX (207) 737-2008

USE A SINGLE SHEET OF POLY TO ACT AS A BOND BREAKER BETWEEN MATCH CAST JOINTS. REMOVE POLY AS SOON AS PIECES ARE MOVED.

DRILL AND ANCHOR ANCHOR RODS FOR TEMPORARY BEARINGS IN THE FIELD

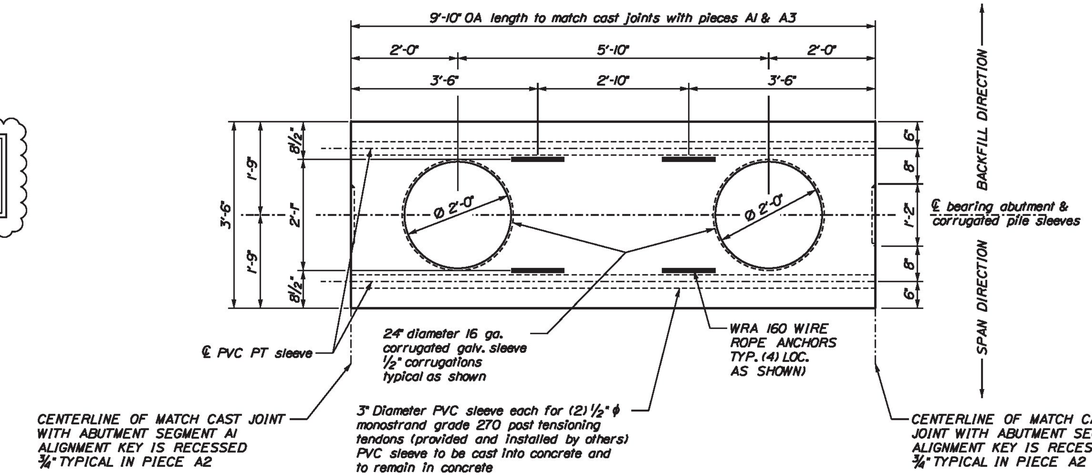

PLAN VIEW ABUTMENT SEGMENT A2

SCALE ¾" = 1'-0"

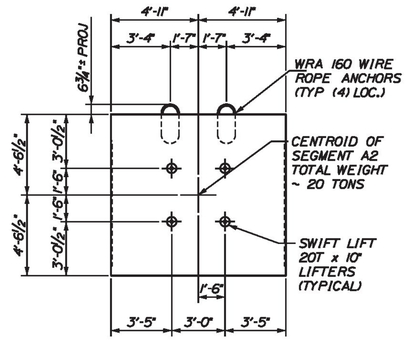

CENTROID AND LIFTER LOCATIONS

LOCATE SWIFT LIFT ANCHORS ON BACKFILL FACE

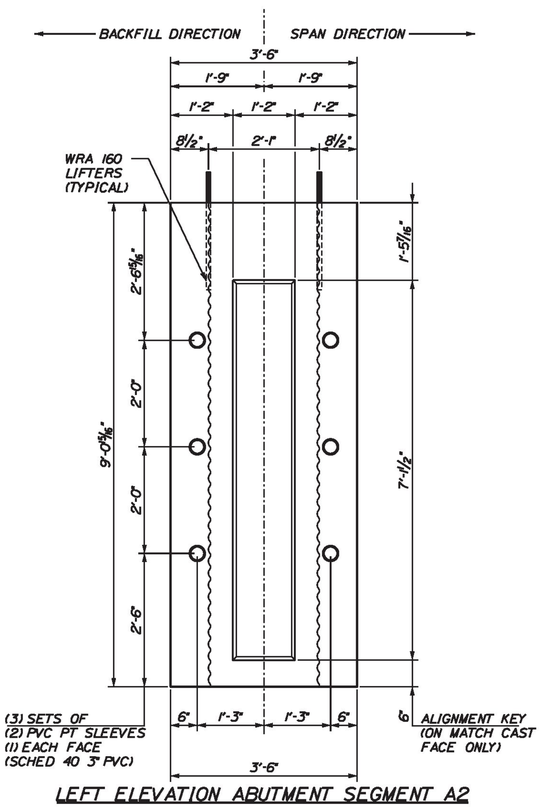

LEFT ELEVATION ABUTMENT SEGMENT A2

SCALE ¾" = 1'-0"

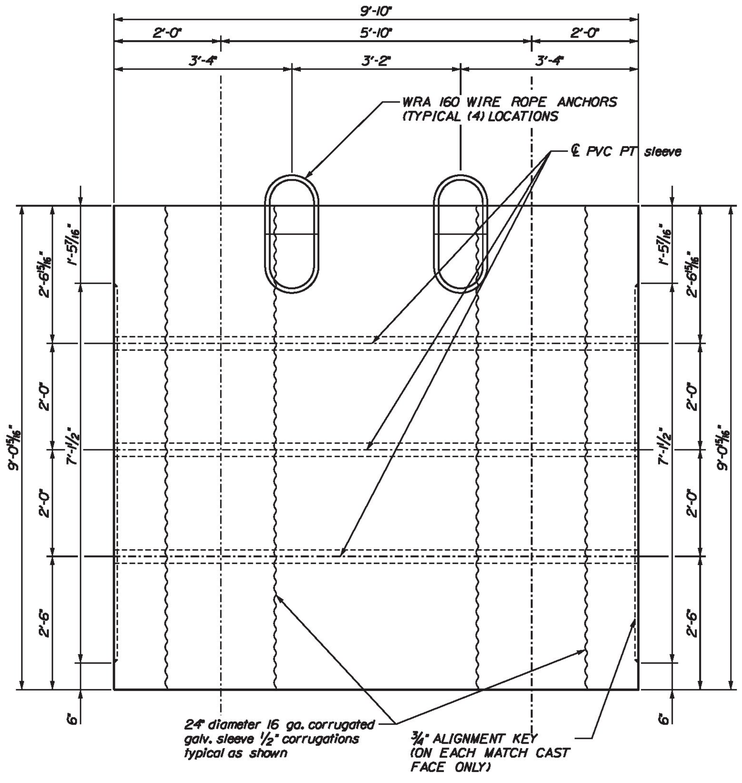

FRONT ELEVATION ABUTMENT SEGMENT A2

SCALE ¾" = 1'-0" (LOOKING BACKSTATION)

ADJUST REBAR IN ORDER TO CLEAR LIFTERS (TYPICAL AS REQUIRED) ⚠

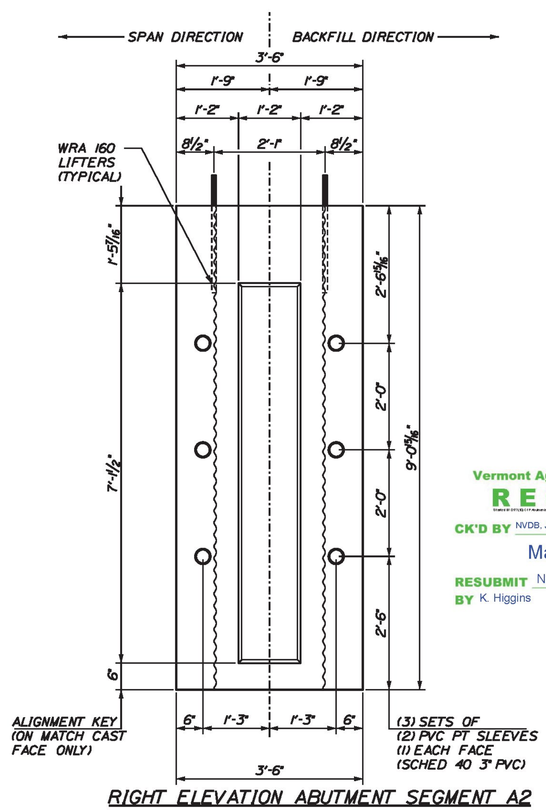

RIGHT ELEVATION ABUTMENT SEGMENT A2

SCALE ¾" = 1'-0"

Vermont Agency of Transportation

RECEIVED

CK'D BY NVDB, JW, KM, TM OK'D BY JG

March 21, 2017

RESUBMIT No Approved

BY K. Higgins DATE 03/23/2017

CALDERWOOD ENGINEERING, ETC.
STRUCTURAL ENGINEERING • DETAILING SERVICES
222 RIVER RD, RICHMOND, ME 04357 PH/FX (207)737-2007 / 737-2008

PREPARED FOR: **MILLER CONSTRUCTION**

STRAFFORD BF 0177(10)

ERIC T. CALDERWOOD — NO. 8710 — Bingham — LICENSED PROFESSIONAL ENGINEER

P.E. NUMBER

DATE

BY	DATE	
ETC	JAN 2017	
	FEB 2017	ADDRESS VTRANS COMMENTS
		REVISIONS 1
		REVISIONS 2
		REVISIONS 3
		REVISIONS 4
		FIELD CHANGES
DESIGN-DETAILED		
CHECKED-REVIEWED		

STRAFFORD VERMONT ABUTMENT SHOP DETAILS

SEGMENT A2 GEOMETRIC DETAILS

SHEET NUMBER

4

CALDERWOOD ENGINEERING, ETC. 222 RIVER RD, RICHMOND, ME 04357 PH/FX (207)737-2007 / 737-2008

DRILL AND ANCHOR ANCHOR RODS FOR TEMPORARY BEARINGS IN THE FIELD

1 USE A SINGLE SHEET OF POLY TO ACT AS A BOND BREAKER BETWEEN MATCH CAST JOINTS. REMOVE POLY AS SOON AS PIECES ARE MOVED.

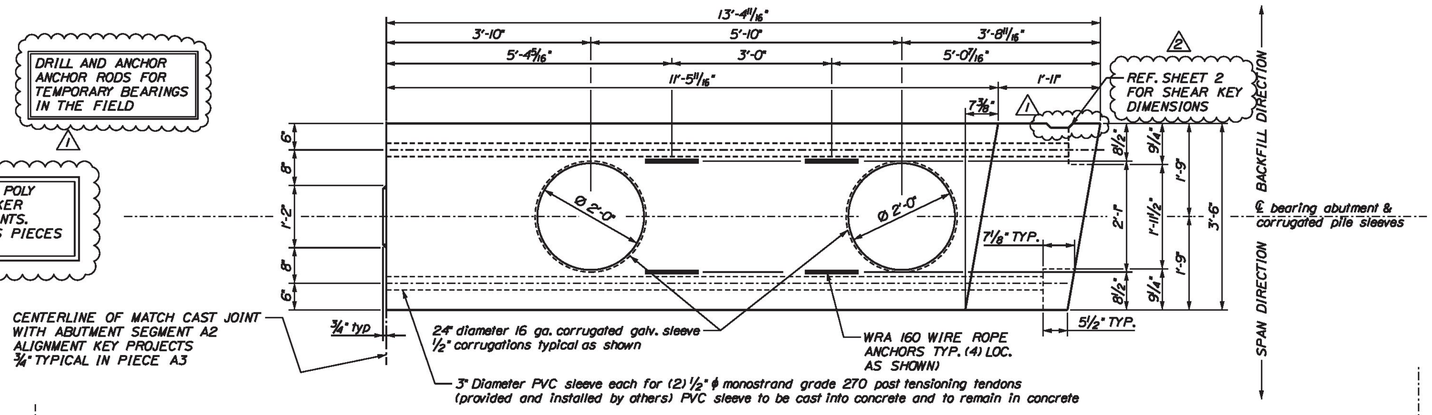

PLAN VIEW ABUTMENT SEGMENT A3

SCALE 3/4" = 1'-0"

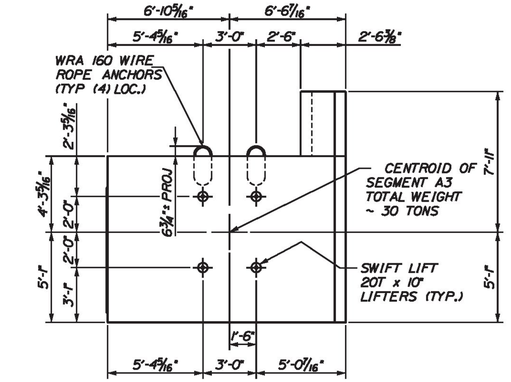

CENTROID AND LIFTER LOCATIONS

LOCATE SWIFT LIFT ANCHORS ON BACKFILL FACE

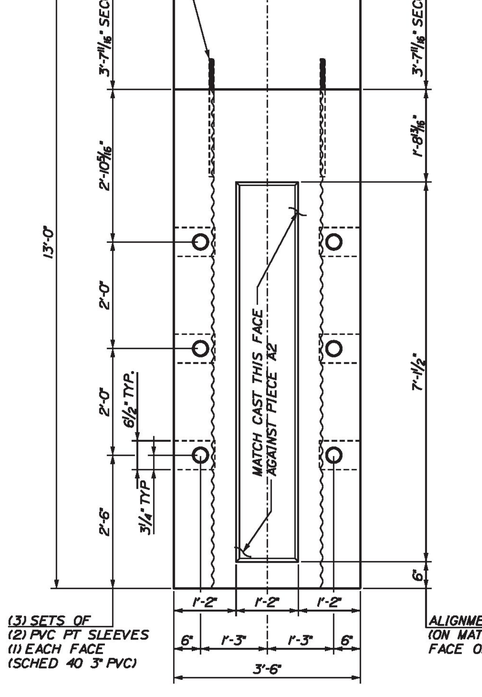

LEFT ELEVATION ABUTMENT SEGMENT A3

SCALE 3/4" = 1'-0"

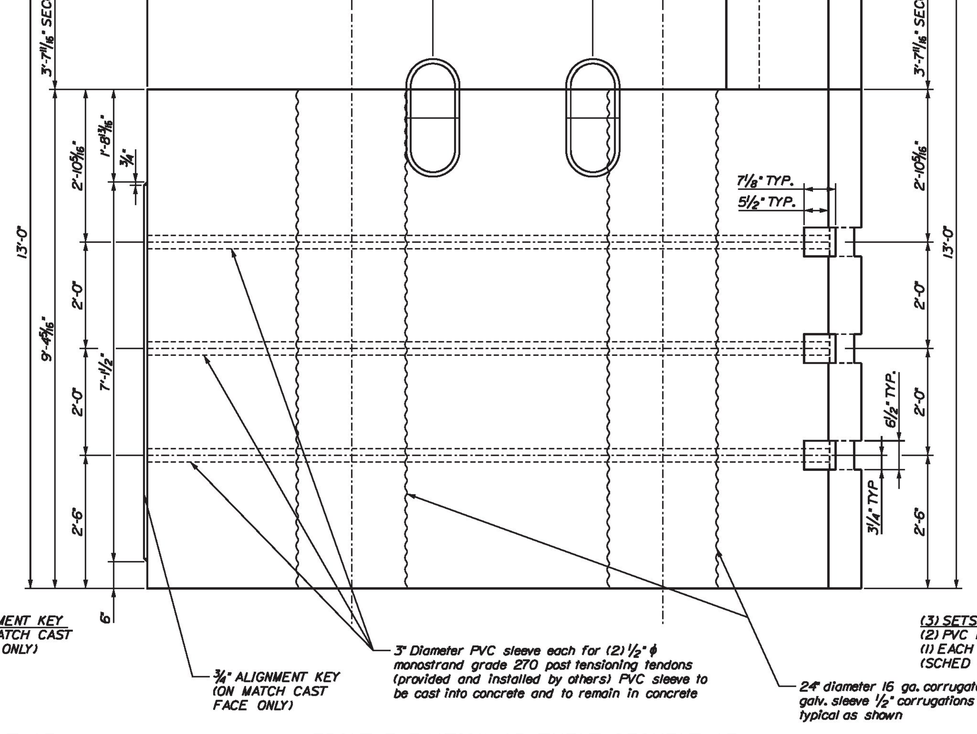

FRONT ELEVATION ABUTMENT SEGMENT A3

SCALE 3/4" = 1'-0" (LOOKING BACKSTATION)

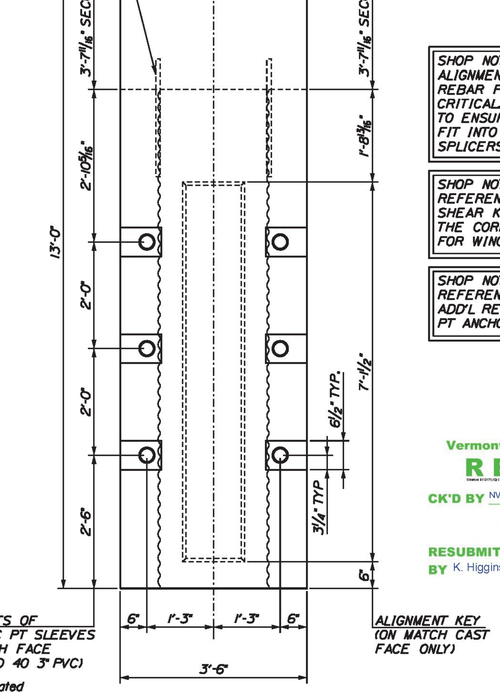

RIGHT ELEVATION ABUTMENT SEGMENT A3

SCALE 3/4" = 1'-0"

SHOP NOTE:
ALIGNMENT OF PROJECTING REBAR FOR WINGWALL CRITICAL. USE A TEMPLATE TO ENSURE REBAR WILL FIT INTO GROUTED SPLICERS IN WING

SHOP NOTE:
REFERENCE SHEET 2 FOR SHEAR KEY DETAILS AT THE CORNER CONNECTION FOR WING WALL WW1

SHOP NOTE:
REFERENCE SHEET 2 FOR ADD'L REINFORCING AT PT ANCHORAGE

Vermont Agency of Transportation
RECEIVED
CK'D BY NVDB, JW, KM, TM OK'D BY JG
March 21, 2017
RESUBMIT No Approved
BY K. Higgins DATE 03/23/2017

CALDERWOOD ENGINEERING, ETC.
STRUCTURAL ENGINEERING • DETAILING SERVICES
222 RIVER RD, RICHMOND, ME 04357 PH/FX (207)737-2007 / 737-2008

PREPARED FOR: **MILLER CONSTRUCTION**

STRAFFORD BF 0177(10)

STATE OF VERMONT ERIC T. CALDERWOOD NO. 9741 Structural LICENSED PROFESSIONAL ENGINEER

P.E. NUMBER

DATE

BY	DATE		
ETC	JAN 2017	DESIGN-DETAILED	
		CHECKED-REVIEWED	
		REVISIONS 1	ADDRESS VTRANS COMMENTS FEB 2017
		REVISIONS 2	ADDRESS VTRANS COMMENTS MAR 2017
		REVISIONS 3	
		REVISIONS 4	
		FIELD CHANGES	

STRAFFORD VERMONT ABUTMENT SHOP DETAILS

SEGMENT A3 GEOMETRIC DETAILS

SHEET NUMBER

5

DRILL AND ANCHOR ANCHOR RODS FOR TEMPORARY BEARINGS IN THE FIELD

SEE SHEET 2 FOR SHEAR KEY DIMENSIONS

USE A SINGLE SHEET OF POLY TO ACT AS A BOND BREAKER BETWEEN MATCH CAST JOINTS. REMOVE POLY AS SOON AS PIECES ARE MOVED.

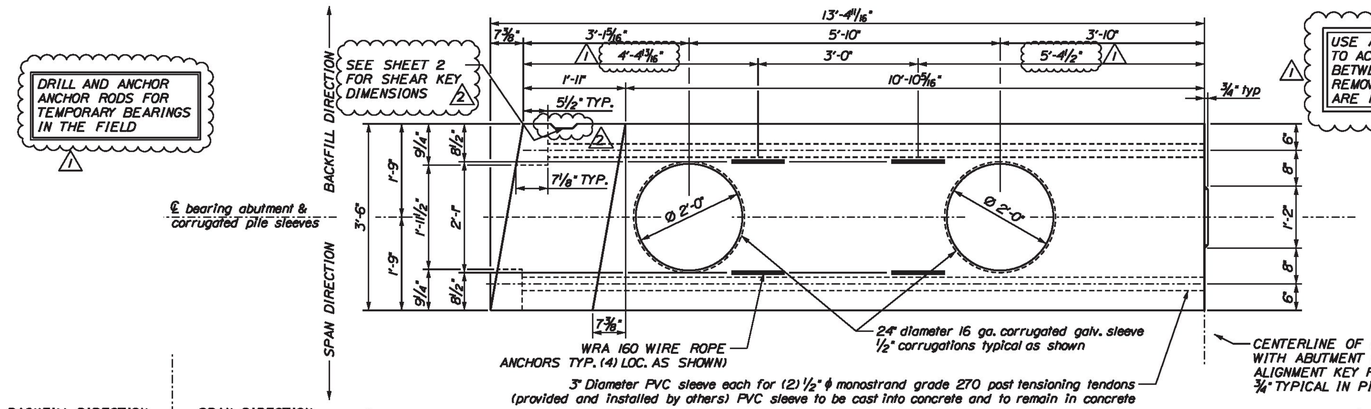

PLAN VIEW ABUTMENT SEGMENT B1

SCALE 3/4" = 1'-0"

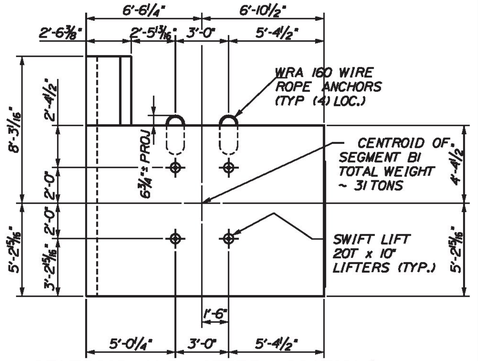

CENTROID AND LIFTER LOCATIONS

LOCATE SWIFT LIFT ANCHORS ON BACKFILL FACE

BACKFILL DIRECTION — SPAN DIRECTION

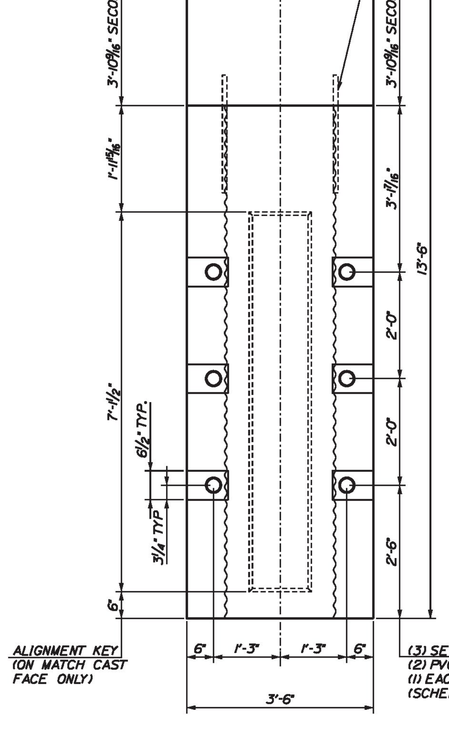

LEFT ELEVATION ABUTMENT SEGMENT B1

SCALE 3/4" = 1'-0"

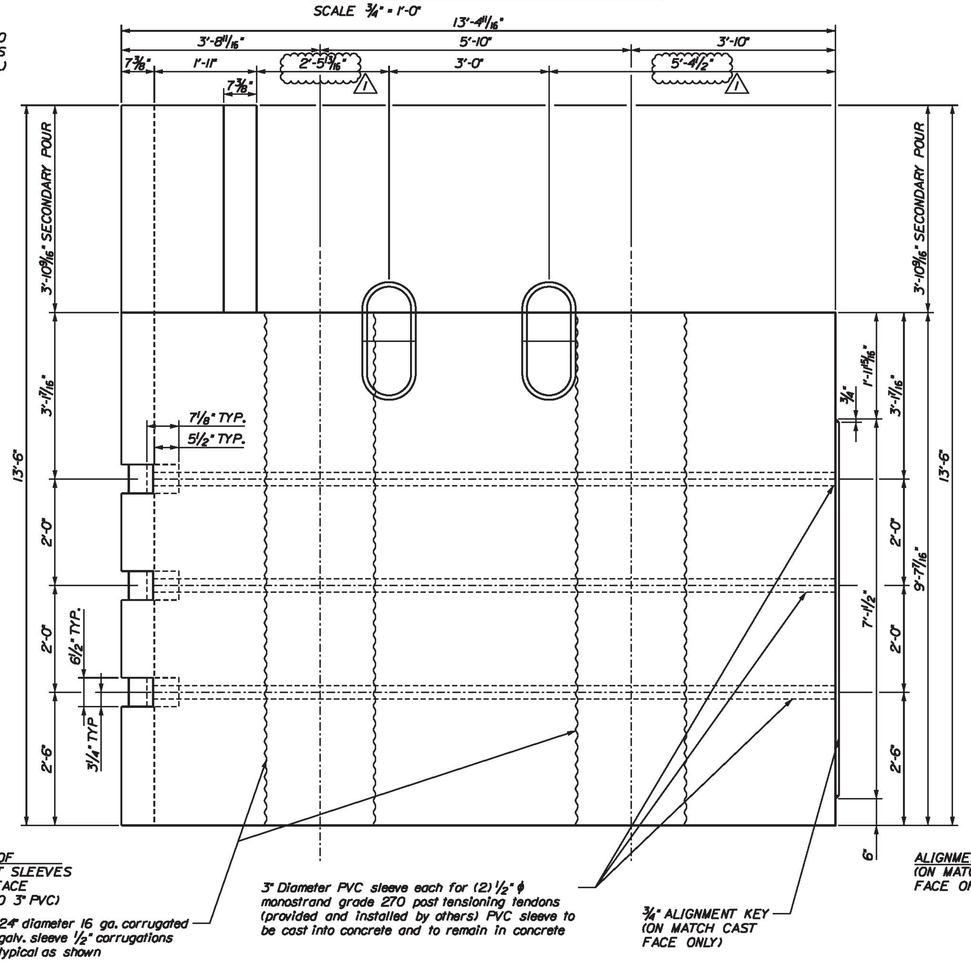

FRONT ELEVATION ABUTMENT SEGMENT B1

SCALE 3/4" = 1'-0" (LOOKING UPSTATION)

SPAN DIRECTION — BACKFILL DIRECTION

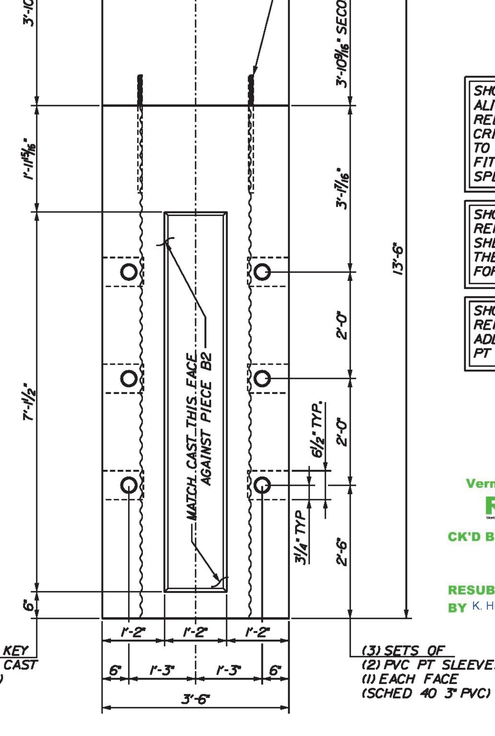

RIGHT ELEVATION ABUTMENT SEGMENT B1

SCALE 3/4" = 1'-0"

SHOP NOTE: ALIGNMENT OF PROJECTING REBAR FOR WINGWALL CRITICAL. USE A TEMPLATE TO ENSURE REBAR WILL FIT INTO GROUTED SPLICERS IN WING

SHOP NOTE: REFERENCE SHEET 2 FOR SHEAR KEY DETAILS AT THE CORNER CONNECTION FOR WING WALL WW3

SHOP NOTE: REFERENCE SHEET 2 FOR ADD'L REINFORCING AT PT ANCHORAGE

Vermont Agency of Transportation
RECEIVED
CK'D BY NVDB, JW, KM, TM OK'D BY JG
March 21, 2017
RESUBMIT No Approved
BY K. Higgins DATE 03/23/2017

CALDERWOOD ENGINEERING, ETC.
STRUCTURAL ENGINEERING • DETAILING SERVICES
222 RIVER RD, RICHMOND, ME 04357 PH/FX (207)737-2007 / 737-2008

PREPARED FOR: MILLER CONSTRUCTION

STRAFFORD BF 0177(10)

STATE OF VERMONT — ERIC T. CALDERWOOD — NO. 8744 — LICENSED PROFESSIONAL ENGINEER

BY	DATE	
ETC	JAN 2017	

USE A SINGLE SHEET OF POLY TO ACT AS A BOND BREAKER BETWEEN MATCH CAST JOINTS. REMOVE POLY AS SOON AS PIECES ARE MOVED.

DRILL AND ANCHOR ANCHOR RODS FOR TEMPORARY BEARINGS IN THE FIELD

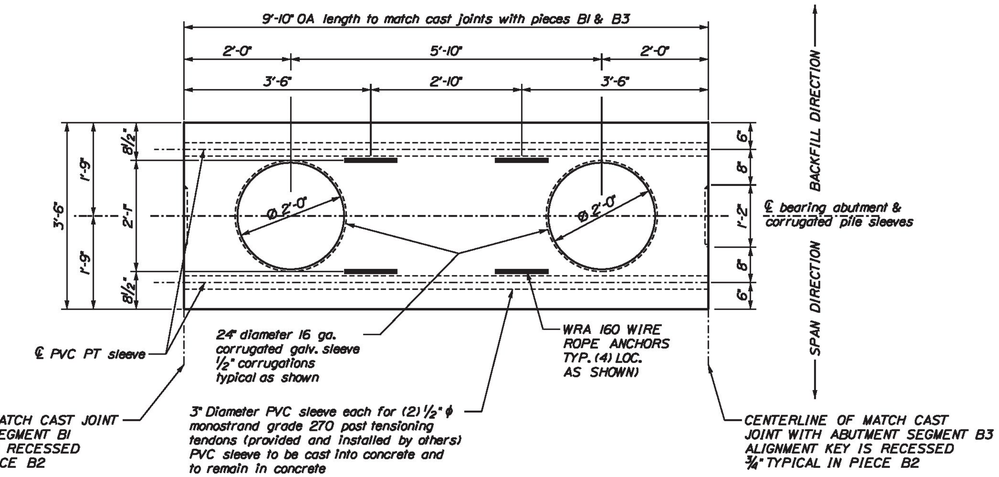

PLAN VIEW ABUTMENT SEGMENT B2

SCALE ¾" = 1'-0"

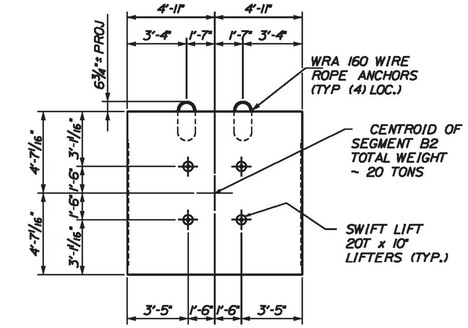

CENTROID AND LIFTER LOCATIONS

LOCATE SWIFT LIFT ANCHORS ON BACKFILL FACE

LEFT ELEVATION ABUTMENT SEGMENT B2

SCALE ¾" = 1'-0"

FRONT ELEVATION ABUTMENT SEGMENT B2

SCALE ¾" = 1'-0" (LOOKING UPSTATION)

RIGHT ELEVATION ABUTMENT SEGMENT B2

SCALE ¾" = 1'-0"

Vermont Agency of Transportation
RECEIVED
CK'D BY NVDB, JW, KM, TM OK'D BY JG
March 21, 2017
RESUBMIT No Approved
BY K. Higgins DATE 03/23/2017

CALDERWOOD ENGINEERING, ETC.
STRUCTURAL ENGINEERING • DETAILING SERVICES
222 RIVER RD, RICHMOND, ME 04357 PH/FX (207)737-2007 / 737-2008
PREPARED FOR: MILLER CONSTRUCTION
STRAFFORD BF 0177(10)

STATE OF VERMONT ERIC T. CALDERWOOD NO. 8744 Structural LICENSED PROFESSIONAL ENGINEER

P.E. NUMBER
DATE

BY	DATE	DESIGN-DETAILED	CHECKED-REVIEWED	ADDRESS VTRANS COMMENTS	FEB 2017
ETC	JAN 2017			REVISIONS 1	
				REVISIONS 2	
				REVISIONS 3	
				REVISIONS 4	
				FIELD CHANGES	

STRAFFORD VERMONT
ABUTMENT SHOP DETAILS

SEGMENT B2 GEOMETRIC DETAILS

SHEET NUMBER
7

CALDERWOOD ENGINEERING, ETC. 222 River Rd. Richmond, ME 04357 PH. (207) 737-2007 FAX (207) 737-2008

1. USE A SINGLE SHEET OF POLY TO ACT AS A BOND BREAKER BETWEEN MATCH CAST JOINTS. REMOVE POLY AS SOON AS PIECES ARE MOVED.

1. DRILL AND ANCHOR ANCHOR RODS FOR TEMPORARY BEARINGS IN THE FIELD

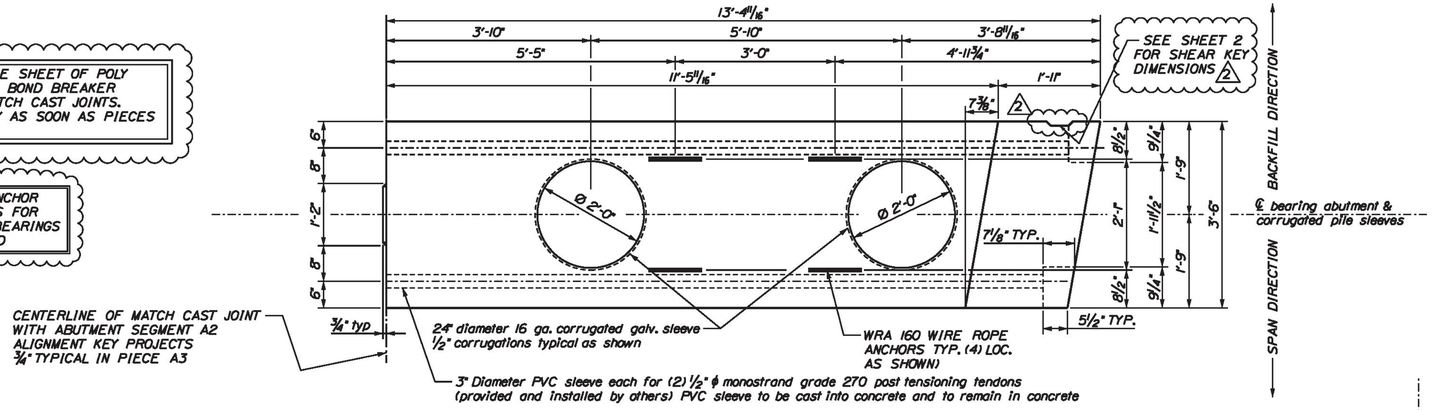

PLAN VIEW ABUTMENT SEGMENT B3

SCALE 3/4" = 1'-0"

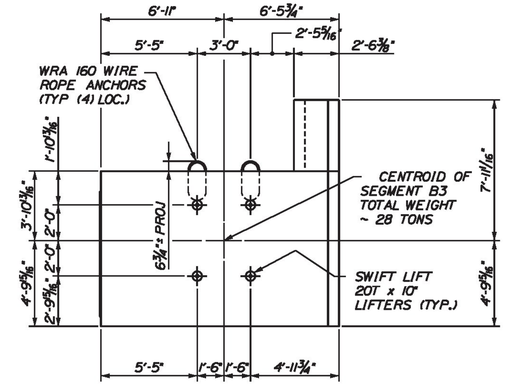

CENTROID AND LIFTER LOCATIONS

LOCATE SWIFT LIFT ANCHORS ON BACKFILL FACE

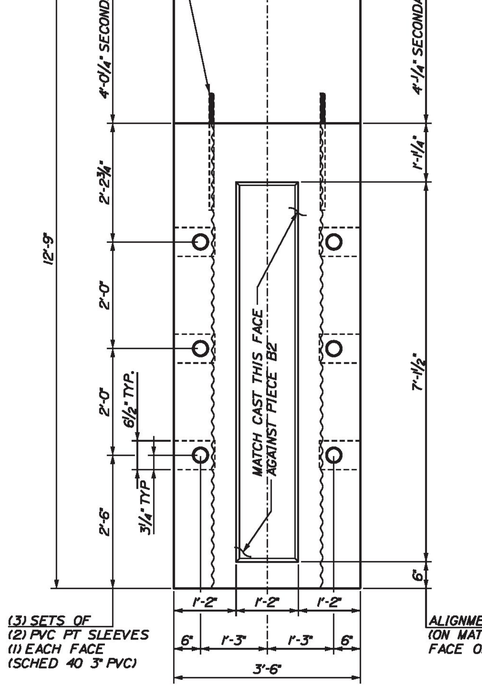

LEFT ELEVATION ABUTMENT SEGMENT B3

SCALE 3/4" = 1'-0"

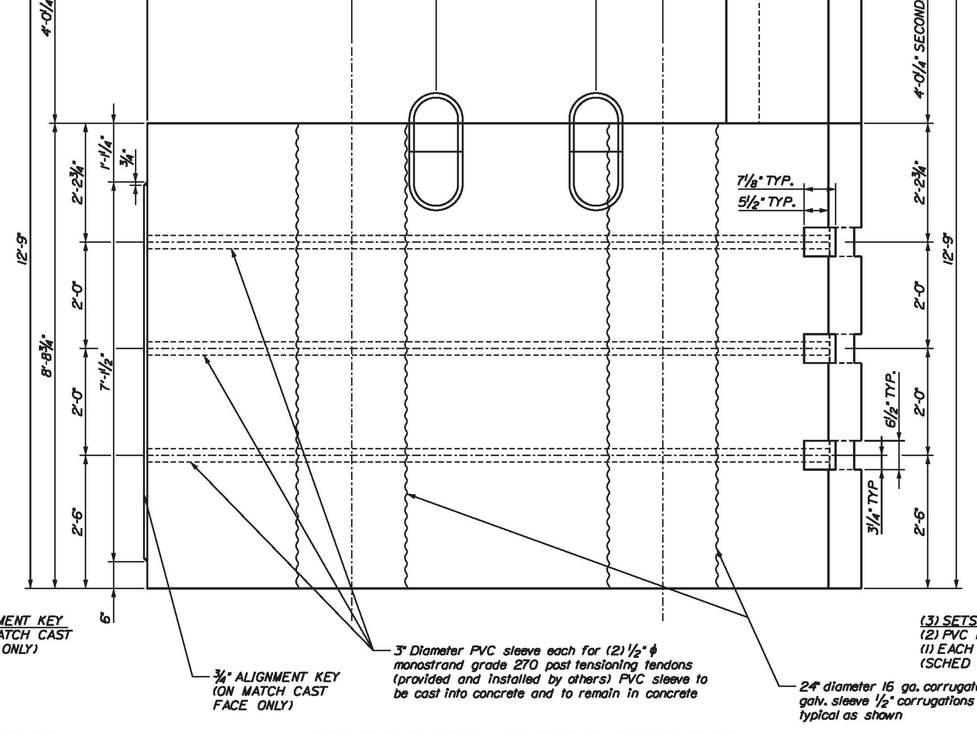

FRONT ELEVATION ABUTMENT SEGMENT B3

SCALE 3/4" = 1'-0" (LOOKING UPSTATION)

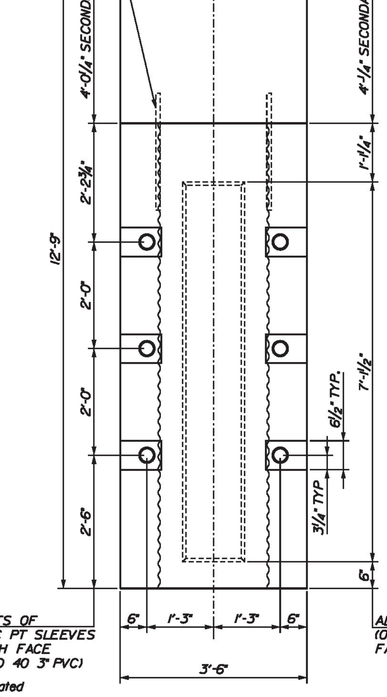

RIGHT ELEVATION ABUTMENT SEGMENT B3

SCALE 3/4" = 1'-0"

SHOP NOTE:
ALIGNMENT OF PROJECTING REBAR FOR WINGWALL CRITICAL. USE A TEMPLATE TO ENSURE REBAR WILL FIT INTO GROUTED SPLICERS IN WING

SHOP NOTE:
REFERENCE SHEET 2 FOR SHEAR KEY DETAILS AT THE CORNER CONNECTION FOR WING WALL WW4

SHOP NOTE:
REFERENCE SHEET 2 FOR ADD'L REINFORCING AT PT ANCHORAGE

Vermont Agency of Transportation
RECEIVED
CK'D BY NVDB, JW, KM, TM OK'D BY JG
March 21, 2017
RESUBMIT No Approved
BY K. Higgins DATE 03/23/2017

CALDERWOOD ENGINEERING, ETC.
STRUCTURAL ENGINEERING • DETAILING SERVICES
222 RIVER RD, RICHMOND, ME 04357 PH/FX (207)737-2007 / 737-2008

PREPARED FOR: MILLER CONSTRUCTION

STRAFFORD BF 0177(10)

STATE OF VERMONT — ERIC F. CALDERWOOD — NO. 8747 — STRUCTURAL — LICENSED PROFESSIONAL ENGINEER

P.E. NUMBER

DATE

DESIGN-DETAILED	BY	DATE
CHECKED-REVIEWED	ETC	JAN 2017
REVISIONS 1		FEB 2017
REVISIONS 2		ADDRESS TTRMS
REVISIONS 3		ADDRESS TTRMS
REVISIONS 4		MAR 2017
FIELD CHANGES		

STRAFFORD VERMONT
ABUTMENT SHOP DETAILS

SEGMENT B3 GEOMETRIC DETAILS

SHEET NUMBER

8

CALDERWOOD ENGINEERING, ETC. 222 RIVER ROAD RICHMOND, ME 04357 PH/FX (207)737-2007/737-2008

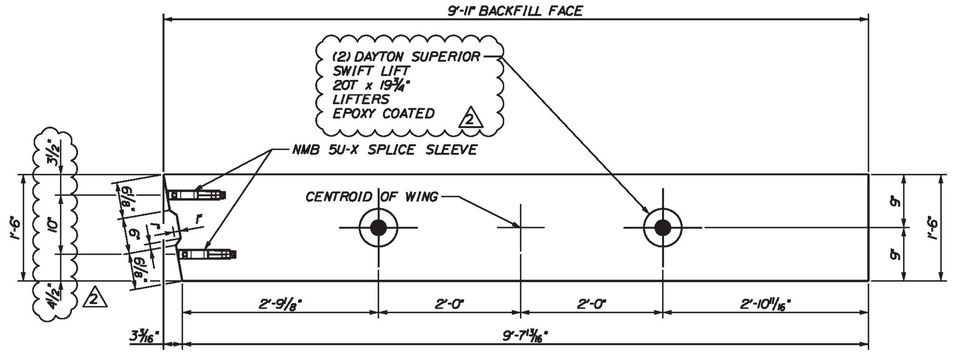

WINGWALL WW1 PLAN VIEW

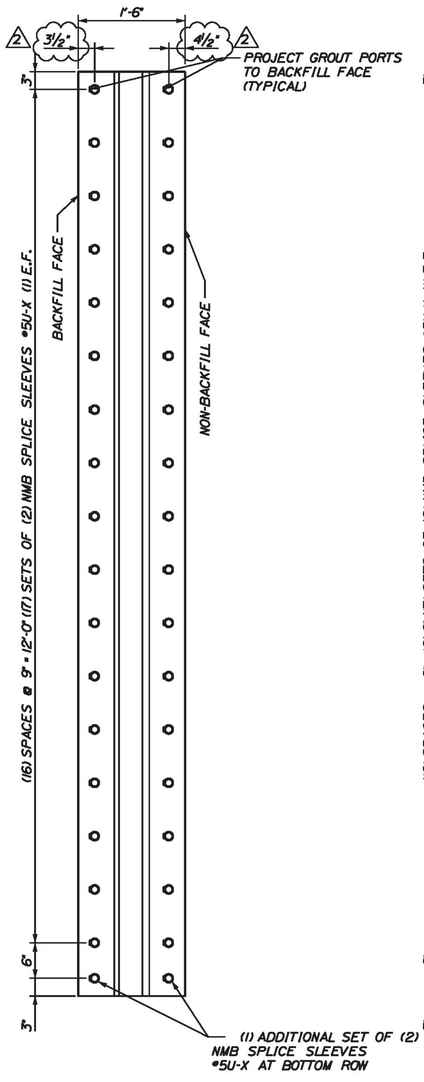

WINGWALL WW1 LEFT ELEVATION

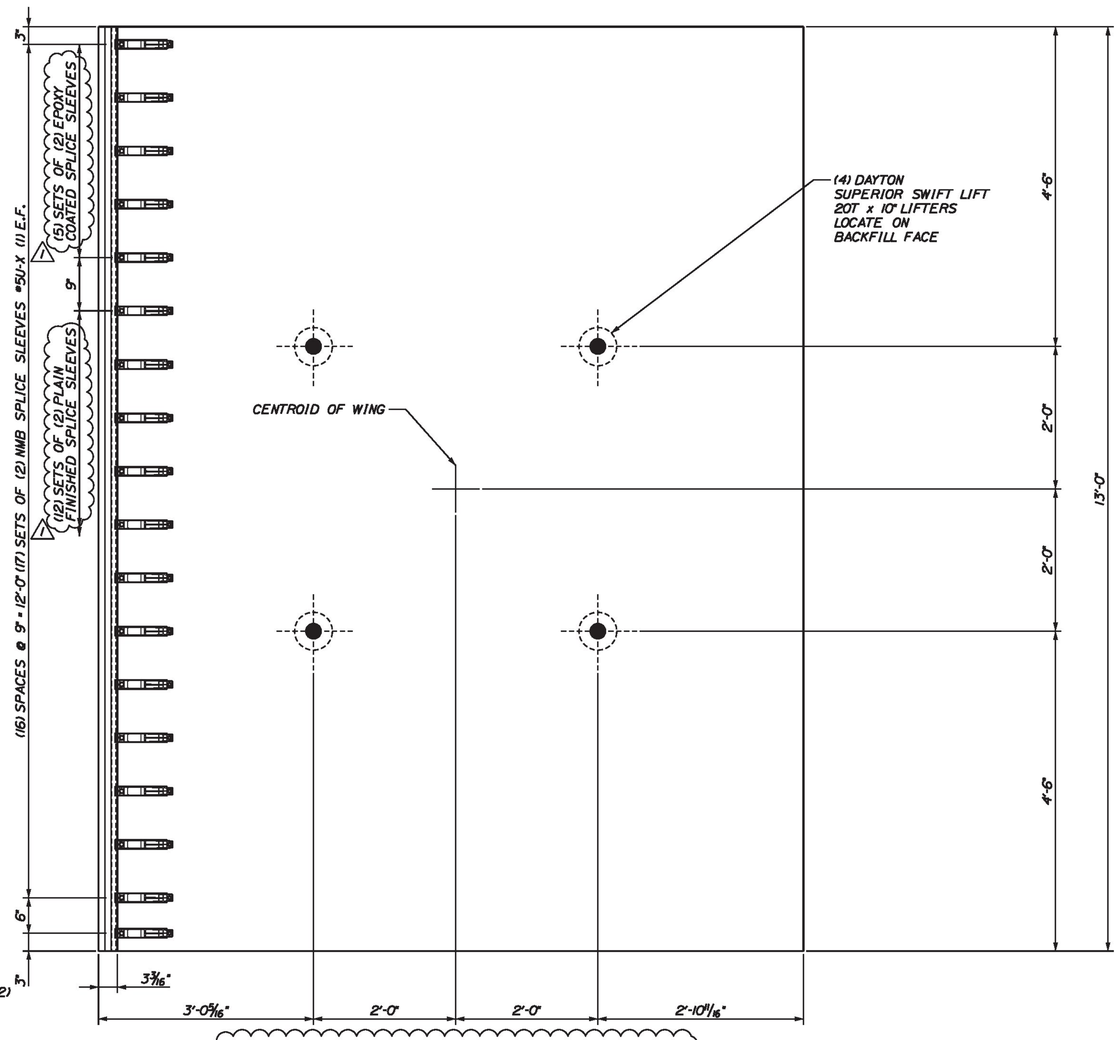

WINGWALL WW1 NON-BACKFILLED ELEVATION
~ 14.5 TONS 2

SHOP NOTE:
ALIGNMENT OF SPLICE SLEEVES INTO ABUTMENT SEGMENT IS CRITICAL USE A TEMPLATE TO ENSURE REBAR WILL FIT INTO GROUTED SPLICERS IN WING
1

PATCH LIFTING HOLES WITH GROUT FROM VTRANS OVERHEAD GROUT APPROVED PRODUCTS LIST
2 1

(PROVIDE ADDITIONAL SPLICE SLEEVES FOR VTRANS TESTING PER SPECIFICATION)
1

Vermont Agency of Transportation
RECEIVED
CK'D BY NVDB, JW, KM, TM OK'D BY JG
March 21, 2017
RESUBMIT No Approved
BY K. Higgins DATE 03/23/2017

CALDERWOOD ENGINEERING, ETC.
STRUCTURAL ENGINEERING • DETAILING SERVICES
222 RIVER RD, RICHMOND, ME 04357 PH/FX (207)737-2007 / 737-2008

PREPARED FOR:
MILLER CONSTRUCTION

STRAFFORD BF 0177(10)

STATE OF VERMONT
ERIC F. CALDERWOOD
NO. 9743
Structural
LICENSED PROFESSIONAL ENGINEER

P.E. NUMBER

DATE

BY	DATE	
ETC	JAN 2017	

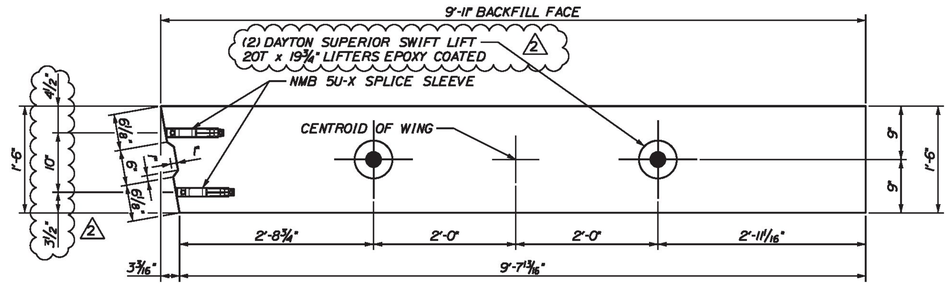

WINGWALL WW3 PLAN VIEW

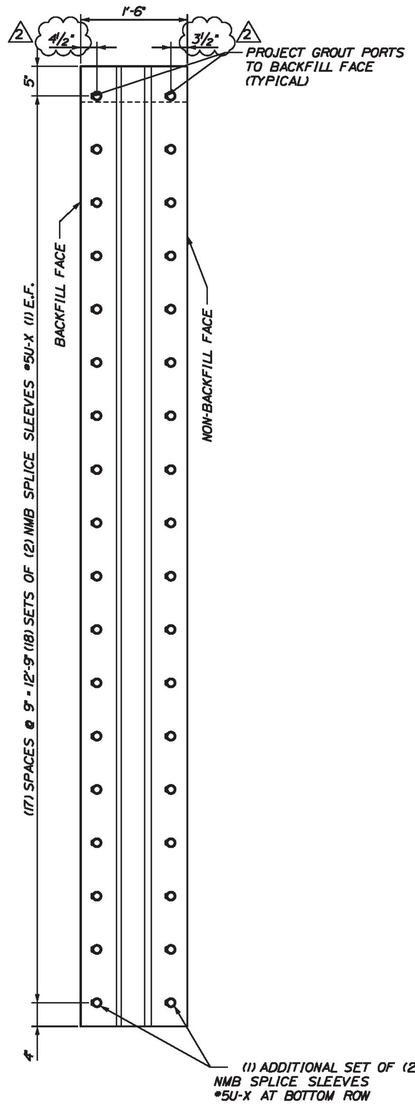

WINGWALL WW3 LEFT ELEVATION

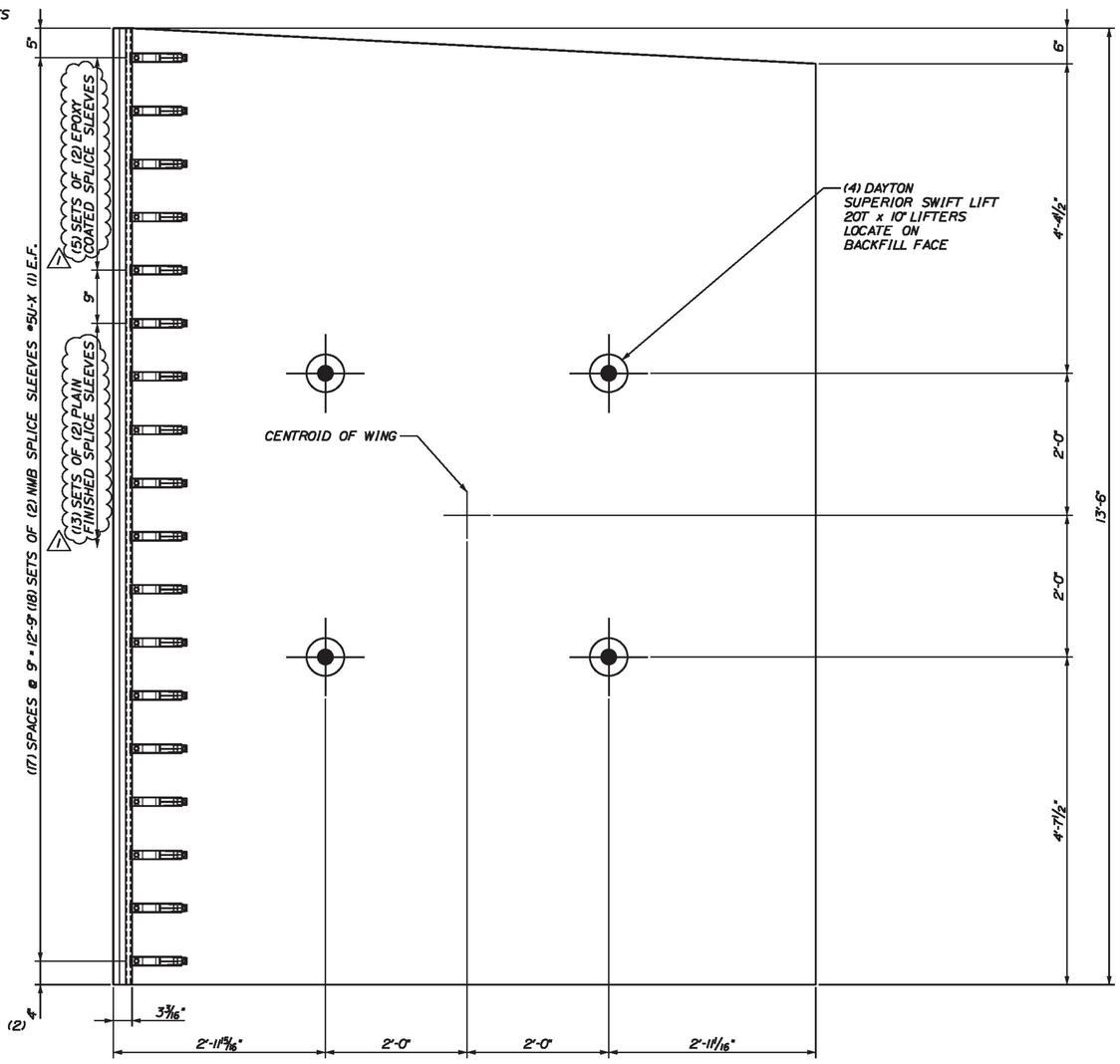

WINGWALL WW3 BACKFILLED ELEVATION
~ 15 TONS

SHOP NOTE:
ALIGNMENT OF SPLICE SLEEVES INTO ABUTMENT SEGMENT IS CRITICAL. USE A TEMPLATE TO ENSURE REBAR WILL FIT INTO GROUTED SPLICERS IN WING

PATCH LIFTING HOLES WITH GROUT FROM VTRANS OVERHEAD GROUT APPROVED PRODUCTS LIST

(PROVIDE ADDITIONAL SPLICE SLEEVES FOR VTRANS TESTING PER SPECIFICATION)

Vermont Agency of Transportation
RECEIVED
CK'D BY NVDB, JW, KM, TM OK'D BY JG
March 21, 2017
RESUBMIT No Approved
BY K. Higgins DATE 03/23/2017

CALDERWOOD ENGINEERING, ETC.
STRUCTURAL ENGINEERING • DETAILING SERVICES
222 RIVER RD, RICHMOND, ME 04357 PH/FX (207)737-2007 / 737-2008
PREPARED FOR:
MILLER CONSTRUCTION
STRAFFORD BF 0177(10)

STATE OF VERMONT
ERIC T. CALDERWOOD
NO. 87
Structural
LICENSED
PROFESSIONAL ENGINEER

	BY	DATE
DESIGN-DETAILED	ETC	JAN 2017
CHECKED-REVIEWED		
REVISIONS 1	ADDRESS VTRANS COMMENTS	FEB 2017
REVISIONS 2	ADDRESS VTRANS COMMENTS	MAR 2017
REVISIONS 3		
REVISIONS 4		
FIELD CHANGES		

P.E. NUMBER
DATE

STRAFFORD VERMONT
ABUTMENT SHOP DETAILS

WINGWALL WW3 GEOMETRIC DETAILS

SHEET NUMBER
10

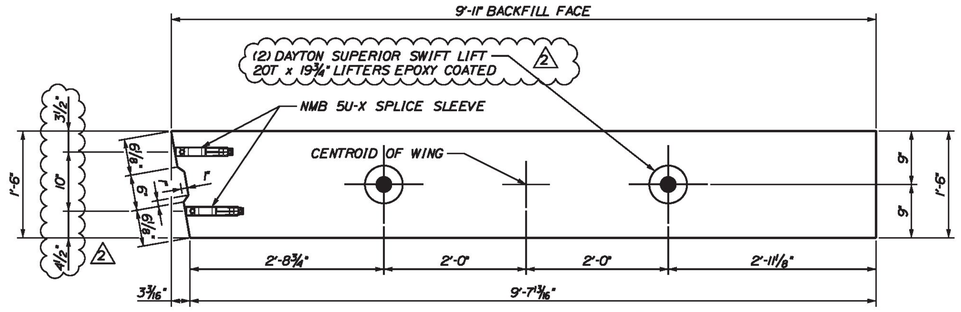

WINGWALL WW4 PLAN VIEW

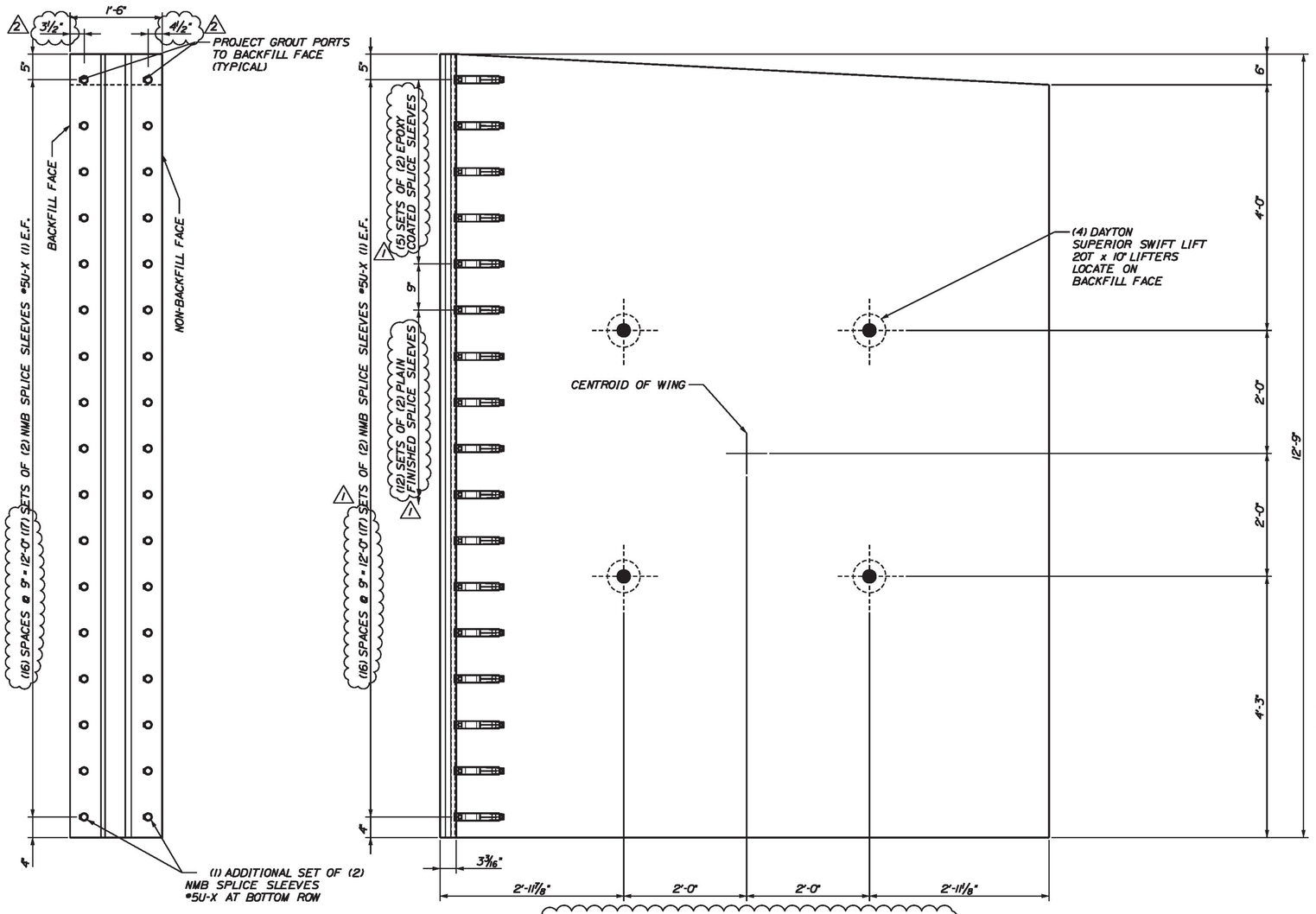

WINGWALL WW4 LEFT ELEVATION

WINGWALL WW4 NON-BACKFILLED ELEVATION
~ 14 TONS
2

1 SHOP NOTE:
ALIGNMENT OF SPLICE SLEEVES INTO ABUTMENT SEGMENT IS CRITICAL. USE A TEMPLATE TO ENSURE REBAR WILL FIT INTO GROUTED SPLICERS IN WING

2
1 PATCH LIFTING HOLES WITH GROUT FROM VTRANS OVERHEAD GROUT APPROVED PRODUCTS LIST

1 (PROVIDE ADDITIONAL SPLICE SLEEVES FOR VTRANS TESTING PER SPECIFICATION)

Vermont Agency of Transportation
RECEIVED
CK'D BY NVDB, JW, KM, TM OK'D BY JG
March 21, 2017
RESUBMIT No Approved
BY K. Higgins DATE 03/23/2017

CALDERWOOD ENGINEERING, ETC.
STRUCTURAL ENGINEERING • DETAILING SERVICES
222 RIVER RD, RICHMOND, ME 04357 PH/FX (207)737-2007 / 737-2008

PREPARED FOR:
MILLER CONSTRUCTION

STRAFFORD BF 0177(10)

STATE OF VERMONT ERIC A. CALDERWOOD NO. 8714 LICENSED PROFESSIONAL ENGINEER

P.E. NUMBER

DATE

BY	ETC	
DATE	JAN 2017	
DESIGN-DETAILED		
CHECKED-REVIEWED		
REVISIONS 1	ADDRESS VTRANS COMMENTS	FEB 2017
REVISIONS 2	ADDRESS VTRANS COMMENTS	MAR 2017
REVISIONS 3		
REVISIONS 4		
FIELD CHANGES		

STRAFFORD VERMONT
ABUTMENT SHOP DETAILS

WINGWALL WW4 GEOMETRIC DETAILS

SHEET NUMBER
11

CALDERWOOD ENGINEERING, ETC. 222 River Road RICHMOND, ME 04357 PH. (207) 737-2007 FAX (207) 737-2008

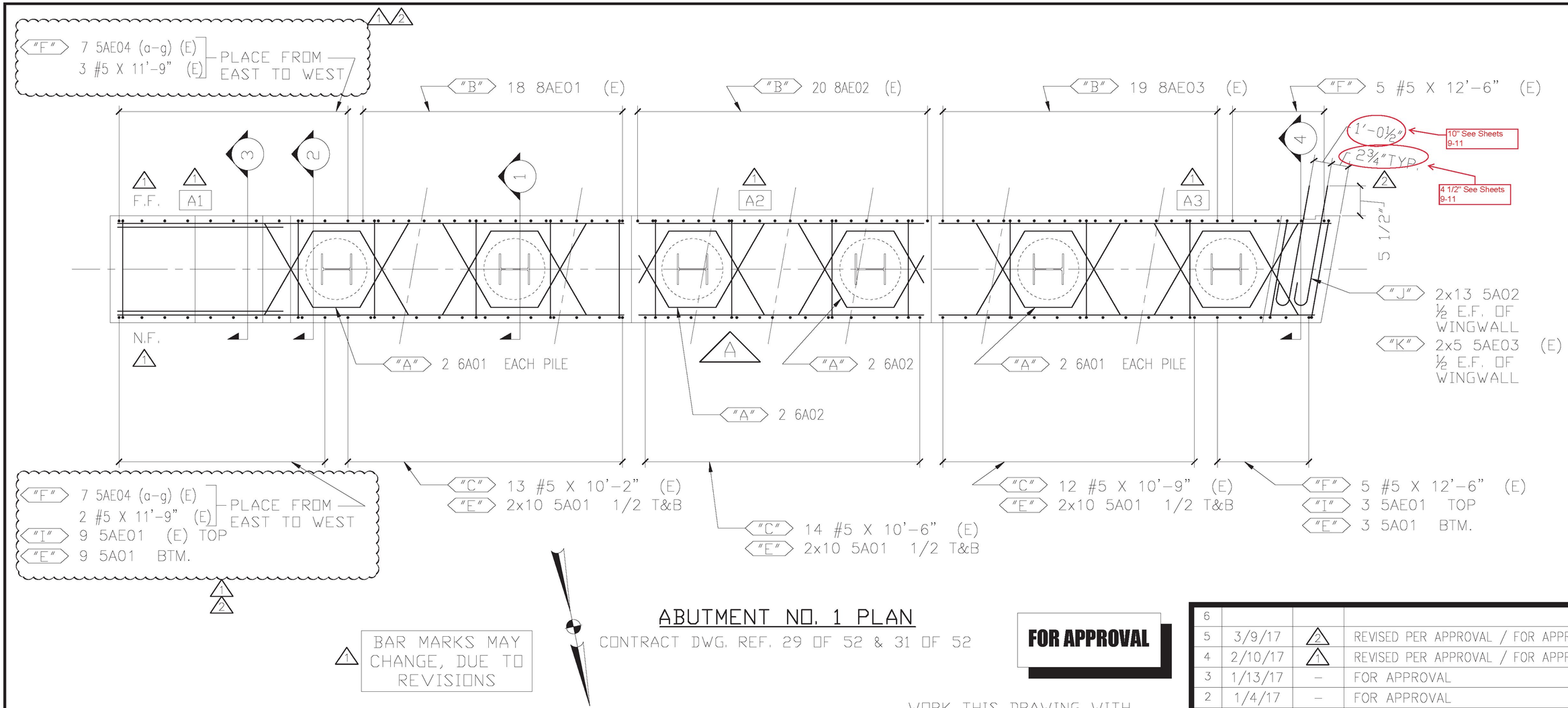

ABUTMENT NO. 1 PLAN

CONTRACT DWG. REF. 29 OF 52 & 31 OF 52

FOR APPROVAL

1 BAR MARKS MAY CHANGE, DUE TO REVISIONS

LEGEND:

CONT.-CONTINUOUS	E.E.-EACH END
TRANS.-TRANSVERSE	E.F.-EACH FACE
DWLS.-DOWELS	N.F.-NEAR FACE
VERTS.-VERTICAL	F.F.-FAR FACE
HORIZ.-HORIZONTAL	E.W.-EACH WAY
T&B -TOP & BOTTOM	O.C.-ON CENTER
I.F.-INNER FACE	L.W.-LONG WAY
O.F.-OUTER FACE	S.W.-SHORT WAY

WORK THIS DRAWING WITH DRAWINGS A1, A2, & A3

EPOXY REINF. BARS ASTM A615 GRADE 60, MARKED (E). EPOXY COATING TO MEET AASHTO M284/ASTM A775.

REINF. BARS ASTM A615 GRADE 60

ELEVATIONS & DIMENSIONS SHOWN ON THIS DWG. ARE FOR REINF. DETAILING PURPOSES ONLY AND ARE NOT INTENDED FOR DIMENSIONAL CONSTRUCTION.

VERIFICATION OF UNCLEAR INFORMATION MAY BE REQUESTED ON THIS DRAWING. SHOULD VERIFICATION BE LEFT UN-ADDRESSED IT WILL REMAIN AS SHOWN AND ASSUME TO BE CORRECT.

Vermont Agency of Transportation

RECEIVED

Strafford BF 0177(10) CFP Abutments 3-21-2017 - Reviewpdf

CK'D BY NVDB, JW, KM, TM OK'D BY JG

March 21, 2017

RESUBMIT No Approved AsNoted

BY K. Higgins DATE 03/23/2017

6			
5	3/9/17	2	REVISED PER APPROVAL / FOR APPROVAL
4	2/10/17	1	REVISED PER APPROVAL / FOR APPROVAL
3	1/13/17	–	FOR APPROVAL
2	1/4/17	–	FOR APPROVAL
1	12/16/16	–	FOR APPROVAL
	DATE	REV.#	SENT FOR

DIMENSION
DIMENSION FABRICATORS INC.
2000 7TH STREET
SCOTIA, N.Y. 12302
PH: (518) 374-1936
FAX (518) 374-4830
www.dimensionfabricators.com

STRUCTURE	VTAOT STRAFFORD BF0177(10)
LOCATION	TOWN OF STRAFFORD, ORANGE COUNTY, VT
ARCHITECT	
ENGINEER	
CUSTOMER	MILLER CONSTRUCTION

DRAWN BY	DATE	DFI #
CMB	12/12/16	10098

DRAWING COVERS	DRAWING #
ABUTMENT 1	A

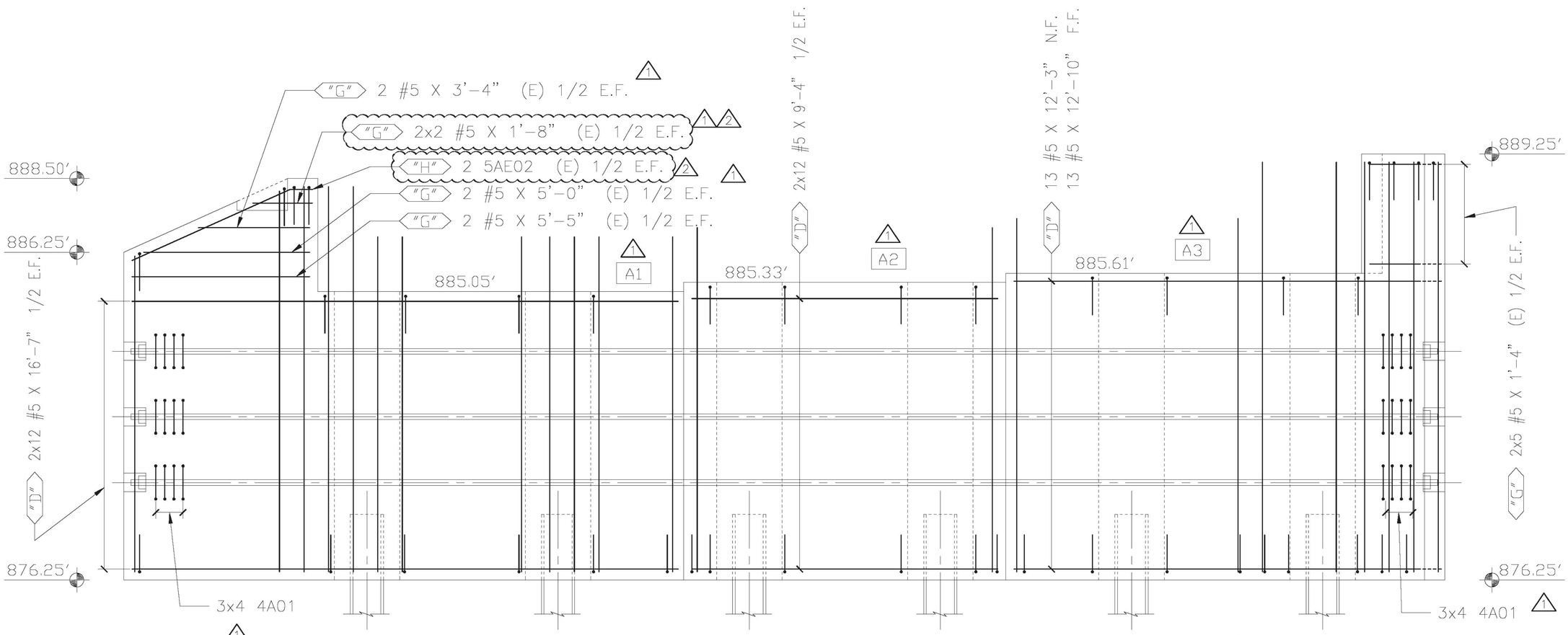

1 BAR MARKS MAY CHANGE, DUE TO REVISIONS

ABUTMENT NO. 1 ELEVATION (LOOKING SOUTH) A

CONTRACT DWG. REF. 29 OF 52 & 31 OF 52

FOR APPROVAL

WORK THIS DRAWING WITH DRAWINGS A, A2, & A3

FOR PROJECTIONS OF REINFORCING OUT OF THE TOP OF ABUTMENT SEATS, PLEASE SEE SECTIONS 1&2 ON DRAWING A2.

1

LEGEND:

CONT.-CONTINUOUS	E.E.-EACH END
TRANS.-TRANSVERSE	E.F.-EACH FACE
DWLS.-DOWELS	N.F.-NEAR FACE
VERTS.-VERTICAL	F.F.-FAR FACE
HORIZ.-HORIZONTAL	E.W.-EACH WAY
T&B -TOP & BOTTOM	O.C.-ON CENTER
I.F.-INNER FACE	L.W.-LONG WAY
O.F.-OUTER FACE	S.W.-SHORT WAY

EPOXY REINF. BARS ASTM A615 GRADE 60, MARKED (E). EPOXY COATING TO MEET AASHTO M284/ASTM A775.

REINF. BARS ASTM A615 GRADE 60

ELEVATIONS & DIMENSIONS SHOWN ON THIS DWG. ARE FOR REINF. DETAILING PURPOSES ONLY AND ARE NOT INTENDED FOR DIMENSIONAL CONSTRUCTION.

VERIFICATION OF UNCLEAR INFORMATION MAY BE REQUESTED ON THIS DRAWING. SHOULD VERIFICATION BE LEFT UN-ADDRESSED IT WILL REMAIN AS SHOWN AND ASSUME TO BE CORRECT.

Vermont Agency of Transportation
RECEIVED
Stratford BF 0177(10) CFP Abutments 3-21-2017 - Review.pdf
CK'D BY NVDB, JW, KM, TM OK'D BY JG
March 21, 2017
RESUBMIT No Approved
BY K. Higgins DATE 03/23/2017

	DATE	REV.#	SENT FOR
6			
5	3/9/17	2	REVISED PER APPROVAL / FOR APPROVAL
4	2/10/17	1	REVISED PER APPROVAL / FOR APPROVAL
3	1/13/17	–	FOR APPROVAL
2	1/4/17	–	FOR APPROVAL
1	12/16/16	–	FOR APPROVAL

DIMENSION
DIMENSION FABRICATORS INC.
2000 7TH STREET
SCOTIA, N.Y. 12302
PH: (518) 374-1936
FAX (518) 374-4830
www.dimensionfabricators.com

STRUCTURE	VTAOT STRAFFORD BF0177(10)
LOCATION	TOWN OF STRAFFORD, ORANGE COUNTY, VT
ARCHITECT	
ENGINEER	
CUSTOMER	MILLER CONSTRUCTION

DRAWN BY	DATE	DFI #
CMB	12/12/16	10098

DRAWING COVERS	DRAWING #
ABUTMENT 1	A1

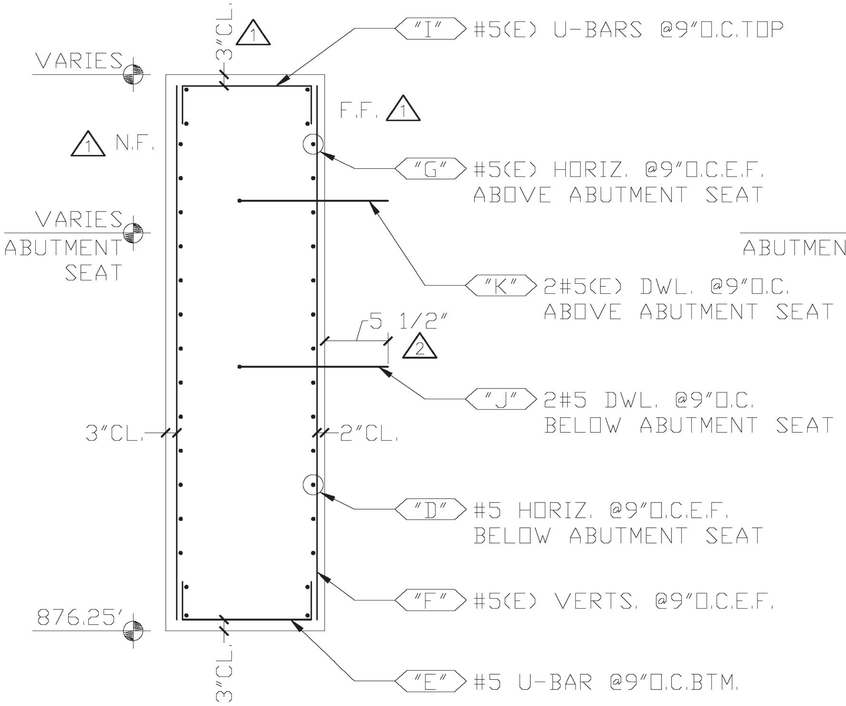

SECTION 4

CONTRACT DWG. REF. 28 OF 52

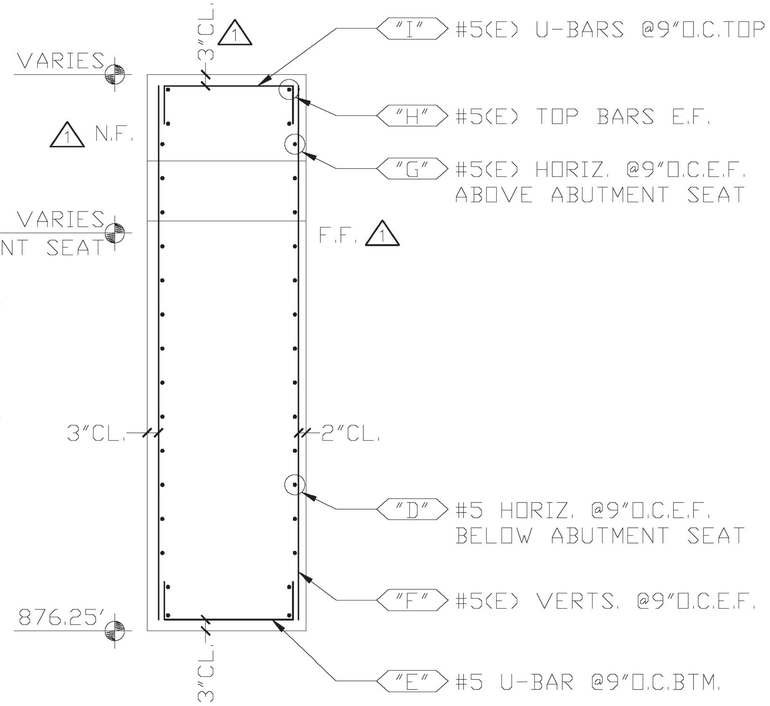

SECTION 3

CONTRACT DWG. REF. 28 OF 52

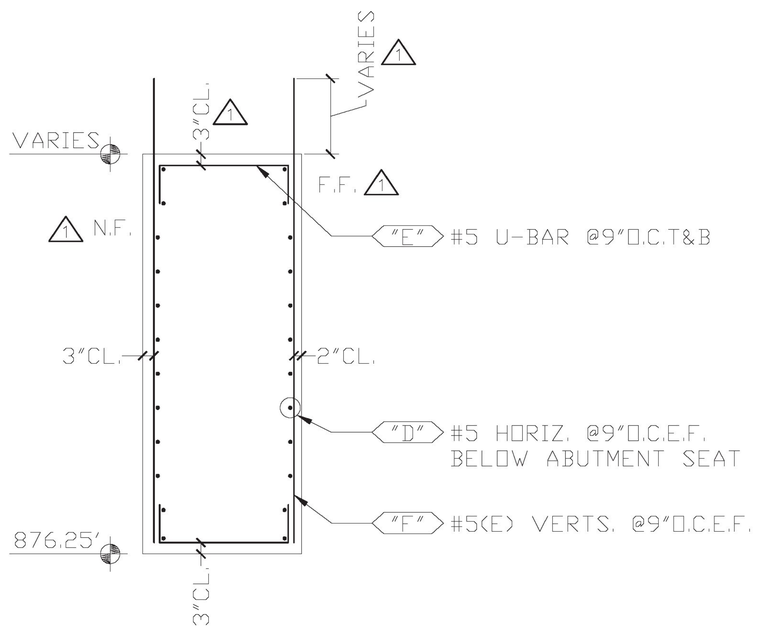

SECTION 2

CONTRACT DWG. REF. 28 OF 52

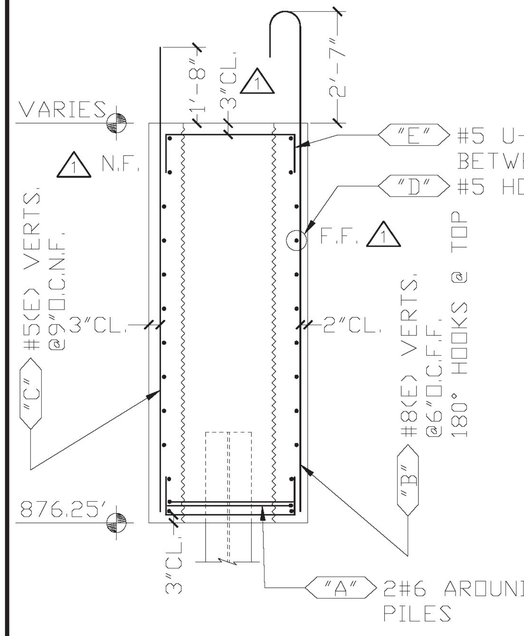

SECTION 1

CONTRACT DWG. REF. 28 OF 52

1 BAR MARKS MAY CHANGE, DUE TO REVISIONS

Vermont Agency of Transportation
RECEIVED
CK'D BY NVDB, JW, KM, TM OK'D BY JG
March 21, 2017
RESUBMIT No Approved
BY K. Higgins DATE 03/23/2017

FOR APPROVAL

WORK THIS DRAWING WITH DRAWINGS A, A1, & A3

LEGEND:

CONT.-CONTINUOUS	E.E.-EACH END
TRANS.-TRANSVERSE	E.F.-EACH FACE
DWLS.-DOWELS	N.F.-NEAR FACE
VERTS.-VERTICAL	F.F.-FAR FACE
HORIZ.-HORIZONTAL	E.W.-EACH WAY
T&B -TOP & BOTTOM	O.C.-ON CENTER
I.F.-INNER FACE	L.W.-LONG WAY
O.F.-OUTER FACE	S.W.-SHORT WAY

EPOXY REINF. BARS ASTM A615 GRADE 60, MARKED (E). EPOXY COATING TO MEET AASHTO M284/ASTM A775.

REINF. BARS ASTM A615 GRADE 60

ELEVATIONS & DIMENSIONS SHOWN ON THIS DWG. ARE FOR REINF. DETAILING PURPOSES ONLY AND ARE NOT INTENDED FOR DIMENSIONAL CONSTRUCTION.

VERIFICATION OF UNCLEAR INFORMATION MAY BE REQUESTED ON THIS DRAWING. SHOULD VERIFICATION BE LEFT UN-ADDRESSED IT WILL REMAIN AS SHOWN AND ASSUME TO BE CORRECT.

6			
5	3/9/17	2	REVISED PER APPROVAL / FOR APPROVAL
4	2/10/17	1	REVISED PER APPROVAL / FOR APPROVAL
3	1/13/17	–	FOR APPROVAL
2	1/4/17	–	FOR APPROVAL
1	12/16/16	–	FOR APPROVAL
	DATE	REV.#	SENT FOR

DIMENSION
DIMENSION FABRICATORS INC.
2000 7TH STREET
SCOTIA, N.Y. 12302
PH: (518) 374-1936
FAX (518) 374-4830
www.dimensionfabricators.com

STRUCTURE	VTAOT STRAFFORD BF0177(10)
LOCATION	TOWN OF STRAFFORD, ORANGE COUNTY, VT
ARCHITECT	
ENGINEER	
CUSTOMER	MILLER CONSTRUCTION

DRAWN BY	DATE	DFI #
CMB	12/12/16	10098

DRAWING COVERS	DRAWING #
ABUTMENT 1	A2

Release Number:

BAR LIST △1 △2

Bar Mark	Qty	Size	Total Length	Type	'A'	'B'	'C'	'D'	'E'	'F'	'G'	'H'	'J'	'K'	'O'	'R'
5A01	72	#5	6'-7"	17		1'-9"	3'-1"	1'-9"								
5A02	26	#5	4'-5"	1	0'-7"	3'-10"							0'-5"			
5AE01	12	#5	6'-7"	17		1'-9"	3'-1"	1'-9"								
5AE02	2	#5	5'-10 ¾"	3		5'-3"	0'-7 ¾"					0'-3 ¼"		0'-7 ¼"	5'-10 ¼"	
5AE03	10	#5	4'-5"	1	0'-7"	3'-10"							0'-5"			
6A01	8	#6	8'-3"	3			3'-5"	1'-5"	3'-5"			2'-11 ½"		1'-8 ½"	4'-10"	
6A02	4	#6	6'-11"	22			2'-1"	1'-5"	3'-5"			1'-9 ½"		2'-11 ½"	4'-2 ¼"	
8AE01	18	#8	12'-0 ½"	1	0'-11"	11'-1 ½"							0'-8"			
8AE02	20	#8	12'-4"	1	0'-11"	11'-5"							0'-8"			
8AE03	19	#8	12'-7"	1	0'-11"	11'-8"							0'-8"			
4A01	24	#4	2'-9"	T1	0'-4 ½"	0'-6"	0'-6"	0'-6"	0'-6"		0'-4 ½"					
5AE04a	2	#5	9'-7"	0		9'-7"										
Varies To																
5AE04g	2	#5	11'-7"	0		11'-7"										

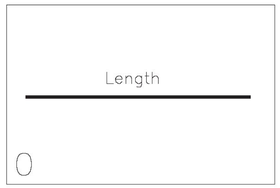

0

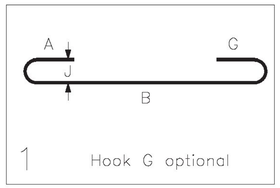

1 Hook G optional

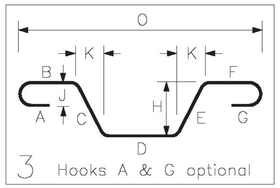

3 Hooks A & G optional

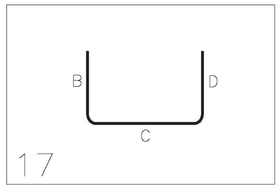

17

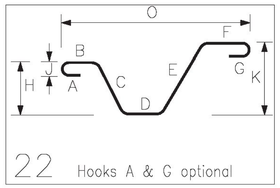

22 Hooks A & G optional

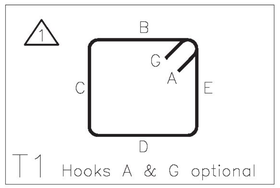

T1 Hooks A & G optional

△1 BAR MARKS MAY CHANGE, DUE TO REVISIONS

△2 2 TEST BARS AT 30" LONG WILL BE PROVIDED FOR EACH 15 TONS OF EACH BAR SIZE OF EACH DELIVERY

FOR APPROVAL

WORK THIS DRAWING WITH DRAWINGS A, A1, & A2

LEGEND:

CONT.-CONTINUOUS	E.E.-EACH END
TRANS.-TRANSVERSE	E.F.-EACH FACE
DWLS.-DOWELS	N.F.-NEAR FACE
VERTS.-VERTICAL	F.F.-FAR FACE
HORIZ.-HORIZONTAL	E.W.-EACH WAY
T&B -TOP & BOTTOM	O.C.-ON CENTER
I.F.-INNER FACE	L.W.-LONG WAY
O.F.-OUTER FACE	S.W.-SHORT WAY

EPOXY REINF. BARS ASTM A615 GRADE 60, MARKED (E). EPOXY COATING TO MEET AASHTO M284/ASTM A775.

REINF. BARS ASTM A615 GRADE 60

ELEVATIONS & DIMENSIONS SHOWN ON THIS DWG. ARE FOR REINF. DETAILING PURPOSES ONLY AND ARE NOT INTENDED FOR DIMENSIONAL CONSTRUCTION.

VERIFICATION OF UNCLEAR INFORMATION MAY BE REQUESTED ON THIS DRAWING. SHOULD VERIFICATION BE LEFT UN-ADDRESSED IT WILL REMAIN AS SHOWN AND ASSUME TO BE CORRECT.

Vermont Agency of Transportation

RECEIVED

Strafford BF 0177(10) CFP Abutments 3-21-2017 - Reviewed.pdf

CK'D BY NVDB, JW, KM, TM OK'D BY JG

March 21, 2017

RESUBMIT No Approved

BY K. Higgins DATE 03/23/2017

6			
5	3/9/17	△2	REVISED PER APPROVAL / FOR APPROVAL
4	2/10/17	△1	REVISED PER APPROVAL / FOR APPROVAL
3	1/13/17	–	FOR APPROVAL
2	1/4/17	–	FOR APPROVAL
1	12/16/16	–	FOR APPROVAL
	DATE	REV.#	SENT FOR

DIMENSION
DIMENSION FABRICATORS INC.
2000 7TH STREET
SCOTIA, N.Y. 12302
PH: (518) 374-1936
FAX (518) 374-4830
www.dimensionfabricators.com

STRUCTURE	VTAOT STRAFFORD BF0177(10)
LOCATION	TOWN OF STRAFFORD, ORANGE COUNTY, VT
ARCHITECT	
ENGINEER	
CUSTOMER	MILLER CONSTRUCTION

DRAWN BY	DATE	DFI #
CMB	12/12/16	10098

DRAWING COVERS	DRAWING #
ABUTMENT 1	A3

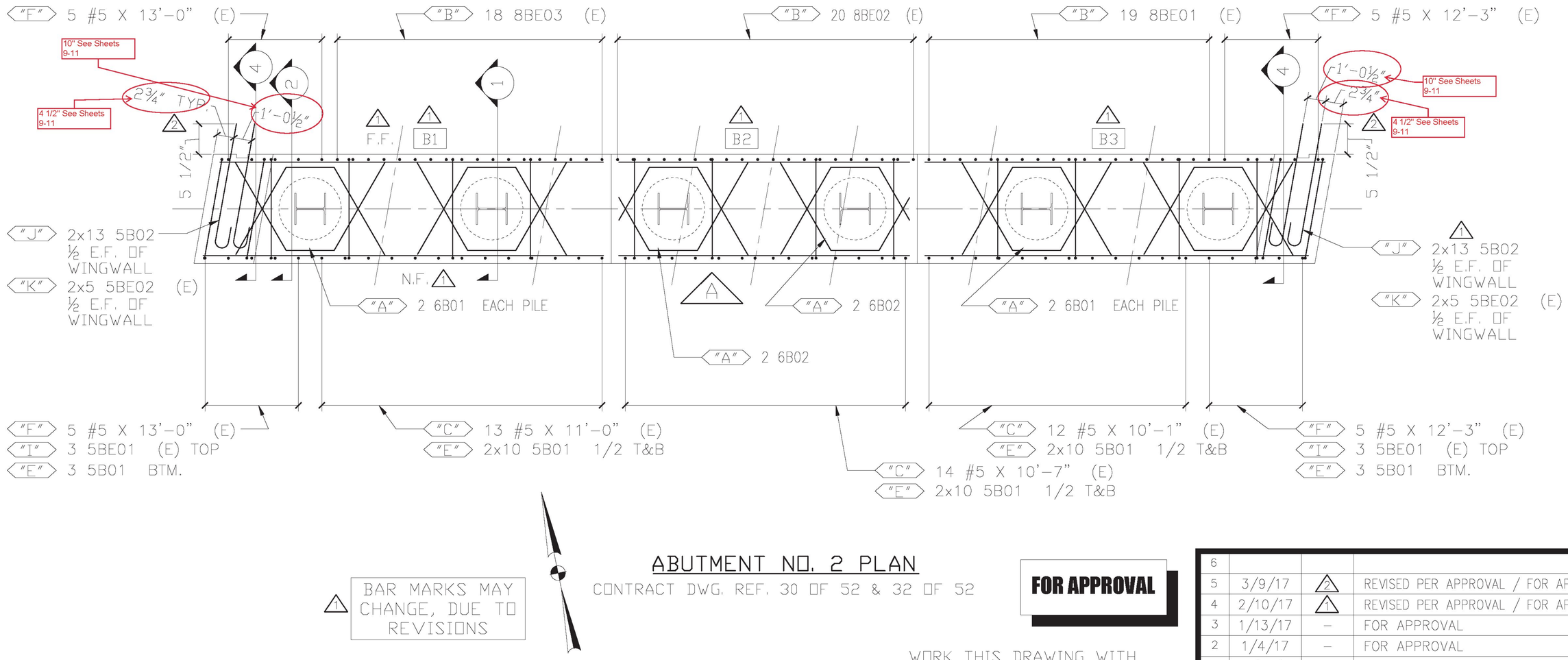

ABUTMENT NO. 2 PLAN

CONTRACT DWG. REF. 30 OF 52 & 32 OF 52

FOR APPROVAL

1 BAR MARKS MAY CHANGE, DUE TO REVISIONS

LEGEND:

CONT.-CONTINUOUS	E.E.-EACH END
TRANS.-TRANSVERSE	E.F.-EACH FACE
DWLS.-DOWELS	N.F.-NEAR FACE
VERTS.-VERTICAL	F.F.-FAR FACE
HORIZ.-HORIZONTAL	E.W.-EACH WAY
T&B -TOP & BOTTOM	O.C.-ON CENTER
I.F.-INNER FACE	L.W.-LONG WAY
O.F.-OUTER FACE	S.W.-SHORT WAY

WORK THIS DRAWING WITH DRAWINGS B1, B2, & B3

EPOXY REINF. BARS ASTM A615 GRADE 60, MARKED (E). EPOXY COATING TO MEET AASHTO M284/ASTM A775.

REINF. BARS ASTM A615 GRADE 60

ELEVATIONS & DIMENSIONS SHOWN ON THIS DWG. ARE FOR REINF. DETAILING PURPOSES ONLY AND ARE NOT INTENDED FOR DIMENSIONAL CONSTRUCTION.

VERIFICATION OF UNCLEAR INFORMATION MAY BE REQUESTED ON THIS DRAWING. SHOULD VERIFICATION BE LEFT UN-ADDRESSED IT WILL REMAIN AS SHOWN AND ASSUME TO BE CORRECT.

Vermont Agency of Transportation

RECEIVED

Strafford BF 0177(10) CFP Abutments 3-21-2017 - Reviewpdf

CK'D BY NVDB, JW, KM, TM OK'D BY JG

March 21, 2017

RESUBMIT No Approved AsNoted

BY K. Higgins DATE 03/23/2017

6			
5	3/9/17	2	REVISED PER APPROVAL / FOR APPROVAL
4	2/10/17	1	REVISED PER APPROVAL / FOR APPROVAL
3	1/13/17	–	FOR APPROVAL
2	1/4/17	–	FOR APPROVAL
1	12/16/16	–	FOR APPROVAL
	DATE	REV.#	SENT FOR

DIMENSION
DIMENSION FABRICATORS INC.
2000 7TH STREET
SCOTIA, N.Y. 12302
PH: (518) 374-1936
FAX (518) 374-4830
www.dimensionfabricators.com

STRUCTURE	VTAOT STRAFFORD BF0177(10)
LOCATION	TOWN OF STRAFFORD, ORANGE COUNTY, VT
ARCHITECT	
ENGINEER	
CUSTOMER	MILLER CONSTRUCTION

DRAWN BY	DATE	DFI #
CMB	12/13/16	10098

DRAWING COVERS	DRAWING #
ABUTMENT 2	B

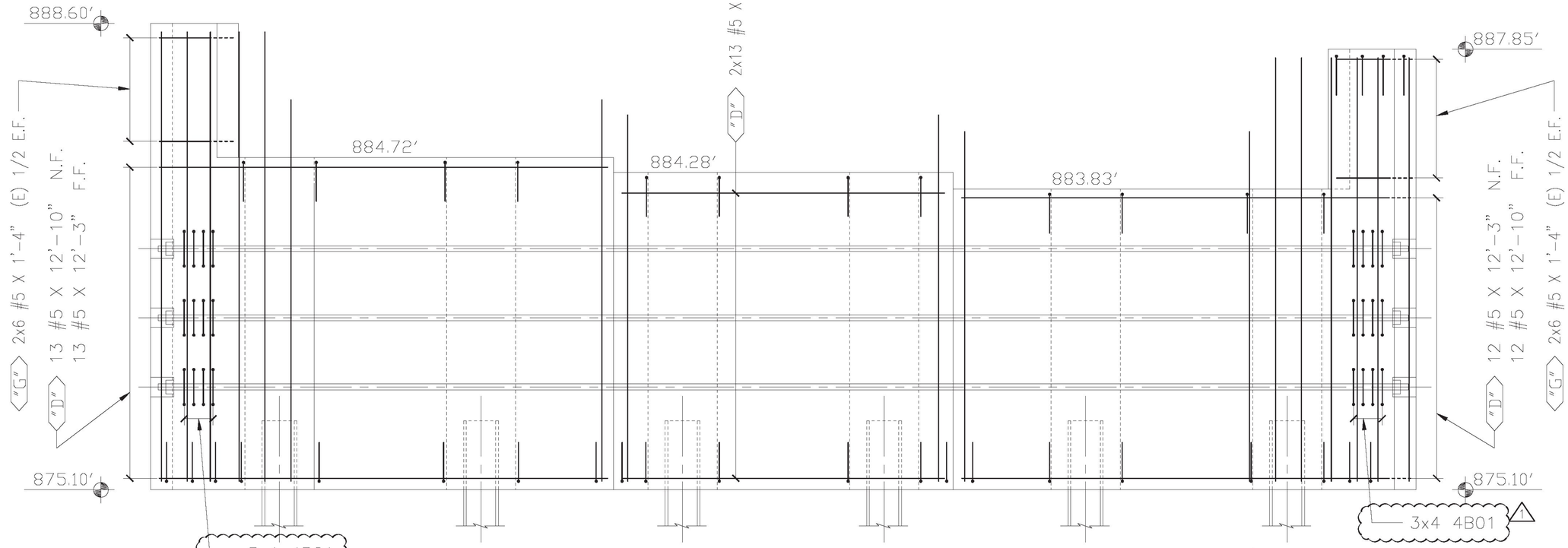

1 BAR MARKS MAY CHANGE, DUE TO REVISIONS

ABUTMENT NO. 2 ELEVATION (LOOKING NORTH)

A

CONTRACT DWG. REF. 30 OF 52 & 32 OF 52

WORK THIS DRAWING WITH DRAWINGS B, B2, & B3

FOR APPROVAL

1 FOR PROJECTION OF REINFORCING OUT OF THE TOP OF ABUTMENT SEATS, PLEASE SEE SECTIONS 1&2 ON DRAWING B2.

LEGEND:

CONT.-CONTINUOUS	E.E.-EACH END
TRANS.-TRANSVERSE	E.F.-EACH FACE
DWLS.-DOWELS	N.F.-NEAR FACE
VERTS.-VERTICAL	F.F.-FAR FACE
HORIZ.-HORIZONTAL	E.W.-EACH WAY
T&B -TOP & BOTTOM	O.C.-ON CENTER
I.F.-INNER FACE	L.W.-LONG WAY
O.F.-OUTER FACE	S.W.-SHORT WAY

EPOXY REINF. BARS ASTM A615 GRADE 60, MARKED (E). EPOXY COATING TO MEET AASHTO M284/ASTM A775.

REINF. BARS ASTM A615 GRADE 60

ELEVATIONS & DIMENSIONS SHOWN ON THIS DWG. ARE FOR REINF. DETAILING PURPOSES ONLY AND ARE NOT INTENDED FOR DIMENSIONAL CONSTRUCTION.

VERIFICATION OF UNCLEAR INFORMATION MAY BE REQUESTED ON THIS DRAWING. SHOULD VERIFICATION BE LEFT UN-ADDRESSED IT WILL REMAIN AS SHOWN AND ASSUME TO BE CORRECT.

Vermont Agency of Transportation
RECEIVED
Stratford BF 0177(10) CFP Abutments 3-21-2017 - Review.pdf
CK'D BY NVDB, JW, KM, TM OK'D BY JG
March 21, 2017
RESUBMIT No Approved
BY K. Higgins DATE 03/23/2017

6			
5	3/10/17	–	NO CHANGES MADE / FOR APPROVAL
4	2/10/17	1	REVISED PER APPROVAL / FOR APPROVAL
3	1/13/17	–	FOR APPROVAL
2	1/4/17	–	FOR APPROVAL
1	12/16/16	–	FOR APPROVAL
	DATE	REV.#	SENT FOR

DIMENSION
DIMENSION FABRICATORS INC.
2000 7TH STREET
SCOTIA, N.Y. 12302
PH: (518) 374-1936
FAX (518) 374-4830
www.dimensionfabricators.com

STRUCTURE	VTAOT STRAFFORD BF0177(10)
LOCATION	TOWN OF STRAFFORD, ORANGE COUNTY, VT
ARCHITECT	
ENGINEER	
CUSTOMER	MILLER CONSTRUCTION

DRAWN BY	DATE	DFI #
CMB	12/13/16	10098

DRAWING COVERS	DRAWING #
ABUTMENT 2	B1

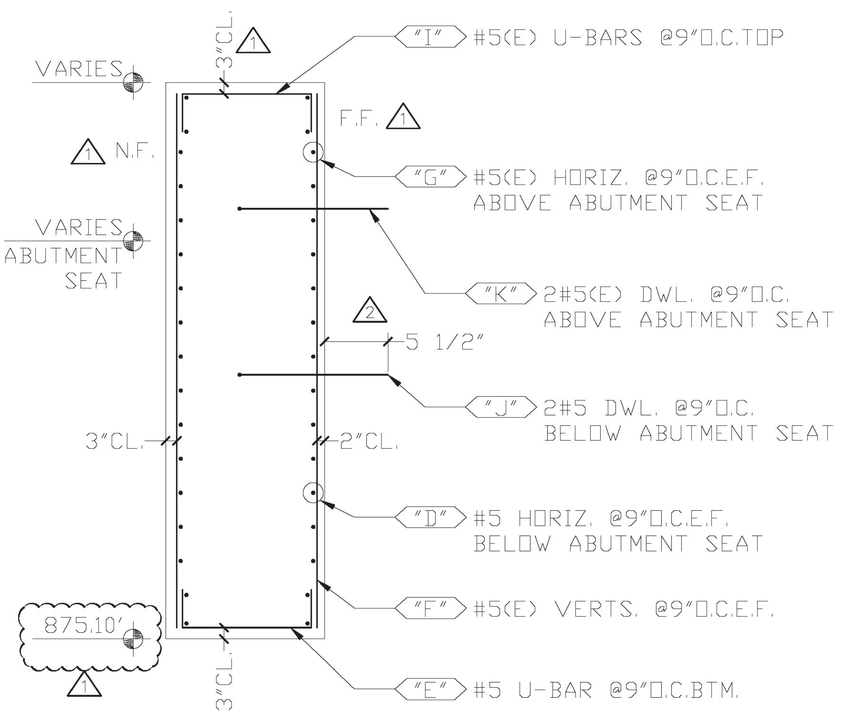

SECTION 4

CONTRACT DWG. REF. 28 OF 52

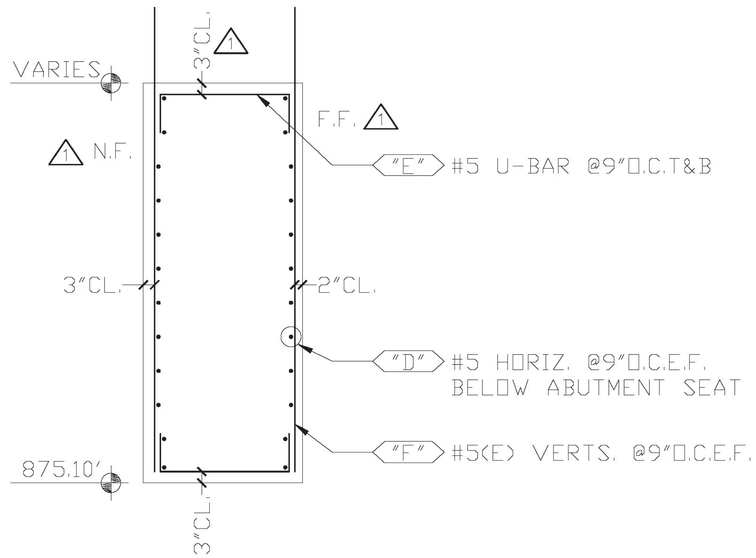

SECTION 2

CONTRACT DWG. REF. 28 OF 52

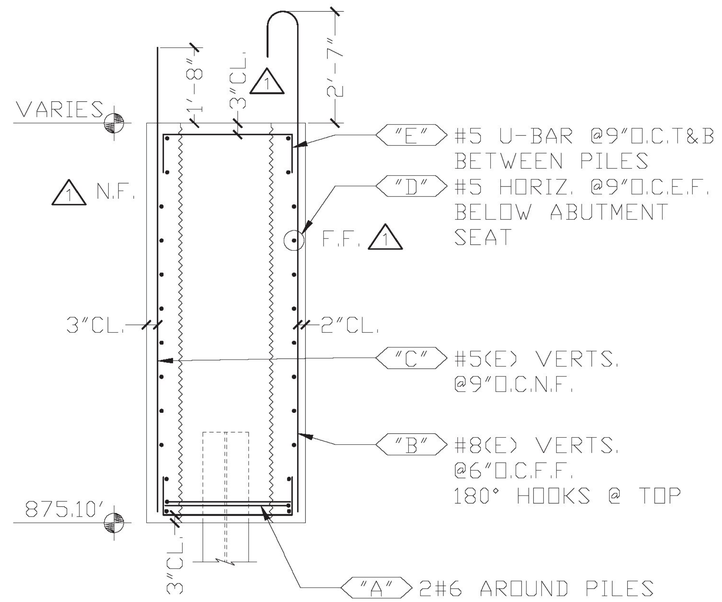

SECTION 1

CONTRACT DWG. REF. 28 OF 52

1 BAR MARKS MAY CHANGE, DUE TO REVISIONS

LEGEND:

CONT.-CONTINUOUS	E.E.-EACH END
TRANS.-TRANSVERSE	E.F.-EACH FACE
DWLS.-DOWELS	N.F.-NEAR FACE
VERTS.-VERTICAL	F.F.-FAR FACE
HORIZ.-HORIZONTAL	E.W.-EACH WAY
T&B -TOP & BOTTOM	O.C.-ON CENTER
I.F.-INNER FACE	L.W.-LONG WAY
O.F.-OUTER FACE	S.W.-SHORT WAY

ELEVATIONS & DIMENSIONS SHOWN ON THIS DWG. ARE FOR REINF. DETAILING PURPOSES ONLY AND ARE NOT INTENDED FOR DIMENSIONAL CONSTRUCTION.

FOR APPROVAL

WORK THIS DRAWING WITH DRAWINGS B, B2, & B3

EPOXY REINF. BARS ASTM A615 GRADE 60, MARKED (E). EPOXY COATING TO MEET AASHTO M284/ASTM A775.

REINF. BARS ASTM A615 GRADE 60

VERIFICATION OF UNCLEAR INFORMATION MAY BE REQUESTED ON THIS DRAWING. SHOULD VERIFICATION BE LEFT UN-ADDRESSED IT WILL REMAIN AS SHOWN AND ASSUME TO BE CORRECT.

Vermont Agency of Transportation
RECEIVED
Strafford BF 0177(10) CFP Abutments 3-21-2017 - Reviewed.pdf

CK'D BY NVDB, JW, KM, TM OK'D BY JG

March 21, 2017

RESUBMIT No Approved

BY K. Higgins DATE 03/23/2017

6			
5	3/9/17	2	REVISED PER APPROVAL / FOR APPROVAL
4	2/10/17	1	REVISED PER APPROVAL / FOR APPROVAL
3	1/13/17	–	FOR APPROVAL
2	1/4/17	–	FOR APPROVAL
1	12/16/16	–	FOR APPROVAL
	DATE	REV.#	SENT FOR

DIMENSION
DIMENSION FABRICATORS INC.
2000 7TH STREET
SCOTIA, N.Y. 12302
PH: (518) 374-1936
FAX (518) 374-4830
www.dimensionfabricators.com

STRUCTURE	VTAOT STRAFFORD BF0177(10)
LOCATION	TOWN OF STRAFFORD, ORANGE COUNTY, VT
ARCHITECT	
ENGINEER	
CUSTOMER	MILLER CONSTRUCTION

DRAWN BY	DATE	DFI #
CMB	12/13/16	10098

DRAWING COVERS	DRAWING #
ABUTMENT 2	B2

Release Number:

BAR LIST △1

Bar Mark	Qty	Size	Total Length	Type	'A'	'B'	'C'	'D'	'E'	'F'	'G'	'H'	'J'	'K'	'O'	'R'
5B01	66	#5	6'-7"	17		1'-9"	3'-1"	1'-9"								
5B02	52	#5	4'-5"	1	0'-7"	3'-10"							0'-5"			
5BE01	6	#5	6'-7"	17		1'-9"	3'-1"	1'-9"								
5BE02	20	#5	4'-5"	1	0'-7"	3'-10"							0'-5"			
6B01	8	#6	8'-3"	3			3'-5"	1'-5"	3'-5"			2'-11 ½"		1'-8 ½"	4'-10"	
6B02	4	#6	6'-11"	22			2'-1"	1'-5"	3'-5"			1'-9 ½"		2'-11 ½"	4'-2 ¼"	
8BE01	19	#8	11'-11"	1	0'-11"	11'-0"							0'-8"			
8BE02	20	#8	12'-5"	1	0'-11"	11'-6"							0'-8"			
8BE03	18	#8	12'-10"	1	0'-11"	11'-11"							0'-8"			
4B01	24	#4	2'-9"	T1	0'-4 ½"	0'-6"	0'-6"	0'-6"	0'-6"		0'-4 ½"					

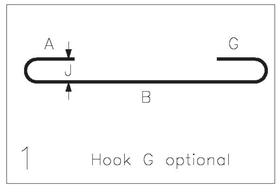

1 Hook G optional

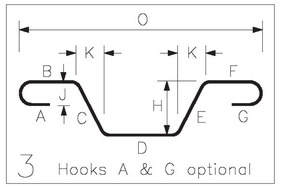

3 Hooks A & G optional

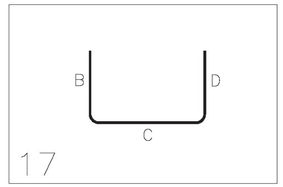

17

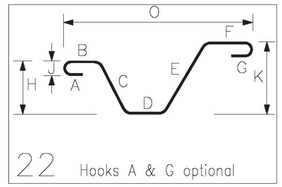

22 Hooks A & G optional

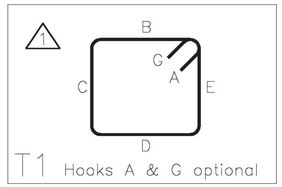

T1 Hooks A & G optional

△1 BAR MARKS MAY CHANGE, DUE TO REVISIONS

△2 2 TEST BARS AT 30" LONG WILL BE PROVIDED FOR EACH 15 TONS OF EACH BAR SIZE OF EACH DELIVERY

FOR APPROVAL

WORK THIS DRAWING WITH DRAWINGS B, B1, & B2

LEGEND:

CONT.-CONTINUOUS	E.E.-EACH END
TRANS.-TRANSVERSE	E.F.-EACH FACE
DWLS.-DOWELS	N.F.-NEAR FACE
VERTS.-VERTICAL	F.F.-FAR FACE
HORIZ.-HORIZONTAL	E.W.-EACH WAY
T&B -TOP & BOTTOM	O.C.-ON CENTER
I.F.-INNER FACE	L.W.-LONG WAY
O.F.-OUTER FACE	S.W.-SHORT WAY

EPOXY REINF. BARS ASTM A615 GRADE 60, MARKED (E). EPOXY COATING TO MEET AASHTO M284/ASTM A775.

REINF. BARS ASTM A615 GRADE 60

ELEVATIONS & DIMENSIONS SHOWN ON THIS DWG. ARE FOR REINF. DETAILING PURPOSES ONLY AND ARE NOT INTENDED FOR DIMENSIONAL CONSTRUCTION.

VERIFICATION OF UNCLEAR INFORMATION MAY BE REQUESTED ON THIS DRAWING. SHOULD VERIFICATION BE LEFT UN-ADDRESSED IT WILL REMAIN AS SHOWN AND ASSUME TO BE CORRECT.

Vermont Agency of Transportation
RECEIVED
Strafford BF 0177(10) CFP Abutments 3-21-2017 - Review.pdf
CK'D BY NVDB, JW, KM, TM OK'D BY JG
March 21, 2017
RESUBMIT No Approved
BY K. Higgins DATE 03/23/2017

6			
5	3/9/17	△2	REVISED PER APPROVAL / FOR APPROVAL
4	2/10/17	△1	REVISED PER APPROVAL / FOR APPROVAL
3	1/13/17	–	FOR APPROVAL
2	1/4/17	–	FOR APPROVAL
1	12/16/16	–	FOR APPROVAL
	DATE	REV.#	SENT FOR

DIMENSION
DIMENSION FABRICATORS INC.
2000 7TH STREET
SCOTIA, N.Y. 12302
PH: (518) 374-1936
FAX (518) 374-4830
www.dimensionfabricators.com

STRUCTURE	VTAOT STRAFFORD BF0177(10)
LOCATION	TOWN OF STRAFFORD, ORANGE COUNTY, VT
ARCHITECT	
ENGINEER	
CUSTOMER	MILLER CONSTRUCTION

DRAWN BY	DATE	DFI #
CMB	12/13/16	10098

DRAWING COVERS	DRAWING #
ABUTMENT 2	B3

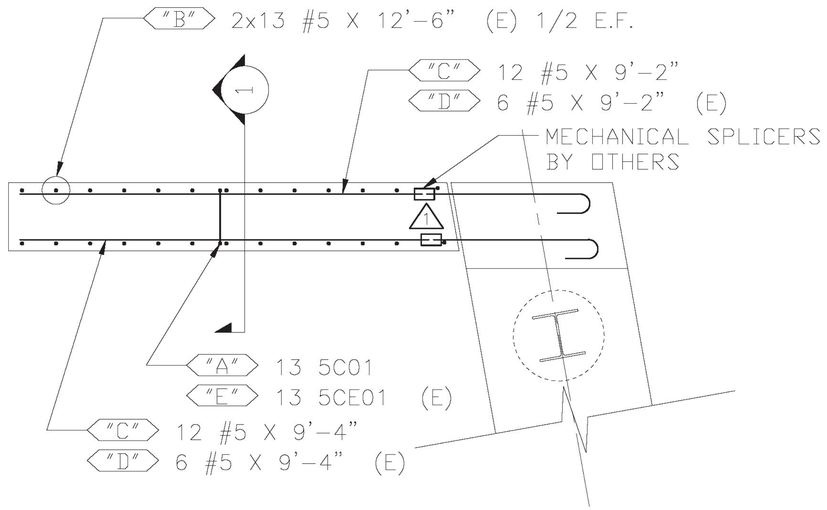

WINGWALL WW1 PLAN

CONTRACT DWG. REF. 34 OF 52

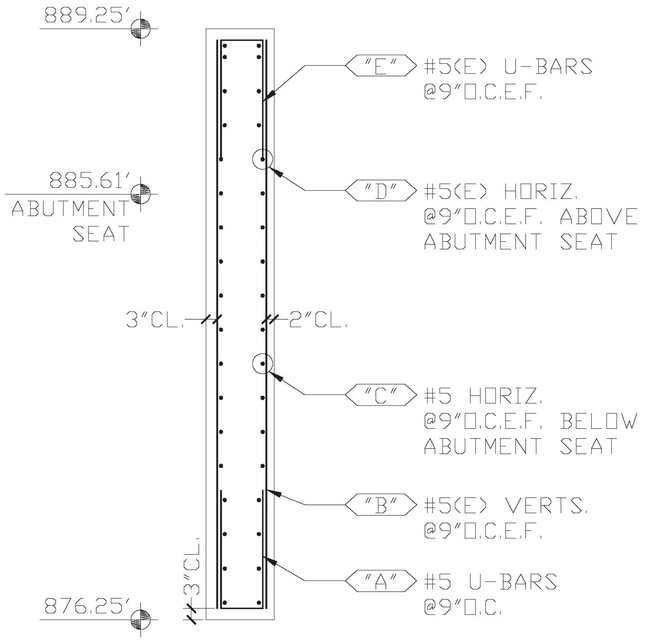

SECTION 1

CONTRACT DWG. REF. 34 OF 52

Release Number:

BAR LIST

Bar Mark	Qty	Size	Total Length	Type	'A'	'B'	'C'	'D'	'E'	'F'	'G'	'H'	'J'	'K'	'O'	'R'
5C01	13	#5	6'-3"	17		2'-7"	1'-1"	2'-7"								
5CE01	13	#5	6'-3"	17		2'-7"	1'-1"	2'-7"								

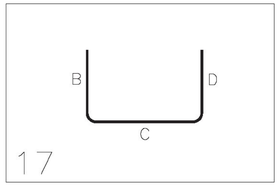

FOR APPROVAL

LEGEND:

CONT.-CONTINUOUS	E.E.-EACH END
TRANS.-TRANSVERSE	E.F.-EACH FACE
DWLS.-DOWELS	N.F.-NEAR FACE
VERTS.-VERTICAL	F.F.-FAR FACE
HORIZ.-HORIZONTAL	E.W.-EACH WAY
T&B -TOP & BOTTOM	O.C.-ON CENTER
I.F.-INNER FACE	L.W.-LONG WAY
O.F.-OUTER FACE	S.W.-SHORT WAY

EPOXY REINF. BARS ASTM A615 GRADE 60, MARKED (E). EPOXY COATING TO MEET AASHTO M284/ASTM A775.

REINF. BARS ASTM A615 GRADE 60

ELEVATIONS & DIMENSIONS SHOWN ON THIS DWG. ARE FOR REINF. DETAILING PURPOSES ONLY AND ARE NOT INTENDED FOR DIMENSIONAL CONSTRUCTION.

VERIFICATION OF UNCLEAR INFORMATION MAY BE REQUESTED ON THIS DRAWING. SHOULD VERIFICATION BE LEFT UN-ADDRESSED IT WILL REMAIN AS SHOWN AND ASSUME TO BE CORRECT.

Vermont Agency of Transportation

RECEIVED

Strafford BF 0177(10) CFP Abutments 3-21-2017 - Reviewpdf

CK'D BY NVDB, JW, KM, TM OK'D BY JG

March 21, 2017

RESUBMIT No Approved

BY K. Higgins DATE 03/23/2017

6			
5			
4			
3	3/9/17	1	REVISED PER APPROVAL / FOR APPROVAL
2	1/4/17	–	FOR APPROVAL
1	12/16/16	–	FOR APPROVAL
	DATE	REV.#	SENT FOR

DIMENSION
DIMENSION FABRICATORS INC.
2000 7TH STREET
SCOTIA, N.Y. 12302
PH: (518) 374-1936
FAX (518) 374-4830
www.dimensionfabricators.com

STRUCTURE	VTAOT STRAFFORD BF0177(10)
LOCATION	TOWN OF STRAFFORD, ORANGE COUNTY, VT
ARCHITECT	
ENGINEER	
CUSTOMER	MILLER CONSTRUCTION

DRAWN BY	DATE	DFI #
CMB	12/13/16	10098

DRAWING COVERS	DRAWING #
ABUTMENT 1 – WINGWALL WW1	C

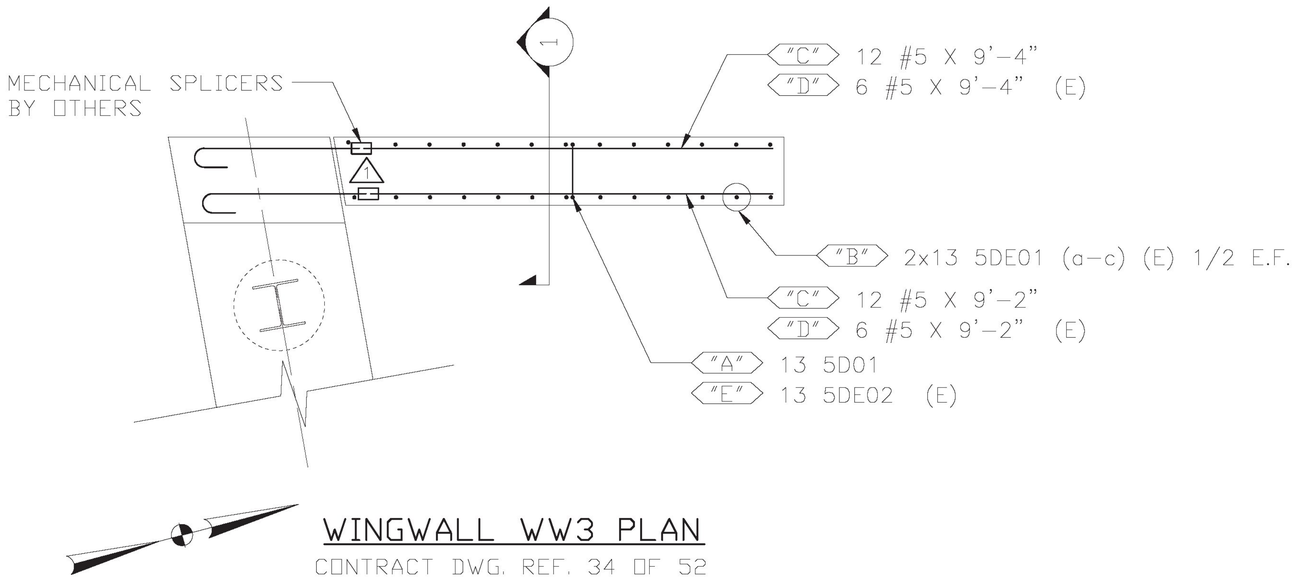

WINGWALL WW3 PLAN

CONTRACT DWG. REF. 34 OF 52

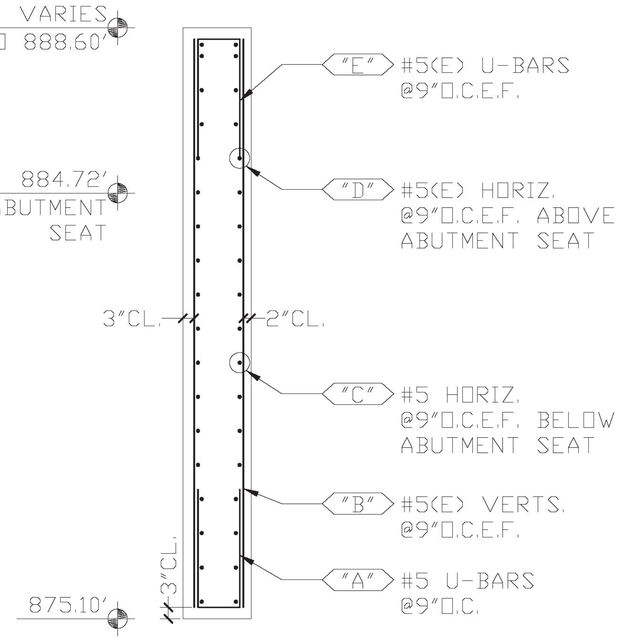

SECTION 1

CONTRACT DWG. REF. 34 OF 52

BAR LIST

Release Number:

Bar Mark	Qty	Size	Total Length	Type	'A'	'B'	'C'	'D'	'E'	'F'	'G'	'H'	'J'	'K'	'O'	'R'
5D01	13	#5	6'-3"	17		2'-7"	1'-1"	2'-7"								
5DE01a	10	#5	12'-6"	0		12'-6"										
Varies To																
5DE01c	6	#5	12'-11"	0		12'-11"										
5DE02	13	#5	6'-3"	17		2'-7"	1'-1"	2'-7"								

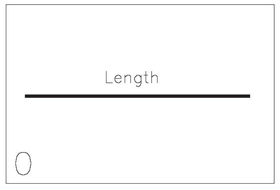

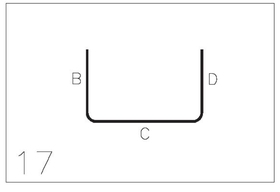

Vermont Agency of Transportation

RECEIVED

Stratford BF 0177(10) CFP Abutments 3-21-2017 - Reviewed.pdf

CK'D BY NVDB, JW, KM, TM OK'D BY JG

March 21, 2017

RESUBMIT No Approved

BY K. Higgins DATE 03/23/2017

LEGEND:

CONT.-CONTINUOUS	E.E.-EACH END
TRANS.-TRANSVERSE	E.F.-EACH FACE
DWLS.-DOWELS	N.F.-NEAR FACE
VERTS.-VERTICAL	F.F.-FAR FACE
HORIZ.-HORIZONTAL	E.W.-EACH WAY
T&B -TOP & BOTTOM	O.C.-ON CENTER
I.F.-INNER FACE	L.W.-LONG WAY
O.F.-OUTER FACE	S.W.-SHORT WAY

ELEVATIONS & DIMENSIONS SHOWN ON THIS DWG. ARE FOR REINF. DETAILING PURPOSES ONLY AND ARE NOT INTENDED FOR DIMENSIONAL CONSTRUCTION.

FOR APPROVAL

EPOXY REINF. BARS ASTM A615 GRADE 60, MARKED (E). EPOXY COATING TO MEET AASHTO M284/ASTM A775.

REINF. BARS ASTM A615 GRADE 60

VERIFICATION OF UNCLEAR INFORMATION MAY BE REQUESTED ON THIS DRAWING. SHOULD VERIFICATION BE LEFT UN-ADDRESSED IT WILL REMAIN AS SHOWN AND ASSUME TO BE CORRECT.

6			
5			
4			
3	3/9/17	1	REVISED PER APPROVAL / FOR APPROVAL
2	1/4/17	–	FOR APPROVAL
1	12/16/16	–	FOR APPROVAL
	DATE	REV.#	SENT FOR

DIMENSION
DIMENSION FABRICATORS INC.
2000 7TH STREET
SCOTIA, N.Y. 12302
PH: (518) 374-1936
FAX (518) 374-4830
www.dimensionfabricators.com

STRUCTURE	VTAOT STRAFFORD BF0177(10)
LOCATION	TOWN OF STRAFFORD, ORANGE COUNTY, VT
ARCHITECT	
ENGINEER	
CUSTOMER	MILLER CONSTRUCTION

DRAWN BY	DATE	DFI #
CMB	12/13/16	10098

DRAWING COVERS	DRAWING #
ABUTMENT 2 – WINGWALL WW3	D

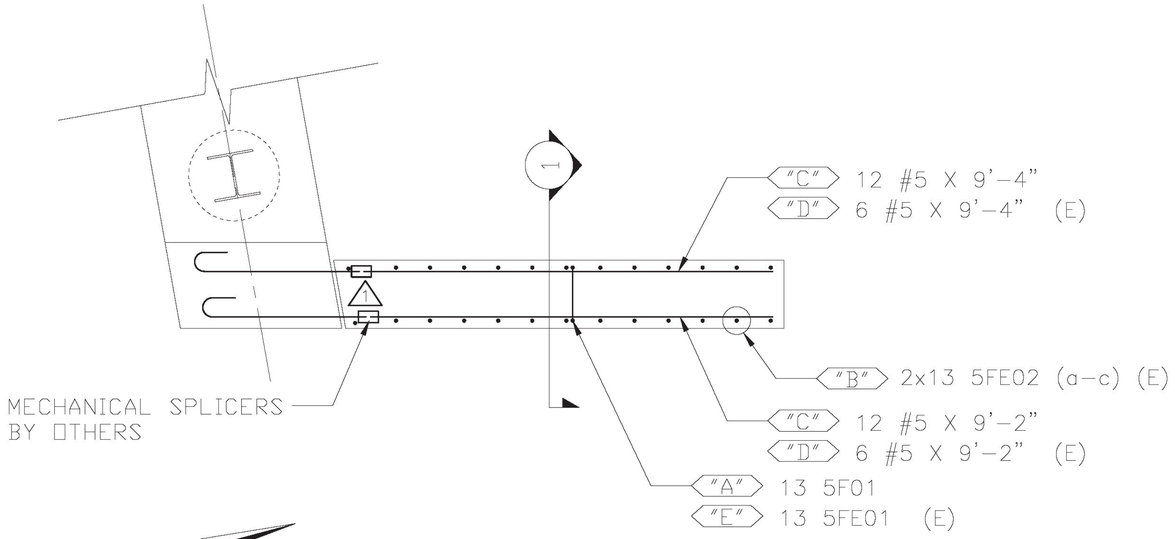

WINGWALL WW4 PLAN

CONTRACT DWG. REF. 34 OF 52

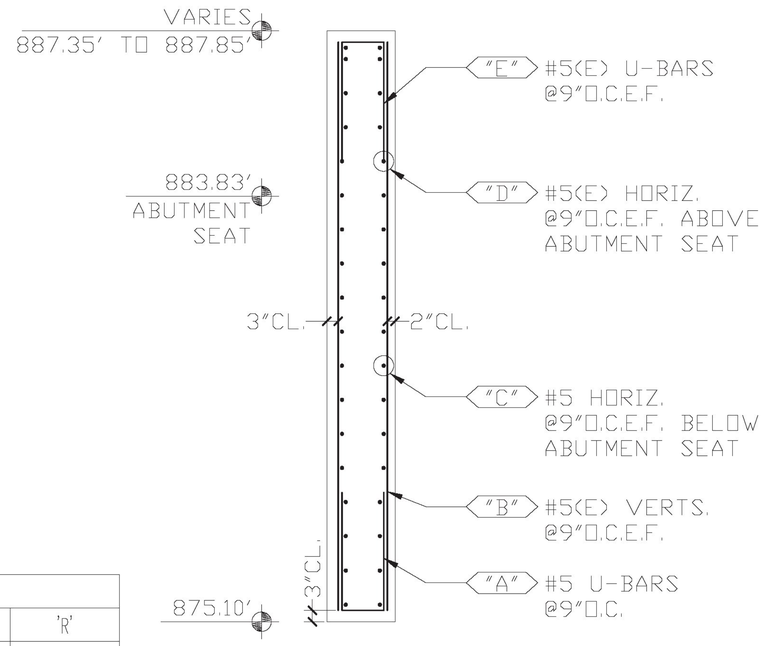

SECTION 1

CONTRACT DWG. REF. 34 OF 52

Release Number:	BAR LIST															
Bar Mark	Qty	Size	Total Length	Type	'A'	'B'	'C'	'D'	'E'	'F'	'G'	'H'	'J'	'K'	'O'	'R'
5F01	13	#5	6'-3"	17		2'-7"	1'-1"	2'-7"								
5FE01	13	#5	6'-3"	17		2'-7"	1'-1"	2'-7"								
5FE02a	10	#5	11'-9"	0		11'-9"										
Varies To																
5FE02c	6	#5	12'-2"	0		12'-2"										

Length

0

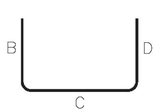

17

FOR APPROVAL

LEGEND:

CONT.-CONTINUOUS	E.E.-EACH END
TRANS.-TRANSVERSE	E.F.-EACH FACE
DWLS.-DOWELS	N.F.-NEAR FACE
VERTS.-VERTICAL	F.F.-FAR FACE
HORIZ.-HORIZONTAL	E.W.-EACH WAY
T&B -TOP & BOTTOM	O.C.-ON CENTER
I.F.-INNER FACE	L.W.-LONG WAY
O.F.-OUTER FACE	S.W.-SHORT WAY

EPOXY REINF. BARS ASTM A615 GRADE 60, MARKED (E). EPOXY COATING TO MEET AASHTO M284/ASTM A775.

REINF. BARS ASTM A615 GRADE 60

ELEVATIONS & DIMENSIONS SHOWN ON THIS DWG. ARE FOR REINF. DETAILING PURPOSES ONLY AND ARE NOT INTENDED FOR DIMENSIONAL CONSTRUCTION.

VERIFICATION OF UNCLEAR INFORMATION MAY BE REQUESTED ON THIS DRAWING. SHOULD VERIFICATION BE LEFT UN-ADDRESSED IT WILL REMAIN AS SHOWN AND ASSUME TO BE CORRECT.

Vermont Agency of Transportation

RECEIVED

Strafford BF 0177(10)CFP Abutments 3-21-2017 - Review.pdf

CK'D BY NVDB, JW, KM, TM OK'D BY JG

March 21, 2017

RESUBMIT No Approved

BY K. Higgins DATE 03/23/2017

6			
5			
4			
3	3/9/17	1	REVISED PER APPROVAL / FOR APPROVAL
2	1/4/17	–	FOR APPROVAL
1	12/16/16	–	FOR APPROVAL
	DATE	REV.#	SENT FOR

DIMENSION
DIMENSION FABRICATORS INC.
2000 7TH STREET
SCOTIA, N.Y. 12302
PH: (518) 374-1936
FAX (518) 374-4830
www.dimensionfabricators.com

STRUCTURE	VTAOT STRAFFORD BF0177(10)
LOCATION	TOWN OF STRAFFORD, ORANGE COUNTY, VT
ARCHITECT	
ENGINEER	
CUSTOMER	MILLER CONSTRUCTION

DRAWN BY	DATE	DFI #
CMB	12/13/16	10098

DRAWING COVERS	DRAWING #
ABUTMENT 2 – WINGWALL WW4	F

Swift Lift System

The Swift Lift System is a quick connect-disconnect system that allows precast concrete elements to be handled repeatedly, with speed, safety and economy. The System is a non-welded system and void of threaded connections. The quality, reusable Swift Lift Lifting Eye's heavy duty construction will provide years of good service.

The Swift Lift System is available with safe load ratings of 1, 2, 4, 8 and 20 tons. Each component is clearly marked with its maximum safe working load. The System is extremely versatile and can be utilized for vertical and diagonal pulls. It can be used to lift concrete elements from a horizontal to a vertical position without the aid of a tilting table.

P-50 Swift Lift Universal Lifting Eye

The Swift Lift Universal Lifting Eye (P-50) consists of a flat-sided, spherical lifting body and a high strength bail. The lifting body has a T-shaped slot that permits rapid attachment and release of the head on Swift Lift Anchors.

The design of the P-50 Universal Lifting Eye permits the bail to freely rotate 180°, while the complete lifting eye may rotate through a 360° arc. This design feature allows precast concrete elements to be turned, tilted and/or rotated under load.

Dayton Superior does not recommend the use of this lifting eye for edge lifting of thin precast concrete panels.

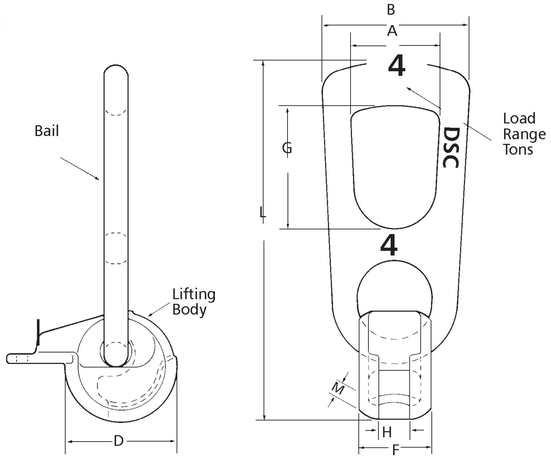

P-50 Swift Lift Universal Lifting Eye Dimensions						
Rated Load Tons	A	B	D	F	G	L
1	1.87"	2.95"	2.20"	1.26"	2.80"	7.40"
2	2.34"	3.58"	2.68"	1.61"	3.41"	9.06"
4	2.76"	4.65"	3.46"	2.22"	3.46"	11.14"
8	3.47"	6.30"	4.41"	2.83"	4.52"	15.79"
20	4.18"	7.09"	6.00"	4.29"	5.31"	20.00"

Vermont Agency of Transportation
RECEIVED
CK'D BY NVDB, JW, KM, TM OK'D BY JG
March 21, 2017
RESUBMIT No Approved
BY K. Higgins DATE 03/23/17

The rated load provides a factor of safety of approximately 5 to 1 (ultimate to rated load).

Inspection and Maintenance

The P-50 Universal Lifting Eye may be subjected to wear, misuse, overloading and other factors that can affect the lifting eye's rated load. Therefore, it is imperative that the lifting eye be user-inspected at least once a month to determine its general condition and degree of wear.

During the user's monthly inspection, the lifting eye should be checked for evidence of heat application. If evidence of heat application is found, the unit must be scrapped. Check for a bent or twisted bail and discard all units found to have these flaws. Also, check to make certain that the bail rotates freely in all directions.

At least once every three months, dimensions "H" and "M" on each unit should be checked. The upper limits are shown in the chart. If either of these limits is exceeded, the P-50 Universal Lifting Eye must be removed from service and destroyed.

The proper method for scrapping a lifting eye is to cut through the bail with a cutting torch to render the unit useless as a lifting device.

No repairs or welding to the P-50 Swift Lift Universal Lifting Eye are permitted.

Limiting Dimensions on P-50 Swift Lift Universal Lifting Eye		
Rated Load (Tons)	H Maximum Width	M Minimum Thickness
1	0.512"	0.217"
2	0.709"	0.236"
4	0.984"	0.315"
8	1.260"	0.472"
20	1.811"	0.709"

Swift Lift System

How to Use the P-50 Swift Lift Universal Lifting Eye

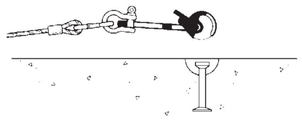

1. To install the P-50 lifting eye, hold the unit upside down with the T-shaped slot directly over the head of the Swift Lift anchor.

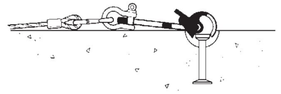

2. Lower the lifting eye down onto the anchor until the T-slot engages the head of the anchor.

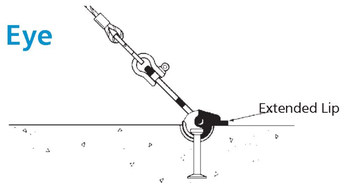

3. Rotate the lifting eye until the extended lip of the body touches the horizontal surface of the concrete.

Note: Prior to lifting a precast element, apply an initial cable tension to make sure that the bail and body of the lifting eye are aligned in the direction of the cable pull.

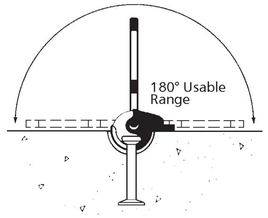

The bail of the P-50 lifting eye can move through a 180° usable range.

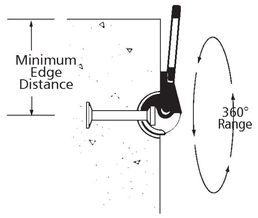

The main body of the lifting eye has a 360° rotational range.

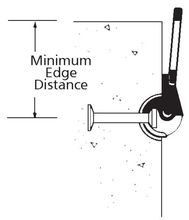

The P-50 lifting is used with the T-shaped slot facing toward the direction of the applied load.

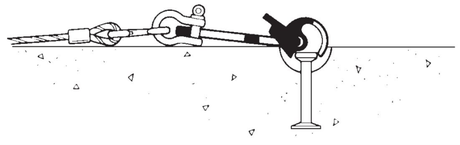

To disengage the lifting eye, the crane hook is lowered and the body removed by rotating the extended lip upward.

Do's and Don'ts of the P-50 Swift Lift Universal Lifting Eye

Vermont Agency of Transportation
RECEIVED
CK'D BY NVDB, JW, KM, TM OK'D BY JG
March 21, 2017
RESUBMIT No Approved
BY K. Higgins DATE 03/23/17

Right

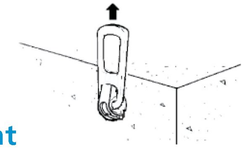

Prior to lifting a precast element, apply an initial cable tension to make certain that the bail and body of the lifting eye are aligned in the direction of the cable pull.

Right

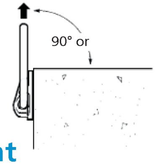

When applying the initial cable tension on edge lift applications, make sure that the cables are at a 90° angle (or larger) to the surface of the precast element.

Wrong

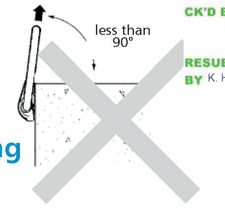

Warning: Do not allow the crane lines to form an angle less than 90° during an edge lift application. This condition can bend the lifting eye bail and could lead to a premature failure.

Warning: The crane line and bail of the lifting hardware must be turned in the direction of the cable forces before the lifting operation begins. The crane line must not be allowed to apply a sideward force on the bail. This condition is dangerous and could lead to premature failure of the hardware or insert.

Warning: Do not modify, weld or alter in any way the Swift Lift Universal Lifting Eye.

Swift Lift System

P-51 Swift Lift Lifting Eye

The P-51 Swift Lift Lifting eye is a high quality, high strength steel casting. Its ball shaped lower end fits into the void formed in the concrete and engages the spherical head of the anchor. Attachment to the anchor head can only be made when the lifting eye is positioned with its front face toward the concrete. In the working position, release is impossible. Accidental disengagement is prevented by a gravity-action safety pin that must be raised before the Lifting Eye can be removed.

The P-51 Swift Lift Lifting Eye is available with safe working loads of 2, 4 and 8 tons. It is extremely versatile in use, being suitable for vertical pull or diagonal pull. The Lifting Eye rotates freely (360°) about the vertical axis of the anchor. Each unit is clearly marked with its MAXIMUM safe working load.

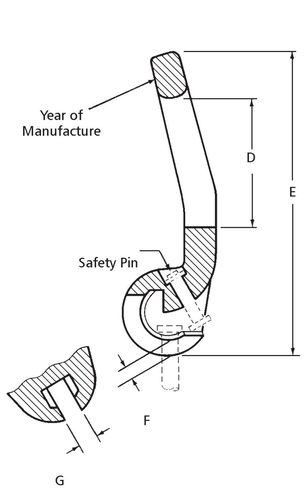

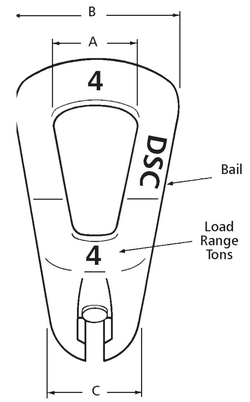

P-51 Swift Lift Lifting Eye Selection Chart

Safe Working Loads (tons)	A (Inches)	B (Inches)	C (Inches)	D (Inches)	E (Inches)
2	2.64	4.52	2.36	3.74	8.43
4	3.00	5.06	2.83	4.96	10.35
8	3.54	5.98	3.70	5.60	12.87

Safe Working Load provides a factor of safety of approximately 5 to 1.

Inspection and Maintenance

While appreciable wear does not normally occur, the P-51 Swift Lift Lifting Eye may be subjected to wear, misuse, overloading and other factors that may affect the lifting eye's rated load. Therefore, the user must inspect lifting eyes at least once a month to determine general condition, degree of wear and any evidence of heat application.

If evidence of heat application is found, the unit must be destroyed. In addition, check to make certain that the bail is not bent or twisted. Destroy all units that have a bent or twisted bail.

Check the safety pin; missing pins must be replaced. Make sure the safety pin is in good condition and moves freely at all times. At least once every three months, dimensions "G" and "F" on each unit should be checked. The upper limits are shown in the chart. If either of these limits is exceeded, the Swift Lift Lifting Eye must be removed from service and destroyed.

The proper method to use in destroying a lifting eye is to cut through the bail with a cutting torch. Other than replacing the safety pin, no repairs to the P-51 Swift Lift Lifting Eye are permitted. In particular, welding is not permitted.

Limiting Dimensions on P-51 Swift Lift Lifting Eye

Safe Working Load (tons)	G (Inches)	F (Inches)
2	0.709	0.236
4	0.984	0.315
8	1.260	0.472

Vermont Agency of Transportation
RECEIVED
CK'D BY NVDB, JW, KM, TM OK'D BY JG
March 21, 2017
RESUBMIT No Approved
BY K. Higgins DATE 03/23/17

Swift Lift System

How to Install The P-51 Swift Lift Lifting Eye

To engage the P-51 Swift Lift Lifting Eye on the head of the Swift Lift Anchor, position the P-51 Swift Lift Lifting Eye so that the front face is toward the concrete, then raise the Swift Lift Lifting Eye into the working position and engage the lifting hook. The safety pin will drop into position to prevent accidental release of the Swift Lift Lifting Eye.

For inclined pulls, the front face of the P-51 Swift Lift Lifting Eye, which indicates the rated load of the lifting eye, must always be facing away from the concrete surface. This must be checked immediately before the lifting operation begins.

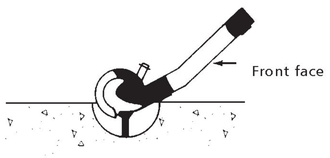

Initial positioning of the P-51 Swift Lift Lifting Eye onto the Swift Lift Anchor

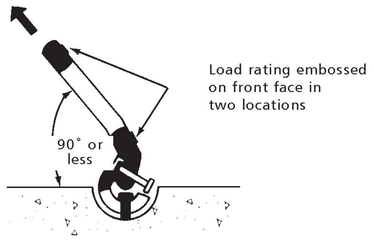

Working position for lifting of a precast concrete element

Warning: If the P-51 Swift Lift Lifting Eye is used when its relative position is 90° or 180° from its correct position, the P-52 Swift Lift Anchor will be overloaded and may result in a premature failure.

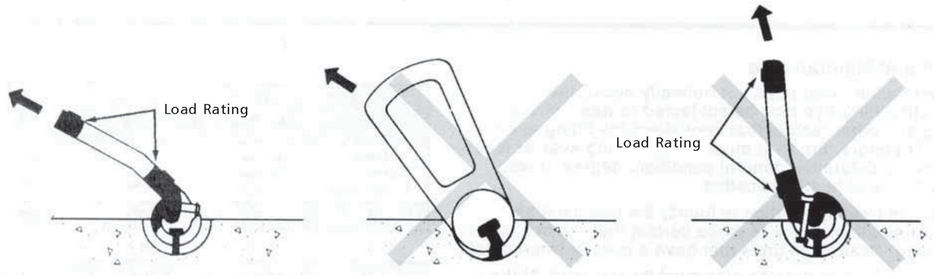

Correct position (Normal position)

Incorrect position (90° out of position)

Incorrect position (180° out of position)

Right **Wrong** **Wrong**

Note: Do not use the lifting eye in this manner as it could bend and/or break the safety pin, allowing the lifting eye to pull off the Swift Lift Anchor. Never use lifting eye without a safety pin in place.

Vermont Agency of Transportation
RECEIVED
CK'D BY NVDB, JW, KM, TM OK'D BY JG
March 21, 2017
RESUBMIT No Approved
BY K. Higgins DATE 03/23/17

Swift Lift System

How to use the P-51 Swift Lift Lifting Eye

When the P-51 Swift LIft Lifting Eye's position is changed from a diagonal pull to a vertical pull relative to the anchor axis, all movements are permissible, even with simultaneous rotation.

If the Swift Lift Anchor is positioned in a relatively thin panel, movement of the P-51 Swift Lift Lifting Eye under load from the vertical to an inclined position relative to the axis of the anchor (such as laying down a panel with edge inserts as shown in 1 below) is NOT PERMITTED due to excessive friction. This friction causes binding of the ball end of the P-51 Swift Lift Lifting Eye, and when the friction is overcome, the resultant sudden movement causes high impact stresses on the surrounding concrete. As an aid in reducing friction, apply a soap solution to the void formed by the recess plug.

The above maneuver can be accomplished when the proper rigging is used. The fleet angle between the slings must be between 90° and 120°. In this manner, precast concrete shapes can be placed from the vertical to the horizontal.

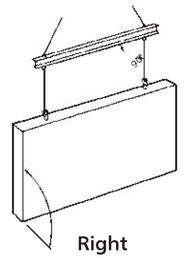

Right

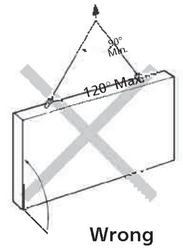

Wrong

1 Maneuvering from horizontal to vertical with edge anchors

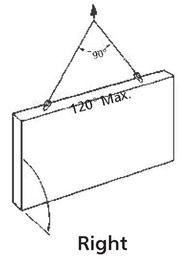

Right

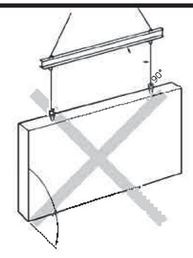

Wrong

2 Maneuvering from vertical to horizontal with edge anchors

Note: To reduce friction between the Swift Lift Lifting Eye and the concrete, apply a soap solution to the cavity formed by the recess plug.

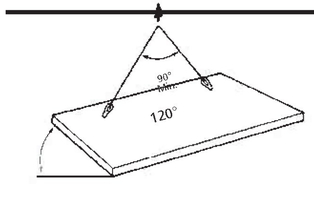

Right

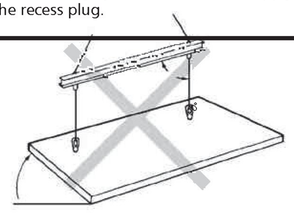

Wrong

3 Maneuvering from horizontal to vertical with face anchors

Note: To reduce friction between the Swift Lift Lifting Eye and the concrete, apply a soap solution to the cavity formed by the recess plug.

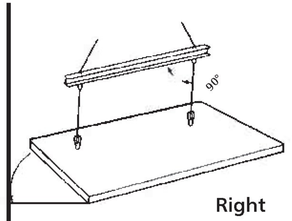

Right

4 Maneuvering from vertical to horizontal with face anchors

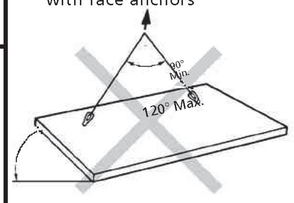

Wrong

Vermont Agency of Transportation
RECEIVED
CK'D BY NVDB, JW, KM, TM OK'D BY JG
March 21, 2017
RESUBMIT No Approved
BY K. Higgins DATE 03/23/17

Swift Lift System

P-52 Swift Lift Anchor

The P-52 Swift Lift Anchor is hot forged from carbon steel. The formed head provides spherical seating that the Lifting Eye engages, while a disc-shaped foot is embedded in the concrete.

Due to its being a forged part, the Swift Lift Anchor does not depend on welds or thread engagement to develop its safe working load. Forging provides maximum safety with its advantageous material structure. This allows the anchor to easily meet the OSHA requirement of a 4 to 1 factor of safety.

In addition to the carbon steel anchors, Type 304 or 316 Stainless Steel Swift Lift Anchors are available on special order. Use stainless steel anchors when maximum protection against corrosion is required.

For safety, refer to the P-52 Swift Lift Anchor Selection Chart on page 31 to determine the actual safe working load of an individual anchor. The MAXIMUM safe working load is clearly visible on the head of the anchor for easy recognition of the appropriate hardware and accessories for-use with each Swift Lift Anchor.

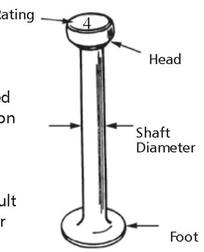

Caution: The Swift Lift Anchor is designed to be used with Dayton Superior components. Failure to use this combination may result in concrete spalling or premature failure.

To Order:
Specify: (1) quantity, (2) name, (3) system size, (4) length

Example:
200, P-52 Swift Lift Anchors, 4 ton, 9-1/2" long

P-52 Swift Lift Anchor and Recess Plug Dimensions

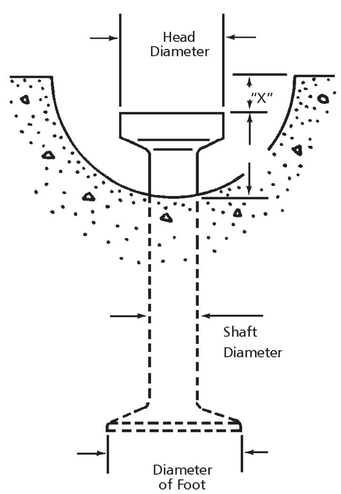

P-52 Swift Lift Anchor

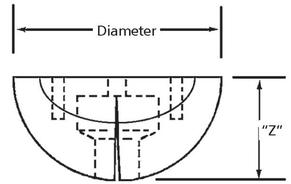

Swift Lift Round Recess Plug

Swift Lift Round Recess Plug Dimensions		
Swift Lift Anchor	Diameter of Recess Plug	Dimension "Z"
1	2-7/16"	1-3/16"
2	3-5/16"	1-7/16"
4	4"	1-13/16"
8	5"	2-5/16"
20 Tons	6-3/8"	3-1/8"

Note: The diameter of the narrow recess plug is the same as the diameter of the round recess plug.

Vermont Agency of Transportation
RECEIVED
CK'D BY NVDB, JW, KM, TM OK'D BY JG
March 21, 2017
RESUBMIT No Approved
BY K. Higgins DATE 03/23/17

P-52 Swift Lift Anchor Dimensions					
Swift Lift Anchor	Dimension "X"	Dimension "Y"	Shaft Diameter	Foot Diameter	Head Diameter
1	5/16"	7/8"	3/8"	1"	11/16"
2	7/16"	1-1/16"	9/16"	1-3/8"	1-1/32"
4	9/16"	1-5/16"	3/4"	1-7/8"	1-11/32"
8	9/16"	1-5/8"	1-3/32"	2-5/8"	1-7/8"
20 Tons	9/16"	2-5/8"	1-1/2"	3-3/4"	2-3/4"

Swift Lift System

How to Install P-56 and P-56-PL Recess Plugs on P-52 Anchors

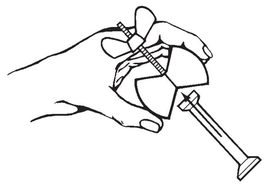

Grasp the recess plug firmly across the top diameter of the plug. Application of pressure by the thumb and fingers on the outer edge of the plug will cause the plug to open up to allow insertion of the anchor.

"Wet Setting" P-52 Swift Lift Face Lift Anchors

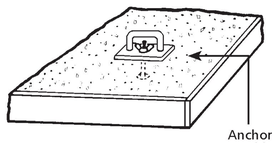

When a Swift Lift anchor is to be positioned in the top surface of a flat precast section, wet setting the anchor is best done immediately after the concrete has been placed.

The anchor/recess plug assembly is attached to a small template board and pressed into the fresh concrete until the template board lies flush on the surface of the concrete.

Light vibration of the fresh concrete will assure proper embedment and anchorage.

Recess Plug Removal

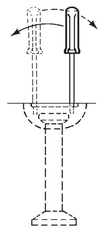

Swift Lift recess plugs provide two holes in the top surface that are used in the removal process. Insert two screw drivers or steel rods into the holes and simply lever the two across the plug for easy removal.

Selecting the Proper Swift Lift Anchor

Determination of the required rated load and length of a P-52 Swift Lift Anchor is based on the actual maximum load that is transferred to the anchor. In most cases, a flat slab can be handled with the anchors properly located in the face of the flat slab. The anchors should normally be the maximum length that can be accommodated in the slab's structural thickness, allowing at least 1/2" clearance between the anchor and the casting bed. Dimension tables and safe working load charts, contained herein, will aid in the selection of the proper anchor. Keep in mind that the safe working load of an anchor is a function of several factors:

1. The effective concrete thickness
2. Actual edge distance
3. Concrete compressive strength at time of lift
4. Anchor length
5. In some applications, the use of a shear bar

Vermont Agency of Transportation
RECEIVED
CK'D BY NVDB, JW, KM, TM OK'D BY JG
March 21, 2017
RESUBMIT No Approved
BY K. Higgins DATE 03/23/17

Swift Lift System

P-52 Swift Lift Anchor Tensile and Shear Capacity

When anchors are used in the face of thin concrete elements

The following table lists the P-52 Swift Lift Anchors that are currently manufactured. Other sizes and lengths are available on special order. However, the sizes and lengths of anchors shown will handle the majority of flat precast concrete elements.

When the P-52 Swift Lift Anchor is properly embedded in normal weight concrete, the tabulated working loads are applicable for any direction of load. This applies even if the direction of load is parallel to the axis of the anchor, perpendicular to it or at any other angle.

Minimum distance between anchors is twice the minimum edge distance.

It is critical to remember that in order to obtain the safe working loads listed in the table below, the normal weight concrete must have obtained the minimum concrete strength shown, prior to initial load application.

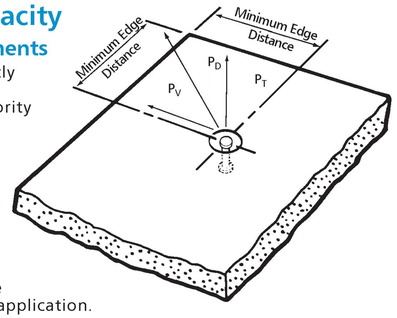

Swift Lift Anchor Ton x Length	Safe Working Load	Minimum Concrete Strength	Minimum Edge Distance
1 ton x 2-5/8"	1,700 lbs.	3,500 psi	8"
1 ton x 3-3/8"	2,000 lbs.	2,200 psi	10"
1 ton x 4-3/8"	2,000 lbs.	1,600 psi	10"
1 ton x 8"	2,000 lbs.	1,600 psi	10"
1 ton x 9-1/2"	2,000 lbs.	1,600 psi	10"
2 ton x 2-3/4"	2,100 lbs.	3,500 psi	8"
2 ton x 3-3/8"	2,900 lbs.	3,500 psi	10"
2 ton x 5-1/2"	4,000 lbs.	1,600 psi	13"
2 ton x 6"	4,000 lbs.	1,600 psi	13"
2 ton x 6-3/4"	4,000 lbs.	1,600 psi	13"
2 ton x 11"	4,000 lbs.	1,600 psi	14"
4 ton x 3-3/4"	4,000 lbs.	3,500 psi	12"
4 ton x 4-1/4"	4,900 lbs.	3,500 psi	13"
4 ton x 4-3/4"	5,800 lbs.	3,500 psi	14"
4 ton x 5-1/2"	7,400 lbs.	3,500 psi	17"
4 ton x 7-1/8"	8,000 lbs.	1,800 psi	20"
4 ton x 9-1/2"	8,000 lbs.	1,600 psi	17"
4 ton x 14"	8,000 lbs.	1,600 psi	18"
4 ton x 19"	8,000 lbs.	1,600 psi	20"
8 ton x 4-3/4"	6,400 lbs.	3,500 psi	16"
8 ton x 6-3/4"	11,200 lbs.	3,500 psi	21"
8 ton x 10"	16,000 lbs.	3,500 psi	19"
8 ton x 13-3/8"	16,000 lbs.	1,600 psi	23"
8 ton x 26-3/4"	16,000 lbs.	1,600 psi	27"
20 ton x 10"	25,000 lbs.	3,500 psi	24"
20 ton x 19-3/4"	40,000 lbs.	3,500 psi	31"

Safe Working Loads provide a factor of safety of approximately 4 to1 in normal weight concrete. Safe Working Load is based on anchor setback from face of concrete "X" dimension, as shown on page 28.

Vermont Agency of Transportation
RECEIVED
CK'D BY NVDB, JW, KM, TM OK'D BY JG
March 21, 2017
RESUBMIT No Approved
BY K. Higgins DATE 03/23/17

Swift Lift System

P-52-W Swift Lift Anchor

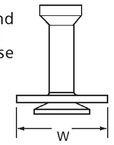

The P-52-W Swift Lift Anchors are the shortest 2-ton and 4-ton Swift Lift Anchors available and have been specially modified. A Type W Plain Washer is placed on the anchor's foot and welded in position. This modification has been made in order to increase the Safe Working Load of these short Swift Lift Anchors in thin precast concrete elements.

Safe Working Load provides a factor of safety of approximately 4 to 1.

To Order:
Specify: (1) quantity, (2) name, (3) system size.

Example:
200, P-52-W Swift Lift Anchors, 2 ton.

Swift Lift Anchor Tons x Length	Safe Working Load	Minimum Concrete Strength	Minimum Edge Distance	W
2 tons x 2-3/4"	3,700 lbs.	3,500 psi	8"	2-1/2"
4 tons x 3-3/4"	5,700 lbs.	3,500 psi	12"	2-3/4"

P-52 Swift Lift Anchors for Edge Lifting

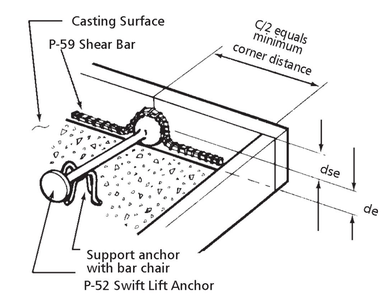

Note: See Shear Bar Chart on page 30.

The P-52 Swift Lift Anchors and P-51 Swift Lift Lifting Eyes are useful for raising precast concrete panels from their horizontal casting position to a vertical position for handling and shipping. When Swift Lift Anchors are used in thin precast panels and under shear loading conditions, a special shear bar must be used.

The applied shear load tends to bend the anchor, allowing the lifting eye to apply load to the thin concrete section above the recess plug. A properly installed shear bar captures the applied load and transfers it deeper into the concrete.

When raising precast panels from a horizontal position to a vertical position, always check both shear and tension safe working loads. In order to develop the anchor's shear safe working load, the minimum spacing between Swift Lift Anchors is two times the corner distance listed.

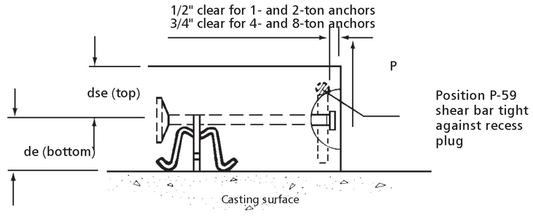

Note: Properly installed shear bars are required to develop Safe Working Loads shown. 2 x de equals effective wall thickness for tensile loads.

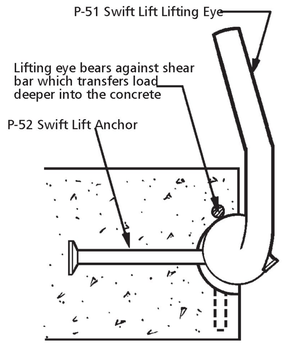

Section View of Swift Lift Assembly

Vermont Agency of Transportation
RECEIVED
CK'D BY NVDB, JW, KM, TM OK'D BY JG
March 21, 2017
RESUBMIT No Approved
BY K. Higgins DATE 03/23/17

Swift Lift System

P-59 Swift Lift Shear Bar
P-59 Swift Lift Smooth Wire Shear Bar

P-59 Swift Lift Shear Bar
1-Ton and 8-Ton

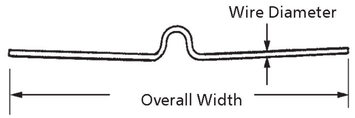

P-59 Swift Lift Smooth Wire Shear Bar
2-Ton and 4-Ton

Dayton Superior Swift Lift Shear Bars (P-59) are utilized when edge lifting precast elements. The shear bar is secured tightly to the recess plug and at the time of lift helps to transfer the shear load deeper into the concrete. The P-59 Smooth Wire Shear Bar is designed to snap into the built-in clips on the P-54 recess plug. The standard shear bar is fabricated from rebar and must be securely wired tightly to the Swift Lift recess plugs.

To Order:
Specify: (1) quantity, (2) name, (3) system size.

Example:
200, P-59 Swift Lift Shear Bars, 4-Ton.

Anchor Safe Working Load (tons)	Shear Bar Type	Overall Width	Minimum Anchor Length	Wall Thickness	Minimum Corner Distance	Safe Working Load
1	Rebar	19"	4-3/4"	5"	15"	1,750 lbs.
1	Rebar	19"	4-3/4"	5-1/2"	16"	2,000 lbs.
1	Rebar	19"	4-3/4"	6"	17"	2,000 lbs.
2	Wire	24"	6-3/4"	5"	15"	1,750 lbs.
2	Wire	24"	6-3/4"	5-1/2"	16"	2,200 lbs.
2	Wire	24"	6-3/4"	6"	17"	2,600 lbs.
2	Wire	24"	6-3/4"	7"	19"	2,700 lbs.
2	Wire	24"	6-3/4"	8"	21"	2,800 lbs.
4	Wire	30"	9-1/2"	5-1/2"	16"	2,100 lbs.
4	Wire	30"	9-1/2"	6"	17"	2,200 lbs.
4	Wire	30"	9-1/2"	7"	19"	2,600 lbs.
4	Wire	30"	9-1/2"	8"	21"	2,800 lbs.
8	Rebar	34"	13-3/8"	8"	19"	5,600 lbs.
8	Rebar	34"	13-3/8"	9"	21"	6,700 lbs.

Safe Working Load provides a factor of safety of approximately 4 to 1 in 4,500 psi normal weight concrete.

Vermont Agency of Transportation
RECEIVED
CK'D BY NVDB, JW, KM, TM OK'D BY JG
March 21, 2017
RESUBMIT No Approved
BY K. Higgins DATE 03/23/17

Swift Lift System

P-52 Swift Lift Anchor in Thin Walls

The P-52 Swift Lift Anchors, listed below, must be located the minimum distance away from a corner with the anchor foot being positioned at the center line of the wall. The anchor head location may be off center, however, any eccentricity of the foot will result in a reduction of the safe working load. When the anchor foot is not positioned at the center line of the wall, the effective wall thickness is equal to twice the actual edge distance.

To develop the safe working load of the P-52 Swift Lift Anchor, the minimum spacing between two anchors is six times the anchor length.

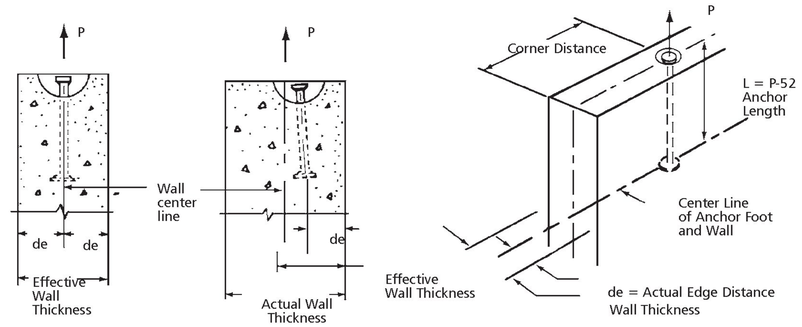

Swift Lift Anchor Effective Tensile Capacity in Thin Walls

Swift Lift Anchor Ton x Length	Effective Wall Thickness 2 de	Actual Edge Distance de	Tensile Safe Working Load Per Anchor				
			Actual Corner Distance				
			6"	12"	18"	24"	30"
1 Ton x 4-3/4" Long	2-1/2"	1-1/4"	900 lbs.	1,100 lbs.	1,200 lbs.	1,200 lbs.	1,200 lbs.
	2-3/4"	1-3/8"	1,000 lbs.	1,200 lbs.	1,300 lbs.	1,300 lbs.	1,300 lbs.
	3"	1-1/2"	1,100 lbs.	1,300 lbs.	1,400 lbs.	1,400 lbs.	1,400 lbs.
	3-1/2"	1-3/4"	1,200 lbs.	1,600 lbs.	1,600 lbs.	1,600 lbs.	1,600 lbs.
	4"	2"	1,450 lbs.	1,800 lbs.	1,900 lbs.	1,900 lbs.	1,900 lbs.
	4-1/2"	2-1/4"	1,600 lbs.	2,000 lbs.	2,000 lbs.	2,000 lbs.	2,000 lbs.
1 Ton x 9-1/2" Long	2-1/2"	1-1/4"	1,300 lbs.	1,700 lbs.	1,900 lbs.	1,900 lbs.	1,900 lbs.
	2-3/4"	1-3/8"	1,400 lbs.	1,900 lbs.	2,000 lbs.	2,000 lbs.	2,000 lbs.
	3"	1-1/2"	1,500 lbs.	2,000 lbs.	2,000 lbs.	2,000 lbs.	2,000 lbs.
	3-1/2"	1-3/4"	1,800 lbs.	2,000 lbs.	2,000 lbs.	2,000 lbs.	2,000 lbs.
	4"	2"	2,000 lbs.	2,000 lbs.	2,000 lbs.	2,000 lbs.	2,000 lbs.
	4-1/2"	2-1/4"	2,000 lbs.	2,000 lbs.	2,000 lbs.	2,000 lbs.	2,000 lbs.

Safe Working Load provides a factor of safety of approximately 4 to 1 in 4,500 psi normal weight concrete.

Vermont Agency of Transportation
RECEIVED
CK'D BY NVDB, JW, KM, TM OK'D BY JG
March 21, 2017
RESUBMIT No Approved
BY K. Higgins DATE 03/23/17

Swift Lift System

Swift Lift Anchor Effective Tensile Capacity in Thin Walls

Swift Lift Anchor Tons x Length	Effective Wall Thickness 2 de	Actual Edge Distance de	Tensile Safe Working Load Per Anchor				
			Actual Corner Distance				
			8"	12"	18"	24"	30"
2 Tons x 6-3/4" Long	3"	1-1/2"	1,500 lbs.	1,700 lbs.	2,000 lbs.	2,000 lbs.	2,000 lbs.
	3-1/4"	1-5/8"	1,600 lbs.	1,900 lbs.	2,100 lbs.	2,200 lbs.	2,200 lbs.
	3-1/2"	1-3/4"	1,700 lbs.	2,000 lbs.	2,300 lbs.	2,300 lbs.	2,300 lbs.
	4"	2"	2,000 lbs.	2,300 lbs.	2,600 lbs.	2,700 lbs.	2,700 lbs.
	5"	2-1/2"	2,500 lbs.	2,900 lbs.	3,300 lbs.	3,400 lbs.	3,400 lbs.
	6"	3"	3,000 lbs.	3,500 lbs.	4,000 lbs.	4,000 lbs.	4,000 lbs.
2 Tons x 11" Long	3"	1-1/2"	1,900 lbs.	2,300 lbs.	2,700 lbs.	3,000 lbs.	3,200 lbs.
	3-1/4"	1-5/8"	2,100 lbs.	2,500 lbs.	3,000 lbs.	3,300 lbs.	3,500 lbs.
	3-1/2"	1-3/4"	2,200 lbs.	2,700 lbs.	3,200 lbs.	3,500 lbs.	3,700 lbs.
	4"	2"	2,500 lbs.	3,100 lbs.	3,700 lbs.	4,000 lbs.	4,000 lbs.
	5"	2-1/2"	3,200 lbs.	3,900 lbs.	4,000 lbs.	4,000 lbs.	4,000 lbs.
	6"	3"	3,800 lbs.	4,000 lbs.	4,000 lbs.	4,000 lbs.	4,000 lbs.

Safe Working Load provides a factor of safety of approximately 4 to 1 in 4,500 psi normal weight concrete.

Swift Lift Anchor Tons x Length	Effective Wall Thickness 2 de	Actual Edge Distance de	Tensile Safe Working Load Per Anchor				
			Actual Corner Distance				
			10"	15"	20"	24"	30"
4 Tons x 9-1/2" Long	3-3/4"	1-7/8"	2,500 lbs.	3,000 lbs.	3,300 lbs.	3,400 lbs.	3,500 lbs.
	4"	2"	2,600 lbs.	3,200 lbs.	3,500 lbs.	3,700 lbs.	3,800 lbs.
	5"	2-1/2"	3,300 lbs.	4,000 lbs.	4,400 lbs.	4,600 lbs.	4,700 lbs.
	6"	3"	4,000 lbs.	4,800 lbs.	5,300 lbs.	5,500 lbs.	5,700 lbs.
	7"	3-1/2"	4,700 lbs.	5,600 lbs.	6,200 lbs.	6,500 lbs.	6,600 lbs.
	8"	4"	5,300 lbs.	6,400 lbs.	7,000 lbs.	7,400 lbs.	7,600 lbs.
4 Tons x 19" Long	3-3/4"	1-7/8"	3,500 lbs.	4,300 lbs.	4,900 lbs.	5,300 lbs.	5,800 lbs.
	4"	2"	3,800 lbs.	4,600 lbs.	5,300 lbs.	5,700 lbs.	6,200 lbs.
	5"	2-1/2"	4,700 lbs.	5,700 lbs.	6,600 lbs.	7,100 lbs.	7,800 lbs.
	6"	3"	5,700 lbs.	6,900 lbs.	7,900 lbs.	8,000 lbs.	8,000 lbs.
	7"	3-1/2"	6,600 lbs.	8,000 lbs.	8,000 lbs.	8,000 lbs.	8,000 lbs.
	8"	4"	7,600 lbs.	8,000 lbs.	8,000 lbs.	8,000 lbs.	8,000 lbs.

Safe Working Load provides a factor of safety of approximately 4 to 1 in 4,500 psi normal weight concrete.

Vermont Agency of Transportation
RECEIVED
CK'D BY NVDB, JW, KH, TH OK'D BY JG
March 21, 2017
RESUBMIT No Approved
BY K. Higgins DATE 03/23/17

DAYTON® SUPERIOR

Swift Lift Anchor Effective Tensile Capacity in Thin Walls

Swift Lift Anchor Tons x Length	Effective Wall Thickness 2de	Actual Edge Distance de	Tensile Safe Working Load Per Anchor				
			Actual Corner Distance				
			12"	18"	24"	36"	45"
8 Tons x 13-3/8" Long	4-3/4"	2-3/8"	4,000 lbs.	4,800 lbs.	5,400 lbs.	6,000 lbs.	6,100 lbs.
	5"	2-1/2"	4,200 lbs.	5,100 lbs.	5,700 lbs.	6,300 lbs.	6,400 lbs.
	6"	3"	5,100 lbs.	6,100 lbs.	6,800 lbs.	7,500 lbs.	7,600 lbs.
	7"	3-1/2"	5,900 lbs.	7,100 lbs.	8,000 lbs.	8,800 lbs.	8,900 lbs.
	8"	4"	6,800 lbs.	8,100 lbs.	9,100 lbs.	10,100 lbs.	10,200 lbs.
	10"	5"	8,500 lbs.	10,200 lbs.	11,400 lbs.	12,600 lbs.	12,700 lbs.
	12"	6"	10,200 lbs.	12,200 lbs.	13,700 lbs.	15,100 lbs.	15,200 lbs.
8 Tons x 26-3/4" Long	4-3/4"	2-3/8"	5,800 lbs.	7,000 lbs.	8,000 lbs.	9,600 lbs.	11,200 lbs.
	5"	2-1/2"	6,100 lbs.	7,400 lbs.	8,500 lbs.	10,100 lbs.	11,800 lbs.
	6"	3"	7,300 lbs.	8,900 lbs.	9,500 lbs.	12,100 lbs.	14,100 lbs.
	7"	3-1/2"	8,500 lbs.	10,300 lbs.	11,800 lbs.	14,200 lbs.	16,000 lbs.
	8"	4"	9,700 lbs.	11,800 lbs.	13,500 lbs.	16,000 lbs.	16,000 lbs.
	10"	5"	12,100 lbs.	14,800 lbs.	16,000 lbs.	16,000 lbs.	16,000 lbs.
	12"	6"	14,500 lbs.	16,000 lbs.	16,000 lbs.	16,000 lbs.	16,000 lbs.

Safe Working Load provides a factor of safety of approximately 4 to 1 in 4,500 psi normal weight concrete.

Swift Lift Anchor Tons x Length	Effective Wall Thickness 2de	Actual Edge Distance de	Tensile Safe Working Load Per Anchor				
			Actual Corner Distance				
			10"	16"	24"	30"	42"
20 Tons x 19-3/4" Long	6-1/2"	3-1/4"	6,200 lbs.	7,500 lbs.	9,400 lbs.	10,300 lbs.	11,500 lbs.
	7"	3-1/2"	6,700 lbs.	8,100 lbs.	10,100 lbs.	11,100 lbs.	12,400 lbs.
	8"	4"	7,600 lbs.	8,900 lbs.	11,500 lbs.	12,600 lbs.	14,200 lbs.
	10"	5"	9,500 lbs.	11,600 lbs.	14,400 lbs.	15,800 lbs.	17,700 lbs.
	12"	6"	11,500 lbs.	14,000 lbs.	17,300 lbs.	19,000 lbs.	22,000 lbs.
	14"	7"	13,400 lbs.	16,300 lbs.	20,100 lbs.	22,100 lbs.	24,800 lbs.

Safe Working Load provides a factor of safety of approximately 4 to 1 in 4,500 psi normal weight concrete.

To recalculate the safe working load when the anchor is used in a lower strength concrete, multiply the tabulated Safe Working Load by the following reduction factors:

Concrete Strength	Reduction Factor
2,000 psi	.66
2,500 psi	.74
3,000 psi	.81
3,500 psi	.88
4,000 psi	.94
4,500 psi	1.00

Vermont Agency of Transportation
RECEIVED
CK'D BY NVDB, JW, KH, TH OK'D BY JG
March 21, 2017
RESUBMIT No Approved
BY K. Higgins DATE 03/23/17

Swift Lift System

DAYTON® SUPERIOR

Swift Lift Anchor Effective Tensile Capacity

When anchors are used in groups and in thin walls

Swift Lift Anchor Tons x Length	Effective Wall Thickness 2 de	Actual Edge Distance de	Tensile Safe Working Load Per Anchor In Groups C = Actual Spacing Between Anchors				
			18"	24"	30"	36"	48"
2 Tons x 6-3/4" Long	3"	1-1/2"	1,200 lbs.	1,500 lbs.	1,800 lbs.	1,900 lbs.	2,000 lbs.
	3-1/4"	1-5/8"	1,300 lbs.	1,700 lbs.	1,900 lbs.	2,100 lbs.	2,200 lbs.
	3-1/2"	1-3/4"	1,400 lbs.	1,800 lbs.	2,100 lbs.	2,300 lbs.	2,400 lbs.
	4"	2"	1,600 lbs.	2,100 lbs.	2,400 lbs.	2,600 lbs.	2,700 lbs.
	5"	2-1/2"	2,000 lbs.	2,600 lbs.	3,000 lbs.	3,200 lbs.	3,400 lbs.
	6"	3"	2,500 lbs.	3,100 lbs.	3,600 lbs.	3,900 lbs.	4,000 lbs.
2 Tons x 11" Long	3"	1-1/2"	1,300 lbs.	1,700 lbs.	2,000 lbs.	2,300 lbs.	2,900 lbs.
	3-1/4"	1-5/8"	1,400 lbs.	1,800 lbs.	2,200 lbs.	2,500 lbs.	3,100 lbs.
	3-1/2"	1-3/4"	1,500 lbs.	1,900 lbs.	2,400 lbs.	2,700 lbs.	3,300 lbs.
	4"	2"	1,700 lbs.	2,200 lbs.	2,700 lbs.	3,100 lbs.	3,800 lbs.
	5"	2-1/2"	2,100 lbs.	2,800 lbs.	3,400 lbs.	3,900 lbs.	4,000 lbs.
	6"	3"	2,600 lbs.	3,400 lbs.	4,000 lbs.	4,000 lbs.	4,000 lbs.

Safe Working Load provides a factor of safety of approximately 4 to 1 in 4,500 psi normal weight concrete.

Swift Lift Anchor Tons x Length	Effective Wall Thickness 2 de	Actual Edge Distance de	Tensile Safe Working Load Per Anchor In Groups C = Actual Spacing Between Anchors				
			18"	24"	36"	48"	60"
4 Tons x 9-1/2" Long	3-3/4"	1-7/8"	1,600 lbs.	2,000 lbs.	2,800 lbs.	3,300 lbs.	3,500 lbs.
	4"	2"	1,700 lbs.	2,200 lbs.	3,000 lbs.	3,600 lbs.	3,800 lbs.
	5"	2-1/2"	2,100 lbs.	2,700 lbs.	3,800 lbs.	4,500 lbs.	4,700 lbs.
	6"	3"	2,500 lbs.	3,300 lbs.	4,600 lbs.	5,400 lbs.	5,700 lbs.
	7"	3-1/2"	3,000 lbs.	3,900 lbs.	5,300 lbs.	6,300 lbs.	6,700 lbs.
	8"	4"	3,400 lbs.	4,400 lbs.	6,100 lbs.	7,200 lbs.	7,600 lbs.
4 Tons x 19" Long	3-3/4"	1-7/8"	1,600 lbs.	2,200 lbs.	3,200 lbs.	4,100 lbs.	5,000 lbs.
	4"	2"	1,700 lbs.	2,300 lbs.	3,400 lbs.	4,400 lbs.	5,300 lbs.
	5"	2-1/2"	2,200 lbs.	2,900 lbs.	4,300 lbs.	5,500 lbs.	6,600 lbs.
	6"	3"	2,600 lbs.	3,500 lbs.	5,100 lbs.	6,600 lbs.	8,000 lbs.
	7"	3-1/2"	3,100 lbs.	4,100 lbs.	6,000 lbs.	7,700 lbs.	8,000 lbs.
	8"	4"	3,500 lbs.	4,500 lbs.	6,800 lbs.	8,000 lbs.	8,000 lbs.

Safe Working Load provides a factor of safety of approximately 4 to 1 in 4,500 psi normal weight concrete.

Vermont Agency of Transportation
RECEIVED
CK'D BY NVDB, JW, KH, TH OK'D BY JG
March 21, 2017
RESUBMIT No Approved
BY K. Higgins DATE 03/23/17

DAYTON® SUPERIOR

Swift Lift Anchor Effective Tensile Capacity

When anchors are used in groups and in Thin Walls

Swift Lift Anchor Tons x Length	Effective Wall Thickness 2 de	Actual Edge Distance de	Tensile Safe Working Load Per Anchor In Groups				
			C = Actual Spacing Between Anchors				
			18"	24"	36"	48"	60"
8 Tons x 13-3/8" Long	4-3/4"	2-3/8"	2,800 lbs.	3,600 lbs.	4,800 lbs.	5,300 lbs.	5,300 lbs.
	5"	2-1/2"	2,900 lbs.	3,800 lbs.	5,000 lbs.	5,600 lbs.	5,600 lbs.
	6"	3"	3,500 lbs.	4,500 lbs.	6,000 lbs.	6,700 lbs.	6,700 lbs.
	7"	3-1/2"	4,100 lbs.	5,300 lbs.	7,100 lbs.	7,800 lbs.	7,800 lbs.
	8"	4"	4,700 lbs.	6,000 lbs.	8,100 lbs.	8,900 lbs.	8,900 lbs.
	10"	5"	5,900 lbs.	7,500 lbs.	10,100 lbs.	11,200 lbs.	11,200 lbs.
	12"	5-1/2"	6,500 lbs.	8,300 lbs.	11,000 lbs.	12,300 lbs.	12,300 lbs.
8 Tons x 26-3/4" Long	4-3/4"	2-3/8"	2,900 lbs.	3,800 lbs.	5,600 lbs.	7,200 lbs.	8,500 lbs.
	5"	2-1/2"	3,100 lbs.	4,000 lbs.	5,900 lbs.	7,600 lbs.	9,000 lbs.
	6"	3"	3,700 lbs.	4,800 lbs.	7,100 lbs.	9,100 lbs.	10,800 lbs.
	7"	3-1/2"	4,300 lbs.	5,700 lbs.	8,300 lbs.	10,600 lbs.	12,500 lbs.
	8"	4"	4,900 lbs.	6,500 lbs.	9,400 lbs.	12,100 lbs.	14,300 lbs.
	10"	5"	6,100 lbs.	8,100 lbs.	11,800 lbs.	15,100 lbs.	16,000 lbs.
	12"	5-1/2"	6,700 lbs.	8,900 lbs.	13,000 lbs.	16,000 lbs.	16,000 lbs.

Safe Working Load provides a factor of safety of approximately 4 to 1 in 4,500 psi normal weight concrete.

Swift Lift Anchor Tons x Length	Effective Wall Thickness 2 de	Actual Edge Distance de	Tensile Safe Working Load Per Anchor In Groups				
			C= Actual Spacing Between Anchors				
			20"	24"	33"	42"	60"
20 Tons x 19-3/4" Long	6-1/2"	3-1/4"	4,300 lbs.	5,200 lbs.	6,800 lbs.	8,300 lbs.	10,200 lbs.
	7"	3-1/2"	4,700 lbs.	5,600 lbs.	7,400 lbs.	8,900 lbs.	11,000 lbs.
	8"	4"	5,400 lbs.	6,300 lbs.	8,400 lbs.	10,200 lbs.	12,600 lbs.
	10"	5"	6,700 lbs.	7,900 lbs.	10,500 lbs.	12,700 lbs.	15,700 lbs.
	12"	6"	8,000 lbs.	9,500 lbs.	12,600 lbs.	15,300 lbs.	18,900 lbs.
	14"	7"	9,300 lbs.	11,100 lbs.	14,700 lbs.	17,800 lbs.	22,000 lbs.

Safe Working Load provides a factor of safety of approximately 4 to 1 in 4,500 psi normal weight concrete.

To recalculate the Safe Working Loads when the anchor is used in a lower strength concrete, multiply the tabulated Safe Working Load by the following reduction factors:

Concrete Strength	Reduction Factor
2,000 psi	.66
2,500 psi	.74
3,000 psi	.81
3,500 psi	.88
4,000 psi	.94
4,500 psi	1.00

Vermont Agency of Transportation
RECEIVED
CK'D BY NVD B, JW, KM, TH OK'D BY JG
March 21, 2017
RESUBMIT No Approved
BY K. Higgins DATE 03/23/17

Swift Lift System

P-53 Swift Lift Eye Anchor

The Dayton Superior Swift LIft Eye Anchor (P-53) is similar to the P-52 anchor but has an eye at the foot to accept P-60 Tension Bars. The P-53 anchor is used primarily in thin sections, thin panels of lightweight concrete or shapes that must be handled at concrete compressive strengths below 2,000 psi. P-53 anchors are available in 1, 2, 4, 8 and 20-ton capacities and each has its load rating embossed on the head.

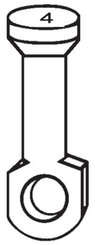

P-53 Swift Lift Eye Anchor

To Order:
Specify: (1) quantity, (2) name, (3) system size, (4) length.

Example:
200, P-53 Swift Lift Eye Anchors, 4 ton, 9-1/2" long.

P-53 Swift Lift Eye Anchor for Lifting and Handling

The P-53 Swift Lift Eye Anchor is designed for use with the P-60 Tension Bar placed through the eye of the anchor. This combination of Swift Lift Eye Anchor and P-60 Tension Bar allows the anchor's full rated tensile load to be developed in thin, narrow wall applications. The anchor should be located at the center line of the wall. **When two or more anchors are required, the minimum spacing between anchors must be equal to the minimum panel width.**

The combination of P-53 Swift Lift Eye Anchor and P-60 Tension Bar is an excellent system to use for lifting, handling and setting precast columns.

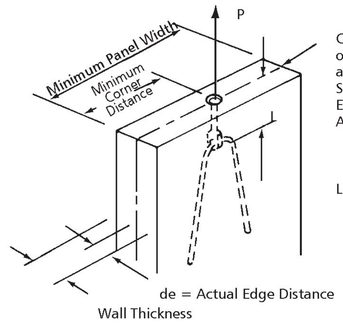

Center line of wall and P-53 Swift Lift Eye Anchor

L = Anchor Length

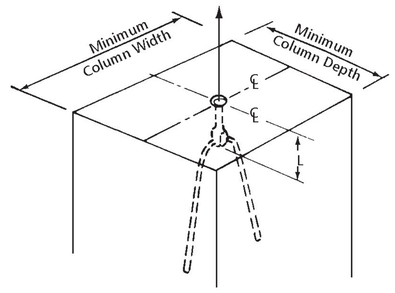

P-53 Swift Lift Eye Anchor Selection Chart

Anchor Rated Load (Tons)	Anchor Length L	Minimum Thickness or Depth 2 de	Actual Edge Distance de	Minimum Corner Distance	Minimum Panel Width	Tensile Safe Working Load per Anchor*
1	2-1/2"	3"	1-1/2"	8"	16"	2,000 lbs.
2	3-1/2"	3"	1-1/2"	4"	8"	4,000 lbs.
4	4-3/4"	3-3/4"	1-7/8"	5"	10"	8,000 lbs.
8	7-1/16"	4-3/4"	2-3/8"	7"	14"	16,000 lbs.
20	9-7/8"	6-3/8"	6-3/4"	8-1/2"	17"	40,000 lbs.

*Safe Working Load provides a factor of safety of approximately 4 to 1 in 2,000 psi normal weight concrete. The P-53 Eye Anchor must be used in conjunction with the P-60 Tension Bar in order to develop its published rated working loads.
Note: Contact Dayton Superior Technical Service Department for safe working loads when the P-53 Eye Anchor is used with straight lengths of rebar.

Vermont Agency of Transportation
RECEIVED
CK'D BY NVDB, JW, KM, TM OK'D BY JG
March 21, 2017
RESUBMIT No Approved
BY K. Higgins DATE 03/23/17

Swift Lift System

P-60 Swift Lift Tension Bar

The Dayton Superior Swift Lift Tension Bar (P-60) is designed to be used with the P-53 Eye Anchor in order for the eye anchor to develop its published rated working loads. See P-60 sizes and dimensions below.

To Order:
Specify: (1) quantity, (2) name, (3) anchor size.

Example:
200, P-60 Swift Lift Tension Bar, 10-ton anchor.

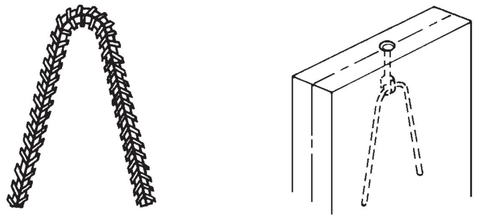

P-60 Swift Lift Tension Bar

P-60 Swift Lift Tension Bar Dimensions					
Anchor Rated Load (Tons)	Grade 60 Rebar Size	Rebar Overall Length	A		R
			Standard	Maximum	
1	.306" Wire	4 0 "	1 4 "	—	3/4"
2	#3	2 4 "	5 "	7 -1 /2 "	1-1/8"
4	#5	2 4 "	6 -1 /4 "	1 0 "	1-7/8"
8	#6	4 8 "	9 -1 /2 "	1 5 "	2-1/4"
20	#9	8 6 "	1 2 -1 /2 "	2 0 "	3"

Note: Wire style is for use with 1 ton P-53 Eye Anchors only.

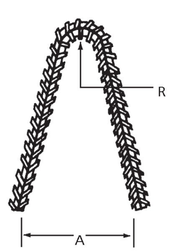

P-60 Rebar Style

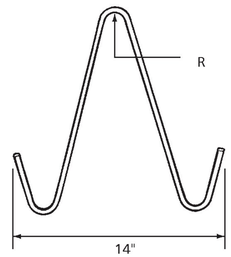

P-60 Wire Style

P-60 Swift Lift Tension Bar Installation

The proper installation of a tension bar is as follows:

1) Place the tension bar through the eye of the anchor in such a manner that the tension bar contacts the bottom of the eye.

2) Make certain the legs of the tension bar are equal on either side of the anchor.

3) Wire the tension bar into position so that the tension bar stays in contact with the bottom of the eye.(See sketch below.)

DO NOT attempt to use field-bent bars as a replacement for the Dayton Superior P-60 Tension Bar. Field bending may result in an improperly shaped tension bar, an incorrect radius and/or a cracked bar. A problem, such as this, can cause the field-bent tension bar to fail prematurely.

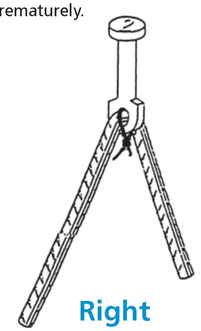

Right

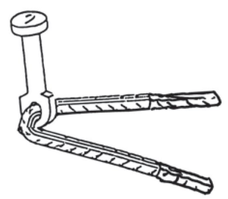

Wrong

Vermont Agency of Transportation
RECEIVED
CK'D BY NVDB, JW, KM, TM OK'D BY JG
March 21, 2017
RESUBMIT No Approved
BY K. Higgins DATE 03/23/17

Swift Lift System

P-54 Swift Lift Throw-Away Recess Plug

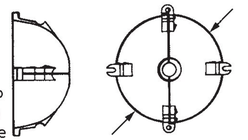

P-54 Swift Lift Recess Plug

3" for 9/16" Diameter Anchors
3-3/4" for 3/4" Diameter Anchors

The Dayton Superior P-54 Recess Plug is fabricated from high-density polyethylene plastic in two sizes (2-ton and 4-ton) to accommodate the P-52 Swift Lift Anchor. The two-piece design snaps together around the head of the anchor to securely grasp the anchor. Tabs on the recess plug provide a convenient method to nail the assembly to the form. Built-in retainers allow a P-59 Shear Bar to clip to the recess plug and be held in correct position. The P-54 recess plug is designed to properly position the anchor below the surface of the concrete. This allows easy patching of the recess and prevents surface staining from exposed steel.

Warning: The P-54 recess plug is designed to be used with the P-52 insert and P-59 shear bar combination. Failure to use these components in this combination may result in concrete spalling and/or premature failure.

To Order:
Specify: (1) quantity, (2) name, (3) anchor size.

Example:
200, P-54 Swift Lift Recess Plugs, 4-ton anchor

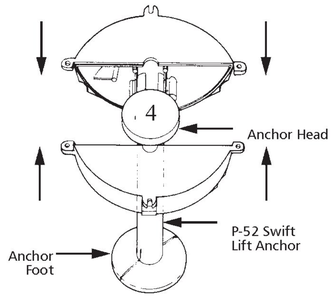

1. Assemble the P-54 Recess Plug by placing the head of the P-52 Swift-Lift Anchor inside two halves of the recess plug. Then snap the two halves together. It is very difficult to assemble the unit with the foot of the anchor inside the P-54 Recess Plug and still get the two halves to close together correctly. If the two halves of the P-54 Recess Plug do not fit closely together, it could be because the anchor is in upside down. In such a case, reverse the anchor and try again.

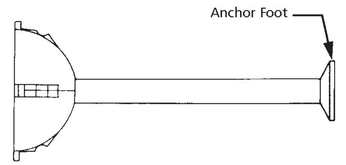

2. A correctly assembled P-54 Recess Plug and P-52 Swift Lift Anchor.

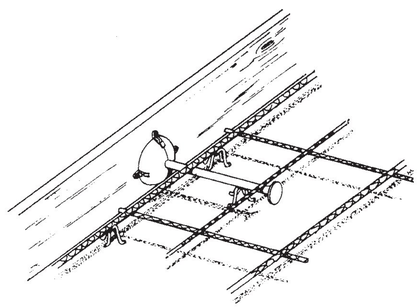

3. Attach the assembled P-54 Recess Plug and anchor to the form work in its predetermined location with the recess plug seam in the vertical position. Use common (not double headed) nails in the upper three tabs of the recess plug. The plug and anchor assembly can also be attached to the form work by using a 2-ton stud and wingnut if desired. Provide bar supports around the anchor, as shown, to prevent displacement during the casting process.

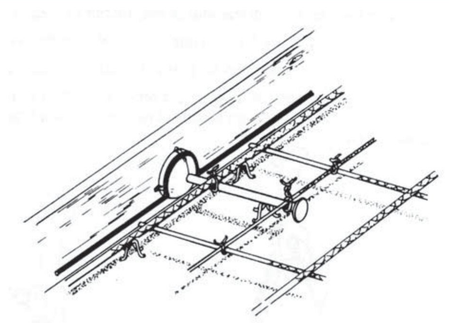

4. Slip the preformed shear bar on the P-54 Recess Plug, as shown. The receiving tabs of the P-54 Recess Plug will correctly position the shear bar. Usually, additional support wiring is not needed to hold the shear bar in place. However, prudent users will provide an additional wire tie or two, to make certain the shear bar will not dislodge during concrete placement. Wire tie the P-52 Swift-Lift Anchor to reinforcing steel, as shown.

Vermont Agency of Transportation
RECEIVED
CK'D BY NVDB, JW, KM, TM OK'D BY JG
March 21, 2017
RESUBMIT No Approved
BY K. Higgins DATE 03/23/17

Swift Lift System

P-56 Swift Lift Narrow Recess Plug

The Dayton Superior P-56 Swift Lift Narrow Recess Plug is designed for use in thin-wall conditions, such as the top edge of highway safety barriers. The recess plug is bolted to the form using a P-63 stud and P-64 wing nut combination and it correctly positions the anchor below the surface of the concrete. P-56 recess plugs are fabricated from nitrile butadiene and are ideal for use in conditions requiring temperature or oil resistance.

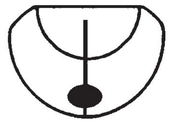

P-56 Swift Lift Narrow Recess Plug

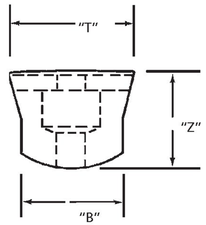

P-56 Swift Lift Narrow Recess Plug

To Order:
Specify: (1) quantity, (2) name, (3) anchor size.

Example:
200, P-56 Swift Lift Narrow Recess Plugs, 4-ton anchor.

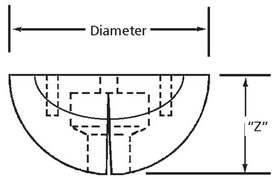

Swift Lift Narrow Recess Plug Dimensions

Swift Lift Anchor	Diameter of Recess Plug	Dimension "Z"	Dimension "T"	Dimension "B"
1	2-3/8"	1-3/16"	1-21/32"	1-11/32"
2	3"	1-7/16"	2-1/32"	1-23/32"
4	3-3/4"	1-13/16"	2-3/4"	2-9/32"
8	4-3/4"	2-5/16"	3-11/32"	2-15/16"
20 Tons	6-3/8"	3-1/8"	4-15/16"	4-7/16"

Note: The diameter of the narrow recess plug is the same as the diameter of the round recess plug.

P-56R Swift Lift Round Recess Plug

The Dayton Superior P-56 Swift Lift Round Recess Plug is fabricated from nitrile butadiene and ideal for use in conditions requiring temperature or oil resistance. The plug must use the P-63R Attachment Stud and P-66R Attachment Nut. This plug can not be attached to the form with either a Holding Plate or Magnetic Setting Plate. Dimensions of the recess plug are slightly smaller than the standard P-56 PL urethane plug. This recess is available by special order.

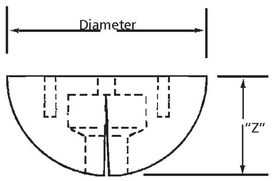

Swift Lift Round Recess Plug Dimensions

Swift Lift Anchor	Diameter of Recess Plug	Depth "Z"
1	2.375	1.188
2	2.918	1.514
4	3.661	1.875
8	4.659	2.375
20 Tons	6.375	3.063

Vermont Agency of Transportation
RECEIVED
CK'D BY NVDB, JW, KM, TM OK'D BY JG
March 21, 2017
RESUBMIT No Approved
BY K. Higgins DATE 03/23/17

Swift Lift System

P-56-PL Swift Lift Plus Recess Plug

The Dayton Superior P-56-PL Swift Lift Plus Recess Plug is manufactured from high-grade elastomeric, thermal set urethane to provide improved tear, heat and chemical resistance. The versatile, reusable plug utilizes a variety of accessories to provide installation and stripping ease in many different applications. P-56-PL recess plugs are available for 1, 2, 4 and 8-ton system sizes. See dimensions of P-56-PL Recess Plug on Page 26.

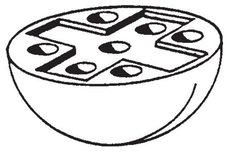

P-56-PL Swift Lift Plus Recess Plug

To Order:
Specify: (1) quantity, (2) name, (3) anchor size.

Example:
200, P-56-PL Swift Lift Plus Recess Plugs, 4-ton anchor

P-56-PL Swift Lift Plus Recess Plug Typical Installations

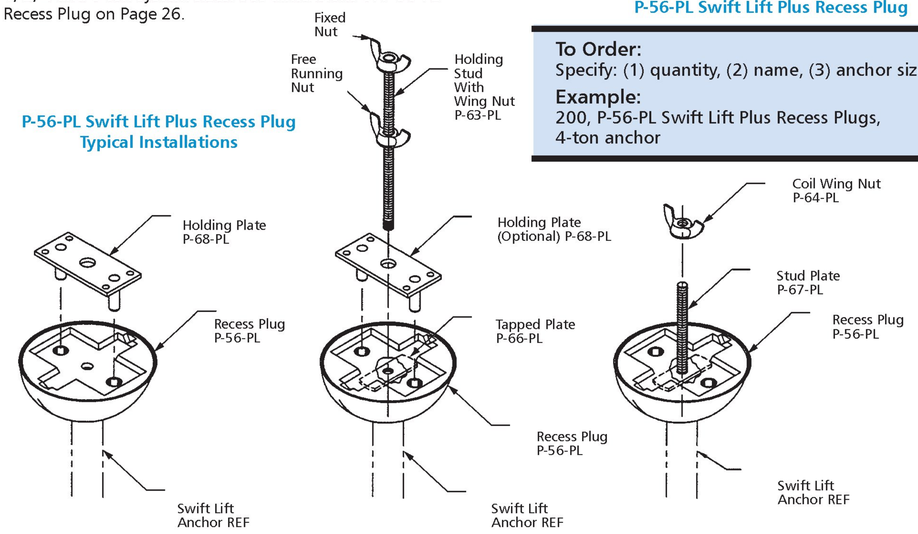

P-57 Swift Lift Steel Recess Plug
P-58 Swift Lift Rubber Ring

The Dayton Superior P-57 Swift Lift Steel Recess Plug is designed for permanent or semi-permanent attachment to repetitive-use precast forms, such as battery molds, steel forms that have a collapsible stripping feature, etc. The recess plug is drilled and tapped for easy attachment to the form or may be held in place by a magnetic plate, tack welded or glued.

The P-58 Swift Lift Rubber Ring is placed on the shaft of the anchor and seats in the recess plug to hold the anchor firmly in the recess plug. It is recommended that when the P-57 recess plug is used, that the anchor end be supported to prevent dislodging (See sketch below).

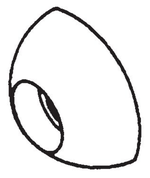

P-57 Swift Lift Steel Recess Plug

P-58 Swift Lift Rubber Ring For Steel Recess Plug

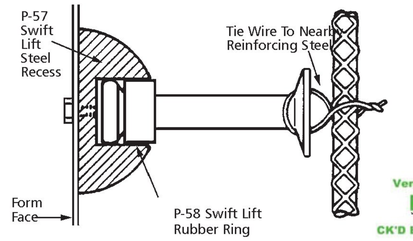

To Order:
Specify: (1) quantity, (2) name, (3) anchor size.

Example:
100, P-57 Swift Lift Steel Recess Plugs, 4 ton anchor and 400 P-58 Swift Lift Rubber Rings for 4-ton anchors.

Vermont Agency of Transportation
RECEIVED
CK'D BY NVDB, JW, KM, TM OK'D BY JG
March 21, 2017
RESUBMIT No Approved
BY K. Higgins DATE 03/23/17

Swift Lift System

P-61 Swift Lift Setting Plate, P-62 Countersunk Screw

The Dayton Superior P-61 Swift Lift Setting Plate and P-62 Countersunk Screw combination provide an easy method of placing a Swift Lift Anchor into the surface of a flat panel without obstructing the screeding process. The P-61 setting plate is available in two sizes, a 4" unit for use with 4-ton anchors and a 5" unit for use with 8-ton anchors. The P-62 screw is available in two sizes to match the setting plates. The-4 ton setup uses a 3/4" long, 5/16" – 18 NC thread screw and the 8-ton setup uses a 3/4" long, 7/16" – 14 NC thread screw.

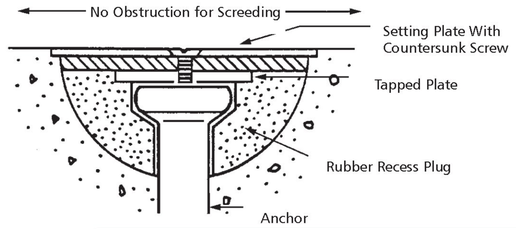

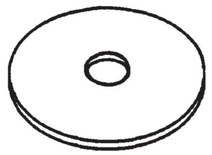

P-61 Swift Lift Setting Plate

P-62 Swift Lift Countersunk Screw

To Order:
Specify: (1) quantity, (2) name, (3) anchor size.

Example:
200, P-61 Swift Lift Setting Plates and 200, P-62 Countersunk Screws for 4-ton anchors.

P-63 Swift Lift Stud, P-64 Swift Lift Wing Nut

The Dayton Superior P-63 Swift Lift Stud and P-64 Wing Nut combination is used to set P-56 Narrow Recess Plugs. Available in two sizes, 5/16" – 18 NC threads for use with the 1-ton anchor and 7/16" – 14 NC threads for use with 2, 4, 8 and 20-ton P-56 anchors.

P-63 Swift Lift Stud

Note: The P-63 Stud and P-64 Wing Nut are not interchangeable with the P-56-PL Recess Plug accessories.

P-64 Swift Lift Wing Nut

To Order:
Specify: 1) quantity, (2) name, (3) size.

Example:
200, P-63 Swift Lift Studs and 200 P-64 Swift Lift Wing Nuts, 7/16" dia.

P-63-PL Swift Lift Plus Holding Stud, P-64-PL Swift Lift Plus Wing Nut

The Dayton Superior P-63-PL Swift Lift Plus Holding Stud is a 3/8" diameter, coil threaded stud with a fixed wing nut and a free-running wing nut used with the P-66-PL threaded plate to quickly attach the P-56-PL recess plug to the formwork. The holding stud is inserted through the form and threaded into the threaded plate. Complete the anchor installation by screwing the free-running wing nut tightly against the form.

The P-64-PL Wing Nut has 3/8" diameter coil thread and is available as a replacement nut for the P-63-PL Holding Stud.

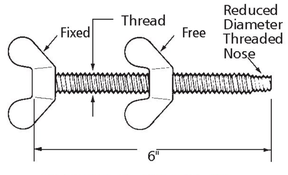

P-63-PL Swift Lift Plus Holding Stud

P-64-PL Swift Lift Plus Wing Nut

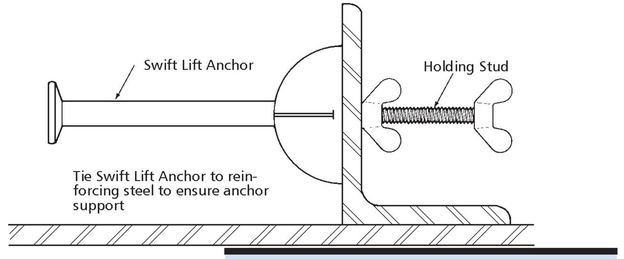

Vermont Agency of Transportation
RECEIVED
CK'D BY NVDB, JW, KM, TM OK'D BY JG
March 21, 2017
RESUBMIT No Approved
BY K. Higgins DATE 03/23/17

To Order:
Specify: (1) quantity, (2) name.

Example:
200, P-63-PL Swift Lift Plus Holding Studs.

Swift Lift System

P-66 Swift Lift Tapped Plate

The Dayton Superior Swift Lift Tapped Plate (P-66) is tapped for either a 5/16" or 7/16" diameter NC thread and used to install the P-56 Narrow Recess Plug. This is a replacement plate only; it can be used with the P-63 Stud or with NC bolts supplied by others.

P-66 Swift Lift Tapped Plate

5/16" or 7/16" Dia. NC Threads

To Order:
Specify: (1) quantity, (2) name, (3) thread size.

Example:
100, P-66 Swift Lift Tapped Plate, 7/16" dia. NC thread.

P-66-PL Swift Lift Plus Threaded Plate
P-67-PL Swift Lift Plus Stud Plate
P-68-PL Swift Lift Plus Holding Plate

The Dayton Superior P-66-PL Swift Lift Plus Threaded Plate, P-67-PL Stud Plate and P-68-PL Holding Plate are working parts used to install the P-56-PL Recess Plug in various applications. These working parts are available in 1, 2, 4 and 8-ton system sizes.

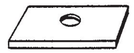

P-66-PL Swift Lift Plus Threaded Plate

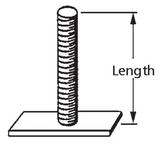

P-67-PL Swift Lift Plus Stud Plate

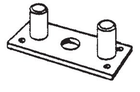

P-68-PL Swift Lift Plus Holding Plate

To Order:
Specify: (1) quantity, (2) name, (3) system size.

Example:
100, P-66-PL Swift Lift Plus Threaded Plate, 4-ton system.

Vermont Agency of Transportation
RECEIVED
CK'D BY NVDB, JW, KM, TM OK'D BY JG
March 21, 2017
RESUBMIT No Approved
BY K. Higgins DATE 03/23/17

P-69 Swift Lift Magnetic Setting Plate

The Dayton Superior P-69 Swift Lift Magnetic Setting Plates are available to firmly set P-56-PL Recess Plugs in metal, precast concrete forms. The reusable magnetic setting plate eliminates holes drilled in the metal forms for anchor setting purposes.

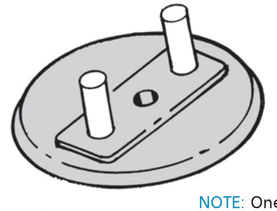

P-69 Swift Lift Magnetic Setting Plate

To Order:
Specify: (1) quantity, (2) name, (3) system size.

Example:
20, P-69 Swift Lift Magnetic Setting Plates, 4-ton system.

NOTE: One piece recess plug with magnets imbedded in top available, contact DSC Customer Service.

Swift Lift System

P-74 Pipe Turning System

The Dayton Superior P-74 Pipe Turning System has been designed to reduce the costs in lifting, transporting and laying precast concrete pipes. Substantial cost savings have been proven when compared to laying pipes
by conventional methods.

A significant advantage, when using this system, is that there are no holes to be filled. This eliminates the potential for poor quality hole filling and results in a consistent high quality, leak-free pipe.

The Dayton Superior Pipe Turning System consists of two P-74 Pipe Turning Devices and two P-52 Swift Lift Anchors. For proper operation, the Swift Lift Anchors must be installed at the center of gravity of the precast element.

P-74 Pipe Turning Devices are available for use with 4, 8 or 20-ton Swift Lift Anchors. They can be used to lift, transport, turn or install precast
concrete elements.

Turning and Lifting – The cables are only to be hoisted vertically; deviation from the vertical should not exceed < 5°. Bending loading to the cables or to the cable-end fastening is not permitted.

Available as two different styles: Style A and Style B. Style A has the wire rope thimble installed parallel with the center line of the Swift Lift Anchor while Style B has the wire rope thimble installed at 90° to the center line of the anchor.

To Order:
Specify: (1) quantity, (2) name, (3) style.

Example:
4, P-74 Pipe Turning Devices, Style B.

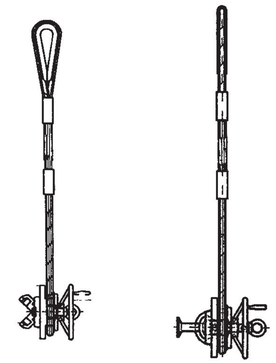

P-74 Pipe Turning Devices

Style A

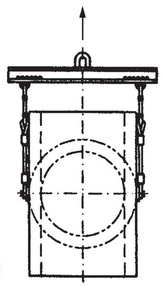

Style B

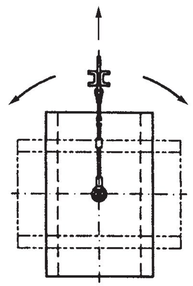

Vermont Agency of Transportation
RECEIVED
CK'D BY NVDB, JW, KM, TM OK'D BY JG
March 21, 2017
RESUBMIT No Approved
BY K. Higgins DATE 03/23/17

P-74 Installation Instructions

The Dayton Superior P-74 Pipe Turning Device must be greased before its first use.

To attach the Pipe Turning Device, push the jaws over the head of the Swift Lift Anchor as the hand wheel is turned, the jaws are pulled into the pressure plate and they are securely clamped around the head of the anchor.

The pressure plate should now be tight against the face of the precast concrete element. For precast concrete pipes, it is sufficient that the pressure plate be tight against the crown of the pipe.

The hand wheel DOES NOT require the use of force to clamp the jaws onto the head of the anchor. Once the jaws are clamped into position, the safety bore-hole should be visible outside the hand wheel.

In order to guarantee proper operation, the faces of both jaws must be clean and free of any dirt or debris.

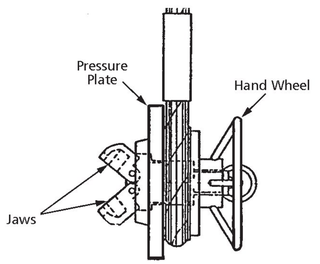

DO NOT attempt to lift and rotate a precast concrete element unless the above instructions have been completed.

To remove the unit from the precast pipe, back off the hand wheel until the jaws are released from the head of the anchor.

The parts that make up this product are subject to a certain amount of wear and damage. The user must ensure that a qualified person inspects the P-74 Pipe Turning Device, before it is used each day. Clean and grease the unit after every 100 uses.

Worn and/or damaged parts are to be replaced by NEW parts supplied by Dayton Superior. For assistance in determining proper maintenance and inspection, contact the nearest Dayton Superior Technical Services office.

Swift Lift System

P-74-S Pipe Laying Sling

Advantages

- Reduced construction time
- Reduced construction costs
- Improved safety

The Dayton Superior P-74-S Pipe Laying Slings have been designed to reduce the costs in lifting, transporting and laying precast concrete pipes. Substantial cost savings have been proven when compared to laying pipes by conventional methods.

P-74-S Pipe Laying Slings are available for use with 4-ton Swift Lift Anchors. They can be used to lift, transport, and lay precast concrete pipe.

Available as two different styles for laying 60" to 96" pipe and 96" to 138" pipe.

To Order:
Specify: (1) quantity, (2) name, (3) style.

Example:
4, P-74-S Pipe Laying Slings, Short Style.

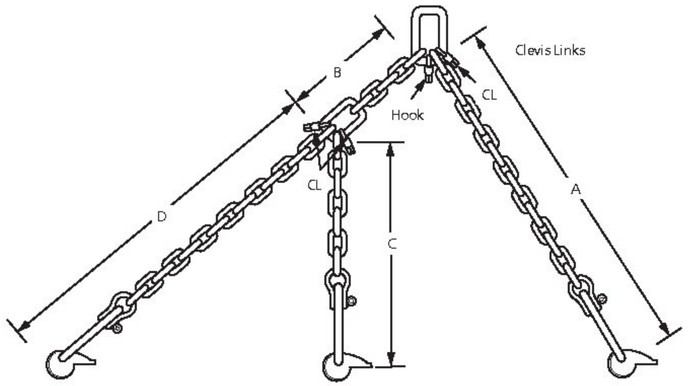

P-74-S Pipe Laying Sling

P-74-S Sling Dimensions and Proper Hardware Attachment

The Dayton Superior P-74-S Pipe Laying Sling is manufactured as a three-legged chain sling with three P-50 Universal Lifting Eyes and three clevis links to enable the chain lengths to be shortened, as needed. The clevis links are also used to hold the chains when they are not in use (when changing from symmetrical to asymmetrical operations).

The sling is so constructed that either a symmetrical or asymmetrical lifting sling can be made.

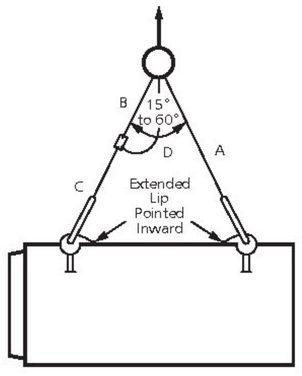

Pipe Lengths	Sling Style	A	B	C	D
60" to 96"	Short	57"	16"	41"	76"
96" to 138"	Long	75"	24"	51"	110"

Vermont Agency of Transportation
RECEIVED
CK'D BY NVDB, JW, KH, TM OK'D BY JG
March 21, 2017
RESUBMIT No Approved
BY K. Higgins DATE 03/23/17

Pipe Turning System

Transporting, Lowering and Placing Pipe in Trench

Pipes are transported and laid into position using the Pipe Laying Sling in its symmetrical mode. They are lowered into the trench close to the previous pipe laid.

When pipes are laid on fill, without a footing, care must be taken to clear the fill away from the area of the joint to ensure that fill is not introduced into the pipe joint.

The pipes may be prevented from rolling laterally by partial backfilling.

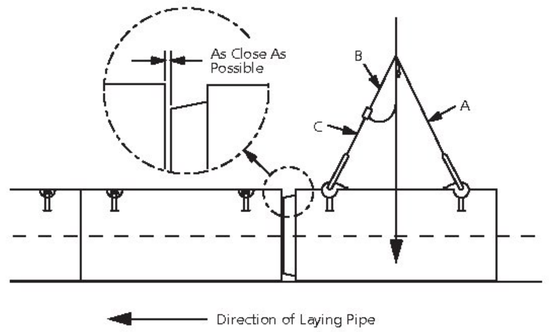

Joining the Pipes

The long leg of the Pipe Laying Sling is attached to the farthest anchor on the previously laid pipe. The free leg is attached – out of the way – on the clevis link provided.

Locate the center of lift over the closest anchor of the previously laid pipe. This will properly align the direction of pull.

The pipe is pulled into position by slowly raising the boom on the crane or backhoe without moving the boom forward or backward.

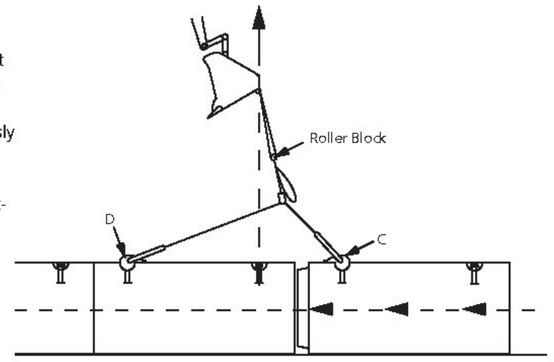

Releasing the Load

When the pipe has been pulled into position, the load is released and the Pipe Laying System is moved to the next pipe, and the process is repeated.

Warning: Anchors can become overloaded and fail if the crane or backhoe continues to apply load after the connection has been completed.

When handling precast concrete elements, extreme care should be taken to ensure that impact or dynamic loads are kept to a minimum. Impact or dynamic loads can greatly increase the applied load to the anchors.

Failure to observe the above warnings may lead to property damage, personnel injury and death.

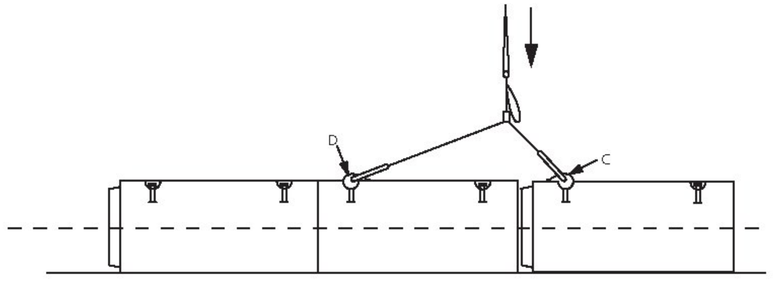

Vermont Agency of Transportation
RECEIVED
CK'D BY MVDB, JW, KM, TH OK'D BY JG
March 21, 2017
RESUBMIT No Approved
BY K. Higgins DATE 03/23/17

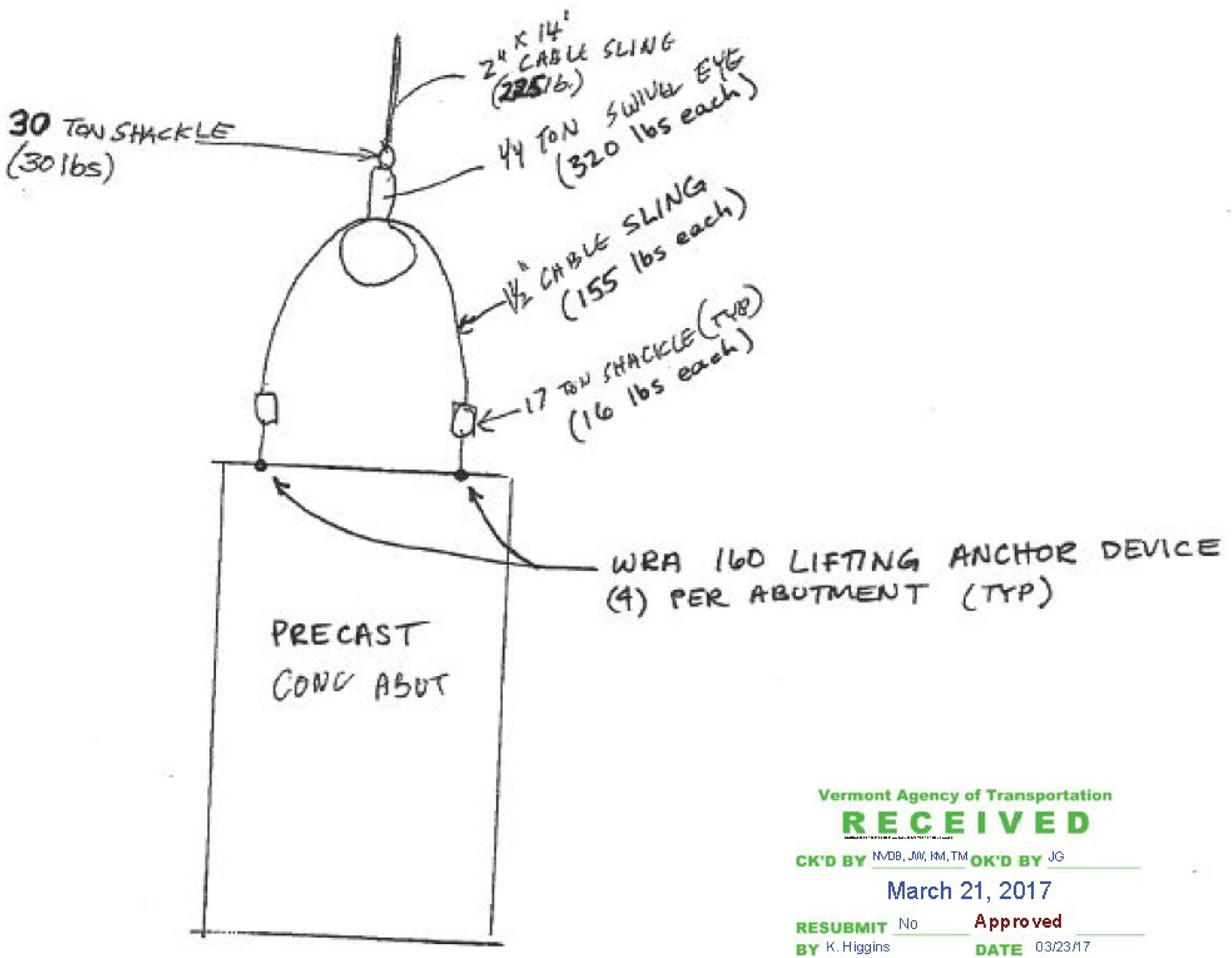

Vermont Agency of Transportation
RECEIVED
CK'D BY NVDB, JW, KM, TM OK'D BY JG
March 21, 2017
RESUBMIT No Approved
BY K. Higgins DATE 03/23/17

TYPICAL ABUTMENT LIFT DIAGRAM - END VIEW

Not to Scale

CONAC

WIRE ROPE ANCHORS - DATA SHEET

Clearances - Projected Installation			Parallel Installation		Transverse Install'n	
Anchor Part No.	Suggested Projection A [in]	Min End Distance B [in]	Edge Dist. at 2,200 psi E_{22} [in]	Edge Dist. at 4,500 psi E_{45} [in]	Edge Dist. at 2,200 psi F_{22} [in]	Edge Dist. at 4,500 psi F_{45} [in]
WRA 008	2-3/8	10-1/2	1-1/2	1-1/4	2-5/8	2-5/8
WRA 012	2-1/2	12	1-3/4	1-1/2	2-3/4	2-3/4
WRA 016	2-3/4	13-3/4	2-3/8	1-3/4	3-3/8	3-3/8
WRA 020	3-1/8	16-1/2	2-3/4	2	3-1/2	3-1/2
WRA 025	3-3/8	17-3/4	3-1/8	2-1/8	3-5/8	3-5/8
WRA 038	4	19-1/2	4-3/8	3	4-3/8	4-3/8
WRA 050	4	20-1/2	5-3/4	4	5-3/4	4-3/8
WRA 063	4-1/2	22-3/4	6-1/4	4-3/8	6-1/4	5-3/8
WRA 080	5	25-1/2	7-7/8	5-1/2	7-7/8	5-1/2
WRA 099	5-1/2	28-3/4	8-3/4	6-1/8	8-3/4	6-1/8
WRA 120	6	31-3/4	11	7-5/8	11	7-5/8
WRA 160	6-3/4	36-1/2	12	8-1/2	12	8-1/2
WRA 180	7	41-3/4	13-3/8	9-3/8	13-3/8	9-3/8
WRA 250	8	47-1/2	14-3/4	10-1/2	14-3/4	10-1/2

NOTE: Minimum spacing between adjacent anchors = 2 x B
Minimum panel thickness = 2 x E for parallel installation.
Minimum panel thickness = 2 x F for transverse installation.

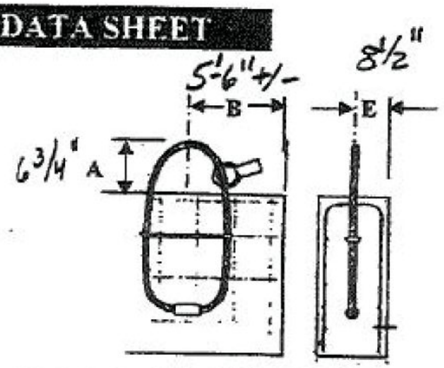

Projected and Parallel Installation

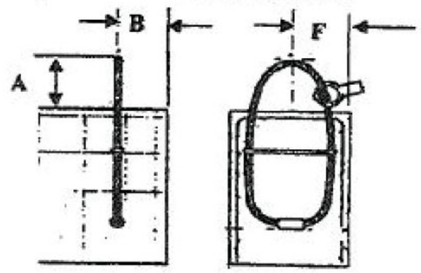

Projected and Transverse Installation

Clearances - Recessed Installation			Parallel Installation		Transverse Install'n	
Anchor Part No.	Depth below surface G [in]	Min End Distance H [in]	Edge Dist. at 2,200 psi J_{22} [in]	Edge Dist. at 4,500 psi J_{45} [in]	Edge Dist. at 2,200 psi K_{22} [in]	Edge Dist. at 4,500 psi K_{45} [in]
WRA 020	9/16	23-1/2	1-3/4	1-1/2	3-3/8	3-3/8
WRA 038	9/16	29	3-1/8	2-1/8	4	4
WRA 063	11/16	33-1/2	4-3/4	3-3/8	5-3/8	5-3/8
WRA 099	1/2	42-1/2	7	5	7	6
WRA 160	1/2	53	9-1/2	6-5/8	9-1/2	7-1/8
WRA 250	1/2	67	12	8-1/2	12	8-5/8

NOTE: Minimum spacing between adjacent anchors = 2 x H
Minimum panel thickness = 2 x J for parallel installation.
Minimum panel thickness = 2 x K for transverse installation.

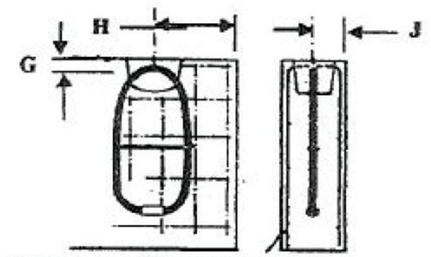

Recessed and Parallel Installation

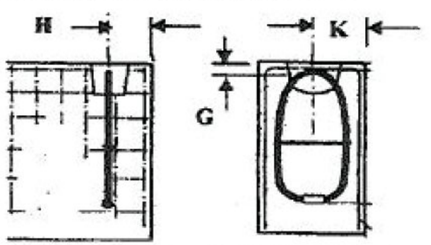

Recessed and Transverse Installation

Vermont Agency of Transportation
RECEIVED
CK'D BY MDB, JK, KM, TM OK'D BY JG
March 21, 2017
RESUBMIT No Approved
BY K. Higgins DATE 03/23/17

CONAC

WIRE ROPE ANCHORS - DATA SHEET

Vermont Agency of Transportation
RECEIVED
CK'D BY MOB, ACKK, TM OK'D BY JG
March 21, 2017
RESUBMIT No Approved
BY K. Higgins DATE 03/23/17

WRA Series WIRE ROPE ANCHORS

Manufactured from high-quality wire rope, with steel swage.

Dimensions & Load Capacities

Nominal System Capacity	Anchor Part No.	Color Code	Allowable Capacity T_A [lb]	Loop Length L [in]	Rope Diameter D [in]	Weight 100 pcs [lb]	Min. Reinf. Mesh Depth M [in]	Min. Reinf. Mesh Area [in^2/ft]
0.8 T	WRA 008	White	1,800	8	0.236	18	12	0.062
1.2 T	WRA 012	Red	2,700	9	0.276	26	14	0.062
1.6 T	WRA 016	Pink	3,600	9-3/4	0.315	38	14	0.062
2 T	WRA 020	Lt green	4,500	11-3/4	0.354	60	17	0.089
2.5 T	WRA 025	Dark gray	5,600	12-3/4	0.394	66	20	0.089
3.8 T	WRA 038	Emerald	9,000	14-1/2	0.472	110	22	0.089
5 T	WRA 050	Lt yellow	11,700	15	0.551	181	22	0.089
6.3 T	WRA 063	Lt blue	14,150	16-3/4	0.630	242	24	0.089
8 T	WRA 080	Lt gray	18,000	18-7/8	0.709	353	27	0.104
10 T	WRA 099	Dark purple	22,450	21	0.787	463	31	0.104
12 T	WRA 120	Yellow	28,100	23-1/4	0.866	661	35	0.104
16 T	WRA 160	Lt purple	35,950	26-3/8	1.024	1,036	39	0.104
18 T	WRA 180	Yellow-grn	44,950	29-1/2	1.102	1,300	45	0.178
25 T	WRA 250	Lt brown	56,200	33-1/2	1.260	1,850	51	0.178

NOTE: Allowable Tension Capacity is based on a Safety Factor of 4:1 against wire rope breakage
Allowable Tension Capacity is based on use in 2,200 psi normal weight concrete.
No additional strength increase can be gained in higher strength concrete.
Additional sizes available with capacities up to 220,000 lb [110 tons].

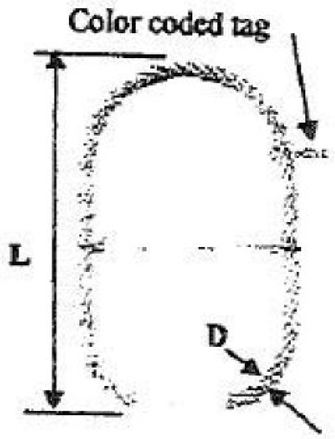

INSTALLATION METHODS

PROJECTED INSTALLATION
No extra reinforcement required
See following page.

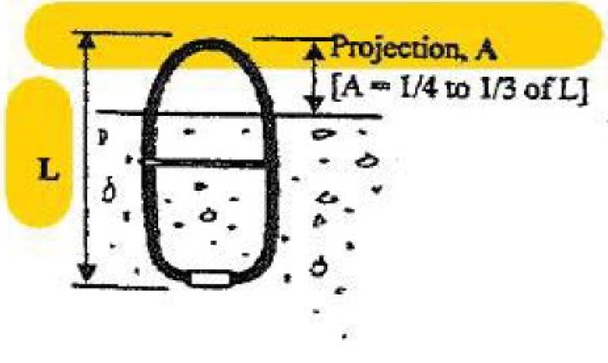

RECESSED INSTALLATION
No extra reinforcement required
See following page.

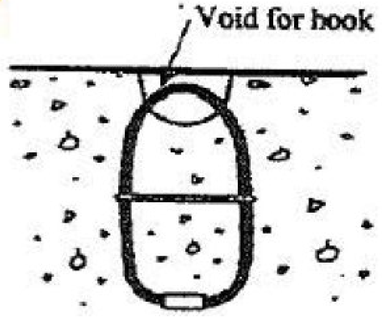

PROJECTED INSTALLATION WITH REINFORCEMENT

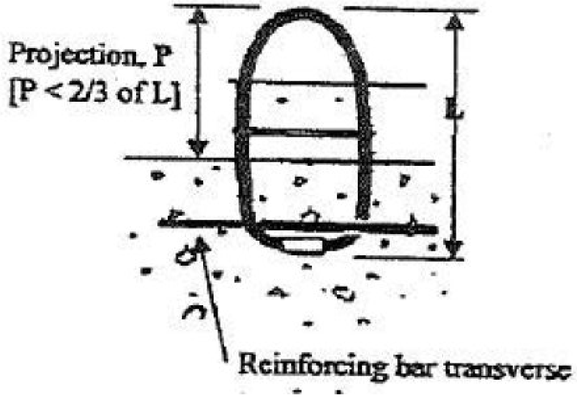

DRAWING LIST:

PAGE #	DESCRIPTION
C-1	COVER SHEET & GENERAL NOTES
E-1	FRAMING PLAN
S-1 - S-6	GIRDER SHOP DRAWINGS
S-7	TYPICAL DETAILS SHOP DRAWING
S-8	DIAPHRAGM SHOP DRAWINGS

16-181
STRAFFORD, VT
BRIDGE REPLACEMENT

GENERAL NOTES:

MATERIAL SPECIFICATIONS

1. ALL MATERIALS AND CONSTRUCTION SHALL CONFORM TO THE VERMONT AGENCY OF TRANSPORTATION 2011 STANDARD SPECIFICATIONS FOR CONSTRUCTION, THE 2014 AASHTO LRFD BRIDGE DESIGN SPECIFICATIONS AND THEIR LATEST REVISIONS
2. ALL MATERIAL SHALL BE AASHTO M270 (ASTM A709) GR.50 U.N.O.
3. ALL MATERIAL DENOTED "CVN" IN THE BILL OF MATERIAL SHALL MEET THE CHARPY V-NOTCH TESTING REQUIREMENTS OF ZONE 2, H FREQUENCY: 15 FT-LB AT 40 ° (UP TO 2" WELDED)
4. BOLTS SHALL BE H.S. ASTM A325 TYPE 1 - HEAVY HEX NUTS ASTM A563 GRADE DH - HARDENED WASHERS ASTM F436 TYPE 1 - DTI WASHERS ASTM F-959
5. A DTI INSPECTION REPRESENTATIVE SHALL BE PRESENT DURING INSTALLATION OF BOLTS THAT UTILIZE A DTI WASHER.
6. BOLTS AND NUTS SHALL BE SUBJECTED TO A ROTATIONAL CAPACITY TEST. DO NOT MIX NUTS AND BOLTS FROM DIFFERENT CONTAINERS UNLESS THEY HAVE THE SAME DESIGNATED LOT NUMBER.

FABRICATION

7. DIE STAMPING IS ALLOWED IN SPECIFIC LOCATIONS WITH THE APPROVAL OF THE ENGINEER.
8. ALL SHARP CORNERS OR EDGES SHALL BE ROUNDED TO A MINIMUM RADIUS OF 1/16" PER STANDARD SPEC. 506.14(b)
9. ALL PLATE MEMBERS SHALL BE CUT SO THAT THE PRIMARY DIRECTION OF ROLLING IS PARALLEL TO THE MAIN TENSILE OR COMPRESSIVE STRESS PER STANDARD SPEC. 506.08
10. FLANGE PLATE MATERIAL SHALL HAVE AN EDGE HARDNESS NOT GREATER THAN HRc 30 PER STANDARD SPEC. 506.09
11. ALL WELDING PROCEDURES SHALL BE IN ACCORDANCE WITH SUBSECTION 506.10
12. NON DESTRUCTIVE TESTING OF WELDS SHALL BE IN ACCORDANCE WITH ANSI/AASHTO/AWS D1.5 - SECTION 6.

FIELD CONNECTIONS

13. FIELD BOLTS SHALL HAVE A HEAVY HEX NUT, HEX HEAD, ONE HARDENED WASHER & ONE DTI WASHER EACH.
14. PIECE MARKS WILL BE LOCATED AS SHOWN IN FRAMING PLAN. ALL ERECTION MARKS, MATCH MARKS & WEIGHT MARKS MUST NOT BE EXPOSED IN THE FINISHED STRUCTURE.
15. ANY HOLES IN THE DIAPHRAGM STIFFENER PLATES AFTER REMOVAL OF THE TEMPORARY DIAPHRAGMS SHALL BE FILLED WITH BUTTON HEAD BOLTS (FURNISHED BY OTHERS). THESE BOLTS SHALL BE TIGHTENED IN ACCORDANCE WITH SUBSECTION 506.19.

COATINGS & FINISH

16. ALL STEEL IS TO BE HOT-DIP GALVANIZED IN ACCORDANCE WITH SUBSECTION 726.08.
17. ALL HARDWARE IS TO BE MECHANICALLY GALVANIZED IN ACCORDANCE WITH AASHTO M298, CLASS 50, TYPE 1.

TYP. ALL SHEETS ⚠1

Vermont Agency of Transportation
RECEIVED
CK'D BY RSF, TAM OK'D BY JDG
February 9, 2017
RESUBMIT No Approved
BY Kristin Higgins DATE 2/14/2017

FINISH:	HOT-DIP GALVANIZED			
MATERIAL:	AASHTO M270 GR.50			
HOLES:	$\phi\frac{13}{16}$" U.N.O			
ELECTRODES:	PER WELD PROCEDURE	⚠1	REVISED PER REVIEWER COMMENTS	1/6/17
WELDS:	PER WELD PROCEDURE	⚠0	ISSUED FOR APPROVAL	12/6/16
SURFACE PREP:	SSPC-SP6	No.	Revision	Date

Fabricator: ARC ENTERPRISES INC.
Detailer: DRAFTWORKS DETAILING, 11 CHESTNUT ST. AMESBURY, MA
Job Number: 16-181
COVER SHEET
Sheet No.: 1 OF 10
Original Submittal Date: 12/6/16
VTRANS, STRAFFORD VT BRIDGE REPLACEMENT PROJ# BF 0177 (10)
Drawing No.: C-1
Drawn By: DAP
Checked By: BLB
QC: MILLER CONSTRUCTION

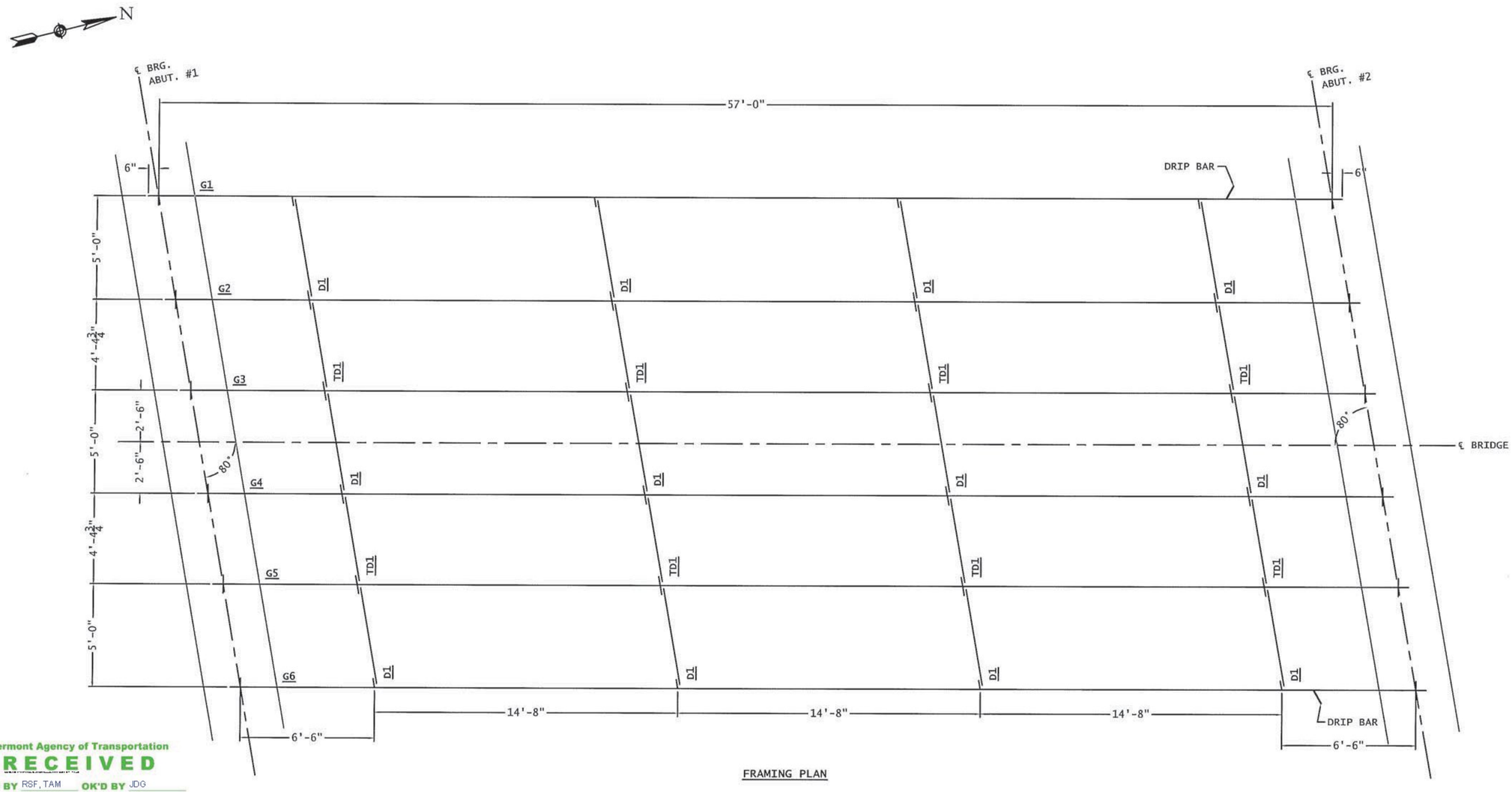

FRAMING PLAN

Vermont Agency of Transportation
RECEIVED
CK'D BY RSF, TAM OK'D BY JDG
February 9, 2017
RESUBMIT No Approved
BY Kristin Higgins DATE 2/14/2017

SHOP BOLT LIST	
QTY	DESCRIPTION
48	7/8" DIA. x 2" H.S. BOLT W/ NUT, WASHER & DTI WASHER

FIELD BOLT LIST	
QTY	DESCRIPTION
32	7/8" DIA. x 2" H.S. BOLT W/ NUT, WASHER & DTI WASHER

NOTES:
1. BRIDGE GIRDERS ARE TO BE SHIPPED TO SITE IN (3) PAIRS OF 2 WITH DIAPHRAGMS 100% SHOP BOLTED IN THEIR FINAL ERECTED POSITION.
2. ALL FIELD BOLTED & SHOP BOLTED DIAPHRAGMS REQUIRE (4) Ø⅞"x2" BOLTS EACH.
3. BOLT QUANTITIES IN BILL OF MATERIAL ARE EXACT & DO NOT TAKE INTO ACCOUNT WASTE & TESTING REQUIREMENTS.

FINISH:	HOT-DIP GALVANIZED			
MATERIAL:	AASHTO M270 GR.50			
HOLES:	Ø15/16" U.N.O			
ELECTRODES:	PER WELD PROCEDURE	1	REVISED PER REVIEWER COMMENTS	1/6/17
WELDS:	PER WELD PROCEDURE	0	ISSUED FOR APPROVAL	12/6/16
SURFACE PREP:	SSPC-SP6	No.	Revision	Date

fabrication: ARC ENTERPRISES INC.	detailer: DRAFTWORKS DETAILING 11 CHESTNUT ST. AMESBURY, MA	
Job Number: 16-181	ERECTION DRAWING FRAMING PLAN	Sheet No.: 2 OF 10
Original Submittal Date: 12/6/16	VTRANS, STRAFFORD VT BRIDGE REPLACEMENT PROJ# BF 0177 (10)	Drawing No.: E-1
Drawn By: DAP / Checked By: BLB	QC: MILLER CONSTRUCTION	

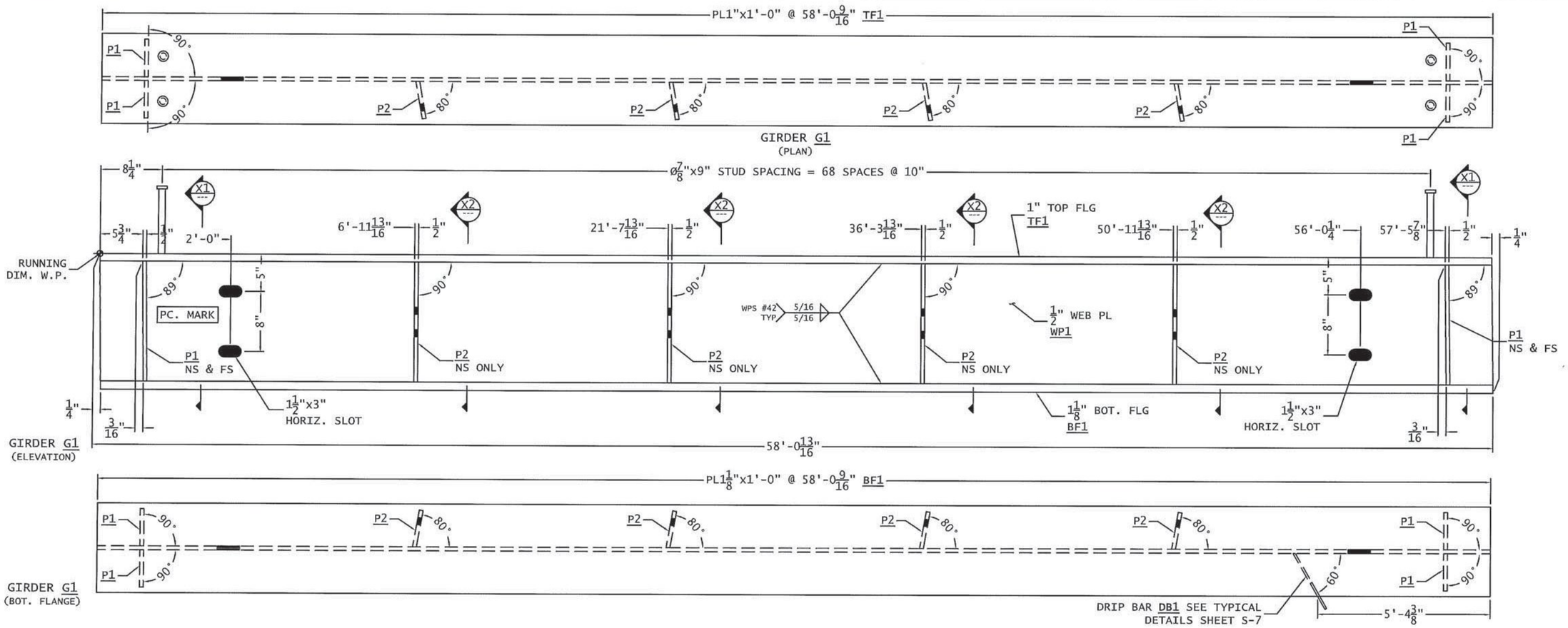

Vermont Agency of Transportation

RECEIVED

CK'D BY RSF, TAM OK'D BY JDG

February 9, 2017

RESUBMIT No Approved

BY Kristin Higgins DATE 2/14/2017

THE TWO CAMBER DIMENSIONS REPRESENT THE FOLLOWING:
-TOP DIMENSION = TOTAL CAMBER IN FINISHED BEAM
-BOTTOM DIMENSION = TOTAL CAMBER @ TIME OF FABRICATION

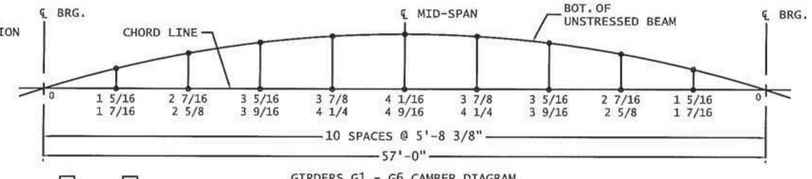

GIRDERS G1 - G6 CAMBER DIAGRAM
UNITS IN INCHES

BILL OF MATERIALS

SHIP MARK	SHIP QTY	PIECE MARK	PC. QTY	DESCRIPTION	LENGTH Ft.	LENGTH In.	WT. lbs. ea.	WT. lbs. tot.	MAT'L
G1	1			GIRDER ASSEMBLY	58	13/16	6704.3	6704.3	
		WP1	1	PL 1/2 " x 16 "	58	13/16	1580.4	1580.4	CVN
		TF1	1	PL 1 " x 12 "	58	9/16	2369.7	2369.7	CVN
		BF1	1	PL 1 1/8 " x 12 "	58	9/16	2665.9	2665.9	CVN
		P1	4	PL 1/2 " x 5 "	1	4	10.9	43.6	
		P2	4	PL 1/2 " x 5 "	1	4	10.9	43.6	
		DB1	1	PL 1/4 " x 3 1/8 "	0	8 5/8	1.1	1.1	
			138	7/8" DIA. SHEAR STUD	0	9			
						TOTAL WEIGHT =		6704.3	

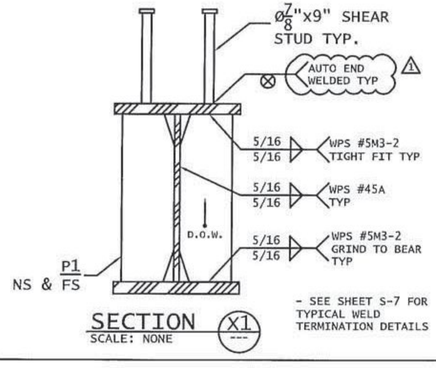

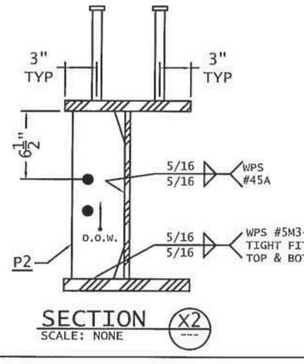

FINISH:	HOT-DIP GALVANIZED		
MATERIAL:	AASHTO M270 GR.50		
HOLES:	Ø13/16" U.N.O		
ELECTRODES:	PER WELD PROCEDURE	1	REVISED PER REVIEWER COMMENTS 1/6/17
WELDS:	PER WELD PROCEDURE	0	ISSUED FOR APPROVAL 12/6/16
SURFACE PREP:	SSPC-SP6	No.	Revision Date

fabricator: ARC ENTERPRISES INC.	detailer: DRAFTWORKS DETAILING 11 CHESTNUT ST. AMESBURY, MA	
Job Number: 16-181	SHOP DRAWING GIRDER G1 DETAILS	Sheet No.: 3 OF 10
Original Submittal Date: 12/6/16	VTRANS, STRAFFORD VT BRIDGE REPLACEMENT PROJ# BF 0177 (10)	Drawing No.: S-1
Drawn By: DAP / Checked By: BLB	QC: MILLER CONSTRUCTION	

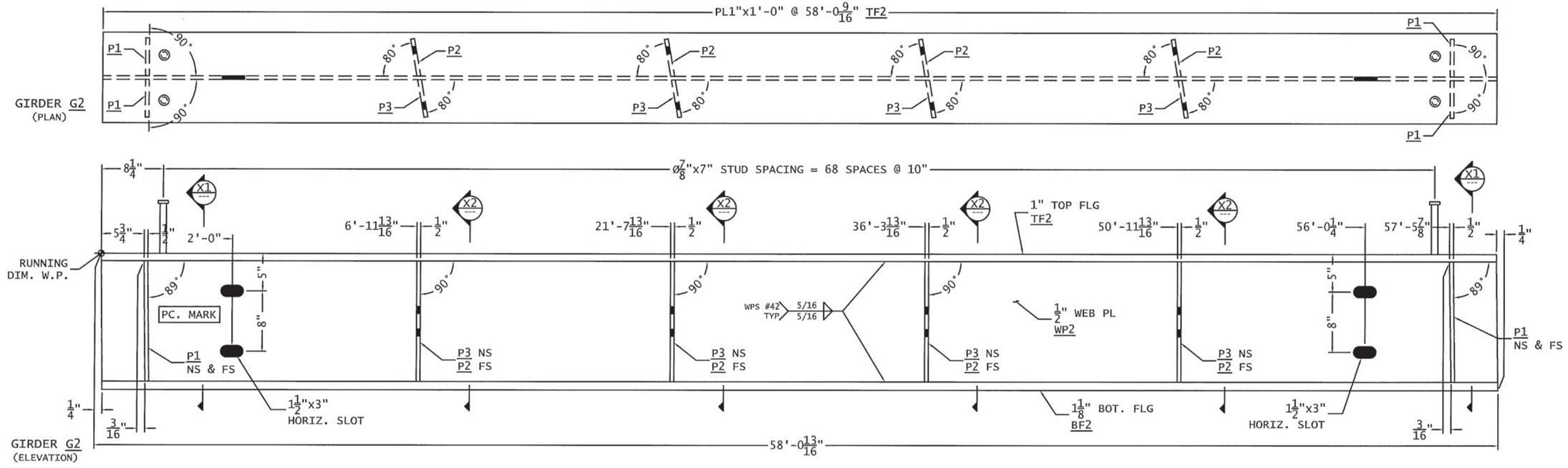

Vermont Agency of Transportation
RECEIVED
CK'D BY RSF, TAM OK'D BY JDG
February 9, 2017
RESUBMIT No Approved
BY Kristin Higgins DATE 2/14/2017

THE TWO CAMBER DIMENSIONS REPRESENT THE FOLLOWING:
-TOP DIMENSION = TOTAL CAMBER IN FINISHED BEAM
-BOTTOM DIMENSION = TOTAL CAMBER @ TIME OF FABRICATION

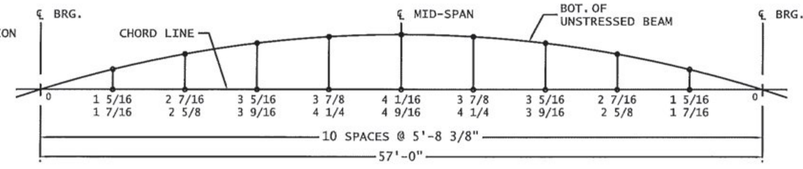

GIRDERS G1 - G6 CAMBER DIAGRAM
UNITS IN INCHES

BILL OF MATERIALS

SHIP MARK	SHIP QTY	PIECE MARK	PC. QTY	DESCRIPTION	LENGTH Ft.	LENGTH In.	WT. lbs. ea.	WT. lbs. tot.	MAT'L
G2	1			GIRDER ASSEMBLY	58	13/16	6746.9	6746.9	
		WP2	1	PL 1/2 " x 16 "	58	13/16	1580.4	1580.4	CVN
		TF2	1	PL 1 " x 12 "	58	9/16	2369.7	2369.7	CVN
		BF2	1	PL 1 1/8 " x 12 "	58	9/16	2665.9	2665.9	CVN
		P1	4	PL 1/2 " x 5 "	1	4	10.9	43.6	
		P2	4	PL 1/2 " x 5 "	1	4	10.9	43.6	
		P3	4	PL 1/2 " x 5 "	1	4	10.9	43.6	
			138	7/8" DIA. SHEAR STUD	0	7			
							TOTAL WEIGHT =	6746.9	

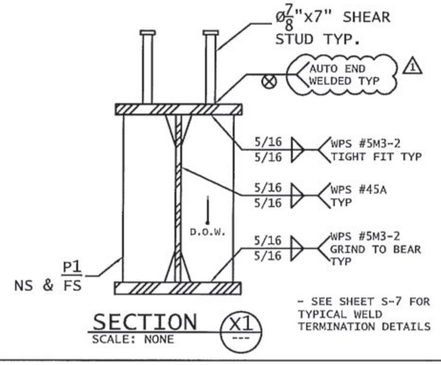

- SEE SHEET S-7 FOR TYPICAL WELD TERMINATION DETAILS

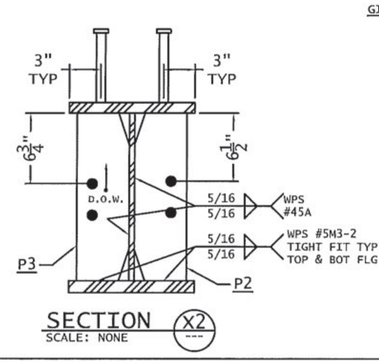

FINISH:	HOT-DIP GALVANIZED		
MATERIAL:	AASHTO M270 GR.50		
HOLES:	Ø15/16" U.N.O		
ELECTRODES:	PER WELD PROCEDURE	1	REVISED PER REVIEWER COMMENTS 1/6/17
WELDS:	PER WELD PROCEDURE	0	ISSUED FOR APPROVAL 12/6/16
SURFACE PREP:	SSPC-SP6	No.	Revision Date

fabricator: ARC ENTERPRISES INC.	detailer: DRAFTWORKS DETAILING 11 CHESTNUT ST. AMESBURY, MA
Job Number: 16-181	SHOP DRAWING GIRDER G2 DETAILS — Sheet No.: 4 OF 10
Original Submitted Date: 12/6/16	VTRANS, STRAFFORD VT BRIDGE REPLACEMENT PROJ# BF 0177 (10) — Drawing No.: S-2
Drawn By: DAP / Checked By: BLB	cc: MILLER CONSTRUCTION

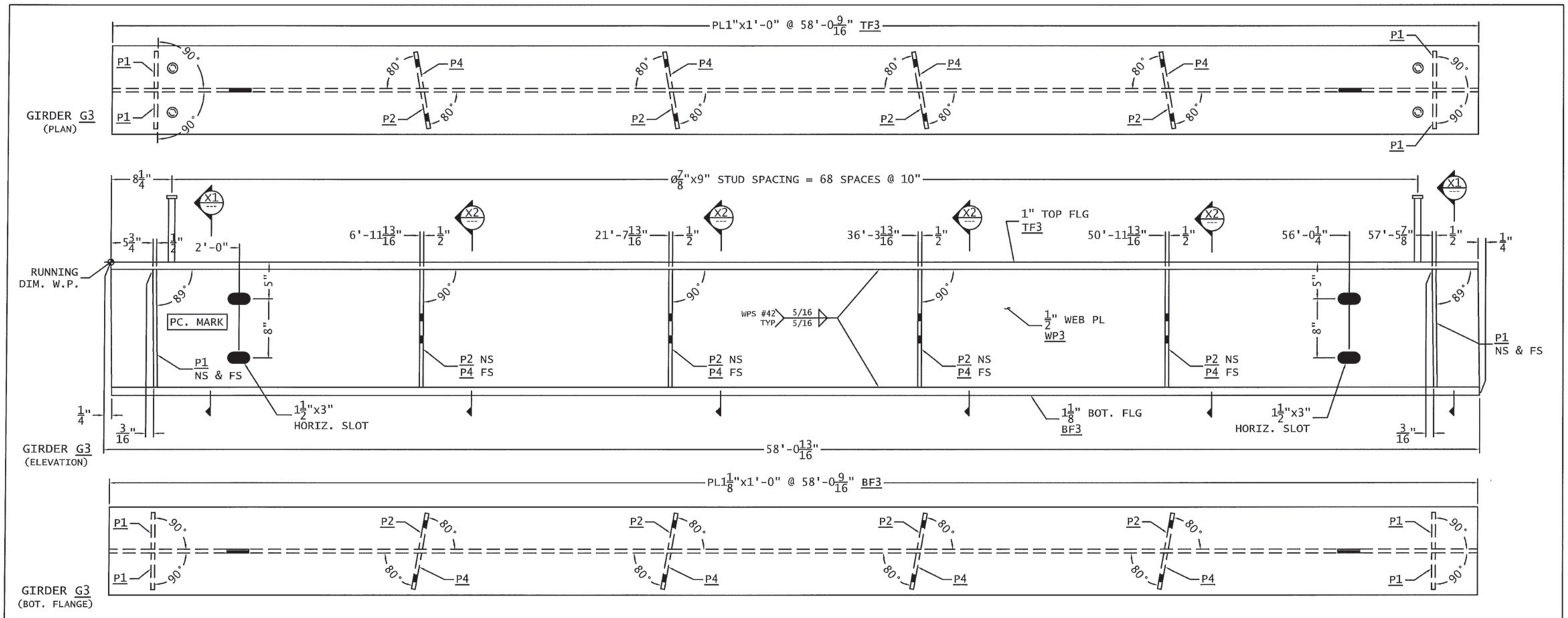

Vermont Agency of Transportation
RECEIVED
CK'D BY RSF, TAM OK'D BY JDG
February 9, 2017
RESUBMIT No Approved
BY Kristin Higgins DATE 2/14/2017

THE TWO CAMBER DIMENSIONS REPRESENT THE FOLLOWING:
-TOP DIMENSION = TOTAL CAMBER IN FINISHED BEAM
-BOTTOM DIMENSION = TOTAL CAMBER @ TIME OF FABRICATION

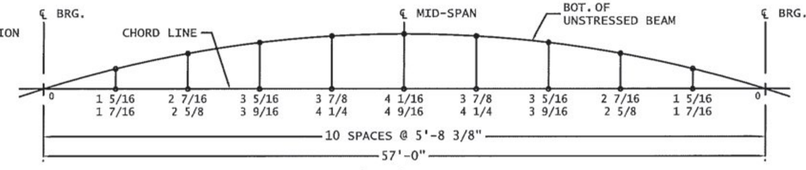

GIRDERS G1 - G6 CAMBER DIAGRAM
UNITS IN INCHES

BILL OF MATERIALS

SHIP MARK	SHIP QTY	PIECE MARK	PC. QTY	DESCRIPTION	LENGTH Ft.	LENGTH In.	WT. lbs. ea.	WT. lbs. tot.	MAT'L
G3	1			GIRDER ASSEMBLY	58	13/16	6746.9	6746.9	
		WP3	1	PL 1/2 " x 16 "	58	13/16	1580.4	1580.4	CVN
		TF3	1	PL 1 " x 12 "	58	9/16	2369.7	2369.7	CVN
		BF3	1	PL 1 1/8 " x 12 "	58	9/16	2665.9	2665.9	CVN
		P1	4	PL 1/2 " x 5 "	1	4	10.9	43.6	
		P2	4	PL 1/2 " x 5 "	1	4	10.9	43.6	
		P4	4	PL 1/2 " x 5 "	1	4	10.9	43.6	
			138	7/8" DIA. SHEAR STUD	0	9			
							TOTAL WEIGHT =	6746.9	

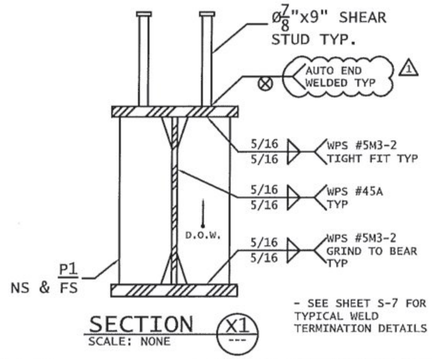

- SEE SHEET S-7 FOR TYPICAL WELD TERMINATION DETAILS

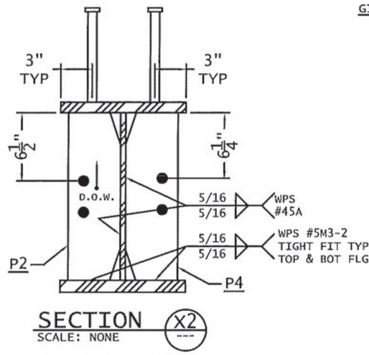

FINISH:	HOT-DIP GALVANIZED		
MATERIAL:	AASHTO M270 GR.50		
HOLES:	Ø15/16" U.N.O		
ELECTRODES:	PER WELD PROCEDURE	1	REVISED PER REVIEWER COMMENTS 1/6/17
WELDS:	PER WELD PROCEDURE	0	ISSUED FOR APPROVAL 12/6/16
SURFACE PREP:	SSPC-SP6	No.	Revision Date

fabricator: ARC ENTERPRISES INC.	detailer: DRAFTWORKS DETAILING 11 CHESTNUT ST. AMESBURY, MA
Job Number: 16-181	SHOP DRAWING GIRDER G3 DETAILS — Sheet No.: 5 OF 10
Original Submittal Date: 12/6/16	VTRANS, STRAFFORD VT BRIDGE REPLACEMENT PROJ# BF 0177 (10) — Drawing No.: S-3
Drawn By: DAP / Checked By: BLB	QC: MILLER CONSTRUCTION

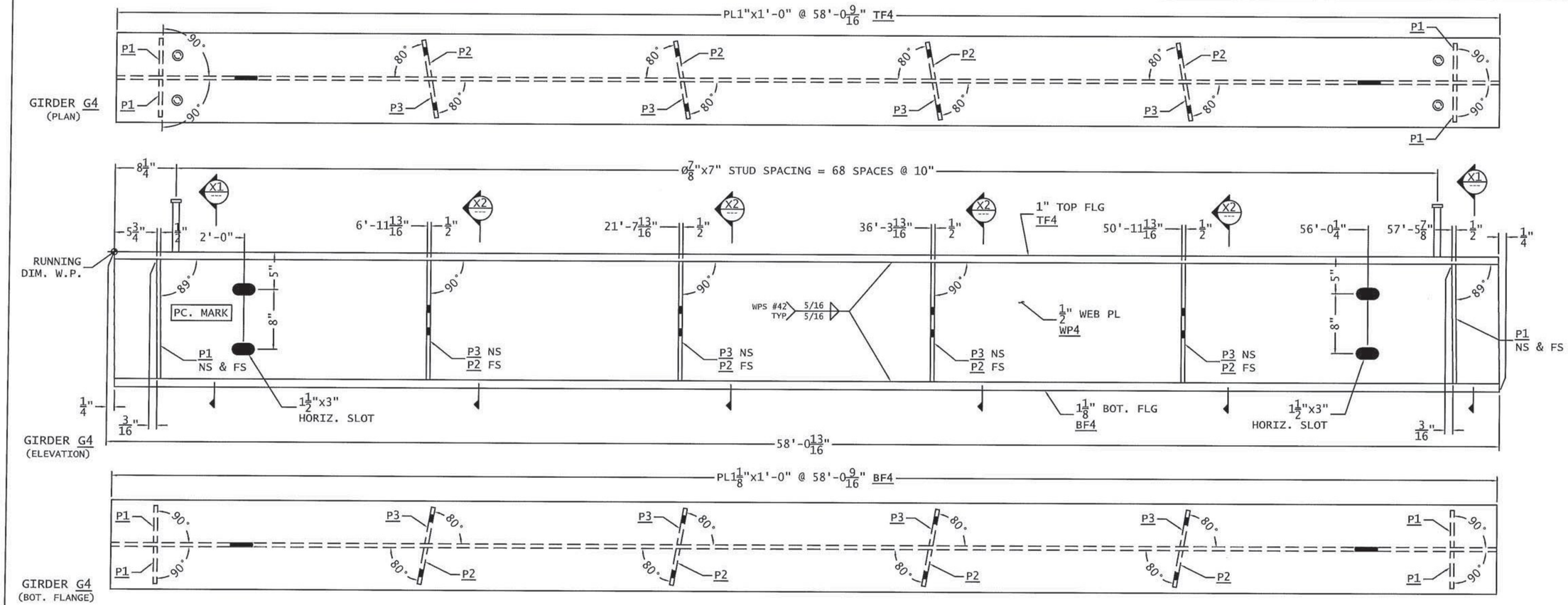

Vermont Agency of Transportation

RECEIVED

CK'D BY RSF, TAM OK'D BY JDG

February 9, 2017

RESUBMIT No Approved

BY Kristin Higgins DATE 2/14/2017

THE TWO CAMBER DIMENSIONS REPRESENT THE FOLLOWING:
-TOP DIMENSION = TOTAL CAMBER IN FINISHED BEAM
-BOTTOM DIMENSION = TOTAL CAMBER @ TIME OF FABRICATION

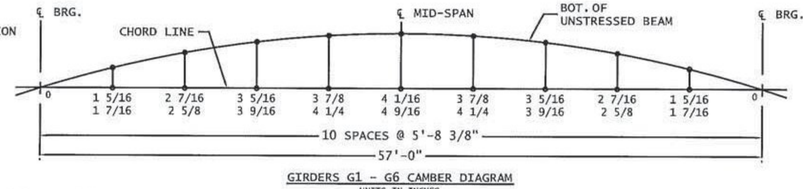

GIRDERS G1 - G6 CAMBER DIAGRAM
UNITS IN INCHES

BILL OF MATERIALS

SHIP MARK	SHIP QTY	PIECE MARK	PC. QTY	DESCRIPTION	LENGTH Ft.	LENGTH In.	WT. lbs. ea.	WT. lbs. tot.	MAT'L
G4	1			GIRDER ASSEMBLY	58	13/16	6746.9	6746.9	
		WP4	1	PL 1/2 " x 16 "	58	13/16	1580.4	1580.4	CVN
		TF4	1	PL 1 " x 12 "	58	9/16	2369.7	2369.7	CVN
		BF4	1	PL 1 1/8 " x 12 "	58	9/16	2665.9	2665.9	CVN
		P1	4	PL 1/2 " x 5 "	1	4	10.9	43.6	
		P2	4	PL 1/2 " x 5 "	1	4	10.9	43.6	
		P3	4	PL 1/2 " x 5 "	1	4	10.9	43.6	
			138	7/8" DIA. SHEAR STUD	0	7			
							TOTAL WEIGHT =	6746.9	

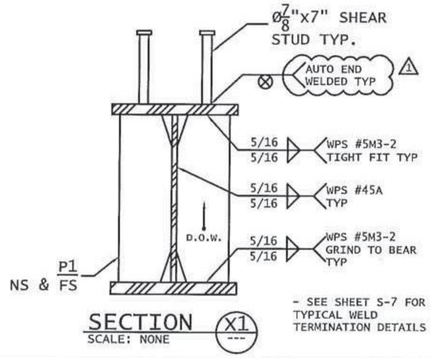

- SEE SHEET S-7 FOR TYPICAL WELD TERMINATION DETAILS

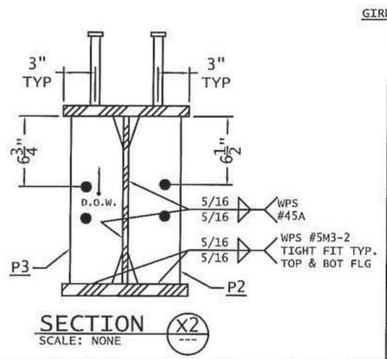

FINISH:	HOT-DIP GALVANIZED		
MATERIAL:	AASHTO M270 GR.50		
HOLES:	Ø15/16" U.N.O		
ELECTRODES:	PER WELD PROCEDURE	1	REVISED PER REVIEWER COMMENTS 1/6/17
WELDS:	PER WELD PROCEDURE	0	ISSUED FOR APPROVAL 12/6/16
SURFACE PREP:	SSPC-SP6	No.	Revision Date

fabricator: ARC ENTERPRISES INC.

detailer: DRAFTWORKS DETAILING
11 CHESTNUT ST. AMESBURY, MA

Job Number: 16-181

SHOP DRAWING
GIRDER G4 DETAILS

Sheet No.: 6 OF 10

Original Submittal Date: 12/6/16

VTRANS, STRAFFORD VT
BRIDGE REPLACEMENT
PROJ# BF 0177 (10)

Drawing No.: S-4

Drawn By: DAP Checked By: BLB

QC: MILLER CONSTRUCTION

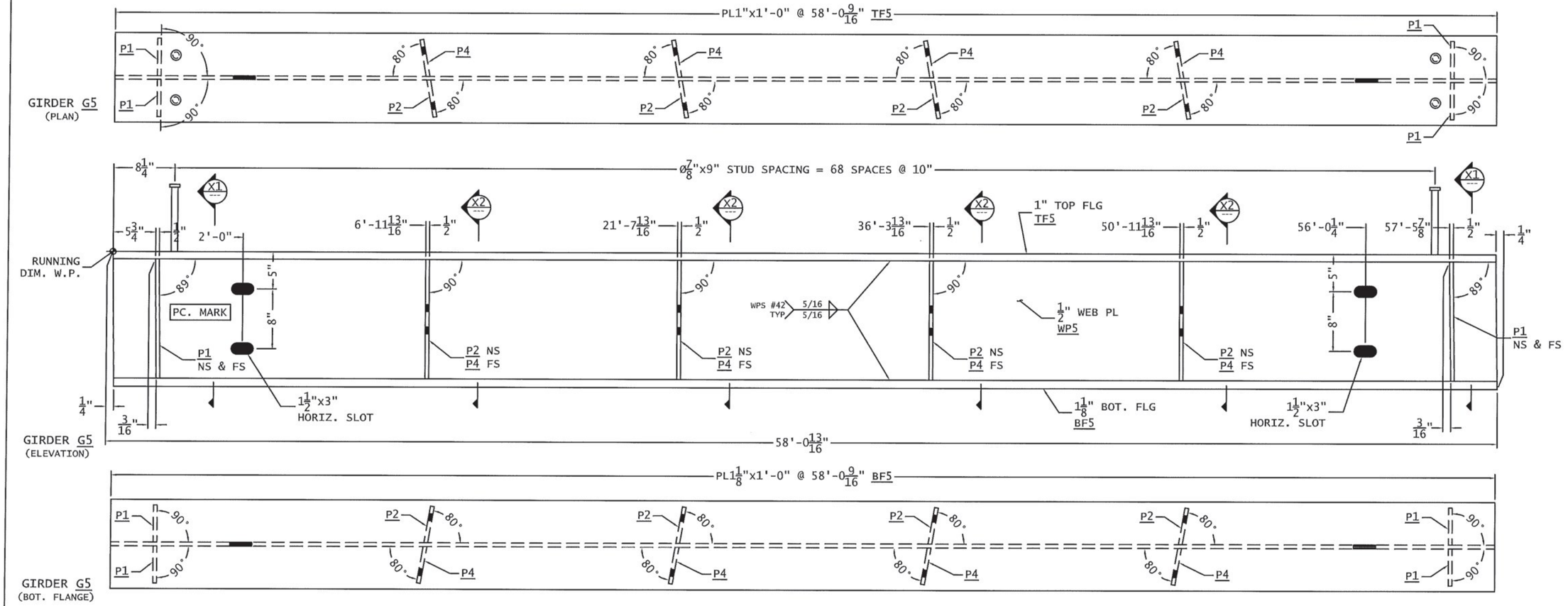

Vermont Agency of Transportation
RECEIVED
CK'D BY RSF, TAM OK'D BY JDG
February 9, 2017
RESUBMIT No Approved
BY Kristin Higgins DATE 2/14/2017

THE TWO CAMBER DIMENSIONS REPRESENT THE FOLLOWING:
-TOP DIMENSION = TOTAL CAMBER IN FINISHED BEAM
-BOTTOM DIMENSION = TOTAL CAMBER @ TIME OF FABRICATION

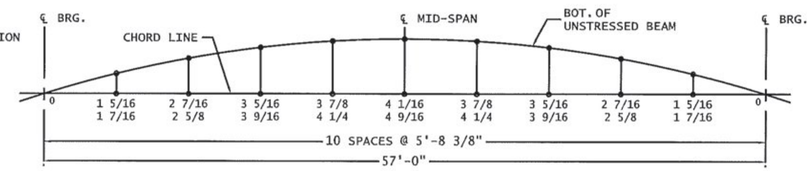

GIRDERS G1 - G6 CAMBER DIAGRAM
UNITS IN INCHES

BILL OF MATERIALS

SHIP MARK	SHIP QTY	PIECE MARK	PC. QTY	DESCRIPTION	LENGTH Ft.	LENGTH In.	WT. lbs. ea.	WT. lbs. tot.	MAT'L
G5	1			GIRDER ASSEMBLY	58	13/16	6746.9	6746.9	
		WP5	1	PL 1/2 " x 16 "	58	13/16	1580.4	1580.4	CVN
		TF5	1	PL 1 " x 12 "	58	9/16	2369.7	2369.7	CVN
		BF5	1	PL 1 1/8 " x 12 "	58	9/16	2665.9	2665.9	CVN
		P1	4	PL 1/2 " x 5 "	1	4	10.9	43.6	
		P2	4	PL 1/2 " x 5 "	1	4	10.9	43.6	
		P4	4	PL 1/2 " x 5 "	1	4	10.9	43.6	
			138	7/8" DIA. SHEAR STUD	0	9			
							TOTAL WEIGHT =	6746.9	

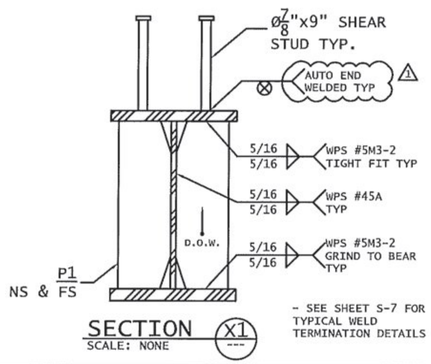

- SEE SHEET S-7 FOR TYPICAL WELD TERMINATION DETAILS

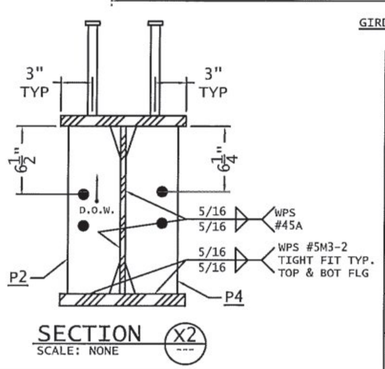

FINISH:	HOT-DIP GALVANIZED		
MATERIAL:	AASHTO M270 GR.50		
HOLES:	Ø13/16" U.N.O		
ELECTRODES:	PER WELD PROCEDURE	1	REVISED PER REVIEWER COMMENTS 1/6/17
WELDS:	PER WELD PROCEDURE	0	ISSUED FOR APPROVAL 12/6/16
SURFACE PREP:	SSPC-SP6	No.	Revision Date

fabricator: ARC ENTERPRISES INC.
detailer: DRAFTWORKS DETAILING, 11 CHESTNUT ST. AMESBURY, MA
Job Number: 16-181
SHOP DRAWING GIRDER G5 DETAILS
Sheet No.: 7 OF 10
Original Submittal Date: 12/6/16
VTRANS, STRAFFORD VT BRIDGE REPLACEMENT PROJ# BF 0177 (10)
Drawing No.: S-5
Drawn By: DAP
Checked By: BLB
QC:
MILLER CONSTRUCTION

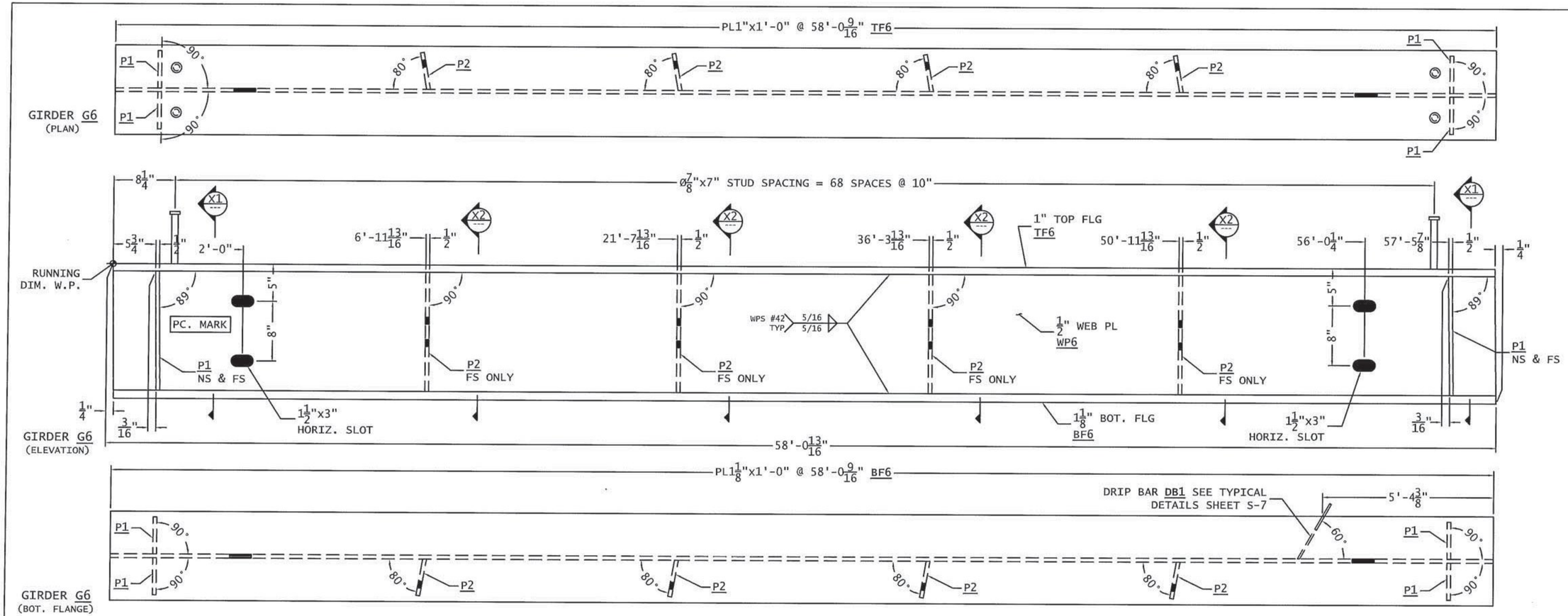

Vermont Agency of Transportation

RECEIVED

CK'D BY RSF, TAM OK'D BY JDG

February 9, 2017

RESUBMIT No Approved

BY Kristin Higgins DATE 2/14/2017

BILL OF MATERIALS

SHIP MARK	SHIP QTY	PIECE MARK	PC. QTY	DESCRIPTION	LENGTH Ft.	LENGTH In.	WT. lbs. ea.	WT. lbs. tot.	MAT'L
G6	1			GIRDER ASSEMBLY	58	13/16	6704.3	6704.3	
		WP6	1	PL 1/2 " x 16 "	58	13/16	1580.4	1580.4	CVN
		TF6	1	PL 1 " x 12 "	58	9/16	2369.7	2369.7	CVN
		BF6	1	PL 1 1/8 " x 12 "	58	9/16	2665.9	2665.9	CVN
		P1	4	PL 1/2 " x 5 "	1	4	10.9	43.6	
		P2	4	PL 1/2 " x 5 "	1	4	10.9	43.6	
		DB1	1	PL 1/4 " x 3 1/8 "	0	8 5/8	1.1	1.1	
			138	7/8" DIA. SHEAR STUD	0	7			
						TOTAL WEIGHT =		6704.3	

THE TWO CAMBER DIMENSIONS REPRESENT THE FOLLOWING:
-TOP DIMENSION = TOTAL CAMBER IN FINISHED BEAM
-BOTTOM DIMENSION = TOTAL CAMBER @ TIME OF FABRICATION

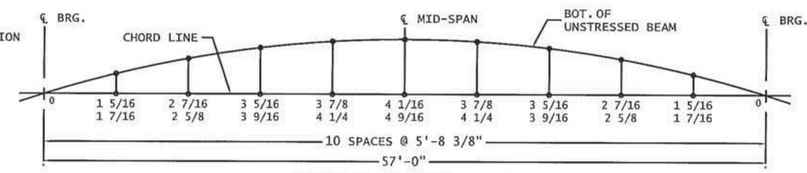

GIRDERS G1 - G6 CAMBER DIAGRAM
UNITS IN INCHES

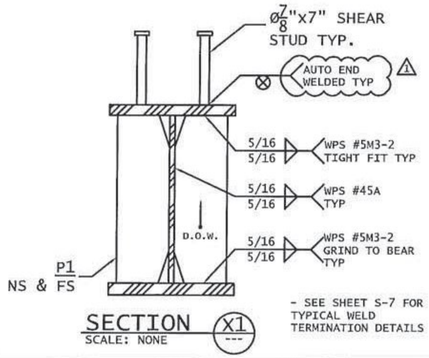

- SEE SHEET S-7 FOR TYPICAL WELD TERMINATION DETAILS

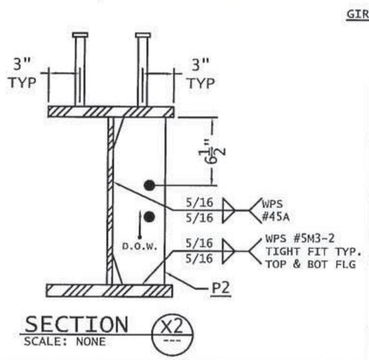

FINISH:	HOT-DIP GALVANIZED		
MATERIAL:	AASHTO M270 GR.50		
HOLES:	Ø13/16" U.N.O		
ELECTRODES:	PER WELD PROCEDURE	1	REVISED PER REVIEWER COMMENTS 1/6/17
WELDS:	PER WELD PROCEDURE	0	ISSUED FOR APPROVAL 12/6/16
SURFACE PREP:	SSPC-SP6	No.	Revision Date

fabricator: ARC ENTERPRISES INC.

detailer: DRAFTWORKS DETAILING
11 CHESTNUT ST. AMESBURY, MA

Job Number: 16-181

SHOP DRAWING
GIRDER G6 DETAILS

Sheet No.: 8 OF 10

Original Submitted Date: 12/6/16

VTRANS, STRAFFORD VT
BRIDGE REPLACEMENT
PROJ# BF 0177 (10)

Drawing No.: S-6

Drawn By: DAP Checked By: BLB QC: MILLER CONSTRUCTION

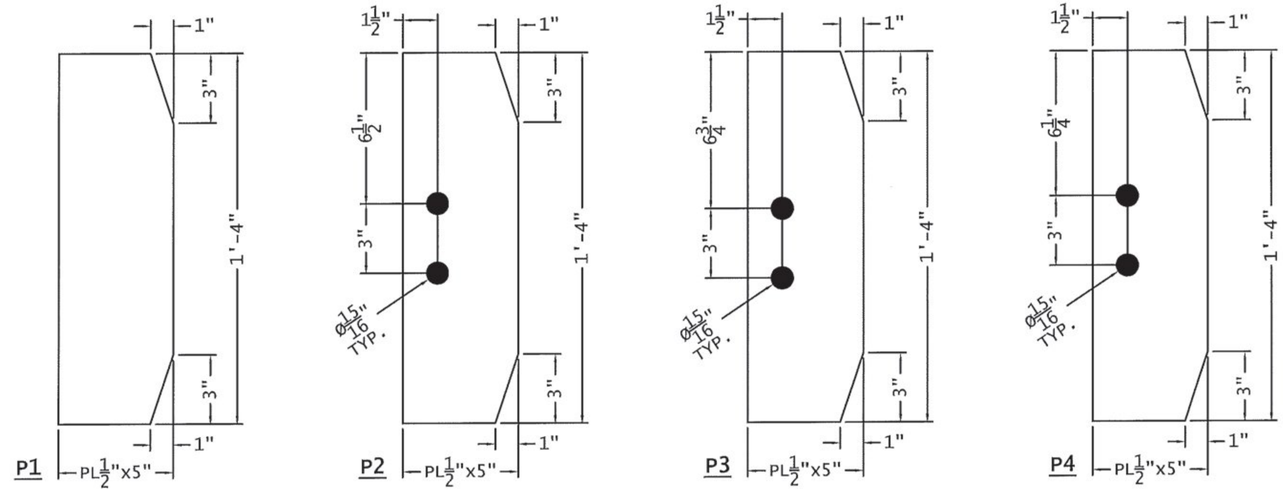

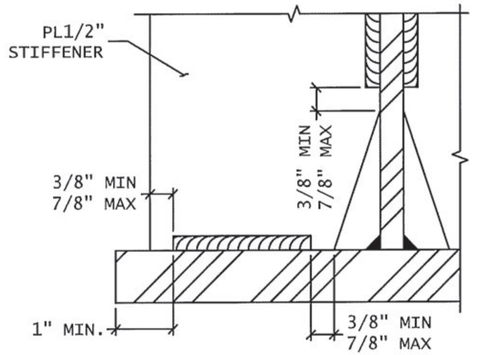

TYPICAL STIFFENER
WELD TERMINATION DETAIL

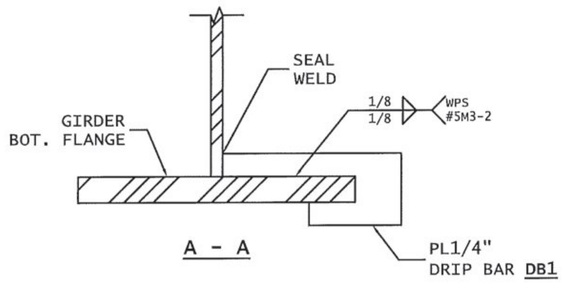

A - A

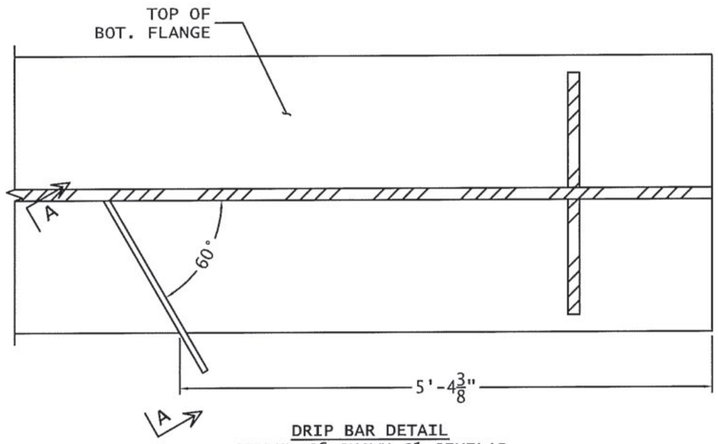

DRIP BAR DETAIL
GIRDER G6 SHOWN G1 SIMILAR

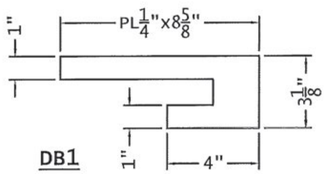

DB1

Vermont Agency of Transportation
RECEIVED
CK'D BY RSF, TAM OK'D BY JDG
February 9, 2017
RESUBMIT No Approved
BY Kristin Higgins DATE 2/14/2017

BILL OF MATERIALS

SHIP MARK	SHIP QTY	PIECE MARK	PC. QTY	DESCRIPTION	LENGTH Ft.	LENGTH In.	WT. lbs. ea.	WT. lbs. tot.	MAT'L
		P1	24	PL 1/2 " x 5 "	1	4	10.9	261.8	
		P2	24	PL 1/2 " x 5 "	1	4	10.9	261.8	
		P3	8	PL 1/2 " x 5 "	1	4	10.9	87.3	
		P4	8	PL 1/2 " x 5 "	1	4	10.9	87.3	
		DB1	2	PL 1/4 " x 3 1/8 "	0	8 5/8	1.1	2.1	
				TOTAL WEIGHT =				700.3	

FINISH:	HOT-DIP GALVANIZED			
MATERIAL:	AASHTO M270 GR.50			
HOLES:	Ø15/16" U.N.O			
ELECTRODES:	PER WELD PROCEDURE	1	REVISED PER REVIEWER COMMENTS	1/6/17
WELDS:	PER WELD PROCEDURE	0	ISSUED FOR APPROVAL	12/6/16
SURFACE PREP:	SSPC-SP6	No.	Revision	Date

fabricator: ARC ENTERPRISES INC.	detailer: DRAFTWORKS DETAILING 11 CHESTNUT ST. AMESBURY, MA	
Job Number: 16-181	SHOP DRAWING TYPICAL DETAILS	Sheet No.: 9 OF 10
Original Submittal Date: 12/6/16	VTRANS, STRAFFORD VT BRIDGE REPLACEMENT PROJ# BF 0177 (10)	Drawing No.: S-7
Drawn By: DAP / Checked By: BLB	QC: MILLER CONSTRUCTION	

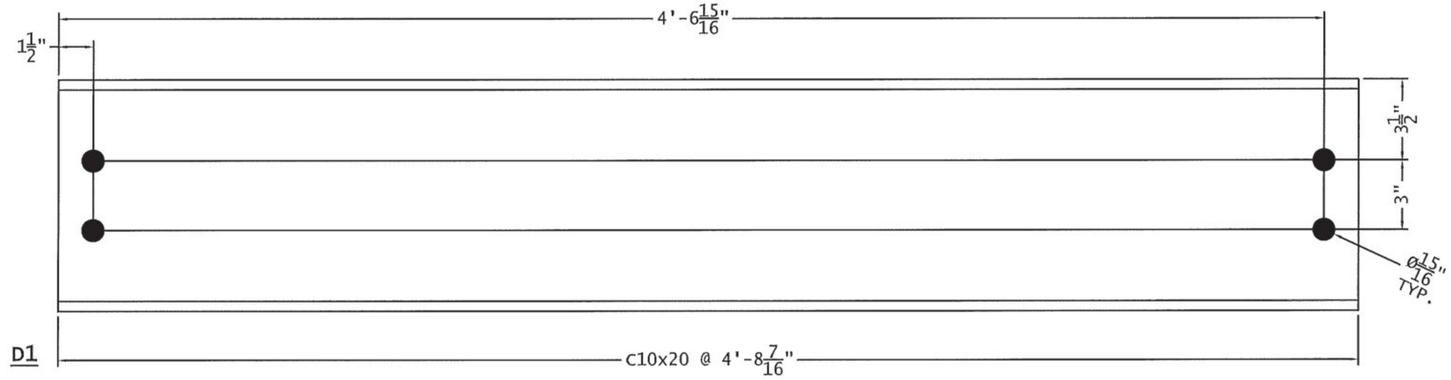

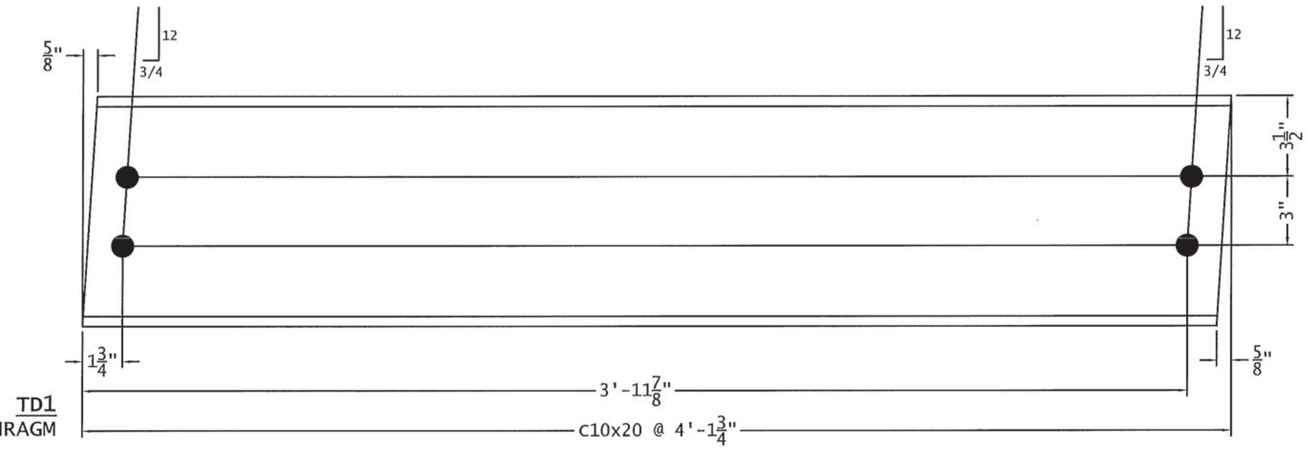

Vermont Agency of Transportation
RECEIVED
CK'D BY RSF, TAM OK'D BY JDG
February 9, 2017
RESUBMIT No Approved
BY Kristin Higgins DATE 2/14/2017

BILL OF MATERIALS

SHIP MARK	SHIP QTY	PIECE MARK	PC. QTY	DESCRIPTION	LENGTH Ft.	LENGTH In.	WT. lbs. ea.	WT. lbs. tot.	MAT'L
D1	12			C10 x 20	4	8 7/16	94.1	1128.8	
TD1	8			C10 x 20	4	1 3/4	82.9	663.3	
						TOTAL WEIGHT =		1792.1	

FINISH:	HOT-DIP GALVANIZED			
MATERIAL:	AASHTO M270 GR.50			
HOLES:	Ø 15/16" U.N.O			
ELECTRODES:	PER WELD PROCEDURE	1	REVISED PER REVIEWER COMMENTS	1/6/17
WELDS:	PER WELD PROCEDURE	0	ISSUED FOR APPROVAL	12/6/16
SURFACE PREP:	SSPC-SP6	No.	Revision	Date

fabricator: ARC ENTERPRISES INC.

detailer: DRAFTWORKS DETAILING
11 CHESTNUT ST. AMESBURY, MA

Job Number: 16-181

SHOP DRAWING
DIAPHRAGM DETAILS

Sheet No.: 10 OF 10

Original Submittal Date: 12/6/16

VTRANS, STRAFFORD VT
BRIDGE REPLACEMENT
PROJ# BF 0177 (10)

Drawing No.: S-8

Drawn By: DAP | Checked By: BLB

QC: MILLER CONSTRUCTION

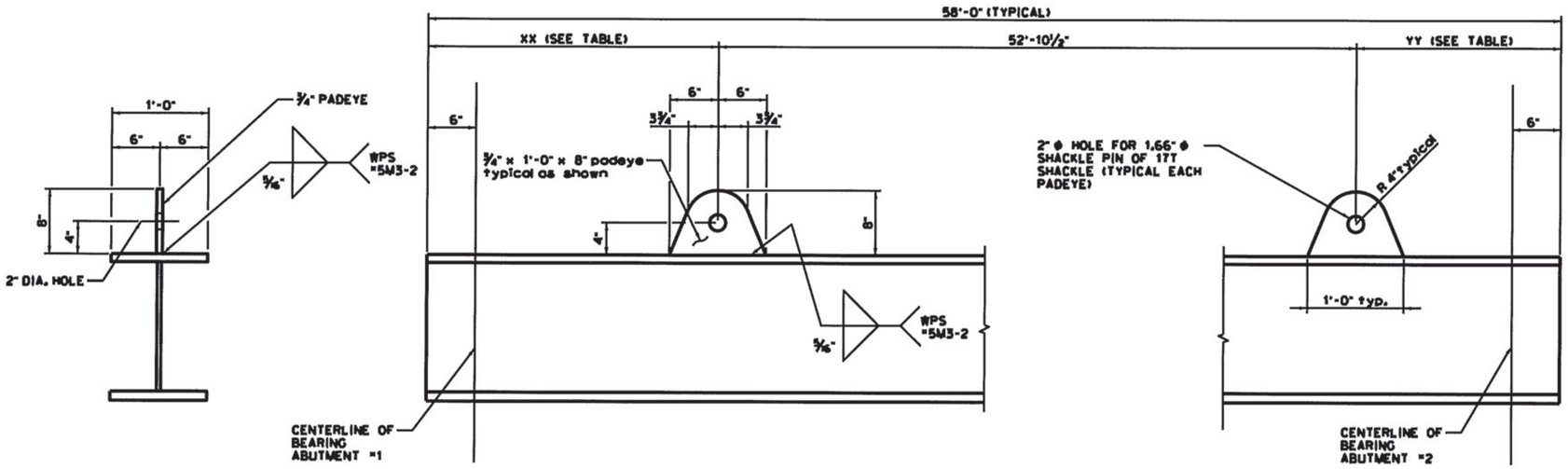

GIRDER	ABUT "1 DIM. XX	ABUT "2 DIM. YY
G1	3'-0"	2'-1½"
G2	2'-1½"	3'-0"
G3	3'-0"	2'-1½"
G4	2'-1½"	3'-0"
G5	3'-0"	2'-1½"
G6	2'-1½"	3'-0"

PADEYES TO BE ASTM A572 GRADE 50 MATERIAL
WELDMENTS TO MADE WITH BE E70XX ELECTRODES OR EQUIVALENT 70KSI WIRE FOR FCAW OR GMAW PROCESSES
WELDMENTS SHALL BE MADE BY CERTIFIED WELDERS QUALIFIED IN THE POSITION, PROCESS, AND PROCEDURE REQUIRED

PBU PADEYE LIFTER DETAILS

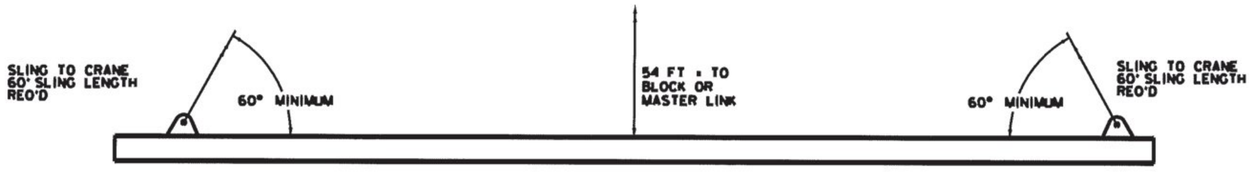

LIFTING LUGS (PADEYES) FOR PBU'S IN STRAFFORD VT.

LIFTING LUGS SHOULD BE PARTIALLY CUT OFF IN THE FIELD AND LEFT WITHIN THE DECK POUR TO ENSURE THAT SUFFICIENT CONCRETE COVER IS PROVIDED OVER THE TOP OF THE LIFTING LUGS TO REMAIN, CALDERWOOD ENGINEERING RECOMMENDS CUTTING OFF THE TOP 3" OF THE LUGS (PADEYES) ONLY.

Vermont Agency of Transportation
RECEIVED
CK'D BY RSF, TAM OK'D BY JDG
February 9, 2017
RESUBMIT No Approved
BY Kristin Higgins DATE 2/14/2017

STATE OF VERMONT
ERIC T. CALDERWOOD
NO. 87
Structural
LICENSED
PROFESSIONAL ENGINEER

FINISH	HOT DIP GALVANIZED			
MATERIAL	AASHTO M270 (ASTM A709) GRADE 50			
HOLES	15/16 " Ø U.N.O.			
ELECTRODES	PER WELD PROCEDURE			
WELDS	PER WELD PROCEDURE			
SURFACE PREP	PRE-BLAST ALL MATERIAL TO SSPC-SP6			
		NO	DATE	DESCRIPTION BY
		REVISIONS		

ARC ENTERPRISES, INC. STEEL FABRICATION
ADVANCED RESOURCES & CONST. ENTERPRISES, INCORPORATED
P.O. BOX 120 KINGFIELD, ME. 04947
PHONE: (207) 265-2646 - FAX: (207) 265-4054

DRAFTER ETC	PADEYE LIFTERS FOR PBU-S	PROJECT NO. 16-181
DATE FEB. 2017	VTRANS, STRAFFORD VT. BRIDGE REPLACEMENT PROJ# BF 0177 (10)	
CHECKED		DWG. NO. M-1
DATE	SC: MILLER CONSTRUCTION	

WELDING PROCEDURE SPECIFICATION (WPS) YES (X)
PREQUALIFIED ____ QUALIFIED BY TESTING ___(X)____
or PROCEDURE QUALIFICATION RECORD (PQR) YES (x)

Company Name ARC ENT. INC.
Welding Process(es) GMAW
Supporting PQR No.(s) ARC PQR 5M3-2

Identification # ARC WPS 5M3-2
Revision 6 **Date** 1/10/2017 **By** SVH
Autherized by **STEVE HOWARD** **Date** 1/10/2017
Type - Manual Semi - Automatic (X)
Machine ( ) Automatic ( )

JOINT DESIGN USED
Type FILLET
Single (X) Double Weld ( )
Backing ( ) NO
Backing Material
Root Opening 0 **Root Face Dimension**
Groove Angle **Radius (J-U)**
Back Gouging **Method**

BASE METALS
Material Spec A709
Type or Grade 36, 50, 50W, HPS50W,
Thickness **Groove** **Fillet** UNLIMITED
Diameter **(Pipe)**

LINCOLN L-56
FILLER METALS
AWS Specification A5.18
AWS Classification ER70S-6

SHIELDING
Flux **Gas** 98/2
Composition 98Argon 2 oxygen
Electrode - Flux (Class) **Flow Rate** 36-50 cfh
Gas Cup Size 5/8"

Preheat up to 3/4" - 50 degress F 3/4"-1 1/2" - 70 degress F
1 1/2" - 2 1/2" - 150 degress
over 2 1/2" - 225 degress F

POSITION
Position of Groove **Fillet** 1F 2F
Vertical Progression ( )

ELECTRICAL CHARACTERISTICS
Transfer Mode (FCAW) **Short Circuiting** ( )
Globular ( ) **Spray** (X)
Current : **AC** ( ) **DCEP** (X) **DCEN** ( )
Pulsed ( )
OTHER :

TECHNIQUE
Stringer or Weave Bead STRINGER
Multi-pass or Single Pass (per side) SINGLE/MULTI
Number of Electrodes ONE
Electrode Spacing **Longitudinal**
Lateral
Angle
Contact Tube to Work Distance 5/8" - 3/4"
Peening
Interpass Cleaning : HAND AND POWER TOOLS

POSTWELD HEAT TREATMENT
Temp
Time

WELDING PROCEDURE

Pass or Weld Layer(s)	S	Filler Metals		Current		Volts	Travel Speed	Joint Details
		Class	Diameter	Type & Polartiy	Amps or Wire Feed Speed			
1	3/16"		.035"	DCEP	230-250	26--28	8.75-9.1 ipm	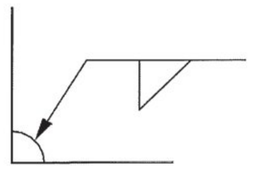
1	1/4"		.035"	DCEP	230-250	26-28	8.75-9.1 ipm	
1	5/16"		"	"	"	"	8.75-9.1 ipm	
2	3/8"		"	"	"	"	8.75-9.1 ipm	
3	7/16"		"	"	"	"	8.75-9.1 ipm	
3	1/2"		"	"	"	"	8.75-9.1 ipm	

No welds over 5/16" with this wire for 5 0W/HPS50W

Vermont Agency of Transportation
RECEIVED
CK'D BY RSF, TAM OK'D BY JDG
February 9, 2017
RESUBMIT No Approved
BY Kristin Higgins DATE 2/14/2017

WELDING PROCEDURE SPECIFICATION (WPS) YES (x)
PREQUALIFIED ____ QUALIFIED BY TESTING _____
or PROCEDURE QUALIFICATION RECORD (PQR) YES (x)

Company Name ARC Ent. Inc.
Welding Process(es) GMAW
Supporting PQR No.(s) ARC PQR 5M3-2

Identification # ARC WPS 5T
Revision 4 **Date** 1/12/2017 **By** SVH
Autherized by STEVE HOWARD **Date** 1/12/2017
Type - Manual Semi - Automatic (x)
Machine ( ) Automatic ( )

JOINT DESIGN USED
Type FILLET
Single (X) Double Weld ( )
Backing ( ) NO
Backing Material N/A
Root Opening 0 **Root Face Dimension**
Groove Angle **Radius (J-U)**
Back Gouging **Method**

BASE METALS
Material Spec A709
Type or Grade 36 50 50W HPS50W
Thickness **Groove** **Fillet** U
Diameter (Pipe)

Lincoln L-56
FILLER METALS
AWS Specification A5.18
AWS Classification ER70S-6

SHIELDING
Flux
Electrode - Flux (Class)
Gas 98/2
Composition 98 argon 2 oxygen
Flow Rate 36-50 cfh
Gas Cup Size 5/8"

Preheat up to 3/4" - 50 degrees F 3/4" - 1 1/2" - 70 degrees F
1 1/2" - 2 1/2" - 150 degrees F
over 2 1/2" - 225 degrees F

POSITION
Position of Groove **Fillet** 1F 2F 3F 4F
Vertical Progression ( )

ELECTRICAL CHARACTERISTICS
Transfer Mode (FCAW) **Short Circuiting** ( )
Globular ( ) **Spray** (X)
Current : **AC** ( ) **DCEP** (X) **DCEN** ( )
Pulsed ( )
OTHER :

TECHNIQUE
Stringer or Weave Bead tack
Multi-pass or Single Pass (per side) single
Number of Electrodes one
Electrode Spacing **Longitudinal**
Lateral
Angle
Contact Tube to Work Distance 5/8" - 3/4"
Peening
Interpass Cleaning :

POSTWELD HEAT TREATMENT
Temp
Time

WELDING PROCEDURE

Pass or Weld Layer(s)	S	Filler Metals		Current		Volts	Travel Speed	Joint Details
		Class	Diameter	Type & Polartiy	Amps or Wire Feed Speed			
1	3/16"	ER70S-6	.035"	DCEP	230-250	26-28	1" TACK	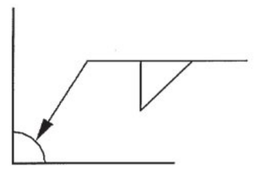

Vermont Agency of Transportation
RECEIVED
CK'D BY RSF, TAM **OK'D BY** JDG
February 9, 2017
RESUBMIT No Approved
BY Kristin Higgins **DATE** 2/14/2017

WELDING PROCEDURE SPECIFICATION (WPS) YES (X)
PREQUALIFIED __x___ QUALIFIED BY TESTING _____
or PROCEDURE QUALIFICATION RECORD (PQR) YES (x)

Company Name ARC Enterprises, Inc.
Welding Process(es) SMAW
Supporting PQR No.(s) _____

Identification # ARC WPS # 40
Revision 5 **Date** 1/10/2017 **By** SVH
Authorized by STEVE HOWARD **Date** 1/10/2017
Type - Manual (X) Semi - Automatic ( )
Machine ( ) Automatic ( )

JOINT DESIGN USED
Type Groove Repair / Fillet Repair
Single Double Weld ( )
Backing ( ) NO
Backing Material _____
Root Opening _____ **Root Face Dimension** _____
Groove Angle 60 degrees **Radius (J-U)** _____
Back Gouging **Method** _____

BASE METALS
Material Spec A709
Type or Grade 36 50 50W HPS50W
Thickness **Groove** unlimited **See below** _____
Diameter **(Pipe)** _____

ESAB ATOM ARC

FILLER METALS
AWS Specification A5.5
AWS Classification E8018-C3-H4R

SHIELDING
Flux _____ **Gas** _____
Composition _____
Electrode - Flux (Class) **Flow Rate** _____
Gas Cup Size _____
_____

pre-heat up to 3/4"=50 degrees F 3/4"-1 1/2" = 70 degrees F
70 degrees F when steel temp is equal to or less than 32 degrees F.
1 1/2" - 2 1/2" = 150degrees F over 2 1/2" = 225 degrees F

POSITION
Position of Groove Flat **Fillet** Horizontal
Vertical Progression ( )

ELECTRICAL CHARACTERISTICS
Transfer Mode (FCAW) **Short Circuiting** ( )
Globular ( ) **Spray**
Current : **AC** ( ) **DCEP** (X) **DCEN** ( )
Pulsed ( )
OTHER : _____

TECHNIQUE
Stringer or Weave Bead stringer
Multi-pass or Single Pass (per side) multi-pass
Number of Electrodes _____
Electrode Spacing **Longitudinal** _____
Lateral _____
Angle _____
Contact Tube to Work Distance _____
Peening _____
Interpass Cleaning : _____

POSTWELD HEAT TREATMENT
Temp _____
Time _____

WELDING PROCEDURE

Pass or Weld Layer(s)	S	Filler Metals		Current		Volts	Travel Speed	Joint Details
		Class	Diameter	Type & Polartiy	Amps or Wire Feed Speed			
1 or more		E8018-C3	3/32"	DCEP	70 - 100	variable	8 ipm	
1 or more		E8018-C3	1/8"	DCEP	90 - 160	variable	8 ipm	
Weld layers Flat = 1/8" V O & H = 3/16"			per 4.6.7					

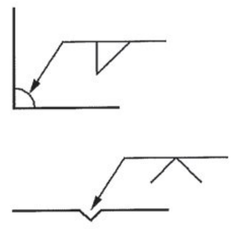

Run-off tabs required M.T. repair

Vermont Agency of Transportation
RECEIVED
CK'D BY RSF, TAM **OK'D BY** JDG
February 9, 2017
RESUBMIT No **Approved**
BY Kristin Higgins **DATE** 2/14/2017

WELDING PROCEDURE SPECIFICATION (WPS) YES (X)
PREQUALIFIED __ ___ QUALIFIED BY TESTING ____(X)___
or PROCEDURE QUALIFICATION RECORD (PQR) YES (x)

Company Name A.R.C. Ent. Inc.
Welding Process(es) SAW
Supporting PQR No.(s) ARC - PQR - 42

Identification # ARC WPS #42
Revision 6 **Date** 1/10/2017 **By** SVH
Autherized by STEVE HOWARD **Date** 1/10/2017
Type - Manual Semi - Automatic ( )
Machine ( ) Automatic (X)

JOINT DESIGN USED
Type FILLET
Single (X) Double Weld ( )
Backing ( ) NO (X)
Backing Material
Root Opening **Root Face Dimension**
Groove Angle **Radius (J-U)**
Back Gouging **Method**

BASE METALS
Material Spec A709
Type or Grade 36 50 50W
Thickness **Groove** **Fillet** UNLIMITED
Diameter **(Pipe)**

FILLER METALS Lincoln I-61
AWS Specification A 5.23 A 5.17
AWS Classification EM12K

SHIELDING
Flux LINCOLN 960 **Gas**
Composition
Electrode - Flux (Class) **Flow Rate**
F7A2-EM12K **Gas Cup Size**

Preheat < 3/4" = 50 degrees 3/4" - 1 1/2" = 70 degrees
1 1/2" - 2 1/2" = 150 degrees Over 2 1/2" = 225 degrees F

POSITION
Position of Groove **Fillet** 1F 2F
Vertical Progression ( )

ELECTRICAL CHARACTERISTICS
Transfer Mode (FCAW) **Short Circuiting** ( )
Globular ( ) **Spray** (X)
Current : **AC** ( ) **DCEP** **DCEN** (X)
Pulsed ( )
OTHER :

TECHNIQUE
Stringer or Weave Bead STRINGER
Multi-pass or Single Pass (per side) SINGLE
Number of Electrodes -1
Electrode Spacing **Longitudinal**
Lateral
Angle
Contact Tube to Work Distance 1"1/4 STICKOUT +/_1/4"
Peening
Interpass Cleaning : hand and power tools

POSTWELD HEAT TREATMENT
Temp
Time

WELDING PROCEDURE

Pass or Weld Layer(s)	S	Filler Metals		Current		Volts	Travel Speed	Joint Details
		Class	Diameter	Type & Polartiy	Amps or Wire Feed Speed			
	5/16"	EM12K	5/32	DCEN	560 - 645	31-33	19 - 23	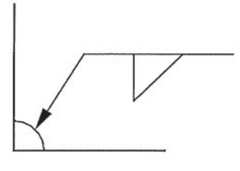

Vermont Agency of Transportation
RECEIVED
CK'D BY RSF, TAM OK'D BY JDG
February 9, 2017
RESUBMIT No Approved
BY Kristin Higgins DATE 2/14/2017

Welding Procedure Specification (wps) Yes (X)
PREQUALIFIED ____ QUALIFIED BY TESTING ___X___
or PROCEDURE QUALIFICATION RECORD (PQR) YES ( )

Company Name A.R.C. Enterprises, Inc.
Welding Process(es) SAW
Supporting PQR No.(s) ARC PQR # 45

Identification # ARC WPS #45
Revision 10 **Date** 1/10/2017 **By** SVH
Authorized by **STEVE HOWARD** **Date** 1/10/2017
Type - Manual Semi - Automatic ( )
Machine ( ) Automatic x

JOINT DESIGN USED
Type B-L2c-S
Single Double Weld (X)
Backing ( ) NO (X)
Backing Material
Root Opening 0" **Root Face Dimension**
Groove Angle 60 degrees **Radius (J-U)**
Back Gouging (YES) **Method** open

BASE METALS
Material Spec A709
Type or Grade 36 50 50W HPS50W
Thickness **Groove** U **Fillet**
Diameter **(Pipe)**
2" Max
Lincoln LA-75

FILLER METALS
AWS Specification A5.23
AWS Classification ENi1K-Ni1-H8

SHIELDING
Flux 960 Lincoln **Gas**
Composition
Electrode - Flux (Class) **Flow Rate**
F8A2-ENi1K-Ni1-H8 **Gas Cup Size**

Preheat 3/4" = 50 degrees 3/4" - 1 1/2" = 70 degrees.
1 1/2" - 2 1/2" = 150 degrees Over 2 1/2" = 225 degrees F.

POSITION
Position of Groove 1G **Fillet**
Vertical Progression ( )

ELECTRICAL CHARACTERISTICS
Transfer Mode (FCAW) **Short Circuiting** ( )
Globular ( ) **Spray (X)**
Current : **AC** ( ) **DCEP (X)** **DCEN** ( )
Pulsed ( )
OTHER :

TECHNIQUE
Stringer or Weave Bead STRINGER
Multi-pass or Single Pass (per side) MULTI
Number of Electrodes ONE
Electrode Spacing **Longitudinal**
Lateral
Angle
Contact Tube to Work Distance 1"1/4 stickout +/-1/4"
Peening none
Interpass Cleaning : Hand or Power tools

POSTWELD HEAT TREATMENT
Temp

WELDING PROCEDURE

Pass or Weld Layer(s)	S	Filler Metals		Current		Volts	Travel Speed	Joint Details
		Class	Diameter	Type & Polartiy	Amps or Wire Feed Speed			Tolerance
	SAW	ENi1K	3/32"	DCEP	370-440	28.5-31	13.5-15.4 ipm	Root = 0" + 1/16" Face = > 1/2" - 1" = 1/4" + 1/4" > 1" - 1 1/2" = 3/8" + 1/4" > 1 1/2" - 2" = 1/2" + 1/4" Angle = 60 degrees + 10 - 5

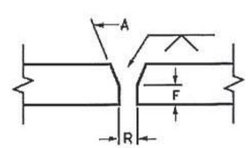

Vermont Agency of Transportation
RECEIVED
CK'D BY RSF, TAM OK'D BY JDG
February 9, 2017
RESUBMIT No Approved AsNoted
BY K. Higgins DATE 02/14/2017

WELDING PROCEDURE SPECIFICATION (WPS) YES (X)
PREQUALIFIED _____ QUALIFIED BY TESTING __X__
or PROCEDURE QUALIFICATION RECORD (PQR) YES ( )

Company Name ARC Ent. Inc.
Welding Process(es) SAW
Supporting PQR No.(s) ARC PQR # 45a

Identification # ARC WPS 45a
Revision 7 **Date** 1/10/2017 **By** SVH
Autherized by STEVE HOWARD **Date** 1/10/2017
Type - Manual Semi - Automatic ( )
Machine ( ) Automatic (X)

DART Welder

JOINT DESIGN USED
Type FILLET
Single (X) Double Weld ( )
Backing ( ) NO
Backing Material
Root Opening 0 **Root Face Dimension**
Groove Angle NA **Radius (J-U)**
Back Gouging **Method**

BASE METALS
Material Spec A709
Type or Grade 50 50W HPS50W
Thickness **Groove** **Fillet** U
Diameter **(Pipe)**

FILLER METALS
AWS Specification A5.23 Lincoln LA-75
AWS Classification ENi1K-Ni1-H8

SHIELDING
Flux 960 **Gas**
Composition
Electrode - Flux (Class) **Flow Rate**
F8A2-ENi1K-Ni1-H8 **Gas Cup Size**

Preheat up to 3/4" = 50 degrees 3/4" - 1 1/2" = 70 degrees
1 1/2" - 2 1/2" = 150 degrees Over 2 1/2" = 225 degrees F.

POSITION
Position of Groove **Fillet** 1F 2F
Vertical Progression ( )

ELECTRICAL CHARACTERISTICS
Transfer Mode (FCAW) **Short Circuiting** ( )
Globular ( ) **Spray** (X)
Current : **AC** ( ) **DCEP** **DCEN** (X)
Pulsed ( )
OTHER :

TECHNIQUE
Stringer or Weave Bead STRINGER
Multi-pass or Single Pass (per side) SINGLE
Number of Electrodes
Electrode Spacing **Longitudinal**
Lateral
Angle
Contact Tube to Work Distance 1 1/4" Stickout +/- 1/4"
Peening
Interpass Cleaning :

POSTWELD HEAT TREATMENT
Temp
Time

WELDING PROCEDURE

Pass or Weld Layer(s)	S	Filler Metals		Current		Volts	Travel Speed	Joint Details
		Class	Diameter	Type & Polartiy	Amps or Wire Feed Speed			
	SAW	ENi1K	3/32"	DCEN	380-420	29-31	14.5-15.4 ipm	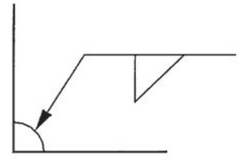
1	5/16"							

Vermont Agency of Transportation
RECEIVED
CK'D BY RSF, TAM **OK'D BY** JDG
February 9, 2017
RESUBMIT No Approved
BY Kristin Higgins **DATE** 2/14/2017

WELDING PROCEDURE SPECIFICATION (WPS) YES (X)
PREQUALIFIED ____ QUALIFIED BY TESTING ____
or PROCEDURE QUALIFICATION RECORD (PQR) YES (x)

Company Name ARC Ent. Inc.
Welding Process(es) SAW
Supporting PQR No.(s) PQR # 52

Identification # ARC WPS # 52
Revision 6 **Date** 1/10/2017 **By** SVH
Autherized by STEVE HOWARD **Date** 1/10/2017
Type - Manual Semi - Automatic ( )
Machine ( ) Automatic (X)

JOINT DESIGN USED
Type B - L2c - S
Single (X) Double Weld ( )
Backing Yes ( ) NO
Backing Material
Root Opening 0 - 1/16" **Root Face Dimension**
Groove Angle 60 degrees **Radius (J-U)**
Back Gouging (YES) **Method**

This isn't the latest version of this WPS, but this is not used on this project anyway. No need to re-submit

Mat
Type

Lincoln LA-85

FILLER METALS
AWS Specification A 5.23
AWS Classification ENi5

SHIELDING
Flux MIL800-HPNi **Gas**
Composition
Electrode - Flux (Class) **Flow Rate**
F8A8-ENi5-Ni5-H2 **Gas Cup Size**

Preheat 3/4"= 50 degrees F 3/4 to 1 1/2"= 125 degrees F
1 1/2 to 2 1/2"= 175 degrees F over 2 1/2"= 225 degrees F

POSITION
Position of Groove 1G **Fillet**
Vertical Progression ( )

ELECTRICAL CHARACTERISTICS
Transfer Mode (FCAW) **Short Circuiting** ( )
Globular ( ) **Spray** (X)
Current : **AC** ( ) **DCEP** (X) **DCEN** ( )
Pulsed ( )
OTHER :

TECHNIQUE
Stringer or Weave Bead Stringer
Multi-pass or Single Pass (per side) Multi
Number of Electrodes ONE
Electrode Spacing **Longitudinal**
Lateral
Angle
Contact Tube to Work Distance 1" stickout +/- 1/4"
Peening
Interpass Cleaning : hand or power tools

POSTWELD HEAT TREATMENT
Temp
Time

WELDING PROCEDURE

Pass or Weld Layer(s)	S	Filler Metals		Current		Volts	Travel Speed	Joint Details
		Class	Diameter	Type & Polartiy	Amps or Wire Feed Speed			
	SAW	ENi5	3/32"	DCEP	360 - 410	28 - 31	14 - 15.1	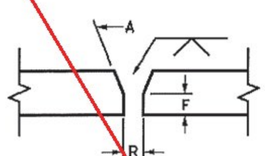

Vermont Agency of Transportation
RECEIVED
CK'D BY RSF, TAM OK'D BY JDG
February 9, 2017
RESUBMIT No Rejected
BY Kristin Higgins DATE 2/14/17

DRAWING LIST:

PAGE #	DESCRIPTION
C-1	COVER SHEET & GENERAL NOTES
E-1	FRAMING PLAN
S-1 - S-6	GIRDER SHOP DRAWINGS
S-7	TYPICAL DETAILS SHOP DRAWING
S-8	DIAPHRAGM SHOP DRAWINGS

16-181
STRAFFORD, VT
BRIDGE REPLACEMENT

GENERAL NOTES:

MATERIAL SPECIFICATIONS

1. ALL MATERIALS AND CONSTRUCTION SHALL CONFORM TO THE VERMONT AGENCY OF TRANSPORTATION 2011 STANDARD SPECIFICATIONS FOR CONSTRUCTION, THE 2014 AASHTO LRFD BRIDGE DESIGN SPECIFICATIONS AND THEIR LATEST REVISIONS
2. ALL MATERIAL SHALL BE AASHTO M270 (ASTM A709) GR.50 U.N.O.
3. ALL MATERIAL DENOTED "CVN" IN THE BILL OF MATERIAL SHALL MEET THE CHARPY V-NOTCH TESTING REQUIREMENTS OF ZONE 2, H FREQUENCY: 15 FT-LB AT 40 ° (UP TO 2" WELDED)
4. BOLTS SHALL BE H.S. ASTM A325 TYPE 1 - HEAVY HEX NUTS ASTM A563 GRADE DH - HARDENED WASHERS ASTM F436 TYPE 1 - DTI WASHERS ASTM F-959
5. A DTI INSPECTION REPRESENTATIVE SHALL BE PRESENT DURING INSTALLATION OF BOLTS THAT UTILIZE A DTI WASHER.
6. BOLTS AND NUTS SHALL BE SUBJECTED TO A ROTATIONAL CAPACITY TEST. DO NOT MIX NUTS AND BOLTS FROM DIFFERENT CONTAINERS UNLESS THEY HAVE THE SAME DESIGNATED LOT NUMBER.

FABRICATION

7. DIE STAMPING IS ALLOWED IN SPECIFIC LOCATIONS WITH THE APPROVAL OF THE ENGINEER.
8. ALL SHARP CORNERS OR EDGES SHALL BE ROUNDED TO A MINIMUM RADIUS OF 1/16" PER STANDARD SPEC. 506.14(b)
9. ALL PLATE MEMBERS SHALL BE CUT SO THAT THE PRIMARY DIRECTION OF ROLLING IS PARALLEL TO THE MAIN TENSILE OR COMPRESSIVE STRESS PER STANDARD SPEC. 506.08
10. FLANGE PLATE MATERIAL SHALL HAVE AN EDGE HARDNESS NOT GREATER THAN HRc 30 PER STANDARD SPEC. 506.09
11. ALL WELDING PROCEDURES SHALL BE IN ACCORDANCE WITH SUBSECTION 506.10
12. NON DESTRUCTIVE TESTING OF WELDS SHALL BE IN ACCORDANCE WITH ANSI/AASHTO/AWS D1.5 - SECTION 6.

FIELD CONNECTIONS

13. FIELD BOLTS SHALL HAVE A HEAVY HEX NUT, HEX HEAD, ONE HARDENED WASHER & ONE DTI WASHER EACH.
14. PIECE MARKS WILL BE LOCATED AS SHOWN IN FRAMING PLAN. ALL ERECTION MARKS, MATCH MARKS & WEIGHT MARKS MUST NOT BE EXPOSED IN THE FINISHED STRUCTURE.
15. ANY HOLES IN THE DIAPHRAGM STIFFENER PLATES AFTER REMOVAL OF THE TEMPORARY DIAPHRAGMS SHALL BE FILLED WITH BUTTON HEAD BOLTS (FURNISHED BY OTHERS). THESE BOLTS SHALL BE TIGHTENED IN ACCORDANCE WITH SUBSECTION 506.19.

COATINGS & FINISH

16. ALL STEEL IS TO BE HOT-DIP GALVANIZED IN ACCORDANCE WITH SUBSECTION 726.08.
17. ALL HARDWARE IS TO BE MECHANICALLY GALVANIZED IN ACCORDANCE WITH AASHTO M298, CLASS 50, TYPE 1.

TYP. ALL SHEETS ⚠1

Vermont Agency of Transportation
RECEIVED
CK'D BY RSF, TAM OK'D BY JDG
February 9, 2017
RESUBMIT No Approved
BY Kristin Higgins DATE 2/14/2017

FINISH:	HOT-DIP GALVANIZED			
MATERIAL:	AASHTO M270 GR.50			
HOLES:	$\phi\frac{13}{16}$" U.N.O			
ELECTRODES:	PER WELD PROCEDURE	⚠1	REVISED PER REVIEWER COMMENTS	1/6/17
WELDS:	PER WELD PROCEDURE	⚠0	ISSUED FOR APPROVAL	12/6/16
SURFACE PREP:	SSPC-SP6	No.	Revision	Date

Fabricator: ARC ENTERPRISES INC.
Detailer: DRAFTWORKS DETAILING, 11 CHESTNUT ST. AMESBURY, MA
Job Number: 16-181
COVER SHEET
Sheet No.: 1 OF 10
Original Submittal Date: 12/6/16
VTRANS, STRAFFORD VT BRIDGE REPLACEMENT PROJ# BF 0177 (10)
Drawing No.: C-1
Drawn By: DAP
Checked By: BLB
QC: MILLER CONSTRUCTION

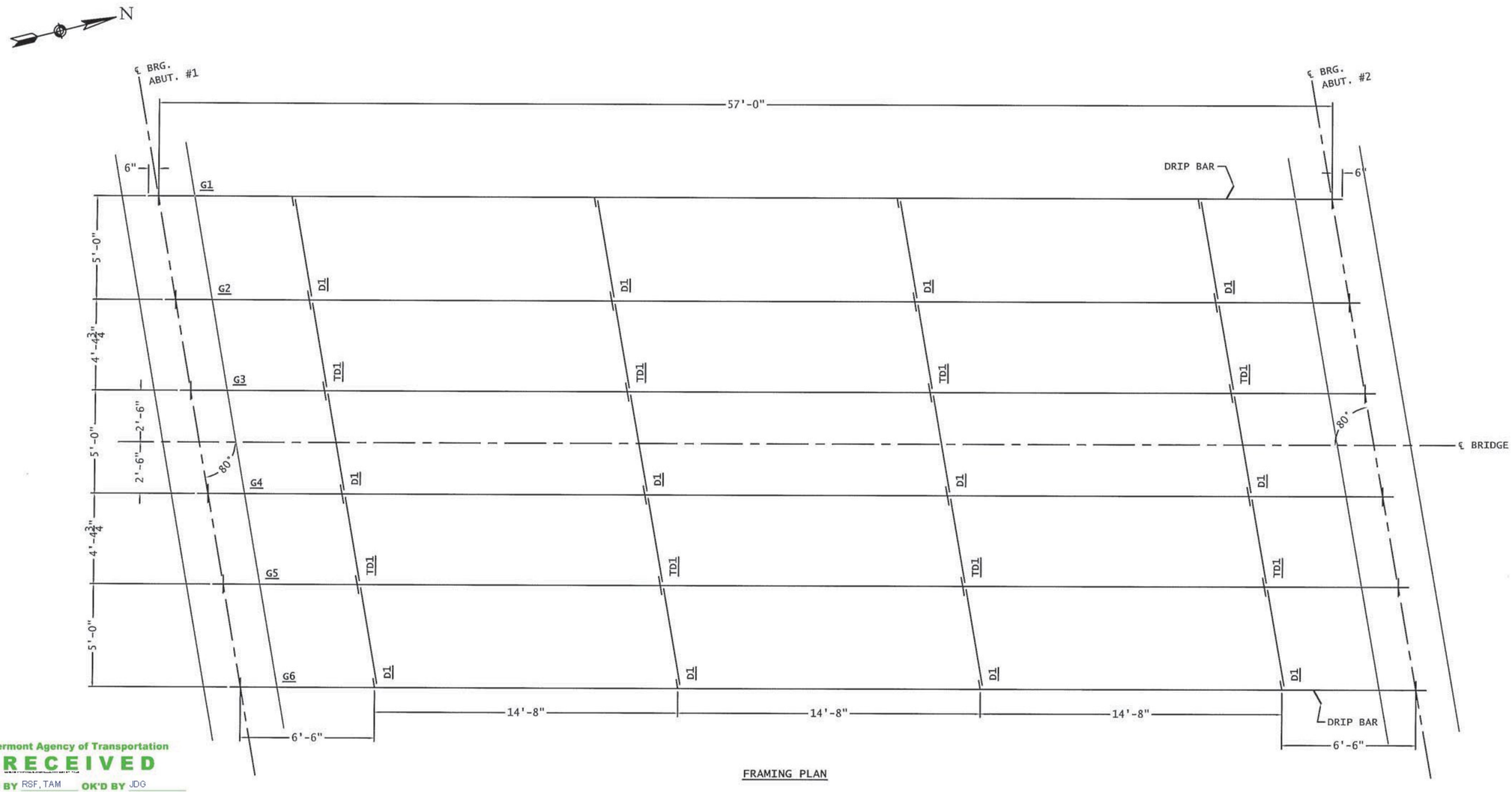

FRAMING PLAN

Vermont Agency of Transportation
RECEIVED
CK'D BY RSF, TAM OK'D BY JDG
February 9, 2017
RESUBMIT No Approved
BY Kristin Higgins DATE 2/14/2017

SHOP BOLT LIST	
QTY	DESCRIPTION
48	7/8" DIA. x 2" H.S. BOLT W/ NUT, WASHER & DTI WASHER

FIELD BOLT LIST	
QTY	DESCRIPTION
32	7/8" DIA. x 2" H.S. BOLT W/ NUT, WASHER & DTI WASHER

NOTES:
1. BRIDGE GIRDERS ARE TO BE SHIPPED TO SITE IN (3) PAIRS OF 2 WITH DIAPHRAGMS 100% SHOP BOLTED IN THEIR FINAL ERECTED POSITION.
2. ALL FIELD BOLTED & SHOP BOLTED DIAPHRAGMS REQUIRE (4) Ø⅞"x2" BOLTS EACH.
3. BOLT QUANTITIES IN BILL OF MATERIAL ARE EXACT & DO NOT TAKE INTO ACCOUNT WASTE & TESTING REQUIREMENTS.

FINISH:	HOT-DIP GALVANIZED			
MATERIAL:	AASHTO M270 GR.50			
HOLES:	Ø15/16" U.N.O			
ELECTRODES:	PER WELD PROCEDURE	1	REVISED PER REVIEWER COMMENTS	1/6/17
WELDS:	PER WELD PROCEDURE	0	ISSUED FOR APPROVAL	12/6/16
SURFACE PREP:	SSPC-SP6	No.	Revision	Date

fabrication: ARC ENTERPRISES INC.	detailer: DRAFTWORKS DETAILING 11 CHESTNUT ST. AMESBURY, MA	
Job Number: 16-181	ERECTION DRAWING FRAMING PLAN	Sheet No.: 2 OF 10
Original Submittal Date: 12/6/16	VTRANS, STRAFFORD VT BRIDGE REPLACEMENT PROJ# BF 0177 (10)	Drawing No.: E-1
Drawn By: DAP / Checked By: BLB	QC: MILLER CONSTRUCTION	

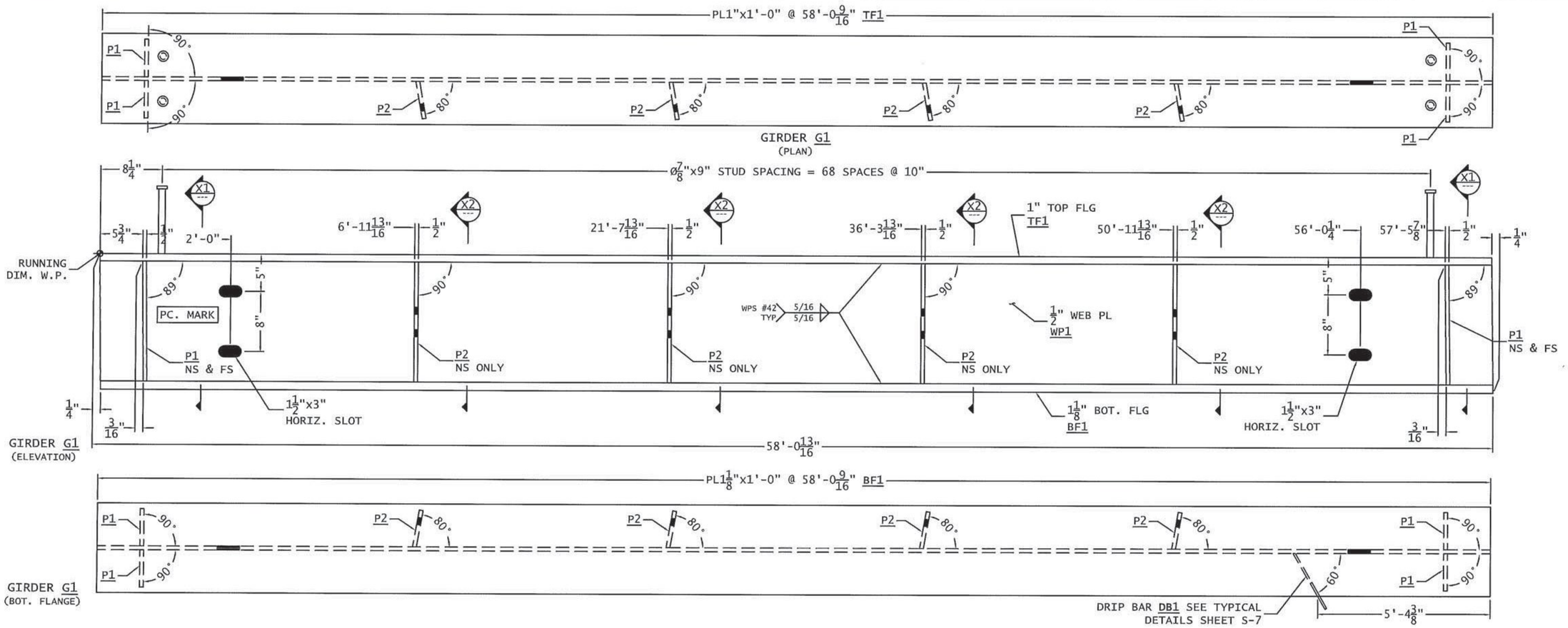

Vermont Agency of Transportation

RECEIVED

CK'D BY RSF, TAM OK'D BY JDG

February 9, 2017

RESUBMIT No Approved

BY Kristin Higgins DATE 2/14/2017

THE TWO CAMBER DIMENSIONS REPRESENT THE FOLLOWING:
-TOP DIMENSION = TOTAL CAMBER IN FINISHED BEAM
-BOTTOM DIMENSION = TOTAL CAMBER @ TIME OF FABRICATION

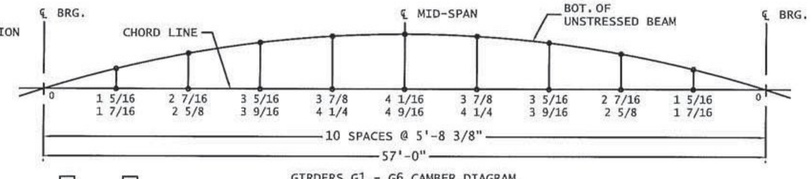

GIRDERS G1 - G6 CAMBER DIAGRAM
UNITS IN INCHES

BILL OF MATERIALS

SHIP MARK	SHIP QTY	PIECE MARK	PC. QTY	DESCRIPTION	LENGTH Ft.	LENGTH In.	WT. lbs. ea.	WT. lbs. tot.	MAT'L
G1	1			GIRDER ASSEMBLY	58	13/16	6704.3	6704.3	
		WP1	1	PL 1/2 " x 16 "	58	13/16	1580.4	1580.4	CVN
		TF1	1	PL 1 " x 12 "	58	9/16	2369.7	2369.7	CVN
		BF1	1	PL 1 1/8 " x 12 "	58	9/16	2665.9	2665.9	CVN
		P1	4	PL 1/2 " x 5 "	1	4	10.9	43.6	
		P2	4	PL 1/2 " x 5 "	1	4	10.9	43.6	
		DB1	1	PL 1/4 " x 3 1/8 "	0	8 5/8	1.1	1.1	
			138	7/8" DIA. SHEAR STUD	0	9			
						TOTAL WEIGHT =		6704.3	

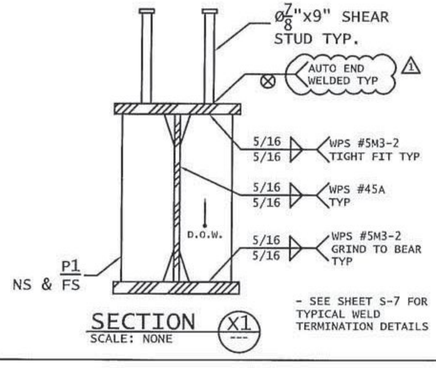

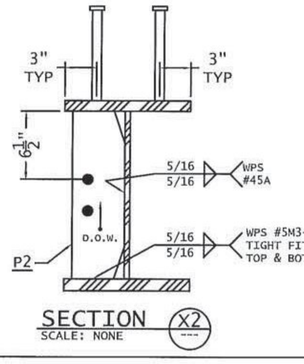

FINISH:	HOT-DIP GALVANIZED		
MATERIAL:	AASHTO M270 GR.50		
HOLES:	Ø13/16" U.N.O		
ELECTRODES:	PER WELD PROCEDURE	1	REVISED PER REVIEWER COMMENTS 1/6/17
WELDS:	PER WELD PROCEDURE	0	ISSUED FOR APPROVAL 12/6/16
SURFACE PREP:	SSPC-SP6	No.	Revision Date

fabricator: ARC ENTERPRISES INC.	detailer: DRAFTWORKS DETAILING 11 CHESTNUT ST. AMESBURY, MA	
Job Number: 16-181	SHOP DRAWING GIRDER G1 DETAILS	Sheet No.: 3 OF 10
Original Submittal Date: 12/6/16	VTRANS, STRAFFORD VT BRIDGE REPLACEMENT PROJ# BF 0177 (10)	Drawing No.: S-1
Drawn By: DAP / Checked By: BLB	QC: MILLER CONSTRUCTION	

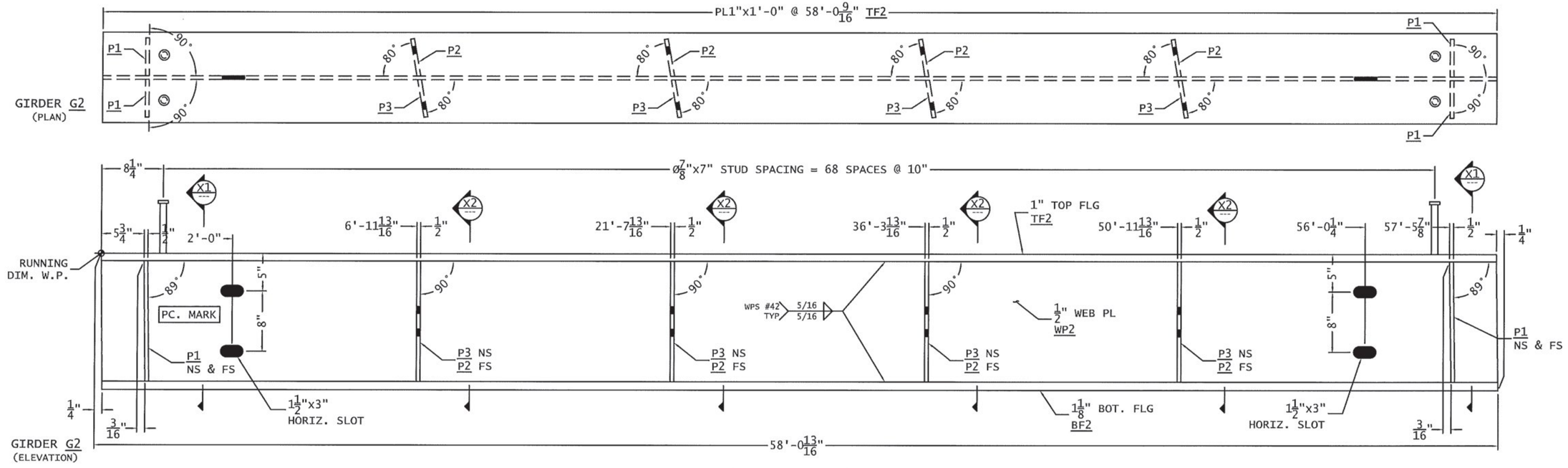

Vermont Agency of Transportation
RECEIVED
CK'D BY RSF, TAM OK'D BY JDG
February 9, 2017
RESUBMIT No Approved
BY Kristin Higgins DATE 2/14/2017

THE TWO CAMBER DIMENSIONS REPRESENT THE FOLLOWING:
-TOP DIMENSION = TOTAL CAMBER IN FINISHED BEAM
-BOTTOM DIMENSION = TOTAL CAMBER @ TIME OF FABRICATION

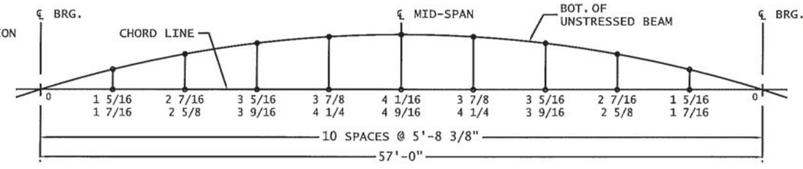

GIRDERS G1 - G6 CAMBER DIAGRAM
UNITS IN INCHES

BILL OF MATERIALS

SHIP MARK	SHIP QTY	PIECE MARK	PC. QTY	DESCRIPTION	LENGTH Ft.	LENGTH In.	WT. lbs. ea.	WT. lbs. tot.	MAT'L
G2	1			GIRDER ASSEMBLY	58	13/16	6746.9	6746.9	
		WP2	1	PL 1/2 " x 16 "	58	13/16	1580.4	1580.4	CVN
		TF2	1	PL 1 " x 12 "	58	9/16	2369.7	2369.7	CVN
		BF2	1	PL 1 1/8 " x 12 "	58	9/16	2665.9	2665.9	CVN
		P1	4	PL 1/2 " x 5 "	1	4	10.9	43.6	
		P2	4	PL 1/2 " x 5 "	1	4	10.9	43.6	
		P3	4	PL 1/2 " x 5 "	1	4	10.9	43.6	
			138	7/8" DIA. SHEAR STUD	0	7			
							TOTAL WEIGHT =	6746.9	

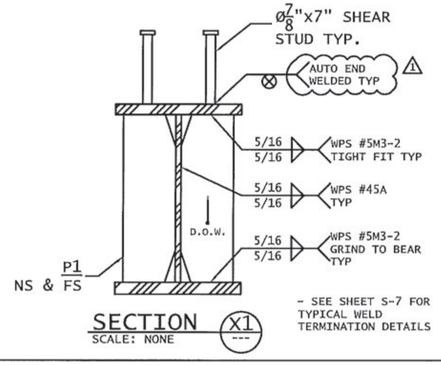

- SEE SHEET S-7 FOR TYPICAL WELD TERMINATION DETAILS

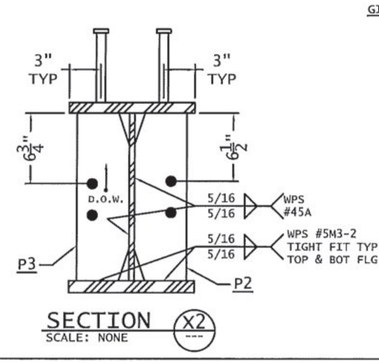

FINISH:	HOT-DIP GALVANIZED		
MATERIAL:	AASHTO M270 GR.50		
HOLES:	Ø15/16" U.N.O		
ELECTRODES:	PER WELD PROCEDURE	1	REVISED PER REVIEWER COMMENTS 1/6/17
WELDS:	PER WELD PROCEDURE	0	ISSUED FOR APPROVAL 12/6/16
SURFACE PREP:	SSPC-SP6	No.	Revision Date

fabricator: ARC ENTERPRISES INC.	detailer: DRAFTWORKS DETAILING 11 CHESTNUT ST. AMESBURY, MA
Job Number: 16-181	SHOP DRAWING GIRDER G2 DETAILS — Sheet No.: 4 OF 10
Original Submitted Date: 12/6/16	VTRANS, STRAFFORD VT BRIDGE REPLACEMENT PROJ# BF 0177 (10) — Drawing No.: S-2
Drawn By: DAP / Checked By: BLB	cc: MILLER CONSTRUCTION

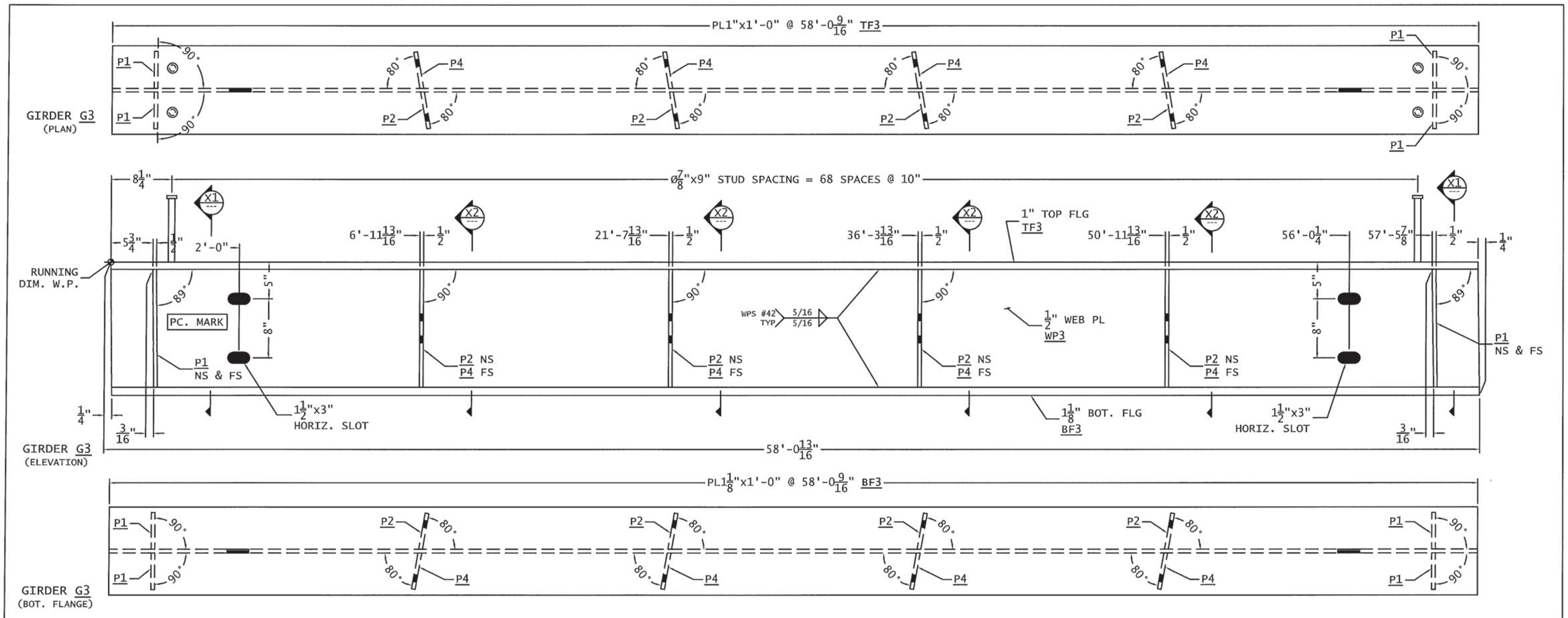

Vermont Agency of Transportation
RECEIVED
CK'D BY RSF, TAM OK'D BY JDG
February 9, 2017
RESUBMIT No Approved
BY Kristin Higgins DATE 2/14/2017

THE TWO CAMBER DIMENSIONS REPRESENT THE FOLLOWING:
-TOP DIMENSION = TOTAL CAMBER IN FINISHED BEAM
-BOTTOM DIMENSION = TOTAL CAMBER @ TIME OF FABRICATION

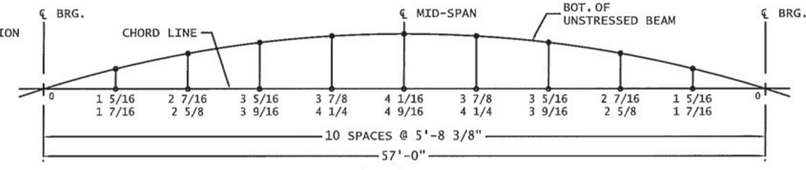

GIRDERS G1 - G6 CAMBER DIAGRAM
UNITS IN INCHES

BILL OF MATERIALS

SHIP MARK	SHIP QTY	PIECE MARK	PC. QTY	DESCRIPTION	LENGTH Ft.	LENGTH In.	WT. lbs. ea.	WT. lbs. tot.	MAT'L
G3	1			GIRDER ASSEMBLY	58	13/16	6746.9	6746.9	
		WP3	1	PL 1/2 " x 16 "	58	13/16	1580.4	1580.4	CVN
		TF3	1	PL 1 " x 12 "	58	9/16	2369.7	2369.7	CVN
		BF3	1	PL 1 1/8 " x 12 "	58	9/16	2665.9	2665.9	CVN
		P1	4	PL 1/2 " x 5 "	1	4	10.9	43.6	
		P2	4	PL 1/2 " x 5 "	1	4	10.9	43.6	
		P4	4	PL 1/2 " x 5 "	1	4	10.9	43.6	
			138	7/8" DIA. SHEAR STUD	0	9			
							TOTAL WEIGHT =	6746.9	

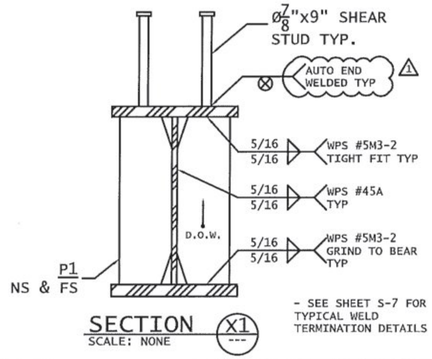

- SEE SHEET S-7 FOR TYPICAL WELD TERMINATION DETAILS

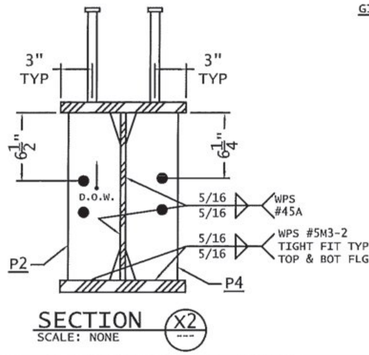

FINISH:	HOT-DIP GALVANIZED		
MATERIAL:	AASHTO M270 GR.50		
HOLES:	Ø15/16" U.N.O		
ELECTRODES:	PER WELD PROCEDURE	1	REVISED PER REVIEWER COMMENTS 1/6/17
WELDS:	PER WELD PROCEDURE	0	ISSUED FOR APPROVAL 12/6/16
SURFACE PREP:	SSPC-SP6	No.	Revision Date

fabricator: ARC ENTERPRISES INC.	detailer: DRAFTWORKS DETAILING 11 CHESTNUT ST. AMESBURY, MA
Job Number: 16-181	SHOP DRAWING GIRDER G3 DETAILS — Sheet No.: 5 OF 10
Original Submittal Date: 12/6/16	VTRANS, STRAFFORD VT BRIDGE REPLACEMENT PROJ# BF 0177 (10) — Drawing No.: S-3
Drawn By: DAP / Checked By: BLB	QC: MILLER CONSTRUCTION

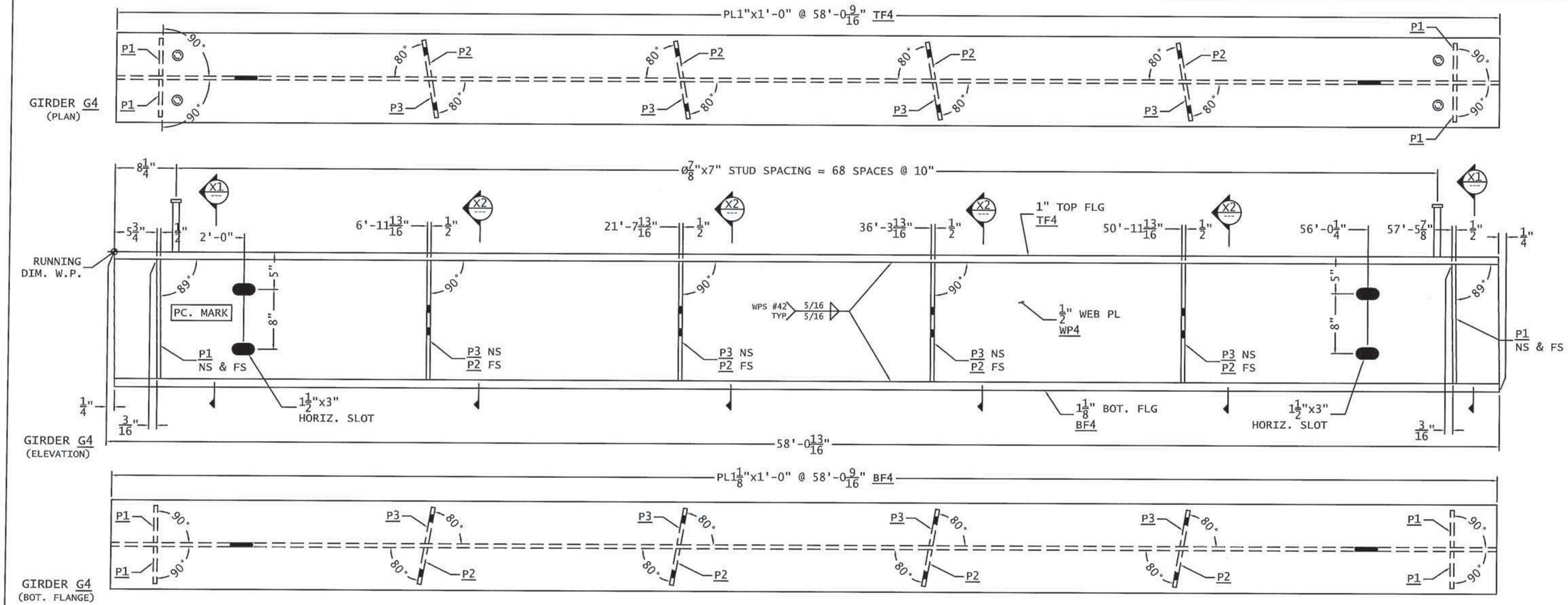

Vermont Agency of Transportation

RECEIVED

CK'D BY RSF, TAM OK'D BY JDG

February 9, 2017

RESUBMIT No Approved

BY Kristin Higgins DATE 2/14/2017

THE TWO CAMBER DIMENSIONS REPRESENT THE FOLLOWING:
-TOP DIMENSION = TOTAL CAMBER IN FINISHED BEAM
-BOTTOM DIMENSION = TOTAL CAMBER @ TIME OF FABRICATION

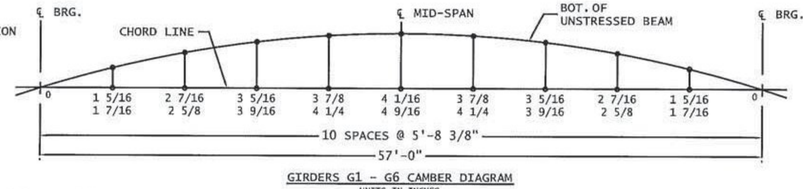

GIRDERS G1 - G6 CAMBER DIAGRAM
UNITS IN INCHES

BILL OF MATERIALS

SHIP MARK	SHIP QTY	PIECE MARK	PC. QTY	DESCRIPTION	LENGTH Ft.	LENGTH In.	WT. lbs. ea.	WT. lbs. tot.	MAT'L
G4	1			GIRDER ASSEMBLY	58	13/16	6746.9	6746.9	
		WP4	1	PL 1/2 " x 16 "	58	13/16	1580.4	1580.4	CVN
		TF4	1	PL 1 " x 12 "	58	9/16	2369.7	2369.7	CVN
		BF4	1	PL 1 1/8 " x 12 "	58	9/16	2665.9	2665.9	CVN
		P1	4	PL 1/2 " x 5 "	1	4	10.9	43.6	
		P2	4	PL 1/2 " x 5 "	1	4	10.9	43.6	
		P3	4	PL 1/2 " x 5 "	1	4	10.9	43.6	
			138	7/8" DIA. SHEAR STUD	0	7			
							TOTAL WEIGHT =	6746.9	

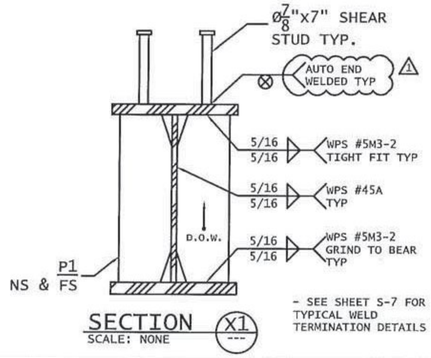

- SEE SHEET S-7 FOR TYPICAL WELD TERMINATION DETAILS

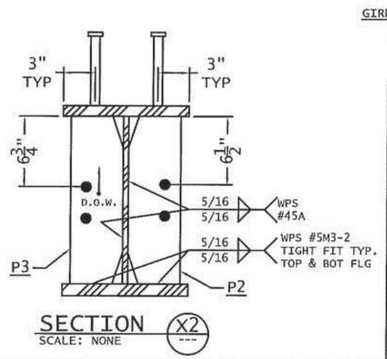

FINISH:	HOT-DIP GALVANIZED		
MATERIAL:	AASHTO M270 GR.50		
HOLES:	Ø15/16" U.N.O		
ELECTRODES:	PER WELD PROCEDURE	1	REVISED PER REVIEWER COMMENTS 1/6/17
WELDS:	PER WELD PROCEDURE	0	ISSUED FOR APPROVAL 12/6/16
SURFACE PREP:	SSPC-SP6	No.	Revision Date

fabricator: ARC ENTERPRISES INC.

detailer: DRAFTWORKS DETAILING
11 CHESTNUT ST. AMESBURY, MA

Job Number: 16-181

SHOP DRAWING
GIRDER G4 DETAILS

Sheet No.: 6 OF 10

Original Submittal Date: 12/6/16

VTRANS, STRAFFORD VT
BRIDGE REPLACEMENT
PROJ# BF 0177 (10)

Drawing No.: S-4

Drawn By: DAP Checked By: BLB

QC: MILLER CONSTRUCTION

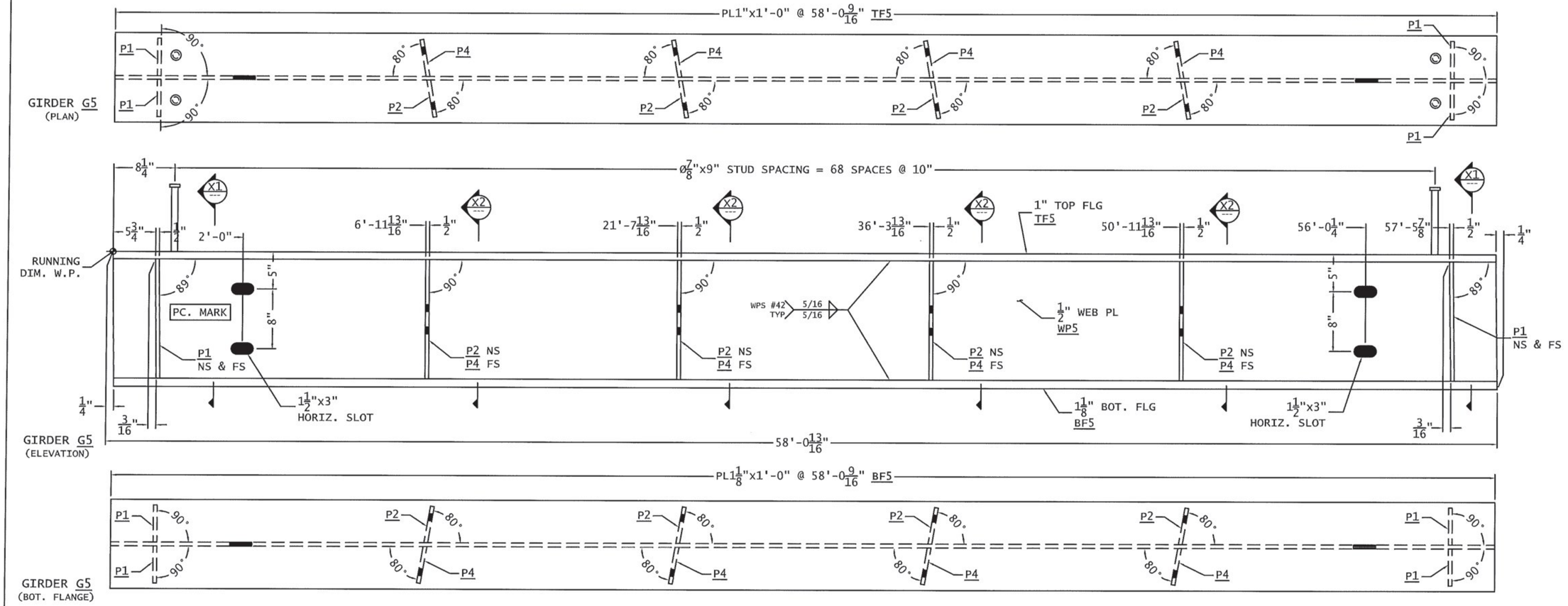

Vermont Agency of Transportation
RECEIVED
CK'D BY RSF, TAM OK'D BY JDG
February 9, 2017
RESUBMIT No Approved
BY Kristin Higgins DATE 2/14/2017

THE TWO CAMBER DIMENSIONS REPRESENT THE FOLLOWING:
-TOP DIMENSION = TOTAL CAMBER IN FINISHED BEAM
-BOTTOM DIMENSION = TOTAL CAMBER @ TIME OF FABRICATION

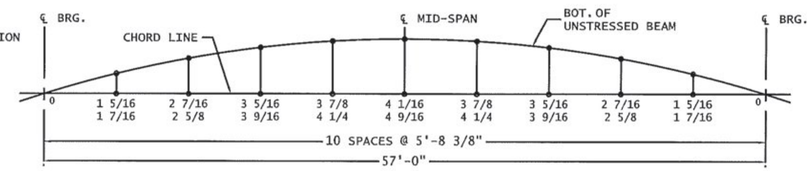

GIRDERS G1 - G6 CAMBER DIAGRAM
UNITS IN INCHES

BILL OF MATERIALS

SHIP MARK	SHIP QTY	PIECE MARK	PC. QTY	DESCRIPTION	LENGTH Ft.	LENGTH In.	WT. lbs. ea.	WT. lbs. tot.	MAT'L
G5	1			GIRDER ASSEMBLY	58	13/16	6746.9	6746.9	
		WP5	1	PL 1/2 " x 16 "	58	13/16	1580.4	1580.4	CVN
		TF5	1	PL 1 " x 12 "	58	9/16	2369.7	2369.7	CVN
		BF5	1	PL 1 1/8 " x 12 "	58	9/16	2665.9	2665.9	CVN
		P1	4	PL 1/2 " x 5 "	1	4	10.9	43.6	
		P2	4	PL 1/2 " x 5 "	1	4	10.9	43.6	
		P4	4	PL 1/2 " x 5 "	1	4	10.9	43.6	
			138	7/8" DIA. SHEAR STUD	0	9			
							TOTAL WEIGHT =	6746.9	

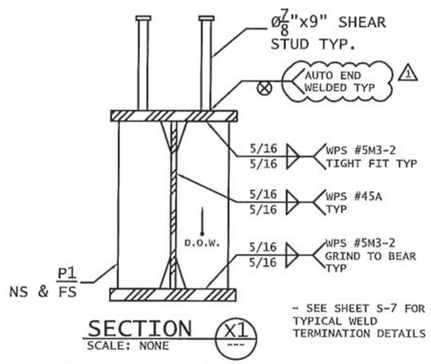

- SEE SHEET S-7 FOR TYPICAL WELD TERMINATION DETAILS

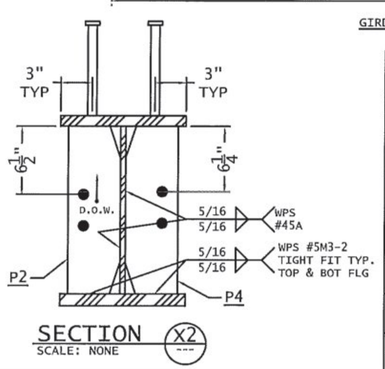

FINISH:	HOT-DIP GALVANIZED		
MATERIAL:	AASHTO M270 GR.50		
HOLES:	Ø13/16" U.N.O		
ELECTRODES:	PER WELD PROCEDURE	1	REVISED PER REVIEWER COMMENTS 1/6/17
WELDS:	PER WELD PROCEDURE	0	ISSUED FOR APPROVAL 12/6/16
SURFACE PREP:	SSPC-SP6	No.	Revision Date

fabricator: ARC ENTERPRISES INC.
detailer: DRAFTWORKS DETAILING, 11 CHESTNUT ST. AMESBURY, MA
Job Number: 16-181
SHOP DRAWING GIRDER G5 DETAILS
Sheet No.: 7 OF 10
Original Submittal Date: 12/6/16
VTRANS, STRAFFORD VT BRIDGE REPLACEMENT PROJ# BF 0177 (10)
Drawing No.: S-5
Drawn By: DAP
Checked By: BLB
QC:
MILLER CONSTRUCTION

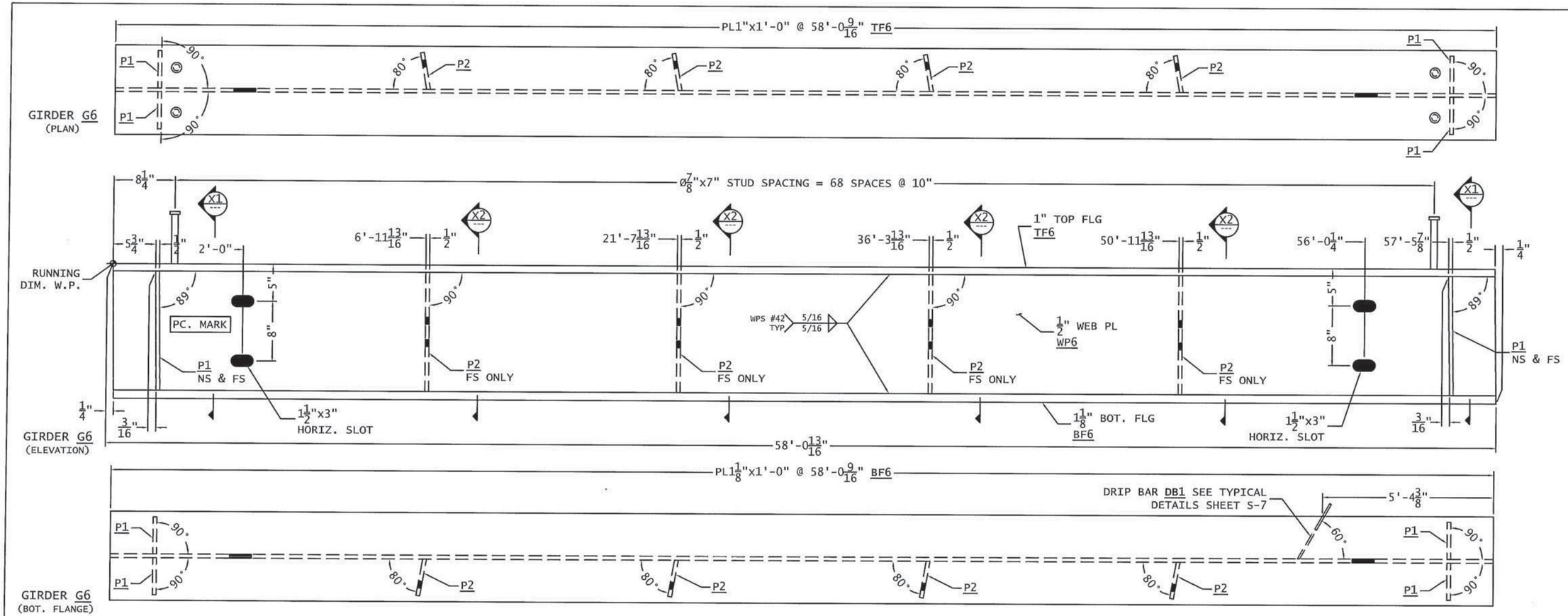

Vermont Agency of Transportation

RECEIVED

CK'D BY RSF, TAM OK'D BY JDG

February 9, 2017

RESUBMIT No Approved

BY Kristin Higgins DATE 2/14/2017

BILL OF MATERIALS

SHIP MARK	SHIP QTY	PIECE MARK	PC. QTY	DESCRIPTION	LENGTH Ft.	LENGTH In.	WT. lbs. ea.	WT. lbs. tot.	MAT'L
G6	1			GIRDER ASSEMBLY	58	13/16	6704.3	6704.3	
		WP6	1	PL 1/2 " x 16 "	58	13/16	1580.4	1580.4	CVN
		TF6	1	PL 1 " x 12 "	58	9/16	2369.7	2369.7	CVN
		BF6	1	PL 1 1/8 " x 12 "	58	9/16	2665.9	2665.9	CVN
		P1	4	PL 1/2 " x 5 "	1	4	10.9	43.6	
		P2	4	PL 1/2 " x 5 "	1	4	10.9	43.6	
		DB1	1	PL 1/4 " x 3 1/8 "	0	8 5/8	1.1	1.1	
			138	7/8" DIA. SHEAR STUD	0	7			
						TOTAL WEIGHT =		6704.3	

THE TWO CAMBER DIMENSIONS REPRESENT THE FOLLOWING:
-TOP DIMENSION = TOTAL CAMBER IN FINISHED BEAM
-BOTTOM DIMENSION = TOTAL CAMBER @ TIME OF FABRICATION

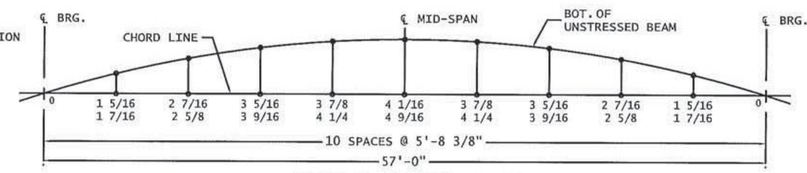

GIRDERS G1 - G6 CAMBER DIAGRAM
UNITS IN INCHES

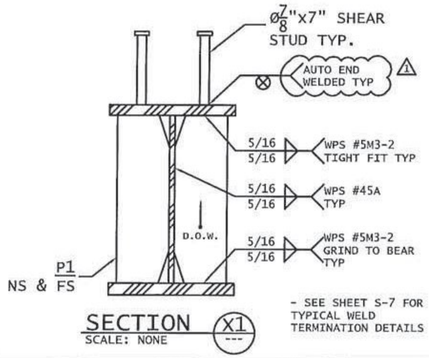

- SEE SHEET S-7 FOR TYPICAL WELD TERMINATION DETAILS

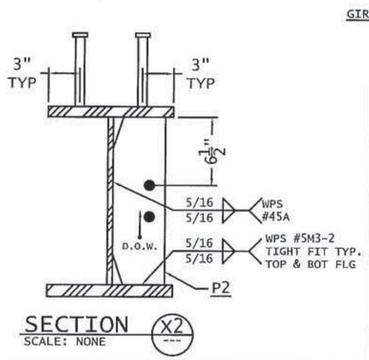

FINISH:	HOT-DIP GALVANIZED		
MATERIAL:	AASHTO M270 GR.50		
HOLES:	Ø13/16" U.N.O		
ELECTRODES:	PER WELD PROCEDURE	1	REVISED PER REVIEWER COMMENTS 1/6/17
WELDS:	PER WELD PROCEDURE	0	ISSUED FOR APPROVAL 12/6/16
SURFACE PREP:	SSPC-SP6	No.	Revision Date

fabricator: ARC ENTERPRISES INC.

detailer: DRAFTWORKS DETAILING
11 CHESTNUT ST. AMESBURY, MA

Job Number: 16-181

SHOP DRAWING
GIRDER G6 DETAILS

Sheet No.: 8 OF 10

Original Submitted Date: 12/6/16

VTRANS, STRAFFORD VT
BRIDGE REPLACEMENT
PROJ# BF 0177 (10)

Drawing No.: S-6

Drawn By: DAP Checked By: BLB QC: MILLER CONSTRUCTION

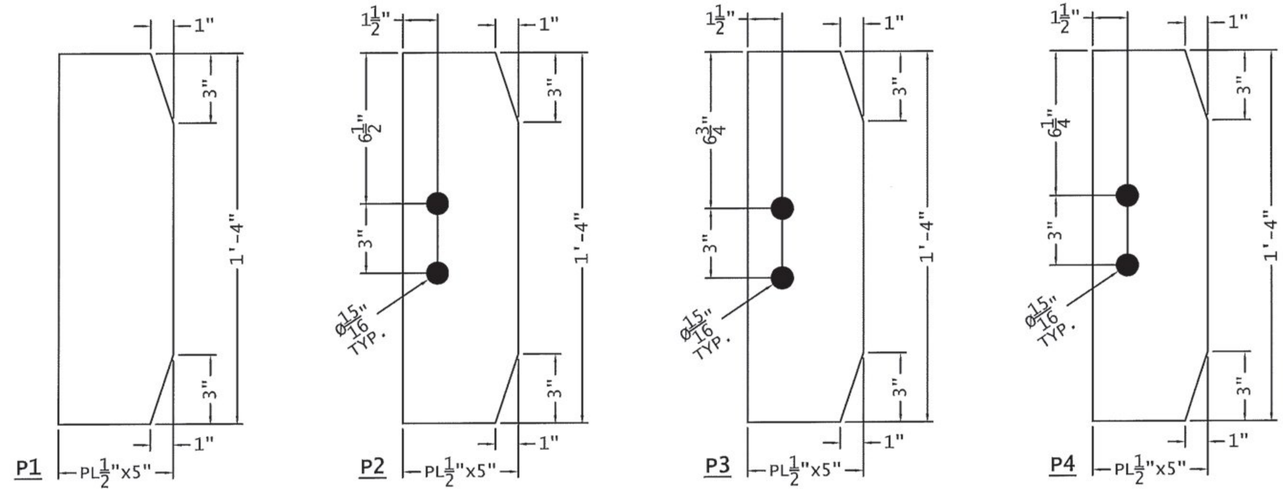

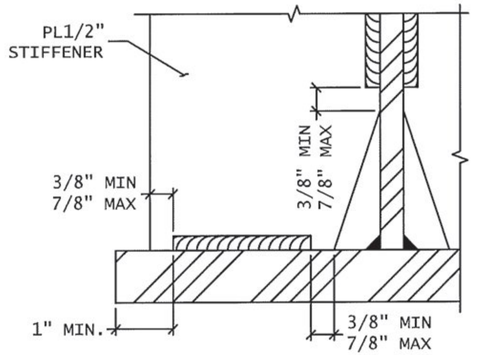

TYPICAL STIFFENER
WELD TERMINATION DETAIL

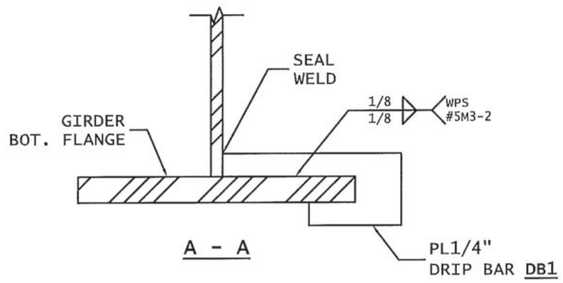

A - A

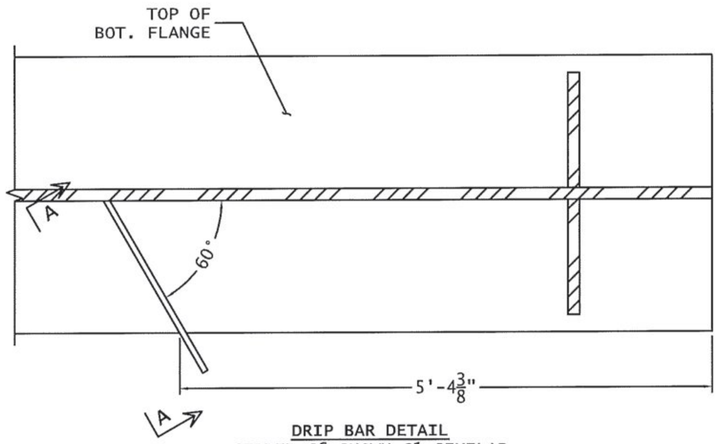

DRIP BAR DETAIL
GIRDER G6 SHOWN G1 SIMILAR

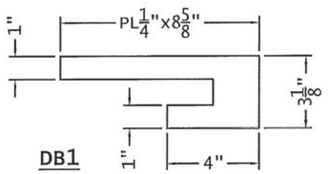

DB1

Vermont Agency of Transportation
RECEIVED
CK'D BY RSF, TAM OK'D BY JDG
February 9, 2017
RESUBMIT No Approved
BY Kristin Higgins DATE 2/14/2017

BILL OF MATERIALS

SHIP MARK	SHIP QTY	PIECE MARK	PC. QTY	DESCRIPTION	LENGTH Ft.	LENGTH In.	WT. lbs. ea.	WT. lbs. tot.	MAT'L
		P1	24	PL 1/2 " x 5 "	1	4	10.9	261.8	
		P2	24	PL 1/2 " x 5 "	1	4	10.9	261.8	
		P3	8	PL 1/2 " x 5 "	1	4	10.9	87.3	
		P4	8	PL 1/2 " x 5 "	1	4	10.9	87.3	
		DB1	2	PL 1/4 " x 3 1/8 "	0	8 5/8	1.1	2.1	
				TOTAL WEIGHT =				700.3	

FINISH:	HOT-DIP GALVANIZED			
MATERIAL:	AASHTO M270 GR.50			
HOLES:	Ø15/16" U.N.O			
ELECTRODES:	PER WELD PROCEDURE	1	REVISED PER REVIEWER COMMENTS	1/6/17
WELDS:	PER WELD PROCEDURE	0	ISSUED FOR APPROVAL	12/6/16
SURFACE PREP:	SSPC-SP6	No.	Revision	Date

fabricator: ARC ENTERPRISES INC.	detailer: DRAFTWORKS DETAILING 11 CHESTNUT ST. AMESBURY, MA	
Job Number: 16-181	SHOP DRAWING TYPICAL DETAILS	Sheet No.: 9 OF 10
Original Submittal Date: 12/6/16	VTRANS, STRAFFORD VT BRIDGE REPLACEMENT PROJ# BF 0177 (10)	Drawing No.: S-7
Drawn By: DAP / Checked By: BLB	QC: MILLER CONSTRUCTION	

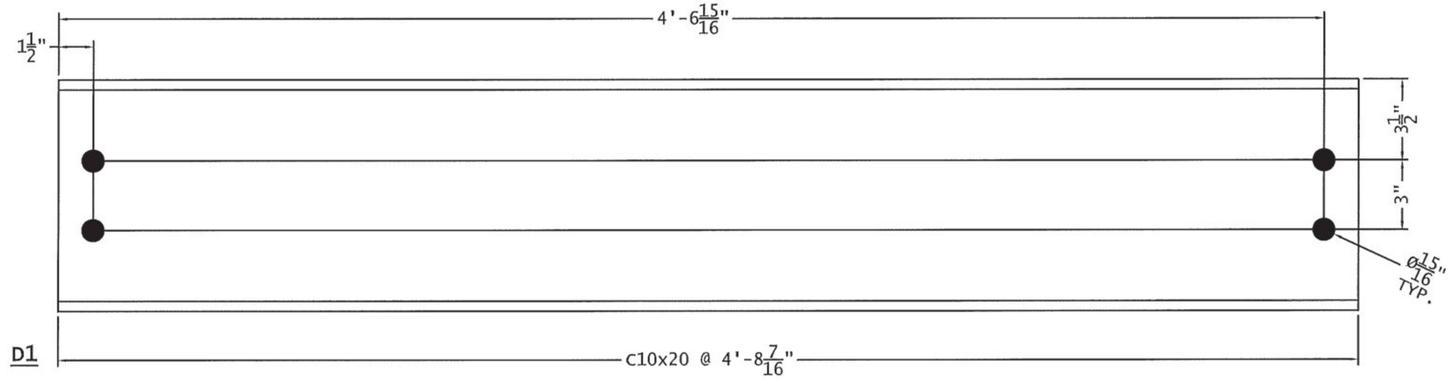

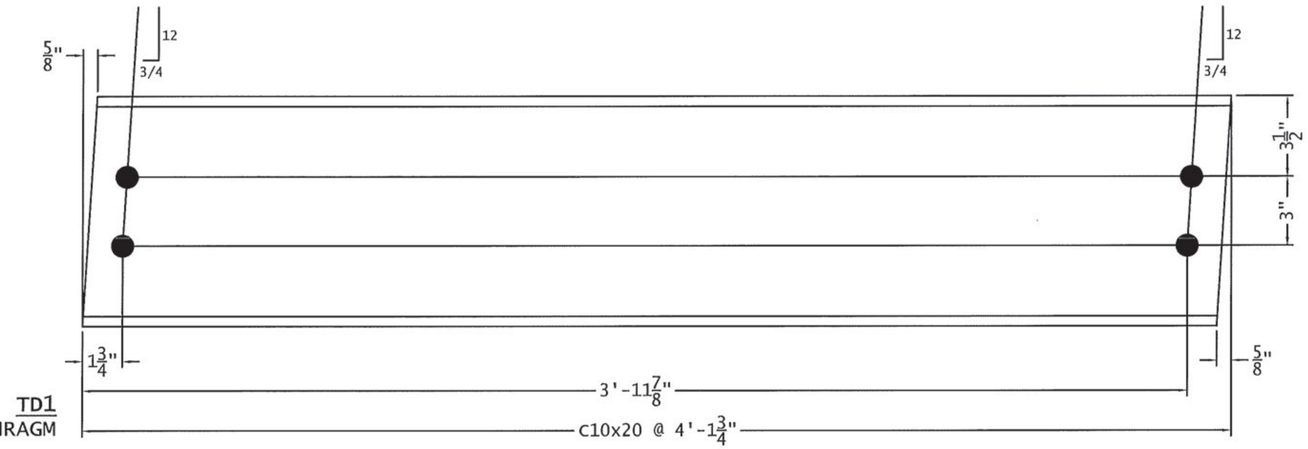

Vermont Agency of Transportation
RECEIVED
CK'D BY RSF, TAM OK'D BY JDG
February 9, 2017
RESUBMIT No Approved
BY Kristin Higgins DATE 2/14/2017

BILL OF MATERIALS

SHIP MARK	SHIP QTY	PIECE MARK	PC. QTY	DESCRIPTION	LENGTH Ft.	LENGTH In.	WT. lbs. ea.	WT. lbs. tot.	MAT'L
D1	12			C10 x 20	4	8 7/16	94.1	1128.8	
TD1	8			C10 x 20	4	1 3/4	82.9	663.3	
						TOTAL WEIGHT =		1792.1	

FINISH:	HOT-DIP GALVANIZED			
MATERIAL:	AASHTO M270 GR.50			
HOLES:	Ø 15/16" U.N.O			
ELECTRODES:	PER WELD PROCEDURE	1	REVISED PER REVIEWER COMMENTS	1/6/17
WELDS:	PER WELD PROCEDURE	0	ISSUED FOR APPROVAL	12/6/16
SURFACE PREP:	SSPC-SP6	No.	Revision	Date

fabricator: ARC ENTERPRISES INC.

detailer: DRAFTWORKS DETAILING
11 CHESTNUT ST. AMESBURY, MA

Job Number: 16-181

SHOP DRAWING
DIAPHRAGM DETAILS

Sheet No.: 10 OF 10

Original Submittal Date: 12/6/16

VTRANS, STRAFFORD VT
BRIDGE REPLACEMENT
PROJ# BF 0177 (10)

Drawing No.: S-8

Drawn By: DAP | Checked By: BLB

QC: MILLER CONSTRUCTION

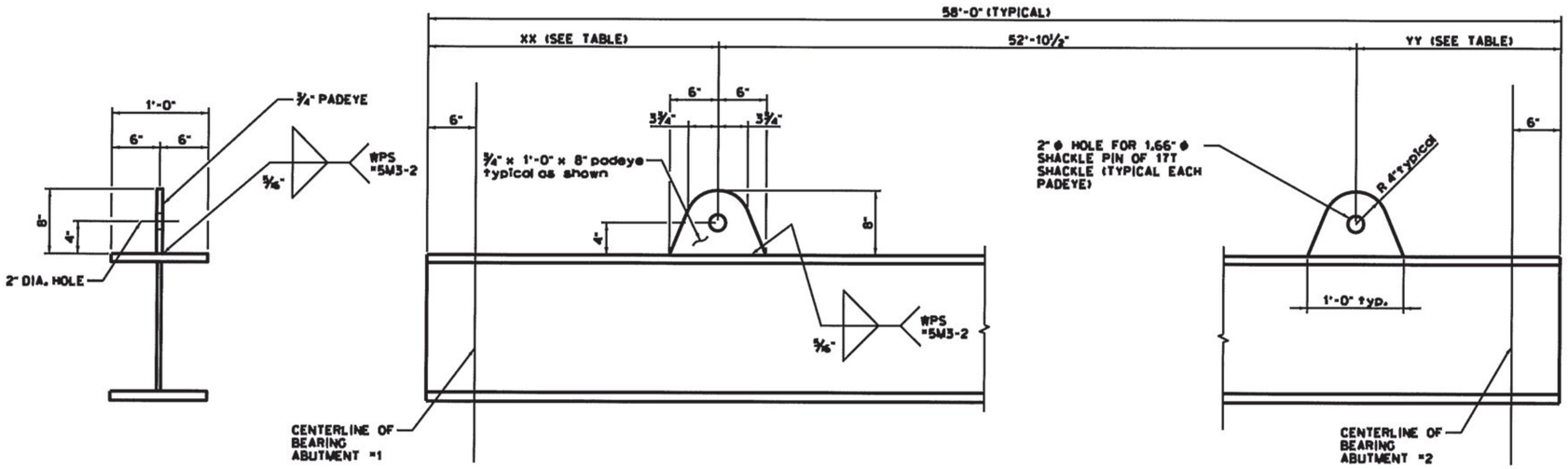

GIRDER	ABUT "1 DIM. XX	ABUT "2 DIM. YY
G1	3'-0"	2'-1½"
G2	2'-1½"	3'-0"
G3	3'-0"	2'-1½"
G4	2'-1½"	3'-0"
G5	3'-0"	2'-1½"
G6	2'-1½"	3'-0"

PADEYES TO BE ASTM A572 GRADE 50 MATERIAL
WELDMENTS TO MADE WITH BE E70XX ELECTRODES OR EQUIVALENT 70KSI WIRE FOR FCAW OR GMAW PROCESSES
WELDMENTS SHALL BE MADE BY CERTIFIED WELDERS QUALIFIED IN THE POSITION, PROCESS, AND PROCEDURE REQUIRED

PBU PADEYE LIFTER DETAILS

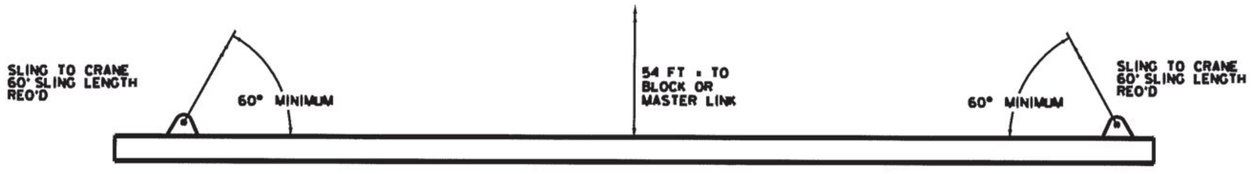

LIFTING LUGS (PADEYES) FOR PBU'S IN STRAFFORD VT.

LIFTING LUGS SHOULD BE PARTIALLY CUT OFF IN THE FIELD AND LEFT WITHIN THE DECK POUR TO ENSURE THAT SUFFICIENT CONCRETE COVER IS PROVIDED OVER THE TOP OF THE LIFTING LUGS TO REMAIN, CALDERWOOD ENGINEERING RECOMMENDS CUTTING OFF THE TOP 3" OF THE LUGS (PADEYES) ONLY.

Vermont Agency of Transportation
RECEIVED
CK'D BY RSF, TAM OK'D BY JDG
February 9, 2017
RESUBMIT No Approved
BY Kristin Higgins DATE 2/14/2017

STATE OF VERMONT
ERIC T. CALDERWOOD
NO. 87
Structural
LICENSED
PROFESSIONAL ENGINEER

FINISH	HOT DIP GALVANIZED			
MATERIAL	AASHTO M270 (ASTM A709) GRADE 50			
HOLES	15/16 " Ø U.N.O.			
ELECTRODES	PER WELD PROCEDURE			
WELDS	PER WELD PROCEDURE			
SURFACE PREP	PRE-BLAST ALL MATERIAL TO SSPC-SP6			
		NO	DATE	DESCRIPTION BY
		REVISIONS		

ARC ENTERPRISES, INC. STEEL FABRICATION
ADVANCED RESOURCES & CONST. ENTERPRISES, INCORPORATED
P.O. BOX 120 KINGFIELD, ME. 04947
PHONE: (207) 265-2646 - FAX: (207) 265-4054

DRAFTER ETC	PADEYE LIFTERS FOR PBU-S	PROJECT NO. 16-181
DATE FEB. 2017	VTRANS, STRAFFORD VT. BRIDGE REPLACEMENT PROJ# BF 0177 (10)	
CHECKED		DWG. NO. M-1
DATE	SC: MILLER CONSTRUCTION	

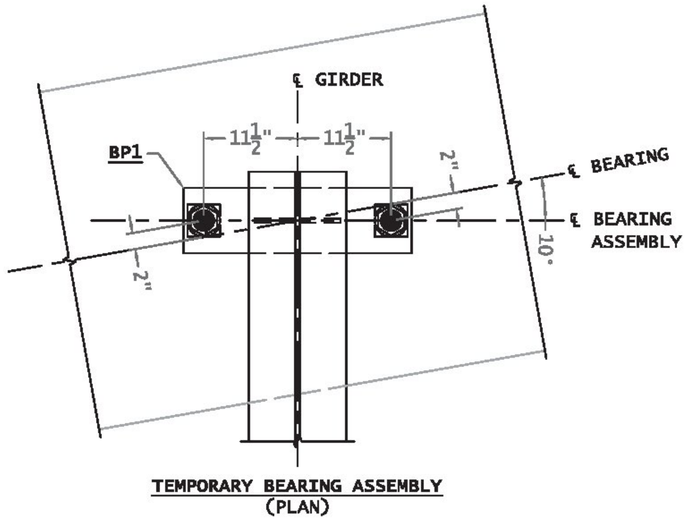

TEMPORARY BEARING ASSEMBLY
(PLAN)

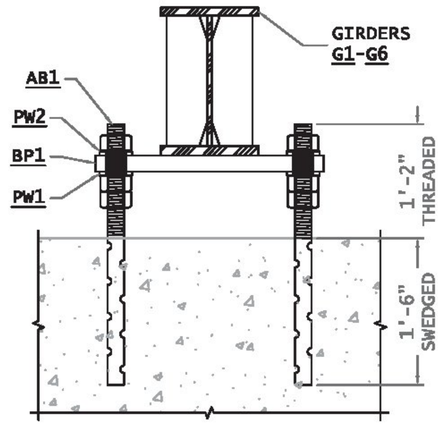

TEMPORARY BEARING ASSEMBLY
(ELEVATION)

BILL OF MATERIALS								
SHIP MARK	SHIP QTY	PIECE MARK	PC. QTY	DESCRIPTION	LENGTH Ft.	LENGTH In.	WT. lbs. ea.	WT. lbs. tot.	MAT'L
		BP1	12	PL 2 " x 8 "	2	4	127.0	1524.1	
		PW1	24	PL 1/2 " x 4 "	0	4	2.3	54.4	
		PW2	24	PL 1/2 " x 4" DIA			1.8	43.2	
		AB1	24	2" DIA. SWEDGED ANCHOR	2	8			
			72	2" HEAVY HEX NUT					
							TOTAL WEIGHT =	1621.7	

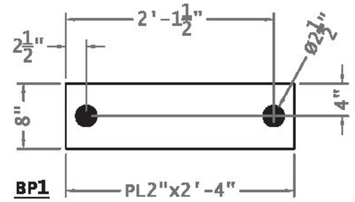

BP1

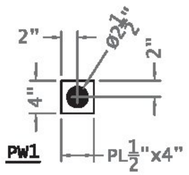

PW1

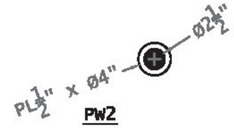

PW2

Vermont Agency of Transportation

RECEIVED

Stamped BF 0177(10) - Bearings Submitted 3-21-17 per

CK'D BY RMK OK'D BY JDG

March 21, 2017

RESUBMIT No Approved

BY K. Higgins DATE 04/04/17

GENERAL NOTES:

MATERIAL SPECIFICATIONS

1. ALL MATERIALS AND CONSTRUCTION SHALL CONFORM TO THE VERMONT AGENCY OF TRANSPORTATION 2011 STANDARD SPECIFICATIONS FOR CONSTRUCTION, THE 2014 AASHTO LRFD BRIDGE DESIGN SPECIFICATIONS AND THEIR LATEST REVISIONS
2. BEARING PLATE & PLATE WASHERS SHALL BE ASTM A572 GR.50 U.N.O.
3. ALL MATERIAL DENOTED "CVN" IN THE BILL OF MATERIAL SHALL MEET THE CHARPY V-NOTCH TESTING REQUIREMENTS OF ZONE 2, H FREQUENCY: 15 FT-LB AT 40 ° (UP TO 2" WELDED)
4. ANCHOR RODS SHALL BE ASTM F1554 GR.55 - HEAVY HEX NUTS ASTM A563 GRADE DH - HARDENED WASHERS ASTM F436 TYPE 1 - DTI WASHERS ASTM F-959

FABRICATION

5. DIE STAMPING IS ALLOWED IN SPECIFIC LOCATIONS WITH THE APPROVAL OF THE ENGINEER.
6. ALL SHARP CORNERS OR EDGES SHALL BE ROUNDED TO A MINIMUM RADIUS OF 1/16" PER STANDARD SPEC. 506.14(b)
7. ALL PLATE MEMBERS SHALL BE CUT SO THAT THE PRIMARY DIRECTION OF ROLLING IS PARALLEL TO THE MAIN TENSILE OR COMPRESSIVE STRESS PER STANDARD SPEC. 506.08
8. FLANGE PLATE MATERIAL SHALL HAVE AN EDGE HARDNESS NOT GREATER THAN HRc 30 PER STANDARD SPEC. 506.09
9. ALL WELDING PROCEDURES SHALL BE IN ACCORDANCE WITH SUBSECTION 506.10
10. NON DESTRUCTIVE TESTING OF WELDS SHALL BE IN ACCORDANCE WITH ANSI/AASHTO/AWS D1.5 - SECTION 6.

INSTALLATION

11. BEARING PLATES SHALL BE LEVEL PRIOR TO SETTING PBUs. ELEVATIONS SHALL BE ADJUSTED TO WITHIN 0.01' OF ELEVATIONS NOTED DURING OFF-SITE FABRICATION OF THE UNITS
12. ALL ERECTION MARKS, MATCH MARKS & WEIGHT MARKS MUST NOT BE EXPOSED IN THE FINISHED STRUCTURE.

COATINGS & FINISH

13. ALL STEEL IS TO BE HOT-DIP GALVANIZED IN ACCORDANCE WITH SUBSECTION 726.08.
14. ALL HARDWARE IS TO BE MECHANICALLY GALVANIZED IN ACCORDANCE WITH AASHTO M298, CLASS 50, TYPE 1.

FINISH:	HOT-DIP GALVANIZED			
MATERIAL:	ASTM A572 GR.50			
HOLES:	Ø2½" U.N.O			
ELECTRODES:	PER WELD PROCEDURE			
WELDS:	PER WELD PROCEDURE	0	ISSUED FOR APPROVAL	3/17/17
SURFACE PREP:	SSPC-SP6	No.	Revision	Date

Fabricator: ARC ENTERPRISES INC.	detailer: DRAFTWORKS DETAILING 11 CHESTNUT ST. AMESBURY, MA	
Job Number: 16-181	TEMP. BEARING ASSEMBLY	Sheet No.: 1 OF 1
Original Submittal Date: 3/17/17	VTRANS, STRAFFORD VT BRIDGE REPLACEMENT PROJ# BF 0177 (10)	Drawing No.: BA-1
Drawn By: DAP / Checked By: DAP	GC: MILLER CONSTRUCTION	

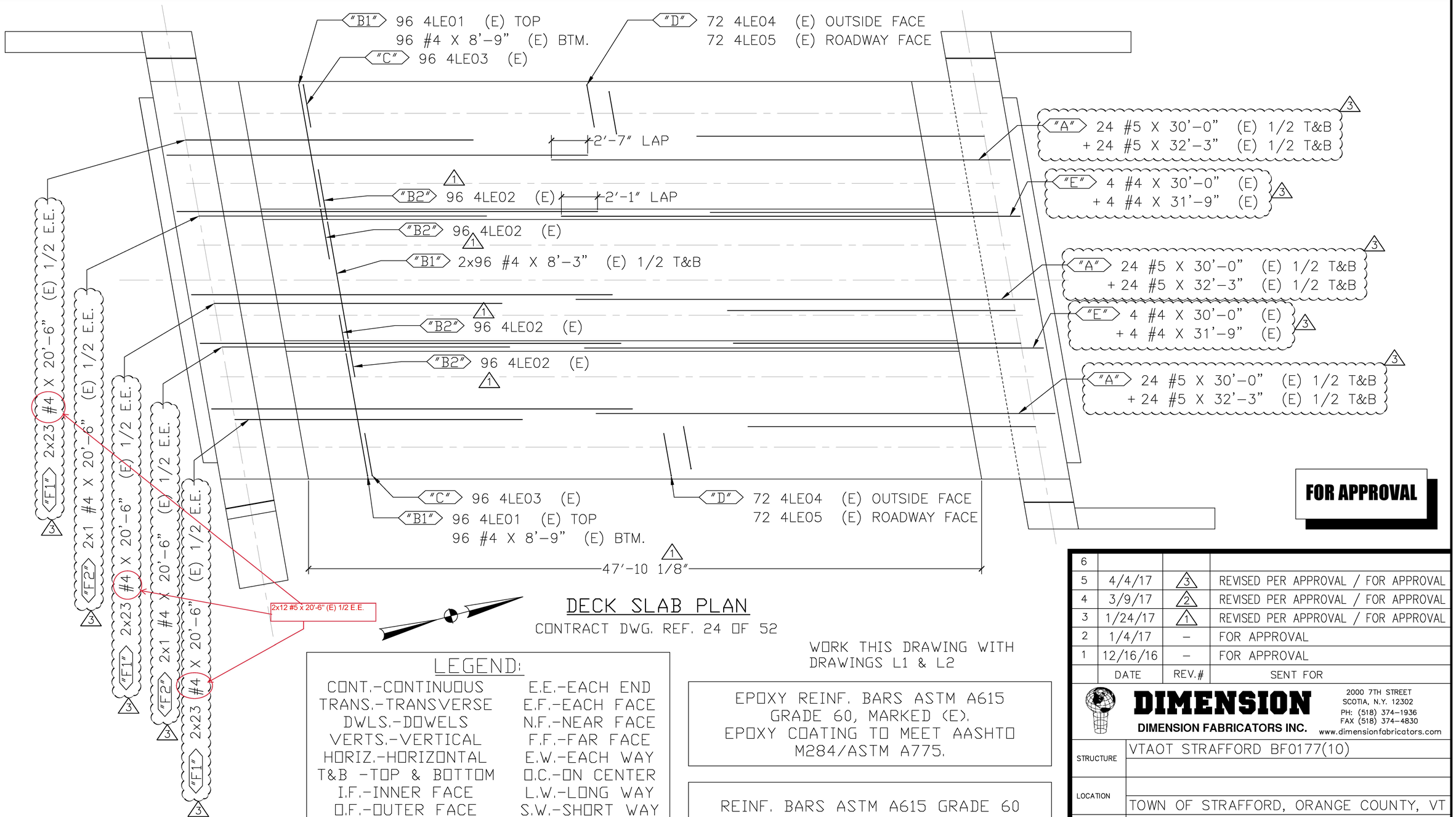

DECK SLAB PLAN

CONTRACT DWG. REF. 24 OF 52

LEGEND:

CONT.-CONTINUOUS	E.E.-EACH END
TRANS.-TRANSVERSE	E.F.-EACH FACE
DWLS.-DOWELS	N.F.-NEAR FACE
VERTS.-VERTICAL	F.F.-FAR FACE
HORIZ.-HORIZONTAL	E.W.-EACH WAY
T&B -TOP & BOTTOM	O.C.-ON CENTER
I.F.-INNER FACE	L.W.-LONG WAY
O.F.-OUTER FACE	S.W.-SHORT WAY

WORK THIS DRAWING WITH DRAWINGS L1 & L2

EPOXY REINF. BARS ASTM A615 GRADE 60, MARKED (E). EPOXY COATING TO MEET AASHTO M284/ASTM A775.

REINF. BARS ASTM A615 GRADE 60

ELEVATIONS & DIMENSIONS SHOWN ON THIS DWG. ARE FOR REINF. DETAILING PURPOSES ONLY AND ARE NOT INTENDED FOR DIMENSIONAL CONSTRUCTION.

VERIFICATION OF UNCLEAR INFORMATION MAY BE REQUESTED ON THIS DRAWING. SHOULD VERIFICATION BE LEFT UN-ADDRESSED IT WILL REMAIN AS SHOWN AND ASSUME TO BE CORRECT.

FOR APPROVAL

6			
5	4/4/17	3	REVISED PER APPROVAL / FOR APPROVAL
4	3/9/17	2	REVISED PER APPROVAL / FOR APPROVAL
3	1/24/17	1	REVISED PER APPROVAL / FOR APPROVAL
2	1/4/17	–	FOR APPROVAL
1	12/16/16	–	FOR APPROVAL
	DATE	REV.#	SENT FOR

DIMENSION
DIMENSION FABRICATORS INC.
2000 7TH STREET
SCOTIA, N.Y. 12302
PH: (518) 374-1936
FAX (518) 374-4830
www.dimensionfabricators.com

STRUCTURE	VTAOT STRAFFORD BF0177(10)
LOCATION	TOWN OF STRAFFORD, ORANGE COUNTY, VT
ARCHITECT	
ENGINEER	
CUSTOMER	MILLER CONSTRUCTION

DRAWN BY	DATE	DFI #
CMB	12/14/16	10098

DRAWING COVERS	DRAWING #
DECK SLAB PBU's	L

Vermont Agency of Transportation
RECEIVED
Strafford BF 0177(10) - Prefabricated Bridge Unit Superstructure Approved as Noted 4-13-17 - Review.pdf
CK'D BY TM, JW, NVDB, KM, RK OK'D BY JG
April 12, 2017
RESUBMIT No Approved AsNoted
BY K. Higgins DATE 04/13/17

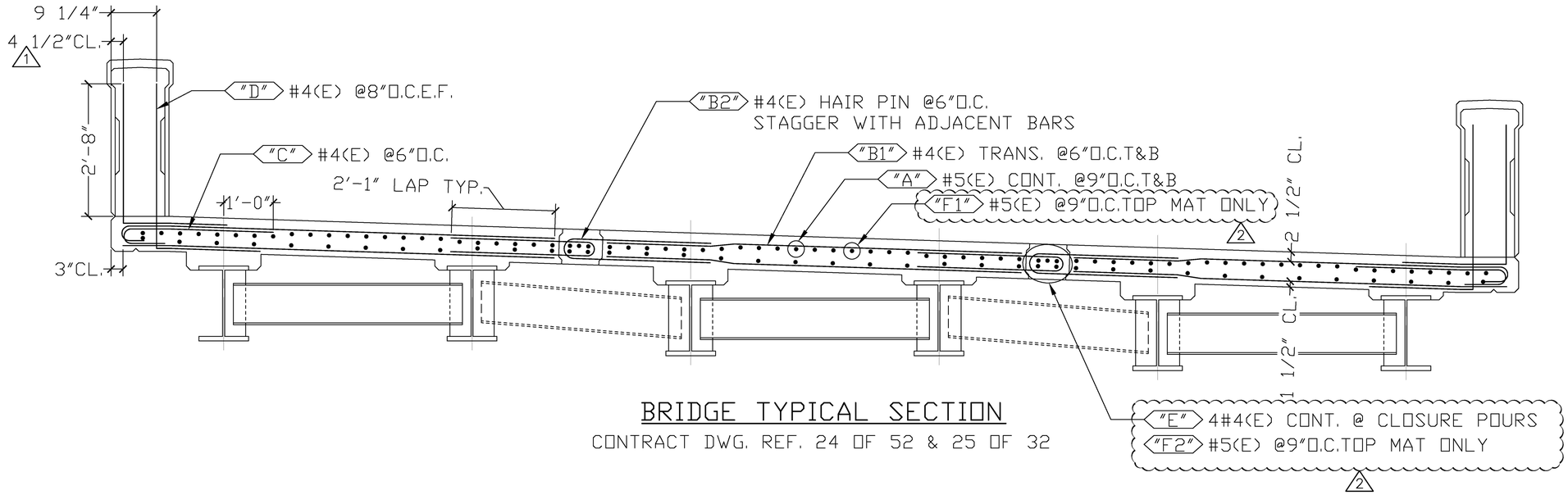

BRIDGE TYPICAL SECTION

CONTRACT DWG. REF. 24 OF 52 & 25 OF 32

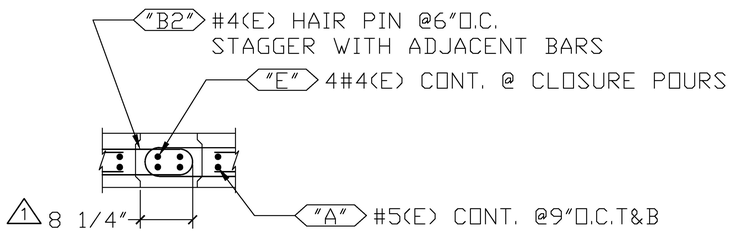

CONNECTION DETAIL SECTION

CONTRACT DWG. REF. 25 OF 52

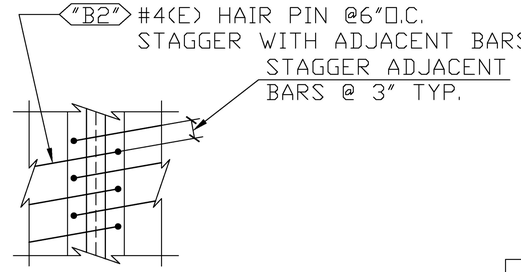

CONNECTION DETAIL PLAN

CONTRACT DWG. REF. 25 OF 52

FOR APPROVAL

WORK THIS DRAWING WITH DRAWINGS L & L2

LEGEND:

CONT.-CONTINUOUS	E.E.-EACH END
TRANS.-TRANSVERSE	E.F.-EACH FACE
DWLS.-DOWELS	N.F.-NEAR FACE
VERTS.-VERTICAL	F.F.-FAR FACE
HORIZ.-HORIZONTAL	E.W.-EACH WAY
T&B -TOP & BOTTOM	O.C.-ON CENTER
I.F.-INNER FACE	L.W.-LONG WAY
O.F.-OUTER FACE	S.W.-SHORT WAY

EPOXY REINF. BARS ASTM A615 GRADE 60, MARKED (E). EPOXY COATING TO MEET AASHTO M284/ASTM A775.

REINF. BARS ASTM A615 GRADE 60

ELEVATIONS & DIMENSIONS SHOWN ON THIS DWG. ARE FOR REINF. DETAILING PURPOSES ONLY AND ARE NOT INTENDED FOR DIMENSIONAL CONSTRUCTION.

VERIFICATION OF UNCLEAR INFORMATION MAY BE REQUESTED ON THIS DRAWING. SHOULD VERIFICATION BE LEFT UN-ADDRESSED IT WILL REMAIN AS SHOWN AND ASSUME TO BE CORRECT.

Vermont Agency of Transportation

RECEIVED

Strafford BF 0177(10) - Prefabricated Bridge Unit Superstructure Approved as Noted 4-13-17 - Review.pdf

CK'D BY TM, JW, NVDB, KM, RK OK'D BY JG

April 12, 2017

RESUBMIT No Approved

BY K. Higgins DATE 04/13/17

6			
5	4/4/17	2	REVISED PER APPROVAL / FOR APPROVAL
4	3/9/17	1	REVISED PER APPROVAL / FOR APPROVAL
3	1/24/17	–	NO CHANGE / FOR APPROVAL
2	1/4/17	–	FOR APPROVAL
1	12/16/16	–	FOR APPROVAL
	DATE	REV.#	SENT FOR

DIMENSION
DIMENSION FABRICATORS INC.
2000 7TH STREET
SCOTIA, N.Y. 12302
PH: (518) 374-1936
FAX (518) 374-4830
www.dimensionfabricators.com

STRUCTURE	VTAOT STRAFFORD BF0177(10)
LOCATION	TOWN OF STRAFFORD, ORANGE COUNTY, VT
ARCHITECT	
ENGINEER	
CUSTOMER	MILLER CONSTRUCTION

DRAWN BY	DATE	DFI #
CMB	12/14/16	10098

DRAWING COVERS	DRAWING #
DECK SLAB PBU"s	L1

Release Number:

BAR LIST 1

Bar Mark	Qty	Size	Total Length	Type	'A'	'B'	'C'	'D'	'E'	'F'	'G'	'H'	'J'	'K'	'O'	'R'
4LE01	192	#4	9'-3"	1	0'-6"	8'-9"							0'-4"			
4LE02	384	#4	6'-3"	10	2'-10"	0'-7"	2'-10"								0'-4 ½"	0'-2 ¼"
4LE03	192	#4	3'-7"	1	0'-6"	3'-1"							0'-4"			
4LE04	144	#4	5'-2"	17		2'-3"	2'-11"									
4LE05	144	#4	5'-6"	17		2'-3"	3'-3"									

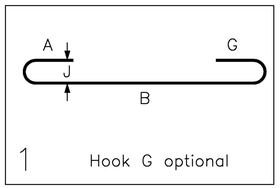

1 Hook G optional

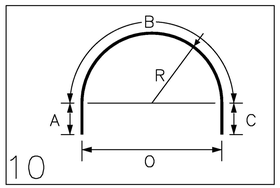

10

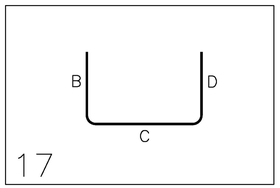

17

2 TEST BARS AT 30" LONG WILL BE PROVIDED FOR EACH 15 TONS OF EACH BAR SIZE OF EACH DELIVERY 2

FOR APPROVAL

WORK THIS DRAWING WITH DRAWINGS L & L1

LEGEND:

CONT.-CONTINUOUS	E.E.-EACH END
TRANS.-TRANSVERSE	E.F.-EACH FACE
DWLS.-DOWELS	N.F.-NEAR FACE
VERTS.-VERTICAL	F.F.-FAR FACE
HORIZ.-HORIZONTAL	E.W.-EACH WAY
T&B -TOP & BOTTOM	O.C.-ON CENTER
I.F.-INNER FACE	L.W.-LONG WAY
O.F.-OUTER FACE	S.W.-SHORT WAY

EPOXY REINF. BARS ASTM A615 GRADE 60, MARKED (E). EPOXY COATING TO MEET AASHTO M284/ASTM A775.

REINF. BARS ASTM A615 GRADE 60

ELEVATIONS & DIMENSIONS SHOWN ON THIS DWG. ARE FOR REINF. DETAILING PURPOSES ONLY AND ARE NOT INTENDED FOR DIMENSIONAL CONSTRUCTION.

VERIFICATION OF UNCLEAR INFORMATION MAY BE REQUESTED ON THIS DRAWING. SHOULD VERIFICATION BE LEFT UN-ADDRESSED IT WILL REMAIN AS SHOWN AND ASSUME TO BE CORRECT.

Vermont Agency of Transportation

RECEIVED

Strafford BF 0177(10) - Prefabricated Bridge Unit Superstructure Approved as Noted 4-13-17 - Review.pdf

CK'D BY TM, JW, NVDB, KM, RK OK'D BY JG

April 12, 2017

RESUBMIT No Approved

BY K. Higgins DATE 04/13/17

6			
5	4/4/17	–	NO CHANGES / FOR APPROVAL
4	3/9/17	2	REVISED PER APPROVAL / FOR APPROVAL
3	1/24/17	1	REVISED PER APPROVAL / FOR APPROVAL
2	1/4/17	–	FOR APPROVAL
1	12/16/16	–	FOR APPROVAL
	DATE	REV.#	SENT FOR

DIMENSION
DIMENSION FABRICATORS INC.
2000 7TH STREET
SCOTIA, N.Y. 12302
PH: (518) 374-1936
FAX (518) 374-4830
www.dimensionfabricators.com

STRUCTURE	VTAOT STRAFFORD BF0177(10)
LOCATION	TOWN OF STRAFFORD, ORANGE COUNTY, VT
ARCHITECT	
ENGINEER	
CUSTOMER	MILLER CONSTRUCTION

DRAWN BY	DATE	DFI #
CMB	12/14/16	10098

DRAWING COVERS	DRAWING #
DECK SLAB PBU"s	L2

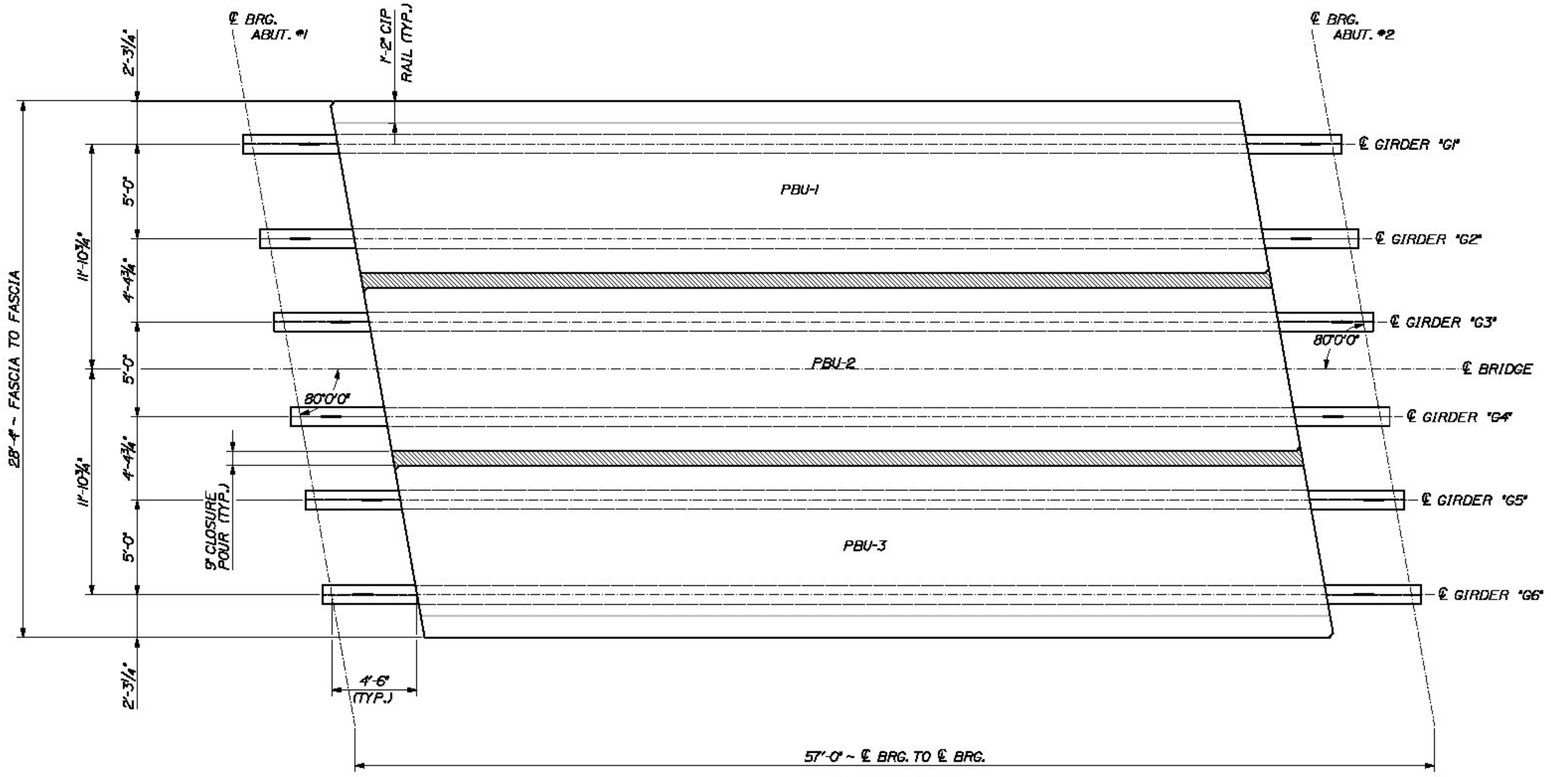

PLAN VIEW

¼" = 1'-0"

NOTE: DIAPHRAGMS, CONNECTION ℄'S, & PROJECTING REBAR NOT SHOWN FOR CLARITY

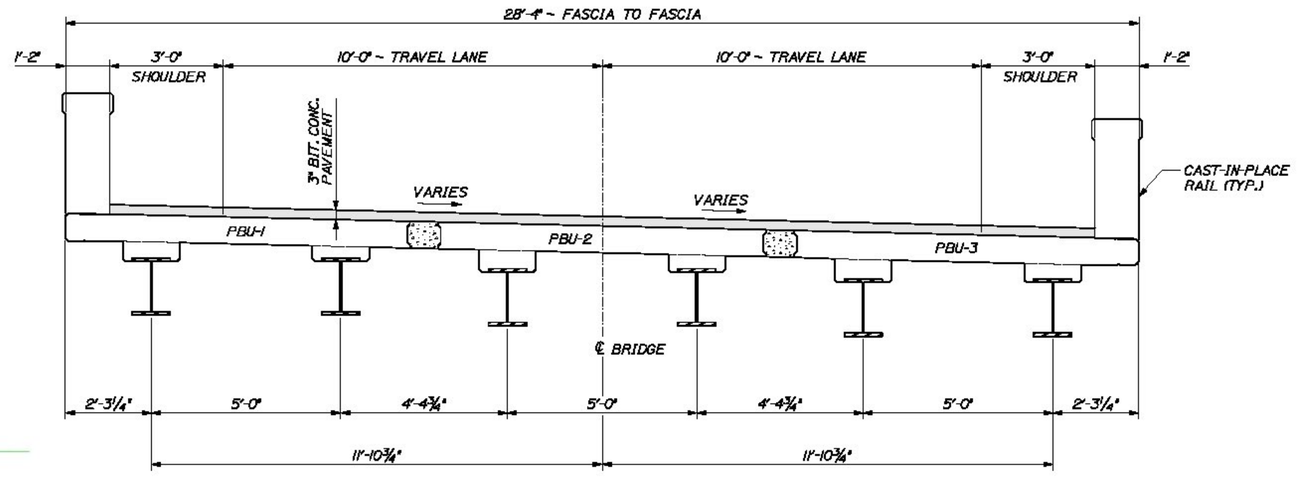

TYPICAL SECTION

½" = 1'-0"

NOTE: DIAPHRAGMS, CONNECTION ℄'S, & PROJECTING REBAR NOT SHOWN FOR CLARITY

Vermont Agency of Transportation

RECEIVED

CK'D BY TM, JW, NVDB, KM, RK OK'D BY JG

April 12, 2017

RESUBMIT No Approved

BY K. Higgins DATE 04/13/17

CALDERWOOD ENGINEERING, ETC.

STRUCTURAL ENGINEERING • DETAILING SERVICES

222 RIVER RD, RICHMOND, ME 04357 PH/FX (207)737-2007 / 737-2008

PREPARED FOR:

MILLER CONSTRUCTION

STRAFFORD BF 0177(10)

STATE OF VERMONT ERIC T. CALDERWOOD NO. 8747 Structural I LICENSED PROFESSIONAL ENGINEER

P.E. NUMBER

DATE

	BY	DATE
DESIGN-DETAILED	ETC	JAN 2017
CHECKED-REVIEWED		
REVISIONS 1		
REVISIONS 2		
REVISIONS 3		
REVISIONS 4		
FIELD CHANGES		

STRAFFORD VERMONT ABUTMENT SHOP DETAILS

PBU LAYOUT & DIMENSIONAL DETAILS

SHEET NUMBER

1

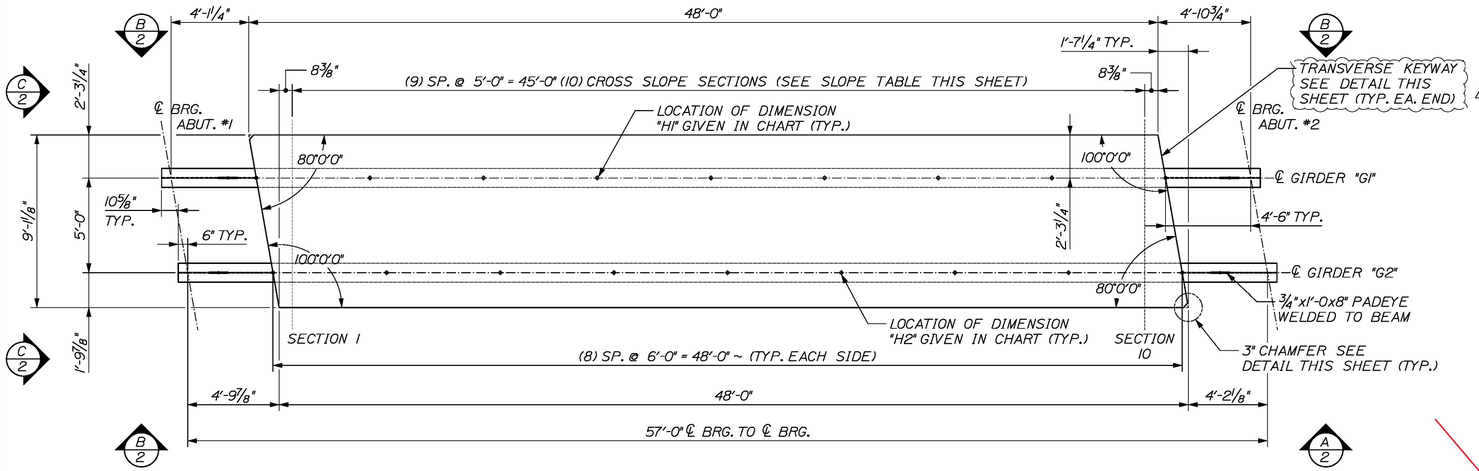

PBU-I PLAN VIEW

1/4" = 1'-0"

NOTE: DIAPHRAGMS, CONNECTION ℄'S, & PROJECTING REBAR NOT SHOWN FOR CLARITY

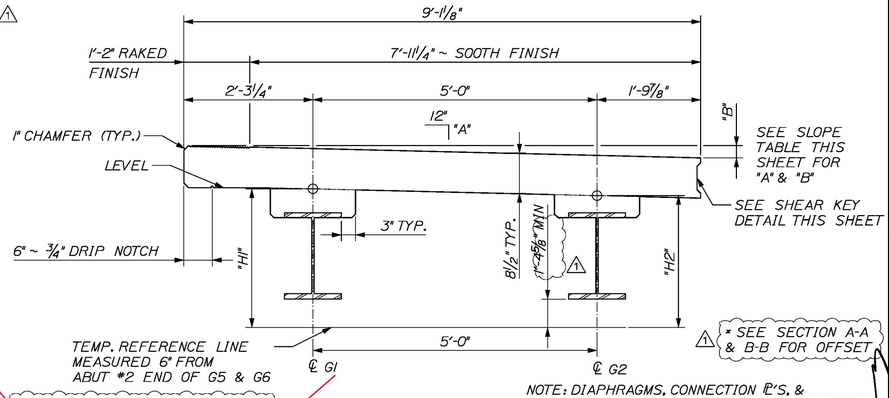

NOTE: DIAPHRAGMS, CONNECTION ℄'S, & PROJECTING REBAR NOT SHOWN FOR CLARITY

SECTION C-C

3/4" = 1'-0"

2

DECK CROSS SLOPE TABLE		
SECTION	"A"	"B"
1	5/16"	3 1/8"
2	3/8"	3 1/4"
3	3/8"	3 7/16"
4	3/8"	3 9/16"
5	7/16"	3 11/16"
6	7/16"	3 7/8"
7	7/16	4"
8	7/16"	4 1/8"
9	1/2"	4 5/16"
10	1/2"	4 1/16"

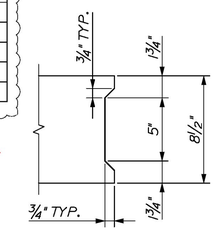

SHEAR KEY DETAIL

2" = 1'-0"

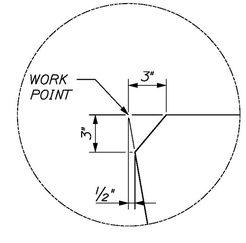

CHAMFER DETAIL

2" = 1'-0"

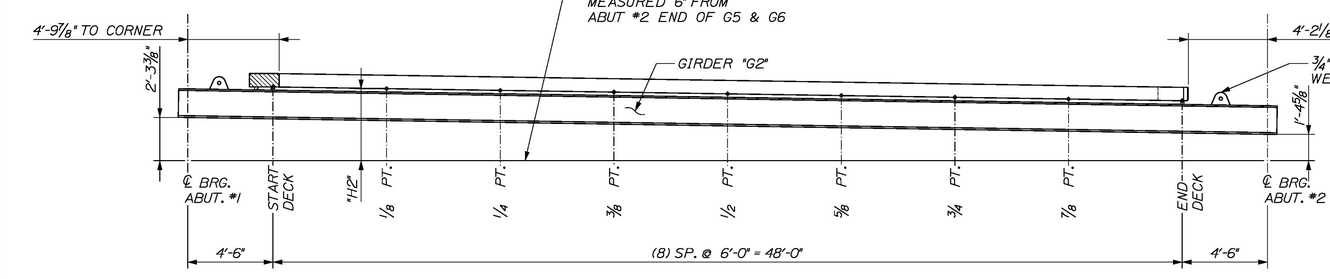

SECTION A-A

1/4" = 1'-0"

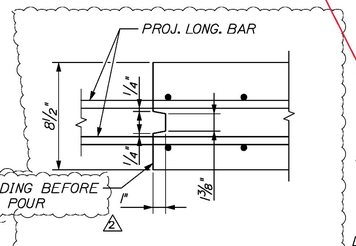

TRANSVERSE BRIDGE SLAB CONSTRUCTION JOINT DETAIL

2" = 1'-0"

RETARDER WILL BE APPLIED TO FORMS PRIOR TO PLACEMENT. STRIPING AND BLASTING PER MANUFACTURERS RECOMMENDATION.

DESIGN NOTES:

CONCRETE f'c @ FINAL = 4,000 PSI
f'c @ LIFTING = 4,000 PSI

FINISH -
TOP - SMOOTH TROWEL U.N.O.
SIDES - FORM FINISH
BOTTOM - FORM FINISH

(1) PBU-I REQ'D
APPROX. WT - 34.8 TONS

BOT. OF DECK SLAB TABLE - PBU-I		
LOCATION	"H1"	"H2"
START DECK	3'-5 3/8"	3'-11 1/2"
1/8 POINT	3'-7 1/4"	3'-11 3/8"
1/4 POINT	3'-9"	3'-11"
3/8 POINT	3'-10 1/2"	3'-10 3/8"
1/2 POINT	3'-11 3/8"	3'-9 3/8"
5/8 POINT	4'-1/2"	3'-8 1/8"
3/4 POINT	4'-1 1/8"	3'-6 5/8"
7/8 POINT	4'-1 1/2"	3'-4 5/8"
END DECK	4'-1 3/8"	3'-2 3/4"

BILL OF MATERIALS FOR PBU-I			
ITEM #	QTY	TOTAL	DESCRIPTION
1	1	1	STEEL ASSEMBLY ~ GIRDERS "G1" & "G2"
2	13.5 CY	13.5 CY	VAOT CLASS "A" CONCRETE
3	4	4	3/4"x8"x1'-0" STEEL PADEYE WELDED TO GIRDER

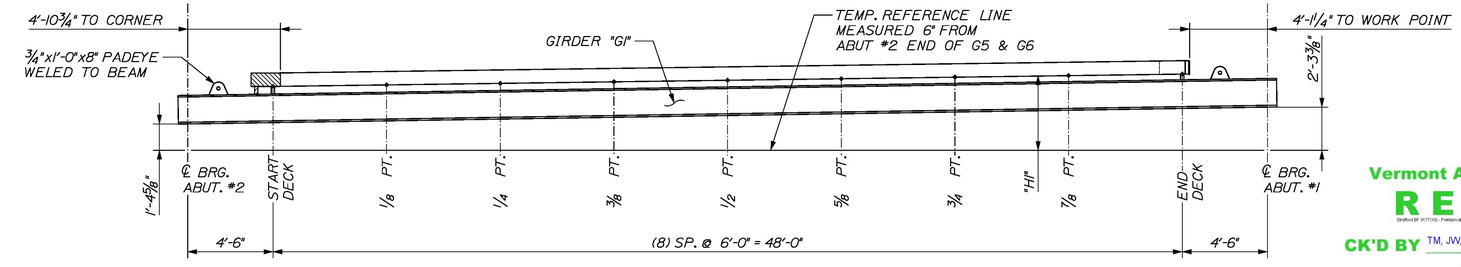

SECTION B-B

1/4" = 1'-0"

Vermont Agency of Transportation

RECEIVED

Stafford BF 0177(10) - Prefabricated Bridge Unit Superstructure Approved as Noted 4-13-17 - Review.pdf

CK'D BY TM, JW, NVDB, KM, RK OK'D BY JG

April 12, 2017

RESUBMIT No Approved AsNoted

BY K. Higgins DATE 04/13/17

This information is unnecessary as Beam Profiles will need to be submitted prior to forming.

CALDERWOOD ENGINEERING, ETC.
STRUCTURAL ENGINEERING • DETAILING SERVICES
222 RIVER RD, RICHMOND, ME 04357 PH/FX (207)737-2007 / 737-2008

PREPARED FOR:
MILLER CONSTRUCTION

STRAFFORD BF 0177(10)

STATE OF VERMONT REG. P.E. CALDERWOOD NO. 8711 Stratford LICENSED PROFESSIONAL ENGINEER

P.E. NUMBER

DATE

DESIGN-DETAILED	BY	ETC
CHECKED-REVIEWED	DATE	JAN 2017
REVISIONS 1		
REVISIONS 2		
REVISIONS 3		
REVISIONS 4		
FIELD CHANGES		

STRAFFORD VERMONT
ABUTMENT SHOP DETAILS

PBU-1 DIMENSIONAL DETAILS

SHEET NUMBER

2

CALDERWOOD ENGINEERING 222 RIVER ROAD RICHMOND, ME 04357 TEL (207) 737-2007 FAX (207) 737-2008

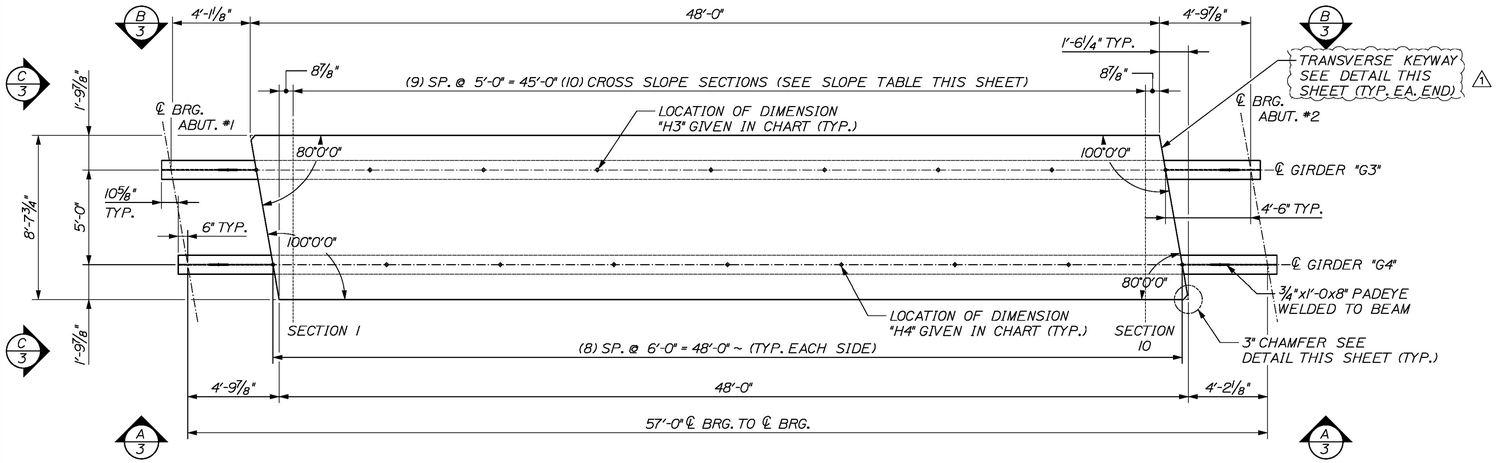

PBU-2 PLAN VIEW

1/4" = 1'-0"

NOTE: DIAPHRAGMS, CONNECTION ℄'S, & PROJECTING REBAR NOT SHOWN FOR CLARITY

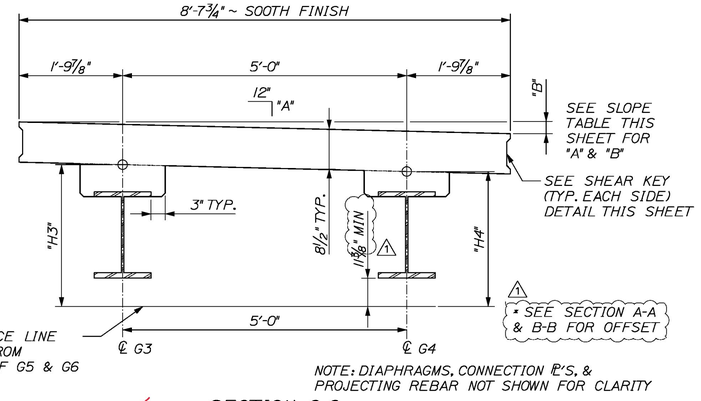

NOTE: DIAPHRAGMS, CONNECTION ℄'S, & PROJECTING REBAR NOT SHOWN FOR CLARITY

SECTION C-C

3/4" = 1'-0"

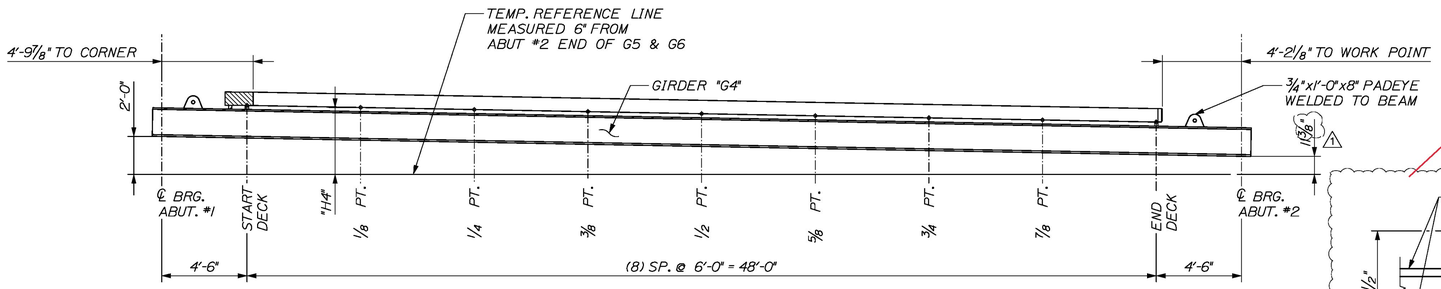

SECTION A-A

1/4" = 1'-0"

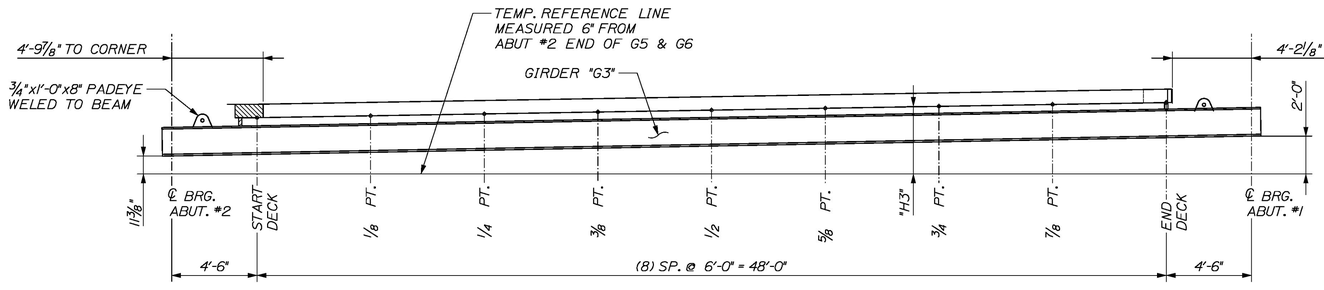

SECTION B-B

1/4" = 1'-0"

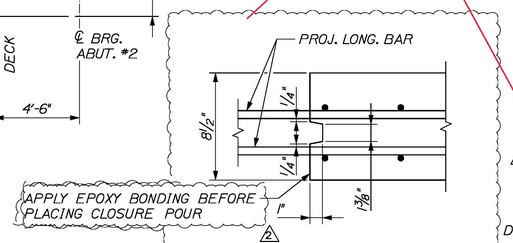

TRANSVERSE BRIDGE SLAB CONSTRUCTION JOINT DETAIL

2" = 1'-0"

DECK CROSS SLOPE TABLE		
SECTION	"A"	"B"
1	3/8"	3"
2	3/8"	3 1/8"
3	3/8"	3 3/16"
4	3/8"	3 7/16"
5	7/16"	3 9/16"
6	7/16"	3 11/16"
7	7/16"	3 7/8"
8	7/16"	4"
9	1/2"	4 1/8"
10	1/2"	4 5/16"

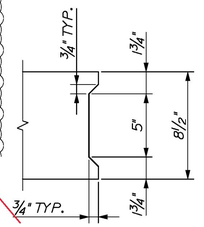

SHEAR KEY DETAIL

2" = 1'-0"

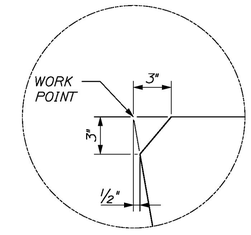

CHAMFER DETAIL

2" = 1'-0"

RETARDER WILL BE APPLIED TO FORMS PRIOR TO PLACEMENT. STRIPING AND BLASTING PER MANUFACTURERS RECOMMENDATION. 2

DESIGN NOTES:

CONCRETE f'c @ FINAL = 4,000 PSI
f'c @ LIFTING = 4,000 PSI

FINISH -
TOP - SMOOTH TROWEL U.N.O.
SIDES - FORM FINISH
BOTTOM - FORM FINISH

(1) PBU-2 REQ'D
APPROX. WT - 34.8 TONS

BOT. OF DECK SLAB TABLE ~ PBU-2		
LOCATION	"H3"	"H4"
START DECK	3'-0 3/8"	3'-8"
1/8 POINT	3'-2 3/4"	3'-7 5/8"
1/4 POINT	3'-4 1/2"	3'-7 1/8"
3/8 POINT	3'-6"	3'-6 1/4"
1/2 POINT	3'-7 1/2"	3'-5 1/8"
5/8 POINT	3'-8 1/2"	3'-3 3/4"
3/4 POINT	3'-9 1/4"	3'-1 1/8"
7/8 POINT	3'-9 3/4"	2'-11 1/8"
END DECK	3'-10"	2'-9 5/8"

BILL OF MATERIALS FOR PBU-2			
ITEM #	QTY	TOTAL	DESCRIPTION
1	1	1	STEEL ASSEMBLY ~ GIRDERS "G3" & "G4"
2	13.5 CY	13.5 CY	VAOT CLASS "A" CONCRETE
3	4	4	3/4"x8"x1'-0" STEEL PADEYE WELDED TO GIRDER

This information is unnecessary as Beam Profiles will need to be submitted prior to forming.

Vermont Agency of Transportation
RECEIVED
Stratford BF 0177(10) - Prefabricated Bridge Unit Superstructure Approved as Noted 4-13-17 - Review.pdf
CK'D BY TM, JW, NVDB, KM, RK OK'D BY JG
April 12, 2017
RESUBMIT No Approved AsNoted
BY K. Higgins DATE 04/13/17

CALDERWOOD ENGINEERING, ETC.
STRUCTURAL ENGINEERING • DETAILING SERVICES
222 RIVER RD, RICHMOND, ME 04357 PH/FX (207)737-2007 / 737-2008

PREPARED FOR:
MILLER CONSTRUCTION

STRAFFORD BF 0177(10)

STATE OF VERMONT
BRIAN T. CALDERWOOD
NO. 8711
LICENSED PROFESSIONAL ENGINEER

P.E. NUMBER
DATE

BY	DATE
ETC	JAN 2017

DESIGN-DETAILED
CHECKED-REVIEWED

REVISIONS 1
REVISIONS 2
REVISIONS 3
REVISIONS 4
FIELD CHANGES

STRAFFORD VERMONT
ABUTMENT SHOP DETAILS

PBU-2 DIMENSIONAL DETAILS

SHEET NUMBER
3

CALDERWOOD ENGINEERING
222 RIVER ROAD
RICHMOND, ME 04357
PH. (207) 737-2007 | FAX (207) 737-2008

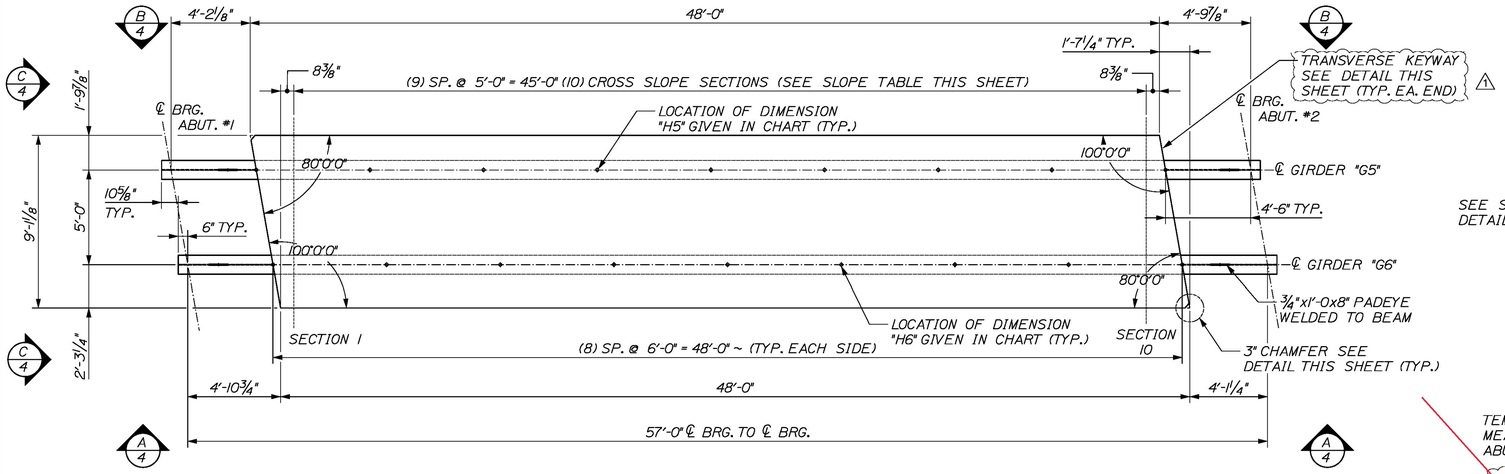

PBU-3 PLAN VIEW

1/4" = 1'-0"

NOTE: DIAPHRAGMS, CONNECTION ℄'S, & PROJECTING REBAR NOT SHOWN FOR CLARITY

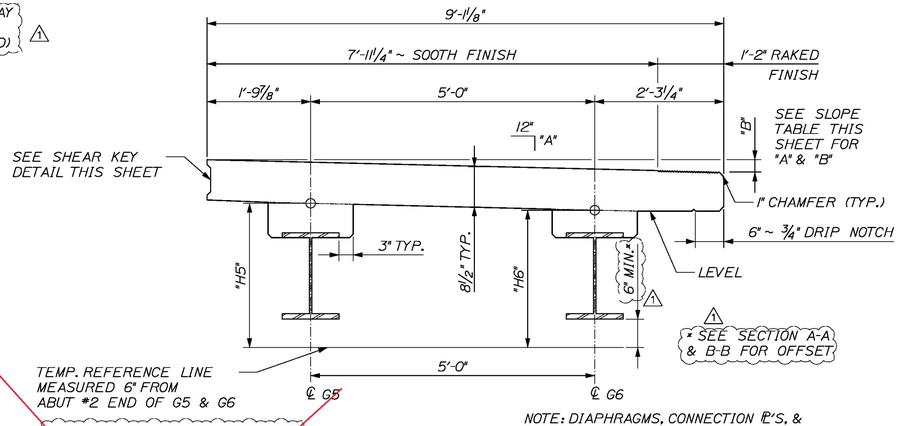

NOTE: DIAPHRAGMS, CONNECTION ℄'S, & PROJECTING REBAR NOT SHOWN FOR CLARITY

SECTION C-C

3/4" = 1'-0"

2

DECK CROSS SLOPE TABLE		
SECTION	"A"	"B"
1	3/8"	3 1/16"
2	3/8"	3 3/16"
3	3/8"	3 5/16"
4	3/8"	3 1/2"
5	1/16"	3 5/8"
6	1/16"	3 3/4"
7	1/16"	3 7/8"
8	1/16"	4 1/16"
9	1/2"	4 3/16"
10	1/2"	4 5/16"

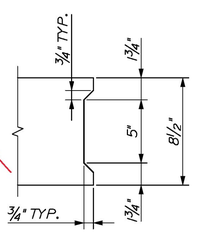

SHEAR KEY DETAIL

2" = 1'-0"

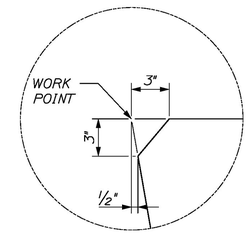

CHAMFER DETAIL

2" = 1'-0"

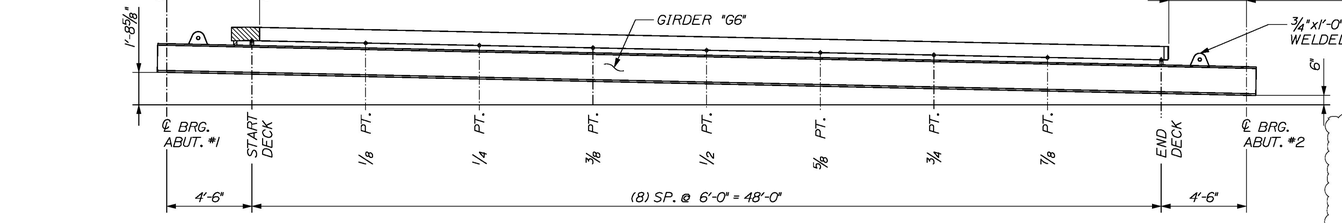

SECTION A-A

1/4" = 1'-0"

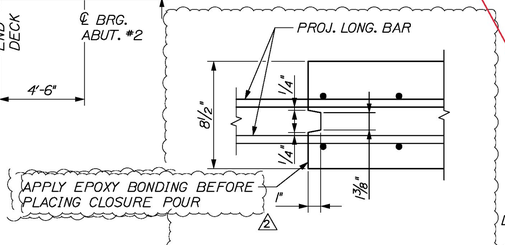

TRANSVERSE BRIDGE SLAB CONSTRUCTION JOINT DETAIL

2" = 1'-0"

1

DESIGN NOTES:

CONCRETE f'c @ FINAL = 4,000 PSI
f'c @ LIFTING = 4,000 PSI

FINISH -
TOP - SMOOTH TROWEL U.N.O.
SIDES - FORM FINISH
BOTTOM - FORM FINISH

(1) PBU-3 REQ'D
APPROX. WT - 34.8 TONS

RETARDER WILL BE APPLIED TO FORMS PRIOR TO PLACEMENT. STRIPING AND BLASTING PER MANUFACTURERS RECOMMENDATION. 2

2

BOT. OF DECK SLAB TABLE ~ PBU-3		
LOCATION	"H5"	"H6"
START DECK	2'-7 1/4"	3'-4 1/2"
1/8 POINT	2'-10 3/8"	3'-3 7/8"
1/4 POINT	3'-1 1/8"	3'-3 1/8"
3/8 POINT	3'-1 3/4"	3'-2"
1/2 POINT	3'-3 3/8"	3'- 3/4"
5/8 POINT	3'-4 1/8"	2'-11"
3/4 POINT	3'-4 3/4"	2'-9 1/8"
7/8 POINT	3'-5 1/4"	2'-7"
END DECK	3'-6 1/2"	2'-4 3/8"

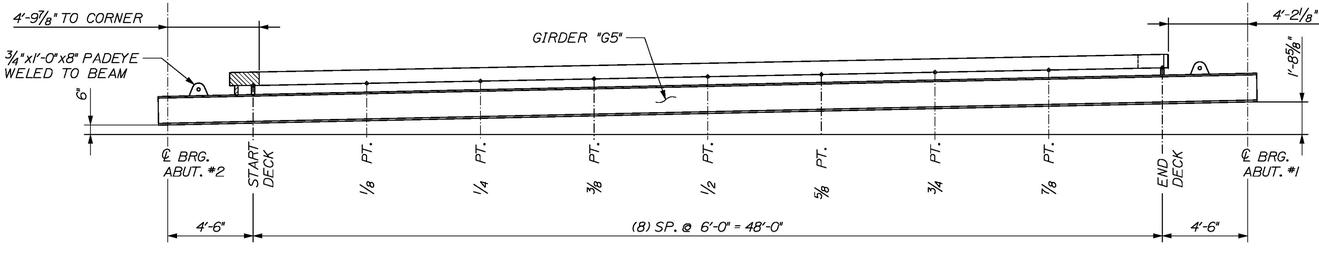

SECTION B-B

1/4" = 1'-0"

BILL OF MATERIALS FOR PBU-3			
ITEM #	QTY	TOTAL	DESCRIPTION
1	1	1	STEEL ASSEMBLY ~ GIRDERS "G5" & "G6"
2	13.5 CY	13.5 CY	VAOT CLASS "A" CONCRETE
3	4	4	3/4"x8"x1'-0" STEEL PADEYE WELDED TO GIRDER

This information is unnecessary as Beam Profiles will need to be submitted prior to forming.

Vermont Agency of Transportation

RECEIVED

Strafford BF 0177(10) - Prefabricated Bridge Unit Superstructure Approved as Noted 4-13-17 - Review.pdf

CK'D BY TM, JW, NVDB, KM, RK OK'D BY JG

April 12, 2017

RESUBMIT No Approved AsNoted

BY K. Higgins DATE 04/13/17

CALDERWOOD ENGINEERING, ETC.
STRUCTURAL ENGINEERING • DETAILING SERVICES
222 RIVER RD, RICHMOND, ME 04357 PH/FX (207)737-2007 / 737-2008

PREPARED FOR:
MILLER CONSTRUCTION

STRAFFORD BF 0177(10)

STATE OF VERMONT
CHRISTOPHER T. CALDERWOOD
NO. 87
Structural
LICENSED PROFESSIONAL ENGINEER

P.E. NUMBER

DATE

BY	DATE	
ETC	JAN 2017	

DESIGN-DETAILED	REVISIONS 1
CHECKED-REVIEWED	REVISIONS 2
	REVISIONS 3
	REVISIONS 4
	FIELD CHANGES

STRAFFORD VERMONT
ABUTMENT SHOP DETAILS

PBU-3 DIMENSIONAL DETAILS

SHEET NUMBER

4

CALDERWOOD ENGINEERING
222 RIVER ROAD
RICHMOND, ME 04357
TEL (207) 737-2007 FAX (207) 737-2008

Strafford BF 0177 (10) – Prefabricated Bridge Unit Structure

Structural Steel shall be shipped to Miller Construction, Inc. yard in pairs and erected on concrete waste blocks located on a level working pad. Steel Plate shims shall be utilized. Temporary diaphragms installed and the end of each girder will be anchored using chain binders.

Waste blocks shall be set on an existing exterior concrete slab at the Miller Construction, Inc. Yard. Elevations shall be attained by placing concrete on top of the waste blocks (Sketch Attached).

Pre-installation verification tests on DTI bolts will be performed by ARC at their shop when pairing the girders. Temporary diaphragms will be installed and tightened after girders are installed on temporary support at Miller Yard. DTI bolts will be tightened with electric impact guns ***or calibrated torque wrench***.

The screed machine shall be supported by screed rail along the exterior girders similar to conventional construction methods. Screed rail will be removed during final finishing operations. ***Once saddle pipes are removed from fresh concrete, additional concrete shall be added to the voids and reconsolidated.***

Elongation of girders has been calculated to be +/- 1/16" at each support. Girders shall not be restrained longitudinally, and will be able to slide 1/16" on the steel shim plate unrestricted.

Deck will be wet cured using ***two layers of*** Burlap.

Bolt holes in the diaphragm stiffener plates shall be filled with button head bolts. These bolts will be tightened in accordance with subsection 506.19.

Shipping shall occur on standard flatbed trucks on 6X6 Hardwood dunnage spaced every 6 FT.

On-Site Erection plan to be submitted at a later date.

Vermont Agency of Transportation
RECEIVED
Strafford BF 0177(10) - Prefabricated Bridge Unit Superstructure Approved as Noted 4-13-17 - Reviewed.pdf
CK'D BY TM, JW, NVDB, KM, RK OK'D BY JG
April 12, 2017
RESUBMIT No Approved
BY K. Higgins DATE 04/13/2017

Miller Construction, Inc.
3103 US Route 5 South
P.O. Box 86
Windsor, Vermont 05089
802-674-5525 Fax: 802-674-5245

JOB STRAFFORD BF 0177 (10)
SHEET NO. 1 OF 1
CALCULATED BY SBS DATE 3/6/17
CHECKED BY _____ DATE _____
SCALE N.T.S.

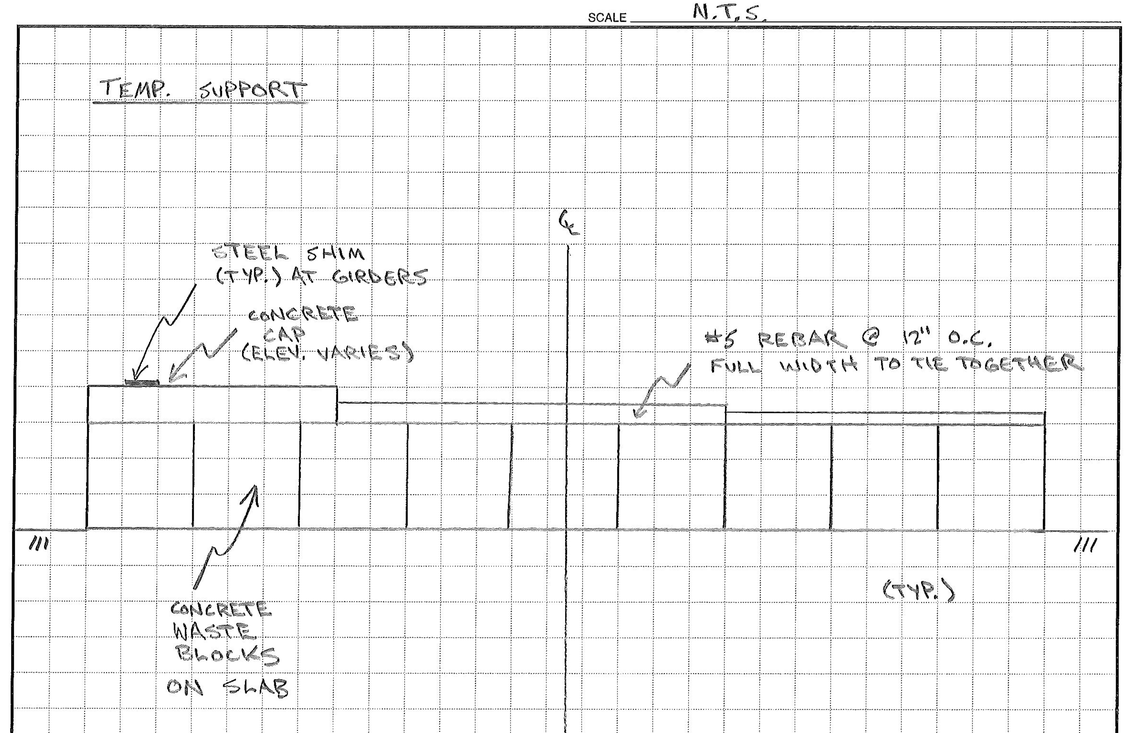

Vermont Agency of Transportation
RECEIVED
Stratford BF 0177(10) - Pre-fabricated Bridge Unit Superstructure Approved as Noted 4-13-17 - Review.pdf
CK'D BY TM, JW, NVDB, KM, RK OK'D BY JG
April 12, 2017
RESUBMIT No Approved
BY K. Higgins DATE 04/13/2017

Vermont Agency of Transportation

RECEIVED

Strafford BF 0177(10) - Prefabricated Bridge Unit Superstructure Approved as Noted 4-13-17 - Review.pdf

CK'D BY TM, JW, NVDB, KM, RK OK'D BY JG

April 12, 2017

RESUBMIT No Approved
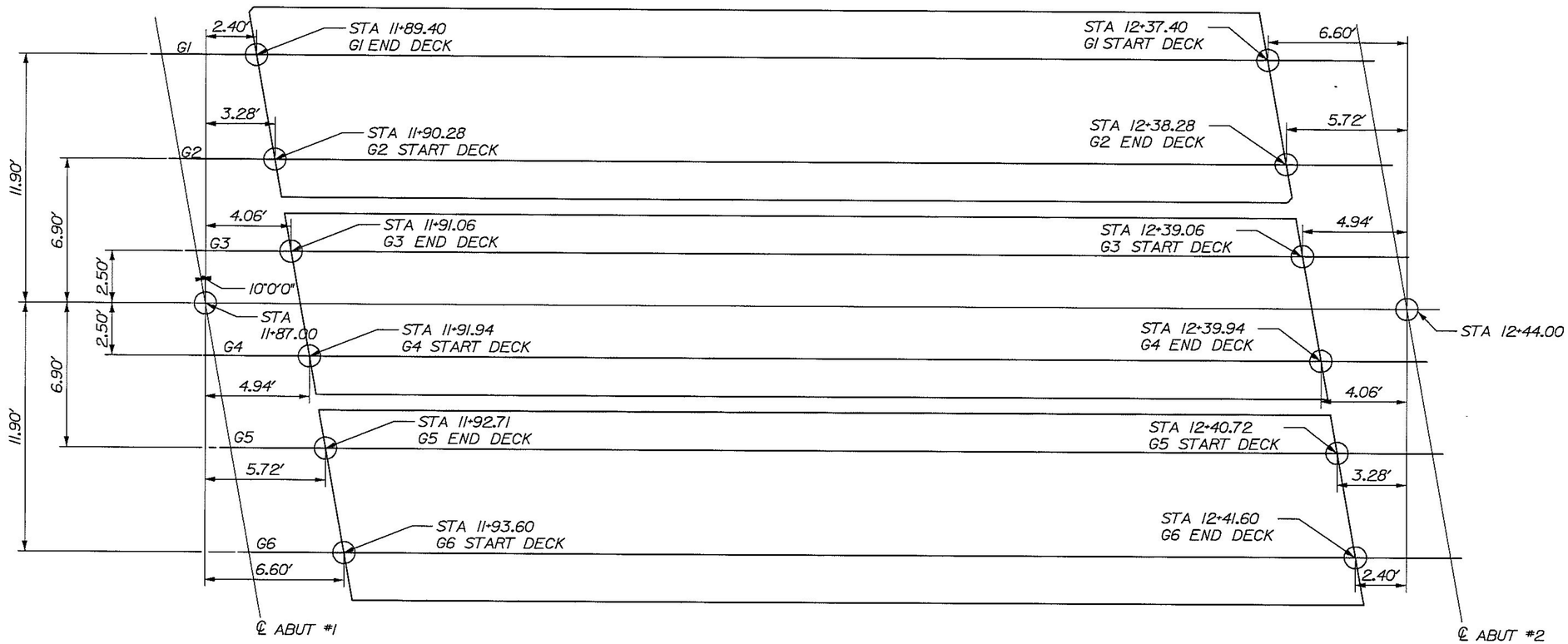
BY K. Higgins DATE 04/13/17