DocuSign Envelope ID: EFA891B2-339F-4457-B8B0-CABE49EED624

Record Plans
Contractor: PECKHAM ROAD CORPORATION
Resident Engineer: CHAD GREENWOOD
Construction Began: AUGUST 3, 2017
Construction Complete: AUGUST 31, 2018
Record Plans By: CHAD GREENWOOD & RYAN GREENE

I hereby certify that all construction required by this set of drawings has been accomplished as indicated herein.

DocuSigned by:
BY: Chad Greenwood Resident Engineer
B891D1D9E4CE4CA...

Date: 8/17/2022

NOTE: Any further information concerning final quantities, amounts or other details relative to this project may be found at Central Files in the electronic archives.

STATE OF VERMONT
AGENCY OF TRANSPORTATION

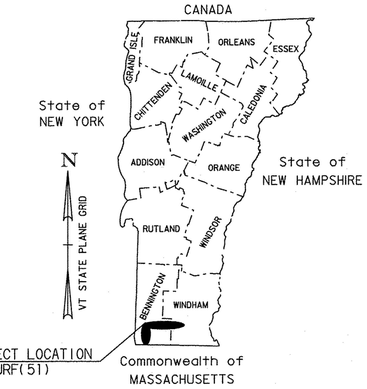

PROPOSED IMPROVEMENT
TOWNS OF POWNAL, BENNINGTON, WOODFORD, SEARSBURG AND WILMINGTON
COUNTIES OF BENNINGTON & WINDHAM
US ROUTE 7 & VT ROUTE 9
PRINCIPAL ARTERIAL (NHS)

BEGINNING IN THE TOWN OF POWNAL AT MILE MARKER 0.000 (VT/MA STATE LINE) AND EXTENDING NORTHERLY ALONG US ROUTE 7 FOR A DISTANCE OF 52,625.76 FT (9.967 MILES) TO MILE MARKER 1.967 IN THE TOWN OF BENNINGTON.

LENGTH OF ROADWAY = 52,625.76 FT = (9.967 MILES)
LENGTH OF PROJECT = 52,625.76 FT = (9.967 MILES)

ALSO, BEGINNING IN THE TOWN OF BENNINGTON AT MM 5.672 AND EXTENDING EASTERLY ALONG VT ROUTE 9 FOR A DISTANCE OF 123,921.60 FEET (23.470 MILES) TO A POINT IN WILMINGTON AT MM 7.160.

LENGTH OF ROADWAY	123,921.60 FT	(23.470 MILES)
LENGTH OF PROJECT	123,921.60 FT	(23.470 MILES)
TOTAL LENGTH OF PROJECT	176,547.36 FT	(33.437 MILES)

WORK TO BE PERFORMED UNDER THIS PROJECT INCLUDES RUMBLE STRIPS, SURFACE PREPARATION INVOLVING PATCHING, POT HOLE REPAIR, CRACK SEALING, COLD PLANING & OVERLAYING WITH A THIN BITUMINOUS CONCRETE WEARING SURFACE ON THE EXISTING TYPICAL, PAVEMENT MARKINGS AND OTHER HIGHWAY RELATED ITEMS.

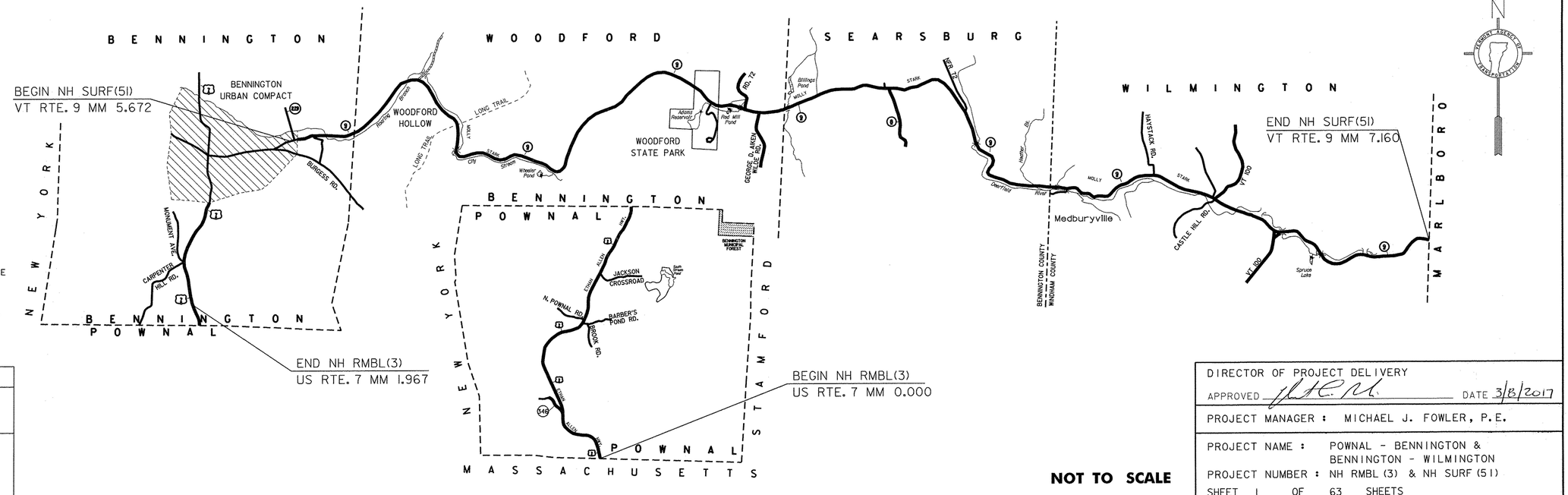

CONSTRUCTION IS TO BE CARRIED ON IN ACCORDANCE WITH THESE PLANS AND THE STANDARD SPECIFICATIONS FOR CONSTRUCTION DATED 2011, AS APPROVED BY THE FEDERAL HIGHWAY ADMINISTRATION ON JULY 20, 2011 FOR USE ON THIS PROJECT, INCLUDING ALL SUBSEQUENT REVISIONS AND SUCH REVISED SPECIFICATIONS AND SPECIAL PROVISIONS AS ARE INCORPORATED IN THESE PLANS.

QUALITY ASSURANCE PROGRAM : LEVEL I
SURVEYED BY : N/A SURVEYED DATE : N/A
DATUM VERTICAL: N/A HORIZONTAL: N/A

NOT TO SCALE

DIRECTOR OF PROJECT DELIVERY APPROVED _____ DATE 3/8/2017
PROJECT MANAGER : MICHAEL J. FOWLER, P.E.
PROJECT NAME : POWNAL - BENNINGTON & BENNINGTON - WILMINGTON PROJECT NUMBER : NH RMBL(3) & NH SURF(51) SHEET 1 OF 63 SHEETS

INDEX OF SHEETS

1	TITLE SHEET
2	INDEX SHEET
3	CONVENTIONAL SYMBOLOGY - LEGEND
4-6	COMPOSITE QUANTITY SHEETS
7	P-B TITLE SHEET
8	P-B PROJECT NOTES
9	P-B QUANTITY SHEET
10	P-B CONSTRUCTION APPROACH SIGNING SHEET
11	B-W TITLE SHEET
12	B-W PROJECT NOTES
13-14	B-W TYPICAL SECTIONS
15	B-W DETAIL SHEETS
16	B-W PROJECT COLD PLANE DETAILS
17-19	B-W QUANTITY SHEETS
20-55	B-W LAYOUT SHEETS
56	B-W TRAFFIC SIGNAL SYSTEM SHEET
57	B-W TRAFFIC SIGNAL SYSTEM NOTES SHEET
58-60	B-W BRIDGE EXPANSION JOINT DETAIL SHEETS
61	B-W VERMONT JOINT ASPHALTIC PLUG DETAIL SHEET
62	B-W RUTTING DATA INFORMATION SHEET
63	B-W ROUGHNESS DATA INFORMATION SHEET
64	B-W CONSTRUCTION APPROACH SIGNING SHEET

DETAIL SHEETS

STRUCTURAL DETAIL SD-516.10	08-29-11
MILLED RUMBLE STRIP (CENTERLINE) DETAILS HSD-213.02	02-13-17
SAFETY EDGE DETAIL HSD-400.01	03-29-16

VAOT STANDARDS

T-1	04/25/16
T-10	08/06/12
T-17	08/06/12
T-28	08/06/12
T-29	08/06/12
T-30	08/06/12
T-31	08/06/12
T-35	08/06/12
T-36	08/06/12
T-80	02/12/16
E-191	02/01/99
E-192	10/12/00
E-193	08/18/95

TRAFFIC DATA

VT ROUTE 7 NORTHBOUND	ADT		DHV		ESAL'S	ESAL'S
	2017	2027	2017	2027	2017-2027	2017-2037
BEGIN PROJECT TO VT 346	6,800	7,000	740	760	1,591,000	3,581,000
VT 346 TO BARBER POND RD	5,300	5,400	600	610	773,000	1,806,000
BARBER POND RD TO JACKSON CROSS RD	5,800	5,900	650	660	849,000	1,806,000
JACKSON CROSS RD TO MONUMENT AVE. EXT.	6,500	6,700	730	750	825,000	1,881,000
MONUMENT AVE. EXT. TO END PROJECT	5,700	5,800	600	610	902,000	2,059,000

VT ROUTE 9 EASTBOUND	ADT		DHV		ESAL'S	ESAL'S
	2017	2027	2017	2027	2017-2027	2017-2037
BEGINNING OF PROJECT US ROUTE 9 (MM 5.672) TO VT ROUTE 279 IN BENNINGTON (MM 5.785)	4,200	4,500	680	720	649,000	1,530,000
VT ROUTE 279 TO HARBOUR RD IN WOODFORD (MM 1.422)	5,200	5,500	840	890	1,734,000	3,989,000
HARBOUR ROAD TO VT ROUTE 8 IN SEARSBURG (MM 1.822)	3,600	3,800	580	610	1,574,000	3,420,000
VT ROUTE 8 TO VT ROUTE 100N IN WILMINGTON (MM 3.088)	4,000	4,300	640	690	1,809,000	4,186,000
VT ROUTE 100N TO VT 100S IN WILMINGTON (MM 4.158)	11,100	11,800	1,400	1,500	2,432,000	5,571,000
VT ROUTE 100S TO END OF PROJECT (MM 7.160)	4,800	5,100	640	680	2,101,000	4,612,000

PROJECT NAME:	POWNAL - BENNINGTON & BENNINGTON - WILMINGTON
PROJECT NUMBER:	NH RMBL (3) & NH SURF (51)

FILE NAME: pl4v201 Bennington-Wilmington.dgn PLOT DATE: 28-MAR-2017
PROJECT LEADER: M. FOWLER DRAWN BY: N. PAPPAS
DESIGNED BY: N. PAPPAS CHECKED BY: M. FOWLER
INDEX SHEET SHEET 2 OF 64

GENERAL INFORMATION

SYMBOLOGY LEGEND NOTE

THE SYMBOLOGY ON THIS SHEET IS INTENDED TO COVER STANDARD CONVENTIONAL SYMBOLOGY. THE SYMBOLOGY IS USED FOR EXISTING & PROPOSED FEATURES WITH HEAVIER LINEWEIGHT, IN COMBINATION WITH PROJECT ANNOTATION, AS NOTED ON PROJECT PLAN SHEETS. THIS LEGEND SHEET COVERS THE BASICS. SYMBOLOGY ON PLANS MAY VARY, PLAN ANNOTATIONS AND NOTES SHOULD BE USED TO CLARIFY AS NEEDED.

R.O.W. ABBREVIATIONS (CODES) & SYMBOLS

POINT	CODE	DESCRIPTION
	CH	CHANNEL EASEMENT
	CONST	CONSTRUCTION EASEMENT
	CUL	CULVERT EASEMENT
	D&C	DISCONNECT & CONNECT
	DIT	DITCH EASEMENT
	DR	DRAINAGE EASEMENT
	DRIVE	DRIVEWAY EASEMENT
	EC	EROSION CONTROL
	HWY	HIGHWAY EASEMENT
	I&M	INSTALL & MAINTAIN EASEMENT
	LAND	LANDSCAPE EASEMENT
	R&RES	REMOVE & RESET
	R&REP	REMOVE & REPLACE
	SR	SLOPE RIGHT
	UE	UTILITY EASEMENT
	(P)	PERMANENT EASEMENT
	(T)	TEMPORARY EASEMENT
■	BNDNS	BOUND SET
⧈	BNDNS	BOUND TO BE SET
●	IPNS	IRON PIN SET
◎	IPNS	IRON PIN TO BE SET
⊠	CALC	EXISTING ROW POINT
○	PROW	PROPOSED ROW POINT
[LENGTH]		LENGTH CARRIED ON NEXT SHEET

COMMON TOPOGRAPHIC POINT SYMBOLS

POINT	CODE	DESCRIPTION
	APL	BOUND APPARENT LOCATION
	BM	BENCH MARK
	BND	BOUND
	CB	CATCH BASIN
	COMB	COMBINATION POLE
	DITHR	DROP INLET THROATED DNC
	EL	ELECTRIC POWER POLE
	FPOLE	FLAGPOLE
	GASFIL	GAS FILLER
	GP	GUIDE POST
	GSO	GAS SHUT OFF
	GUY	GUY POLE
	GUYW	GUY WIRE
	GV	GATE VALUE
	H	TREE HARDWOOD
	HCTRL	CONTROL HORIZONTAL
	HVCTRL	CONTROL HORIZ. & VERTICAL
	HYD	HYDRANT
	IP	IRON PIN
	IPIPE	IRON PIPE
	LI	LIGHT - STREET OR YARD
	MB	MAILBOX
	MH	MANHOLE (MH)
	MM	MILE MARKER
	PM	PARKING METER
	PMK	PROJECT MARKER
	POST	POST STONE/WOOD
	RRSIG	RAILROAD SIGNAL
	RRSL	RAILROAD SWITCH LEVER
	S	TREE SOFTWOOD
	SAT	SATELLITE DISH
	SHRUB	SHRUB
	SIGN	SIGN
	STUMP	STUMP
	TEL	TELEPHONE POLE
	TIE	TIE
	TSIGN	SIGN W/DOUBLE POST
	VCTRL	CONTROL VERTICAL
	WELL	WELL
	WSO	WATER SHUT OFF

THESE ARE COMMON VAOT SURVEY POINT SYMBOLS FOR EXISTING FEATURES, ALSO USED FOR PROPOSED FEATURES WITH HEAVIER LINEWEIGHT, IN COMBINATION WITH PROPOSED ANNOTATION.

PROPOSED GEOMETRY CODES

CODE	DESCRIPTION
PC	POINT OF CURVATURE
PI	POINT OF INTERSECTION
CC	CENTER OF CURVE
PT	POINT OF TANGENCY
PCC	POINT OF COMPOUND CURVE
PRC	POINT OF REVERSE CURVE
POB	POINT OF BEGINNING
POE	POINT OF ENDING
STA	STATION PREFIX
AH	AHEAD STATION SUFFIX
BK	BACK STATION SUFFIX
D	CURVE DEGREE OF (100FT)
R	CURVE RADUIS OF
T	CURVE TANGENT LENGTH
L	CURVE LENGTH OF
E	CURVE EXTERNAL DISTANCE

UTILITY SYMBOLOGY

UNDERGROUND UTILITIES

- UT — TELEPHONE
- UE — ELECTRIC
- UC — CABLE (TV)
- UEC — ELECTRIC+CABLE
- UET — ELECTRIC+TELEPHONE
- UCT — CABLE+TELEPHONE
- UECT — ELECTRIC+CABLE+TELEP.
- G — GAS LINE
- W — WATER LINE
- S — SANITARY SEWER (SEPTIC)

ABOVE GROUND UTILITIES (AERIAL)

- T — TELEPHONE
- E — ELECTRIC
- C — CABLE (TV)
- EC — ELECTRIC+CABLE
- ET — ELECTRIC+TELEPHONE
- AER E&T — ELECTRIC+TELEPHONE
- CT — CABLE+TELEPHONE
- ECT — ELECTRIC+CABLE+TELEP.
- UTILITY POLE GUY WIRE

PROJECT CONSTRUCTION SYMBOLOGY

PROJECT DESIGN & LAYOUT SYMBOLOGY

- CZ — CLEAR ZONE
- PLAN LAYOUT MATCHLINE

PROJECT CONSTRUCTION FEATURES

- TOP OF CUT SLOPE
- TOE OF FILL SLOPE
- STONE FILL
- BOTTOM OF DITCH ℄
- CULVERT PROPOSED
- STRUCTURE SUBSURFACE
- PDF — PROJECT DEMARCATION FENCE
- BF — BARRIER FENCE
- TREE PROTECTION ZONE (TPZ)
- STRIPING LINE REMOVAL
- SHEET PILES

CONVENTIONAL BOUNDARY SYMBOLOGY

BOUNDARY LINES

- TOWN LINE — TOWN BOUNDARY LINE
- COUNTY LINE — COUNTY BOUNDARY LINE
- STATE LINE — STATE BOUNDARY LINE
- PROPOSED STATE R.O.W. (LIMITED ACCESS)
- PROPOSED STATE R.O.W.
- STATE ROW (LIMITED ACCESS)
- STATE ROW
- TOWN ROW
- PERMANENT EASEMENT LINE (P)
- TEMPORARY EASEMENT LINE (T)
- SURVEY LINE
- P/L — PROPERTY LINE (P/L)
- SR SR SR — SLOPE RIGHTS
- 6F — 6F PROPERTY BOUNDARY
- 4F — 4F PROPERTY BOUNDARY
- HAZ — HAZ — HAZARDOUS WASTE

EPSC LAYOUT PLAN SYMBOLOGY

EPSC MEASURES

- FILTER CURTAIN
- SILT FENCE
- SILT FENCE WOVEN WIRE
- CHECK DAM
- DISTURBED AREAS REQUIRING RE-VEGETATION
- EROSION MATTING

ENVIRONMENTAL RESOURCES

- WETLAND BOUNDARY
- RIPARIAN BUFFER ZONE
- WETLAND BUFFER ZONE
- SOIL TYPE BOUNDARY
- T&E — THREATENED & ENDANGERED SPECIES
- HAZ — HAZ — HAZARDOUS WASTE AREA
- AG — AGRICULTURAL LAND
- HABITAT — FISH & WILDLIFE HABITAT
- FLOOD PLAIN — FLOOD PLAIN
- OHW — ORDINARY HIGH WATER (OHW)
- STORM WATER
- USDA FOREST SERVICE LANDS
- WILDLIFE HABITAT SUIT/CONN

ARCHEOLOGICAL & HISTORIC

- ARCH — ARCHEOLOGICAL BOUNDARY
- HISTORIC DIST — HISTORIC DISTRICT BOUNDARY
- HISTORIC — HISTORIC AREA
- Ⓗ — HISTORIC STRUCTURE

CONVENTIONAL TOPOGRAPHIC SYMBOLOGY

EXISTING FEATURES

- ROAD EDGE PAVEMENT
- ROAD EDGE GRAVEL
- DRIVEWAY EDGE
- DITCH
- FOUNDATION
- FENCE (EXISTING)
- FENCE WOOD POST
- FENCE STEEL POST
- GARDEN
- ROAD GUARDRAIL
- RAILROAD TRACKS
- CULVERT (EXISTING)
- STONE WALL
- WALL
- WOOD LINE
- BRUSH LINE
- HEDGE
- BODY OF WATER EDGE
- LEDGE EXPOSED

PROJECT NAME:	POWNAL - BENNINGTON & BENNINGTON - WILMINGTON
PROJECT NUMBER:	NH RMBL(3) & NH SURF(51)

FILE NAME: pl4v201Bennington-Wilmington.dgn PLOT DATE: 28-MAR-2017
PROJECT LEADER: M. FOWLER DRAWN BY: N. PAPPAS
DESIGNED BY: N. PAPPAS CHECKED BY: M. FOWLER
CONVENTIONAL SYMBOLOGY - LEGEND SHEET 3 OF 64

STATE OF VERMONT
AGENCY OF TRANSPORTATION

COMPOSITE QUANTITY SHEET 1

SUMMARY OF ESTIMATED QUANTITIES											TOTALS		DESCRIPTIONS				DETAILED SUMMARY OF QUANTITIES		
						ROADWAY BENNINGTON-WILMINGTON	ROADWAY POWNAL-BENNINGTON	ROADWAY BENN.-WILM. (NO PART.)	EROSION CONTROL BENN.-WILM.	BRIDGE BENNINGTON-WILMINGTON	FULL C & E ITEMS BENN.-WILM.	GRAND TOTAL	FINAL	UNIT	ITEMS	ITEM NUMBER	ROUND	QUANTITIES	UNIT	ITEMS
						95000						95000		LF	SHOULDER BERM REMOVAL	203.40	609			
						1						1		CY	TRENCH EXCAVATION OF EARTH, EXPLORATORY (N.A.B.I.)	204.22	EST			
						14300						14300		SY	COLD PLANING, BITUMINOUS PAVEMENT	210.10	446			
						78300	31900					110200		LF	MILLED RUMBLE STRIPS (CENTERLINE)	213.10	634			
						5600						5600		TON	SUBBASE OF CRUSHED GRAVEL, FINE GRADED	301.28	96			
															BEGIN OPTION AA					
						2000						2000		TON	AGGREGATE SHOULDERS	402.12	104			
						2000						2000		TON	AGGREGATE SHOULDERS, RAP	402.13	104			
															END OPTION AA					
															BEGIN OPTION BB					
						375						375		CWT	EMULSIFIED ASPHALT	404.65	24			
						375						375		CWT	SPECIAL PROVISION (EMULSIFIED ASPHALT)(RS-1H)(CRS-1H)	900.683	24			
															END OPTION BB					
						1	1					2		LU	PRICE ADJUSTMENT, ASPHALT CEMENT (N.A.B.I.)	406.50	-			
						35200						35200		LB	BITUMINOUS CRACK SEALING, "BLOW AND GO" METHOD (AASHTO M 324 (ASTM D 6690) TYPE II)	417.20	338			
						8800						8800		TON	SUPERPAVE BITUMINOUS CONCRETE PAVEMENT(PG 70-28)	490.30	70			
						1						1		LU	AIR VOIDS PAY ADJUSTMENT (N.A.B.I.)	490.31	-			
										312		312		LF	BRIDGE EXPANSION JOINT, ASPHALTIC PLUG (@FINGER PLATE/VERMONT JOINT)	516.10	EST			
										570		570		LF	BRIDGE EXPANSION JOINT, ASPHALTIC PLUG	516.10	EST			
										100		100		CF	RAPID SETTING CONCRETE REPAIR MATERIAL WITH COARSE AGGREGATE	580.20	EST			
						81						81		EACH	CHANGING ELEVATION OF DROP INLETS, CATCH BASINS, OR MANHOLES	604.40	-			
						32		22				54		EACH	CHANGING ELEVATION OF SEWER MANHOLES	604.42	-			
						525						525		HR	ALL PURPOSE EXCAVATOR RENTAL, TYPE I	608.25	EST			
						125						125		HR	POWER BROOM RENTAL, TYPE I	608.30	EST			
						200						200		HR	POWER BROOM RENTAL, TYPE II	608.31	EST			
						1075						1075		HR	TRUCK RENTAL	608.37	EST			
						525						525		HR	LOADER RENTAL, TYPE I	608.40	EST			
								10				10		EACH	ADJUST ELEVATION OF VALVE BOX	629.20	-			
						2000	140					2140		HR	UNIFORMED TRAFFIC OFFICERS	630.10	EST			
						10000						10000		HR	FLAGGERS	630.15	EST			
											1	1		LS	FIELD OFFICE, ENGINEERS	631.10	-			
											1	1		LS	TESTING EQUIPMENT, BITUMINOUS	631.17	-			
											3000	3000		DL	FIELD OFFICE TELEPHONE (N.A.B.I.)	631.26	-			
						520						520		HR	EMPLOYEE TRAINEESHIP	634.10	-			
						1						1		LS	MOBILIZATION/DEMOBILIZATION (NH SURF(51))	635.11	-			
						1						1		LS	TRAFFIC CONTROL ((NH SURF(51))	641.10	-			
							1					1		LS	TRAFFIC CONTROL (NH RMBL(3))	641.10	-			
						6						6		EACH	PORTABLE CHANGEABLE MESSAGE SIGN	641.15	-			
							63					63		DAY	PORTABLE CHANGEABLE MESSAGE SIGN RENTAL	641.17	-			

PROJECT NAME: POWNAL - BENNINGTON & BENNINGTON - WILMINGTON
PROJECT NUMBER: NH RMBL (3) & NH SURF (51)

FILE NAME: pl4v20lBennington-Wilmington.dgnPLOT DATE: 06-APR-2017
PROJECT LEADER: M. FOWLER DRAWN BY: N. PAPPAS
DESIGNED BY: N. PAPPAS CHECKED BY: M. FOWLER
COMPOSITE QUANTITY SHEET 1 SHEET 4 OF 64

STATE OF VERMONT
AGENCY OF TRANSPORTATION

COMPOSITE QUANTITY SHEET 2

SUMMARY OF ESTIMATED QUANTITIES										TOTALS		DESCRIPTIONS				DETAILED SUMMARY OF QUANTITIES		
					ROADWAY BENNINGTON-WILMINGTON	ROADWAY POWNAL-BENNINGTON	ROADWAY BENN.-WILM. (NO PART.)	EROSION CONTROL BENN.-WILM.	BRIDGE BENNINGTON-WILMINGTON	FULL C & E ITEMS BENN.-WILM.	GRAND TOTAL	FINAL	UNIT	ITEMS	ITEM NUMBER	ROUND	QUANTITIES	UNIT	ITEMS
														BEGIN OPTION CC					
					700						700		LF	DURABLE 24 INCH STOP BAR, THERMOPLASTIC	646.482	EST			
					700						700		LF	SPECIAL PROVISION (DURABLE 24 INCH STOP BAR, EPOXY)(24MILS)	900.640	EST			
					700						700		LF	SPECIAL PROVISION (DURABLE 24 INCH STOP BAR, POLYUREA)(24MILS)	900.640	EST			
														END OPTION CC					
														BEGIN OPTION DD					
					217						217		EACH	DURABLE LETTER OR SYMBOL, THERMOPLASTIC	646.492	-			
					217						217		EACH	SPECIAL PROVISION (DURABLE LETTER OR SYMBOL, EPOXY)(28 MILS)	900.620	-			
					217						217		EACH	SPECIAL PROVISION (DURABLE LETTER OR SYMBOL, POLYUREA)(28 MILS)	900.620	-			
														END OPTION DD					
														BEGIN OPTION EE					
					400						400		LF	DURABLE CROSSWALK MARKING, THERMOPLASTIC	646.502	EST			
					400						400		LF	SPECIAL PROVISION (DURABLE CROSSWALK MARKING, EPOXY)(28 MILS)	900.640	EST			
					400						400		LF	SPECIAL PROVISION (DURABLE CROSSWALK MARKING, POLYUREA)(28 MILS)	900.640	EST			
														END OPTION EE					
					307900						307900		LF	TEMPORARY 4 INCH WHITE LINE, PAINT	646.602	EST			
					285700						285700		LF	TEMPORARY 4 INCH YELLOW LINE, PAINT	646.612	EST			
					280						280		LF	TEMPORARY 6 INCH WHITE LINE, PAINT	646.622	EST			
					210						210		LF	TEMPORARY 6 INCH YELLOW LINE, PAINT	646.632	EST			
					775						775		LF	TEMPORARY 8 INCH WHITE LINE, PAINT	646.642	EST			
					700						700		LF	TEMPORARY 8 INCH YELLOW LINE, PAINT	646.652	EST			
					700						700		LF	TEMPORARY 24 INCH STOP BAR, PAINT	646.682	EST			
					217						217		EACH	TEMPORARY LETTER OR SYMBOL, PAINT	646.692	-			
					400						400		LF	TEMPORARY CROSSWALK MARKING, PAINT	646.702	EST			
					49500	10800					60300		EACH	LINE STRIPING TARGETS	646.76	EST			
								500			500		LB	SEED	651.15	EST			
								500			500		LB	FERTILIZER	651.18	EST			
								2			2		TON	AGRICULTURAL LIMESTONE	651.20	EST			
								2			2		TON	HAY MULCH	651.25	EST			
					1						1		EACH	TRAFFIC CONTROL SIGNAL SYSTEM, INTERSECTION	678.15	-			
					1						1		LU	PRICE ADJUSTMENT, FUEL (N.A.B.I.)	690.50	-			
														BEGIN OPTION FF					
					249900						249900		LF	SPECIAL PROVISION (DURABLE 4 INCH WHITE LINE, EPOXY)(28 MILS)	900.640	EST			
					249900						249900		LF	SPECIAL PROVISION (DURABLE 4 INCH WHITE LINE, POLYUREA)(28 MILS)	900.640	EST			
														END OPTION FF					
														BEGIN OPTION GG					
					250500	31900					282400		LF	SPECIAL PROVISION (DURABLE 4 INCH YELLOW LINE, EPOXY)(28 MILS)	900.640	EST			
					250500	31900					282400		LF	SPECIAL PROVISION (DURABLE 4 INCH YELLOW LINE, POLYUREA)(28 MILS)	900.640	EST			
														END OPTION GG					

PROJECT NAME: POWNAL - BENNINGTON & BENNINGTON - WILMINGTON
PROJECT NUMBER: NH RMBL (3) & NH SURF (51)

FILE NAME: pl4v20lBennington-Wilmington.dgnPLOT DATE: 06-APR-2017
PROJECT LEADER: M. FOWLER DRAWN BY: N. PAPPAS
DESIGNED BY: N. PAPPAS CHECKED BY: M. FOWLER
COMPOSITE QUANTITY SHEET 2 SHEET 5 OF 64

STATE OF VERMONT
AGENCY OF TRANSPORTATION

COMPOSITE QUANTITY SHEET 3

SUMMARY OF ESTIMATED QUANTITIES											TOTALS		DESCRIPTIONS				DETAILED SUMMARY OF QUANTITIES		
						ROADWAY BENNINGTON-WILMINGTON	ROADWAY POWNAL-BENNINGTON	ROADWAY BENN.-WILM. (NO PART.)	EROSION CONTROL BENN.-WILM.	BRIDGE BENNINGTON-WILMINGTON	FULL C & E ITEMS BENN.-WILM.	GRAND TOTAL	FINAL	UNIT	ITEMS	ITEM NUMBER	ROUND	QUANTITIES	UNIT	ITEMS
															BEGIN OPTION HH					
						280						280		LF	SPECIAL PROVISION (DURABLE 6 INCH WHITE LINE, EPOXY)(28 MILS)	900.640	EST			
						280						280		LF	SPECIAL PROVISION (DURABLE 6 INCH WHITE LINE, POLYUREA)(28 MILS)	900.640	EST			
															END OPTION HH					
															BEGIN OPTION II					
						210						210		LF	SPECIAL PROVISION (DURABLE 6 INCH YELLOW LINE, EPOXY)(28 MILS)	900.640	EST			
						210						210		LF	SPECIAL PROVISION (DURABLE 6 INCH YELLOW LINE, POLYUREA)(28 MILS)	900.640	EST			
															END OPTION II					
															BEGIN OPTION JJ					
						775						775		LF	SPECIAL PROVISION (DURABLE 8 INCH WHITE LINE, EPOXY)(28 MILS)	900.640	EST			
						775						775		LF	SPECIAL PROVISION (DURABLE 8 INCH WHITE LINE, POLYUREA)(28 MILS)	900.640	EST			
															END OPTION JJ					
															BEGIN OPTION KK					
						700						700		LF	SPECIAL PROVISION (DURABLE 8 INCH YELLOW LINE, EPOXY 28 MILS)	900.640	EST			
						700						700		LF	SPECIAL PROVISION (DURABLE 8 INCH YELLOW LINE, POLYUREA)(28 MILS)	900.640	EST			
															END OPTION KK					
						13400						13400		SY	SPECIAL PROVISION (HAND-PLACED BITUMINOUS CONCRETE MATERIAL, DRIVES)	900.675	EST			
						395000						395000		SY	SPECIAL PROVISION (MICRO-MILLING BITUMINOUS CONCRETE PAVEMENT)	900.675	2808			
						432750						432750		SY	SPECIAL PROVISION (PAVER PLACED SURFACE TREATMENT, TYPE C)(PG 70-28)(SBS POLYMER)	900.675	2815			
						250						250		TON	SPECIAL PROVISION (BITUMINOUS CONCRETE PAVEMENT SURFACE PREPARATION, TYPE I)	900.680	EST			
						230	100					330		CWT	SPECIAL PROVISION (FOG SEAL SURFACE TREATMENT)	900.683	19			

PROJECT NAME: POWNAL - BENNINGTON & BENNINGTON - WILMINGTON
PROJECT NUMBER: NH RMBL(3) & NH SURF(51)

FILE NAME: pl4v201 Bennington-Wilmington.dgn PLOT DATE: 06-APR-2017
PROJECT LEADER: M. FOWLER DRAWN BY: N. PAPPAS
DESIGNED BY: N. PAPPAS CHECKED BY: M. FOWLER
COMPOSITE QUANTITY SHEET 3 SHEET 6 OF 64

STATE OF VERMONT
AGENCY OF TRANSPORTATION

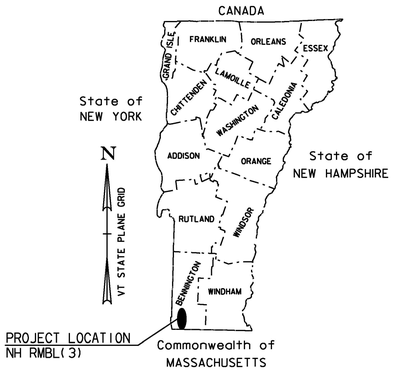

PROPOSED IMPROVEMENT
TOWNS OF POWNAL & BENNINGTON
COUNTY OF BENNINGTON
US ROUTE 7
PRINCIPAL ARTERIAL (NHS)

BEGINNING IN THE TOWN OF POWNAL AT MILE MARKER 0.000 (VT/MA STATE LINE) AND EXTENDING NORTHERLY ALONG US ROUTE 7 FOR A DISTANCE OF 52,625.76 FT (9.967 MILES) TO MILE MARKER 1.967 IN THE TOWN OF BENNINGTON.

LENGTH OF ROADWAY = 52,625.76 FT = (9.967 MILES)
LENGTH OF PROJECT = 52,625.76 FT = (9.967 MILES)

WORK TO BE PERFORMED UNDER THIS PROJECT INCLUDES RUMBLE STRIPS, FOG SEAL, PAVEMENT MARKINGS AND OTHER RELATED ITEMS.

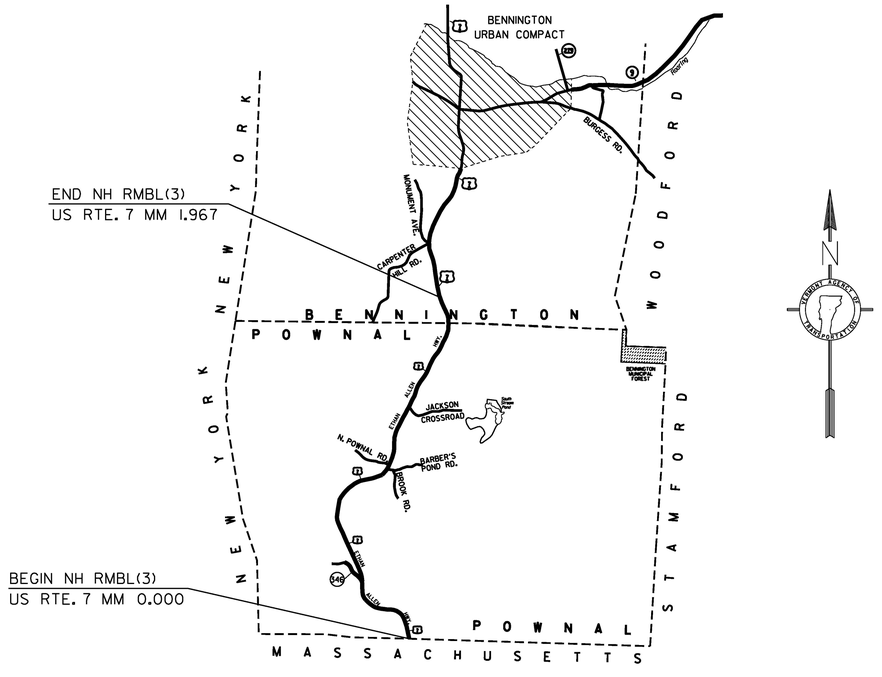

NOT TO SCALE

CONSTRUCTION IS TO BE CARRIED ON IN ACCORDANCE WITH THESE PLANS AND THE STANDARD SPECIFICATIONS FOR CONSTRUCTION DATED 2011, AS APPROVED BY THE FEDERAL HIGHWAY ADMINISTRATION ON JULY 20, 2011 FOR USE ON THIS PROJECT, INCLUDING ALL SUBSEQUENT REVISIONS AND SUCH REVISED SPECIFICATIONS AND SPECIAL PROVISIONS AS ARE INCORPORATED IN THESE PLANS.

QUALITY ASSURANCE PROGRAM : LEVEL I
SURVEYED BY : N/A SURVEYED DATE : N/A
DATUM VERTICAL: N/A HORIZONTAL: N/A

PROJECT MANAGER : MICHAEL J. FOWLER, P.E.
PROJECT NAME : POWNAL-BENNINGTON PROJECT NUMBER : NH RMBL (3)
SHEET 7 OF 64

RUMBLE STRIP LOCATIONS

NOTE: PRIOR TO PLACEMENT OF RUMBLE STRIPS ALL LOCATION SHALL BE FIELD VERIFIED BY THE ENGINEER AND PROJECT MANAGER.

	POWNAL US ROUTE 7	BENNINGTON US ROUTE 7
	MM 0.080 - 0.246	MM ~~0.000~~ - ~~0.060~~
	MM 0.344 - 0.459	MM 0.263 - 0.430
0.566	MM ~~0.548~~ - 1.674	MM ~~0.920~~ - ~~1.366~~ 0.921 - 1.347
	MM 1.961 - ~~2.163~~ 2.144	MM 1.589 - 1.777
	MM 2.360 - 4.558	MM 1.826 - 1.967
6.049	MM ~~6.031~~ - 6.677	
7.182	MM ~~7.164~~ - ~~7.670~~ 7.510	
7.7359	MM ~~7.717~~ - 7.854	
	MM ~~7.962~~ - ~~8.000~~	

NOTE:

SEE MILLED RUMBLE STRIP (CENTERLINE) DETAILS HSD-213.02. TWO APPLICATIONS OF FOG SEAL SURFACE TREATMENT SHALL BE APPLIED TO THE COMPLETED CENTERLINE RUMBLE STRIPS AT A RATE OF 0.15 GAL./SY. WITH A TOLERANCE OF +/- 0.05 GAL./SY. OR AS DIRECTED BY THE ENGINEER. THERE SHALL BE A 14 DAY CURE TIME FOR THE FOG SEAL SURFACE TREATEMENT BEFORE ANY PAVEMENT MARKING CAN BE APPLIED.

PROJECT NAME:	POWNAL-BENNINGTON
PROJECT NUMBER:	NH RMBL(3)
FILE NAME: pl4v201 Bennington-Wilmington.dgn	PLOT DATE: 28-MAR-2017
PROJECT LEADER: M. FOWLER	DRAWN BY: N. PAPPAS
DESIGNED BY: N. PAPPAS	CHECKED BY: M. FOWLER
PROJECT NOTES	SHEET 8 OF 64

STATE OF VERMONT
AGENCY OF TRANSPORTATION

QUANTITY SHEET 1

SUMMARY OF ESTIMATED QUANTITIES	TOTALS		DESCRIPTIONS				DETAILED SUMMARY OF QUANTITIES		
ROADWAY	GRAND TOTAL	FINAL	UNIT	ITEMS	ITEM NUMBER	ROUND	QUANTITIES	UNIT	ITEMS
31900	31900		LF	MILLED RUMBLE STRIPS (CENTERLINE)	213.10	233			
1	1		LU	PRICE ADJUSTMENT, ASPHALT CEMENT (N.A.B.I.)	406.50	-			
140	140		HR	UNIFORMED TRAFFIC OFFICERS	630.10	EST			
1	1		LS	TRAFFIC CONTROL (NH RMBL(3))	641.10	-			
63	63		DAY	PORTABLE CHANGEABLE MESSAGE SIGN RENTAL	641.17	-			
10800	10800		EACH	LINE STRIPING TARGETS	646.76	EST			
				BEGIN OPTION GG					
31900	31900		LF	SPECIAL PROVISION (DURABLE 4 INCH YELLOW LINE, EPOXY)(28 MILS)	900.640	EST			
31900	31900		LF	SPECIAL PROVISION (DURABLE 4 INCH YELLOW LINE, POLYUREA)(28 MILS)	900.640	EST			
				END OPTION GG					
100	100		CWT	SPECIAL PROVISION (FOG SEAL SURFACE TREATMENT)	900.683	9			

PROJECT NAME: POWNAL-BENNINGTON
PROJECT NUMBER: NH RMBL(3)

FILE NAME: pl4v201 Bennington-Wilmington.dgn PLOT DATE: 11-APR-2017
PROJECT LEADER: M. FOWLER DRAWN BY: N. PAPPAS
DESIGNED BY: N. PAPPAS CHECKED BY: M. FOWLER
QUANTITY SHEET 1 SHEET 9 OF 64

CONSTRUCTION APPROACH SIGNING

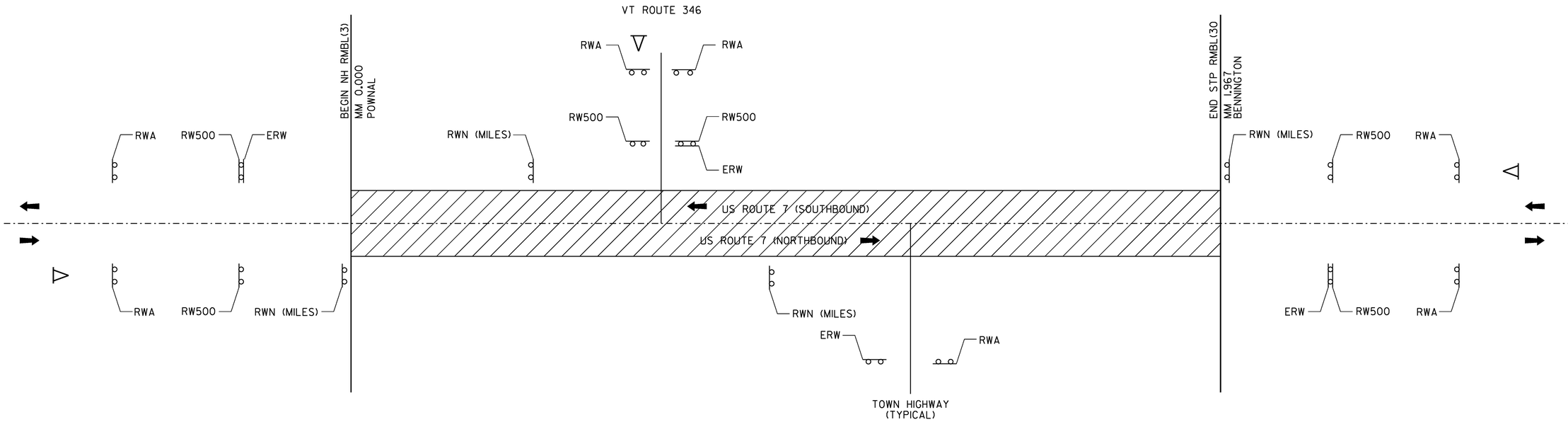

NOTES:

1. THE CONTRACTOR SHALL SUBMIT A SITE-SPECIFIC TRAFFIC CONTROL PLAN TO THE ENGINEER FOR APPROVAL PRIOR TO THE START OF CONSTRUCTION. THE COST OF PREPARING THIS PLAN (AND MAKING CHANGES IF NECESSARY) SHALL NOT BE PAID SEPARATELY BUT SHALL BE INCLUDED IN THE UNIT PRICE BID FOR ITEM 641.10, TRAFFIC CONTROL(NH RMBL(3)).

2. THE CONTRACTOR SHALL INCLUDE A CONSTRUCTION SIGN APPROACH PACKAGE FOR EXPECTED LANE CLOSURES AND WORK ZONE SPEED REDUCTIONS IN COMPLIANCE WITH VAOT STANDARD T-17 AND THE LATEST EDITION OF THE MUTCD. PAYMENT FOR PROVIDING THIS PACKAGE SHALL BE INCIDENTAL TO ITEM 641.10, TRAFFIC CONTROL(NH RMBL(3)).

3. THE BID PRICE FOR TRAFFIC CONTROL(NH RMBL(3)), ITEM 641.10, SHALL INCLUDE ALL APPROACH AND ON-PROJECT CONSTRUCTION SIGNING, PORTABLE ARROW BOARDS, BARRELS, CONES, BARRICADES, TEMPORARY REGULATORY AND WARNING SIGNS, AND POSTS AS DETAILED IN VTRANS STANDARDS. ALL ADJUSTING, RELOCATING, AND REMOVING OF THESE DEVICES AS DIRECTED BY THE ENGINEER SHALL ALSO BE INCLUDED. THE FOLLOWING ITEMS WILL BE PAID FOR SEPARATELY: 630.10 - UNIFORMED TRAFFIC OFFICERS, AND 630.15 - FLAGGERS, AND 646.76 - LINE STRIPING TARGETS.

4. PORTABLE CHANGEABLE MESSAGE SIGNS (PCMS) SHALL BE PROVIDED FOR USE ALONG THIS PROJECT. THE PLACEMENT OF THESE UNITS AS WELL AS THE MESSAGE WILL BE APPROVED BY THE ENGINEER. THESE SIGNS WILL BE PAID FOR UNDER ITEM 641.17, PORTABLE CHANGEABLE MESSAGE SIGN RENTAL.

FOR THE DURATION OF THE PROJECT, THE CONTRACTOR SHALL POSITION A PCMS PRIOR TO THE BEGIN AND END PROJECT LIMITS WARNING MOTORISTS OF EXPECTED ROADWAY CONDITIONS AND REDUCED ROADWAY WIDTHS.

PCMS SHALL NOT REPLACE ANY OF THE SIGNING DETAILED IN THE MUTCD AND SHOULD NOT BE USED IF STANDARD TRAFFIC CONTROL DEVICES ADEQUATELY PROVIDE THE INFORMATION THE MOTORISTS NEED TO TRAVEL SAFELY.

THE PCMS SHALL CONSIST OF EITHER ONE OR TWO PHASES. TYPICALLY, A PHASE SHALL CONSIST OF UP TO THREE LINES OF EIGHT CHARACTERS PER LINE. THE PCMS SHOULD BE USED AS A SUPPLEMENT AND NOT AS A SUBSTITUTE FOR CONVENTIONAL SIGNS AND PAVEMENT MARKINGS.

THE PCMS SHOULD COMMUNICATE WHAT INFORMATION MOTORISTS NEED TO KNOW. UNNECESSARY INFORMATION SHALL BE AVOIDED. MESSAGES SHOULD BE UPDATED PERIODICALLY TO DESCRIBE THE WORK ACTIVITY OCCURRING SO THAT THE PCMS CONTINUES TO COMMAND THE ATTENTION OF MOTORISTS.

5. NO CONSTRUCTION SIGNS SHALL BE INSTALLED AS TO INTERFERE OR OBSTRUCT THE VIEW OF EXISTING TRAFFIC CONTROL DEVICES, STOPPING SIGHT DISTANCE, AND CORNER SIGHT DISTANCE FROM DRIVES AND TOWN HIGHWAYS.

6. REFER TO VT. STATE STANDARDS AND THE LATEST EDITION OF THE MUTCD FOR TEMPORARY TRAFFIC CONTROL SIGN COLORS.

7. EXISTING SPEED LIMIT SIGNS SHALL BE COVERED WHEN REDUCED SPEED SIGNS ARE POSTED. KEEP RECORDS WHEN POSTING THE WORK ZONE SPEED LIMIT FOR LEGAL PURPOSES; DOCUMENTING DATES, TIMES, AND LOCATIONS OF SIGNS. WHEN WORK ZONE SPEED LIMIT IS NOT IN USE ALL ASSOCIATED SIGNS SHALL BE COVERED, TURNED AND/OR LAID FLAT SO AS THE MOTORING PUBLIC CANNOT READ THESE SIGNS.

8. PORTABLE OR STATIONARY WORK ZONE SPEED LIMIT SIGNS SHOULD BE SPACED EVERY 1.5 TO TWO MILES WHERE APPLICABLE AND AFTER INTERSECTIONS AS A REMINDER TO THE MOTORIST TRAVELING THROUGH THE WORK ZONE WHAT SPEED THEY SHOULD BE TRAVELING.

9. WHEN REDUCED REGULATORY SPEED LIMIT SIGNS ARE USED, THE RESUMPTION OF THE USUAL SPEED LIMIT SHALL BE INDICATED BY AN APPROPRIATE SPEED LIMIT SIGN AT THE END OF THE WORK ZONE.

10. THE CONTRACTOR SHALL MAINTAIN PEDESTRIAN THROUGH MOVEMENTS FROM ONE END OF THE CONSTRUCTION AREA TO THE OTHER, ON AT LEAST ONE SIDE OF THE STREET DURING CONSTRUCTION. ANY SIDEWALK CLOSURES SHALL MEET THE REQUIREMENTS OF THE MUTCD, PART 6.

11. PEDESTRIAN ACCESS SHALL BE PROVIDED TO ALL ADJACENT PROPERTIES, BUILDINGS, RESIDENCES AND COMMERCIAL PROPERTIES AT ALL TIMES. THIS MAY INCLUDE TEMPORARY WALKWAYS SPANNING THE CONSTRUCTION AREA.

12. IF SIDEWALKS ARE CLOSED, A TEMPORARY PEDESTRIAN ACCESS ROUTE (TPAR) SHALL BE PROVIDED ON THE SAME SIDE OF THE ROAD AS THE CLOSED SIDEWALK, IF POSSIBLE. SIGNS AND BARRICADES SHALL BE USED TO PROVIDE ADVANCE NOTICE OF THE CLOSURE AND THE ROUTE OF ANY PEDESTRIAN DETOURS. THE TPAR SHALL HAVE A MINIMUM UNOBSTRUCTED WIDTH OF FOUR FEET. IF THE TPAR IS LESS THAN FIVE FEET IN WIDTH, A FIVE FOOT BY FIVE FOOT PASSING SPACE SHOULD BE PROVIDED AT LEAST EVERY 200 FEET. THE SURFACE OF THE TPAR SHALL BE SMOOTH AND CONTINUOUS FOR THE LENGTH OF THE TPAR. THE TPAR SHALL MAINTAIN THE SAME LEVEL OF ACCESSIBILITY AND DETECTABILITY AS THE FACILITY THAT IS BEING CLOSED. THE TPAR SHALL NOT LEAD PEDESTRIANS INTO CONFLICT WITH VEHICLES, EQUIPMENT, OR CONSTRUCTION OPERATIONS.

13. IF THE TPAR IS ADJACENT TO MOVING TRAFFIC, CONSTRUCTION OPERATIONS/EQUIPMENT, OR DROP-OFFS, THEN CRASH WORTHY CHANNELIZING DEVICES THAT MEET THE REQUIREMENTS OF THE MUTCD SHALL BE USED.

14. THE CONTRACTOR SHALL NOT STORE OR PLACE ANY CONSTRUCTION MATERIALS, EQUIPMENT OR SIGNS IN THE PEDESTRIAN PATH OF TRAVEL.

15. THE CONTRACTOR'S OPERATIONS SHALL NOT OCCUPY SIDEWALKS EXCEPT WHERE PROPER PROTECTION AND A TPAR HAVE BEEN PROVIDED.

16. THE CONTRACTOR SHALL PROVIDE A TEMPORARY PEDESTRIAN TRAFFIC CONTROL PLAN FOR REVIEW AND WRITTEN APPROVAL A MINIMUM OF THREE WEEKS BEFORE SUCH PLAN IS IMPLEMENTED. THIS PLAN SHALL DETAIL THE CONSTRUCTION PHASING AND SCHEDULE AND THE SPECIFIC METHODS OF MAINTAINING SAFE PEDESTRIAN ACCESS THROUGHOUT THE CONSTRUCTION AREA. THIS PLAN SHALL PROVIDE THE LOCATION AND DETAILS OF TEMPORARY CONSTRUCTION SIGNING, MARKINGS, BARRICADES, CHANNELIZING DEVICES, TPARS AND METHODS TO MAINTAIN ACCESS TO ADJACENT PROPERTIES, BUSINESSES, RESIDENCES, AND ETC. PAYMENT FOR DEVELOPING, IMPLEMENTING, AND MAINTAINING THE TEMPORARY PEDESTRIAN TRAFFIC CONTROL PLAN WILL BE INCLUDED IN THE UNIT PRICE BID FOR CONTRACT ITEM 641.10, TRAFFIC CONTROL.

17. FOR THE PLACEMENT OF MUTCD COMPLIANT CONSTRUCTION WARNING SIGN PACKAGES AND FOR THE PLACEMENT OF PORTABLE CHANGEABLE MESSAGE SIGNS WITHIN THE COMMONWEALTH OF MASSACHUSETTS THE CONTRACTOR IS REQUIRED TO OBTAIN A PERMIT FROM MR. PETER NILES, P.E., DISTRICT HIGHWAY DIRECTOR MASSDOT, HIGHWAY DISTRICT 1 TEL. 413-637-5700.

LEGEND

RWA = ROAD WORK AHEAD
RW500 = ROAD WORK IN 500 FEET
RWN = ROAD WORK NEXT (XX MILES)
ERW = END ROAD WORK
△ = PORTABLE CHANGEABLE MESSAGE SIGN
▨ = WORK AREA
⬅ = DIRECTION OF TRAFFIC FLOW

NOT TO SCALE

PROJECT NAME:	POWNAL-BENNINGTON
PROJECT NUMBER:	NH RMBL(3)

FILE NAME: pl4v20 Bennington-Wilmington.dgn PLOT DATE: 28-MAR-2017
PROJECT LEADER: M. FOWLER DRAWN BY: N. PAPPAS
DESIGNED BY: N. PAPPAS CHECKED BY: M. FOWLER
CONSTRUCTION APPROACH SIGNING SHEET SHEET 10 OF 64

STATE OF VERMONT
AGENCY OF TRANSPORTATION

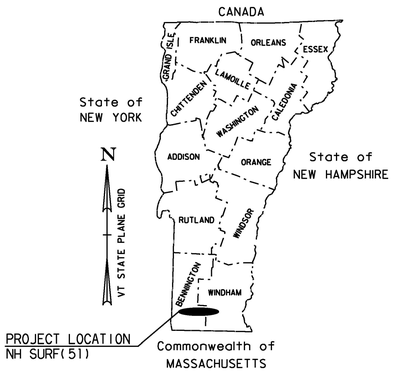

PROPOSED IMPROVEMENT
TOWNS OF BENNINGTON, WOODFORD, SEARSBURG AND WILMINGTON
COUNTIES OF BENNINGTON & WINDHAM
VT ROUTE 9
PRINCIPAL ARTERIAL (NHS)

BEGINNING IN THE TOWN OF BENNINGTON AT MM 5.672 AND EXTENDING EASTERLY ALONG VT ROUTE 9 FOR A DISTANCE OF 123,921.60 FEET (23.470 MILES) TO A POINT IN WILMINGTON AT MM 7.160.

LENGTH OF ROADWAY	123,921.60 FT	(23.470 MILES)
LENGTH OF PROJECT	123,921.60 FT	(23.470 MILES)

WORK TO BE PERFORMED UNDER THIS PROJECT INCLUDES RUMBLE STRIPS, SURFACE PREPARATION INVOLVING PATCHING, POT HOLE REPAIR, CRACK SEALING, COLD PLANING & OVERLAYING WITH A THIN BITUMINOUS CONCRETE WEARING SURFACE ON THE EXISTING TYPICAL AND APPLICABLE PAVEMENT MARKINGS.

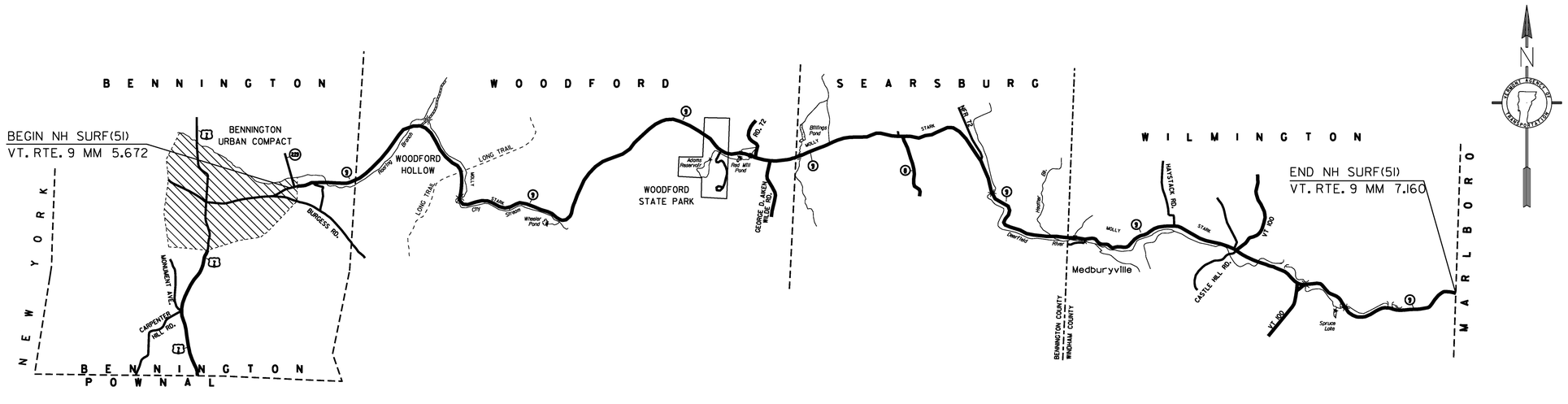

CONSTRUCTION IS TO BE CARRIED ON IN ACCORDANCE WITH THESE PLANS AND THE STANDARD SPECIFICATIONS FOR CONSTRUCTION DATED 2011, AS APPROVED BY THE FEDERAL HIGHWAY ADMINISTRATION ON JULY 20, 2011 FOR USE ON THIS PROJECT, INCLUDING ALL SUBSEQUENT REVISIONS AND SUCH REVISED SPECIFICATIONS AND SPECIAL PROVISIONS AS ARE INCORPORATED IN THESE PLANS.

QUALITY ASSURANCE PROGRAM : LEVEL I

SURVEYED BY : N/A
SURVEYED DATE : N/A

DATUM
VERTICAL: N/A
HORIZONTAL: N/A

NOT TO SCALE

PROJECT MANAGER : MICHAEL J. FOWLER, P.E.

PROJECT NAME : BENNINGTON-WILMINGTON
PROJECT NUMBER : NH SURF(51)

SHEET II OF 64

NOTES:

1. ALL NECESSARY SURFACE PREPARATION INVOLVING PATCHING, POTHOLE REPAIR, AND CRACK SEALING SHALL BE PERFORMED PRIOR TO APPLICATION OF ANY SPOT LEVELING OR PLACEMENT OF THE WEARING COURSE. ALL CRACKS GREATER THAN 0.10 INCH AND UP TO ONE INCH IN WIDTH SHALL BE SEALED USING THE "BLOW AND GO" FLUSH FILL METHOD. ALL COSTS ASSOCIATED WITH THIS WORK SHALL BE PAID FOR UNDER ITEM 417.20, BITUMINOUS CRACK SEALING, "BLOW AND GO" METHOD. THE PATCHING OF ALL CRACKS GREATER THAN ONE INCH AND ALL OTHER PATCHING AND POTHOLE REPAIR SHALL BE COMPLETED USING BITUMINOUS CONCRETE PAVEMENT IN ACCORDANCE WITH ITEM 900.680 SPECIAL PROVISION (BITUMINOUS CONCRETE PAVEMENT SURFACE PREPARATION, TYPE I). AN ESTIMATED QUANTITY FOR THIS ITEM HAS BEEN INCLUDED TO COVER ALL COSTS ASSOCIATED WITH THIS WORK.

2. FOLLOWING COMPLETION OF COLD PLANING, THE MILLED SURFACE FOR ALL BRIDGES SHALL RECEIVE CRACK SEALING AND RELATED PATCHING AND POTHOLE REPAIR TREATMENTS, AS DIRECTED BY THE ENGINEER.

3. ALL EXISTING PAVEMENT MARKINGS SHALL BE REMOVED PRIOR TO ANY CRACK SEALING BEING PERFORMED AND PRIOR TO APPLYING THE THIN BITUMINOUS SURFACE TREATMENT. ALL LANE DELINEATION IS TO BE MAINTAINED DURING CONSTRUCTION BY THE USE OF LINE STRIPING TARGETS OR TEMPORARY PAINT.

4. A 50' COLD PLANED TRANSITION SHALL BE CONSTRUCTED AT THE PROJECT BEGIN, PROJECT END, AND AT ALL BRIDGE APPROACHES OR AS DIRECTED BY THE ENGINEER. ANY SAW CUTTING AT BUTT JOINTS SHALL BE INCIDENTAL TO ITEM 210.10, COLD PLANING, BITUMINOUS PAVEMENT. THE CONTRACTOR SHALL USE CAUTION WHEN COLD PLANING AND PAVING OPERATIONS OCCUR ADJACENT TO EXISTING DROP INLETS OR CATCH BASINS. ANY DAMAGE WHICH OCCURS TO THESE DRAINAGE STRUCTURES AS A RESULT OF THE CONTRACTOR'S OPERATIONS SHALL BE THE RESPONSIBILITY OF THE CONTRACTOR AND SHALL BE REPAIRED BY THE CONTRACTOR AT NO COST TO THE STATE OF VERMONT.

5. IF IT IS DETERMINED BY THE ENGINEER IN AREAS ALONG THE BASE OF THE GUARDRAIL THAT WINTER SAND AND OTHER DEBRIS HAS ACCUMULATED SUFFICIENTLY TO AFFECT PROPER CRACK SEALING AND RELATED PATCHING AND POTHOLE REPAIR TREATMENTS, THIS MATERIAL SHALL BE REMOVED PRIOR TO CRACK SEALING, PATCHING, AND POTHOLE REPAIR AS DIRECTED BY THE ENGINEER. AN ESTIMATED QUANTITY FOR ITEM 203.40 SHOULDER BERM REMOVAL HAS BEEN INCLUDED TO COVER THE COSTS ASSOCIATED WITH THIS WORK.

6. TWO APPLICATIONS OF FOG SEAL SURFACE TREATMENT SHALL BE APPLIED TO THE COMPLETED CENTERLINE RUMBLE STRIPS AT A RATE OF 0.15 GAL./SY. WITH A TOLERANCE OF +/- 0.05 GAL./SY. OR AS DIRECTED BY THE ENGINEER. THERE SHALL BE A 14 DAY CURE TIME FOR THE FOG SEAL SURFACE TREATEMENT BEFORE ANY PAVEMENT MARKING CAN BE APPLIED.

7. THERE ARE R.W.I.S. SENSORS IN THE PAVEMENT IN WOODFORD AT +/- MM 4.196 EASTBOUND THAT MAY BE IMPACTED BY CONSTRUCTION ACTIVITIES. THE CONTRACTOR SHALL CONTACT MARK GERRISH, FIBER OPTIC PROJECT MANAGER, VTRANS OPERATIONS AND MAINTENANCE BUREAU AT 802-461-5570 TWO WEEKS PRIOR TO BEGINNING ANY WORK IN THIS AREA SO THAT MARK OR HIS REPRESENTATIVE CAN REMOVE THESE SENSORS. INSTALLATION OF NEW SENSORS WILL BE PERFORMED BY OTHERS FOLLOWING COMPLETION OF THE PROJECT.

BRIDGES WITHIN THE PROJECT LIMITS ARE:

BENNINGTON:
BRIDGE NUMBER 9 MM 6.420 THREE SPAN STEEL CONCRETE CIP, LENGTH 252' (COLD PLANE 1" THEN OVERLAY WITH THE FINAL ALTERNATIVE SURFACE TREATMENT)

WOODFORD:
BRIDGE NUMBER 9A MM 0.163 48" ACCGMP (OVERLAY WITH THE FINAL ALTERNATIVE SURFACE TREATMENT)
BRIDGE NUMBER 10 MM 1.110 8' X 4.5' CONCRETE SLAB (OVERLAY WITH THE FINAL ALTERNATIVE SURFACE TREATMENT)
BRIDGE NUMBER 11 MM 1.215 THREE SPAN STEEL CONCRETE CIP, LENGTH 279' (COLD PLANE 1" THEN OVERLAY WITH THE FINAL ALTERNATIVE SURFACE TREATMENT)
BRIDGE NUMBER 12 MM 2.814 THREE SPAN STEEL CONCRETE CIP, LENGTH 237' (COLD PLANE 1" THEN OVERLAY WITH THE FINAL ALTERNATIVE SURFACE TREATMENT)
BRIDGE NUMBER 13 MM 3.705 48" ACCGMP (OVERLAY WITH THE FINAL ALTERNATIVE SURFACE TREATMENT)
BRIDGE NUMBER 13A MM 4.085 48" ACCGMP (OVERLAY WITH THE FINAL ALTERNATIVE SURFACE TREATMENT)
BRIDGE NUMBER 14 MM 5.587 5' X 5' CONCRETE BOX (OVERLAY WITH THE FINAL ALTERNATIVE SURFACE TREATMENT)
BRIDGE NUMBER 15 MM 5.925 5' X 5.5' CONCRETE BOX (OVERLAY WITH THE FINAL ALTERNATIVE SURFACE TREATMENT)
BRIDGE NUMBER 15A MM 6.372 4' X 3.5' CONCRETE BOX (OVERLAY WITH THE FINAL ALTERNATIVE SURFACE TREATMENT)
BRIDGE NUMBER 16 MM 8.676 10' X 6.5' CONCRETE BOX (OVERLAY WITH THE FINAL ALTERNATIVE SURFACE TREATMENT)
BRIDGE NUMBER 17 MM 8.796 72" CGMP (OVERLAY WITH THE FINAL ALTERNATIVE SURFACE TREATMENT)
BRIDGE NUMBER 18 MM 9.033 84" CGMP (OVERLAY WITH THE FINAL ALTERNATIVE SURFACE TREATMENT)

SEARSBURG:
BRIDGE NUMBER 19 MM 0.067 108" CGMP (OVERLAY WITH THE FINAL ALTERNATIVE SURFACE TREATMENT)
BRIDGE NUMBER 20 MM 0.641 84" CGMP (OVERLAY WITH THE FINAL ALTERNATIVE SURFACE TREATMENT)
BRIDGE NUMBER 21 MM 1.704 50" X 31" ACCGMP (OVERLAY WITH THE FINAL ALTERNATIVE SURFACE TREATMENT)
BRIDGE NUMBER 22 MM 2.253 58" X 36" ACCGMP (OVERLAY WITH THE FINAL ALTERNATIVE SURFACE TREATMENT)
BRIDGE NUMBER 23 MM 3.236 15.5' X 11.75' CONCRETE CIP (OVERLAY WITH THE FINAL ALTERNATIVE SURFACE TREATMENT)
BRIDGE NUMBER 24 MM 3.911 25' X 7' CONCRETE I-BEAM (OVERLAY WITH THE FINAL ALTERNATIVE SURFACE TREATMENT)
BRIDGE NUMBER 25 MM 3.972 THREE SPAN STEEL CONCRETE CIP, LENGTH 240' (COLD PLANE 1" THEN OVERLAY WITH THE FINAL ALTERNATIVE SURFACE TREATMENT)
BRIDGE NUMBER 25A MM 4.187 TWO SPAN STEEL CONCRETE CIP, LENGTH 293' (COLD PLANE 1" THEN OVERLAY WITH THE FINAL ALTERNATIVE SURFACE TREATMENT)
BRIDGE NUMBER 25B MM 4.415 THREE SPAN STEEL CONCRETE CIP, LENGTH 276' (COLD PLANE 1" THEN OVERLAY WITH THE FINAL ALTERNATIVE SURFACE TREATMENT)

WILMINGTON:
BRIDGE NUMBER 26 MM 0.121 11' CAMPPA (OVERLAY WITH THE FINAL ALTERNATIVE SURFACE TREATMENT)
BRIDGE NUMBER 27 MM 1.234 10' CAMPPA (OVERLAY WITH THE FINAL ALTERNATIVE SURFACE TREATMENT)
BRIDGE NUMBER 30 MM 2.270 THREE SPAN STEEL CONCRETE CIP, LENGTH 74' (COLD PLANE 1" THEN OVERLAY WITH THE FINAL ALTERNATIVE SURFACE TREATMENT)
BRIDGE NUMBER 31 MM 3.064 CONCRETE-CONCRETE CIP, LENGTH 59' (COLD PLANE 1" THEN OVERLAY WITH THE FINAL ALTERNATIVE SURFACE TREATMENT)
BRIDGE NUMBER 32 MM 3.462 STEEL CONCRETE CIP, LENGTH 84' (COLD PLANE 1" THEN OVERLAY WITH THE FINAL ALTERNATIVE SURFACE TREATMENT)
BRIDGE NUMBER 33 MM 3.719 4' X 4' CONCRETE BOX (OVERLAY WITH THE FINAL ALTERNATIVE SURFACE TREATMENT)
BRIDGE NUMBER 34 MM 4.283 STEEL CONCRETE CIP, LENGTH 64' (COLD PLANE 1" THEN OVERLAY WITH THE FINAL ALTERNATIVE SURFACE TREATMENT)
BRIDGE NUMBER 35 MM 4.920 10' X 7' CONCRETE BOX (OVERLAY WITH THE FINAL ALTERNATIVE SURFACE TREATMENT)
BRIDGE NUMBER 36 MM 5.060 CONCRETE CIP, LENGTH 25' (OVERLAY WITH THE FINAL ALTERNATIVE SURFACE TREATMENT)
BRIDGE NUMBER 37 MM 5.550 48" PCCSP (OVERLAY WITH THE FINAL ALTERNATIVE SURFACE TREATMENT)
BRIDGE NUMBER 38 MM 6.054 13.9' X 8.6' CGM PLATE (OVERLAY WITH THE FINAL ALTERNATIVE SURFACE TREATMENT)
BRIDGE NUMBER 39 MM 6.298 CONCRETE BOX, LENGTH 24' (OVERLAY WITH THE FINAL ALTERNATIVE SURFACE TREATMENT)
BRIDGE NUMBER 40 MM 6.389 81" X 59" CAAPA (OVERLAY WITH THE FINAL ALTERNATIVE SURFACE TREATMENT
BRIDGE NUMBER 41 MM 6.678 48" CAAP (OVERLAY WITH THE FINAL ALTERNATIVE SURFACE TREATMENT
BRIDGE NUMBER 42 MM 7.075 48" CAAP (OVERLAY WITH THE FINAL ALTERNATIVE SURFACE TREATMENT

RUMBLE STRIP LOCATIONS

NOTE: PRIOR TO PLACEMENT OF RUMBLE STRIPS ALL LOCATION SHALL BE FIELD VERIFIED BY THE ENGINEER AND PROJECT MANAGER.

BENNINGTON VT ROUTE 9	WOODFORD VT ROUTE 9	SEARSBURG VT ROUTE 9	WILMINGTON VT ROUTE 9
6.508 MM ~~6.206~~ ~~6.211~~ 6.221	MM 0.000 - 0.369	MM 0.043~~1~~ - 0.539	MM 0.000 - 0.362
6.616 MM ~~6.602~~ - 6.850	1.570 MM ~~1.586~~ ~~4.613~~ 4.727	MM 0.59~~16~~ 0.788~~6~~	MM 0.425 - 0.638
	4.789 MM ~~4.795~~ ~~4.995~~ 5.137	MM 1.01~~905~~ 1.37~~9~~67	MM 0.918 - 1.071
	5.766 MM ~~5.615~~ ~~5.852~~ 6.016	MM ~~2.378~~ ~~3.420~~	MM 1.221 - 1.793
	6.278 MM ~~6.121~~ ~~6.387~~ 6.556	MM ~~3.598~~ ~~5.562~~	4.367 MM ~~4.273~~ - 5.162
	6.758 MM ~~6.583~~ ~~6.732~~ 6.907	MM 1.411 - 1.483	5.230 MM ~~5.225~~ - 6.492
	6.959 MM ~~6.789~~ ~~8.275~~ 8.346	MM 1.571 - 1.659	MM 6.601 - 7.014
	8.665 MM ~~8.532~~ ~~9.570~~ 9.535	MM 1.896 - 1.980	
		MM 2.027 - 2.116	
		MM 2.358 - 3.417	
		MM 3.586 - 4.471	
		MM 4.508 - 5.562	

PROJECT NAME:	BENNINGTON-WILMINGTON
PROJECT NUMBER:	NH SURF (51)
FILE NAME: pl4v201 Bennington-Wilmington.dgn	PLOT DATE: 28-MAR-2017
PROJECT LEADER: M. FOWLER	DRAWN BY: N. PAPPAS
DESIGNED BY: N. PAPPAS	CHECKED BY: M. FOWLER
PROJECT NOTES	SHEET 12 OF 64

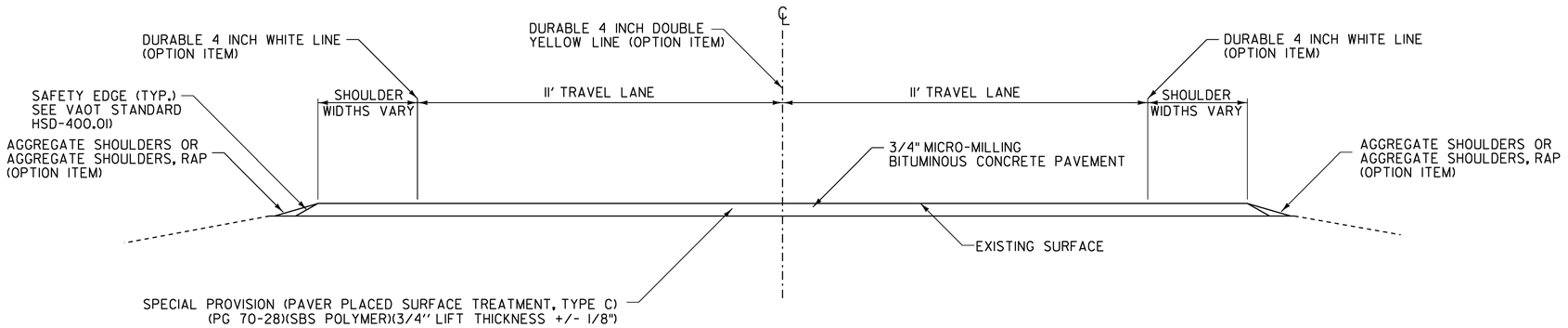

VT ROUTE 9 TYPICAL SECTION

MM 5.672 (BENNINGTON) – MM 2.000 (WILMINGTON)

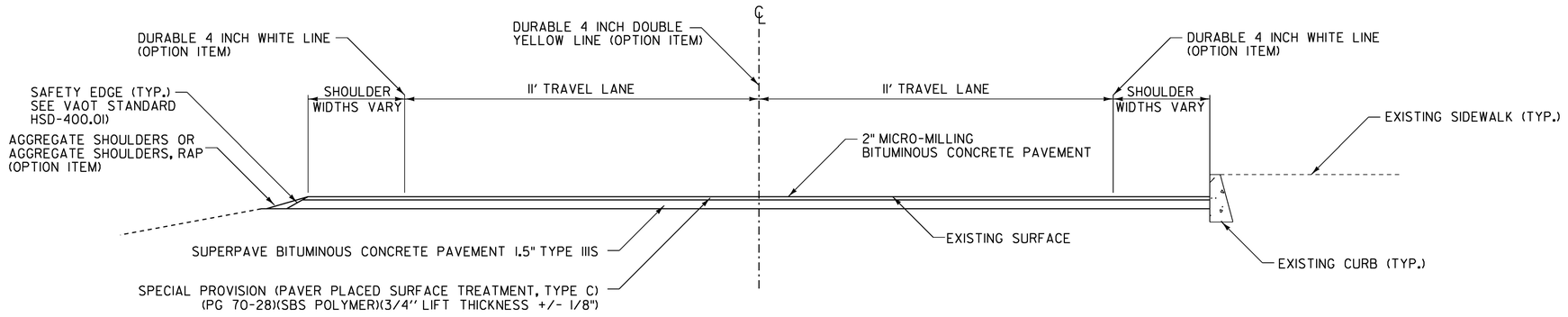

VT ROUTE 9 TYPICAL SECTION

MM 2.000 (WILMINGTON) – MM 4.220 (WILMINGTON)

NOT TO SCALE

PROJECT NAME:	BENNINGTON-WILMINGTON
PROJECT NUMBER:	NH SURF (51)

FILE NAME: pl4v201 Bennington-Wilmington.dgn PLOT DATE: 06-APR-2017
PROJECT LEADER: M. FOWLER DRAWN BY: N. PAPPAS
DESIGNED BY: N. PAPPAS CHECKED BY: M. FOWLER
TYPICAL SECTIONS SHEET 1 SHEET 13 OF 64

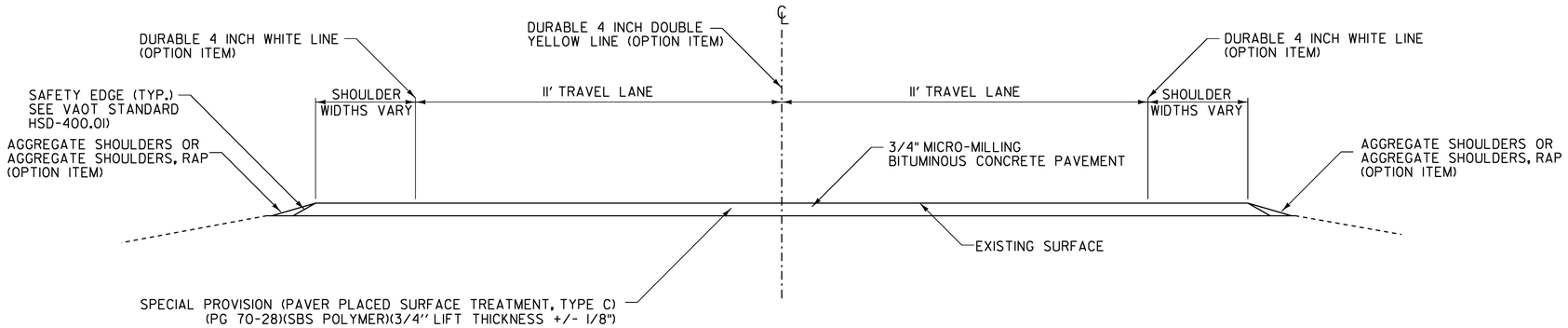

VT ROUTE 9 TYPICAL SECTION

MM 4.220 (WILMINGTON) – MM 7.160 (WILMINGTON)

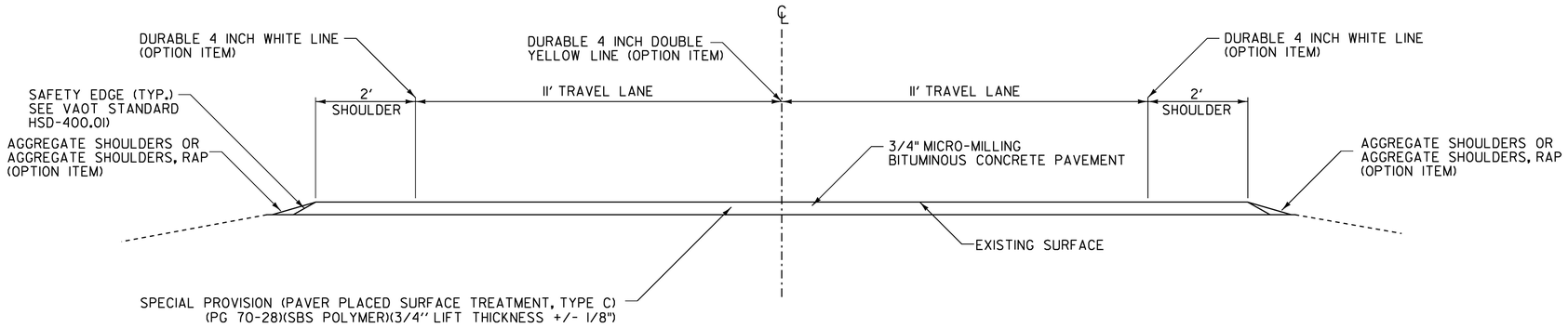

OXBOW LOOP ROAD

WILMINGTON MM 1.012 RT

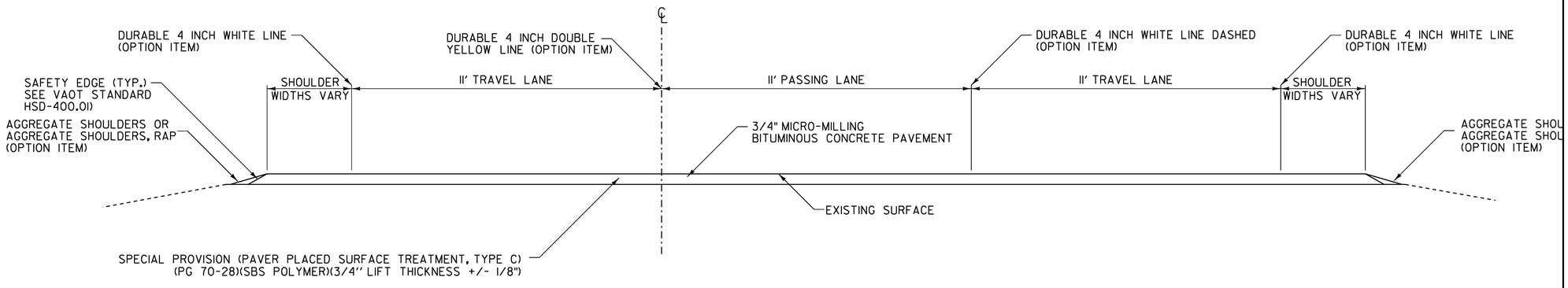

CLIMBING LANE TYPICAL

NOT TO SCALE

PROJECT NAME:	BENNINGTON-WILMINGTON
PROJECT NUMBER:	NH SURF (51)

FILE NAME: pl4v201 Bennington-Wilmington.dgn PLOT DATE: 28-MAR-2017
PROJECT LEADER: M. FOWLER DRAWN BY: N. PAPPAS
DESIGNED BY: N. PAPPAS CHECKED BY: M. FOWLER
TYPICAL SECTIONS SHEET 2 SHEET 14 OF 64

VAOT RURAL AREA MIX						
	LBS/AC					
WEIGHT	BROADCAST	HYDROSEED	NAME	LATIN NAME	GERM	PURITY
37.5%	22.5	45	CREEPING RED FESCUE	FESTUCA RUBRA VAR. RUBRA	85%	98%
37.5%	22.5	45	TALL FESCUE	FESTUCA ARUNDINACEA	90%	95%
5.0%	3	6	RED TOP	AGROSTIS GIGANTEA	90%	95%
15.0%	9	18	WHITE FIELD CLOVER	TRIFOLIUM REPENS	85%	98%
5.0%	3	6	ANNUAL RYE GRASS	LOLIUM MULTIFLORUM	85%	95%
100%	60	120				

GENERAL AMENDMENT GUIDANCE		
FERTILIZER	LIME	
10/20/10	AG LIME	PELLITIZED
500 LBS/AC	2 TONS/AC	1 TONS/AC

GENERAL NOTES

SEED MIX: THE CONTRACTOR SHALL COORDINATE WITH THE RESIDENT ENGINEER ON WHICH SEED MIX TO USE. SEED MIX: USE AS INDICATED IN THE PLANS AND/OR FOR ALL ESTABLISHED UPLAND (NON WETLAND) AREAS DISTURBED BY THE CONTRACTOR. ALL SEED MIXTURES: SHALL NOT HAVE A WEED CONTENT EXCEEDING 0.40% BY WEIGHT AND SHALL BE FREE OF ALL NOXIOUS SEED. FERTILIZER AND LIMESTONE: SHALL FOLLOW RATES SHOWN ON PLAN OR AS DIRECTED BY THE ENGINEER. HAY MULCH: TO BE PLACED ON EARTH SLOPES AT THE RATE OF 2 TONS/ACRE, ACHIEVE 90% GROUND COVER OR AS DIRECTED BY THE ENGINEER. HYDROSEEDING: ALTHOUGH GUIDANCE IS GIVEN ABOVE THE SITE CONDITIONS AND THE TYPE OF HYDROSEED PROPOSED FOR USE WILL ULTIMATELY DICTATE THE AMOUNTS AND TYPES OF SOIL AMENDMENTS TO BE APPLIED. TURF ESTABLISHMENT: PLACING SEED, FERTILIZER, LIME AND MULCH PRIOR TO SEPTEMBER 15 AND AFTER APRIL 15 CAN BETTER ENSURE A VIGOROUS GROWTH OF GRASS.

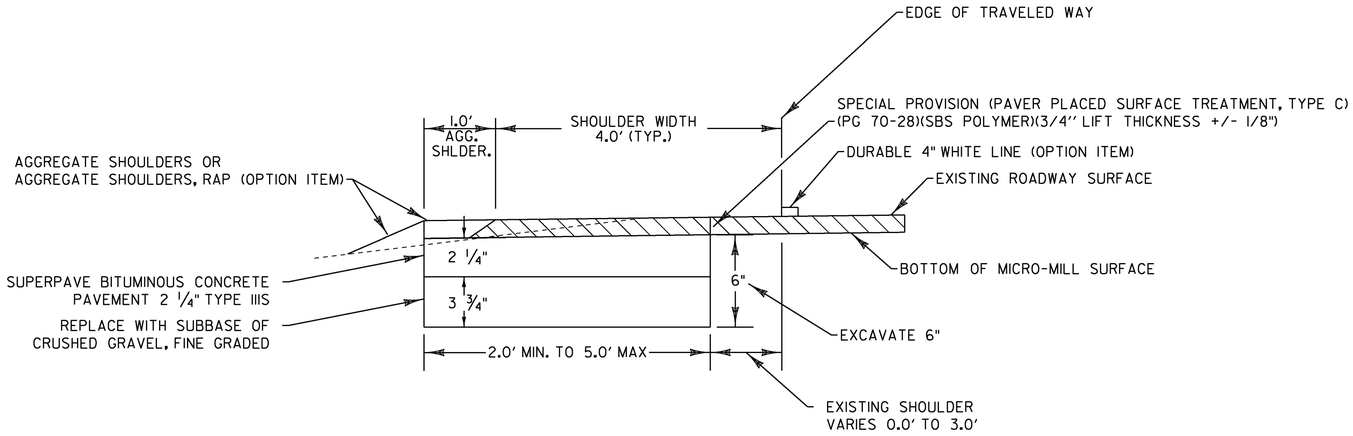

SHOULDER RECONSTRUCTION DETAIL

BENNINGTON
MM 5.995 - 6.276 LT
MM 5.995 - 6.005 RT
MM 6.054 - 6.334 RT
MM 6.464 - 6.588 LT & RT

WOODFORD
MM 0.529 - 1.115 LT & RT
MM 1.365 - 2.080 RT
MM 1.430 - 1.970 LT
MM 2.435 - 2.666 LT
MM 2.435 - 2.771 RT
MM 2.901- 3.036 RT
MM 2.990 - 3.086 LT
MM 3.996 - 4.031 RT
MM 4.136 - 4.297 RT
MM 4.852 - 4.947 RT
MM 5.117 - 5.932 LT
MM 5.117 - 5.908 RT
MM 5.933 - 6.558 RT
MM 6.048 - 6.283 LT
MM 6.393 - 6.558 LT
MM 6.598 - 7.268 LT
MM 6.952 - 8.287 RT
MM 7.654 - 7.679 LT
MM 7.969 - 8.559 LT
MM 8.454 - 8.494 RT

SEARSBURG
MM 1.177 - 1.951 LT
MM 1.542 - 1.951 RT
MM 1.987 - 2.495 LT
MM 2.156 - 2.580 RT
MM 2.705 - 2.795 RT
MM 2.925 - 3.185 LT

WILMINGTON
MM 3.457 - 3.857 LT
MM 3.562 - 4.067 RT
MM 3.912 - 4.042 LT
MM 3.922 - 4.067 RT
MM 4.082 - 4.187 LT
MM 5.232 - 5.952 RT
MM 6.237 - 6.982 RT

NOTE:
PRIOR TO PAVING, ANY EXISTING SHOULDER MATERIAL DEEMED UNSUITABLE BY THE ENGINEER SHALL BE EXCAVATED TO A DEPTH OF SIX INCHES. EXCAVATION SHALL BE PAID FOR USING THE APPROPRIATE RENTAL ITEMS. THE METHOD OF REMOVAL AND THE USE OF RENTAL ITEMS SHALL BE APPROVED BY THE ENGINEER PRIOR TO ANY WORK BEING DONE. MATERIAL REMOVED SHALL BE REPLACED WITH ITEM 301.28 SUBBASE OF CRUSHED GRAVEL, FINE GRADED. EXCAVATED MATERIAL SHALL BE SPREAD ON THE ADJACENT SLOPES OR REMOVED FROM THE PROJECT AS DIRECTED BY THE ENGINEER. THIS WORK SHALL COMPLETED PRIOR TO PLACEMENT OF THE WEARING COURSE. ANY SOIL SPREAD ON SIDE SLOPE SHALL HAVE TURF ESTABLISHMENT AS DIRECTED BY THE ENGINEER. THE FOLLOWING ITEMS WERE ESTIMATED FOR TURF ESTABLISHMENT: 651.15 SEED, 651.18 FERTILIZER, 651.20 AGRICULTURAL LIMESTONE AND 651.25 HAY MULCH.

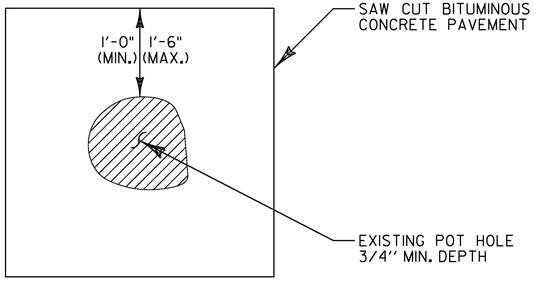

TYPICAL - POT HOLE REPAIR

NOTE:
EMULSIFIED ASPHALT SHALL BE APPLIED AT ALL PATCH INTERFACES AT A RATE OF 0.25 - 0.50 GAL/SY. EMULSIFIED ASPHALT SHALL MEET THE REQUIREMENTS OF SECTION 404 AND WILL BE CONSIDERED INCIDENTAL TO SPECIAL PROVISION(BITUMINOUS CONCRETE PAVEMENT SURFACE PREPARATION, TYPE I)

NOT TO SCALE

PROJECT NAME: BENNINGTON-WILMINGTON
PROJECT NUMBER: NH SURF (51)

FILE NAME: pl4v201 Bennington-Wilmington.dgn PLOT DATE: 06-APR-2017
PROJECT LEADER: M. FOWLER DRAWN BY: N. PAPPAS
DESIGNED BY: N. PAPPAS CHECKED BY: M. FOWLER
DETAIL SHEET 1 SHEET 15 OF 64

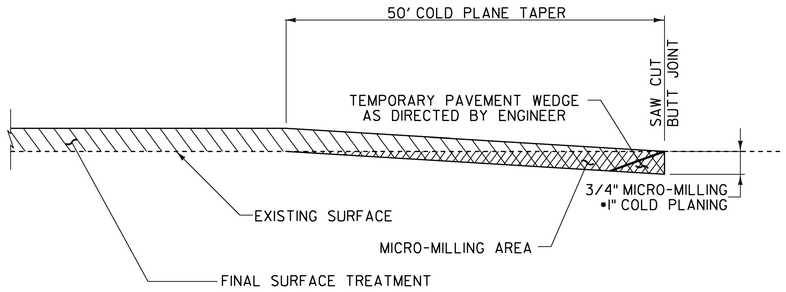

COLD PLANE DETAIL AT BEGIN & END PROJECT

•VT ROUTE 100 NORTH AND SOUTH SHALL BE COLD PLANED BACK 50 FEET UNLESS SHOWN OTHERWISE ON THE PLANS.

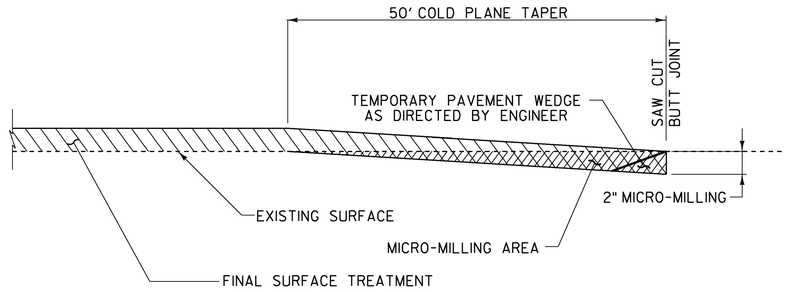

MICRO-MILLING TO COLD PLANING BEGIN & END TRANSITION DETAIL

WILMINGTON BEGIN MM 2.000 TO END MM 4.220

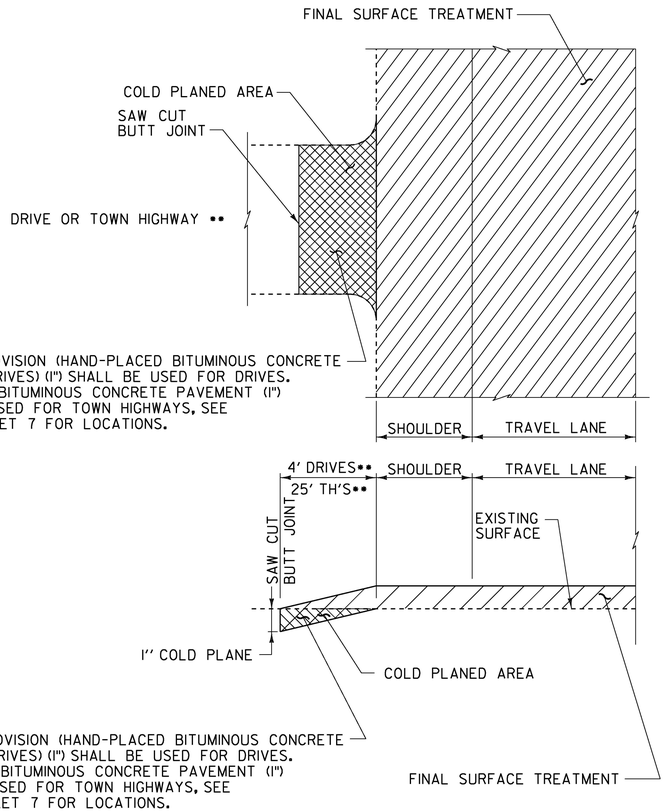

COLD PLANE DETAILS AT DRIVES & TOWN HIGHWAYS

•• ALL DRIVES SHALL HAVE A 4' PAVED APRON MINIMUM AND ALL FIELD DRIVES A 2' PAVED APRON MINIMUM. TOWN HIGHWAYS SHALL BE COLD PLANED BACK 25 FEET UNLESS SHOWN OTHERWISE ON THE PLANS.

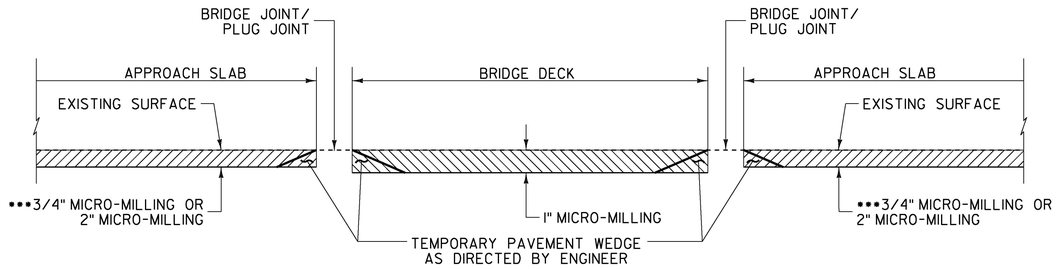

BRIDGE MICRO-MILLING DETAIL

•••SEE TYPICAL SHEETS FOR MICRO-MILLING DEPTH LOCATIONS.

NOTES:

1. REFER TO VT JOINT ASPHALTIC PLUG DETAIL SHEET AND ASPHALTIC PLUG JOINT DETAIL SHEET, SD-516.10. ALL NEW JOINTS TO BE PAID FOR UNDER ITEM 516.10, "BRIDGE EXPANSION JOINT, ASPHALTIC PLUG (@FINGER PLATE/VERMONT JOINT)" AND ITEM 516.10, "BRIDGE EXPANSION JOINT, ASPHALTIC PLUG".

2. THE CONTRACTOR SHALL TAKE PRECAUTIONS TO AVOID DAMAGING DRAINAGE STRUCTURES AND EXPANSION JOINTS. ANY DAMAGE CAUSED BY THE CONTRACTOR SHALL BE REPAIRED BY THE CONTRACTOR AT NO COST TO THE STATE.

3. THE CONTRACTOR SHALL TAKE PRECAUTIONS TO AVOID THE ACCUMULATION OF DEBRIS IN THE DRAINAGE STRUCTURES LOCATED AT CURB LINE AND IN THE EXPANSION JOINTS. THE CONTRACTOR SHALL EXAMINE THESE BRIDGE FEATURES ON A DAILY BASIS TO ENSURE THAT DEBRIS HAS NOT ACCUMULATED. ANY DEBRIS WHICH IS PRESENT SHALL BE REMOVED BY THE CONTRACTOR AT NO COST TO THE STATE.

4. THE CONTRACTOR SHALL USE CAUTION WHEN COLD PLANING AND PAVING OPERATIONS OCCUR ON BRIDGE DECKS. SHOULD ANY DAMAGE OCCUR TO THE DECK OR MEMBRANE AS A RESULT OF THESE OPERATIONS THE ENGINEER SHALL CONTACT THE VTRANS CONSTRUCTION STRUCTURES ENGINEER TO PROVIDE AN ASSESSMENT OF THE DAMAGE AND RECOMMEND ANY NECESSARY REPAIRS. THE CONSTRUCTION STRUCTURES ENGINEER WILL ALSO DETERMINE IF THE DAMAGE WAS AVOIDABLE. IF THE CONTRACTOR IS DETERMINED BY THE ENGINEER TO BE AT FAULT FOR THE DAMAGE, THE RECOMMENDED REPAIRS SHALL BE COMPLETED BY THE CONTRACTOR AT NO COST TO THE STATE.

NOT TO SCALE

PROJECT NAME:	BENNINGTON-WILMINGTON
PROJECT NUMBER:	NH SURF (51)

FILE NAME: pl4v201Bennington-Wilmington.dgnPLOT DATE: 29-MAR-2017
PROJECT LEADER: M. FOWLER DRAWN BY: N. PAPPAS
DESIGNED BY: N. PAPPAS CHECKED BY: M. FOWLER
PROJECT COLD PLANE DETAILS SHEET 16 OF 64

STATE OF VERMONT
AGENCY OF TRANSPORTATION

QUANTITY SHEET 1

SUMMARY OF ESTIMATED QUANTITIES

ROADWAY	ROADWAY (NO FEDERAL/STATE PART.)	BRIDGE	FULL C & E ITEMS	GRAND TOTAL	FINAL	UNIT	ITEMS	ITEM NUMBER	ROUND
95000				95000		LF	SHOULDER BERM REMOVAL	203.40	609
1				1		CY	TRENCH EXCAVATION OF EARTH, EXPLORATORY (N.A.B.I.)	204.22	EST
14300				14300		SY	COLD PLANING, BITUMINOUS PAVEMENT	210.10	446
78300				78300		LF	MILLED RUMBLE STRIPS (CENTERLINE)	213.10	401
5600				5600		TON	SUBBASE OF CRUSHED GRAVEL, FINE GRADED	301.28	28
							BEGIN OPTION AA		
2000				2000		TON	AGGREGATE SHOULDERS	402.12	104
2000				2000		TON	AGGREGATE SHOULDERS, RAP	402.13	104
							END OPTION AA		
							BEGIN OPTION BB		
375				375		CWT	EMULSIFIED ASPHALT	404.65	24
375				375		CWT	SPECIAL PROVISION (EMULSIFIED ASPHALT)(RS-1H OR CRS-1H)	900.683	24
							END OPTION BB		
1				1		LU	PRICE ADJUSTMENT, ASPHALT CEMENT (N.A.B.I.)	406.50	-
35200				35200		LB	BITUMINOUS CRACK SEALING, "BLOW AND GO" METHOD (AASHTO M 324 (ASTM D 6690) TYPE II)	417.20	197
8800				8800		TON	SUPERPAVE BITUMINOUS CONCRETE PAVEMENT (PG 70-28)	490.30	69
1				1		LU	AIR VOIDS PAY ADJUSTMENT (N.A.B.I.)	490.31	-
		312		312		LF	BRIDGE EXPANSION JOINT, ASPHALTIC PLUG (@FINGER PLATE/VERMONT JOINT)	516.10	EST
		570		570		LF	BRIDGE EXPANSION JOINT, ASPHALTIC PLUG	516.10	EST
		100		100		CF	RAPID SETTING CONCRETE REPAIR MATERIAL WITH COARSE AGGREGATE	580.20	EST
81				81		EACH	CHANGING ELEVATION OF DROP INLETS, CATCH BASINS, OR MANHOLES	604.40	-
32	22			54		EACH	CHANGING ELEVATION OF SEWER MANHOLES	604.42	-
525				525		HR	ALL PURPOSE EXCAVATOR RENTAL, TYPE I	608.25	EST
125				125		HR	POWER BROOM RENTAL, TYPE I	608.30	EST
200				200		HR	POWER BROOM RENTAL, TYPE II	608.31	EST
1075				1075		HR	TRUCK RENTAL	608.37	EST
525				525		HR	LOADER RENTAL, TYPE I	608.40	EST
	10			10		EACH	ADJUST ELEVATION OF VALVE BOX	629.20	-
2000				2000		HR	UNIFORMED TRAFFIC OFFICERS	630.10	EST
10000				10000		HR	FLAGGERS	630.15	EST
			1	1		LS	FIELD OFFICE, ENGINEERS	631.10	-
			1	1		LS	TESTING EQUIPMENT, BITUMINOUS	631.17	-
			3000	3000		DL	FIELD OFFICE TELEPHONE (N.A.B.I.)	631.26	-
520				520		HR	EMPLOYEE TRAINEESHIP	634.10	-
1				1		LS	MOBILIZATION/DEMOBILIZATION (NH SURF(51))	635.11	-
1				1		LS	TRAFFIC CONTROL (NH SURF(51))	641.10	-
6				6		EACH	PORTABLE CHANGEABLE MESSAGE SIGN	641.15	-

DETAILED SUMMARY OF QUANTITIES

QUANTITIES	UNIT	ITEMS
		SUPERPAVE BITUMINOUS CONCRETE PAVEMENT
428	TON	TOWN HIGHWAYS, DRIVES, STATE ROUTES, SIDELINES AND ETC.
1,674	TON	WILMINGTON MAINLINE MM 2.000 TO MM 4.220
4,954	TON	SHOULDER RECONSTRUCTION
7,056	TON	SUBTOTAL
69	TON	ROUNDING
7,125	TON	TOTAL
		COLD PLANING BITUMINOUS CONCRETE PAVEMENT
13,854	SY	TOWN HIGHWAYS, DRIVES, STATE ROUTES, SIDELINES AND ETC.
446	SY	ROUNDING
14,300	SY	TOTAL
		SPECIAL PROVISION (MICRO-MILLING BITUMINOUS CONCRETE PAVEMENT)
380,790	SY	MAINLINE AND APPROACHES
		BENNINGTON
1,133	SY	BRIDGE #9
		WOODFORD
1,319	SY	BRIDGE #11
1,093	SY	BRIDGE #12
		SEARSBURG
1,056	SY	BRIDGE #25
1,233	SY	BRIDGE #25A
1,203	SY	BRIDGE #25B
		WILMINGTON
4,000	SY	OXBOW LOOP ROAD
247	SY	BRIDGE #30
200	SY	BRIDGE #31
317	SY	BRIDGE #32
192	SY	BRIDGE #34
392,192	SY	SUBTOTAL
2,808	SY	ROUNDING
395,000	SY	TOTAL
		SPECIAL PROVISION (PAVER PLACED SURFACE TREATMENT, TYPE C)
388,192	SY	MAINLINE
4,000	SY	OXBOW LOOP ROAD
37,743	SY	SHOULDER RECONSTRUCTION
429,935	SY	SUBTOTAL
2,815	SY	ROUNDING
432,750	SY	TOTAL

PROJECT NAME: BENNINGTON-WILMINGTON
PROJECT NUMBER: NH SURF (51)

FILE NAME: pl4v20l Bennington-Wilmington.dgn PLOT DATE: 06-APR-2017
PROJECT LEADER: M. FOWLER DRAWN BY: N. PAPPAS
DESIGNED BY: N. PAPPAS CHECKED BY: M. FOWLER
QUANTITY SHEET 1 SHEET 17 OF 64

STATE OF VERMONT
AGENCY OF TRANSPORTATION

QUANTITY SHEET 2

SUMMARY OF ESTIMATED QUANTITIES										TOTALS		DESCRIPTIONS				DETAILED SUMMARY OF QUANTITIES		
						ROADWAY	ROADWAY (NO FEDERAL/STATE PART.)	BRIDGE	FULL C & E ITEMS	GRAND TOTAL	FINAL	UNIT	ITEMS	ITEM NUMBER	ROUND	QUANTITIES	UNIT	ITEMS
													BEGIN OPTION CC					
						700				700		LF	DURABLE 24 INCH STOP BAR, THERMOPLASTIC	646.482	EST			
						700				700		LF	SPECIAL PROVISION (DURABLE 24 INCH STOP BAR, EPOXY)(28MILS)	900.640	EST			
						700				700		LF	SPECIAL PROVISION (DURABLE 24 INCH STOP BAR, POLYUREA)(28MILS)	900.640	EST			
													END OPTION CC					
													BEGIN OPTION DD					
						217				217		EACH	DURABLE LETTER OR SYMBOL, THERMOPLASTIC	646.492	-			
						217				217		EACH	SPECIAL PROVISION (DURABLE LETTER OR SYMBOL, EPOXY)(28 MILS)	900.620	-			
						217				217		EACH	SPECIAL PROVISION (DURABLE LETTER OR SYMBOL, POLYUREA)(28 MILS)	900.620	-			
													END OPTION DD					
													BEGIN OPTION EE					
						400				400		LF	DURABLE CROSSWALK MARKING, THERMOPLASTIC	646.502	EST			
						400				400		LF	SPECIAL PROVISION (DURABLE CROSSWALK MARKING, EPOXY)(28MILS)	900.640	EST			
						400				400		LF	SPECIAL PROVISION (DURABLE CROSSWALK MARKING, POLYUREA)(28MILS)	900.640	EST			
													END OPTION EE					
						307900				307900		LF	TEMPORARY 4 INCH WHITE LINE, PAINT	646.602	EST			
						285700				285700		LF	TEMPORARY 4 INCH YELLOW LINE, PAINT	646.612	EST			
						280				280		LF	TEMPORARY 6 INCH WHITE LINE, PAINT	646.622	EST			
						210				210		LF	TEMPORARY 6 INCH YELLOW LINE, PAINT	646.632	EST			
						775				775		LF	TEMPORARY 8 INCH WHITE LINE, PAINT	646.642	EST			
						700				700		LF	TEMPORARY 8 INCH YELLOW LINE, PAINT	646.652	EST			
						700				700		LF	TEMPORARY 24 INCH STOP BAR, PAINT	646.682	EST			
						217				217		EACH	TEMPORARY LETTER OR SYMBOL, PAINT	646.692	-			
						400				400		LF	TEMPORARY CROSSWALK MARKING, PAINT	646.702	EST			
						49500				49500		EACH	LINE STRIPING TARGETS	646.76	EST			
						500				500		LB	SEED	651.15	EST			
						500				500		LB	FERTILIZER	651.18	EST			
						2				2		TON	AGRICULTURAL LIMESTONE	651.20	EST			
						2				2		TON	HAY MULCH	651.25	EST			
						1				1		EACH	TRAFFIC CONTROL SIGNAL SYSTEM, INTERSECTION	678.15	-			
						1				1		LU	PRICE ADJUSTMENT, FUEL (N.A.B.I.)	690.50	-			
													BEGIN OPTION FF					
						249900				249900		LF	SPECIAL PROVISION (DURABLE 4 INCH WHITE LINE, EPOXY)(28MILS)	900.640	EST			
						249900				249900		LF	SPECIAL PROVISION (DURABLE 4 INCH WHITE LINE, POLYUREA)(28MILS)	900.640	EST			
													END OPTION FF					
													BEGIN OPTION GG					
						250500				250500		LF	SPECIAL PROVISION (DURABLE 4 INCH YELLOW LINE, EPOXY)(28MILS)	900.640	EST			
						250500				250500		LF	SPECIAL PROVISION (DURABLE 4 INCH YELLOW LINE, POLYUREA)(28MILS)	900.640	EST			
													END OPTION GG					

PROJECT NAME: BENNINGTON-WILMINGTON
PROJECT NUMBER: NH SURF (51)

FILE NAME: p14v201 Bennington-Wilmington.dgn PLOT DATE: 06-APR-2017
PROJECT LEADER: M. FOWLER DRAWN BY: N. PAPPAS
DESIGNED BY: N. PAPPAS CHECKED BY: M. FOWLER
QUANTITY SHEET 2 SHEET 18 OF 64

STATE OF VERMONT
AGENCY OF TRANSPORTATION

QUANTITY SHEET 3

SUMMARY OF ESTIMATED QUANTITIES										TOTALS		DESCRIPTIONS				DETAILED SUMMARY OF QUANTITIES		
						ROADWAY	ROADWAY (NO FEDERAL/STATE PART.)	BRIDGE	FULL C & E ITEMS	GRAND TOTAL	FINAL	UNIT	ITEMS	ITEM NUMBER	ROUND	QUANTITIES	UNIT	ITEMS
													BEGIN OPTION HH					
						280				280		LF	SPECIAL PROVISION (DURABLE 6 INCH WHITE LINE, EPOXY)(28MILS)	900.640	EST			
						280				280		LF	SPECIAL PROVISION (DURABLE 6 INCH WHITE LINE, POLYUREA)(28MILS)	900.640	EST			
													END OPTION HH					
													BEGIN OPTION II					
						210				210		LF	SPECIAL PROVISION (DURABLE 6 INCH YELLOW LINE, EPOXY)(28 MILS)	900.640	EST			
						210				210		LF	SPECIAL PROVISION (DURABLE 6 INCH YELLOW LINE, POLYUREA)(28MILS)	900.640	EST			
													END OPTION II					
													BEGIN OPTION JJ					
						775				775		LF	SPECIAL PROVISION (DURABLE 8 INCH WHITE LINE, EPOXY)(28MILS)	900.640	EST			
						775				775		LF	SPECIAL PROVISION (DURABLE 8 INCH WHITE LINE, POLYUREA)(28MILS)	900.640	EST			
													END OPTION JJ					
													BEGIN OPTION KK					
						700				700		LF	SPECIAL PROVISION (DURABLE 8 INCH YELLOW LINE, EPOXY)(28MILS)	900.640	EST			
						700				700		LF	SPECIAL PROVISION (DURABLE 8 INCH YELLOW LINE, POLYUREA)(28MILS)	900.640	EST			
													END OPTION KK					
						13400				13400		SY	SPECIAL PROVISION (HAND-PLACED BITUMINOUS CONCRETE MATERIAL, DRIVES)	900.675	EST			
						395000				395000		SY	SPECIAL PROVISION (MICRO-MILLING BITUMINOUS CONCRETE PAVEMENT)	900.675	2808			
						432750				432750		SY	SPECIAL PROVISION (PAVER PLACED SURFACE TREATMENT, TYPE C)(PG 70-28)(SBS POLYMER)(3/4" LT+/-1/8")	900.675	2815			
						250				250		TON	SPECIAL PROVISION (BITUMINOUS CONCRETE PAVEMENT SURFACE PREPARATION, TYPE I)	900.680				
						230				230		CWT	SPECIAL PROVISION (FOG SEAL SURFACE TREATMENT)	900.683	10			

PROJECT NAME: BENNINGTON-WILMINGTON
PROJECT NUMBER: NH SURF (51)

FILE NAME: pl4v201 Bennington-Wilmington.dgn PLOT DATE: 06-APR-2017
PROJECT LEADER: M. FOWLER DRAWN BY: N. PAPPAS
DESIGNED BY: N. PAPPAS CHECKED BY: M. FOWLER
QUANTITY SHEET 3 SHEET 19 OF 64

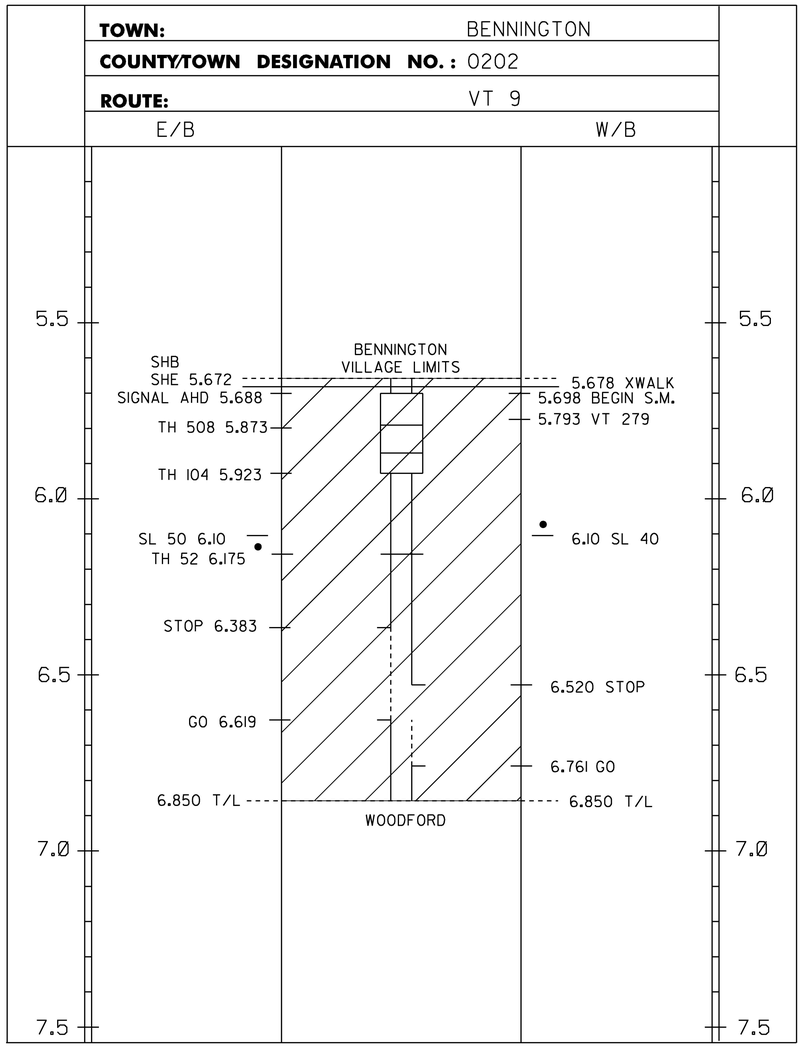

DURABLE 4 INCH WHITE LINE (OPTION BID ITEM)
(ALL LINES WILL INCLUDE EDGE LINE BREAKS AND RADIUS FOR TOWN HIGHWAYS)
MM 5.672 - MM 2.500 LT & RT
MM 2.470 - MM 2.500 DASHED RT

DURABLE 4 INCH YELLOW LINE (OPTION BID ITEM)
(ALL LINES WILL INCLUDE C/L BREAKS FOR TOWN HIGHWAYS)
MM 5.672 - MM 6.383 SOLID LT & RT
MM 6.383 - MM 6.520 SOLID LT & DASHED RT
MM 6.520 - MM 6.619 DASHED RT
MM 6.619 - MM 6.761 DASHED LT & SOLID RT
MM 6.761 - MM 0.104 SOLID LT & RT
MM 0.104 - MM 0.250 DASHED RT & SOLID LT
MM 0.250 - MM 0.438 DASHED RT
MM 0.438 - MM 0.520 DASHED LT & SOLID RT
MM 0.520 - MM 1.680 SOLID LT & RT
MM 1.680 - MM 1.820 DASHED RT & SOLID LT
MM 1.820 - MM 1.840 DASHED RT
MM 1.840 - MM 1.970 DASHED LT & SOLID RT
MM 1.970 - MM 2.470 SOLID LT & RT
MM 2.470 - MM 2.500 SOLID LT & RT

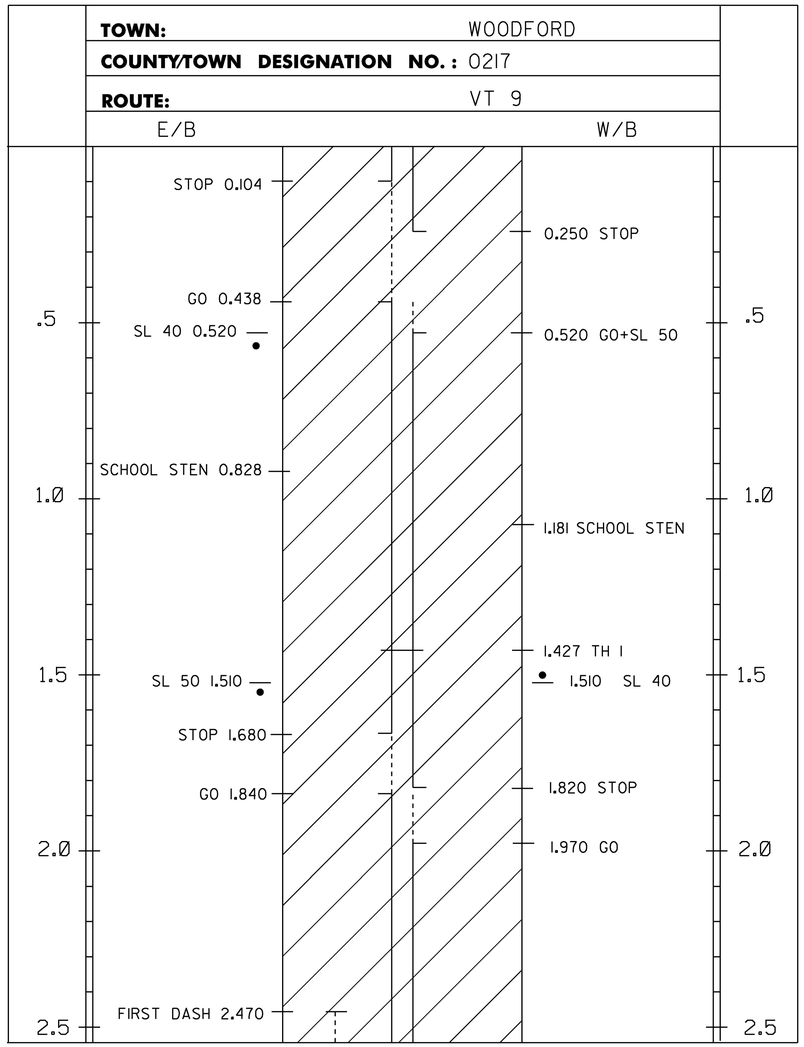

LEGEND
TWBH-THROUGHWAY BEGINS HERE
TWEH-THROUGHWAY ENDS HERE
SHB-STATE HIGHWAY BEGINS
SHE-STATE HIGHWAY ENDS
SL-SPEED LIMIT
SM-SPECIAL MARKINGS
T/L-TOWN LINE

PROJECT AREA

NOTES:
1. THIS SHEET TO BE USED FOR THE LAYOUT OF ALL CENTERLINE PAVEMENT MARKINGS. THE ENGINEER MAY CONTACT KEITH SWEET, PAVEMENT MARKING SUPERVISOR AT (802) 828-5573 FOR ASSISTANCE LAYING OUT THE CENTERLINE DURING CONSTRUCTION.

NOT TO SCALE

PROJECT NAME:	BENNINGTON-WILMINGTON
PROJECT NUMBER:	NH SURF (51)
FILE NAME: pl4v201 Bennington-Wilmington.dgn	PLOT DATE: 28-MAR-2017
PROJECT LEADER: M. FOWLER	DRAWN BY: N. PAPPAS
DESIGNED BY: N. PAPPAS	CHECKED BY: M. FOWLER
LAYOUT SHEET 1	SHEET 20 OF 64

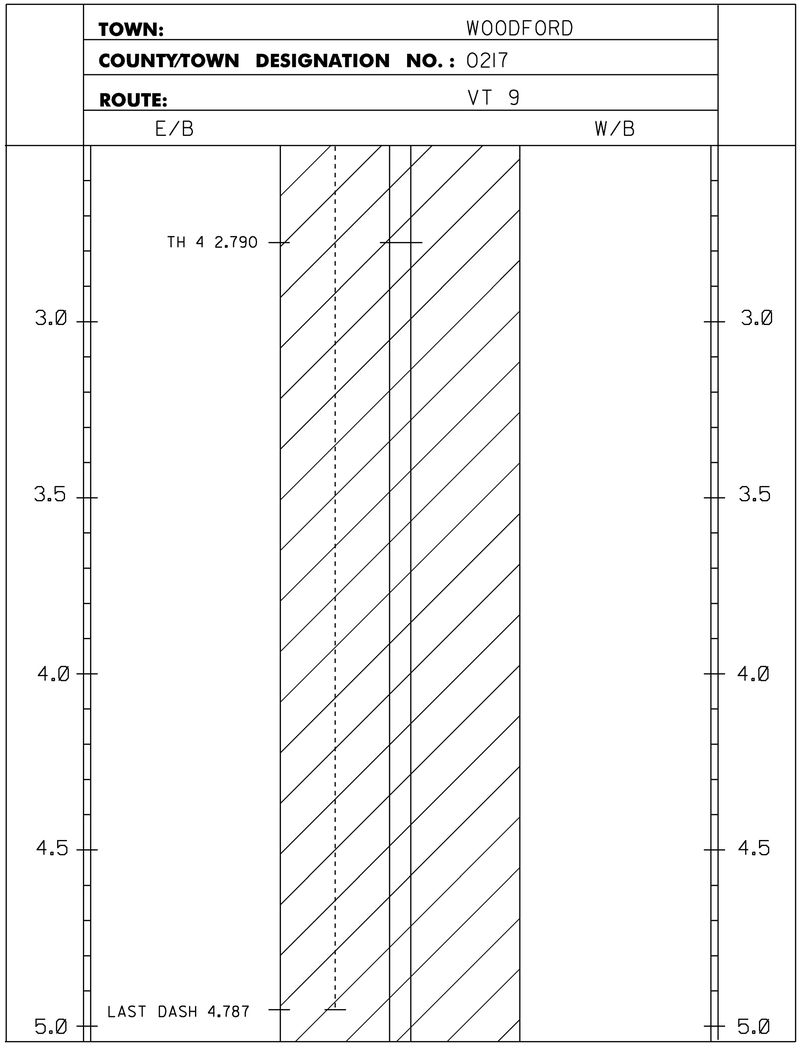

DURABLE 4 INCH WHITE LINE (OPTION BID ITEM)
(ALL LINES WILL INCLUDE EDGE LINE BREAKS AND RADIUS FOR TOWN HIGHWAYS)
MM 2.500 - MM 7.500 LT & RT
MM 2.500 - 4.787 DASHED RT

DURABLE 4 INCH YELLOW LINE (OPTION BID ITEM)
(ALL LINES WILL INCLUDE C/L BREAKS FOR TOWN HIGHWAYS)
MM 2.500 - MM 6.990 SOLID LT & RT
MM 6.990 - MM 7.500 SOLID LT & RT

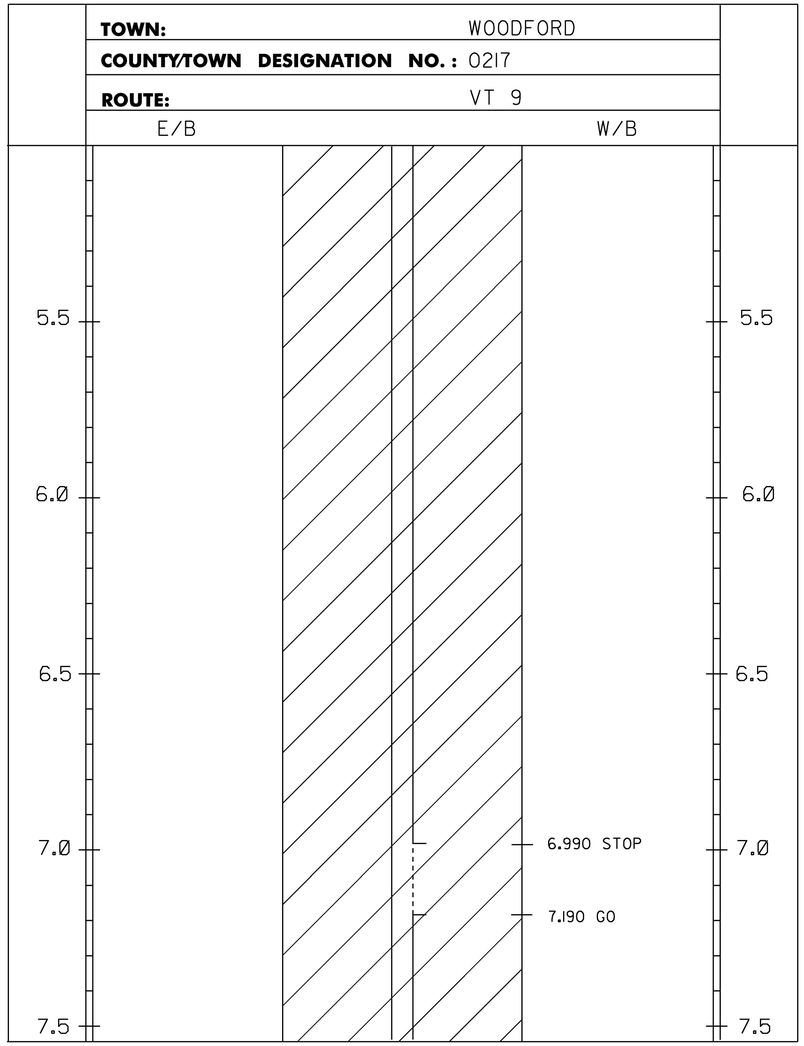

PROJECT AREA

LEGEND
TWBH-THROUGHWAY BEGINS HERE
TWEH-THROUGHWAY ENDS HERE
SHB-STATE HIGHWAY BEGINS
SHE-STATE HIGHWAY ENDS
SL-SPEED LIMIT
T/L-TOWN LINE

NOTES:
1. THIS SHEET TO BE USED FOR THE LAYOUT OF ALL CENTERLINE PAVEMENT MARKINGS. THE ENGINEER MAY CONTACT KEITH SWEET, PAVEMENT MARKING SUPERVISOR AT (802) 828-5573 FOR ASSISTANCE LAYING OUT THE CENTERLINE DURING CONSTRUCTION.

NOT TO SCALE

PROJECT NAME:	BENNINGTON-WILMINGTON
PROJECT NUMBER:	NH SURF (51)

FILE NAME: pl4v201 Bennington-Wilmington.dgn PLOT DATE: 28-MAR-2017
PROJECT LEADER: M. FOWLER DRAWN BY: N. PAPPAS
DESIGNED BY: N. PAPPAS CHECKED BY: M. FOWLER
LAYOUT SHEET 2 SHEET 21 OF 64

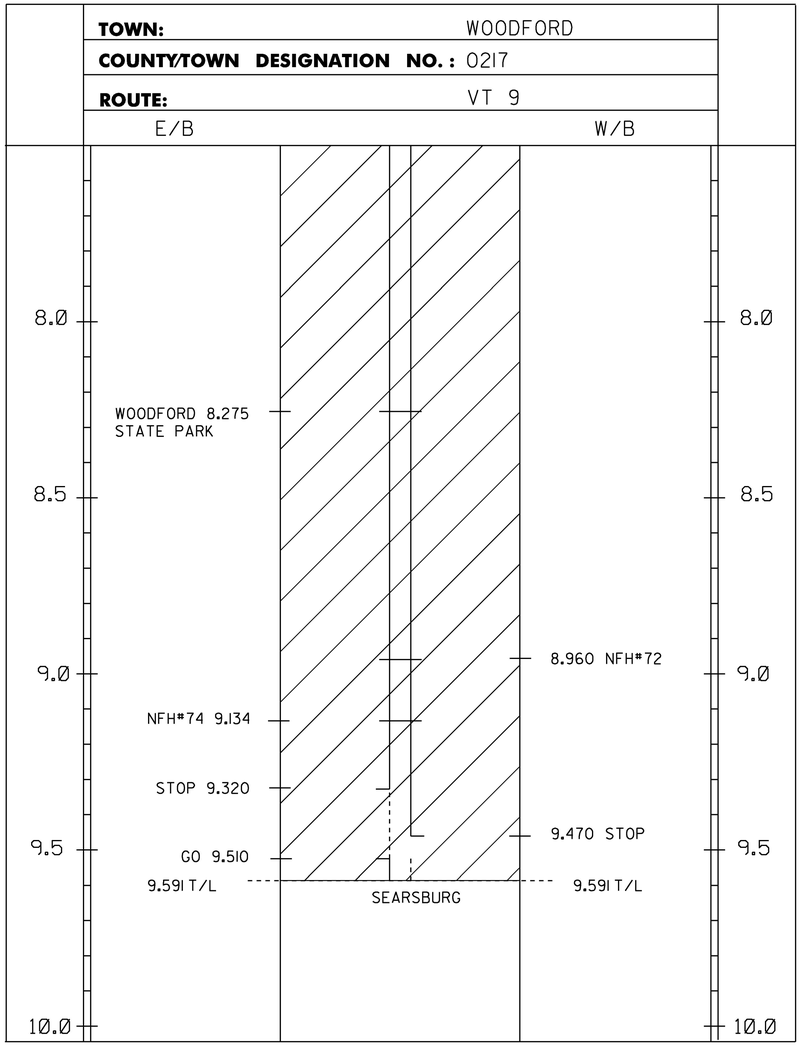

DURABLE 4 INCH WHITE LINE (OPTION BID ITEM)
(ALL LINES WILL INCLUDE EDGE LINE BREAKS AND RADIUS FOR TOWN HIGHWAYS)
MM 7.500 - MM 2.500 LT & RT
MM 1.725 - MM 2.500 LT
MM 1.725 - MM 2.500 DASHED LT

DURABLE 4 INCH YELLOW LINE (OPTION BID ITEM)
(ALL LINES WILL INCLUDE C/L BREAKS FOR TOWN HIGHWAYS)
MM 7.500 - MM 9.320 SOLID LT & RT
MM 9.320 - MM 9.470 SOLID LT & DASHED RT
MM 9.470 - MM 9.510 DASHED RT
MM 9.510 - MM 0.050 DASHED LT & SOLID RT
MM 0.050 - MM 2.500 SOLID LT & RT

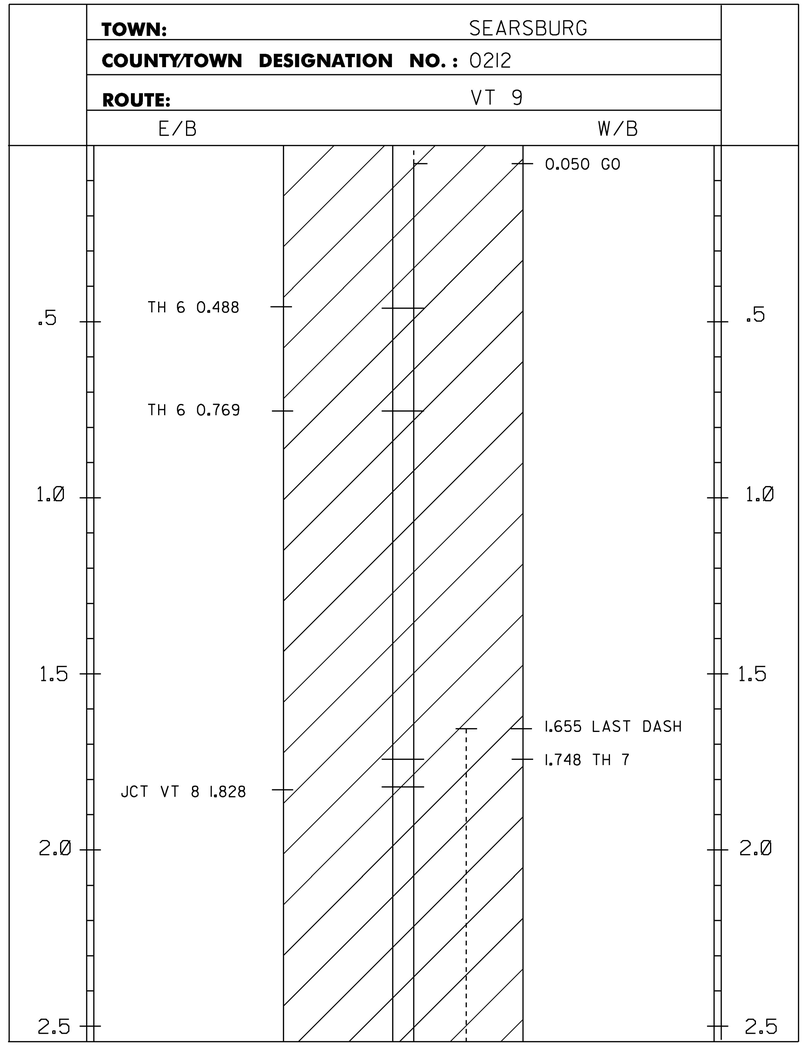

LEGEND
TWBH-THROUGHWAY BEGINS HERE
TWEH-THROUGHWAY ENDS HERE
SHB-STATE HIGHWAY BEGINS
SHE-STATE HIGHWAY ENDS
SL-SPEED LIMIT
T/L-TOWN LINE

PROJECT AREA

NOTES:
1. THIS SHEET TO BE USED FOR THE LAYOUT OF ALL CENTERLINE PAVEMENT MARKINGS. THE ENGINEER MAY CONTACT KEITH SWEET, PAVEMENT MARKING SUPERVISOR AT (802) 828-5573 FOR ASSISTANCE LAYING OUT THE CENTERLINE DURING CONSTRUCTION.

NOT TO SCALE

PROJECT NAME:	BENNINGTON-WILMINGTON
PROJECT NUMBER:	NH SURF (51)
FILE NAME: pl4v201 Bennington-Wilmington.dgn	PLOT DATE: 28-MAR-2017
PROJECT LEADER: M. FOWLER	DRAWN BY: N. PAPPAS
DESIGNED BY: N. PAPPAS	CHECKED BY: M. FOWLER
LAYOUT SHEET 3	SHEET 22 OF 64

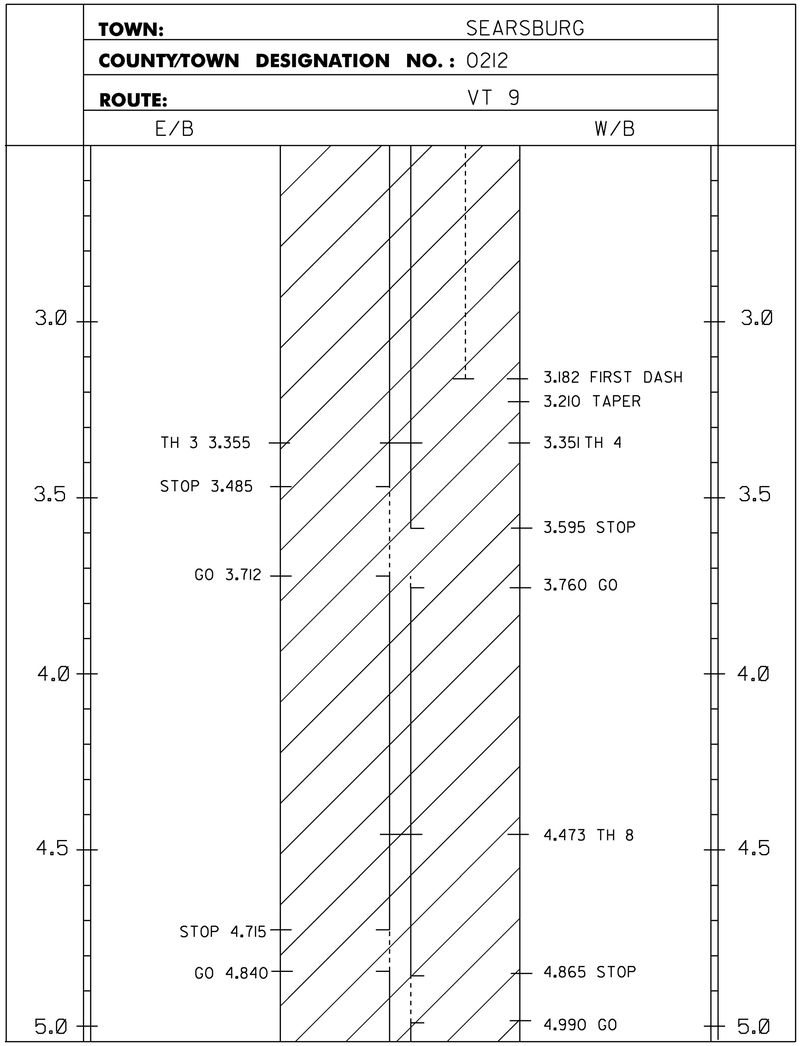

DURABLE 4 INCH WHITE LINE (OPTION BID ITEM)
(ALL LINES WILL INCLUDE EDGE LINE BREAKS AND RADIUS FOR TOWN HIGHWAYS)
MM 2.500 - MM 5.526 LT & RT
MM 2.500 - MM 3.182 DASHED LT

DURABLE 4 INCH YELLOW LINE (OPTION BID ITEM)
(ALL LINES WILL INCLUDE C/L BREAKS FOR TOWN HIGHWAYS)
MM 2.500 - MM 3.485 SOLID LT & RT
MM 3.485 - MM 3.959 DASHED RT & SOLID LT
MM 3.959 - MM 3.172 DASHED RT
MM 3.172 - MM 3.760 DASHED LT & SOLID RT
MM 3.760 - MM 4.715 SOLID LT & RT
MM 4.715 - MM 4.840 SOLID LT & DASHED RT
MM 4.840 - MM 4.865 SOLID LT & RT
MM 4.865 - MM 4.990 DASHED LT & SOLID RT
MM 4.990 - MM 5.320 SOLID LT & RT
MM 5.320 - MM 5.430 SOLID LT & DASHED RT
MM 5.430 - MM 5.520 DASHED RT
MM 5.520 - MM 5.526 DASHED LT & SOLID RT)

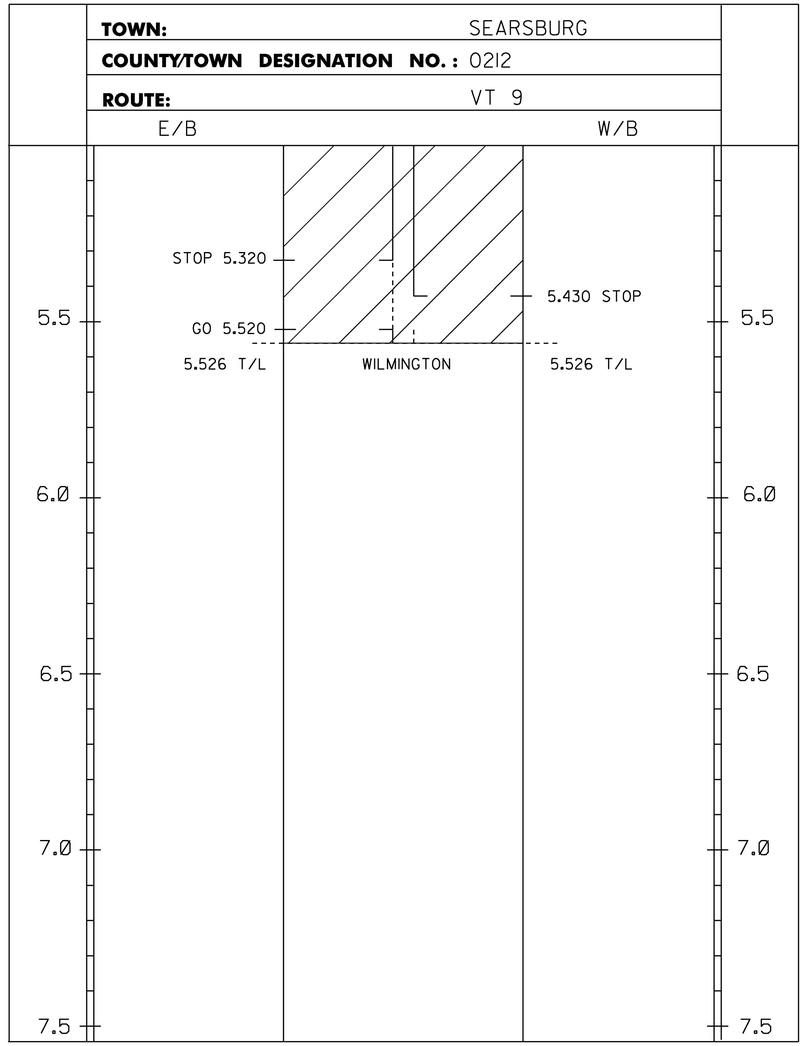

LEGEND
TWBH-THROUGHWAY BEGINS HERE
TWEH-THROUGHWAY ENDS HERE
SHB-STATE HIGHWAY BEGINS
SHE-STATE HIGHWAY ENDS
SL-SPEED LIMIT
T/L-TOWN LINE
SM-SPECIAL MARKINGS

PROJECT AREA

NOTES:
1. THIS SHEET TO BE USED FOR THE LAYOUT OF ALL CENTERLINE PAVEMENT MARKINGS. THE ENGINEER MAY CONTACT KEITH SWEET, PAVEMENT MARKING SUPERVISOR AT (802) 828-5573 FOR ASSISTANCE LAYING OUT THE CENTERLINE DURING CONSTRUCTION.

NOT TO SCALE

PROJECT NAME:	BENNINGTON-WILMINGTON
PROJECT NUMBER:	NH SURF (51)

FILE NAME: pl4v201 Bennington-Wilmington.dgn PLOT DATE: 28-MAR-2017
PROJECT LEADER: M. FOWLER DRAWN BY: N. PAPPAS
DESIGNED BY: N. PAPPAS CHECKED BY: M. FOWLER
LAYOUT SHEET 4 SHEET 23 OF 64

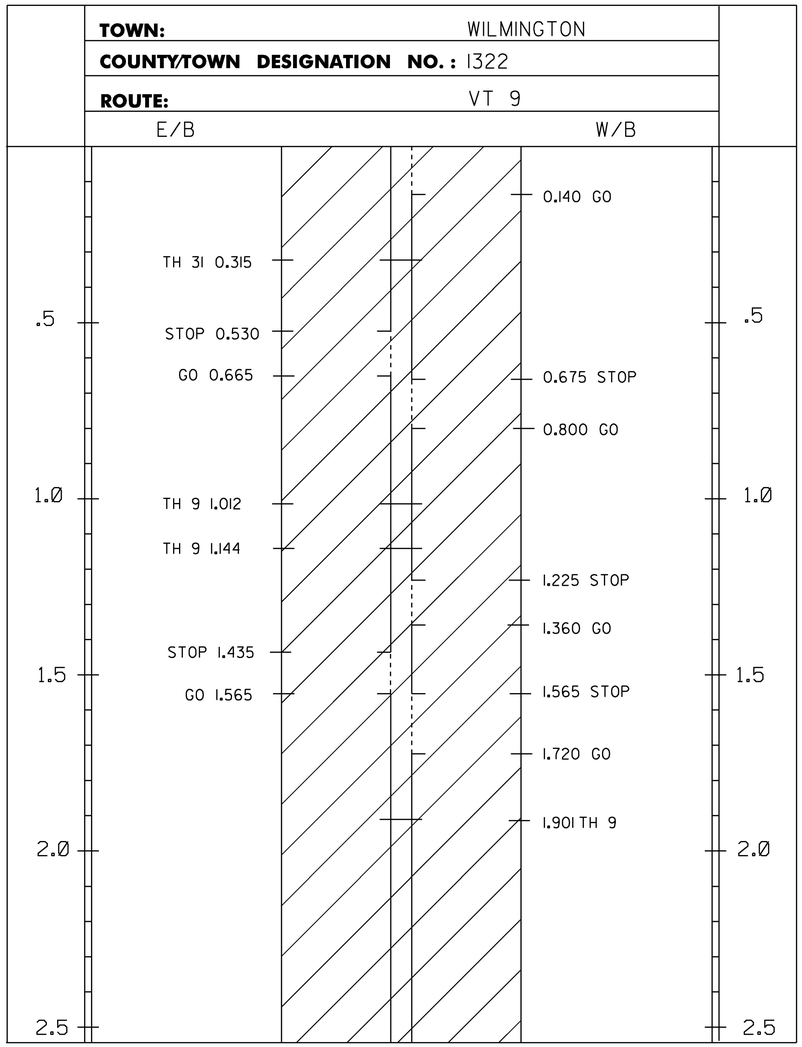

DURABLE 4 INCH WHITE LINE (OPTION BID ITEM)
(ALL LINES WILL INCLUDE EDGE LINE BREAKS AND RADIUS FOR TOWN HIGHWAYS)
MM 0.000 - MM 5.000 LT & RT

DURABLE 4 INCH YELLOW LINE (OPTION BID ITEM)
(ALL LINES WILL INCLUDE C/L BREAKS FOR TOWN HIGHWAYS)
MM 0.000 - MM 0.140 DASHED LT & SOLID RT
MM 0.140 - MM 0.530 SOLID LT & RT
MM 0.530 - MM 0.665 SOLID LT & DASHED RT
MM 0.665 - MM 0.675 SOLID LT & RT
MM 0.675 - MM 0.800 DASHED LT & SOLID RT
MM 0.800 - MM 1.225 SOLID LT & RT
MM 1.225 - MM 1.360 DASHED LT & SOLID RT
MM 1.360 - MM 1.435 SOLID LT & RT
MM 1.435 - MM 1.565 SOLID LT & DASHED RT
MM 1.565 - MM 1.720 DASHED LT & SOLID RT
MM 1.720 - MM 4.833 SOLID LT & RT
MM 4.833 - MM 4.939 SOLID LT & DASHED RT
MM 4.939 - MM 4.948 DASHED LT
MM 4.948 - MM 5.000 DASHED LT & SOLID RT

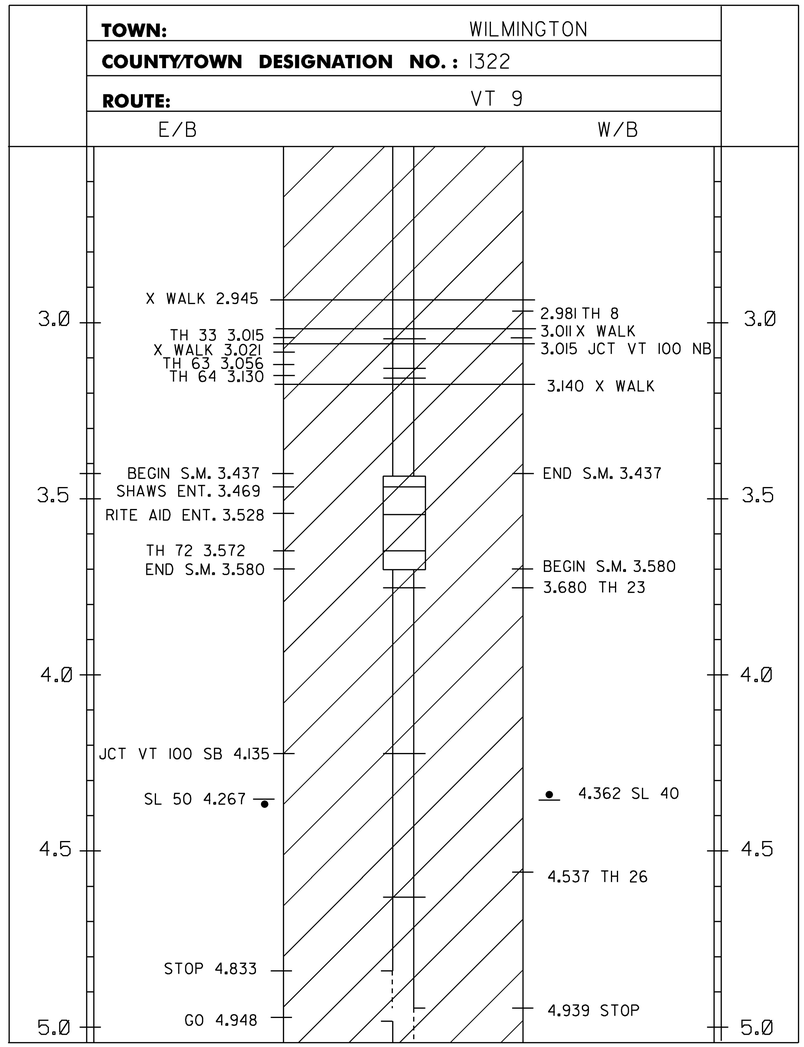

PROJECT AREA

LEGEND
TWBH-THROUGHWAY BEGINS HERE
TWEH-THROUGHWAY ENDS HERE
SHB-STATE HIGHWAY BEGINS
SHE-STATE HIGHWAY ENDS
SL-SPEED LIMIT
T/L-TOWN LINE
SM-SPECIAL MARKINGS

NOTES:
1. THIS SHEET TO BE USED FOR THE LAYOUT OF ALL CENTERLINE PAVEMENT MARKINGS. THE ENGINEER MAY CONTACT KEITH SWEET, PAVEMENT MARKING SUPERVISOR AT (802) 828-5573 FOR ASSISTANCE LAYING OUT THE CENTERLINE DURING CONSTRUCTION.

NOT TO SCALE

PROJECT NAME:	BENNINGTON-WILMINGTON
PROJECT NUMBER:	NH SURF (51)
FILE NAME: pl4v201 Bennington-Wilmington.dgn	PLOT DATE: 28-MAR-2017
PROJECT LEADER: M. FOWLER	DRAWN BY: N. PAPPAS
DESIGNED BY: N. PAPPAS	CHECKED BY: M. FOWLER
LAYOUT SHEET 5	SHEET 24 OF 64

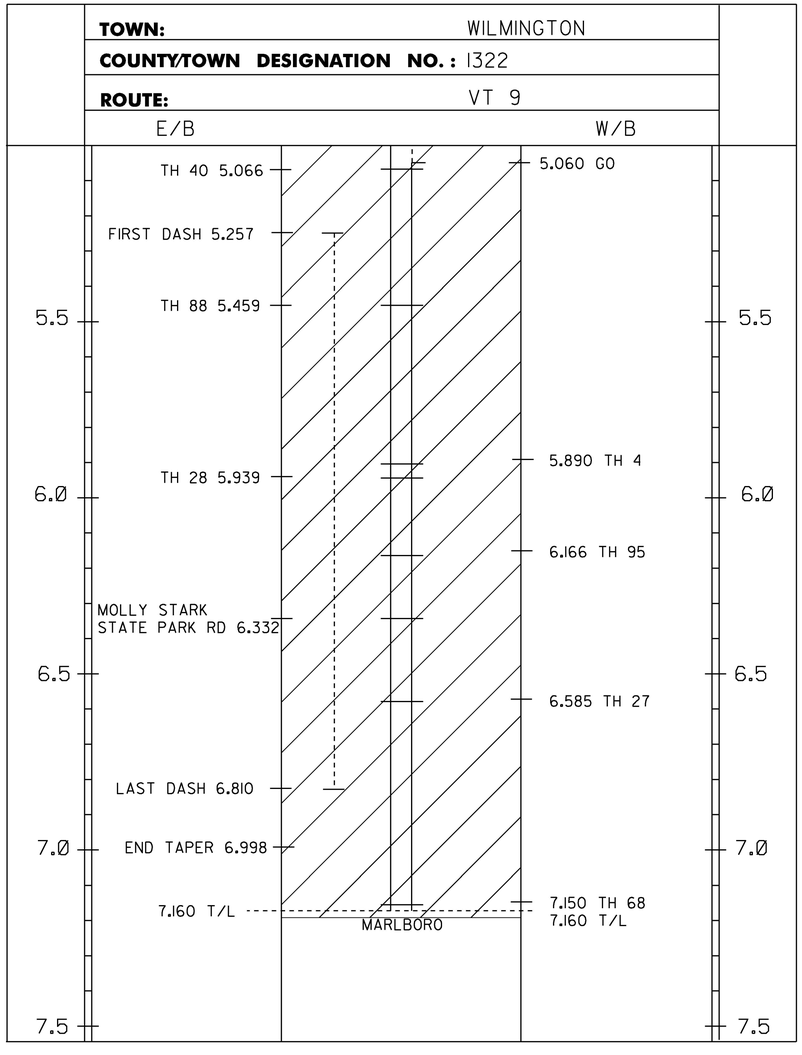

DURABLE 4 INCH WHITE LINE (OPTION BID ITEM)
(ALL LINES WILL INCLUDE EDGE LINE BREAKS AND RADIUS FOR TOWN HIGHWAYS)
MM 0.000 - MM 5.000 LT & RT
MM 5.247 - MM 6.810 DASHED RT

DURABLE 4 INCH YELLOW LINE (OPTION BID ITEM)
(ALL LINES WILL INCLUDE C/L BREAKS FOR TOWN HIGHWAYS)
MM 5.000 - MM 5.060 DASHED LT & SOLID RT
MM 5.060 - MM 5.075 DASHED RT
MM 5.060 - MM 7.160 SOLID LT & RT

LEGEND
TWBH-THROUGHWAY BEGINS HERE
TWEH-THROUGHWAY ENDS HERE
SHB-STATE HIGHWAY BEGINS
SHE-STATE HIGHWAY ENDS
SL-SPEED LIMIT
T/L-TOWN LINE
SM-SPECIAL MARKINGS

PROJECT AREA

NOTES:
1. THIS SHEET TO BE USED FOR THE LAYOUT OF ALL CENTERLINE PAVEMENT MARKINGS. THE ENGINEER MAY CONTACT KEITH SWEET, PAVEMENT MARKING SUPERVISOR AT (802) 828-5573 FOR ASSISTANCE LAYING OUT THE CENTERLINE DURING CONSTRUCTION.

NOT TO SCALE

PROJECT NAME:	BENNINGTON-WILMINGTON
PROJECT NUMBER:	NH SURF (51)

FILE NAME: pl4v201 Bennington-Wilmington.dgn		PLOT DATE:	28-MAR-2017
PROJECT LEADER:	M. FOWLER	DRAWN BY:	N. PAPPAS
DESIGNED BY:	N. PAPPAS	CHECKED BY:	M. FOWLER
LAYOUT SHEET 6		SHEET	25 OF 64

TOWN/STATE HIGHWAY NAME	LOCATION MM	MAINLINE CENTERLINE BREAK	MAINLINE EDGE LINE BREAK	TH OR SIDELINE CENTERLINE	TH OR SIDELINE EDGE LINE	TH OR SIDELINE STOP BAR	TH OR SIDELINE STOP BAR LETTERS
BENNINGTON							
VT RTE. 279	5.793 LT	YES	YES	-	-	-	-
TH #508 HARVARD ST	5.873 RT	YES	YES	YES	YES	YES	YES
TH #104 HICKORY HILL RD	5.923 RT	YES	YES	YES	YES	YES	YES
TH #123 LINDEN ST	5.987 RT	YES	YES	YES	YES	YES	YES
TH #52 BARNEY RD	6.175 RT	YES	YES	YES	YES	YES	YES
WOODFORD							
WOODFORD ELEMENTARY	0.993 LT	YES	YES	NO	NO	NO	NO
TH #1 HARBOUR RD	1.427 LT	YES	YES	YES	YES	YES	YES
TH #4 NOTCH RD	2.790 RT	YES	YES	YES	YES	YES	YES
WOODFORD STATE PARK RD	8.158 RT	YES	YES	YES	YES	YES	YES
NFH #72	8.960 LT	YES	YES	NO	NO	NO	NO
NFH #74	9.134 RT	YES	YES	NO	NO	NO	NO
SEARSBURG							
TH #6 OLD RTE. 9	0.488 RT	YES	YES	YES	YES	YES	YES
TH #6 OLD RTE. 9	0.769 RT	YES	YES	YES	YES	YES	YES
TH #7 TOWN GARAGE RD	1.748 LT	YES	YES	YES	YES	YES	YES
VT RTE. 8	1.828 RT	YES	YES	YES	YES	YES	YES
TH #4 SLEEPY HOLLOW RD	3.351 LT	YES	YES	YES	YES	YES	YES
TH #3 SLEEPY HOLLOW RD	3.355 RT	YES	YES	YES	YES	YES	YES
TH #8 VT 53 LIND LN	4.473 LT	YES	YES	YES	YES	YES	YES
WILMINGTON							
TH #31 N.E. POWER RD	0.351 RT	YES	YES	YES	YES	YES	YES
TH #9 OXBOW LOOP RD	1.012 RT	YES	YES	NO	NO	NO	NO
TH #9 OXBOW LOOP RD	1.144 RT	YES	YES	YES	YES	YES	YES
TH #5 HAYSTAK RD	1.901 LT	YES	YES	YES	YES	YES	YES
TH #8 RAY HILL RD	2.983 LT	YES	YES	YES	YES	YES	YES
VT RTE. 100 NB	3.091 LT	YES	YES	YES	YES	YES	NO
TH #33 S. MAIN ST	3.091 RT	YES	YES	YES	YES	YES	NO
TH #63 CHURCH ST	3.132 RT	YES	YES	NO	NO	NO	NO
TH #64 BEAVER ST	3.206 RT	YES	YES	YES	YES	YES	YES
TH #72 COUNTRY CLUB RD	3.572 RT	YES	YES	YES	YES	YES	YES
TH #23 WHITES RD	3.680 LT	YES	YES	YES	YES	YES	YES
VT RTE. 100 SB	4.135 RT	YES	YES	YES	YES	YES	YES
TH #26 BALLUO RD	4.537 LT	YES	YES	YES	YES	YES	YES
TH #40 SHEARER HILL RD	5.068 RT	YES	YES	YES	YES	YES	YES
TH #88 CHARLES FORREST RD	5.459 RT	YES	YES	YES	YES	YES	YES
TH #4 LAKE RAPONDA RD	5.890 LT	YES	YES	YES	YES	YES	YES
TH #28 LARSON RD	5.939 RT	YES	YES	YES	YES	YES	YES
TH #95 SPARROW LN	6.166 LT	YES	YES	YES	YES	YES	YES
MOLLY STARK STATE PARK RD	6.332 RT	YES	YES	YES	YES	YES	YES
TH #27 HALL RD	6.623 LT	YES	YES	YES	YES	YES	YES
TH # 68 SUN AND SKI RD	7.150 LT	YES	YES	NO	NO	NO	NO

PROJECT NAME: BENNINGTON-WILMINGTON
PROJECT NUMBER: NH SURF (51)

FILE NAME: pl4v201 Bennington-Wilmington.dgn PLOT DATE: 28-MAR-2017
PROJECT LEADER: M. FOWLER DRAWN BY: N. PAPPAS
DESIGNED BY: N. PAPPAS CHECKED BY: M. FOWLER
LAYOUT SHEET 7 SHEET 26 OF 64

CHANGING ELEVATION OF DROP INLETS, CATCH BASINS, OR MANHOLES
BENNINGTON:
MM 5.688 LT
MM 5.693 RT
MM 5.720 LT
MM 5.720 RT
MM 5.748 LT

CHANGING ELEVATION OF SEWER MANHOLES
(ELEVATION ADJUSTMENT BY OTHERS)
BENNINGTON:
MM 5.684 LT

ADJUST ELEVATION OF VALVE BOX
(ELEVATION ADJUSTMENT BY OTHERS)
BENNINGTON:
MM 5.687 RT
MM 5.687 RT

TEMPORARY 4 INCH WHITE LINE, PAINT & DURABLE 4 INCH WHITE LINE (OPTION BID ITEM)
(ALL LINES WILL INCLUDE EDGE LINE BREAKS AND RADIUS FOR TOWN HIGHWAYS)
BENNINGTON:
MM 5.672 - 5.752 DOUBLE SOLID LT & RT
MM 5.719 - 5.740 DOTTED RT
MM 5.740 - 5.752 SOLID RT (LANE LINE)

TEMPORARY 4 INCH YELLOW LINE, PAINT & DURABLE 4 INCH YELLOW LINE (OPTION BID ITEM)
(ALL LINES WILL INCLUDE C/L BREAKS FOR TOWN HIGHWAYS)
BENNINGTON:
MM 5.672 - 5.752 DOUBLE SOLID C/L
MM 5.694 - 5.740 DOUBLE SOLID RT

TEMPORARY 8 INCH YELLOW LINE, PAINT & DURABLE 8 INCH YELLOW LINE (OPTION BID ITEM)
BENNINGTON:
MM 5.694 - 5.740 RT (DIAGONALS MEDIAN)(215 FT)

TEMPORARY LETTER OR SYMBOL, PAINT & DURABLE LETTER OR SYMBOL (OPTION BID ITEM)
BENNINGTON:
MM 5.688 RT - "SIGNAL" (6 EA)
MM 5.796 RT - "AHEAD" (5 EA)
MM 5.741 RT - "ONLY" (4 EA)
MM 5.748 RT - " " (1 EA)
MM 5.748 RT - " " (1 EA)

TEMPORARY CROSSWALK MARKING, PAINT & DURABLE CROSSWALK MARKING (OPTION BID ITEM)
BENNINGTON:
MM 5.683

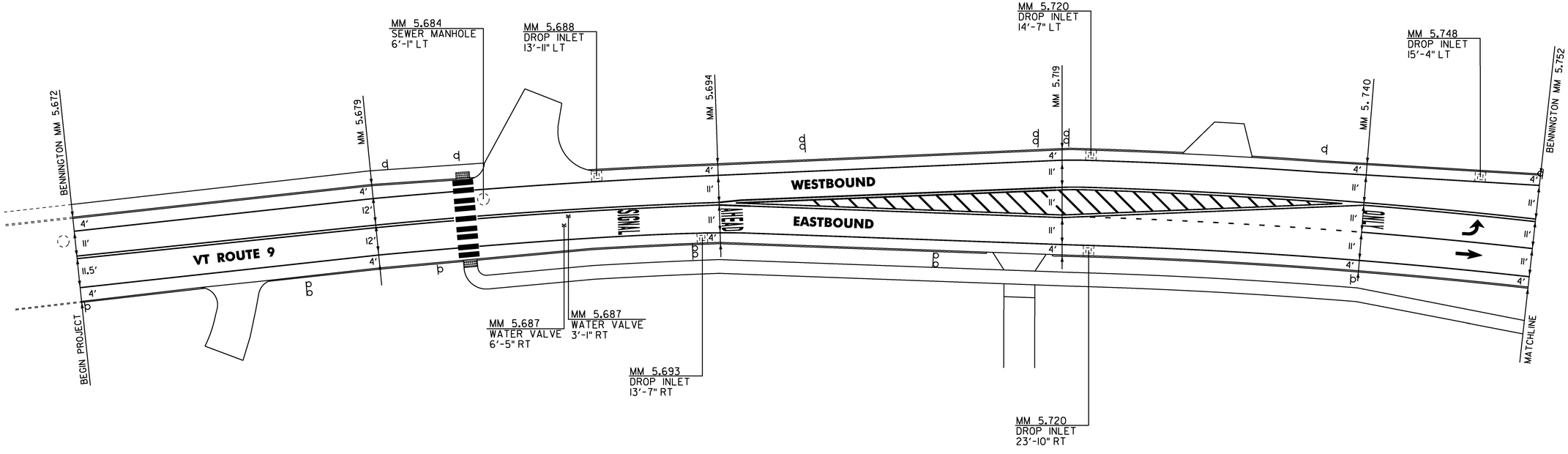

LEGEND: COLD PLANE AREA

NOT TO SCALE

PROJECT NAME:	BENNINGTON-WILMINGTON
PROJECT NUMBER:	NH SURF (51)
FILE NAME: pl4v201 Bennington-Wilmington.dgn	PLOT DATE: 28-MAR-2017
PROJECT LEADER: M. FOWLER	DRAWN BY: N. PAPPAS
DESIGNED BY: N. PAPPAS	CHECKED BY: M. FOWLER
LAYOUT SHEET 8	SHEET 27 OF 64

CHANGING ELEVATION OF DROP INLETS, CATCH BASINS, OR MANHOLES
BENNINGTON:
MM 5.762 RT
MM 5.769 LT
MM 5.788 LT
MM 5.788 RT
MM 5.811 LT
MM 5.811 RT
MM 5.842 RT

CHANGING ELEVATION OF SEWER MANHOLES
(ELEVATION ADJUSTMENT BY OTHERS)
BENNINGTON:
MM 5.763 CL
MM 5.814 CL
MM 5.868 CL

TEMPORARY 4 INCH WHITE LINE, PAINT & DURABLE 4 INCH WHITE LINE (OPTION BID ITEM)
(ALL LINES WILL INCLUDE EDGE LINE BREAKS AND RADIUS FOR TOWN HIGHWAYS)
BENNINGTON:
MM 5.752 - 5.765 SOLID LT
MM 5.752 - 5.871 SOLID RT
MM 5.752 - 5.779 SOLID RT (LANE LINE)
MM 5.779 - 5.786 DOTTED RT TO LT
MM 5.791 - 5.799 DOTTED LT TO RT
MM 5.802 - 5.829 SOLID LT
MM 5.826 - 5.844 DOTTED RT
MM 5.837 - 5.858 DOTTED LT
MM 5.844 - 5.869 SOLID RT (LANE LINE)
MM 5.858 - 5.871 SOLID LT

TEMPORARY 4 INCH YELLOW LINE, PAINT & DURABLE 4 INCH YELLOW LINE (OPTION BID ITEM)
(ALL LINES WILL INCLUDE C/L BREAKS FOR TOWN HIGHWAYS)
BENNINGTON:
MM 5.752 - 5.779 DOUBLE SOLID C/L
MM 5.811 - 5.869 DOUBLE SOLID LT & RT

TEMPORARY 6 INCH WHITE LINE, PAINT & DURABLE 6 INCH WHITE LINE, POLYUREA
BENNINGTON:
MM 5.762 - 5.763 SOLID LT
MM 5.787 - 5.791 SOLID LT
MM 5.800 - 5.802 SOLID LT
MM 5.827 - 5.869 SOLID LT

TEMPORARY 6 INCH YELLOW LINE, PAINT & DURABLE 6 INCH YELLOW LINE, POLYUREA
BENNINGTON:
MM 5.763 - 5.769 SOLID LT
MM 5.793 - 5.794 SOLID LT
MM 5.798 - 5.801 SOLID LT
MM 5.835 - 5.837 SOLID LT

TEMPORARY 8 INCH WHITE LINE, PAINT & DURABLE 8 INCH WHITE LINE (OPTION BID ITEM)
BENNINGTON:
MM 5.763 - 5.768 SOLID LT (GORE)
MM 5.786 - 5.791 SOLID LT (GORE)
MM 5.800 - 5.802 SOLID LT (GORE)
MM 5.828 - 5.837 SOLID LT (DIAGONALS MEDIAN)(106 FT)

TEMPORARY 8 INCH YELLOW LINE, PAINT & DURABLE 8 INCH YELLOW LINE (OPTION BID ITEM)
BENNINGTON:
MM 5.793 - 5.798 SOLID LT
MM 5.811 - 5.868 (GORE W/DIAGONALS)(328 FT)

TEMPORARY 24 INCH STOP BAR, PAINT & DURABLE 24 INCH STOP BAR (OPTION BID ITEM)
BENNINGTON:
MM 5.779 RT
MM 5.791 LT
MM 5.811 LT

TEMPORARY LETTER OR SYMBOL, PAINT & DURABLE LETTER OR SYMBOL (OPTION BID ITEM)
BENNINGTON:
MM 5.753 RT - "ONLY" (4 EACH)
MM 5.763 RT - "↑" (1 EACH)
MM 5.763 RT - "↰" (1 EACH)
MM 5.764 LT - "ONLY" (4 EACH)
MM 5.771 RT - "▼▼▼▼" (4 EACH)
MM 5.778 RT - "↑" (1 EACH)
MM 5.778 RT - "↰" (1 EACH)
MM 5.846 RT - "↱" (2 EACH)
MM 5.863 RT - "↱" (2 EACH)

TEMPORARY CROSSWALK MARKING, PAINT & DURABLE CROSSWALK MARKING (OPTION BID ITEM)
BENNINGTON:
MM 5.873 RT (HARVARD ST.)

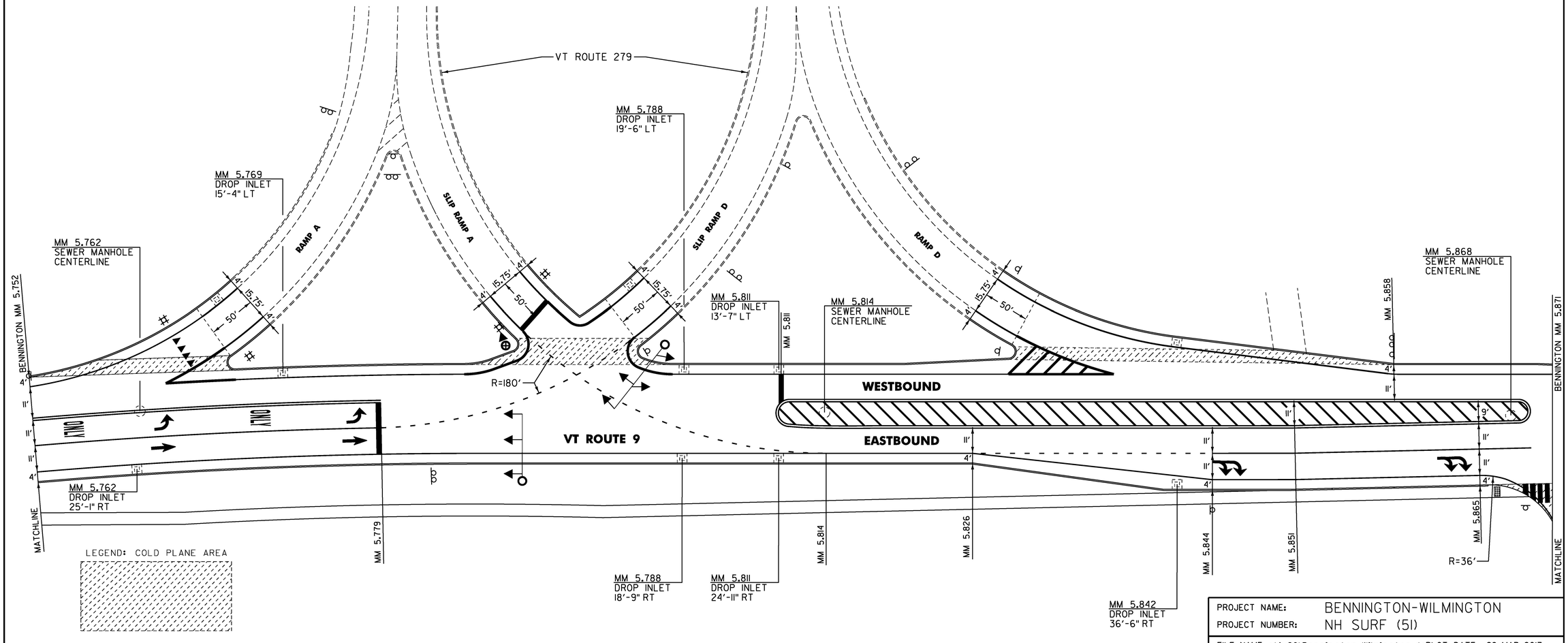

NOT TO SCALE

PROJECT NAME:	BENNINGTON-WILMINGTON
PROJECT NUMBER:	NH SURF (51)

FILE NAME: pl4v201 Bennington-Wilmington.dgn PLOT DATE: 28-MAR-2017
PROJECT LEADER: M. FOWLER DRAWN BY: N. PAPPAS
DESIGNED BY: N. PAPPAS CHECKED BY: M. FOWLER
LAYOUT SHEET 9 SHEET 28 OF 64

CHANGING ELEVATION OF DROP INLETS, CATCH BASINS, OR MANHOLES
BENNINGTON:
MM 5.888 LT
MM 5.888 RT
MM 5.922 LT
MM 5.924 RT

CHANGING ELEVATION OF SEWER MANHOLES
(ELEVATION ADJUSTMENT BY OTHERS)
BENNINGTON:
MM 5.922 LT

629.20 ADJUST ELEVATION OF VALVE BOX
(ELEVATION ADJUSTMENT BY OTHERS)
BENNINGTON:
MM 5.873 LT
MM 5.873 LT
MM 5.925 RT
MM 5.925 RT

TEMPORARY 4 INCH WHITE LINE, PAINT &
DURABLE 4 INCH WHITE LINE (OPTION BID ITEM)
(ALL LINES WILL INCLUDE EDGE LINE BREAKS AND RADIUS FOR TOWN HIGHWAYS)
BENNINGTON:
MM 5.866 - 5.953 SOLID LT & RT
MM 5.872 - 5.920 SOLID RT LANE LINE
MM 5.874 - 5.922 SOLID RT
MM 5.926 - 5.953 SOLID RT

TEMPORARY 4 INCH YELLOW LINE, PAINT &
DURABLE 4 INCH YELLOW LINE (OPTION BID ITEM)
(ALL LINES WILL INCLUDE C/L BREAKS FOR TOWN HIGHWAYS)
BENNINGTON:
MM 5.869 DOUBLE SOLID RT TH-508
MM 5.873 - 5.891 DOUBLE SOLID LT & RT
MM 5.891 - 5.922 DOUBLE SOLID C/L
MM 5.923 DOUBLE SOLID RT TH-104
MM 5.926 - 5.958 DOUBLE SOLID C/L

TEMPORARY 8 INCH YELLOW LINE, PAINT &
DURABLE 8 INCH YELLOW LINE (OPTION BID ITEM)
BENNINGTON:
MM 5.873 - 5.885 (DIAGONALS MEDIAN)(20 FT)

TEMPORARY 24 INCH STOP BAR, PAINT &
DURABLE 24 INCH STOP BAR (OPTION BID ITEM)
BENNINGTON:
MM 5.874 RT
MM 5.924 RT

TEMPORARY LETTER OR SYMBOL, PAINT &
DURABLE LETTER OR SYMBOL (OPTION BID ITEM)
BENNINGTON:
MM 5.873 RT - "STOP" (4 EACH)
MM 5.882 RT - "ONLY" (1 EACH)
MM 5.890 RT - "↱" (1 EACH)
MM 5.897 RT - "ONLY" (4 EACH)
MM 5.905 RT - "↱" (1 EACH)
MM 5.912 RT - "ONLY" (4 EACH)
MM 5.919 RT - "↱" (1 EACH)
MM 5.923 RT - "STOP" (4 EACH)

TEMPORARY CROSSWALK MARKING, PAINT &
DURABLE CROSSWALK MARKING (OPTION BID ITEM)
BENNINGTON:
MM 5.873 RT (HARVARD ST.)

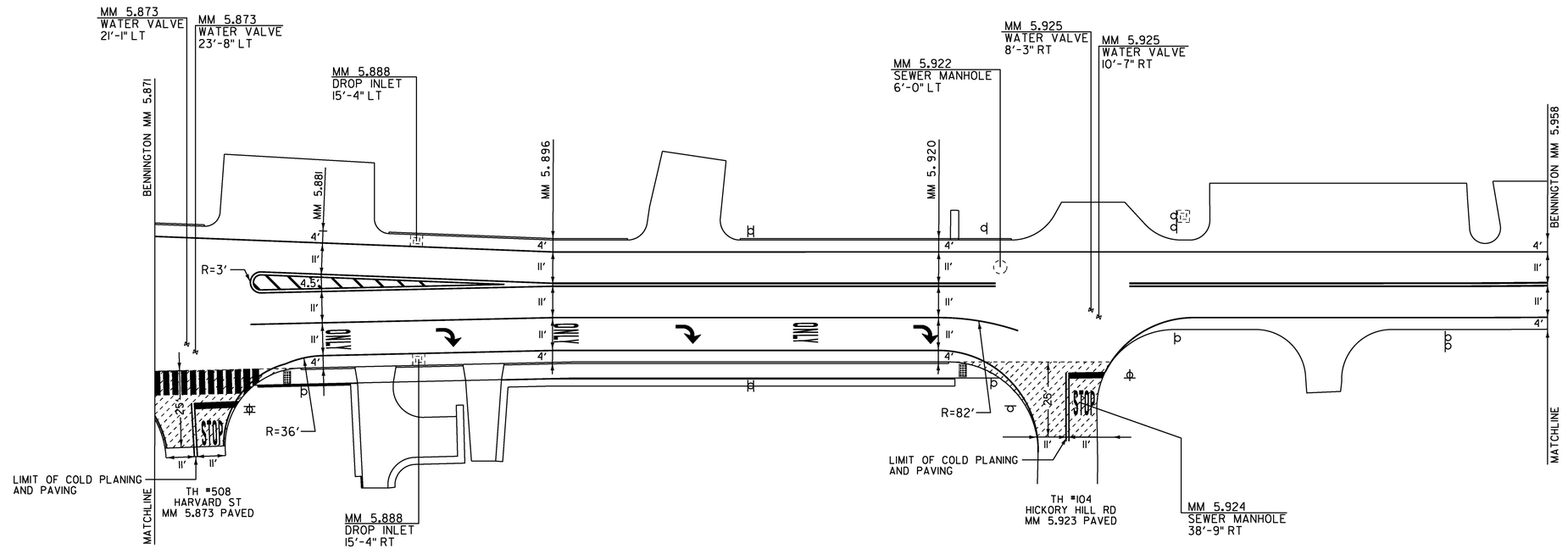

LEGEND: COLD PLANE AREA

NOT TO SCALE

PROJECT NAME:	BENNINGTON-WILMINGTON
PROJECT NUMBER:	NH SURF (51)
FILE NAME: pl4v201 Bennington-Wilmington.dgn	PLOT DATE: 28-MAR-2017
PROJECT LEADER: M. FOWLER	DRAWN BY: N. PAPPAS
DESIGNED BY: N. PAPPAS	CHECKED BY: M. FOWLER
LAYOUT SHEET 10	SHEET 29 OF 64

CHANGING ELEVATION OF SEWER MANHOLES
(ELEVATION ADJUSTMENT BY OTHERS)
BENNINGTON:
MM 5.959 LT
MM 5.988 LT
MM 6.022 LT

629.20 ADJUST ELEVATION OF VALVE BOX
(ELEVATION ADJUSTMENT BY OTHERS)
BENNINGTON:
MM 5.986 RT
MM 5.989 RT

TEMPORARY 4 INCH WHITE LINE, PAINT &
DURABLE 4 INCH WHITE LINE (OPTION BID ITEM)
(ALL LINES WILL INCLUDE EDGE LINE BREAKS AND RADIUS FOR TOWN HIGHWAYS)
BENNINGTON:
MM 5.958 - 6.032 SOLID LT & RT

TEMPORARY 4 INCH YELLOW LINE, PAINT &
DURABLE 4 INCH YELLOW LINE (OPTION BID ITEM)
(ALL LINES WILL INCLUDE C/L BREAKS FOR TOWN HIGHWAYS)
BENNINGTON:
MM 5.958 - 6.032 DOUBLE SOLID C/L
MM 5.987 DOUBLE SOLID RT TH-123

TEMPORARY LETTER OR SYMBOL, PAINT &
DURABLE LETTER OR SYMBOL (OPTION BID ITEM)
BENNINGTON:

MM 5.986 RT - "STOP" (4 EACH)

MM 5.997 LT - "AHEAD" (5 EACH)

MM 6.005 LT - "SIGNAL" (6 EACH)

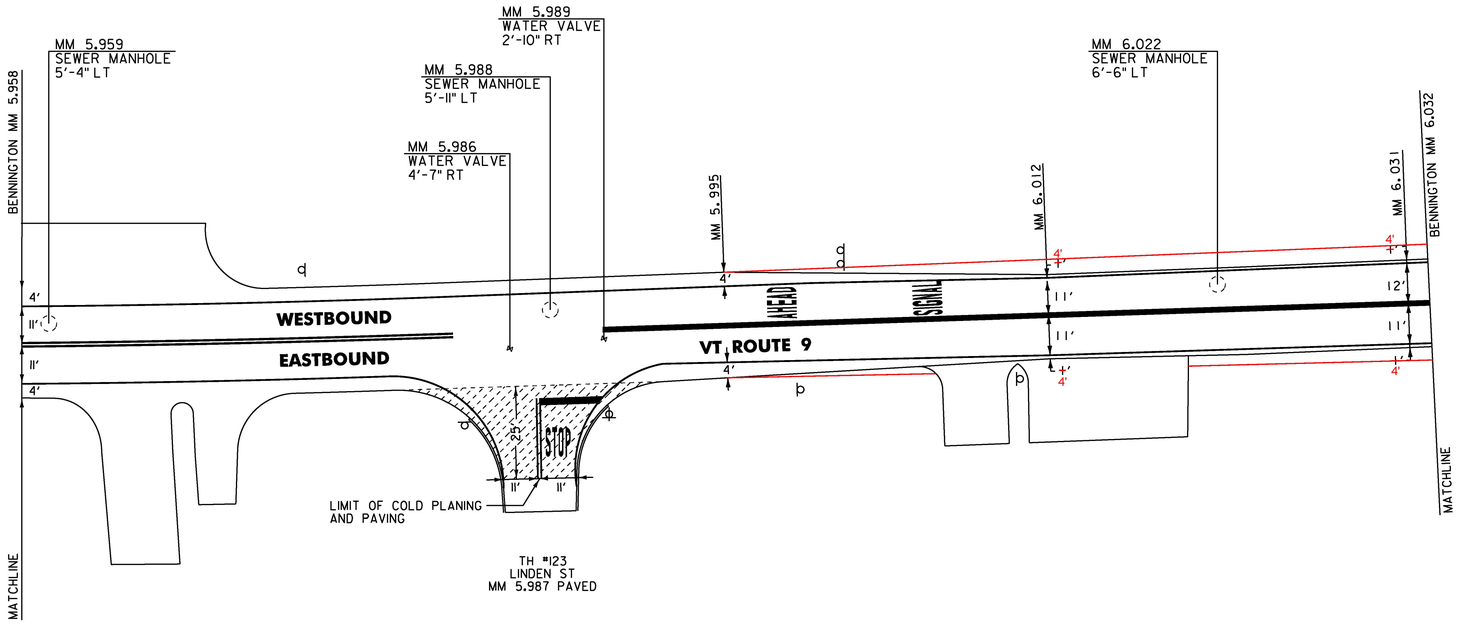

LEGEND: COLD PLANE AREA

NOT TO SCALE

PROJECT NAME:	BENNINGTON-WILMINGTON
PROJECT NUMBER:	NH SURF (51)
FILE NAME: pl4v201 Bennington-Wilmington.dgn	PLOT DATE: 28-MAR-2017
PROJECT LEADER: M. FOWLER	DRAWN BY: N. PAPPAS
DESIGNED BY: N. PAPPAS	CHECKED BY: M. FOWLER
LAYOUT SHEET 11	SHEET 30 OF 64

TEMPORARY 4 INCH WHITE LINE, PAINT & DURABLE 4 INCH WHITE LINE (OPTION BID ITEM)
(ALL LINES WILL INCLUDE EDGE LINE BREAKS AND RADIUS FOR DRIVE)
WILMINGTON:
MM 1.010 - 1.761 EDGE LINE LT & RT
STA 0+00 - 11+68 EDGE LINE LT & RT
STA 0+83 LT (11')
STA 2+14 LT (11')
STA 3+44 LT (11')
STA 4+74 LT (11')
STA 6+04 LT (11')
STA 7+34 LT (11')

TEMPORARY 4 INCH YELLOW LINE, PAINT & DURABLE 4 INCH YELLOW LINE (OPTION BID ITEM)
(ALL LINES WILL INCLUDE C/L BREAKS FOR TOWN HIGHWAYS)
WILMINGTON:
MM 1.010 - 1.761 DOUBLE SOLID C/L
STA 8+59 - 11+68 DOUBLE SOLID C/L

TEMPORARY 24 INCH STOP BAR, PAINT & DURABLE 24 INCH STOP BAR (OPTION BID ITEM)
WILMINGTON:
STA 11+67 RT

TEMPORARY LETTER OR SYMBOL, PAINT & DURABLE LETTER OR SYMBOL (OPTION BID ITEM)
WILMINGTON:
STA 11+63 RT - "STOP" (4 EACH)
STA 0+41 RT - "↑" (1 EACH)
STA 1+48 RT - "↑" (1 EACH)
STA 2+79 RT - "↑" (1 EACH)
STA 4+09 RT - "↑" (1 EACH)
STA 5+39 RT - "↑" (1 EACH)
STA 6+69 RT - "↑" (1 EACH)

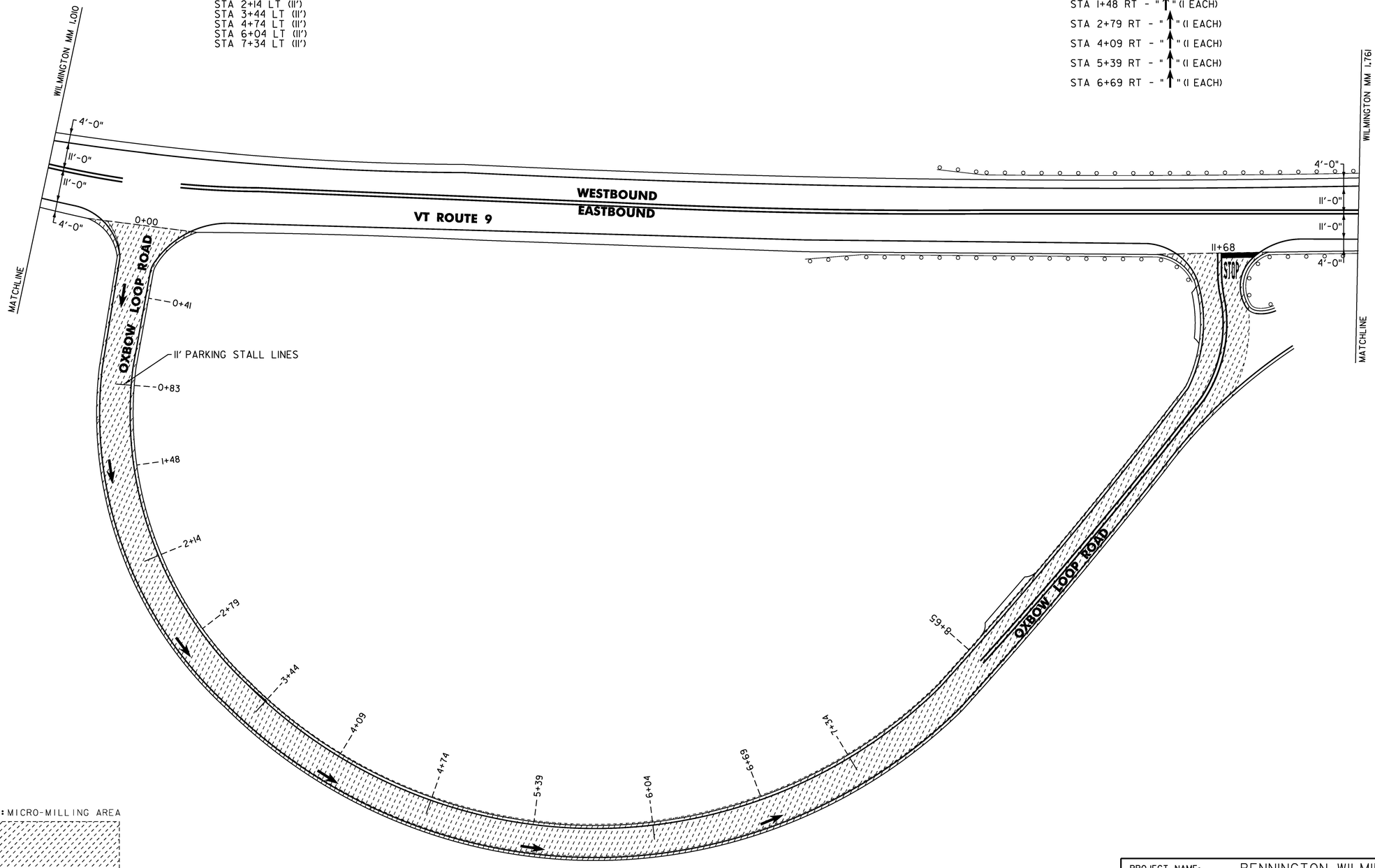

LEGEND: MICRO-MILLING AREA

NOT TO SCALE

PROJECT NAME:	BENNINGTON-WILMINGTON
PROJECT NUMBER:	NH SURF (51)

FILE NAME: pl4v201 Bennington-Wilmington.dgn PLOT DATE: 28-MAR-2017
PROJECT LEADER: M. FOWLER DRAWN BY: N. PAPPAS
DESIGNED BY: N. PAPPAS CHECKED BY: M. FOWLER
LAYOUT SHEET 12 SHEET 31 OF 64

CHANGING ELEVATION OF SEWER MANHOLES
WILMINGTON:
MM 2.042 LT

TEMPORARY 4 INCH WHITE LINE, PAINT &
DURABLE 4 INCH WHITE LINE (OPTION BID ITEM)
(ALL LINES WILL INCLUDE EDGE LINE BREAKS AND RADIUS FOR TOWN HIGHWAYS)
WILMINGTON:
MM 1.761 - 2.046 EDGE LINE LT & RT

TEMPORARY 4 INCH YELLOW LINE, PAINT &
DURABLE 4 INCH YELLOW LINE (OPTION BID ITEM)
(ALL LINES WILL INCLUDE C/L BREAKS FOR TOWN HIGHWAYS)
WILMINGTON:
MM 1.761 - 2.046 DOUBLE SOLID C/L
MM 1.901 DOUBLE SOLID LT TH-5

TEMPORARY 24 INCH STOP BAR, PAINT &
DURABLE 24 INCH STOP BAR (OPTION BID ITEM)
WILMINGTON:
MM 1.090 LT TH-5

TEMPORARY LETTER OR SYMBOL, PAINT &
DURABLE LETTER OR SYMBOL (OPTION BID ITEM)
WILMINGTON:

MM 1.091 LT - "STOP" (4 EACH)

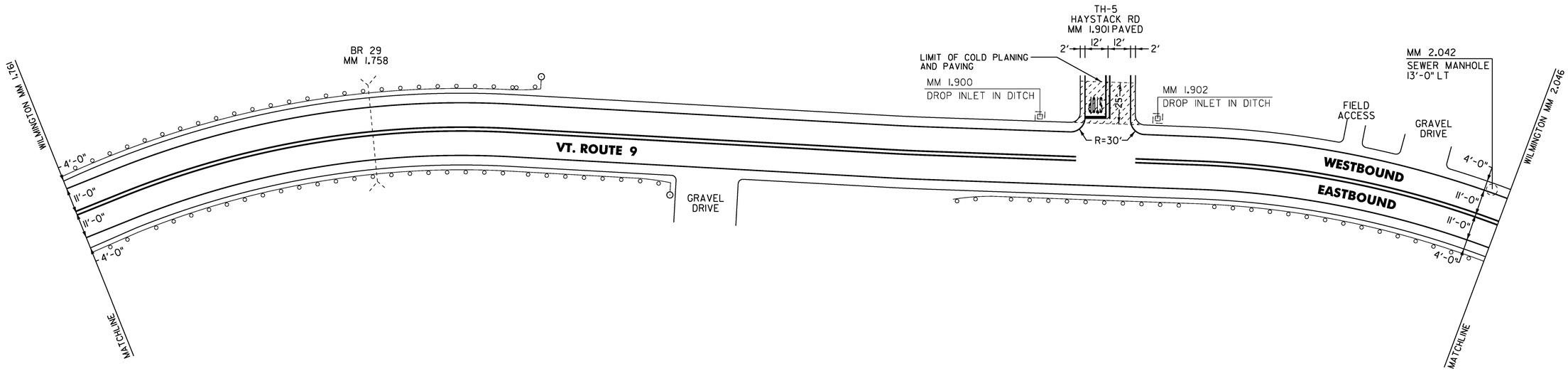

LEGEND: COLD PLANE AREA

NOT TO SCALE

PROJECT NAME:	BENNINGTON-WILMINGTON
PROJECT NUMBER:	NH SURF (51)
FILE NAME: pl4v201 Bennington-Wilmington.dgn	PLOT DATE: 28-MAR-2017
PROJECT LEADER: M. FOWLER	DRAWN BY: N. PAPPAS
DESIGNED BY: N. PAPPAS	CHECKED BY: M. FOWLER
LAYOUT SHEET 13	SHEET 32 OF 64

CHANGING ELEVATION OF SEWER MANHOLES
WILMINGTON:
MM 2.178 LT
MM 2.228 LT
MM 2.311 LT
MM 2.344 LT

TEMPORARY 4 INCH WHITE LINE, PAINT & DURABLE 4 INCH WHITE LINE (OPTION BID ITEM)
(ALL LINES WILL INCLUDE EDGE LINE BREAKS AND RADIUS FOR TOWN HIGHWAYS)
WILMINGTON:
MM 2.046 - 2.349 EDGE LINE LT & RT

TEMPORARY 4 INCH YELLOW LINE, PAINT & DURABLE 4 INCH YELLOW LINE (OPTION BID ITEM)
(ALL LINES WILL INCLUDE C/L BREAKS FOR TOWN HIGHWAYS)
WILMINGTON:
MM 2.046 - 2.349 DOUBLE SOLID C/L

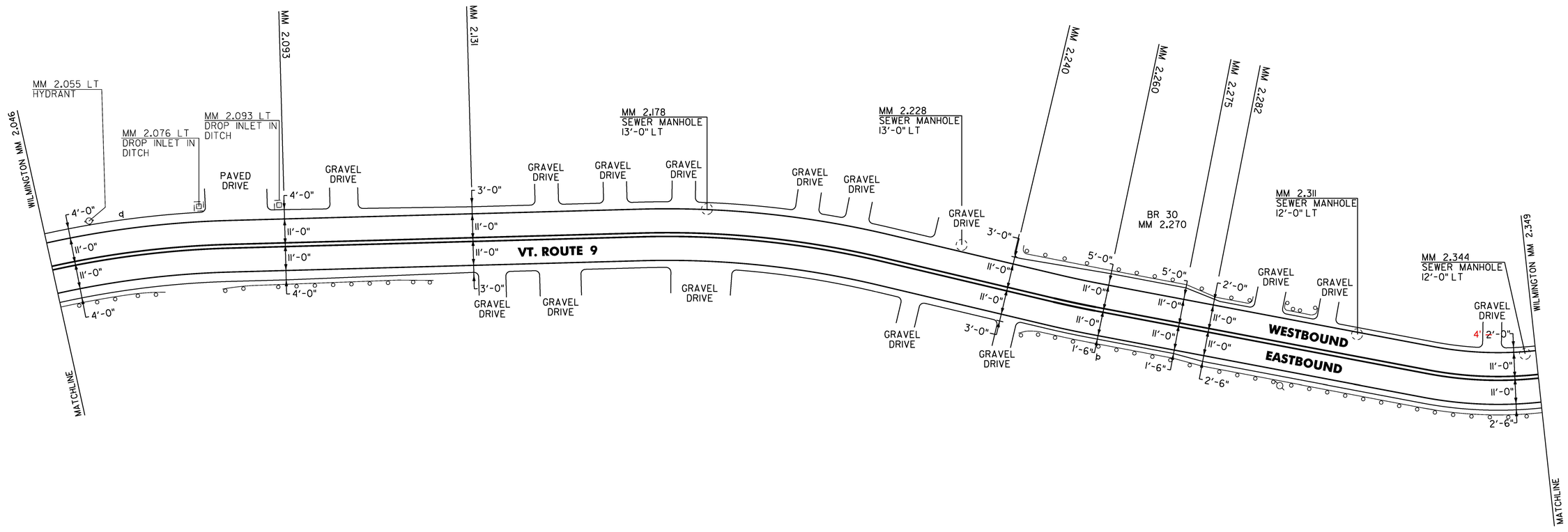

LEGEND: COLD PLANE AREA

NOT TO SCALE

PROJECT NAME:	BENNINGTON-WILMINGTON
PROJECT NUMBER:	NH SURF (51)

FILE NAME: pl4v201 Bennington-Wilmington.dgn PLOT DATE: 28-MAR-2017
PROJECT LEADER: M. FOWLER DRAWN BY: N. PAPPAS
DESIGNED BY: N. PAPPAS CHECKED BY: M. FOWLER
LAYOUT SHEET 14 SHEET 33 OF 64

CHANGING ELEVATION OF DROP INLETS, CATCH BASINS, OR MANHOLES
WILMINGTON:
MM 2.371 LT
MM 2.514 LT
MM 2.580 LT
MM 2.617 LT

CHANGING ELEVATION OF SEWER MANHOLES
WILMINGTON:
MM 2.386 LT
MM 2.481 LT

TEMPORARY 4 INCH WHITE LINE, PAINT & DURABLE 4 INCH WHITE LINE (OPTION BID ITEM)
(ALL LINES WILL INCLUDE EDGE LINE BREAKS AND RADIUS FOR TOWN HIGHWAYS)
WILMINGTON:
MM 2.439 - 2.652 EDGE LINE LT & RT

TEMPORARY 4 INCH YELLOW LINE, PAINT & DURABLE 4 INCH YELLOW LINE (OPTION BID ITEM)
(ALL LINES WILL INCLUDE C/L BREAKS FOR TOWN HIGHWAYS)
WILMINGTON:
MM 2.439 - 2.652 C/L SOLID LT & RT

TEMPORARY 8 INCH WHITE LINE, PAINT & DURABLE 8 INCH WHITE LINE, (OPTION BID ITEM)
WILMINGTON:
MM 2.583 - 2.585 LT NO PARKING FIRE HYDRANT

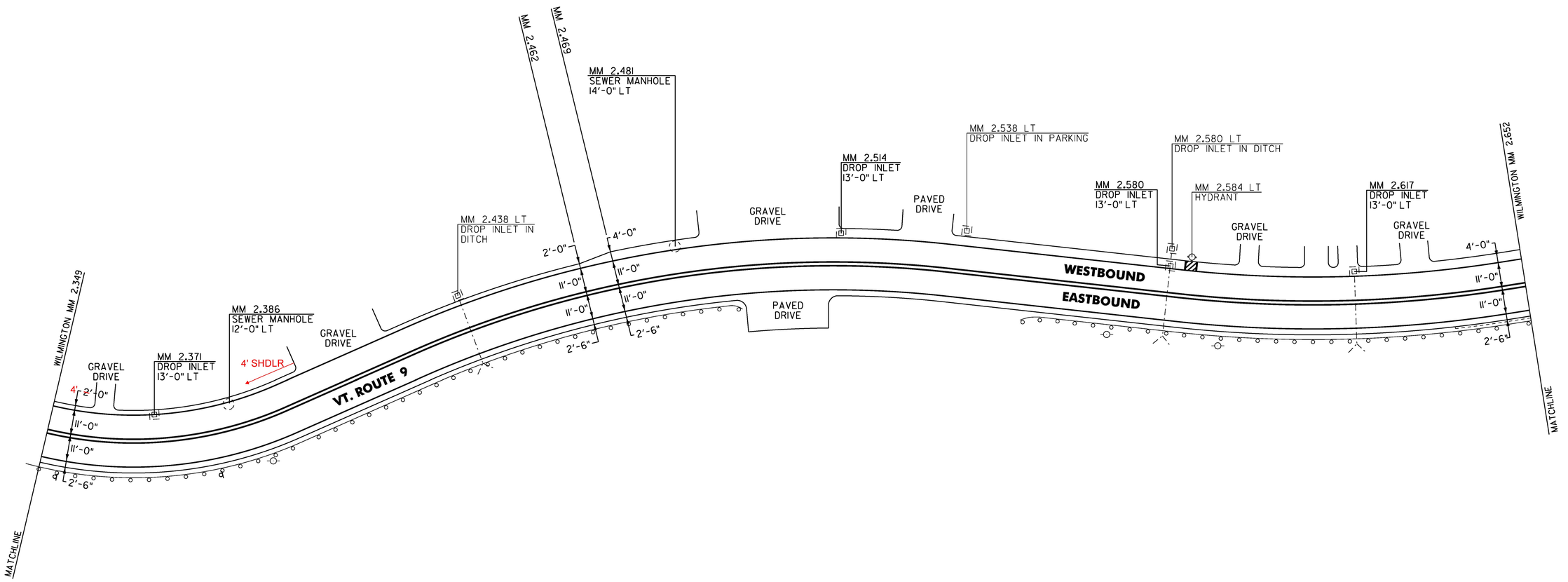

LEGEND: COLD PLANE AREA

NOT TO SCALE

PROJECT NAME:	BENNINGTON-WILMINGTON
PROJECT NUMBER:	NH SURF (51)
FILE NAME: p14v201 Bennington-Wilmington.dgn	PLOT DATE: 28-MAR-2017
PROJECT LEADER: M. FOWLER	DRAWN BY: N. PAPPAS
DESIGNED BY: N. PAPPAS	CHECKED BY: M. FOWLER
LAYOUT SHEET 15	SHEET 34 OF 64

CHANGING ELEVATION OF DROP INLETS, CATCH BASINS, OR MANHOLES
WILMINGTON:
MM 2.660 LT
MM 2.700 LT
MM 2.670 RT
MM 2.721 LT
MM 2.743 LT
MM 2.764 LT
MM 2.764 RT
MM 2.806 LT
MM 2.843 RT
MM 2.890 RT
MM 2.891 LT
MM 2.923 RT
MM 2.928 LT

CHANGING ELEVATION OF SEWER MANHOLES
WILMINGTON:
MM 2.933 LT

ADJUST ELEVATION OF VALVE BOX
WILMINGTON:
MM 2.711 LT
MM 2.773 LT
MM 2.821 LT (2)

TEMPORARY 4 INCH WHITE LINE, PAINT & DURABLE 4 INCH WHITE LINE (OPTION BID ITEM)
(ALL LINES WILL INCLUDE EDGE LINE BREAKS AND RADIUS FOR TOWN HIGHWAYS)
WILMINGTON:
MM 2.652 - 2.955 EDGE LINE LT & RT

TEMPORARY 4 INCH YELLOW LINE, PAINT & DURABLE 4 INCH YELLOW LINE (OPTION BID ITEM)
(ALL LINES WILL INCLUDE C/L BREAKS FOR TOWN HIGHWAYS)
WILMINGTON:
MM 2.652 - 2.955 C/L SOLID LT & RT

DURABLE CROSSWALK MARKING:
MM 2.900 C/L

TEMPORARY 8 INCH WHITE LINE, PAINT & DURABLE 8 INCH WHITE LINE (OPTION BID ITEM)
WILMINGTON:
MM 2.722 - 2.724 LT NO PARKING FIRE HYDRANT
MM 2.820 - 2.822 LT NO PARKING FIRE HYDRANT
MM 2.886 - 2.888 LT NO PARKING FIRE HYDRANT

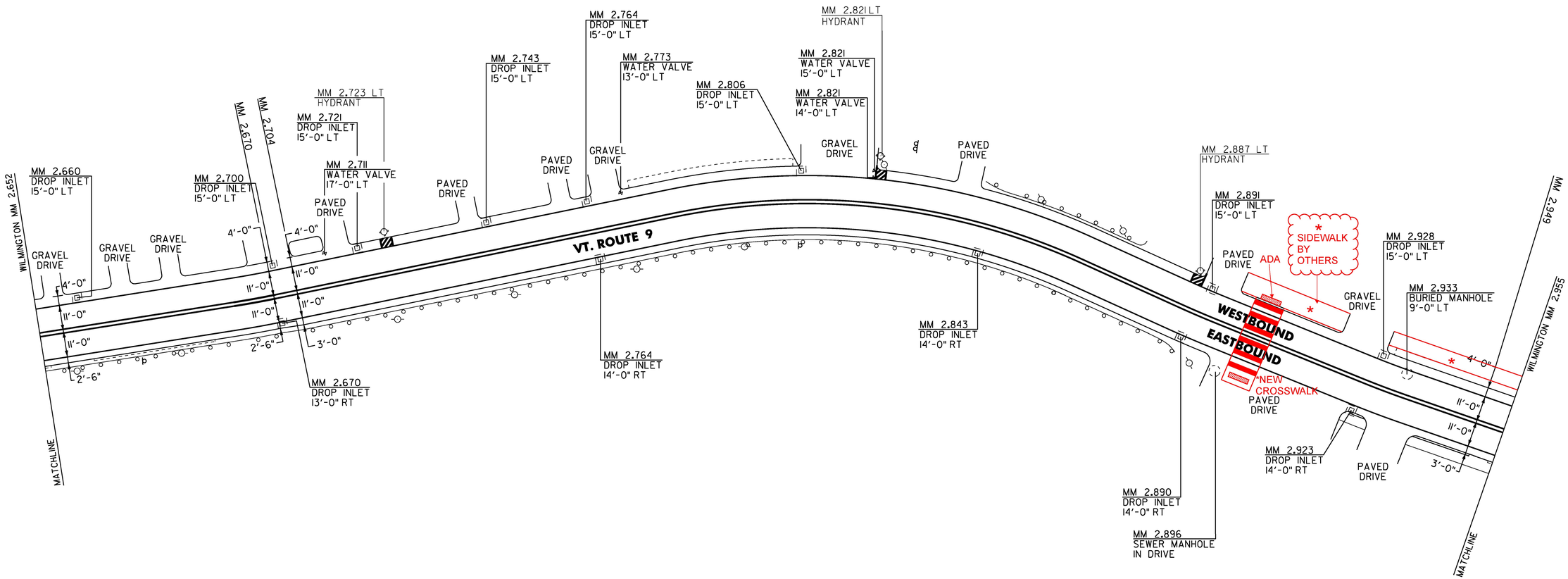

LEGEND: COLD PLANE AREA

NOT TO SCALE

PROJECT NAME:	BENNINGTON-WILMINGTON
PROJECT NUMBER:	NH SURF (51)

FILE NAME: pl4v201Bennington-Wilmington.dgn PLOT DATE: 28-MAR-2017
PROJECT LEADER: M. FOWLER DRAWN BY: N. PAPPAS
DESIGNED BY: N. PAPPAS CHECKED BY: M. FOWLER
LAYOUT SHEET 16 SHEET 35 OF 64

CHANGING ELEVATION OF DROP INLETS, CATCH BASINS, OR MANHOLES
WILMINGTON:
MM 2.960 LT
MM 2.968 RT
MM 2.968 LT
MM 3.006 RT
MM 3.010 LT

CHANGING ELEVATION OF SEWER MANHOLES
WILMINGTON:
MM 2.960 LT
MM 2.965 LT

ADJUST ELEVATION OF VALVE BOX
WILMINGTON:
MM 3.040 RT
MM 3.018 RT

TEMPORARY 4 INCH WHITE LINE, PAINT & DURABLE 4 INCH WHITE LINE (OPTION BID ITEM)
(ALL LINES WILL INCLUDE EDGE LINE BREAKS AND RADIUS FOR TOWN HIGHWAYS)
WILMINGTON:
MM 2.955 - 3.049 EDGE LINE LT & RT

TEMPORARY 4 INCH YELLOW LINE, PAINT & DURABLE 4 INCH YELLOW LINE (OPTION BID ITEM)
(ALL LINES WILL INCLUDE C/L BREAKS FOR TOWN HIGHWAYS))
WILMINGTON:
MM 2.955 - 3.049 C/L SOLID LT & RT

TEMPORARY 8 INCH WHITE LINE, PAINT & DURABLE 8 INCH WHITE LINE (OPTION BID ITEM)
WILMINGTON:
MM 2.957 - 2.960 RT NO PARKING FIRE HYDRANT
MM 3.011 - 3.015 LT NO PARKING
MM 3.017 - 3.023 RT NO PARKING / FIRE HYDRANT
MM 3.031 RT (2)
MM 3.033 RT
MM 3.048 LT

TEMPORARY LETTER OR SYMBOL, PAINT & DURABLE LETTER OR SYMBOL (OPTION BID ITEM)
WILMINGTON:
MM 3.032 RT - "♿" (1 EACH)

TEMPORARY CROSSWALK MARKING, PAINT & DURABLE CROSSWALK MARKING (OPTION BID ITEM)
WILMINGTON:
MM 3.016

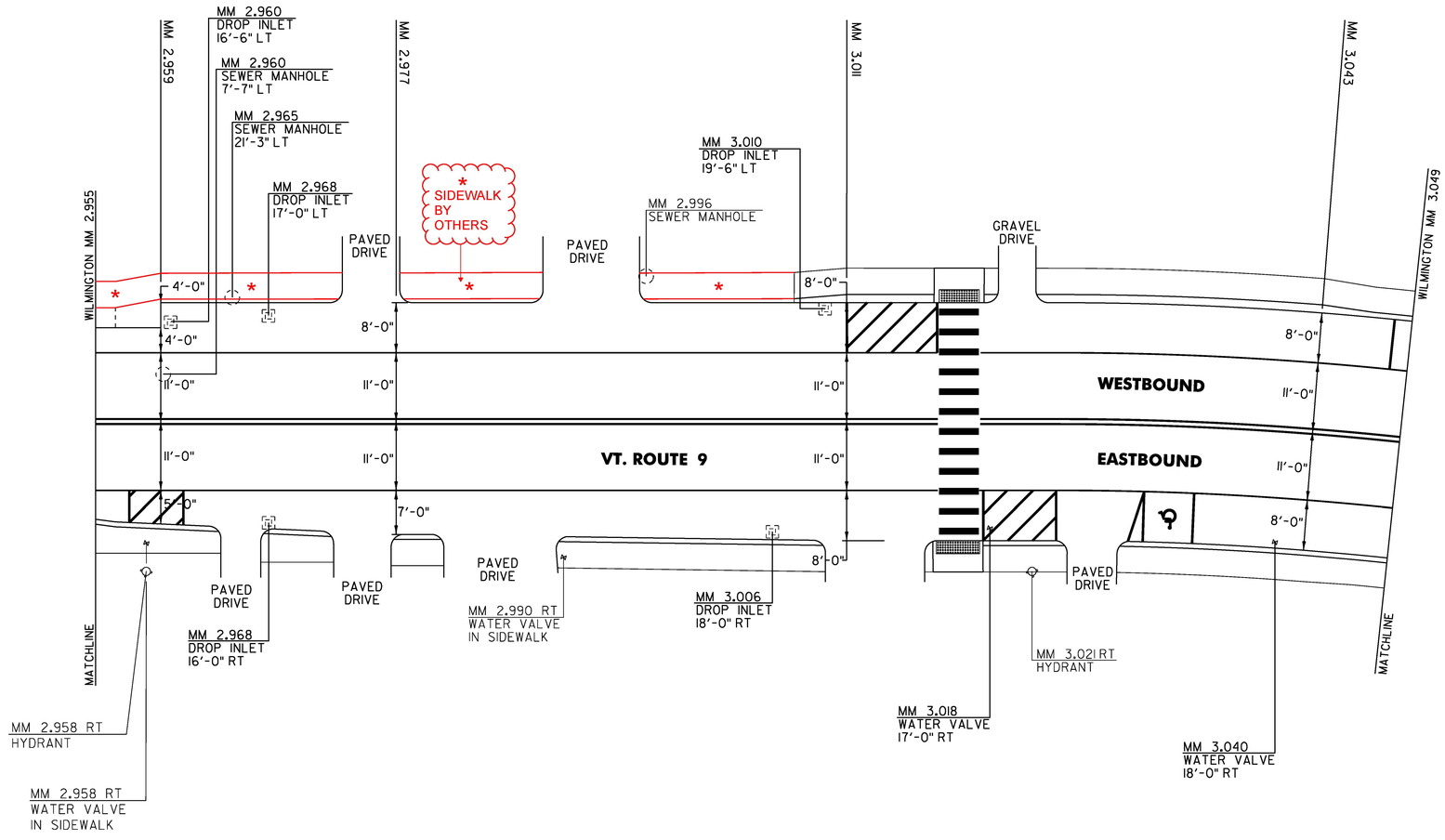

LEGEND: COLD PLANE AREA

NOT TO SCALE

PROJECT NAME:	BENNINGTON-WILMINGTON
PROJECT NUMBER:	NH SURF (51)

FILE NAME: pl4v201 Bennington-Wilmington.dgn PLOT DATE: 28-MAR-2017
PROJECT LEADER: M. FOWLER DRAWN BY: N. PAPPAS
DESIGNED BY: N. PAPPAS CHECKED BY: M. FOWLER
LAYOUT SHEET 17 SHEET 36 OF 64

CHANGING ELEVATION OF DROP INLETS, CATCH BASINS, OR MANHOLES
WILMINGTON:
MM 3.058 LT
MM 3.060 LT
MM 3.090 LT
MM 3.090 RT
MM 3.092 LT
MM 3.093 LT
MM 3.093 RT (2)
MM 3.106 LT

CHANGING ELEVATION OF SEWER MANHOLES
WILMINGTON:
MM 3.060 LT
MM 3.090 LT
MM 3.092 RT

ADJUST ELEVATION OF VALVE BOX
WILMINGTON:
MM 3.058 LT
MM 3.091 LT

TEMPORARY 4 INCH WHITE LINE, PAINT & DURABLE 4 INCH WHITE LINE (OPTION BID ITEM)
(ALL LINES WILL INCLUDE EDGE LINE BREAKS AND RADIUS FOR TOWN HIGHWAYS)
WILMINGTON:
MM 3.049 - 3.125 EDGE LINE LT & RT
MM 3.059 SOLID LT & RT TH-8
MM 3.091 SOLID LT & RT TH-33
MM 3.091 SOLID LT & RT VT ROUTE 100N

TEMPORARY 4 INCH YELLOW LINE, PAINT & DURABLE 4 INCH YELLOW LINE (OPTION BID ITEM)
(ALL LINES WILL INCLUDE C/L BREAKS FOR TOWN HIGHWAYS)
WILMINGTON:
MM 3.049 - 3.051 C/L SOLID LT & RT
MM 3.061 - 3.076 C/L SOLID LT & RT
MM 3.100 - 3.125 C/L SOLID LT & RT
MM 3.059 DOUBLE SOLID LT TH-8
MM 3.091 DOUBLE SOLID RT TH-33
MM 3.091 DOUBLE SOLID LT VT ROUTE 100N

TEMPORARY 8 INCH WHITE LINE, PAINT & DURABLE 8 INCH WHITE LINE (OPTION BID ITEM)
WILMINGTON:
MM 3.051 LT (2)
MM 3.092 RT

TEMPORARY 24 INCH STOP BAR, PAINT & DURABLE 24 INCH STOP BAR (OPTION BID ITEM)
WILMINGTON:
MM 3.051 RT
MM 3.058 LT TH-8
MM 3.087 RT
MM 3.092 RT TH-33
MM 3.090 LT VT ROUTE 100N
MM 3.095 LT

TEMPORARY LETTER OR SYMBOL, PAINT & DURABLE LETTER OR SYMBOL (OPTION BID ITEM)
WILMINGTON:
MM 2.974 LT - "♿" (1 EACH)
MM 3.057 LT - "STOP" (4 EACH)

TEMPORARY CROSSWALK MARKING, PAINT & DURABLE CROSSWALK MARKING (OPTION BID ITEM)
WILMINGTON:
MM 3.059 LT TH-8
MM 3.089
MM 3.091 RT TH-33
MM 3.091 LT VT ROUTE 100N
MM 3.092

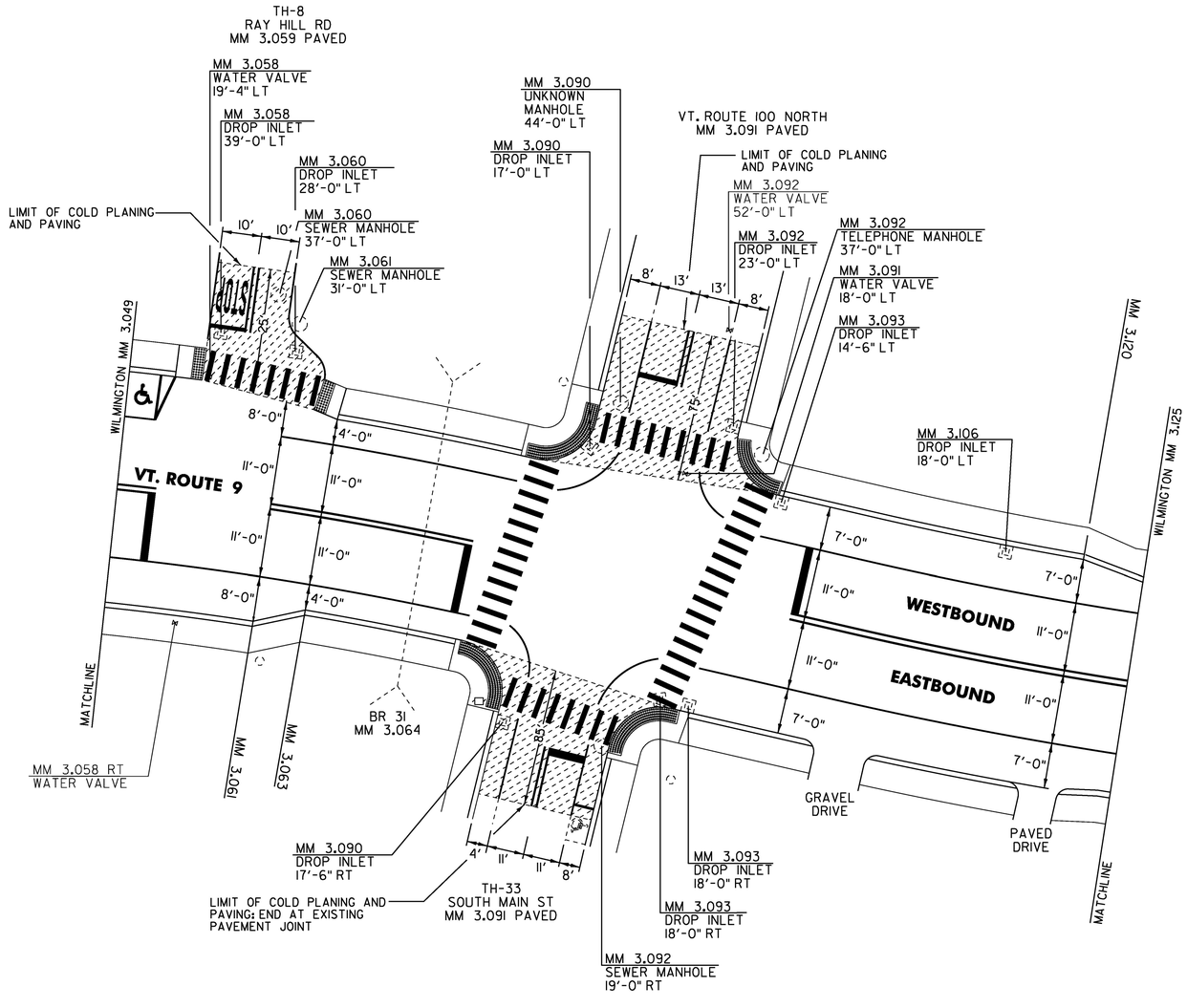

LEGEND: COLD PLANE AREA

NOTES:
1) SEE TYPICAL MARKINGS FOR TURN LANES ON LAYOUT SHEET 33.
2) SEE TRAFFIC SIGNAL SYSTEMS SHEET NOTE 6 BEFORE COLD PLANING.

NOT TO SCALE

PROJECT NAME:	BENNINGTON-WILMINGTON
PROJECT NUMBER:	NH SURF (51)
FILE NAME: pl4v201 Bennington-Wilmington.dgn	PLOT DATE: 28-MAR-2017
PROJECT LEADER: M. FOWLER	DRAWN BY: N. PAPPAS
DESIGNED BY: N. PAPPAS	CHECKED BY: M. FOWLER
LAYOUT SHEET 18	SHEET 37 OF 64

CHANGING ELEVATION OF DROP INLETS, CATCH BASINS, OR MANHOLES
WILMINGTON:
MM 3.134 LT
MM 3.134 RT
MM 3.179 LT
MM 3.179 RT

CHANGING ELEVATION OF SEWER MANHOLES
WILMINGTON:
MM 3.132 RT
MM 3.136 LT

ADJUST ELEVATION OF VALVE BOX
WILMINGTON:
MM 3.133 RT

TEMPORARY 4 INCH WHITE LINE, PAINT & DURABLE 4 INCH WHITE LINE (OPTION BID ITEM)
(ALL LINES WILL INCLUDE EDGE LINE BREAKS AND RADIUS FOR TOWN HIGHWAYS)
WILMINGTON:
MM 3.125 - 3.258 EDGE LINE LT & RT

TEMPORARY 4 INCH YELLOW LINE, PAINT & DURABLE 4 INCH YELLOW LINE (OPTION BID ITEM)
(ALL LINES WILL INCLUDE C/L BREAKS FOR TOWN HIGHWAYS)
WILMINGTON:
MM 3.125 - 3.258 C/L SOLID LT & RT
MM 3.132 DOUBLE SOLID RT TH-63
MM 3.206 DOUBLE SOLID RT TH-64

TEMPORARY 8 INCH WHITE LINE, PAINT & DURABLE 8 INCH WHITE LINE (OPTION BID ITEM)
(ALL LINES WILL INCLUDE EDGE LINE BREAKS AND RADIUS FOR TOWN HIGHWAYS)
WILMINGTON:
MM 3.119 - 3.128 RT NO PARKING FIRE HYDRANT

TEMPORARY 24 INCH STOP BAR, PAINT & DURABLE 24 INCH STOP BAR (OPTION BID ITEM)
WILMINGTON:
MM 3.207 RT TH-64

TEMPORARY LETTER OR SYMBOL, PAINT & DURABLE LETTER OR SYMBOL (OPTION BID ITEM)
WILMINGTON:

MM 3.209 RT - "STOP" (4 EACH)

TEMPORARY CROSSWALK MARKING, PAINT & DURABLE CROSSWALK MARKING (OPTION BID ITEM)
WILMINGTON:
MM 3.132 RT TH-63
MM 3.206 RT TH-64
MM 3.217

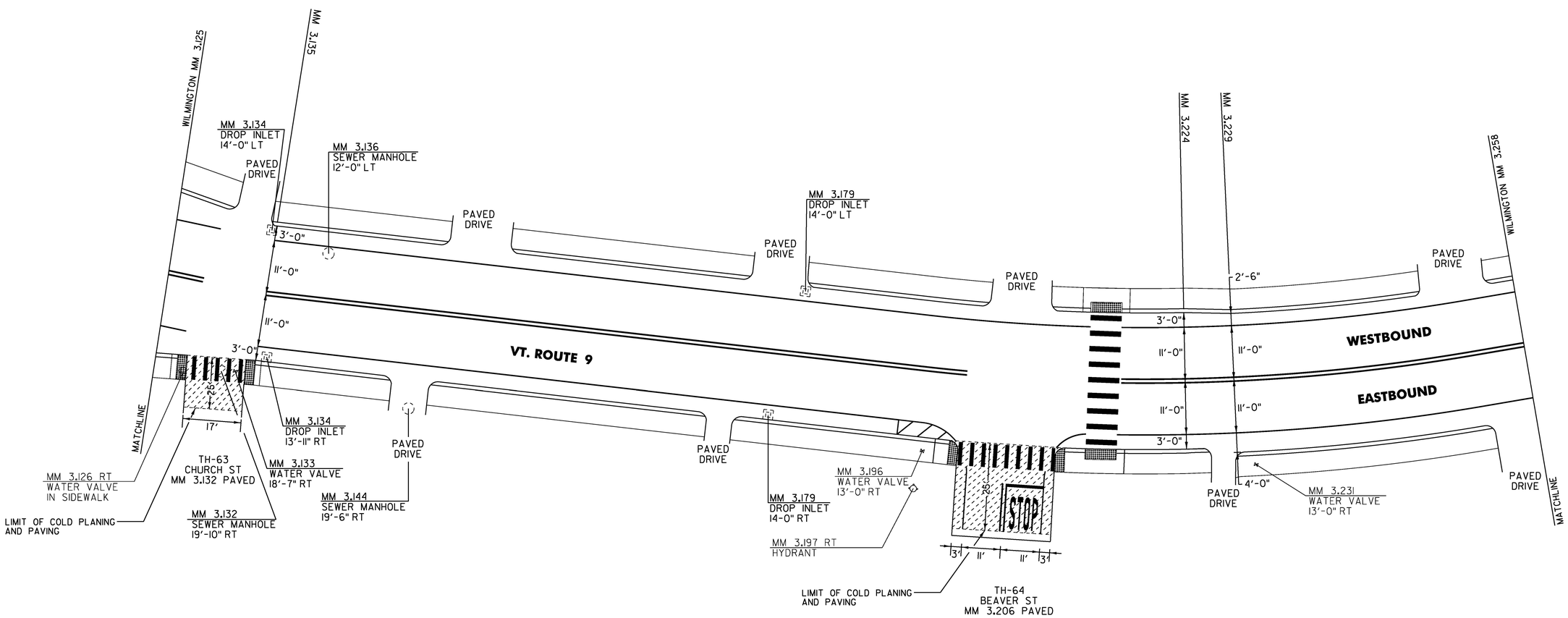

LEGEND: COLD PLANE AREA

NOT TO SCALE

PROJECT NAME:	BENNINGTON-WILMINGTON
PROJECT NUMBER:	NH SURF (51)
FILE NAME: pl4v201 Bennington-Wilmington.dgn	PLOT DATE: 28-MAR-2017
PROJECT LEADER: M. FOWLER	DRAWN BY: N. PAPPAS
DESIGNED BY: N. PAPPAS	CHECKED BY: M. FOWLER
LAYOUT SHEET 19	SHEET 38 OF 64

CHANGING ELEVATION OF DROP INLETS, CATCH BASINS, OR MANHOLES
WILMINGTON:
MM 3.274 LT
MM 3.308 LT
MM 3.332 LT
MM 3.386 RT
MM 3.392 LT
MM 3.423 LT
MM 3.427 RT
MM 3.457 LT
MM 3.457 RT
MM 3.529 RT

CHANGING ELEVATION OF SEWER MANHOLES
WILMINGTON:
MM 3.499 LT

TEMPORARY 4 INCH WHITE LINE, PAINT & DURABLE 4 INCH WHITE LINE (OPTION BID ITEM)
(ALL LINES WILL INCLUDE EDGE LINE BREAKS AND RADIUS FOR TOWN HIGHWAYS)
WILMINGTON:
MM 3.258 - 3.561 EDGE LINE LT & RT
MM 3.513 - 3.532 DOTTED LANE LINE RT
MM 3.532 - 3.552 SOLID LANE LINE RT

ADJUST ELEVATION OF VALVE BOX
WILMINGTON:
MM 3.504 LT

TEMPORARY 4 INCH YELLOW LINE, PAINT & DURABLE 4 INCH YELLOW LINE (OPTION BID ITEM)
(ALL LINES WILL INCLUDE C/L BREAKS FOR TOWN HIGHWAYS)
WILMINGTON:
MM 3.258 - 3.561 C/L SOLID LT & RT

TEMPORARY 8 INCH WHITE LINE, PAINT & DURABLE 8 INCH YELLOW LINE (OPTION BID ITEM)
(ALL LINES WILL INCLUDE EDGE LINE BREAKS AND RADIUS FOR TOWN HIGHWAYS)
WILMINGTON:
MM 3.273 - 3.276 RT NO PARKING FIRE HYDRANT
MM 3.503 - 3.505 LT NO PARKING FIRE HYDRANT

TEMPORARY 24 INCH STOP BAR, PAINT & DURABLE 24 INCH STOP BAR (OPTION BID ITEM)
WILMINGTON:
MM 3.473 RT TH-64

TEMPORARY LETTER OR SYMBOL, PAINT & DURABLE LETTER OR SYMBOL (OPTION BID ITEM)
WILMINGTON:
MM 3.533 RT - "↱" (1 EACH)
MM 3.542 RT - "ONLY" (4 EACH)
MM 3.550 RT - "↱" (1 EACH)

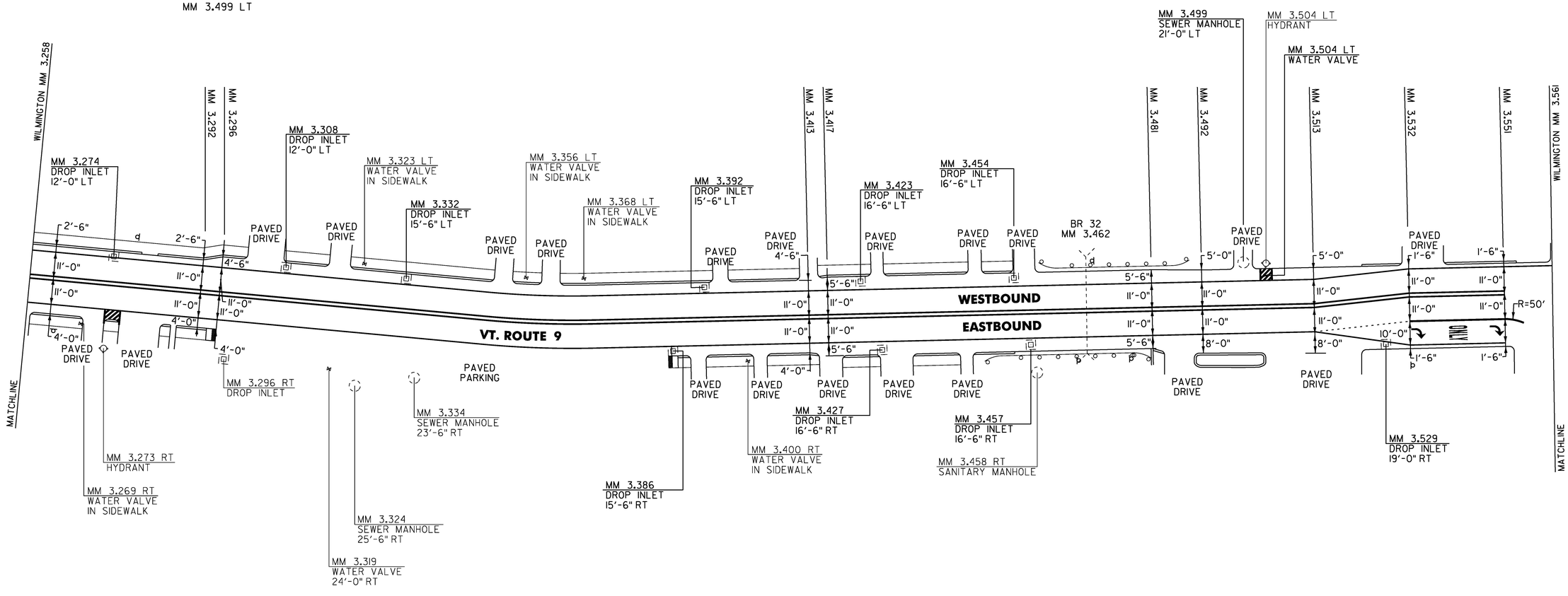

LEGEND: COLD PLANE AREA

NOT TO SCALE

PROJECT NAME:	BENNINGTON-WILMINGTON
PROJECT NUMBER:	NH SURF (51)

FILE NAME: pl4v201 Bennington-Wilmington.dgn PLOT DATE: 28-MAR-2017
PROJECT LEADER: M. FOWLER DRAWN BY: N. PAPPAS
DESIGNED BY: N. PAPPAS CHECKED BY: M. FOWLER
LAYOUT SHEET 20 SHEET 39 OF 64

CHANGING ELEVATION OF DROP INLETS, CATCH BASINS, OR MANHOLES
WILMINGTON:
MM 3.569 RT
MM 3.582 RT
MM 3.846 RT

CHANGING ELEVATION OF SEWER MANHOLES
WILMINGTON:
MM 3.570 LT
MM 3.616 LT
MM 3.648 RT
MM 3.745 RT

TEMPORARY 4 INCH WHITE LINE, PAINT & DURABLE 4 INCH WHITE LINE (OPTION BID ITEM)
(ALL LINES WILL INCLUDE EDGE LINE BREAKS AND RADIUS FOR TOWN HIGHWAYS)
WILMINGTON:
MM 3.561 - 3.864 EDGE LINE LT & RT
MM 3.562 RT DRIVE

TEMPORARY 4 INCH YELLOW LINE, PAINT & DURABLE 4 INCH YELLOW LINE (OPTION BID ITEM)
(ALL LINES WILL INCLUDE C/L BREAKS FOR TOWN HIGHWAYS)
WILMINGTON:
MM 3.561 - 3.864 C/L SOLD LT & RT
MM 3.562 RT DRIVE
MM 3.680 DOUBLE SOLID LT TH-23

TEMPORARY 24 INCH STOP BAR, PAINT & DURABLE 24 INCH STOP BAR (OPTION BID ITEM)
WILMINGTON:
MM 3.562 RT DRIVE
MM 3.679 LT TH-23

TEMPORARY LETTER OR SYMBOL, PAINT & DURABLE LETTER OR SYMBOL (OPTION BID ITEM)
WILMINGTON:
MM 3.679 LT - "STOP" (4 EACH)
MM 3.572 RT - "STOP" (4 EACH)

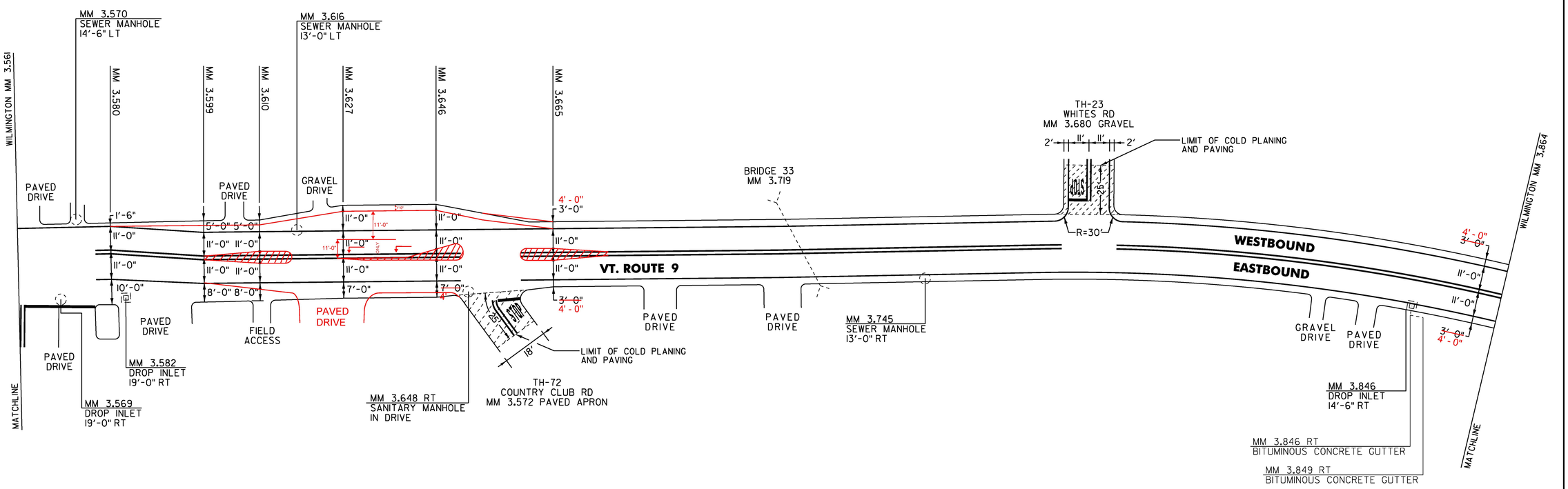

LEGEND: COLD PLANE AREA

NOT TO SCALE

PROJECT NAME:	BENNINGTON-WILMINGTON
PROJECT NUMBER:	NH SURF (51)
FILE NAME: pl4v201 Bennington-Wilmington.dgn	PLOT DATE: 28-MAR-2017
PROJECT LEADER: M. FOWLER	DRAWN BY: N. PAPPAS
DESIGNED BY: N. PAPPAS	CHECKED BY: M. FOWLER
LAYOUT SHEET 21	SHEET 40 OF 64

CHANGING ELEVATION OF DROP INLETS, CATCH BASINS, OR MANHOLES
WILMINGTON:
MM 3.937 LT
MM 4.043 RT
MM 4.081 RT

TEMPORARY 4 INCH WHITE LINE, PAINT & DURABLE 4 INCH WHITE LINE (OPTION BID ITEM)
(ALL LINES WILL INCLUDE EDGE LINE BREAKS AND RADIUS FOR TOWN HIGHWAYS)
WILMINGTON:
MM 3.864 - 4.167 EDGE LINE LT & RT

TEMPORARY 4 INCH YELLOW LINE, PAINT & DURABLE 4 INCH YELLOW LINE (OPTION BID ITEM)
(ALL LINES WILL INCLUDE C/L BREAKS FOR TOWN HIGHWAYS)
WILMINGTON:
MM 3.864 - 4.167 C/L SOLD LT & RT

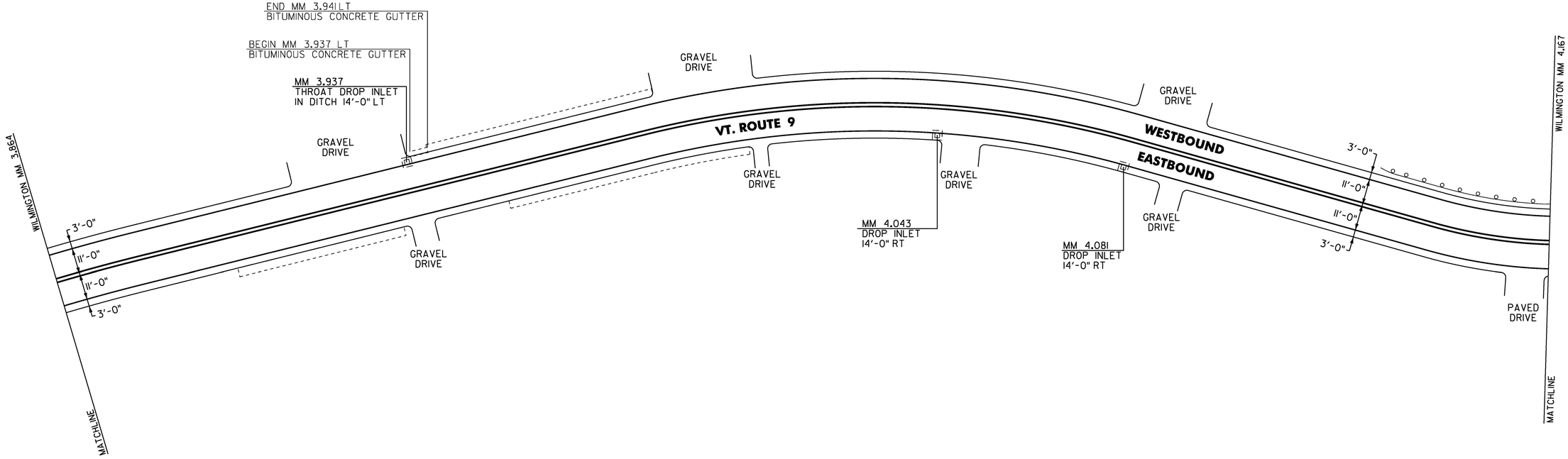

LEGEND: COLD PLANE AREA

NOT TO SCALE

PROJECT NAME:	BENNINGTON-WILMINGTON
PROJECT NUMBER:	NH SURF (51)
FILE NAME: pl4v201 Bennington-Wilmington.dgn	PLOT DATE: 28-MAR-2017
PROJECT LEADER: M. FOWLER	DRAWN BY: N. PAPPAS
DESIGNED BY: N. PAPPAS	CHECKED BY: M. FOWLER
LAYOUT SHEET 22	SHEET 41 OF 64

CHANGING ELEVATION OF DROP INLETS, CATCH BASINS, OR MANHOLES
WILMINGTON:
MM 4.300 LT
MM 4.322 LT
MM 4.356 LT

TEMPORARY 4 INCH WHITE LINE, PAINT & DURABLE 4 INCH WHITE LINE (OPTION BID ITEM)
(ALL LINES WILL INCLUDE EDGE LINE BREAKS AND RADIUS FOR TOWN HIGHWAYS)
WILMINGTON:
MM 4.167 - 4.470 EDGE LINE LT & RT

TEMPORARY 4 INCH YELLOW LINE, PAINT & DURABLE 4 INCH YELLOW LINE (OPTION BID ITEM)
(ALL LINES WILL INCLUDE C/L BREAKS FOR TOWN HIGHWAYS)
WILMINGTON:
MM 4.167 - 4.470 C/L SOLD LT & RT
MM 4.135 DOUBLE SOLID LT VT. ROUTE 100S

TEMPORARY 24 INCH STOP BAR, PAINT & DURABLE 24 INCH STOP BAR (OPTION BID ITEM)
WILMINGTON:
MM 4.136 RT VT. ROUTE 100S

TEMPORARY LETTER OR SYMBOL, PAINT & DURABLE LETTER OR SYMBOL (OPTION BID ITEM)
WILMINGTON:

MM 4.136 RT - "STOP" (4 EACH)

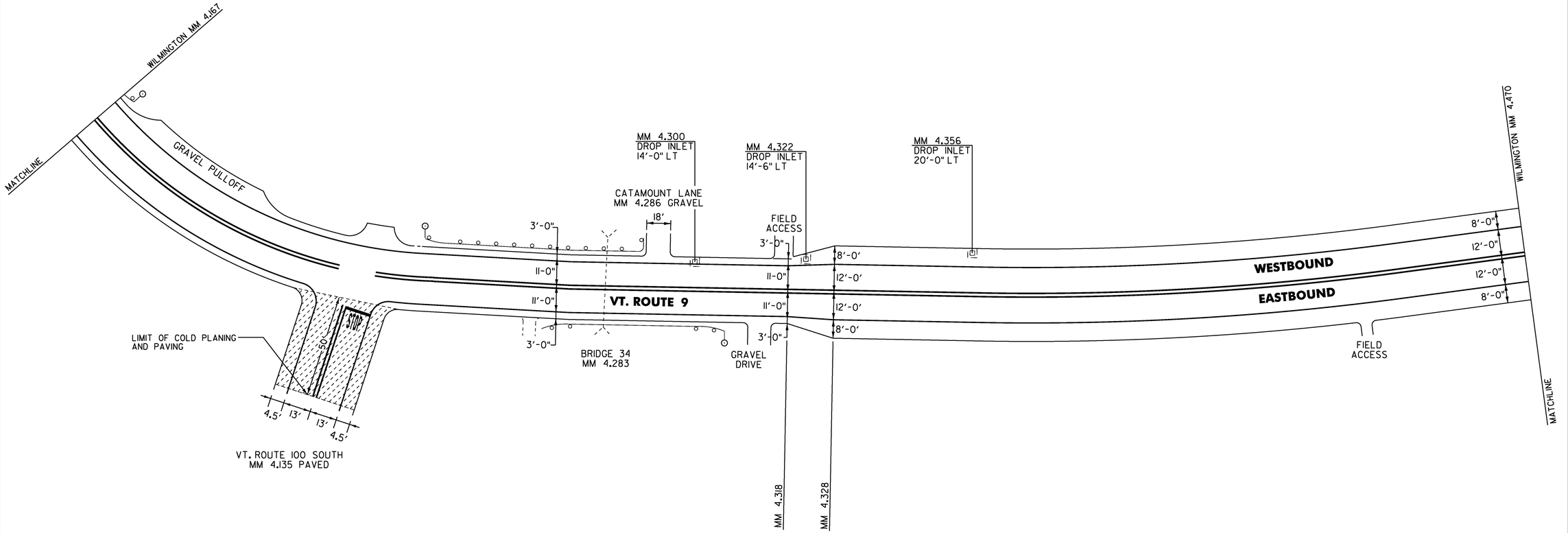

LEGEND: COLD PLANE AREA

NOT TO SCALE

PROJECT NAME:	BENNINGTON-WILMINGTON
PROJECT NUMBER:	NH SURF (51)

FILE NAME: pl4v201Bennington-Wilmington.dgn PLOT DATE: 28-MAR-2017
PROJECT LEADER: M. FOWLER DRAWN BY: N. PAPPAS
DESIGNED BY: N. PAPPAS CHECKED BY: M. FOWLER
LAYOUT SHEET 23 SHEET 42 OF 64

CHANGING ELEVATION OF DROP INLETS, CATCH BASINS, OR MANHOLES
WILMINGTON:
MM 4.635 RT
MM 4.694 RT

TEMPORARY 4 INCH WHITE LINE, PAINT & DURABLE 4 INCH WHITE LINE (OPTION BID ITEM)
(ALL LINES WILL INCLUDE EDGE LINE BREAKS AND RADIUS FOR TOWN HIGHWAYS)
WILMINGTON:
MM 4.470 - 4.773 EDGE LINE LT & RT

TEMPORARY 4 INCH YELLOW LINE, PAINT & DURABLE 4 INCH YELLOW LINE (OPTION BID ITEM)
(ALL LINES WILL INCLUDE C/L BREAKS FOR TOWN HIGHWAYS)
WILMINGTON:
MM 4.470 - 4.773 C/L SOLD LT & RT
MM 4.537 DOUBLE SOLID LT TH-26

TEMPORARY 24 INCH STOP BAR, PAINT & DURABLE 24 INCH STOP BAR (OPTION BID ITEM)
WILMINGTON:
MM 4.536 LT TH-26

TEMPORARY LETTER OR SYMBOL, PAINT & DURABLE LETTER OR SYMBOL (OPTION BID ITEM)
WILMINGTON:

MM 4.536 RT - "STOP" (4 EACH)

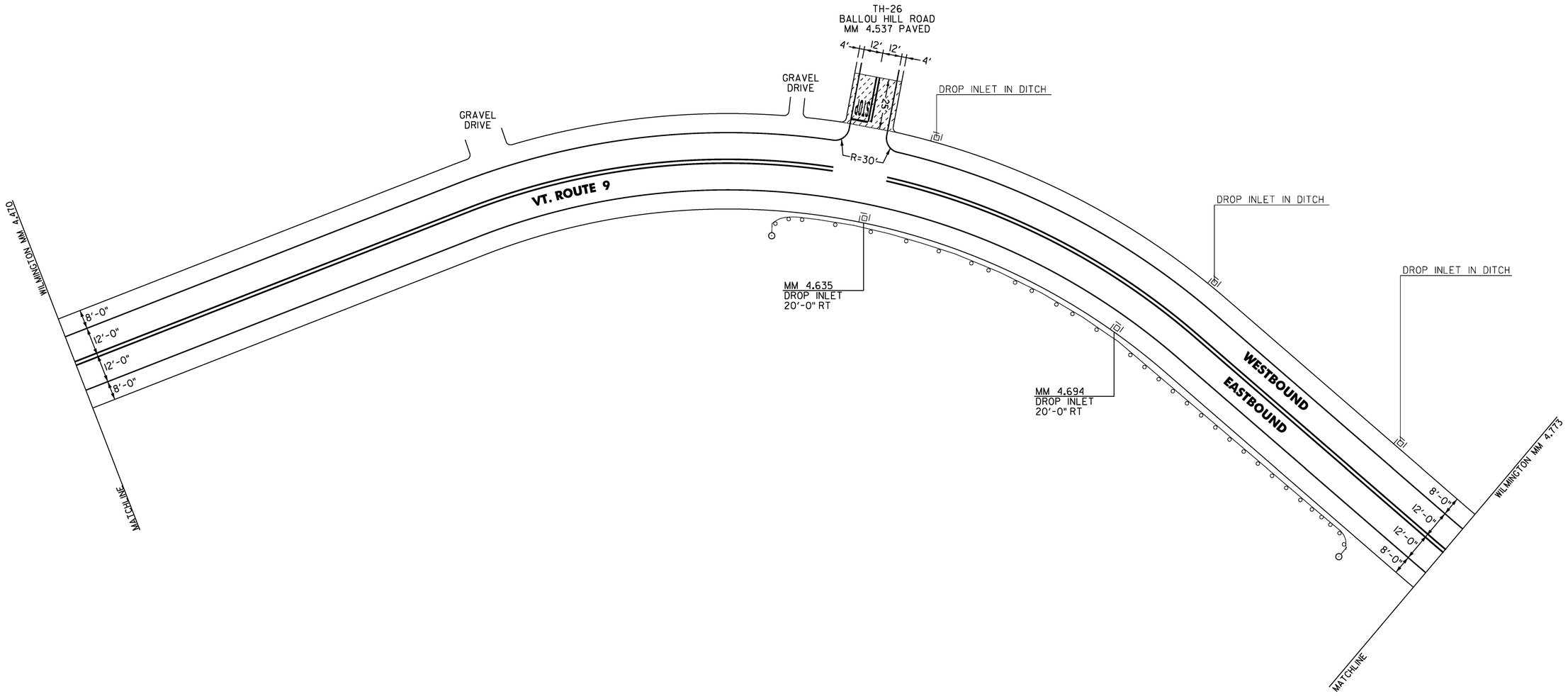

LEGEND: COLD PLANE AREA

NOT TO SCALE

PROJECT NAME:	BENNINGTON-WILMINGTON
PROJECT NUMBER:	NH SURF (51)
FILE NAME: pl4v201 Bennington-Wilmington.dgn	PLOT DATE: 28-MAR-2017
PROJECT LEADER: M. FOWLER	DRAWN BY: N. PAPPAS
DESIGNED BY: N. PAPPAS	CHECKED BY: M. FOWLER
LAYOUT SHEET 24	SHEET 43 OF 64

TEMPORARY 4 INCH WHITE LINE, PAINT &
DURABLE 4 INCH WHITE LINE (OPTION BID ITEM)
(ALL LINES WILL INCLUDE EDGE LINE BREAKS AND RADIUS FOR TOWN HIGHWAYS)
WILMINGTON:
MM 4.773 - 5.076 EDGE LINE LT & RT

TEMPORARY 4 INCH YELLOW LINE, PAINT &
DURABLE 4 INCH YELLOW LINE (OPTION BID ITEM)
(ALL LINES WILL INCLUDE C/L BREAKS FOR TOWN HIGHWAYS)
WILMINGTON:
MM 4.773 - 4.925 C/L SOLD LT & RT
MM 4.537 DOUBLE SOLID LT TH-26
MM 4.925 - 5.075 SOLID LT & DASHED RT
MM 5.075 - 5.076 C/L DASHED

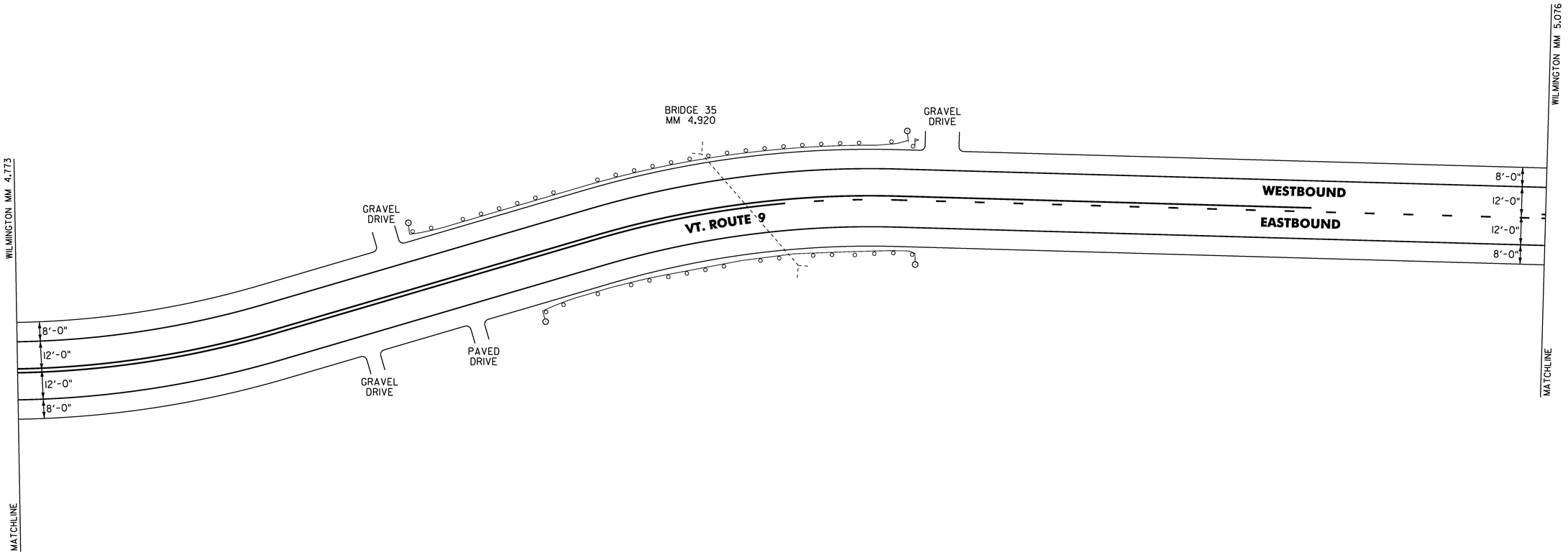

LEGEND: COLD PLANE AREA

NOT TO SCALE

PROJECT NAME:	BENNINGTON-WILMINGTON
PROJECT NUMBER:	NH SURF (51)

FILE NAME: pl4v201 Bennington-Wilmington.dgn PLOT DATE: 28-MAR-2017
PROJECT LEADER: M. FOWLER DRAWN BY: N. PAPPAS
DESIGNED BY: N. PAPPAS CHECKED BY: M. FOWLER
LAYOUT SHEET 25 SHEET 44 OF 64

CHANGING ELEVATION OF DROP INLETS, CATCH BASINS, OR MANHOLES
WILMINGTON:
MM 5.350 LT

TEMPORARY 4 INCH WHITE LINE, PAINT & DURABLE 4 INCH WHITE LINE (OPTION BID ITEM)
(ALL LINES WILL INCLUDE EDGE LINE BREAKS AND RADIUS FOR TOWN HIGHWAYS)
WILMINGTON:
MM 5.076 - 5.379 EDGE LINE LT & RT
MM 5.349 - 5.379 DASHED LANE LINE RT

TEMPORARY 4 INCH YELLOW LINE, PAINT & DURABLE 4 INCH YELLOW LINE (OPTION BID ITEM)
(ALL LINES WILL INCLUDE C/L BREAKS FOR TOWN HIGHWAYS)
WILMINGTON:
MM 5.076 - 5.150 SOLID RT & DASHED LT
MM 5.150 - 5.379 C/L SOLD LT & RT
MM 5.537 DOUBLE SOLID RT TH-40

TEMPORARY 24 INCH STOP BAR, PAINT & DURABLE 24 INCH STOP BAR (OPTION BID ITEM)
WILMINGTON:
MM 5.538 RT TH-40

TEMPORARY LETTER OR SYMBOL, PAINT & DURABLE LETTER OR SYMBOL (OPTION BID ITEM)
WILMINGTON:

MM 5.538 RT - "STOP" (4 EACH)

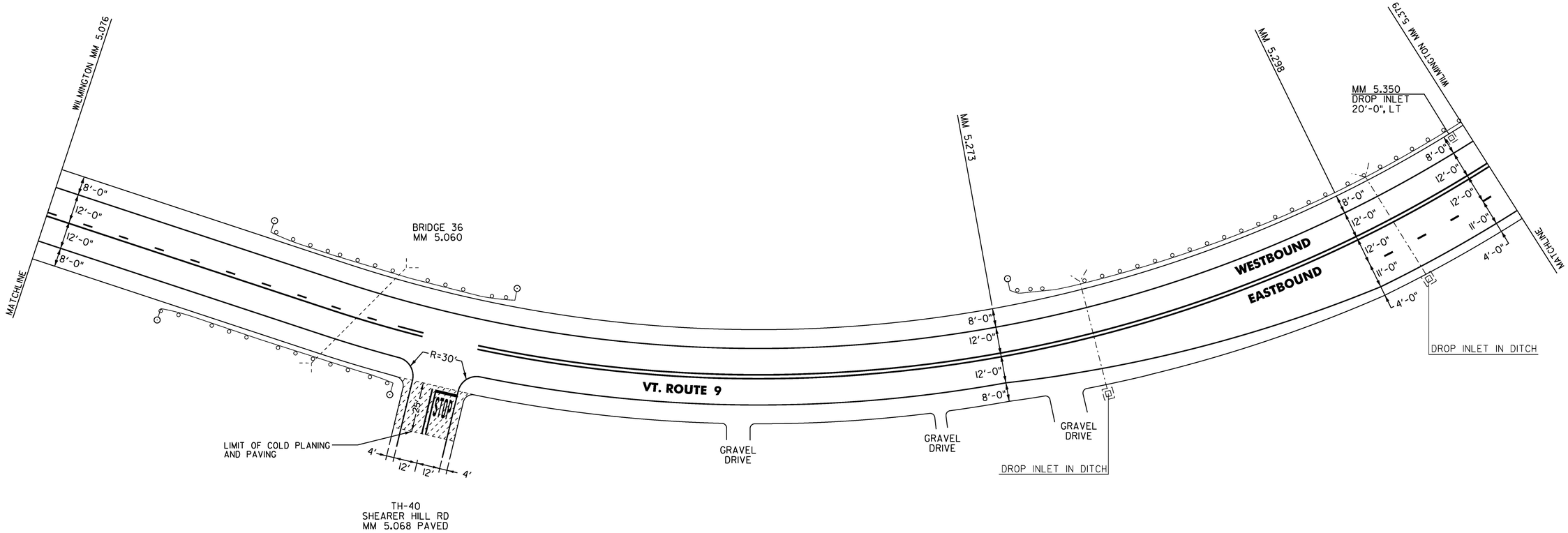

LEGEND: COLD PLANE AREA

NOT TO SCALE

PROJECT NAME:	BENNINGTON-WILMINGTON
PROJECT NUMBER:	NH SURF (51)

FILE NAME: pl4v201 Bennington-Wilmington.dgn PLOT DATE: 28-MAR-2017
PROJECT LEADER: M. FOWLER DRAWN BY: N. PAPPAS
DESIGNED BY: N. PAPPAS CHECKED BY: M. FOWLER
LAYOUT SHEET 26 SHEET 45 OF 64

CHANGING ELEVATION OF DROP INLETS, CATCH BASINS, OR MANHOLES
WILMINGTON:
MM 5.561 LT

TEMPORARY 4 INCH WHITE LINE, PAINT & DURABLE 4 INCH WHITE LINE (OPTION BID ITEM)
(ALL LINES WILL INCLUDE EDGE LINE BREAKS AND RADIUS FOR TOWN HIGHWAYS)
WILMINGTON:
MM 5.379 - 5.682 EDGE LINE LT & RT
MM 5.379 - 5.682 DASHED LANE LINE RT

TEMPORARY 4 INCH YELLOW LINE, PAINT & DURABLE 4 INCH YELLOW LINE (OPTION BID ITEM)
(ALL LINES WILL INCLUDE C/L BREAKS FOR TOWN HIGHWAYS)
WILMINGTON:
MM 5.379 - 5.682 C/L SOLD LT & RT
MM 5.459 DOUBLE SOLID RT TH-88

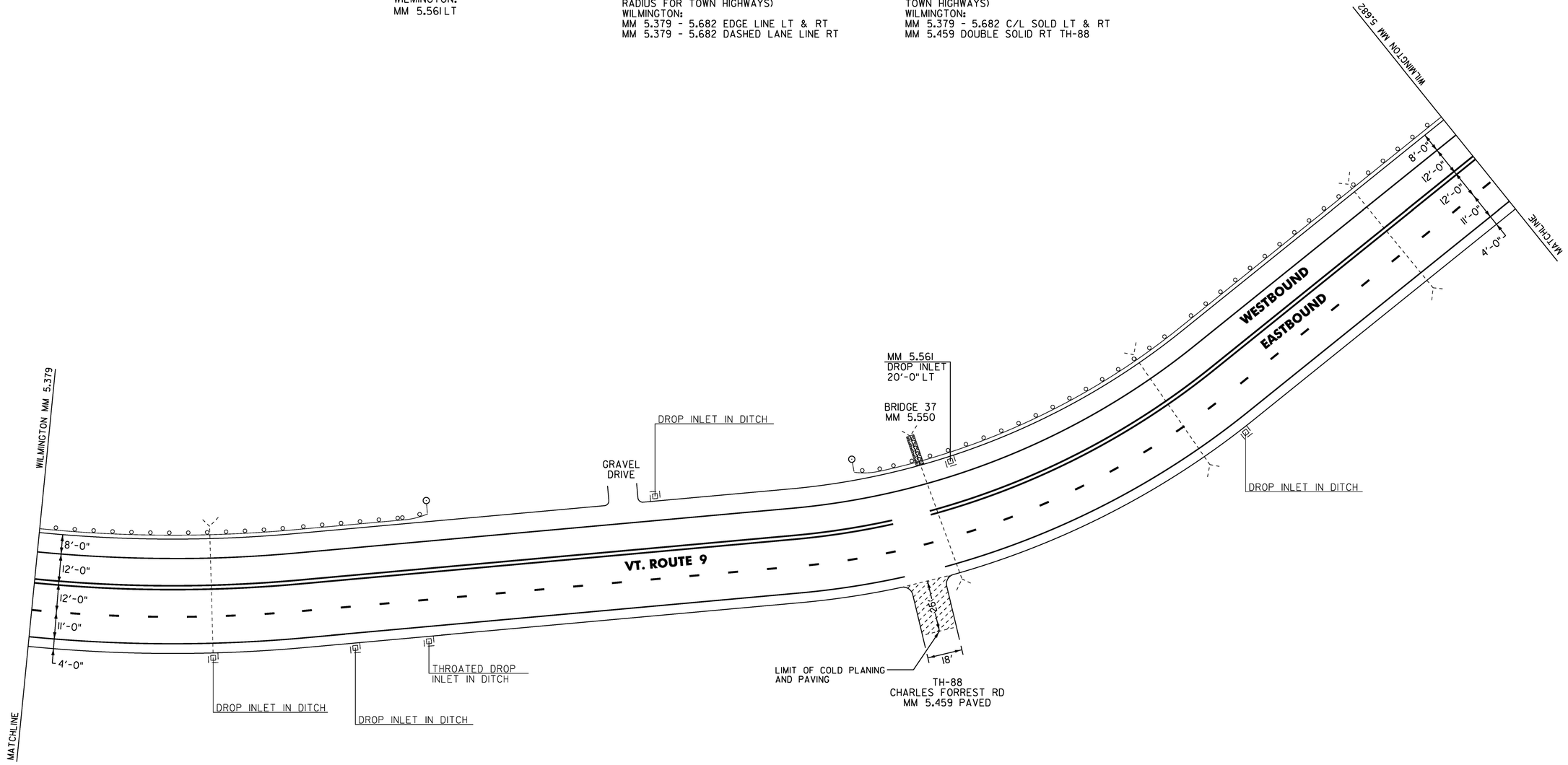

LEGEND: COLD PLANE AREA

NOT TO SCALE

PROJECT NAME:	BENNINGTON-WILMINGTON
PROJECT NUMBER:	NH SURF (51)
FILE NAME: pl4v201 Bennington-Wilmington.dgn	PLOT DATE: 28-MAR-2017
PROJECT LEADER: M. FOWLER	DRAWN BY: N. PAPPAS
DESIGNED BY: N. PAPPAS	CHECKED BY: M. FOWLER
LAYOUT SHEET 27	SHEET 46 OF 64

TEMPORARY 4 INCH WHITE LINE, PAINT &
DURABLE 4 INCH WHITE LINE (OPTION BID ITEM)
(ALL LINES WILL INCLUDE EDGE LINE BREAKS AND RADIUS FOR TOWN HIGHWAYS)
WILMINGTON:
MM 5.682 - 5.891 EDGE LINE LT & RT
MM 5.682 - 5.891 DASHED LANE LINE RT

TEMPORARY 4 INCH YELLOW LINE, PAINT &
DURABLE 4 INCH YELLOW LINE (OPTION BID ITEM)
(ALL LINES WILL INCLUDE C/L BREAKS FOR TOWN HIGHWAYS)
WILMINGTON:
MM 5.682 - 5.891 C/L SOLD LT & RT

TEMPORARY 24 INCH STOP BAR, PAINT &
DURABLE 24 INCH STOP BAR (OPTION BID ITEM)
WILMINGTON:
MM 5.889 RT TH-4

TEMPORARY LETTER OR SYMBOL, PAINT &
DURABLE LETTER OR SYMBOL (OPTION BID ITEM)
WILMINGTON:

MM 5.889 RT - "STOP" (4 EACH)

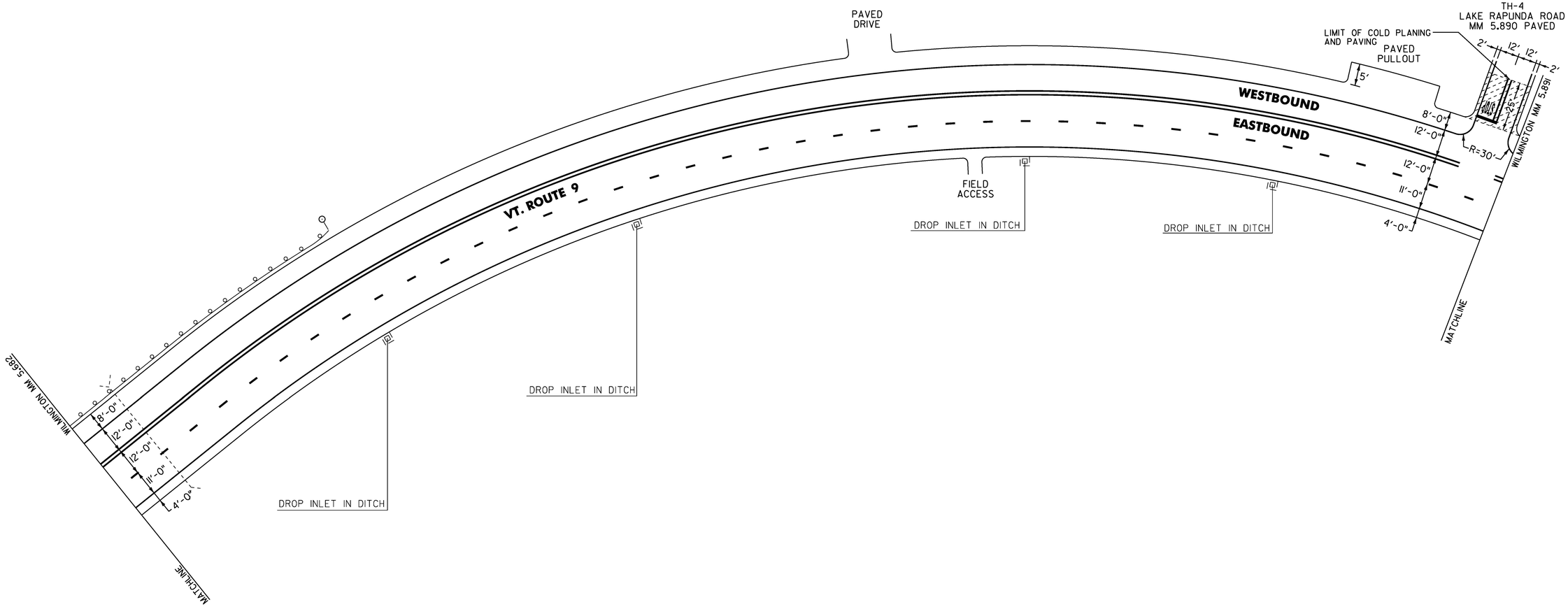

LEGEND: COLD PLANE AREA

NOT TO SCALE

PROJECT NAME:	BENNINGTON-WILMINGTON
PROJECT NUMBER:	NH SURF (51)

FILE NAME: pl4v201 Bennington-Wilmington.dgn PLOT DATE: 28-MAR-2017
PROJECT LEADER: M. FOWLER DRAWN BY: N. PAPPAS
DESIGNED BY: N. PAPPAS CHECKED BY: M. FOWLER
LAYOUT SHEET 28 SHEET 47 OF 64

CHANGING ELEVATION OF DROP INLETS, CATCH BASINS, OR MANHOLES
WILMINGTON:
MM 6.153 RT
MM 6.166 RT

TEMPORARY 4 INCH WHITE LINE, PAINT & DURABLE 4 INCH WHITE LINE (OPTION BID ITEM)
(ALL LINES WILL INCLUDE EDGE LINE BREAKS AND RADIUS FOR TOWN HIGHWAYS)
WILMINGTON:
MM 5.891 - 6.238 EDGE LINE LT & RT
MM 5.891 - 6.238 DASHED LANE LINE RT

TEMPORARY 4 INCH YELLOW LINE, PAINT & DURABLE 4 INCH YELLOW LINE (OPTION BID ITEM)
(ALL LINES WILL INCLUDE C/L BREAKS FOR TOWN HIGHWAYS)
WILMINGTON:
MM 5.891 - 6.238 C/L SOLD LT & RT
MM 5.939 DOUBLE SOLID RT TH-28
MM 6.166 DOUBLE SOLID LT TH-95

TEMPORARY 24 INCH STOP BAR, PAINT & DURABLE 24 INCH STOP BAR (OPTION BID ITEM)
WILMINGTON:
MM 5.940 RT TH-28
MM 6.165 LT TH-95

TEMPORARY LETTER OR SYMBOL, PAINT & DURABLE LETTER OR SYMBOL (OPTION BID ITEM)
WILMINGTON:
MM 5.940 RT - "STOP" (4 EACH)
MM 6.165 LT - "STOP" (4 EACH)

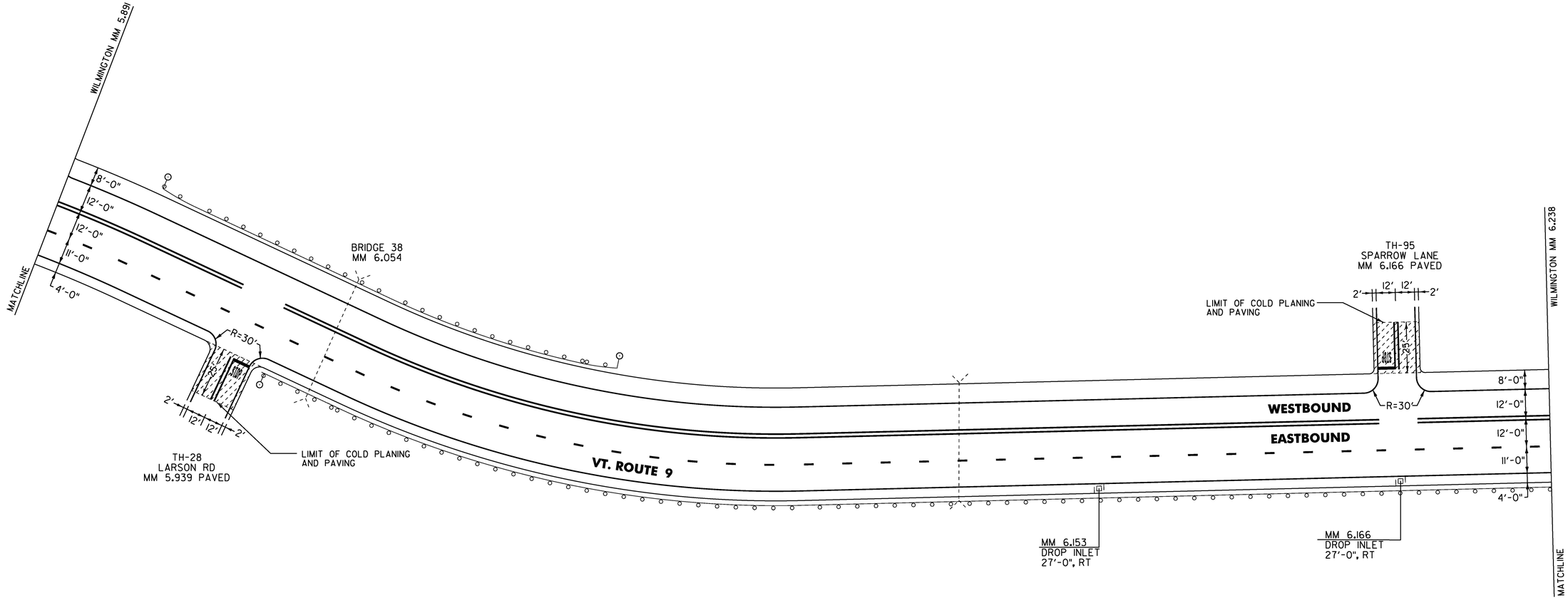

LEGEND: COLD PLANE AREA

NOT TO SCALE

PROJECT NAME:	BENNINGTON-WILMINGTON
PROJECT NUMBER:	NH SURF (51)
FILE NAME: pl4v201 Bennington-Wilmington.dgn	PLOT DATE: 28-MAR-2017
PROJECT LEADER: M. FOWLER	DRAWN BY: N. PAPPAS
DESIGNED BY: N. PAPPAS	CHECKED BY: M. FOWLER
LAYOUT SHEET 29	SHEET 48 OF 64

CHANGING ELEVATION OF DROP INLETS, CATCH BASINS, OR MANHOLES
WILMINGTON:
MM 6.253 LT
MM 6.313 LT
MM 6.358 LT
MM 6.477 LT
MM 6.534 LT
MM 6.590 LT

TEMPORARY 4 INCH WHITE LINE, PAINT & DURABLE 4 INCH WHITE LINE (OPTION BID ITEM)
(ALL LINES WILL INCLUDE EDGE LINE BREAKS AND RADIUS FOR TOWN HIGHWAYS)
WILMINGTON:
MM 6.238 - 6.591 EDGE LINE LT & RT
MM 6.238 - 6.591 DASHED LANE LINE RT

TEMPORARY 4 INCH YELLOW LINE, PAINT & DURABLE 4 INCH YELLOW LINE (OPTION BID ITEM)
(ALL LINES WILL INCLUDE C/L BREAKS FOR TOWN HIGHWAYS)
WILMINGTON:
MM 6.238 - 6.591 C/L SOLD LT & RT
MM 6.373 DOUBLE SOLID RT

TEMPORARY 24 INCH STOP BAR, PAINT & DURABLE 24 INCH STOP BAR (OPTION BID ITEM)
WILMINGTON:
MM 6.374 RT

TEMPORARY LETTER OR SYMBOL, PAINT & DURABLE LETTER OR SYMBOL (OPTION BID ITEM)
WILMINGTON:

MM 6.375 RT - "STOP" (4 EACH)

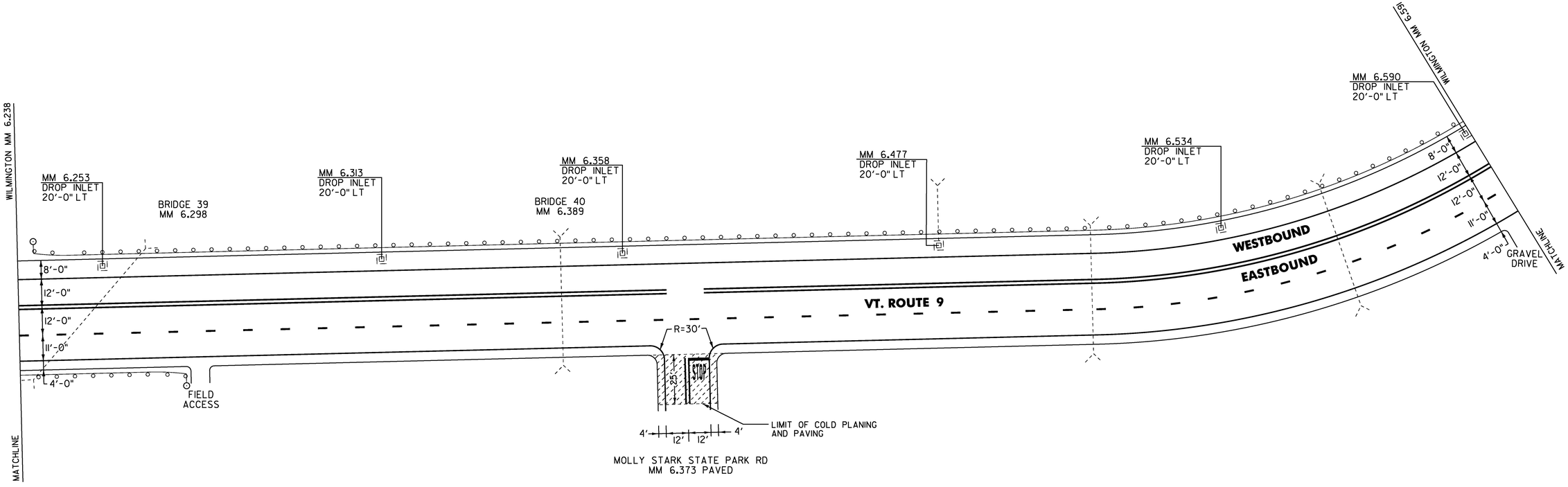

LEGEND: COLD PLANE AREA

NOT TO SCALE

PROJECT NAME:	BENNINGTON-WILMINGTON
PROJECT NUMBER:	NH SURF (51)

FILE NAME: pl4v201 Bennington-Wilmington.dgn PLOT DATE: 28-MAR-2017
PROJECT LEADER: M. FOWLER DRAWN BY: N. PAPPAS
DESIGNED BY: N. PAPPAS CHECKED BY: M. FOWLER
LAYOUT SHEET 30 SHEET 49 OF 64

TEMPORARY 4 INCH WHITE LINE, PAINT &
DURABLE 4 INCH WHITE LINE (OPTION BID ITEM)
(ALL LINES WILL INCLUDE EDGE LINE BREAKS AND RADIUS FOR TOWN HIGHWAYS)
WILMINGTON:
MM 6.591 - 6.894 EDGE LINE LT & RT
MM 6.591 - 6.894 DASHED LANE LINE RT

TEMPORARY 4 INCH YELLOW LINE, PAINT &
DURABLE 4 INCH YELLOW LINE (OPTION BID ITEM)
(ALL LINES WILL INCLUDE C/L BREAKS FOR TOWN HIGHWAYS)
WILMINGTON:
MM 6.591 - 6.894 C/L SOLD LT & RT
MM 6.623 DOUBLE SOLID LT TH-27

TEMPORARY 24 INCH STOP BAR, PAINT &
DURABLE 24 INCH STOP BAR (OPTION BID ITEM)
WILMINGTON:
MM 6.622 LT TH-27

TEMPORARY LETTER OR SYMBOL, PAINT &
DURABLE LETTER OR SYMBOL (OPTION BID ITEM)
WILMINGTON:

MM 6.375 RT - "STOP" (4 EACH)

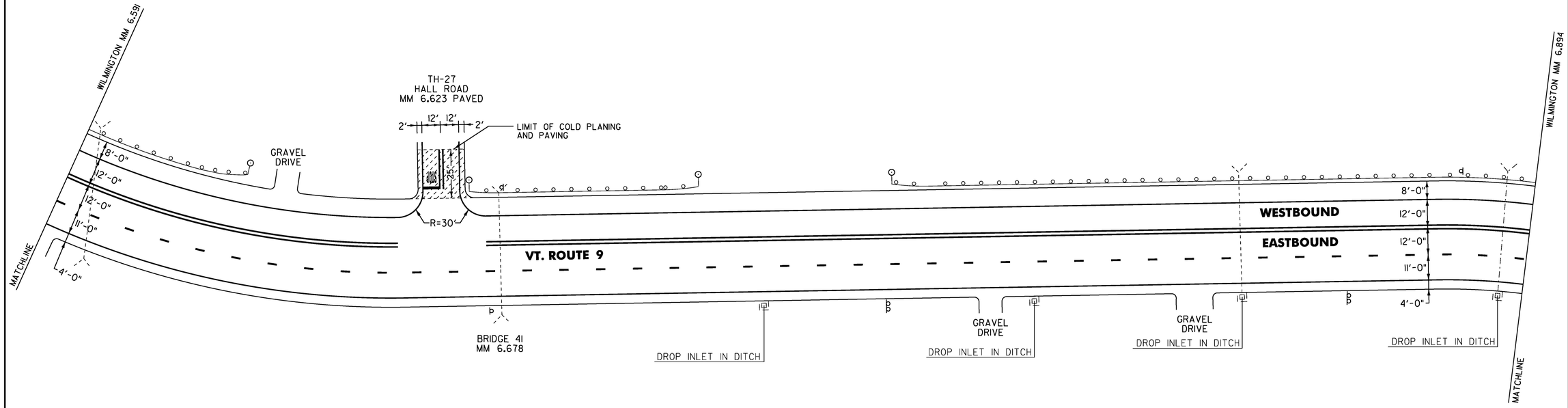

LEGEND: COLD PLANE AREA

NOT TO SCALE

PROJECT NAME:	BENNINGTON-WILMINGTON
PROJECT NUMBER:	NH SURF (51)

FILE NAME: pl4v201 Bennington-Wilmington.dgn PLOT DATE: 28-MAR-2017
PROJECT LEADER: M. FOWLER — DRAWN BY: N. PAPPAS
DESIGNED BY: N. PAPPAS — CHECKED BY: M. FOWLER
LAYOUT SHEET 31 — SHEET 50 OF 64

TEMPORARY 4 INCH WHITE LINE, PAINT &
DURABLE 4 INCH WHITE LINE (OPTION BID ITEM)
(ALL LINES WILL INCLUDE EDGE LINE BREAKS AND RADIUS FOR TOWN HIGHWAYS)
WILMINGTON:
MM 6.894 - 7.160 EDGE LINE LT & RT
MM 6.894 - 6.896 DASHED LANE LINE RT

TEMPORARY 4 INCH YELLOW LINE, PAINT &
DURABLE 4 INCH YELLOW LINE (OPTION BID ITEM)
(ALL LINES WILL INCLUDE C/L BREAKS FOR TOWN HIGHWAYS)
WILMINGTON:
MM 6.894 - 7.160 C/L SOLD LT & RT

TEMPORARY 24 INCH STOP BAR, PAINT &
DURABLE 24 INCH STOP BAR (OPTION BID ITEM)
WILMINGTON:
MM 7.149 LT TH-68

TEMPORARY LETTER OR SYMBOL, PAINT &
DURABLE LETTER OR SYMBOL (OPTION BID ITEM)
WILMINGTON:

MM 6.895 RT - "↖" (1 EACH)

MM 6.957 RT - "↖" (1 EACH)

MM 7.017 RT - "↖" (1 EACH)

MM 7.149 LT - "STOP" (4 EACH)

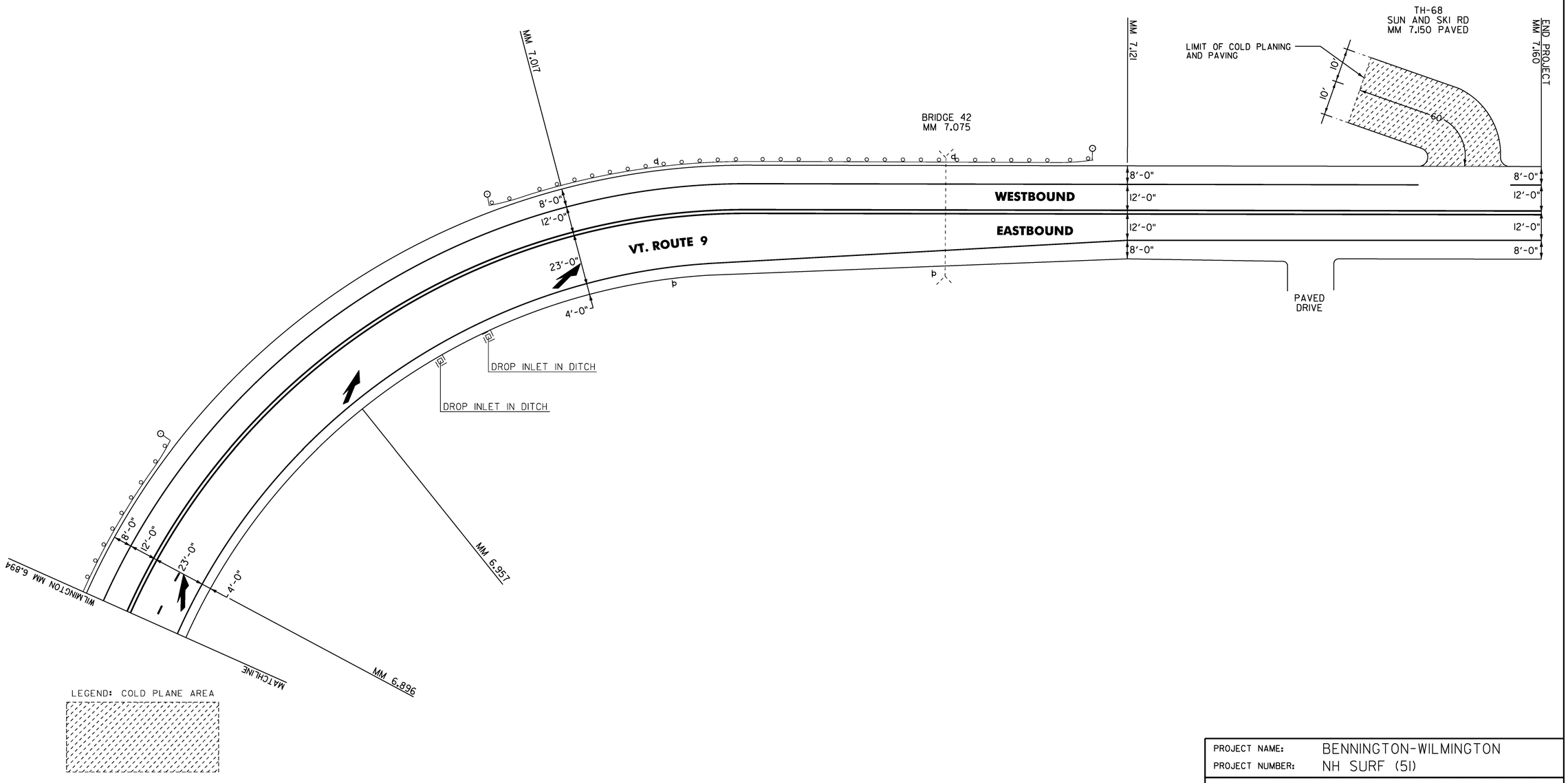

NOT TO SCALE

PROJECT NAME:	BENNINGTON-WILMINGTON
PROJECT NUMBER:	NH SURF (51)

FILE NAME: pl4v201 Bennington-Wilmington.dgn PLOT DATE: 28-MAR-2017
PROJECT LEADER: M. FOWLER DRAWN BY: N. PAPPAS
DESIGNED BY: N. PAPPAS CHECKED BY: M. FOWLER
LAYOUT SHEET 32 SHEET 51 OF 64

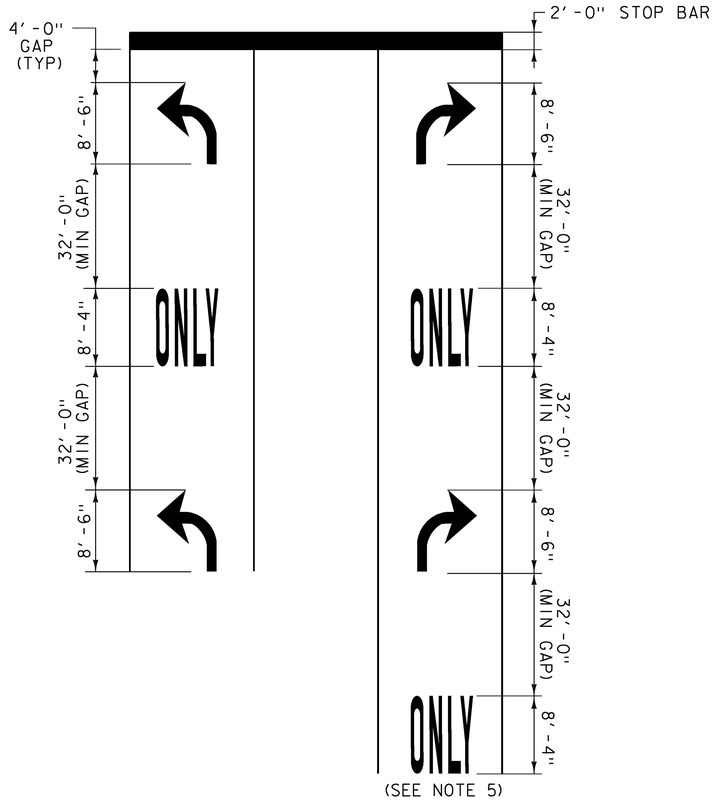

(SEE NOTE 5)

TYPICAL MARKINGS FOR TURN LANES

NOTES:

1. MARKINGS START AT THE BEGINNING OF SOLID LANE LINE.
2. THE "ONLY" WORD MARKINGS SHALL BE USED TO SUPPLEMENT LANE-USE ARROW MARKINGS AS SHOWN ON THE PLANS OR AS DIRECTED BY THE ENGINEER.
3. IF LANE LENGTH IS LESS THAN 50 FEET, ONLY ONE TURN ARROW PLACED AT THE BEGINNING OF THE SOLID LANE LINE IS REQUIRED.
4. THE LONGITUDINAL SPACE BETWEEN WORD OR SYMBOL MESSAGE MARKINGS SHOULD BE AT LEAST FOUR TIMES THE HEIGHT OF THE CHARACTERS USED FOR LOW SPEED ROADS, BUT NOT MORE THAN TEN TIMES THE HEIGHT OF THE CHARACTERS UNDER ANY CONDITIONS.
5. A SECOND "ONLY" IS OPTIONAL WHEN SPACE PERMITS AS SHOWN ON THE PLANS OR AS DIRECTED BY THE ENGINEER.
6. EXCLUSIVE TURN (LEFT OR RIGHT) LANE LINES SHALL BE SOLID AND EXTEND BACK FROM THE STOP LINE TO THE POINT OF FULL LANE WIDTH OF THE TURN LANE.

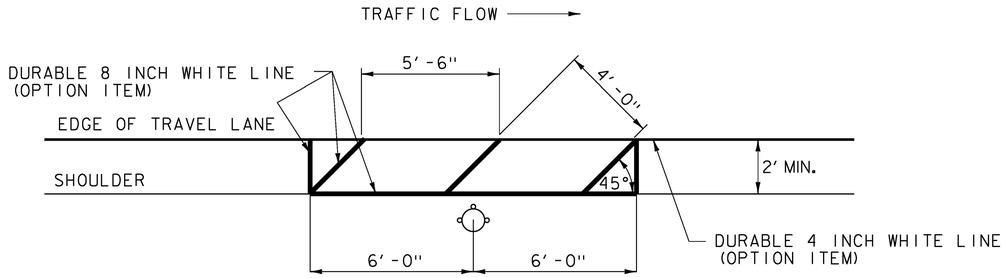

FIRE HYDRANT AND NO PARKING PAVEMENT MARKING DETAIL

WILMINGTON:

MM 2.583 - 2.585 LT
MM 2.722 - 2.724 LT
MM 2.820 - 2.822 LT
MM 2.886 - 2.888 LT
MM 2.957 - 2.959 RT
MM 3.013 - 3.016 RT
MM 3.017 - 3.023 RT
MM 3.196 - 3.198 RT
MM 3.202 RT
MM 3.273 RT
MM 3.504 LT

NOTE: THE CONTRACTOR SHALL ADJUST THE PLACEMENT OF THE FIRE HYDRANT AND NO PARKING PAVEMENT MARKINGS TO MEET THE EXISTING SITE CONSTRAINTS AS DIRECTED BY THE ENGINEER.

NOT TO SCALE

PROJECT NAME:	BENNINGTON-WILMINGTON
PROJECT NUMBER:	NH SURF (51)

FILE NAME: pl4v201Bennington-Wilmington.dgn PLOT DATE: 28-MAR-2017
PROJECT LEADER: M. FOWLER DRAWN BY: N. PAPPAS
DESIGNED BY: N. PAPPAS CHECKED BY: M. FOWLER
LAYOUT SHEET 33 SHEET 52 OF 64

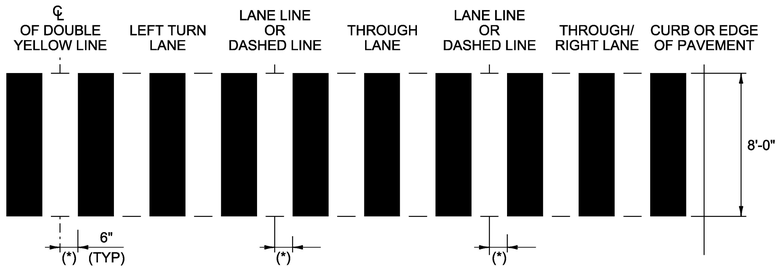

BLOCK PATTERN CROSSWALK DETAIL

NOTES:

1. THIS DETAIL IS SETUP FOR AN 11 FOOT LANE.
2. MARK LIGHT STRING LINE ON PAVEMENT ACROSS ROADWAY (CURB TO CURB).
3. ESTABLISH THE CENTERLINE OF THE ROADWAY (DOUBLE YELLOW LINE OR LANE LINE).
4. BLOCKS ARE PARALLEL TO THE CENTERLINE (DOUBLE YELLOW LINE OR LANE LINE) (OFFSET BLOCKS VERTICALLY TO ACHIEVE RQ SKEW).
5. ALWAYS START MEASURING FROM THE CENTERLINE OR LANE LINE RIGHT, WITH THE FLOW OF TRAFFIC.

(*)6. PAINTED BLOCKS SHALL BE 24 INCHES (TYPICAL).

7. THIS DISTANCE WILL INCREASE TO 1.0' FOR A 12 FOOT LANE.

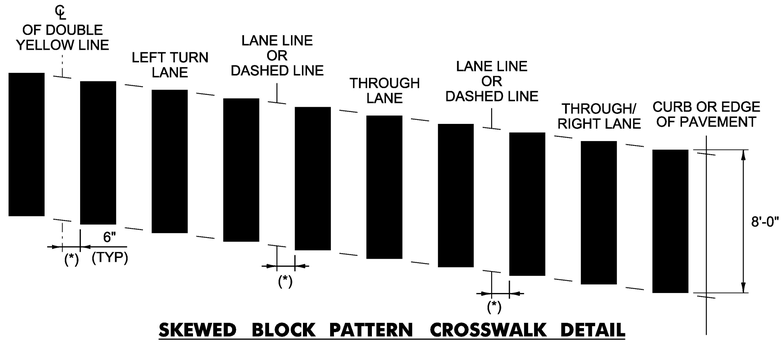

SKEWED BLOCK PATTERN CROSSWALK DETAIL

NOTES:

1. THIS DETAIL IS SETUP FOR AN 11 FOOT LANE.
2. MARK LIGHT STRING LINE ON PAVEMENT ACROSS ROADWAY (CURB TO CURB).
3. ESTABLISH THE CENTERLINE OF THE ROADWAY (DOUBLE YELLOW LINE OR LANE LINE).
4. BLOCKS ARE PARALLEL TO THE CENTERLINE (DOUBLE YELLOW LINE OR LANE LINE) (OFFSET BLOCKS VERTICALLY TO ACHIEVE REQUIRED SKEW).
5. ALWAYS START MEASURING FROM THE CENTERLINE OR LANE LINE RIGHT, WITH THE FLOW OF TRAFFIC.

(*)6. PAINTED BLOCKS SHALL BE 24 INCHES (TYPICAL).

7. THIS DISTANCE WILL INCREASE TO 1.0' FOR A 12 FOOT LANE.

NOT TO SCALE

PROJECT NAME:	BENNINGTON-WILMINGTON
PROJECT NUMBER:	NH SURF (51)

FILE NAME: pl4v201 Bennington-Wilmington.dgn PLOT DATE: 28-MAR-2017
PROJECT LEADER: M. FOWLER DRAWN BY: N. PAPPAS
DESIGNED BY: N. PAPPAS CHECKED BY: M. FOWLER
LAYOUT SHEET 34 SHEET 53 OF 64

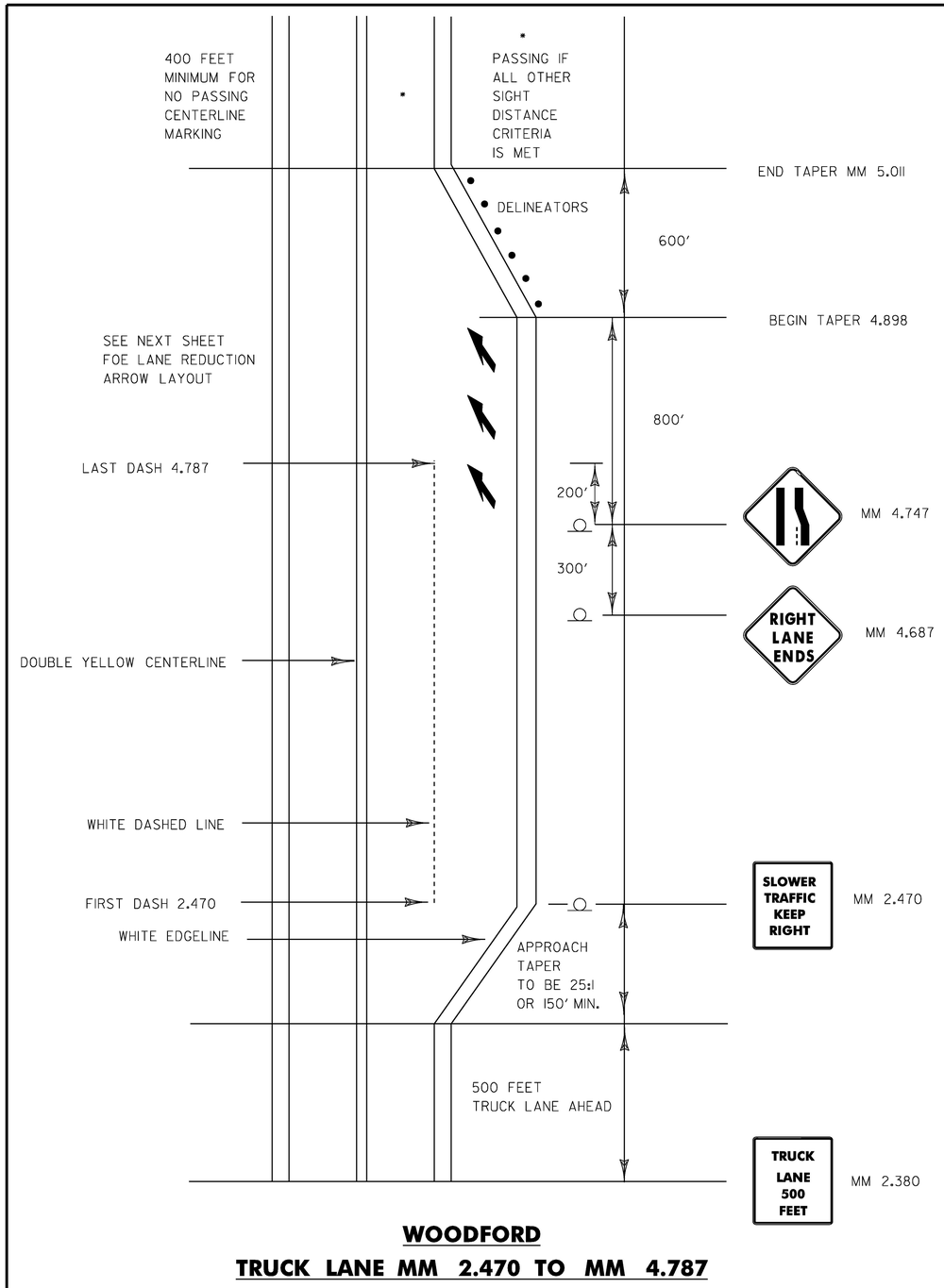

WOODFORD

TRUCK LANE MM 2.470 TO MM 4.787

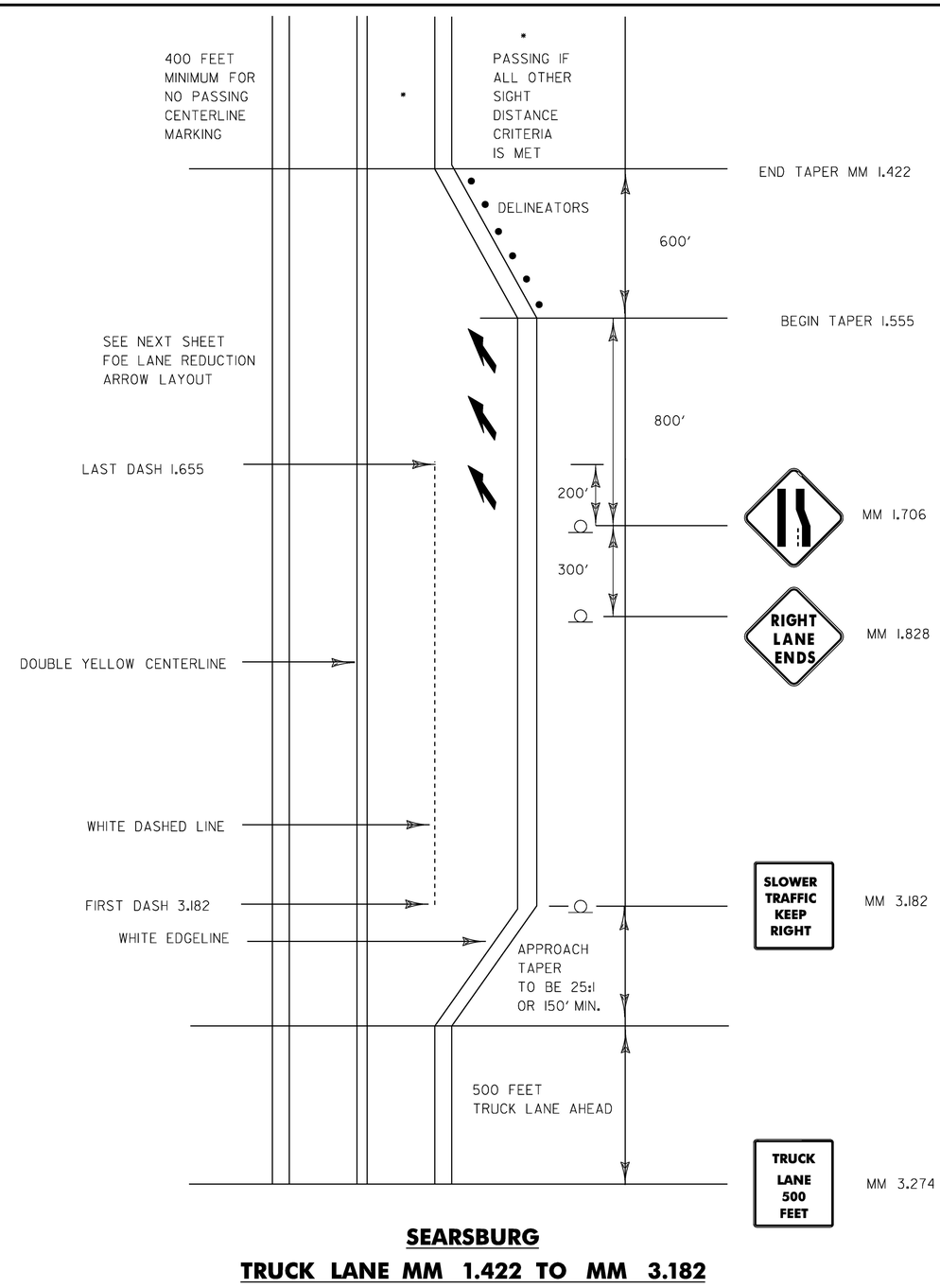

SEARSBURG

TRUCK LANE MM 1.422 TO MM 3.182

NOT TO SCALE

PROJECT NAME:	BENNINGTON-WILMINGTON
PROJECT NUMBER:	NH SURF (51)

FILE NAME: pl4v201 Bennington-Wilmington.dgn PLOT DATE: 28-MAR-2017
PROJECT LEADER: M. FOWLER DRAWN BY: N. PAPPAS
DESIGNED BY: N. PAPPAS CHECKED BY: M. FOWLER
LAYOUT SHEET 35 SHEET 54 OF 64

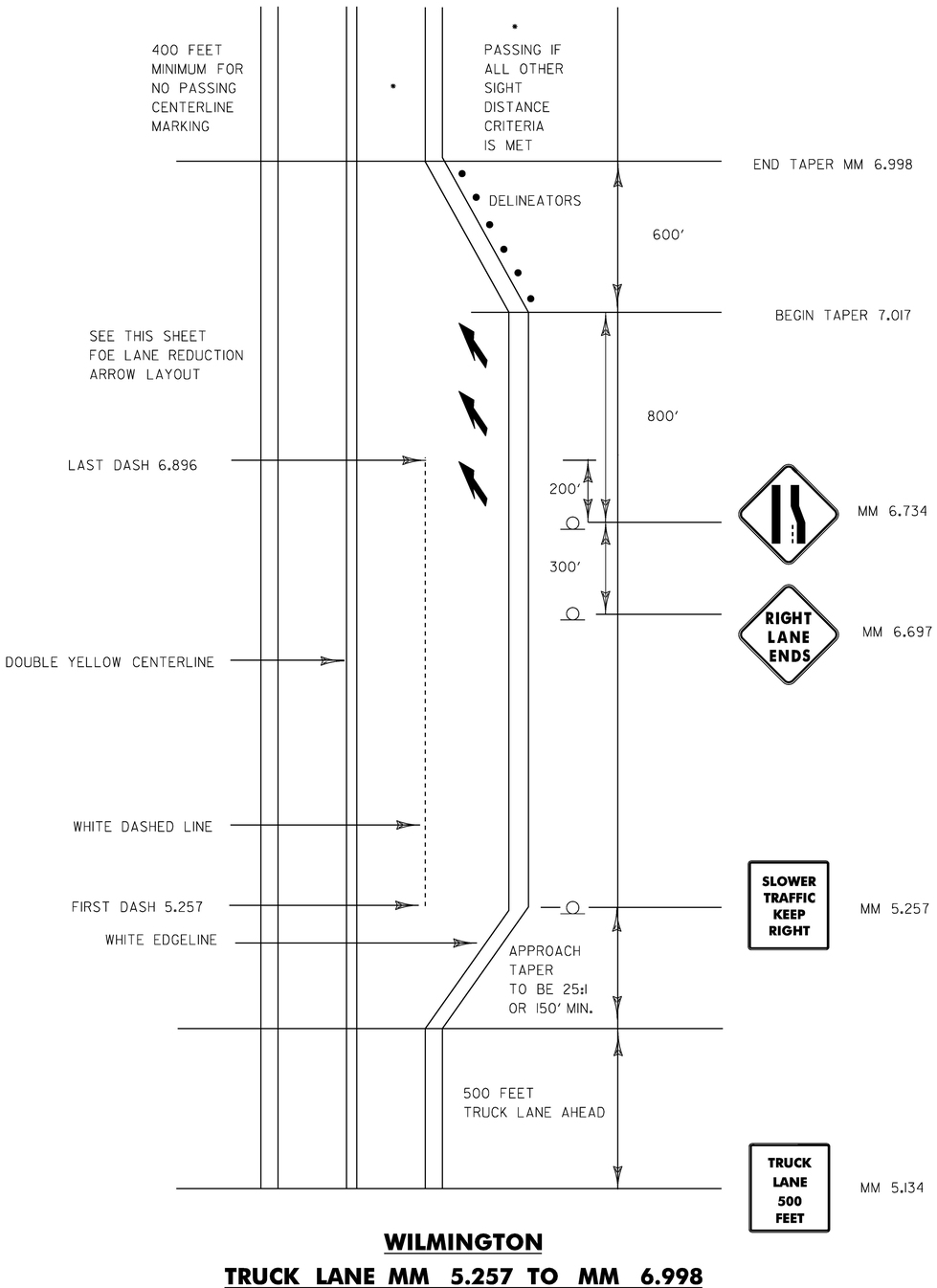

WILMINGTON

TRUCK LANE MM 5.257 TO MM 6.998

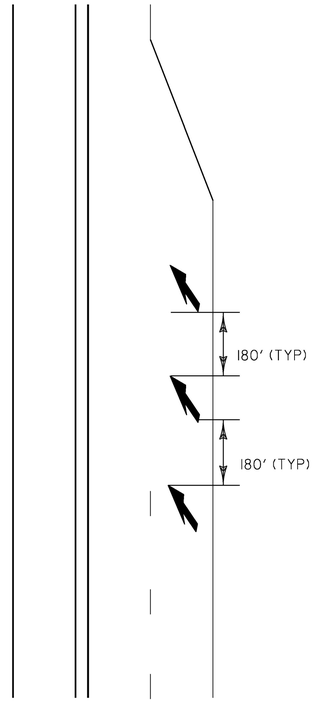

FIRST LANE REDUCTION ARROW SHALL BE PLACED OPPOSITE THE LAST DASH. TWO MORE ARROWS (TOTAL OF THREE ARROWS) TO BE PLACED 180'(MAX.) BETWEEN LAST DASH AND BEGINNING OF LANE TAPER. FOR LEFT LANE USE MIRROR IMAGE.

LANE REDUCTION TRANSITION MARKINGS

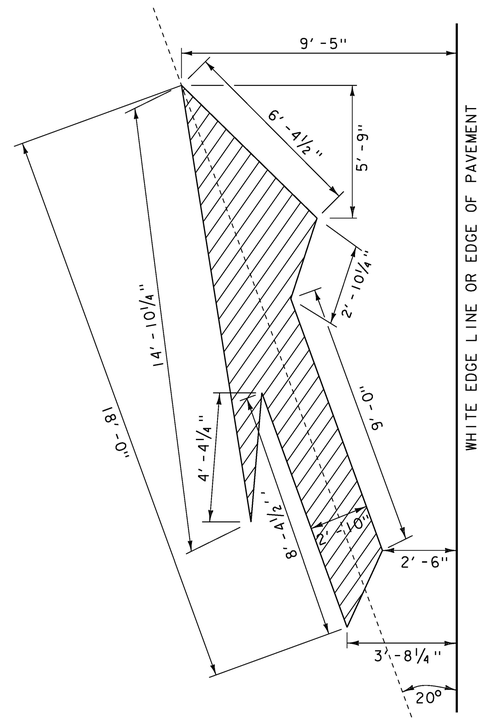

LANE DROP ARROW

NOT TO SCALE

PROJECT NAME:	BENNINGTON-WILMINGTON
PROJECT NUMBER:	NH SURF (51)

FILE NAME: pl4v201 Bennington-Wilmington.dgn LOT DATE: 28-MAR-2017
PROJECT LEADER: M. FOWLER DRAWN BY: N. PAPPAS
DESIGNED BY: N. PAPPAS CHECKED BY: M. FOWLER
LAYOUT SHEET 36 SHEET 55 OF 64

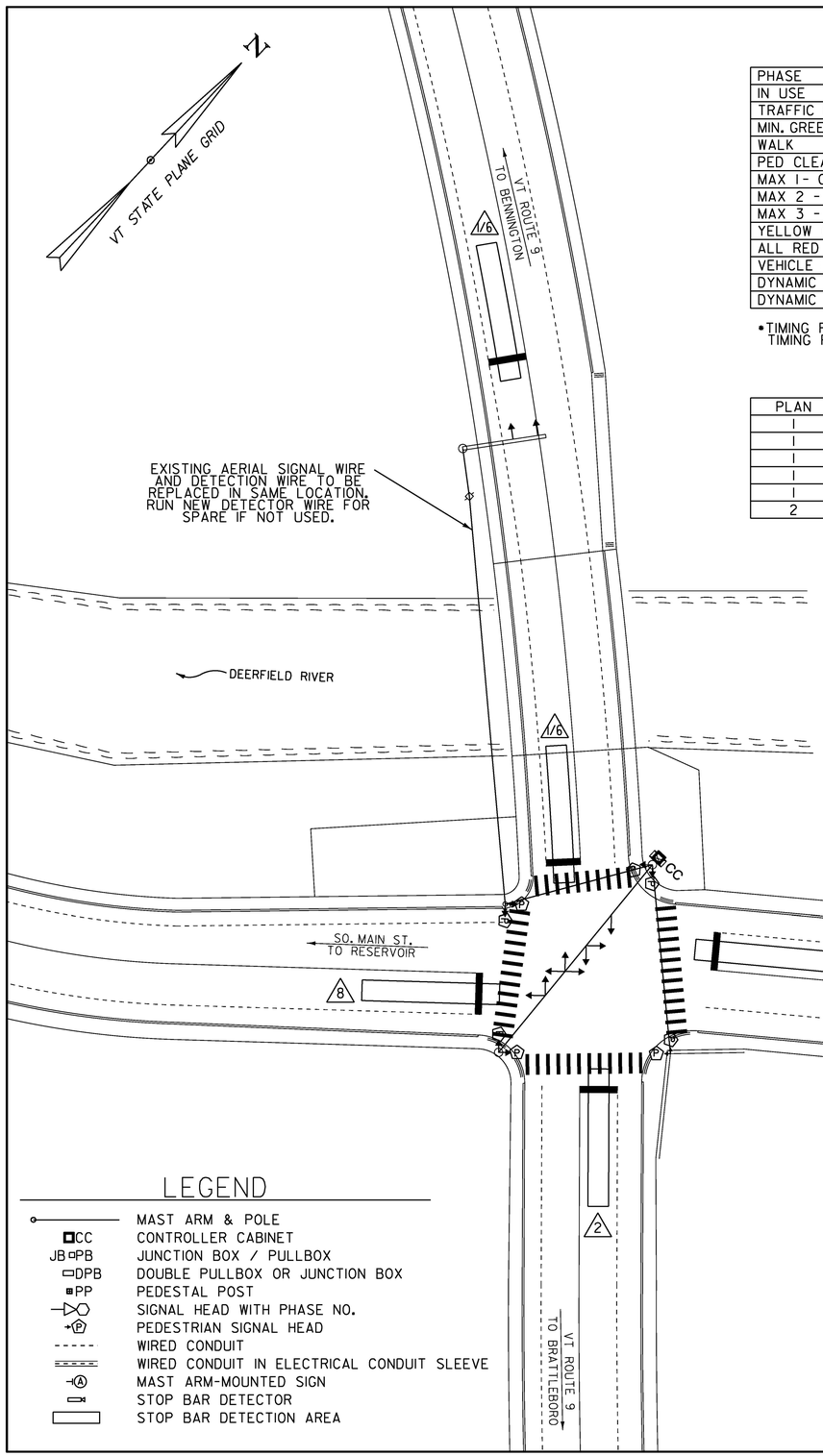

CONTROLLER TIMING CHART

PHASE	1	2	3	4	5	6	7	8	9
IN USE	X	X		X		X		X	X
TRAFFIC MOVEMENT	EBL	WB		SB		EBTHRU		NB	PED
MIN. GREEN	5	9		9		9		9	
WALK									7
PED CLEARANCE									12
MAX 1- GREEN (OFF)	8	25		25		25		25	
MAX 2 - GREEN (AM)	8	25		25		25		25	
MAX 3 - GREEN (PM)	8	25		25		25		25	
YELLOW CLEARANCE	4	4		4		4		4	
ALL RED CLEARANCE	0	2.5		2.5		2.5		2.5	
VEHICLE EXTENSION	0	3		3		3		3	
DYNAMIC MAX•				48•					
DYNAMIC STEP•				8•					

•TIMING PLAN 1 WITHOUT DYNAMIC MAX.
TIMING PLAN 2 USES SAME TIMINGS WITH DYNAMIC MAX ON PH 4.

TIME OF DAY PLAN

PLAN	EVENT	FLASH	REFERENCE	START TIME
1	1	NO	MAX 1	12:00 AM
1	2	NO	MAX 2	6:00 AM
1	3	NO	MAX 1	10:00 AM
1	4	NO	MAX 3	3:00 PM
1	5	NO	MAX 1	7:00 PM
2	1	NO	MAX 1	12:00 AM

TIMING PLAN

TIMING PLAN	WEEK OF YEAR
1	16-21, 24-45
2	1-15, 22-23, 46-53

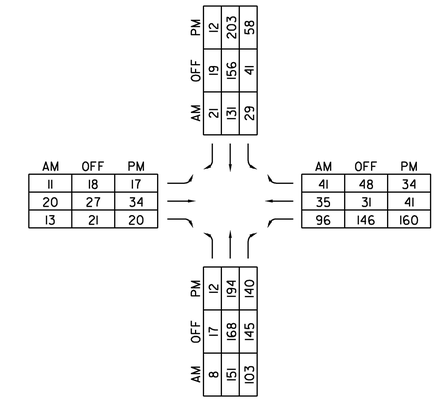

PEAK HOURLY VOLUMES

FROM 2013 COUNT

PEDESTRIAN COUNTDOWN HEAD AND R10-3e SIGN

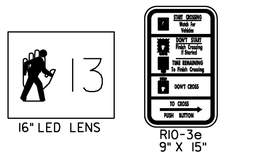

16" LED LENS

R10-3e
9" X 15"

LIST OF MAJOR EQUIPMENT

EQUIPMENT ITEMS 678.15 - (VT ROUTE 9 & VT ROUTE 100)	QUANTITY	REMARKS
POWER METER WITH BYPASS AND DISCONNECT	1	MOUNTED ON STRAIN POLE
NEMA M TS2 POLE MOUNTED CONTROLLER CABINET WITH ANCILLARY EQUIPMENT	1	ALUMINUM FINISH
NEMA TS2 TRAFFIC SIGNAL CONTROLLER	1	ECONOLITE COBALT TS2, TYPE 2
MALFUNCTION MANAGEMENT UNIT (MMU)	1	ECONOLITE SMARTMONITOR MMU216-LE
ACCESSIBLE PEDESTRIAN PUSH BUTTON ASSEMBLIES	4	WITH R10-3e SIGN AND INCLUDING WIRING
LED COUNTDOWN PEDESTRIAN SIGNAL HEADS INCLUDING MOUNTING HARDWARE AND WIRING	8	MOUNTING CONFIGURATION TO MATCH EXISTING CONDITION
STOP BAR DETECTOR ASSEMBLY	5	WITH CABLE, MOUNTING BRACKETS AND CABINET INTERFACE
NEW 12-INCH LED SIGNAL HEADS - 3-SECTION WITH VISORS, BACKPLATES AND MOUNTING HDW.	9	MOUNTING CONFIGURATION TO MATCH EXISTING CONDITION
NEW 12-INCH LED SIGNAL HEADS - 5-SECTION WITH VISORS, BACKPLATE AND MOUNTING HDW.	1	MOUNTING LOCATION TO MATCH EXISTING CONDITION
NEW 24" LED BLANKOUT NO RIGHT TURN ON RED SIGNS, INCLUDING MOUNTING HARDWARE AND WIRING	4	MOUNTING LOCATIONS TO MATCH EXISTING CONDITION
SIGNAL WIRING	650 LF	ESTIMATED QTY - AS REQUIRED
SPAN WIRE	75 LF	ESTIMATED QTY - AS REQUIRED

LEGEND

———	MAST ARM & POLE
CC	CONTROLLER CABINET
JB PB	JUNCTION BOX / PULLBOX
DPB	DOUBLE PULLBOX OR JUNCTION BOX
PP	PEDESTAL POST
	SIGNAL HEAD WITH PHASE NO.
P	PEDESTRIAN SIGNAL HEAD
- - - - -	WIRED CONDUIT
	WIRED CONDUIT IN ELECTRICAL CONDUIT SLEEVE
A	MAST ARM-MOUNTED SIGN
	STOP BAR DETECTOR
	STOP BAR DETECTION AREA

PHASING DIAGRAM

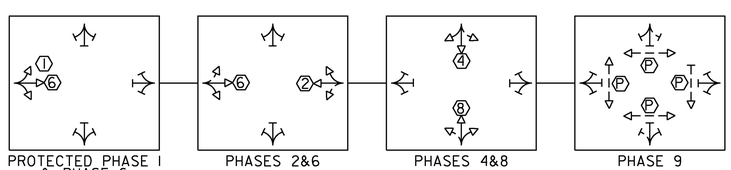

PROTECTED PHASE 1 & PHASE 6 | PHASES 2&6 | PHASES 4&8 | PHASE 9

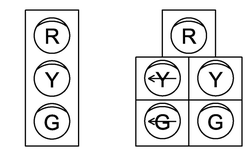

FACES 2,4,6,8 FACE 1/6

0 20 40
SCALE IN FEET

PROJECT NAME: BENNINGTON-WILMINGTON
PROJECT NUMBER: NH SURF(51)

FILE NAME: t14v20lnul.dgn
PROJECT LEADER: M. FOWLER
DESIGNED BY: K. RECORD
TRAFFIC SIGNAL SYSTEM SHEET

PLOT DATE: 28-MAR-2017
DRAWN BY: K. RECORD
CHECKED BY: M. LACROIX
SHEET 56 OF 64

TRAFFIC SIGNAL SYSTEM NOTES

A. NEW SIGNAL EQUIPMENT

1. THE TRAFFIC SIGNAL CONTROLLER AND RELATED EQUIPMENT SHALL BE AN ECONOLITE COBALT (NEMA TS2, TYPE 2) IN A NEMA M TS2 TRAFFIC CONTROL CABINET INSTALLED AT THE LOCATION SHOWN ON THE PLANS. TRAFFIC CONTROL CABINET SHALL BE ORIENTED SUCH THAT THE DOOR DOES NOT FACE THE ROADWAY.
2. SIGNAL HEADS, SPAN WIRE, PEDESTRIAN SIGNAL HEADS, PUSH BUTTONS AND LED BLANKOUT SIGNS SHALL BE REPLACED IN SAME LOCATIONS AND ALL WIRING SHALL BE REPLACED WITH NEW.
3. ALL SIGNAL HEAD HOUSINGS SHALL BE 12" POLYCARBONATE. THE SIGNAL HEAD EQUIPMENT SHALL BE FLAT BLACK AND INCLUDE FLAT BLACK VISORS.
4. ALL SIGNAL HEADS SHALL HAVE FLAT BLACK LOUVERED BACK PLATES WITH A 2-INCH RETROREFLECTIVE TAPE BORDER.
5. ALL SIGNAL HEADS SHALL HAVE RED, YELLOW, AND GREEN L.E.D. INDICATORS WITH A VISIBLE SPREAD OF 80 DEGREES OFF AXIS.
6. ALL TRAFFIC SIGNAL EQUIPMENT SHALL BE FLAT BLACK IN ACCORDANCE WITH THE SPECIAL PROVISIONS UNLESS OTHERWISE SPECIFIED.
7. A DISCONNECT BREAKER FOR EACH CIRCUIT SHALL BE INSTALLED IN A RAINPROOF (NEMA 3R), LOCKED CABINET NEXT TO OR BELOW THE METER SOCKET. ALL METER SOCKETS SHALL HAVE A BYPASS INSTALLED.

B. SIGNAL OPERATION

1. SWITCH-OVER TO THE NEW TRAFFIC SIGNAL SYSTEM SHALL NOT OCCUR DURING PEAK TRAFFIC OPERATING PERIODS. UNIFORMED TRAFFIC OFFICERS SHALL CONTROL TRAFFIC DURING THE SWITCH-OVER.
2. ALL SIGNALS SHALL DWELL ON VT ROUTE 9 UNLESS OTHERWISE NOTED.
3. THE VT ROUTE 9 THRU PHASE SHALL BE USED FOR THE START-UP PHASE FOLLOWING FLASHING OPERATION.
4. SIGNAL TIMING SHOWN ON THE PLANS MAY REQUIRE FINE-TUNING IN THE FIELD BASED ON TRAFFIC OBSERVATION AND/OR ADDITIONAL FIELD STUDIES.

C. TRAFFIC SIGNAL CONDUIT

1. ALL TRAFFIC SIGNAL CONDUIT SHALL BE SCHEDULE 80 PVC.
2. WHEN CONDUIT IS PLACED BELOW THE ROADWAY OR ACROSS SIDE ROADS, IT SHALL BE PLACED IN A STEEL OR HDPE SLEEVE, SIZE SHOWN ON THE PLANS.
3. ALL TRAFFIC SIGNAL CONDUIT WORK SHALL BE PERFORMED IN ACCORDANCE WITH VTRANS' "STANDARD SPECIFICATIONS FOR CONSTRUCTION", DATED 2011, SECTION 678.
4. CONDUIT INSTALLED ON BUILDINGS SHALL BE RETAINED. IF DAMAGED THROUGH THE CONTRACTORS OPERATIONS, IT SHALL BE REPLACED AT THE CONTRACTORS EXPENSE. REPLACEMENT CONDUIT SHALL BE PAINTED TO MATCH EXISTING.

D. VEHICLE DETECTION

1. THE CONTRACTOR SHALL CONTACT GREEN MOUNTAIN POWER COMPANY PRIOR TO COMMENCING ANY WORK ON THE SIGNAL SYSTEM TO COORDINATE THE WIRING FOR THE VEHICLE DETECTORS.
2. VEHICLE DETECTORS SHALL BE PLACED SO THAT OCCLUSION IS MINIMIZED AND PHASING IS NOT AFFECTED.
3. VEHICLE STOP BAR DETECTION AREAS SHALL EXTEND FIVE FEET PAST THE PERMANENT STOP BAR.
4. VEHICLE STOP BAR DETECTION SYSTEMS SHALL BE AN ECONOLITE AUTOSCOPE ENCORE DETECTION SYSTEM.
5. THERE SHALL BE NO WIRING SPLICES BETWEEN THE SIGNAL CONTROLLER AND THE STOP BAR DETECTORS UNLESS IN A MANUFACTURER-APPROVED JUNCTION BOX.
6. SEE THE PLANS AND THE SPECIAL PROVISIONS FOR A DETAILED LIST OF EQUIPMENT.

E. COMMUNICATIONS

1. THE CONTRACTOR SHALL CONTACT THE VTRANS TRAFFIC SIGNAL OPERATIONS ENGINEER, DEREK LYMAN (802-249-5079) TO DETERMINE WHICH TELECOMMUNICATIONS SERVICE PROVIDER TO CONTACT TO ESTABLISH A TELECOMMUNICATION DROP FOR THE TRAFFIC SIGNAL SYSTEM.
2. THE CONTRACTOR SHALL COORDINATE WITH THE VTRANS INFORMATION TECHNOLOGY SECTION TO SET UP AN ACCOUNT WITH THE PREFERRED TELECOMMUNICATIONS SERVICE PROVIDER FOR BROADBAND COMMUNICATIONS, JIM WOOD (828-2739) OF VTRANS IT SECTION TO SUPPLY AND CONFIGURE ROUTER FOR INSTALLATION AFTER 30-DAY TEST PERIOD HAS CONCLUDED AND THE AGENCY HAS TAKEN OWNERSHIP OF THE INTERSECTION.
3. THE CONTRACTOR SHALL BE RESPONSIBLE FOR WIRING THE BROADBAND CONNECTION TO THE CONTROLLER CABINET FROM THE NEAREST POSSIBLE SOURCE OF THE SELECTED UTILITY TRANSMISSION.

F. GENERAL

1. A UNIFORMED TRAFFIC OFFICER WITH A BLUE LIGHT SHALL BE PRESENT DURING ALL LANE CLOSURES.
2. ALL CABINET WIRING SHALL BE INSTALLED NEATLY AND OFF THE BOTTOM OF THE CABINET.
3. PRIOR TO WORK COMMENCING ON THE SIGNAL EQUIPMENT LOCATED ON THE BUILDING CORNER, THE CONTRACTOR SHALL CONTACT THE TOWN OFFICES AND POLICE DEPARTMENT TO COORDINATE ANY POTENTIAL POWER DISCONNECTIONS FOR INSTALLATION PURPOSES.
4. THE EXISTING PEDESTRIAN SIGNAL HEADS, BLANKOUTS AND PUSHBUTTONS REMOVED SHALL BE SALVAGED TO AOT WILMINGTON GARAGE (464-8032).

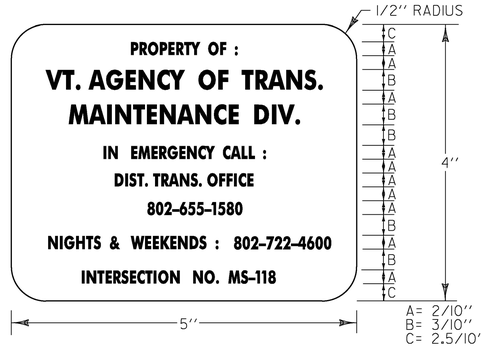

LEGEND: - BLACK (NON-REFL.) - STAMPED PRIOR TO PAINTING
BACKGROUND: NATURAL ALUMINUM OR BRASS SURFACE

NOTES:

1. THE PLAQUE SHALL BE MOUNTED ON ALL TRAFFIC SIGNAL CONTROLLER CABINETS. IT SHALL BE FASTENED TO THE CONTROLLER CABINET IN SUCH A MANNER AS TO BE NOT EASILY REMOVED, SUCH AS WELDED, RIVETED OR BOLTED WITH VANDAL PROOF BOLTS.
2. THE LETTERS SHALL BE PUNCHED OR STAMPED, SUCH STAMPING SHALL PENETRATE AT LEAST ½ THE BASE MATERIAL THICKNESS.
3. THE BASE MATERIAL FOR THE PLAQUE SHALL BE BRASS OR ALUMINUM WITH A MINIMUM THICKNESS OF 1/16".

CONTROLLER IDENTIFICATION PLAQUE
NOT TO SCALE

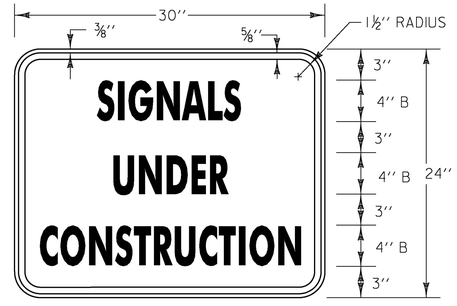

MATERIALS: SEE STD. T-30
COLORS: TEXT & BORDER - BLACK
BACKGROUND - ORANGE (RETROREFLECTIVE SHEETING)

CONSTRUCTION SIGN DETAIL
NOT TO SCALE
TO BE INSTALLED ON ROAD WORK AHEAD SIGN POSTS.

REVISION	DATE	DESCRIPTION	BY
1	5/1/17	NOTES REVISED	KAR

PROJECT NAME: BENNINGTON-WILMINGTON
PROJECT NUMBER: NH SURF(51)

FILE NAME: sig02.dgn
PROJECT LEADER: M. FOWLER
DESIGNED BY: K. RECORD
TRAFFIC SIGNAL SYSTEM NOTES SHEET

PLOT DATE: 5/1/17
DRAWN BY: K. RECORD
CHECKED BY: M. LACROIX
SHEET 57 OF 64

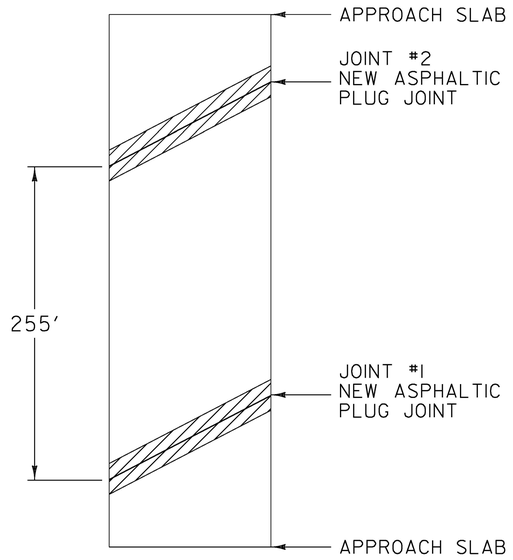

BRIDGE 9

MM 6.420 BENNINGTON
LENGTH OF ASPHALTIC PLUG JOINTS:
JOINT #1 - 45'
JOINT #2 - 45'

TOTAL = 90'

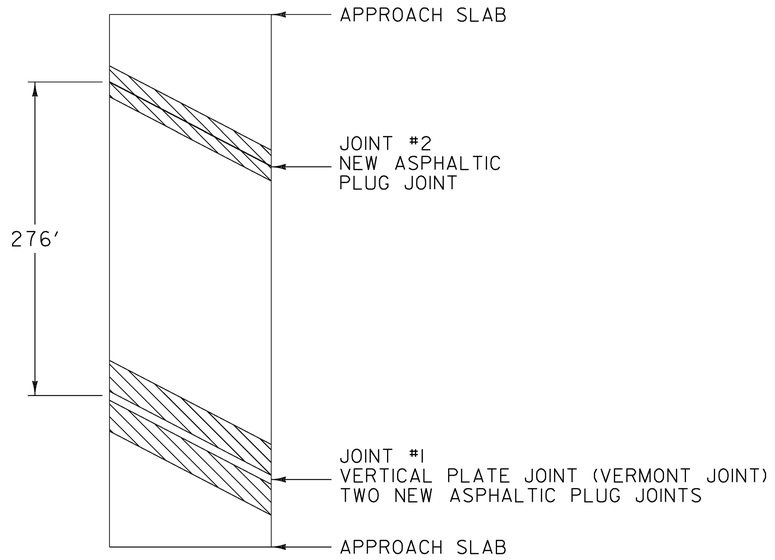

BRIDGE 11

MM 1.215 WOODFORD
LENGTH OF ASPHALTIC PLUG JOINTS:
JOINT #1 - 2 X 62= 124'
JOINT #2 - 62'

TOTAL = 186'

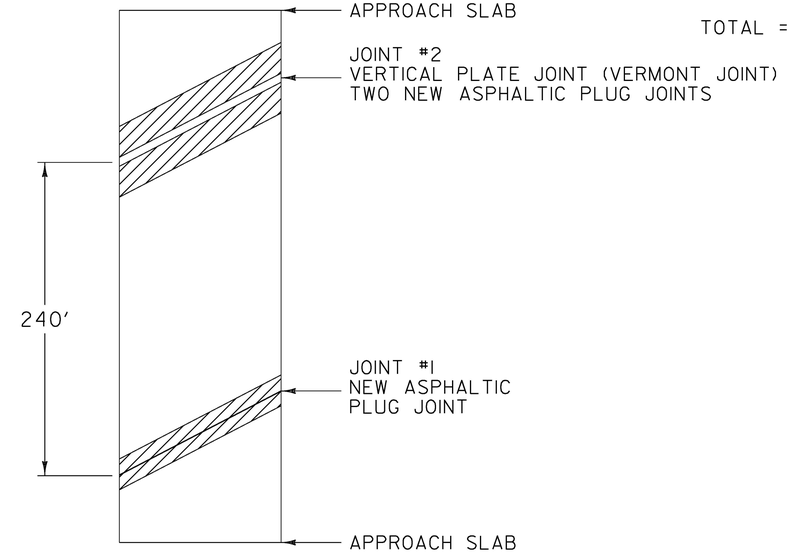

BRIDGE 12

MM 2.814 WOODFORD
LENGTH OF ASPHALTIC PLUG JOINTS:
JOINT #1 - 54'
JOINT #2 - 2 X 54'= 108'

TOTAL = 162'

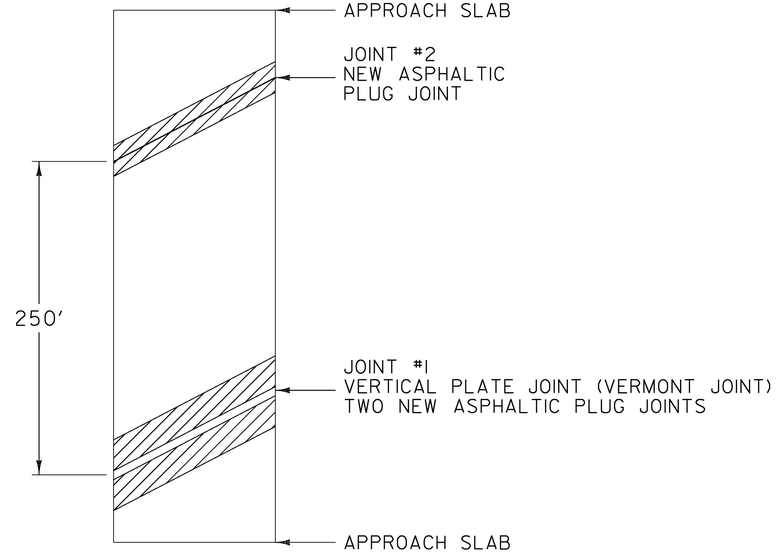

BRIDGE 25

MM 3.972 SEARSBURG
LENGTH OF ASPHALTIC PLUG JOINTS:
JOINT #1 - 2 X 60'= 120'
JOINT #2 - 60'

TOTAL = 180'

LEGEND

EXISTING BRIDGE JOINTS TO BE
REPAIRED WITH ASPHALTIC PLUG JOINT

NOT TO SCALE

PROJECT NAME:	BENNINGTON-WILMINGTON
PROJECT NUMBER:	NH SURF (51)

FILE NAME: pl4v201 Bennington-Wilmington.dgn PLOT DATE: 28-MAR-2017
PROJECT LEADER: M. FOWLER DRAWN BY: N. PAPPAS
DESIGNED BY: N. PAPPAS CHECKED BY: M. FOWLER
BRIDGE EXPANSION JOINT DETAIL SHEET 1 SHEET 58 OF 64

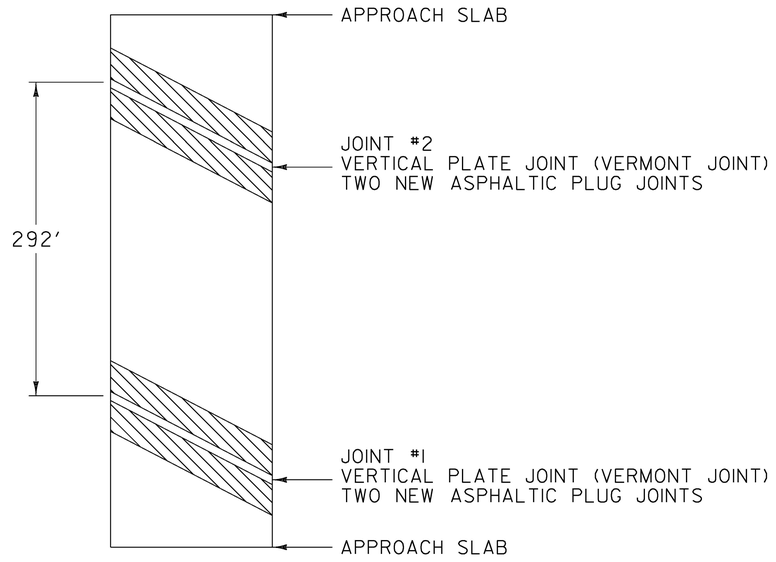

BRIDGE 25A

MM 4.187 SEARSBURG
LENGTH OF ASPHALTIC PLUG JOINTS:
JOINT #1 - 2 X 40= 80'
JOINT #2 - 2 X 40 '= 80'

TOTAL = 160'

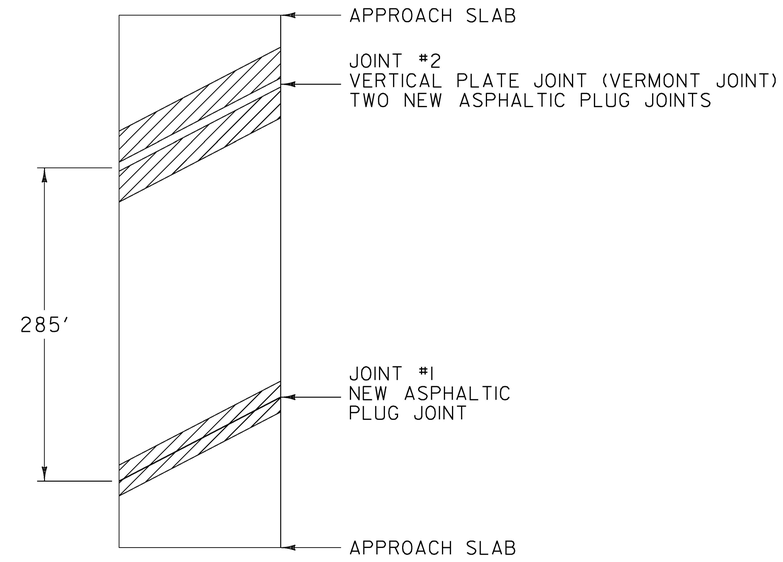

BRIDGE 25B

MM 4.415 SEARSBURG
LENGTH OF ASPHALTIC PLUG JOINTS:
JOINT #1 - 62'
JOINT #2 - 2 X 62= 124'

TOTAL = 186'

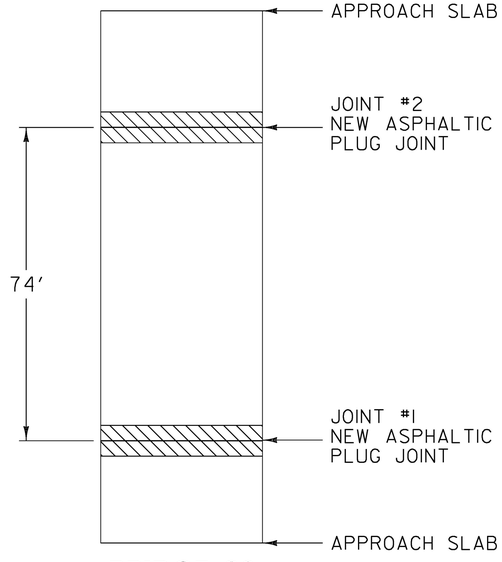

BRIDGE 30

MM 2.270 WILMINGTON
LENGTH OF ASPHALTIC PLUG JOINTS:
JOINT #1 - 30'
JOINT #2 - 30'

TOTAL = 60'

LEGEND

EXISTING BRIDGE JOINTS TO BE REPAIRED WITH ASPHALTIC PLUG JOINT

NOT TO SCALE

PROJECT NAME:	BENNINGTON-WILMINGTON
PROJECT NUMBER:	NH SURF (51)

FILE NAME: pl4v201 Bennington-Wilmington.dgn PLOT DATE: 28-MAR-2017
PROJECT LEADER: M. FOWLER DRAWN BY: N. PAPPAS
DESIGNED BY: N. PAPPAS CHECKED BY: M. FOWLER
BRIDGE EXPANSION JOINT DETAIL SHEET 2 SHEET 59 OF 64

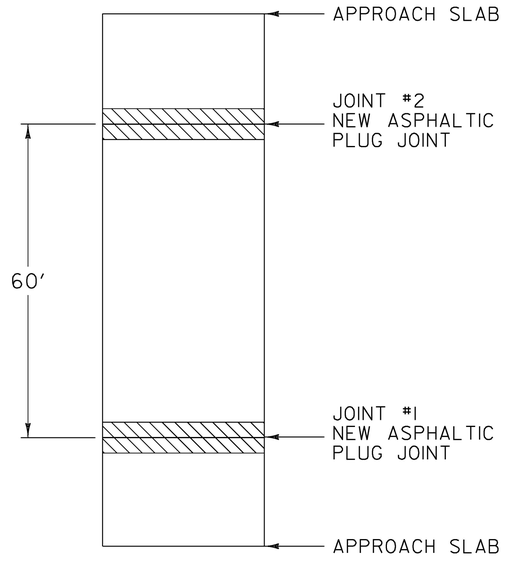

BRIDGE 31

MM 2.988 WILMINGTON
LENGTH OF ASPHALTIC PLUG JOINTS:
JOINT #1 - 30'
JOINT #2 - 30'

TOTAL = 60'

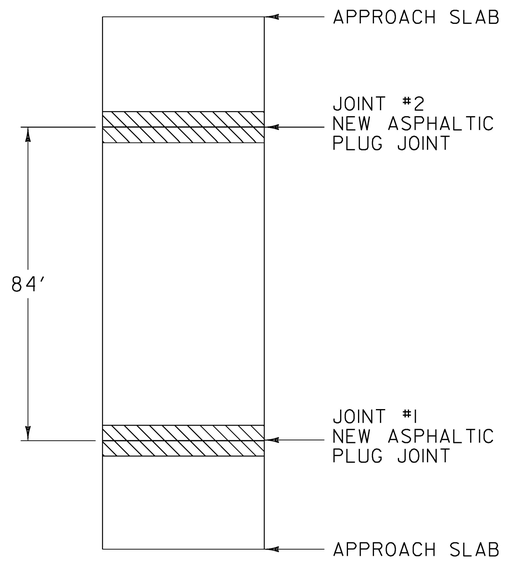

BRIDGE 32

MM 3.462 WILMINGTON
LENGTH OF ASPHALTIC PLUG JOINTS:
JOINT #1 - 34'
JOINT #2 - 34'

TOTAL = 68'

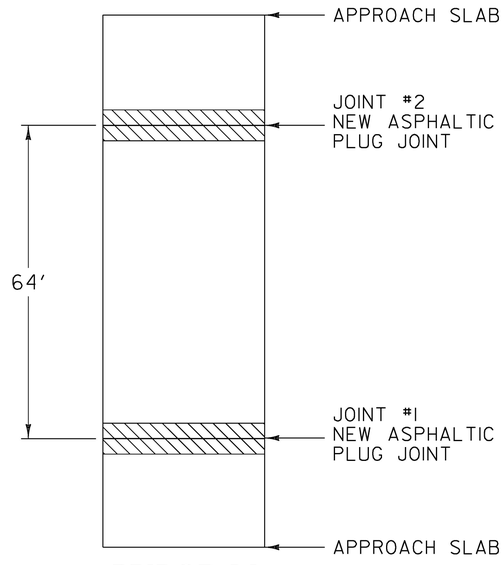

BRIDGE 34

MM 4.283 WILMINGTON
LENGTH OF ASPHALTIC PLUG JOINTS:
JOINT #1 - 27'
JOINT #2 - 27'

TOTAL = 54'

LEGEND

EXISTING BRIDGE JOINTS TO BE REPAIRED WITH ASPHALTIC PLUG JOINT

NOT TO SCALE

PROJECT NAME:	BENNINGTON-WILMINGTON
PROJECT NUMBER:	NH SURF (51)

FILE NAME: pl4v201 Bennington-Wilmington.dgn PLOT DATE: 28-MAR-2017
PROJECT LEADER: M. FOWLER DRAWN BY: N. PAPPAS
DESIGNED BY: N. PAPPAS CHECKED BY: M. FOWLER
BRIDGE EXPANSION JOINT DETAIL SHEET 3 SHEET 60 OF 64

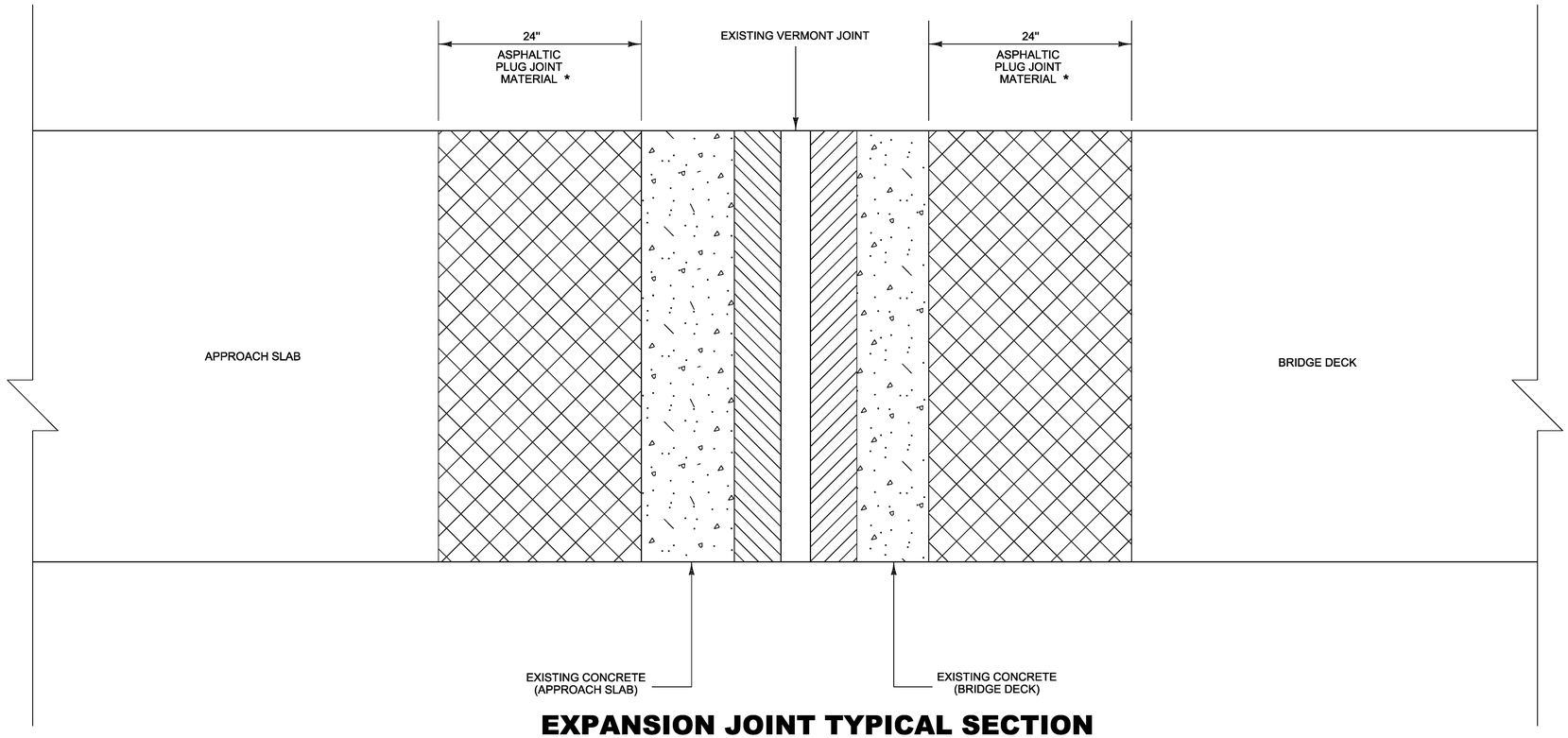

EXPANSION JOINT TYPICAL SECTION
PLAN VIEW
(VERMONT JOINT)

NOT TO SCALE

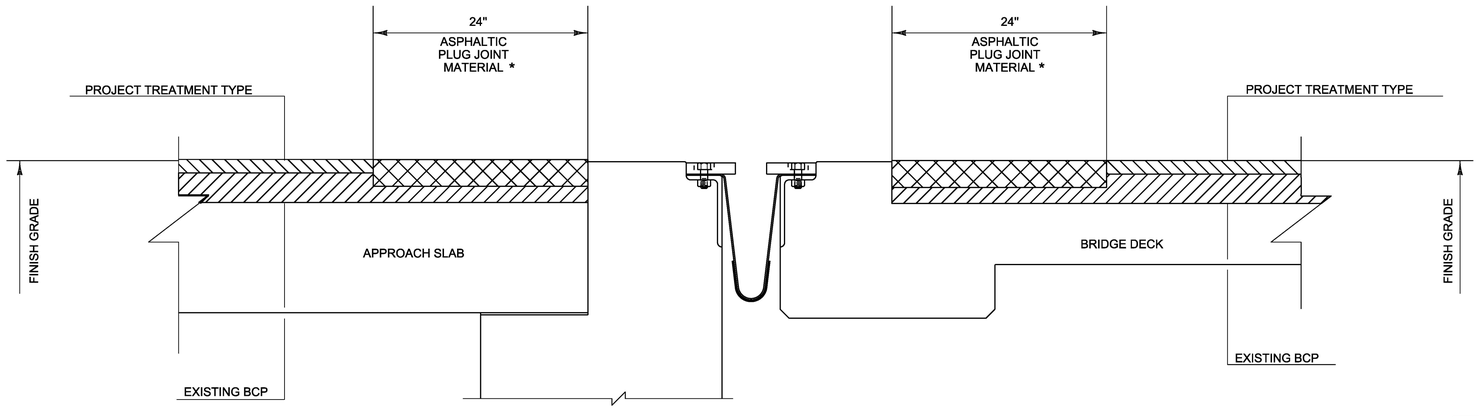

* 2" MINIMUM THICKNESS UNLESS OTHERWISE DIRECTED BY THE ENGINEER

EXPANSION JOINT TYPICAL SECTION
CROSS SECTION
(VERMONT JOINT)

NOT TO SCALE

PROJECT NAME:	BENNINGTON-WILMINGTON
PROJECT NUMBER:	NH SURF (51)

FILE NAME: pl4v201 Bennington-Wilmington.dgn PLOT DATE: 28-MAR-2017
PROJECT LEADER: M. FOWLER DRAWN BY: N. PAPPAS
DESIGNED BY: N. PAPPAS CHECKED BY: M. FOWLER
VT JOINT ASPHALTIC PLUG DETAIL SHEET SHEET 61 OF 64

VT 9 Bennington-Wilmington NH SURF(51) PreCon Ruts

Profiled 6/3/2016

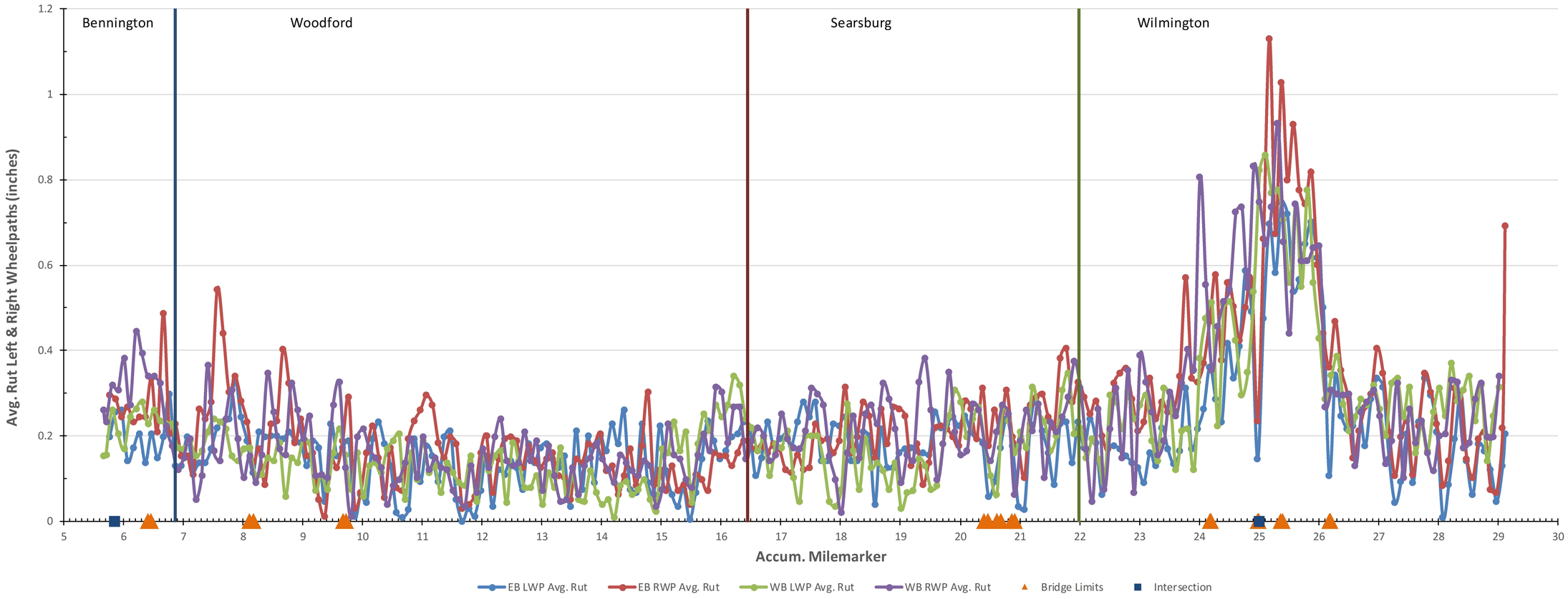

FOR INFORMATIONAL PURPOSES ONLY

NOT TO SCALE

PROJECT NAME:	BENNINGTON-WILMINGTON
PROJECT NUMBER:	NH SURF (51)
FILE NAME: pl4v201	Bennington-Wilmington.dgn PLOT DATE: 28-MAR-2017
PROJECT LEADER: M. FOWLER	DRAWN BY: N. PAPPAS
DESIGNED BY: N. PAPPAS	CHECKED BY: M. FOWLER
RUTTING DATA INFORMATION SHEET	SHEET 62 OF 64

VT 9 Bennington-Wilmington NH SURF(51) PreCon IRI

Profiled 6/3/2016

EB Avg. IRI = 104.7 WB Avg. IRI = 102.2

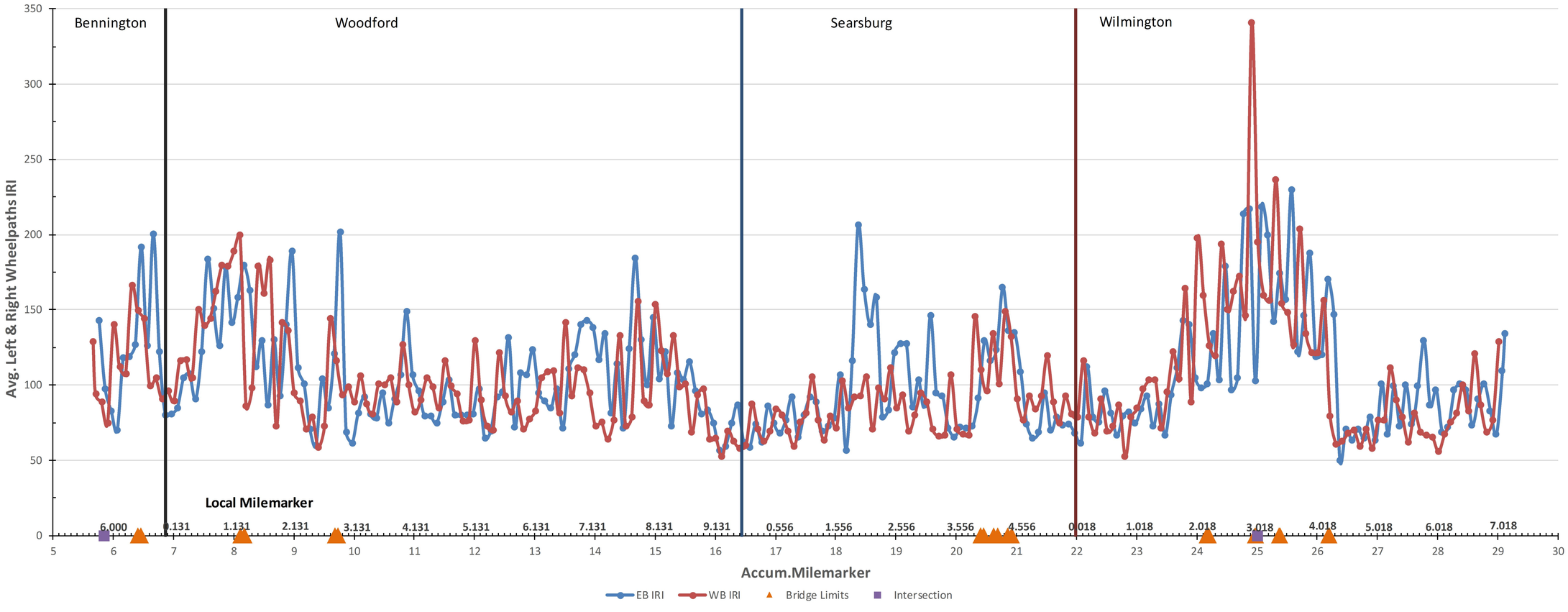

FOR INFORMATIONAL PURPOSES ONLY

NOT TO SCALE

PROJECT NAME:	BENNINGTON-WILMINGTON
PROJECT NUMBER:	NH SURF (51)
FILE NAME: p14v201 Bennington-Wilmington.dgn	PLOT DATE: 28-MAR-2017
PROJECT LEADER: M. FOWLER	DRAWN BY: N. PAPPAS
DESIGNED BY: N. PAPPAS	CHECKED BY: M. FOWLER
ROUGHNESS DATA INFORMATION SHEET	SHEET 63 OF 64

CONSTRUCTION APPROACH SIGNING

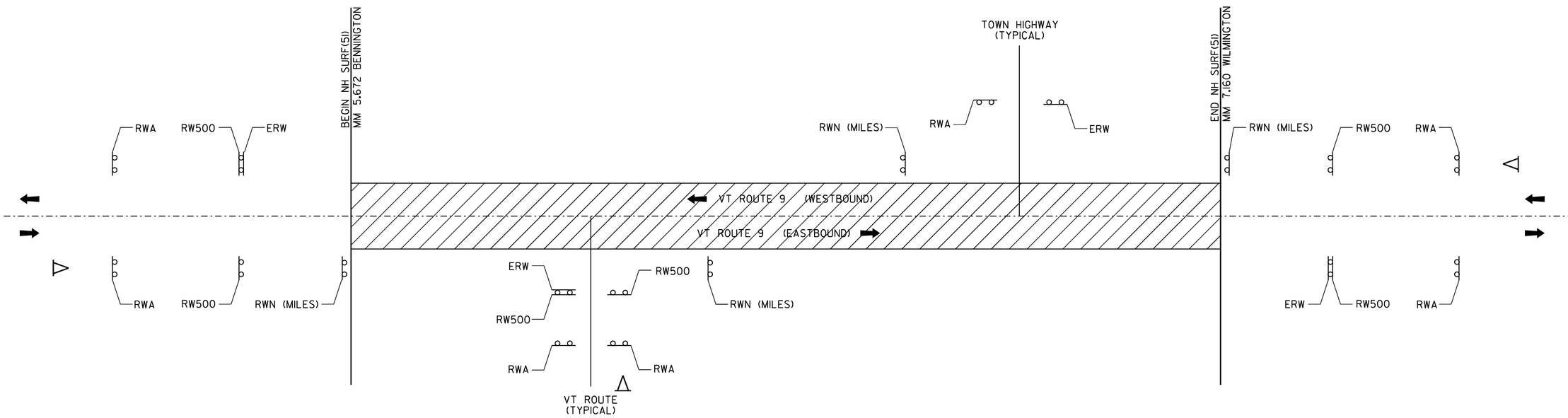

NOTES:

1. THE CONTRACTOR SHALL SUBMIT A SITE-SPECIFIC TRAFFIC CONTROL PLAN TO THE ENGINEER FOR APPROVAL PRIOR TO THE START OF CONSTRUCTION. THE COST OF PREPARING THIS PLAN (AND MAKING CHANGES IF NECESSARY) SHALL NOT BE PAID SEPARATELY BUT SHALL BE INCLUDED IN THE UNIT PRICE BID FOR ITEM 641.10, TRAFFIC CONTROL(NH SURF(51)).

2. THE CONTRACTOR SHALL INCLUDE A CONSTRUCTION SIGN APPROACH PACKAGE FOR EXPECTED LANE CLOSURES AND WORK ZONE SPEED REDUCTIONS IN COMPLIANCE WITH VAOT STANDARD T-17 AND THE LATEST EDITION OF THE MUTCD. PAYMENT FOR PROVIDING THIS PACKAGE SHALL BE INCIDENTAL TO ITEM 641.10, TRAFFIC CONTROL(NH SURF(51)).

3. THE BID PRICE FOR TRAFFIC CONTROL(NH SURF(51)), ITEM 641.10, SHALL INCLUDE ALL APPROACH AND ON-PROJECT CONSTRUCTION SIGNING, PORTABLE ARROW BOARDS, BARRIERS, BARRELS, CONES, BARRICADES, TEMPORARY REGULATORY AND WARNING SIGNS, AND POSTS AS DETAILED IN VTRANS STANDARDS. ALL ADJUSTING, RELOCATING, AND REMOVING OF THESE DEVICES AS DIRECTED BY THE ENGINEER SHALL ALSO BE INCLUDED. THE FOLLOWING ITEMS WILL BE PAID FOR SEPARATELY: 630.10 - UNIFORMED TRAFFIC OFFICERS, AND 630.15 - FLAGGERS, 646.602 - TEMPORARY 4 INCH WHITE LINE, PAINT, 646.612 - TEMPORARY 4 INCH YELLOW LINE, PAINT, 646.622 - TEMPORARY 6 INCH WHITE LINE, PAINT, 646.632 - TEMPORARY 6 INCH YELLOW LINE, PAINT, 646.642 - TEMPORARY 8 INCH WHITE LINE, PAINT, 646.652 - TEMPORARY 8 INCH YELLOW LINE, PAINT, 646.682 - TEMPORARY 24 INCH STOP BAR, PAINT, 646.692 - TEMPORARY LETTER OR SYMBOL, PAINT, 646.702 - TEMPORARY CROSSWALK MARKING, PAINT, AND 646.76 - LINE STRIPING TARGETS.

4. PORTABLE CHANGEABLE MESSAGE SIGNS (PCMS) SHALL BE PROVIDED FOR USE ALONG THIS PROJECT. THE PLACEMENT OF THESE UNITS AS WELL AS THE MESSAGE WILL BE APPROVED BY THE ENGINEER. THESE SIGNS WILL BE PAID FOR UNDER ITEM 641.15, PORTABLE CHANGEABLE MESSAGE SIGN.

FOR THE DURATION OF THE PROJECT, THE CONTRACTOR SHALL POSITION A PCMS PRIOR TO THE BEGIN AND END PROJECT LIMITS WARNING MOTORISTS OF EXPECTED ROADWAY CONDITIONS AND REDUCED ROADWAY WIDTHS.

PCMS SHALL NOT REPLACE ANY OF THE SIGNING DETAILED IN THE MUTCD AND SHOULD NOT BE USED IF STANDARD TRAFFIC CONTROL DEVICES ADEQUATELY PROVIDE THE INFORMATION THE MOTORISTS NEED TO TRAVEL SAFELY.

THE PCMS SHALL CONSIST OF EITHER ONE OR TWO PHASES. TYPICALLY, A PHASE SHALL CONSIST OF UP TO THREE LINES OF EIGHT CHARACTERS PER LINE. THE PCMS SHOULD BE USED AS A SUPPLEMENT AND NOT AS A SUBSTITUTE FOR CONVENTIONAL SIGNS AND PAVEMENT MARKINGS.

THE PCMS SHOULD COMMUNICATE WHAT INFORMATION MOTORISTS NEED TO KNOW. UNNECESSARY INFORMATION SHALL BE AVOIDED. MESSAGES SHOULD BE UPDATED PERIODICALLY TO DESCRIBE THE WORK ACTIVITY OCCURRING SO THAT THE PCMS CONTINUES TO COMMAND THE ATTENTION OF MOTORISTS.

5. NO CONSTRUCTION SIGNS SHALL BE INSTALLED AS TO INTERFERE OR OBSTRUCT THE VIEW OF EXISTING TRAFFIC CONTROL DEVICES, STOPPING SIGHT DISTANCE, AND CORNER SIGHT DISTANCE FROM DRIVES AND TOWN HIGHWAYS.

6. REFER TO VT. STATE STANDARDS AND THE LATEST EDITION OF THE MUTCD FOR TEMPORARY TRAFFIC CONTROL SIGN COLORS.

7. EXISTING SPEED LIMIT SIGNS SHALL BE COVERED WHEN REDUCED SPEED SIGNS ARE POSTED. KEEP RECORDS WHEN POSTING THE WORK ZONE SPEED LIMIT FOR LEGAL PURPOSES; DOCUMENTING DATES, TIMES, AND LOCATIONS OF SIGNS. WHEN WORK ZONE SPEED LIMIT IS NOT IN USE ALL ASSOCIATED SIGNS SHALL BE COVERED, TURNED AND/OR LAID FLAT SO AS THE MOTORING PUBLIC CANNOT READ THESE SIGNS.

8. PORTABLE OR STATIONARY WORK ZONE SPEED LIMIT SIGNS SHOULD BE SPACED EVERY 1.5 TO TWO MILES WHERE APPLICABLE AND AFTER INTERSECTIONS AS A REMINDER TO THE MOTORIST TRAVELING THROUGH THE WORK ZONE WHAT SPEED THEY SHOULD BE TRAVELING.

9. WHEN REDUCED REGULATORY SPEED LIMIT SIGNS ARE USED, THE RESUMPTION OF THE USUAL SPEED LIMIT SHALL BE INDICATED BY AN APPROPRIATE SPEED LIMIT SIGN AT THE END OF THE WORK ZONE.

10. THE CONTRACTOR SHALL MAINTAIN PEDESTRIAN THROUGH MOVEMENTS FROM ONE END OF THE CONSTRUCTION AREA TO THE OTHER, ON AT LEAST ONE SIDE OF THE STREET DURING CONSTRUCTION. ANY SIDEWALK CLOSURES SHALL MEET THE REQUIREMENTS OF THE MUTCD, PART 6.

11. PEDESTRIAN ACCESS SHALL BE PROVIDED TO ALL ADJACENT PROPERTIES, BUILDINGS, RESIDENCES AND COMMERCIAL PROPERTIES AT ALL TIMES. THIS MAY INCLUDE TEMPORARY WALKWAYS SPANNING THE CONSTRUCTION AREA.

12. IF SIDEWALKS ARE CLOSED, A TEMPORARY PEDESTRIAN ACCESS ROUTE (TPAR) SHALL BE PROVIDED ON THE SAME SIDE OF THE ROAD AS THE CLOSED SIDEWALK, IF POSSIBLE. SIGNS AND BARRICADES SHALL BE USED TO PROVIDE ADVANCE NOTICE OF THE CLOSURE AND THE ROUTE OF ANY PEDESTRIAN DETOURS. THE TPAR SHALL HAVE A MINIMUM UNOBSTRUCTED WIDTH OF FOUR FEET. IF THE TPAR IS LESS THAN FIVE FEET IN WIDTH, A FIVE FOOT BY FIVE FOOT PASSING SPACE SHOULD BE PROVIDED AT LEAST EVERY 200 FEET. THE SURFACE OF THE TPAR SHALL BE SMOOTH AND CONTINUOUS FOR THE LENGTH OF THE TPAR. THE TPAR SHALL MAINTAIN THE SAME LEVEL OF ACCESSIBILITY AND DETECTABILITY AS THE FACILITY THAT IS BEING CLOSED. THE TPAR SHALL NOT LEAD PEDESTRIANS INTO CONFLICT WITH VEHICLES, EQUIPMENT, OR CONSTRUCTION OPERATIONS.

13. IF THE TPAR IS ADJACENT TO MOVING TRAFFIC, CONSTRUCTION OPERATIONS/EQUIPMENT, OR DROP-OFFS, THEN CRASH WORTHY CHANNELIZING DEVICES THAT MEET THE REQUIREMENTS OF THE MUTCD SHALL BE USED.

14. THE CONTRACTOR SHALL NOT STORE OR PLACE ANY CONSTRUCTION MATERIALS, EQUIPMENT OR SIGNS IN THE PEDESTRIAN PATH OF TRAVEL.

15. THE CONTRACTOR'S OPERATIONS SHALL NOT OCCUPY SIDEWALKS EXCEPT WHERE PROPER PROTECTION AND A TPAR HAVE BEEN PROVIDED.

16. THE CONTRACTOR SHALL PROVIDE A TEMPORARY PEDESTRIAN TRAFFIC CONTROL PLAN FOR REVIEW AND WRITTEN APPROVAL A MINIMUM OF THREE WEEKS BEFORE SUCH PLAN IS IMPLEMENTED. THIS PLAN SHALL DETAIL THE CONSTRUCTION PHASING AND SCHEDULE AND THE SPECIFIC METHODS OF MAINTAINING SAFE PEDESTRIAN ACCESS THROUGHOUT THE CONSTRUCTION AREA. THIS PLAN SHALL PROVIDE THE LOCATION AND DETAILS OF TEMPORARY CONSTRUCTION SIGNING, MARKINGS, BARRICADES, CHANNELIZING DEVICES, TPARS AND METHODS TO MAINTAIN ACCESS TO ADJACENT PROPERTIES, BUSINESSES, RESIDENCES, AND ETC. PAYMENT FOR DEVELOPING, IMPLEMENTING, AND MAINTAINING THE TEMPORARY PEDESTRIAN TRAFFIC CONTROL PLAN WILL BE INCLUDED IN THE UNIT PRICE BID FOR CONTRACT ITEM 641.10, TRAFFIC CONTROL.

NOT TO SCALE

LEGEND

RWA = ROAD WORK AHEAD
RW500 = ROAD WORK IN 500 FEET
RWN = ROAD WORK NEXT (XX MILES)
ERW = END ROAD WORK
△ = PORTABLE CHANGEABLE MESSAGE SIGN
▨ = WORK AREA
⬅ = DIRECTION OF TRAFFIC FLOW

PROJECT NAME:	BENNINGTON - WILMINGTON
PROJECT NUMBER:	NH SURF (51)

FILE NAME: pl4v201 Bennington-Wilmington.dgn PLOT DATE: 28-MAR-2017
PROJECT LEADER: M. FOWLER DRAWN BY: N. PAPPAS
DESIGNED BY: N. PAPPAS CHECKED BY: M. FOWLER
CONSTRUCTION APPROACH SIGNING SHEET SHEET 64 OF 64

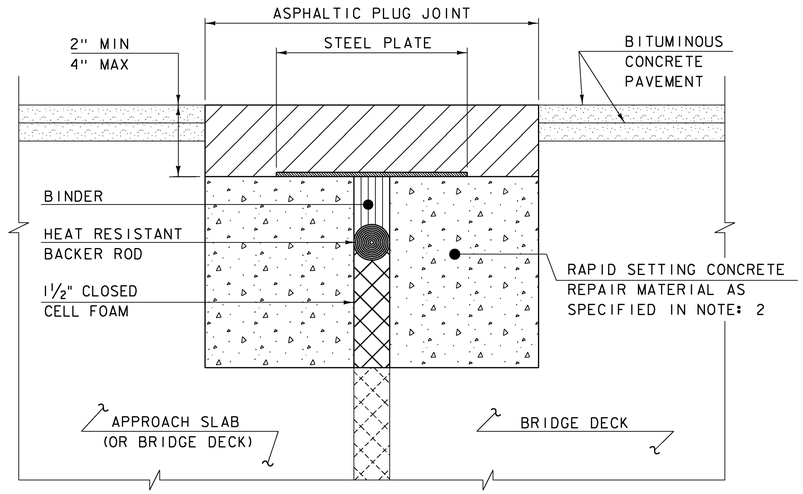

ASPHALTIC PLUG JOINT DETAIL - REHAB

NOTES:

1. THE CONTRACTOR SHALL REMOVE ALL ASPHALTIC PLUG JOINT MATERIAL AND DETERIORATED CONCRETE AS DIRECTED BY THE ENGINEER. REMOVAL OF THE FIRST 4 INCHES OF MATERIAL SHALL BE INCLUDED IN THE BID PRICE FOR ITEM 516.10 BRIDGE EXPANSION JOINT, ASPHALTIC PLUG. ANY REMOVAL OF MATERIAL GREATER THAN 4 INCHES SHALL BE INCLUDED IN THE BID PRICE OF ITEM 580.20 RAPID SETTING CONCRETE REPAIR MATERIAL WITH COARSE AGGREGATE.

2. THE CONTRACTOR SHALL REPLACE REMOVED MATERIAL THAT IS LESS THAN 4" FROM FINISHED GRADE WITH ASPHALTIC PLUG JOINT MATERIAL MEETING THE REQUIREMENTS OF SUBSECTION 707.15. ALL REMOVED MATERIAL THAT IS GREATER THAN 4 INCHES FROM FINISHED GRADE SHALL BE REPLACED WITH RAPID SETTING CONCRETE REPAIR MATERIAL WITH COARSE AGGREGATE MEETING THE REQUIREMENTS OF SUBSECTION 780.04.

3. REINFORCING STEEL NOT SHOWN FOR CLARITY.

4. PLACE 1/4" THICK BY 8" WIDE SECTIONS OF STEEL PLATE OVER THE CENTER OF THE MOVEMENT GAP. SECURE THE PLATES FROM MOVING BY INSERTING LOCATING PINS THROUGH THE PRE-STAMPED HOLES INTO BACKER ROD AND COVER WITH HOT BINDER. THE STEEL PLATES MAY BE OMITTED WHERE THE ENGINEER DETERMINES THAT THE APPROACH SLAB OR BRIDGE DECK WILL PROVIDE INADEQUATE SUPPORT AND WHERE VERTICAL MOVEMENT OF THE PLATES MIGHT OCCUR.

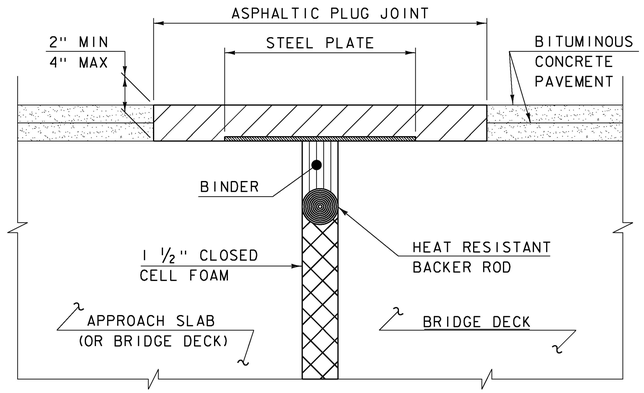

ASPHALTIC PLUG JOINT DETAIL "A" - NEW

NOTE:
PLACE 1/4" THICK BY 8" WIDE SECTIONS OF STEEL PLATE OVER THE CENTER OF THE MOVEMENT GAP. SECURE THE PLATES FROM MOVING BY INSERTING LOCATING PINS THROUGH THE PRE-STAMPED HOLES INTO BACKER ROD AND COVER WITH HOT BINDER.

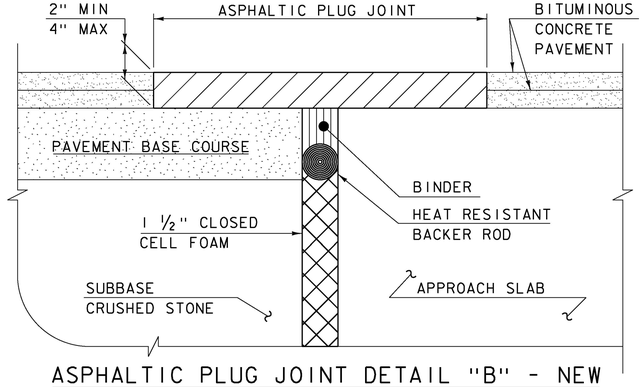

ASPHALTIC PLUG JOINT DETAIL "B" - NEW

ASPHALTIC PLUG JOINT NOTES

INSTALLATION:

1. LOCATE THE JOINT CENTRALLY OVER THE DECK OVERLAY EXPANSION GAP OR FIXED JOINT, MARKED OUT TO THE MANUFACTURER'S RECOMMENDED WIDTH.

2. REMOVE THE BITUMINOUS CONCRETE PAVEMENT FULL DEPTH AS SHOWN ON THE PLANS. THE PAVEMENT SHALL BE DRY AND SAW CUT TO THE LIMITS REQUIRED TO PLACE THE JOINT. A PNEUMATIC HAMMER AND CHISEL MAY BE USED ADJACENT TO THE CURB ONLY WHEN SAW CUTTING IS NOT POSSIBLE.

3. BLAST CLEAN THE JOINT AREA OF DEBRIS, ASPHALT AND SHEET MEMBRANE. THOROUGHLY DRY THE JOINT AREA WITH COMPRESSED AIR PRIOR TO APPLYING BINDER MATERIAL.

4. PLACE PROPERLY SIZED HEAT RESISTANT BACKER ROD IN THE MOVEMENT GAP ALLOWING FOR 1" +/- OF BINDER ABOVE THE ROD.

5. HEAT AND PLACE THE BINDER MATERIAL AS RECOMMENDED BY THE MANUFACTURER.

6. IMMEDIATELY AFTER TOP COATING, CAST AN ANTI-SKID MATERIAL OVER THE JOINT TO REDUCE THE RISK OF TRACKING.

WEATHER LIMITATIONS

APPLY BINDER MATERIAL ONLY WHEN THE FOLLOWING CONDITIONS PREVAIL OR AS RECOMMENDED BY THE MANUFACTURER:

1. THE AMBIENT AIR TEMPERATURE IS AT LEAST 10 DEG C (50 DEG F) AND RISING.

2. THE ROAD SURFACE IS DRY.

3. WEATHER CONDITIONS OR OTHER CONDITIONS ARE FAVORABLE AND ARE EXPECTED TO REMAIN SO FOR THE PERFORMANCE OF SATISFACTORY WORK.

DETAILS ON THIS SHEET ARE NOT TO SCALE.

REVISIONS	
MAY 7, 2010	APPROVED FOR USE BY VAOT STRUCTURES SECTION
AUGUST 29, 2011	ADD DETAIL "B" AND REV. NOTES

BRIDGE JOINT
ASPHALTIC PLUG

VERMONT AGENCY OF TRANSPORTATION
STRUCTURES - DIVISION

STRUCTURES DETAIL
SD-516.10

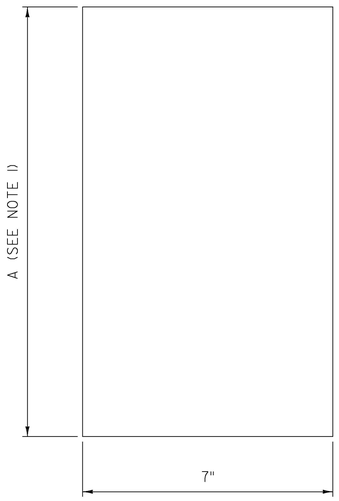

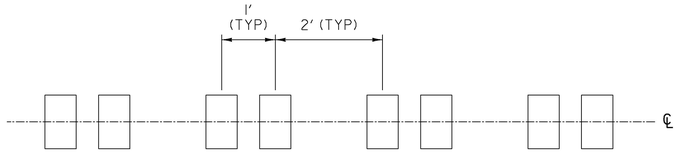

RUMBLE STRIP LAYOUT DETAIL

NOTE:

1. MILLED RUMBLE STRIPS (CENTERLINE) SHALL BE CENTERED ALONG THE CENTERLINE OF THE ROADWAY WITH A LATERAL TOLERANCE IN EITHER TRANSVERSE DIRECTION OF +/- ONE INCH AND INSTALLED AT THE INTERVALS AS DETAILED.

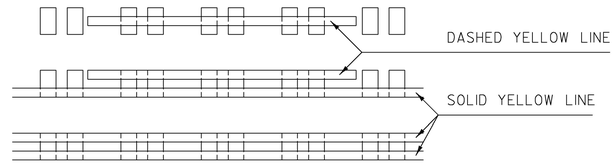

PAVEMENT MARKING LAYOUT DETAIL

NOTES:

1. MILLED RUMBLE STRIPS (CENTERLINE) SHALL BE INSTALLED PRIOR TO FINAL CENTERLINE PAVEMENT MARKINGS.
2. ALL FINAL CENTERLINE PAVEMENT MARKINGS SHALL BE CENTERED ON THE MILLED RUMBLE STRIPS (CENTERLINE).
3. UNLESS OTHERWISE SPECIFIED IN THE PLANS, CENTERLINE PAVEMENT MARKINGS SHALL BE POLYUREA.

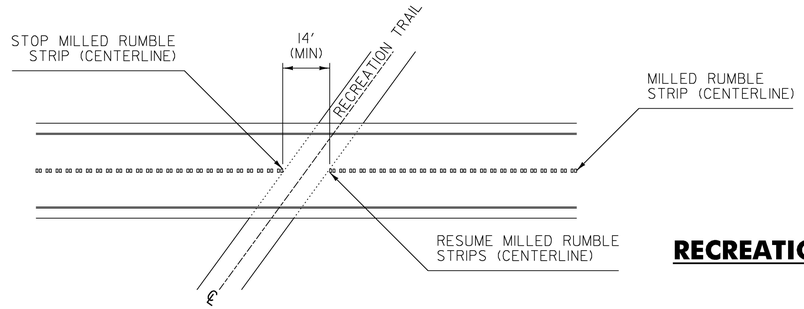

RECREATION TRAIL CROSSING DETAIL

NOTE:

1. WIDTH OF GAP FOR RAIL TRAILS WILL VARY DEPENDENT ON THE SKEW OF THE TRAIL, WITH A 14 FOOT MINIMUM GAP.

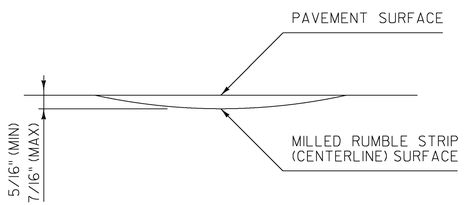

RUMBLE STRIP DETAIL

NOTES:

1. DIMENSION "A" SHALL BE 12 INCHES WHEN FOUR INCH CENTERLINE PAVEMENT MARKINGS ARE TO BE INSTALLED AND 18 INCHES WHEN SIX INCH CENTERLINE PAVEMENT MARKINGS ARE TO BE INSTALLED.
2. WHEN MILLED RUMBLE STRIP (CENTERLINE) IS SPECIFIED TO BE SEALED WITH SPECIAL PROVISION (FOG SEAL SURFACE TREATMENT) IT SHALL BE SEALED WITH TWO APPLICATIONS.

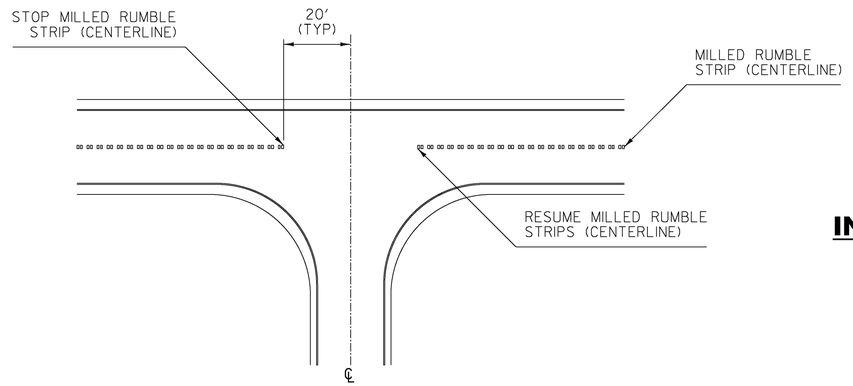

INTERSECTION DETAIL

NOTE:

1. MILLED RUMBLE STRIPS (CENTERLINE) SHALL STOP 20 FEET PRIOR TO ALL INTERSECTIONS, IN BOTH DIRECTIONS OF TRAVEL.

REV.	DATE	DESCRIPTION
0	NOV. 3, 2015	ORIGINAL APPROVAL
1	FEB. 4, 2016	ADDED LATERAL TOLERANCE NOTE

OTHER DETAILS REQUIRED: NONE

DETAILS APPROVED FOR USE BY HIGHWAY SAFETY & DESIGN

MILLED RUMBLE STRIP (CENTERLINE) DETAILS

VTrans Working to Get You There
VERMONT AGENCY OF TRANSPORTATION

HIGHWAY SAFETY & DESIGN DETAIL

HSD-213.02

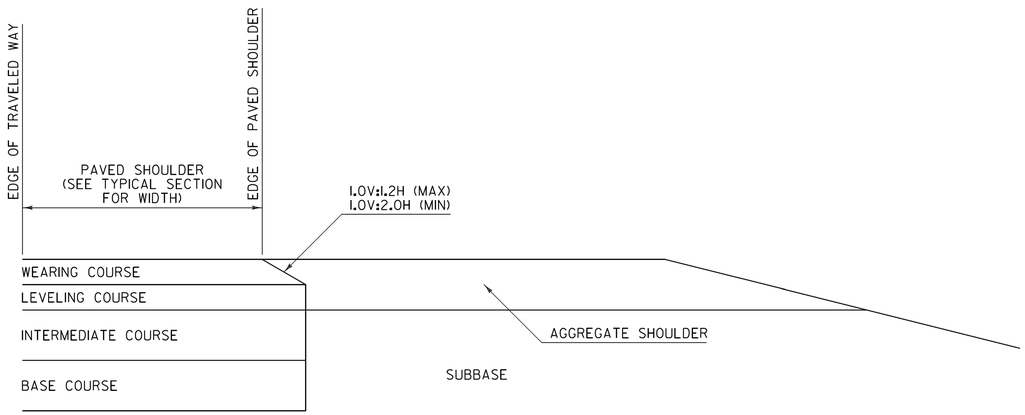

SAFETY EDGE DETAIL
FOR PAVING BELOW WEARING COURSE

NOTES:

1. THIS DETAIL IS INTENDED FOR WHEN PAVING EXTENDS BELOW THE WEARING COURSE.
2. PRIOR TO PLACEMENT OF THE LEVELING AND/OR WEARING COURSE, THE SUBBASE LOCATED BENEATH THE AGGREGATE SHOULDER SHALL BE PREPARED FLUSH WITH THE BOTTOM OF THE LEVELING COURSE.
3. BASE COURSE LIMITS MAY VARY, SEE TYPICAL SECTIONS FOR WIDTH.

SAFETY EDGE WIDTH BASED ON WEARING COURSE THICKNESS AND A 1V:1.6H SLOPE	
WEARING COURSE THICKNESS (INCHES)	NOMINAL SAFETY EDGE WIDTH (INCHES)
1.25	2.000
1.50	2.375
1.75	2.750
2.00	3.125
2.25	3.500
2.50	4.000

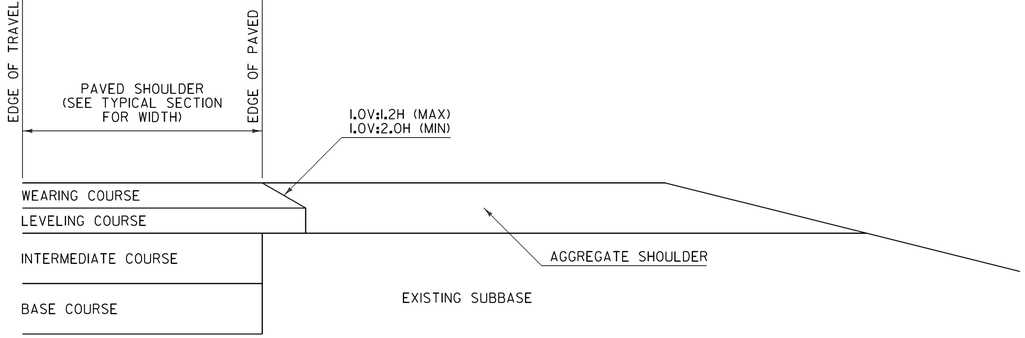

SAFETY EDGE DETAIL
FOR PAVING WEARING COURSE ONLY

NOTES:

1. THIS DETAIL IS INTENDED FOR WHEN ONLY THE LEVELING AND/OR WEARING COURSE IS TO BE PLACED.
2. PAVEMENT COURSES MAY VARY, SEE TYPICAL SECTIONS FOR ACTUAL PAVEMENT COURSES REQUIRED.

GENERAL NOTES:

1. PLACEMENT OF THE WEARING COURSE SHALL INCLUDE THE SAFETY EDGE, UNLESS THE FOLLOWING APPLIES:
   - A. THE ADJACENT SLOPE IS STEEPER THAN THE SAFETY EDGE.
   - B. THE EDGE OF PAVEMENT BEING PLACED ABUTS BOUND MATERIAL.
   - C. VEHICLES ARE RESTRICTED FROM LEAVING THE PAVED SURFACE (EXAMPLE: GUARDRAIL).
2. THE SAFETY EDGE SHALL BE FORMED IN SUCH A WAY THAT THE BITUMINOUS CONCRETE PAVEMENT IS EXTRUDED OR COMPRESSED TO FORM THE SLOPE. DEVICES THAT SIMPLY STRIKE-OFF THE MIX WITHOUT PROVIDING ANY COMPACTIVE EFFORT WILL NOT BE ALLOWED.
3. THE SAFETY EDGE SHALL NOT BE CONSIDERED PART OF THE PAVED SHOULDER.
4. THIS WORK SHALL BE INCIDENTAL TO THE RESPECTIVE BITUMINOUS CONCRETE PAVEMENT ITEM.

REV.	DATE	DESCRIPTION
0	MAR. 29, 2016	ORIGINAL APPROVAL
OTHER DETAILS REQUIRED: NONE		
DETAILS APPROVED FOR USE BY HIGHWAY SAFETY & DESIGN		

SAFETY EDGE DETAILS

VTrans Working to Get You There
VERMONT AGENCY OF TRANSPORTATION

HIGHWAY SAFETY & DESIGN DETAIL

HSD-400.01