STATE OF VERMONT
AGENCY OF TRANSPORTATION

PROPOSED IMPROVEMENT
TOWN OF LYNDON
COUNTY OF CALEDONIA
US ROUTE 5 (MAJOR COLLECTOR)

INDEX OF SHEETS

1 TITLE SHEET
2 CONVENTIONAL SYMBOLOGY LEGEND SHEET
3 TIE SHEET
4 BORING INFORMATION SHEET
5 BORING LOGS
6-7 QUANTITY SHEETS
8 TYPICAL DETAILS SHEET
9 PLAN SHEET
10 EPSC DETAILS
11 TRAFFIC SIGNAL GENERAL NOTES
12 TRAFFIC SIGNAL SYSTEM NOTES
13 JUNCTION BOX DETAIL
14-15 TRAFFIC SIGNAL LAYOUTS
16 TRAFFIC CONTROL PLAN
17 MAST ARM CROSS SECTIONS

HIGHWAY SAFETY & DESIGN DETAILS

HSD-400.01 SAFETY EDGE DETAILS

TRAFFIC DATA

LOCATION	AADT		DHV		ESALs	
	2018	2038	2018	2038	2018-2038	2018-2058
US ROUTE 5	13400	14100	1400	1500	4,646,000	10,292,000

DESIGN SPEED = 35 MPH
POSTED SPEED = 35 MPH
RAILROAD SPEED = 30 MPH

INDEX OF VAOT STANDARDS

STD	DATE	DESCRIPTION
D-20	3/3/2003	HIGHWAY CROSSING SLEEVES FOR UNDERGROUND UTILITIES
E-170	11/4/1999	TRAFFIC CONTROL SIGNALS PEDESTAL POST MOUNTED
E-171A	8/9/1995	TRAFFIC CONTROL SIGNALS GENERAL NOTES & DETAILS
E-171B	8/9/1995	TRAFFIC CONTROL SIGNALS MISC. DETAILS
E-171C	8/9/1995	TRAFFIC CONTROL SIGNALS CANTILEVER MOUNTING DETAILS PED. PUSH BUTTON ACCESSIBILITY DETAIL
E-173	8/9/1995	PULLBOXES AND JUNCTION BOXES
E-175	6/8/2009	POWER DROP STANCHIONS
E-191	2/1/1999	PAVEMENT MARKING DETAILS
E-192	10/12/2000	PAVEMENT MARKING DETAILS
E-193	8/18/1995	PAVEMENT MARKING DETAILS
T-1	4/25/2016	TRAFFIC CONTROL GENERAL NOTES
T-2	4/25/2016	TRAFFIC SIGN GENERAL NOTES
T-10	8/6/2012	CONVENTIONAL ROADS CONSTRUCTION APPROACH SIGNING
T-17	8/6/2016	TRAFFIC CONTROL MISCELLANEOUS DETAILS
T-28	8/6/2012	CONSTRUCTION SIGN DETAILS
T-30	8/6/2012	CONSTRUCTION SIGN DETAILS
T-31	8/6/2012	CONSTRUCTION SIGN DETAILS
T-45	1/2/2013	SQUARE TUBE SIGN POST AND ANCHOR

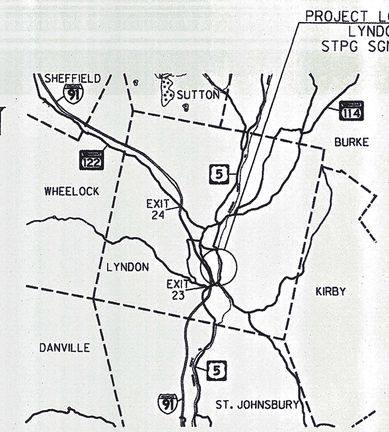

LOCATION MAP

0 2 4
SCALE IN MILES

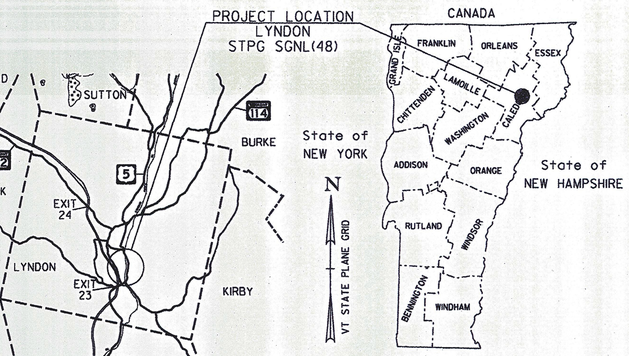

BEGINNING AT A POINT ON US ROUTE 5 APPROXIMATELY 195 FEET SOUTH OF THE INTERSECTION OF US ROUTE 5 AND RED VILLAGE ROAD AND EXTENDING APPROXIMATELY 410 FEET NORTH OF THE RAILROAD CROSSING.

LYNDON STA 93+00.00 (MM 1.761) ~ STA 98+85.00 (MM 1.872) = 585 FEET (0.111 MILES)

LENGTH OF PROJECT = 585 FEET (0.111 MILES)

WORK TO BE PERFORMED UNDER THIS PROJECT INCLUDES COLD PLANING AND RESURFACING OF THE EXISTING ROADWAY, THE INSTALLATION OF MAST ARMS WITH THE TRAFFIC AND RAILROAD SIGNALS, NEW TRAFFIC SIGNAL EQUIPMENT, TRAFFIC SIGNS, PAVEMENT MARKINGS AND OTHER HIGHWAY RELATED ITEMS.

30 DAY TEST PERIOD
10/5/17 - 11/5/17

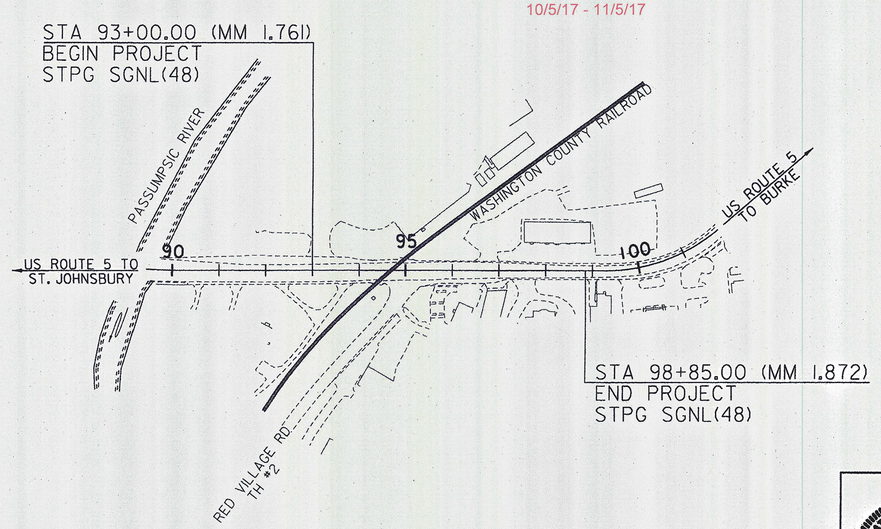

0 150 300
SCALE IN FEET

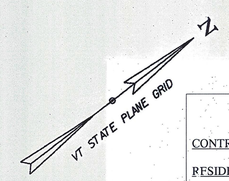

RECORD PLANS

CONTRACTOR: ENGINEERS CONSTRUCTION, INC. - S. BURLINGTON, VT
RESIDENT ENGINEER: DOUG BUMPS
CONSTRUCTION BEGAN: AUGUST 08, 2017
CONSTRUCTION COMPLETE: MAY 15, 2018
RECORD PLANS BY: DOUG BUMPS & JESSE IVES

I HEREBY CERTIFY THAT ALL THE CONSTRUCTION REQUIRED BY THIS SET OF DRAWINGS HAS BEEN ACCOMPLISHED AS INDICATED HEREIN.

BY _____ RESIDENT ENGINEER
DATE 9/27/18

NOTE: Any further information concerning final quantities, amounts or other details relative to this project may be found at Central Files in the electronic archives.

CONSTRUCTION IS TO BE CARRIED ON IN ACCORDANCE WITH THESE PLANS AND THE STANDARD SPECIFICATIONS FOR CONSTRUCTION DATED 2011, AS APPROVED BY THE FEDERAL HIGHWAY ADMINISTRATION ON JULY 20, 2011 FOR USE ON THIS PROJECT, INCLUDING ALL SUBSEQUENT REVISIONS AND SUCH REVISED SPECIFICATIONS AND SPECIAL PROVISIONS AS ARE INCORPORATED IN THESE PLANS.

QUALITY ASSURANCE PROGRAM : LEVEL 2

SURVEYED BY : R. GILMAN, H. MCGOWAN, VAOT
SURVEYED DATE : 09-08-2011

DATUM
VERTICAL NAVD 88
HORIZONTAL NAD 83 (92)

STATE OF VERMONT
CHRISTOPHER R. SCHAEFER
No. 9629
REGISTERED PROFESSIONAL ENGINEER

CONSULTING ENGINEERS
540 Commercial Street
Manchester, NH 03101
(603) 668-8223
www.cldengineers.com

DIRECTOR OF PROJECT DELIVERY
APPROVED _____ DATE 11/30/2016

PROJECT MANAGER : BRUCE B. MARTIN, P.E.

PROJECT NAME : LYNDON
PROJECT NUMBER : STPG SGNL(48)

SHEET 1 OF 17 SHEETS

GENERAL INFORMATION

SYMBOLOGY LEGEND NOTE

THE SYMBOLOGY ON THIS SHEET IS INTENDED TO COVER STANDARD CONVENTIONAL SYMBOLOGY. THE SYMBOLOGY IS USED FOR EXISTING & PROPOSED FEATURES WITH HEAVIER LINEWEIGHT, IN COMBINATION WITH PROJECT ANNOTATION, AS NOTED ON PROJECT PLAN SHEETS. THIS LEGEND SHEET COVERS THE BASICS. SYMBOLOGY ON PLANS MAY VARY, PLAN ANNOTATIONS AND NOTES SHOULD BE USED TO CLARIFY AS NEEDED.

R.O.W. ABBREVIATIONS (CODES) & SYMBOLS

POINT	CODE	DESCRIPTION
	CH	CHANNEL EASEMENT
	CONST	CONSTRUCTION EASEMENT
	CUL	CULVERT EASEMENT
	D&C	DISCONNECT & CONNECT
	DIT	DITCH EASEMENT
	DR	DRAINAGE EASEMENT
	DRIVE	DRIVEWAY EASEMENT
	EC	EROSION CONTROL
	HWY	HIGHWAY EASEMENT
	I&M	INSTALL & MAINTAIN EASEMENT
	LAND	LANDSCAPE EASEMENT
	R&RES	REMOVE & RESET
	R&REP	REMOVE & REPLACE
	SR	SLOPE RIGHT
	UE	UTILITY EASEMENT
	(P)	PERMANENT EASEMENT
	(T)	TEMPORARY EASEMENT
■	BNDNS	BOUND SET
▣	BNDNS	BOUND TO BE SET
●	IPNS	IRON PIN SET
◎	IPNS	IRON PIN TO BE SET
⊠	CALC	EXISTING ROW POINT
○	PROW	PROPOSED ROW POINT
[LENGTH]		LENGTH CARRIED ON NEXT SHEET

COMMON TOPOGRAPHIC POINT SYMBOLS

POINT	CODE	DESCRIPTION
	APL	BOUND APPARENT LOCATION
	BM	BENCHMARK
	BND	BOUND
	CB	CATCH BASIN
	COMB	COMBINATION POLE
	DITHR	DROP INLET THROATED DNC
	EL	ELECTRIC POWER POLE
	FPOLE	FLAGPOLE
	GASFIL	GAS FILLER
	GP	GUIDE POST
	GSO	GAS SHUT OFF
	GUY	GUY POLE
	GUYW	GUY WIRE
	GV	GATE VALUE
	H	TREE HARDWOOD
	HCTRL	CONTROL HORIZONTAL
	HVCTRL	CONTROL HORIZ. & VERTICAL
	HYD	HYDRANT
	IP	IRON PIN
	IPIPE	IRON PIPE
	LI	LIGHT - STREET OR YARD
	MB	MAILBOX
	MH	MANHOLE (MH)
	MM	MILE MARKER
	PM	PARKING METER
	PMK	PROJECT MARKER
	POST	POST STONE/WOOD
	RRSIG	RAILROAD SIGNAL
	RRSL	RAILROAD SWITCH LEVER
	S	TREE SOFTWOOD
	SAT	SATELLITE DISH
	SHRUB	SHRUB
	SIGN	SIGN
	STUMP	STUMP
	TEL	TELEPHONE POLE
	TIE	TIE
	TSIGN	SIGN W/DOUBLE POST
	VCTRL	CONTROL VERTICAL
	WELL	WELL
	WSO	WATER SHUT OFF

THESE ARE COMMON VAOT SURVEY POINT SYMBOLS FOR EXISTING FEATURES, ALSO USED FOR PROPOSED FEATURES WITH HEAVIER LINEWEIGHT, IN COMBINATION WITH PROPOSED ANNOTATION.

PROPOSED GEOMETRY CODES

CODE	DESCRIPTION
PC	POINT OF CURVATURE
PI	POINT OF INTERSECTION
CC	CENTER OF CURVE
PT	POINT OF TANGENCY
PCC	POINT OF COMPOUND CURVE
PRC	POINT OF REVERSE CURVE
POB	POINT OF BEGINNING
POE	POINT OF ENDING
STA	STATION PREFIX
AH	AHEAD STATION SUFFIX
BK	BACK STATION SUFFIX
D	CURVE DEGREE OF (100FT)
R	CURVE RADIUS OF
T	CURVE TANGENT LENGTH
L	CURVE LENGTH OF
E	CURVE EXTERNAL DISTANCE

UTILITY SYMBOLOGY

UNDERGROUND UTILITIES

UGU	UTILITY (GENERIC-UNKNOWN)
UT	TELEPHONE
UE	ELECTRIC
UC	CABLE (TV)
UEC	ELECTRIC+CABLE
UET	ELECTRIC+TELEPHONE
UCT	CABLE+TELEPHONE
UECT	ELECTRIC+CABLE+TELEP.
G	GAS LINE
W	WATER LINE
S	SANITARY SEWER (SEPTIC)

ABOVE GROUND UTILITIES (AERIAL)

AGU	UTILITY (GENERIC-UNKNOWN)
T	TELEPHONE
E	ELECTRIC
C	CABLE (TV)
EC	ELECTRIC+CABLE
ET	ELECTRIC+TELEPHONE
AER E&T	ELECTRIC+TELEPHONE
CT	CABLE+TELEPHONE
ECT	ELECTRIC+CABLE+TELEP.
	UTILITY POLE GUY WIRE

PROJECT CONSTRUCTION SYMBOLOGY

PROJECT DESIGN & LAYOUT SYMBOLOGY

CZ	CLEAR ZONE
	PLAN LAYOUT MATCHLINE

PROJECT CONSTRUCTION FEATURES

	TOP OF CUT SLOPE
	TOE OF FILL SLOPE
	STONE FILL
	BOTTOM OF DITCH ℄
	CULVERT PROPOSED
	STRUCTURE SUBSURFACE
PDF	PROJECT DEMARCATION FENCE
BF	BARRIER FENCE
	TREE PROTECTION ZONE (TPZ)
	STRIPING LINE REMOVAL
	SHEET PILES

CONVENTIONAL BOUNDARY SYMBOLOGY

BOUNDARY LINES

TOWN LINE	TOWN BOUNDARY LINE
COUNTY LINE	COUNTY BOUNDARY LINE
STATE LINE	STATE BOUNDARY LINE
	PROPOSED STATE R.O.W. (LIMITED ACCESS)
	PROPOSED STATE R.O.W.
	STATE ROW (LIMITED ACCESS)
	STATE ROW
	TOWN ROW
	PERMANENT EASEMENT LINE (P)
	TEMPORARY EASEMENT LINE (T)
	SURVEY LINE
P L	PROPERTY LINE (P/L)
SR	SLOPE RIGHTS
6f	6F PROPERTY BOUNDARY
4f	4F PROPERTY BOUNDARY
HAZ	HAZARDOUS WASTE

EPSC LAYOUT PLAN SYMBOLOGY

EPSC MEASURES

	FILTER CURTAIN
	SILT FENCE
	SILT FENCE WOVEN WIRE
	CHECK DAM
	DISTURBED AREAS REQUIRING RE-VEGETATION
	EROSION MATTING

SEE EPSC DETAIL SHEETS FOR ADDITIONAL SYMBOLOGY

ENVIRONMENTAL RESOURCES

	WETLAND BOUNDARY
	RIPARIAN BUFFER ZONE
	WETLAND BUFFER ZONE
	SOIL TYPE BOUNDARY
T&E	THREATENED & ENDANGERED SPECIES
HAZ	HAZARDOUS WASTE AREA
AG	AGRICULTURAL LAND
HABITAT	FISH & WILDLIFE HABITAT
FLOOD PLAIN	FLOOD PLAIN
OHW	ORDINARY HIGH WATER (OHW)
	STORM WATER
	USDA FOREST SERVICE LANDS
	WILDLIFE HABITAT SUIT/CONN

ARCHEOLOGICAL & HISTORIC

ARCH	ARCHEOLOGICAL BOUNDARY
HISTORIC DIST	HISTORIC DISTRICT BOUNDARY
HISTORIC	HISTORIC AREA
H	HISTORIC STRUCTURE

CONVENTIONAL TOPOGRAPHIC SYMBOLOGY

EXISTING FEATURES

	ROAD EDGE PAVEMENT
	ROAD EDGE GRAVEL
	DRIVEWAY EDGE
	DITCH
	FOUNDATION
	FENCE (EXISTING)
	FENCE WOOD POST
	FENCE STEEL POST
	GARDEN
	ROAD GUARDRAIL
	RAILROAD TRACKS
	CULVERT (EXISTING)
	STONE WALL
	WALL
	WOOD LINE
	BRUSH LINE
	HEDGE
	BODY OF WATER EDGE
	LEDGE EXPOSED

PROJECT NAME:	LYNDON
PROJECT NUMBER:	STPG SGNL(48)

FILE NAME: z16d054frm.dgn	PLOT DATE: 12/13/2016
PROJECT LEADER: P. SHEDD	DRAWN BY: S. GOODWIN
DESIGNED BY: P. KONIECZKA	CHECKED BY: L. GREER
CONVENTIONAL SYMBOLOGY LEGEND SHEET	SHEET 2 OF 18

CONSULTING ENGINEERS

CLD 13-0194

GPS CONTROL POINTS

HVCTRL # 1

STANDARD DISK STAMPED
D 54 VTHD

N = 735475.626
E = 1769146.426
ELEV. = 727.617

GENERAL LOCATION, LYNDON, VT.
LYNDONVILLE, 8.35 MILES NORTH OF THE JUNCTION OF U.S. HIGHWAY 2 AT ST. JOHNSBURY, IN THE TOP OF THE NORTHEAST END OF THE SOUTHEAST ABUTMENT TO THE NORTH BOUND SPAN OF THE INTERSTATE 91 OVERPASS, 6.9 FT. NORTHEAST OF THE CENTER LINE OF THE NORTH BOUND LANE.
THE MARK IS SET IN THE TOP OF THE CONCRETE ABUTMENT AT THE SOUTH END, SOUTHEAST CORNER OF THE I-91 NORTHBOUND BRIDGE OVER US ROUTE 5 AT EXIT 23. IT IS 1.1 M (3.6 FT) EAST OF THE WEST EDGE OF THE GRANITE BRIDGE CURB, 0.2 M (0.7 FT) SOUTH OF THE NORTH FACE OF THE ABUTMENT, 0.7 M (2.3 FT) WEST OF THE VERTICAL ANGLE POINT IN THE TOP OF THE CONCRETE WINGWALL, AND 0.3 M (1.0 FT) NORTH OF A FIBERGLASS WITNESS POST.

HVCTRL # 2

STANDARD DISK STAMPED
RED 5

N = 736364.715
E = 1770312.076
ELEV. = 706.429

GENERAL LOCATION, LYNDON, VT.
TO REACH FROM THE I-91 BRIDGES OVER U.S.ROUTE 5 AT EXIT 23 SOUTH OF LYNDONVILLE GO NORTHEAST ALONG U.S.ROUTE 5 FOR 0.3 MI (0.5 KM) TO THE INTERSECTION OF RED VILLAGE ROAD RIGHT. TURN RIGHT AND GO SOUTH ALONG RED VILLAGE ROAD FOR 55 M (180.4 FT) TO THE MARK ON THE RIGHT. THE MARK IS SET FLUSH WITH GROUND SURFACE IN THE TOP OF A 30 CM (12") DIAMETER CONCRETE MONUMENT POURED 1.4 M (4.6 FT) DEEP. IT IS 12.7 M (41.7 FT) WEST OF AND ABOUT LEVEL WITH THE CENTERLINE OF RED VILLAGE ROAD, 7.9 M (25.9 FT) EAST OF THE EAST RAIL OF THE CANADIAN PACIFIC RAILROAD, 1.2 M (3.9 FT) SOUTH OF POLE NO.1175, AND 0.3 M (1.0 FT) EAST OF A FIBERGLASS WITNESS POST.

• DESCRIPTION PROVIDED BY VERMONT AGENCY OF TRANSPORTATION GEODETIC SURVEY UNIT

TRAVERSE TIES

HVCTRL #3

NORTH = 736619.859
EAST = 1770300.252
ELEV. = 704.405

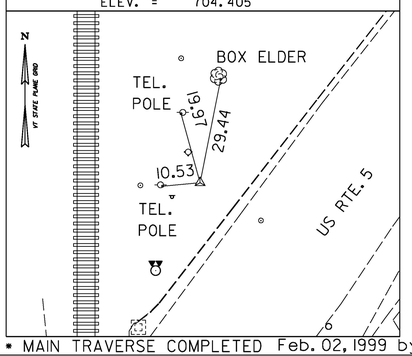

HVCTRL #4

NORTH = 737064.031
EAST = 1770667.741
ELEV. = 716.203

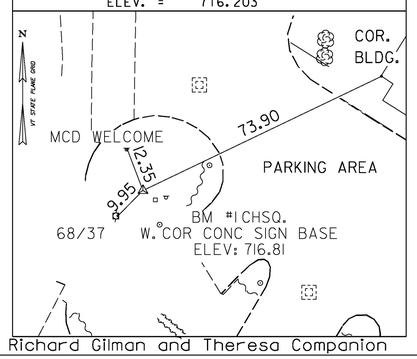

HVCTRL #5

NORTH = 737794.496
EAST = 1770446.981
ELEV. = 706.8060

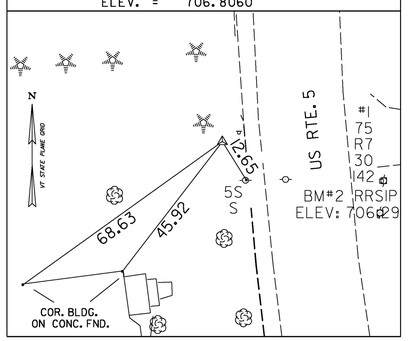

HVCTRL #6

NORTH = 739389.335
EAST = 1770743.171
ELEV. = 700.645

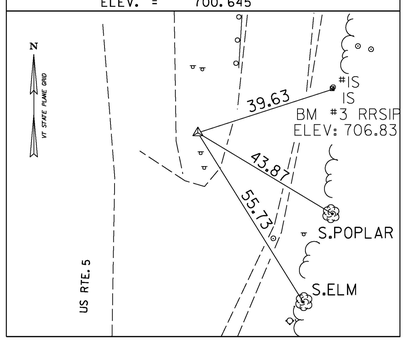

HVCTRL #7

NORTH = 740795.425
EAST = 1770162.040
ELEV. = 704.467

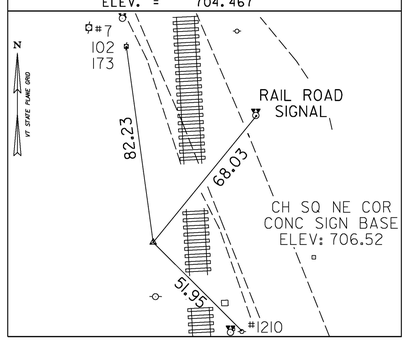

* MAIN TRAVERSE COMPLETED Feb. 02, 1999 by Richard Gilman and Theresa Companion

ALIGNMENT TIES

NORTH =	NORTH =	NORTH =	NORTH =	NORTH =
EAST =	EAST =	EAST =	EAST =	EAST =
ELEV. =	ELEV. =	ELEV. =	ELEV. =	ELEV. =

DATUM

VERTICAL	NAVD 88
HORIZONTAL	NAD 83 (92)
ADJUSTMENT	COMPASS

PROJECT NAME: LYNDON
PROJECT NUMBER: STPG SGNL(48)

FILE NAME: X10C176T1.DGN
PROJECT LEADER: B. MARTIN
DESIGNED BY: VTRANS
TIE SHEET 1

PLOT DATE: 12/13/2016
DRAWN BY: G. HITCHCOCK
CHECKED BY: P. BEYOR
SHEET 3 OF 18

ALIGNMENT TIES

POT 93+00.00
NORTH = 736393.9820
EAST = 1770166.7920

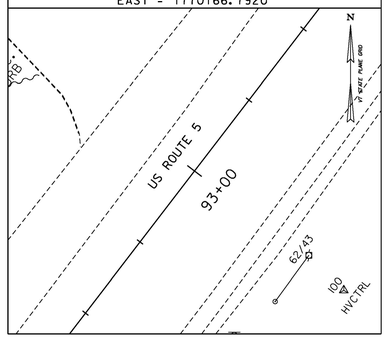

POT 99+00.00
NORTH = 736869.8346
EAST = 1770532.2565

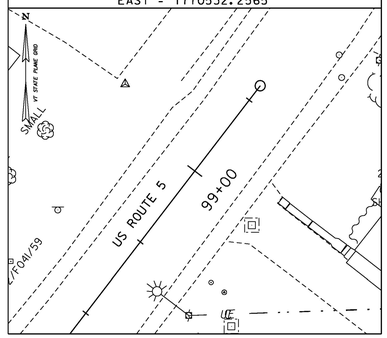

NORTH =
EAST =

NORTH =
EAST =

NORTH =
EAST =

ALIGNMENT TIES

POB 200+00.00
NORTH = 736548.6341
EAST = 1770285.5680

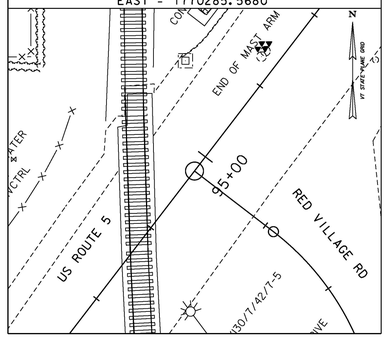

PC 200+27.82
NORTH = 736531.6904
EAST = 1770307.6295

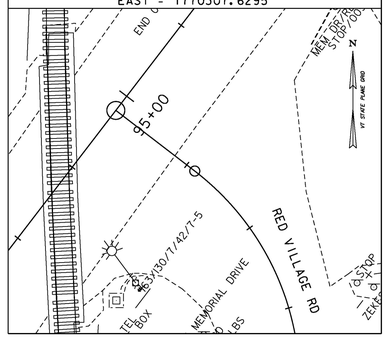

PT 200+84.47
NORTH = 736484.1938
EAST = 1770335.9826

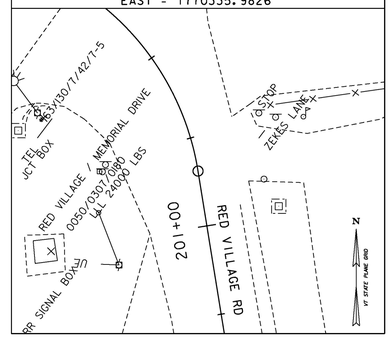

POT 201+25.00
NORTH = 736444.1849
EAST = 1770342.4592

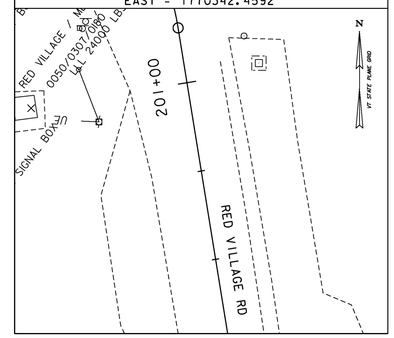

NORTH =
EAST =

PROJECT NAME:	LYNDON
PROJECT NUMBER:	STPG SGNL(48)

FILE NAME: z16d0541i.dgn	PLOT DATE: 12/13/2016
PROJECT LEADER: P. SHEDD	DRAWN BY: S. GOODWIN
DESIGNED BY: M. HALEY	CHECKED BY: P. SHEDD
TIE SHEET 2	SHEET 4 OF 18

SOIL CLASSIFICATION

AASHTO	
A1	Gravel and Sand
A3	Fine Sand
A2	Silty or Clayey Gravel and Sand
A4	Silty Soil - Low Compressibility
A5	Silty Soil - Highly Compressible
A6	Clayey Soil - Low Compressibility
A7	Clayey Soil - Highly Compressible

ROCK QUALITY DESIGNATION

R.Q.D. (%)	ROCK DESCRIPTION
<25	Very Poor
25 to 50	Poor
51 to 75	Fair
76 to 90	Good
>90	Excellent

SHEAR STRENGTH

UNDRAINED SHEAR STRENGTH IN P.S.F.	CONSISTENCY
<250	Very Soft
250-500	Soft
500-1000	Med. Stiff
1000-2000	Stiff
2000-4000	Very Stiff
>4000	Hard

CORRELATION GUIDE OF "N" TO DENSITY/CONSISTENCY

DENSITY (GRANULAR SOILS)		CONSISTENCY (COHESIVE SOILS)	
N	DESCRIPTIVE TERM	N	DESCRIPTIVE TERM
<5	Very Loose	<2	Very Soft
5-10	Loose	2-4	Soft
11-24	Med. Dense	5-8	Med. Stiff
25-50	Dense	9-15	Stiff
>50	Very Dense	16-30	Very Stiff
		31-60	Hard
		>60	Very Hard

COMMONLY USED SYMBOLS

▼	Water Elevation
⊗	Standard Penetration Boring
⊕	Auger Boring
⊙	Rod Sounding
S	Sample
N	Standard Penetration Test Blow Count Per Foot For: 2" O.D. Sampler; 1 3/8" I.D. Sampler; Hammer Weight Of 140 Lbs.; Hammer Fall Of 30"
VS	Field Vane Shear Test
US	Undisturbed Soil Sample
B	Blast
DC	Diamond Core
MD	Mud Drill
WA	Wash Ahead
HSA	Hollow Stem Auger
AX	Core Size 1 1/8"
BX	Core Size 1 5/8"
NX	Core Size 2 1/8"
M	Double Tube Core Barrel Used
LL	Liquid Limit
PL	Plastic Limit
PI	Plasticity Index
NP	Non Plastic
w	Moisture Content (Dry Wgt. Basis)
D	Dry
M	Moist
MTW	Moist To Wet
W	Wet
Sat	Saturated
Bo	Boulder
Gr	Gravel
Sa	Sand
Si	Silt
Cl	Clay
HP	Hardpan
Le	Ledge
NLTD	No Ledge To Depth
CNPF	Can Not Penetrate Further
TLOB	Top of Ledge Or Boulder
NR	No Recovery
Rec.	Recovery
%Rec.	Percent Recovery
RQD	Rock Quality Designation
CBR	California Bearing Ratio
<	Less Than
>	Greater Than
R	Refusal (N > 100)
VTSPG	NAD83 - See Note 7

COLOR

blk	Black	pnk	Pink
bl	Blue	pu	Purple
brn	Brown	rd	Red
dk	Dark	tn	Tan
gry	Gray	wh	White
gn	Green	yel	Yellow
lt	Light	mltc	Multicolored
or	Orange		

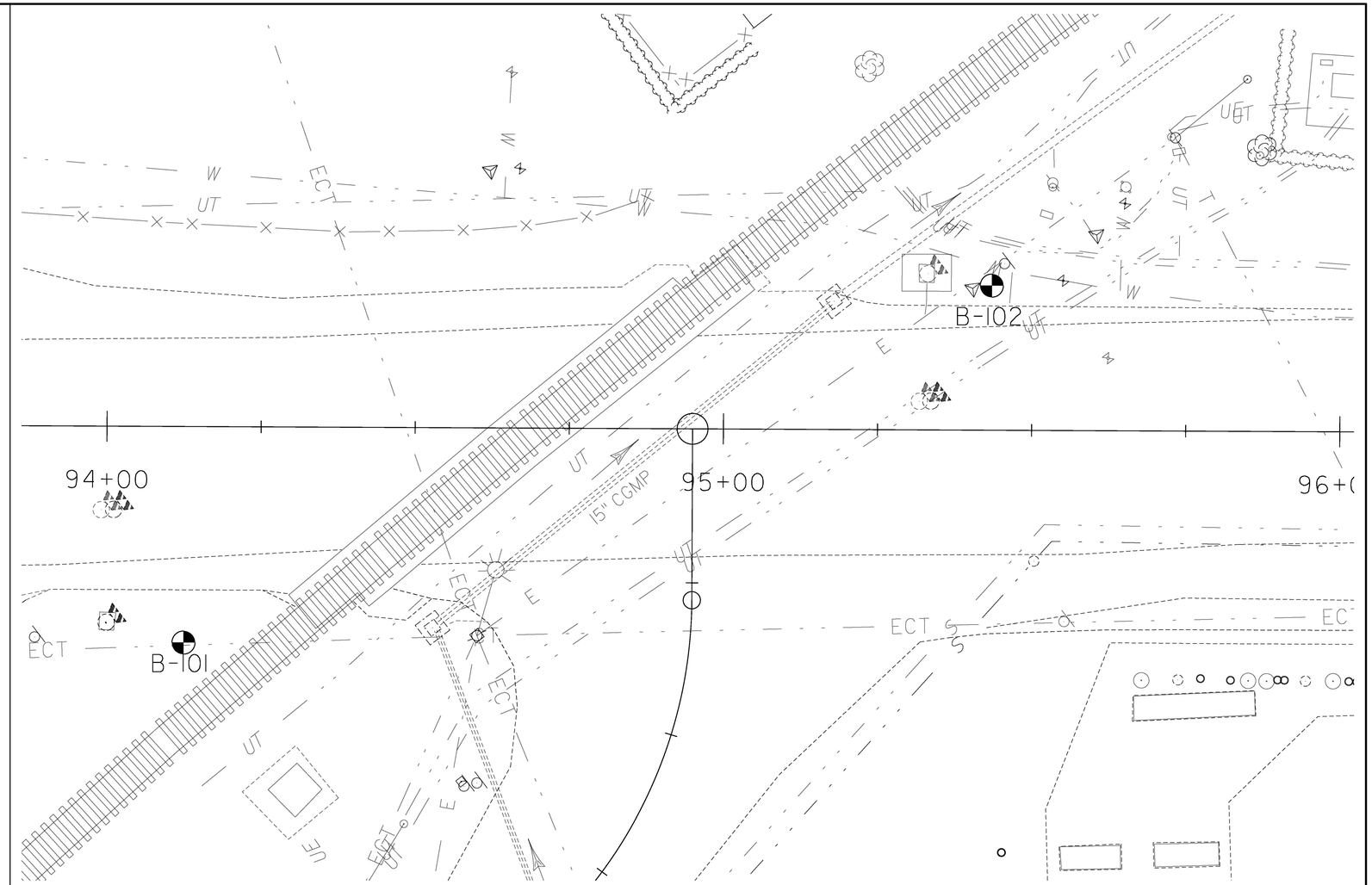

BORING PLAN

0 10 20
SCALE IN FEET

BORING CHART

HOLE NO.	STATION	OFFSET	GROUND ELEV.	ELEV. TLOB
B-101	94+08	31.0 RT	704.65 FT	N/A
B-102	95+40	24.9 LT	704.72 FT	N/A

DEFINITIONS (AASHTO)

BEDROCK (LEDGE) - Rock in its native location of indefinite thickness.

BOULDER - A rock fragment with an average dimension > 12 inches.

COBBLE - Rock fragments with an average dimension between 3 and 12 inches.

GRAVEL - Rounded particles of rock < 3" and > 0.0787" (#10 sieve).

SAND - Particles of rock < 0.0787" (#10 sieve) and > 0.0029" (#200 sieve).

SILT - Soil < 0.0029" (#200 sieve), non or slightly plastic and exhibits no strength when air-dried.

CLAY - Fine grained soil, exhibits plasticity when moist and considerable strength when air-dried.

VARVED - Alternate layers of silt and clay.

HARDPAN - Extremely dense soil, cemented layer, not softened when wet.

MUCK - Soft organic soil (containing > 10% organic material.

MOISTURE CONTENT - Weight of water divided by dry weight of soil.

FLOWING SAND - Granular soil so saturated (loose) that it flows into drill casing during extraction of wash rod.

STRIKE - Angle from magnetic north to line of intersection of bed with a horizontal plane.

DIP - Inclination of bed with a horizontal plane.

GENERAL NOTES

1. The subsurface explorations shown herein were made on 8/11/15 by VAOT.
2. Soil and rock classifications, properties and descriptions are based on engineering interpretation from available subsurface information by the Agency and may not necessarily reflect actual variations in subsurface conditions that may be encountered between individual boring or sample locations.
3. Observed water levels and/or conditions indicated are as recorded at the time of exploration and may vary according to the prevailing rainfall, methods of exploration and other factors.
4. Engineering judgment was exercised in preparing the subsurface information presented herein. Analysis and interpretation of subsurface data was performed and interpreted for Agency design and estimating purposes. Presentation of the information in the Contract is intended to provide the Contractor access to the same data available to the Agency. The subsurface information is presented in good faith and is not intended as a substitute for personal investigation, independent interpretation, independent analysis or judgment by the Contractor.
5. Pictorial structure details shown on the boring plan layout or soils profile are for illustrative purposes only and may not accurately portray final contract details.
6. Terminology used on boring logs to describe the hardness, degree of weathering, and spacing of fractures, joints and other discontinuities in the bedrock is defined in the AASHTO Manual on Subsurface Investigations, 1988.
7. Northing and Easting coordinates are shown in Vermont State Plane Grid North American Datum 1983 in meters and survey feet.

CONSULTING ENGINEERS

PROJECT NAME: LYNDON
PROJECT NUMBER: STPG SGNL(48)

FILE NAME: z16d054bor.dgn
PROJECT LEADER: P. SHEDD
DESIGNED BY: P. KONIECZKA
BORING INFORMATION SHEET

PLOT DATE: 12/13/2016
DRAWN BY: M. HALEY
CHECKED BY: L. GREER
SHEET 5 OF 18

QLD 13-094

STATE OF VERMONT
AGENCY OF TRANSPORTATION
CONSTRUCTION AND
MATERIALS BUREAU
CENTRAL LABORATORY

BORING LOG

LYNDON
STP 0113(65)
US-5 MAST ARMS

Boring No.: **B-101**
Page No.: 1 of 1
Pin No.: 10C176
Checked By: MRG

Boring Crew: NIETO, GARROW, GARDNER
Date Started: 8/11/15 Date Finished: 8/11/15
VTSPG NAD83: N 736461.89 ft E 1770263.17 ft
Station: 94+08 Offset: 31.00
Ground Elevation: 704.65 ft

	Casing	Sampler
Type:	WB	SS
I.D.:	4 in	1.5 in
Hammer Wt:	N.A.	140 lb.
Hammer Fall:	N.A.	30 in.
Hammer/Rod Type:	Auto/AWJ	
Rig:	CME 45C SKID	C_E = 1.33

Groundwater Observations

Date	Depth (ft)	Notes
08/11/15	15.3	During Drilling.

Depth (ft)	Strata (1)	CLASSIFICATION OF MATERIALS (Description)	Blows/6" (N Value)	Moisture Content %	Gravel %	Sand %	Fines %
		A-2-4, GrSa, brn, Moist, Rec. = 0.6 ft	2-3-7-7 (10)	3.5	27.0	58.1	14.9
		A-2-4, GrSiSa, brn, Moist, Rec. = 0.5 ft, Lab Note: Broken Rock was within sample. Small Glass fragments were noticeable.	6-6-6-4 (12)	8.4	23.1	47.9	29.0
5		A-2-4, SiSa, brn, Moist, Rec. = 0.4 ft	5-4-5-5 (9)	8.7	2.0	72.4	25.6
		A-2-4, SiSa, brn, Moist, Rec. = 0.9 ft, Lab Note: Broken Rock was within sample.	5-4-5-6 (9)	11.7	13.6	61.3	25.1
		A-2-4, SiSa, brn, Moist, Rec. = 0.9 ft	6-7-6-5 (13)	11.7	3.1	73.7	23.2
		A-3, Sa, brn, Moist, Rec. = 1.0 ft		8.5	19.3	70.4	10.3
10		A-2-4, GrSa, brn, Moist, Rec. = 0.8 ft	6-7-6-5 (13)	9.9	21.4	62.5	16.1
		A-1-b, GrSa, brn, Moist, Rec. = 0.7 ft		5.6	20.7	70.4	8.9
15		A-2-4, GrSa, brn, MTW, Rec. = 0.9 ft, (Visual Classification) Lab Note: Very strong gasoline odor from sample. PID test performed showing 377 ppm.	7-3-3-1 (6)				
20		Field Note:, No Recovery.	9-6-6-6 (12)				
25		A-2-4, SiSa, gry, Moist, Rec. = 0.6 ft, Lab Note: A faint gasoline odor was noticeable in sample.	5-6-6-5 (12)	23.4		78.8	21.2
		A-2-4, Sa, brn, Moist, Rec. = 0.7 ft		27.5		84.4	15.6
		Hole stopped @ 27.0 ft					
30		Remarks: Hole Collapsed at 16.8 ft.					

Notes:
1. Stratification lines represent approximate boundary between material types. Transition may be gradual.
2. N Values have not been corrected for hammer energy. C_E is the hammer energy correction factor.
3. Water level readings have been made at times and under conditions stated. Fluctuations may occur due to other factors than those present at the time measurements were made.

BORING LOG 2 LYNDON STP 0113(65).GPJ VERMONT AOT.GDT 9/9/15

STATE OF VERMONT
AGENCY OF TRANSPORTATION
CONSTRUCTION AND
MATERIALS BUREAU
CENTRAL LABORATORY

BORING LOG

LYNDON
STP 0113(65)
US-5 MAST ARMS

Boring No.: **B-102**
Page No.: 1 of 1
Pin No.: 10C176
Checked By: MRG

Boring Crew: NIETO, GARROW, GARDNER
Date Started: 8/11/15 Date Finished: 8/11/15
VTSPG NAD83: N 736601.33 ft E 1770296.49 ft
Station: 95+40 Offset: -24.90
Ground Elevation: 704.72 ft

	Casing	Sampler
Type:	WB	SS
I.D.:	4 in	1.5 in
Hammer Wt:	N.A.	140 lb.
Hammer Fall:	N.A.	30 in.
Hammer/Rod Type:	Auto/AWJ	
Rig:	CME 45C SKID	C_E = 1.33

Groundwater Observations

Date	Depth (ft)	Notes
08/11/15	13.0	During Drilling.

Depth (ft)	Strata (1)	CLASSIFICATION OF MATERIALS (Description)	Blows/6" (N Value)	Moisture Content %	Gravel %	Sand %	Fines %
		A-2-4, SiSa, brn, Moist, Rec. = 0.4 ft, Lab Note: Grass was within sample.	1-2-1-1 (3)	12.0	15.7	58.5	25.8
		A-1-a, SaGr, brn, Moist, Rec. = 0.2 ft, Lab Note: Performed gradation with an insufficient sample size. Broken Rock was within sample.	2-3-3-2 (6)	7.0	67.6	24.0	8.4
5		A-2-4, SiSa, brn, Moist, Rec. = 0.8 ft	1-1-1-1 (2)	14.7	15.0	59.0	26.0
		A-2-4, SiSa, brn, Moist, Rec. = 1.2 ft	1-1-WH-1 (1)	20.8	12.1	58.4	29.5
		A-1-b, SaGr, brn, Moist, Rec. = 0.8 ft, Stone in end of sampler.	2-4-6-8 (10)	7.2	46.2	45.4	8.4
10		A-1-b, GrSa, brn, Moist, Rec. = 1.8 ft	6-7-7-6 (14)	8.6	37.1	53.2	9.7
		Field Note:, NXDC					
15		A-1-a, SaGr, brn, Moist, Rec. = 0.5 ft, Lab Note: Performed gradation with an insufficient sample size. Coal cinders were within sample.	2-1-WH-WH (1)	11.4	74.2	21.3	4.5
		A-2-4, SiSa, brn, Wet, Rec. = 1.0 ft		27.2	4.4	70.2	25.4
20		A-4, SiSa, brn, Wet, Rec. = 1.2 ft, Lab Note: Sample was rust colored.	2-5-5-5 (10)	28.9		60.8	39.2
25		A-2-4, SiSa, brn, Wet, Rec. = 1.1 ft	6-9-9-9 (18)	22.9		77.0	23.0
		Hole stopped @ 27.0 ft					
30		Remarks: Hole Collapsed at 21.0 ft.					

Notes:
1. Stratification lines represent approximate boundary between material types. Transition may be gradual.
2. N Values have not been corrected for hammer energy. C_E is the hammer energy correction factor.
3. Water level readings have been made at times and under conditions stated. Fluctuations may occur due to other factors than those present at the time measurements were made.

BORING LOG 2 LYNDON STP 0113(65).GPJ VERMONT AOT.GDT 9/9/15

CLD 13-0194

PROJECT NAME: LYNDON
PROJECT NUMBER: STPG SGNL(48)

FILE NAME: z16d054bor.dgn
PROJECT LEADER: P. SHEDD
DESIGNED BY: P. KONIECZKA
BORING LOGS

PLOT DATE: 12/13/2016
DRAWN BY: M. HALEY
CHECKED BY: L. GREER
SHEET 6 OF 18

STATE OF VERMONT
AGENCY OF TRANSPORTATION

QUANTITY SHEET 1

SUMMARY OF ESTIMATED QUANTITIES			TOTALS		DESCRIPTIONS			
ROADWAY	EROSION CONTROL	FULL C.E. ITEMS	GRAND TOTAL	FINAL	UNIT	ITEMS	ITEM NUMBER	ROUND
1			1		CY	TRENCH EXCAVATION OF EARTH, EXPLORATORY (N.A.B.I.)	204.22	-
2175			2175		SY	COLD PLANING, BITUMINOUS PAVEMENT	210.10	12
						BEGIN OPTION AA		
13			13		TON	AGGREGATE SHOULDERS	402.12	0.1
13			13		TON	AGGREGATE SHOULDERS, RAP	402.13	0.1
						END OPTION AA		
						BEGIN OPTION BB		
22			22		CWT	EMULSIFIED ASPHALT	404.65	0.4
22			22		CWT	SPECIAL PROVISION (EMULSIFIED ASPHALT) (RS-1H OR CRS-1H)	900.683	0.4
						END OPTION BB		
1			1		LU	PRICE ADJUSTMENT, ASPHALT CEMENT (N.A.B.I.)	406.50	-
600			600		HR	UNIFORMED TRAFFIC OFFICERS	630.10	EST.
600			600		HR	FLAGGERS	630.15	EST.
		1	1		LS	TESTING EQUIPMENT, CONCRETE	631.16	-
		1	1		LS	TESTING EQUIPMENT, BITUMINOUS	631.17	-
1			1		LS	MOBILIZATION/DEMOBILIZATION	635.11	-
1			1		LS	TRAFFIC CONTROL	641.10	-
3			3		EACH	PORTABLE CHANGEABLE MESSAGE SIGN	641.15	-
						BEGIN OPTION CC		
1300			1300		LF	DURABLE 4 INCH WHITE LINE, THERMOPLASTIC	646.402	43
1300			1300		LF	DURABLE 4 INCH WHITE LINE, EPOXY PAINT	646.403	43
1300			1300		LF	DURABLE 4 INCH WHITE LINE, POLYUREA	646.404	43
						END OPTION CC		
						BEGIN OPTION DD		
1250			1250		LF	DURABLE 4 INCH YELLOW LINE, THERMOPLASTIC	646.412	20
1250			1250		LF	DURABLE 4 INCH YELLOW LINE, EPOXY PAINT	646.413	20
1250			1250		LF	DURABLE 4 INCH YELLOW LINE, POLYUREA	646.414	20
						END OPTION DD		
						BEGIN OPTION EE		
100			100		LF	DURABLE 8 INCH YELLOW LINE, THERMOPLASTIC	646.452	8
100			100		LF	DURABLE 8 INCH YELLOW LINE, EPOXY PAINT	646.453	8
100			100		LF	DURABLE 8 INCH YELLOW LINE, POLYUREA	646.454	8
						END OPTION EE		
						BEGIN OPTION FF		
70			70		LF	DURABLE 24 INCH STOP BAR, THERMOPLASTIC	646.482	1
70			70		LF	DURABLE 24 INCH STOP BAR, EPOXY PAINT	646.483	1
70			70		LF	DURABLE 24 INCH STOP BAR, POLYUREA	646.484	1
						END OPTION FF		

DETAILED SUMMARY OF QUANTITIES		
QUANTITIES	UNIT	ITEMS

CLD 13-0194

CONSULTING ENGINEERS

PROJECT NAME: LYNDON
PROJECT NUMBER: STPG SGNL(48)

FILE NAME: z16d054frm.dgn
PROJECT LEADER: P. SHEDD
DESIGNED BY: P. KONIECZKA
QUANTITY SHEET 1

PLOT DATE: 12/13/2016
DRAWN BY: M. HALEY
CHECKED BY: L. GREER
SHEET 7 OF 18

STATE OF VERMONT
AGENCY OF TRANSPORTATION

QUANTITY SHEET 2

SUMMARY OF ESTIMATED QUANTITIES			TOTALS		DESCRIPTIONS			
ROADWAY	EROSION CONTROL	FULL C.E. ITEMS	GRAND TOTAL	FINAL	UNIT	ITEMS	ITEM NUMBER	ROUND
						BEGIN OPTION GG		
6			6		EACH	DURABLE LETTER OR SYMBOL, THERMOPLASTIC	646.492	-
6			6		EACH	DURABLE LETTER OR SYMBOL, EPOXY PAINT	646.493	-
6			6		EACH	DURABLE LETTER OR SYMBOL, POLYUREA	646.494	-
						END OPTION GG		
350			350		SF	REMOVAL OF EXISTING PAVEMENT MARKINGS	646.85	9.3
	10		10		LB	SEED	651.15	2.1
	35		35		LB	FERTILIZER	651.18	2
	0.25		0.25		TON	AGRICULTURAL LIMESTONE	651.20	0.12
	0.25		0.25		TON	HAY MULCH	651.25	0.12
20			20		CY	TOPSOIL	651.35	2
	2		2		EACH	INLET PROTECTION DEVICE, TYPE I	653.40	-
	300		300		LF	PROJECT DEMARCATION FENCE	653.55	21
8			8		SF	TRAFFIC SIGNS, TYPE A	675.20	0.08
15			15		LF	SQUARE TUBE SIGN POST AND ANCHOR	675.341	-
3			3		EACH	REMOVING SIGNS	675.50	-
1			1		EACH	ERECTING SALVAGED SIGNS	675.60	-
1			1		EACH	TRAFFIC CONTROL SIGNAL SYSTEM, INTERSECTION (US ROUTE 5 & RED VILLAGE ROAD)	678.15	-
460			460		LF	ELECTRICAL CONDUIT (2") (SCH 80)	678.21	2
640			640		LF	WIRED CONDUIT (2") (SCH 80)	678.23	10
8			8		CY	SPECIAL PROVISION (EXCAVATION OF PETROLEUM CONTAMINATED SOILS, CLASS I)	900.608	-
1			1		CY	SPECIAL PROVISION (EXCAVATION OF PETROLEUM CONTAMINATED SOILS, CLASS II)	900.608	-
1			1		CY	SPECIAL PROVISION (EXCAVATION OF PETROLEUM CONTAMINATED SOILS, CLASS III)	900.608	-
15000			15000		DL	SPECIAL PROVISION (MAINTENANCE OF RAILROAD TRAFFIC) (N.A.B.I.)	900.615	-
7			7		EACH	SPECIAL PROVISION (JUNCTION BOX, HEAVY DUTY)	900.620	-
20			20		LF	SPECIAL PROVISION (HORIZONTAL DIRECTIONAL DRILLING 12" CASING)	900.640	1
1			1		LS	SPECIAL PROVISION (RECONSTRUCT RAIL-HIGHWAY CROSSING ACTIVE WARNING SYSTEM) (AARDOT 850-920X)	900.645	-
1			1		LU	SPECIAL PROVISION (MAT DENSITY PAY ADJUSTMENT, SMALL QUANTITY) (N.A.B.I.)	900.650	-
1			1		LU	SPECIAL PROVISION (MIXTURE PAY ADJUSTMENT) (N.A.B.I.)	900.650	-
270			270		TON	SPECIAL PROVISION (BITUMINOUS CONCRETE PAVEMENT, SMALL QUANTITY)	900.680	2

DETAILED SUMMARY OF QUANTITIES		
QUANTITIES	UNIT	ITEMS

CLD 13-0194

PROJECT NAME: LYNDON
PROJECT NUMBER: STPG SGNL(48)

FILE NAME: z16d054frm.dgn
PROJECT LEADER: P. SHEDD
DESIGNED BY: P. KONIECZKA
QUANTITY SHEET 2

PLOT DATE: 1/19/2017
DRAWN BY: M. HALEY
CHECKED BY: L. GREER
SHEET 8 OF 18

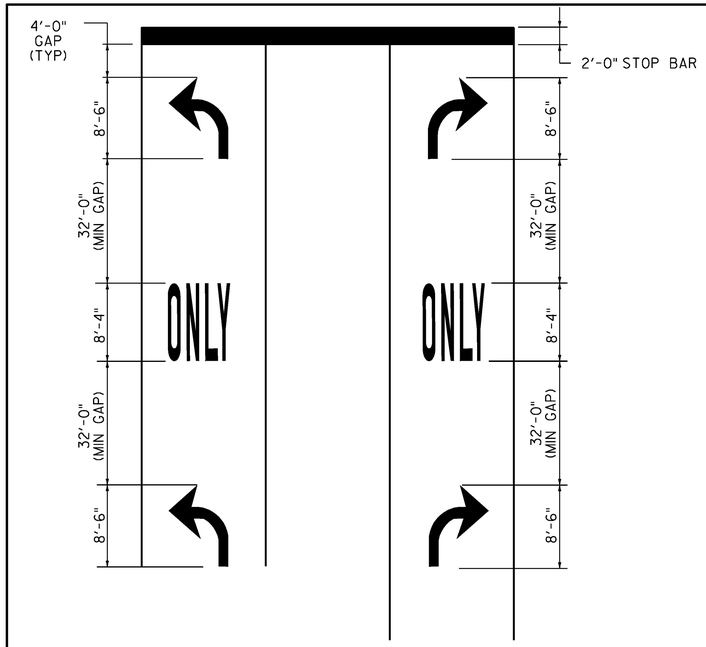

TYPICAL MARKINGS FOR TURN LANES

TYPICAL PAVEMENT MARKINGS FOR TURN LANE NOTES

1. MARKINGS START AT THE BEGINNING OF SOLID LANE LINE.
2. THE "ONLY" WORD MARKINGS SHALL BE USED TO SUPPLEMENT LANE-USE ARROW MARKINGS AS SHOWN ON THE PLANS OR AS DIRECTED BY THE ENGINEER.
3. IF LANE LENGTH IS LESS THAN 50 FEET, ONLY ONE TURN ARROW PLACED AT THE BEGINNING OF THE SOLID LANE LINE IS REQUIRED.
4. THE LONGITUDINAL SPACE BETWEEN WORD OR SYMBOL MESSAGE MARKINGS SHOULD BE AT LEAST FOUR TIMES THE HEIGHT OF THE CHARACTERS USED FOR LOW SPEED ROADS, BUT NOT MORE THAN TEN TIMES THE HEIGHT OF THE CHARACTERS UNDER ANY CONDITIONS.
5. EXCLUSIVE TURN (LEFT OR RIGHT) LANE LINES SHALL BE SOLID AND EXTEND BACK FROM THE STOP LINE TO THE POINT OF FULL LANE WIDTH OF THE TURN LANE.

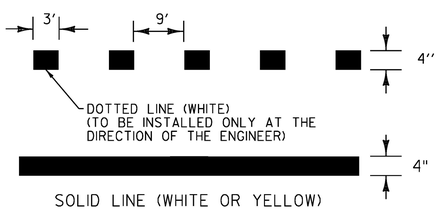

PAVEMENT MARKING LINE DETAILS

PAVEMENT MARKING NOTES

1. DURABLE PAVEMENT MARKINGS ARE OPTIONED AS SHOWN ON THE PLAN SHEETS FOR THIS PROJECT. THE CONTRACTOR SHALL BID THE SAME MARKING MATERIAL FOR ALL OPTION ITEMS.
2. ALL PAVEMENT MARKINGS SHALL CONFORM TO THE LATEST EDITION OF THE MANUAL ON UNIFORM TRAFFIC CONTROL DEVICES (MUTCD) AND THE LATEST EDITION OF THE STANDARD HIGHWAY SIGNS INCLUDING PAVEMENT MARKINGS AND STANDARD ALPHABETS BOOKS.

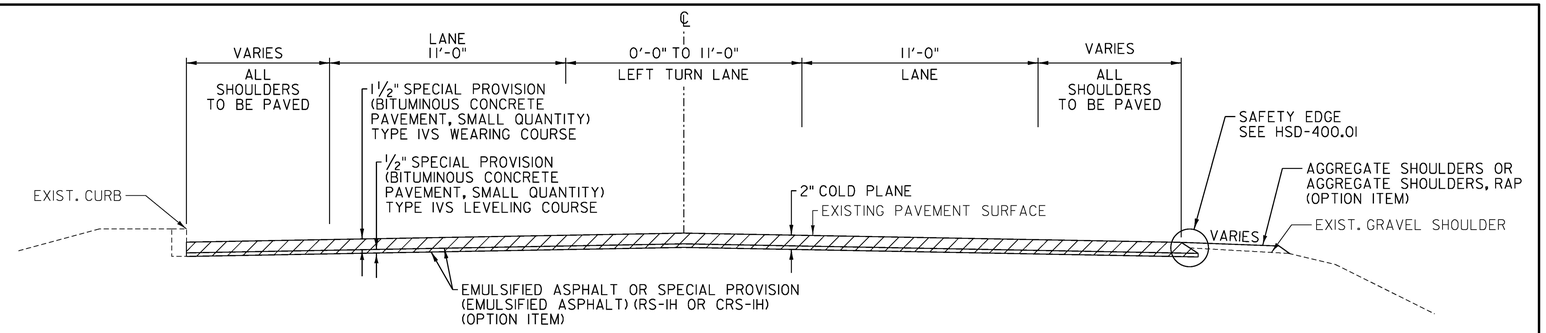

US ROUTE 5
COLD PLANE AND OVERLAY TYPICAL SECTION

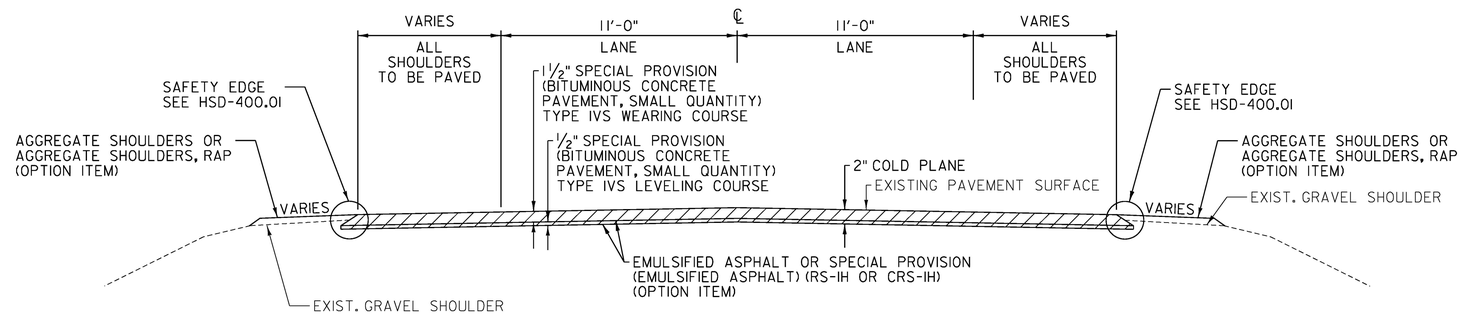

RED VILLAGE ROAD
COLD PLANE AND OVERLAY TYPICAL SECTION

TYPICAL SECTION NOTE
EMULSIFIED ASPHALT SHALL BE APPLIED TO ALL COLD PLANED SURFACES AT A RATE OF 0.080 GAL/SY AND BETWEEN EACH LIFT OF PAVEMENT AT A RATE OF 0.040 GAL/SY OR AS DIRECTED BY THE ENGINEER.

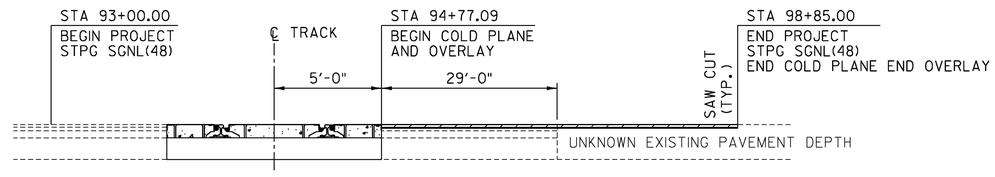

MATERIAL TRANSITION DIAGRAM

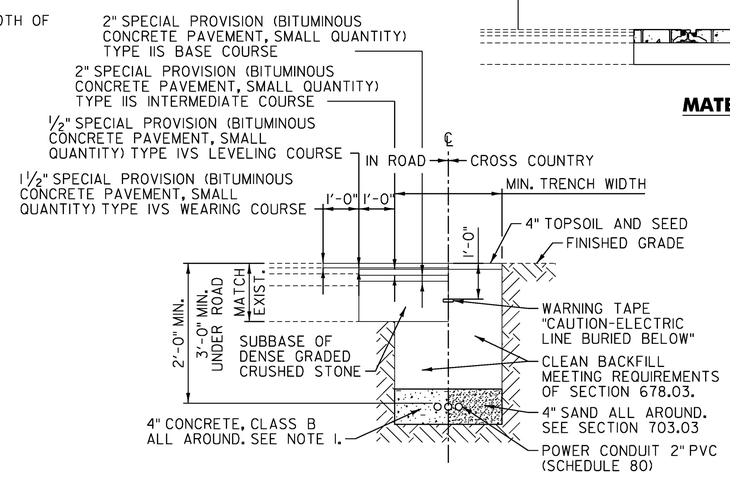

TYPICAL TRENCH SECTION

NOT TO SCALE

TYPICAL TRENCH SECTION NOTES

1. PROVIDE 4" CONCRETE ENCASEMENT AROUND PVC CONDUITS AT ROAD CROSSING TO 5' BEYOND EDGE OF PAVEMENT. PVC CONDUITS SHALL PASS THROUGH SLEEVES AT ALL RAILROAD CROSSINGS.
2. EXCAVATION AND BACKFILL, CONCRETE, SAND, AND ROAD SUBBASE SHALL BE INCIDENTAL TO CONDUIT PAY ITEMS. PAVEMENT AND TURF ESTABLISHMENT SHALL BE PAID UNDER THE APPROPRIATE PAY ITEMS.

PROJECT NAME: LYNDON	
PROJECT NUMBER: STPG SGNL(48)	
FILE NAME: z16d054frm.dgn	PLOT DATE: 12/13/2016
PROJECT LEADER: P. SHEDD	DRAWN BY: S. GOODWIN
DESIGNED BY: M. HALEY	CHECKED BY: P. SHEDD
TYPICAL DETAILS SHEET	SHEET 9 OF 18

CLD 13-0194

REMOVAL OF EXISTING PAVEMENT MARKINGS
93+00 TO 94+40 RT (SOLID WHITE)
93+33 TO 94+62 LT & RT (DOUBLE SOLID) (ISLAND)
93+45 TO 94+80 LT (SOLID WHITE)
93+58 TO 94+52 LT & RT (SOLID DIAGONALS)
93+92 RT (STOP BAR)

DURABLE 4 INCH WHITE LINE (OPTION BID ITEM)
93+00 TO 94+40 RT (SOLID)
93+45 TO 94+80 LT (SOLID)
94+52 TO 200+58 RT (SOLID) (TH #2)
94+95 TO 98+85 LT (SOLID)
95+64 TO 98+85 RT (SOLID)
96+05 TO 97+05 LT (SOLID) (LANE LINE)
97+05 TO 98+75 LT (DOTTED)
200+50 LT TO 95+64 RT (SOLID) (TH #2)

DURABLE 4 INCH YELLOW LINE (OPTION BID ITEM)
93+33 TO 94+79 LT & RT (DOUBLE SOLID)(ISLAND)
96+05 RT TO 98+85 RT (DOUBLE SOLID)
200+37 TO 201+00 CL (DOUBLE SOLID)

DURABLE 8 INCH YELLOW LINE (OPTION BID ITEM)
93+58 TO 94+52 LT & RT (SOLID DIAGONALS)

DURABLE LETTER OR SYMBOL (OPTION BID ITEM)
96+14 CL (LEFT TURN ARROW)
96+57 CL ("ONLY")
97+02 CL (LEFT TURN ARROW)

DURABLE 24 INCH STOP BAR (OPTION BID ITEM)
93+48 RT
96+05 LT & RT
200+37 LT (TH #2)

REMOVING SIGNS
AS SHOWN - 3

ERECTING SALVAGED SIGNS
AS SHOWN - 1

SQUARE TUBE SIGN POST AND ANCHOR
97+25 LT

TRAFFIC SIGNS, TYPE A
95+56 LT (ON MAST ARM)

PROJECT DEMARCATION FENCE
93+48 TO 94+28 RT
94+26 TO 94+42 RT
94+37 TO 94+66 RT
95+16 TO 95+95 LT

INLET PROTECTION DEVICE, TYPE I
94+52 RT
95+18 LT

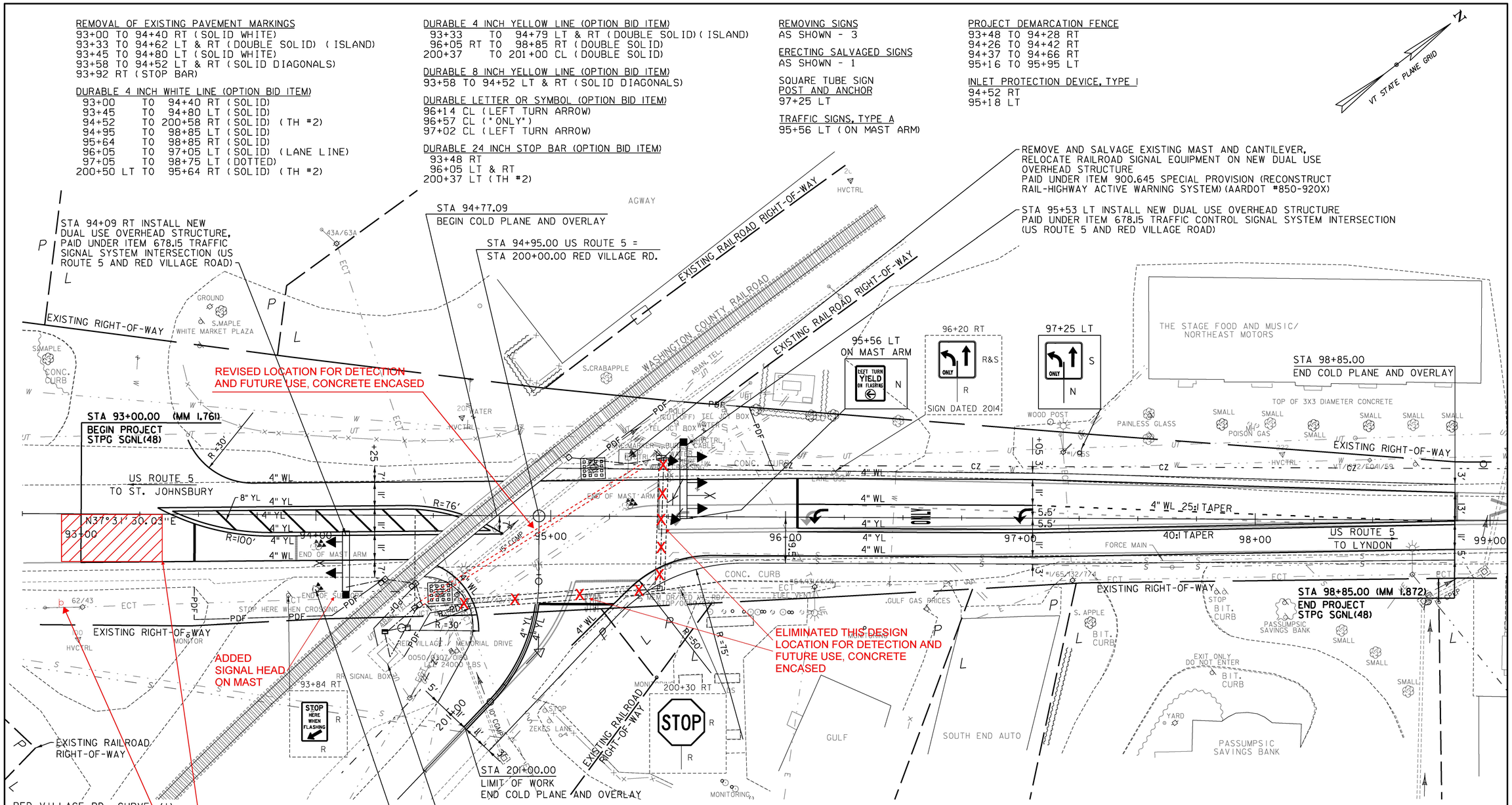

LEGEND
WL = WHITE LINE
YL = YELLOW LINE

PROJECT NAME: LYNDON	
PROJECT NUMBER: STPG SGNL(48)	
FILE NAME: zl6d054bdr.dgn	PLOT DATE: 1/9/2017
PROJECT LEADER: P. SHEDD	DRAWN BY: M. HALEY
DESIGNED BY: M. HALEY	CHECKED BY: P. SHEDD
PLAN SHEET	SHEET 10 OF 18

CLD CONSULTING ENGINEERS

CLD 13-0194

VAOT LOW GROW/FINE FESCUE MIX

	LBS/AC					
WEIGHT	BROADCAST	HYDROSEED	NAME	LATIN NAME	GERM	PURITY
38%	57	95	CREEPING RED FESCUE	FESTUCA RUBRA VAR. RUBRA	90%	98%
29%	43.5	72.5	HARD FESCUE	FESTUCA LONGIFOLIA	85%	95%
15%	22.5	37.5	CHEWINGS FESCUE	FESTUCA RUBRA VAR. COMMUTATA	87%	95%
15%	22.5	37.5	ANNUAL RYEGRASS	LOLIUM MULTIFLORUM	90%	95%
3%	4.5	7.5	INERTS			
100%	150	250				

VAOT RURAL AREA MIX

	LBS/AC					
WEIGHT	BROADCAST	HYDROSEED	NAME	LATIN NAME	GERM	PURITY
37.5%	22.5	45	CREEPING RED FESCUE	FESTUCA RUBRA VAR. RUBRA	85%	98%
37.5%	22.5	45	TALL FESCUE	FESTUCA ARUNDINACEA	90%	95%
5.0%	3	6	RED TOP	AGROSTIS GIGANTEA	90%	95%
15.0%	9	18	WHITE FIELD CLOVER	TRIFOLIUM REPENS	85%	98%
5.0%	3	6	ANNUAL RYE GRASS	LOLIUM MULTIFLORUM	85%	95%
100%	60	120				

GENERAL AMENDMENT GUIDANCE		
FERTILIZER	LIME	
10/20/10	AG LIME	PELLITIZED
500 LBS/AC	2 TONS/AC	1 TONS/AC

CONSTRUCTION GUIDANCE

1. SEED MIX: THE CONTRACTOR SHALL COORDINATE WITH THE RESIDENT ENGINEER ON WHICH SEED MIX TO USE.
2. SEED MIX: USE AS INDICATED IN THE PLANS AND/OR FOR ALL ESTABLISHED UPLAND (NON WETLAND) AREAS DISTURBED BY THE CONTRACTOR.
3. ALL SEED MIXTURES: SHALL NOT HAVE A WEED CONTENT EXCEEDING 0.40% BY WEIGHT AND SHALL BE FREE OF ALL NOXIOUS SEED.
4. FERTILIZER AND LIMESTONE: SHALL FOLLOW RATES SHOWN ON PLAN OR AS DIRECTED BY THE ENGINEER.
5. HAY MULCH: TO BE PLACED ON EARTH SLOPES AT THE RATE OF 2 TONS/ACRE, ACHIEVE 90% GROUND COVER OR AS DIRECTED BY THE ENGINEER.
6. HYDROSEEDING: ALTHOUGH GUIDANCE IS GIVEN ABOVE THE SITE CONDITIONS AND THE TYPE OF HYDROSEED PROPOSED FOR USE WILL ULTIMATELY DICTATE THE AMOUNTS AND TYPES OF SOIL AMENDMENTS TO BE APPLIED.
7. TURF ESTABLISHMENT: PLACING SEED, FERTILIZER, LIME AND MULCH PRIOR TO SEPTEMBER 15 AND AFTER APRIL 15 CAN BETTER ENSURE A VIGOROUS GROWTH OF GRASS.

ADAPTED FROM VTRANS TECHNICAL LANDSCAPE MANUAL FOR ROADWAYS AND TRANSPORTATION FACILITIES

TURF ESTABLISHMENT

THIS WORK SHALL BE PERFORMED IN ACCORDANCE WITH SECTION 651FOR SEED (PAY ITEM 651.15)

REVISIONS	
JANUARY 12, 2015	WHF

VAOT URBAN LAWN MIX

	LBS/AC					
WEIGHT	BROADCAST	HYDROSEED	NAME	LATIN NAME	GERM	PURITY
42.5%	34	68	CREEPING RED FESCUE	FESTUCA RUBRA X RUBRA	85%	98%
20.0%	16	32	PERENNIAL RYE GRASS	LOLIUM PERENNE	90%	95%
32.5%	26	52	KENTUCKY BLUE GRASS	POA PRATENSIS	85%	85%
5.0%	4	8	ANNUAL RYE GRASS	LOLIUM MULTIFLORUM	85%	95%
100%	80	160				

GENERAL AMENDMENT GUIDANCE		
FERTILIZER	LIME	
10/20/10	AG LIME	PELLITIZED
500 LBS/AC	2 TONS/AC	1 TONS/AC

CONSTRUCTION GUIDANCE

1. SEED MIX: THE URBAN AREA MIX SHALL NOT BE USED IN WETLANDS OR ANY WATERS OF THE STATE OF VERMONT.
2. SEED MIX: USE ONLY AS INDICATED IN THE PLANS.
3. SEED MIX: SHALL NOT HAVE A WEED CONTENT EXCEEDING 0.40% BY WEIGHT AND SHALL BE FREE OF ALL NOXIOUS SEED.
4. FERTILIZER AND LIMESTONE: SHALL FOLLOW RATES SHOWN ON PLAN OR AS DIRECTED BY THE ENGINEER
5. HAY MULCH: TO BE PLACED ON EARTH SLOPES AT THE RATE OF 2 TONS/ACRE, ACHIEVE 90% GROUND COVER OR AS DIRECTED BY THE ENGINEER.
6. HYDROSEEDING: ALTHOUGH GUIDANCE IS GIVEN ABOVE THE SITE CONDITIONS AND THE TYPE OF HYDROSEED WILL ULTIMATELY DICTATE THE AMOUNTS AND TYPES OF SOIL AMENDMENTS TO BE APPLIED
7. TURF ESTABLISHMENT: PLACING SEED, FERTILIZER, LIME AND MULCH PRIOR TO SEPTEMBER 15 AND AFTER APRIL 15 CAN BETTER ENSURE A VIGOROUS GROWTH OF GRASS.

ADAPTED FROM VTRANS TECHNICAL LANDSCAPE MANUAL FOR ROADWAYS AND TRANSPORTATION FACILITIES

TURF ESTABLISHMENT

THIS WORK SHALL BE PERFORMED IN ACCORDANCE WITH SECTION 651FOR SEED (PAY ITEM 651.15)

REVISIONS	
JANUARY 22, 2015	WHF

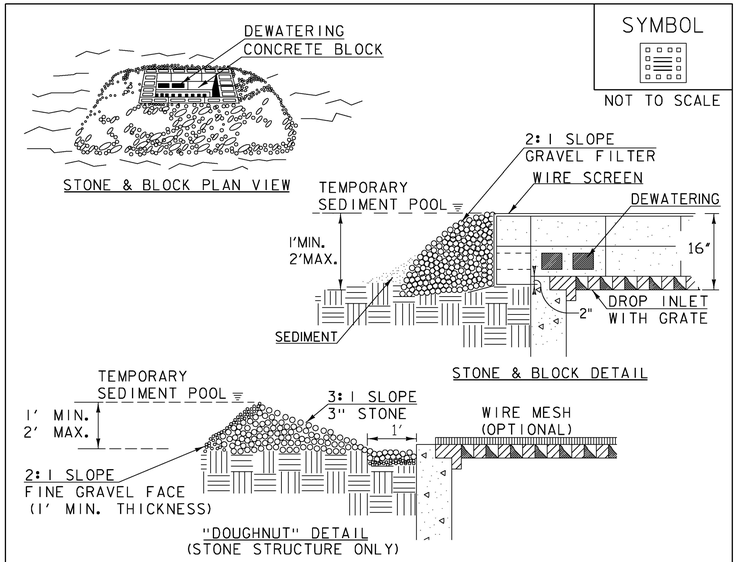

CONSTRUCTION SPECIFICATIONS

1. LAY ONE BLOCK ON EACH SIDE OF THE STRUCTURE ON ITS SIDE FOR DEWATERING. FOUNDATION SHALL BE 2" MINIMUM BELOW REST OF INLET AND BLOCKS SHALL BE PLACED AGAINST INLET FOR SUPPORT.
2. HARDWARE CLOTH OR ½" WIRE MESH SHALL BE PLACED OVER BLOCK OPENINGS TO SUPPORT STONE.
3. USE CLEAN STONE OR GRAVEL ½"- ¾" IN DIAMETER PLACED 2" BELOW TOP OF THE BLOCK ON A 2:1 SLOPE OR FLATTER.
4. FOR STONE STRUCTURES ONLY, A 1' THICK LAYER OF THE FILTER STONE WILL BE PLACED AGAINST THE 3" STONE AS SHOWN ON THE DRAWINGS.
5. MAXIMUM DRAINAGE AREA 1 ACRE

ADAPTED FROM DETAILS PROVIDED BY: NEW YORK STATE DEC
ORIGINALLY DEVELOPED BY USDA-NRCS
VERMONT DEPARTMENT OF ENVIRONMENTAL CONSERVATION

STONE & BLOCK DROP INLET PROTECTION

NOTES:
REFER TO "THE VERMONT STANDARDS & SPECIFICATIONS FOR EROSION PREVENTION & SEDIMENT CONTROL -2006- "FROM THE VT AGENCY OF NATURAL RESOURCES FOR ADDITIONAL GUIDANCE.

THIS WORK SHALL BE PERFORMED IN ACCORDANCE WITH SECTION 653 FOR INLET PROTECTION DEVICE, TYPE I(PAY ITEM 653.40).

REVISIONS	
MARCH 6, 2008	WHF
JANUARY 13, 2009	WHF

CLD 13-0194

CLD CONSULTING ENGINEERS

PROJECT NAME:	LYNDON
PROJECT NUMBER:	STPG SGNL(48)

FILE NAME: z16d054frm.dgn	PLOT DATE: 12/13/2016
PROJECT LEADER: P. SHEDD	DRAWN BY: S. GOODWIN
DESIGNED BY: M. HALEY	CHECKED BY: P. SHEDD
EPSC DETAILS	SHEET 11 OF 18

TRAFFIC SIGNAL GENERAL NOTES

1. OVERHEAD SIGN/SIGNAL SUPPORTS SHALL CONFORM TO AASHTO'S "STANDARD SPECIFICATIONS FOR STRUCTURAL SUPPORTS FOR HIGHWAY SIGNS, LUMINAIRES, AND TRAFFIC SIGNALS", DATED 2013 AND ITS LATEST REVISIONS.

2. THE DESIGN CALCULATIONS SHALL TAKE INTO ACCOUNT THE FOLLOWING CRITERIA:

   STRUCTURE CRITERIA
   - DESIGN LIFE: 50 YEARS
   - WIND LOAD: 90 M.P.H., UNLESS SPECIAL SITE CONDITIONS DICTATE ICE LOAD

   FATIGUE CRITERIA
   - FATIGUE CATEGORY: 1 FOR MAST ARM SIGN STRUCTURES, 2 FOR SIGNAL MAST ARMS
   - VORTEX SHEDDING: INCLUDE
   - NATURAL WIND GUSTS: INCLUDE
   - TRUCK INDUCED WIND GUSTS: INCLUDE FOR ROADWAYS WHERE SPEED LIMIT IS 40 M.P.H. OR GREATER
   - GALLOPING: DO NOT INCLUDE IN DESIGN CALCULATIONS

   FOUNDATION CRITERIA
   - CONCRETE: CONCRETE, CLASS B, VTRans' "STANDARD SPECIFICATIONS FOR CONSTRUCTION", DATED 2011, SECTION 541
   - REINFORCING STEEL: VTRans' "STANDARD SPECIFICATIONS FOR CONSTRUCTION", DATED 2011, SECTION 507
   - ALLOWABLE BEARING CAPACITY: TO BE DETERMINED
   - INTERNAL SOIL FRICTION ANGLE, ϕ : TO BE DETERMINED

3. ANCHOR BOLTS

   A) GALVANIZED ANCHOR BOLTS WITH TWO HEXAGON NUTS, ONE WASHER PER BOLT SHALL BE FURNISHED WITH EACH POLE. ANCHOR BOLT PLATES, WHEN USED, SHALL ALSO BE GALVANIZED. SEE SECTION 714.09 FOR OTHER REQUIREMENTS. AFTER INSTALLATION, A MINIMUM OF TWO THREADS ON THE BOLT SHOULD BE EXPOSED ABOVE THE NUT.

   B) ALL BOLTS SHALL BE CHECKED ON THE NUT SIDE AFTER INSTALLATION FOR CONSISTENCY OF PATTERN. ANY STICKOUTS GREATER THAN THE OTHER BOLTS SHALL BE DISCARDED AND REINSTALLED PROPERLY. THE END OF THE PROPERLY INSTALLED BOLT SHALL BE AT LEAST FLUSH WITH THE NUT OF STICK OUT NOT MORE THAN THREE THREADS.

   C) ALL BOLT TIGHTENING SHALL BE TURN-OF-THE-NUT METHOD. ALL BOLTS SHALL BE TIGHTENED TO 1/6 TURN PAST SNUG TIGHT CONDITION FOR BOLTS LESS THAN OR EQUAL TO 1 ½" DIAMETER AND 1/12 TURN PAST SNUG TIGHT CONDITION FOR BOLTS GREATER THAN 1 ½" DIAMETER.

4. FLANGE BOLTS

   ALL FLANGE BOLTS AND HEX NUTS SHALL BE HIGH STRENGTH STEEL AND SHALL CONFORM TO ASTM A325. THE FLANGE BOLTS SHALL BE CAPABLE OF RESISTING 133% OF THE FULL DESIGN STRESS OF THE TUBE AT ITS YIELD STRENGTH STRESS.

5. HORIZONTAL AND VERTICAL MEMBERS

   STEEL TUBES SHALL BE FORMED AND WELDED WITH ONE CONTINUOUS LONGITUDINAL WELD ONLY. AFTER FORMING AND WELDING THEY SHALL BE COLD ROLLED TO ENSURE UNIFORMITY OF SIZE AND SMOOTHNESS OF WELD. THEY SHALL HAVE A MINIMUM YIELD STRENGTH OF 55 KSI. THERE SHALL BE NO TRANSVERSE WELDING EXCEPT AT THE FLANGE CONNECTIONS AND POLE BASE PLATES, WHERE THE TUBES SHALL TELESCOPE THE FLANGES AND PLATES AND BE CONTINUOUSLY WELDED BOTH SIDES INSIDE AND OUT TO WITHSTAND THE FULL TRANSFER OF THE BENDING STRENGTH TO THE BOLTS. OPTIONALLY, THE MEMBERS MAY BE A SERIES OF TWO OR THREE DIFFERENT DIAMETER PIPES WELDED TOGETHER. STEEL TUBES SHALL BE CONSTRUCTED FROM MATERIALS CONFORMING TO SECTION 752.02.

6. GALVANIZING

   ALL STEEL COMPONENTS, EXCEPT CONCRETE REINFORCING, ARE TO BE HOT DIPPED GALVANIZED AFTER FABRICATION. THE ASSEMBLIES SHALL BE DESIGNED AND FABRICATED TO PERMIT GALVANIZING ON ALL INTERIOR AND EXTERIOR SURFACES AND SHALL BE FREE OF POCKETS AND OTHER STRUCTURAL OBSTRUCTIONS THAT WILL NOT PERMIT PROPER DEPOSITION OF ZINC COATING. GALVANIZING SHALL BE IN ACCORDANCE WITH SECTION 752.02.

7. WELDING

   A) ALL WELDING SHALL BE PERFORMED PER SECTION 506.10.

   B) ALL WELDS SHALL BE AT LEAST AS STRONG AS THE MATERIAL(S) BEING WELDED.

8. FOUNDATIONS

   A) FOOTINGS SHALL BE DESIGNED IN ACCORDANCE WITH VAOT'S MATERIALS & RESEARCH ENGINEERING INSTRUCTIONS – GEOTECHNICAL DESIGN PROCEDURES FOR MAST ARM AND OVERHEAD SIGN SUPPORT FOUNDATIONS (MREI 10-01), DATED MARCH 9, 2010, A COPY OF WHICH CAN BE FOUND ON THE AGENCY'S WEBSITE: WWW.VTRANS.VERMONT.GOV.

   B) FOUNDATIONS SHALL BE CONSTRUCTED IN ACCORDANCE WITH THE FOLLOWING NOTES:

      1. EXCEPT FOR THE UPPERMOST TWO FEET OF SOIL, DRILLED SHAFT FOUNDATIONS SHALL BE POURED AGAINST UNDISTURBED MATERIAL; THE TOP TWO FEET OF SOIL SHALL BE NEGLECTED FOR DESIGN PURPOSES. A DISPOSABLE CIRCULAR CONCRETE FORM, IF USED, SHALL NOT BE PLACED DEEPER THAN TWO FEET, IN ORDER NOT TO REDUCE THE FRICTION BETWEEN THE SOIL AND THE CONCRETE.

      2. ANY BACKFILL PLACED ADJACENT TO THE FOOTING SHALL BE GRANULAR MATERIAL MEETING THE REQUIREMENTS FOR GRANULAR BACKFILL FOR STRUCTURES, SECTION 704.08. IT SHALL BE COMPACTED AS DESCRIBED IN SECTION 204.08.

      3. CONCRETE FOR THE FOUNDATION SHALL CONFORM TO THE REQUIREMENTS OF CONCRETE, SECTION 541 STRUCTURAL CONCRETE. IF DRILLED SHAFT FOUNDATIONS ARE REQUIRED, THE CONCRETE SPECIFICATIONS MAY NEED TO BE ADJUSTED FOR CONSTRUCTABILITY ISSUES. HOWEVER, IF REQUIRED, THE CONTRACTOR SHALL SUBMIT ANY CHANGES TO THE CONCRETE SPECIFICATION FOR REVIEW BY THE VAOT PROJECT MANAGER.

      4. WHEN THE DESIGN DEPTH OF A FOUNDATION CANNOT BE OBTAINED DUE TO UNFORSEEN FIELD CONDITIONS, THE CONTRACTOR SHALL NOTIFY THE ENGINEER FOR THE MANUFACTURER TO OBTAIN A REVISED FOUNDATION DESIGN. SUCH A REVISION SHALL BE SUBMITTED TO VTRans PROJECT MANAGEMENT AND MAY REQUIRE UP TO A FOUR WEEK REVIEW PERIOD BY VTrans.

   C) SIGNALS/SIGNS SHALL BE INSTALLED AND LEVELED AND POLES SHALL BE PLUMB PRIOR TO PLACING GROUT UNDER POLE BASE. GROUT MATERIAL SHALL BE NON-SHRINKING MORTAR CONFORMING TO SECTION 707.03, MORTAR TYPE IV.

9. EACH OVERHEAD TRAFFIC SIGNAL/SIGN SUPPORT SHALL BE GROUNDED. THE GROUND SHALL CONSIST OF THE FOLLOWING:

   A) AN INTERNAL GROUND LUG OPPOSITE THE HAND HOLE

   B) A #6 (MIN.) SOFT DRAWN COPPER GROUNDING ELECTRODE CONDUCTOR

   C) A 5/8" X 8' (MIN.) COPPER CLAD GROUNDING ELECTRODE THE RESISTANCE TO GROUND SHALL BE 25 OHMS OR LESS. ADDITIONAL GROUNDING ELECTRODES MAY BE REQUIRED (MINIMUM SPACING SHALL BE 6'). WHEN A POWER SERVICE, METER AND DISCONNECT ARE ATTACHED TO A POLE, THERE SHALL BE A CONTINUOUS GROUND WIRE FROM THE METER AND DISCONNECT WHICH MAY RUN INTERNAL TO THE UPRIGHT, THROUGH THE ½" FLEXIBLE TUBING IN THE CONCRETE BASE TO THE REQUIRED GROUNDING ELECTRODE(S). THE GROUND WIRE FROM THE POLE GROUNDING LUG, CONTROLLER CABINET AND/OR LUMINAIRE MAY ATTACH TO THIS CONTINUOUS GROUNDING ELECTRODE CONDUCTOR FROM THE SERVICE METER AND DISCONNECT. THE CONTRACTOR SHALL PERFORM A RESISTANCE TO GROUND TEST ON THE CONTINUOUS GROUNDING ELECTRODE CONDUCTOR FROM THE SERVICE METER AND DISCONNECT AND PROVIDE A WRITTEN STATEMENT TO THE AREA ELECTRICAL INSPECTOR THAT THE GROUNDING ELECTRODE CONDUCTOR IS CONTINUOUS FROM THE SERVICE METER AND DISCONNECT AND THE RESISTANCE TO GROUND IS 25 OHMS OR LESS.

10. HORIZONTAL MEMBERS SHALL BE CAMBERED AND THE VERTICAL POLES BACK RAKED, TO THE ANTICIPATED DEAD LOAD DEFLECTION PLUS THE CAMBER, IF ANY, SPECIFIED ON THE PLANS.

11. AN EQUIVALENT ALTERNATE DESIGN MAY BE SUBSTITUED FOR THE DETAILS AND MATERIALS SHOWN.

12. THE DETAILS OF DESIGN FOR THE STRUCTURE AND FOUNDATION ARE TO BE SUPPLIED BY THE CONTRACTOR AND/OR BY THE MANUFACTURER, THE STRUCTURE SHALL BE DESIGNED TO RESIST THE MAXIMUM LOADING AS OUTLINED IN THE AASHTO STANDARD SPECIFICATIONS, SEE NOTE 2. ALL DESIGN CALCULATIONS FOR THE STRUCTURE AND THE FOUNDATION SHALL BE CHECKED AND STAMPED BY A LICENSED PROFESSIONAL ENGINEER REGISTERED IN THE STATE OF VERMONT PRIOR TO SUBMITTAL OF THE FABRICATION DRAWINGS TO VAOT.

13. THE CONTRACTOR SHALL SUBMIT ONE DIGITAL VERSION OF THE DESIGN CALCULATIONS TO VTrans PROJECT MANAGER SHOWING THE FOLLOWING INFORMATION FOR EACH OF THE VERTICAL AND HORIZONTAL COMPONENTS OF THE STRUCTURE AND FOUNDATION:

   A) THE DESIGN AXIAL AND SHEAR FORCES AND BENDING AND TORSIONAL MOMENTS ACTING AT THE TOP OF THE FOUNDATION.

   B) THE DESIGN AXIAL, BENDING AND SHEAR STRESSES AND THE COMBINED STRESS RATIO.

   C) VIBRATION AND FATIGUE CALCULATIONS AS SET FORTH IN SECTION 11 OF THE AASHTO PUBLICATION REFERENCED IN NOTE 2.

   D) THE ALLOWABLE AXIAL, BENDING, AND SHEAR STRESSES.

   E) ITEMS A, B, AND D SHALL BE SHOWN FOR EACH OF THE GROUP LOADINGS (I, II, III) AND FOR THE BASIC WIND LOAD APPLIED TO THE TWO CASES OUTLINED IN THE AASHTO STANDARD SPECIFICATIONS (SEE NOTE 2), SECTION 1.2.5(D)(4).

   F) FAILURE TO SUPPLY THE PROPER DESIGN INFORMATION SHALL BE CAUSE FOR REJECTION OF THE STRUCTURE.

   G) A MINIMUM OF FOUR WEEKS SHALL BE REQUIRED FOR REVIEW BY VAOT.

   H) EVERY MEMBER AND CONNECTION IN AN OVERHEAD TRAFFIC SIGNAL SUPPORT SHALL BE DESIGNED TO PROVIDE ADDITIONAL RESIDUAL CAPACITY FOR FUTURE MODIFICATION EQUIVALENT TO A FIVE(5)-SECTION TRAFFIC SIGNAL HEAD WITH A FIVE(5)-INCH LOUVERED BACKPLATE LOCATED ON THE OUTERMOST EXTENT OF THE MAST ARM.

14. FABRICATION DRAWINGS IN A DIGITAL FORMAT SHALL BE SUBMITTED TO VTrans PROJECT MANAGER FOR APPROVAL PRIOR TO FABRICATION. THE FABRICATION DRAWINGS SHALL INCLUDE THE FOLLOWING INFORMATION:

   A) DETAILED DRAWING OF EACH COMPONENT OF THE STRUCTURE.

   B) MATERIAL SPECIFICATION FOR EACH COMPONENT OF THE STRUCTURE, EITHER BY COMPLETE SPECIFICATION OR REFERENCE TO APPLICABLE ASTM STANDARDS.

   C) NOTATION OF PROJECT NAME, PROJECT NUMBER, ROUTE NUMBER, AND STRUCTURE STATIONING TO BE INCLUDED ON EACH SHEET.

   D) DETAILS FOR LOCATION OF SIGNS/SIGNALS AND ATTACHMENT HARDWARE FOR THE SUPPORT STRUCTURE.

   E) ALL ELEVATIONS AND DIMENSIONS NECESSARY TO PROVIDE A COMPLETE SET OF RECORD PLANS.

   F) DEAD LOAD DEFLECTION AND CAMBER INFORMATION.

   G) WELDING DETAILS AND PROCEDURES ARE REQUIRED FOR ALL WELDS. PROCEDURES SHALL BE SUBMITTED FOR APPROVAL WITH REFERENCE TO EACH WELD IDENTIFIED ON THE FABRICATION DRAWINGS. SEE SECTION 506.10.

   H) BOLT TENSIONING REQUIREMENT.

15. THE TRAFFIC SIGNALS SHALL BE MOUNTED TO THE ARM OR POLE USING A FIXED MOUNT SYSTEM, UNLESS OTHERWISE NOTED ON THE CROSS SECTION SHEET. FOR SIGNALS MOUNTED ON A MAST ARM, THE MAST ARM AND MOUNTING POINT SHALL BE IN THE MIDDEL OF THE SIGNAL HEAD.

16. BASE PLATES SHALL BE STAMPED WITH THE POLE INFORMATION INCLUDING: POLE DIAMETER, HEIGHT, YIELD STRENGTH, AND GAUGE; ARM INFORMATION SHALL INCLUDE; HORIZONTAL MEMBER DIAMETER, LENGTH, YIELD STRENGTH AND GAUGE. THE INFORMATION SHALL BE STAMPED ON A METAL TAG RIVETED TO THE POLE NEAR THE HAND HOLE.

17. SEE STANDARD E-171A FOR ADDITIONAL NOTES. SEE SHEETS 4-5 FOR BORING INFORMATION.

18. CONTRACTOR TO SCHEDULE FINAL INSPECTION AND OBTAIN WRITTEN APPROVAL OF WORK FROM VAOT TRAFFIC SIGNAL TECHNICIAN.

CLD CONSULTING ENGINEERS

PROJECT NAME: LYNDON	
PROJECT NUMBER: STPG SGNL(48)	
FILE NAME: zl6d054tr-f.dgn	PLOT DATE: 12/13/2016
PROJECT LEADER: P. SHEDD	DRAWN BY: S. GOODWIN
DESIGNED BY: P. KONIECZKA	CHECKED BY: L. GREER
TRAFFIC SIGNAL GENERAL NOTES	SHEET 12 OF 18

CLD 13-0194

TRAFFIC SIGNAL SYSTEM NOTES

A. NEW SIGNAL EQUIPMENT

1. ALL SIGNAL HEADS SHALL HAVE 12" POLYCARBONATE. THE SIGNAL HEADS EQUIPMENT SHALL BE FLAT BLACK AND INCLUDE FLAT BLACK VISORS.
2. ALL SIGNAL HEADS SHALL HAVE FLAT BLACK LOUVERED BACK PLATES WITH A 2-INCH RETROREFLECTIVE TAPE BORDER.
3. ALL SIGNAL HEADS SHALL HAVE RED, YELLOW AND GREEN LED. INDICATORS WITH A VISIBLE SPREAD OF 80 DEGREES OFF AXIS.
4. ALL SIGNAL HEADS SHALL BE MOUNTED ON THE BRACKET SUCH THAT THE MIDDLE ONE-THIRD OF THE SIGNAL HEAD ALIGNS WITH THE MAST ARM.
5. THE TRAFFIC SIGNAL CONTROLLER SHALL BE AN ECONOLITE COLBALT (NEMA TS2 TYPE 2) IN A NEMA P44 TRAFFIC SIGNAL CONTROL CABINET WITH A 15-INCH BASE EXTENSION INSTALLED AT THE LOCATION SHOWN ON THE TRAFFIC LAYOUT PLAN. THE CABINET AND BASE EXTENSIONS SHALL BE BLACK.
6. THE TRAFFIC SIGNAL CONTROLLER CABINET SHALL BE ORIENTED SUCH THAT THE DOOR DOES NOT FACE THE ROADWAY.
7. RELATED TRAFFIC SIGNAL EQUIPMENT SUCH AS THE BUS INTERFACE UNIT (BIU) AND THE MALFUNCTION MANAGEMENT UNIT (MMU) SHALL BE ECONOLITE BRAND.
8. ALL SIGNAL EQUIPMENT AND SIGNS MOUNTED ON CANTILEVERED MAST ARM SHALL HAVE SAFETY CABLES.
9. A DISCONNECT BREAKER FOR EACH CIRCUIT SHALL BE INSTALLED IN A RAINPROOF (NEMA 3R), LOCKED CABINET ON A STANCHION NEXT TO OR BELOW THE METER SOCKET. IF STREET LIGHTING IS PRESENT, THE TRAFFIC SIGNAL CIRCUITS MUST BE SEPARATE FROM THE STREET LIGHTING CIRCUITS.

B. TRAFFIC SIGNAL OPERATION

1. SIGNAL TIMING SHOWN ON THE PLANS MAY REQUIRE FINE-TUNING IN THE FIELD BASED ON TRAFFIC OBSERVATION AND/OR ADDITIONAL FIELD STUDIES.
2. SWITCH-OVER TO INSTALLED SIGNAL SYSTEM SHALL NOT OCCUR DURING PEAK TRAFFIC OPERATING PERIODS. UNIFORMED TRAFFIC OFFICERS SHALL CONTROL TRAFFIC DURING SWITCH-OVER.
3. ALL SIGNALS SHALL DWELL ON THE US ROUTE 5 THRU MOVEMENT.
4. THE US ROUTE 5 THRU PHASE SHALL BE USED FOR THE START-UP PHASE FOLLOWING FLASHING OPERATION.

C. VEHICLE DETECTION

1. ALL VEHICLE DETECTORS SHALL HAVE FLAT BLACK HOUSINGS.
2. STOP BAR VEHICLE DETECTOR LOCATIONS SHALL BE DETERMINED BY THE CONTRACTOR IN ACCORDANCE WITH THE MANUFACURER'S GUIDANCE FOR THE TYPE OF DETECTOR SUPPLIED. THE CONTRACTOR SHALL SUBMIT PROPOSED MOUNTING LOCATIONS AND DOCUMENTATION OF CONFORMANCE WITH THE MANUFACTURER'S GUIDANCE TO THE ENGINEER.
3. ALL VEHICLE DETECTORS SHALL BE PLACED SUCH THAT OCCLUSION IS MINIMIZED AND PHASING IS NOT NEGATIVELY AFFECTED.
4. STOP BAR VEHICLE DETECTION ZONES SHALL EXTEND FIVE FEET PAST THE FINAL, PERMANENT STOP BAR.
5. THERE SHALL BE NO WIRING SPLICES BETWEEN THE VEHICLE DETECTORS AND THE TRAFFIC SIGNAL CONTROLLER EQUIPMENT.
6. VEHICLE DETECTION SYSTEM SHALL BE WAVETRONIX MATRIX/SMART SENSOR BRAND.
7. SEE THE PLANS OR THE SPECIAL PROVISIONS FOR A DETAILED LIST OF EQUIPMENT.

D. MAST ARM POLE FOUNDATIONS

1. THE CONTRACTOR SHALL BE RESPONSIBLE FOR FOUNDATION DESIGN. FOUNDATIONS SHALL BE DESIGNED IN ACCORDANCE WITH THE MREI 10-01 GUIDELINES. IN ADDITION TO FABRICATION DRAWINGS. THE BORING LOGS DESIGN CRITERIA, AND DESIGN CALCULATIONS SHALL BE SUBMITTED AS WORKING DRAWINGS IN ACCORANCES WITH SECTION 105.03. ADDITIONAL REQUIREMENTS CAN BE FOUND IN THE TRAFFIC SIGNAL GENERAL NOTES IN THIS PLAN SET.

E. JUNCTION BOXES

1. THE LOGO ON JUNCTION BOXES SHALL BE "TRAFFIC SIGNAL".

F. TRAFFIC SIGNAL CONDUIT

1. WHEN CONDUIT IS PLACED BELOW THE ROADWAY OR ACROSS SIDE ROADS, IT SHALL BE PLACED IN A STEEL OR HDPE SLEEVE, SIZE AND PAYMENT METHOD AS SHOWN ON THE PLANS.
2. ALL UNUSED CONDUIT SHALL BE FILLED WITH STEEL WOOL PRIOR TO BEING CAPPED.
4. ALL TRAFFIC SIGNAL CONDUIT WORK SHALL BE PERFORMED IN ACCORDANCE WITH SECTION 678.

G. SIGNAL STRUCTURE FOUNDATIONS

1. FOUNDATIONS SHALL BE DESIGNED IN ACCORDANCE WITH THE MREI 10-01 GUIDELINES. THE CONTRACTOR SHALL BE RESPONSIBLE FOR FOUNDATION DESIGN. IN ADDITION TO FABRICATION DRAWINGS, THE BORING LOGS, DESIGN CRITERIA, AND DESIGN CALCULATIONS SHALL BE SUBMITTED AS WORKING DRAWINGS IN ACCORDANCE WITH SECTION 105.03. ADDITIONAL DESIGN REQUIREMENTS CAN BE FOUND IN THE TRAFFIC SIGNAL GENERAL NOTES IN THIS PLAN SET. FOUNDATIONS FOR DUAL USE OVERHEAD STRUCTURES FOR RAILROAD AND TRAFFIC SIGNALS SHALL BE DRILLED SHAFT TO AVIOD EXISTING UNDERGROUND UTILITIES.

H. GENERAL

1. A UNIFORMED TRAFFIC OFFICER WITH A BLUE LIGHT SHALL BE PRESENT DURING ALL LANE CLOSURES.
2. THE CONTRACTOR SHALL ACQUIRE ALL THE NECESSARY PERMITS AND MAKE ALL NECESSARY ARRANGEMENTS WITH THE UTILITY COMPANY TO PROVIDE A PERMANENT POWER SUPPLY TO THE TRAFFIC SIGNAL EQUIPMENT, IF APPLICABLE. THE ROUTING OF POWER TO THE INTERSECTION SHALL BE SUCH THAT THE AGENCY OF TRANSPORTATION HAS FULL RESPONSIBILITY FROM THE TRANSFORMER THROUGH THE TRAFFIC SIGNAL SYSTEM. NO INTERVENING OWNERSHIP OR RESPONSIBILITY SHALL BE ALLOWED.
3. THE CONTRACTOR SHALL RETURN ANY SALVAGED SIGNS TO THE VAOT DISTRICT 7 OFFICE PRIOR TO PROJECT COMPLETION. COORDINATE THROUGH KEVIN GADAPEE AT 802-748-6670.
4. ALL ELECTRICAL WIRING SHALL BE DONE BY A LICENSED ELECTRICIAN AND OVERSEEN BY A MASTER ELECTRICIAN.

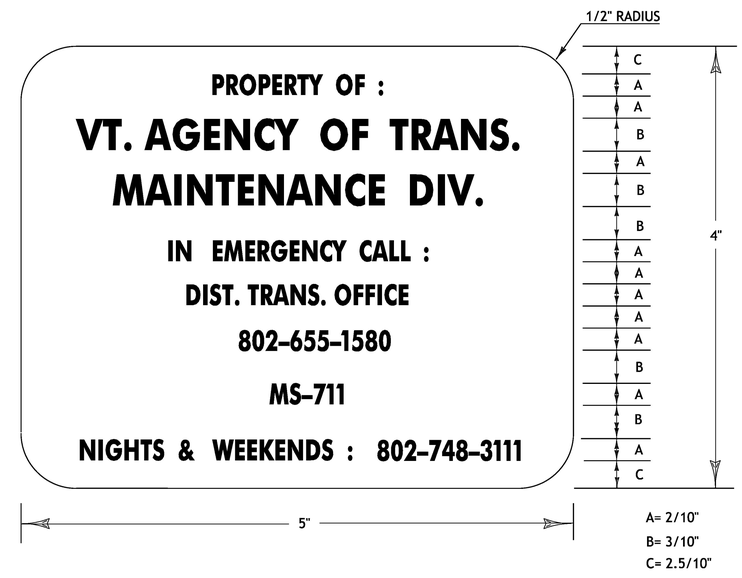

LEGEND: - BLACK (NON-REFL.) - STAMPED PRIOR TO PAINTING

BACKGROUND: NATURAL ALUMINUM OR BRASS SURFACE

CONTROLLER IDENTIFICATION PLAQUE

CONTROLLER IDENTIFICATION PLAQUE NOTES

1. THE PLAQUE SHALL BE MOUNTED ON ALL TRAFFIC SIGNAL CONTROLLER CABINETS. IT SHALL BE FASTENED TO THE CONTROLLER CABINET IN SUCH A MANNER AS TO BE NOT EASILY REMOVED, SUCH AS WELDED, RIVETED OR BOLTED WITH VANDAL PROOF BOLTS.
2. THE LETTERS SHALL BE PUNCHED OR STAMPED, SUCH STAMPING SHALL PENETRATE AT LEAST 1/2 THE BASE MATERIAL THICKNESS.
3. THE BASE MATERIAL FOR THE PLAQUE SHALL BE BRASS OR ALUMINUM WITH A MINIMUM THICKNESS OF 0.100 INCHES.

CLD 13-0194

CONSULTING ENGINEERS

PROJECT NAME: LYNDON	
PROJECT NUMBER: STPG SGNL(48)	
FILE NAME: z16d054trf.dgn	PLOT DATE: 1/9/2017
PROJECT LEADER: P. SHEDD	DRAWN BY: S. GOODWIN
DESIGNED BY: P. KONIECZKA	CHECKED BY: L. GREER
TRAFFIC SIGNAL SYSTEM NOTES	SHEET 13 OF 18

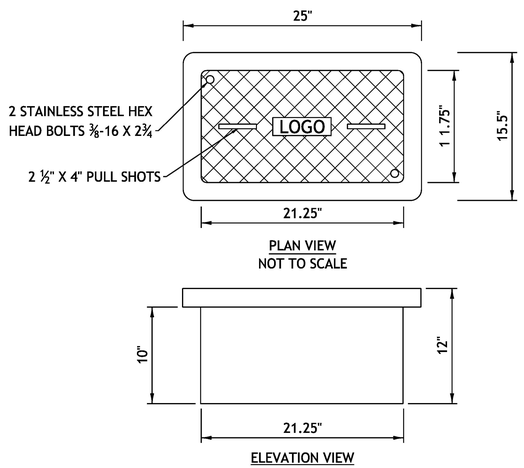

JUNCTION BOX, HEAVY DUTY DETAIL
NOT TO SCALE

JUNCTION BOX NOTES

1. JUNCTION BOX SHALL BE CONSTRUCTED WITH CONCRETE, CLASS B.

2. CONDUIT SIZE SHALL BE SHOWN ON THE PLANS.

3. EXCAVATION FOR JUNCTION BOX SHALL INCLUDE EXCAVATION OF AN AREA ONE FOOT OUTSIDE AND EXTENDING ONE FOOT BELOW THE FINISH GRADE OF THE BOTTOM OF THE JUNCTION BOX. ONE FOOT GRANULAR MATERIAL THAT MEETS THE REQUIREMENTS OF SUBSECTION 703.04, SHALL BE PLACED IN THE EXCAVATED AREA AND PROPERLY COMPACTED PRIOR TC INSTALLATION. COMPACTION SHALL MEET REQUIREMENTS OF SUBSECTION 301.06. WHERE NECESSARY AND AT THE DISCRETION OF THE ENGINEER, A DRAINAGE PIPE (MINIMUM 3" PERFORATED PVC) SHALL BE PROVIDED FROM THE JUNCTION BOX TO THE NEAREST APPROPRIATE OUTLET. ANY EXCAVATION AND DRAINAGE SHALL BE PAID FOR AS PART OF THE JUNCTION BOX ITEM.

4. ALL EXPOSED METAL HARDWARE, INCLUDING PULLBOX COVERS, FRAMES AND ANGLES, SHALL BE STAINLESS STEEL.

5. A SUFFICIENT COVER GASKET SHALL BE PROVIDED TO REDUCE THE INFLOW OF FLUIDS. THE COVER GAPS SHALL BE FILLED WITH CAULKING JUST PRIOR TO PROJECT COMPLETION.

6. WHEN INSTALLING ON SLOPES, JUNCTION BOXES SHALL BE TIPPED TO MATCH THE EXISTING SLOPE UP TO A 1 ON 4 SLOPE. EXCAVATED MATERIAL SHALL BE USED TO SHAPE AROUND THE LOW SIDE OF THE BOX TO THE SATISFACTION OF THE ENGINEER AND SHALL BE MOW-ABLE. IF SUFFICIENT MATERIAL IS NOT AVAILABLE, MATERIAL MEETING THE REQUIREMENTS OF EARTH BORROW (SUBSECTION 703.02) SHALL BE USED. PAYMENT SHALL BE CONSIDERED PART OF THE JUNCTION BOX ITEM.

7. ALL COVERS SHALL BE FLUSH WITH THE BOXES AND FRAMES.

8. ALL CONDUIT ENTERING THE JUNCTION BOX THROUGH A CUTOUT SHALL HAVE BUSHINGS TC PROTECT THE CABLES.

9. ALL JUNCTION BOX COVERS SHALL BE SKID RESISTANT.

10. ALL COVERS SHALL HAVE THE LOGO PUNCHED, FORMED OR STAMPED INTO A FLAT RECTANGULAR AREA. MINIMUM LETTER HEIGHT IS ½". MINIMUM DEPTH IS 1/16".

11. ALTERNATIVE LOGO NAMES:
    SIGNAL
    ELECTRIC
    LIGHTING

12. DIMENSIONS SHOWN ARE MINIMUM SIZE REQUIRED. EQUIVALENT JUNCTION BOX OF LARGER DIMENSIONS MAY BE USED.

PROJECT NAME: LYNDON	
PROJECT NUMBER: STPG SGNL(48)	
FILE NAME: z16d054trf.dgn	PLOT DATE: 12/13/2016
PROJECT LEADER: P. SHEDD	DRAWN BY: S. GOODWIN
DESIGNED BY: P. KONIECZKA	CHECKED BY: L. GREER
JUNCTION BOX DETAIL	SHEET 14 OF 18

CLD CONSULTING ENGINEERS

CLD 13-0194

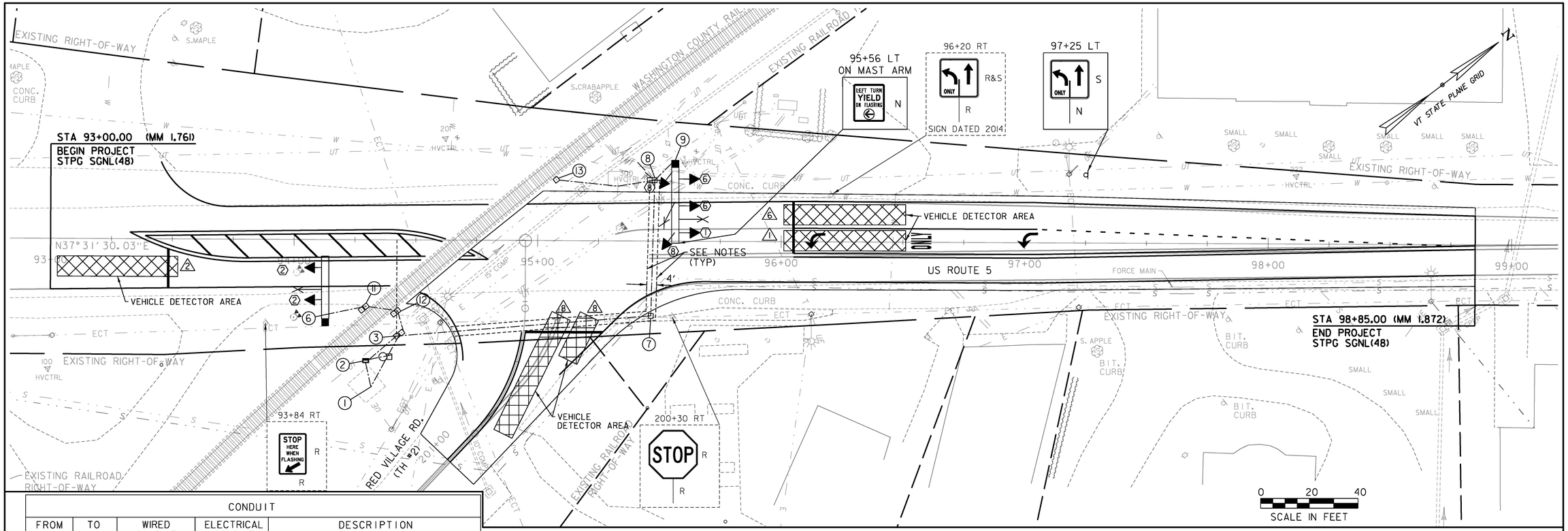

CONDUIT						
FROM	TO	WIRED CONDUIT SIZE		ELECTRICAL CONDUIT SIZE		DESCRIPTION
		2"	4"	2"	4"	
POWER	①					EXISTING
• POWER	②	16'				INTERCONNECT
POWER	②			16'		FUTURE USE
①	②	16'				INTERCONNECT
①	②			16'		FUTURE USE
①	③			31'		RAILROAD SIGNAL
①	③			31'		FUTURE USE
②	③	23'				TRAFFIC SIGNAL
②	③	23'				DETECTION
②	③			23'		FUTURE USE
•• ③	⑦	110'				TRAFFIC SIGNAL (CONCRETE ENCASED)
•• ③	⑦	110'				DETECTION (CONCRETE ENCASED)
•• ③	⑦			110'		FUTURE USE (CONCRETE ENCASED)
•• ⑦	⑧	60'				TRAFFIC SIGNAL (CONCRETE ENCASED)
•• ⑦	⑧	60'				DETECTION (CONCRETE ENCASED)
•• ⑦	⑧			60'		FUTURE USE (CONCRETE ENCASED)
⑧	⑨	16'				TRAFFIC SIGNAL
⑧	⑨	16'				DETECTION
⑧	⑨	16'				RAILROAD SIGNAL
⑧	⑨			16'		FUTURE USE
⑬	⑧			46'		RAILROAD SIGNAL
⑬	⑧			46'		FUTURE USE
••• ⑪	⑫	19'				TRAFFIC SIGNAL(12" GALV. STEEL SLEEVE)
••• ⑪	⑫	19'				DETECTION (12" GALV. STEEL SLEEVE)
••• ⑪	⑫			19'		FUTURE USE (12" GALV. STEEL SLEEVE)
③	⑫	15'				TRAFFIC SIGNAL
③	⑫	15'				DETECTION
③	⑫	15'				RAILROAD SIGNAL
③	⑫			15'		FUTURE USE
⑫	⑬					EXISTING RAILROAD CONDUIT
⑥	⑪	23'				TRAFFIC SIGNAL
⑥	⑪	23'				DETECTION
⑥	⑪	23'				RAILROAD SIGNAL
⑥	⑪			23'		FUTURE USE

• RUN ON UTILITY POLE
•• SEE TYPICAL TRENCH SECTION ON SHEET 8.
••• PLACE 12" GALVANIZED STEEL SLEEVE FOLLOWING SPECIAL PROVISION (HORIZONTAL DIRECTIONAL DRILLING 12" CASING) NEXT TO EXISTING RAILROAD 4" GALVANIZED STEEL CONDUIT. CONDUIT LENGTHS AT MAST ARMS INCLUDE ADDITIONAL LENGTH FOR SWEEPS.

EQUIPMENT LOCATIONS				
LOC.	TYPE	STATION	OFFSET	NOTES
①	RRCC	94+32	60.3	NEW RR SIGNAL CASE ON EXISTING FOUNDATION
②	CC	94+30	49.5	TRAFFIC SIGNAL CONTROL CABINET
③	PB-1	94+42	39.4	2 CONCRETE JUNCTION BOXES (RR & TRAFFIC)
⑥	MAP-1	94+13	30.8	DUAL-USE OVERHEAD STRUCTURE FOR RAILROAD AND TRAFFIC SIGNALS
⑦	PB-3	95+46	30.6	CONCRETE JUNCTION BOX (TRAFFIC)
⑧	PB-4	95+48	25.0	2 CONCRETE JUNCTION BOXES (RR & TRAFFIC)
⑨	MAP-2	95+56	31.7	DUAL-USE OVERHEAD STRUCTURE FOR RAILROAD AND TRAFFIC SIGNALS
⑪	PB-5	94+30	27.3	NEW JUNCTION BOX NEXT TO EXISTING RR PB
⑫	PB-6	94+43	29.0	NEW JUNCTION BOX NEXT TO EXISTING RR PB
⑬	PB-7	95+08	25.0	EXISTING RR JUNCTION BOXES

NEW	LEGEND
	UTILITY POLE
	LUMINAIRE
	CONTROLLER CABINET
	SIGNAL HEAD
	WIRED CONDUIT
	STANCHION
	STOP BAR RADAR
	JUNCTION BOX
	PRE-EMPTION RECEIVER
	STROBE LIGHT

SIGNAL HEADS

12 IN LENSES,
LED LAMPS,
5 IN BACKPLATES-WITH 2" RETROREFLECTIVE TAPE BORDER

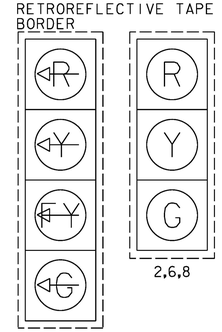

CONDUIT NOTES

1. ALL CONDUIT TRENCHES IN PAVEMENT SHALL BE RESTORED AS SHOWN IN THE TYPICAL TRENCH SECTION ON THE TYPICAL DETAILS SHEET, AND PAVEMENT SHALL BE PAID UNDER ITEM 900.675 SPECIAL PROVISION (BITUMINOUS CONCRETE PAVEMENT, SMALL QUANTITY).
2. SAWCUTTING OF PAVEMENT SHALL BE INCIDENTAL TO CONDUIT INSTALLATION.

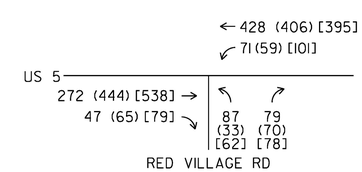

2015 PEAK MONTH TRAFFIC
XXX = AM PEAK HOUR
(XXX) = MIDDAY PEAK HOUR
[XXX] = PM PEAK HOUR

NOTE
VTRANS GROWTH FACTORS FOR RURAL PRIMARY AND SECONDARY ROADS SHOW NO FUTURE GROWTH. THEREFORE THE 2025 DESIGN YEAR TRAFFIC IS THE SAME AS THE 2015 TRAFFIC

CONSULTING ENGINEERS

PROJECT NAME: LYNDON
PROJECT NUMBER: STPG SGNL(48)

FILE NAME: zl6d054trf.dgn
PROJECT LEADER: P. SHEDD
DESIGNED BY: P. KONIECZKA
TRAFFIC SIGNAL LAYOUT 1
PLOT DATE: 12/13/2016
DRAWN BY: S. GOODWIN
CHECKED BY: L. GREER
SHEET 15 OF 18

CLD 13-0194

US ROUTE 5, RED VILLAGE RD

SIGNAL PHASING DATA								
SIGNAL PHASING *(ALL ENTRIES BELOW ARE IN SECONDS)*								
PHASE	01	02	03	04	05	06	07	08
INTIAL	8	10				10		8
VEHICLE EXT.	3	5				5		3
MAX. 2 (AM PK)	15	40				40		15
MAX. 1 (MID PK)	15	40				40		15
MAX. 3 (PM PK)	20	35				35		15
YELLOW	4	4				4		4
RED	4	4				4		3.5
RECALL	NONE	SOFT				SOFT		NONE
DELAY	NONE	NONE				NONE		NONE

STANDARD 8Ø NEMA CONTROLLER

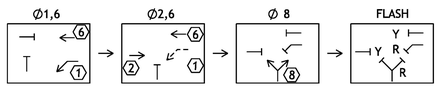

SYMBOL

= PERMISSIVE MOVEMENT (FLASHING YELLOW ARROW)

WEEKDAY TIMINGS

FLASH	12:00 AM - 6:00 AM
AM PEAK	- 6:00 AM - 9:00 AM (MAX 2)
MIDDAY PEAK	- 9:00 AM - 3:00 PM (MAX 1)
PM PEAK	- 3:00 PM - 6:00 PM (MAX 3)
	6:00 PM - 10:00 PM (MAX 1)
FLASH	- 10:00 PM - 12:00 AM

EQUIPMENT ITEM 678.15	QUANTITY
ECONOLITE COBALT (NEMA TS2 TYPE 2) CONTROLLER	1
ECONOLITE P44 MOUNTED CONTROLLER CABINET WITH 15" BASE ON A CONCRETE FOUNDATION	1
POWER DROP STANCHION	1
DUAL USE RAIL/TRAFFIC SIGNAL STRUCTURE WITH 22' MAST ARM	1
DUAL USE RAIL/TRAFFIC SIGNAL STRUCTURE WITH 31' MAST ARM	1
12" LED TRAFFIC SIGNAL HEAD WITH 5" BACKPLATES AND 2" RETROREFLECTIVE TAPE	
ONE-WAY 4-SECTION	1
ONE-WAY 3-SECTION	6
RADAR VEHICLE DETECTOR	
STOP BAR DETECTION	3
REMOVAL OF EXISTING RAIL OVERHEAD STRUCTURES	2

EXISTING UTILITY NOTES

1. THE CONTRACTOR IS MADE AWARE THAT EXISTING UNDERGROUND AND AERIAL UTILITIES ARE WITHIN THE CONSTRUCTION LIMITS. THE CONTRACTOR IS SOLELY RESPONSIBLE FOR LOCATING AND PROTECTING FROM DAMAGE ALL UTILITIES ON SITE DURING ALL STAGES OF CONSTRUCTION. ANY DAMAGE TO UTILITIES DUE TO THE CONTRACTOR'S OPERATIONS SHALL BE REPAIRED AS DIRECTED BY THE ENGINEER AT NO ADDITIONAL COST TO THE STATE.

2. DUAL USE OVERHEAD STRUCTURE FOUNDATIONS SHALL BE DRILLED SHAFT TO AVOID EXISTING UNDERGROUND UTILITIES.

RAILROAD PRE-EMPTION NOTES

1. BASED ON RECORD PLANS THE EXISTING RAILROAD INSULATED JOINT ASSEMBLY (IJA) IS LOCATED 1,716 FEET FROM THE RAILROAD CROSSING WHICH PROVIDES 39 SECONDS OF PREEMPTION TIME. CONTRACT SHALL RELOCATE EXISTING IJA TO A LOCATION THAT IS 2,156 FEET FROM THE CROSSING, AND ADJUST ANY NECESSARY EQUIPMENT, TO PROVIDE 49 SECONDS OF PREEMPTION TIME TO ACCOMMODATE THE CLEARANCE INTERVAL FOR THE TRAFFIC SIGNALS.

2. SIGNAL TIMINGS AND CLEARANCES HAVE BEEN SET FOR A TRAIN SPEED THAT WILL NOT EXCEED 30 MPH. THE APPROACH CIRCUITS SHALL BE SET FOR 30 SEC. AT THE MAXIMUM SPEED INDICATED ON THE COVER OF THE PLANS FOR THIS CROSSING.

3. UPON RAILROAD CIRCIT ACTIVATION, THE TRAFFIC SIGNAL AT RED VILLAGE ROAD SHALL END THE CURRENTLY ACTIVE VEHICLE PHASE AFTER SATISFYING THE MINIMUM GREEN TIME. NO YELLOW OR RED CLEARANCES MAY BE SHORTENED IN ORDER TO SERVE THE PRE-EMPTED PHASE.

4. IF THE RAILROAD PRE-EMPTION CALL COMES DURING THE YELLOW CLEARANCE FOR PHASES 2 AND 6, THE SIGNAL MAY REVERT DIRECTLY FROM A YELLOW BACK TO A GREEN INDICATION WITHOUT THE RED INTERVAL.

5. FOLLOWING THE CLEARANCE OF ANY OTHER CONFLICTING PHASE, PHASES 2 AND 6 SHALL RUN IN RAILROAD PRE-EMPTION FOR A MINIMUM OF 45 SECONDS. ONCE THIS RELAY IS ACTIVATED, THE CONTROLLER SHALL OPERATE IN A PRE-EMPTION HOLD, WHEREBY THE CONTROLLER CAN SERVE OTHER NON-CONFLICTING PHASES WHILE THE TRAIN PASSES.

6. ONLY PHASE 1 IS ALLOWED DURING RAILROAD PRE-EMPTION.

7. RAILROAD PRE-EMPTION SHALL SUPERSEDE ANY PRE-EMPTION CALLS OR SERVICE FOR EMERGENCY VEHICLES AT THE INTERSECTION.

8. THE RAILROAD DETECTION SYSTEM SHALL BE CHECKED FOR OCCURRENCE OF FALSE-CALLS RELATED TO VARYING TRAIN SPEEDS.

9. IF THE TRAFFIC SIGNAL IS OPERATING UNDER A SCHEDULED FLASH OPERATION, THE RAILROAD PRE-EMPTION CALL SHALL IMMEDIATELY MAKE THE FLASHING RED INDICATIONS OPERATE WITH A STEADY SIGNAL AND THE FLASHING YELLOW INDICATIONS SHALL TIME THEIR PROPER STEADY YELLOW AND RED CLEARANCES. THIS SHALL BE FOLLOWED BY THE PHASE 2 AND 6 PRE-EMPTION INTERVAL LEADING AWAY FROM THE TRACKS.

TRAFFIC CONTROL NOTES

1. ALL WORK IS TO BE PERFORMED WITHIN THE RAILROAD AND HIGHWAY RIGHT-OF-WAY.

2. THE CONTRACTOR SHALL SUBMIT A SITE SPECIFIC TRAFFIC CONTROL PLAN, IN ACCORDANCE WITH SECTION 105, TO THE ENGINEER FOR APPROVAL PRIOR TO THE START OF CONSTRUCTION. THE CONTRACTOR SHALL INCLUDE A CONSTRUCTION SIGN PACKAGE FOR THE EXPECTED SHOULDER CLOSURES IN COMPLIANCE WITH THE LATEST EDITION OF THE MANUAL ON UNIFORM TRAFFIC CONTROL DEVICES (MUTCD). THE COST OF PREPARING THIS PLAN (AND MAKING CHANGES IF NECESSARY) SHALL BE INCLUDED IN THE UNIT PRICE BID FOR ITEM 641.10, TRAFFIC CONTROL.

3. THE LATEST EDITION OF THE MUTCD SHALL BE THE STANDARD FOR ALL TRAFFIC CONTROL DEVICES. EXISTING SIGNS AND MARKINGS SHALL BE VALID UNTIL SUCH TIME AS THEY ARE REPLACED OR RECONSTRUCTED. WHEN NEW TRAFFIC DEVICES ARE ERECTED OR PLACED, OR EXISTING TRAFFIC CONTROL DEVICES ARE REPLACED OR REPAIRED, THE EQUIPMENT, DESIGN, METHOD OF INSTALLATION, PLACEMENT OR REPAIR SHALL CONFORM WITH SUCH STANDARDS.

4. THE BID PRICE FOR TRAFFIC CONTROL, ITEM 641.10, SHALL INCLUDE BUT IS NOT LIMITED TO ALL OF THE FOLLOWING, AS NEEDED: APPROACH AND ON-PROJECT CONSTRUCTION SIGNING, PORTABLE FLASHING ARROW BOARDS, BARRIERS, BARRELS, CONES, BARRICADES, TEMPORARY REGULATORY AND WARNING SIGNS, AND POSTS AS DETAILED IN THE MUTCD AND VAOT STANDARDS. ALL ADJUSTING, RELOCATING AND REMOVING OF THESE DEVICES AS DIRECTED BY THE ENGINEER SHALL ALSO BE INCLUDED.

5. NO CONSTRUCTION SIGNS SHALL BE INSTALLED AS TO INTERFERE OR OBSTRUCT THE VIEW OF EXISTING TRAFFIC CONTROL DEVICES, STOPPING SIGHT DISTANCE AND CORNER SIGHT DISTANCE FROM DRIVES AND TOWN HIGHWAYS. EXISTING SIGNS WHICH CONFLICT WITH TEMPORARY TRAFFIC CONTROL SHALL BE COMPLETELY COVERED OR REMOVED.

6. CONSTRUCTION ZONE SIGN LAYOUT SHALL BE IN ACCORDANCE WITH SECTION 6 OF THE LATEST EDITION OF THE MUTCD, AND AS OUTLINED IN THE SPECIAL PROVISIONS.

7. CONSTRUCTION SIGNS SHALL BE IN NEW OR LIKE NEW CONDITION PER VAOT STANDARDS AND SPECIAL PROVISIONS.

8. SEE VAOT STANDARD T-1 FOR ADDITIONAL TRAFFIC CONTROL GENERAL NOTES. RETROREFLECTIVE SHEETING SHALL BE AS NOTED ON VAOT STANDARD T-1 AND IN SUBSECTION 750.08.

9. SEE VAOT STANDARDS T-10 AND T-17 FOR ADDITIONAL SIGN PLACEMENT DETAILS.

10. BARRELS AND CONES SHALL BE USED TO CLEARLY DEFINE THE TRAVEL SPACE AND PROVIDE SEPARATION FROM THE WORK ZONE ALONG ITS ENTIRE LENGTH.

11. FOR THE SOUTHBOUND DUAL USE OVERHEAD STRUCTURE, RAILROAD SIGNALS NEED TO BE REMOVED AND RESET ON NEW MAST ARM THE SAME DAY THAT THE NEW MAST ARM IS ERECTED.

12. WHEN MAST ARMS ARE ERECTED AND SIGNALS ARE BEING INSTALLED, A UNIFORMED TRAFFIC OFFICER SHALL BE USED AND TRAFFIC SHALL BE ONE-WAY ALTERNATING, PAID UNDER ITEM 630.10, UNIFORMED TRAFFIC OFFICERS.

13. SHOULDER CLOSURES SHALL BE DONE DURING OFF TRAFFIC PEAK HOURS. THE TRAFFIC PEAK HOURS FOR THIS INTERSECTION ARE 7:45AM-8:45AM AND 3:00PM-4:00PM.

14. RAILROAD FLAGGERS SHALL BE USED WHENEVER THE CONTRACTOR IS PERFORMING WORK OVER, UNDER, OR ADJACENT TO THE RAILROAD TRACK OR IN THE RIGHT-OF-WAY, PAID UNDER ITEM 900.615 SPECIAL PROVISION (MAINTENANCE OF RAILROAD TRAFFIC) (N.A.B.I.).

CLD 13-0194

CONSULTING ENGINEERS

PROJECT NAME: LYNDON	
PROJECT NUMBER: STPG SGNL(48)	
FILE NAME: z16d054trf.dgn	PLOT DATE: 1/11/2017
PROJECT LEADER: P. SHEDD	DRAWN BY: S. GOODWIN
DESIGNED BY: P. KONIECZKA	CHECKED BY: L. GREER
TRAFFIC SIGNAL LAYOUT 2	SHEET 16 OF 18

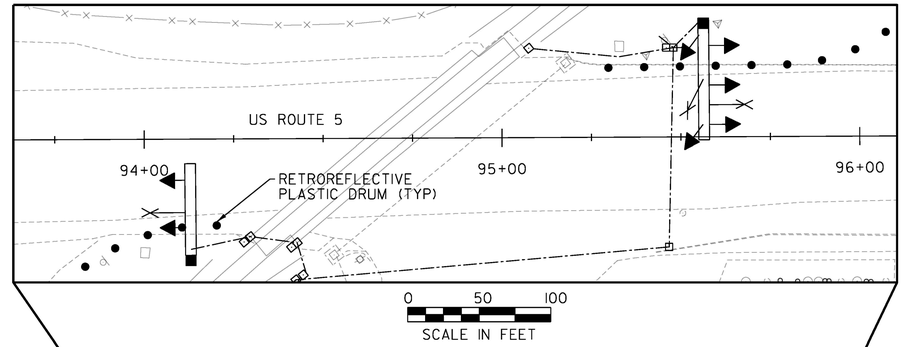

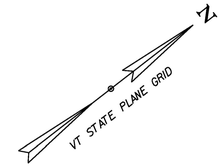

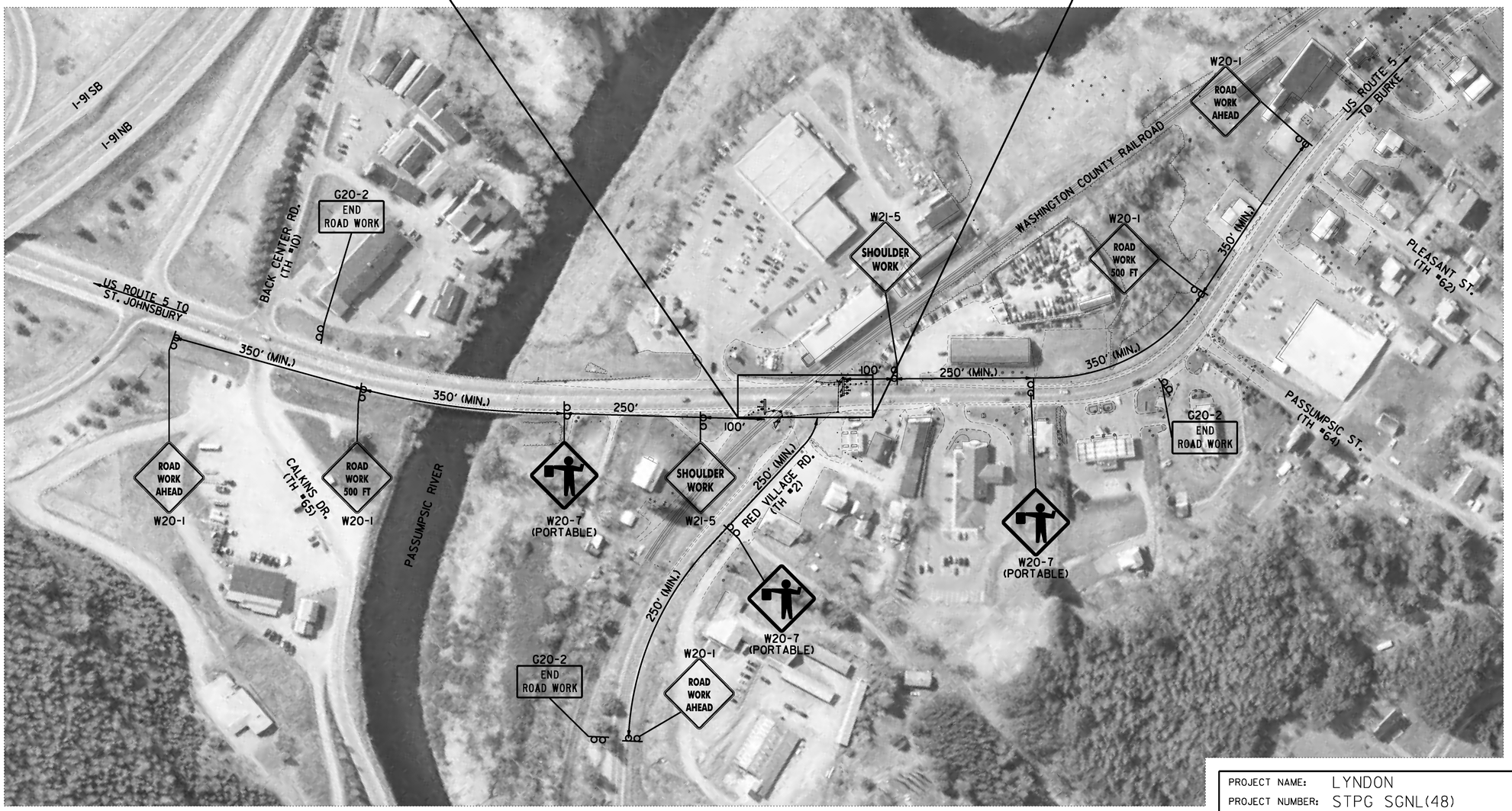

0 100 200
SCALE IN FEET

CLD 13-0194

PROJECT NAME: LYNDON	
PROJECT NUMBER: STPG SGNL(48)	
FILE NAME: z16d054tcp.dgn	PLOT DATE: 1/9/2017
PROJECT LEADER: P. SHEDD	DRAWN BY: S. FORTIER
DESIGNED BY: S. FORTIER	CHECKED BY: P. SHEDD
TRAFFIC CONTROL PLAN	SHEET 17 OF 18

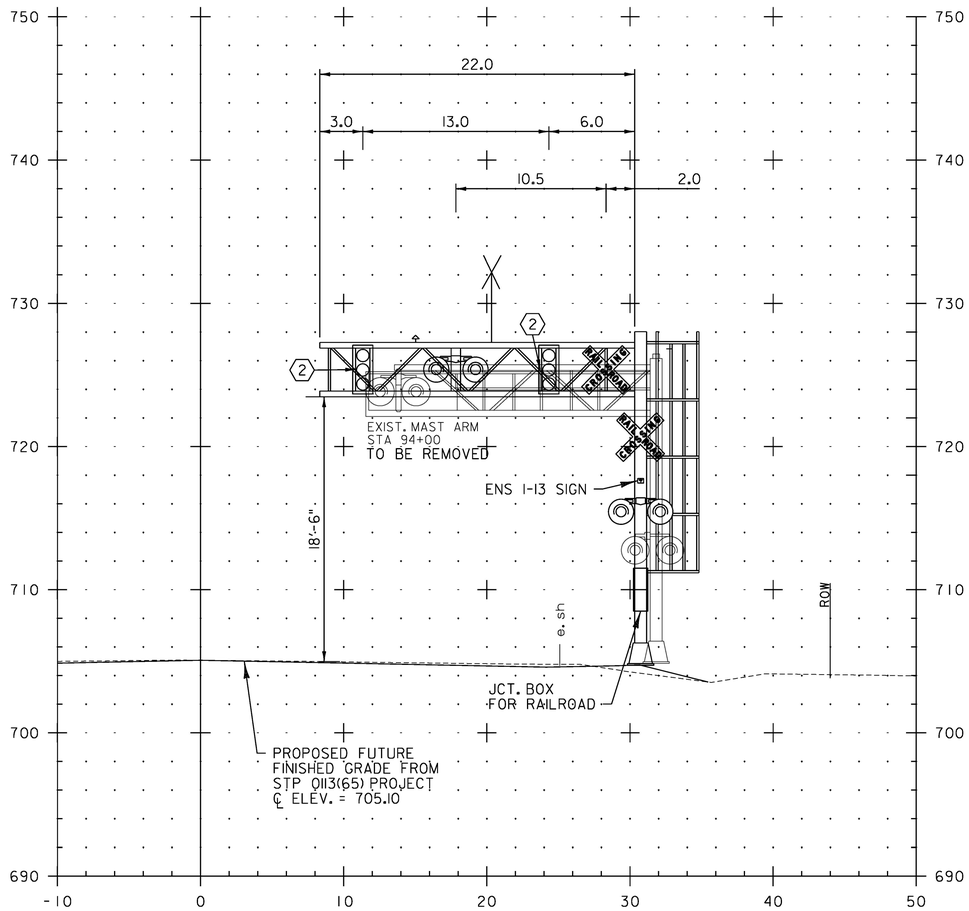

94+13

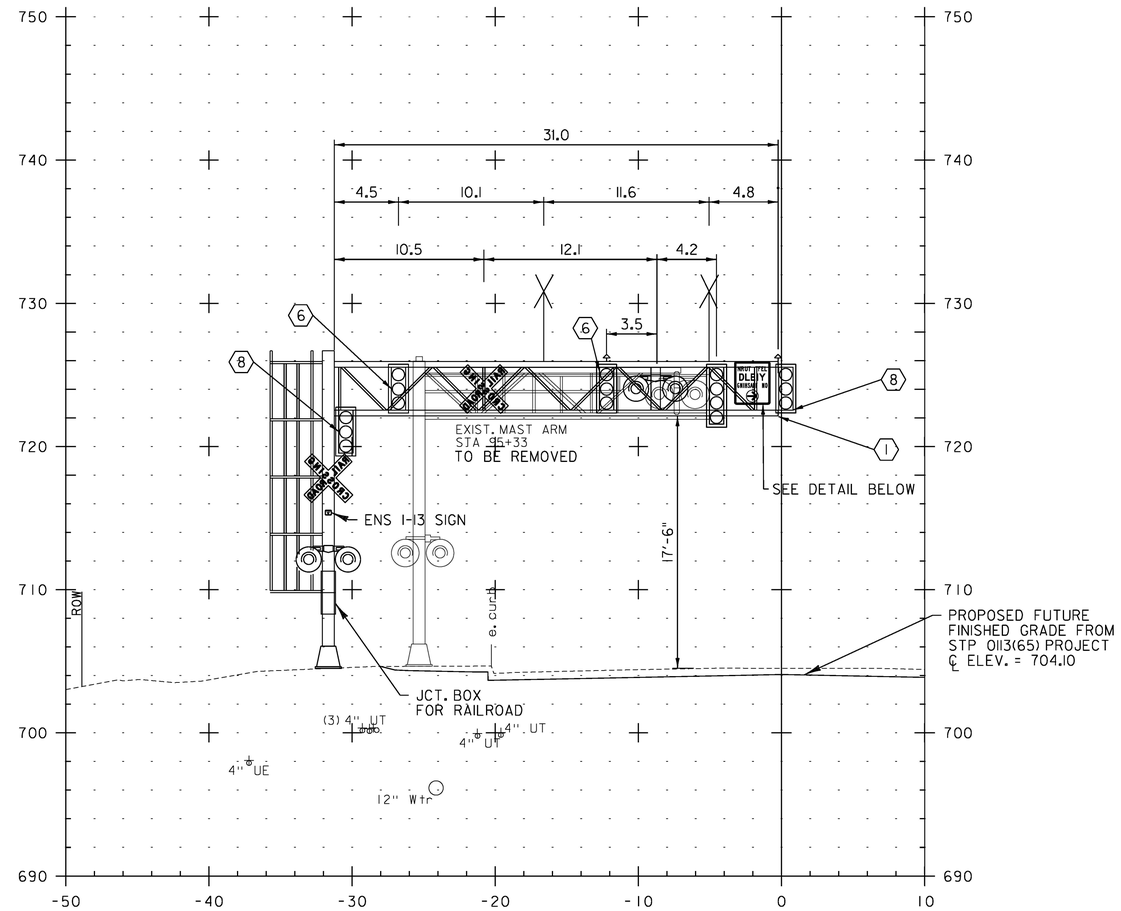

95+56

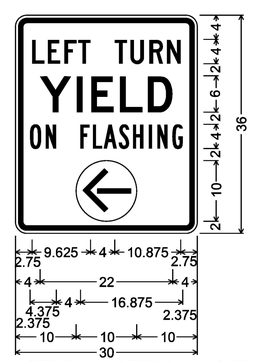

1.875" Radius, 0.750" Border, 0.500" Indent, Black on White;
[LEFT TURN] C 2K;
[YIELD] D 2K;
[ON FLASHING] B 2K;
FYA symbol;

NEW	LEGEND
	SIGNAL HEAD
	RADAR
	SIGNAL PHASE

NOTE
DRILLED SHAFT FOUNDATIONS ARE REQUIRED FOR DUAL USE OVERHEAD STRUCTURES.

0 5 10
SCALE IN FEET

CONSULTING ENGINEERS

PROJECT NAME: LYNDON
PROJECT NUMBER: STPG SGNL(48)

FILE NAME: z16d054xs.dgn
PROJECT LEADER: P. SHEDD
DESIGNED BY: P. KONIECZKA
MAST ARM CROSS SECTIONS

PLOT DATE: 12/13/2016
DRAWN BY: S. GOODWIN
CHECKED BY: L. GREER
SHEET 18 OF 18

CLD 13-0194

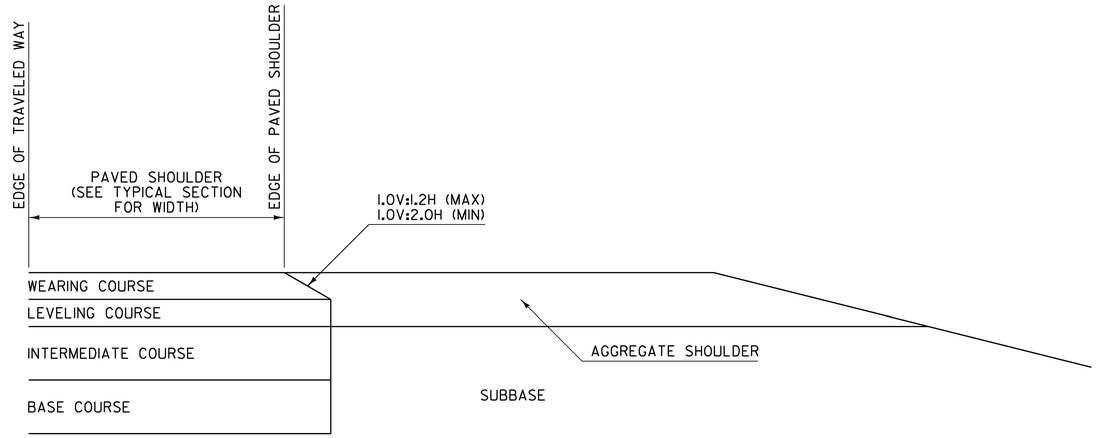

SAFETY EDGE DETAIL
FOR PAVING BELOW WEARING COURSE

NOTES:

1. THIS DETAIL IS INTENDED FOR WHEN PAVING EXTENDS BELOW THE WEARING COURSE.
2. PRIOR TO PLACEMENT OF THE LEVELING AND/OR WEARING COURSE, THE SUBBASE LOCATED BENEATH THE AGGREGATE SHOULDER SHALL BE PREPARED FLUSH WITH THE BOTTOM OF THE LEVELING COURSE.
3. BASE COURSE LIMITS MAY VARY, SEE TYPICAL SECTIONS FOR WIDTH.

SAFETY EDGE WIDTH BASED ON WEARING COURSE THICKNESS AND A 1V:1.6H SLOPE	
WEARING COURSE THICKNESS (INCHES)	NOMINAL SAFETY EDGE WIDTH (INCHES)
1.25	2.000
1.50	2.375
1.75	2.750
2.00	3.125
2.25	3.500
2.50	4.000

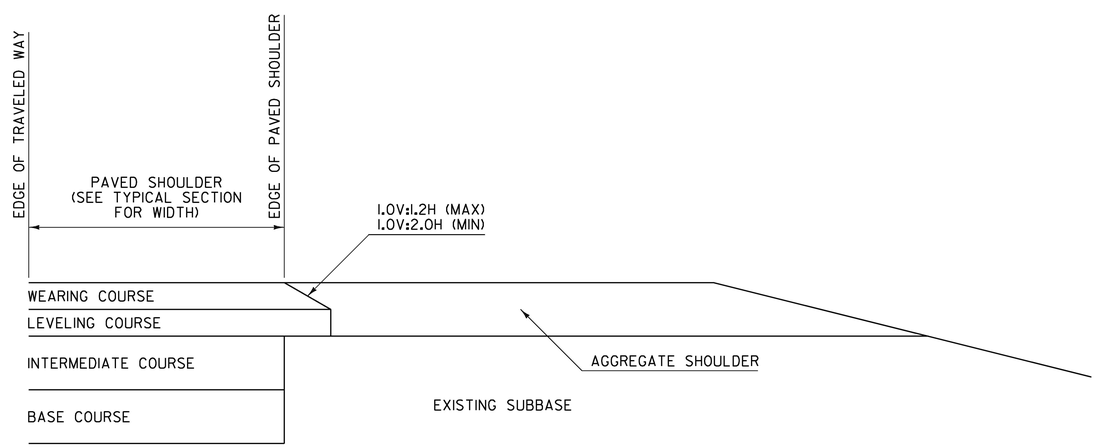

SAFETY EDGE DETAIL
FOR PAVING WEARING COURSE ONLY

NOTES:

1. THIS DETAIL IS INTENDED FOR WHEN ONLY THE LEVELING AND/OR WEARING COURSE IS TO BE PLACED.
2. PAVEMENT COURSES MAY VARY, SEE TYPICAL SECTIONS FOR ACTUAL PAVEMENT COURSES REQUIRED.

GENERAL NOTES:

1. PLACEMENT OF THE WEARING COURSE SHALL INCLUDE THE SAFETY EDGE, UNLESS THE FOLLOWING APPLIES:
   - A. THE ADJACENT SLOPE IS STEEPER THAN THE SAFETY EDGE.
   - B. THE EDGE OF PAVEMENT BEING PLACED ABUTS BOUND MATERIAL.
   - C. VEHICLES ARE RESTRICTED FROM LEAVING THE PAVED SURFACE (EXAMPLE: GUARDRAIL).
2. THE SAFETY EDGE SHALL BE FORMED IN SUCH A WAY THAT THE BITUMINOUS CONCRETE PAVEMENT IS EXTRUDED OR COMPRESSED TO FORM THE SLOPE. DEVICES THAT SIMPLY STRIKE-OFF THE MIX WITHOUT PROVIDING ANY COMPACTIVE EFFORT WILL NOT BE ALLOWED.
3. THE SAFETY EDGE SHALL NOT BE CONSIDERED PART OF THE PAVED SHOULDER.
4. THIS WORK SHALL BE INCIDENTAL TO THE RESPECTIVE BITUMINOUS CONCRETE PAVEMENT ITEM.

REV.	DATE	DESCRIPTION
0	MAR. 29, 2016	ORIGINAL APPROVAL

OTHER DETAILS REQUIRED: NONE

DETAILS APPROVED FOR USE BY HIGHWAY SAFETY & DESIGN

SAFETY EDGE DETAILS

VTrans Working to Get You There VERMONT AGENCY OF TRANSPORTATION

HIGHWAY SAFETY & DESIGN DETAIL

HSD-400.01

PROPRIETARY & CONFIDENTIAL DATA

INFORMATION CONTAINED IN THIS DRAWING IS PROPRIETARY & CONFIDENTIAL DATA BY GE TRANSPORTATION SYSTEMS – GLOBAL SIGNALING AND IS SUBMITTED FOR THE SOLE PURPOSE OF MAINTAINING GE TRANSPORTATION SYSTEMS – GLOBAL SIGNALING EQUIPMENT. ANY UNAUTHORIZED USE OR DISTRIBUTION OF THIS DRAWING IS STRICTLY PROHIBITED. ©2001 GE TRANSPORTATION SYSTEMS – GLOBAL SIGNALING

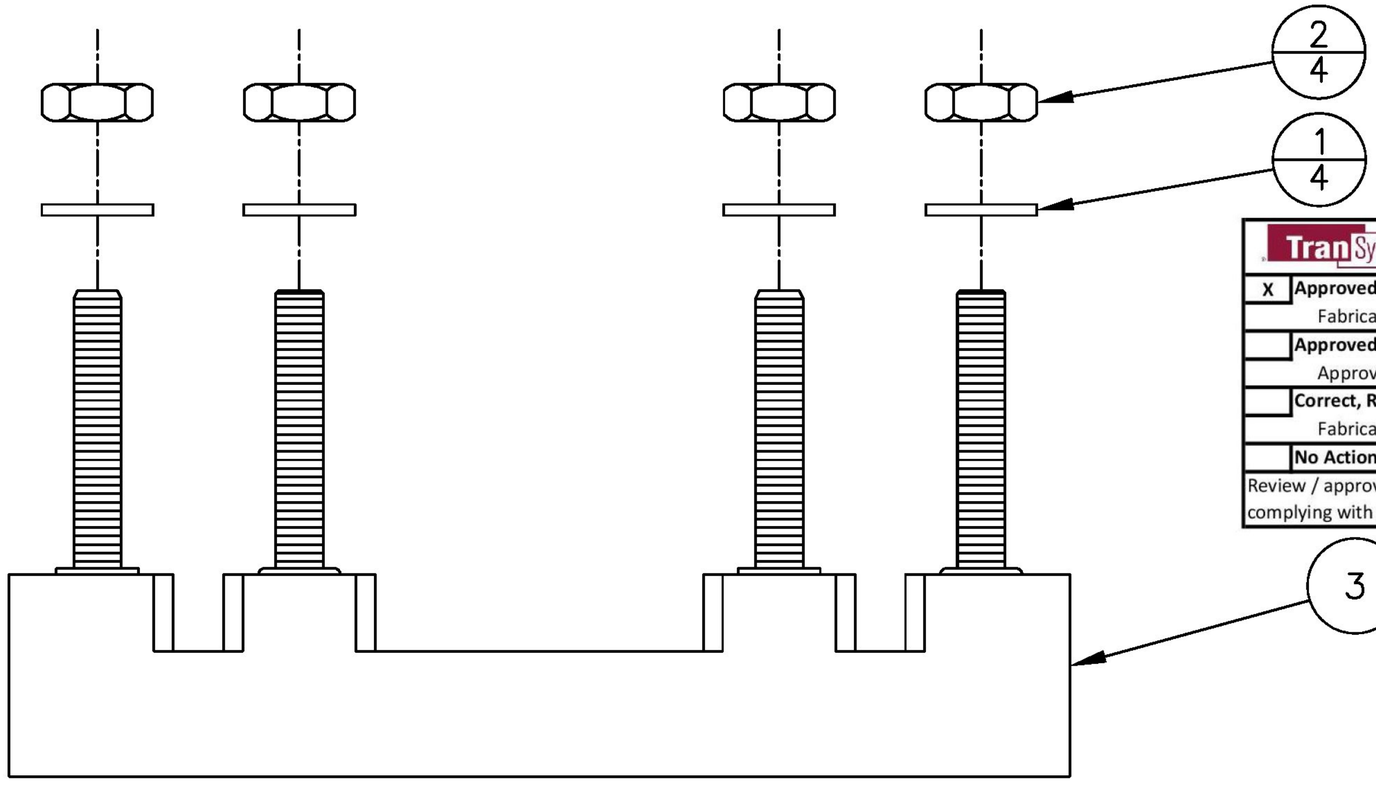

TranSystems

Vermont Agency of Transportation
Lyndon STPG SGNL(48) Project

X	**Approved** – Fabrication/Installation may be undertaken
	Approved as Corrected – Approval provided comments are incorporated
	Correct, Revise and Resubmit – Fabrication/Installation MAY NOT be undertaken
	No Action Taken

Review / approval does not relieve the contractor from complying with all the requirements of the contract

NOTES:

1. TORQUE NUTS (DIN 2) TO 60 IN LBS.

UNLESS OTHERWISE SPECIFIED DIMENSIONS ARE IN INCHES.
DIMENSIONS IN [ ] ARE MILLIMETERS.

.XX ± NA FRACTIONS ± NA
.XXX ± NA ANGLES ± NA

REV	CHANGE NO.	DATE	BY	APVD
AA0	90102800	08/05	SU	WW

DRAWN BY SUNIL UDDARAJU	DATE 08/01/05
APPROVED WAYNE WOMACK	DATE 08/05
PRODUCT:	

GE TRANSPORTATION SYSTEMS
GLOBAL SIGNALING

ARGO & DILLINGHAM, GRAIN VALLEY, MO 64029 U.S.A.

TITLE
ASSEMBLY
4 POST
ARRESTOR BASE

SIZE	SCALE	DRAWING NO.	SHEET	REV.
A	NTS	203032–000	1 OF 1	AA0

Product Data Sheet | Anixter Catalog Page

ANIXTER

Bare Copper, Solid and Stranded

TranSystems	Vermont Agency of Transportation Lyndon STPG SGNL(48) Project
	Approved Fabrication/Installation may be undertaken
X	**Approved as Corrected** Approval provided comments are incorporated 1
	Correct, Revise and Resubmit Fabrication/Installation MAY NOT be undertaken
	No Action Taken
Review / approval does not relieve the contractor from complying with all the requirements of the contract	

Applications
Solid (medium-hard or hard-drawn temper) for use in overhead, outdoor applications for distribution circuits.
Stranded (hard-, medium-hard or soft-drawn temper) for grounding.

Specifications
- SOLID: ASTM B-1=Hard-drawn temper; ASTM B-2=Medium-hard-drawn temper; ASTM B-3=Soft-drawn temper
- STRANDED: ASTM B-8=Concentric lay, Class B or Class C

SOLID
All part numbers are for soft-drawn temper. For other tempers use the suffix "H" for hard-drawn or "M" for medium-hard-drawn temper, (e.g. 1A-0801H). Diameters and weights may vary among manufacturers.

Part No.	Conductor Size AWG	No. of Strands	Nom. O.D. (in.)	Approx. Wt. lb./1,000 ft.
1A-2601	26	Solid	0.016	0.8
1A-2401	24	Solid	0.020	1.2
1A-2201	22	Solid	0.025	1.9
1A-2001	20	Solid	0.032	3.1
1A-1801	18	Solid	0.040	4.9
1A-1601	16	Solid	0.051	7.8
1A-1401	14	Solid	0.064	12.4
1A-1201	12	Solid	0.081	19.8
1A-1001	10	Solid	0.102	31.4
1A-0801	8	Solid	0.129	50.0
1A-0601	6	Solid	0.162	79.4
1A-0401	4	Solid	0.204	126.3
1A-0201	2	Solid	0.258	201.9

1 - All Cable must meet the requirements of Special Provision Section 63 ACTIVE WARNING SYSTEM MATERIALS (j) Miscellaneous Products and Components Part 30 Vital Signal Cables (see attached pgs 58 to 61 of Special Provisions). Contractor shall provide appropriate test reports when cable is installed.

Anixter is a leading global supplier of communications and security products, electrical and electronic wire and cable, fasteners and other small components. We help our customers specify solutions and make informed purchasing decisions around technology, applications and relevant standards. Throughout the world, we provide innovative supply chain management solutions to reduce our customers' total cost of production and implementation.

Anixter does not manufacture the items described in this publication. Any applicable product warranties are provided by the manufacturers. To the fullest extent permitted by law, Anixter disclaims all warranties, either express or implied. The information provided and any images shown are for descriptive purposes only. Anixter makes no warranty or representation, express or implied, about the accuracy or completeness of any information provided. Data and suggestions made in the publication are not to be construed as recommendations to purchase or as authorizations to use any products in violation of any law or regulation. All products are sold subject to Anixter's General Conditions of Sale.

TranSystems	Vermont Agency of Transportation Lyndon STPG SGNL(48) Project
	Approved Fabrication/Installation may be undertaken
	Approved as Corrected Approval provided comments are incorporated
X	**Correct, Revise and Resubmit** Fabrication/Installation MAY NOT be undertaken 1
	No Action Taken
Review / approval does not relieve the contractor from complying with all the requirements of the contract	

MODEL ETC BATTERY CHARGER

The Cragg Railcharger® ETC Battery Charger is a regulated battery charger that features built-in filtering and temperature compensation for use on Lead Acid and NiCad batteries.

1 - Charger shall conform to Special Provision Section 63 ACTIVE WARNING SYSTEM MATERIALS (j) Miscellaneous Products and Components, (28) Batteries and Charging Equipment (see attached pgs 55 and 56 of Special Provisions). The Contractor shall determine the capacity required for the charging equipment and shall verify all charging equipment proposed to have a reserve capacity at least 25% above the calculated requirements to be approved by the Engineer.

CRAGG RAILCHARGER®

Instruction Manual for Models

10ETC-12V
20ETC-12V
30ETC-24V

60ETC-12V

RAILWAY EQUIPMENT CO.

525 Ninth Street South
P.O. Box 68
Delano, Minnesota 55328
(763) 972-2200
(763) 972-2900 Fax
E-Mail: mail@rwy.com

Contents

1.0 WARNINGS, CAUTIONS, AND NOTES 1
2.0 OPERATION 2
2.1 Front Panel Features and Components 2
2.1.1 AC and DC Connection Terminals 3
2.1.2 LED Status Indicating Lights 3
2.1.3 Battery Type Configuration Switch 3
2.1.4 Temperature Sensor Cable 4
2.1.5 Remote Voltage Sensor Input Terminals 4
2.1.6 Voltage Monitor Output Terminals 5
2.1.7 Float Voltage Adjustment Potentiometer 5
2.1.8 Current Limit Adjustment Potentiometer 5
2.1.9 AC Input Fuses 5
2.1.10 DC Output Circuit Breaker 5
2.2 Set Up Procedures 6
2.2.1 Setting the Battery Cell Switches 6
2.2.2 Adjusting the Float Voltage 8
2.2.3 Setting the Temp Comp Switch 9
2.2.4 Setting the Current Limit 9
2.2.5 Remote Voltage Sensing 10
2.2.6 Using the Voltage Monitor 10
3.0 STANDARD FEATURES 11
4.0 SPECIFICATIONS 12

List of Tables

Table 1. Warnings, Cautions, and Notes 1
Table 2. AC Connection Terminals 3
Table 3. LED Status Lights 3
Table 4. Temperature Compensation Rate 4
Table 5. AC Input Fuses 5
Table 6. Number of Cells Guide 6
Table 7. General Specifications 12
Table 8. Model Specifications 12

1.0 WARNINGS, CAUTIONS, AND NOTES

Please read the entire instruction manual before using the battery charger.

Also, read the warnings, cautions, and notes in Table 1. Failure to observe the warnings and cautions can lead to equipment damage or personal injury.

If you have any questions concerning the manufacture, design, function, installation, operation or maintenance, contact Railway Equipment Company before proceeding.

Table 1. Warnings, Cautions, and Notes

Symbol	Description
	WARNING indicates a potentially hazardous situation which, if not avoided, could result in death or serious injury.
	CAUTION indicates a potentially hazardous situation which, if not avoided, may result in minor or moderate personal injury. It may also be used to alert against unsafe practices.
NOTE	NOTE indicates explanatory information that applies to the next step in the procedure. It is used to clarify and expand upon the importance of the procedural step when needed.
	If incorrectly wired, charger can be damaged. Be sure to observe correct polarity on all DC wire connections, check the AC wiring instructions, and connect the ground wire.

2.0 OPERATION

The model ETC series battery chargers are equipped with an automatic analog circuit design.

The charger will regulate output voltage to less than ± 1 percent from full load to no load with a ± 15 percent supply voltage (115/230 VAC). The output ripple is less than one volt at full load.

The charger has easy front panel access for setting up charger for most battery and load possibilities, also LED's with volt and amp meters for easy monitoring of status of charger operation.

The charger has a built-in temp compensation circuit to permit the longest battery life possible. Also available is a remote voltage sense capability to compensate for voltage drop between charger and battery.

The charger is equipped with a voltage monitor that is independent from charger circuits, if the charger output voltage deviates more than ± 10 percent from cell select settings an isolated relay will drop out. This circuit runs from battery power. The charger also features an adjustable current limit circuit to protect both the charger and battery.

2.1 Front Panel Features and Components

This section describes the features and components that are on the front panel of the battery charger (see Figure 1).

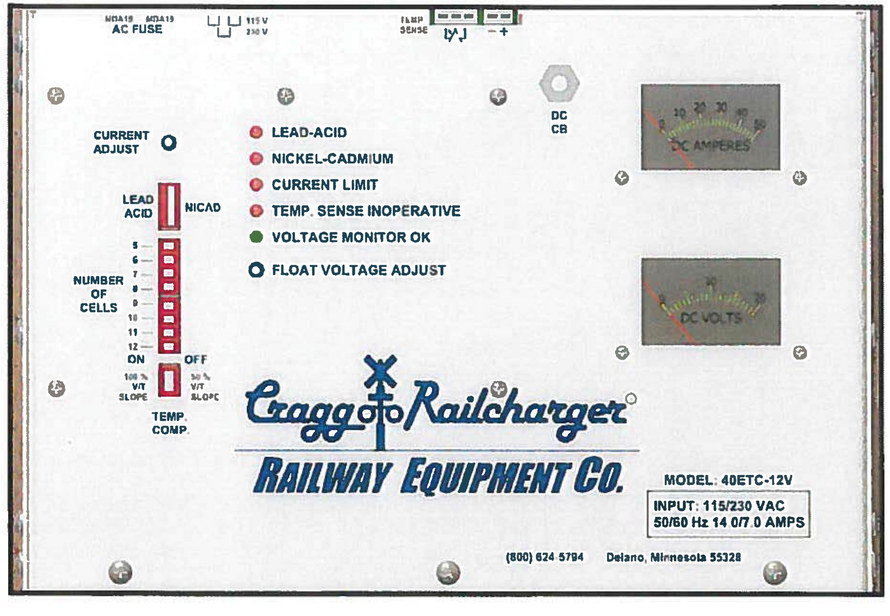

Figure 1. Front Panel of Battery Charger – Example (Model 40ETC-12V)

2.1.1 AC and DC Connection Terminals

At the front top of the battery charger there is a cover plate with a screw at each side. The AC and DC connections are made to the terminal posts within, with the wires entering through the holes in the top of the charger. The temp sensor, fuses, remote voltage, and voltage monitor contacts are also installed within this area. To wire the charger, loosen the two screws and remove the cover plate. On the front of the face plate are the AC wiring instructions. When selecting the input voltage, adjust the two jumper plugs on the "AC IN" header.

Table 2 defines the input power requirements and the AC terminal connections for the battery charger.

Table 2. AC Connection Terminals

A.C. INPUT	USE JUMPER PLUG(S)
115 V.A.C. 50/60 Hz	Two plugs on the AC IN header.
230 V.A.C. 50/60 Hz	One plug connected to the two center pins on the AC IN header.

2.1.2 LED Status Indicating Lights

Table 3 provides a description of the five LED status indicating lights on the front panel.

Table 3. LED Status Lights

Status Light	Description
Type of Cells	The applicable LED is lit to indicate the type of battery selected. The choices are: • Lead-Acid • Nickel-Cadmium
Current Limit	When this LED is lit, the load applied to the charger exceeds the current limit setting, or if the remote voltage sense is used, the unit senses a voltage drop of more than 2.5 volts, which rarely occurs.
No Temperature Compensation	When this LED is lit, the charger is operating without temperature compensation. (This condition typically is caused by the temperature sensor being disconnected or broken.)
Voltage Monitor	When this LED is lit, the battery voltage is within ± 10% of the battery voltage setting.

2.1.3 Battery Type Configuration Switch

There is one switch which is set for either "Lead Acid" or "Nickel Cadmium". A second series of "DIP" switches is used to set the number of cells. The single switch which corresponds to the number of cells being used should be set to the left. All other cell selection switches should be set to the right.

2.1.4 Temperature Sensor Cable

The temperature sensor cable connector, which is located behind the wire terminal cover plate, provides the input for the remote temperature sensor cable assembly.

To obtain the temperature of battery, connect the sensor end of the cable assembly on the battery surface or between cells. When the temperature sensor is connected, the battery charger will adjust the output voltage up or down depending on the temperature of the batteries.

Table 4 defines the temperature compensation rate when the battery charger adjusts the output voltage. If the remote temperature sensor is not used, the temperature compensation function will be fixed at 77°F.

Table 4. Temperature Compensation Rate

Battery Type	Temp Switch	Compensation Slope	Low Temp Limit	High Temp Limit
Lead Acid	50% V/T	1.47mV/°F/cell	2.35 volts/cell@ +3°F	2.20 volts/cell@ +116°F
Lead Acid	100% V/T	3.0mV/°F/cell	2.35 volts/cell@ +37°F	2.20 volts/cell@ +95°F
Ni-Cad	50% V/T	0.967mV/°F/cell	No Limit	No Limit
Ni-Cad	100% V/T	1.94mV/°F/cell	No Limit	No Limit

2.1.5 Remote Voltage Sensor Input Terminals

The two remote voltage sensor terminals behind the wiring terminal cover plate provide input for the remote battery voltage sensing. If the batteries to be charged are located more than 12 feet from the charger, there can be voltage drop through the wires. It is recommended that two separate wires be connected from the battery terminals to the remote voltage sensor input terminals on the charger. This is done by removing the two pre-installed jumper wires from the remote voltage sense terminals and the DC output terminals and replacing them with wires from the battery terminals to the remote voltage sense terminals.

CAUTION: WHEN CONNECTING WIRES FROM THE BATTERY TERMINALS TO THE CHARGER, WATCH THE VOLTAGE POLARITY.

(Wire size: 18GA minimum, 14GA maximum.) If the remote voltage sensing function is not used, leave the two jumpers from remote voltage sense terminals to the D.C. output terminals connected.

2.1.6 Voltage Monitor Output Terminals

Three terminals are provided for connection to the voltage monitor relay. This is a Form C dry contact relay. The voltage monitor terminals are for the common, the normally open, and the normally closed contacts.

The voltage monitor draws its power from the battery (75 mA maximum). The set points for the voltage monitor are ± 10% of the voltage setting. When the voltage is within the set points, the relay will be energized, and the normally open contact will be closed. If the voltage is above or below by 10% of the voltage setting, the relay will be de-energized and the normally open contact will be open.

2.1.7 Float Voltage Adjustment Potentiometer

The float voltage adjustment potentiometer is used to set the float voltage. ***Adjusting the float voltage is a very important setting.*** Check with the battery manufacturer for the correct float voltage per cell, and then calculate the number of cells being used to determine your float adjustment.

2.1.8 Current Limit Adjustment Potentiometer

The current limit adjustment potentiometer can be used to set the current limit of the charger. The factory setting for current limit is 100% of the chargers rated capability, which is, for example: 10 Amps for the 10ETC12V charger. The current limit can be adjusted down to a minimum of 50% of the chargers rated capability, which is 5 Amps.

2.1.9 AC Input Fuses

Table 5 lists the AC input fuses for the different model numbers. The fuses, which are type "MDA" fuses, are located in the wire terminal area behind the cover plate.

Table 5. AC Input Fuses

Model No.	MDA Fuse Rating
10ETC12	6 Amp
20ETC12	6 Amp
40ETC12	15 Amp
60ETC12	15 Amp
30ETC24	15 Amp

2.1.10 DC Output Circuit Breaker

The DC circuit breaker protects both customer load and the battery charger from malfunction. When the circuit breaker trips, the problem must be determined and repaired. Then the circuit breaker can be reset.

2.2 Set Up Procedures

This section describes the set up procedures for the battery charger.

NOTE

Before connecting power to the battery charger, make sure AC power is turned off.

1. Connect AC power to the battery charger per label below the terminal posts.

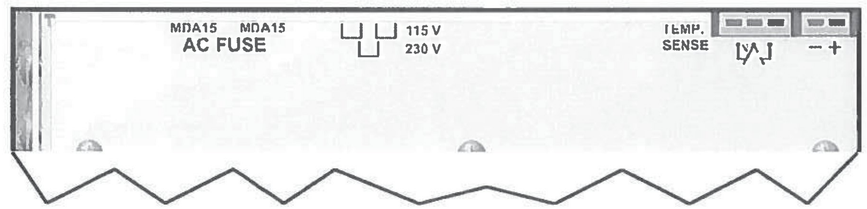

2. Connect AC jumper plugs on the "AC IN" header for 115VAC or 230VAC per instructions printed on the front of the face plate.

2.2.1 Setting the Battery Cell Switches

1. Using Table 6, verify the battery type and Number of Cells in the battery being charged.

Table 6. Number of Cells Guide

10ETC-12V/ 20ETC-12V/ 40ETC-12V/ 60ETC-12V/	30ETC-24V
5 to 8 Lead Acid Cells	11 to 18 Lead Acid Cells
5 to 12 NiCad Cells	19 to 26 NiCad Cells

2. Set the two-position switch to the battery type (Lead Acid or NiCad) being charged.
3. Set the Number of Cell switches on the front of the battery charger, as follows:
   a. Set the switch that corresponds to the Number of Cells on the battery charger to the left (on position).
   b. Set the other Number of Cell switches to the right (off position).

   For example: Figure 2 illustrates that the battery being charged has 6 cells. This denotes that the number 6 cell switch is set to the left position. The other Number of Cells switches are set to the right position.

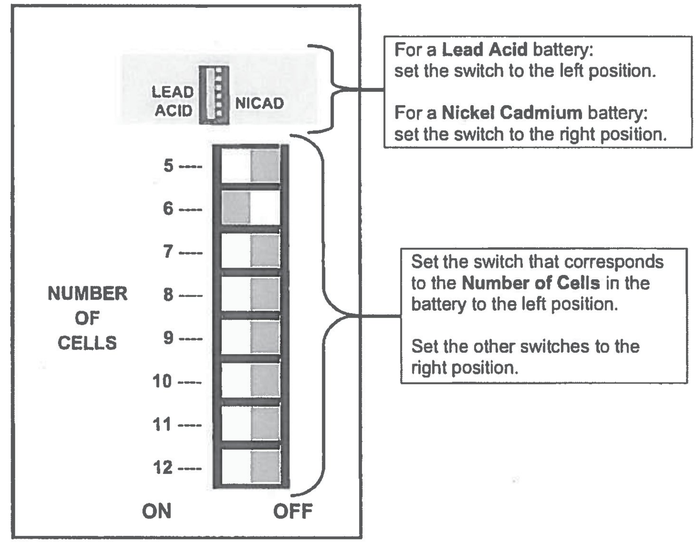

Figure 2. Cell Switch Settings for Battery Chargers (Except 30ETC)

NOTE

When setting the cell switches for the 30ETC battery charger:

- For Lead Acid batteries, use the cell switches numbered 11 thru 18.
- For NiCad batteries, use cell switches numbered 19 thru 26.

4. For 30ETC battery chargers, set the switch that corresponds to the Number of Cells on the battery charger to the left (on position). Set the other Number of Cell switches to the right (off position).

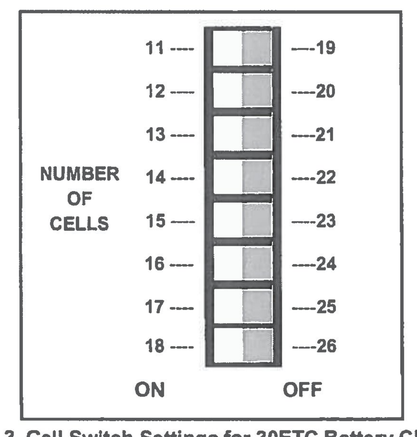

Figure 3. Cell Switch Settings for 30ETC Battery Chargers

2.2.2 Adjusting the Float Voltage

NOTE

DO NOT CONNECT THE BATTERIES to the charger.

1. Make sure the remote temperature sensor cable is disconnected from charger at this time. (This preliminary step is required in order to adjust the float voltage.)
2. Verify that the two jumper wires are connected between the remote voltage terminals and the DC output terminals.
3. Connect a DC voltmeter to charger output terminals.
4. Turn ON AC main power. Then wait for output voltage to stabilize.
5. Calculate what the correct output float voltage should be by taking the battery manufacturers recommended per cell float voltage and multiplying by the number of cells.

   For example: The desired output float voltage is 1.53 volts per cell for nine nickel cadmium cells: 1.53 X 9 = 13.77 volts.
6. Adjust the float voltage as follows:
   a. Locate the potentiometer labeled "Float Voltage Adjust."
   b. Turn the potentiometer clockwise to increase the float voltage.
   c. Or, turn the potentiometer counterclockwise to decrease the float voltage.
7. Turn OFF AC main power.
8. Connect the temperature sensor cable to its connector.

NOTE

Before connecting the battery terminals to the battery charger, make sure the polarity is correct.

9. Connect the batteries to the battery terminals on the charger.
10. Turn ON AC main power. The ammeter will indicate the load current.

2.2.3 Setting the Temp Comp Switch

The Temp Comp switch is based on the voltage/temperature (V/T) slope. The Temp Comp switch is a two-position switch setting that provides a method to set the slope of temperature charge rate.

1. Set the Temp Comp switch (see Figure 4) to the applicable position.
2. Refer to Table 4, "Temperature Compensation Rate" (see page 4) for detailed information.

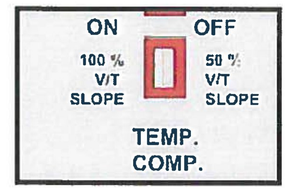

Figure 4. Setting the Temperature Compensation Switch

2.2.4 Setting the Current Limit

The factory setting for current limit is 100% of the rated current capability. The current limit may be adjusted from the chargers full rating to 50% of the rated current capability. For example: The 20 amp charger can be adjusted down to 10 amps.

1. Locate the current limit potentiometer on the front panel.

NOTE

When the potentiometer is turned fully clockwise, the charger current limit is set for 100% of rated capacity. When the potentiometer is turned fully counterclockwise, the charger current limit is set for 50% of rated capacity.

2. Adjust the current limit set point between 50% and 100% of rated capacity, as follows:
   a. Apply an excessive load to the charger.
   b. Adjust the current limit potentiometer to the desired current level.

2.2.5 Remote Voltage Sensing

1. Disconnect the two jumper wires from the remote voltage sense terminals inside the wire terminal area and the DC battery output terminals.

CAUTION

Before connecting the two wires to the battery terminals, make sure that the polarity is correct to avoid equipment damage and prevent personnel injury.

2. Using minimum 18GA, maximum 14GA wire, connect two wires to the remote voltage sensing input terminals using a small flat blade screw driver on the terminal insertion tabs.
3. Watching the polarity, connect the two wires to the battery terminals.

2.2.6 Using the Voltage Monitor

The voltage monitor provides a Form C dry contact relay which can be used to indicate when the battery voltage is either above or below 10% of the voltage setting.

The voltage monitor circuit is independent from the battery charger system and the AC power, and operates from the battery voltage.

The "normally open" contact is closed when the battery voltage is within ± 10% of the voltage setting.

The relay is rated for 2 Amp at 60 VDC, or 2 Amps at 120 VAC resistive loads. The mechanical contact life is 5,000,000 operations. Minimum inductive life @ .5 Amp 12vdc is 50,000 times.

The voltage monitor can be used for an alarm by connecting the coil of an indication relay to the normally open relay contact terminals on the battery charger. Wire size should be minimum 18GA, maximum 14GA.

3.0 STANDARD FEATURES

The standard features of the battery charger are listed as follows:

- Fully Automatic and Convection Cooled
- For Lead Acid and NiCad Batteries
- Switch Selectable Voltage/Cell Configuration
- LED Status Indicating Lights
- Amp Meter
- Volt Meter
- Temperature Compensation with Controlled Limits
- Adjustable Current Limit
- Battery Voltage Monitor with Relay Output
- Remote or Local Battery Voltage Sensing
- AAR/AREMA Terminals
- Delayed Power-up, 5-10 seconds
- AC & DC Circuit, Transient Protection
- Meets or Exceeds AAR/AREMA Specifications
- Rack mounting kit available
- 2-Year Warranty

4.0 SPECIFICATIONS

Table 7 provides the general specifications for all the battery chargers in the manual. Table 8 provides the specifications for the each individual battery charger model number in this manual.

Table 7. General Specifications

Description	Specification
Input Voltage	115/230VAC ± 15%, 50, 60, 100 Hz
Voltage Regulation	± 1%
Voltage Ripple	Less than 1 volt ripple, peak to peak at maximum output current
Operating Temperature	-40°F to +158°F (-40°C to +70°C) with 0-95% non-condensing humidity

Table 8. Model Specifications

Model No.	Cells	Input Volts Amps	Output Amps	Output Volts	Width x Height x Depth	Ship Weight
10ETC-12V	5–8 Lead Acid 5–12 NiCad	115VAC – 4.2 Amps 230VAC – 2.1 Amps	10 Amps	7 to 18.8 volts	12.00 x 10.12 x 8.75 inches	40 Lbs.
20ETC-12V	5–8 Lead Acid 5–12 NiCad	115VAC – 8 Amps 230VAC – 4 Amps	20 Amps	7 to 18.8 volts	12.00 x 10.12 x 8.75 inches	40 Lbs.
	5–8 Lead Acid 5–12 NiCad	115VAC – 14 Amps 230VAC – 7 Amps	40 Amps	7 to 18.8 volts	13.00 x 13.75 x 11.75 inches	52 Lbs.
60ETC-12V	5–8 Lead Acid 5–12 NiCad	115VAC – 18 Amps 230VAC – 9 Amps	60 Amps	7 to 18.8 volts	13.00 x 13.75 x 11.75 inches	74 Lbs.
30ETC-24V	11–18 Lead Acid 19–26 NiCad	115VAC – 20 Amps 230VAC – 10 Amps	30 Amps	24 to 42.5 volts	13.00 x 13.75 x 11.75 inches	63 Lbs.

RECO
RAILWAY EQUIPMENT CO.

CRAGG RAILCHARGER®
BATTERY CHARGERS
TEMPERATURE SENSORS
& VOLTAGE MONITORS

ETC BATTERY CHARGER

STANDARD FEATURES

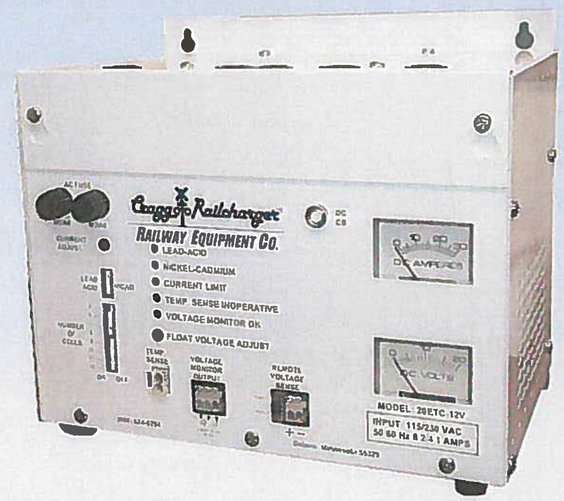

- Fully Automatic
- For All Lead Acid & NiCad Batteries
- Switch Selectable Cell Configuration
- LED Status Indicating Lights
- Amp Meter
- Volt Meter
- Temperature Compensation with Controlled Limits
- Adjustable Current Limit
- Battery Voltage Monitor with Relay Output
- Remote Voltage Sensing Capability
- AAR/AREMA Terminals
- Delayed Power-up, 5-10 seconds
- AC & DC Circuit and Transient Protection
- Meets or Exceeds AAR/AREMA Specifications
- Rack mounting kit available
- 2-Year Limited Warranty

SPECIFICATIONS

115/230 VAC ± 15%, 50, 60, 100Hz
± 1% Voltage Regulation
<1V Ripple, Peak to Peak at Max. Output Current
Operating Temperature -40°C to +70°C
with 0-95% non-condensing humidity

MODEL	CELLS	INPUT VOLTS - AMPS	OUTPUT AMPS	OUTPUT VOLTS	WIDTH-HEIGHT-DEPTH	SHIP WEIGHT
10ETC-12V	5-8 Lead Acid 5-12 NiCad	115VAC – 4.2 amps 230VAC – 2.1 amps	10 amps	7 - 18.8	12.00 x 10.12 x 8.75 inches	39 Lbs.
20ETC-12V	5-8 Lead Acid 5-12 NiCad	115VAC – 8 amps 230VAC – 4 amps	20 amps	7 - 18.8	12.00 x 10.12 x 8.75 inches	40 Lbs.
	5-8 Lead Acid 5-12 NiCad	115VAC – 14 amps 230VAC – 7 amps	40 amps	7 - 18.8	13.00 x 13.75 x 11.75 inches	52 Lbs.
60ETC-12V	5-8 Lead Acid 5-12 NiCad	115VAC – 18 amps 230VAC – 9 amps	60 amps	7 - 18.8	13.00 x 13.75 x 11.75 inches	74 Lbs.
30ETC-24V	11-18 Lead Acid 19-26 NiCad	115VAC – 20 amps 230VAC – 10 amps	30 amps	24 - 42.5	13.00 x 13.75 x 11.75 inches	63 Lbs..

Title	Drawing No.	Rev.	Sheet
CHARGER, BATTERY	017061-XXX	DC0	3 OF 5

Catalog Cut - Battery Tray 12"x24" Polyethylene - Fiber-Co #82687-1-P for GETSGS #040231-000 (Page 1 of 1)

" " 12" x 27" GETSGS # 040231-001
" " 12" x 38" GETSGS # 040231-002

Battery Trays

1 - Battery Trays shall be used on top of shelves or on floor within signal enclosure and not freely supporting equipment

TranSystems	Vermont Agency of Transportation Lyndon STPG SGNL(48) Project
	Approved Fabrication/Installation may be undertaken
X	**Approved as Corrected** Approval provided comments are incorporated
	Correct, Revise and Resubmit Fabrication/Installation MAY NOT be undertaken
	No Action Taken
Review / approval does not relieve the contractor from complying with all the requirements of the contract	

1

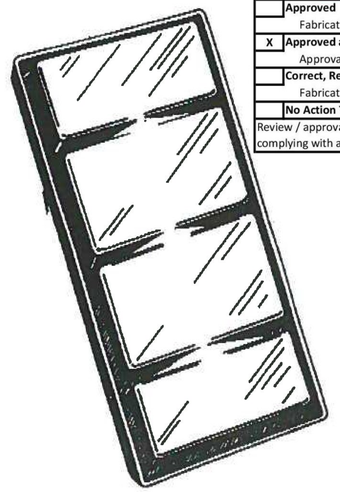

High Density
Polyethylene

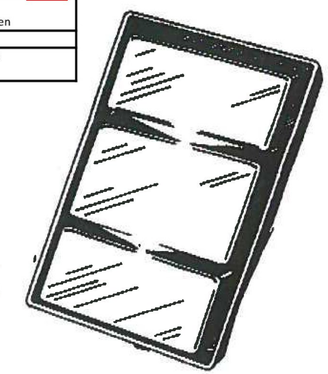

	FIBER-CO PN:	GETSGS PN:
12" Wide x 24" Long	82687-1-P	040231-000
12" Wide x 27" Long	82687-2-P	040231-001
12" Wide x 38" Long	82687-3-P	040231-002
13" Wide x 38" Long		

No Ground * Protect Battery Boxes and Floors For Special Applications, Custom Sizes are Available.
For Further Information, Call or Write:

F I B E R - C O, I N C.
145 US Hwy 441 S.E.
Okeechobee, FL 34974
Phone: (863) 763-1927
Fax: (863) 763-1359
E-mail: fibercofl@earthlink.net

(H3128)

TranSystems	Vermont Agency of Transportation Lyndon STPG SGNL(48) Project
	Approved Fabrication/Installation may be undertaken
	Approved as Corrected Approval provided comments are incorporated
X	**Correct, Revise and Resubmit** Fabrication/Installation MAY NOT be undertaken 1
	No Action Taken
Review / approval does not relieve the contractor from complying with all the requirements of the contract	

1 - Battery selected shall conform to Special Provision Section 63 ACTIVE WARNING SYSTEM MATERIALS (j) Miscellaneous Products and Components, (28) Batteries and Charging Equipment, (d) Storage Batteries (see attached pgs 56 and 57 of Special Provisions). Batteries shall have a minimum storage capacity of 240 Amp-Hours, and shall be sized for a minimum 24-hour standby capacity at an ambient temperature of 40 degrees Fahrenheit. Contractor shall provide load calculations.

HARMON PART NUMBERING

HPN	TYPE	NOM. AH CAPACITY	NUMBER OF CELLS	SPECIFIC GRAVITY	DIMENSIONS			WEIGHT		FIGURE (SINGLE CELL SHOWN)
					LENGTH	WIDTH	HEIGHT	UNPACKED	DOMESTIC PACKED	
-000	EMP-9	160	1	1.215	5.16"	10.1"	17.9"	66 LBS.	70 LBS.	SEE FIGURE 1
-001	EMP-7	120	1	1.215	4.34"	10.1"	17.9"	52 LBS.	56 LBS.	SEE FIGURE 1
-002	3EMP-5	80	3	1.215	10.25"	10.1"	17.9"	105 LBS.	114 LBS.	SEE FIGURE 1
-003	EMP-11	200	1	1.215	6.88"	10.1"	17.9"	83 LBS.	94 LBS.	SEE FIGURE 1
-004	EMP-13	240	1	1.215	6.88"	10.1"	17.9"	92 LBS.	98 LBS.	SEE FIGURE 1
-200	EJ-17	750	1	1.215	8.1"	11.0"	18.7"	147 LBS	156 LBS	SEE FIGURE 2
-201	ELM-160	160	1	1.210 –1.220	6.63"	5.42"	18.85"	29 LBS.	--	SEE FIGURE 3
-202	ELM-200	200	1	1.210 –1.220	6.63"	5.42"	18.85"	34 LBS.	--	SEE FIGURE 3
-203	ELM-240	240	1	1.210 –1.220	6.63"	5.42"	18.85"	40 LBS.	--	SEE FIGURE 3
-204	ELM-340	340	1	1.210 –1.220	6.69"	8.42"	18.85"	64 LBS.	--	SEE FIGURE 3
-205	ELM-425	425	1	1.210 –1.220	6.69"	8.42"	18.85"	75 LBS.	--	SEE FIGURE 3
-206	ELM-120	120	1	1.210 –1.220	6.63"	5.42"	13.56"	25 LBS.	--	SEE FIGURE 3
-207	ELM-710	710	1	1.210 –1.220	7.00"	12.50"	19.16"	118 LBS.	--	SEE FIGURE 3

HPN	TYPE	NOM. AH CAPACITY	NUMBER OF CELLS	VOLTAGE	SPECIFIC GRAVITY	DIMENSIONS OF BATTERY			FIGURE	
						LENGTH	WIDTH	HEIGHT		
-100	EI-7	288	6	12 V	1.170 TROPICAL	42.1"	11.0"	18.7"	SEE FIGURE 2 (ONLY ONE CELL SHOWN)	BATTERIES HAVE CONNECTORS, HYD

DESCRIPTION: BATTERY, LEAD ACID
MARKING: MANUFACTURER, MANUFACTURER'S MODEL NUMBER
MATERIAL SPECIFICATION:
SEDIMENT SPACE:
HPN -00X: 3.0"
HPN -1XX AND –200: 0.75"
ELECTROLYTE OVER PLATES:
HPN -00X: 2.3"
HPN -1XX AND –200: 2.1"
CONTAINER:
HPN -00X: POLYSTYRENE
HPN -1XX AND –200: STYRENE ACRYLONITRILE COPOLYMER
COVER:
HPN -00X: STYRENE BUTADIENE
HPN -1XX AND –200: FLAME RETARDANT PVC
HPN –201 THROUGH –207: HI-IMPACT POLYPROPYLENE
SEPARATORS:
HPN -00X, -1XX, AND –200: MICROPOROUS RUBBER
HPN –201 THROUGH –207: HIGH POROSITY MICROPOROUS POLYETHYLENE SLEEVE.
POST TYPE:
HPN -00X, –1XX: SINGLE POST
HPN –200 THROUGH –203 AND –206: DOUBLE POSTS
HPN –204, -205 AND –207: FOUR POSTS
POST SEAL TYPE:
HPN -00X: BURNED RING
HPN -1XX AND –200: SLIDE-LOCK SEAL
PLATE SUSPENSION TYPE:
POSITIVE: HPN -00X: LEDGE HUNG
HPN -1XX AND –200: BRIDGE HUNG
NEGATIVE: HPN -00X: LEDGE HUNG
HPN -1XX AND -200: BOTTOM SUPPORTED
PLATES (HPN –201 THROUGH –207)
POSITIVE: SQUARE TUBULAR, W/LOW ANTIMONY ALLOY SPINES
NEGATIVE: FLAT PLATE, PASTED, W/ CALCIUM ALLOY GRID
VENT TYPE: FLAME ARRESTOR, FUSED ALUMINA
BOLT CONNECTORS:
HPN –00X, -1XX, AND –200: STAINLESS STEEL, STANDARD ENGLISH MEASURE, HEX-HEAD
INTERCELL CONNECTORS: LEAD-PLATED COPPER

ELECTRICAL SPECIFICATION:
FLOAT VOLTAGE:
ACCEPTABLE RANGE: 2.15 - 2.22 VPC
RECOMMENDED: 2.20 VPC

MAXIMUM PHYSICAL DIMENSION:
PLATE DIMENSIONS:
POSITIVE:
HPN -00X: .44" THICK
HPN -1XX AND –200: 10.9"H X 9.2"W X .35"T
NEGATIVE:
HPN -00X: .18" THICK
HPN -1XX AND –200: 11.4"H X 9.4"W X .24"T

NOTE:
FOR HPNS –201 THROUGH –207, USE TEMPERATURE-COMPENSATED CHARGING.

FIGURE 1: HPN -00X (SINGLE CELL SHOWN)

FIGURE 2: HPN -1XX AND –200 (SINGLE CELL SHOWN)

FIGURE 3: HPN –201 THRU -207

REVISION CONTROL				
REV	ECRN	DATE	BY	APPRV
CA0	90014658	2/4/98	ADH	ADH
CB0	90037354	2/02	ADH	ADH

ENGINEERING	
Approved A. HOWERY	Date 2/4/98
Engineer A. HOWERY	
Drawn By B. KAISER	Date 6/4/99
Harmon Industries Grain Valley, MO	
Title BATT LEAD ACID	
Drawing No. 017123-XXX	Sheet 1 of 1

Mechanical Connectors

Related Materials

Bond Strand

TranSystems	Vermont Agency of Transportation Lyndon STPG SGNL(48) Project
	Approved Fabrication/Installation may be undertaken
X	Approved as Corrected Approval provided comments are incorporated 1
	Correct, Revise and Resubmit Fabrication/Installation MAY NOT be undertaken
	No Action Taken
Review / approval does not relieve the contractor from complying with all the requirements of the contract	

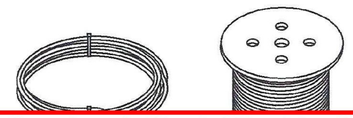

1 - Bond Strand shall conform to Special Provision Section 64 INSTALLATION OF ACTIVE WARNING SYSTEM (c) Installation Part 7 Rail Bonding Installation (e) Track Circuit Connections (see attached pages 67 and 68). Bond Strands shall be installed with compression sleeves, taped and insulated to prevent corrosion.

Part Number			Description
100' Coil	500' Reel	1000' Reel	
SBS8CINSUL	SBS8LINSUL	SBS8INSUL	S-8, 3/16", Black 4/64 PVC
SBS8CINORG	SBS8LINSORG	SBS8INORG	S-8, 3/16", Orange 4/64 PVC
SBS8TCINS	SBS8TDINSUL	SBS8TINSUL	S-8, 3/16" Tinned, Black 4/64 PVC
SBS8TCINS664	SBS8TLINS664		S-8, 3/16" Tinned, Black 6/64 PVC
SBS8TCINSRD		SBS8TINSRD	S-8, 3/16" Tinned, Red 6/64 PVC
SBS8CBARE SBS17CBARE	SBS8LBARE	SBS8BARE	S-8, 3/16", Bare S-17, 5/16", Bare
A806A12F100		A806A12F1000	S-8, 3/16" Tinned, Orange 6/64 PVC

Miscellaneous Bonding Items

Part Number	Description	Std. Pkg.
B154A	3/8" Straight head plug terminal	25
B101AA	Lug - 1/16" x 1/2", 1-hole (1/4" stud)	25
SBK012A	1/4" split stud kit	10
SBK012B	1/4" split stud kit	100
SB25	Rail Welding Material F80	50
SB32	Rail Welding Material F80	50

installed in accordance with the manufacturer's instructions.

6. Insulated Joint Installation.

   a. Insulated joints, where required, shall be furnished by the Contractor in accordance with these specifications.

7. Rail Bonding Installation.

   a. All non-insulated joint bars in the crossing circuited territory shall be double bonded with one 48 inch long welded web bond and one 60 inch plug type web bond.

   b. Track switch, frog fouling bonds, and track circuit connections shall be exothermically welded bonds.

   c. Welded Bonds.

      1. The surfaces of the rails where the bond is to be applied shall be ground clean with a reinforced grinding wheel, of a type as recommended by the bonding material manufacturer. The use of vitrified grinding wheels will not be allowed. After grinding, the surface shall be cleaned with an approved non-toxic solvent to remove all traces of grease and dirt. After the surface has been ground and cleaned, it shall be heated to drive out any moisture. The bond wire shall then be welded to the rail in a manner to ensure a thorough mechanical and electrical connection.

      2. The Contractor shall insure that each bond connection is thoroughly welded to the rail. The Engineer reserves the right to require a test of each weld by hammer and striker, or in any other manner that in the opinion of the Engineer is reasonable.

      3. The Contractor shall demonstrate that the bonding is accordance with the requirements of this Section and as specified in AREMA Signal Manual Part 8.1.32 and AREMA Drawing Number 8.1.25 figure 1 (type 2 plugs).

   d. Plug-Type Rail Web Bonds.

      1. Plug type web 60 inch bonds shall be installed in accordance with AREMA Signal Manual Part 8.1.25 and AREMA Drawing number 8.1.25 figure 1 (type 2 plug).

      2. Rail shall be drilled in accordance with AREMA Signal Manual Part 8.6.25. Rail shall be drilled with an approved 3/8 inch bonding drill bit and drill normally used for this purpose to permit the application of the bond to the rail web.

   e. Track Circuit Connections.

      1. Track Circuit Connectors shall be furnished and installed in accordance with AREMA Signal Manual, Part 8.1.32 and meet the requirements of AREMA Signal Manual, Part 8.1.33. Connectors shall have a tab end

that fits squarely to the rails. The opposite end of the connectors shall have a 7" length of turned bond strand with a compression sleeve installed for connection to bond strand wires.

2. Track Circuit Connectors shall be furnished and installed with insulated bond strand cable. The bond strand shall have a nominal diameter of 0.200" and be jacketed with 3/32" rubber compound. The bond strand shall be connected to the solid #6 insulated twisted track wire with compression sleeves, and taped and insulated to prevent corrosion. The connection between track wire and bond strand shall be housed in rubber water hosing to prevent damage from ballast and frost in the ground.

3. The underground cable shall be stripped back a sufficient distance for the exposed conductor to be fully inserted into the compression sleeve. The sleeve shall then be compressed with the type of compression tool designed for that purpose. The sleeve shall then be covered with two layers of vinyl plastic electrical tape.

4. A twenty-four inch piece of Cordura hose shall be located beneath the rail base and sealed with sealing compound, in a manner as approved by the Engineer.

5. Any track circuit connection installed by the Contractor, that is found to be defective prior to acceptance, shall be removed and a new track circuit connection installed at no additional cost the Agency.

f. Care shall be taken to avoid excessive slack in the bond conductor to prevent vandalism.

g. Any bond, weld, or connection installed by the Contractor which is found to be defective prior to acceptance, shall be removed and a new bond shall be installed as part of the work at no additional cost to the Contract.

h. If existing rail bonding is in place on the approach circuits then the Contractor shall inspect and verify that all such bonding, including track switches, is in accordance with these specifications. If additional rail bonding, or rail bonding corrections, is required then the Contractor shall correct any such deficient existing rail bonding at no cost to the Agency in accordance with these specifications, or as directed by the Engineer.

8. Installation of AHCW Shelters and Cases:

a. Each AHCW Shelter or case shall be mounted level and plumb on the foundation and secured thereon with the hardware provided.

CADWELD® Bonding Products

TranSystems	Vermont Agency of Transportation Lyndon STPG SGNL(48) Project
	Approved Fabrication/Installation may be undertaken
x	Approved as Corrected Approval provided comments are incorporated
	Correct, Revise and Resubmit Fabrication/Installation MAY NOT be undertaken
	No Action Taken
Review / approval does not relieve the contractor from complying with all the requirements of the contract	

1

Bonds

Track Connectors - Web

Order in boxes of 100 - Includes one pair of replacement molds, flint ignitor and necessary F80 formulation welding material.

1 - related to Submittal 012 "Joint Bonds", refer to response for Submittal 012 for comments.

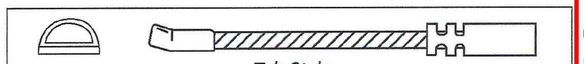

Tab Style

Part Number	Description
SBTBBU4A	3/16" Dia. x 1" Tab x 4" Long Bootleg
SBTBCU412	3/16" Dia. x 1" Tab x 12" Long Bootleg

For complete Welder (SBTBT21C) see page 13 and compression tool (SBT031DJ) see page 16.

The CADWELD® track connector from ERICO is used when the advantages of a welded connection to the rail web are desired and standard compression connection to track wire is required. The connector provides flexibility and resistance to vibration fatigue by incorporating a length of bond strand between the CADWELD connection and the sleeved end. The SBTBBU4A and SBTBCU412 are 3/16" tinned copper alloy. (Other lengths available.)

Jumper, Switch and Bootleg Bonds

Substitute desired length of bond in even inches for 'X'. Replacement molds sold separately. All CADWELD bonds are furnished with the necessary F80 formulation welding material.

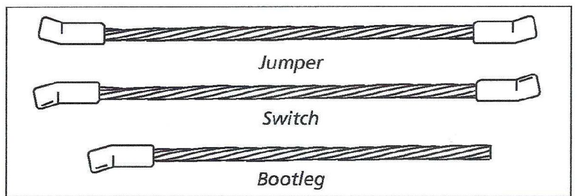

Diameter	Jumper	Switch	Bootleg
3/16" Dia.			
3/4" XS Style	SBXSJ33"X"	SBXSS33"X"	SBXSB33"X"
3/4" Tab	SBTBJ33"X"	SBTBS33"X"	SBTBB33"X"
1" Tab	SBTBJ34"X"	SBTBS34"X"	SBTBB34"X"
1-1/2" Tab	SBTBJ36"X"	SBTBS36"X"	SBTBB36"X"
5/16" Dia.			
1" Tab	SBTBJ54"X"	SBTBS54"X"	SBTBB54"X"

Also available as bond only.
STD Packs of 10 or 25

PLT2S-M

Add to BOM | Add to Favorites

Cable Tie, 7.4", Standard cross section

TranSystems	Vermont Agency of Transportation Lyndon STPG SGNL(48) Project
X	**Approved** Fabrication/Installation may be undertaken
	Approved as Corrected Approval provided comments are incorporated
	Correct, Revise and Resubmit Fabrication/Installation MAY NOT be undertaken
	No Action Taken
Review / approval does not relieve the contractor from complying with all the requirements of the contract	

Product Details Related Documents

Std. Pkg. Qty.	1000
Std. Pallet Volume (cf)	53.046174
Std. Pallet Weight (lb)	747.8400
Std. Ctn. Volume (cf)	2.2103
Std. Ctn. Weight (lb)	31.1600
RoHS Compliancy Status	Compliant
Part Description	Cable Tie, 7.4", Standard cross section
Product Type	Cable Ties
Material	Nylon 6.6
Color	Natural
Mil. Std. Part Number	MS3367-1-9
CSA Certified	Yes
UL Listed (File #E56854)	Yes
UL Recognized (File #E56854)	Yes
Width (In.)	0.190

Width (mm)	4.8
Length (mm)	188
Length (In.)	7.4
Max. Continuous Use Temperature	185°F (85°C)
CE Compliant	Yes
Locking Style	Locking
Pricing Description	Cable Tie, 7.4"L (188mm), Standard, Nylon, Natural
Tool	GTS, GTSL, GS2B, GTH, GS4H, PTS, PTH, PPTS, STS2, STH2
Thickness (mm)	1.3
Thickness (In.)	0.052
Plenum-Rated	Yes, for use in plenum or air handling spaces per NEC Sec. 300.22 (C) and (D)
Min. Loop Tensile Strength (Lbs.)	50
Min. Bundle Diameter (mm)	1.5
Min. Bundle Diameter (In.)	0.06
Max. Bundle Diameter (mm)	48
Max. Bundle Diameter (In.)	1.88
Cross Section	Standard
Min. Loop Tensile Strength (N)	222
Min. Order Qty.	1,000.0000

ERITECH®

CADWELD® ONE SHOT

For Connections to Ground Rods

- Features a single-use ceramic mold which eliminates the need for a mold and frame and / or handle clamps.
- Produces a permanent connection that will not loosen or corrode.
- Fits copper-bonded (threaded and plain), galvanized and stainless steel ground rods.
- Simple to use.
- NEC® compliant
- cULus® Listed
- Rural Utilities Service (RUS) accepted

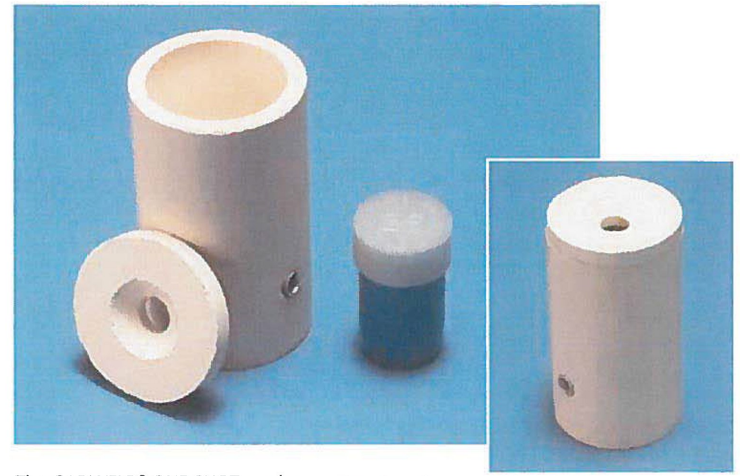

The CADWELD® ONE SHOT produces a permanent exothermically welded connection to a ground rod that will not loosen, corrode away, or increase in resistance for the life of the installation.

TranSystems	Vermont Agency of Transportation Lyndon STPG SGNL(48) Project
X	**Approved** Fabrication/Installation may be undertaken
	Approved as Corrected Approval provided comments are incorporated
	Correct, Revise and Resubmit Fabrication/Installation MAY NOT be undertaken
	No Action Taken
Review / approval does not relieve the contractor from complying with all the requirements of the contract	

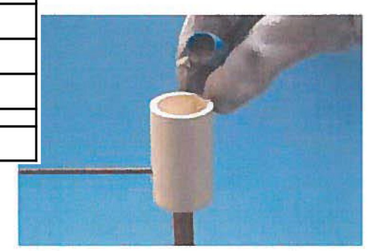

Position CADWELD ONE SHOT and wire on prepared ground rod. Dump the welding material into the ceramic crucible.

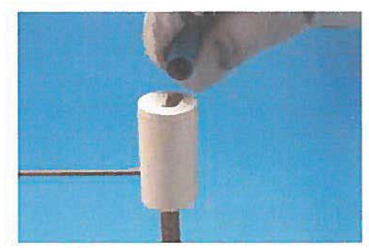

Set the lid on the CADWELD ONE SHOT body and add the starting material.

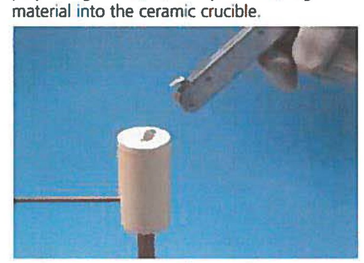

Initiate the reaction with T320 flint ignitor

The reaction produces a finished permanent exothermic connection

ERICO®

ERITECH

CADWELD® ONE SHOT

For Connections to Ground Rods

Ordering Information

Ground Rod	Concentric Conductor Solid	Concentric Conductor Stranded	Metric Cable Conductor Square mm	CADWELD ONE SHOT Part Number Type GR	Type GT	Type NT	Type NX
1/2" (12.7 mm)	6, 8 3, 4 1, 2	8 4, 6 2, 3	8-10 14-22 30-38	GR1141G GR1141L GR1141V	GT1141G GT1141L GT1141V	NT1141G NT1141L NT1141V	NX1141G NX1141L
5/8" (14.2 mm)	6, 8 3, 4 1, 2 2/0, 1/0	8 4, 6 2, 3 1/0, 1 2/0 4/0	8-10 14-22 30-38 50-60 70	GR1161G GR1161L GR1161V GR1162C GR1162G GR1162Q	GT1161G GT1161L GT1161V GT1162C GT1162G	NT1161G NT1161L NT1161V	NX1161G NX1161L NX1161V
3/4" (17.2 mm)	6, 8 3, 4 1, 2 2/0, 1/0	8 4, 6 2, 3 1/0, 1 2/0 4/0	8-10 14-22 30-38 50-60 70	GR1181G GR1181L GR1181V GR1182C GR1182G GR1182Q	GT1181G GT1181L GT1181V GT1182C GT1182G	NT1181G NT1181L NT1181V	NX1181G NX1181L NX1181V
				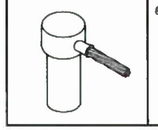	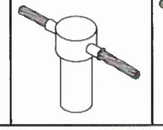	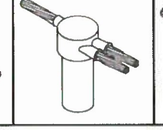	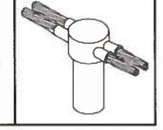

Note: T320 flint ignitor sold separately.

NEC is a registered trademark of, and National Electric Code (NEC) standard is a copyright of the National Fire Protection Association.
cULus is a registered trademark of the Underwriters Laboratories, Inc.

WARNING – ERICO products shall be installed and used only as indicated in ERICO's product instruction sheets and training materials. Instruction sheets are available at www.erico.com and from your ERICO customer service representative. Improper installation, misuse, misapplication or other failure to completely follow ERICO's instructions and warnings may cause product malfunction, property damage, serious bodily injury and death.

Copyright ©2007 ERICO International Corporation. All rights reserved.
CADDY, CADWELD, CRITEC, ERICO, ERIFLEX, ERITECH, and LENTON are registered trademarks of ERICO International Corporation.

GE Transportation
Rail

TranSystems	Vermont Agency of Transportation Lyndon STPG SGNL(48) Project
X	**Approved** Fabrication/Installation may be undertaken
	Approved as Corrected Approval provided comments are incorporated
	Correct, Revise and Resubmit Fabrication/Installation MAY NOT be undertaken
	No Action Taken
Review / approval does not relieve the contractor from complying with all the requirements of the contract	

Crossing Lamp Controller XLC

Safe, reliable crossing light and bell activation

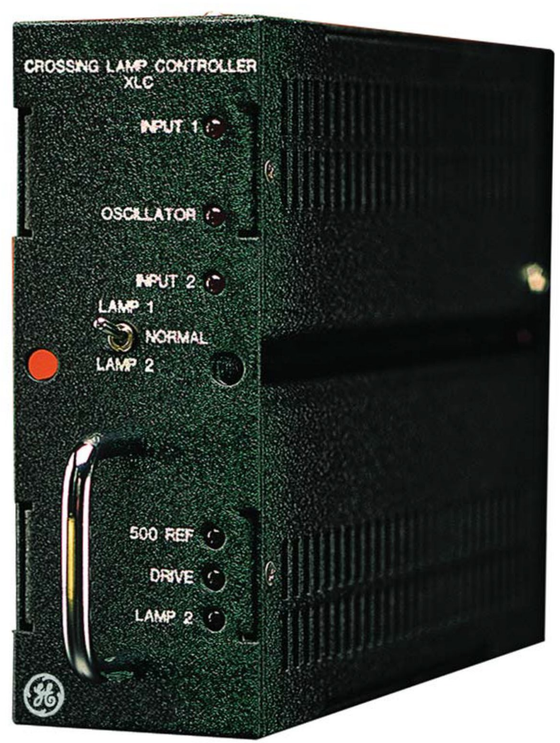

The GE Crossing Lamp Controller XLC represents an advanced concept in flashing light circuit technology. Using time-tested all solid-state flasher technology and a B1 relay base package, the Crossing Lamp Controller provides safe, reliable operation.

As a 20-amp output/two-input flasher control circuit, the XLC provides the flasher and bell outputs necessary for virtually any standard crossing application. The XLC's ability to synchronize multiple units allows it to be used for applications ranging from a single flasher location to systems with multiple XLCs providing additional output current as necessary to match the location's maximum current draw.

With its unique packaging concept and a series of LED indicators and lamp adjustment switches, the XLC provides a low-cost system that's easy to install, set up, and troubleshoot. The XLC's solid state design does not require mandatory testing.

imagination at work

Accessories

The XLC has the following accessories available to assist in simplifying installation and system setup.

- A lamp arrester panel designed for flasher-only applications (model LAP-F)
- A lamp arrester panel designed for gated locations (model LAP-G)
- A 40-amp lamp resistor panel used for l lamp voltage adjustment (model LRP-40)
- A combination 20-amp lamp resistor, surge arrestor panel used with a single XLC with or without gates (model Crossing Arrestor Panel XAP-20)
- A low-output impedance gate interface module, the Vital Relay Driver (VRD), is designed to interface a gate control output to the low-input impedance of most gate mechanisms' motor control relays

Specifications

Dimensions
Width: 2.5"
Height: 8.0"
Depth: 8.0"

Weight
3.5 pounds

Operating Temperature
Minimum: -40°C
Maximum: +70°C

Relative Humidity
95%, non-condensing

Voltage
8 to 16 VDC

Current Draw
500 ma maximum B12
100 ma maximum L12

Control Inputs
500 ohms

Lamp Output
20 amps maximum

Flash Rate
55 flashes per minute

Bell Output
2 amps maximum

Synchronous Input
10K ohms

imagination at work

NOTE 1:- HEX NUT REF 6 TO BE TIGHTENED ENOUGH TO REMOVE PAINT FROM OUTER SURFACE OF CHANNEL THUS PROVIDING A GOOD ELECTRICAL GROUND

NOTE 2:- PLACE GROUND POST PARTS IN LARGE COIN ENVELOPE (TAG) AND SEAL BY STAPLING (PARTS NOT TO BE ASSEMBLED.)

USE 46989–7 UNTIL STOCK IS EXHAUSTED

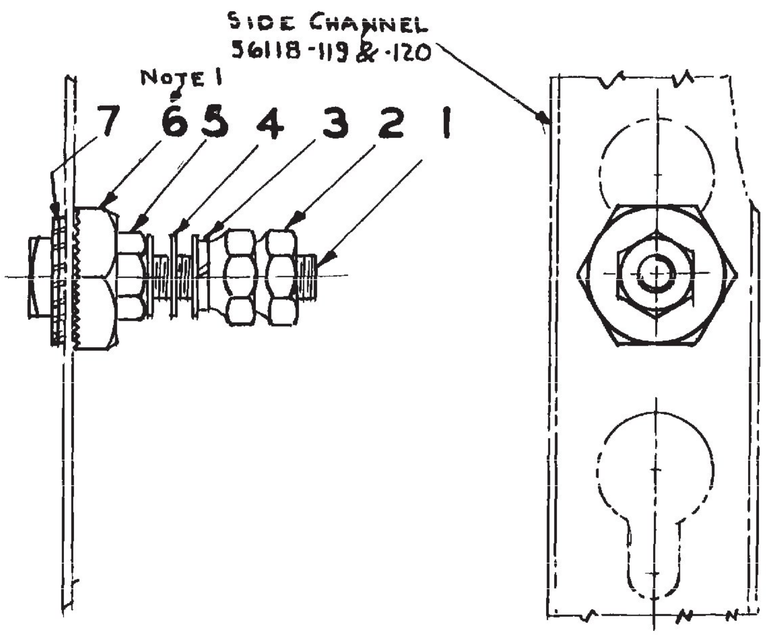

GENERAL RAILWAY SIGNAL CO · ROCHESTER N.Y.

INDEX NAME: GROUND POST ASSEM. DWG NO: 58277

KIND & DESC: 5/16-18 GROUND POST ASSEM. WITH SELF SCRAPING BASE NUTT

LISTED ON DWG | MAJOR SUB ASS'Y | DWG NO

DEVICE USED ON: ADJUSTABLE INSTRUMENT CASE DWG NO: 58271 KEY NO

SUPERSEDES 58277 (REV 5) DATED 11-30-54

TOLERANCES UNLESS OTHERWISE SPECIFIED FRACTIONS ± DECIMALS ± ANGLES ±

GR-2	GR.1	DRAW. NO	REF	NAME	
VOID	1	353	1	SCREW 5/16-18 x 1 1/8 SQ HD BRZ.	
	2	42843-9	2	NUT 5/16-18 x 1/2 HEX 5/16 TH	
	1	0623-4	3	WASHER 5/16 SPR LOCK BRZ	
	3	1225-21	4	WASHER 21/64 ID 5/8 OD .040 TH	
	1	46989-11	5	NUT 5/16-18 x 1/2 HEX 3/16 TH	
	1	18466	6	NUT 5/16-18 x 1 HEX 3/16 TH	
	2	53029-50	7	WASHER 5/16 SHAKEPROOF	
	1	55085-193		TAG (ENVELOPE)	SEE NOTE 2

REVISIONS & NO AND DATE OF DRAWING	REV. NO	APP'LS
RETRACED. REF 2 WAS 42843-4 REF 5 WAS 46989-7 R-A2098 12-7-56	6	

A

TransSystems — Vermont Agency of Transportation, Lyndon STPG SGNL(48) Project

- [X] Approved — Fabrication/Installation may be undertaken
- [ ] Approved as Corrected — Approval provided comments are incorporated
- [ ] Correct, Revise and Resubmit — Fabrication/Installation MAY NOT be undertaken
- [ ] No Action Taken

Review / approval does not relieve the contractor from complying with all the requirements of the contract

DR FRED BURNICKA	TR F H H.	CHKD	12/7/56
ENGR		LAB	
ENGR		CH DR	
ENGR		CH ENGR	

NOTICE OF CONFIDENTIAL INFORMATION Information contained herein is confidential and is the property of the General Railway Signal Company Where furnished with a proposal the recipient shall use it solely to evaluate the proposal Where furnished to a customer it shall be used solely for purposes of inspection, installation or maintenance Where furnished to a supplier it shall be used solely in the performance of the contract The information shall not be used or disclosed by the recipient for any other purpose whatsoever

CUT WIRE GUARANTEED 4-58

10 X 14

H-5

Copper-Bonded Ground Rods

Pointed Rods

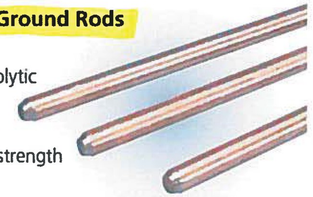

- 99.9% pure electrolytic copper coating
- Molecular bond to nickel-sealed high strength steel core
- Tensile strength greater than 80,000 PSI on 1/2" & 90,000 PSI on 5/8" and 3/4"
- Minimum copper coating of 10 mils on rods listed to UL® 467
- Legibly marked with manufacturer's ID and catalog designation
- Manufactured to exceed the requirements of ANSI®/NEMA® GR1

Part No.	Nominal Diameter (in)	Length (ft)	Plating Thickness (mils)	Weight per 100 rods (lbs)	Standard Bundle
613840**	3/8	4	10	135	5
613880**	3/8	8	10	270	5
611380	1/2	8	10	553	5
615880	5/8	8	10	680	5
615883	5/8	8	13*	680	5
613480	3/4	8	10	1,000	5
613483	3/4	8	13*	1,000	5
611300	1/2	10	10	738	5
615800	5/8	10	10	844	5
615803	5/8	10	13*	844	5
613400	3/4	10	10	1,240	5
614400	1	10	10	2,204	5
615812	5/8	12	10	1,000	5
613412	3/4	12	10	1,480	5
615815	5/8	15	10	1,275	5
613415	3/4	15	10	1,850	5

* 13 mils of copper meet specifications of RUS.
** Non-UL listed rods.
† Additional lengths available.

Threadless Compression Couplers for Copper-Bonded Pointed Rods

- Made of high-strength silicon bronze
- Tapered so when rod is driven into coupling, parts compress to form a conductive connection
- UL & CSA® Listed

Part No.	Nominal Rod Diameter (In)	Unit Weight (lbs)	Unit Weight (kg)	Standard Package
CC12F	1/2 (full)	0.240	0.108	25
CC58	5/8	0.300	0.134	25
CC34	3/4	0.450	0.202	25

Steel Driving Sleeves for Pointed Rods*

- Slides on top of ground rod to prevent mushrooming while driving into ground

Part No.	Ground Rod Size (Unthreaded)	Standard Package
B13714	1/2" Copper-Bonded or Steel rod	1
B13716	5/8" Copper-Bonded rod (.563" diameter)	1
B13731	5/8" Steel rod (.625" diameter)	1
B13718	3/4" Copper-Bonded rod (.682" diameter)	1
B13733	3/4" Steel rod (.750" diameter)	1
B13722	1" Copper-Bonded rod (.914" diameter)	1
B13737	1" Steel rod (1.00" diameter)	1

*For unthreaded ground rods only.

Economical Sleeves for 5/8" Copper-Bonded, Pointed Rods

Part No.	Ground Rod Size	Standard Package
ED558	5/8" Copper-Bonded Rods (.563" diameter)	1

Driving Heads For Copper-Bonded Pointed Rods

- For use in power assisted ground rod drivers

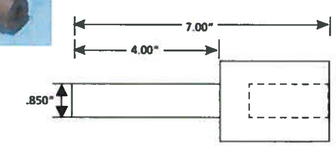

Part No.	Ground Rod Size	Standard Package
DH58	5/8" Copper-Bonded Rods (.563" diameter)	1
DH34	3/4" Copper-Bonded Rods (.682" diameter)	1

TranSystems	Vermont Agency of Transportation Lyndon STPG SGNL(48) Project
X	**Approved** Fabrication/Installation may be undertaken
	Approved as Corrected Approval provided comments are incorporated
	Correct, Revise and Resubmit Fabrication/Installation MAY NOT be undertaken
	No Action Taken
Review / approval does not relieve the contractor from complying with all the requirements of the contract	

This Drawing, which contains proprietary Information is the property of General Electric Company. It shall not be reproduced in any manner nor disclosed to third parties without written permission of General Electric Company

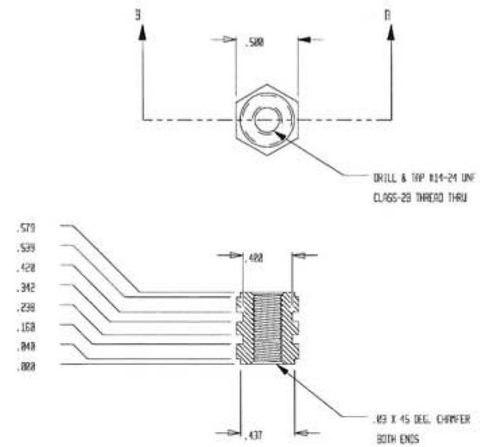

SECTION B-B

BRASS THREADED INSERT

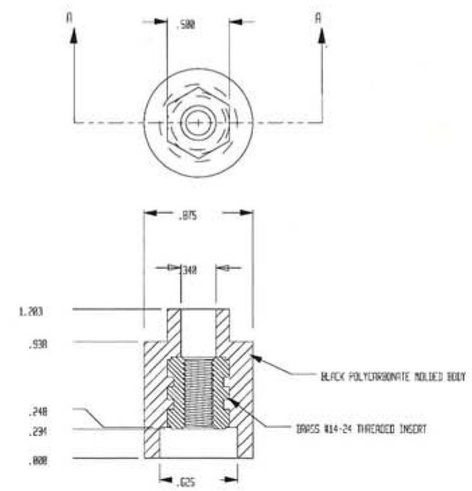

SECTION A-A

NOTE:

1. MANUFACTURED BY RUCO PRODUCTS, BLUE SPRINGS MO.

BRASS INSERT NOTES:

1. MATERIAL: FREE CUTTING BRASS, HALF HARD TEMPER (H-02)
HPN 36065-429 BAR

2. FINISH: BRIGHT NICKEL (.0004 TO .0006 IN THICK)
PER ASTM B456-71 1979.

MFG: FISCHER SPECIAL CO.

CORNELL MFG. CO.
P/N 1424-32107
OR EQUIVALENT

		PEB	PEB	PEB	PEB	APPR	
		CAG	MTK	MTK	PEB	BY	
		12/00	10/00	3/98	5/95	DATE	
		98031908	98030551	98015067	250-5589	ECRN	
		A00	A00	A00	A00	REV	

ENGINEER: P. BROWN	SCALE: 1:1
DRAWN BY: P. BROWN	DATE: 5/95
MATERIAL: ---	FINISH: ---
TOLERANCE UNLESS NOTED	
DECIMALS: .XX ±.015, .XXX ±.005	FRACTIONS: ± ---
ANGLES: ± ---	

Harmon

HARMON INDUSTRIES, INC.
ARGO & DILLINGHAM ROADS
GRAIN VALLEY, MO. 64029
(800) 825-3178

TITLE: HARMON INSULATED NUT

FILE TYPE	DRAWING NO.	SHEET OF	SIZE
CADKEY	013986-000	1 1	B

TranSystems

Vermont Agency of Transportation
Lyndon STPG SGNL(48) Project

X	**Approved** Fabrication/Installation may be undertaken
	Approved as Corrected Approval provided comments are incorporated
	Correct, Revise and Resubmit Fabrication/Installation MAY NOT be undertaken
	No Action Taken

Review / approval does not relieve the contractor from complying with all the requirements of the contract

CADWELD® BONDING PRODUCTS

BONDS

Joint Head Bonds

Order in boxes of 100 - Includes one pair of replacement molds, flint ignitor and necessary weld me

Bond	6 1/2"	7"	7 1/2"	9 3/4"	9 3/4"
3/16" Dia.					
XS Style	SBS24882		SBS24883	SBS24884	
Head Free Rail	SB20112		SB20128	SB20116	
Tab Style	SB20104		SB20136	SB20108	
5/16" Dia.					
Tab Style		SB20175			SB20118
Head Free Rail		SB20175HF			
Price Each	2.70	3.90	2.91	3.12	4.71

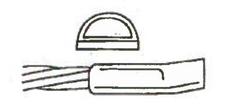

Tab Style

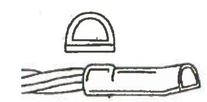

XS Style

2161-01

For complete Welders (T-6 & T-7 style) see page 7.

CADWELD rail head joint bonds provide:

- Maximum broken rail protection
- Maximum corrosion resistance
- Simple and highly portable installation equipment
- Maximum protection against physical damage
- 7 to 1 shear strength over a pin head bond
- Unchanging electrical resistance
- Minimum installer skill required
- Equally usable on old, worn, or new rail
- Not destroyed by rail end build up

1 - Joint Bonds shall conform to Special Provision Section 74 ACTIVE WARNING SYSTEM MATERIALS (j) Miscellaneous Products and Components, (25) Rail Bonds (see attached pg 54 of Special Provisions). All non-insulated joints shall be double bonded. Both proposed joint bonds are acceptable however at least one bond at each joint must be the proposed SB20175 - 7" Long Joint Bond.

Track Connectors - Web

Orders in boxes of 100 - Includes one pair of replacement molds, flint ignitor and necessary weld metal.

Part No.	Description	Price Each
SBTBBU4A	3/16" Dia. x 1" Tab x 4" Long Bootleg	3.08
SBTBCU412	3/16" Dia. x 1" Tab x 12" Long Bootleg	3.16

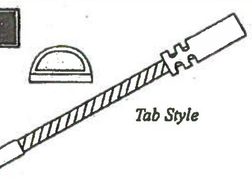

Tab Style

3522-01

For complete Welder (SBTBT21C) see page 8 and compression tool (SBT031TJ) see page 12.

The ERICO CADWELD Track Connector is used when the advantages of a welded connection to the rail web are desired and standard compression connection to track wire is required. The connector provides flexibility and resistance to vibration fatigue by incorporating a length of bond strand between the CADWELD connection and the sleeved end. The SBTBBU4A and SBTBCU412 are 3/16" tinned copper alloy. (Other lengths available)

TranSystems — Vermont Agency of Transportation, Lyndon STPG SGNL(48) Project

- [ ] Approved — Fabrication/Installation may be undertaken
- [X] Approved as Corrected — Approval provided comments are incorporated 1
- [ ] Correct, Revise and Resubmit — Fabrication/Installation MAY NOT be undertaken
- [ ] No Action Taken

Review / approval does not relieve the contractor from complying with all the requirements of the contract

ERICO®

34600 Solon Road • Solon, OH 44139 United States
(800) 447-7245 • Fax (800) 309-8961
RT2A68 10/1/98

Part # 005712-012

Rail Jumper Bond Kit, Signal, Tab Style – SBTBJ5448

TranSystems	Vermont Agency of Transportation Lyndon STPG SGNL(48) Project
	Approved Fabrication/Installation may be undertaken
X	**Approved as Corrected** Approval provided comments are incorporated 1
	Correct, Revise and Resubmit Fabrication/Installation MAY NOT be undertaken
	No Action Taken
Review / approval does not relieve the contractor from complying with all the requirements of the contract	

- Provides unchanging electrical resistance
- Superior corrosion resistance
- Easy installation, with minimum installer training required
- Simple and highly-portable installation equipment
- Equally usable on old, worn, or new rails
- Highly durable

1 - Joint Bond installation shall conform to Special Provision Section 64. INSTALLATION OF ACTIVE WARNING SYSTEM (c) Installation (7) Rail Bonding Installation (see attached pg 67 of Special Provisions). All non-insulated joint bars within crossing circuited territory shall be double bonded with one 48 inch long welded web bond and one 60 inch plug type bond

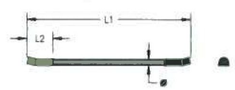

Part Number	SBTBJ5448
Material	Cadmium Bronze Copper
Finish	Bare Tinned
Bond Terminal Style	Tab
Conductor Size	5/16" Bondstrand
Length 1 (L1)	48"
Length 2 (L2)	1"
Diameter (Ø)	5/16"
Standard Packaging Quantity	25 pc
UPC	782856760B0

Kits include: (25) bonds and (50) F80 alloy welding material.

WARNING
Pentair products shall be installed and used only as indicated in Pentair's product instruction sheets and training materials. Instruction sheets are available at erico.pentair.com and from your Pentair customer service representative. Improper installation, misuse, misapplication or other failure to completely follow Pentair's instructions and warnings may cause product malfunction, property damage, serious bodily injury and death and/or void your warranty.

© 2016 Pentair. All rights reserved.
Pentair, CADDY, CADWELD, CRITEC, ERICO, ERIFLEX, ERITECH and LENTON are owned by Pentair or its global affiliates.
All other trademarks are the property of their respective owners. Pentair reserves the right to change specifications without prior notice.

ERICO PENTAIR

KRPA Series Panel Plug-in Relay

- **5 to 10A current capability**
- **Contact arrangements of 1, 2 and 3 form C (CO)**
- **Octal type termination for quick installation**
- **Indicator lamp available on certain models**

TranSystems	Vermont Agency of Transportation Lyndon STPG SGNL(48) Project
	Approved Fabrication/Installation may be undertaken
X	**Approved as Corrected** 1 Approval provided comments are incorporated
	Correct, Revise and Resubmit Fabrication/Installation MAY NOT be undertaken
	No Action Taken
Review / approval does not relieve the contractor from complying with all the requirements of the contract	

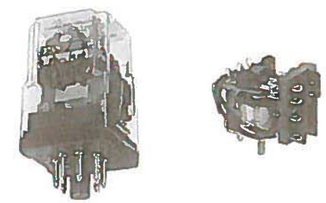

Approvals

UL E22575; CSA LR15734

Technical data of approved types on request

Contact Data

Contact arrangement	1 form C (CO), 2 form C (CO), 3 form C (CO)	
Rated voltage	240VAC	
Rated current	10A	
Contact material	Ag	AgCdO
Min. recommended contact load	100mA, 12VDC	300mA, 12VDC
Frequency of operation	360 ops./hour	360 ops./hour

Contact ratings

Type	Load	Cycles
UL 508		
KRPA, Ag		
	5A, 120VAC	$100x10^3$
	3A, 240VAC	$100x10^3$
	1/10HP, 120VAC	$1x10^3$
	1/6HP, 240VAC	$1x10^3$
KRPA, AgCdO		
	10A, 240VAC	$100x10^3$
	1/3HP, 120VAC	$1x10^3$
	1/2HP, 240VAC	$1x10^3$
KA, Ag		
	5A, 120VAC	
	3A, 240VAC	
	1/10HP, 120VAC	
	1/6HP, 240VAC	
KA, AgCdO		
	10A, 120VAC	
	6A, 240VAC	
	1/6HP, 120VAC	
	1/3HP, 240VAC	
Mechanical endurance	$10x10^6$ ops	

Coil Data

Coil voltage range	6 to 220VDC 6 to 240VAC
Coil insulation system according UL	Class B

Coil versions, DC coil

Coil code	Rated voltage VDC	Operate voltage VDC	Coil resistance Ω±10%	Rated coil power W
6	6	4.5	32	1.15
12	12	9.0	120	1.2
24	24	18.0	472	1.25
48	48	36.0	1800	1.3
110	110	82.5	10000	1.2
–	220	Use 110V relay with 10KΩ, 5W resistor in series		

All figures are given for coil without preenergization, at ambient temperature +23°C.

Coil Data (continued)

Coil versions, AC coil

Coil code	Rated voltage VAC	Operate voltage VAC	Coil resistance Ω±15%	Rated coil power VA
6	6	5.1	6	2.01
12	12	10.2	24	2.02
24	24	20.4	85	2.02
20	120	102.0	2250	2.1
240	240	204.0	9110	2.1

All figures are given for coil without preenergization, at ambient temperature +23°C.

Insulation Data

Initial dielectric strength	
between open contacts	1000V$_{rms}$
between contact and coil	1000V$_{rms}$
between adjacent contacts	1000V$_{rms}$
Initial insulation resistance	
between insulated elements	KRPA: 1000MΩ KA: 100MΩ

Other Data

Material compliance	EU RoHS/ELV, China RoHS, REACH, Halogen content refer to the Product Compliance Support Center at www.te.com/customersupport/rohssupportcenter
Ambient temperature	
DC coil	KRPA: -45°C to 70°C KA: -45°C to 85°C
AC coil	KRPA: -45°C to 55°C KA: -45°C to 70°C
Category of environmental protection IEC 61810	RTI - dust protected KRPA and RT0 - open style KA
Terminal type	KRPA: 8- or 11-pin octal type plug KA: solder terminals
Weight	85g
Packaging/unit	tray/25 pcs., box/150pcs

Accessories

For details see datasheet — Sockets and Accessories, KRPA Relays

Product Code	Description
27E891	Two pole DIN socket (use 20C318 clip)
27E892	Three pole DIN socket (use 20C318 clip)
27E122	Two pole track mount socket (use 20C318 clip)
27E123	Three pole track mount socket (use 20C318 clip)

1 - Relays shall conform to Special Provision Section 63 ACTIVE WARNING SYSTEM MATERIALS (j) Miscellaneous Products and Components Part 29 Vital Relays (see attached pgs 57 and 58) and shall each be clearly marked with a registration plate.

© 2012 Tyco Electronics Corporation,
a TE Connectivity Ltd company

Catalog and product specification according to IEC 61810-1 and to be used only together with the 'Definitions' section

KRPA Series Panel Plug-in Relay (Continued)

Dimensions

KRPA

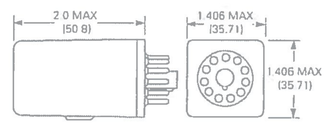

KA

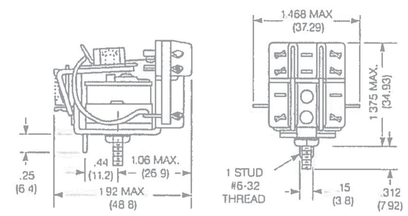

Terminal assignment

KRPA 1 form C

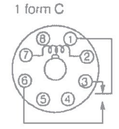

KRPA 2 form C

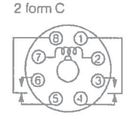

KRPA 3 form C

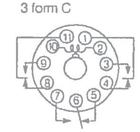

KA 1 form C

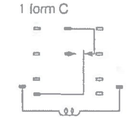

KA 2 form C

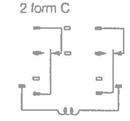

KA 3 form C

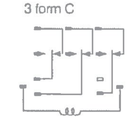

Product code structure

Typical product code: KRPA -5 A Y -120

Type
- **KRPA** Enclosed relay with octal-style plug
- **KA** Open style relay with solder terminals

Contact arrangement and rating
- **5** 1 form C (CO)
- **11** 2 form C (CO)
- **14** 3 form C (CO)

Coil input
- **A** AC, 50/60Hz
- **D** DC

Contact material and indicator lamp option
- **Y** Ag, no indicator lamp
- **G** AgCdO, no indicator lamp
- **N** AgCdO, with indicator (Code N only available with relay type KRPA)

Options
- **Leave blank** no additional options
- **F** Au flashed contacts
- **P** Push to test button
- (Options F and P only available with relay type KRPA)

Coil voltage
- Coil code: please refer to coil versions table

11-2012, Rev. 1112
www.te.com
© 2012 Tyco Electronics Corporation,
a TE Connectivity Ltd company.

Catalog and product specification according to IEC 61810-1 and to be used only together with the 'Definitions' section.

Catalog and product data is subject to the terms of the disclaimer and all chapters of the 'Definitions' section, available at http://relays.te.com/definitions

Catalog product data, 'Definitions' section, application notes and all specifications are subject to change.

KRPA Series Panel Plug-in Relay (Continued)

Product Code	Arrangement	Contact Material	Coil	Option	Part Number
KA-5AG-120	1 form C, 1 CO	AgCdO	120VAC	Open style	7-1393099-1
KA-5AY-120		Ag			7-1393099-3
KA-5DG-6		AgCdO	6VDC		7-1393099-9
KA-5DG-12			12VDC		7-1393099-7
KA-5DG-110			110VDC		7-1393099-6
KA-11AG-120	2 form C, 2 CO		120VAC		3-1393099-6
KA-11AY-6		Ag	6VAC		4-1393099-1
KA-11AY-24			24VAC		4-1393099-0
KA-11AY-120			120VAC		3-1393099-9
KA-11DG-12		AgCdO	12VDC		4-1393099-3
KA-11DG-24			24VDC		4-1393099-5
KA-11DG-110			110VDC		4-1393099-2
KA-14AG-120	3 form C, 3 CO		120VAC		5-1393099-0
KA-14AY-120		Ag			5-1393099-4
KA-14DG-24		AgCdO	24VDC		5-1393099-7
KA-14DG-110			110VDC		5-1393099-5
KRPA-5AG-24	1 form C, 1 CO		24VAC	None	9-1393104-9
KRPA-5AG-120			120VAC		9-1393104-8
KRPA-5DG-6			6VDC		1393105-5
KRPA-5DG-12			12VDC		1393105-3
KRPA-5DG-24			24VDC		1393105-4
KRPA-5DY-12		Ag	12VDC		1393105-6
KRPA-5DY-24			24VDC		1393105-7
KRPA-11AG-6	2 form C, 2 CO	AgCdO	6VAC		2-1393104-8
KRPA-11AG-12			12VAC		2-1393104-4
KRPA-11AG-24			24VAC		1-1393105-2
KRPA-11AG-120			120VAC		2-1393104-5
KRPA-11AG-240			240VAC		2-1393104-7
KRPA-11AN-12			12VAC	Indicator	3-1393104-1
KRPA-11AN-24			24VAC		3-1393104-3
KRPA-11AN-120			120VAC		3-1393104-2
KRPA-11AN-240			240VAC		3-1393104-4
KRPA-11AY-6		Ag	6VAC	None	3-1393104-9
KRPA-11AY-12			12VAC		3-1393104-5
KRPA-11AY-24			24VAC		3-1393104-7
KRPA-11AY-120			120VAC		3-1393104-6
KRPA-11AY-240			240VAC		3-1393104-8
KRPA-11DG-6		AgCdO	6VDC		4-1393104-7
KRPA-11DG-12			12VDC		4-1393104-3
KRPA-11DG-24			24VDC		4-1393104-5
KRPA-11DG-48			48VDC		4-1393104-6
KRPA-11DG-110			110VDC		4-1393104-2
KRPA-11DG-125			125VDC		4-1393104-4
KRPA-11DG-24			24VDC		4-1393104-5
KRPA-11DG-48			48VDC		4-1393104-6
KRPA-11DN-12			12VDC	Indicator	5-1393104-0
KRPA-11DN-24			24VDC		5-1393104-1
KRPA-11DN-110			110VDC		4-1393104-9
KRPA-11DY-12		Ag	12VDC	None	5-1393104-6
KRPA-11DY-24			24VDC		5-1393104-7
KRPA-14AG-12	3 form C, 3 CO	AgCdO	12VAC		6-1393104-4
KRPA-14AG-24			24VAC		6-1393104-7
KRPA-14AG-120			120VAC		6-1393104-5
KRPA-14AG-240			240VAC		6-1393104-8
KRPA-14AN-24			24VAC	Indicator	7-1393104-4
KRPA-14AN-120			120VAC		7-1393104-3
KRPA-14AN-240			240VAC		7-1393104-5
KRPA-14AY-24		Ag	24VAC	None	7-1393104-8
KRPA-14AY-120			120VAC		7-1393104-7
KRPA-14AY-240			240VAC		7-1393104-9
KRPA-14DG-12		AgCdO	12VDC		8-1393104-2
KRPA-14DG-24			24VDC		8-1393104-4
KRPA-14DG-48			48VDC		8-1393104-5
KRPA-14DG-110			110VDC		8-1393104-1
KRPA-14DG-125			125VDC		8-1393104-3
KRPA-14DN-24			24VDC	Indicator	9-1393104-0
KRPA-14DY-24		Ag		None	9-1393104-3

11-2012, Rev. 1112
www.te.com
© 2012 Tyco Electronics Corporation,
a TE Connectivity Ltd company

Catalog and product specification according to IEC 61810-1 and to be used only together with the 'Definitions' section.

Catalog and product data is subject to the terms of the disclaimer and all chapters of the 'Definitions' section, available at http://relays.te.com/definitions

Catalog product data, 'Definitions' section, application notes and all specifications are subject to change

Sockets & Accessories, KRPA Relays

- **Sockets for relays with 8-pin (octal) and 11-pin (undecal) round plugs**
- **Screw terminals**
- **Hold down springs**
- **Various mounting options**

Approvals

UL E59244, CSA LR15734

Technical data of approved types on request

Technical Data

Socket contact material	Spring brass, tin plated
Socket body material	
27E122 and 27E123	Glass-filled polyester
27E891 and 27E892	Polyamide
Maximum current	10A
Maximum Voltage	300VAC

Ordering Code for Sockets

Product Code	Pins	Terminal type	Mounting	Part number
27E122	8	screw	panel/rail	1393143-6
27E891			snap-on DIN-rail	2-1419106-3
27E123	11		panel/rail	1393143-7
27E892			snap-on DIN-rail	2-1419106-4

All accessories must be ordered separately

Dimensions

Screw terminal socket for relays with 8-pin octal base 27E122

Offers screw termination for KRPA relays and other devices with 8 pin octal base. When panel mounting, two #6-32 screws of suitable length are required. When track mounting two 24A071 retainer clips or two 24A072 retainer clips are required

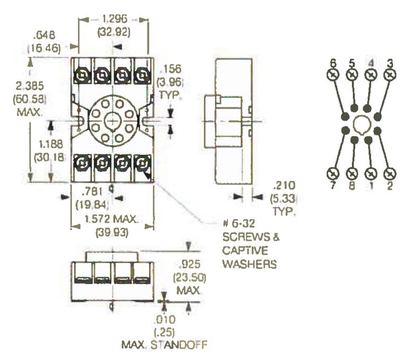

Screw terminal socket for relays with 11-pin undecal base 27E123

Offers screw termination for KRPA relays and other devices with 11-pin undecal base. When panel mounting, two #6-32 screws of suitable length are required. When track mounting, two 24A071 retainer clips or two 24A072 retainer clips are required —

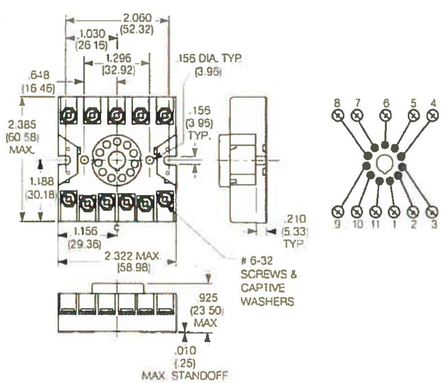

10-2012, Rev. 1012
www.te.com
© 2012 Tyco Electronics Corporation,
a TE Connectivity Ltd company

Catalog and product specification according to IEC 61810-1 and to be used only together with the 'Definitions' section.

Catalog and product data is subject to the terms of the disclaimer and all chapters of the 'Definitions' section, available at http://relays.te.com/definitions

Catalog product data, 'Definitions' section, application notes and all specifications are subject to change

Sockets & Accessories, KRPA Relays (Continued)

Dimensions

Screw terminal, DIN rail, snap-mount socket 27E891

Offers screw termination for KRPA relays and other devices with 8 pin octal base. This socket is constructed with a spring-loaded latch which allows it to be quickly snapped onto or removed from a DIN or "top hat" style mounting track. No special tools or extra hardware is required for installation. Sockets have M3.5 screw terminals which accept up to two #12 AWG wires.

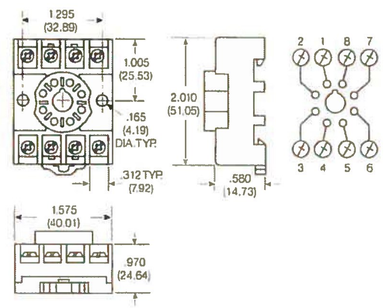

Screw terminal, DIN rail, snap-mount socket 27E892

Offers screw termination for KRPA relays and other devices with 11-pin undecal base. This socket is constructed with a spring loaded latch which allows it to be quickly snapped onto or removed from a DIN or "top hat" style mounting track. No special tools or extra hardware is required for installation. Sockets have M3.5 screw terminals which accept up to two #12 AWG wires.

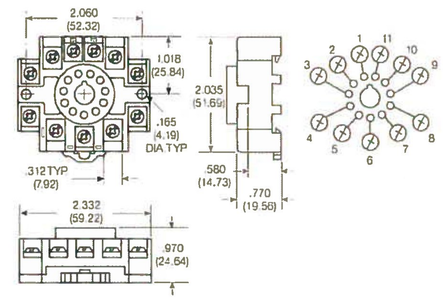

Ordering Code for Accessories

Product Code	Description	Part number
20C318	Snap-in relay hold down spring for use with KRPA, KCP and R10-T relay and KRPA sockets listed on these pages	4-1393159-8
20C176	Relay hold down spring for use with KRPA, KCP and R10-T relays and various hard mount KRPA sockets. Is held in place by mounting hardware (not supplied).	3-1393159-3
20C206	Relay hold down spring for use with KRP3 and KAP relays and various hard mount KRPA sockets. Is held in place by mounting hardware (not supplied).	1419111-1
20C419	Snap-in relay hold down spring (coil type) for use with various relays and various hard mount KRPA sockets.	5-1393159-0
24A110	Mounting track	1419111-6
24A071	Steel mounting clip with #6-32 screw - use with sockets on 24A110 track	1419111-5
24A072	Plastic twist mounting clip - use with sockets on 24A110 track	5-1393159-4
40G432	Plastic insulator - use with 24A071 to make end clip for 24A110 track	9-1393159-5

All accessories must be ordered separately

Dimensions

24A110 DIN rail style mounting track

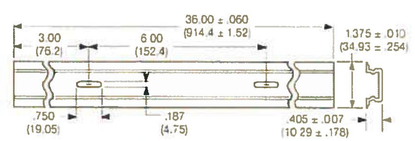

24A110 mounting track is designed to accept snap-mount sockets, as well as other P&B screw terminal sockets. Track is made of lightweight, sturdy extruded aluminum and is shipped in three-foot (914cm) lengths with mounting holes on six-inch (152mm) centers. Track can be cut to shorter lengths or used end-to-end.

Track and mounting accessories

10-2012, Rev. 1012
www.te.com
© 2012 Tyco Electronics Corporation, a TE Connectivity Ltd company

Catalog and product specification according to IEC 61810-1 and to be used only together with the 'Definitions' section.

Catalog and product data is subject to the terms of the disclaimer and all chapters of the 'Definitions' section, available at http://relays.te.com/definitions

Catalog product data, 'Definitions' section, application notes and all specifications are subject to change.

PN	MFR. P.N.	DESCRIPTION
-003	59686-005-08	B1 RELAY PLUGBOARD. TERMINALS NOT INCLUDED. (SEE PN 032781-XXX FOR TERMINALS)
-004	59686-019-02	B1 RELAY PLUGBOARD KIT WHICH INCLUDES VOLTAGE TEST POST, CURRENT TEST POST WITH PRE-SOLDERED WIRE AND GOLD COLORED TEST NUT, AND 11 EACH OF #16-20 AND 11 EACH OF #10-14 CRIMP TYPE AMP TERMINALS.
-005	59686-007-15	B2 RELAY PLUGBOARD KIT WHICH INCLUDES VOLTAGE TEST POST, CURRENT TEST POST WITH PRE-SOLDERED WIRE AND GOLD COLORED TEST NUT, AND 22 EACH OF #16-20 AND 22 EACH OF #10-14 CRIMP TYPE AMP TERMINALS.
-006	59686-007-16	SAME AS 007062-508, EXCEPT FOR VANE RELAY, AND TERMINALS ARE NOT INCLUDED.
-506	A62-506	PLUGBOARD KIT FOR ALL TYPE B1 RELAYS INCLUDES PLUGBOARD, TWO RELAY-MOUNTING GUIDE RODS, SOLDER TYPE TERMINALS, INSULATORS, CURRENT TEST TERMINAL, AND MOUNTING HARDWARE, DOESN'T INCLUDE VOLTAGE TEST POST.
-508	A62-508	PLUGBOARD KIT FOR ALL TYPE B2 RELAYS EXCEPT VANE RELAYS, VTB RELAYS, AND MICROCHRON RELAYS, INCLUDES PLUGBOARD, TWO RELAY-MOUNTING GUIDE RODS, SOLDER TYPE TERMINALS, INSULATORS, CURRENT TEST TERMINAL AND MOUNTING HARDWARE. DOESN'T INCLUDE VOLTAGE TEST POST.
-509	A62-509	SAME AS 007062-508, EXCEPT FOR VANE RELAY
-586	A62-586	SAME AS 007062-506, EXCEPT INCLUDES 22 EACH OF CRIMP TYPE #16-20 TERMINALS
-587	A62-587	SAME AS 007062-508, EXCEPT HAS CRIMP TYPE TERMINALS FOR USE WITH #16-20 AWG
-650	A62-650	SAME AS 007062-506, EXCEPT INCLUDES 22 EACH OF CRIMP TYPE #14-10 TERMINALS
-675	A62-675	SAME AS 007062-508, EXCEPT FOR MICROCHRON RELAY
-685	A62-685	SAME AS 007062-508, EXCEPT TERMINALS ARE NOT INCLUDED.

NOTE: AN "R" SUFFIX ON THE PART NUMBER DENOTES A REBUILT RELAY.
EXAMPLE: 007062-557R

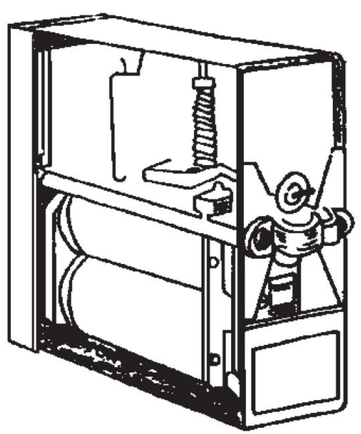

FIGURE 1: PLUG-IN RELAY, TYPE B1
HEIGHT OF RELAY: 6-5/16"
WIDTH OF RELAY: 2-7/16"
DEPTH WITHOUT PLUGBOARD: 8-9/16"
DEPTH INCLUDING PLUGBOARD, FULLY WIRED (APPROX.): 15-1/2"
WEIGHT OF RELAY WITH PLUGBOARD (WEIGHT OF WIRING NOT INCLUDED): 7 TO 10 LBS.

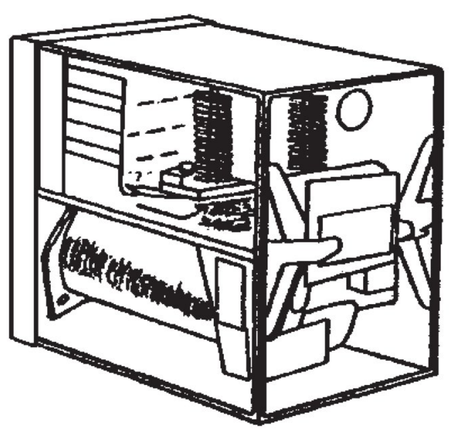

FIGURE 2: PLUG-IN RELAY, TYPE B2
HEIGHT OF RELAY: 6-5/16"
WIDTH OF RELAY: 4-15/16"
DEPTH WITHOUT PLUGBOARD: 8-9/16"
DEPTH INCLUDING PLUGBOARD, FULLY WIRED (APPROX.): 15-1/2"
WEIGHT OF RELAY WITH PLUGBOARD (WEIGHT OF WIRING NOT INCLUDED): 10 TO 15 LBS.

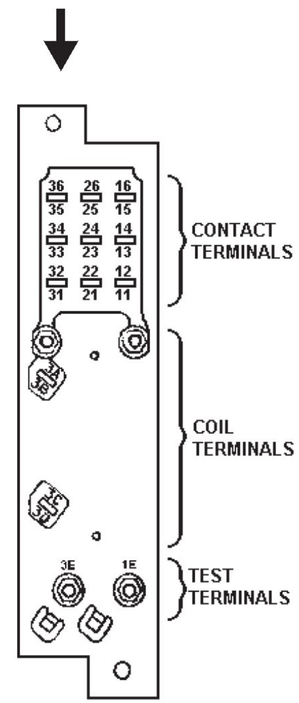

FIGURE 3: TYPE B1 PLUGBOARD (REAR VIEW)
WEIGHT OF PLUGBOARD ALONE WITHOUT WIRING: 1 LB

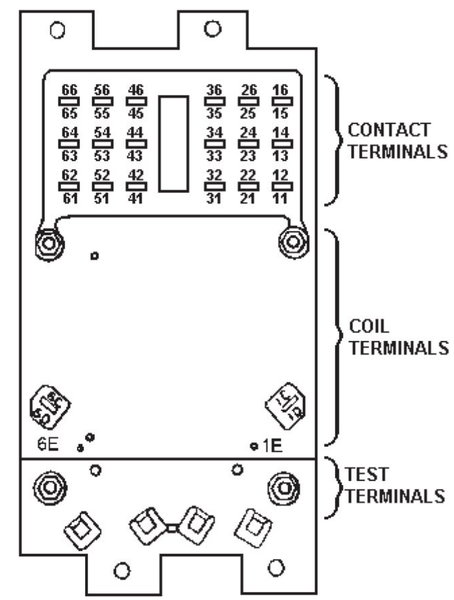

FIGURE 4: TYPE B2 PLUGBOARD (REAR VIEW)
WEIGHT OF PLUGBOARD ALONE WITHOUT WIRING: 2 LBS

REV
LK0

GE Transportation Systems
Global Signaling

Argo and Dillingham Rds, Grain Valley, MO 64029

Title	RLY GRS TYPE B VITAL PLUG-IN
Drawing No. 007062-XXX	Sheet 3 of 4

GETSGS Drawing - Plugboard Kit Relay B1 - Alstom #59686-005-08 for GETSGS #007062-003 (Page 3 of 4)

(H0867)

REFERENCE BILL OF MATERIAL FOR 007062-003 PLUGBOARD KIT
SEE FIGURE 5

DIN	DESCRIPTION	QUANTITY
1	B1 PLUGBOARD	1
2	RELAY POSTS, ¼-28 THREADS	2
3	MOUNTING SCREWS, 14-28 THREADS X 1 ¼"	2
4	THIN WASHERS	2
5	SPLIT WASHERS, ¼" COPPER COLOR	2
6	HEX NUT, ¼-28 THREADS, SS	2
7	HEX NUTS, ¼-28 THREADS, NYLON	2
8	THIN WASHERS	2
9	RELAY NUTS, AAR KNURLED	2
10	SUPER FLAT NUTS, AAR	2
11	E-POST, AAR	1
12	CROWN NUTS, AAR	2
13	FLAT HEX NUT, AAR	1
14	¼" FLAT WASHERS, AAR	4 (ONLY USE 3)
15	SLOTTED NUT, 3-E, AAR	1
16	3E-CLIP, SOLDER TYPE	1
17	3-E WASHER, PLASTIC	1
18	¼" FLAT WASHER	2

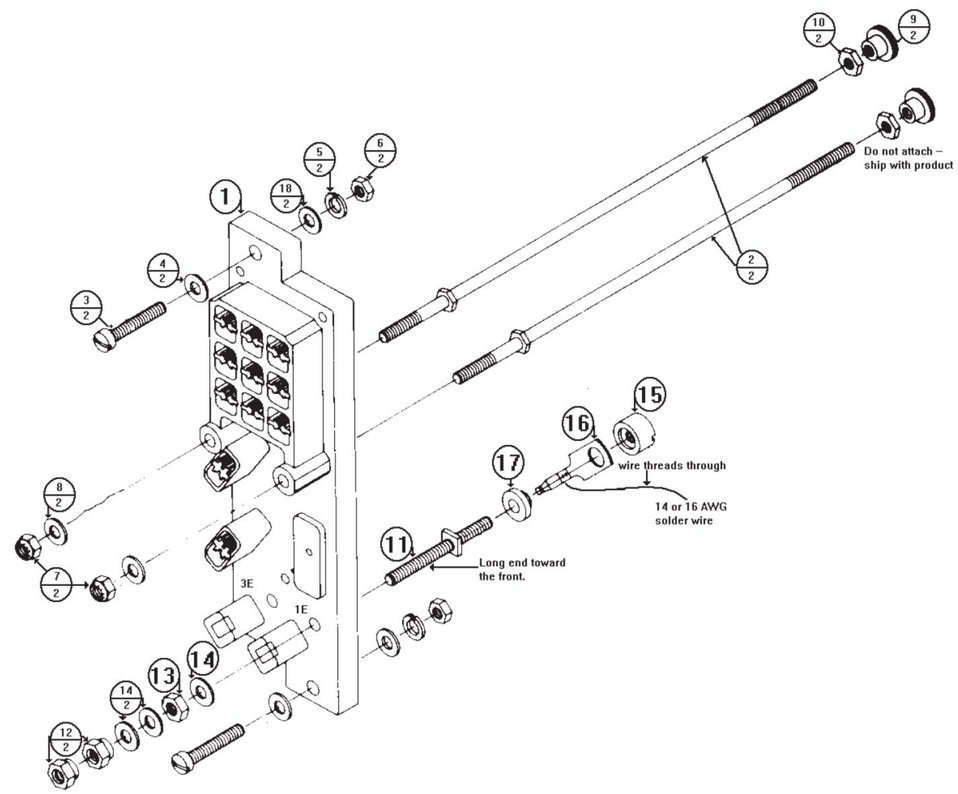

FIGURE 5: B1 RELAY PLUGBOARD ASSEMBLY

REV
LK0

GE Transportation Systems
Global Signaling

Argo and Dillingham Rds, Grain Valley, MO 64029

Title RLY GRS TYPE B VITAL PLUG-IN

Drawing No. 007062-XXX

Sheet 4 of 4

POST COMPLETE

|P|O|S|T| |T|E|R|M| | | | | | | | | | |

FOR USE WITH PLUGBOARDS 59686-000-00 AND 59686-000-01

42788-001-02

FOR ASSEMBLY, SEE: 42788-001-00

Super | 42788-1 GR. 2 (14 x 20) REV. B DTD. 4-2-92 | Sheet 1 Of 1

ITEM	REQ'D	DRAWING NO.	REF.	NAME	REV
1	1	00376-009-00	1	Screw, .242-24 x 2.39 Lg	D
2	1	42839-005-00	4	Nut, .242-24 x .19 Thk Hex	
3	6	01225-002-00	5	Washer, .266 ID, .188 OD, .04 Thk	
4	4	42843-001-00	6	Nut, .242-24 x .31 Thk Hex	
5	1	59825-052-00	8	Terminal, .242 Ring (20-16)	
6	1	53148-000-00		Bag	

SA/IB RAILWAY GRS

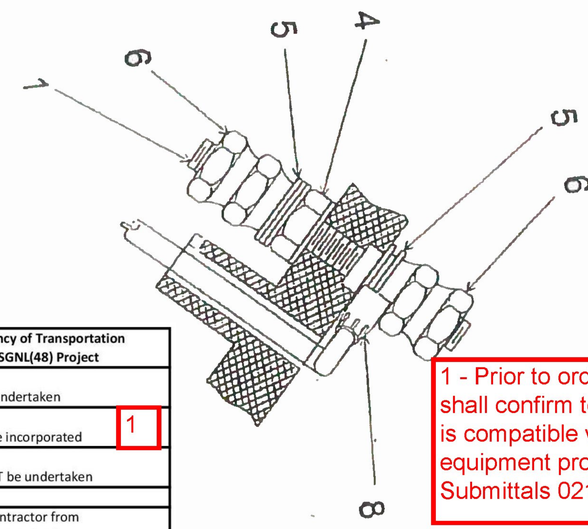

1 - Prior to ordering, Contractor shall confirm terminal proposed is compatible with the plugboard equipment proposed in Submittals 021 and 022.

TranSystems — Vermont Agency of Transportation, Lyndon STPG SGNL(48) Project

- [ ] Approved — Fabrication/Installation may be undertaken
- [x] Approved as Corrected — Approval provided comments are incorporated 1
- [ ] Correct, Revise and Resubmit — Fabrication/Installation MAY NOT be undertaken
- [ ] No Action Taken

Review / approval does not relieve the contractor from complying with all the requirements of the contract

Notice Of Confidential Information: Information contained herein is confidential and is the property of the General Railway Signal Company. Where furnished with a proposal, the recipient shall use it solely to evaluate the proposal. Where furnished to a customer, it shall be used solely for purposes of inspection, installation or maintenance. Where furnished to a supplier, it shall be used solely in the performance of the contract. The information shall not be used or disclosed by the recipient for any other purpose whatsoever.

FOR OFFICE USE ONLY

REV	C	D					
DATE	5-4-92	6-3-93					
R NO.	A50879	A52496					
APP'D	JTF/RWD/NJI	MJB/RWD/WDR					

(H1067)

Mechanical Connectors

Associated Material

Sleeves - Compression Type

Standard Package 100

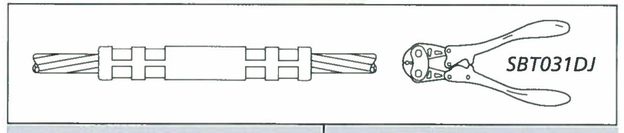

Part Number	3/16" Bond Strand To: Description
A2314J	#9 solid or #10 str
A2364J	#8 solid or #9 str
A2363J	#6 solid or #8 str
A2367J	#3/16" or #6 str
A2412J	1/4" Binding Post, Lug
SBT031DJ	Compression Tool

No-Oxide Grease

Part Number	Description
T369	1 ounce tube

Bond Removal Punch

TranSystems	Vermont Agency of Transportation Lyndon STPG SGNL(48) Project
X	**Approved** Fabrication/Installation may be undertaken
	Approved as Corrected Approval provided comments are incorporated
	Correct, Revise and Resubmit Fabrication/Installation MAY NOT be undertaken
	No Action Taken
Review / approval does not relieve the contractor from complying with all the requirements of the contract	

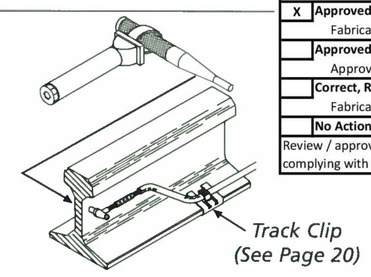

Part Number	Description
SBT382B	Punch Only
SBT408	Plastic Handle Only
SBT382BWH	Punch w/Handle
SBT382BWPH	Punch w/Plastic Handle

PN	MFR. P.N.	DESCRIPTION
-003	59686-005-08	B1 RELAY PLUGBOARD. TERMINALS NOT INCLUDED. (SEE PN 032781-XXX FOR TERMINALS)
-004	59686-019-02	B1 RELAY PLUGBOARD KIT WHICH INCLUDES VOLTAGE TEST POST, CURRENT TEST POST WITH PRE-SOLDERED WIRE AND GOLD COLORED TEST NUT, AND 11 EACH OF #16-20 AND 11 EACH OF #10-14 CRIMP TYPE AMP TERMINALS.
-005	59686-007-15	B2 RELAY PLUGBOARD KIT WHICH INCLUDES VOLTAGE TEST POST, CURRENT TEST POST WITH PRE-SOLDERED WIRE AND GOLD COLORED TEST NUT, AND 22 EACH OF #16-20 AND 22 EACH OF #10-14 CRIMP TYPE AMP TERMINALS.
-006	59686-007-16	SAME AS 007062-508, EXCEPT FOR VANE RELAY, AND TERMINALS ARE NOT INCLUDED.
-506	A62-506	PLUGBOARD KIT FOR ALL TYPE B1 RELAYS INCLUDES PLUGBOARD, TWO RELAY-MOUNTING GUIDE RODS, SOLDER TYPE TERMINALS, INSULATORS, CURRENT TEST TERMINAL, AND MOUNTING HARDWARE, DOESN'T INCLUDE VOLTAGE TEST POST.
-508	A62-508	PLUGBOARD KIT FOR ALL TYPE B2 RELAYS EXCEPT VANE RELAYS, VTB RELAYS, AND MICROCHRON RELAYS, INCLUDES PLUGBOARD, TWO RELAY-MOUNTING GUIDE RODS, SOLDER TYPE TERMINALS, INSULATORS, CURRENT TEST TERMINAL AND MOUNTING HARDWARE. DOESN'T INCLUDE VOLTAGE TEST POST.
-509	A62-509	SAME AS 007062-508, EXCEPT FOR VANE RELAY
-586	A62-586	SAME AS 007062-506, EXCEPT INCLUDES 22 EACH OF CRIMP TYPE #16-20 TERMINALS
-587	A62-587	SAME AS 007062-508, EXCEPT HAS CRIMP TYPE TERMINALS FOR USE WITH #16-20 AWG
-650	A62-650	SAME AS 007062-506, EXCEPT INCLUDES 22 EACH OF CRIMP TYPE #14-10 TERMINALS
-675	A62-675	SAME AS 007062-508, EXCEPT FOR MICROCHRON RELAY
-685	A62-685	SAME AS 007062-508, EXCEPT TERMINALS ARE NOT INCLUDED.

NOTE: AN "R" SUFFIX ON THE PART NUMBER DENOTES A REBUILT RELAY.
EXAMPLE: 007062-557R

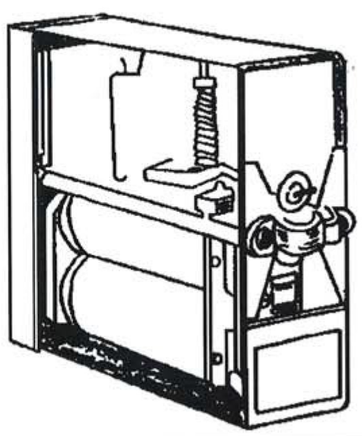

FIGURE 1: PLUG-IN RELAY, TYPE B1
HEIGHT OF RELAY: 6-5/16"
WIDTH OF RELAY: 2-7/16"
DEPTH WITHOUT PLUGBOARD: 8-9/16"
DEPTH INCLUDING PLUGBOARD, FULLY WIRED (APPROX.): 15-1/2"
WEIGHT OF RELAY WITH PLUGBOARD (WEIGHT OF WIRING NOT INCLUDED): 7 TO 10 LBS.

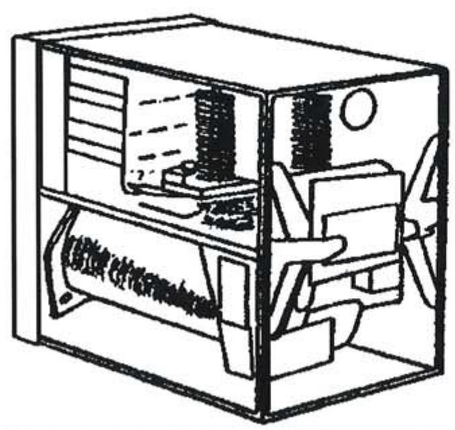

FIGURE 2: PLUG-IN RELAY, TYPE B2
HEIGHT OF RELAY: 6-5/16"
WIDTH OF RELAY: 4-15/16"
DEPTH WITHOUT PLUGBOARD: 8-9/16"
DEPTH INCLUDING PLUGBOARD, FULLY WIRED (APPROX.): 15-1/2"
WEIGHT OF RELAY WITH PLUGBOARD (WEIGHT OF WIRING NOT INCLUDED): 10 TO 15 LBS.

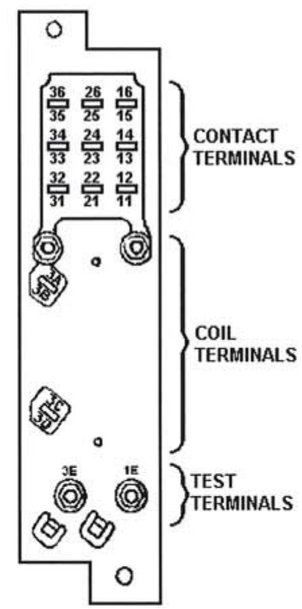

FIGURE 3: TYPE B1 PLUGBOARD (REAR VIEW)
WEIGHT OF PLUGBOARD ALONE WITHOUT WIRING: 1 LB

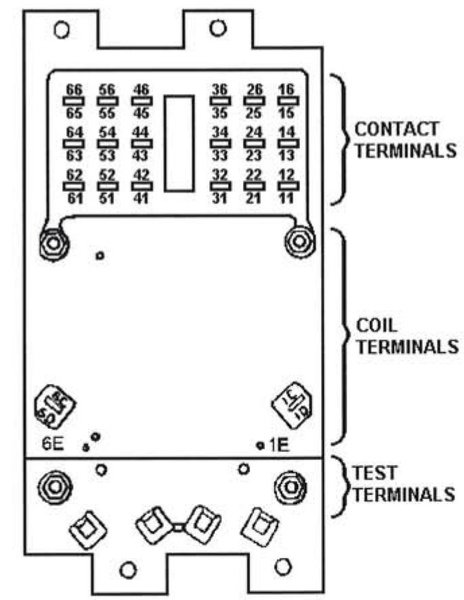

FIGURE 4: TYPE B2 PLUGBOARD (REAR VIEW)
WEIGHT OF PLUGBOARD ALONE WITHOUT WIRING: 2 LBS

REV
LK0

GE Transportation Systems
Global Signaling

Argo and Dillingham Rds, Grain Valley, MO 64029

Title	RLY GRS TYPE B VITAL PLUG-IN
Drawing No. 007062-XXX	Sheet 3 of 4

REFERENCE BILL OF MATERIAL FOR 007062-003 PLUGBOARD KIT
SEE FIGURE 5

DIN	DESCRIPTION	QUANTITY
1	B1 PLUGBOARD	1
2	RELAY POSTS, ¼-28 THREADS	2
3	MOUNTING SCREWS, 14-28 THREADS X 1 ¼"	2
4	THIN WASHERS	2
5	SPLIT WASHERS, ¼" COPPER COLOR	2
6	HEX NUT, ¼-28 THREADS, SS	2
7	HEX NUTS, ¼-28 THREADS, NYLON	2
8	THIN WASHERS	2
9	RELAY NUTS, AAR KNURLED	2
10	SUPER FLAT NUTS, AAR	2
11	E-POST, AAR	1
12	CROWN NUTS, AAR	2
13	FLAT HEX NUT, AAR	1
14	¼" FLAT WASHERS, AAR	4 (ONLY USE 3)
15	SLOTTED NUT, 3-E, AAR	1
16	3E-CLIP, SOLDER TYPE	1
17	3-E WASHER, PLASTIC	1
18	¼" FLAT WASHER	2

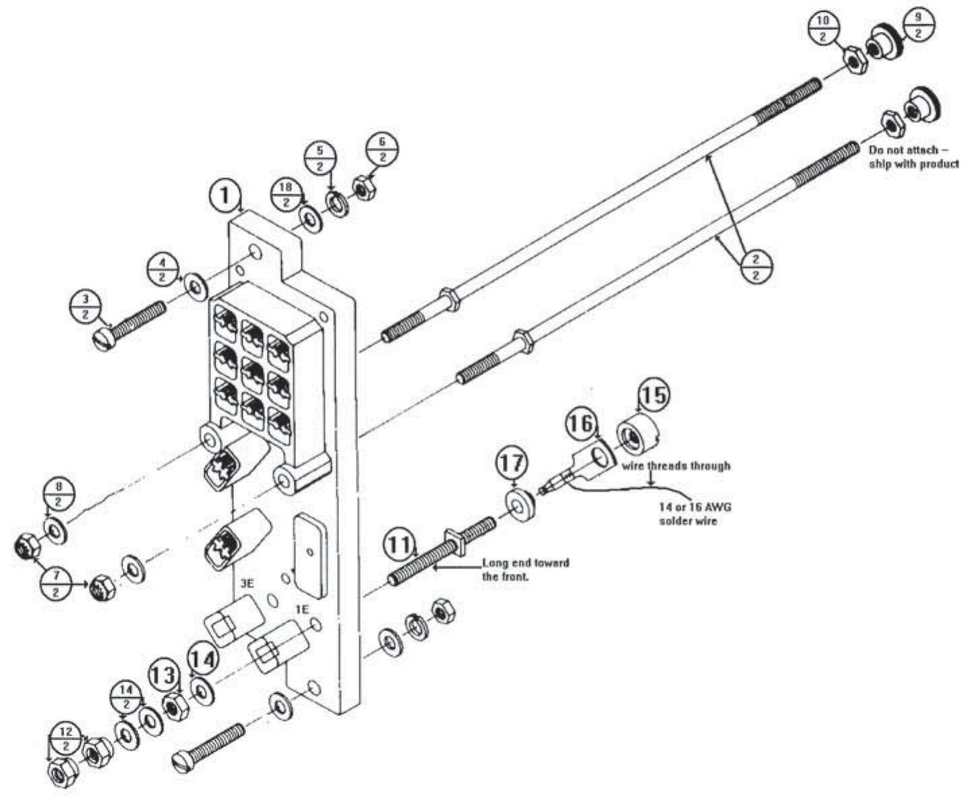

FIGURE 5: B1 RELAY PLUGBOARD ASSEMBLY

REV
LK0

GE Transportation Systems
Global Signaling

Argo and Dillingham Rds, Grain Valley, MO 64029

Title	RLY GRS TYPE B VITAL PLUG-IN	
Drawing No.	007062-XXX	Sheet 4 of 4

HARMON PART NUMBERING

HPN	TOTAL RESISTANCE IN OHMS	OHMS PER STEP	RATING IN WATTS	NUMBER OF TURNS	TYPE OF WIRE	DIMENSIONS	MOUNTING
-000	1.0	0.05	15	21	BARE NICHROME	SEE FIGURE 1	2 WOOD SCREWS
-001	1.5	0.075	15	21	BARE NICHROME	SEE FIGURE 1	2 WOOD SCREWS
-002	2.88	0.13	15	21	BARE NICHROME	SEE FIGURE 1	2 WOOD SCREWS
-101	5.69	0.133	15	42	BARE NICHROME	SEE FIGURE 1	2 WOOD SCREWS
-102	8.90	0.212	15	42	BARE NICHROME	SEE FIGURE 1	2 WOOD SCREWS
-103	11.21	0.267	15	42	BARE NICHROME	SEE FIGURE 1	2 WOOD SCREWS
-104	17.84	0.425	15	42	BARE NICHROME	SEE FIGURE 1	2 WOOD SCREWS

DESCRIPTION: ADJUSTABLE SLIDE RESISTANCE UNIT

MARKING:

ELECTRICAL SPECIFICATION:
SEE HPN TABLE

MATERIAL SPECIFICATION:
BASE: PORCELAIN
WIRE: SEE HPN TABLE

MAXIMUM PHYSICAL DIMENSION:
SEE HPN TABLE AND FIGURE 1.

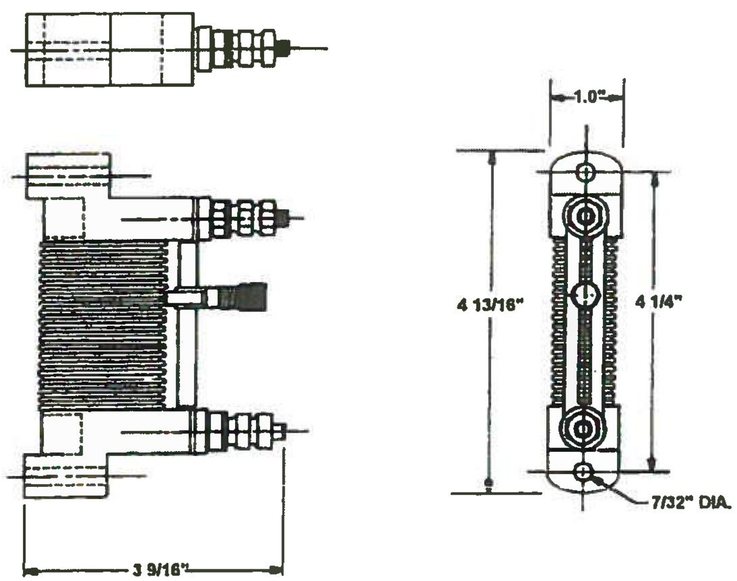

FIGURE 1: ADJUSTABLE SLIDE RESISTANCE UNIT

TranSystems — Vermont Agency of Transportation
Lyndon STPG SGNL(48) Project

X	**Approved** — Fabrication/Installation may be undertaken
	Approved as Corrected — Approval provided comments are incorporated
	Correct, Revise and Resubmit — Fabrication/Installation MAY NOT be undertaken
	No Action Taken

Review / approval does not relieve the contractor from complying with all the requirements of the contract

RECEIVING / INSPECTION
- ☑ Quantity-Verify From Material Traveler
- ☑ Value / Tolerance Markings
- ☑ Overall Appearance

REVISION CONTROL

REV	ECRN	DATE	BY	CHKD
A00	281-6203	12-28-94	ADH	ADH

ENGINEERING

Approved A. Howery Date 12-1-94
Engineer A. HOWERY
Drawn By A. HOWERY Date 12-28-94

Harmon Electronics
Grain Valley, MO

Title ADJUSTABLE SLIDE RESISTANCE UNITS
Drawing No. 002238-XXX
Sheet 1 of 1

This Drawing, which contains proprietary Information is the property of General Electric Company. It shall not be reproduced in any manner nor disclosed to third parties without written permission of General Electric Company

TranSystems	Vermont Agency of Transportation Lyndon STPG SGNL(48) Project
	Approved Fabrication/Installation may be undertaken
X	Approved as Corrected Approval provided comments are incorporated
	Correct, Revise and Resubmit Fabrication/Installation MAY NOT be undertaken
	No Action Taken
Review / approval does not relieve the contractor from complying with all the requirements of the contract	

1

Okonite® Armored Underground Signal Cables

With P.C.F. (Pull Cord Feature)

Heavy Duty Direct Burial Railroad Signal Cable

— AREMA Type I EPR Insulation — 600V

Multiple Copper Conductors/90°C Rating

1 - All Cable must meet the requirements of Special Provision Section 63 ACTIVE WARNING SYSTEM MATERIALS (j) Miscellaneous Products and Components Part 30 Vital Signal Cables (see attached pgs 58 to 61 of Special Provisions). Contractor shall provide appropriate test reports when cable is installed.

A Solid or stranded, Uncoated Copper Conductors
B Insulation—Okonite #14 AWG-#9 AWG 5/64", #6 - #2 AWG 6/64" with printed number code and tracer
C Cushion Tape Layer
D Flat Copper Alloy Armor Tape
E Pull Cord
F Jacket—Okolene with sequential footage markings

Insulation

Okonite EPR insulation is a heat, moisture and chemical resistant, mechanically rugged compound. The insulation thickness for size #14 AWG through #9 AWG is 5/64" and for #6 AWG through #2 AWG is 6/64". One conductor in each layer is identified as "Tracer". In addition, each conductor is number coded for ease of identification.

Assembly and Finish

Individual conductors are assembled with suitable fillers, where necessary, and a cable cushioning tape. A 7 mil flat copper alloy tape is then helically applied, giving outstanding mechanical protection. The black Okolene® (polyethylene) jacket is then applied overall.

Applications

Okonite Armored Underground Signal Cables are designed for use in all vital railroad signal circuits where security of service and long life are required in all vital circuit and safety related applications. These cables are recommended for use where crush resistance, termite and rodent protection are considerations and in all wet and dry locations.

Specifications

AREMA Signal Manual Part 10.3.17

Conductors: Solid uncoated copper per ASTM B-3, stranded uncoated compact round copper per ASTM B-496.

Insulation: Meets or exceeds electrical and physical requirements of ICEA S-95-658 (NEMA WC70) and AREMA Manual Part 10.3.19, thickness per table 10317-4.

Armor Tape: Copper alloy C19400 per ASTM B-465.

Jacket: Meets or exceeds electrical and physical requirements of ICEA S-95-658, Part 4.1.5.

Product Features

- Mechanically rugged.
- Resistant to aging.
- Easy to install and splice.
- Resistant to environmental hazards.
- Superior moisture resistance.
- Outstanding termite and rodent protection.
- Excellent electrical properties... high dielectric strength, low SIC and power factor and high insulation resistance.
- The Pull Cord feature affords easy and quick accessibility to conductors for splicing and terminating.
- Sequential footage markings on surface of outer jacket.

COMPOSITE CONSTRUCTIONS

Okonite Insulation: #14 AWG through #9 AWG 5/64", #6 AWG 6/64"

Catalog Number	Composite Make-Up	Conductors No. x Size (# Strands)	Conductors No. x Size (# Strands)	Outer Jacket Thickness 64th	Approx Cable O.D. (In.)	Approx Net Wt. Lbs./M'	Approx Ship Wt. Lbs./M
206-11-8974	7/C	2 x 9 (1X)	5 x 14 (1X)	5	0.99	523	574
▲ 206-11-8255	15/C	3 x 6 (1X)	12 x 14 (1X)	6	1.48	1711	1319
▲ 206-11-6283	19/C	6 x 6 (1X)	13 x 14 (1X)	6	1.69	1674	1877

▲ **Authorized Stock Item** - Available from Customer Service Centers.

Composite Cable Constructions are also available with stranded conductors. Consult your Okonite Representative.

Okonite Armored Underground Signal Cables

Product Data
Section 7: Sheet 1

Okonite Insulation: #14 AWG Through #9 AWG, 5/64", #6 through #2 AWG, 6/64"

Catalog Number	Size AWG	No. of Strands (1)	No. Condrs.	Outer Jacket Thickness-64th	Approx. Cable O.D. Inches	Net Wt. Lbs./M'	Approx. Ship Wt. Lbs./M'
▲ 206-11-6882	14	Sol.	2	4	.65	208	241
206-11-6883	14	Sol.	3	4	.68	253	286
206-11-6884	14	Sol.	4	4	.74	300	338
▲ 206-11-6885	14	Sol.	5	4	.81	349	408
▲ 206-11-6887	14	Sol.	7	5	.91	451	510
206-11-6889	14	Sol.	9	5	1.05	579	671
206-11-6890	14	Sol.	10	5	1.12	698	790
▲ 206-11-6892	14	Sol.	12	5	1.17	700	792
206-11-6895	14	Sol.	15	6	1.33	871	994
206-11-6896	14	Sol.	16	6	1.33	906	1029
▲ 206-11-6899	14	Sol.	19	6	1.40	1028	1151
206-11-6901	14	Sol.	21	6	1.47	1127	1250
▲ 206-11-6907	14	Sol.	27	6	1.67	1388	1638
▲ 206-11-6910	14	Sol.	37	7	1.89	1834	2076
206-11-6692	12	Sol.	2	4	.68	240	273
206-11-6693	12	Sol.	3	4	.72	292	330
206-11-6694	12	Sol.	4	4	.78	354	392
206-11-6695	12	Sol.	5	4	.85	412	471
206-11-6697	12	Sol.	7	5	.96	535	594
206-11-6699	12	Sol.	9	5	1.11	689	781
206-11-6700	12	Sol.	10	5	1.19	774	866
206-11-6702	12	Sol.	12	5	1.24	847	952
206-11-6812	10	Sol.	2	4	.72	279	317
206-11-6813	10	Sol.	3	4	.76	346	384
206-11-6814	10	Sol.	4	4	.83	424	483
206-11-6815	10	Sol.	5	5	.94	518	577
206-11-6817	10	Sol.	7	5	1.02	654	746
206-11-6819	10	Sol.	9	5	1.18	842	934
206-11-6820	10	Sol.	10	6	1.30	973	1078
206-11-6822	10	Sol.	12	6	1.36	1076	1199
206-11-6922	9	Sol.	2	4	.75	317	350
▲ 206-11-6923	9	Sol.	3	4	.79	384	443
206-11-6924	9	Sol.	4	5	.90	495	554
▲ 206-11-6925	9	Sol.	5	5	.97	581	640
▲ 206-11-6927	9	Sol.	7	5	1.06	737	829
206-11-6928	9	Sol.	8	5	1.14	843	935
206-11-6929	9	Sol.	9	5	1.23	952	1057
▲ 206-11-6930	9	Sol.	10	6	1.35	1098	1221
206-11-6931	9	Sol.	12	6	1.42	1215	1338
▲ 206-11-6242	6	Sol.	2	5	.94	505	564
▲ 206-11-6243	6	Sol.	3	5	1.00	632	724
206-11-6244	6	Sol.	4	5	1.10	789	881
▲ 206-11-6245	6	Sol.	5	5	1.20	952	1044
▲ 206-11-6247	6	Sol.	7	6	1.34	1245	1368
206-11-6248	6	Sol.	8	6	1.45	1429	1552
206-11-6249	6	Sol.	9	6	1.56	1642	1820
▲ 206-11-6070	6	7	3	5	1.01	698	753
▲ 206-11-6042	4	7	2	5	1.02	619	674
▲ 206-11-6045	4	7	5	6	1.34	1266	1356
▲ 206-11-6130	2	7	3	6	1.28	1256	1346

Minimum Manufacturing Quantity is 1000 ft. Standard Package—1000' N.R. Reel.

▲ **Authorized Stock Item -** Available from Customer Service Centers.

(1) This construction is also available with stranded conductors. Consult your Okonite Representative.

E/14040701

THE OKONITE COMPANY
Ramsey, New Jersey 07446

CURRENT SPECIFICATION REVISIONS

6 X 6 GETRNS ALUMINUM ENCLOSURE

91000336 A
GETBR

Date Sent to Customer: 9/14/2015
Sent Via: EMAIL
Customer Approval Date:

	Changes	Spec Page Chgd	Start Rev	Chgs Made By	Date Chgs Made	End Rev
A	1. REVISED WALL MATERIAL.	2		DAV	9/14/2015	A

TranSystems
Vermont Agency of Transportation
Lyndon STPG SGNL(48) Project

X	**Approved** Fabrication/Installation may be undertaken 1
	Approved as Corrected Approval provided comments are incorporated
	Correct, Revise and Resubmit Fabrication/Installation MAY NOT be undertaken
	No Action Taken

Review / approval does not relieve the contractor from complying with all the requirements of the contract

1 - Signal Instrument House was previously approved in Vermont Grade Crossing Projects "CHESTER-SPRINGFIELD-ROCKINGHAM-WINDOR STP 2952" and THETFORD STP 2221 (1)

PTMW Inc.

OEM METAL ENCLOSURE & FABRICATION

THIS DRAWING IS SOLE PROPERTY OF PTMW AND IS PROTECTED UNDER ALL APPLICABLE COPYRIGHT LAWS. THIS DESIGN IS PROPRIETARY TO PTMW AND IS PROVIDED ON A CONFIDENTIAL BASIS FOR USE RELATED TO PTMW'S BUSINESS. THIS DRAWING MAY NOT BE REPRODUCED AND THE DESIGN MAY NOT BE DUPLICATED WITHOUT THE WRITTEN PERMISSION OF PTMW. WE RESERVE THE RIGHT TO MODIFY THIS DESIGN. THIS DRAWING IS LOANED SUBJECT TO RETURN ON DEMAND.

6 X 6 GETRNS ALUMINUM ENCLOSURE

91000336 A COVER PAGE

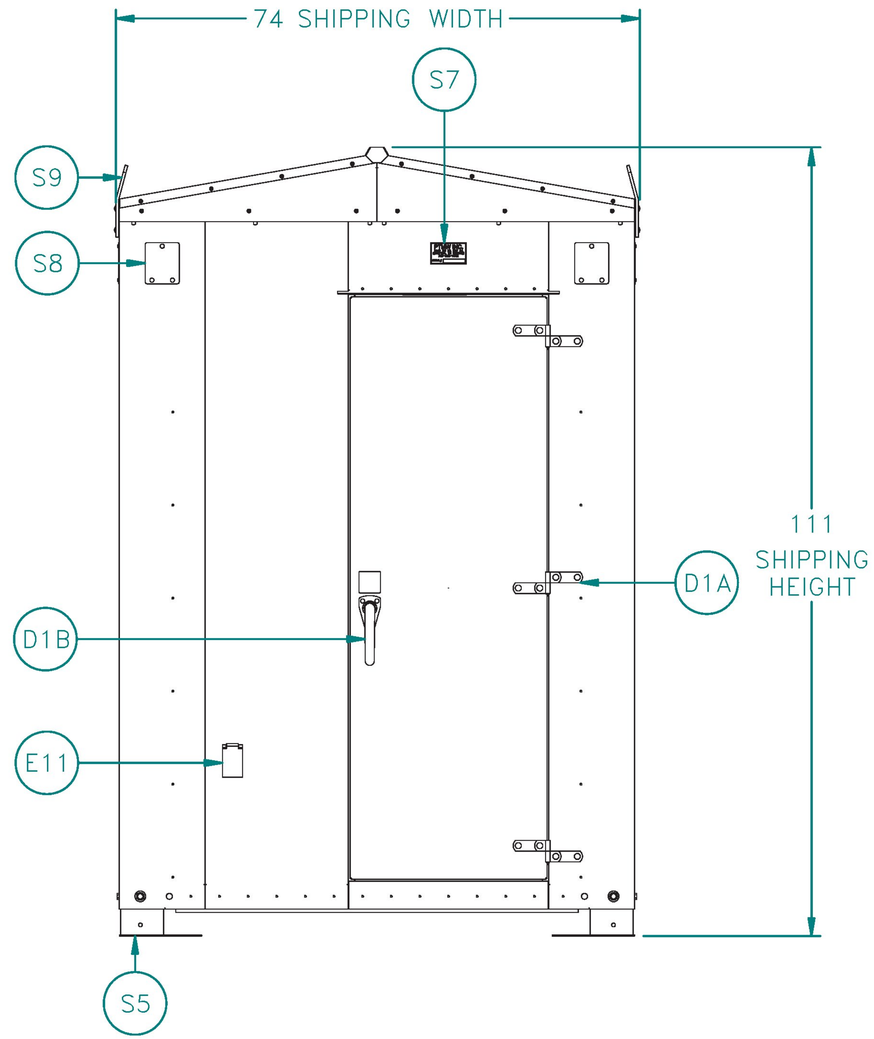

EXTERIOR VIEW OF D WALL

PTMW, Inc.
O.E.M. METAL ENCLOSURES & FABRICATION

THIS DRAWING IS SOLE PROPERTY OF PTMW AND IS PROTECTED UNDER ALL COPYRIGHT LAWS. THIS DESIGN IS PROPERTY OF PTMW AND IS PROVIDED ON A CONFIDENTIAL BASIS FOR USE RELATED TO PTMWS BUSINESS. THIS DRAWING MAY NOT BE REPRODUCED AND THE DESIGN MAY NOT BE DUPLICATED WITHOUT THE WRITTEN PERMISSION OF PTMW. WE RESERVE THE RIGHT TO MODIFY THIS DESIGN. THIS DRAWING IS LOANED SUBJECT TO RETURN ON DEMAND.

6 X 6 GETRNS ALUMINUM ENCLOSURE

91000336 A

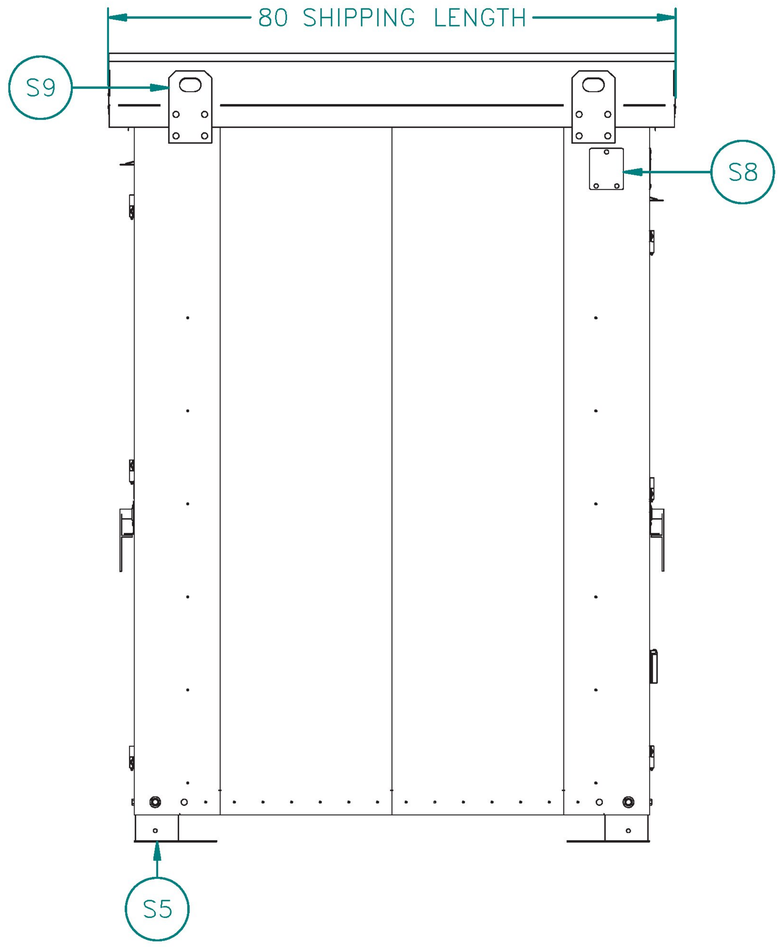

EXTERIOR VIEW OF A WALL

PTMW, Inc.
O.E.M. METAL ENCLOSURES & FABRICATION

THIS DRAWING IS SOLE PROPERTY OF PTMW AND IS PROTECTED UNDER ALL COPYRIGHT LAWS. THIS DESIGN IS PROPERTY OF PTMW AND IS PROVIDED ON A CONFIDENTIAL BASIS FOR USE RELATED TO PTMWS BUSINESS. THIS DRAWING MAY NOT BE REPRODUCED AND THE DESIGN MAY NOT BE DUPLICATED WITHOUT THE WRITTEN PERMISSION OF PTMW. WE RESERVE THE RIGHT TO MODIFY THIS DESIGN. THIS DRAWING IS LOANED SUBJECT TO RETURN ON DEMAND.

6 X 6 GETRNS ALUMINUM ENCLOSURE

91000336 A

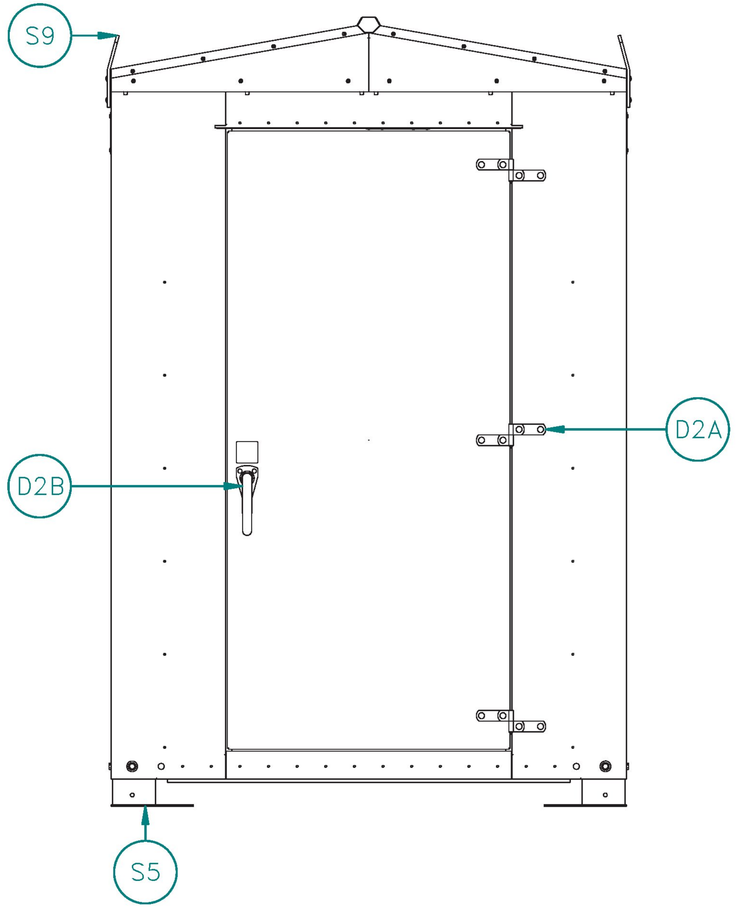

EXTERIOR VIEW OF B WALL

PTMW, Inc.
O.E.M. METAL ENCLOSURES & FABRICATION

THIS DRAWING IS SOLE PROPERTY OF PTMW AND IS PROTECTED UNDER ALL COPYRIGHT LAWS. THIS DESIGN IS PROPERTY OF PTMW AND IS PROVIDED ON A CONFIDENTIAL BASIS FOR USE RELATED TO PTMWS BUSINESS. THIS DRAWING MAY NOT BE REPRODUCED AND THE DESIGN MAY NOT BE DUPLICATED WITHOUT THE WRITTEN PERMISSION OF PTMW. WE RESERVE THE RIGHT TO MODIFY THIS DESIGN. THIS DRAWING IS LOANED SUBJECT TO RETURN ON DEMAND.

6 X 6 GETRNS ALUMINUM ENCLOSURE

91000336 A

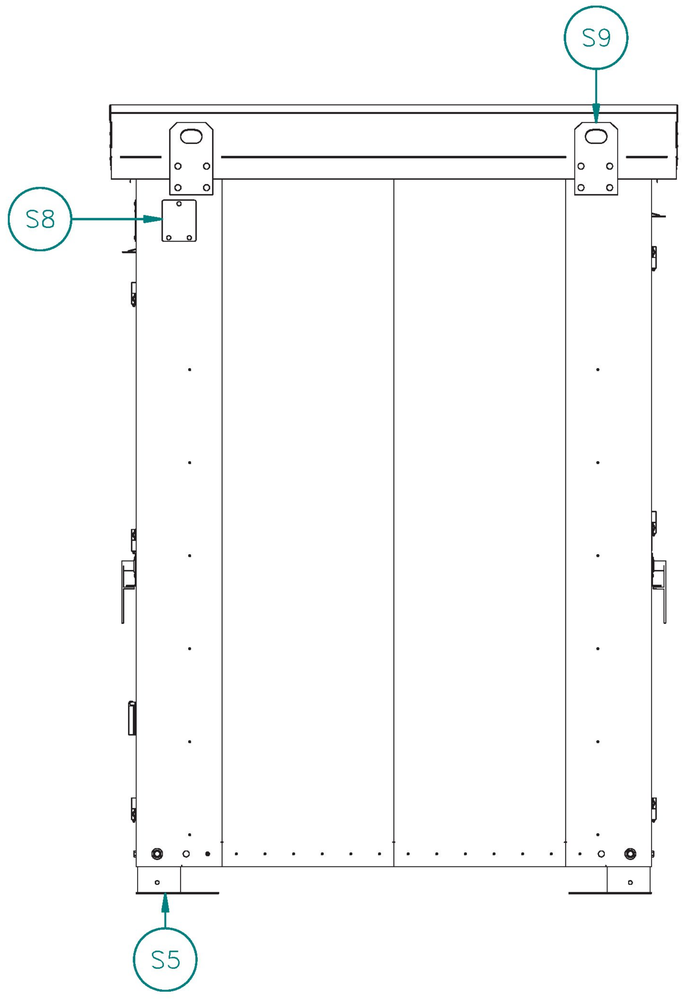

EXTERIOR VIEW OF C WALL

PTMW, Inc.
O.E.M. METAL ENCLOSURES & FABRICATION

THIS DRAWING IS SOLE PROPERTY OF PTMW AND IS PROTECTED UNDER ALL COPYRIGHT LAWS. THIS DESIGN IS PROPERTY OF PTMW AND IS PROVIDED ON A CONFIDENTIAL BASIS FOR USE RELATED TO PTMWS BUSINESS. THIS DRAWING MAY NOT BE REPRODUCED AND THE DESIGN MAY NOT BE DUPLICATED WITHOUT THE WRITTEN PERMISSION OF PTMW. WE RESERVE THE RIGHT TO MODIFY THIS DESIGN. THIS DRAWING IS LOANED SUBJECT TO RETURN ON DEMAND.

6 X 6 GETRNS ALUMINUM ENCLOSURE

91000336 A

B WALL

A WALL

C WALL

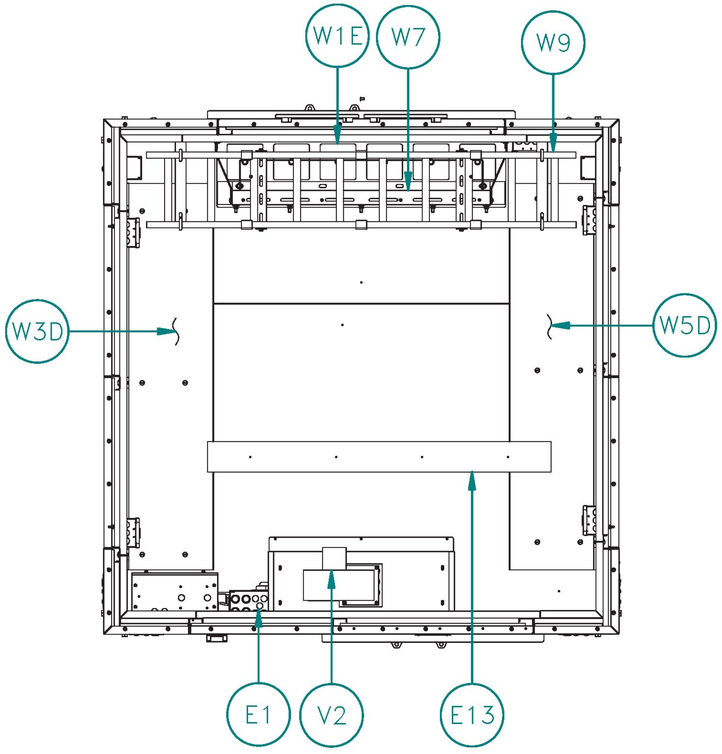

D WALL

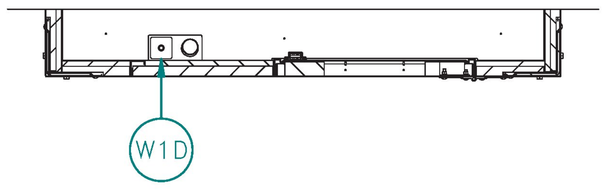

PLAN VIEW OF ENCLOSURE

PTMW, Inc.
O.E.M. METAL ENCLOSURES & FABRICATION

THIS DRAWING IS SOLE PROPERTY OF PTMW AND IS PROTECTED UNDER ALL COPYRIGHT LAWS. THIS DESIGN IS PROPERTY OF PTMW AND IS PROVIDED ON A CONFIDENTIAL BASIS FOR USE RELATED TO PTMW'S BUSINESS. THIS DRAWING MAY NOT BE REPRODUCED AND THE DESIGN MAY NOT BE DUPLICATED WITHOUT THE WRITTEN PERMISSION OF PTMW. WE RESERVE THE RIGHT TO MODIFY THIS DESIGN. THIS DRAWING IS LOANED SUBJECT TO RETURN ON DEMAND.

6 X 6 GETRNS ALUMINUM ENCLOSURE

91000336 A

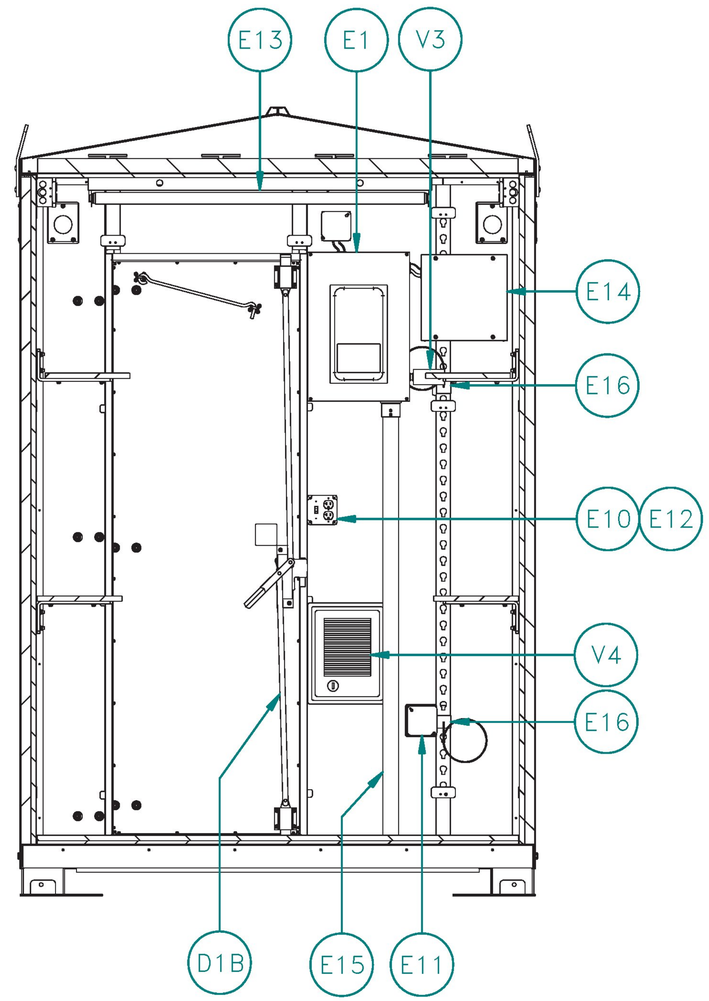

INTERIOR VIEW OF D WALL

PTMW, Inc.
O.E.M. METAL ENCLOSURES & FABRICATION

THIS DRAWING IS SOLE PROPERTY OF PTMW AND IS PROTECTED UNDER ALL COPYRIGHT LAWS. THIS DESIGN IS PROPERTY OF PTMW AND IS PROVIDED ON A CONFIDENTIAL BASIS FOR USE RELATED TO PTMW'S BUSINESS. THIS DRAWING MAY NOT BE REPRODUCED AND THE DESIGN MAY NOT BE DUPLICATED WITHOUT THE WRITTEN PERMISSION OF PTMW. WE RESERVE THE RIGHT TO MODIFY THIS DESIGN. THIS DRAWING IS LOANED SUBJECT TO RETURN ON DEMAND.

6 X 6 GETRNS ALUMINUM ENCLOSURE

91000336 A

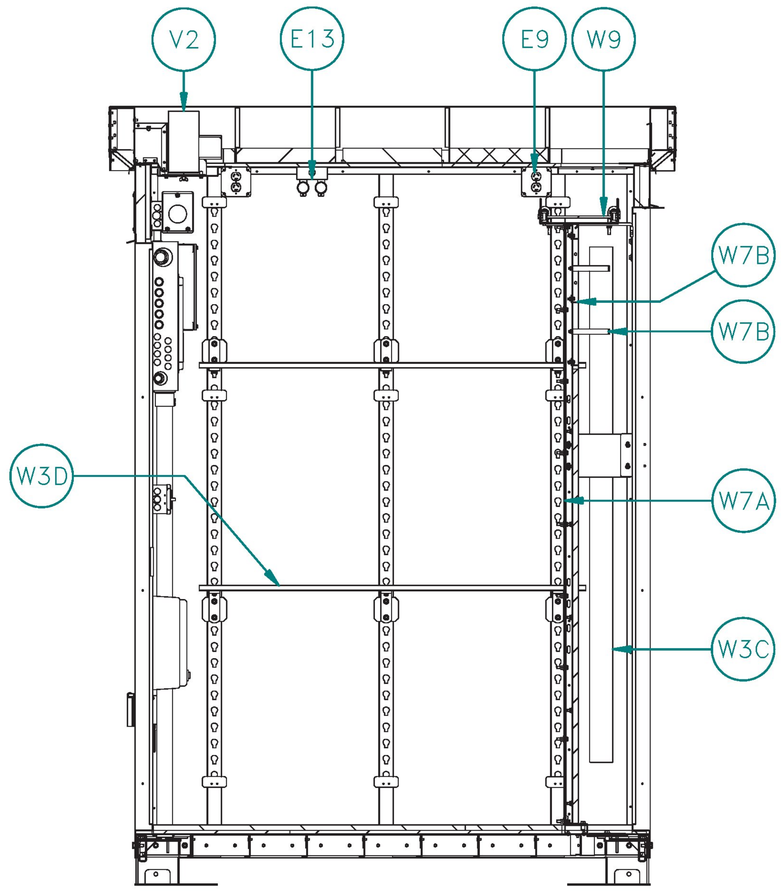

INTERIOR VIEW OF A WALL

PTMW, Inc.
O.E.M. METAL ENCLOSURES & FABRICATION

THIS DRAWING IS SOLE PROPERTY OF PTMW AND IS PROTECTED UNDER ALL COPYRIGHT LAWS. THIS DESIGN IS PROPERTY OF PTMW AND IS PROVIDED ON A CONFIDENTIAL BASIS FOR USE RELATED TO PTMWS BUSINESS. THIS DRAWING MAY NOT BE REPRODUCED AND THE DESIGN MAY NOT BE DUPLICATED WITHOUT THE WRITTEN PERMISSION OF PTMW. WE RESERVE THE RIGHT TO MODIFY THIS DESIGN. THIS DRAWING IS LOANED SUBJECT TO RETURN ON DEMAND.

6 X 6 GETRNS ALUMINUM ENCLOSURE

91000336 A

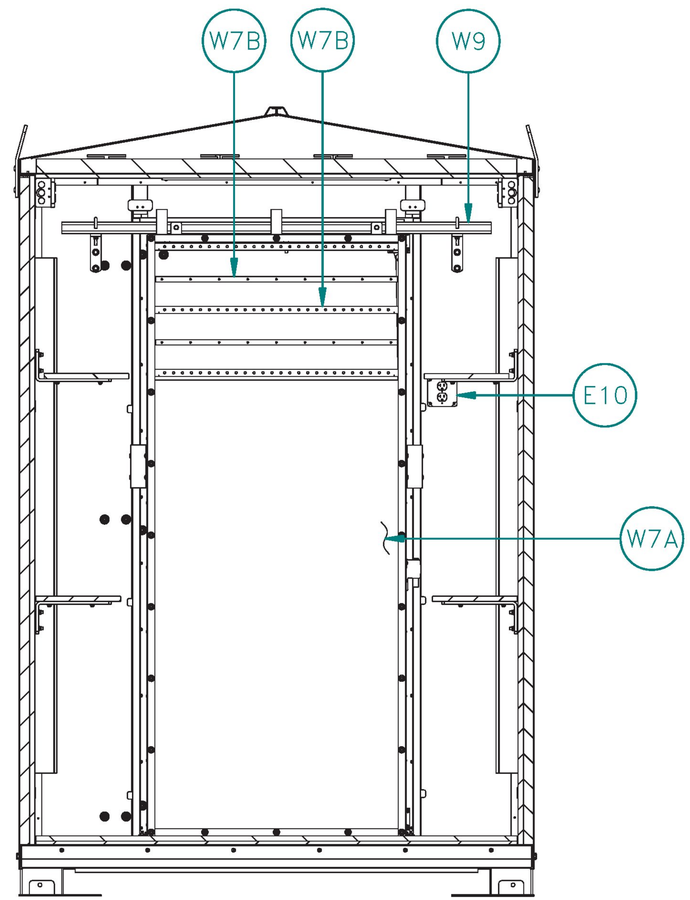

INTERIOR VIEW OF B WALL

PTMW, Inc.
O.E.M. METAL ENCLOSURES & FABRICATION

THIS DRAWING IS SOLE PROPERTY OF PTMW AND IS PROTECTED UNDER ALL COPYRIGHT LAWS. THIS DESIGN IS PROPERTY OF PTMW AND IS PROVIDED ON A CONFIDENTIAL BASIS FOR USE RELATED TO PTMW'S BUSINESS. THIS DRAWING MAY NOT BE REPRODUCED AND THE DESIGN MAY NOT BE DUPLICATED WITHOUT THE WRITTEN PERMISSION OF PTMW. WE RESERVE THE RIGHT TO MODIFY THIS DESIGN. THIS DRAWING IS LOANED SUBJECT TO RETURN ON DEMAND.

6 X 6 GETRNS ALUMINUM ENCLOSURE

91000336 A

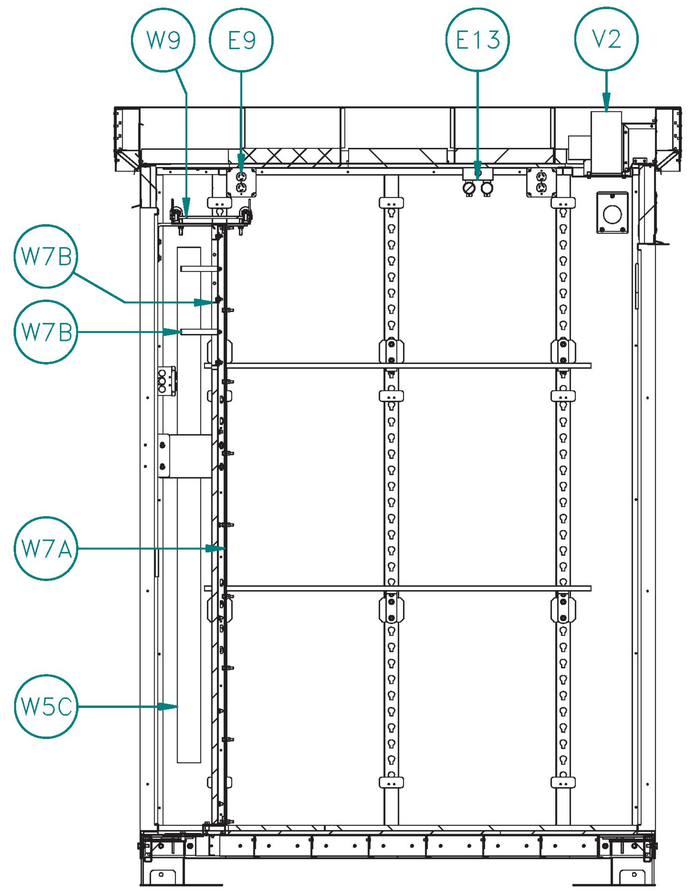

INTERIOR VIEW OF C WALL

PTMW, Inc.
O.E.M. METAL ENCLOSURES & FABRICATION

THIS DRAWING IS SOLE PROPERTY OF PTMW AND IS PROTECTED UNDER ALL COPYRIGHT LAWS. THIS DESIGN IS PROPERTY OF PTMW AND IS PROVIDED ON A CONFIDENTIAL BASIS FOR USE RELATED TO PTMWS BUSINESS. THIS DRAWING MAY NOT BE REPRODUCED AND THE DESIGN MAY NOT BE DUPLICATED WITHOUT THE WRITTEN PERMISSION OF PTMW. WE RESERVE THE RIGHT TO MODIFY THIS DESIGN. THIS DRAWING IS LOANED SUBJECT TO RETURN ON DEMAND.

6 X 6 GETRNS ALUMINUM ENCLOSURE

91000336 A

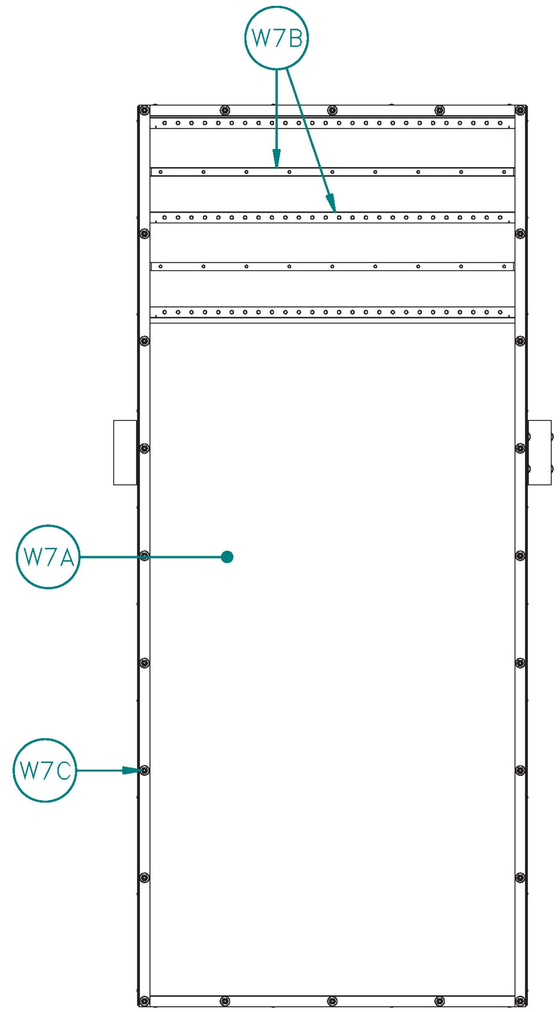

PTMW, Inc.
O.E.M. METAL ENCLOSURES & FABRICATION

THIS DRAWING IS SOLE PROPERTY OF PTMW AND IS PROTECTED UNDER ALL COPYRIGHT LAWS. THIS DESIGN IS PROPERTY OF PTMW AND IS PROVIDED ON A CONFIDENTIAL BASIS FOR USE RELATED TO PTMWS BUSINESS. THIS DRAWING MAY NOT BE REPRODUCED AND THE DESIGN MAY NOT BE DUPLICATED WITHOUT THE WRITTEN PERMISSION OF PTMW. WE RESERVE THE RIGHT TO MODIFY THIS DESIGN. THIS DRAWING IS LOANED SUBJECT TO RETURN ON DEMAND.

6 X 6 GETRNS ALUMINUM ENCLOSURE

91000336 A

HARMON PART NUMBERING

HPN	VOLTAGE (NOMINAL)	TYPE OF SERVICE	CLAMPING VOLTAGE	MCOV	TOTAL PEAK SURGE CURRENT	SURGE ENERGY PER PHASE (MIN)	RESPONSE TIME	RELATIVE HUMIDITY	DESCRIPTION	TERMINATION	DIMENSIONS / WIRING DIAGRAM	NOTES
-000	240 VAC RMS L-L	3-WIRE, SINGLE PHASE, 50/60 HZ	260 VOLTS AT 1 mA L-N	NOT AVAILABLE	---	16667 JOULES (SEE NOTE 1)	6 ns	100%	FUSED SURGE PROTECTOR WITH INDICATORS	LEAD WIRES 14 AWG 18" LONG MIN.	SEE FIGURES 1 AND 2	---
-001	120/240 VAC 50/60 HZ 50-100 A SERVICE	SINGLE PHASE WYE; 3 WIRE + GROUND CONNECTION	NOT AVAILABLE	275 VAC L-L; 150 VAC L-G, L-N, N-G	117,000 A	1,800 JOULES	1 ns	0-97% NON-CONDENSING	PRIMARY SURGE PROTECTOR WITH INDICATORS	SCREW TERMINALS, ACCEPTS 10AWG AND SMALLER STRANDED WIRE.	SEE FIGURE 3 (NEMA TYPE 12 ENCLOSURE)	NOT FOR NEW DESIGN USE -003
-002	120/240 VAC 50/60 HZ 50-100 A SERVICE	SINGLE PHASE WYE; 3 WIRE + GROUND CONNECTION	NOT AVAILABLE	275 VAC L-L; 150 VAC L-G, L-N, N-G	117,000 A	1,800 JOULES	1 ns	0-97% NON-CONDENSING	PRIMARY SURGE PROTECTOR WITH INDICATORS, INTERNALLY FUSED	PRESSURE TYPE, ACCEPTS 8AWG AND SMALLER STRANDED WIRE.	SEE FIGURES 4 AND 5 (NEMA TYPE 12 ENCLOSURE)	NOT FOR NEW DESIGN USE -004
-003	120/240 VAC 50/60 HZ 300 A SERVICE	SPLIT PHASE WYE; 3 WIRE + GROUND CONNECTION	---	275 VAC L-L; 150 VAC L-G, L-N, N-G	120,000 A (8/20µs)	1,800 JOULES	1 ns	0-90% NON-CONDENSING	PRIMARY SURGE PROTECTOR WITH INDICATORS, WITH FORM C CONTACTS FOR REMOTE UNIT STATUS MONITORING, 2A@ 30VDC, 0.6A@ 110VDC, 0.6A@ 125VAC	SCREW TERMINALS, ACCEPTS 10AWG AND SMALLER STRANDED WIRE.	SEE FIGURES 6 AND 7	---
-004	120/240 VAC 50/60 HZ 300 A SERVICE	SPLIT PHASE WYE; 3 WIRE + GROUND CONNECTION	---	275 VAC L-L; 150 VAC L-G, L-N, N-G	120,000 A (8/20µs)	1,800 JOULES	1 ns	0-90% NON-CONDENSING	PRIMARY SURGE PROTECTOR WITH INDICATORS, INTERNALLY FUSED, WITH FORM C CONTACTS FOR REMOTE UNIT STATUS MONITORING, 2A@ 30VDC, 0.6A@ 110VDC, 0.6A@ 125VAC	SCREW TERMINALS, ACCEPTS 2 AWG AND SMALLER STRANDED WIRE.	SEE FIGURES 8 AND 9	---
-005	120/240 VAC 50/60 HZ 300 A SERVICE	SPLIT PHASE WYE; 3 WIRE + GROUND CONNECTION	---	275 VAC L-L; 150 VAC L-G, L-N, N-G	120,000 A (8/20µs)	1,800 JOULES	1 ns	0-90% NON-CONDENSING	PRIMARY SURGE PROTECTOR WITH INDICATORS, WITH FORM C CONTACTS FOR REMOTE UNIT STATUS MONITORING, 2A@ 30VDC, 0.6A@ 110VDC, 0.6A@ 125VAC	WIRE LEADS	SEE FIGURES 6 AND 7	THIS SURGE PROTECTOR IS IDENTICAL TO –003 EXCEPT THAT IT HAS FLYING LEADS WIRED TO THE SCREW TERMINALS.

TranSystems — Vermont Agency of Transportation
Lyndon STPG SGNL(48) Project

- [ ] **Approved** — Fabrication/Installation may be undertaken
- [X] **Approved as Corrected** — Approval provided comments are incorporated (1)
- [ ] **Correct, Revise and Resubmit** — Fabrication/Installation MAY NOT be undertaken
- [ ] **No Action Taken**

Review / approval does not relieve the contractor from complying with all the requirements of the contract

DESCRIPTION: SURGE PROTECTOR WITH INDICATORS

MARKING: MANUFACTURER AND MODEL NUMBER

ELECTRICAL SPECIFICATION:
SEE HPN TABLE .
EACH PHASE IS EQUIPPED WITH A STATUS INDICATOR LIGHT.

MATERIAL SPECIFICATION:
SEE HPN TABLE.
STORAGE TEMPERATURE: -40°C TO 70°C
OPERATING TEMPERATURE
-000: -40°C TO 50°C
-001/-005: -40°C TO 70°C

MAXIMUM PHYSICAL DIMENSION:
SEE FIGURES.

NOTES:
1. TEST CONDITION FOR SURGE ENERGY PER PHASE: 500A AT 5000V FOR 100 CONSECUTIVE TIMES AT A DURATION OF 0.0083 SECONDS EACH PULSE.
2. 010132-001 IS A SPECIAL BN SPECIFIED SURGE PROTECTOR.
1. THE HPN MAY HAVE A –30 SUFFIX TO DENOTE SPECIAL CUSTOMER CONTRACT PRICING. (I.E. 010132-005-30)

1 - Contractor shall confirm the surge protector is compatible and in-line with the proposed battery system and any additional equipment it may be utilized for.

REVISION CONTROL				
REV	ECRN	DATE	BY	APPRV
A	877-0012	10/27/94	ADH	ADH
B	81284-13	4/7/95	ADH	ADH
CA0	90013308	11/10/97	ADH	ADH
CB0	90024496	12/17/99	DFR	ADH
CC0	90020330	2/6/01	ADH	ADH

ENGINEERING	
Approved A. HOWERY	Date 10/94
Engineer A. HOWERY	
Drawn By A. HOWERY	Date 10/27/94

Harmon Industries
Grain Valley, MO

Title SURGE PROTECTOR WITH INDICATORS

Drawing No. 010132-XXX

Sheet 1 of 3

This Drawing, which contains proprietary Information is the property of General Electric Company. It shall not be reproduced in any manner nor disclosed to third parties without written permission of General Electric Company

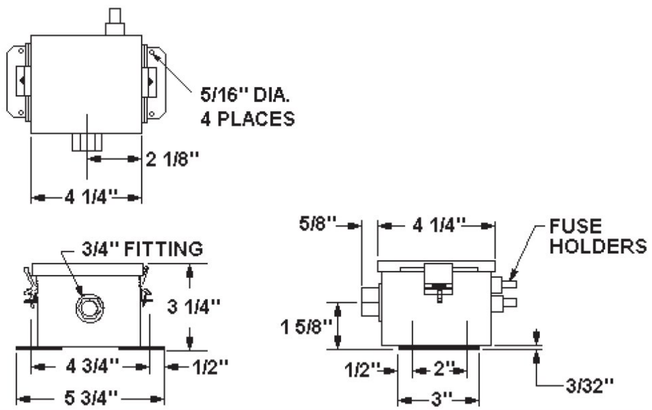

FIGURE 1: SURGE PROTECTOR HPN -000

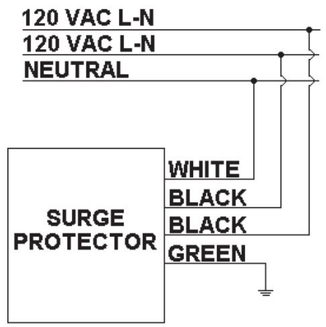

FIGURE 2: WIRING DIAGRAM FOR HPN -000

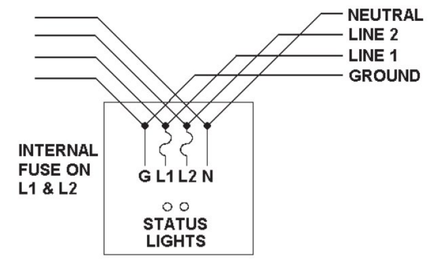

FIGURE 5: WIRING DIAGRAM FOR HPN -002

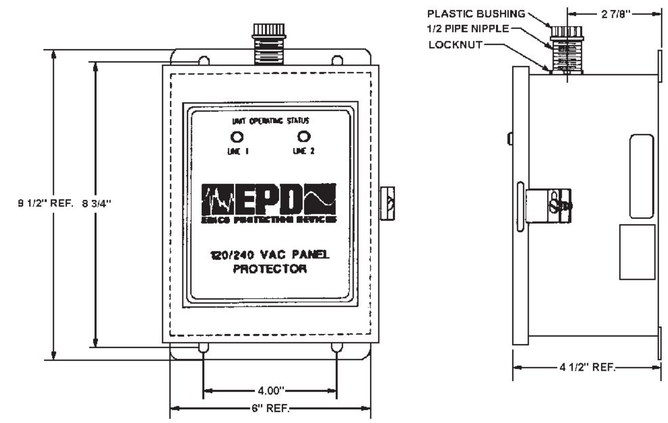

FIGURE 3: SURGE PROTECTOR HPN -001

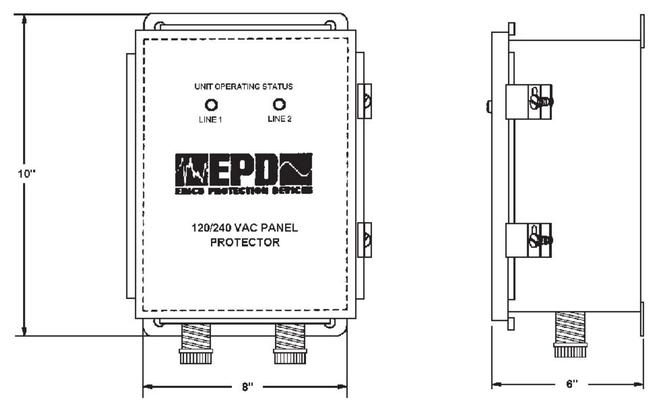

FIGURE 4: SURGE PROTECTOR HPN -002

REV
CC0

Harmon
Industries
Grain Valley, MO

Title	SURGE PROTECTOR WITH INDICATORS
Drawing No. 010132-XXX	Sheet 2 of 3

This Drawing, which contains proprietary Information is the property of General Electric Company. It shall not be reproduced in any manner nor disclosed to third parties without written permission of General Electric Company

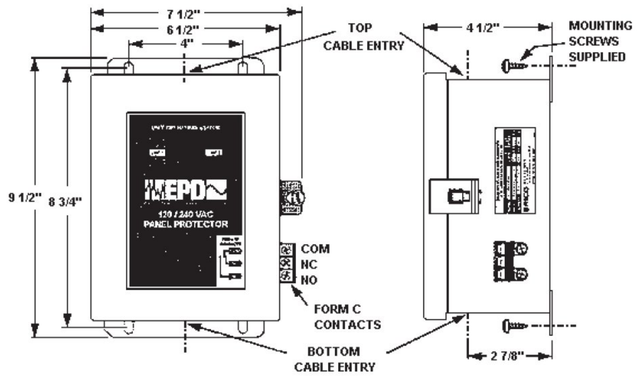

FIGURE 6: SURGE PROTECTOR HPN –003 AND –005
NOTE: HPN –005 HAS FLYING LEADS NOT SHOWN IN FIGURE 6.

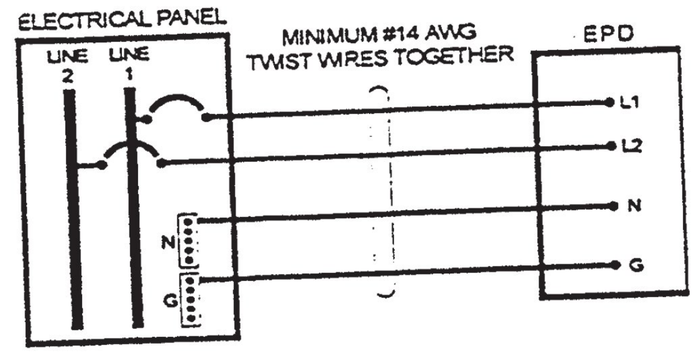

FIGURE 7: WIRING DIAGRAM FOR HPN –003 AND HPN –005

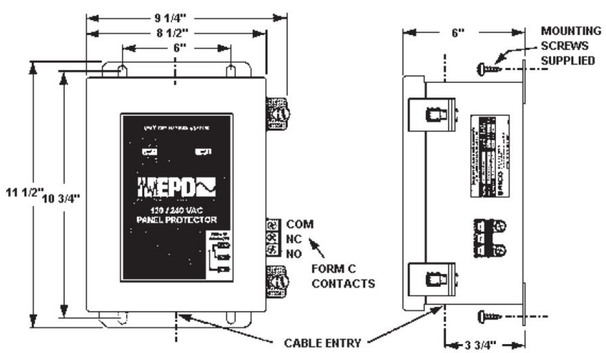

FIGURE 8: SURGE PROTECTOR HPN-004

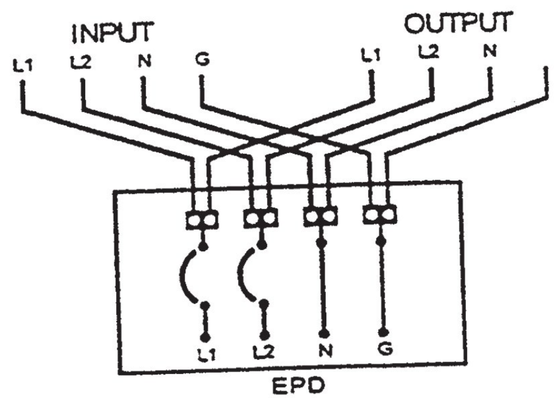

FIGURE 9: WIRING DIAGRAM FOR HPN -004

REV
CC0

Harmon
Industries
Grain Valley, MO

Title	SURGE PROTECTOR WITH INDICATORS
Drawing No. 010132-XXX	Sheet 3 of 3

This Drawing, which contains proprietary Information is the property of General Electric Company. It shall not be reproduced in any manner nor disclosed to third parties without written permission of General Electric Company

GE PROPRIETARY PROPERTY
THE INFORMATION AND/OR MATERIALS INCLUDED HEREIN ARE GE PROPRIETARY PROPERTY AND ARE PROVIDED IN CONFIDENCE. THIS GE PROPRIETARY PROPERTY SHALL NOT BE USED, DISCLOSED TO OTHER OR REPRODUCED WITHOUT THE EXPRESS WRITTEN CONSENT OF GE, INCLUDING BUT WITHOUT LIMITATION, IT IS NOT TO BE USED IN THE CREATION, MANUFACTURE, DEVELOPMENT, OR DERIVATION OF ANY REPAIRS, MODIFICATIONS, SPARE PARTS, DESIGNS, OR CONFIGURATION CHANGES OR TO OBTAIN ANY GOVERNMENT OR REGULATORY APPROVAL. IF CONSENT IS GIVEN FOR REPRODUCTION, IN WHOLE OR IN PART, THIS NOTICE AND THE NOTICE SET FORTH ON EACH PAGE OF THIS DOCUMENT SHALL APPEAR IN ANY SUCH REPRODUCTION IN WHOLE OR IN PART. THE INFORMATION AND/OR MATERIALS CONTAINED HEREIN MAY ALSO BE CONTROLLED BY THE U.S. EXPORT CONTROL LAWS. UNAUTHORIZED EXPORT OR RE-EXPORT IS PROHIBITED.

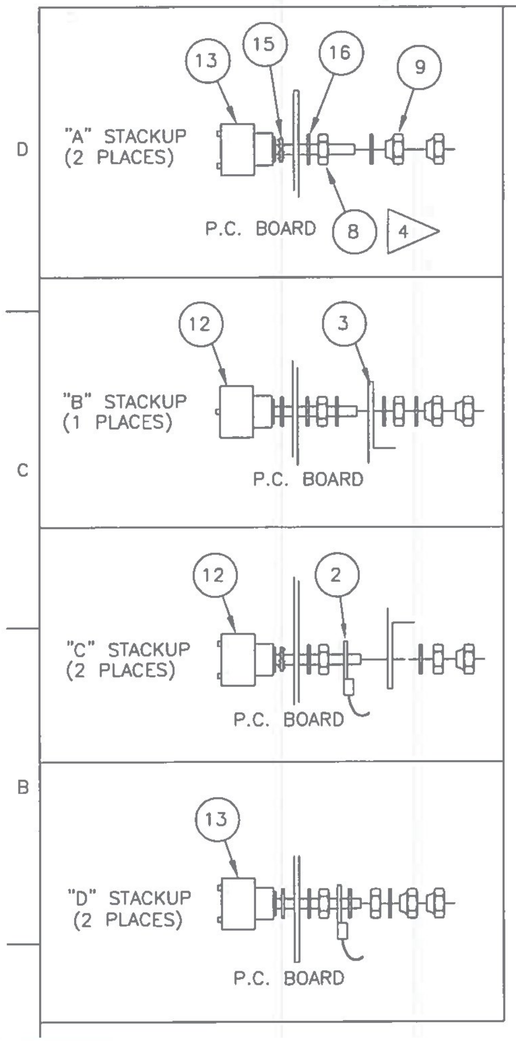

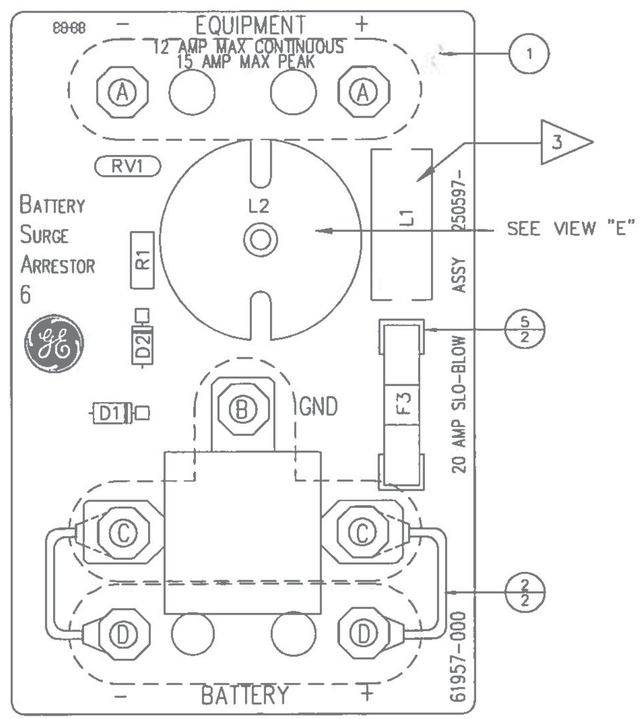

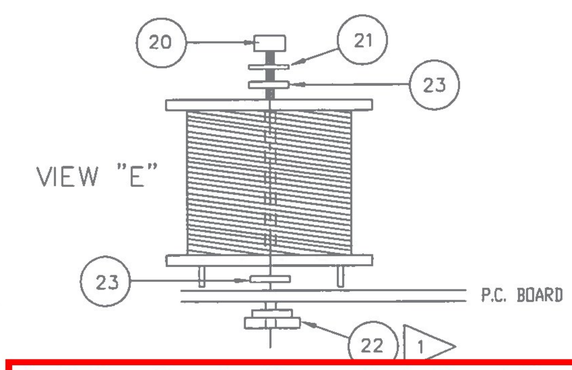

CAUTION: PARTS CAN BE DAMAGED BY STATIC. USE THE PROPER HANDLING TECHNIQUES TO AVOID DAMAGE.

BOARDS ARE TO BE ASSEMBLED PER "PWA REQUIREMENTS FOR SUPPLIERS" DOCUMENT 090032-000. (LATEST REV.).

NOTES: UNLESS OTHERWISE SPECIFIED

1. APPLY 1 DROP OF LIQUID THREAD LOCKER (DIN 25) TO THE THREADS OF THE PEM NUT (DIN 22) JUST PRIOR TO INSTALLING THE SCREW (DIN 20).
2. PLACE THE (4) #10 SCREWS (DIN 11) IN A BAG (DIN 6) AND ATTACH IT TO A TERMINAL WITH A CABLE TIE (DIN 7) FOR FOR SHIPMENT TO THE CUSTOMER.
3. APPLY ADHESIVE (DIN 10) UNDER L1.
4. APPLY 1 OR 2 DROPS OF LIQUID THREAD LOCKER (DIN 4) TO THE THREADS WHERE THE FIRST NUT (DIN 8) WILL SEAT AND THEN TORQUE THE NUT TO 60 INCH POUNDS. THIS NOTE APPLIES TO ALL 7 TERMINALS.

REV	ECRN	DATE	BY	APPR
BCO	90111769	08/23/11	CAG	JCS
BBO	901009.38	5/22/01	CAG	QLJ
BAD	90023705	09/08/99	DTR	JRP
ADD	864-0045	10/02/95	VMD	JV

ARTWORK NO. 061957-000
SCHEMATIC NO. 135392-000
MIN/MOD LEVEL N/A
DRAWN BY VICKIE DOWELL
DATE 10/02/95
ECR APPROVED BY: JOHN SNIEGOWSKI

GE TRANSPORTATION SYSTEMS
GLOBAL SIGNALING

TITLE
PCB ASSEMBLY
BSA-6
BATTERY SURGE ARRESTOR 6

ENGINEER JEFF VOLSHTEYN
DRAWING NO. 250597-100
SHEET 1 OF 1

1

TranSystems
Vermont Agency of Transportation
Lyndon STPG SGNL(48) Project

	Approved Fabrication/Installation may be undertaken
X	Approved as Corrected Approval provided comments are incorporated
	Correct, Revise and Resubmit Fabrication/Installation MAY NOT be undertaken
	No Action Taken

Review / approval does not relieve the contractor from complying with all the requirements of the contract

1

1 - Battery Arrester / Surge Protector shall conform to Special Provision Section 63 ACTVE WARNING SYSTEM MATERIALS (j) Miscellaneous Products and components Part 28 Batteries and Charging Equipment (d) Storage Batteires (see attached pgs 55 and 56). Contractor shall provide additional information confirming the proposed surge arrestor is compatible with the proposed storage batteries, is sized appropriately and ensure the stability of the battery during a short circuit.

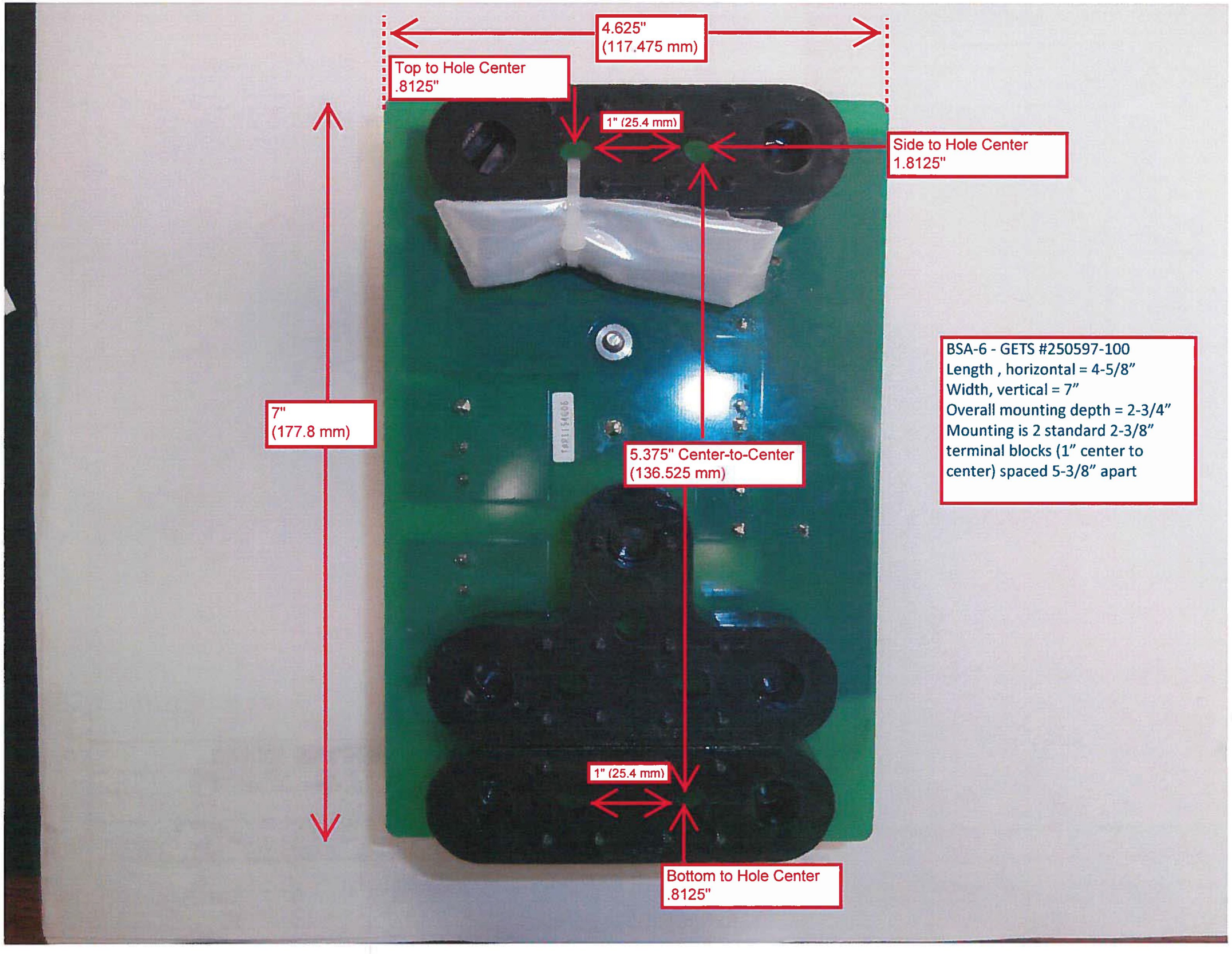

BSA-6 - GETS #250597-100
Length , horizontal = 4-5/8"
Width, vertical = 7"
Overall mounting depth = 2-3/4"
Mounting is 2 standard 2-3/8" terminal blocks (1" center to center) spaced 5-3/8" apart

TranSystems	Vermont Agency of Transportation Lyndon STPG SGNL(48) Project
X	**Approved** Fabrication/Installation may be undertaken
	Approved as Corrected Approval provided comments are incorporated
	Correct, Revise and Resubmit Fabrication/Installation MAY NOT be undertaken
	No Action Taken

Review / approval does not relieve the contractor from complying with all the requirements of the contract

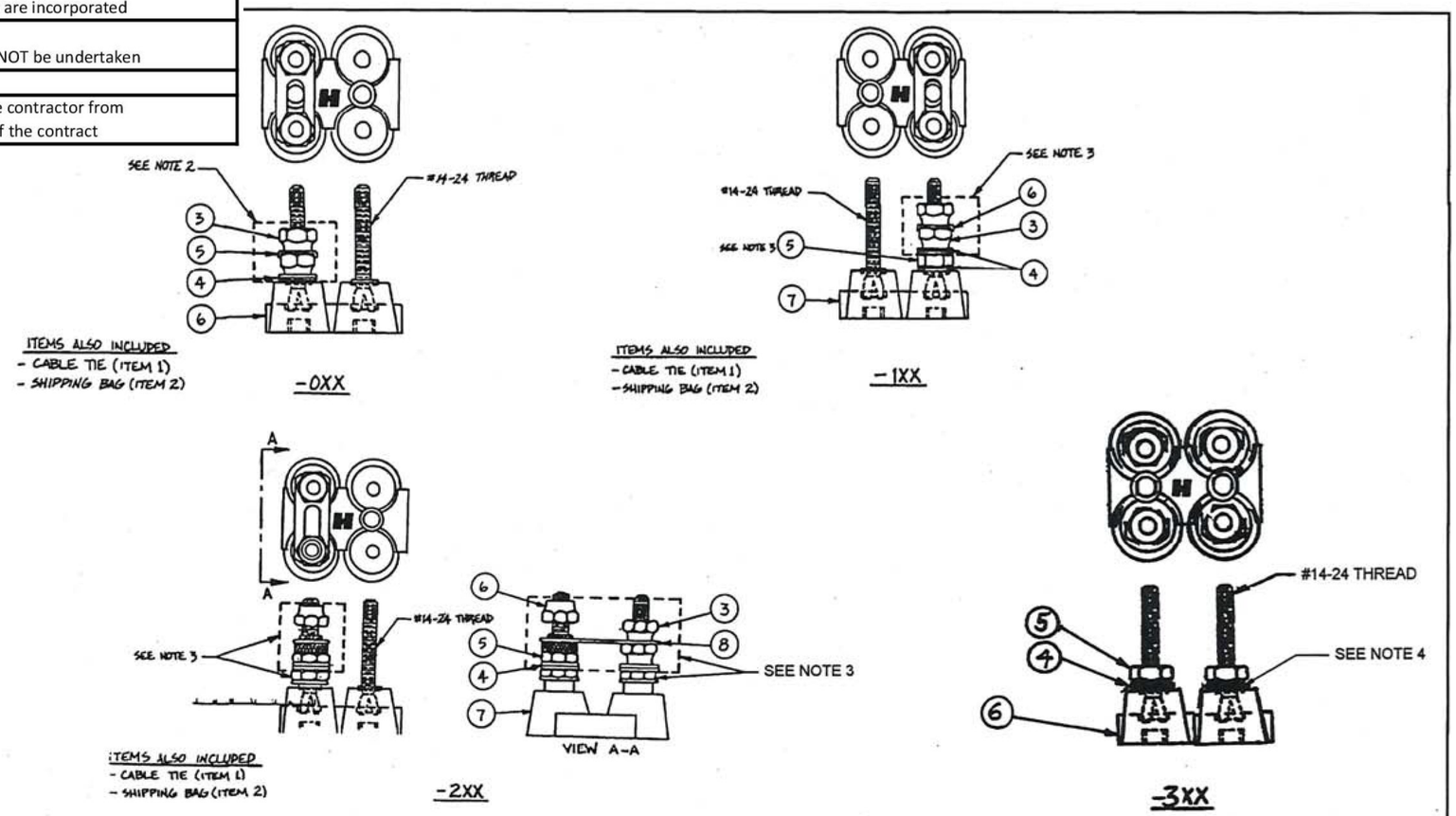

HARMON DASH NO.				NO. OF POSTS
-000	-100	-200	-300	12 (2X6)
-001	-101	-201	-301	2 (2X1)
-002	-102	-202	-302	4 (2X2)
-003	-103	-203	-303	6 (2X3)
-004	-104	-204	-304	8 (2X4)
-005	-105	-205	-305	10 (2X5)

NOTES:

1. USE THE TABLE TO SELECT THE CORRECT HPN WITH RESPECT TO THE DESIRED NUMBER OF POSTS.
2. THE HARDWARE STACKUPS ARE TYPICAL FOR EACH POST AND ARE SHOWN FOR REFERENCE. THE HARDWARE SHOWN ENCLOSED IN THE DASHED BOXES SHOULD BE PACKED IN THE 4" X 6" PLASTIC BAG, ITEM 2 AND TIED TO A POST OF THE TERMINAL BLOCK WITH THE CABLE TIE, ITEM 1. THE CUSTOMER WILL ASSEMBLE AS NEEDED.
3. THE HARDWARE STACKUP SHOWN IS TYPICAL FOR EACH PAIR OF POSTS. INSTALL ONE FLAT WASHER, ITEM 4 AND ONE CLAMP NUT, ITEM 5 ON TO EACH POST. TORQUE EACH NUT TO 60 IN. LBS. THE BALANCE OF THE HARDWARE SHOWN ENCLOSED IN THE DASHED BOXES SHOULD BE PACKED IN THE 4" X 6" PLASTIC BAG, ITEM 2 AND TIED TO A POST OF THE TERMINAL BLOCK WITH THE CABLE TIE, ITEM 1. THE CUSTOMER WILL ASSEMBLE AS NEEDED.
4. THE HARDWARE STACK-UP IS TYPICAL FOR EACH PAIR OF POST. INSTALL ONE FLAT WASHER (DIN 4) AND ONE CLAMP NUT (DIN 5) ON EACH POST. TIGHTEN NUTS TO 60 INCH POUNDS, ± 5%.

REV	BY	DATE	ECRN	ENGINEER: WAYNE WOMACK	DRAWN BY: MARK KRAUSE	SCALE	DATE 7/24/96
FC0	DFR	9/98	90017674			MATERIAL	FINISH
FB0	MTK	7/96	90005299			TOLERANCES UNLESS NOTED OTHERWISE	
	APPR						

Harmon Industries
Grain Valley, MO 64029

TITLE: ASSY TERMINAL STRIP DOUBLE ROW

DECIMALS	FRACTIONS	ANGLES	FILE TYPE	DRAWING NO.	SHEET	SIZE
.XX± .01 .XXX± .005	± 1/16	± 1°	AUTOCAD	250094-XXX	1 of 1	B

This Drawing, which contains proprietary Information is the property of General Electric Company. It shall not be reproduced in any manner nor disclosed to third parties without written permission of General Electric Company

This Drawing, which contains proprietary Information is the property of General Electric Company. It shall not be reproduced in any manner nor disclosed to third parties without written permission of General Electric Company

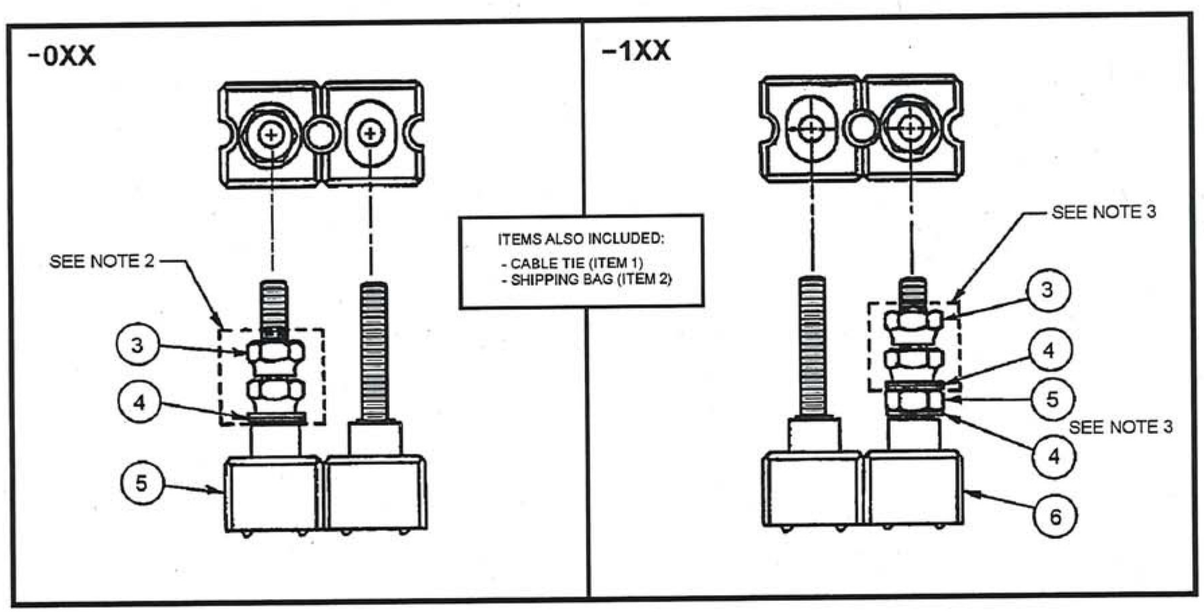

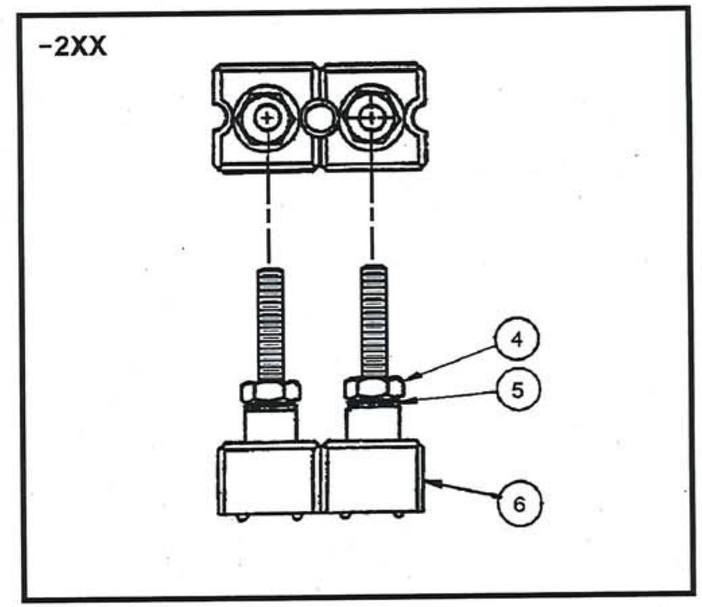

HARMON DASH NUMBER			NUMBER OF POSTS
-001	-101	-201	1
-002	-102	-202	2
-003	-103	-203	3
-004	-104	-204	4
-005	-105	-205	5
-006	-106	-206	6
-007	-107	-207	7
-008	-108	-208	8
-009	-109	-209	9
-010	-110	-210	10
-011	-111	-211	11
-012	-112	-212	12

NOTES:

1. USE THE TABLE TO SELECT THE CORRECT HPN WITH RESPECT TO THE DESIRED NUMBER OF POSTS.

2. **FOR –0XX**
THE HARDWARE STACK-UPS ARE TYPICAL FOR EACH POST AND ARE SHOWN FOR REFERENCE. THE HARDWARE SHOWN ENCLOSED IN THE DASHED BOXES SHOULD BE PACKED IN THE 4" X 6" PLASTIC BAG (ITEM 2) AND TIED TO A POST OF THE TERMINAL BLOCK WITH THE CABLE TIE (ITEM 1). THE CUSTOMER WILL ASSEMBLE AS NEEDED.

3. **FOR –1XX**
THE HARDWARE STACK-UP SHOWN IS TYPICAL FOR EACH PAIR OF POSTS. INSTALL ONE FLAT WASHER (ITEM 4) AND ONE CLAMP NUT (ITEM 5) ONTO EACH POST. TORQUE EACH NUT TO 60 IN. LBS. THE BALANCE OF THE HARDWARE SHOWN ENCLOSED IN THE DASHED BOXES SHOULD BE PACKED IN THE 4" X 6" PLASTIC BAG (ITEM 2) AND TIED TO A POST OF THE TERMINAL BLOCK WITH THE CABLE TIE (ITEM 1). THE CUSTOMER WILL ASSEMBLE AS NEEDED.

4. **FOR –2XX**
THE HARDWARE STACK-UP IS TYPICAL FOR EACH POST.
INSTALL ONE WASHER (ITEM 5) AND ONE CLAMP NUT (ITEM 4) ON EACH POST.
TORQUE NUT TO 60 IN. LBS ± 5%.

REVISION CONTROL				
REV	ECRN	DATE	BY	APPRV
GA0	90005299	7/96	MTK	WW
GB0	90017673	9/98	MTK	WW

ENGINEERING

Engineer W. WOMACK
Drawn By M. KRAUSE — Date 9/98

Harmon Industries
Grain Valley, MO

Title ASSY, SINGLE ROW TERMINAL POST

Drawing No. 250084-XXX — Sheet 1 of 1

This Drawing, which contains proprietary Information is the property of General Electric Company. It shall not be reproduced in any manner nor disclosed to third parties without written permission of General Electric Company

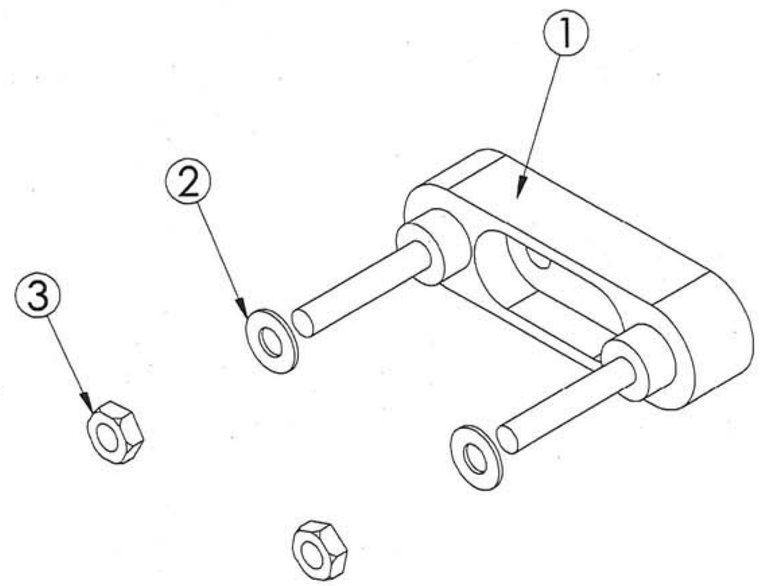

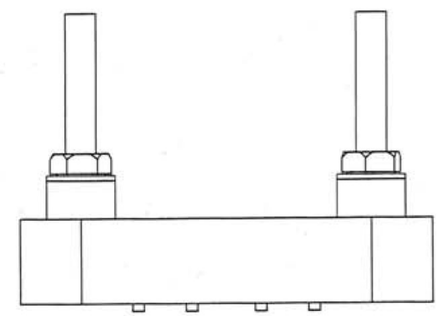

NOTE:

TORQUE NUT TO 60 IN/LBS. ±5%.

		H. P. N.			DESCRIPTION		DIN
SLT	APPRV	ENGINEER S. TRIMBLE		SCALE 1:1	HARMON INDUSTRIES, INC. ARGO & DILLINGHAM ROADS GRAIN VALLEY, MO 64029 (800) 825-3178 Harmon		
SLT	BY	DRAWN BY S. TRIMBLE		DATE 4-14-00			
4/00	DATE	MATERIAL N/A	FINISH N/A		TITLE: ASSY, 2-WAY TERM BLK W/AAR HARD		
90027550	ECRN	TOLERANCE UNLESS NOTED					
AA0	REV	DECIMALS XX ± XXX ±	FRACTIONS + -	ANGLES + -	FILE TYPE SLDWRKS	DRAWING NO. 202810-000	SHEET 1 OF 1	SIZE B

Cable Clips

Retainer Clips

Design Features

- Spring steel and "snap-on" designs mean no more holes to drill.
- Flexibility - wide range of clips fit all standard rails and a variety of conductors.
- Versatility - ERICO now enables you to secure cables — reducing maintenance and improving wayside safety.

Electroplated Spring Steel

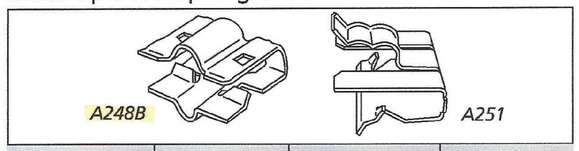

Part Number	Max Cable Diameter	Position on Rail Base	Standard Packaging
A248B	3/8"	Perpendicular	50
A251	3/8"	Double Parallel	50

Electroplated Steel

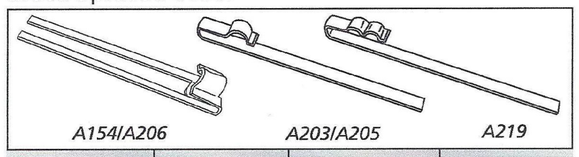

Part Number	Max Cable Diameter	Position on Rail Base	Standard Packaging
A154	5/16"	Perpendicular	50
A203	5/16"	Parallel	100
A205	1/2"	Parallel	100
SBA206	1/2"	Perpendicular	50
A219	5/16"	Double Parallel	100

PVC Cable Keeper

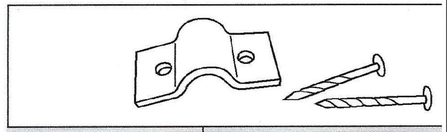

Part Number	Description
T375	7/16" Diameter Cable Keeper – 2 Holes w/nails

TranSystems
Vermont Agency of Transportation
Lyndon STPG SGNL(48) Project

X	**Approved** Fabrication/Installation may be undertaken
	Approved as Corrected Approval provided comments are incorporated
	Correct, Revise and Resubmit Fabrication/Installation MAY NOT be undertaken
	No Action Taken

Review / approval does not relieve the contractor from complying with all the requirements of the contract

Typical Applications

Track Clips

Track Retainer Clip

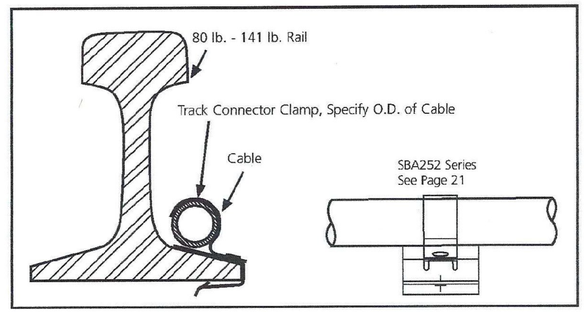

Rail Clip and Concrete Tie Clip (Contact ERICO)

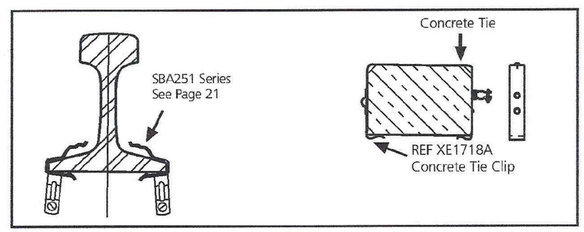

Clip, Bootleg, Track Connector

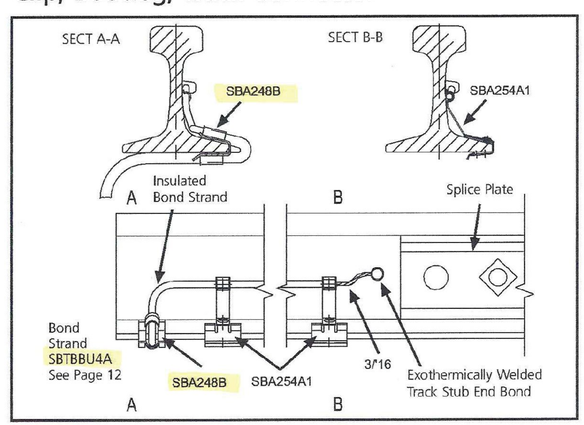

Typical Applications

Concrete Tie Clips

Concrete Tie Clip Bootleg Riser 4-Wire Kit

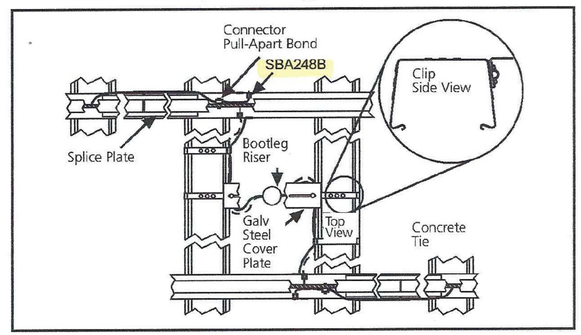

Concrete Tie Clip Applications

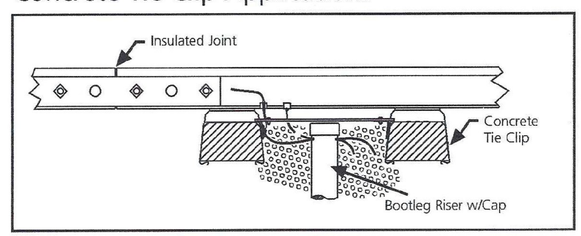

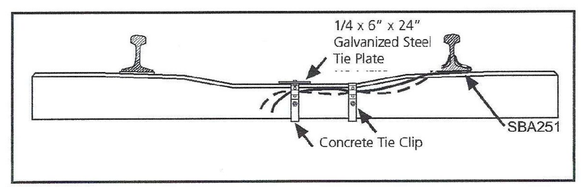

GETSGS Drawing - Track Driver MDL TD-4 DC - GETSGS #800-081033-100 (Page 1 of 6)

GE PROPRIETARY INFORMATION

THE INFORMATION CONTAINED IN THIS DOCUMENT IS GE PROPRIETARY INFORMATION AND IS DISCLOSED IN CONFIDENCE. IT IS THE PROPERTY OF GE AND SHALL NOT BE USED, DISCLOSED TO OTHERS OR REPRODUCED WITHOUT THE EXPRESS WRITTEN CONSENT OF GE, INCLUDING, BUT WITHOUT LIMITATION, IT IS NOT TO BE USED IN THE CREATION, MANUFACTURE, DEVELOPMENT, OR DERIVATION OF ANY REPAIRS, MODIFICATIONS, SPARE PARTS, DESIGNS, OR CONFIGURATION CHANGES OR TO OBTAIN ANY GOVERNMENT OR REGULATORY APPROVAL. IF CONSENT IS GIVEN FOR REPRODUCTION IN WHOLE OR IN PART, THIS NOTICE AND THE NOTICE SET FORTH ON EACH PAGE OF THIS DOCUMENT SHALL APPEAR IN ANY SUCH REPRODUCTION IN WHOLE OR IN PART. EXPORT CONTROL LAWS OF THE UNITED STATES MAY ALSO CONTROL THE INFORMATION AND/OR MATERIALS CONTAINED HEREIN. UNAUTHORIZED EXPORT OR RE-EXPORT IS PROHIBITED.

TranSystems — Vermont Agency of Transportation
Lyndon STPG SGNL(48) Project

	Approved Fabrication/Installation may be undertaken
X	Approved as Corrected Approval provided comments are incorporated
	Correct, Revise and Resubmit Fabrication/Installation MAY NOT be undertaken
	No Action Taken

Review / approval does not relieve the contractor from complying with all the requirements of the contract

1

1 - Track Driver Shall conform to Special provision, Section 63 ACTIVE WARNING SYSTEM MATERIALS (b) Type "C" AC-DC Track Circuit Control (see attached pages 36 and 37). The AC generators, track drivers and termination shunt rectifiers shall be system engineered by one manufacturer.

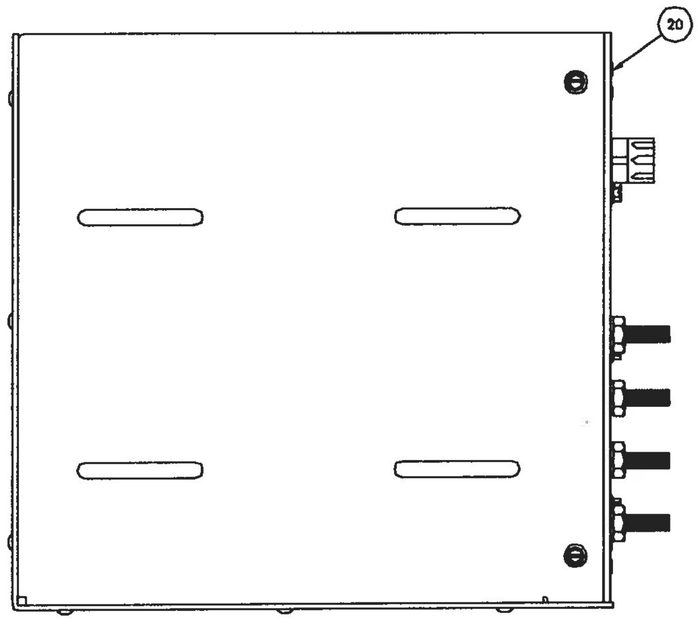

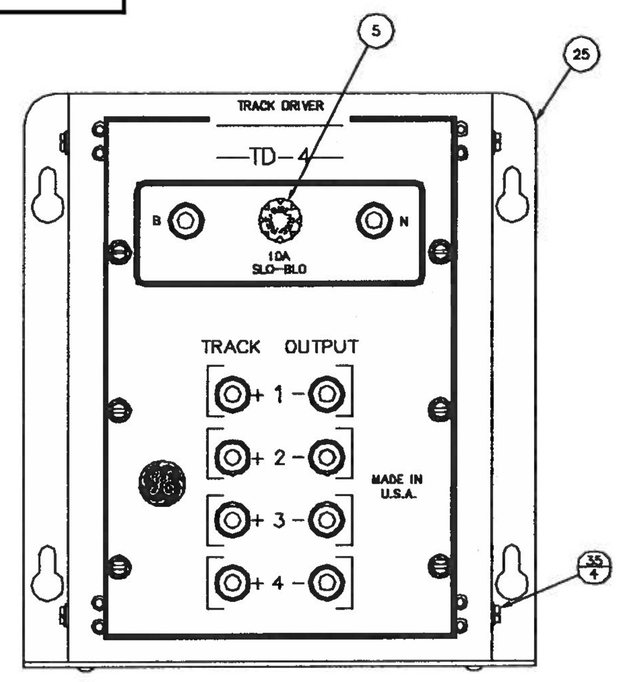

NOTES: UNLESS OTHERWISE SPECIFIED

1. ITEM #65 (HARDWARE KIT BAG) IS TO BE SHIPPED UNINSTALLED.

UNLESS OTHERWISE SPECIFIED DIMENSIONS ARE IN INCHES. DIMENSIONS IN [ ] ARE MILLIMETERS.
.XX ± NA FRACTIONS ± NA
.XXX ± NA ANGLES ± NA

REV	CHANGE NO.	DATE	BY
B00	2326	12/28/90	PC
C00	3375	07/12/95	PC
D00	3676	03/12/97	CW
E00	4850	NA	WAK
FA0	80109235	07/07/09	SZ

ENGINEER CGO — DATE 03/83
DRAWN BY T. WILEY — DATE 03/29/83
ENGINEER APPROVAL BRANDI WOOD
CRITICAL TO QUALITY CHARACTERISTICS ARE MARKED AS
MIN/MOD LEVEL:NA
PRODUCT:

GE TRANSPORTATION SYSTEMS GLOBAL SIGNALING
ARGO & DILLINGHAM, GRAIN VALLEY, MO 64029 U.S.A.

TITLE FINAL ASSY TRACK DRIVER MDL TD-4 DC

SIZE	SCALE	DRAWING NO.	SHEET	REV.
D	NTS	800-081033-100	1 OF 1	FA0

(H1701)

Component List with DIN for
GETSGS Part #800-081033-100 - ASSY TRACK DRIVER TD-4

DIN from Drawing	Component Item PN	Description	Qty Per	UM
	005019-017	CABLE TIE 4L NAT	15	EA
5	010001-033	FUSE 3AG 32V 10A SLO BLO GLASS	1	EA
	082471-000	PROC TD-4 (FINAL TEST)	1	EA
75	100564-101	L TD-4, TCM, RING 10, & 10-5	1	EA
25	112-081033-115	HOUSING SUB ASSY TD-4	1	EA
35	153-002802-240	SCREW 8-32X1/2 CAP HEX SLT HD	4	EA
50	155-002804-005	WASHER FLAT #8	4	EA
55	155-002805-003	WASHER LOCK #8 INT	4	EA
66	162-002500-020	HARDWARE KIT BAG #20	1	EA
20	812-081033-101	CHASSIS SUB-ASSY TD-4	1	EA
60	894-081033-900	WIRE LIST TD-4	1	EA

Harmon INDUSTRIES

TD-4

Technical Product Information

Track Driver

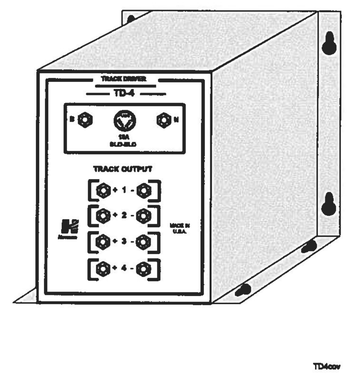

Introduction

The TD-4 Track Driver consists of a DC to AC inverter and power amplifier with 4 sets of outputs in a single unit. These units are used with a Track Rectifier Model RING 10 Model RING 10-5 for each track circuit. This equipment produces sufficient excitation to the track to operate a conventional 2 ohm or 4 ohm signal relay.

Application

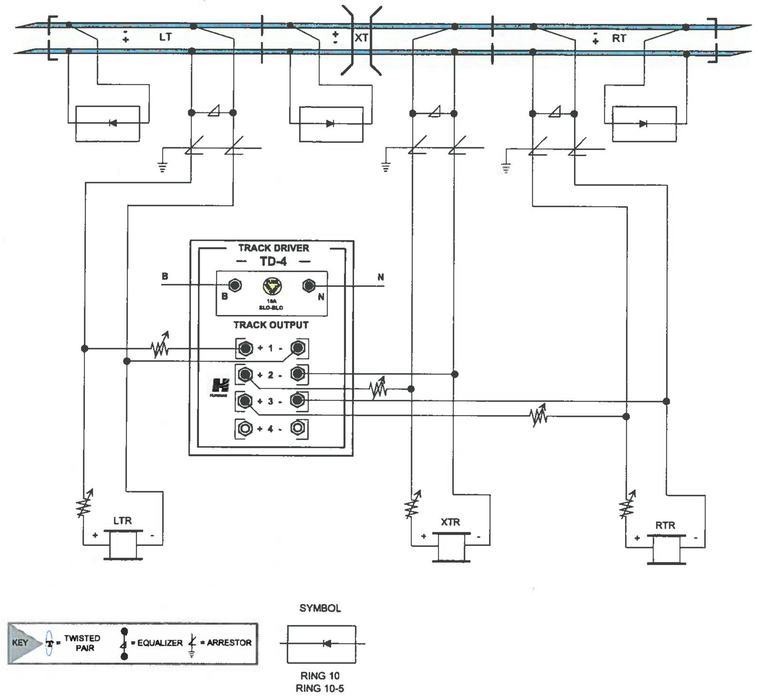

Universal AC-DC Track Circuit (Typical Application) TD4apps

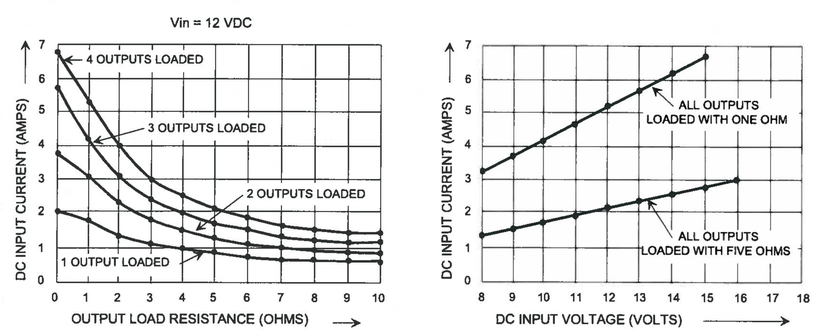

Track Driver Operating Characteristics TD4fig1

Installation

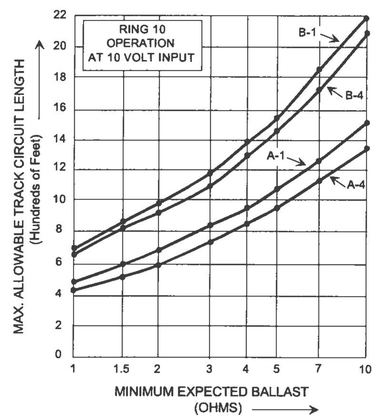

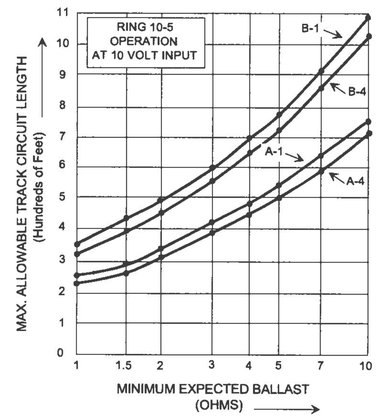

B-1 Adjustment B, One Output Loaded*
B-4 Adjustment B, Four Outputs Loaded*

A-1 Adjustment A, One Output Loaded*
A-4 Adjustment A, Four Outputs Loaded*

* See Diagram Below

Maximum Track Circuit Length VS. Minimum Expected Ballast

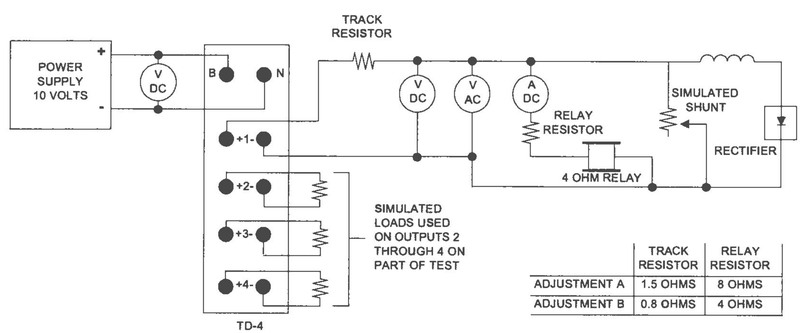

	TRACK RESISTOR	RELAY RESISTOR
ADJUSTMENT A	1.5 OHMS	8 OHMS
ADJUSTMENT B	0.8 OHMS	4 OHMS

Test Condition for Determining Track Length VS. Ballast

TD4fig2

Theory of Operation

The TD-4 Track Driver uses a free-running multivibrator, operating at 180 Hz, to produce a continuous square-wave which is amplified to produce the proper power and impedance level to feed the track. The resulting AC voltage on the track is about 7 volts. Because of the "transient" components of the square-wave, there are also high voltage spikes, which help to penetrate films of rust between rail and wheel. This voltage will depend upon the conditions of ballast and shunting factors at the time of measurement. The shunting characteristics of the AC-DC track circuit equipment are definitely superior to that of a sine wave source.

The drive and amplifier circuits are so arranged that one common frequency and phase results for all four outputs. This allows both phase and polarity to be reversed across the insulated joints to prevent the adjacent circuit from being picked up through failed insulated joints.

Specifications

Operating Voltage and Current	
DC Nominal:	10 or 12 Volt Battery 9 Amps maximum
Range:	8-15 VDC
Output Current Per Track Circuit	
12.5 VDC Input	.86 Amps @ 4.0 Ohms 1.68 Amps @ 1.0 Ohms 2.01 Amps @ 0 Ohms
10 VDC Input	.71 Amps @ 4.0 Ohms 1.39 Amps @ 1.0 Ohms 1.67 Amps @ 0 Ohms

Fuse	ACG-10 (Amp)
Temperature Range	-40°F to +160°F -40°C to + 71°C
Weight	4 lbs

Dimensions

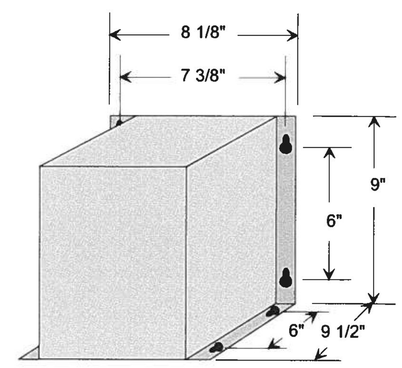

TD4dims

RING-10

To rectify the AC power, a RING-10 network is placed across the rails at the opposite end of each track circuit. This network has 10 diodes in a series loop or ring, hence the name RING-10. Leads are connected from each end of one diode in the series loop. The remaining nine diodes provide surge protection.

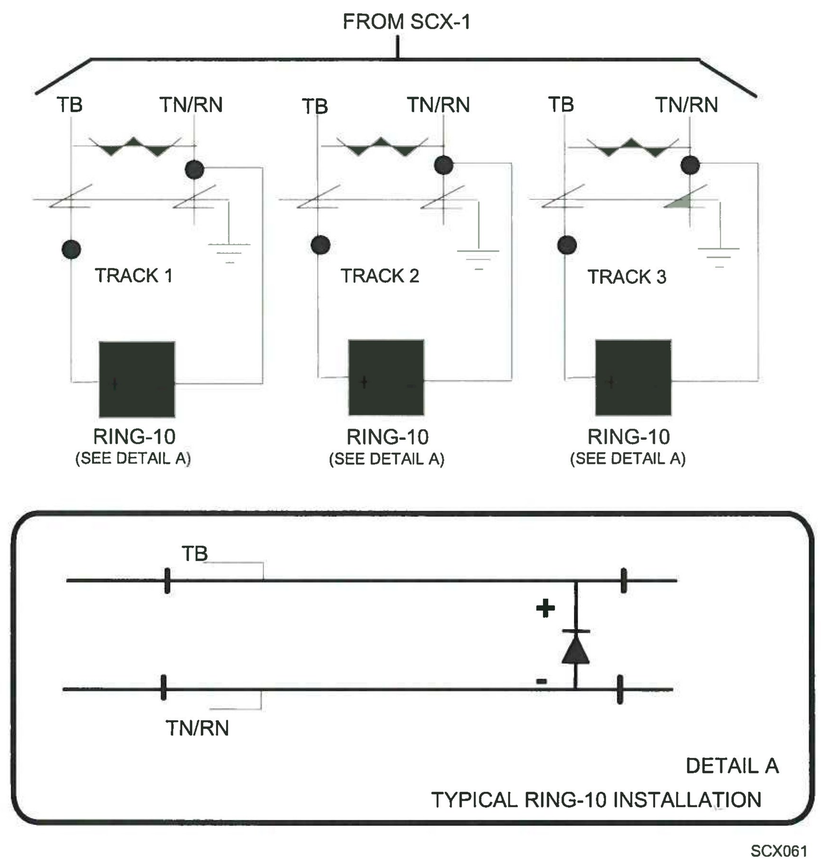

Figure 1-2, Typical RING-10 Installation

TranSystems	Vermont Agency of Transportation Lyndon STPG SGNL(48) Project
	Approved Fabrication/Installation may be undertaken
X	**Approved as Corrected** Approval provided comments are incorporated
	Correct, Revise and Resubmit Fabrication/Installation MAY NOT be undertaken
	No Action Taken
Review / approval does not relieve the contractor from complying with all the requirements of the contract	

1

1 - Track Rectifier shall conform to Special Provision, Section 63 ACTIVE WARNING SYSTEM MATERIALS (b) Type "C" AC-DC Track Circuit Control (see attached pages 36 and 37). The AC generators, track drivers and termination shunt rectifiers shall be system engineered by one manufacturer.

© 2009 GE Transportation Systems Global Signaling, LLC.
All rights reserved. Subject to restrictions on the cover or first page.

GE Part #: 1094-02

Product Data
Section 7: Sheet 6

Okonite®-Okolene® Duplex Track Wire

600V

One Copper Conductor/90°C Rating

A Bare Copper Conductor- Size #9 AWG, #6 AWG Solid
B Insulation - Okonite-Sizes #9 AWG and #8 AWG-5/64", #6 AWG-6/64"
C Jacket-Okolene, Color Coded; 1-Black, 1-Red

Insulation
Okonite EPR is Okonite's trade name for its heat resistant, mechanically rugged ethylene-propylene based insulating compound. The insulation thickness for wire sizes #9 AWG and #8 AWG is 5/64" and for #6 AWG is 6/64".

Jackets and Finishes
The Okolene (PE) jacket supplied with this cable provides excellent resistance to mechanical abuse, weathering and most acids, oils and alkalies. Color Coded; 1-Black, 1-Red.

Applications
Okonite-Okolene 600V Duplex Track Wire is recommended for use in track circuits, signal operations, car retarder and switch machine applications. Can be installed in either wet or dry locations, in conduit trays or trough or buried direct.

Specifications
Conductor: Bare copper- size #9 AWG to #6 AWG solid per ASTM B-3, #6 AWG.
Insulation: Per ICEA S-95-658, and AREMA Signal Manual Part 10.3.19.
Jacket: Meets or exceeds the physical and electrical requirements of ICEA S-95-658, and AREMA Signal Manual Part 10.3.21

Product Features
- Exceptional heat resistance.
- 90°C Continuous Rating
130°C Emergency Overload Rating.
250°C Short Circuit Rating.
- Mechanically rugged.
- Flexible, easy to handle and splice.
- Resistant to most oils, acids, alkalies and effects of weather.
- Stable electrical and physical properties.
- Excellent moisture resistance.

TranSystems	Vermont Agency of Transportation Lyndon STPG SGNL(48) Project
	Approved Fabrication/Installation may be undertaken
X	Approved as Corrected Approval provided comments are incorporated 1
	Correct, Revise and Resubmit Fabrication/Installation MAY NOT be undertaken
	No Action Taken
Review / approval does not relieve the contractor from complying with all the requirements of the contract	

Okonite Insulation: #9 AWG, 5/64", #6 AWG, 6/64"

Catalog Number	Size AWG	No. of Strands	Jacket Thickness 64 th's	Approx. Duplexed O.D. (In.)	Approx. Net Wt. Lbs./M'	Approx. Ship Wt. Lbs./M'
150-12-3931	9	Solid	4	0.83"	199	243
▲ 150-12-3933	6	Solid	4	1.00"	329	404

▲ Authorized Stock Item: Available from our Customer Service Center
Standard Package -1000' Non-Returnable Reel

1 - All Cable must meet the requirements of Special Provision Section 63 ACTIVE WARNING SYSTEM MATERIALS (j) Miscellaneous Products and Components Part 30 Vital Signal Cables (see attached pgs 58 to 61 of Special Provisions). Contractor shall provide appropriate test reports when cable is installed.

E/11100706

THE OKONITE COMPANY
Ramsey, New Jersey 07446

PART NUMBERING

PN	AWG	NO. OF STRANDS	COLOR	INSULATION THICKNESS (IN.)	JACKET THICKNESS (IN.)	O.D. (IN.)	LBS. M/Ft
-000	6	19	BLACK	.030	.005	.26	97
-001	10	1	BLACK	.020	.004	.16	40
-002	6	19	GREEN	.030	.005	.26	97
-003	6	19	RED	.030	.005	.26	97
-004	12	19	RED	.015	.004	.13	25
-005	12	19	BLACK	.015	.004	.13	25
-006	10	1	RED	.020	.004	.16	40
-007	10	1	WHITE	.020	.004	.16	40
-008	4	19	BLACK	.040	.006	.33	154
-009	10	19	RED	.020	.004	.17	39
-010	10	19	WHITE	.020	.004	.17	39
-011	8	19	WHITE	.030	.005	.22	64
-012	6	19	WHITE	.030	.005	.26	97
-013	10	1	GREEN	.020	.004	.16	40

DESCRIPTION: WIRE, THHN

ELECTRICAL SPECIFICATION:
600 VOLTS

MATERIAL SPECIFICATION:
OPERATING TEMPERATURE:
DRY: 90°C
WET: 75°C
GASOLINE AND OIL RESISTANT
CONDUCTORS: STRANDED OR SOLID COPPER
INSULATION: PVC
JACKET: NYLON

MAXIMUM PHYSICAL DIMENSION:
SEE PN TABLE

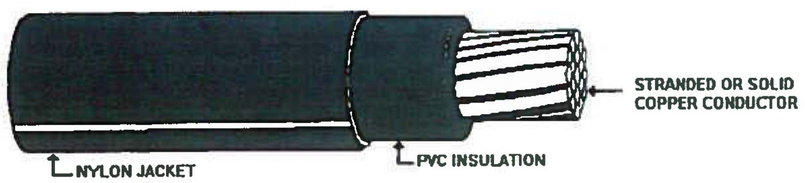

FIGURE 1:

TranSystems	Vermont Agency of Transportation Lyndon STPG SGNL(48) Project
	Approved Fabrication/Installation may be undertaken
X	Approved as Corrected Approval provided comments are incorporated 1
	Correct, Revise and Resubmit Fabrication/Installation MAY NOT be undertaken
	No Action Taken
Review / approval does not relieve the contractor from complying with all the requirements of the contract	

REVISION CONTROL				
REV	ECRN	DATE	BY	APPRV
CC0	90106641	10/07	BS	Prapulla

ENGINEERING	
Approved Prapulla	Date 10/07
Engineer ANAND GOGATE	
Drawn By SUBASH .B	Date

GE Transportation Systems
Global Signaling

Argo and Dillingham Rds, Grain Valley, MO 64029

Title WIRE, THHN

Drawing No.	Sheet
012253-XXX	1 of 1

1 - All Cable must meet the requirements of Special Provision Section 63 ACTIVE WARNING SYSTEM MATERIALS (j) Miscellaneous Products and Components Part 30 Vital Signal Cables (see attached pgs 58 to 61 of Special Provisions). Contractor shall provide appropriate test reports when cable is installed.

Carolprene® Jacketed Type SJOOW

90°C, 300 Volt, UL/CSA Portable Cord

NOW WITH TRU-Mark® Footage Marking System PRECISION

Product Construction:

Conductors:
- 18 through 10 AWG fully annealed stranded bare copper

Insulation:
- Premium-grade, color-coded 90°C EPDM
- Color code: See chart below

Jacket:
- Carolprene®, black
- Temperature range: -40°C to +90°C

Jacket Marking:
- CAROL (SIZE) (mm²) 90°C (UL) WATER RESISTANT SJOOW CSA (-40°C) FT2 P-7K-123033 MSHA 300 VOLT ROHS MADE IN USA (TRU-MARK SEQUENTIAL FOOTAGE)

Applications:
- Portable tools and equipment
- Portable appliances
- Small motors and associated machinery

Features:
- Excellent resistance to oil and moisture
- Good tensile strength, elongation and aging characteristics
- High flexibility
- Excellent abrasion resistance
- Water-resistant*
- UL Listed and CSA Certified for indoor and outdoor use
- Ozone-, sunlight (UV)- and weather-resistant
- TRU-Mark® sequential footage marking

Industry Approvals:
- UL Flexible Cord - UL 62
- CSA Flexible Cord - C22.2-49
- MSHA Approved
- RoHS Compliant

Packaging:
- 250' (76.2 m), 500' (152.4 m), 1000' (304.8 m)
- Other put-ups available on special order

*Suitable for immersion in water if properly sealed and terminated.

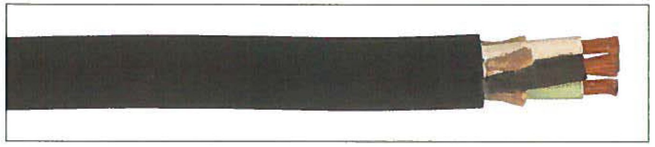

TYPE SJOOW – 300 VOLT – UL/CSA

CATALOG NUMBER	NO. OF COND.	AWG SIZE	COND. STRAND	NOMINAL INS. THICKNESS		NOMINAL O.D.		CURRENT AMPS†	APPROX. NET WT. LBS/M'(5)	STD. CTN.
				INCHES	mm	INCHES	mm			
01310	2	18	16/30	0.030	0.76	0.285	7.24	10	46	1000'
01311	3	18	16/30	0.030	0.76	0.305	7.75	10	60	1000'
01344	4	18	16/30	0.030	0.76	0.330	8.38	7	72	250'
01312	2	16	26/30	0.030	0.76	0.310	7.87	13	56	1000'
01342	3	16	26/30	0.030	0.76	0.330	8.38	13	72	250'
01343	4	16	26/30	0.030	0.76	0.365	9.27	10	89	250'
01358	2	14	41/30	0.030	0.76	0.340	8.64	18	75	250'
01360	3	14	41/30	0.030	0.76	0.370	9.40	18	100	250'
01364	4	14	41/30	0.030	0.76	0.410	10.41	15	128	250'
01379	2	12	65/30	0.030	0.76	0.410	10.41	25	108	250'
01380	3	12	65/30	0.030	0.76	0.430	10.92	25	136	250'
01381	4	12	65/30	0.030	0.76	0.475	12.07	20	177	250'
01382*	2	10	104/30	0.045	1.14	0.560	14.22	30	190	250'
01383	3	10	104/30	0.045	1.14	0.580	14.73	30	236	250'
01384	4	10	104/30	0.045	1.14	0.655	16.64	25	296	250'

Cord furnished with UL and CSA labels.
* Non-stock item; minimum quantity purchase required.
† Green conductor for grounding only. Ampacities based on NEC Table 400.5(A)(1).
(5)Actual shipping weight may vary.

COLOR CODE CHART

NO. OF CONDUCTORS	COLOR
2	Black, White
3	Black, White, Green
4	Black, White, Red, Green

TranSystems — Vermont Agency of Transportation
Lyndon STPG SGNL(48) Project

- [ ] Approved
  Fabrication/Installation may be undertaken
- [x] Approved as Corrected
  Approval provided comments are incorporated
- [ ] Correct, Revise and Resubmit
  Fabrication/Installation MAY NOT be undertaken
- [ ] No Action Taken

Review / approval does not relieve the contractor from complying with all the requirements of the contract

1

1 - All Cable must meet the requirements of Special Provision Section 63 ACTIVE WARNING SYSTEM MATERIALS (j) Miscellaneous Products and Components Part 30 Vital Signal Cables (see attached pgs 58 to 61 of Special Provisions). Contractor shall provide appropriate test reports when cable is installed.

General Cable

Made in U.S.A. | RoHS Compliant Directive 2002/95/EC | MSHA Mine Safety and Health Administration | Certified Canadian Standard Association | UL LISTED | CAROL BRAND

Cable: Wire 16 AWG 19 STR EPC/PVC BLU GETSGS # 012092-002
Wire 10 AWG 19 STR EPC/PVC BLU
GETSGS # 012092-000

Product Data
Section 7: Sheet 10

TranSystems	Vermont Agency of Transportation Lyndon STPG SGNL(48) Project
	Approved Fabrication/Installation may be undertaken
X	Approved as Corrected Approval provided comments are incorporated 1
	Correct, Revise and Resubmit Fabrication/Installation MAY NOT be undertaken
	No Action Taken
Review / approval does not relieve the contractor from complying with all the requirements of the contract	

Okonite® TC Blue Tower and Case Wire

600 Volt

One Copper Conductor/90°C Rating

A Uncoated, Stranded Copper Conductor
B Insulation—Okonite
C Jacket—Blue Okoseal

Insulation

Okonite EPR is Okonite's trade name for its heat resistant, mechanically rugged ethylene-propylene based insulating compound. The insulation thickness for wire sizes are listed below.

Jackets and Finishes

The Blue Okoseal® (PVC) jacket supplied with this cable provides excellent resistance to mechanical abuse, flame, weathering, and most acids, oils, and alkalies.

Applications

Okonite Tower and Case Wire is recommended for use as relay and associated signal apparatus wiring and for connector wire use where a flexible, small diameter wire is required.

Specifications

Conductor: Uncoated stranded copper stranded per ASTM B-8.
Insulation: Per ICEA S-95-658. Meets or exceeds all requirements for EPR insulation.
Jacket: Per ICEA S-95-658. Meets or exceeds all requirements.
Okonite Tower and Case Wire meets or exceeds the requirements of AREMA Manual Part 10.3.15.

Product Features

- Exceptional heat resistance.
- 90°C Continuous Rating
130°C Emergency Overload Rating.
250°C Short Circuit Rating.
- Mechanically rugged.
- Flexible, easy to handle and splice.
- Flame resistant—meets U.L. horizontal flame test.
- Resistant to most oils acids, alkalies and effects of weather.
- Stable electrical and physical properties.

1 - All Cable must meet the requirements of Special Provision Section 63 ACTIVE WARNING SYSTEM MATERIALS (j) Miscellaneous Products and Components Part 30 Vital Signal Cables (see attached pgs 58 to 61 of Special Provisions). Contractor shall provide appropriate test reports when cable is installed.

Catalog Number	Size AWG	No. of Strands	Insulation Thickness Mils	Jacket Thickness Mils	Approx. O.D. (in.)	Approx. Net Wt. Lbs./m'	Approx. Ship Wt. Lbs./m'
▲ 152-11-3002	16	19	30	20	.17	20	24
▲ 152-11-3024	14	19	30	20	.20	26	28
152-11-3026	12	19	45	20	.23	42	46
▲ 152-11-3038	10	19	30	20	.23	56	60
152-11-3108	10	37	45	20	.26	58	62
152-11-3010	9	19	45	25	.29	71	75

▲ **Authorized Stock Item** - Available from our Customer Service Centers.
Note: The construction described has a Blue Jacket. Consult your local Okonite Representative for details about alternate colors.
Standard Package - #16 AWG and #14 AWG, 10000 spool; #12 AWG, #10 AWG, and #9 AWG, 500' spool.

D/11100710

THE OKONITE COMPANY
Ramsey, New Jersey 07446