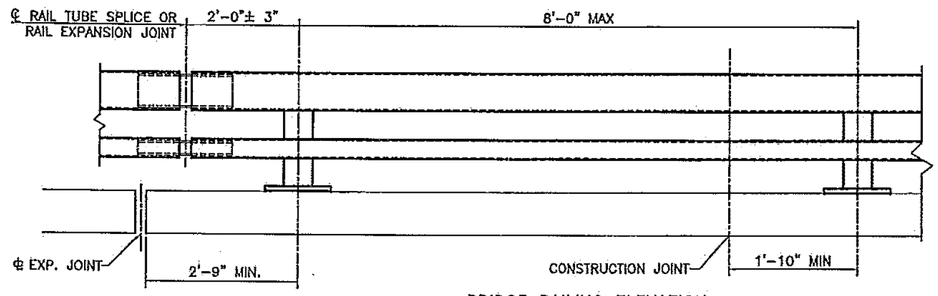

BRIDGE RAILING ELEVATION

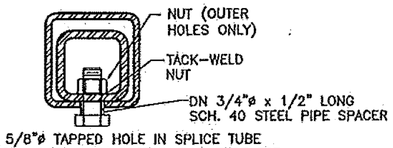

EXPANSION JOINT SECTION

FOR DETAILS NOT SHOWN, SEE "RAIL TUBE SPLICE SECTION."

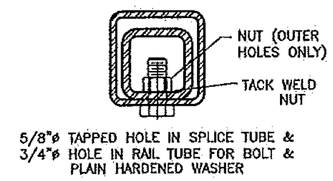

ADD TITLE

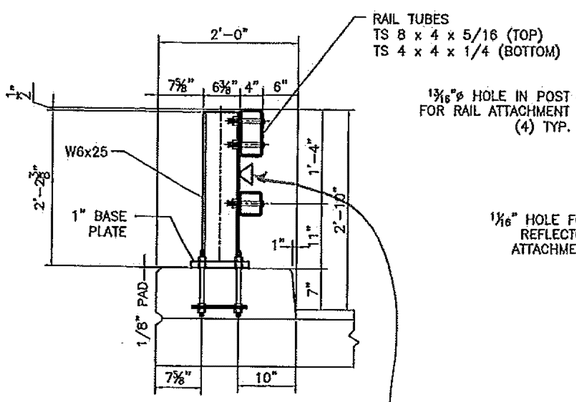

TYPICAL SECTION

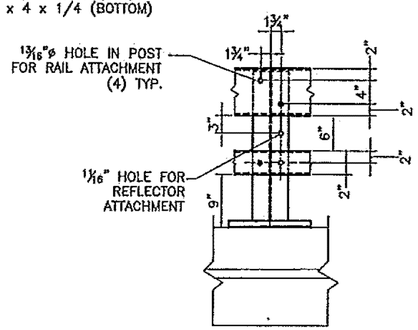

ELEVATION

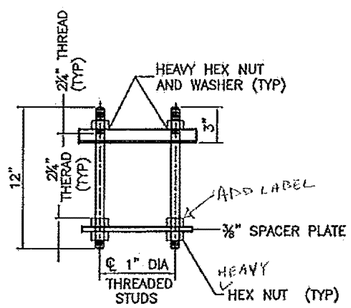

RAIL POST ANCHORAGE

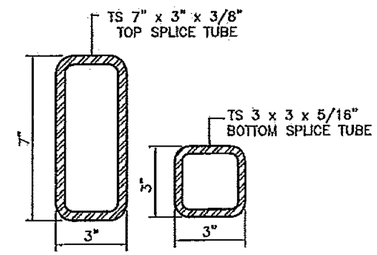

RAIL TUBE SPLICE SECTION

ADD DELINEATION DEVICE DETAILS

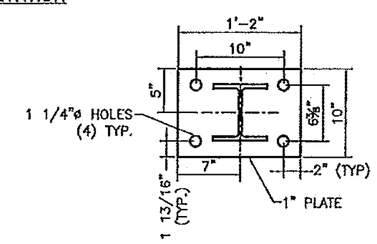

POST AND BASE PLATE

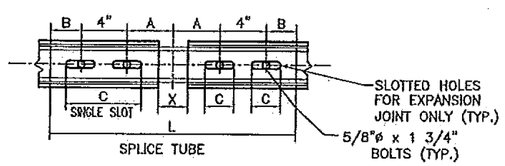

RAIL TUBE SPLICE AND RAIL EXPANSION JOINT DETAIL

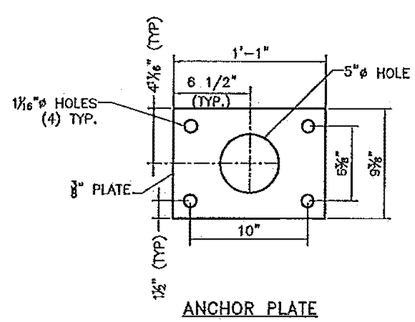

ANCHOR PLATE

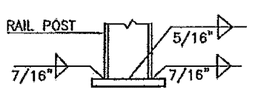

BASE WELD DETAIL

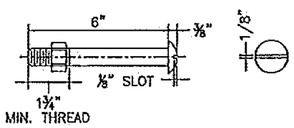

3/4" DIA. M164 (TYPE 1) ROUND HEAD BOLT

(WITH WASHER AND PREVAILING TORQUE TYPE LOCK NUT (SEE NOTE #8)
ONLY FULL DIAMETER BODY BOLTS WILL BE ALLOWED.

SPLICE TABLE					
T	A	B	C	L	X
N/A	4"	2"	--	20"	3/4"
EXPANSION JOINT TABLE					
<4"	4"	2"	2 1/2"	20"	2 1/2"

T = TOTAL MOVEMENT BETWEEN BRIDGE EXPANSION JOINTS. SEE NOTE 5

NOTES:

1. ALL RAILINGS AND MATERIALS SHALL CONFORM TO THE PROVISION OF SECTION 525, "RAILINGS OF THE STANDARD SPECIFICATION FOR CONSTRUCTION".
2. PRIOR TO GALVANIZING, ALL EXPOSED CUT OR SHEARED EDGES SHALL BE ROUNDED TO A 1/16" RADIUS AND BE FREE OF BURRS.
3. RAIL POSTS SHALL BE SET NORMAL TO GRADE.
4. SECTIONS OF RAIL TUBE SHALL BE ATTACHED TO A MINIMUM OF TWO (2) RAIL POSTS AND PREFERABLY TO AT LEAST FOUR (4) POSTS.
5. RAIL TUBE EXPANSION JOINT SHALL BE PROVIDED IN ANY RAIL BAY SPANNING A SUPERSTRUCTURE EXPANSION JOINT. EXPANSION JOINT WIDTH SHALL BE "X" AT 45°F AND WILL BE ADJUSTED IN THE FIELD BY THE ENGINEER FOR OTHER TEMPERATURES.
6. ALL PARTS SHALL BE GALVANIZED AFTER FABRICATION IN ACCORDANCE WITH AASHTO M111, EXCEPT HARDWARE, WHICH SHALL MEET THE REQUIREMENTS OF AASHTO M232.
7. RAIL POST ANCHORING NUTS SHALL BE TIGHTENED TO A SNUG FIT AND GIVEN AN ADDITIONAL ONE-EIGHTH TURN.
8. RAIL TUBES SHALL BE ATTACHED USING 3/4" FULL DIAMETER BODY AASHTO M164 (TYPE 1) ROUND HEAD BOLT INSERTED THROUGH THE FACE OF THE TUBE. HOLES IN POSTS SHALL BE 1/16" LARGER THAN THE BOLT SIZE.
9. HOLES IN RAILS FOR RAIL TUBE ATTACHMENT SHALL BE FIELD-DRILLED. HOLES SHALL BE COATED WITH AN APPROVED ZINC-RICH PAINT PRIOR TO ERECTION.
10. IF THERE IS A CONFLICT BETWEEN THE DETAILS SHOWN ON THIS SHEET AND THE DESIGN, THE REQUIREMENTS OF THE DESIGN DRAWINGS SHALL BE FOLLOWED.
11. ANY BENDING OF RAIL SHALL BE BY SHOP PROCEDURE ONLY.
12. THE FABICATOR SHALL SUBMIT SHOP DRAWINGS, INCLUDING WELDING PROCEDURES TO THE STRUCTURES SECTION FOR APPROVAL IN ACCORDANCE WITH SUBSECTION 506.04 OF THE STANDARD SPECIFICATIONS. ALL WELDING SHALL CONFORM WITH SUBSECTION 506.10.
13. RAIL POSTS AND BASE PLATES SHALL BE TESTED FOR IMPACT PROPERTIES IN ACCORDANCE WITH ASTM A-370 CHARPY IMPACT TESTING USING TYPE A SPECIMEN
14. EXPANSION JOINT HARDWARE, REFLECTORS AND REFLECTOR HARDWARE PROVIDED BY OTHERS.

MATERIALS
RAIL TUBES.....ASTM A500, GRADE B OR ASTM A501
RAIL POSTS AND BASE PLATES.....ASTM A709/A709M, GRADE 50
AALL OTHER SHAPRE AND PLATES.....ASTM A709/A709M, GARDE 36
ANCHOR STUDS.....ASTM A449
ALL OTHER BOLTS (UNLESS NOTED).....AASHTO M164, TYPE1

NUTS FOR AASHTO M164 BOLTS AND FOR ANCHOR STUDS SHALL COMPLY WITH AASTHO M291 (ASTM A563).

WASHERS SHALL COMPLY WITH AASHTO M293 (ASTM F436) SPECIFCATIONS.

1/8" PAD SHALL COMPLY WITH STANDARD SPECIFICATION SUBSECTION 731.01 OR 731.02.

APPROVED ☐
Approved as Noted ☐
Revise and Resubmit ☒
DISAPPROVED ☐

CHECKING IS ONLY FOR GENERAL CONFORMANCE WITH THE DESIGN CONCEPT OF THE PROJECT AND GENERAL COMPLIANCE WITH THE INFORMATION GIVEN IN THE CONTRACT DOCUMENTS. ANY ACTION SHOWN IS SUBJECT TO THE REQUIREMENTS OF THE PLANS AND SPECIFICATIONS. CONTRACTOR IS RESPONSIBLE FOR: DIMENSIONS WHICH SHALL BE CONFIRMED AND CORRELATED AT THE JOB SITE; FABRICATION PROCESSES AND TECHNIQUES OF CONSTRUCTION; COORDINATION OF HIS WORK WITH THAT OF ALL OTHER TRADES AND THE SATISFACTORY PERFORMANCE OF HIS WORK.

GREEN INTERNATIONAL AFFILIATES, INC.
CONSULTING ENGINEERS

CHECKED BY X.Z DATE 8/11
SIGNED BY Michael A Cuez DATE 8/11

REVISIONS		
No.	Remarks	Date

HIGHWAY SAFETY CORP
GLASTONBURY, CT
860-633-9445

ITEM 525.33 BRIDGE RAILING - NETC 2 RAIL
US RT 2 OVER EXISTING STREAM
TOWN OF CABOT-DANVILLE, VERMONT
PROJECT NUMBER: F EGC F 028-3(26)C/1

CERTIFIED FABRICATOR

HSC JOB NO. 1807
SHEET NO. 2 of 3

GENERAL CONTRACTOR
SUB CONTRACTOR F.R. LAFAYETTE, INC.

DRAWN	CHECKED	DATE	SCALE	SIZE
MHM	PAR	3-25-11	NONE	D