SEARSBURG - WILMINGTON
NHF 010-1(18)
BRIDGE #24 - APPROACHES
ITEM 203.32 - GRANULAR BORROW
SHEET 1 OF

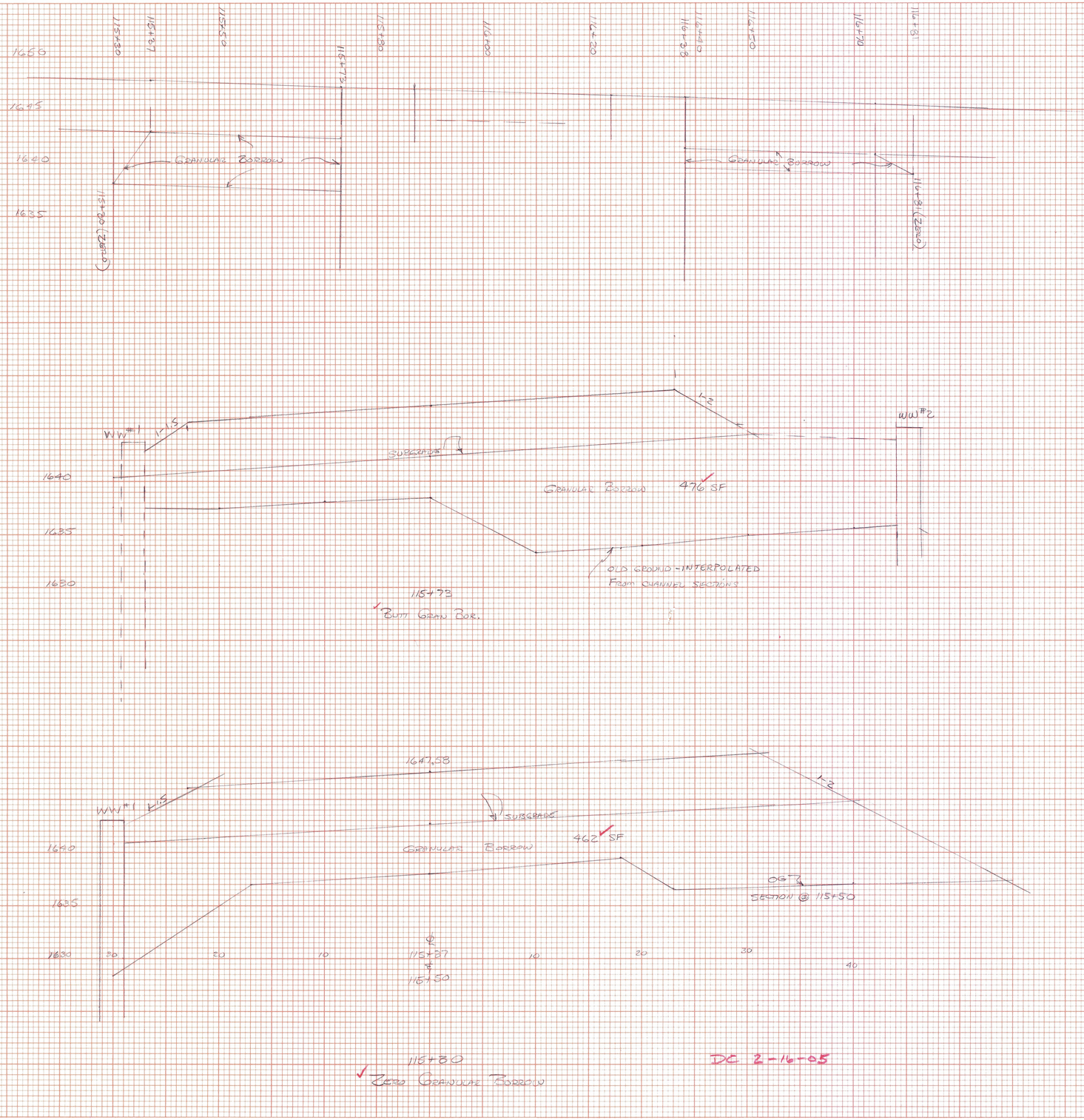

ITEM 203.32 - GRANULAR BORROW SUMMARY

(APPROACH BRIDGE)

	STA	DIST	AREA	CY
(ZERO)	116+30	7	0	60
	115+37	13	462	222
	115+50	23	462	400
(BUTT)	115+73		476	

682 CY

(EXIT BRIDGE)

	STA	DIST	AREA	CY
(BUTT)	116+33	12	393	139
	116+50	20	243	197
	116+70	11	288	59
(ZERO)	116+81		0	

395 CY

TOTAL GRAN BORROW - BR 24 = 1077 CY

BOOK 1 - PAGE 131

DC 2-16-05

FINAL SURVEY
DATE
BY
SURVEYED
PLOTTED
TEMPLATE
AREAS
AREAS CHECKED
NOTE BOOK
NO.

ORIGINAL SURVEY
DATE
BY
SURVEYED
PLOTTED
TEMPLATE
AREAS
AREAS CHECKED
NOTE BOOK
NO.

SEARSBURG - WILMINGTON
NHF - 010-1(18)

BRIDGE #24 APPROACHES

ITEM 203.32 - GRANULAR BORROW

SHEET 2 OF

FINAL SURVEY
SURVEYED
PLOTTED
TEMPLATE
AREAS
NOTE BOOK
NO.
BY
DATE
AREAS CHECKED

ORIGINAL SURVEY
SURVEYED
PLOTTED
TEMPLATE
AREAS
NOTE BOOK
NO.
BY
DATE
AREAS CHECKED

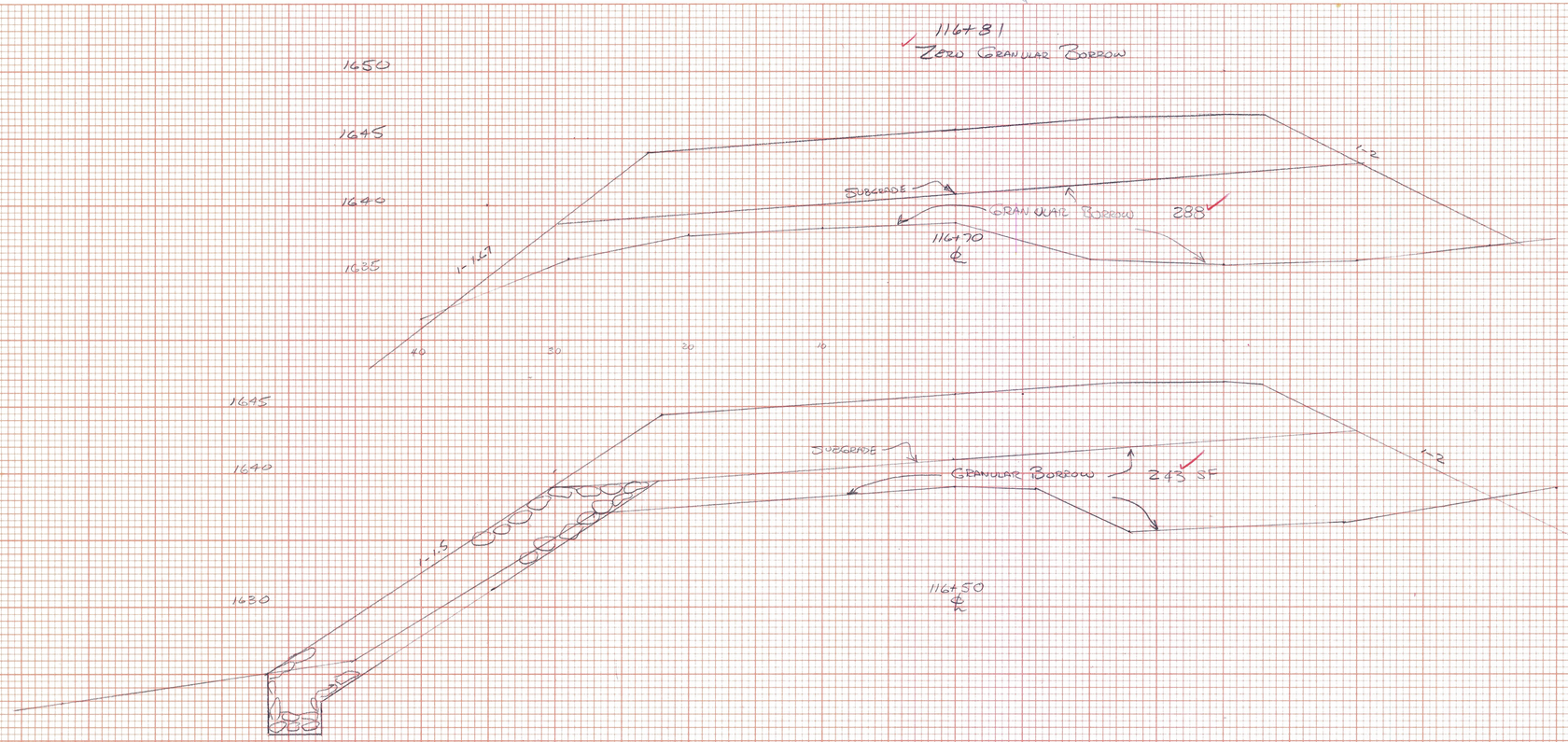

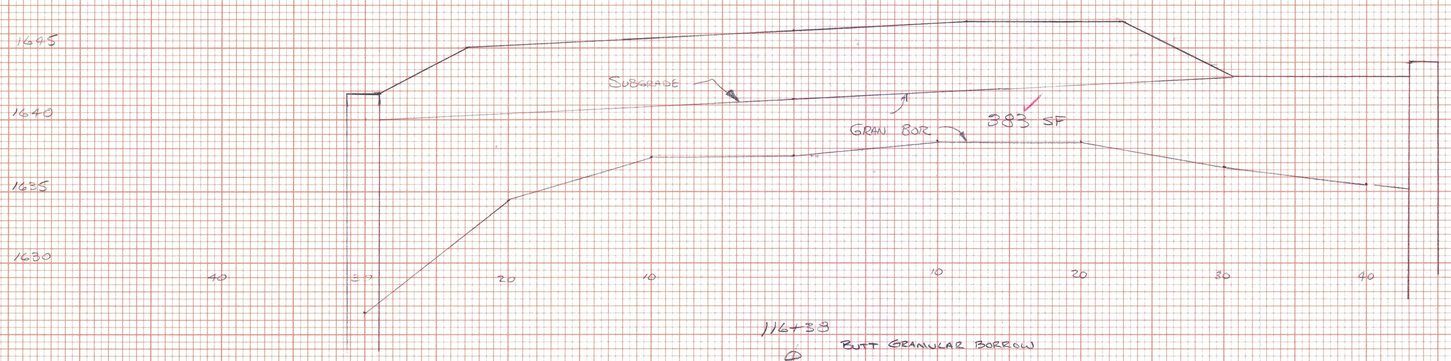

DC 2-16-05

NATIONAL PRINTFAST
PRINTED IN U.S.A.

SEARSBURG WILMINGTON
NHF 010-1(18)
BRIDGE 25 APPROACHES
ITEM 20332 - GRANULAR BORROW
SHEET 3 OF

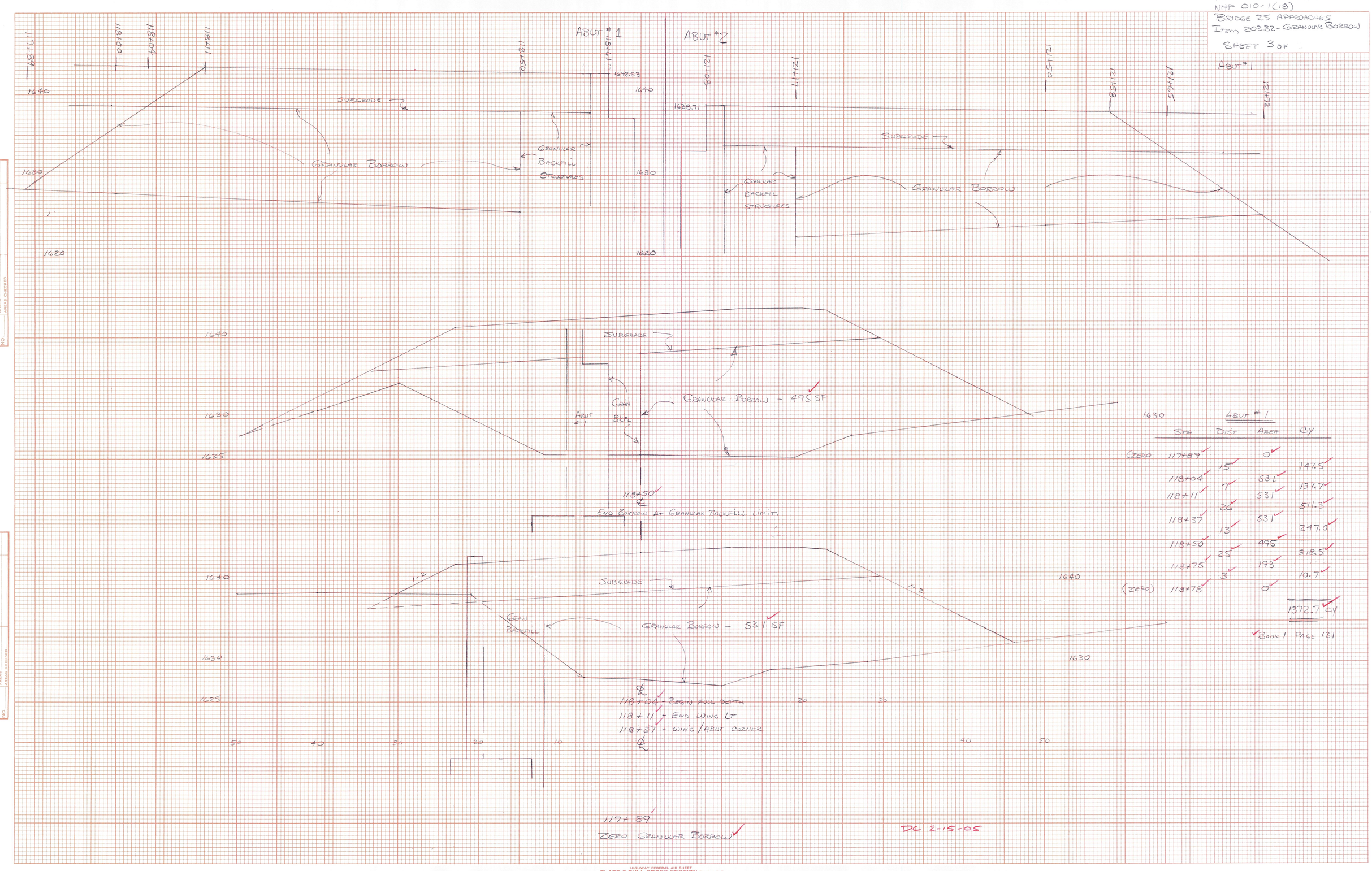

ABUT #1

STA	DIST	AREA	CY
(ZERO) 117+89		0	
118+04	15	531	147.5
118+11	7	531	137.7
118+37	26	531	511.3
118+50	13	495	247.0
118+75	25	193	318.5
(ZERO) 118+78	3	0	10.7
			1372.7 CY

BOOK 1 PAGE 131

117+89
ZERO GRANULAR BORROW

DC 2-15-05

FINAL SURVEY
NOTE BOOK NO.
SURVEYED
PLOTTED
TEMPLATE
AREAS
AREAS CHECKED
BY
DATE

ORIGINAL SURVEY
NOTE BOOK NO.
SURVEYED
PLOTTED
TEMPLATE
AREAS
AREAS CHECKED
BY
DATE

Edenton - Wilmington
NHF 010-1(18)
Bridge 25 Approaches
Item 202.32 - Granular Borrow
Sheet 4 of
Abut #1

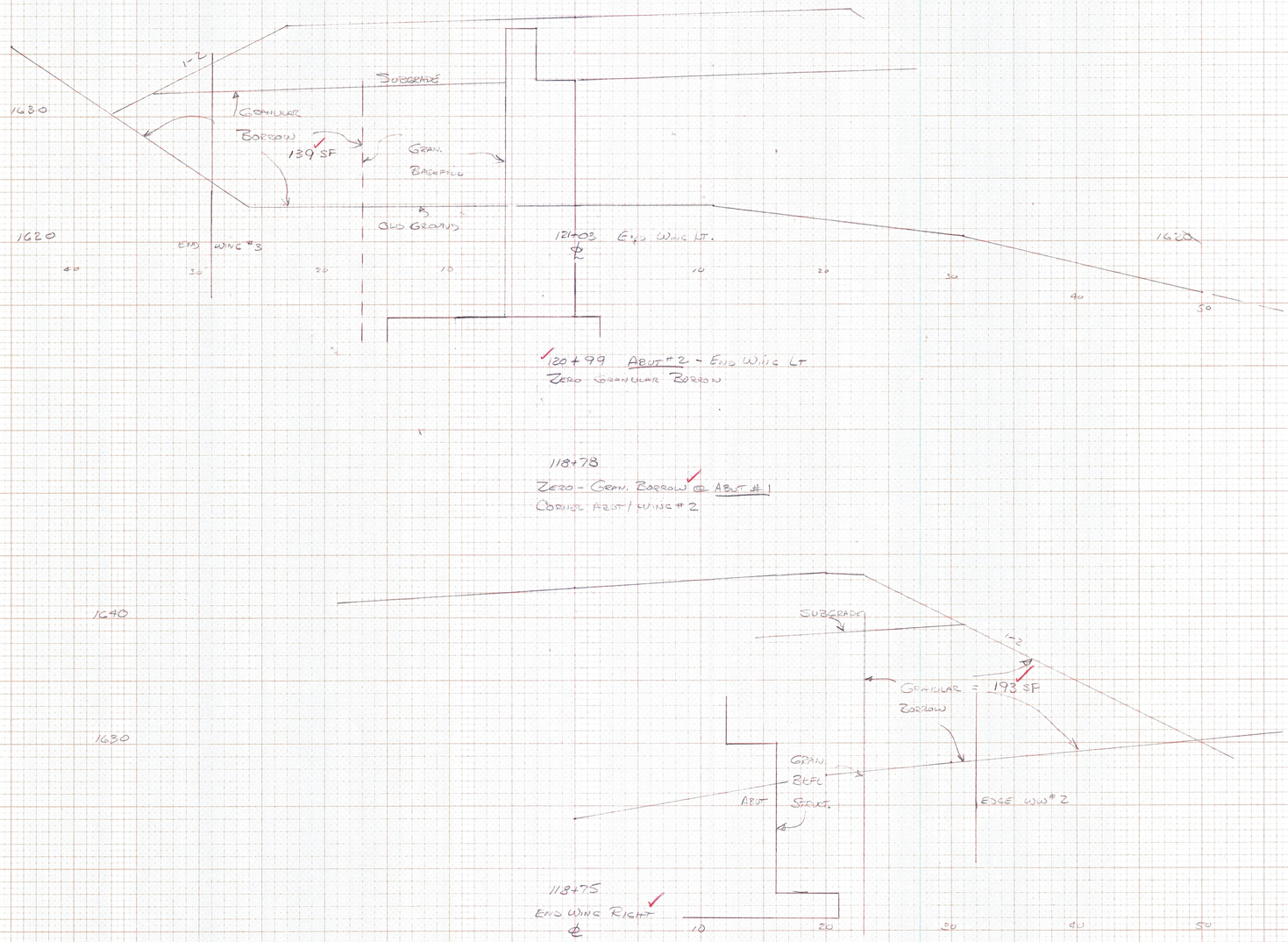

DC 2-15-05

FINAL SURVEY
SURVEYED
PLOTTED
TEMPLATE
AREAS
AREAS CHECKED
NOTE BOOK
NO.
BY
DATE

ORIGINAL SURVEY
SURVEYED
PLOTTED
TEMPLATE
AREAS
AREAS CHECKED
NOTE BOOK
NO.
BY
DATE

SEABURG-WILMINGTON
NHF 010-1(8)
BRIDGE 25 APPROACHES
ITEM 203.32 GRANULAR BORROW
SHEET 5 OF

121+72 - ZERO GRANULAR BORROW

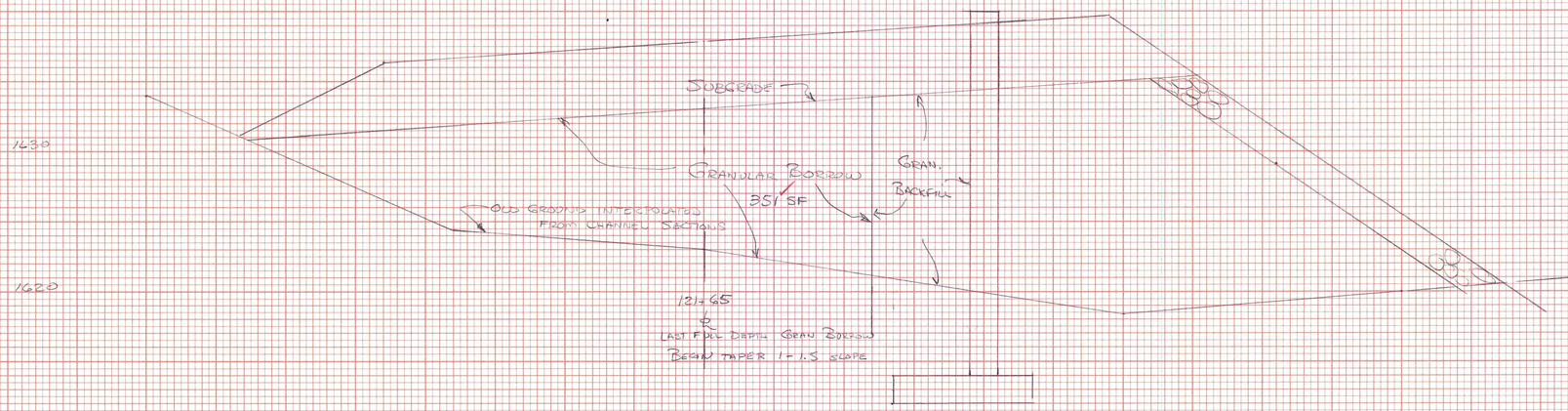

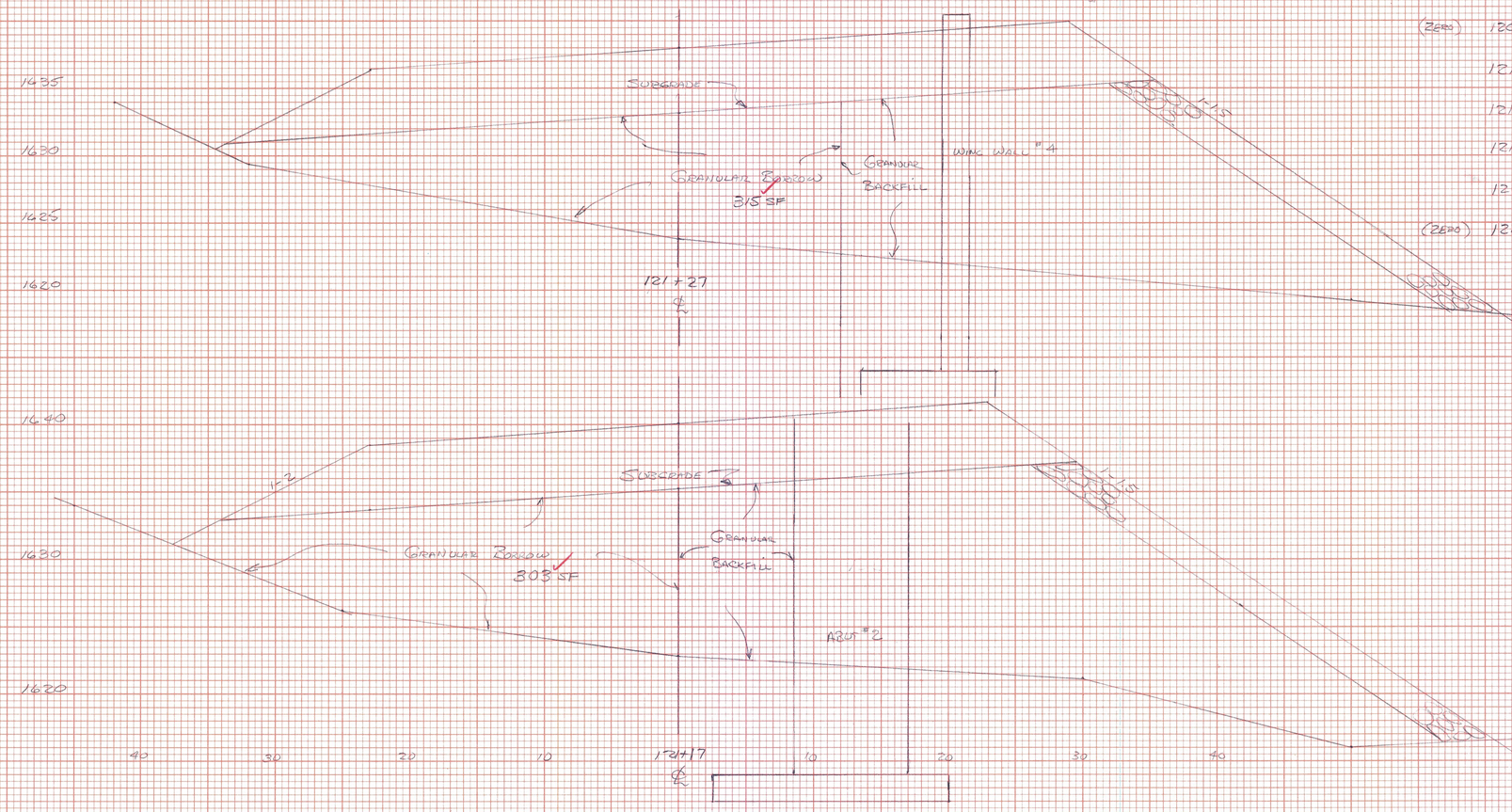

ABUT #2

	STA	DIST	AREA	CY
(ZERO)	120+99	4	0	10.3
	121+03	14	139	114.6
	121+17	10	303	114.4
	121+27	38	315	468.7
	121+65	7	351	45.5
(ZERO)	121+72		0	

753.5 CY

BOOK 1 PAGE 131

DC 2-15-05

FINAL SURVEY — DATE, BY, SURVEYED, PLOTTED, TEMPLATE, AREAS, AREAS CHECKED, NOTE BOOK, NO.

ORIGINAL SURVEY — DATE, BY, SURVEYED, PLOTTED, TEMPLATE, AREAS, AREAS CHECKED, NOTE BOOK, NO.

SEARSBORY - WILMINGTON
NHF 018-1(18)
BRIDGE 25A APPROACHES
ITEM 202.32 GRANULAR BORROW
SHEET 6 OF

FINAL SURVEY
SURVEYED
PLOTTED
TEMPLATE
AREAS
AREAS CHECKED
NOTE BOOK
NO.
BY
DATE

ORIGINAL SURVEY
SURVEYED
PLOTTED
TEMPLATE
AREAS
AREAS CHECKED
NOTE BOOK
NO.
BY
DATE

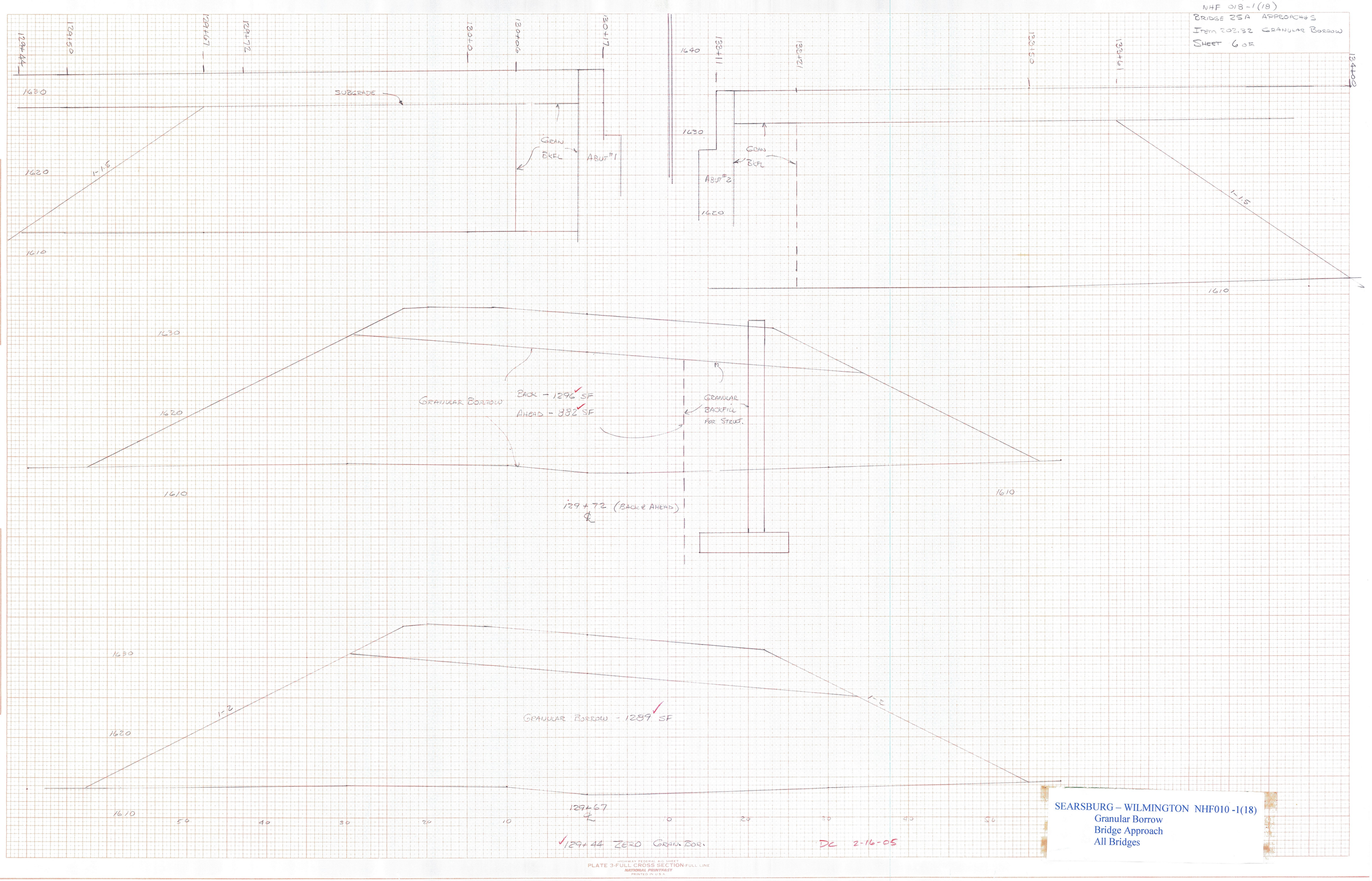

SEARSBURG – WILMINGTON NHF010 -1(18)
Granular Borrow
Bridge Approach
All Bridges

SEABOARD - WILMINGTON
NHF 010-1(18)
BRIDGE #25A-APPROACHES
ITEM 203.32 GRANULAR BORROW
SHEET 7 OF

ABUT #1

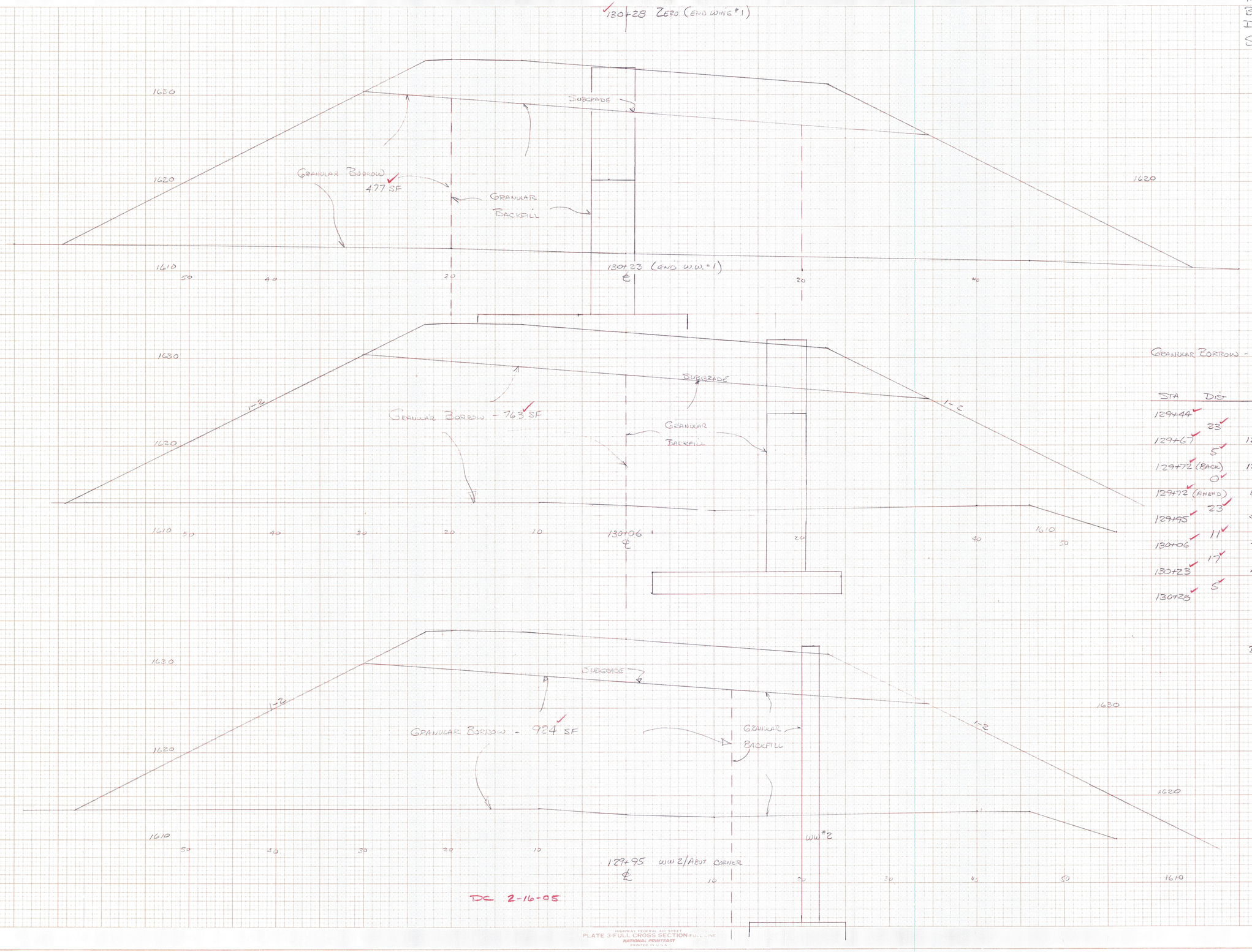

GRANULAR BORROW - BR #25A - ABUT #1 APPROACH

STA	DIST	AREA	CY
129+44		0	
	23		549
129+67		1289	
	5		239
129+72 (BACK)		1296	
	0		0
129+72 (AHEND)		882	
	23		769
129+95		924	
	11		344
130+06		763	
	17		390
130+23		477	
	5		44
130+28		0	

2335 CY

BOOK 1 PAGE 131

FINAL SURVEY — SURVEYED, PLOTTED, TEMPLATE, AREAS, AREAS CHECKED, NOTE BOOK, NO, BY, DATE

ORIGINAL SURVEY — SURVEYED, PLOTTED, TEMPLATE, AREAS, AREAS CHECKED, NOTE BOOK, NO, BY, DATE

DC 2-16-05

HIGHWAY FEDERAL AID SHEET
PLATE 3-FULL CROSS SECTION-FULL LINE
NATIONAL PRINTRAST
PRINTED IN U.S.A.

SEARSBURG - WILMINGTON
NHF 010-1(18)
BRIDGE 25A APPROACHES
ITEM 203.32 GRANULAR BORROW
SHEET 8 OF

ABUT #2

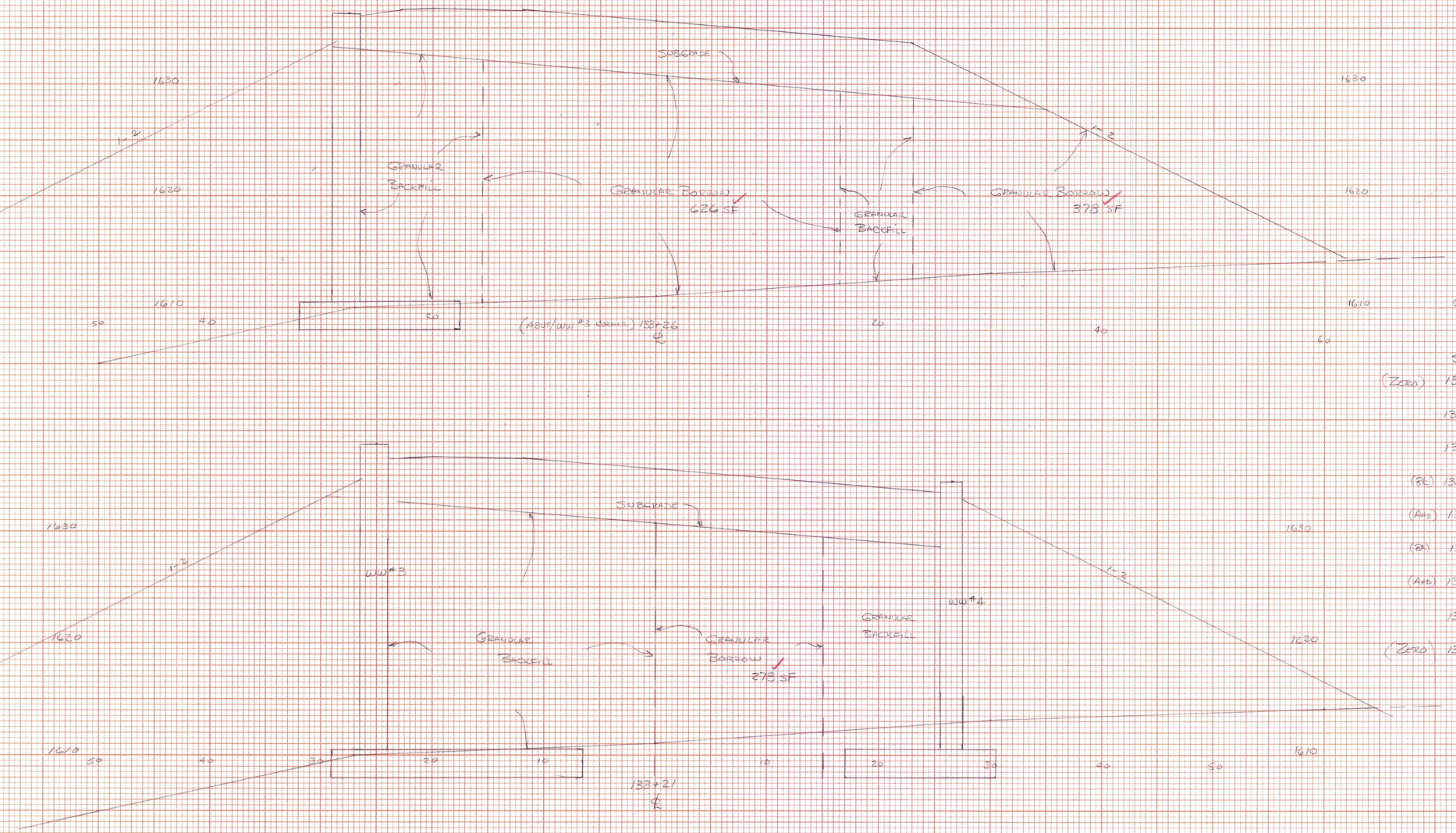

GRANULAR BORROW BR 25A - ABUT #2

	STA	DIST	AREA	CY
(ZERO)	133+16	5	0	26
	133+21	5	278	119
	133+26	2	1064	62
(BL)	133+28	0	677	0
(ABUT)	133+28	22	1220	1116
(BL)	133+50	6	1520	0
(ABUT)	133+50	11	2060	835
	133+61	39	2039	1473
(ZERO)	134+3		0	

3631 CY

BOOK 1 PG 131

133+16 (WW #4 / ABUT)
ZERO END AREA

DC 2-17-05

SURVEYED
PLOTTED
TEMPLATE
AREAS
AREAS CHECKED
NOTE BOOK
NO.
BY
DATE
FINAL SURVEY

ORIGINAL SURVEY

SEARSBURG - WILMINGTON
NHF 010-1(18)

BRIDGE 25A APPROACHES
ITEM 203.32 GRANULAR BORROW
SHEET 9 OF

ABUT #2

134+00 ZERO GRANULAR BORROW

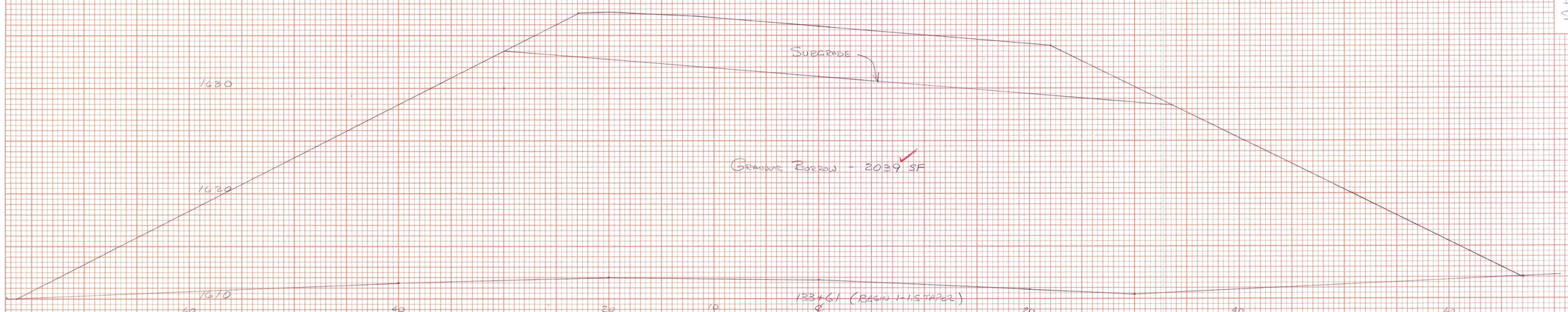

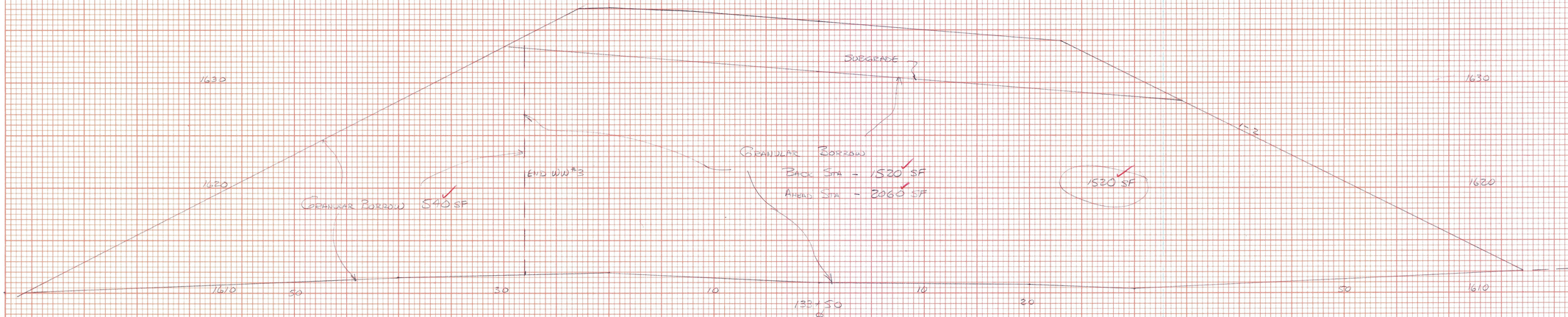

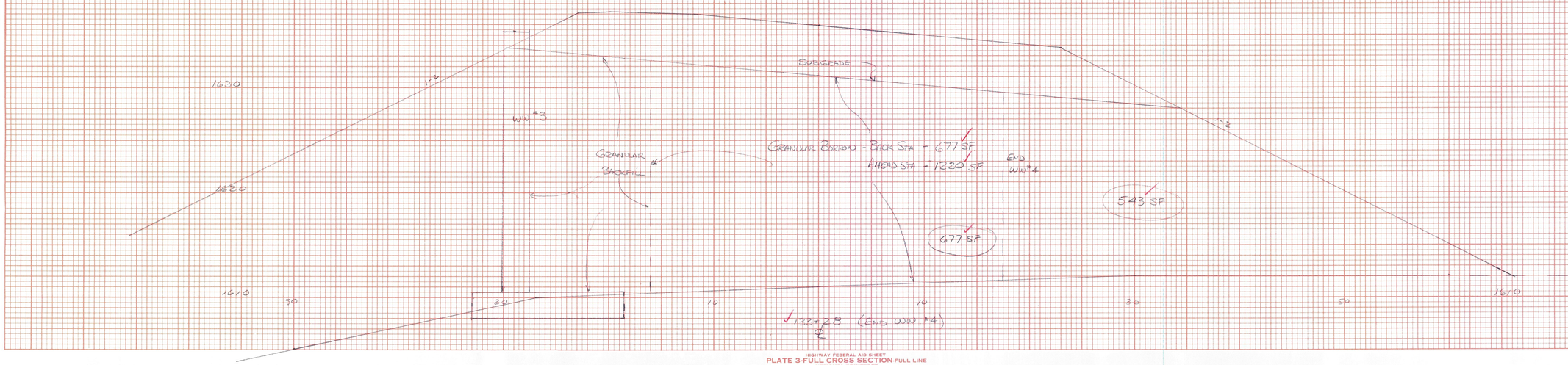

FINAL SURVEY
DATE
BY
SURVEYED
PLOTTED
TEMPLATE
AREAS
AREAS CHECKED
NOTE BOOK
NO.

ORIGINAL SURVEY
DATE
BY
SURVEYED
PLOTTED
TEMPLATE
AREAS
AREAS CHECKED
NOTE BOOK
NO.

SEABURG - WILMINGTON
NHF 010-1(18)
BR # 258 - APPROACHES
ITEM 203.32 - GRANULAR BORROW
SHEET 10 OF

ABUT # 1

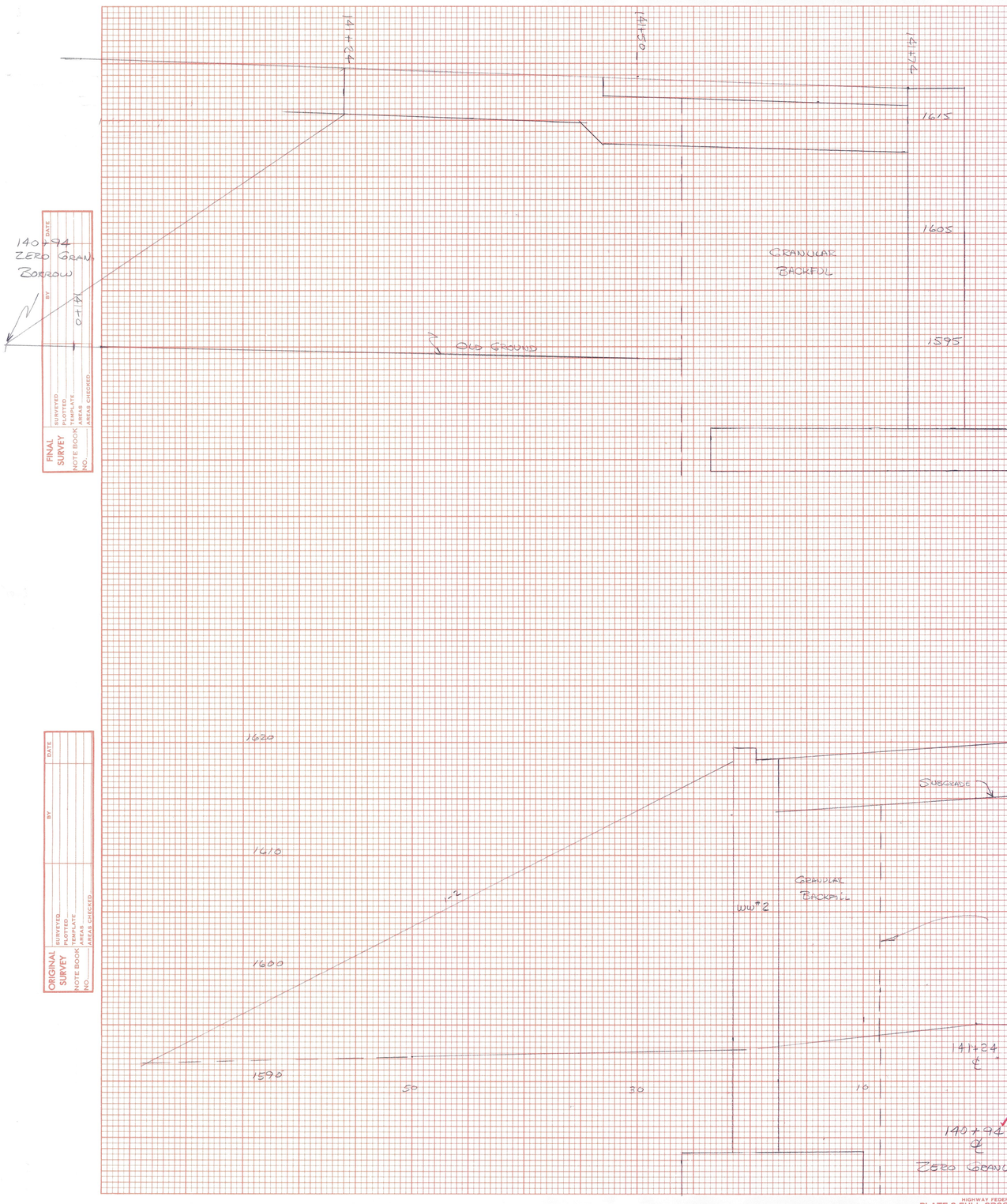

DC 2-22-05

FINAL SURVEY
DATE
BY
SURVEYED
PLOTTED
TEMPLATE
AREAS
AREAS CHECKED
NOTE BOOK
NO.

ORIGINAL SURVEY
DATE
BY
SURVEYED
PLOTTED
TEMPLATE
AREAS
AREAS CHECKED
NOTE BOOK
NO.

SEARSBURG - WILMINGTON
NHF 010-1(18)
BR 258 - APPROACHES
ITEM 203.32 - GRANULAR BORROW
SHEET 11 OF

ABUT 1

FINAL SURVEY
NOTE BOOK
NO.
SURVEYED
PLOTTED
TEMPLATE
AREAS
AREAS CHECKED
BY
DATE

ORIGINAL SURVEY
NOTE BOOK
NO.
SURVEYED
PLOTTED
TEMPLATE
AREAS
AREAS CHECKED
BY
DATE

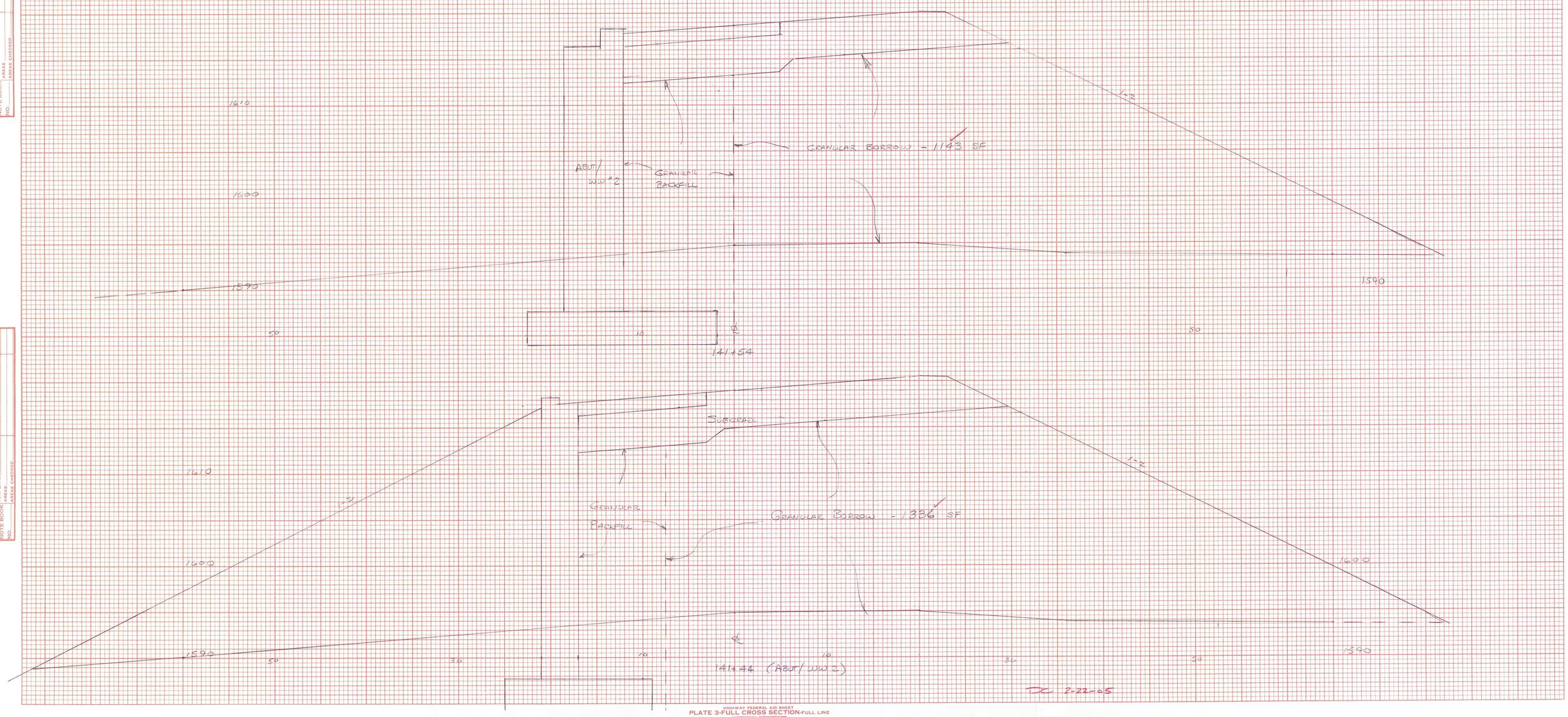

DC 2-22-05

SEARSBURG - WILMINGTON
NHF 010-1(18)
BRIDGE 25B APPROACHES
ITEM 203.32 GRANULAR BORROW
SHEET 12 OF
ABUT #1

FINAL SURVEY
SURVEYED
PLOTTED
NOTE BOOK TEMPLATE
NO. AREAS
AREAS CHECKED
BY
DATE

ORIGINAL SURVEY
SURVEYED
PLOTTED
NOTE BOOK TEMPLATE
NO. AREAS
AREAS CHECKED
BY
DATE

GRANULAR BORROW - ABUT 1 APPROACH

STA	DIST	AREA	CY
140+94		0	
	30		738
141+24		1329	
	20		987
141+44		1336	
	10		459
141+54		1143	
	7		285
141+61 B		1056	
	0		0
141+61 A		92	
	5		9
141+66		0	

2478 CY BOOK 1 PAGE 101

141+66
ZERO GRANULAR BORROW

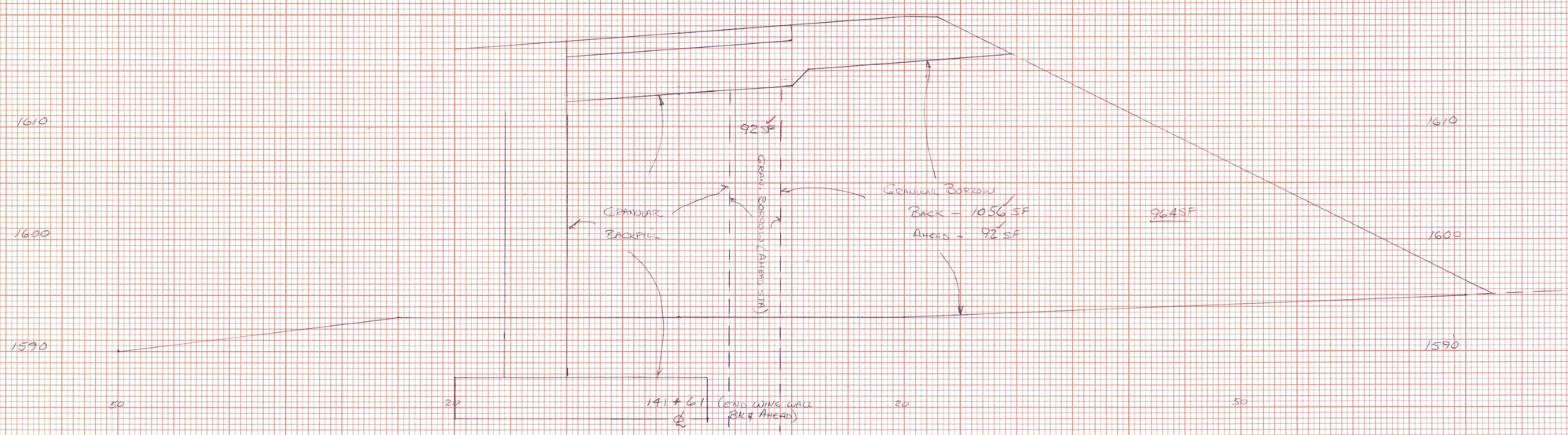

DC 2-22-05

SGRAESBURG - WILMINGTON
NHF 010-1(18)
BR 25 B - APPROACHES
ITEM 203 32 GRANULAR BORROW
SHEET 13 OF

ABUT #2

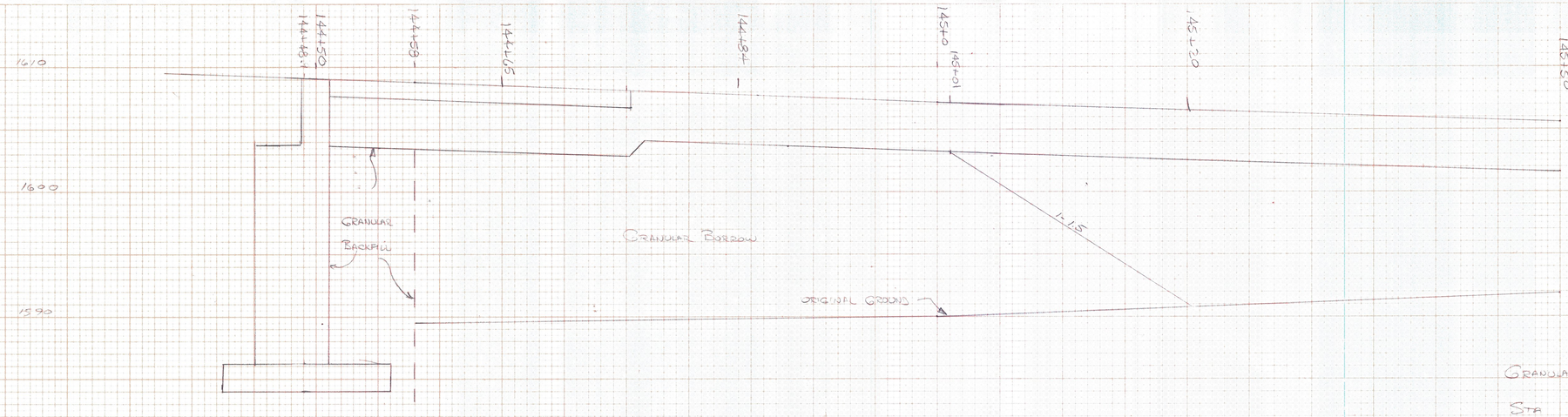

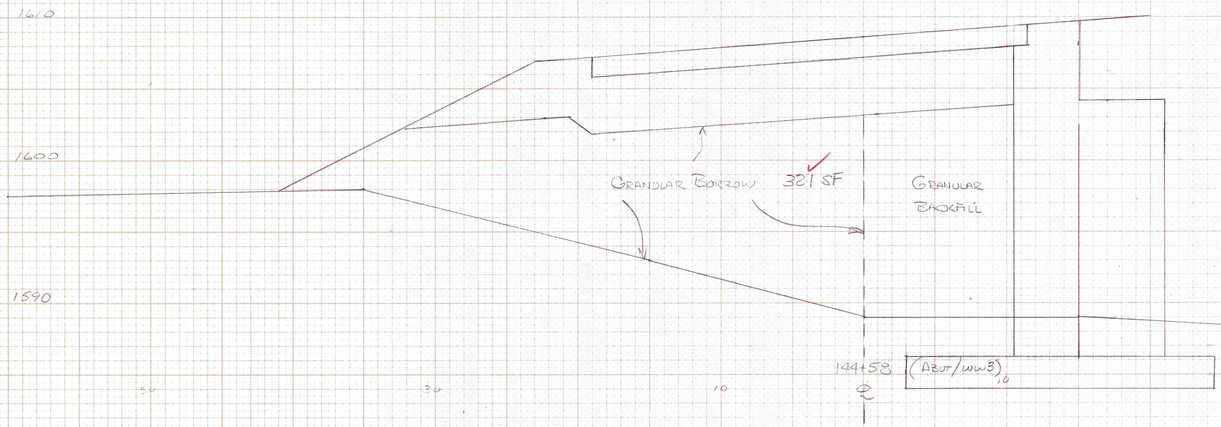

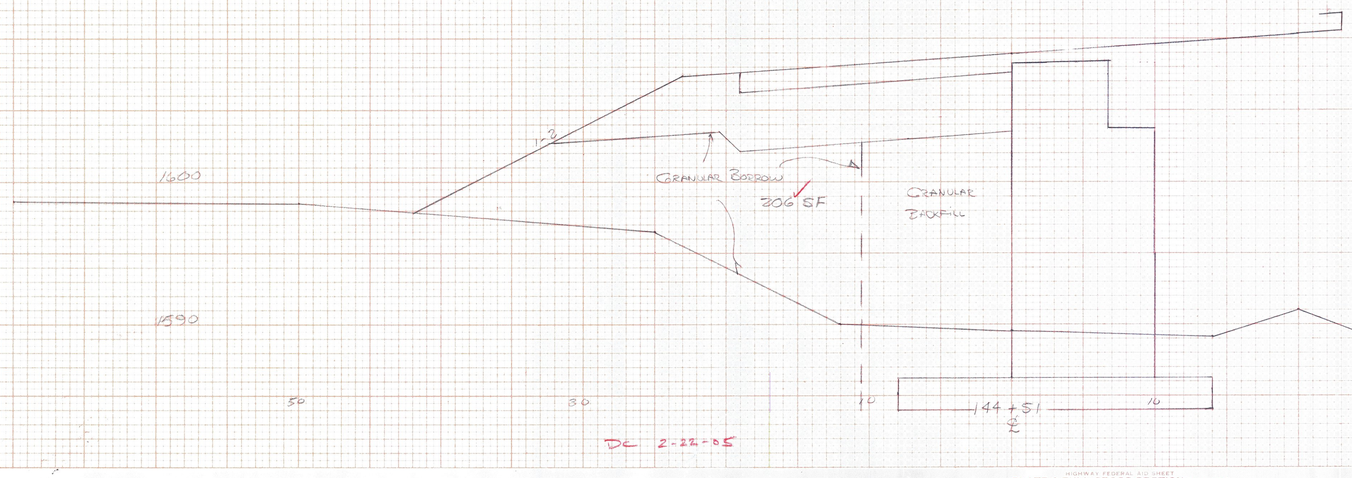

GRANULAR BORROW - ABUT #2 APPROACH

	STA	DIST	AREA	CY
(BUTT)	144+51	7	206	68
	144+58	7	321	96
	144+65	19	420	296
	144+84 (BK)	0	421	0
	144+84 (AHD)	17	850	534
	145+01	19	845	297
(ZERO)	145+20		0	

1291 CY

Book 1 Page 131

DC 2-22-05

HIGHWAY FEDERAL AID SERIES
PLATE 3 FULL CROSS SECTION FULL LINE
NATIONAL PRINTFAST
PRINTED IN U.S.A.

SCARSBURG - WILMINGTON
NHF 010-1(18)
BR 25B - APPROACHES
ITEM 203.32 - GRANULAR BORROW
SHEET 14 OF

145+20 ℄ ZERO GRANULAR BORROW

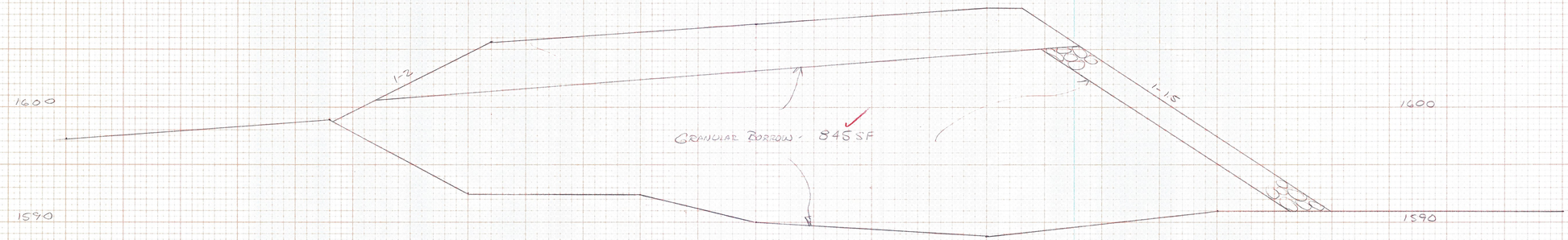

145+01 (BEGIN 1-1.5 SLOPE ℄

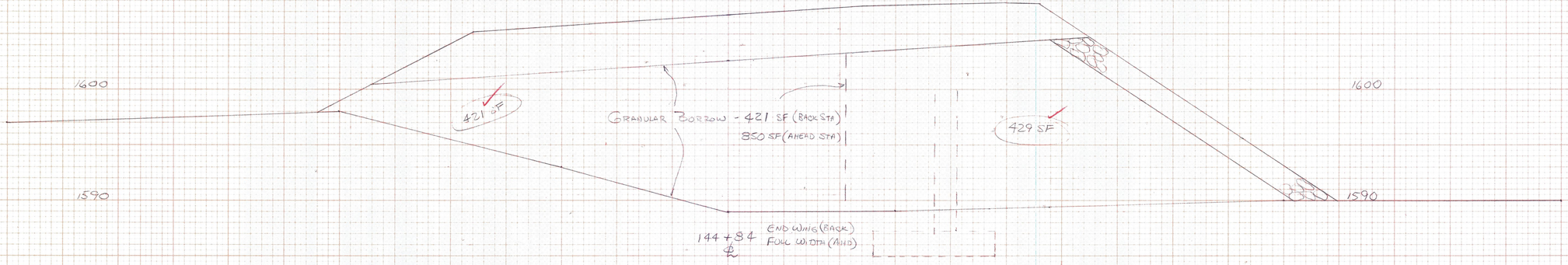

144+84 ℄ END WING (BACK)
FULL WIDTH (AHD)

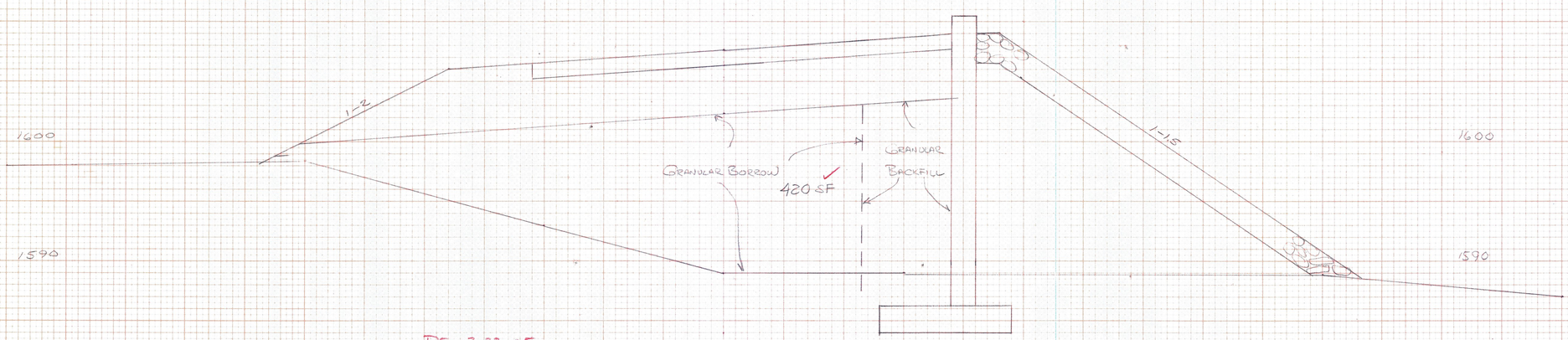

DC 2-22-05

144+65 ℄ (ABUT/WING 4)

50 40 30 20 10 0 10 20 30 40 50

FINAL SURVEY — SURVEYED, PLOTTED, TEMPLATE, AREAS, AREAS CHECKED — NOTE BOOK — NO. — BY — DATE
ORIGINAL SURVEY — SURVEYED, PLOTTED, TEMPLATE, AREAS, AREAS CHECKED — NOTE BOOK — NO. — BY — DATE
HIGHWAY FEDERAL AID SHEET
PLATE 3-FULL CROSS SECTION-FULL LINE
NATIONAL PRINTRITE
PRINTED IN U.S.A.

ROUTE 9 217+60±
T.H. 31 20+00

MATCH R.O.W. SHEET 29 OF 36 SHEETS

MATCH TO EXIST. T.H. 31 BRIDGE
STA. 218+50 REMOVE EXIST. 18" R.C.P.

STA. 217+00 TO STA 218+50 SPECIAL DITCH

STA 218+50 ~ 219+25 LT CONSTRUCT SPECIAL DITCH W/STONE FILL TYPE II

STA. 218+50 NEW 30"x76" PCCSP.079 OR CAAP.075 w/STONE FILL TYPE II @ INLET

CONST. EASE. (T)
SR(P)
CONST. EASE. (T)
SR(P)
SR(P)

RT. 218+43.18

DRIVE (T)
219+00
40' LT.

DIT. (P)
Stone Ret. Wall
Anchor
Stone Ret. Wall
Exist. Highway Boundary
Sign
Sign
Sign

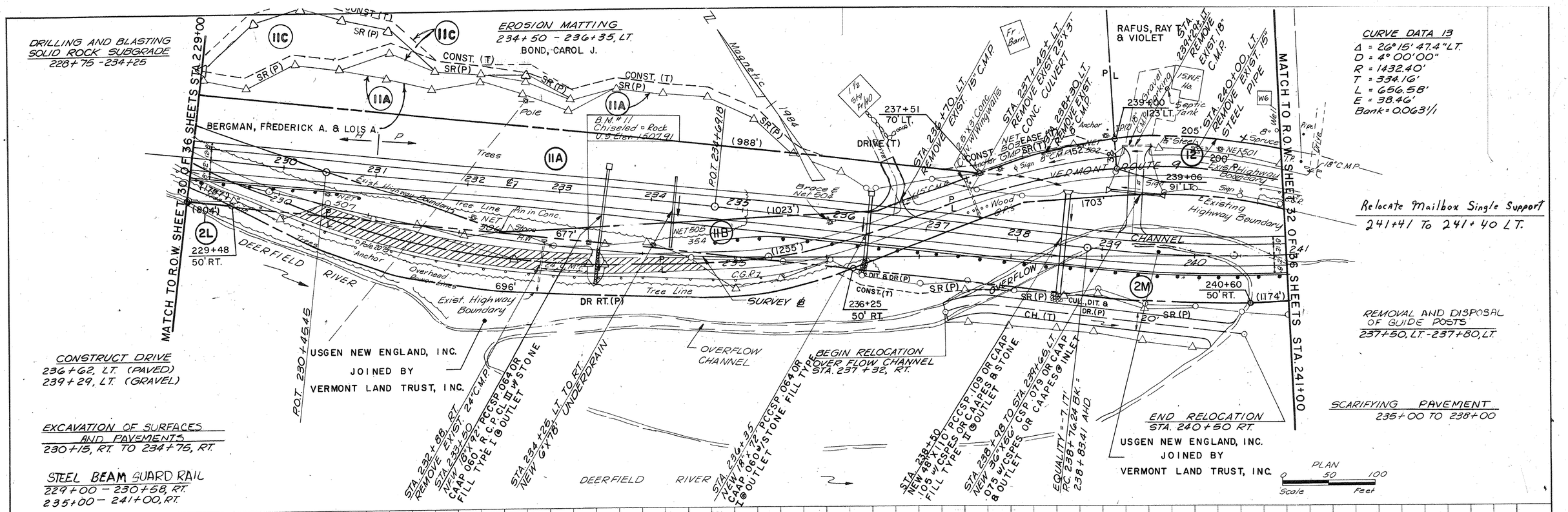
DRILLING AND BLASTING SOLID ROCK SUBGRADE 228+75 - 234+25
EROSION MATTING 234+50 - 236+35, LT.
BOND, CAROL J.
CURVE DATA 13
Δ = 26°15'47.4" LT.
D = 4°00'00"
R = 1432.40'
T = 334.16'
L = 656.58'
E = 38.46'
Bank = 0.063'/'
MATCH TO R.O.W. SHEET 30 OF 36 SHEETS STA. 229+00
MATCH TO R.O.W. SHEET 32 OF 36 SHEETS STA. 241+00
BERGMAN, FREDERICK A. & LOIS A.
RAFUS, RAY T. & VIOLET
VERMONT ROUTE 9
Relocate Mailbox Single Support
241+41 To 241+40 LT.
CONSTRUCT DRIVE
236+62, LT. (PAVED)
239+29, LT. (GRAVEL)
EXCAVATION OF SURFACES AND PAVEMENTS
230+15, RT. TO 234+75, RT.
STEEL BEAM GUARD RAIL
229+00 - 230+58, RT.
235+00 - 241+00, RT.
USGEN NEW ENGLAND, INC.
JOINED BY
VERMONT LAND TRUST, INC.
BEGIN RELOCATION
STA. 237+32, RT.
END RELOCATION
STA. 240+50 RT.
USGEN NEW ENGLAND, INC.
JOINED BY
VERMONT LAND TRUST, INC.
REMOVAL AND DISPOSAL OF GUIDE POSTS
237+50, LT. - 237+80, LT.
SCARIFYING PAVEMENT
235+00 TO 238+00
DEERFIELD RIVER
OVERFLOW CHANNEL
Existing Highway Boundary
Tree Line
Overhead Power Lines
Pole
Anchor
Trees
Brace E Net 508
Net 507
Net 508
Net 509
Net 510
Net 501
Net 502
Net 503
Net 504
Net 505
Net 506
Net 511
Net 512
Net 513
Net 514
Net 515
Net 516
Net 517
Net 518
Net 519
Net 520
Net 521
Net 522
Net 523
Net 524
Net 525
Net 526
Net 527
Net 528
Net 529
Net 530
Net

STATE OF VERMONT
AGENCY OF TRANSPORTATION
RIGHT OF WAY PLANS
DETAIL SHEET

TABLE OF PROJECT PROPERTY ACQUISITION

PARCEL NO.	GRANTOR	SHEET NO.	BEGINNING STATION	ENDING STATION	TAKING	REM.	RIGHTS	TITLE TAKEN	DATE	TOWN OR CITY RECORDED	BK.	PG.	REMARKS
8A	WILLIAM E. DAILEY, INC.	27, 28	181+18 LT.	188+45 RT.	0.42A±			COND	08-25-90	SEARSBURG	13	189	
			181+18 LT.	184+05 LT.			CONST. EASE. (T) 0.05A±)						2,400 S.F.±
			181+18 LT.	182+80 LT.			SLOPE (P) 0.02A±)						750 S.F.±
			183+40 LT.				DRIVE (T)						24' PAVED MM 0519
			184+25 LT.	184+60 LT.			EASE. TO REMOVE (T) 0.01A±)						SHED 450 S.F.±
			184+30 LT.										SCALE D-5
			184+42 LT.										SHED D-6
			185+40 LT.				DRIVE (T)						30' GRAVEL MM 0522
			187+00 LT.	188+40 LT.			CONST. EASE. (T) (0.03A±)						1,350 S.F.±
			187+20 LT.	188+30 LT.			SLOPE (P) (0.02A±)						975 S.F.±
			181+18 LT.	188+40 LT.	9.32A±								
8B		27, 28	181+20 RT.	188+54 RT.	0.36A±								
8C		27, 28	181+18 LT.	188+52 RT.	1.27A±		ALL R. T. & I.						HWY. EASE. VT. RTE. 9
9A	TOWNE, DONALD M.	28	197+75 LT.	201+17 LT.	0.17A±			COND	08-25-90	SEARSBURG	13	189	
			198+35 LT.				DRIVE (T)						12' GRAVEL MM 0547
			198+20 LT.										WOOD GUIDE POST D-8
			198+40 LT.										WOOD GUIDE POST D-8
			197+75 LT.	201+17 LT.		4.76A±							
9B		28	197+67 RT.	201+03 RT.	0.22A±			WD		SEARSBURG			
			197+67 RT.	198+60 RT.			SLOPE (T) (0.01A±)						425 S.F.±
			197+66 RT.	198+88 RT.			CONST. EASE. (T) (0.02A±)						1,020 S.F.±
			199+09 RT.	199+92 RT.			CONST. EASE. (T) (0.02A±						660 S.F.±
			199+33 RT.	199+68 RT.			SLOPE (T) (0.01A±)						136 S.F.±
			197+62 RT.	207+62 RT.		1.06A±							
9C		28, 29	201+10 LT.	207+46 RT.	1.00A±			COND	08-27-90	WILMINGTON	129	499	
			203+00 LT.	206+80 LT.			CONST. EASE. (T) (0.07A±)						3,000 S.F.±
			206+00 LT.	206+65 LT.			SLOPE (T) (175 S.F.±)						
			206+40 LT.	206+80 LT.			DITCH (P)						
			201+17 LT.	206+80 LT.		2.00A±							

REVISION NO.	SHEET	DESCRIPTION OF REVISION	DATE	MADE BY	APPROVED BY
62	15, 30 31	PARCEL NO. 11 BOND. CREATE NEW PARCEL 11C. THE STATE OF VERMONT ACQUIRED PARCELS 11A & 11B AND ASSOCIATED RIGHTS THEREIN FROM BERGMAN BY WARRANTY DEED DATED SEPT. 22, 1989. SINCE THAT TIME BERGMAN SOLD ENTIRE PROPERTY TO BOND AND CONSTRUCTION ON THE PROJECT BEGAN. AT THIS TIME ADDITIONAL RIGHTS ARE NECESSARY AND THEY WILL BE ACQUIRED FROM BOND BY CREATING A COMPLETLY NEW PARCEL CALLED 11C. IT WILL CONSIST OF: SLOPE (P) AT STA. 228+53 LT. ~ 231+53 LT. CONST. (T) AT STA. 228+48 LT. ~ 231+53 LT. SLOPE (P) AT STA. 232+02 LT. ~ 233+02 LT. CONST. (T) AT STA. 232+02 LT. ~ 233+02 LT. PER C.O. 9295.	03-18-03	P. J. H.	M. J. R.

MAR 17 2003

R.O.W. Plans

ACCT. mryan
\\vaot_cadd\filingcabinet$\78d096\RightOfWay\llnd.dgn
DATE PLOTTED 18-MAR-2003

DR. (P)- DRAINAGE RIGHT
DIT. (P)- DITCHING RIGHT
CH. (P)- CHANNEL RT.
DRIVE (T)- DRIVE RIGHT
CUL. (P)- CULVERT RIGHT
[W]- WATER SOURCES

PRESENT R.O.W.
TAKING WITHOUT ACCESS
TAKING WITHOUT ACCESS ALONG PROPERTY LINE
TAKING WITH ACCESS
(P) PERMANENT EASEMENT
(T) TEMPORARY EASEMENT

LEGEND
C&T (P) CLEARING & TRIMMING
CZ (P) CLEAR ZONE
CONST. (T) CONSTRUCTION EASEMENT
SR SR SLOPE RIGHTS
P L PROPERTY LINE
TOP OF CUT
TOE OF SLOPE
UE (P) PERMANENT UTILITY EASEMENT

APPROVED: LAWRENCE W. BLISS DATE: 07-05-88
CHIEF, PLANS & TITLES

R. O. W. PLANS
SEARSBURG - WILMINGTON
F 010-1 (18)
SHEET 1X3 OF 36

STATE OF VERMONT
AGENCY OF TRANSPORTATION
RIGHT OF WAY PLANS
DETAIL SHEET

TABLE OF PROJECT PROPERTY ACQUISITION

PARCEL NO.	GRANTOR	SHEET NO.	BEGINNING STATION	ENDING STATION	TAKING	REM.	RIGHTS	TITLE TAKEN	DATE	TOWN OR CITY RECORDED	BK.	PG.	REMARKS
10D	CONTINUED	32	250+19 CL	253+80 RT.	0.18A±		ALL R.T. & I.	WD	09-06-90	WILMINGTON	129	606	HWY. EASE. VT. RTE. 9
11A	BERGMAN, FREDERICK A. & LOIS A.	30, 31	227+63 LT.	237+51 LT.	1.50A±			WD	09-27-89	WILMINGTON	126	254	
			228+15 LT.	235+80 LT.			CONST. EASE. (T) (0.18A±)						
			228+25 LT.	235+45 LT.			SLOPE (P) (0.70A±)						
			236+62 LT.				DRIVE (T)						15' PAVED MM 0067
			226+86 LT.	239+00 LT.	44.29A±								
11B		30, 31	226+86 LT.	239+06 LT.	1.00A±		ALL R. T. & I.	WD		WILMINGTON			HWY. EASE. VT. RTE. 9
			237+05 LT.	238+70 LT.			CONST. EASE. (T) (0.03A±)						1,300 S.F.±
			237+51 LT.	238+55 LT.			SLOPE (T) (0.01A±)						200 S.F.±
11C	BOND, CAROL J.	30, 31	228+53 LT.	231+53 LT.			SLOPE (P) (0.27A±)			WILMINGTON			BY OPTION ONLY
			228+48 LT.	231+53 LT.			CONST. EASE. (T) (0.07A±)						3025 S.F.±
			232+02 LT.	233+02 LT.			SLOPE (P)						540 S.F.±
			232+02 LT.	233+02 LT.			CONST. EASE. (T)						470 S.F.±
12	RAFUS, RAY T. & VIOLET	31, 32	239+00 LT.	241+21 LT.	0.15A±	0.95A±	ALL R. T. & I.	WD	01-18-90	WILMINGTON	127	513	HWY. EASE. VT. RTE. 9
			239+29 LT.										16' GRAVEL DRIVE
													MM 0072
13	BROOKS, FRANK W. & ELAINE M.	32	241+20 LT.	242+48 LT.	0.01A±		ALL R. T. & I.	WD	12-12-89	WILMINGTON	127	253	HWY. EASE. VT. RTE. 9
			241+35 LT.										12' GRAVEL DRIVE
													MM 0076
			241+21 LT.	242+48 LT.	1.37A±								
14A	DOUGHERTY, MARY BETH	32	243+22 LT.	243+97 LT.	0.01A±			COND	08-27-90	WILMINGTON	129	499	481 S.F.±
			243+91 LT.										12' GRAVEL DRIVE
													MM 0081
			242+75 LT.	243+75 LT.			REMOVE & RESET (T)						PICKET FENCE
14B		32	242+48 LT.	243+99 LT.	0.09A±		ALL R. T. & I.	COND	08-27-90	WILMINGTON	129	499	4,131 S.F.±
			242+48 LT.	243+96 LT.	1.24A±								HWY. EASE. VT. RTE. 9

REVISION NO.	SHEET	DESCRIPTION OF REVISION	DATE	MADE BY	APPROVED BY

MAR 17 2003

ACCT. mryan
\\vaot_cadd\filingcabinet$\78d096\RightOfWay\lind.dgn
DATE PLOTTED 18-MAR-2003

DR. (P)- DRAINAGE RIGHT
DIT. (P)- DITCHING RIGHT
CH. (P)- CHANNEL RT.
DRIVE (T)- DRIVE RIGHT
CUL. (P)- CULVERT RIGHT
[W]- WATER SOURCES

PRESENT R.O.W.
TAKING WITHOUT ACCESS
TAKING WITHOUT ACCESS ALONG PROPERTY LINE
TAKING WITH ACCESS
(P) PERMANENT EASEMENT
(T) TEMPORARY EASEMENT

LEGEND
C&T (P) CLEARING & TRIMMING
CZ (P) CLEAR ZONE
CONST. (T) CONSTRUCTION EASEMENT
SR SR SLOPE RIGHTS
PROPERTY LINE
TOP OF CUT
TOE OF SLOPE
UE (P) PERMANENT UTILITY EASEMENT

APPROVED: LAWRENCE W. BLISS DATE: 07-05-88
CHIEF, PLANS & TITLES

R. O. W. PLANS
SEARSBURG - WILMINGTON
F 010-1 (18)
SHEET 15 OF 36

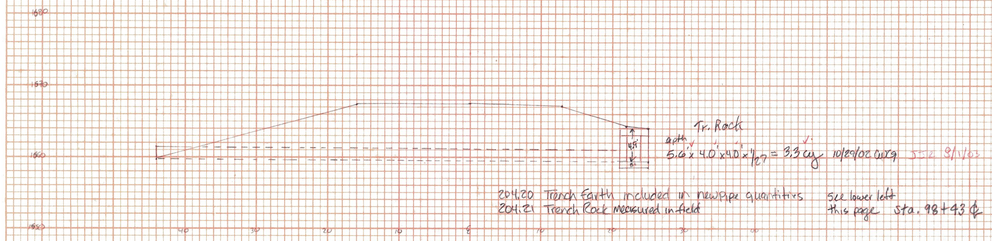

Tr. Rock
with
$5.6' \times 4.0' \times 1' \times 1/27 = 3.3$ cy
10/30/02 cwb

204.20 Trench Earth included in new pipe quantities — see lower left this page
204.21 Trench Rock measured in field — Sta. 98+93 ℄

98+41
Remove 15" RCP
(See Book 7, pg 69)
(See Dr. Bk 2, pg 6)

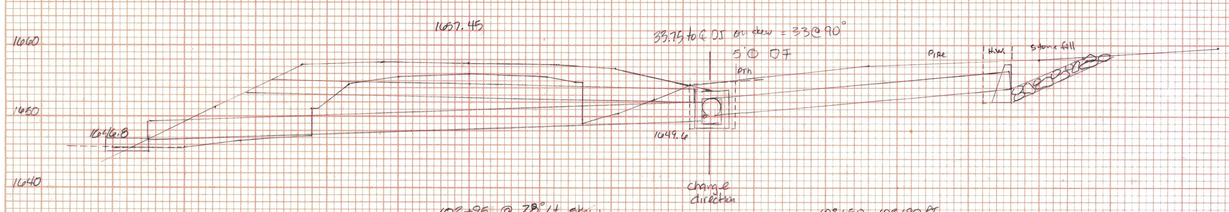

102+95 @ 78° Lt skew
New 30" x 76' CPEP (SL)
(See Dr. Bk 2, pg 16)

102+50 – 102+90 RT
New 30" x 40' CPEP (SL)

Total trench excavation
30" pipe $167' \times 4.8' \times 1/27 = 29.7$ cy
10' long headwall $24' \times 10' \times 1/27 = 8.9$
for the Stone Fill $45' \times 6' \text{ wide} \times 1/27 = 10.0$
48.6 cy
10/30/02 cwb

204.21 Trench Rock backfills measured
$8' \times 6' \times 2 \times 1/27 = 5.6$
$6' \times 6.5' \times 2.5 \times 1/27 = 4.8$ = −8.4 cy
204.20 Trench Earth 40.2 cy
10/30/02 cwb

613.11 Stone Fill Type II $14' \times 6' \times 2' \times 1/27 = 6.2$ cy field measured M.W.H. 11/14/04

Item 602.15 CRM headwall from Charts = 3.5 sy Standard D-2
M.W.H. 11/14/04

Item 203.30 Earth Borrow
$20' \times 4.8' \times 1/27 = 3.6$ cy @ 30/cy for curb
12-17-02 cwb

613.11 Stone Fill Type II @ outlet
$6.0' \times 6.0' \times 2.0' \times 1/27 = 2.7$ cy 10/30/02 cwb
12-17-02 cwb

Trench Rock
$5.0' \times 11' \text{ long} \times 1/27 \times 2 \text{ ea} = 6.1$ cy 10/30/02 cwb
12-17-02 cwb
Measured in field

2 concrete headwalls

Item 202.20 T.E. pipe $140' \times 3.8' \times 1/27 = 19.7$
DI $6' \times 6' \times 5.0' \text{ deep} \times 1/27 = 6.7$
26.4 cy 10/30/02 cwb
12-16-02 MW

98+43 ℄
New 18" x 66' CPEP (SL)
(See Dr. Bk 2, pg 8)

613.10 Stone Fill Type I
Measured in Field $6' \times 6' \times 1' \times 1/27 = 1.3$ cy 10/30/02 cwb

6'@0 @ 98+00 1659.56
@ 98+50 1658.34
1659.95
1.05
1658.37

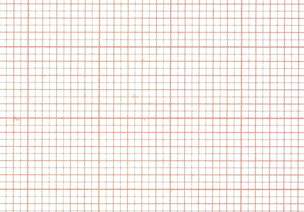

REMOVAL OF CB
(See Dr. Bk 2, pg 24)

Removed 5/14/04
Item 203.16 – $2' \times 4' \times 4/27 = 1.2$ cy < 6 cy ∴ no payment
Item 209.21 – $3' \times 4' \times 4 = 1.8$ cy 5/14/04 cwb

All quantities placed on Item Detail and Dr. Sh. #1 of 3

Sharpsburg - Wilmington
Drainage sheet 1 of 27

New 18" 98+43 ℄
New 30" 102+95 & 102+50 – 102+90 RT
Removal 15" 98+41
Removal CB 106+00

SHARPSBURG - WILMINGTON
UNIT 2 (SECTION)

FINAL SURVEY
NOTE BOOK
NO.
SURVEYED
PLOTTED
TEMPLATE
AREAS
AREAS CHECKED
BY
DATE

ORIGINAL SURVEY
NOTE BOOK
NO.
SURVEYED
PLOTTED
TEMPLATE
AREAS
AREAS CHECKED
BY
DATE

HIGHWAY FEDERAL AID SHEET
PLATE 3-FULL CROSS SECTION-FULL LINE
NATIONAL PRINTOUT
PRINTED IN U.S.A.

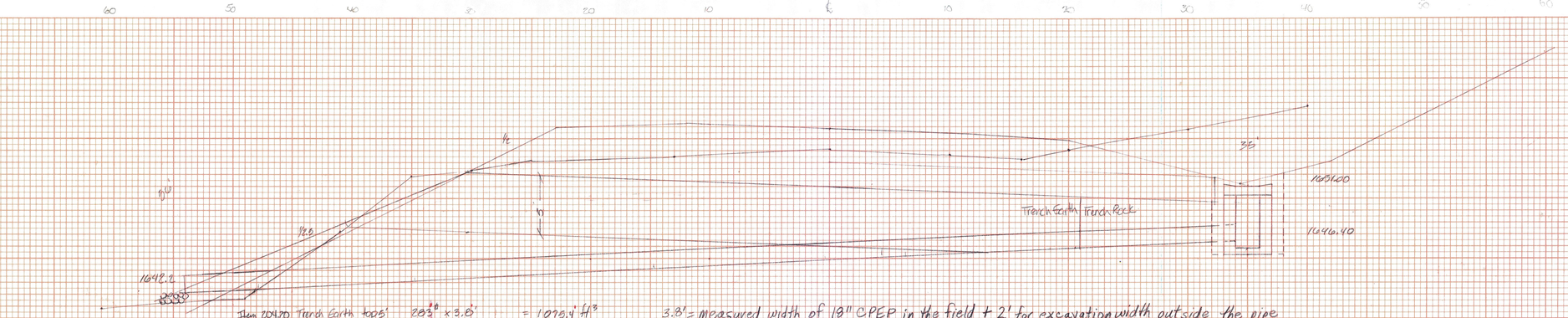

Item 203.10 Stone Fill Type I
5' x 5' x 1/27 = 1.02 cy Dsp
M.W.H. 1/14/04

Item 204.20 Trench Earth 0.05' below 5'
283 sf x 3.6' = 1075.4' ft³
144 sf x 3.6' x 1.5 = 820.8'
1896.2'/27 = 70.2 cy 11/4/02 cwy M.W.H. 1/14/04

Item 204.21 Trench Rock Dpe DI
144 sf x 3.6'
6' x 6' x 6.8' = 167.2' ft³
= 23.4'
401.6'/27 = 14.9 cy 11/4/02 cwy M.W.H. 1/14/04

3.8' = measured width of 18" CPEP in the field + 2' for excavation width outside the pipe

105+62 (Rt)
New 18" CPEP x 90' / 6%
w/ RCDI 4X6 w/ Type E3 Grate

See Book 7 pg. 127
See Book Drawings #'s 2, pg 22

TRENCH ROCK BOULDERS

	3.0 x 3.0 x 2.0	= 22.8
	7.0 x 5.0 x 3.0	= 105.0
	7.0 x 3.6 x 1.8	= 45.4
	3.9 x 1.7 x 2.7	= 17.9
	7.4 x 5.3 x 2.3	= 90.2
	4.0 x 4.8 x 3.0	= 57.6
	3.7 x 2.3 x 2.3	= 19.6
(DI)	4.0 x 4.0 x 4.0	= 64
	6.8 x 8.1 x 4.6	= 282.3
	4.2 x 5.0 x 2.5	= 31.5
	4.4 x 2.0 x 1.7	= 14.9
	3.5 x 2.3 x 1.8	= 14.5
	4.0 x 2.5 x 1.7	= 17.0
	3.6 x 2.5 x 2.4	= 21.6
	5.0 x 2.3 x 3.5	= 40.3
	3.6 x 4.6 x 1.6	= 26.5
	3.0 x 3.8 x 1.6	= 18.2
	3.6 x 3.6 x 1.7	= 22.0
	2.2 x 1.9 x 3.5	= 14.6
	4.3 x 4.5 x 2.0	= 38.7
	3.8 x 2.8 x 1.8	= 19.2
	5.6 x 2.5 x 1.5	= 21.0
	TOTAL:	1008.8 ft³
	8 DX 2.8 x 1.0	= 14
	4.0 x 2.0 x 2.8	= 22.4
	4.8 x 4.0 x 2.0	= 38.4
		1083.6 / 27 = 40.2 cy 7/10/02 cwy

Trench Rock Boulders

	2.0 x 3.3 x 2.4	= 15.8
	2.9 x 2.7 x 2.4	= 18.8
	SUB-TOTAL:	34.6 ft³
	4.6 x 2.6 x 1.9	= 18.3
	3.3 x 2.5 x 3.0	= 24.8
	4.6 x 3.0 x 1.8	= 24.8
	4.0 x 3.1 x 3.8	= 51.7
	2.5 x 3.0 x 2.0	= 15.0
	3.4 x 3.4 x 2.0	= 23.1
	3.0 x 5.0 x 2.5	= 34.6
		224/27 = 8.3 cy 7/10/02 cwy

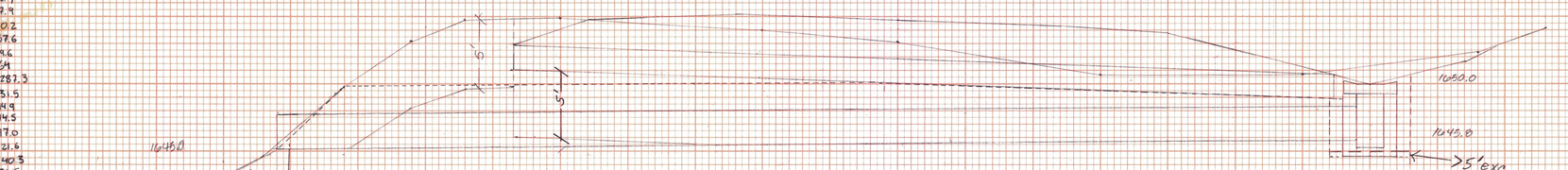

150% x 44' = 66 sf
100% = 33 sf
401' x 4.8' = 1925 ft³

DI 6'x8'x5' = 240'
1.5x6x8x0.41 = 29'

Total Trench = 2794'/27 = 81 cy 6/27/02 cwy 11/14/04 M.W.H.
204.21 ob DI TR 3.0' x 4' x 4.5'/27 = 2.1 cy 6/27/02 cwy MIF
204.21 Boulders TR = 40.2 cy 7/10/02 cwy
204.20 Trench Earth = 38.7 cy 7/10/02 cwy
8/1/03 JSR

Total Tr. Rock = 42.3 C.Y. ✓

Item 613.11
10' x 10' x 2.0' x 1/27 = 7.4 cy ✓ measured in field 7/10/02 cwy
8/1/03 JSR
Type II Stone Fill

107+40 (Lt)
New 30" CPEP (SD) x 80'
w/ RCDI 4'x6' w/ Type E3 Grates

See book 7 pg 128 & 66
see Drawings Bk 2 pg 30

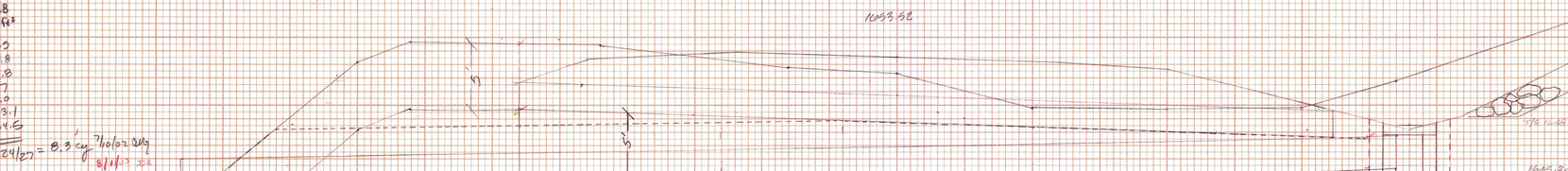

150% x 81' = 122 sf
100% = 95 sf
477 sf x 4.8' = 2290 ft³

DI 6' x 8' x 4.8' = 230'
2520'/27 = 93.3 cy 6/27/02 cwy
-8.3 cy
84.7' 7/10/02 cwy
8/1/03 JSR

110+20
New 30" CPEP (SD) x 90'
w/ RCDI 4'x6' w/ Type E3 Grates

See book 7 pg 76
see Drawings Bk 2 pg 34

Item 613.11
10' x 10' x 2.0' x 1/27 = 7.4 cy ✓ measured in field 7/10/02 cwy
8/1/03 JSR
Type II Stone Fill

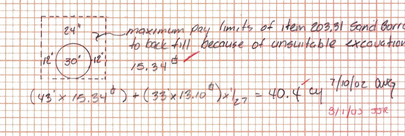

(43' x 15.34 sf) + (33' x 18.10 sf) x 1/27 = 40.4 cy 7/10/02 cwy
8/1/03 JSR



(45' x 15.34 sf) + (39' x 10.85 sf) x 1/27 = 41.2 cy 7/10/02 cwy
8/1/03 JSR

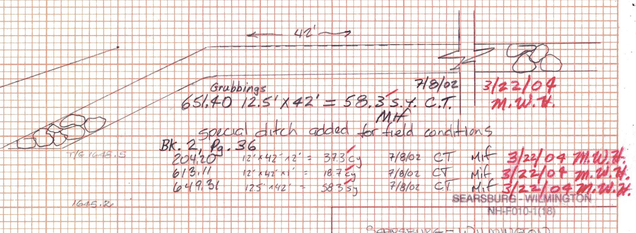

special ditch added for field conditions
Bk. 2, Pg. 36

204.20	12.5' x 42' x 2'	= 373 cy	7/8/02	CT	MIF	3/22/04 M.W.H.
613.11	12' x 42' x 1'	= 18.7 cy	7/8/02	CT	MIF	3/22/04 M.W.H.
649.31	12.5' x 42'	= 58.3 sy	7/8/02	CT	MIF	3/22/04 M.W.H.

SEARSBURG - WILMINGTON
NH-RHODE ISLAND

Searsburg - Wilmington
Drainage Sheet 2 of

New 30"	Sta. 110+20	4 inch Spec. Ditch
New 30"		107+75
New 18"		105+52

All drainage quantities placed on Item Detail and Dr. Sh. #1 of 3 except for Special Ditch at Sta. 110+20 RT. which is on Item Detail and Dr. Sh. #3 of 3

FINAL SURVEY — SURVEYED, PLOTTED, TEMPLATE, AREAS CHECKED, NOTE BOOK, NO., BY, DATE

ORIGINAL SURVEY — SURVEYED, PLOTTED, TEMPLATE, AREAS CHECKED, NOTE BOOK, NO., BY, DATE

HIGHWAY FEDERAL AID SERIES
NATIONAL PRINTFAST
PRINTED IN U.S.A.

FINAL SURVEY — SURVEYED / PLOTTED / TEMPLATE / AREAS / NOTE BOOK / NO. / AREAS CHECKED — DATE / BY

Trench Rock Boulders
6.0'x6.0'x4.0' = 144.0
3.0'x3.0'x3.0' = 27.0
3.14'x2.6'x2.0' = 17.7
OD) 4.0'x4.0'x5.0' = 80.0
SUB-TOTAL : 268.7 ft³
= 10.0 yd³ total
8/11/03 JSK

1655 1650 1645 1640

10+25 ℄
REMOVAL 15" RCP
See BK 7 pg 68
See Drainage BK 2 pg 38 and Item Detail and Dr. Sh. #1 of 3

204.20 Trench Earth
150% x 6.6' x 3.6' x 1/27 = 13.2 cy
100% x 15.2' x 3.6' x 1/27 = 20.3 cy
Total = 33.5 cy
- Rock = 10.0 cy
= 23.5 cy 7/11/02 cwg
8/1/03 JSK

1660 1650 1640

1656.50

TOTAL Trench 170' x 3.9' x 1/27 = 24.6 cy
- Trench Rock 8/4/03 JSK = 0.0
Trench Earth = 24.6 cy

M.W.H. 1/23/04

SIR 104+15 (NOT ON PLANS)
REMOVAL 18" RCP See BK 7 pg 67
for X-section notes BK #2, Pg. 21 and Item Detail and Dr. Sh. #3 of 3

1660 1650 1640 1630

204.20 Tr. Earth 15" RCP
150% x 9' x 3.6
Do not use - see note
zero Tr. Exc.
M.W.H. 3/24/04

Pipe Removed 6/3/03 JSK
NO Trench Excavation Payable
EXCAVATION to be PAID with INSTALLATION of CARRIER pipe
Plan 6 8/4/03 JSK

112+00 ℄
REMOVAL 15" RCP See BK 7 pg 70
See Dr. Bk 2 pg 40 and Item Detail and Dr. Sh. #1 of 3

1655 1650 1645 1640 1635 1630

1653.52

613.15 Type II Inlet Fill 10 x 10 x 3/27 = 7.4 cy JSK 11/15/03
M.W.H. 1/23/04

150 LF 18"

129+45 ℄
REMOVAL 18" RCP See BK 7 pg 77
See Dr. Bk 2 pg 60
(54)
new 18" CPEP x 130 LF
see Item Detail and Dr. Sh. #1 of 3

1660 1650 1640 1630 1620 1610 1600

REMOVAL 18" RCP (PIPE ON FRAME) See BK 7 pg 72
No location determined - no payment M.W.H. 1/14/04

204.30 Gr. Backfill for Structures = ((50 x 2.5' x 3.8') - ((7.1 5/9 x 50))) 3/27 = 14.3 cy JSK 9/16/03
M.W.H. 1/23/04

150 LF 18"
redesign Detail keying

1616.84
1616.10
613.10 Type I Inlet Fill 10 x 10 x 3/27 = 3.7 cy JSK
M.W.H. 1/23/04

pipe removed 6/4/03 JSK
Tr. Excavation to be paid with installation of new 18" pipe

18" x 120' CPEP Trench Excavation
Tr. Excav = 5' = 420 sy
Tr. Excav < 5' = 90 sy (60 x 1.5)
- Tr. Rock = 0
Tr. Earth = 510 sy x 3.8 x 1/27
= 71.8 cy 6/24/03 JSK
1/23/04 M.W.H.

1630 1620 1610 1600

204.21
Trench Rock
Stone Rubble Masonry = Q
Boulders
3.5 x 4.0 x 2.0 x 1/27 = 1.0 cy 7/11/02 cwg
8/4/03 JSK

new road

1617.2 1615.8

204.20
Total Trench 185 sy x 3.9 x 1/27 = 26.7 cy
- Trench Rock 1.0 cy
Trench Earth 25.7 cy 7/11/02 cwg
8/4/03 JSK

Backfilled 2' over Pipe w/ sand borrow because of unsuitable excavation

128+52 ℄ see DRAINAGE BK 3 pg 74
REMOVAL 18" RCP See BK 7 pg 74
and Replace w/ 18" CPEP X 48' SO'L.E
see Item Detail and Dr. Sh. #1 of 3

2'
1' 9" 1'

12.25
1.77
10.48 sy x 3.7 x 1/27 = 14.9 cy 7/12/02 cwg

203.31
sand borrow
8/4/03 JSK

JEARSBURG - WAMPLER
DRAINAGE SHEET 3 OF
REMOVAL: 104+15
104+85
112+00
Replace 124+31
Replace 128+52

HIGHWAY FEDERAL AID SHEET
PLATE 3-FULL CROSS SECTION-FULL LINE
NATIONAL PRINTPAST
PRINTED IN U.S.A.



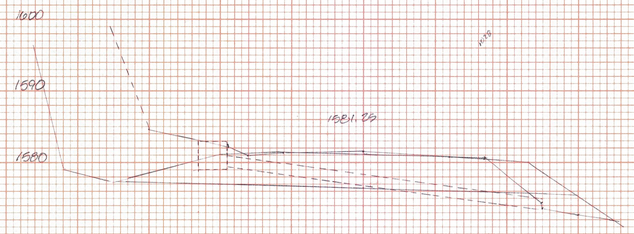

156+25
Remove 18" No quantities

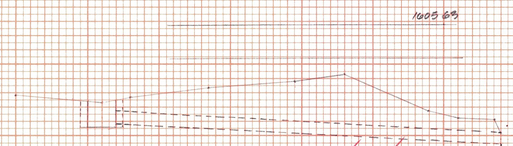

Te Earth Removal Pipe 300^3 * 2.5' * 1/27 = 27.8 cy JSE 11/15/02 M.W.H. 1/27/04
Te Rock D.I. Removal 20^3 * 3' * 1/27 = 2.2 cy JSE 11/15/02 M.W.H. 1/27/04

145+50
Removal 24" RCP

See Drainage BK 2 pg 98 and Item Detail and Dr. Sh. #1 of 3

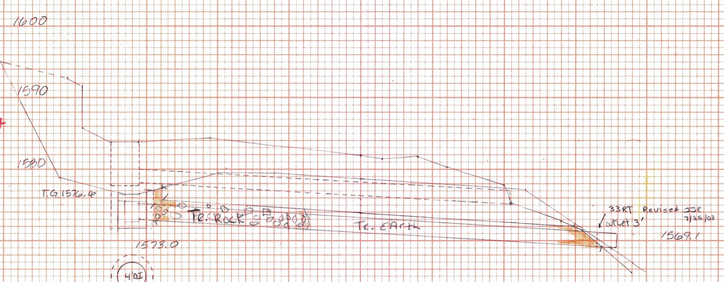

(405)

158+70 64'
Replace 24"x60' CDEP Removal Out in Common Excavation
See bk #7 pg 82
See Dr. Bk 2 pg 118 and Item Detail and Dr. # 1 of 3

Te. Excav for D.I
$\frac{\pi 2^2}{4} * \frac{5}{27}$ = 5.0 cy
Te Rock - 5.0 cy JSE 7/21/03
Te Earth = 0.0 cy M.W.H. 1/29/04

Te Excavation for 24" Pipe
113 ✓
Te. Earth = 170^3 x 4.3 x 1/27 = 27.1 cy ✓ 18.0 ✓
← Te. Rock = 66^3 x 4.3 x 1/27 = 10.5 c.y.
Combine w/DI T. Rock

T. Rock DI = 5.0 C.Y.
T. Rock Pipe = 10.5 C.Y.
15.5 C.Y. ✓
M.W.H. 1/28/04
BB 3-31-04

JSE 7/21/03
M.W.H. 1/28/04
B.B. 3-31-04

204.30 Gr. Backfill Structures

Pipe - $((60' * 4.3' * 3.05) - (\frac{\pi 2^2}{4} * 60))/27$ = 31.7 cy
D.I. - $((\frac{\pi 4^2}{4} * 5) - (\frac{\pi 4^2}{4} * 5))/27$ = 2.9 cy
Total = 24.6 cy (m.f.) JSE 7/21/03
M.W.H. 1/28/04

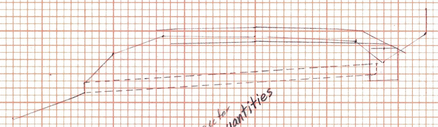

Remove Concrete Headwall Connector for 5'0" Riding Curb and Gutter for quantities

Replace with New 18"x52" CDEP(SL) 50'
see Bk. 28, Page 120
see book 7, page 79
See also Item Detail and Dr. Sh. #3 of 3

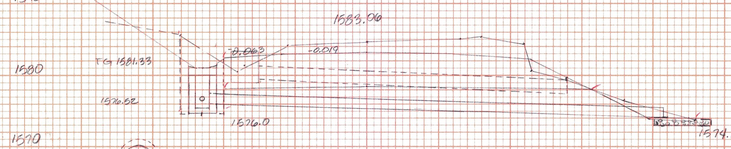

(D.I.)

T.E. for D.I. - See below - paid as T. Rock
$\frac{\pi 6^2}{4} * \frac{6.3}{27}$ = 66.4 5/12/03 JSE
1/28/04 M.W.H.
Te. Excav for D.I. All Te. Rock
6.6 cy JSE 7/21/03
M.W.H. 1/28/04

154+65 70'
Replace 18"x CMP CDEP
See bk #7, pg 81
See Dr. Bk 2 pg 112 and Item Detail and Dr. sh. #1 of 3

Total Trench for pipe 170^3 x 3.8' x 1/27 = 23.9 cy 5/12/03 JSE M.W.H. 1/28/04

613.10 Stone Fill @ outlet (see plan view @ RT)
8 x 7 x 1/27 = 2.1 cy JSE 7/21/03 M.W.H. 1/28/04

204.30 Gr. Backfill Structures
Pipe - $((68' * 2.5' * 3.8') - (\frac{\pi 3^2}{4} * 68))/27$ = 19.4 cy
D.I. - $((\frac{\pi 4^2}{4} * 5) - (\frac{\pi 4^2}{4} * 5))/27$ = 2.9 cy
Total = 22.3 cy JSE 7/21/03
M.W.H. 1/28/04

Shaw Dairy - Wilmington
Drainage Sheet 4 of

Removal	18"	135+00 - No quantities
Removal	24"	145+50
Replace	18"	West Connector 25+00
Grade	18"	154+65
Replace	24"	158+70
Remove	18"	150+25 - No quantities

✓

FINAL SURVEY — BY, DATE, SURVEYED, PLOTTED, TEMPLATE, MAPS, AREAS CHECKED, NOTE BOOK, NO.

ORIGINAL SURVEY — BY, DATE, SURVEYED, PLOTTED, TEMPLATE, MAPS, AREAS CHECKED, NOTE BOOK, NO.

HIGHWAY FEDERAL AID SHEET
PLATE 3-FULL CROSS SECTION-FULL LINE
NATIONAL PRINTFAST
PRINTED IN U.S.A.

FINAL SURVEY — SURVEYED, PLOTTED, TEMPLATE, AREAS, AREAS CHECKED, NOTE BOOK, NO., BY, DATE

ORIGINAL SURVEY — SURVEYED, PLOTTED, TEMPLATE, AREAS, AREAS CHECKED, NOTE BOOK, NO., BY, DATE

1600
1590
1580
15820
15850
150+00 – 151+50
NEW 15" CPEP
(See Dr. BK 2 pg 140)
(See Dr. BK 2 pg 134)

* System Eliminated
per Gary Dubray Project Manager

204.21 Tr. Rock DI. Removal
$\frac{21.5^2}{9} \times 6.7' \times \frac{1}{27} = 4.9$ C.Y. JJC 11/17/03
M.W.H. 1/28/04

204.20 Tr. Earth Pipe Removal
~~300~~ 76 × 2.0' × 1/27 = ~~23~~ 5.6 C.Y. JJC 11/17/03
M.W.H. 1/28/04 ✓
10.11 3-31-04

1600
1590
1580
Trench Earth – pipe removal
Gabion Wall

151+43
Remove 18" RCP ± DI
See BK 2 pg 141
See Dr. BK 2 pg 108

GAUGE:
1/2" = 1'-0"
1/4" = 1'-0"
1/8" = 1'-0"

145+60
144+00

204.30
DI Excavation Bridge Backfill Structures
$((\frac{\pi 3.5^2}{4} \times 4.5) - (\frac{\pi 1.5^2}{4} \times 4.5))/27 =$ 2.6 C.Y. JJC 11/17/03
M.W.H. 1/28/04

204.30
Pipe Gr. Bk. F. Structures
$((\frac{\pi 3.5^2}{4} \times 3.5') - (\frac{\pi 1.5^2}{4} \times 3.5'))/27 =$ 27.5 C.Y. JJC 11/17/03
M.W.H. 1/28/04

DI + 2.6 c.y.
Total Gr. Bk. Str. 30.1 c.y.
M.W.H. 1/28/04
10.12 3-31-04

1604.82
1600
1590
1580
TG 1590.2
Trench Rock
1592.2
1588.4
Gabion Wall

DI Trench Rock
$\frac{\pi 4.5^2}{4} \times \frac{4.5}{27} = 4.7$ C.Y. JJC 11/17/03
M.W.H. 1/28/04

Total Tr. Rock Exc.
4.7 + 9.1 = 13.8 c.y.
M.W.H. 1/28/04
B.B. 3-31-04

Type I Stone Fill
(8 x 7 x 1)/27 = 2.1 c.y. JJC 11/17/03
1/28/04 M.W.H.

T. Earth for Stone Fill
(8' x 7' x 1.5') ÷ 27 = 3.1 C.Y.
From pipe exc. = ~~40.6 c.y.~~ 41.0
T. Earth Total ~~43.7~~ 44.1 C.Y.
M.W.H. 1/28/04
B.B. 3-31-04
M.W.H. 4/13/04

297
~~253~~ 41.0 ← Use this figure as the pipe Tr. Earth
19.7
65
9.1
Pipe Tr. Excavation $\frac{\pi 3.8^2}{4} \times \frac{3.8}{27} =$ ~~27.7~~ 9.1 C.Y. JJC 11/17/03
– Trench Rock $\frac{\pi 4.5^2}{4} \times \frac{3.0}{27} =$ ~~28.1~~ C.Y. JJC 11/17/03
Trench Earth ~~28.1~~ 40.6 C.Y. JJC 11/17/03
M.W.H. 1/28/04 – add to Stone Fill, T. Earth
41.0 B.B. 3-31-04
M.W.H. 4/13/04

145+77 on skew
New 18" x 108' CPEP(SL)
10 10
See Drainage BK 2 pg 100
50
See Sht 7 pg 47

All quantities placed on Item Detail and Dr. Sh. #1 of 3

Searsburg – Wilmington
Drainage Sheet 5 of

New 18"	145+77 skewed
New 15" CPEP	150+00 – 151+50
Remove 18" RCP	151+43

SEARSBURG - WILMINGTON
NH-F010-1(98)

PRINTED ON RECYCLED FEDERAL AID SHEET
PLAN & PROFILE CROSS SECTION-FULL LINE
NATIONAL PRINTFAST
PRINTED IN U.S.A.

FINAL SURVEY — SURVEYED / PLOTTED / TEMPLATE / AREAS / AREAS CHECKED / NOTE BOOK / NO. / BY / DATE

ORIGINAL SURVEY — NOTE BOOK / NO. / BY / DATE

204.30 Gr. Backfill Structures
Pipe = (((8A' x 4.8' x 3.5') - (π 2.5² / 4 x 8A')) / 27 = 36.1 CY
D.I. = (((π 5² / 4 x 5.8') - (π 2² / 4 x 5.8')) / 27 = 3.4 CY
Total = 39.5 CY (m.f.) JJR 7/22/03
m.w.#. 2/4/04

Type IE Stone Pad
10' x 10' x 3/27 = 7.4 CY JJR 7/22/03
m.w.#. 2/4/04

All Tr. Rock
Tr. Earth
5' LINE
T.E. for D.I.
<5' = π 5² / 4 x 5 / 27 = 5.2 CY
>5' = π 5² / 4 x 3 / 27 x 1.5 = 1.6 CY
Total T.E. for D.I. = 6.8 CY JJR 5/20/03 (All Trench Earth) 7/22/03 JJR
m.w.#. 2/4/04

Add a inlet along see watchfit std

163+65
NEW 30" CPEP X 84 L.F.
(See Book 7, pg 145)
See Dr. Bk 2 pg 132

<5' Trench for Pipe 380 LF x 4.8' x 1/27 = 67.6 CY
>5' Trench for Pipe 90 LF x 1.5 x 4.8' x 1/27 = 24.0 CY
Total Trench for Pipe = 91.6 CY 5/20/03 JJR
Tr. Earth = 40 A' x 4.8' x 1/27 = 7.0 C.Y. - 7.0 C.Y. 7/22/03 JJR
Tr. Rock = 84.6 C.Y. 7/22/03 JJR
2/9/04 m.w.#.

84.6 C.Y.
+6.8 C.Y.
91.4 C.Y. Total T. Rock
BB 3-31-04

Unknown location

T.E. for DI
= π 6² / 4 x 4.8 / 27 = 5.0 CY JJR 5/13/03
m.w.#. 2/4/04

All Tr. Rock
Installed 7/18/03 BB

Total Trench for Pipe 15 LF x 3.8' x 1/27 = 21.8 CY 5/13/03 JJR
* All Tr. Rock
Tr. Rock = 21.8 CY JJR 7/8/03
m.w.#. 2/9/04

Stone Fill, Type I pad
(10' x 10' x 1') / 27 = 3.7 C.Y.
F.M. 7/8/03 JJR
m.w.#. 2/4/03

21.8 C.Y.
+5.0 C.Y.
26.8 C.Y. Total T. Rock

204.30 Gr. Backfill Structures = ((77' x 3.8' x 2.5') - (π 22.5² / 4 x 77')) / 27 = 22.1 CY (m.f.) JJR 7/8/03
m.w.#. 2/9/04

Installed Plans

DI Tr. Excav. = π 6² / 4 x 2.3 / 27 = 2.3 C.Y.
DI All Tr. Earth (2.3 CY Cm.F.) JJR 8/4/03
m.w.#. 2/4/04

18" Pipe Tr. Excavation = 60 LF x 3.2' x 1/27 = 7.1 CY
- Tr. Rock 0 CY
Tr. Earth = 7.1 CY
T. Earth DI. + 2.3 C.Y.
9.4 C.Y.

m.w.#. 2/9/04 JJR 8/4/03

161+80
NEW 18" CPEP X 82 L.F.
(See Book 7 pg 143)
See Dr. Bk 2 pg 126

List of backhoes measured in field 7/19/02
4.4 x 3.4 x 1.3 = 19.4
3.0 x 2.4 x 2.1 = 15.1
5.7 x 2.4 x 1.8 = 14.0
8.4 x 6.0 x 2.3 = 116.9
4.0 x 2.6 x 1.5 = 13.5
7.3 x 5.0 x 2.4 = 87.6
6.0 x 2.8 x 5.0 = 75.0
3.8 x 4.5 x 1.2 = 20.5
3.4 x 3.6 x 1.7 = 20.8
4.1 x 2.7 x 1.3 = 14.4
3.2 x 3.3 x 1.7 = 29.2
4.6 x 3.6 x 1.6 = 26.5
455.9 / 27 = 16.8 CY 7/22/02 CWM
5.1 CY
21.9 CY
1/28/04 m.w.#.

4.2 x 3.0 x 1.8 = 22.7
6.6 x 3.0 x 1.4 = 27.7
4.8 x 3.0 x 1.0 = 14.4
4.0 x 3.2 x 2.0 = 25.6
7.0 x 3.3 x 2.0 = 46.2
136.6 / 27 = 5.1 CY

Total Tr. Rock

168+00
NEW 30" CPEP W/ IES
(See Book 7 pg 140)
See Dr. Bk 2 pg 148
80' Length

Total Trench = 290 LF x 4.8' x 1/27 = 51.6 CY 7/22/02 CWM
- Trench Rock = 20' x 1.5' x 1/27 = 1.1 CY
Trench Earth = 80' x 1.5' x 1/27 = 29.7 CY 7/22/02 CWM
2/9/04 m.w.#.

205.31 Sand Borrow
Avg Length 75.0' measured in field
75.0' x 15.84 SF x 1/27 = 43.6 CY

6/13/03 Stone fill @ inlet (See plan view @ right)
10' x 6' x 1' x 1/27 = 8.2 CY measured in field 11/19/02 CWM
1/28/04 m.w.#.

Stone F.I. Type II
10 x 10 x 1/27 = 3.7 CY 5/20/03 JJR
1/28/04 m.w.#.

Special Ditch
Field measured 11/19/02 CWM

Plan View

Type I Stone Lined Ditch for detail

Type I Stone Lining

Ditch

Pipe

All quantities placed on the Item Detail and Dr. Sh. #1 of 3

164+25	REMOVAL 24" RCP	
168+00	NEW 30" CPEP	
161+80	NEW 18" CPEP	
163+65	NEW 30" CPEP	
167+41	NEW 15" CPEP	

162+00 New 12" CSP
Sears burg - Wilmington
Drainage Sheet 2 of

SEARSBURG - WILMINGTON
NH-F(10)11(10)

167+41 (SE1)
NEW 15" CPEP 68 LF
(See Book 7 pg 145)
See Dr. Bk 2 pg 140

Trench ex. pipe 178 LF x 3.5' x 1/27 = 82.3 CY
endwalls 32.1 LF x 6' x 1.9' x 1/27 = 10.7 CY
93.0 CY
6/13/03 32' x 6' x 1' x 1/27 = 7.1 CY
Type I, Stone

11/19/02 CWM
8/4/03 JJR

164+25
Removing 24" RCP
(See Book 7 pg 89)
See Dr. Bk 2 pg 140

HIGHWAY FEDERAL AID SHEET
PLATE 3-FULL CROSS SECTION-FULL LINE
NATIONAL PRINTFAST
PRINTED IN U.S.A.

FINAL SURVEY
SURVEYED
PLOTTED
TEMPLATE
AREAS
AREAS CHECKED
NOTE BOOK
NO.
BY
DATE

ORIGINAL SURVEY
SURVEYED
PLOTTED
TEMPLATE
AREAS
AREAS CHECKED
NOTE BOOK
NO.
BY
DATE

℄

1609.86

171+65
Remove 15" RCP

see bk #7 pg 85
see Dr. Bk. 2A pg 146 and Item Detail and Dr. Sh. #1 of 3

15" Removal Tr. Excavation $25.5^{\square'} \times 2' \times 1/27 = 18.9$ c.y. 8/4/03 JSR
2.0' M.I.F.
Tr. Rock = 0.0 c.y. 2/4/04 M.W.F.
Tr. Earth = 18.9 c.y.

1565.50

171+70
Remove 18" RCP

see bk #7 pg 86
see Dr. Bk 2 pg 132 and Item Detail and Dr. Sh. #1 of 3

18" RCP Removal Tr. Excavation $41.5^{\square'} \times 2.5' \times 1/27 = 38.4$ c.y. 8/4/03 JSR
2.5' M.I.F.
Tr. Rock = 0.0 c.y. 2/4/04 M.W.F.
Tr. Earth = 38.4 c.y.

1561.90

174+00
Remove 15" RCP

see bk #7 pg 87
see Dr. Bk 2A pg 10 and Item Detail and Dr. Sh. #1 of 3

DI 4'x4'x3.5' x 1/27 = 1.0 cy Item 204.21 removed 5/21/03 WMJ
Pipe $32.4^{\square'} \times 2$ wires $\times 1/27$ = 24.0 cy Item 204.20 removed 9/23/03 WMJ
8/4/03 JSR 5/13/03 JSR

Unit of Boulders in Trench

$8.0 \times 6.5 \times 3.0 \times 182.0$ ft^3
$3.4 \times 2.3 \times 17$ ft = 19.5 ft^3
$145.3/27 = 5.4$ c.y. 7/17/02 WMJ Trench Rock
8/4/03 JSR

1568.60

0.07' 0.07' 0.07' 0.06' 1/4 1/8

1554.5

Mes not installed

1553.0

173+00
New 18" x 112' W/ES CPEP SL option D

see bk #7 pg 91
see Dr. Bk 2A pg 6 See Item Detail and Dr. Sh. #1 of 3

Total Trench $485' \times 3.8' \times 1/27 = 68.3$ c.y. 7/17/02 WMJ
Trench Rock boulders 5.4 c.y. 8/4/03 JSR
Trench Earth 62.9 c.y. 7/17/02 WMJ 8/4/03 JSR

Type I Stone Bed $(10' \times 10' \times 1)/27 = 3.7$ c.y. JSR 10/9/03 (in DI)

M.W.F. 2/4/04

sand borrow backfill (avg. measured in field) $95 \times 14.1' \times 1/2 = 59.0$ c.y. 7/17/02 WMJ 8/4/03 JSR

$A = 11.1^{\square'}$

50

℄

1580
1570
1560
1550
1540

Trench excavation
DI $4'x6'x9.0'/27 = 6.2$ c.y. JSR
pipe

1554.06
0.05' 0.01' 0.01' 0.01' 0.03' 1/4 1/8

1546.0

1542.2
8'x10' DOT type II = 5.9 c.y. (in Cm.Fl) JJR 10/9/03
M.W.F. 2/4/04

178+80(SL)
New 36" x 80' CPEP option R w/4'x6' DI w/Type B Grate

See back 7 pg 150
See Dr. Bk 2A pg 22 and Item Detail and Dr. Sh. #1 of 3

36" Pipe Trench Excavation $340^{\square'} \times 6.2' \times 1/27 = 78.0$ c.y. (in.f.)

* note 6.2' Trench width includes excavation for 6' I.D. carrier pipe.

Pipe Tr. Earth = 78.0 c.y. JSR 5/13/03
DI " " = 6.2 c.y. M.W.F. 2/9/04
84.2 c.y. ✓ R.B. 3-31-04

204.30 Gr. Backfill Structures
Pipe - $((80' \times 6.3' \times 3) - (\frac{\pi \times 3^2}{4} \times 80'))/27 = 6.2$ c.y.
DI - $((\frac{\pi \times 6^2}{4} \times 7) - (\frac{\pi \times 4^2}{4} \times 7))/27$
= 4.0 c.y.
Total = 10.2 c.y. JSR 5/13/03
38.2 ✓ 30.2
M.W.F. 9/19/04
M.W.F. 2/4/04
R.B. 3-31-04

1553.11
1/8' 1/8'
1550.00
1549.00
1545.5

178+00 +10 +20 +30 +40 +50 +60 +70 +80 +90 179+00
48' Lt

178+35 Lt
New 21" x 28' CPEP (SL) option L w/ES & inlet
See bk 7 pg 148
See Dr. Bk 2A pg 14 and Item Detail and Dr. Sh. #1 of 3

Total Trench $210^{\square'} \times 4.3' \times 1/27 = 33.4$ c.y. 5/29/03 JSR
Trench Rock (From Bk. 2A, Pg 16) - 3.1 c.y. 5/29/03 JSR
Trench Earth 30.3 c.y. 5/29/03 JSR
2/4/04 M.W.F.

204.30 Gr. Backfill Structures
Pipe - $((68' \times 4.3' \times 3') - (\frac{\pi \times 3^2}{4} \times 68'))/27 = 24.6$ c.y. (in.s) JSR 5/29/03
M.W.F. 2/4/04

1556.32
1/8'
1552.0

177+40
Pipe $130^{\square'} \times 2$ wires $\times 1/27 = 9.6$ c.y. 5/13/03 JSR

Remove 15" RCP

See bk #7 pg 88
See Dr. Bk 2A pg 12 and Item Detail and Dr. Sh. #1 of 3

Searsburg - Wilmington
Drainage Sheet 7 of 2.7

New 18" 173+00
Remove 15" 174+00
Removal 18" 171+70
Remove 18" 167+65
Remove 15" 177+40
New Drive 24' 178+35 Lt
New 36" 178+80

SEARSBURG - WILMINGTON
NH-F010-1(19)

Pipe installed 8/13/03 JSR

1555.48

Pipe Tr. Excavation 110 LF x 3.1' x 1/27 = 12.6 cy
Tr. Rock = 0.0 cy
Tr. Earth = 12.6 cy 8/13/03 JSR
2/10/04 M.W.H.

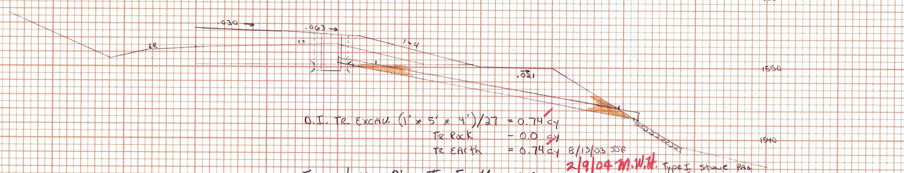
1555.48
1550
1540
1540
1554
1554
1552
1552
1554
1554
1554

FINAL SURVEY — NOTE BOOK NO. — SURVEYED / PLOTTED / TEMPLATE / AREAS / AREAS CHECKED — BY — DATE

204.20 TR. EARTH (M.F.)
50' × 1.5' × 2/27 = 5.6 cy JJR 11/17/03
M.W.H. 2/10/04



186+90
Removal 15" RCP
(See Book 7, pg 92)
See Dr. Bk 2A pg 34 and Item Detail and Dr. Sh. #1 of 3

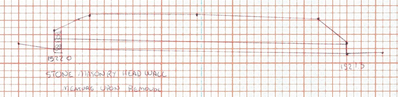

Pipe All in Subgrade - no Qtys Paid JJR 10/8/03

203+22
Removal 15" RCP
(Book 7, pg 93)
See Dr. Bk 2A pg 56 and Item Detail and Dr. Sh. #1 of 3

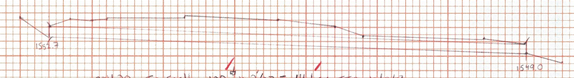

204.20 Tr. Earth 190' × 2/27 = 14.1 cy JJR 10/8/03
M.W.H. 2/10/04

183+70
Removal 18" RCP
(See Book 7, pg 90)
See Dr. Bk 2A pg 32 and Item Detail and Dr. Sh. #1 of 3

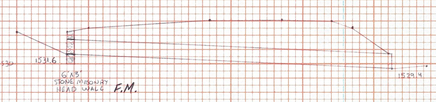

204.20 Tr. Earth Pipe (240' × 2')/27 = 17.8 cy JJR 10/8/03
204.21 Tr. Rock CRM F.M. (6 × 3 × 5.5)/27 = 3.7 cy JJR 10/8/03
M.W.H. 2/10/04

194+33
Removal 18" RCP
(See Book 7, pg 94)
See Dr. Bk 2A pg 44 and Item Detail and Dr. Sh. #1 of 3

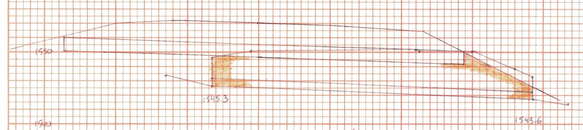

195' × 2' × 1/27 = 14.3 cy removed 5/22/03
2/10/04 M.W.H.

179+20
Removal 24" RCP
(See Book 7, pg 89)
See Dr. Bk 2A pg 26 and Item Detail and Dr. Sh. #1 of 3

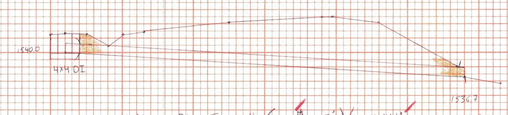

204.20 Pipe Tr. Earth (260' × 1.5')/27 = 14.4 cy JJR 10/8/03 M.W.H. 2/10/04
204.21 DI Tr. Rock (4' × 4' × 3.5')/27 = 2.1 cy JJR 10/8/03
M.W.H. 2/10/04

190+43
Removal 15" RCP
(See Book 7, pg 93)
See Dr. Bk 2A pg 39 and Item Detail and Dr. Sh. #1 of 3

SEARSBURG / WILMINGTON

179+20	Removal 24" RCP
183+70	Removal 18" RCP
186+90	Removal 15" RCP
190+43	Removal 15" RCP
194+33	Removal 18" RCP
203+22	Removal 15" RCP
7/22/02	CT

Drainage Sheet 9 of 27

SEARSBURG - WILMINGTON
NH-F010-1(18)

ORIGINAL SURVEY — NOTE BOOK NO. — SURVEYED / PLOTTED / TEMPLATE / AREAS / AREAS CHECKED — BY — DATE

HIGHWAY FEDERAL AID SHEET
PLATE 3-FULL CROSS SECTION-FULL LINE
NATIONAL PRINTFAST
PRINTED IN U.S.A.

HIGHWAY FORESAIL AID SHEET
PLATE 3-FULL CROSS SECTION-FULL LINE
NATIONAL PRINTRITE
PRINTED IN U.S.A.

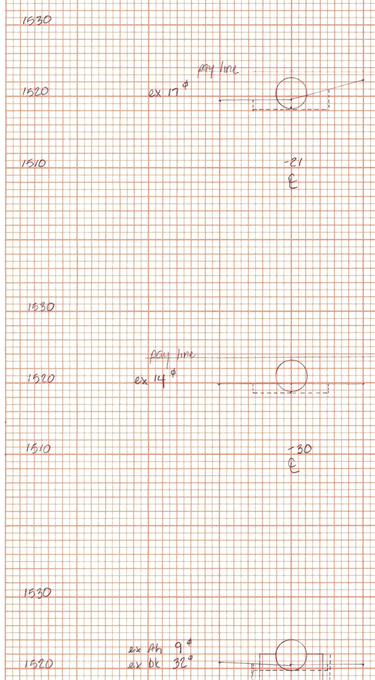

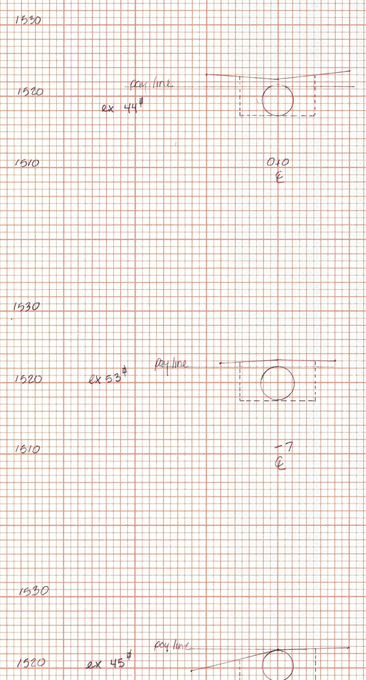

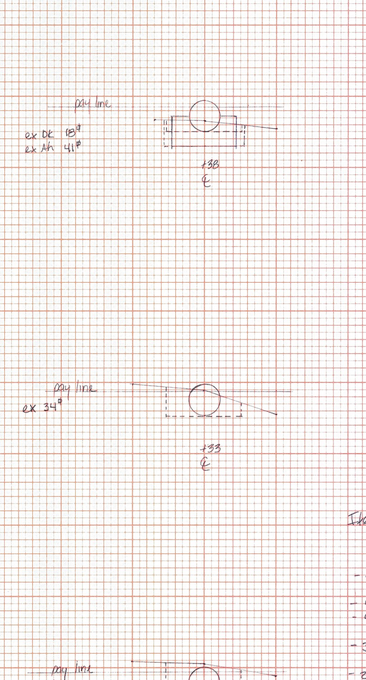

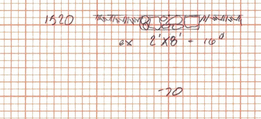

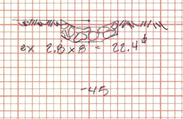

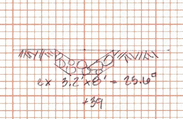

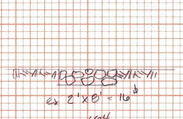

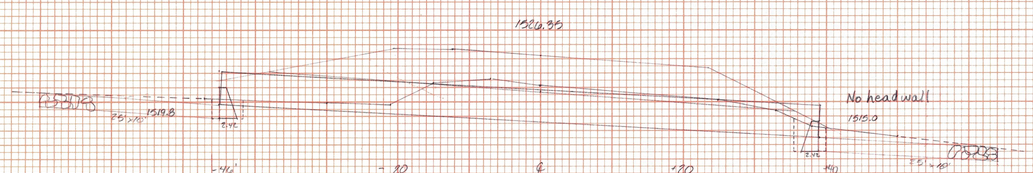

2.10+10 on sheet
54" x 84'
See Dr. Sh. #1 pg 6a and Item Detail and Dr. Sh. #2 of 3

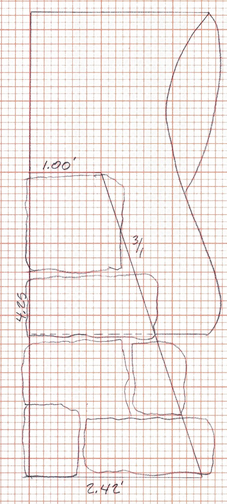

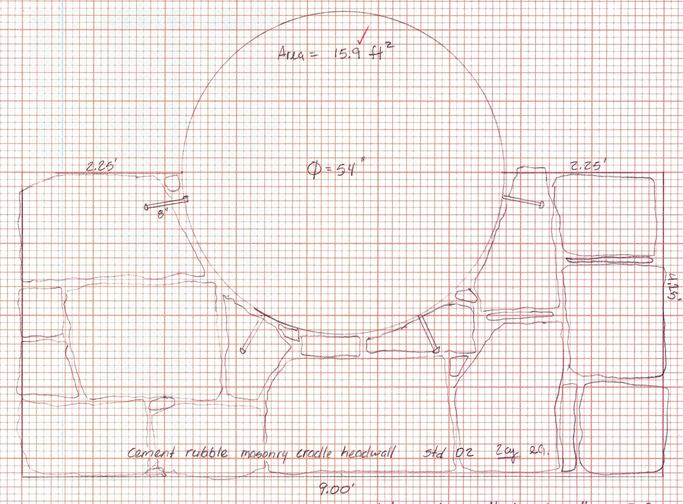

Inlet CRM cradle headwall = 2.0 c.y.

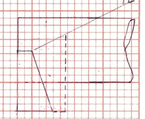

3.4 x 5.0' x 9.0'/27 = 2.8 cy ea

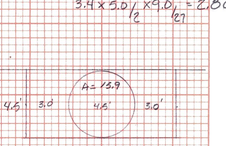

A = 31.35#
L = 41.58 (36) + 35.6 (24) = 77.2 ft
V = 89.6 cy

Item 204.85 Structure Excavation

Sta	Area	Dist	Vol
-46	32 ft²		
		4.4'	140.8 ft³
-41.6	32		
		11.6	193.4
-41.6	9		
		9	139.5
-30	14		
		6	186.0
-21	17		
		8	392.0
-15	45		
		7	339.5
-7	53		
		25	1037.5
0	44		
		8	292.0
+23	39		
		2.6	67.6
+33	34		
		4.4	180.4
+35.6	18		
+39.6	41		
+40	41		

2908.7/27 = 107.7 cy 12/16/02 awg
10/8/03 JJK

Item 204.20 Trench Excavation of Earth

Sta	Area	Dist	Vol
-70	16#		
		25'	480 ft³
-45	22.4#		
+39	25.6#		
		25'	520 ft³
+64	16#		

1000 ft³/27 = 37.0 cy 12/16/02 awg
10/8/03 JJK

Item 613.11 Stone fill Type II
Inlet 8'x25'x2'/27 = 14.8 cy
Outlet 8'x25'x2'/27 = 14.8 cy
29.6 cy 12/16/02 awg
10/3/03 JJK

Item 204.30 Granular Backfill for Structures

Headwalls	2.0 cy
	2.0 cy
Pipe	89.6 cy
	93.6 cy 12/17/02 awg
	10/8/03 JJK

*Pipe installation completed 9/2/03 JJK

Secrsburg-Wilmington
Drainage Sheet 10 of 27
210100 New 54" x 84" PCCSP
Quantities placed on Item Detail and Drainage Sh. #1 of 3

SEARSBURG - WILMINGTON
NH-E010(118)

ORIGINAL SURVEY
NOTE BOOK
NO.
SUBMITTED
PLOTTED
TEMPLATE
AREAS
AREA CHECKED
BY
DATE

FINAL SURVEY
NOTE BOOK
NO.
SUBMITTED
PLOTTED
TEMPLATE
AREAS
AREA CHECKED
BY
DATE

FINAL SURVEY
SURVEYED
PLOTTED
TEMPLATE
AREAS
AREAS CHECKED
NOTE BOOK
NO.
BY
DATE

ORIGINAL SURVEY
SURVEYED
PLOTTED
TEMPLATE
AREAS
AREAS CHECKED
NOTE BOOK
NO.
BY
DATE

20 ℄ 20

1530
1520
1510
1500

1515.65

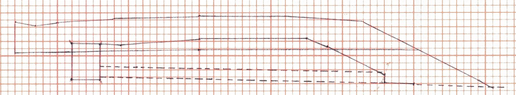

T.R. for D.I.
4x4x5 = 80/27
= 3.0cy
Inc 6/16/03
M.W.#. 2/10/04

219+60
Remove 18" RCP w/ DI
see Drawings Book 2A pg 90 and Item Detail and Dr. #2 of 3

Pipe removal all in cut
NO T.E. Paid. SSE 6/16/03

1530
1520
1510
1500

1517.20

Limit of 204.90

1509.11

1507.1

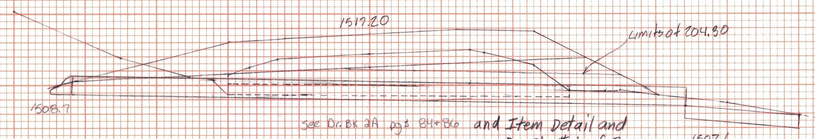

See Dr. Bk 2A pg 8 Bk 8c and Item Detail and Dr. Sh. #1 of 3

No quantities-Bk 7 pg 98 Remove 218+47 18" RCP
See quantities below-Bk 7, pg 159 New 86 218+50 30" CPEP w/ End

TRENCH EARTH EXCAVATION:
$\frac{1}{27}$ 148 x 7.33^2 = 58.7cy 8/13/02 DT
Inc 6/16/03 SSE

GRANULAR BACKFILL FOR STRUCTURES:
AVERAGE LENGTH = 650' FIELD MEASURED
$\frac{1}{27}$ 650' x 15.33 ft^2 = 36.9 cy
10/29/02 SSE

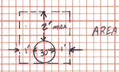

AREA = 4.5' x 4.5' - $\frac{\pi}{4}$ 1.75^2
= 20.25 - 4.9^2
= 15.33 ft^2

TYPE E STONE
6' x 10' = 60^2
60ft^2 x 1' = 60 ft^3 = 2.2 cy FIELD MEASURED
SSE 10/29/02

1580
1570
1560
1550

1516.29

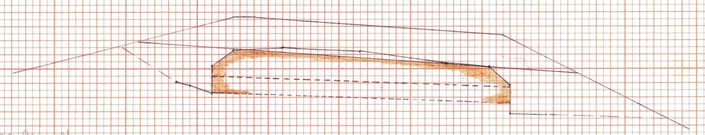

Pipe Removal
TR. EARTH 204.30
0.30 x $\frac{26'}{27}$ x $\frac{7.33}{27}$ = 22.1 cy SSE 6/16/03
M.W.#. 2/10/04
D.I. #5 cy

210+30
Remove 30" CSP w/ headwall
See BE 7 pg 96
See Dr. Bk 2A pg 9 and Item Detail and Dr. Sh. #1 of 3
Revised: 9/23/03 SSE

20 ℄ 20

1530
1520
1510
1500

1510.60

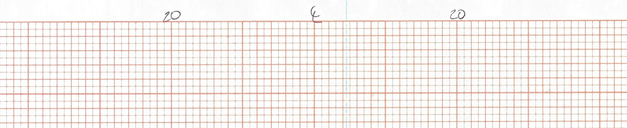

613.10 TYPE I Stone F.11
10 x 10 x 1.27 = 3.7cy (in F) 7/9/03 SSE
2/10/04 M.W.#.

204.30 Gr. Backfill for Structures ((56 x 3.7 x 2.5') - ($\frac{\pi 1.5^2}{4}$ x 56')) 27 = 15.5cy
SSE 6/16/03
M.W.#. 2/10/04

225+46
Replace 15" RCP w/ New 18" x 38" CPEP
See Dr. Bk 2A pg 101 and Item Detail and Dr. Sh. #2 of 3

* Pipe Removal all in cut
AREA no T.E. paid. SSE 6/16/03

D.I. Excavation = $\frac{36^2}{27}$ x 4 x 1.30 = 8.6cy
Trench 0.0 cy
Tr. Earth = 4.4 cy SSE 6/16/03
M.W.#. 2/10/04

Pipe Excavation = 1.04 x 3.8 x 1.30 = 14.8 cy
Trench 0.0 cy
Trench Earth 14.8 cy SSE 6/16/03
M.W.#. 2/10/04

Tr. Earth Pipe 14.8 C.Y.
" " DI. 4.2 C.Y.
19.0 C.Y.

1530
1520
1510
1500

1513.55

T.R. for D.I.
4 x 4 x 4 = 64/27
= 2.4cy
SSE 6/16/03
M.W.#. 2/10/04
Pipe removal all in cut no T.E. paid SSE 6/16/03 - common Exc.

221+15
Remove 18" RCP w/ DI
See Dr. Bk 2A pg 90 and Item Detail and Dr. Sh. #2 of 3

20 ℄ 20

Searsburg - Wilmington
Drainage Sheet 11 of 27

Remove	210+30
Remove	218+49
New	218+50
Remove	219+60
Remove	221+15
Replace	225+46

SEARSBURG | WILMINGTON
NH FD10-1(18)

HIGHWAY FEDERAL AID SHEET
PLATE 3-FULL CROSS SECTION-FULL LINE
NATIONAL PRINTFAST
PRINTED IN U.S.A.



Total Trench Pipe 140 ⌀ x 3.8' x 1/27 = 19.7 cy
DI $\frac{\pi 6^2}{4}$ x 5.5' x 1/27 = 5.8 cy
25.5 cy 8/28/03 CWG

T.E. Pipe 40 ⌀ x 3.8' x 1/27 = -5.6 cy 8/28/03

T.R. 19.9 cy 8/28/03 CWG JJR 9/8/03

204.30 Granular Backfill for Structures
21.1
(150 ⌀ x 3.8' x 1/27) - ($\frac{\pi 1.5^2}{4}$ x 66' x 1/27) = 3.8 cy JJR 9/8/03

Searsburg - Wilmington
Drainage Sheet 12 of 27

212+62 Replace 18"
215+00 New 18'

SEARSBURG - WILMINGTON
NH-F010-1(18)

FINAL SURVEY
NOTE BOOK NO.
SURVEYED
PLOTTED
TEMPLATE
AREAS
AREAS CHECKED
BY
DATE

ORIGINAL SURVEY
NOTE BOOK NO.
SURVEYED
PLOTTED
TEMPLATE
AREAS
AREAS CHECKED
BY
DATE

HIGHWAY FEDERAL AID SHEET
PLATE 3-FULL CROSS SECTION-FULL LINE
NATIONAL PRINTFAST
PRINTED IN U.S.A.

FINAL SURVEY
NOTE BOOK NO.
SURVEYED
PLOTTED
TEMPLATE
AREAS
AREAS CHECKED
BY
DATE

ORIGINAL SURVEY
NOTE BOOK NO.
SURVEYED
PLOTTED
TEMPLATE
AREAS
AREAS CHECKED
BY
DATE

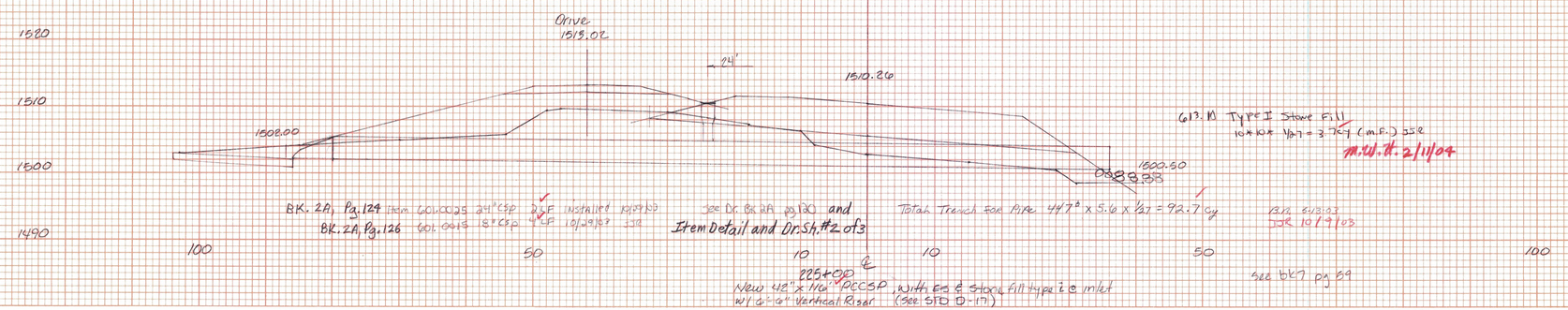

613.11 Type I Stone Fill
10*10* 1/27 = 3.7cy (m.f.) JJR
M.W.H. 2/11/04

BK. 2A, Pg. 124 Item 601.0025 24" CSP 2 LF installed 10/29/03
BK. 2A, Pg. 126 601.0015 18" CSP 4 LF 10/29/03 JJR

See Dr. Bk 2A pg 120 and
Item Detail and Dr. Sh. #2 of 3

Total Trench for Pipe 447' x 5.6 x 1/27 = 92.7 cy

B.R. 5-13-03
JJR 10/9/03

225+00 ℄
New 42" x 116' PCCSP, with ES & Stone fill type I @ inlet
w/ 6'-6" Vertical Riser (See STD D-17)

See bk7 pg 59

Searsburg - Wilmington
Drainage Sheet 13 of 27
New 42" 225+00 ℄ and LT.

SEARSBURG - WILMINGTON
NH-F010-1(18)

HIGHWAY FEDERAL AID SHEET
PLATE 3-FULL CROSS SECTION-FULL LINE
NATIONAL PRINTFAST
PRINTED IN U.S.A.

FINAL SURVEY — SURVEYED / PLOTTED / TEMPLATE / NOTE BOOK / NO. / DATE / BY / AREAS CHECKED

ORIGINAL SURVEY — SURVEYED / PLOTTED / TEMPLATE / NOTE BOOK / NO. / DATE / BY / AREAS CHECKED

228+00 E

204.30 Gr. BACKFILL for Structures

Pipe ((66'×2.5'×3.8')-(π11.5²/4 × 66'))/27 = 17.8 C.Y. JJE 9/18/03

M.W.H. 2/11/04

Pipe Tr. EXCAVATION = 70'/9 × 3.8' × 1/27 = 9.9 C.Y. JJE 6/20/03

Tr. Rock 23.5'×3.8'×1/27 = 3.3 C.Y. F.M. boulder

Tr. Earth 6.3 C.Y. JJE 6/26/03

6.6

M.W.H. 2/11/04

Total Tr. Rock = 4.2 + 3.3 = 7.5 C.Y. 7-2-04 BB

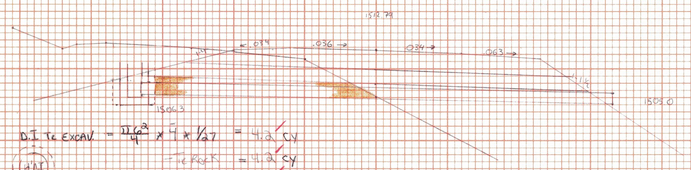

DI Tr. EXCAV = π4.6²/4 × 4 × 1/27 = 4.3 C.Y.

Tr. ROCK = 4.3 C.Y.

Tr. EARTH = 0.0 C.Y.

JJE 6/20/03

M.W.H. 2/11/04

228+00
NEW 18" CMEP (SL) X 66'
SEE DR. BK 3A PG 136

and Item Detail and Dr. Sh. #2 of 3

System fill in Fill

226+75
NEW 15" CMEP 40' Length

BK. 2A, Pg. 132 and Item Detail and Dr. Sh. #2 of 3

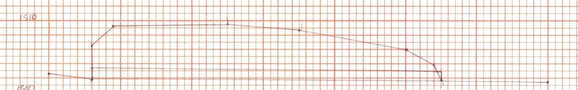

Tr. Rock = 6'×10.2'×1.5'/27 = 4.0 C.Y. JJE 6/27/03 (m.f.)

M.W.H. 2/11/04

225+25
REMOVAL 18" RCP
SEE BK 3A PG 136

REMOVAL 18" RCP
Tr. EARTH 3.0'×1.5'×1/27 = 17.2 C.Y. JJE 6/27/03

M.W.H. 2/11/04

and Item Detail and Dr. Sh. #2 of 3

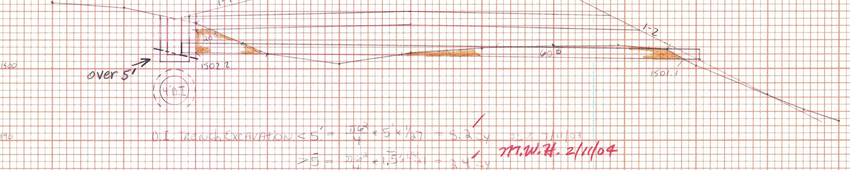

Pipe Trench EXCAVATION = ((60'+2')×3.8'×2.5')/27 = 11.3 C.Y. JJE 9/18/03

M.W.H. 2/11/04

204.30 Gr. BACKFILL for Structures

Pipe (70'×3.8'×2.5')-(π11.5²/4 × 70'))/27 = 20.0 C.Y. JJE 9/18/03

D.I. ((π6²/4 × 6')-(π4²/4 × 6'))/27 = 3.5 C.Y.

Total = 23.5 C.Y. (m.f.) JJE 9/18/03

ADDITIONAL D.I. FILL + 6.5 C.Y. (m.f.) = 14.7'×2'×6' 14.7' = dist. around circular DI

GRAND TOTAL = 30.0 C.Y. (m.f.) JJE 9/19/03

M.W.H. 2/11/04

D.I. Trench EXCAVATION < 5' → π6²/4 × 5' × 1/27 = 5.2 C.Y.

VS > 5' = (π4²/4 × 1.5') + (π6²/4 × 3.5') = 8.1 C.Y.

Tr. ROCK = 5.2 C.Y.

Tr. EARTH = 7.6 C.Y. JJE 9/18/03

M.W.H. 2/11/04 M.W.H. 2/11/04 Total Tr. Earth = 11.3 + 7.6 = 18.9 C.Y.

233+36
NEW 18" CMEP (SL) X 76'
SEE BK 3A PG 15
SEE DR. BK 3A PG 146

and Item Detail and Dr. Sh. #2 of 3

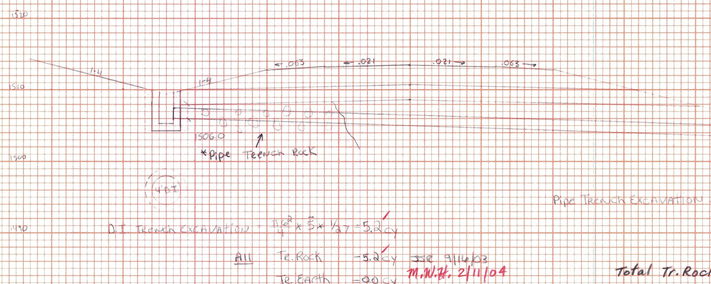

D.I. Trench EXCAVATION ≤ 5' → π6²/4 × 5' × 1/27 = 5.2 C.Y.

All Tr. Rock = 5.2 C.Y. JJE 9/16/03

Tr. EARTH = 9.0 C.Y.

M.W.H. 2/11/04

233+30
NEW 18" CMEP (SL) X 116'
SEE BK 3A PG 15
SEE DR. BK 3A PG 146

and Item Detail and Dr. Sh. #2 of 3

204.30 Granular BACKFILL for Structures ((98'×3.3'×2.5')-(π11.5²/4 × 98'))/27 = 25.2 C.Y.

D.I. 204.30 ((π6²/4 × 5')-(π4²/4 × 5'))/27 = 2.9 C.Y.

Total = 28.1 C.Y. JJE 7/16/03

M.W. 2/11/04

24LF ADDED 9/26/03 JJE

CORRECTED 10/1/03

613.0 Type I Stone PAD (10'×10'×1')/27 = 3.7 C.Y. (m.f.) JJE 9/26/03

M.W.H. 2/11/04

Pipe Trench EXCAVATION = 270'/9 × 3.8' × 1/27 = 38.0 C.Y. JJE 7/11/03

Tr. Rock 8.4 C.Y.

Total Tr. Earth = 29.6 C.Y. JJE 7/16/03

M.W.H. 2/11/04

M.W.H. 2/11/04

*Pipe Trench Rock = 60'/9 × 3.8' × 1/27 = 8.4 C.Y. JJE 9/16/03

M.W.H. 2/11/04

Total Tr. Rock = 5.2 + 8.4 = 13.6 C.Y.

Tr. EXCAVATION 350'/9 × 2.5' × 1/27 = 23.1 C.Y. JJE 11/20/03

M.W.H. 2/11/04

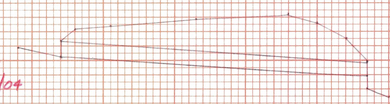

SEARSBURG - WILMINGTON

DRAINAGE SHEET 14 OF 27

225+25 REMOVAL 18" RCP
226+75 NEW 15" CMEP CC
228+00 NEW 18" CMEP
232+08 REMOVAL 24" CMP
233+30 NEW 18" CMEP
233+36 NEW 18" CMEP

SEARSBURG - WILMINGTON
NH-F010-1(118)

HIGHWAY FEDERAL AID SHEET
PLATE 3-FULL CROSS SECTION-FULL LINE
NATIONAL PRINTFAST
PRINTED IN U.S.A.

FINAL SURVEY — NOTE BOOK — NO. — SURVEYED — PLOTTED — TEMPLATE — AREAS — AREAS CHECKED — BY — DATE

ORIGINAL SURVEY — SURVEYED — PLOTTED — TEMPLATE — AREAS — AREAS CHECKED — BY — DATE

NO Ditch Paid

237+45
Remove CONC CULVERT
See Dr. Bk 2A pg 150 and Item Detail and Dr. Sh. #2 of 3

Conc. Culvert Removal Tr. Excavation = 2.85' x 5' x 1/27 = 53 cy
F.M. Tr. Rock = 15.0 cy 3SA 7/11/03 M.W.#. 2/11/04
Tr. Earth = 37.8 cy 3SA 7/11/03 M.W.#. 2/11/04

Trench Rock = 10' x 3' x 45'/27 = 15cy F.M.

238+30
Remove 18" CMP
DRIVE PIPE
See Dr. Bk 3B pg 15 and Item Detail and Dr. Sh. #2 of 3

System All in Fill

2+11 +10
New 18" CMEP
DRIVE PIPE
See Dr. Bk 2D pg 14 and Item Detail and Dr. Sh. #2 of 3

NO Ditch Paid

236+70
Remove 15" CMP
DRIVE PIPE
See Dr. Bk 2A pg 150 and Item Detail and Dr. Sh. #2 of 3

238+50
New 48" CSP x 112'
See Dr. Bk 2A pg 156 and Item Detail and Dr. Sh. #2 of 3

304.30 cy Backfill for Structures
((10' * 6.1' * 6.0') - (π 4'²/4 * 10')/27 = 97.7 cy 3SA 6/19/03 M.W.#. 2/11/04

1502.32

1/1.0

N90.5

2+11 +10 Stone Fill
10' x 10' x 3'/27 = 7.4 cy 7/10/03 3SK
2/11/04 M.W.#.

W = Pipe + 10 Stone pad/2 = 30 width of trench

Trench Excavation for Pipe + Stone Pad at Inlet
Tr. Exc 125 cy x 80 x 1/27 = 370 cy 3SK 6/18/03 M.W.#. 2/11/04
Tr. Rock - 00 cy
Tr. Earth =37.0 cy 7/10/03 3SK M.W.#. 2/11/04

238+30
New 48" CSP x 112'
See Dr. Bk 2A pg 156 and Item Detail and Dr. Sh. #2 of 3

304.30 cy Backfill for Structures
((10' * 6.1' * 6.0') - (π 4'²/4 * 10')/27 = 97.7 cy 3SA 6/19/03 M.W.#. 2/11/04

SEARSBURG - WILMINGTON
DRAINAGE SHEET 15 OF 27

236+70	Remove 15" CMP DRIVE
237+45	Remove CONC CULVERT
238+30	Remove 8" CMP + DRIVE
238+50	NEW 48" CSP
239+25	Remove 18" CMP, DRIVE
241+10	NEW 18" CMEP, DRIVE

SEARSBURG - WILMINGTON
NH-F010-1(19)

HIGHWAY FEDERAL AID SHEET
PLATE 3-FULL CROSS SECTION-FULL LINE
NATIONAL PRINTRAST
PRINTED IN U.S.A.

D.I. Gr. Backfill 204.30 = $((\frac{\pi 6^2}{4} \times 5) - (\frac{\pi 4^2}{4} \times 5))/27 = 2.9$ cy JSR 9/4/03 M.W.H. 2/12/04

Pipe Gr. Backfill 204.30 = $((82' \times 3.8' \times 2.5') - (\frac{\pi 2.5^2}{4} \times 82'))/27 = 23.5$ cy JSR 9/4/03 M.W.H. 2/12/04

Pipe Tr. Excavation < 5' = $360^{\square} \times 3.8' \times 1/27 = 50.1$ cy
> 5' = $160^{\square} \times 3.8' \times 1.5/27 = 33.8$ cy
Tr. Rock = 0.0 cy
Tr. Earth = 83.9 cy

Total Trench Earth = 83.9 + 6.0 = 89.9 C.Y. ✓
Total Gran. Bkfl. Struct. = 23.5 + 2.9 = 26.4 c.y. ✓ B.B. 4-5-04

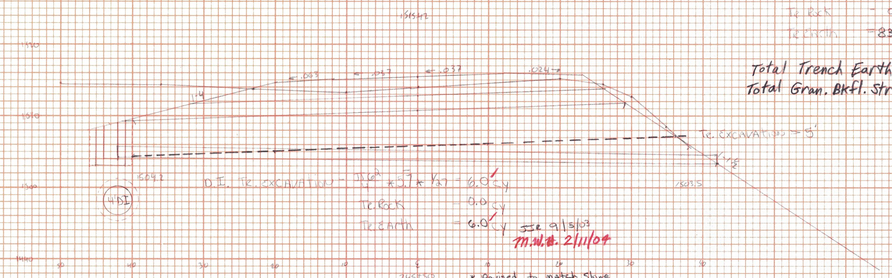

D.I. Tr. Excavation = $\frac{\pi 6^2}{4} \times 5.7 \times 1/27 = 6.0$ cy
Tr. Rock = 0.0 cy
Tr. Earth = 6.0 cy JSR 9/5/03 M.W.H. 2/11/04

* Revised to match Slope
New 18" CPEP (SL) 88 LF 42 LT 46 RT
See Bk 7-A pg 26
See Dr. Bk 2B pg 22 and Item Detail and Dr. Sh. #2 of 3

D.I. Gr. Backfill 204.30 = $((\frac{\pi 6^2}{4} \times 8') - (\frac{\pi 4^2}{4} \times 8'))/27 = 4.7$ cy JSR 9/4/03 M.W.H. 2/11/04

D.I. Tr. Excavation < 5' = $\frac{\pi 6^2}{4} \times 5 \times 1/27 = 5.2$ cy
> 5' = $\frac{\pi 6^2}{4} \times 1 \times \frac{1.5}{27} = 1.6$ cy
Tr. Rock = 0.0 cy
Tr. Earth = 6.8 cy

Pipe Tr. Exc. < 5' $210^{\square} \times 3.8 \times 1/27 = 29.6$ C.Y. ✓
> 5' $50^{\square} \times 1.5 \times 3.8 \times 1/27 = 10.5$ c.y. ✓
Tr. Earth = 40.1 cy. ✓ M.W.H. 2/11/04 B.B. 4-5-04

Pipe Gr. Backfill 204.30 = $((70' \times 3.8' \times 2.5') - (\frac{\pi 1.5^2}{4} \times 70'))/27 = 20.0$ cy JSR 9/4/03 M.W.H. 2/11/04

Total Trench Earth = 40.1 + 6.8 = 46.9 C.Y. ✓
Total Gran. Bkfl. Struct. = 20.0 + 4.7 = 24.7 c.y. ✓

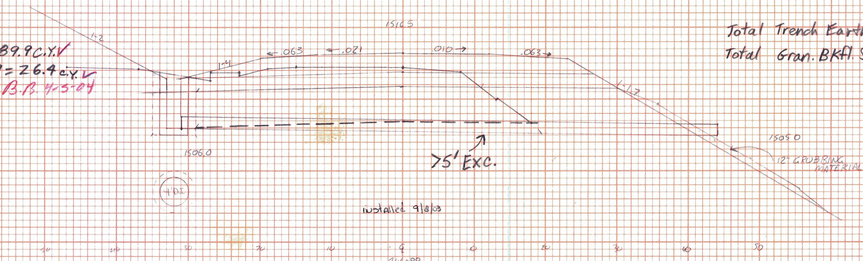

Installed 9/8/03

246+88
Replace 15" RCP w/ 18" CPEP (SL) X 72'
See Bk 7-A pg 29
See Dr. Bk. 2B pg 30 and Item Detail and Dr. Sh. #2 of 3

Tr. Earth Removal 15" $(240^{\square} \times 1.5')/27 = 13.3$ cy JSR 10/9/03 M.W.H. 2/11/04
Trench Rock-DI $(4' \times 4' \times 4')/27 = 2.4$ cy (M.F.) 10/9/03 JSR M.W.H. 2/11/04

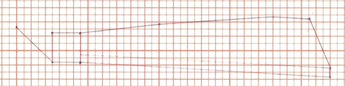

246+56
Remove 15" RCP
See Bk 7A pg 25
See Dr. Bk 2B pg 20 and Item Detail and Dr. Sh. #2 of 3

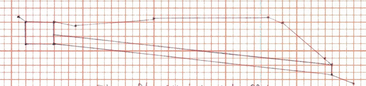

* No Qty's Rd All in Subgrade

246+10
Remove 15" RCP
See Bk 7A pg 28
See Dr. Bk 2B pg 28 and Item Detail and Dr. Sh. #2 of 3

* Note 204.20 Tr. Earth (M.F.)
Trench Earth calculated from Bottom Special Ditch to Bottom of 15" CPEP Trench
Tr. Excav. $175^{\square} \times 3.5' \times 1/27 = 22.7$ cy
Tr. Rock = 0.0 cy
Tr. Earth = 22.7 cy JSR 9/10/03 M.W.H. 2/11/04

204.30 Granular Backfill Structures (M.F.)
$((70' \times 3.5' \times 2.3') - (\frac{\pi 1.5^2}{4} \times 70'))/27 = 17.4$ cy JSR 9/10/03 M.W.H. 2/11/04

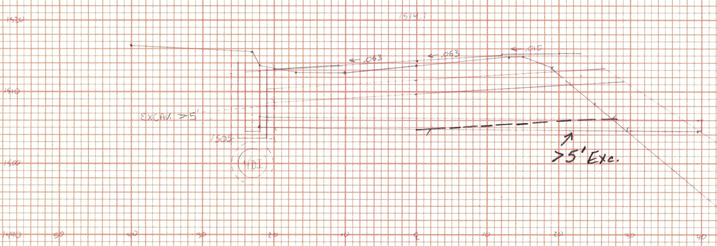

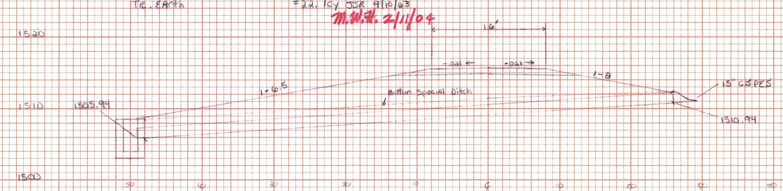

246+00
New 15" CPEP (SL) Drive X 76'
See Dr. Bk 2B pg 26 and Item Detail and Dr. Sh. #2 of 3

244+05 New 18" CPEP (SL) X 64'
See Bk 7A pg 24 See Dr. Bk 2B pg 16 and Item Detail and Dr. Sh. #2 of 3

D.I. Trench Excav. < 5' = $\frac{\pi 6^2}{4} \times 5 \times 1/27 = 5.2$ cy
> 5' = $\frac{\pi 6^2}{4} \times 4 \times 1/27 = 4.2$ cy
Tr. Rock = 0.0 cy
Tr. Earth = 9.4 cy JSR 9/4/03 M.W.H. 2/11/04

D.I. Gr. Backfill 204.30 = $((\frac{\pi 6^2}{4} \times 4') - (\frac{\pi 4^2}{4} \times 4'))/27 = 2.8$ cy JSR 9/4/03 M.W.H. 2/11/04

Pipe Gr. Backfill 204.30 = $((62' \times 3.8' \times 3.5') - (\frac{\pi 1.5^2}{4} \times 62'))/27 = 17.8$ cy JSR 9/4/03 M.W.H. 2/11/04

Pipe Tr. Excavation < 5' = $200^{\square} \times 3.8' \times 1/27 = 28.1$ C.Y. ✓
> 5' $25^{\square} \times 1.5 \times 3.8 \times 1/27 = 5.3$ C.Y. ✓
Tr. Earth = 33.4 C.Y. ✓ M.W.H. 2/11/04

Total Tr. Earth = 33.4 + 9.4 = ~~42.4 c.y.~~ 42.8 cy ✓ MW 4/5/04
Total Gran. Bkfl. Struct. = 17.8 + 2.3 = 20.1 c.y. ✓ B.B. 4-5-04

SEARSBURG - WILMINGTON
DRAINAGE SHEET 16 OF 27

244+05	NEW 18" CPEP
244+56	REMOVE 15" RCP
245+50	NEW 18" CPEP
246+00	NEW 15" CPEP, DRIVE
246+10	REMOVE 15" RCP
246+88	REPLACE 15" RCP w/ 18" CPEP

SEARSBURG - WILMINGTON
NH-F010-1(18)

FINAL SURVEY — NOTE BOOK NO. — SURVEYED — PLOTTED — TEMPLATE — AREAS — AREAS CHECKED — BY — DATE

ORIGINAL SURVEY — NOTE BOOK NO. — SURVEYED — PLOTTED — TEMPLATE — AREAS — AREAS CHECKED — BY — DATE

HIGHWAY FEDERAL AID SHEET
PLATE 3-FULL CROSS SECTION-FULL LINE
NATIONAL PRINTFAST
PRINTED IN U.S.A.

FINAL SURVEY — SURVEYED / PLOTTED / TEMPLATE / AREAS / AREAS CHECKED — NOTE BOOK — NO. — BY — DATE

ORIGINAL SURVEY — SURVEYED / PLOTTED / TEMPLATE / AREAS / AREAS CHECKED — NOTE BOOK — NO. — BY — DATE

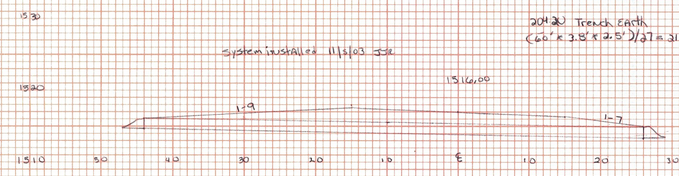

System installed 11/3/03 JSE

204.20 Trench Earth
(60' x 3.8' x 2.5')/27 = 31.1 cy (Cmpt.) JSE
M.W.#. 3/9/04

258+65 LT
18" x 70' CPEP(CW)
See Dr. BK 28 pg 48 and Item Detail and Dr. Sh. #2 of 3

D.I
204.30 Gr. Backfill Structures
((π/4 x 5²) - (π/4 x 5²))/27 = 2.9 cy JSE 11/3/03
M.W.#. 3/9/04

Pipe
204.30 Gr. Backfill Structures
((100' x 3.8' x 0.5') - (π/4 x 5² x 100))/27 = 28.6 cy JSE 11/3/03
M.W.#. 3/9/04

Total Gr. Backfill for Structures = 2.9 + 28.6 = 31.5 C.Y.

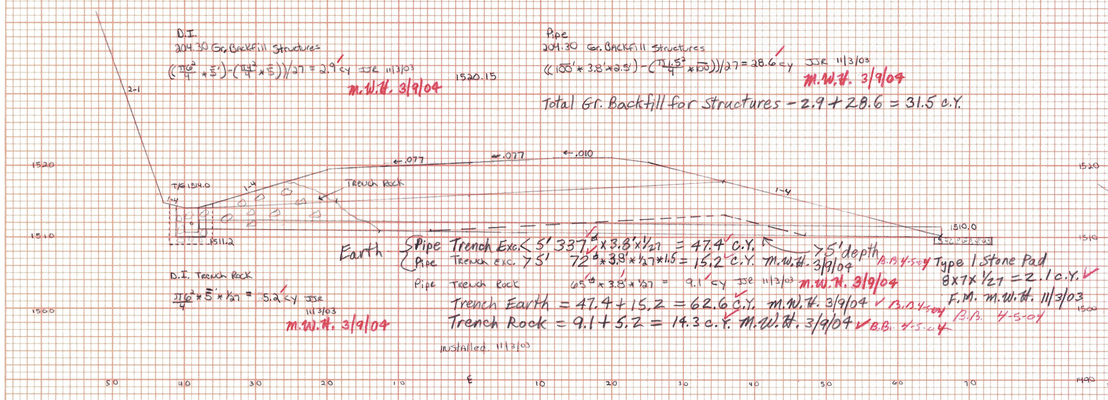
1520.15
2:1
1520
1515
1510
TR 1514.0
TRENCH ROCK
.077
.077
.010
1:4
1:4
1:4

FINAL SURVEY — DATE / BY / SURVEYED / PLOTTED / TEMPLATE / AREAS / NOTE BOOK / AREAS CHECKED / NO.

ORIGINAL SURVEY — DATE / BY / SURVEYED / PLOTTED / TEMPLATE / AREAS / NOTE BOOK / AREAS CHECKED / NO.

Pipe Tr. Excavation = 100 × 3.0 × 1/27 = 22.2 cy
Tr. Rock — 0.0 cy
Tr. Earth — 22.2 cy 5/20/03 JJR
DI — 10.4 c.y. M.W.H. 3/12/04
Total Tr. Earth — 32.6 c.y.

D.I. Excavation = 6' 12/12 × 6 × 1/27 = 3.8 cy
6' 12/12 × 3.5 × 1/27 = 5.8 cy
Tr. Rock — 0.0 cy
= 10.4 cy 5% 7/14/03
M.W.H. 3/12/04

Inlet Grate Adj. (mE)
10 × 10 × 1/27 = 3.7 cy 5/20/03 JJR
M.W.H. 3/9/04

Gran. Bkfl. for Struct.
204.30 Pipe (<<54 × 3.8 × 2.5) − (11/12 × 54))/27 = 15.5 cy 5/20/03 JJR
DI ((11/12 × 6.3) − (11/12 × 8.3))/27 = 4.8 cy 5/20/03
Total = 20.3 c.y. 7/14/03
M.W.H. 3/9/04

267+67
REPLACE 15" SCP w/ 18" CPEP (SL) × 60'
SKEW 76° RR
Bk 7A pg 39
REVISED 267+62
See Dr. Bk 20 pg 72 and Item Detail and Dr. Sh. #2 of 3

T.E. for D.I < 5' — 11/4 × 5' × 1/27 = 5.2 cy
T.E. for D.I > 5' — 11/4 × 68' × 1.5 × 1/27 = 10.7 cy
Total T.E. D.I = 15.9 cy 5/20/03 JJR
M.W.H. 3/12/04

T.E. for Pipe — Trench Rock: 455 lb × 3.8 × 1/27 = 64.0 cy 5/20/03 JJR

Total T.E. = 64.0 cy 5/20/03 JJR
DI + 15.9 c.y. M.W.H. 3/12/04
79.9 c.y.

18' × 6' × 1/27 = 4.0 c.y.
4 cy of 7+67 TE
M.E. 5/16/03 CMR
M.W.H. 3/12/04

New 18" x 104' CPEP (SL)
259+70 60° SKEW OF

Total Trench (340 Dia. in. × 3.8 in.) × (6' × 6' × 4') = 53.2 cy
Trench Rock 13.5' × 3.5' × 3.5' = 165.9 ft³ = 6.1 cy
FIELD MEASURED
TOTAL TRENCH EARTH = 47.1 cy

TRENCH ROCK (13.5' × 11' × 7.5') FIELD MEASURED

Pipe installed 8/15/02 CWG

M.W.H. 3/12/04

See Bk. #28, Page 54
see also Item Detail and Dr. #2 of 3

2644+36
New 18" x 116' CPEP SL
1/16
Bk 7A pg 38
see Dr. Bk 28 pg 68 and Item Detail and Dr. Sh. #2 of 3

Scale: 1" = 10'

Seaford — Wilmington
Drainage Sheet 18 of 27

New 18"	259+70	SKEWED (Not drawn)
New 18"	262+80	DRIVE PIPE (Not drawn)
Remove 15"	265+08	CMP DRIVE PIPE (Not drawn)
New 18"	264+36	
Replace 15" w/ 18" CPEP SKEW 76° RR	267+62	

DEARBORN - WILMINGTON
NHE HORSEY (DE)

80

HIGHWAY FEDERAL AID SHEET
PLATE 3-FULL CROSS SECTION-FULL LINE
NATIONAL PRINTFAST
PRINTED IN U.S.A.

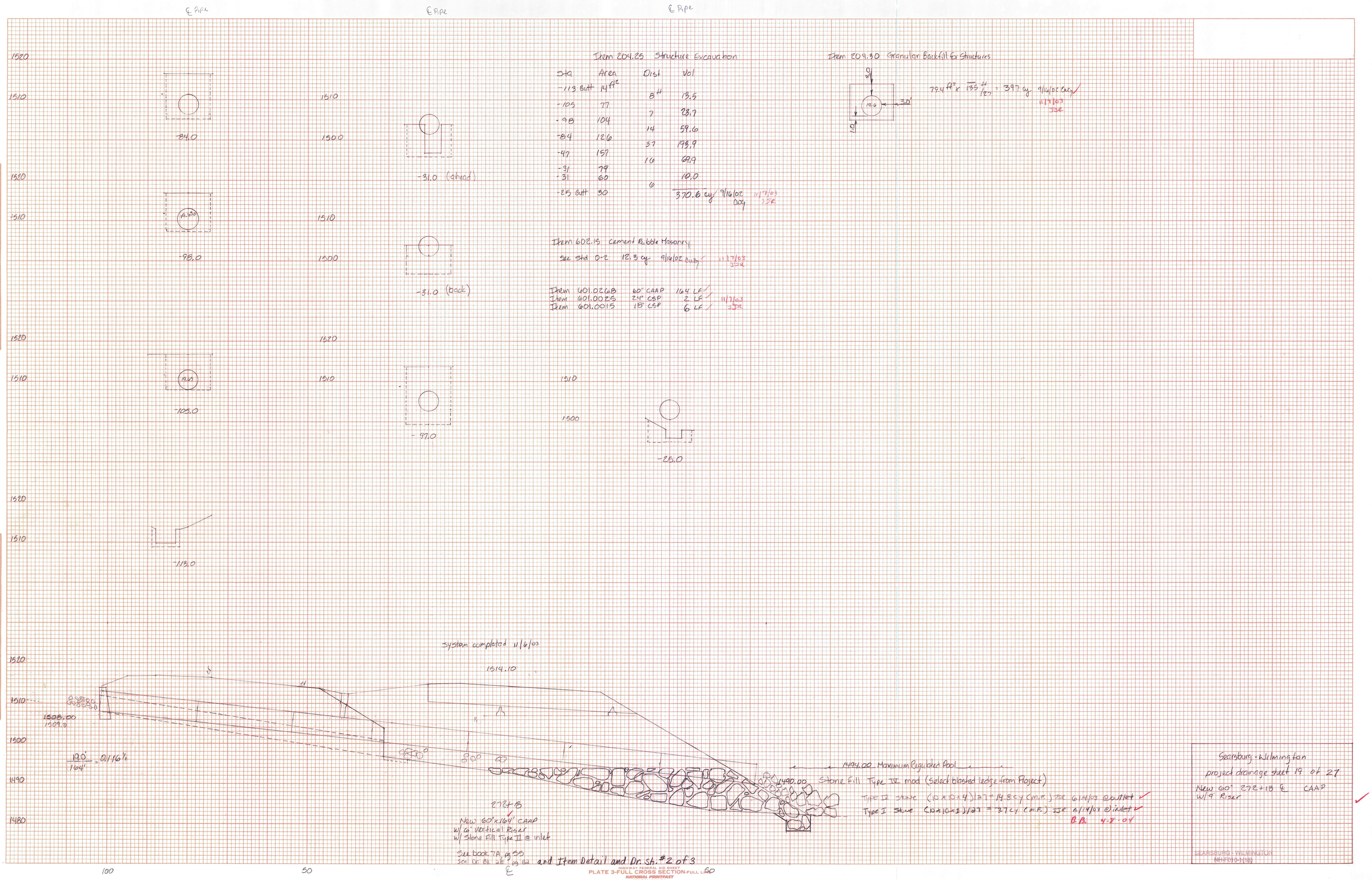

Item 204.25 Structure Excavation

Sta	Area	Dist	Vol
-113 Butt	14 ft²		
		8 ft	13.5
-105	77		
		7	23.7
-98	104		
		14	59.6
-84	126		
		37	193.9
-47	157		
		16	69.9
-31	79		
-31	60		10.0
		6	
-25 Butt	30		370.6 cy 9/16/02 DOG 11/7/03 JJR

Item 602.15 Cement Rubble Masonry

See Std 0-2 12.3 cy 9/16/02 CWG 11/7/03 JJR

Item 601.0268	60" CAAP	164 LF	
Item 601.0025	24" CSP	2 LF	11/7/03 JJR
Item 601.0015	18" CSP	6 LF	

Item 204.30 Granular Backfill for Structures

3.0
19.6
3.0'
1.0

79.4 ft² x 135 ft/27 = 397 cy 9/16/02 CWG 11/7/03 JJR

Searsburg - Wilmington
project drainage sheet 19 of 27
New 60" 272+18 ℄ CAAP
w/ 9' Riser

SEARSBURG - WILMINGTON
NH-F010-1(18)

FINAL SURVEY — SURVEYED, PLOTTED, TEMPLATE, AREAS, AREAS CHECKED — NOTE BOOK NO. — BY — DATE

ORIGINAL SURVEY — SURVEYED, PLOTTED, TEMPLATE, AREAS, AREAS CHECKED — NOTE BOOK NO. — BY — DATE

HIGHWAY FEDERAL AID SHEET
PLATE 3-FULL CROSS SECTION-FULL LINE
NATIONAL PRINTFAST
PRINTED IN U.S.A.

FINAL SURVEY
NOTE BOOK NO.
SURVEYED
PLOTTED
TEMPLATE
AREAS
AREAS CHECKED
BY
DATE

ORIGINAL SURVEY
NOTE BOOK NO.
SURVEYED
PLOTTED
TEMPLATE
AREAS
AREAS CHECKED
BY
DATE

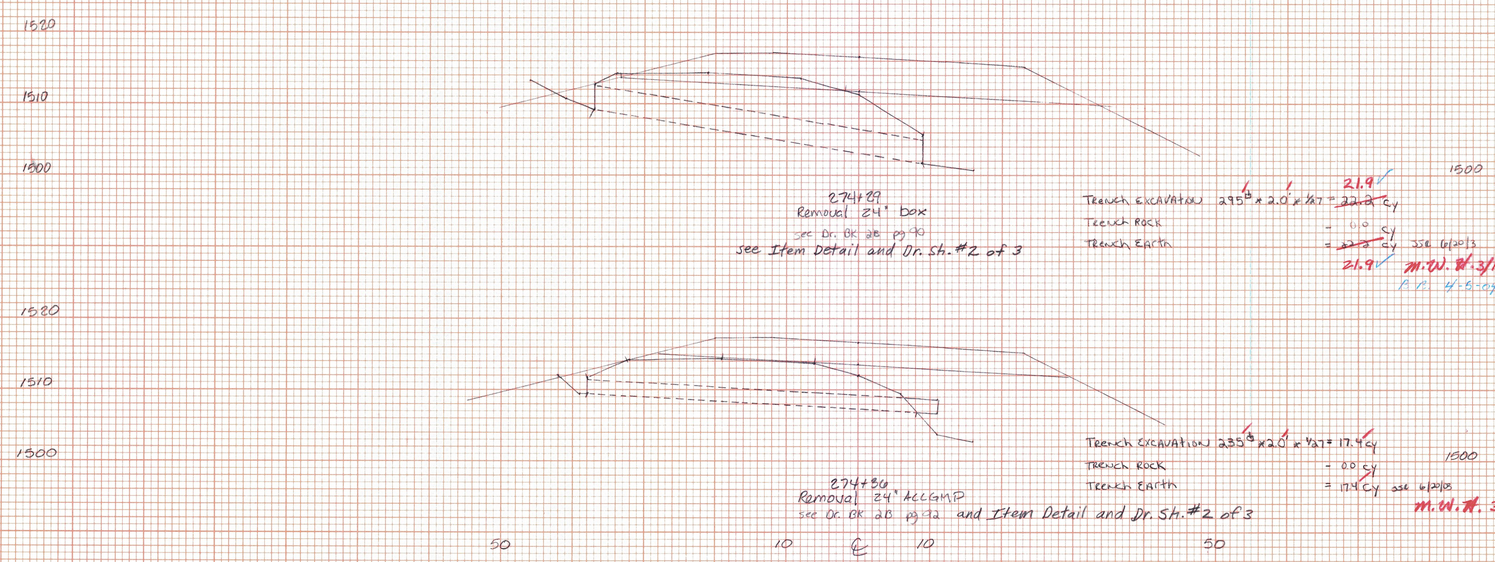

274+29
Removal 24" box
see Dr. Bk 28 pg 90
see Item Detail and Dr. Sh. #2 of 3

Trench Excavation 295 ⌀ x 2.0' x 1/27 = ~~22.2~~ 21.9 cy
Trench Rock = 0.0 cy
Trench Earth = ~~22.2~~ 21.9 cy SSE 6/20/3
M.W.H. 3/12/04
P.R. 4-5-04

274+36
Removal 24" ACCGMP
see Dr. Bk 28 pg 92 and Item Detail and Dr. Sh. #2 of 3

Trench Excavation 235 ⌀ x 2.0' x 1/27 = 17.4 cy
Trench Rock = 0.0 cy
Trench Earth = 17.4 cy SSE 6/20/03
M.W.H. 3/12/04

Searsburg - Wilmington
Drainage sheet 20 of 27
Removal 274+36
Removal 274+29
New/Removal 272+18 / 272+25
see also Sh. #19

SEARSBURG - WILMINGTON
NH-F010-1(18)

HIGHWAY FEDERAL AID SHEET
PLATE 3-FULL CROSS SECTION-FULL LINE
NATIONAL PRINTFAST
PRINTED IN U.S.A.

FINAL SURVEY
NOTE BOOK NO.
SURVEYED
PLOTTED
TEMPLATE
AREAS
AREAS CHECKED
BY
DATE

ORIGINAL SURVEY
NOTE BOOK NO.
SURVEYED
PLOTTED
TEMPLATE
AREAS
AREAS CHECKED
BY
DATE

204.30 Gr. Backfill Structures
((96'x4.8'x3.5') - (~~72.5~~ x 96'))/27 = 42.3 cy SJR 7/15/03
M.W.H. 3/15/04

Note:
Installed
New 30" CAAP Paid as Option "OA"
Change order to be submitted for 30" CAAP option 6/9/03 JJR

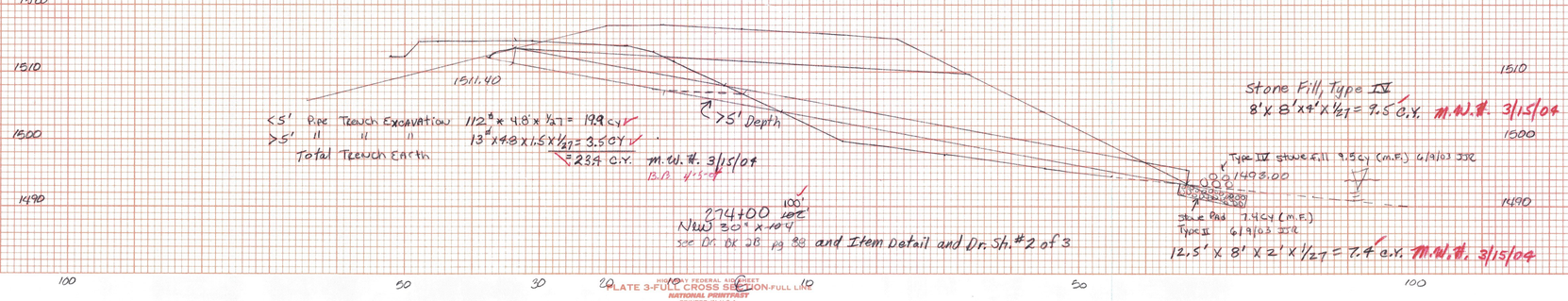

<5' Pipe Trench Excavation 112# x 4.8' x 1/27 = 19.9 cy
>5' " " " 13# x 4.8 x 1.5 x 1/27 = 3.5 cy
Total Trench Earth = 23.4 C.Y. M.W.H. 3/15/04
B.B. 4-5-04

274+00 ~~102'~~ 100'
New 30" x ~~104~~
see Dr. Bk 28 pg 88 and Item Detail and Dr. Sh. #2 of 3

Stone Fill, Type IV
8' x 8' x 4' x 1/27 = 9.5 C.Y. M.W.H. 3/15/04

Type IV stone fill 9.5 cy (m.f.) 6/9/03 JJR

Stone Pad 7.4 cy (m.f.)
Type II 6/9/03 JJR
12.5' x 8' x 2' x 1/27 = 7.4 c.y. M.W.H. 3/15/04

Searsburg - Wilmington
Drainage sheet 21 of 27
New 30" 274+00

SEARSBURG - WILMINGTON
NH-F010-1(18)

HIGHWAY FEDERAL AID SHEET
PLATE 3-FULL CROSS SECTION-FULL LINE
NATIONAL PRINTFAST
PRINTED IN U.S.A.

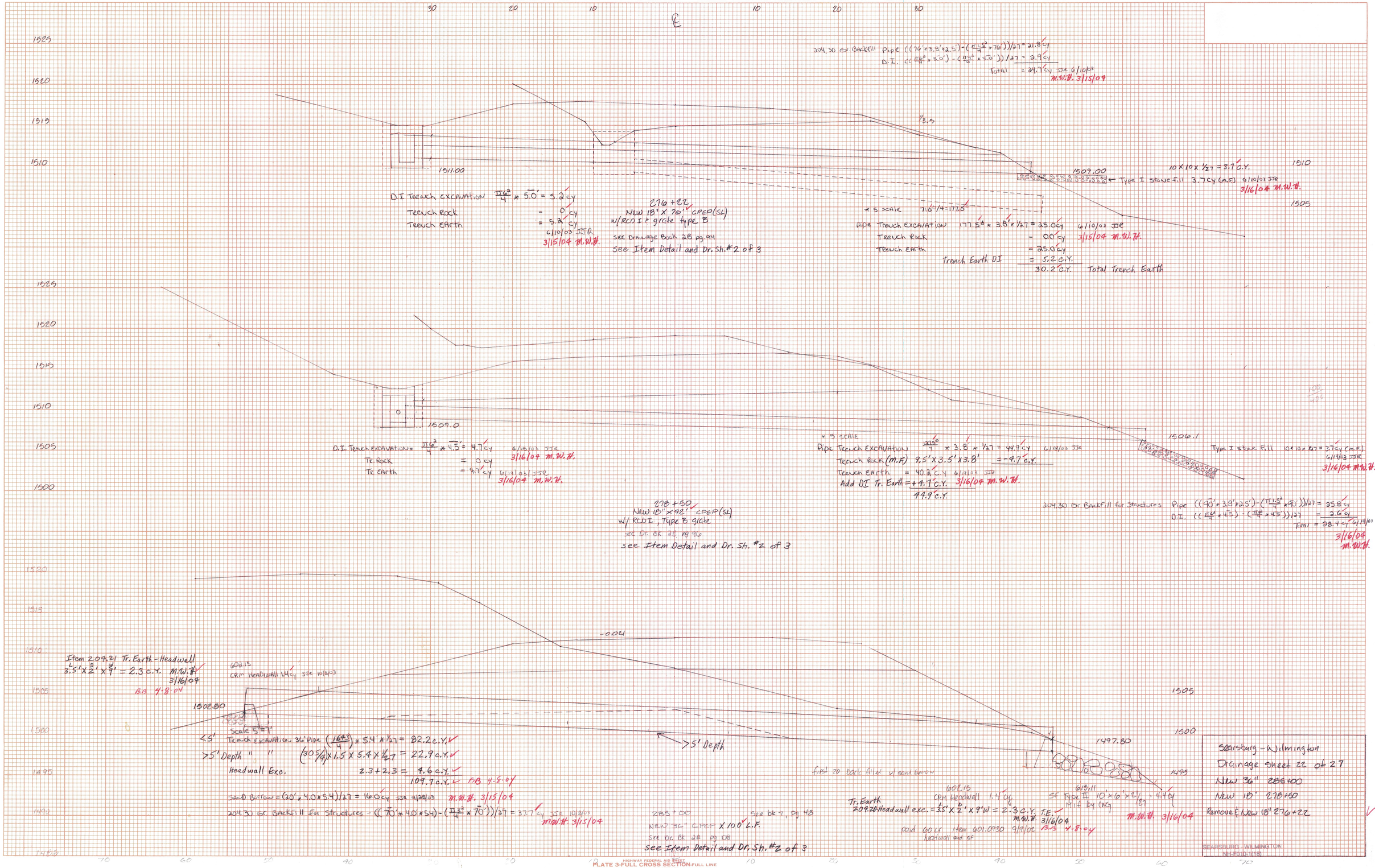

204.30 Gr. Backfill Pipe $((76' \times 3.8' \times 2.5') - (\frac{\pi 1.5^2}{4} \times 76'))/27 = 21.8$ cy
D.I. $((\frac{\pi 6^2}{4} \times 5.0') - (\frac{\pi 4^2}{4} \times 5.0'))/27 = 2.9$ cy
Total = 24.7 cy JJR 6/10/03
M.W.H. 3/15/04

10 x 10 x 1/27 = 3.7 c.y.
← Type I stone fill 3.7 cy (m.F.) 6/10/03 JJR
3/16/04 M.W.H.

D.I Trench excavation $\frac{\pi 6^2}{4} \times 5.0' = 5.2$ cy
Trench Rock - 0 cy
Trench Earth = 5.2 cy
6/10/03 JJR
3/15/04 M.W.H.

276+22
New 18" x 76' CPEP (SL)
w/ RCD I & grate type B
see Drainage Book 28 pg 94
See Item Detail and Dr. Sh. #2 of 3

* 5 scale 7.6'/4 = 177.5'
Pipe Trench excavation 177.5' x 3.8' x 1/27 = 25.0 cy 6/10/03 JJR
Trench Rock - 0.0 cy 3/15/04 M.W.H.
Trench Earth = 25.0 cy
Trench Earth DI = 5.2 c.y.
30.2 c.y. Total Trench Earth

D.I. Trench excavation = $\frac{\pi 6^2}{4} \times 4.5' = 4.7$ cy 6/18/03 JJR
Tr. Rock = 0 cy 3/16/04 M.W.H.
Tr. Earth = 4.7 cy 6/19/03 JJR
3/16/04 M.W.H.

* 5 scale
Pipe Trench excavation $\frac{127.5^2}{4} \times 3.8' \times 1/27 = 44.9$ cy 6/18/03 JJR
Trench Rock (m.F.) 9.5' x 3.5' x 3.8' = -4.7 c.y.
Trench Earth = 40.2 c.y. 6/19/03 JJR
Add DI Tr. Earth = +4.7 c.y. 3/16/04 M.W.H.
44.9 c.y.

Type I stone fill 10 x 10 x 1/27 = 3.7 cy (m.F.)
6/19/03 JJR
3/16/04 M.W.H.

278+50
New 18" x 92' CPEP (SL)
w/ RCD I, Type B grate
see Dr. Bk 28 pg 96
see Item Detail and Dr. Sh. #2 of 3

204.30 Gr. Backfill for Structures Pipe $((90' \times 3.8' \times 2.5') - (\frac{\pi 1.5^2}{4} \times 90'))/27 = 25.8$ cy
D.I. $((\frac{\pi 6^2}{4} \times 4.5') - (\frac{\pi 4^2}{4} \times 4.5'))/27 = 2.6$ cy
Total = 28.4 cy 6/19/03
3/16/04 M.W.H.

Item 209.21 Tr. Earth - Headwall
$3.5' \times 2' \times 9' = 2.3$ c.y. M.W.H. 3/16/04
B.B. 4-8-04

602.15
CRM Headwall 1.4 cy JJR 10/8/03

Scale 5' = 1'
<5' Trench excavation 36" Pipe $(\frac{1643}{4}) \times 5.4' \times 1/27 = 82.2$ c.y.
>5' Depth " " $(305/4) \times 1.5 \times 5.4 \times 1/27 = 22.9$ c.y.
Headwall Exc. 2.3 + 2.3 = 4.6 c.y.
109.7 c.y. B.B. 4-8-04

Sand Borrow = (20' x 4.0 x 5.4)/27 = 16.0 cy JJR 9/28/03 M.W.H. 3/15/04
204.30 Gr. Backfill for Structures - $((70' \times 4.0' \times 5.4) - (\frac{\pi 3^2}{4} \times 70'))/27 = 37.7$ cy JJR 10/8/03
M.W.H. 3/15/04

>5' Depth

first 20 back filled w/ sand borrow

285+00
New 36" CPEP x 100' L.F.
See Dr. Bk 28 pg 108
See bk 7, pg 48
See Item Detail and Dr. Sh. #2 of 3

Tr. Earth
209.20 Headwall exc. = $3.5' \times 2' \times 9'$ w = 2.3 c.y. T.E.
M.W.H. 3/16/04
paid 60 LF item 601.0930 9/9/02 B.B. 4-8-04
headwall and SF

602.15
CRM Headwall 1.4 cy

618.11
SF Type II 10' x 6' x 2'/27 = 4.4 cy
Mif by CWG
M.W.H. 3/16/04

Searsburg - Wilmington
Drainage sheet 22 of 27
New 36" 285+00
New 18" 278+50
Remove & New 18" 276+22

SEARSBURG - WILMINGTON
NH-F010-1(18)

FINAL SURVEY — SURVEYED, PLOTTED, TEMPLATE, AREAS, AREAS CHECKED — NOTE BOOK NO. — BY — DATE

ORIGINAL SURVEY — SURVEYED, PLOTTED, TEMPLATE, AREAS, AREAS CHECKED — NOTE BOOK NO. — BY — DATE

HIGHWAY FEDERAL AID SHEET
PLATE 3-FULL CROSS SECTION-FULL LINE
NATIONAL PRINTFAST
PRINTED IN U.S.A.

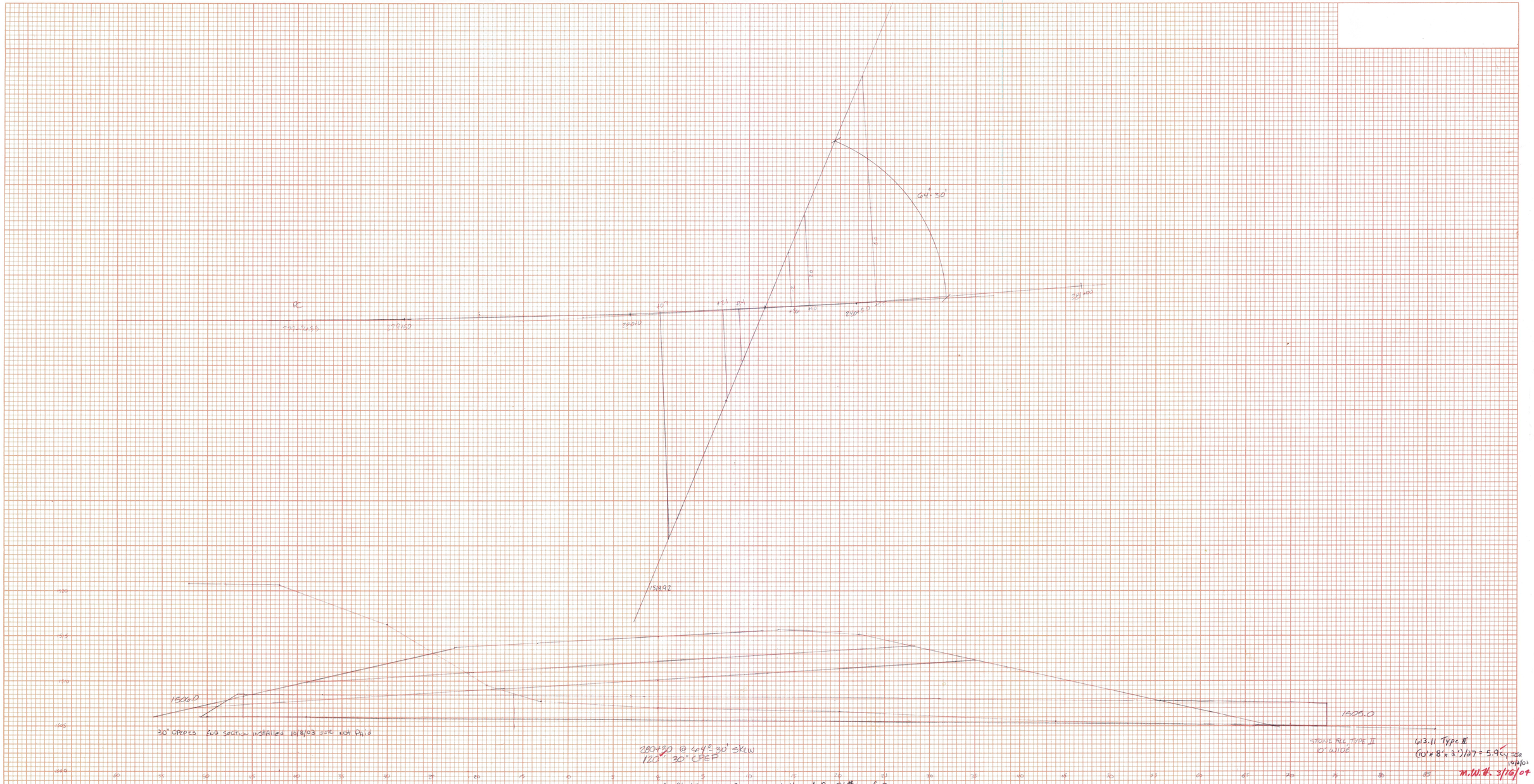

613.11 Type II
(10' x 8' x 2')/27 = 5.9 cy JJR 10/2/03
M.W.H. 3/16/04

see Dr. Bk 2B pg 100 & Item Detail and Dr. Sh. #2 of 3

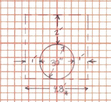

* INCLUDES CORRUGATION

TOTAL TRENCH (132.5 ft² x 4.9 ft) + (7.5 ft² x 4.9 ft) = 25.4 cy
TRENCH ROCK = 0.0 cy
TOTAL TRENCH EARTH 25.4 cy JJR 10/2/03
M.W.H. 3/16/04

PAID

→ 30" CPEP
90' 8/28/02 CT
paid 30' 10/2/03 JJR

→ TRENCH EARTH
66.0 ft² x 4.9' = 12.0 cy 8/28/02 CT
paid 13.4 cy 10/2/03 JJR
see calculation on left.

→ SAND BORROW
17.4 ft² x 25' = 16.1 cy 8/28/02 CT
3.55' x 4.9' = 17.4 ft²
M.W.H. 3/16/04

204.30 Gr. Backfill structures
((30' x 4.9' x 3.5') - (π 2.5²/4 x 30'))/27 = 13.6 cy JJR 10/2/03
M.W.H. 3/16/04

SEARSBURG - WILMINGTON
DRAINAGE SHEET 23 OF
NEW 280+30 30" CPEP
SKEWED 64°30' Lt

SEARSBURG - WILMINGTON
NH-F010-1(18)

FINAL SURVEY
NOTE BOOK NO.
SURVEYED
PLOTTED
TEMPLATE
AREAS
AREAS CHECKED
BY
DATE

ORIGINAL SURVEY
NOTE BOOK NO.
SURVEYED
PLOTTED
TEMPLATE
AREAS
AREAS CHECKED
BY
DATE

HIGHWAY FEDERAL AID SHEET
PLATE 3-FULL CROSS SECTION-FULL LINE
NATIONAL PRINTFAST
PRINTED IN U.S.A.

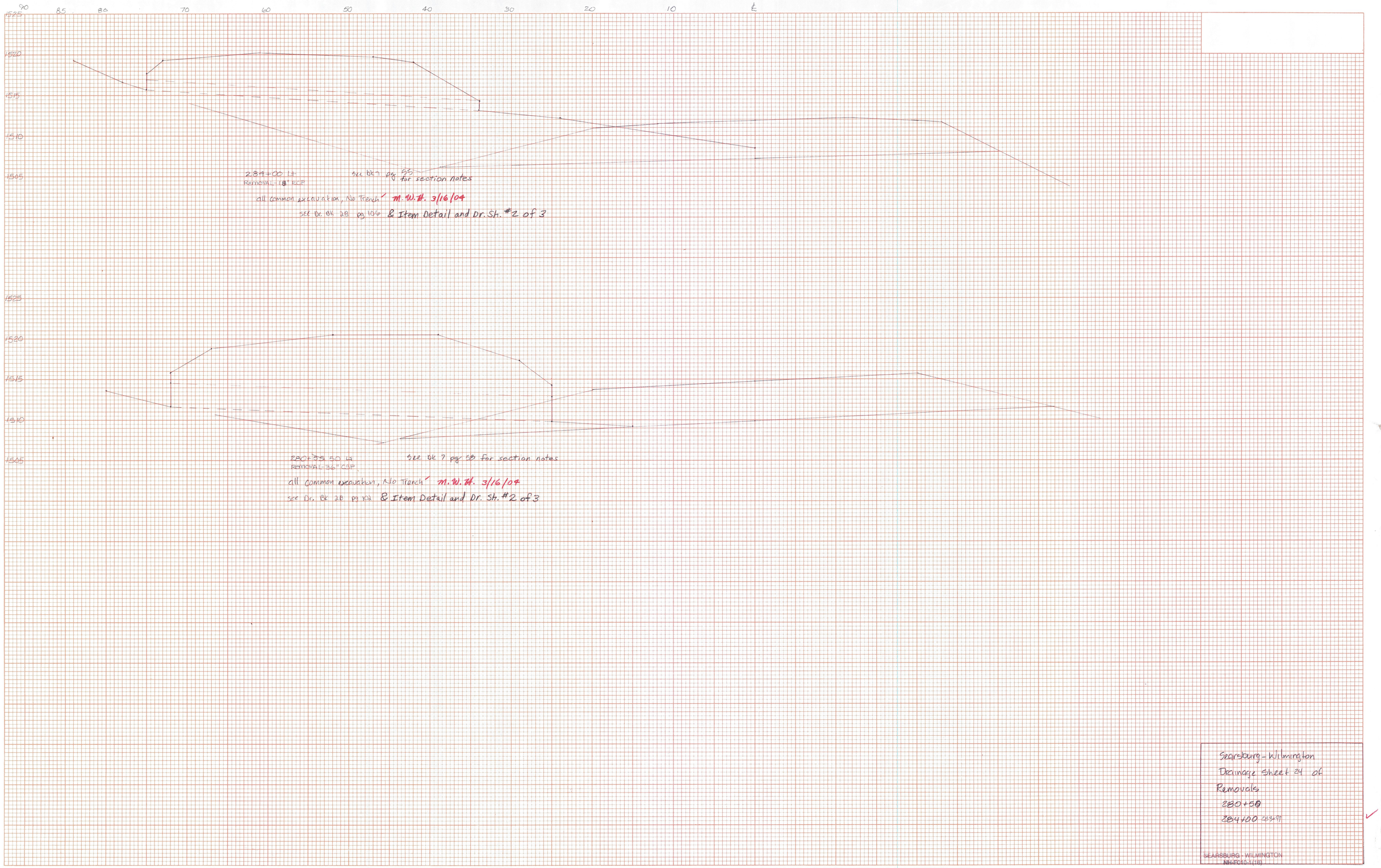

Searsburg - Wilmington
Drainage Sheet 24 of
Removals
280+50
284+00 283+99

SEARSBURG - WILMINGTON
NH-F010-1(18)

FINAL SURVEY
NOTE BOOK NO.
SURVEYED
PLOTTED
TEMPLATE
AREAS
AREAS CHECKED
BY
DATE

ORIGINAL SURVEY
NOTE BOOK NO.
SURVEYED
PLOTTED
TEMPLATE
AREAS
AREAS CHECKED
BY
DATE

HIGHWAY FEDERAL AID SHEET
PLATE 3-FULL CROSS SECTION-FULL LINE
NATIONAL PRINTPAST
PRINTED IN U.S.A.

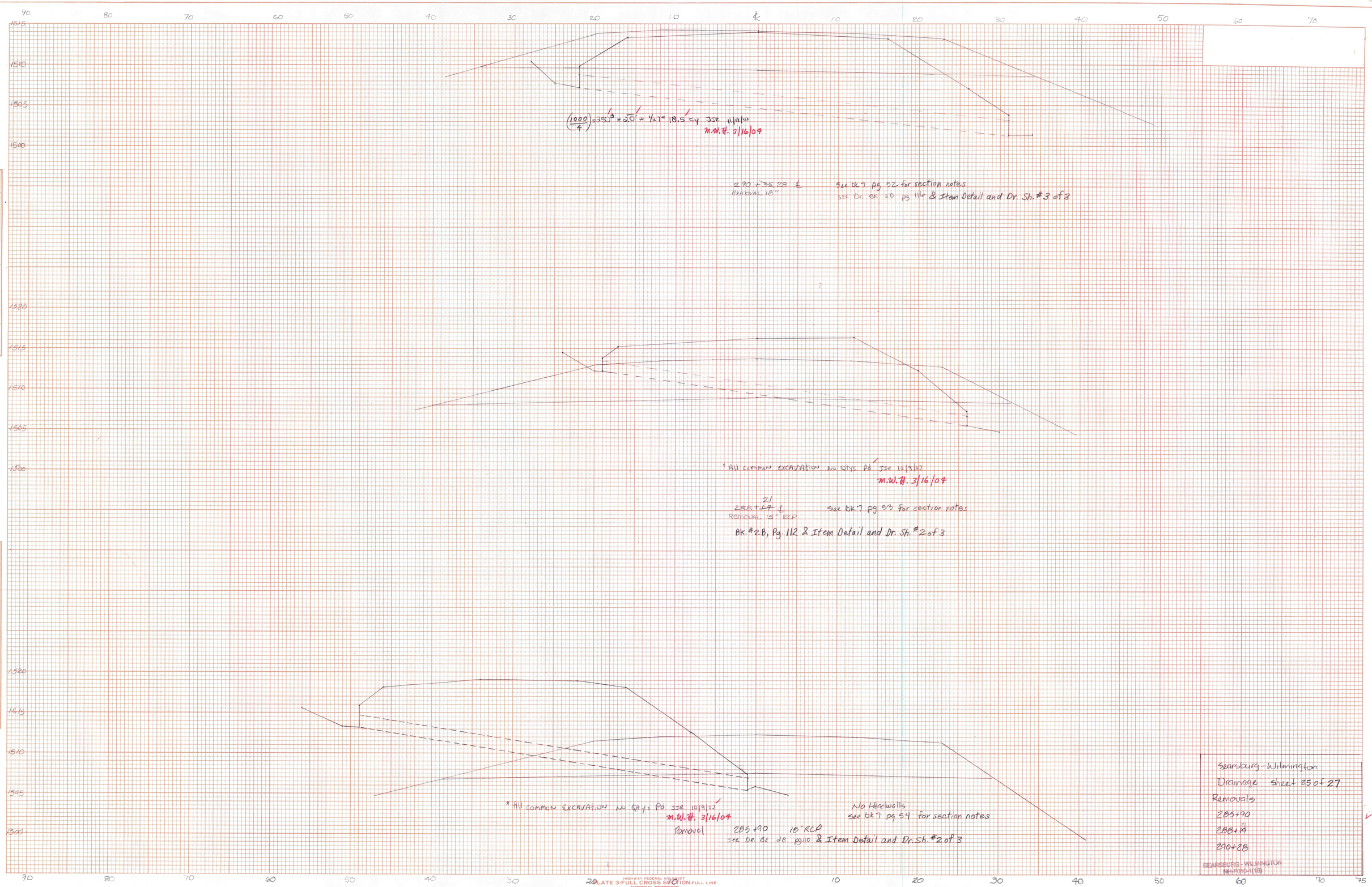

PLATE 3-FULL CROSS SECTION-FULL LINE
HIGHWAY FEDERAL AID SHEET
NATIONAL PRINTFAST
PRINTED IN U.S.A.

FINAL SURVEY — NOTE BOOK NO. — SURVEYED / PLOTTED / TEMPLATE / AREAS / AREAS CHECKED — BY — DATE

ORIGINAL SURVEY — NOTE BOOK NO. — SURVEYED / PLOTTED / TEMPLATE / AREAS / AREAS CHECKED — BY — DATE

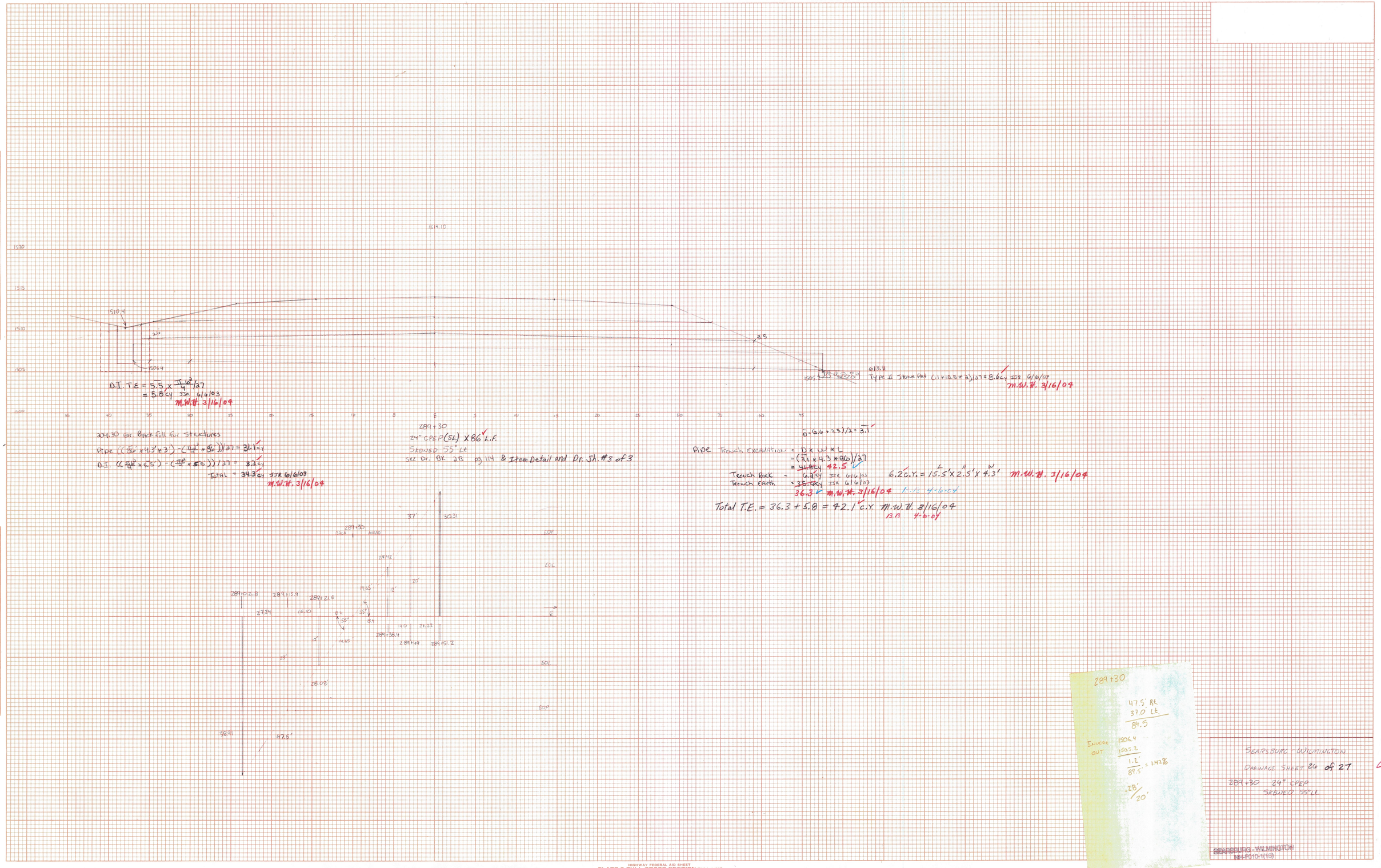

SEARSBURG - WILMINGTON

DRAINAGE SHEET 26 of 27

289+30 24" CPEP
SKEWED 55° Lt.

SEARSBURG - WILMINGTON
NH-F010-1(19)

HIGHWAY FEDERAL AID SHEET
PLATE 3-FULL CROSS SECTION-FULL LINE
NATIONAL PRINTPAST
PRINTED IN U.S.A.

FINAL SURVEY — SURVEYED, PLOTTED, TEMPLATE, AREAS, AREAS CHECKED, NOTE BOOK, NO., BY, DATE

D.I. 201.30 Cl. B Backfill Structures
((17.5/4 x 3) x (17.5/4 x 5'))/27 = 2.9 cy (m.f.) JJC 11/16/03
m.w.#. 3/16/04

System installed 11/6/03 JJC

151.28

Pipe
204.30 Cl. B Backfill for Structures (m.f.)
((8' x 3.5' x 2.5') - (π(1.5/4)² x 50'))/27 = 14.3 cy JJC 11/26/03
m.w.#. 3/16/04

Total Gran. Bkfl. for Structures = 14.3 + 2.9 = 17.2 c.y. ✓
B.B. 4-6-04

613.10 Type Stone F.11
6 x 5 x 1/27 = 1.0 cy JJC (m.f.)
11/26/03
m.w.#. 3/16/04

D.I. Trench Excavation (Pay as Tr. Rock)
(2(1.5² x 5'))/27 = 5.3 cy JJC 11/10/03
Tr. Rock 5.3 cy JJC 11/10/03
Tr. Earth = 0.0 cy
m.w.#. 3/16/04

Trench Excavation
200' x 3.3 x 1/27 = 36.1 cy
Tr. Rock = 0.0 cy
Tr. Earth = 28.1 cy JJC 11/10/03
m.w.#. 3/16/04

12+40 East con.
New 18" CMP
SEE DR. BK 28 pg 104 & Item Detail and Dr. Sh. #3 of 3

204.21 Tr. Rock D.I. Removal
(1.5²/4) x 6.5' x 1/27 = 3.0 cy JJC 11/17/03
m.w.#. 3/16/04

204.20 Tr. Earth Pipe Removal
390' x 1.5' x 1/27 = 21.7 cy JJC 11/17/03
m.w.#. 3/16/04

12+00 East con.
Remove 15" CMP
SEE DR. BK 28 pg 102 & Item Detail and Dr. Sh. #3 of 3

SEARSBURG - WILMINGTON
DRAINAGE SHEET 27 OF 27
12+00 East Connector Remove 15" CMP
12+40 East con. New 18" CMES
20+60 East con., New 18" CMES, SLEEVED ✓

SEARSBURG - WILMINGTON
NH-F010-1(18)

ORIGINAL SURVEY — SURVEYED, PLOTTED, TEMPLATE, AREAS, AREAS CHECKED, NOTE BOOK, NO., BY, DATE

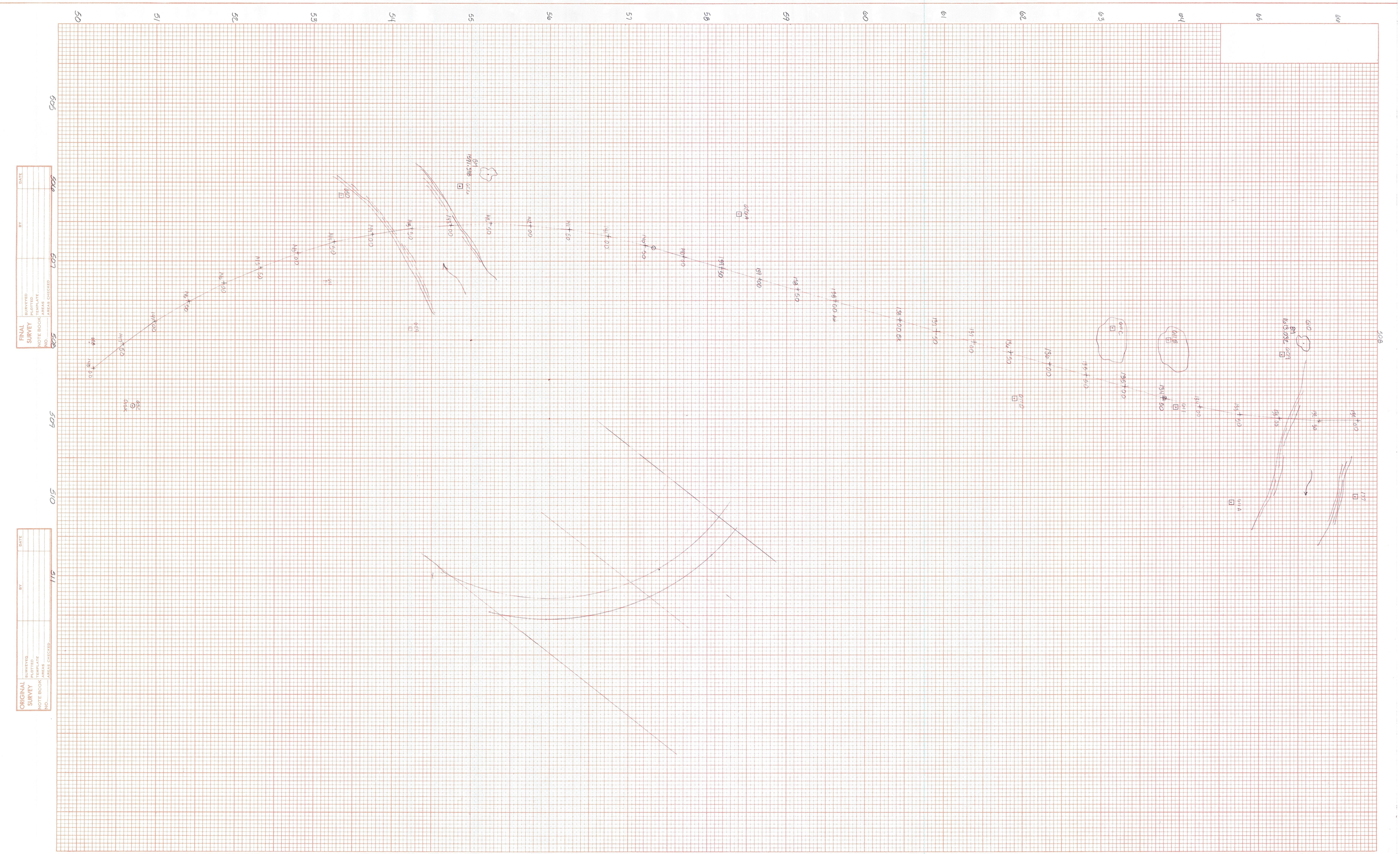

HIGHWAY FEDERAL AID SHEET
PLATE 3-FULL CROSS SECTION-FULL LINE
NATIONAL PRINTFAST
PRINTED IN U.S.A.

ITEM DETAIL AND DRAINAGE SHEET

STATE OF VERMONT
AGENCY OF TRANSPORTATION

FINAL DRAINAGE SEARSBURG - WILMINGTON

Drainage Sheet #

STA.	STA.	BK/PG#	ASKEW	12" CSP 601 .0005 L (FT)	15" CSP 601 .0010 L (FT)	18" CSP 601 .0015 L (FT)	24" CSP 601 .0025 L (FT)	30" CAAP 601 .0236 L (FT)	60" CAAP 601 .0268 L (FT)	42" PCCSP 601 .0452 L (FT)	48" PCCSP 601 .0457 L (FT)	54" PCCSP 601 .0527 L (FT)	15" CPEP(SL) 601 .2610 L (FT)	18" CPEP(SL) 601 .2615 L (FT)	24" CPEP(SL) 601 .2620 L (FT)	30" CPEP(SL) 601 .2625 L (FT)	36" CPEP(SL) 601 .2630 L (FT)	42" CAAPES 601 .6252 L (FT)	12" CPEP(CA) 601 .3005 L(FT)	18" CPEPES 601 .7010 EA	18" CPEPES 601 .7015 EA	30" CPEPES 601 .7005 EA	30" CAAPES 601 .6236 EA	48" CAAPES 601 .6252 EA	48" CAAPES 601 .6257 EA	ES EA	CB 4'	CB 5'	PRCCD DI	DEPTH DI (FT)	PRECAST CONC DI	REIN STEEL LBS	DI GRATE TYPE	CHAN ELEV	CRM CY	TR EXCAV EARTH CY	TR EXCAV ROCK CY	COMM EXC CY	UNC CHAN EXC CY	STRUC EXCAV CY	GRAN BKF STRUC CY	GRAN BORR CY	SAND BORR CY	EROS MATT CY	STONE FILL CY	STONE FILL TYPE	MRKR POSTS LT	MRKR POSTS RT	GEO LINER UNDER STONE FILL SY	GEO for curvature 699.91 SY
98+41 ℄	Removal	2/6																																														1059'
98+43 ℄		2/8												66'													1			5.0			1-B			26.4	Ø						1.3'	I	1	1			456'
102+50	102+90 RT	2/12														40'																				3.5'	40.2	8.4						6.2'	II	1	1			356'
102+96 ℄		2/16	Includes 20" RCP Removal in BK#2, pg 20													76'											1			6.0			1-B			45.0	10.1						2.7'	II	1	1			388'
105+52 ℄		2/22												90'													1			6.5			1-B			70.2	14.9						1.0'	I	1	1			398'
106+00 RT	Removal	2/26																																			Ø	1.8												—
107+75 ℄		2/30	Includes 15" RCP Removal BK#2 Pg 28													80'											1			6.0			2-B			38.7	42.3						7.4'	II	1	1			899'
110+80 ℄		2/34														90'											1			5.0			2-B			84.7	8.3						7.4'	II	1	1			—
110+25 LT	Removal	2/38																																			23.5	10.0												878'
112+22 ℄	Removal	2/40																																			16'	Ø												135+25
115+50 ℄		2/42												60'													1			6.8			1-D			Ø	Ø						Ø	I		1			137+00
117+90 ℄		2/46												64'													1			7.0			1-D			Ø	Ø						1.0	I					—
121+24 ET	123+00 LT	2/50												174'													1			7.3			2-D			0'												1980'
123+00 ℄		2/54												58'													1			6.8			1-D			0'							3.7'	I		1			409'
124+81 ℄		2/60												120'																														3.7' 7.4'	I II		1			—
124+81 ℄		2/64												56'													1			5.0			1-D			1.7'	71.8'	Ø					14.3'							58'
~~138+00 RT~~	136+04 RT	2/68		22'																									1	4.4														3.7'	I		1			178'
128+52 RT	56 LT	2/74	20"RCP 90° LT											50'																																3.7'	I		1			500'
129+65 RT	129+25 RT	2/78												30'													1			6.3'			2-D			35.7'	1.0'												—
~~133+28 RT~~	133+50 RT	2/82		22'																									1	4.4														14.4'	I		1			490'
139+50 LT	140+87 LT	2/86												140'													1			7.0			1-D														2.1'	I		1			513'
140+87 ℄		2/90												62'													1			7.0			1-D						38.4'												—
144+65 LT	146+00 LT	2/94												128'													1			6.5			2-D						18.7'												490'
145+50 RT	145+72 LT	2/98	Removal 24" RCP																																				2.74												—
145+77		2/100	60°45'55" LT											108'													1			4.5			1-B			27.8'	22'						3.7'	I		1			818'
150+00 LT	151+50 LT	2/104	Bk. 2 pg 32																																				44.1'	13.8'				30.1'							—
151+43 ℄	Removal	2/108	18" RCP & D.I.																																				0	0						2.1'	I		1			208'
154+65 ℄		2/112												70'													1			6.3			1-B			5.6'	4.9'												173+50
158+70 ℄		2/118													64'												1			4.8			2-B			23.7'	6.6'				22.3'		2.1'	I	1	1			180'
159+00 RT		2/122	14'																										1	4.4						18.9'	15.5'				24.6'				1				—
161+50 ℄		2/126												82'													1			4.8			2-B			Ø	26.3				22.1'		3.7'	I	1	1			344'
162+00 RT		2/130	28'																										1	4.4						9.4'	Ø												611'
163+65 ET		2/132	Quantities in Book #2 - Not drawn on Dr. Sheet													12'																				5.9'	Ø	3.5											580'
163+65 ℄		2/136														84'											1			6.0			2-B			7.0'	9.4'				32.5'		7.4'	II	1	1			—
164+25 ℄	Removal	2/140																																			12.5'	Ø												—
167+41 LT		2/142											28'														1			4.4			1-B			33.0'	Ø						8.0'	I	1	1			485'
167+65 ℄	Removal	2/146																																			18.9'	Ø												—
168+00 ℄		2/148							80'																												29.7'	21.9'				42.6'		3.7'	I-II	1	1			697'
171+70 ℄	Removal	2/152																																			38.4'	Ø												—
173+12 LT		2/154	Quantities in Book #2 - Not drawn on Dr. Sheet										52'																																					617'
173+00 ℄		2A/6														112'											2			6.9						63.9'	9.4'				31.0'		3.7'	I	1	1			—
174+00 RT	Removal	2A/10	Remove 15" RCP																																				84.0'	1.8'												1440'
177+40 RT	Removal	2A/16	Remove 15 RCP																																				4.6'												—
178+25 ET		2A/19													68'					24" CPEPES 1							1			9.2						9.2'	3.1'				24.6'				1				1650'
178+50 RT		2A/18	22'																										1	4.4						4.4'							3.7'	I					—
178+80 ℄		2A/22														80'											1			7.0			2-B			84.2					38.2		5.9'	II	1	1			—
179+20 ℄	Removal	2A/26	Remove 24" RCP																																			14.3'													198+75
181+73 RT	Revised	2A/28	42'																										1	4.5						13.3'							3.7'	I					93'
183+70 ℄	Removal	2A/32	Remove 18" RCP																																			14.1'													207+65
186+90 RT	Removal	2A/34	12" RCP																																			5.6'													207+58
189+00 LT	192+00 LT	2A/36																																															211+75
190+13 RT	Removal	2A/38	Remove 18" RCP																																			14.4'	2.1'												212+67
192+03 ℄		2A/40												100'																								29.6'					28.6'		2.1'	I	1	1			837'
194+33 RT	Removal	2A/44	Remove 18" RCP																																			17.8'	3.7'												218+75
195+00 ℄		2A/46												16'																								26.7'					34.9'		2.1'	I	1	1			—
198+35 ET		2A/50	Pipe eliminated due to field conditions											Ø						No quantities																		37.0'													222+95
203+66 LT	204+00 LT	2A/54	Remove 15" RCP																																			Ø													223+63
203+22 RT	Removal	2A/56	Remove 15" RCP																																																223+63
209+50 RT		2A/58	22'																										1	4.5																					228+50
210+00 ℄		2A/62	73° RT									84'																								20'	37.0'				107.7	95.3'	39.6'	II		1			229+50
210+30 ℄	Removal	2A/60	Remove 15" CMP																																			22.1'													—
212+50 RT		2A/68	18'																										1	4.5																					18799' to Sheet #2
213+62 ℄		2A/74												66'													1			5.6			1-B			5.6'	19.9'				3.8'				1	1			
215+00 ℄		2A/78												80'													1			5.0			1-B				69.9'				93.5'		3.7'	I	1				
218+79 ℄	Removal	2A/33	Remove 15" RCP																																			Ø												
219+50 ℄		2A/84														86'																						58.1'					36.9'		2.2'	II	1	1			
TOTALS				190 ✓				80 ✓				84 ✓	120 ✓	1802 ✓	132 ✓	468 ✓	80 ✓										1 ✓ 24" CPEPES	6 ✓	14 ✓	9 ✓		20-B 12-D		12.8 ✓	120.1 ✓	38.8 ✓			107.7 ✓	590.2 ✓	20.2 ✓	177.6 ✓		63.1 ✓ 79.4	Type I Type II	21 ✓	25 ✓	11.11 A. 4/20/04	

3.6' Earth Borrow

Rec. 4/21/04

UNDERDRAIN

STA.	STA.	TYPE	POS.	D 6"	D 8"	L	TRENCH E	TRENCH R	GRAN BKF	FB	MKR PST
97+00	102+90	U	RT	6		605'	338.5	84'		2	
103+00	105+52	U	RT	6		254'		118.9		1	
105+54	107+75	U	RT	6		225'	49.0	32.8		1	
107+77	110+20	U	RT	6		245'	40.4	19.8		1	
110+25	112+50	U	RT	6		225'	7.0	2.6		1	
—	112+50	C	LT-RT	6		65'	18.1	0	17.1	1	
122+00	123+25	U	LT	6		134'	38.2	0		1	
—	123+25	C	LT-RT	6		68'	3.6	0		1	
135+25	137+00	U	RT	6		183'	6.9	53.3		1	
—	137+00	C	LT-RT	6		71'	8.0	0	10.0	1	
140+68	142+00	U	RT	6		132'	0	71.5		1	
142+00	142+70	U	RT	6		70'	33.3	3.7	3.4	1	
142+70	144+90	U	RT	6		220'	43.3	5.1		2	
144+90	145+08	C	RT	6		18'	4.2	0		1	
145+08	145+76	U	RT	6		68'	14.8	8.5	6.9	1	
145+76	146+02	C	RT	6		26'	0	4.5		1	
146+02	146+40	U	RT	6		38'	0	17.1		1	
146+40	146+70	C	RT	6		30'	0	4.5		1	
146+70	147+00	U	RT	6		30'	0	13.7		1	
147+00	147+30	C	RT	6		30'	0	4.5		1	
147+30	147+60	U	RT	6		30'	0	13.7		1	
147+60	147+90	C	RT	6		30'	0	4.5		1	
147+90	148+20	U	RT	6		30'	0	13.7		1	
148+20	148+50	C	RT	6		30'	0	4.5		1	
148+50	148+80	U	RT	6		30'	0	13.7		1	
148+80	149+10	C	RT	6		30'	0	4.5		1	
149+10	149+40	U	RT	6		30'	0	13.7		1	
149+40	149+70	C	RT	6		30'	0	4.5		1	
149+70	150+00	U	RT	6		30'	0	13.7		1	
150+00	150+30	C	RT	6		30'	0	4.5		1	
150+30	150+60	U	RT	6		30'	0	13.7		1	
150+60	150+90	C	RT	6		30'	0	4.5		1	
150+90	151+20	U	RT	6		30'	0	13.7		1	
151+20	151+50	C	RT	6		30'	0	4.5		1	
151+50	151+80	U	RT	6		30'	0	13.7		1	
151+80	152+10	C	RT	6		30'	0	4.5		1	
152+10	152+40	U	RT	6		30'	0	13.7		1	
152+40	152+70	C	RT	6		30'	0	4.5		1	
152+70	153+00	U	RT	6		30'	0	13.7		1	
153+00	153+30	C	RT	6		30'	0	4.5		1	
153+30	153+60	U	RT	6		30'	0	13.7		1	
153+60	153+90	C	RT	6		30'	0	4.5		1	
153+90	154+20	U	RT	6		30'	0	13.7		1	
154+20	154+50	C	RT	6		30'	0	4.5		1	
154+50	154+80	U	RT	6		30'	0	13.7		1	
154+80	155+10	C	RT	6		30'	0	4.5		1	
155+10	155+40	U	RT	6		30'	0	13.7		1	
155+40	155+70	C	RT	6		30'	0	4.5		1	
155+70	156+00	U	RT	6		30'	0	13.7		1	
156+00	156+30	C	RT	6		30'	0	4.5		1	
156+30	156+60	U	RT	6		30'	0	13.7		1	
156+60	156+90	C	RT	6		30'	0	4.5		1	
156+90	157+20	U	RT	6		30'	0	13.7		1	
157+20	157+50	C	RT	6		30'	0	4.5		1	
157+50	157+80	U	RT	6		30'	0	13.7		1	
157+80	158+10	C	RT	6		30'	0	4.5		1	
158+10	158+40	U	RT	6		30'	0	13.7		1	
158+40	158+70	C	RT	6		30'	0	4.5		1	
158+70	159+00	U	RT	6		30'	0	13.7		1	
159+00	159+30	C	RT	6		30'	0	4.5		1	
159+30	159+60	U	RT	6		30'	0	13.7		1	
159+60	159+90	C	RT	6		30'	0	4.5		1	
159+90	160+20	U	RT	6		30'	0	13.7		1	
160+20	160+50	C	RT	6		30'	0	4.5		1	
160+50	160+80	U	RT	6		30'	0	13.7		1	
160+80	161+10	C	RT	6		30'	0	4.5		1	
161+10	161+40	U	RT	6		30'	0	13.7		1	
161+40	161+70	C	RT	6		30'	0	4.5		1	
161+70	162+00	U	RT	6		30'	0	13.7		1	
162+00	162+30	C	RT	6		30'	0	4.5		1	
162+30	162+60	U	RT	6		30'	0	13.7		1	
162+60	162+90	C	RT	6		30'	0	4.5		1	
162+90	163+20	U	RT	6		30'	0	13.7		1	
163+20	163+50	C	RT	6		30'	0	4.5		1	
163+50	163+80	U	RT	6		30'	0	13.7		1	
163+80	164+10	C	RT	6		30'	0	4.5		1	
164+10	164+40	U	RT	6		30'	0	13.7		1	
164+40	164+70	C	RT	6		30'	0	4.5		1	
164+70	165+00	U	RT	6		30'	0	13.7		1	
165+00	165+30	C	RT	6		30'	0	4.5		1	
165+30	165+60	U	RT	6		30'	0	13.7		1	
165+60	165+90	C	RT	6		30'	0	4.5		1	
165+90	166+20	U	RT	6		30'	0	13.7		1	
166+20	166+50	C	RT	6		30'	0	4.5		1	
166+50	166+80	U	RT	6		30'	0	13.7		1	
166+80	167+10	C	RT	6		30'	0	4.5		1	
167+10	167+40	U	RT	6		30'	0	13.7		1	
167+40	167+70	C	RT	6		30'	0	4.5		1	
167+70	168+00	U	RT	6		30'	0	13.7		1	
168+00	168+30	C	RT	6		30'	0	4.5		1	
168+30	168+60	U	RT	6		30'	0	13.7		1	
168+60	168+90	C	RT	6		30'	0	4.5		1	
168+90	169+20	U	RT	6		30'	0	13.7		1	
169+20	169+50	C	RT	6		30'	0	4.5		1	
169+50	169+80	U	RT	6		30'	0	13.7		1	
169+80	170+10	C	RT	6		30'	0	4.5		1	
170+10	170+40	U	RT	6		30'	0	13.7		1	
170+40	170+70	C	RT	6		30'	0	4.5		1	
170+70	171+00	U	RT	6		30'	0	13.7		1	
171+00	171+30	C	RT	6		30'	0	4.5		1	
171+30	171+60	U	RT	6		30'	0	13.7		1	
171+60	171+90	C	RT	6		30'	0	4.5		1	
171+90	172+20	U	RT	6		30'	0	13.7		1	
172+20	172+50	C	RT	6		30'	0	4.5		1	
172+50	172+80	U	RT	6		30'	0	13.7		1	
172+80	173+10	C	RT	6		30'	0	4.5		1	
173+10	173+40	U	RT	6		30'	0	13.7		1	
173+40	173+70	C	RT	6		30'	0	4.5		1	
173+70	174+00	U	RT	6		30'	0	13.7		1	
174+00	174+30	C	RT	6		30'	0	4.5		1	
174+30	174+60	U	RT	6		30'	0	13.7		1	
174+60	174+90	C	RT	6		30'	0	4.5		1	
174+90	175+20	U	RT	6		30'	0	13.7		1	
175+20	175+50	C	RT	6		30'	0	4.5		1	
175+50	175+80	U	RT	6		30'	0	13.7		1	
175+80	176+10	C	RT	6		30'	0	4.5		1	
176+10	176+40	U	RT	6		30'	0	13.7		1	
176+40	176+70	C	RT	6		30'	0	4.5		1	
176+70	177+00	U	RT	6		30'	0	13.7		1	
177+00	177+30	C	RT	6		30'	0	4.5		1	
177+30	177+60	U	RT	6		30'	0	13.7		1	
177+60	177+90	C	RT	6		30'	0	4.5		1	
177+90	178+20	U	RT	6		30'	0	13.7		1	
178+20	178+50	C	RT	6		30'	0	4.5		1	
178+50	178+80	U	RT	6		30'	0	13.7		1	
178+80	179+10	C	RT	6		30'	0	4.5		1	
179+10	179+40	U	RT	6		30'	0	13.7		1	
179+40	179+70	C	RT	6		30'	0	4.5		1	
179+70	180+00	U	RT	6		30'	0	13.7		1	
180+00	180+30	C	RT	6		30'	0	4.5		1	
180+30	180+60	U	RT	6		30'	0	13.7		1	
180+60	180+90	C	RT	6		30'	0	4.5		1	
180+90	181+20	U	RT	6		30'	0	13.7		1	
181+20	181+50	C	RT	6		30'	0	4.5		1	
181+50	181+80	U	RT	6		30'	0	13.7		1	
181+80	182+10	C	RT	6		30'	0	4.5		1	
182+10	182+40	U	RT	6		30'	0	13.7		1	
182+40	182+70	C	RT	6		30'	0	4.5		1	
182+70	183+00	U	RT	6		30'	0	13.7		1	
183+00	183+30	C	RT	6		30'	0	4.5		1	
183+30	183+60	U	RT	6		30'	0	13.7		1	
183+60	183+90	C	RT	6		30'	0	4.5		1	
183+90	184+20	U	RT	6		30'	0	13.7		1	
184+20	184+50	C	RT	6		30'	0	4.5		1	
184+50	184+80	U	RT	6		30'	0	13.7		1	
184+80	185+10	C	RT	6		30'	0	4.5		1	
185+10	185+40	U	RT	6		30'	0	13.7		1	
185+40	185+70	C	RT	6		30'	0	4.5		1	
185+70	186+00	U	RT	6		30'	0	13.7		1	
186+00	186+30	C	RT	6		30'	0	4.5		1	
186+30	186+60	U	RT	6		30'	0	13.7		1	
186+60	186+90	C	RT	6		30'	0	4.5		1	
186+90	187+20	U	RT	6		30'	0	13.7		1	
187+20	187+50	C	RT	6		30'	0	4.5		1	
187+50	187+80	U	RT	6		30'	0	13.7		1	
187+80	188+10	C	RT	6		30'	0	4.5		1	
188+10	188+40	U	RT	6		30'	0	13.7		1	
188+40	188+70	C	RT	6		30'	0	4.5		1	
188+70	189+00	U	RT	6		30'	0	13.7		1	
189+00	189+30	C	RT	6		30'	0	4.5		1	
189+30	189+60	U	RT	6		30'	0	13.7		1	
189+60	189+90	C	RT	6		30'	0	4.5		1	
189+90	190+20	U	RT	6		30'	0	13.7		1	
190+20	190+50	C	RT	6		30'	0	4.5		1	
190+50	190+80	U	RT	6		30'	0	13.7		1	
190+80	191+10	C	RT	6		30'	0	4.5		1	
191+10	191+40	U	RT	6		30'	0	13.7		1	
191+40	191+70	C	RT	6		30'	0	4.5		1	
191+70	192+00	U	RT	6		30'	0	13.7		1	
192+00	192+30	C	RT	6		30'	0	4.5		1	
192+30	192+60	U	RT	6		30'	0	13.7		1	
192+60	192+90	C	RT	6		30'	0	4.5		1	
192+90	193+20	U	RT	6		30'	0	13.7		1	
193+20	193+50	C	RT	6		30'	0	4.5		1	
193+50	193+80	U	RT	6		30'	0	13.7		1	
193+80	194+10	C	RT	6		30'	0	4.5		1	
194+10	194+40	U	RT	6		30'	0	13.7		1	
194+40	194+70	C	RT	6		30'	0	4.5		1	
194+70	195+00	U	RT	6		30'	0	13.7		1	
195+00	195+30	C	RT	6		30'	0	4.5		1	
195+30	195+60	U	RT	6		30'	0	13.7		1	
195+60	195+90	C	RT	6		30'	0	4.5		1	
195+90	196+20	U	RT	6		30'	0	13.7		1	
196+20	196+50	C	RT	6		30'	0	4.5		1	
196+50	196+80	U	RT	6		30'	0	13.7		1	
196+80	197+10	C	RT	6		30'	0	4.5		1	
197+10	197+40	U	RT	6		30'	0	13.7		1	
197+40	197+70	C	RT	6		30'	0	4.5		1	
197+70	198+00	U	RT	6		30'	0	13.7		1	
198+00	198+30	C	RT

ITEM DETAIL AND DRAINAGE SHEET

STATE OF VERMONT
AGENCY OF TRANSPORTATION

FINAL DRAINAGE SEARSBURG - WILMINGTON

Option D

Drainage Sheet #	STA.	STA.	BK/PG#	ASKEW	12" CSP 601 .0005 L (FT)	15" CSP 601 .0010 L (FT)	18" CSP 601 .0015 L (FT)	24" CSP 601 .0025 L (FT)	30" CAAP 601 .0236 L (FT)	60" CAAP 601 .0268 L (FT)	42" PCCSP 601 .0452 L (FT)	48" PCCSP 601 .0457 L (FT)	54" PCCSP 601 .0527 L (FT)	15" CPEP(SL) 601 .2610 L (FT)	18" CPEP(SL) 601 .2615 L (FT)	24" CPEP(SL) 601 .2620 L (FT)	30" CPEP(SL) 601 .2625 L (FT)	36" CPEP(SL) 601 .2630 L (FT)	42" CAAPES 601 .6252 L (FT)	12" CPEP(SL) 601 .2605 L(FT)	15" CPEPES 601 .7010 EA	18" CPEPES 601 .7015 EA	30" CPEPES 601 .7035 EA	30" CAAPES 601 .6036 EA	42" CAAPES 601 .6050 EA	48" CAAPES 601 .6057 EA	ES EA	CB 4'	CB 5'	PRCD DI	DEPTH DI	CONC CL B CY	REIN STEEL LBS	DI GRATE TYPE	CHAN ELEV	CRM CY	TR EXCAV EARTH CY	TR EXCAV ROCK CY	COMM EXC CY	UNC CHAN EXC CY	STRUC EXCAV CY	GRAN BKF STRUC CY	GRAN BORR CY	SAND BORR CY	EROS MATT CY	STONE FILL CY	STONE FILL TYPE	MRKR POSTS LT	MRKR POSTS RT	GEO LINER UNDER STONE FILL SY
26	287+30 ℄		28/114	55° LT												86'											1			5.5			1-B			42.1'	6.9'				34.3'				8.6'	II	1	1	
25	290+34 ℄	Removal	28/116		REMOVE 18" RCP																															18.5'	0'											
24	290+50 LT	290+54 LT	28/118												60'							2'					2'									16.4'	0'									2		
4	23+00 ℄	W. connector	28/120	See West Connector Ledge sections											50'																					16.2'	13.1'								3.7'	I	1		
27	12+00 RT	E. connector	28/122		Remove 15" RCP																															21.7'	30'											
27	12+40 ℄	E. connector	28/124												58'												1			4.5			1-B			28.1'	5.2'				17.2'				1.0'	I	1	1	
	30+81 ℄	E. connector	28/126												106'												1			4.5			1-B			53.6'	7.8'								3.7'	I		1	
	237+70 LT	238+80 LT	2/156																																									69.0'	I			
	239+50 LT	241+00 LT	2/157																																									89.0'	I			
3	104+15	Removal	2/21	Originally not on plans																																24.6'												
2	110+20 RT		2/36	" " " "	Special Ditch																															37.3'									18.7'	II			58.3'
	Sheet # 1			190			80				84	120	1802	132	469	80					2	2		1		24 CPEP 601.70 1		6	14	9	8		20-B	13.19	120.1	388.6		107.7	624.7	22.2	177.6		63.1	I	21	28	
																																	12-D		258.4	324.2				23.8	25.0	36 CMP Culvert		594	II			
	Sheet # 2			78		10	4		164	116	112		144	1354	220	164					198	3	2	1	1	1	1	9	16	5			16-B	15.10	1356.0	83.1		370.6	935.6		32.1		191.7	I	24	18	367
																																2-C										563.1	II			
	Sheet # 3													274'	86'							2'					2	3				3-B		258.7	353			51.5'					24.3	IV			
																																												166.4	I	5	3	58.3
GRAND	TOTALS			268		10	4	80	164	116	112	84	264	3430	688	244					198	5	6	1	2	1	1	17	39	13			39-B	28.29	2587	353		478.3	1604.8	22.2	209.7		38.6	II	50	49	
																																2-C							3.6			481.2	I			
																																12-D										870.6	II			
																																												15.6	II			
																																												24.3	IV			
																																1C/40														I			
																																1C/48														II			
																																1C/46														IV			
	Sheet # 3 TOTALS													274'	86'							2'					2	3				3-B	28.29	258.7	35.3		51.5'					21.3	166.4	I			
																																												8.6	II			

UNDERDRAIN

STA.	STA.	TYPE	POS.	D 6"	D 8"	L	TRENCH E	TRENCH R	GRAN BKF	FB	MKR PST

TOTALS

PROJECT NAME:	SEARSBURG - WILMINGTON
PROJECT NUMBER:	NHF 010-1(18)
FILE NAME: G:\landqty01.dgn	PLOT DATE: 03-SEP-2003
PROJECT LEADER: G. DUBRAY	DRAWN BY: JJR
DESIGNED BY:	CHECKED BY:
	SHEET 3 OF 3

M.W.H. 4/20/04

ABC 4/21/04 ✓M.W.H. 4/21/04

ITEM DETAIL AND DRAINAGE SHEET

STATE OF VERMONT
AGENCY OF TRANSPORTATION

FINAL DRAINAGE SEARSBURG - WILMINGTON

STA.	STA.	BK/PG#	ASKEW	12" CSP 601 .0005 L (FT)	15" CSP 601 .0000 L (FT)	18" CSP 601 .0005 L (FT)	24" CSP 601 .0025 L (FT)	30" CAAP 601 .0236 L (FT)	60" CAAP 601 .0268 L (FT)	42" PCCSP 601 .0452 L (FT)	48" PCCSP 601 .0457 L (FT)	54" PCCSP 601 .0527 L (FT)	15" CPEP(SL) 601 .2610 L (FT)	18" CPEP(SL) 601 .2615 L (FT)	24" CPEP(SL) 601 .2620 L (FT)	30" CPEP(SL) 601 .2625 L (FT)	36" CPEP(SL) 601 .2630 L (FT)	42" CAAPES 601 .6252 L (FT)	12" CPEP(SL) 601 .3605 L (FT)	15" CPEPES 601 .7310 EA	18" CPEPES 601 .7415 EA	30" CPEPES 601 .7035 EA	30" CAAPES 601 .6236 EA	42" CAAPES 601 .6252 EA	48" CAAPES 601 .6257 EA	ES EA	CB 4'	CB 5'	PRCD	DEPTH DI FT	CONC CL B CY	REIN STEEL LBS	DI GRATE TYPE	CHAN ELEV	CRM CY	TR EXCAV EARTH CY	TR EXCAV ROCK CY	COMM EXC CY	UNC CHAN EXC CY	STRUC EXCAV CY	GRAN BKF STRUC CY	GRAN BORR CY	SAND BORR CY	EROS MATT CY	STONE FILL CY	STONE FILL TYPE	MRKR POSTS LT	MRKR POSTS RT	GEO LINER UNDER STONE FILL SY	GEO for Underdrain 649.41 54
218+50 LT	219+35 LT	2A/88																																													
219+60 E	REMOVAL	2A/90		REMOVE		15" CMP																													Ø 3.0														441'
221+15 E	REMOVAL	2A/92		REMOVE		18" RCP																													Ø 2.4														296'
221+75 LT	HDWT Pipe	2A/94		REMOVE		24" CMP																													5.6 2														—
222+00 LT	223+94 LT	2A/96																	198'								1		3.0			1-B		7.4 0														500'
223+95 LT	CONNECTION	2A/100																																	2.2 Ø														352'
223+46 E		2A/104												56'													1		4.0			1-B		19.0 Ø								3.7'	I	1	1			—
223+55 LT	224+95 LT	2A/108																																	Ø 0								3.7'	I					218'
224+00 RT		2A/112		16'																									1	4.4																			236'
224+50 RT		2A/116		16'																									1	4.4					0 0														814'
225+00 E		2A/120								116'																1'		1						10.7 0								3.7'	I	1	1			936'
225+00 LT		2A/124	126			4'	2'																								1-C				17.2 4.0														356'
225+25 LT	REMOVAL	2A/128		REMOVE		18" RCP																													0 0														400'
226+50 RT		2A/130		16'																									1	4.4					0 0														—
226+75 LT		2A/132											40'																						49.2 0														796'
227+00 LT	228+50 LT	2A/134																																	45.9 0														—
228+00 E		2A/136												66'													1		4.0			1-B		6.6 7.5					17.8'				1	1			796'
232+88 RT	REMOVAL	2A/140		REMOVE		24" CMP																													23.1 Ø								3.7'	I	1	1			205'
233+50 E		2A/142												116'													1		5.0			1-B		27.6 13.6					28.1'				3.7'	I	1	1			194'
236+30 E		2A/146												76'													1		6.5			1-B		18.9'					30.6'						1	1			—
236+70 LT	REMOVAL	2A/150		REMOVE		15" CMP																													Ø														188'
237+45 LT	REMOVAL	2A/152		REMOVE		24" CMP																													37.8 15.0														429'
238+30 LT	REMOVAL	2A/154		REMOVE		18" RCP																													0 4														—
238+50 E		2A/156										112'															1		3.7			1-B		37.0 6					37.9'				7.4'	II	1	1			215'
238+72 LT	239+52 LT	2B/6																	64'																7.7 4.5														450'
239+15 LT	REMOVAL	2B/10		REMOVE		18" RCP																													0 0														1190'
240+00 LT	REMOVAL	2B/12		REMOVE		12" CMP																													0 0														—
241+10 LT	241+62 LT	2B/14												52'																					0 0					13.9'									613'
244+05 E		2B/16												64'													1		9.0			1-B		42.8 7					30.1'				1	1			—
244+56 E	REMOVAL	2B/20		REMOVE		18" RCP																													12.3 3.4														224'
245+50 E		2B/22												88'													1		5.7			1-B		89.9 Ø					26.4'				1	1			—
246+00 LT		2B/26											76'								1						1		—						22.7 Ø					17.4'									870'
246+10 E	REMOVAL	2B/28		REMOVE		12" CMP																													Ø Ø														—
246+83 E		2B/30		REMOVE		12" RCP								72'													1		6.0			1-B		46.9 Ø					34.7'				1	1			9948' - Sheet #2	Sheet 2	Totals 6" UD 3605 19620 6837 40.6 34
248+99 E	REMOVAL	2B/34		REMOVE		12" RCP																													14.5 Ø														6" carrier 449
250+80 LT	REMOVAL	2B/36		REMOVE		12" CMP																													Ø Ø														
251+00 E		2B/38												84'													1		4.8			1-B		22.6 4.2					25.7'				2.1'	I	1	1			
252+00 RT	REMOVAL	2B/42		REMOVE		12" RCP																													19.0 5.9														18199'
253+50 E		2B/44												104'													1		4.9			1-B		62.6 4.3					31.5'				2.1'	I	1	1			From Sheet #1
258+65 LT		2B/48		CHANGE FROM 12" TO 18" RCP AT NEW FIELD ENTRY										70'								2'					2									31.1 Ø														68147'
258+74 LT	260+78 LT	2B/52		SPECIAL DITCH																															83.4 Ø								5.5'	I			16734'		To Book #1F Page 58
259+50 RT	260+00 LT	2B/54												104'													1		3.5			1-B		47.1 6.1										1	1			3/31/04
260+00 RT	260+30 RT	2B/58																																	Ø Ø														
260+00 RT	260+20 RT	2B/60		SPECIAL DITCH																															Ø Ø														
262+80 LT		2B/62												58'													1		4.0			1-B		56.4 Ø					22.6'				2.2'	I	2				
263+52 LT	REMOVAL	2B/66		REMOVE		15" CMP																													Ø Ø														
264+26 E		2B/68												116'													1		6.5			1-B		79.9								4.0'	I	1	1			
267+23 E		2B/72		REMOVE		15" RCP				INSTALL 12" →				60'													1		8.3			1-B		32.9 Ø					20.3'				3.7'	I	1	1			
268+50 RT		2B/76		16'																							1		4.5															1.5'	I					
268+75 LT		2B/78											28'								2'					2									8.3' Ø											2			
272+18 E		2B/82				6'	2'		164'																						1-C		12.3				370.6	397.0				3.7+11.8	I+II					
273+50 RT		2B/86		14'																							1		4.5															1.6	I					
274+00 E		2B/88												100'													1									23.4 Ø					42.3'				7.4+9.5	II+IV	1	1			
274+09 E	REMOVAL	2B/90		REMOVE		18" RCP																													21.9 4														
274+36 E	REMOVAL	2B/92		REMOVE		24" CMP																													17.4 4														
276+22		2B/94												76'													1		5.0			1-B		30.2 Ø					24.7'				3.7'	I	1	1			
278+50 E		2B/96												92'													1		4.5			1-B		44.9 4.7					28.4'				3.7'	I	1	1			
280+00 LT	282+50 LT	2B/98		SPECIAL DITCH																																								9.3	I	1	1			
280+55 LT		2B/102		REMOVE 36" CMP																															Ø Ø														
284+50 LT	285+50 LT	2B/104																																									0'	I					
283+95 LT	REMOVAL	2B/106		REMOVE		18" RCP																													0 6														
285+00 E		2B/108																	100'								2.8		10.9.7							109.7 Ø					37.7'		160'		4.4'	II	1	Ø			
290+50 RT	290+50 LT	2B/110																	120'			1					1									35.4 Ø					13.6'		16.1'		5.9'	II					
285+90 LT	REMOVAL	2B/110		REMOVE		18" RCP																													0 Ø														
285+31 E		2B/112																																	0 Ø														
294+50 LT	~~287+00~~ LT 285+50	2B/104																																														
*Out of order	TOTALS			78 68		10	4		164	116	112		144	1354	220	164		198	3	2	1	1	1	1	9	6	5		16-B, 2-C		16.1	1356.2	83.8		370.6	935.6		32.1		191.7 I 56.3 II 24.3 IV		25	18		867	700.34	

UNDERDRAIN

STA.	STA.	TYPE	POS.	D 6"	D 8"	L	TRENCH E	TRENCH R	GRAN BKF	FB	MKR PST
331+02	333+50	U	LT	6		158'	0'	113.6'			1
331+02	333+50	U	RT	6		164'	0'	73.9'			1
—	333+50	C	RT	6		154'	5.6		2.7'		1
333+55	336+36	U	LT	6		208'	0'	131.9			2
342+00	344+00	U	LT	6		208'	73.5	4.3'			1
—	342+00	C	LT-RT	6		72'	0		10.0'		1
344+05	345+45	U	LT	6		144'	45.3				1
345+50	346+83	U	LT	6		133'	26.3				1
346+84	350+35	U	LT	6		351'	89.9				2
351+00	352+45	U	LT	6		145'	0	102.1			1
352+50	355+50	U	LT	6		300'	0	180.5			1
355+50	356+50	U	RT	6		100'	0	0.6			1
—	356+50	C	RT	6		586'	0				1
356+50	359+50	U	LT	6		300'	0'	0.3			2
—	359+50	C	LT	6		19'	0				1
359+50	365+50	U	RT	6		600'	0	195.5			2
363+00	364+36	U	LT	6		136'	37.3				1
363+25	364+34	U	RT	6		109'	29.6				Ø
—	—					70'					Ø
364+36	367+50	U	LT	6		314'	56.8				2
364+15	367+25	U	RT	6		310'	58.5	1'			Ø
364+28	365+50	C	RT	6		74'	28.7		9.7'		Ø
—	—					45'	35.6	0.3'			1
—	—					750'	0	3.5'			1
—	—					1100'	0	3.3			3
—	384+50	C	LT-RT	6		74'	15.5	4.3	10.3'		1
—	389+00	U	LT	6		350'	0	0			2
389+00	391+50	U	LT	6		250'	0	0			1
—	392+50	C	LT	6		53'	0	0			1
392+50	394+50	U	LT	6		200'	0	0			1
394+50	396+50	U	LT	6		200'	0	0			1
396+50	398+50	U	LT	6		200'	0	0			1

SKEW ANGLE Δ : 41°–37'–48"

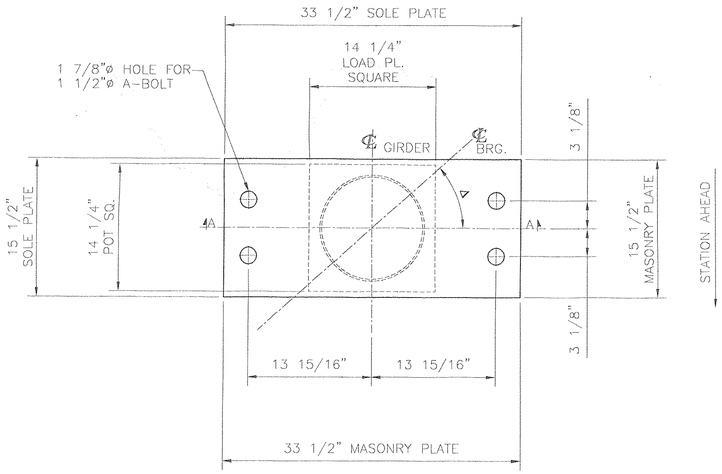

PLAN

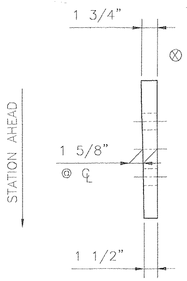

SIDE ELEVATION
BEVELED SOLE PLATE ONLY

SKEW ANGLE Δ : 28°–40'–30"

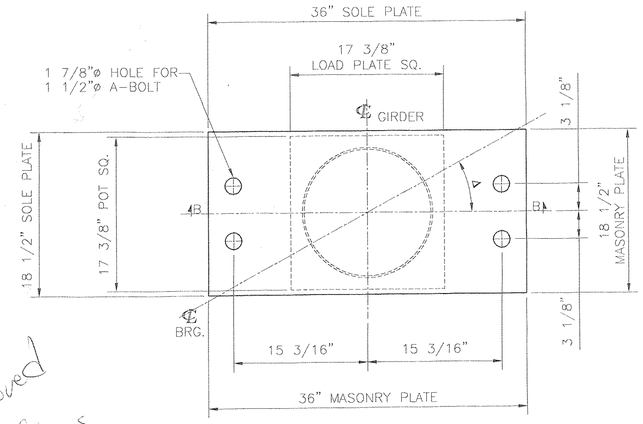

PLAN

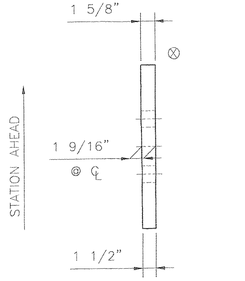

SIDE ELEVATION
BEVELED SOLE PLATE ONLY

Please Note: Approved bearing hts. will require bridge seat elevation changes on all bridges.

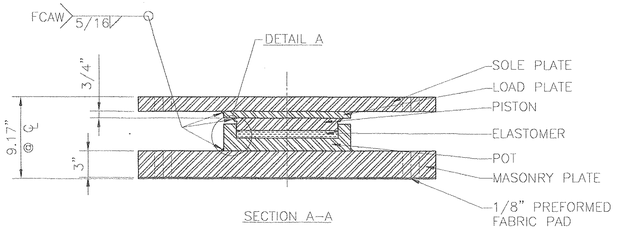

SECTION A–A

FIXED POT BEARING
LOCATION – BRIDGE 25, PIER 2
QUANTITY – 5
VERTICAL LOAD – 361 KIPS
HORIZONTAL LOAD – 112 KIPS

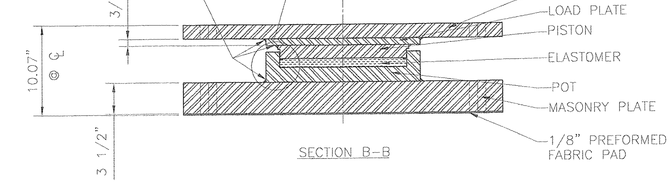

SECTION B–B

FIXED POT BEARING
LOCATION – BRIDGE 25A, PIER 1
QUANTITY – 5
VERTICAL LOAD – 565 KIPS
HORIZONTAL LOAD – 143 KIPS

MATERIAL:
STEEL – ASTM A709 GR 50 ZINC METALIZED. MASONRY PLATE TO BE CVN.
ELASTOMER – AASHTO 50 DUROMETER NEOPRENE PER VT AOT SECTION 731.03. (LUBRICATED USING DOW CORNING COMPOUND NO. 4 SILICONE GREASE)
BRASS RINGS – ASTM B36 HALF HARD
PREFORMED FABRIC PAD – AASHTO 18.4.10.1 DIV. II

NOTES:
1. DESIGN ROTATION: 0.02 RADS.
2. BEARINGS MUST NOT BE DISASSEMBLED.
3. BEARINGS SHALL BE SHIPPED IN DUST & MOISTURE PROOF COVERS FOR PROTECTION DURING TRANSIT & STORAGE.
4. LOCATION OF FABRICATION PLANT – 70 SOUTH ST. WALPOLE, MA 02081
5. COSMEC INC. REPRESENTATIVE – MR. MATT McANDREWS (508–668–6600)
6. ALL STEEL COMPONENETS SHALL BE METALIZED AS PER SECTION 531.04(b) AND 506.15. AFTER THE BEARINGS ARE METALIZED, THEY SHALL BE SEALED WITH AN APPROVED PRIMER AS SPECIFIED IN SUBSECTION 506.15(c).
7. ⊗ MARK THICK END OF BEVEL
⚠8. PRIOR TO METALIZING, ALL CORNERS & EDGES OF STEEL PLATES, SHAPES, ETC., SHALL BE GROUND TO A 1/16" RADIUS.

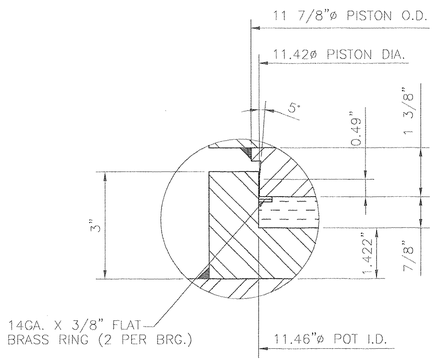

DETAIL A

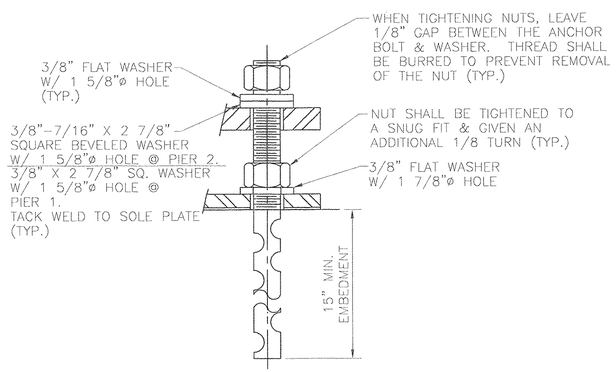

ANCHOR BOLT DETAIL
N.T.S.

1 1/2"ø X 28 1/2" LONG ASTM A307 SWEDGED ANCHOR BOLT WITH 11" THREADS ONE END, TWO HEAVY HEX NUTS, TWO ASTM F844 PLATE WASHERS AND ONE ASTM F844 BEVELED WASHER. ALL GALVANIZED.

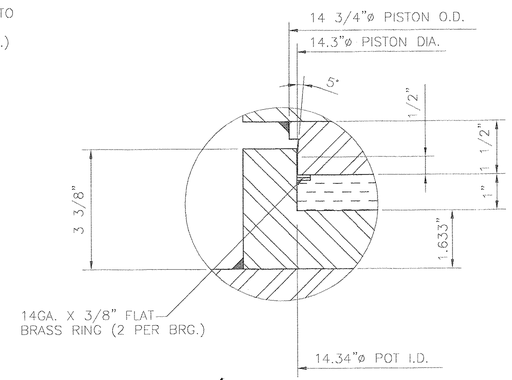

DETAIL B

VTrans - PDD
OCT 16 2002
Structures Design Section
RECEIVED
CK'D BY _____ CK'D BY _____
OCT 16 2002
RESUBMIT _____ APPROVE ✓
BY RRC DATE 10-17-02

STATE OF VERMONT
AGENCY OF TRANSPORATION

BRIDGE NO. 25 & 25A
PROJECT: SEARSBURG – WILMINGTON
PROJECT NO. NHF 010–K(18)
VT. RTE. 9 OVER DEERFIELD RIVER

COSMEC, INC. 70 SOUTH STREET WALPOLE, MA. 02081

SCALE: 1/8"=1"	DRAWN BY: NH	CHECKED BY: MCM
SHEET 1 OF 4	DATE: 8.5.02	DATE: 8.21.02

COSMEC POT BEARINGS

CUSTOMER	S.O. NUMBER	DRAWING NUMBER	REV.
BECK & BELLUCCI, INC.	59599	3701	1

REV.		BY	DATE	CK'D	DATE
⚠	ADDED NOTE 8	NH	10.2.02		

C:\DWG\CURRENT\VT59599\VT59599A.dwg, 10/11/2002 07:56:31 AM

SKEW ANGLE Δ : 44°-25'-12"

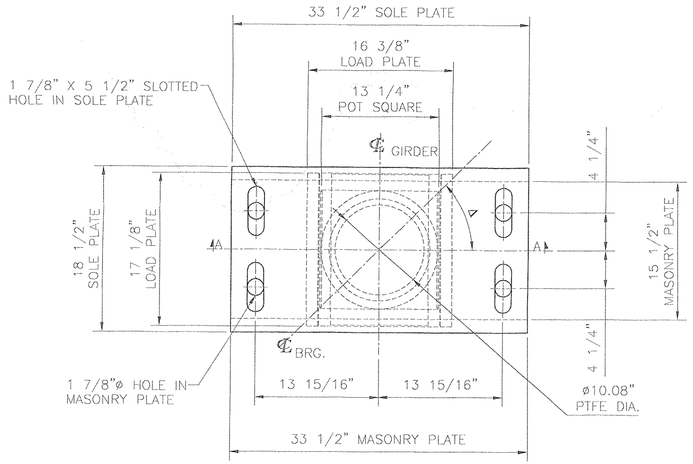

PLAN

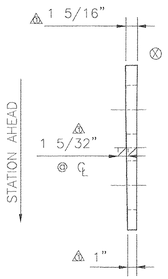

SIDE ELEVATION
BEVELED SOLE PLATE ONLY

SKEW ANGLE Δ @ ABUT. 1: 34°-20'-15"
SKEW ANGLE Δ @ ABUT. 2: 23°-34'-31"

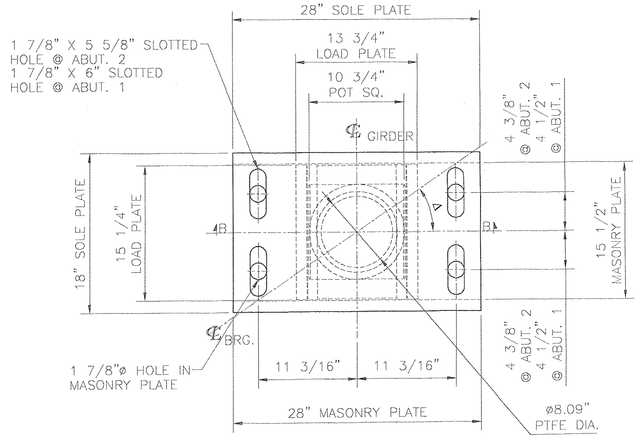

PLAN

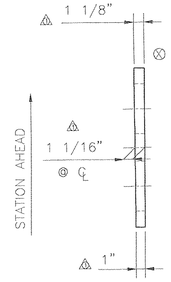

SIDE ELEVATION
BEVELED SOLE PLATE ONLY

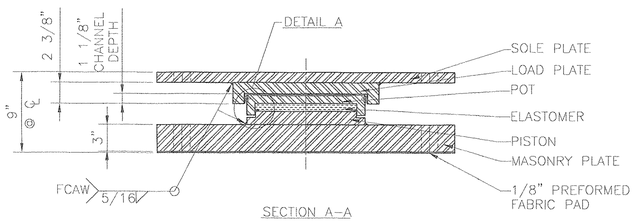

SECTION A-A

GUIDED EXPANSION POT BEARING
LOCATION - BRIDGE 25, PIER 1
QUANTITY - 5
VERTICAL LOAD - 359 KIPS
HORIZONTAL LOAD - 46 KIPS
TOTAL LONGITUDINAL MOVEMENT - 3 7/8"
TOTAL TRANSVERSE MOVEMENT - 1/4"

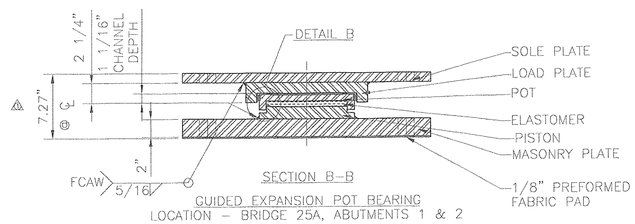

SECTION B-B

GUIDED EXPANSION POT BEARING
LOCATION - BRIDGE 25A, ABUTMENTS 1 & 2
QUANTITY - 10
VERTICAL LOAD - 231 KIPS
HORIZONTAL LOAD - 32 KIPS
TOTAL LONGITUDINAL MOVEMENT - 4 1/2"
TOTAL TRANSVERSE MOVEMENT - 1/4"

MATERIAL:
STEEL - ASTM A709 GR 50 ZINC METALIZED. MASONRY PLATE TO BE CVN.
ELASTOMER - AASHTO 50 DUROMETER NEOPRENE PER VT AOT SECTION 731.03. (LUBRICATED USING DOW CORNING COMPOUND NO. 4 SILICONE GREASE)
BRASS RINGS - ASTM B36 HALF HARD
PREFORMED FABRIC PAD - AASHTO 18.4.10.1 DIV. II
STAINLESS STEEL - ASTM A240 TYPE 304, 10 RMS FINISH OR LESS
PTFE - ASTM D1457 VIRGIN UNFILLED & FILLED

NOTES:
1. DESIGN ROTATION: 0.02 RADS.
2. BEARINGS MUST NOT BE DISASSEMBLED.
3. BEARINGS SHALL BE SHIPPED IN DUST & MOISTURE PROOF COVERS FOR PROTECTION DURING TRANSIT & STORAGE.
4. LOCATION OF FABRICATION PLANT - 70 SOUTH ST. WALPOLE, MA 02081
5. COSMEC INC. REPRESENTATIVE - MR. MATT McANDREWS (508-668-6600)
6. ALL STEEL COMPONENETS SHALL BE METALIZED AS PER SECTION 531.04(b) AND 506.15. AFTER THE BEARINGS ARE METALIZED, THEY SHALL BE SEALED WITH AN APPROVED PRIMER AS SPECIFIED IN SUBSECTION 506.15(c).
7. ⊗ MARK THICK END OF BEVEL
⚠ 8. PRIOR TO METALIZING, ALL CORNERS & EDGES OF STEEL PLATES, SHAPES, ETC., SHALL BE GROUND TO A 1/16" RADIUS.

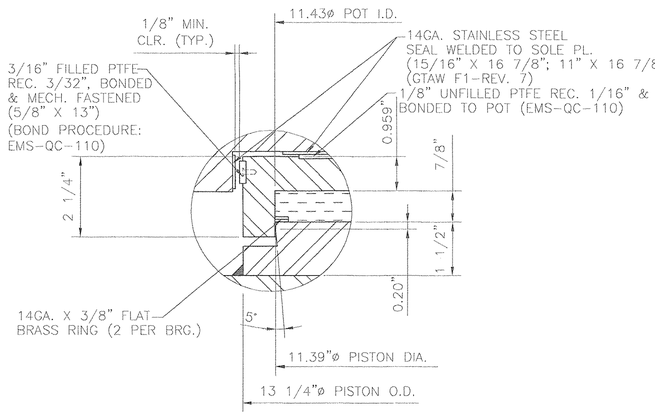

DETAIL A

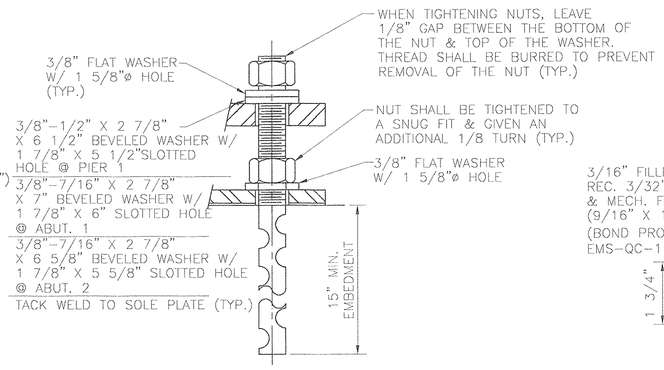

ANCHOR BOLT DETAIL
N.T.S.

1 1/2"ø ASTM A307 SWEDGED ANCHOR BOLT WITH 11" THREADS ONE END, TWO HEAVY HEX NUTS, TWO ASTM F844 FLAT WASHERS AND ONE ASTM F844 BEVELED WASHER. ALL GALVANIZED.

PIER 1: 27" LONG
ABUTS. 1 & 2: 25" LONG

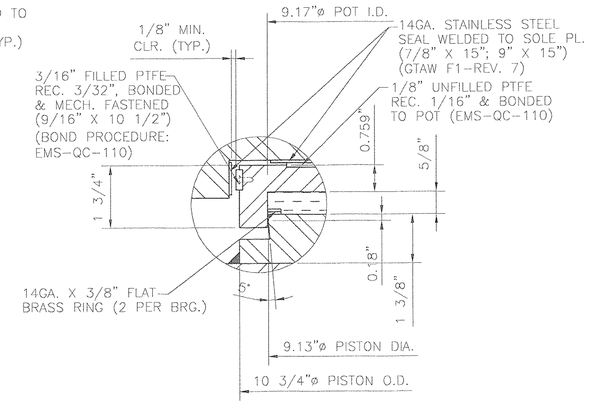

DETAIL B

RECEIVED
OCT 16 2002
RESUBMIT APPROVED
BY RLC DATE 10-17-02

REV.		BY	DATE	CK'D	DATE
⚠	ADDED NOTE 8, REVISED SOLE PLATE THICKNESS & BEARING HEIGHTS	NH	10.2.02		

STATE OF VERMONT
AGENCY OF TRANSPORATION

BRIDGE NO. 25 & 25A
PROJECT: SEARSBURG - WILMINGTON
PROJECT NO. NHF 010-K(18)
VT. RTE. 9 OVER DEERFIELD RIVER

COSMEC, INC. — 70 SOUTH STREET WALPOLE, MA. 02081

SCALE: 1/8"=1"	DRAWN BY: NH	CHECKED BY: MCM
SHEET 2 OF 4	DATE: 8.5.02	DATE: 8.22.02

COSMEC POT BEARINGS

CUSTOMER	S.O. NUMBER	DRAWING NUMBER	REV.
BECK & BELLUCCI, INC.	59599	3702	1

C:\DWG\CURRENT\VT59599\VT59599R.dwg, 10/11/2002 08:26:00 AM

SKEW ANGLE Δ @ ABUT. 1: 45°-49'-20"
SKEW ANGLE Δ @ ABUT. 2: 39°-11'-15"

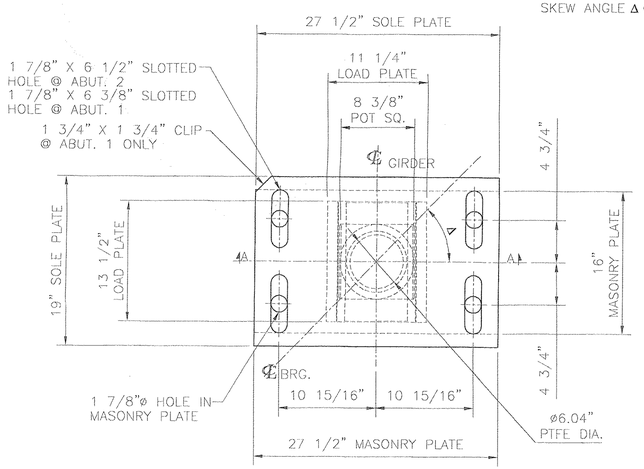

PLAN

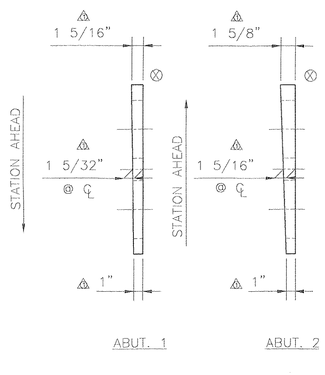

SIDE ELEVATION
BEVELED SOLE PLATE ONLY

SKEW ANGLE Δ @ ABUT. 1: 49°-18'-45"
SKEW ANGLE Δ @ ABUT. 2: 40°-26'-21"

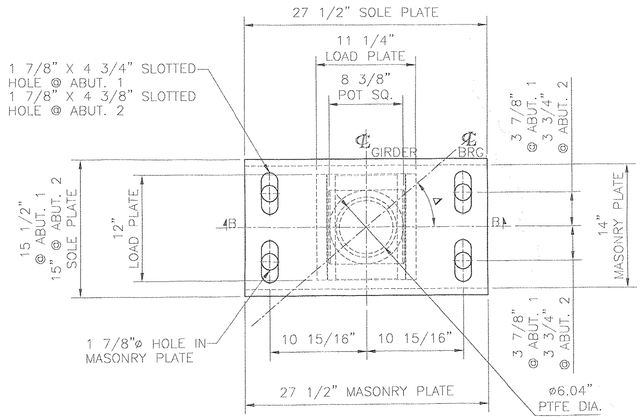

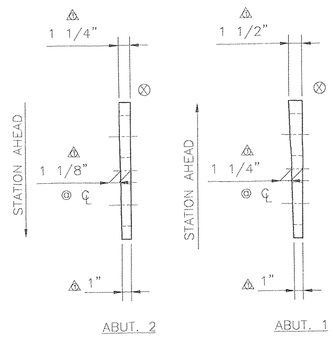

SIDE ELEVATION
BEVELED SOLE PLATE ONLY

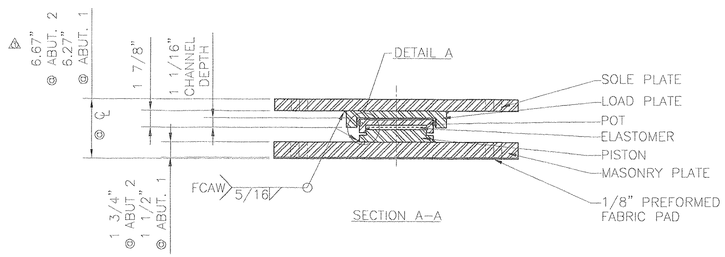

SECTION A-A

GUIDED EXPANSION POT BEARING
LOCATION - BRIDGE 25B, ABUT. 2
QUANTITY - 6
BRIDGE 25, ABUT. 1
QUANTITY - 5
VERTICAL LOAD - 117 KIPS
HORIZONTAL LOAD - 23 KIPS
TOTAL LONGITUDINAL MOVEMENT - 4 7/8"
TOTAL TRANSVERSE MOVEMENT - 1/4"

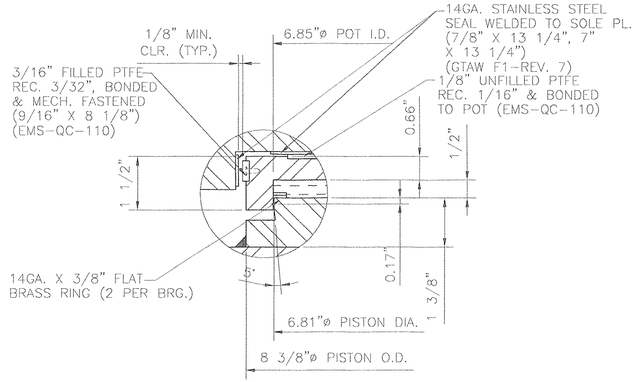

DETAIL A

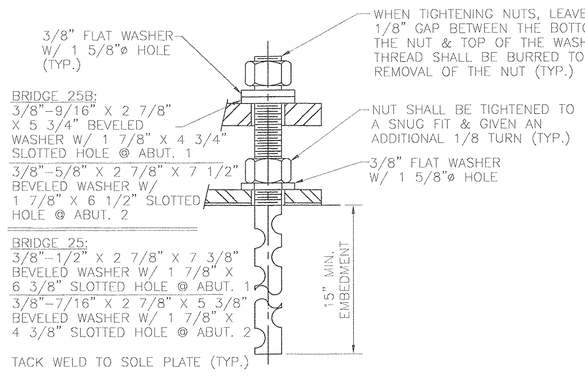

ANCHOR BOLT DETAIL
N.T.S.

1 1/2"ø X 25" LONG ASTM A307 SWEDGED ANCHOR BOLT WITH 11" THREADS ONE END, TWO HEAVY HEX NUTS, TWO ASTM F844 FLAT WASHERS AND ONE ASTM F844 BEVELED WASHER. ALL GALVANIZED.

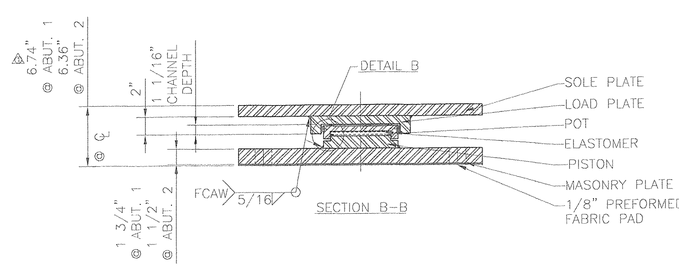

SECTION B-B

GUIDED EXPANSION POT BEARING
LOCATION - BRIDGE 25B, ABUT. 1
QUANTITY - 6
BRIDGE 25, ABUT. 2
QUANTITY - 5
VERTICAL LOAD - 129 KIPS
HORIZONTAL LOAD - 23 KIPS
TOTAL LONGITUDINAL MOVEMENT - 3 1/4"
TOTAL TRANSVERSE MOVEMENT - 1/4"

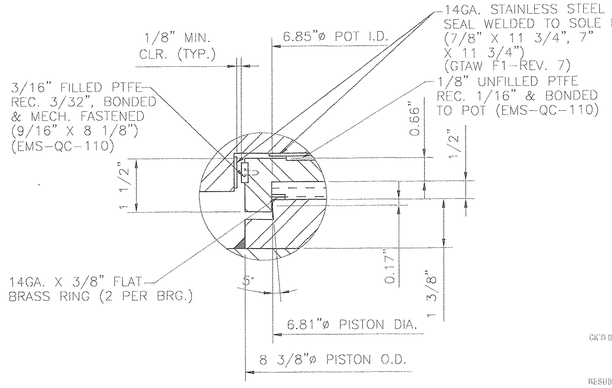

DETAIL A

MATERIAL:
STEEL - ASTM A709 GR 50 ZINC METALIZED. MASONRY PLATE TO BE CVN.
ELASTOMER - AASHTO 50 DUROMETER NEOPRENE PER VT AOT SECTION 731.03. (LUBRICATED USING DOW CORNING COMPOUND NO. 4 SILICONE GREASE)
BRASS RINGS - ASTM B36 HALF HARD
PREFORMED FABRIC PAD - AASHTO 18.4.10.1 DIV. II
STAINLESS STEEL - ASTM A240 TYPE 304, 10 RMS FINISH OR LESS
PTFE - ASTM D1457 VIRGIN UNFILLED & FILLED

NOTES:
1. DESIGN ROTATION: 0.02 RADS.
2. BEARINGS MUST NOT BE DISASSEMBLED.
3. BEARINGS SHALL BE SHIPPED IN DUST & MOISTURE PROOF COVERS FOR PROTECTION DURING TRANSIT & STORAGE.
4. LOCATION OF FABRICATION PLANT - 70 SOUTH ST. WALPOLE, MA 02081
5. COSMEC INC. REPRESENTATIVE - MR. MATT McANDREWS (508-668-6600)
6. ALL STEEL COMPONENETS SHALL BE METALIZED AS PER SECTION 531.04(b) AND 506.15. AFTER THE BEARINGS ARE METALIZED, THEY SHALL BE SEALED WITH AN APPROVED PRIMER AS SPECIFIED IN SUBSECTION 506.15(c).
7. ⊗ MARK THICK END OF BEVEL.
⚠8. PRIOR TO METALIZING, ALL CORNERS & EDGES OF STEEL PLATES, SHAPES, ETC., SHALL BE GROUND TO A 1/16" RADIUS.

RECEIVED
CK'D BY _____ CK'D BY _____
OCT 16 2002
RESUBMIT _____ APPROVED ✓
BY RLC DATE 10-17-02

REV.		BY	DATE	CK'D	DATE
⚠	ADDED NOTE 8, REVISED SOLE PLATE THICKNESS & BEARING HEIGHTS	NH	10.2.02		

STATE OF VERMONT
AGENCY OF TRANSPORATION

BRIDGE NO. 25 & 25B
PROJECT: SEARSBURG - WILMINGTON
PROJECT NO. NHF 010-K(18)
VT. RTE. 9 OVER DEERFIELD RIVER

COSMEC, INC. — 70 SOUTH STREET WALPOLE, MA. 02081

SCALE: 1/8"=1"	DRAWN BY: NH	CHECKED BY: MCM
SHEET 3 OF 4	DATE: 8.6.02	DATE: 8.22.02

COSMEC POT BEARINGS

CUSTOMER	S.O. NUMBER	DRAWING NUMBER	REV.
BECK & BELLUCCI, INC.	59599	3703	1

C:\DWG\CURRENT\VT59599\VT59599C.dwg, 10/11/2002 08:49:27 AM

SKEW ANGLE Δ : 42°-13'-30"

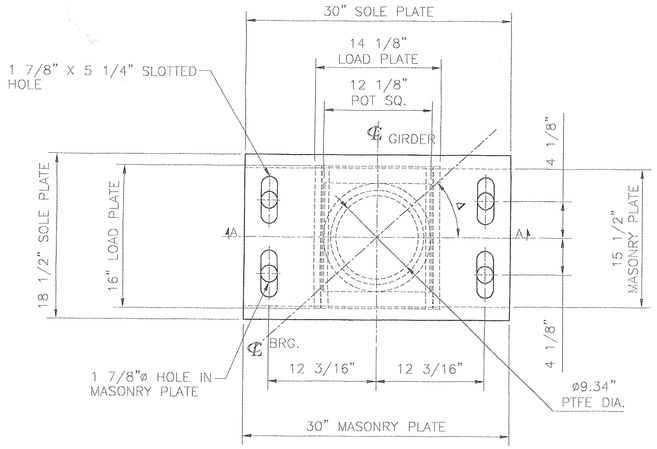

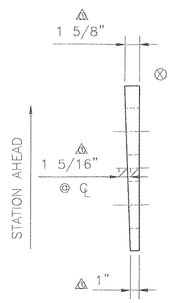

SIDE ELEVATION
BEVELED SOLE PLATE ONLY

SKEW ANGLE Δ : 46°-16'-30"

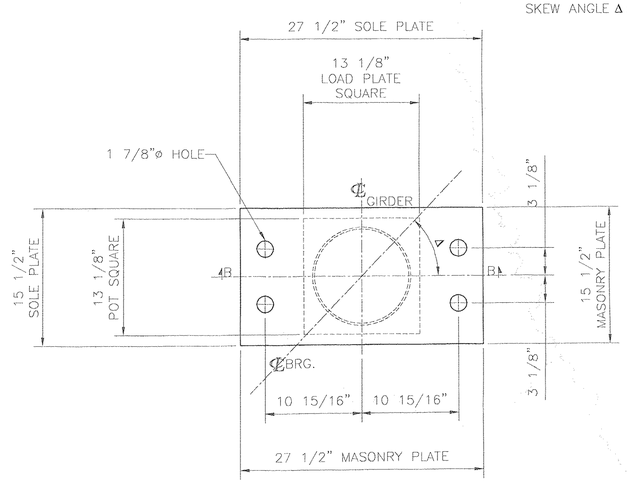

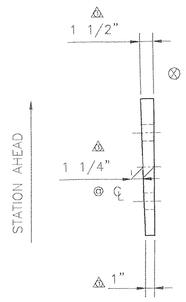

SIDE ELEVATION
BEVELED SOLE PLATE ONLY

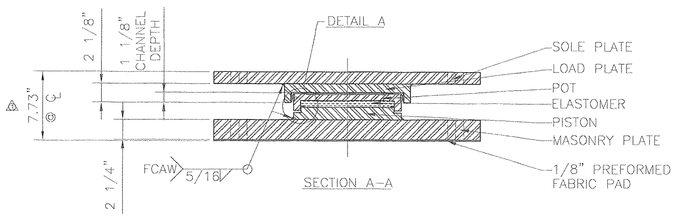

SECTION A-A

GUIDED EXPANSION POT BEARING
LOCATION - BRIDGE 25B, PIER 2
QUANTITY - 6
VERTICAL LOAD - 308 KIPS
HORIZONTAL LOAD - 30 KIPS
TOTAL LONGITUDINAL MOVEMENT - 3 5/8"
TOTAL TRANSVERSE MOVEMENT - 1/4"

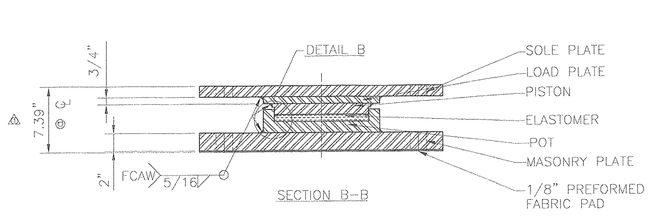

SECTION B-B

FIXED POT BEARING
LOCATION - BRIDGE 25B, PIER 1
QUANTITY - 6
VERTICAL LOAD - 313 KIPS
HORIZONTAL LOAD - 86 KIPS

MATERIAL:
STEEL - ASTM A709 GR 50 ZINC METALIZED. MASONRY PLATE TO BE CVN.
ELASTOMER - AASHTO 50 DUROMETER NEOPRENE PER VT AOT SECTION 731.03. (LUBRICATED USING DOW CORNING COMPOUND NO. 4 SILICONE GREASE)
BRASS RINGS - ASTM B36 HALF HARD
PREFORMED FABRIC PAD - AASHTO 18.4.10.1 DIV. II
STAINLESS STEEL - ASTM A240 TYPE 304, 10 RMS FINISH OR LESS
PTFE - ASTM D1457 VIRGIN UNFILLED & FILLED

NOTES:
1. DESIGN ROTATION: 0.02 RADS.
2. BEARINGS MUST NOT BE DISASSEMBLED.
3. BEARINGS SHALL BE SHIPPED IN DUST & MOISTURE PROOF COVERS FOR PROTECTION DURING TRANSIT & STORAGE.
4. LOCATION OF FABRICATION PLANT - 70 SOUTH ST. WALPOLE, MA 02081
5. COSMEC INC. REPRESENTATIVE - MR. MATT McANDREWS (508-668-6600)
6. ALL STEEL COMPONENETS SHALL BE METALIZED AS PER SECTION 531.04(b) AND 506.15. AFTER THE BEARINGS ARE METALIZED, THEY SHALL BE SEALED WITH AN APPROVED PRIMER AS SPECIFIED IN SUBSECTION 506.15(c).
7. ⊗ MARK THICK END OF BEVEL
⚠8. PRIOR TO METALIZING, ALL CORNERS & EDGES OF STEEL PLATES, SHAPES, ETC., SHALL BE GROUND TO A 1/16" RADIUS.

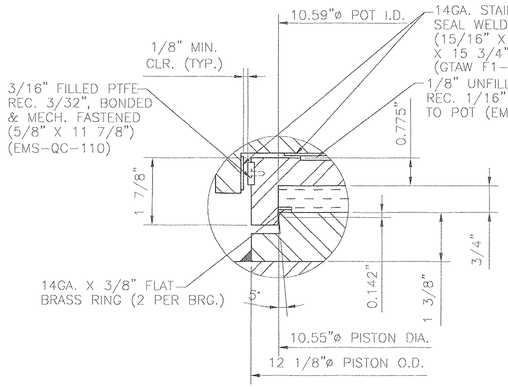

DETAIL A

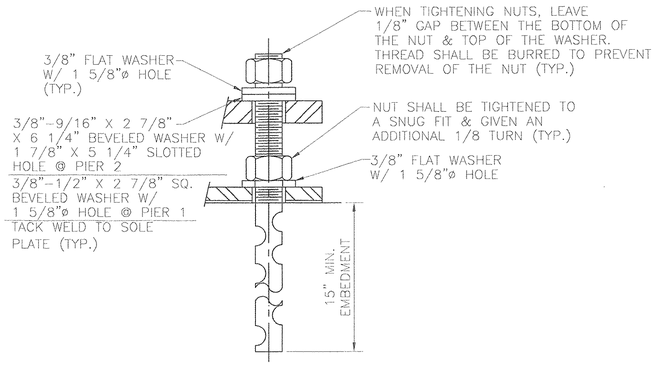

ANCHOR BOLT DETAIL
N.T.S.

1 1/2"ø X 25 1/2" LONG ASTM A307 SWEDGED ANCHOR BOLT WITH 11" THREADS ONE END, TWO HEAVY HEX NUTS, TWO ASTM F844 FLAT WASHERS AND ONE ASTM F844 BEVELED WASHER. ALL GALVANIZED.

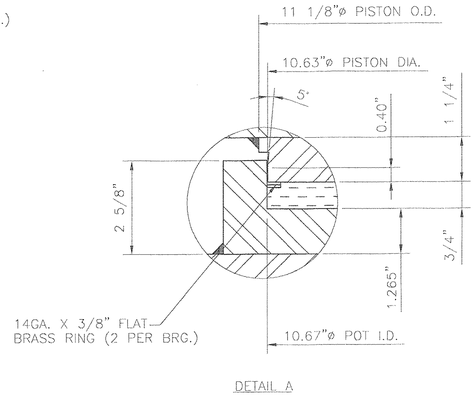

DETAIL A

RECEIVED
CK'D BY _____ CK'D BY _____
OCT 16 2002
RESUBMIT _____ APPROVED _____
BY FKW DATE 10-17-02

STATE OF VERMONT
AGENCY OF TRANSPORATION

BRIDGE NO. 25B
PROJECT: SEARSBURG - WILMINGTON
PROJECT NO. NHF 010-K(18)
VT. RTE. 9 OVER DEERFIELD RIVER

COSMEC, INC. — 70 SOUTH STREET WALPOLE, MA. 02081

SCALE: 1/8"=1"	DRAWN BY: NH	CHECKED BY: MCM
SHEET 4 OF 4	DATE: 8.7.02	DATE: 8.22.02

COSMEC POT BEARINGS

CUSTOMER	S.O. NUMBER	DRAWING NUMBER	REV.
BECK & BELLUCCI, INC.	59599	3704	1

REV.		BY	DATE	CK'D	DATE
⚠	ADDED NOTE 8, REVISED SOLE PLATE THICKNESS & BEARING HEIGHTS	NH	10.2.02		

C:\DWG\CURRENT\VT59599\VT595990.dwg, 10/11/2002 08:51:42 AM

NOTE: THE REQUIREMENTS OF ITEM #540.10 – PRECAST CONCRETE BOX (MOD.) – AND SECTION 501 (STRUCTURAL CONCRETE) OF THE VAOT STANDARD SPECIFICATIONS FOR CONSTRUCTION SHALL APPLY TO THIS WORK.

DESCRIPTION OF FABRICATING FACILITIES FOR UNIT PRODUCTION:

1. ALL CONCRETE TO BE SUPPLIED BY THE FORT MILLER CO., INC. AUTOMATED, NPCA CERTIFIED BATCH PLANT.
2. CONCRETE TO BE DELIVERED FROM BATCH PLANT DIRECTLY TO THE FORM USING A MIXER TRUCK AND CONCRETE BUCKET.
3. ALL CONCRETE TO BE CONSOLIDATED USING INTERNAL VIBRATION.
4. QUALITY CONTROL EQUIPMENT: A) COMPRESSION MACHINE: FORNEY MODEL QC–410 (DATE OF CALIBRATION MAY 9, 2002)
   B) HIGH PRESSURE AIR METER – PRESS–AIRE METER FORNEY MODEL LA–316

CONCRETE DATA

1. CONCRETE COMPRESSIVE STRENGTH

A) LIFTING STRENGTH (FORM STRIPPING) = 4000 PSI

B) 28–DAY STRENGTH = 6000 PSI

2. MIX DESIGN (YIELD: 1.0 CUBIC YARD): MIX CODE ASP09

CEMENT:	752	LBS	TYPE I/II	UNIT WEIGHT:	144.47 PCF (APPROX.)
COARSE AGGREGATE:	1643	LBS	ASTM C33, SIZE #67	28–DAY STRENGTH:	6000 PSI (MIN.)
FINE AGGREGATE:	1306	LBS	ASTM C33	STRIPPING STRENGTH:	4000 PSI (MIN.)
WATER CONTENT:	256	LBS		WATER–CEMENT RATIO:	0.34 (APPROX.)
HIGH RANGE WATER REDUCER:	50	OZ	ASTM C494	AIR CONTENT:	5.0% TO 9.0%
LOW RANGE WATER REDUCER:	22	OZ	ASTM C494	SLUMP:	5" TO 9" (AFTER ADDITION OF HRWR)
AIR ENTRAINING AGENT:	22	OZ	ASTM C260		
CORROSION INHIBITOR:	256	OZ	ASTM C494 TYPE C		

PRIMARY MATERIAL SOURCE: 3901 LBS TOTAL (SEE ADMIXTURE NOTE BELOW)

CEMENT: BLUE CIRCLE CEMENT CO.; RAVENA, NY
COARSE AGGREGATE: E. GALUSHA & SONS; SOURCE #1–97G, TEST #99AG26C
FINE AGGREGATE: PECKHAM MATERIALS; SOURCE #1–85F, TEST #00AF20
HIGH RANGE WATER REDUCER: W.R. GRACE CO.; ADVA
LOW RANGE WATER REDUCER: W.R. GRACE CO.; WRDA/HYCOL
AIR ENTRAINING AGENT: W.R. GRACE CO.; DARAVAIR
CORROSION INHIBITOR: W.R. GRACE CO.; DCI

Per Steve Grimmett 9/19/02 To Be Approved By VAOT Materials & Research

ADMIXTURE NOTE:
THE AMOUNT OF WATER REDUCING ADMIXTURES MAY VARY SLIGHTLY FROM DAY TO DAY. VARIATIONS IN ADMIXTURE QUANTITIES ARE MADE TO MAINTAIN A FAVORABLE WATER–CEMENT RATIO WHILE MAINTAINING A WORKABLE MIXTURE. THEREFORE WHEN THERE IS AN INCREASE IN THE HIGH RANGE WATER REDUCER, THERE IS A CORRESPONDING DE–CREASE IN THE AMOUNT OF WATER REQUIRED. THIS, IN TURN, INCREASES SLIGHTLY THE AMOUNT OF SAND AND STONE REQUIRED TO MAINTAIN A 1.0 CUBIC YARD YIELD.

3. TESTING:

PRECAST CONCRETE UNITS SHALL BE MANUFACTURED IN A PLANT WHICH PROVIDES BATCHING FACILITIES COMPLYING WITH THE REQUIREMENTS OF VAOT SECTION 501.05, WHICH PROVIDES A TESTING LABORATORY AS REQUIRED IN VAOT 501.04(B) AND WHICH CONTAINS A QUALITY CONTROL LABORATORY COMPLETE WITH EQUIPMENT FOR MEASURING THE PROPERTIES OF FRESH AND HARDENED CONCRETE. AT A MINIMUM, THE QUALITY CONTROL LABORATORY SHALL BE EQUIPPED WITH A COMPRESSION TESTING MACHINE, A CURING ROOM OR CHAMBER, APPARATUS FOR MEASURING SLUMP AND AIR ENTRAINMENT, AND A COMPLETE SET OF AGGREGATE SIEVES. THE COMPRESSION TESTING MACHINE SHALL BE CALIBRATED YEARLY BY AN INDEPENDENT LABORATORY USING EQUIPMENT WHICH IS CERTIFIED BY THE NATIONAL BUREAU OF STANDARDS. THE TESTING MACHINE SHALL BE POWER OPERATED AND CAPABLE OF APPLYING THE LOAD CONTINUOUSLY RATHER THAN INTERMITTENTLY, AND WITHOUT SHOCK.

FOR TESTING CONCRETE, THE FOLLOWING REQUIREMENTS SHALL APPLY:
A) SAMPLING – SAMPLING FOR TESTS SHALL BE TAKEN IN ACCORDANCE WITH AASHTO T–141, SAMPLING OF FRESH CONCRETE, AS MODIFIED BY VAOT.
B) SLUMP TESTS – SLUMP TESTS, USING A SLUMP CONE, SHALL BE MADE IN ACCORDANCE WITH AASHTO T–119, SLUMP OF PORTLAND CEMENT CONCRETE.
C) AIR CONTENT – AIR CONTENET TESTS SHALL BE MADE IN ACCORDANCE WITH AASHTO T–152, AIR CONTENT OF FRESHLY MIXED CONCRETE BY PRESSURE METHOD, USING A PRESSURE TYPE AIR METER.

THE QUALITY CONTROL LABORATORY AND ITS EQUIPMENT MAY BE FACILITIES SEPARATE FROM THE TESTING LABORATORY, OR THE SAME FACILITIES, AS LONG AS ALL REQUIREMENTS ARE SATISFIED FULLY.
THE FABRICATOR SHALL PROVIDE ALL NECESSARY ASSISTANCE TO THE ENGINEER TO ENSURE THAT ALL NECESSARY TESTING IS PERFORMED IN A TIMELY MANNER. UNLESS OTHERWISE DIRECTED BY THE CHIEF ENGINEER, ACTUAL TESTING WILL BE PERFORMED BY THE AGENCIES INSPECTOR.

SPECIMENS FOR COMPRESSIVE STRENGTH TESTING SHALL BE 6" BY 12" STANDARD CYLINDERS. A TEST SHALL BE THE AVERAGE OF THE STRENGTH OF AT LEAST (2) SPECIMENS FROM THE SAMPLE OF CONCRETE. A MINIMUM OF (4) CYLINDERS PER DAY OR PER (50) CUBIC YARDS OF CONCRETE SHALL BE MADE TO DETERMINE COMPLIANCE WITH THE 28–DAY STRENGTH REQUIREMENT. ADDITIONAL CYLINDERS SHALL MADE TO MONITOR THE REQUIRED CURING OR HANDLING STRENGTH (4000 PSI). TEST CYLINDERS SHALL BE CURED FOR THE REQUIRED CURING PERIOD WITH AND BY THE SAME METHODS AS THE UNITS THEY REPRESENT. AT THE END OF THE REQUIRED CURING PERIOD, THE CYLINDERS SHALL BE REMOVED FROM THEIR MOLDS AND PLACED IN STORAGE IN A MOIST CONDITION AT 73.5° ± 3°F.

REINFORCING STEEL DATA

1. BLACK REINFORCEMENT SHALL BE IN CONFORMANCE WITH ASTM A615, GRADE 60.
2. EPOXY–COATED REINFORCEMENT (WHERE REQ'D) IN CONFORMANCE WITH ASTM A775.

PRODUCTION SCHEDULE

1. THE CONTRACTOR SHALL BE NOTIFIED AT LEAST (3) WEEKS PRIOR TO THE DATE THAT CASTING OF THE UNITS IS TO BEGIN IN ORDER THAT ARRANGEMENTS FOR PLANT INSPECTION MAY BE MADE BY VAOT.
2. ONCE CASTING HAS BEGUN IT SHALL BE DONE ON A RELATIVELY CONTINUOUS BASIS. CURING ON A PIECEMEAL BASIS WILL NOT BE ACCEPTABLE.
3. MARKING: EACH UNIT SHALL BE MARKED WITH THE FOLLOWING INFORMATION:

   THE FORT MILLER CO., INC.
   JOB #734 DATE CAST
   (MARK #) (LOT #)

FABRICATION

PRECAST CONCRETE UNITS SHALL BE CAST TO CONFORM TO THE SHAPE AND SIZE SHOWN ON THESE APPROVED SHOP DRAWINGS. UNITS SHALL BE UNIFORM IN APPEARANCE. THE ENDS OF CHAIRS OR SPACERS USED TO SUPPORT AND LOCATE REINFORCING STEEL AND BEAR ON THE FACES OF FORMS SHALL BE MADE OF OR COATED WITH NON–CORROSIVE MATERIALS SO THAT NO DISCOLORATION WILL SHOW ON THE FACES OF UNITS.

FORMS SHALL BE EXTERNALLY BRACED AND OF SUFFICIENT THICKNESS TO MAINTAIN A TRUE SHAPE AND ALIGNMENT. FORM OIL USED SHALL BE OF A NON–STAINING TYPE.

CURING

REGARDLESS OF THE CURING METHOD USED, UNITS SHALL NOT BE MOVED UNTIL THE CONCRETE HAS ATTAINED A COMPRESSIVE STRENGTH OF AT LEAST 4000 PSI.

NON–ACCELERATED CURE / SATURATED COVER:

PRODUCTION OF THESE PRECAST UNITS WILL OCCUR INSIDE A HEATED BUILDING.

1) INITIAL CURING PHASE:
INITIAL CURING PHASE FOR EACH UNIT SHALL BE THAT PERIOD BEGINNING FROM THE TIME EACH UNIT IS COMPLETELY FINISHED AND CONTINUING UNTIL THE FINAL CURING PHASE COMMENCES. DURING THIS PHASE, THE ENCLOSURE (FORM) TEMPERATURE SHALL BE MAINTAINED AT APPROXIMATELY THE CONCRETE PLACING TEMPERATURE; ARTIFICIAL HEAT SHALL BE APPLIED IF NECESSARY. THE PLASTIC CONCRETE OF EACH UNIT CAST SHALL BE ALLOWED TO ATTAIN INITIAL SET BEFORE THE FINAL CURING PHASE BEGINS TO PREVENT DAMAGE TO THE TOP–IN–FORM–SURFACE. THE INITIAL CURING PHASE SHALL BE APPROXIMATELY 1–4 HOURS, BUT SHALL NOT EXCEED 8 HOURS.

2) FINAL CURING PHASE:
THE FINAL CURING PHASE MAY BEGIN AT ANY TIME AFTER INITIAL SET HAS BEEN ATTAINED. EACH UNIT SHALL BE COVERED WITH HEAVY, WATER SATURATED BURLAP, OR OTHER MATERIAL ACCEPTABLE TO THE INSPECTOR. THE BURLAP SHALL BE KEPT SATURATED, AND THE CONCRETE SURFACE TEMPERATURE SHALL NOT DROP BELOW 45°F. THESE CONDITIONS SHALL BE MAINTAINED FOR A MINIMUM PERIOD OF (7) DAYS.

3) FALL/WINTER WEATHER CURING PROCEDURES
ALL CASTING WILL BE DONE IN HEATED PRODUCTION BUILDINGS WHERE THE AMBIENT AIR TEMPERATURE IS ABOVE 45°F. IF THE NECESSITY ARISES FOR PLACING CONCRETE AT A TEMPERATURE BELOW 45°F, A SEPARATE PROCEDURE WILL BE SUBMITTED FOR REVIEW.

TOLERANCES

ALL UNITS SHALL BE CHECKED FOR COMPLIANCE WITH THE TOLERANCES LISTED BELOW, AFTER THE UNITS HAVE COMPLETED THE FINAL CURING PHASE AND WITHIN THREE DAYS OF ACTUAL SHIPMENT.
TOLERANCES ARE AS FOLLOWS:

A. BAR REINFORCEMENT COVER
   1. 2" –0", +¼" BACK FILLED SURFACES (ROOF & WALLS)
   2. 1½" –0", +¼" ON ALL OTHER SURFACES

B. INTERNAL DIMENSIONS
   SPAN: 32'–0" ± 1" (PERPENDICULAR)
   RISE: 7'–4" ± 1"
   HAUNCH: ±¼" OF DESIGN DIMENSIONS

C. SLAB & WALL THICKNESSES
   1'–3¾" MINIMUM SLAB THICKNESS
   1'–6¾" MINIMUM WALL THICKNESS (MEASURED PERPENDICULAR)
   (A THICKNESS GREATER THAN REQUIRED SHALL NOT BE CAUSE FOR REJECTION.)

D. LENGTH OF OPPOSITE SURFACES
   LAYING LENGTH OF 2 ADJACENT UNITS SHALL NOT VARY BY MORE THAN ⅝" MAX.

E. LENGTH OF SECTION
   UNDERRUN IN ANY SECTION SHALL NOT BE MORE THAN ½" MAX.

REPAIR OF UNITS

UNITS THAT CONTAIN MINOR DEFECTS CAUSED BY MANUFACTURE OR HANDLING MAY BE REPAIRED AT THE MANUFACTURING SITE. MINOR DEFECTS ARE DEFINED AS HOLES, HONEYCOMBING OR SPALLS WHICH ARE 6 INCHES OR LESS IN DIAMETER, THAT DO NOT PENETRATE DEEPER THAN 2 INCHES INTO THE CONCRETE. SURFACE VOIDS OR "BUGHOLES" THAT ARE LESS THAN ⅝" IN DIAMETER AND LESS THAN ¼" DEEP NEED NOT BE REPAIRED. REPAIRS SHALL BE MADE USING AN OVERHEAD AND VERTICAL CONCRETE REPAIR MATERIAL SATISFACTORY TO THE ENGINEER. REPAIRS SHALL BE MADE IN ACCORDANCE WITH THE APPLICABLE REQUIREMENTS OF VAOT SECTION 580 – STRUCTURAL CONCRETE REPAIR – AND SHALL BE APPROVED BY THE ENGINEER.
UNITS HAVING MAP OR CRAZE CRACKING OR LARGE SPALLS ARE NOT ACCEPTABLE AND SHALL NOT BE REPAIRED. ANY UNITS HAVING CRACKS WHICH GO THROUGH THE SECTION ARE NOT ACCEPTABLE AND SHALL NOT BE REPAIRED.

LOAD RATING (LOAD FACTOR METHOD)		
LIVE LOADING	INVENTORY	OPERATING
HS–25	HS–28.01	HS–46.75

YARD STORAGE

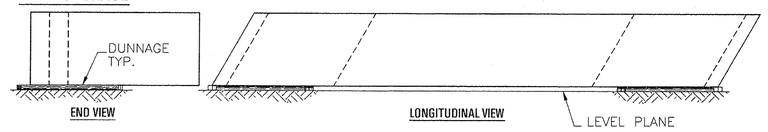

SHIPPING

PRECAST UNITS SHALL MEET 28–DAY STRENGTH REQUIREMENTS PRIOR TO SHIPPING. THE VAOT INSPECTOR SHALL INSPECT ALL UNITS PRIOR TO SHIPPING. UNITS WILL BE CONSIDERED FOR SHIPPING ONLY IF THEY ARE FREE FROM DEFECTS AS NOTED UNDER "REPAIR OF UNITS" ABOVE AND IF ALL SPECIFICATION REQUIREMENTS ARE ACHIEVED. PRECAST UNITS SHIPPED WITHOUT THE INSPECTOR'S APPROVAL WILL NOT BE USED AND WILL BE REJECTED WITHOUT EXCEPTION.

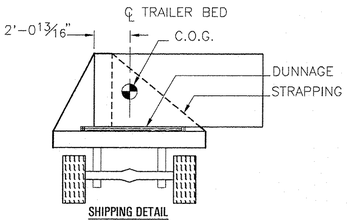

SHIPPING SUPPORT

1. STRUCTURAL UNITS SHALL PLACED ON WOOD DUNNAGE SPACED NEAR EACH END.
2. HYSPAN SHALL BE STRAPPED TO THE TRAILER AT A MINIMUM OF TWO PLACES PER UNIT. STRAPPING TO BE LOCATED OVER DUNNAGE.

INSPECTION/TESTING: VERMONT AGENCY OF TRANSPORTATION.

BASIS OF ACCEPTANCE:

THE INSPECTOR'S STAMP OF APPROVAL SHALL CONSTITUTE THE BASIS OF ACCEPTANCE FOR SHIPMENT TO THE JOB SITE. THE INSPECTOR'S STAMP SHALL BE PLACED ON EACH UNIT AFTER LOADING FOR SHIPMENT.

MISCELLANEOUS NOTES:

1) VERTICAL EDGES OF THE HYSPAN WALLS DESCRIBING AN ACUTE ANGLE SHALL RECEIVE A 1" CHAMFER.
2) POSITION OF REINFORCEMENT MAINTAINED WITH THERMOPLASTIC CHAIRS.
3) ALL HYSPAN LIFTING DEVICES TO BE MEDCO 20S(16T), SC–52 LIFTING ANCHORS U.N.O.
4) HYSPAN INTERIOR JOINT KEYWAYS TO RECEIVE A BRUSH SANDBLAST PRIOR TO SHIPPING.
5) FORT MILLER SUPPLIED ITEMS INCLUDE THE FOLLOWING:
   A) 1" RUBATEX CLOSED–CELL FOAM FOR VERTICAL JOINTS. (INSTALLED)
   B) MEDCO #6 STANDARDLOK EPOXY REBAR COUPLERS (CAST IN)
   C) ITEMS SHOWN IN "SHIP LOOSE" LIST BELOW
6) CONTRACTOR SUPPLIED ITEMS INCLUDE (& ARE NOT LIMITED TO) THE FOLLOWING:
   A) APPROVED GROUT USED FOR SEALING JOINTS & FOOTER KEY.
   B) STEEL OR OTHER APPROVED NON–COMPRESSIBLE SHIMS.
   C) CABLES/SHACKLES/UNEQUAL LENGTH SLINGS FOR UNLOADING & SETTING.
   D) 1" MIN. FOAM BACKER ROD FOR JOINTS.
   E) #6 THREADED EPOXY DOWEL BARS (¾"–10NC THREAD) FOR C.I.P. HEADWALL CONNECTION.
   F) ALL REINFORCEMENT FOR CAST–IN–PLACE CONSTRUCTION

SHIP LOOSE:

1) 16T SC–52 LIFTING EYES (TO BE RETURNED) QTY. (4)
2) 18T COFFEE POT LIFTING SLINGS (TO BE RETURNED) QTY. (2)
3) CLIP ANGLE ASSEMBLIES (TEMP. CONNECTION HARDWARE – TO BE RETURNED) QTY. (8)
   EACH ASSEMBLY TO CONSIST OF:
   (2) – 6" X 6" X ½" CLIP ANGLES X 6" LONG
   (2) – 1"ø X 3" HEX BOLTS
   (2) – 1"ø FLAT WASHERS
   (1) – ¾"ø X 28" LONG COIL ROD W/TAB
   (1) – ¾"ø COIL NUT
   (1) – ¾"ø FLAT WASHER
4) TECHNICAL SERVICE

TABLE OF CONTENTS

SHEET No.	DRAWING No.	TITLE	REVISION No.
1	B1	PRODUCTION NOTE SHEET	0
2	B2	BRIDGE LAYOUT	0
3	B3	UNIT DETAILS	0
4	B4	REINFORCEMENT/LIFTING	0

TABLE OF UNITS

	UNIT	QTY	LAY LENGTH	VOLUME (CY)	WEIGHT (T)
HYSPAN UNITS	H1	1	4'–6⅜"	12.9	26.1
	H2	14	4'–6⅜"	12.9	26.1
	H3	1	4'–6⅜"	12.9	26.1

NOTE:
THE VOLUMES AND WEIGHTS LISTED ARE BASED ON DESIGN THICKNESSES. ACTUAL VALUES CAN AND DO VARY IN ACCORDANCE WITH ALLOWABLE TOLERANCES. IT IS NECESSARY TO SIZE ALL LIFTING EQUIPMENT TAKING THIS FACT INTO CONSIDERATION.

NOTE TO CONTRACTOR:

THIS SHOP DRAWING REPRESENTS OUR INTERPRETATION OF THE PLANS AND SPECIFICATIONS, AND OUR CONTRACT REQUIREMENTS FOR THIS PROJECT. PRIOR TO THE MANUFACTURE OF ANY ITEM FOR THIS PROJECT, ALL DIMENSIONS, METHODS OF CONSTRUCTION AND EXISTING CONDITIONS MUST BE CHECKED, CORRECTED AND/OR APPROVED BY OUR CUSTOMER. NO ITEM WILL BE SCHEDULED FOR PRODUCTION UNTIL WE HAVE BEEN NOTIFIED IN WRITING THAT OUR DRAWINGS HAVE BEEN APPROVED FOR FABRICATION. APPROVAL DELAYS WILL RESULT IN FABRICATION DELAYS. ANY ITEM THAT IS FABRICATED IN ACCORDANCE WITH APPROVED SHOP DRAWINGS THAT DOES NOT FIT THE CUSTOMER'S REQUIREMENTS WILL BE REMADE AND SHIPPED TO THE PROJECT ONLY AT THE CUSTOMER'S EXPENSE, AND ONLY AFTER RECEIPT OF A PURCHASE ORDER TO COVER THE ADDED EXPENSE. WE ASSUME NO RESPONSIBILITY FOR THE ALTERING OF OUR PRODUCTS TO ACCOM–MODATE OTHER TRADES UNLESS REQUIRED INFORMATION IS FURNISHED AND SHOWN ON OUR SHOP DRAWINGS AT THE TIME THEY ARE APPROVED FOR FABRICATION BY OUR CUSTOMER.

VAOT
RECEIVED
CK'D BY DV OK'D BY
AUG 0 1 2002
RESUBMIT APPROVED As Noted
BY RRW DATE 8/2/02

NO.	DATE	BY	REVISIONS

THE FORT MILLER Co., Inc.
P.O. BOX 98
SCHUYLERVILLE, NY 12871
(518) 695–5000
(518) 695–4970 FAX

F.M. JOB NO. 734
SHEET NO. 1
DATE: 6–1–02
DRN. BY: M.WERN
CHK. BY: S. HARRIGAN
SCALE: NONE

PROJECT: VT RTE 9 OVER BOND BROOK T/O SEARSBURG, VT
SUBJECT: PRODUCTION NOTE SHEET
CONTRACTOR: BECK & BELLUCCI, INC.
ENGINEER/ARCHITECT CLOUGH, HARBOUR & ASSOCIATES

DWG. NO. B1

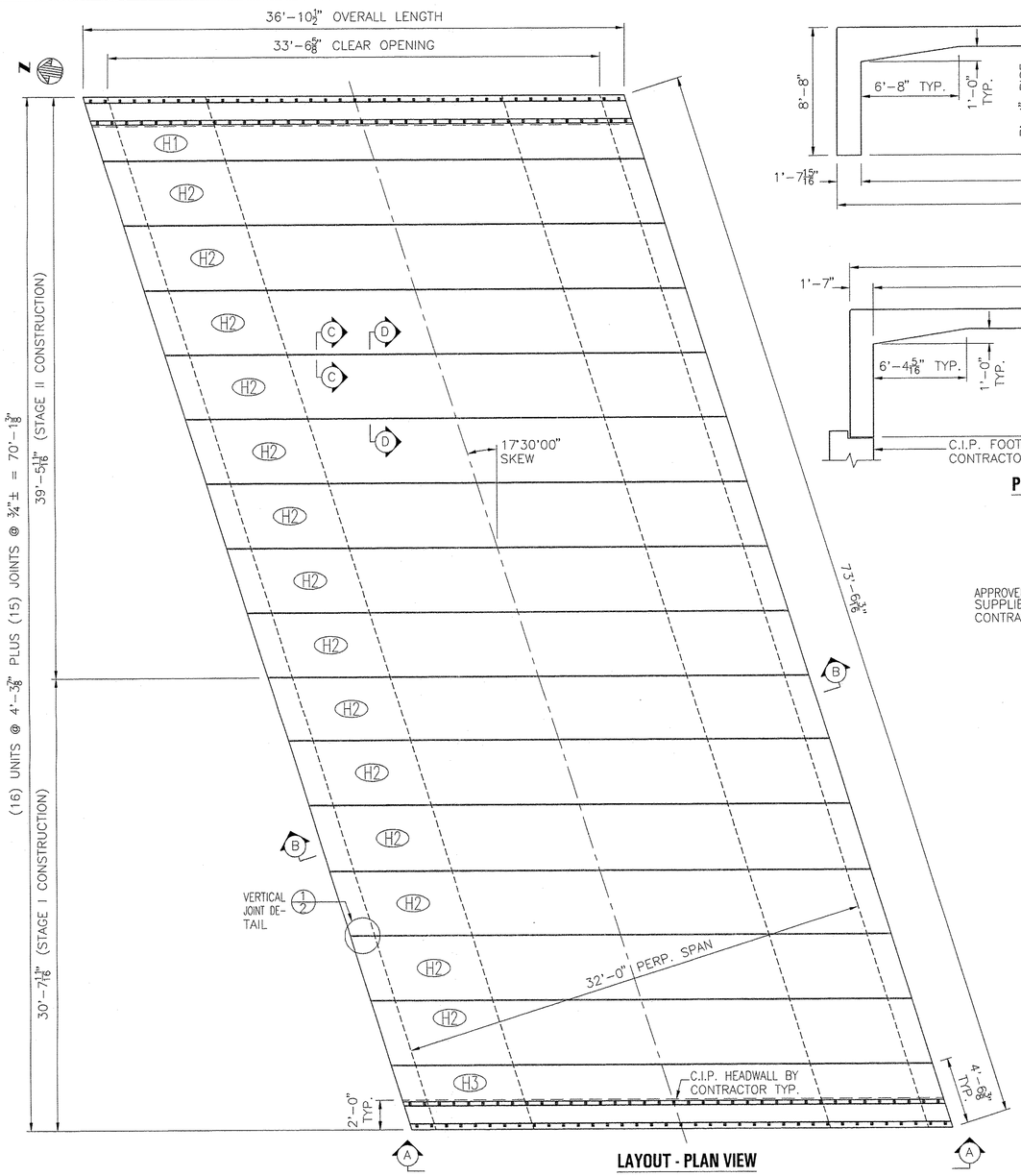

LAYOUT - PLAN VIEW

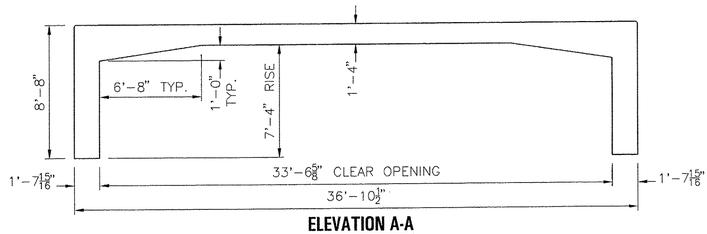

ELEVATION A-A

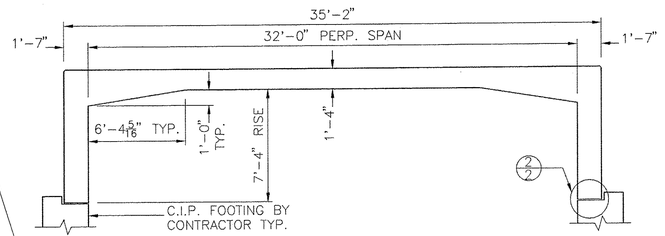

PERPENDICULAR SECTION B-B

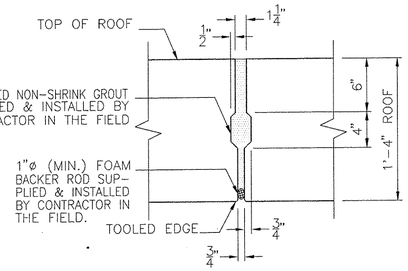

SECTION C-C

TYP. INTERIOR ROOF JOINT
NOTE: NO ROOF KEYWAY REQ'D @ FASCIA, MK#'S H1 & H3

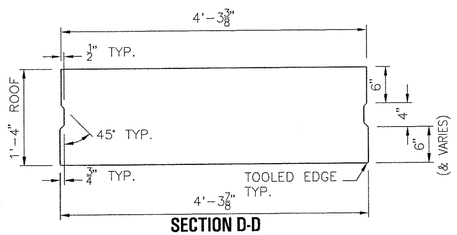

SECTION D-D

TYP. AT INTERIOR UNITS
NO ROOF KEYWAY @ FASCIA
(MK#'S H1 & H3)

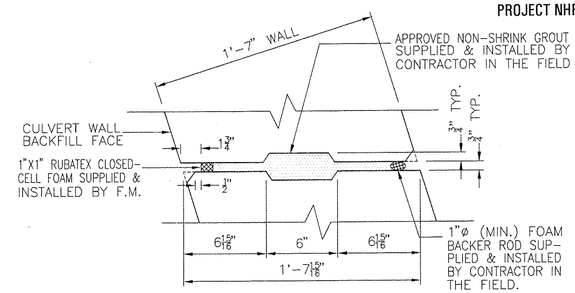

1/2 VERTICAL JOINT DETAIL

PLAN - TYP. BETWEEN UNITS
NOTE: ALL VERTICAL EDGES DESCRIBING AN ACUTE ANGLE TO RECEIVE A 1" CHAMFER

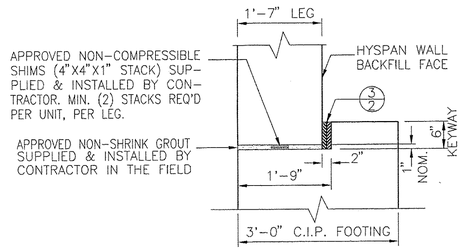

2/2 FOOTING DETAIL

PERPENDICULAR SECTION
C.I.P. FOOTING BY CONTRACTOR

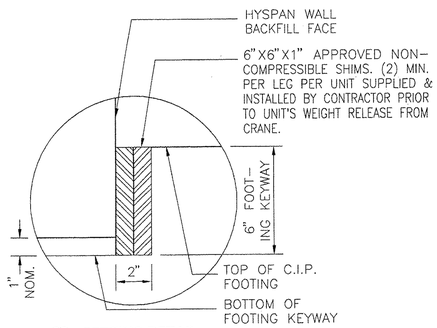

3/2 SETTING DETAIL

FOOTING KEYWAY GROUT NOT SHOWN FOR CLARITY

NOTE TO CONTRACTOR:

THIS SHOP DRAWING REPRESENTS OUR INTERPRETATION OF THE PLANS AND SPECIFICATIONS, AND OUR CONTRACT REQUIREMENTS FOR THIS PROJECT. PRIOR TO THE MANUFACTURE OF ANY ITEM FOR THIS PROJECT, ALL DIMENSIONS, METHODS OF CONSTRUCTION AND EXISTING CONDITIONS MUST BE CHECKED, CORRECTED AND/OR APPROVED BY OUR CUSTOMER. NO ITEM WILL BE SCHEDULED FOR PRODUCTION UNTIL WE HAVE BEEN NOTIFIED IN WRITING THAT OUR DRAWINGS HAVE BEEN APPROVED FOR FABRICATION. APPROVAL DELAYS WILL RESULT IN FABRICATION DELAYS. ANY ITEM THAT IS FABRICATED IN ACCORDANCE WITH APPROVED SHOP DRAWINGS THAT DOES NOT FIT THE CUSTOMER'S REQUIREMENTS WILL BE REMADE AND SHIPPED TO THE PROJECT ONLY AT THE CUSTOMER'S EXPENSE, AND ONLY AFTER RECEIPT OF A PURCHASE ORDER TO COVER THE ADDED EXPENSE. WE ASSUME NO RESPONSIBILITY FOR THE ALTERING OF OUR PRODUCTS TO ACCOMMODATE OTHER TRADES UNLESS REQUIRED INFORMATION IS FURNISHED AND SHOWN ON OUR SHOP DRAWINGS AT THE TIME THEY ARE APPROVED FOR FABRICATION BY OUR CUSTOMER.

VAOT
RECEIVED
OK'D BY DV OK'D BY
AUG 0 1 2002
RESUBMIT APPROVED
BY RKW DATE 8/29/02

NO.	DATE	BY	REVISIONS

THE FORT MILLER Co., Inc.
P.O. BOX 98
SCHUYLERVILLE, NY 12871
(518) 695-5000
(518) 695-4970 FAX

F.M. JOB NO. 734
SHEET NO. 2
DATE: 6-1-02
DRN. BY: M.WERN
CHK. BY: S. HARRIGAN
SCALE: NONE

PROJECT: VT RTE 9 OVER BOND BROOK T/O SEARSBURG, VT
SUBJECT: BRIDGE LAYOUT
CONTRACTOR: BECK & BELLUCCI, INC.
ENGINEER/ARCHITECT CLOUGH, HARBOUR & ASSOCIATES

DWG. NO. B2

(2) ROWS OF (37) E620 – MEDCO #6 EPOXY REBAR COUPLERS @ 12" O.C
FOR CONNECTION TO C.I.P. HEADWALL BY CONTRACTOR IN THE FIELD (= 36'–0")

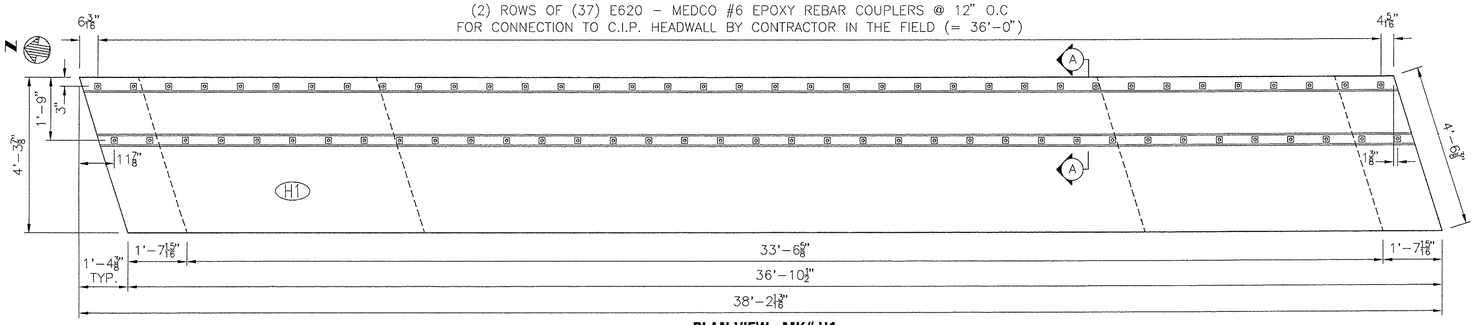

PLAN VIEW - MK# H1

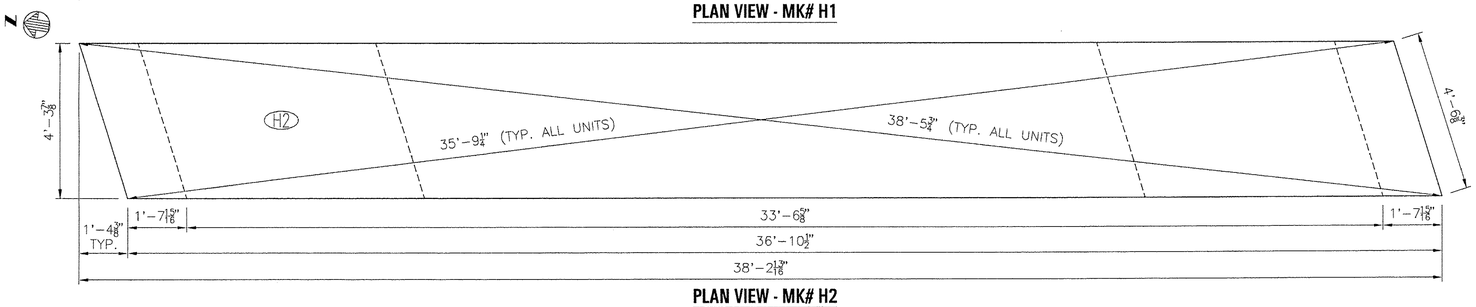

PLAN VIEW - MK# H2

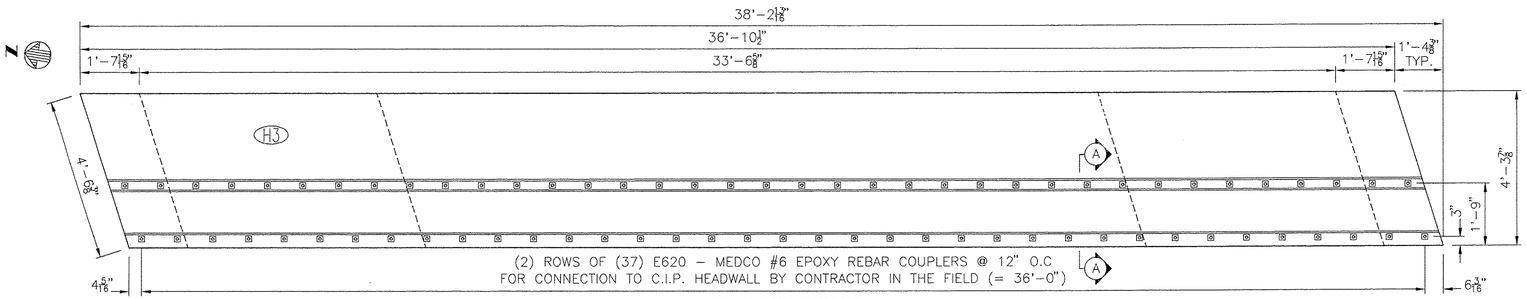

(2) ROWS OF (37) E620 – MEDCO #6 EPOXY REBAR COUPLERS @ 12" O.C
FOR CONNECTION TO C.I.P. HEADWALL BY CONTRACTOR IN THE FIELD (= 36'–0")

PLAN VIEW - MK# H3

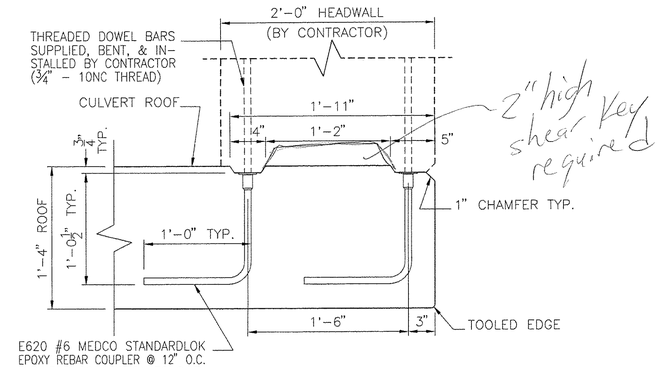

SECTION A-A
FASCIA UNITS H1 & H3 ONLY

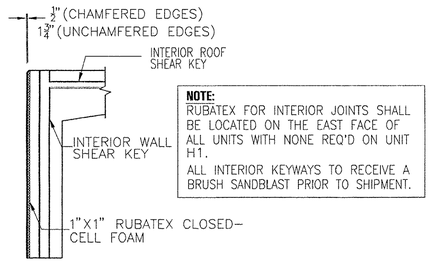

NOTE:
RUBATEX FOR INTERIOR JOINTS SHALL BE LOCATED ON THE EAST FACE OF ALL UNITS WITH NONE REQ'D ON UNIT H1.
ALL INTERIOR KEYWAYS TO RECEIVE A BRUSH SANDBLAST PRIOR TO SHIPMENT.

INTERIOR SHEAR KEY ELEVATION
FOR RUBATEX LOCATION (INTERIOR JOINTS) ONLY
VERTICAL EDGES DESCRIBING AN ACUTE ANGLE IN PLAN TO RECEIVE A 1" CHAMFER.

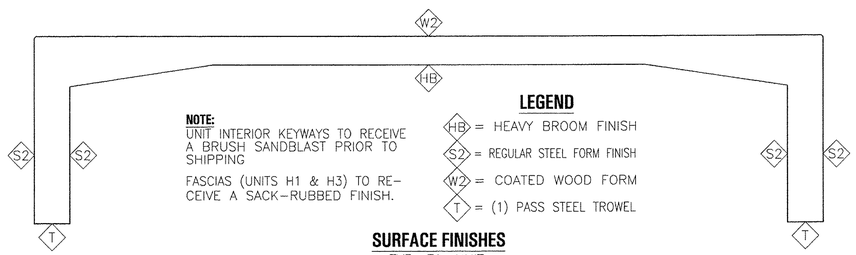

NOTE:
UNIT INTERIOR KEYWAYS TO RECEIVE A BRUSH SANDBLAST PRIOR TO SHIPPING

FASCIAS (UNITS H1 & H3) TO RECEIVE A SACK–RUBBED FINISH.

LEGEND
HB = HEAVY BROOM FINISH
S2 = REGULAR STEEL FORM FINISH
W2 = COATED WOOD FORM
T = (1) PASS STEEL TROWEL

SURFACE FINISHES
TYP. EA. UNIT

NOTE TO CONTRACTOR:
THIS SHOP DRAWING REPRESENTS OUR INTERPRETATION OF THE PLANS AND SPECIFICATIONS, AND OUR CONTRACT REQUIREMENTS FOR THIS PROJECT. PRIOR TO THE MANUFACTURE OF ANY ITEM FOR THIS PROJECT, ALL DIMENSIONS, METHODS OF CONSTRUCTION AND EXISTING CONDITIONS MUST BE CHECKED, CORRECTED AND/OR APPROVED BY OUR CUSTOMER. NO ITEM WILL BE SCHEDULED FOR PRODUCTION UNTIL WE HAVE BEEN NOTIFIED IN WRITING THAT OUR DRAWINGS HAVE BEEN APPROVED FOR FABRICATION. APPROVAL DELAYS WILL RESULT IN FABRICATION DELAYS. ANY ITEM THAT IS FABRICATED IN ACCORDANCE WITH APPROVED SHOP DRAWINGS THAT DOES NOT FIT THE CUSTOMER'S REQUIREMENTS WILL BE REMADE AND SHIPPED TO THE PROJECT ONLY AT THE CUSTOMER'S EXPENSE, AND ONLY AFTER RECEIPT OF A PURCHASE ORDER TO COVER THE ADDED EXPENSE. WE ASSUME NO RESPONSIBILITY FOR THE ALTERING OF OUR PRODUCTS TO ACCOMMODATE OTHER TRADES UNLESS REQUIRED INFORMATION IS FURNISHED AND SHOWN ON OUR SHOP DRAWINGS AT THE TIME THEY ARE APPROVED FOR FABRICATION BY OUR CUSTOMER.

VAOT
RECEIVED
CK'D BY DV CK'D BY
AUG 0 1 2002
RESUBMIT APPROVED As Noted
BY RRW DATE 8/29/02

NO.	DATE	BY	REVISIONS

THE FORT MILLER Co., Inc.
P.O. BOX 98
SCHUYLERVILLE, NY 12871
(518) 695–5000
(518) 695–4970 FAX

F.M. JOB NO. 734
SHEET NO. 3
DATE: 6–1.02
DRN. BY: M.WERN
CHK. BY: S. HARRIGAN
SCALE: NONE

PROJECT: VT RTE 9 OVER BOND BROOK T/O SEARSBURG, VT
SUBJECT: UNIT DETAILS
CONTRACTOR: BECK & BELLUCCI, INC.
ENGINEER/ARCHITECT CLOUGH, HARBOUR & ASSOCIATES

DWG. NO.
B3

VERMONT AGENCY OF TRANSPORTATION
PROJECT NHF 010-1(18) ITEM 540.10

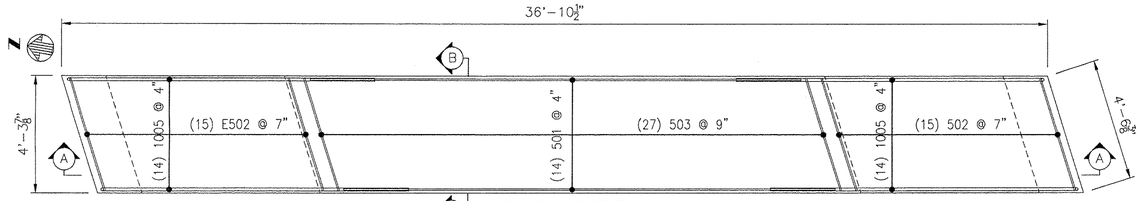

REINFORCEMENT PLAN
TOP MAT SHOWN – TYP. EA. UNIT

REINFORCEMENT SCHEDULE - TYP .EA UNIT

Bar Mark	Qty	Size	Total Length	Type	'A'	'B'	'C'	'D'	'E'	'F'	'G'	'H'	'J'	'K'	'O'	'R'
501	14	#5	18'4"			18'4"										
502	58	#5	4'4"			4'4"										
503	54	#5	4'4"			4'4"										
704	14	#7	35'0"			35'0"										
1005	28	#10	19'10 ½"	17		8'4 ½"	11'6"									
506	42	#5	4'4"			4'4"										
507	16	#5	7'10 ½"			7'10 ½"										
508	8	#5	10'7 ½"	1	11"	8'9 ½"						11"		5"		
509	14	#5	4'4"			4'4"										
610	4	#6	5'4 ½"	S11		11 ½"						2'5"			7 ½"	
611	32	#6	5'10 ½"	S11		1'2"						2'7 ½"			9"	REBAR MAT SPACER – ROOF
412	12	#4	5'10 ½"	S11		1'7"						2'6"			1'0"	REBAR MAT SPACER – WALL

ALL DIMENSIONS ARE OUT TO OUT
ALL STEEL A615 Grade 60
FOR TYPICAL BAR BENDS REFER TO CRSI MANUAL OF STANDARD PRACTICE

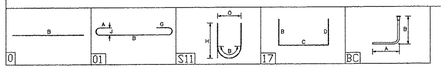

EPOXY REBAR COULERS - MK#'S H1 & H3 ONLY

Bar Mark	Qty	Size	Total Length	Type	'A'	'B'	'C'	'D'	'E'	'F'	'G'	'H'	'J'	'K'	'O'	'R'
E620	74	#6	2'0 ½"	BC	1'0"	1'0 ½"										

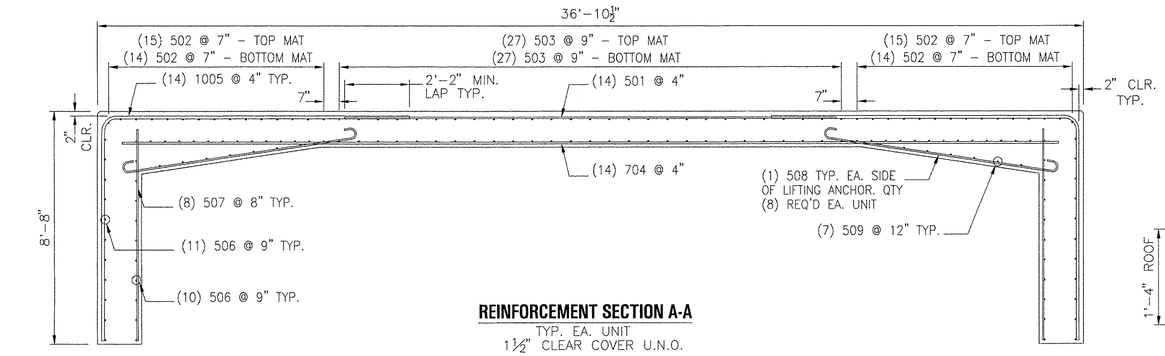

REINFORCEMENT SECTION A-A
TYP. EA. UNIT
1½" CLEAR COVER U.N.O.

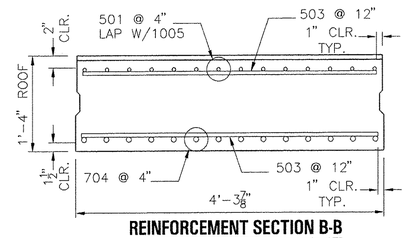

REINFORCEMENT SECTION B-B
TYP. AT INTERIOR UNITS
NO ROOF KEYWAY @ FASCIA
(MK#'S H1 & H3)

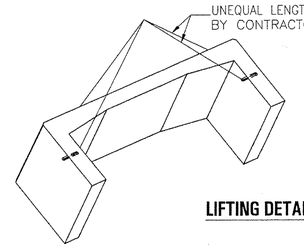

NOTES:

1) ROTATING HOLE TO BE ON INTERIOR JOINT SIDE OF H1 & H3, 1'–6" FROM INTERIOR EDGE OF WALL
2) 610 BARS ARE ADD'L REINFORCEMENT AROUND ROTATING HOLE (2) REQ'D. PER HOLE, (1) EACH MAT.
3) (2) "ROTATING HOLES" & THE TOPSIDE LIFTING ANCHORS SHALL BE USED WHEN LIFTING THE UNIT IN THE LAID DOWN POSITION.

LIFTING DETAIL FOR LOADING & UNLOADING
TYP. EA. UNIT

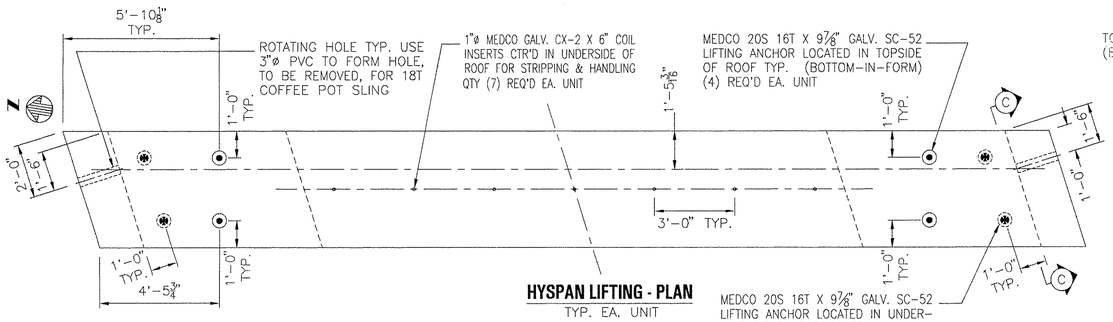

HYSPAN LIFTING - PLAN
TYP. EA. UNIT

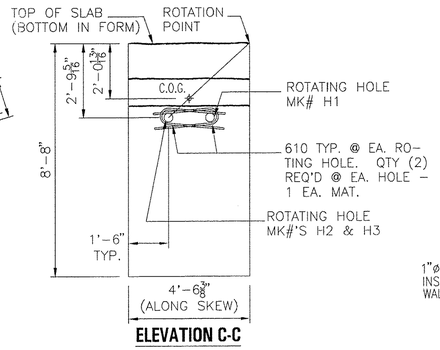

ELEVATION C-C

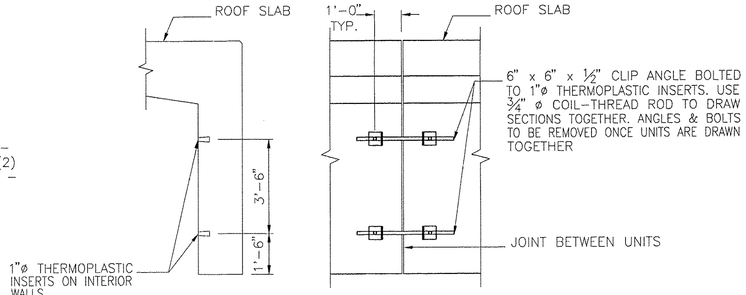

AUXILIARY ERECTION HARDWARE DETAIL
TYP. EA. UNIT

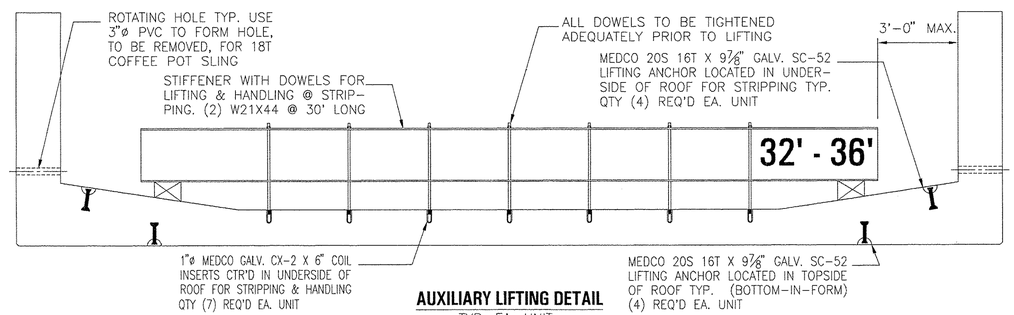

AUXILIARY LIFTING DETAIL
TYP. EA. UNIT

NOTE TO CONTRACTOR:

THIS SHOP DRAWING REPRESENTS OUR INTERPRETATION OF THE PLANS AND SPECIFICATIONS, AND OUR CONTRACT REQUIREMENTS FOR THIS PROJECT. PRIOR TO THE MANUFACTURE OF ANY ITEM FOR THIS PROJECT, ALL DIMENSIONS, METHODS OF CONSTRUCTION AND EXISTING CONDITIONS MUST BE CHECKED, CORRECTED AND/OR APPROVED BY OUR CUSTOMER. NO ITEM WILL BE SCHEDULED FOR PRODUCTION UNTIL WE HAVE BEEN NOTIFIED IN WRITING THAT OUR DRAWINGS HAVE BEEN APPROVED FOR FABRICATION. APPROVAL DELAYS WILL RESULT IN FABRICATION DELAYS. ANY ITEM THAT IS FABRICATED IN ACCORDANCE WITH APPROVED SHOP DRAWINGS THAT DOES NOT FIT THE CUSTOMER'S REQUIREMENTS WILL BE REMADE AND SHIPPED TO THE PROJECT ONLY AT THE CUSTOMER'S EXPENSE, AND ONLY AFTER RECEIPT OF A PURCHASE ORDER TO COVER THE ADDED EXPENSE. WE ASSUME NO RESPONSIBILITY FOR THE ALTERING OF OUR PRODUCTS TO ACCOMMODATE OTHER TRADES UNLESS REQUIRED INFORMATION IS FURNISHED AND SHOWN ON OUR SHOP DRAWINGS AT THE TIME THEY ARE APPROVED FOR FABRICATION BY OUR CUSTOMER.

VAOT
RECEIVED
CK'D BY DV OK'D BY
AUG 0 1 2002
RESUBMIT APPROVED
BY RW DATE 8/28/02

NO.	DATE	BY	REVISIONS

THE FORT MILLER Co., Inc.
P.O. BOX 98
SCHUYLERVILLE, NY 12871
(518) 695-5000
(518) 695-4970 FAX

F.M. JOB NO. 734
SHEET NO. 4
DATE: 6-1-02
DRN. BY: M.WERN
CHK. BY: S. HARRIGAN
SCALE: NONE

PROJECT: VT RTE 9 OVER BOND BROOK T/O SEARSBURG, VT
SUBJECT: REINFORCEMENT/LIFTING
CONTRACTOR: BECK & BELLUCCI, INC.
ENGINEER/ARCHITECT CLOUGH, HARBOUR & ASSOCIATES

DWG. NO. B4

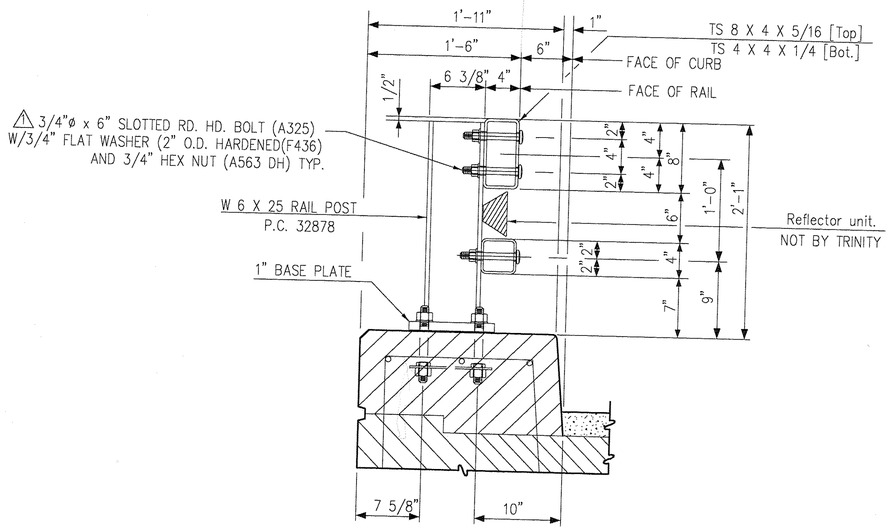

TYPICAL SECTION

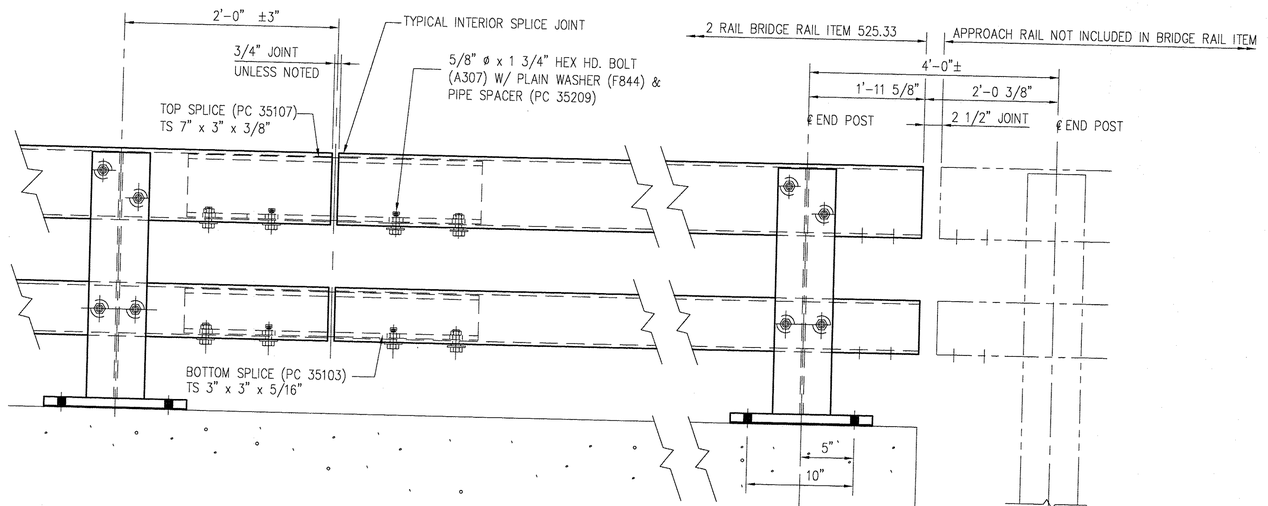

POST & RAIL ERECTION DETAIL

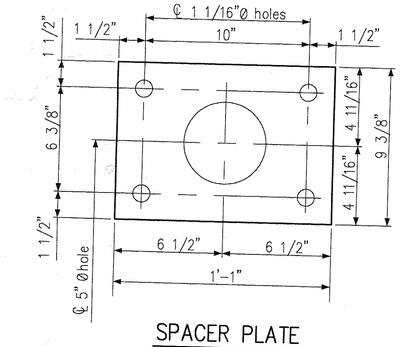

SPACER PLATE

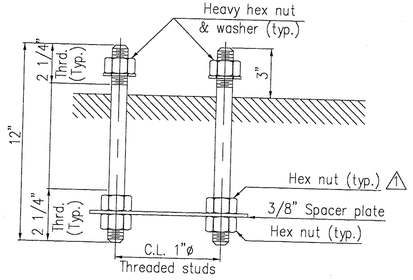

RAIL POST ANCHORAGE

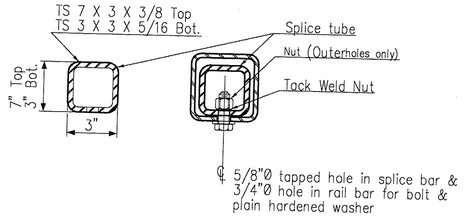

RAIL BAR SPLICE SECTION

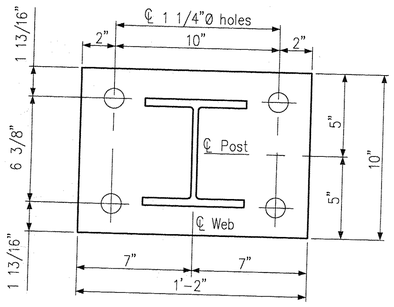

POST & BASE PLATE

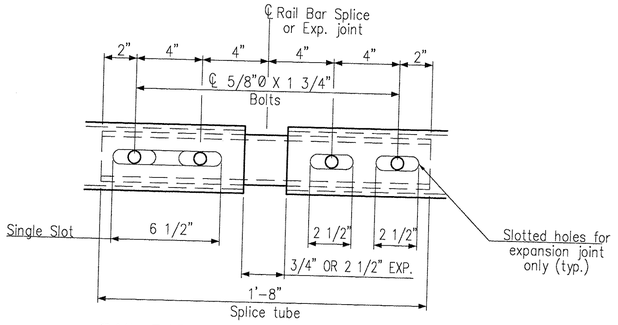

RAIL BAR SPLICE & EXP. JOINT DETAIL

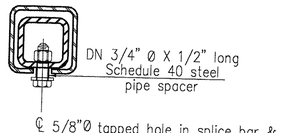

EXPANSION JOINT SECTION

NOTES:

1. ALL RAILING POSTS ARE PC 32878.
2. ALL TS 8" x 4" RAIL SPLICES ARE PC 35107.
3. ALL TS 4" x 4" RAIL SPLICES ARE PC 35103.
4. TOTAL PAY LENGTH: 1870'-7 13/16" LIN. FT.
5. FINISH: GALV. A123,
   HARDWARE: GALV. A153.

This drawing and the information shown thereon is the sole property of TRINITY INDUSTRIES, INC. Neither the drawing nor such information is to be used for any purpose other than that for which it was specifically furnished by TRINITY INDUSTRIES, INC., nor is any reproduction authorized without written permission.

VAOT RECEIVED
GK'D BY RKC GK'D BY
JAN 29 2003
RESUBMIT APPROVED
BY RRW DATE 1-30-03

GIRARD ENGINEERING DEPT.
ISSUED
JAN 15 2003
TRINITY INDUSTRIES, INC.
1170 N. STATE STREET
GIRARD, OHIO 44420

NOTES

1. All work and materials shall conform to the provisions of Section 525 – Railings of the Standard Specifications for Construction.
2. Rail posts shall be set normal to grade.
3. Sections of rail bar shall be attached to a minimum of two [2] rail posts and preferably to at least four [4] posts.
4. Rail bar expansion joints shall be provided in any rail bay spanning a superstructure expansion joint. Expansion joint width shall be 2 1/2" at 45°F and will be adjusted in the field by the Engineer.
5. All parts shall be galvanized after fabrication in accordance with AASHTO M111, except that hardware shall meet the requirements of AASHTO M232. Prior to galvanizing, all corners and edges of steel plates, shapes, etc., shall be ground to a 1/16" radius.
6. Rail posts anchoring nuts shall be tightened to a snug fit and given an additional 45 degree turn.
7. Any bending of rail shall be by shop procedure only.
8. Holes in rails for rail bar attachment may be field drilled. Holes shall be coated with an approved zinc-rich paint prior to erection.

APPROVAL DRAWING

FOR RAILING LAYOUTS SEE SHTS. E2 THRU. E4 OF 4 (22) 1006227
FOR DETAILS SEE SHEET D1 THRU. D4 OF 4 (22) 1006227

REV.	CHK'D	BY	DATE	REMARKS
1		SAR	1/02/03	REVISED CALL OUTS

ITEM NUMBER 525.33 T2 STEEL BRIDGE RAIL (PL2)

STATE OF VERMONT AGENCY OF TRANSPORTATION
VT. ROUTE 9 – TOWNS OF SEARSBURGH & WILMINGTON
COUNTIES OF BENNINGTON & WINDHAM
STATE PROJECT NO. NHF 010-1(18) BRIDGE Nos. 25, 25A & 25B

CUSTOMER NORTHLAND SPECIALTIES P.O. No. VERBAL

TRINITY INDUSTRIES, INC.
HIGHWAY SAFETY PRODUCTS
2525 STEMMONS FREEWAY, DALLAS, TX 75207

DRAWN	SAR
CHECKED	S.H.
SCALE:	N.T.S.
DATE	11/12/02
ENG. FILE #	22-1006227-E1
SHT.No.	E1 OF 4
TRINITY SALES ORDER NO.	REV.

F:\IRAShare\Engineering\WIP\VT100622T\22-1006227-E1.dwg 1/14/03 16:39:27

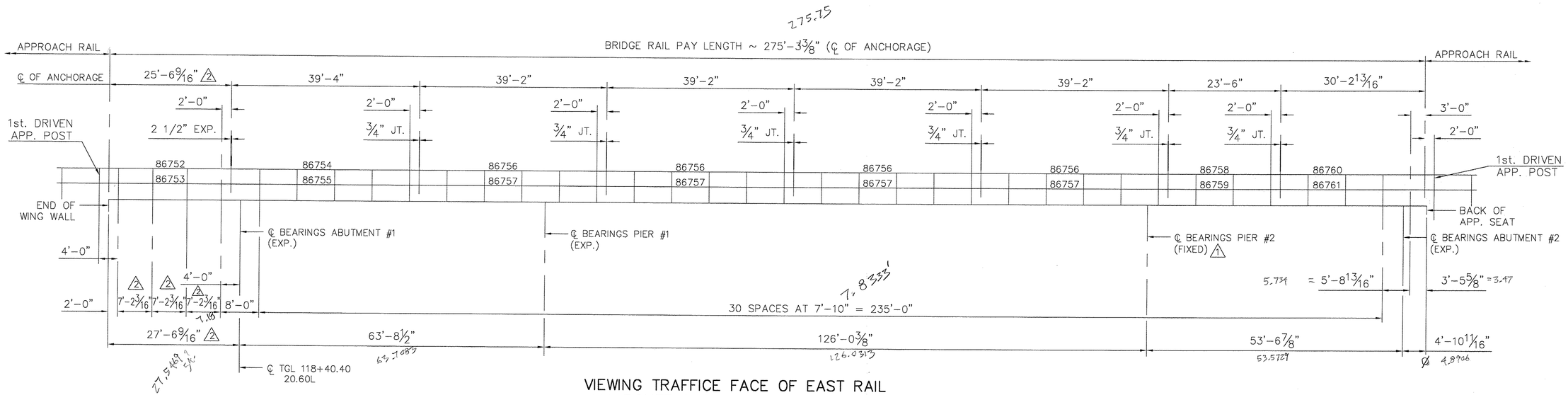

VIEWING TRAFFICE FACE OF EAST RAIL
VT. ROUTE 9 OVER DEERFIELD RIVER
BRIDGE No. 25

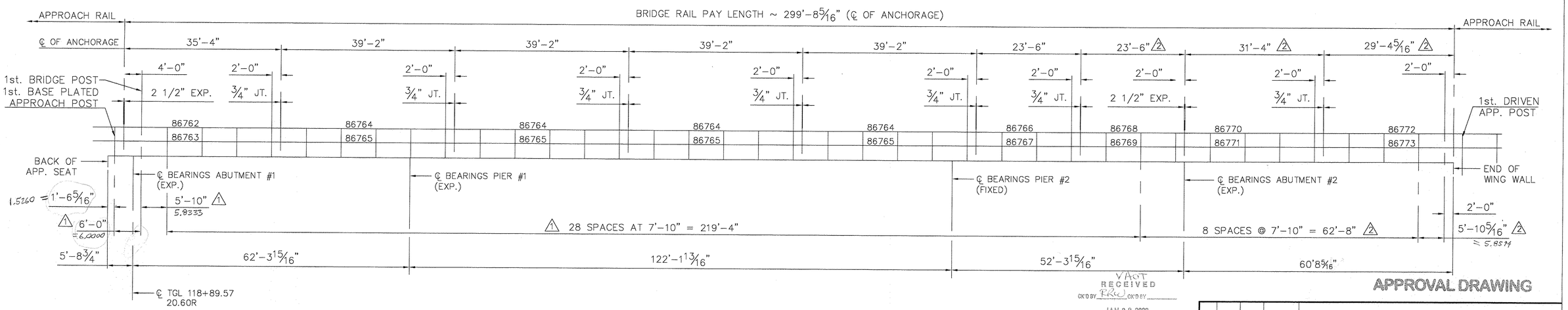

VIEWING NON-TRAFFICE FACE OF WEST RAIL
VT. ROUTE 9 OVER DEERFIELD RIVER
BRIDGE No. 25

NOTE:
1. DIMENSIONS SHOWN ARE AT ℄ OF RAIL ANCHORAGE.

NOTES:
1. ALL POSTS ARE P.C. 32878. (U.N.)
2. RAIL SPLICES:
   FOR T.S. 8" x 4" ~ STD. P.C. 35107
   FOR T.S. 4" x 4" ~ STD. P.C. 35103
3. FINISH: GALV. A123
   HWD.: GALV. A153
4. PAY LENGTH THIS SHEET:
   ITEM 525.33 ~ 574'-11 11/16"

GIRARD ENGINEERING DEPT.
ISSUED
JAN 15 2003
TRINITY INDUSTRIES, INC.
1170 N. STATE STREET
GIRARD, OHIO 44420

VAOT
RECEIVED
CK'D BY RRW CK'D BY
JAN 29 2003
RESUBMIT APPROVED
BY RRW DATE 1-30-03

APPROVAL DRAWING

REV.	CHK'D	BY	DATE	REMARKS
2		SAR	1/02/03	REVISED PER FIELD CHANGE
1		SAR	11/12/02	REVISED POST SPACING & PIER #2 TO FIXED JOINT

PAY ITEM NUMBER 525.33 BR. RAIL 2 BAR NETC

STATE OF VERMONT AGENCY OF TRANSPORTATION
VT. ROUTE 9 – TOWNS OF SEARSBURGH & WILMINGTON
COUNTIES OF BENNINGTON & WINDHAM
STATE PROJECT NO. NHF 010-1(18) BRIDGE No. 25

CUSTOMER NORTHLAND SPECIALITES | P.O. No. VERBAL

TRINITY INDUSTRIES, INC.
HIGHWAY SAFETY PRODUCTS
2525 STEMMONS FREEWAY, DALLAS, TX 75207

DRAWN	SAR
CHECKED	S.H.
SCALE:	N.T.S.
DATE	7/9/02
ENG. FILE #	22-1006277-E2
SHT.No.	E2 OF 4
TRINITY SALES ORDER NO.	(22) 1006227
REV.	2

This drawing and the information shown thereon is the sole property of TRINITY INDUSTRIES, INC. Neither the drawing nor such information is to be used for any purpose other than that for which it was specifically furnished by TRINITY INDUSTRIES, INC., nor is any reproduction authorized without written permission.

F:\Rf\Share\Engineering\WIP\VT1006227\22-1006227-E2.dwg 1/14/03 16:39:24

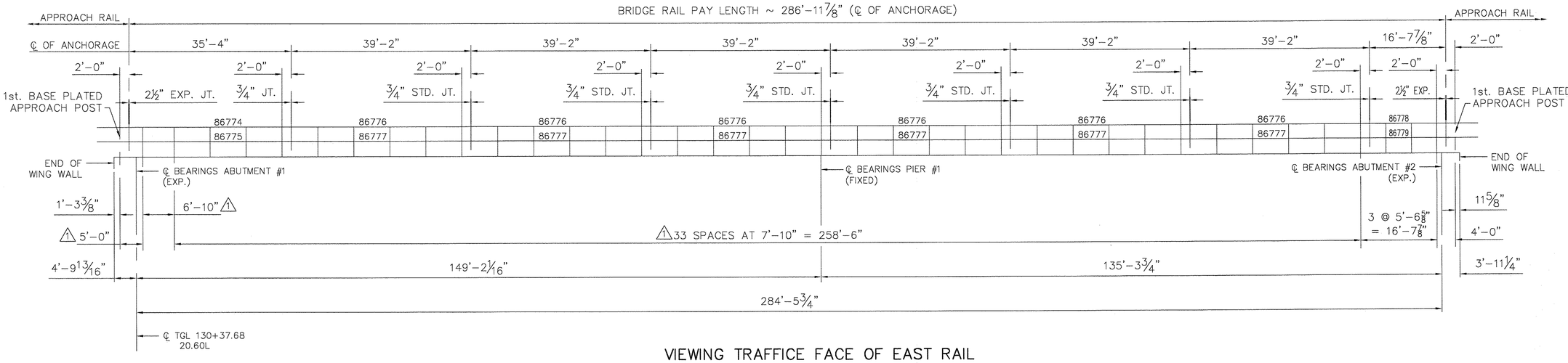

VIEWING TRAFFICE FACE OF EAST RAIL
VT. ROUTE 9 OVER DEERFIELD RIVER
BRIDGE No. 25A

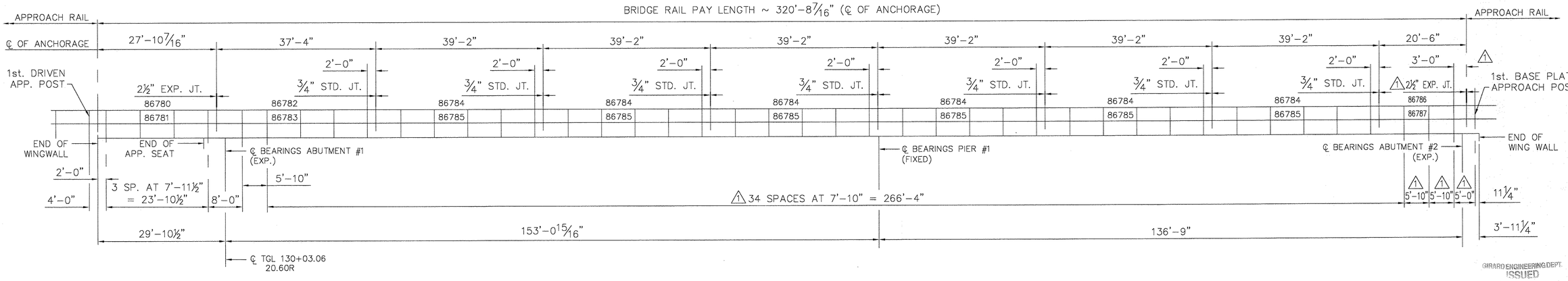

VIEWING NON-TRAFFICE FACE OF WEST RAIL
VT. ROUTE 9 OVER DEERFIELD RIVER
BRIDGE No. 25A

NOTE:
1. DIMENSIONS SHOWN ARE AT ℄ OF RAIL ANCHORAGE.

VAGT RECEIVED
CK'D BY RRW CK'D BY
JAN 29 2003
RESUBMIT APPROVED
BY RRW DATE 1-30-03

NOTES:
1. ALL POSTS ARE P.C. 32878. (U.N.)
2. RAIL SPLICES:
   FOR T.S. 8" x 4" ~ STD. P.C. 35107
   FOR T.S. 4" x 4" ~ STD. P.C. 35103
3. FINISH: GALV. A123
   HWD.: GALV. A153
4. PAY LENGTH THIS SHEET:
   ITEM 525.33 ~ 607'-8 5/16"

This drawing and the information shown thereon is the sole property of TRINITY INDUSTRIES, INC. Neither the drawing nor such information is to be used for any purpose other than that for which it was specifically furnished by TRINITY INDUSTRIES, INC., nor is any reproduction authorized without written permission.

GIRARD ENGINEERING DEPT.
ISSUED
JAN 15 2003

APPROVAL DRAWING

TRINITY INDUSTRIES, INC
1170 N. STATE STREET
GIRARD, OHIO 44420

REV.	CHK'D	BY	DATE	REMARKS
1		SAR	11/12/02	REVISED POST SPACING

PAY ITEM NUMBER 525.33 BR. RAIL 2 BAR NETC

STATE OF VERMONT AGENCY OF TRANSPORTATION
VT. ROUTE 9 – TOWNS OF SEARSBURGH & WILMINGTON
COUNTIES OF BENNINGTON & WINDHAM
STATE PROJECT NO. NHF 010-1(18) BRIDGE No. 25A

CUSTOMER NORTHLAND SPECIALITES | P.O. No. VERBAL

TRINITY INDUSTRIES, INC.
HIGHWAY SAFETY PRODUCTS
2525 STEMMONS FREEWAY, DALLAS, TX 75207

DRAWN	SAR
CHECKED	S.H.
SCALE:	N.T.S.
DATE	7/9/02
ENG. FILE #	22-1006277-E3
SHT.No.	E3 OF 4
TRINITY SALES ORDER NO.	(22) 1006227
REV.	1

F:\RrShare\Engineering\WIP\VT1006227\22-1006227-E3.dwg 1/14/03 16:39:20

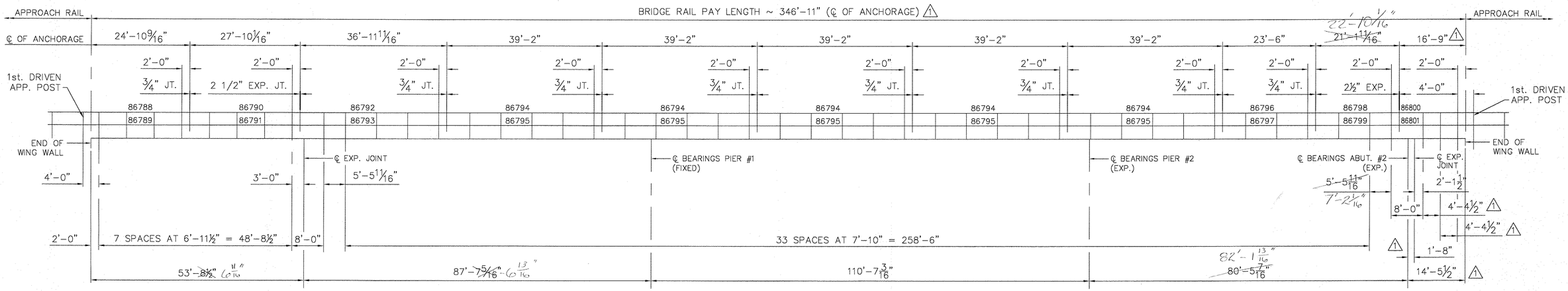

VIEWING TRAFFICE FACE OF EAST RAIL
VT. ROUTE 9 OVER DEERFIELD RIVER
BRIDGE No. 25B

GIRARD ENGINEERING DEPT.
ISSUED
JAN 15 2003
TRINITY INDUSTRIES, INC.
1170 N. STATE STREET
GIRARD, OHIO 44420

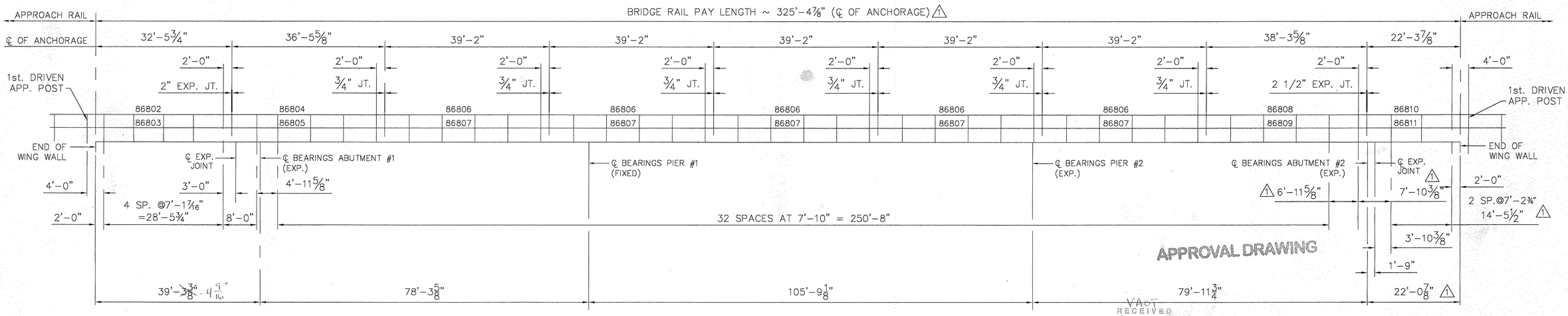

APPROVAL DRAWING

VAOT
RECEIVED
DATE RRW CKD BY
JAN 2 2003
RESUBMIT APPROVED As Noted
BY RRW DATE 1-30-03

VIEWING NON-TRAFFICE FACE OF WEST RAIL
VT. ROUTE 9 OVER DEERFIELD RIVER
BRIDGE No. 25B

NOTE:
1. DIMENSIONS SHOWN ARE AT ℄ OF RAIL ANCHORAGE.

NOTES:
1. ALL POSTS ARE P.C. 32878. (U.N.)
2. RAIL SPLICES:
   FOR T.S. 8" x 4" ~ STD. P.C. 35107
   FOR T.S. 4" x 4" ~ STD. P.C. 35103
3. FINISH: GALV. A123
   HWD.: GALV. A153
4. PAY LENGTH THIS SHEET:
   ITEM 525.33 ~ 672'-3 7/8"

This drawing and the information shown thereon is the sole property of TRINITY INDUSTRIES, INC. Neither the drawing nor such information is to be used for any purpose other than that for which it was specifically furnished by TRINITY INDUSTRIES, INC., nor is any reproduction authorized without written permission.

REV.	CHK'D	BY	DATE	REMARKS
1		SAR	11/12/02	REVISED POST SPACING

PAY ITEM NUMBER 525.33 BR. RAIL 2 BAR NETC

STATE OF VERMONT AGENCY OF TRANSPORTATION
VT. ROUTE 9 – TOWNS OF SEARSBURGH & WILMINGTON
COUNTIES OF BENNINGTON & WINDHAM
STATE PROJECT NO. NHF 010-1(18) BRIDGE No. 25B

CUSTOMER NORTHLAND SPECIALITES | P.O. No. VERBAL

TRINITY INDUSTRIES, INC.
HIGHWAY SAFETY PRODUCTS
2525 STEMMONS FREEWAY, DALLAS, TX 75207

DRAWN	SAR
CHECKED	S.H.
SCALE:	N.T.S.
DATE	7/9/02
ENG. FILE #	22-1006277-E4
SHT.No.	E4 OF 4
TRINITY SALES ORDER NO.	(22) 1006227
REV.	1

F:\Rf\Share\Engineering\WIP\VT1006227\22-1006227-E4.dwg 1/14/03 16:39:17

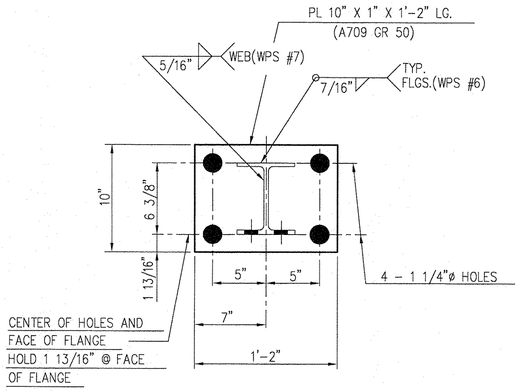

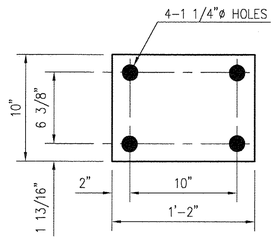

PC 5218 BEARING PAD

1/8" THIICK ELASTOMERIC PAD
(AASHTO M251)
(50 DUROMETER ELASTOMER)

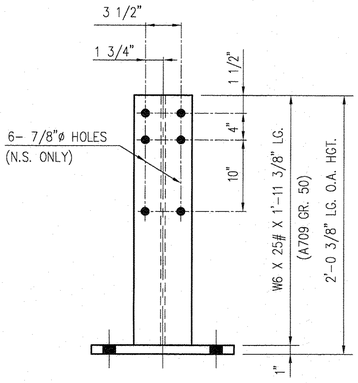

PC 32878 POST

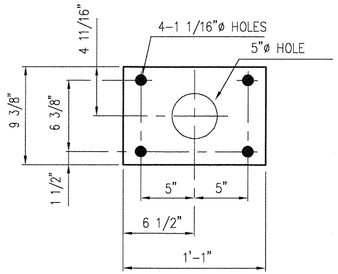

(*) PC 32812 ANCHOR PLATE

PL 9 3/8" X 3/8" X 1'-1" LG
(A 36)

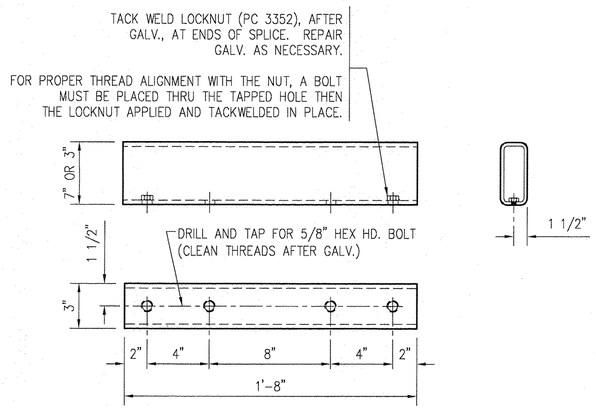

PC 35107 SPLICE TS 7" X 3" X 3/8" LG. (A500 GR B)

PC 35103 SPLICE TS 3" X 3" X 5/16" LG. (A500 GR B)

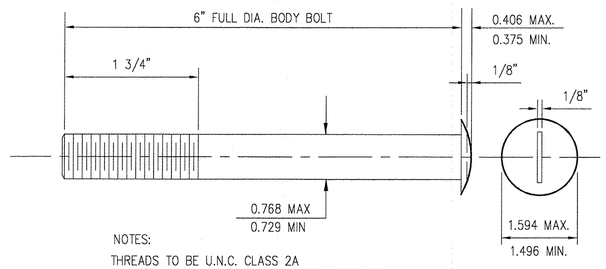

NOTES:
THREADS TO BE U.N.C. CLASS 2A
State Standard Drawing No. BR1–97 & BR2–97
* AASHTO M164 TYPE–1
ASTM A–325M TYPE–1

PC 6984 SLOTTED RD. HD. BOLT ⚠

BILL OF MATERIAL

	PRODUCT CODE	BRIDGE 25	BRIDGE 25A	BRIDGE 25B	TOTAL QTY.	DESCRIPTION	WT. EA.	REMARKS
⚠	32878A	75	80	90	245	POST	98 #	
⚠ *	32812G	75	80	90	245	ANCHOR PLATE	10 #	
⚠	5218B	75	80	90	245	BEARING PAD	1 #	NOT GALVANIZED
⚠	35107A	15	15	18	48	Ssplice (TS 7" x 3" x 3/8" x 1'-8")	39 #	
⚠	35103A	15	15	18	48	SPLICE (TS 3" x 3" x 5/16" x 1'-8")	19 #	
						FIELD HARDWARE		
	35209G	64	76	88	228	3/4" ø SCH. 40 PIPE x 1/2" LG.	0.1 #	A53 NOT DETAILED A123
⚠	3390H	120	120	144	384	5/8" ø x 1 3/4 LG. HEX HD. BOLT		A307 GR A A153
⚠	3300H	120	120	144	384	5/8" WASHER, 1 3/4" O.D.		F844 A153
⚠	6984H	300	320	360	980	3/4" ø x 6" LG. SLOTTED RD. HD. BOLT		A325 A153
⚠	3702H	300	320	360	980	3/4" WASHER, 2" O.D. (HARDENED)	TYPE A	F436 A153
⚠	3704H	300	320	360	980	3/4" HEX NUT		A563 DH A153
						ANCHORAGE HARDWARE		
⚠ *	4914H	300	320	360	980	1" ø x 1'-0" LG. ANCHOR STUD	FULLY THRD.	A449 A153
⚠ *	3908H	300	320	360	980	1" HEX NUT		A563 DH A153
⚠ *	3910H	600	640	720	1960	1" HEX NUT		A563 A153
⚠ *	4902H	300	320	360	980	1" PLAIN WASHER		F436 A153
						PAY QUANTITY		
					⚠2	1855'-3 15/16" LIN. FT.	ITEM NO. 525.33 ~ BR. RAIL 2 BAR NETC	

(*) ANCHORAGE TO BE SHIPPED PRIOR TO REMAINDER OF MATERIAL.

GIRARD ENGINEERING DEPT.
ISSUED
JAN 15 2003
TRINITY INDUSTRIES, INC.
1170 N. STATE STREET
GIRARD, OHIO 44420

NOTES:

1. TUBING AND POSTS SHALL MEET THE REQUIREMENTS OF SECTION 732 – RAILING MATERIALS OF THE STANDARD SPECIFICATIONS FOR CONSTRUCTION, EXCEPT THE DROP WEIGHT TEAR TEST IN SECTION 732 SHALL NOT APPLY TO THE STRUCTUAL TUBING IN THIS STANDARD.
2. ALL EXPOSED CUT OR SHEARED EDGES SHALL BE ROUNDED TO A 1/16" RADIUS AND BE FREE OF BURRS.
3. GALVANIZED SURFACES SHALL HAVE A UNIFORM APPEARANCE AND GALVANIZED MATERIAL SHALL BE PROPERLY STORED WITH WOOD BLOCKING BETWEEN PIECES.
4. RAIL POSTS.....ASTM A709, GRADE 50 SEE SECTION 732.03, SUBSECTION 2
BEARING PAD SHALL COMPLY WITH 731.01 OR 731.02.
5. SHOP INSPECTION IS REQUIRED. CALL VERMONT AGENCY OF TRANSPORTATION TO SCHEDULE SHOP INSPECTION.
CONTACT: ~~CHRISTOPHER WILLIAMS~~ Jeff Clark
PHONE: (802) 828–2621
APPROVAL DRAWING
6. RAIL POSTS & BASE PLATES SHALL BE TESTED FOR IMPACT PROPERTIES IN ACCORDANCE WITH ASTM A–370 CHARPY IMPACT TESTING USING TYPE A SPECIMEN.

FOR RAILING LAYOUTS SEE SHEET E2 THRU. E4 (22) 1006227
FOR ERECTION DETAILS SEE SHEET E1 OF 4 (22) 1006227

VAOT
RECEIVED
CK'D BY Robert CK'D BY _____
JAN 29 2003
RESUBMIT ____ APPROVED As Noted
BY RRW DATE 1-30-03

REV.	CHK'D	BY	DATE	REMARKS
⚠		SAR	1/02/03	ADDED P.C. 6984 & ADJUSTED B.O.M.

PAY ITEM NUMBER 525.33 ~ BR RAIL 2 BAR NETC

STATE OF VERMONT AGENCY OF TRANSPORTATION
VT. ROUTE 9 – TOWNS OF SEARSBURGH & WILMINGTON
COUNTIES OF BENNINGTON & WINDHAM
STATE PROJECT NO. NHF 010–1(18) VARIOUS BRIDGES

CUSTOMER NORTHLAND SPECIALITIES | P.O. No. VERBAL

TRINITY INDUSTRIES, INC.
HIGHWAY SAFETY PRODUCTS
2525 STEMMONS FREEWAY, DALLAS, TX 75207

DRAWN	SAR
CHECKED	S.H.
SCALE:	N.T.S.
DATE	7/11/02
ENG. FILE #	22–1006227–D1
SHT.No.	D1 OF 4
TRINITY SALES ORDER NO.	(22) 1006227
REV.	1

This drawing and the information shown thereon is the sole property of TRINITY INDUSTRIES, INC. Neither the drawing nor such information is to be used for any purpose other than that for which it was specifically furnished by TRINITY INDUSTRIES, INC., nor is any reproduction authorized without written permission.

F:\RfiShare\Engineering\WIP\VT1006227\22-1006227-D1.dwg 1/14/03 16:39:14

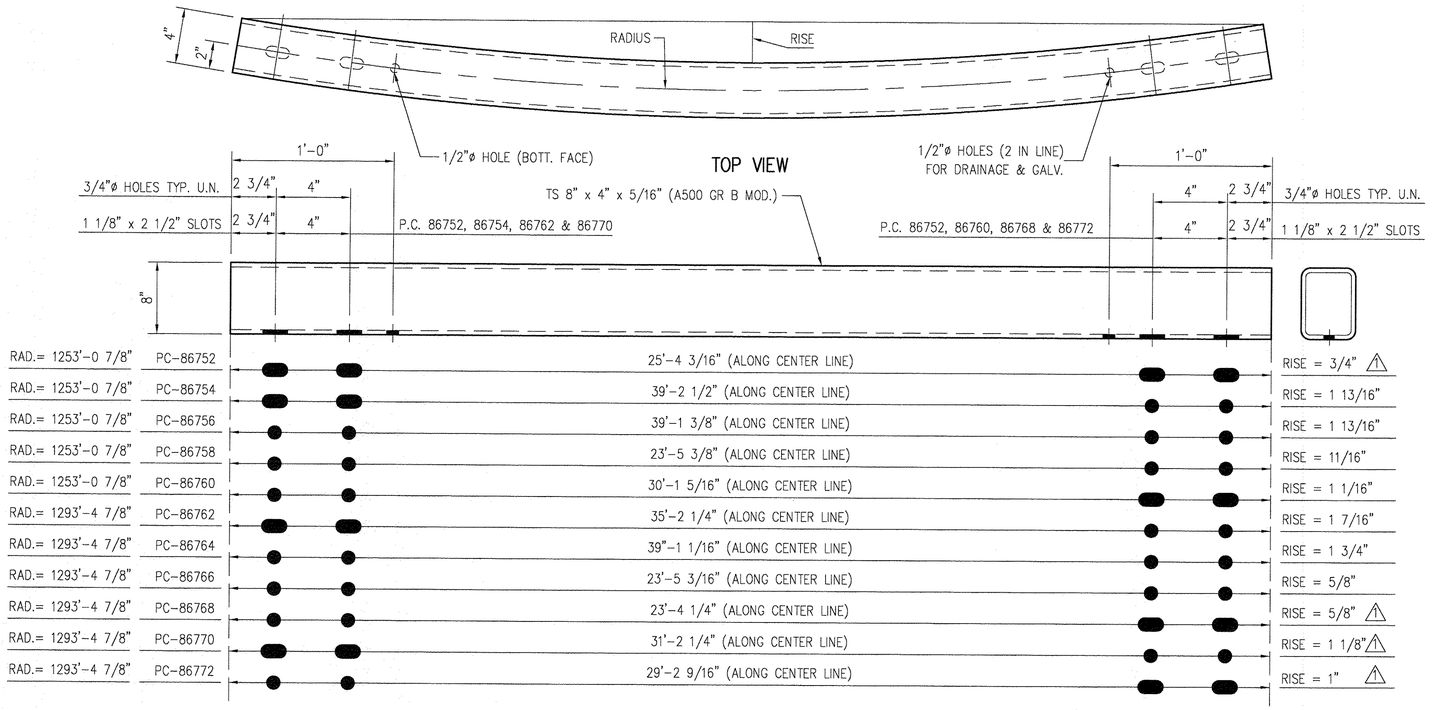

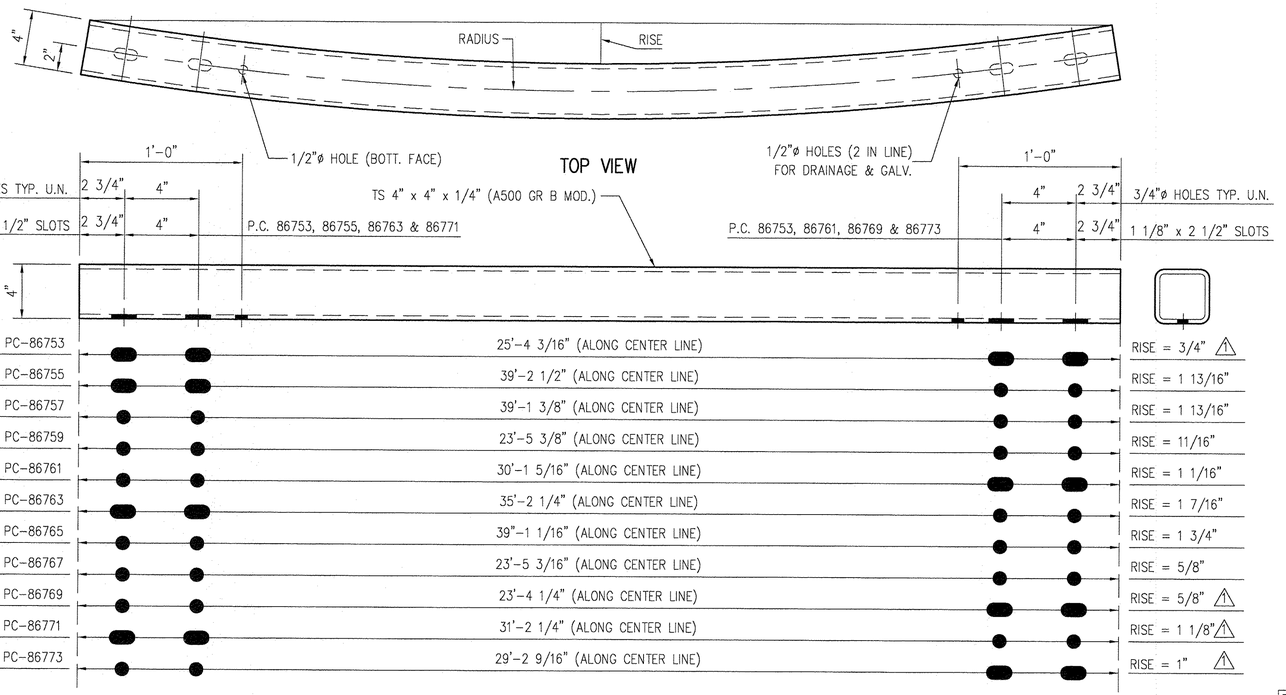

BILL OF MATERIAL

	PRODUCT CODE	BRIDGE 25	DESCRIPTION	WT. EA.	REMARKS
1	86752G	1	TS 8" x 4" x 5/16" x 25'-4 3/16"	578 #	
	86754G	1	TS 8" x 4" x 5/16" x 39'-2 1/2"	968 #	
	86756G	4	TS 8" x 4" x 5/16" x 39'-1 3/8"	966 #	
	86758G	1	TS 8" x 4" x 5/16" x 23'-5 3/8"	579 #	
	86760G	1	TS 8" x 4" x 5/16" x 30'-1 5/16"	744 #	
	86762G	1	TS 8" x 4" x 5/16" x 35'-2 1/4"	869 #	
	86764G	4	TS 8" x 4" x 5/16" x 39"-1 1/16"	965 #	
	86766G	1	TS 8" x 4" x 5/16" x 23'-5 3/16"	579 #	
1	86768G	1	TS 8" x 4" x 5/16" x 23'-4 1/4"	528 #	
1	86770G	1	TS 8" x 4" x 5/16" x 31'-2 1/4"	774 #	
1	86772G	1	TS 8" x 4" x 5/16" x 29'-2 9/16"	767 #	
1	86753G	1	TS 4" x 4" x 1/4" x 25'-4 3/16"	302 #	
	86755G	1	TS 4" x 4" x 1/4" x 39'-2 1/2"	506 #	
	86757G	4	TS 4" x 4" x 1/4" x 39'-1 3/8"	505 #	
	86759G	1	TS 4" x 4" x 1/4" x 23'-5 3/8"	303 #	
	86761G	1	TS 4" x 4" x 1/4" x 30'-1 5/16"	388 #	
	86763G	1	TS 4" x 4" x 1/4" x 35'-2 1/4"	454 #	
	86765G	4	TS 4" x 4" x 1/4" x 39"-1 1/16"	504 #	
	86767G	1	TS 4" x 4" x 1/4" x 23'-5 3/16"	302 #	
1	86769G	1	TS 4" x 4" x 1/4" x 23'-4 1/4"	276 #	
1	86771G	1	TS 4" x 4" x 1/4" x 31'-2 1/4"	405 #	
1	86773G	1	TS 4" x 4" x 1/4" x 29'-2 9/16"	400 #	

GIRARD ENGINEERING DEPT.
ISSUED
JAN 15 2003
TRINITY INDUSTRIES, INC.
1170 N. STATE STREET
GIRARD, OHIO 44420

APPROVAL DRAWING

NOTES:

1. FOR GENERAL NOTES PLEASE REFER TO SHEET D1 OF 4
2. FOR ERECTION DETAILS SEE SHEET E1 OF 4 (22) 1006227
3. FOR RAILING LAYOUT SEE SHEET E2 OF 4 (22) 1006227
4. DETAIL DIMENSION SHOWN ARE ALONG CENTER LINE OF RAIL.

VAOT
RECEIVED
CK'D BY KRW DK'D BY
JAN 29 2003
RESUBMIT APPROVED
BY KRW DATE 1-30-03

REV.	CHK'D	BY	DATE	REMARKS
1		SAR	1/02/03	REVISED CALL OUTS

PAY ITEM NUMBER 525.33 BR. RAIL 2 BAR NETC

STATE OF VERMONT AGENCY OF TRANSPORTATION
VT. ROUTE 9 – TOWNS OF SEARSBURGH & WILMINGTON
COUNTIES OF BENNINGTON & WINDHAM
STATE PROJECT NO. NHF 010-1(18) BRIDGE No. 25

CUSTOMER NORTHLAND SPECIALITES P.O. No. VERBAL

TRINITY INDUSTRIES, INC.
HIGHWAY SAFETY PRODUCTS
2525 STEMMONS FREEWAY, DALLAS, TX 75207

DRAWN	SAR
CHECKED	S.H.
SCALE:	N.T.S.
DATE	11/13/02
ENG. FILE #	22-1006227-D2
SHT.No.	D2 OF 4
TRINITY SALES ORDER NO.	(22) 1006227
REV.	1

This drawing and the information shown thereon is the sole property of TRINITY INDUSTRIES, INC. Neither the drawing nor such information is to be used for any purpose other than that for which it was specifically furnished by TRINITY INDUSTRIES, INC., nor is any reproduction authorized without written permission.

F:\RRShare\Engineering\WIP\VT1006227\22-1006227-D2.dwg 1/14/03 16:39:10

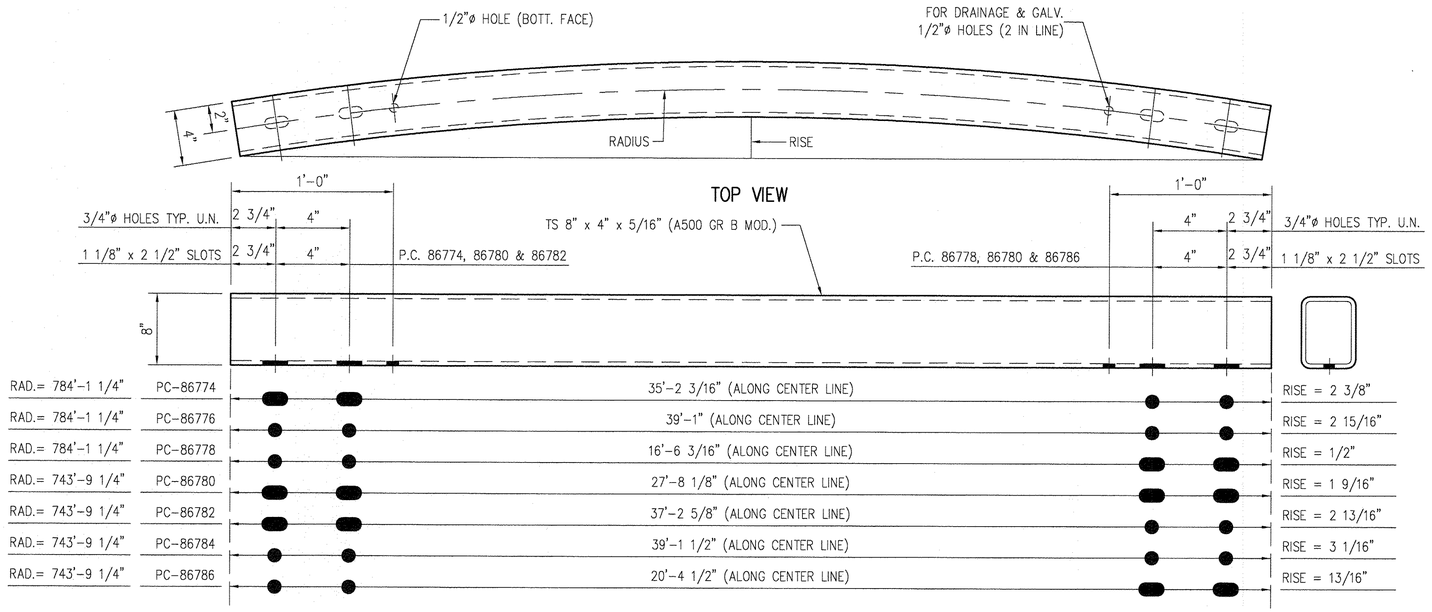

BILL OF MATERIAL

PRODUCT CODE	BRIDGE 25A	DESCRIPTION	WT. EA.	REMARKS
86774G	1	TS 8" x 4" x 5/16" x 35'-2 3/16"	869 #	
86776G	6	TS 8" x 4" x 5/16" x 39'-1"	965 #	
86778G	1	TS 8" x 4" x 5/16" x 16'-6 3/16"	408 #	
86780G	1	TS 8" x 4" x 5/16" x 27'-8 1/8"	684 #	
86782G	1	TS 8" x 4" x 5/16" x 37'-2 5/8"	919 #	
86784G	6	TS 8" x 4" x 5/16" x 39'-1 1/2"	966 #	
86786G	1	TS 8" x 4" x 5/16" x 20'-4 1/2"	503 #	
86775G	1	TS 4" x 4" x 1/4" x 35'-2 3/16"	454 #	
86777G	6	TS 4" x 4" x 1/4" x 39'-1"	504 #	
86779G	1	TS 4" x 4" x 1/4" x 16'-6 3/16"	213 #	
86781G	1	TS 4" x 4" x 1/4" x 27'-8 1/8"	357 #	
86783G	1	TS 4" x 4" x 1/4" x 37'-2 5/8"	480 #	
86785G	6	TS 4" x 4" x 1/4" x 39'-1 1/2"	505 #	
86787G	1	TS 4" x 4" x 1/4" x 20'-4 1/2"	263 #	

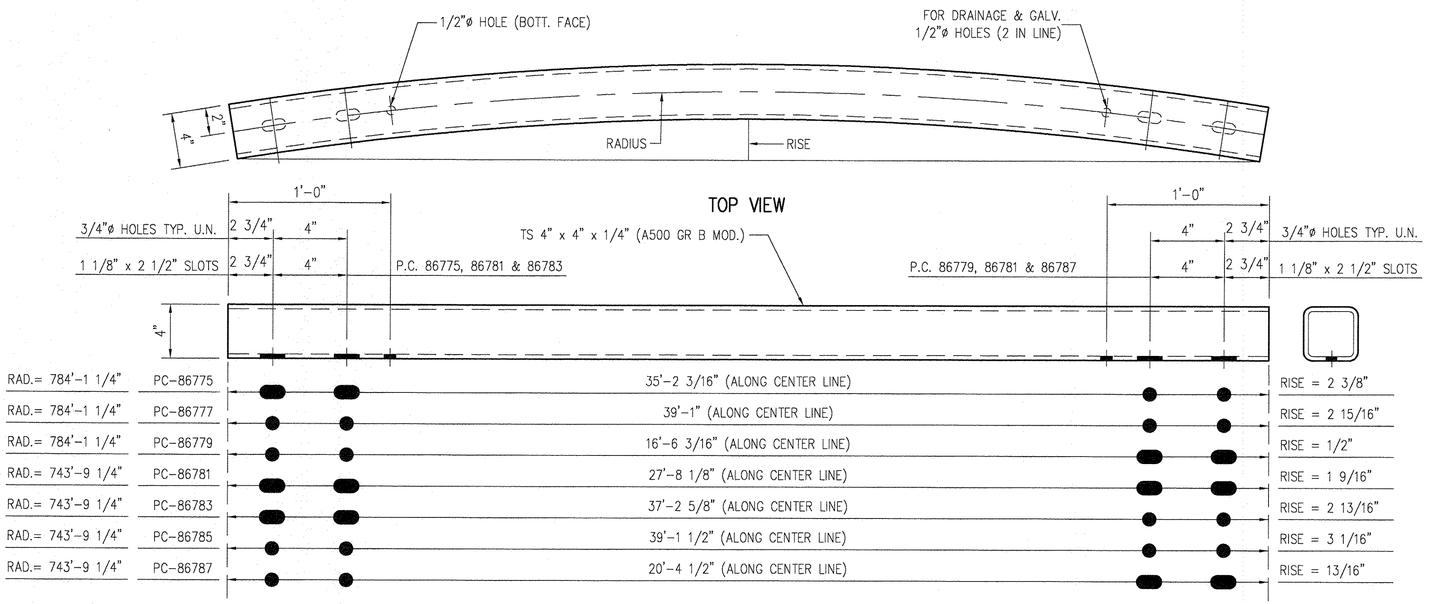

GIRARD ENGINEERING DEPT.
ISSUED
JAN 15 2003
TRINITY INDUSTRIES, INC.
1170 N. STATE STREET
GIRARD, OHIO 44420

NOTES: APPROVAL DRAWING

1. FOR GENERAL NOTES PLEASE REFER TO SHEET D1 OF 4
2. FOR ERECTION DETAILS SEE SHEET E1 OF 4 (22) 1006227
3. FOR RAILING LAYOUT SEE SHEET E3 OF 4 (22) 1006227
4. DETAIL DIMENSION SHOWN ARE ALONG CENTER LINE OF RAIL.

VAOT
RECEIVED
CK'D BY RRW CK'D BY
JAN 29 2003
RESUBMIT APPROVED
BY RRW DATE 1-30-03

This drawing and the information shown thereon is the sole property of TRINITY INDUSTRIES, INC. Neither the drawing nor such information is to be used for any purpose other than that for which it was specifically furnished by TRINITY INDUSTRIES, INC., nor is any reproduction authorized without written permission.

REV.	CHK'D	BY	DATE	REMARKS

PAY ITEM NUMBER 525.33 BR. RAIL 2 BAR NETC

STATE OF VERMONT AGENCY OF TRANSPORTATION
VT. ROUTE 9 – TOWNS OF SEARSBURGH & WILMINGTON
COUNTIES OF BENNINGTON & WINDHAM
STATE PROJECT NO. NHF 010-1(18) BRIDGE No. 25A

CUSTOMER NORTHLAND SPECIALITES P.O. No. VERBAL

TRINITY INDUSTRIES, INC.
HIGHWAY SAFETY PRODUCTS
2525 STEMMONS FREEWAY, DALLAS, TX 75207

DRAWN	SAR
CHECKED	S.H.
SCALE:	N.T.S.
DATE	11/14/02
ENG. FILE #	22-1006227-D3
SHT.No.	D3 OF 4
TRINITY SALES ORDER NO.	(22) 1006227
REV.	0

F:\RR\Share\Engineering\WIP\VT1006227\22-1006227-D3.dwg 1/14/03 16:39:07

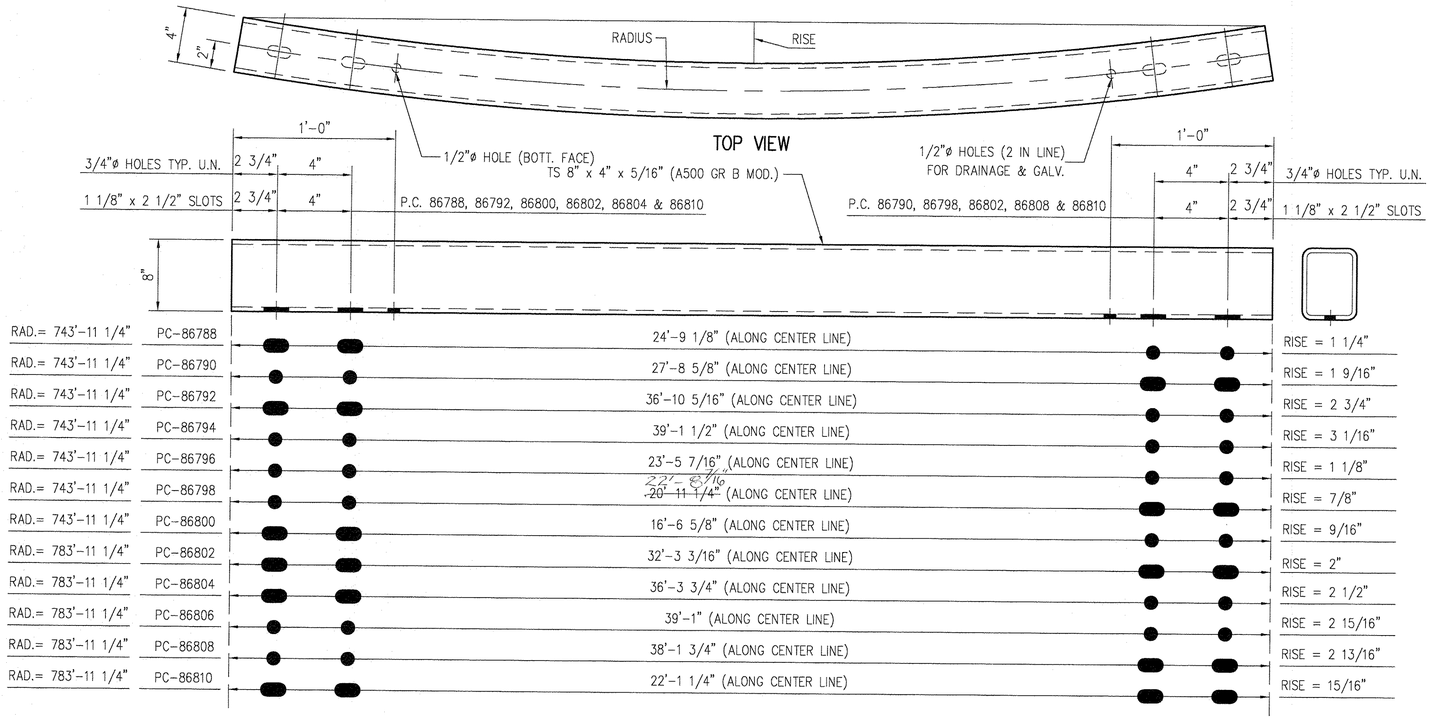

BILL OF MATERIAL

PRODUCT CODE	BRIDGE 25B	DESCRIPTION	WT. EA.	REMARKS
86788G	1	TS 8" x 4" x 5/16" x 24'-9 1/8"	611 #	
86790G	1	TS 8" x 4" x 5/16" x 27'-8 5/8"	684 #	
86792G	1	TS 8" x 4" x 5/16" x 36'-10 5/16"	910 #	
86794G	5	TS 8" x 4" x 5/16" x 39'-1 1/2"	966 #	
86796G	1	TS 8" x 4" x 5/16" x 23'-5 7/16"	579 #	
86798G	1	TS 8" x 4" x 5/16" x ~~20'-11 1/4"~~ 22'-8 1/16"	517 #	
86800G	1	TS 8" x 4" x 5/16" x 16'-6 5/8"	409 #	
86802G	1	TS 8" x 4" x 5/16" x 32'-3 3/16"	803 #	
86804G	1	TS 8" x 4" x 5/16" x 36'-3 3/4"	896 #	
86806G	5	TS 8" x 4" x 5/16" x 39'-1"	965 #	
86808G	1	TS 8" x 4" x 5/16" x 38'-1 3/4"	942 #	
86810G	1	TS 8" x 4" x 5/16" x 22'-1 1/4"	546 #	
86789G	1	TS 4" x 4" x 1/4" x 24'-9 1/8"	319 #	
86791G	1	TS 4" x 4" x 1/4" x 27'-8 5/8"	358 #	
86793G	1	TS 4" x 4" x 1/4" x 36'-10 5/16"	504 #	
86795G	5	TS 4" x 4" x 1/4" x 39'-1 1/2"	505 #	
86797G	1	TS 4" x 4" x 1/4" x 23'-5 7/16"	303 #	
86799G	1	TS 4" x 4" x 1/4" x ~~20'-11 1/4"~~ 22'-8 1/16"	270 #	
86801G	1	TS 4" x 4" x 1/4" x 16'-6 5/8"	214 #	
86803G	1	TS 4" x 4" x 1/4" x 32'-3 3/16"	416 #	
86805G	1	TS 4" x 4" x 1/4" x 36'-3 3/4"	468 #	
86807G	5	TS 4" x 4" x 1/4" x 39'-1"	504 #	
86809G	1	TS 4" x 4" x 1/4" x 38'-1 3/4"	492 #	
86811G	1	TS 4" x 4" x 1/4" x 22'-1 1/4"	285 #	

GIRARD ENGINEERING DEPT.
ISSUED
JAN 15 2003
TRINITY INDUSTRIES, INC
1170 N. STATE STREET
GIRARD, OHIO 44420

APPROVAL DRAWING

NOTES:

1. FOR GENERAL NOTES REFER TO SHEET D1 OF 4
2. FOR ERECTION DETAILS SEE SHEET E1 OF 4 (22) 1006227
3. FOR RAILING LAYOUT SEE SHEET E4 OF 4 (22) 1006227
4. DETAIL DIMENSION SHOWN ARE ALONG CENTER LINE OF RAIL.

VAOT RECEIVED
CK'D BY RLW CK'D BY
JAN 29 2003
RESUBMIT APPROVED As Noted
BY RLW DATE 1-30-03

This drawing and the information shown thereon is the sole property of TRINITY INDUSTRIES, INC. Neither the drawing nor such information is to be used for any purpose other than that for which it was specifically furnished by TRINITY INDUSTRIES, INC., nor is any reproduction authorized without written permission.

REV.	CHK'D	BY	DATE	REMARKS

PAY ITEM NUMBER 525.33 BR. RAIL 2 BAR NETC

STATE OF VERMONT AGENCY OF TRANSPORTATION
VT. ROUTE 9 – TOWNS OF SEARSBURGH & WILMINGTON
COUNTIES OF BENNINGTON & WINDHAM
STATE PROJECT NO. NHF 010-1(18) BRIDGE No. 25B

CUSTOMER NORTHLAND SPECIALITES | P.O. No. VERBAL

TRINITY INDUSTRIES, INC.
HIGHWAY SAFETY PRODUCTS
2525 STEMMONS FREEWAY, DALLAS, TX 75207

DRAWN	SAR
CHECKED	S.H.
SCALE:	N.T.S.
DATE	11/14/02
ENG. FILE #	22-1006227-D4
SHT.No.	D4 OF 4
TRINITY SALES ORDER NO.	(22) 1006227
REV.	0

F:\RRShare\Engineering\WIP\VT1006227\22-1006227-D4.dwg 1/14/03 16:39:04

H:\Highway Engineering\DGN\VT1006227\30-1006227-01.dwg, 03/26/03 03:24:44 PM, Plotted By: Scott Rhoades

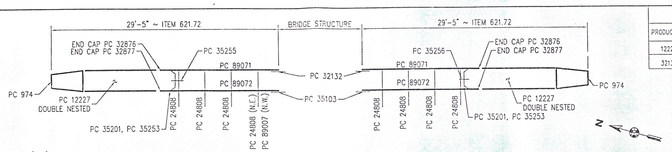

KEY LAYOUT (VIEWING TRAFFIC FACE) EAST SIDE
KEY LAYOUT (VIEWING NON TRAFFIC FACE) WEST SIDE
BRIDGE No. 25

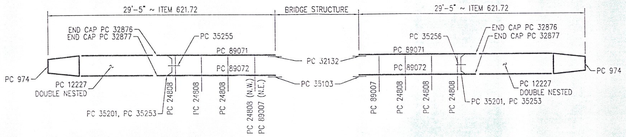

KEY LAYOUT (VIEWING TRAFFIC FACE) EAST SIDE
KEY LAYOUT (VIEWING NON TRAFFIC FACE) WEST SIDE
BRIDGE No. 25A

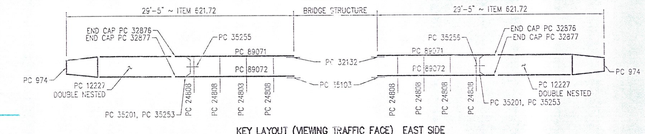

KEY LAYOUT (VIEWING TRAFFIC FACE) EAST SIDE
KEY LAYOUT (VIEWING NON TRAFFIC FACE) WEST SIDE
BRIDGE No. 25B

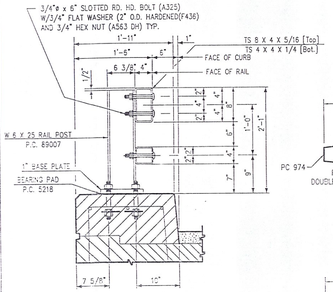

TYPICAL SECTION
P.C. 89007

RECEIVED
CK'D BY_____ OK'D BY_____
APR 2 2 2003
RESUBMIT_____ APPROVED_____
BY _____ DATE 4-24-03

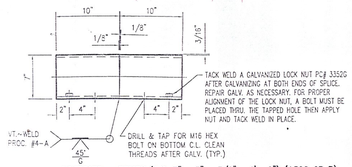

PC#32132 ~ SPLICE (T.S. 7" x 3" x 3/8" x 1'- 8") (A500 GR B)

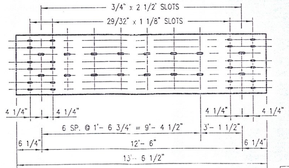

PC 12227 ~ THRIE BEAM (M-180)

This drawing and the information shown thereon is the sole property of TRINITY INDUSTRIES, INC. Neither the drawing nor such information is to be used for any purpose other than that for which it was specifically furnished by TRINITY INDUSTRIES, INC. nor is any reproduction permitted without written permission.

BILL OF MATERIAL

PRODUCT CODE	QTY	DESCRIPTION	WT EACH	REMARKS
12227G	24	T12/12'-6"/3'-1 1/2"-5@"-6 3/4"/S	148 #	
32132A	12	T.S. 7" x 3" x 3/8" x 10"	39 #	

NOTE:
FIELD DRILL BOTTOM RAIL CONNECTION HOLES IN POSTS. REPAIR GALVANIZING AS NECESSARY.

NOTE:
ALL WOOD COMPONENTS, NOT BY TRINITY

NOTES

1. All work and materials shall conform to the provisions of Section 525 – Railings of the Standard Specifications for Construction.
2. Tubing and Posts shall meet the requirements of section 732 – Rolled Materials of The Standard Specifications for Construction, Except the drop-weight tear test in section 732 shall not apply to the structural tubing in this standard.
3. All exposed cut or sheared edges shall be rounded to 1/16" radius and be free of burrs.
4. Rail posts shall be set normal to grade.
5. Sections of rail bar shall be attached to a minimum of two (2) rail posts and preferably to at least four (4) posts.
6. Rail tube expansion joints shall be provided in any rail bay spanning a superstructure expansion joint. Expansion joint width shall be 2 1/2" at 45° F and will be adjusted in the field by the Engineer.
7. All parts shall be galvanized after fabrication in accordance with AASHTO M111, except that hardware shall meet the requirements of AASHTO M232. Parts shall be blast – cleaned prior to galvanizing in accordance with SSPC – SP6.
8. Rail posts anchoring nuts shall be tightened to a snug fit and given an additional 45 degree turn.
9. Any bending of rail shall be by shop procedure only.
10. Holes in rails for rail bar attachment may be field drilled. Holes shall be coated with an approved zinc-rich paint prior to erection.
11. The Fabricator shall submit shop drawings including welding procedures to the structures section for approval in accordance with the provision of 506.04, shop drawings. All welding shall conform with section 506.11.
12. Rail posts and base plates shall be tested for impact properties in accordance with ASTM A-370 Charpy Impact Testing using Type A specimen.
13. Shop inspection is required upon approval of drawings. Shop to call Vermont Agency of Transportation to schedule shop inspection.
Contact: Mr. Jeff Clark (802) 828-2621

GIRARD ENGINEERING DEPT
ISSUED
MAR 19 2003

APPROVAL DRAWING

TRINITY INDUSTRIES, INC
1170 N. STATE STREET
GIRARD, OHIO 44420

FOR DETAILS SEE 30-1006227-02

REV.	CK'D	BY	DATE	REMARKS

PAY ITEM 621.72 BRIDGE APPROACH RAIL T2

STATE OF VERMONT AGENCY OF TRANSPORTATION VT. ROUTE 9 – TOWNS OF SEARSBURG & WILMINGTON COUNTIES OF BENNINGTON & WINDHAM STATE PROJECT NO. NHP 0100 10(19) VARIOUS BRIDGES	DRAWN JRS CHECKED SCALE N.T.S. DATE 07/31/02 ENG FILE # 30-1006227-01
CUSTOMER NORTLAND SPECIALTIES P.O. No. VERBAL	SHT No. 01 OF 01
TRINITY INDUSTRIES, INC. HIGHWAY SAFETY PRODUCTS 2525 STEMMONS FREEWAY, DALLAS, TX 75207	TRINITY SALES ORDER NO. (30) 1006227

H:\Engineering\WIP\1006227-30-1006227-02.dwg 03-10-03 01:30:06PM Plotted By: Scott Rhoades

PC 24808 POST

RECEIVED
CK'D BY _____ OK'D BY _____
APR 2 2 2003
RESUBMIT _____ APPROVED As Noted
BY _____ DATE 4-21-3

PC 35255 DEFLECTOR PL (AS SHOWN)
PC 35256 DEFLECTOR PL (OPP. HAND)

PC 35253 CONNECTION PL

PC 974 TRANSITION
(M180)

GIRARD ENGINEERING DEPT
ISSUED
MAR 10 2003
TRINITY INDUSTRIES, INC
1170 N. STATE STREET
GIRARD, OHIO 44420

BILL OF MATERIAL				
PRODUCT CODE	QTY	DESCRIPTION	WT EACH	REMARKS
24808G	44	W6 x 25 x 8'-0" POST	212#	
974G	12	TRANSITION	67#	
35201G	12	TRI-GARD TERMINAL	35#	
35253G	12	CONN. PL 1"-8" x 3/8" x 2'-3"	60#	
35255G	6	DEFLECTOR PL 4" x 3/8" x 9 15/16"	10#	AS SHOWN
35256G	6	DEFLECTOR PL 4" x 3/8" x 9 15/16"	10#	OPP. HAND
32876A	12	TOP END CAP 8" x 4"	2.2#	
32877A	12	BOTTOM END CAP 4" x 4"	1#	
35203G	96	PIPE SPACER (3/4"ø SCH. 40 x 1/2")	.5#	USED ONLY AS REQ. NOT DETAILED
35103A	12	BOTTOM SPLICE TS 3" x 3" x 5/16"	19#	

HARDWARE				
3320H	324	5/8" WASHER		FBW SALV. #7.53
3310H	96	5/8" LOCKWASHER		FACE SALV. #7.53
3220H	228	PLATE WASHER		ADR #7.52 NOT DETAILED
3240H	612	5/8" HGR NUT		ASST'D# A SALV. #7.53
3360H	96	5/8"ø x 1 1/4" HGR BOLT		ASST'D# A SALV. #7.53
3368H	288	5/8"ø x 1 1/2" HGR BOLT		ASST'D# A SALV. #7.53
3372H	96	5/8"ø x 1 3/4" HEX HD. BOLT		ASST'D# A SALV. #7.53
3382H	228	5/8"ø x 1'-6" HGR BOLT		ASST'D# A SALV. #7.53
3569H	12	3/4"ø x 2" CARRIAGE BOLT		ASST'D# A SALV. #7.52
3700H	96	3/4" WASHER		FBW SALV. #7.53
3702H	192	3/4" WASHER, 2" O.D.	TYPE A HARDNED	FACE SALV. #7.52
3710H	96	3/4" HEX NUT		ASST'D# A SALV. #7.53
4682H	192	3/4"ø LOCKNUT		ASTM-24 SALV. #7.53
4785H	84	3/4"ø x 6" CARRIAGE BOLT		ASST'D# A SALV. #7.52
6984H	192	3/4"ø x 6" ROUND HD BOLT SLTD		ASTD SALV. #7.52

PAY QUANTITY	
12 EACH	ITEM 621.72 (12 RUNS @ 29'-5") APPROACH RAIL, TYPE "T2"

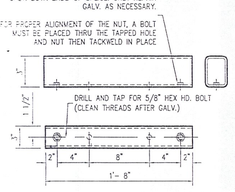

PC 35103 BOTTOM SPLICE TS 3" x 3" x 5/16" (A500 GR B)

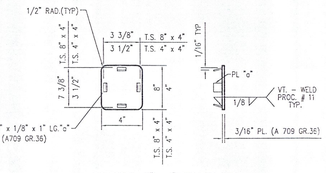

PC 32876 8" x 4" TOP END CAP
PC 32877 4" x 4" BOTT. END CAP

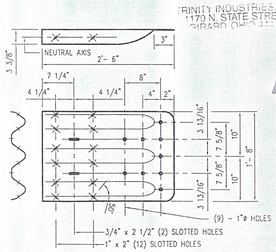

PC 35201 TRI-GRD TERMINAL
10 GA. (M180)

APPROVAL DRAWING

SEE NOTES ON SHEET 30-1006227-01
ERECTION DETAILS ARE ON SHEET 30-1006227-01

REV	DWG	BY	DATE	REMARKS

PAY ITEM 621.72 BRIDGE APPROACH RAIL T2

STATE OF VERMONT AGENCY OF TRANSPORTATION VT ROUTE 9 - TOWNS OF SEARSBURGH & WILMINGTON COUNTIES OF BENNINGTON & WINDHAM STATE PROJECT NO. NHF 019-1(18) VARIOUS BRIDGES	DRAWN JRS CHECKED SCALE N.T.S. DATE 07/01/02
CUSTOMER NORTHLAND SPECIALTIES P.O. No. VERBAL	DWG. FILE # 30-1006227-02
TRINITY INDUSTRIES, INC. HIGHWAY SAFETY PRODUCTS 2525 STEMMONS FREEWAY, DALLAS, TX 75207	SHEET NO. 02 OF 4 TRINITY SALES SHEET NO. REV (30) 1006227 -

This drawing and the information shown thereon is the sole property of TRINITY INDUSTRIES, INC. Neither the drawing nor such information is to be used for any purpose other than that for which it was specifically furnished by TRINITY INDUSTRIES, INC. nor is any reproduction authorized without written permission.

c:\projects\engineering\VSP\VT1006227-30-1006227-03.dwg, 03-06-03 03:23:31 PM, Plotted By: Scott Rhoades

PC 89072 BOTTOM TUBE

VIEW OF SLOTS ON THE BOTTOM

PC 89071 TOP TUBE

VIEW OF SLOTS ON THE BOTTOM

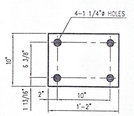

PC 5218 BEARING PAD

1/8" THICK ELASTOMERIC PAD
(AASHTO M251)
(50 DUROMETER ELASTOMER)

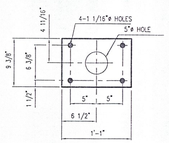

(#) PC 32812 ANCHOR PLATE

PL 9 3/8" X 3/8" X 1'-1" LG
(A 36)

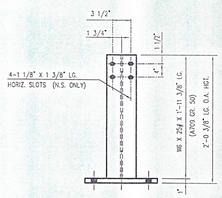

PC 89007 POST

BILL OF MATERIAL

	PRODUCT CODE	QTY.	DESCRIPTION	WT. EA.	REMARKS
	89007A	4	POST	98 #	
*	32812G	4	ANCHOR PLATE	10 #	
	5218	4	BEARING PAD	1 #	NOT GALVANIZED
	89072G	12	T.S. 4" x 4" x 1/4" x 10'-0 1/4"	119 #	
	89071G	12	T.S. 8" x 4" x 5/16" x 10'-0 1/4"	241 #	
	ANCHORAGE HARDWARE				
*	4914H	16	1" ø x 1'-0" LG. ANCHOR STUD	FULLY THRD	A449 A*53
*	390BH	16	1" HEX NUT		A563 DH A*53
*	391DH	16	1" HEX NUT		A563 A*53
*	4910H	16	1" HEX JAM NUT		A563 A*53
*	4902H	16	1" PLAIN WASHER		F436 A*53
	PAY QUANTITY				
	1231.48 LIN. FT.		ITEM NO. 525.33 ~ 72 STEEL BRIDGE RAIL (PL2)		

(*) ANCHORAGE TO BE SHIPPED PRIOR TO REMAINDER OF MATERIAL.

GIRARD ENGINEERING DEPT
ISSUED
APR 17 2003
TRINITY INDUSTRIES, INC
1170 N. STATE STREET
GIRARD, OHIO 44420

RECEIVED
CK'D BY _____ OK'D BY _____
APR 2 2 2003
RESUBMIT _____ APPROVED As Noted
BY KK DATE 4-24-03

APPROVAL DRAWING

SEE NOTES ON SHEET 30-1006227-01
ERECTION DETAILS ARE ON SHEET 30-1006227-01

REV.	CK'D	BY	DATE	REMARKS

PAY ITEM 621.72 BRIDGE APPROACH RAIL T2

STATE OF VERMONT AGENCY OF TRANSPORTATION
VT ROUTE 9 ~ TOWNS OF SEARSBURGH & WILMINGTON
COUNTIES OF BENNINGTON & WINDHAM
STATE PROJECT NO. NHF 070 1(18) VARIOUS BRIDGES

CUSTOMER: NORTHLAND SPECIALTIES | P.O. No.: VERBAL

DRAWN: SAR
CHECKED:
SCALE: N.T.S.
DATE: 2/28/03
CAD FILE #: 30-1006227-T2
SHT. No.: 03 OF 4
TRINITY SALES SHEET NO.: (30) 1006227

TRINITY INDUSTRIES, INC.
HIGHWAY SAFETY PRODUCTS
2525 STEMMONS FREEWAY, DALLAS, TX 75207

The drawing and the information shown thereon is the sole property of TRINITY INDUSTRIES, INC. Neither the drawing nor such information is to be used for any purpose other than that for which it was specifically furnished by TRINITY INDUSTRIES, INC, nor is any reproduction authorized without written permission.

C:\Drawing\WIP\VT1506227.30-1506227.04.dwg 03/10/2003 01:29:49 PM, Plotted By: Scott Rhoades

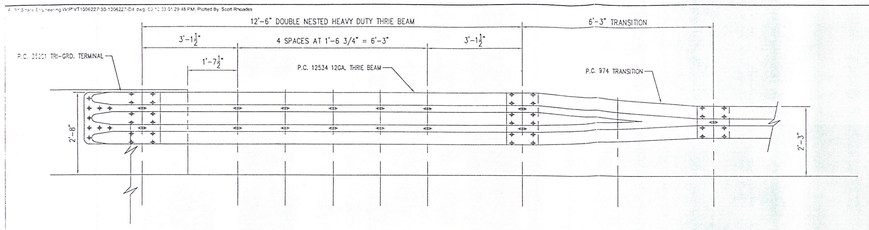

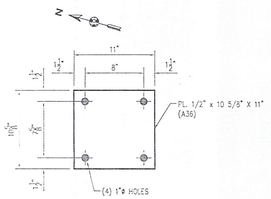

PC 89070 ~ CONNECTION PLATE (A-36)

KEY LAYOUT MODIFIED APPROACH

NOTE:
ALL WOOD COMPONENTS, NOT BY TRINITY

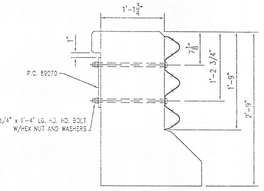

CONNECTION DETAIL

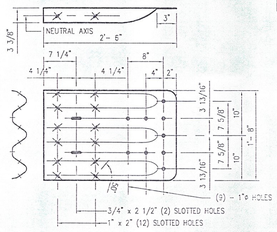

PC 35201 TRI-GRD TERMINAL
10 GA. (M180)

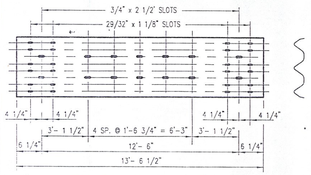

PC 12534 ~ THRIE BEAM (M-180)

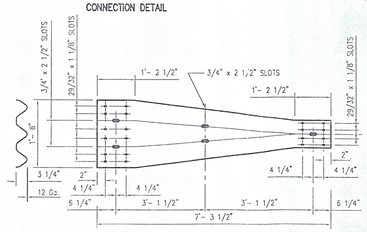

PC 974 TRANSITION
(M180)

BILL OF MATERIAL

PRODUCT CODE	QTY	DESCRIPTION	WT EACH	REMARKS
12534G	4	7'12/12"-5"/3"-1 1/2"-.428"-6 3/4"/3"-1 1/2"/5	153 #	
89070G	2	PL 1/2" X 10 5/8" x 11"		18 #
974G	2	TRANSITION	67#	
35201G	2	TRI-GARD TERMINAL	35#	

HARDWARE

330DH	24	5/8" WASHER		ITEM 714 DAILY M.13
332DH	24	PLATE WASHER		ASST. M.13 MOD. DCP-M25
334DH	88	5/8" HGR NUT		ASST. M.6 DAILY M.13
336DH	16	5/8"ø x 1 1/4" HGR BOLT		ASST. M.6 DAILY M.13
338BH	48	5/8"ø x 1 1/2" HGR BOLT		ASST. M.6 DAILY M.13
358DH	24	5/8"ø x 1'-5" HGR BOLT		ASST. M.6 DAILY M.13
370DH	16	3/4" WASHER		ITEM 714 DAILY M.13
371DH	16	3/4" HEX NUT		ASST. M.6 DAILY M.13
364BH	8	3/4"ø x 18" ROUND HD BOLT		M.13 DAILY M.13

PAY QUANTITY

2 EACH	ITEM 621.72 (2 RUNS @ 25'-7 3/4")	MOD. APPROACH RAIL, TYPE T-2

RECEIVED
OK'D BY _____ OK'D BY _____
APR 2 2 2003
RESUBMIT _____ APPROVED _____
BY _____ DATE 4-24-03

GIRARD ENGINEERING DEPT
ISSUED
MAR 10 2003
TRINITY INDUSTRIES, INC
1170 N. STATE STREET
GIRARD, OHIO 44420

APPROVAL DRAWING

KEY	CHK'D	BY	DATE	REMARKS

PAY ITEM 621.72 MODIFIED BRIDGE APPROACH RAIL T2

STATE OF VERMONT AGENCY OF TRANSPORTATION
VT. ROUTE 9 – TOWNS OF SEARSBURGH & WILMINGTON
COUNTIES OF BENNINGTON & WINDHAM
STATE PROJECT NO. NHF 019 1(18) VARIOUS BRIDGES

CUSTOMER: NORTHLAND SPECIALTIES | P.O. No.: VERBAL

DRAWN: SAH
CHECKED:
SCALE: N.T.S.
DATE: 3/3/03
ENG. FILE #: 30-1506227.04
DETAIL: 24 OF
DRAWING NO.: NA
(800) 644-2

TRINITY INDUSTRIES, INC.
HIGHWAY SAFETY PRODUCTS
2525 STEMMONS FREEWAY, DALLAS, TX 75207

This drawing and the information shown thereon is the sole property of TRINITY INDUSTRIES, INC. Neither this drawing nor such information is to be used for any purpose other than that for which it was specifically furnished by TRINITY INDUSTRIES, INC. nor is any reproduction authorized without written permission.