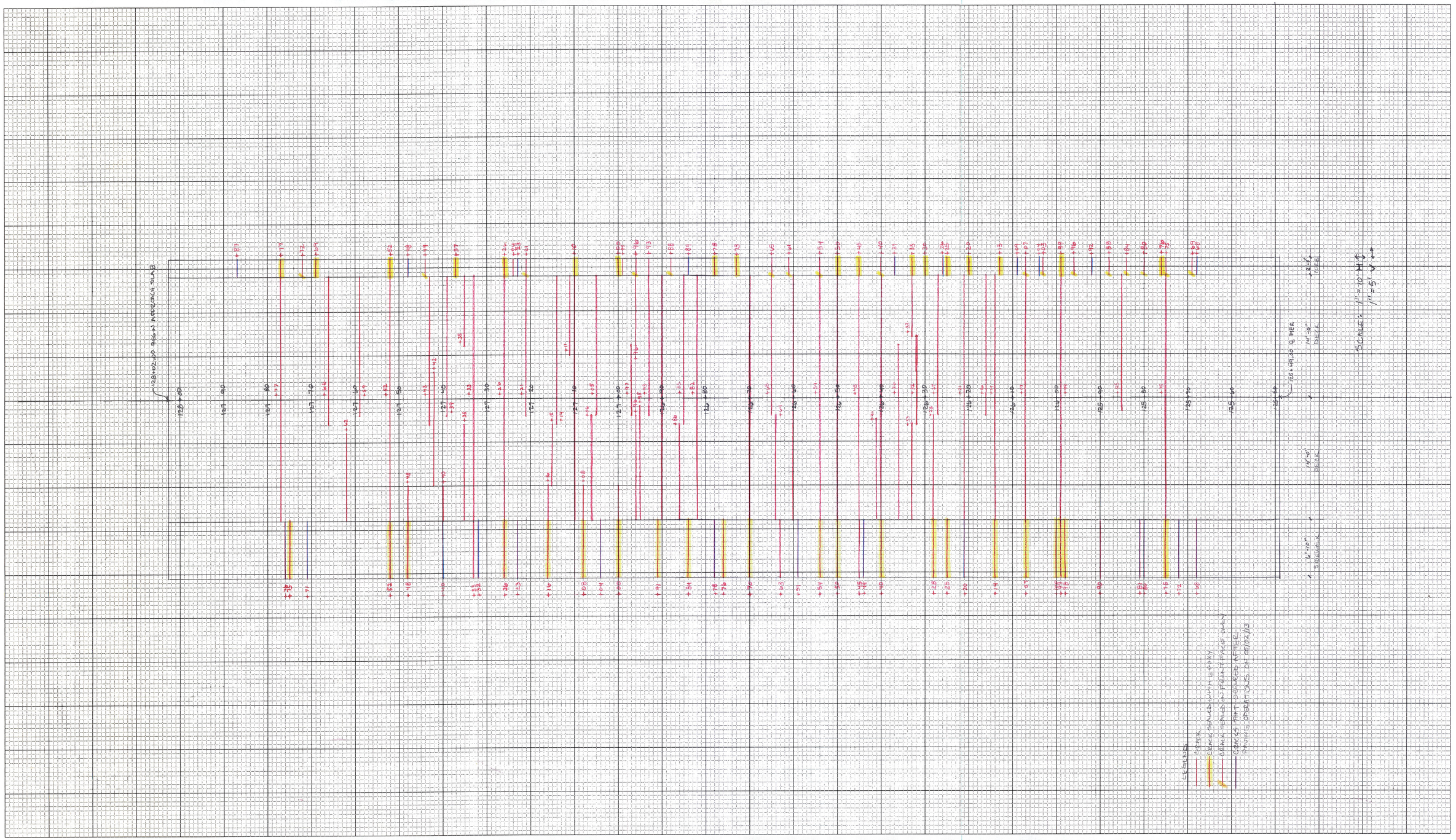
STA 1+25
STA 2+00
STA 2+50
STA 3+00
STA 3+50
STA 4+00
STA 4+50
STA 5+00
STA 5+50
STA 6+00
STA 6+50
STA 7+00
STA 7+50
STA 8+00
STA 8+50
STA 9+00
STA 9+50
STA 10+00
STA 10+50
STA 11+00
STA 11+50
STA

VERMONT

Agency of Transportation

State of Vermont
PDD/Structures Design Section
National Life Building – Drawer 33
Montpelier, VT 05633-5001
www.aot.state.vt.us

[phone] 802-828-2621
[fax] 802-828-2566
[ttd] 800-253-0191

DATE:11/18/2011

Project Name: Bethel **Project #: BRF 022-1(14)**

Structure Identification: Bridge #15

The following Approach Span Structural Steel details [Item 506.50 Structural Steel, Rolled Beam] for the above project (Vendor's Job #498) transmitted with your letter dated 11/9/2011 have been reviewed and are being returned herewith.

Sheets: E201, WS201, C201, 201, 202, 203, 204, 205, 206 and Welding Procedures
are approved

Sheets: GN201, AND X201
are approved "as noted"

Please make appropriate changes as indicated on these "as noted" or "approved" drawings and submit **white prints** for our use in the record plans for this project.

You must provide notice to our fabrication inspector, Jeff Clark, as to the date fabrication represented by these drawings will begin. Jeff must receive and acknowledge your notice at least seven days prior to that date, as per Specification 506.03. You may contact Jeff by phone at (802)828-0044 or email at jeff.clark@state.vt.us. Any material fabricated prior to the notification date is subject to rejection without further cause.

Sincerely,

Sven Scribner

Attachments
cc: [x] Resident Engineer w/prints Jeremy Reed
[x] Shop Inspector w/prints Jeff Clark
[x] Contractor w/prints Beck&Bellucci
[x] Construction Divison – letter only
[x] Materials & Research Section (C&IA Unit) – letter only
[x] Files (Structures & Central)

VTrans Working to Get You There Vermont Agency of Transportation

BECK & BELLUCCI, INC.
10 Salisbury Road
P.O. Box 429
Franklin, New Hampshire 03235
(603) 934-5236

LETTER OF TRANSMITTAL

DATE: 11-9-11	JOB NO.BRF-022-1(14)
Re: Shop Drawings Approach Span And welding Procedures	

TO Martha Evans-Mongeon
Vermont Agency of Transportation
National Life Bldg.
Draw 33
Montpelier,Vt. 05633-2621

WE ARE SENDING YOU ■ ATTACHED ■ SHOP DRAWINGS ☐ PRINTS

COPIES	DATE	No.	DESCRIPTION
6 Sets	**11-9-11**	**11**	**GN201,E201,WS201,C201,X201,201-206**
6 Sets	**11-9-11**	**4**	**Welding Procedure**

VTrans Received
CKD. OK'd BY
NOV 14 2011
Resubmit APPROVED
BY DATE

THESE ARE TRANSMITTED as checked below:

☐ For approval ■ For your use ☐ As requested ☐ For review and comment

REMARKS:
These drawings and weld procedure are being submitted for approval.

Please call if you have any questions.

Thank You Keith Korbet

SIGNED: Keith Korbet
Keith Korbet

CONTRACT PLANS

These Plans do NOT Reflect changes Made on the Project-

Casco Bay Steel Structures, Inc.

5 Industry Road
South Portland, Maine 04106
hone: (207) 772-2533 Fax: (207) 772-0580

WELDING PROCEDURE SPECIFICATION

Material specification ASTM 709-Gr 36-50-50W (250-345-345W)
Welding process Shielded Metal Arc welding (SMAW)
Manual or machine Manual
Position of welding Flat (1F), Horizontal (2F)
Filler metal specification ANSI/AWS A5.1 - A5.5
Filler metal classification E7018 - 8018 C1/C3 - 7028
Flux NA
Shielding gas NA Flow rate NA
Single or multiple pass Single and multiple
Single or multiple arc Single
Welding current AC/DC
Polarity Straight / Reverse
Welding progression
Root treatment Meet AWS specification
Preheat and interpass temperature To 3/4(19) 50°(10°) 3/4(19) To 1 1/2(38) 70°(20°) 1 1/2(38) To 2 1/2(63.5) 150°(65°) over 2 1/2(63.5) 225°(110°)
Postheat temperature NA
Heat Input Min NA Max NA

Vitrans Recieved
OK'D SSS OK'd BY JWC
NOV 14 2011
Remarks APPROVED
BY DATE 11/15/11

VT-AOT Bethel
VT 107 (River ST) over
White River
Proj No. RRFC22-1(14)
CBSS 498

WELDING PROCEDURE

(metric)

Pass no.	Electrode size	Welding current Amperes	Welding current Volts	Travel speed	AWS D1.5 Joint detail Fillet
	7018				1F
	1/8 (3.2)	70-170	22-26		
AS.	5/32 (3.9)	120-225	22-26	AS	
REQ.	3/16 (4.8)	170-300	24-27	REQ	3/16 To 3/8 (5 To 10) 3/8 To 1/2 (10 To 13) 1/2 To 5/8 (13 To 16)
	8018				
	1/8 (3.2)	90-160	22-26		2F
	5/32 (3.9)	120-225	22-26		
	3/16 (4.8)	180-290	24-27		
	7028				
	5/32 (3.9)	170-270	22-26		3/16 To 5/16 (5 To 8) 3/8 (10) 7/16 To 5/8 (11 To 16)
	3/16 (4.8)	210-330	24-27		

This procedure may vary due to fabrication sequence, fit-up, pass size, etc., within the limitation of variables given in applicable AWS codes or contract specifications

Procedure no. 401
Revision no.
Form III-2

Contractor Casco Bay Steel
Authorized By Paul E. Goodale
Date 3/2/00

AWS QC 1 PAUL E. GOODALE 08100301 6/07

Casco Bay Steel Structures, Inc.

WELDING PROCEDURE SPECIFICATION

Material specification ASTM-A709- Gr 50
Welding process Flux Cored Arc welding
Manual or machine Semi AUTO
Position of welding Flat - Horizontal
Filler metal specification Aws A5-29
Filler metal classification E-81T1-NiMJ-H4 - Dual Shield II 80-NiI-H4
Flux NA
Shielding gas 75% AR -25% CO2 Flow rate 35 CFH +8, -4
Single or multiple pass Single & MULTiple
Single or multiple arc Single
Welding current DC
Polarity DC EP
Welding progression See Detail
Root treatment Arc-Tche Prep & RuST - slag - loose Scale & MoiSTure
Preheat and interpass temperature See Table
Postheat temperature NA
Heat Input Min 34 KJ/in Max 43.7 KJ/in PAR-#3 - 33.6 KJ/in

VT-AOT RETEST
WT 1277 (NI-MJ-ST) over
WA-TC-RIVET
PROJ NO. BRFC22-1(14)
CBSS 498

Minimum Preheat and Interpass Temperature, °C [°F]

Welding Process (Base Metal)	Thickness of Thickest Part at Point of Welding, mm [in]			
	To 20 mm [3/4 in] Incl.	Over 20 mm [3/4 in] to 40 mm [1-1/2 in] Incl.	Over 40 mm [1-1/2 in] to 65 mm [2-1/2 in] Incl.	Over 65 mm [2-1/2 in]
SAW; GMAW; FCAW; SMAW (M270M [M270] Gr. 345 [50],	10 [50]	20 [70]	65 [150]	110 [225]

WELDING PROCEDURE

Pass no.	Electrode size	Welding current Amperes	Welding current Volts	Travel speed
AS REQ	1/16	320	28	16
		288 TO 340	27 TO 30	14 TO 18

Sec 5-13 and NY-SCM
AWS D1.5 Joint detail Fillet

Flat: To 1/2
Horizontal: To 3/8

INTerpass Temp MAX - 260°F

CKD CSS Receiver Vtrans Dkd In TUE
NOV 14 2011
Resubmit BY APPROVED DATE 11/15/11

This procedure may vary due to fabrication sequence, fit-up, pass size, etc., within the limitation of variables given in applicable A.W.S. codes or contract specifications

Procedure no. 101 ST OF VT
Revision no. 1 - 8-3-09
PAUL E. GOODALE CWI 88100209 OCI EXP. 10/01/10
Contractor Casco Bay Steel
Authorized By Paul E Goodale
Date 3-13-09

Casco Bay Steel Structures, Inc.

WELDING PROCEDURE SPECIFICATION

Material specification ASTM 709 - Gr 36-50-50W
Welding process Submerged Arc Welding
Manual or machine Machine
Position of welding Flat + Horizontal
Filler metal specification A5.23
Filler metal classification F8A2-EN1K-Ni1-H8
Flux Lincoln 960 - Electrode LA-95
Shielding gas NA Flow rate NA
Single or multiple pass Both
Single or multiple arc Single
Welding current DC
Polarity DC EP
Welding progression See Detail
Root treatment Grind-Wirebrush-Free of Mill scale, Slag-Rust & Moisture
Preheat and interpass temperature See Table
Postheat temperature AS REQ
Heat Input Min 39.8 Max 62.5 FCM 14-56.8 KJ/in

VT-AOT Bethel
VT 107 (RIVER ST) over
WHITE RIVER
Proj No. BRF032-1(14)
CASS 498

VTrans Received
CKD SSS dd by JWK
NOV 14 2011

Minimum Preheat and Interpass Temperature, °C [°F]

Welding Process (Base Metal)	To 20 mm [3/4 in] Incl.	Thickness of Thicker Part at Point of Welding, mm [in] Over 20 mm [3/4 in] to 40 mm [1-1/2 in] Incl.	Over 40 mm [1-1/2 in] to 65 mm [2-1/2 in] Incl.	Over 65 mm [2-1/2 in.]
SAW; GMAW; FCAW; SMAW (M270M [M270] [A 709/A 709] Gr. 250 [36], 345 [50], 345W [50W], HPS 345W [HPS 70W])	10 [50]	20 [70]	65 [150]	110 [225]
SAW; GMAW; FCAW; SMAW (M270M [M270] [A 709M (A 709)] Gr. HPS 485W [HPS 70W], 690 [100], 690W [100W])*	10 [50]	50 [125]	80 [175]	110 [225]

Resubmit BY ____ APPROVED DATE 11/14/11 ✓

WELDING PROCEDURE

Pass no.	Electrode size	Welding current Amperes	Welding current Volts	Travel speed
		600	30	19
AS	5/32	640	32	21
REQ		TO	TO	TO
		560	28	17

Sec. 5-13
AWS D1-5
Joint detail Fillet

2F

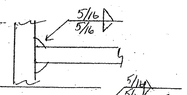

1F

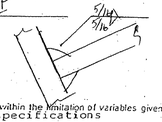

This procedure may vary due to fabrication sequence, fit-up, pass size, etc., within the limitation of variables given in applicable A.W.S. codes or contract specifications

Procedure no. 201-A
Revision no. ____

Contractor Casco Bay Steel
Authorized By Todd Goodwin
Date 1-11-10

75 Spring Hill Road
Saco, Maine 04072

Phone: (207) 282-7360 Fax: (207) 282-117

WELDING PROCEDURE SPECIFICATION

Material specification ASTM 709 Gr 250-345-345W
Welding process Submerged Arc Welding (SAW)
Manual or machine Machine
Position of welding Flat 1F - Horizontal 2F
Filler metal specification AWS A5-23
Filler metal classification Lincoln LA 75, FBA2-EN1-N1
Flux Lincoln 960 Elec. EX 1/8 ± 3/4
Shielding gas NA Flow rate NA
Single or multiple pass Single and Multiple Pass
Single or multiple arc Single
Welding current DC
Polarity DCEN
Welding progression See joint Detail
Root treatment To meet AWS specification
Preheat and interpass temperature To 3/4-50, +3/4 To 1 1/2-70°, 1 1/2 To 2 1/2-150° over 2 1/2 225
Postheat temperature NA
Heat Input Min 30 KJ/in Max 47.1 KJ/in PQR-FCM #9 42.8 KJ/in

VT-AOT Bethel
VT 107 (River ST) over
White River
Proj. No. BRF022-1(14)
CBSS 498

WELDING PROCEDURE

Pass no.	Electrode size	Welding current Amperes	Welding current Volts	Travel speed
		293	32	13 IPM
1	3/32	264 TO 322	30 TO 34	11 TO 15

AWS D1-5 Joint detail Fillet

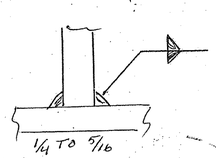

1/4 TO 5/16

Vfrans Received
CKD SSS OKD BY JWC
NOV 14 2011
Responsible By ____ APPROVED DATE 11/15/11

AWS QC 1 PAUL E. GOODALE RS100201 Cinn

This procedure may vary due to fabrication sequence, fit-up, pass size, etc., within the limitation of variables given in applicable A.W.S. codes or contract specifications

Procedure no. 250
Revision no. 1 new PQR
Form III-2

Contractor Casco Bay Steel
Authorized By Paul E. Goodale
Date 11-1-06

GENERAL NOTES

CONSTRUCTION SPECIFICATIONS

1) ALL MATERIAL AND WORKMANSHIP TO BE IN ACCORDANCE WITH THE STATE OF VERMONT AGENCY OF TRANSPORTATION STANDARD SPECIFICATIONS FOR CONSTRUCTION DATED 2006 WITH LATEST REVISIONS AND THE AASHTO LRFD BRIDGE CONSTRUCTION SPECIFICATIONS FOR HIGHWAY BRIDGES 4th EDITION WITH INTERIMS THROUGH 2010.

MATERIAL SPECIFICATIONS

1) UNLESS OTHERWISE NOTED, ALL STEEL TO BE UNPAINTED AASHTO M270 (ASTM A709) GRADE 50W.

2) MATERIAL NOTED "CVN" OR "T2" ON DETAIL DRAWINGS SHALL BE CHARPY V-NOTCH TESTED IN ACCORDANCE WITH THE REQUIREMENTS OF VERMONT STANDARD SPECIFICATIONS SECTION 714.01.

3) HIGH STRENGTH BOLTS:
-ASTM A325 (AASHTO M164) TYPE 3 W/ A563 GRADE C3 NUTS & F436W WASHERS IN NON-PAINTED AREAS.
-ASTM A325 (AASHTO M164) TYPE 1 (GALV.) W/ A563 GRADE DH NUTS & F436 WASHERS IN PAINTED AREAS.

BOLTS & NUTS SHALL BE ROTATIONAL CAPACITY TESTED.
DO NOT MIX NUTS & BOLTS FROM DIFFERENT CONTAINERS UNLESS ALL BOLTS & NUTS HAVE THE SAME LOT NUMBER.

FABRICATION

1) ALL HOLES SHALL BE PUNCHED OR DRILLED FULL SIZE (UN).

WELDING

1) THE CONFIGURATION OF THE WELD JOINTS AND ALL WELDING PROCEDURES SHALL BE IN ACCORDANCE WITH AASHTO/AWS D1.5-08 BRIDGE WELDING CODE AND IN ADDITION TO SPECIFICATIONS SHOWN ABOVE. ALL WELDING WILL BE DETAILED TO PRE-QUALIFIED JOINTS, UNLESS PROHIBITED BY THE DESIGNER.

2) WELDING OF MAIN LOAD CARRYING MEMBERS AND ATTACHMENTS SHALL BE PERFORMED USING THE AUTOMATIC SUBMERGED ARC & SHIELDED METAL ARC PROCESSES. ALL WELDS ARE CONTINUOUS U.N.

3) NON DESTRUCTIVE TESTING OF WELDS SHALL BE IN ACCORDANCE WITH THE REFERENCED SPECIFICATION.

4) SEE DETAIL "WS1" ON THIS DRAWING FOR WELD TERMINATION DETAIL.

FIELD CONNECTIONS

1) ALL FIELD CONNECTIONS SHALL BE MADE WITH A-325 HS BOLTS, INSTALLED PER SECTION 506.19(c).

2) BOLTS SHALL HAVE HEAVY HEX NUT, HEAVY HEX HEAD, AND AT LEAST ONE FLAT WASHER EACH. WASHER TO BE PLACED UNDER TURNED ELEMENT.

3) PIECE MARKS WILL BE LOCATED AS SHOWN ON ERECTION DRAWINGS.

CLEANING

1) ALL STEEL SHALL BE BLAST CLEANED IN ACCORDANCE WITH SSPC SP-10.

PAINTING

1) THE END 10'-0 OF STRINGERS & DIAPHRAGMS AT THE PIER (BRG 2) SHALL BE PAINTED AS SHOWN IN SKETCH "P1", (UN).

2) THE PAINT SYSTEM AND ITS APPLICATION SHALL CONFORM TO SECTION 513 OF THE STANDARD SPECIFICATIONS.

3) PAINT SYSTEM SHALL BE AS FOLLOWS:
PRIMER: INTERZINC 315B EPOXY ZINC RICH PRIMER - 2.0 - 6.0 MILS DFT.
INTERMEDIATE: INTERGARD 475HS EPOXY 4.0-8.0 MILS DFT.
TOPCOAT: INTERTHANE 870 UHS - 3.0-5.0 MILS DFT.
TOPCOAT COLOR: DARK BROWN FED. COLOR #30045 CONFORMING TO SUBSECTION 708.03.
GREASE SHALL ALSO BE APPLIED IN THIS AREA AS SPECIFIED IN SUBSECTION 513.06(d).
THE GREASE SHALL BE BROWN.

4) PRIME COAT ONLY WITHIN 3" OF OPEN HOLES IN PAINTED AREAS.

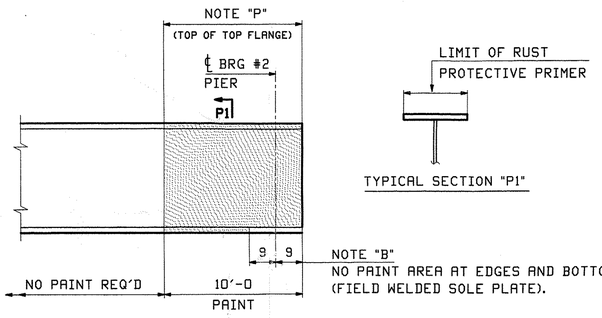

SKETCH "P1"

NOTE "P"
PAINT WITH A LIGHT RUST-PREVENTATIVE COAT OF PRIMER (SEE SECTION "P1")

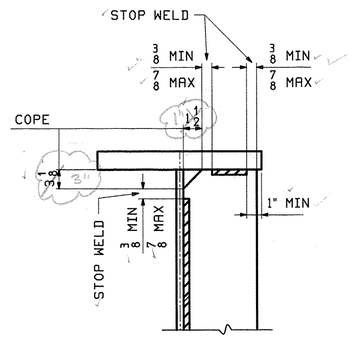

DETAIL "WS1"

STIFFENER WELD TERMINATION

NOTE TO ENGINEER:
THESE NOTES ARE NOT INTENDED TO BE ALL INCLUSIVE AND COMPLIANCE WITH RELEVANT SPECIFICATIONS REMAIN UNCHANGED.

REV.	DATE	REMARKS	DWN	CHK	APVL	SHOP
0					NOV 8 2011	

MATERIAL:	SURFACE PREP. & PAINT:	HOLES:	SHOP BOLTS:

DESCRIPTION: GENERAL NOTES

CASCO BAY STEEL STRUCTURES, INC.
1 WALLACE AVE. PHONE (207) 780-6722
SOUTH PORTLAND, ME 04106 FAX. (207) 780-6726
TENSOR 3073R

STRUCTURE: VT 107 (RIVER STREET) over WHITE RIVER APPROACH SPAN, County of WINDSOR		DRAWN: JTB	DATE: 09/28
		CHKD: PCP	DATE: 10/4/11
LOCATION: TOWN OF BETHEL, VERMONT		JOB NO. 498	DWG NO. GN201
PROJ NO. BRF 022-1(14)			REV. △
CUSTOMER: BECK & BELLUCCI			

VTrans Received NOV 14 2011 as noted
CKD. WBP
Resubmit BY ____ APPROVED WBP DATE 11/18/11

VTrans set

JTB Tue, Oct 4, 2011 09:30:52 AM //users/jobs/3073R/DWGS/GN201.dgn

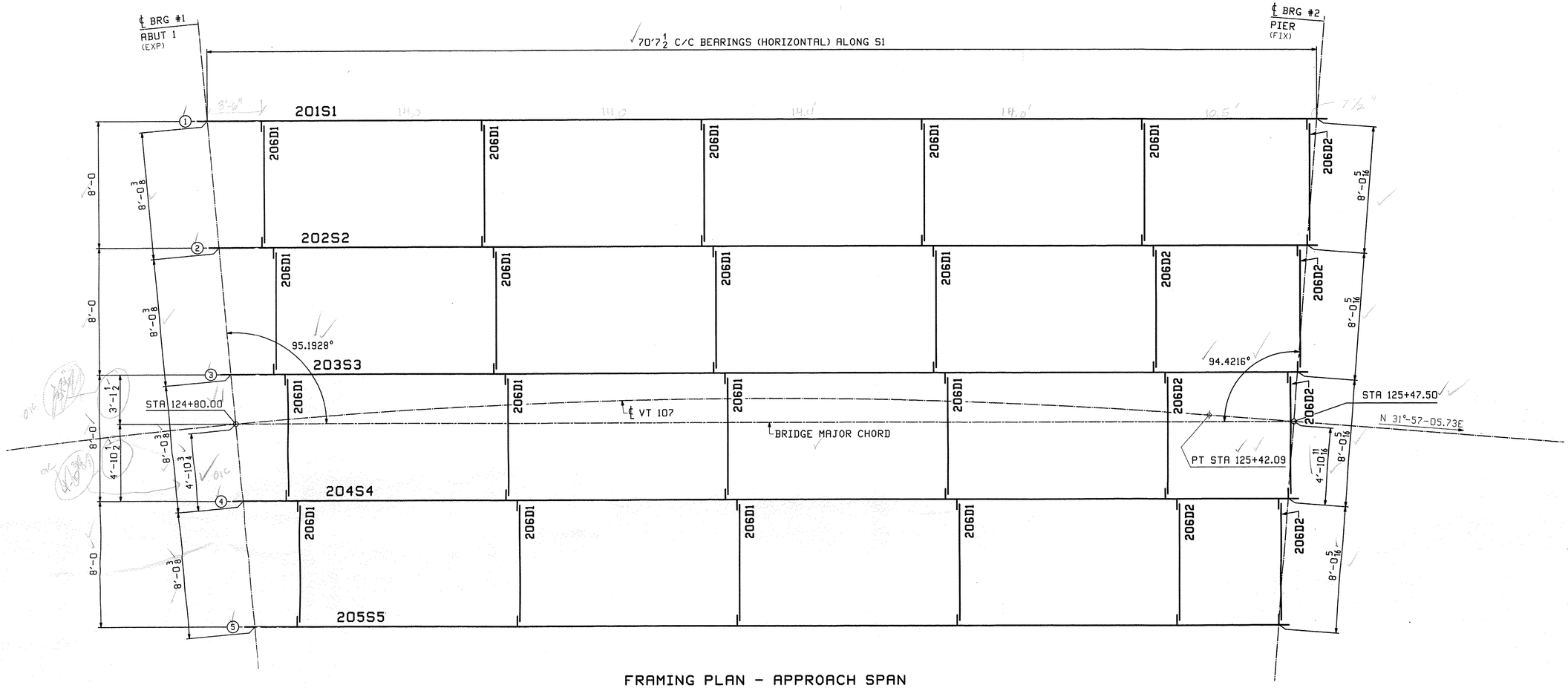

FRAMING PLAN - APPROACH SPAN

FIELD BOLT LIST						A325 Type 3 BOLTS								
LINE	NO REQ'D.	BOLT DIAM.	BOLT LEN.	BOLTS /CONN.	# OF CONN.	GRIP	THICKNESS OF PCS. CONNECTED						WASH CODE	PIECES CONNECTED AND REMARKS
1														**DIAPHRAGM 206D1**
2	170	7/8	2 1/4	5	34	15/16	7/16	1/2					1	DIAPHRAGM WEB TO CONN. PLATE

WASHER CODES

1: 1 Hard Flat Washer

FIELD BOLT LIST						A325 Type 1 BOLTS (GALV)								
LINE	NO REQ'D.	BOLT DIAM.	BOLT LEN.	BOLTS /CONN.	# OF CONN.	GRIP	THICKNESS OF PCS. CONNECTED						WASH CODE	PIECES CONNECTED AND REMARKS
3														**DIAPHRAGM 206D2**
4	70	7/8	2 1/4	5	14	15/16	7/16	1/2					1	DIAPHRAGM WEB TO CONN. PLATE

WASHER CODES

1: 1 Hard Flat Washer

FIELD BOLT SUMMARY			EXACT COUNT - NONE EXTRA			
LINE	NO. OF BOLTS	BOLT DIAM.	TYPE	BOLT LEN	ACTUAL COUNT	REMARKS
1	70	7/8	A325 Type 1	2 1/4	70	(GALVANIZED)
2						
3	70	Hard Flat Washers for 7/8 ø BOLT				F436-1 (GALVANIZED)
4						
5						
6	170	7/8	A325 Type 3	2 1/4	170	
7						
8	170	Hard Flat Washers for 7/8 ø BOLT				F436-3
9						
10						
11						

NOTE:
FOR GENERAL NOTES SEE DRAWING GN201.

VTrans Received
CK'D MCF OK'd BY WBP
NOV 14 2011
Resubmit BY APPROVED DATE 11/18/11

REV.	DATE	REMARKS	DWN	CHK	APVL	SHOP
					NOV 8 2011	
0						

MATERIAL: | SURFACE PREP. & PAINT: | HOLES: | SHOP BOLTS:

DESCRIPTION: FRAMING PLAN & FIELD BOLTS

CASCO BAY STEEL STRUCTURES, INC.
1 WALLACE AVE. PHONE (207) 780-6722
SOUTH PORTLAND, ME 04106 FAX. (207) 780-6726
TENSOR 3073R

STRUCTURE: VT 107 (RIVER STREET) over WHITE RIVER
APPROACH SPAN
County of WINDSOR

DRAWN: JTB DATE: 09/29
CHKD: PCP DATE: 10/4/11

LOCATION: TOWN OF BETHEL, VERMONT
PROJ NO. BRF 022-1(14)
CUSTOMER: BECK & BELLUCCI

JOB NO. 498
DWG NO. E201
REV. △

JTB Tue, Oct 4, 2011 09:30:52 AM /users/jobs/3073R/E201 : Rev0

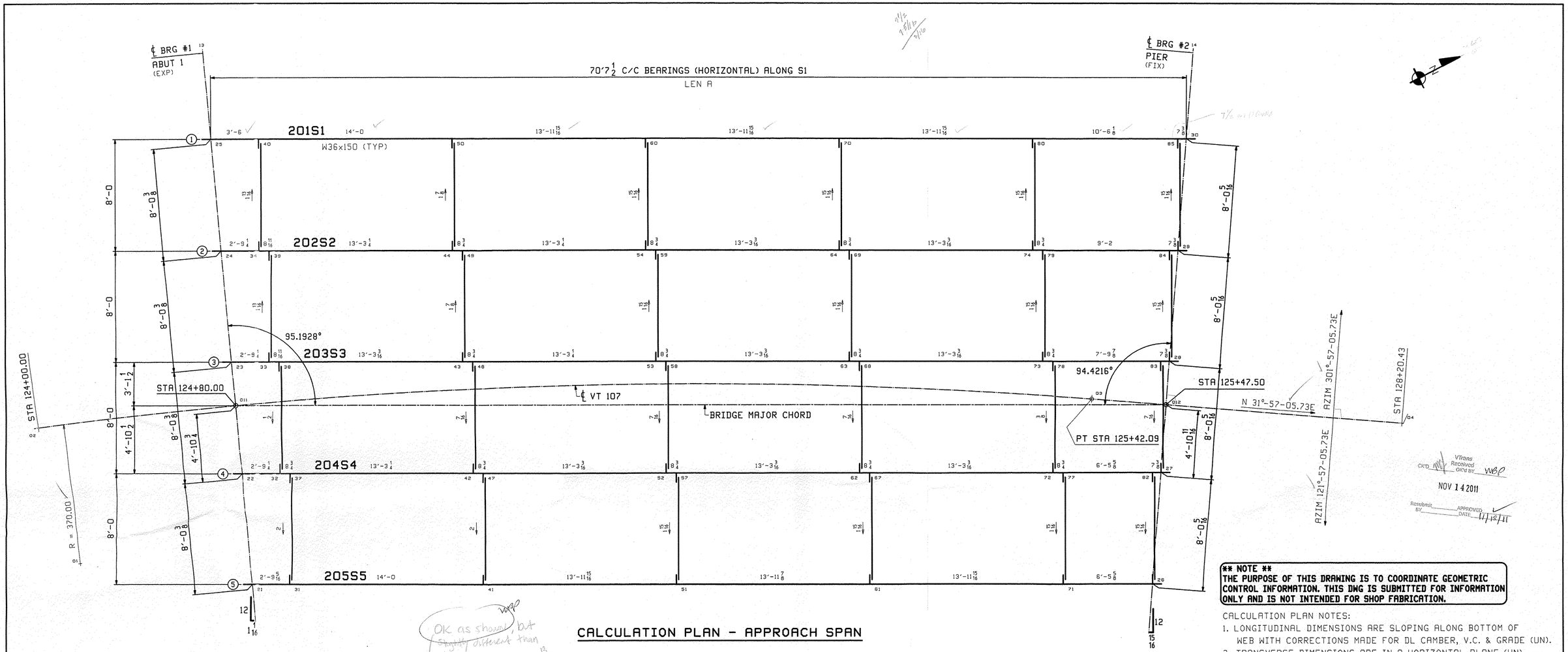

CALCULATION PLAN - APPROACH SPAN

Line	LEN A	SLOPE BRG 1	SLOPE BRG 2
1	70'-7 5/16	.0110	.0021
2	69'-3 3/16	.0112	.0021
3	67'-11	.0114	.0021
4	66'-6 13/16	.0116	.0022
5	65'-2 11/16	.0118	.0022

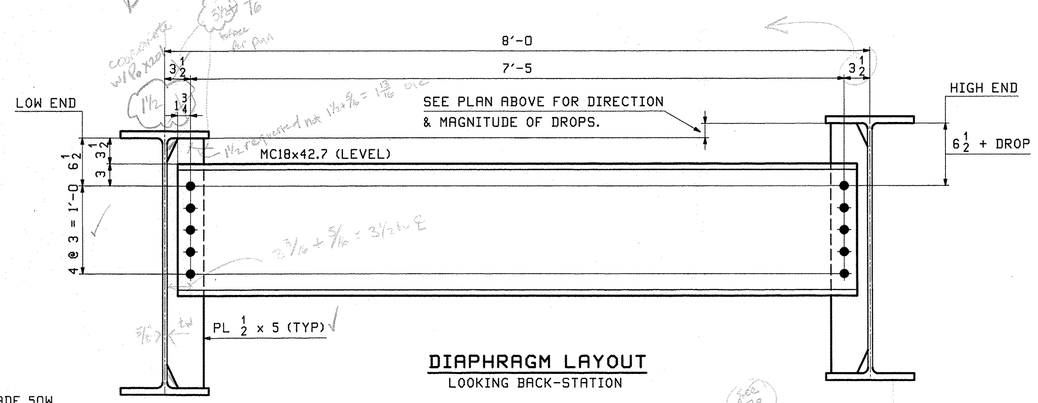

DIAPHRAGM LAYOUT

LOOKING BACK-STATION

DIAPHRAGM NOTES:

1. MATERIAL SHALL BE AASHTO M270 (ASTM A709) GRADE 50W.
2. ALL BOLT HOLES SHALL BE 15/16"ø FOR 7/8"ø HSB.

**** NOTE ****
THE PURPOSE OF THIS DRAWING IS TO COORDINATE GEOMETRIC CONTROL INFORMATION. THIS DWG IS SUBMITTED FOR INFORMATION ONLY AND IS NOT INTENDED FOR SHOP FABRICATION.

CALCULATION PLAN NOTES:

1. LONGITUDINAL DIMENSIONS ARE SLOPING ALONG BOTTOM OF WEB WITH CORRECTIONS MADE FOR DL CAMBER, V.C. & GRADE (UN).
2. TRANSVERSE DIMENSIONS ARE IN A HORIZONTAL PLANE (UN).
3. ARROW POINTS TOWARD LOW END OF MEMBER.
4. ENDS OF STRINGERS ARE VERTICAL AFTER DL ROTATION.
5. DIAPHRAGM STIFFENERS ARE NORMAL TO GRADE.
6. BOTTOM POINT NUMBERS = TOP POINT NUMBERS + 100

REV.	DATE	REMARKS	DWN	CHK	APVL	SHOP
					NOV 8 2011	
0						

MATERIAL: | SURFACE PREP. & PAINT: | HOLES: | SHOP BOLTS:

DESCRIPTION: CALCULATION PLAN

CASCO BAY STEEL STRUCTURES, INC.
1 WALLACE AVE. PHONE (207) 780-6722
SOUTH PORTLAND, ME 04106 FAX. (207) 780-6726
TENSOR 3073A

STRUCTURE: VT 107 (RIVER STREET) over WHITE RIVER
APPROACH SPAN
County of WINDSOR

DRAWN: JTB DATE: 09/28
CHKD: PCP DATE: 10/4/11

LOCATION: TOWN OF BETHEL, VERMONT
PROJ NO. BRF 022-1(14)
CUSTOMER: BECK & BELLUCCI
JOB NO. 498
DWG NO. WS201
REV. △

P.71
31 x 12" x 1/4" curtain wall box at expansion end

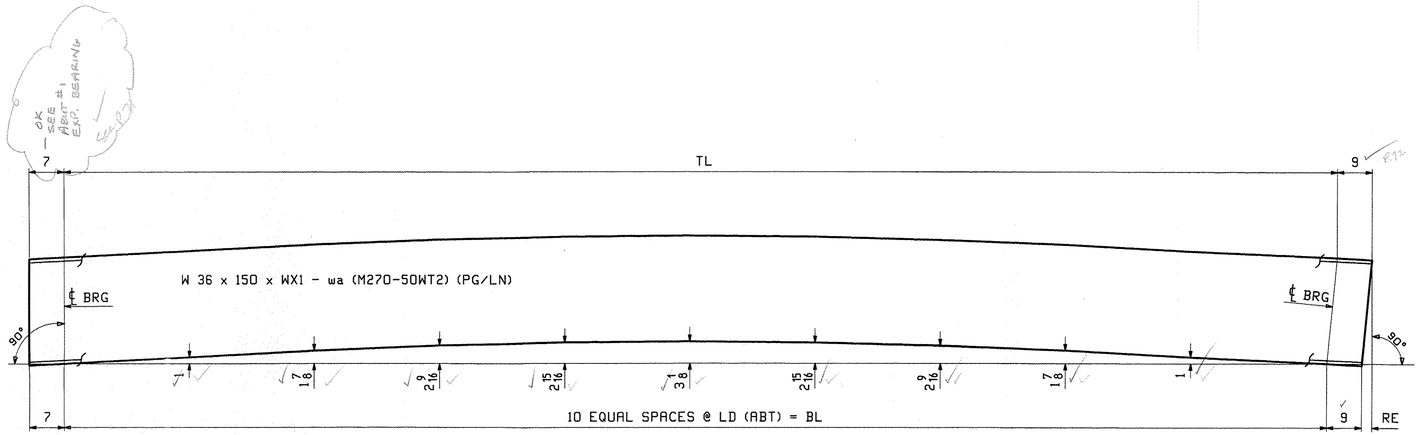

CAMBER DIAGRAM - MARK

MARK	TL	BL	RE	WX1	LD	PG/LINE
201S1	70'-7 3/4	70'-7 5/16	7/16	71'-11 3/4	7'-0 3/4	201/ A
202S2	69'-3 5/8	69'-3 3/16	7/16	70'-7 5/8	6'-11 1/8	201/ C
203S3	67'-11 7/16	67'-11	7/16	69'-3 7/16	6'-9 1/2	201/ E
204S4	66'-7 5/16	66'-6 13/16	1/2	67'-11 5/16	6'-7 7/8	201/ G
205S5	65'-3 3/16	65'-2 11/16	1/2	66'-7 3/16	6'-6 1/4	201/ J

VTrans Received
CK'D ___ OK'd BY WBP
NOV 14 2011
Resubmit ___ APPROVED ✓
BY ___ DATE 11/18/11

NOTES:

1. FOR GENERAL NOTES SEE DRAWING GN1.
2. H2-3 DENOTES MATERIAL SUBJECT TO CHARPY V-NOTCH TEST AT H FREQ. FOR ZONE 2

REV.	DATE	REMARKS	DWN	CHK	APVL	SHOP
					NOV 8 2011	
0						

MATERIAL:	SURFACE PREP. & PAINT:	HOLES:	SHOP BOLTS:
M270-50W(UN)	SEE DWG GN1		

DESCRIPTION: CAMBER DIAGRAM

CASCO BAY STEEL STRUCTURES, INC.
1 WALLACE AVE. PHONE (207) 780-6722
SOUTH PORTLAND, ME 04106 FAX. (207) 780-6726
TENSOR 3073A

STRUCTURE: VT 107 (RIVER STREET) over WHITE RIVER APPROACH SPAN County of WINDSOR	DRAWN: JTB	DATE: 09/28	
	CHKD: PCP	DATE: 10/4/11	
LOCATION: TOWN OF BETHEL, VERMONT	JOB NO.	DWG NO.	
PROJ NO. BRF 022-1(14)	498	C201	
CUSTOMER: BECK & BELLUCCI		REV. △	

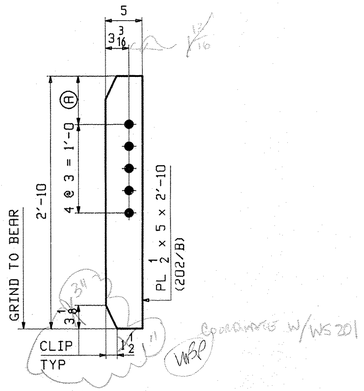

MARK "A"

DIAPH CONN @ PIER BRG

MARK "A"	QTY	A	
x201a	2	$6\frac{1}{2}$	LOW END
x201b	2	$8\frac{7}{16}$	HIGH END DROP = $1\frac{15}{16}$

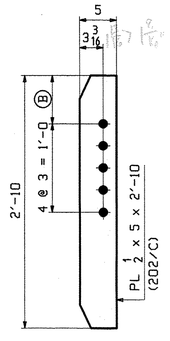

MARK "B"

INT DIAPH CONN

MARK "B"	QTY	B	
x201c	22	$6\frac{1}{2}$	LOW END
x201d	6	$6\frac{15}{16}$	HIGH END DROPS = $\frac{3}{8}$ TO $\frac{1}{2}$
x201f	16	$8\frac{3}{8}$	HIGH END DROP = $1\frac{13}{16}$ TO 2

VTrans Received
CK'D ___ OK'd BY WSP
NOV 14 2011
Resubmit ___ APPROVED as noted
BY ___ DATE 11/18/11

NOTE:
FOR GENERAL NOTES SEE DRAWING GN201.

REV.	DATE	REMARKS	DWN	CHK	APVL	SHOP
					NOV 8 2011	
0						

MATERIAL:	SURFACE PREP. & PAINT:	HOLES:	SHOP BOLTS:
M270-50W	SEE DWG GN201	$\frac{15}{16}$"Ø	NONE

DESCRIPTION: STANDARD DETAILS

CASCO BAY STEEL STRUCTURES, INC.
1 WALLACE AVE. PHONE (207) 780-6722
SOUTH PORTLAND, ME 04106 FAX. (207) 780-6726
TENSOR 3073A

STRUCTURE: VT 107 (RIVER STREET) over WHITE RIVER APPROACH SPAN County of WINDSOR		DRAWN: JTB	DATE: 09/29
		CHKD: PCP	DATE: 10/4/11
LOCATION: TOWN OF BETHEL, VERMONT		JOB NO.	DWG NO.
PROJ NO. BRF 022-1(14)		498	X201
CUSTOMER: BECK & BELLUCCI			REV. △

ABM INFO		SHIP	BILL OF MATERIAL					JOB NO.	DRAWING NO.	REV.
								498	201	
PAGE	LINE	MARK	QTY	MARK	MATERIAL	LENGTH FT	LENGTH INCHES	REMARKS	WT	PROCUREMENT NOTES
		201S1	1		STRINGER				10941	
201	A		1	wa	W 36x150	71	$11\frac{3}{4}$	M270-50WT2		
202	C		6	x201c	PL $\frac{1}{2}$x5	2	10	M270-50W		

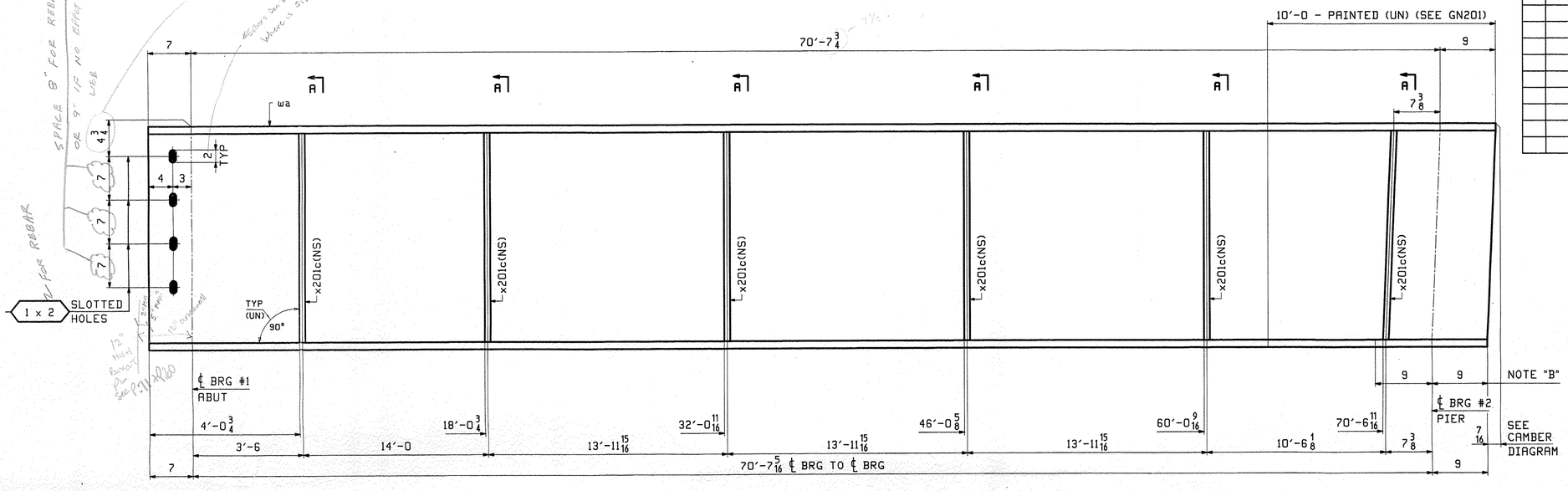

ONE - STRINGER - 201S1

FOR STANDARD DETAILS SEE DRAWING X201.
FOR CAMBER DIAGRAM SEE DRAWING C201.
FOR GENERAL NOTES SEE DRAWING GN201.
T2 DENOTES MATERIAL SUBJECT TO CHARPY V-NOTCH TESTING.

NOTE "B"
NO PAINT AREA AT EDGES AND BOTTOM OF BOTTOM FLANGE.
(FIELD WELDED SOLE PLATE).

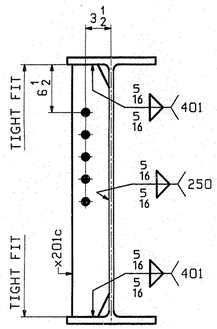

SECTION A

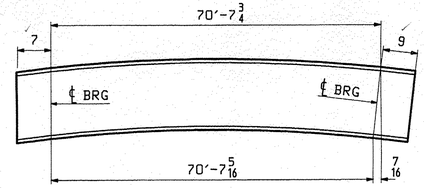

ORIENTATION DIAGRAM
FOR CAMBER SEE DWG C201

CK'D VTrans Received Ck'd BY WBP
NOV 14 2011
Resubmit BY APPROVED DATE 11/15/11

REV.	DATE	REMARKS	DWN	CHK	APVL	SHOP
					NOV 8 2011	
0						

MATERIAL:	SURFACE PREP. & PAINT:	HOLES:	SHOP BOLTS:
M270-50W	SEE DWG GN201	15/16"Ø	NONE

DESCRIPTION: STRINGER - 201S1

CASCO BAY STEEL STRUCTURES, INC.
1 WALLACE AVE. PHONE (207) 780-6722
SOUTH PORTLAND, ME 04106 FAX. (207) 780-6726
TENSOR 3073A

STRUCTURE: VT 107 (RIVER STREET) over WHITE RIVER APPROACH SPAN County of WINDSOR	DRAWN: JTB	DATE: 09/29	
	CHKD: PCP	DATE: 10/4/11	
LOCATION: TOWN OF BETHEL, VERMONT	JOB NO.	DWG NO.	
PROJ NO. BRF 022-1(14)	498	201	
CUSTOMER: BECK & BELLUCCI		REV. △	

ABM INFO		SHIP	BILL OF MATERIAL					JOB NO.	DRAWING NO.	REV.
								498	202	
PAGE	LINE	MARK	QTY	MARK	MATERIAL	LENGTH FT	LENGTH INCHES	REMARKS	WT	PROCUREMENT NOTES
		202S2	1		STRINGER				10885	
201	C		1	wa	W 36x150	70	7 5/8	M270-50WT2		
202	B		1	x201b	PL 1/2x5	2	10	M1E M270-50W		
202	C		6	x201c	PL 1/2x5	2	10	M270-50W		
202	C		5	x201f	PL 1/2x5	2	10	M270-50W		

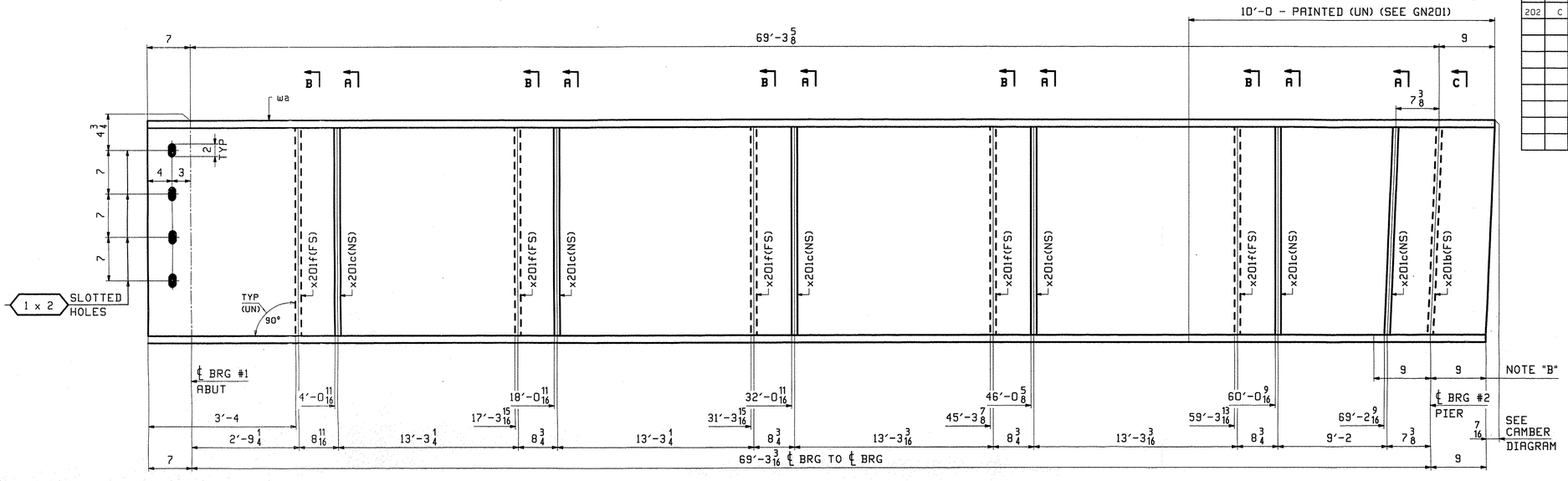

ONE - STRINGER - 202S2

FOR STANDARD DETAILS SEE DRAWING X201.
FOR CAMBER DIAGRAM SEE DRAWING C201.
FOR GENERAL NOTES SEE DRAWING GN201.
T2 DENOTES MATERIAL SUBJECT TO CHARPY V-NOTCH TESTING.

NOTE "B"
NO PAINT AREA AT EDGES AND BOTTOM OF BOTTOM FLANGE.
(FIELD WELDED SOLE PLATE).

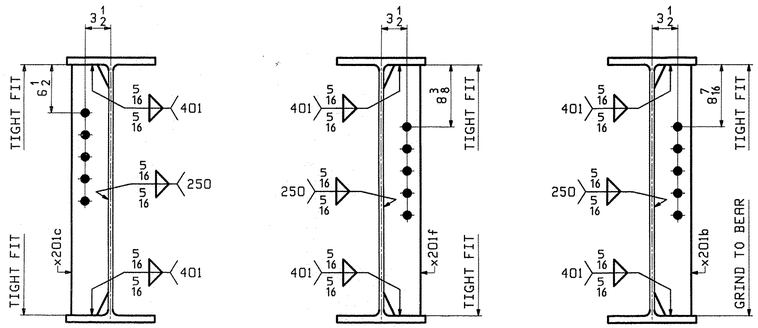

SECTION A SECTION B SECTION C

VTrans Received
CK'D AW OK'd BY WBP
NOV 14 2011
Resubmit BY APPROVED DATE 11/18/11

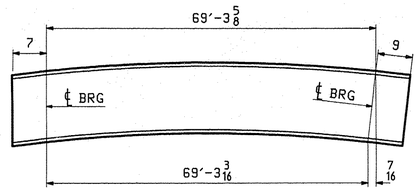

ORIENTATION DIAGRAM
FOR CAMBER SEE DWG C201

REV.	DATE	REMARKS	DWN	CHK	APVL	SHOP
					NOV 8 2011	
0						

MATERIAL:	SURFACE PREP. & PAINT:	HOLES:	SHOP BOLTS:
M270-50W	SEE DWG GN201	15/16"Ø	NONE

DESCRIPTION: STRINGER - 202S2

CASCO BAY STEEL STRUCTURES, INC.
1 WALLACE AVE. PHONE (207) 780-6722
SOUTH PORTLAND, ME 04106 FAX. (207) 780-6726
TENSOR 3073A

STRUCTURE: VT 107 (RIVER STREET) over WHITE RIVER APPROACH SPAN County of WINDSOR	DRAWN: JTB	DATE: 09/29	
	CHKD: PCP	DATE: 10/4/11	
LOCATION: TOWN OF BETHEL, VERMONT	JOB NO.	DWG NO.	
PROJ NO. BRF 022-1(14)	498	202	
CUSTOMER: BECK & BELLUCCI		REV. △	

ABM INFO		SHIP	BILL OF MATERIAL					JOB NO.	DRAWING NO.	REV.
								498	203	
PAGE	LINE	MARK	QTY	MARK	MATERIAL	LENGTH FT	LENGTH INCHES	REMARKS	WT	PROCUREMENT NOTES
		203S3	1		STRINGER				10682	
201	E		1	wa	W 36x150	69	$3\frac{7}{16}$	M270-50WT2		
202	B		1	x201b	PL $\frac{1}{2}$x5	2	10	MIE M270-50W		
202	C		6	x201d	PL $\frac{1}{2}$x5	2	10	M270-50W		
202	C		5	x201f	PL $\frac{1}{2}$x5	2	10	M270-50W		

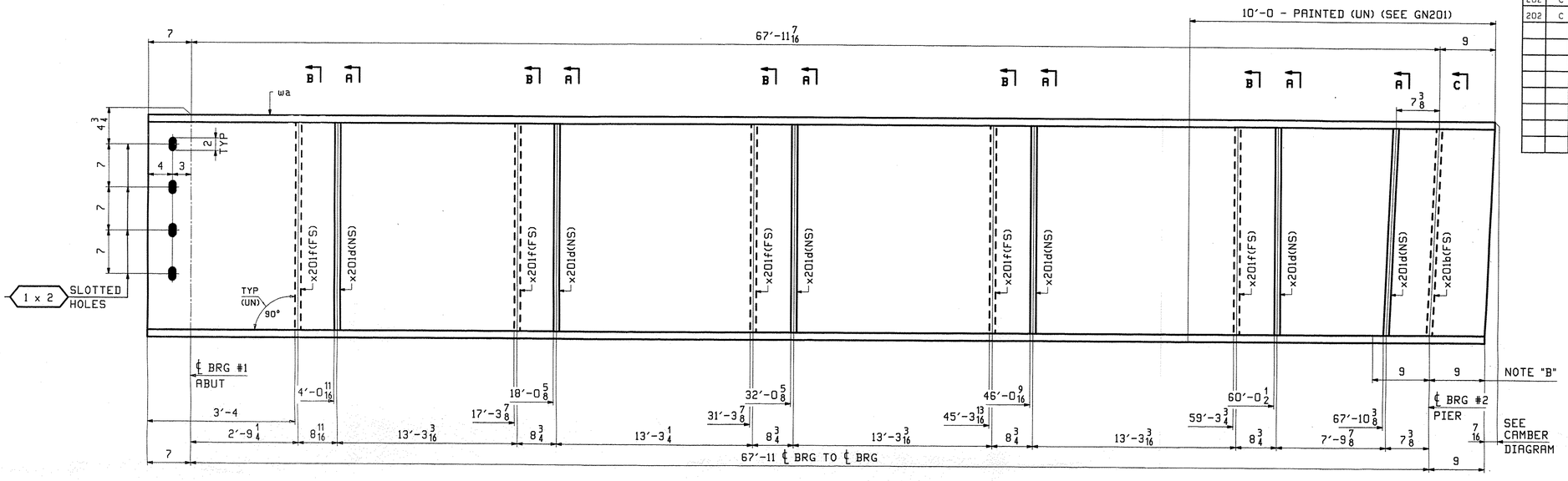

ONE - STRINGER - 203S3

FOR STANDARD DETAILS SEE DRAWING X201.
FOR CAMBER DIAGRAM SEE DRAWING C201.
FOR GENERAL NOTES SEE DRAWING GN201.
T2 DENOTES MATERIAL SUBJECT TO CHARPY V-NOTCH TESTING.

NOTE "B"
NO PAINT AREA AT EDGES AND BOTTOM OF BOTTOM FLANGE.
(FIELD WELDED SOLE PLATE).

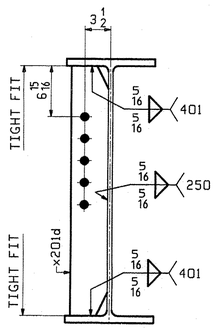

SECTION A

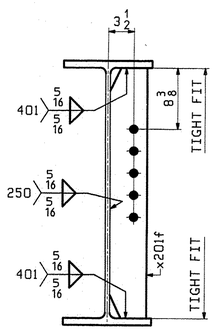

SECTION B

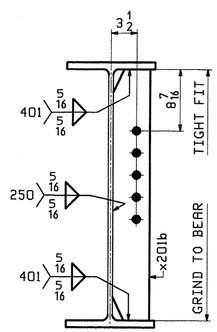

SECTION C

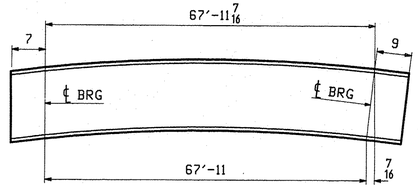

ORIENTATION DIAGRAM
FOR CAMBER SEE DWG C201

VTrans Received NOV 14 2011 CK'D VWP OK'd BY

Resubmit BY APPROVED DATE 11/18/11

NOV 8 2011

REV.	DATE	REMARKS	DWN	CHK	APVL	SHOP
0						

MATERIAL:	SURFACE PREP. & PAINT:	HOLES:	SHOP BOLTS:
M270-50W	SEE DWG GN201	$\frac{15}{16}$"ø	NONE

DESCRIPTION: STRINGER - 203S3

CASCO BAY STEEL STRUCTURES, INC.
1 WALLACE AVE. PHONE (207) 780-6722
SOUTH PORTLAND, ME 04106 FAX. (207) 780-6726

TENSOR 3073A

STRUCTURE: VT 107 (RIVER STREET) over WHITE RIVER APPROACH SPAN County of WINDSOR	DRAWN: JTB	DATE: 09/29
	CHK'D: PCP	DATE: 10/4/11
LOCATION: TOWN OF BETHEL, VERMONT	JOB NO. 498	DWG NO. 203
PROJ NO. BRF 022-1(14)		REV. △
CUSTOMER: BECK & BELLUCCI		

I:\Projects\20395\203 3.dgn Tue, Oct 4, 2011 09:20:49 PM JTB

ABM INFO		SHIP	BILL OF MATERIAL					JOB NO.	DRAWING NO.	REV.
								498	204	
PAGE	LINE	MARK	QTY	MARK	MATERIAL	LENGTH FT	LENGTH INCHES	REMARKS	WT	PROCUREMENT NOTES
		204S4	1		STRINGER				10481	
201	G		1	wa	W 36x150	67	$11\frac{5}{16}$	M270-50WT2		
202	B		1	x201a	PL $\frac{1}{2}$x5	2	10	M1E M270-50W		
202	C		5	x201c	PL $\frac{1}{2}$x5	2	10	M270-50W		
202	C		6	x201f	PL $\frac{1}{2}$x5	2	10	M270-50W		

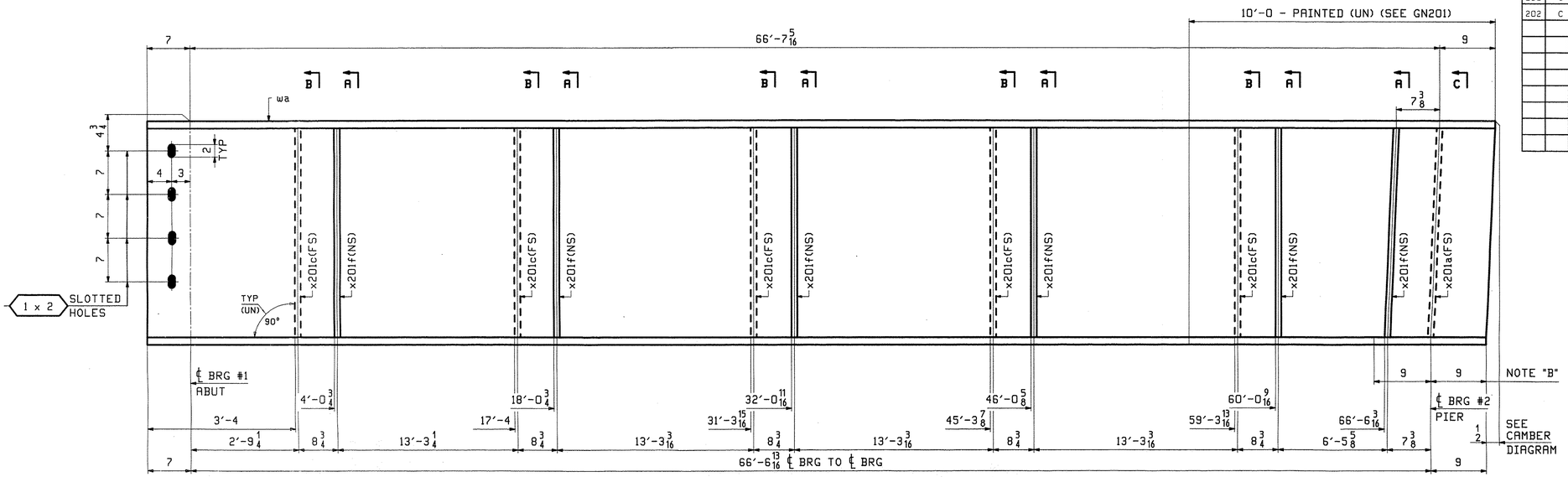

ONE - STRINGER - 204S4

FOR STANDARD DETAILS SEE DRAWING X201.
FOR CAMBER DIAGRAM SEE DRAWING C201.
FOR GENERAL NOTES SEE DRAWING GN201.
T2 DENOTES MATERIAL SUBJECT TO CHARPY V-NOTCH TESTING.

NOTE "B"
NO PAINT AREA AT EDGES AND BOTTOM OF BOTTOM FLANGE.
(FIELD WELDED SOLE PLATE).

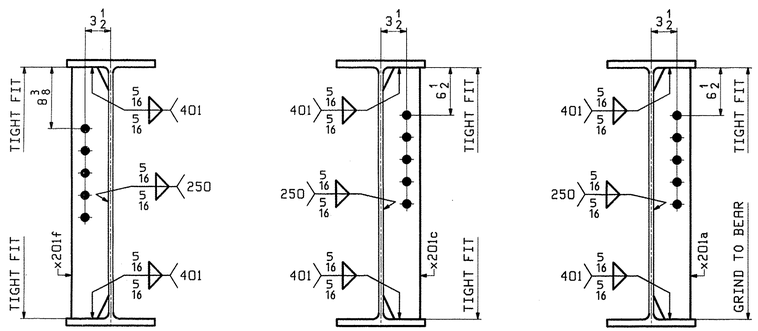

SECTION A

SECTION B

SECTION C

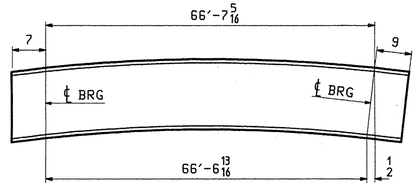

ORIENTATION DIAGRAM
FOR CAMBER SEE DWG C201

REV.	DATE	REMARKS	DWN	CHK	APVL	SHOP
					NOV 8 2011	
0						

MATERIAL:	SURFACE PREP. & PAINT:	HOLES:	SHOP BOLTS:
M270-50W	SEE DWG GN201	$\frac{15}{16}$"Ø	NONE

DESCRIPTION: STRINGER - 204S4

CASCO BAY STEEL STRUCTURES, INC.
1 WALLACE AVE. PHONE (207) 780-6722
SOUTH PORTLAND, ME 04106 FAX. (207) 780-6726
TENSOR 3073A

STRUCTURE: VT 107 (RIVER STREET) over WHITE RIVER APPROACH SPAN County of WINDSOR	DRAWN: JTB	DATE: 09/29	
	CHKD: PCP	DATE: 10/4/11	
LOCATION: TOWN OF BETHEL, VERMONT	JOB NO.	DWG NO.	
PROJ NO. BRF 022-1(14)	498	204	
CUSTOMER: BECK & BELLUCCI		REV. △	

VTrans Received
CK'D MJ OK'd BY WRP
NOV 14 2011
Resubmit BY APPROVED DATE 11/15/11

ABM INFO		SHIP	BILL OF MATERIAL					JOB NO.	DRAWING NO.	REV.
						LENGTH		498	205	
PAGE	LINE	MARK	QTY	MARK	MATERIAL	FT	INCHES	REMARKS	WT	PROCUREMENT NOTES
		205S5	1		STRINGER				10134	
201	J		1	wa	W 36x150	66	$7\frac{3}{16}$	M270-50WT2		
202	B		1	x201a	PL $\frac{1}{2}$x5	2	10	MIE M270-50W		
202	C		5	x201c	PL $\frac{1}{2}$x5	2	10	M270-50W		

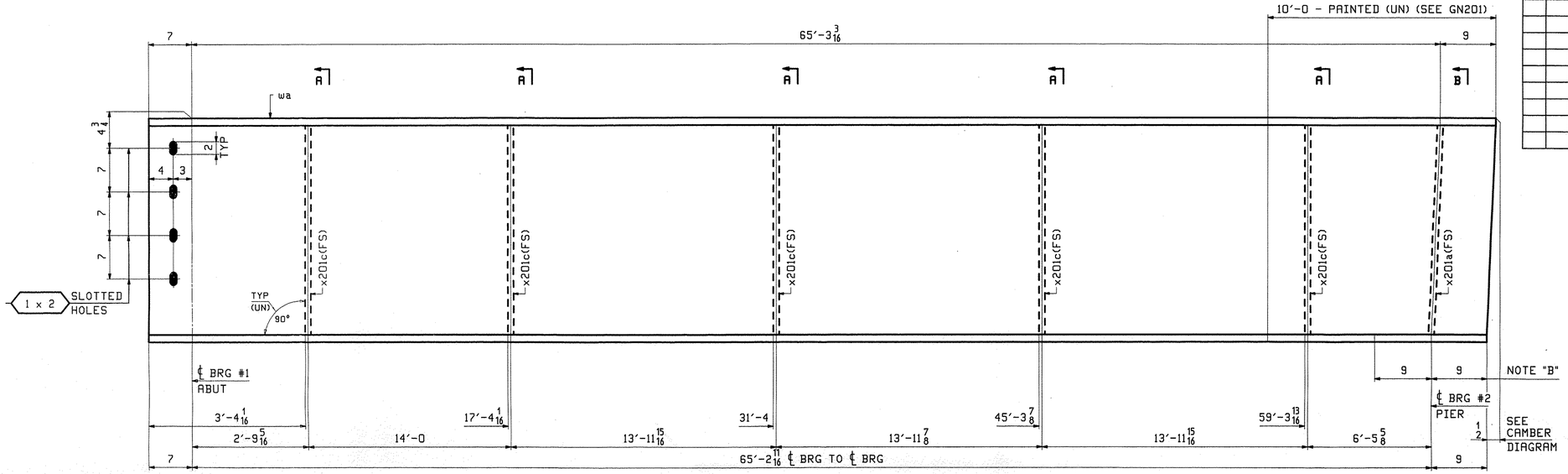

ONE - STRINGER - 205S5

FOR STANDARD DETAILS SEE DRAWING X201.
FOR CAMBER DIAGRAM SEE DRAWING C201.
FOR GENERAL NOTES SEE DRAWING GN201.
T2 DENOTES MATERIAL SUBJECT TO CHARPY V-NOTCH TESTING.

NOTE "B"
NO PAINT AREA AT EDGES AND BOTTOM OF BOTTOM FLANGE.
(FIELD WELDED SOLE PLATE).

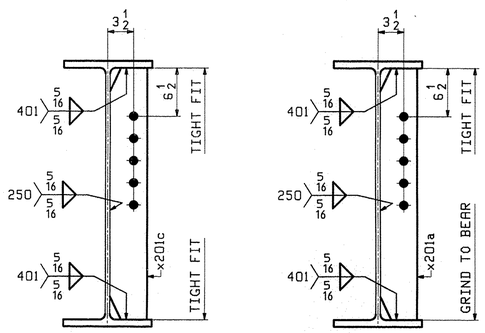

SECTION A

SECTION B

VTrans Received CK'D OK'd BY WBP
NOV 14 2011
Resubmit BY APPROVED DATE 11/8/11

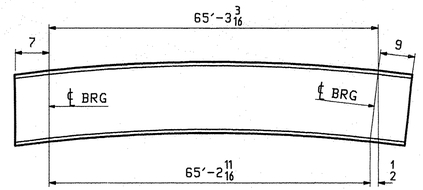

ORIENTATION DIAGRAM
FOR CAMBER SEE DWG C201

NOV 8 2011

REV.	DATE	REMARKS	DWN	CHK	APVL	SHOP
0						

MATERIAL:	SURFACE PREP. & PAINT:	HOLES:	SHOP BOLTS:
M270-50W	SEE DWG GN201	$\frac{15}{16}$"Ø	NONE

DESCRIPTION: STRINGER - 205S5

CASCO BAY STEEL STRUCTURES, INC.
1 WALLACE AVE. PHONE (207) 780-6722
SOUTH PORTLAND, ME 04106 FAX. (207) 780-6726
TENSOR 3073R

STRUCTURE: VT 107 (RIVER STREET) over WHITE RIVER APPROACH SPAN, County of WINDSOR	DRAWN: JTB	DATE: 09/29
	CHK'D: PCP	DATE: 10/4/11
LOCATION: TOWN OF BETHEL, VERMONT	JOB NO. 498	DWG NO. 205
PROJ NO. BRF 022-1(14)		REV. △
CUSTOMER: BECK & BELLUCCI		

JTB Tue, Oct 4, 2011 08:30:50 AM //users/jobs/2073R/205 - Rev0

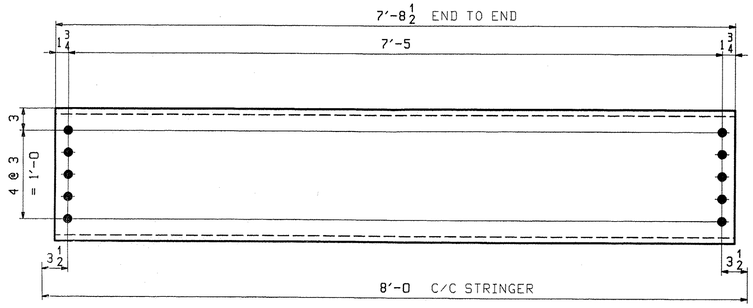

17 ~ DIAPHRAGMS - 206D1 ← NO PAINT REQ'D

7 ~ DIAPHRAGMS - 206D2 ← PAINTED - SEE DWG GN201

ABM INFO		SHIP	BILL OF MATERIAL					JOB NO. 498	DRAWING NO. 206	REV.
PAGE	LINE	MARK	QTY	MARK	MATERIAL	LENGTH FT	LENGTH INCHES	REMARKS	WT	PROCUREMENT NOTES
					DIAPHRAGMS					
202	F	206D1	17		MC 18x42.7	7	8 1/2	M270-50W	329	
202	F	206D2	7		MC 18x42.7	7	8 1/2	M270-50W	329	

VTrans Received
CK'D MVL OK'd BY WBP
NOV 14 2011
Resubmit BY ____ APPROVED ✓ DATE 11/18/11

REV.	DATE	REMARKS	DWN	CHK	APVL	SHOP
					NOV 8 2011	
0		~				

MATERIAL:	SURFACE PREP. & PAINT:	HOLES:	SHOP BOLTS:
M270-50W	SEE DWG GN201	15/16"Ø	NONE

DESCRIPTION: DIAPHRAGMS

CASCO BAY STEEL STRUCTURES, INC.
1 WALLACE AVE. PHONE (207) 780-6722
SOUTH PORTLAND, ME 04106 FAX. (207) 780-6726
TENSOR 3073A

STRUCTURE:	VT 107 (RIVER STREET) over WHITE RIVER APPROACH SPAN County of WINDSOR	DRAWN: JTB	DATE: 09/29
		CHKD: PCP	DATE: 10/4/11
LOCATION:	TOWN OF BETHEL, VERMONT	JOB NO.	DWG NO.
PROJ NO.	BRF 022-1(14)	498	206
CUSTOMER:	BECK & BELLUCCI		REV. △

VERMONT

Agency of Transportation

State of Vermont
PDD/Structures Design Section
National Life Building – Drawer 33
Montpelier, VT 05633-5001
www.aot.state.vt.us

[phone] 802-828-2621
[fax] 802-828-3566
[ttd] 800-253-0191

DATE:10/18/2011

Project Name: Bethel **Project #: BRF 022-1(14)**

Structure Identification: Bridge #15

The following Bearing details [Item 531.11 Bearing Device Assembly, Elastomeric Pad and Item 531.12 Bearing Device Assembly, Pot] for the above project (Vendor's Job #BRF-022-1(14) transmitted with your letter dated 10/13/2011 have been reviewed and are being returned herewith.

Sheets: 2,4,5,7 and Welding Procedures
are approved

Sheets: 1,3, and 6
are approved "as noted"

Please make appropriate changes as indicated on these "as noted" or "approved" drawings and submit **white prints** for our use in the record plans for this project.

You must provide notice to our fabrication inspector, Jeff Clark, as to the date fabrication represented by these drawings will begin. Jeff must receive and acknowledge your notice at least seven days prior to that date, as per Specification 506.03. You may contact Jeff by phone at (802)828-0044 or email at jeff.clark@state.vt.us. Any material fabricated prior to the notification date is subject to rejection without further cause.

Sincerely,

Sven Scribner

Attachments
cc: [x] Resident Engineer w/prints Jeremy Reed
[x] Shop Inspector w/prints Jeff Clark
[x] Contractor w/prints Beck&Bellucci
[x] Construction Divison – letter only
[x] Materials & Research Section (C&IA Unit) – letter only
[x] Files (Structures & Central)

VTrans Working to Get You There
Vermont Agency of Transportation

WELDING PROCEDURE SPECIFICATION ☒
OR
PROCEDURE QUALIFICATION RECORD ☐

Specification No.: 402919

Customer: Single Bevel Groove Partial Joint Penn. Customer P.O.#: BECK & BELLUCCI BETHEL, VT.

Base Metals: A-588 P-NO.: 1 Group NO.: 1 to P-NO.: 1 Group NO.: 1

Material Specification Type & Grade: AASHTO M270 Gr. 50 to M270 Gr. 50

Welding Process: F.C.A.W.

Manual or Machine: Manual

Position of Welding: Flat 1-F

Filler Metal Specification: A 5.29

Filler Metal Classification: E-80T1-W, Esab Dual Shield 8100-W

Shielding Gas: CO^2 Rate: 25 CFH

Single or Multiple Pass: Single

Single or Multiple Arc: Single

Welding Current: Direct

Polarity: Reverse

Root Treatment: Remove all scale, grease, etc. from weld preparation face

Preheat and Interpass Temp: 200 Deg F. to 250 Deg F.

Post weld Heat Treatment: N/A

Trovel Speed: 13-15 ipm

VTRANS
RECEIVED
CK'D BY SSS OK'D BY JWC
OCT 13 2011
RESUBMIT ____ APPROVED ✓
BY DATE 10/14/11

Pass No.	Electrode Size	Welding Current Amperes	Welding Current Volts	Weld Size	Joint Detail
1	.06	300-310	30-31	5/16"	SINGLE BEVEL GROOVE WELD - TC-P4-GF

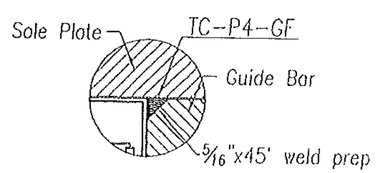

This procedure may vary due to fabrication sequence, fit-up, pass size, etc., within the limitation of variables given in Section 5.

Manufacturer: Amscot Structural Products Authorized By:

Date: 10/6/11

WELDPROD3_SGR-1.dwg

VERMONT AGENCY OF TRANSPORTATION
PROJECT NAME: BETHEL
PROJECT NUMBER: BRF-022-1(14)
HLMR POT BEARING

WELDING PROCEDURE SPECIFICATION

Material Specification: ASTM A-588 to A-588 P1 to P1
Welding Process: F.C.A.W.
Manual or Machine: Manual
Position of Welding: 1F or 2F
Filler Metal Specification: A5.29
Filler Metal Classification: E80T1-W
Flux: ESAB Dual Shield
Shielding Gas: Carbon Dioxide Flow Rate: 25-30 CFH
Single or Multiple Pass: Multiple
Single or Multiple Arc: Single
Welding Current: Direct
Polarity: Reverse
Welding Progression: Flat
Root Treatment: Remove scale, Grease, Etc. from weld preparation face
Preheat and Interpass Temp: 200°F
Post weld Heat Treatment: N/A
Heat Input Min. _____ Max. _____

VTRANS
RECEIVED
OCT 13 2011
CK'D BY SSS OK'D BY JW
RESUBMIT _____ APPROVED ✓
BY _____ DATE 10/14/11

Pass No.	Electrode Size	Welding Current		Weld Size	Joint Detail
		Amperes	Volts		
1	.06	200-225	27-28	1/8	
2	.06	200-225	27-28	1/8	
3	.06	200-225	27-28	1/8	

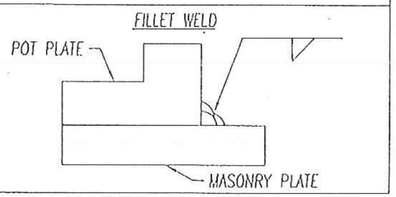

This procedure may vary due to fabrication sequence, fit-up, pass size, etc., within the limitation of variables given in Section 5.

Procedure No.: 59343
Revision No.: 1
Contractor: Amscot Structural Products Corp.
Authorized By: _____
Date: 10/6/11

WELDING PROCEDURE SPECIFICATION [X]
OR
PROCEDURE QUALIFICATION RECORD [ ]

Specification No.: 57948

BECK & BELLUCCI
Customer: Standard Fusion of T-304 to CS Backing Plate Customer P.O.#: BETHEL, VT.

Base Metals: P-NO.: 8 Group NO.: to P-NO.: 1 Group NO.: 1

Material Specification Type & Grade: T-304 S.S. to Carbon Steel Backing Plate

Welding Process: G.T.A.W. 1/2" dia. nozzle w/gas lens

Manual or Machine: Manual

Position of Welding: 1G Flat

VTRANS
RECEIVED
OCT 13 2011

Filler Metal Specification: N/A OK'D BY SSS OK'D BY JLR

Filler Metal Classification: N/A

Shielding Gas: Argon 20-30 cfh RESUBMIT ____ APPROVED ✓

Single or Multiple Pass: Single BY ____ DATE 10/13/11

Single or Multiple Arc: Single

Welding Current: Direct

Polarity: Straight

Root Treatment: Remove all oil, grease, scale etc. on weld preparation face and adjacent plate surface

Preheat and Interpass Temp: N/A

Post weld Heat Treatment: N/A

Filler Metal			Pass	Process	Welding Current		Travel
Class	Dia.	F No.	No.		Amperes	Voltage	Speed
N/A	N/A		1	G.T.A.W.	100-170	19-23	5-7 ipm

JOINT DETAIL

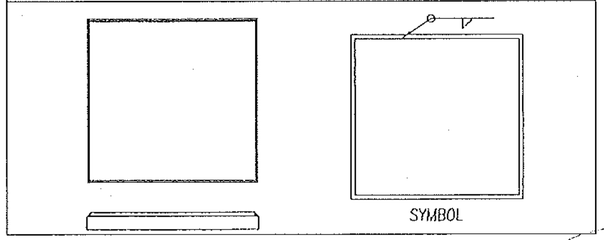

Manufacturer: Amscot Structural Products Authorized By:

Date: 10/6/11

REVISIONS					
ZONE	REV	DESCRIPTION	DATE	REV. BY	APPROVED
-	A	PER ENGINEER & CHECKER MARKS	9/28/11	E.J.O.	R.F.
-	B	CHANGE ANGLE TO 6x3½x1/2	11/1/11	E.J.O.	R.F.

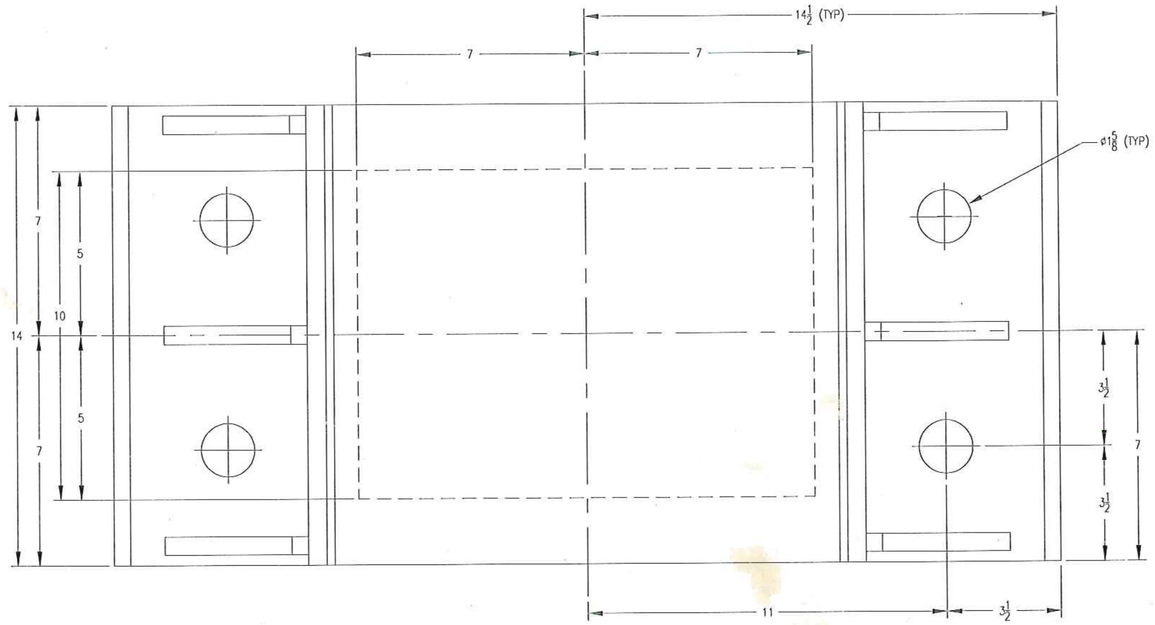

ABUTMENT #1 EXPANSION BEARING
PLAN VIEW

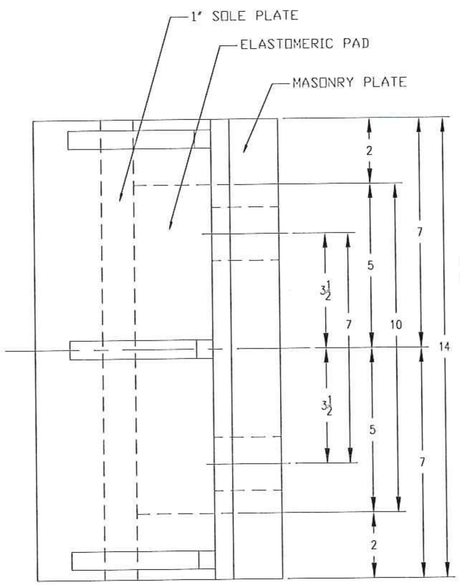

ABUTMENT #1 EXPANSION BEARING
SIDE ELEVATION

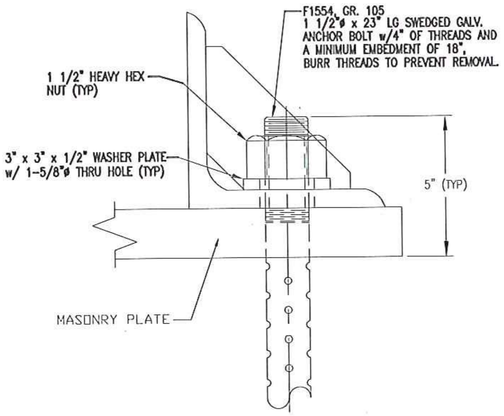

ANCHOR BOLT DETAIL
QTY. REQ'D = 20

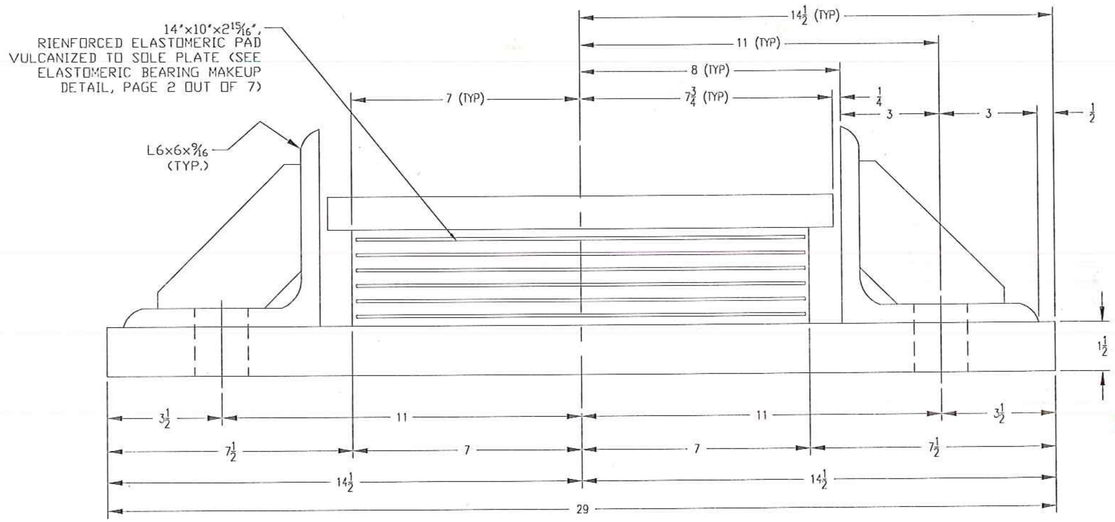

ABUTMENT #1 EXPANSION BEARING END ELEVATION
QTY. REQ'D = 5

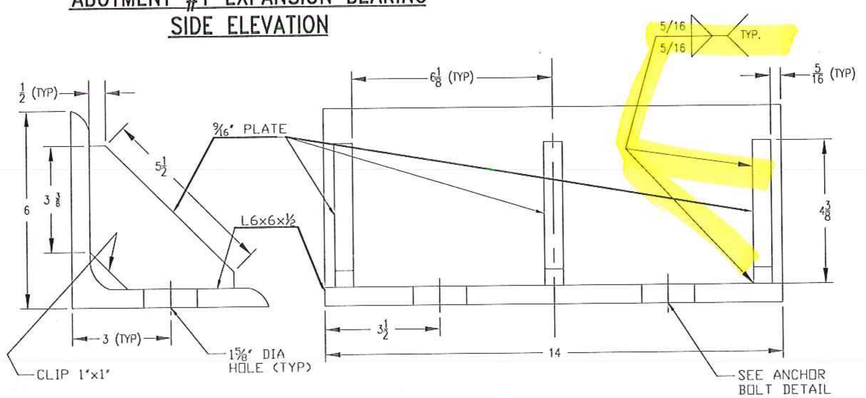

SIDE RETAINER DETAIL

VTrans - PDD
NOV 0 4 2011
Structures Design
Section

Final

VERMONT AGENCY OF TRANSPORTATION
PROJECT NAME: BETHEL
PROJECT NUMBER: BRF-022-1(14)

AMSCOT
STRUCTURAL PRODUCTS CORP.

SCALE: N.T.S.	APPRV'D: R.F.	DRAWN BY: P.S.
DATE: 8/19/11		REV.: B
LAMINATED ELASTOMERIC BEARING PADS NATURAL RUBBER		
FOR: BECK & BELLUCCI	SHEET NO 1 of 7	DWG NO: BB11A1RB

REVISIONS					
ZONE	REV	DESCRIPTION	DATE	REV. BY	APPROVED
--	A	PER ENGINEER & CHECKER MARKS	9/28/11	E.I.G.	R.F.

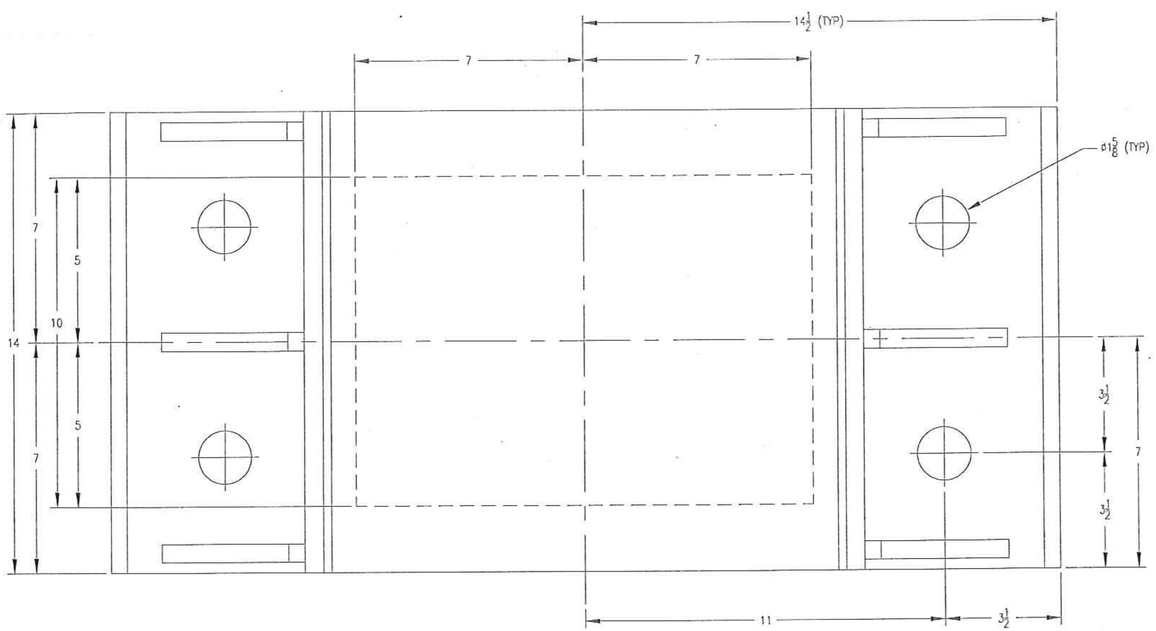

ABUTMENT #1 EXPANSION BEARING
PLAN VIEW

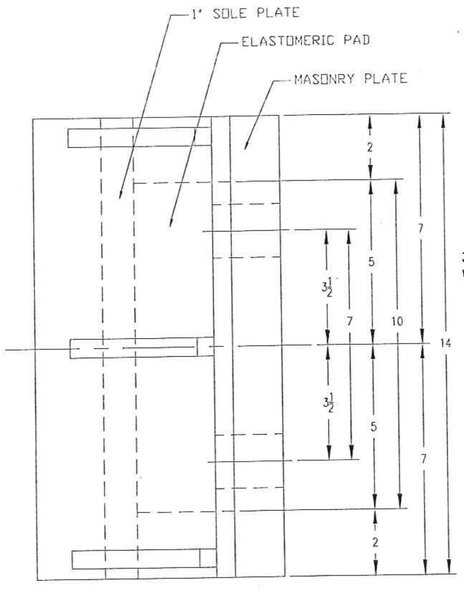

ABUTMENT #1 EXPANSION BEARING
SIDE ELEVATION

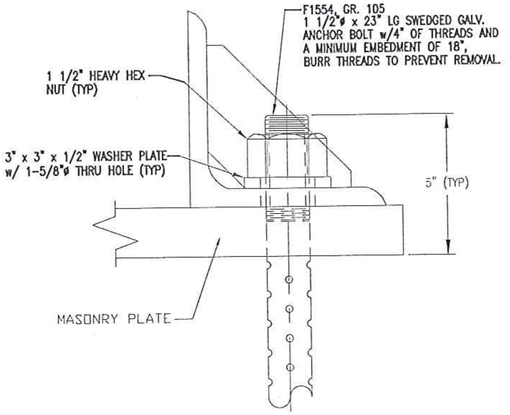

ANCHOR BOLT DETAIL
QTY. REQ'D = 20

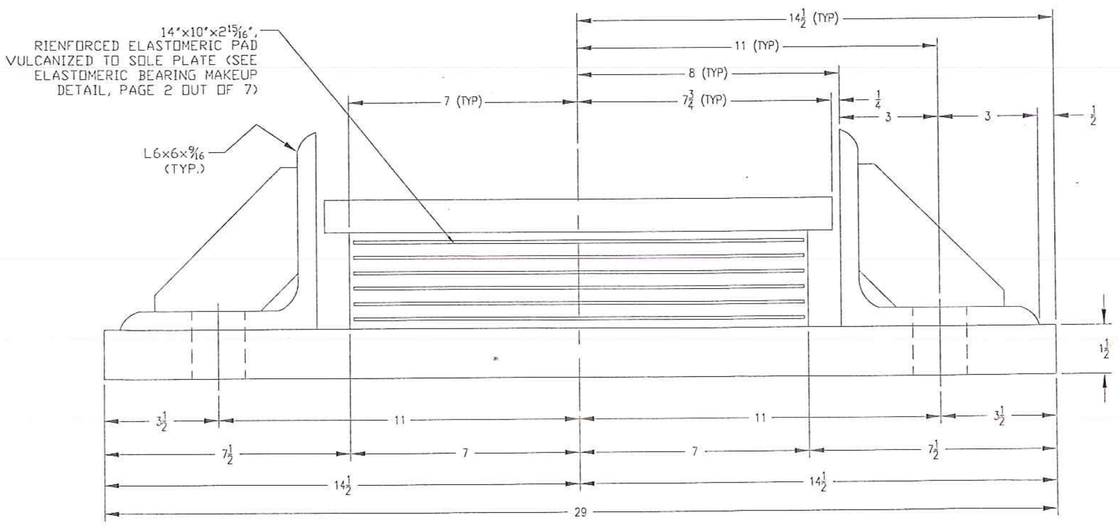

ABUTMENT #1 EXPANSION BEARING END ELEVATION
QTY. REQ'D = 5

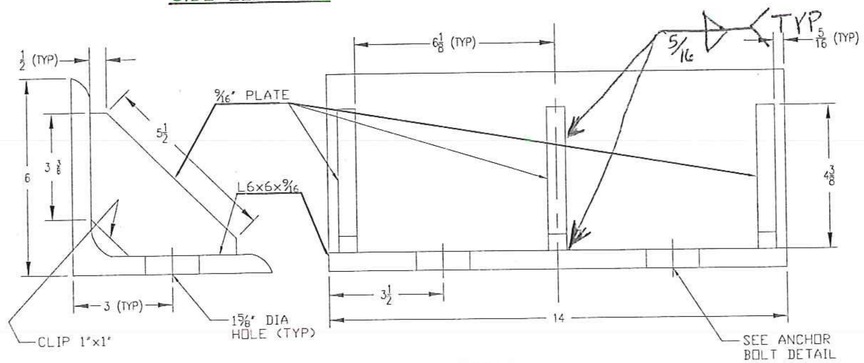

SIDE RETAINER DETAIL

RECEIVED
CK'D BY NVDB OK'D BY SSS
OCT 14 2011
RESUBMIT ____ APPROVED AS Noted
BY DATE 10/18/11

VERMONT ANGENCY OF TRANSPORTATION
PROJECT NAME: BETHEL
PROJECT NUMBER: BRF-022-1(14)

AMSCOT
STRUCTURAL PRODUCTS CORP.

SCALE: N.T.S.	APPRV'D: R.F.	DRAWN BY: P.S.
DATE: 8/19/11		REV.: A

LAMINATED ELASTOMERIC BEARING PADS NATURAL RUBBER

FOR: BECK & BELLUCCI	SHEET NO 1 of 7	DWG NO: BB11A1RA

REVISIONS					
ZONE	REV	DESCRIPTION	DATE	REV. BY	APPROVED
–	A	PER ENGINEER & CHECKER'S MARKS	9/28/11	E.J.G.	R.F.
–	B	PER ENGINEER'S MARKS	10/6/11	E.J.G.	R.F.

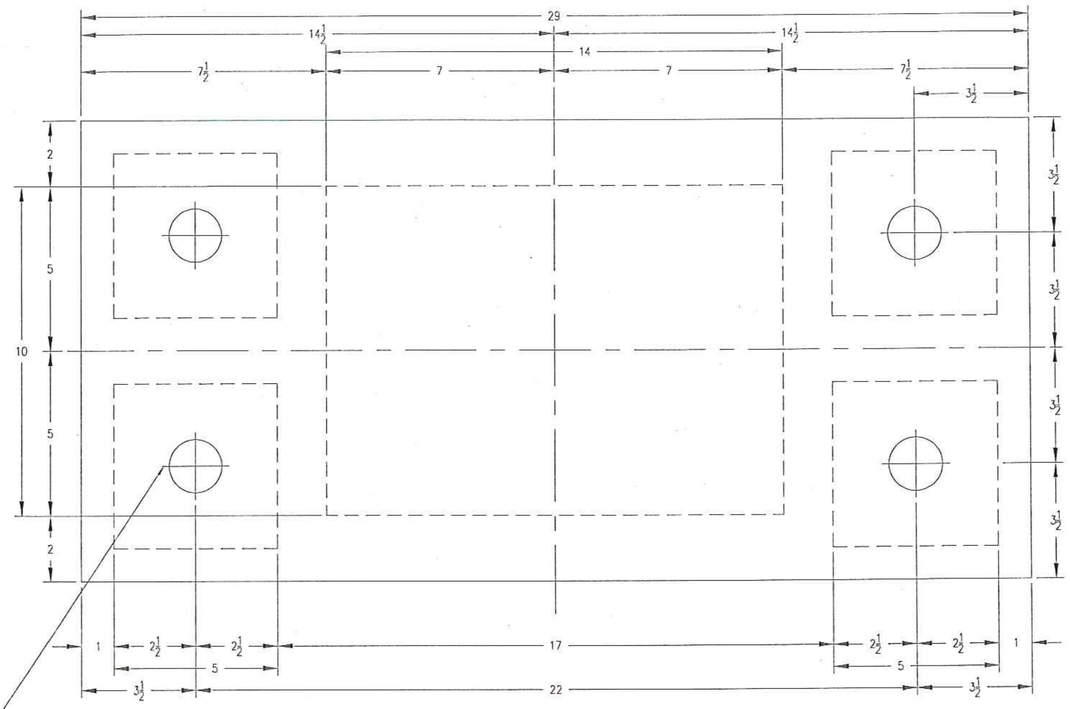

1 5/8" HOLES IN SOLE AND MASONRY PLATES FOR ANCHOR BOLTS (TYP)

SPAN PIER FIXED BEARING
PLAN VIEW

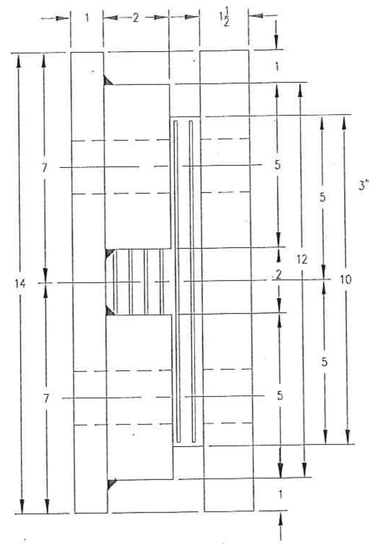

SPAN PIER FIXED BEARING
SIDE ELEVATION

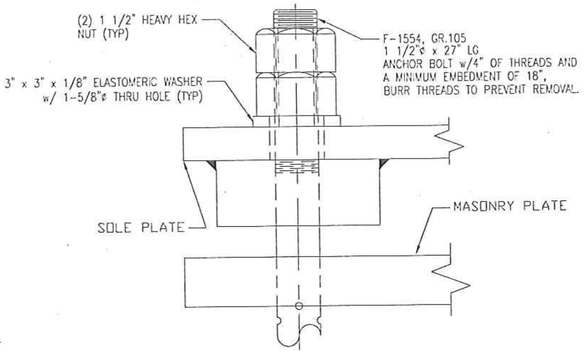

ANCHOR BOLT DETAIL
QTY. REQ'D = 20

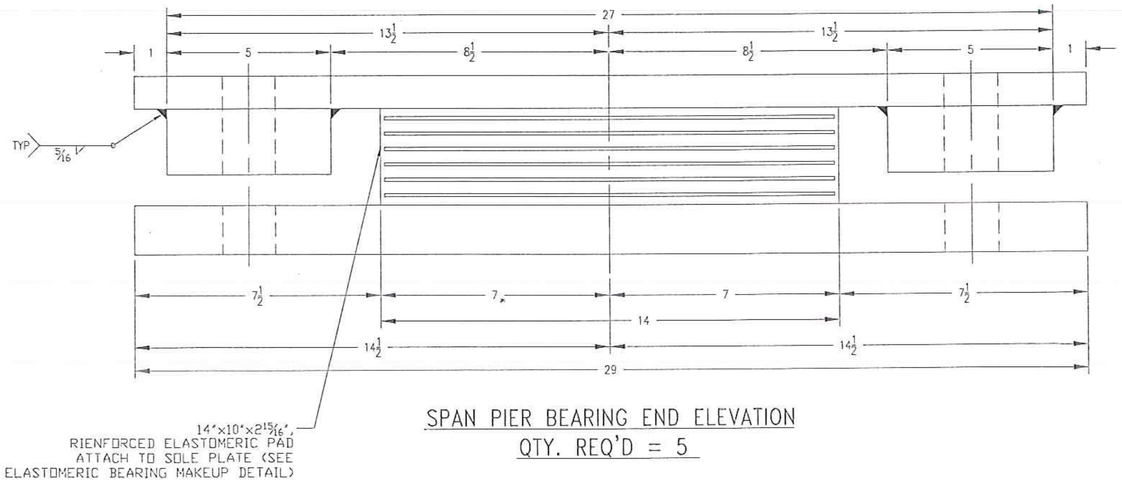

14"x10"x2 15/16", RIENFORCED ELASTOMERIC PAD ATTACH TO SOLE PLATE (SEE ELASTOMERIC BEARING MAKEUP DETAIL)

SPAN PIER BEARING END ELEVATION
QTY. REQ'D = 5

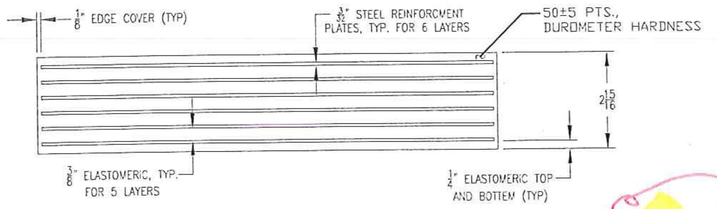

ELASTOMERIC BEARING MAKEUP DETAIL

RECEIVED
CK'D BY NVDB OK'D BY SSS
OCT 14 2011
RESUBMIT ____ APPROVED ✓
BY DATE 10/18/11

Final

VERMONT AGENCY OF TRANSPORTATION
PROJECT NAME: BETHEL
PROJECT NUMBER: BRF-022-1(14)

AMSCOT
STRUCTURAL PRODUCTS CORP.

SCALE: N.T.S.	APPRV'D: R.F.	DRAWN BY: P.S.
DATE: 8/19/11		REV.: B

LAMINATED ELASTOMERIC BEARING PADS NATURAL RUBBER

FOR: BECK & BELLUCCI	SHEET NO 2 of 7	DWG NO: BB11A2RB

REVISIONS					
ZONE	REV	DESCRIPTION	DATE	REV. BY	APPROVED
--	A	AS PER ENGINEER & CHECKER'S MARKS	9/28/11	E.J.G.	R.F.
--	B	AS PER ENGINEER'S MARKS	10/6/11	E.J.G.	R.F.
--	C	DIMENSIONAL CHANGES DUE TO STEEL AVAILABILITY	11/11/11	E.J.G.	R.F.
--	D	AS PER ENGINEER'S MARKS	11/16/11	E.J.G.	R.F.

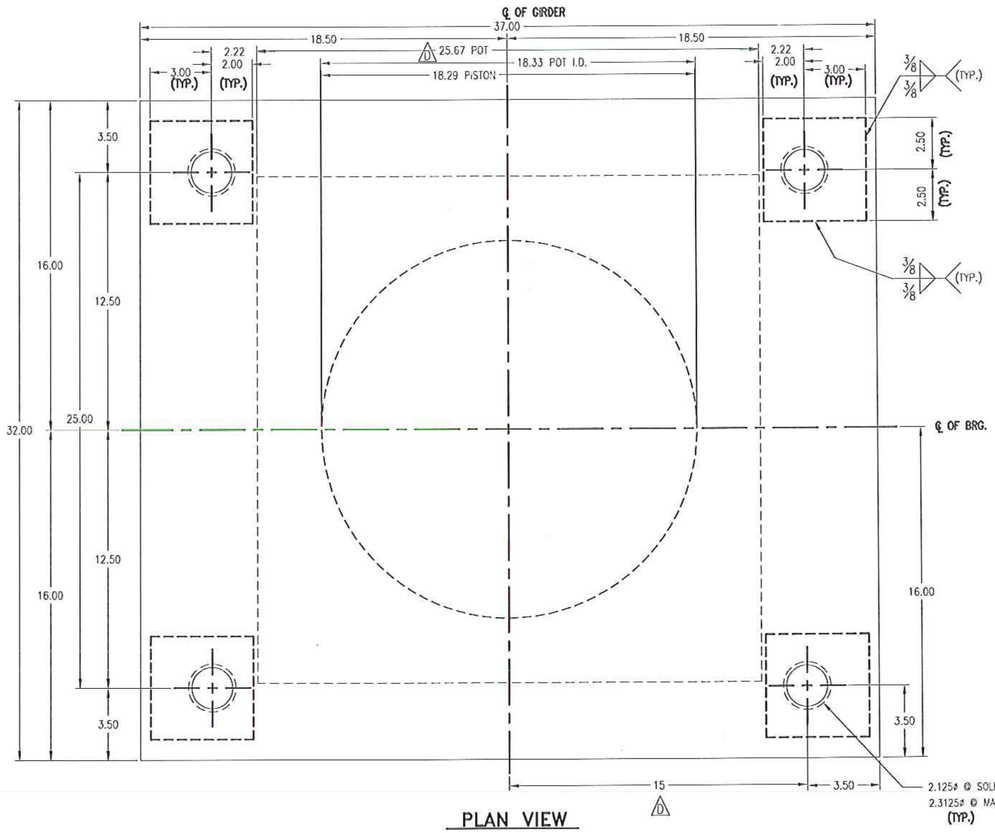

PLAN VIEW

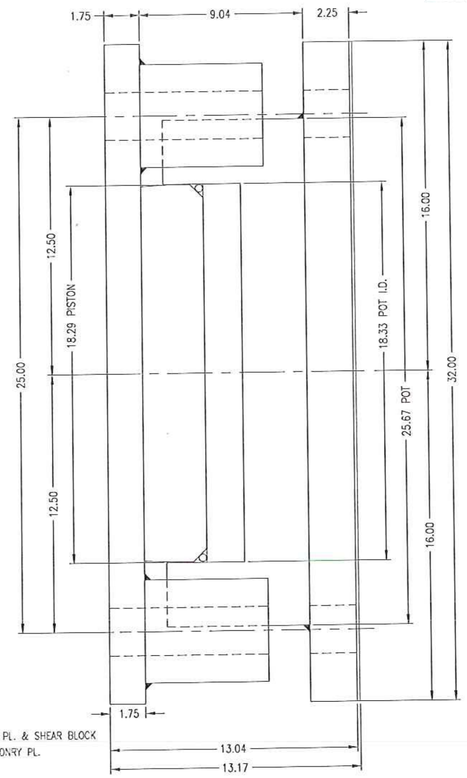

SIDE VIEW

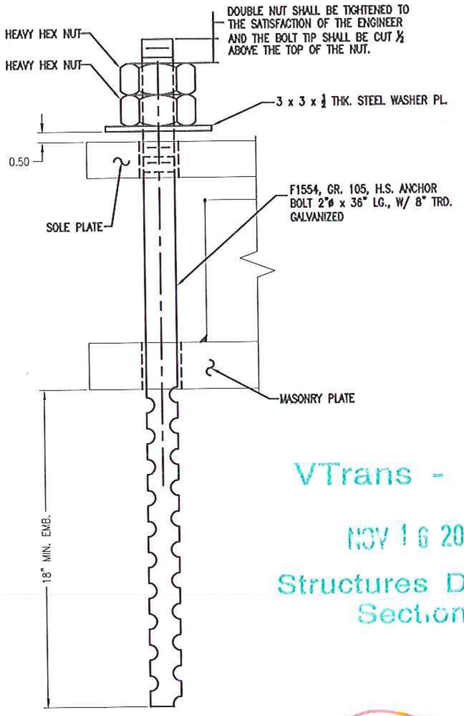

ANCHOR BOLT DETAIL
QTY. REQ'D = 4

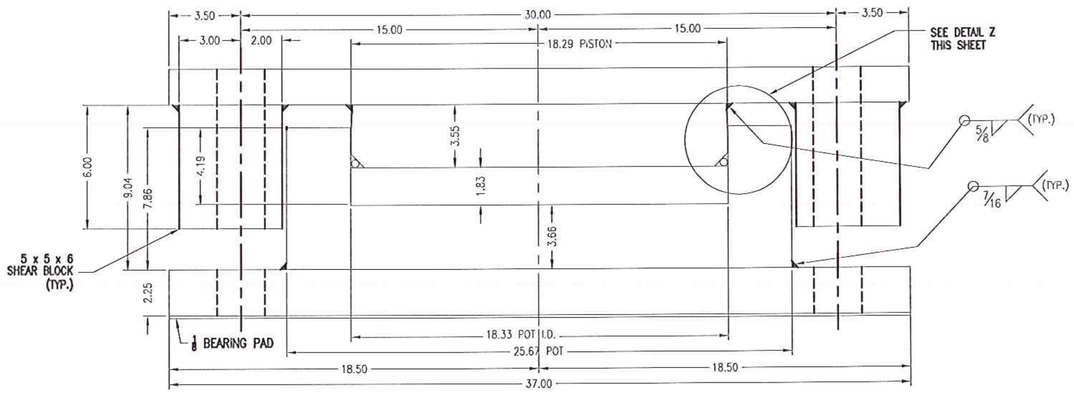

SPAN PIER FIXED BEARING (N1)
QTY. REQ'D = 1
924 KIPS

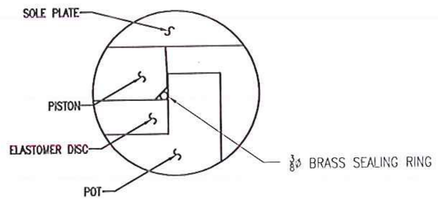

DETAIL Z

VTrans - PDD
NOV 16 2011
Structures Design Section

Final

VERMONT AGENCY OF TRANSPORTATION
PROJECT NAME: BETHEL
PROJECT NUMBER: BRF-022-1(14)

AMSCOT
STRUCTURAL PRODUCTS CORP.

SCALE: N.T.S.	APPRV'D: R.F.	DRAWN BY: P.S.
DATE: 8/19/11		REV.: D

FIXED TYPE HLMR POT BEARING

FOR: BECK & BELLUCCI	SHEET NO 3 of 7	DWG NO: BB11A3RD

REVISIONS					
ZONE	REV	DESCRIPTION	DATE	REV. BY	APPROVED
--	A	AS PER ENGINEER & CHECKER'S MARKS	9/28/11	E.J.G.	R.F.
--	B	AS PER ENGINEER'S MARKS	10/6/11	E.J.G.	R.F.
--	C	DIMENSIONAL CHANGES DUE TO STEEL AVAILABILITY	11/11/11	E.J.G.	R.F.

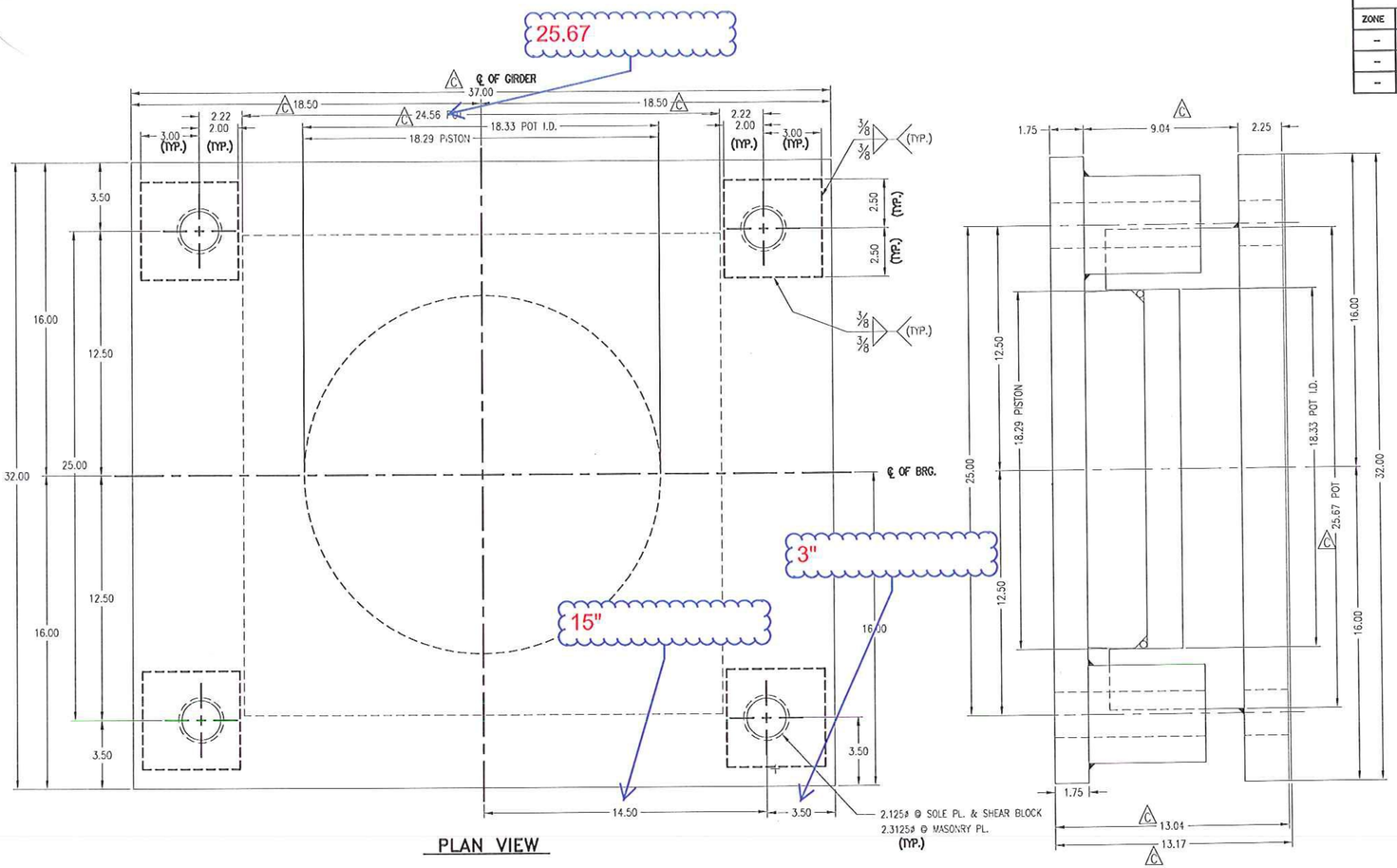

PLAN VIEW

SIDE VIEW

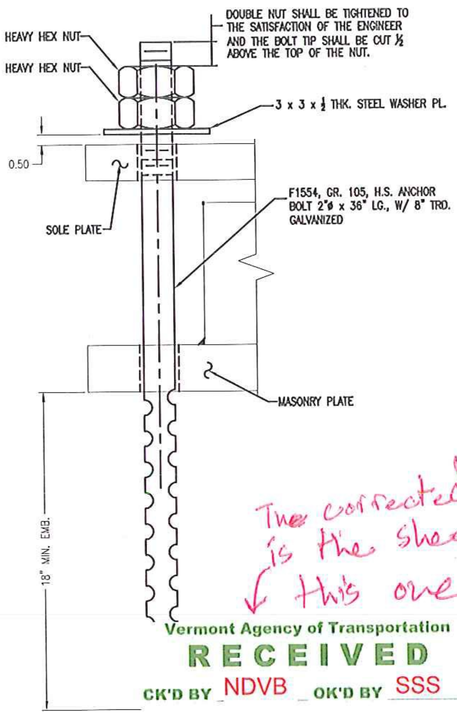

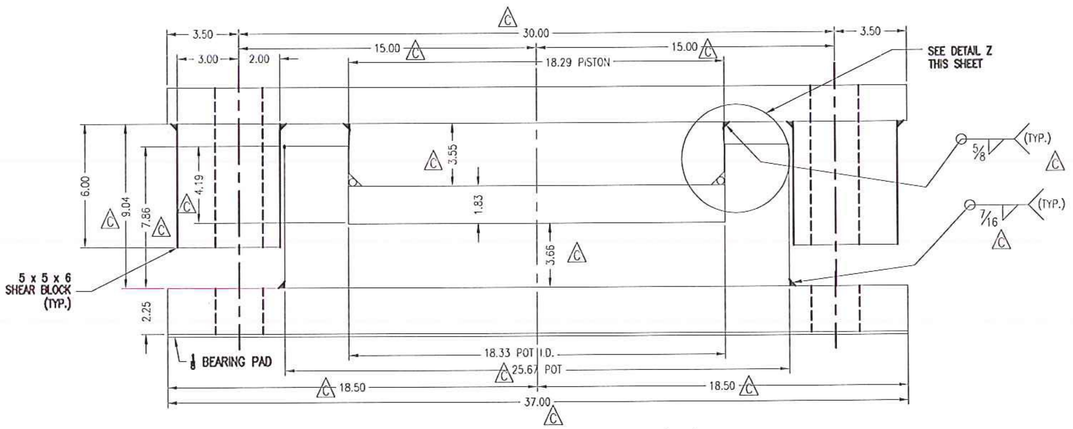

SPAN PIER FIXED BEARING (N1)
QTY. REQ'D = 1
924 KIPS

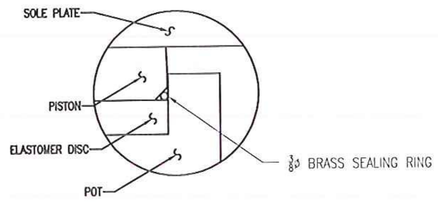

DETAIL Z

The corrected version is the sheet before this one

Vermont Agency of Transportation
RECEIVED
CK'D BY NDVB OK'D BY SSS

ANCHOR QTY. REQ'D
RESUBMIT ____ APPROVED AS NOTED
BY ____ DATE 11/15/2011

VERMONT AGENCY OF TRANSPORTATION
PROJECT NAME: BETHEL
PROJECT NUMBER: BRF-022-1(14)

AMSCOT
STRUCTURAL PRODUCTS CORP.

SCALE: N.T.S.	APPRV'D: R.F.	DRAWN BY: P.S.
DATE: 8/19/11		REV.: C
FIXED TYPE HLMR POT BEARING		
FOR: BECK & BELLUCCI	SHEET NO 3 of 7	DWG NO: BB11A3RC

REVISIONS					
ZONE	REV	DESCRIPTION	DATE	REV. BY	APPROVED
–	A	AS PER ENGINEER & CHECKER'S MARKS	9/28/11	E.J.O.	R.F.
–	B	AS PER ENGINEER'S MARKS	10/6/11	E.J.O.	R.F.

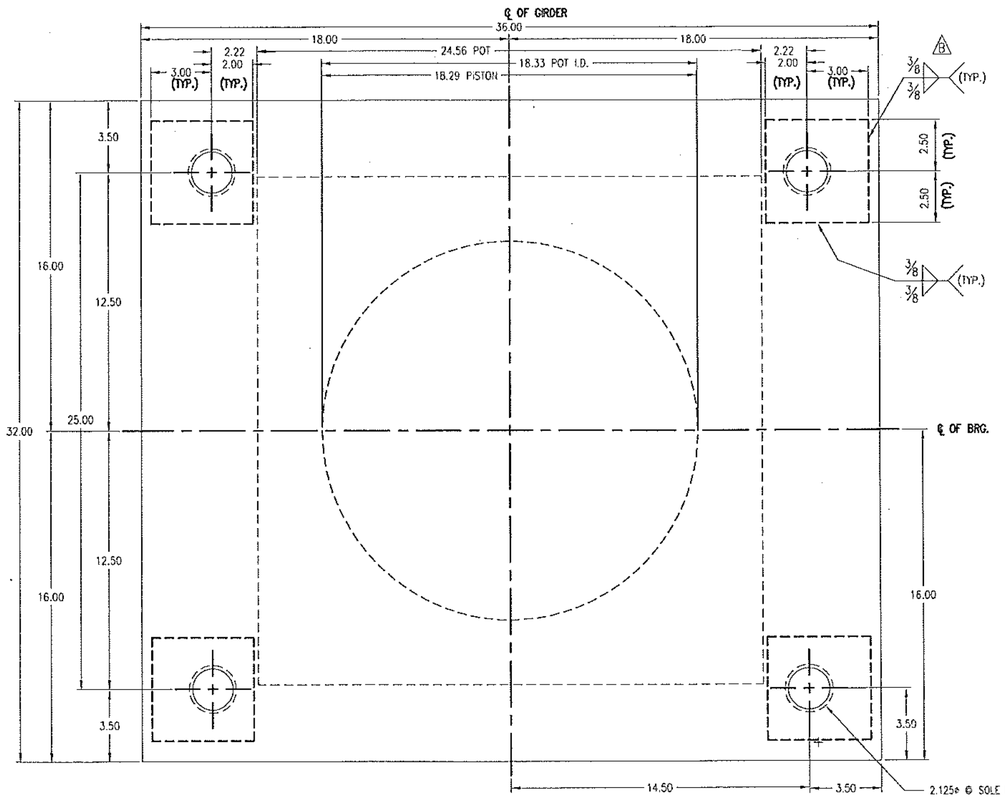

PLAN VIEW

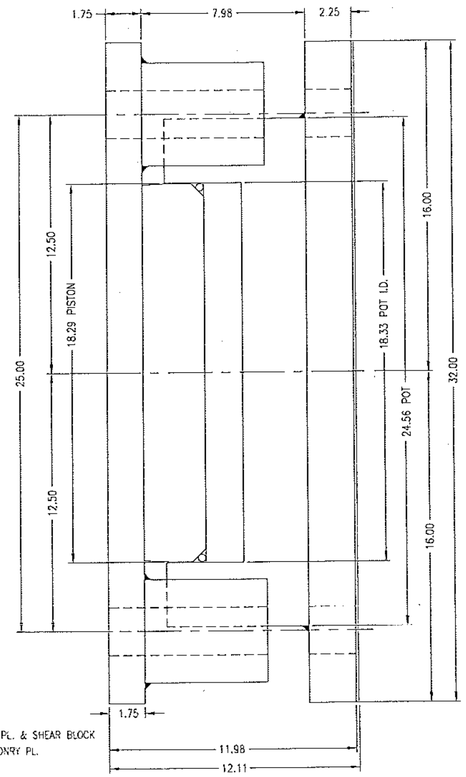

SIDE VIEW

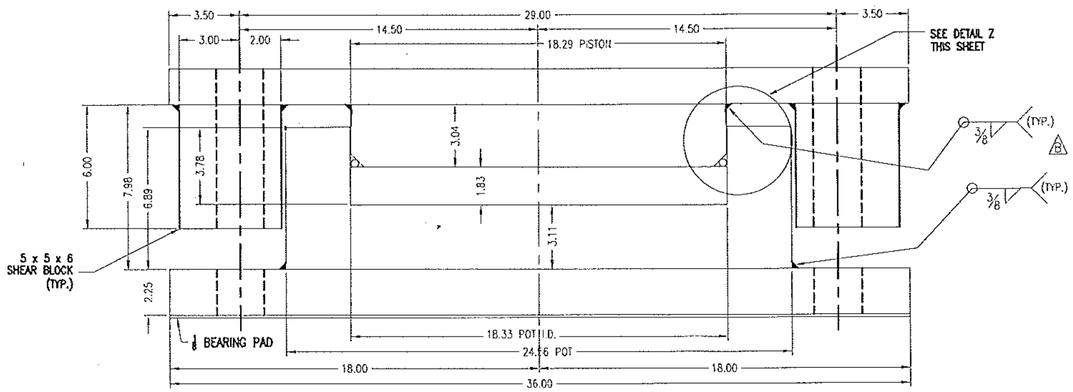

SPAN PIER FIXED BEARING (N1)
QTY. REQ'D = 1
924 KIPS

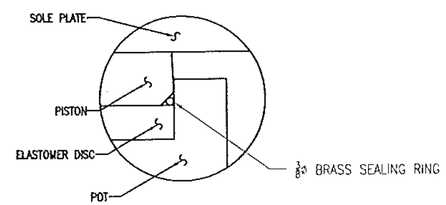

DETAIL Z

Double

(2) HEAVY HEX NUT

THE NUT SHALL BE TIGHTENED TO THE SATISFACTION OF THE ENGINEER AND THE BOLT TIP SHALL BE CUT ½ ABOVE THE TOP OF THE NUT.

3 x 3 x ½ THK. STEEL WASHER PL.

B 0.50

SOLE PLATE

F1554, GR. 105, H.S. ANCHOR BOLT 2"ø x 34" LG., W/ 4" TRD. GALVANIZED

MASONRY PLATE

18" MIN. EMB.

ANCHOR BOLT DETAIL
QTY. REQ'D = 4

RECEIVED
CK'D BY NVDB OK'D BY SSS
OCT 14 2011
RESUBMIT ____ APPROVED As Noted B
BY DATE 10/18/11

VERMONT AGENCY OF TRANSPORTATION
PROJECT NAME: BETHEL
PROJECT NUMBER: BRF-022-1(14)

AMSCOT
STRUCTURAL PRODUCTS CORP.

SCALE: N.T.S.	APPRV'D: R.F.	DRAWN BY: P.S.
DATE: 8/19/11		REV.: B
FIXED TYPE HLMR POT BEARING		
FOR: BECK & BELLUCCI	SHEET NO 3 of 7	DWG NO: BB11AJRB

REVISIONS					
ZONE	REV	DESCRIPTION	DATE	REV. BY	APPROVED
--	A	AS PER ENGINEER & CHECKER'S MARKS	9/29/11	E.J.G.	R.F.
--	B	AS PER ENGINEER'S MARKS	10/6/11	E.J.G.	R.F.
--	C	DIMENSIONAL CHANGES DUE TO STEEL AVAILABILITY	11/11/11	E.J.G.	R.F.
--	D	AS PER ENGINEER'S MARKS	11/18/11	E.J.G.	R.F.

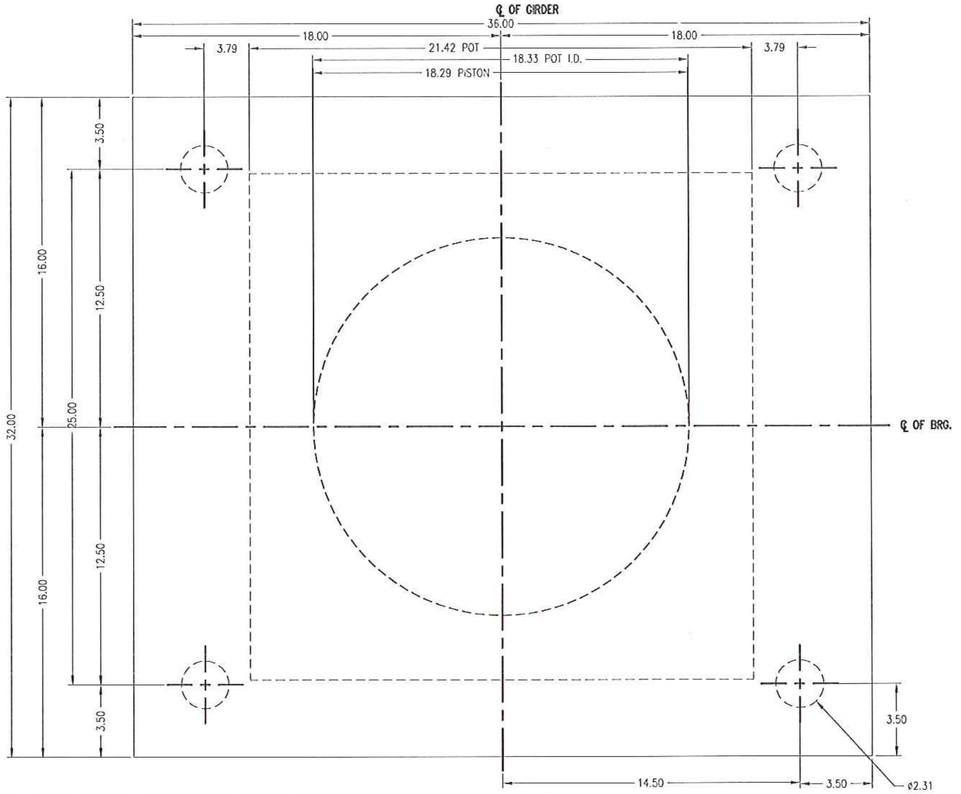

PLAN VIEW

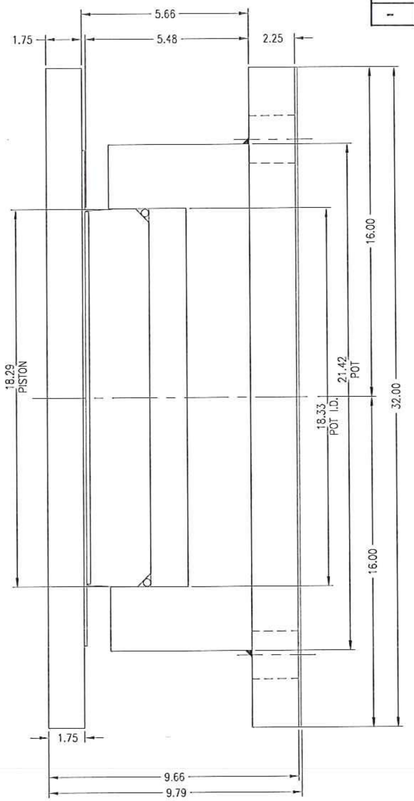

SIDE VIEW

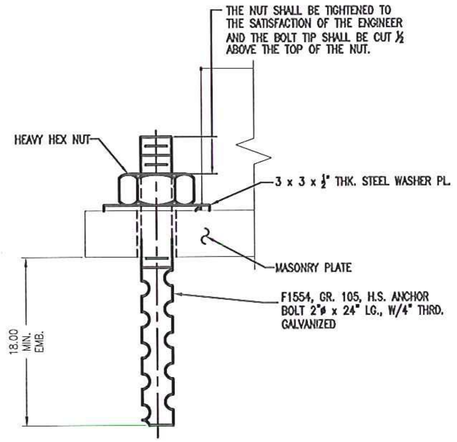

ANCHOR BOLT DETAIL
QTY. REQ'D = 4

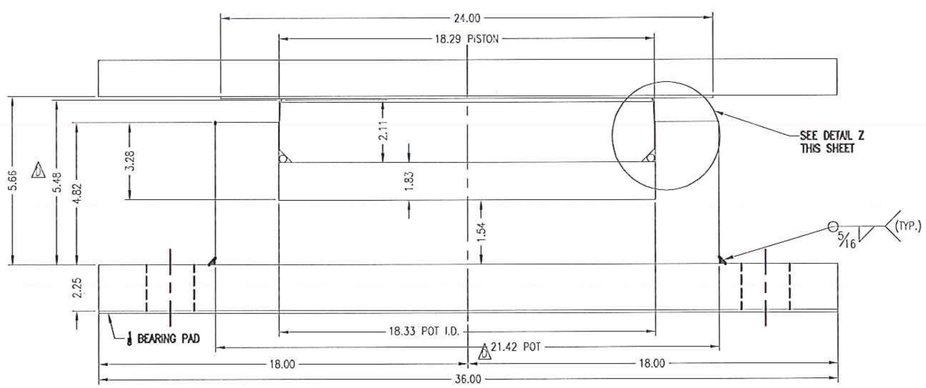

SPAN PIER FTM EXPANSION BEARING (N4)
QTY. REQ'D = 1
924 KIPS

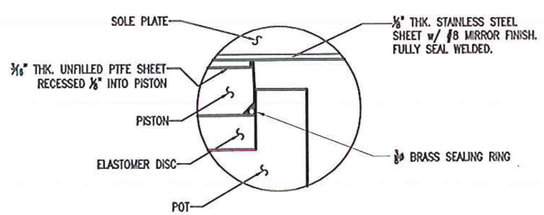

DETAIL Z

VTrans - PDD
NOV 16 2011
Structures Design Section
Final

VERMONT AGENCY OF TRANSPORTATION
PROJECT NAME: BETHEL
PROJECT NUMBER: BRF-022-1(14)

AMSCOT
STRUCTURAL PRODUCTS CORP.

SCALE: N.T.S.	APPRV'D: R.F.	DRAWN BY: P.S.
DATE: 8/19/11		REV.: D
FTM EXPANSION TYPE HLMR POT BEARING		
FOR: BECK & BELLUCCI	SHEET NO 4 of 7	DWG NO: BB11A4RD

REVISIONS					
ZONE	REV	DESCRIPTION	DATE	REV. BY	APPROVED
--	A	AS PER ENGINEER & CHECKER'S MARKS	9/29/11	E.J.G.	R.F.
--	B	AS PER ENGINEER'S MARKS	10/6/11	E.J.G.	R.F.
--	C	DIMENSIONAL CHANGES DUE TO STEEL AVAILABILITY	11/11/11	E.J.G.	R.F.

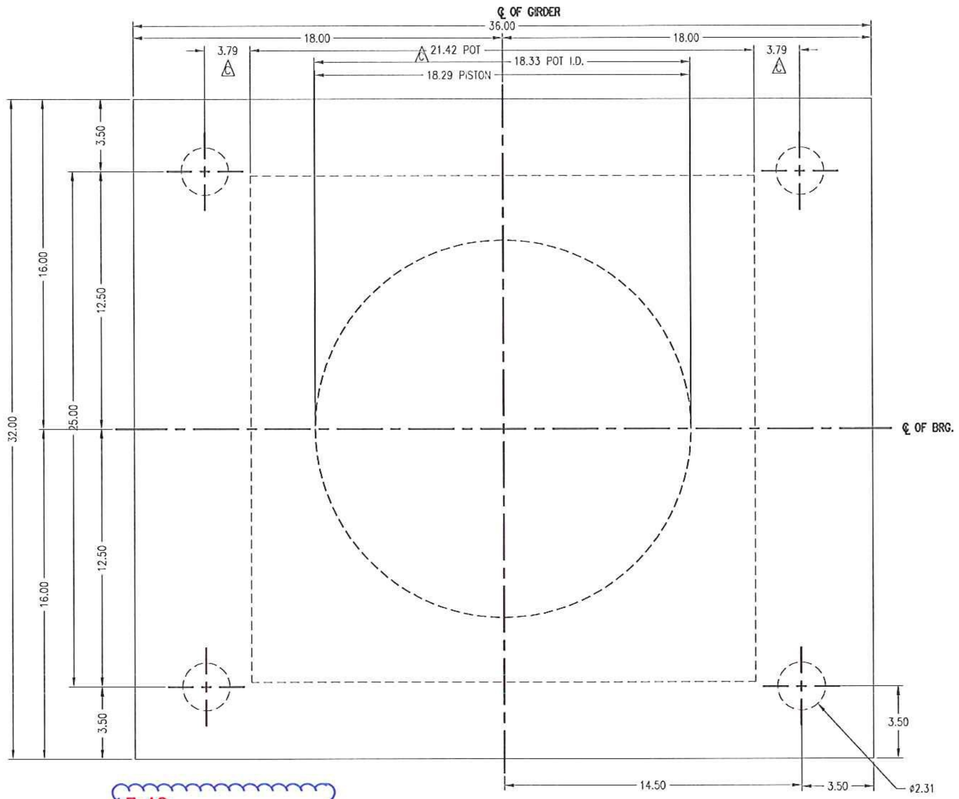

PLAN VIEW

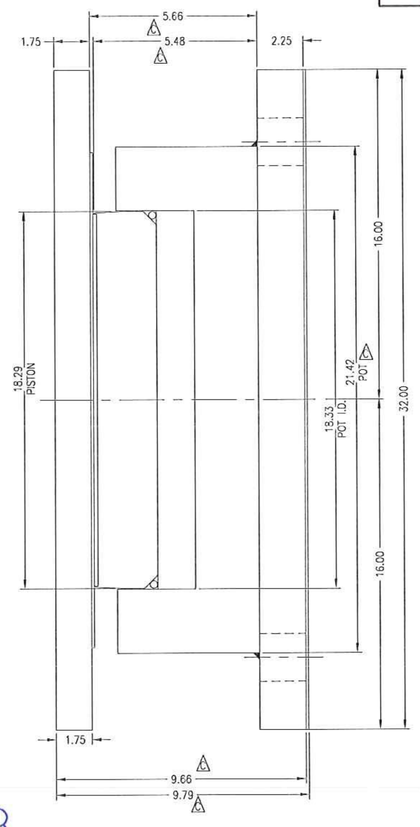

SIDE VIEW

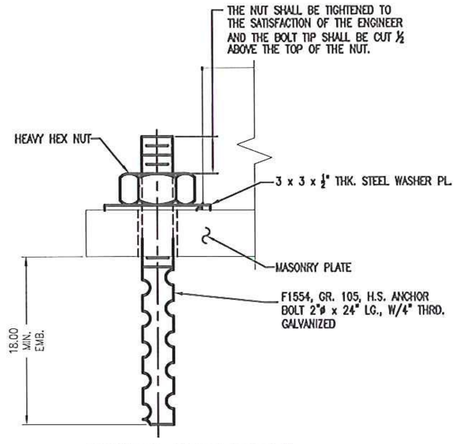

ANCHOR BOLT DETAIL
QTY. REQ'D = 4

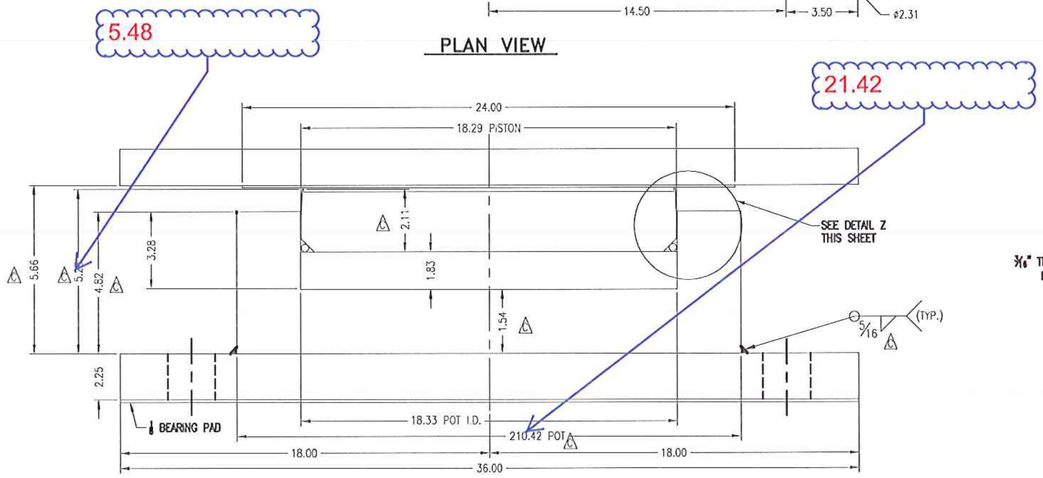

SPAN PIER FTM EXPANSION BEARING (N4)
QTY. REQ'D = 1
924 KIPS

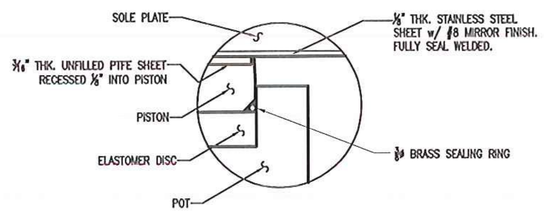

DETAIL Z

The corrected version is the sheet before & this one

Vermont Agency of Transportation
RECEIVED
CK'D BY NDVB OK'D BY SSS
RESUBMIT BY
APPROVED AS NOTED
DATE 11/15/2011

VERMONT AGENCY OF TRANSPORTATION
PROJECT NAME: BETHEL
PROJECT NUMBER: BRF-022-1(14)

AMSCOT
STRUCTURAL PRODUCTS CORP.

SCALE: N.T.S.	APPRV'D: R.F.	DRAWN BY: P.S.
DATE: 8/19/11		REV.: C
FTM EXPANSION TYPE HLMR POT BEARING		
FOR: BECK & BELLUCCI	SHEET NO 4 of 7	DWG NO: BB11A4RC

REVISIONS					
ZONE	REV	DESCRIPTION	DATE	REV. BY	APPROVED
–	A	AS PER ENGINEER & CHECKER'S MARKS	9/29/11	E.J.G.	R.F.
–	B	AS PER ENGINEER'S MARKS	10/6/11	E.J.G.	R.F.

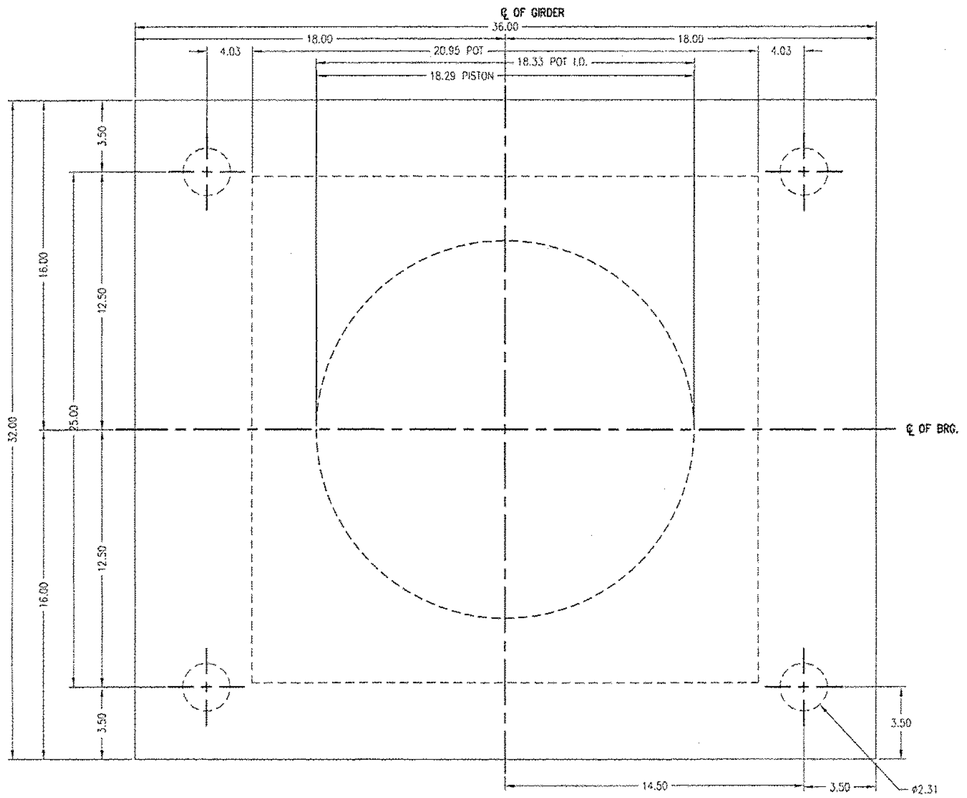

PLAN VIEW

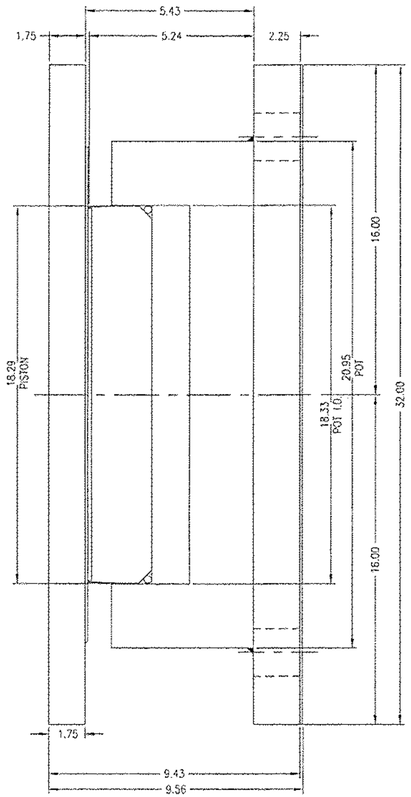

SIDE VIEW

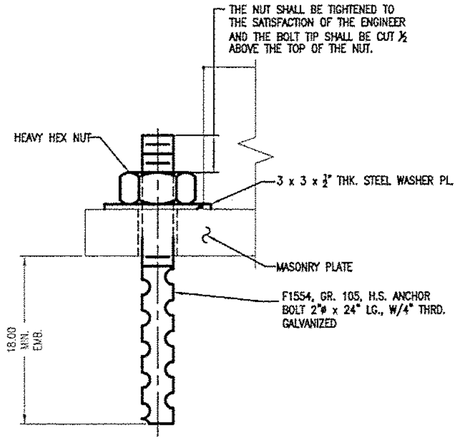

ANCHOR BOLT DETAIL
QTY. REQ'D = 4

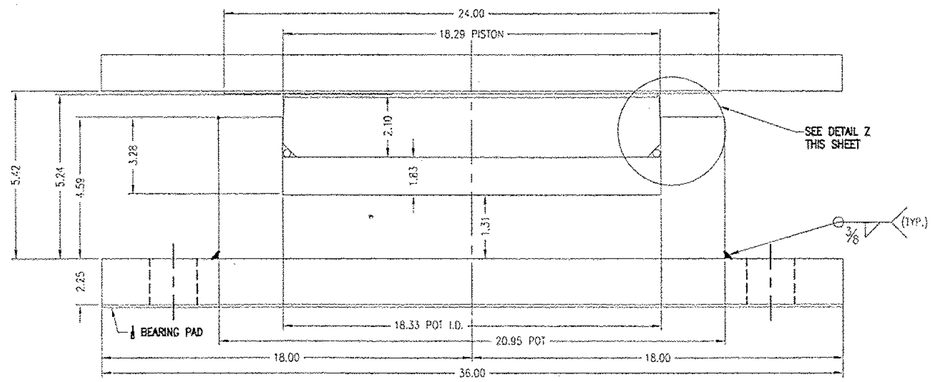

SPAN PIER FTM EXPANSION BEARING (N4)
QTY. REQ'D = 1
924 KIPS

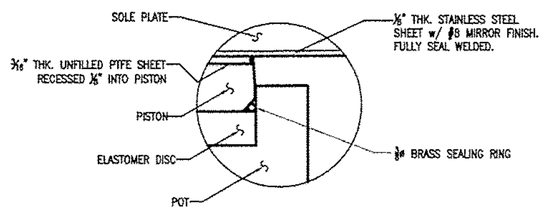

DETAIL Z

RECEIVED
CK'D BY NVDB OK'D BY SSS
OCT 14 2011
RESUBMIT ____ APPROVED ✓
BY DATE 10/18/11

VERMONT AGENCY OF TRANSPORTATION
PROJECT NAME: BETHEL
PROJECT NUMBER: BRF-022-1(14)

AMSCOT
STRUCTURAL PRODUCTS CORP.

SCALE: N.T.S.	APPRV'D: R.F.	DRAWN BY: P.S.
DATE: 8/19/11		REV.: B

FTM EXPANSION TYPE HLMR POT BEARING

FOR: BECK & BELLUCCI	SHEET NO 4 of 7	DWG NO: BB11A4RB

REVISIONS					
ZONE	REV	DESCRIPTION	DATE	REV. BY	APPROVED
--	A	AS PER ENGINEER & CHECKER'S MARKS	9/29/11	E.J.G.	R.F.
--	B	AS PER ENGINEER'S MARKS	10/8/11	E.J.G.	R.F.
--	C	DIMENSIONAL CHANGES DUE TO STEEL AVAILABILITY	11/11/11	E.J.G.	R.F.
--	D	AS PER ENGINEER'S MARKS	11/18/11	E.J.G.	R.F.

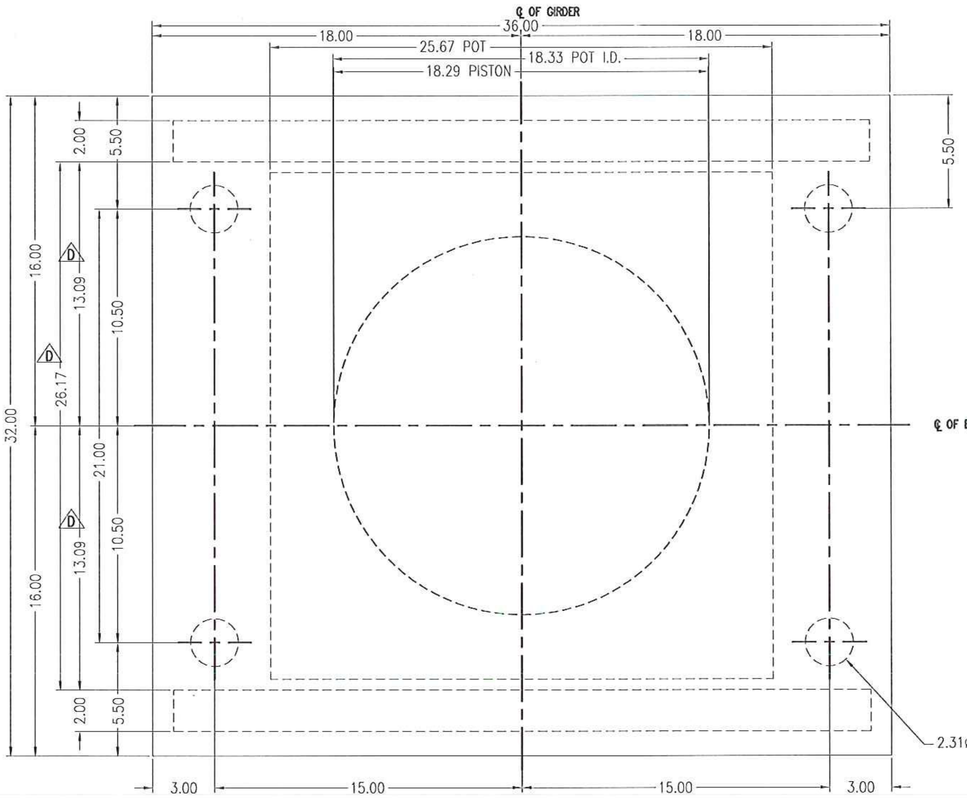

PLAN VIEW

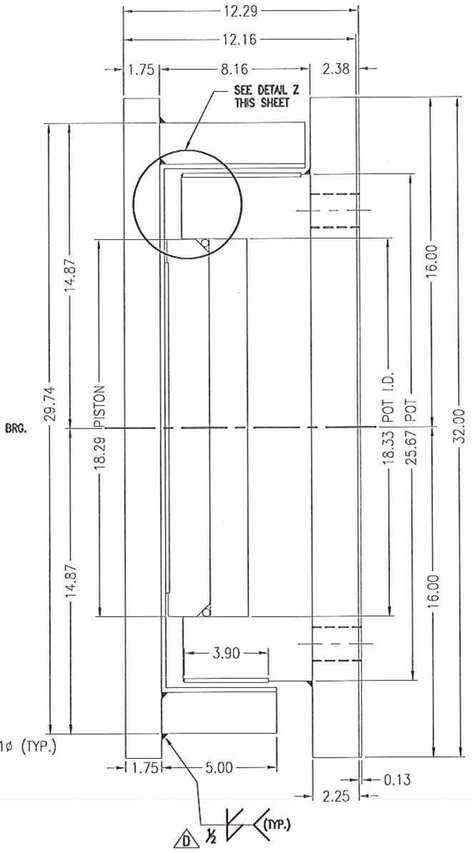

SIDE VIEW

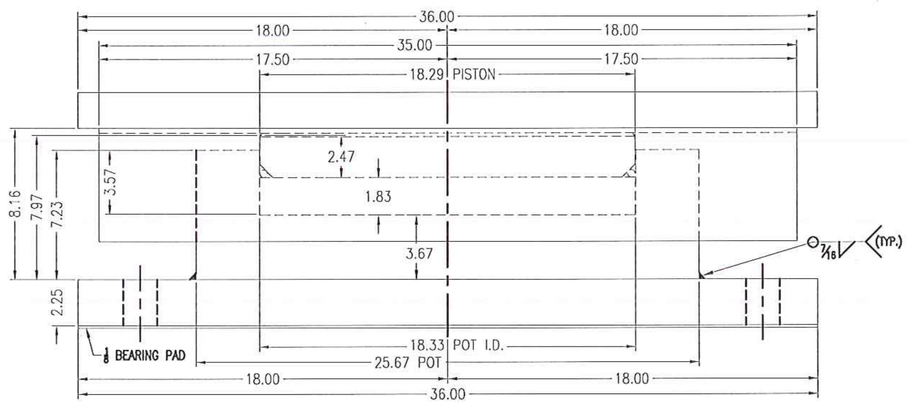

SPAN PIER TRANSVERSE GUIDED BEARING (N3)
QTY. REQ'D = 1
924 KIPS

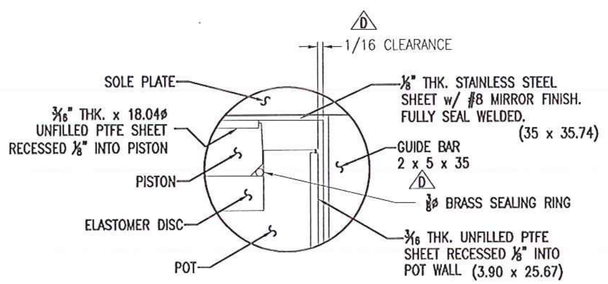

DETAIL Z

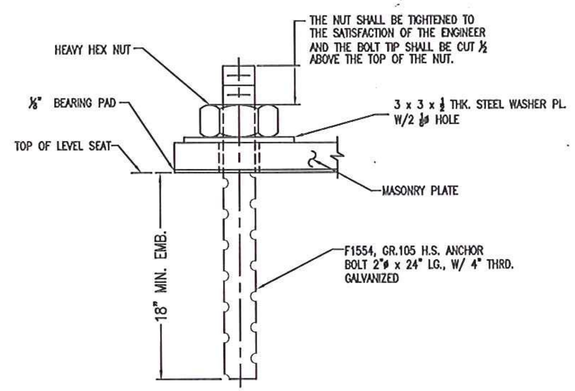

ANCHOR BOLT DETAIL
QTY. REQ'D = 4

VTrans - PDD
NOV 16 2011
Structures Design Section
Final

VERMONT AGENCY OF TRANSPORTATION
PROJECT NAME: BETHEL
PROJECT NUMBER: BRF-022-1(14)

AMSCOT
STRUCTURAL PRODUCTS CORP.

SCALE: N.T.S.	APPRV'D: R.F.	DRAWN BY: P.S.
DATE: 8/19/11		REV.: D
TRANSVERSAL EXPANSION HLMR POT BEARING		
FOR: BECK & BELLUCCI	SHEET NO 5 of 7	DWG NO: BB11A5RD

REVISIONS					
ZONE	REV	DESCRIPTION	DATE	REV. BY	APPROVED
--	A	AS PER ENGINEER & CHECKER'S MARKS	9/29/11	E.J.G.	R.F.
--	B	AS PER ENGINEER'S MARKS	10/6/11	E.J.G.	R.F.
--	C	DIMENSIONAL CHANGES DUE TO STEEL AVAILABILITY	11/11/11	E.J.G.	R.F.

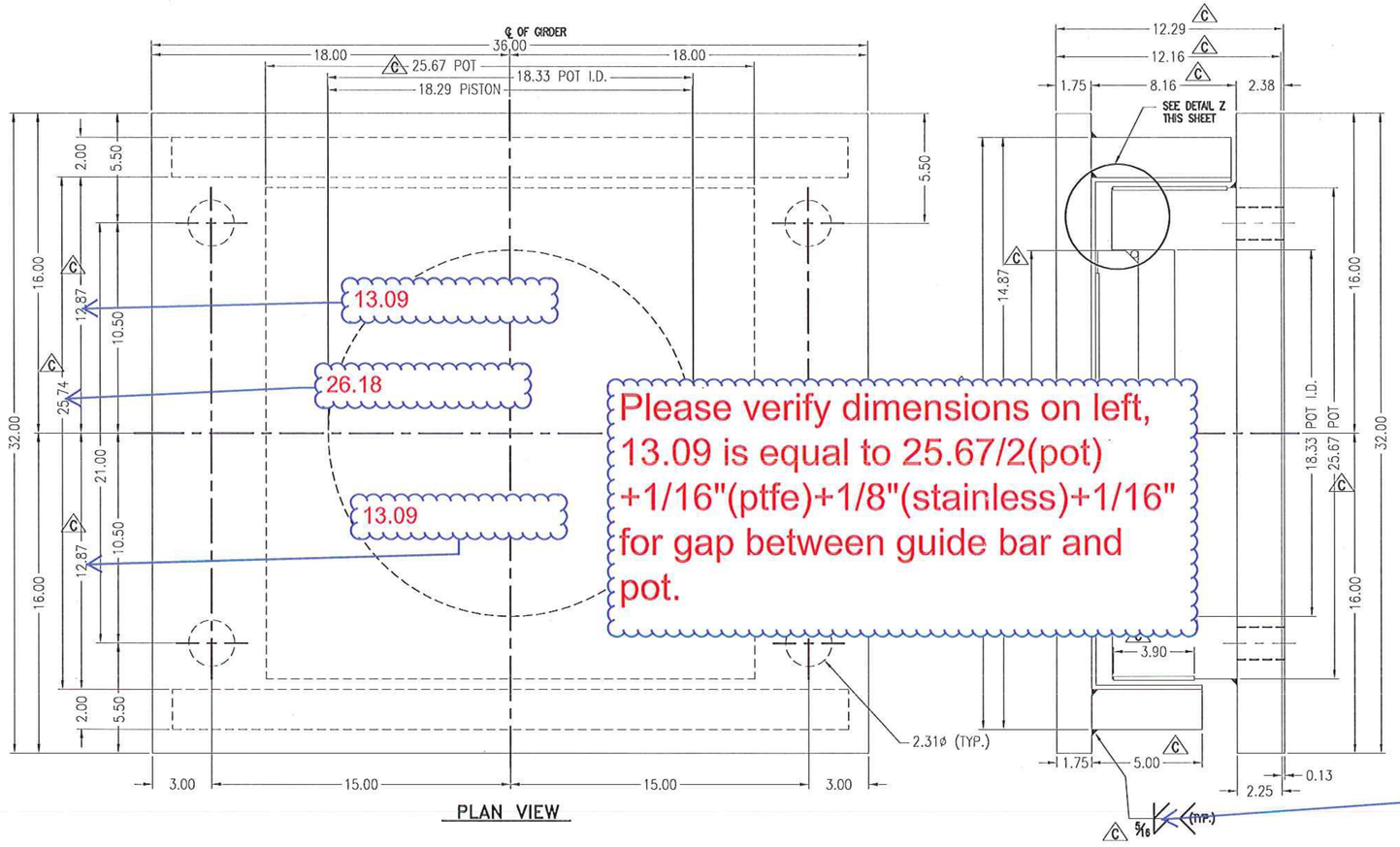

PLAN VIEW

SIDE VIEW

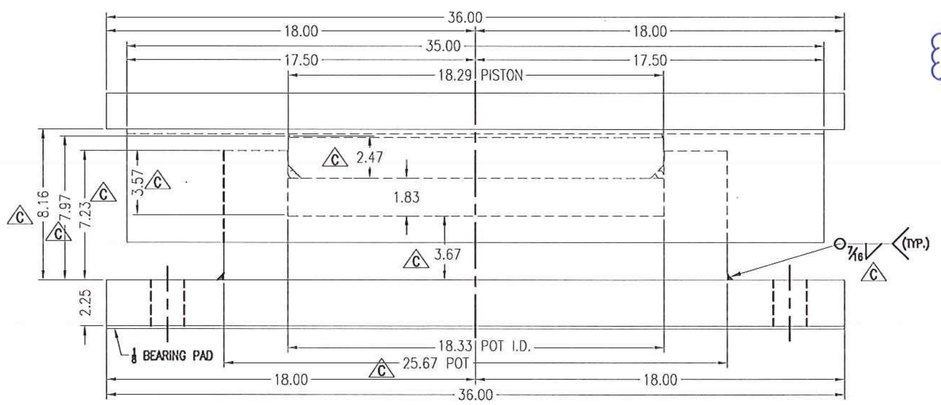

SPAN PIER TRANSVERSE GUIDED BEARING (N3)
QTY. REQ'D = 1
924 KIPS

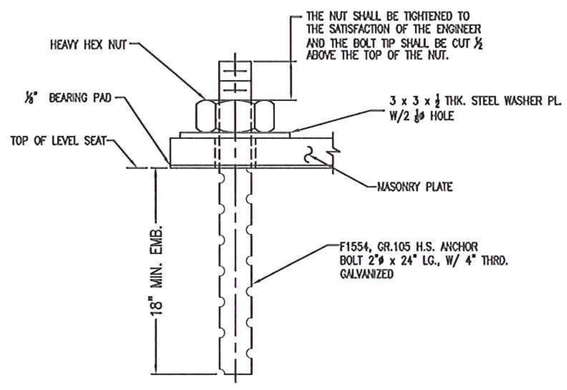

ANCHOR BOLT DETAIL
QTY. REQ'D = 4

5

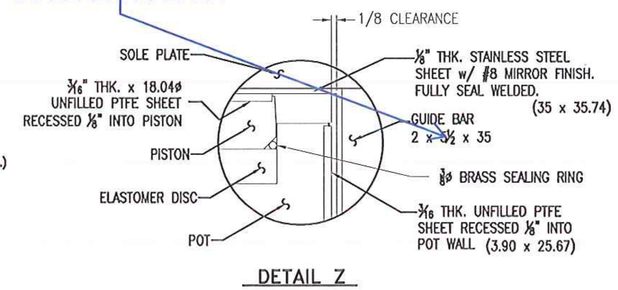

DETAIL Z

1/2, ON SHEET 4 OF DESIGN CALCS IS SAYS FOR A FILLET WELD TO USE 1/2"

The corrected version is the sheet before this one

Vermont Agency of Transportation
RECEIVED
CK'D BY NDVB OK'D BY SSS
RESUBMIT APPROVED AS NOTED
BY DATE 11/15/2011

VERMONT AGENCY OF TRANSPORTATION
PROJECT NAME: BETHEL
PROJECT NUMBER: BRF-022-1(14)

AMSCOT
STRUCTURAL PRODUCTS CORP.

SCALE: N.T.S.	APPRV'D: R.F.	DRAWN BY: P.S.
DATE: 8/19/11		REV.: C

TRANSVERSAL EXPANSION HLMR POT BEARING

FOR: BECK & BELLUCCI	SHEET NO 5 of 7	DWG NO: BB11A5RC

REVISIONS					
ZONE	REV	DESCRIPTION	DATE	REV. BY	APPROVED
--	A	AS PER ENGINEER & CHECKER'S MARKS	9/29/11	E.J.G.	R.F.
--	B	AS PER ENGINEER & CHECKER'S MARKS	10/14/11	E.J.G.	R.F.
--	C	DIMENSIONAL CHANGES DUE TO STEEL AVAILABILITY	11/11/11	E.J.G.	R.F.
--	D	AS PER ENGINEER MARKS	11/18/11	E.J.G.	R.F.

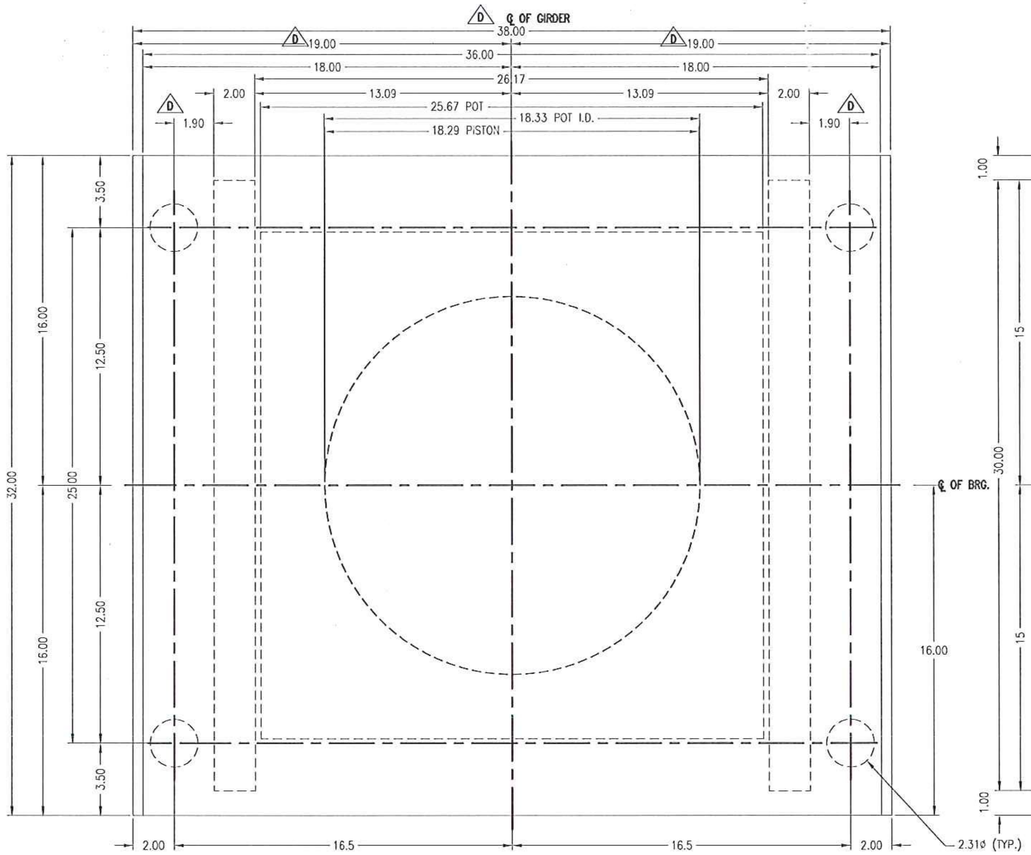

PLAN VIEW

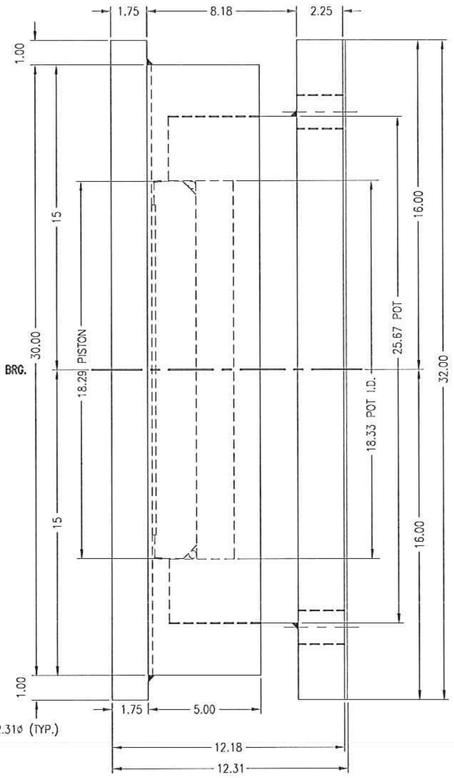

SIDE VIEW

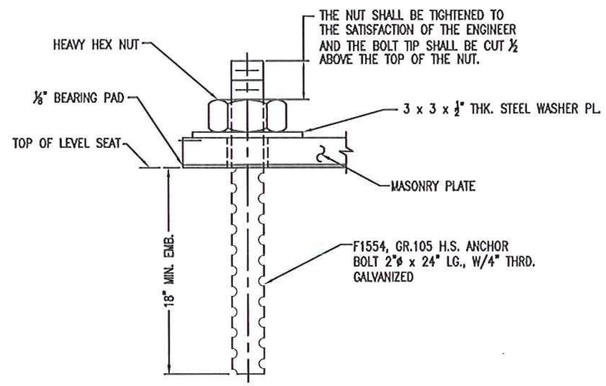

ANCHOR BOLT DETAIL
QTY. REQ'D = 4

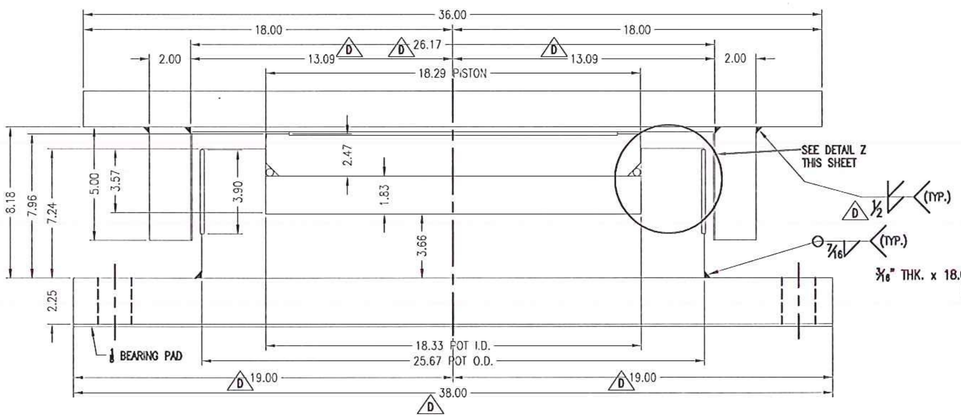

SPAN PIER LONGITUDINAL EXPANSION BEARING (N2)
QTY. REQ'D = 1
924 KIPS

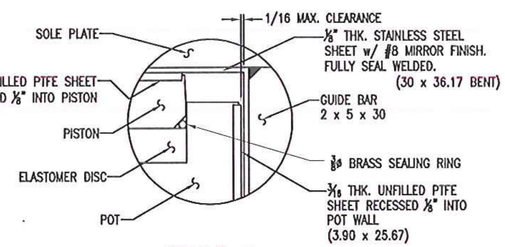

DETAIL Z

VTrans - PDD
NOV 16 2011
Structures Design Section
Final

VERMONT AGENCY OF TRANSPORTATION
PROJECT NAME: BETHEL
PROJECT NUMBER: BRF-022-1(14)

AMSCOT
STRUCTURAL PRODUCTS CORP.

SCALE: N.T.S.	APPRV'D: R.F.	DRAWN BY: P.S.
DATE: 8/17/11		REV.: D
LONGITUDINAL EXPANSION HLMR POT BEARING		
FOR: BECK & BELLUCCI	SHEET NO 6 of 7	DWG NO: BB11A6RD

REVISIONS					
ZONE	REV	DESCRIPTION	DATE	REV. BY	APPROVED
–	A	AS PER ENGINEER & CHECKER'S MARKS	9/29/11	E.J.G.	R.F.
–	B	AS PER ENGINEER'S MARKS	10/6/11	E.J.G.	R.F.

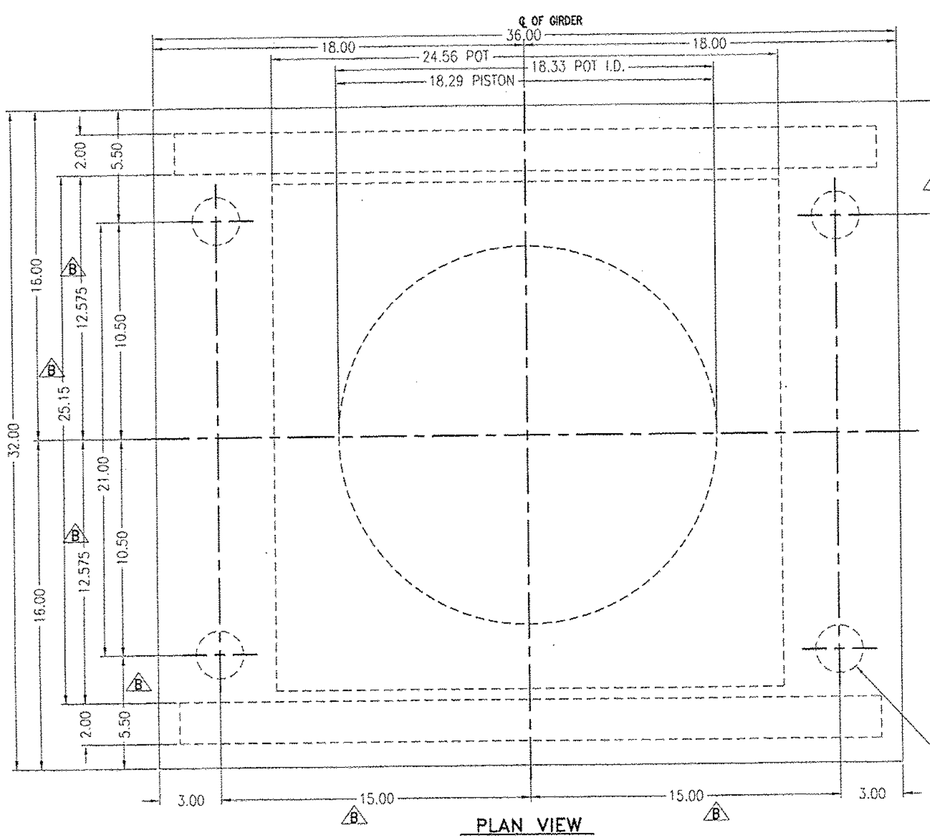

PLAN VIEW

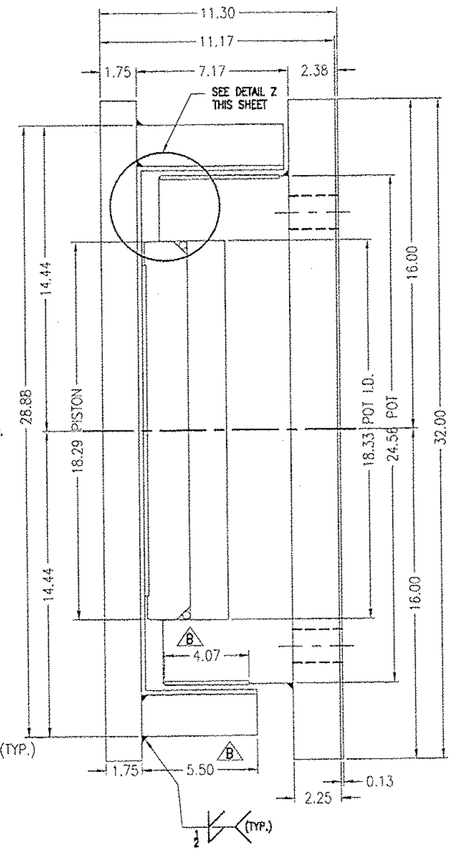

SIDE VIEW

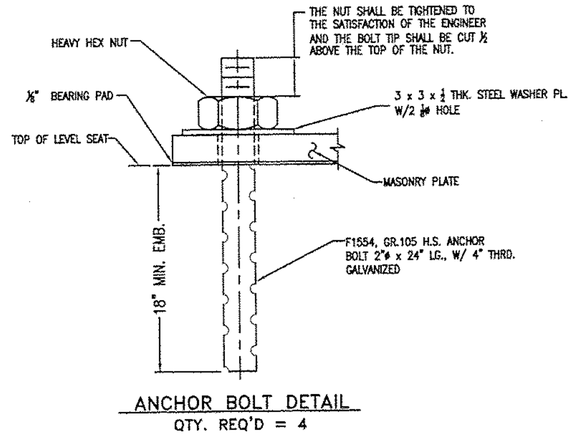

ANCHOR BOLT DETAIL
QTY. REQ'D = 4

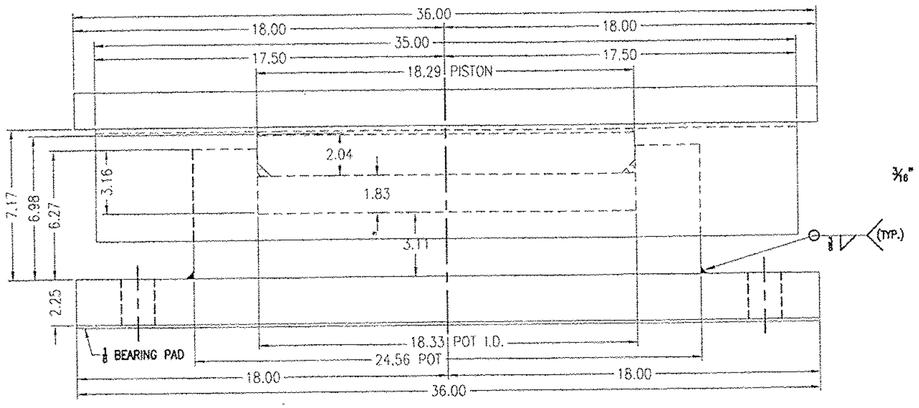

SPAN PIER TRANSVERSE GUIDED BEARING (N3)
QTY. REQ'D = 1
924 KIPS

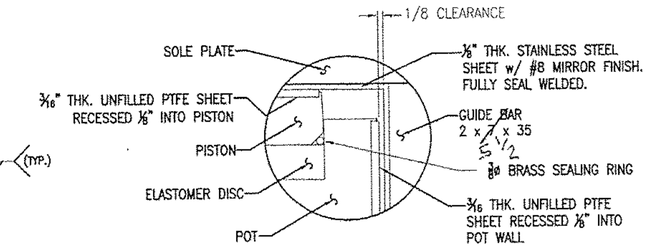

DETAIL Z

RECEIVED
OK'D BY NVDB OK'D BY SSS
OCT 14 2011
RESUBMIT ____ APPROVED ✓
BY DATE 10/18/11

VERMONT AGENCY OF TRANSPORTATION
PROJECT NAME: BETHEL
PROJECT NUMBER: BRF-022-1(14)

AMSCOT
STRUCTURAL PRODUCTS CORP.

SCALE: N.T.S.	APPRV'D: R.F.	DRAWN BY: P.S.
DATE: 8/19/11		REV.: B
TRANSVERSAL EXPANSION HLMR POT BEARING		
FOR: BECK & BELLUCCI	SHEET NO 5 of 7	DWG NO: BB11A5RB

150

REVISIONS					
ZONE	REV	DESCRIPTION	DATE	REV. BY	APPROVED
-	A	AS PER ENGINEER & CHECKER'S MARKS	9/23/11	E.J.G.	R.F.
-	B	AS PER ENGINEER & CHECKER'S MARKS	10/14/11	E.J.G.	R.F.
-	C	DIMENSIONAL CHANGES DUE TO STEEL AVAILABILITY	11/11/11	E.J.G.	R.F.

19.5

38

19.5

1.9

1.9

The nut for the anchor bolt would not of fit as dimensioned.

26.17

13.09

13.09

PLAN VIEW

1/2, fillet requires .4655

5

19.5

38

SPAN PIER LONGITUDINAL EXPANSION BEARING (N2)
QTY. REQ'D = 1
924 KIPS

DETAIL Z

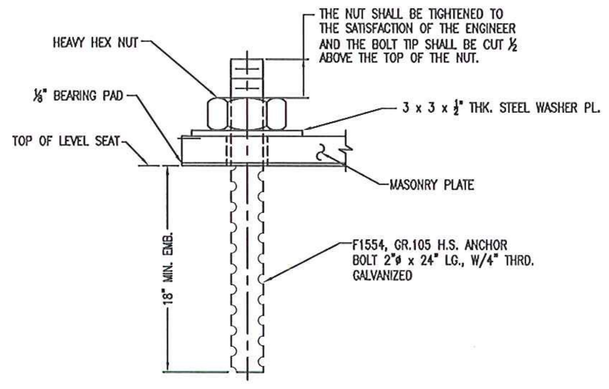

ANCHOR BOLT DETAIL
QTY. REQ'D = 4

Their corrected version is the ~~one~~ sheet before this one

Vermont Agency of Transportation
RECEIVED
CK'D BY NDVB OK'D BY SSS
RESUBMIT BY
APPROVED AS NOTED
DATE 11/15/2011

VERMONT AGENCY OF TRANSPORTATION
PROJECT NAME: BETHEL
PROJECT NUMBER: BRF-022-1(14)

AMSCOT
STRUCTURAL PRODUCTS CORP.

SCALE: N.T.S.	APPRV'D: R.F.	DRAWN BY: P.S.
DATE: 8/17/11		REV.: C
LONGITUDINAL EXPANSION HLMR POT BEARING		
FOR: BECK & BELLUCCI	SHEET NO 6 of 7	DWG NO: BB11A6RC

REVISIONS					
ZONE	REV	DESCRIPTION	DATE	REV. BY	APPROVED
–	A	AS PER ENGINEER & CHECKER'S MARKS	9/29/11	E.M.B.	R.F.
–	B	AS PER ENGINEER & CHECKER'S MARKS	10/14/11	E.M.B.	R.F.

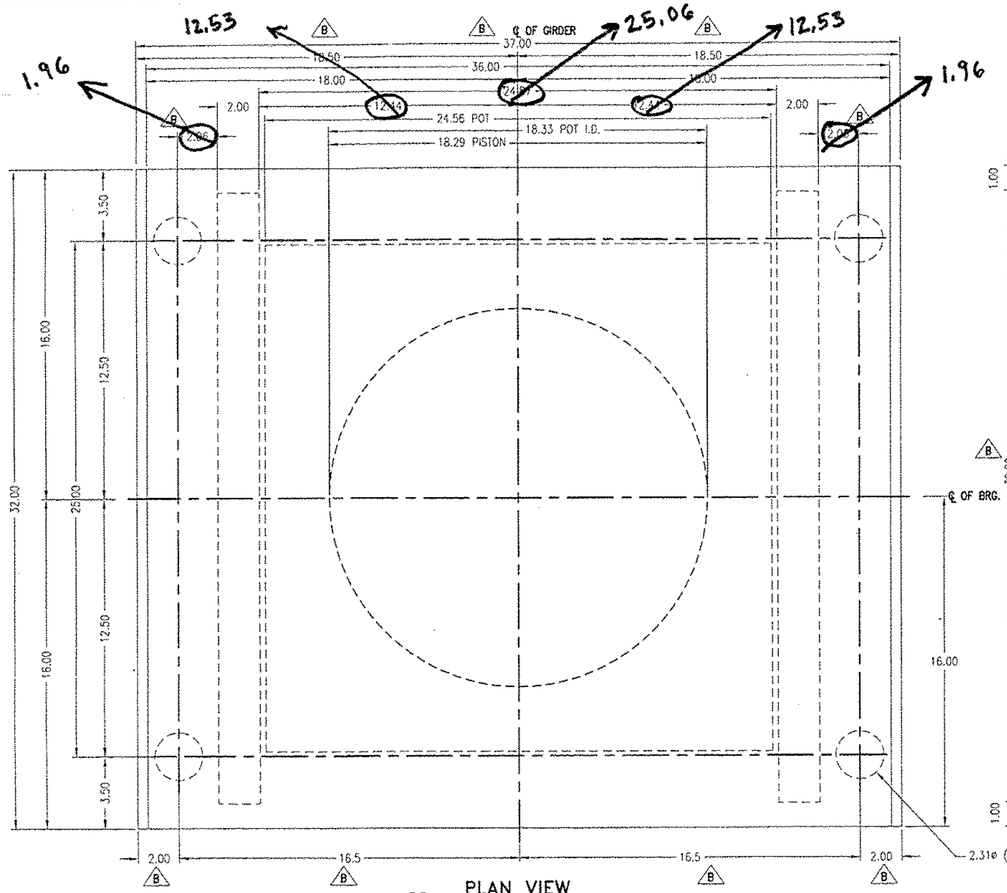

PLAN VIEW

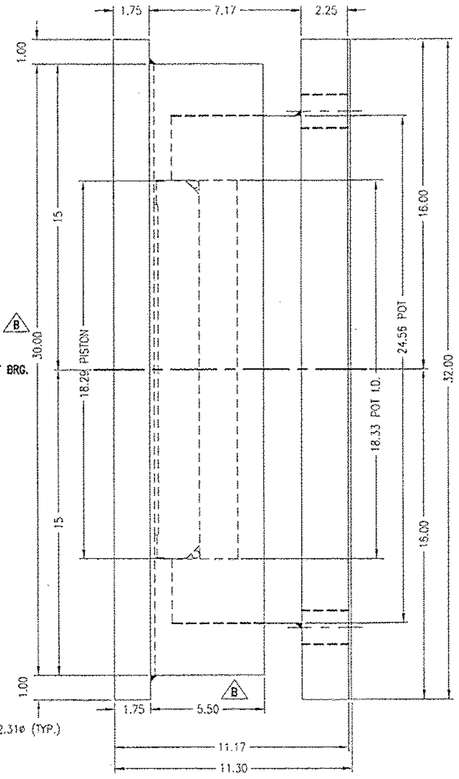

SIDE VIEW

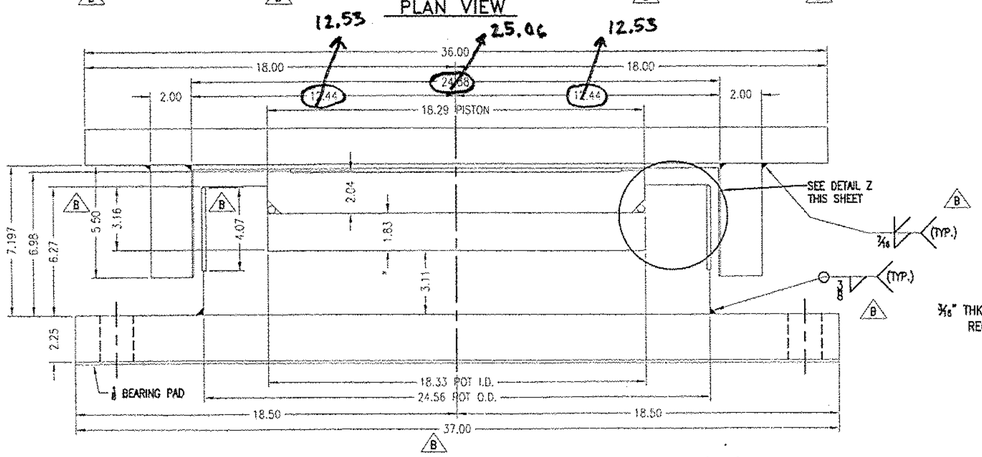

SPAN PIER LONGITUDINAL EXPANSION BEARING (N2)
QTY. REQ'D = 1
924 KIPS

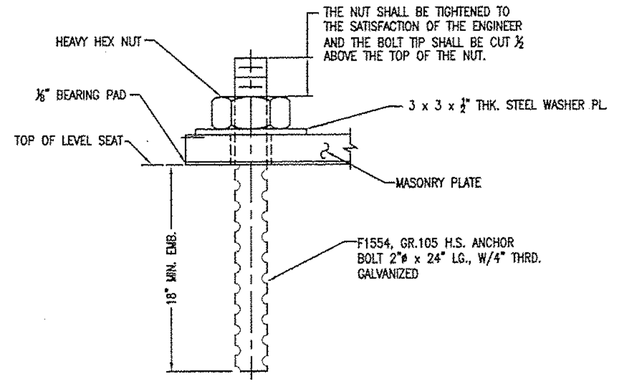

ANCHOR BOLT DETAIL
QTY. REQ'D = 4

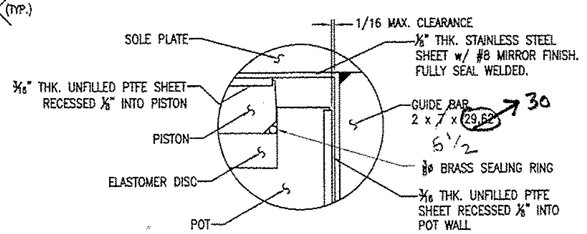

DETAIL Z

RECEIVED
OK'D BY AVDB OK'D BY SSS
OCT 14 2011
RESUBMIT ____ APPROVED As Noted
BY DATE 10/18/11

VERMONT AGENCY OF TRANSPORTATION
PROJECT NAME: BETHEL
PROJECT NUMBER: BRF-022-1(14)

AMSCOT
STRUCTURAL PRODUCTS CORP.

SCALE: N.T.S.	APPRV'D: R.F.	DRAWN BY: P.S.
DATE: 8/17/11		REV.: B
LONGITUDINAL EXPANSION HLMR POT BEARING		
FOR: BECK & BELLUCCI	SHEET NO 6 of 7	DWG NO: BB11A6RB

NOTES FOR HLMR POT BEARING ASSEMBLY (ITEM NO. 531.12):

1. ELASTOMERIC DISC.
   (A)–ELASTOMERIC DISCS SHALL HAVE THE MINIMUM THICKNESS PER AASHTO LRFD 14.7.4.3

   (B)–AREAS OF ELASTOMERIC DISCS SHALL BE DESIGNED FOR A MAXIMUM AVERAGE STRESS OF 3500 PSI AT THE TOTAL DEAD AND LIVE LOADS OF THE STRUCTURE PER AASHTO LRFD 14.7.4.4

   (C)–ELASTOMERIC DISC TO BE OF 50 SHORE "A" DUROMETER HARDNESS PER AASHTO LRFD 14.7.4.2.

2. POT

C (A)–ALL STEEL USED IN POT BEARING TO BE AASHTO M270, GR. 50, EXCEPT ANY STEEL OVER 4" THICK, WHICH SHALL BE ASTM A36 DUE TO UNAVAILABILITY OF STEEL FROM SUPPLIERS, AND SHALL BE GALVANIZED EXCEPT INSIDE POT BEARING SURFACES SHALL NOT BE GALVANIZED.

   (B)–DEPTH OF THE POT CAVITY SHALL BE EQUAL TO OR GREATER THAN: (POT ID/2) X DESIGN ROTATION (03 RADIANS) +.1 + THE THICKNESS OF THE ELASTOMERIC DISC. + THE PISTON FACE WIDTH.

   (C)–INSIDE DIAMETERS SHALL BE THE SAME AS THE ELASTOMERIC DISC.

3. PISTON
   (A)–PISTONS SHALL BE DESIGNED AS FOLLOWS FOR THICKNESS AND CLEARANCE PER AASHTO LRFD 14.7.4.7.

   (B)–PISTON FOR ROUND CROSS SECTION SEALING RINGS SHALL HAVE THE LOWER OUTSIDE EDGE BEVELED TO ACCEPT AND RETAIN THE RING AND PERMIT FULL DESIGN ROTATION.

4. ELASTOMERIC SEAL RINGS
   (A)–ROUND CROSS SECTION BRASS SEALING RINGS SHALL MEET THE FOLLOWING DESIGN REQUIREMENTS PER AASHTO LRFD 14.7.4.5
      (1) RINGS SHALL FIT THE POT ID SNUGLY, 5/16"ø MIN.

      (2) RINGS SHALL BE ROLLED INTO A CIRCLE AND BRAZED. (TO BE MADE FROM ONE PIECE).

5. PTFE SLIDING SURFACE
   (A)–THE AREA OF THE PTFE SHALL BE DESIGNED FOR A CONTACT STRESS AS PER AASHTO LRFD 14.7.2.4, AT THE FULL DEAD AND LIVE LOAD OF THE STRUCTURE.

   (B)–UNFILLED PTFE SHALL MEET THE FOLLOWING REQUIREMENTS:
      (1) BONDED TO THE PISTON IT SHALL HAVE A MINIMUM THICKNESS OF 1/8" AND SHALL BE RECESSED ONE–HALF OF ITS THICKNESS INTO STEEL PISTON. TO CONFORM TO AASHTO LRFD 14.7.2.6.1.

   (C)–PTFE SURFACE SHALL BE ASTM D 4894 AASHTO LRFD S14.7.2.1.

   (D)–EXPOSED PTFE SLIDING SURFACES SHALL BE PIGMENTED TO INCREASE RESISTANCE TO DAMAGE FROM UV LIGHT.

6. STAINLESS STEEL SLIDING SURFACE
   (A)–THE STAINLESS STEEL SLIDING SURFACE SHALL COVER THE PTFE SURFACE IN ALL OPERATING POSITIONS PLUS ONE ADDITIONAL INCH IN EVERY DIRECTION OF MOVEMENT.

   (B)–STAINLESS STEEL SHALL BE 14ga. (AASHTO LRFD 14.7.2.3.2) THICKNESS AND SHALL BE CONNECTED TO THE TOP PLATE BY MEANS OF AN EPOXY BOND & SEAL WELDED AROUND THE ENTIRE PERIMETER (AS PER AASHTO SUBSECTION 14.7.2.6.2)

   (C)–WELDING PROCEDURES SHALL BE CHOSEN SUCH THAT THE STAINLESS STEEL IN SERVICE IS IN CONTACT WITH THE TOP PLATE AND THE SURFACE IS SMOOTH AND FLAT.

   (D)–STAINLESS STEEL SLIDING SURFACES SHALL BE PREFERABLY FACE DOWN.

7. GUIDE BARS
   (A)–GUIDE BARS AND THEIR CONNECTIONS TO THE TOP PLATE SHALL BE DESIGNED FOR THE HORIZONTAL STRENGTH FORCES ON THE BEARING AND NOT LESS THAN 19% OF THE TOTAL VERTICAL LOAD CAPACITY OF THE BEARING.

   (B)–UNLESS THE GUIDE BAR CLEARANCE IS SPECIFIED IT SHALL BE A TOTAL OF 1/8" (MAX.) PER 14.7.9.4.

   (C)–GUIDING ARRANGEMENTS SHALL BE DESIGNED SO THAT GUIDING MEMBER IS ALWAYS WITHIN THE GUIDES AT ALL POINTS OF TRANSLATION OF THE BEARING.

   (D)–GUIDE BAR MATERIAL SHALL CONFORM TO THE REQUIREMENTS OF ASTM M270 GR. 50 AND SHALL BE GALVANIZED. SEE NOTE 9 (I).

   (A)–STRUCTURE STEEL SHALL CONFORM TO THE REQUIREMENTS OF AASHTO M270 GR. 50 AND SHALL BE GALVANIZED.

   (B)–ELASTOMERS SHALL CONFORM TO AASHTO LRFD SUBSECTION 14.7.4.2.

   (C)–ELASTOMER SEALS MAY ONLY BE MADE OF METAL AS FOLLOWS:
      (1)–ROUND CROSS SECTION BRASS RINGS SHALL CONFORM TO ASTM B16 STANDARD TEMPER H02

   (D)–PTFE SLIDING SURFACES SHALL CONFORM TO THE REQUIREMENTS OF AASHTO LRFD SECTION 14.7.2.

   (E)–STAINLESS STEEL SLIDING SURFACES SHALL CONFORM TO ASTM A–240 TYPE 304 WITH A SURFACE FINISH OF #8 MIRROR (AASHTO LRFD 14.7.2.2)

9. MANUFACTURING REQUIREMENTS
   (A)–POTS AND PISTONS SHALL BE MACHINED FROM A SOLID PIECE OF STEEL AS PER AASHTO LRFD SECTION 18.3.3.2.1 POT BEARINGS.

   (B)–ELASTOMERIC DISC TOLERANCES SHALL BE PER AASHTO LRFD BRIDGE CONSTRUCTION SPECIFICATIONS 18.1.4.2.

   (C)–PTFE SLIDING SURFACE TOLERANCES SHALL BE PER AASHTO LRFD BRIDGE CONSTRUCTION SPECIFICATIONS 18.1.4.2.

   (D)–STAINLESS STEEL SLIDING SURFACES SHALL BE EPOXY BONDED & SEAL WELDED. CONFORMING TO THE AMERICAN WELDING SOCIETY REQUIREMENTS FOR STAINLESS STEEL, AROUND IT'S PERIMETER USING TECHNIQUES WHICH WILL ENSURE IT REMAINS IN CONTACT WITH THE BACKING PLATE. FINISH SHALL BE #8 MIRROR (AASHTO 14.7.2.2). FLATNESS SHALL CONFORM TO CLASS "A" OR BETTER.

   (E)–SOLE PLATE TOLERANCES SHALL CONFORM TO AASHTO LRFD BRIDGE CONSTRUCTION SPECIFICATIONS 18.1.4.2.

   (F)–GUIDE BAR TOLERANCES SHALL CONFORM TO AASHTO LRFD BRIDGE CONSTRUCTION SPECIFICATIONS 18.1.4.2.

   (G)–OVERALL HEIGHT OF BEARING SHALL NOT EXCEED THE NOMINAL HEIGHT BY MORE THAN 3/16".

   (H)–THE EDGES OF ALL PARTS SHALL BE BROKEN BY GRINDING SO THAT THERE ARE NO SHARP EDGES.

   (I)–EXTERNAL STEEL PLATE SURFACES TO BE HOT DIP GALVANIZED AS PER SPECIFICATIONS.

10. TOLERANCES FOR FLATNESS
   (A)–FLATNESS OF BEARING SURFACES SHALL BE DETERMINED BY THE FOLLOWING METHOD:
      (1)–A PRECISION STRAIGHT EDGE LONGER THAN THE NOMINAL DIMENSION TO BE MEASURED SHALL BE PLACED IN CONTACT WITH THE SURFACE TO BE MEASURED AS PARALLEL TO IT AS POSSIBLE.

      (2)–SELECT A FEELER GAUGE HAVING AN ACCURACY OF ±.001" EQUAL TO THE TOLERANCE ALLOWED AND ATTEMPT TO INSERT IT UNDER THE STRAIGHT EDGE.

      (3)–PLATES ARE "ACCEPTABLE" IF THE FEELER GAUGE DOES NOT PASS UNDER THE STRAIGHT EDGE.

   (B)–FLATNESS TOLERANCES SHALL BE AS FOLLOWS:
      (1)–CLASS "A" 0.001 X NOMINAL DIMENSION PER AASHTO LRFD BRIDGE CONSTRUCTION SPECIFICATION 18.1.4.2–1.

   (C)–"NOMINAL DIMENSIONS" SHALL BE INTERPRETED AS THE ACTUAL DIMENSION OF THE PLATE UNDER THE STRAIGHT EDGE WHERE THE STRAIGHT EDGE IS NOT PARALLEL TO ANY PLAN DIMENSION OF THE PLATE BEING MEASURED.

   (D)–IN DETERMINING THE FLATNESS THE STRAIGHT EDGE MAY BE LOCATED IN ANY POSITION ON THE SURFACE BEING MEASURED.

11. REFERENCE
   (A)–AASHTO LRFD STANDARD SPECIFICATIONS FOR HIGHWAY BRIDGES, 4TH. EDITION 2007 WITH CURRENT INTERIMS, AS MODIFIED BY THE 2006 STANDARD SPECIFICATIONS FOR CONSTRUCTION, AS MODIFIED BY THE SPECIAL PROVISIONS.

12. ADDITIONAL COMMENTS
   (A)–BEARINGS SHALL BE TESTED ACCORDING TO SECTION 531 OF VERMONT'S 2006 STANDARD SPECIFICATION FOR CONSTRUCTION.

   (B)–ALL WELDERS SHALL BE QUALIFIED AS PER AWS D1.5.

   (C)–ALL BEARINGS SHALL BE PLACED ON A 1/8" THK. BEARING PAD SAME SIZE AS MASONRY PLATE.

   (D) ALL DIMENSIONS ARE IN INCHES UNLESS OTHERWISE NOTED.

   (E) SCALE = N.T.S.

   (E) NEW BRIDGE SEAT ELEVATIONS SHALL BE ADJUSTED BY THE G/C BASED ON THE FINAL CONFIGURATION OF THE BEARINGS.

   (F) MANUFACTURING LOCATION:
   AMSCOT STRUCTURAL PRODUCTS CORP. INC.
   241 EAST BLACKWELL STREET
   DOVER, NJ 07801
   PH: (973) 989–8800
   FX: (973) 989–5651
   CONTACT: PETER SOMOGYI

REVISIONS					
ZONE	REV	DESCRIPTION	DATE	REV. BY	APPROVED
–	A	AS PER ENGINEER & CHECKER'S MARKS	9/29/11	E.J.G.	R.F.
–	B	AS PER ENGINEER'S MARKS	10/6/11	E.J.G.	R.F.
–	C	NOTE CHANGE	11/11/11	E.J.G.	R.F.

NOTES FOR LAMINATED ELASTOMERIC BEARING PADS (ITEM NO. 531.12):

1. ALL STEEL BEARINGS SHALL BE AASHTO M270 GRADE 50.
2. ALL BEARING DEVICES SHALL BE GALVANIZED AS PER STANDARD SPECIFICATIONS 506.15 AND 531.04(b), AS MODIFIED BY THE GENERAL SPECIAL PROMSIONS.
3. BEARINGS TO BE MANUFACTURED ACCORDING TO AASHTO LRFD STANDARD SPECIFICATIONS FOR HIGHWAY BRIDGES, SECTION 14 & 18, 17th. EDITION, 2002 AND 2010 INTERIMS.
4. ELASTOMERIC NATURAL RUBBER MATERIAL TO BE 50+/–5 DUROMETER HARDNESS, GR. 4
5. ALL STEEL PRODUCED IN THE U.S.A.
6. THE BEARINGS ARE DESIGNED SO THAT THE SUPERSTRUCTURE MAY BE ERECTED WHEN THE AMBIENT AIR TEMPERATURE IS WITHIN THE RANGE OF 40 DEG. F. TO 90 DEG. F.
7. ALL SWEDGED ANCHOR BOLTS F1554, GR. 105, HH NUTS A–563, AND WASHERS F–436, SHALL BE GALVANIZED
8. PRIOR TO GALVANIZING, ALL CORNERS AND EDGES OF STEEL PLATES, SHAPES, ETC. SHALL BE GROUND TO A 1/16" MIN. RADIUS (TYP).

Vermont Agency of Transportation
RECEIVED
CK'D BY NDVB OK'D BY SSS
RESUBMIT ____ APPROVED X
BY ____ DATE 11/15/2011
Final

VERMONT AGENCY OF TRANSPORTATION
PROJECT NAME: BETHEL
PROJECT NUMBER: BRF-022-1(14)

BEARING NOTES

AMSCOT
STRUCTURAL PRODUCTS CORP.
DOVER, NJ

SCALE: N.T.S.	CHECKED: B.F.	DRAWN BY: C.A.M.
DATE: 8/19/11		REVISION: C
FOR: BECK & BELLUCCI		
DWG NO: BB11A7RC		SHEET NO. 7 OF 7

NOTES FOR HLMR POT BEARING ASSEMBLY (ITEM NO. 531.12):

1. ELASTOMERIC DISC.
   (A)–ELASTOMERIC DISCS SHALL HAVE THE MINIMUM THICKNESS PER AASHTO LRFD 14.7.4.3

   (B)–AREAS OF ELASTOMERIC DISCS SHALL BE DESIGNED FOR A MAXIMUM AVERAGE STRESS OF 3500 PSI AT THE TOTAL DEAD AND LIVE LOADS OF THE STRUCTURE PER AASHTO LRFD 14.7.4.4

   (C)–ELASTOMERIC DISC TO BE OF 50 SHORE "A" DUROMETER HARDNESS PER AASHTO LRFD 14.7.4.2.

2. POT
   (A)–ALL STEEL USED IN POT BEARING TO BE AASHTO M270, GR. 50 AND SHALL BE GALVANIZED EXCEPT INSIDE POT BEARING SURFACES SHALL NOT BE GALVANIZED.

   (B)–DEPTH OF THE POT CAVITY SHALL BE EQUAL TO OR GREATER THAN: (POT ID/2) X DESIGN ROTATION (03 RADIANS) +.1 + THE THICKNESS OF THE ELASTOMERIC DISC. + THE PISTON FACE WIDTH.

   (C)–INSIDE DIAMETERS SHALL BE THE SAME AS THE ELASTOMERIC DISC.

3. PISTON
   (A)–PISTONS SHALL BE DESIGNED AS FOLLOWS FOR THICKNESS AND CLEARANCE PER AASHTO LRFD 14.7.4.7.

   (B)–PISTON FOR ROUND CROSS SECTION SEALING RINGS SHALL HAVE THE LOWER OUTSIDE EDGE BEVELED TO ACCEPT AND RETAIN THE RING AND PERMIT FULL DESIGN ROTATION.

4. ELASTOMERIC SEAL RINGS
   (A)–ROUND CROSS SECTION BRASS SEALING RINGS SHALL MEET THE FOLLOWING DESIGN REQUIREMENTS PER AASHTO LRFD 14.7.4.5
      (1) RINGS SHALL FIT THE POT ID SNUGLY, 5/16"ø MIN.

      (2) RINGS SHALL BE ROLLED INTO A CIRCLE AND BRAZED. (TO BE MADE FROM ONE PIECE).

5. PTFE SLIDING SURFACE
   (A)–THE AREA OF THE PTFE SHALL BE DESIGNED FOR A CONTACT STRESS AS PER AASHTO LRFD 14.7.2.4, AT THE FULL DEAD AND LIVE LOAD OF THE STRUCTURE.

   (B)–UNFILLED PTFE SHALL MEET THE FOLLOWING REQUIREMENTS:
      (1) BONDED TO THE PISTON IT SHALL HAVE A MINIMUM THICKNESS OF 1/8" AND SHALL BE RECESSED ONE–HALF OF ITS THICKNESS INTO STEEL PISTON. TO CONFORM TO AASHTO LRFD 14.7.2.6.1.

   (C)–PTFE SURFACE SHALL BE ASTM D 4894 AASHTO LRFD S14.7.2.1.

B (D)–EXPOSED PTFE SLIDING SURFACES SHALL BE PIGMENTED TO INCREASE RESISTANCE TO DAMAGE FROM UV LIGHT.

6. STAINLESS STEEL SLIDING SURFACE
   (A)–THE STAINLESS STEEL SLIDING SURFACE SHALL COVER THE PTFE SURFACE IN ALL OPERATING POSITIONS PLUS ONE ADDITIONAL INCH IN EVERY DIRECTION OF MOVEMENT.

   (B)–STAINLESS STEEL SHALL BE 14ga. (AASHTO LRFD 14.7.2.3.2) THICKNESS AND SHALL BE CONNECTED TO THE TOP PLATE BY MEANS OF AN EPOXY BOND & SEAL WELDED AROUND THE ENTIRE PERIMETER (AS PER AASHTO SUBSECTION 14.7.2.6.2)

   (C)–WELDING PROCEDURES SHALL BE CHOSEN SUCH THAT THE STAINLESS STEEL IN SERVICE IS IN CONTACT WITH THE TOP PLATE AND THE SURFACE IS SMOOTH AND FLAT.

   (D)–STAINLESS STEEL SLIDING SURFACES SHALL BE PREFERABLY FACE DOWN.

7. GUIDE BARS
   (A)–GUIDE BARS AND THEIR CONNECTIONS TO THE TOP PLATE SHALL BE DESIGNED FOR THE HORIZONTAL STRENGTH FORCES ON THE BEARING AND NOT LESS THAN 19% OF THE TOTAL VERTICAL LOAD CAPACITY OF THE BEARING.

   (B)–UNLESS THE GUIDE BAR CLEARANCE IS SPECIFIED IT SHALL BE A TOTAL OF 1/8" (MAX.) PER 14.7.9.4.

   (C)–GUIDING ARRANGEMENTS SHALL BE DESIGNED SO THAT GUIDING MEMBER IS ALWAYS WITHIN THE GUIDES AT ALL POINTS OF TRANSLATION OF THE BEARING.

   (D)–GUIDE BAR MATERIAL SHALL CONFORM TO THE REQUIREMENTS OF ASTM M270 GR. 50 AND SHALL BE GALVANIZED. SEE NOTE 9 (I).

   (A)–STRUCTURE STEEL SHALL CONFORM TO THE REQUIREMENTS OF AASHTO M270 GR. 50 AND SHALL BE GALVANIZED.

   (B)–ELASTOMERS SHALL CONFORM TO AASHTO LRFD SUBSECTION 14.7.4.2.

   (C)–ELASTOMER SEALS MAY ONLY BE MADE OF METAL AS FOLLOWS:
      (1)–ROUND CROSS SECTION BRASS RINGS SHALL CONFORM TO ASTM B16 STANDARD TEMPER H02

   (D)–PTFE SLIDING SURFACES SHALL CONFORM TO THE REQUIREMENTS OF AASHTO LRFD SECTION 14.7.2.

   (E)–STAINLESS STEEL SLIDING SURFACES SHALL CONFORM TO ASTM A–240 TYPE 304 WITH A SURFACE FINISH OF #8 MIRROR (AASHTO LRFD 14.7.2.2)

9. MANUFACTURING REQUIREMENTS
   (A)–POTS AND PISTONS SHALL BE MACHINED FROM A SOLID PIECE OF STEEL AS PER AASHTO LRFD SECTION 18.3.3.2.1 POT BEARINGS.

   (B)–ELASTOMERIC DISC TOLERANCES SHALL BE PER AASHTO LRFD BRIDGE CONSTRUCTION SPECIFICATIONS 18.1.4.2.

   (C)–PTFE SLIDING SURFACE TOLERANCES SHALL BE PER AASHTO LRFD BRIDGE CONSTRUCTION SPECIFICATIONS 18.1.4.2.

   (D)–STAINLESS STEEL SLIDING SURFACES SHALL BE EPOXY BONDED & SEAL WELDED. CONFORMING TO THE AMERICAN WELDING SOCIETY REQUIREMENTS FOR STAINLESS STEEL, AROUND IT'S PERIMETER USING TECHNIQUES WHICH WILL ENSURE IT REMAINS IN CONTACT WITH THE BACKING PLATE. FINISH SHALL BE #8 MIRROR (AASHTO 14.7.2.2). FLATNESS SHALL CONFORM TO CLASS "A" OR BETTER.

   (E)–SOLE PLATE TOLERANCES SHALL CONFORM TO AASHTO LRFD BRIDGE CONSTRUCTION SPECIFICATIONS 18.1.4.2.

   (F)–GUIDE BAR TOLERANCES SHALL CONFORM TO AASHTO LRFD BRIDGE CONSTRUCTION SPECIFICATIONS 18.1.4.2.

   (G)–OVERALL HEIGHT OF BEARING SHALL NOT EXCEED THE NOMINAL HEIGHT BY MORE THAN 3/16".

   (H)–THE EDGES OF ALL PARTS SHALL BE BROKEN BY GRINDING SO THAT THERE ARE NO SHARP EDGES.

   (I)–EXTERNAL STEEL PLATE SURFACES TO BE HOT DIP GALVANIZED AS PER SPECIFICATIONS.

10. TOLERANCES FOR FLATNESS
   (A)–FLATNESS OF BEARING SURFACES SHALL BE DETERMINED BY THE FOLLOWING METHOD:
      (1)–A PRECISION STRAIGHT EDGE LONGER THAN THE NOMINAL DIMENSION TO BE MEASURED SHALL BE PLACED IN CONTACT WITH THE SURFACE TO BE MEASURED AS PARALLEL TO IT AS POSSIBLE.

      (2)–SELECT A FEELER GAUGE HAVING AN ACCURACY OF ±.001" EQUAL TO THE TOLERANCE ALLOWED AND ATTEMPT TO INSERT IT UNDER THE STRAIGHT EDGE.

      (3)–PLATES ARE "ACCEPTABLE" IF THE FEELER GAUGE DOES NOT PASS UNDER THE STRAIGHT EDGE.

   (B)–FLATNESS TOLERANCES SHALL BE AS FOLLOWS:
      (1)–CLASS "A" 0.001 X NOMINAL DIMENSION PER AASHTO LRFD BRIDGE CONSTRUCTION SPECIFICATION 18.1.4.2–1.

   (C)–"NOMINAL DIMENSIONS" SHALL BE INTERPRETED AS THE ACTUAL DIMENSION OF THE PLATE UNDER THE STRAIGHT EDGE WHERE THE STRAIGHT EDGE IS NOT PARALLEL TO ANY PLAN DIMENSION OF THE PLATE BEING MEASURED.

   (D)–IN DETERMINING THE FLATNESS THE STRAIGHT EDGE MAY BE LOCATED IN ANY POSITION ON THE SURFACE BEING MEASURED.

11. REFERENCE
   (A)–AASHTO LRFD STANDARD SPECIFICATIONS FOR HIGHWAY BRIDGES, 4TH. EDITION 2007 WITH CURRENT INTERIMS, AS MODIFIED BY THE 2006 STANDARD SPECIFICATIONS FOR CONSTRUCTION, AS MODIFIED BY THE SPECIAL PROVISIONS.

12. ADDITIONAL COMMENTS
   (A)–BEARINGS SHALL BE TESTED ACCORDING TO SECTION 531 OF VERMONT'S 2006 STANDARD SPECIFICATION FOR CONSTRUCTION.

   (B)–ALL WELDERS SHALL BE QUALIFIED AS PER AWS D1.5.

   (C)–ALL BEARINGS SHALL BE PLACED ON A 1/8" THK. BEARING PAD SAME SIZE AS MASONRY PLATE.

   (D) ALL DIMENSIONS ARE IN INCHES UNLESS OTHERWISE NOTED.

   (E) SCALE = N.T.S.

   (E) NEW BRIDGE SEAT ELEVATIONS SHALL BE ADJUSTED BY THE G/C BASED ON THE FINAL CONFIGURATION OF THE BEARINGS.

   (F) MANUFACTURING LOCATION:
   AMSCOT STRUCTURAL PRODUCTS CORP. INC.
   241 EAST BLACKWELL STREET
   DOVER, NJ 07801
   PH: (973) 989–8800
   FX: (973) 989–5651
   CONTACT: PETER SOMOGYI

REVISIONS					
ZONE	REV	DESCRIPTION	DATE	REV. BY	APPROVED
–	A	AS PER ENGINEER & CHECKER'S MARKS	9/29/11	E.J.G.	R.F.
–	B	AS PER ENGINEER'S MARKS	10/6/11	E.J.G.	R.F.

NOTES FOR LAMINATED ELASTOMERIC BEARING PADS (ITEM NO. 531.12):

1. ALL STEEL BEARINGS SHALL BE AASHTO M270 GRADE 50.
2. ALL BEARING DEVICES SHALL BE GALVANIZED AS PER STANDARD SPECIFICATIONS 506.15 AND 531.04(b), AS MODIFIED BY THE GENERAL SPECIAL PROMSIONS.
3. B BEARINGS TO BE MANUFACTURED ACCORDING TO AASHTO LRFD STANDARD SPECIFICATIONS FOR HIGHWAY BRIDGES, SECTION 14 & 18, 17th. EDITION, 2002 AND 2010 INTERIMS.
4. ELASTOMERIC NATURAL RUBBER MATERIAL TO BE 50+/–5 DUROMETER HARDNESS, GR. 4
5. ALL STEEL PRODUCED IN THE U.S.A.
6. THE BEARINGS ARE DESIGNED SO THAT THE SUPERSTRUCTURE MAY BE ERECTED WHEN THE AMBIENT AIR TEMPERATURE IS WITHIN THE RANGE OF 40 DEG. F. TO 90 DEG. F.
7. ALL SWEDGED ANCHOR BOLTS F1554, GR. 105, HH NUTS A–563, AND WASHERS F–436, SHALL BE GALVANIZED
8. PRIOR TO GALVANIZING, ALL CORNERS AND EDGES OF STEEL PLATES, SHAPES, ETC. SHALL BE GROUND TO A 1/16" MIN. RADIUS (TYP).

RECEIVED
CK'D BY NVDB OK'D BY SSS
OCT 14 2011
RESUBMIT _____ APPROVED ✓
BY DATE 10/18/11

VERMONT AGENCY OF TRANSPORTATION
PROJECT NAME: BETHEL
PROJECT NUMBER: BRF-022-1(14)

BEARING NOTES

AMSCOT
STRUCTURAL PRODUCTS CORP.
DOVER, NJ

SCALE: N.T.S.	CHECKED: B.F.	DRAWN BY: C.A.M.
DATE: 8/19/11		REVISION: B
FOR: BECK & BELLUCCI		
DWG NO: BB11A7RB		SHEET NO. 7 OF 7

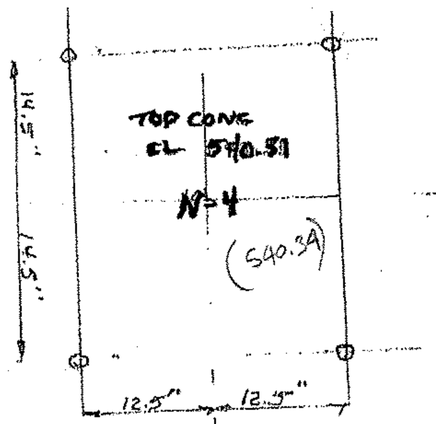

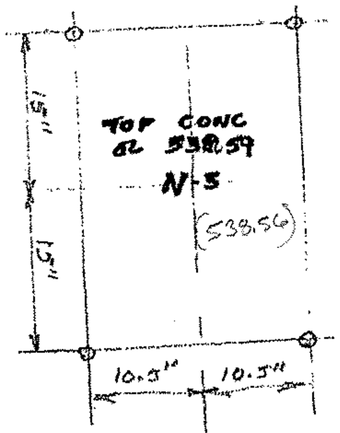

℄ BRG
PIER

℄ BRG
ABUT #2

ANCHOR BOLT LAYOUT
TRUSS BETHEL VT.
BECK & BELLUCCI INC.
12-6-11

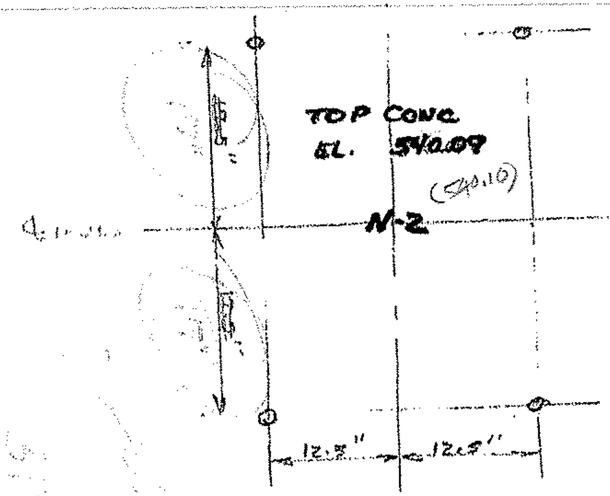

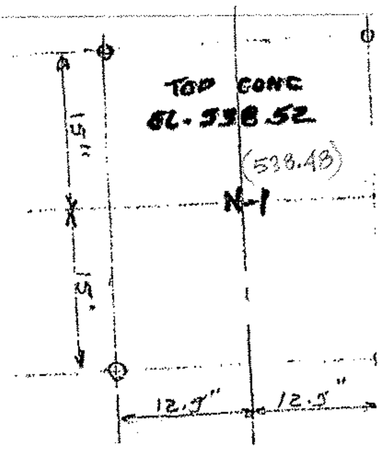

Notes to Procedure:

1. Material to be delivered and unloaded and placed on wood blocking on the ground throughout the erection to Delivery Areas [DAx]. The delivery location will be to the location it is lifted from for erecting. Crane connections (rigging) to pieces are as spelled out in chart.
2. Many pieces will be of similar weight and configuration. The weight of the heaviest piece in a group (ie: Floor Beam) will be used. The longest crane radius will be shown. Those radii of lesser dimension with a like piece will be omitted for clarity.
3. When setting pieces using the rigging as shown in SK1D, the worst case of lifting three pieces at once will be shown.
4. Panel Point Locations shown below plan view.
5. Truss members are marked with an E or W as the last letter of the piece mark denoting east or west truss. This letter is omitted in the elevations shown.
6. Sling protectors and softeners to be used as required to protect the rigging.
7. Some piece marks are omitted for clarity. Refer to the fabricator drawings for those numbers.

NOTES

1. No crane will be operated in a manner that will exceed its rated capacity at any radius as specified by the crane manufacturer.
2. If any, Unless electrical distribution and transmission lines are de-energized and visibly grounded at the point of work, or unless insulating barriers not a part of or attached to the crane have been erected to prevent physical contact with lines, cranes may be operated near power lines only in accordance with the following:
   A. For lines rated 50 kV or below, minimum clearance between the lines and any part of the crane or load shall be 10 feet (3.05 m).
   B. For lines rated over 50 kV, minimum clearance between the lines and any part of the crane or load shall be either 10 feet (3.05 m) plus 0.4 inch (10.16 mm) for each 1 kV over 50 kV, or twice the length of the line insulator, but never less than 10 feet) and in transit with no load and boom lowered, the clearance shall be a minimum of 4 feet (1.22 m).
   C. Determination of energized lines. Any overhead line shall be presumed to be energized until the owner of the line indicates that it is not energized.
3. The table or chart prepared by the crane manufacturer to describe the maximum lift at all conditions of loading shall be posted in each crane cab in clear view of the operator.
4. The contractor shall be responsible for verifying the weight of each lift and for insuring the stability of each member during all phases of erection.
5. Members shall be subjected to only light drifting of the holes. Any drifting that results in distortion of the member or damage to holes will be cause for rejection of the member.
6. Field reaming of holes shall not be permitted unless approved by the VAOT.
7. The final alignment and profiles of the erected steel shall be in conformance with the requirements of the contract documents.

INFORMATION (Referred to as INF in Procedure)

1. Cranes specified in Erection Procedure.
2. All radii shown are boom point to center of crane rotation
3. Bracing and stringers will be installed as erection progresses. The number and location needed to insure stability are spelled out in the erection procedure on this drawing.
4. Between pieces erected, each connection will be made with a minimum of two approved high strength bolts at each connection unless a greater number is required for alignment and stability. The bolts shall be tightened until there is no gap between the connected parts (snug tight).
5. If surfaces which are to be connected by field bolting or field welding have been painted or become rusted or contaminated with any foreign material that would make these connecting procedures unacceptable, the contractor shall clean the surfaces at no additional cost to the State. A tight coating of light rust will be permitted on faying surfaces of bolted joints. No rust will be permitted at the fusion boundaries of groove welds.
6. Erection bolts shall be the same nominal diameter and shall conform to the same specification as the final bolts. Cylindrical erection pins shall be the same size as the hole. Full size erection pins shall be installed at the extreme corners of the connection.
7. Splices and all field connections of main stress carrying members shall be made with a minimum of 25% of the holes filled with approved high strength bolts and full size erection pins before the external support systems are released. At least one-half of this percentage shall be bolts tightened snug tight to facilitate adding members to the connection. Bolts will be installed uniformly throughout the connection unless they will interfere with connecting future members to that location and except that erection pins shall be used at the extreme corner of all main connections. Before tensioning bolts to specification requirements, all bolts are to be snug tight
8. N/A
9. Maintenance and protection of traffic to be reviewed and approved by the VAOT Personnel.
10. No welding shall be performed until a welding procedure has been submitted by Burt Crane & Rigging and approved by the VAOT.
11. All bolts to be fully tensioned per VAOT Specification S06.19 prior to removing temporary supports..

N

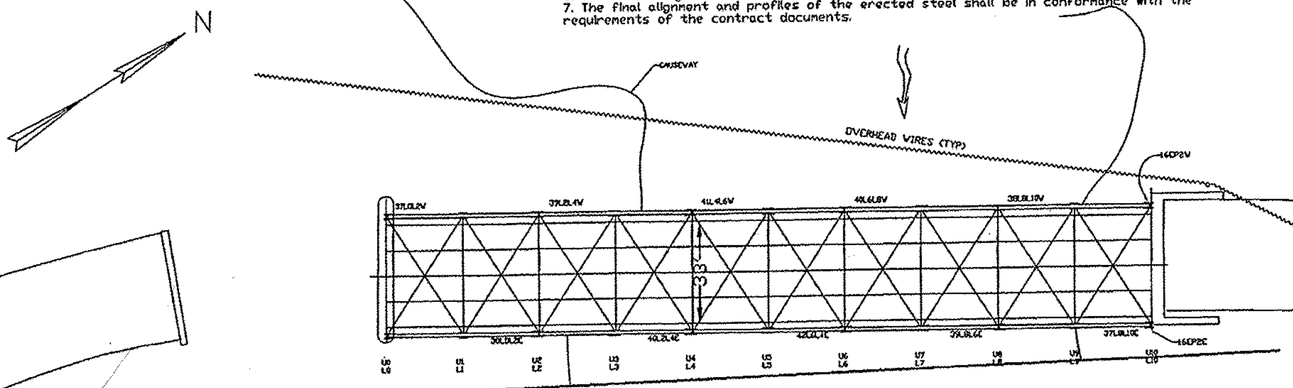

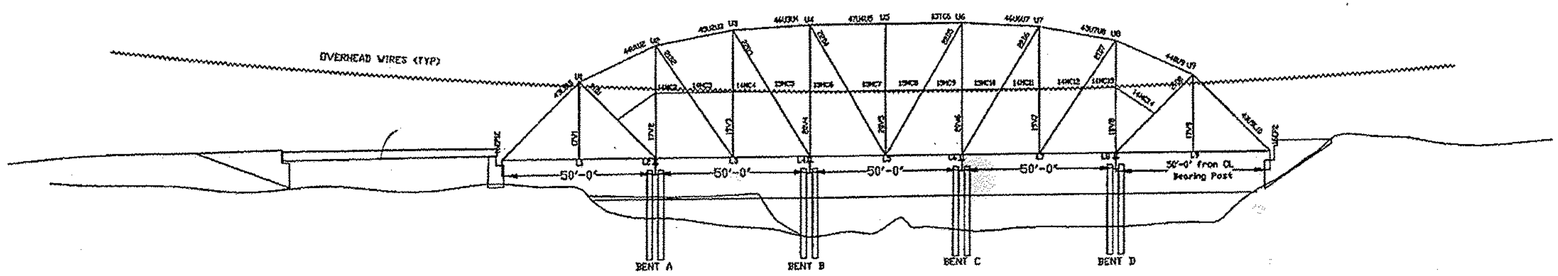

Bents shown for location only. The design by others may vary



Scale

	Sym.	Date	Drawn	Checked
X	1	X	X	X
X	2	X	X	X
As noted	3	6/1/2012	WCS	TS
As Noted	4	6/1/2012	WCS	X

DIRECTOR:
BURT CRANE & RIGGING
A Veterans Managed Co
Green Island, N.Y. 12183
(518) 271-6858 800-282-2878
FAX (518) 271-6936
EMAIL: INFO@BURTCRANE.COM
HTTP://WWW.BURTCRANE.COM
Engineering in NYC
BURT cranes & rigging

CONTRACTOR: BECK & BELLUCCI, INCORPORATED

CONTRACT #/LOCATION:
BRF 022-1 (14); WINDSOR COUNTY
VT ROUTE 107 OVER WHITE RIVER

DRAWN BY: WCS
CHECKED BY: TS

SCALE: Per Scale Bar
BOR #: B108526
DATE: 3/02/2012
FABRICATORS #: 498
DRAWING NO. E1

TITLE OF DRAWING:
STRUCTURAL STEEL ERECTION PLAN
Bridge 15

JOB PHONE: X
JOB FAX: X
EIC PHONE: X
FAB PHONE: X

STATE OF VERMONT
BRIGIT CALDERWOOD
No. 8711
Structural
LICENSED
PROFESSIONAL ENGINEER

Crane 9
175 ton Krupp Model 5175
Hydraulic All Terrain Crane
fitted with 45 MTon counterweight,
boom length set at 161 feet
360 degrees F.S. = 1.17

Radius Meters	Capacity Kilograms	Radius Feet	Capacity Pounds
6.1	20.860	20	46,000
7.6	20.860	25	46,000
9.1	20,860	30	46,000
10.7	20.860	35	46,000
12.2	20.860	40	46,000
13.7	20,860	45	46,000
15.2	20.860	50	46,000
16.8	19,590	55	43,200
18.3	18,320	60	40,400
19.8	17,140	65	37,800
21.3	16,240	70	35,800
22.9	15,330	75	33,800
24.4	14,330	80	31,600
25.9	13,610	85	30,000
27.4	12,880	90	28,400
29.0	11,970	95	26,400
30.5	10,880	100	24,000
32.0	9,800	105	21,600
33.5	8,890	110	19,600
35.1	8,070	115	17,800
36.6	7,260	120	16,000
38.1	6,620	125	14,600
39.6	5,990	130	13,200
41.1	5,350	135	11,800
42.7	4,810	140	10,600
44.2	4,350	145	9,600

10945MR161

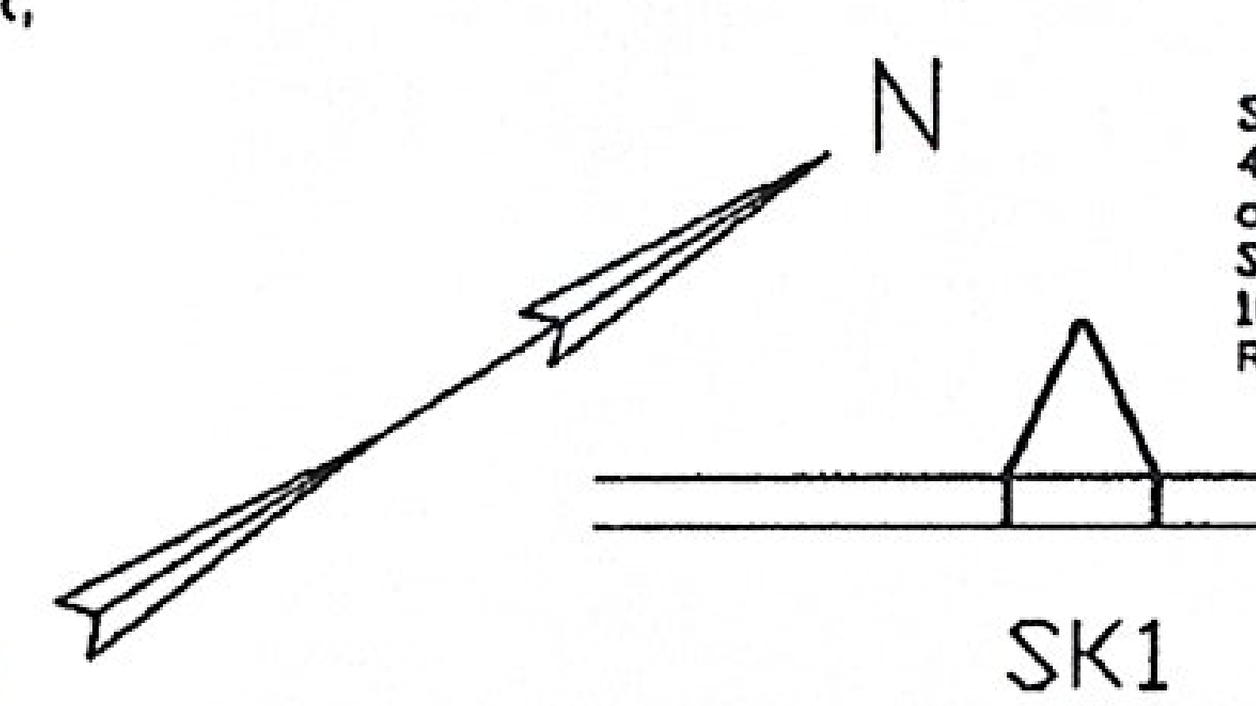

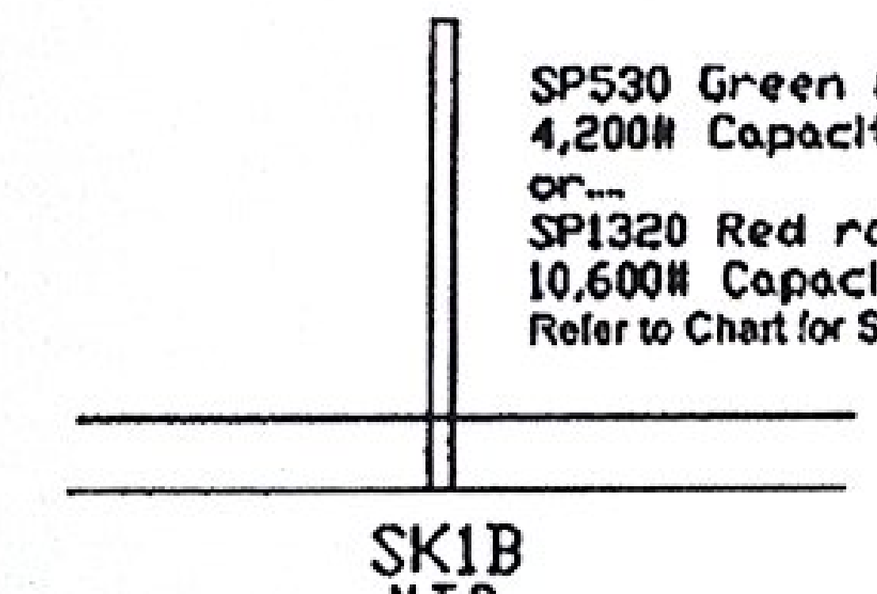

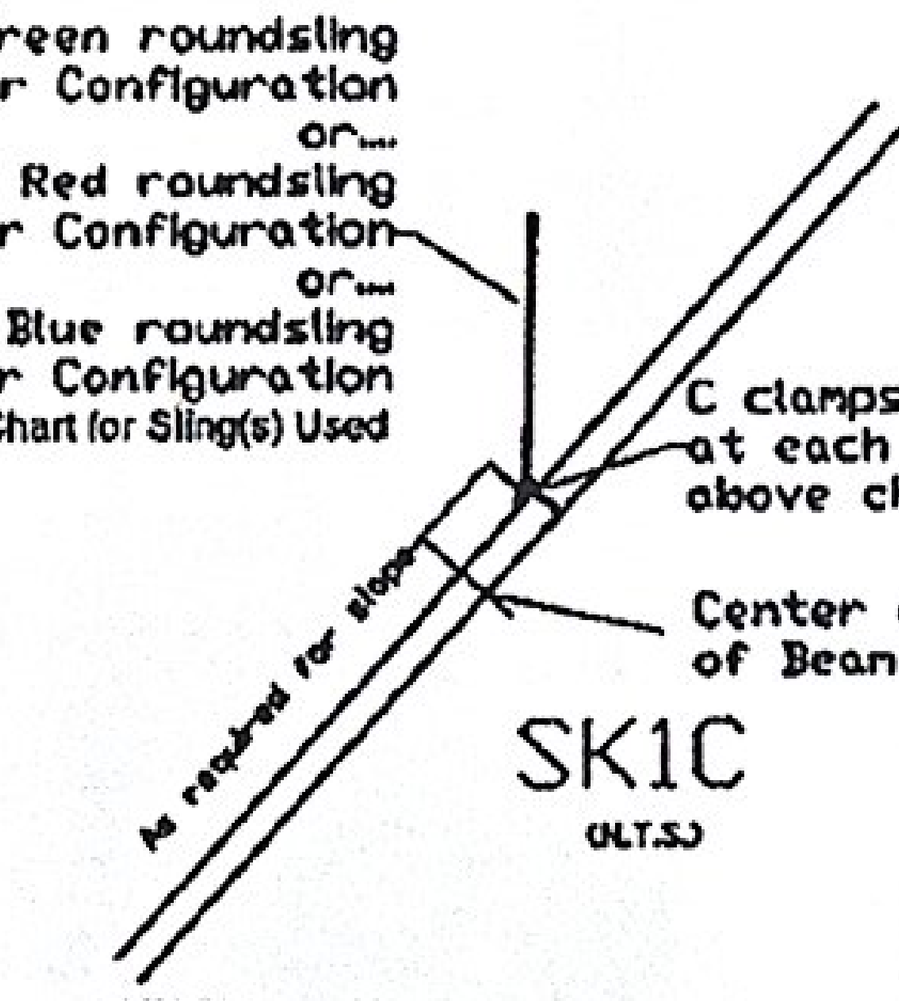

INFORMATION (Referred to as IN# in Procedure)

4. Between pieces erected, each connection will be made with a minimum of two approved high strength bolts at each connection unless a greater number is required for alignment and stability. The bolts shall be tightened until there is no gap between the connected parts (snug tight).

7. Splices and all field connections of main stress carrying members shall be made with a minimum of 25% of the holes filled with approved high strength bolts and full size erection pins before the external support systems are released. At least one-half of this percentage shall be bolts tightened snug tight to facilitate adding members to the connection. Bolts will be installed uniformly throughout the connection unless they will interfere with connecting future members to that location and except that erection pins shall be used at the extreme corner of all main connections. Before tensioning bolts to specification requirements, all bolts are to be snug tight

Table SA1

Panel Point	Top of Web Elevation
L1	541.924
L2	541.839
L3	541.743
L4	541.638
L5	541.507
L6	541.339
L7	541.146
L8	540.942
L9	540.727

	Top of Shoring	Bottom of Chord Flange	Top of Chord Flange
Bent A	539.98	541.16	542.46
Bent B	539.78	540.96	542.26
Bent C	539.48	540.66	541.96
Bent D	539.08	540.26	541.56

ERECTION PROCEDURE

1. Shoring to be set by others in location shown with top at elevation per table SA1.
2. Crane 9 to be a Krupp Model KMK 5175 Hydraulic All Terrain Crane set up on fully extended outriggers at C9L1 fitted with 45 metric ton counterweight, boom length set at 161 ft, all sections extended 100 %.
3. East end portal bracing 23TS1, 28PS1, 33DG1, (2) 33DG2, (3) 33DG3, 33DG4, 33DG5 and (2) 33LS1 to be delivered to DA1'. End portal bracing to be assembled on wood blocking, dimensions to be confirmed and all interior connections to be fully bolted, ends to have bolts installed and left loose. Crane to be connected to top and bottom member per SK2. Bracing to be set aside on wood blocking set so that the assembly will not twist.
4. 16EP2E and 37L10L8E to be delivered to DA1 or DA1'. 16EP2E to be connected to 37L10L8E per IN7. Crane to be connected to beam and as stability is observed, crane to lift 37L10L8E to bearing and shim on falsework. Elevation to be set per Table SA1 beam to be aligned with Abutment and Pier Bearings. Post 16EP2W and beam 38L8L10W to be delivered and set using the same procedure as that used to set 37L10L8E.
5. Floor Beam 1FB10 to be delivered to DA1, connected to crane per SK1 and set in place between bottom chords. 1FB10 to be bolted per IN7, stability observed and crane disconnected.
6. 39L8L6E to be delivered and set using the same procedure as that used to set 37L10L8 with the exception that 39L8L6E is to be bolted to 37L10L8E per IN7 in lieu of the bearing post leaving out the bolts for the floorbeam. 40L6L8W to be delivered and set using the same procedure as that used to set 39L8L6E. Floorbeam 2FB8 to be delivered and set using the same procedure as that use to set 1FB10.
7. Plumb post 17V9E to be delivered to DA1', crane to be connected to post and post lifted into position. 17V9E to be bolted per IN7, stability observed and crane disconnected.
8. Diagonal 21D8E to be delivered and set using the same procedure as that used to set 17V9E.
9. 43L10U9E to be delivered and set using the same procedure as that used to set 21D8E. 43L10U9E to be bolted to 17V9E, 21D8E and 37L8L10E per IN7. Stability to be observed and crane disconnected.
10. The corresponding west truss members to be delivered and set in the same sequence using the same procedure as that used to set the east truss members.
11. Floor beam 2FB9 to be delivered and set using the same procedure as that used to set 1FB10.
12. 17V8E to be delivered and set using the same procedure as that used to set 17V9E. 14MC14E to be delivered, set in place and and bolted per IN4, stability observed and crane disconnected. 21D7E to be delivered and set using the same procedure as that used to set 21D8E. 14MC13E to be delivered, set in place using the same procedure as that used to set 14MC14E. 44U9U8E to be delivered and set using the same procedure as that used to set 43L10L9E.
13. The corresponding west truss members to be delivered and set in the same sequence using the same procedure as that used to set the east truss members.
14. Crane to be connected to portal bracing per SK2, bracing raised and set in place and bolted per IN7. Stability to be observed and crane disconnected.
15. Bracing 48SA2 and then 48SA1 and 10LB1 to be delivered and set, connected to the crane per Table, bolted per IN4 and stability to be observed before disconnecting crane. Bottom Lateral Bracing to be set in Bay L8–L9 setting 48SA8 first, delivered and set using the same procedure as that used to set bay L9–L'0.
16. Stringers in Bays L9–L10 and L8–L9 to be delivered and set, in that order, using the same procedure as that used to set 10LB1's and bolted per IN4, stability to be observed before disconnecting crane.
17. Diaphragms (not shown for clarity) to be installed between stringers in bays between L8 and L10, bolted per IN4.
18. Prior to installing the work platform in a bay, all bottom chord, lateral bracing and stringer F and bolts in those bays to be installed and tensioned to specification requirements section 506.19(c). The S end of the stringers are to be fully bolted snug tight.
19. Work platform as shown in SK3/E3 to be set on floor system. between L10 and L8 as follows:
20. Wood blocking to be installed in stringers number 2 and 4 per SK3/E3. Mats to be placed on top of the blocking on the stringers as shown in SK3/E3. A 1" thick steel plate will be used to bridge over the higher studs at the floorbeams. The work platform is to be installed from north to south as the steel erection progresses.

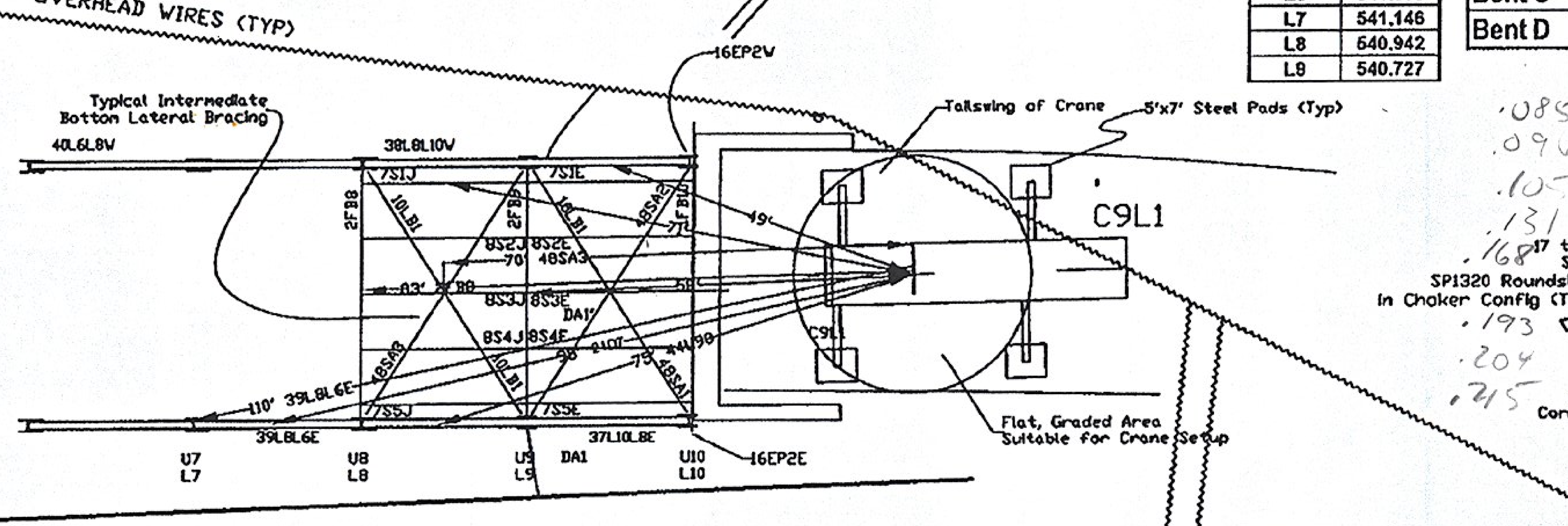

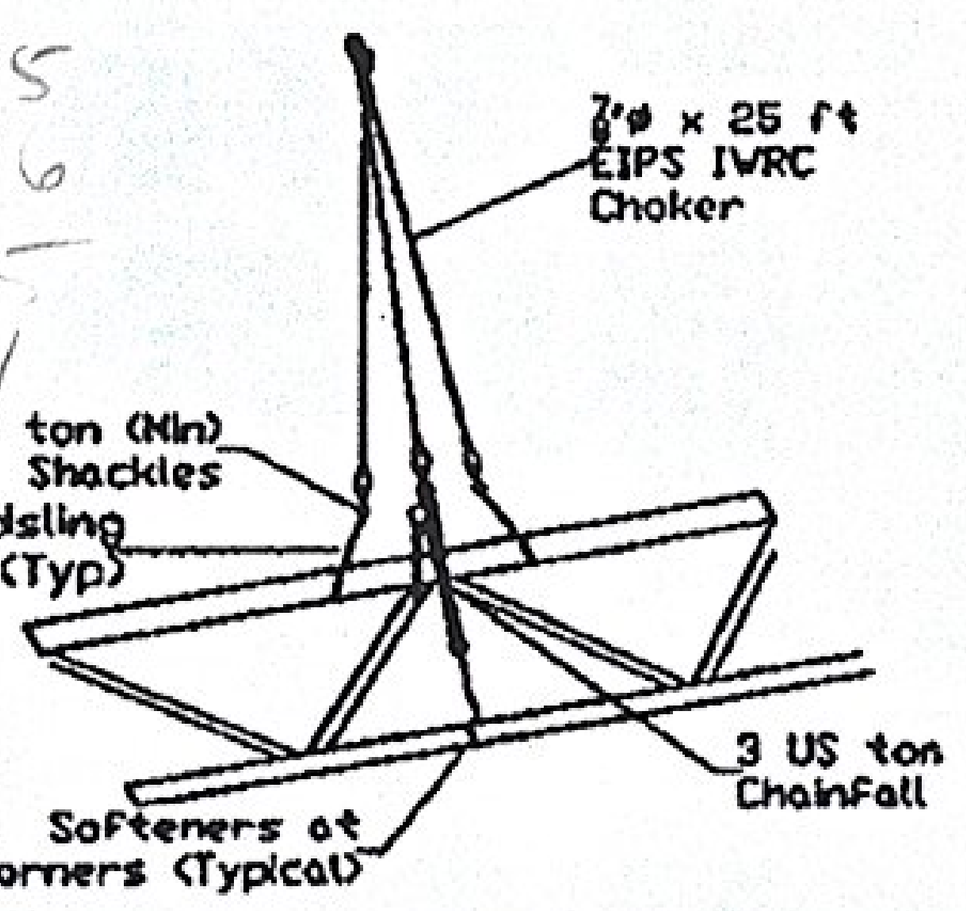

1ft (Typ) 10 ft (Typ) 1N (Typ) 5N (Typ)

Scale

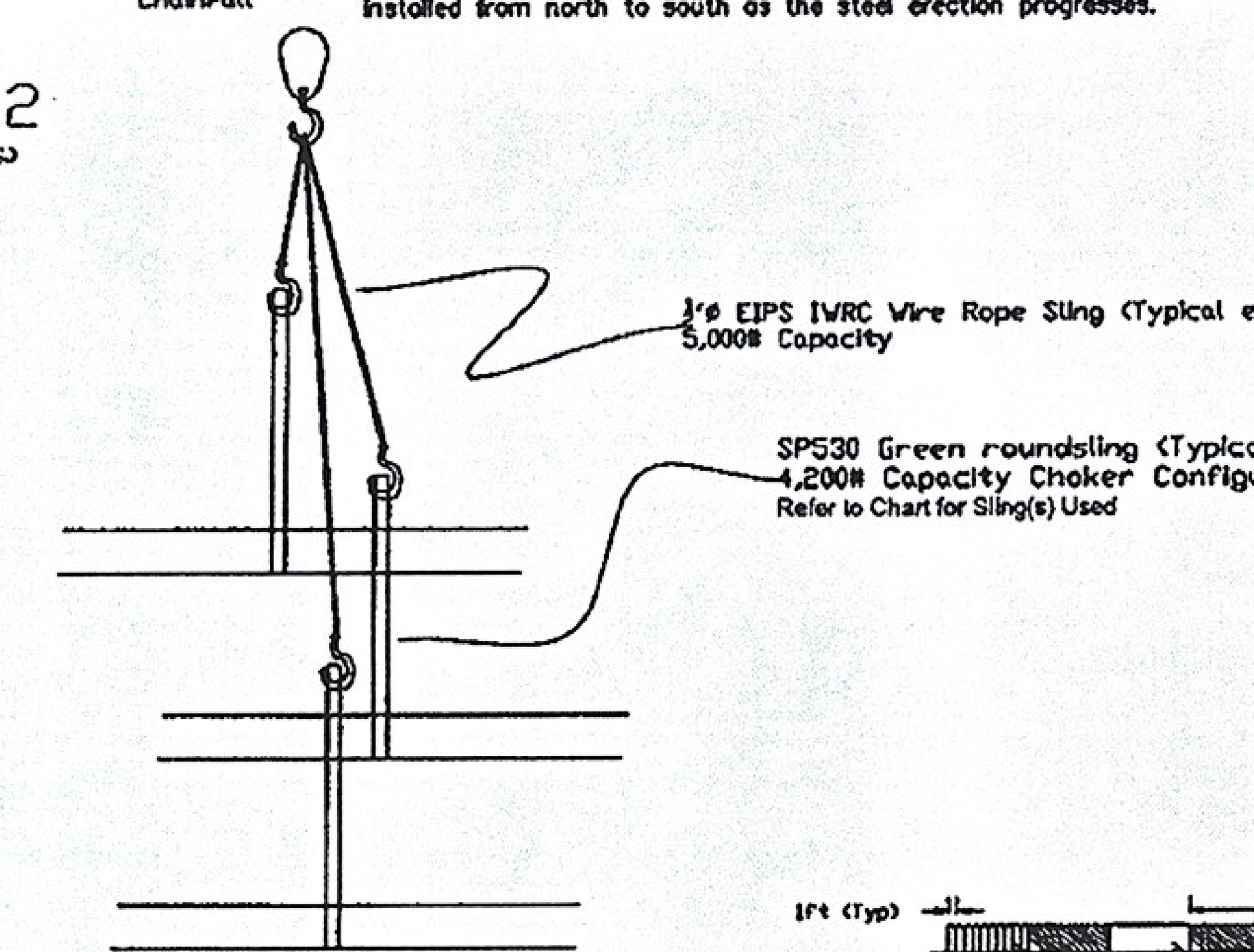

CHART OF WEIGHTS AND RIGGING

Piece Mark	Piece Weight (Pounds)	Weight on Crane Incl' 5,000# Rigging (Pounds)	Maximum Crane Radius (Feet)	Crane 9 45 Mton Counterweight 161 ft Boom Chart Capacity at Next Increment at Radius (F.S. 1.18) (Pounds)	Crane 9 Actual Factor of Safety	Rigging Detail when Piece is Lifted	Minimum Sling(s) Used denoted by Code Number and Color
39L2L4 39L6L8	12,587	17,600	110	19,600	1.3	SK1	SP1320 [Red]
38L2L0 38L8L10	14,197	19,200	70	35,800	2.2	SK1	SP1320 [Red]
Heaviest Floorbeam	11,237	16,200	132	11,800	NG	SK1	SP1320 [Red]
Heaviest Stringer	1,736	10,200	71	33,800	3.9	SK1B	SP530 [Green]
Portal Brace	10,295	15,300	58	40,400	3.1	SK2	See Sketch
Heaviest Bottom Lateral Bracing	3,728	8,700	70	35,800	4.8	SK1	SP530 [Green]
Short Lateral Bracing	1,689	6,700	105	21,600	3.8	SK1B	SP530 [Green]
21D7	2,496	7,500	98	24,000	3.8	SK1C	SP530 [Green]
17V8	2,303	7,300	83	30,000	4.8	SK1C	SP530 [Green]
44U9U8	7,238	12,200	75	33,800	3.3	SK1C	SP1320 [Red]
43U9U10	13,560	18,600	49	46,000	2.9	SK1C	SP2120 [Blue]

STATE OF VERMONT
ERIC T. CALDERWOOD
NO. 8711
Structural
LICENSED
PROFESSIONAL ENGINEER

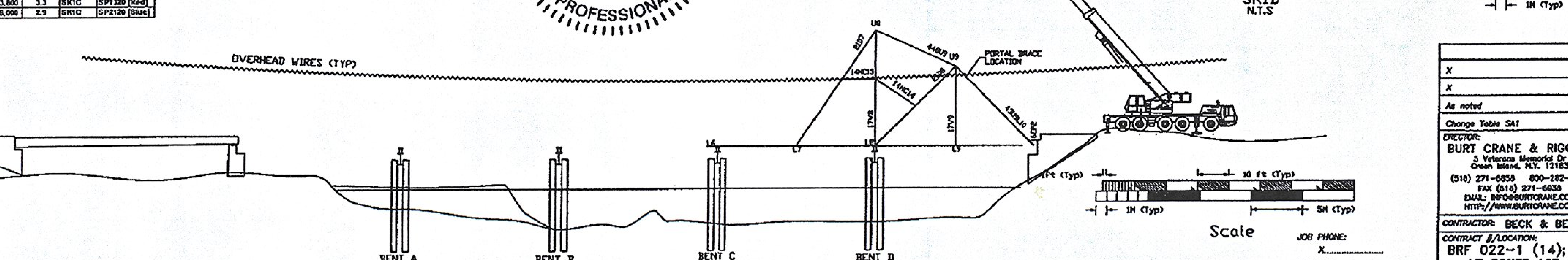

Bents shown for location only. The design by others may vary

1ft (Typ) 10 ft (Typ) 1N (Typ) 5N (Typ)

Scale

JOB PHONE: X
JOB FAX: X
DC PHONE: X
FAB PHONE: X

	Sym.	Date	Drawn / Checked
X	4	X	X / X
X	3	X	X / X
As noted	2	6/1/2012	WCS / TS
Change Table SA1	1	5/1/2012	WCS / X

ERECTOR: BURT CRANE & RIGGING
5 Veterans Memorial Dr
Green Island, N.Y. 12183
(518) 271-6858 800-282-2878
FAX (518) 271-6838
EMAIL: INFO@BURTCRANE.COM
HTTP://WWW.BURTCRANE.COM
Beginnings in 1979

CONTRACTOR: BECK & BELLUCCI, INCORPORATED

CONTRACT #/LOCATION: BRF 022-1 (14); WINDSOR COUNTY VT ROUTE 107 OVER WHITE RIVER

DRAWN BY: WCS
CHECKED BY: TS

SCALE: Per Scale Bar | BCR #: B108526
DATE: 3/02/2012 | FABRICATORS #: 498

TITLE OF DRAWING: STRUCTURAL STEEL ERECTION PLAN

DRAWING NO. E2

Bridge 15

Crane 109
161 ft boom + 33 ft jib 0 deg
45 MT Counterweight

Radius Feet	Capacky Pounds
20	26,600
25	26,600
30	26,600
35	26,600
40	26,600
45	26,600
50	26,400
55	26,000
60	25,800
65	25,400
70	25,000
75	24,400
80	23,600
85	22,600
90	21,600
95	20,600
100	19,600
105	18,800
110	18,000
115	17,200
120	16,400
125	15,400
130	14,200
131	13,840
132	13,680
133	13,420
134	13,160
135	12,900
136	12,640
137	12,380
138	12,120
139	11,860
140	11,600
150	9,400
160	7,600
170	6,000
180	4,800

CHART OF WEIGHTS AND RIGGING

Piece Mark	Piece Weight (Pounds)	Weight on Crane Incl 5,000# Rigging (Pounds)	Maximum Crane Radius (Feet)	Crane @ 45 Mton Counterweight, 161 ft Boom, Plus 33 ft Jib Chart Capacity at Next Increment of Radius (F.S. 1.19) (Pounds)	Crane @ Actual Factor of Safety	Rigging Detail when Piece is Lifted	Minimum Sling(s) Used dictated by Code Number and Color
37L0L2 37L10L8	14,197	19,300	47	26,600	1.5	SK1	SP1320 (Red)
38L3L5 38L6L10	14,197	19,300	70	26,000	1.5	SK1	SP1320 (Red)
39L2L4 39L8L8	13,587	17,600	92	20,500	1.4	SK1	SP1320 (Red)
40L4L2 40L6L8	13,587	17,600	86	20,500	1.4	SK1	SP1320 (Red)
41L4L6 42L6L4	10,076	15,100	78	23,000	1.8	SK1	SP1320 (Red)
Heaviest Floorbeam	11,237	16,260	111	17,300	1.2	SK1	SP1320 (Red)
Heaviest Stringer	1,734	10,500	138	14,200	1.6	SK1D	SP1320 (Green)
45U7U8	6,884	11,900	130	14,200	1.4	SK1C	SP1320 (Red)
44U8U7	6,161	11,750	108	18,000	1.8	SK1D	SP1320 (Red)
Heaviest Bottom Lateral Bracing	3,726	8,700	125	15,400	2.1	SK1	SP850 (Green)
Short Lateral Bracing	1,681	6,700	107	18,000	3.2	SK1B	SP850 (Green)
U8 & U7 Sway Brace	6,644	11,500	135	12,900	1.3	SK1	SP850 (Green)
Heaviest Plumb Post (29V8)	2,637	7,600	118	18,400	2.6	SK1C	SP836 (Green)
Heaviest Truss Diagonal (21D8)	2,725	7,500	108	18,000	2.7	SK1C	SP836 (Green)
34LB1	2,868	7,800	147	9,600	1.8	SK1	SP836 (Green)
34LB2	3,131	6,100	156	7,600	1.6	SK1B	SP836 (Green)
U8 Sway Brace	6,632	11,600	66	35,000	3.5	SK1	SP830 (Green)
U8 & U7 Sway Brace	6,689	11,600	111	17,300	1.7	SK1	SP830 (Green)
Heaviest Mid Chord (MC)	443	6,300	168	8,000	1.6	SK1C	SP830 (Green)
43U8U1	13,668	18,600	77	23,000	1.5	SK1C	SP3138 (Blue)
Portal Brace	10,293	15,200	61	25,600	2.0	SH2	See Sketch
Crane Mat	8,200	10,200	135	12,900	1.6	SH2	(6) 3/4"dia x 20' Chokers

⚠ Table SA1

Panel Point	Top of Web Elevation
L1	541.924
L2	541.839
L3	541.743
L4	541.638
L5	541.507
L6	541.339
L7	541.146
L8	540.942
L9	540.727

	Top of Shoring	Bottom of Chord Flange	Top of Chord Flange
Bent A	539.98	541.16	542.46
Bent B	539.78	540.96	542.26
Bent C	539.48	540.66	541.96
Bent D	539.08	540.26	541.56

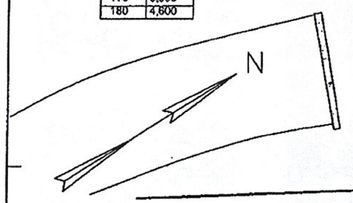

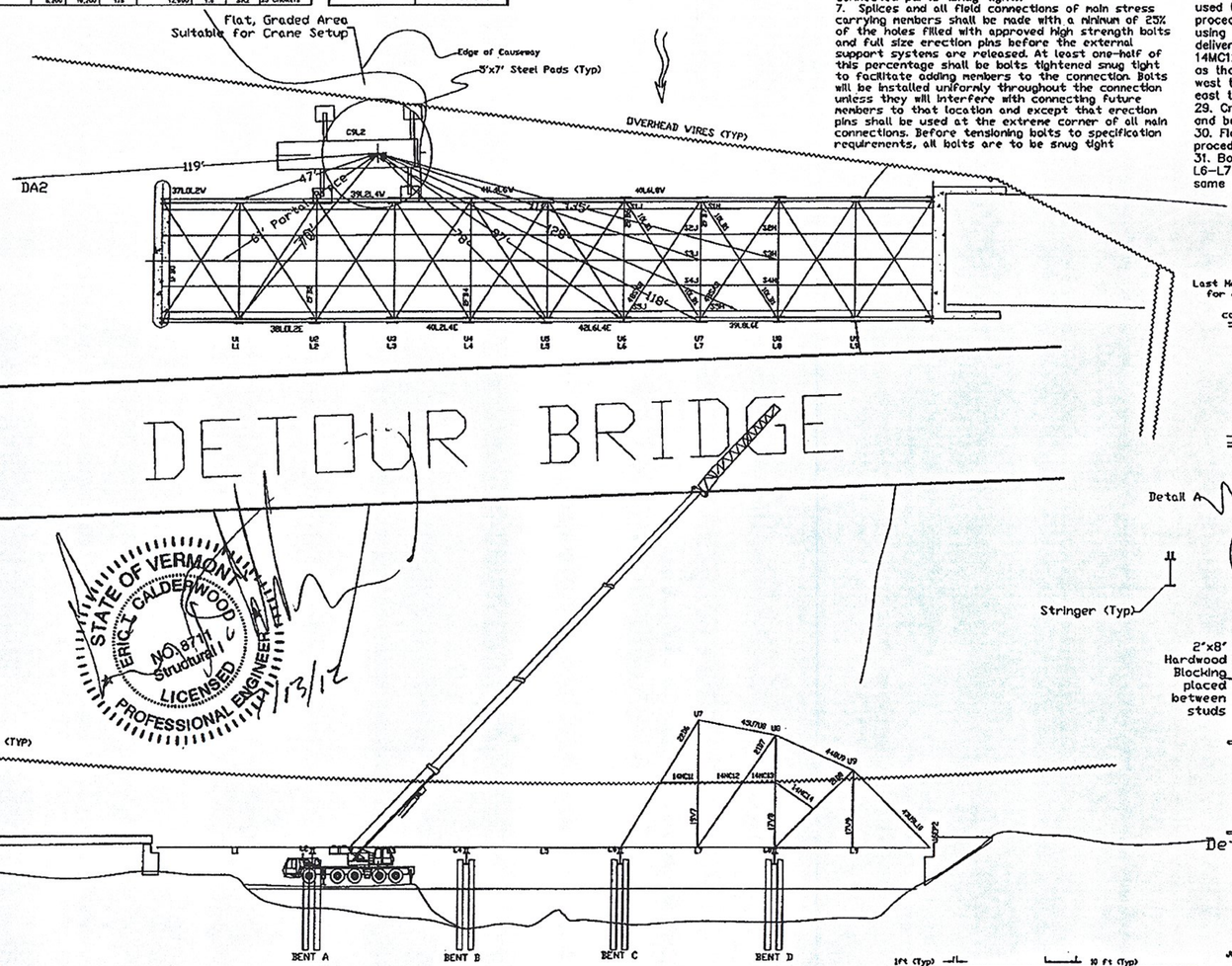



Scale

⚠ General Notes to Work Platform:

Work platform to be added as erection progresses, one span between bents at a time. (ie: L10-L8; L8-L6; L6-L4; L4-L2). The floor system, vertical members and sway bracing in those bays to be erected prior to placing the platform. The floor beams in those bays are to be fully bolted to the truss bottom chord. The F end of the stringers will be fully bolted, the S end will be snug tight. The top lateral bracing will be set after the mats for the work platform. Work platform to be installed only to panel points where truss top chord and web have been connected to the bottom chord and floorbeam etc.

INFORMATION (Referred to as IN# in Procedure)

4. Between pieces erected, each connection will be made with a minimum of two approved high strength bolts at each connection unless a greater number is required for alignment and stability. The bolts shall be tightened until there is no gap between the connected parts (snug tight).
7. Splices and all field connections of main stress carrying members shall be made with a minimum of 25% of the holes filled with approved high strength bolts and full size erection pins before the external support systems are released. At least one-half of this percentage shall be bolts tightened snug tight to facilitate adding members to the connection. Bolts will be installed uniformly throughout the connection unless they will interfere with connecting future members to that location and except that erection pins shall be used at the extreme corner of all main connections. Before tensioning bolts to specification requirements, all bolts are to be snug tight

ERECTION PROCEDURE

21. Crane to be moved and set up at C9L2 on causeway on fully extended outriggers fitted with 45 Mton counterweight and 33 ft jib erected on end of fully extended 161 foot boom. Crane to swing to the south to avoid wires at all times.
22. 42L6L4E to be delivered to DA2. Crane to be connected per SK1. As stability is observed, beam to be lifted and connected to 39L8L6E. Elevation on shoring to be set per Table SA1, beam to be aligned with truss centerline and connection to be bolted per IN7 prior to crane release.
23. 40L4L2E to be delivered to DA2 and set, in that order using the same procedure as that used to set 42L6L4E.
24. 16EP1E and 38L2L0E to be delivered, assembled and set in place spliced to 40L2L4E, set on the bearing and bolted per IN7.
25. 41L4L6W, 39L2L4W, 37L0L2W and 16EP1E to be delivered and set, in that order, using the same procedure as the east bottom chord beams.
26. Floor Beam 2FB6, 2FB4, 2FB2 and 1FB0 to be delivered, in that order to DA2 and beam to be set in place and connected per IN7 using the same procedure as the previous floor beams.
27. Sway braces to be assembled adjacent to DA2. The quantity to be determined by the area available and the requirements of the erecting schedule. Interior connections (those that do not connect to truss) to be fully bolted.
28. 19V7E to be delivered and set using the same procedure as that used to set 17V8; 14MC12E to be delivered and set using the same procedure as that used for 14MC13. 22D6Eto be delivered and set using the same procedure as that used to set 21D7; 14MC11E to be delivered and set using the same procedure as that used to set 14MC12E. 45U8U7E to be delivered and set using the same procedure as that used to set 44U8U9E. The corresponding members of the west truss to be set using the same procedure as that used for the east truss.
29. Crane to be connected to sway brace for U8 and brace to be set and bolted per IN7, stability observed and crane disconnected.
30. Floor Beam 2FB7 to be delivered and set using the same procedure as that used to set the previous floor beams.
31. Bottom lateral bracing and then stringers in bay L7-L8 and then L6-L7 to be delivered and set, in that order, bracing first, using the same procedure as previous bays.

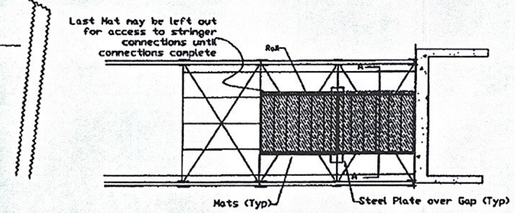

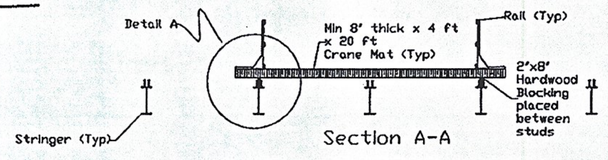

WORK PLATFORM DETAIL SK3
N.T.S.

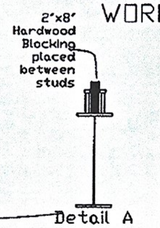

	Sym.	Date	Drawn:	Checked
x	⚠	x	x	x
x	⚠	x	x	x
As Noted	⚠	6/4/2012	WCS	TS
As Noted	⚠	5/1/2012	WCS	x

ERECTOR:
BURT CRANE & RIGGING
8 Veterans Memorial Dr.
Green Island, NY. 12183
(518) 271-6838 800-282-2878
FAX (518) 271-6838
EMAIL: INFO@BURTCRANE.COM
HTTP://www.BURTCRANE.COM
Beginning in 1919
BURT crane & rigging

CONTRACTOR: BECK & BELLUCCI, INCORPORATED

JOB PHONE: x.....
JOB FAX: x.....
EIC PHONE: x.....
FAB PHONE: x.....

CONTRACT #/LOCATION: BRF 022-1 (14); WINDSOR COUNTY VT ROUTE 107 OVER WHITE RIVER
DRAWN BY: WCS
CHECKED BY: TS
SCALE: Per Scale Bar
BCR #: B108526
DATE: 3/02/2012
FABRICATORS #: 498
DRAWING NO. E3
TITLE OF DRAWING: STRUCTURAL STEEL ERECTION PLAN
Bridge 15

Crane 109
161 ft boom + 33 ft jib 0 deg
45 MT Counterweight

Radius Feet	Capacity Pounds
20	28,600
25	26,600
30	26,600
35	26,600
40	26,600
45	26,600
50	26,400
55	26,000
60	25,800
65	25,400
70	25,000
75	24,400
80	23,600
85	22,600
90	21,600
95	20,600
100	19,600
105	18,800
110	18,000
115	17,200
120	16,400
125	15,400
130	14,200
131	13,940
132	13,680
133	13,420
134	13,160
135	12,900
136	12,640
137	12,380
138	12,120
139	11,860
140	11,600
150	9,400
160	7,600
170	6,000
180	4,600

CHART OF WEIGHTS AND RIGGING

Piece Mark	Piece Weight (Pounds)	Weight on Crane Incl Rigging (Pounds)	Maximum Crane Radius (Feet)	Crane 8 46 Mton Counterweight, 155 ft Boom Plus 33 ft Jib Chart Capacity at Next Increment at Radius (P.S. 1/8) (Pounds)	Crane 8 Actual Factor of Safety	Rigging Detail when Piece is Lifted	Minimum Sling(s) Used denoted by Code Number and Color
37L0L2 37L10L8	14,197	19,200	47	25,600	1.6	SK1	SP1330 (Red)
36L2L2 36L8L10	14,197	19,200	70	26,000	1.5	SK1	SP1330 (Red)
39L3L4 39L8L8	12,987	17,600	95	20,600	1.4	SK1	SP1330 (Red)
40L4L3 40L8L8	12,587	17,600	95	20,600	1.4	SK1	SP1330 (Red)
41L4L8 41L8L4	10,076	14,100	78	23,600	1.8	SK1	SP1330 (Red)
Headrail Floorbeam	11,237	16,300	111	17,200	1.2	SK1	SP1330 (Red)
Headrail Stringer	1,756	10,700	118	14,200	1.6	SK10	SP1320 (Green)
46U7U8	6,804	11,800	130	14,200	1.4	SK10	SP1320 (Red)
45U6U7	6,667	11,700	128	18,000	1.8	SK1B	SP1320 (Red)
Headrail Bottom Lateral Bracing	3,728	8,700	122	13,600	2.1	SK1	SP330 (Green)
Short Lateral Bracing	1,689	8,700	107	18,000	3.2	SK10	SP330 (Green)
U8 & U9 Sway Brace	6,564	11,600	115	13,900	1.3	SK1	SP830 (Green)
Headrail Plumb Post (20V9)	3,837	7,600	118	19,400	2.9	SK10	SP330 (Green)
Headrail Truss Outpost (22D5)	3,789	7,800	150	18,000	2.7	SK10	SP330 (Green)
34LB1	2,940	7,000	147	9,400	1.5	SK1	SP330 (Green)
34LB2	1,131	5,900	156	7,600	1.5	SK1B	SP330 (Green)
U8 Sway Brace	6,652	11,800	98	26,000	2.5	SK1	SP836 (Green)
U3 & U7 Sway Brace	6,589	11,600	111	17,200	1.7	SK1	SP836 (Green)
Headrail Mid Chord (16C)	443	2,300	155	9,600	1.4	SK10	SP820 (Green)
45U6U7	13,066	18,600	77	23,800	1.5	SK10	SP2130 (Blue)
Portal Brace	19,295	25,300	61	25,600	2.0	SK2	See Sketch
Crane Mat	8,200	10,200	135	12,900	1.6	SK2	(6) 3/4"ø6 x 25' Chokers

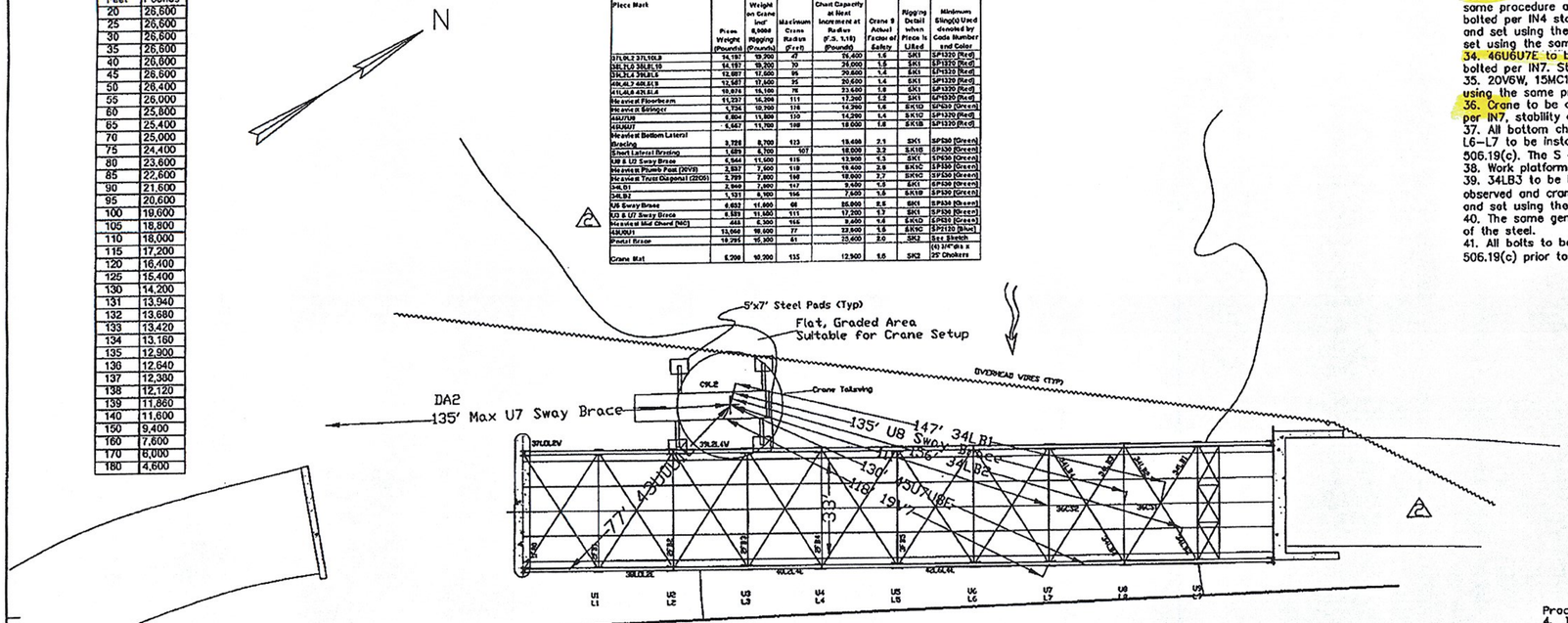

Bents shown for location only. The design by others may vary

Scale

ERECTION PROCEDURE

32. 34LB1 to be lifted from DA2 and set in place and bolted per IN4, stability observed and crane disconnected. Two (2) 34LB2 and one (1) 36CS1 to be lifted and set using the same procedure as that used to set 34LB1.
33. 20V6E to be delivered to DA2, set in place and bolted per IN7 using the same procedure as that used to set 19V7. 15MC10E to be delivered and set and bolted per IN4 stability observed and crane disconnected. 22D5E to be delivered and set using the same procedure as that used to set 22D6E. 15MC9E to be set using the same procedure as that used to set 15MC10E.
34. 46U6U7E to be delivered to DA2, crane connected, beam to be set and bolted per IN7. Stability to be observed and crane disconnected.
35. 20V6W, 15MC10W, 22D5W, 15MC9W and 46U6U7W to be delivered and set using the same procedure as that used to set the east members.
36. Crane to be connected to sway brace for U7 and brace to be set and bolted per IN7, stability observed and crane disconnected.
37. All bottom chord, lateral bracing and stringer F end bolts in bays L7–L8 and L6–L7 to be installed and tensioned to specification requirements section 506.19(c). The S end of the stringers are to be fully bolted snug tight.
38. Work platform to be installed in those bays.
39. 34LB3 to be lifted from DA2 and set in place and bolted per IN4, stability observed and crane disconnected. Two (2) 34LB4 and one (1) 36CS2 to be lifted and set using the same procedure as that used to set 34LB1.
40. The same general sequence and procedure to be used to erect the remainder of the steel.
41. All bolts to be installed and tensioned to specification requirements section 506.19(c) prior to the removal of temporary supports per section 506.19(b).

INFORMATION (Referred to as IN# in Procedure)

4. Between pieces erected, each connection will be made with a minimum of two approved high strength bolts at each connection unless a greater number is required for alignment and stability. The bolts shall be tightened until there is no gap between the connected parts (snug tight).
7. Splices and all field connections of main stress carrying members shall be made with a minimum of 25% of the holes filled with approved high strength bolts and full size erection pins before the external support systems are released. At least one-half of this percentage shall be bolts tightened snug tight to facilitate adding members to the connection. Bolts will be installed uniformly throughout the connection unless they will interfere with connecting future members to that location and except that erection pins shall be used at the extreme corner of all main connections. Before tensioning bolts to specification requirements, all bolts are to be snug tight.

STATE OF VERMONT
ERIC T. CALDERWOOD
NO. 9744
Structural
LICENSED
PROFESSIONAL ENGINEER
2/12

	Sym.	Date	Drawn/Checked
X	4	X	K / X
X	3	X	K / X
As noted	2	6/1/2012	WCS / TS
As Noted	1	6/4/2012	WCS / X

ERECTOR:
BURT CRANE & RIGGING
5 Veterans Memorial Dr.
Green Island, N.Y. 12183
(518) 271-6856 800-262-2878
FAX (518) 271-6838
EMAIL: INFO@BURTCRANE.COM
HTTP://WWW.BURTCRANE.COM
Beginnings in 1899

JOB PHONE: X
JOB FAX: X
ERC PHONE: X
FAB PHONE: X

CONTRACTOR: BECK & BELLUCCI, INCORPORATED

CONTRACT #/LOCATION:
BRF 022-1 (14); WINDSOR COUNTY
VT ROUTE 107 OVER WHITE RIVER

SCALE: Per Scale Bar | BCR #: B108526
DATE: 3/02/2012 | FABRICATORS #: 498

TITLE OF DRAWING:
STRUCTURAL STEEL ERECTION PLAN
Bridge 15

DRAWN BY: WCS
CHECKED BY: TS
DRAWING NO. E4

AMSCOT STRUCTURAL PRODUCTS CORP. / 241 EAST BLACKWELL ST., DOVER, N.J. 07801 Ph: 973-989-8000 / Fx: 973-989-5651

PROJECT: BETHEL, VT — Guided Expansion Span Pair

MADE BY EJG DATE 9/29/2011 JOB NO. BRF-007-1516
CHECKED BY BE DATE 9/29/2011 ITEM NO. 031.12
RECHECKED BY EB DATE 9/29/2011 MARK NO. SB

AASHTO LRFD SECTION 14 - POT BEARINGS GUIDED

INPUT BEARING DESIGN DATA:				
Vertical Service Load - (V_service)	924.00	kip	4109.95	KN
Vertical Strength Load - (V_strength)	1109.00	kip	4933.56	KN
Horizontal Service Load - (H_service)	114.00	kip	507.07	KN
Horizontal Strength Load - (H_strength)	455.00	kip	2024.03	KN
Horizontal Extreme Load - (H_extreme) - (Resultant Force)	649.15	kip	2888.09	KN
Input ONE WAY Longitudinal Movement - (MOVE_long)	3.1920	in.	82.71	mm
ONE-WAY Movement Safety Factor - (MOV_sf) - (Std. = 1)	2	in.	50.80	mm
Guide Bar PTFE Str (S_gb_shd (AASHTO Table 14.7.2.4-2)Virgin PTFE confined shed	4.10	ksi	34.05	MPA
Guide Bar Clearance - (GB_clear) - (Input from contract plan)	1.10	in.	1.10	mm
Design Rotation - (D_rotation)	0.05	radians	2.72	deg.
Elastomer Disk Allowable Stress - (S_disk) - (AASHTO Section 14.7.4.4)	3.10	ksi	24.15	MPA
PTFE Sptl. Dec Str(S_surf_str)-(AASHTO Table 14.7.2.4-2)Virgin PTFE confined shed	4.10	ksi	34.05	MPA
Steel Specification - ASTM A 709 Gr. 50W - (Fy)	50.00	ksi	345.74	MPA
Steel Specification - ASTM A 709 Gr. 50W - (Fu_shear)	70.00	ksi	482.64	MPA
Washer - (Fu_wash)	70.00	ksi	482.64	MPA
Allowable Bearing Stress - (S_bearing) - (AASHTO Table 10.32.1A)	0.80	fy		
Allowable Bending Stress - (S_bending)	0.15	fy		
Allowable Shear Stress - (S_shear)	0.35	fy		
Sole Plate Thickness (High Side) - Input from contract plan	1 3/4	in.	44.45	mm
Sole Plate Thickness (Low Side) - Input from contract plan	1 3/4	in.	44.45	mm
Sole Plate Longitudinal Dimension - Input from contract plan	32	in.	812.80	mm
Sole Plate Transverse Dimension - Input from contract plan	36	in.	914.40	mm
Masonry Plate Thickness - Input from contract plan	2 1/4	in.	57.15	mm
Masonry Plate Longitudinal Dimension - Input from contract plan	32	in.	812.80	mm
Masonry Plate Transverse Dimension - Input from contract plan	36	in.	914.40	mm
Sadding Material Thickness	1/8	in.	3.18	mm

OUTPUT BEARING DESIGN DATA:					
Sole Plate Thickness (High Side)	1 3/4	in.	44.45	mm	
Sole Plate Thickness (Low Side)	1 3/4	in.	44.45	mm	
Sole Plate Longitudinal Dimension	32	in.	812.80	mm	*N.G. ex Designed Increase Sole Plate*
Sole Plate Transverse Dimension	36	in.	914.40	mm	*N.G. ex Designed*
Guide Bar Length - (GB_lgth)	29.62	in.	752.16	mm	
Guide Bar Width - (GB_width)	2	in.	50.80	mm	
Guide Bar Height - (GB_ht)	4.57	in.	116.09	mm	
Fillet Weld Size for Guide Bar to Sole Plate Connection - (FILLET_weld_size)	0.4251	in.	10.75	mm	
Groove Weld Size for Guide Bar to Sole Plate Connection - (GROOVE_weld_size)	0.1875	in.	7.94	mm	
Masonry Plate Thickness	2 1/4	in.	57.15	mm	
Masonry Plate Longitudinal Dimension	32	in.	812.80	mm	*OK ex Designed*
Masonry Plate Transverse Dimension	36	in.	914.40	mm	*OK ex Designed*
Piston Diameter - (PIST_dia)	16.2040	in.	404.07	mm	
Piston Thickness - (PIST_thk)	2.0469	in.	51.51	mm	
Pot Height at Piston - (Pot_piston)	1.0957	in.	26.01	mm	
Diameter of Brass Sealing Ring - (DBS_ring)	0.3750	in.	9.53	mm	
Diameter of Elastomeric Pad - (ELAST_dia)	15.9340	in.	405.00	mm	
Thickness of Elastomeric Pad - (ELAST_thk)	1.8898	in.	48.02	mm	
Pot Inside Diameter - (POT_id)	15.9340	in.	405.00	mm	
Pot outside Diameter - (POT_od)	24.1056	in.	625.73	mm	
Thickness of Pot Wall - (THKP_wall)	3.1496	in.	79.02	mm	
Depth of Pot - (POT_depth)	3.1822	in.	80.52	mm	
Thickness of Pot Base - (THKP_base)	3.1496	in.	79.02	mm	
Overall Pot Plate Thickness - (POT_thk)	6.2751	in.	159.38	mm	
Weld Size Required for Pot to Masonry Plate Connection - (POT_weld)	0.1220	in.	3.04	mm	

AMSCOT STRUCTURAL PRODUCTS CORP. / 241 EAST BLACKWELL ST., DOVER, N.J. 07801 Ph: 973-989-8800 / Fx: 973-989-5651

PROJECT: BETHEL, VT — MADE BY: EJG — DATE: 9/29/2011 — JOB NO.: BRF-022-11(4)
Guided Expansion Span Pier — CHECKED BY: BE — DATE: 9/29/2011 — ITEM NO.: EG1.12
RECHECKED BY: EG — DATE: 9/29/2011 — MARK NO.: S4

1 Calculate the Elastomeric Disk Diameter (El_BOT_dia) - (AASHTO Section 14.7.6.4)

Formula: (ELAST_dia) = [sqrt(pi*(V_service)/(5_disk)*3.1416)]
18.3540

Therefore: Use this value for design **19.1040** in **485.00** mm

2 Calculate the Thickness of the Elastomeric Disk Diameter (El_BOT_thk) - (AASHTO Equation 14.7.4.3-1)

Formula: (ELAST_thk) = (3.5)*(D_rotation)*(ELAST_dia)
1.8314

Therefore: Use this value for design **1.8566** in **46.52** mm

3 Calculate Diameter of Sealing Rings-Brass Rings (DBS_ring) - (AASHTO Section 14.7.4.5.3)

Formula: (DBS_ring) = (1.117)*(ELAST_dia) or .188" (min)
0.3208

Where: (DBS_ring) minimum as allable = .188" dia.

Therefore: 0.3750

Plot the Calc = FALSE

Use this value for design **0.3750** in **9.70** mm

Brass Ring Sizes (in) & Depth for Area	
0.188	0.300
0.250	0.407
0.375	0.620
0.438	0.727
0.500	0.834
0.625	1.047
0.750	1.260

4 Calculate the Rim Height of the Piston (RIM_pistons) - (AASHTO Equation 14.7.4.7.2, 7-4)

Formula: (RIM_piston) = max [((1.1)*(H_ashimark)/((ELAST_dia*E18)), (1.10)*(ELAST_dia))]
Where Calc #1: 1.0957
Where Calc #2: 0.5500
Max Value: 1.0957
dimension is in contact with the pot wall
Fy = Yield strength of the steel (ksi)
Therefore: Rim Height thickness of piston as designed **1.0957** in **26.01** mm

5 Calculate the Interior Depth of Pot (POT_depth) - (AASHTO Equation C14.7.4.9-1)

Formula: (POT_depth) =[(ELAST_dia)/(2*(D_rotation))]+[(ELAST_thk)+(RIM_piston)+(hfw)
Where: 3.1622
Therefore: Use this value for design **3.1622** in **80.32** mm

6 Calculate the Thickness of the Pot Base (THKP_base) - (AASHTO Equation 14.7.4.6-3, 6-4, 7-1)

Formula: (THKP_base) = max [(0.04*(ELAST_dia), 0.75, sqrt[(3*(H_ashimark)*(D_rotation))/(F.y)])
Where Calc #1: 0.7334
Where Calc #2: 0.7500
Where Calc #3: 3.1168
Max Value: 3.1168
Therefore: Use this value for design **3.1100** in **79.02** mm

7 Calculate the Overall Pot Plate Thickness (POT_thk) - (AASHTO Section 14.7.4.6)

Formula: (POT_thk) = (POT_depth) + (THKP_base)
Where: 6.2731
Therefore: Use this value for design (Note: matl will be ordered thicker to allow the Pot Plate to be machined on all surf aces) **6.2731** in **159.34** mm

8 Calculate the Thickness of the Pot Wall (THKP_wall) - (AASHTO Equation 14.7.4.7-1, 6-6)

Formula: (THKP_wall) = max [sqrt[(3*(H_ashimark)*(D_rotation))/(F.y)], 0.75]
Where Calc #1: 3.1168
Where Calc #2: 0.7500
Max Value: 3.1168
Therefore: Use this value for design **3.1100** in **79.02** mm

9 Calculate the Pot Octode Diameter (POT_od)

Formula: (POT_od) = (ELAST_dia) + (2*(THKP_wall))
Where: 24.5856
Therefore: Use this v alue for design (Note: matl will be ordered larger to allow the Pot Plate to be machined on all surf aces) **24.5556** in **625.71** mm

10 Calculate the Weld Size Requirement for Pot to Masonry Plate Connection (POT_weld)

Formula: (F.y) = min(F.u_weld) or (Fy_steel)
Therefore (F.y) = 70.0
Formula: (Weld_area_req) = (H_ashimark)/((0.707)*(0.67)*(.7071)*(F.y))
(Weld_area_req) in^2/in 27.1544
Formula: (POT_weld) = m ax[(WELD_area_req)/(3.1414*(POT_od)), 0.3125]
Where Calc #1: 0.3529
Where Calc #2: 0.3125
Max Value: 0.3529
Therefore: Use this value for design **0.3529** in **8.94** mm

11 Calculate the Piston Diameter (PIST_dia) - (AASHTO Equation 14.7.4.7-5)

Formula: (Clearance) = max [(D_rotation)*(RIM_piston)-((ELAST_dia)*(D_rotation))/(2)), 0.04]
Where Calc #1: 0.0234
Where Calc #2: 0.0400
Max Value: 0.0400

AMSCOT STRUCTURAL PRODUCTS CORP. / 241 EAST BLACKWELL ST., DOVER, N.J. 07801 Ph: 973-989-8800 / Fx: 973-989-5651

PROJECT: BETHEL, VT — MADE BY: EJG — DATE: 9/29/2011 — JOB NO.: BRF-097-1516
Guided Expansion Span Pier — CHECKED BY: BE — DATE: 9/29/2011 — ITEM NO.: EG1.12
RECHECKED BY: BS — DATE: 9/29/2011 — MARK NO.: SB

Therefore: Use this value for design in Pot Clearance **0.0400** in **1.02** mm

Formula: (PIST_dia) = ((LAST_dia) - (Clearance)) - **(AASHTO Section 14.7.4.7)**
Where: 18.2040

Therefore: Use this value for design **18.2040** in **464.47** mm

11 Calculate the Weld Size Requirement for Piston to Sole Plate Connection (PIST_weld)
Formula: (Fy) = min(fu_weld) or (Fu_steel)
Therefore (F.y): 79.8
Formula: (Weld_area_req) = (H_external)/((0.707)*.6*(1.7617)*(Fy))
(Weld_area_req) in^2: 27.1644
Formula: (PIST_weld) = max((WELD_area_req)/(3.1414*(PIST_dia)), 0.3125)
Where Calc #1: 0.4725
Where Calc #2: 0.3125
Max Value: 0.4725
Therefore: Use this value for design ***N/A-Guided*** in ***N/A-Guided*** mm

12 Calculate the Thickness of the Poter - (PIST_thk)
Formula_1: (PIST_thk_1) = 2*(.75 * (LAST_dia)
Where (PIST_thk_1): 1.1000 **(AASHTO Section 14.7.4.7)**
Formula_2: (PIST_thk_2) = (POT_depth)-((LAST_thk)+((POT_dia)/2)*(2_inches/(2in*2))-1)*((LAST_thk)+0.125
Where (PIST_thk_2): 2.0438 **(AASHTO Equation C14.7.4.3-2)**
Max Value: 2.0438
Therefore: Use this v alue for design (Note: matl will be ordered thicker to allow the Piston to be machined on all surfaces) **2.0400** in **51.91** mm

13 Calculate the Length of the Teflon recessed 1/2 thk into Pot OD - (PTFE_lgth) - [Note recess pocket machined into pot wall]
Formula: (PTFE_lgth) = ((POT_od)
Where: 24.5556
Therefore: Use this value for design **24.5550** in **623.71** mm

14 Calculate the Height of the Teflon recessed 1/2 thk into Pot OD - (PTFE_ht)
Formula: (PTFE_ht) = (H_strength) / (.75_gb_pt*e) * (PTFE_lgth)
Where: 6.7466
Therefore: Use this value for design **5.7400** in **145.80** mm

15 Calculate the Logitudinal Width of the Stainless Steel on the Sole Pl - (LONG_sst_width)
Formula: (LONG_sst_width) = (POT_od) + ((2*(MOVE_long)) + ((MOVE_st))
Where: 33.8556
Therefore: Use this value for design **33.8550** in **859.93** mm
Check: If calculated (LONG_sp_lgth) < (LONG_sst_width)
Therefore: ***N.G. as Designed Increase Sole Plate Width***

16 Calculate the Guide Bar & Stainless Steel Height - (GB_SST_height)
Formula: (GB_SST_height) = ((PTFE_ht) + (1.)
Where: 6.7466
Therefore: Use this value for design **7.0** in **177.80** mm

17 Calculate the Alequacy of the Sole Plate Transverse Dimension - (TRANS_sp_lgth)
Formula: (TRANS_sp_lgth) = ((PIST_dia) + (2*(POT_wall)) + (2*(GB_clear)) + (2*(GB_thk)) + (One Way MOVE_st)
Where: 46.6456
Check: If calculated (TRANS_sp_lgth) < Sole Plate Transverse Dimension
Therefore: ***N.G. as Designed***

18 Calculate the Alequacy of the Masonry Plate Longitudinal Dimension - (LONG_mp_lgth)
Formula: (LONG_mp_lgth) = (POT_od) + (2*(1 std DOT clearance))
Where: 24.8556
Check: If calculated (LONG_mp_lgth) < Masonry Plate Longitudinal Dimension
Therefore: ***OK as Designed***

19 Calculate the Alequacy of the Masonry Plate Transverse Dimension - (TRANS_mp_lgth)
Formula: (TRANS_mp_lgth) = (POT_od) + (2*(1 std DOT clearance))
Where: 24.8556
Check: If calculated (TRANS_mp_lgth) < Masonry Plate Transverse Dimension
Therefore: ***OK as Designed***

20 Calculate the Weld Size Requirement for Guide Bar to Sole Plate Connection (GB_weld)
Formula: (Fy) = min(fu_weld) or (Fu_steel)
Therefore (F.y): 79.8
Formula: (FILLET_allow) = (0.6) * (0.6) * (0.7070) * (Fy)
Therefore: Fillet Weld Allowable (AASHTO Equation 6.13.3.2.4b-1) = **29.7906** ksi
Formula: (GROOVE_allow) = (0.6) * (0.6) * (0.7070) * (Fy)
Therefore: Groove Weld Allowable (AASHTO Equation 6.13.3.2.4a-1) = **29.7906** ksi
Formula: (FILLET_weld_size) = (GB_lgth) / (FILLET_allow)
Formula: (FILLET_weld_size) = max ((FILLET_weld_size), 0.3125))
Where Calc #1: 0.4231
Where Calc #2: 0.3125
Max Value: 0.4231

AMSCOT STRUCTURAL PRODUCTS CORP. / 241 EAST BLACKWELL ST., DOVER, N.J. 07801 Ph: 973-989-8800 / Fx: 973-989-5651

PROJECT	BETHEL, VT	MADE BY	EJG	DATE	9/29/2011	JOB NO.	BRF-002-1510
	Guided Expansion Span Plan	CHECKED BY	EF	DATE	9/29/2011	ITEM NO.	521-12
		RECHECKED BY	EG	DATE	9/29/2011	MARK NO.	1a

Therefore: Use this value for design of the Fillet Weld Size **0.4261** in **10.75** mm

Formula: (GROOVE_weld_size) = sqrt(3_gb_pf*sf) + (3_bending*t) / (GROOVE_allow)

Formula: (GROOVE_weld_size) = max ((GROOVE_weld_size), 0.3125)

Where Calc #1: 0.1473

Where Calc #2: 0.3125

Max Value: 0.3125

Therefore: Use this value for design of the Groove Weld Size **0.3125** in **7.94** mm

21 Provide Design of PTFE on Piston Capacity (PTFE_pist)

Formula: (PTFE_pist) = (PTFE_area) - (1/4*PTFE_relief for rotation from top of rim to top of Piston+ recess for PTFE on the top dia of Piston)^2 (3_surf_pt#) allowable

(PTFE_pist) Capacity: 1150.7

Where: Design Capacity (PTFE_pist) > Vertical Service

Therefore: **Okay as Designed**

REVISIONS					
ZONE	REV	DESCRIPTION	DATE	REV. BY	APPROVED
–	A	AS PER ENGINEER & CHECKER'S MARKS	9/28/11	E.J.G.	R.F.

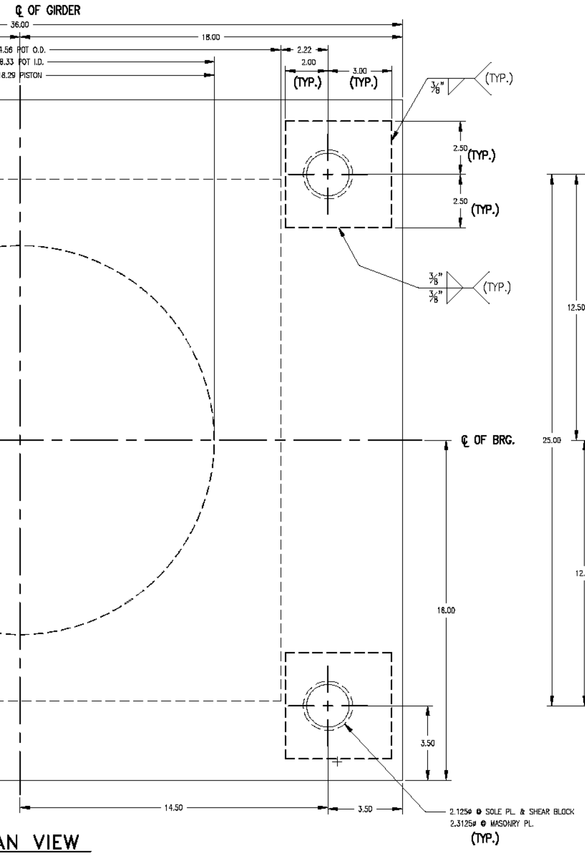

PLAN VIEW

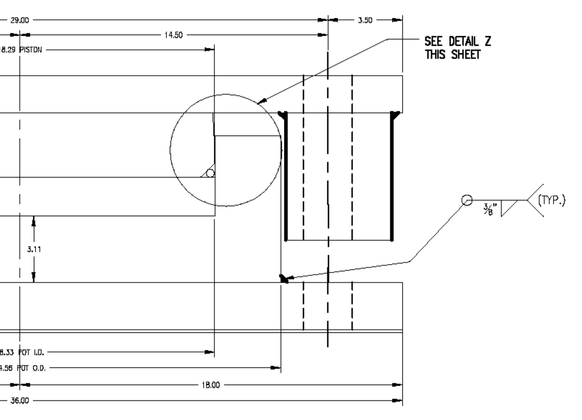

FIXED BEARING (N1)
QTY. REQ'D = 1
1224 KIPS

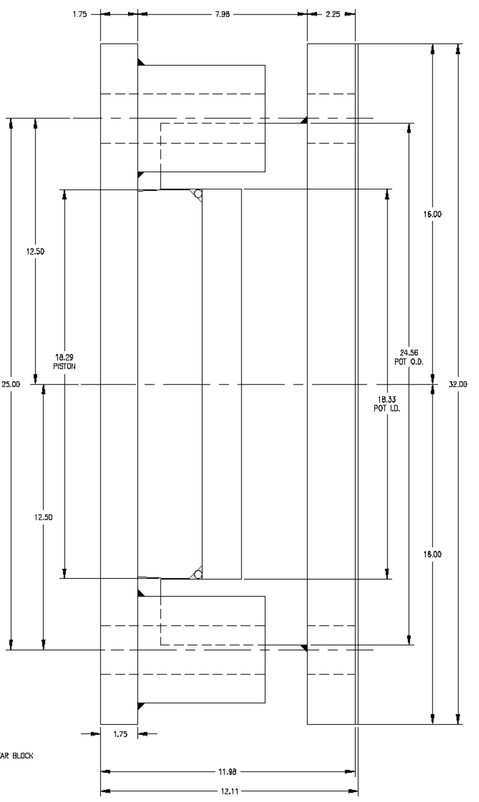

SIDE VIEW

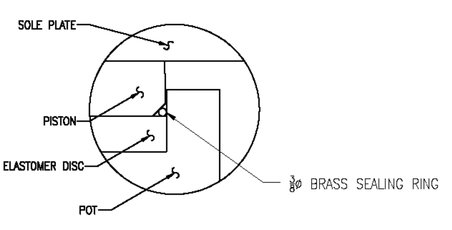

DETAIL Z

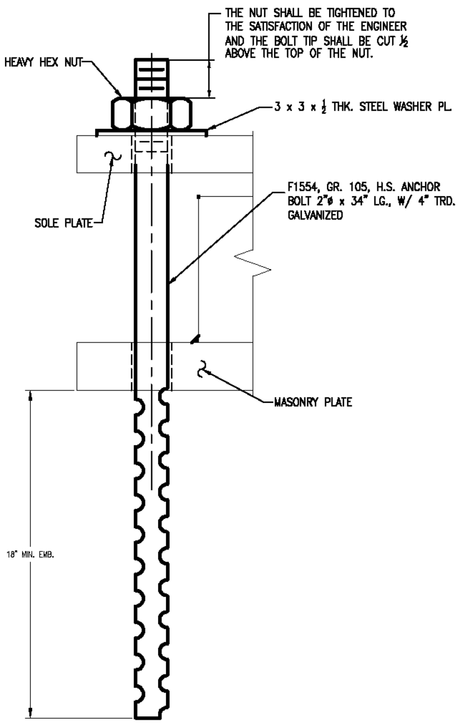

ANCHOR BOLT DETAIL
QTY. REQ'D = 4

VERMONT ANGENCY OF TRANSPORTATION
PROJECT NAME: BETHEL
PROJECT NUMBER: BRF-022-1(14)

AMSCOT
STRUCTURAL PRODUCTS CORP.

SCALE: N.T.S.	APPRV'D: R.F.	DRAWN BY: P.S.
DATE: 8/19/11		REV.: A
FIXED TYPE HLMR POT BEARING		
FOR: BECK & BELLUCCI	SHEET NO 3 of 7	DWG NO: BB11A3RA

REVISIONS					
ZONE	REV	DESCRIPTION	DATE	REV. BY	APPROVED
–	A	AS PER ENGINEER & CHECKER'S MARKS	8/29/11	E.J.G.	R.F.

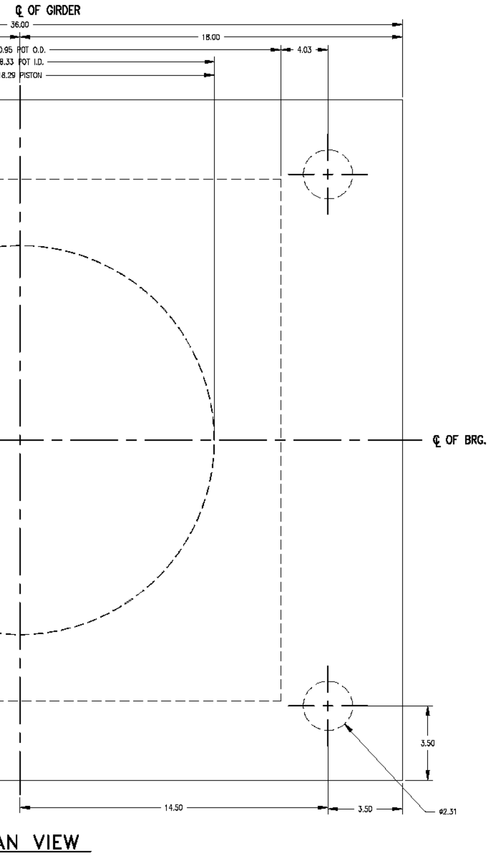

AN VIEW

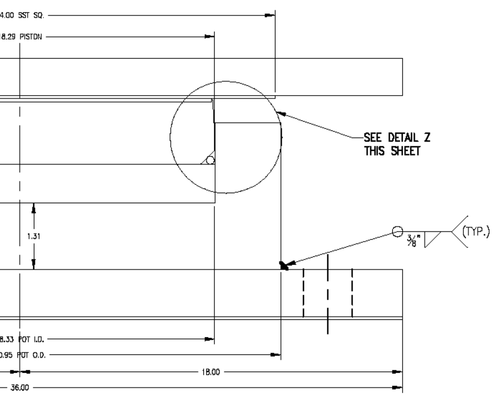

XPANSION BEARING (N4)
REQ'D = 1
24 KIPS

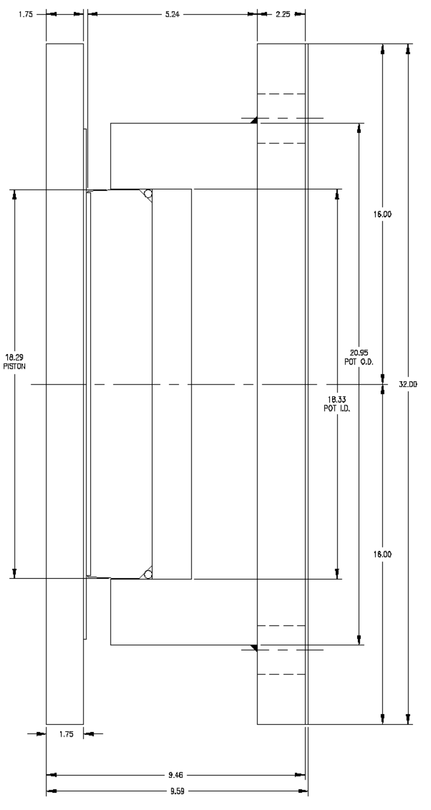

SIDE VIEW

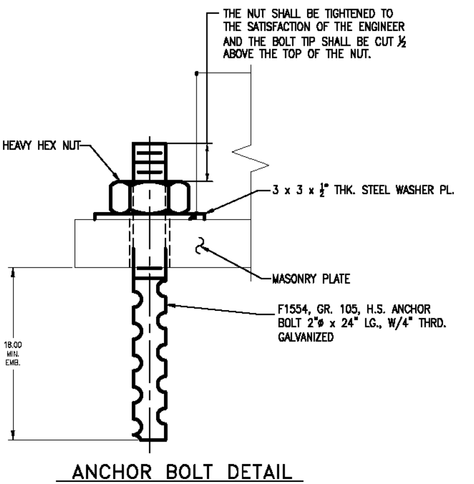

ANCHOR BOLT DETAIL
QTY. REQ'D = 4

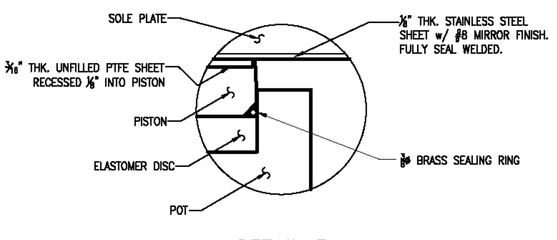

DETAIL Z

VERMONT ANGENCY OF TRANSPORTATION
PROJECT NAME: BETHEL
PROJECT NUMBER: BRF-022-1(14)

AMSCOT
STRUCTURAL PRODUCTS CORP.

SCALE: N.T.S.	APPRV'D: R.F.	DRAWN BY: P.S.
DATE: 8/19/11		REV.: A
FTM EXPANSION TYPE HLMR POT BEARING		
FOR: BECK & BELLUCCI	SHEET NO 4 of 7	DWG NO: BB11A4RA

REVISIONS					
ZONE	REV	DESCRIPTION	DATE	REV. BY	APPROVED
–	A	AS PER ENGINEER & CHECKER'S MARKS	9/29/11	E.J.G.	R.F.

OF GIRDER

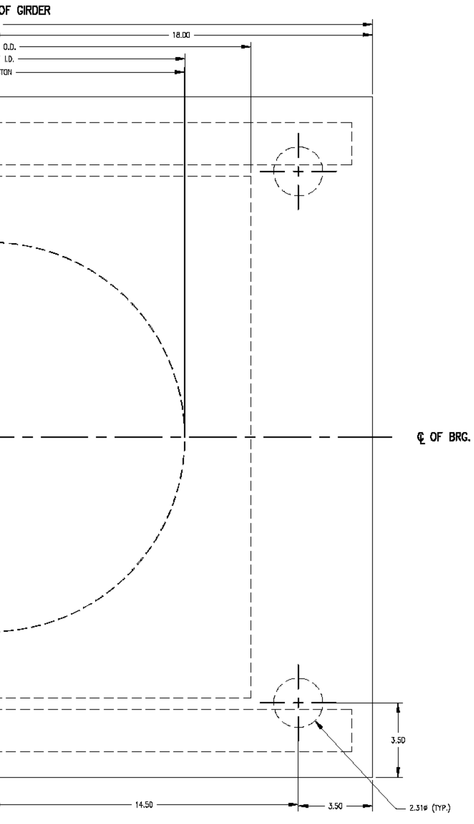

VIEW

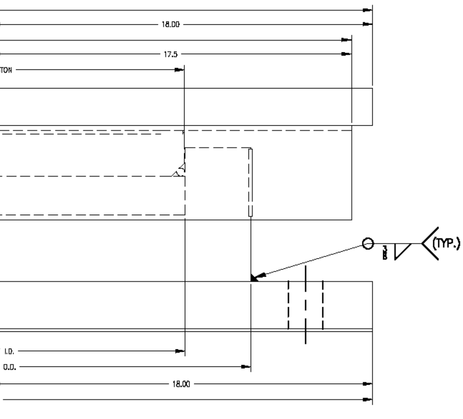

SE GUIDED BEARING (N3)
REQ'D = 1
4 KIPS

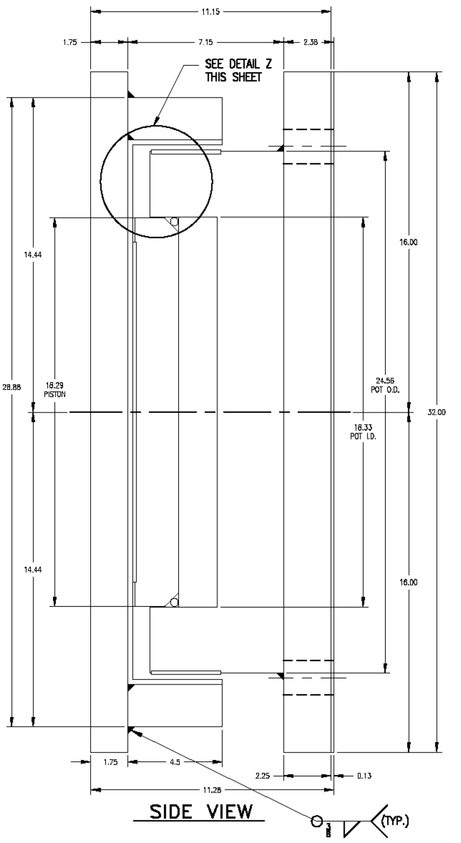

SIDE VIEW

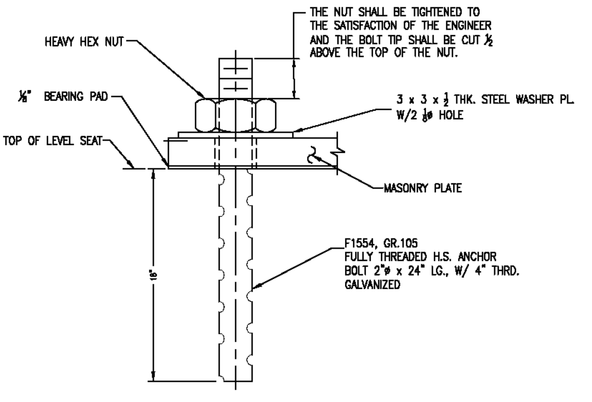

ANCHOR BOLT DETAIL
QTY. REQ'D = 4

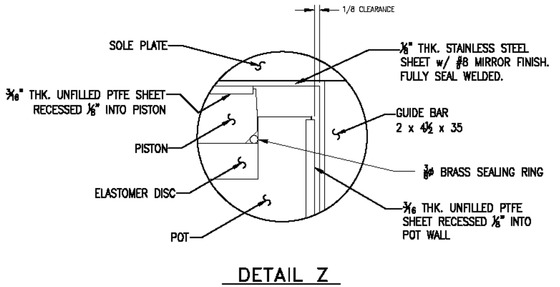

DETAIL Z

VERMONT ANGENCY OF TRANSPORTATION
PROJECT NAME: BETHEL
PROJECT NUMBER: BRF-022-1(14)

AMSCOT
STRUCTURAL PRODUCTS CORP.

SCALE: N.T.S.	APPRV'D: R.F.	DRAWN BY: P.S.
DATE: 8/19/11		REV.: A
TRANSVERSAL EXPANSION HLMR POT BEARING		
FOR: BECK & BELLUCCI	SHEET NO 5 of 7	DWG NO: CRB11A5RA

REVISIONS					
ZONE	REV	DESCRIPTION	DATE	REV. BY	APPROVED
–	A	AS PER ENGINEER & CHECKER'S MARKS	8/29/11	E.J.Q.	R.F.

OF GIRDER

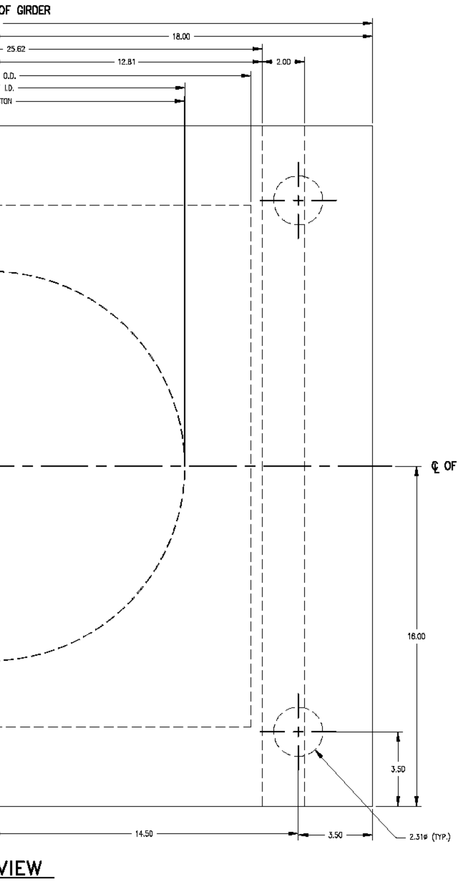

VIEW

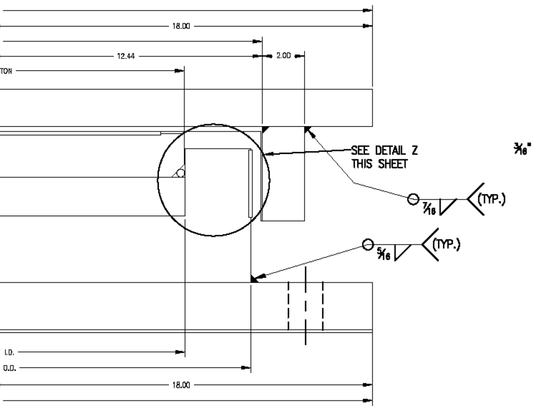

L EXPANSION BEARING (N2)
REQ'D = 1
4 KIPS

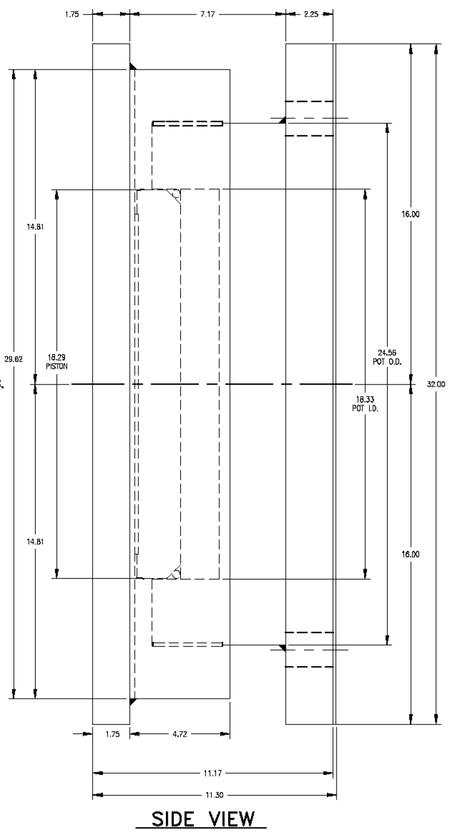

SIDE VIEW

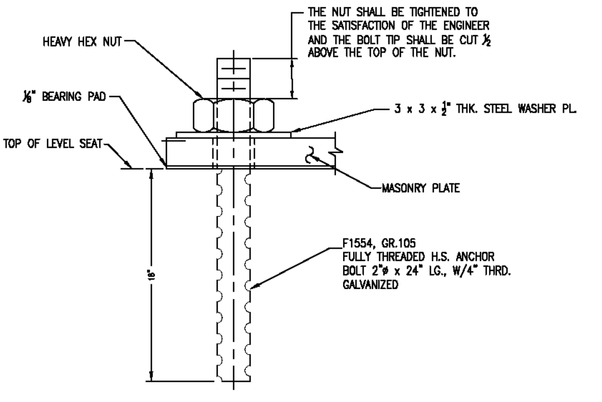

ANCHOR BOLT DETAIL
QTY. REQ'D = 4

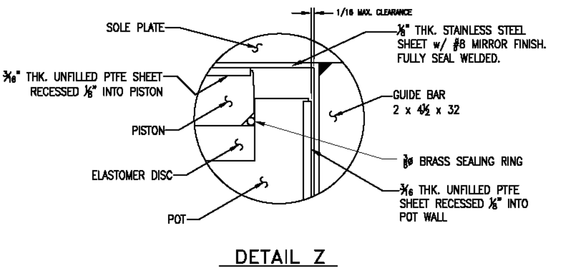

DETAIL Z

VERMONT ANGENCY OF TRANSPORTATION
PROJECT NAME: BETHEL
PROJECT NUMBER: BRF-022-1(14)

AMSCOT
STRUCTURAL PRODUCTS CORP.

SCALE: N.T.S.	APPRV'D: R.F.	DRAWN BY: P.S.
DATE: 8/17/11		REV.: A
LONGITUDINAL EXPANSION HLMR POT BEARING		
FOR: BECK & BELLUCCI	SHEET NO 6 of 7	DWG NO: CRB11A6RA

REVISIONS					
ZONE	REV	DESCRIPTION	DATE	REV. BY	APPROVED
–	A AS	PER ENGINEER & CHECKER'S MARKS	9/29/11	E.J.G.	R.F.

) LRFD 14.7.4.3

AVERAGE
STRUCTURE

PER AASHTO

SHALL BE
ALVANIZED.

OF THE

RANCE PER

LOWER
T FULL

AS PER
STRUCTURE.

1/8"
PISTON.

ACE IN ALL
N OF

SS AND SHALL
SEAL WELDED
6.2)

STEEL IN
MOOTH

N.

ESIGNED
LESS THAN

L OF 1/8"

R IS
BEARING.

M M270

M270

ASTM B16

AASHTO

(E)–STAINLESS STEEL SLIDING SURFACES SHALL CONFORM TO ASTM A–240 TYPE 304 WITH A SURFACE FINISH OF #8 MIRROR (AASHTO LRFD 14.7.2.2)

9. MANUFACTURING REQUIREMENTS
(A)–POTS AND PISTONS SHALL BE MACHINED FROM A SOLID PIECE OF STEEL AS PER AASHTO LRFD SECTION 18.3.3.2.1 POT BEARINGS.

(B)–ELASTOMERIC DISC TOLERANCES SHALL BE PER AASHTO LRFD BRIDGE CONSTRUCTION SPECIFICATIONS 18.1.4.2.

(C)–PTFE SLIDING SURFACE TOLERANCES SHALL BE PER AASHTO LRFD BRIDGE CONSTRUCTION SPECIFICATIONS 18.1.4.2.

(D)–STAINLESS STEEL SLIDING SURFACES SHALL BE EPOXY BONDED & SEAL WELDED. CONFORMING TO THE AMERICAN WELDING SOCIETY REQUIREMENTS FOR STAINLESS STEEL, AROUND IT'S PERIMETER USING TECHNIQUES WHICH WILL ENSURE IT REMAINS IN CONTACT WITH THE BACKING PLATE. FINISH SHALL BE #8 MIRROR (AASHTO 14.7.2.2). FLATNESS SHALL CONFORM TO CLASS "A" OR BETTER.

(E)–SOLE PLATE TOLERANCES SHALL CONFORM TO AASHTO LRFD BRIDGE CONSTRUCTION SPECIFICATIONS 18.1.4.2.

(F)–GUIDE BAR TOLERANCES SHALL CONFORM TO AASHTO LRFD BRIDGE CONSTRUCTION SPECIFICATIONS 18.1.4.2.

(G)–OVERALL HEIGHT OF BEARING SHALL NOT EXCEED THE NOMINAL HEIGHT BY MORE THAN 3/16".

(H)–THE EDGES OF ALL PARTS SHALL BE BROKEN BY GRINDING SO THAT THERE ARE NO SHARP EDGES.

(I)–EXTERNAL STEEL PLATE SURFACES TO BE HOT DIP GALVANIZED AS PER SPECIFICATIONS.

10. TOLERANCES FOR FLATNESS
(A)–FLATNESS OF BEARING SURFACES SHALL BE DETERMINED BY THE FOLLOWING METHOD:
(1)–A PRECISION STRAIGHT EDGE LONGER THAN THE NOMINAL DIMENSION TO BE MEASURED SHALL BE PLACED IN CONTACT WITH THE SURFACE TO BE MEASURED AS PARALLEL TO IT AS POSSIBLE.

(2)–SELECT A FEELER GAUGE HAVING AN ACCURACY OF ±.001" EQUAL TO THE TOLERANCE ALLOWED AND ATTEMPT TO INSERT IT UNDER THE STRAIGHT EDGE.

(3)–PLATES ARE "ACCEPTABLE" IF THE FEELER GAUGE DOES NOT PASS UNDER THE STRAIGHT EDGE.

(B)–FLATNESS TOLERANCES SHALL BE AS FOLLOWS:
(1)–CLASS "A" 0.001 X NOMINAL DIMENSION PER AASHTO LRFD BRIDGE CONSTRUCTION SPECIFICATION 18.1.4.2–1.

(C)–"NOMINAL DIMENSIONS" SHALL BE INTERPRETED AS THE ACTUAL DIMENSION OF THE PLATE UNDER THE STRAIGHT EDGE WHERE THE STRAIGHT EDGE IS NOT PARALLEL TO ANY PLAN DIMENSION OF THE PLATE BEING MEASURED.

(D)–IN DETERMINING THE FLATNESS THE STRAIGHT EDGE MAY BE LOCATED IN ANY POSITION ON THE SURFACE BEING MEASURED.

11. REFERENCE
(A)–AASHTO LRFD STANDARD SPECIFICATIONS FOR HIGHWAY BRIDGES, 4TH. EDITION 2007 WITH CURRENT INTERIMS, AS MODIFIED BY THE 2006 STANDARD SPECIFICATIONS FOR CONSTRUCTION, AS MODIFIED BY THE SPECIAL PROVISIONS.

12. ADDITIONAL COMMENTS
(A)–BEARINGS SHALL BE TESTED ACCORDING TO SECTION 531 OF VERMONT'S 2006 STANDARD SPECIFICATION FOR CONSTRUCTION.

(B)–ALL WELDERS SHALL BE QUALIFIED AS PER AWS D1.5.

(C)–ALL BEARINGS SHALL BE PLACED ON A 1/8" THK. BEARING PAD SAME SIZE AS MASONRY PLATE.

(D) ALL DIMENSIONS ARE IN INCHES UNLESS OTHERWISE NOTED.

(E) SCALE = N.T.S.

(E) NEW BRIDGE SEAT ELEVATIONS SHALL BE ADJUSTED BY THE G/C BASED ON THE FINAL CONFIGURATION OF THE BEARINGS.

(F) MANUFACTURING LOCATION:
AMSCOT STRUCTURAL PRODUCTS CORP. INC.
241 EAST BLACKWELL STREET
DOVER, NJ 07801
PH: (973) 989–8800
FX: (973) 989–5651
CONTACT: PETER SOMOGYI

NOTES FOR LAMINATED ELASTOMERIC BEARING PADS (ITEM NO. 531.12):

1. ALL STEEL BEARINGS SHALL BE AASHTO M270 GRADE 50.
2. ALL BEARING DEVICES SHALL BE GALVANIZED AS PER STANDARD SPECIFICATIONS 506.15 AND 531.04(b), AS MODIFIED BY THE GENERAL SPECIAL PROMSIONS.
3. BEARINGS TO BE MANUFACTURED ACCORDING TO AASHTO LRFD STANDARD SPECIFICATIONS FOR HIGHWAY BRIDGES, SECTION 14 & 18, 17th. EDITION, 2002
4. ELASTOMERIC NATURAL RUBBER MATERIAL TO BE 50+/–5 DUROMETER HARDNESS, GR. 4
5. ALL STEEL PRODUCED IN THE U.S.A.
6. THE BEARINGS ARE DESIGNED SO THAT THE SUPERSTRUCTURE MAY BE ERECTED WHEN THE AMBIENT AIR TEMPERATURE IS WITHIN THE RANGE OF 40 DEG. F. TO 90 DEG. F.
7. ALL SWEDGED ANCHOR BOLTS F1554, GR. 105, HH NUTS A–563, AND WASHERS F–436, SHALL BE GALVANIZED
8. PRIOR TO GALVANIZING, ALL CORNERS AND EDGES OF STEEL PLATES, SHAPES, ETC. SHALL BE GROUND TO A 1/16" MIN. RADIUS (TYP).

VERMONT AGENCY OF TRANSPORTATION
PROJECT NAME: BETHEL
PROJECT NUMBER: BRF-022-1(14)

BEARING NOTES

AMSCOT
STRUCTURAL PRODUCTS CORP.
DOVER, NJ

SCALE: N.T.S.	CHECKED: B.F.	DRAWN BY: C.A.M.
DATE: 8/19/11		REVISION: A
FOR: BECK & BELLUCCI		
DWG NO: BB11A7RA		SHEET NO. 7 OF 7

FIELD BOLT LIST — A325 Type 1 GALV. BOLTS

LINE	NO REQ'D.	BOLT DIAM.	BOLT LEN.	BOLTS/CONN.	# OF CONN.	GRIP	THICKNESS OF PCS. CONNECTED						WASH CODE	PIECES CONNECTED AND REMARKS
1														**JOINT L0 & L10**
2														
3														EXTERIOR
4	176	7/8	4 1/2	44	4	3	3/4	2 1/4					L1	Guss ~ Vertical
5	224	7/8	4 1/2	56	4	3	3/4	2 1/4					L1	Guss ~ Diagonal
6	256	7/8	4 1/2	64	4	3	3/4	1 1/16	1 3/16				L1	Guss ~ Fill ~ Chord
7														
8														INTERIOR
9	80	7/8	4 1/2	20	4	3	3/4	2 1/4					L1	Guss ~ Vertical
10	224	7/8	4 1/2	56	4	3	3/4	2 1/4					L1	Guss ~ Diagonal
11	216	7/8	4 1/2	54	4	3	3/4	1 1/16	1 3/16				L1	Guss ~ Fill ~ Chord
12	144	1	6	36	4	4 1/8	1 1/8	3/4	2 1/4				L2	Flbm Conn L's ~ Guss ~ Vert ✱
13	40	7/8	5	10	4	3 1/2	1/2	3/4	1 1/16	1 3/16			L1	Lat Br Guss L ~ Guss ~ Fill ~ Chord
14	72	7/8	3	18	4	1 3/8	5/8	3/4					L1	Lat Br Guss ~ Lat Bracing
15														
16														**JOINT L1 & L9**
17														
18														EXTERIOR
19	32	7/8	3 1/2	8	4	1 15/16	3/4	9/16	5/8				L1	Guss ~ Fill ~ Vertical
20	48	1	3 1/2	12	4	1 15/16	3/4	9/16	5/8				L1	Guss ~ Fill ~ Vertical
21	120	7/8	3 1/2	30	4	1 15/16	3/4	1 3/16					L1	Guss ~ Chord
22	24	1	3 1/2	6	4	1 15/16	3/4	1 3/16					L1	Guss ~ Chord
23	48	7/8	4	12	4	2 7/16	3/4	1 3/16	1/2				L1	Guss ~ Chord ~ Btm Guss Conn L
24														
25														INTERIOR
26	32	7/8	3 1/2	8	4	1 15/16	3/4	9/16	5/8				L1	Guss ~ Fill ~ Vertical
27	48	1	4	12	4	2 7/16	1/2	3/4	9/16	5/8			L1	Flbm Conn L's ~ Guss ~ Fill ~ Vert
28	120	7/8	3 1/2	30	4	1 15/16	3/4	1 3/16					L1	Guss ~ Chord
29	24	1	4	6	4	2 7/16	1/2	3/4	1 3/16				L1	Floorbeam ~ Guss ~ Chord
30	48	7/8	4	12	4	2 7/16	3/4	1 3/16	1/2				L1	Guss ~ Chord ~ Btm Guss Conn L
31														
32														BOTTOM
33	80	7/8	4	20	4	2 9/16	5/8	9/16	1 3/8				L1	Btm Guss ~ Fill ~ Floorbeam
34	144	7/8	3	18	8	1 3/8	5/8	3/4					L1	Btm Guss ~ Lateral Bracing
35	96	7/8	2 3/4	12	8	1 1/8	5/8	1/2					L1	Btm Guss ~ Btm Guss Conn L
36														
37														**JOINT L2 & L8**
38														
39														EXTERIOR
40	32	7/8	3 1/2	8	4	1 15/16	3/4	9/16	5/8				L1	Guss ~ Fill ~ Vertical
41	48	1	3 1/2	12	4	1 15/16	3/4	9/16	5/8				L1	Guss ~ Fill ~ Vertical
42	72	7/8	3 1/2	18	4	1 15/16	3/4	9/16	5/8				L1	Guss ~ Fill ~ Diagonal
43	376	7/8	3 1/2	94	4	1 15/16	3/4	1 3/16					L1	Guss ~ Chord
44	24	1	3 1/2	6	4	1 15/16	3/4	1 3/16					L1	Guss ~ Chord
45	80	7/8	4	20	4	2 7/16	3/4	1 3/16	1/2				L1	Guss ~ Chord ~ Btm Guss Conn L
46														
47														INTERIOR
48	32	7/8	3 1/2	8	4	1 15/16	3/4	9/16	5/8				L1	Guss ~ Fill ~ Vertical
49	48	1	4	12	4	2 7/16	1/2	3/4	9/16	5/8			L1	Flbm Conn L's ~ Guss ~ Fill ~ Vert
50	72	7/8	3 1/2	18	4	1 15/16	3/4	9/16	5/8				L1	Guss ~ Fill ~ Diagonal
51	376	7/8	3 1/2	94	4	1 15/16	3/4	1 3/16					L1	Guss ~ Chord
52	24	1	4	6	4	2 7/16	1/2	3/4	1 3/16				L1	Floorbeam ~ Guss ~ Chord
53	80	7/8	4	20	4	2 7/16	3/4	1 3/16	1/2				L1	Guss ~ Chord ~ Btm Guss Conn L
54														
55														BOTTOM
56	80	7/8	4	20	4	2 9/16	5/8	9/16	1 3/8				L1	Btm Guss ~ Fill ~ Floorbeam
57	144	7/8	3	18	8	1 3/8	5/8	3/4					L1	Btm Guss ~ Lateral Bracing
58	96	7/8	2 3/4	12	8	1 1/8	5/8	1/2					L1	Btm Guss ~ Btm Guss Conn L
59														

WASHER CODES
L1: 1 Flat, 1 Load Ind. L2: 2 Flat, 1 Load Ind.
LIW @ head,hard wa. @ nut

FIELD BOLT LIST — A325 Type 1 GALV. BOLTS

LINE	NO REQ'D.	BOLT DIAM.	BOLT LEN.	BOLTS/CONN.	# OF CONN.	GRIP	THICKNESS OF PCS. CONNECTED						WASH CODE	PIECES CONNECTED AND REMARKS
60														**JOINT L3 & L7**
61														
62														EXTERIOR
63	32	7/8	3 1/2	8	4	1 15/16	3/4	9/16	5/8				L1	Guss ~ Fill ~ Vertical
64	48	1	3 1/2	12	4	1 15/16	3/4	9/16	5/8				L1	Guss ~ Fill ~ Vertical
65	72	7/8	3 1/2	18	4	1 15/16	3/4	9/16	5/8				L1	Guss ~ Fill ~ Diagonal
66	120	7/8	3 1/2	30	4	1 15/16	3/4	1 3/16					L1	Guss ~ Chord
67	24	1	3 1/2	6	4	1 15/16	3/4	1 3/16					L1	Guss ~ Chord
68	48	7/8	4	12	4	2 7/16	3/4	1 3/16	1/2				L1	Guss ~ Chord ~ Btm Guss Conn L
69														
70														INTERIOR
71	32	7/8	3 1/2	8	4	1 15/16	3/4	9/16	5/8				L1	Guss ~ Fill ~ Vertical
72	48	1	4	12	4	2 7/16	1/2	3/4	9/16	5/8			L1	Flbm Conn L's ~ Guss ~ Fill ~ Vert
73	72	7/8	3 1/2	18	4	1 15/16	3/4	9/16	5/8				L1	Guss ~ Fill ~ Diagonal
74	120	7/8	3 1/2	30	4	1 15/16	3/4	1 3/16					L1	Guss ~ Chord
75	24	1	4	6	4	2 7/16	1/2	3/4	1 3/16				L1	Floorbeam ~ Guss ~ Chord
76	48	7/8	4	12	4	2 7/16	3/4	1 3/16	1/2				L1	Guss ~ Chord ~ Btm Guss Conn L
77														
78														BOTTOM
79	80	7/8	4	20	4	2 9/16	5/8	9/16	1 3/8				L1	Btm Guss ~ Fill ~ Floorbeam
80	144	7/8	3	18	8	1 3/8	5/8	3/4					L1	Btm Guss ~ Lateral Bracing
81	96	7/8	2 3/4	12	8	1 1/8	5/8	1/2					L1	Btm Guss ~ Btm Guss Conn L
82														
83														**JOINT L4 & L6**
84														
85														EXTERIOR
86	32	7/8	3 1/2	8	4	1 15/16	3/4	9/16	5/8				L1	Guss ~ Fill ~ Vertical
87	48	1	3 1/2	12	4	1 15/16	3/4	9/16	5/8				L1	Guss ~ Fill ~ Vertical
88	72	7/8	3 1/2	18	4	1 15/16	3/4	9/16	5/8				L1	Guss ~ Fill ~ Diagonal
89	376	7/8	3 1/2	94	4	1 15/16	3/4	1 3/16					L1	Guss ~ Chord
90	24	1	3 1/2	6	4	1 15/16	3/4	1 3/16					L1	Guss ~ Chord
91	80	7/8	4	20	4	2 7/16	3/4	1 3/16	1/2				L1	Guss ~ Chord ~ Btm Guss Conn L
92														
93														INTERIOR
94	32	7/8	3 1/2	8	4	1 15/16	3/4	9/16	5/8				L1	Guss ~ Fill ~ Vertical
95	48	1	4	12	4	2 7/16	1/2	3/4	9/16	5/8			L1	Flbm Conn L's ~ Guss ~ Fill ~ Vert
96	72	7/8	3 1/2	18	4	1 15/16	3/4	9/16	5/8				L1	Guss ~ Fill ~ Diagonal
97	376	7/8	3 1/2	94	4	1 15/16	3/4	1 3/16					L1	Guss ~ Chord
98	24	1	4	6	4	2 7/16	1/2	3/4	1 3/16				L1	Floorbeam ~ Guss ~ Chord
99	80	7/8	4	20	4	2 7/16	3/4	1 3/16	1/2				L1	Guss ~ Chord ~ Btm Guss Conn L
100														
101														BOTTOM
102	80	7/8	4	20	4	2 9/16	5/8	9/16	1 3/8				L1	Btm Guss ~ Fill ~ Floorbeam
103	144	7/8	3	18	8	1 3/8	5/8	3/4					L1	Btm Guss ~ Lateral Bracing
104	96	7/8	2 3/4	12	8	1 1/8	5/8	1/2					L1	Btm Guss ~ Btm Guss Conn L
105														
106														**JOINT L5**
107														
108														EXTERIOR
109	16	7/8	3 1/2	8	2	1 15/16	3/4	9/16	5/8				L1	Guss ~ Fill ~ Vertical
110	24	1	3 1/2	12	2	1 15/16	3/4	9/16	5/8				L1	Guss ~ Fill ~ Vertical
111	36	7/8	3 1/2	18	2	1 15/16	3/4	9/16	5/8				L1	Guss ~ Fill ~ Diagonal
112	60	7/8	3 1/2	30	2	1 15/16	3/4	1 3/16					L1	Guss ~ Chord
113	12	1	3 1/2	6	2	1 15/16	3/4	1 3/16					L1	Guss ~ Chord
114	24	7/8	4	12	2	2 7/16	3/4	1 3/16	1/2				L1	Guss ~ Chord ~ Btm Guss Conn L
115														
116														
117														
118														

WASHER CODES
L1: 1 Flat, 1 Load Ind.
LIW @ head,hard wa. @ nut

FIELD BOLT LIST — A325 Type 1 GALV. BOLTS

LINE	NO REQ'D.	BOLT DIAM.	BOLT LEN.	BOLTS/CONN.	# OF CONN.	GRIP	THICKNESS OF PCS. CONNECTED						WASH CODE	PIECES CONNECTED AND REMARKS
119														
120														INTERIOR
121	16	7/8	3 1/2	8	2	1 15/16	3/4	9/16	5/8				L1	Guss ~ Fill ~ Vertical
122	24	1	4	12	2	2 7/16	1/2	3/4	9/16	5/8			L1	Flbm Conn L's ~ Guss ~ Fill ~ Vert
123	72	7/8	3 1/2	18	4	1 15/16	3/4	9/16	5/8				L1	Guss ~ Fill ~ Diagonal
124	60	7/8	3 1/2	30	2	1 15/16	3/4	1 3/16					L1	Guss ~ Chord
125	12	1	4	6	2	2 7/16	1/2	3/4	1 3/16				L1	Floorbeam ~ Guss ~ Chord
126	24	7/8	4	12	2	2 7/16	3/4	1 3/16	1/2				L1	Guss ~ Chord ~ Btm Guss Conn L
127														
128														BOTTOM
129	40	7/8	4	20	2	2 9/16	5/8	9/16	1 3/8				L1	Btm Guss ~ Fill ~ Floorbeam
130	72	7/8	3	18	4	1 3/8	5/8	3/4					L1	Btm Guss ~ Lateral Bracing
131	48	7/8	2 3/4	12	4	1 1/8	5/8	1/2					L1	Btm Guss ~ Btm Guss Conn L
132														
133														
134														**JOINT U1 & U9**
135														
136														TOP
137	80	7/8	2 1/2	5	16	1	1/2	1/2					L1	Top Guss ~ Top Guss Conn L
138	32	7/8	4	8	4	2 7/16	1/2	1 7/16	1/2				L1	Top Guss ~ Fill ~ Top Strut
139	16	7/8	4	4	4	2 9/16	1/2	1 3/8	11/16				L1	Top Guss ~ Fill ~ Lat Brac
140														
141														EXTERIOR
142	204	7/8	4 1/2	51	4	3	3/4	2 1/4					L1	Guss ~ Chord
143	20	7/8	5	5	4	3 1/2	3/4	2 1/4	1/2				L1	Guss ~ Chord ~ Top Guss Conn L
144	280	7/8	4 1/2	70	4	3	3/4	13/16	1 7/16				L1	Guss ~ Fill ~ Chord
145	24	7/8	5	6	4	3 1/2	3/4	13/16	1 7/16	1/2			L1	Guss ~ Fill ~ Chord ~ Top Guss Conn L
146	64	7/8	4 1/2	16	4	3	3/4	1 5/8	5/8				L1	Guss ~ Fill ~ Vertical
147	72	7/8	4 1/2	18	4	3	3/4	1 5/8	5/8				L1	Guss ~ Fill ~ Diagonal
148	32	7/8	2 3/4	8	4	1 1/8	3/4	3/8					L1	Guss ~ Angle Stiff
149														
150														INTERIOR
151	204	7/8	4 1/2	51	4	3	3/4	2 1/4					L1	Guss ~ Chord
152	20	7/8	5	5	4	3 1/2	3/4	2 1/4	1/2				L1	Guss ~ Chord ~ Top Guss Conn L
153	280	7/8	4 1/2	70	4	3	3/4	13/16	1 7/16				L1	Guss ~ Fill ~ Chord
154	24	7/8	5	6	4	3 1/2	3/4	13/16	1 7/16	1/2			L1	Guss ~ Fill ~ Chord ~ Top Guss Conn L
155	64	7/8	4 1/2	16	4	3	3/4	1 5/8	5/8				L1	Guss ~ Fill ~ Vertical
156	72	7/8	4 1/2	18	4	3	3/4	1 5/8	5/8				L1	Guss ~ Fill ~ Diagonal
157	32	7/8	2 3/4	8	4	1 1/8	3/4	3/8					L1	Guss ~ Angle Stiff
158														
159														BOTTOM
160	32	7/8	2 1/2	8	4	1	1/2	1/2					L1	Btm Guss ~ Top Strut
161	16	7/8	2 3/4	4	4	1 3/16	1/2	11/16					L1	Btm Guss ~ Lateral Bracing
162														
163														
164														**JOINT U2 & U8**
165														
166														TOP
167	64	7/8	2 1/2	4	16	1	1/2	1/2					L1	Top Guss ~ Top Guss Conn L
168	32	7/8	4	8	4	2 3/8	1/2	1 1/2	3/8				L1	Top Guss ~ Fill ~ Top Strut
169	32	7/8	4	4	8	2 9/16	1/2	1 3/8	11/16				L1	Top Guss ~ Fill ~ Lat Brac
170														
171														EXTERIOR
172	344	7/8	3 3/4	86	4	2 3/16	3/4	1 7/16					L1	Guss ~ Chord
173	40	7/8	4 1/4	5	8	2 11/16	3/4	1 7/16	1/2				L1	Guss ~ Chord ~ Top Guss Conn L
174	64	7/8	3 3/4	16	4	2 3/16	3/4	13/16	5/8				L1	Guss ~ Fill ~ Vertical
175	72	7/8	3 3/4	18	4	2 3/16	3/4	13/16	5/8				L1	Guss ~ Fill ~ Diagonal
176														
177														

WASHER CODES
L1: 1 Flat, 1 Load Ind.
LIW @ head,hard wa. @ nut

FIELD BOLT LIST — A325 Type 1 GALV. BOLTS

LINE	NO REQ'D.	BOLT DIAM.	BOLT LEN.	BOLTS/CONN.	# OF CONN.	GRIP	THICKNESS OF PCS. CONNECTED						WASH CODE	PIECES CONNECTED AND REMARKS
178														INTERIOR
179	344	7/8	3 3/4	86	4	2 3/16	3/4	1 7/16					L1	Guss ~ Chord
180	40	7/8	4 1/4	5	8	2 11/16	3/4	1 7/16	1/2				L1	Guss ~ Chord ~ Top Guss Conn L
181	60	7/8	3 3/4	15	4	2 3/16	3/4	13/16	5/8				L1	Guss ~ Fill ~ Vertical
182	4	7/8	4 1/4	1	4	2 11/16	1/2	3/4	13/16	5/8			L1	Sway Conn L ~ Guss ~ Fill ~ Vert
183	72	7/8	3 3/4	18	4	2 3/16	3/4	13/16	5/8				L1	Guss ~ Fill ~ Diagonal
184														
185														BOTTOM
186	32	7/8	2 1/2	4	8	1	1/2	1/2					L1	Btm Guss ~ Btm Guss Conn L
187	32	7/8	4	8	4	2 3/8	3/8	1/2	1/2	1/2	1/2		L1	Top Strut~Btm Guss~PL~Fill~PL
188	32	7/8	2 3/4	4	8	1 3/16	1/2	11/16					L1	Btm Guss ~ Lat Bracing
189														
190														**JOINT U3 & U7**
191														
192														TOP
193	64	7/8	2 1/2	4	16	1	1/2	1/2					L1	Top Guss ~ Top Guss Conn L
194	32	7/8	3 3/4	8	4	2 1/4	1/2	1 3/8	3/8				L1	Top Guss ~ Fill ~ Top Strut
195	32	7/8	4	4	8	2 9/16	1/2	1 3/8	11/16				L1	Top Guss ~ Fill ~ Lat Brac
196														
197														EXTERIOR
198	344	7/8	3 3/4	86	4	2 3/16	3/4	1 7/16					L1	Guss ~ Chord
199	40	7/8	4 1/4	5	8	2 11/16	3/4	1 7/16	1/2				L1	Guss ~ Chord ~ Top Guss Conn L
200	64	7/8	3 3/4	16	4	2 3/16	3/4	13/16	5/8				L1	Guss ~ Fill ~ Vertical
201	72	7/8	3 3/4	18	4	2 3/16	3/4	13/16	5/8				L1	Guss ~ Fill ~ Diagonal
202	32	7/8	2 3/4	8	4	1 1/8	3/4	3/8					L1	Guss ~ Angle Stiff
203														
204														INTERIOR
205	344	7/8	3 3/4	86	4	2 3/16	3/4	1 7/16					L1	Guss ~ Chord
206	40	7/8	4 1/4	5	8	2 11/16	3/4	1 7/16	1/2				L1	Guss ~ Chord ~ Top Guss Conn L
207	56	7/8	3 3/4	14	4	2 3/16	3/4	13/16	5/8				L1	Guss ~ Fill ~ Vertical
208	8	7/8	4 1/4	1	8	2 11/16	1/2	3/4	13/16	5/8			L1	Sway Conn L ~ Guss ~ Fill ~ Vert
209	72	7/8	3 3/4	18	4	2 3/16	3/4	13/16	5/8				L1	Guss ~ Fill ~ Diagonal
210	32	7/8	2 3/4	8	4	1 1/8	3/4	3/8					L1	Guss ~ Angle Stiff
211														
212														BOTTOM
213	32	7/8	2 1/2	4	8	1	1/2	1/2					L1	Btm Guss ~ Btm Guss Conn L
214	32	7/8	3 1/2	8	4	1 7/8	3/8	1/2	1/2	1/2			L1	Top Strut ~ Btm Guss ~ PL ~ PL
215	32	7/8	2 3/4	4	8	1 3/16	1/2	11/16					L1	Btm Guss ~ Lat Bracing

WASHER CODES
L1: 1 Flat, 1 Load Ind.
LIW @ head,hard wa. @ nut

NOTES:
1. REFER TO SHEET GN1 FOR GENERAL NOTES.
2. WORK THIS SHEET WITH SHEETS E6 & E7.
3. ✱ - BOLT FLOORBEAM CONN. ANGLES TO INTERIOR GUSSET, WITH BOLT HEADS @ THE CONN. ANGLES, BEFORE BOLTING ANGLES TO WEB OF FLOORBEAM.

Approved 1/10/12

REV.	DATE	REMARKS	DWN	CHK	APVL	SHOP
0		~			2/29/12	APR 13 2012

MATERIAL: | SURFACE PREP. & PAINT: | HOLES: | SHOP BOLTS:

DESCRIPTION: FIELD BOLTS

CASCO BAY STEEL STRUCTURES, INC.
1 WALLACE AVE. PHONE (207) 780-6722
SOUTH PORTLAND, ME 04106 FAX. (207) 780-6726
TENSOR 3073

STRUCTURE: VT RTE 107 OVER WHITE RIVER
DRAWN: EEO DATE: 02/10
CHKD: TJB DATE: 02/20

LOCATION: BETHEL, VT.
PROJ NO. BRF 022-1(14)
CUSTOMER: BECK & BELLUCCI
JOB NO. 498
DWG NO. E5
REV. △

TJB Mon, Feb 27, 2012 03:12:07 PM /users/jobs/3073/E5 ; Rev0

FIELD BOLT LIST — A325 Type 1 GALV. BOLTS

LINE	NO REQ'D.	BOLT DIAM.	BOLT LEN.	BOLTS /CONN.	# OF CONN.	GRIP	THICKNESS OF PCS. CONNECTED						WASH CODE	PIECES CONNECTED AND REMARKS
216														**JOINT U4 & U6**
217														
218														TOP
219	64	7/8	2 1/2	4	16	1	1/2	1/2					L1	Top Guss ~ Top Guss Conn L
220	32	7/8	3 3/4	8	4	2 1/4	1/2	1 3/8	3/8				L1	Top Guss ~ Fill ~ Top Strut
221	32	7/8	4	4	8	2 9/16	1/2	1 3/8	11/16				L1	Top Guss ~ Fill ~ Lat Brac
222														
223														EXTERIOR
224	344	7/8	3 3/4	86	4	2 3/16	3/4	1 7/16					L1	Guss ~ Chord
225	40	7/8	4 1/4	5	8	2 11/16	3/4	1 7/16	1/2				L1	Guss ~ Chord ~ Top Guss Conn L
226	64	7/8	3 3/4	16	4	2 3/16	3/4	13/16	5/8				L1	Guss ~ Fill ~ Vertical
227	72	7/8	3 3/4	18	4	2 3/16	3/4	13/16	5/8				L1	Guss ~ Fill ~ Diagonal
228	32	7/8	2 3/4	8	4	1 1/8	3/4	3/8					L1	Guss ~ Angle Stiff
229														
230														INTERIOR
231	344	7/8	3 3/4	86	4	2 3/16	3/4	1 7/16					L1	Guss ~ Chord
232	40	7/8	4 1/4	5	8	2 11/16	3/4	1 7/16	1/2				L1	Guss ~ Chord ~ Top Guss Conn L
233	56	7/8	3 3/4	14	4	2 3/16	3/4	13/16	5/8				L1	Guss ~ Fill ~ Vertical
234	8	7/8	4 1/4	1	8	2 11/16	1/2	3/4	13/16	5/8			L1	Sway Conn L ~ Guss ~ Fill ~ Vert
235	72	7/8	3 3/4	18	4	2 3/16	3/4	13/16	5/8				L1	Guss ~ Fill ~ Diagonal
236	32	7/8	2 3/4	8	4	1 1/8	3/4	3/8					L1	Guss ~ Angle Stiff
237														
238														BOTTOM
239	32	7/8	2 1/2	4	8	1	1/2	1/2					L1	Btm Guss ~ Btm Guss Conn L
240	32	7/8	3 1/2	8	4	1 7/8	3/8	1/2	1/2	1/2			L1	Top Strut ~ Btm Guss ~ PL ~ PL
241	32	7/8	2 3/4	4	8	1 3/16	1/2	11/16					L1	Btm Guss ~ Lat Bracing
242														
243														**JOINT U5**
244														
245														TOP
246	32	7/8	2 1/2	4	8	1	1/2	1/2					L1	Top Guss ~ Top Guss Conn L
247	16	7/8	3 3/4	8	2	2 1/4	1/2	1 3/8	3/8				L1	Top Guss ~ Fill ~ Top Strut
248	16	7/8	4	4	4	2 9/16	1/2	1 3/8	11/16				L1	Top Guss ~ Fill ~ Lat Brac
249														
250														EXTERIOR
251	172	7/8	3 3/4	86	2	2 3/16	3/4	1 7/16					L1	Guss ~ Chord
252	20	7/8	4 1/4	5	4	2 11/16	3/4	1 7/16	1/2				L1	Guss ~ Chord ~ Top Guss Conn L
253	32	7/8	3 3/4	16	2	2 3/16	3/4	13/16	5/8				L1	Guss ~ Fill ~ Vertical
254	32	7/8	2 3/4	8	4	1 1/8	3/4	3/8					L1	Guss ~ Angle Stiff
255														
256														INTERIOR
257	172	7/8	3 3/4	86	2	2 3/16	3/4	1 7/16					L1	Guss ~ Chord
258	20	7/8	4 1/4	5	4	2 11/16	3/4	1 7/16	1/2				L1	Guss ~ Chord ~ Top Guss Conn L
259	28	7/8	3 3/4	14	2	2 3/16	3/4	13/16	5/8				L1	Guss ~ Fill ~ Vertical
260	4	7/8	4 1/4	1	4	2 11/16	1/2	3/4	13/16	5/8			L1	Sway Conn L ~ Guss ~ Fill ~ Vert
261	32	7/8	2 3/4	8	4	1 1/8	3/4	3/8					L1	Guss ~ Angle Stiff
262														
263														BOTTOM
264	16	7/8	2 1/2	4	4	1	1/2	1/2					L1	Btm Guss ~ Btm Guss Conn L
265	16	7/8	3 1/2	8	2	1 7/8	3/8	1/2	1/2	1/2			L1	Top Strut ~ Btm Guss ~ PL ~ PL
266	16	7/8	2 3/4	4	4	1 3/16	1/2	11/16					L1	Btm Guss ~ Lat Bracing
267														
268														
269														
270														
271														
272														
273														

WASHER CODES

L1: 1 Flat, 1 Load Ind.

LIW @ head,hard wa. @ nut

FIELD BOLT LIST — A325 Type 1 GALV. BOLTS

LINE	NO REQ'D.	BOLT DIAM.	BOLT LEN.	BOLTS /CONN.	# OF CONN.	GRIP	THICKNESS OF PCS. CONNECTED						WASH CODE	PIECES CONNECTED AND REMARKS
274														**JOINT M1 & M9**
275	32	7/8	2 3/4	4	8	1 1/8	1/2	5/8					L1	Conn Plate ~ Diagonal
276	32	7/8	2 1/2	4	8	7/8	1/2	3/8					L1	Conn Plate ~ Mid Chord
277														
278														**JOINT M2 & M8**
279	64	7/8	2 1/2	4	16	7/8	1/2	3/8					L1	Conn Plate ~ Mid Chord
280	16	7/8	3	4	4	1 1/2	1/2	1/2	1/2				L1	Conn PL ~ Mid Chrd Guss ~ Conn L
281	32	7/8	2 1/2	8	4	1	1/2	1/2					L1	Mid Chord Guss ~ Conn L
282	48	7/8	2 1/2	12	4	1	1/2	1/2					L1	Mid Chord Guss ~ Conn L
283	16	7/8	4	4	4	2 7/16	1/2	1 9/16	3/8				L1	Mid Chrd Guss ~ Fill ~ Mid Strut
284	16	7/8	4 1/2	4	4	2 15/16	1/2	1/2	1 9/16	3/8			L1	Conn PL~Mid Chord Guss~Fill~Mid Strut
285														
286														**JOINT M3, M4, M5, M6 & M7**
287	160	7/8	2 1/2	4	40	7/8	1/2	3/8					L1	Conn Plate ~ Mid Chord
288	240	7/8	2 1/2	12	20	1	1/2	1/2					L1	Mid Chrd Guss ~ Conn L
289	80	7/8	4 1/2	4	20	2 15/16	1/2	1/2	1 9/16	3/8			L1	Conn PL~Mid Chord Guss~Fill~Mid Chord
290														
291														**INT. MID CHORD JOINTS**
292														(M23, M34, M45, M56, M67 & M78)
293	96	7/8	2 3/4	4	24	1 1/8	1/2	5/8					L1	Conn Plate ~ Diagonal
294	192	7/8	2 1/2	8	24	7/8	1/2	3/8					L1	Conn Plate ~ Mid Chord
295														
296														**FLOORBEAMS**
297														
298														L0 & L10
299	72	1	5	18	4	3 3/8	1 1/8	1 1/8	1 1/8				L1	Conn L ~ Floorbeam ~ Conn L
300	40	7/8	4 1/4	10	4	2 11/16	1 1/2	9/16	5/8				L1	Flbm ~ Fill ~ Lat Brac Guss
301	60	7/8	3 1/4	6	10	1 3/4	1 1/8	5/8					L1	Floorbeam ~ Stringer Conn L
302														
303														L1 THRU L9
304	225	7/8	3 1/2	5	45	2 1/16	5/8	13/16	5/8				L1	Conn L ~ Stringer ~ Conn L
305														
306														**STRINGERS**
307														
308														CONN. TO FLBM @ L0 & L10
309														(LINES 1 THRU 5)
310	60	7/8	3 3/4	6	10	2 1/4	5/8	5/16	3/8	5/16	5/8		L1	L~Conn PL~Stringer~Conn PL~L
311	20	7/8	2 3/4	2	10	1 1/8	5/8	1/2					L1	Seat L ~ Stringer
312														
313														CONN. TO FLBM @ L1 THRU L9
314														(LINES 1 & 5)
315	180	7/8	3 1/4	5	36	1 5/8	5/8	3/8	5/8				L1	Conn L ~ Stringer ~ Conn L
316	32	7/8	2 3/4	2	16	1 1/8	5/8	1/2					L1	Seat L ~ Stringer
317	40	7/8	3	2	20	1 7/16	5/16	5/8	1/2				L1	PL Wash ~ Seat L ~ Stringer
318														(SEE DETAILS 1, 2 & 3 ON SHT E7)
319														
320														CONN. TO FLBM @ L1 THRU L9
321														(LINES 2 THRU 4)
322	270	7/8	3 3/4	5	54	2 1/4	5/8	5/16	3/8	5/16	5/8		L1	L~Conn PL~Stringer~Conn PL~L
323	48	7/8	2 3/4	2	24	1 1/8	5/8	1/2					L1	Seat L ~ Stringer
324	60	7/8	3	2	30	1 7/16	5/16	5/8	1/2				L1	PL Wash ~ Seat L ~ Stringer
325														(SEE DETAILS 1, 2 & 3 ON SHT E7)
326														
327														
328														
329														
330														
331														

WASHER CODES

L1: 1 Flat, 1 Load Ind.

LIW @ head,hard wa. @ nut

FIELD BOLT LIST — A325 Type 1 GALV. BOLTS

LINE	NO REQ'D.	BOLT DIAM.	BOLT LEN.	BOLTS /CONN.	# OF CONN.	GRIP	THICKNESS OF PCS. CONNECTED						WASH CODE	PIECES CONNECTED AND REMARKS
332														**DIAPHRAGMS**
333	1280	7/8	2 1/2	4	320	7/8	1/2	3/8					L1	Conn L ~ Diaphragm
334														
335														**BOTTOM LAT. BRACING**
336	180	7/8	3	18	10	1 1/2	3/4	3/4					L1	Ctr Guss ~ Long Lateral
337	360	7/8	3	18	20	1 1/2	3/4	3/4					L1	Ctr Guss ~ Short Laterals
338														
339														**TOP STRUTS**
340														
341														U1 & U9
342	56	7/8	4	14	4	2 7/16	1/2	1 7/16	1/2				L1	Portal Guss ~ Fill ~ Strut
343														
344														U2 & U8
345	16	7/8	2 1/2	8	2	1	1/2	1/8	3/8				L1	Ctr Strut Guss ~ Fill ~Strut
346	16	7/8	4	8	2	2 3/8	3/8	1/2	1/2	1/2	1/2		L1	Strut~Ctr Strut Guss~PL~Fill~PL
347	24	7/8	4	6	4	2 3/8	3/8	1/2	1/2	1/2	1/2		L1	Strut ~ Fill ~ PL ~ Fill ~PL
348	16	7/8	2 1/2	4	4	7/8	1/2	3/8					L1	Ctr Strut Guss ~ Ctr Strut
349														
350														U3 & U7
351	16	7/8	2 1/2	8	2	7/8	1/2	3/8					L1	Ctr Strut Guss ~ Strut
352	16	7/8	3 1/2	8	2	1 7/8	3/8	1/2	1/2	1/2			L1	Strut ~ Ctr Strut Guss ~ PL~ PL
353	24	7/8	3 1/2	6	4	1 7/8	3/8	1/2	1/2	1/2			L1	Strut ~ Fill ~ PL ~ PL
354	16	7/8	2 1/2	4	4	7/8	1/2	3/8					L1	Ctr Strut Guss ~ Ctr Strut
355														
356														U4 & U6
357	16	7/8	2 1/2	8	2	7/8	1/2	3/8					L1	Ctr Strut Guss ~ Strut
358	16	7/8	3 1/2	8	2	1 7/8	3/8	1/2	1/2	1/2			L1	Strut ~ Ctr Strut Guss ~ PL~ PL
359	24	7/8	3 1/2	6	4	1 7/8	3/8	1/2	1/2	1/2			L1	Strut ~ Fill ~ PL ~ PL
360	16	7/8	2 1/2	4	4	7/8	1/2	3/8					L1	Ctr Strut Guss ~ Ctr Strut
361														
362														U5
363	8	7/8	2 1/2	8	1	7/8	1/2	3/8					L1	Ctr Strut Guss ~ Strut
364	8	7/8	3 1/2	8	1	1 7/8	3/8	1/2	1/2	1/2			L1	Strut ~ Ctr Strut Guss ~ PL~ PL
365	12	7/8	3 1/2	6	2	1 7/8	3/8	1/2	1/2	1/2			L1	Strut ~ Fill ~ PL ~ PL
366	16	7/8	2 1/2	4	4	7/8	1/2	3/8					L1	Ctr Strut Guss ~ Ctr Strut
367														
368														**TOP LAT. BRACING**
369	160	7/8	2 3/4	10	16	1 3/16	1/2	11/16					L1	Ctr Guss ~ Long Lateral
370	128	7/8	2 3/4	4	32	1 3/16	1/2	11/16					L1	Ctr Guss ~ Short Laterals
371	64	7/8	2 1/2	4	16	7/8	1/2	3/8					L1	Ctr Guss ~ Top C r Strut
372														
373														**MID STRUTS**
374	84	7/8	2 1/2	6	14	7/8	1/2	3/8					L1	Sway Frame Guss ~ Strut
375														
														SWAY FRAMES
378														
378														U2 & U8
379	24	7/8	2 1/2	3	8	1	1/2	1/2					L1	Top Corner Guss ~ Conn L
380	16	7/8	2 1/2	4	4	7/8	1/2	3/8					L1	Top Corner Guss ~ Sway Diag
381	16	7/8	5 1/2	4	4	3 11/16	1/2	2 13/16	3/8				L2	Top Corner Guss ~ Fill ~ Sway Diag
382	16	7/8	2 1/2	4	4	7/8	1/2	3/8					L1	Top Ctr Guss ~ Sway Diag
383	16	7/8	5 1/2	4	4	3 11/16	1/2	2 13/16	3/8				L2	Top Ctr Guss ~ Fill ~ Sway Diag
384	32	7/8	2 1/2	4	8	7/8	1/2	3/8					L1	Ctr Guss ~ Long Sway Diag
385	64	7/8	2 1/2	4	16	7/8	1/2	3/8					L1	Ctr Guss ~ Short Sway Diag's
386	32	7/8	4	4	8	2 7/16	1/2	1 9/16	3/8				L1	Btm Corner Guss ~ Fill ~ Sway Diag
387	32	7/8	2 1/2	4	8	7/8	1/2	3/8					L1	Btm Ctr Guss ~ Sway Diag
388														
389														

WASHER CODES

L1: 1 Flat, 1 Load Ind. L2: 2 Flat, 1 Load Ind.

LIW @ head,hard wa. @ nut

FIELD BOLT LIST — A325 Type 1 GALV. BOLTS

LINE	NO REQ'D.	BOLT DIAM.	BOLT LEN.	BOLTS /CONN.	# OF CONN.	GRIP	THICKNESS OF PCS. CONNECTED						WASH CODE	PIECES CONNECTED AND REMARKS
390														U3 & U7
391	16	7/8	2 1/2	4	4	1	1/2	1/2					L1	Top Corner Guss ~ Conn L
392	12	7/8	2 1/2	3	4	1	1/2	1/2					L1	Top Corner Guss ~ Conn L
393	16	7/8	2 1/2	4	4	7/8	1/2	3/8					L1	Top Corner Guss ~ Sway Diag
394	16	7/8	4	4	4	2 7/16	1/2	1 9/16	3/8				L1	Top Corner Guss ~ Fill ~ Sway Diag
395	16	7/8	2 1/2	4	4	7/8	1/2	3/8					L1	Top Ctr Guss ~ Sway Diag
396	16	7/8	4	4	4	2 7/16	1/2	1 9/16	3/8				L1	Top Ctr Guss ~ Fill ~ Sway Diag
397	32	7/8	2 1/2	4	8	7/8	1/2	3/8					L1	Ctr Guss ~ Long Sway Diag
398	64	7/8	2 1/2	4	16	7/8	1/2	3/8					L1	Ctr Guss ~ Short Sway Diag's
399	32	7/8	4	4	8	2 7/16	1/2	1 9/16	3/8				L1	Btm Corner Guss ~ Fill ~ Sway Diag
400	32	7/8	2 1/2	4	8	7/8	1/2	3/8					L1	Btm Ctr Guss ~ Sway Diag
401														
402														U4 & U6
403	24	7/8	2 1/2	3	8	1	1/2	1/2					L1	Top Corner Guss ~ Conn L
404	32	7/8	2 1/2	4	8	1 1/16	1/2	3/16	3/8				L1	Top Corner Guss ~ Fill ~ Sway Diag
405	32	7/8	2 1/2	4	8	1 1/16	1/2	3/16	3/8				L1	Top Ctr Guss ~ Fill ~ Sway Diag
406	32	7/8	2 1/2	4	8	7/8	1/2	3/8					L1	Ctr Guss ~ Long Sway Diag
407	64	7/8	2 1/2	4	16	7/8	1/2	3/8					L1	Ctr Guss ~ Short Sway Diag's
408	32	7/8	4	4	8	2 7/16	1/2	1 9/16	3/8				L1	Btm Corner Guss ~ Fill ~ Sway Diag
409	32	7/8	2 1/2	4	8	7/8	1/2	3/8					L1	Btm Ctr Guss ~ Sway Diag
410														
411														U5
412	12	7/8	2 1/2	3	4	1	1/2	1/2					L1	Top Corner Guss ~ Conn L
413	16	7/8	2 1/2	4	4	1 1/16	1/2	3/16	3/8				L1	Top Corner Guss ~ Fill ~ Sway Diag
414	16	7/8	2 1/2	4	4	1 1/16	1/2	3/16	3/8				L1	Top Ctr Guss ~ Fill ~ Sway Diag
415	16	7/8	2 1/2	4	4	7/8	1/2	3/8					L1	Ctr Guss ~ Long Sway Diag
416	32	7/8	2 1/2	4	8	7/8	1/2	3/8					L1	Ctr Guss ~ Short Sway Diag's
417	16	7/8	4	4	4	2 7/16	1/2	1 9/16	3/8				L1	Btm Corner Guss ~ Fill ~ Sway Diag
418	16	7/8	2 1/2	4	4	7/8	1/2	3/8					L1	Btm Ctr Guss ~ Sway Diag

WASHER CODES

L1: 1 Flat, 1 Load Ind.

LIW @ head,hard wa. @ nut

NOTES:

1. REFER TO SHEET GN1 FOR GENERAL NOTES.
2. WORK THIS SHEET WITH SHEETS E5 & E7.

Approved 1/10/12

REV.	DATE	REMARKS	DWN	CHK	APVL	SHOP
0		~			2/29/12	APR 13 2012

MATERIAL:	SURFACE PREP. & PAINT:	HOLES:	SHOP BOLTS:

DESCRIPTION: FIELD BOLTS

CASCO BAY STEEL STRUCTURES, INC.

1 WALLACE AVE. PHONE (207) 780-6722

SOUTH PORTLAND, ME 04106 FAX. (207) 780-6726

TENSOR 3073

STRUCTURE: VT RTE 107 OVER WHITE RIVER	DRAWN: EEO	DATE: 02/13
	CHKD: TJB	DATE: 02/20
LOCATION: BETHEL, VT.	JOB NO.	DWG NO.
PROJ NO. BRF 022-1(14)	498	E6
CUSTOMER: BECK & BELLUCCI		REV. △

TJB Mon, Feb 27, 2012 03:23:18 PM /users/jobs/3073/E6 : Rev0

FIELD BOLT LIST

A325 Type 1 GALV. BOLTS

LINE	NO RECV'D.	BOLT DIAM.	BOLT LEN.	BOLTS /CONN.	# OF CONN.	GRIP	THICKNESS OF PCS. CONNECTED						WASHER CODE	PIECES CONNECTED AND REMARKS
419														**PORTAL STRUT**
420	80	7/8	2 1/2	5	16	1	1/2	1/2					L1	End Guss ~ Conn L
421	64	7/8	4	8	8	2 7/16	1/2	1 7/16	1/2				L1	End Guss ~ Fill ~ Strut
422	56	7/8	4	14	4	2 7/16	1/2	1 7/16	1/2				L1	Portal Guss ~ Fill ~ Strut
423														
424														**END PORTAL**
425	24	GUS	3 3/4	6	4	2 7/16	1/2	1 5/8	5/16				L1	TopCornerGuss~Fill~Port Diag
426	24	GUS	2 1/4	6	4	1	1/2	3/16	5/16				L1	TopCornerGuss~Fill~Port Diag
427	48	GUS	3 3/4	6	8	2 7/16	1/2	1 5/8	5/16				L1	Top Port Guss~Fill~Port Diag
428	48	GUS	2 1/4	6	8	1	1/2	3/16	5/16				L1	Top Port Guss~Fill~Port Diag
429	24	GUS	3 1/4	6	4	2 7/16	1/2	1 5/8	5/16				L1	TopPortGuss~Fill~Long. Strut
430	24	GUS	2 1/4	6	4	1	1/2	3/16	5/16				L1	TopPortGuss~Fill~Long. Strut
431	48	GUS	2	4	12	13/16	1/2	5/16					L1	Ctr Guss ~ Long Portal Diag
432	144	GUS	2	6	24	13/16	1/2	5/16					L1	Ctr Guss ~ Short Portal Diag
433	48	GUS	3 3/4	6	8	2 7/16	1/2	1 5/8	5/16				L1	BtmCornerGuss~Fill~Port Diag
434	96	GUS	3 3/4	6	16	2 7/16	1/2	1 5/8	5/16				L1	Btm Port Guss~Fill~Port Diag
435	48	GUS	3 3/4	6	8	2 7/16	1/2	1 5/8	5/16				L1	BtmPortGuss~Fill~Long. Strut
436														

WASHER CODES

L1: 1 Flat, 1 Load Ind.
LIM @ head,hard ws. @ nut

FIELD BOLT SUMMARY

2% + 2 ADDED, MIN. 2 EXTRA

LINE	NO. OF BOLTS	BOLT DIAM.	TYPE	BOLT LEN	ACTUAL COUNT	REMARKS
1	198	5/8	A325 Type 1	2	192	RCT (MECH. GALV.)
2	100	5/8	"	2 1/4	96	RCT (MECH. GALV.)
3	296	5/8	A325 Type 1	3 3/4	288	RCT (MECH. GALV.)
4						
5	594	Hard Flat Washers	for 5/8 ø	BOLT		F436, RCT (MECH. GALV.)
6	594	Load Ind. Washers	for 5/8 ø	BOLT		F959, RCT (MECH. GALV.)
7						
8						
9	3613	7/8	A325 Type 1	2 1/2	3540	RCT (MECH. GALV.)
10	1361	7/8	"	2 3/4	1332	RCT (MECH. GALV.)
11	1406	7/8	"	3	1376	RCT (MECH. GALV.)
12	247	7/8	"	3 1/4	240	RCT (MECH. GALV.)
13	3408	7/8	"	3 1/2	3337	RCT (MECH. GALV.)
14	3749	7/8	"	3 3/4	3674	RCT (MECH. GALV.)
15	1552	7/8	"	4	1520	RCT (MECH. GALV.)
16	353	7/8	"	4 1/4	344	RCT (MECH. GALV.)
17	2564	7/8	"	4 1/2	2512	RCT (MECH. GALV.)
18	133	7/8	"	5	128	RCT (MECH. GALV.)
19	35	7/8	A325 Type 1	5 1/2	32	RCT (MECH. GALV.)
20						
21	18494	Hard Flat Washers	for 7/8 ø	BOLT		F436, RCT (MECH. GALV.)
22	18419	Load Ind. Washers	for 7/8 ø	BOLT		F959, RCT (MECH. GALV.)
23						
24						
25	332	1	A325 Type 1	3 1/2	324	RCT (MECH. GALV.)
26	332	1	"	4	324	RCT (MECH. GALV.)
27	75	1	"	5	72	RCT (MECH. GALV.)
28	149	1	A325 Type 1	6	144	RCT (MECH. GALV.)
29						
30	1037	Hard Flat Washers	for 1 ø	BOLT		F436, RCT (MECH. GALV.)
31	888	Load Ind. Washers	for 1 ø	BOLT		F959, RCT (MECH. GALV.)
32						
33						
34						

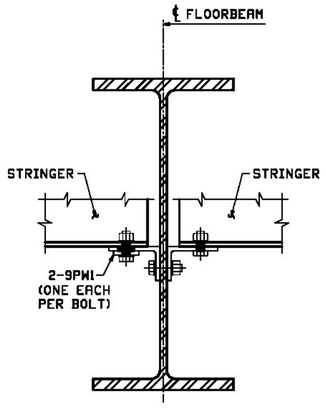

DETAIL "1"
(AT L1, L2, L3 & L4)

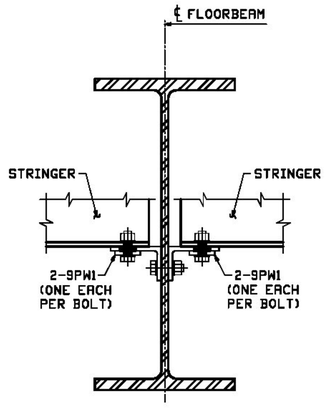

DETAIL "2"
(AT L5)

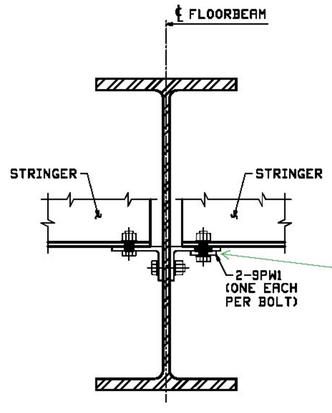

DETAIL "3"
(AT L6, L7, L8 & L9)

Washer should be under turned element (typical).

Vermont Agency of Transportation

RECEIVED

CK'D BY M.C.L. OK'D BY S.S.S.

March 9 2012

RESUBMIT ____ APPROVED AS NOTED ✓

BY J. LACROIX DATE 01-12-2012

NOTES:
1. REFER TO SHEET GN1 FOR GENERAL NOTES.
2. WORK THIS SHEET WITH SHEETS E5 & E6.

REV.	DATE	REMARKS	DWN	CHK	APVL	SHOP
0						

MATERIAL: | SURFACE PREP. & PAINT: | HOLES: | SHOP BOLTS:

DESCRIPTION: FIELD BOLTS

CASCO BAY STEEL STRUCTURES, INC.
1 WALLACE AVE. PHONE (207) 780-6722
SOUTH PORTLAND, ME 04106 FAX. (207) 780-6726

TEKSOR 3073

STRUCTURE: VT RTE 107 OVER WHITE RIVER

		DRAWN: EEO	DATE: 02/16
		CHK'D: TJB	DATE: 02/20
LOCATION: BETHEL, VT.		JOB NO.	DWG NO.
PROJ NO. BRF 022-1(14)		498	E7
CUSTOMER: BECK & BELLUCCI			REV. △

Mon, Feb 27, 2012 03:28:28 PM J:\acts\job\2012\12.1.0\s3

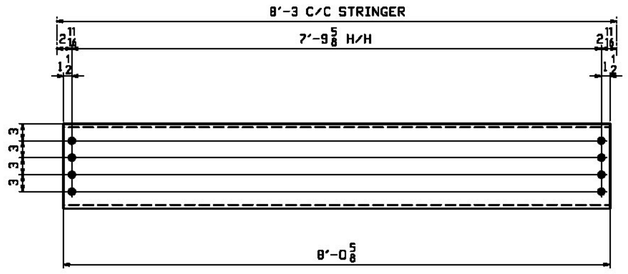

120 ~ DIAPHRAGMS ~ 9D1

(TYPICAL)

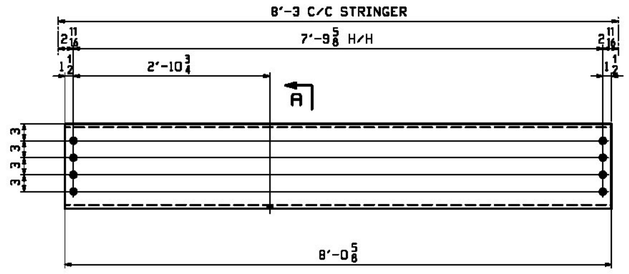

20 ~ DIAPHRAGMS ~ 9D2

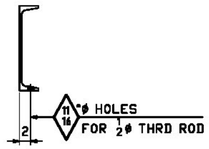

SECT -A

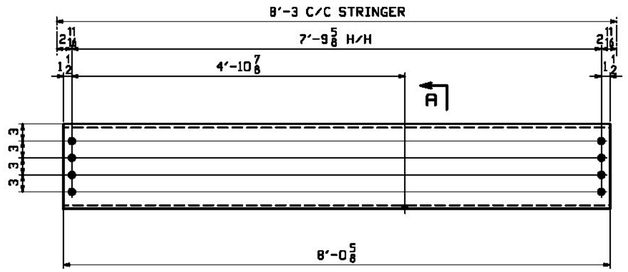

20 ~ DIAPHRAGMS ~ 9D3

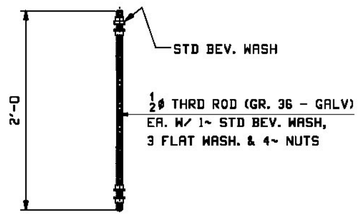

40 ~ HANGER RODS ~ 9HR1

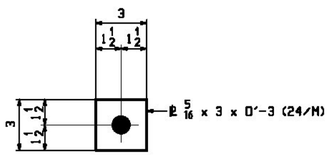

100 ~ PLATE WASHER ~ 9PW1 ⚠

ABM INFO		SHIP	BILL OF MATERIAL					JOB NO.	DRAWING NO.	REV.
						LENGTH		498	9	⚠
PAGE	LINE	MARK	QTY	MARK	MATERIAL	FT	INCHES	REMARKS	WT	PROCUREMENT NOTES
		9D1	120		DIAPHRAGMS				32756	
2	B		120	a9	C 15x33.9	8	0 5/8		32756	
		9D2	20		DIAPHRAGMS				5459	
2	B		20	b9	C 15x33.9	8	0 5/8		5459	
		9D3	20		DIAPHRAGMS				5459	
2	B		20	c9	C 15x33.9	8	0 5/8		5459	
		9HR1	40		HANGER RODS				76	
3	Y		40	d9	1/2 ø ROD	2	0	GALV.WITHREADED) 938	53	
14	C		40		BEVEL WASH FOR 1/2 ø HSB			MECH. GALV.(SQUARE BEV. WASHER) 2438	9	
14	D		120		1/2 ø HSW			MECH. GALV. 2438	9	
14	E		160		1/2 ø HHN			MECH. GALV. 2353	10	
24	M	9PW1	100		PL 5/16x3	0	3	MECH. GALV. (PLATE WASHER)	80	

Vermont Agency of Transportation

RECEIVED

CK'D BY M.C.L. OK'D BY S.S.S.

March 9 2012

RESUBMIT _____ APPROVED ✓

BY J. LACROIX DATE 01-12-2012

NOTES:

1. FOR GENERAL NOTES SEE DWG. GN1.
2. T2 DENOTES MATERIAL SUBJECT TO CHARPY V-NOTCH TESTING

REV.	DATE	REMARKS	DWN	CHK	APVL	SHOP
⚠ 0	2/18/12	ADD PLATE WASHER "9PW1"	EEG	TJB		

MATERIAL:	SURFACE PREP. & PAINT:	HOLES:	SHOP BOLTS:
M270-50 (UN)	HOT-DIP GALV.	15/16ø (UN)	7/8ø (UN)

DESCRIPTION: DIAPHRAGMS & HANGER RODS

CASCO BAY STEEL STRUCTURES, INC.
1 WALLACE AVE. PHONE (207) 780-6722
SOUTH PORTLAND, ME 04106 FAX. (207) 780-6726
TENSOR 3073

STRUCTURE: VT RTE 107 OVER WHITE RIVER		DRAWN: TJB	DATE: 10/17
		CHK'D: PCP	DATE: 10/21
LOCATION: BETHEL, VT.		JOB NO.	DWG NO.
PROJ NO. BRF 022-1(14)		498	9
CUSTOMER: BECK & BELLUCCI			REV. ⚠

TJB Mon, Feb 27, 2012 03:36:25 PM //users/jobs/9DT1/9 Rev1

INPUT BEARING DESIGN DATA:				
Vertical Service Load - (V_service)	924.00	kip	4109.95	KN
Vertical Strength Load - (V_strength)	1195.00	kip	5315.36	KN
Horizontal Service Load - (H_service)	114.00	kip	507.07	KN
Horizontal Strength Load - (H_strength)	635.00	kip	2824.48	KN
Horizontal Extreme Load - (H_extreme) - (Resultant Force)	645.15	kip	2869.63	KN
Design Rotation - (D_rotation)	0.03	radians	1.72	deg.
Elast Disk Allowable Stress-(S_disk)-(AASHTO Sect 14.7.4.4) Virgin PTFE confined sheet	3.50	ksi	24.13	MPA
Steel Specification - ASTM A-709 Gr. 50W - (Fy)	50.00	ksi	344.74	MPA
Steel Specification - ASTM A-709 Gr. 50W - (Fu_steel)	70.00	ksi	482.64	MPA
Welding - (Fu_weld)	70.00	ksi	482.64	MPA
Allowable Bearing Stress - (S_bearing) - (AASHTO Table 10.32.1A)	0.80	Fy		
Allowable Bending Stress - (S_bending)	0.55	Fy		
Allowable Shear Stress - (S_shear)	0.33	Fy		
Allowable Tensile Stress - (S_tensile)	0.55	Fy		
Sole Plate Thickness (High Side) - input from contract plan	1 3/4	in.	44.45	mm
Sole Plate Thickness (Low Side) - input from contract plan	1 3/4	in.	44.45	mm
Sole Plate Longitudinal Dimension - input from contract plan	32	in.	812.80	mm
Sole Plate Transverse Dimension - input from contract plan	36	in.	914.40	mm
Masonry Plate Thickness - input from contract plan	2 1/4	in.	57.15	mm
Masonry Plate Longitudinal Dimension - input from contract plan	32	in.	812.80	mm
Masonry Plate Transverse Dimension - input from contract plan	36	in.	914.40	mm
Bedding Material Thickness	1/8	in.	3.18	mm

OUTPUT BEARING DESIGN DATA:					
Sole Plate Thickness (High Side)	1 3/4	in.	44.45	mm	
Sole Plate Thickness (Low Side)	1 3/4	in.	44.45	mm	
Sole Plate Longitudinal Dimension	32	in.	812.80	mm	***OK as Designed***
Sole Plate Transverse Dimension	36	in.	914.40	mm	***OK as Designed***
Masonry Plate Thickness	2 1/4	in.	57.15	mm	
Masonry Plate Longitudinal Dimension	32	in.	812.80	mm	***OK as Designed***
Masonry Plate Transverse Dimension	36	in.	914.40	mm	***OK as Designed***
Piston Diameter - (PIST_dia)	18.2940	in.	464.67	mm	
Piston Thickness - (PIST_thk)	3.0423	in.	77.28	mm	
Rim Height of Piston - (RH_piston)	1.0557	in.	26.81	mm	
Weld Size Required for Piston to Sole Plate Connection - (PIST_weld) ***IF REQ'D***	0.4725	in.	12.00	mm	
Diameter of Brass Sealing Ring - (DBS_ring)	0.3750	in.	9.53	mm	
Diameter of Elastomeric Pad - (ELAST_dia)	18.3340	in.	465.68	mm	
Thickness of Elastomeric Pad - (ELAST_thk)	1.8316	in.	46.52	mm	
Pot Inside Diameter - (POT_id)	18.3340	in.	465.68	mm	
Pot outside Diameter - (POT_od)	24.5556	in.	623.71	mm	
Thickness of Pot Wall - (THKP_wall)	3.1108	in.	79.02	mm	
Depth of Pot - (POT_depth)	3.7822	in.	96.07	mm	
Thickness of Pot Base - (THKP_base)	3.1108	in.	79.02	mm	
Overall Pot Plate Thickness - (POT_thk)	6.8931	in.	175.08	mm	
Weld Size Required for Pot to Masonry Plate Connection - (POT_weld)	0.3520	in.	8.94	mm	

18.3340

Therefore: Use this value for design **18.3340** *in* **465.68** *mm*

2 Calculate the Thickness of the Elastomeric Disk Diameter (ELAST_thk) - (AASHTO Equation 14.7.4.3-1)

Formula: (ELAST_thk) = (3.33*(D_rotation)*(ELAST_dia)

1.8316

Therefore: Use this value for design **1.8316** *in* **46.52** *mm*

3 Calculate Diameter of Sealing Rings-Brass Rings (DBS_ring) - (AASHTO Section 14.7.4.5.3)

Formula: (DBS_ring) = (0.0175*ELAST_dia) or .188" (min)

0.3208

Where: (DBS_ring) minimum available = .188" dia.

Therefore: 0.375

Pist Hw Calc = 0.62

Use this value for design **0.3750** *in* **9.53** *mm*

Brass Ring Sizes (in) & Depth for (Hw)	
0.188	0.300
0.250	0.407
0.375	0.620
0.438	0.727
0.500	0.834
0.625	1.047
0.750	1.260

4 Calculate the Rim Height of the Piston (RH_piston) - (AASHTO Equation 14.7.4.7-2, 7-4)

Formula: (RH_piston) = max [(((1.5*(H_extreme))/(ELAST_dia*Fy)), (0.03*(ELAST_dia))]

Where Calc #1: 1.0557

Where Calc #2: 0.5500

Max Value: 1.0557

dimension is in contact with the pot wall

Fy = Yield strength of the steel (ksi)

Therefore: Rim Height thickness of piston -as designed **1.0557** *in* **26.81** *mm*

5 Calculate the Interior Depth of Pot (POT_depth) - (AASHTO Equation C14.7.4.3-1)

Formula: (POT_depth) =((ELAST_dia/2)*(D_rotation))+(ELAST_thk)+(RH_piston)+(Hw)

Where: 3.7822

Therefore: Use this value for design **3.7822** *in* **96.07** *mm*

6 Calculate the Thickness of the Pot Base (THKP_base) - (AASHTO Equation 14.7.4.6-3, 6-4, 7-1)

Formula: (THKP_base) = max [(0.04*(ELAST_dia), 0.75, sqrt((25*(H_extreme)*(D_rotation)/(Fy))

Where Calc #1: 0.7334

Where Calc #2: 0.7500

Where Calc #3: 3.1108

Max Value: 3.1108

Therefore: Use this value for design **3.1108** *in* **79.02** *mm*

7 Calculate the Overall Pot Plate Thickness (POT_thk) - (AASHTO Section 14.7.4.6)

Formula: (POT_thk) = (POT_depth) + (THKP_base)

Where: 6.8931

Therefore: Use this value for design (Note: matl will be ordered thicker to allow the Pot Plate to be machined on all surdfaces) **6.8931** *in* **175.08** *mm*

8 Calculate the Thickness of the Pot Wall (THKP_wall) - (AASHTO Equation 14.7.4.7-1, 6-6)

Formula: (THKP_wall) = max [sqrt((25*(H_extreme)*(D_rotation))/(Fy)), 0.75]

Where Calc #1: 3.1108

Where Calc #2: 0.7500

Max Value: 3.1108

Therefore: Use this value for design **3.1108** *in* **79.02** *mm*

8 Calculate the Pot Outside Diameter (POT_od)

Formula: (POT_od) = (ELAST_dia) + (2*(THKP_wall))

Where: 24.5556

Therefore: Use this value for design (Note: matl will be ordered larger to allow the Pot Plate to be machined on all surdfaces) **24.5556** *in* **623.71** *mm*

9 Calculate the Weld Size Requirement for Pot to Masonry Plate Connection (POT_weld)

Formula: (Fy) = min(Fu_weld) or (Fu_steel)

Therefore (Fy) = 70.0

Formula: (Weld_area_req) = (H_extreme)/((0.8)*(0.6)*(.7071)*(Fy))

(Weld_area_req) in^2= 27.1544

Formula: (POT_weld) = max[(WELD_area_req)/(3.1416*(POT_od)), 0.3125]

Where Calc #1: 0.3520

Where Calc #2: 0.3125

10 **Calculate the Piston Diameter (PIST_dia) - (AASHTO Equation 14.7.4.7-5)**

Formula: (Clearance) = max [((D_rotation)*((RH_piston)-((ELAST_dia)*(D_rotation)/2))), 0.04]

Where Calc #1: 0.0234

Where Calc #2: 0.0400

Max Value: 0.0400

Therefore: Use this value for design in Pot Clearance **0.0400** *in* **1.02** *mm*

Formula: (PIST_dia) = (ELAST_dia) - (Clearance) - **(AASHTO Section 14.7.4.7)**

Where: 18.2940

Therefore: Use this value for design **18.2940** *in* **464.67** *mm*

11 **Calculate the Weld Size Requirement for Piston to Sole Plate Connection (PIST_weld)**

Formula: (Fy) = min(Fu_weld) or (Fu_steel)

Therefore (Fy) = 70.0

Formula: (Weld_area_req) = (H_extreme)/((0.8)*(0.6)*(.7071)*(Fy))

(Weld_area_req) in^2= 27.1544

Formula: (PIST_weld) = max[(WELD_area_req)/(3.1416*(PIST_dia)), 0.3125]

Where Calc #1: 0.4725

Where Calc #2: 0.3125

Max Value: 0.4725

Therefore: Use this value for design **0.4725** *in* **12.00** *mm*

12 **Calculate the Thickness of the Piston - (PIST_thk)**

Formula_1: (PIST_thk_1) = (0.06) * (ELAST_dia)

Where (PIST_thk_1): 1.1000 **(AASHTO Section 14.7.4.7)**

Formula_2: (PIST_thk_2) = (POT_depth)-(ELAST_thk)+((POT_dia)/2)*(D_rotation))+(2*(0.06*(ELAST_thk))+0.125

Where (PIST_thk_2): 2.6638 **(AASHTO Equation C14.7.4.3-2)**

Formula_3: (PIST_thk_3) = (POT_depth)-(ELAST_thk)+((PIST_dia)/2)*(D_rotation))+(PIST_weld)+((0.12*(ELAST_thk))+0.125)

Where (PIST_thk_3): 3.0423 **(AASHTO Equation C14.7.4.3-2)**

Max Value: 3.0423

Therefore: Use this value for design (Note: matl will be ordered thicker to allow the Piston to be machined on all surdfaces) **3.0423** *in* **77.28** *mm*

13 **Calculate the Adequacy of the Sole Plate Longitudinal Dimension - (LONG_sp_lgth)**

Formula: (LONG_sp_lgth) = (PIST_dia) + (2*(PIST_weld)) + 1" safety factor

Where: 20.2389

Check: If calculated (LONG_sp_lgth) < Sole Plate Longitudinal Dimension

Therefore: ***OK as Designed***

14 **Calculate the Adequacy of the Sole Plate Transverse Dimension - (TRANS_sp_lgth)**

Formula: (TRANS_sp_lgth) = (PIST_dia) + (2*(PIST_weld)) + 1" safety factor

Where: 20.2389

Check: If calculated (LONG_sp_lgth) < Sole Plate Transverse Dimension

Therefore: ***OK as Designed***

15 **Calculate the Adequacy of the Masonry Plate Longitudinal Dimension - (LONG_mp_lgth)**

Formula: (LONG_mp_lgth) = (POT_od) + (2*1" std DOT clearance)

Where: 26.5556

Check: If calculated (LONG_mp_lgth) < Masonry Plate Longitudinal Dimension

Therefore: ***OK as Designed***

16 **Calculate the Adequacy of the Masonry Plate Transverse Dimension - (TRANS_mp_lgth)**

Formula: (TRANS_mp_lgth) = (POT_od) + (2*1" std DOT clearance)

Where: 26.5556

Check: If calculated (LONG_mp_lgth) < Masonry Plate Transverse Dimension

Therefore: ***OK as Designed***

AASHTO LRFD SECTION 14 - POT BEARINGS

Un-Guided

INPUT BEARING DESIGN DATA:				
Vertical Service Load - (V_service)	924.00	kip	4109.95	KN
Vertical Strength Load - (V_strength)	1195.00	kip	5315.36	KN
Horizontal Extreme Load - (H_extreme)	114.00	kip	507.07	KN
One-Way Longitudinal Movement - (MOVE_long)	3 13/20	in.	92.71	mm
One-Way Transverse Movement - (MOVE_trans)	2	in.	50.80	mm
ONE-WAY Movement Safety Factor - (MOVE_sf) - {Std. = 1"}	1	in.	25.40	mm
Design Rotation - (D_rotation)	0.03	radians	1.72	deg.
Elastomer Disk Allowable Stress - (S_disk) - {AASHTO Section 14.7.4.4}	3.50	ksi	24.13	MPA
PTFE Contact Stress - (S_ptfe) - {AASHTO Table 14.7.2.4-1}Virgin PTFE confined shee	4.50	ksi	31.03	MPA
Steel Specification - ASTM A-709 Gr. 50W - (Fy)	50.00	ksi	344.74	MPA
Steel Specification - ASTM A-709 Gr. 50W - (Fu_steel)	70.00	ksi	482.64	MPA
Welding - (Fu_weld)	70.00	ksi	482.64	MPA
Allowable Bearing Stress - (S_bearing) - {AASHTO Table 10.32.1A}	0.80	Fy		
Allowable Bending Stress - (S_bending)	0.55	Fy		
Allowable Shear Stress - (S_shear)	0.33	Fy		
Allowable Tensile Stress - (S_tensile)	0.55	Fy		
Sole Plate Thickness (High Side) - input from contract plan	1 3/4	in.	44.45	mm
Sole Plate Thickness (Low Side) - input from contract plan	1 3/4	in.	44.45	mm
Sole Plate Longitudinal Dimension - input from contract plan	32	in.	812.80	mm
Sole Plate Transverse Dimension - input from contract plan	36	in.	914.40	mm
Masonry Plate Thickness - input from contract plan	2 1/4	in.	57.15	mm
Masonry Plate Longitudinal Dimension - input from contract plan	32	in.	812.80	mm
Masonry Plate Transverse Dimension - input from contract plan	36	in.	914.40	mm
Bedding Material Thickness	1/8	in.	3.18	mm

OUTPUT BEARING DESIGN DATA:					
Sole Plate Thickness (High Side)	1 3/4	in.	44.45	mm	
Sole Plate Thickness (Low Side)	1 3/4	in.	44.45	mm	
Sole Plate Longitudinal Dimension	32	in.	812.80	mm	*OK as Designed*
Sole Plate Transverse Dimension	36	in.	914.40	mm	*OK as Designed*
Masonry Plate Thickness	2 1/4	in.	57.15	mm	
Masonry Plate Longitudinal Dimension	32	in.	812.80	mm	*OK as Designed*
Masonry Plate Transverse Dimension	36	in.	914.40	mm	*OK as Designed*
Piston Diameter - (PIST_dia)	18.2940	in.	464.67	mm	
Piston Thickness - (PIST_thk)	2.1041	in.	53.44	mm	
Rim Height of Piston - (RH_piston)	0.5500	in.	13.97	mm	
Diameter of Brass Sealing Ring - (DBS_ring)	0.3750	in.	9.53	mm	
Diameter of Elastomeric Pad - (ELAST_dia)	18.3340	in.	465.68	mm	
Thickness of Elastomeric Pad - (ELAST_thk)	1.8316	in.	46.52	mm	
Pot Inside Diameter - (POT_id)	18.3340	in.	465.68	mm	
Pot outside Diameter - (POT_od)	20.9493	in.	532.11	mm	
Thickness of Pot Wall - (THKP_wall)	1.3077	in.	33.21	mm	
Depth of Pot - (POT_depth)	3.2766	in.	83.23	mm	
Thickness of Pot Base - (THKP_base)	1.3077	in.	33.21	mm	
Overall Pot Plate Thickness - (POT_thk)	4.5843	in.	116.44	mm	
Weld Size Required for Pot to Masonry Plate Connection - (POT_weld)	0.3125	in.	7.94	mm	

1 **Calculate the Elastomeric Disk Diameter (ELAST_dia) - (AASHTO Section 14.7.4.4)**

Formula: (ELAST_dia) = (sqrt((4*(V_service))/((S_disk)*3.1416)))

18.3340

Therefore: Use this value for design **18.3340** *in* **465.68** *mm*

2 **Calculate the Thickness of the Elastomeric Disk Diameter (ELAST_thk) - (AASHTO Equation 14.7.4.3-1)**

Formula: (ELAST_thk) = (3.33*(D_rotation)*(ELAST_dia)

1.8316

Therefore: Use this value for design **1.8316** *in* **46.52** *mm*

3 **Calculate Diameter of Sealing Rings-Brass Rings (DBS_ring) - (AASHTO Section 14.7.4.5.3)**

Formula: (DBS_ring) = (0.0175*ELAST_dia) or .188" (min)

0.3208

Where: (DBS_ring) minimum available = .188" dia.

Therefore: 0.375

Pist Hw Calc = 0.62

Use this value for design **0.3750** *in* **9.53** *mm*

Brass Ring Sizes (in) & Depth for (Hw	
0.188	0.300
0.250	0.407
0.375	0.620
0.438	0.727
0.500	0.834
0.625	1.047
0.750	1.260

4 **Calculate the Rim Height of the Piston (RH_piston) - (AASHTO Equation 14.7.4.7-2, 7-4)**

Formula: (RH_piston) = max [(((1.5*(H_extreme))/(ELAST_dia*Fy)), (0.03*(ELAST_dia))]

Where Calc #1: 0.1865

Where Calc #2: 0.5500

Max Value: 0.5500

dimension is in contact with the pot wall

Fy = Yield strength of the steel (ksi)

Therefore: Rim Height thickness of piston -as designed **0.5500** *in* **13.97** *mm*

5 **Calculate the Interior Depth of Pot (POT_depth) - (AASHTO Equation C14.7.4.3-1)**

Formula: (POT_depth) =((ELAST_dia/2)*(D_rotation))+(ELAST_thk)+(RH_piston)+Hw

Where: 3.2768

Therefore: Use this value for design **3.2766** *in* **83.23** *mm*

6 **Calculate the Thickness of the Pot Base (THKP_base) - (AASHTO Equation 14.7.4.6-3, 6-4, 7-1)**

Formula: (THKP_base) = max [(0.04*(ELAST_dia), 0.75, sqrt((25*(H_extreme)*(D_rotation)/(Fy))

Where Calc #1: 0.7334

Where Calc #2: 0.7500

Where Calc #3: 1.3077

Max Value: 1.3077

Therefore: Use this value for design **1.3077** *in* **33.21** *mm*

7 **Calculate the Overall Pot Plate Thickness (POT_thk) - (AASHTO Section 14.7.4.6)**

Formula: (POT_thk) = (POT_depth) + (THKP_base)

Where: 4.5843

Therefore: Use this value for design (Note: matl will be ordered thicker to allow the Pot Plate to be machined on all surdfaces) **4.5843** *in* **116.44** *mm*

8 **Calculate the Thickness of the Pot Wall (THKP_wall) - (AASHTO Equation 14.7.4.7-1, 6-6)**

Formula: (THKP_wall) = max [sqrt((25*(H_extreme)*(D_rotation))/(Fy)), 0.75]

Where Calc #1: 1.3077

Where Calc #2: 0.7500

Max Value: 1.3077

Therefore: Use this value for design **1.3077** *in* **33.21** *mm*

8 **Calculate the Pot Outside Diameter (POT_od)**

Formula: (POT_od) = (ELAST_dia) + (2*(THKP_wall))

Where: 20.9493

Therefore: Use this value for design (Note: matl will be ordered larger to allow the Pot Plate to be machined on all surdfaces) **20.9493** *in* **532.11** *mm*

9 **Calculate the Weld Size Requirement for Pot to Masonry Plate Connection (POT_weld)**

Formula: (Fy) = min(Fu_weld) or (Fu_steel)

Therefore (Fy) = 70.0

Formula: (Weld_area_req) = (H_extreme)/((0.8)*(0.6)*(.7071)*(Fy))

(Weld_area_req) in^2= 4.7983

Formula: (POT_weld) = max[(WELD_area_req)/(3.1416*(POT_od)), 0.3125]

Where Calc #1: 0.0729

Where Calc #2: 0.3125

Max Value: 0.3125

Therefore: Use this value for design **0.3125** *in* **7.94** *mm*

10 **Calculate the Piston Diameter (PIST_dia) - (AASHTO Equation 14.7.4.7-5)**

Formula: (Clearance) = max [((D_rotation)*((RH_piston)-((ELAST_dia)*(D_rotation)/2))), 0.04]
Where Calc #1: 0.0083
Where Calc #2: 0.0400
Max Value: 0.0400
Therefore: Use this value for design in Pot Clearance **0.0400** *in* **1.02** *mm*
Formula: (PIST_dia) = (ELAST_dia) - (Clearance) - **(AASHTO Section 14.7.4.7)**
Where: 18.2940
Therefore: Use this value for design **18.2940** *in* **464.67** *mm*

11 **Calculate the Weld Size Requirement for Piston to Sole Plate Connection (PIST_weld)**

Formula: (Fy) = min(Fu_weld) or (Fu_steel)
Therefore (Fy) = 70.0
Formula: (Weld_area_req) = (H_extreme)/((0.8)*(0.6)*(.7071)*(Fy))
(Weld_area_req) in^2= 4.7983
Formula: (PIST_weld) = max[(WELD_area_req)/(3.1416*(PIST_dia)), 0.3125]
Where Calc #1: 0.0835
Where Calc #2: 0.3125
Max Value: 0.3125
Therefore: Use this value for design ***N/A-UnGuided*** *in* ***N/A-UnGuided*** *mm*

12 **Calculate the Thickness of the Piston - (PIST_thk)**

Formula_1: (PIST_thk_1) = (0.06) * (ELAST_dia)
Where (PIST_thk_1): 1.1000 **(AASHTO Section 14.7.4.7)**
Formula_2: (PIST_thk_2) = (POT_depth)-(ELAST_thk)+((POT_dia)/2)*(D_rotation))+(2*(0.06*(ELAST_thk))+0.125
Where (PIST_thk_2): 2.1041 **(AASHTO Equation C14.7.4.3-2)**
Max Value: 2.1041
Therefore: Use this value for design (Note: matl will be ordered thicker to allow the Piston to be machined on all surdfaces) **2.1041** *in* **53.44** *mm*

13 **Calculate the Adequacy of the Sole Plate Longitudinal Dimension - (LONG_sp_lgth)**

Formula: (LONG_sp_lgth) = (PIST_dia) + (2*(MOVE_long)) + (MOVE_sf)
Where: 26.5940
Check: If calculated (LONG_sp_lgth) < Sole Plate Longitudinal Dimension
Therefore: ***OK as Designed***

14 **Calculate the Adequacy of the Sole Plate Transverse Dimension - (TRANS_sp_lgth)**

Formula: (TRANS_sp_lgth) = (PIST_dia) + (2*(MOVE_trans)) + (MOVE_sf)
Where: 23.2940
Check: If calculated (LONG_sp_lgth) < Sole Plate Transverse Dimension
Therefore: ***OK as Designed***

15 **Calculate the Adequacy of the Masonry Plate Longitudinal Dimension - (LONG_mp_lgth)**

Formula: (LONG_mp_lgth) = (POT_od) + (2*1" std DOT clearance)
Where: 22.9493
Check: If calculated (LONG_mp_lgth) < Masonry Plate Longitudinal Dimension
Therefore: ***OK as Designed***

16 **Calculate the Adequacy of the Masonry Plate Transverse Dimension - (TRANS_mp_lgth)**

Formula: (TRANS_mp_lgth) = (POT_od) + (2*1" std DOT clearance)
Where: 22.9493
Check: If calculated (LONG_mp_lgth) < Masonry Plate Transverse Dimension
Therefore: ***OK as Designed***

17 **Provide Design of PTFE on Piston Capacity (PTFE_pist)**

Formula: (PTFE_pist) = (PIST_area) - (1/4*(PIST_relief for rotation from top of rim to top of Piston+ recess for PTFE on the top dia of Piston)) * (S_surf_ptfe) allowable
(PTFE_pist) Capacity = 1150.71454
Where: Design Capacity (PTFE_pist) > Vertical Service
Therefore: **Okay as Designed**

INPUT BEARING DESIGN DATA:				
Vertical Service Load - (V_service)	924.00	*kip*	4109.95	*KN*
Vertical Strength Load - (V_strength)	1195.00	*kip*	5315.36	*KN*
Horizontal Service Load - (H_service)	114.00	*kip*	507.07	*KN*
Horizontal Strength Load - (H_strength)	635.00	*kip*	2824.48	*KN*
Horizontal Extreme Load - (H_extreme) - (Resultant Force)	645.15	*kip*	2869.63	*KN*
Input ONE-WAY Longitudinal Movement - (MOVE_long)	3 13/20	*in.*	92.71	*mm*
ONE-WAY Movement Safety Factor - (MOVE_sf) - (Std. = 1")	2	*in.*	50.80	*mm*
Guide Bar PTFE Str-(S_gb_ptfe)-(AASHTO Table 14.7.2.4-1)Virgin PTFE confined sheet	4.50	*ksi*	31.03	*MPA*
Guide Bar Clearance - (GB_clear) - (Input from contract plan)	1/16	*in.*	1.59	*mm*
Design Rotation - (D_rotation)	0.03	*radians*	1.72	*deg.*
Elastomer Disk Allowable Stress - (S_disk) - (AASHTO Section 14.7.4.4)	3.50	*ksi*	24.13	*MPA*
PTFE Surf. Des Str-(S_surf_ptfe)-(AASHTO Table 14.7.2.4-1)Virgin PTFE confined shee	4.50	*ksi*	31.03	*MPA*
Steel Specification - ASTM A-709 Gr. 50W - (Fy)	50.00	*ksi*	344.74	*MPA*
Steel Specification - ASTM A-709 Gr. 50W - (Fu_steel)	70.00	*ksi*	482.64	*MPA*
Welding - (Fu_weld)	70.00	*ksi*	482.64	*MPA*
Allowable Bearing Stress - (S_bearing) - (AASHTO Table 10.32.1A)	0.80	*Fy*		
Allowable Bending Stress - (S_bending)	0.55	*Fy*		
Allowable Shear Stress - (S_shear)	0.33	*Fy*		
Sole Plate Thickness (High Side) - input from contract plan	1 3/4	*in.*	44.45	*mm*
Sole Plate Thickness (Low Side) - input from contract plan	1 3/4	*in.*	44.45	*mm*
Sole Plate Longitudinal Dimension - input from contract plan	32	*in.*	812.80	*mm*
Sole Plate Transverse Dimension - input from contract plan	36	*in.*	914.40	*mm*
Masonry Plate Thickness - input from contract plan	2 1/4	*in.*	57.15	*mm*
Masonry Plate Longitudinal Dimension - input from contract plan	32	*in.*	812.80	*mm*
Masonry Plate Transverse Dimension - input from contract plan	36	*in.*	914.40	*mm*
Bedding Material Thickness	1/8	*in.*	3.18	*mm*

OUTPUT BEARING DESIGN DATA:					
Sole Plate Thickness (High Side)	1 3/4	*in.*	44.45	*mm*	
Sole Plate Thickness (Low Side)	1 3/4	*in.*	44.45	*mm*	
Sole Plate Longitudinal Dimension	32	*in.*	812.80	*mm*	***N.G. as Designed Increase Sole Pl***
Sole Plate Transverse Dimension	36	*in.*	914.40	*mm*	***N.G. as Designed***
Guide Bar Length - (GB_lgth)	35.00	*in.*	889.00	*mm*	
Guide Bat Width - (GB_width)	2	*in.*	50.80	*mm*	
Guide Bar Height - (GB-th)	4 4/9	*in.*	113.03	*mm*	
Fillet Weld Size for Guide Bar to Sole Plate Connection - (FILLET_weld_size)	0.5000	*in.*	12.70	*mm*	
Groove Weld Size for Guide Bar to Sole Plate Connection - (GROOVE_weld_size)	0.3125	*in.*	7.94	*mm*	
Masonry Plate Thickness	2 1/4	*in.*	57.15	*mm*	
Masonry Plate Longitudinal Dimension	32	*in.*	812.80	*mm*	***OK as Designed***
Masonry Plate Transverse Dimension	36	*in.*	914.40	*mm*	***OK as Designed***
Piston Diameter - (PIST_dia)	18.2940	*in.*	464.67	*mm*	
Piston Thickness - (PIST_thk)	2.0438	*in.*	51.91	*mm*	
Rim Height of Piston - (RH_piston)	1.0557	*in.*	26.81	*mm*	
Diameter of Brass Sealing Ring - (DBS_ring)	0.3750	*in.*	9.53	*mm*	
Diameter of Elastomeric Pad - (ELAST_dia)	18.3340	*in.*	465.68	*mm*	
Thickness of Elastomeric Pad - (ELAST_thk)	1.8316	*in.*	46.52	*mm*	
Pot Inside Diameter - (POT_id)	18.3340	*in.*	465.68	*mm*	
Pot outside Diameter - (POT_od)	24.5556	*in.*	623.71	*mm*	
Thickness of Pot Wall - (THKP_wall)	3.1108	*in.*	79.02	*mm*	
Depth of Pot - (POT_depth)	3.1622	*in.*	80.32	*mm*	
Thickness of Pot Base - (THKP_base)	3.1108	*in.*	79.02	*mm*	
Overall Pot Plate Thickness - (POT_thk)	6.2731	*in.*	159.34	*mm*	
Weld Size Required for Pot to Masonry Plate Connection - (POT_weld)	0.3520	*in.*	8.94	*mm*	

18.3340

Therefore: Use this value for design **18.3340** *in* **465.68** *mm*

2 Calculate the Thickness of the Elastomeric Disk Diameter (ELAST_thk) - (AASHTO Equation 14.7.4.3-1)

Formula: (ELAST_thk) = (3.33*(D_rotation)*(ELAST_dia)

1.8316

Therefore: Use this value for design **1.8316** *in* **46.52** *mm*

3 Calculate Diameter of Sealing Rings-Brass Rings (DBS_ring) - (AASHTO Section 14.7.4.5.3)

Formula: (DBS_ring) = (0.0175*ELAST_dia) or .188" (min)

0.3208

Where: (DBS_ring) minimum available = .188" dia.

Therefore: 0.3750

Pist Hw Calc = FALSE

Use this value for design **0.3750** *in* **4.76** *mm*

Brass Ring Sizes (in) & Depth for (Hw)	
0.188	0.300
0.250	0.407
0.375	0.620
0.438	0.727
0.500	0.834
0.625	1.047
0.750	1.260

4 Calculate the Rim Height of the Piston (RH_piston) - (AASHTO Equation 14.7.4.7-2, 7-4)

Formula: (RH_piston) = max [(((1.5*(H_extreme))/(ELAST_dia*E18)), (0.03*(ELAST_dia))]

Where Calc #1: 1.0557

Where Calc #2: 0.5500

Max Value: 1.0557

dimension is in contact with the pot wall

Fy = Yield strength of the steel (ksi)

Therefore: Rim Height thickness of piston -as designed **1.0557** *in* **26.81** *mm*

5 Calculate the Interior Depth of Pot (POT_depth) - (AASHTO Equation C14.7.4.3-1)

Formula: (POT_depth) =((ELAST_dia/2)*(D_rotation))+(ELAST_thk)+(RH_piston)+(Hw)

Where: 3.1622

Therefore: Use this value for design **3.1622** *in* **80.32** *mm*

6 Calculate the Thickness of the Pot Base (THKP_base) - (AASHTO Equation 14.7.4.6-3, 6-4, 7-1)

Formula: (THKP_base) = max [(0.04*(ELAST_dia), 0.75, sqrt((25*(H_extreme)*(D_rotation)/(Fy))

Where Calc #1: 0.7334

Where Calc #2: 0.7500

Where Calc #3: 3.1108

Max Value: 3.1108

Therefore: Use this value for design **3.1108** *in* **79.02** *mm*

7 Calculate the Overall Pot Plate Thickness (POT_thk) - (AASHTO Section 14.7.4.6)

Formula: (POT_thk) = (POT_depth) + (THKP_base)

Where: 6.2731

Therefore: Use this value for design (Note: matl will be ordered thicker to allow the Pot Plate to be machined on all surdfaces) **6.2731** *in* **159.34** *mm*

8 Calculate the Thickness of the Pot Wall (THKP_wall) - (AASHTO Equation 14.7.4.7-1, 6-6)

Formula: (THKP_wall) = max [sqrt((25*(H_extreme)*(D_rotation))/(Fy)), 0.75]

Where Calc #1: 3.1108

Where Calc #2: 0.7500

Max Value: 3.1108

Therefore: Use this value for design **3.1108** *in* **79.02** *mm*

8 Calculate the Pot Outside Diameter (POT_od)

Formula: (POT_od) = (ELAST_dia) + (2*(THKP_wall))

Where: 24.5556

Therefore: Use this value for design (Note: matl will be ordered larger to allow the Pot Plate to be machined on all surdfaces) **24.5556** *in* **623.71** *mm*

9 Calculate the Weld Size Requirement for Pot to Masonry Plate Connection (POT_weld)

Formula: (Fy) = min(Fu_weld) or (Fu_steel)

Therefore (Fy) = 70.0

Formula: (Weld_area_req) = (H_extreme)/((0.8)*(0.6)*(.7071)*(Fy))

(Weld_area_req) in^2= 27.1544

Formula: (POT_weld) = max[(WELD_area_req)/(3.1416*(POT_od)), 0.3125]

Where Calc #1: 0.3520

Where Calc #2: 0.3125

Max Value: 0.3520

Therefore: Use this value for design **0.3520** *in* **8.94** *mm*

10 Calculate the Piston Diameter (PIST_dia) - (AASHTO Equation 14.7.4.7-5)

Formula: (Clearance) = max [((D_rotation)*((RH_piston)-((ELAST_dia)*(D_rotation)/2))), 0.04]

Where Calc #1: 0.0234

Where Calc #2: 0.0400

Max Value: 0.0400

Therefore: Use this value for design **18.2940** *in* **464.67** *mm*

11 Calculate the Weld Size Requirement for Piston to Sole Plate Connection (PIST_weld)

Formula: (Fy) = min(Fu_weld) or (Fu_steel)
Therefore (Fy) = 70.0
Formula: (Weld_area_req) = (H_extreme)/((0.8)*(0.6)*(.7071)*(Fy))
(Weld_area_req) in^2= 27.1544
Formula: (PIST_weld) = max[(WELD_area_req)/(3.1416*(PIST_dia)), 0.3125]
Where Calc #1: 0.4725
Where Calc #2: 0.3125
Max Value: 0.4725
Therefore: Use this value for design ***N/A-Guided*** *in* ***N/A-Guided*** *mm*

12 Calculate the Thickness of the Piston - (PIST_thk)

Formula_1: (PIST_thk_1) = (0.06) * (ELAST_dia)
Where (PIST_thk_1): 1.1000 **(AASHTO Section 14.7.4.7)**
Formula_2: (PIST_thk_2) = (POT_depth)-(ELAST_thk)+((POT_dia)/2)*(D_rotation))+(2*(0.06*(ELAST_thk))+0.125
Where (PIST_thk_2): 2.0438 **(AASHTO Equation C14.7.4.3-2)**
Max Value: 2.0438
Therefore: Use this value for design (Note: matl will be ordered thicker to allow the Piston to be machined on all surdfaces) **2.0438** *in* **51.91** *mm*

13 Calculate the Length of the Teflon recessed 1/2 thk into Pot OD - (PTFE_lgth) - (Note recess pocket machined into pot wall)

Formula: (PTFE_lgth) = ((POT_od)
Where: 24.5556
Therefore: Use this value for design **24.5556** *in* **623.71** *mm*

14 Calculate the Height of the Teflon recessed 1/2 thk into Pot OD - (PTFE_ht)

Formula: (PTFE_ht) = (H_strength) / (S_gb_ptfe) * (PTFE_lgth)
Where: 5.7466
Therefore: Use this value for design **5.7466** *in* **145.96** *mm*

15 Calculate the Logitudinal Width of the Stainless Steel on the Sole Pl - (LONG_sst_width)

Formula: (LONG_sst_width) = (POT_od) + ((2*(MOVE_long)) + ((MOVE_sf))
Where: 33.8556
Therefore: Use this value for design **33.8556** *in* **859.93** *mm*
Check: If calculated (LONG_sp_lgth) < (LONG_sst_width)
Therefore: ***N.G. as Designed Increase Sole Plate Width***

16 Calculate the Guide Bar & Stainless Steel Height - (GB_SST_height)

Formula: (GB_SST_height) = (PTFE_ht) + (1.)
Where: 6.7466
Therefore: Use this value for design **7.0** *in* **177.80** *mm*

17 Calculate the Adequacy of the Sole Plate Transverse Dimension - (TRANS_sp_lgth)

Formula: (TRANS_sp_lgth) = (PIST_dia) + (2*(POT_wall)) + (2*(GB_clear)) + (2*(GB_thk)) + (One Way MOVE_sf)
Where: 40.6406
Check: If calculated (TRANS_sp_lgth) < Sole Plate Transverse Dimension
Therefore: ***N.G. as Designed***

18 Calculate the Adequacy of the Masonry Plate Longitudinal Dimension - (LONG_mp_lgth)

Formula: (LONG_mp_lgth) = (POT_od) + (2*1" std DOT clearance)
Where: 26.5556
Check: If calculated (LONG_mp_lgth) < Masonry Plate Longitudinal Dimension
Therefore: ***OK as Designed***

19 Calculate the Adequacy of the Masonry Plate Transverse Dimension - (TRANS_mp_lgth)

Formula: (TRANS_mp_lgth) = (POT_od) + (2*1" std DOT clearance)
Where: 26.5556
Check: If calculated (TRANS_mp_lgth) < Masonry Plate Transverse Dimension
Therefore: ***OK as Designed***

20 Calculate the Weld Size Requirement for Guide Bar to Sole Plate Connection (GB_weld)

Formula: (Fy) = min(Fu_weld) or (Fu_steel)
Therefore (Fy) = 70.0
Formula: (FILLET_allow) = (0.8) * (0.6) * (0.7071) * (Fy)
Therefore: Fillet Weld Allowable (AASHTO Equation 6.13.3.2.4b-1) = **23.7586** ksi
Formula: (GROOVE_allow) = (0.8) * (0.6) * (0.7071) * (Fy)
Therefore: Groove Weld Allowable (AASHTO Equation 6.13.3.2.4a-1) = **23.7586** ksi
Formula: (FILLET_weld_size) = (GB_lgth) / (FILLET_allow)
Formula: (FILLET_weld_size) = max [((FILLET_weld_size), 0.3125)]
Where Calc #1: 0.5000
Where Calc #2: 0.3125
Max Value: 0.5000

Where Calc #1: 0.1473

Where Calc #2: 0.3125

Max Value: 0.3125

Therefore: Use this value for design of the Groove Weld Size **0.3125** *in* **7.94** *mm*

21 Provide Design of PTFE on Piston Capacity (PTFE_pist)

Formula: (PTFE_pist) = (PIST_area) - (1/4*(PIST_relief for rotation from top of rim to top of Piston+ recess for PTFE on the top dia of Piston)) * (S_surf_ptfe) allowable

(PTFE_pist) Capacity = 1150.7

Where: Design Capacity (PTFE_pist) > Vertical Service

Therefore: **Okay as Designed**

GENERAL NOTES

Vermont Agency of Transportation
RECEIVED
CK'D BY M.C.L. OK'D BY S.S.S.
January 10 2012
RESUBMIT APPROVED AS NOTED ✓
BY J. LACROIX DATE 01-12-2012

CONSTRUCTION SPECIFICATIONS

1) ALL MATERIAL AND WORKMANSHIP TO BE IN ACCORDANCE WITH THE STATE OF VERMONT AGENCY OF TRANSPORTATION STANDARD SPECIFICATIONS FOR CONSTRUCTION DATED 2006 WITH LATEST REVISIONS AND THE AASHTO LRFD BRIDGE CONSTRUCTION SPECIFICATIONS FOR HIGHWAY BRIDGES 4th EDITION WITH INTERIMS THROUGH 2010.

MATERIAL SPECIFICATIONS

1) ALL STEEL SHALL BE AASHTO M270 GRADE 50 AND SHALL BE GALVANIZED PER SUBSECTION 506.15, WITH THE FOLLOWING EXCEPTIONS:

   A. ALL STANDARD ANGLE ROLLED SHAPES, EXCEPT FOR THE ANGLES CONNECTING THE END FLOOR BEAMS SHALL BE AASHTO M270 GRADE 36.

   B. THE TWO END FLOORBEAM MEMBERS SHALL BE AASHTO M270 HIGH PERFORMANCE STEEL GRADE HPS 70W.

   C. ALL TOP CHORD GUSSET PLATES SHALL BE AASHTO M270 HIGH PERFORMANCE STEEL GRADE HPS 70W.

2) MATERIAL NOTED "T2" OR CVN ON DETAIL DRAWINGS SHALL BE CHARPY V-NOTCH TESTED IN ACCORDANCE WITH THE REQUIREMENTS OF VERMONT STANDARD SPECIFICATIONS SECTION 714.01.

3) MATERIAL NOTED "F2" OR FCM (FRACTURE CRITICAL MEMBERS) ON DETAIL DRAWINGS SHALL MEET THE FOLLOWING CONSTRUCTION AND TESTING REQUIREMENTS:

   A. ALL FRACTURE CRITICAL MEMBERS SHALL BE FABRICATED ACCORDING TO SECTION 12 OF THE AASHTO/AWS D1.5 BRIDGE WELDING CODE.

   B. ALL FRACTURE CRITICAL MEMBERS SHALL BE FABRICATED IN A PLANT HAVING AN AISC FRACTURE CRITICAL ENDORSMENT OR THE FABRICATOR SHALL PROVIDE TO THE STRUCTURES ENGINEER AN ACCEPTABLE FRACTURE CONTROL PLAN MEETING THE REQUIREMENTS OF AASHTO/AWS D1.5, PRIOR TO FABRICATION.

   C. ALL FRACTURE CRITICAL MEMBERS SHALL BE IMPACT TESTED TO THE FRACTURE CRITICAL REQUIREMENTS AS SPECIFIED IN AASHTO M270.

4) HIGH STRENGTH BOLTS: ASTM A325 TYPE 1 GALVANIZED PER SECTION 506 (UN).
   NUTS SHALL BE A563 GRADE DH GALVANIZED.
   LOAD INDICATOR WASHERS (LIW) SHALL BE USED AS THE METHOD FOR PRETENSIONING ALL BOLTED TRUSS CONNECTIONS.
   BOLTS & NUTS SHALL BE ROTATIONAL CAPACITY TESTED.
   DO NOT MIX NUTS & BOLTS FROM DIFFERENT CONTAINERS UNLESS ALL BOLTS & NUTS HAVE THE SAME LOT NUMBER.

5) ALL STRUCTURAL CONNECTIONS INCORPORATING THE BEVELED SIDE OF A STANDARD BEAM, CHANNEL OR ANGLE SHALL USE THE CORRESPONDING GALVANIZED ASTM F436 BEVELED WASHERS.

FABRICATION

1) ALL HOLES SHALL BE DRILLED FULL SIZE (UN).

⚠ 2) NO FIELD DRILLING, REAMING, OR CUTTING OF TRUSS OR CONNECTION MEMBERS.

WELDING

1) ALL WELDING SHALL CONFORM TO THE PROVISIONS OF SUBSECTION 506.10.

2) NON DESTRUCTIVE TESTING OF WELDS SHALL BE IN ACCORDANCE WITH THE REFERENCED SPECIFICATION.

3) SHEAR CONNECTORS FOR TRUSS MEMBERS SHALL BE ATTACHED IN THE SHOP, PRIOR TO GALVANIZING. WELDING AND INSPECTION OF SHEAR CONNECTORS SHALL CONFORM TO THE PROVISIONS OF SUBSECTION 508.

4) SEE DETAIL "WS1" ON THIS DRAWING FOR WELD TERMINATION DETAIL.

SURFACE PREPERATION

1) PRIOR TO GALVANIZING, ALL CORNERS AND EDGES OF STEEL PLATES, SHAPES, ETC., SHALL BE GROUND TO A 1/16" RADIUS.

2) ALL STEEL TO BE GALVANIZED SHALL BE CLEANED TO BE AT LEAST EQUIVALENT TO SURFACE PREPARATION GRADE SSPC-SP8, UNLESS OTHERWISE APPROVED BY THE ENGINEER.

PAINTING

1) ALL STEEL SHALL BE HOT DIP GALVANIZED IN ACCORDANCE WITH SUBSECTION 506.15.

2) ALL FAYING SURFACES SHALL BE HAND WIRE BRUSHED, OR BRUSH BLASTED, AFTER GALVANIZING TO ACHIEVE AN AASHTO CLASS C SURFACE CONDITION. NO MECHANICAL OR POWER BRUSHING ALLOWED.

⚠ 3) NO FIELD GALVANIZING PERMITTED.

FIELD CONNECTIONS

1) ALL FIELD CONNECTIONS SHALL BE MADE WITH 7/8" DIAMETER OR 5/8" DIAMETER HIGH STRENGTH A325 TYPE 1 GALVANIZED BOLTS (UN), INSTALLED PER SECTION 506.19(c).

2) BOLTS SHALL HAVE A HEAVY HEX HEAD, ONE HEAVY HEX NUT, ONE LOAD INDICATOR WASHER (LIW), AND AT LEAST ONE FLAT WASHER EACH. WASHER TO BE PLACED UNDER TURNED ELEMENT. SEE "TYPICAL BOLT DETAIL".

3) PIECE MARKS WILL BE LOCATED AS SHOWN ON ERECTION DRAWINGS.

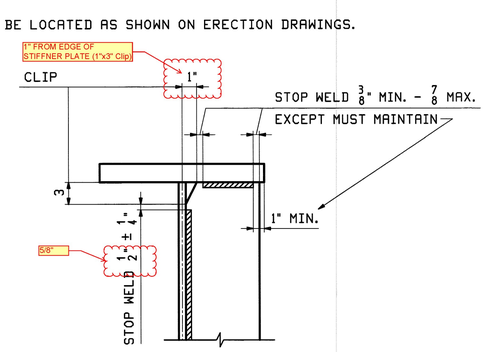

DETAIL "WS1"
STIFF. WELD TERMINATION

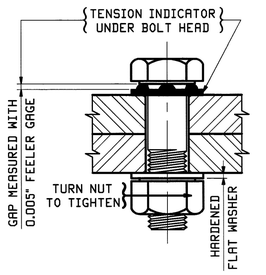

TYPICAL BOLT DETAIL

NOTE TO ENGINEER:
THESE NOTES ARE NOT INTENDED TO BE ALL INCLUSIVE AND COMPLIANCE WITH RELEVANT SPECIFICATIONS REMAIN UNCHANGED.

REV.	DATE	REMARKS	DWN	CHK	APVL	SHOP
⚠ 1	1/03/12	APPROVAL COMMENTS	EEO	PCP	JAN 9 2012	
0					NOV 18 2011	

MATERIAL:	SURFACE PREP. & PAINT:	HOLES:	SHOP BOLTS:

DESCRIPTION: GENERAL NOTES

CASCO BAY STEEL STRUCTURES, INC.
1 WALLACE AVE. PHONE (207) 780-6722
SOUTH PORTLAND, ME 04106 FAX. (207) 780-6726
TENSOR 3073

STRUCTURE: VT RTE 107 OVER WHITE RIVER		DRAWN: EEO	DATE: 10/18
		CHKD: PCP	DATE: 10/17
LOCATION: BETHEL, VT.		JOB NO.	DWG NO.
PROJ NO. BRF 022-1(14)		498	GN1
CUSTOMER: BECK & BELLUCCI			REV. ⚠

BCP Fri Jan 6, 2012 10:06:06 PM //corp/jobs/3073/GN1.dgn

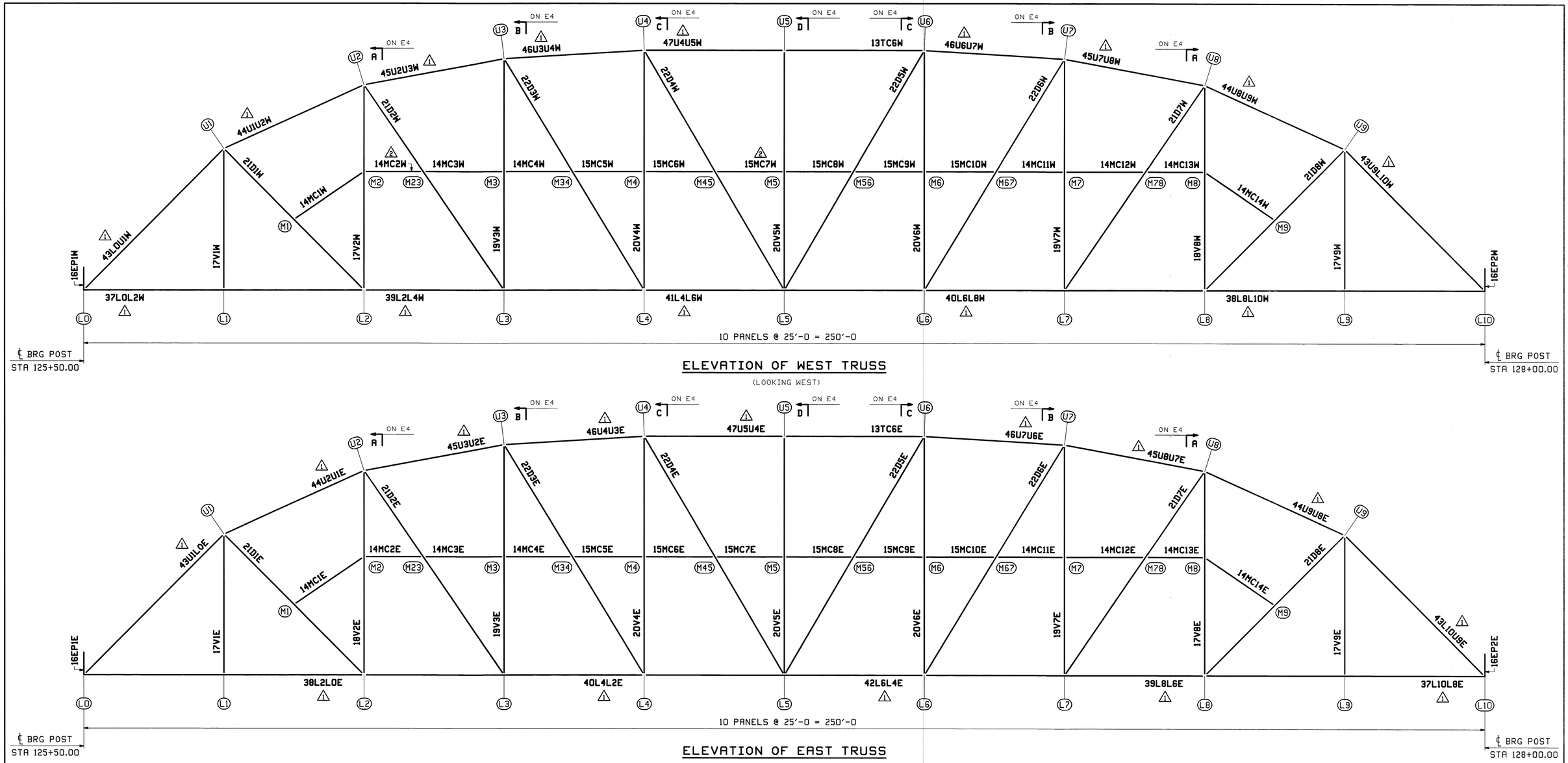

ELEVATION OF WEST TRUSS

(LOOKING WEST)

ELEVATION OF EAST TRUSS

(LOOKING WEST)

NOTES:
1. REFER TO SHEET GN1 FOR GENERAL NOTES.
2. WORK THIS SHEET WITH SHEET E2, E3 & E4.

REV.	DATE	REMARKS	DWN	CHK	APVL	SHOP
2	1/03/12	APPROVAL COMMENTS	EEO	PCP	JAN 9 2012	
1	11/22/11	REV'D MARKS	EEO	PCP	NOV 30 2011	
0					NOV 18 2011	

MATERIAL: | SURFACE PREP. & PAINT: | HOLES: | SHOP BOLTS:

DESCRIPTION: TRUSS ELEVATION FRAMING PLAN

CASCO BAY STEEL STRUCTURES, INC.
1 WALLACE AVE. PHONE (207) 780-6722
SOUTH PORTLAND, ME 04106 FAX. (207) 780-6726
TENSOR 3073

STRUCTURE: VT RTE 107 OVER WHITE RIVER

DRAWN: EEO	DATE: 10/24		
CHKD: PCP	DATE: 11/03		
LOCATION: BETHEL, VT.	JOB NO.	DWG NO.	
PROJ NO. BRF 022-1(14)	498	E1	
CUSTOMER: BECK & BELLUCCI		REV. 2	

Vermont Agency of Transportation
RECEIVED
CK'D BY M.C.L. OK'D BY S.S.S.
January 10 2012
RESUBMIT APPROVED ✓
BY J. LACROIX DATE 01-12-2012

PCP Fri, Jan 6, 2012 12:11:26 PM /users/jobs/3073/E1 : Rev2

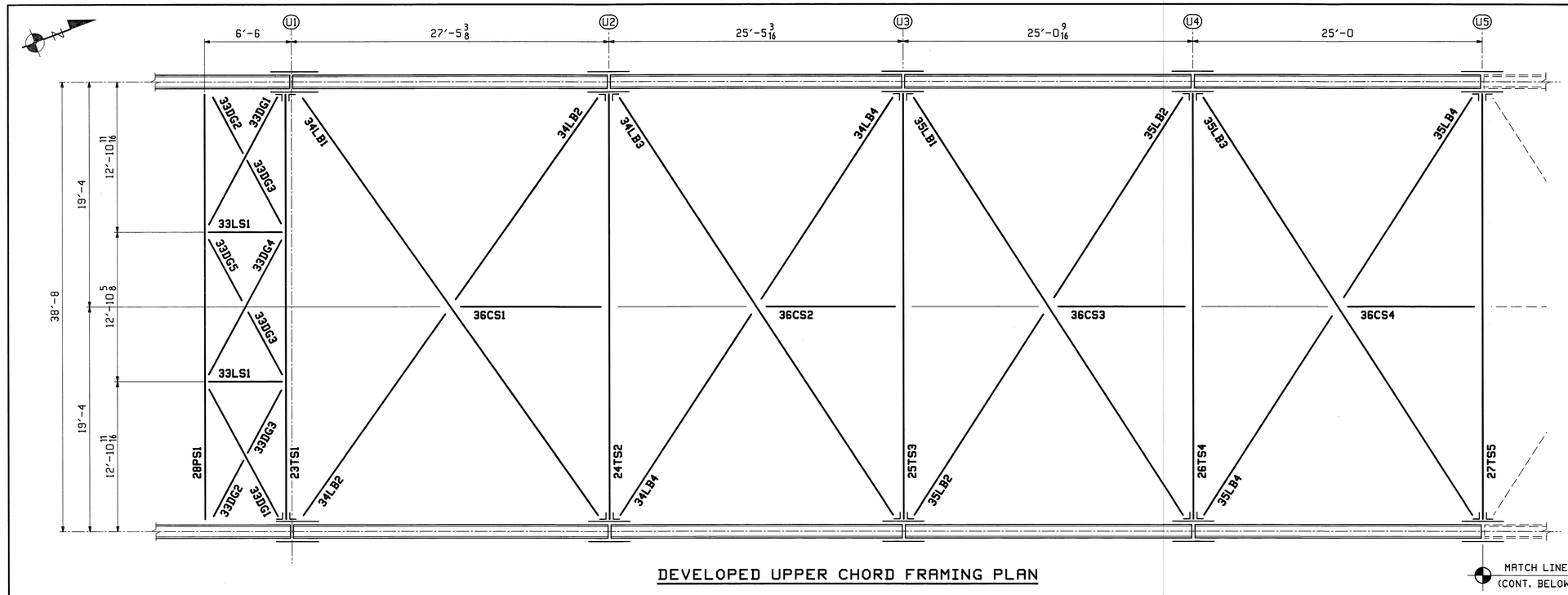

DEVELOPED UPPER CHORD FRAMING PLAN

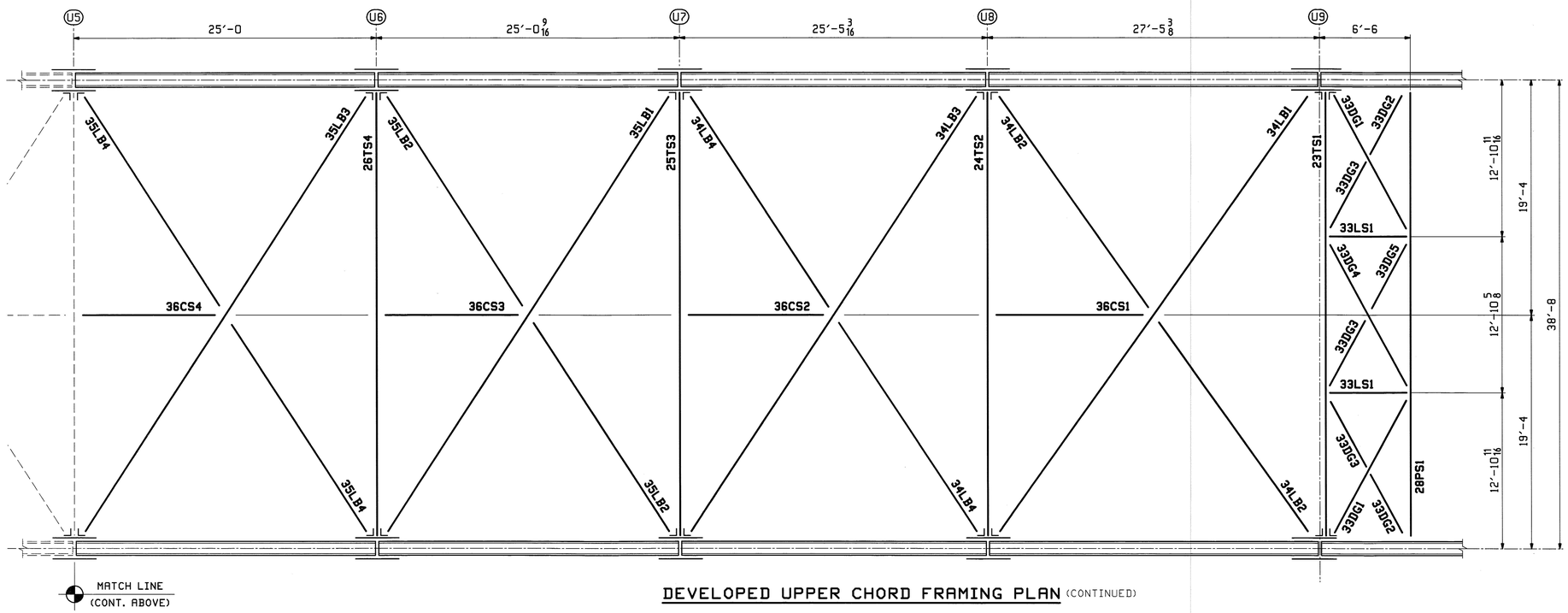

DEVELOPED UPPER CHORD FRAMING PLAN (CONTINUED)

Vermont Agency of Transportation
RECEIVED
CK'D BY M.C.L. OK'D BY S.S.S.
January 10 2012
RESUBMIT APPROVED ✓
BY J. LACROIX DATE 01-12-2012

NOTES:
1. REFER TO SHEET GN1 FOR GENERAL NOTES.
2. WORK THIS SHEET WITH SHEETS E1, E3 & E4.

REV.	DATE	REMARKS	DWN	CHK	APVL	SHOP
					JAN 9 2012	
0					NOV 18 2011	

MATERIAL:	SURFACE PREP. & PAINT:	HOLES:	SHOP BOLTS:

DESCRIPTION: DEVELOPED UPPER CHORD FRAMING PLAN

CASCO BAY STEEL STRUCTURES, INC.
1 WALLACE AVE. PHONE (207) 780-6722
SOUTH PORTLAND, ME 04106 FAX. (207) 780-6726
TENSOR 3073

STRUCTURE: VT RTE 107 OVER WHITE RIVER	DRAWN: EEO	DATE: 11/02
	CHKD: PCP	DATE: 11/03
LOCATION: BETHEL, VT.	JOB NO.	DWG NO.
PROJ NO. BRF 022-1(14)	498	E2
CUSTOMER: BECK & BELLUCCI		REV. △

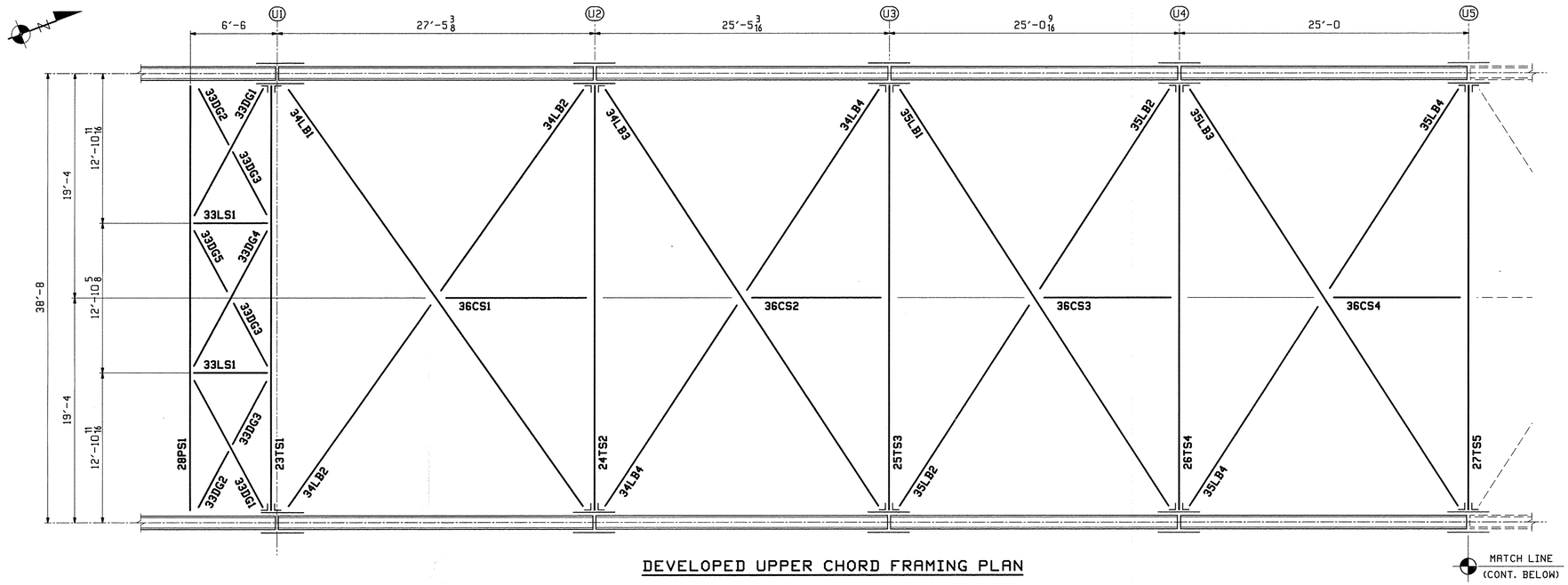

DEVELOPED UPPER CHORD FRAMING PLAN

MATCH LINE
(CONT. BELOW)

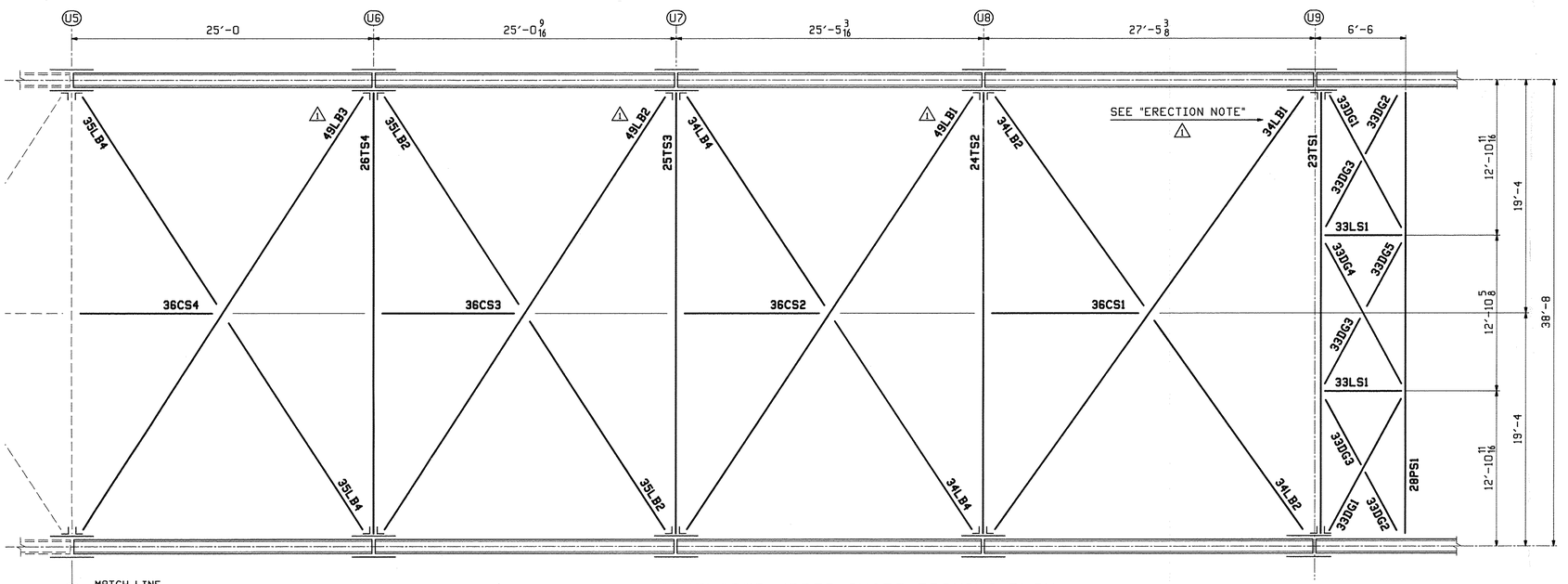

MATCH LINE
(CONT. ABOVE)

DEVELOPED UPPER CHORD FRAMING PLAN (CONTINUED)

1

ERECTION NOTE:
IF CENTER GUSSET PLATES ARE BOLTED TO BRACE 34LB1, TURN BRACE 34LB1 OVER SO THE BOTTOM FLANGE IS ON TOP.

NOTES:
1. REFER TO SHEET GN1 FOR GENERAL NOTES.
2. WORK THIS SHEET WITH SHEETS E1, E3 & E4.

REV.	DATE	REMARKS	DWN	CHK	APVL	SHOP
1	9/14/12	REV'D MARKS & ADDED ERECTION NOTE	EEO	PCP		
0						

MATERIAL:	SURFACE PREP. & PAINT:	HOLES:	SHOP BOLTS:

DESCRIPTION: DEVELOPED UPPER CHORD FRAMING PLAN

CASCO BAY STEEL STRUCTURES, INC.
1 WALLACE AVE. PHONE (207) 780-6722
SOUTH PORTLAND, ME 04106 FAX. (207) 780-6726
TENSOR 3073

STRUCTURE: VT RTE 107 OVER WHITE RIVER	DRAWN: EEO	DATE: 11/02
	CHKD: PCP	DATE: 11/03
LOCATION: BETHEL, VT.	JOB NO.	DWG NO.
PROJ NO. BRF 022-1(14)	498	E2
CUSTOMER: BECK & BELLUCCI		REV. 1

Fri, Sep 14, 2012 01:08:43 PM //casco/jobs/3073/E2.dwg
PCP

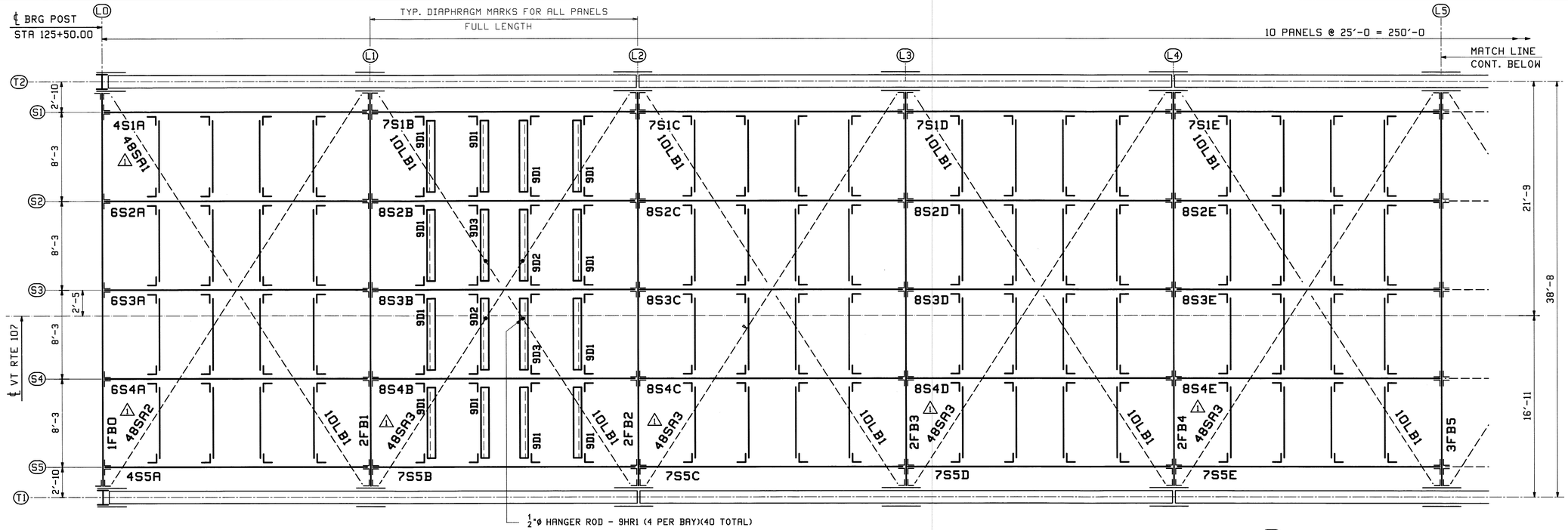

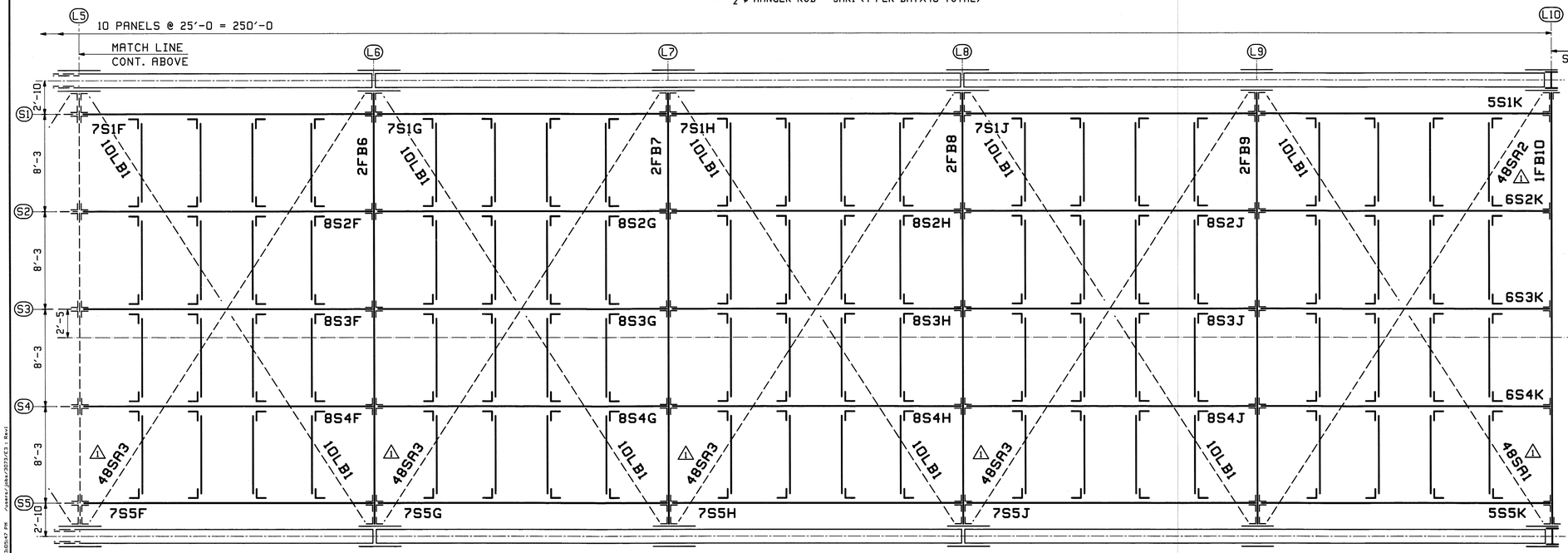

LOWER CHORD FRAMING PLAN

Vermont Agency of Transportation

RECEIVED

CK'D BY M.C.L. OK'D BY S.S.S.

January 10 2012

RESUBMIT ____ APPROVED ✓

BY J. LACROIX DATE 01-12-2012

NOTES:
1.) REFER TO SHEET GN1 FOR GENERAL NOTES.
2.) WORK THIS SHEET WITH SHEETS E1 & E2.

REV.	DATE	REMARKS	DWN	CHK	APVL	SHOP
					JAN 9 2012	
1	11/22/11	REV'D MARKS	EEO	PCP	NOV 30 2011	
0					NOV 18 2011	

MATERIAL:	SURFACE PREP. & PAINT:	HOLES:	SHOP BOLTS:
M270-50 (UN)		AS NOTED	AS NOTED

DESCRIPTION: LOWER CHORD FRAMING PLAN

CASCO BAY STEEL STRUCTURES, INC.
1 WALLACE AVE. PHONE (207) 780-6722
SOUTH PORTLAND, ME 04106 FAX. (207) 780-6726

TENSOR 3D73

STRUCTURE: VT RTE 107 OVER WHITE RIVER		DRAWN: TJB	DATE: 10/18
		CHK'D: PCP	DATE: 10/21
LOCATION: BETHEL, VT.		JOB NO.	DWG NO.
PROJ NO. BRF 022-1(14)		498	E3
CUSTOMER: BECK & BELLUCCI			REV. 1

PCP Tue, Nov 29, 2011 03:05:47 PM /users/jobs/3073/E3.1.Rev1

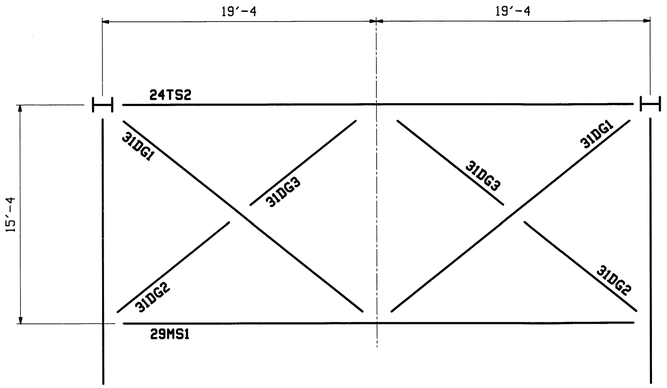

SECTION - A
(@ U2 & U8)

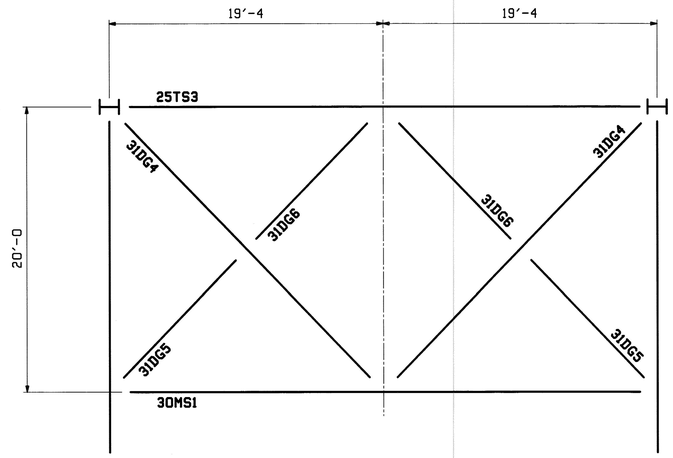

SECTION - B
(@ U3 & U7)

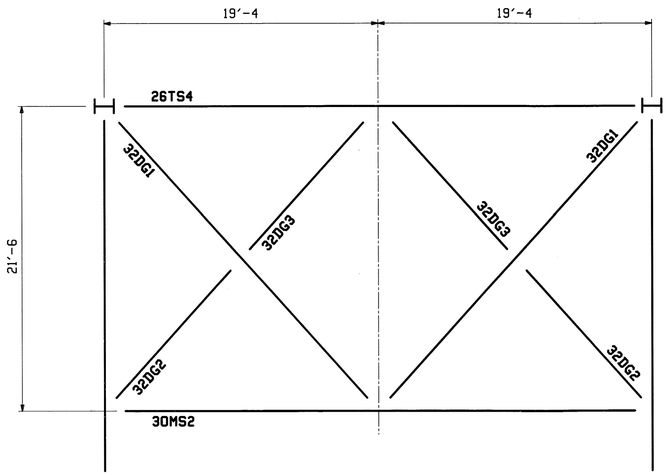

SECTION - C
(@ U4 & U6)

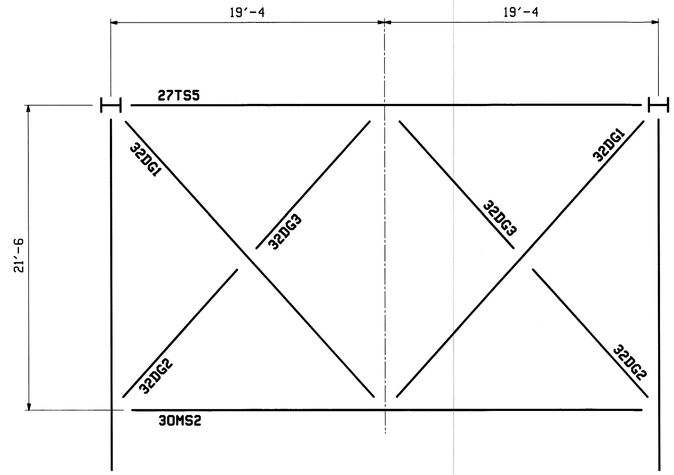

SECTION - D
(@ U5)

Vermont Agency of Transportation
RECEIVED
CK'D BY M.C.L. OK'D BY S.S.S.
January 10 2012
RESUBMIT APPROVED ✓
BY J. LACROIX DATE 01-12-2012

NOTES:
1. REFER TO SHEET GN1 FOR GENERAL NOTES.
2. WORK THIS SHEET WITH SHEETS E1, E2 & E3.

REV.	DATE	REMARKS	DWN	CHK	APVL	SHOP
					JAN 9 2012	
0					NOV 18 2011	

MATERIAL:	SURFACE PREP. & PAINT:	HOLES:	SHOP BOLTS:

DESCRIPTION: SWAY FRAME FRAMING PLAN

CASCO BAY STEEL STRUCTURES, INC.
1 WALLACE AVE. PHONE (207) 780-6722
SOUTH PORTLAND, ME 04106 FAX. (207) 780-6726
TENSOR 3073

STRUCTURE: VT RTE 107 OVER WHITE RIVER	DRAWN: EEO	DATE: 11/02
	CHKD: PCP	DATE: 11/03
LOCATION: BETHEL, VT.	JOB NO.	DWG NO.
PROJ NO. BRF 022-1(14)	498	E4
CUSTOMER: BECK & BELLUCCI		REV. △

Vermont Agency of Transportation
RECEIVED
CK'D BY M.C.L. OK'D BY S.S.S.
January 10 2012
RESUBMIT APPROVED ✓
BY J. LACROIX DATE 01-12-2012

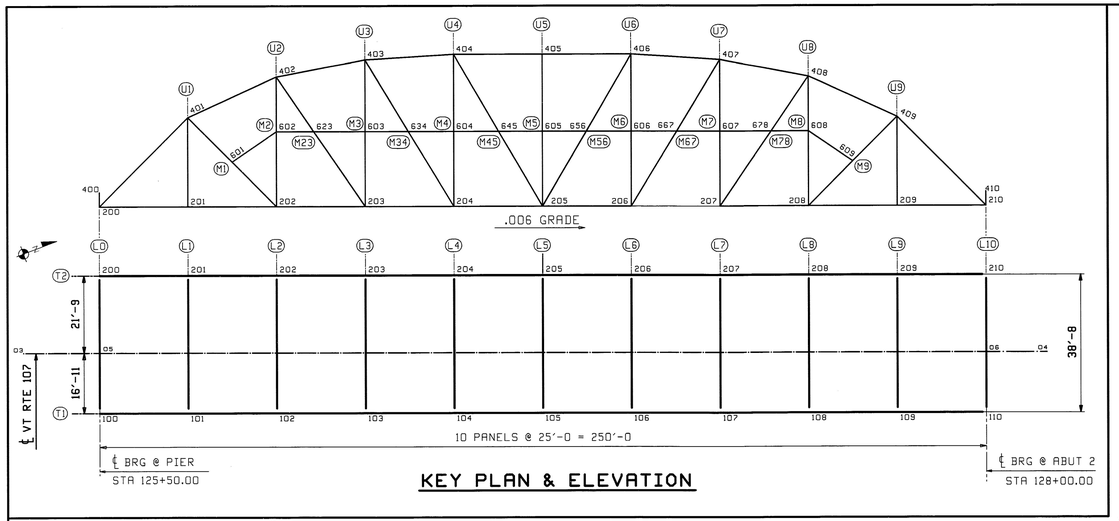

KEY PLAN & ELEVATION

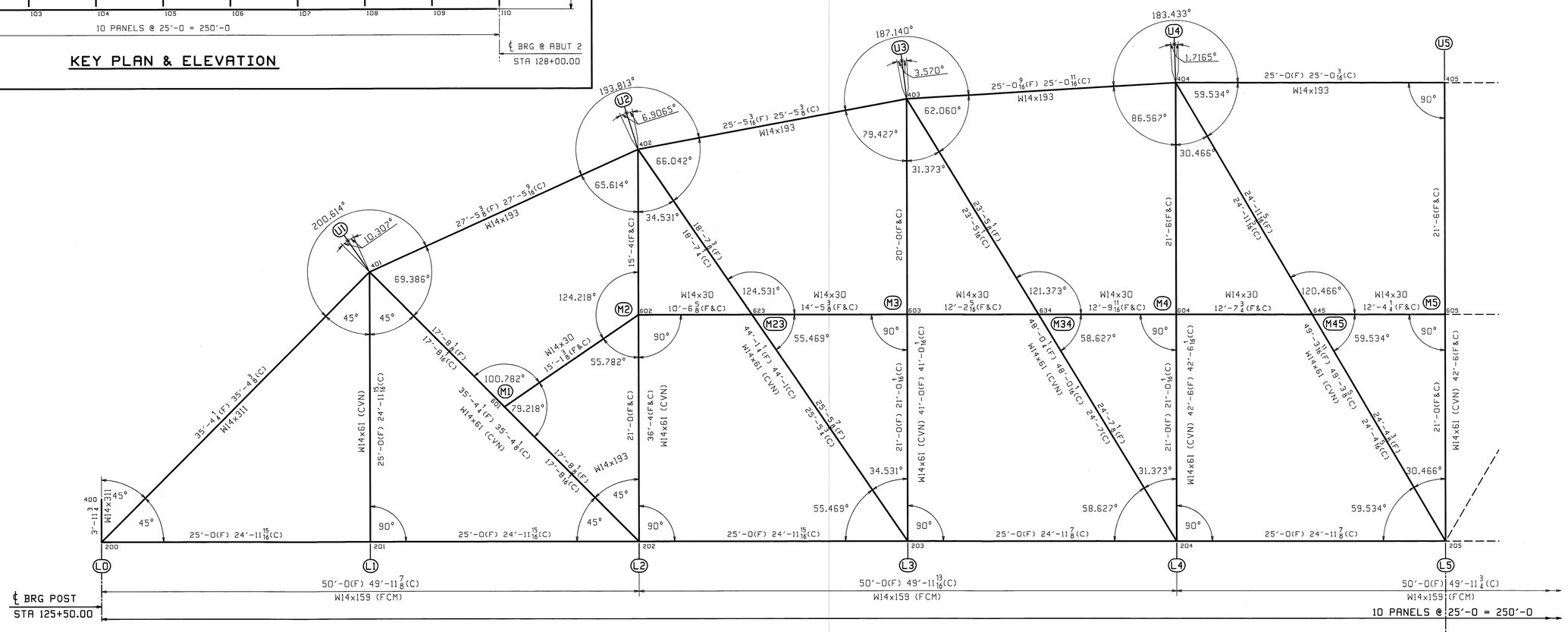

INTERIOR ELEVATION OF TRUSS T2

(TRUSS T1 POINTS = T2 POINTS - 100)

NOTES:

1. TRUSS DETAILS SHALL BE BASED ON FINAL GEOMETRIC ANGLES AND CAMBERED LENGTHS. CAMBERED LENGTHS ARE NOTED (C), FINAL LENGTHS (F). FINAL LENGTHS ARE SHOWN FOR REFERENCE ONLY, AND SHOULD NOT BE USED FOR DETAILING.
2. TRUSS GEOMETRY IS SYMMETRICAL ABOUT PP 5. TRUSS T1 & T2 ARE OPPOSITE HAND.
3. ALL TRUSS MEMBER MATERIAL SHALL BE A709-50 W/ FCM & CVN AS NOTED. FRACTURE CRITICAL MEMBERS ARE NOTED (FCM). CHARPY MEMBERS ARE NOTES (CVN).
4. WORK THIS SHEET WITH SHEETS WS2 THRU WS4.

** NOTE **
THE PURPOSE OF THIS DRAWING IS TO COORDINATE GEOMETRIC CONTROL INFORMATION. THIS DWG IS SUBMITTED FOR INFORMATION ONLY AND IS NOT INTENDED FOR SHOP FABRICATION.

DESCRIPTION: TRUSS ELEVATION L0 - L5

CASCO BAY STEEL STRUCTURES, INC.
1 WALLACE AVE. PHONE (207) 780-6722
SOUTH PORTLAND, ME 04106 FAX. (207) 780-6726

TENSOR 3073

REV.	DATE	REMARKS	DWN	CHK	APVL	SHOP
0					JAN 9 2012	
					NOV 18 2011	

STRUCTURE: VT RTE 107 OVER WHITE RIVER
LOCATION: BETHEL, VT.
PROJ NO. BRF 022-1(14)
CUSTOMER: BECK & BELLUCCI

DRAWN:	DATE:	JOB NO.	DWG NO.
WL	09/09	498	WS1
CHKD: PCP	DATE: 09/22		REV. △

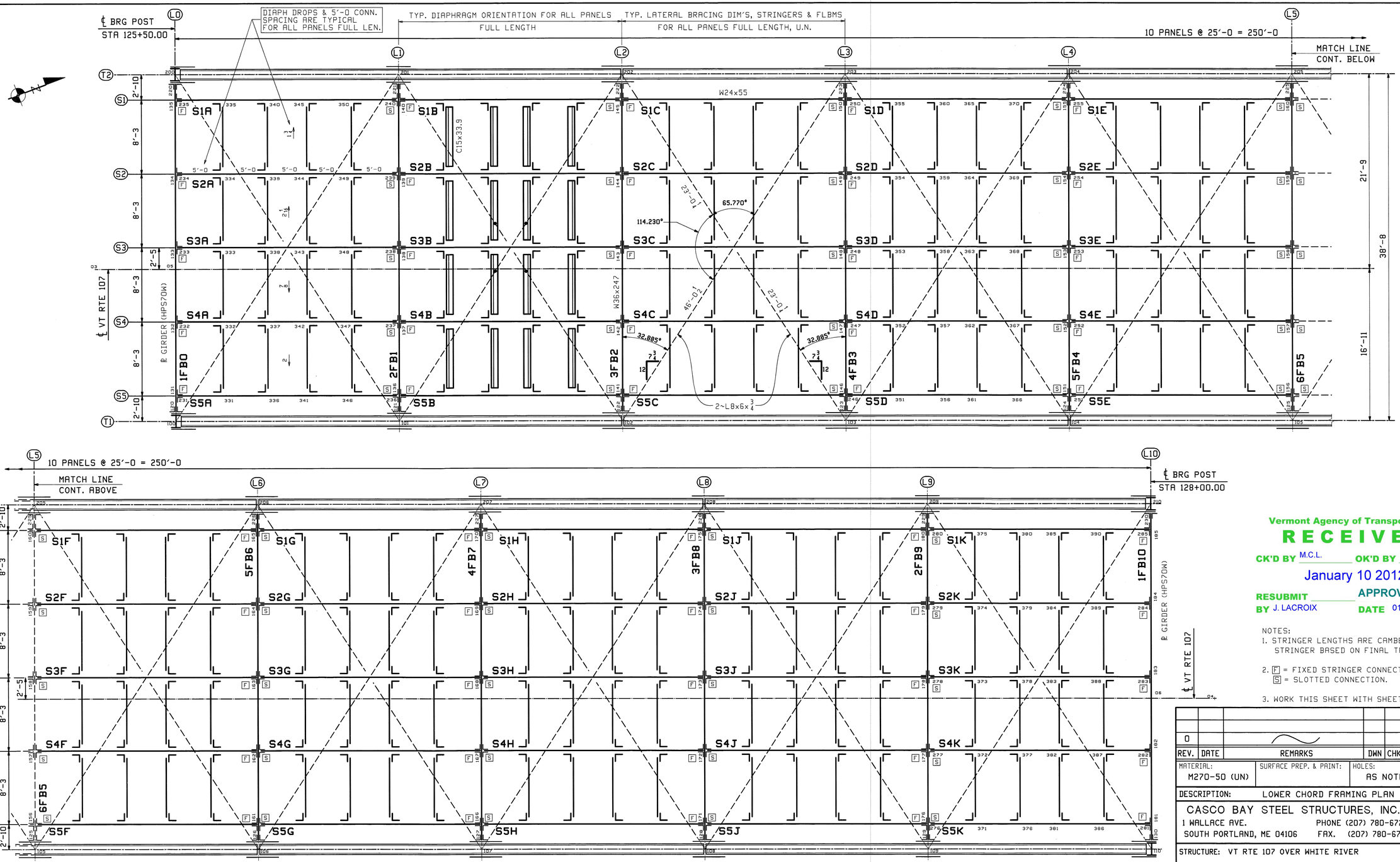

LOWER CHORD FRAMING PLAN

** NOTE **
THE PURPOSE OF THIS DRAWING IS TO COORDINATE GEOMETRIC CONTROL INFORMATION. THIS DWG IS SUBMITTED FOR INFORMATION ONLY AND IS NOT INTENDED FOR SHOP FABRICATION.

Vermont Agency of Transportation

RECEIVED

CK'D BY M.C.L. OK'D BY S.S.S.

January 10 2012

RESUBMIT ____ APPROVED ✓

BY J. LACROIX DATE 01-12-2012

NOTES:
1. STRINGER LENGTHS ARE CAMBERED AT TOP OF STRINGER BASED ON FINAL TRUSS GEOMETRY.
2. [F] = FIXED STRINGER CONNECTION. [S] = SLOTTED CONNECTION.
3. WORK THIS SHEET WITH SHEETS WS1, WS3 & WS4.

REV.	DATE	REMARKS	DWN	CHK	APVL	SHOP
					JAN 9 2012	
0					NOV 18 2011	

MATERIAL:	SURFACE PREP. & PAINT:	HOLES:	SHOP BOLTS:
M270-50 (UN)		AS NOTED	AS NOTED

DESCRIPTION: LOWER CHORD FRAMING PLAN

CASCO BAY STEEL STRUCTURES, INC.
1 WALLACE AVE.
SOUTH PORTLAND, ME 04106
PHONE (207) 780-6722
FAX. (207) 780-6726
TENSOR 3073

STRUCTURE: VT RTE 107 OVER WHITE RIVER		DRAWN: WL	DATE: 09/09
		CHK'D: PCP	DATE: 09/22
LOCATION: BETHEL, VT.		JOB NO.	DWG NO.
PROJ NO.	BRF 022-1(14)	498	WS2
CUSTOMER:	BECK & BELLUCCI		REV. △

J:\cascobay\jobs\2012\498\ws2 - Rev0
Mon, Oct 3, 2011 01:41:37 PM EDO

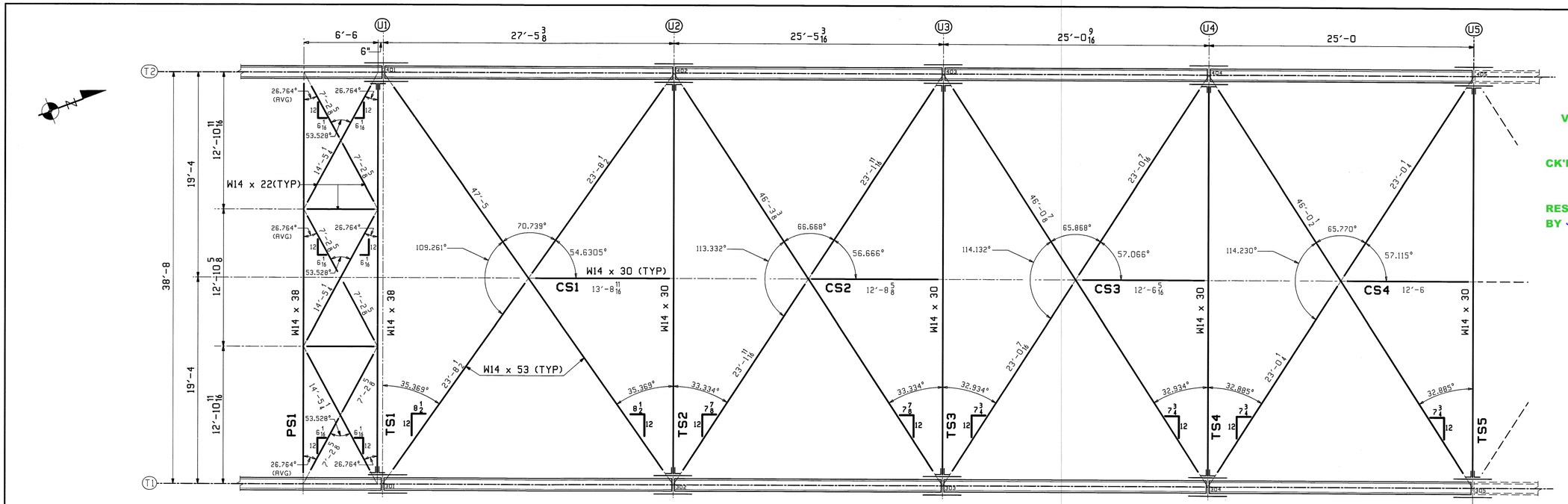

DEVELOPED UPPER CHORD FRAMING PLAN

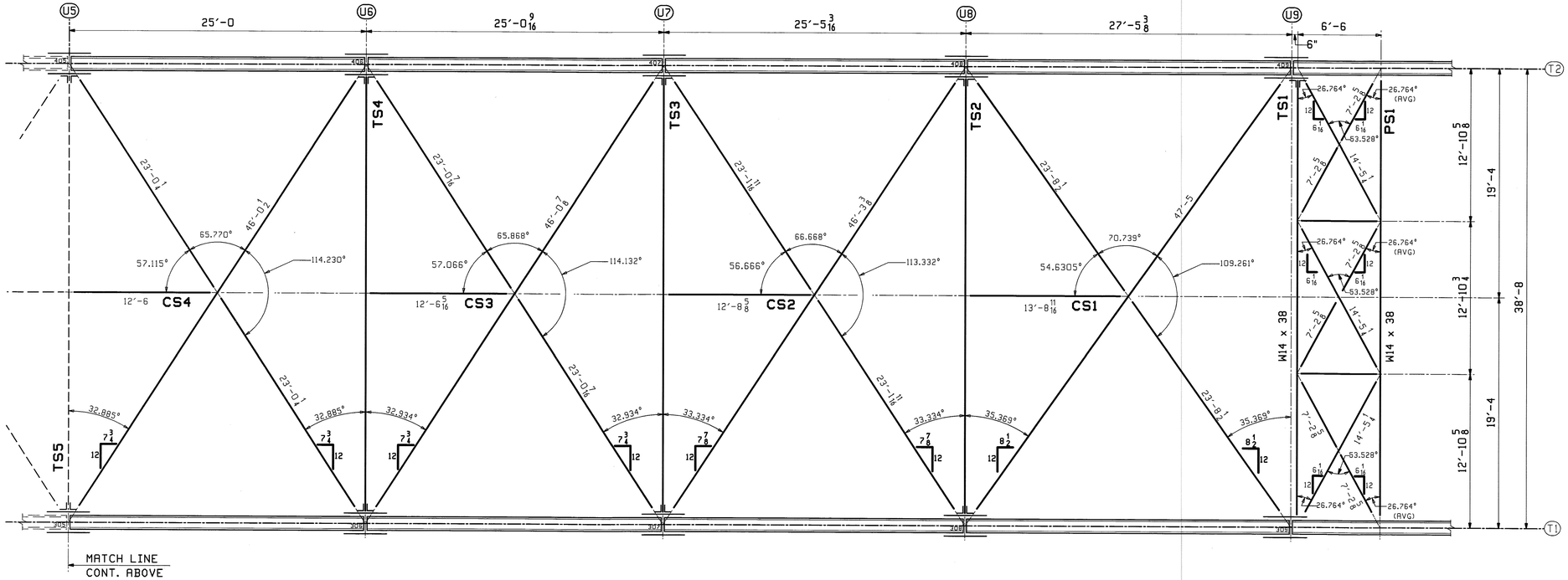

Vermont Agency of Transportation
RECEIVED
CK'D BY M.C.L. OK'D BY S.S.S.
January 10 2012
RESUBMIT APPROVED ✓
BY J. LACROIX DATE 01-12-2012

** NOTE **
THE PURPOSE OF THIS DRAWING IS TO COORDINATE GEOMETRIC CONTROL INFORMATION. THIS DWG IS SUBMITTED FOR INFORMATION ONLY AND IS NOT INTENDED FOR SHOP FABRICATION.

NOTES:
1. LATERAL BRACING LENGTHS & ANGLES ARE BASED ON FINAL GEOMETRY.
2. WORK THIS SHEET WITH WS1 & WS2.

REV.	DATE	REMARKS	DWN	CHK	APVL	SHOP
0					JAN 9 2012 / NOV 18 2011	

MATERIAL:	SURFACE PREP. & PAINT:	HOLES:	SHOP BOLTS:
M270-50 (UN)		AS NOTED	AS NOTED

DESCRIPTION: DEVELOPED TOP PLAN

CASCO BAY STEEL STRUCTURES, INC.
1 WALLACE AVE. PHONE (207) 780-6722
SOUTH PORTLAND, ME 04106 FAX. (207) 780-6726
TENSOR 3073

STRUCTURE: VT RTE 107 OVER WHITE RIVER		DRAWN: WL	DATE: 09/09
		CHKD: PCP	DATE: 09/22
LOCATION: BETHEL, VT.		JOB NO.	DWG NO.
PROJ NO. BRF 022-1(14)		498	WS3
CUSTOMER: BECK & BELLUCCI			REV. △

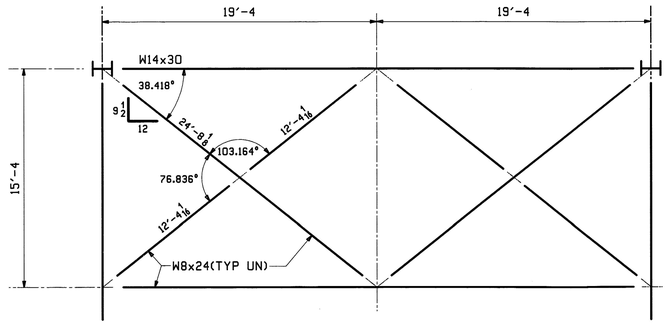

SWAY FRAME @ V2 & V8

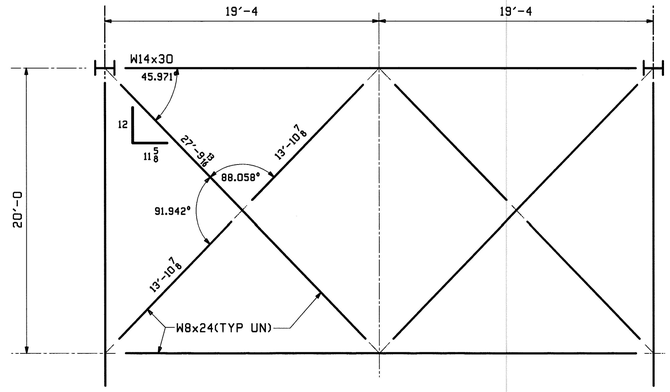

SWAY FRAME @ V3 & V7

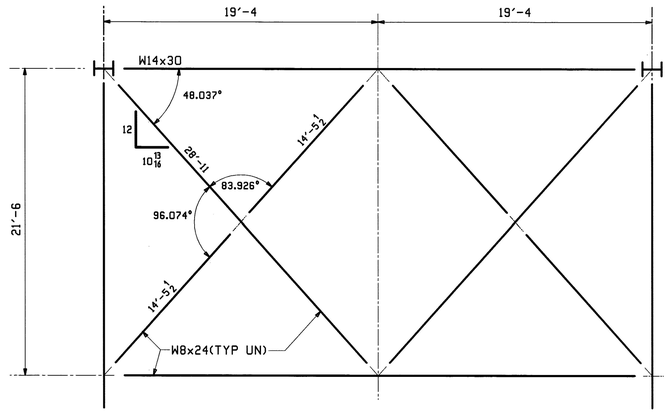

SWAY FRAME @ V4, V5 & V6

** NOTE **
THE PURPOSE OF THIS DRAWING IS TO COORDINATE GEOMETRIC CONTROL INFORMATION. THIS DWG IS SUBMITTED FOR INFORMATION ONLY AND IS NOT INTENDED FOR SHOP FABRICATION.

NOTES:
1. ALL SWAY FRAME LENGTHS AND ANGLES ARE BASED ON FINAL TRUSS GEOMETRY.
2. SWAY FRAMES ARE SYMMETRICAL ABOUT ℄ BRIDGE.
3. WORK THIS SHEET WITH SHEETS WS1-WS3.

TYPICAL SWAY FRAME GEOMETRY

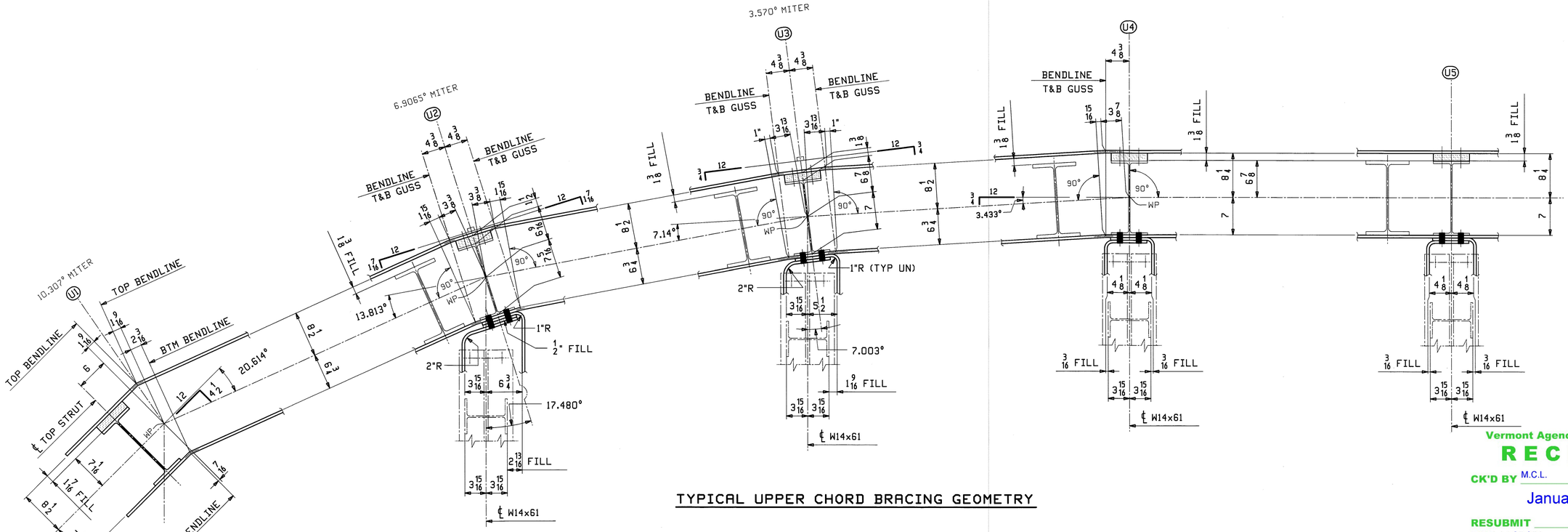

TYPICAL UPPER CHORD BRACING GEOMETRY

Vermont Agency of Transportation
RECEIVED
CK'D BY M.C.L. OK'D BY S.S.S.
January 10 2012
RESUBMIT APPROVED ✓
BY J. LACROIX DATE 01-12-2012

DESCRIPTION: UPPER CHORD & SWAY FRAME GEOMETRY							
CASCO BAY STEEL STRUCTURES, INC. 1 WALLACE AVE. SOUTH PORTLAND, ME 04106 PHONE (207) 780-6722 FAX. (207) 780-6726					JAN 9 2012 NOV 18 2011		
TENSOR 3073	0						
	REV.	DATE	REMARKS	DWN	CHK	APVL	SHOP

STRUCTURE: VT RTE 107 OVER WHITE RIVER					
LOCATION: BETHEL, VT.	DRAWN: WL	DATE: 09/10	JOB NO.	DWG NO.	
PROJ NO. BRF 022-1(14)	CHKD: PCP	DATE: 09/30	498	WS4	
CUSTOMER: BECK & BELLUCCI				REV.	△

** NOTE **
THE PURPOSE OF THIS DRAWING IS TO COORDINATE GEOMETRIC CONTROL INFORMATION AND CONNECTION SPACING. THIS DWG IS SUBMITTED FOR INFORMATION ONLY & IS NOT INTENDED FOR SHOP FABRICATION. DETAIL DWGS WILL SHOW ALL WELDING AND DIMENSIONS REQ'D FOR FABRICATION.

Vermont Agency of Transportation
RECEIVED
CK'D BY M.C.L. OK'D BY S.S.S.
January 10 2012
RESUBMIT APPROVED ✓
BY J. LACROIX DATE 01-12-2012

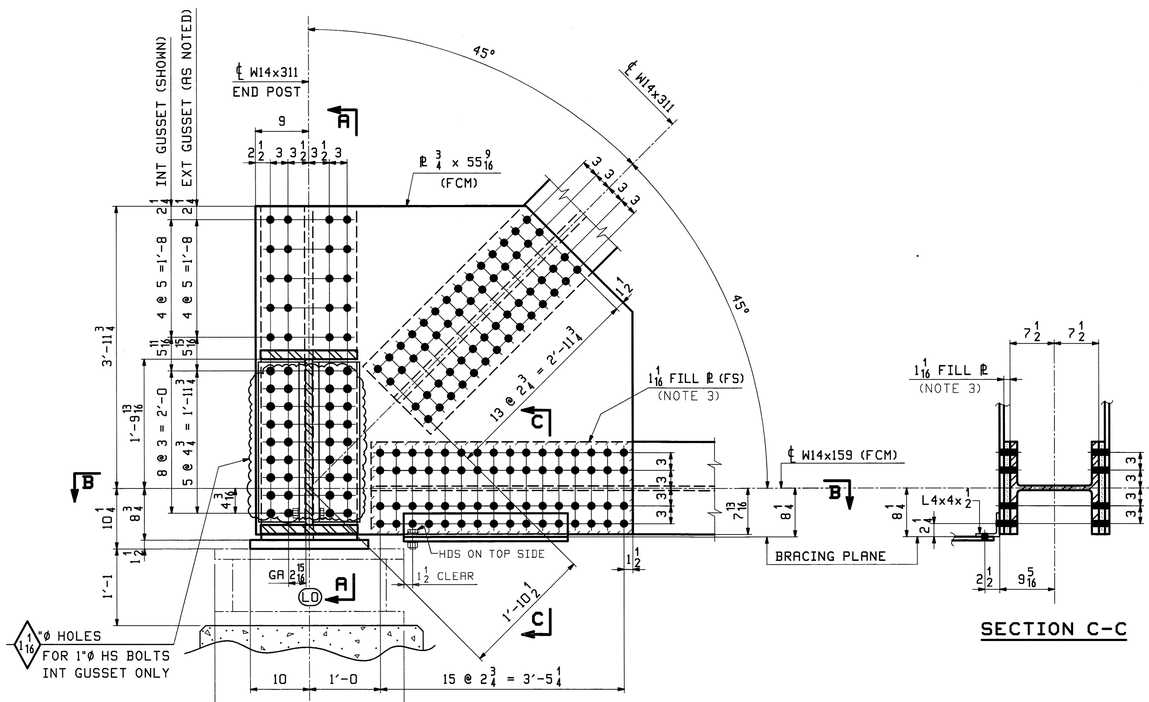

PANEL POINT LO
TRUSS T2 SHOWN, T1 OPP. HAND

SECTION C-C

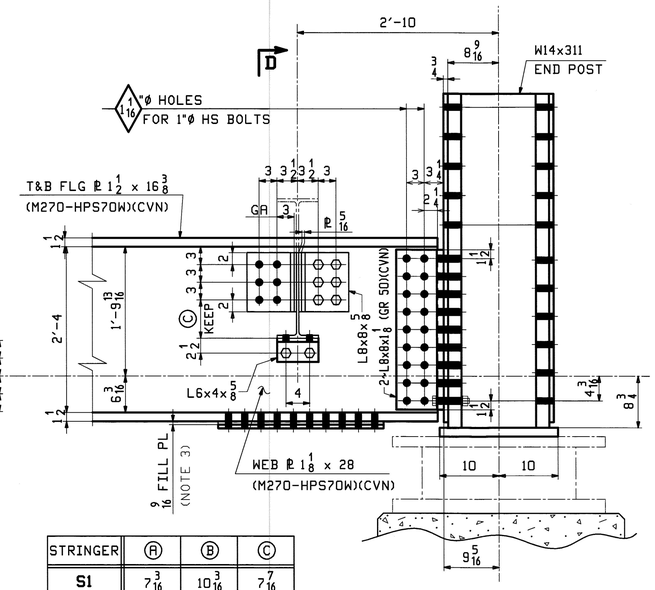

SECTION A-A

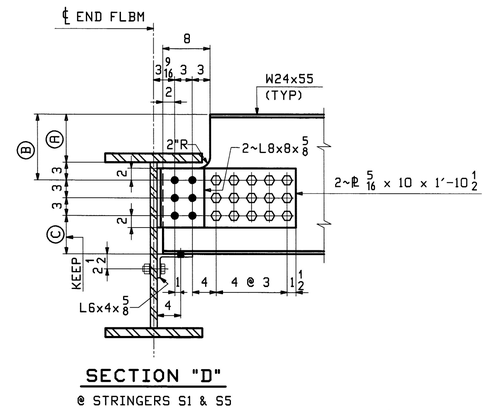

SECTION "D"
@ STRINGERS S1 & S5

STRINGER	Ⓐ	Ⓑ	Ⓒ
S1	7 3/16	10 3/16	7 7/16
S2	8 15/16	11 15/16	5 11/16
S3	11	1'-2	3 5/8
S4	10 1/8	1'-1 1/8	4 1/2
S5	8 1/8	11 1/8	6 1/2

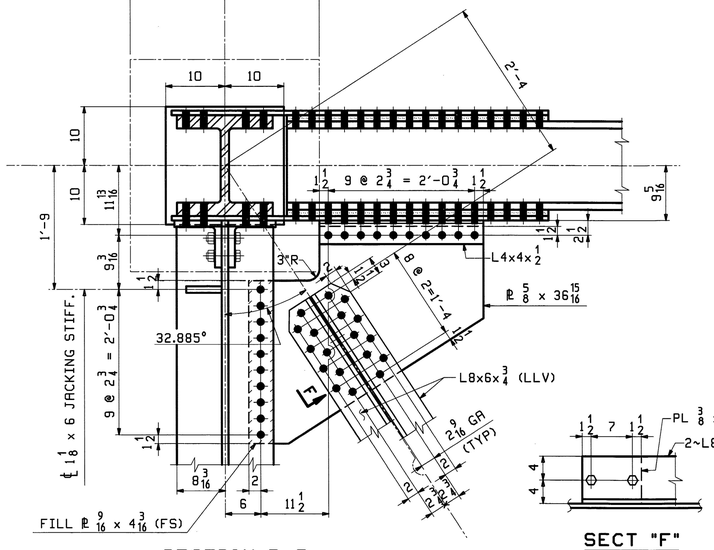

SECTION B-B

SECT "F"

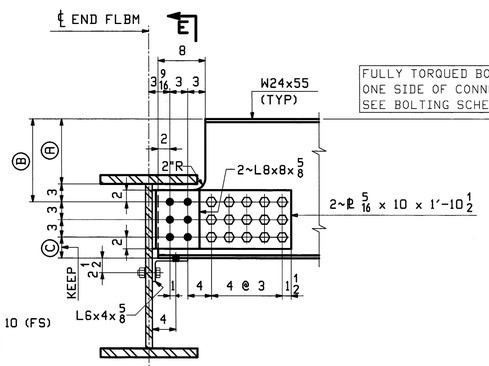

SECTION "D" @ TYP STRINGER
(STRINGER S3 SHOWN, S2 & S4 AS NOTED)

FULLY TORQUED BOLTS ON ONE SIDE OF CONNECTION SEE BOLTING SCHEMATIC

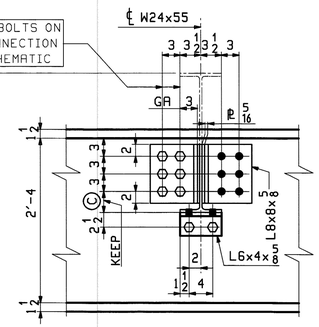

SECTION "E"

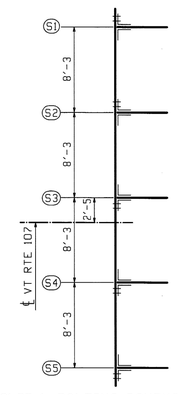

CLIP L BOLTING SCHEMATIC

NOTES:
1. ALL MATERIAL IS M270-50 (UN), WITH CVN & FCM TESTING AS INDICATED. ALL CONN. Ls SHALL BE M270-36 U.N. ALL ROLLED SHAPES AND PLATES SHALL BE HOT-DIP GALVANIZED AFTER FABRICATION.
2. BOLTS SHALL BE 7/8ø A325-1 GALV. (UN). ALL BOLTS SHALL BE INSTALLED WITH HEADS EXPOSED TO PUBLIC VIEW WITH ONE HARDENNED WASHER AND ONE DTI WASHER. BOLTS AND WASHERS SHALL BE MECHANICALLY GALVANIZED. RFI-TEC-3073005
3. DUE TO ROLLING MILL TOLERANCE, THE ACTUAL THICKNESS OF FILL PLATES MAY VARY FROM WHAT IS SHOWN ON THIS DWG. THE SHOP WILL BE RESPONSIBLE FOR ADJUSTING FILL THICKNESS AS REQUIRED TO SUIT THE ACTUAL MATERIAL SIZE. FILL PLATES SHALL BE A SINGLE THICKNESS PLATE.
4. INTERIOR AND EXTERIOR GUSSET PLATES ARE IDENTICAL EXCEPT AS NOTED.

SPACER PLs ARE REQ'D @ EACH END & 7'-8 MAX SPACING

SCALE 1.0" = 1.0"

REV.	DATE	REMARKS	DWN	CHK	APVL	SHOP
					JAN 9 2012	
0					NOV 18 2011	

MATERIAL:	SURFACE PREP. & PAINT:	HOLES:	SHOP BOLTS:
M270-50 (UN)	HOT-DIP GALV.	15/16ø (UN)	7/8ø (UN)

DESCRIPTION: TRUSS LAYOUT @ LO

CASCO BAY STEEL STRUCTURES, INC.
1 WALLACE AVE. PHONE (207) 780-6722
SOUTH PORTLAND, ME 04106 FAX. (207) 780-6726
TENSOR 3073

STRUCTURE: VT RTE 107 OVER WHITE RIVER		DRAWN: WL	DATE: 09/22
		CHK'D: PCP	DATE: 09/25
LOCATION: BETHEL, VT.		JOB NO. 498	DWG NO. TD1
PROJ NO. BRF 022-1(14)			
CUSTOMER: BECK & BELLUCCI			REV. △

PCP Tue, Oct 11, 2011 08:02:32 AM J:\work\jobs\2023\TD1.dwg

Vermont Agency of Transportation
RECEIVED
CK'D BY M.C.L. OK'D BY S.S.S.
January 10 2012
RESUBMIT APPROVED ✓
BY J. LACROIX DATE 01-12-2012

NOTE "FB":
-CONN. TO INTERIOR & EXTERIOR GUSSET TO BE IDENTICAL. USE $1\frac{1}{16}$"ø HOLES FOR 1"ø HS BOLTS @ THESE HOLES ONLY.
RFI-TEC-3073006

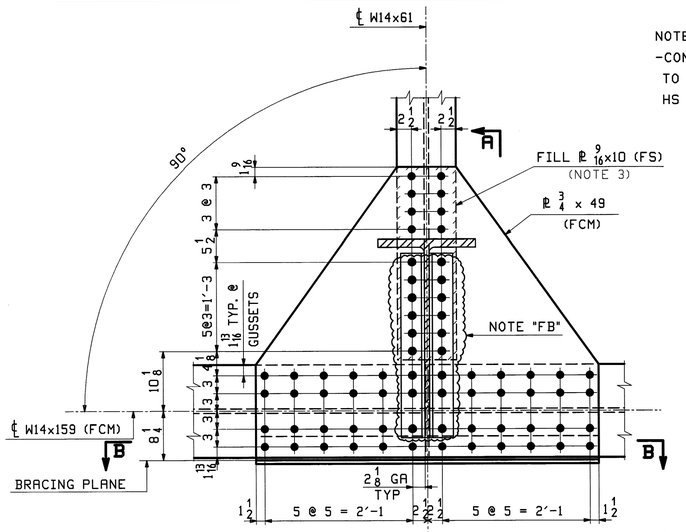

PANEL POINT L1

TRUSS T2 SHOWN, T1 OPP. HAND

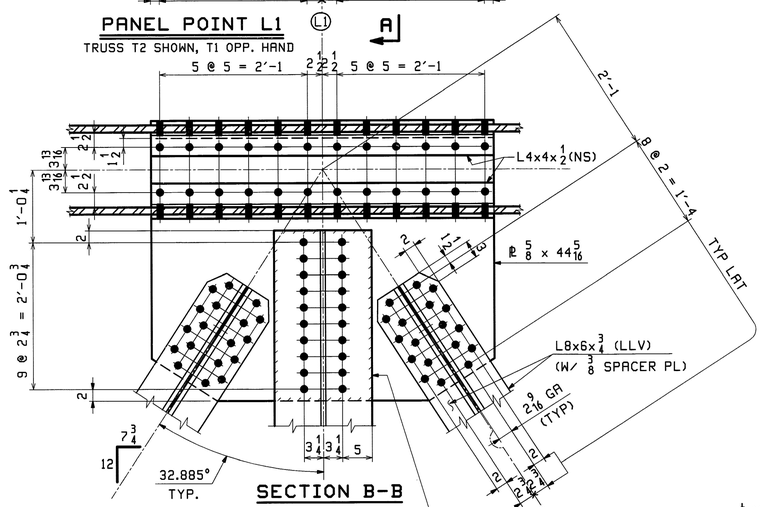

SECTION B-B

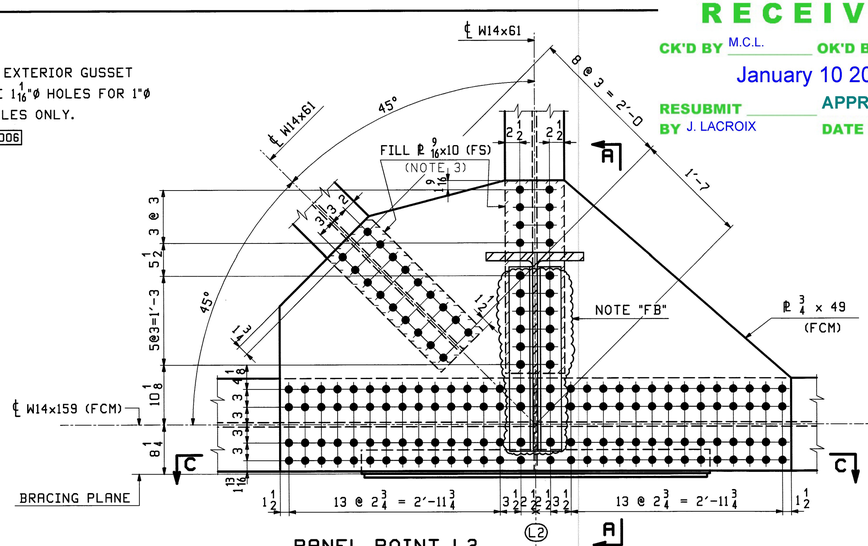

PANEL POINT L2

TRUSS T2 SHOWN, T1 OPP. HAND

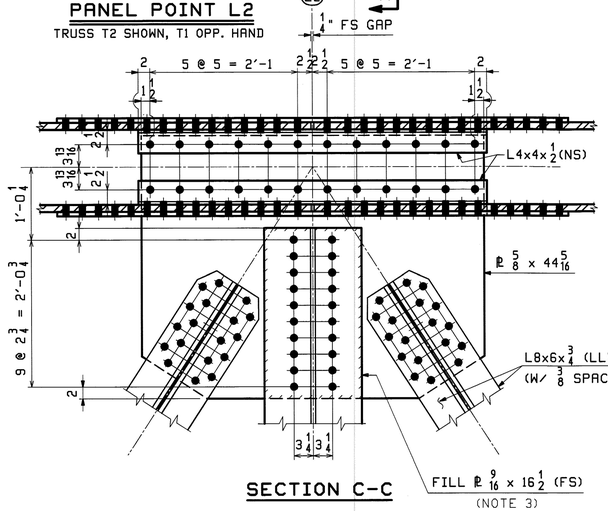

SECTION C-C

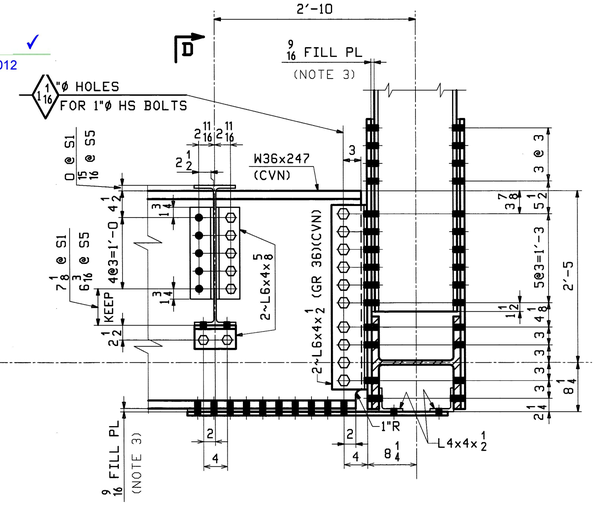

SECTION A-A

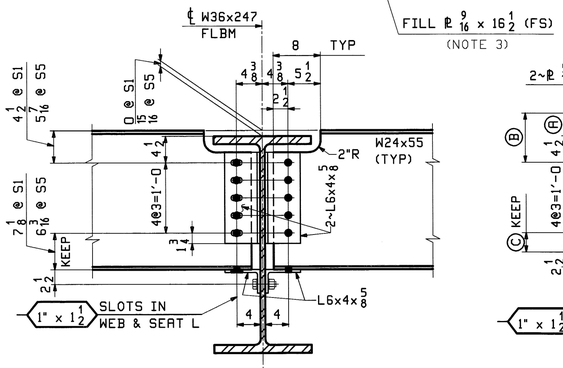

SECTION "D"

@ STRINGERS S1 & S5

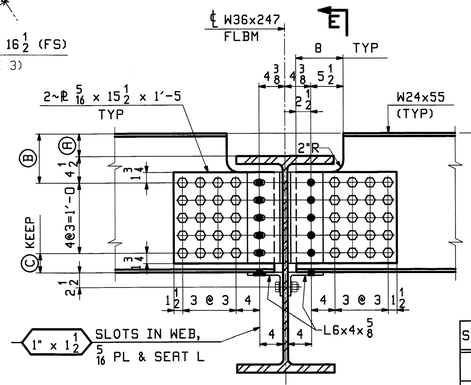

SECTION @ TYP STRINGER

(STRINGER S3 SHOWN, S2 & S4 AS NOTED)

STRINGER	Ⓐ	Ⓑ	Ⓒ
S2	1 3/4	6 1/4	5 3/8
S3	3 13/16	8 5/16	3 5/16
S4	2 15/16	7 7/16	4 3/16

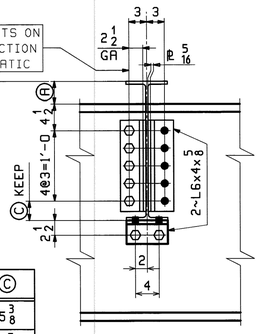

SECTION "E"

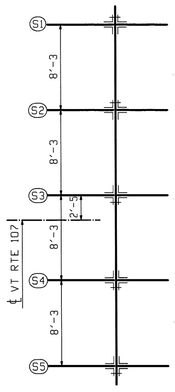

CLIP L BOLTING SCHEMATIC

SCALE 1.0" = 1.0'

** NOTE **
THE PURPOSE OF THIS DRAWING IS TO COORDINATE GEOMETRIC CONTROL INFORMATION AND CONNECTION SPACING. THIS DWG IS SUBMITTED FOR INFORMATION ONLY & IS NOT INTENDED FOR SHOP FABRICATION. DETAIL DWGS WILL SHOW ALL WELDING AND DIMENSIONS REQ'D FOR FABRICATION.

NOTES:

1. ALL MATERIAL IS M270-50 (UN), WITH CVN & FCM TESTING AS INDICATED. ALL CONN. Ls SHALL BE M270-36. ALL ROLLED SHAPES AND PLATES SHALL BE HOT-DIP GALVANIZED AFTER FABRICATION.
2. BOLTS SHALL BE 7/8ø A325-1 GALV. (UN). ALL BOLTS SHALL BE INSTALLED WITH HEADS EXPOSED TO PUBLIC VIEW WITH ONE HARDENNED WASHER AND ONE DTI WASHER. BOLTS AND WASHERS SHALL BE MECHANICALLY GALVANIZED. RFI-TEC-3073005
3. DUE TO ROLLING MILL TOLERANCE, THE ACTUAL THICKNESS OF FILL PLATES MAY VARY FROM WHAT IS SHOWN ON THIS DWG. THE SHOP WILL BE RESPONSIBLE FOR ADJUSTING FILL THICKNESS AS REQUIRED TO SUIT THE ACTUAL MATERIAL SIZE. FILL PLATES SHALL BE A SINGLE THICKNESS PLATE.
4. INTERIOR AND EXTERIOR GUSSET PLATES ARE IDENTICAL (UN).

REV.	DATE	REMARKS	DWN	CHK	APVL	SHOP
D					JAN 9 2012	
					NOV 7 8 2011	

MATERIAL:	SURFACE PREP. & PAINT:	HOLES:	SHOP BOLTS:
M270-50 (UN)	HOT-DIP GALV.	15/16ø (UN)	7/8ø (UN)

DESCRIPTION: TRUSS LAYOUT @ L1 & L2

CASCO BAY STEEL STRUCTURES, INC.
1 WALLACE AVE. PHONE (207) 780-6722
SOUTH PORTLAND, ME 04106 FAX. (207) 780-6726

TENSOR 3073

STRUCTURE: VT RTE 107 OVER WHITE RIVER	DRAWN: WL	DATE: 09/19
	CHK'D: PCP	DATE: 09/22
LOCATION: BETHEL, VT.	JOB NO.	DWG NO.
PROJ NO. BRF 022-1(14)	498	TD2
CUSTOMER: BECK & BELLUCCI		REV. △

Tue, Oct 11, 2011 04:58:18 PM //casco/jobs/3073/TD2 1 Rev0
ML

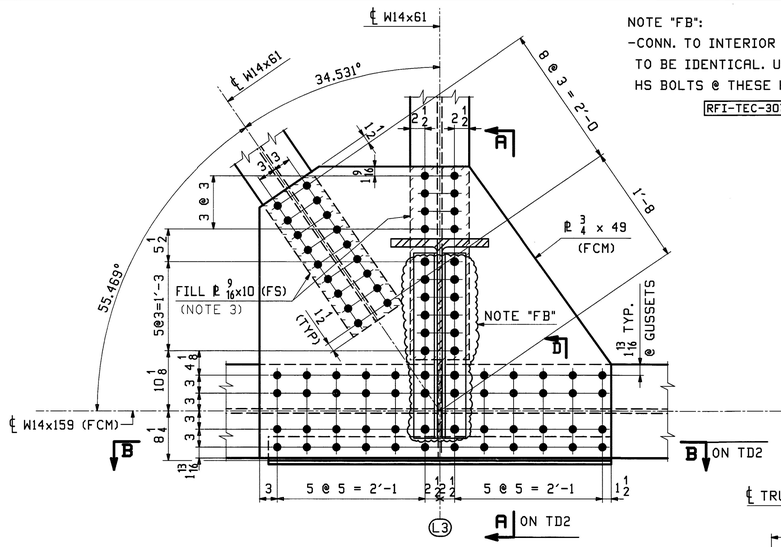

PANEL POINT L3

TRUSS T2 SHOWN, T1 OPP. HAND

NOTE "FB":
-CONN. TO INTERIOR & EXTERIOR GUSSET TO BE IDENTICAL. USE $1\frac{1}{16}$"ø HOLES FOR 1"ø HS BOLTS @ THESE HOLES ONLY.

RFI-TEC-3073006

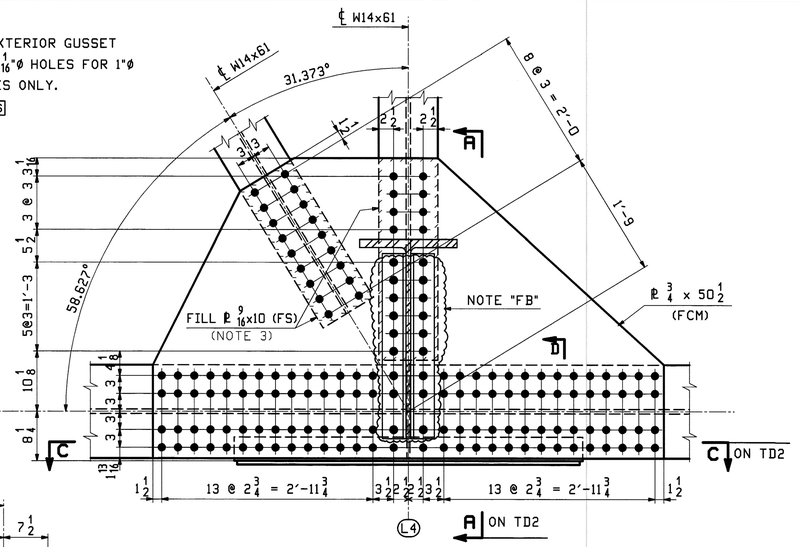

PANEL POINT L4

TRUSS T2 SHOWN, T1 OPP. HAND

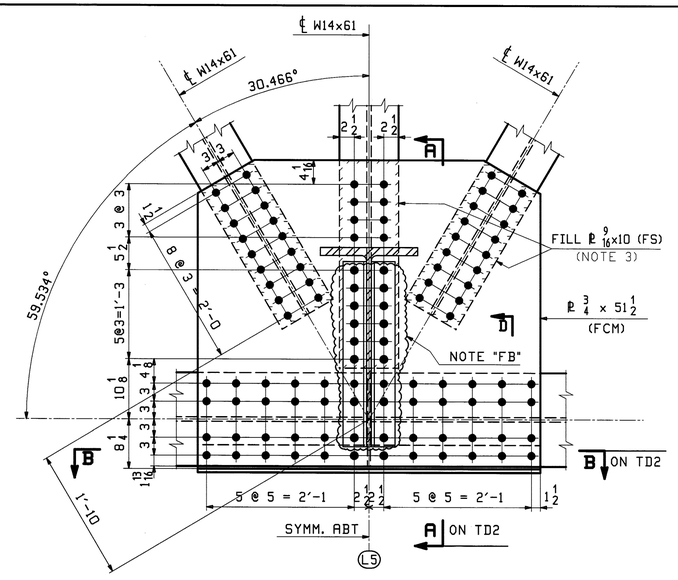

PANEL POINT L5

TRUSS T2 SHOWN, T1 OPP. HAND

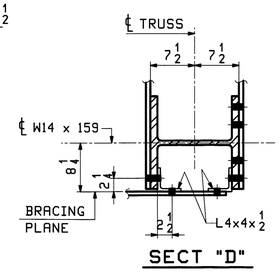

SECT "D"

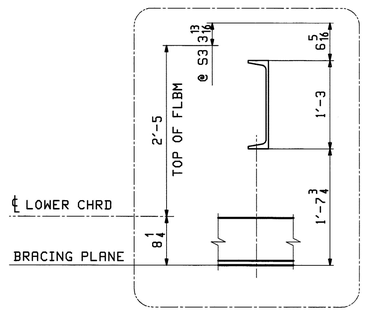

HANGER LENGTH CALC.

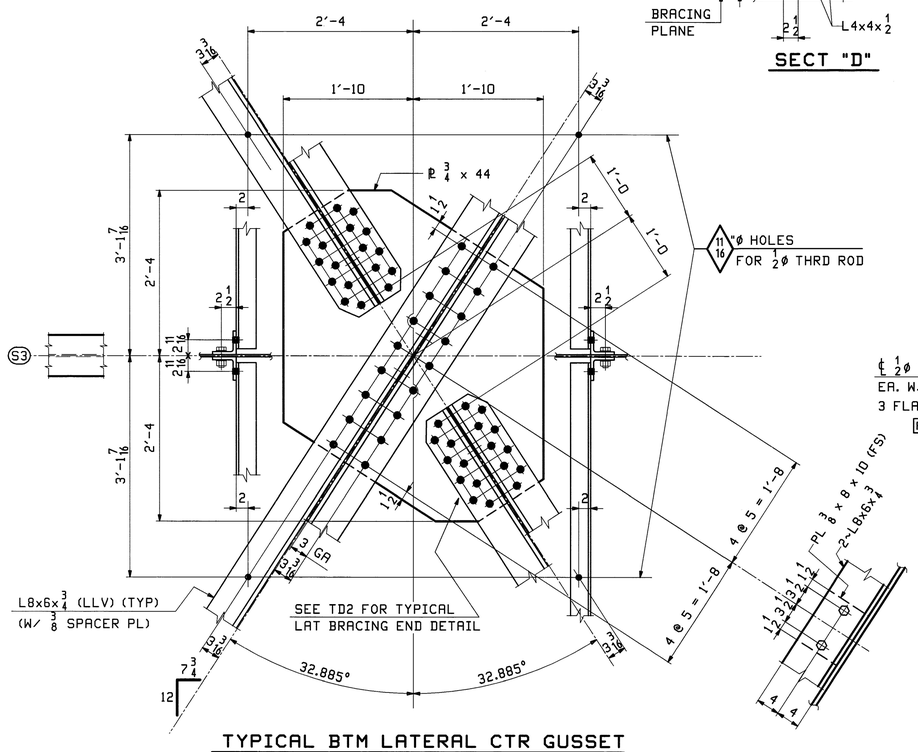

TYPICAL BTM LATERAL CTR GUSSET

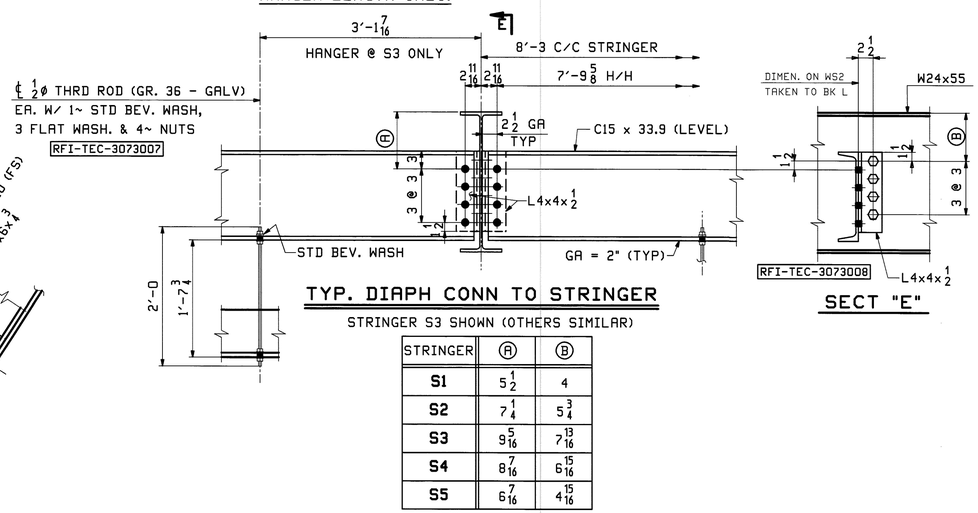

TYP. DIAPH CONN TO STRINGER

STRINGER S3 SHOWN (OTHERS SIMILAR)

SECT "E"

STRINGER	Ⓐ	Ⓑ
S1	5½	4
S2	7¼	5¾
S3	9 5/16	7 13/16
S4	8 7/16	6 15/16
S5	6 7/16	4 15/16

Vermont Agency of Transportation

RECEIVED

CK'D BY M.C.L. OK'D BY S.S.S.

January 10 2012

RESUBMIT ____ APPROVED ✓

BY J. LACROIX DATE 01-12-2012

** NOTE **
THE PURPOSE OF THIS DRAWING IS TO COORDINATE GEOMETRIC CONTROL INFORMATION AND CONNECTION SPACING. THIS DWG IS SUBMITTED FOR INFORMATION ONLY & IS NOT INTENDED FOR SHOP FABRICATION. DETAIL DWGS WILL SHOW ALL WELDING AND DIMENSIONS REQ'D FOR FABRICATION.

NOTES:

1. ALL MATERIAL IS M270-50 (UN), WITH CVN & FCM TESTING AS INDICATED. ALL CONN. Ls SHALL BE M270-36. ALL ROLLED SHAPES AND PLATES SHALL BE HOT-DIP GALVANIZED AFTER FABRICATION.

2. BOLTS SHALL BE ⅞ø A325-1 GALV. (UN). ALL BOLTS SHALL BE INSTALLED WITH HEADS EXPOSED TO PUBLIC VIEW WITH ONE HARDENNED WASHER AND ONE DTI WASHER. BOLTS AND WASHERS SHALL BE MECHANICALLY GALVANIZED. RFI-TEC-3073005

3. DUE TO ROLLING MILL TOLERANCE, THE ACTUAL THICKNESS OF FILL PLATES MAY VARY FROM WHAT IS SHOWN ON THIS DWG. THE SHOP WILL BE RESPONSIBLE FOR ADJUSTING FILL THICKNESS AS REQUIRED TO SUIT THE ACTUAL MATERIAL SIZE. FILL PLATES SHALL BE A SINGLE THICKNESS PLATE.

4. INTERIOR AND EXTERIOR GUSSET PLATES ARE IDENTICAL (UN).

REV.	DATE	REMARKS	DWN	CHK	APVL	SHOP
					JAN 9 2012	
0					NOV 18 2011	

MATERIAL:	SURFACE PREP. & PAINT:	HOLES:	SHOP BOLTS:
M270-50 (UN)	HOT-DIP GALV.	15/16ø (UN)	⅞ø (UN)

DESCRIPTION: TRUSS LAYOUT @ L3 - L5 & LATERAL CTR GUSSET

CASCO BAY STEEL STRUCTURES, INC.
1 WALLACE AVE. PHONE (207) 780-6722
SOUTH PORTLAND, ME 04106 FAX. (207) 780-6726
TENSOR 3073

STRUCTURE: VT RTE 107 OVER WHITE RIVER	DRAWN: WL	DATE: 09/23
	CHK'D: PCP	DATE: 09/24
LOCATION: BETHEL, VT.	JOB NO.	DWG NO.
PROJ NO. BRF 022-1(14)	498	TD3
CUSTOMER: BECK & BELLUCCI		REV. △

Tue, Oct 11, 2011 04:58:01 PM //casco/jobs/3073/TD3 - Rev0

** NOTE **
THE PURPOSE OF THIS DRAWING IS TO COORDINATE GEOMETRIC CONTROL INFORMATION AND CONNECTION SPACING. THIS DWG IS SUBMITTED FOR INFORMATION ONLY & IS NOT INTENDED FOR SHOP FABRICATION. DETAIL DWGS WILL SHOW ALL WELDING AND DIMENSIONS REQ'D FOR FABRICATION.

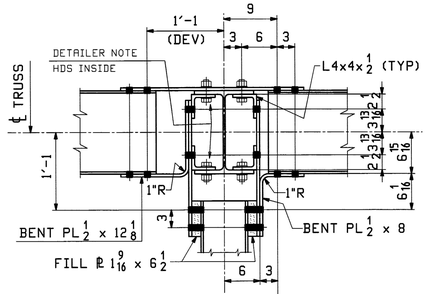

SECT "B"

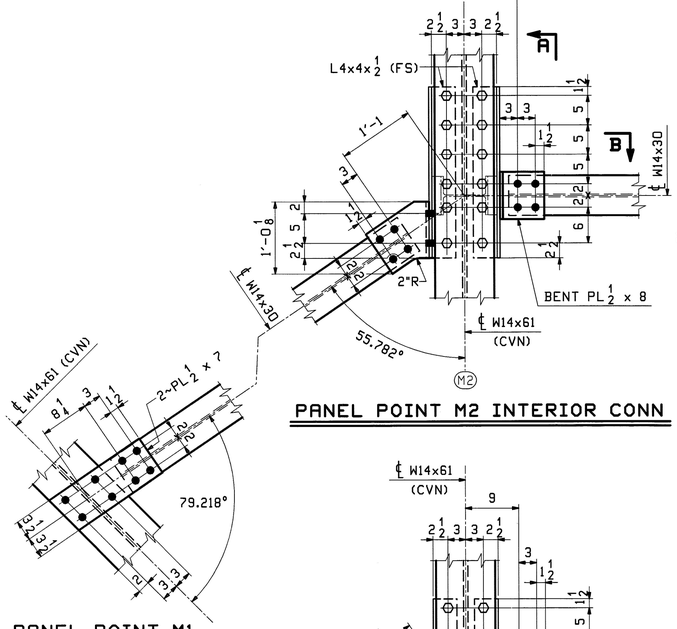

PANEL POINT M2 INTERIOR CONN

PANEL POINT M1

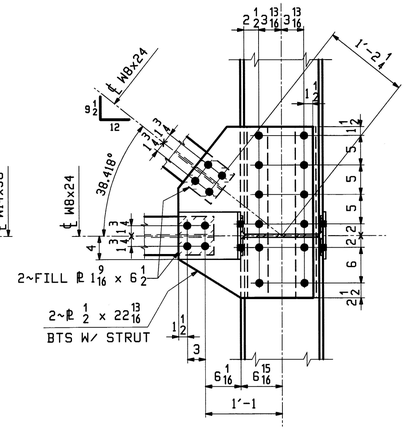

SECT "A"

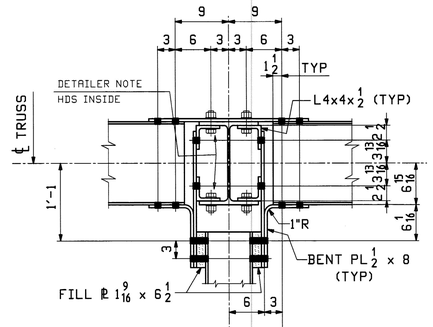

SECT "D"

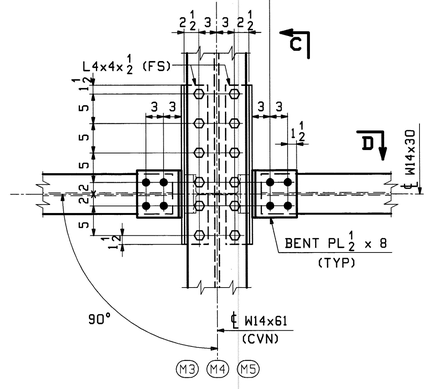

PANEL POINT M3, M4 & M5 INTERIOR CONN

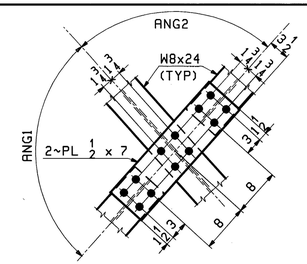

SWAY FRAME CTR CONN.

PP	ANG1	ANG2
M2	76.836°	103.164°
M3	91.942°	88.058°
M4 & M5	96.074°	83.926°

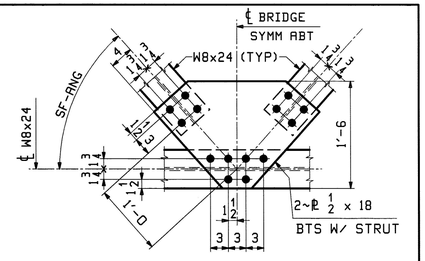

SWAY FRAME CTR STRUT CONN.

PP	SF-ANG
M2	38.418°
M3	45.971°
M4 & M5	48.037°

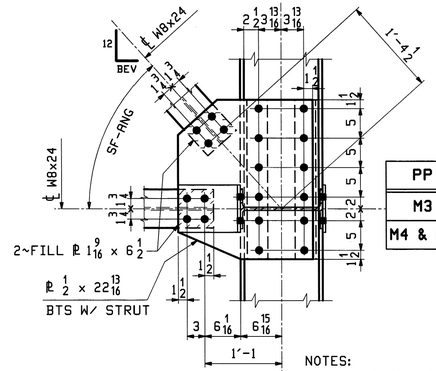

SECT "C"

PP	SF-ANG	BEV
M3	45.971°	11 5/8
M4 & M5	48.037°	10 13/16

NOTES:
1. ALL MATERIAL IS M270-50 (UN), WITH CVN & FCM TESTING AS INDICATED. ALL CLIP Ls SHALL BE M270-36. ALL ROLLED SHAPES AND PLATES SHALL BE HOT-DIP GALVANIZED AFTER FABRICATION.
2. BOLTS SHALL BE 7/8ø A325-1 GALV. (UN). ALL BOLTS SHALL BE INSTALLED WITH HEADS EXPOSED TO PUBLIC VIEW (UN) WITH ONE HARDENNED WASHER AND ONE DTI WASHER. BOLTS AND WASHERS SHALL BE MECHANICALLY GALVANIZED. RFI-TEC-3073005
3. DUE TO ROLLING MILL TOLERANCE, THE ACTUAL THICKNESS OF FILL PLATES MAY VARY FROM WHAT IS SHOWN ON THIS DWG. THE SHOP WILL BE RESPONSIBLE FOR ADJUSTING FILL THICKNESS AS REQUIRED TO SUIT THE ACTUAL MATERIAL SIZE. FILL PLATES SHALL BE A SINGLE THICKNESS PLATE.
4. INTERIOR AND EXTERIOR GUSSET PLATES ARE IDENTICAL (UN).

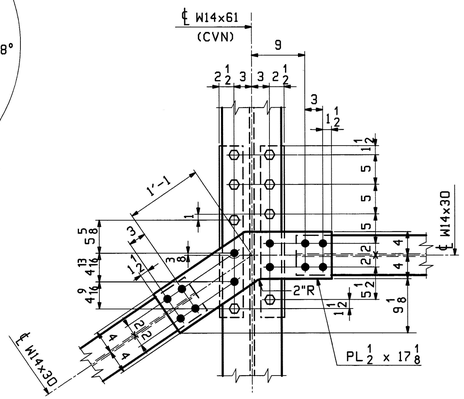

PANEL POINT M1

PANEL POINT M2 EXTERIOR CONN

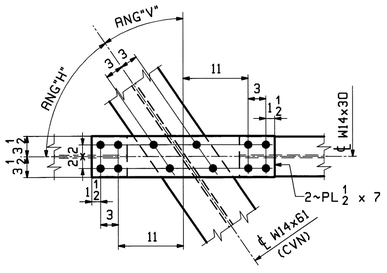

PANEL POINT M23, M34 & M45

PP	RNG"H"	RNG"V"
M23	55.469°	34.531°
M34	58.627°	31.373°
M45	59.534°	30.466°

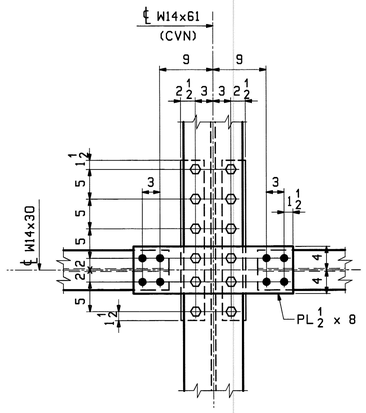

PANEL POINT M3, M4 & M5 EXTERIOR CONN

Vermont Agency of Transportation
RECEIVED
CK'D BY M.C.L. OK'D BY S.S.S.
January 10 2012
RESUBMIT APPROVED ✓
BY J. LACROIX DATE 01-12-2012

REV.	DATE	REMARKS	DWN	CHK	APVL	SHOP
0					JAN 9 2012 NOV 18 2011	

MATERIAL:	SURFACE PREP. & PAINT:	HOLES:	SHOP BOLTS:
M270-50 (UN)	HOT-DIP GALV.	15/16ø (UN)	7/8ø (UN)

DESCRIPTION: TRUSS LAYOUT @ MID-PANEL CONNECTIONS

CASCO BAY STEEL STRUCTURES, INC.
1 WALLACE AVE. PHONE (207) 780-6722
SOUTH PORTLAND, ME 04106 FAX. (207) 780-6726

TENSOR 3073

STRUCTURE: VT RTE 107 OVER WHITE RIVER	DRAWN: WL	DATE: 09/24
	CHKD: PCP	DATE: 09/28
LOCATION: BETHEL, VT.	JOB NO. 498	DWG NO. TD4
PROJ NO. BRF 022-1(14)		REV. △
CUSTOMER: BECK & BELLUCCI		

SCALE 1.0" = 1.0'

PCP Tue, Oct 11, 2011 03:29:36 PM /users/pw/3073/TD4.dwg

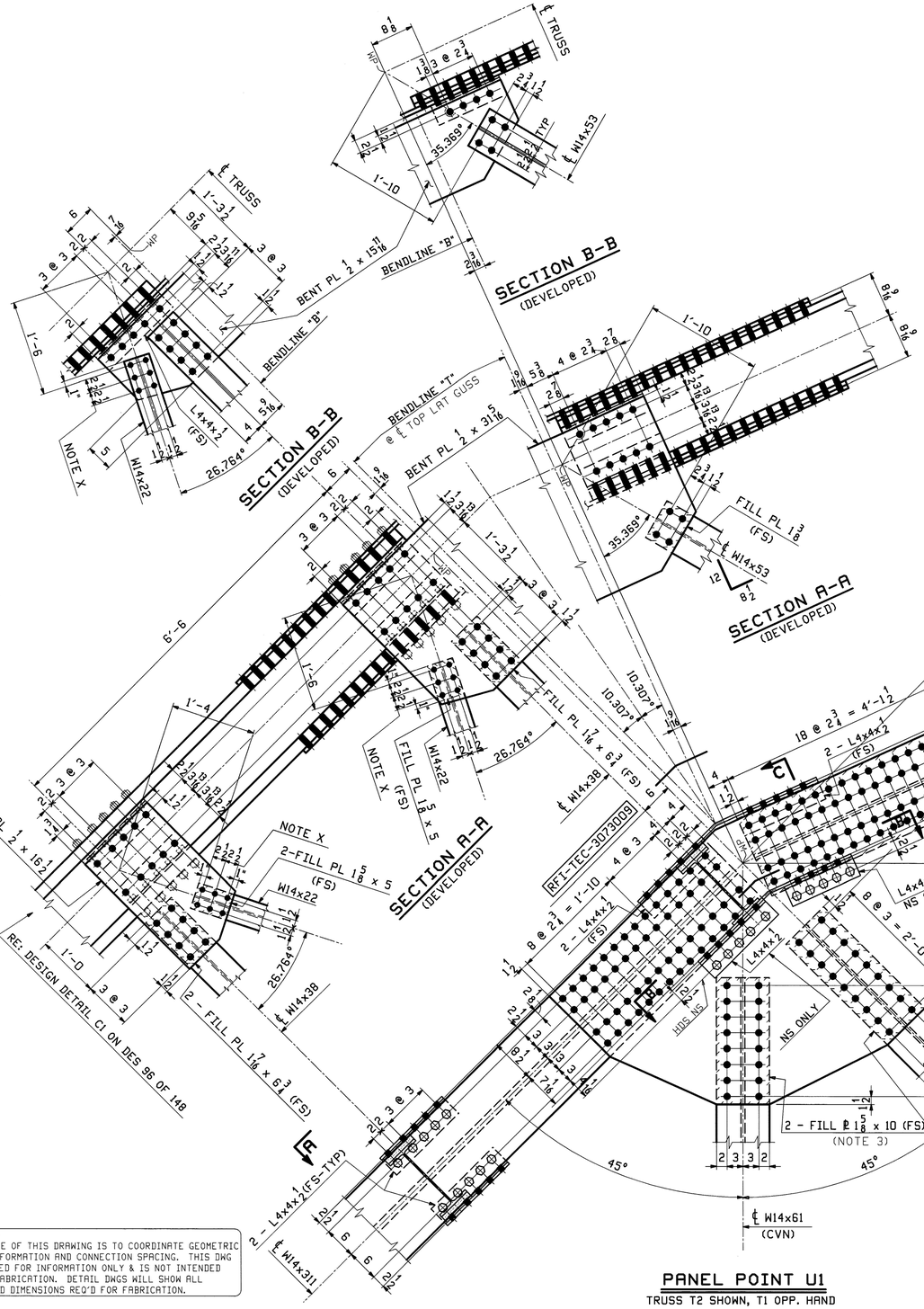

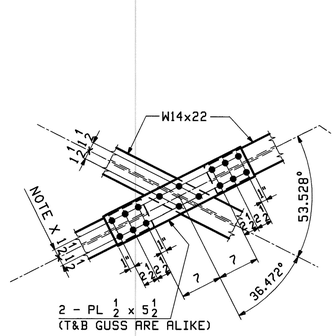

END PORTAL DETAIL "C2"

(RE: DESIGN DETAIL C2 ON DES 96 OF 148)

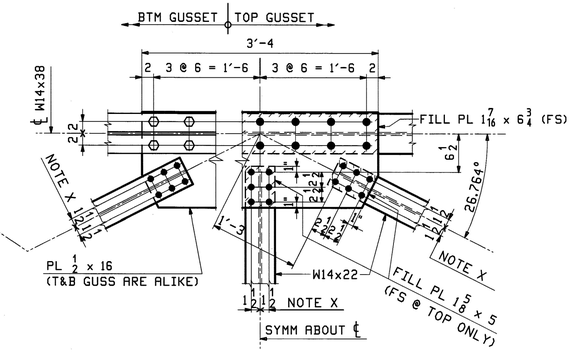

END PORTAL DETAIL "C3"

DETAIL AT TOP STRUT SHOWN, BTM STRUT IS OPP HAND

(RE: DESIGN DETAIL C3 ON DES 96 OF 148)

PANEL POINT U1

TRUSS T2 SHOWN, T1 OPP. HAND

** NOTE **
THE PURPOSE OF THIS DRAWING IS TO COORDINATE GEOMETRIC CONTROL INFORMATION AND CONNECTION SPACING. THIS DWG IS SUBMITTED FOR INFORMATION ONLY & IS NOT INTENDED FOR SHOP FABRICATION. DETAIL DWGS WILL SHOW ALL WELDING AND DIMENSIONS REQ'D FOR FABRICATION.

NOTE X:
USE 11/16ø HOLES FOR 5/8"ø HS BOLTS IN W14 x 22 PORTAL MEMBERS.

NOTES:
1. ALL MATERIAL IS M270-50 (UN), WITH CVN & FCM TESTING AS INDICATED. ALL Ls SHALL BE M270-36. ALL ROLLED SHAPES AND PLATES SHALL BE HOT-DIP GALVANIZED AFTER FABRICATION.
2. BOLTS SHALL BE 7/8ø A325-1 GALV. (UN). ALL BOLTS SHALL BE INSTALLED WITH HEADS EXPOSED TO PUBLIC VIEW WITH ONE HARDENNED WASHER AND ONE DTI WASHER. BOLTS AND WASHERS SHALL BE MECHANICALLY GALVANIZED.
3. DUE TO ROLLING MILL TOLERANCE, THE ACTUAL THICKNESS OF FILL PLATES MAY VARY FROM WHAT IS SHOWN ON THIS DWG. THE SHOP WILL BE RESPONSIBLE FOR ADJUSTING FILL THICKNESS AS REQUIRED TO SUIT THE ACTUAL MATERIAL SIZE. FILL PLATES SHALL BE A SINGLE THICKNESS PLATE.
4. INTERIOR AND EXTERIOR GUSSET PLATES ARE IDENTICAL EXCEPT AS NOTED.

SCALE 1.0" = 1.0'

Vermont Agency of Transportation
RECEIVED
CK'D BY M.C.L. OK'D BY S.S.S.
January 10 2012
RESUBMIT ____ APPROVED ✓
BY J. LACROIX DATE 01-12-2012

REV.	DATE	REMARKS	DWN	CHK	APVL	SHOP
0					JAN 9 2012	
					NOV 18 2011	

MATERIAL:	SURFACE PREP. & PRINT:	HOLES:	SHOP BOLTS:
M270-50 (UN)	HOT-DIP GALV.	15/16ø (UN)	7/8ø (UN)

DESCRIPTION: TRUSS LAYOUT @ U1

CASCO BAY STEEL STRUCTURES, INC.
1 WALLACE AVE. PHONE (207) 780-6722
SOUTH PORTLAND, ME 04106 FAX. (207) 780-6726
TENSOR 3073

STRUCTURE: VT RTE 107 OVER WHITE RIVER	DRAWN: WL	DATE: 09/26
	CHKD: PCP	DATE: 10/01
LOCATION: BETHEL, VT.	JOB NO.	DWG NO.
PROJ NO. BRF 022-1(14)	498	TD5
CUSTOMER: BECK & BELLUCCI		REV. △

Tue, Oct 11, 2011 09:03:43 PM //casco-jobs/2011/165 - Rev0

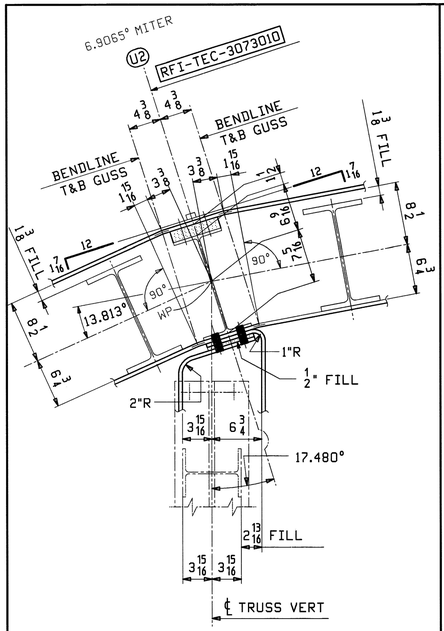

U2 WORKPOINT GEOMETRY

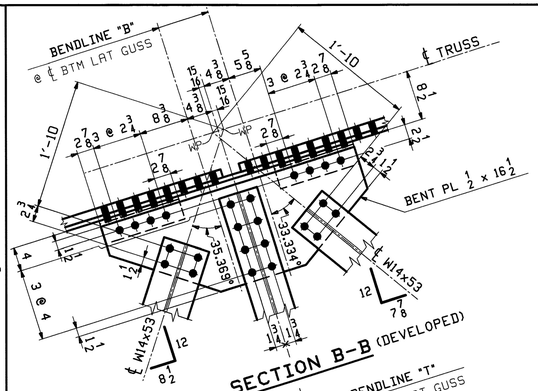

SECTION B-B (DEVELOPED)

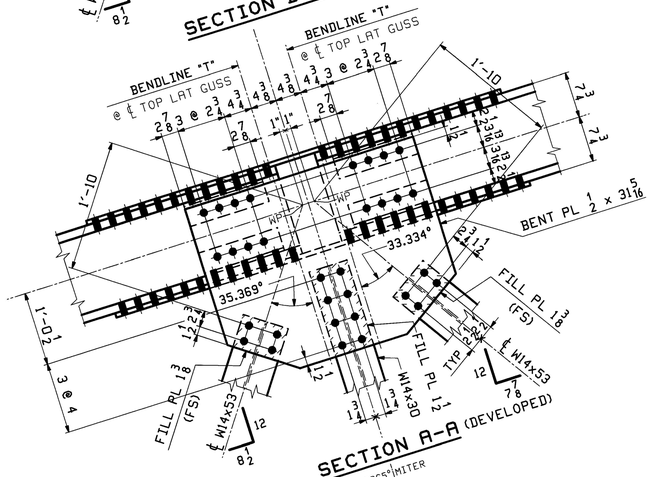

SECTION A-A (DEVELOPED)

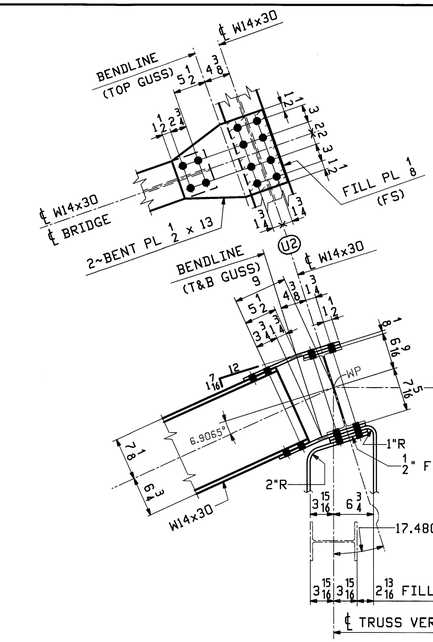

SWAY BRACE CONNECTION @ U2

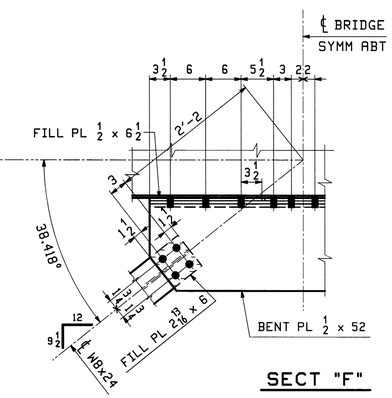

SECT "F"

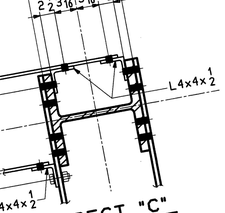

SECT "C"

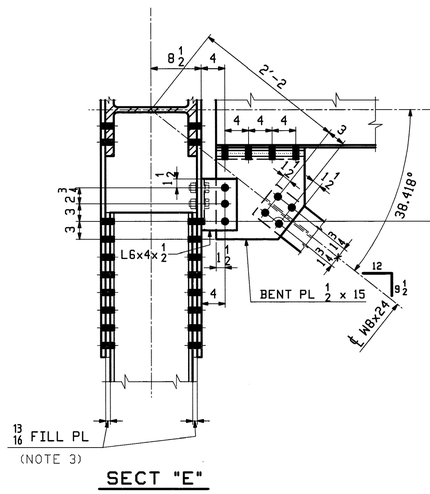

SECT "E"

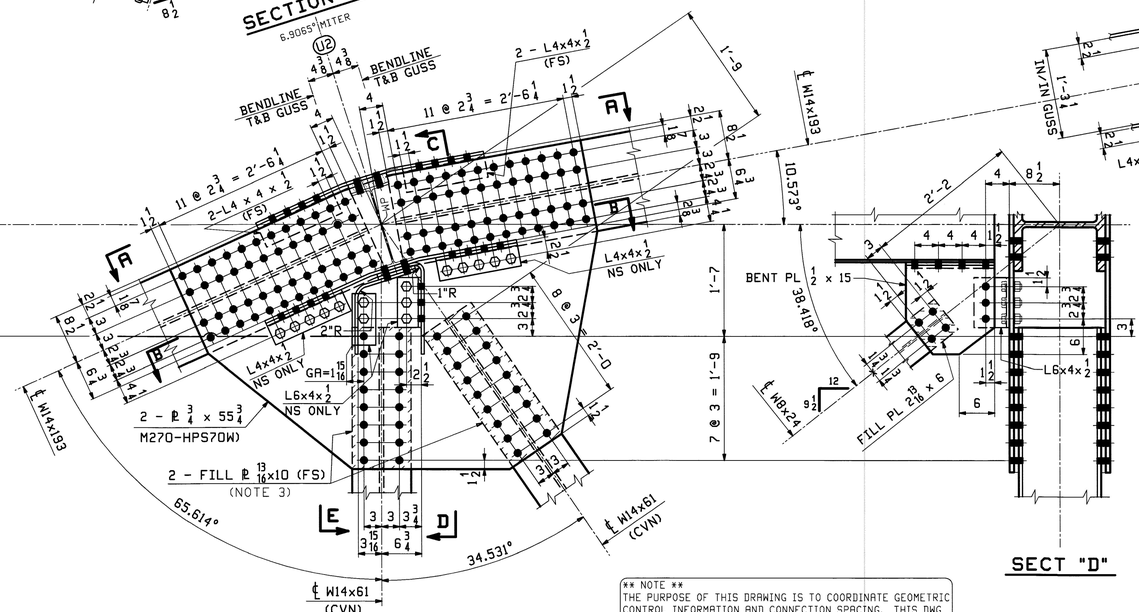

PANEL POINT U2

TRUSS T2 SHOWN, T1 OPP. HAND

SECT "D"

** NOTE **
THE PURPOSE OF THIS DRAWING IS TO COORDINATE GEOMETRIC CONTROL INFORMATION AND CONNECTION SPACING. THIS DWG IS SUBMITTED FOR INFORMATION ONLY & IS NOT INTENDED FOR SHOP FABRICATION. DETAIL DWGS WILL SHOW ALL WELDING AND DIMENSIONS REQ'D FOR FABRICATION.

SCALE 1.0" = 1.0'

NOTES:
1. ALL MATERIAL IS M270-50 (UN), WITH CVN & FCM TESTING AS INDICATED. ALL Ls SHALL BE M270-36. ALL ROLLED SHAPES AND PLATES SHALL BE HOT-DIP GALVANIZED AFTER FABRICATION.
2. BOLTS SHALL BE ⅞ø A325-1 GALV. (UN). ALL BOLTS SHALL BE INSTALLED WITH HEADS EXPOSED TO PUBLIC VIEW WITH ONE HARDENNED WASHER AND ONE DTI WASHER. BOLTS AND WASHERS SHALL BE MECHANICALLY GALVANIZED.
3. DUE TO ROLLING MILL TOLERANCE, THE ACTUAL THICKNESS OF FILL PLATES MAY VARY FROM WHAT IS SHOWN ON THIS DWG. THE SHOP WILL BE RESPONSIBLE FOR ADJUSTING FILL THICKNESS AS REQUIRED TO SUIT THE ACTUAL MATERIAL SIZE. FILL PLATES SHALL BE A SINGLE THICKNESS PLATE.
4. INTERIOR AND EXTERIOR GUSSET PLATES ARE IDENTICAL EXCEPT AS NOTED.

Vermont Agency of Transportation
RECEIVED
CK'D BY M.C.L. OK'D BY S.S.S.
January 10 2012
RESUBMIT APPROVED ✓
BY J. LACROIX DATE 01-12-2012

JAN 9 2012
NOV 18 2011

REV.	DATE	REMARKS	DWN	CHK	APVL	SHOP
0						

MATERIAL:	SURFACE PREP. & PAINT:	HOLES:	SHOP BOLTS:
M270-50 (UN)	HOT-DIP GALV.	15/16ø (UN)	⅞ø (UN)

DESCRIPTION: TRUSS LAYOUT @ U2

CASCO BAY STEEL STRUCTURES, INC.
1 WALLACE AVE. PHONE (207) 780-6722
SOUTH PORTLAND, ME 04106 FAX. (207) 780-6726

TENSOR 3073

STRUCTURE: VT RTE 107 OVER WHITE RIVER	DRAWN: WL	DATE: 09/30
	CHK'D: PCP	DATE: 10/06
LOCATION: BETHEL, VT.	JOB NO.	DWG NO.
PROJ NO. BRF 022-1(14)	498	TD6
CUSTOMER: BECK & BELLUCCI		REV. △

WL Tue, Oct 11, 2011 09:09:52 PM c:\users\jobs\3073-TDS - Rev0

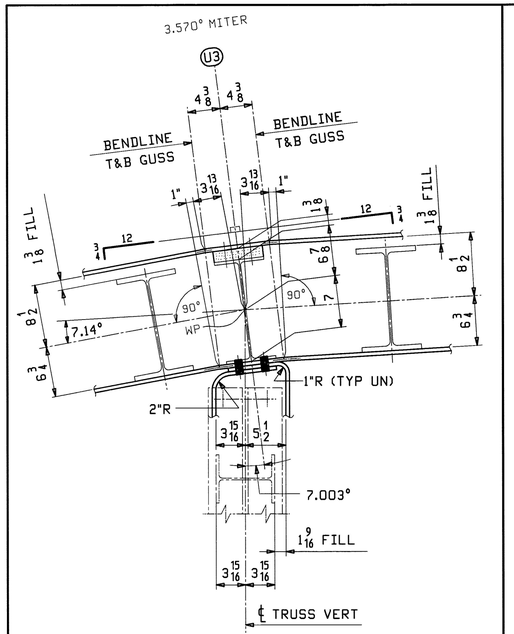

U3 WORKPOINT GEOMETRY

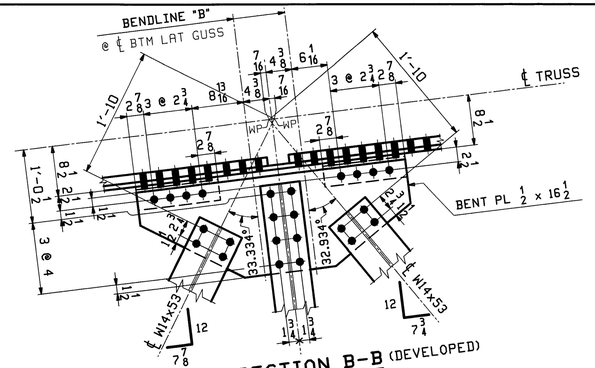

SECTION B-B (DEVELOPED)

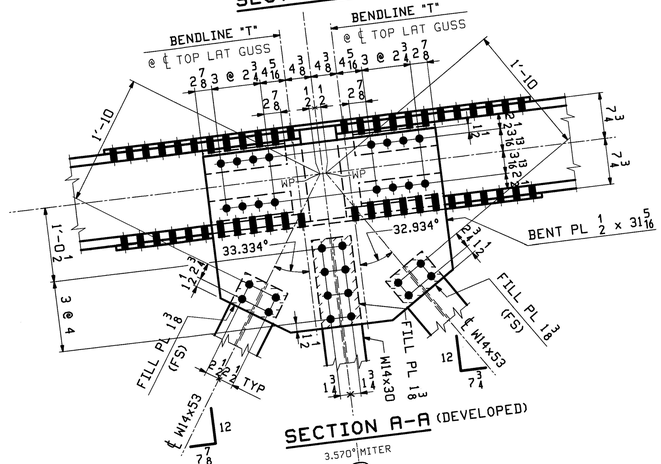

SECTION A-A (DEVELOPED)

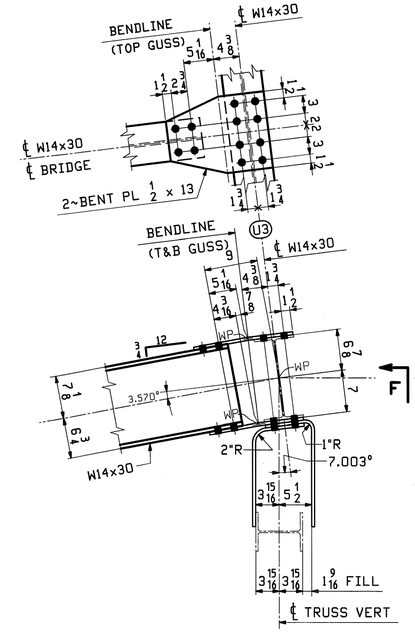

SWAY BRACE CONNECTION @ U3

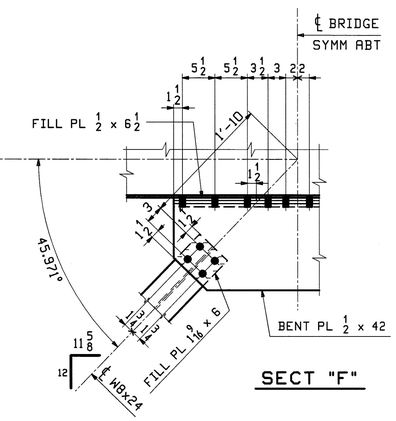

SECT "F"

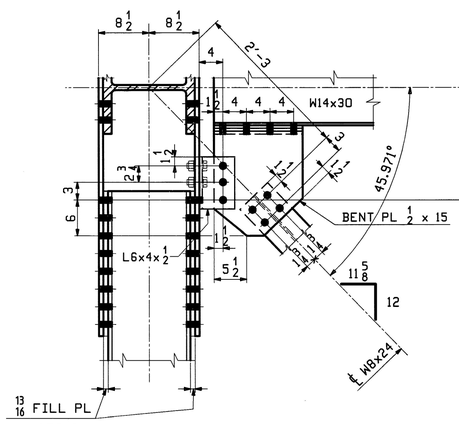

SECT "E"

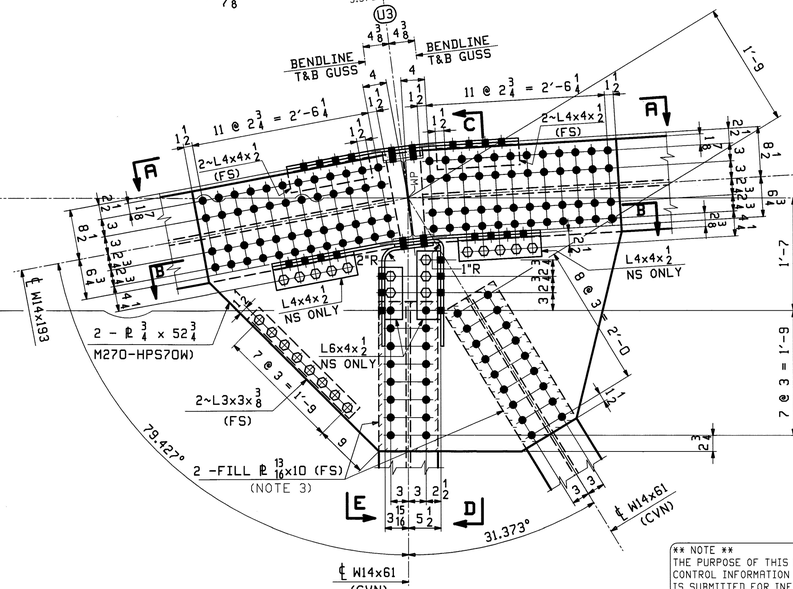

PANEL POINT U3

TRUSS T2 SHOWN, T1 OPP. HAND

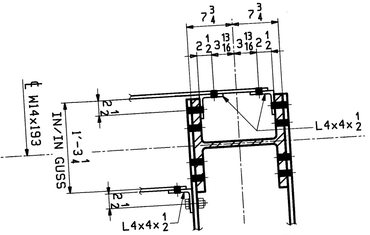

SECT "C"

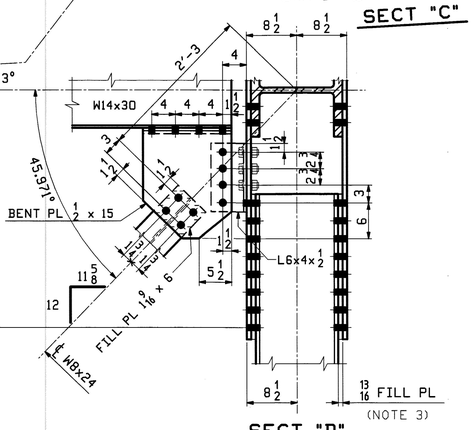

SECT "D"

NOTES:

1. ALL MATERIAL IS M270-50 (UN), WITH CVN & FCM TESTING AS INDICATED. ALL Ls SHALL BE M270-36. ALL ROLLED SHAPES AND PLATES SHALL BE HOT-DIP GALVANIZED AFTER FABRICATION.

2. BOLTS SHALL BE 7/8ø A325-1 GALV. (UN). ALL BOLTS SHALL BE INSTALLED WITH HEADS EXPOSED TO PUBLIC VIEW WITH ONE HARDENNED WASHER AND ONE DTI WASHER. BOLTS AND WASHERS SHALL BE MECHANICALLY GALVANIZED.

3. DUE TO ROLLING MILL TOLERANCE, THE ACTUAL THICKNESS OF FILL PLATES MAY VARY FROM WHAT IS SHOWN ON THIS DWG. THE SHOP WILL BE RESPONSIBLE FOR ADJUSTING FILL THICKNESS AS REQUIRED TO SUIT THE ACTUAL MATERIAL SIZE. FILL PLATES SHALL BE A SINGLE THICKNESS PLATE.

4. INTERIOR AND EXTERIOR GUSSET PLATES ARE IDENTICAL EXCEPT AS NOTED.

** NOTE **
THE PURPOSE OF THIS DRAWING IS TO COORDINATE GEOMETRIC CONTROL INFORMATION AND CONNECTION SPACING. THIS DWG IS SUBMITTED FOR INFORMATION ONLY & IS NOT INTENDED FOR SHOP FABRICATION. DETAIL DWGS WILL SHOW ALL WELDING AND DIMENSIONS REQ'D FOR FABRICATION.

SCALE 1.0" = 1.0'

Vermont Agency of Transportation

RECEIVED

CK'D BY M.C.L. OK'D BY S.S.S.

January 10 2012

RESUBMIT APPROVED ✓

BY J. LACROIX DATE 01-12-2012

REV.	DATE	REMARKS	DWN	CHK	APVL	SHOP
					JAN 9 2012	
0					NOV 18 2011	

MATERIAL:	SURFACE PREP. & PAINT:	HOLES:	SHOP BOLTS:
M270-50 (UN)	HOT-DIP GALV.	15/16ø (UN)	7/8ø (UN)

DESCRIPTION: TRUSS LAYOUT @ U3

CASCO BAY STEEL STRUCTURES, INC.
1 WALLACE AVE. PHONE (207) 780-6722
SOUTH PORTLAND, ME 04106 FAX. (207) 780-6726
TENSOR 3073

STRUCTURE: VT RTE 107 OVER WHITE RIVER	DRAWN:	DATE:
	WL	10/03
	CHKD:	DATE:
	PCP	10/06
LOCATION: BETHEL, VT.	JOB NO.	DWG NO.
PROJ NO. BRF 022-1(14)	498	TD7
CUSTOMER: BECK & BELLUCCI		REV. △

PCP Tue, Oct 11, 2011 03:28:54 PM //server/jobs/2023/102/_dwg

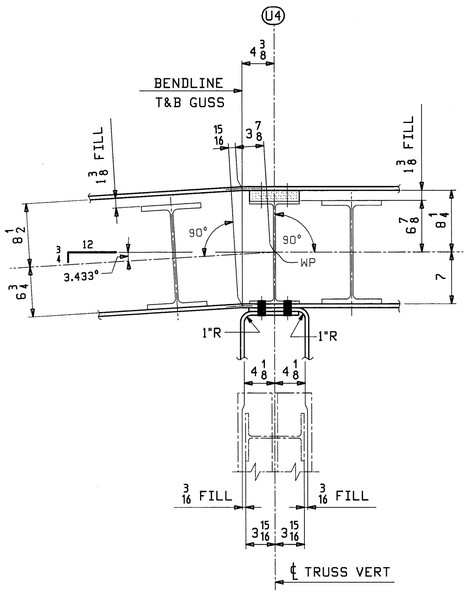

U4 WORKPOINT GEOMETRY

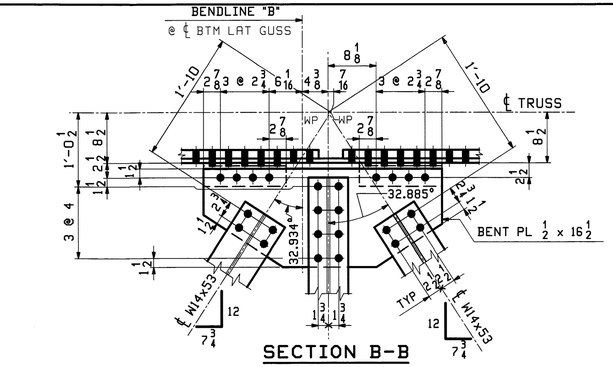

SECTION B-B
(DEVELOPED)

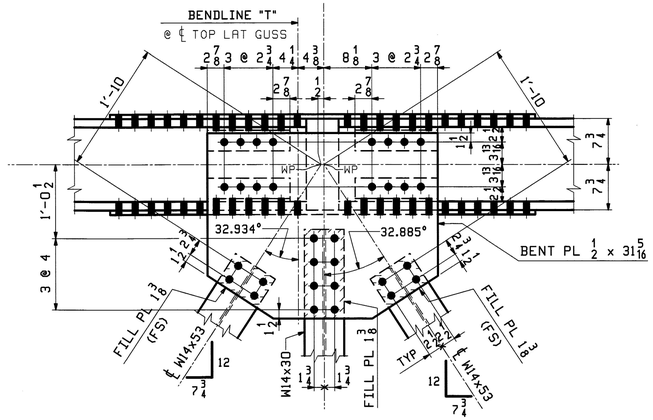

SECTION A-A (DEVELOPED)

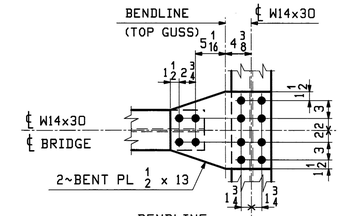

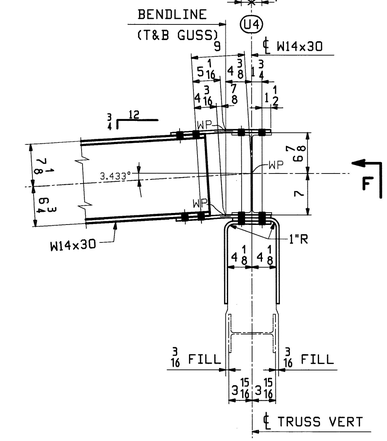

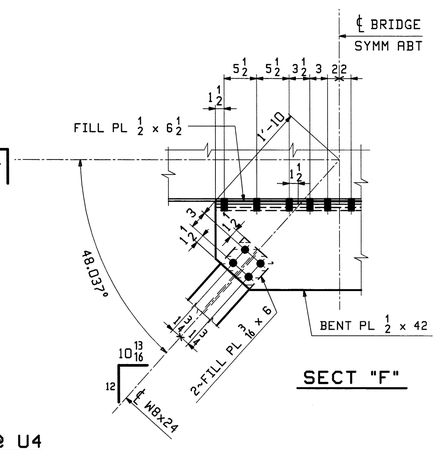

F

SECT "F"

SWAY BRACE CONNECTION @ U4

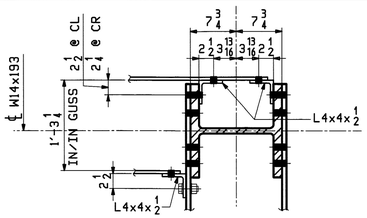

SECT "CL" & "CR"

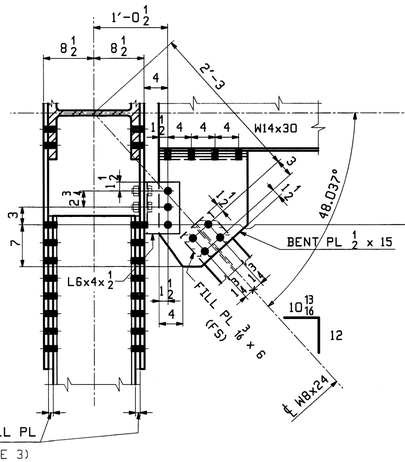

SECT "E"

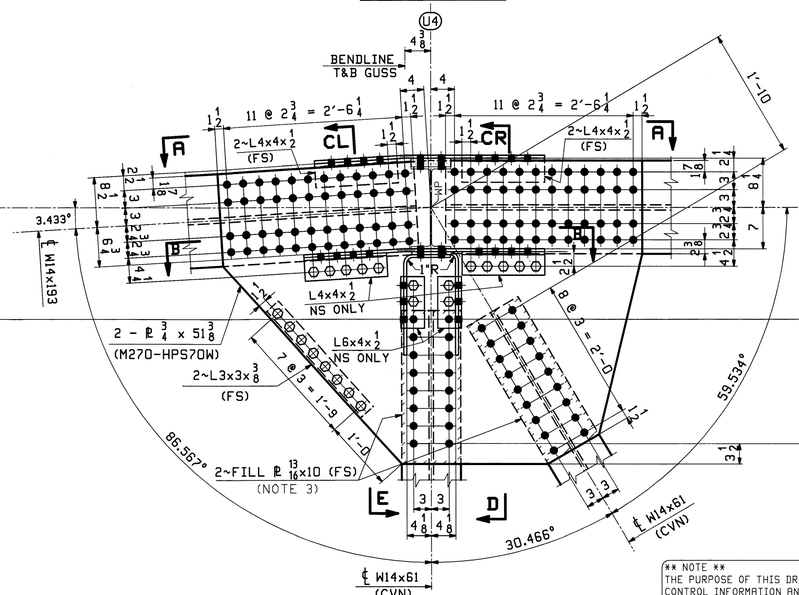

PANEL POINT U4
TRUSS T2 SHOWN, T1 OPP. HAND

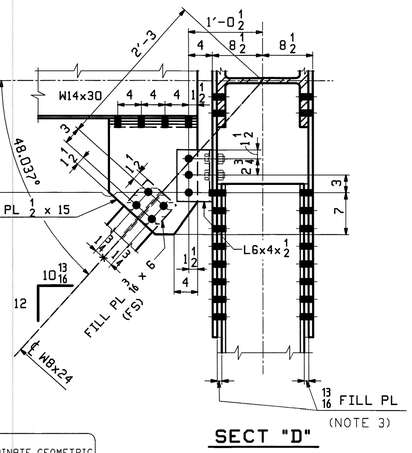

SECT "D"

NOTES:
1. ALL MATERIAL IS M270-50 (UN), WITH CVN & FCM TESTING AS INDICATED. ALL Ls SHALL BE M270-36. ALL ROLLED SHAPES AND PLATES SHALL BE HOT-DIP GALVANIZED AFTER FABRICATION.

2. BOLTS SHALL BE 7/8ø A325-1 GALV. (UN). ALL BOLTS SHALL BE INSTALLED WITH HEADS EXPOSED TO PUBLIC VIEW WITH ONE HARDENNED WASHER AND ONE DTI WASHER. BOLTS AND WASHERS SHALL BE MECHANICALLY GALVANIZED.

3. DUE TO ROLLING MILL TOLERANCE, THE ACTUAL THICKNESS OF FILL PLATES MAY VARY FROM WHAT IS SHOWN ON THIS DWG. THE SHOP WILL BE RESPONSIBLE FOR ADJUSTING FILL THICKNESS AS REQUIRED TO SUIT THE ACTUAL MATERIAL SIZE. FILL PLATES SHALL BE A SINGLE THICKNESS PLATE.

4. INTERIOR AND EXTERIOR GUSSET PLATES ARE IDENTICAL EXCEPT AS NOTED.

** NOTE **
THE PURPOSE OF THIS DRAWING IS TO COORDINATE GEOMETRIC CONTROL INFORMATION AND CONNECTION SPACING. THIS DWG IS SUBMITTED FOR INFORMATION ONLY & IS NOT INTENDED FOR SHOP FABRICATION. DETAIL DWGS WILL SHOW ALL WELDING AND DIMENSIONS REQ'D FOR FABRICATION.

SCALE 1.0" = 1.0'

Vermont Agency of Transportation
RECEIVED
CK'D BY M.C.L. OK'D BY S.S.S.
January 10 2012
RESUBMIT APPROVED ✓
BY J. LACROIX DATE 01-12-2012

REV.	DATE	REMARKS	DWN	CHK	APVL	SHOP
					JAN 9 2012	
0					NOV 18 2011	

MATERIAL:	SURFACE PREP. & PRINT:	HOLES:	SHOP BOLTS:
M270-50 (UN)	HOT-DIP GALV.	15/16ø (UN)	7/8ø (UN)

DESCRIPTION: TRUSS LAYOUT @ U4

CASCO BAY STEEL STRUCTURES, INC.
1 WALLACE AVE. PHONE (207) 780-6722
SOUTH PORTLAND, ME 04106 FAX. (207) 780-6726
TENSOR 3073

STRUCTURE: VT RTE 107 OVER WHITE RIVER	DRAWN: WL	DATE: 10/04
	CHK'D: PCP	DATE: 10/06
LOCATION: BETHEL, VT.	JOB NO.	DWG NO.
PROJ NO. BRF 022-1(14)	498	TD8
CUSTOMER: BECK & BELLUCCI		REV. △

PCP Tue, Oct 11, 2011 03:26:40 PM //users/pbw/2010/108 • Rev0

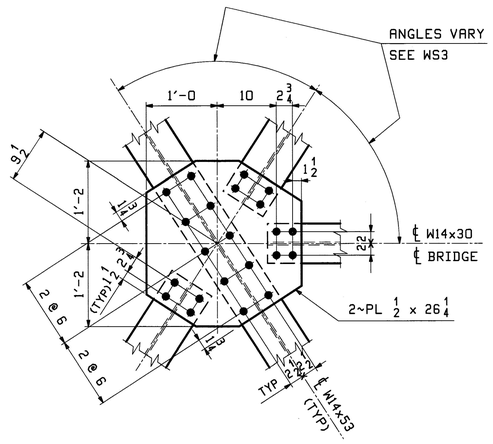

TYPICAL CENTER LAT CONN.

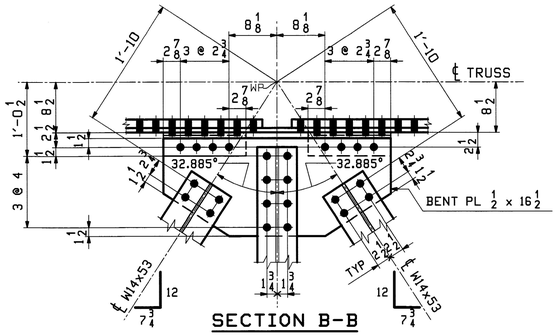

SECTION B-B

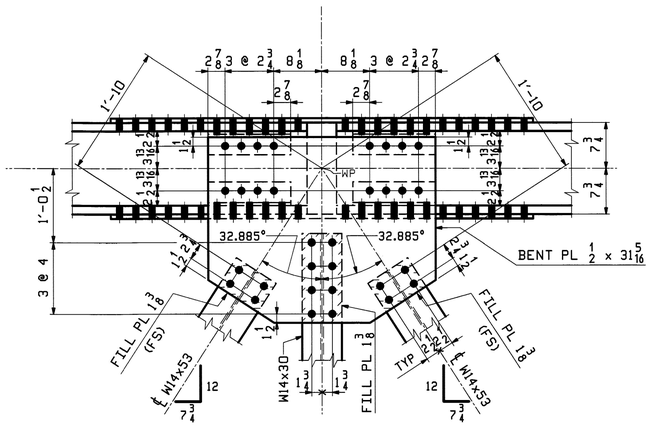

SECTION A-A

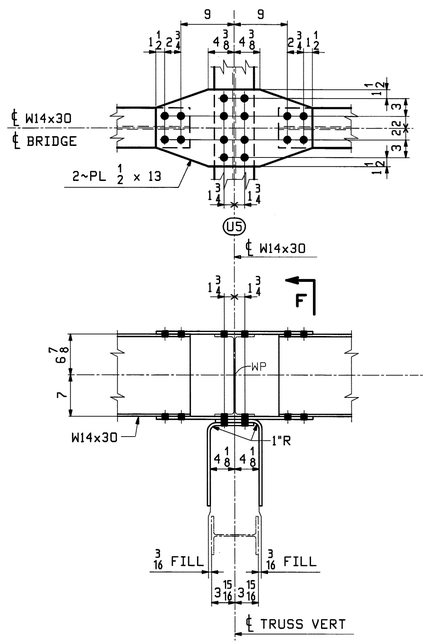

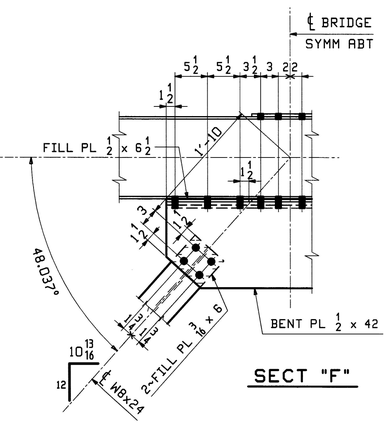

SECT "F"

SWAY BRACE CONNECTION @ U5

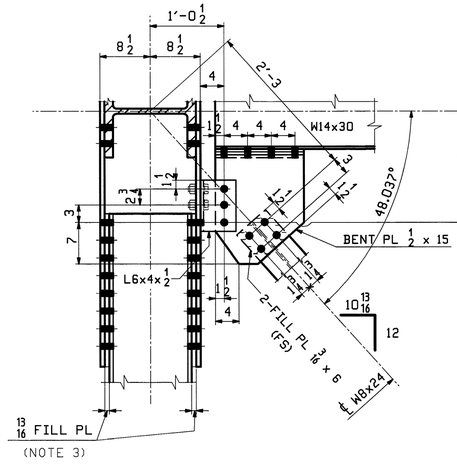

SECT "E"

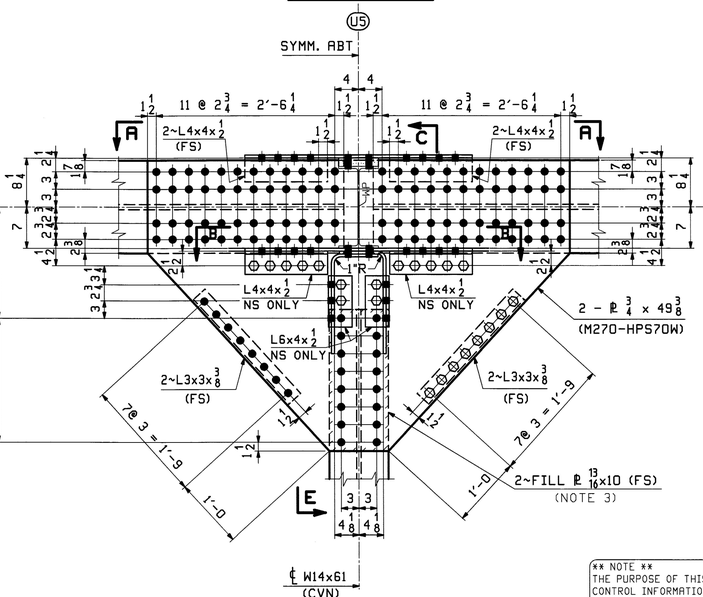

PANEL POINT U5

TRUSS T2 SHOWN, T1 OPP. HAND

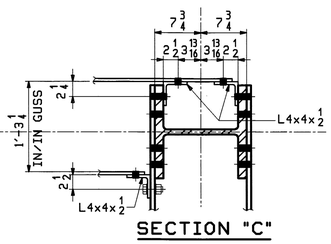

SECTION "C"

NOTES:

1. ALL MATERIAL IS M270-50 (UN), WITH CVN & FCM TESTING AS INDICATED. ALL Ls SHALL BE M270-36. ALL ROLLED SHAPES AND PLATES SHALL BE HOT-DIP GALVANIZED AFTER FABRICATION.

2. BOLTS SHALL BE 7/8ø A325-1 GALV. (UN). ALL BOLTS SHALL BE INSTALLED WITH HEADS EXPOSED TO PUBLIC VIEW WITH ONE HARDENNED WASHER AND ONE DTI WASHER. BOLTS AND WASHERS SHALL BE MECHANICALLY GALVANIZED.

3. DUE TO ROLLING MILL TOLERANCE, THE ACTUAL THICKNESS OF FILL PLATES MAY VARY FROM WHAT IS SHOWN ON THIS DWG. THE SHOP WILL BE RESPONSIBLE FOR ADJUSTING FILL THICKNESS AS REQUIRED TO SUIT THE ACTUAL MATERIAL SIZE. FILL PLATES SHALL BE A SINGLE THICKNESS PLATE.

4. INTERIOR AND EXTERIOR GUSSET PLATES ARE IDENTICAL EXCEPT AS NOTED.

REV.	DATE	REMARKS	DWN	CHK	APVL	SHOP
0					JAN 9 2012	NOV 18 2011

MATERIAL:	SURFACE PREP. & PAINT:	HOLES:	SHOP BOLTS:
M270-50 (UN)	HOT-DIP GALV.	15/16ø (UN)	7/8ø (UN)

DESCRIPTION: TRUSS LAYOUT @ U5

CASCO BAY STEEL STRUCTURES, INC.
1 WALLACE AVE. PHONE (207) 780-6722
SOUTH PORTLAND, ME 04106 FAX. (207) 780-6726

TENSOR 3073

STRUCTURE: VT RTE 107 OVER WHITE RIVER	DRAWN: WL	DATE: 10/05	
	CHKD: PCP	DATE: 10/06	
LOCATION: BETHEL, VT.	JOB NO.	DWG NO.	
PROJ NO. BRF 022-1(14)	498	TD9	
CUSTOMER: BECK & BELLUCCI		REV. △	

Vermont Agency of Transportation
RECEIVED
CK'D BY M.C.L. OK'D BY S.S.S.
January 10 2012
RESUBMIT APPROVED ✓
BY J. LACROIX DATE 01-12-2012

** NOTE **
THE PURPOSE OF THIS DRAWING IS TO COORDINATE GEOMETRIC CONTROL INFORMATION AND CONNECTION SPACING. THIS DWG IS SUBMITTED FOR INFORMATION ONLY & IS NOT INTENDED FOR SHOP FABRICATION. DETAIL DWGS WILL SHOW ALL WELDING AND DIMENSIONS REQ'D FOR FABRICATION.

SCALE 1.0" = 1.0'

Tue Oct 11 2011 03:25:55 PM J:\acad\jobs\3073\TD9.dwg Rev0

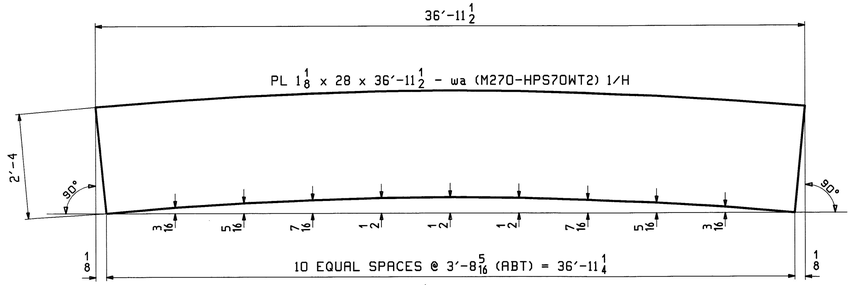

CAMBER DIAGRAM FOR 1FB0

CAMBER DIAGRAM FOR 1FB10

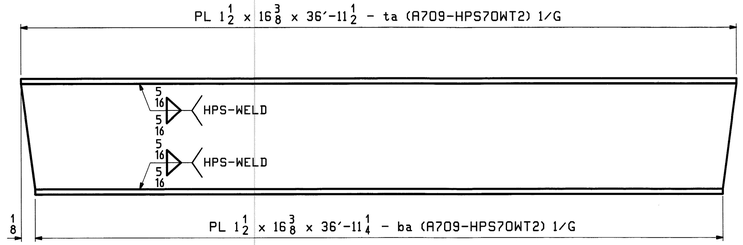

FLANGE DIAGRAM FOR 1FB0

FLANGE DIAGRAM FOR 1FB10

CAMBER DIAGRAM FOR 2FB1

CAMBER DIAGRAM FOR 2FB2

CAMBER DIAGRAM FOR 2FB3

CAMBER DIAGRAM FOR 2FB4

CAMBER DIAGRAM FOR 3FB5

CAMBER DIAGRAM FOR 2FB6

CAMBER DIAGRAM FOR 2FB7

CAMBER DIAGRAM FOR 2FB8

CAMBER DIAGRAM FOR 2FB9

Vermont Agency of Transportation

RECEIVED

CK'D BY M.C.L. OK'D BY S.S.S.

January 10 2012

RESUBMIT APPROVED ✓

BY J. LACROIX DATE 01-12-2012

NOTES:

1. FOR GENERAL NOTES SEE GN1.
2. T2 - DENOTES CHARPY V-NOTCH TEST IS REQUIRED.

REV.	DATE	REMARKS	DWN	CHK	APVL	SHOP
0					JAN 9 2012	
					NOV 18 2011	

MATERIAL:	SURFACE PREP. & PAINT:	HOLES:	SHOP BOLTS:
M270-50 (UN)	SEE DWG GN1		

DESCRIPTION: FLOORBEAM CAMBER DIAGRAMS

CASCO BAY STEEL STRUCTURES, INC.
1 WALLACE AVE. PHONE (207) 780-6722
SOUTH PORTLAND, ME 04106 FAX. (207) 780-6726
TENSOR 3073

STRUCTURE: VT RTE 107 OVER WHITE RIVER	DRAWN: RB	DATE: 10/10/11
	CHK'D: PCP	DATE: 11/17/11
LOCATION: BETHEL, VT.	JOB NO.	DWG NO.
PROJ NO. BRF 022-1(14)	498	C1
CUSTOMER: BECK & BELLUCCI		REV. △

PCP Thu, Nov 17, 2011 01:55:42 PM //casco/jobs/3073/C1.dgn

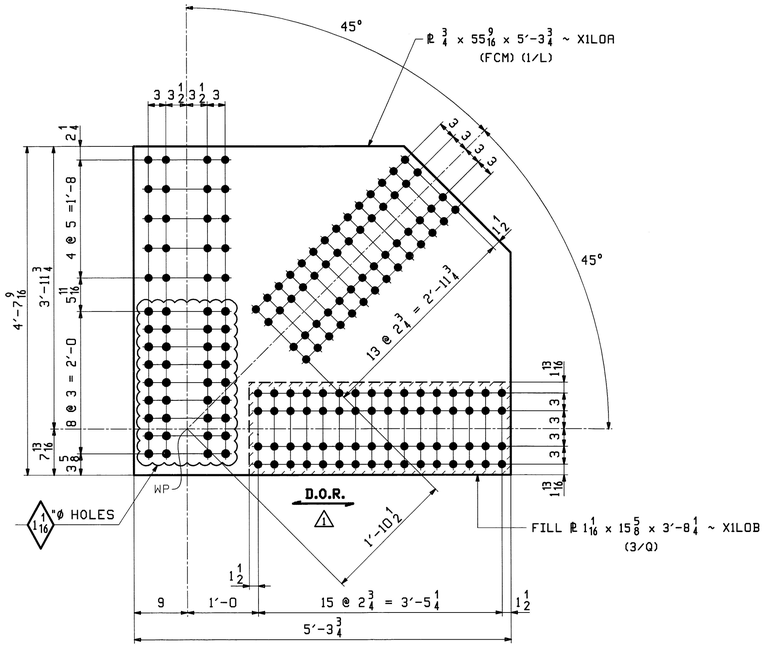

4 ~ GUSSET PLATE ~ X1L0A

INTERIOR GUSSET @ L0 & L10

8 ~ FILL PLATE ~ X1L0B

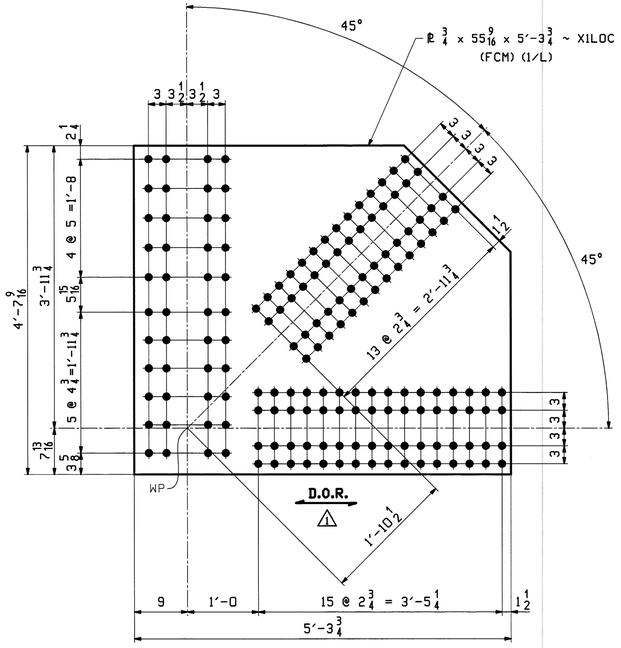

4 ~ GUSSET PLATE ~ X1L0C

EXTERIOR GUSSET @ L0 & L10

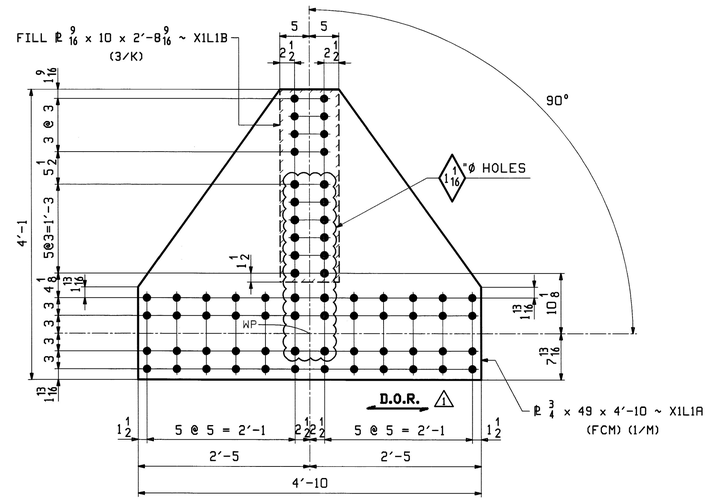

8 ~ GUSSET PLATE ~ X1L1A

INTERIOR & EXTERIOR GUSSET @ L1 & L9

8 ~ FILL PLATE ~ X1L1B

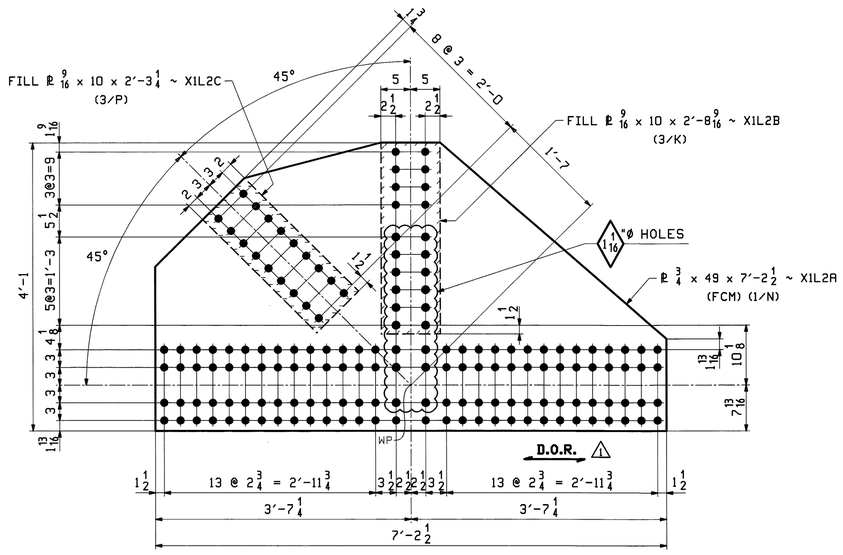

8 ~ GUSSET PLATE ~ X1L2A

INTERIOR & EXTERIOR GUSSET @ L2 & L8

8 ~ FILL PLATE ~ X1L2B

8 ~ FILL PLATE ~ X1L2C

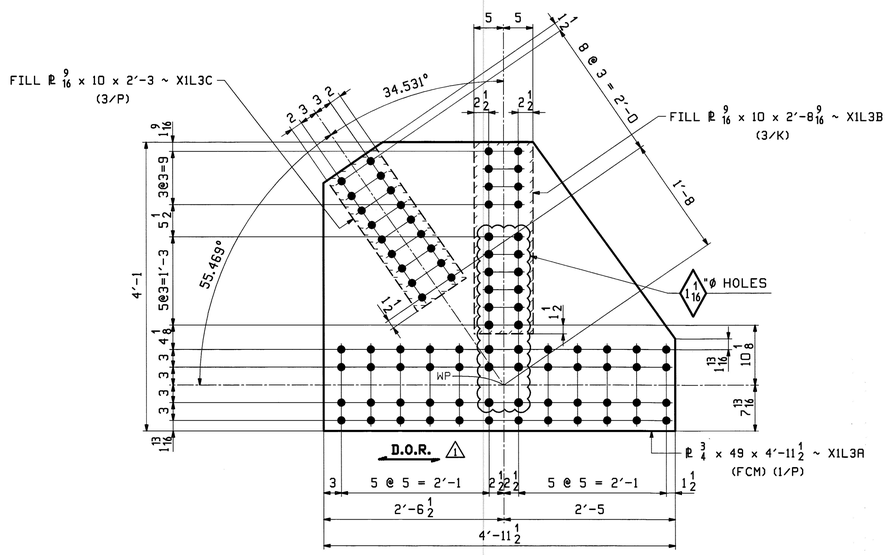

8 ~ GUSSET PLATE ~ X1L3A

INTERIOR & EXTERIOR GUSSET @ L3 & L7

8 ~ FILL PLATE ~ X1L3B

8 ~ FILL PLATE ~ X1L3C

Vermont Agency of Transportation

RECEIVED

CK'D BY M.C.L. OK'D BY S.S.S.

January 10 2012

RESUBMIT BY J. LACROIX APPROVED ✓ DATE 01-12-2012

NOTES:

1. FOR GENERAL NOTES SEE SHEET GN1.
2. FCM - DENOTES FRACTURE CRITICAL MATERIAL.
3. ⚠1 **D.O.R.** - DENOTES DIRECTION OF ROLLING.

REV.	DATE	REMARKS	DWN	CHK	APVL	SHOP
⚠1	12/1/11	ADD D.O.R.	EEO	PCP	DEC 2 2011	
0					NOV 18 2011	

JAN 9 2012

MATERIAL:	SURFACE PREP. & PAINT:	HOLES:	SHOP BOLTS:
M270-50 (UN)	HOT-DIP GALV.	15 1/16 Ø (UN)	NONE

DESCRIPTION: TRUSS STANDARDS

CASCO BAY STEEL STRUCTURES, INC.
1 WALLACE AVE. PHONE (207) 780-6722
SOUTH PORTLAND, ME 04106 FAX. (207) 780-6726
TENSOR 3073

STRUCTURE: VT RTE 107 OVER WHITE RIVER	DRAWN: EEO	DATE: 10/03
	CHKD: PCP	DATE: 10/08
LOCATION: BETHEL, VT.	JOB NO.	DWG NO.
PROJ NO. BRF 022-1(14)	498	X1
CUSTOMER: BECK & BELLUCCI		REV. ⚠1

EEO Thu, Dec 1, 2011 02:02:39 PM /users/jobs/3073/X1.dwg

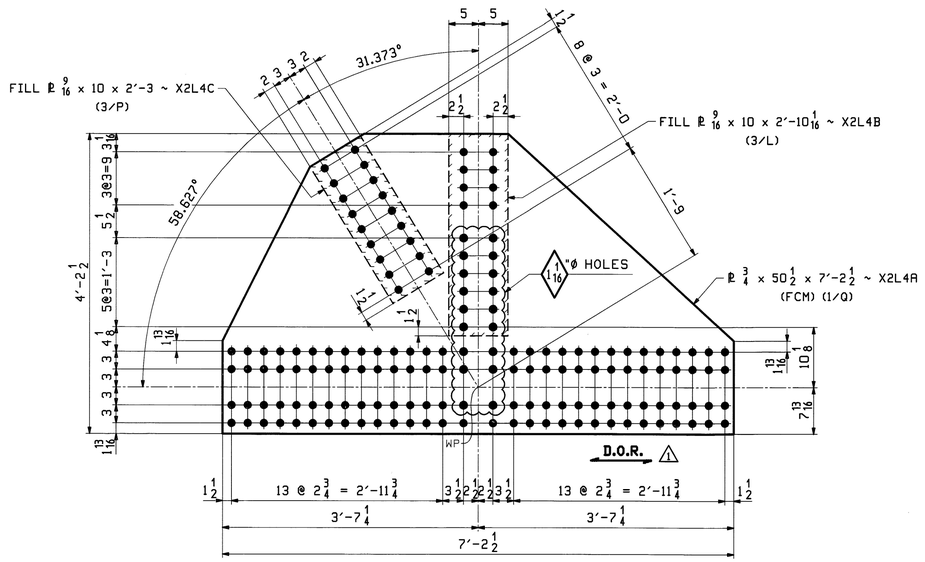

8 ~ GUSSET PLATE ~ X2L4A

INTERIOR & EXTERIOR GUSSET @ L4 & L6

8 ~ FILL PLATE ~ X2L4B

8 ~ FILL PLATE ~ X2L4C

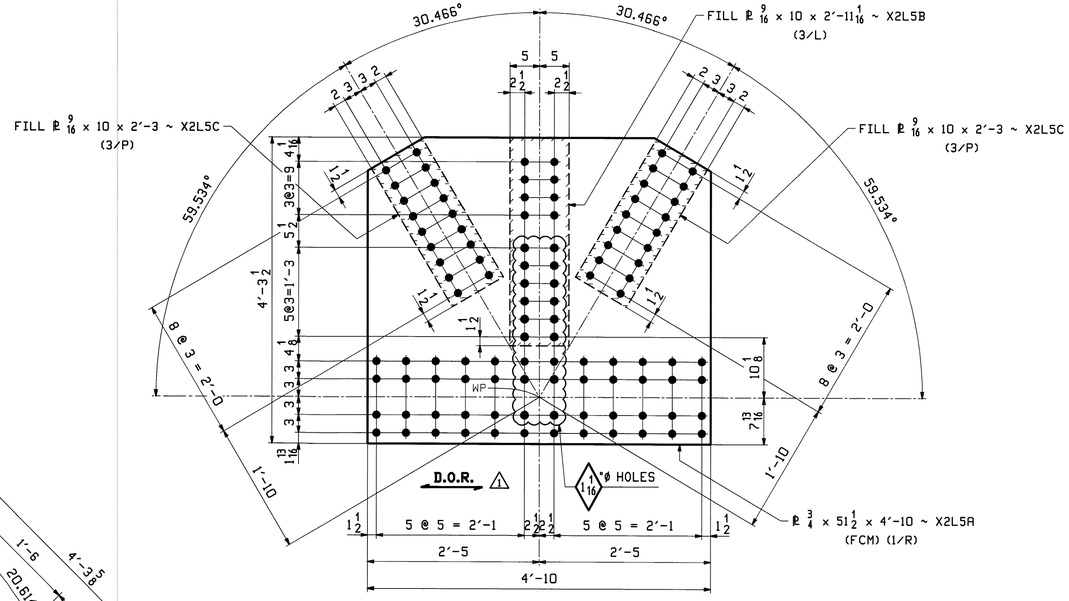

4 ~ GUSSET PLATE ~ X2L5A

INTERIOR & EXTERIOR GUSSET @ L5

4 ~ FILL PLATE ~ X2L5B

8 ~ FILL PLATE ~ X2L5C

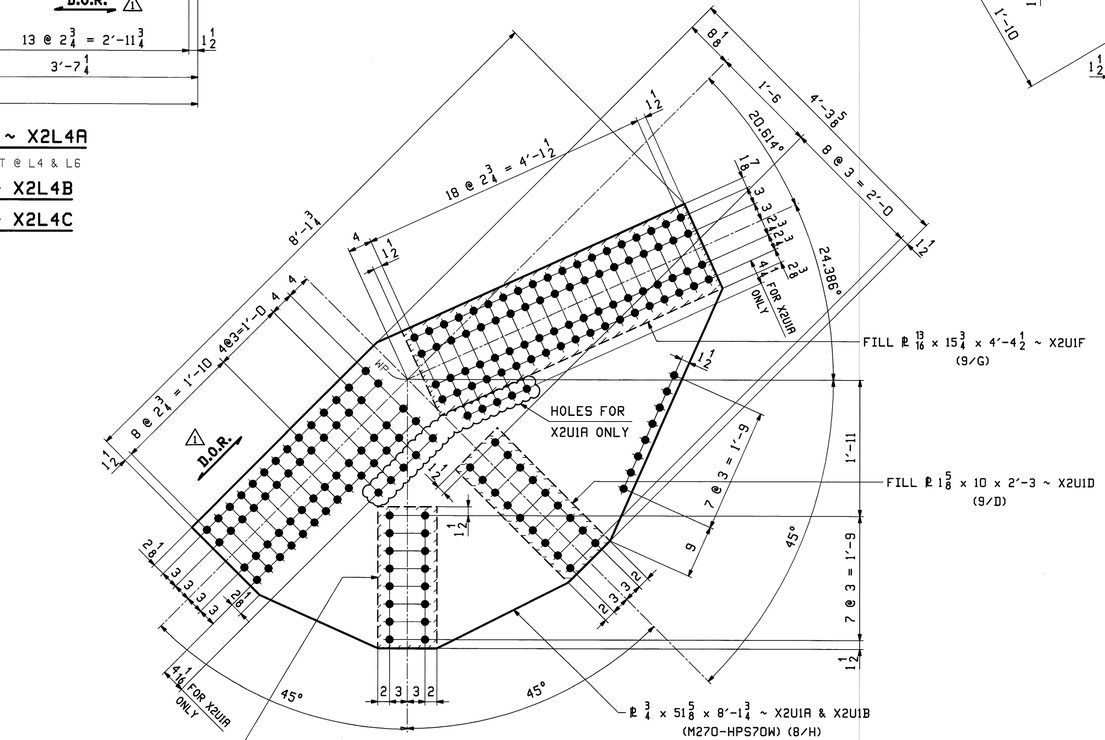

4 ~ GUSSET PLATE ~ X2U1A

INTERIOR GUSSET @ U1 & U9

4 ~ GUSSET PLATE ~ X2U1B

EXTERIOR GUSSET @ U1 & U9

8 ~ FILL PLATE ~ X2U1C

8 ~ FILL PLATE ~ X2U1D

8 ~ FILL PLATE ~ X2U1F

NOTES:

1. FOR GENERAL NOTES SEE SHEET GN1.
2. FCM - DENOTES FRACTURE CRITICAL MATERIAL.
3. ⚠1 D.O.R. - DENOTES DIRECTION OF ROLLING.

Vermont Agency of Transportation
RECEIVED
JAN 9 2012
DEC 2 2011
NOV 18 2011
CK'D BY M.C.L. OK'D BY S.S.S.
January 10 2012
RESUBMIT APPROVED ✓
BY J. LACROIX DATE 01-12-2012

REV.	DATE	REMARKS	DWN	CHK	APVL	SHOP
⚠1	12/1/11	ADD D.O.R.	EEO	PCP		
0						

MATERIAL:	SURFACE PREP. & PAINT:	HOLES:	SHOP BOLTS:
M270-50 (UN)	HOT-DIP GALV.	15/16Ø (UN)	NONE

DESCRIPTION: TRUSS STANDARDS

CASCO BAY STEEL STRUCTURES, INC.
1 WALLACE AVE. PHONE (207) 780-6722
SOUTH PORTLAND, ME 04106 FAX. (207) 780-6726
TENSOR 3073

STRUCTURE: VT RTE 107 OVER WHITE RIVER	DRAWN: EEO	DATE: 10/04
	CHK'D: PCP	DATE: 10/08
LOCATION: BETHEL, VT.	JOB NO. 498	DWG NO. X2
PROJ NO. BRF 022-1(14)		
CUSTOMER: BECK & BELLUCCI		REV. ⚠

EEO Thu, Dec 1, 2011 02:09:20 PM c:\users_jobs\3073\X2.1 Rev1

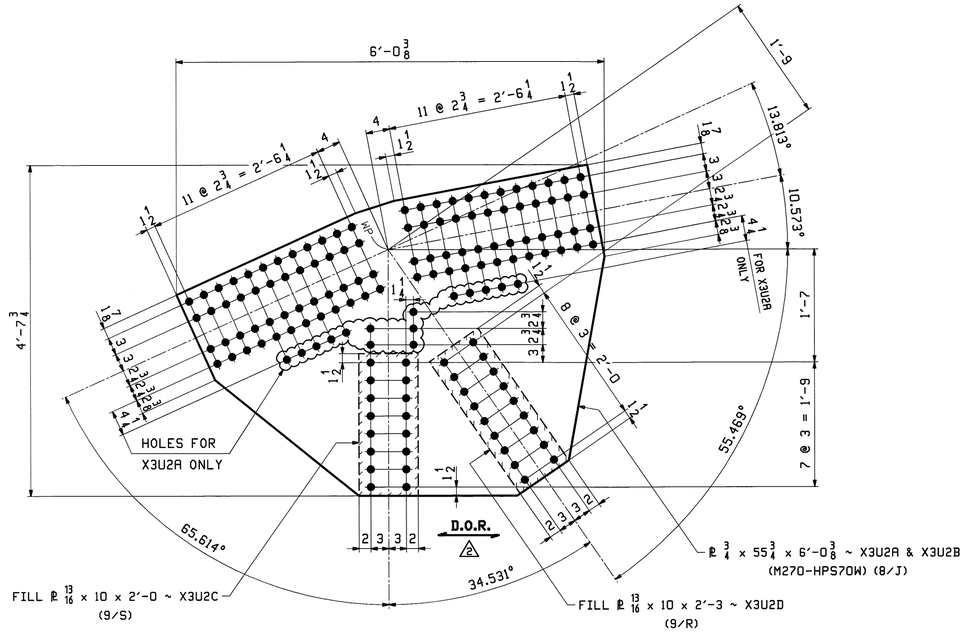

4 ~ GUSSET PLATE ~ X3U2A **8 ~ FILL PLATE ~ X3U2C**

INTERIOR GUSSET @ U2 & U8

4 ~ GUSSET PLATE ~ X3U2B **8 ~ FILL PLATE ~ X3U2D**

EXTERIOR GUSSET @ U2 & U8

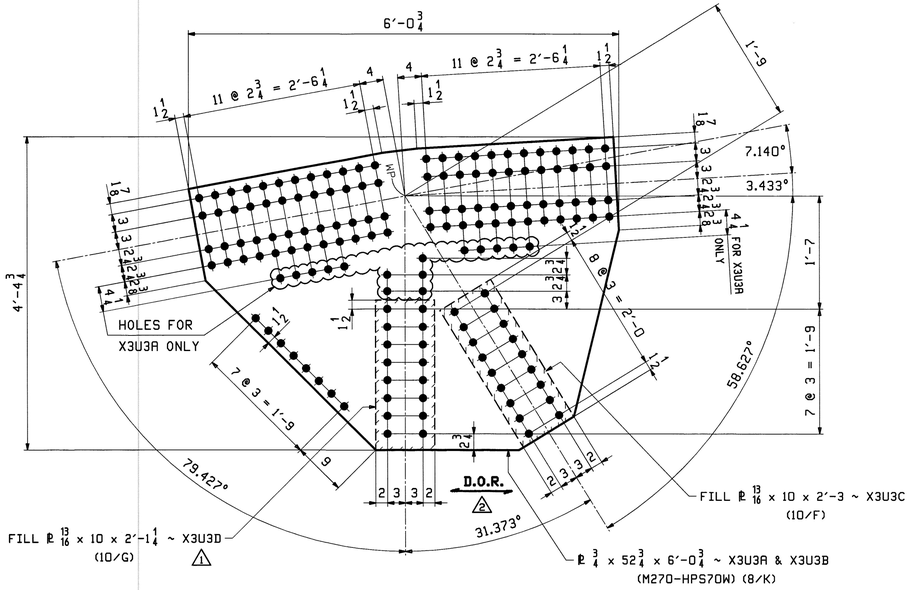

4 ~ GUSSET PLATE ~ X3U3A **8 ~ FILL PLATE ~ X3U3C**

INTERIOR GUSSET @ U3 & U7

4 ~ GUSSET PLATE ~ X3U3B **8 ~ FILL PLATE ~ X3U3D**

EXTERIOR GUSSET @ U3 & U7

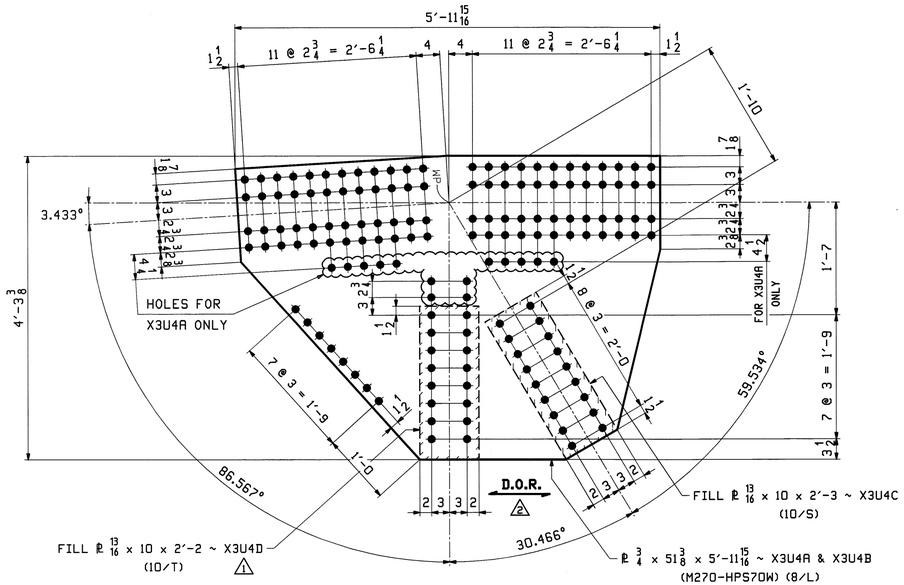

4 ~ GUSSET PLATE ~ X3U4A **8 ~ FILL PLATE ~ X3U4C**

INTERIOR GUSSET @ U4 & U6

4 ~ GUSSET PLATE ~ X3U4B **8 ~ FILL PLATE ~ X3U4D**

EXTERIOR GUSSET @ U4 & U6

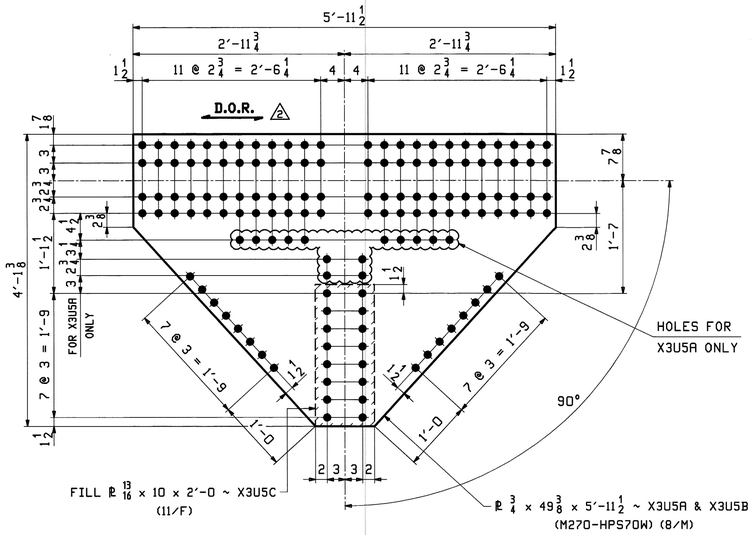

2 ~ GUSSET PLATE ~ X3U5A

INTERIOR GUSSET @ U5

2 ~ GUSSET PLATE ~ X3U5B

EXTERIOR GUSSET @ U5

4 ~ FILL PLATE ~ X3U5C

Vermont Agency of Transportation

RECEIVED

CK'D BY M.C.L. OK'D BY S.S.S.

January 10 2012

RESUBMIT APPROVED ✓

BY J. LACROIX DATE 01-12-2012

JAN 9 2012

DEC 2 2011

NOV 30 2011

NOV 18 2011

NOTES:

1. FOR GENERAL NOTES SEE SHEET GN1.
2. D.O.R. - DENOTES DIRECTION OF ROLLING.

REV.	DATE	REMARKS	DWN	CHK	APVL	SHOP
2	12/1/11	ADD D.O.R.	EEO	PCP		
1	11/22/11	REV'D MARKS	EEO	PCP		
0						

MATERIAL:	SURFACE PREP. & PAINT:	HOLES:	SHOP BOLTS:
M270-50 (UN)	HOT-DIP GALV.	15/16ø (UN)	NONE

DESCRIPTION: TRUSS STANDARDS

CASCO BAY STEEL STRUCTURES, INC.
1 WALLACE AVE. PHONE (207) 780-6722
SOUTH PORTLAND, ME 04106 FAX. (207) 780-6726

TENSOR 3073

STRUCTURE: VT RTE 107 OVER WHITE RIVER	DRAWN: EEO	DATE: 10/07	
	CHK'D: PCP	DATE: 10/11	
LOCATION: BETHEL, VT.	JOB NO.	DWG NO.	
PROJ NO. BRF 022-1(14)	498	X3	
CUSTOMER: BECK & BELLUCCI		REV. 2	

PCP Thu, Dec 1, 2011 03:21:05 PM //users/pcp/3073/X3.dwg Rev2

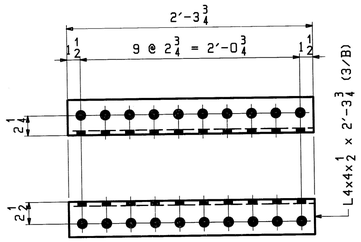

4 ~ CONN. ANGLES ~ x4a

BTM CHORD CONN. TO LAT. GUSSET ℄
@ L0 & L10

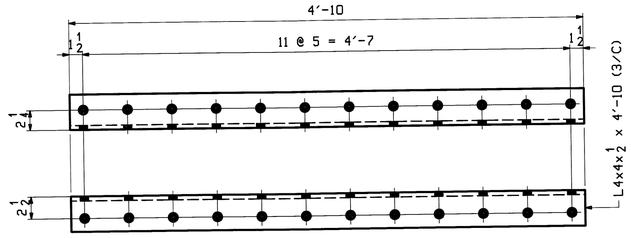

20 ~ CONN. ANGLES ~ x4b

BTM CHORD CONN. TO LAT. GUSSET ℄
@ L1 & L9, L3 & L7, L5

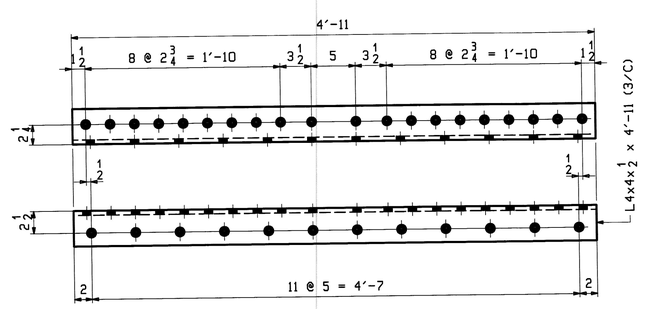

16 ~ CONN. ANGLES ~ x4c

BTM CHORD CONN. TO LAT. GUSSET ℄
@ L2 & L8, L4 & L6

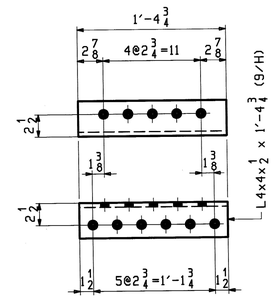

8 ~ CONN. ANGLES ~ x4d

TOP CHORD CONN. TO LAT. GUSSET ℄
@ U1 & U9

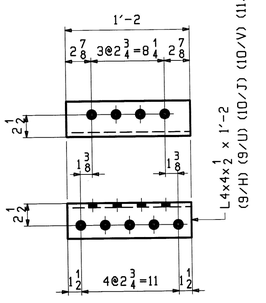

88 ~ CONN. ANGLES ~ x4f

TOP CHORD CONN. TO LAT. GUSSET ℄
U1 - U9

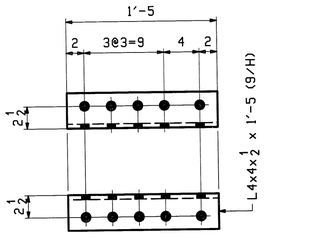

12 ~ CONN. ANGLES ~ x4g

END POST CONN. TO LAT. GUSSET ℄
@ U1 & U9

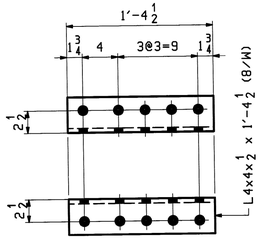

16 ~ CONN. ANGLES ~ x4h

END POST CONN. TO PORTAL GUSSET ℄
@ U1 & U9

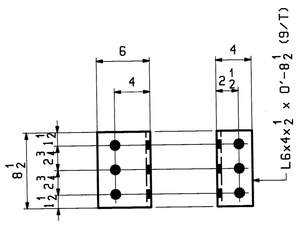

4 ~ CONN. ANGLES ~ x4k

TOP CHORD CONN. TO SWAY FRAME GUSSET ℄
@ U2 & U8

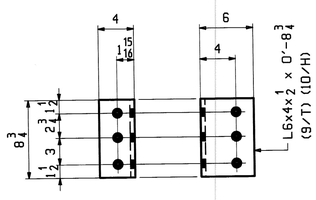

4 ~ CONN. ANGLES ~ x4m

TOP CHORD CONN. TO SWAY FRAME GUSSET ℄
@ U2 & U8, U3 & U7

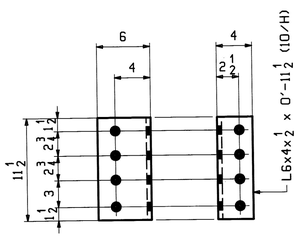

2 ~ CONN. ANGLES ~ x4n

TOP CHORD CONN. TO SWAY FRAME GUSSET ℄
@ U3 & U7

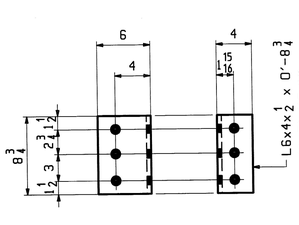

4 ~ CONN. ANGLES ~ x4p

TOP CHORD CONN. TO SWAY FRAME GUSSET ℄
@ U2 & U8, U3 & U7

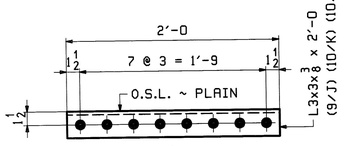

32 ~ SUPPORT ANGLES ~ x4s

TOP CHORD GUSSET EDGE SUPPORTS
@ U1 & U9, U3 & U7, U4 & U6, U5

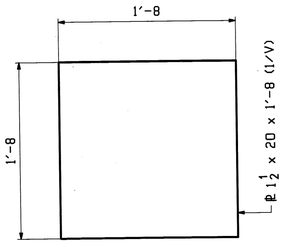

4 ~ BASE PLATE ~ x4t

END POST BASE/BEARING PLATE
@ L0 & L10

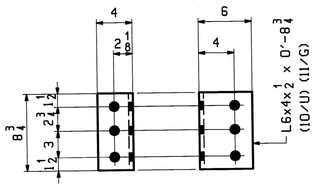

6 ~ CONN. ANGLES ~ x4aa

TOP CHORD CONN. TO SWAY FRAME GUSSET ℄
@ U4, U5 & U6

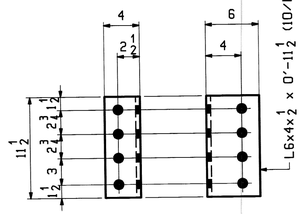

2 ~ CONN. ANGLES ~ x4ab

TOP CHORD CONN. TO SWAY FRAME GUSSET ℄
@ U3 & U7

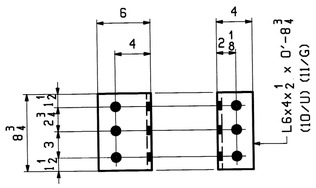

6 ~ CONN. ANGLES ~ x4ac

TOP CHORD CONN. TO SWAY FRAME GUSSET ℄
@ U4, U5 & U6

NOTES:
1. FOR GENERAL NOTES SEE SHEET GN1.

Vermont Agency of Transportation
RECEIVED
CK'D BY M.C.L. OK'D BY S.S.S.
January 10 2012
RESUBMIT ____ APPROVED ✓
BY J. LACROIX DATE 01-12-2012

REV.	DATE	REMARKS	DWN	CHK	APVL	SHOP
0					JAN 9 2012	
					NOV 18 2011	

MATERIAL:	SURFACE PREP. & PAINT:	HOLES:	SHOP BOLTS:
M270-36 (UN)	HOT-DIP GALV.	15/16ø (UN)	NONE

DESCRIPTION: TRUSS STANDARDS

CASCO BAY STEEL STRUCTURES, INC.
1 WALLACE AVE. PHONE (207) 780-6722
SOUTH PORTLAND, ME 04106 FAX. (207) 780-6726
TENSOR 3073

STRUCTURE: VT RTE 107 OVER WHITE RIVER	DRAWN: EEO	DATE: 10/10
	CHK'D:	DATE:
LOCATION: BETHEL, VT.	JOB NO.	DWG NO.
PROJ NO. BRF 022-1(14)	498	X4
CUSTOMER: BECK & BELLUCCI		REV. △

EEO Wed, Nov 16, 2011 08:58:14 AM C:\Users\jobs\3073\X4 - Rev0

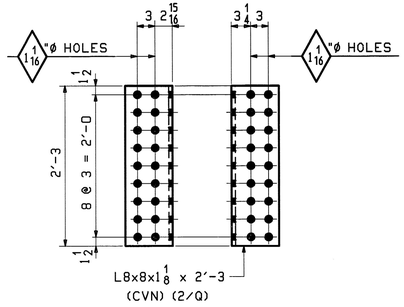

8 ~ ANGLES ~ x5a
(FLBM CONN @ L0, L10)

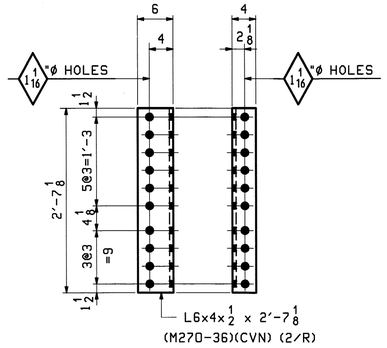

18 ~ ANGLES ~ x5b
(FLBM CONN @ L1-L9)

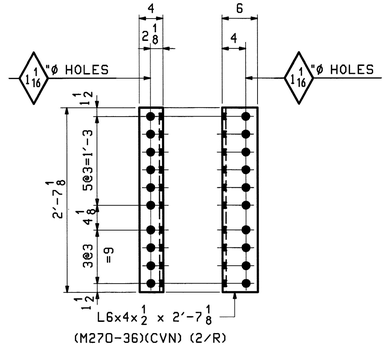

18 ~ ANGLES ~ x5c
(FLBM CONN @ L1-L9)

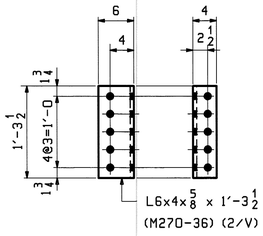

180 ~ ANGLES ~ x5f
(STRINGER CONN @ L1-L9 FLBM)

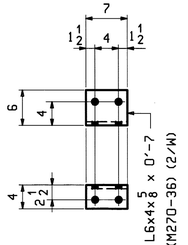

50 ~ ANGLES ~ x5h
(SEAT ANGLES FOR STRINGER CONN @ L0-L10 FLBM)

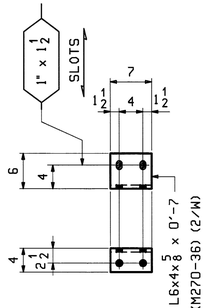

50 ~ ANGLES ~ x5k
(SEAT ANGLES FOR STRINGER CONN @ L1-L9 FLBM)

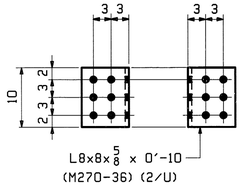

20 ~ ANGLES ~ x5d
(STRINGER CONN @ L0, L10 FLBMs)

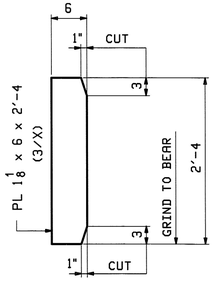

4 ~ STIFFENERS ~ x5m
(JACKING STIFF. @ L0, L10)

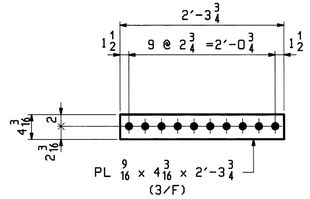

4 ~ FILL PLATES ~ x5n
(@ L0, L10 FLBMs)

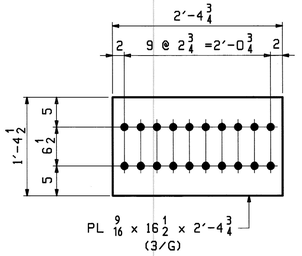

18 ~ FILL PLATES ~ x5p
(@ L1-L9 FLBMs)

FLOORBEAM STANDARDS

STRINGER STANDARDS

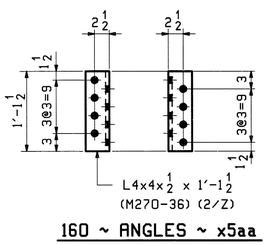

160 ~ ANGLES ~ x5aa
(DIAPHRAGM CONN TO STRINGERS)

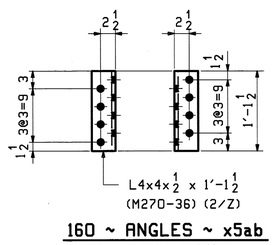

160 ~ ANGLES ~ x5ab
(DIAPHRAGM CONN TO STRINGERS)

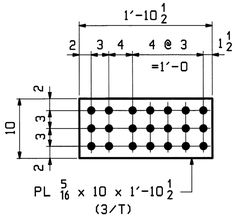

20 ~ FILL PLATES ~ x5ac
(@ L0, L10 STRINGER WEBS)

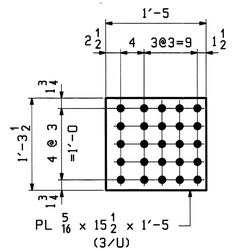

54 ~ FILL PLATES ~ x5ad
(@ L1-L9 STRINGER WEBS)

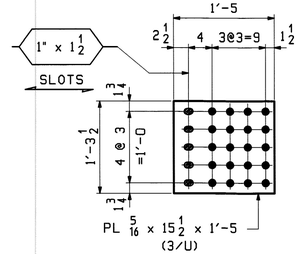

54 ~ FILL PLATES ~ x5af
(@ L1-L9 STRINGER WEBS)

Vermont Agency of Transportation
RECEIVED
CK'D BY M.C.L. OK'D BY S.S.S.
January 10 2012
RESUBMIT APPROVED ✓
BY J. LACROIX DATE 01-12-2012

NOTES:
1. FOR GENERAL NOTES SEE DWG. GN1.
2. CVN - DENOTES MATERIAL SUBJECT TO CHARPY V-NOTCH TESTING.

REV.	DATE	REMARKS	DWN	CHK	APVL	SHOP
					JAN 9 2012	
0					NOV 18 2011	

MATERIAL:	SURFACE PREP. & PAINT:	HOLES:	SHOP BOLTS:
M270-50 (UN)	HOT-DIP GALV.	15/16ø (UN)	NONE

DESCRIPTION: FLOORBEAM & STRINGER STANDARDS

CASCO BAY STEEL STRUCTURES, INC.
1 WALLACE AVE. PHONE (207) 780-6722
SOUTH PORTLAND, ME 04106 FAX. (207) 780-6726
TENSOR 3073

STRUCTURE: VT RTE 107 OVER WHITE RIVER	DRAWN: RB	DATE: 10/10/11
	CHKD: PCP	DATE: 10/12/11
LOCATION: BETHEL, VT.	JOB NO. 498	DWG NO. X5
PROJ NO. BRF 022-1(14)		REV. △
CUSTOMER: BECK & BELLUCCI		

PCP Thu, Nov 17, 2011 09:09:26 PM c:\users\pcp\x5073\05\ Rev0

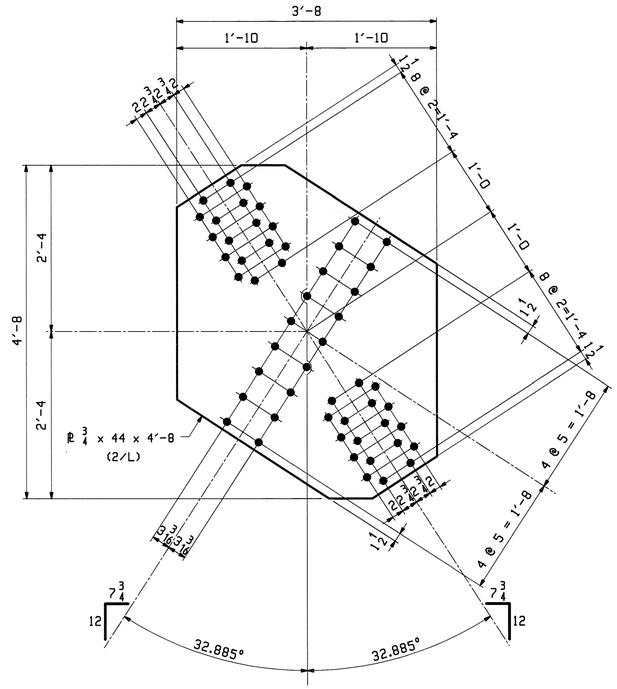

10 ~ GUSSET PLATES ~ x6a ⚠

BTM LATERAL CENTER GUSSET

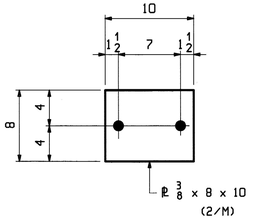

150 ~ SPACERS ~ x6b

BTM LATERALS

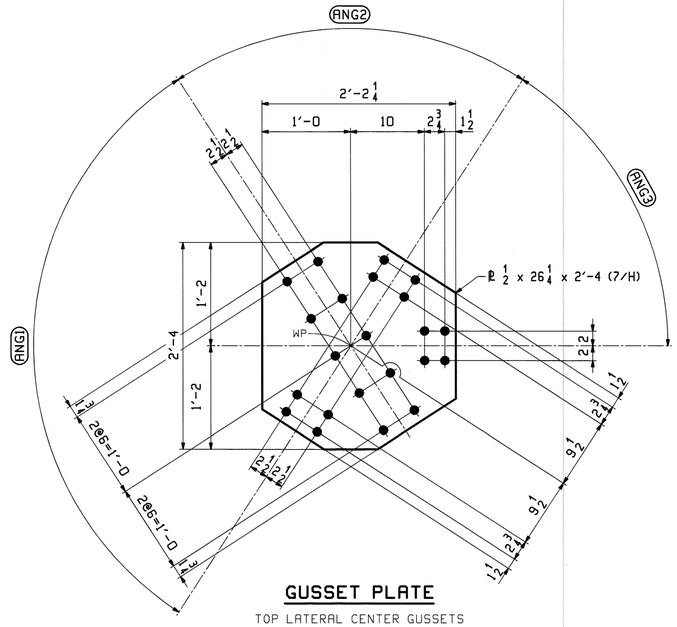

GUSSET PLATE

TOP LATERAL CENTER GUSSETS

	MARK	QTY	ANG1	ANG2	ANG3
BTWN U1 & U2, U8 & U9	**x6c**	4	109.261°	70.739°	54.631°
BTWN U2 & U3, U7 & U8	**x6d**	4	113.332°	66.668°	56.666°
BTWN U3 & U4, U6 & U7	**x6f**	4	114.132°	65.868°	57.066°
BTWN U4 & U5, U5 & U6	**x6g**	4	114.230°	65.770°	57.115°

NOTES:

1. FOR GENERAL NOTES SEE SHEET GN1.

Vermont Agency of Transportation

RECEIVED

CK'D BY M.C.L. OK'D BY S.S.S.

January 10 2012

RESUBMIT ____ APPROVED ✓

BY J. LACROIX DATE 01-12-2012

REV.	DATE	REMARKS	DWN	CHK	APVL	SHOP
					JAN 9 2012	
⚠	11/22/11	REV'D MARK	EEO	PCP	NOV 30 2011	
0					NOV 18 2011	

MATERIAL:	SURFACE PREP. & PAINT:	HOLES:	SHOP BOLTS:
M270-50 (UN)	HOT-DIP GALV.	15/16ø (UN)	7/8ø (UN)

DESCRIPTION: TOP & BOTTOM LATERAL BRACING STANDARDS

CASCO BAY STEEL STRUCTURES, INC.
1 WALLACE AVE. PHONE (207) 780-6722
SOUTH PORTLAND, ME 04106 FAX. (207) 780-6726
TENSOR 3073

STRUCTURE: VT RTE 107 OVER WHITE RIVER	DRAWN: TJB EEO	DATE: 10/17
	CHK'D: PCP	DATE: 10/19
LOCATION: BETHEL, VT.	JOB NO.	DWG NO.
PROJ NO. BRF 022-1(14)	498	X6
CUSTOMER: BECK & BELLUCCI		REV. ⚠

PCP Tue, Nov 29, 2011 03:08:30 PM /users/jake/3073/X6 & Rev1

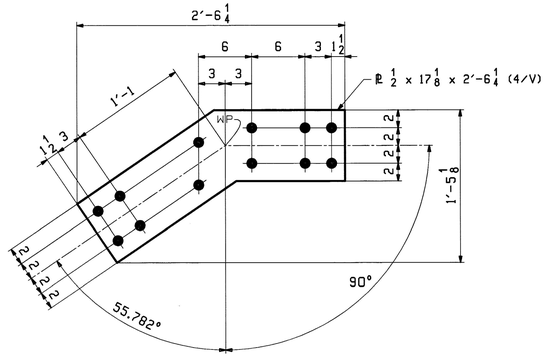

4 ~ GUSSET PLATE ~ x7a

MID CHORD CONN. TO VERTICAL
EXTERIOR GUSSET @ M2 & M8

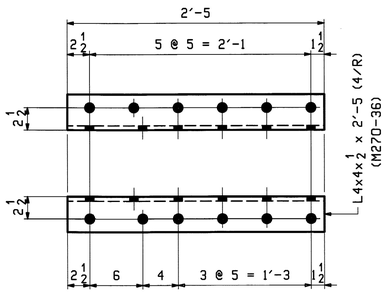

2 ~ CONN. ANGLES ~ x7b

VERTICAL CONN. TO SWAY GUSSET ℄
@ U2 (WEST TRUSS) & U8 (EAST TRUSS)

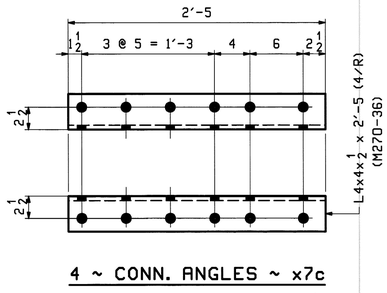

4 ~ CONN. ANGLES ~ x7c

VERTICAL CONN. TO SWAY GUSSET ℄
@ U2 & U8

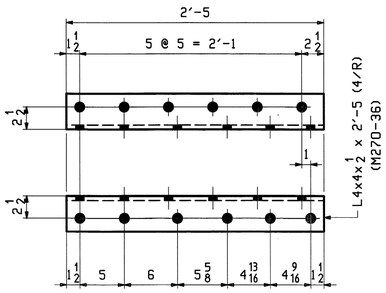

2 ~ CONN. ANGLES ~ x7d

VERTICAL CONN. TO SWAY GUSSET ℄
@ U2 (WEST TRUSS) & U8 (EAST TRUSS)

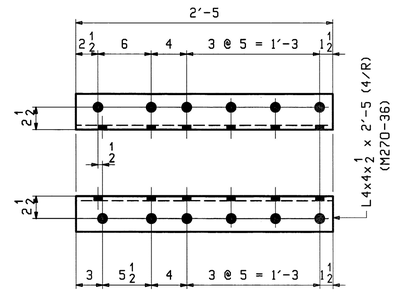

2 ~ CONN. ANGLES ~ x7f

VERTICAL CONN. TO SWAY GUSSET ℄
@ U2 (WEST TRUSS) & U8 (EAST TRUSS)

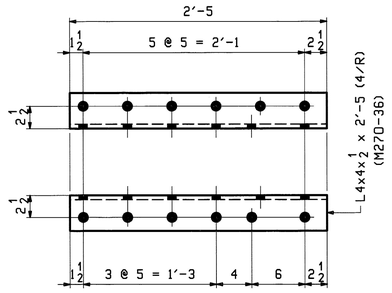

2 ~ CONN. ANGLES ~ x7g

VERTICAL CONN. TO SWAY GUSSET ℄
@ U2 (EAST TRUSS) & U8 (WEST TRUSS)

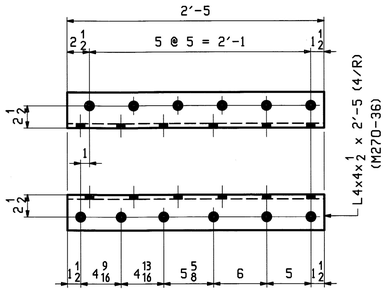

2 ~ CONN. ANGLES ~ x7h

VERTICAL CONN. TO SWAY GUSSET ℄
@ U2 (EAST TRUSS) & U8 (WEST TRUSS)

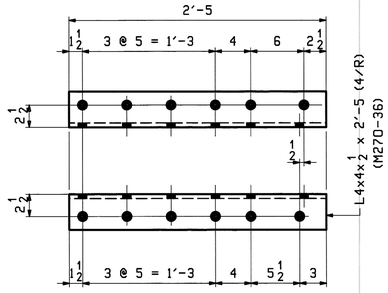

2 ~ CONN. ANGLES ~ x7k

VERTICAL CONN. TO SWAY GUSSET ℄
@ U2 (EAST TRUSS) & U8 (WEST TRUSS)

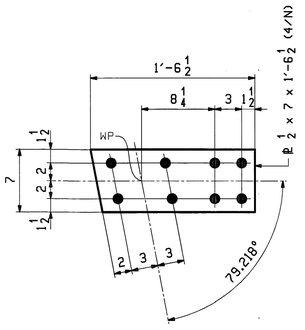

8 ~ GUSSET PLATE ~ x7m

MID CHORD CONN. TO DIAGONAL
@ M1 & M9

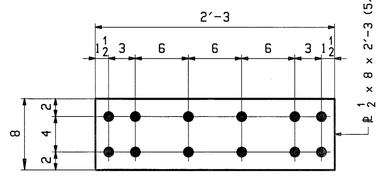

10 ~ GUSSET PLATE ~ x7n

MID CHORD CONN. TO VERTICALS
@ M3, M4, M5, M6 & M7

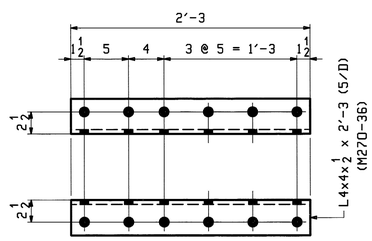

40 ~ CONN. ANGLES ~ x7p

VERTICAL CONN. TO SWAY GUSSET ℄
@ U3, U4, U5, U6 & U7

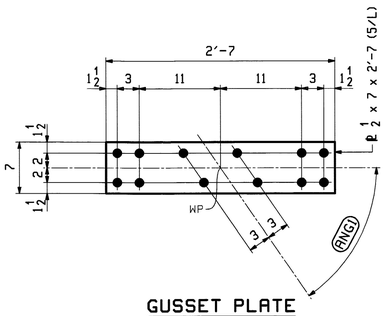

GUSSET PLATE

MID CHORD CONNECTION TO DIAGONAL

	MARK	QTY	ANGI
@ M23 & M78	x7s	8	55.469°
@ M34 & M67	x7t	8	58.627°
@ M45 & M56	x7v	8	59.534°

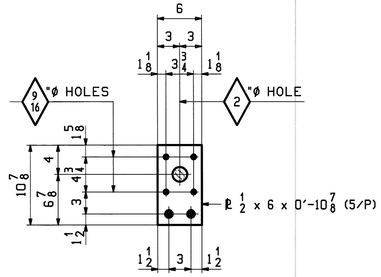

⚠ 3 ~ CONN. PLATES ~ x7aa

LIGHT MOUNTING PLATE (NEAR M2, M5 & M8)

Vermont Agency of Transportation

RECEIVED

CK'D BY M.C.L. OK'D BY S.S.S.

January 10 2012

RESUBMIT _____ APPROVED ✓

BY J. LACROIX DATE 01-12-2012

NOTES:
1. FOR GENERAL NOTES SEE SHEET GN1.

REV.	DATE	REMARKS	DWN	CHK	APVL	SHOP
⚠1	1/03/12	APPROVAL COMMENTS	EEO	PCP	JAN 9 2012	
0					NOV 18 2011	

MATERIAL:	SURFACE PREP. & PAINT:	HOLES:	SHOP BOLTS:
M270-50 (UN)	HOT-DIP GALV.	15/16ø (UN)	NONE

DESCRIPTION: TRUSS STANDARDS

CASCO BAY STEEL STRUCTURES, INC.
1 WALLACE AVE. PHONE (207) 780-6722
SOUTH PORTLAND, ME 04106 FAX. (207) 780-6726
TENSOR 3073

STRUCTURE: VT RTE 107 OVER WHITE RIVER	DRAWN: EEO	DATE: 10/12	
	CHKD: PCP	DATE: 10/14	
LOCATION: BETHEL, VT.	JOB NO.	DWG NO.	
PROJ NO. BRF 022-1(14)	498	X7	
CUSTOMER: BECK & BELLUCCI		REV. ⚠	

PCP Fri, Jan 6, 2012 10:03:03 PM J:\eeo\jobs\2009\X7.dwg

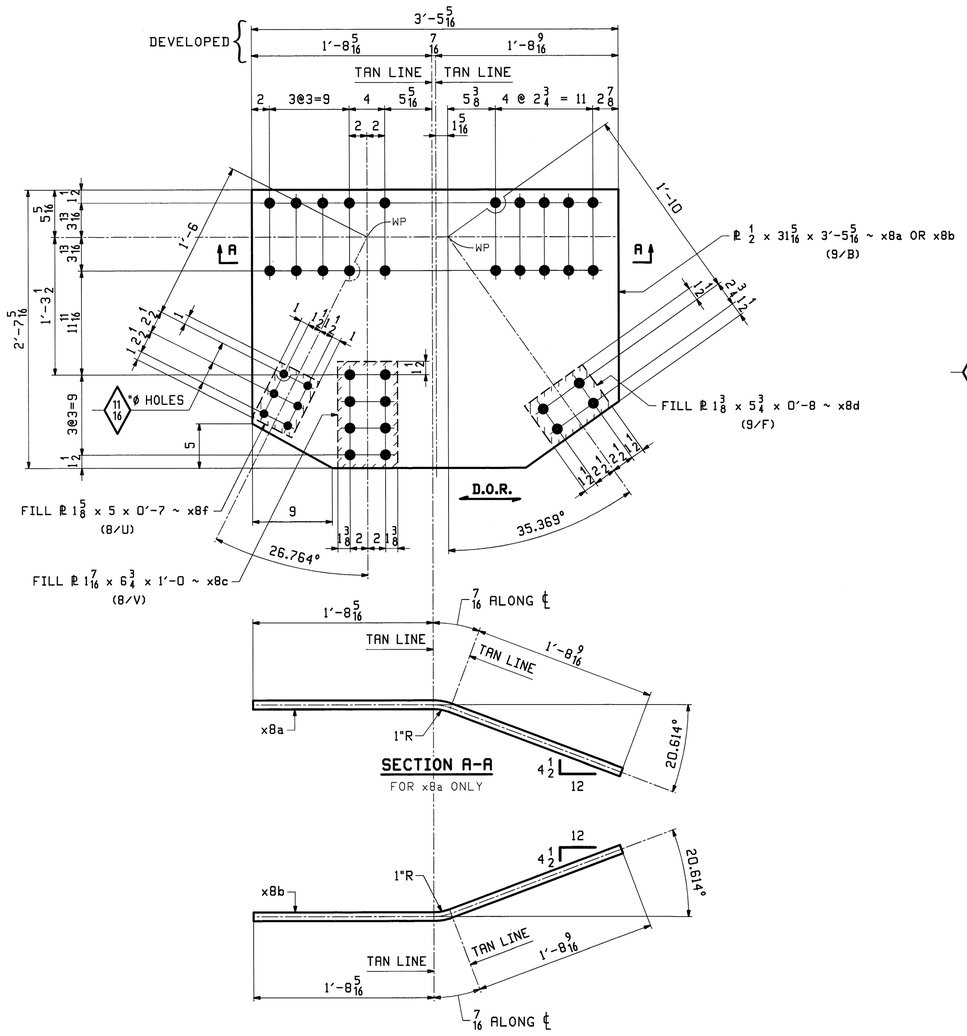

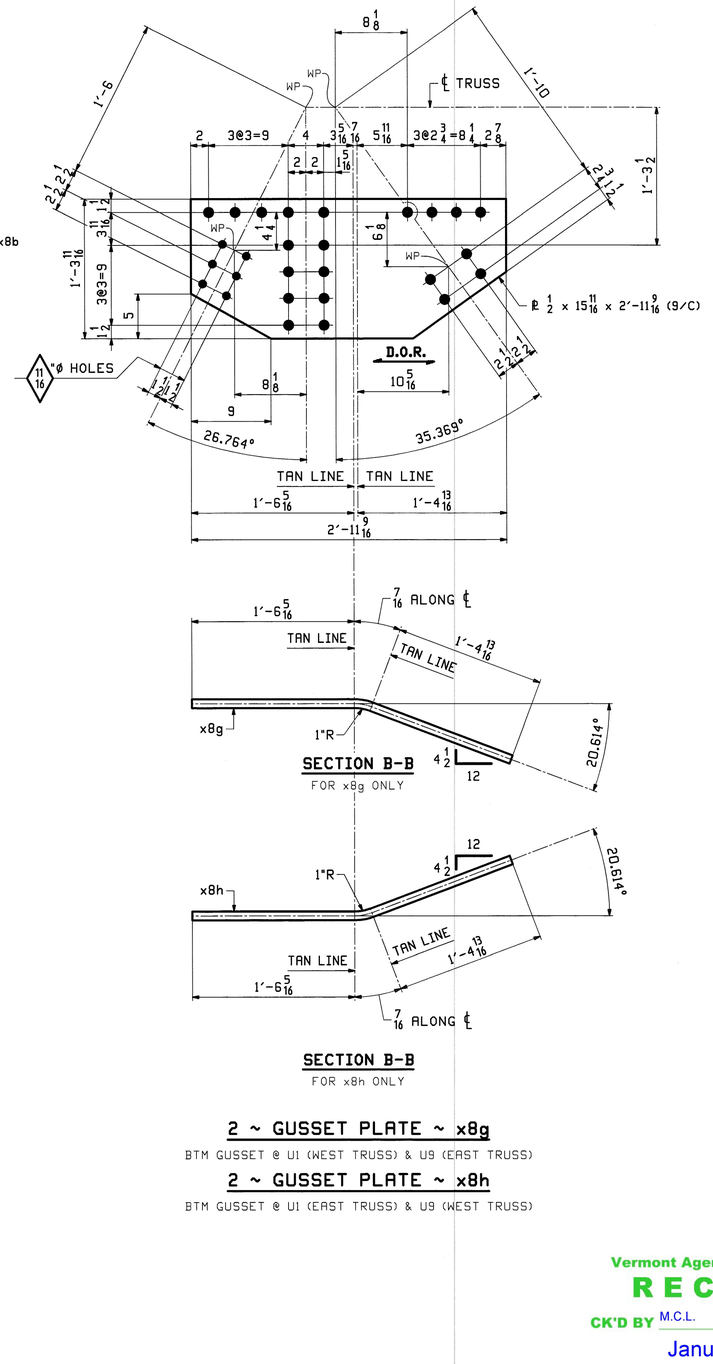

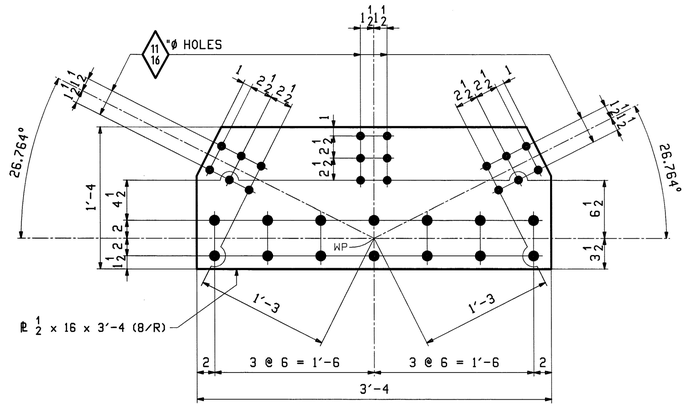

16 ~ GUSSET PLATE ~ x8k

CTR GUSSETS @ U1 & U9

SECTION A-A

FOR x8b ONLY

2 ~ GUSSET PLATE ~ x8a

TOP GUSSET @ U1 (WEST TRUSS) & U9 (EAST TRUSS)

2 ~ GUSSET PLATE ~ x8b

TOP GUSSET @ U1 (EAST TRUSS) & U9 (WEST TRUSS)

12 ~ FILL PLATE ~ x8c

4 ~ FILL PLATE ~ x8d

48 ~ FILL PLATE ~ x8f

SECTION B-B

FOR x8h ONLY

2 ~ GUSSET PLATE ~ x8g

BTM GUSSET @ U1 (WEST TRUSS) & U9 (EAST TRUSS)

2 ~ GUSSET PLATE ~ x8h

BTM GUSSET @ U1 (EAST TRUSS) & U9 (WEST TRUSS)

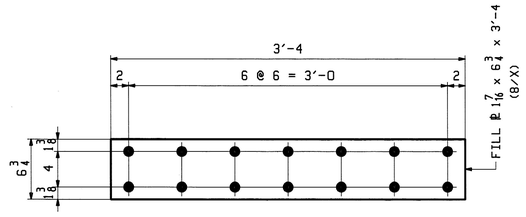

12 ~ FILL PLATE ~ x8m

FILL ℄ @ CTR GUSSETS (U1 & U9)

NOTES:

1. FOR GENERAL NOTES SEE SHEET GN1.
2. **D.O.R.** – DENOTES DIRECTION OF ROLLING.

Vermont Agency of Transportation

RECEIVED

CK'D BY M.C.L. OK'D BY S.S.S.

January 10 2012

RESUBMIT APPROVED ✓

BY J. LACROIX DATE 01-12-2012

REV.	DATE	REMARKS	DWN	CHK	APVL	SHOP
					JAN 9 2012	
0					NOV 18 2011	

MATERIAL:	SURFACE PREP. & PAINT:	HOLES:	SHOP BOLTS:
M270-50 (UN)	HOT-DIP GALV.	15/16ø (UN)	7/8ø (UN)

DESCRIPTION: TOP STRUT STANDARDS

CASCO BAY STEEL STRUCTURES, INC.
1 WALLACE AVE. PHONE (207) 780-6722
SOUTH PORTLAND, ME 04106 FAX. (207) 780-6726
TENSOR 3073

STRUCTURE: VT RTE 107 OVER WHITE RIVER	DRAWN: EEO	DATE: 10/14
	CHKD: PCP	DATE: 10/18
LOCATION: BETHEL, VT.	JOB NO. 498	DWG NO. X8
PROJ NO. BRF 022-1(14)		
CUSTOMER: BECK & BELLUCCI		REV. △

EEO Thu, Nov 17, 2011 11:54:50 PM /users/jobs/3073/X8.dgn RevD

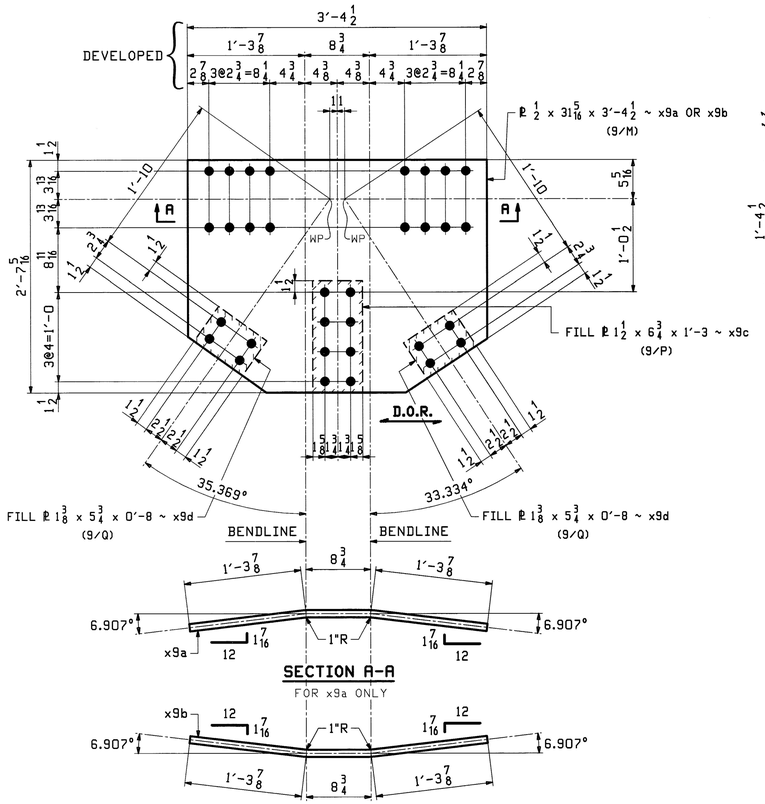

SECTION A-A
FOR x9a ONLY

SECTION A-A
FOR x9b ONLY

2 ~ GUSSET PLATE ~ x9a
TOP GUSSET @ U2 (WEST TRUSS) & U8 (EAST TRUSS)

2 ~ GUSSET PLATE ~ x9b
TOP GUSSET @ U2 (EAST TRUSS) & U8 (WEST TRUSS)

4 ~ FILL PLATE ~ x9c

8 ~ FILL PLATE ~ x9d

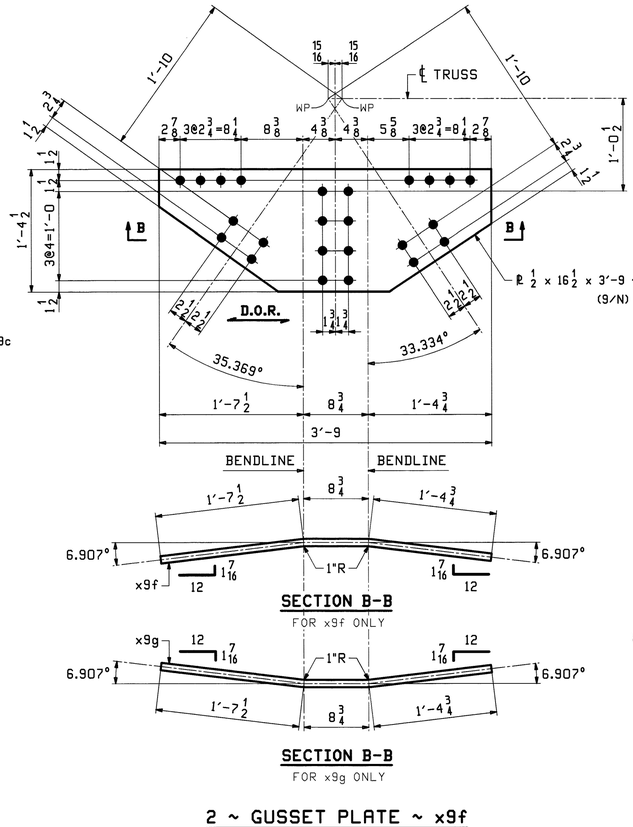

SECTION B-B
FOR x9f ONLY

SECTION B-B
FOR x9g ONLY

2 ~ GUSSET PLATE ~ x9f
TOP GUSSET @ U2 (WEST TRUSS) & U8 (EAST TRUSS)

2 ~ GUSSET PLATE ~ x9g
TOP GUSSET @ U2 (EAST TRUSS) & U8 (WEST TRUSS)

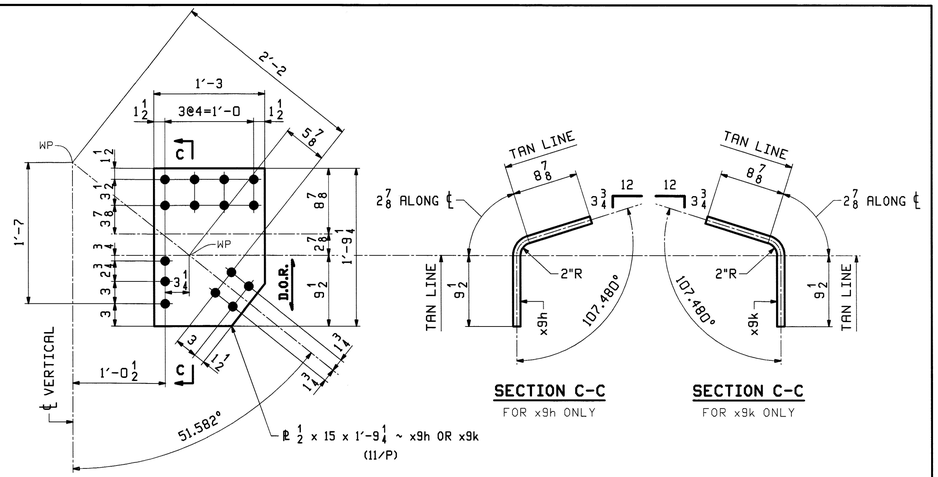

SECTION C-C
FOR x9h ONLY

SECTION C-C
FOR x9k ONLY

2 ~ GUSSET PLATE ~ x9h
TOP CORNER SWAY GUSSET @ U2 (WEST TRUSS) & U8 (EAST TRUSS)

2 ~ GUSSET PLATE ~ x9k
TOP CORNER SWAY GUSSET @ U2 (EAST TRUSS) & U8 (WEST TRUSS)

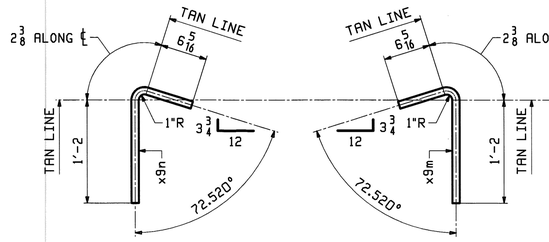

SECTION D-D
FOR x9n ONLY

SECTION D-D
FOR x9m ONLY

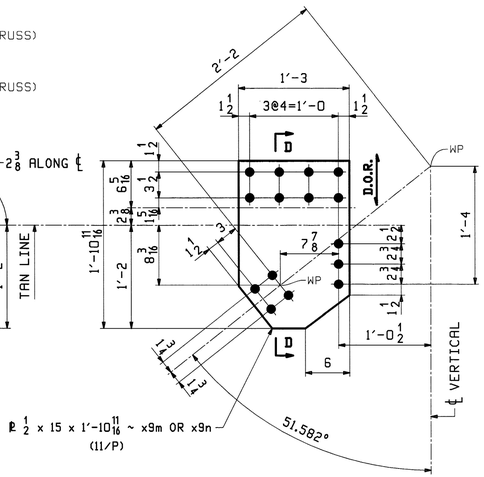

2 ~ GUSSET PLATE ~ x9m
TOP CORNER SWAY GUSSET @ U2 (WEST TRUSS) & U8 (EAST TRUSS)

2 ~ GUSSET PLATE ~ x9n
TOP CORNER SWAY GUSSET @ U2 (EAST TRUSS) & U8 (WEST TRUSS)

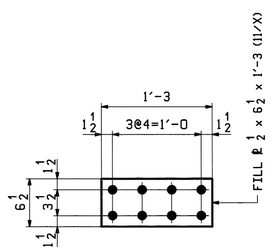

4 ~ FILL PLATE ~ x9p
TOP CORNER SWAY FILL PL @ U2 & U8

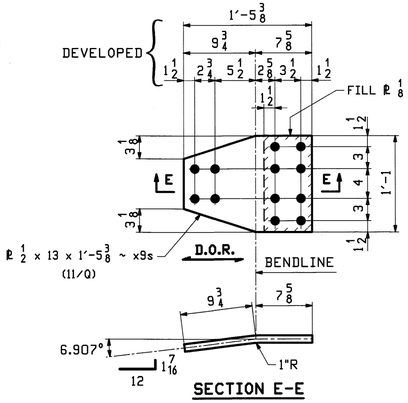

SECTION E-E

2 ~ GUSSET PLATE ~ x9s
TOP GUSSET @ LONG. STRUT (U2 & U8)

2 ~ FILL PLATE ~ x9t

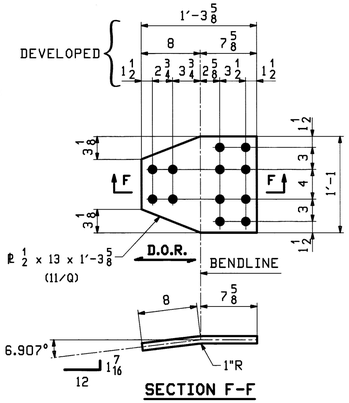

SECTION F-F

2 ~ GUSSET PLATE ~ x9v
BTM GUSSET @ LONG. STRUT (U2 & U8)

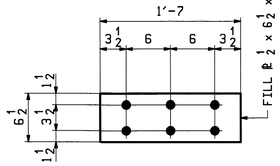

4 ~ FILL PLATE ~ x9w
FILL PL @ BTM OF TOP STRUT (U2 & U8)

NOTES:
1. FOR GENERAL NOTES SEE SHEET GN1.
2. D.O.R. - DENOTES DIRECTION OF ROLLING.

Vermont Agency of Transportation
RECEIVED
CK'D BY M.C.L. OK'D BY S.S.S.
January 10 2012
RESUBMIT ____ APPROVED ✓
BY J. LACROIX DATE 01-12-2012

REV.	DATE	REMARKS	DWN	CHK	APVL	SHOP
					JAN 9 2012	
0					NOV 18 2011	

MATERIAL:	SURFACE PREP. & PRINT:	HOLES:	SHOP BOLTS:
M270-50 (UN)	HOT-DIP GALV.	15/16 Ø (UN)	7/8 Ø (UN)

DESCRIPTION: TOP STRUT STANDARDS

CASCO BAY STEEL STRUCTURES, INC.
1 WALLACE AVE. PHONE (207) 780-6722
SOUTH PORTLAND, ME 04106 FAX. (207) 780-6726
TENSOR 3073

STRUCTURE: VT RTE 107 OVER WHITE RIVER	DRAWN: EEO	DATE: 10/17	
	CHKD: PCP	DATE: 10/31	
LOCATION: BETHEL, VT.	JOB NO.	DWG NO.	
PROJ NO. BRF 022-1(14)	498	X9	
CUSTOMER: BECK & BELLUCCI		REV. △	

ECO Thu, Nov 17, 2011 10:07:39 PM //users/jobs/3073/05 - Rev0

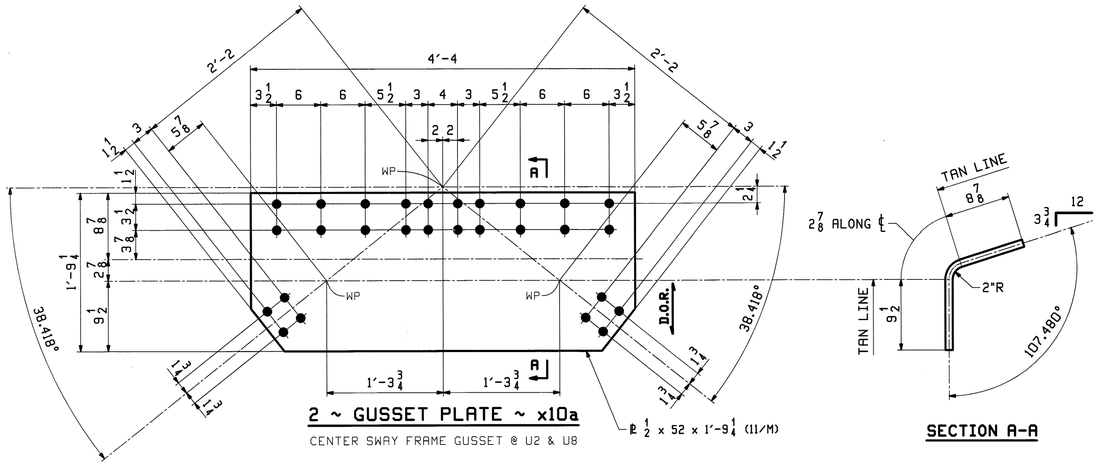

2 ~ GUSSET PLATE ~ x10a

CENTER SWAY FRAME GUSSET @ U2 & U8

SECTION A-A

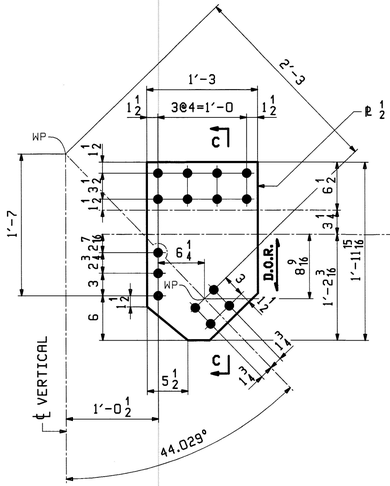

2 ~ GUSSET PLATE ~ x10f

TOP CORNER SWAY GUSSET @ U3 (WEST TRUSS) & U7 (EAST TRUSS)

2 ~ GUSSET PLATE ~ x10g

TOP CORNER SWAY GUSSET @ U3 (EAST TRUSS) & U7 (WEST TRUSS)

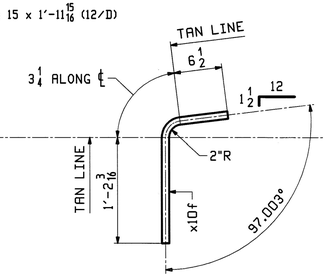

SECTION C-C

FOR x10f ONLY

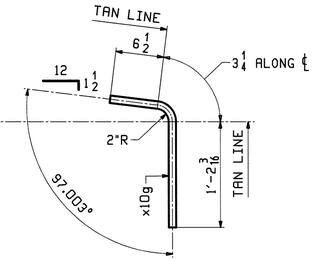

SECTION C-C

FOR x10g ONLY

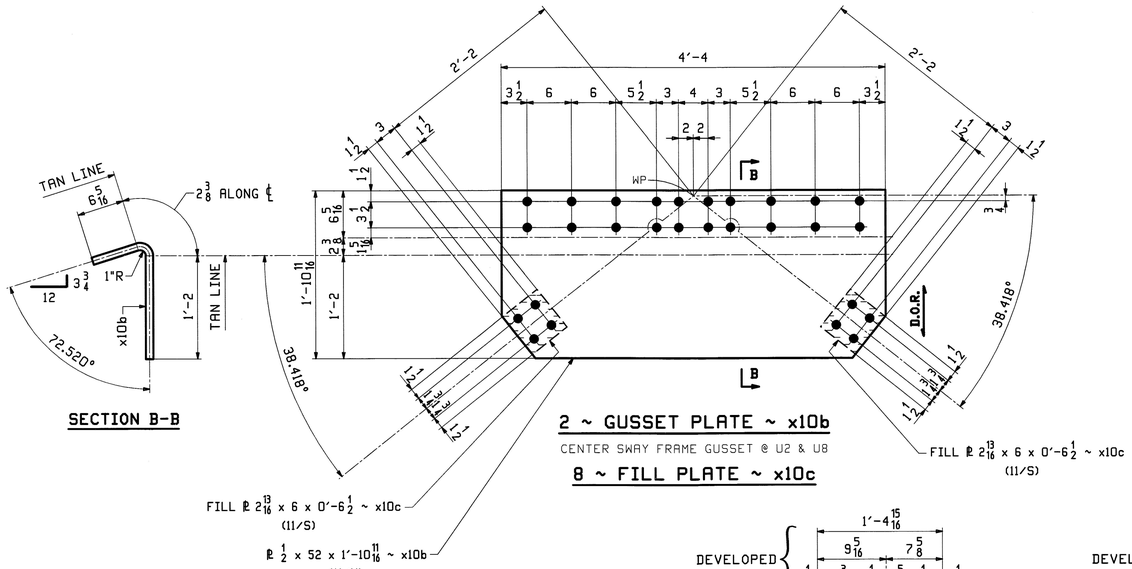

2 ~ GUSSET PLATE ~ x10b

CENTER SWAY FRAME GUSSET @ U2 & U8

8 ~ FILL PLATE ~ x10c

SECTION B-B

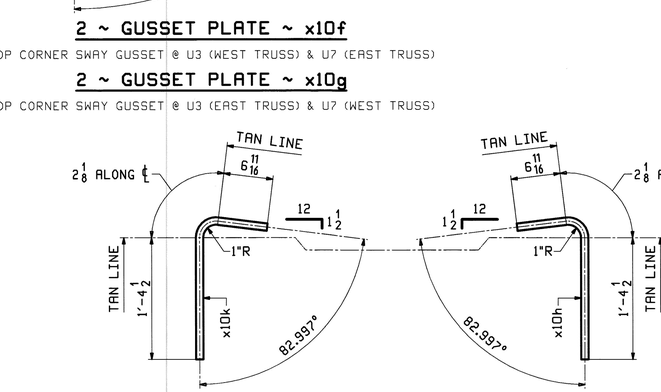

SECTION D-D

FOR x10k ONLY

SECTION D-D

FOR x10h ONLY

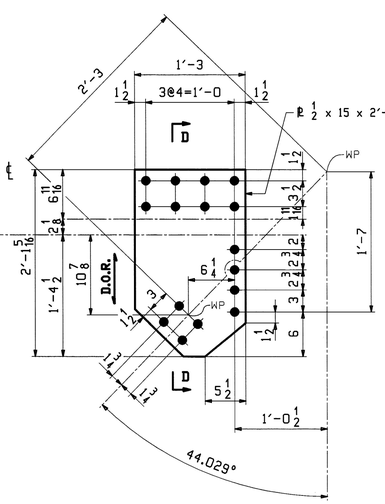

2 ~ GUSSET PLATE ~ x10h

TOP CORNER SWAY GUSSET @ U3 (WEST TRUSS) & U7 (EAST TRUSS)

2 ~ GUSSET PLATE ~ x10k

TOP CORNER SWAY GUSSET @ U3 (EAST TRUSS) & U7 (WEST TRUSS)

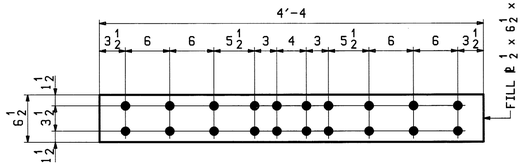

2 ~ FILL PLATE ~ x10d

FILL PL BTWN CENTER SWAY FRAME GUSSETS (U2 & U8)

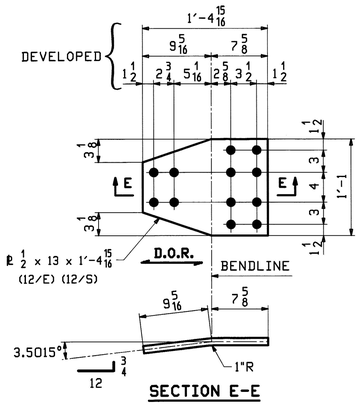

SECTION E-E

4 ~ GUSSET PLATE ~ x10m

TOP GUSSET @ LONG. STRUT (U3 & U7, U4 & U6)

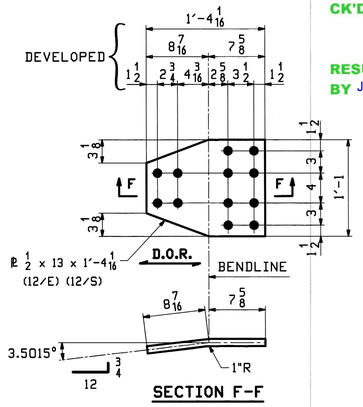

SECTION F-F

4 ~ GUSSET PLATE ~ x10n

BTM GUSSET @ LONG. STRUT (U3 & U7, U4 & U6)

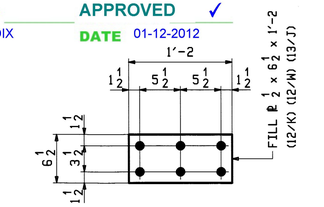

10 ~ FILL PLATE ~ x10p

FILL PL @ BTM OF TOP STRUT (U3 & U7, U4 & U6, U5)

NOTES:

1. FOR GENERAL NOTES SEE SHEET GN1.
2. D.O.R. - DENOTES DIRECTION OF ROLLING.

Vermont Agency of Transportation

RECEIVED

CK'D BY M.C.L. OK'D BY S.S.S.

January 10 2012

RESUBMIT APPROVED ✓

BY J. LACROIX DATE 01-12-2012

REV.	DATE	REMARKS	DWN	CHK	APVL	SHOP
					JAN 9 2012	
0					NOV 18 2011	

MATERIAL:	SURFACE PREP. & PAINT:	HOLES:	SHOP BOLTS:
M270-50 (UN)	HOT-DIP GALV.	15/16 Ø (UN)	NONE

DESCRIPTION: TOP STRUT STANDARDS

CASCO BAY STEEL STRUCTURES, INC.
1 WALLACE AVE. PHONE (207) 780-6722
SOUTH PORTLAND, ME 04106 FAX. (207) 780-6726
TENSOR 3073

STRUCTURE: VT RTE 107 OVER WHITE RIVER	DRAWN: EEO	DATE: 10/18
	CHKD: PCP	DATE: 10/31
LOCATION: BETHEL, VT.	JOB NO. 498	DWG NO. X10
PROJ NO. BRF 022-1(14)		REV. △
CUSTOMER: BECK & BELLUCCI		

EEO Thu, Nov 17, 2011 03:02:24 PM //server/jobs/2011/X10 : Rev0

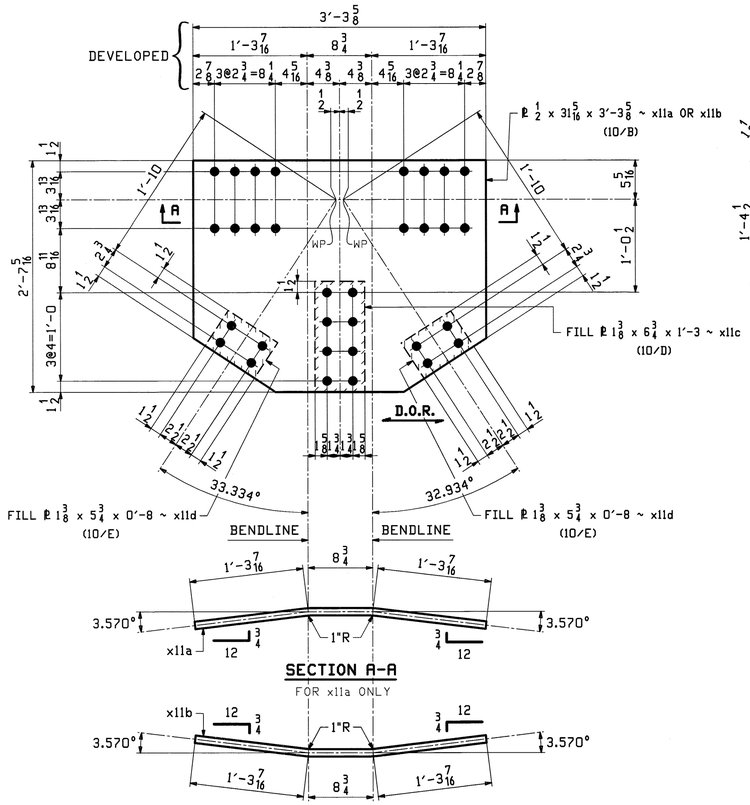

2 ~ GUSSET PLATE ~ x11a

TOP GUSSET @ U3 (WEST TRUSS) & U7 (EAST TRUSS)

2 ~ GUSSET PLATE ~ x11b

TOP GUSSET @ U3 (EAST TRUSS) & U7 (WEST TRUSS)

4 ~ FILL PLATE ~ x11c

8 ~ FILL PLATE ~ x11d

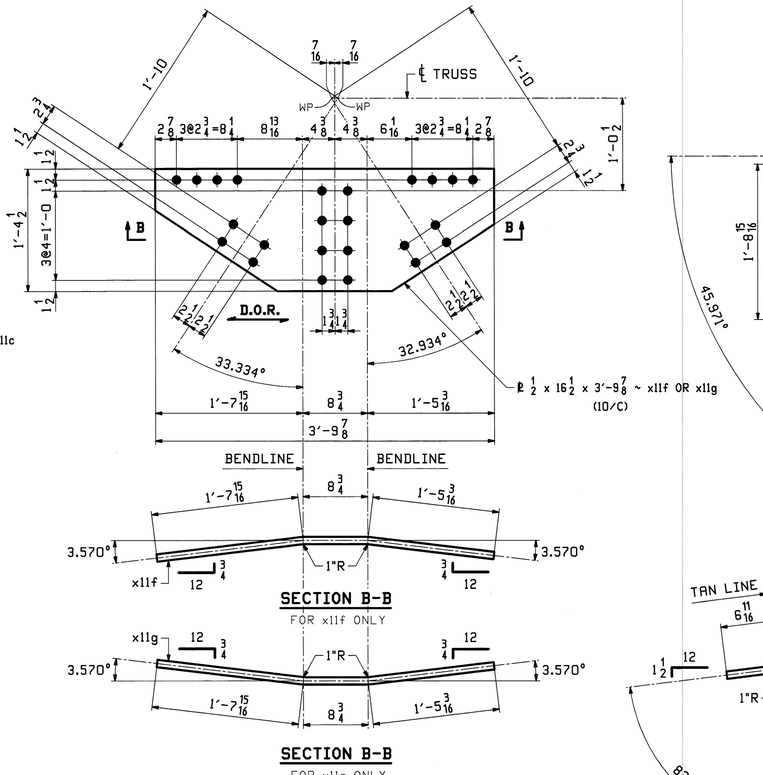

2 ~ GUSSET PLATE ~ x11f

TOP GUSSET @ U3 (WEST TRUSS) & U7 (EAST TRUSS)

2 ~ GUSSET PLATE ~ x11g

TOP GUSSET @ U3 (EAST TRUSS) & U7 (WEST TRUSS)

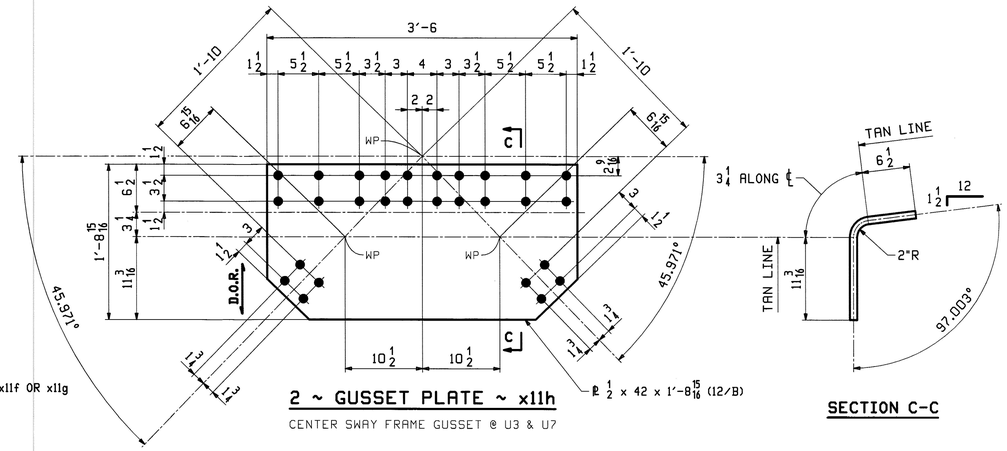

2 ~ GUSSET PLATE ~ x11h

CENTER SWAY FRAME GUSSET @ U3 & U7

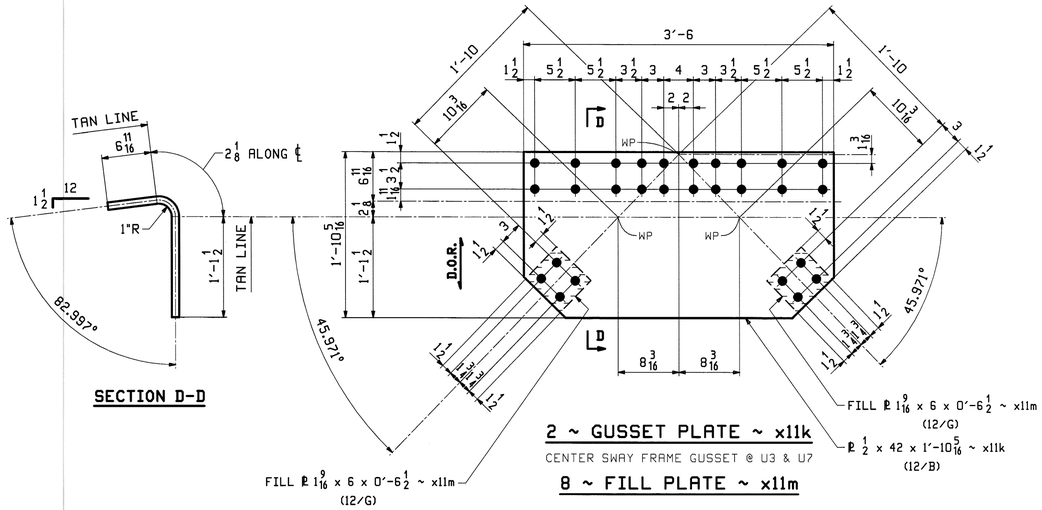

2 ~ GUSSET PLATE ~ x11k

CENTER SWAY FRAME GUSSET @ U3 & U7

8 ~ FILL PLATE ~ x11m

Vermont Agency of Transportation

RECEIVED

CK'D BY M.C.L. OK'D BY S.S.S.

January 10 2012

RESUBMIT _____ APPROVED ✓

BY J. LACROIX DATE 01-12-2012

NOTES:

1. FOR GENERAL NOTES SEE SHEET GN1.
2. **D.O.R.** - DENOTES DIRECTION OF ROLLING.

REV.	DATE	REMARKS	DWN	CHK	APVL	SHOP
0					JAN 9 2012	NOV 18 2011

MATERIAL:	SURFACE PREP. & PAINT:	HOLES:	SHOP BOLTS:
M270-50 (UN)	HOT-DIP GALV.	15/16ø (UN)	NONE

DESCRIPTION: TOP STRUT STANDARDS

CASCO BAY STEEL STRUCTURES, INC.
1 WALLACE AVE. PHONE (207) 780-6722
SOUTH PORTLAND, ME 04106 FAX. (207) 780-6726
TENSOR 3073

STRUCTURE: VT RTE 107 OVER WHITE RIVER	DRAWN: EEO	DATE: 10/20
	CHKD: PCP	DATE: 10/31
LOCATION: BETHEL, VT.	JOB NO. 498	DWG NO. X11
PROJ NO. BRF 022-1(14)		REV. △
CUSTOMER: BECK & BELLUCCI		

ECO Thu, Nov 17, 2011 08:20:05 PM J:\steel\jobs\2073\X11.dwg

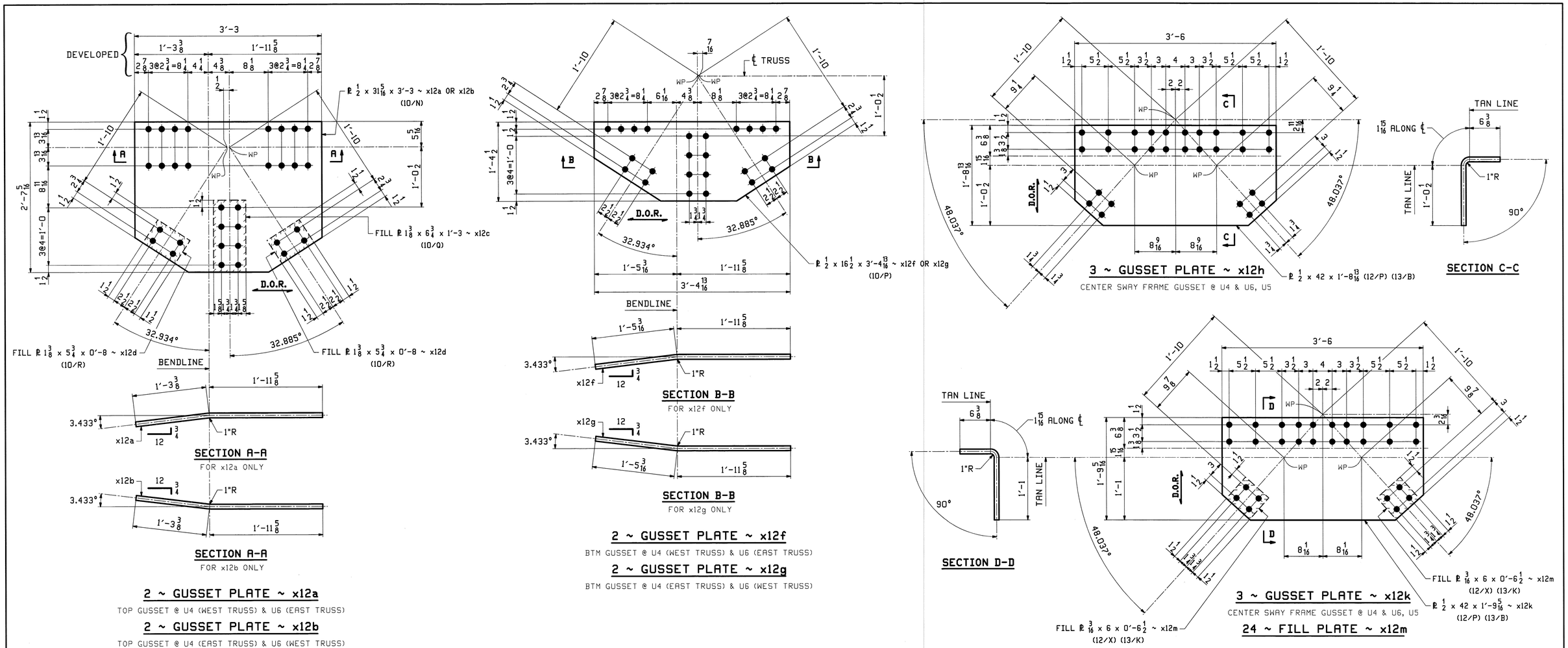

2 ~ GUSSET PLATE ~ x12a

TOP GUSSET @ U4 (WEST TRUSS) & U6 (EAST TRUSS)

2 ~ GUSSET PLATE ~ x12b

TOP GUSSET @ U4 (EAST TRUSS) & U6 (WEST TRUSS)

4 ~ FILL PLATE ~ x12c

8 ~ FILL PLATE ~ x12d

2 ~ GUSSET PLATE ~ x12f

BTM GUSSET @ U4 (WEST TRUSS) & U6 (EAST TRUSS)

2 ~ GUSSET PLATE ~ x12g

BTM GUSSET @ U4 (EAST TRUSS) & U6 (WEST TRUSS)

Vermont Agency of Transportation
RECEIVED
CK'D BY M.C.L. OK'D BY S.S.S.
January 10 2012
RESUBMIT APPROVED ✓
BY J. LACROIX DATE 01-12-2012

NOTES:
1. FOR GENERAL NOTES SEE SHEET GN1.
2. D.O.R. - DENOTES DIRECTION OF ROLLING.

REV.	DATE	REMARKS	DWN	CHK	APVL	SHOP
					JAN 9 2012	
0					NOV 18 2011	

MATERIAL:	SURFACE PREP. & PAINT:	HOLES:	SHOP BOLTS:
M270-50 (UN)	HOT-DIP GALV.	15/16 ø (UN)	NONE

DESCRIPTION: TOP STRUT STANDARDS

CASCO BAY STEEL STRUCTURES, INC.
1 WALLACE AVE. PHONE (207) 780-6722
SOUTH PORTLAND, ME 04106 FAX. (207) 780-6726
TENSOR 3073

STRUCTURE: VT RTE 107 OVER WHITE RIVER	DRAWN: EEO	DATE: 10/21
	CHKD: PCP	DATE: 10/24
LOCATION: BETHEL, VT.	JOB NO.	DWG NO.
PROJ NO. BRF 022-1(14)	498	X12
CUSTOMER: BECK & BELLUCCI		REV. △

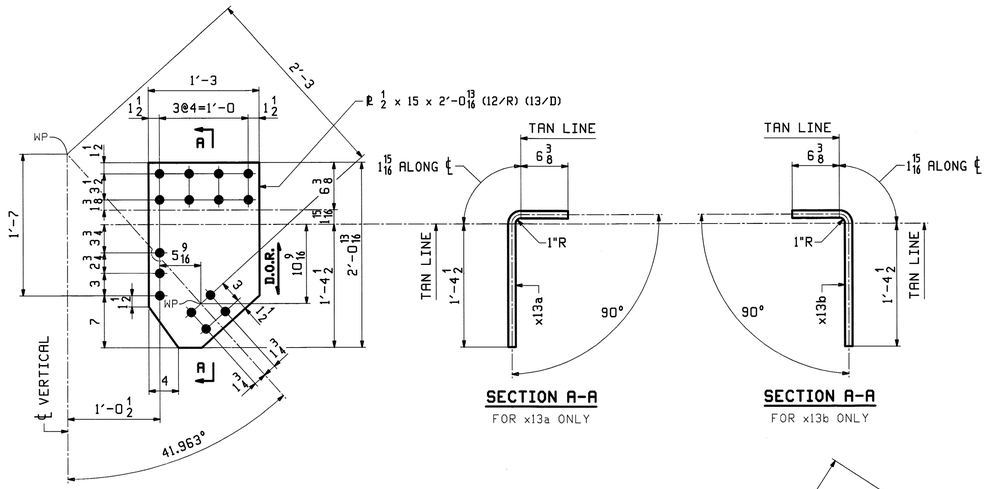

SECTION A-A
FOR x13a ONLY

SECTION A-A
FOR x13b ONLY

3 ~ GUSSET PLATE ~ x13a

TOP CORNER SWAY GUSSET @ U4 & U5 (WEST TRUSS) & U6 (EAST TRUSS)

3 ~ GUSSET PLATE ~ x13b

TOP CORNER SWAY GUSSET @ U4 & U5 (EAST TRUSS) & U6 (WEST TRUSS)

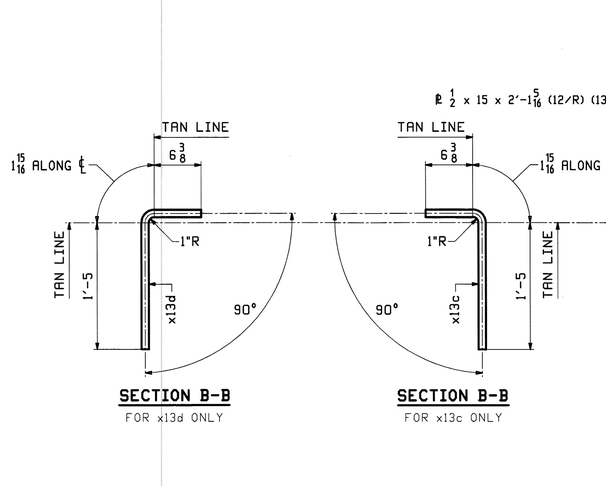

SECTION B-B
FOR x13d ONLY

SECTION B-B
FOR x13c ONLY

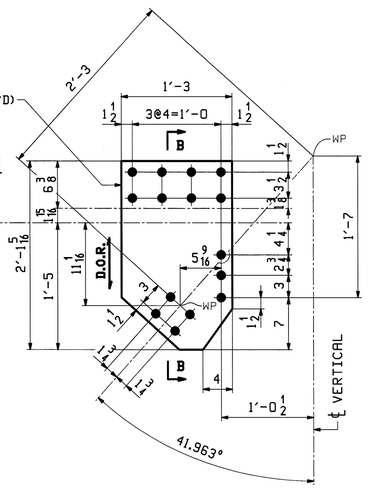

3 ~ GUSSET PLATE ~ x13c

TOP CORNER SWAY GUSSET @ U4 & U5 (WEST TRUSS) & U6 (EAST TRUSS)

3 ~ GUSSET PLATE ~ x13d

TOP CORNER SWAY GUSSET @ U4 & U5 (EAST TRUSS) & U6 (WEST TRUSS)

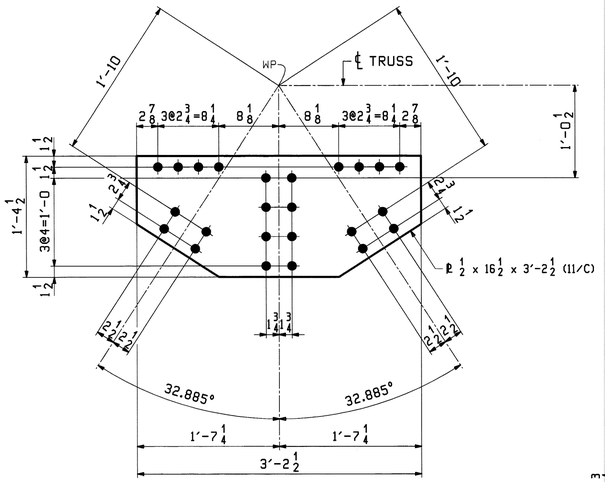

2 ~ GUSSET PLATE ~ x13k

BTM GUSSET @ U5 (EAST TRUSS & WEST TRUSS)

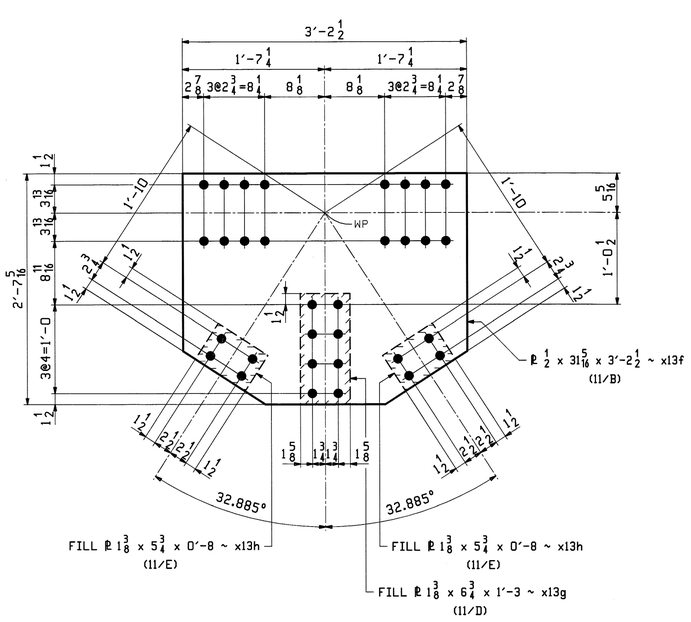

2 ~ GUSSET PLATE ~ x13f

TOP GUSSET @ U5 (EAST TRUSS & WEST TRUSS)

2 ~ FILL PLATE ~ x13g

4 ~ FILL PLATE ~ x13h

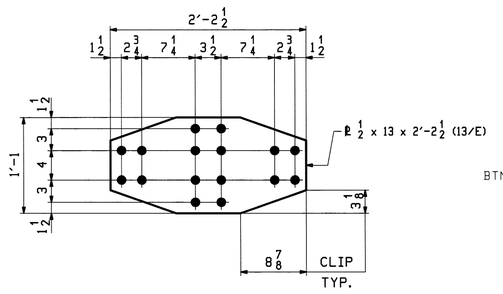

2 ~ GUSSET PLATE ~ x13m

TOP GUSSET @ LONG. STRUT (U5)

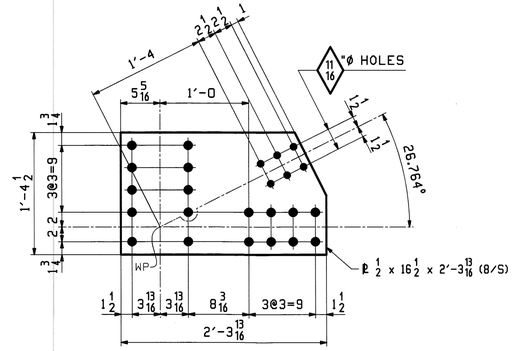

8 ~ GUSSET PLATE ~ x13n

BTM CORNER GUSSET @ END PORTAL (EAST TRUSS & WEST TRUSS)

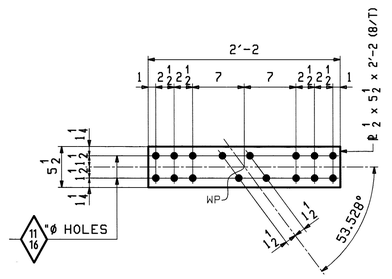

12 ~ GUSSET PLATE ~ x13p

END PORTAL DIAGONAL TIE PLATE

Vermont Agency of Transportation
RECEIVED
CK'D BY M.C.L. OK'D BY S.S.S.
January 10 2012
RESUBMIT APPROVED ✓
BY J. LACROIX DATE 01-12-2012

NOTES:
1. FOR GENERAL NOTES SEE SHEET GN1.
2. D.O.R. - DENOTES DIRECTION OF ROLLING.

REV.	DATE	REMARKS	DWN	CHK	APVL	SHOP
					JAN 9 2012	
0					NOV 18 2011	

MATERIAL:	SURFACE PREP. & PAINT:	HOLES:	SHOP BOLTS:
M270-50 (UN)	HOT-DIP GALV.	15/16ø (UN)	7/8ø (UN)

DESCRIPTION: TOP STRUT & PORTAL STANDARDS

CASCO BAY STEEL STRUCTURES, INC.
1 WALLACE AVE. PHONE (207) 780-6722
SOUTH PORTLAND, ME 04106 FAX. (207) 780-6726

TENSOR 3073

STRUCTURE: VT RTE 107 OVER WHITE RIVER	DRAWN: EEO	DATE: 10/23
	CHK'D: PCP	DATE: 10/26
LOCATION: BETHEL, VT.	JOB NO.	DWG NO.
PROJ NO. BRF 022-1(14)	498	X13
CUSTOMER: BECK & BELLUCCI		REV. △

EEO Thu, Nov 17, 2011 01:34:08 PM J:\steel\jobs\3073\013\13-Rev0.dgn

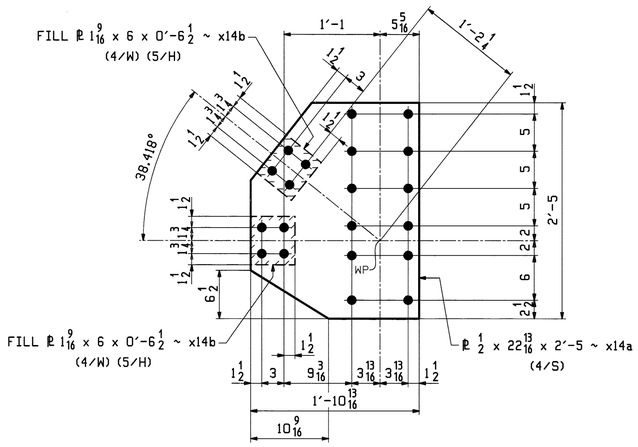

4 ~ GUSSET PLATE ~ x14a

SWAY FRAME MID GUSSET @ M2 & M8

56 ~ FILL PLATE ~ x14b

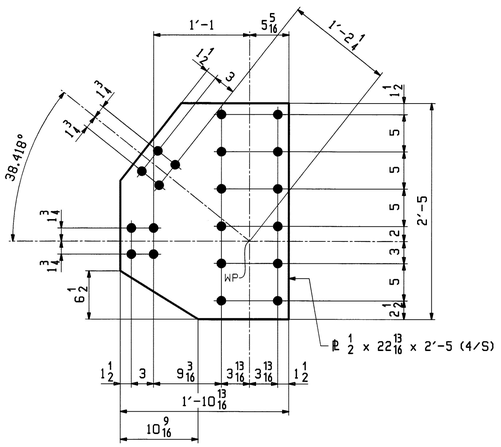

4 ~ GUSSET PLATE ~ x14d

SWAY FRAME MID GUSSET @ M2 & M8

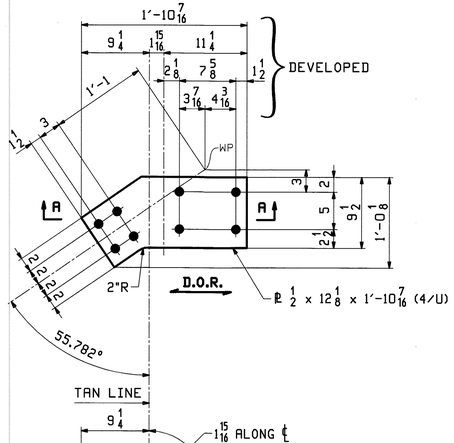

SECTION A-A

FOR x14f ONLY

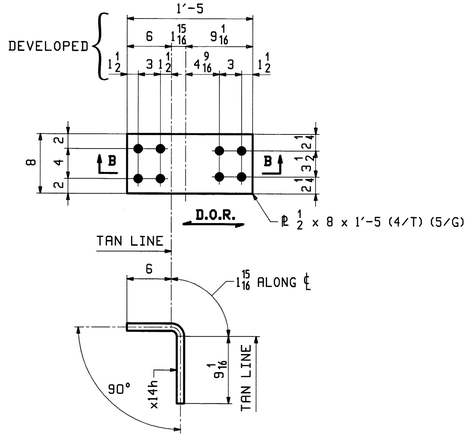

SECTION B-B

24 ~ GUSSET PLATE ~ x14h

MID CHORD CONNECTION TO VERTICAL
INTERIOR GUSSET @ M2 - M8

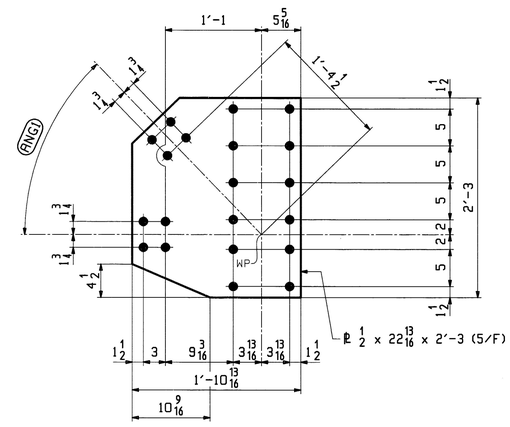

GUSSET PLATE

SWAY FRAME MID GUSSETS

	MARK	QTY	ANG1
@ M3 & M7	**x14m**	8	45.971°
@ M4, M5 & M6	**x14n**	12	48.037°

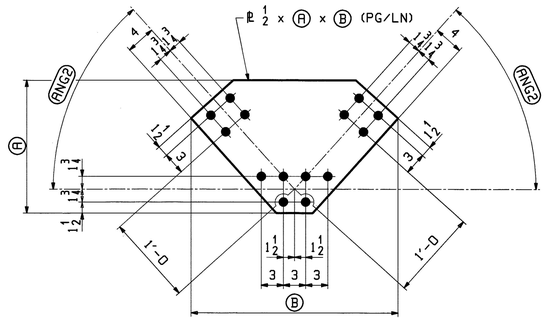

GUSSET PLATE

CENTER SWAY FRAME GUSSETS @ BOTTOM

	MARK	QTY	(A)	(B)	ANG2	PG/LN
@ V2 & V8	**x14p**	4	1'-4 1/2	2'-6 7/8	38.418°	11/N
@ V3 & V7	**x14s**	4	1'-6	2'-4 3/4	45.971°	12/C
@ V4, V5 & V6	**x14t**	6	1'-6	2'-4	48.037°	12/Q 13/C

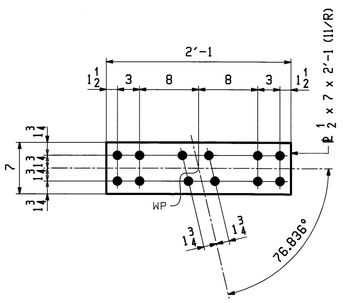

8 ~ GUSSET PLATE ~ x14v

SWAY FRAME GUSSET @ DIAGONAL (V2 & V8)

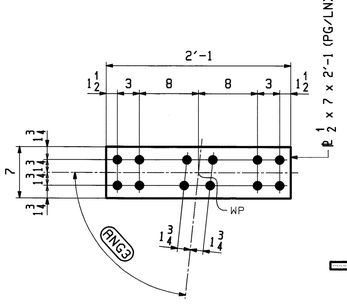

GUSSET PLATE

SWAY FRAME GUSSET @ DIAGONALS

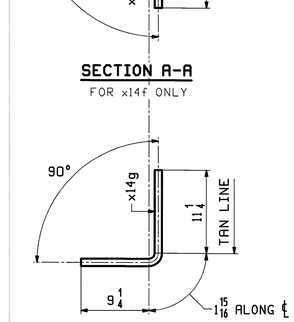

SECTION A-A

FOR x14g ONLY

2 ~ GUSSET PLATE ~ x14f

MID CHORD CONNECTION TO VERTICAL
INTERIOR GUSSET @ M2 & M8

2 ~ GUSSET PLATE ~ x14g

MID CHORD CONNECTION TO VERTICAL
INTERIOR GUSSET @ M2 & M8

	MARK	QTY	ANG3	PG/LN
@ V3 & V7	**x14w**	8	88.058°	12/F
@ V4, V5 & V6	**x14y**	12	83.926°	12/T 13/F

Vermont Agency of Transportation

RECEIVED

CK'D BY M.C.L. OK'D BY S.S.S.

January 10 2012

RESUBMIT APPROVED ✓

BY J. LACROIX DATE 01-12-2012

NOTES:
1. FOR GENERAL NOTES SEE SHEET GN1.
2. D.O.R. - DENOTES DIRECTION OF ROLLING.

REV.	DATE	REMARKS	DWN	CHK	APVL	SHOP
					JAN 9 2012	
0					NOV 18 2011	

MATERIAL:	SURFACE PREP. & PAINT:	HOLES:	SHOP BOLTS:
M270-50 (UN)	HOT-DIP GALV.	15/16ø (UN)	NONE

DESCRIPTION: SWAY FRAME STANDARDS

CASCO BAY STEEL STRUCTURES, INC.
1 WALLACE AVE. PHONE (207) 780-6722
SOUTH PORTLAND, ME 04106 FAX. (207) 780-6726
TENSOR 3073

STRUCTURE: VT RTE 107 OVER WHITE RIVER	DRAWN: EEO	DATE: 10/25
	CHK'D: PCP	DATE: 10/28
LOCATION: BETHEL, VT.	JOB NO. 498	DWG NO. X14
PROJ NO. BRF 022-1(14)		REV. △
CUSTOMER: BECK & BELLUCCI		

ECO Wed, Nov 16, 2011 09:09:55 AM c:\users\jobs\3073\x14 - Rev0

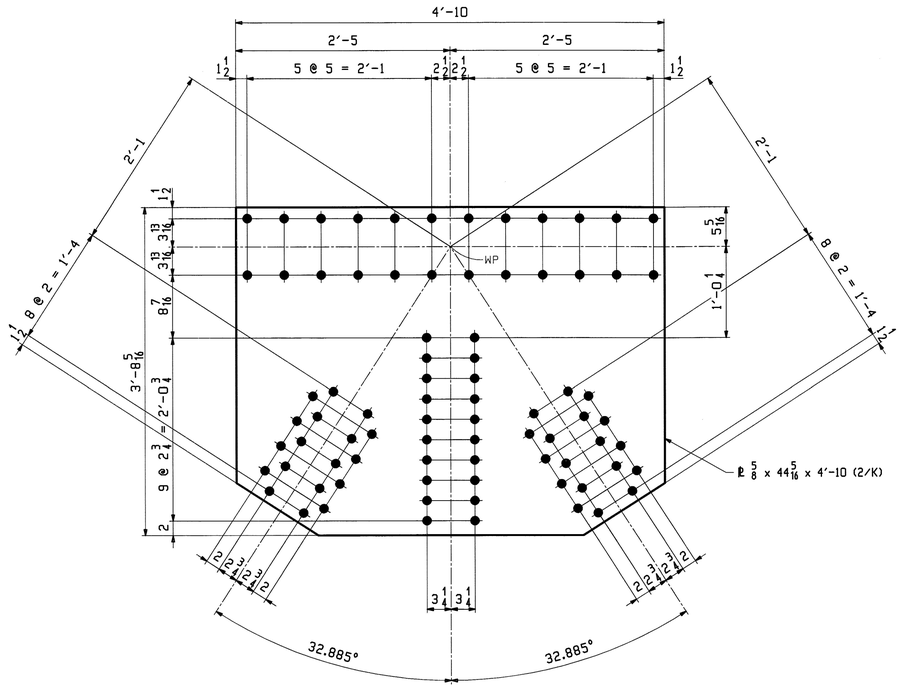

18 ~ GUSSET PLATE ~ x15a

BTM GUSSET @ L1 - L9 (EAST TRUSS & WEST TRUSS)

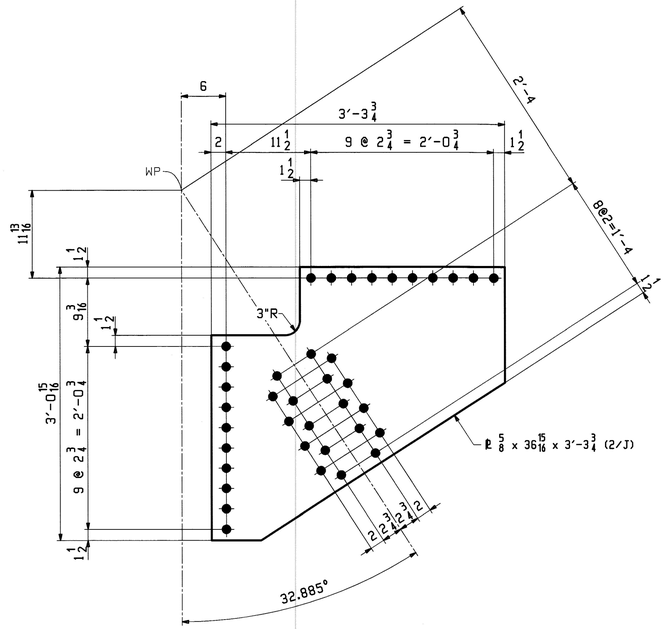

4 ~ GUSSET PLATE ~ x15b

LAT. GUSSET PL @ L0 & L10

Vermont Agency of Transportation
RECEIVED
CK'D BY M.C.L. OK'D BY S.S.S.
January 10 2012
RESUBMIT APPROVED ✓
BY J. LACROIX DATE 01-12-2012

REV.	DATE	REMARKS	DWN	CHK	APVL	SHOP
0					JAN 9 2012	

MATERIAL:	SURFACE PREP. & PAINT:	HOLES:	SHOP BOLTS:
M270-50 (UN)	HOT-DIP GALV.	15/16 Ø (UN)	NONE

DESCRIPTION: TRUSS STANDARDS

CASCO BAY STEEL STRUCTURES, INC.
1 WALLACE AVE. PHONE (207) 780-6722
SOUTH PORTLAND, ME 04106 FAX. (207) 780-6726
TENSOR 3073

STRUCTURE: VT RTE 107 OVER WHITE RIVER	DRAWN: EEO	DATE: 11/18	
	CHK'D: PCP	DATE: 11/23	
LOCATION: BETHEL, VT.	JOB NO. 498	DWG NO. X15	
PROJ NO. BRF 022-1(14)			
CUSTOMER: BECK & BELLUCCI		REV. △	

EEO Tue, Nov 29, 2011 03:20:03 PM //users/jobs/3073/X15 - Rev0

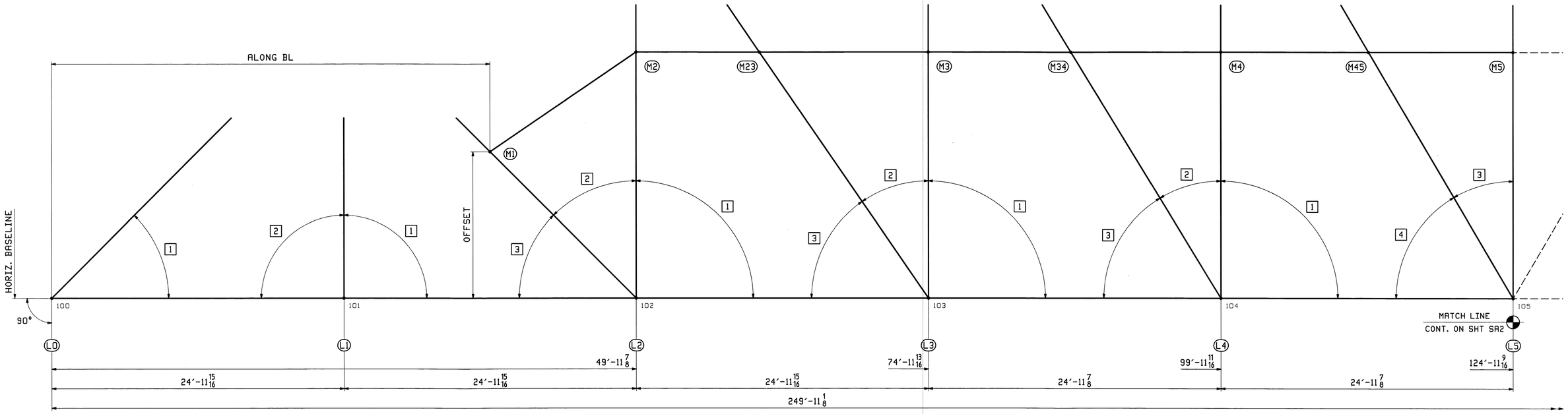

BOTTOM CHORD SHOP ASSEMBLY DIAGRAM

BOTTOM CHORD				
PANEL POINT	CHD 1	CHD 2	CHD 3	CHD 4
L0	7'-7 7/8			
L1	14'-1 11/16	14'-1 11/16		
L2	14'-1 11/16	7'-7 7/8	7'-7 7/8	
L3	14'-1 11/16	5'-11 1/4	9'-3 11/16	
L4	14'-1 11/16	5'-4 7/8	9'-9 1/2	
L5			5'-3 1/16	9'-11 1/8

MID CHORD		
PANEL POINT	ALONG BL	OFFSET
M1	37'-5 15/16	12'-5 15/16
M2	49'-11 7/8	21'-0
M23	60'-6 7/16	20'-11 7/8
M3	74'-11 13/16	21'-0 1/16
M34	87'-2 1/16	20'-11 7/8
M4	99'-11 11/16	21'-0 1/16
M45	112'-7 5/16	20'-11 15/16
M5	124'-11 9/16	21'-0

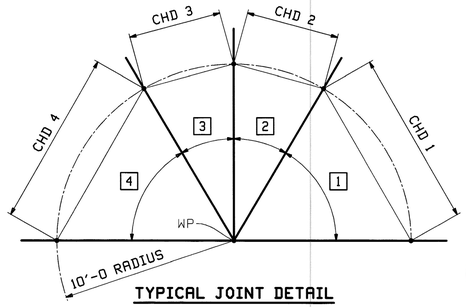

TYPICAL JOINT DETAIL

BLOCKING NOTES:
1. CENTER PUNCH MEMBERS AT 10'-0 OFFSET FROM WORKPOINT.
2. SHOP TO USE CENTER PUNCH TO LOCATE MEMEBERS AT THE PROPER ALIGNMENT, AS SHOWN IN "TYPICAL JOINT DETAIL".
3. EAST TRUSS (T1) & WEST TRUSS (T2) ARE IDENTICAL.
4. ALL LENGTHS SHOWN ARE CAMBERED.
5. FOR SHIPPING MARKS SEE SHEET E1.

Vermont Agency of Transportation
RECEIVED
CK'D BY M.C.L. OK'D BY S.S.S.
January 10 2012
RESUBMIT APPROVED ✓
BY J. LACROIX DATE 01-12-2012

REV.	DATE	REMARKS	DWN	CHK	APVL	SHOP
					JAN 9 2012	
0					NOV 30 2011	

MATERIAL: SURFACE PREP. & PAINT: HOLES: SHOP BOLTS:

DESCRIPTION: SHOP ASSEMBLY - BOTTOM CHORD

CASCO BAY STEEL STRUCTURES, INC.
1 WALLACE AVE. PHONE (207) 780-6722
SOUTH PORTLAND, ME 04106 FAX. (207) 780-6726
TENSOR 3073

STRUCTURE: VT RTE 107 OVER WHITE RIVER

DRAWN: EEO DATE: 11/22
CHKD: PCP DATE: 11/28

LOCATION: BETHEL, VT.
PROJ NO. BRF 022-1(14)
CUSTOMER: BECK & BELLUCCI

JOB NO. 498
DWG NO. SA1
REV. △

EEO Tue, Nov 29, 2011 03:51:16 PM /users/jobs/3073/SA1 : Rev0

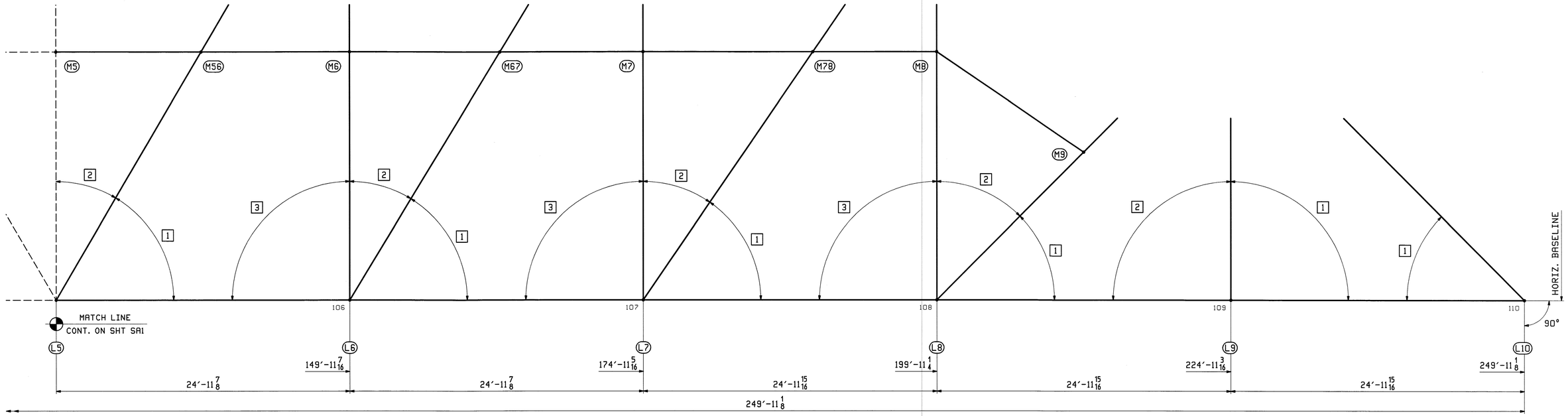

BOTTOM CHORD SHOP ASSEMBLY DIAGRAM (CONTINUED)

BOTTOM CHORD				
PANEL POINT	CHD 1	CHD 2	CHD 3	CHD 4
L5	9'-11 1/8	5'-3 1/16		
L6	9'-9 1/2	5'-4 7/8	14'-1 11/16	
L7	9'-3 11/16	5'-11 1/4	14'-1 11/16	
L8	7'-7 7/8	7'-7 7/8	14'-1 11/16	
L9	14'-1 11/16	14'-1 11/16		
L10	7'-7 7/8			

MID CHORD		
PANEL POINT	ALONG BL	OFFSET
M56	137'-3 13/16	20'-11 15/16
M6	149'-11 7/16	21'-0 1/16
M67	162'-9	20'-11 7/8
M7	174'-11 5/16	21'-0 1/16
M78	189'-4 5/8	20'-11 7/8
M8	199'-11 1/4	21'-0
M9	212'-5 3/16	12'-5 15/16

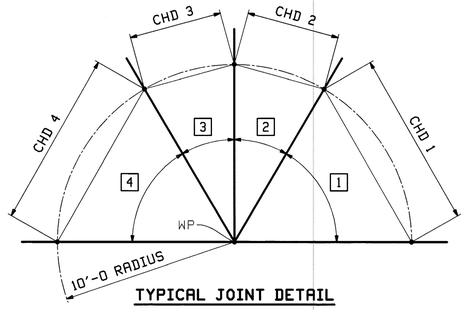

TYPICAL JOINT DETAIL

Vermont Agency of Transportation

RECEIVED

CK'D BY M.C.L. OK'D BY S.S.S.

January 10 2012

RESUBMIT APPROVED ✓

BY J. LACROIX DATE 01-12-2012

BLOCKING NOTES:
1. CENTER PUNCH MEMBERS AT 10'-0 OFFSET FROM WORKPOINT.
2. SHOP TO USE CENTER PUNCH TO LOCATE MEMEBERS AT THE PROPER ALIGNMENT, AS SHOWN IN "TYPICAL JOINT DETAIL".
3. EAST TRUSS (T1) & WEST TRUSS (T2) ARE IDENTICAL.
4. ALL LENGTHS SHOWN ARE CAMBERED.
5. FOR SHIPPING MARKS SEE SHEET E1.

REV.	DATE	REMARKS	DWN	CHK	APVL	SHOP
					JAN 9 2012	
0					NOV 30 2011	

MATERIAL:	SURFACE PREP. & PAINT:	HOLES:	SHOP BOLTS:

DESCRIPTION: SHOP ASSEMBLY - TOP CHORD

CASCO BAY STEEL STRUCTURES, INC.
1 WALLACE AVE. PHONE (207) 780-6722
SOUTH PORTLAND, ME 04106 FAX. (207) 780-6726

TENSOR 3073

STRUCTURE: VT RTE 107 OVER WHITE RIVER	DRAWN: EEO	DATE: 11/23
	CHK'D: PCP	DATE: 11/28
LOCATION: BETHEL, VT.	JOB NO.	DWG NO.
PROJ NO. BRF 022-1(14)	498	SA2
CUSTOMER: BECK & BELLUCCI		REV. △

EEO Tue, Nov 29, 2011 03:54:20 PM //users/jobs/3073/SA2 | Rev:0

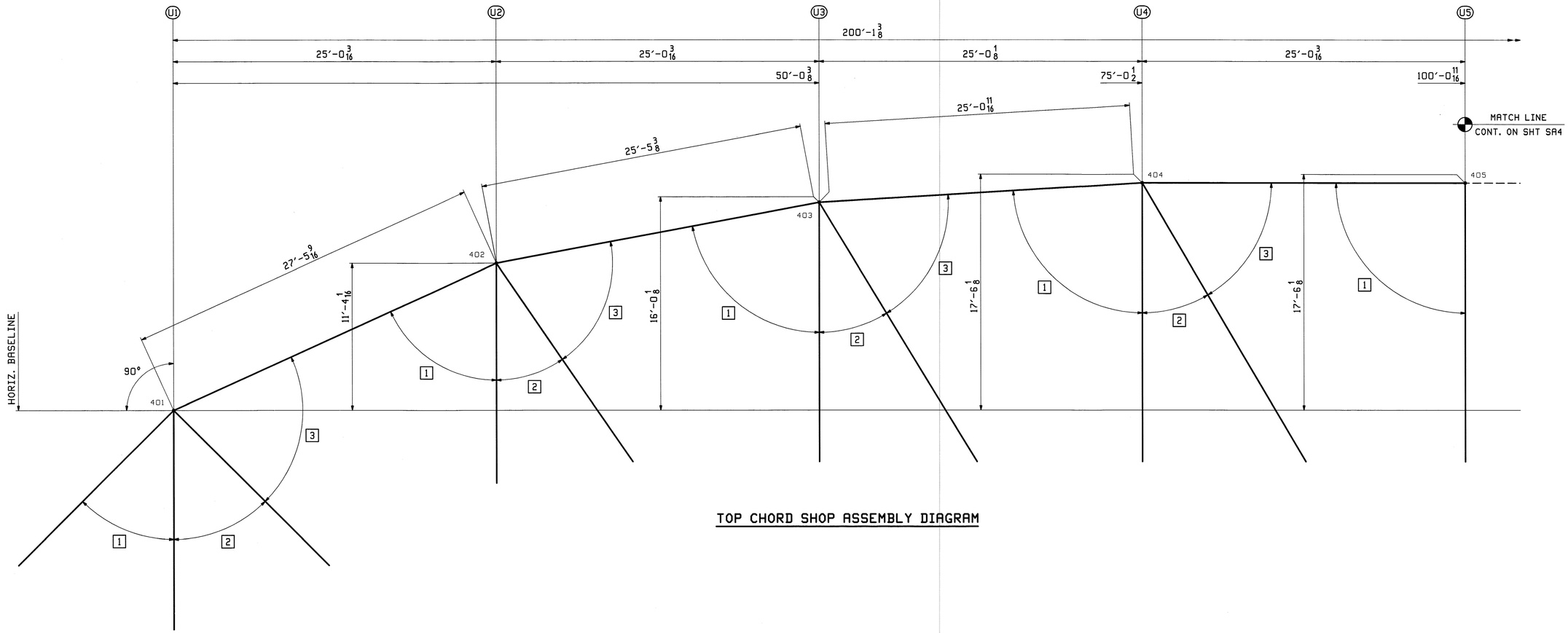

TOP CHORD SHOP ASSEMBLY DIAGRAM

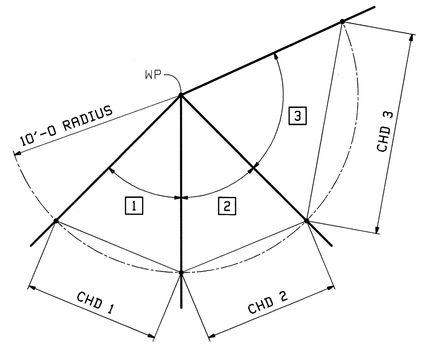

TYPICAL JOINT DETAIL

TOP CHORD			
PANEL POINT	CHD 1	CHD 2	CHD 3
U1	7'-7 7/8	7'-7 7/8	11'-4 5/8
U2	10'-10 1/16	5'-11 1/4	10'-10 13/16
U3	12'-9 3/8	5'-4 7/8	10'-3 11/16
U4	13'-8 9/16	5'-3 1/16	9'-11 1/8
U5	14'-1 11/16		

BLOCKING NOTES:
1. CENTER PUNCH MEMBERS AT 10'-0 OFFSET FROM WORKPOINT.
2. SHOP TO USE CENTER PUNCH TO LOCATE MEMEBERS AT THE PROPER ALIGNMENT, AS SHOWN IN "TYPICAL JOINT DETAIL".
3. EAST TRUSS (T1) & WEST TRUSS (T2) ARE IDENTICAL.
4. ALL LENGTHS SHOWN ARE CAMBERED.
5. FOR SHIPPING MARKS SEE SHEET E1.

Vermont Agency of Transportation
RECEIVED
CK'D BY M.C.L. OK'D BY S.S.S.
January 10 2012
RESUBMIT APPROVED ✓
BY J. LACROIX DATE 01-12-2012

REV.	DATE	REMARKS	DWN	CHK	APVL	SHOP
0					JAN 9 2012 NOV 30 2011	

MATERIAL: SURFACE PREP. & PAINT: HOLES: SHOP BOLTS:

DESCRIPTION: SHOP ASSEMBLY - TOP CHORD

CASCO BAY STEEL STRUCTURES, INC.
1 WALLACE AVE. PHONE (207) 780-6722
SOUTH PORTLAND, ME 04106 FAX. (207) 780-6726
TENSOR 3073

STRUCTURE: VT RTE 107 OVER WHITE RIVER

DRAWN: EEO DATE: 11/23
CHKD: PCP DATE: 11/28

LOCATION: BETHEL, VT.
PROJ NO. BRF 022-1(14)
CUSTOMER: BECK & BELLUCCI

JOB NO. 498
DWG NO. SA3
REV. △

EEO Tue, Nov 29, 2011 03:55:06 PM /users/jobs/3073/SA3 1 Rev0

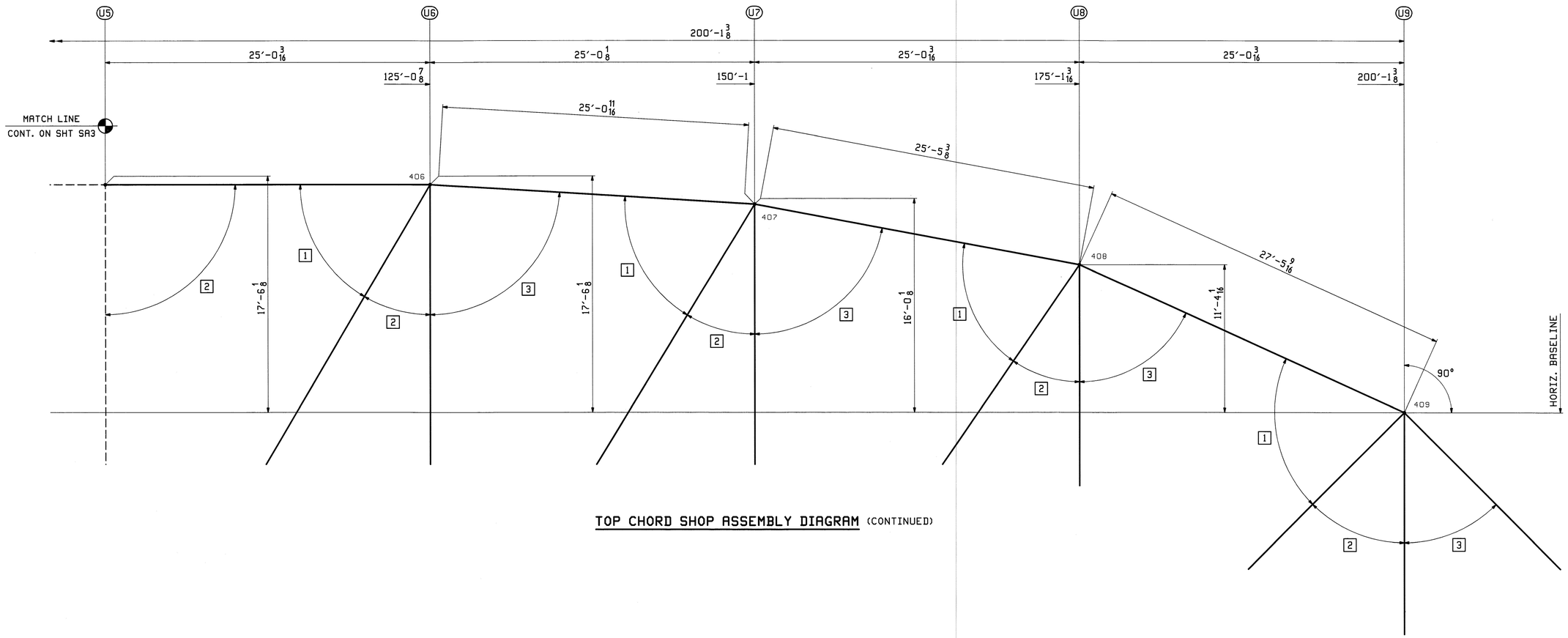

TOP CHORD SHOP ASSEMBLY DIAGRAM (CONTINUED)

TOP CHORD			
PANEL POINT	CHD 1	CHD 2	CHD 3
U5		14′-1 11/16	
U6	9′-11 1/8	5′-3 1/16	13′-8 9/16
U7	10′-3 11/16	5′-4 7/8	12′-9 3/8
U8	10′-10 13/16	5′-11 1/4	10′-10 1/16
U9	11′-4 5/8	7′-7 7/8	7′-7 7/8

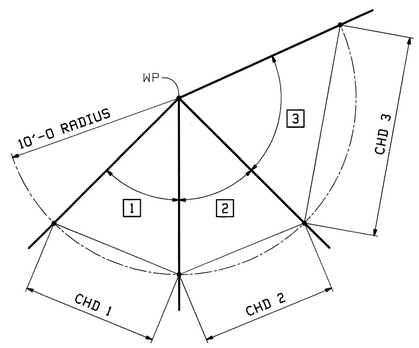

TYPICAL JOINT DETAIL

Vermont Agency of Transportation
RECEIVED
CK'D BY M.C.L. OK'D BY S.S.S.
January 10 2012
RESUBMIT APPROVED ✓
BY J. LACROIX DATE 01-12-2012

BLOCKING NOTES:
1. CENTER PUNCH MEMBERS AT 10′-0 OFFSET FROM WORKPOINT.
2. SHOP TO USE CENTER PUNCH TO LOCATE MEMEBERS AT THE PROPER ALIGNMENT, AS SHOWN IN "TYPICAL JOINT DETAIL".
3. EAST TRUSS (T1) & WEST TRUSS (T2) ARE IDENTICAL.
4. ALL LENGTHS SHOWN ARE CAMBERED.
5. FOR SHIPPING MARKS SEE SHEET E1.

REV.	DATE	REMARKS	DWN	CHK	APVL	SHOP
0					JAN 9 2012	NOV 30 2011

MATERIAL:	SURFACE PREP. & PAINT:	HOLES:	SHOP BOLTS:

DESCRIPTION: SHOP ASSEMBLY - TOP CHORD

CASCO BAY STEEL STRUCTURES, INC.
1 WALLACE AVE. PHONE (207) 780-6722
SOUTH PORTLAND, ME 04106 FAX. (207) 780-6726

TENSOR 3073

STRUCTURE: VT RTE 107 OVER WHITE RIVER	DRAWN: EEO	DATE: 11/27
	CHK'D: EEO	DATE: 11/28
LOCATION: BETHEL, VT.	JOB NO.	DWG NO.
PROJ NO. BRF 022-1(14)	498	SA4
CUSTOMER: BECK & BELLUCCI		REV. △

EEO Tue, Nov 29, 2011 03:56:47 PM J:\steel jobs\3073-SHT\ SA4.0

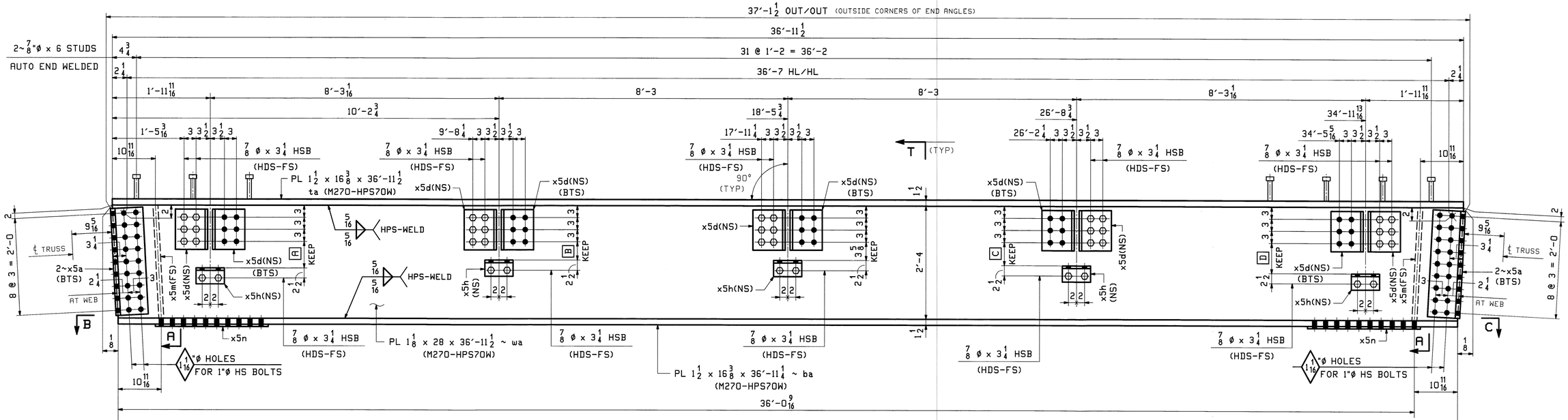

FLOORBEAMS

MARK	REQ'D	A	B	C	D
1FB0 (LOOKING SOUTH) (@ L0)	ONE	6 1/2	4 1/2	5 11/16	7 7/16
1FB10 (LOOKING NORTH) (@ L10)	ONE	7 7/16	5 11/16	4 1/2	6 1/2

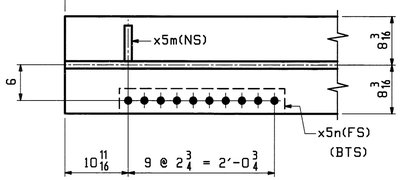

SECTION -B

NOTES:

1. FOR GENERAL NOTES SEE DWG. GN1.
2. FOR CAMBER & FLANGE DIAGRAM SEE DWG. C1.
3. FOR STANDARD DETAILS SEE DWG. X5.
4. ALL BOLTS SHALL BE FULLY TORQUED (UN).
5. BTS - DENOTES BOLT TO SHIP OR SECURE FOR SHIPMENT.
6. EACH BOLT SHALL HAVE 1-HARD FLAT WASHER & 1-LOAD INDICATOR WASHER.
7. T2 DENOTES MATERIAL SUBJECT TO CHARPY V-NOTCH TESTING.
8. GIE DENOTES GRINDING AT ONE END OF PLATE.

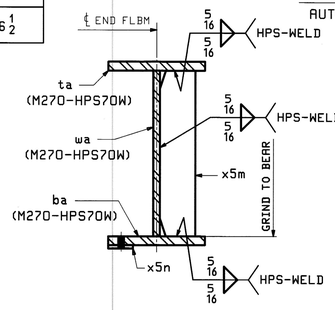

SECTION -A

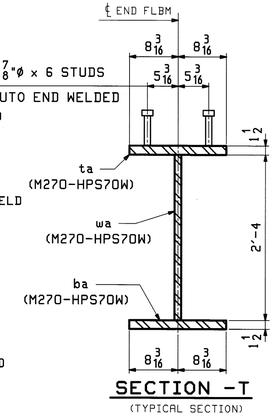

SECTION -T
(TYPICAL SECTION)

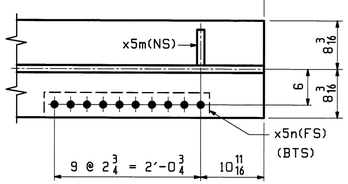

SECTION -C

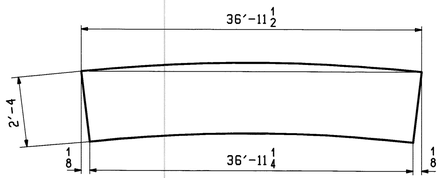

ORIENTATION DIAGRAM

Vermont Agency of Transportation

RECEIVED

CK'D BY M.C.L. OK'D BY S.S.S.

January 10 2012

RESUBMIT APPROVED ✓

BY J. LACROIX DATE 01-12-2012

ABM INFO PAGE	ABM INFO LINE	SHIP MARK	QTY	MARK	MATERIAL	LENGTH FT	LENGTH INCHES	REMARKS	WT	PROCUREMENT NOTES
		1FB10	1		FLOORBEAM				11237	
1	H		1	wa	PL 1 1/8x28	36	11 1/2	A709-HPS70WT2		
1	G		1	ta	PL 1 1/2x16 3/8	36	11 1/2	A709-HPS70WT2		
1	G		1	ba	PL 1 1/2x16 3/8	36	11 1/4	A709-HPS70WT2		
2	Q		4	x5a	L 8x8x1 1/8	2	3	M270-50T2		
2	U		10	x5d	L 8x8x5/8	0	10	M270-36		
2	W		5	x5h	L 6x4x5/8	0	7	M270-36		
3	X		2	x5m	PL 1/8x6	2	4	GIE		
3	F		2	x5n	PL 9/16x4 3/16	2	3 3/4	FILL		
20	C		64		STUD 7/8 ø	0	6	A108		
21	G		40		7/8 ø HSB	0	3 1/4	MECH. GALV. A325-1		
21	X		40		7/8 ø HSW			MECH. GALV. F436		
21	Y		40		LOAD IND. 7/8 ø WASH FOR 7/8 ø HSB			MECH. GALV. F436		

ABM INFO PAGE	ABM INFO LINE	SHIP MARK	QTY	MARK	MATERIAL	LENGTH FT	LENGTH INCHES	REMARKS	WT	PROCUREMENT NOTES
		1FB0	1		FLOORBEAM				11237	
1	H		1	wa	PL 1 1/8x28	36	11 1/2	A709-HPS70WT2		
1	G		1	ta	PL 1 1/2x16 3/8	36	11 1/2	A709-HPS70WT2		
1	G		1	ba	PL 1 1/2x16 3/8	36	11 1/4	A709-HPS70WT2		
2	Q		4	x5a	L 8x8x1 1/8	2	3	M270-50T2		
2	U		10	x5d	L 8x8x5/8	0	10	M270-36		
2	W		5	x5h	L 6x4x5/8	0	7	M270-36		
3	X		2	x5m	PL 1/8x6	2	4	GIE		
3	F		2	x5n	PL 9/16x4 3/16	2	3 3/4	FILL		
20	C		64		STUD 7/8 ø	0	6	A108		
21	G		40		7/8 ø HSB	0	3 1/4	MECH. GALV. A325-1		
21	X		40		7/8 ø HSW			MECH. GALV. F436		
21	Y		40		LOAD IND. 7/8 ø WASH FOR 7/8 ø HSB			MECH. GALV. F436		

REV.	DATE	REMARKS	DWN	CHK	APVL	SHOP
					JAN 9 2012	
0					NOV 18 2011	

MATERIAL:	SURFACE PREP. & PAINT:	HOLES:	SHOP BOLTS:
M270-50 (UN)	HOT-DIP GALV.	15/16ø (UN)	AS NOTED

DESCRIPTION: FLOORBEAMS 1FB0 & 1FB10

CASCO BAY STEEL STRUCTURES, INC.
1 WALLACE AVE. PHONE (207) 780-6722
SOUTH PORTLAND, ME 04106 FAX. (207) 780-6726

TENSOR 3073

STRUCTURE: VT RTE 107 OVER WHITE RIVER		DRAWN: RB	DATE: 10/11/11
		CHKD: PCP	DATE: 11/17/11
LOCATION: BETHEL, VT.		JOB NO.	DWG NO.
PROJ NO. BRF 022-1(14)		498	1
CUSTOMER: BECK & BELLUCCI			REV. △

Thu, Nov 17, 2011 8:58:51 PM J:\steel\dgn\2007\1 Rev0

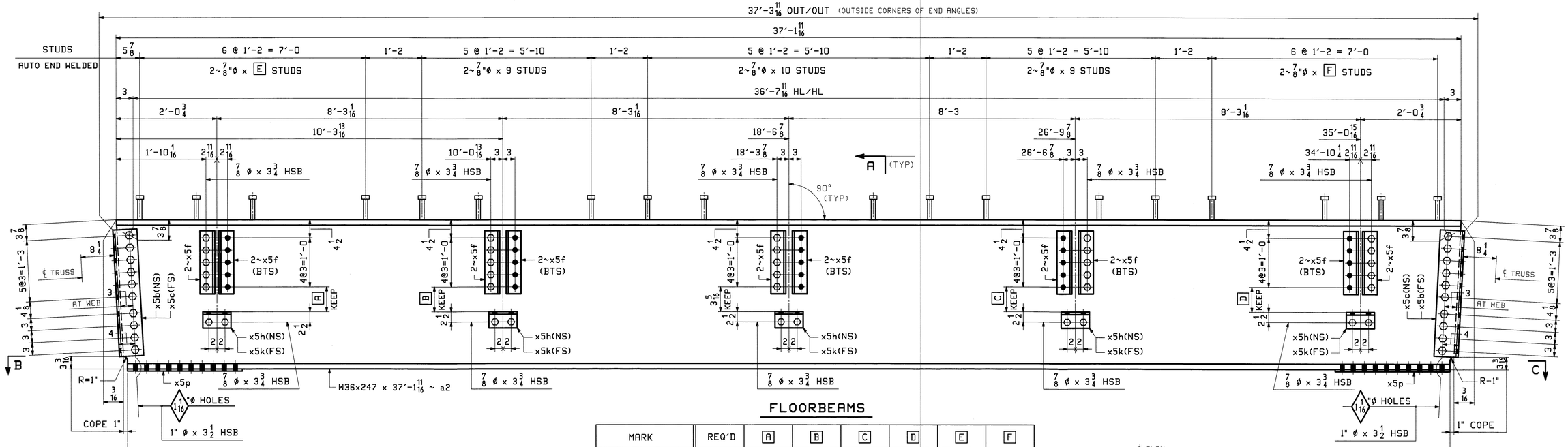

FLOORBEAMS

MARK	REQ'D	A	B	C	D	E	F
2FB1	ONE	6 3/16	4 3/16	5 3/8	7 1/8	8	7
2FB2	ONE						
2FB3	ONE						
2FB4	ONE						
2FB6	ONE	7 1/8	5 3/8	4 3/16	6 3/16	7	8
2FB7	ONE						
2FB8	ONE						
2FB9	ONE						

ALIKE EXCEPT FOR MARK: (LOOKING SOUTH) (@ L1); (LOOKING SOUTH) (@ L2); (LOOKING SOUTH) (@ L3); (LOOKING SOUTH) (@ L4)

ALIKE EXCEPT FOR MARK: (LOOKING NORTH) (@ L6); (LOOKING NORTH) (@ L7); (LOOKING NORTH) (@ L8); (LOOKING NORTH) (@ L9)

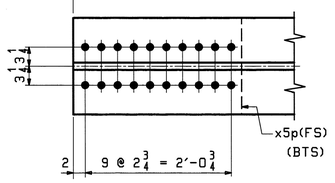

SECTION -B

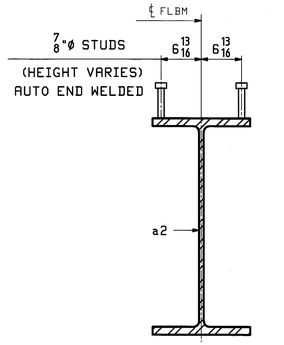

SECTION -A
(TYPICAL SECTION)

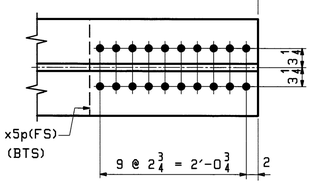

SECTION -C

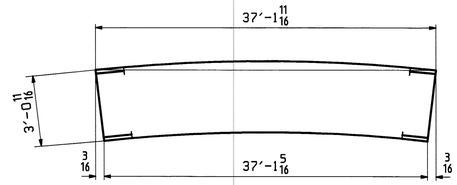

ORIENTATION DIAGRAM

NOTES:

1. FOR GENERAL NOTES SEE DWG. GN1.
2. FOR CAMBER DIAGRAM SEE DWG. C2.
3. FOR STANDARD DETAILS SEE DWG. X5.
4. ALL BOLTS SHALL BE FULLY TORQUED (UN).
5. BTS - DENOTES BOLT TO SHIP OR SECURE FOR SHIPMENT.
6. EACH BOLT SHALL HAVE 1-HARD FLAT WASHER & 1-LOAD INDICATOR WASHER.
7. T2 DENOTES MATERIAL SUBJECT TO CHARPY V-NOTCH TESTING.

BILL OF MATERIAL — JOB NO. 498 — DRAWING NO. 2 — REV.

ABM INFO PAGE	ABM INFO LINE	SHIP MARK	QTY	MARK	MATERIAL	LENGTH FT	LENGTH INCHES	REMARKS	WT	PROCUREMENT NOTES
		2FB6	1		FLOORBEAM			ALIKE EXCEPT FOR MARK	10257	
		2FB7	1		FLOORBEAM				10257	
		2FB8	1		FLOORBEAM				10257	
		2FB9	1		FLOORBEAM				10257	
1	F		4	a2	W 36x247	37	1 11/16	M270-50T2		
2	R		8	x5b	L 6x4x1/2	2	7 1/8	M270-36T2		
2	R		8	x5c	L 6x4x1/2	2	7 1/8	M270-36T2		
2	V		80	x5f	L 6x4x5/8	1	3 1/2	M270-36		
2	W		20	x5h	L 6x4x5/8	0	7	M270-36		
2	W		20	x5k	L 6x4x5/8	0	7	M270-36		
3	G		8	x5p	PL 9/16x16 1/2	2	4 3/4	FILL		
20	D		56		STUD 7/8 ø	0	7	A108		
20	E		56		STUD 7/8 ø	0	8	A108		
20	F		96		STUD 7/8 ø	0	9	A108		
20	G		48		STUD 7/8 ø	0	10	A108		
21	J		140		7/8 ø HSB	0	3 3/4	MECH. GALV. A325-1		
21	X		140		7/8 ø HSW			MECH. GALV. F436		
21	Y		140		LOAD IND. WASH FOR 7/8 ø HSB			MECH. GALV. F436		
22	H		80		1 ø HSB	0	3 1/2	MECH. GALV. A325-1		
22	X		80		1 ø HSW			MECH. GALV. F436		
22	Y		80		LOAD IND. WASH FOR 1 ø HSB			MECH. GALV. F436		

BILL OF MATERIAL — JOB NO. 498 — DRAWING NO. 2 — REV.

ABM INFO PAGE	ABM INFO LINE	SHIP MARK	QTY	MARK	MATERIAL	LENGTH FT	LENGTH INCHES	REMARKS	WT	PROCUREMENT NOTES
		2FB1	1		FLOORBEAM			ALIKE EXCEPT FOR MARK	10257	
		2FB2	1		FLOORBEAM				10257	
		2FB3	1		FLOORBEAM				10257	
		2FB4	1		FLOORBEAM				10257	
1	F		4	a2	W 36x247	37	1 11/16	M270-50T2		
2	R		8	x5b	L 6x4x1/2	2	7 1/8	M270-36T2		
2	R		8	x5c	L 6x4x1/2	2	7 1/8	M270-36T2		
2	V		80	x5f	L 6x4x5/8	1	3 1/2	M270-36		
2	W		20	x5h	L 6x4x5/8	0	7	M270-36		
2	W		20	x5k	L 6x4x5/8	0	7	M270-36		
3	G		8	x5p	PL 9/16x16 1/2	2	4 3/4	FILL		
20	D		56		STUD 7/8 ø	0	7	A108		
20	E		56		STUD 7/8 ø	0	8	A108		
20	F		96		STUD 7/8 ø	0	9	A108		
20	G		48		STUD 7/8 ø	0	10	A108		
21	J		140		7/8 ø HSB	0	3 3/4	MECH. GALV. A325-1		
21	X		140		7/8 ø HSW			MECH. GALV. F436		
21	Y		140		LOAD IND. WASH FOR 7/8 ø HSB			MECH. GALV. F436		
22	H		80		1 ø HSB	0	3 1/2	MECH. GALV. A325-1		
22	X		80		1 ø HSW			MECH. GALV. F436		
22	Y		80		LOAD IND. WASH FOR 1 ø HSB			MECH. GALV. F436		

Vermont Agency of Transportation

RECEIVED

CK'D BY M.C.L. OK'D BY S.S.S.

January 10 2012

RESUBMIT APPROVED ✓

BY J. LACROIX DATE 01-12-2012

REV.	DATE	REMARKS	DWN	CHK	APVL	SHOP
					JAN 9 2012	
0					NOV 18 2011	

MATERIAL:	SURFACE PREP. & PAINT:	HOLES:	SHOP BOLTS:
M270-50 (UN)	HOT-DIP GALV.	15/16ø (UN)	AS NOTED

DESCRIPTION: FLOORBEAMS 2FB1,2FB2,2FB3,2FB4,2FB6,2FB7,2FB8 & 2FB9

CASCO BAY STEEL STRUCTURES, INC.
1 WALLACE AVE. PHONE (207) 780-6722
SOUTH PORTLAND, ME 04106 FAX. (207) 780-6726
TENSOR 3073

STRUCTURE: VT RTE 107 OVER WHITE RIVER	DRAWN: RB	DATE: 10/11/11
	CHKD: PCP	DATE: 11/17/11
LOCATION: BETHEL, VT.	JOB NO. 498	DWG NO. 2
PROJ NO. BRF 022-1(14)		REV. △
CUSTOMER: BECK & BELLUCCI		

\\casco\jobs\2012\2012-2 - Rev0
Thu, Nov 17, 2011 01:08:13 PM
PCP

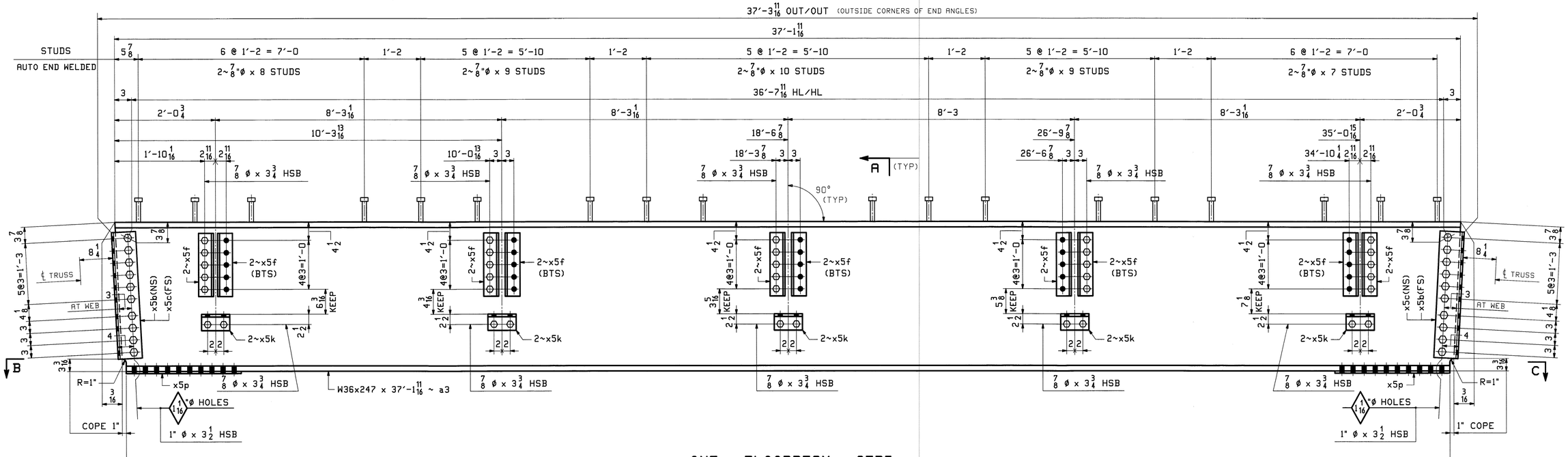

ONE ~ FLOORBEAM ~ 3FB5

(LOOKING SOUTH)
(@ L5)

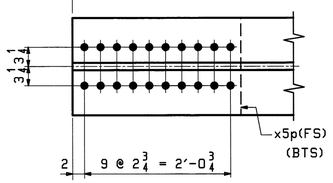

SECTION -B

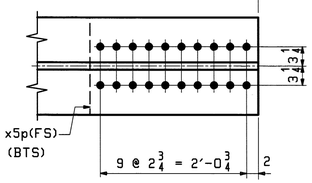

SECTION -C

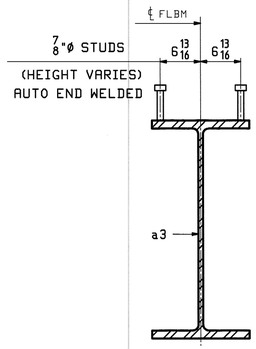

SECTION -A
(TYPICAL SECTION)

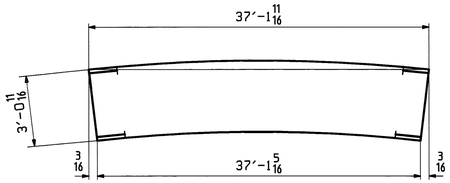

ORIENTATION DIAGRAM

ABM INFO		SHIP	BILL OF MATERIAL					JOB NO.	DRAWING NO.	REV.
								498	3	
PAGE	LINE	MARK	QTY	MARK	MATERIAL	LENGTH FT	LENGTH INCHES	REMARKS	WT	PROCUREMENT NOTES
		3FB5	1		FLOORBEAM				10257	
1	F		1	a3	W 36x247	37	1 11/16	M270-50T2		
2	R		2	x5b	L 6x4x 1/2	2	7 1/8	M270-36T2		
2	R		2	x5c	L 6x4x 1/2	2	7 1/8	M270-36T2		
2	V		20	x5f	L 6x4x 5/8	1	3 1/2	M270-36		
2	W		10	x5k	L 6x4x 5/8	0	7	M270-36		
3	G		2	x5p	PL 9/16x16 1/2	2	4 3/4	FILL		
20	D		14		STUD 7/8 ø	0	7	AI08		
20	E		14		STUD 7/8 ø	0	8	AI08		
20	F		24		STUD 7/8 ø	0	9	AI08		
20	G		12		STUD 7/8 ø	0	10	AI08		
21	J		35		7/8 ø HSB	0	3 3/4	MECH. GALV. A325-1		
21	X		35		7/8 ø HSW			MECH. GALV. F436		
21	Y		35		LOAD IND. WASH FOR 7/8 ø HSB			MECH. GALV. F436		
22	H		20		1 ø HSB	0	3 1/2	MECH. GALV. A325-1		
22	X		20		1 ø HSW			MECH. GALV. F436		
22	Y		20		LOAD IND. WASH FOR 1 ø HSB			MECH. GALV. F436		

Thu, Nov 17, 2011 01:58:23 PM jwarner J:\BRF\022-1(14)\3FB5\3FB5.dgn PCP

NOTES:

1. FOR GENERAL NOTES SEE DWG. GN1.
2. FOR CAMBER DIAGRAM SEE DWG. C2.
3. FOR STANDARD DETAILS SEE DWG. X5.
4. ALL BOLTS SHALL BE FULLY TORQUED (UN).
5. BTS - DENOTES BOLT TO SHIP OR SECURE FOR SHIPMENT.
6. EACH BOLT SHALL HAVE 1-HARD FLAT WASHER & 1-LOAD INDICATOR WASHER.
7. T2 DENOTES MATERIAL SUBJECT TO CHARPY V-NOTCH TESTING.

Vermont Agency of Transportation

RECEIVED

CK'D BY M.C.L. OK'D BY S.S.S.

January 10 2012

RESUBMIT APPROVED ✓

BY J. LACROIX DATE 01-12-2012

REV.	DATE	REMARKS	DWN	CHK	APVL	SHOP
					JAN 9 2012	
0					NOV 18 2011	

MATERIAL:	SURFACE PREP. & PRINT:	HOLES:	SHOP BOLTS:
M270-50 (UN)	HOT-DIP GALV.	15/16ø (UN)	AS NOTED

DESCRIPTION: FLOORBEAM 3FB5

CASCO BAY STEEL STRUCTURES, INC.
1 WALLACE AVE. PHONE (207) 780-6722
SOUTH PORTLAND, ME 04106 FAX. (207) 780-6726
TENSOR 3073

STRUCTURE: VT RTE 107 OVER WHITE RIVER	DRAWN: RB	DATE: 10/12/11
	CHKD: PCP	DATE: 11/17/11
LOCATION: BETHEL, VT.	JOB NO.	DWG NO.
PROJ NO. BRF 022-1(14)	498	3
CUSTOMER: BECK & BELLUCCI		REV. △

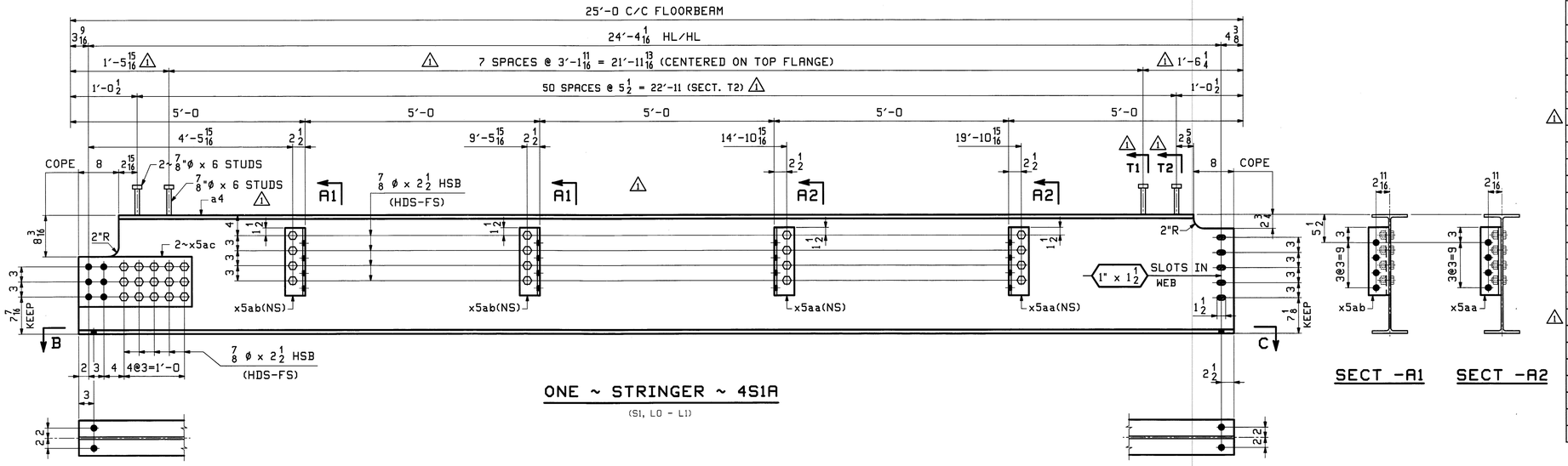

ONE ~ STRINGER ~ 4S1A

(S1, L0 - L1)

SECTION -B

SECTION -C

SECT -A1 SECT -A2

ABM INFO		SHIP	BILL OF MATERIAL					JOB NO. 498	DRAWING NO. 4	REV.
PAGE	LINE	MARK	QTY	MARK	MATERIAL	LENGTH FT	LENGTH INCHES	REMARKS	WT	PROCUREMENT NOTES
		4S1A	1		STRINGER				1613	
1	Y		1	a4	W 24x55	24	8 9/16	M270-50T2	1359	
2	Z		2	x5aa	L 4x4x1/2	1	1 1/2	M270-36	29	
2	Z		2	x5ab	L 4x4x1/2	1	1 1/2	M270-36	29	
3	T		2	x5ac	PL 5/16x10	1	10 1/2		40	
20	C		110		STUD 7/8 ø	0	6	A108	127	
21	D		31		7/8 ø HSB	0	2 1/2	MECH. GALV. A325-1	25	
21	X		31		7/8 ø HSH			MECH. GALV. F436	2	
21	Y		31		LOAD IND. WASH FOR 7/8 ø HSB			MECH. GALV. F436	2	
		4S5A	1		STRINGER				1613	
1	Y		1	b4	W 24x55	24	8 9/16	M270-50T2	1359	
2	Z		2	x5aa	L 4x4x1/2	1	1 1/2	M270-36	29	
2	Z		2	x5ab	L 4x4x1/2	1	1 1/2	M270-36	29	
3	T		2	x5ac	PL 5/16x10	1	10 1/2		40	
20	C		110		STUD 7/8 ø	0	6	A108	127	
21	D		31		7/8 ø HSB	0	2 1/2	MECH. GALV. A325-1	25	
21	X		31		7/8 ø HSH			MECH. GALV. F436	2	
21	Y		31		LOAD IND. WASH FOR 7/8 ø HSB			MECH. GALV. F436	2	

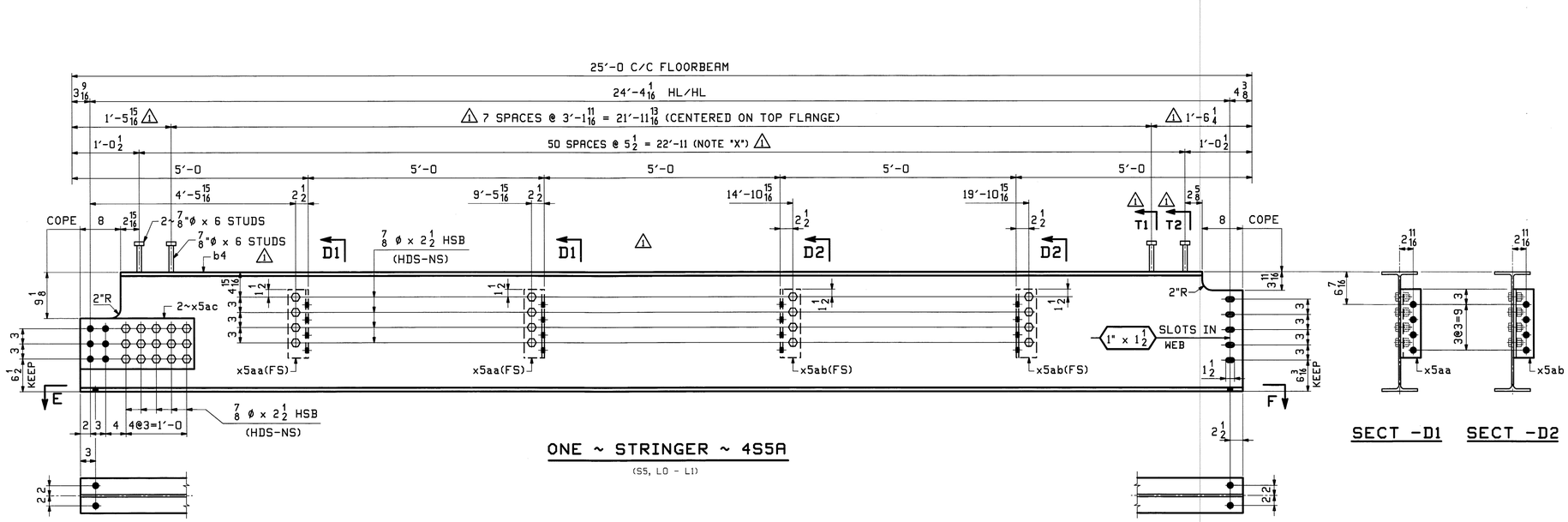

ONE ~ STRINGER ~ 4S5A

(S5, L0 - L1)

SECTION -E

SECTION -F

SECT -D1 SECT -D2

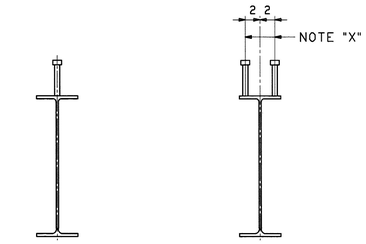

SECTION - T1 SECTION - T2

⚠ NOTE "X":
WELD STUDS SHOWN IN SECT. T2 AFTER WELDING STUDS ALONG CENTERLINE. STUDS SHOWN IN SECT. T2 MAY BE MOVED UP TO 1" MAX, AS REQ'D, BY SHOP TO CLEAR STUDS ALONG CENTERLINE.

Vermont Agency of Transportation
RECEIVED
CK'D BY M.C.L. OK'D BY S.S.S.
January 10 2012
RESUBMIT ____ APPROVED ✓
BY J. LACROIX DATE 01-12-2012

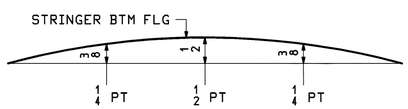

CAMBER DIAGRAM

NOTES:
1. MILL CAMBER UP.
2. FOR GENERAL NOTES SEE DWG. GN1.
3. FOR STANDARD DETAILS SEE DWG. X5.
4. ALL BOLTS SHALL BE FULLY TORQUED (UN).
5. EACH BOLT SHALL HAVE 1-HARD FLAT WASHER & 1-LOAD INDICATOR WASHER.
6. T2 DENOTES MATERIAL SUBJECT TO CHARPY V-NOTCH TESTING

REV.	DATE	REMARKS	DWN	CHK	APVL	SHOP
⚠	1/03/12	APPROVAL COMMENTS	EEO	PCP	JAN 9 2012	
0					NOV 18 2011	

MATERIAL:	SURFACE PREP. & PAINT:	HOLES:	SHOP BOLTS:
M270-50 (UN)	HOT-DIP GALV.	15/16ø (UN)	7/8ø (UN)

DESCRIPTION: STRINGERS

CASCO BAY STEEL STRUCTURES, INC.
1 WALLACE AVE. PHONE (207) 780-6722
SOUTH PORTLAND, ME 04106 FAX. (207) 780-6726
TENSOR 3073

STRUCTURE: VT RTE 107 OVER WHITE RIVER	DRAWN: TJB	DATE: 10/13
	CHK'D: PCP	DATE: 10/19
LOCATION: BETHEL, VT.	JOB NO. 498	DWG NO. 4
PROJ NO. BRF 022-1(14)		REV. ⚠
CUSTOMER: BECK & BELLUCCI		

PCP Fri, Jan 6, 2012 10:06:48 PM //corsvr/jobs/2007/4 (Rev)

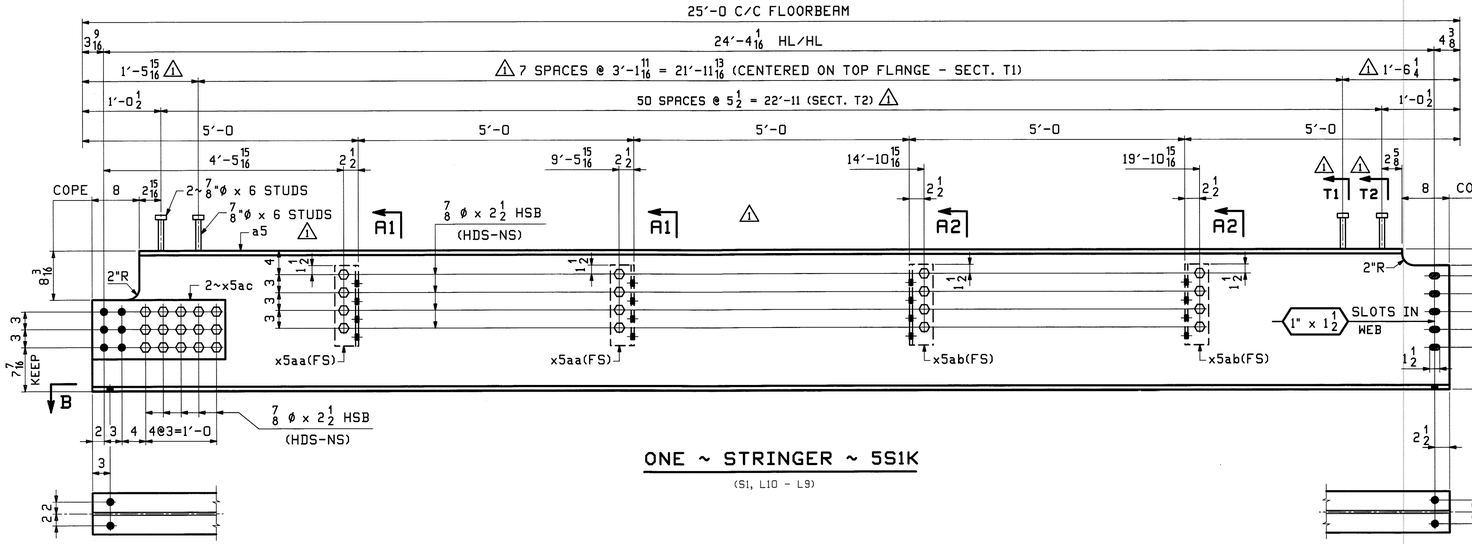

ONE ~ STRINGER ~ 5S1K

(S1, L10 - L9)

ABM INFO		SHIP	BILL OF MATERIAL					JOB NO.	DRAWING NO.	REV.
								498	5	
PAGE	LINE	MARK	QTY	MARK	MATERIAL	LENGTH FT	LENGTH INCHES	REMARKS	WT	PROCUREMENT NOTES
		5S1K	1		STRINGER				1670	
1	Y		1	a5	W 24x55	24	8 9/16	M270-50T2	1359	
2	Z		4	x5aa	L 4x4x 1/2	1	1 1/2	M270-36	57	
2	Z		4	x5ab	L 4x4x 1/2	1	1 1/2	M270-36	57	
3	T		2	x5ac	PL 5/16x10	1	10 1/2		40	
20	C		110		STUD 7/8 ø	0	6	A108	127	
21	D		31		7/8 ø HSB	0	2 1/2	MECH. GALV. A325-1	25	
21	X		31		7/8 ø HSW			MECH. GALV. F436	2	
21	Y		31		LORD IND. WASH FOR 7/8 ø HSB			MECH. GALV. F436	2	
		5S5K	1		STRINGER				1670	
1	Y		1	b5	W 24x55	24	8 9/16	M270-50T2	1359	
2	Z		4	x5aa	L 4x4x 1/2	1	1 1/2	M270-36	57	
2	Z		4	x5ab	L 4x4x 1/2	1	1 1/2	M270-36	57	
3	T		2	x5ac	PL 5/16x10	1	10 1/2		40	
20	C		110		STUD 7/8 ø	0	6	A108	127	
21	D		31		7/8 ø HSB	0	2 1/2	MECH. GALV. A325-1	25	
21	X		31		7/8 ø HSW			MECH. GALV. F436	2	
21	Y		31		LORD IND. WASH FOR 7/8 ø HSB			MECH. GALV. F436	2	

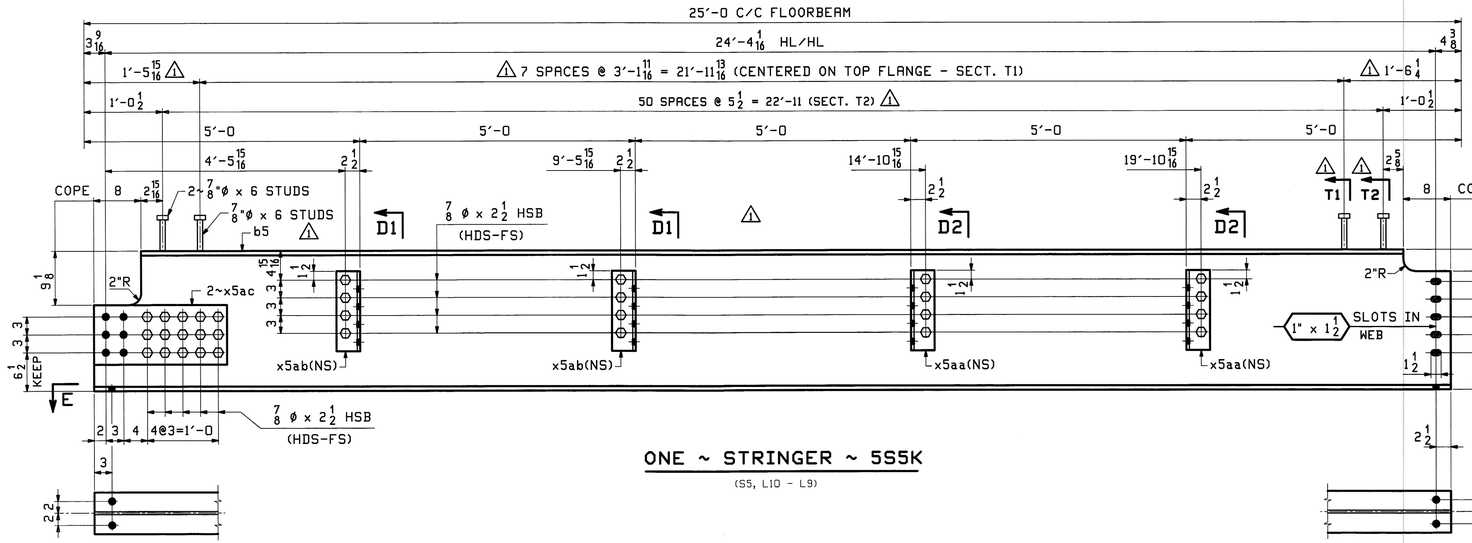

ONE ~ STRINGER ~ 5S5K

(S5, L10 - L9)

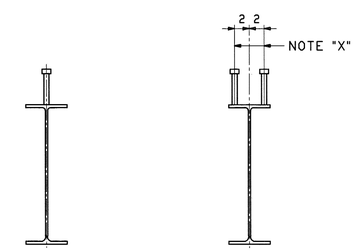

SECTION - T1 ⚠ SECTION - T2 ⚠

⚠ NOTE "X":
WELD STUDS SHOWN IN SECT. T2 AFTER WELDING STUDS ALONG CENTERLINE. STUDS SHOWN IN SECT. T2 MAY BE MOVED UP TO 1" MAX, AS REQ'D, BY SHOP TO CLEAR STUDS ALONG CENTERLINE.

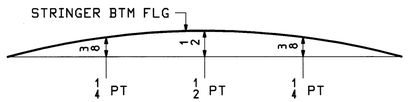

CAMBER DIAGRAM

NOTES:
1. MILL CAMBER UP.
2. FOR GENERAL NOTES SEE DWG. GN1.
3. FOR STANDARD DETAILS SEE DWG. X5.
4. ALL BOLTS SHALL BE FULLY TORQUED (UN).
5. EACH BOLT SHALL HAVE 1-HARD FLAT WASHER & 1-LOAD INDICATOR WASHER.
6. T2 DENOTES MATERIAL SUBJECT TO CHARPY V-NOTCH TESTING

Vermont Agency of Transportation
RECEIVED
CK'D BY M.C.L. OK'D BY S.S.S.
January 10 2012
RESUBMIT APPROVED ✓
BY J. LACROIX DATE 01-12-2012

REV.	DATE	REMARKS	DWN	CHK	APVL	SHOP
⚠ 1	1/03/12	APPROVAL COMMENTS	EEO	PCP	JAN 9 2012	
0					NOV 18 2011	

MATERIAL:	SURFACE PREP. & PAINT:	HOLES:	SHOP BOLTS:
M270-50 (UN)	HOT-DIP GALV.	15/16ø (UN)	7/8ø (UN)

DESCRIPTION: STRINGERS

CASCO BAY STEEL STRUCTURES, INC.
1 WALLACE AVE. PHONE (207) 780-6722
SOUTH PORTLAND, ME 04106 FAX. (207) 780-6726
TENSOR 3073

STRUCTURE: VT RTE 107 OVER WHITE RIVER	DRAWN: TJB	DATE: 10/14
	CHKD: PCP	DATE: 10/19
LOCATION: BETHEL, VT.	JOB NO. 498	DWG NO. 5
PROJ NO. BRF 022-1(14)		REV. ⚠
CUSTOMER: BECK & BELLUCCI		

PCP Fri, Jan 6, 2012 10:10:38 PM //www/jobs/2023/5 - Rev1

Vermont Agency of Transportation

RECEIVED

CK'D BY M.C.L. OK'D BY S.S.S.

January 10 2012

RESUBMIT APPROVED ✓

BY J. LACROIX DATE 01-12-2012

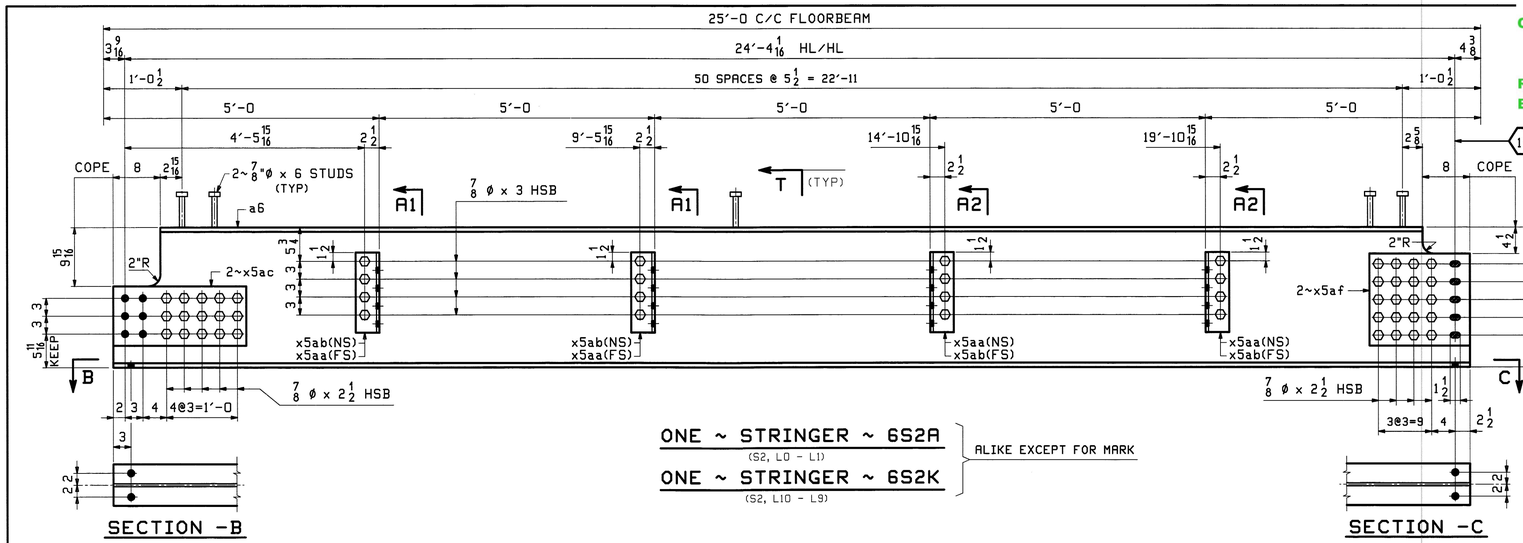

ONE ~ STRINGER ~ 6S2A
(S2, L0 - L1)

ONE ~ STRINGER ~ 6S2K
(S2, L10 - L9)

ALIKE EXCEPT FOR MARK

SECTION -B

SECTION -C

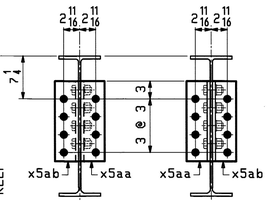

SECT -A1 SECT -A2

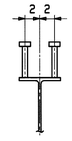

SECTION -T
(TYPICAL SECTION)

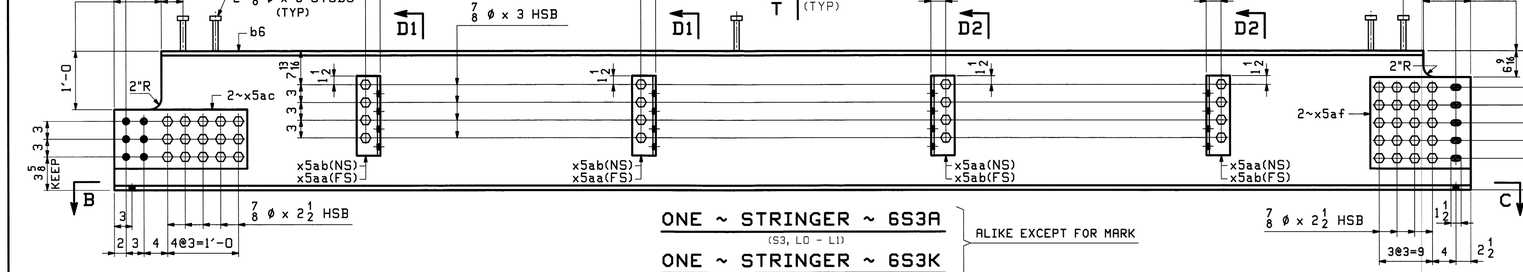

ONE ~ STRINGER ~ 6S3A
(S3, L0 - L1)

ONE ~ STRINGER ~ 6S3K
(S3, L10 - L9)

ALIKE EXCEPT FOR MARK

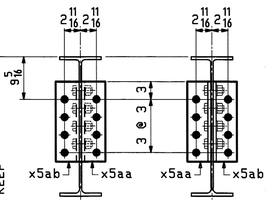

SECT -D1 SECT -D2

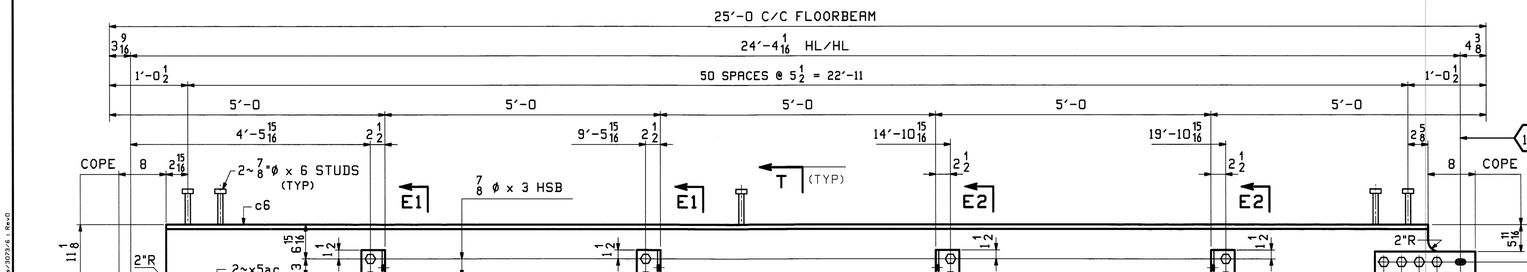

ONE ~ STRINGER ~ 6S4A
(S4, L0 - L1)

ONE ~ STRINGER ~ 6S4K
(S4, L10 - L9)

ALIKE EXCEPT FOR MARK

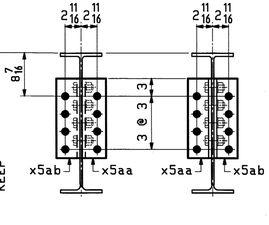

SECT -E1 SECT -E2

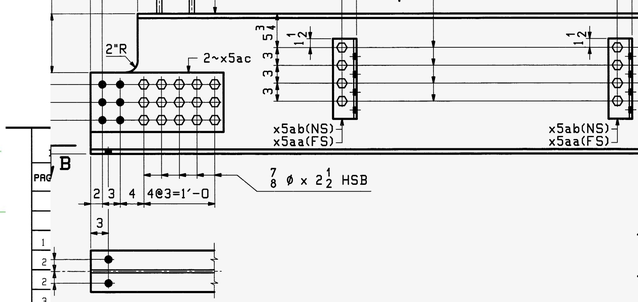

SECTION -B

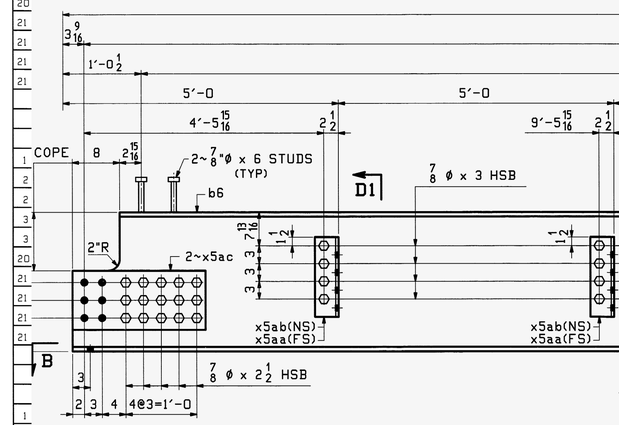

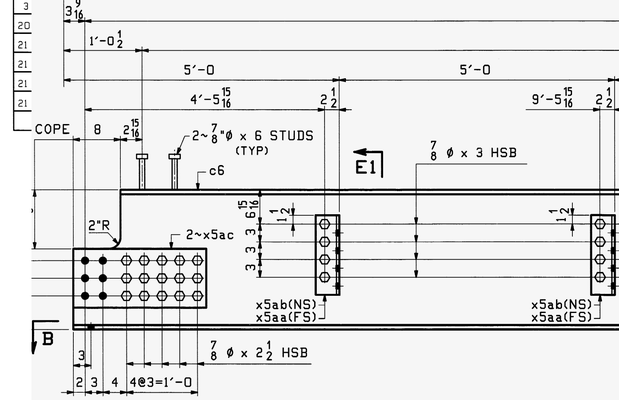

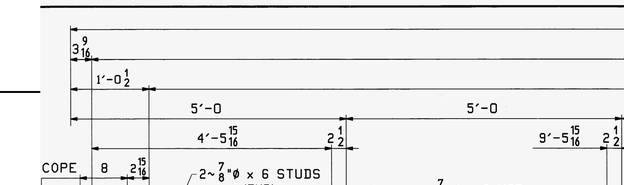

Thu, Nov 17, 2011 11:47:37 AM //users/jbk/3079-6.dwg

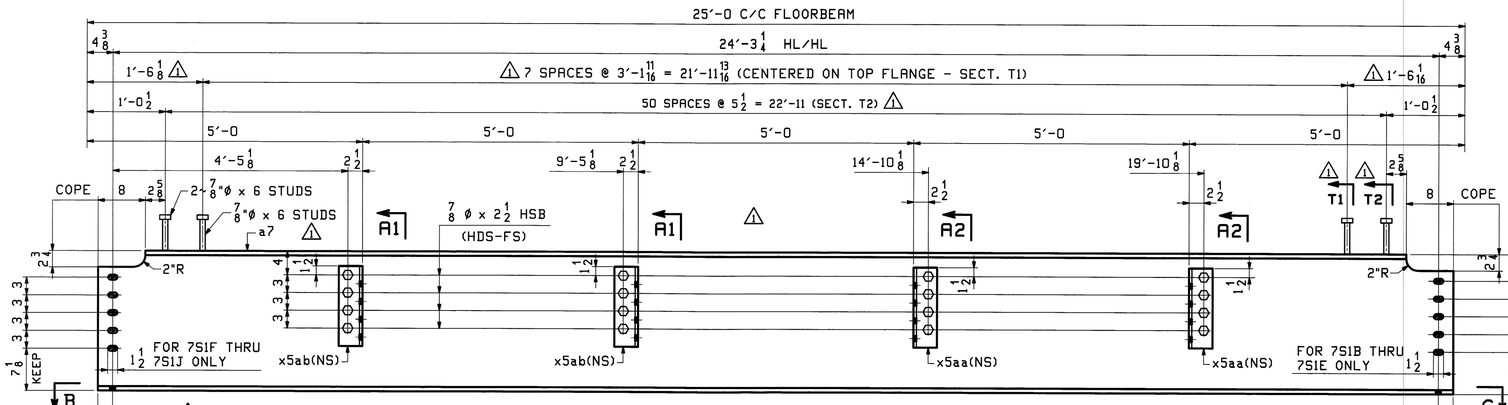

ONE - STRINGER ~ 7S1B
ONE - STRINGER ~ 7S1C
ONE - STRINGER ~ 7S1D
ONE - STRINGER ~ 7S1E
ALIKE EXCEPT FOR MARKS

ONE - STRINGER ~ 7S1F
ONE - STRINGER ~ 7S1G
ONE - STRINGER ~ 7S1H
ONE - STRINGER ~ 7S1J
ALIKE EXCEPT FOR MARKS

SECTION -B

SECTION -C

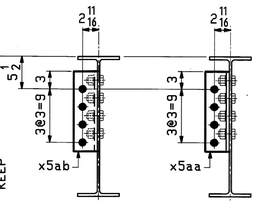

SECT -A1 SECT -A2

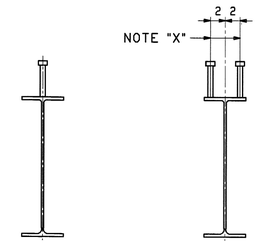

SECTION - T1 SECTION - T2

ABM INFO		SHIP	BILL OF MATERIAL					JOB NO.	DRAWING NO.	REV.	
								498	7		
PAGE	LINE	MARK	QTY	MARK	MATERIAL	LENGTH FT	LENGTH INCHES	REMARKS	WT	PROCUREMENT NOTES	
		7S1B	1		STRINGER				12457		
		7S1C	1		STRINGER				12457		
		7S1D	1		STRINGER				12457		
		7S1E	1		STRINGER				12457		
		7S1F	1		STRINGER				12457		
		7S1G	1		STRINGER				12457		
		7S1H	1		STRINGER				12457		
		7S1J	1		STRINGER				12457		
1	Y		8	a7	W 24x55	24	8 1/4	M270-50T2	10863		
2	Z		16	x5aa	L 4x4x1/2	1	1 1/2	M270-36	230		
2	Z		16	x5ab	L 4x4x1/2	1	1 1/2	M270-36	230		
20	C		880		STUD 7/8 ø	0	6	A108	1015		
21	D		128		7/8 ø HSB	0	2 1/2	MECH. GALV. A325-1	103		
21	X		128		7/8 ø HSW			MECH. GALV. F436	9		
21	Y		128		LOAD IND. 7/8 ø WASH FOR 7/8 ø HSB			MECH. GALV. F436	9		
		7S5B	1		STRINGER				12457		
		7S5C	1		STRINGER				12457		
		7S5D	1		STRINGER				12457		
		7S5E	1		STRINGER				12457		
		7S5F	1		STRINGER				12457		
		7S5G	1		STRINGER				12457		
		7S5H	1		STRINGER				12457		
		7S5J	1		STRINGER				12457		
1	Y		8	b7	W 24x55	24	8 1/4	M270-50T2	10863		
2	Z		16	x5aa	L 4x4x1/2	1	1 1/2	M270-36	230		
2	Z		16	x5ab	L 4x4x1/2	1	1 1/2	M270-36	230		
20	C		880		STUD 7/8 ø	0	6	A108	1015		
21	D		128		7/8 ø HSB	0	2 1/2	MECH. GALV. A325-1	103		
21	X		128		7/8 ø HSW			MECH. GALV. F436	9		
21	Y		128		LOAD IND. 7/8 ø WASH FOR 7/8 ø HSB			MECH. GALV. F436	9		

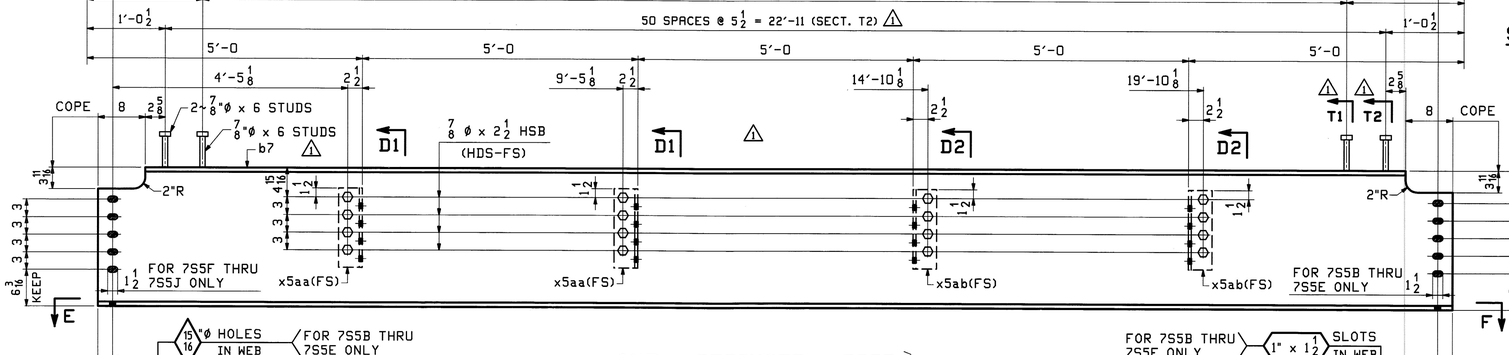

ONE - STRINGER ~ 7S5B
ONE - STRINGER ~ 7S5C
ONE - STRINGER ~ 7S5D
ONE - STRINGER ~ 7S5E
ALIKE EXCEPT FOR MARKS

ONE - STRINGER ~ 7S5F
ONE - STRINGER ~ 7S5G
ONE - STRINGER ~ 7S5H
ONE - STRINGER ~ 7S5J
ALIKE EXCEPT FOR MARKS

SECTION -E

SECTION -F

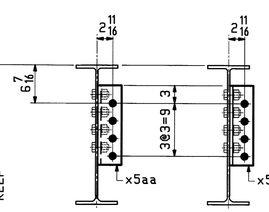

SECT -D1 SECT -D2

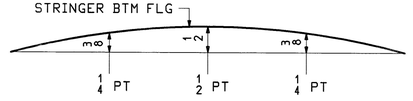

CAMBER DIAGRAM

NOTES:
1. MILL CAMBER UP.
2. FOR GENERAL NOTES SEE DWG. GN1.
3. FOR STANDARD DETAILS SEE DWG. X5.
4. ALL BOLTS SHALL BE FULLY TORQUED (UN).
5. EACH BOLT SHALL HAVE 1-HARD FLAT WASHER & 1-LOAD INDICATOR WASHER.
6. T2 DENOTES MATERIAL SUBJECT TO CHARPY V-NOTCH TESTING

REV.	DATE	REMARKS	DWN	CHK	APVL	SHOP
1	1/03/12	APPROVAL COMMENTS	EEO	PCP	JAN 9 2012	
0					NOV 18 2011	

MATERIAL:	SURFACE PREP. & PAINT:	HOLES:	SHOP BOLTS:
M270-50 (UN)	HOT-DIP GALV.	15/16ø (UN)	7/8ø (UN)

DESCRIPTION: STRINGERS

CASCO BAY STEEL STRUCTURES, INC.
1 WALLACE AVE. SOUTH PORTLAND, ME 04106
PHONE (207) 780-6722 FAX. (207) 780-6726
TENSOR 3073

STRUCTURE: VT RTE 107 OVER WHITE RIVER		DRAWN: TJB	DATE: 10/15
		CHKD: PCP	DATE: 10/21
LOCATION: BETHEL, VT.		JOB NO.	DWG NO.
PROJ NO.	BRF 022-1(14)	498	7
CUSTOMER:	BECK & BELLUCCI		REV. 1

Vermont Agency of Transportation
RECEIVED
CK'D BY M.C.L. OK'D BY S.S.S.
January 10 2012
RESUBMIT APPROVED ✓
BY J. LACROIX DATE 01-12-2012

NOTE "X":
WELD STUDS SHOWN IN SECT. T2 AFTER WELDING STUDS ALONG CENTERLINE. STUDS SHOWN IN SECT. T2 MAY BE MOVED UP TO 1" MAX, AS REQ'D, BY SHOP TO CLEAR STUDS ALONG CENTERLINE.

PCP Fri, Jan 6, 2012 12:02:2 PM c:\users\pcp\2073\7.dwg

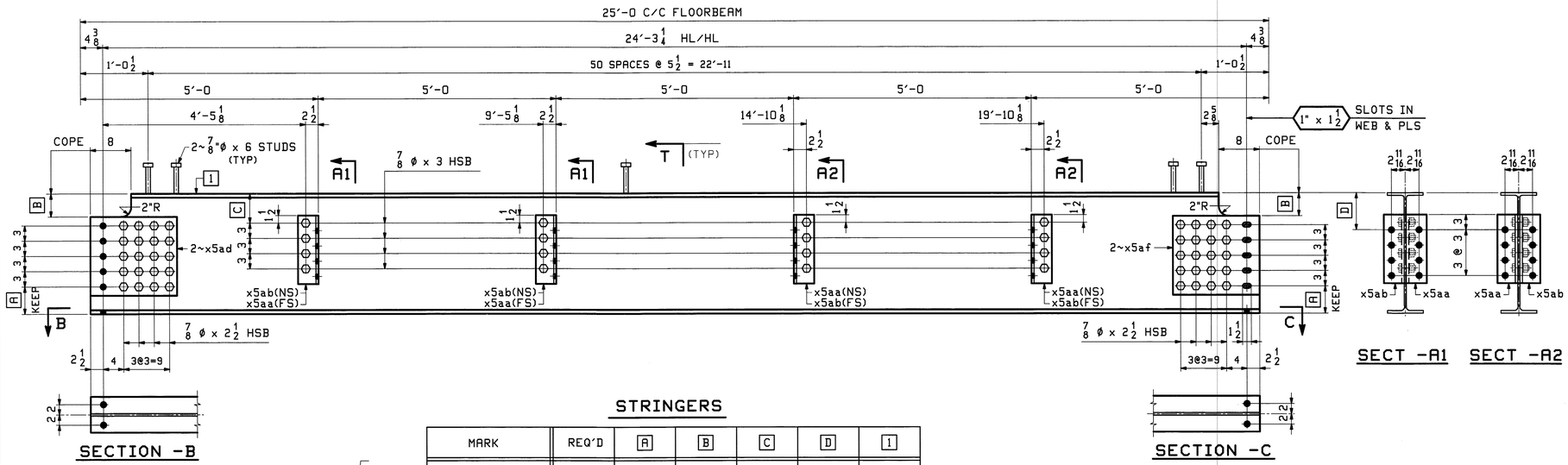

STRINGERS

MARK	REQ'D	A	B	C	D	I
8S2B	ONE	5 3/8	4 1/2	5 3/4	7 1/4	a8
8S2C	ONE					
8S2D	ONE					
8S2E	ONE					
8S2F	ONE					
8S2G	ONE					
8S2J	ONE					

ALIKE EXCEPT FOR MARK LINE S2: (L1 - L2), (L2 - L3), (L3 - L4), (L4 - L5), (L6 - L5), (L7 - L6), (L8 - L7), (L9 - L8)

MARK	REQ'D	A	B	C	D	I
8S3B	ONE	3 5/16	6 9/16	7 13/16	9 5/16	b8
8S3C	ONE					
8S3D	ONE					
8S3E	ONE					
8S3F	ONE					
8S3G	ONE					
8S3H	ONE					
8S3J	ONE					

ALIKE EXCEPT FOR MARK LINE S3: (L1 - L2), (L2 - L3), (L3 - L4), (L4 - L5), (L6 - L5), (L7 - L6), (L8 - L7), (L9 - L8)

MARK	REQ'D	A	B	C	D	I
8S4B	ONE	4 3/16	5 11/16	6 15/16	8 7/16	c8
8S4C	ONE					
8S4D	ONE					
8S4E	ONE					
8S4F	ONE					
8S4G	ONE					
8S4H	ONE					
8S4J	ONE					

ALIKE EXCEPT FOR MARK LINE S4: (L1 - L2), (L2 - L3), (L3 - L4), (L4 - L5), (L6 - L5), (L7 - L6), (L8 - L7), (L9 - L8)

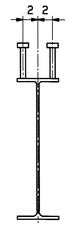

SECTION -T
(TYPICAL SECTION)

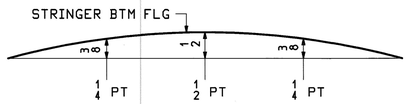

CAMBER DIAGRAM

NOTES:
1. MILL CAMBER UP.
2. FOR GENERAL NOTES SEE DWG. GN1.
3. FOR STANDARD DETAILS SEE DWG. X5.
4. ALL BOLTS SHALL BE FULLY TORQUED (UN).
5. EACH BOLT SHALL HAVE 1-HARD FLAT WASHER & 1-LOAD INDICATOR WASHER.
6. T2 DENOTES MATERIAL SUBJECT TO CHARPY V-NOTCH TESTING

ABM INFO PAGE	LINE	SHIP MARK	QTY	MARK	MATERIAL	LENGTH FT	LENGTH INCHES	REMARKS	WT	PROCUREMENT NOTES
		8S2B	1		STRINGER				1737	
		8S2C	1		STRINGER				1737	
		8S2D	1		STRINGER				1737	
		8S2E	1		STRINGER				1737	
		8S2F	1		STRINGER				1737	
		8S2G	1		STRINGER				1737	
		8S2H	1		STRINGER				1737	
		8S2J	1		STRINGER				1737	
1	Y		8	a8	W 24x55	24	8 1/4	M270-50T2		
2	Z		32	x5aa	L 4x4x 1/2	1	1 1/2	M270-36		
2	Z		32	x5ab	L 4x4x 1/2	1	1 1/2	M270-36		
3	U		16	x5ad	PL 5/16x15 1/2	1	5			
3	U		16	x5af	PL 5/16x15 1/2	1	5			
20	C		816		STUD 7/8 Ø	0	6	A108		
21	D		320		7/8 Ø HSB	0	2 1/2	MECH. GALV. M325-1		
21	F		128		7/8 Ø HSB	0	3	MECH. GALV. M325-1		
21	X		448		7/8 Ø HSW			MECH. GALV. F436		
21	Y		448		LOAD IND. WASH FOR 7/8 Ø HSB			MECH. GALV. F436		
		8S3B	1		STRINGER				1737	
		8S3C	1		STRINGER				1737	
		8S3D	1		STRINGER				1737	
		8S3E	1		STRINGER				1737	
		8S3F	1		STRINGER				1737	
		8S3G	1		STRINGER				1737	
		8S3H	1		STRINGER				1737	
		8S3J	1		STRINGER				1737	
1	Y		8	b8	W 24x55	24	8 1/4	M270-50T2		
2	Z		32	x5aa	L 4x4x 1/2	1	1 1/2	M270-36		
2	Z		32	x5ab	L 4x4x 1/2	1	1 1/2	M270-36		
3	U		16	x5ad	PL 5/16x15 1/2	1	5			
3	U		16	x5af	PL 5/16x15 1/2	1	5			
20	C		816		STUD 7/8 Ø	0	6	A108		
21	D		320		7/8 Ø HSB	0	2 1/2	MECH. GALV. M325-1		
21	F		128		7/8 Ø HSB	0	3	MECH. GALV. M325-1		
21	X		448		7/8 Ø HSW			MECH. GALV. F436		
21	Y		448		LOAD IND. WASH FOR 7/8 Ø HSB			MECH. GALV. F436		
		8S4B	1		STRINGER				1737	
		8S4C	1		STRINGER				1737	
		8S4D	1		STRINGER				1737	
		8S4E	1		STRINGER				1737	
		8S4F	1		STRINGER				1737	
		8S4G	1		STRINGER				1737	
		8S4H	1		STRINGER				1737	
		8S4J	1		STRINGER				1737	
1	Y		8	c8	W 24x55	24	8 1/4	M270-50T2		
2	Z		32	x5aa	L 4x4x 1/2	1	1 1/2	M270-36		
2	Z		32	x5ab	L 4x4x 1/2	1	1 1/2	M270-36		
3	U		16	x5ad	PL 5/16x15 1/2	1	5			
3	U		16	x5af	PL 5/16x15 1/2	1	5			
20	C		816		STUD 7/8 Ø	0	6	A108		
21	D		320		7/8 Ø HSB	0	2 1/2	MECH. GALV. M325-1		
21	F		128		7/8 Ø HSB	0	3	MECH. GALV. M325-1		
21	X		448		7/8 Ø HSW			MECH. GALV. F436		
21	Y		448		LOAD IND. WASH FOR 7/8 Ø HSB			MECH. GALV. F436		

REV.	DATE	REMARKS	DWN	CHK	APVL	SHOP
0					JAN 9 2012 NOV 18 2011	

MATERIAL:	SURFACE PREP. & PRINT:	HOLES:	SHOP BOLTS:
M270-50 (UN)	HOT-DIP GALV.	15/16Ø (UN)	7/8Ø (UN)

DESCRIPTION: STRINGERS

CASCO BAY STEEL STRUCTURES, INC.
1 WALLACE AVE. PHONE (207) 780-6722
SOUTH PORTLAND, ME 04106 FAX. (207) 780-6726

TENSOR 3073

STRUCTURE: VT RTE 107 OVER WHITE RIVER

DRAWN:	DATE:
TJB	10/15
CHKD:	DATE:
PCP	10/21

LOCATION: BETHEL, VT.
PROJ NO. BRF 022-1(14)
CUSTOMER: BECK & BELLUCCI

JOB NO. 498 | DWG NO. 8 | REV. △

Vermont Agency of Transportation
RECEIVED
CK'D BY M.C.L. OK'D BY S.S.S.
January 10 2012
RESUBMIT ____ APPROVED ✓
BY J. LACROIX DATE 01-12-2012

T2B Thu, Nov 17, 2011 11:49:48 AM J:\users\jake\2027-48.1 Rev0

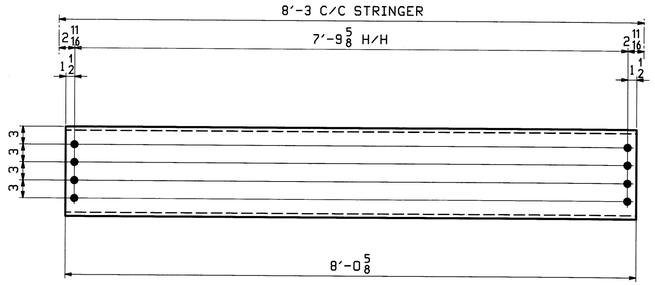

120 ~ DIAPHRAGMS ~ 9D1

(TYPICAL)

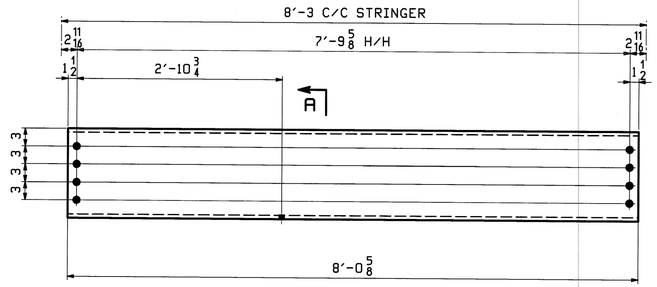

20 ~ DIAPHRAGMS ~ 9D2

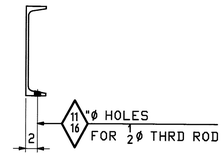

SECT -A

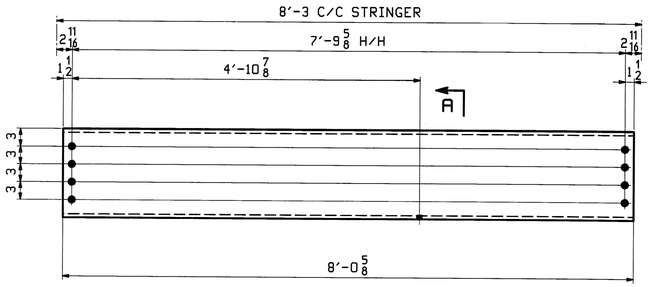

20 ~ DIAPHRAGMS ~ 9D3

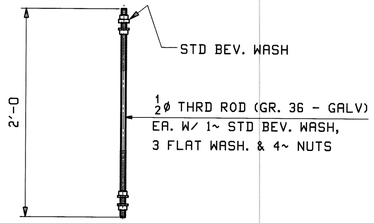

40 ~ HANGER RODS ~ 9HR1

ABM INFO		SHIP	BILL OF MATERIAL					JOB NO.	DRAWING NO.	REV.
								498	9	
PAGE	LINE	MARK	QTY	MARK	MATERIAL	LENGTH FT	LENGTH INCHES	REMARKS	WT	PROCUREMENT NOTES
		9D1	120		DIAPHRAGMS				273	
2	B		120	a9	C 15x33.9	8	0 5/8			
		9D2	20		DIAPHRAGMS				273	
2	B		20	b9	C 15x33.9	8	0 5/8			
		9D3	20		DIAPHRAGMS				273	
2	B		20	c9	C 15x33.9	8	0 5/8			
		9HR1	40		HANGER RODS				2	
3	Y		40	d9	1/2 Ø ROD	2	0	(GALV)(THREADED) R36		
14	C		40		BEVEL WASH FOR 1/2 Ø HSB			MECH. GALV.(SQUARE BEV. WASHER) F436		
14	D		120		1/2 Ø HSW			MECH. GALV. F436		
14	E		160		1/2 Ø HHN			MECH. GALV. A563		

NOTES:

1. FOR GENERAL NOTES SEE DWG. GN1.
2. T2 DENOTES MATERIAL SUBJECT TO CHARPY V-NOTCH TESTING

REV.	DATE	REMARKS	DWN	CHK	APVL	SHOP
0					JAN 9 2012 NOV 18 2011	

MATERIAL:	SURFACE PREP. & PAINT:	HOLES:	SHOP BOLTS:
M270-50 (UN)	HOT-DIP GALV.	15/16Ø (UN)	7/8Ø (UN)

DESCRIPTION: DIAPHRAGMS & HANGER RODS

CASCO BAY STEEL STRUCTURES, INC.
1 WALLACE AVE. PHONE (207) 780-6722
SOUTH PORTLAND, ME 04106 FAX. (207) 780-6726

TENSOR 3073

STRUCTURE: VT RTE 107 OVER WHITE RIVER	DRAWN: TJB	DATE: 10/17
	CHKD: PCP	DATE: 10/21
LOCATION: BETHEL, VT.	JOB NO. 498	DWG NO. 9
PROJ NO. BRF 022-1(14)		REV. △
CUSTOMER: BECK & BELLUCCI		

Vermont Agency of Transportation
RECEIVED
CK'D BY M.C.L. OK'D BY S.S.S.
January 10 2012
RESUBMIT APPROVED ✓
BY J. LACROIX DATE 01-12-2012

PCP Tue, Oct 25, 2011 11:24:44 AM c:\users\pbs\2023\9.1 Rev0

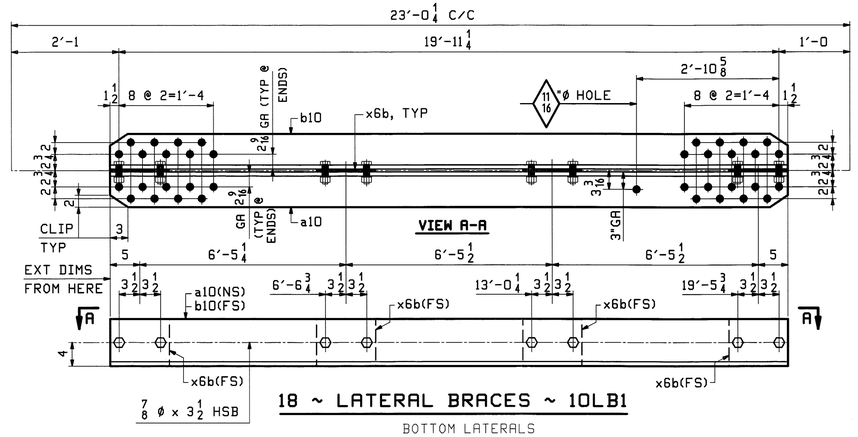

18 ~ LATERAL BRACES ~ 10LB1

BOTTOM LATERALS

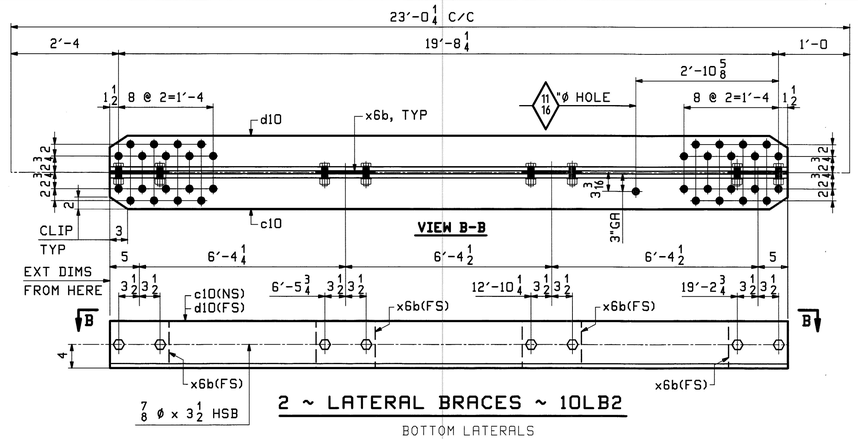

2 ~ LATERAL BRACES ~ 10LB2

BOTTOM LATERALS

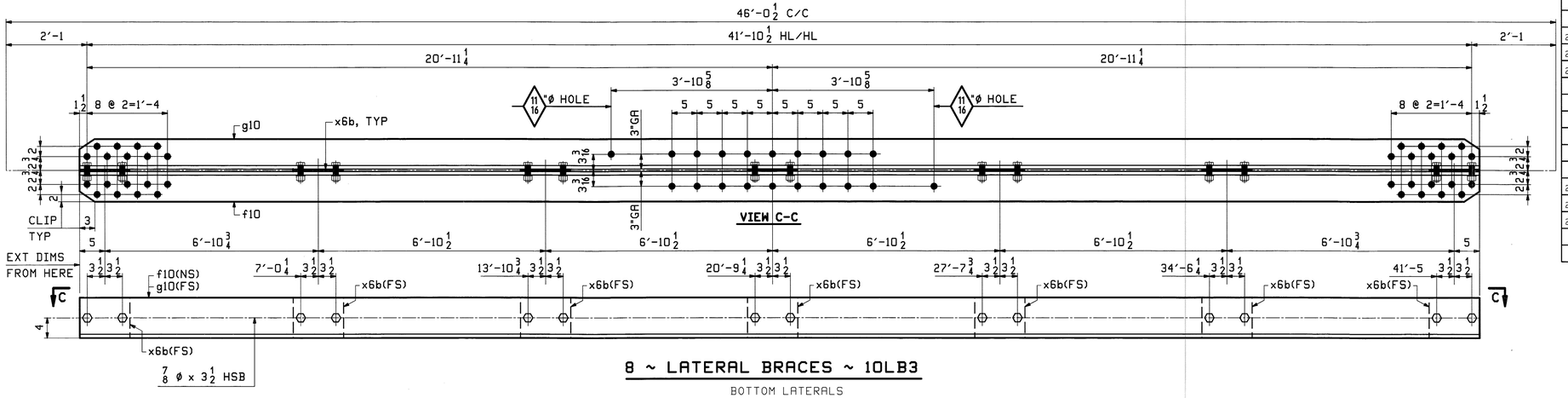

8 ~ LATERAL BRACES ~ 10LB3

BOTTOM LATERALS

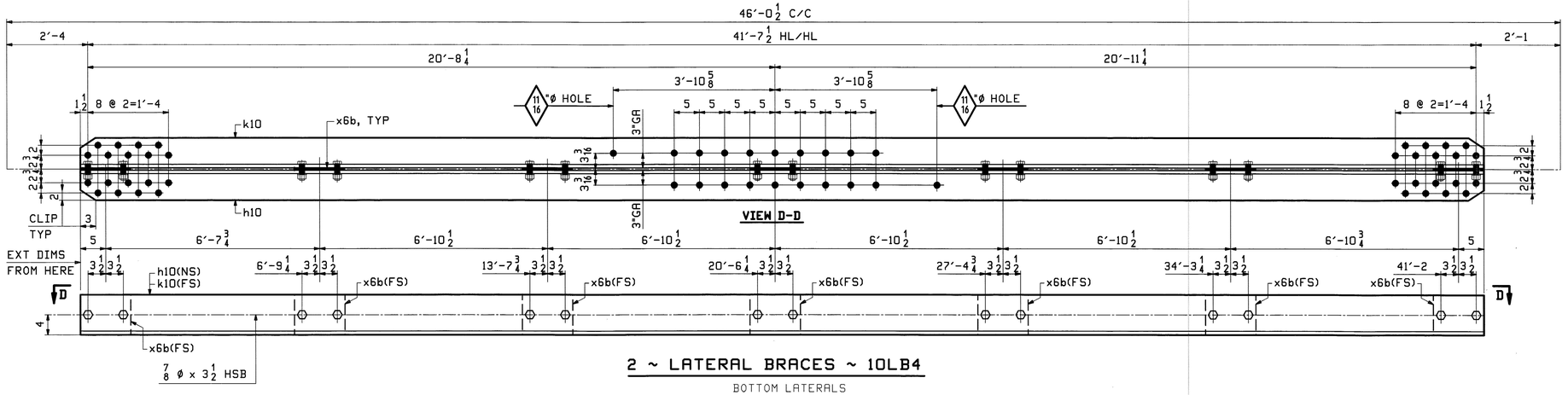

2 ~ LATERAL BRACES ~ 10LB4

BOTTOM LATERALS

ABM INFO		SHIP	BILL OF MATERIAL					JOB NO.	DRAWING NO.	REV.
								498	10	
PAGE	LINE	MARK	QTY	MARK	MATERIAL	LENGTH FT	LENGTH INCHES	REMARKS	WT	PROCUREMENT NOTES
		10LB1	18		LATERAL BRACES				1407	
2	F		18	a10	L 8x6x3/4	20	2 1/4	M270-50T2		
2	F		18	b10	L 8x6x3/4	20	2 1/4	M270-50T2		
2	M		72	x6b	PL 3/8x8	0	10			
21	H		144		7/8 ø HSB	0	3 1/2	MECH. GALV. A325-1		
21	X		144		7/8 ø HSW			MECH. GALV. F436		
21	Y		144		LOAD IND. 7/8 ø HSB WASH FOR			MECH. GALV. F436		
		10LB2	2		LATERAL BRACES				1390	
2	F		2	c10	L 8x6x3/4	19	11 1/4	M270-50T2		
2	F		2	d10	L 8x6x3/4	19	11 1/4	M270-50T2		
2	M		8	x6b	PL 3/8x8	0	10			
21	H		16		7/8 ø HSB	0	3 1/2	MECH. GALV. A325-1		
21	X		16		7/8 ø HSW			MECH. GALV. F436		
21	Y		16		LOAD IND. 7/8 ø HSB WASH FOR			MECH. GALV. F436		
		10LB3	8		LATERAL BRACES				2922	
2	E		8	f10	L 8x6x3/4	42	1 1/2	M270-50T2		
2	E		8	g10	L 8x6x3/4	42	1 1/2	M270-50T2		
2	M		56	x6b	PL 3/8x8	0	10			
21	H		112		7/8 ø HSB	0	3 1/2	MECH. GALV. A325-1		
21	X		112		7/8 ø HSW			MECH. GALV. F436		
21	Y		112		LOAD IND. 7/8 ø HSB WASH FOR			MECH. GALV. F436		
		10LB4	2		LATERAL BRACES				2905	
2	E		2	h10	L 8x6x3/4	41	10 1/2	M270-50T2		
2	E		2	k10	L 8x6x3/4	41	10 1/2	M270-50T2		
2	M		14	x6b	PL 3/8x8	0	10			
21	H		28		7/8 ø HSB	0	3 1/2	MECH. GALV. A325-1		
21	X		28		7/8 ø HSW			MECH. GALV. F436		
21	Y		28		LOAD IND. 7/8 ø HSB WASH FOR			MECH. GALV. F436		

Vermont Agency of Transportation

RECEIVED

CK'D BY M.C.L. OK'D BY S.S.S.

January 10 2012

RESUBMIT APPROVED ✓

BY J. LACROIX DATE 01-12-2012

NOTES:

1. FOR GENERAL NOTES SEE DWG. GN1.
2. FOR STANDARD DETAILS SEE DWG. X6.
3. ALL BOLTS SHALL BE FULLY TORQUED (UN).
4. EACH BOLT SHALL HAVE 1-HARD FLAT WASHER & 1-LOAD INDICATOR WASHER.
5. T2 DENOTES MATERIAL SUBJECT TO CHARPY V-NOTCH TESTING
6. "SHIP" MARKS INDICATED ON THIS SHEET ARE FOR THE FABRICATION PROCESS, DELIVERED COMPONENTS MAY BE PRE-ASSEMBLED AND MARKED DIFFERENTLY.

REV.	DATE	REMARKS	DWN	CHK	APVL	SHOP
1	1/03/12	APPROVAL COMMENTS	EEO	PCP	JAN 9 2012	
0					NOV 18 2011	

MATERIAL:	SURFACE PREP. & PAINT:	HOLES:	SHOP BOLTS:
M270-50 (UN)	HOT-DIP GALV.	15/16ø (UN)	7/8ø (UN)

DESCRIPTION: BOTTOM LATERAL BRACING

CASCO BAY STEEL STRUCTURES, INC.
1 WALLACE AVE. PHONE (207) 780-6722
SOUTH PORTLAND, ME 04106 FAX. (207) 780-6726
TENSOR 3073

STRUCTURE: VT RTE 107 OVER WHITE RIVER	DRAWN: TJB	DATE: 10/17
	CHK'D: PCP	DATE: 10/21
LOCATION: BETHEL, VT.	JOB NO. 498	DWG NO. 10
PROJ NO. BRF 022-1(14)		REV. 1
CUSTOMER: BECK & BELLUCCI		

PCP Fri, Jan 6, 2012 10:40:30 PM /users/jobs/3073/10.dwg

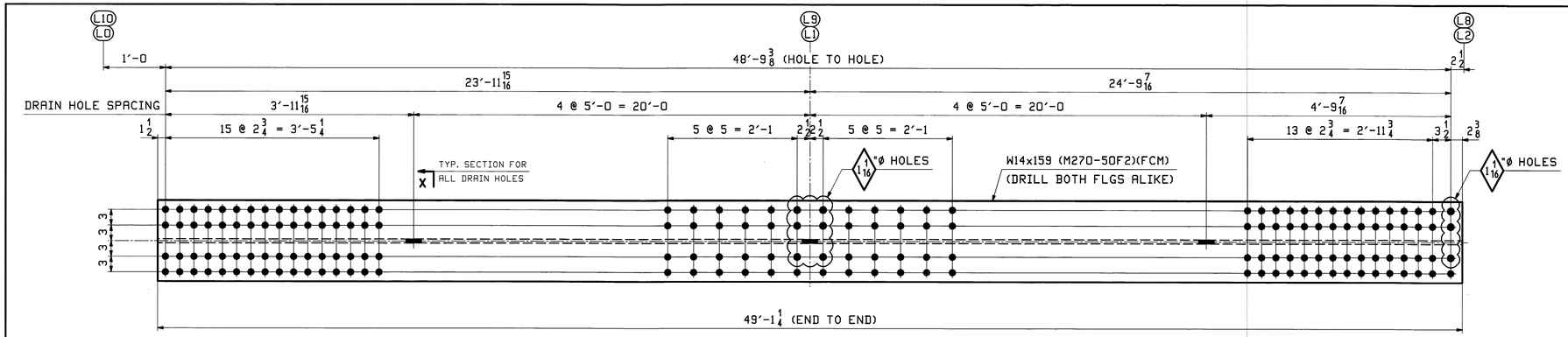

ONE ~ BOTTOM CHORD ~ 11BC1W (L0 - L2 WEST)

ONE ~ BOTTOM CHORD ~ 11BC5W (L10 - L8 WEST)

ONE ~ BOTTOM CHORD ~ 11BC1E (L0 - L2 EAST)

ONE ~ BOTTOM CHORD ~ 11BC5E (L10 - L8 EAST)

} ALL ALIKE EXCEPT FOR MARK

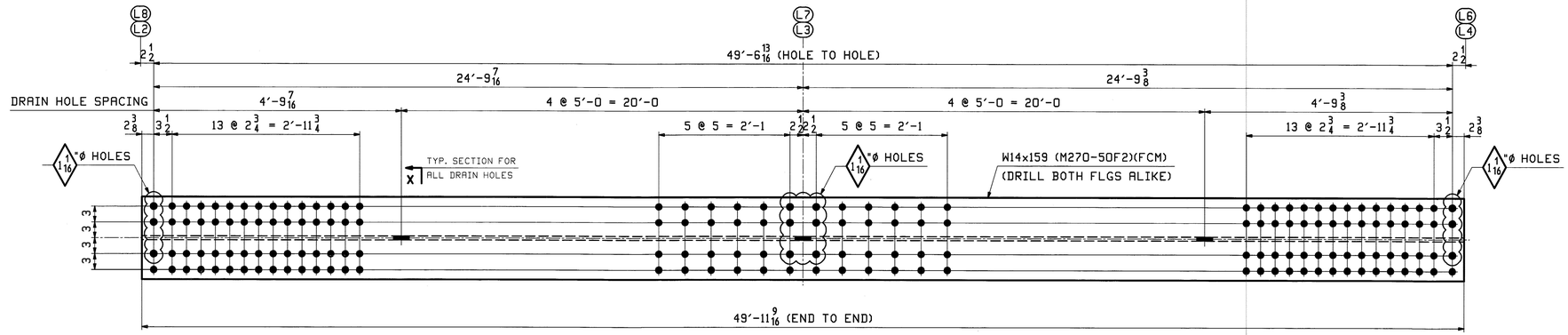

ONE ~ BOTTOM CHORD ~ 11BC2W (L2 - L4 WEST)

ONE ~ BOTTOM CHORD ~ 11BC4W (L8 - L6 WEST)

ONE ~ BOTTOM CHORD ~ 11BC2E (L2 - L4 EAST)

ONE ~ BOTTOM CHORD ~ 11BC4E (L8 - L6 EAST)

} ALL ALIKE EXCEPT FOR MARK

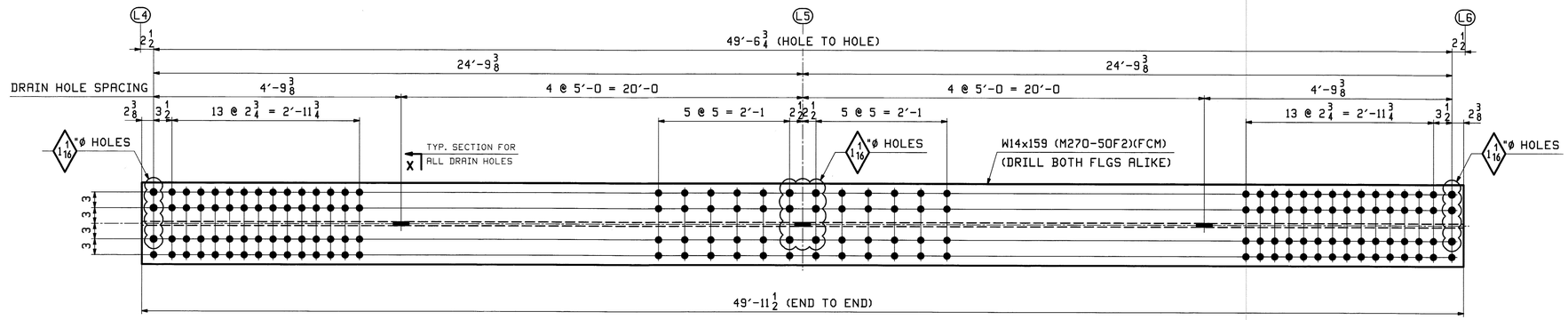

ONE ~ BOTTOM CHORD ~ 11BC3W (L4 - L6 WEST)

ONE ~ BOTTOM CHORD ~ 11BC3E (L4 - L6 EAST)

} ALIKE EXCEPT FOR MARK

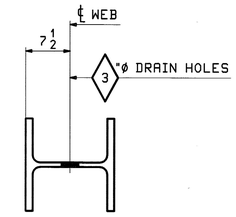

SECTION-X

ABM INFO		SHIP	BILL OF MATERIAL			LENGTH		JOB NO. 498	DRAWING NO. 11	REV.
PAGE	LINE	MARK	QTY	MARK	MATERIAL	FT	INCHES	REMARKS	WT	PROCUREMENT NOTES
1	C	11BC1W	1		W 14x159	49	1 1/4	M270-50F2 (FCM)	7808	
1	C	11BC1E	1		W 14x159	49	1 1/4	M270-50F2 (FCM)	7808	
1	C	11BC5W	1		W 14x159	49	1 1/4	M270-50F2 (FCM)	7808	
1	C	11BC5E	1		W 14x159	49	1 1/4	M270-50F2 (FCM)	7808	
1	B	11BC2W	1		W 14x159	49	11 9/16	M270-50F2 (FCM)	7944	
1	B	11BC2E	1		W 14x159	49	11 9/16	M270-50F2 (FCM)	7944	
1	B	11BC4W	1		W 14x159	49	11 9/16	M270-50F2 (FCM)	7944	
1	B	11BC4E	1		W 14x159	49	11 9/16	M270-50F2 (FCM)	7944	
1	B	11BC3W	1		W 14x159	49	11 1/2	M270-50F2 (FCM)	7943	
1	B	11BC3E	1		W 14x159	49	11 1/2	M270-50F2 (FCM)	7943	

Vermont Agency of Transportation

RECEIVED

CK'D BY M.C.L. OK'D BY S.S.S.

January 10 2012

RESUBMIT APPROVED ✓

BY J. LACROIX DATE 01-12-2012

NOTES:
1. FOR GENERAL NOTES SEE SHEET GN1.
2. F2 & FCM - DENOTES FRACTURE CRITICAL MATERIAL.
3. HOLES IN BOTH FLANGES ARE ALIKE.
4. "SHIP" MARKS INDICATED ON THIS SHEET ARE FOR THE FABRICATION PROCESS, DELEVERED COMPONENTS MAY BE PRE-ASSEMBLED AND MARKED DIFFERENTLY.

REV.	DATE	REMARKS	DWN	CHK	APVL	SHOP
1	1/03/12	APPROVAL COMMENTS	EEO	PCP	JAN 9 2012	
0					NOV 18 2011	

MATERIAL:	SURFACE PREP. & PAINT:	HOLES:	SHOP BOLTS:
M270-50 (UN)	HOT-DIP GALV.	15/16Ø (UN)	NONE

DESCRIPTION: BOTTOM CHORDS

CASCO BAY STEEL STRUCTURES, INC.
1 WALLACE AVE. PHONE (207) 780-6722
SOUTH PORTLAND, ME 04106 FAX. (207) 780-6726
TENSOR 3073

STRUCTURE: VT RTE 107 OVER WHITE RIVER	DRAWN: EEO	DATE: 10/10
	CHK'D: PCP	DATE: 10/12
LOCATION: BETHEL, VT.	JOB NO.	DWG NO.
PROJ NO. BRF 022-1(14)	498	11
CUSTOMER: BECK & BELLUCCI		REV. 1

PCP Fri, Jan 6, 2012 12:42 PM /users/pbs/3073/11 1.dwg

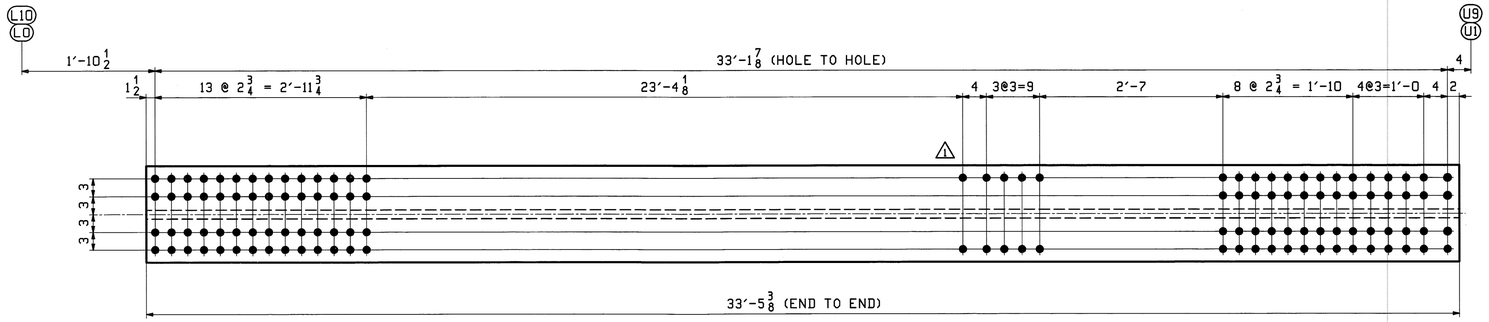

ONE ~ END POST ~ 12EP1W (L0 - U1 WEST)
ONE ~ END POST ~ 12EP1E (L0 - U1 EAST)
ONE ~ END POST ~ 12EP10W (L10 - U9 WEST)
ONE ~ END POST ~ 12EP10E (L10 - U9 EAST)
} ALL ALIKE EXCEPT FOR MARK

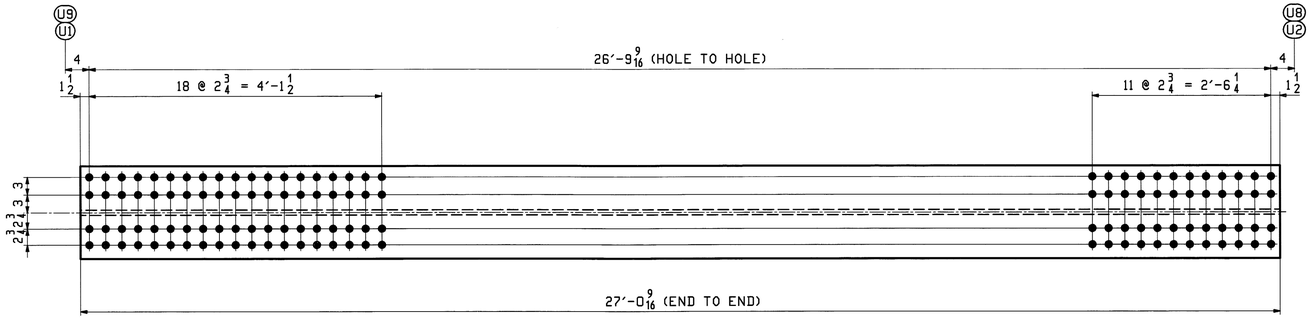

ONE ~ TOP CHORD ~ 12TC2W (U1 - U2 WEST)
ONE ~ TOP CHORD ~ 12TC2E (U1 - U2 EAST)
ONE ~ TOP CHORD ~ 12TC9W (U9 - U8 WEST)
ONE ~ TOP CHORD ~ 12TC9E (U9 - U8 EAST)
} ALL ALIKE EXCEPT FOR MARK

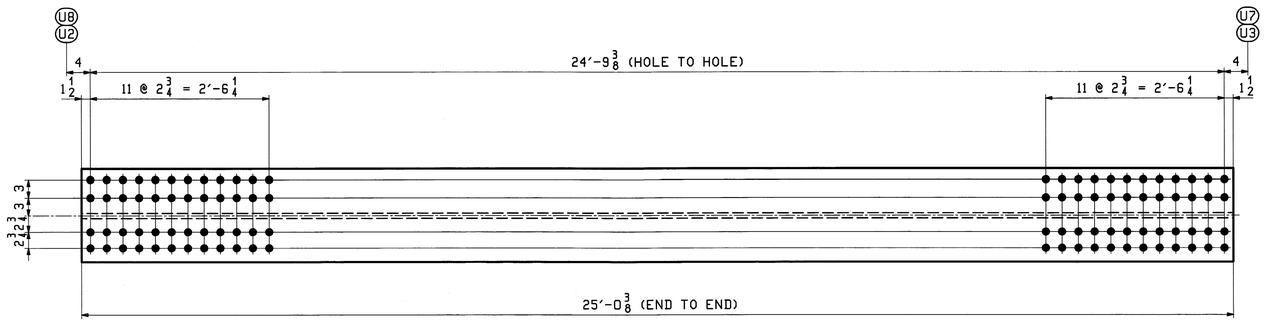

ONE ~ TOP CHORD ~ 12TC3W (U2 - U3 WEST)
ONE ~ TOP CHORD ~ 12TC3E (U2 - U3 EAST)
ONE ~ TOP CHORD ~ 12TC8W (U8 - U7 WEST)
ONE ~ TOP CHORD ~ 12TC8E (U8 - U7 EAST)
} ALL ALIKE EXCEPT FOR MARK

	ABM INFO		SHIP	BILL OF MATERIAL					JOB NO. 498	DRAWING NO. 12	REV.
	PAGE	LINE	MARK	QTY	MARK	MATERIAL	LENGTH FT	LENGTH INCHES	REMARKS	WT	PROCUREMENT NOTES
1	6	B	12EP1W	1		W 14x311	33	5 3/8		10402	
1	6	B	12EP1E	1		W 14x311	33	5 3/8		10402	
1	6	B	12EP10W	1		W 14x311	33	5 3/8		10402	
1	6	B	12EP10E	1		W 14x311	33	5 3/8		10402	
	6	C	12TC2W	1		W 14x193	27	0 9/16		5220	
	6	C	12TC2E	1		W 14x193	27	0 9/16		5220	
	6	C	12TC9W	1		W 14x193	27	0 9/16		5220	
	6	C	12TC9E	1		W 14x193	27	0 9/16		5220	
	6	D	12TC3W	1		W 14x193	25	0 3/8		4831	
	6	D	12TC3E	1		W 14x193	25	0 3/8		4831	
	6	D	12TC8W	1		W 14x193	25	0 3/8		4831	
	6	D	12TC8E	1		W 14x193	25	0 3/8		4831	

NOTES:
1. FOR GENERAL NOTES SEE SHEET GN1.
2. HOLES IN BOTH FLANGES ARE ALIKE.
2 3. "SHIP" MARKS INDICATED ON THIS SHEET ARE FOR THE FABRICATION PROCESS, DELEVERED COMPONENTS MAY BE PRE-ASSEMBLED AND MARKED DIFFERENTLY.

REV.	DATE	REMARKS	DWN	CHK	APVL	SHOP
2	1/03/12	APPROVAL COMMENTS	EEO	PCP	JAN 9 2012	
1	11/21/11	REMOVE MARKS x4h FROM ASSEMBLY			NOV 30 2011	
0					NOV 18 2011	

MATERIAL: M270-50 | SURFACE PREP. & PAINT: HOT-DIP GALV. | HOLES: 15/16ø (UN) | SHOP BOLTS: NONE 1

DESCRIPTION: END POSTS & TOP CHORDS (L0-U1,L10-U9,U1-U2,U9-U8,U2-U3,U8-U7)

CASCO BAY STEEL STRUCTURES, INC.
1 WALLACE AVE. PHONE (207) 780-6722
SOUTH PORTLAND, ME 04106 FAX. (207) 780-6726

TENSOR 3073

STRUCTURE: VT RTE 107 OVER WHITE RIVER
DRAWN: EEO DATE: 10/11
CHK'D: PCP DATE: 10/14
LOCATION: BETHEL, VT. JOB NO. 498 DWG NO. 12
PROJ NO. BRF 022-1(14)
CUSTOMER: BECK & BELLUCCI REV. 2

Vermont Agency of Transportation
RECEIVED
CK'D BY M.C.L. OK'D BY S.S.S.
January 10 2012
RESUBMIT APPROVED ✓
BY J. LACROIX DATE 01-12-2012

PCP Fri, Jan 6, 2012 10:45:53 PM //server/jobs/2012/12 Rev2

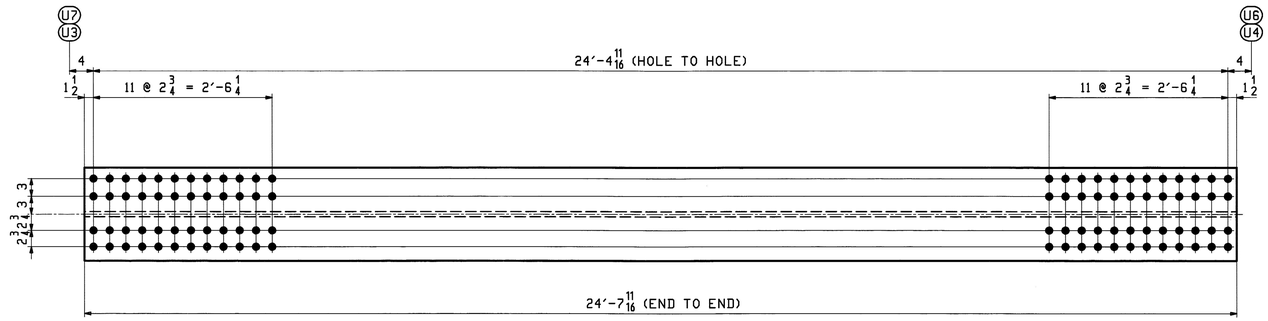

ONE ~ TOP CHORD ~ 13TC4W (U3 – U4 WEST)

ONE ~ TOP CHORD ~ 13TC4E (U3 – U4 EAST)

ONE ~ TOP CHORD ~ 13TC7W (U7 – U6 WEST)

ONE ~ TOP CHORD ~ 13TC7E (U7 – U6 EAST)

} ALL ALIKE EXCEPT FOR MARK

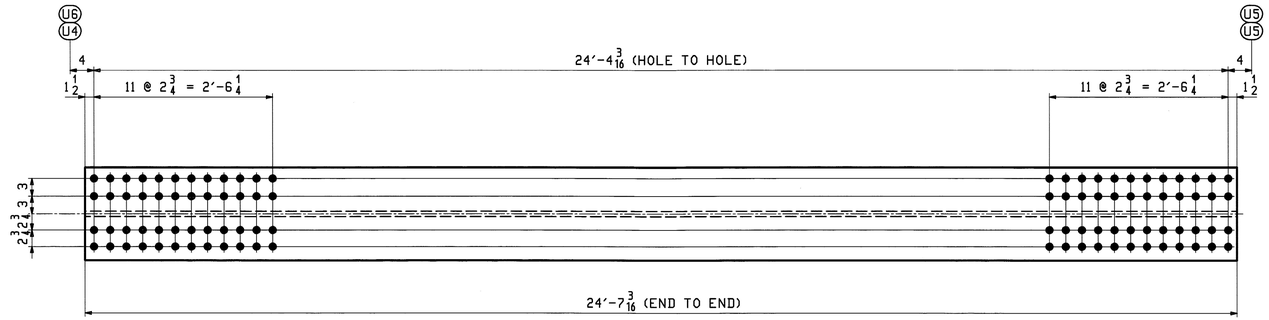

ONE ~ TOP CHORD ~ 13TC5W (U4 – U5 WEST)

ONE ~ TOP CHORD ~ 13TC5E (U4 – U5 EAST)

ONE ~ TOP CHORD ~ 13TC6W (U6 – U5 WEST)

ONE ~ TOP CHORD ~ 13TC6E (U6 – U5 EAST)

} ALL ALIKE EXCEPT FOR MARK

ABM INFO		SHIP	BILL OF MATERIAL					JOB NO. 498	DRAWING NO. 13	REV.
PAGE	LINE	MARK	QTY	MARK	MATERIAL	LENGTH FT	LENGTH INCHES	REMARKS	WT	PROCUREMENT NOTES
6	E	13TC4W	1		W 14x193	24	7 11/16		4756	
6	E	13TC4E	1		W 14x193	24	7 11/16		4756	
6	E	13TC7W	1		W 14x193	24	7 11/16		4756	
6	E	13TC7E	1		W 14x193	24	7 11/16		4756	
6	E	13TC5W	1		W 14x193	24	7 3/16		4748	
6	E	13TC5E	1		W 14x193	24	7 3/16		4748	
6	E	13TC6W	1		W 14x193	24	7 3/16		4748	
6	E	13TC6E	1		W 14x193	24	7 3/16		4748	

NOTES:
1. FOR GENERAL NOTES SEE SHEET GN1.
2. HOLES IN BOTH FLANGES ARE ALIKE.
⚠1 3. "SHIP" MARKS INDICATED ON THIS SHEET ARE FOR THE FABRICATION PROCESS, DELEVERED COMPONENTS MAY BE PRE-ASSEMBLED AND MARKED DIFFERENTLY.

Vermont Agency of Transportation
RECEIVED
CK'D BY M.C.L. OK'D BY S.S.S.
January 10 2012
RESUBMIT APPROVED ✓
BY J. LACROIX DATE 01-12-2012

REV.	DATE	REMARKS	DWN	CHK	APVL	SHOP
⚠1	1/03/12	APPROVAL COMMENTS	EEO	PCP	JAN 9 2012	
0					NOV 18 2011	

MATERIAL:	SURFACE PREP. & PAINT:	HOLES:	SHOP BOLTS:
M270-50	HOT-DIP GALV.	15/16ø (UN)	NONE

DESCRIPTION: TOP CHORDS (U3-U4, U7-U6, U4-U5, U6-U5)

CASCO BAY STEEL STRUCTURES, INC.
1 WALLACE AVE. PHONE (207) 780-6722
SOUTH PORTLAND, ME 04106 FAX. (207) 780-6726
TENSOR 3073

STRUCTURE: VT RTE 107 OVER WHITE RIVER	DRAWN: EEO	DATE: 10/11
	CHKD: PCP	DATE: 11/11
LOCATION: BETHEL, VT.	JOB NO.	DWG NO.
PROJ NO. BRF 022-1(14)	498	13
CUSTOMER: BECK & BELLUCCI		REV. ⚠

PCP Fri, Jan 6, 2012 10:56:02 AM J:\eeo\jobs\2012\13\Dwg\

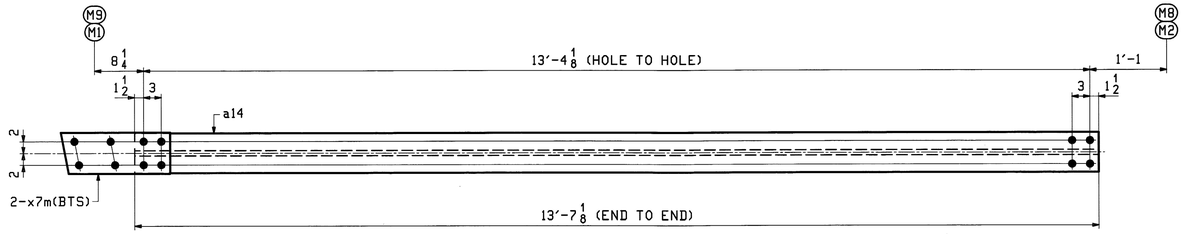

ONE ~ MID CHORD ~ 14MC1W (M1 - M2 WEST)
ONE ~ MID CHORD ~ 14MC1E (M1 - M2 EAST)
ONE ~ MID CHORD ~ 14MC14W (M9 - M8 WEST)
ONE ~ MID CHORD ~ 14MC14E (M9 - M8 EAST)

} ALL ALIKE EXCEPT FOR MARK

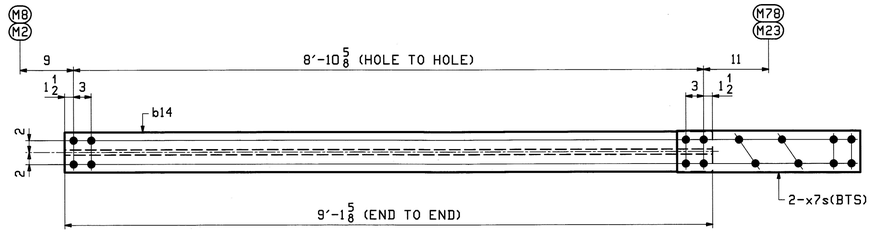

⚠1 **ONE ~ MID CHORD ~ 14MC2E** (M2 - M23 EAST)
ONE ~ MID CHORD ~ 14MC13E (M8 - M78 EAST)

} ALL ALIKE EXCEPT FOR MARK

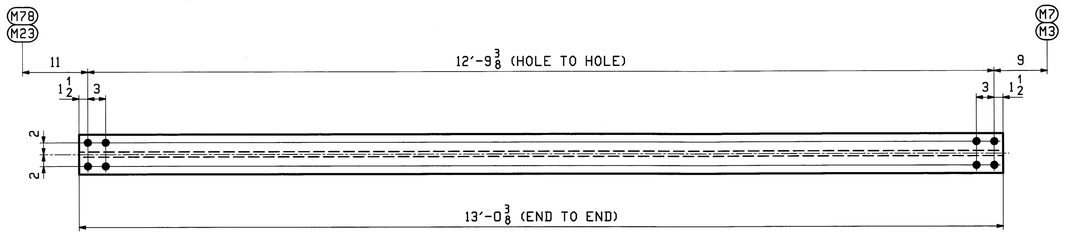

ONE ~ MID CHORD ~ 14MC3W (M23 - M3 WEST)
ONE ~ MID CHORD ~ 14MC3E (M23 - M3 EAST)
ONE ~ MID CHORD ~ 14MC12W (M78 - M7 WEST)
ONE ~ MID CHORD ~ 14MC12E (M78 - M7 EAST)

} ALL ALIKE EXCEPT FOR MARK

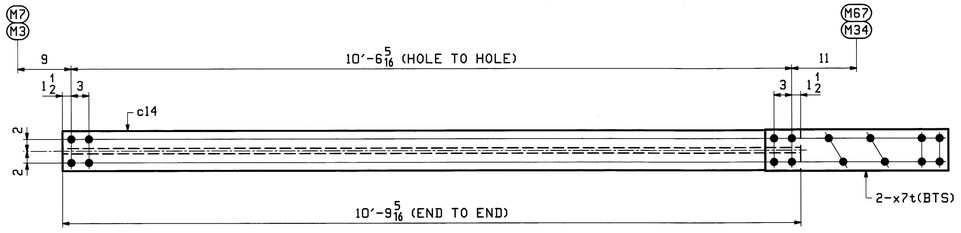

ONE ~ MID CHORD ~ 14MC4W (M3 - M34 WEST)
ONE ~ MID CHORD ~ 14MC4E (M3 - M34 EAST)
ONE ~ MID CHORD ~ 14MC11W (M7 - M67 WEST)
ONE ~ MID CHORD ~ 14MC11E (M7 - M67 EAST)

} ALL ALIKE EXCEPT FOR MARK

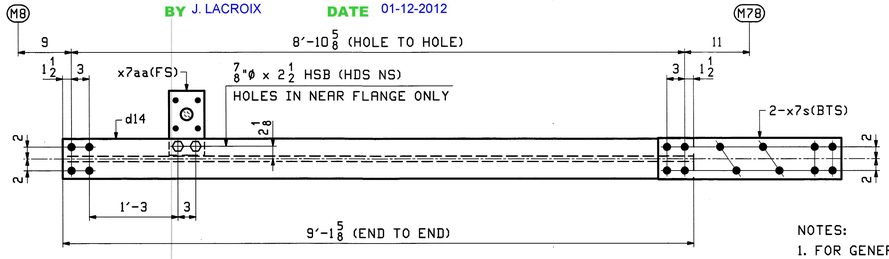

⚠1 **ONE ~ MID CHORD ~ 14MC13W** (M8 - M78 WEST)

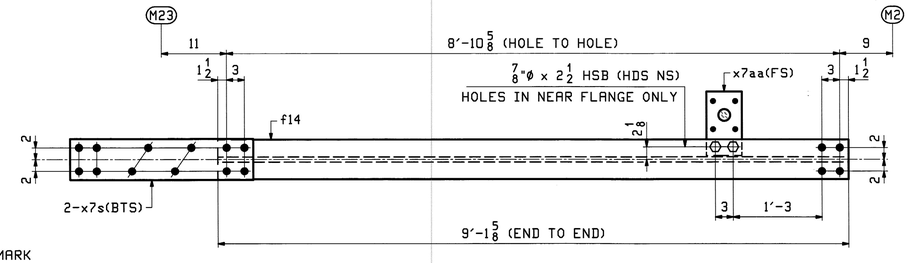

⚠1 **ONE ~ MID CHORD ~ 14MC2W** (M23 - M2 WEST)

ABM INFO PAGE	ABM INFO LINE	SHIP MARK	QTY	MARK	MATERIAL	LENGTH FT	LENGTH INCHES	REMARKS	WT	PROCUREMENT NOTES
		14MC13E	1		MID CHORD				336	
4	E		1	b14	W 14x30	9	1 5/8		274	
5	L		2	x7s	PL 1/2x7	2	7		62	
4	F	14MC3W	1		W 14x30	13	0 3/8		391	
4	F	14MC3E	1		W 14x30	13	0 3/8		391	
4	F	14MC12W	1		W 14x30	13	0 3/8		391	
4	F	14MC12E	1		W 14x30	13	0 3/8		391	
		14MC4W	1		MID CHORD				385	
4	G		1	c14	W 14x30	10	9 5/16		323	
5	L		2	x7t	PL 1/2x7	2	7		62	
		14MC4E	1		MID CHORD				385	
4	G		1	c14	W 14x30	10	9 5/16		323	
5	L		2	x7t	PL 1/2x7	2	7		62	
		14MC11W	1		MID CHORD				385	
4	G		1	c14	W 14x30	10	9 5/16		323	
5	L		2	x7t	PL 1/2x7	2	7		62	
		14MC11E	1		MID CHORD				385	
4	G		1	c14	W 14x30	10	9 5/16		323	
5	L		2	x7t	PL 1/2x7	2	7		62	

ABM INFO PAGE	ABM INFO LINE	SHIP MARK	QTY	MARK	MATERIAL	LENGTH FT	LENGTH INCHES	REMARKS	WT	PROCUREMENT NOTES
		14MC1W	1		MID CHORD				445	
4	D		1	a14	W 14x30	13	7 1/8		408	
4	N		2	x7m	PL 1/2x7	1	6 1/2		37	
		14MC1E	1		MID CHORD				445	
4	D		1	a14	W 14x30	13	7 1/8		408	
4	N		2	x7m	PL 1/2x7	1	6 1/2		37	
		14MC14W	1		MID CHORD				445	
4	D		1	a14	W 14x30	13	7 1/8		408	
4	N		2	x7m	PL 1/2x7	1	6 1/2		37	
		14MC14E	1		MID CHORD				445	
4	D		1	a14	W 14x30	13	7 1/8		408	
4	N		2	x7m	PL 1/2x7	1	6 1/2		37	
		14MC2W	1		MID CHORD				347	
4	E		1	f14	W 14x30	9	1 5/8		274	
5	L		2	x7s	PL 1/2x7	2	7		62	
⚠1 5	P		1	x7aa	PL 1/2x6	0	10 7/8		9	
⚠1 21	D		2		7/8 ø HSB	0	2 1/2	MECH. GALV. A325-1	2	
⚠1 21	X		2		7/8 ø HSW			MECH. GALV. F436	.14	
⚠1 21	Y		2		LOAD IND. WASH FOR 7/8 ø HSB			MECH. GALV. F436	.14	
		14MC2E	1		MID CHORD				336	
4	E		1	b14	W 14x30	9	1 5/8		274	
5	L		2	x7s	PL 1/2x7	2	7		62	
		14MC13W	1		MID CHORD				347	
4	E		1	d14	W 14x30	9	1 5/8		274	
5	L		2	x7s	PL 1/2x7	2	7		62	
⚠1 5	P		1	x7aa	PL 1/2x6	0	10 7/8		9	
⚠1 21	D		2		7/8 ø HSB	0	2 1/2	MECH. GALV. A325-1	2	
⚠1 21	X		2		7/8 ø HSW			MECH. GALV. F436	.14	
⚠1 21	Y		2		LOAD IND. WASH FOR 7/8 ø HSB			MECH. GALV. F436	.14	

Vermont Agency of Transportation
RECEIVED
CK'D BY M.C.L. OK'D BY S.S.S.
January 10 2012
RESUBMIT ____ APPROVED ✓
BY J. LACROIX DATE 01-12-2012

NOTES:
1. FOR GENERAL NOTES SEE SHEET GN1.
2. HOLES IN BOTH FLANGES ARE ALIKE, U.N. ⚠1

REV.	DATE	REMARKS	DWN	CHK	APVL	SHOP
⚠1	1/03/12	APPROVAL COMMENTS	EEO	PCP	JAN 9 2012	
0					NOV 18 2011	

MATERIAL:	SURFACE PREP. & PAINT:	HOLES:	SHOP BOLTS:
M270-50	HOT-DIP GALV.	15/16ø (UN)	NONE

DESCRIPTION: MID CHORDS

CASCO BAY STEEL STRUCTURES, INC.
1 WALLACE AVE. PHONE (207) 780-6722
SOUTH PORTLAND, ME 04106 FAX. (207) 780-6726
TENSOR 3073

STRUCTURE: VT RTE 107 OVER WHITE RIVER	DRAWN: EEO	DATE: 10/11	
	CHK'D: PCP	DATE: 11/11	
LOCATION: BETHEL, VT.	JOB NO. 498	DWG NO. 14	
PROJ NO. BRF 022-1(14)			
CUSTOMER: BECK & BELLUCCI		REV. ⚠1	

PCP Fri, Jan 6, 2012 12:05:14 PM J:\work\jobs\2012\14\ Rev1

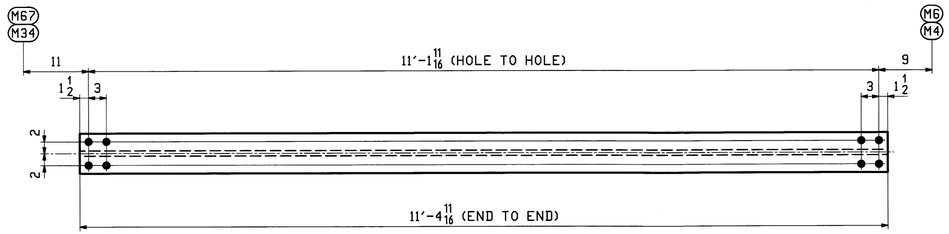

ONE ~ MID CHORD ~ 15MC5W (M34 - M4 WEST)

ONE ~ MID CHORD ~ 15MC10W (M67 - M6 WEST)

ONE ~ MID CHORD ~ 15MC5E (M34 - M4 EAST)

ONE ~ MID CHORD ~ 15MC10E (M67 - M6 EAST)

} ALL ALIKE EXCEPT FOR MARK

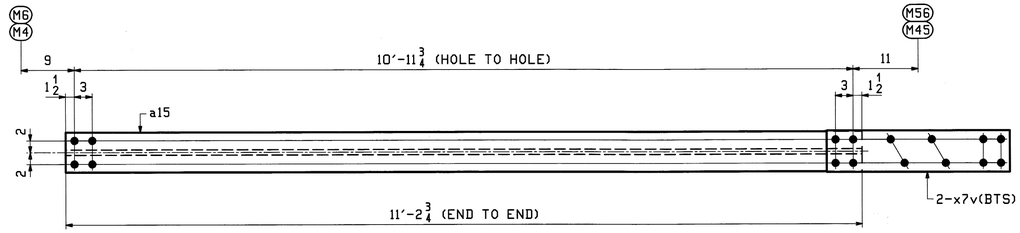

ONE ~ MID CHORD ~ 15MC6W (M4 - M45 WEST)

ONE ~ MID CHORD ~ 15MC9W (M6 - M56 WEST)

ONE ~ MID CHORD ~ 15MC6E (M4 - M45 EAST)

ONE ~ MID CHORD ~ 15MC9E (M6 - M56 EAST)

} ALL ALIKE EXCEPT FOR MARK

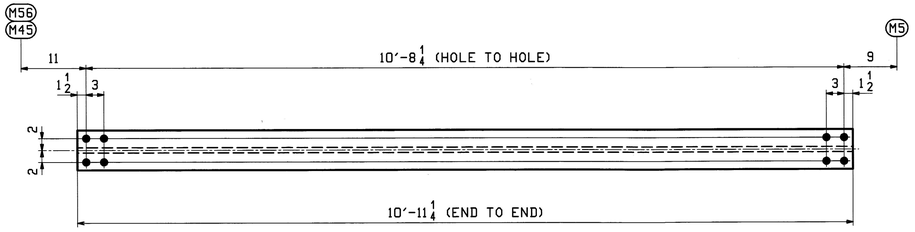

⚠ ONE ~ MID CHORD ~ 15MC8W (M56 - M5 WEST)

ONE ~ MID CHORD ~ 15MC7E (M45 - M5 EAST)

ONE ~ MID CHORD ~ 15MC8E (M56 - M5 EAST)

} ALL ALIKE EXCEPT FOR MARK

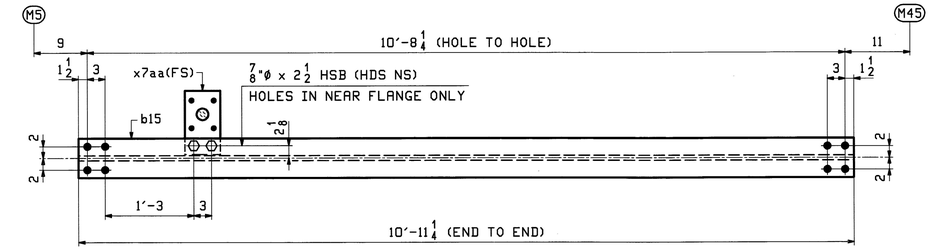

⚠ ONE ~ MID CHORD ~ 15MC7W (M5 - M45 WEST)

ABM INFO		SHIP	BILL OF MATERIAL					JOB NO. 498	DRAWING NO. 15	REV.
PAGE	LINE	MARK	QTY	MARK	MATERIAL	LENGTH FT	LENGTH INCHES	REMARKS	WT	PROCUREMENT NOTES
4	H	15MC5W	1		W 14x30	11	4 11/16		342	
4	H	15MC5E	1		W 14x30	11	4 11/16		342	
4	H	15MC10W	1		W 14x30	11	4 11/16		342	
4	H	15MC10E	1		W 14x30	11	4 11/16		342	
		15MC6W	1		MID CHORD				398	
4	J		1	a15	W 14x30	11	2 3/4		337	
5	L		2	x7v	PL 1/2x7	2	7		62	
		15MC6E	1		MID CHORD				398	
4	J		1	a15	W 14x30	11	2 3/4		337	
5	L		2	x7v	PL 1/2x7	2	7		62	
		15MC9W	1		MID CHORD				398	
4	J		1	a15	W 14x30	11	2 3/4		337	
5	L		2	x7v	PL 1/2x7	2	7		62	
		15MC9E	1		MID CHORD				398	
4	J		1	a15	W 14x30	11	2 3/4		337	
5	L		2	x7v	PL 1/2x7	2	7		62	
⚠		15MC7W	1		MID CHORD				339	
⚠ 4	K		1	b15	W 14x30	10	11 1/4		328	
⚠ 5	P		1	x7aa	PL 1/2x6	0	10 7/8		9	
⚠ 21	D		2		7/8 ø HSB	0	2 1/2	MECH. GALV. A325-1	2	
⚠ 21	X		2		7/8 ø HSH			MECH. GALV. F436	.14	
⚠ 21	Y		2		LOAD IND. 7/8 ø HSB WASH FOR HSB			MECH. GALV. F436	.14	
4	K	15MC7E	1		W 14x30	10	11 1/4		328	
4	K	15MC8W	1		W 14x30	10	11 1/4		328	
4	K	15MC8E	1		W 14x30	10	11 1/4		328	

NOTES:
1. FOR GENERAL NOTES SEE SHEET GN1.
2. HOLES IN BOTH FLANGES ARE ALIKE, U.N. ⚠

REV.	DATE	REMARKS	DWN	CHK	APVL	SHOP
⚠ 1	1/03/12	APPROVAL COMMENTS	EEO	PCP	JAN 9 2012	
0					NOV 18 2011	

MATERIAL:	SURFACE PREP. & PAINT:	HOLES:	SHOP BOLTS:
M270-50	HOT-DIP GALV.	15/16ø (UN)	NONE

DESCRIPTION: MID CHORDS

CASCO BAY STEEL STRUCTURES, INC.
1 WALLACE AVE. SOUTH PORTLAND, ME 04106
PHONE (207) 780-6722 FAX. (207) 780-6726
TENSOR 3073

STRUCTURE: VT RTE 107 OVER WHITE RIVER	DRAWN: EEO	DATE: 10/11	
	CHKD: PCP	DATE: 11/11	
LOCATION: BETHEL, VT.	JOB NO. 498	DWG NO. 15	
PROJ NO. BRF 022-1(14)		REV. ⚠	
CUSTOMER: BECK & BELLUCCI			

Vermont Agency of Transportation
RECEIVED
CK'D BY M.C.L. OK'D BY S.S.S.
January 10 2012
RESUBMIT APPROVED ✓
BY J. LACROIX DATE 01-12-2012

PCP Fri, Jan 6, 2012 12:02:25 PM //apps/jobs/2012/15.1.Rev1

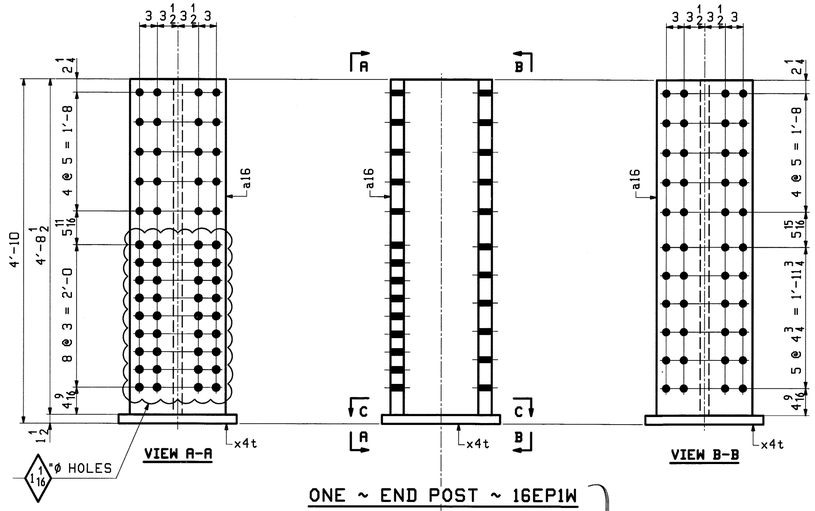

ONE ~ END POST ~ 16EP1W
(LOOKING SOUTH @ L0 WEST)

ONE ~ END POST ~ 16EP1E
(LOOKING NORTH @ L0 EAST)

ONE ~ END POST ~ 16EP2W
(LOOKING SOUTH @ L10 WEST)

ONE ~ END POST ~ 16EP2E
(LOOKING NORTH @ L10 EAST)

ALIKE EXCEPT FOR MARK

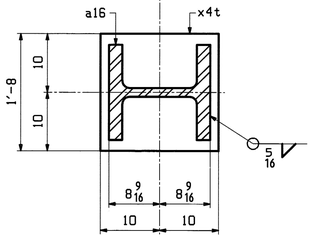

SECTION C-C

ABM INFO		SHIP	BILL OF MATERIAL					JOB NO.	DRAWING NO.		REV.
								498	16		
PAGE	LINE	MARK	QTY	MARK	MATERIAL	LENGTH FT	LENGTH INCHES	REMARKS	WT	PROCUREMENT NOTES	
		16EP1W	1		END POST				1634		
1	U			1 a16	W 14x311	4	8 1/2				
1	V			1 x4t	PL 1 1/2 x 20	1	8				
		16EP1E	1		END POST				1634		
1	U			1 a16	W 14x311	4	8 1/2				
1	V			1 x4t	PL 1 1/2 x 20	1	8				
		16EP2W	1		END POST				1634		
1	U			1 a16	W 14x311	4	8 1/2				
1	V			1 x4t	PL 1 1/2 x 20	1	8				
		16EP2E	1		END POST				1634		
1	U			1 a16	W 14x311	4	8 1/2				
1	V			1 x4t	PL 1 1/2 x 20	1	8				

Vermont Agency of Transportation
RECEIVED
CK'D BY M.C.L. OK'D BY S.S.S.
January 10 2012
RESUBMIT APPROVED ✓
BY J. LACROIX DATE 01-12-2012

REV.	DATE	REMARKS	DWN	CHK	APVL	SHOP
0					JAN 9 2012 NOV 18 2011	

MATERIAL:	SURFACE PREP. & PAINT:	HOLES:	SHOP BOLTS:
M270-50 (UN)	HOT-DIP GALV.	15/16 Ø (UN)	7/8 Ø (UN)

DESCRIPTION: END POSTS @ L0 & L10

CASCO BAY STEEL STRUCTURES, INC.
1 WALLACE AVE. PHONE (207) 780-6722
SOUTH PORTLAND, ME 04106 FAX. (207) 780-6726
TENSOR 3073

STRUCTURE: VT RTE 107 OVER WHITE RIVER	DRAWN: EEO	DATE: 10/11
	CHKD: PCP	DATE: 10/14
LOCATION: BETHEL, VT.	JOB NO.	DWG NO.
PROJ NO. BRF 022-1(14)	498	16
CUSTOMER: BECK & BELLUCCI		REV. △

EEO Thu, Nov 17, 2011 08:50:00 AM c:\users\john\2023\16 - Rev0

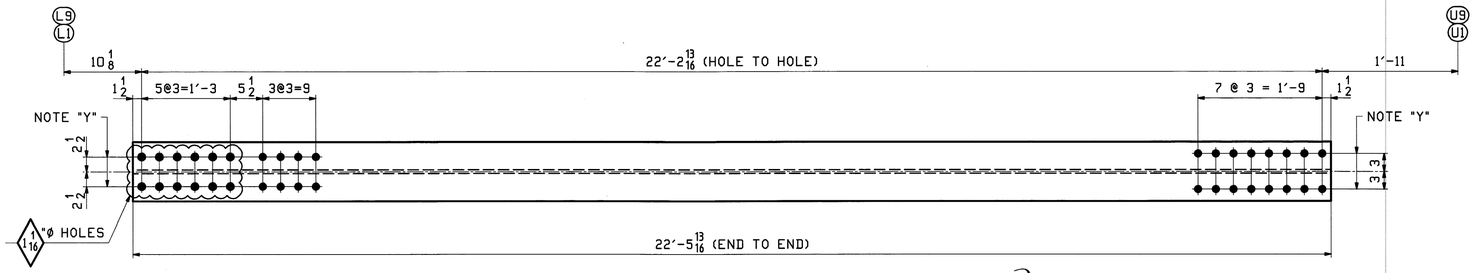

NOTE "Y"
HOLES IN BOTH FLANGES ARE ALIKE.

ONE ~ VERTICAL ~ 17V1W (L1 - U1 WEST)
ONE ~ VERTICAL ~ 17V1E (L1 - U1 EAST)
ONE ~ VERTICAL ~ 17V9W (L9 - U9 WEST)
ONE ~ VERTICAL ~ 17V9E (L9 - U9 EAST)
} ALL ALIKE EXCEPT FOR MARK

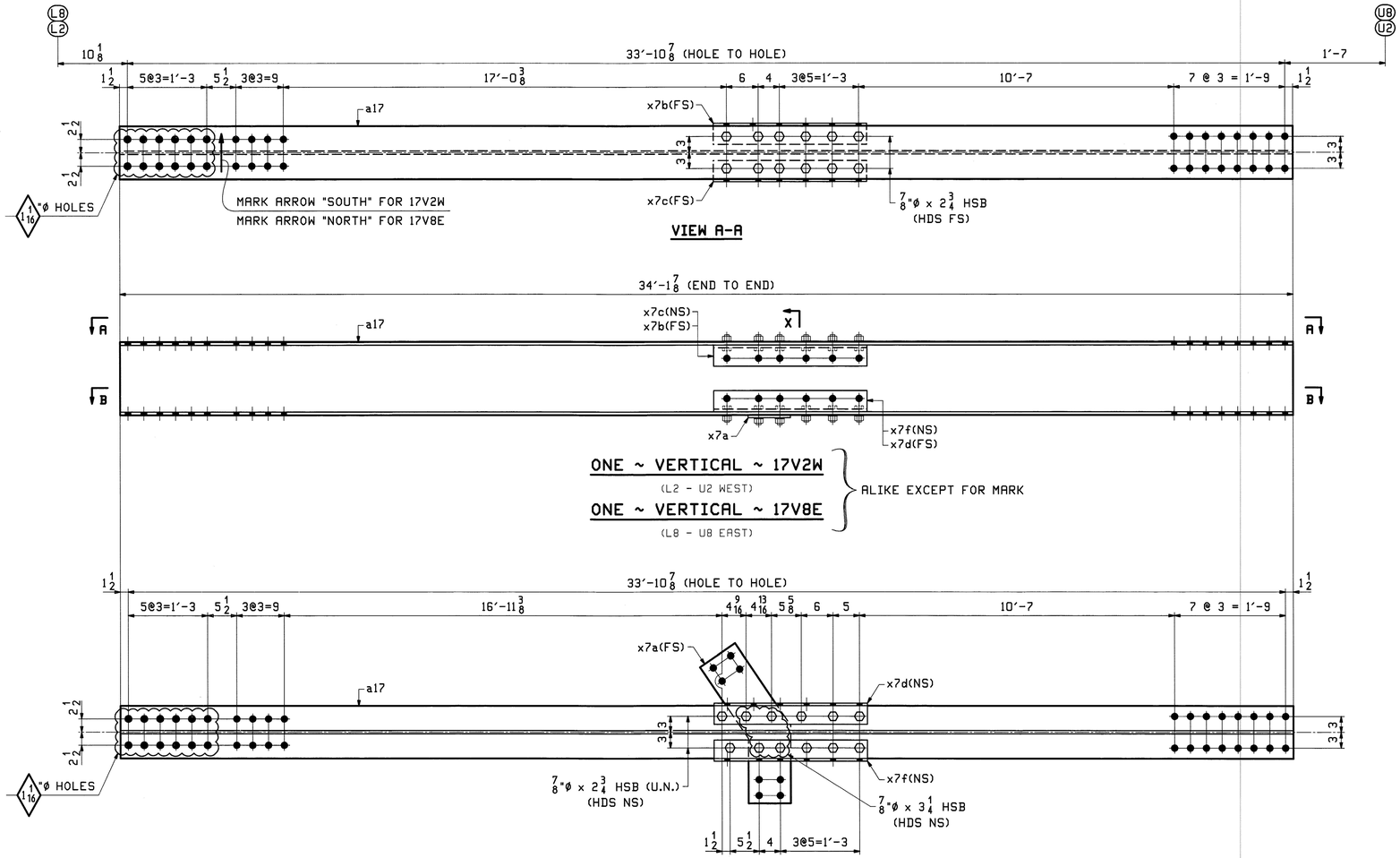

VIEW A-A

ONE ~ VERTICAL ~ 17V2W (L2 - U2 WEST)
ONE ~ VERTICAL ~ 17V8E (L8 - U8 EAST)
} ALIKE EXCEPT FOR MARK

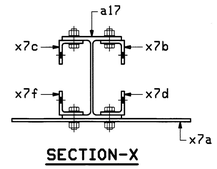

SECTION-X

SECTION B-B

ABM INFO		SHIP	BILL OF MATERIAL						JOB NO.	DRAWING NO.	REV.
									498	17	
PAGE	LINE	MARK	QTY	MARK	MATERIAL	LENGTH FT	LENGTH INCHES	REMARKS	WT	PROCUREMENT NOTES	
6	H	17V1W	1		W 14x61	22	5 13/16	M270-50T2	1372		
6	H	17V1E	1		W 14x61	22	5 13/16	M270-50T2	1372		
6	H	17V9W	1		W 14x61	22	5 13/16	M270-50T2	1372		
6	H	17V9E	1		W 14x61	22	5 13/16	M270-50T2	1372		
		17V2W	1		VERTICAL				2303		
6	J		1	a17	W 14x61	34	1 7/8	M270-50T2			
4	V		1	x7a	PL 1/2x17 1/8	2	6 1/4				
4	R		1	x7b	L 4x4x1/2	2	5	M270-36			
4	R		1	x7c	L 4x4x1/2	2	5	M270-36			
4	R		1	x7d	L 4x4x1/2	2	5	M270-36			
4	R		1	x7f	L 4x4x1/2	2	5	M270-36			
21	E		20		7/8 ø HSB	0	2 3/4	MECH. GALV. A325-1			
21	G		4		7/8 ø HSB	0	3 1/4	MECH. GALV. A325-1			
21	X		24		7/8 ø HSW			MECH. GALV. F436			
21	Y		24		LOAD IND. WASH FOR 7/8 ø HSB			MECH. GALV. F436			
		17V8E	1		VERTICAL				2303		
6	J		1	a17	W 14x61	34	1 7/8	M270-50T2			
4	V		1	x7a	PL 1/2x17 1/8	2	6 1/4				
4	R		1	x7b	L 4x4x1/2	2	5	M270-36			
4	R		1	x7c	L 4x4x1/2	2	5	M270-36			
4	R		1	x7d	L 4x4x1/2	2	5	M270-36			
4	R		1	x7f	L 4x4x1/2	2	5	M270-36			
21	E		20		7/8 ø HSB	0	2 3/4	MECH. GALV. A325-1			
21	G		4		7/8 ø HSB	0	3 1/4	MECH. GALV. A325-1			
21	X		24		7/8 ø HSW			MECH. GALV. F436			
21	Y		24		LOAD IND. WASH FOR 7/8 ø HSB			MECH. GALV. F436			

Vermont Agency of Transportation
RECEIVED
CK'D BY M.C.L. OK'D BY S.S.S.
January 10 2012
RESUBMIT APPROVED ✓
BY J. LACROIX DATE 01-12-2012

NOTES:
1. FOR GENERAL NOTES SEE SHEET GN1.

REV.	DATE	REMARKS	DWN	CHK	APVL	SHOP
0					JAN 9 2012 NOV 18 2011	

MATERIAL:	SURFACE PREP. & PAINT:	HOLES:	SHOP BOLTS:
M270-50 (UN)	HOT-DIP GALV.	15/16ø (UN)	7/8ø (UN)

DESCRIPTION: VERTICALS (L1-U1, L9-U9, L2-U2, L8-U8)

CASCO BAY STEEL STRUCTURES, INC.
1 WALLACE AVE. PHONE (207) 780-6722
SOUTH PORTLAND, ME 04106 FAX. (207) 780-6726
TENSOR 3073

STRUCTURE: VT RTE 107 OVER WHITE RIVER	DRAWN: EEO	DATE: 10/12
	CHKD: PCP	DATE: 10/14
LOCATION: BETHEL, VT.	JOB NO. 498	DWG NO. 17
PROJ NO. BRF 022-1(14)		REV. △
CUSTOMER: BECK & BELLUCCI		

EEO Thu, Nov 17, 2011 08:55:55 PM /users/jobs/2012/17 Rev0

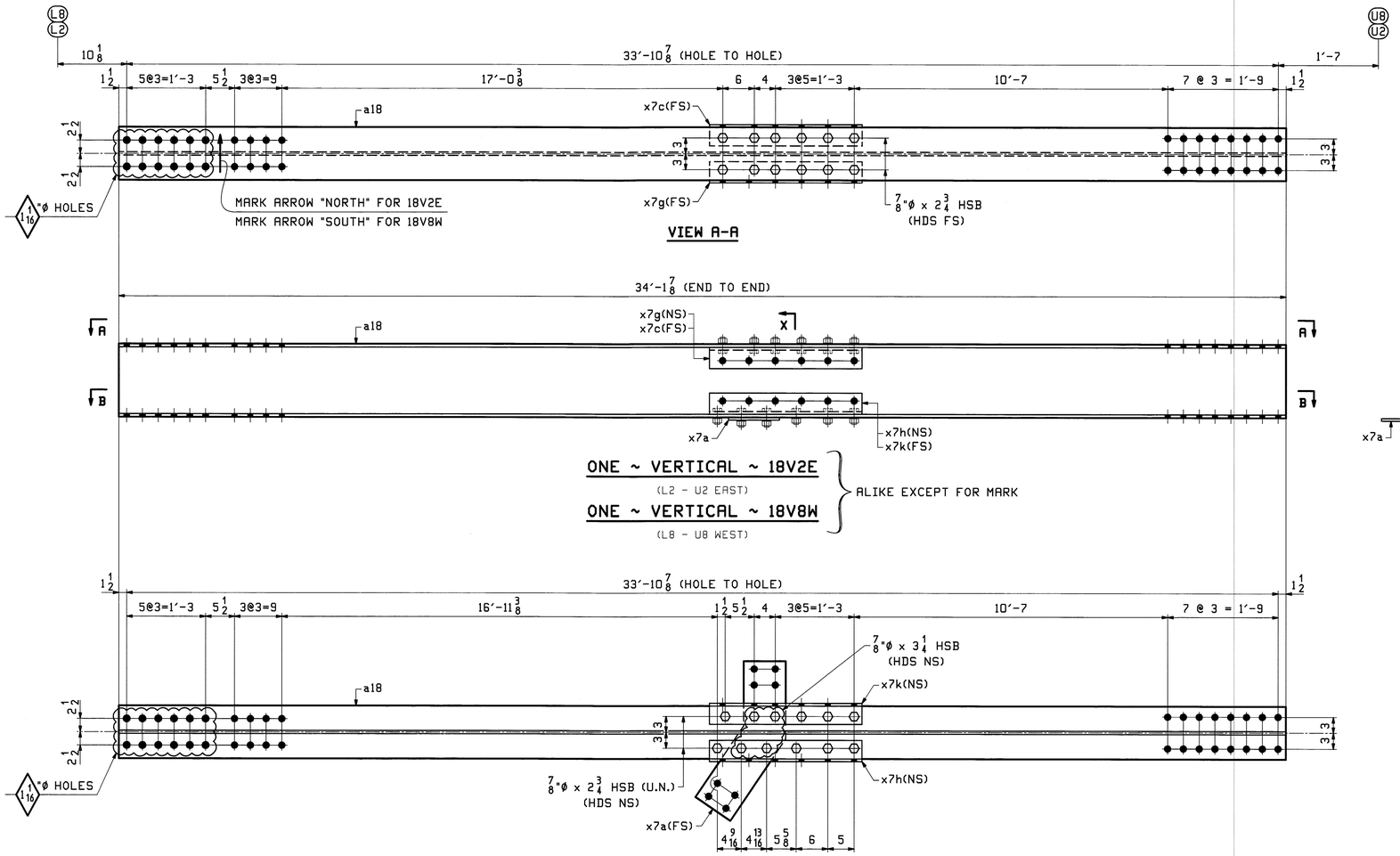

ABM INFO		SHIP	BILL OF MATERIAL			LENGTH		JOB NO. 498	DRAWING NO. 18	REV.
PAGE	LINE	MARK	QTY	MARK	MATERIAL	FT	INCHES	REMARKS	WT	PROCUREMENT NOTES
		18V2E	1		VERTICAL				2303	
6	J		1	a18	W 14x61	34	1 7/8	M270-50T2		
4	V		1	x7a	PL 1/2x17 1/8	2	6 1/4			
4	R		1	x7c	L 4x4x1/2	2	5	M270-36		
4	R		1	x7g	L 4x4x1/2	2	5	M270-36		
4	R		1	x7h	L 4x4x1/2	2	5	M270-36		
4	R		1	x7k	L 4x4x1/2	2	5	M270-36		
21	E		20		7/8ø HSB	0	2 3/4	MECH. GALV. A325-1		
21	G		4		7/8ø HSB	0	3 1/4	MECH. GALV. A325-1		
21	X		24		7/8ø HSW			MECH. GALV. F436		
21	Y		24		LOAD IND. WASH FOR 7/8ø HSB			MECH. GALV. F436		
		18V8W	1		VERTICAL				2303	
6	J		1	a18	W 14x61	34	1 7/8	M270-50T2		
4	V		1	x7a	PL 1/2x17 1/8	2	6 1/4			
4	R		1	x7c	L 4x4x1/2	2	5	M270-36		
4	R		1	x7g	L 4x4x1/2	2	5	M270-36		
4	R		1	x7h	L 4x4x1/2	2	5	M270-36		
4	R		1	x7k	L 4x4x1/2	2	5	M270-36		
21	E		20		7/8ø HSB	0	2 3/4	MECH. GALV. A325-1		
21	G		4		7/8ø HSB	0	3 1/4	MECH. GALV. A325-1		
21	X		24		7/8ø HSW			MECH. GALV. F436		
21	Y		24		LOAD IND. WASH FOR 7/8ø HSB			MECH. GALV. F436		

NOTES:
1. FOR GENERAL NOTES SEE SHEET GN1.

Vermont Agency of Transportation
RECEIVED
CK'D BY M.C.L. OK'D BY S.S.S.
January 10 2012
RESUBMIT APPROVED ✓
BY J. LACROIX DATE 01-12-2012

REV.	DATE	REMARKS	DWN	CHK	APVL	SHOP
						JAN 9 2012
0					NOV 18 2011	

MATERIAL:	SURFACE PREP. & PAINT:	HOLES:	SHOP BOLTS:
M270-50 (UN)	HOT-DIP GALV.	15/16ø (UN)	7/8ø (UN)

DESCRIPTION: VERTICALS (L2-U2, L8-U8)

CASCO BAY STEEL STRUCTURES, INC.
1 WALLACE AVE. PHONE (207) 780-6722
SOUTH PORTLAND, ME 04106 FAX. (207) 780-6726
TENSOR 3073

STRUCTURE: VT RTE 107 OVER WHITE RIVER	DRAWN: EEO	DATE: 10/12
	CHKD: PCP	DATE: 10/14
LOCATION: BETHEL, VT.	JOB NO. 498	DWG NO. 18
PROJ NO. BRF 022-1(14)		REV. △
CUSTOMER: BECK & BELLUCCI		

EEO Thu, Nov 17, 2011 08:53:18 PM //users/jobs/3073/18.dwg

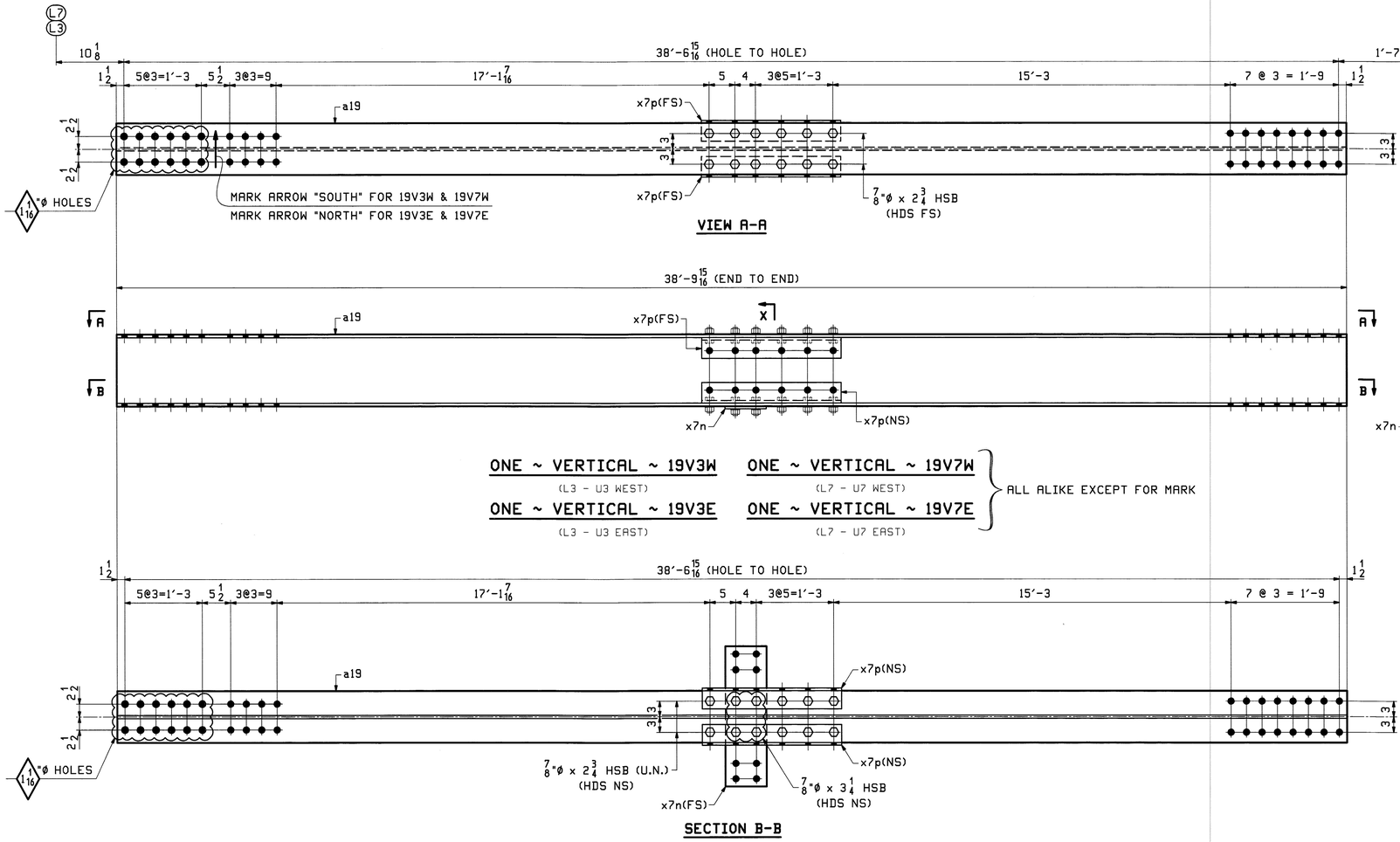

ABM INFO		SHIP	BILL OF MATERIAL					JOB NO.	DRAWING NO.	REV.
								498	19	
PAGE	LINE	MARK	QTY	MARK	MATERIAL	LENGTH FT	LENGTH INCHES	REMARKS	WT	PROCUREMENT NOTES
		19V3W	1		VERTICAL				2537	
6	K		1	a19	W 14x61	38	9 15/16	M270-50T2		
5	E		1	x7n	PL 1/2x8	2	3			
5	D		4	x7p	L 4x4x1/2	2	3	M270-36		
21	E		20		7/8ø HSB	0	2 3/4	MECH. GALV. A325-1		
21	G		4		7/8ø HSB	0	3 1/4	MECH. GALV. A325-1		
21	X		24		7/8ø HSW			MECH. GALV. F436		
21	Y		24		LOAD IND. 7/8ø WASH FOR HSB			MECH. GALV. F436		
		19V3E	1		VERTICAL				2537	
6	K		1	a19	W 14x61	38	9 15/16	M270-50T2		
5	E		1	x7n	PL 1/2x8	2	3			
5	D		4	x7p	L 4x4x1/2	2	3	M270-36		
21	E		20		7/8ø HSB	0	2 3/4	MECH. GALV. A325-1		
21	G		4		7/8ø HSB	0	3 1/4	MECH. GALV. A325-1		
21	X		24		7/8ø HSW			MECH. GALV. F436		
21	Y		24		LOAD IND. 7/8ø WASH FOR HSB			MECH. GALV. F436		
		19V7W	1		VERTICAL				2537	
6	K		1	a19	W 14x61	38	9 15/16	M270-50T2		
5	E		1	x7n	PL 1/2x8	2	3			
5	D		4	x7p	L 4x4x1/2	2	3	M270-36		
21	E		20		7/8ø HSB	0	2 3/4	MECH. GALV. A325-1		
21	G		4		7/8ø HSB	0	3 1/4	MECH. GALV. A325-1		
21	X		24		7/8ø HSW			MECH. GALV. F436		
21	Y		24		LOAD IND. 7/8ø WASH FOR HSB			MECH. GALV. F436		
		19V7E	1		VERTICAL				2537	
6	K		1	a19	W 14x61	38	9 15/16	M270-50T2		
5	E		1	x7n	PL 1/2x8	2	3			
5	D		4	x7p	L 4x4x1/2	2	3	M270-36		
21	E		20		7/8ø HSB	0	2 3/4	MECH. GALV. A325-1		
21	G		4		7/8ø HSB	0	3 1/4	MECH. GALV. A325-1		
21	X		24		7/8ø HSW			MECH. GALV. F436		
21	Y		24		LOAD IND. 7/8ø WASH FOR HSB			MECH. GALV. F436		

NOTES:
1. FOR GENERAL NOTES SEE SHEET GN1.

Vermont Agency of Transportation
RECEIVED
CK'D BY M.C.L. OK'D BY S.S.S.
January 10 2012
RESUBMIT APPROVED ✓
BY J. LACROIX DATE 01-12-2012

REV.	DATE	REMARKS	DWN	CHK	APVL	SHOP
0					JAN 9 2012 NOV 18 2011	

MATERIAL:	SURFACE PREP. & PAINT:	HOLES:	SHOP BOLTS:
M270-50 (UN)	HOT-DIP GALV.	15/16ø (UN)	7/8ø (UN)

DESCRIPTION: VERTICALS (L3-U3,L7-U7)

CASCO BAY STEEL STRUCTURES, INC.
1 WALLACE AVE. PHONE (207) 780-6722
SOUTH PORTLAND, ME 04106 FAX. (207) 780-6726
TENSOR 3073

STRUCTURE: VT RTE 107 OVER WHITE RIVER	DRAWN: EEO	DATE: 10/13
	CHK'D: PCP	DATE: 11/11
LOCATION: BETHEL, VT.	JOB NO. 498	DWG NO. 19
PROJ NO. BRF 022-1(14)		
CUSTOMER: BECK & BELLUCCI		REV. △

PCP Wed, Nov 2, 2011 01:18:03 PM //users/jobs/3073/01.dwg

ABM INFO PAGE	ABM INFO LINE	SHIP MARK	QTY	BILL OF MATERIAL MARK	MATERIAL	LENGTH FT	LENGTH INCHES	REMARKS	WT	PROCUREMENT NOTES
		20V5W	1		VERTICAL				2628	
6	L		1	a20	W 14x61	40	$3\frac{15}{16}$	M270-50T2		
5	E		1	x7n	PL $\frac{1}{2}$x8	2	3			
5	D		4	x7p	L 4x4x$\frac{1}{2}$	2	3	M270-36		
21	E		20		$\frac{7}{8}$ ø HSB	0	$2\frac{3}{4}$	MECH. GALV. A325-1		
21	G		4		$\frac{7}{8}$ ø HSB	0	$3\frac{1}{4}$	MECH. GALV. A325-1		
21	X		24		$\frac{7}{8}$ ø HSW			MECH. GALV. F436		
21	Y		24		LOAD IND. $\frac{7}{8}$ ø WASH FOR $\frac{7}{8}$ ø HSB			MECH. GALV. F436		
		20V5E	1		VERTICAL				2628	
6	L		1	a20	W 14x61	40	$3\frac{15}{16}$	M270-50T2		
5	E		1	x7n	PL $\frac{1}{2}$x8	2	3			
5	D		4	x7p	L 4x4x$\frac{1}{2}$	2	3	M270-36		
21	E		20		$\frac{7}{8}$ ø HSB	0	$2\frac{3}{4}$	MECH. GALV. A325-1		
21	G		4		$\frac{7}{8}$ ø HSB	0	$3\frac{1}{4}$	MECH. GALV. A325-1		
21	X		24		$\frac{7}{8}$ ø HSW			MECH. GALV. F436		
21	Y		24		LOAD IND. $\frac{7}{8}$ ø WASH FOR $\frac{7}{8}$ ø HSB			MECH. GALV. F436		

JOB NO. 498 | DRAWING NO. 20 | REV.

ABM INFO PAGE	ABM INFO LINE	SHIP MARK	QTY	BILL OF MATERIAL MARK	MATERIAL	LENGTH FT	LENGTH INCHES	REMARKS	WT	PROCUREMENT NOTES
		20V4W	1		VERTICAL				2628	
6	L		1	a20	W 14x61	40	$3\frac{15}{16}$	M270-50T2		
5	E		1	x7n	PL $\frac{1}{2}$x8	2	3			
5	D		4	x7p	L 4x4x$\frac{1}{2}$	2	3	M270-36		
21	E		20		$\frac{7}{8}$ ø HSB	0	$2\frac{3}{4}$	MECH. GALV. A325-1		
21	G		4		$\frac{7}{8}$ ø HSB	0	$3\frac{1}{4}$	MECH. GALV. A325-1		
21	X		24		$\frac{7}{8}$ ø HSW			MECH. GALV. F436		
21	Y		24		LOAD IND. $\frac{7}{8}$ ø WASH FOR $\frac{7}{8}$ ø HSB			MECH. GALV. F436		
		20V4E	1		VERTICAL				2628	
6	L		1	a20	W 14x61	40	$3\frac{15}{16}$	M270-50T2		
5	E		1	x7n	PL $\frac{1}{2}$x8	2	3			
5	D		4	x7p	L 4x4x$\frac{1}{2}$	2	3	M270-36		
21	E		20		$\frac{7}{8}$ ø HSB	0	$2\frac{3}{4}$	MECH. GALV. A325-1		
21	G		4		$\frac{7}{8}$ ø HSB	0	$3\frac{1}{4}$	MECH. GALV. A325-1		
21	X		24		$\frac{7}{8}$ ø HSW			MECH. GALV. F436		
21	Y		24		LOAD IND. $\frac{7}{8}$ ø WASH FOR $\frac{7}{8}$ ø HSB			MECH. GALV. F436		
		20V6W	1		VERTICAL				2628	
6	L		1	a20	W 14x61	40	$3\frac{15}{16}$	M270-50T2		
5	E		1	x7n	PL $\frac{1}{2}$x8	2	3			
5	D		4	x7p	L 4x4x$\frac{1}{2}$	2	3	M270-36		
21	E		20		$\frac{7}{8}$ ø HSB	0	$2\frac{3}{4}$	MECH. GALV. A325-1		
21	G		4		$\frac{7}{8}$ ø HSB	0	$3\frac{1}{4}$	MECH. GALV. A325-1		
21	X		24		$\frac{7}{8}$ ø HSW			MECH. GALV. F436		
21	Y		24		LOAD IND. $\frac{7}{8}$ ø WASH FOR $\frac{7}{8}$ ø HSB			MECH. GALV. F436		
		20V6E	1		VERTICAL				2628	
6	L		1	a20	W 14x61	40	$3\frac{15}{16}$	M270-50T2		
5	E		1	x7n	PL $\frac{1}{2}$x8	2	3			
5	D		4	x7p	L 4x4x$\frac{1}{2}$	2	3	M270-36		
21	E		20		$\frac{7}{8}$ ø HSB	0	$2\frac{3}{4}$	MECH. GALV. A325-1		
21	G		4		$\frac{7}{8}$ ø HSB	0	$3\frac{1}{4}$	MECH. GALV. A325-1		
21	X		24		$\frac{7}{8}$ ø HSW			MECH. GALV. F436		
21	Y		24		LOAD IND. $\frac{7}{8}$ ø WASH FOR $\frac{7}{8}$ ø HSB			MECH. GALV. F436		

JOB NO. 498 | DRAWING NO. 20 | REV.

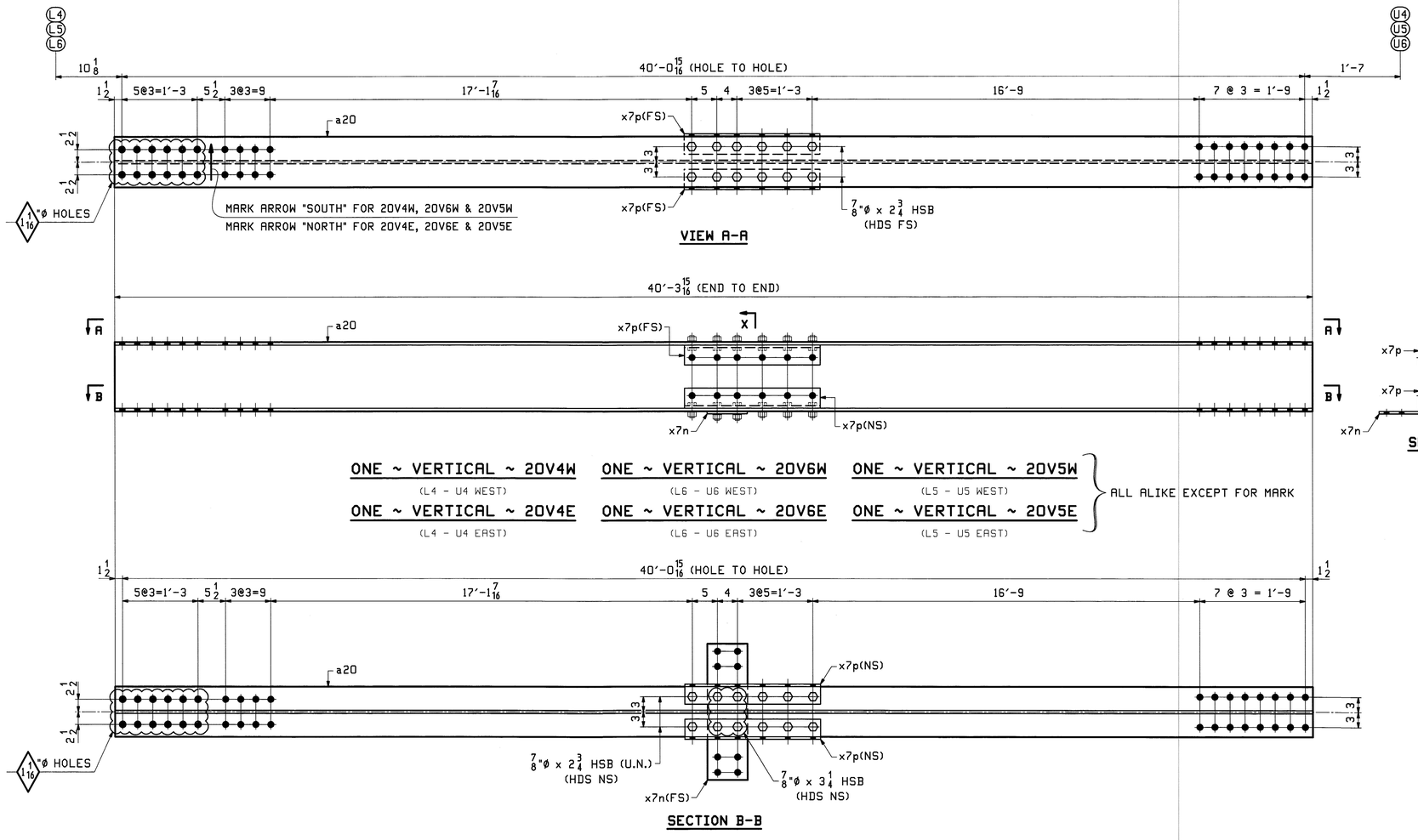

VIEW A-A

SECTION-X

ONE ~ VERTICAL ~ 20V4W (L4 - U4 WEST)
ONE ~ VERTICAL ~ 20V6W (L6 - U6 WEST)
ONE ~ VERTICAL ~ 20V5W (L5 - U5 WEST)
ONE ~ VERTICAL ~ 20V4E (L4 - U4 EAST)
ONE ~ VERTICAL ~ 20V6E (L6 - U6 EAST)
ONE ~ VERTICAL ~ 20V5E (L5 - U5 EAST)
} ALL ALIKE EXCEPT FOR MARK

SECTION B-B

Vermont Agency of Transportation
RECEIVED
CK'D BY M.C.L. OK'D BY S.S.S.
January 10 2012
RESUBMIT APPROVED ✓
BY J. LACROIX DATE 01-12-2012

NOTES:
1. FOR GENERAL NOTES SEE SHEET GN1.

REV.	DATE	REMARKS	DWN	CHK	APVL	SHOP
0						

JAN 9 2012
NOV 18 2011

MATERIAL:	SURFACE PREP. & PRINT:	HOLES:	SHOP BOLTS:
M270-50 (UN)	HOT-DIP GALV.	$\frac{15}{16}$ø (UN)	$\frac{7}{8}$ø (UN)

DESCRIPTION: VERTICALS (L4-U4, L6-U6, L5-U5)

CASCO BAY STEEL STRUCTURES, INC.
1 WALLACE AVE. PHONE (207) 780-6722
SOUTH PORTLAND, ME 04106 FAX. (207) 780-6726
TENSOR 3073

STRUCTURE: VT RTE 107 OVER WHITE RIVER	DRAWN: EEO	DATE: 10/13
	CHK'D: PCP	DATE: 10/14
LOCATION: BETHEL, VT.	JOB NO. 498	DWG NO. 20
PROJ NO. BRF 022-1(14)		REV. △
CUSTOMER: BECK & BELLUCCI		

PCP Thu, Nov 17, 2011 10:20:10 PM //casco-jobs/2012/20_Rev0

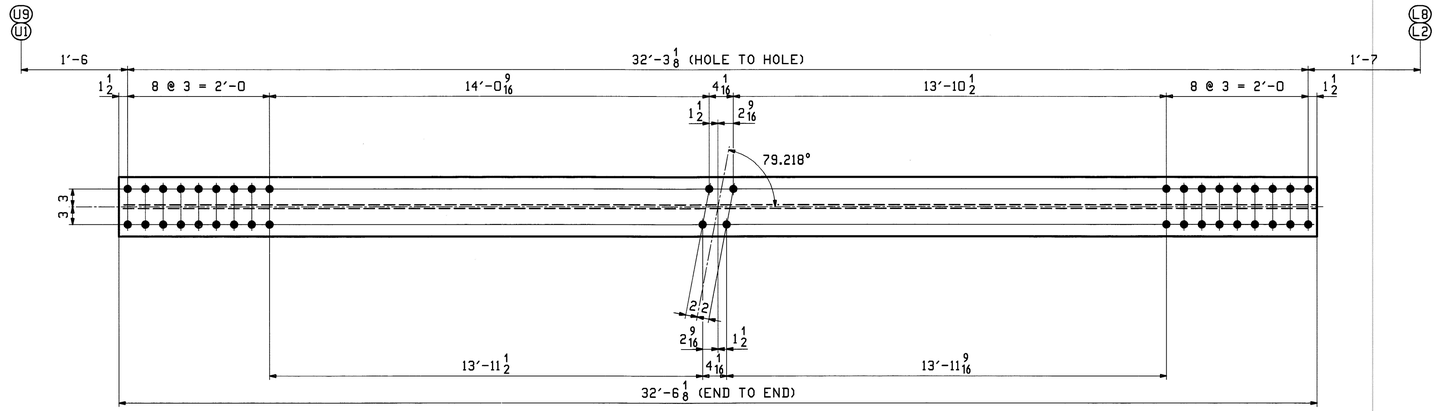

ONE ~ DIAGONAL ~ 21D1W (U1 - L2 WEST)
ONE ~ DIAGONAL ~ 21D1E (U1 - L2 EAST)
ONE ~ DIAGONAL ~ 21D8W (U9 - L8 WEST)
ONE ~ DIAGONAL ~ 21D8E (U9 - L8 EAST)
ALL ALIKE EXCEPT FOR MARK

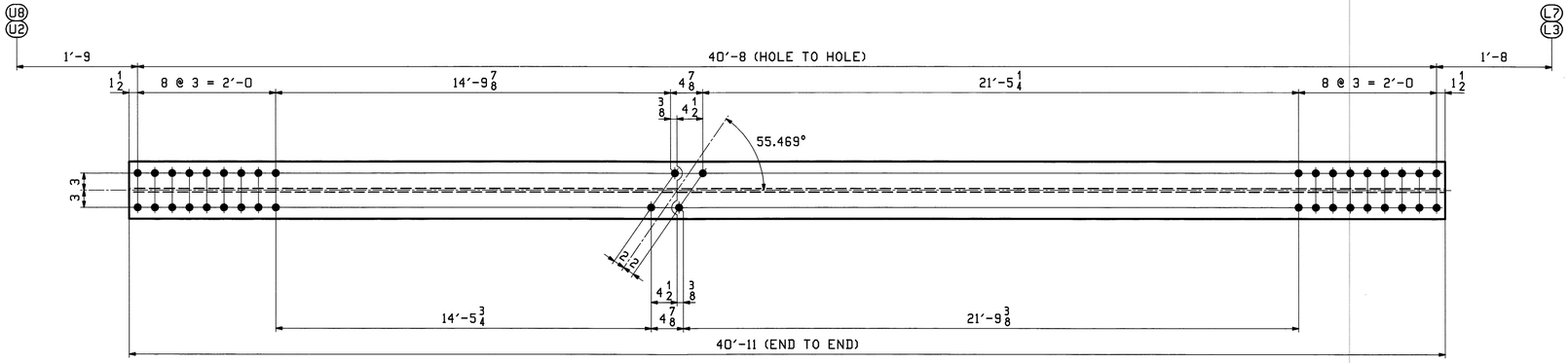

ONE ~ DIAGONAL ~ 21D2W (U2 - L3 WEST)
ONE ~ DIAGONAL ~ 21D2E (U2 - L3 EAST)
ONE ~ DIAGONAL ~ 21D7W (U8 - L7 WEST)
ONE ~ DIAGONAL ~ 21D7E (U8 - L7 EAST)
ALL ALIKE EXCEPT FOR MARK

ABM INFO		SHIP	BILL OF MATERIAL					JOB NO.	DRAWING NO.	REV.
								498	21	
PAGE	LINE	MARK	QTY	MARK	MATERIAL	LENGTH FT	LENGTH INCHES	REMARKS	WT	PROCUREMENT NOTES
6	P	21D1W	1		W 14x61	32	6 1/8	M270-50T2	1983	
6	P	21D1E	1		W 14x61	32	6 1/8	M270-50T2	1983	
6	P	21D8W	1		W 14x61	32	6 1/8	M270-50T2	1983	
6	P	21D8E	1		W 14x61	32	6 1/8	M270-50T2	1983	
6	Q	21D2W	1		W 14x61	40	11	M270-50T2	2496	
6	Q	21D2E	1		W 14x61	40	11	M270-50T2	2496	
6	Q	21D7W	1		W 14x61	40	11	M270-50T2	2496	
6	Q	21D7E	1		W 14x61	40	11	M270-50T2	2496	

Vermont Agency of Transportation
RECEIVED
CK'D BY M.C.L. OK'D BY S.S.S.
January 10 2012
RESUBMIT APPROVED ✓
BY J. LACROIX DATE 01-12-2012

NOTES:
1. FOR GENERAL NOTES SEE SHEET GN1.
2. HOLES IN BOTH FLANGES ARE ALIKE.

REV.	DATE	REMARKS	DWN	CHK	APVL	SHOP
0					JAN 9 2012 NOV 18 2011	

MATERIAL:	SURFACE PREP. & PAINT:	HOLES:	SHOP BOLTS:
M270-50 (UN)	HOT-DIP GALV.	15/16 ø (UN)	NONE

DESCRIPTION: DIAGONALS (U1-L2, U9-L8, U2-L3, U8-L7)

CASCO BAY STEEL STRUCTURES, INC.
1 WALLACE AVE. PHONE (207) 780-6722
SOUTH PORTLAND, ME 04106 FAX. (207) 780-6726
TENSOR 3073

STRUCTURE: VT RTE 107 OVER WHITE RIVER	DRAWN: EEO	DATE: 10/13
	CHKD: PCP	DATE: 10/14
LOCATION: BETHEL, VT.	JOB NO.	DWG NO.
PROJ NO. BRF 022-1(14)	498	21
CUSTOMER: BECK & BELLUCCI		REV. △

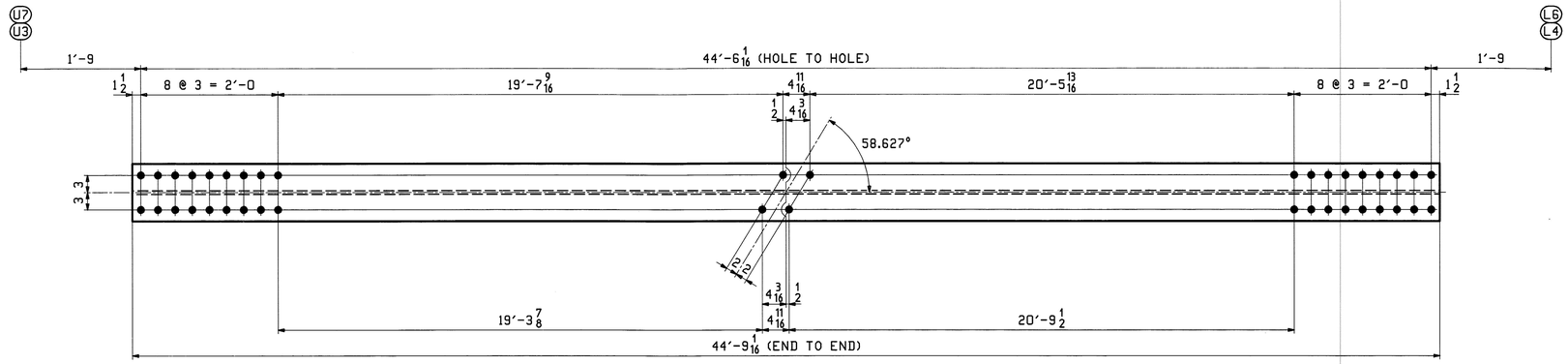

ONE ~ DIAGONAL ~ 22D3W (U3 - L4 WEST)
ONE ~ DIAGONAL ~ 22D3E (U3 - L4 EAST)
ONE ~ DIAGONAL ~ 22D6W (U7 - L6 WEST)
ONE ~ DIAGONAL ~ 22D6E (U7 - L6 EAST)
ALL ALIKE EXCEPT FOR MARK

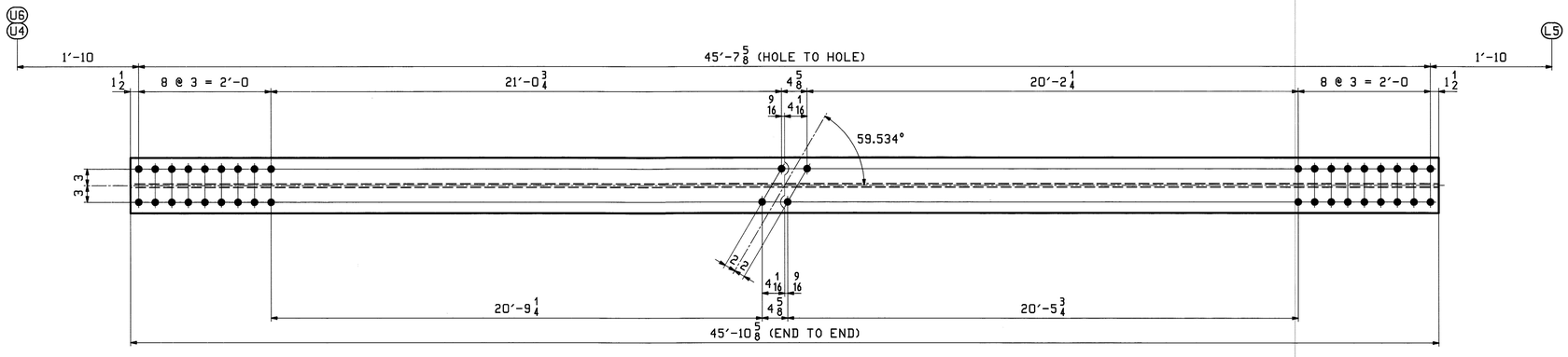

ONE ~ DIAGONAL ~ 22D4W (U4 - L5 WEST)
ONE ~ DIAGONAL ~ 22D4E (U4 - L5 EAST)
ONE ~ DIAGONAL ~ 22D5W (U6 - L5 WEST)
ONE ~ DIAGONAL ~ 22D5E (U6 - L5 EAST)
ALL ALIKE EXCEPT FOR MARK

ABM INFO		SHIP	BILL OF MATERIAL					JOB NO.	DRAWING NO.	REV.
								498	22	
PAGE	LINE	MARK	QTY	MARK	MATERIAL	LENGTH FT	LENGTH INCHES	REMARKS	WT	PROCUREMENT NOTES
6	R	22D3W	1		W 14x61	44	9 1/16	M270-50T2	2730	
6	R	22D3E	1		W 14x61	44	9 1/16	M270-50T2	2730	
6	R	22D6W	1		W 14x61	44	9 1/16	M270-50T2	2730	
6	R	22D6E	1		W 14x61	44	9 1/16	M270-50T2	2730	
6	S	22D4W	1		W 14x61	45	10 5/8	M270-50T2	2799	
6	S	22D4E	1		W 14x61	45	10 5/8	M270-50T2	2799	
6	S	22D5W	1		W 14x61	45	10 5/8	M270-50T2	2799	
6	S	22D5E	1		W 14x61	45	10 5/8	M270-50T2	2799	

Vermont Agency of Transportation
RECEIVED
CK'D BY M.C.L. OK'D BY S.S.S.
January 10 2012
RESUBMIT APPROVED ✓
BY J. LACROIX DATE 01-12-2012

NOTES:
1. FOR GENERAL NOTES SEE SHEET GN1.
2. HOLES IN BOTH FLANGES ARE ALIKE.

REV.	DATE	REMARKS	DWN	CHK	APVL	SHOP
0					JAN 9 2012 / NOV 18 2011	

MATERIAL:	SURFACE PREP. & PAINT:	HOLES:	SHOP BOLTS:
M270-50 (UN)	HOT-DIP GALV.	15/16 ø (UN)	7/8 ø (UN)

DESCRIPTION: DIAGONALS (U3-L4, U7-L6, U4-L5, U6-L5)

CASCO BAY STEEL STRUCTURES, INC.
1 WALLACE AVE. PHONE (207) 780-6722
SOUTH PORTLAND, ME 04106 FAX. (207) 780-6726
TENSOR 3073

STRUCTURE: VT RTE 107 OVER WHITE RIVER	DRAWN: EEO	DATE: 10/13
	CHKD: PCP	DATE: 11/11
LOCATION: BETHEL, VT.	JOB NO.	DWG NO.
PROJ NO. BRF 022-1(14)	498	22
CUSTOMER: BECK & BELLUCCI		REV. △

PCP Wed, Nov 2, 2011 05:16:44 PM /users/jobs/3073/22 : Rev0

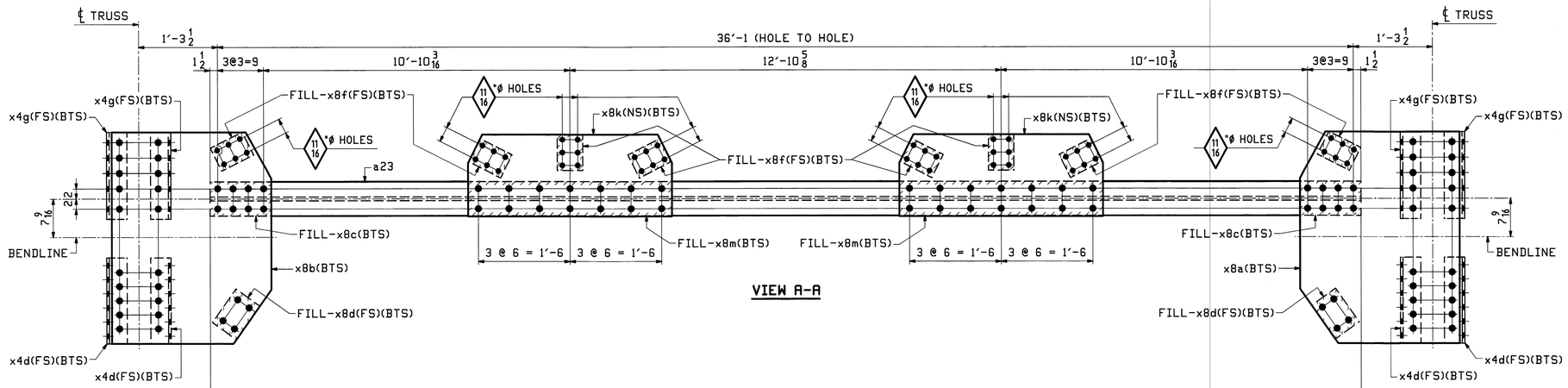

VIEW A-A

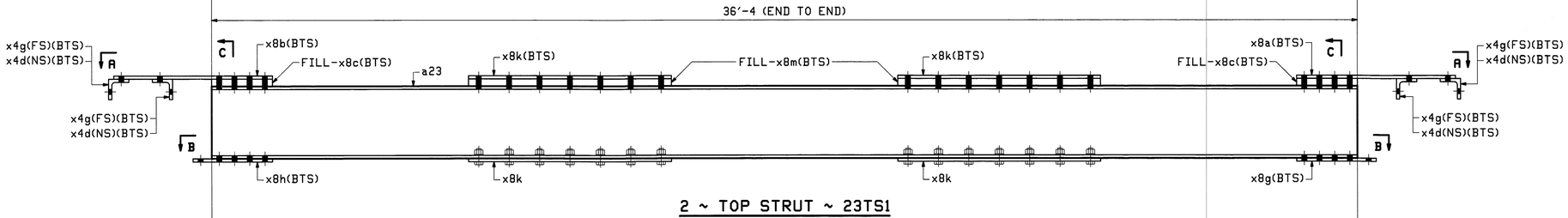

2 ~ TOP STRUT ~ 23TS1

LOOKING BACKSTATION @ U1
LOOKING UPSTATION @ U9

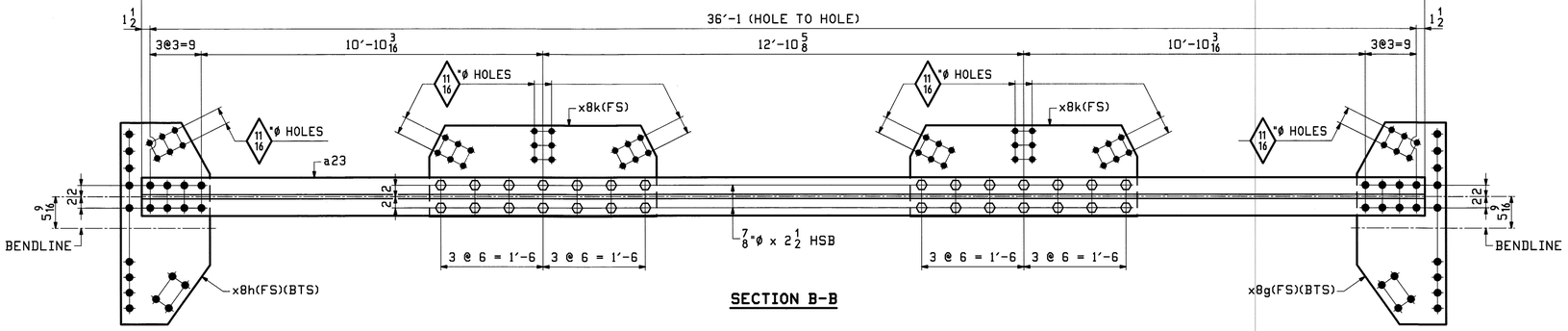

SECTION B-B

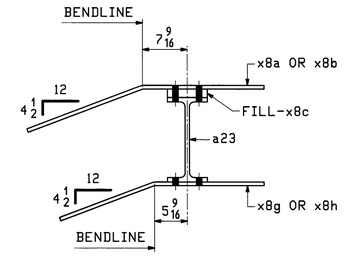

SECTION-C

ABM INFO PAGE	ABM INFO LINE	SHIP MARK	QTY	MARK	MATERIAL	LENGTH FT	LENGTH INCHES	REMARKS	WT	PROCUREMENT NOTES
		23TS1	2		TOP STRUT				2890	
6	W		2	a23	W 14x38	36	4			
9	H		8	x4d	L 4x4x 1/2	1	4 3/4	M270-36		
9	H		8	x4g	L 4x4x 1/2	1	5	M270-36		
9	B		2	x8a	PL 1/2x31 5/16	3	5 5/16	BENT		
9	B		2	x8b	PL 1/2x31 5/16	3	5 5/16	BENT		
8	V		4	x8c	PL 1 1/16x5 3/4	1	0	FILL		
9	F		4	x8d	PL 1 3/8x5 3/4	0	8	FILL		
8	U		16	x8f	PL 1 3/8x5	0	7	FILL		
9	C		2	x8g	PL 1/2x15 11/16	2	11 9/16	BENT		
9	C		2	x8h	PL 1/2x15 11/16	2	11 9/16	BENT		
8	R		8	x8k	PL 1/2x16	3	4			
8	X		4	x8m	PL 1 1/16x6 3/4	3	4	FILL		
21	D		56		7/8 ø HSB	0	2 1/2	MECH. GALV. A325-1		
21	X		56		7/8 ø HSW			MECH. GALV. F436		
21	Y		56		LOAD IND. WASH FOR 7/8 ø HSB			MECH. GALV. F436		

Vermont Agency of Transportation
RECEIVED
CK'D BY M.C.L. OK'D BY S.S.S.
January 10 2012
RESUBMIT APPROVED ✓
BY J. LACROIX DATE 01-12-2012

NOTES:
1. FOR GENERAL NOTES SEE SHEET GN1.

REV.	DATE	REMARKS	DWN	CHK	APVL	SHOP
					JAN 9 2012	
0					NOV 18 2011	

MATERIAL:	SURFACE PREP. & PAINT:	HOLES:	SHOP BOLTS:
M270-50 (UN)	HOT-DIP GALV.	15/16ø (UN)	7/8ø (UN)

DESCRIPTION: TOP STRUT 23TS1

CASCO BAY STEEL STRUCTURES, INC.
1 WALLACE AVE. PHONE (207) 780-6722
SOUTH PORTLAND, ME 04106 FAX. (207) 780-6726
TENSOR 3073

STRUCTURE: VT RTE 107 OVER WHITE RIVER	DRAWN: EEO	DATE: 10/14
	CHKD: PCP	DATE: 10/18
LOCATION: BETHEL, VT.	JOB NO.	DWG NO.
PROJ NO. BRF 022-1(14)	498	23
CUSTOMER: BECK & BELLUCCI		REV. △

ECO Thu Nov 17, 2011 08:04:27 AM //users/jobs/3073-23 - Rev0

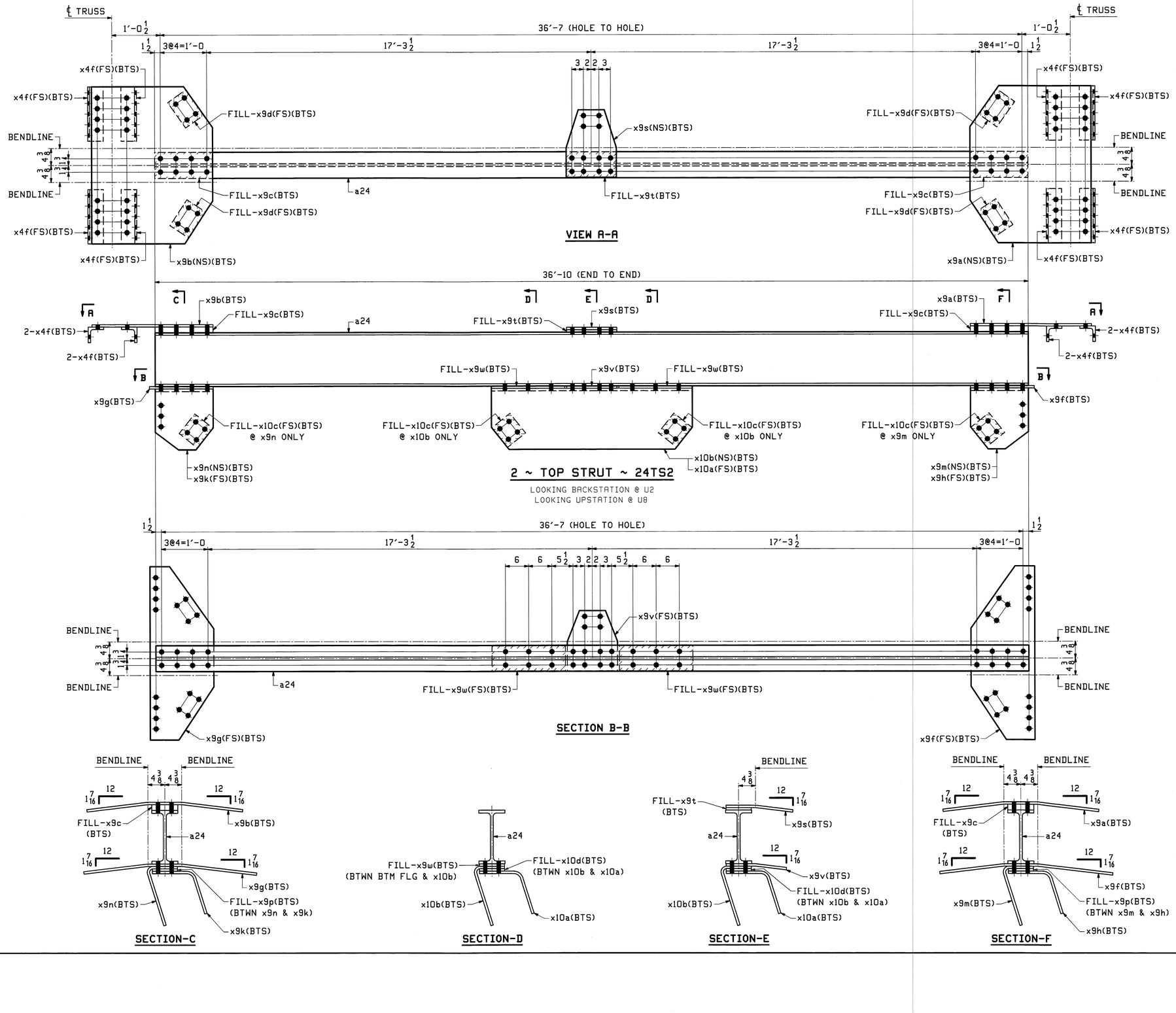

ABM INFO		SHIP	BILL OF MATERIAL					JOB NO.	DRAWING NO.	REV.
								498	24	
PAGE	LINE	MARK	QTY	MARK	MATERIAL	LENGTH FT	LENGTH INCHES	REMARKS	WT	PROCUREMENT NOTES
		24TS2	2		TOP STRUT				2762	
6	X		2	a24	W 14x30	36	10			
9	U		16	x4f	L 4x4x 1/2	1	2	M270-36		
9	M		2	x9a	PL 1/2x31 5/16	3	4 1/2	BENT		
9	M		2	x9b	PL 1/2x31 5/16	3	4 1/2	BENT		
9	P		4	x9c	PL 1 1/2x6 3/4	1	3	FILL		
9	Q		8	x9d	PL 1 3/8x5 3/4	0	8	FILL		
9	N		2	x9f	PL 1/2x16 1/2	3	9	BENT		
9	N		2	x9g	PL 1/2x16 1/2	3	9	BENT		
11	P		2	x9h	PL 1/2x15	1	9 1/4	BENT		
11	P		2	x9k	PL 1/2x15	1	9 1/4	BENT		
11	P		2	x9m	PL 1/2x15	1	10 11/16	BENT		
11	P		2	x9n	PL 1/2x15	1	10 11/16	BENT		
11	X		4	x9p	PL 1/2x6 1/2	1	3	FILL		
11	Q		2	x9s	PL 1/2x13	1	5 3/8	BENT		
11	T		2	x9t	PL 1/8x6 1/2	1	1	FILL		
11	Q		2	x9v	PL 1/2x13	1	3 5/8	BENT		
11	W		4	x9w	PL 1/2x6 1/2	1	7	FILL		
11	M		2	x10a	PL 1/2x52	1	9 1/4	BENT		
11	M		2	x10b	PL 1/2x52	1	10 11/16	BENT		
11	S		8	x10c	PL 2 13/16x6	0	6 1/2	FILL		
11	V		2	x10d	PL 1/2x6 1/2	4	4	FILL		

Vermont Agency of Transportation

RECEIVED

CK'D BY M.C.L. OK'D BY S.S.S.

January 10 2012

RESUBMIT APPROVED ✓

BY J. LACROIX DATE 01-12-2012

NOTES:

1. FOR GENERAL NOTES SEE SHEET GN1.

REV.	DATE	REMARKS	DWN	CHK	APVL	SHOP
0					JAN 9 2012	
					NOV 18 2011	

MATERIAL:	SURFACE PREP. & PAINT:	HOLES:	SHOP BOLTS:
M270-50 (UN)	HOT-DIP GALV.	15/16ø (UN)	NONE

DESCRIPTION: TOP STRUT 24TS2

CASCO BAY STEEL STRUCTURES, INC.
1 WALLACE AVE. PHONE (207) 780-6722
SOUTH PORTLAND, ME 04106 FAX. (207) 780-6726

TENSOR 3073

STRUCTURE: VT RTE 107 OVER WHITE RIVER	DRAWN: EEO	DATE: 10/17
	CHK'D: PCP	DATE: 10/31
LOCATION: BETHEL, VT.	JOB NO. 498	DWG NO. 24
PROJ NO. BRF 022-1(14)		REV. △
CUSTOMER: BECK & BELLUCCI		

EEO Thu, Nov 17, 2011 09:06:08 PM J:\users\jobs\3073\24\ Rev0

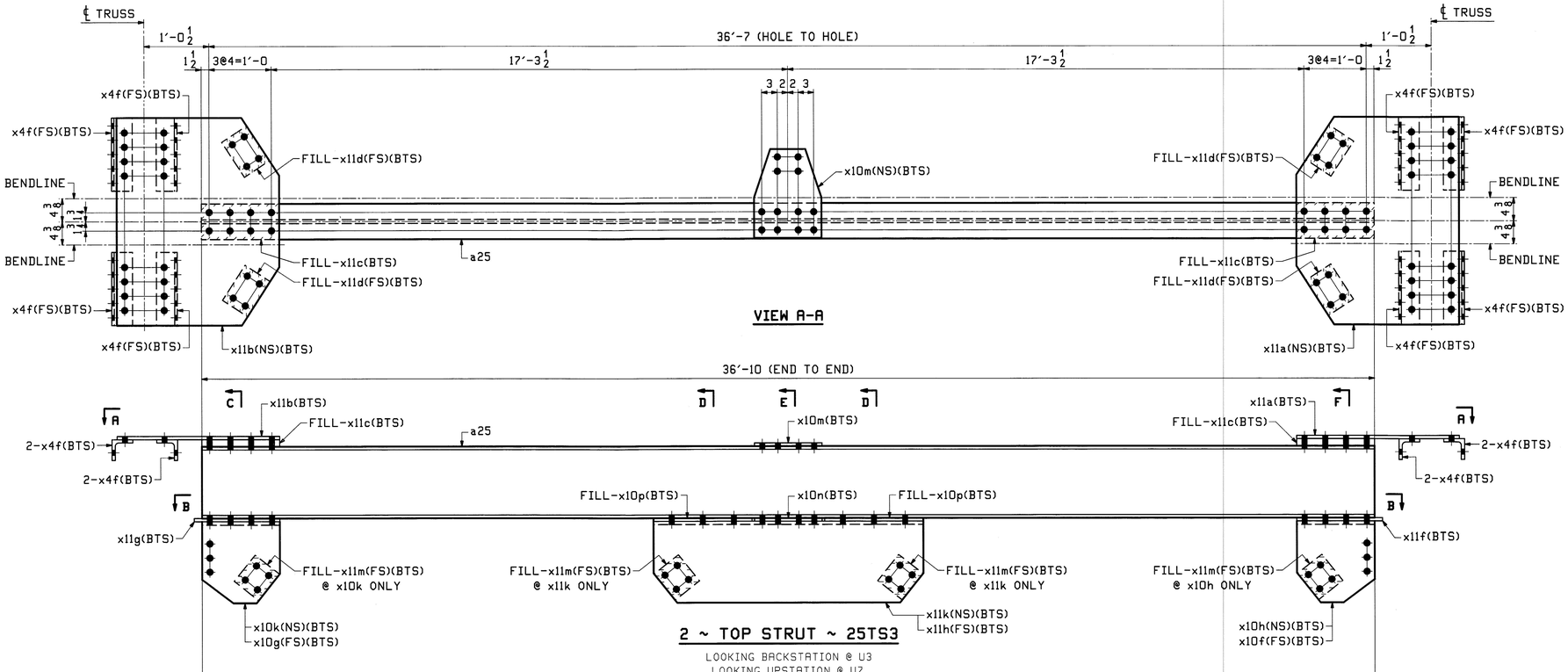

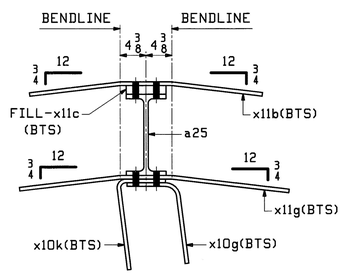

SECTION-C

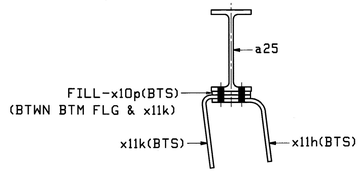

SECTION-D

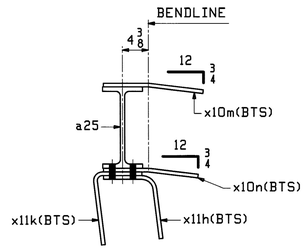

SECTION-E

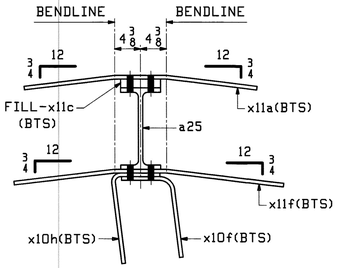

SECTION-F

ABM INFO		SHIP	BILL OF MATERIAL					JOB NO.	DRAWING NO.	REV.
								498	25	
PAGE	LINE	MARK	QTY	MARK	MATERIAL	LENGTH FT	LENGTH INCHES	REMARKS	WT	PROCUREMENT NOTES
		25TS3	2		TOP STRUT				2564	
6	X		2	a25	W 14x30	36	10			
10	J		16	x4f	L 4x4x 1/2	1	2	M270-36		
12	D		2	x10f	PL 1/2x15	1	11 15/16	BENT		
12	D		2	x10g	PL 1/2x15	1	11 15/16	BENT		
12	D		2	x10h	PL 1/2x15	2	1 5/16	BENT		
12	D		2	x10k	PL 1/2x15	2	1 5/16	BENT		
12	E		2	x10m	PL 1/2x13	1	4 15/16	BENT		
12	E		2	x10n	PL 1/2x13	1	4 15/16	BENT		
12	K		4	x10p	PL 1/2x6 1/2	1	2	FILL		
10	B		2	x11a	PL 1/2x31 5/16	3	3 5/8	BENT		
10	B		2	x11b	PL 1/2x31 5/16	3	3 5/8	BENT		
10	D		4	x11c	PL 1 3/8x6 3/4	1	3	FILL		
10	E		8	x11d	PL 1 3/8x5 3/4	0	8	FILL		
10	C		2	x11f	PL 1/2x16 1/2	3	9 7/8	BENT		
10	C		2	x11g	PL 1/2x16 1/2	3	9 7/8	BENT		
12	B		2	x11h	PL 1/2x42	1	8 15/16	BENT		
12	B		2	x11k	PL 1/2x42	1	10 5/16	BENT		
12	G		8	x11m	PL 1 1/16x6	0	6 1/2	FILL		

Vermont Agency of Transportation

RECEIVED

CK'D BY M.C.L. OK'D BY S.S.S.

January 10 2012

RESUBMIT APPROVED ✓

BY J. LACROIX DATE 01-12-2012

NOTES:

1. FOR GENERAL NOTES SEE SHEET GN1.

REV.	DATE	REMARKS	DWN	CHK	APVL	SHOP
					JAN 9 2012	
0					NOV 18 2011	

MATERIAL:	SURFACE PREP. & PAINT:	HOLES:	SHOP BOLTS:
M270-50 (UN)	HOT-DIP GALV.	15/16ø (UN)	7/8ø (UN)

DESCRIPTION: TOP STRUT 25TS3

CASCO BAY STEEL STRUCTURES, INC.
1 WALLACE AVE. PHONE (207) 780-6722
SOUTH PORTLAND, ME 04106 FAX. (207) 780-6726

TENSOR 3073

STRUCTURE: VT RTE 107 OVER WHITE RIVER	DRAWN: EEO	DATE: 10/21
	CHKD: PCP	DATE: 10/31
LOCATION: BETHEL, VT.	JOB NO. 498	DWG NO. 25
PROJ NO. BRF 022-1(14)		REV. △
CUSTOMER: BECK & BELLUCCI		

EEO Thu, Nov 17, 2011 09:08:39 AM J:\steel\jobs\3073\25\GenD

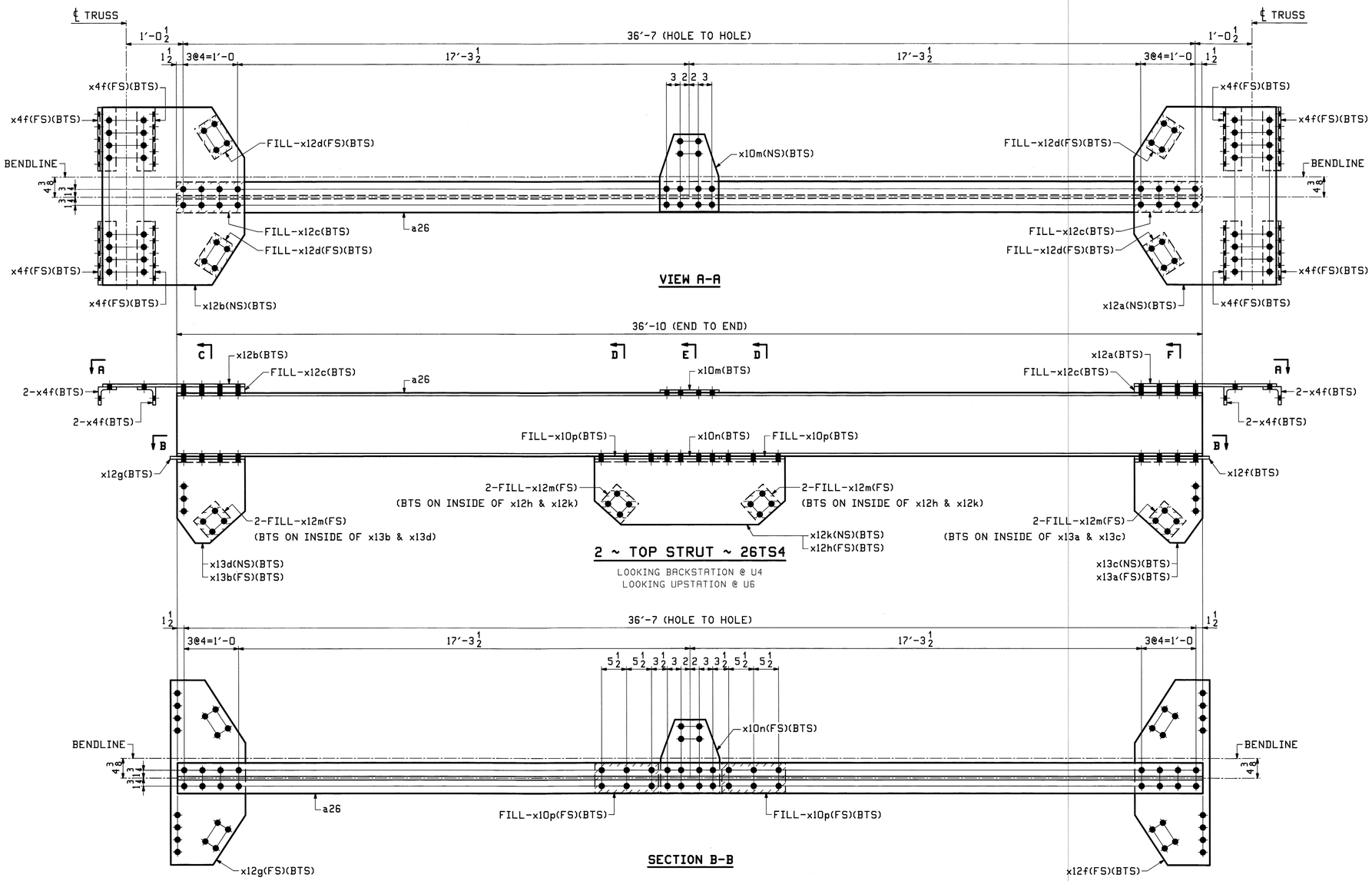

ABM INFO		SHIP	BILL OF MATERIAL					JOB NO.	DRAWING NO.	REV.
								498	26	
PAGE	LINE	MARK	QTY	MARK	MATERIAL	LENGTH FT	LENGTH INCHES	REMARKS	WT	PROCUREMENT NOTES
		26TS4	2		TOP STRUT				2479	
6	X		2	a26	W 14x30	36	10			
10	V		16	x4f	L 4x4x 1/2	1	2	*270-36		
12	S		2	x10m	PL 1/2x13	1	4 15/16	BENT		
12	S		2	x10n	PL 1/2x13	1	4 1/16	BENT		
12	W		4	x10p	PL 1/2x6 1/2	1	2	FILL		
10	N		2	x12a	PL 1/2x31 5/16	3	3	BENT		
10	N		2	x12b	PL 1/2x31 5/16	3	3	BENT		
10	Q		4	x12c	PL 1 3/8x6 3/4	1	3	FILL		
10	R		8	x12d	PL 1 3/8x5 3/4	0	8	FILL		
10	P		2	x12f	PL 1/2x16 1/2	3	4 13/16	BENT		
10	P		2	x12g	PL 1/2x16 1/2	3	4 13/16	BENT		
12	P		2	x12h	PL 1/2x42	1	8 13/16	BENT		
12	P		2	x12k	PL 1/2x42	1	9 5/16	BENT		
12	X		16	x12m	PL 3/16x6	0	6 1/2	FILL		
12	R		2	x13a	PL 1/2x15	2	0 13/16	BENT		
12	R		2	x13b	PL 1/2x15	2	0 13/16	BENT		
12	R		2	x13c	PL 1/2x15	2	1 5/16	BENT		
12	R		2	x13d	PL 1/2x15	2	1 5/16	BENT		

Vermont Agency of Transportation
RECEIVED
CK'D BY M.C.L. OK'D BY S.S.S.
January 10 2012
RESUBMIT ____ APPROVED ✓
BY J. LACROIX DATE 01-12-2012

NOTES:
1. FOR GENERAL NOTES SEE SHEET GN1.

REV.	DATE	REMARKS	DWN	CHK	APVL	SHOP
0					JAN 9 2012 NOV 18 2011	

MATERIAL:	SURFACE PREP. & PAINT:	HOLES:	SHOP BOLTS:
M270-50 (UN)	HOT-DIP GALV.	15/16Ø (UN)	7/8Ø (UN)

DESCRIPTION: TOP STRUT 26TS4

CASCO BAY STEEL STRUCTURES, INC.
1 WALLACE AVE. PHONE (207) 780-6722
SOUTH PORTLAND, ME 04106 FAX. (207) 780-6726
TENSOR 3073

STRUCTURE: VT RTE 107 OVER WHITE RIVER	DRAWN: EEO	DATE: 10/24
	CHKD: PCP	DATE: 10/31
LOCATION: BETHEL, VT.	JOB NO. 498	DWG NO. 26
PROJ NO. BRF 022-1(14)		
CUSTOMER: BECK & BELLUCCI		REV. △

EEO Thu, Nov 17, 2011 08:02:23 AM //corp/jobs/2012/26_Rev0

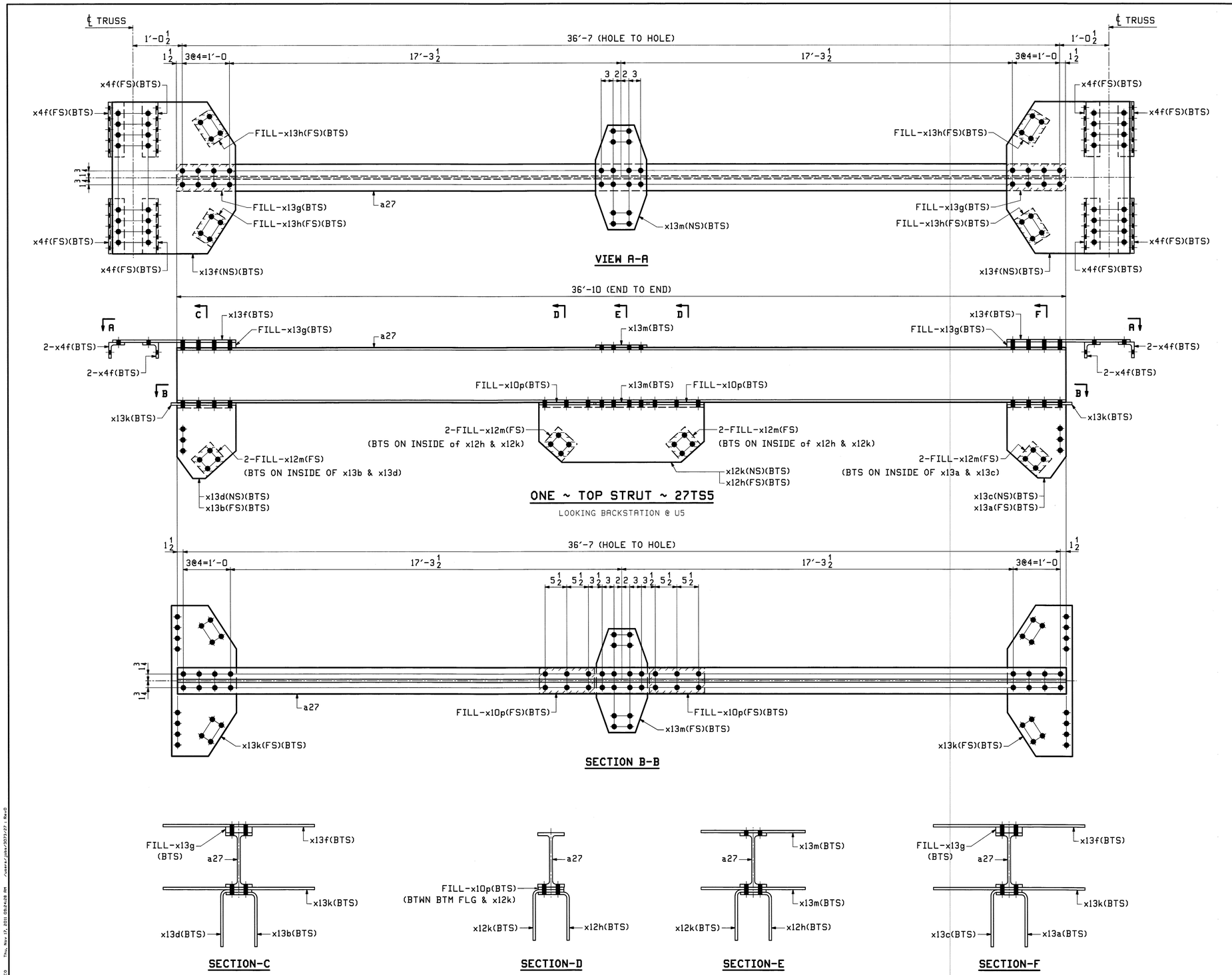

ABM INFO		SHIP	BILL OF MATERIAL					JOB NO.	DRAWING NO.	REV.
								498	27	
PAGE	LINE	MARK	QTY	MARK	MATERIAL	LENGTH FT	LENGTH INCHES	REMARKS	WT	PROCUREMENT NOTES
		27TS5	1		TOP STRUT				2501	
6	X		1	a27	W 14x30	36	10			
11	H		8	x4f	L 4x4x1/2	1	2	M270-36		
13	J		2	x10p	PL 1/2x6 1/2	1	2	FILL		
13	B		1	x12h	PL 1/2x42	1	8 13/16	BENT		
13	B		1	x12k	PL 1/2x42	1	9 5/16	BENT		
13	K		8	x12m	PL 3/16x6	0	6 1/2	FILL		
13	D		1	x13a	PL 1/2x15	2	0 13/16	BENT		
13	D		1	x13b	PL 1/2x15	2	0 13/16	BENT		
13	D		1	x13c	PL 1/2x15	2	1 5/16	BENT		
13	D		1	x13d	PL 1/2x15	2	1 5/16	BENT		
11	B		2	x13f	PL 1/2x31 5/16	3	2 1/2			
11	D		2	x13g	PL 1 3/8x6 3/4	1	3	FILL		
11	E		4	x13h	PL 1 3/8x5 3/4	0	8	FILL		
11	C		2	x13k	PL 1/2x16 1/2	3	2 1/2			
13	E		2	x13m	PL 1/2x13	2	2 1/2			

Vermont Agency of Transportation
RECEIVED
CK'D BY M.C.L. OK'D BY S.S.S.
January 10 2012
RESUBMIT APPROVED ✓
BY J. LACROIX DATE 01-12-2012

NOTES:
1. FOR GENERAL NOTES SEE SHEET GN1.

REV.	DATE	REMARKS	DWN	CHK	APVL	SHOP
0					JAN 9 2012 NOV 18 2011	

MATERIAL:	SURFACE PREP. & PAINT:	HOLES:	SHOP BOLTS:
M270-50 (UN)	HOT-DIP GALV.	15/16 ø (UN)	7/8 ø (UN)

DESCRIPTION: TOP STRUT 27TS5

CASCO BAY STEEL STRUCTURES, INC.
1 WALLACE AVE. PHONE (207) 780-6722
SOUTH PORTLAND, ME 04106 FAX. (207) 780-6726
TENSOR 3073

STRUCTURE: VT RTE 107 OVER WHITE RIVER	DRAWN: EEO	DATE: 10/24
	CHKD: PCP	DATE: 10/24
LOCATION: BETHEL, VT.	JOB NO.	DWG NO.
PROJ NO. BRF 022-1(14)	498	27
CUSTOMER: BECK & BELLUCCI		REV. △

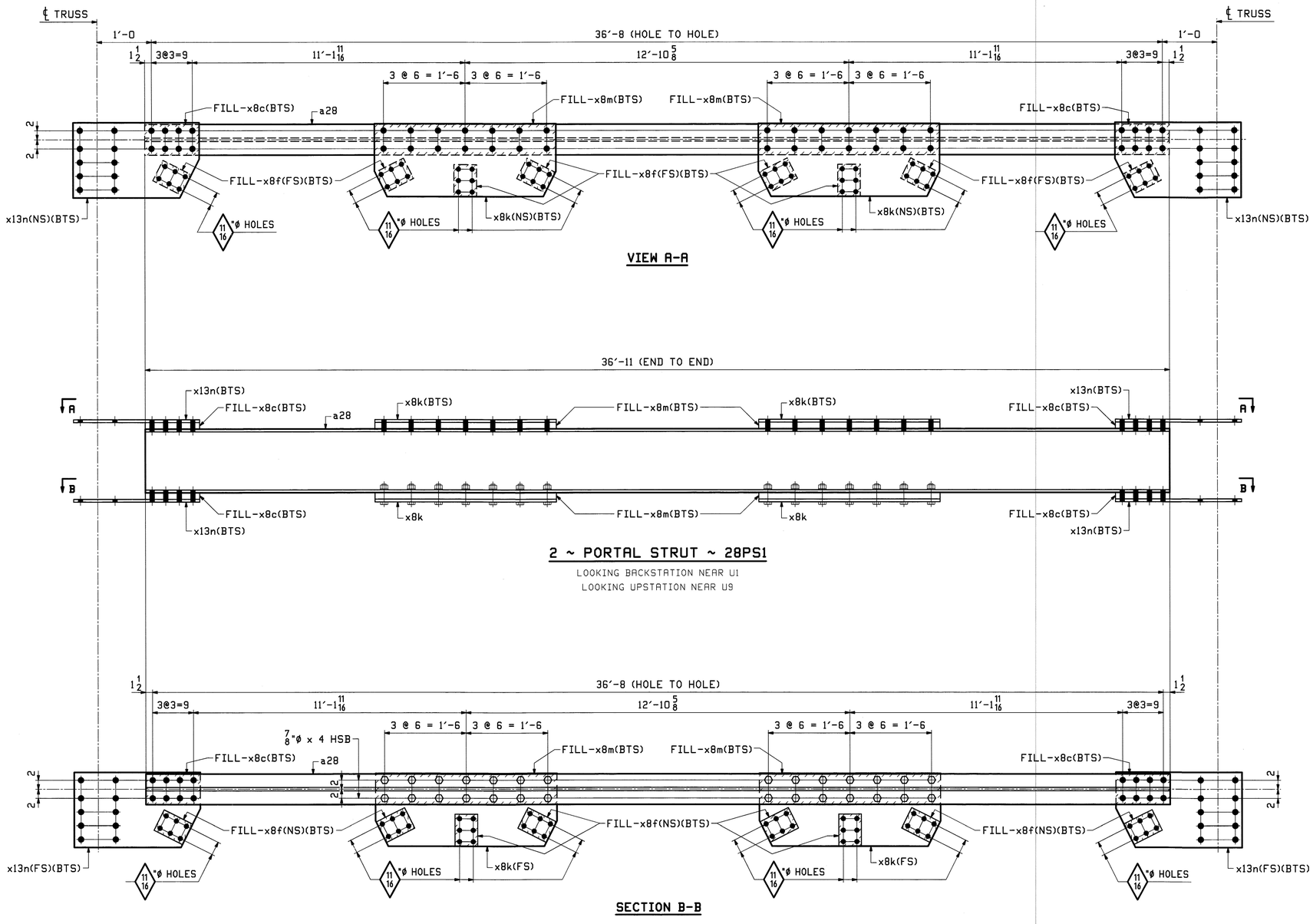

ABM INFO		SHIP	BILL OF MATERIAL					JOB NO. 498	DRAWING NO. 28	REV.
PAGE	LINE	MARK	QTY	MARK	MATERIAL	LENGTH FT	LENGTH INCHES	REMARKS	WT	PROCUREMENT NOTES
		28PS1	2		PORTAL STRUT				2883	
6	V		2	a28	W 14x38	36	11			
8	V		8	x8c	PL 1 7/16x6 3/4	1	0	FILL		
8	U		32	x8f	PL 1 5/8x5	0	7	FILL		
8	R		8	x8k	PL 1/2x16	3	4			
8	X		8	x8m	PL 1 7/16x6 3/4	3	4	FILL		
8	S		8	x13n	PL 1/2x16 1/2	2	3 13/16			
21	K		56		7/8 ø HSB	0	4	MECH. GALV. A325-1		
21	X		56		7/8 ø HSW			MECH. GALV. F436		
21	Y		56		LOAD IND. 7/8 ø HSB WASH FOR			MECH. GALV. F436		

Vermont Agency of Transportation
RECEIVED
CK'D BY M.C.L. OK'D BY S.S.S.
January 10 2012
RESUBMIT APPROVED ✓
BY J. LACROIX DATE 01-12-2012

NOTES:
1. FOR GENERAL NOTES SEE SHEET GN1.

REV.	DATE	REMARKS	DWN	CHK	APVL	SHOP
					JAN 9 2012	
0					NOV 18 2011	

MATERIAL:	SURFACE PREP. & PAINT:	HOLES:	SHOP BOLTS:
M270-50 (UN)	HOT-DIP GALV.	15/16 ø (UN)	7/8 ø (UN)

DESCRIPTION: END PORTAL STRUT 28PS1

CASCO BAY STEEL STRUCTURES, INC.
1 WALLACE AVE. PHONE (207) 780-6722
SOUTH PORTLAND, ME 04106 FAX. (207) 780-6726
TENSOR 3073

STRUCTURE: VT RTE 107 OVER WHITE RIVER	DRAWN: EEO	DATE: 10/25
	CHKD: PCP	DATE: 10/28
LOCATION: BETHEL, VT.	JOB NO.	DWG NO.
PROJ NO. BRF 022-1(14)	498	28
CUSTOMER: BECK & BELLUCCI		REV. △

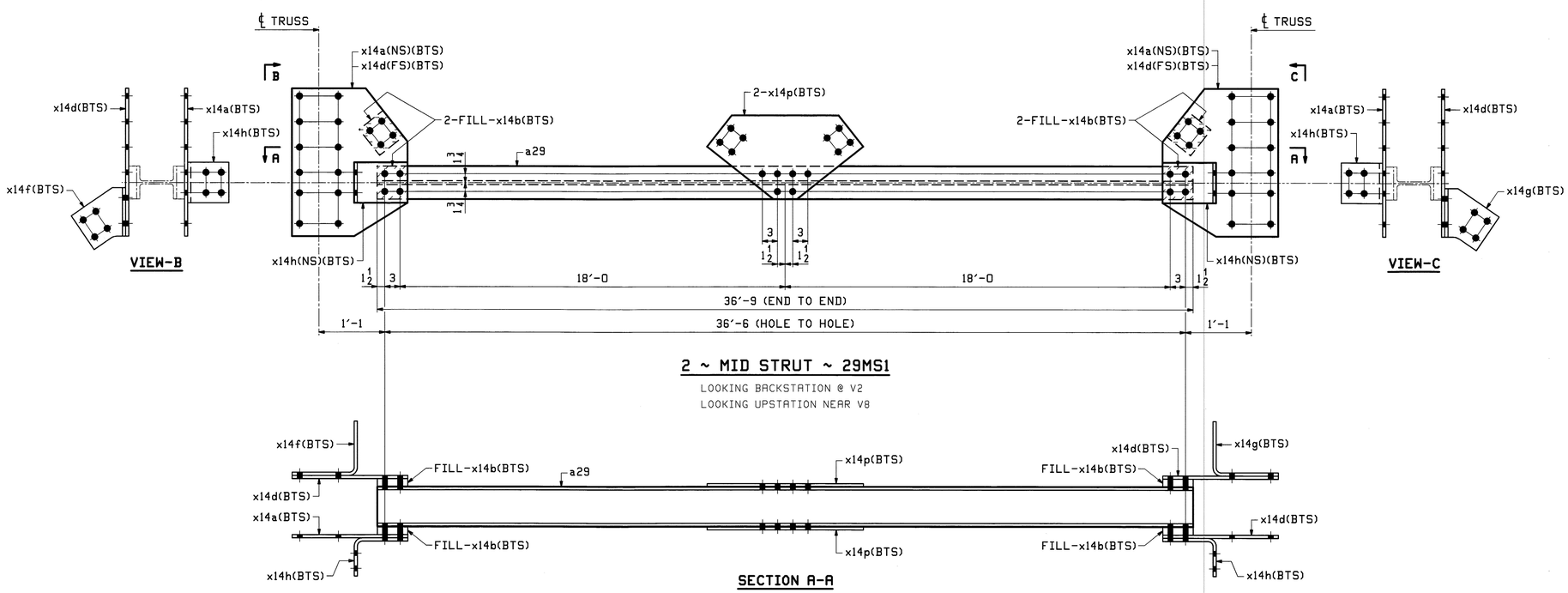

2 ~ MID STRUT ~ 29MS1

LOOKING BACKSTATION @ V2
LOOKING UPSTATION NEAR V8

SECTION A-A

ABM INFO		SHIP	BILL OF MATERIAL					JOB NO. 498	DRAWING NO. 29	REV.
PAGE	LINE	MARK	QTY	MARK	MATERIAL	LENGTH FT	LENGTH INCHES	REMARKS	WT	PROCUREMENT NOTES
		29MS1	2		MID STRUT				1656	
7	Q		2	a29	W 8x24	36	9			
4	S		4	x14a	PL $\frac{1}{2}$x22$\frac{13}{16}$	2	5			
4	W		16	x14b	PL 1$\frac{9}{16}$x6	0	6$\frac{1}{2}$	FILL		
4	S		4	x14d	PL $\frac{1}{2}$x22$\frac{13}{16}$	2	5			
4	U		2	x14f	PL $\frac{1}{2}$x12$\frac{1}{8}$	1	10$\frac{7}{16}$	BENT		
4	U		2	x14g	PL $\frac{1}{2}$x12$\frac{1}{8}$	1	10$\frac{7}{16}$	BENT		
4	T		4	x14h	PL $\frac{1}{2}$x8	1	5	BENT		
11	N		4	x14p	PL $\frac{1}{2}$x16$\frac{1}{2}$	2	6$\frac{7}{8}$			

Vermont Agency of Transportation
RECEIVED
CK'D BY M.C.L. OK'D BY S.S.S.
January 10 2012
RESUBMIT APPROVED ✓
BY J. LACROIX DATE 01-12-2012

NOTES:
1. FOR GENERAL NOTES SEE SHEET GN1.

REV.	DATE	REMARKS	DWN	CHK	APVL	SHOP
0					JAN 9 2012 NOV 18 2011	

MATERIAL:	SURFACE PREP. & PAINT:	HOLES:	SHOP BOLTS:
M270-50 (UN)	HOT-DIP GALV.	$\frac{15}{16}$Ø (UN)	NONE

DESCRIPTION: MID SWAY FRAME STRUT 29MS1

CASCO BAY STEEL STRUCTURES, INC.
1 WALLACE AVE. PHONE (207) 780-6722
SOUTH PORTLAND, ME 04106 FAX. (207) 780-6726
TENSOR 3073

STRUCTURE: VT RTE 107 OVER WHITE RIVER	DRAWN: EEO	DATE: 10/27
	CHKD: PCP	DATE: 10/28
LOCATION: BETHEL, VT.	JOB NO.	DWG NO.
PROJ NO. BRF 022-1(14)	498	29
CUSTOMER: BECK & BELLUCCI		REV. △

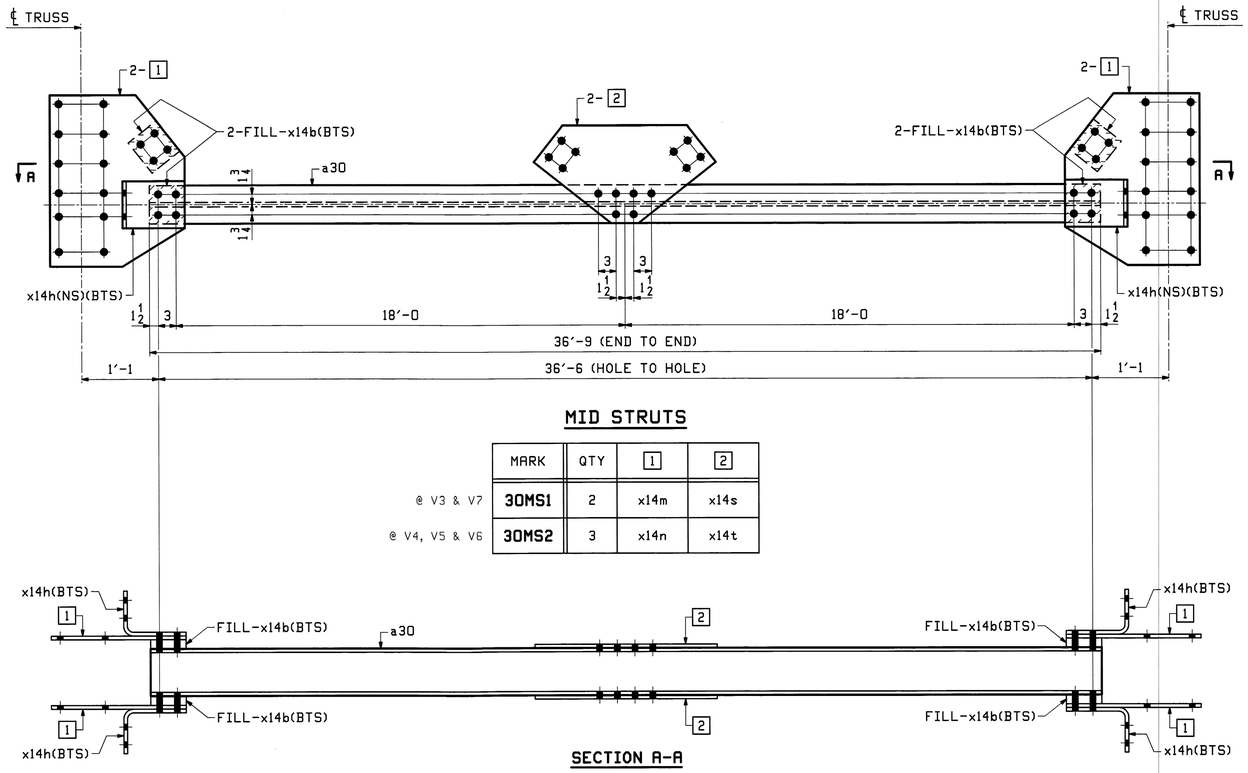

MID STRUTS

	MARK	QTY	1	2
@ V3 & V7	**30MS1**	2	x14m	x14s
@ V4, V5 & V6	**30MS2**	3	x14n	x14t

ABM INFO PAGE	ABM INFO LINE	SHIP MARK	QTY	MARK	MATERIAL	LENGTH FT	LENGTH INCHES	REMARKS	WT	PROCUREMENT NOTES
		30MS1	2		MID STRUT				1593	
7	Q		2	a30	W 8x24	36	9			
5	F		8	x14m	PL $\frac{1}{2}$x22$\frac{13}{16}$	2	3			
5	H		16	x14b	PL $1\frac{9}{16}$x6	0	$6\frac{1}{2}$	FILL		
5	G		8	x14h	PL $\frac{1}{2}$x8	1	5	BENT		
12	C		4	x14s	PL $\frac{1}{2}$x18	2	$4\frac{3}{4}$			
		30MS2	3		MID STRUT				1590	
7	Q		3	a30	W 8x24	36	9			
5	F		12	x14n	PL $\frac{1}{2}$x22$\frac{13}{16}$	2	3			
5	H		24	x14b	PL $1\frac{9}{16}$x6	0	$6\frac{1}{2}$	FILL		
5	G		12	x14h	PL $\frac{1}{2}$x8	1	5	BENT		
12	Q		6	x14t	PL $\frac{1}{2}$x18	2	4	ALSO ORDERED ON 13/C		

JOB NO. 498 | DRAWING NO. 30 | REV.

Vermont Agency of Transportation

RECEIVED

CK'D BY M.C.L. OK'D BY S.S.S.

January 10 2012

RESUBMIT APPROVED ✓

BY J. LACROIX DATE 01-12-2012

NOTES:

1. FOR GENERAL NOTES SEE SHEET GN1.

REV.	DATE	REMARKS	DWN	CHK	APVL	SHOP
					JAN 9 2012	
0					NOV 18 2011	

MATERIAL:	SURFACE PREP. & PRINT:	HOLES:	SHOP BOLTS:
M270-50 (UN)	HOT-DIP GALV.	$\frac{15}{16}$Ø (UN)	NONE

DESCRIPTION: MID SWAY FRAME STRUT 30MS1 & 30MS2

CASCO BAY STEEL STRUCTURES, INC.
1 WALLACE AVE. PHONE (207) 780-6722
SOUTH PORTLAND, ME 04106 FAX. (207) 780-6726
TENSOR 3073

STRUCTURE: VT RTE 107 OVER WHITE RIVER	DRAWN: EEO	DATE: 10/28
	CHKD: PCP	DATE: 10/28
LOCATION: BETHEL, VT.	JOB NO.	DWG NO.
PROJ NO. BRF 022-1(14)	498	30
CUSTOMER: BECK & BELLUCCI		REV. △

EEO Thu, Nov 17, 2011 09:30:49 AM //users/jobs/2073/30 - Rev0

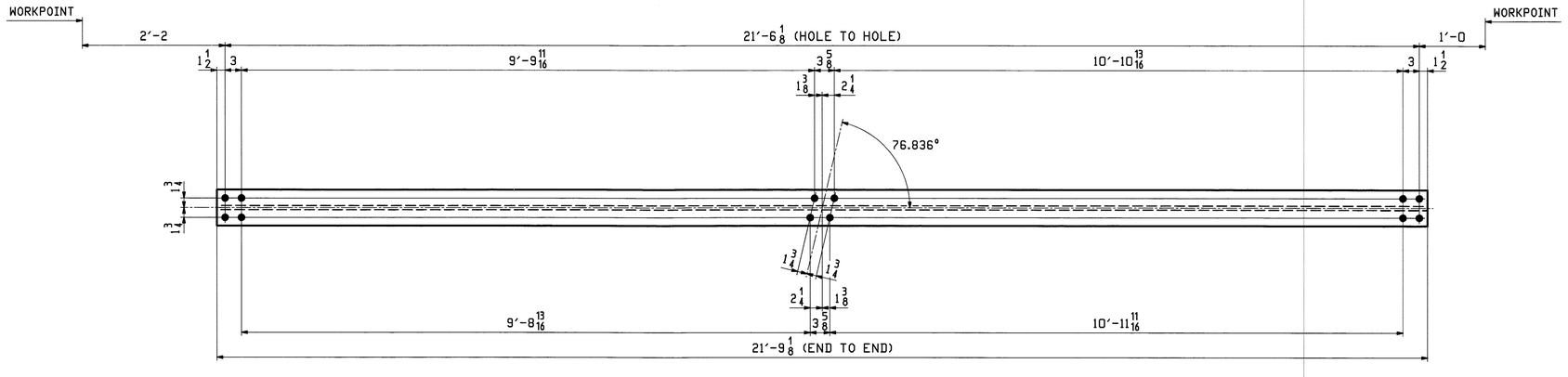

4 ~ SWAY FRAME DIAGONAL ~ 31DG1

(V2 & V8)

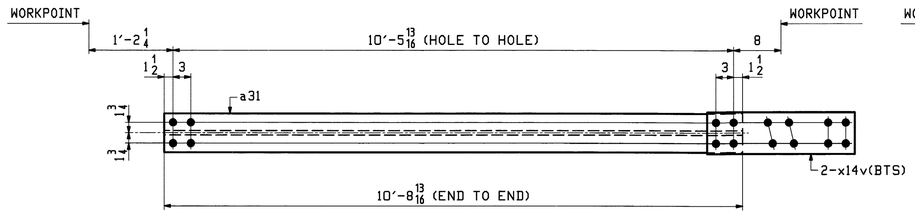

4 ~ SWAY FRAME DIAGONAL ~ 31DG2

(V2 & V8)

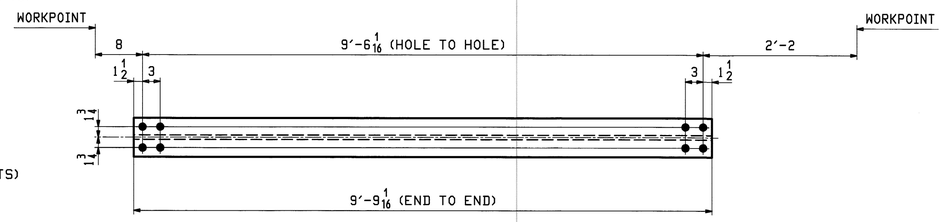

4 ~ SWAY FRAME DIAGONAL ~ 31DG3

(V2 & V8)

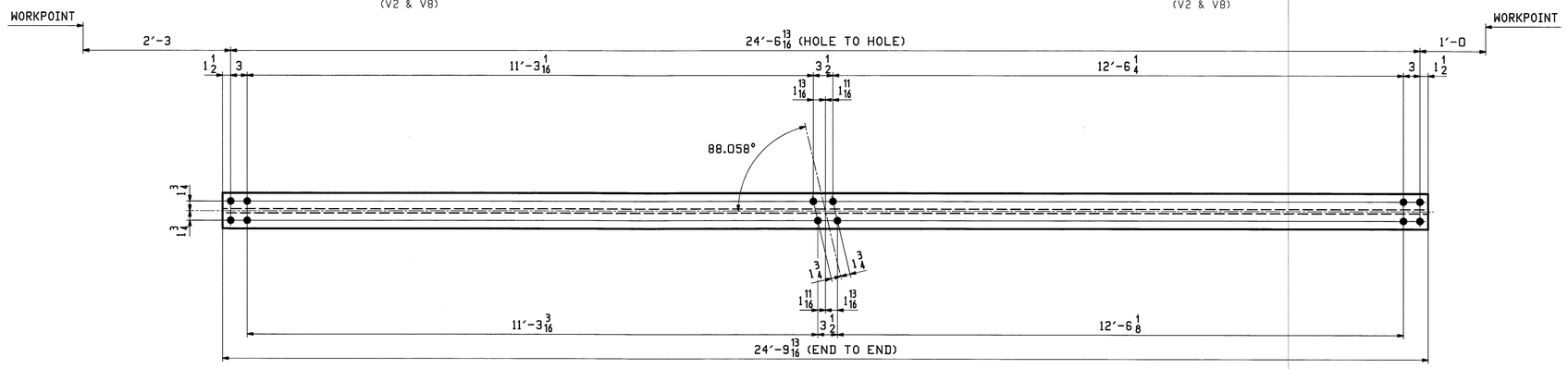

4 ~ SWAY FRAME DIAGONAL ~ 31DG4

(V3 & V7)

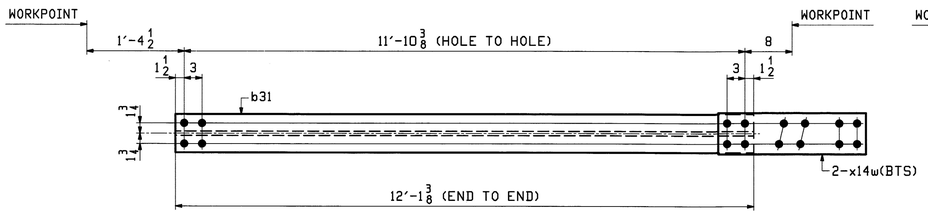

4 ~ SWAY FRAME DIAGONAL ~ 31DG5

(V3 & V7)

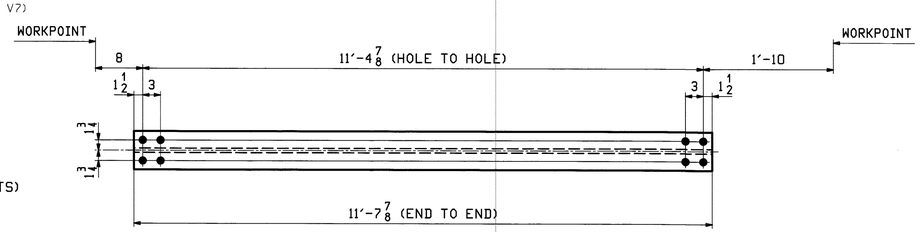

4 ~ SWAY FRAME DIAGONAL ~ 31DG6

(V3 & V7)

ABM INFO		SHIP	BILL OF MATERIAL			LENGTH		JOB NO. 498	DRAWING NO. 31	REV.
PAGE	LINE	MARK	QTY	MARK	MATERIAL	FT	INCHES	REMARKS	WT	PROCUREMENT NOTES
7	R	31DG1	4		W 8x24	21	9 1/8		522	
		31DG2	4		SWAY DIAGONAL				307	
7	S		4	a31	W 8x24	10	8 13/16			
11	R		8	x14v	PL 1/2x7	2	1			
7	T	31DG3	4		W 8x24	9	9 1/16		234	
7	U	31DG4	4		W 8x24	24	9 13/16		596	
		31DG5	4		SWAY DIAGONAL				340	
7	V		4	b31	W 8x24	12	1 3/8			
12	F		8	x14w	PL 1/2x7	2	1			
7	W	31DG6	4		W 8x24	11	7 7/8		280	

Vermont Agency of Transportation

RECEIVED

CK'D BY M.C.L. OK'D BY S.S.S.

January 10 2012

RESUBMIT ____ APPROVED ✓

BY J. LACROIX DATE 01-12-2012

NOTES:
1. FOR GENERAL NOTES SEE SHEET GN1.
2. HOLES IN BOTH FLANGES ARE ALIKE.

REV.	DATE	REMARKS	DWN	CHK	APVL	SHOP
0					JAN 9 2012 NOV 18 2011	

MATERIAL:	SURFACE PREP. & PAINT:	HOLES:	SHOP BOLTS:
M270-50 (UN)	HOT-DIP GALV.	15/16Ø (UN)	NONE

DESCRIPTION: SWAY FRAME DIAGONALS

CASCO BAY STEEL STRUCTURES, INC.
1 WALLACE AVE. PHONE (207) 780-6722
SOUTH PORTLAND, ME 04106 FAX. (207) 780-6726
TENSOR 3073

STRUCTURE: VT RTE 107 OVER WHITE RIVER	DRAWN: EEO	DATE: 10/30
	CHKD: PCP	DATE: 11/01
LOCATION: BETHEL, VT.	JOB NO.	DWG NO.
PROJ NO. BRF 022-1(14)	498	31
CUSTOMER: BECK & BELLUCCI		REV. △

EEO Thu, Nov 17, 2011 02:15:54 PM //corp/jobs/2012/31 - Rev0

ABM INFO		SHIP	BILL OF MATERIAL					JOB NO.	DRAWING NO.	REV.
								498	32	
PAGE	LINE	MARK	QTY	MARK	MATERIAL	LENGTH FT	LENGTH INCHES	REMARKS	WT	PROCUREMENT NOTES
7	X	32DG1	6		W 8x24	25	11		622	
		32DG2	6		SWAY DIAGONAL				354	
7	Y		6	a32	W 8x24	12	8			
12	T		12	x14y	PL $\frac{1}{2}$x7	2	1	ALSO ORDERED ON 13/F		
7	Z	32DG3	6		W 8x24	12	$2\frac{1}{2}$		293	

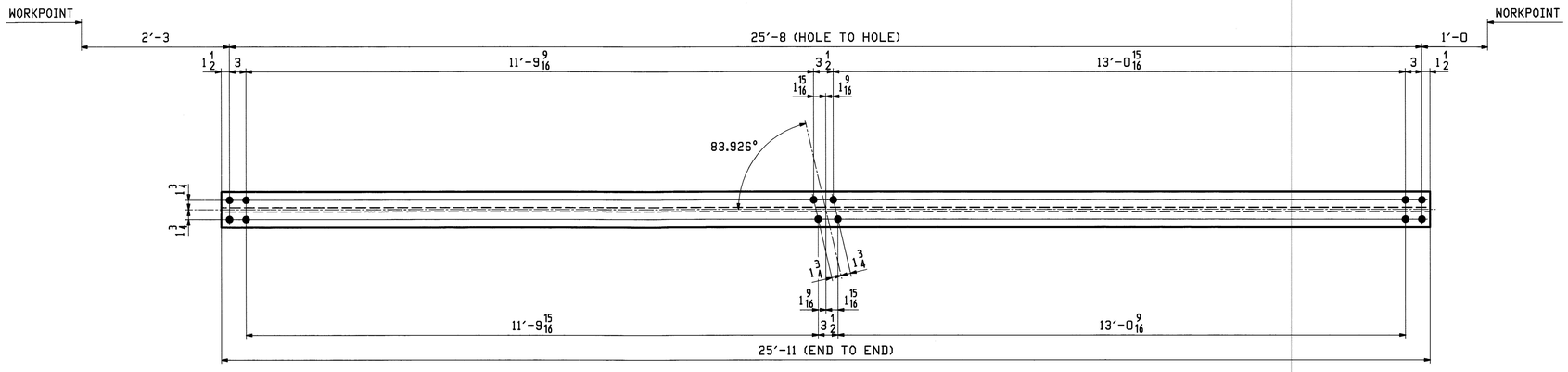

6 ~ SWAY FRAME DIAGONAL ~ 32DG1

(V4, V5 & V6)

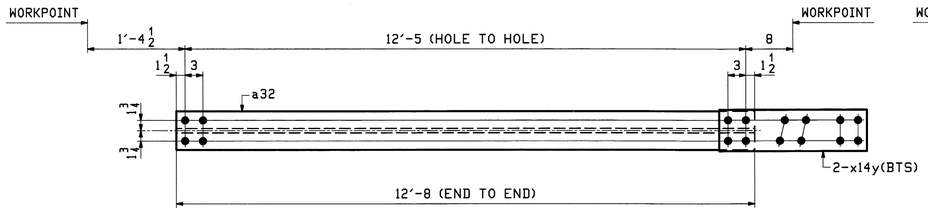

6 ~ SWAY FRAME DIAGONAL ~ 32DG2

(V4, V5 & V6)

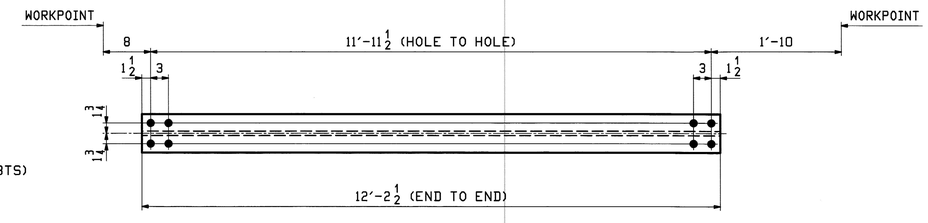

6 ~ SWAY FRAME DIAGONAL ~ 32DG3

(V4, V5 & V6)

NOTES:
1. FOR GENERAL NOTES SEE SHEET GN1.
2. HOLES IN BOTH FLANGES ARE ALIKE.

Vermont Agency of Transportation
RECEIVED
CK'D BY M.C.L. OK'D BY S.S.S.
January 10 2012
RESUBMIT APPROVED ✓
BY J. LACROIX DATE 01-12-2012

REV.	DATE	REMARKS	DWN	CHK	APVL	SHOP
					JAN 9 2012	
0					NOV 18 2011	

MATERIAL:	SURFACE PREP. & PAINT:	HOLES:	SHOP BOLTS:
M270-50 (UN)	HOT-DIP GALV.	$\frac{15}{16}\phi$ (UN)	NONE

DESCRIPTION: SWAY FRAME DIAGONALS

CASCO BAY STEEL STRUCTURES, INC.
1 WALLACE AVE. PHONE (207) 780-6722
SOUTH PORTLAND, ME 04106 FAX. (207) 780-6726
TENSOR 3073

STRUCTURE: VT RTE 107 OVER WHITE RIVER	DRAWN: EEO	DATE: 11/01
	CHKD: PCP	DATE: 11/11
LOCATION: BETHEL, VT.	JOB NO. 498	DWG NO. 32
PROJ NO. BRF 022-1(14)		
CUSTOMER: BECK & BELLUCCI		REV. △

EEO Thu, Nov 17, 2011 02:12:24 PM //users/jobs/2012/32 - Rev0

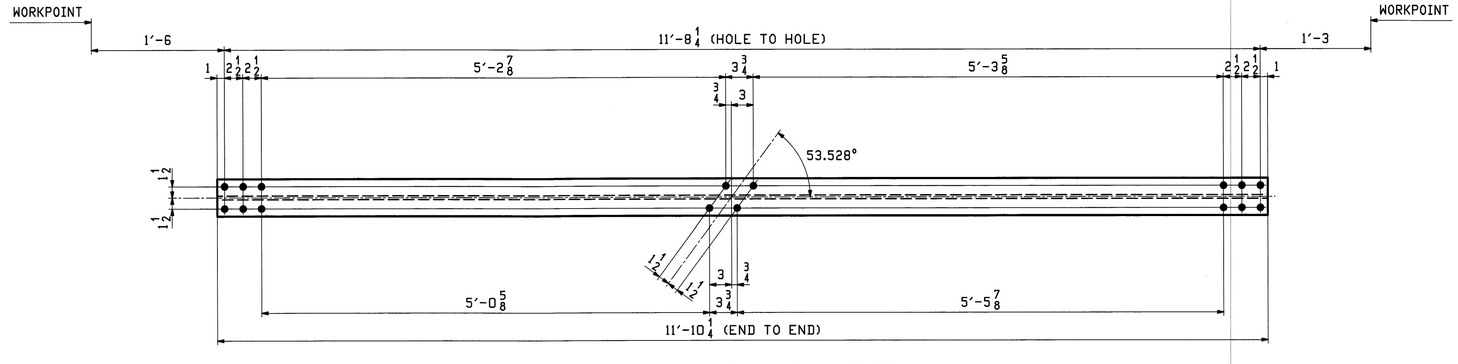

4 ~ PORTAL DIAGONAL ~ 33DG1

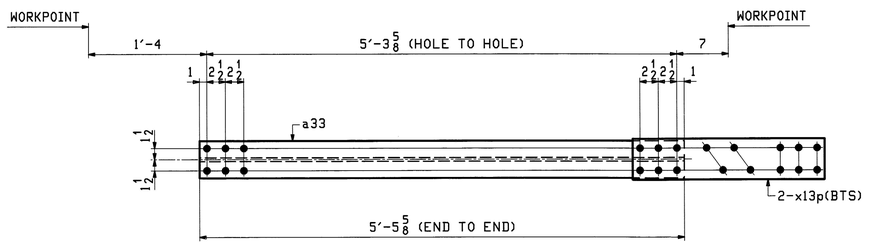

4 ~ PORTAL DIAGONAL ~ 33DG2

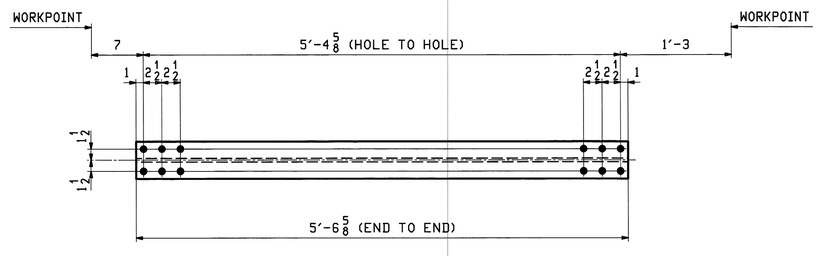

6 ~ PORTAL DIAGONAL ~ 33DG3

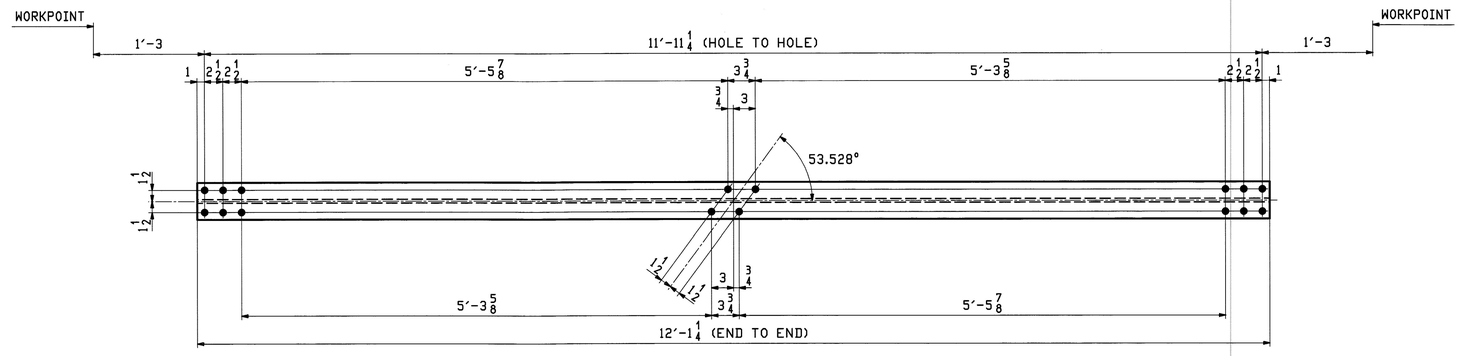

2 ~ PORTAL DIAGONAL ~ 33DG4

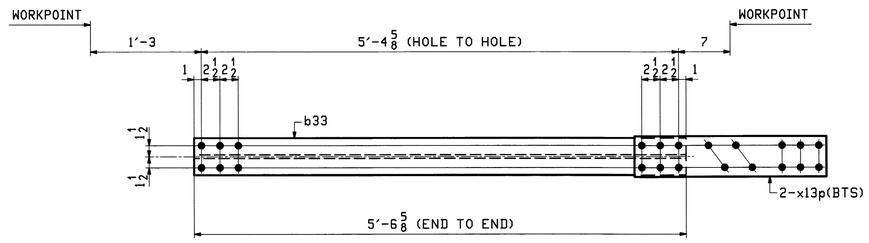

2 ~ PORTAL DIAGONAL ~ 33DG5

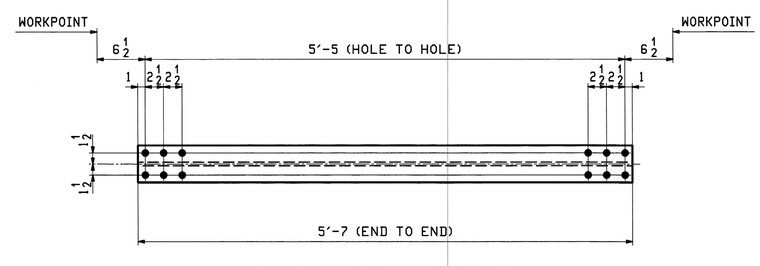

4 ~ LONG. STRUT ~ 33LS1

ABM INFO PAGE	ABM INFO LINE	SHIP MARK	QTY	MARK	MATERIAL	LENGTH FT	LENGTH INCHES	REMARKS	WT	PROCUREMENT NOTES
8	B	33DG1	4		W 14x22	11	10 1/4		261	
		33DG2	4		PORTAL DIAGONAL				161	
8	C		4	a33	W 14x22	5	5 5/8			
8	T		8	x13p	PL 1/2x5 1/2	2	2			
8	C	33DG3	6		W 14x22	5	6 5/8		122	
8	B	33DG4	2		W 14x22	12	1 1/4		266	
		33DG5	2		PORTAL DIAGONAL				163	
8	C		2	b33	W 14x22	5	6 5/8			
8	T		4	x13p	PL 1/2x5 1/2	2	2			
8	D	33LS1	4		W 14x22	5	7		123	

BILL OF MATERIAL — JOB NO. 498 — DRAWING NO. 33 — REV.

Vermont Agency of Transportation
RECEIVED
CK'D BY M.C.L. OK'D BY S.S.S.
January 10 2012
RESUBMIT APPROVED ✓
BY J. LACROIX DATE 01-12-2012

NOTES:
1. FOR GENERAL NOTES SEE SHEET GN1.
2. HOLES IN BOTH FLANGES ARE ALIKE.

REV.	DATE	REMARKS	DWN	CHK	APVL	SHOP
0					JAN 9 2012 NOV 18 2011	

MATERIAL:	SURFACE PREP. & PAINT:	HOLES:	SHOP BOLTS:
M270-50 (UN)	HOT-DIP GALV.	11/16 Ø (UN)	NONE

DESCRIPTION: PORTAL DIAGONALS & LONG. STRUT

CASCO BAY STEEL STRUCTURES, INC.
1 WALLACE AVE. PHONE (207) 780-6722
SOUTH PORTLAND, ME 04106 FAX. (207) 780-6726
TENSOR 3073

STRUCTURE: VT RTE 107 OVER WHITE RIVER	DRAWN: EEO	DATE: 11/01
	CHK'D: PCP	DATE: 11/01
LOCATION: BETHEL, VT.	JOB NO.	DWG NO.
PROJ NO. BRF 022-1(14)	498	33
CUSTOMER: BECK & BELLUCCI		REV. △

EEO Thu, Nov 17, 2011 09:34:22 PM //users/jobs/3073-33 | Rev0

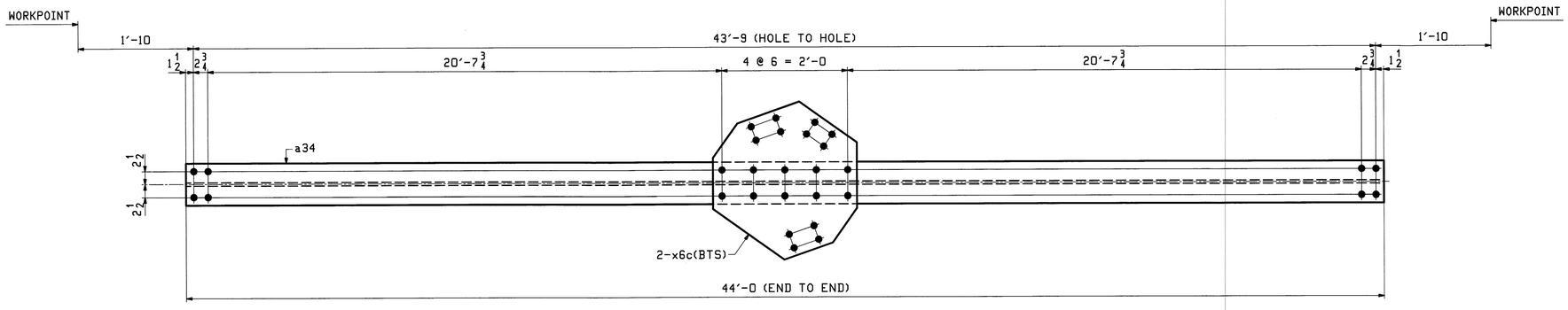

2 ~ TOP LATERAL BRACING ~ 34LB1

(U1 - U2 & U9 - U8)

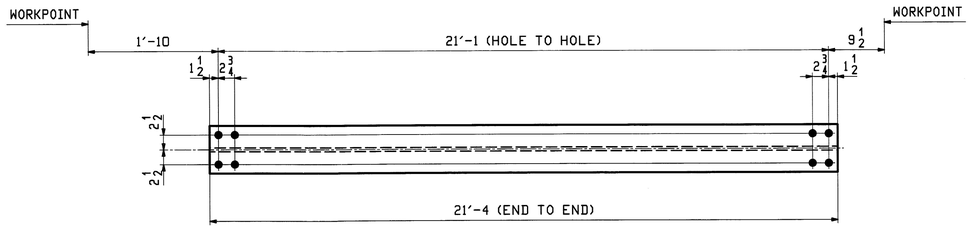

4 ~ TOP LATERAL BRACING ~ 34LB2

(U1 - U2 & U9 - U8)

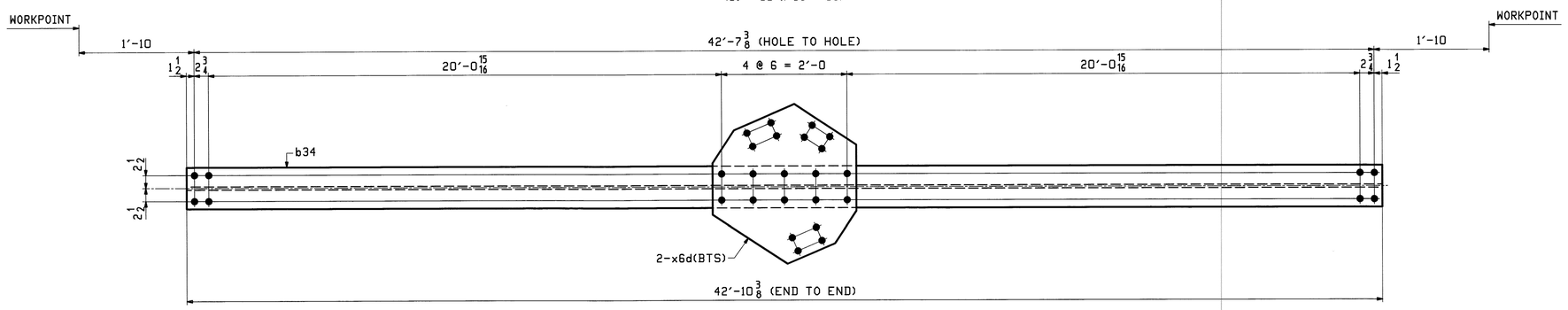

2 ~ TOP LATERAL BRACING ~ 34LB3

(U2 - U3 & U8 - U7)

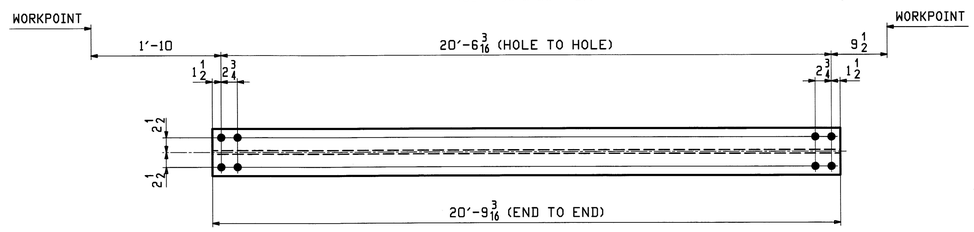

4 ~ TOP LATERAL BRACING ~ 34LB4

(U2 - U3 & U8 - U7)

ABM INFO		SHIP	BILL OF MATERIAL					JOB NO.	DRAWING NO.	REV.
								498	34	
PAGE	LINE	MARK	QTY	MARK	MATERIAL	LENGTH FT	LENGTH INCHES	REMARKS	WT	PROCUREMENT NOTES
		34LB1	2		TOP LATERAL BRACING				2540	
7	B		2	a34	W 14x53	44	0			
7	H		4	x6c	PL 1/2x26 1/4	2	4			
7	C	34LB2	4		W 14x53	21	4		1131	
		34LB3	2		TOP LATERAL BRACING				2480	
7	D		2	b34	W 14x53	42	10 3/8			
7	H		4	x6d	PL 1/2x26 1/4	2	4			
7	E	34LB4	4		W 14x53	20	9 3/16		1101	

NOTES:
1. FOR GENERAL NOTES SEE SHEET GN1.
2. HOLES IN BOTH FLANGES ARE ALIKE.

REV.	DATE	REMARKS	DWN	CHK	APVL	SHOP
					JAN 9 2012	
0					NOV 18 2011	

MATERIAL:	SURFACE PREP. & PAINT:	HOLES:	SHOP BOLTS:
M270-50 (UN)	HOT-DIP GALV.	15/16ø (UN)	NONE

DESCRIPTION: TOP LATERAL BRACING

CASCO BAY STEEL STRUCTURES, INC.
1 WALLACE AVE. PHONE (207) 780-6722
SOUTH PORTLAND, ME 04106 FAX. (207) 780-6726
TENSOR 3073

STRUCTURE: VT RTE 107 OVER WHITE RIVER

DRAWN:	EEO	DATE:	11/01
CHKD:	PCP	DATE:	11/11
LOCATION:	BETHEL, VT.	JOB NO.	DWG NO.
PROJ NO.	BRF 022-1(14)	498	34
CUSTOMER:	BECK & BELLUCCI		REV. △

Vermont Agency of Transportation
RECEIVED
CK'D BY M.C.L. OK'D BY S.S.S.
January 10 2012
RESUBMIT APPROVED ✓
BY J. LACROIX DATE 01-12-2012

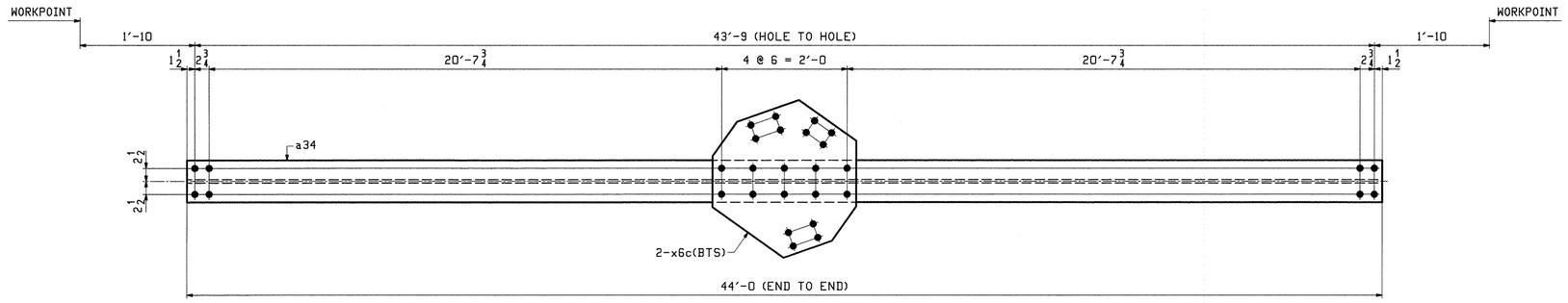

2 ~ TOP LATERAL BRACING ~ 34LB1

(U1 - U2 & U9 - U8)

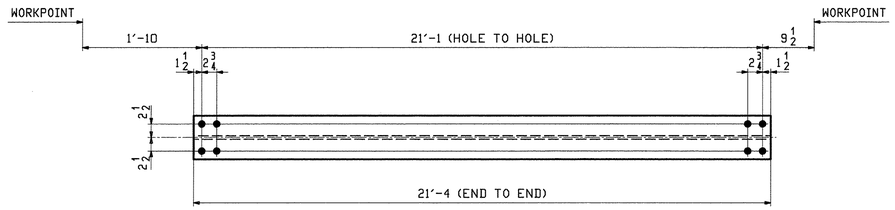

4 ~ TOP LATERAL BRACING ~ 34LB2

(U1 - U2 & U9 - U8)

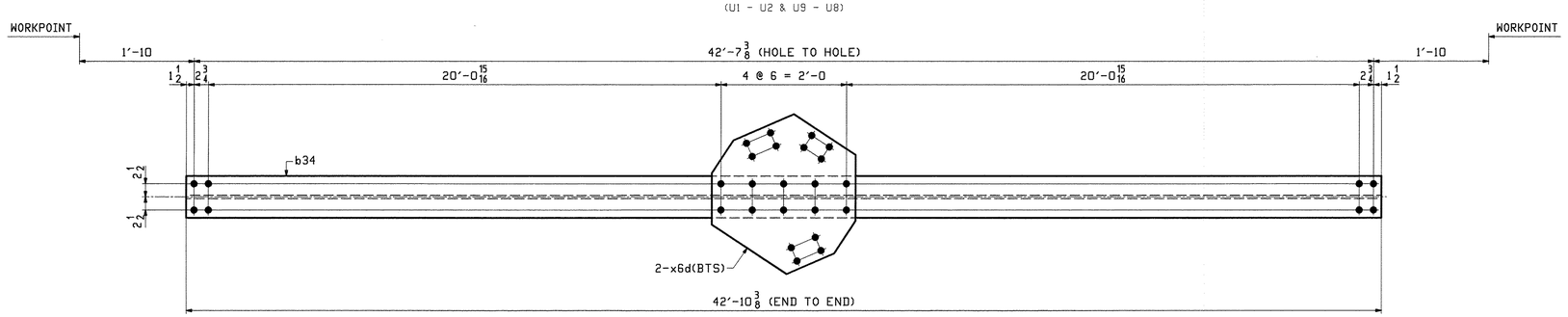

△2 1 ~ TOP LATERAL BRACING ~ 34LB3

(U2 - U3 & U8 - U7)

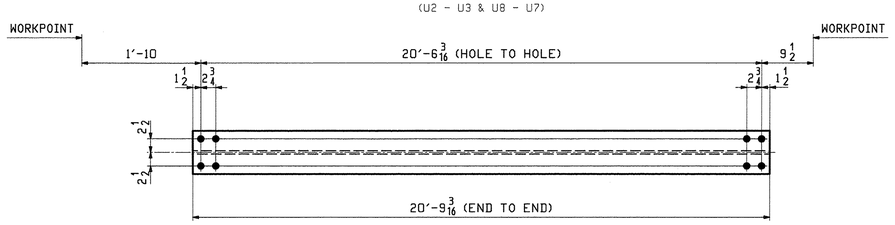

4 ~ TOP LATERAL BRACING ~ 34LB4

(U2 - U3 & U8 - U7)

ABM INFO		SHIP	BILL OF MATERIAL					JOB NO.	DRAWING NO.	REV.
								498	34	△2
PAGE	LINE	MARK	QTY	MARK	MATERIAL	LENGTH FT	LENGTH INCHES	REMARKS	WT	PROCUREMENT NOTES
		34LB1	2		TOP LATERAL BRACING				2540	
7	B		2	a34	W 14x53	44	0		2332	△1
7	H		4	x6c	PL 1/2x26 1/4	2	4		104	△1
7	C	34LB2	4		W 14x53	21	4		1131	
△2		34LB3	1		TOP LATERAL BRACING				2480	
△2 7	D		1	b34	W 14x53	42	10 3/8		2272	△1
△2 7	H		2	x6d	PL 1/2x26 1/4	2	4		104	△1
7	E	34LB4	4		W 14x53	20	9 3/16		1101	

NOTES:
1. FOR GENERAL NOTES SEE SHEET GN1.
2. HOLES IN BOTH FLANGES ARE ALIKE.

REV.	DATE	REMARKS	DWN	CHK	APVL	SHOP
△2	9/14/12	REV'D QTY OF 34LB3	EEO	PCP		
△1	8/9/12	REVISE WEIGHTS IN B.O.M.	EEO	PCP		
0						

MATERIAL:	SURFACE PREP. & PAINT:	HOLES:	SHOP BOLTS:
M270-50 (UN)	HOT-DIP GALV.	15/16Ø (UN)	NONE

DESCRIPTION: TOP LATERAL BRACING

CASCO BAY STEEL STRUCTURES, INC.
1 WALLACE AVE. PHONE (207) 780-6722
SOUTH PORTLAND, ME 04106 FAX. (207) 780-6726
TENSOR 3073

STRUCTURE: VT RTE 107 OVER WHITE RIVER	DRAWN: EEO	DATE: 11/01
	CHKD: PCP	DATE: 11/11
LOCATION: BETHEL, VT.	JOB NO.	DWG NO.
PROJ NO. BRF 022-1(14)	498	34
CUSTOMER: BECK & BELLUCCI		REV. △2

72a

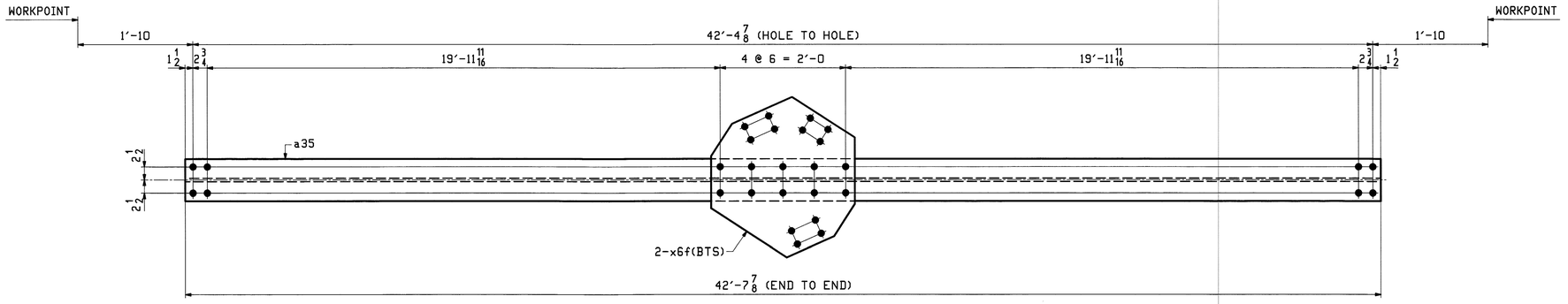

2 ~ TOP LATERAL BRACING ~ 35LB1

(U3 - U4 & U7 - U6)

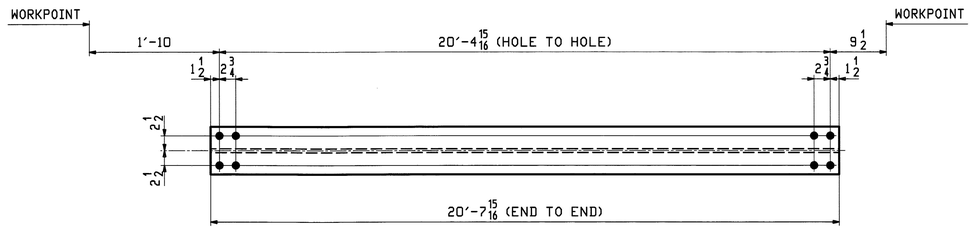

4 ~ TOP LATERAL BRACING ~ 35LB2

(U3 - U4 & U7 - U6)

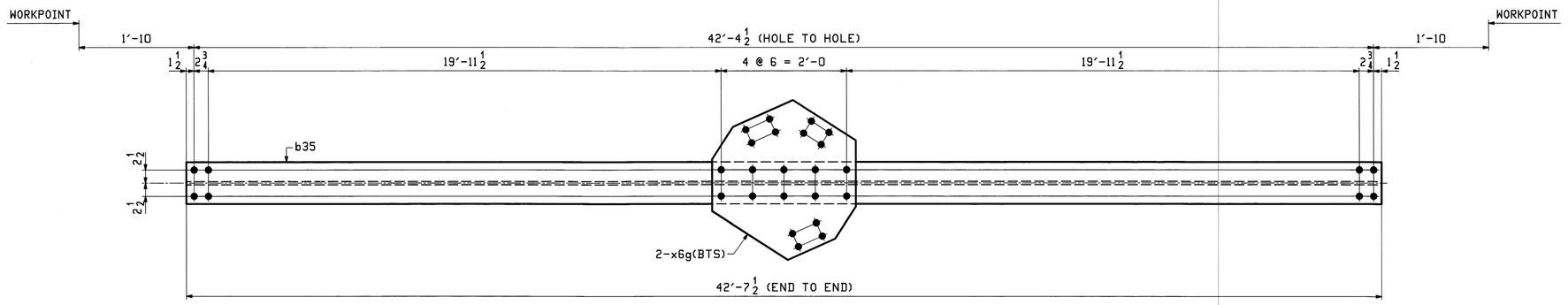

2 ~ TOP LATERAL BRACING ~ 35LB3

(U4 - U5 & U6 - U5)

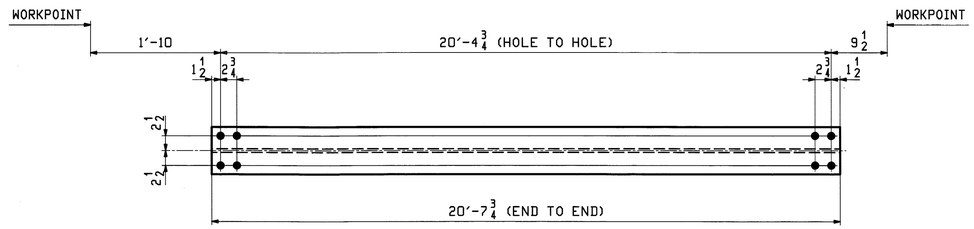

4 ~ TOP LATERAL BRACING ~ 35LB4

(U4 - U5 & U6 - U5)

ABM INFO		SHIP	BILL OF MATERIAL					JOB NO.	DRAWING NO.	REV.
								498	35	
PAGE	LINE	MARK	QTY	MARK	MATERIAL	LENGTH FT	LENGTH INCHES	REMARKS	WT	PROCUREMENT NOTES
		35LB1	2		TOP LATERAL BRACING				2469	
7	F		2	a35	W 14x53	42	7 7/8			
7	H		4	x6f	PL 1/2x26 1/4	2	4			
7	G	35LB2	4		W 14x53	20	7 15/16		1095	
		35LB3	2		TOP LATERAL BRACING				2468	
7	F		2	b35	W 14x53	42	7 1/2			
7	H		4	x6g	PL 1/2x26 1/4	2	4			
7	G	35LB4	4		W 14x53	20	7 3/4		1094	

NOTES:
1. FOR GENERAL NOTES SEE SHEET GN1.
2. HOLES IN BOTH FLANGES ARE ALIKE.

Vermont Agency of Transportation
RECEIVED
CK'D BY M.C.L. OK'D BY S.S.S.
January 10 2012
RESUBMIT APPROVED ✓
BY J. LACROIX DATE 01-12-2012

REV.	DATE	REMARKS	DWN	CHK	APVL	SHOP
					JAN 9 2012	
0					NOV 10 2011	

MATERIAL:	SURFACE PREP. & PAINT:	HOLES:	SHOP BOLTS:
M270-50 (UN)	HOT-DIP GALV.	15/16ø (UN)	NONE

DESCRIPTION: TOP LATERAL BRACING

CASCO BAY STEEL STRUCTURES, INC.
1 WALLACE AVE. PHONE (207) 780-6722
SOUTH PORTLAND, ME 04106 FAX. (207) 780-6726
TENSOR 3073

STRUCTURE: VT RTE 107 OVER WHITE RIVER	DRAWN: EEO	DATE: 11/01
	CHKD: PCP	DATE: 11/11
LOCATION: BETHEL, VT.	JOB NO. 498	DWG NO. 35
PROJ NO. BRF 022-1(14)		REV. △
CUSTOMER: BECK & BELLUCCI		

BEP Wed, Nov 2, 2011 09:09:08 PM //casco/jobs/2072/25\ Rev3

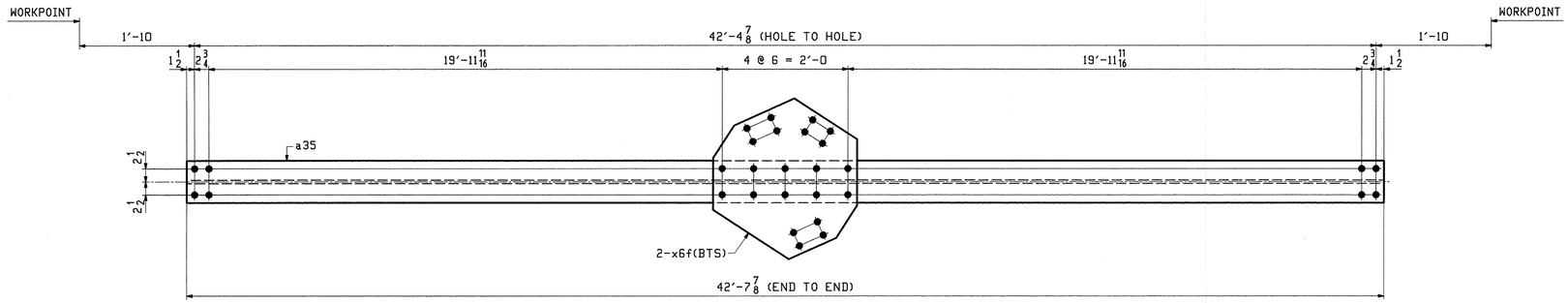

△2 1 ~ TOP LATERAL BRACING ~ 35LB1

(U3 - U4 & U7 - U6)

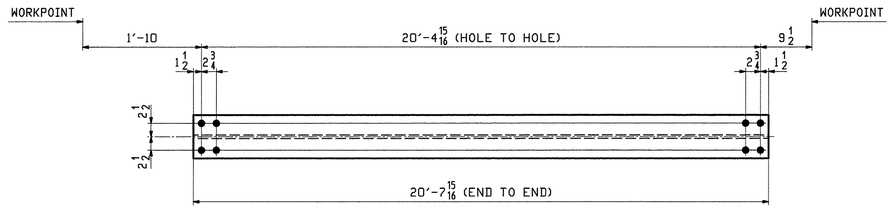

4 ~ TOP LATERAL BRACING ~ 35LB2

(U3 - U4 & U7 - U6)

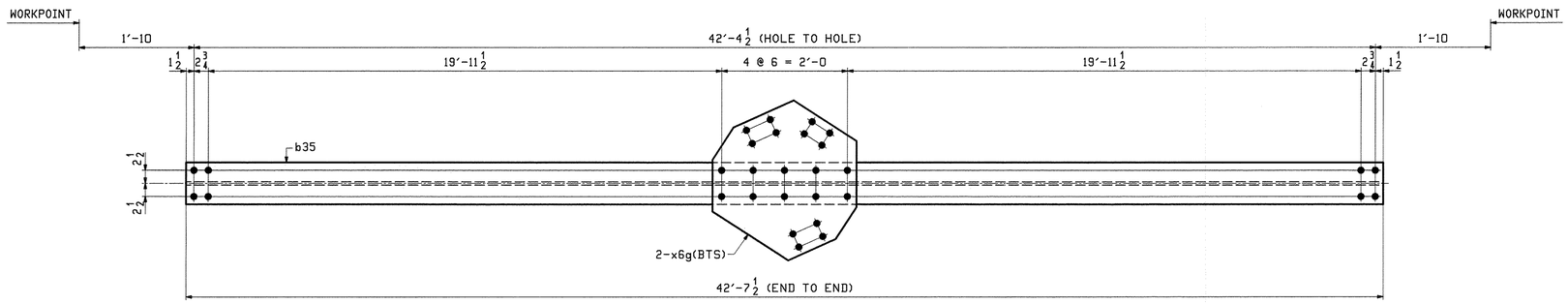

△2 1 ~ TOP LATERAL BRACING ~ 35LB3

(U4 - U5 & U6 - U5)

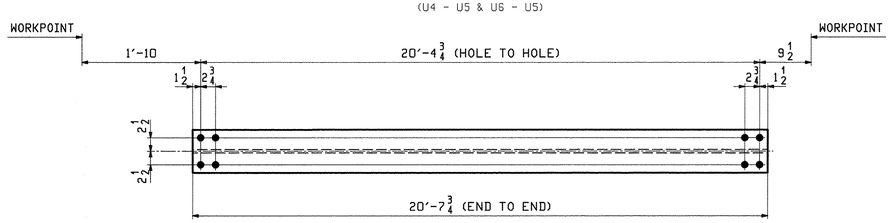

4 ~ TOP LATERAL BRACING ~ 35LB4

(U4 - U5 & U6 - U5)

ABM INFO		SHIP	BILL OF MATERIAL					JOB NO.	DRAWING NO.	REV.
								498	35	△2
PAGE	LINE	MARK	QTY	MARK	MATERIAL	LENGTH FT	LENGTH INCHES	REMARKS	WT	PROCUREMENT NOTES
△2		35LB1	1		TOP LATERAL BRACING				2469	
△2	7	F	1	a35	W 14x53	42	7 7/8		2261	△1
△2	7	H	2	x6f	PL 1/2x26 1/4	2	4		104	△1
	7	G	35LB2	4	W 14x53	20	7 15/16		1095	
△2		35LB3	1		TOP LATERAL BRACING				2468	
△2	7	F	1	b35	W 14x53	42	7 1/2		2259	△1
△2	7	H	2	x6g	PL 1/2x26 1/4	2	4		104	△1
	7	G	35LB4	4	W 14x53	20	7 3/4		1094	

NOTES:
1. FOR GENERAL NOTES SEE SHEET GN1.
2. HOLES IN BOTH FLANGES ARE ALIKE.

REV.	DATE	REMARKS	DWN	CHK	APVL	SHOP
△2	9/14/12	REV'D QTY OF 35LB1 & 35LB3	EEO	PCP		
△1	8/9/12	REVISE WEIGHTS IN B.O.M.	EEO	PCP		
0						

MATERIAL:	SURFACE PREP. & PAINT:	HOLES:	SHOP BOLTS:
M270-50 (UN)	HOT-DIP GALV.	15/16ϕ (UN)	NONE

DESCRIPTION: TOP LATERAL BRACING

CASCO BAY STEEL STRUCTURES, INC.
1 WALLACE AVE. PHONE (207) 780-6722
SOUTH PORTLAND, ME 04106 FAX. (207) 780-6726
TENSOR 3073

STRUCTURE: VT RTE 107 OVER WHITE RIVER	DRAWN: EEO	DATE: 11/01
	CHKD: PCP	DATE: 11/11
LOCATION: BETHEL, VT.	JOB NO.	DWG NO.
PROJ NO. BRF 022-1(14)	498	35
CUSTOMER: BECK & BELLUCCI		REV. △2

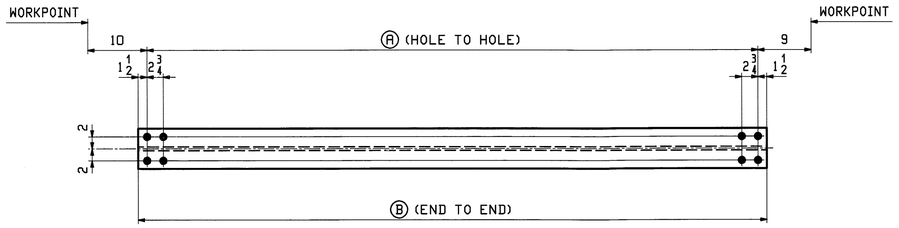

TOP CENTER STRUTS

	MARK	QTY	Ⓐ	Ⓑ
U2 & U8	**36CS1**	2	12′-1 11/16	12′-4 11/16
U3 & U7	**36CS2**	2	11′-1 5/8	11′-4 5/8
U4 & U6	**36CS3**	2	10′-11 5/16	11′-2 5/16
U5	**36CS4**	2	10′-11	11′-2

ABM INFO		SHIP	BILL OF MATERIAL					JOB NO.	DRAWING NO.	REV.
								498	36	
PAGE	LINE	MARK	QTY	MARK	MATERIAL	LENGTH FT	LENGTH INCHES	REMARKS	WT	PROCUREMENT NOTES
7	L	36CS1	2		W 14x30	12	4 11/16		372	
7	M	36CS2	2		W 14x30	11	4 5/8		342	
7	M	36CS3	2		W 14x30	11	2 5/16		336	
7	M	36CS4	2		W 14x30	11	2		335	

NOTES:
1. FOR GENERAL NOTES SEE SHEET GN1.
2. HOLES IN BOTH FLANGES ARE ALIKE.

REV.	DATE	REMARKS	DWN	CHK	APVL	SHOP
					JAN 9 2012	
0					NOV 18 2011	

MATERIAL:	SURFACE PREP. & PAINT:	HOLES:	SHOP BOLTS:
M270-50 (UN)	HOT-DIP GALV.	15/16 Ø (UN)	NONE

DESCRIPTION: TOP CENTER STRUTS

CASCO BAY STEEL STRUCTURES, INC.
1 WALLACE AVE. PHONE (207) 780-6722
SOUTH PORTLAND, ME 04106 FAX. (207) 780-6726
TENSOR 3073

STRUCTURE: VT RTE 107 OVER WHITE RIVER		DRAWN: EEO	DATE: 11/02
		CHKD: PCP	DATE: 11/11
LOCATION: BETHEL, VT.		JOB NO.	DWG NO.
PROJ NO. BRF 022-1(14)		498	36
CUSTOMER: BECK & BELLUCCI			REV. △

Vermont Agency of Transportation
RECEIVED
CK'D BY M.C.L. OK'D BY S.S.S.
January 10 2012
RESUBMIT APPROVED ✓
BY J. LACROIX DATE 01-12-2012

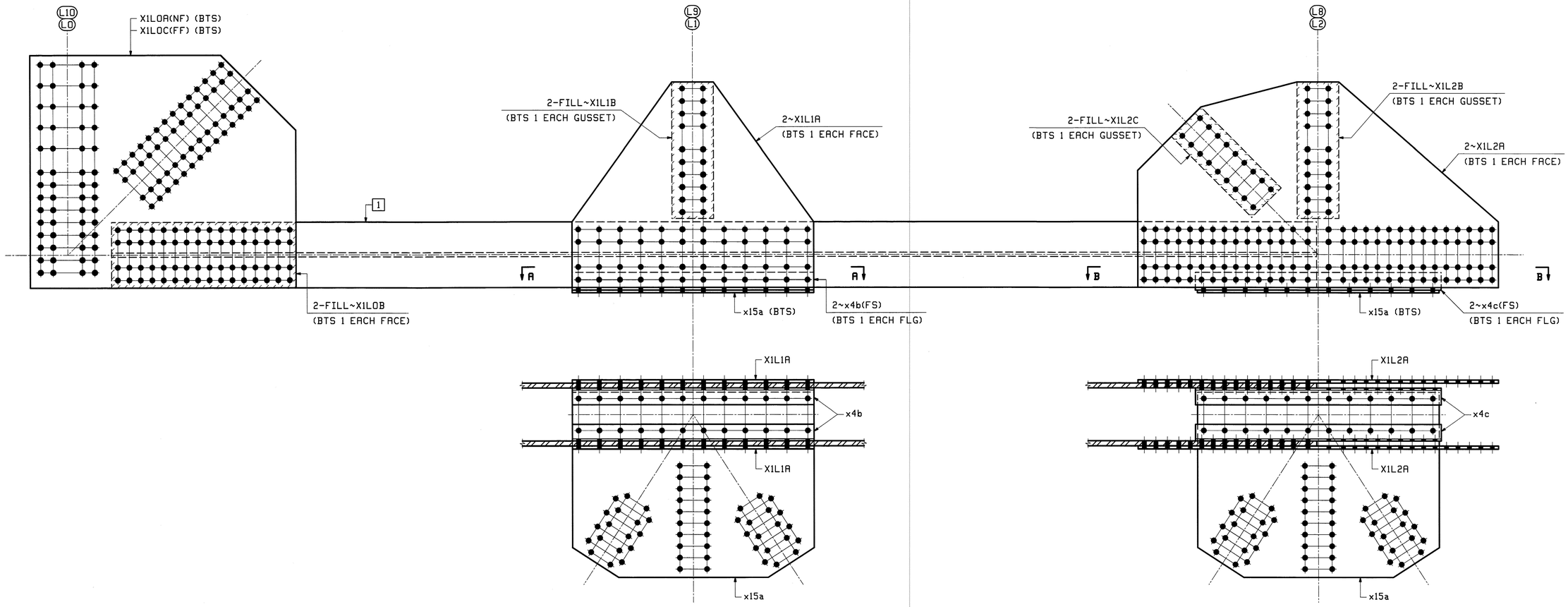

SECTION A-A

SECTION B-B

SHIPPING ASSEMBLY ~ MARK

(BOTTOM CHORDS)

MARK	QTY	1
(L0 - L2 WEST TRUSS, LOOKING WEST) 37L0L2W	ONE	11BC1W
(L10 - L8 EAST TRUSS, LOOKING EAST) 37L10L8E	ONE	11BC5E

NOTES:
1. NF - DENOTES NEAR FACE OF BTM CHORD.
2. FF - DENOTES FAR FACE OF BTM CHORD.
3. NS - DENOTES NEAR SIDE.
4. FS - DENOTES FAR SIDE.

ABM INFO PAGE	ABM INFO LINE	SHIP MARK	QTY	MARK	MATERIAL	LENGTH FT	LENGTH INCHES	REMARKS
		37L0L2W	1		BTM CHORD SHIPPING ASS'Y			
			1	11BC1W	BOTTOM CHORD			
1	L		1	X1LOA	PL $\frac{3}{4}$x55$\frac{9}{16}$	5	3$\frac{3}{4}$	M270-50F2 (FCM)
3	Q		2	X1LOB	PL 1$\frac{1}{16}$x15$\frac{5}{8}$	3	8$\frac{1}{4}$	FILL M270-50
1	L		1	X1LOC	PL $\frac{3}{4}$x55$\frac{9}{16}$	5	3$\frac{3}{4}$	M270-50F2 (FCM)
1	M		2	X1L1A	PL $\frac{3}{4}$x49	4	10	M270-50F2 (FCM)
3	K		2	X1L1B	PL $\frac{9}{16}$x10	2	8$\frac{9}{16}$	FILL M270-50
1	N		2	X1L2A	PL $\frac{3}{4}$x49	7	2$\frac{1}{2}$	M270-50F2 (FCM)
3	K		2	X1L2B	PL $\frac{9}{16}$x10	2	8$\frac{9}{16}$	FILL M270-50
3	P		2	X1L2C	PL $\frac{9}{16}$x10	2	3$\frac{1}{4}$	FILL M270-50
3	C		2	x4b	L 4x4x$\frac{1}{2}$	4	10	M270-36
3	C		2	x4c	L 4x4x$\frac{1}{2}$	4	11	M270-36
2	K		2	x15a	PL $\frac{5}{8}$x44$\frac{5}{16}$	4	10	M270-50

JOB NO. 498 | DRAWING NO. 37 | REV.

ABM INFO PAGE	ABM INFO LINE	SHIP MARK	QTY	MARK	MATERIAL	LENGTH FT	LENGTH INCHES	REMARKS
		37L10L8E	1		BTM CHORD SHIPPING ASS'Y			
			1	11BC5E	BOTTOM CHORD			
1	L		1	X1LOA	PL $\frac{3}{4}$x55$\frac{9}{16}$	5	3$\frac{3}{4}$	M270-50F2 (FCM)
3	Q		2	X1LOB	PL 1$\frac{1}{16}$x15$\frac{5}{8}$	3	8$\frac{1}{4}$	FILL M270-50
1	L		1	X1LOC	PL $\frac{3}{4}$x55$\frac{9}{16}$	5	3$\frac{3}{4}$	M270-50F2 (FCM)
1	M		2	X1L1A	PL $\frac{3}{4}$x49	4	10	M270-50F2 (FCM)
3	K		2	X1L1B	PL $\frac{9}{16}$x10	2	8$\frac{9}{16}$	FILL M270-50
1	N		2	X1L2A	PL $\frac{3}{4}$x49	7	2$\frac{1}{2}$	M270-50F2 (FCM)
3	K		2	X1L2B	PL $\frac{9}{16}$x10	2	8$\frac{9}{16}$	FILL M270-50
3	P		2	X1L2C	PL $\frac{9}{16}$x10	2	3$\frac{1}{4}$	FILL M270-50
3	C		2	x4b	L 4x4x$\frac{1}{2}$	4	10	M270-36
3	C		2	x4c	L 4x4x$\frac{1}{2}$	4	11	M270-36
2	K		2	x15a	PL $\frac{5}{8}$x44$\frac{5}{16}$	4	10	M270-50

JOB NO. 498 | DRAWING NO. 37 | REV.

Vermont Agency of Transportation
RECEIVED
CK'D BY M.C.L. OK'D BY S.S.S.
January 10 2012
RESUBMIT ____ APPROVED ✓
BY J. LACROIX DATE 01-12-2012

REV.	DATE	REMARKS	DWN	CHK	APVL	SHOP
0	NOV 30 2011					

JAN 9 2012

MATERIAL:	SURFACE PREP. & PAINT:	HOLES:	SHOP BOLTS:
M270-50 (UN)	HOT-DIP GALV.	$\frac{15}{16}$Ø (UN)	NONE

DESCRIPTION: SHIPPING ASSEMBLY (L0-L2 WEST & L10-L8 EAST)

CASCO BAY STEEL STRUCTURES, INC.
1 WALLACE AVE. PHONE (207) 780-6722
SOUTH PORTLAND, ME 04106 FAX. (207) 780-6726
TENSOR 3073

STRUCTURE: VT RTE 107 OVER WHITE RIVER	DRAWN: EEO	DATE: 11/18
	CHKD: PCP	DATE: 11/23
LOCATION: BETHEL, VT.	JOB NO. 498	DWG NO. 37
PROJ NO. BRF 022-1(14)		REV. △
CUSTOMER: BECK & BELLUCCI		

EEO Tue, Nov 29, 2011 03:25:14 PM //users/jobs/3073/37 - Rev0

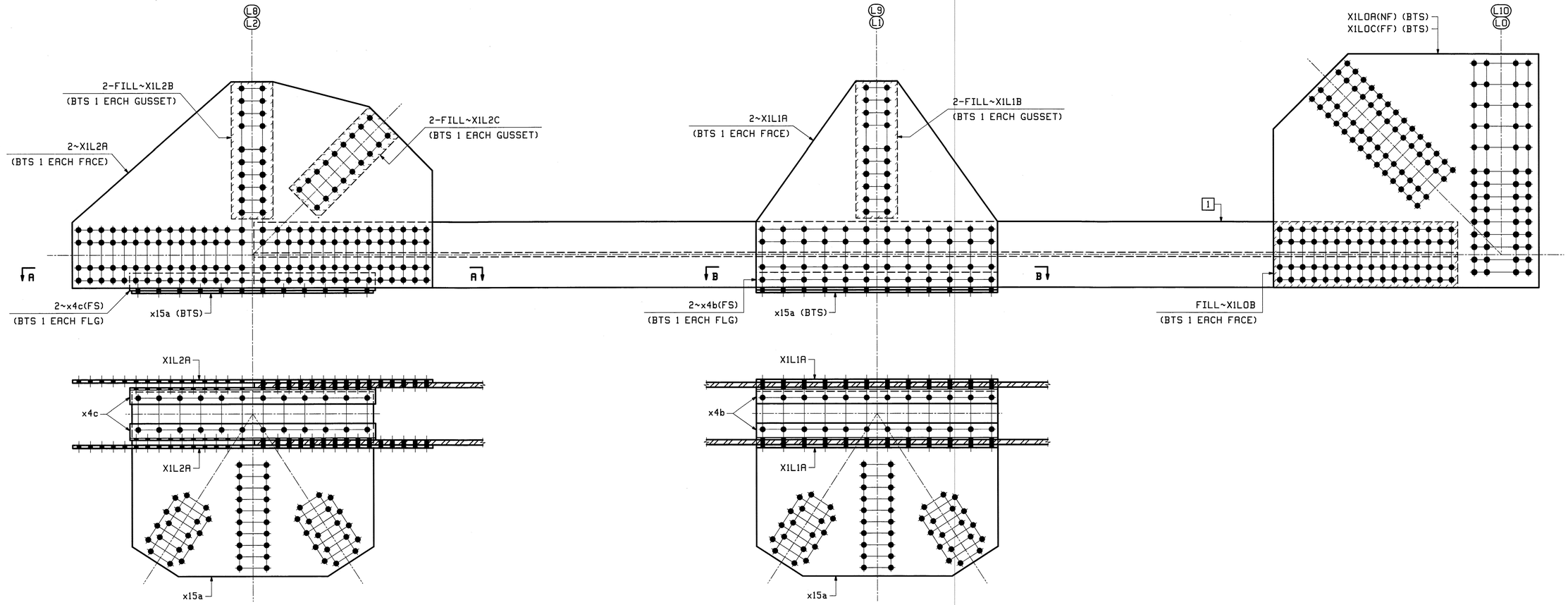

SECTION A-A

SECTION B-B

SHIPPING ASSEMBLY ~ MARK

(BOTTOM CHORDS)

	MARK	QTY	1
(L8 - L10 WEST TRUSS, LOOKING WEST)	38L8L10W	ONE	11BC5W
(L2 - L0 EAST TRUSS, LOOKING EAST)	38L2L0E	ONE	11BC1E

NOTES:
1. NF - DENOTES NEAR FACE OF BTM CHORD.
2. FF - DENOTES FAR FACE OF BTM CHORD.
3. NS - DENOTES NEAR SIDE.
4. FS - DENOTES FAR SIDE.

ABM INFO PAGE	ABM INFO LINE	SHIP MARK	QTY	MARK	MATERIAL	LENGTH FT	LENGTH INCHES	REMARKS	WT	PROCUREMENT NOTES
		38L8L10W	1		BTM CHORD SHIPPING ASS'Y				14197	
			1	11BC5W	BOTTOM CHORD					
1	L		1	X1L0A	PL $\frac{3}{4}$x55$\frac{9}{16}$	5	3$\frac{3}{4}$	M270-50F2 (FCM)		
3	Q		2	X1L0B	PL 1$\frac{1}{16}$x15$\frac{5}{8}$	3	8$\frac{1}{4}$	FILL M270-50		
1	L		1	X1L0C	PL $\frac{3}{4}$x55$\frac{9}{16}$	5	3$\frac{3}{4}$	M270-50F2 (FCM)		
1	M		2	X1L1A	PL $\frac{3}{4}$x49	4	10	M270-50F2 (FCM)		
3	K		2	X1L1B	PL $\frac{9}{16}$x10	2	8$\frac{9}{16}$	FILL M270-50		
1	N		2	X1L2A	PL $\frac{3}{4}$x49	7	2$\frac{1}{2}$	M270-50F2 (FCM)		
3	K		2	X1L2B	PL $\frac{9}{16}$x10	2	8$\frac{9}{16}$	FILL M270-50		
3	P		2	X1L2C	PL $\frac{9}{16}$x10	2	3$\frac{1}{4}$	FILL M270-50		
3	C		2	x4b	L 4x4x$\frac{1}{2}$	4	10	M270-36		
3	C		2	x4c	L 4x4x$\frac{1}{2}$	4	11	M270-36		
2	K		2	x15a	PL $\frac{5}{8}$x44$\frac{5}{16}$	4	10	M270-50		

ABM INFO PAGE	ABM INFO LINE	SHIP MARK	QTY	MARK	MATERIAL	LENGTH FT	LENGTH INCHES	REMARKS	WT	PROCUREMENT NOTES
		38L2L0E	1		BTM CHORD SHIPPING ASS'Y				14197	
			1	11BC1E	BOTTOM CHORD					
1	L		1	X1L0A	PL $\frac{3}{4}$x55$\frac{9}{16}$	5	3$\frac{3}{4}$	M270-50F2 (FCM)		
3	Q		2	X1L0B	PL 1$\frac{1}{16}$x15$\frac{5}{8}$	3	8$\frac{1}{4}$	FILL M270-50		
1	L		1	X1L0C	PL $\frac{3}{4}$x55$\frac{9}{16}$	5	3$\frac{3}{4}$	M270-50F2 (FCM)		
1	M		2	X1L1A	PL $\frac{3}{4}$x49	4	10	M270-50F2 (FCM)		
3	K		2	X1L1B	PL $\frac{9}{16}$x10	2	8$\frac{9}{16}$	FILL M270-50		
1	N		2	X1L2A	PL $\frac{3}{4}$x49	7	2$\frac{1}{2}$	M270-50F2 (FCM)		
3	K		2	X1L2B	PL $\frac{9}{16}$x10	2	8$\frac{9}{16}$	FILL M270-50		
3	P		2	X1L2C	PL $\frac{9}{16}$x10	2	3$\frac{1}{4}$	FILL M270-50		
3	C		2	x4b	L 4x4x$\frac{1}{2}$	4	10	M270-36		
3	C		2	x4c	L 4x4x$\frac{1}{2}$	4	11	M270-36		
2	K		2	x15a	PL $\frac{5}{8}$x44$\frac{5}{16}$	4	10	M270-50		

JOB NO. 498 | DRAWING NO. 38 | REV.

Vermont Agency of Transportation
RECEIVED
CK'D BY M.C.L. OK'D BY S.S.S.
January 10 2012
RESUBMIT APPROVED ✓
BY J. LACROIX DATE 01-12-2012

REV.	DATE	REMARKS	DWN	CHK	APVL	SHOP
0	NOV 30 2011					
	JAN 9 2012					

MATERIAL: M270-50 (UN) | SURFACE PREP. & PAINT: HOT-DIP GALV. | HOLES: $\frac{15}{16}$Ø (UN) | SHOP BOLTS: NONE

DESCRIPTION: SHIPPING ASSEMBLY (L8-L10 WEST & L2-L0 EAST)

CASCO BAY STEEL STRUCTURES, INC.
1 WALLACE AVE. PHONE (207) 780-6722
SOUTH PORTLAND, ME 04106 FAX. (207) 780-6726
TENSOR 3073

STRUCTURE: VT RTE 107 OVER WHITE RIVER	DRAWN: EEO	DATE: 11/18	
	CHKD: PCP	DATE: 11/23	
LOCATION: BETHEL, VT.	JOB NO. 498	DWG NO. 38	
PROJ NO. BRF 022-1(14)			
CUSTOMER: BECK & BELLUCCI		REV. △	

C:\Users\jlacroix\Desktop\3073-38 - Rev0
Tue, Nov 29, 2011 03:50:50 PM
ECO

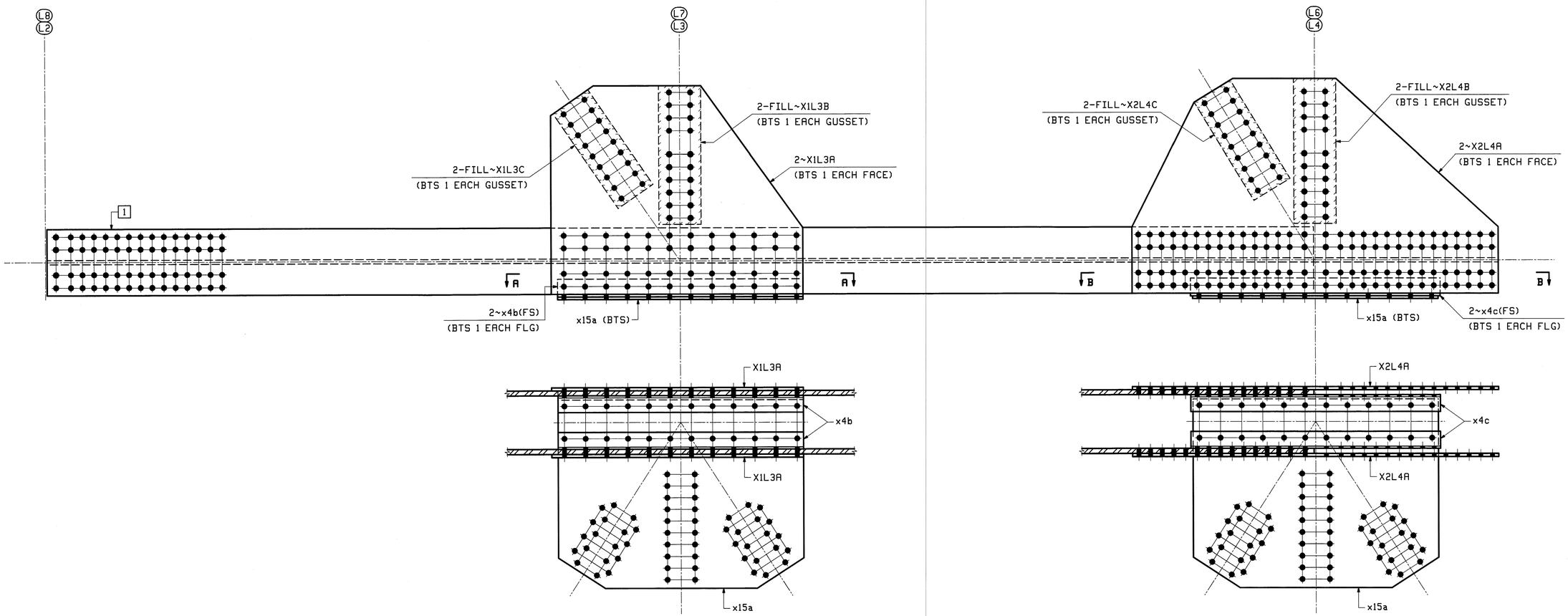

SECTION A-A

SECTION B-B

SHIPPING ASSEMBLY ~ MARK

(BOTTOM CHORDS)

	MARK	QTY	1
(L2 - L4 WEST TRUSS, LOOKING WEST)	39L2L4W	ONE	11BC2W
(L8 - L6 EAST TRUSS, LOOKING EAST)	39L8L6E	ONE	11BC4E

ABM INFO PAGE	ABM INFO LINE	SHIP MARK	QTY	MARK	MATERIAL	LENGTH FT	LENGTH INCHES	REMARKS	WT	PROCUREMENT NOTES
		39L2L4W	1		BTM CHORD SHIPPING ASS'Y				12587	
			1	11BC2W	BOTTOM CHORD					
1	P		2	X1L3A	PL 3/4x49	4	11 1/2	M270-50F2 (FCM)		
3	K		2	X1L3B	PL 9/16x10	2	8 9/16	FILL M270-50		
3	P		2	X1L3C	PL 9/16x10	2	3	FILL M270-50		
1	Q		2	X2L4A	PL 3/4x50 1/2	7	2 1/2	M270-50F2 (FCM)		
3	L		2	X2L4B	PL 9/16x10	2	10 1/16	FILL M270-50		
3	P		2	X2L4C	PL 9/16x10	2	3	FILL M270-50		
3	C		2	x4b	L 4x4x1/2	4	10	M270-36		
3	C		2	x4c	L 4x4x1/2	4	11	M270-36		
2	K		2	x15a	PL 5/8x44 5/16	4	10	M270-50		

BILL OF MATERIAL — JOB NO. 498 — DRAWING NO. 39 — REV.

ABM INFO PAGE	ABM INFO LINE	SHIP MARK	QTY	MARK	MATERIAL	LENGTH FT	LENGTH INCHES	REMARKS	WT	PROCUREMENT NOTES
		39L8L6E	1		BTM CHORD SHIPPING ASS'Y				12587	
			1	11BC4E	BOTTOM CHORD					
1	P		2	X1L3A	PL 3/4x49	4	11 1/2	M270-50F2 (FCM)		
3	K		2	X1L3B	PL 9/16x10	2	8 9/16	FILL M270-50		
3	P		2	X1L3C	PL 9/16x10	2	3	FILL M270-50		
1	Q		2	X2L4A	PL 3/4x50 1/2	7	2 1/2	M270-50F2 (FCM)		
3	L		2	X2L4B	PL 9/16x10	2	10 1/16	FILL M270-50		
3	P		2	X2L4C	PL 9/16x10	2	3	FILL M270-50		
3	C		2	x4b	L 4x4x1/2	4	10	M270-36		
3	C		2	x4c	L 4x4x1/2	4	11	M270-36		
2	K		2	x15a	PL 5/8x44 5/16	4	10	M270-50		

BILL OF MATERIAL — JOB NO. 498 — DRAWING NO. 39 — REV.

Vermont Agency of Transportation
RECEIVED
CK'D BY M.C.L. OK'D BY S.S.S.
January 10 2012
RESUBMIT APPROVED ✓
BY J. LACROIX DATE 01-12-2012

REV.	DATE	REMARKS	DWN	CHK	APVL	SHOP
0	NOV 30 2011					
	JAN 9 2012					

MATERIAL: M270-50 (UN) | SURFACE PREP. & PAINT: HOT-DIP GALV. | HOLES: 15 16Ø (UN) | SHOP BOLTS: NONE

DESCRIPTION: SHIPPING ASSEMBLY (L2-L4 WEST & L8-L6 EAST)

CASCO BAY STEEL STRUCTURES, INC.
1 WALLACE AVE. PHONE (207) 780-6722
SOUTH PORTLAND, ME 04106 FAX. (207) 780-6726

TENSOR 3073

STRUCTURE: VT RTE 107 OVER WHITE RIVER

DRAWN: EEO DATE: 11/18
CHK'D: PCP DATE: 11/23

LOCATION: BETHEL, VT. JOB NO. 498 DWG NO. 39
PROJ NO. BRF 022-1(14) REV. △
CUSTOMER: BECK & BELLUCCI

EEO Tue, Nov 29, 2011 03:03:13 PM //steel/jobs/2012/39 - Rev0

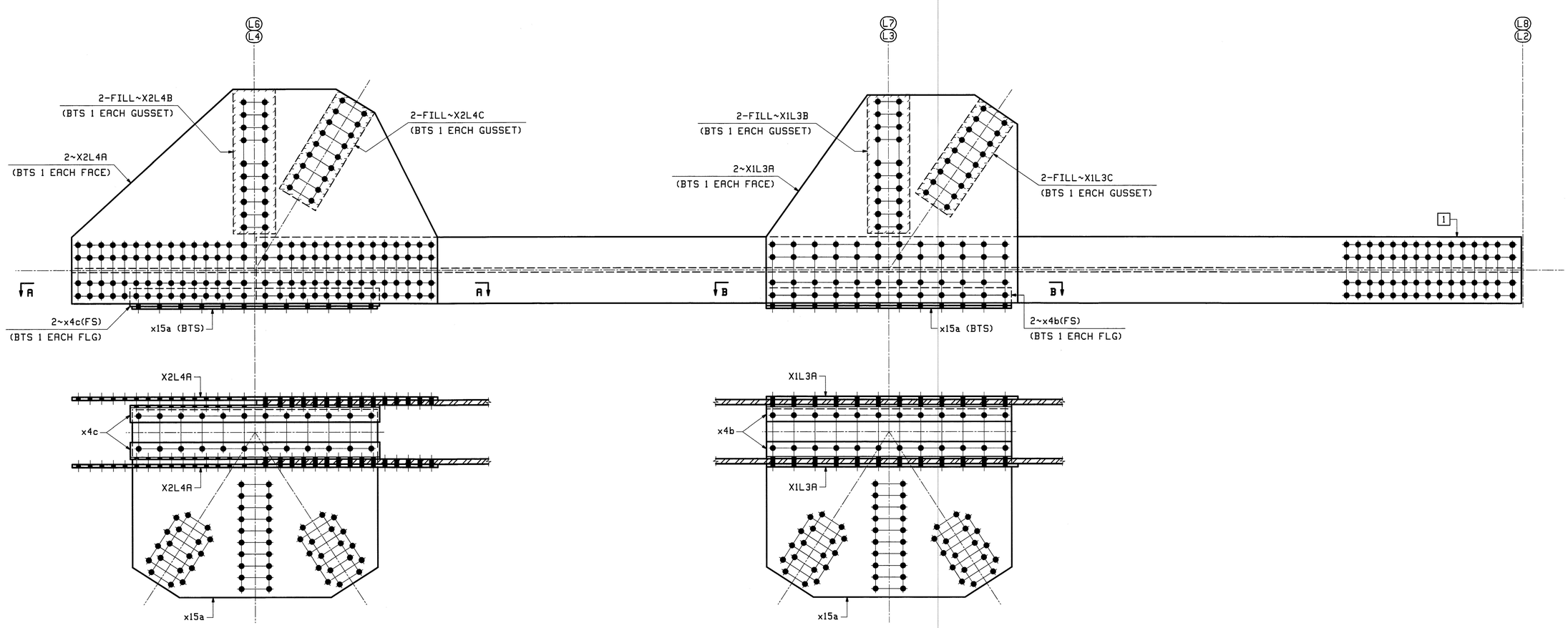

SECTION A-A

SECTION B-B

SHIPPING ASSEMBLY ~ MARK

(BOTTOM CHORDS)

	MARK	QTY	1
(L6 - L8 WEST TRUSS, LOOKING WEST)	40L6L8W	ONE	11BC4W
(L4 - L2 EAST TRUSS, LOOKING EAST)	40L4L2E	ONE	11BC2E

ABM INFO PAGE	ABM INFO LINE	SHIP MARK	QTY	MARK	MATERIAL	LENGTH FT	LENGTH INCHES	REMARKS	WT	PROCUREMENT NOTES
		40L6L8W	1		BTM CHORD SHIPPING ASS'Y				12587	
			1	11BC4W	BOTTOM CHORD					
1	P		2	X1L3A	PL $\frac{3}{4}$x49	4	11 $\frac{1}{2}$	M270-50F2 (FCM)		
3	K		2	X1L3B	PL $\frac{9}{16}$x10	2	8 $\frac{9}{16}$	FILL M270-50		
3	P		2	X1L3C	PL $\frac{9}{16}$x10	2	3	FILL M270-50		
1	Q		2	X2L4A	PL $\frac{3}{4}$x50 $\frac{1}{2}$	7	2 $\frac{1}{2}$	M270-50F2 (FCM)		
3	L		2	X2L4B	PL $\frac{9}{16}$x10	2	10 $\frac{1}{16}$	FILL M270-50		
3	P		2	X2L4C	PL $\frac{9}{16}$x10	2	3	FILL M270-50		
3	C		2	x4b	L 4x4x $\frac{1}{2}$	4	10	M270-36		
3	C		2	x4c	L 4x4x $\frac{1}{2}$	4	11	M270-36		
2	K		2	x15a	PL $\frac{5}{8}$x44 $\frac{5}{16}$	4	10	M270-50		

ABM INFO PAGE	ABM INFO LINE	SHIP MARK	QTY	MARK	MATERIAL	LENGTH FT	LENGTH INCHES	REMARKS	WT	PROCUREMENT NOTES
		40L4L2E	1		BTM CHORD SHIPPING ASS'Y				12587	
			1	11BC2E	BOTTOM CHORD					
1	P		2	X1L3A	PL $\frac{3}{4}$x49	4	11 $\frac{1}{2}$	M270-50F2 (FCM)		
3	K		2	X1L3B	PL $\frac{9}{16}$x10	2	8 $\frac{9}{16}$	FILL M270-50		
3	P		2	X1L3C	PL $\frac{9}{16}$x10	2	3	FILL M270-50		
1	Q		2	X2L4A	PL $\frac{3}{4}$x50 $\frac{1}{2}$	7	2 $\frac{1}{2}$	M270-50F2 (FCM)		
3	L		2	X2L4B	PL $\frac{9}{16}$x10	2	10 $\frac{1}{16}$	FILL M270-50		
3	P		2	X2L4C	PL $\frac{9}{16}$x10	2	3	FILL M270-50		
3	C		2	x4b	L 4x4x $\frac{1}{2}$	4	10	M270-36		
3	C		2	x4c	L 4x4x $\frac{1}{2}$	4	11	M270-36		
2	K		2	x15a	PL $\frac{5}{8}$x44 $\frac{5}{16}$	4	10	M270-50		

BILL OF MATERIAL — JOB NO. 498 — DRAWING NO. 40 — REV.

Vermont Agency of Transportation
RECEIVED
CK'D BY M.C.L. OK'D BY S.S.S.
January 10 2012
RESUBMIT APPROVED ✓
BY J. LACROIX DATE 01-12-2012

REV.	DATE	REMARKS	DWN	CHK	APVL	SHOP
	JAN 9 2012					
0	NOV 30 2011					

MATERIAL: M270-50 (UN) | SURFACE PREP. & PAINT: HOT-DIP GALV. | HOLES: 15/16ø (UN) | SHOP BOLTS: NONE

DESCRIPTION: SHIPPING ASSEMBLY (L6-L8 WEST & L4-L2 EAST)

CASCO BAY STEEL STRUCTURES, INC.
1 WALLACE AVE. PHONE (207) 780-6722
SOUTH PORTLAND, ME 04106 FAX. (207) 780-6726
TENSOR 3073

STRUCTURE: VT RTE 107 OVER WHITE RIVER

DRAWN:	DATE:
EEO	11/21
CHK'D:	DATE:
PCP	11/23

LOCATION: BETHEL, VT. | JOB NO. 498 | DWG NO. 40

PROJ NO. BRF 022-1(14) | REV. △

CUSTOMER: BECK & BELLUCCI

Tue, Nov 29, 2011 03:30:05 PM //stars/jobs/3073/40 - Rev.0
EEO

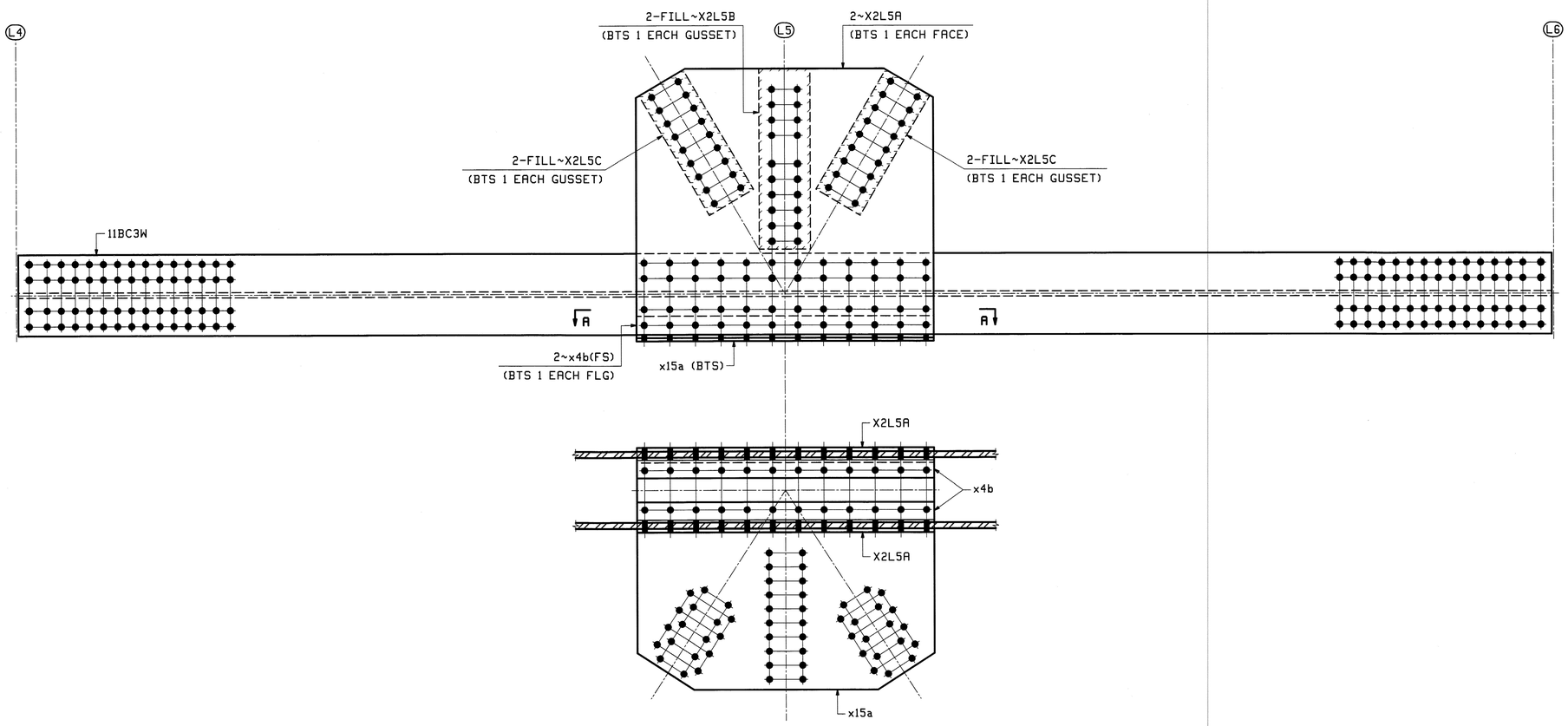

SECTION A-A

ONE ~ SHIPPING ASSEMBLY ~ 41L4L6W

(BOTTOM CHORD) (L4 - L6 WEST TRUSS, LOOKING WEST)

ABM INFO		SHIP	BILL OF MATERIAL					JOB NO.	DRAWING NO.	REV.
								498	41	
PAGE	LINE	MARK	QTY	MARK	MATERIAL	LENGTH FT	LENGTH INCHES	REMARKS	WT	PROCUREMENT NOTES
		41L4L6W	1		BTM CHORD SHIPPING ASS'Y				10076	
			1	11BC3W	BOTTOM CHORD					
1	R		2	X2L5A	PL $\frac{3}{4}$x51$\frac{1}{2}$	4	10	M270-50F2 (FCM)		
3	L		2	X2L5B	PL $\frac{9}{16}$x10	2	11$\frac{1}{16}$	FILL M270-50		
3	P		4	X2L5C	PL $\frac{9}{16}$x10	2	3	FILL M270-50		
3	C		2	x4b	L 4x4x$\frac{1}{2}$	4	10	M270-36		
2	K		1	x15a	PL $\frac{5}{8}$x44$\frac{5}{16}$	4	10	M270-50		

Vermont Agency of Transportation
RECEIVED
CK'D BY M.C.L. OK'D BY S.S.S.
January 10 2012
RESUBMIT APPROVED ✓
BY J. LACROIX DATE 01-12-2012

REV.	DATE	REMARKS	DWN	CHK	APVL	SHOP
					JAN 9 2012	
0					NOV 30 2011	

MATERIAL:	SURFACE PREP. & PAINT:	HOLES:	SHOP BOLTS:
M270-50 (UN)	HOT-DIP GALV.	15 $\frac{15}{16}$Ø (UN)	NONE

DESCRIPTION: SHIPPING ASSEMBLY (L4-L6 WEST)

CASCO BAY STEEL STRUCTURES, INC.
1 WALLACE AVE. PHONE (207) 780-6722
SOUTH PORTLAND, ME 04106 FAX. (207) 780-6726
TENSOR 3073

STRUCTURE: VT RTE 107 OVER WHITE RIVER	DRAWN: EEO	DATE: 11/21
	CHK'D: PCP	DATE: 11/23
LOCATION: BETHEL, VT.	JOB NO.	DWG NO.
PROJ NO. BRF 022-1(14)	498	41
CUSTOMER: BECK & BELLUCCI		REV. △

EEO Tue, Nov 29, 2011 03:13:13 PM /users/jobs/3073.41.dwg

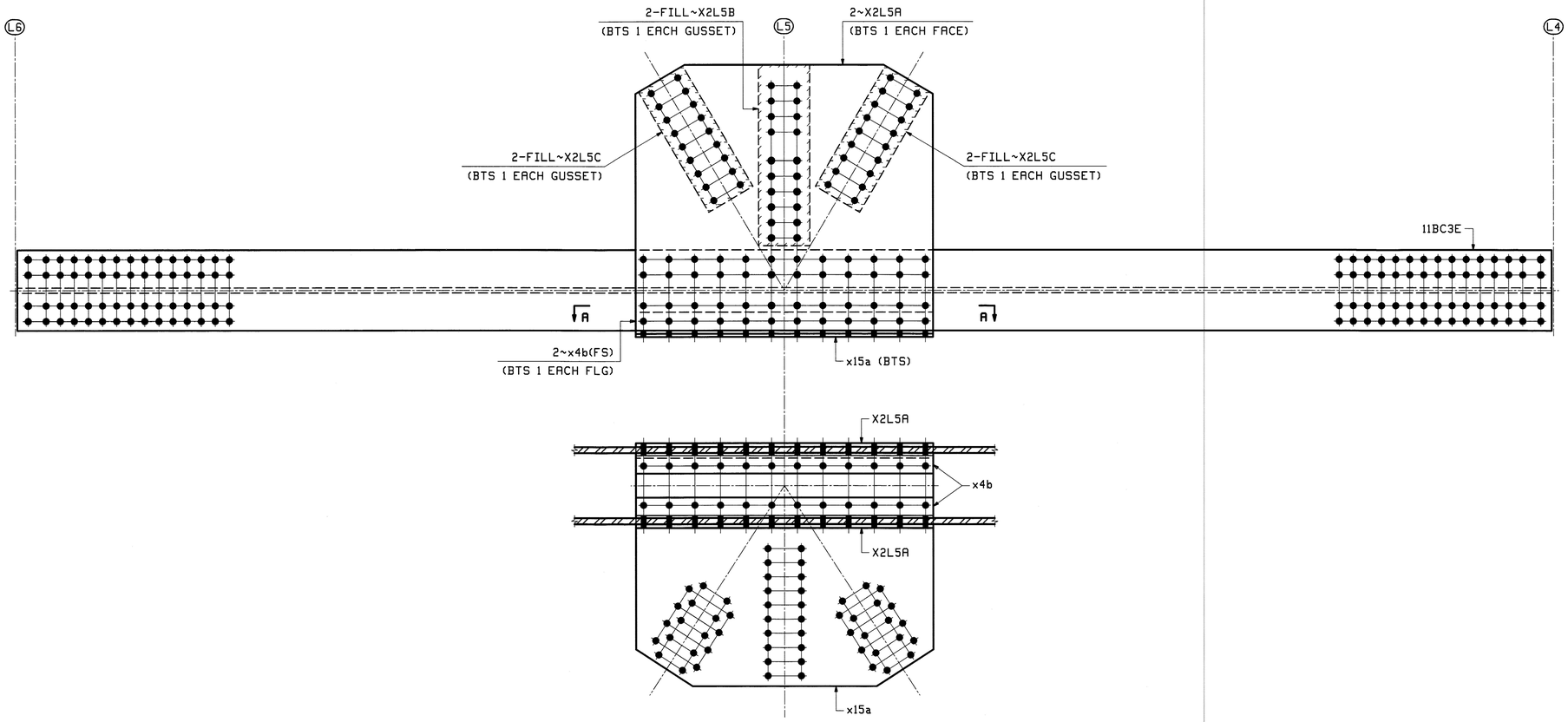

SECTION A-A

ONE ~ SHIPPING ASSEMBLY ~ 42L6L4E

(BOTTOM CHORD) (L6 - L4 EAST TRUSS, LOOKING EAST)

ABM INFO		SHIP	BILL OF MATERIAL					JOB NO.	DRAWING NO.	REV.
								498	42	
PAGE	LINE	MARK	QTY	MARK	MATERIAL	LENGTH FT	LENGTH INCHES	REMARKS	WT	PROCUREMENT NOTES
		42L6L4E	1		BTM CHORD SHIPPING ASSY				100726	
			1	11BC3E	BOTTOM CHORD					
1	R		2	X2L5A	PL $\frac{3}{4}$x51 $\frac{1}{2}$	4	10	M270-50F2 (FCM)		
3	L		2	X2L5B	PL $\frac{9}{16}$x10	2	11 $\frac{1}{16}$	FILL M270-50		
3	P		4	X2L5C	PL $\frac{9}{16}$x10	2	3	FILL M270-50		
3	C		2	x4b	L 4x4x $\frac{1}{2}$	4	10	M270-36		
2	K		1	x15a	PL $\frac{5}{8}$x44 $\frac{5}{16}$	4	10	M270-50		

Vermont Agency of Transportation
RECEIVED
CK'D BY M.C.L. OK'D BY S.S.S.
January 10 2012
RESUBMIT APPROVED ✓
BY J. LACROIX DATE 01-12-2012

REV.	DATE	REMARKS	DWN	CHK	APVL	SHOP
					JAN 9 2012	
0					NOV 30 2011	

MATERIAL:	SURFACE PREP. & PAINT:	HOLES:	SHOP BOLTS:
M270-50 (UN)	HOT-DIP GALV.	$\frac{15}{16}$ø (UN)	NONE

DESCRIPTION: SHIPPING ASSEMBLY (L6-L4 EAST)

CASCO BAY STEEL STRUCTURES, INC.
1 WALLACE AVE. PHONE (207) 780-6722
SOUTH PORTLAND, ME 04106 FAX. (207) 780-6726
TENSOR 3073

STRUCTURE: VT RTE 107 OVER WHITE RIVER	DRAWN: EEO	DATE: 11/21
	CHKD: PCP	DATE: 11/23
LOCATION: BETHEL, VT.	JOB NO.	DWG NO.
PROJ NO. BRF 022-1(14)	498	42
CUSTOMER: BECK & BELLUCCI		REV. △

EEO Tue, Nov 29, 2011 03:43:05 PM /users/jobs/3073/42 | Rev0

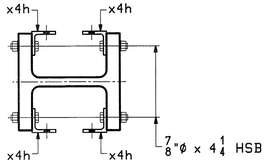

SECTION-X

SHOP NOTE:
INSTALL BOLT HEADS AS SHOWN.

ABM INFO PAGE	ABM INFO LINE	SHIP MARK	QTY	MARK	MATERIAL	LENGTH FT	LENGTH INCHES	REMARKS	WT	PROCUREMENT NOTES
		43U1L0E	1		END POST SHIPPING ASS'Y				13560	
			1	12EP1E	END POST					
8	H		1	X2U1A	PL 3/4 x 51 5/8	8	1 3/4	M270-HPS70W		
8	H		1	X2U1B	PL 3/4 x 51 5/8	8	1 3/4	M270-HPS70W		
9	E		2	X2U1C	PL 1 5/8 x 10	2	0	FILL		
9	D		2	X2U1D	PL 1 5/8 x 10	2	3	FILL		
9	G		2	X2U1F	PL 13/16 x 15 3/4	4	4 1/2	FILL		
9	H		1	x4f	L 4x4x 1/2	1	2	M270-36		
9	H		1	x4g	L 4x4x 1/2	1	5	M270-36		
8	W		4	x4h	L 4x4x 1/2	1	4 1/2	M270-36		
9	J		2	x4s	L 3x3x 3/8	2	0	M270-36		
21	E		10		7/8 ø HSB	0	2 3/4	MECH. GALV. A325-1		
21	L		20		7/8 ø HSB	0	4 1/4	MECH. GALV. A325-1		
21	X		30		7/8 ø HSW			MECH. GALV. F436		
21	Y		30		LOAD IND. 7/8 ø HSB WASH FOR			MECH. GALV. F436		

ABM INFO PAGE	ABM INFO LINE	SHIP MARK	QTY	MARK	MATERIAL	LENGTH FT	LENGTH INCHES	REMARKS	WT	PROCUREMENT NOTES
		43L0U1W	1		END POST SHIPPING ASS'Y				13560	
			1	12EP1W	END POST					
8	H		1	X2U1A	PL 3/4 x 51 5/8	8	1 3/4	M270-HPS70W		
8	H		1	X2U1B	PL 3/4 x 51 5/8	8	1 3/4	M270-HPS70W		
9	E		2	X2U1C	PL 1 5/8 x 10	2	0	FILL		
9	D		2	X2U1D	PL 1 5/8 x 10	2	3	FILL		
9	G		2	X2U1F	PL 13/16 x 15 3/4	4	4 1/2	FILL		
9	H		1	x4f	L 4x4x 1/2	1	2	M270-36		
9	H		1	x4g	L 4x4x 1/2	1	5	M270-36		
8	W		4	x4h	L 4x4x 1/2	1	4 1/2	M270-36		
9	J		2	x4s	L 3x3x 3/8	2	0	M270-36		
21	E		10		7/8 ø HSB	0	2 3/4	MECH. GALV. A325-1		
21	L		20		7/8 ø HSB	0	4 1/4	MECH. GALV. A325-1		
21	X		30		7/8 ø HSW			MECH. GALV. F436		
21	Y		30		LOAD IND. 7/8 ø HSB WASH FOR			MECH. GALV. F436		
		43L10U9E	1		END POST SHIPPING ASS'Y				13560	
			1	12EP10E	END POST					
8	H		1	X2U1A	PL 3/4 x 51 5/8	8	1 3/4	M270-HPS70W		
8	H		1	X2U1B	PL 3/4 x 51 5/8	8	1 3/4	M270-HPS70W		
9	E		2	X2U1C	PL 1 5/8 x 10	2	0	FILL		
9	D		2	X2U1D	PL 1 5/8 x 10	2	3	FILL		
9	G		2	X2U1F	PL 13/16 x 15 3/4	4	4 1/2	FILL		
9	H		1	x4f	L 4x4x 1/2	1	2	M270-36		
9	H		1	x4g	L 4x4x 1/2	1	5	M270-36		
8	W		4	x4h	L 4x4x 1/2	1	4 1/2	M270-36		
9	J		2	x4s	L 3x3x 3/8	2	0	M270-36		
21	E		10		7/8 ø HSB	0	2 3/4	MECH. GALV. A325-1		
21	L		20		7/8 ø HSB	0	4 1/4	MECH. GALV. A325-1		
21	X		30		7/8 ø HSW			MECH. GALV. F436		
21	Y		30		LOAD IND. 7/8 ø HSB WASH FOR			MECH. GALV. F436		
		43U9L10W	1		END POST SHIPPING ASS'Y				13560	
			1	12EP10W	END POST					
8	H		1	X2U1A	PL 3/4 x 51 5/8	8	1 3/4	M270-HPS70W		
8	H		1	X2U1B	PL 3/4 x 51 5/8	8	1 3/4	M270-HPS70W		
9	E		2	X2U1C	PL 1 5/8 x 10	2	0	FILL		
9	D		2	X2U1D	PL 1 5/8 x 10	2	3	FILL		
9	G		2	X2U1F	PL 13/16 x 15 3/4	4	4 1/2	FILL		
9	H		1	x4f	L 4x4x 1/2	1	2	M270-36		
9	H		1	x4g	L 4x4x 1/2	1	5	M270-36		
8	W		4	x4h	L 4x4x 1/2	1	4 1/2	M270-36		
9	J		2	x4s	L 3x3x 3/8	2	0	M270-36		
21	E		10		7/8 ø HSB	0	2 3/4	MECH. GALV. A325-1		
21	L		20		7/8 ø HSB	0	4 1/4	MECH. GALV. A325-1		
21	X		30		7/8 ø HSW			MECH. GALV. F436		
21	Y		30		LOAD IND. 7/8 ø HSB WASH FOR			MECH. GALV. F436		

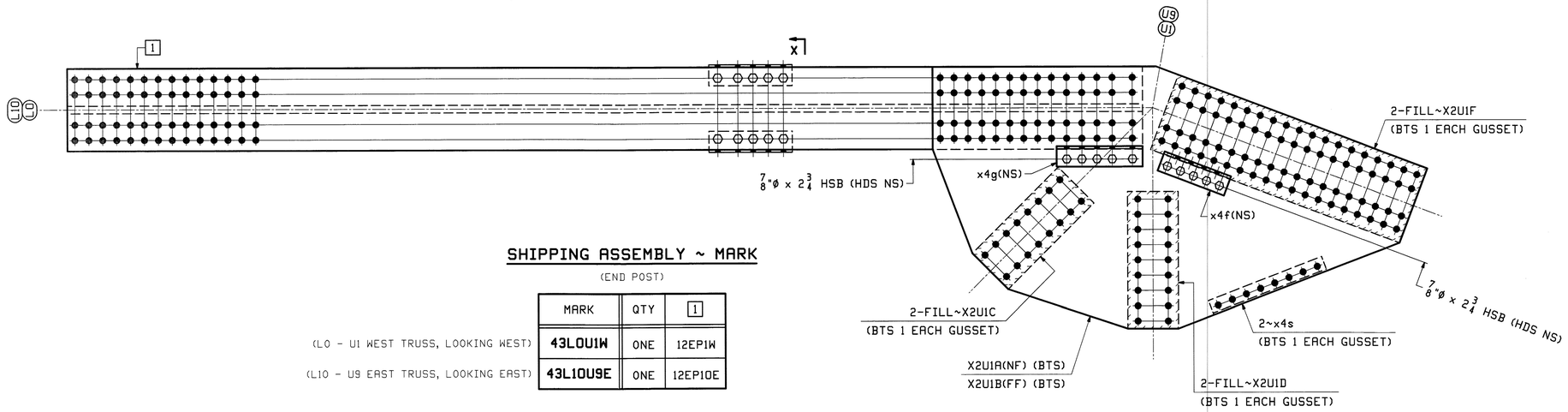

SHIPPING ASSEMBLY ~ MARK

(END POST)

MARK	QTY	1
43L0U1W	ONE	12EP1W
43L10U9E	ONE	12EP10E

(L0 - U1 WEST TRUSS, LOOKING WEST)

(L10 - U9 EAST TRUSS, LOOKING EAST)

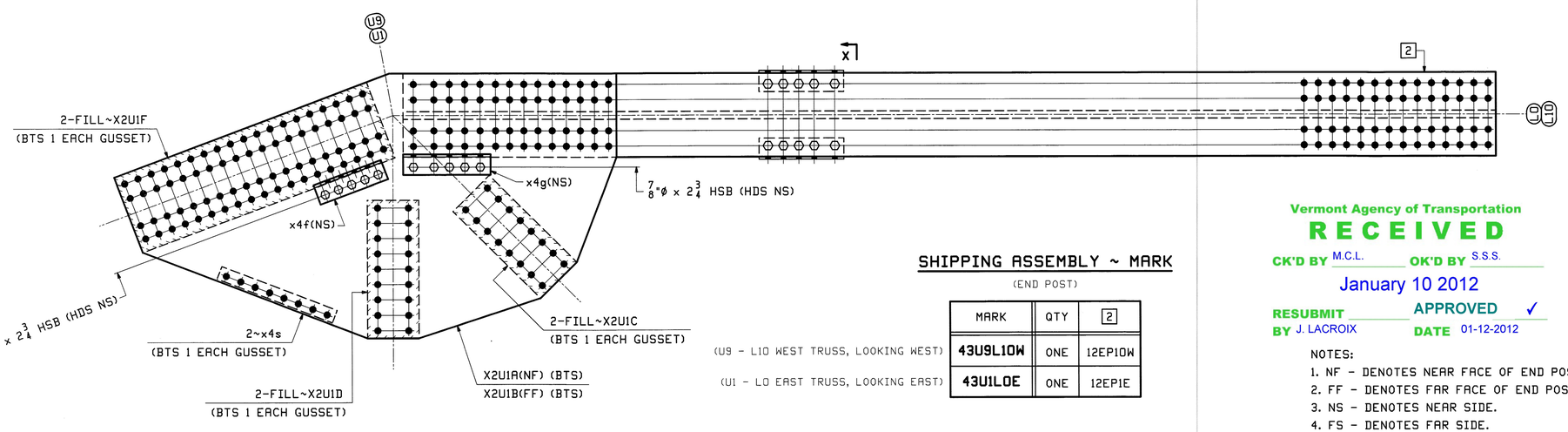

SHIPPING ASSEMBLY ~ MARK

(END POST)

MARK	QTY	2
43U9L10W	ONE	12EP10W
43U1L0E	ONE	12EP1E

(U9 - L10 WEST TRUSS, LOOKING WEST)

(U1 - L0 EAST TRUSS, LOOKING EAST)

Vermont Agency of Transportation
RECEIVED
CK'D BY M.C.L. OK'D BY S.S.S.
January 10 2012
RESUBMIT ____ APPROVED ✓
BY J. LACROIX DATE 01-12-2012

NOTES:
1. NF - DENOTES NEAR FACE OF END POST.
2. FF - DENOTES FAR FACE OF END POST.
3. NS - DENOTES NEAR SIDE.
4. FS - DENOTES FAR SIDE.

REV.	DATE	REMARKS	DWN	CHK	APVL	SHOP
0					JAN 9 2012 NOV 30 2011	

MATERIAL:	SURFACE PREP. & PAINT:	HOLES:	SHOP BOLTS:
M270-50 (UN)	HOT-DIP GALV.	15/16 ø (UN)	7/8 ø (UN)

DESCRIPTION: SHIPPING ASSEMBLY (L0-U1, L10-U9, U9-L10 & U1-L0)

CASCO BAY STEEL STRUCTURES, INC.
1 WALLACE AVE. PHONE (207) 780-6722
SOUTH PORTLAND, ME 04106 FAX. (207) 780-6726
TENSOR 3073

STRUCTURE: VT RTE 107 OVER WHITE RIVER	DRAWN: EEO	DATE: 11/21
	CHKD: PCP	DATE: 11/28
LOCATION: BETHEL, VT.	JOB NO. 498	DWG NO. 43
PROJ NO. BRF 022-1(14)		
CUSTOMER: BECK & BELLUCCI		REV. △

EEO Tue, Nov 29, 2011 04:56:53 PM c:\users\john\3073\43 | Rev0

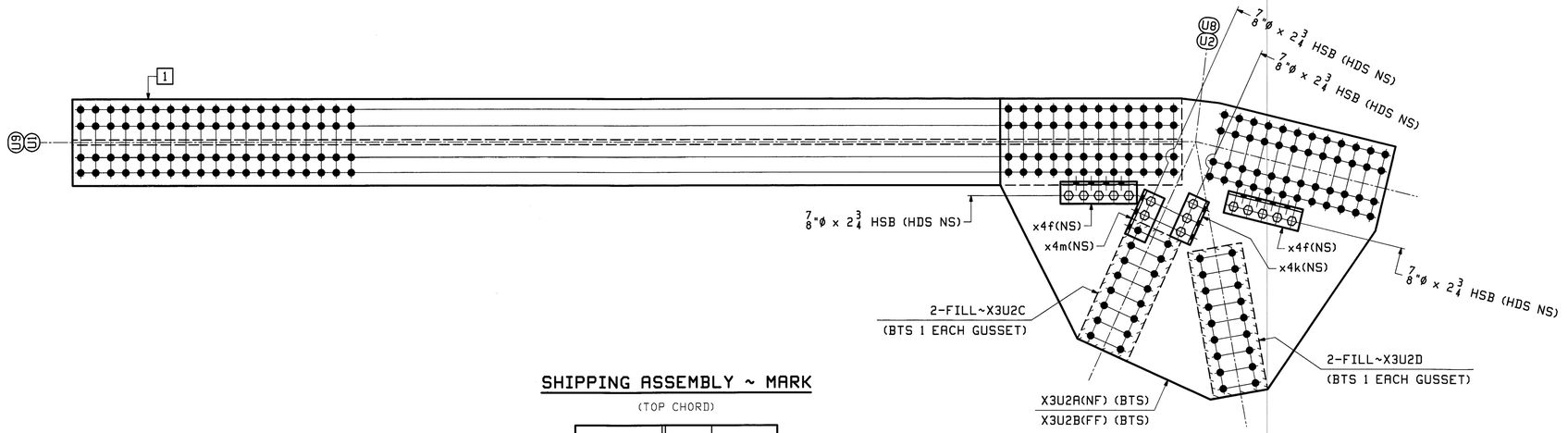

SHIPPING ASSEMBLY ~ MARK

(TOP CHORD)

	MARK	QTY	1
(U1 - U2 WEST TRUSS, LOOKING WEST)	**44U1U2W**	ONE	12TC2W
(U9 - U8 EAST TRUSS, LOOKING EAST)	**44U9U8E**	ONE	12TC9E

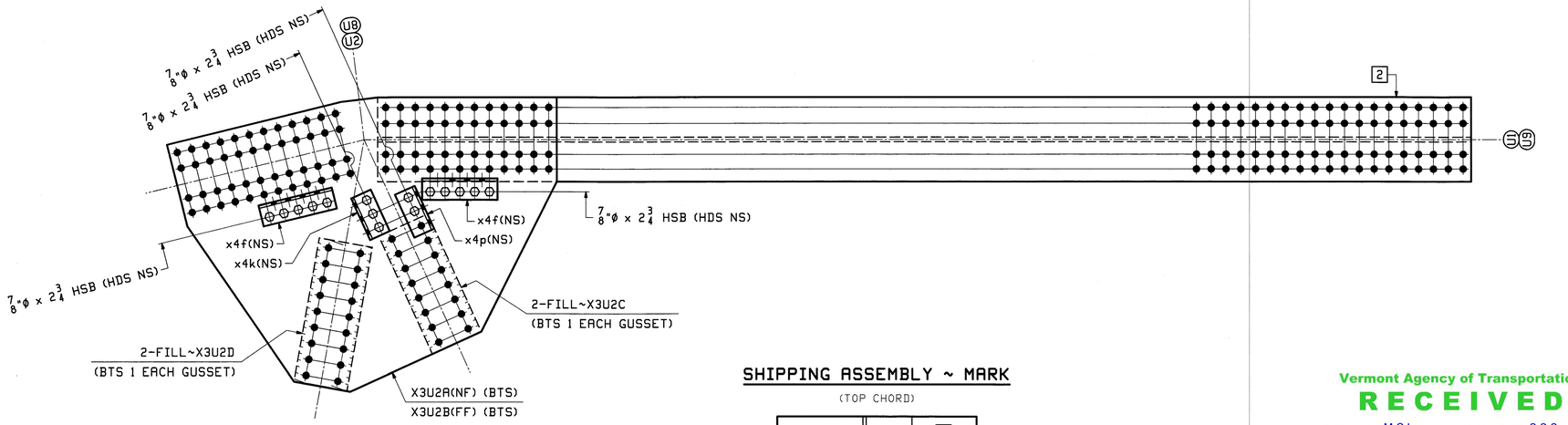

SHIPPING ASSEMBLY ~ MARK

(TOP CHORD)

	MARK	QTY	2
(U8 - U9 WEST TRUSS, LOOKING WEST)	**44U8U9W**	ONE	12TC9W
(U2 - U1 EAST TRUSS, LOOKING EAST)	**44U2U1E**	ONE	12TC2E

NOTES:
1. NF - DENOTES NEAR FACE OF TOP CHORD.
2. FF - DENOTES FAR FACE OF TOP CHORD.
3. NS - DENOTES NEAR SIDE.
4. FS - DENOTES FAR SIDE.

Vermont Agency of Transportation
RECEIVED
CK'D BY M.C.L. OK'D BY S.S.S.
January 10 2012
RESUBMIT APPROVED ✓
BY J. LACROIX DATE 01-12-2012

ABM INFO PAGE	ABM INFO LINE	SHIP MARK	QTY	MARK	MATERIAL	LENGTH FT	LENGTH INCHES	REMARKS	WT	PROCUREMENT NOTES
		44U1U2W	1		TOP CHORD SHIPPING ASS'Y				7238	
			1	12TC2W	TOP CHORD					
8	J		1	X3U2A	PL 3/4 x 55 3/4	6	0 3/8	M270-HPS70W		
8	J		1	X3U2B	PL 3/4 x 55 3/4	6	0 3/8	M270-HPS70W		
9	S		2	X3U2C	PL 13/16 x 10	2	0	FILL		
9	R		2	X3U2D	PL 13/16 x 10	2	3	FILL		
9	U		2	x4f	L 4x4x 1/2	1	2	M270-36		
9	T		1	x4k	L 6x4x 1/2	0	8 1/2	M270-36		
9	T		1	x4m	L 6x4x 1/2	0	8 3/4	M270-36		
21	E		15		7/8 ø HSB	0	2 3/4	MECH. GALV. A325-1		
21	X		15		7/8 ø HSW			MECH. GALV. F436		
21	Y		15		LOAD IND. 7/8 ø WASH FOR HSB			MECH. GALV. F436		
		44U9U8E	1		TOP CHORD SHIPPING ASS'Y				7238	
			1	12TC9E	TOP CHORD					
8	J		1	X3U2A	PL 3/4 x 55 3/4	6	0 3/8	M270-HPS70W		
8	J		1	X3U2B	PL 3/4 x 55 3/4	6	0 3/8	M270-HPS70W		
9	S		2	X3U2C	PL 13/16 x 10	2	0	FILL		
9	R		2	X3U2D	PL 13/16 x 10	2	3	FILL		
9	U		2	x4f	L 4x4x 1/2	1	2	M270-36		
9	T		1	x4k	L 6x4x 1/2	0	8 1/2	M270-36		
9	T		1	x4m	L 6x4x 1/2	0	8 3/4	M270-36		
21	E		15		7/8 ø HSB	0	2 3/4	MECH. GALV. A325-1		
21	X		15		7/8 ø HSW			MECH. GALV. F436		
21	Y		15		LOAD IND. 7/8 ø WASH FOR HSB			MECH. GALV. F436		
		44U8U9W	1		TOP CHORD SHIPPING ASS'Y				7238	
			1	12TC9W	TOP CHORD					
8	J		1	X3U2A	PL 3/4 x 55 3/4	6	0 3/8	M270-HPS70W		
8	J		1	X3U2B	PL 3/4 x 55 3/4	6	0 3/8	M270-HPS70W		
9	S		2	X3U2C	PL 13/16 x 10	2	0	FILL		
9	R		2	X3U2D	PL 13/16 x 10	2	3	FILL		
9	U		2	x4f	L 4x4x 1/2	1	2	M270-36		
9	T		1	x4k	L 6x4x 1/2	0	8 1/2	M270-36		
9	T		1	x4m	L 6x4x 1/2	0	8 3/4	M270-36		
21	E		15		7/8 ø HSB	0	2 3/4	MECH. GALV. A325-1		
21	X		15		7/8 ø HSW			MECH. GALV. F436		
21	Y		15		LOAD IND. 7/8 ø WASH FOR HSB			MECH. GALV. F436		
		44U2U1E	1		TOP CHORD SHIPPING ASS'Y				7238	
			1	12TC2E	TOP CHORD					
8	J		1	X3U2A	PL 3/4 x 55 3/4	6	0 3/8	M270-HPS70W		
8	J		1	X3U2B	PL 3/4 x 55 3/4	6	0 3/8	M270-HPS70W		
9	S		2	X3U2C	PL 13/16 x 10	2	0	FILL		
9	R		2	X3U2D	PL 13/16 x 10	2	3	FILL		
9	U		2	x4f	L 4x4x 1/2	1	2	M270-36		
9	T		1	x4k	L 6x4x 1/2	0	8 1/2	M270-36		
9	T		1	x4m	L 6x4x 1/2	0	8 3/4	M270-36		
21	E		15		7/8 ø HSB	0	2 3/4	MECH. GALV. A325-1		
21	X		15		7/8 ø HSW			MECH. GALV. F436		
21	Y		15		LOAD IND. 7/8 ø WASH FOR HSB			MECH. GALV. F436		

JOB NO.	DRAWING NO.	REV.
498	44	

REV.	DATE	REMARKS	DWN	CHK	APVL	SHOP
0						

JAN 9 2012
NOV 30 2011

MATERIAL:	SURFACE PREP. & PAINT:	HOLES:	SHOP BOLTS:
M270-50 (UN)	HOT-DIP GALV.	15/16ø (UN)	7/8ø (UN)

DESCRIPTION: SHIPPING ASSEMBLY (U1-U2, U9-U8, U8-U9 & U2-U1)

CASCO BAY STEEL STRUCTURES, INC.
1 WALLACE AVE. PHONE (207) 780-6722
SOUTH PORTLAND, ME 04106 FAX. (207) 780-6726

TENSOR 3073

STRUCTURE: VT RTE 107 OVER WHITE RIVER	DRAWN: EEO	DATE: 11/21
	CHKD: PCP	DATE: 11/28
LOCATION: BETHEL, VT.	JOB NO. 498	DWG NO. 44
PROJ NO. BRF 022-1(14)		REV. △
CUSTOMER: BECK & BELLUCCI		

EEO Tue, Nov 29, 2011 03:46:01 PM /users/jobs/3073/44.1 Rev0

ABM INFO PAGE	ABM INFO LINE	SHIP MARK	QTY	MARK	MATERIAL	LENGTH FT	LENGTH INCHES	REMARKS	WT	PROCUREMENT NOTES
		45U3U2E	1		TOP CHORD SHIPPING ASS'Y				6804	
			1	12TC3E	TOP CHORD					
8	K		1	X3U3A	PL $\frac{3}{4}$x52$\frac{3}{4}$	6	0$\frac{3}{4}$	M270-HPS70W		
8	K		1	X3U3B	PL $\frac{3}{4}$x52$\frac{3}{4}$	6	0$\frac{3}{4}$	M270-HPS70W		
10	F		2	X3U3C	PL $\frac{13}{16}$x10	2	3	FILL		
10	G		2	X3U3D	PL $\frac{13}{16}$x10	2	1$\frac{1}{4}$	FILL		
10	J		2	x4f	L 4x4x$\frac{1}{2}$	1	2	M270-36		
10	H		1	x4p	L 6x4x$\frac{1}{2}$	0	8$\frac{3}{4}$	M270-36		
10	H		1	x4ab	L 6x4x$\frac{1}{2}$	0	11$\frac{1}{2}$	M270-36		
10	K		2	x4s	L 3x3x$\frac{3}{8}$	2	0	M270-36		
21	E		15		$\frac{7}{8}$ ø HSB	0	2$\frac{3}{4}$	MECH. GALV. A325-1		
21	X		15		$\frac{7}{8}$ ø HSW			MECH. GALV. F436		
21	Y		15		LOAD IND. $\frac{7}{8}$ WASH FOR $\frac{7}{8}$ ø HSB			MECH. GALV. F436		

ABM INFO PAGE	ABM INFO LINE	SHIP MARK	QTY	MARK	MATERIAL	LENGTH FT	LENGTH INCHES	REMARKS	WT	PROCUREMENT NOTES
		45U2U3W	1		TOP CHORD SHIPPING ASS'Y				6804	
			1	12TC3W	TOP CHORD					
8	K		1	X3U3A	PL $\frac{3}{4}$x52$\frac{3}{4}$	6	0$\frac{3}{4}$	M270-HPS70W		
8	K		1	X3U3B	PL $\frac{3}{4}$x52$\frac{3}{4}$	6	0$\frac{3}{4}$	M270-HPS70W		
10	F		2	X3U3C	PL $\frac{13}{16}$x10	2	3	FILL		
10	G		2	X3U3D	PL $\frac{13}{16}$x10	2	1$\frac{1}{4}$	FILL		
10	J		2	x4f	L 4x4x$\frac{1}{2}$	1	2	M270-36		
10	H		1	x4m	L 6x4x$\frac{1}{2}$	0	8$\frac{3}{4}$	M270-36		
10	H		1	x4n	L 6x4x$\frac{1}{2}$	0	11$\frac{1}{2}$	M270-36		
10	K		2	x4s	L 3x3x$\frac{3}{8}$	2	0	M270-36		
21	E		15		$\frac{7}{8}$ ø HSB	0	2$\frac{3}{4}$	MECH. GALV. A325-1		
21	X		15		$\frac{7}{8}$ ø HSW			MECH. GALV. F436		
21	Y		15		LOAD IND. $\frac{7}{8}$ WASH FOR $\frac{7}{8}$ ø HSB			MECH. GALV. F436		
		45U8U7E	1		TOP CHORD SHIPPING ASS'Y				6804	
			1	12TC8E	TOP CHORD					
8	K		1	X3U3A	PL $\frac{3}{4}$x52$\frac{3}{4}$	6	0$\frac{3}{4}$	M270-HPS70W		
8	K		1	X3U3B	PL $\frac{3}{4}$x52$\frac{3}{4}$	6	0$\frac{3}{4}$	M270-HPS70W		
10	F		2	X3U3C	PL $\frac{13}{16}$x10	2	3	FILL		
10	G		2	X3U3D	PL $\frac{13}{16}$x10	2	1$\frac{1}{4}$	FILL		
10	J		2	x4f	L 4x4x$\frac{1}{2}$	1	2	M270-36		
10	H		1	x4m	L 6x4x$\frac{1}{2}$	0	8$\frac{3}{4}$	M270-36		
10	H		1	x4n	L 6x4x$\frac{1}{2}$	0	11$\frac{1}{2}$	M270-36		
10	K		2	x4s	L 3x3x$\frac{3}{8}$	2	0	M270-36		
21	E		15		$\frac{7}{8}$ ø HSB	0	2$\frac{3}{4}$	MECH. GALV. A325-1		
21	X		15		$\frac{7}{8}$ ø HSW			MECH. GALV. F436		
21	Y		15		LOAD IND. $\frac{7}{8}$ WASH FOR $\frac{7}{8}$ ø HSB			MECH. GALV. F436		
		45U8U7E	1		TOP CHORD SHIPPING ASS'Y				6804	
			1	12TC8E	TOP CHORD					
8	K		1	X3U3A	PL $\frac{3}{4}$x52$\frac{3}{4}$	6	0$\frac{3}{4}$	M270-HPS70W		
8	K		1	X3U3B	PL $\frac{3}{4}$x52$\frac{3}{4}$	6	0$\frac{3}{4}$	M270-HPS70W		
10	F		2	X3U3C	PL $\frac{13}{16}$x10	2	3	FILL		
10	G		2	X3U3D	PL $\frac{13}{16}$x10	2	1$\frac{1}{4}$	FILL		
10	J		2	x4f	L 4x4x$\frac{1}{2}$	1	2	M270-36		
10	H		1	x4p	L 6x4x$\frac{1}{2}$	0	8$\frac{3}{4}$	M270-36		
10	H		1	x4ab	L 6x4x$\frac{1}{2}$	0	11$\frac{1}{2}$	M270-36		
10	K		2	x4s	L 3x3x$\frac{3}{8}$	2	0	M270-36		
21	E		15		$\frac{7}{8}$ ø HSB	0	2$\frac{3}{4}$	MECH. GALV. A325-1		
21	X		15		$\frac{7}{8}$ ø HSW			MECH. GALV. F436		
21	Y		15		LOAD IND. $\frac{7}{8}$ WASH FOR $\frac{7}{8}$ ø HSB			MECH. GALV. F436		

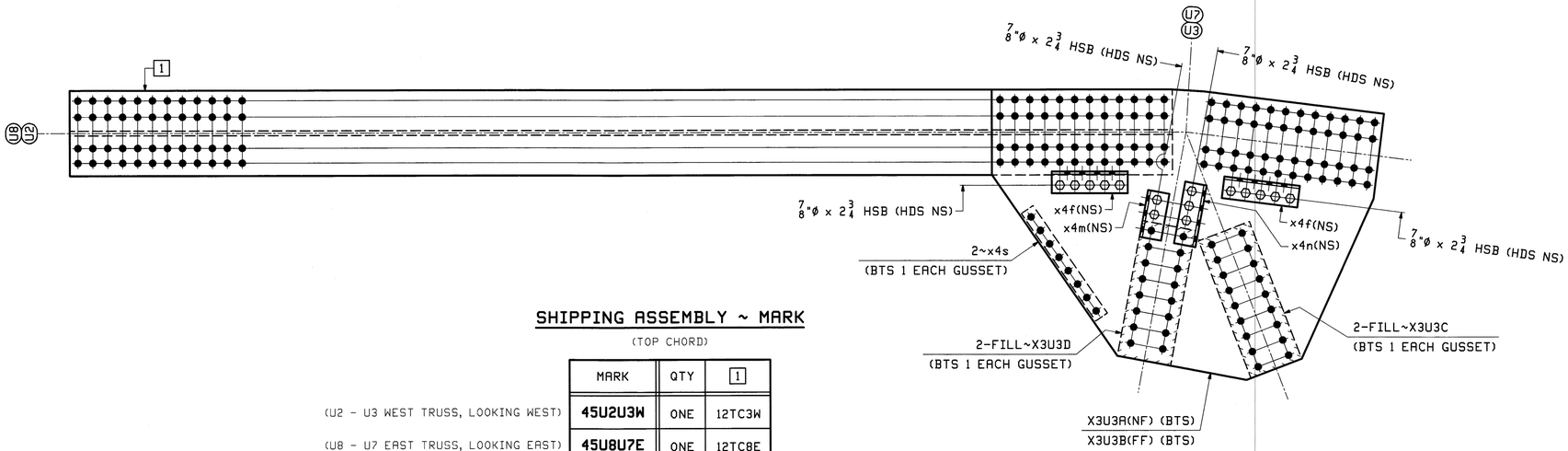

SHIPPING ASSEMBLY ~ MARK

(TOP CHORD)

	MARK	QTY	1
(U2 - U3 WEST TRUSS, LOOKING WEST)	45U2U3W	ONE	12TC3W
(U8 - U7 EAST TRUSS, LOOKING EAST)	45U8U7E	ONE	12TC8E

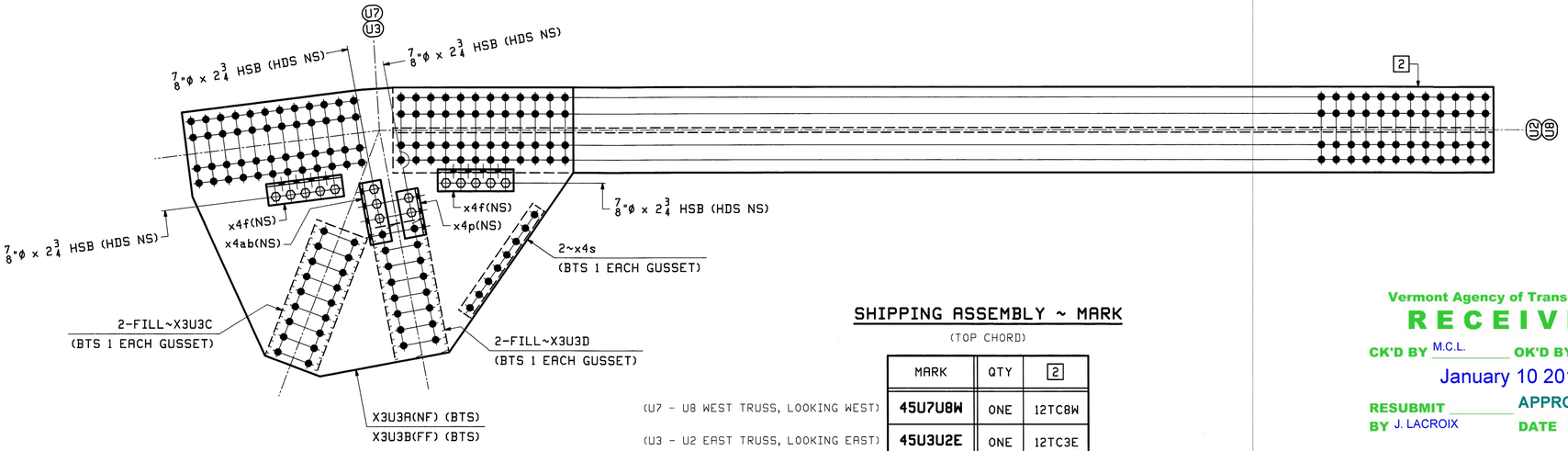

SHIPPING ASSEMBLY ~ MARK

(TOP CHORD)

	MARK	QTY	2
(U7 - U8 WEST TRUSS, LOOKING WEST)	45U7U8W	ONE	12TC8W
(U3 - U2 EAST TRUSS, LOOKING EAST)	45U3U2E	ONE	12TC3E

NOTES:
1. NF - DENOTES NEAR FACE OF TOP CHORD.
2. FF - DENOTES FAR FACE OF TOP CHORD.
3. NS - DENOTES NEAR SIDE.
4. FS - DENOTES FAR SIDE.

REV.	DATE	REMARKS	DWN	CHK	APVL	SHOP
					JAN 9 2012	
0					NOV 30 2011	

MATERIAL:	SURFACE PREP. & PAINT:	HOLES:	SHOP BOLTS:
M270-50 (UN)	HOT-DIP GALV.	$\frac{15}{16}$ø (UN)	$\frac{7}{8}$ø (UN)

DESCRIPTION: SHIPPING ASSEMBLY (U2-U3, U8-U7, U7-U8 & U3-U2)

Vermont Agency of Transportation
RECEIVED
CK'D BY M.C.L. OK'D BY S.S.S.
January 10 2012
RESUBMIT _____ APPROVED ✓
BY J. LACROIX DATE 01-12-2012

CASCO BAY STEEL STRUCTURES, INC.
1 WALLACE AVE. PHONE (207) 780-6722
SOUTH PORTLAND, ME 04106 FAX. (207) 780-6726
TENSOR 3073

STRUCTURE: VT RTE 107 OVER WHITE RIVER		DRAWN: EEO	DATE: 11/22
		CHK'D: PCP	DATE: 11/28
LOCATION: BETHEL, VT.		JOB NO.	DWG NO.
PROJ NO. BRF 022-1(14)		498	45
CUSTOMER: BECK & BELLUCCI			REV. △

EEO Tue, Nov 29, 2011 03:47:28 PM //users/jobs/3073/45 - Rev0

ABM INFO PAGE	ABM INFO LINE	SHIP MARK	QTY	MARK	MATERIAL	LENGTH FT	LENGTH INCHES	REMARKS	WT	PROCUREMENT NOTES
		46U4U3E	1		TOP CHORD SHIPPING ASS'Y				6667	
			1	13TC4E	TOP CHORD					
8	L		1	X3U4A	PL $\frac{3}{4}$×51$\frac{3}{8}$	5	11$\frac{15}{16}$	M270-HPS70W		
8	L		1	X3U4B	PL $\frac{3}{4}$×51$\frac{3}{8}$	5	11$\frac{15}{16}$	M270-HPS70W		
10	S		2	X3U4C	PL $\frac{13}{16}$×10	2	3	FILL		
10	T		2	X3U4D	PL $\frac{13}{16}$×10	2	2	FILL		
10	V		2	x4f	L 4×4×$\frac{1}{2}$	1	2	M270-36		
10	W		2	x4s	L 3×3×$\frac{3}{8}$	2	0	M270-36		
10	U		1	x4aa	L 6×4×$\frac{1}{2}$	0	8$\frac{3}{4}$	M270-36		
10	U		1	x4ac	L 6×4×$\frac{1}{2}$	0	8$\frac{3}{4}$	M270-36		
21	E		14		$\frac{7}{8}$ ø HSB	0	2$\frac{3}{4}$	MECH. GALV. A325-1		
21	X		14		$\frac{7}{8}$ ø HSW			MECH. GALV. F436		
21	Y		14		LOAD IND. 7/8 ø WASH FOR HSB			MECH. GALV. F436		

ABM INFO PAGE	ABM INFO LINE	SHIP MARK	QTY	MARK	MATERIAL	LENGTH FT	LENGTH INCHES	REMARKS	WT	PROCUREMENT NOTES
		46U3U4W	1		TOP CHORD SHIPPING ASS'Y				6667	
			1	13TC4W	TOP CHORD					
8	L		1	X3U4A	PL $\frac{3}{4}$×51$\frac{3}{8}$	5	11$\frac{15}{16}$	M270-HPS70W		
8	L		1	X3U4B	PL $\frac{3}{4}$×51$\frac{3}{8}$	5	11$\frac{15}{16}$	M270-HPS70W		
10	S		2	X3U4C	PL $\frac{13}{16}$×10	2	3	FILL		
10	T		2	X3U4D	PL $\frac{13}{16}$×10	2	2	FILL		
10	V		2	x4f	L 4×4×$\frac{1}{2}$	1	2	M270-36		
10	W		2	x4s	L 3×3×$\frac{3}{8}$	2	0	M270-36		
10	U		1	x4aa	L 6×4×$\frac{1}{2}$	0	8$\frac{3}{4}$	M270-36		
10	U		1	x4ac	L 6×4×$\frac{1}{2}$	0	8$\frac{3}{4}$	M270-36		
21	E		14		$\frac{7}{8}$ ø HSB	0	2$\frac{3}{4}$	MECH. GALV. A325-1		
21	X		14		$\frac{7}{8}$ ø HSW			MECH. GALV. F436		
21	Y		14		LOAD IND. 7/8 ø WASH FOR HSB			MECH. GALV. F436		
		46U7U6E	1		TOP CHORD SHIPPING ASS'Y				6667	
			1	13TC7E	TOP CHORD					
8	L		1	X3U4A	PL $\frac{3}{4}$×51$\frac{3}{8}$	5	11$\frac{15}{16}$	M270-HPS70W		
8	L		1	X3U4B	PL $\frac{3}{4}$×51$\frac{3}{8}$	5	11$\frac{15}{16}$	M270-HPS70W		
10	S		2	X3U4C	PL $\frac{13}{16}$×10	2	3	FILL		
10	T		2	X3U4D	PL $\frac{13}{16}$×10	2	2	FILL		
10	V		2	x4f	L 4×4×$\frac{1}{2}$	1	2	M270-36		
10	W		2	x4s	L 3×3×$\frac{3}{8}$	2	0	M270-36		
10	U		1	x4aa	L 6×4×$\frac{1}{2}$	0	8$\frac{3}{4}$	M270-36		
10	U		1	x4ac	L 6×4×$\frac{1}{2}$	0	8$\frac{3}{4}$	M270-36		
21	E		14		$\frac{7}{8}$ ø HSB	0	2$\frac{3}{4}$	MECH. GALV. A325-1		
21	X		14		$\frac{7}{8}$ ø HSW			MECH. GALV. F436		
21	Y		14		LOAD IND. 7/8 ø WASH FOR HSB			MECH. GALV. F436		
		46U6U7W	1		TOP CHORD SHIPPING ASS'Y				6667	
			1	13TC7W	TOP CHORD					
8	L		1	X3U4A	PL $\frac{3}{4}$×51$\frac{3}{8}$	5	11$\frac{15}{16}$	M270-HPS70W		
8	L		1	X3U4B	PL $\frac{3}{4}$×51$\frac{3}{8}$	5	11$\frac{15}{16}$	M270-HPS70W		
10	S		2	X3U4C	PL $\frac{13}{16}$×10	2	3	FILL		
10	T		2	X3U4D	PL $\frac{13}{16}$×10	2	2	FILL		
10	V		2	x4f	L 4×4×$\frac{1}{2}$	1	2	M270-36		
10	W		2	x4s	L 3×3×$\frac{3}{8}$	2	0	M270-36		
10	U		1	x4aa	L 6×4×$\frac{1}{2}$	0	8$\frac{3}{4}$	M270-36		
10	U		1	x4ac	L 6×4×$\frac{1}{2}$	0	8$\frac{3}{4}$	M270-36		
21	E		14		$\frac{7}{8}$ ø HSB	0	2$\frac{3}{4}$	MECH. GALV. A325-1		
21	X		14		$\frac{7}{8}$ ø HSW			MECH. GALV. F436		
21	Y		14		LOAD IND. 7/8 ø WASH FOR HSB			MECH. GALV. F436		

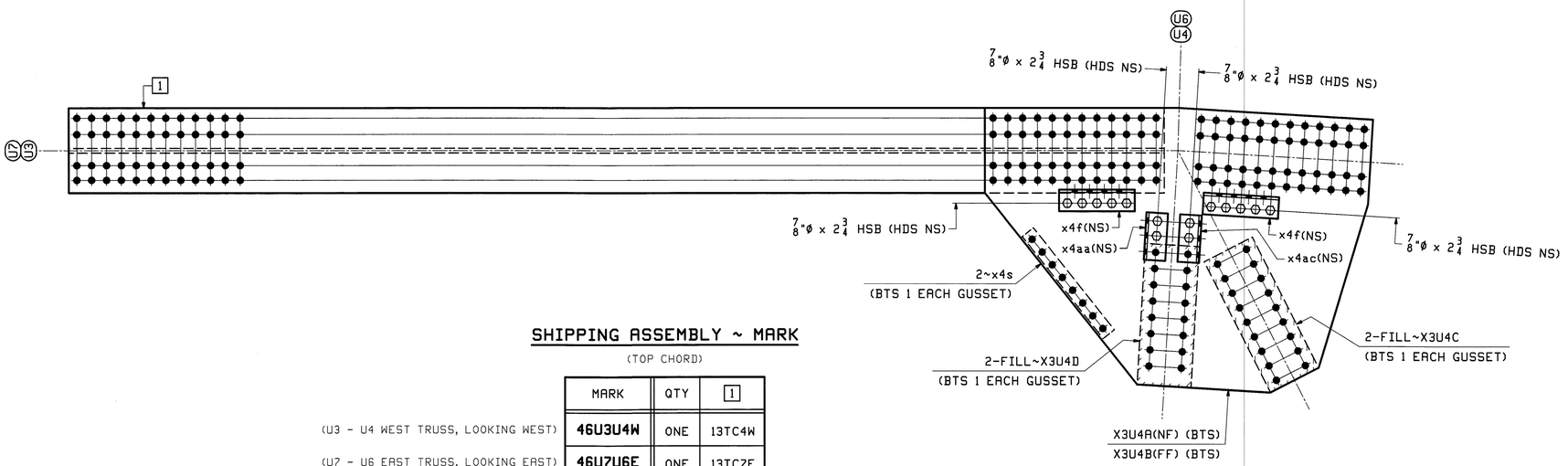

SHIPPING ASSEMBLY ~ MARK

(TOP CHORD)

MARK	QTY	1
46U3U4W	ONE	13TC4W
46U7U6E	ONE	13TC7E

(U3 - U4 WEST TRUSS, LOOKING WEST)

(U7 - U6 EAST TRUSS, LOOKING EAST)

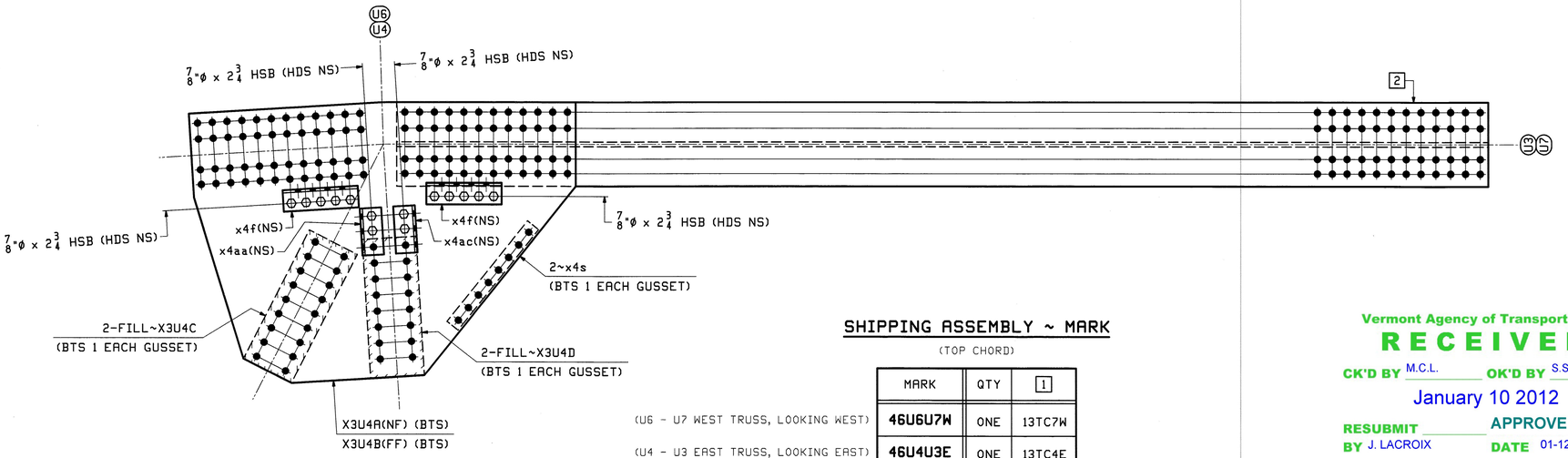

SHIPPING ASSEMBLY ~ MARK

(TOP CHORD)

MARK	QTY	1
46U6U7W	ONE	13TC7W
46U4U3E	ONE	13TC4E

(U6 - U7 WEST TRUSS, LOOKING WEST)

(U4 - U3 EAST TRUSS, LOOKING EAST)

NOTES:
1. NF - DENOTES NEAR FACE OF TOP CHORD.
2. FF - DENOTES FAR FACE OF TOP CHORD.
3. NS - DENOTES NEAR SIDE.
4. FS - DENOTES FAR SIDE.

Vermont Agency of Transportation
RECEIVED
JAN 9 2012

CK'D BY M.C.L. OK'D BY S.S.S.
January 10 2012
RESUBMIT APPROVED ✓
BY J. LACROIX DATE 01-12-2012

NOV 30 2011

REV.	DATE	REMARKS	DWN	CHK	APVL	SHOP
0						

MATERIAL:	SURFACE PREP. & PAINT:	HOLES:	SHOP BOLTS:
M270-50 (UN)	HOT-DIP GALV.	15/16ø (UN)	7/8ø (UN)

DESCRIPTION: SHIPPING ASSEMBLY (U3-U4, U7-U6, U6-U7 & U4-U3)

CASCO BAY STEEL STRUCTURES, INC.
1 WALLACE AVE. PHONE (207) 780-6722
SOUTH PORTLAND, ME 04106 FAX. (207) 780-6726
TENSOR 3073

STRUCTURE: VT RTE 107 OVER WHITE RIVER	DRAWN: EEO	DATE: 11/22
	CHK'D: PCP	DATE: 11/28
LOCATION: BETHEL, VT.	JOB NO. 498	DWG NO. 46
PROJ NO. BRF 022-1(14)		
CUSTOMER: BECK & BELLUCCI		REV. △

EEO Tue, Nov 29, 2011 03:47:58 PM /users/jobs/2073/46.dgn

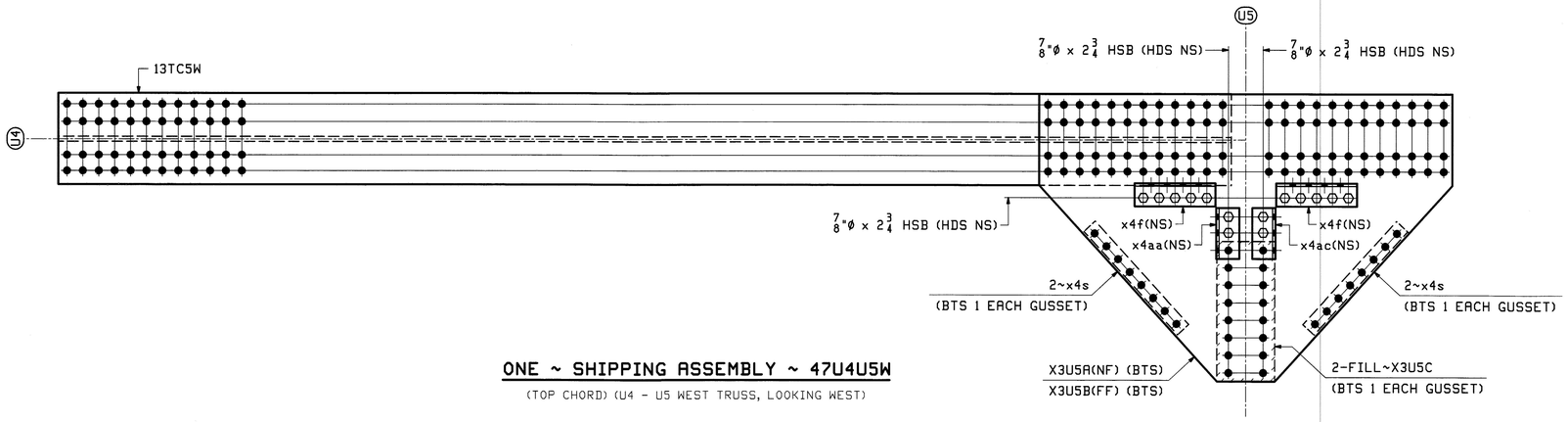

ONE ~ SHIPPING ASSEMBLY ~ 47U4U5W

(TOP CHORD) (U4 - U5 WEST TRUSS, LOOKING WEST)

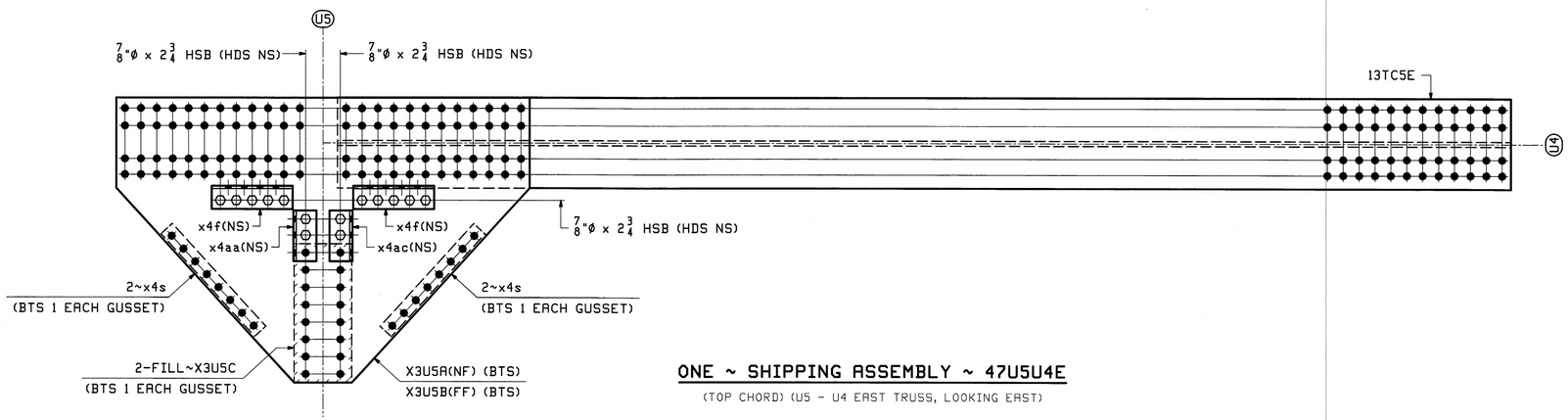

ONE ~ SHIPPING ASSEMBLY ~ 47U5U4E

(TOP CHORD) (U5 - U4 EAST TRUSS, LOOKING EAST)

ABM INFO		SHIP	BILL OF MATERIAL					JOB NO.	DRAWING NO.	REV.
								498	47	
PAGE	LINE	MARK	QTY	MARK	MATERIAL	LENGTH FT	LENGTH INCHES	REMARKS	WT	PROCUREMENT NOTES
		47U4U5W	1		TOP CHORD SHIPPING ASS'Y				6484	
			1	13TC5W	TOP CHORD					
8	M		1	X3U5A	PL 3/4 x 49 3/8	5	11 1/2	M270-HPS70W		
8	M		1	X3U5B	PL 3/4 x 49 3/8	5	11 1/2	M270-HPS70W		
11	F		2	X3U5C	PL 13/16 x 10	2	0	FILL		
11	H		2	x4f	L 4x4x 1/2	1	2	M270-36		
11	J		4	x4s	L 3x3x 3/8	2	0	M270-36		
11	G		1	x4aa	L 6x4x 1/2	0	8 3/4	M270-36		
11	G		1	x4ac	L 6x4x 1/2	0	8 3/4	M270-36		
21	E		14		7/8 ø HSB	0	2 3/4	MECH. GALV. F325-1		
21	X		14		7/8 ø HSW			MECH. GALV. F436		
21	Y		14		LOAD IND. 7/8 ø HSB WASH FOR 7/8 ø HSB			MECH. GALV. F436		
		47U5U4E	1		TOP CHORD SHIPPING ASS'Y				6484	
			1	13TC5E	TOP CHORD					
8	M		1	X3U5A	PL 3/4 x 49 3/8	5	11 1/2	M270-HPS70W		
8	M		1	X3U5B	PL 3/4 x 49 3/8	5	11 1/2	M270-HPS70W		
11	F		2	X3U5C	PL 13/16 x 10	2	0	FILL		
11	H		2	x4f	L 4x4x 1/2	1	2	M270-36		
11	J		4	x4s	L 3x3x 3/8	2	0	M270-36		
11	G		1	x4aa	L 6x4x 1/2	0	8 3/4	M270-36		
11	G		1	x4ac	L 6x4x 1/2	0	8 3/4	M270-36		
21	E		14		7/8 ø HSB	0	2 3/4	MECH. GALV. F325-1		
21	X		14		7/8 ø HSW			MECH. GALV. F436		
21	Y		14		LOAD IND. 7/8 ø HSB WASH FOR 7/8 ø HSB			MECH. GALV. F436		

NOTES:
1. NF - DENOTES NEAR FACE OF TOP CHORD.
2. FF - DENOTES FAR FACE OF TOP CHORD.
3. NS - DENOTES NEAR SIDE.
4. FS - DENOTES FAR SIDE.

Vermont Agency of Transportation
RECEIVED
CK'D BY M.C.L. OK'D BY S.S.S.
January 10 2012
RESUBMIT APPROVED ✓
BY J. LACROIX DATE 01-12-2012

REV.	DATE	REMARKS	DWN	CHK	APVL	SHOP
					JAN 9 2012	
0					NOV 30 2011	

MATERIAL:	SURFACE PREP. & PAINT:	HOLES:	SHOP BOLTS:
M270-50 (UN)	HOT-DIP GALV.	15/16ø (UN)	7/8ø (UN)

DESCRIPTION: SHIPPING ASSEMBLY (U4-U5 WEST & U5-U4 EAST)

CASCO BAY STEEL STRUCTURES, INC.
1 WALLACE AVE. PHONE (207) 780-6722
SOUTH PORTLAND, ME 04106 FAX. (207) 780-6726
TENSOR 3073

STRUCTURE: VT RTE 107 OVER WHITE RIVER	DRAWN: EEO	DATE: 11/22
	CHKD: PCP	DATE: 11/28
LOCATION: BETHEL, VT.	JOB NO.	DWG NO.
PROJ NO. BRF 022-1(14)	498	47
CUSTOMER: BECK & BELLUCCI		REV. △

EEO Tue, Nov 29, 2011 03:48:58 PM //casco_pbs/2011/47 - Rev0

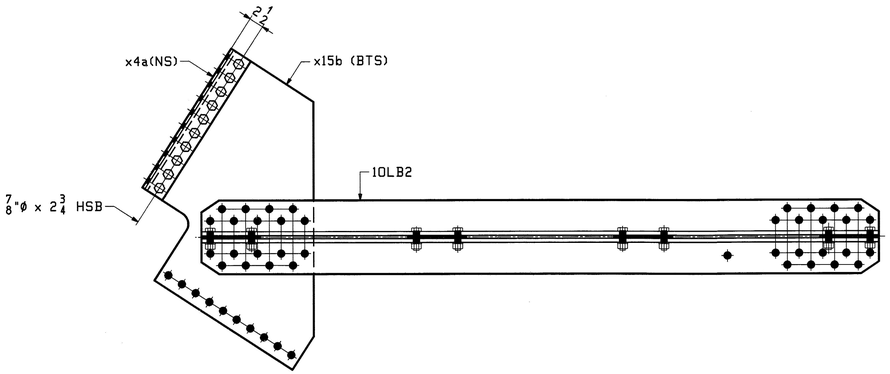

2 ~ SHIPPING ASSEMBLY ~ 48SA1

BTM LATERALS @ L0 (WEST TRUSS) & L10 (EAST TRUSS)

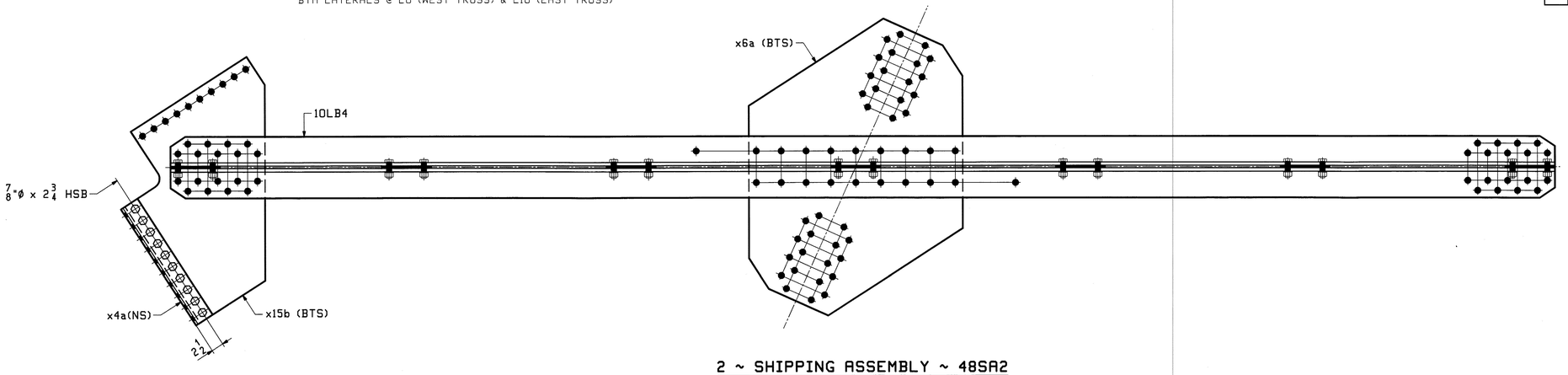

2 ~ SHIPPING ASSEMBLY ~ 48SA2

BTM LATERAL FROM L0 (EAST TRUSS) TO L1 (WEST TRUSS)
BTM LATERAL FROM L10 (WEST TRUSS) TO L9 (EAST TRUSS)

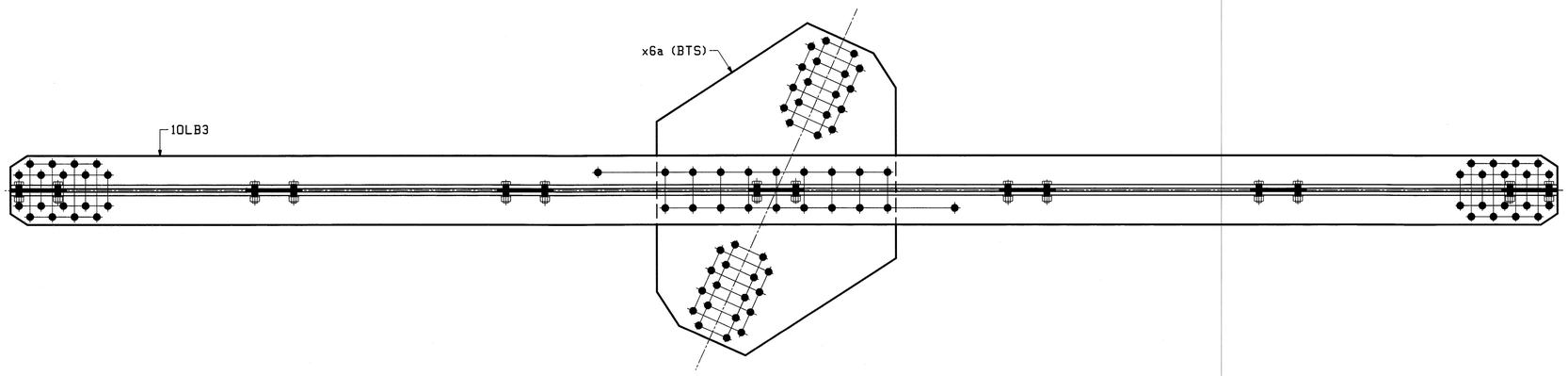

8 ~ SHIPPING ASSEMBLY ~ 48SA3

TYP. BTM LATERALS FROM EAST TRUSS TO WEST TRUSS

ABM INFO		SHIP	BILL OF MATERIAL					JOB NO.	DRAWING NO.	REV.
								498	48	
PAGE	LINE	MARK	QTY	MARK	MATERIAL	LENGTH FT	LENGTH INCHES	REMARKS	WT	PROCUREMENT NOTES
		48SA1	2		BTM LATERAL SHIPPING ASS'Y				1689	
			2	10LB2	BTM LATERAL					
2	J		2	x15b	PL 5/8x36 15/16	3	3 3/4			
3	B		2	x4a	L 4x4x1/2	2	3 3/4	M270-36		
21	E		20		7/8 ø HSB	0	2 3/4	MECH. GALV. A325-1		
21	X		20		7/8 ø HSW			MECH. GALV. F436		
21	Y		20		LOAD IND. WASH FOR 7/8 ø HSB			MECH. GALV. F436		
		48SA2	2		BTM LATERAL SHIPPING ASS'Y				3728	
			2	10LB4	BTM LATERAL					
2	L		2	x6a	PL 3/4x44	4	8			
2	J		2	x15b	PL 5/8x36 15/16	3	3 3/4			
3	B		2	x4a	L 4x4x1/2	2	3 3/4	M270-36		
21	E		20		7/8 ø HSB	0	2 3/4	MECH. GALV. A325-1		
21	X		20		7/8 ø HSW			MECH. GALV. F436		
21	Y		20		LOAD IND. WASH FOR 7/8 ø HSB			MECH. GALV. F436		
		48SA3	8		BTM LATERAL SHIPPING ASS'Y				3446	
			8	10LB3	BTM LATERAL					
2	L		8	x6a	PL 3/4x44	4	8			

Vermont Agency of Transportation
RECEIVED
CK'D BY M.C.L. OK'D BY S.S.S.
January 10 2012
RESUBMIT APPROVED ✓
BY J. LACROIX DATE 01-12-2012

REV.	DATE	REMARKS	DWN	CHK	APVL	SHOP
					JAN 9 2012	
0					NOV 30 2011	

MATERIAL:	SURFACE PREP. & PAINT:	HOLES:	SHOP BOLTS:
M270-50 (UN)	HOT-DIP GALV.	15/16 ø (UN)	7/8 ø (UN)

DESCRIPTION: SHIPPING ASSEMBLY

CASCO BAY STEEL STRUCTURES, INC.
1 WALLACE AVE. PHONE (207) 780-6722
SOUTH PORTLAND, ME 04106 FAX. (207) 780-6726
TENSOR 3073

STRUCTURE: VT RTE 107 OVER WHITE RIVER		DRAWN: EEO	DATE: 11/22
		CHKD: PCP	DATE: 11/28
LOCATION:	BETHEL, VT.	JOB NO.	DWG NO.
PROJ NO.	BRF 022-1(14)	498	48
CUSTOMER:	BECK & BELLUCCI		REV. △

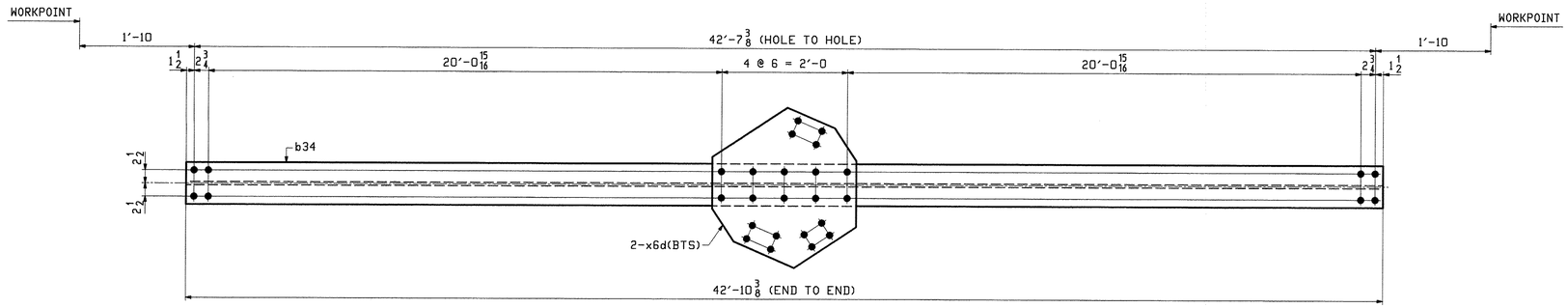

1 ~ TOP LATERAL BRACING ~ 49LB1

(U8 - U7)

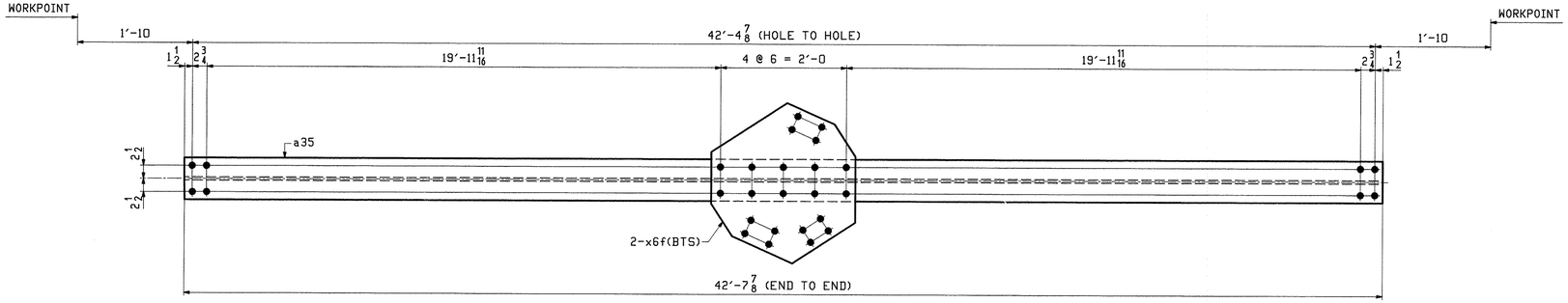

1 ~ TOP LATERAL BRACING ~ 49LB2

(U7 - U6)

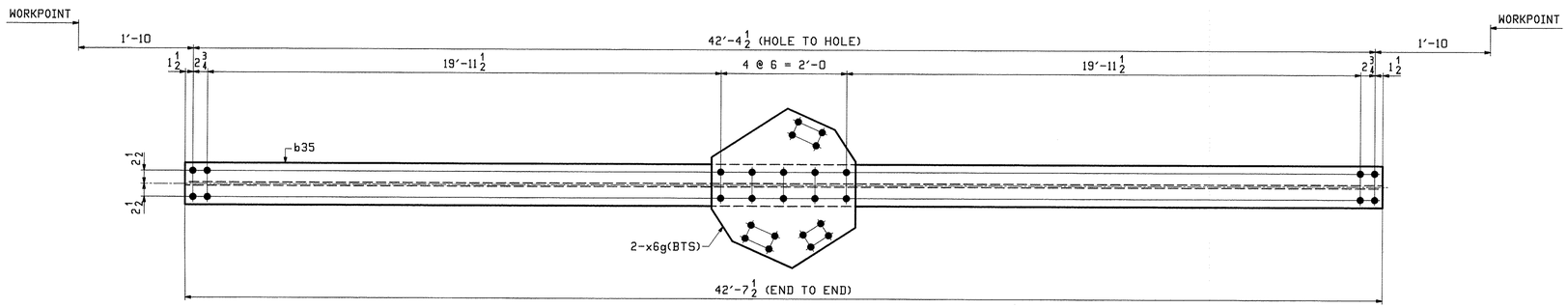

1 ~ TOP LATERAL BRACING ~ 49LB3

(U6 - U5)

ABM INFO		SHIP	BILL OF MATERIAL					JOB NO.	DRAWING NO.	REV.
								498	49	
PAGE	LINE	MARK	QTY	MARK	MATERIAL	LENGTH FT	LENGTH INCHES	REMARKS	WT	PROCUREMENT NOTES
		49LB1	1		TOP LATERAL BRACING				2480	
7	D		1	b34	W 14x53	42	10 3/8		2272	
7	H		2	x6d	PL 1/2x26 1/4	2	4		104	
		49LB2	1		TOP LATERAL BRACING				2469	
7	F		1	a35	W 14x53	42	7 7/8		2261	
7	H		2	x6f	PL 1/2x26 1/4	2	4		104	
		49LB3	1		TOP LATERAL BRACING				2468	
7	F		1	b35	W 14x53	42	7 1/2		2259	
7	H		2	x6g	PL 1/2x26 1/4	2	4		104	

NOTES:
1. FOR GENERAL NOTES SEE SHEET GN1.
2. HOLES IN BOTH FLANGES ARE ALIKE.

REV.	DATE	REMARKS	DWN	CHK	APVL	SHOP
0						

MATERIAL:	SURFACE PREP. & PAINT:	HOLES:	SHOP BOLTS:
M270-50 (UN)	HOT-DIP GALV.	15/16ø (UN)	7/8ø (UN)

DESCRIPTION: TOP LATERAL BRACING

CASCO BAY STEEL STRUCTURES, INC.
1 WALLACE AVE. PHONE (207) 780-6722
SOUTH PORTLAND, ME 04106 FAX. (207) 780-6726
TENSOR 3073

STRUCTURE: VT RTE 107 OVER WHITE RIVER	DRAWN: EEO	DATE: 09/14
	CHKD: PCP	DATE: 09/14
LOCATION: BETHEL, VT.	JOB NO.	DWG NO.
PROJ NO. BRF 022-1(14)	498	49
CUSTOMER: BECK & BELLUCCI		REV. △

PCP Fri, Sep 14, 2018 01:59:56 PM J:\casco\jobs\2018\498\Dwg\498-49.dwg

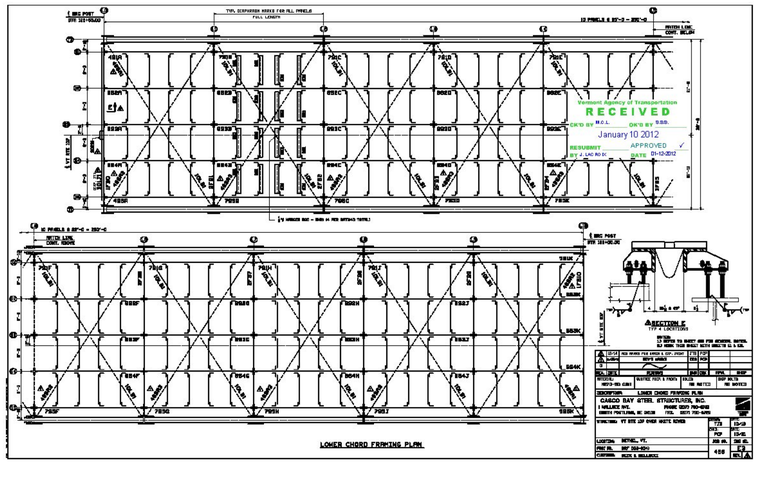
Vermont Agency of Transportation
RECEIVED
January 10 2012
APPROVED
DATE 01-13-2012
LOWER CHORD FRAMING PLAN

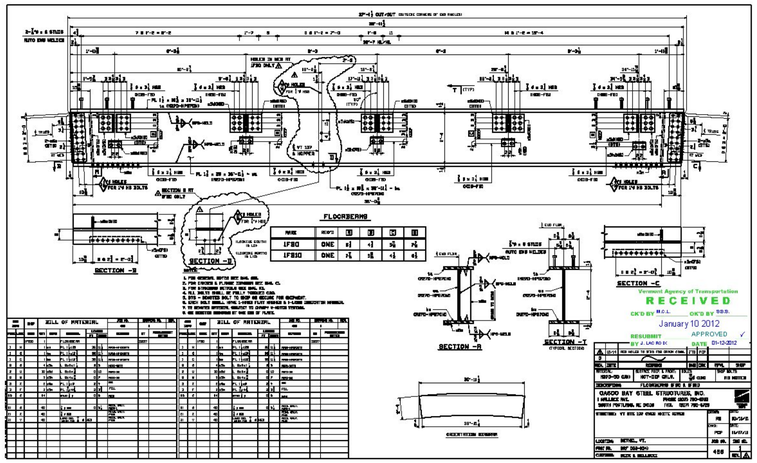
FLOORBEAMS
SECTION -B
SECTION -C
SECTION -A
SECTION -T
RECEIVED
January 10 2012
APPROVED
CAUCO BAY STEEL STRUCTURES, INC.

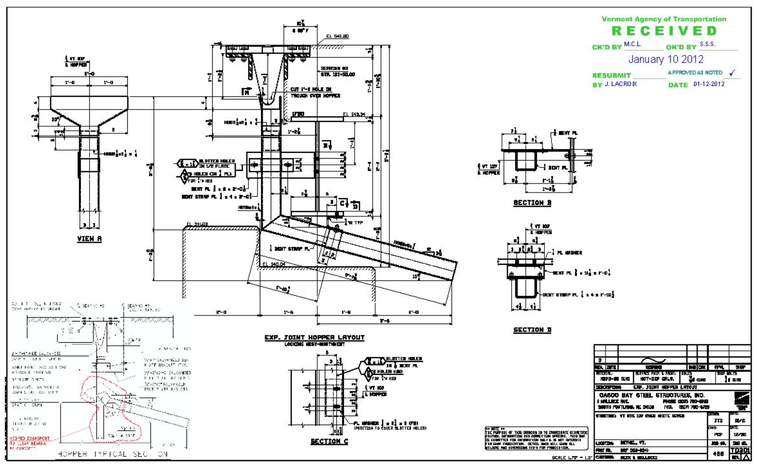
Vermont Agency of Transportation
RECEIVED
CK'D BY M.C.L.
OK'D BY S.S.S.
January 10 2012
RESUBMIT
APPROVED AS NOTED
BY J. LACROIX
DATE 01-12-2012
VIEW A
SECTION B
SECTION B
SECTION C
EXP. JOINT HOPPER LAYOUT
HOPPER TYPICAL SECTION
GAGOO BAY STEEL STRUCTURES, INC.
PHONE (802) 760-6000
FAX (802) 760-6100
EXP. JOINT HOPPER LAYOUT
LOCATION: BETHEL, VT.
PROJ. NO. BRF 2000-0201
CONTROL: MAIN & BALLARDS
488
TO2010
NO. 1

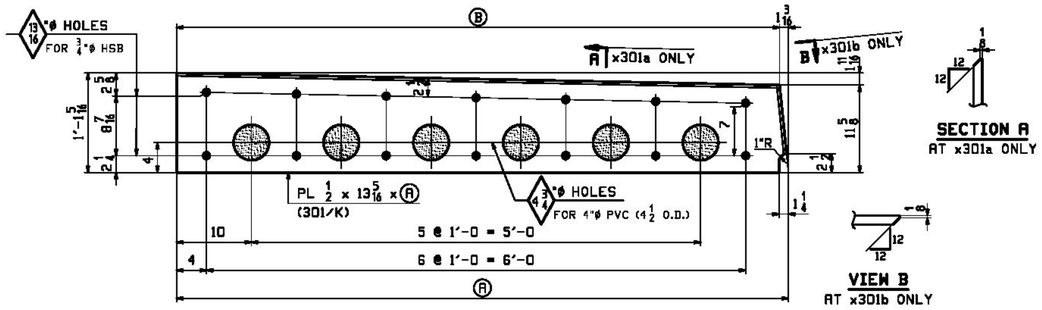

MARK "A"

SIDEWALK SIDE COVER PLATES

MARK "A"	QTY	Ⓐ	Ⓑ
x301a	1	6'-9 5/8	6'-8 7/16
x301b	1	6'-9 3/4	6'-8 9/16

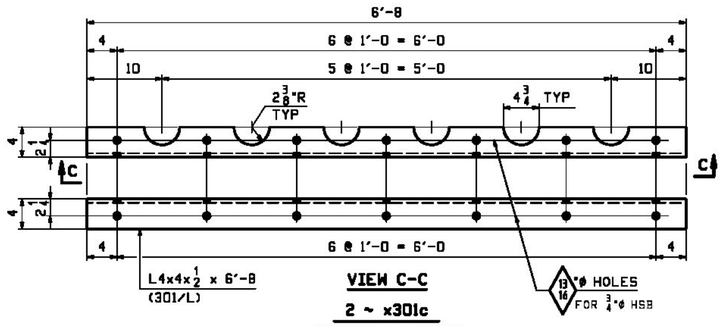

VIEW C-C

2 ~ x301c

SIDEWALK LOWER ANGLES

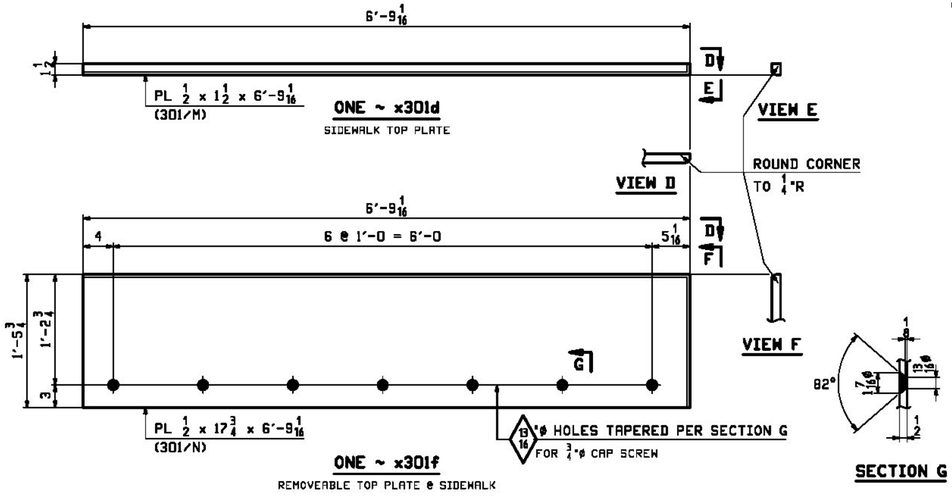

ONE ~ x301d

SIDEWALK TOP PLATE

ONE ~ x301f

REMOVEABLE TOP PLATE @ SIDEWALK

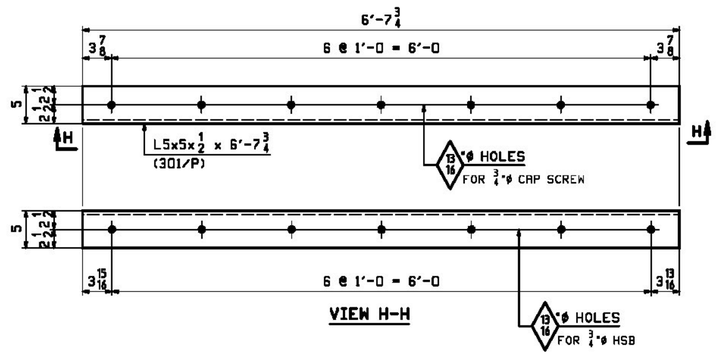

VIEW H-H

ONE ~ x301g

SIDEWALK UPPER ANGLE

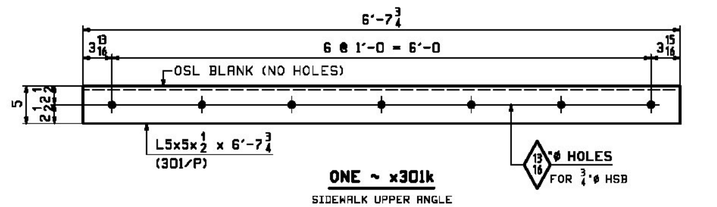

ONE ~ x301k

SIDEWALK UPPER ANGLE

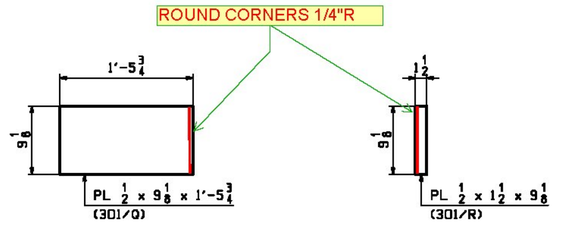

ONE ~ x301m

CURB SIDE COVER PLATE

ONE ~ x301n

CURB SIDE PLATE

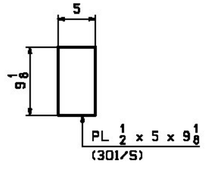

ONE ~ x301p

CURB SIDE INNER PLATE

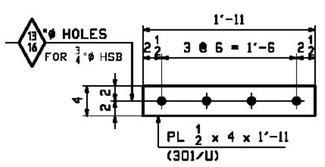

2 ~ x301t

CURB PLATE

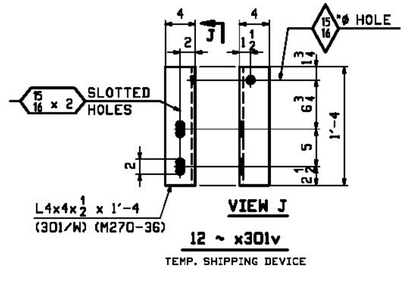

VIEW J

12 ~ x301v

TEMP. SHIPPING DEVICE

NOTE:
FOR GENERAL NOTES SEE DRAWING GN1.

Vermont Agency of Transportation

RECEIVED

CK'D BY M.C.L. OK'D BY S.S.S.

January 10 2012

RESUBMIT APPROVED AS NOTED ✓

BY J. LACROIX DATE 01-12-2012

REV.	DATE	REMARKS	DWN	CHK	APVL	SHOP
0						

MATERIAL:	SURFACE PREP. & PAINT:	HOLES:	SHOP BOLTS:
M270-50 (UN)	HOT-DIP GALV.	AS NOTED	NONE

DESCRIPTION: EXP. JOINT STANDARDS

CASCO BAY STEEL STRUCTURES, INC.
1 WALLACE AVE. PHONE (207) 780-6722
SOUTH PORTLAND, ME 04106 FAX. (207) 780-6726

TENSOR 3073

STRUCTURE: VT RTE 107 OVER WHITE RIVER	DRAWN: JTB	DATE: 12/12	
	CHKD: PCP	DATE: 12/30	
LOCATION: BETHEL, VT.	JOB NO.	DWG NO.	
PROJ NO. BRF 022-1(14)	498	X301	
CUSTOMER: BECK & BELLUCCI		REV. △	

JTB Thu, Jan 5, 2012 CUSTOM PM //users/jake/2011/X301.1.Rev0

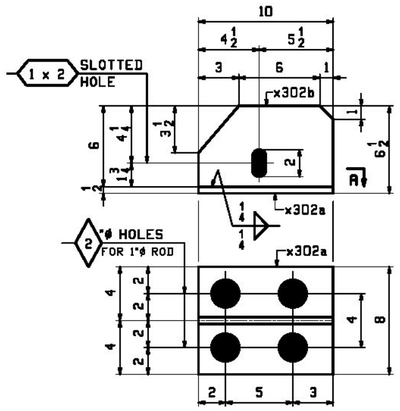

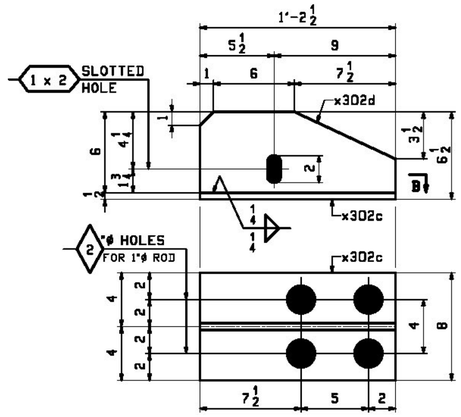

4 ~ BRACKET SUB-ASSEMBLIES ~ X302M1

(5) BRACKETS REQUIRED

4 ~ BRACKET SUB-ASSEMBLIES ~ X302M2

(5) BRACKETS REQUIRED

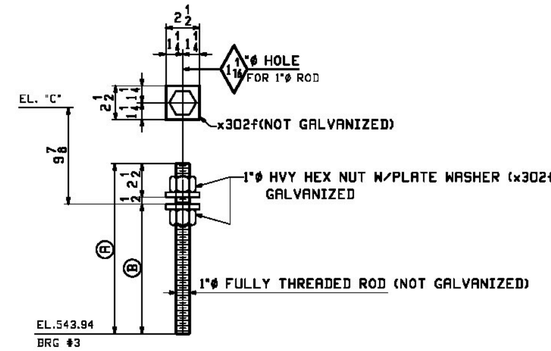

THREADED ROD SUB-ASSEMBLIES - MARK "A"

AT BRACKETS

MARK "A"	QTY	Ⓐ	Ⓑ	EL "C"	
X302M3	4	1'-0¾	9¾	545.574	AT B2 (BRG 3)
X302M4	4	1'-2⅝	11⅝	545.734	AT B3 (BRG 3)
X302M5	4	1'-2 5/16	11 5/16	545.704	AT B4 (BRG 3)
X302M6	4	1'-0⅜	9⅜	545.543	AT B5 (BRG 3)
X302M7	16	7¾	4¾	N.A.	TYP @ BRG 2

Need 8 more THREADED ROD SUB-ASSEMBLIES, for the added bracket location at BEAM #1

BILL OF MATERIAL

JOB NO. 498 | DRAWING NO. X302 | REV.

ASM INFO PAGE	ASM INFO LINE	SHIP MARK	QTY	MARK	MATERIAL	LENGTH FT	LENGTH INCHES	REMARKS	WT	PROCUREMENT NOTES
		X302M1	4		BRACKET SUB-ASS'Y				20	
302	B		4	x302a	PL ½x8	0	10			
302	C		4	x302b	PL ½x6	0	10			
		X302M2	4		BRACKET SUB-ASS'Y				29	
302	D		4	x302c	PL ½x8	1	2½			
302	E		4	x302d	PL ½x6	1	2½			
		X302M3	4		THREADED ROD SUB ASS'Y				5	
302	J		4		1 ø ROD	1	0 1/16	A307		
302	L		8		1 ø HHN			A563		
302	M		8	x302f	PL ⅜x2½	0	2½	(NOT GALV)		
		X302M4	4		THREADED ROD SUB ASS'Y				5	
302	H		4		1 ø ROD	1	2 5/8	A307		
302	L		8		1 ø HHN			A563		
302	M		8	x302f	PL ⅜x2½	0	2½	(NOT GALV)		
		X302M5	4		THREADED ROD SUB ASS'Y				5	
302	H		4		1 ø ROD	1	2 5/16	A307		
302	L		8		1 ø HHN			A563		
302	M		8	x302f	PL ⅜x2½	0	2½	(NOT GALV)		
		X302M6	4		THREADED ROD SUB ASS'Y				5	
302	J		4		1 ø ROD	1	0⅜	A307		
302	L		8		1 ø HHN			A563		
302	M		8	x302f	PL ⅜x2½	0	2½	(NOT GALV)		
		X302M7	16		THREADED ROD SUB ASS'Y				5	
302	K		16		1 ø ROD	1	0⅜	A307		
302	L		32		1 ø HHN			A563		
302	M		32	x302f	PL ⅜x2½	0	2½	(NOT GALV)		

(8) more THREADED ROD SUB ASS'Y needed.

NOTE:
FOR GENERAL NOTES SEE DRAWING GN1.

Vermont Agency of Transportation
RECEIVED
CK'D BY M.C.L. OK'D BY S.S.S.
January 10 2012
RESUBMIT APPROVED AS NOTED ✓
BY J. LACROIX DATE 01-12-2012

REV.	DATE	REMARKS	DWN	CHK	APVL	SHOP
0						

MATERIAL: M270-50 (UN) | SURFACE PREP. & PAINT: HOT-DIP GALV.,U.N. | HOLES: 15/16ø (UN) | SHOP BOLTS: ⅞ø (UN)

DESCRIPTION: EXP. JOINT SUB-ASSEMBLIES

CASCO BAY STEEL STRUCTURES, INC.
1 WALLACE AVE. SOUTH PORTLAND, ME 04106
PHONE (207) 780-6722 FAX. (207) 780-6726
TENSOR 3073

STRUCTURE: VT RTE 107 OVER WHITE RIVER
DRAWN: JTB DATE: 12/12
CHKD: PCP DATE: 12/30
LOCATION: BETHEL, VT. JOB NO. 498 DWG NO. X302
PROJ NO. BRF 022-1(14) REV. △
CUSTOMER: BECK & BELLUCCI

PCP Thu, Jan 5, 2012 09:43:38 PM J:\work\jobs\3073\X302 - Rev0

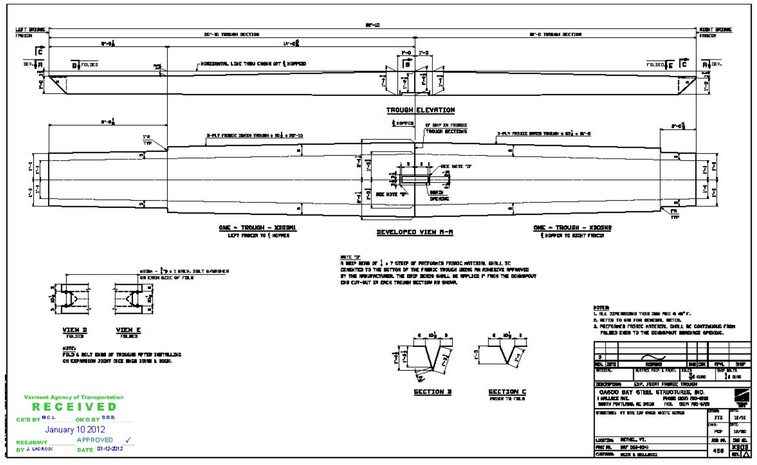

NOTES:
1. ALL DIMENSIONS THUS [ ] ARE TO BE IN mm.
2. REFER TO WIN FOR BONDING DETAIL.
3. PROTRUDING FABRIC ANCHORS, SHALL BE CONTINUOUS FROM FENCE SIDES TO THE DOWNSPOUT ENTRANCE OPENING.

NOTE 'D'
A DROP PANEL OF 1 x 7 STRIP OF POLYPROPYLENE FABRIC ANCHORS, SHALL BE CEMENTED TO THE BOTTOM OF THE FABRIC TROUGH USING AN ADHESIVE APPROVED BY THE MANUFACTURERS. THE DROP PANEL SHALL BE APPLIED 1" FROM THE DOWNSPOUT CUT-OUT IN EACH TROUGH SECTION AS SHOWN.

NOTES:
FIELD DRILL HOLE FOR TROUGH WITH INSTALLED 1/4 EXPANSION JOINT SIZE HIGH STRAP & BOLT.

NO.	DATE	REVISIONS	MADE BY	CHK.	APP.
MATERIAL:		ULTRA TUF V FABRIC	SCALE:	AS SHOWN	DRAWN BY:

DESCRIPTION: 32'0", FENCE TROUGH

CHICOO BAY RIBS, STUDIO/VISUS, INC.
1 VILLAGE AVE. PHONE (802) 760-4563
SMITH FALLING, NC 29538 FAX. (877) 762-1212

STRUCTURE: VT RIB 120' CHICO RUSTIC GREEN

	DATE
DRAWN	2/12
CHECKED	10/30
APPROVED	
JOB NO.	DWG NO.
408	1 OF 1 SHT.

LOCATION: DENVER, CO
PROJECT: 360' CHICO-CHICO
CUSTOMER: MAIN & BALANCED

Vermont Agency of Transportation
RECEIVED
CK'D BY M.C.L. OK'D BY BBB
January 10 2012
RESUBMIT APPROVED
BY A LACROIX DATE 01-12-2012

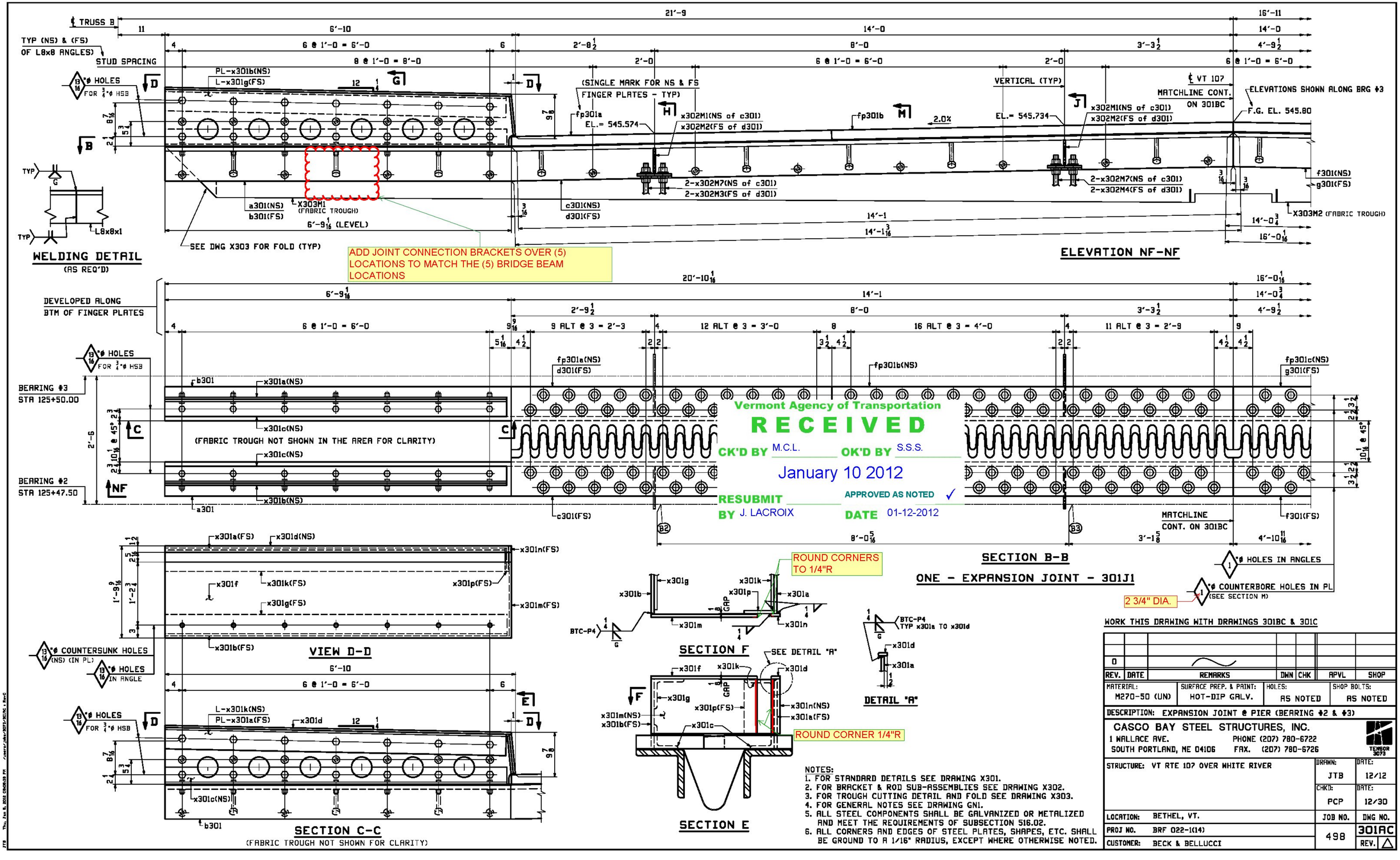

Vermont Agency of Transportation
RECEIVED
CK'D BY M.C.L. OK'D BY S.S.S.
January 10 2012
RESUBMIT APPROVED AS NOTED ✓
BY J. LACROIX DATE 01-12-2012

NOTES:
1. FOR STANDARD DETAILS SEE DRAWING X301.
2. FOR BRACKET & ROD SUB-ASSEMBLIES SEE DRAWING X302.
3. FOR TROUGH CUTTING DETAIL AND FOLD SEE DRAWING X303.
4. FOR GENERAL NOTES SEE DRAWING GN1.
5. ALL STEEL COMPONENTS SHALL BE GALVANIZED OR METALIZED AND MEET THE REQUIREMENTS OF SUBSECTION 516.02.
6. ALL CORNERS AND EDGES OF STEEL PLATES, SHAPES, ETC. SHALL BE GROUND TO A 1/16" RADIUS, EXCEPT WHERE OTHERWISE NOTED.

WORK THIS DRAWING WITH DRAWINGS 301BC & 301C

REV.	DATE	REMARKS	DWN	CHK	APVL	SHOP
0						

MATERIAL:	SURFACE PREP. & PAINT:	HOLES:	SHOP BOLTS:
M270-50 (UN)	HOT-DIP GALV.	AS NOTED	AS NOTED

DESCRIPTION: EXPANSION JOINT @ PIER (BEARING #2 & #3)

CASCO BAY STEEL STRUCTURES, INC.
1 WALLACE AVE. PHONE (207) 780-6722
SOUTH PORTLAND, ME 04106 FAX. (207) 780-6726
TENSOR 3073

STRUCTURE: VT RTE 107 OVER WHITE RIVER	DRAWN: JTB	DATE: 12/12
	CHKD: PCP	DATE: 12/30
LOCATION: BETHEL, VT.	JOB NO.	DWG NO.
PROJ NO. BRF 022-1(14)	498	301AC
CUSTOMER: BECK & BELLUCCI		REV. △

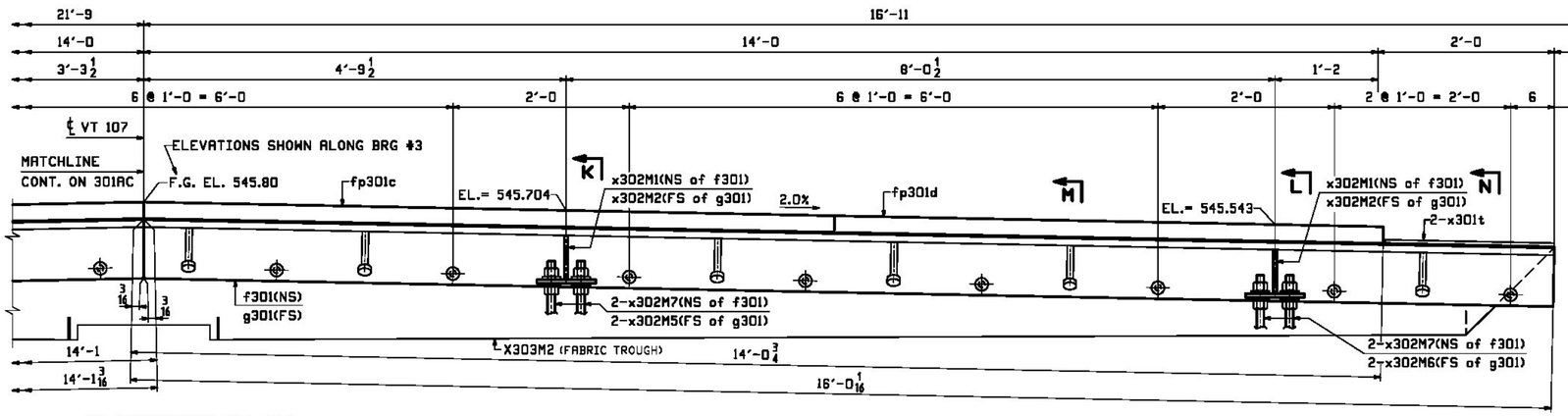

ELEVATION NF-NF (CONT.)

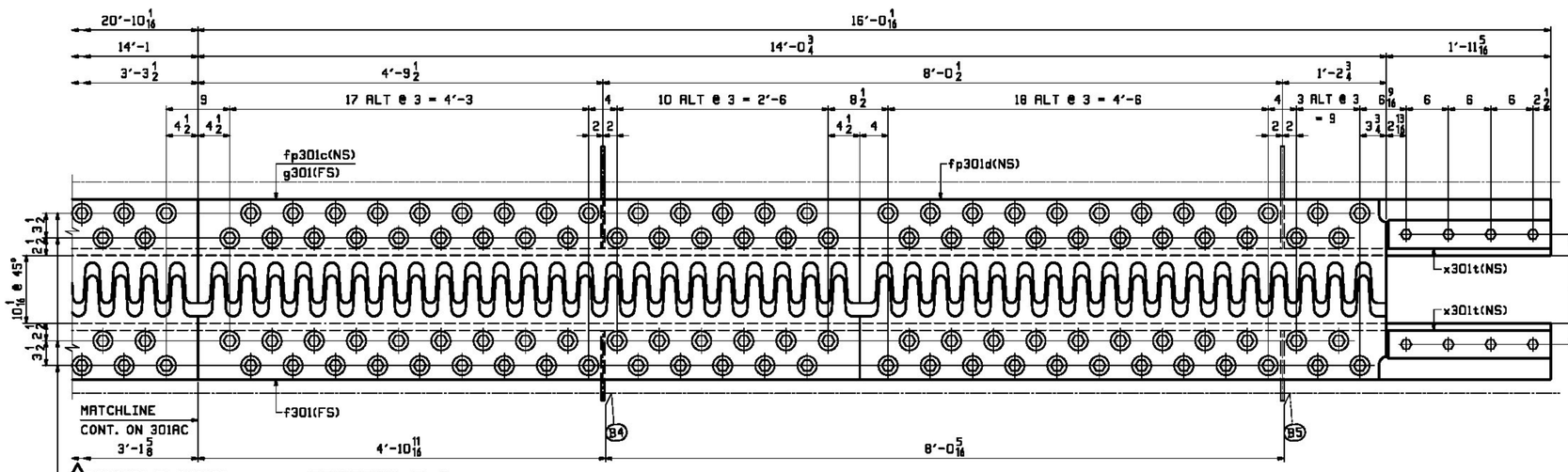

SECTION B-B (CONT.)

¾℄ HOLES IN ANGLES

1 ¾℄ COUNTERBORE HOLES IN PL (SEE SECTION M)

2 3/4" DIA.

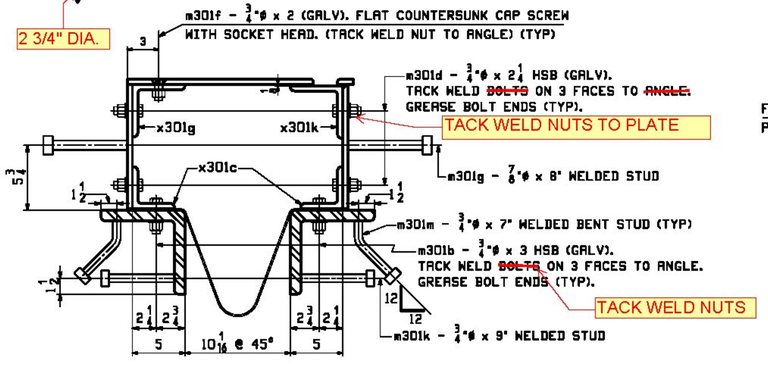

SECTION G

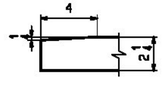

DETAIL "B"
TYP FULL LENGTH

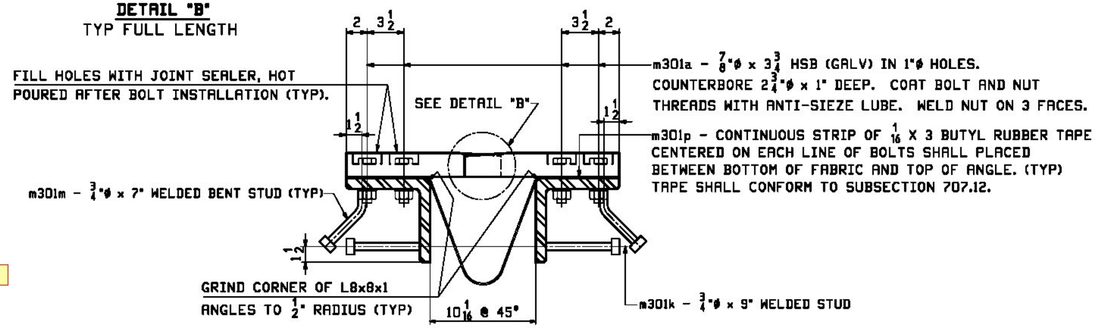

SECTION M

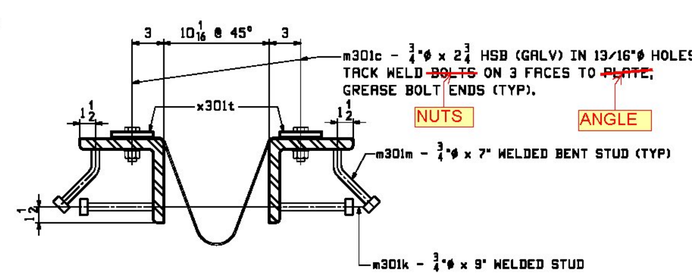

SECTION N

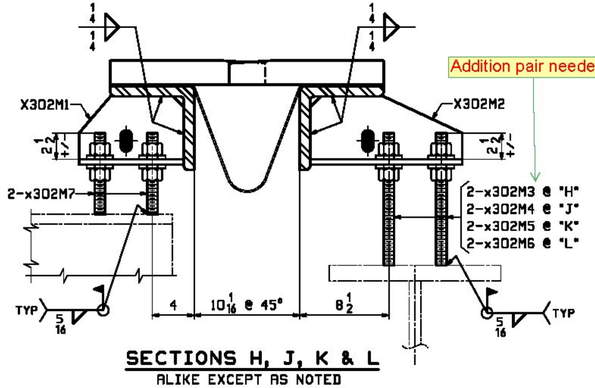

SECTIONS H, J, K & L

ALIKE EXCEPT AS NOTED

Vermont Agency of Transportation

RECEIVED

CK'D BY M.C.L. OK'D BY S.S.S.

January 10 2012

RESUBMIT APPROVED AS NOTED ✓

BY J. LACROIX DATE 01-12-2012

WORK THIS DRAWING WITH DRAWINGS 301AC & 301C

REV.	DATE	REMARKS	DWN	CHK	APVL	SHOP
0						

MATERIAL:	SURFACE PREP. & PAINT:	HOLES:	SHOP BOLTS:
M270-50 (UN)	HOT-DIP GALV.	AS NOTED	AS NOTED

DESCRIPTION: EXPANSION JOINT @ PIER (BEARING #2 & #3)

CASCO BAY STEEL STRUCTURES, INC.
1 WALLACE AVE. PHONE (207) 780-6722
SOUTH PORTLAND, ME 04106 FAX. (207) 780-6726

TENSOR 3073

STRUCTURE: VT RTE 107 OVER WHITE RIVER	DRAWN: JTB	DATE: 12/14
	CHKD: PCP	DATE: 12/30
LOCATION: BETHEL, VT.	JOB NO.	DWG NO.
PROJ NO. BRF 022-1(14)	498	301BC
CUSTOMER: BECK & BELLUCCI		REV. △

PCP Thu Jan 5, 2012 08:08:08 PM J:\work\jobs\2012\301BC.1.dwg



DETAIL B SHIPPING DEVICES
SCALE: 1" = 1'-0"

BILL OF MATERIAL

ITEM NO.	QUAN	DESCRIPTION	LENGTH	WEIGHT
	1	SHIPPING DEVICE NO. 1		
	1	SHIPPING DEVICE NO. 2		
	1	SHIPPING DEVICE NO. 3		
	1	SHIPPING DEVICE NO. 4		
1	1	5/8" DIA. THREAD ROD	20'-0"	
2	1	5/8" DIA. THREAD ROD	10'-0"	
3	2	5/8" DIA. HEX NUT		
4	2	5/8" DIA. FLAT WASHER		
5	4	5/8" DIA. HEX NUT		
6	4	5/8" DIA. FLAT WASHER		
7	2	5/8" DIA. HEX NUT		
8	2	5/8" DIA. FLAT WASHER		
9	1	5/8" DIA. HEX NUT		
10	1	5/8" DIA. FLAT WASHER		
11	1	5/8" DIA. HEX NUT		
12	1	5/8" DIA. FLAT WASHER		
13	1	5/8" DIA. HEX NUT		
14	1	5/8" DIA. FLAT WASHER		

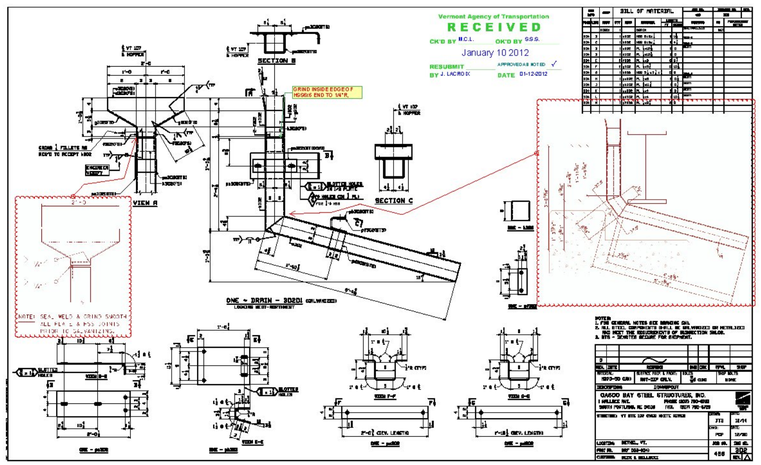
Vermont Agency of Transportation
RECEIVED
CK'D BY M.C.L.
OK'D BY S.S.S.
January 10 2012
RESUBMIT
APPROVED AS NOTED
BY J. LACROIX
DATE 01-12-2012
SECTION B
SECTION C
VIEW A
GRIND INSIDE EDGE OF HSS66 END TO 1/4"R.
ONE - DRAIN - 3020I
SILL OF MATERIAL
GASCO BAY STEEL STRUCTURES, INC.
1 WALLACE AVE.
SMITH PORTLAND, ME 04038
FAX: (207) 780-6100
STRUCTURE: VT RTE 120 OVER WHITE RIVER
LOCATION: BETHEL, VT.
PROJ. NO. 3007-2020-0011
CONTROL: MICK & MALLORCE
DWG. NO. 308
REV. 1

Manual or machine MANUAL
Position of welding HORIZONTAL 2F
Filler metal specification AWS A5-1
Filler metal classification E 7018
Flux N/A
Shielding gas N/A Flow rate N/A
Single or multiple pass SINGLE OR MULTIPLE
Single or multiple arc SINGLE
Welding current AC/DC
Polarity STRAIGHT OR REVERSE
Welding progression —
Root treatment WIRE BRUSH AREA TO BE FREE OF LOOSE RUST, MOISTURE
Preheat and interpass temperature 50° TO 3/4, 70° 3/4"-1 1/2", 150°F 1 1/2" TO 2 1/2"
Postheat treatment

WELDING PROCEDURE

Pass no.	Electrode size	Welding current: Amperes	Welding current: Volts	Travel speed	Joint detail
As	1/8"	90-170	22-26	As	2F
REQUIRED	5/32"	120-200	22-26	REQUIRED	BE 2" 5/16 *
	3/16"	170-250	24-27		PL 1" SOLE PLATE

Vermont Agency of Transportation
RECEIVED
CK'D BY _____ OK'D BY J.W.C
15 DEC 2011
RESUBMIT _____ APPROVED ✓
BY DATE 12-19-2011

This procedure may vary due to fabrication sequence, fit-up, pass size, etc., within the limitation of variables given in Section 5.

Procedure no. 401-A-FIELD WELD
Revision no. # REV PER VTRANS REQUEST

Contractor WINTERSET, INC.
Authorized by GLENN A. LAVOIE, P.E.
Date 11-11-11 REV. 12-15-11
PROJECT: BETHEL
BHF 0241(30)

STATE OF VERMONT Glenn A. Lavoie No. 6674 REGISTERED PROFESSIONAL ENGINEER

Welding process SMAW
Manual or machine MANUAL
Position of welding HORIZONTAL 2G
Filler metal specification AWS A 5.1
Filler metal classification E 7018
Flux NA
Shielding gas N/A Flow rate N/A
Single or multiple pass SINGLE
Single or multiple arc SINGLE
Welding current DC
Polarity REVERSE
Welding progression SEE JOINT DETAIL
Root treatment WIRE BRUSH AREA TO BE FREE OF LOOSE SCALE, RUST, MOISTURE
Preheat and interpass temperature 70° MIN OVER 3/4 T
Posthest treatment N/A

* operator must be certified in position used

WELDING PROCEDURE

Pass no	Electrode size	Welding current: Amperes	Welding current: Volts	Travel speed	Joint detail
1	1/8	125 ±10%	30 ±7%	10 IPM	11/16" HP 12x84
1	5/32	125 ±10%	30 ±7%	10 IPM	3/8" 45° T/2

Vermont Agency of Transportation
RECEIVED
CK'D BY _____ OK'D BY J.W.C
15 DEC 2011
RESUBMIT _____ APPROVED ✓
BY DATE 12-19-2011

STATE OF VERMONT GLENN A. LAVOIE No. 6077 PROFESSIONAL ENGINEER

to fabrication sequence, fit-up, pass size, etc., within the limitation of variables given in

Procedure no. PILE POINT
Revision no. -0-

Contractor: WINTERSET, INC.
Authorized by: GLENN A. LAVOIE, P.E.
Date: 11-11-11

PROJECT: BETHEL
BHF 0241 (30)

Filler metal classification E 7018
Flux — N/A
Shielding gas — N/A Flow rate — N/A
Single or multiple pass MULTIPLE
Single or multiple arc SINGLE
Welding current DC
Polarity REVERSE
Welding progression — SEE JOINT DETAIL
Root treatment WIRE BRUSH
Preheat and interpass temperature 50° MIN
Postheat treatment N/A

* OPERATOR MUST BE CERTIFIED IN POSITION USED

Vermont Agency of Transportation
RECEIVED
CK'D BY _____ OK'D BY J.W.C
15 DEC 2011
RESUBMIT _____ APPROVED ✓
BY _____ DATE 12-19-2011

WELDING PROCEDURE

Pass no	Electrode size	Welding current: Amperes	Welding current: Volts	Travel speed
1	1/8	90-170	22-26	AS REQ'D
AS REQ'D	3/16	170-250	24-27	AS REQ'D

Joint detail

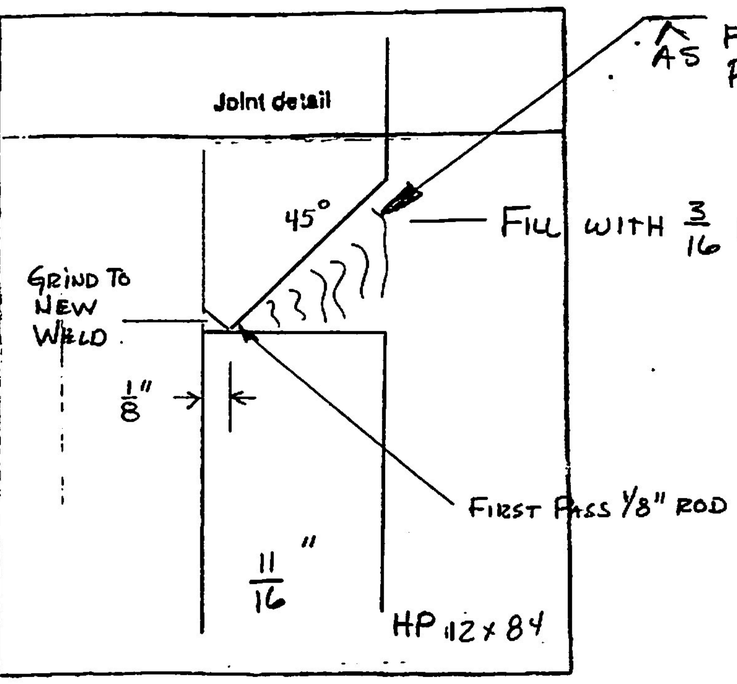

This procedure may vary due to fabrication sequence, fit-up, pass size, etc., within the limitation of variables given in Section 5.

Procedure no. PILE SPLICE
Revision no. 0
Contractor WINTERSET, INC.
Authorized by GLENN A. LAVOIE, P.E.
Date 11-11-11
PROJECT: BETHEL
BHF 0241(30)



Position of welding HORIZONTAL / VERTICAL / OVERHEAD

Filler metal specification AWS A5/1

Filler metal classification E 7018

Flux N/A

Shielding gas N/A Flow rate N/A

Single or multiple pass MULTIPLE PASS FOR 3/8; SINGLE FOR 5/16

Single or multiple arc SINGLE

Welding current DC

Polarity REVERSE

Welding progression SEE JOINT DETAIL

Root treatment WIRE BRUSH AREA

Preheat and interpass temperature 50° MIN

Postheat treatment N/A

* operator must be certified in postion used

WELDING PROCEDURE

Pass no.	Electrode size	Welding current		Travel speed	Joint detail
		Amperes	Volts		
1	1/8	125	30	10±	
2	or more	±10%	±7%	1pm	

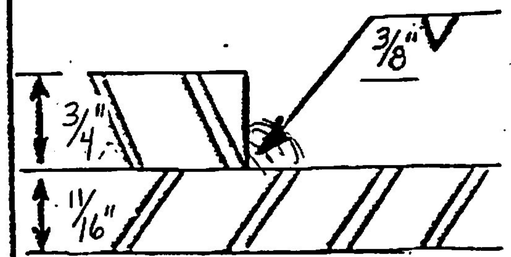

HP 12 x 84
(HP 310 x 125)

Vermont Agency of Transportation
RECEIVED
CK'D BY _____ OK'D BY J.W.C
15 DEC 2011
RESUBMIT _____ APPROVED ✓
BY _____ DATE 12-19-2011

STATE OF VERMONT
Glenn A. Lavoie
No. 6077
PROFESSIONAL ENGINEER

This procedure may vary due to fabrication sequence, fit-up, pass size, etc., within the limitation of variables given in Section 5.

Procedure no. SPLICE PLATE

Revision no. 0

Contractor WINTERSET INC.

Authorized by GLENN A. LAVOIE, P.E.

Date 11-11-11

PROJECT: BETHEL ?
BHF 0241(30)

VERMONT

State of Vermont
PDD/Structures Design Section
National Life Building – Drawer 33
Montpelier, VT 05633-5001
www.aot.state.vt.us

[phone] 802-828-2621
[fax] 802-828-3566
[ttd] 800-253-0191

Agency of Transportation

DATE:11/2/2011

Project Name: Bethel **Project #: BRF 022-1(14)**

Structure Identification: Bridge #15

The following Rail details [Item 525.22 Bridge Railing, 3 Rail Aluminum, Item 525.23 Bridge Railing, Aluminum/Pedestrian, and Item 621.74 Aluminum Approach Railing] for the above project (Vendor's Job #AR0700 transmitted with your letter dated 10/13/2011 have been reviewed and are being returned herewith.

Sheets: All Sheets and Welding Procedures

are approved

You must provide notice to our fabrication inspector, Jeff Clark, as to the date fabrication represented by these drawings will begin. Jeff must receive and acknowledge your notice at least seven days prior to that date, as per Specification 506.03. You may contact Jeff by phone at (802)828-0044 or email at jeff.clark@state.vt.us. Any material fabricated prior to the notification date is subject to rejection without further cause.

Sincerely,

Sven Scribner

Attachments
cc: [x] Resident Engineer w/prints Jeremy Reed
[x] Shop Inspector w/prints Jeff Clark
[x] Contractor w/prints Beck&Bellucci
[x] Construction Divison – letter only
[x] LB FOSTER w/prints
[x] F.R. Lafayette Inc. w/prints
[x] Files (Structures & Central)

VTrans Working to Get You There
Vermont Agency of Transportation

LBFoster
Fabricated Bridge Products

Transmittal

For Approval

Catherine Starr
1016 Greentree Rd.
Pittsburgh, PA 15220
Phone: 412-875-3506
Fax: 412-875-3510
Email: cstarr@lbfoster.com

October 17, 2011

LBF Job Number: AR0700

To: F. R. Lafayette Inc
52 Kellog Road
Essex Junction, VT 05452
Attn: **Doug Ford**
Phone: 802-878-5341
Fax: 802-878-2041
Email: dford@frlafayette.com

Project: 3L alum bridge & approach railing for Vermont Agency of Transportation - Project #BRF 022-1 (14) - Bridge 15 - VT Rte 7 (Minor Arterial) - Town of Bethel - Windsor County, VT

We are sending you the followinging prints:
Delivery: Email (PDF)

Copies	Drawing Number	Revision	Submittal
Email	LB01 thru LB25(Last) 3L alum bridge and approach railing details	0	1st

PLEASE EXPEDITE APPROVAL. Return stamped or signed prints via email or hard copy for each drawing submitted for approval, or comments indicated thereon. NOTE: Production will not proceed until drawings are returned 'APPROVED' to L.B. Foster Company.

Respectfully,
Catherine Starr
Catherine Starr

CC: D Hecker
Edward Coholich
Brent Tewskbury

RECEIVED
OK'D BY WBP OK'D BY SSS
OCT 24 2011
RESUBMIT _____ APPROVED ✓
BY DATE 11/1/2011

L.B. Foster Co.

Welding Procedure Specification

1F AL (AWS 56)

Material Spec. 6061-T6 or 6061-T6

Welding Process(es) GMAW

Position of Welding Flat

Manual ☐ Machine ☐ Semi-Automatic ☒ Automatic ☐

Filler Metal Specification AWS A5.10

Filler Metal Classification ER5356 F22

Flux N/A

Shielding Gas 100% Argon Gas Flow Rate 35 CFH

Single or Multiple Pass Single

Single or Multiple Arc Single

Welding Current Direct Current

Polarity: AC ☐ DCEP ☒ DCEN ☐ Pulsed ☐

Welding Progression Up ☐ Down ☐

Root Treatment Wire Brush

Preheat Temperature 60 Deg. F min. Interpass Temperature N/A

Postheat Treatment None

Heat Input Min N/A Max N/A

VTrans Received CK'D OK'd BY JWC

OCT 27 2011

Resubmit APPROVED

BY DATE 11/27/11

WELDING PROCEDURE

Pass No.	Electrode Size	Amperes	Volts	Travel Speed	Other
3/16"	0.035"	160	23	20 IPM	
1/4"	0.035"	160	23	20 IPM	
5/16"	0.035"	160	23	20 IPM	
3/8"	0.035"	160	23	20 IPM	
	Min.	128	20	18 IPM	
	Max.	192	26	22 IPM	

Timothy A Miller
CWI 01061151
QC1 EXP 6/1/2013

Joint Detail

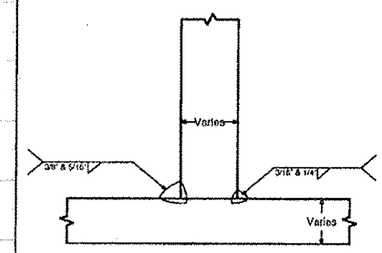

This procedure may vary due to fabrication sequence, fit-up, pass size, etc., within the limitation of variables given in Section 5.

Procedure No. 1F AL (AWS 56) Contractor L. B. Foster Co.

Revision No. 0 Authorized By Timothy A. Miller Date 7/12/2011

L.B. Foster Co.

Welding Procedure Specification

1F AL (AWS 56)

Joint Detail

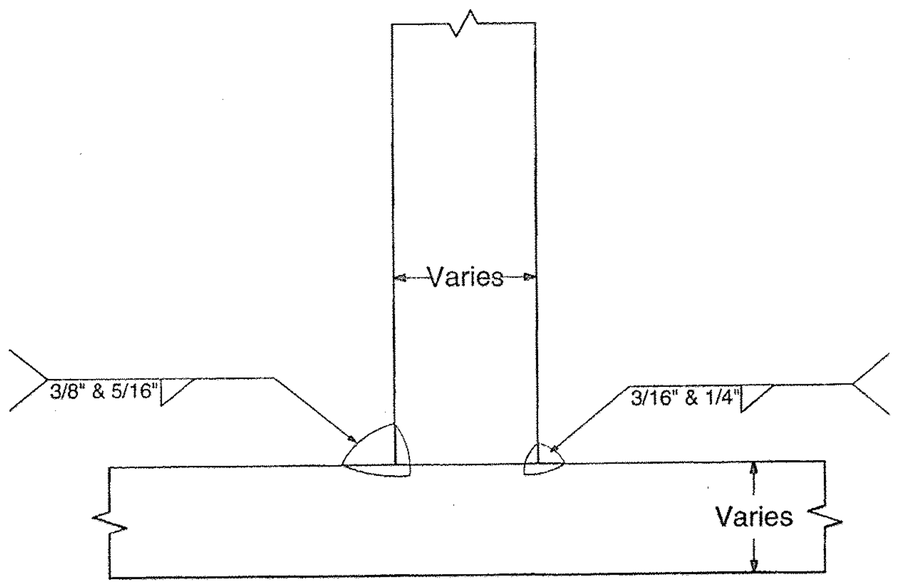

MEMO

Supporting PQR's: PQR AL122, AL-100

Timothy A Miller
CWI 01061151
QC1 EXP. 6/1/2013

L.B. Foster Co.

Welding Procedure Specification

2F AL (AWS 56)

Material Spec. 6061-T6 or 6061-T6

VTrans Received OCT 27 2011 CK'D OK'd BY JWC

Welding Process(es) GMAW

Position of Welding Horizontal

Manual ☐ Machine ☐ Semi-Automatic ☒ Automatic ☐

Resubmit BY APPROVED DATE 11/01/11

Filler Metal Specification AWS A5.10

Filler Metal Classification ER5356 F22

Flux N/A

Shielding Gas 100% Argon Gas Flow Rate 35 CFH

Single or Multiple Pass Single

Single or Multiple Arc Single

Welding Current Direct Current

Polarity: AC ☐ DCEP ☒ DCEN ☐ Pulsed ☐

Welding Progression Up ☐ Down ☐

Root Treatment Wire Brush

Preheat Temperature 60 Deg. F min. Interpass Temperature N/A

Postheat Treatment None

Heat Input Min N/A Max N/A

WELDING PROCEDURE

Pass No.	Electrode Size	Amperes	Volts	Travel Speed	Other
3/16"	0.035"	160	23	20 IPM	
1/4"	0.035"	160	23	20 IPM	
5/16"	0.035"	160	23	20 IPM	
3/8"	0.035"	160	23	20 IPM	
	Min.	128	20	18 IPM	
	Max.	192	26	22 IPM	

Timothy A Miller
CWI 01061151
QC1 EXP. 6/1/2013

Joint Detail

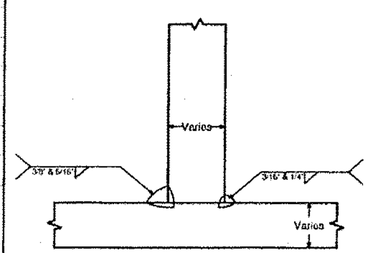

This procedure may vary due to fabrication sequence, fit-up, pass size, etc., within the limitation of variables given in Section 5.

Procedure No. 2F AL (AWS 56) Contractor L. B. Foster Co.

Revision No. 0 Authorized By Timothy A. Miller Date 7/12/2011

L.B. Foster Co.

Welding Procedure Specification

2F AL (AWS 56)

Joint Detail

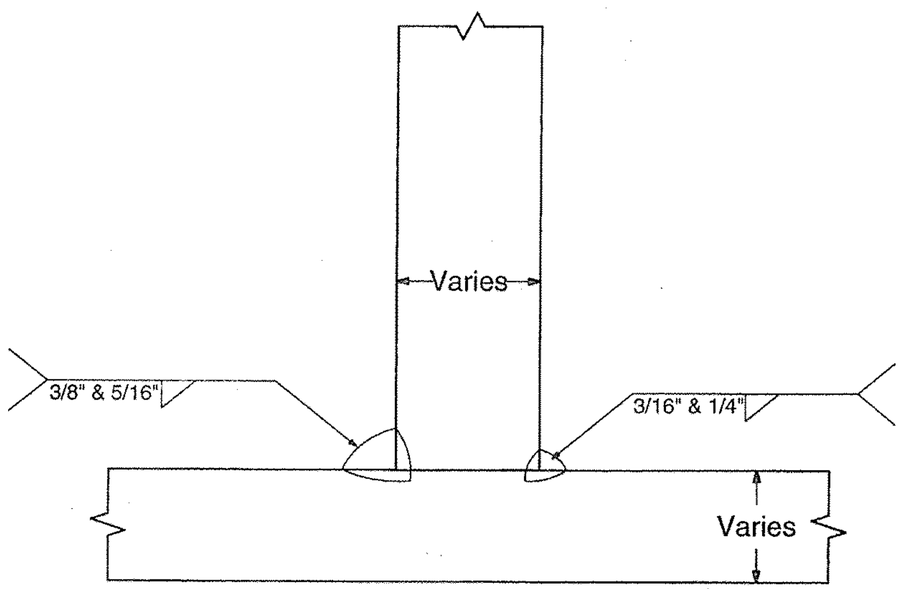

MEMO

Supporting PQR's: PQR AL122, AL-100

Timothy A Miller
CWI 01081151
QC1 EXP. 6/1/2013

L. B. Foster Co.

Welding Procedure Specification

1G AL 3/16 (BC-P2)

Material Spec. 6061-T6, 6063-T6

Welding Process(es) GMAW

Position of Welding 1G

VTrans Received OCT 27 2011

CK'D _____ OK'd BY JWC

Manual ☐ Machine ☐ Semi-Automatic ☒ Automatic ☐

Filler Metal Specification AWS A5.10

Filler Metal Classification ER5356 F22

Resubmit _____ APPROVED 11/01/11

BY _____ DATE

Flux N/A

Shielding Gas 100% Argon Gas Flow Rate 35 CFH

Single or Multiple Pass Multiple

Single or Multiple Arc Single

Welding Current Direct Current Reverse Polarity

Polarity: AC ☐ DCEP ☒ DCEN ☐ Pulsed ☐

Welding Progression Up ☐ Down ☐

Root Treatment Clean With SS Wire Brush

Preheat Temperature 60 Deg. F min. Interpass Temperature N/A

Postheat Treatment None

Heat Input Min N/A Max N/A

WELDING PROCEDURE

Pass No.	Electrode Size	Amperes	Volts	Travel Speed	Other
All	.035"	160	23	20 IPM	
	Min.	128	19.5	18.6 IPM	
	Max.	192	26.5	21.4 IPM	

Joint Detail

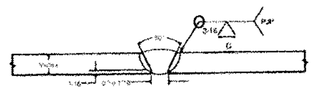

Timothy A Miller
CWI 01061161
QC1 EXP. 8/1/2013

This procedure may vary due to fabrication sequence, fit-up, pass size, etc., within the limitation of variables given in Section 5.

Procedure No. 1G AL 3/16 (BC-P2) Contractor L.B. Foster Co.

Revision No. 0 Authorized By Timothy A. Miller Date 7/12/2011

L. B. Foster Co.

Welding Procedure Specification

1G AL 3/16 (BC-P2)

Joint Detail

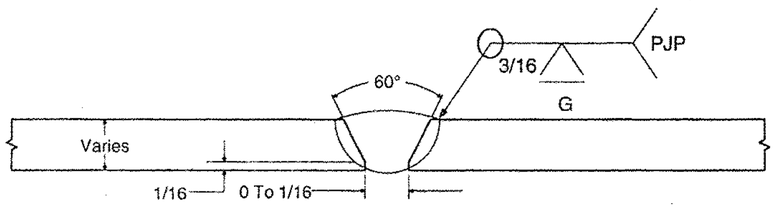

MEMO

Supporting PQR's: PQR AL-122, AL112

Joint Design Per AWS D1.2-97 page 146 BC-P2

Timothy A Miller
CWI 01051131
QC1 EXP. 8/1/2013

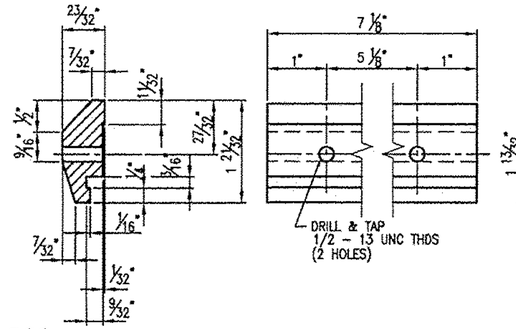

208 ~ REQ'D CLAMP BAR CB-03-A #19447
(BARRIER RAIL)

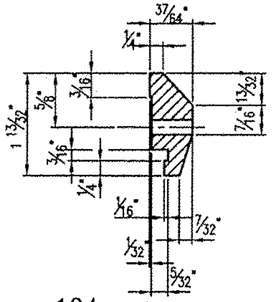

104 ~ REQ'D CLAMP BAR CB-01-H #19439
(HANDRAIL)

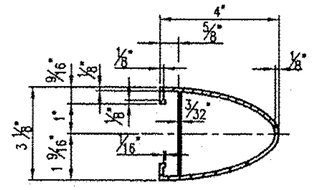

TYPICAL SECTION
(HANDRAIL)

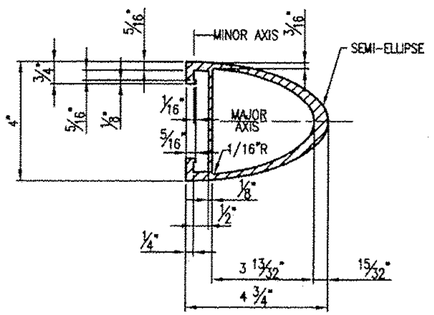

TYPICAL SECTION
(BARRIER RAIL)

GENERAL NOTES

ALL MATERIAL AND WORKMANSHIP SHALL BE IN ACCORDANCE WITH VERMONT AGENCY OF TRANSPORTATION STANDARD SPECIFICATIONS FOR CONSTRUCTION DATED 2006 AND ITS LATEST REVISIONS.

DESCRIPTION	ASTM	ALLOY/GR.	REMARKS
RAILS, POSTS, BASES, SPLICES, CLAMP BARS, PINS, & BALUSTER FRAMES	B221	6061-T6 OR 6351-T5	MIN. YIELD STRENGTH Fy = 35,000 psi.
BALUSTERS	B221	6061 OR 6351	T4 – USED FOR SUPERIOR EXPANDING QUALITIES
RIVETS	B316	6061-T6	BUTTON HD., COLD DRWN, BUTTON HD., COLD DRWN, CONE
SET SCREWS FOR BALUSTERS	F880	TYPE 303	
STAINLESS STEEL BOLTS	A193	GRADE B8	
ANCHOR RODS	A449		GALV. A153
STEEL HEX. NUTS	A563	GRADE DH	GALV. A153
STEEL WASHERS	F436		GALV. A153
ANCHOR PLATES	A569		COMMERCIAL QUALITY (PLAIN)
ALUMINUM WASHERS	B209	2024-T3/T4	ALCLAD
PREFORMED PADS			SECTION 731.01 OR 731.02
ELECTRODES FOR WELDING		AWS A5.10 ER5356	

POSTS TO BE NORMAL TO GRADE AND RAILS SHALL BE PARALLEL TO GRADE. RAILS TO BE ATTACHED TO A MINIMUM OF THREE POSTS WHEN POSSIBLE.

ALL RAILS AND WELDS TO BE FREE FROM ALL BURRS AND ROUGH EDGES. ENDS OF TUBE SECTIONS SHALL BE SAWED OR MILLED. GRIND ALL CUT EDGES SMOOTH.

ALL THREADS TO BE UNC CLASS 2A/2B.

ALL EXTRUSION TOLERANCES NOT SHOWN SHALL BE IN ACCORDANCE WITH ASTM B221.

IF CUT THREADS ARE USED, BOLT DIAMETER SHALL NOT BE LESS THAN NOMINAL DIAMETER. IF ROLLED THREADS ARE USED, BOLT DIAMETER SHALL NOT BE LESS THAN THE ROOT DIAMETER OF THREADS

THE SPLICE BAR SHALL BE ATTACHED TO THE RAIL ELEMENT AS FOLLOWS:
THE RAIL SPLICE AT THE BRIDGE EXPANSION JOINT SHALL BE FASTENED ON BOTH SIDES OF THE RAIL SPLICE USING THE PARTIALLY THREADED BOLTS, WITH THE WASHER FACED BOLT, TIGHTENED SECURELY TO THE END OF THREADS, AND LEAVING A 1/8" GAP, THIS ALLOWS EXPANSION ON BOTH SIDES OF THE JOINT.

ALL NUTS SHALL COMPLY WITH AMERICAN HEXAGON ANSI SPECIFICATIONS B18.2

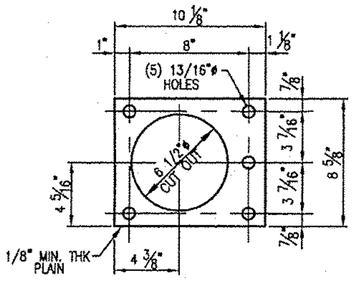

52 ~ REQ'D ANCHOR PLATE AP1
#31286

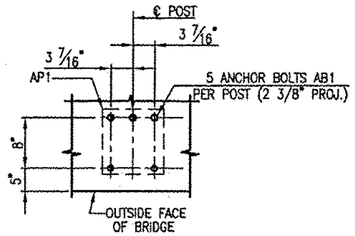

TYPICAL ANCHOR BOLT SETTING

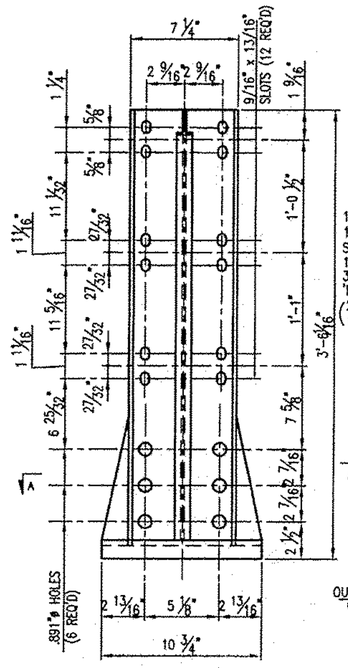

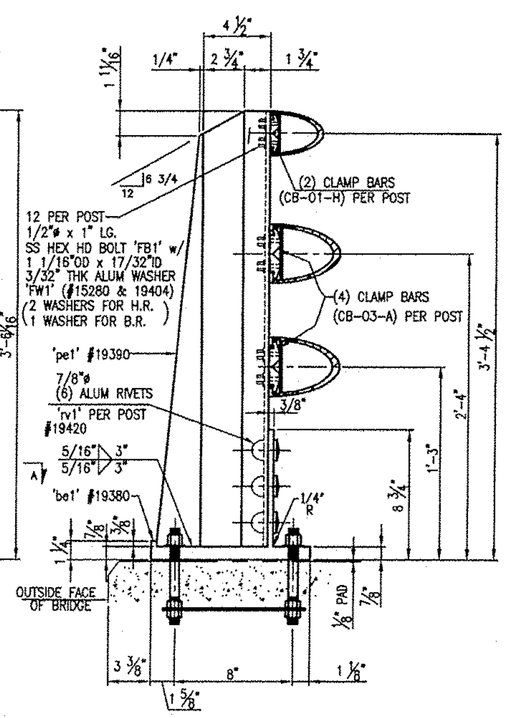

52 ~ REQ'D FABRICATED RAIL POSTS 'P1'
(SIDEWALK)

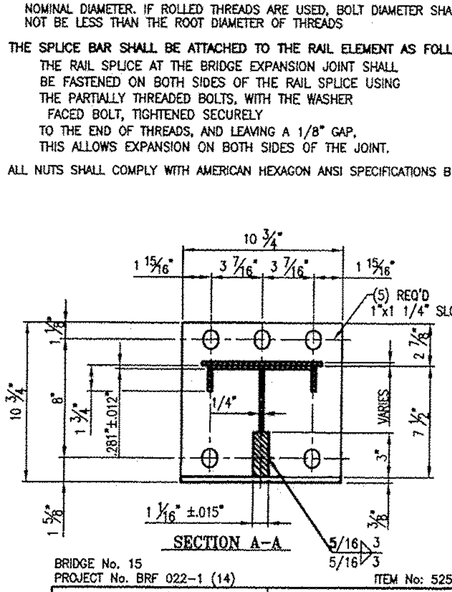

SECTION A-A

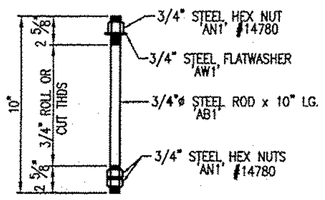

260 ~ REQ'D ANCHOR BOLTS AB1

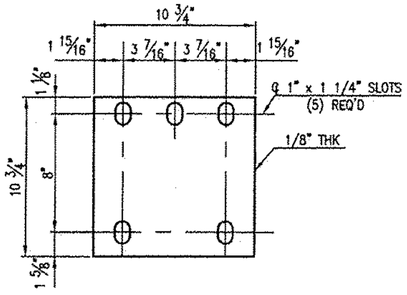

52 ~ REQ'D FABRIC PADS 'EP1'

RIVET DETAIL 'rv1'
#19420

RECEIVED
CK'D BY MBP OK'D BY SSS
OCT 24 2011
RESUBMIT _____ APPROVED ✓
BY _____ DATE 11/1/2011

BRIDGE No. 15
PROJECT No. BRF 022-1 (14) ITEM No: 525.23

LBFoster
Fabricated Bridge Products

L.B. FOSTER COMPANY
1016 GREENTREE RD.
PITTSBURGH, PA 15220

FOR: F. R. LAFAYETTE, INC.
VERMONT AGENCY OF TRANSPORTATION
TOWN OF BETHEL, WINDSOR COUNTY, VT
3-LINE ALUMINUM BRIDGE RAIL FOR VT ROUTE 7
(MINOR ARTERIAL)(SIDEWALK) – GENERAL NOTES & TYPICAL DETAILS

REV.	DESCRIPTION	BY	DATE

MADE CMS DATE 09/15/11 JOB NO. ARQ700
CHECK Dd DATE 10/12/11 DRAWING LB1
REV. NO.

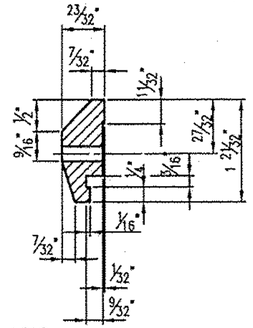

176 ~ REQ'D CLAMP BAR CB-03-A #19447
(BARRIER RAIL)

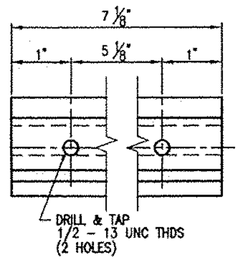

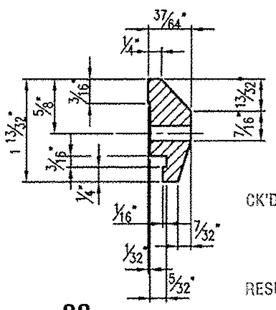

88 ~ REQ'D CLAMP BAR CB-01-H #19439
(HANDRAIL)

RECEIVED
CK'D BY WPL OK'D BY SSS
OCT 24 2011
RESUBMIT ____ APPROVED ✓
DATE 11/1/2011
BY

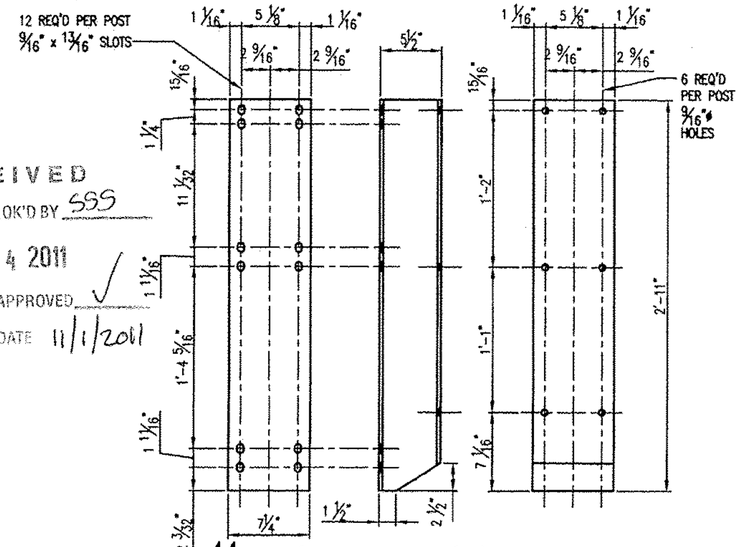

44 ~ REQ'D OFFSET BLOCK 'OB' H-SECTION DETAIL

GENERAL NOTES

ALL MATERIAL AND WORKMANSHIP SHALL BE IN ACCORDANCE WITH VERMONT AGENCY OF TRANSPORTATION STANDARD SPECIFICATIONS FOR CONSTRUCTION DATED 2006 AND ITS LATEST REVISIONS.

DESCRIPTION	ASTM	ALLOY/GR.	REMARKS
RAILS, POSTS, BASES, SPLICES, CLAMP BARS, PINS,	B221	6061-T6 OR 6351-T5	MIN. YIELD STRENGTH Fy = 35,000 psi
RIVETS	B316	6061-T6	BUTTON HD., CONE PT. COLD DRIVEN
OFFSET BLOCKS (H-SECT.)	B308	6061-T6	
STAINLESS STEEL BOLTS	A193	GRADE B8	
STAINLESS STEEL HEX NUTS	A194	GR 8	
STAINLESS WASHERS	A240	TYPE 304	
ANCHOR RODS	A449		GALV. A153
STEEL HEX NUTS	A563	GRADE DH	GALV. A153
STEEL WASHERS	F436		GALV. A153
ANCHOR PLATES	A569		COMMERCIAL QUALITY (PLAIN)
ALUMINUM WASHERS	B209	2024-T3/T4	ALCLAD
PREFORMED PADS			SECTION 731.01 OR 731.02
BACK-UP PLATES	A36		GALV. A123
ELECTRODES FOR WELDING	AWS A5.10 ER5356		

POSTS TO BE NORMAL TO GRADE AND RAILS SHALL BE PARALLEL TO GRADE. RAILS TO BE ATTACHED TO A MINIMUM OF THREE POSTS WHEN POSSIBLE.

ALL RAILS AND WELDS TO BE FREE FROM ALL BURRS AND ROUGH EDGES. ENDS OF TUBE SECTIONS SHALL BE SAWED OR MILLED. GRIND ALL CUT EDGES SMOOTH.

ALL THREADS TO BE UNC CLASS 2A/2B.

ALL EXTRUSION TOLERANCES NOT SHOWN SHALL BE IN ACCORDANCE WITH ASTM B221.

IF CUT THREADS ARE USED, BOLT DIAMETER SHALL NOT BE LESS THAN NOMINAL DIAMETER. IF ROLLED THREADS ARE USED, BOLT DIAMETER SHALL NOT BE LESS THAN THE ROOT DIAMETER OF THREADS

THE SPLICE BAR SHALL BE ATTACHED TO THE RAIL ELEMENT AS FOLLOWS:
THE RAIL SPLICE AT THE BRIDGE EXPANSION JOINT SHALL BE FASTENED ON BOTH SIDES OF THE RAIL SPLICE USING THE PARTIALLY THREADED BOLTS, WITH THE WASHER FACED BOLT, TIGHTENED SECURELY TO THE END OF THREADS, AND LEAVING A 1/8" GAP, THIS ALLOWS EXPANSION ON BOTH SIDES OF THE JOINT.

ALL NUTS SHALL COMPLY WITH AMERICAN HEXAGON ANSI SPECIFICATIONS B18.2

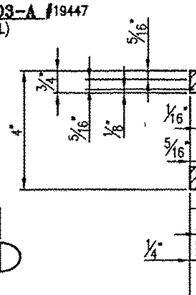

RIVET DETAIL 'rv1'
#19420

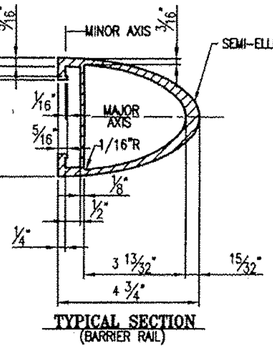

TYPICAL SECTION
(BARRIER RAIL)

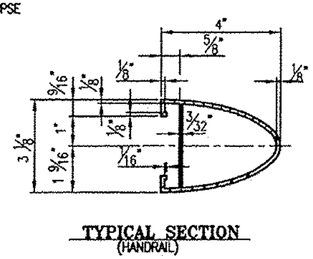

TYPICAL SECTION
(HANDRAIL)

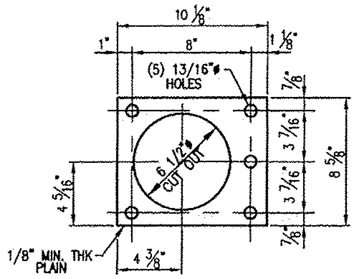

44 ~ REQ'D ANCHOR PLATE AP1
#31286

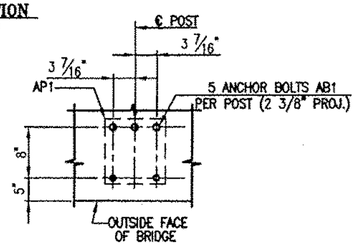

TYPICAL ANCHOR BOLT SETTING

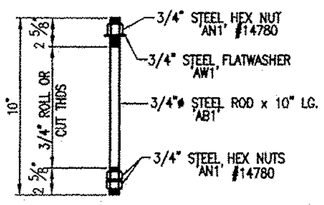

220 ~ REQ'D ANCHOR BOLTS AB1

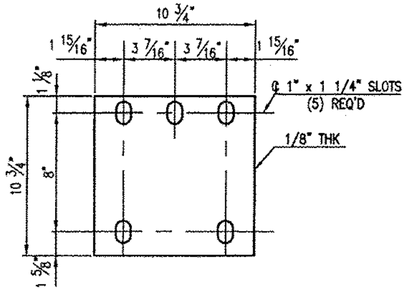

44 ~ REQ'D FABRIC PADS 'EP2'

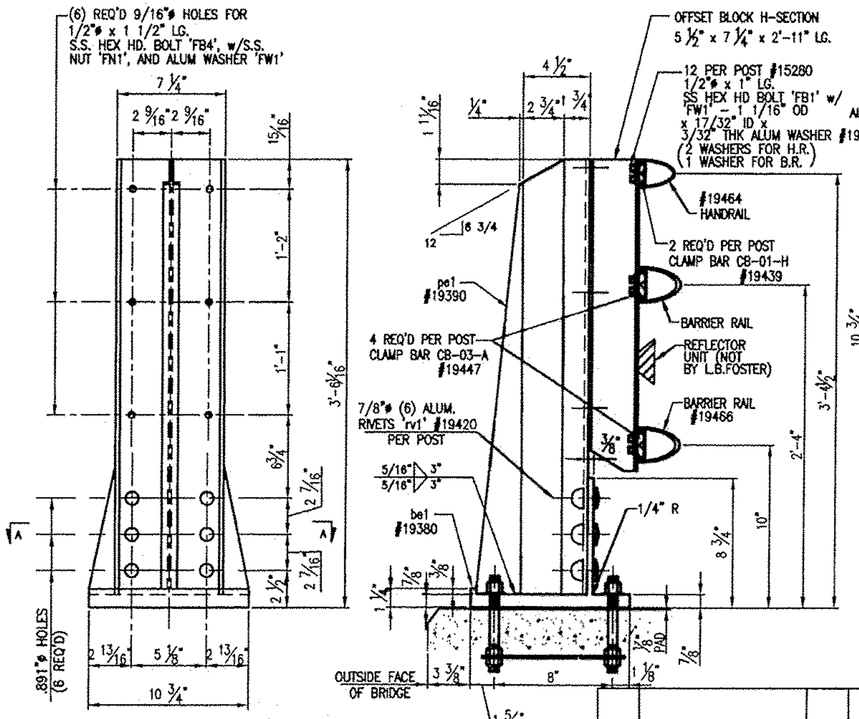

44 ~ REQ'D FABRICATED RAIL POSTS 'P2'
(REFLECTOR UNITS TO BE SUPPLIED & PLACED BY OTHERS)

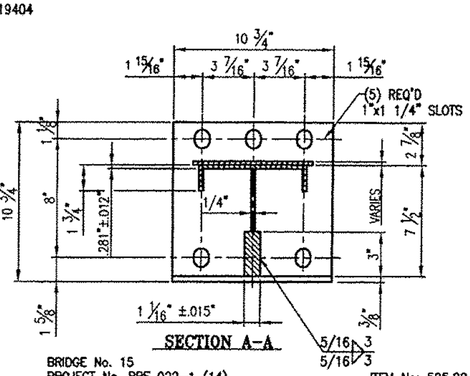

BRIDGE No. 15
PROJECT No. BRF 022-1 (14)
ITEM No: 525.22

REV.	DESCRIPTION	BY	DATE

LBFoster
Fabricated Bridge Products

L.B. FOSTER COMPANY
1016 GREENTREE RD.
PITTSBURGH, PA 15220

FOR: F. R. LAFAYETTE, INC.
VERMONT AGENCY OF TRANSPORTATION
TOWN OF BETHEL, WINDSOR COUNTY, VT
3-LINE ALUMINUM BRIDGE RAIL (CURBSIDE) FOR VT ROUTE 7 (MINOR ARTERIAL)(CURBSIDE) - GENERAL NOTES & TYPICAL DETAILS

MADE CMS DATE 09/15/11 JOB NO. AR0700
CHECK Dd DATE 10/12/11 DRAWING LB2
REV. NO.

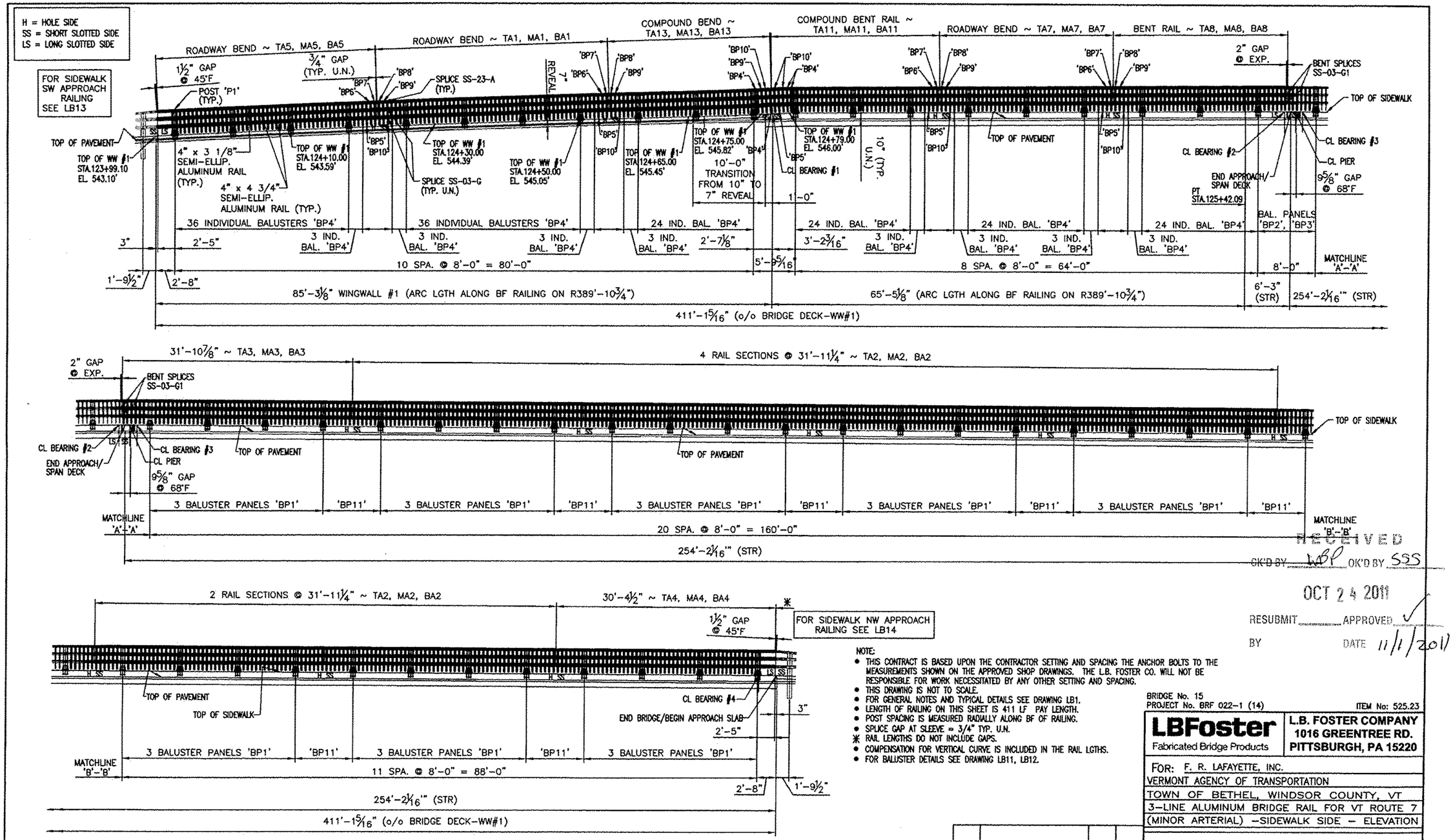

INSIDE ELEVATION ~ SIDEWALK SIDE ~ WEST RAIL

NOTE:
- THIS CONTRACT IS BASED UPON THE CONTRACTOR SETTING AND SPACING THE ANCHOR BOLTS TO THE MEASUREMENTS SHOWN ON THE APPROVED SHOP DRAWINGS. THE L.B. FOSTER CO. WILL NOT BE RESPONSIBLE FOR WORK NECESSITATED BY ANY OTHER SETTING AND SPACING.
- THIS DRAWING IS NOT TO SCALE.
- FOR GENERAL NOTES AND TYPICAL DETAILS SEE DRAWING LB1.
- LENGTH OF RAILING ON THIS SHEET IS 411 LF PAY LENGTH.
- POST SPACING IS MEASURED RADIALLY ALONG BF OF RAILING.
- SPLICE GAP AT SLEEVE = ¾" TYP. U.N.
- ✱ RAIL LENGTHS DO NOT INCLUDE GAPS.
- COMPENSATION FOR VERTICAL CURVE IS INCLUDED IN THE RAIL LGTHS.
- FOR BALUSTER DETAILS SEE DRAWING LB11, LB12.

REV.	DESCRIPTION	BY	DATE

RECEIVED
OCT 24 2011

CK'D BY WBP OK'D BY SSS

RESUBMIT ____ APPROVED ✓

BY ____ DATE 11/1/2011

BRIDGE No. 15
PROJECT No. BRF 022-1 (14) ITEM No: 525.23

LBFoster Fabricated Bridge Products

L.B. FOSTER COMPANY
1016 GREENTREE RD.
PITTSBURGH, PA 15220

FOR: F. R. LAFAYETTE, INC.
VERMONT AGENCY OF TRANSPORTATION
TOWN OF BETHEL, WINDSOR COUNTY, VT
3-LINE ALUMINUM BRIDGE RAIL FOR VT ROUTE 7
(MINOR ARTERIAL) -SIDEWALK SIDE - ELEVATION

MADE CMS DATE 09/15/11 JOB NO. AR0700
CHECK Dd DATE 10/12/11 DRAWING LB3
REV. NO.

FOR CURB SIDE NE APPROACH RAILING SEE LB15

H = HOLE SIDE
SS = SHORT SLOTTED SIDE
LS = LONG SLOTTED SIDE

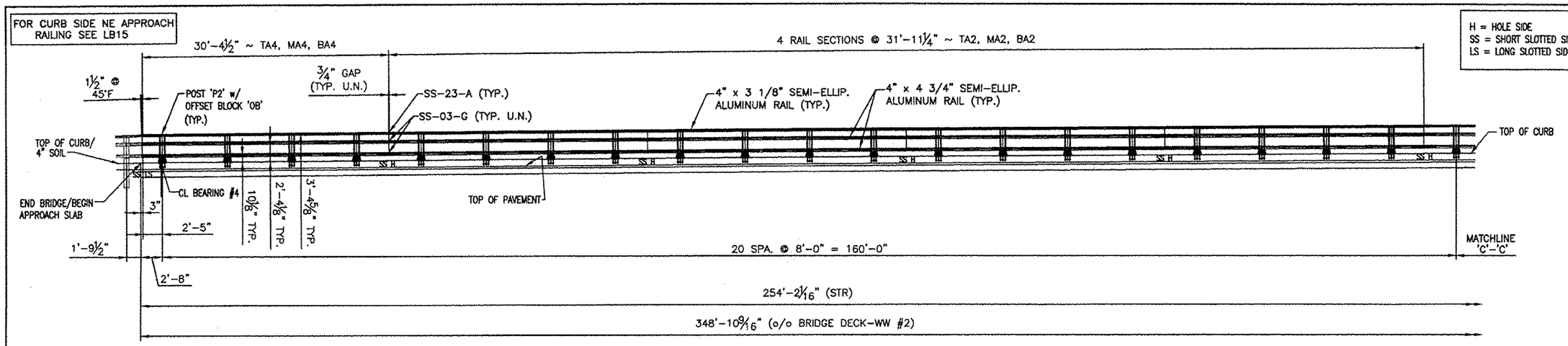

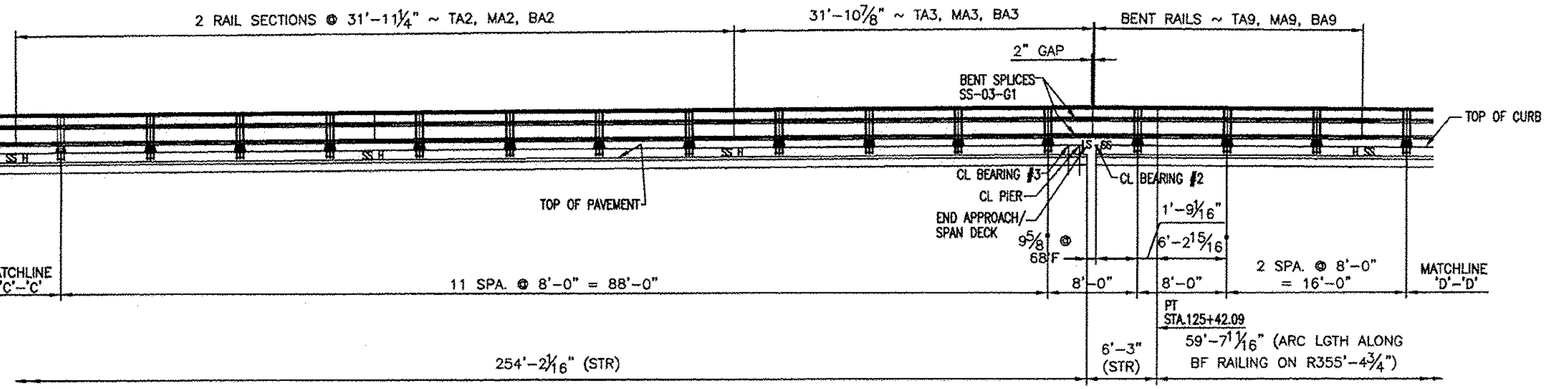

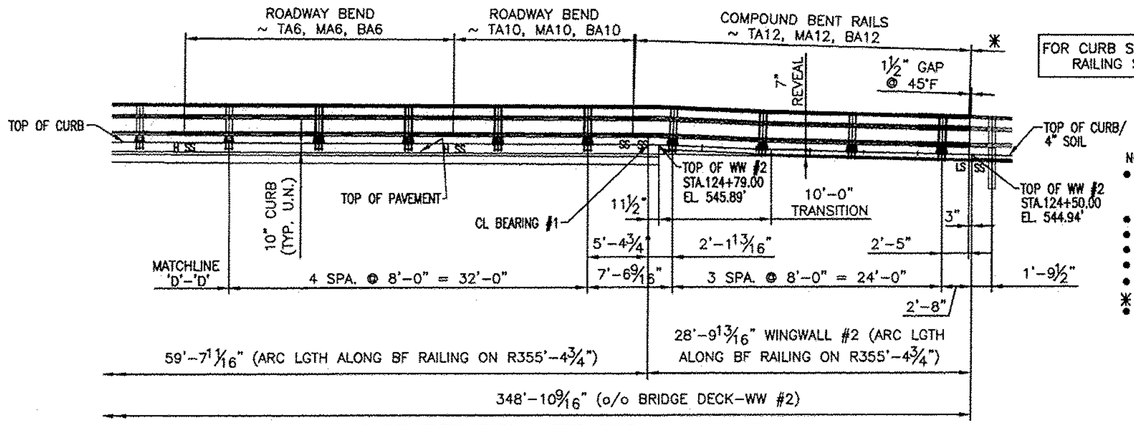

INSIDE ELEVATION ~ CURBSIDE ~ EAST RAIL

NOTE:
- THIS CONTRACT IS BASED UPON THE CONTRACTOR SETTING AND SPACING THE ANCHOR BOLTS TO THE MEASUREMENTS SHOWN ON THE APPROVED SHOP DRAWINGS. THE L.B. FOSTER CO. WILL NOT BE RESPONSIBLE FOR WORK NECESSITATED BY ANY OTHER SETTING AND SPACING.
- THIS DRAWING IS NOT TO SCALE.
- FOR GENERAL NOTES AND TYPICAL DETAILS SEE DRAWING LB2.
- LENGTH OF RAILING ON THIS SHEET IS 349 LF PAY LENGTH.
- POST SPACING IS MEASURED RADIALLY ALONG BF OF RAILING.
- SPLICE GAP AT SLEEVE = 3/4" TYP. U.N.
- ✱ RAIL LENGTHS DO NOT INCLUDE GAPS.
- COMPENSATION FOR VERTICAL CURVE IS INCLUDED IN THE RAIL LGTHS.

RECEIVED
CK'D BY WRP OK'D BY SSS
OCT 24 2011
RESUBMIT ____ APPROVED ✓
BY ____ DATE 11/1/2011

BRIDGE No. 15
PROJECT No. BRF 022-1 (14) ITEM No: 525.22

LBFoster Fabricated Bridge Products

L.B. FOSTER COMPANY
1016 GREENTREE RD.
PITTSBURGH, PA 15220

FOR: F. R. LAFAYETTE, INC.
VERMONT AGENCY OF TRANSPORTATION
TOWN OF BETHEL, WINDSOR COUNTY, VT
3-LINE ALUMINUM BRIDGE RAIL FOR VT ROUTE 7
(MINOR ARTERIAL) - CURBSIDE ELEVATION

REV.	DESCRIPTION	BY	DATE

MADE CMS DATE 09/16/11 JOB NO. AR0700
CHECK Dd DATE 10/12/11 DRAWING LB4
REV. NO. ____

RECEIVED
CK'D BY WBP OK'D BY SSS
OCT 24 2011
RESUBMIT ____ APPROVED ✓
BY DATE 11/1/2011

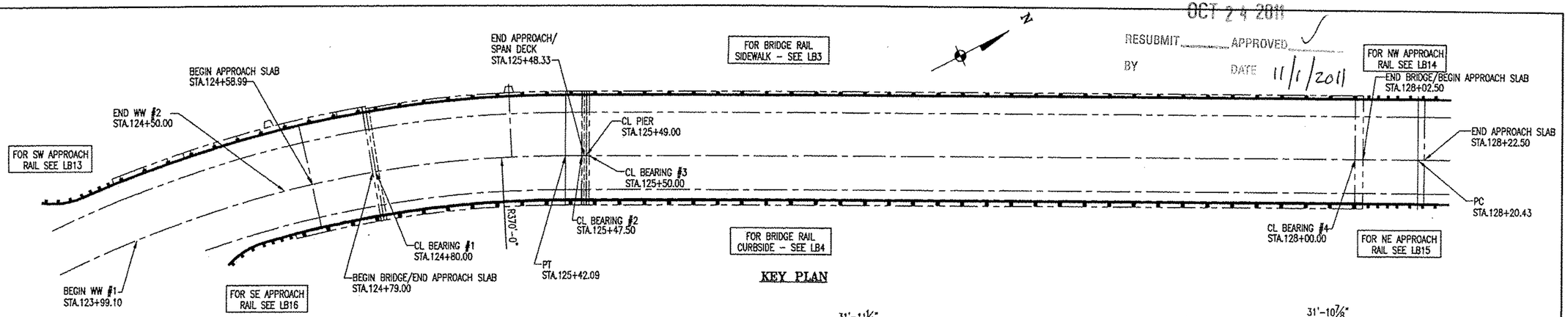

KEY PLAN

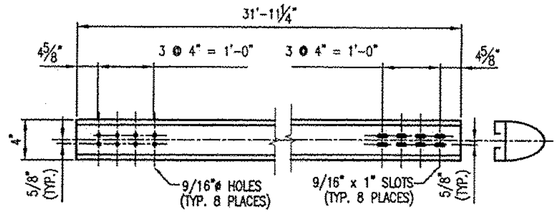

12 REQ'D. ~ RAIL 'MA2'
(BACK ELEVATION VIEW)

12 REQ'D. ~ RAIL 'BA2'
(BACK ELEVATION VIEW)

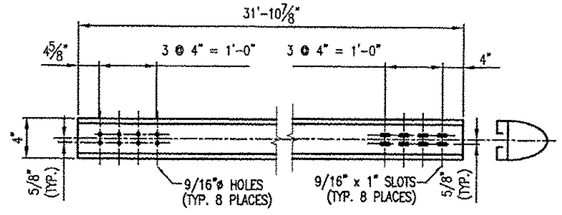

2 REQ'D. ~ RAIL 'MA3'
(BACK ELEVATION VIEW)

2 REQ'D. ~ RAIL 'BA3'
(BACK ELEVATION VIEW)

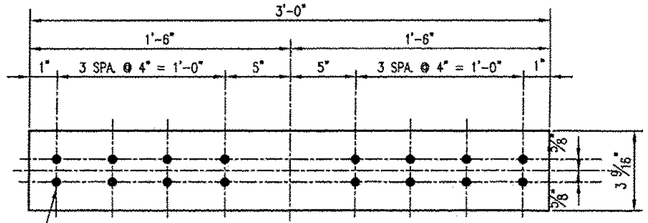

44 ~ REQ'D SPLICE SLEEVES SS-03-G
(BARRIER RAIL) #19501

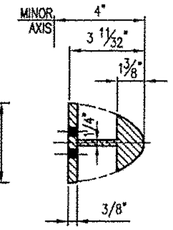

SECTION 'A'–'A'

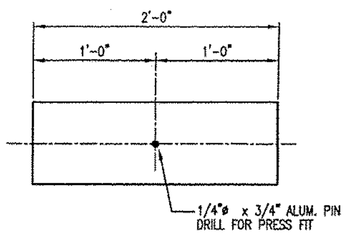

24 ~ REQ'D SPLICE SLEEVES SS-23-A
(HANDRAIL) #20204

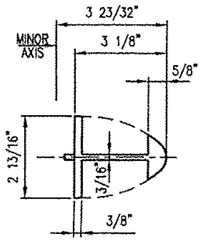

SECTION 'B'–'B'

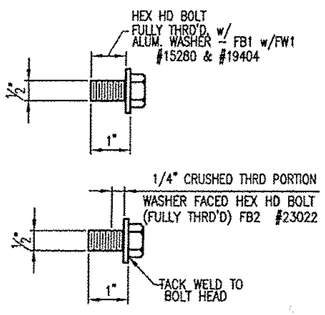

SPLICE BOLT DETAILS

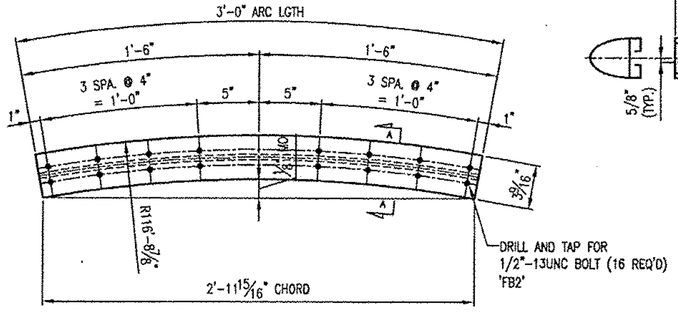

REAR ELEVATION VIEW

4 ~ REQ'D BENT SPLICE SLEEVES SS-03-G1
(BARRIER RAIL) #19501

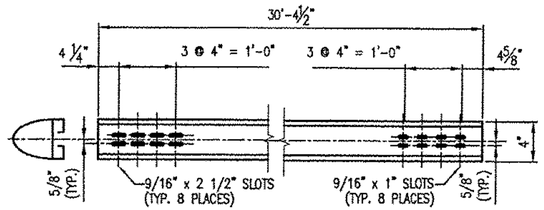

2 REQ'D. ~ RAIL 'MA4'
(BACK ELEVATION VIEW)

2 REQ'D. ~ RAIL 'BA4'
(BACK ELEVATION VIEW)

BRIDGE No. 15
PROJECT No. BRF 022-1 (14) ITEM No: 525.22/525.23

LBFoster Fabricated Bridge Products
L.B. FOSTER COMPANY
1016 GREENTREE RD.
PITTSBURGH, PA 15220

FOR: F. R. LAFAYETTE, INC.
VERMONT DEPARTMENT OF TRANSPORTATION
TOWN OF BETHEL, WINDSOR COUNTY, VT
3-LINE ALUMINUM BRIDGE RAIL FOR VT ROUTE 7
(MINOR ARTERIAL) – KEY PLAN & MISC RAIL DETAILS

MADE CMS DATE 08/26/11 JOB NO. AR0700
CHECK DD DATE 10/12/11 DRAWING LB5
REV. NO.

REV.	DESCRIPTION	BY	DATE

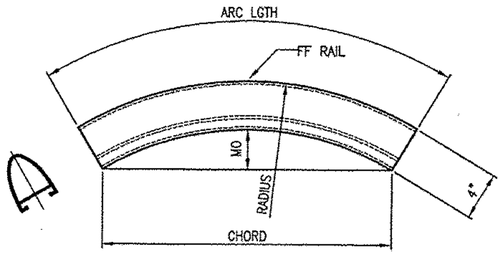

PLAN VIEW

ROADWAY BEND TOP RAILS (CURB)					
MK.	QTY	ARC LGTH	MO	CHORD	RADIUS
TA6	1	23'-11 1/2"	2 5/16"	23'-11 3/16"	355'-8 3/4"

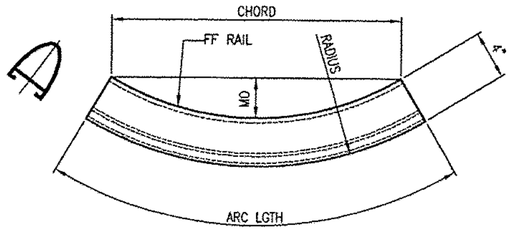

PLAN VIEW

ROADWAY BEND TOP RAILS (SIDEWALK)					
MK.	QTY	ARC LGTH	MO	CHORD	RADIUS
TA1	1	32'-0"	3 15/16"	31'-11 9/16"	389'-10 3/4"
TA5	1	30'-3 5/16"	3 1/2"	30'-2 15/16"	389'-10 3/4"
TA7	1	23'-11 1/4"	2 3/16"	23'-10 15/16"	389'-10 3/4"

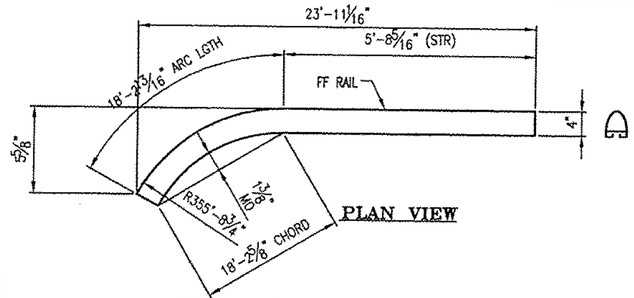

PLAN VIEW

ONE REQ'D ~ BENT RAIL 'TA9' (CURB)
(23'-11 1/8" LGTH ALONG LONGEST EDGE)

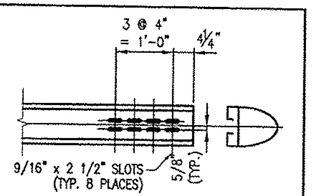

VIEW 'D'-'D'

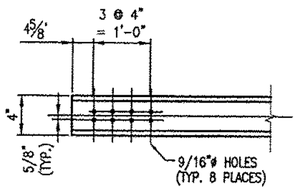

VIEW 'A'-'A'

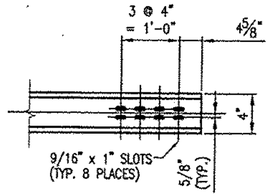

VIEW 'C'-'C'

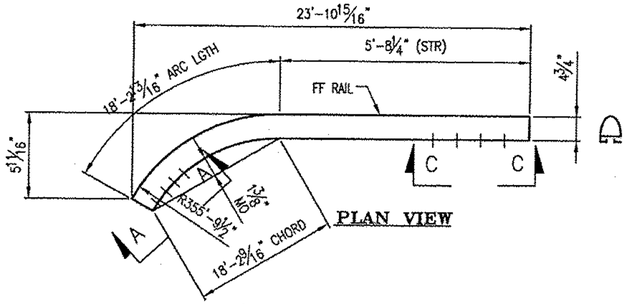

PLAN VIEW

ONE REQ'D ~ BENT RAIL 'MA9' (CURB)
(23'-11 1/16" LGTH ALONG LONGEST EDGE)
ONE REQ'D ~ BENT RAIL 'BA9' (CURB)
(23'-11 1/16" LGTH ALONG LONGEST EDGE)

PLAN VIEW

ROADWAY BEND MIDDLE/BOTTOM RAILS (SDWK)						
MK.	QTY	ARC LGTH	MO	CHORD	RADIUS	
MA1	1	31'-11 7/8"	3 15/16"	31'-11 3/8"	389'-10 3/4"	
BA1	1	31'-11 11/16"	3 15/16"	31'-11 3/16"	389'-10 3/4"	
MA5	1	30'-3 3/4"	3 1/2"	30'-3 5/16"	389'-10 3/4"	*
BA5	1	30'-4 5/16"	3 9/16"	30'-3 15/16"	389'-10 3/4"	*
MA7	1	23'-11 1/4"	2 3/16"	23'-10 15/16"	389'-10 3/4"	
BA7	1	23'-11 1/4"	2 3/16"	23'-10 15/16"	389'-10 3/4"	

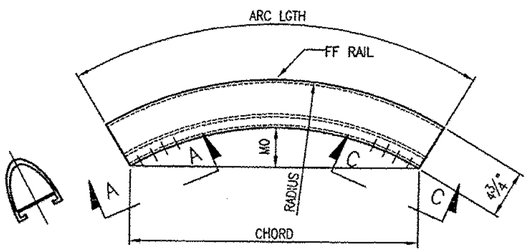

PLAN VIEW

ROADWAY BEND MIDDLE/BOTTOM RAILS (CURB)					
MK.	QTY	ARC LGTH	MO	CHORD	RADIUS
MA6	1	23'-11 9/16"	2 5/16"	23'-11 3/16"	355'-9 1/2"
BA6	1	23'-11 9/16"	2 5/16"	23'-11 3/16"	355'-9 1/2"

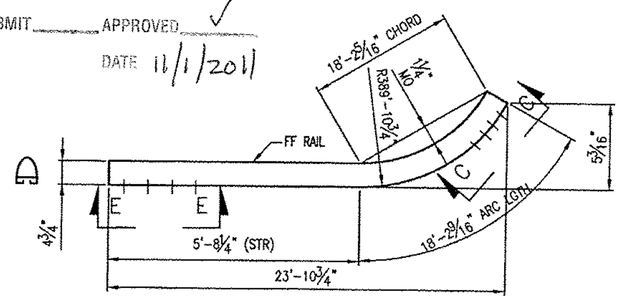

PLAN VIEW

ONE REQ'D ~ BENT RAIL 'MA8' (SIDEWALK)
(23'-10 13/16" LGTH ALONG LONGEST EDGE)
ONE REQ'D ~ BENT RAIL 'BA8' (SIDEWALK)
(23'-10 13/16" LGTH ALONG LONGEST EDGE)

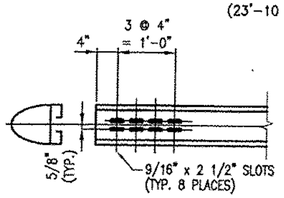

VIEW 'E'-'E'

RECEIVED
OCT 24 2011
CK'D BY WBP OK'D BY SSS
RESUBMIT ____ APPROVED ____
BY ____ DATE 11/1/2011

BRIDGE No. 15
PROJECT No. BRF 022-1 (14) ITEM No: 525.22/525.23

LBFoster
Fabricated Bridge Products

L.B. FOSTER COMPANY
1016 GREENTREE RD.
PITTSBURGH, PA 15220

FOR: F. R. LAFAYETTE, INC.
VERMONT AGENCY OF TRANSPORTATION
TOWN OF BETHEL, WINDSOR COUNTY, VT
3-LINE ALUMINUM BRIDGE RAIL FOR VT ROUTE 7
(MINOR ARTERIAL) - KEY PLAN & MISC RAIL DETAILS

REV.	DESCRIPTION	BY	DATE

MADE CMS DATE 09/20/11 JOB NO. AR0700
CHECK DD DATE 10/12/11 DRAWING LB6
REV. NIL

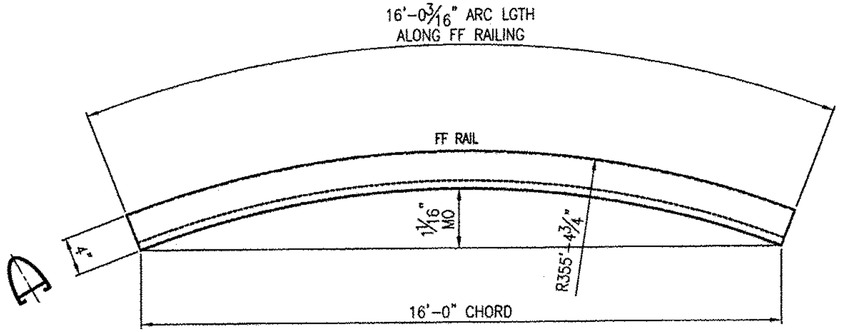

PLAN VIEW

ONE REQ'D ~ ROADWAY BEND TOP RAIL 'TA10'
(16'-0 3/16" LGTH ALONG LONGEST EDGE)

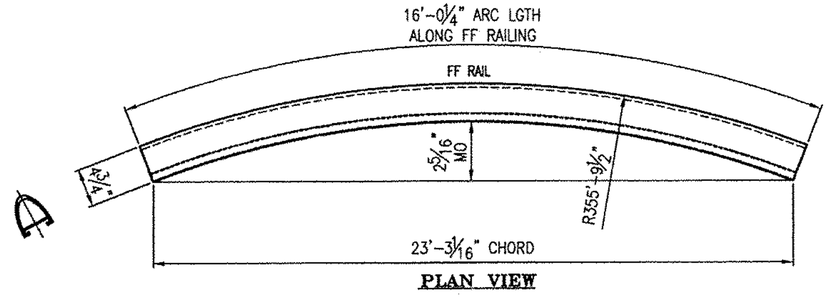

PLAN VIEW

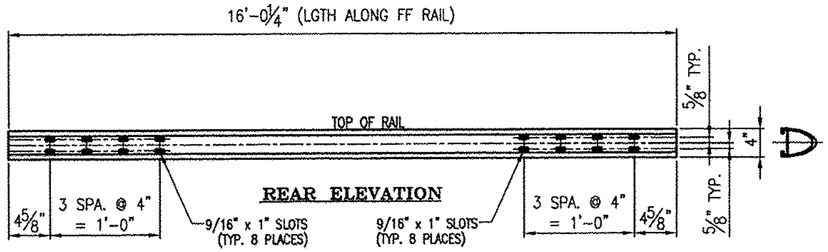

REAR ELEVATION

ONE REQ'D ~ ROADWAY BEND MIDDLE RAIL 'MA10'
(16'-0 1/4" LGTH ALONG FF RAIL)

ONE REQ'D ~ ROADWAY BEND BOTTOM RAIL 'BA10'
(16'-0 1/4" LGTH ALONG FF RAIL)

RECEIVED
CK'D BY WSP OK'D BY SSS
OCT 24 2011
RESUBMIT ____ APPROVED ✓
BY DATE 11/1/2011

BRIDGE No. 15
PROJECT No. BRF 022-1 (14)
ITEM No: 525.22

LBFoster
Fabricated Bridge Products

L.B. FOSTER COMPANY
1016 GREENTREE RD.
PITTSBURGH, PA 15220

FOR: F. R. LAFAYETTE, INC.
VERMONT AGENCY OF TRANSPORTATION
TOWN OF BETHEL, WINDSOR COUNTY, VT
3-LINE ALUMINUM BRIDGE RAIL FOR VT ROUTE 7
(MINOR ARTERIAL)(CURBSIDE) -- RAIL DETAILS

REV.	DESCRIPTION	BY	DATE

MADE CMS DATE 09/20/11 JOB NO. AR0700
CHECK Dd DATE 10/12/11 DRAWING LB7
REV. NO. ____

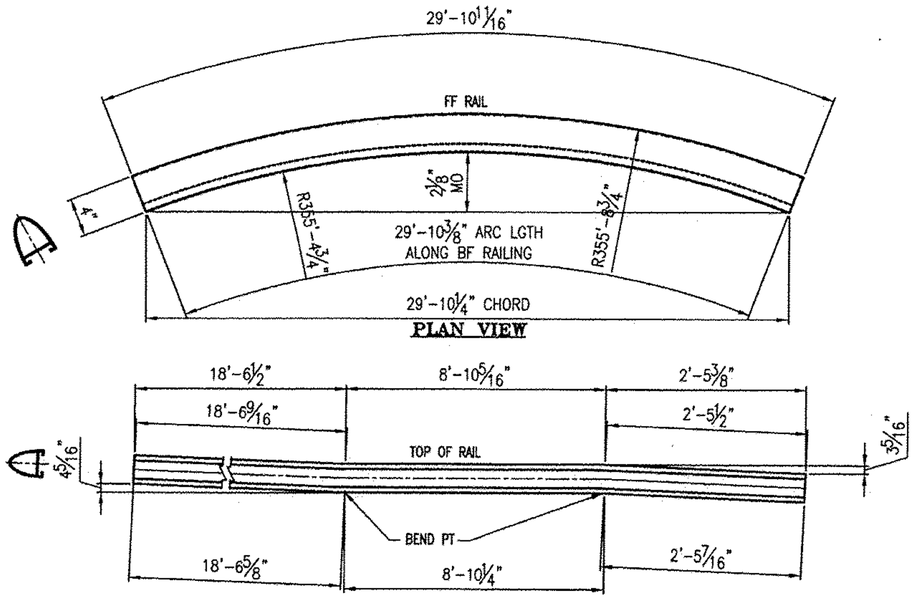

ONE REQ'D ~ COMPOUND BENT TOP RAIL 'TA12'
REAR ELEVATION
(29'-10 3/8" LGTH ALONG BF RAILING)

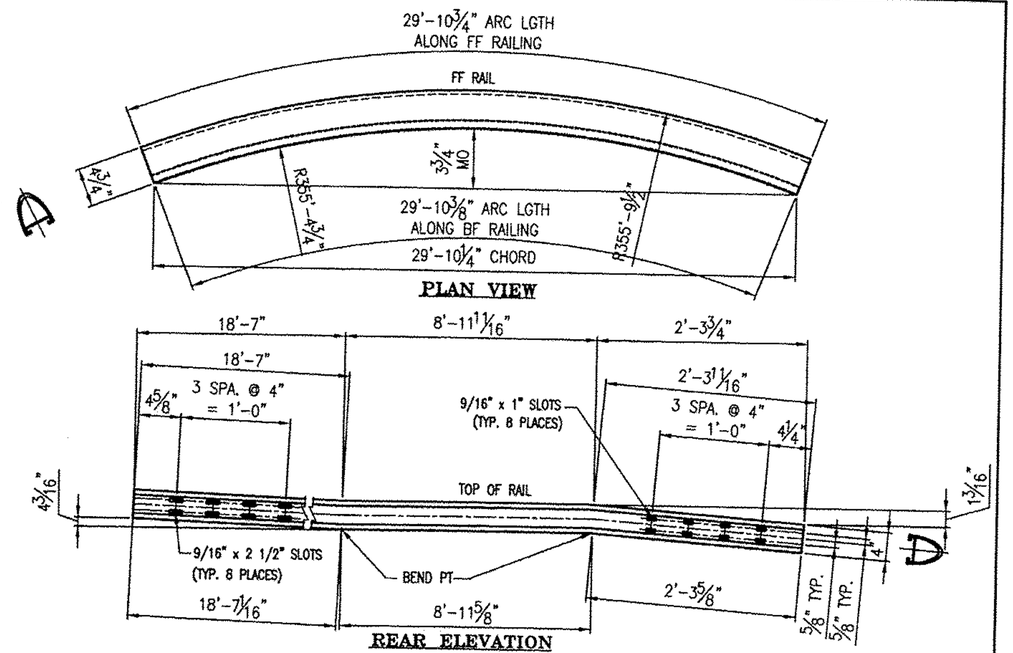

REAR ELEVATION
ONE REQ'D ~ COMPOUND BENT MIDDLE RAIL 'MA12'
(29'-10 3/8" LGTH ALONG BF RAILNG)

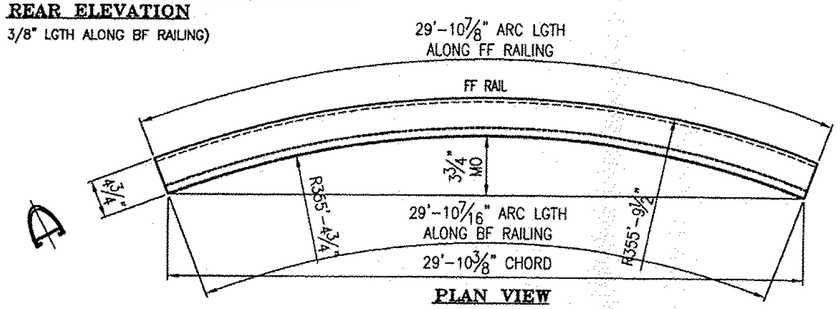

REAR ELEVATION
ONE REQ'D ~ COMPOUND BENT BOTTOM RAIL 'BA12'
(29'-10 3/8" LGTH ALONG BF RAILING)

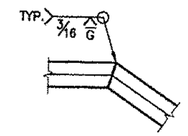

TYPICAL WELD DETAIL
(OPTIONAL IF REQ'D.)

RECEIVED
OK'D BY WBP OK'D BY SSS
OCT 24 2011
RESUBMIT ____ APPROVED ✓
BY ____ DATE 11/1/2011

BRIDGE No. 15
PROJECT No. BRF 022-1 (14) ITEM No: 525.22

LBFoster
Fabricated Bridge Products

L.B. FOSTER COMPANY
1016 GREENTREE RD.
PITTSBURGH, PA 15220

FOR: F. R. LAFAYETTE, INC.
VERMONT AGENCY OF TRANSPORTATION
TOWN OF BETHEL, WINDSOR COUNTY, VT
3-LINE ALUMINUM BRIDGE RAIL FOR VT ROUTE 7
(MINOR ARTERIAL)(CURBSIDE) - RAIL DETAILS

MADE CMS DATE 09/20/11 JOB NO. AR0700
CHECK Dd DATE 10/12/11 DRAWING LB8
REV. NO.

REV.	DESCRIPTION	BY	DATE

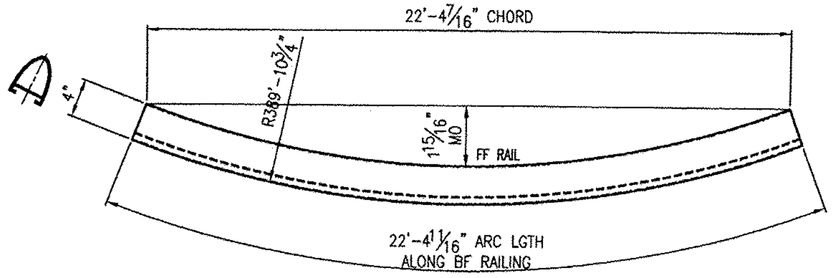

PLAN VIEW

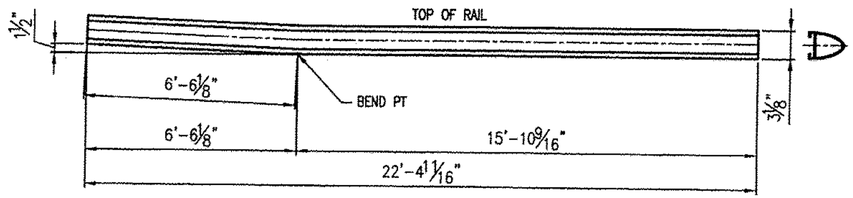

REAR ELEVATION

ONE REQ'D ~ COMPOUND BENT TOP RAIL 'TA13'

(22-4 11/16" LGTH ALONG LONGEST EDGE)

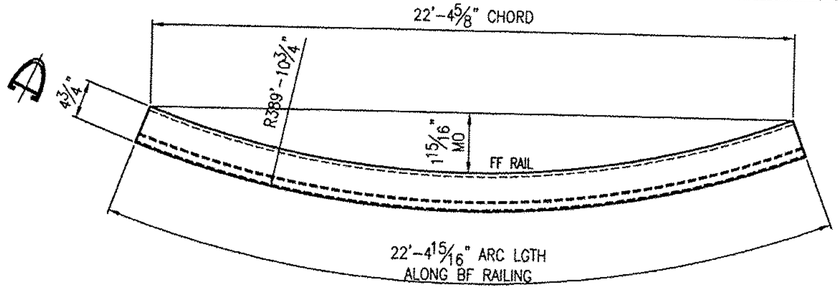

PLAN VIEW

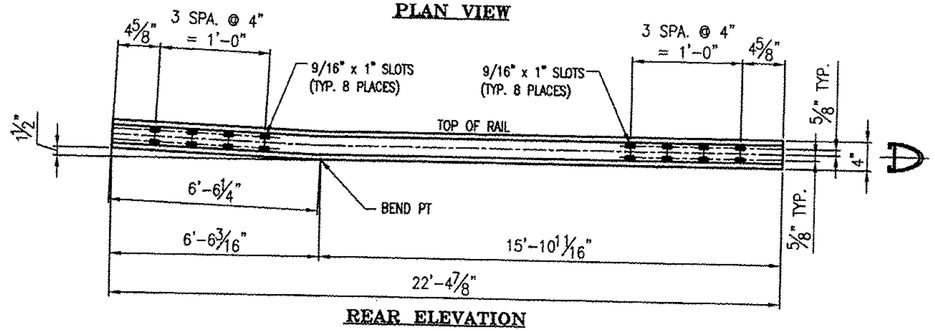

REAR ELEVATION

ONE REQ'D ~ COMPOUND BENT MIDDLE RAIL 'MA13'

(22'-4 15/16" LGTH ALONG LONGEST EDGE)

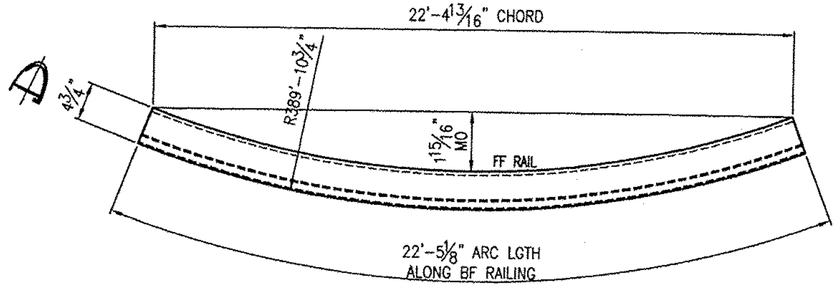

PLAN VIEW

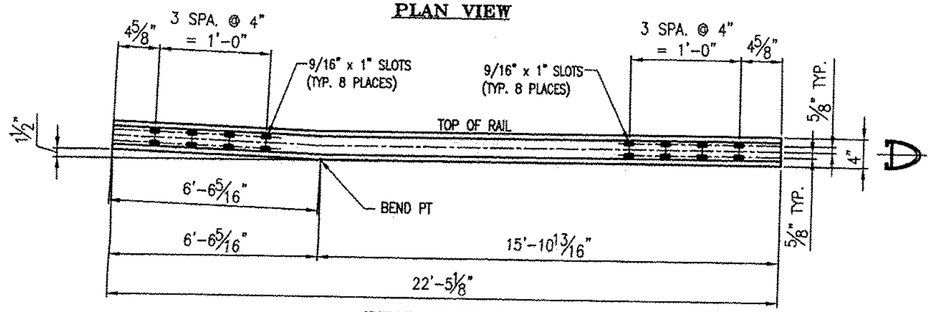

REAR ELEVATION

ONE REQ'D ~ COMPOUND BENT BOTTOM RAIL 'BA13'

(22'-5 1/8" LGTH ALONG LONGEST EDGE)

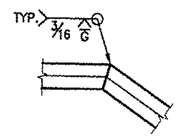

TYPICAL WELD DETAIL
(OPTIONAL IF REQ'D.)

RECEIVED
CK'D BY WBP OK'D BY SSS
OCT 24 2011
RESUBMIT _____ APPROVED ✓
BY _____ DATE 11/1/2011

REV.	DESCRIPTION	BY	DATE

BRIDGE No. 15
PROJECT No. BRF 022-1 (14)
ITEM No: 525.23

LBFoster
Fabricated Bridge Products

L.B. FOSTER COMPANY
1016 GREENTREE RD.
PITTSBURGH, PA 15220

FOR: F. R. LAFAYETTE, INC.
VERMONT AGENCY OF TRANSPORTATION
TOWN OF BETHEL, WINDSOR COUNTY, VT
3-LINE ALUMINUM BRIDGE RAIL FOR VT ROUTE 7
(MINOR ARTERIAL)(SIDEWALK) - RAIL DETAILS

MADE CMS DATE 09/20/11 JOB NO. AR0700
CHECK Dd DATE 10/12/11 DRAWING LB9
REV. NO.

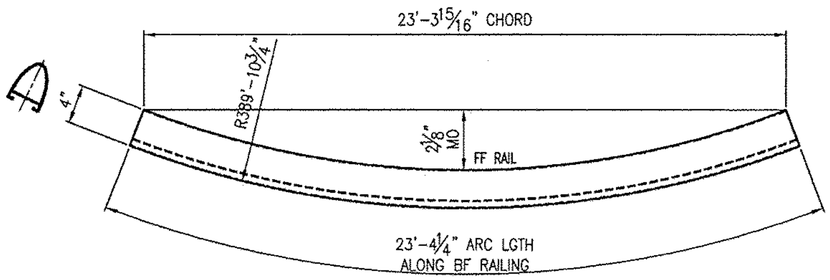

PLAN VIEW

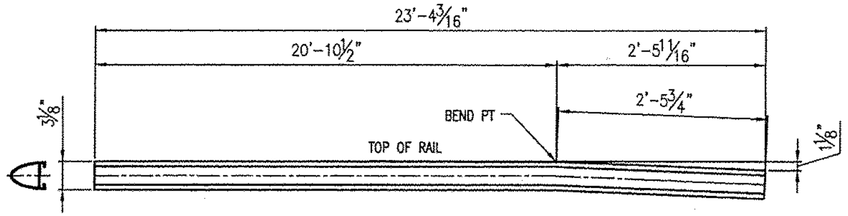

REAR ELEVATION
ONE REQ'D ~ COMPOUND BENT TOP RAIL 'TA11'
(23'-4 1/4" LGTH ALONG LONGEST EDGE)

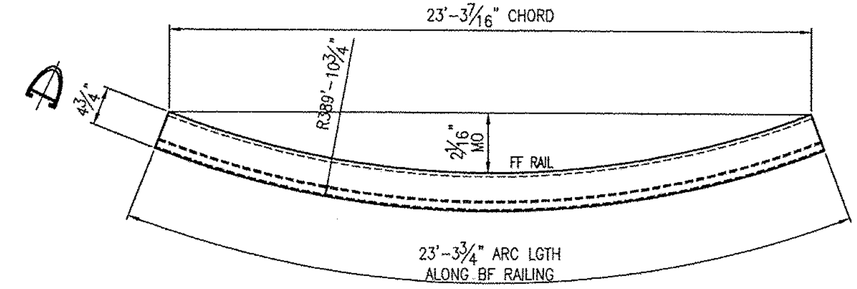

PLAN VIEW

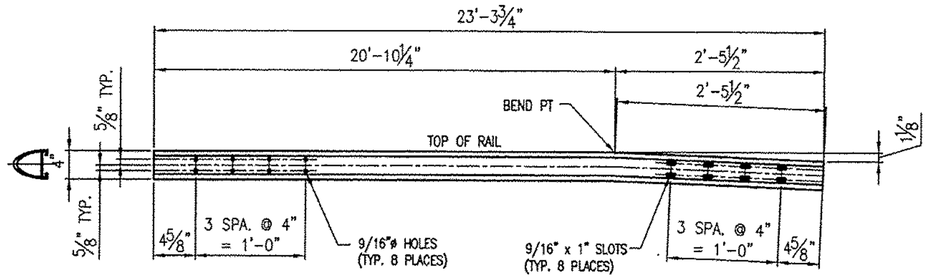

REAR ELEVATION
ONE REQ'D ~ COMPOUND BENT MIDDLE RAIL 'MA11'
(23'-3 3/4" LGTH ALONG LONGEST EDGE)

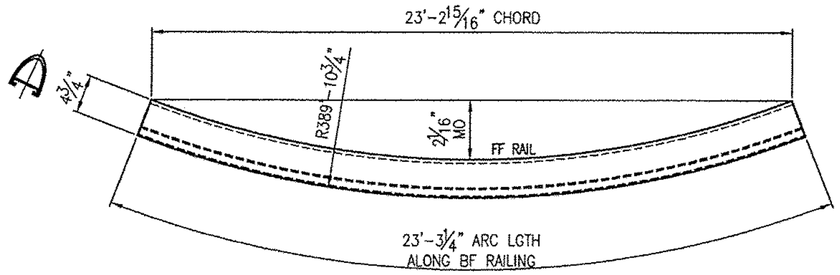

PLAN VIEW

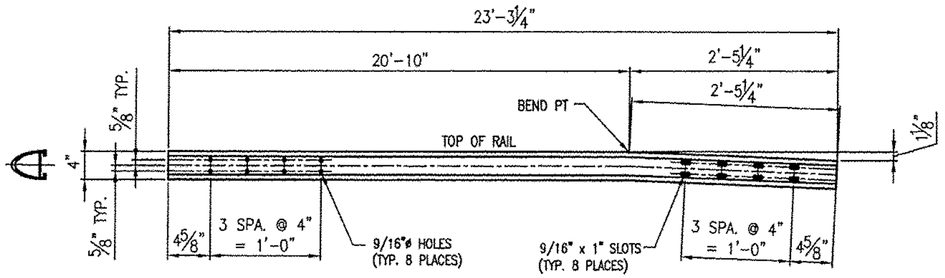

REAR ELEVATION
ONE REQ'D ~ COMPOUND BENT BOTTOM RAIL 'BA11'
(23'-3 1/4" LGTH ALONG LONGEST EDGE)

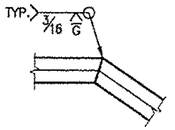

TYPICAL WELD DETAIL
(OPTIONAL IF REQ'D.)

RECEIVED
CK'D BY WBP OK'D BY SSS
OCT 24 2011
RESUBMIT ____ APPROVED ✓
BY ____ DATE 11/1/2011

REV.	DESCRIPTION	BY	DATE

BRIDGE No. 15
PROJECT No. BRF 022-1 (14) ITEM No: 525.23

LBFoster
Fabricated Bridge Products

L.B. FOSTER COMPANY
1016 GREENTREE RD.
PITTSBURGH, PA 15220

FOR: F. R. LAFAYETTE, INC.
VERMONT AGENCY OF TRANSPORTATION
TOWN OF BETHEL, WINDSOR COUNTY, VT
3-LINE ALUMINUM BRIDGE RAIL FOR VT ROUTE 7
(MINOR ARTERIAL)(SIDEWALK) ~ RAIL DETAILS

MADE CMS DATE 09/22/11 JOB NO. AR0700
CHECK Dd DATE 10/12/11 DRAWING LB10
REV. NO.

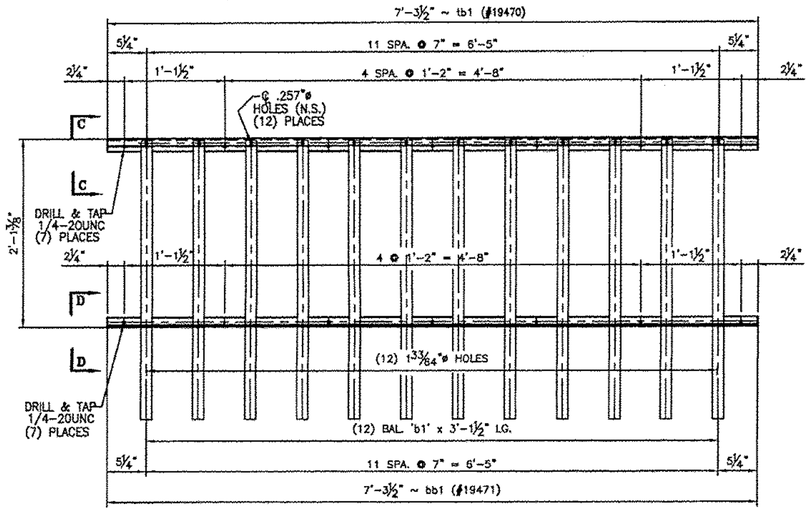

24 REQ'D. ~ BALUSTER PANEL ASSEMBLY 'BP1'
(REAR ELEVATION VIEW)

PLAN VIEW

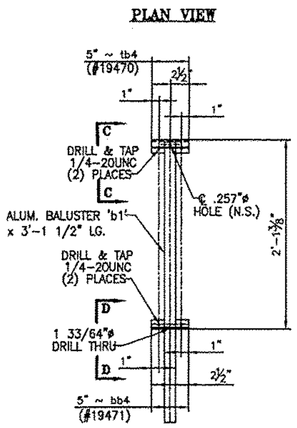

IND. BALUSTER PANEL ASSEMBLY 'BP4'
195 REQ'D.
(REAR ELEVATION VIEW)

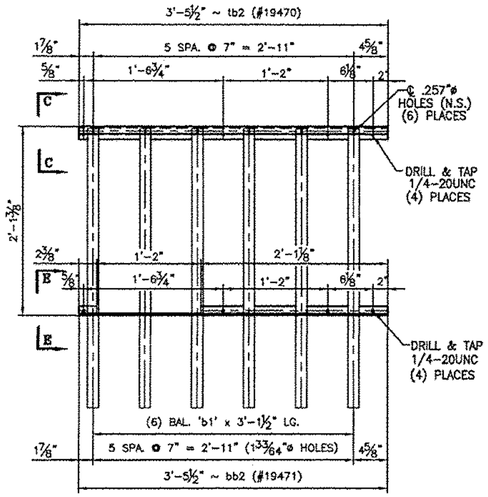

BALUSTER PANEL ASSEMBLY 'BP2'
ONE REQ'D.
(REAR ELEVATION VIEW)

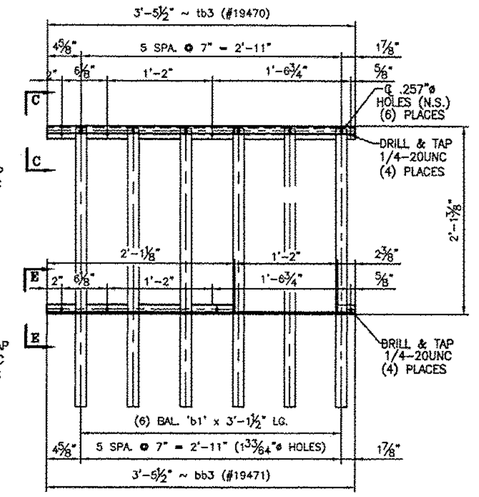

BALUSTER PANEL ASSEMBLY 'BP3'
ONE REQ'D.
(REAR ELEVATION VIEW)

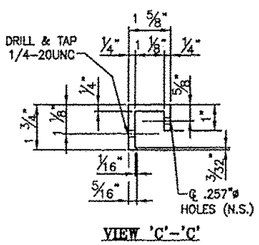

VIEW 'C'–'C'

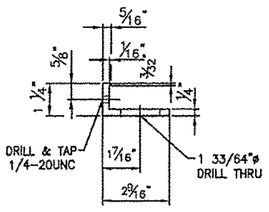

VIEW 'D'–'D'

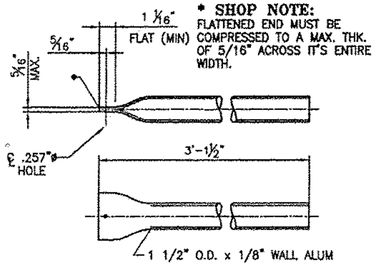

* SHOP NOTE:
FLATTENED END MUST BE COMPRESSED TO A MAX. THK. OF 5/16" ACROSS IT'S ENTIRE WIDTH.

495 ~ REQ'D BALUSTERS 'b1'
#19451

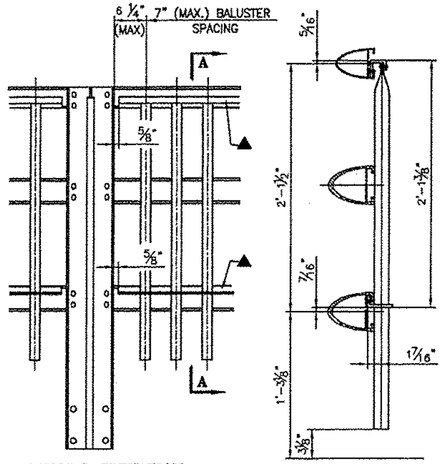

TYPICAL ELEVATION
▲ 1/4"-20UNC S.S. SOCKET SET SCREW x 1/2" - 'SS1' (#22079) EVERY OTHER SPACE BETWEEN BALUSTERS IF POSSIBLE

SECTION A–A

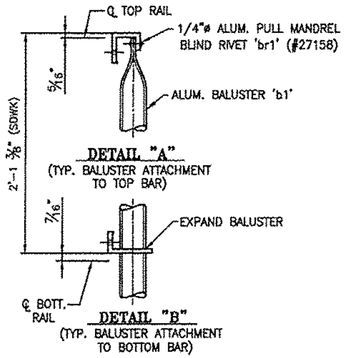

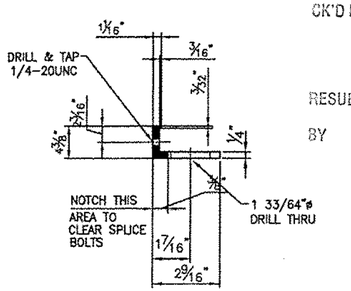

VIEW 'E'–'E'

RECEIVED
CK'D BY WSP OK'D BY SBS
OCT 24 2011
RESUBMIT ____ APPROVED ✓
BY ____ DATE 10/1/2011

BRIDGE No. 15
PROJECT No. BRF 022-1 (14) ITEM No: 525.23

LBFoster Fabricated Bridge Products
L.B. FOSTER COMPANY
1016 GREENTREE RD.
PITTSBURGH, PA 15220

FOR: F. R. LAFAYETTE, INC.
VERMONT AGENCY OF TRANSPORTATION
TOWN OF BETHEL, WINDSOR COUNTY, VT
3-LINE ALUMINUM BRIDGE RAIL FOR VT ROUTE 7 (MINOR ARTERIAL)(SIDEWALK) - BALUSTER PANEL DETAILS

REV.	DESCRIPTION	BY	DATE

MADE CMS DATE 09/16/11 JOB NO. AR0700
CHECK Dd DATE 10/12/11 DRAWING LB11
REV. NO.

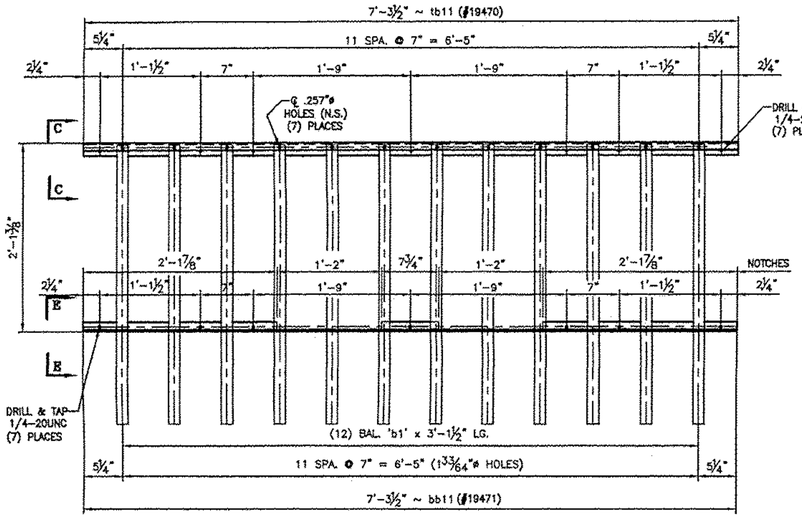

7 REQ'D. ~ BALUSTER PANEL ASSEMBLY 'BP11'
(REAR ELEVATION VIEW)

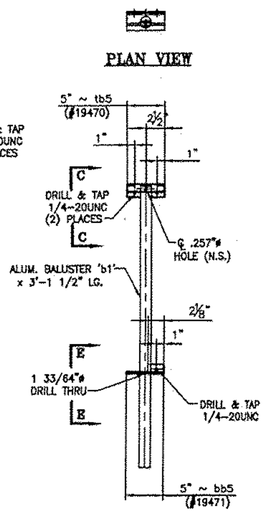

IND. BALUSTER 'BP5'
5 REQ'D.
(REAR ELEVATION VIEW)

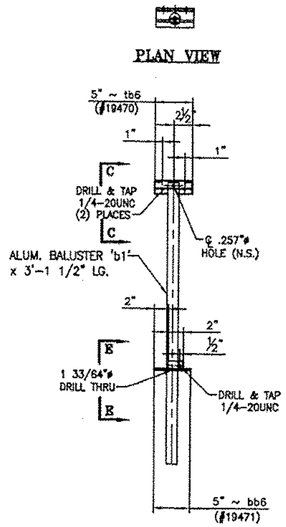

IND. BALUSTER 'BP6'
4 REQ'D.
(REAR ELEVATION VIEW)

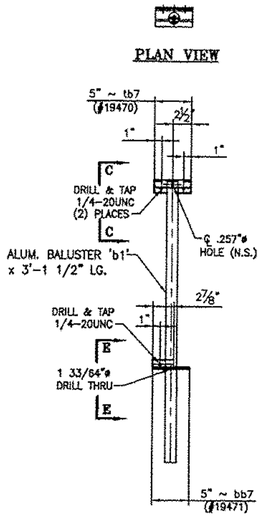

IND. BALUSTER 'BP7'
4 REQ'D.
(REAR ELEVATION VIEW)

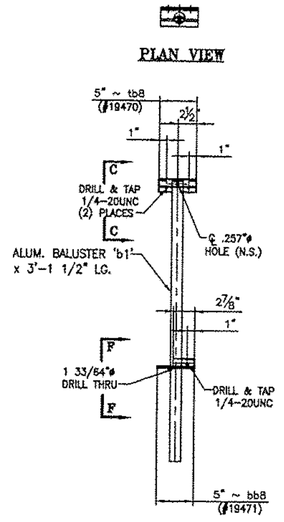

IND. BALUSTER 'BP8'
4 REQ'D.
(REAR ELEVATION VIEW)

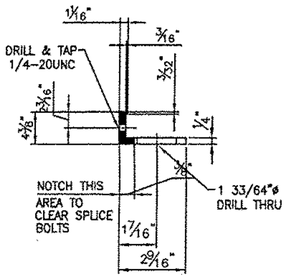

VIEW 'E'-'E'

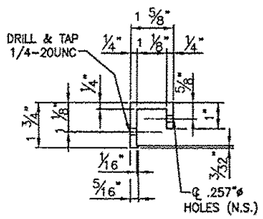

VIEW 'C'-'C'
(NO NOTCHING REQ'D)

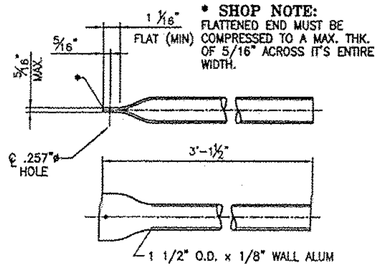

112 ~ REQ'D BALUSTERS 'b1'
#19451

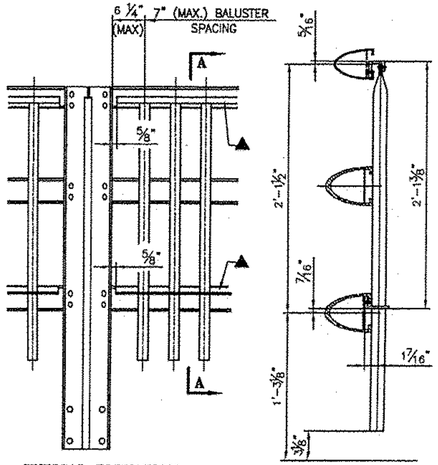

TYPICAL ELEVATION
▲ 1/4"-20UNC S.S. SOCKET SET SCREW x 1/2" ~ 'SS1' (#22079) EVERY OTHER SPACE BETWEEN BALUSTERS IF POSSIBLE

SECTION
A-A

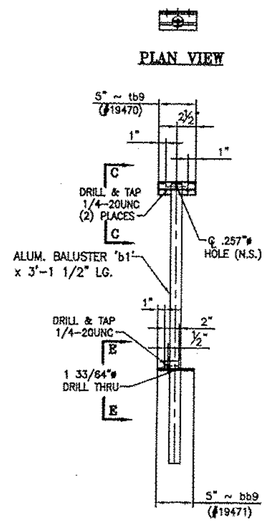

IND. BALUSTER 'BP9'
5 REQ'D.
(REAR ELEVATION VIEW)

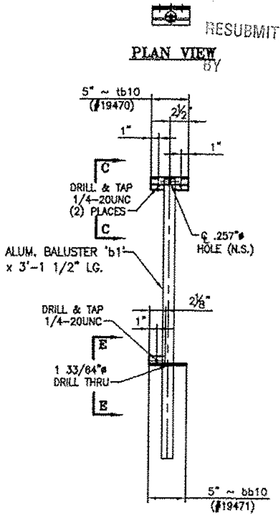

IND. BALUSTER 'BP10'
7 REQ'D.
(REAR ELEVATION VIEW)

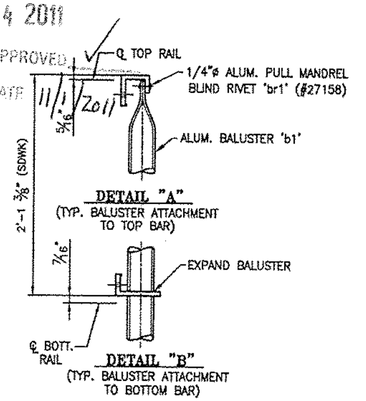

RECEIVED
DR'D BY WBL CK'D BY SSS
OCT 24 2011
RESUBMIT APPROVED
BY
DATE 11/1/2011

REV.	DESCRIPTION	BY	DATE

BRIDGE No. 15
PROJECT No. BRF 022-1 (14) ITEM No: 525.23

LBFoster Fabricated Bridge Products
L.B. FOSTER COMPANY
1016 GREENTREE RD.
PITTSBURGH, PA 15220

FOR: F. R. LAFAYETTE, INC.
VERMONT AGENCY OF TRANSPORTATION
TOWN OF BETHEL, WINDSOR COUNTY, VT
3-LINE ALUMINUM BRIDGE RAIL FOR VT ROUTE 7
(MINOR ARTERIAL)(SIDEWALK) - BALUSTER PANEL DETAILS

MADE CMS DATE 09/16/11 JOB NO. AR0700
CHECK Dd DATE 10/12/11 DRAWING LB12
REV. NO.

SS = SHORT SLOTTED SIDE
LS = LONG SLOTTED SIDE

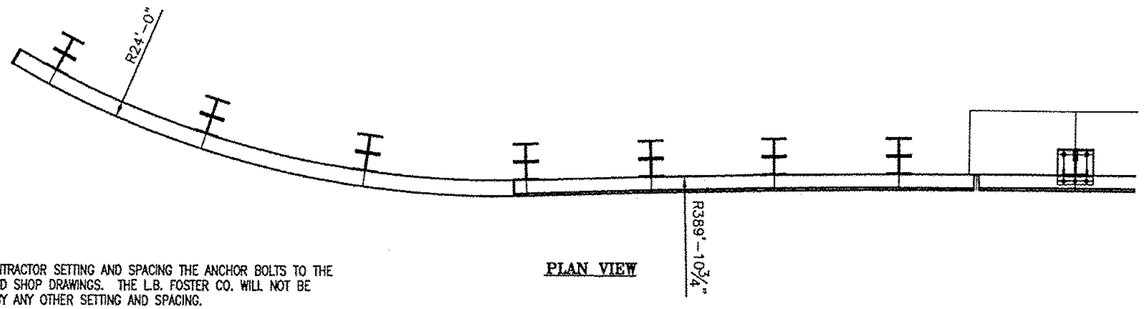

PLAN VIEW

NOTE:
- THIS CONTRACT IS BASED UPON THE CONTRACTOR SETTING AND SPACING THE ANCHOR BOLTS TO THE MEASUREMENTS SHOWN ON THE APPROVED SHOP DRAWINGS. THE L.B. FOSTER CO. WILL NOT BE RESPONSIBLE FOR WORK NECESSITATED BY ANY OTHER SETTING AND SPACING.
- THIS DRAWING IS NOT TO SCALE.
- LENGTH OF APPROACH RAILING ON THIS SHEET IS 25 LF PAY LENGTH.
- POST SPACING IS MEASURED ALONG FF OF RAILING.
- SPLICE GAP AT SLEEVE = 1 1/2" TYP.
- ✳ RAIL LENGTHS DO NOT INCLUDE GAPS.
- COMPENSATION FOR VERTICAL CURVE IS INCLUDED IN RAIL LGTHS.

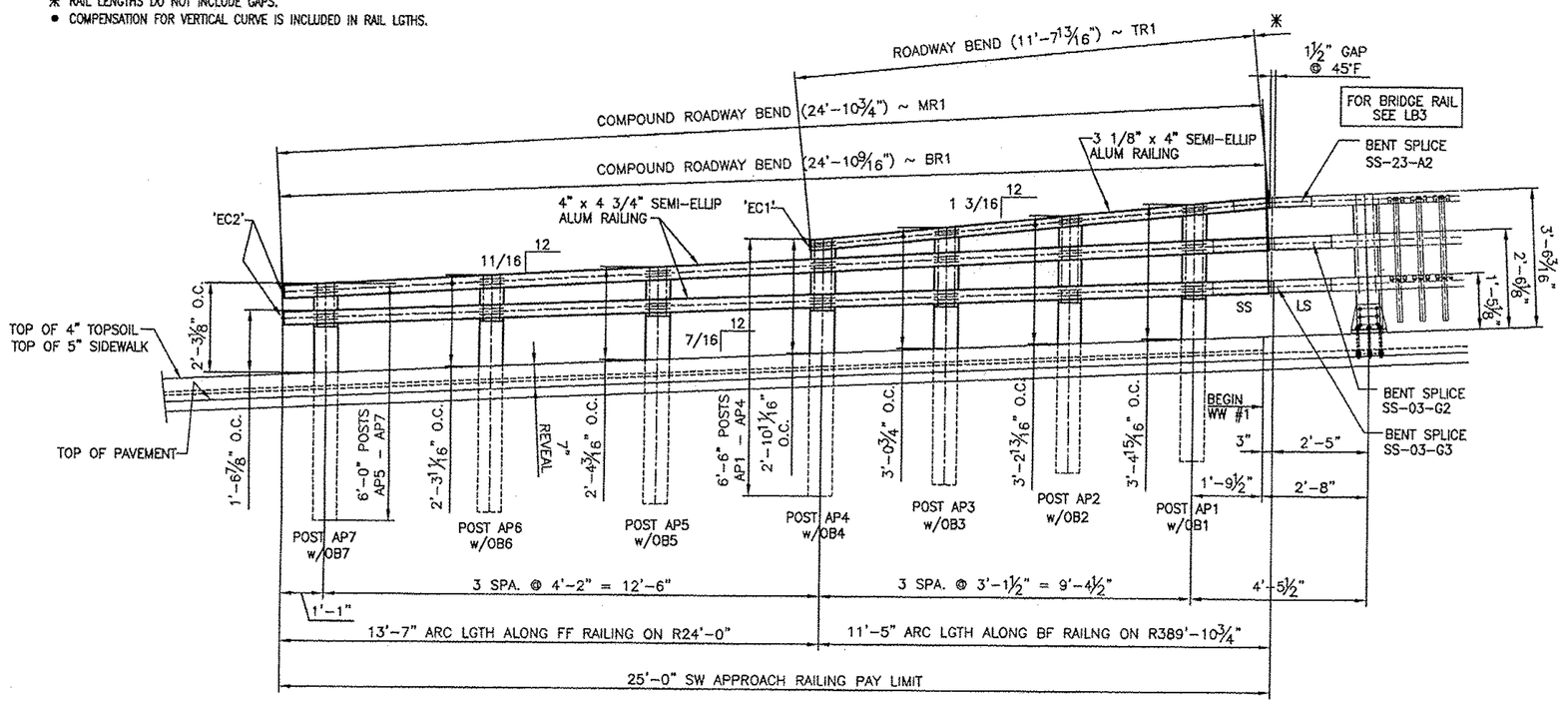

INSIDE ELEVATION ~ SW APPROACH ~ SIDEWALK SIDE

GENERAL NOTES

ALL MATERIAL AND WORKMANSHIP SHALL BE IN ACCORDANCE WITH VERMONT AGENCY OF TRANSPORTATION STANDARD SPECIFICATIONS FOR CONSTRUCTION DATED 2006 AND ITS LATEST REVISIONS.

DESCRIPTION	ASTM	ALLOY/GR.	REMARKS
RAILS, POSTS, SPLICES, CLAMP BARS, PINS,	B221	6061-T6 OR 6351-T5	MIN. YIELD STRENGTH Fy = 35,000 psi.
STAINLESS STEEL BOLTS	A193	GRADE B8	
STAINLESS STEEL WASHERS	A240	GRADE 8	
END CAPS	B26		356-F
BACKUP PLATE	A36		GALV. A123 AFTER FAB.
ALUMINUM WASHERS	B209	2024-T4/T3	2024-T4/T3
PREFORMED PADS			SECTION 731.01 OR 731.02
ELECTRODES FOR WELDING		AWS A5.10 ER5356	

POSTS TO BE NORMAL TO GRADE AND RAILS SHALL BE PARALLEL TO GRADE.
RAILS TO BE ATTACHED TO A MINIMUM OF THREE POSTS WHEN POSSIBLE.

ALL RAILS AND WELDS TO BE FREE FROM ALL BURRS AND ROUGH EDGES. ENDS OF TUBE SECTIONS SHALL BE SAWED OR MILLED. GRIND ALL CUT EDGES SMOOTH.

ALL THREADS TO BE UNC CLASS 2A/2B.

ALL EXTRUSION TOLERANCES NOT SHOWN SHALL BE IN ACCORDANCE WITH ASTM B221.

IF CUT THREADS ARE USED, BOLT DIAMETER SHALL NOT BE LESS THAN NOMINAL DIAMETER. IF ROLLED THREADS ARE USED, BOLT DIAMETER SHALL NOT BE LESS THAN THE ROOT DIAMETER OF THREADS

THE SPLICE BAR SHALL BE ATTACHED TO THE RAIL ELEMENT AS FOLLOWS:
THE RAIL SPLICE AT THE BRIDGE EXPANSION JOINT SHALL BE FASTENED ON BOTH SIDES OF THE RAIL SPLICE USING THE FULLY THREADED WASHER FACED BOLTS, TIGHTENED SECURELY TO THE END OF THREADS, AND LEAVING A 1/8" GAP, THIS ALLOWS EXPANSION ON BOTH SIDES OF THE JOINT.

ALL NUTS SHALL COMPLY WITH AMERICAN HEXAGON ANSI SPECIFICATIONS B18.2

RECEIVED
CK'D BY WBP CK'D BY SSS
OCT 24 2011
RESUBMIT ____ APPROVED ✓
BY ____ DATE 11/1/2011

REV.	DESCRIPTION	BY	DATE

BRIDGE No. 15
PROJECT No. BRF 022-1 (14) ITEM No: 621.74

LBFoster Fabricated Bridge Products
L.B. FOSTER COMPANY
1016 GREENTREE RD.
PITTSBURGH, PA 15220

FOR: F. R. LAFAYETTE, INC.
VERMONT AGENCY OF TRANSPORTATION
TOWN OF BETHEL, WINDSOR COUNTY, VT
3-LINE ALUMINUM APPROACH RAIL FOR VT ROUTE 7
(MINOR ARTERIAL) - SIDEWALK SIDE ELEVATIONS & GENERAL NOTES

MADE CMS DATE 09/19/11 JOB NO. AR0700
CHECK Dd DATE 10/14/11 DRAWING LB13
REV. NO.

SS = SHORT SLOTTED SIDE
LS = LONG SLOTTED SIDE

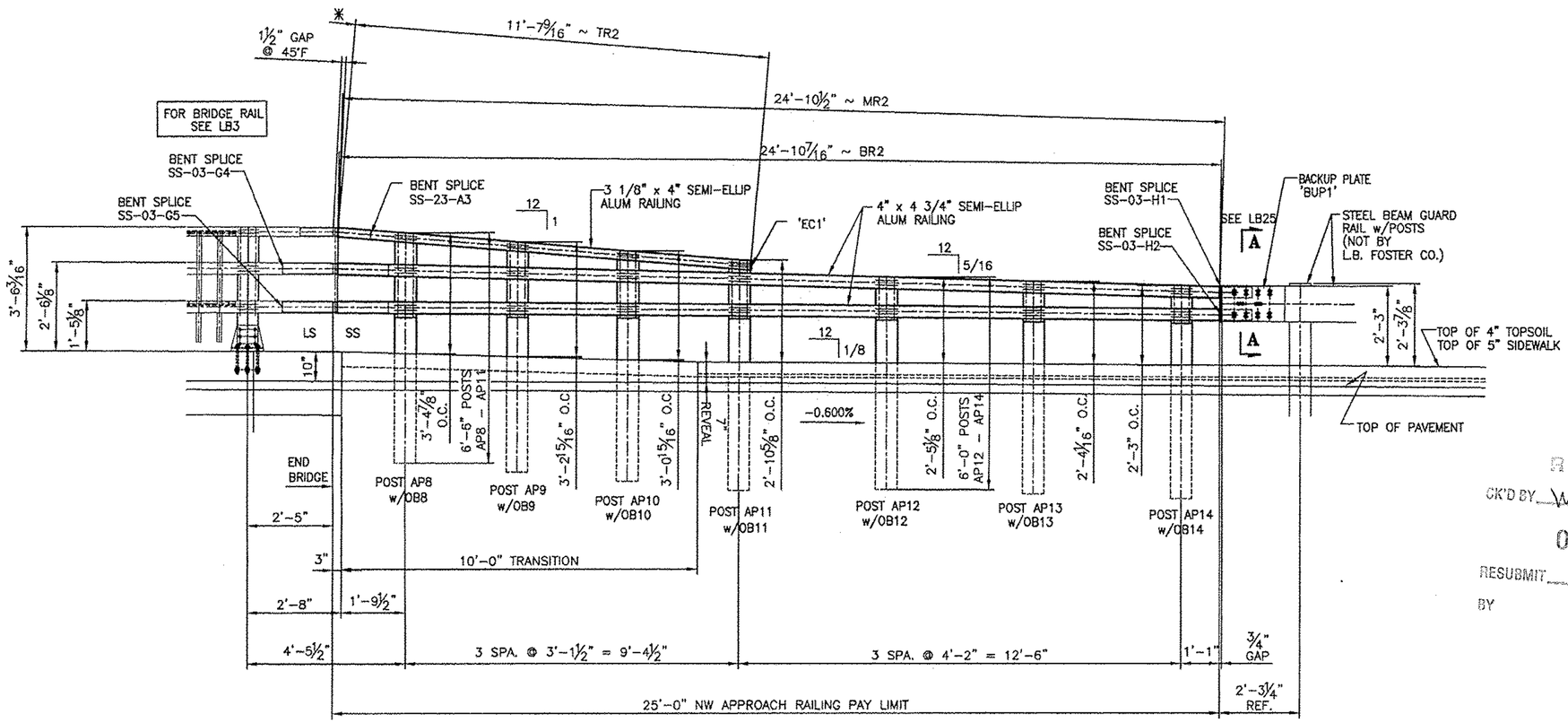

INSIDE ELEVATION ~ NW APPROACH ~ SIDEWALK SIDE

NOTE:
- THIS CONTRACT IS BASED UPON THE CONTRACTOR SETTING AND SPACING THE ANCHOR BOLTS TO THE MEASUREMENTS SHOWN ON THE APPROVED SHOP DRAWINGS. THE L.B. FOSTER CO. WILL NOT BE RESPONSIBLE FOR WORK NECESSITATED BY ANY OTHER SETTING AND SPACING.
- THIS DRAWING IS NOT TO SCALE.
- LENGTH OF APPROACH RAILING ON THIS SHEET IS 25 LF PAY LENGTH.
- POST SPACING IS MEASURED ALONG FF OF RAILING.
- SPLICE GAP AT SLEEVE = 1 1/2" TYP.
- ✳ RAIL LENGTHS DO NOT INCLUDE GAPS.
- COMPENSATION FOR VERTICAL CURVE IS INCLUDED IN RAIL LGTHS.

RECEIVED
CK'D BY WGP OK'D BY SSS
OCT 24 2011
RESUBMIT ____ APPROVED ✓
BY ____ DATE 11/1/2011

REV.	DESCRIPTION	BY	DATE

BRIDGE No. 15
PROJECT No. BRF 022-1 (14) ITEM No: 621.74

LBFoster
Fabricated Bridge Products

L.B. FOSTER COMPANY
1016 GREENTREE RD.
PITTSBURGH, PA 15220

FOR: F. R. LAFAYETTE, INC.
VERMONT AGENCY OF TRANSPORTATION
TOWN OF BETHEL, WINDSOR COUNTY, VT
3-LINE ALUMINUM APPROACH RAIL FOR VT ROUTE 7
(MINOR ARTERIAL) -- SIDEWALK SIDE ELEVATION

MADE CMS DATE 09/19/11 JOB NO. AR0700
CHECK Dd DATE 10/13/11 DRAWING LB14
REV. NO. ____

SS = SHORT SLOTTED SIDE
LS = LONG SLOTTED SIDE

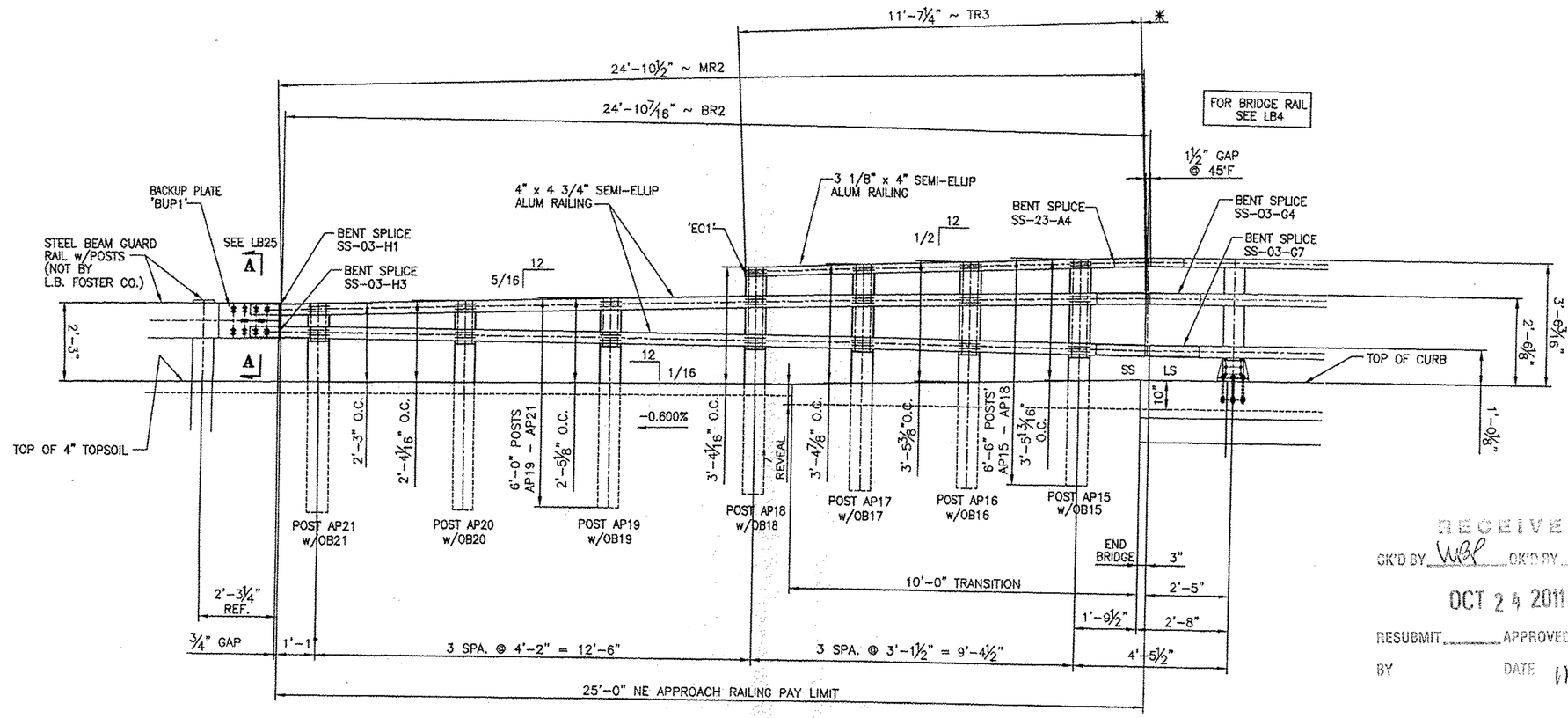

INSIDE ELEVATION ~ NE APPROACH ~ CURBSIDE

NOTE:
- THIS DRAWING IS NOT TO SCALE.
- LENGTH OF APPROACH RAILING ON THIS SHEET IS 25 LF PAY LENGTH.
- POST SPACING IS MEASURED ALONG FF OF RAILING.
- SPLICE GAP AT SLEEVE = 1 1/2" TYP.
- ✳ RAIL LENGTHS DO NOT INCLUDE GAPS.
- COMPENSATION FOR VERTICAL CURVE IS INCLUDED IN RAIL LGTHS.

RECEIVED
OK'D BY WBP OK'D BY SSS
OCT 24 2011
RESUBMIT ____ APPROVED ✓
BY ____ DATE 11/1/2011

REV.	DESCRIPTION	BY	DATE

BRIDGE No. 15
PROJECT No. BRF 022-1 (14)
ITEM No: 621.74

LBFoster
Fabricated Bridge Products

L.B. FOSTER COMPANY
1016 GREENTREE RD.
PITTSBURGH, PA 15220

FOR: F. R. LAFAYETTE, INC.
VERMONT AGENCY OF TRANSPORTATION
TOWN OF BETHEL, WINDSOR COUNTY, VT
3-LINE ALUMINUM APPROACH RAIL FOR VT ROUTE 7
(MINOR ARTERIAL) – CURB SIDE ELEVATION

MADE CMS DATE 09/19/11 JOB NO. AR0700
CHECK Dd DATE 10/14/11 DRAWING LB15
REV. NO.

SS = SHORT SLOTTED SIDE
LS = LONG SLOTTED SIDE

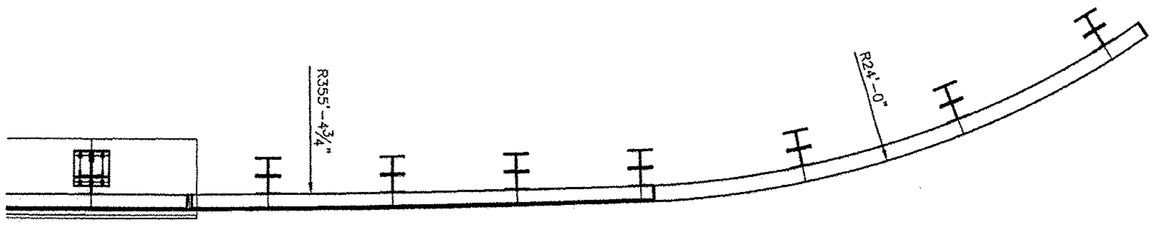

PLAN VIEW

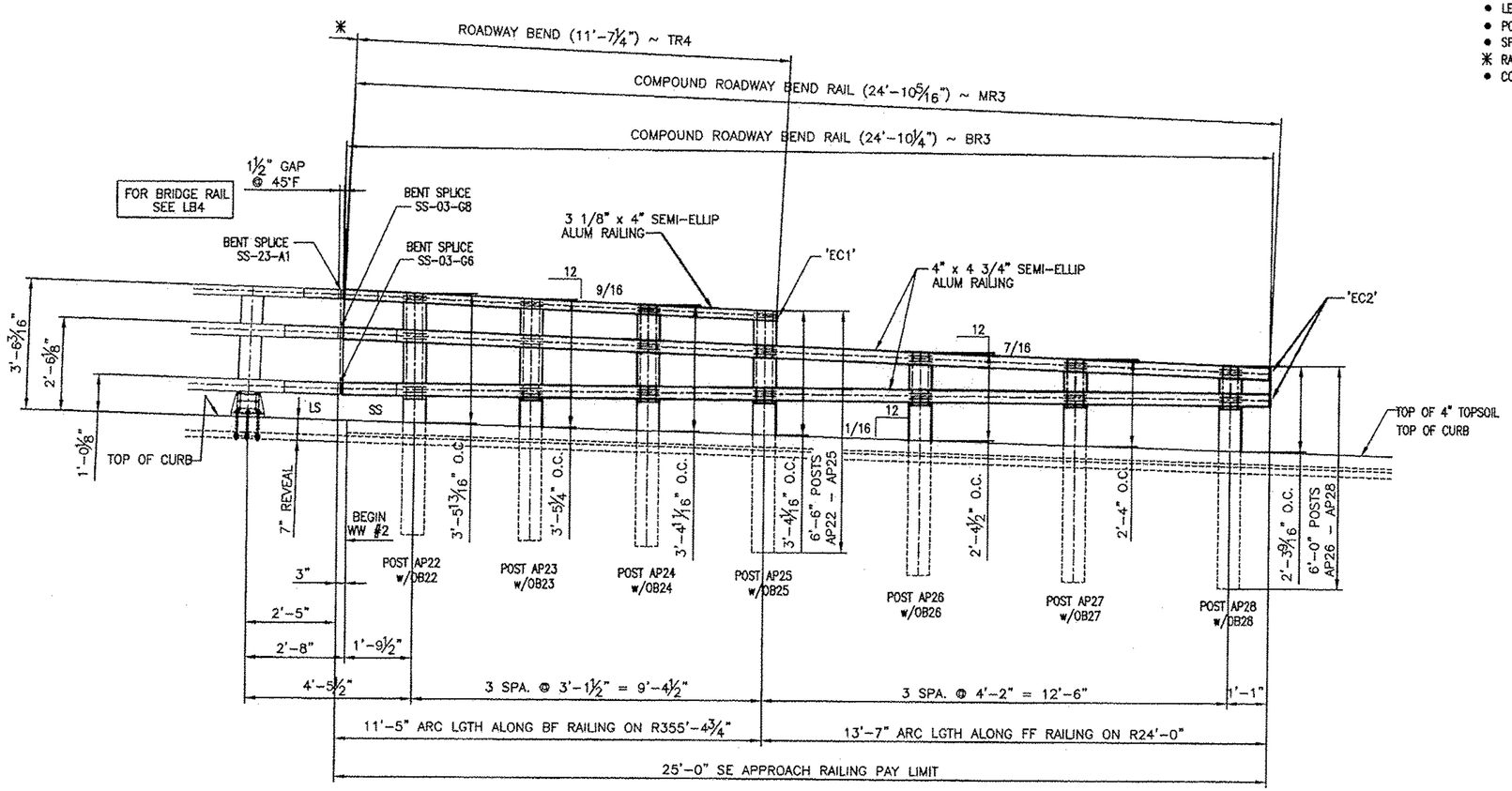

INSIDE ELEVATION ~ SE APPROACH ~ CURBSIDE

NOTE:
- THIS DRAWING IS NOT TO SCALE.
- LENGTH OF APPROACH RAILING ON THIS SHEET IS 25 LF PAY LENGTH.
- POST SPACING IS MEASURED ALONG FF OF RAILING.
- SPLICE GAP AT SLEEVE = 1 1/2" TYP.
- ✳ RAIL LENGTHS DO NOT INCLUDE GAPS.
- COMPENSATION FOR VERTICAL CURVE IS INCLUDED IN RAIL LGTHS.

RECEIVED
CK'D BY WBP CK'D BY SSS
OCT 24 2011
RESUBMIT ____ APPROVED ✓
BY DATE 11/1/2011

REV.	DESCRIPTION	BY	DATE

BRIDGE No. 15
PROJECT No. BRF 022-1 (14) ITEM No: 621.74

LBFoster Fabricated Bridge Products
L.B. FOSTER COMPANY
1016 GREENTREE RD.
PITTSBURGH, PA 15220

FOR: F. R. LAFAYETTE, INC.
VERMONT AGENCY OF TRANSPORTATION
TOWN OF BETHEL, WINDSOR COUNTY, VT
3-LINE ALUMINUM APPROACH RAIL FOR VT ROUTE 7
(MINOR ARTERIAL) — CURB SIDE ELEVATION

MADE CMS DATE 09/19/11 JOB NO. AR0700
CHECK Dd DATE 10/14/11 DRAWING LB16
REV. NO.

POST DETAIL CHART SW SIDEWALK APPROACH

		OFFSET BLOCK MTG. DIMENSIONS						BEV
POST No.	QTY.	A	B	C	D	E	F (0.C.)	X
AP1	1	1 15/16"	1'-1 3/8"	2'-2"	3/4"	1 3/16"	3'-4 15/16"	1 3/16
AP2	1	1 15/16"	11 11/16"	1'-11 11/16"	3/4"	1 3/16"	3'-2 13/16"	1 3/16
AP3	1	1 15/16"	10"	1'-9 3/8"	3/4"	1 3/16"	3'-0 3/4"	1 3/16
AP4	1	1 15/16"	8 5/16"	1'-7 1/16"	3/4"	1 3/16"	2'-10 11/16"	1 3/16
AP5	1	2 3/16"	1'-0 1/8"		3/8"	1 13/16"	2'-4 3/16"	11/16
AP6	1	2 3/16"	11 5/16"		3/8"	1 13/16"	2'-3 11/16"	11/16
AP7	1	2 3/16"	10 7/16"		3/8"	1 13/16"	2'-3 1/8"	11/16

POST DETAIL CHART FOR NE CURB APPROACH

		OFFSET BLOCK MTG. DIMENSIONS						BEV
POST No.	QTY.	A	B	C	D	E	F (0.C.)	X
AP15	1	1 3/4"	1'-1 13/16"	2'-7"	5/16"	1 3/8"	3'-5 13/16"	1/2
AP16	1	1 3/4"	1'-1 1/4"	2'-5 1/8"	5/16"	1 3/8"	3'-5 3/8"	1/2
AP17	1	1 3/4"	1'-0 5/8"	2'-3 3/16"	5/16"	1 3/8"	3'-4 7/8"	1/2
AP18	1	1 3/4"	1'-0"	2'-1 15/16"	5/16"	1 3/8"	3'-4 1/16"	1/2
AP19	1	2 1/8"	1'-1 5/8"		3/16"	1 7/8"	2'-5 1/8"	5/16
AP20	1	2 1/8"	11 15/16"		3/16"	1 7/8"	2'-4 1/16"	5/16
AP21	1	2 1/8"	10 3/16"		3/16"	1 7/8"	2'-3"	5/16

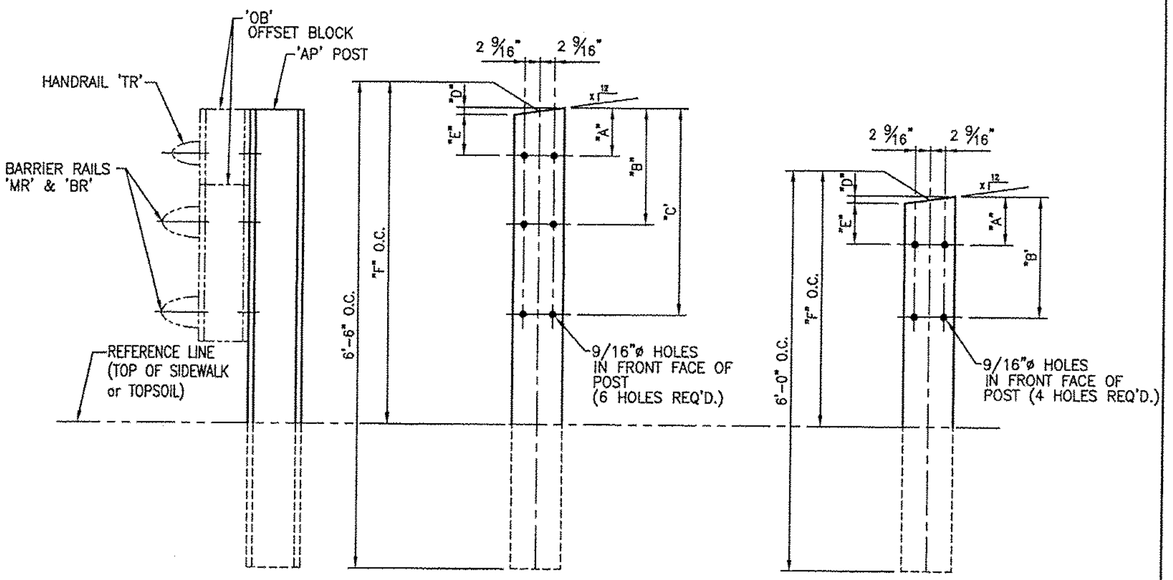

FRT VIEW

AP1 – AP4
AP15 – AP18

FRT VIEW

AP5 – AP7
AP19 – AP21

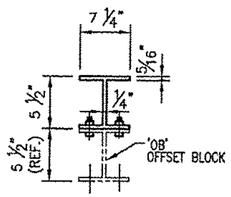

TYP. SECT. POST & OFFSET BLOCK

RECEIVED
OK'D BY MBP OK'D BY SSS
OCT 24 2011
RESUBMIT ____ APPROVED ✓
BY DATE 11/1/2011

BRIDGE No. 15
PROJECT No. BRF 022-1 (14) ITEM No: 621.74

LBFoster Fabricated Bridge Products
L.B. FOSTER COMPANY
1016 GREENTREE RD.
PITTSBURGH, PA 15220

FOR: F. R. LAFAYETTE, INC.
VERMONT AGENCY OF TRANSPORTATION
TOWN OF BETHEL, WINDSOR COUNTY, VT
3-LINE ALUMINUM APPROACH RAIL FOR VT ROUTE 7
(MINOR ARTERIAL) – APPROACH POST DETAILS

MADE CMS DATE 09/15/11 JOB NO. AR0700
CHECK Dd DATE 10/14/11 DRAWING LB17
REV. NO.

REV.	DESCRIPTION	BY	DATE

POST DETAIL CHART FOR NW SIDEWALK APPROACH

		OFFSET BLOCK MTG. DIMENSIONS						BEV
POST No.	QTY.	A	B	C	D	E	F (0.C.)	X
AP8	1	1 7/8"	1'-1 1/16"	2'-1 5/8"	5/8"	1 1/4"	3'-4 7/8"	1
AP9	1	1 7/8"	10 15/16"	1'-10 13/16"	5/8"	1 1/4"	3'-2 15/16"	1
AP10	1	1 7/8"	8 13/16"	1'-8 1/16"	5/8"	1 1/4"	3'-0 15/16"	1
AP11	1	1 7/8"	6 3/4"	1'-5 5/16"	5/8"	1 1/4"	2'-10 5/8"	1
AP12	1	2 1/8"	11 3/4"		3/16"	1 7/8"	2'-5 1/8"	5/16
AP13	1	2 1/8"	10 7/8"		3/16"	1 7/8"	2'-4 1/16"	5/16
AP14	1	2 1/8"	9 15/16"		3/16"	1 7/8"	2'-3"	5/16

POST DETAIL CHART FOR SE CURB APPROACH

		OFFSET BLOCK MTG. DIMENSIONS						BEV
POST No.	QTY.	A	B	C	D	E	F (0.C.)	X
AP22	1	1 3/4"	1'-2 1/16"	2'-7 5/16"	5/16"	1 3/8"	3'-5 13/16"	9/16
AP23	1	1 3/4"	1'-1 13/16"	2'-5 7/8"	5/16"	1 3/8"	3'-5 1/4"	9/16
AP24	1	1 3/4"	1'-1 9/16"	2'-4 7/16"	5/16"	1 3/8"	3'-4 11/16"	9/16
AP25	1	1 3/4"	1'-1 5/16"	2'-3"	5/16"	1 3/8"	3'-4 1/16"	9/16
AP26	1	2 1/8"	1'-2 1/4"		1/4"	1 7/8"	2'-4 1/2"	7/16
AP27	1	2 1/8"	1'-0 11/16"		1/4"	1 7/8"	2'-4"	7/16
AP28	1	2 1/8"	11 1/16"		1/4"	1 7/8"	2'-3 9/16"	7/16

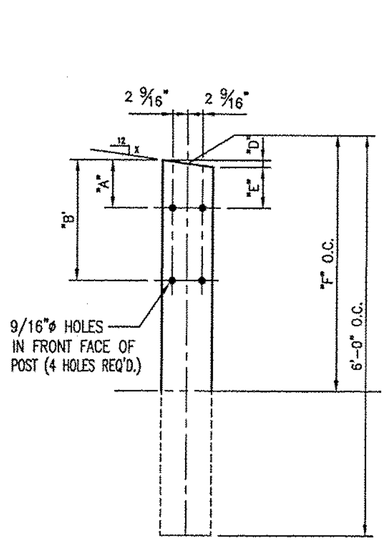

FRT ELEV VIEW
AP12 – AP14
AP26 – AP28

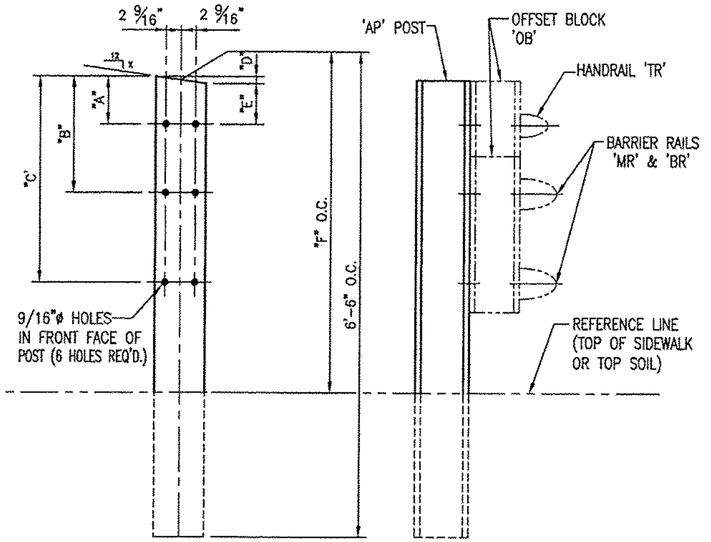

FRT ELEV VIEW
AP8 – AP11
AP22 – AP25

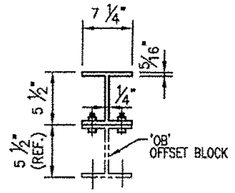

TYP. SECT. POST & OFFSET BLOCK

RECEIVED
CK'D BY WBL OK'D BY SSS
OCT 24 2011
RESUBMIT ____ APPROVED ✓
BY ____ DATE 11/1/2011

BRIDGE No. 15
PROJECT No. BRF 022-1 (14)
ITEM No: 621.74

LBFoster
Fabricated Bridge Products

L.B. FOSTER COMPANY
1016 GREENTREE RD.
PITTSBURGH, PA 15220

FOR: F. R. LAFAYETTE, INC.
VERMONT AGENCY OF TRANSPORTATION
TOWN OF BETHEL, WINDSOR COUNTY, VT
3-LINE ALUMINUM APPROACH RAIL FOR VT ROUTE 7
(MINOR ARTERIAL) – APPROACH POST DETAILS

MADE CMS DATE 09/15/11 JOB NO. AR0700
CHECK Dd DATE 10/14/11 DRAWING LB18
REV. NO.

REV.	DESCRIPTION	BY	DATE

RECEIVED
OK'D BY WBP OK'D BY SSS

OCT 24 2011
RESUBMIT ____ APPROVED ✓
BY ____ DATE 11/1/2011

OFFSET BLOCK DETAIL CHART FOR NE (CURB) & SW (SDWK) APPROACHES

POST No.	QTY.	OFFSET BLOCK MTG. DIMENSIONS A	B	C	D	E	F (0.C.)	LGTH	BEV X
AP1	1	1 15/16"	1'-1 3/8"	2'-2"	3/4"	1 3/16"	2'-4 5/8"	2'-5"	1 3/16
AP2	1	1 15/16"	11 11/16"	1'-11 11/16"	3/4"	1 3/16"	2'-2 5/16"	2'-2 11/16"	1 3/16
AP3	1	1 15/16"	10"	1'-9 3/8"	3/4"	1 3/16"	2'-0"	2'-0 3/8"	1 3/16
AP4	1	1 15/16"	8 5/16"	1'-7 1/16"	3/4"	1 3/16"	1'-9 11/16"	1'-10 1/16"	1 3/16
AP15	1	1 3/4"	1'-1 13/16"	2'-7"	5/16"	1 3/8"	2'-9 7/8"	2'-10"	1/2
AP16	1	1 3/4"	1'-1 1/4"	2'-5 1/8"	5/16"	1 3/8"	2'-7 15/16"	2'-8 1/8"	1/2
AP17	1	1 3/4"	1'-0 5/8"	2'-3 3/16"	5/16"	1 3/8"	2'-6 1/16"	2'-6 3/16"	1/2
AP18	1	1 3/4"	1'-0"	2'-1 15/16"	5/16"	1 3/8"	2'-4 1/8"	2'-4 5/16"	1/2

OFFSET BLOCK ~ RAIL MTG. DIMENSIONS

POST No.	OFFSET BLOCK	H	J	K	L	M	N
AP1	OB1	1 1/16"	1'-0 3/8"	2'-1 1/16"	13/16"	11 15/16"	2'-0 1/2"
AP2	OB2	1 1/16"	10 11/16"	1'-10 3/4"	13/16"	10 1/4"	1'-10 3/16"
AP3	OB3	1 1/16"	9"	1'-8 7/16"	13/16"	8 9/16"	1'-7 7/8"
AP4	OB4	1 1/16"	7 5/16"	1'-6 1/8"	13/16"	6 7/8"	1'-5 9/16"
AP15	OB15	1"	1'-0 15/16"	2'-6 3/16"	7/8"	1'-0 3/4"	2'-5 13/16"
AP16	OB16	1"	1'-0 5/16"	2'-4 5/16"	7/8"	1'-0 1/8"	2'-3 15/16"
AP17	OB17	1"	11 11/16"	2'-2 3/8"	7/8"	11 9/16"	2'-2 1/16"
AP18	OB18	1"	11 1/8"	2'-0 1/2"	7/8"	10 15/16"	2'-0 1/8"

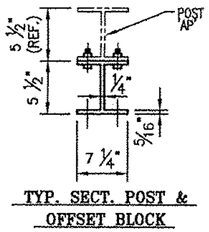

TYP. SECT. POST & OFFSET BLOCK

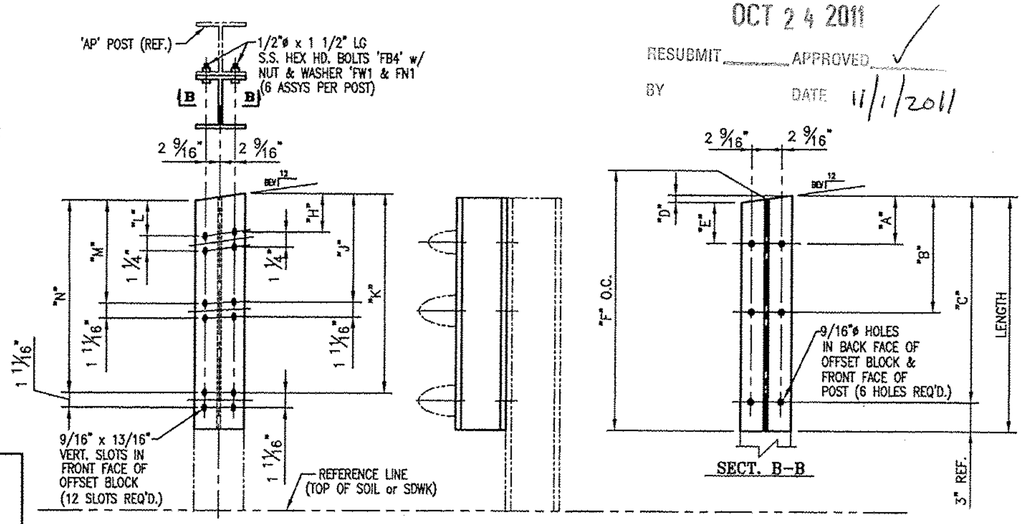

FRT ELEV VIEW ~ OB1-OB4, OB15-OB18

NOTE:
2 CLAMPING BARS CB-01-H (#28596) PER POSTS AP1-AP4, AP15-AP18
4 CLAMPING BARS CB-03-A (#19447) PER POSTS AP1-AP4, AP15-AP18
w/ 1/2"ø-13 UNC S.S. BOLT x 1" LG. 'FB1', 1 1/16" O.D. x 17/32" I.D. x 3/32" THK. ALUM WASHER 'FW1' (#15280 & # 19404) (12 PER POST)

OFFSET BLOCK DETAIL CHART FOR NE (CURB) & SW (SDWK) APPROACHES

POST No.	QTY.	OFFSET BLOCK MTG. DIMENSIONS A	B	LGTH	D	E	F (0.C.)	BEV X
AP5	1	2 3/16"	1'-0 1/8"	1'-3 1/8"	3/8"	1 13/16"	1'-2 15/16"	11/16
AP6	1	2 3/16"	11 5/16"	1'-2 5/16"	3/8"	1 13/16"	1'-2 1/8"	11/16
AP7	1	2 3/16"	10 7/16"	1'-1 7/16"	3/8"	1 13/16"	1'-1 1/4"	11/16
AP19	1	2 1/8"	1'-1 5/8"	1'-4 5/8"	3/16"	1 7/8"	1'-4 9/16"	5/16
AP20	1	2 1/8"	11 15/16"	1'-2 15/16"	3/16"	1 7/8"	1'-2 13/16"	5/16
AP21	1	2 1/8"	10 3/16"	1'-1 3/16"	3/16"	1 7/8"	1'-1 1/16"	5/16

OFFSET BLOCK ~ RAIL MTG. DIMENSIONS

POST No.	OFFSET BLOCK	G	H	J	K
AP5	OB5	1 3/16"	11 3/16"	1 1/8"	11"
AP6	OB6	1 3/16"	10 3/8"	1 1/8"	10 1/8"
AP7	OB7	1 3/16"	9 1/2"	1 1/8"	9 5/16"
AP19	OB19	1 3/16"	1'-0 13/16"	1 1/8"	1'-0 9/16"
AP20	OB20	1 3/16"	11 1/8"	1 1/8"	10 7/8"
AP21	OB21	1 3/16"	9 3/8"	1 1/8"	9 1/8"

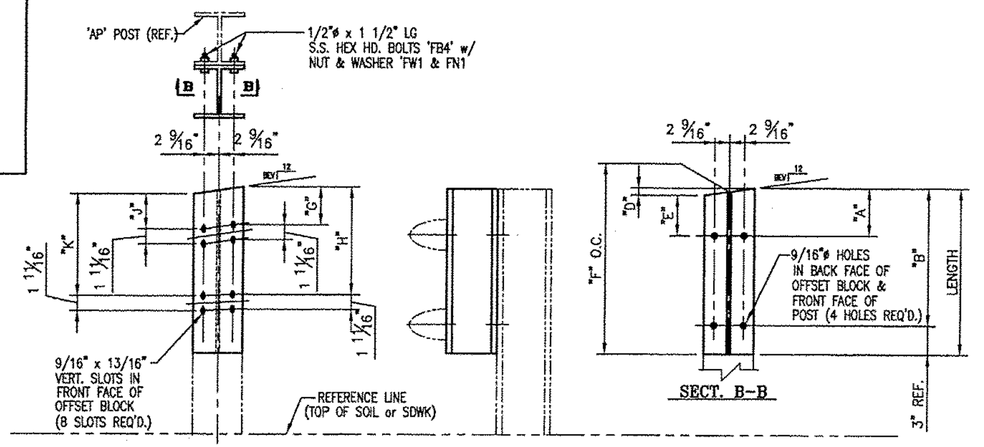

FRT ELEV VIEW ~ OB5-OB7, OB19-OB21

NOTE:
4 CLAMPING BARS CB-03-A (#19447) PER POSTS AP5-AP7, AP19-AP21
w/ 1/2"ø-13 UNC S.S. BOLT x 1" LG. 'FB1', 1 1/16" O.D. x 17/32" I.D. x 3/32" THK. ALUM WASHER 'FW1' (#15280 & # 19404) (8 PER POST)

REV.	DESCRIPTION	BY	DATE

BRIDGE No. 15
PROJECT No. BRF 022-1 (14) ITEM No: 621.74

LBFoster Fabricated Bridge Products
L.B. FOSTER COMPANY
1016 GREENTREE RD.
PITTSBURGH, PA 15220

FOR: F. R. LAFAYETTE, INC.
VERMONT AGENCY OF TRANSPORTATION
TOWN OF BETHEL, WINDSOR COUNTY, VT
3-LINE ALUMINUM APPROACH RAIL FOR VT ROUTE 7 (MINOR ARTERIAL) - APPROACH OFFSET BLOCK DETAILS

MADE CMS DATE 09/15/11 JOB NO. AR0700
CHECK Dd DATE 10/14/11 DRAWING LB19
REV. NO. ____

OFFSET BLOCK DETAIL CHART FOR NW (SDWK) & SE (CURB) APPROACHES

		OFFSET BLOCK MTG. DIMENSIONS							BEV
POST No.	QTY.	A	B	C	D	E	F (0.C.)	LGTH	X
AP8	1	1 7/8"	1'-1 1/16"	2'-1 5/8"	5/8"	1 1/4"	2'-4 5/8"	2'-4 15/16"	1
AP9	1	1 7/8"	10 15/16"	1'-10 13/16"	5/8"	1 1/4"	2'-1 9/16"	2'-1 7/8"	1
AP10	1	1 7/8"	8 13/16"	1'-8 1/16"	5/8"	1 1/4"	1'-10 3/4"	1'-11 1/16"	1
AP11	1	1 7/8"	6 3/4"	1'-5 5/16"	5/8"	1 1/4"	1'-8"	1'-8 5/16"	1
AP22	1	1 3/4"	1'-2 1/16"	2'-7 5/16"	5/16"	1 3/8"	2'-10 3/16"	2'-10 5/16"	9/16
AP23	1	1 3/4"	1'-1 13/16"	2'-5 7/8"	5/16"	1 3/8"	2'-8 3/4"	2'-8 7/8"	9/16
AP24	1	1 3/4"	1'-1 9/16"	2'-4 7/16"	5/16"	1 3/8"	2'-7 5/16"	2'-7 7/16"	9/16
AP25	1	1 3/4"	1'-1 5/16"	2'-3"	5/16"	1 3/8"	2'-5 7/8"	2'-6"	9/16

OFFSET BLOCK ~ RAIL MTG. DIMENSIONS

POST No.	OFFSET BLOCK	H	J	K	L	M	N
AP8	OB8	1"	1'-0 1/8"	2'-0 3/4"	7/8"	11 11/16"	2'-0 3/16"
AP9	OB9	1"	10"	1'-10"	7/8"	9 9/16"	1'-9 7/16"
AP10	OB10	1"	7 15/16"	1'-7 3/16"	7/8"	7 7/16"	1'-6 5/8"
AP11	OB11	1"	5 13/16"	1'-4 7/16"	7/8"	5 3/8"	1'-3 7/8"
AP22	OB22	1"	1'-1 1/8"	2'-6 1/2"	7/8"	1'-1"	2'-6 3/16"
AP23	OB23	1"	1'-0 7/8"	2'-5 1/16"	7/8"	1'-0 3/4"	2'-4 3/4"
AP24	OB24	1"	1'-0 5/8"	2'-3 5/8"	7/8"	1'-0 1/2"	2'-3 5/16"
AP25	OB25	1"	1'-0 3/8"	2'-2 3/16"	7/8"	1'-0 1/4"	2'-1 7/8"

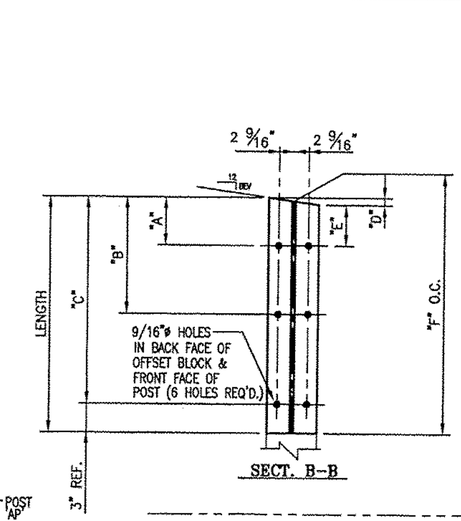

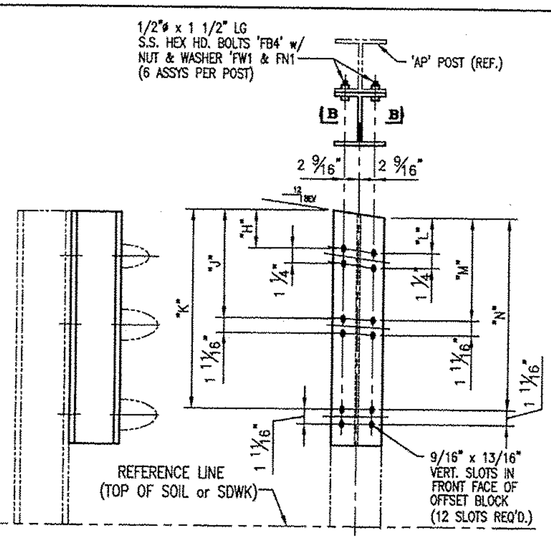

FRT ELEV VIEW ~ OB8-OB11, OB22-OB25

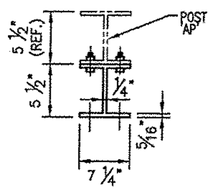

TYP. SECT. POST & OFFSET BLOCK

OFFSET BLOCK DETAIL CHART FOR NW (SDWK) & SE (CURB) APPROACHES

		OFFSET BLOCK MTG. DIMENSIONS						BEV
POST No.	QTY.	A	B	LGTH	D	E	F (0.C.)	X
AP12	1	2 1/8"	11 3/4"	1'-2 3/4"	3/16"	1 7/8"	1'-2 11/16"	5/16
AP13	1	2 1/8"	10 7/8"	1'-1 7/8"	3/16"	1 7/8"	1'-1 3/4"	5/16
AP14	1	2 1/8"	9 15/16"	1'-0 15/16"	3/16"	1 7/8"	1'-0 7/8"	5/16
AP26	1	2 1/8"	1'-2 1/4"	1'-5 1/4"	1/4"	1 7/8"	1'-5 1/8"	7/16
AP27	1	2 1/8"	1'-0 11/16"	1'-3 5/8"	1/4"	1 7/8"	1'-3 1/2"	7/16
AP28	1	2 1/8"	11 1/16"	1'-2 1/16"	1/4"	1 7/8"	1'-1 15/16"	7/16

OFFSET BLOCK ~ RAIL MTG. DIMENSIONS

POST No.	OFFSET BLOCK	G	H	J	K
AP12	OB12	1 3/16"	10 7/8"	1 1/8"	10 3/4"
AP13	OB13	1 3/16"	10"	1 1/8"	9 7/8"
AP14	OB14	1 3/16"	9 1/8"	1 1/8"	8 15/16"
AP26	OB26	1 3/16"	1'-1 3/8"	1 1/8"	1'-1 1/8"
AP27	OB27	1 3/16"	11 13/16"	1 1/8"	11 9/16"
AP28	OB28	1 3/16"	10 1/4"	1 1/8"	10"

NOTE:
4 CLAMPING BARS CB-03-A (#19447) PER POSTS AP12-AP14, AP26-AP28 w/ 1/2"ø-13 UNC S.S. BOLT x 1" LG. 'FB1', 1 1/16" O.D. x 17/32" I.D. x 3/32" THK. ALUM WASHER 'FW1' (#15280 & # 19404) (8 PER POST)

NOTE:
2 CLAMPING BARS CB-01-H (#28596) PER POSTS AP8-AP11, AP22-AP25
4 CLAMPING BARS CB-03-A (#19447) PER POSTS AP8-AP11, AP22-AP25 w/ 1/2"ø-13 UNC S.S. BOLT x 1" LG. 'FB1', 1 1/16" O.D. x 17/32" I.D. x 3/32" THK. ALUM WASHER 'FW1' (#15280 & # 19404) (12 PER POST)

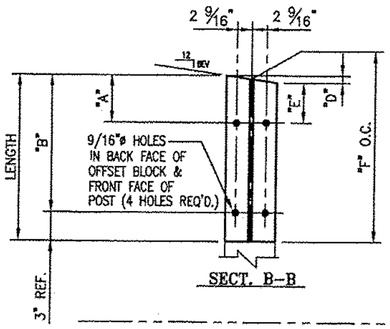

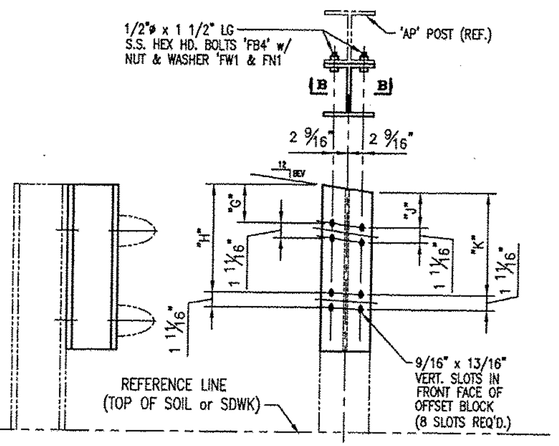

FRT ELEV VIEW ~ OB12-OB14, OB26-OB28

RECEIVED
CK'D BY WDL CK'D BY SSS
OCT 24 2011
RESUBMIT ____ APPROVED ✓
BY ____ DATE 11/1/2011

BRIDGE No. 15
PROJECT No. BRF 022-1 (14) ITEM No: 621.74

LBFoster Fabricated Bridge Products
L.B. FOSTER COMPANY
1016 GREENTREE RD.
PITTSBURGH, PA 15220

FOR: F. R. LAFAYETTE, INC.
VERMONT AGENCY OF TRANSPORTATION
TOWN OF BETHEL, WINDSOR COUNTY, VT
3-LINE ALUMINUM APPROACH RAIL FOR VT ROUTE 7
(MINOR ARTERIAL) - APPROACH OFFSET BLOCK DETAILS

REV.	DESCRIPTION	BY	DATE

MADE CMS DATE 09/15/11 JOB NO. AR0700
CHECK Dd DATE 10/14/11 DRAWING LH20
REV. NO.

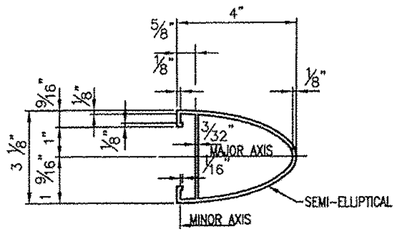

TYPICAL SECTION
(HANDRAIL)

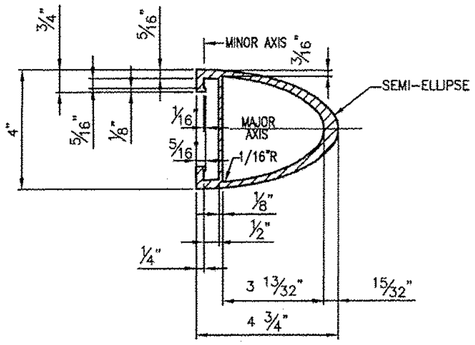

TYPICAL SECTION
(BARRIER RAIL)

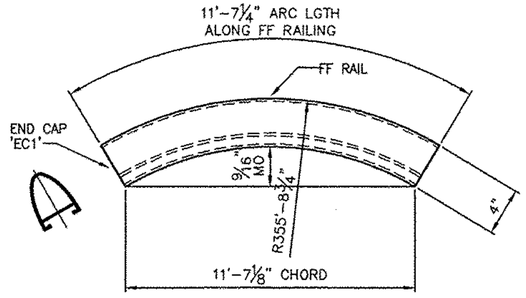

PLAN VIEW

ONE REQ'D – HANDRAIL 'TR4'

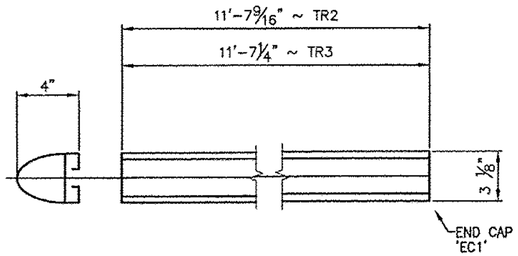

ONE REQ'D – HANDRAIL 'TR2'
(BACK ELEVATION VIEW)

ONE REQ'D – HANDRAIL 'TR3'
(BACK ELEVATION VIEW)

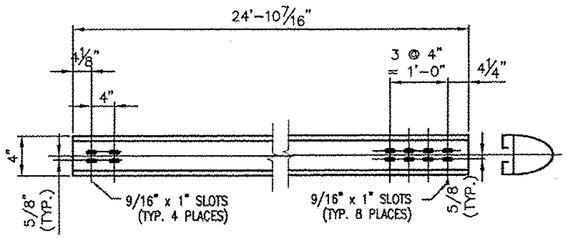

2 REQ'D. ~ RAIL 'BR2'
(BACK ELEVATION VIEW)

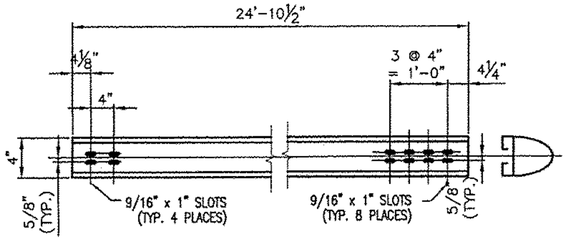

2 REQ'D. ~ RAIL 'MR2'
(BACK ELEVATION VIEW)

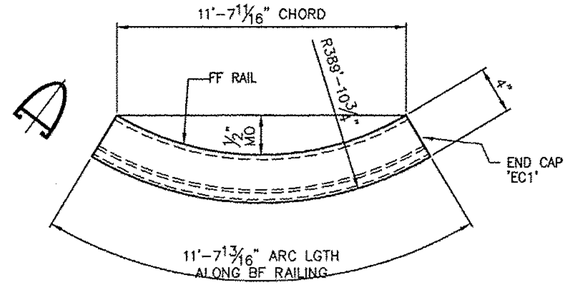

PLAN VIEW

ONE REQ'D – HANDRAIL 'TR1'

RECEIVED
OK'D BY WLP OK'D BY SSS
OCT 24 2011
RESUBMIT ____ APPROVED ✓
BY ____ DATE 11/1/2011

REV.	DESCRIPTION	BY	DATE

BRIDGE No. 15
PROJECT No. BRF 022-1 (14) ITEM No: 621.74

LBFoster
Fabricated Bridge Products

L.B. FOSTER COMPANY
1016 GREENTREE RD.
PITTSBURGH, PA 15220

FOR: F. R. LAFAYETTE, INC.
VERMONT AGENCY OF TRANSPORTATION
TOWN OF BETHEL, WINDSOR COUNTY, VT
3-LINE ALUMINUM APPROACH RAIL FOR VT ROUTE 7
(MINOR ARTERIAL) – APPROACH RAIL DETAILS

MADE CMS DATE 09/22/11 JOB NO. AR0700
CHECK Dd DATE 10/14/11 DRAWING LB21
REV. NO. ____

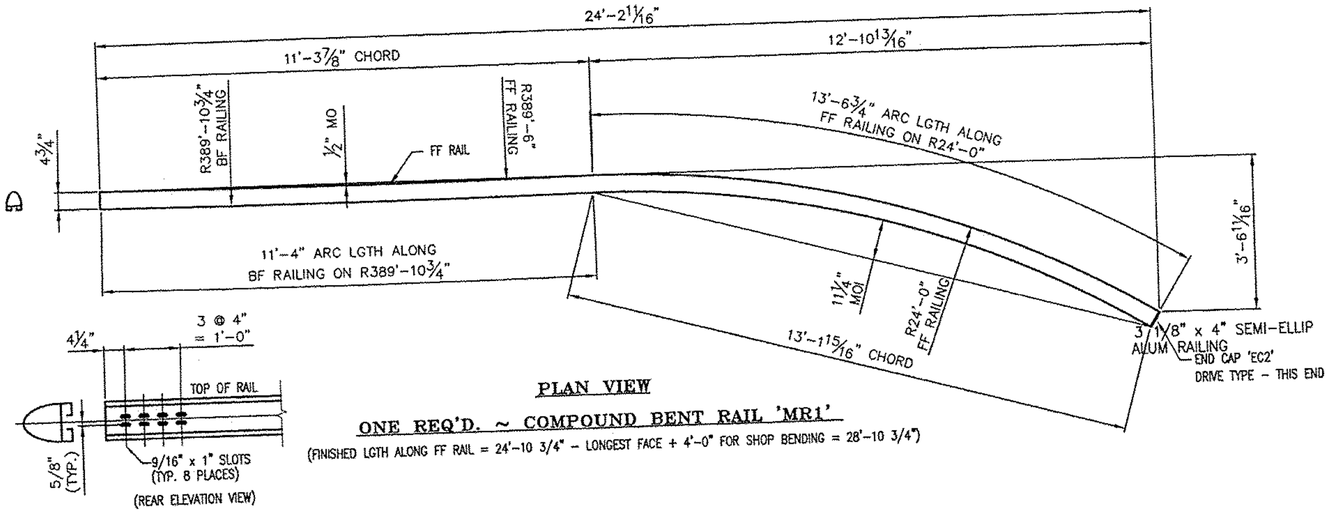

PLAN VIEW

ONE REQ'D. ~ COMPOUND BENT RAIL 'MR1'

(FINISHED LGTH ALONG FF RAIL = 24'-10 3/4" - LONGEST FACE + 4'-0" FOR SHOP BENDING = 28'-10 3/4")

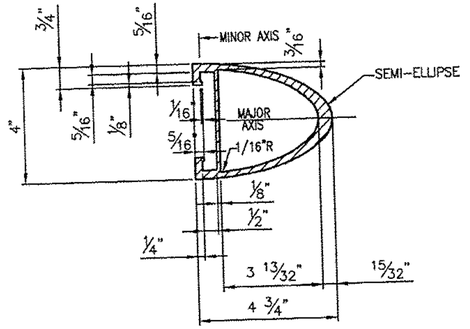

TYPICAL SECTION
(BARRIER RAIL)

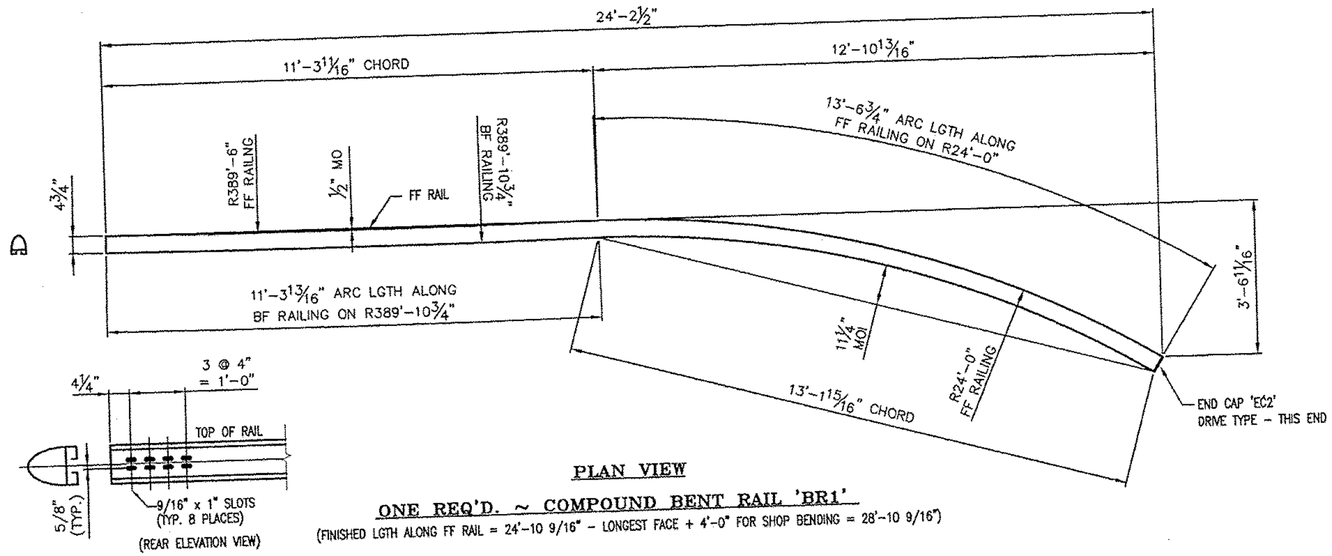

PLAN VIEW

ONE REQ'D. ~ COMPOUND BENT RAIL 'BR1'

(FINISHED LGTH ALONG FF RAIL = 24'-10 9/16" - LONGEST FACE + 4'-0" FOR SHOP BENDING = 28'-10 9/16")

RECEIVED
CK'D BY WBP CK'D BY SSS
OCT 24 2011
RESUBMIT ____ APPROVED ✓
BY DATE 11/1/2011

BRIDGE No. 15
PROJECT No. BRF 022-1 (14)
ITEM No: 621.74

LBFoster Fabricated Bridge Products

L.B. FOSTER COMPANY
1016 GREENTREE RD.
PITTSBURGH, PA 15220

FOR: F. R. LAFAYETTE, INC.
VERMONT AGENCY OF TRANSPORTATION
TOWN OF BETHEL, WINDSOR COUNTY, VT
3-LINE ALUMINUM APPROACH RAIL FOR VT ROUTE 7
(MINOR ARTERIAL)(SIDEWALK) - APPROACH RAIL DETAILS

REV.	DESCRIPTION	BY	DATE

MADE CMS DATE 09/22/11 JOB NO. AR0700
CHECK Dd DATE 10/14/11 DRAWING LB22
REV. NO.

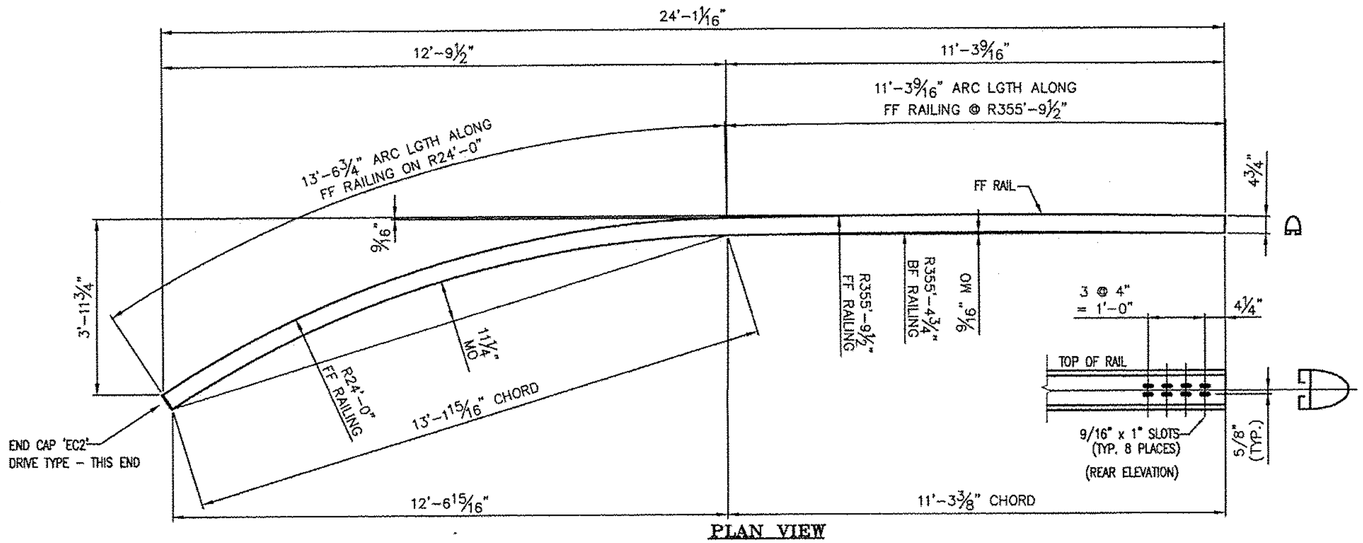

PLAN VIEW

ONE REQ'D. ~ COMPOUND BENT RAIL 'MR3'

(FINISHED LGTH ALONG FF RAIL = 24'-10 5/16" - LONGEST FACE + 4'-0" FOR SHOP BENDING = 28'-10 5/16")

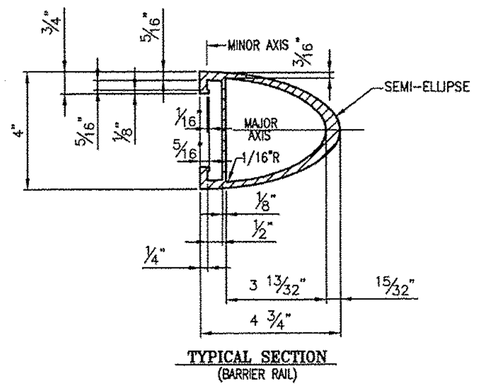

TYPICAL SECTION
(BARRIER RAIL)

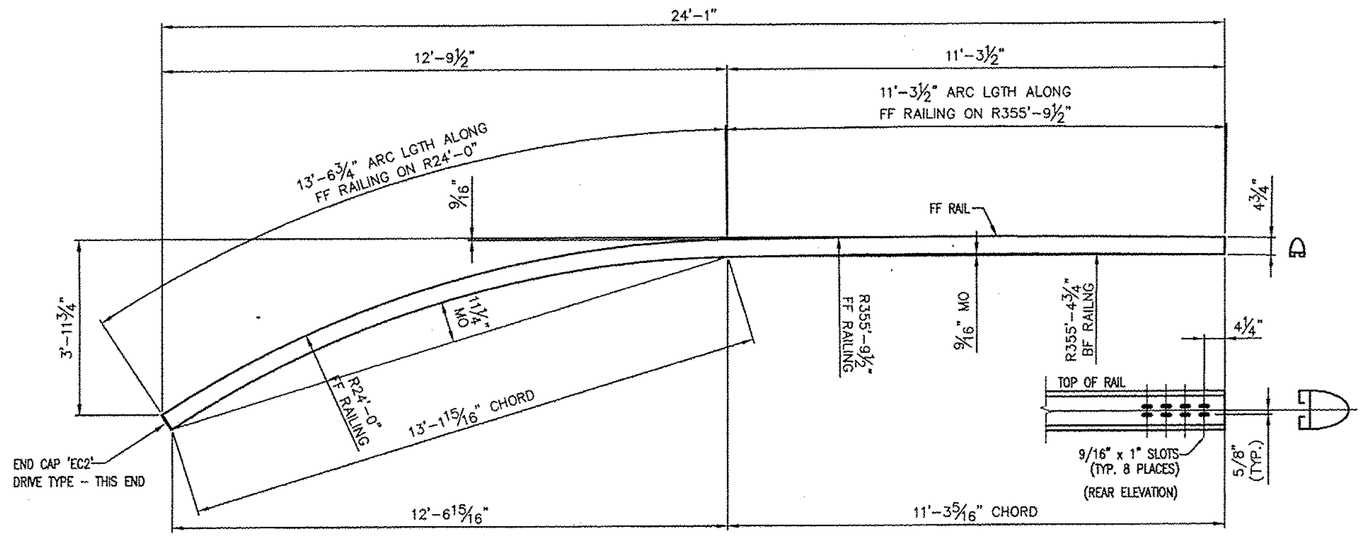

PLAN VIEW

ONE REQ'D. ~ COMPOUND BENT RAIL 'BR3'

(FINISHED LGTH ALONG FF RAIL = 24'-10 1/4" - LONGEST FACE + 4'-0" FOR SHOP BENDING = 28'-10 1/4")

RECEIVED
CK'D BY WBP CK'D BY SSS
OCT 24 2011
RESUBMIT _____ APPROVED ✓
BY _____ DATE 11/1/2011

REV.	DESCRIPTION	BY	DATE

BRIDGE No. 15
PROJECT No. BRF 022-1 (14) ITEM No: 621.74

LBFoster
Fabricated Bridge Products

L.B. FOSTER COMPANY
1016 GREENTREE RD.
PITTSBURGH, PA 15220

FOR: F. R. LAFAYETTE, INC.
VERMONT AGENCY OF TRANSPORTATION
TOWN OF BETHEL, WINDSOR COUNTY, VT
3-LINE ALUMINUM APPROACH RAIL FOR VT ROUTE 7
(MINOR ARTERIAL) - SE APPROACH RAIL DETAILS

MADE CMS DATE 09/22/11 JOB NO. AR0700
CHECK Dd DATE 10/14/11 DRAWING LB23
REV. NO. _____

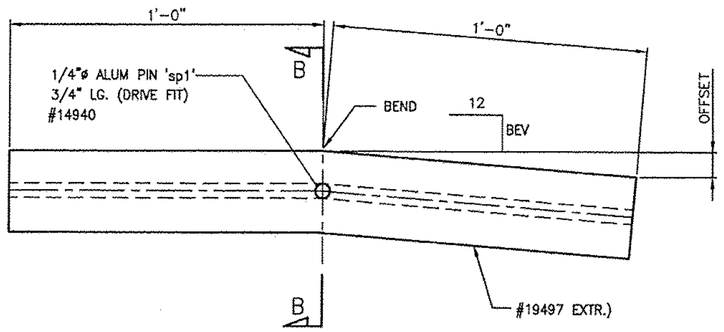

REAR ELEVATION VIEW

HANDRAIL SPLICES				
MK.	QTY.	OFFSET	BEV	LOCATION
SS-23-A1	1	3/16"	9/16	SE
SS-23-A2	1	11/16"	1 3/16	SW
SS-23-A3	1	15/16"	1	NW
SS-23-A4	1	7/16"	1/2	NE

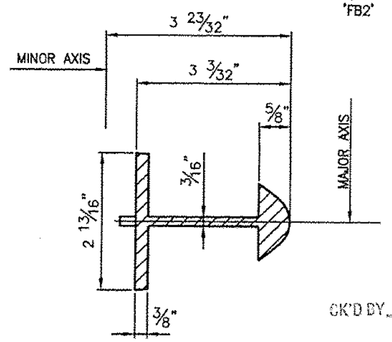

SECTION B-B

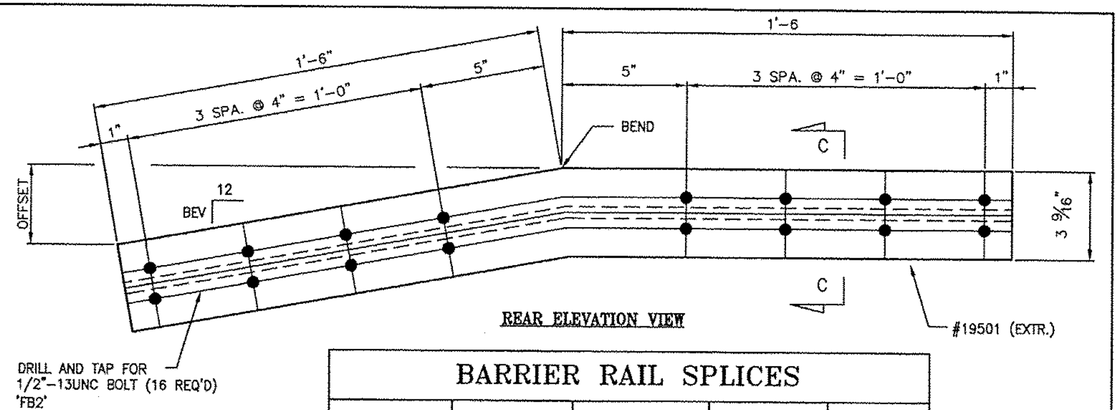

REAR ELEVATION VIEW

BARRIER RAIL SPLICES				
MK.	QTY.	OFFSET	BEV	LOCATION
SS-03-G2	1	3/16"	11/16	SW
SS-03-G3	1	1/8"	7/16	SW
SS-03-G4	2	3/8"	5/16	NE , NW
SS-03-G5	1	1/16"	1/8	NW
SS-03-G6	1	7/16"	1/16	SE
SS-03-G7	1	1/4"	1/16	NE
SS-03-G8	1	3/16"	7/16	SE

RECEIVED
OK'D BY WBP OK'D BY SSS
OCT 24 2011
RESUBMIT APPROVED ✓
BY DATE 11/1/2011

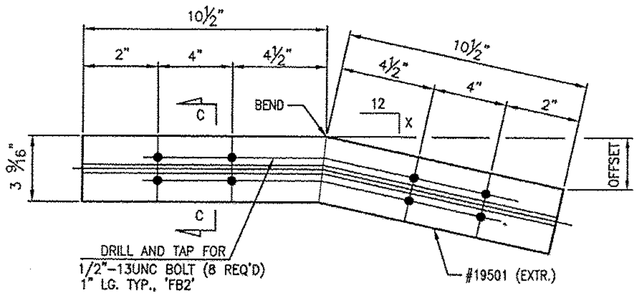

REAR ELEVATION VIEW

BARRIER RAIL SPLICES				
MK.	X	QTY.	OFFSET	LOCATION
SS-03-H1	5/16	2	1/4"	NE, NW
SS-03-H2	1/8	1	1/16"	NW
SS-03-H3	1/16	1	1/8"	NE

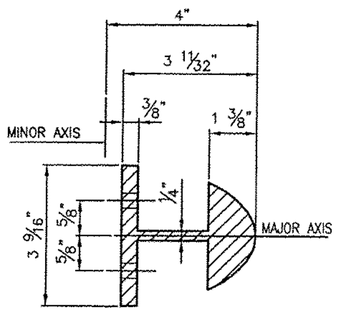

SECTION C-C

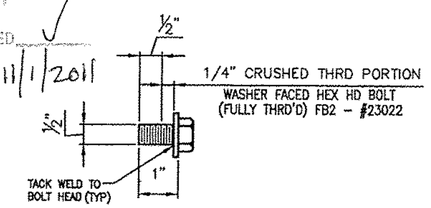

SPLICE BOLT DETAILS

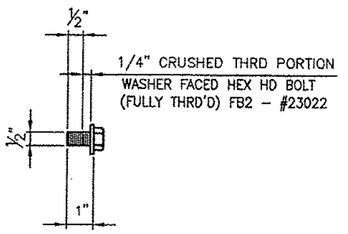

SPLICE BOLT DETAILS

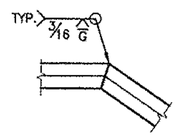

OPTIONAL WELD
@ MITERED SPLICES
(IF REQ'D.)

BRIDGE No. 15
PROJECT No. BRF 022-1 (14) ITEM No: 621.74

LBFoster
Fabricated Bridge Products

L.B. FOSTER COMPANY
1016 GREENTREE RD.
PITTSBURGH, PA 15220

FOR: F. R. LAFAYETTE, INC.
VERMONT AGENCY OF TRANSPORTATION
TOWN OF BETHEL, WINDSOR COUNTY, VT
3-LINE ALUMINUM APPROACH RAIL FOR VT ROUTE 7
(MINOR ARTERIAL) - APPROACH RAIL SPLICE DETAILS

MADE CMS DATE 09/22/11 JOB NO. AR0700
CHECK Dd DATE 10/14/11 DRAWING LB24
REV. NO.

REV.	DESCRIPTION	BY	DATE

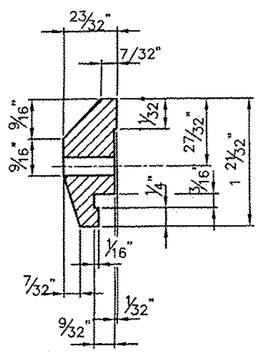

112 ~ REQ'D CLAMP
BAR CB-03-A
(BARRIER RAIL - 4 PER POST)
(#19447)

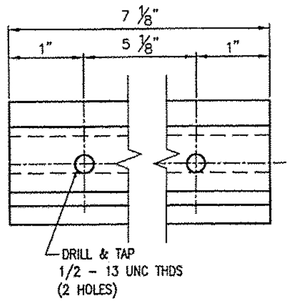

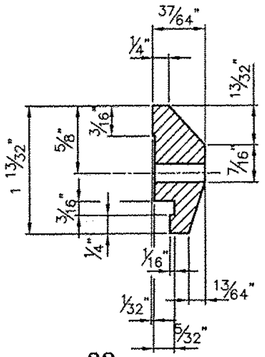

32 ~ REQ'D CLAMP
BAR CB-01-H
(HANDRAIL - 2 PER POST)
(#28596)

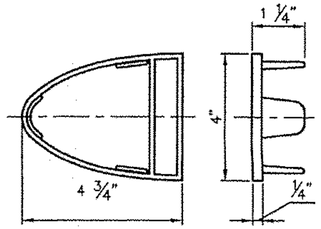

4 ~ REQ'D. ALUM
END CAPS EC2
#19345

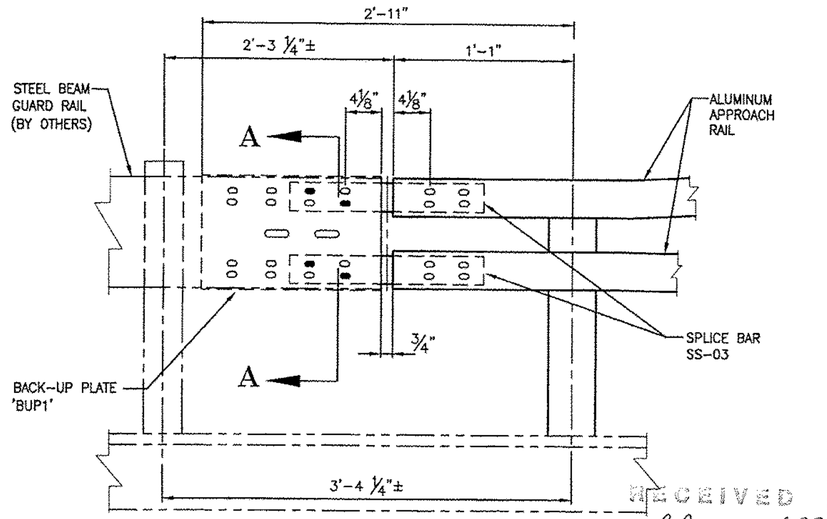

DETAIL "B"
(FRONT ELEVATION VIEW)

RECEIVED
CK'D BY MBP OK'D BY SSS
OCT 24 2011
RESUBMIT APPROVED
BY DATE 11/1/2011

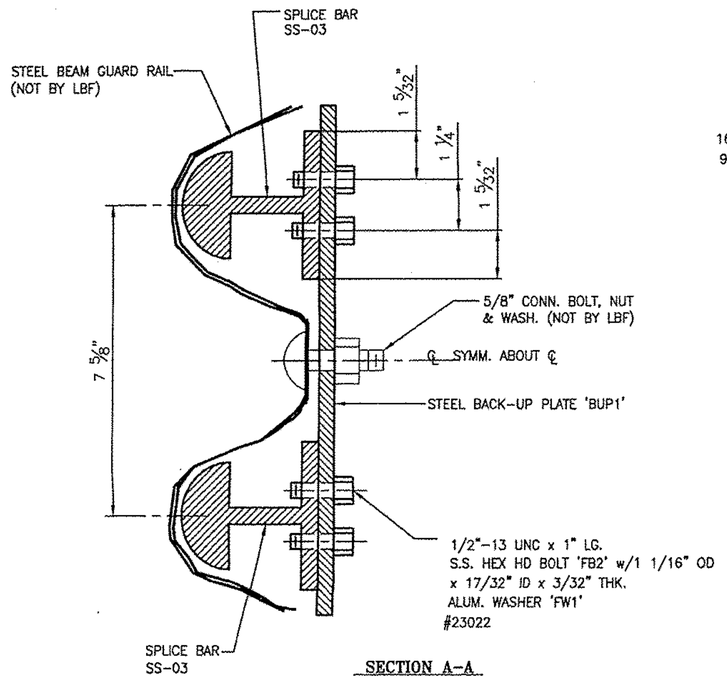

SECTION A-A

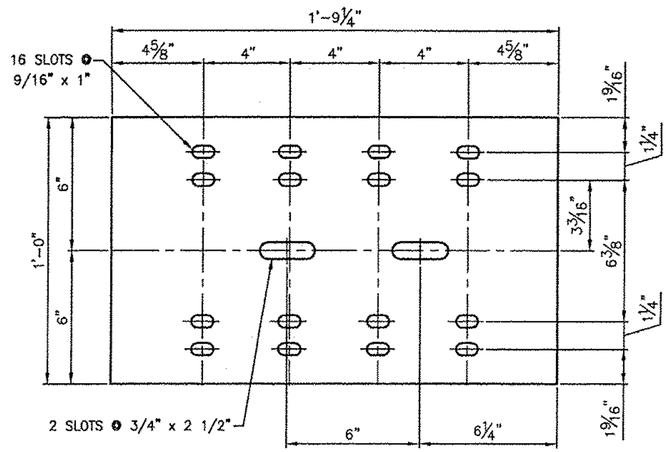

2 REQ'D. ~ BACK-UP PLATE BUP1
(1/4" THK. PLATE ~ A36 - GALV.)

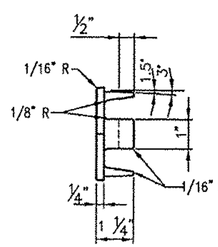

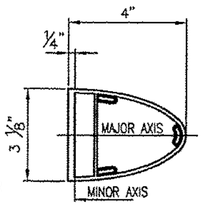

4 ~ REQ'D END CAPS (3 1/8" x 4") 'EC1'
#19344

BRIDGE No. 15
PROJECT No. BRF 022-1 (14) ITEM No: 621.74

LBFoster
Fabricated Bridge Products

L.B. FOSTER COMPANY
1016 GREENTREE RD.
PITTSBURGH, PA 15220

FOR: F. R. LAFAYETTE, INC.
VERMONT AGENCY OF TRANSPORTATION
TOWN OF BETHEL, WINDSOR COUNTY, VT
3-LINE ALUMINUM APPROACH RAIL FOR VT ROUTE 7
(MINOR ARTERIAL) - MISC DETAILS

MADE CMS DATE 09/22/11 JOB NO. AR0700
CHECK DD DATE 10/13/11 DRAWING LB25 (LAST) REV. NO.

REV.	DESCRIPTION	BY	DATE

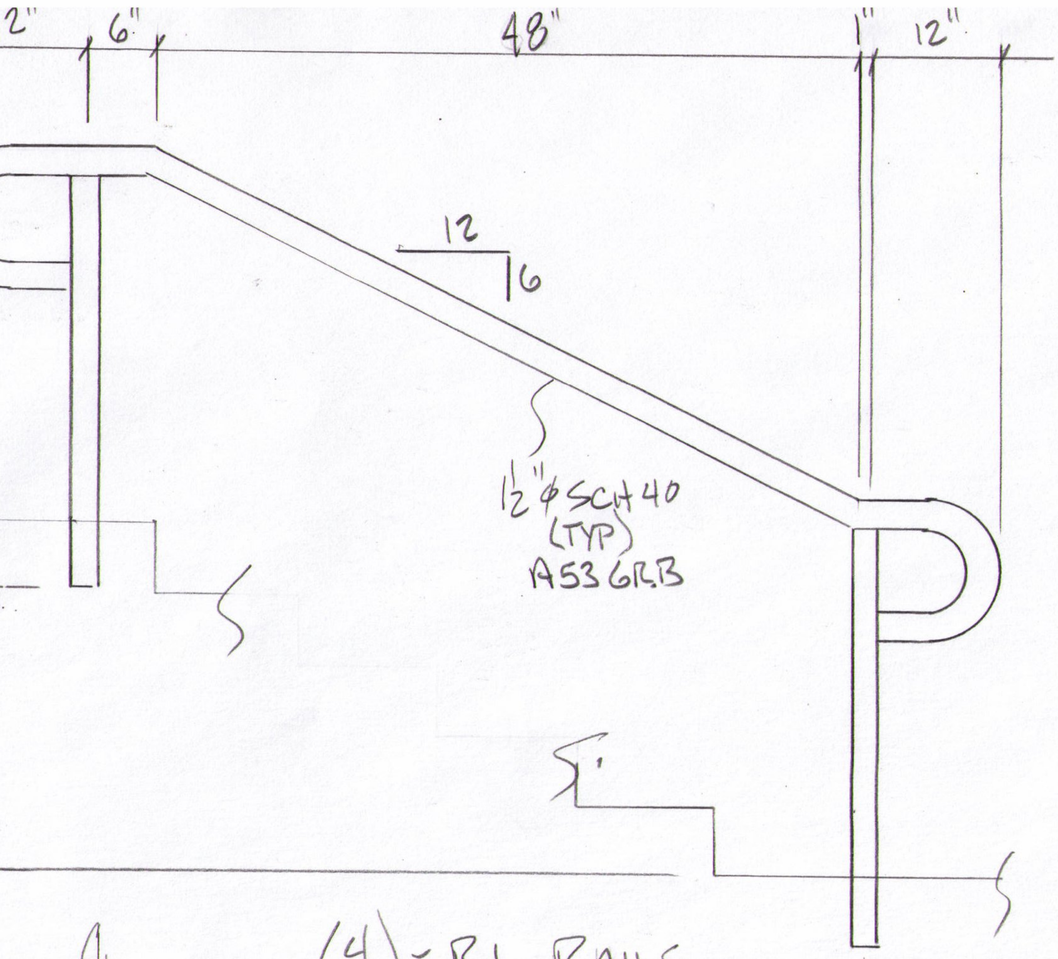

(4) - R1 RAILS

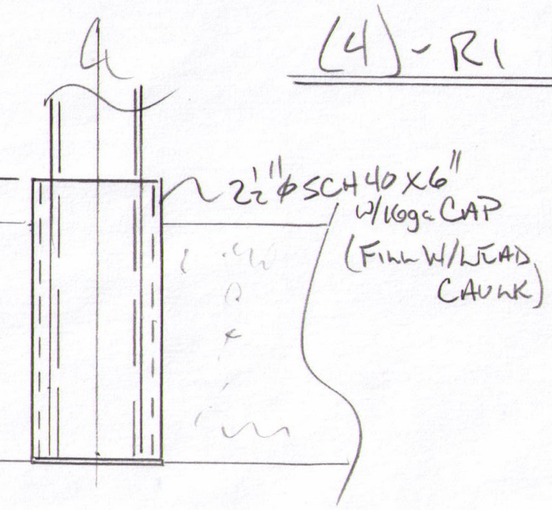

EYE DETAIL (8) REQ

-PRIME-

Vermont Agency of Transportation
RECEIVED
CK'D BY M.C.L. OK'D BY S.S.S.
May 7 2012
RESUBMIT APPROVED ✓
BY J. LACROIX DATE 05-07-2012

HANDRAILS

MERRIMACK SHEET METAL, INC.
119 HALL ST.
CONCORD, NH 03301

SCALE		REVISIONS	BY	DATE
DATE				
DR'N.	CKD.			
AP'VD.				

TITLE BETHEL, VT #BRF-022-1(14) BECK + BELLUCCI #3944

NO. R1