INDEX OF SHEETS

SEE SHEET 2

STATE OF VERMONT
AGENCY OF TRANSPORTATION

TRAFFIC DATA

VT ROUTE 15 (WEST)	VT ROUTE 108 (NORTH)
2012 AADT= 6400 2032 AADT= 7000 2032 DHV= 790 2032 %T= 14.5 2032 %D= 59 2012 ADTT= 660 2032 ADTT= 1100 FUNCTIONAL CLASS - MINOR ARTERIAL 2012 - 2032 ESAL'S = 4,923,000 2012 - 2052 ESAL'S = 11,273,000 POSTED SPEED = 70 KMH	2012 AADT= 1800 2032 AADT= 1900 2032 DHV= 240 2032 %T= 3.2 2032 %D= 56 2012 ADTT= 75 2032 ADTT= 130 FUNCTIONAL CLASS - MINOR ARTERIAL 2012 - 2032 ESAL'S = 512,000 2012 - 2052 ESAL'S = 1,244,000 POSTED SPEED = 80 KMH
VT ROUTE 15 (EAST)	**VT ROUTE 108 (SOUTH)**
2012 AADT= 6100 2032 AADT= 6700 2032 DHV= 760 2032 %T= 12.1 2032 %D= 56 2012 ADTT= 570 2032 ADTT= 960 FUNCTIONAL CLASS - MINOR ARTERIAL 2012 - 2032 ESAL'S = 4,694,000 2012 - 2052 ESAL'S = 10,747,000 POSTED SPEED = 70 KMH	2012 AADT= 2400 2032 AADT= 2600 2032 DHV= 290 2032 %T= 12.2 2032 %D= 65 2012 ADTT= 190 2032 ADTT= 330 FUNCTIONAL CLASS - MAJOR COLLECTOR 2012 - 2032 ESAL'S = 1,161,000 2012 - 2052 ESAL'S = 2,697,000 POSTED SPEED = 70 KMH

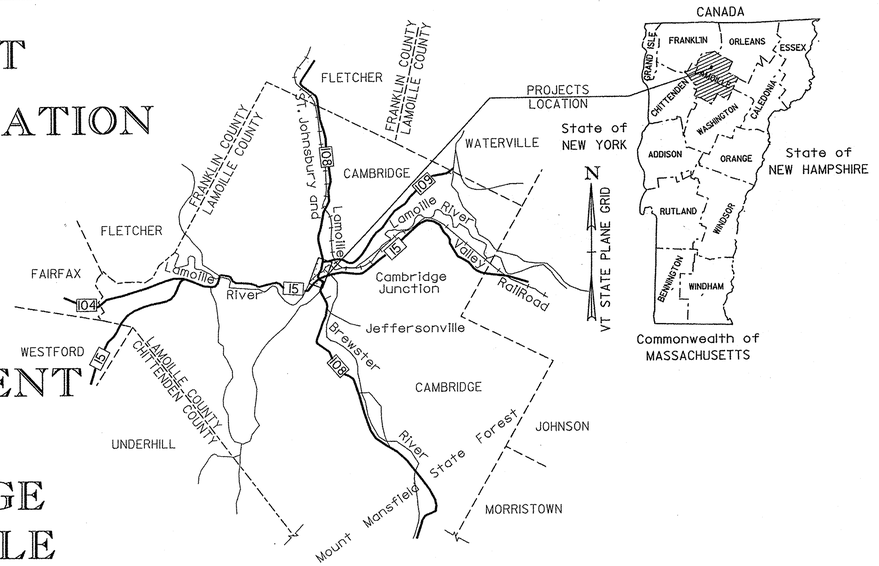

PROPOSED IMPROVEMENT

TOWN OF CAMBRIDGE
COUNTY OF LAMOILLE
VT ROUTE 15 AND VT ROUTE 108, BRIDGE #21
MINOR ARTERIAL, MAJOR COLLECTOR

PROJECT STP 030-2(27)

BEGINNING AT A POINT, IN THE TOWN OF CAMBRIDGE, ON VT ROUTE 15, APPROXIMATELY 128.456 M WEST OF THE VT ROUTE 15 AND VT ROUTE 108 INTERSECTION, AND EXTENDING EASTERLY FOR A DISTANCE OF APPROXIMATELY 259.520 M; THEN BEGINNING AT A POINT ON VT ROUTE 108, APPROXIMATELY 89.095 M SOUTHERLY OF THE VT ROUTE 15 AND VT ROUTE 108 INTERSECTION, AND EXTENDING NORTHERLY FOR A DISTANCE OF APPROXIMATELY 171.889 M, WHICH IS THE BEGINNING OF PROJECT BRF 027-1(4).

LENGTH OF ROADWAY (VT ROUTE 15) = 259.520 m
LENGTH OF ROADWAY (VT ROUTE 108) = 171.889 m
LENGTH OF PROJECT = 431.409 m

WORK TO BE PERFORMED UNDER THIS PROJECT CONSISTS OF CONSTRUCTION OF A ROUNDABOUT AT THE INTERSECTION OF VT ROUTE 15 AND VT ROUTE 108, SAND BORROW, SUBBASE, DRAINAGE, SIGNS AND OTHER HIGHWAY RELATED ITEMS.

PROJECT BRF 027-1(4)

BEGINNING AT A POINT, IN THE TOWN OF CAMBRIDGE, ON VT ROUTE 108, APPROXIMATELY 82.794 M NORTHERLY OF THE VT ROUTE 15 AND VT ROUTE 108 INTERSECTION AND EXTENDING NORTHERLY FOR A DISTANCE OF APPROXIMATELY 367.206 M.

LENGTH OF ROADWAY = 289.156 m
LENGTH OF BRIDGE = 78.050 m
LENGTH OF PROJECT = 367.206 m

WORK TO BE PERFORMED UNDER THIS PROJECT INCLUDES REMOVAL OF EXISTING BRIDGE NO. 21 AND CONSTRUCTION OF A NEW BRIDGE AND APPROACHES ON AN IMPROVED HORIZONTAL ALIGNMENT, CONSTRUCTION OF VT ROUTE 108, SAND BORROW, SUBBASE, PAVEMENT, DRAINAGE, SIGNS AND OTHER HIGHWAY RELATED ITEMS.

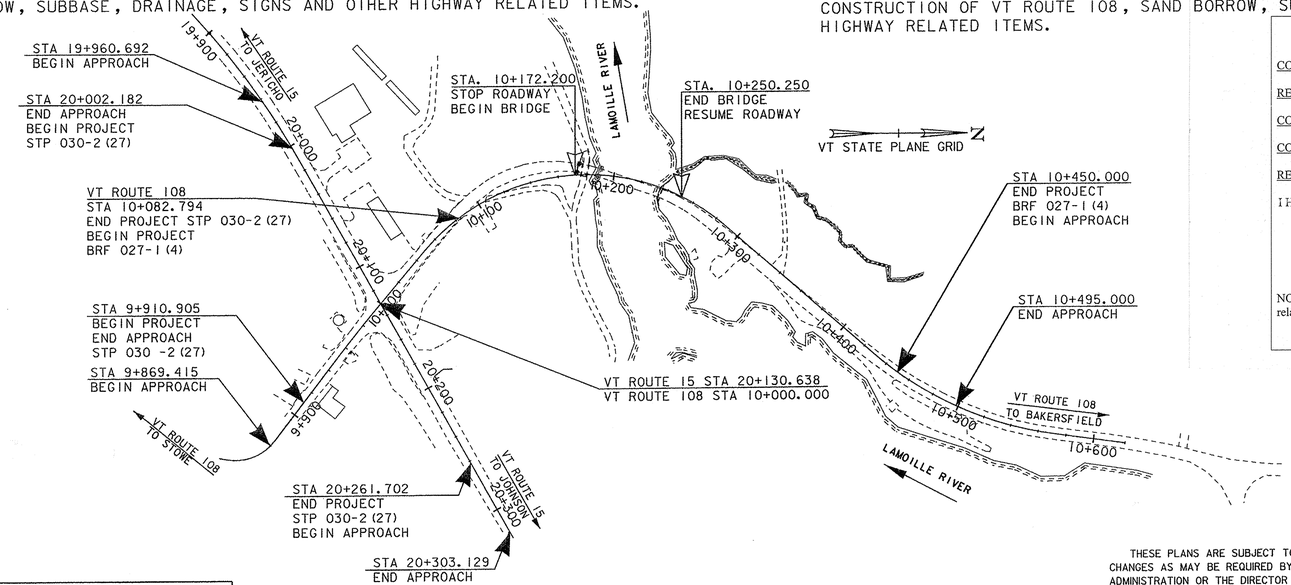

QUALITY ASSURANCE PROGRAM: LEVEL 2

CONVENTIONAL SYMBOLS

COUNTY LINE
TOWN LINE
LIMITS OF ACCESS
POINT OF ACCESS
FENCE LINE
STONE WALL
TRAVELED WAY
GUARD RAIL
RAILROAD
SURVEY LINE
CULVERT
POWER POLE
TELEPHONE POLE
TREES
CONTROL OF ACCESS
PROPERTY LINE
R.O.W. TAKING LINE
SLOPE RIGHTS
TOP OF CUT
TOE OF SLOPE

SURVEYED BY : CLD/VTRANS
SURVEYED DATE : 12/1998/2010

DATUM
VERTICAL NAVD 88
HORIZONTAL NAD 83/96

SCALE IN METERS
0 50 100 200

RECORD PLANS

CONTRACTOR: A.L. ST. ONGE CONTRACTOR, INC. – MONTGOMERY, VT
RESIDENT ENGINEER: GREG WILCOX
CONSTRUCTION BEGAN: SEPTEMBER 14, 2012
CONSTRUCTION COMPLETE: JUNE 12, 2014
RECORD PLANS BY: GREG WILCOX & KEVIN KING

I HEREBY CERTIFY THAT ALL THE CONSTRUCTION REQUIRED BY THIS SET OF DRAWINGS HAS BEEN ACCOMPLISHED AS INDICATED HEREIN.

BY _____ RESIDENT ENGINEER
DATE 6/9/16

NOTE: Any further information concerning final quantities, amounts or other details relative to this project may be found at Central Files in the electronic archives.

Vtrans Metric

UNLESS NOTED OTHERWISE
STATIONS ARE IN KILOMETERS
ELEVATIONS ARE IN METERS
DIMENSIONS ARE IN MILLIMETERS

THESE PLANS ARE SUBJECT TO SUCH ENGINEERING CHANGES AS MAY BE REQUIRED BY THE FEDERAL HIGHWAY ADMINISTRATION OR THE DIRECTOR OF PROGRAM DEVELOPMENT.

CONSTRUCTION IS TO BE CARRIED ON IN ACCORDANCE WITH THESE PLANS AND THE STANDARD SPECIFICATIONS FOR CONSTRUCTION DATED 2011, AS APPROVED BY THE FEDERAL HIGHWAY ADMINISTRATION ON JULY 20, 2011 FOR USE ON THIS PROJECT, INCLUDING ALL SUBSEQUENT REVISIONS AND SUCH REVISED SPECIFICATIONS AND SPECIAL PROVISIONS AS ARE INCORPORATED IN THESE PLANS.

DIRECTOR OF PROGRAM DEVELOPMENT
APPROVED _____ DATE 6-5-12

PROJECT MANAGER : J. SCHULTZ

PROJECT NAME : CAMBRIDGE
PROJECT NUMBER : STP 030 -2 (27) /BRF 027-1 (4)

SHEET 1 OF 214 SHEETS

STATE OF VERMONT
AGENCY OF TRANSPORTATION

INDEX OF SHEETS

Metric

1	TITLE SHEET
2	INDEX OF SHEETS
3-7	COMPOSITE QUANTITY SHEETS
8-9	EPSC NARRATIVE SHEETS
10-16	EPSC EXISTING CONDITION PLANS
17-23	EPSC PLANS
24-30	EPSC FINAL CONDITION PLANS
31-33	EROSION CONTROL DETAIL SHEETS
	STP 030-2(27)
34	TITLE SHEET
35	TIE SHEET
36-38	QUANTITY SHEETS
39-40	TYPICAL SECTION SHEETS
41	DRAINAGE SUMMARY SHEET
42	EARTHWORKS SUMMARY SHEET
43	ITEM DETAIL SHEET
44-47	LAYOUT PLANS
48-51	PROFILE SHEETS
52	CURBING PLAN
53-54	DRAINAGE PLANS
55-57	DRAINAGE PROFILE SHEETS
58	DRAINAGE DETAIL SHEET
59	LIGHTING PLAN
59A	STREET LIGHTING DETAILS
60	LANDSCAPING PLAN
61	LANDSCAPING DETAILS
62-65	SIGNING AND PAVEMENT MARKING PLANS
66-70	TRAFFIC SIGN SUMMARY SHEETS
71	SIGN DETAILS SHEET
72-76	TRAFFIC CONTROL PLANS
77	RIGHT OF WAY DETAIL SHEET
78-81	ROW STP LAYOUT SHEETS
82-124	CROSS SECTION SHEETS
	BRF 027-1(4)
125	TITLE SHEET
126-127	TIE SHEETS
128-131	QUANTITY SHEETS
132	BRIDGE QUANTITY SHEET
133	TYPICAL ROADWAY SECTIONS
134	TYPICAL SECTIONS - RECREATION PATH
135	EARTHWORK SECTIONS
136	TYPICAL BRIDGE SECTION
137	PRELIMINARY INFORMATION SHEET
138	PROJECT NOTES
139	DRAINAGE DETAIL SHEET
140	EARTHWORK SHEET
141	ITEM DETAIL SHEET
142-144	ROADWAY LAYOUT SHEETS
145-147	PROFILE SHEETS
148	MATERIAL TRANSITION DETAILS & BANKING DIAGRAM
149-150	SIGNING AND PAVEMENT MARKING PLANS
151-152	TRAFFIC SIGN SUMMARY SHEETS
153	DETOUR DETAILS\CONSTRUCTION APPROACH SIGNING
154	LANDSCAPING DETAILS
155	BORING INFORMATION SHEET
156-158	BORING LOGS
159	PLAN & ELEVATION
160	DECK REINFORCING
161	FRAMING PLAN AND GIRDER DETAILS
162	DEAD LOADS AND CAMBER DIAGRAMS
163	SPLICE DETAIL
164	EXPANSION JOINT DETAILS
165	EXPANSION JOINT LAYOUT
166	DOWNSPOUT DETAILS
167	ELASTOMERIC BEARING NOTES
168	EXPANSION BEARING ABUTMENT #1
169	HIGH LOAD MULTI-ROTATIONAL BEARING
170	INTEGRAL ABUTMENT BEARING DETAILS
171	APPROACH SLAB
172-174	ABUTMENT #1 SHEETS
175	WINGWALLS 1 & 2 TYPICAL SECTIONS
176	WINGWALLS 1 & 2 ELEVATIONS
177	PIER TYPICAL
178	PIER FOOTING & SHAFTS
179	ABUTMENT #2
180	WINGWALLS #3 & #4
181-182	REINFORCING STEEL SCHEDULE SHEETS
183	RIGHT OF WAY DETAIL SHEET
184-187	ROW BRF LAYOUT SHEETS
188-200	VT 108 CROSS SECTIONS
201-214	CHANNEL SECTIONS

STRUCTURES DETAIL SHEETS

STRUCTURES DETAIL SD-501.00
STRUCTURES DETAIL SD-502.00
STRUCTURES DETAIL SD-516.10
STRUCTURES DETAIL SD-601.00
STRUCTURES DETAIL SD-602.00

STD.	REVISION DATE
B-5	6/1/1994
B-12	6/1/1994
B-71	7/8/2005
C-10	2/11/2008
D-1	6/1/1994
D-3	6/1/1994
D-4	8/13/2007
D-9	6/1/1994
D-11	6/1/1994
D-15	6/1/1994
D-16	6/1/1994
D-20	3/3/2003
D-30	8/13/2007
E-100	1/2/2004
E-100A	1/2/2004
E-101	5/30/2003
E-102	6/30/2003
E-102A	5/1/2004
E-106	3/1/2004
E-107	6/30/2003
E-107A	6/8/2009
E-108	6/8/2009
E-120	8/8/1995
E-121	8/8/1995
E-123	3/16/2004
E-125	8/8/1995
E-127	8/8/1995
E-130	8/8/1995
E-134	8/8/1995
E-136B	8/8/1995
E-138	5/30/2003
E-141	9/20/1995
E-142	9/20/1995
E-143	6/15/2004
E-145A	12/23/1994
E-146	9/20/1995
E-150	5/1/2004
E-152	5/1/2004
E-155	5/1/2004
E-163	5/20/1999
E-164	6/8/2009
E-173	8/9/1995
E-175	6/8/2009
E-180A	8/9/1995
E-180B	8/9/1995
E-191	2/1/1999
E-192	10/12/2000
E-193	8/18/1995
F-1	6/1/1994
F-2	6/1/1994
G-1	1/3/2000
G-1D	1/3/2000
G-4	6/1/1994
G-19	11/15/2002
J-3	8/7/1995
S-360a	4/23/2012
S-360b	4/23/2012
S-363	4/23/2012

PROJECT NAME: **CAMBRIDGE**
PROJECT NUMBER: **STP 030-2(27) / BRF 027-1(4)**

FILE NAME: **S78F163FORMS.DGN**
PROJECT LEADER: **J. SCHULTZ / M. E-MONGEON**
DESIGNED BY: **M. EVANS-MONGEON**
INDEX OF SHEETS

PLOT DATE: **5/29/2012**
DRAWN BY: **MEM**
CHECKED BY: **S. SCRIBNER**
SHEET **2** OF **214**

STATE OF VERMONT
AGENCY OF TRANSPORTATION

COMPOSITE QUANTITY SHEET 1

Metric

SUMMARY OF ESTIMATED QUANTITIES STP 030-2(27)				SUMMARY OF ESTIMATED QUANTITIES BRF 027-1(4)				TOTALS		DESCRIPTIONS				DETAILED SUMMARY OF QUANTITIES		
ROADWAY	TRAINING	EROSION CONTROL	FULL C.E. ITEMS	ROADWAY	TRAINING	EROSION CONTROL	BRIDGE	FULL C.E. ITEMS	GRAND TOTAL	FINAL	UNIT	ITEMS	ITEM NUMBER	ROUND	QUANTITIES	UNIT	ITEMS
0.5				0.5					1		LS	CLEARING AND GRUBBING, INCLUDING INDIVIDUAL TREES AND STUMPS	201.10				NOTE: SEE THE SEPARATE PROJECT QUANTITY SHEETS FOR QUANTITY ROUNDING VALUES
7300				1590					8890		CM	COMMON EXCAVATION	203.15				
5									5		CM	SOLID ROCK EXCAVATION	203.16				
1									1		CM	UNCLASSIFIED EXCAVATION	203.17				
							2690		2690		CM	UNCLASSIFIED CHANNEL EXCAVATION	203.27				
				520					520		CM	EARTH BORROW	203.30				
2700				2430					5130		CM	SAND BORROW	203.31				
1750				1350					3100		CM	TRENCH EXCAVATION OF EARTH	204.20				
1				50					51		CM	TRENCH EXCAVATION OF ROCK	204.21				
				1					1		CM	TRENCH EXCAVATION OF EARTH, EXPLORATORY (N.A.B.I.)	204.22				
							400		400		CM	STRUCTURE EXCAVATION	204.25				
425				90			360		875		CM	GRANULAR BACKFILL FOR STRUCTURES	204.30				
							110		110		CM	COFFERDAM EXCAVATION, EARTH	208.30				
							50		50		CM	COFFERDAM EXCAVATION, ROCK	208.35				
							1		1		LS	COFFERDAM (PIER #1)	208.40				
							1		1		LS	COFFERDAM (PIER #2)	208.40				
1500				170					1670		SM	COLD PLANING, BITUMINOUS PAVEMENT	210.10				
4650				2270					6920		CM	SUBBASE OF DENSE GRADED CRUSHED STONE	301.35				
				70					70		CM	AGGREGATE SURFACE COURSE	401.10				
1110				850			90		2050		KG	EMULSIFIED ASPHALT	404.65				
200									200		T	BITUMINOUS CONCRETE PAVEMENT	406.25				
1				1					2		LU	PRICE ADJUSTMENT, ASPHALT CEMENT (N.A.B.I.)	406.50				
2300				757			163		3220		T	SUPERPAVE BITUMINOUS CONCRETE PAVEMENT	490.30				
1				1					2		LU	AIR VOIDS PAY ADJUSTMENT (N.A.B.I.)	490.31				
1				1					2		LU	MAT DENSITY PAY ADJUSTMENT (N.A.B.I.)	490.32				
							333		333		CM	CONCRETE, HIGH PERFORMANCE CLASS A	501.33				
40							344		384		CM	CONCRETE, HIGH PERFORMANCE CLASS B	501.34				
							1		1		LS	FURNISHING EQUIPMENT FOR DRIVING PILING	504.10				
							56		56		M	STEEL PILING, HP 310 X 125	505.165				
							1		1		EACH	DYNAMIC PILE LOADING TEST	505.45				
							95078		95078		KG	STRUCTURAL STEEL, CURVED PLATE GIRDER	506.56				
							119		119		KG	STRUCTURAL STEEL	506.60				
3525							89003		92528		KG	REINFORCING STEEL, LEVEL I	507.11				
							30		30		M	DRILLING AND GROUTING DOWELS	507.16				
							1		1		LS	SHEAR CONNECTORS (3034- 22 X 180)	508.15				
							200		200		L	WATER REPELLENT, SILANE	514.10				
							9.3		9.3		M	BRIDGE EXPANSION JOINT, ASPHALTIC PLUG	516.10				
							9.9		9.9		M	BRIDGE EXPANSION JOINT, VERMONT	516.11				
							729		729		SM	SHEET MEMBRANE WATERPROOFING, TORCH APPLIED	519.20				
							157		157		M	BRIDGE RAILING, GALVANIZED 2 RAIL BOX BEAM	525.33				

PROJECT NAME: CAMBRIDGE
PROJECT NUMBER: STP 030-2(27) / BRF 027-1(4)

FILE NAME: QuantitySheet.xls
PROJECT LEADER: J. SHULTZ
DESIGNED BY: J. DEVLIN / T. FILBACH
COMPOSITE QUANITITY SHEET #1

PLOT DATE: 05/22/2012
DRAWN BY: M.E-MONGEON
CHECKED BY: M.E-MONGEON

STATE OF VERMONT
AGENCY OF TRANSPORTATION

COMPOSITE QUANTITY SHEET 2

Metric

SUMMARY OF ESTIMATED QUANTITIES STP 030-2(27)				SUMMARY OF ESTIMATED QUANTITIES BRF 027-1(4)					TOTALS		DESCRIPTIONS				DETAILED SUMMARY OF QUANTITIES		
ROADWAY	TRAINING	EROSION CONTROL	FULL C.E. ITEMS	ROADWAY	TRAINING	EROSION CONTROL	BRIDGE	FULL C.E. ITEMS	GRAND TOTAL	FINAL	UNIT	ITEMS	ITEM NUMBER	ROUND	QUANTITIES	UNIT	ITEMS
							1		1		LS	TWO-WAY TEMPORARY BRIDGE (599 SM - EST.)	528.11				
							1		1		EACH	REMOVAL OF STRUCTURE (378 SM - EST.)	529.15				
							8		8		EACH	BEARING DEVICE ASSEMBLY, HIGH LOAD MULTI-ROTATIONAL	531.15				
							4		4		EACH	BEARING DEVICE ASSEMBLY, STEEL REINFORCED ELASTOMERIC PAD (ABUTMENT 1)	531.17				
							4		4		EACH	BEARING DEVICE ASSEMBLY, STEEL REINFORCED ELASTOMERIC PAD (ABUTMENT 2)	531.17				
												BEGIN OPTION AA					
				15.1					15.1		M	600 CAAP 1.52 (68 X 12)	601.0225				
				15.1					15.1		M	600 PCCSP 1.63 (68 X 12)	601.0425				
												END OPTION AA					
												BEGIN OPTION BB					
				28.3					28.3		M	600 RCP CLASS III	601.0825				
				28.3					28.3		M	600 CPEP(SL)	601.2620				
												END OPTION BB					
37									37		M	375 CPEP(SL)	601.2610				
190									190		M	450 CPEP(SL)	601.2615				
40									40		M	600 CPEP(SL)	601.2620				
												BEGIN OPTION CC					
				1					1		EACH	600 CSPES 1.63 (68 X 12)	601.6025				
				1					1		EACH	600 CAAPES 1.52 (68 X 12)	601.6225				
												END OPTION CC					
												BEGIN OPTION DD					
				1					1		EACH	600 RCPES CLASS III	601.6825				
				1					1		EACH	600 CPEPES	601.7020				
												END OPTION DD					
1									1		EACH	375 CPEPES	601.7010				
2									2		EACH	450 CPEPES	601.7015				
2									2		EACH	600 CPEPES	601.7020				
32									32		M	CLEANING CULV. PIPE, IN-PLACE [0 TO 600 MM, INCL.]	601.995				
16									16		EACH	PRECAST REINFORCED CONCRETE CATCH BASIN WITH CAST IRON GRATE	604.20				
3									3		EACH	CHANGING ELEVATION OF SEWER MANHOLES	604.42				
500									500		M	200 MM UNDERDRAIN PIPE	605.11				
30									30		M	200 MM UNDERDRAIN CARRIER PIPE	605.21				
10									10		EACH	UNDERDRAIN FLUSHING BASIN	605.95				
720				500					1220		CM	DUST CONTROL WITH WATER	609.10				
2				1					3		T	DUST AND ICE CONTROL WITH CALCIUM CHLORIDE	609.15				
							10		10		CM	STONE FILL, TYPE I	613.10				
							1730		1730		CM	STONE FILL, TYPE IV	613.13				
600				50					650		M	CAST-IN-PLACE CONCRETE CURB, TYPE B	616.28				
				2					2		EACH	RELOCATE MAILBOX, SINGLE SUPPORT	617.10				
				140					140		SM	PORTLAND CEMENT CONCRETE SIDEWALK, 125 MM	618.10				

PROJECT NAME: CAMBRIDGE
PROJECT NUMBER: STP 030-2(27) / BRF 027-1(4)

FILE NAME: QuantitySheet.xls
PROJECT LEADER: J. SHULTZ
DESIGNED BY: J. DEVLIN / T. FILBACH
COMPOSITE QUANITITY SHEET #2

PLOT DATE: 05/22/2012
DRAWN BY: M.E-MONGEON
CHECKED BY: M.E-MONGEON

STATE OF VERMONT
AGENCY OF TRANSPORTATION

COMPOSITE QUANTITY SHEET 3

Metric

SUMMARY OF ESTIMATED QUANTITIES STP 030-2(27)				SUMMARY OF ESTIMATED QUANTITIES BRF 027-1(4)					TOTALS		DESCRIPTIONS				DETAILED SUMMARY OF QUANTITIES		
ROADWAY	TRAINING	EROSION CONTROL	FULL C.E. ITEMS	ROADWAY	TRAINING	EROSION CONTROL	BRIDGE	FULL C.E. ITEMS	GRAND TOTAL	FINAL	UNIT	ITEMS	ITEM NUMBER	ROUND	QUANTITIES	UNIT	ITEMS
13									13		EACH	STEEL MARKER POSTS	619.16				
				6					6		EACH	YIELDING MARKER POSTS	619.17				
				4					4		EACH	BRACING ASSEMBLY FOR CHAIN-LINK FENCE, 2.4 M	620.22				
				40					40		M	WOVEN WIRE FENCE WITH WOOD POSTS	620.26				
				2					2		EACH	WOOD BRACE FOR WOVEN WIRE FENCE	620.41				
18				90					108		M	REMOVING AND RESETTING FENCE	620.50				
				230					230		M	REMOVAL OF EXISTING FENCE	620.55				
				370					370		M	STEEL BEAM GUARDRAIL, GALVANIZED	621.20				
				5					5		EACH	MANUFACTURED TERMINAL SECTION, FLARED	621.50				
9									9		EACH	ENERGY ABSORPTION ATTENUATOR	621.56				
				1					1		EACH	ANCHOR FOR STEEL BEAM RAIL	621.60				
				4					4		EACH	GUARDRAIL APPROACH SECTION, GALVANIZED 2 RAIL BOX BEAM	621.72				
				141					141		M	REMOVAL AND DISPOSAL OF GUARDRAIL	621.80				
204									204		M	TEMPORARY TRAFFIC BARRIER	621.90				
204									204		M	REMOVE AND RESET TEMPORARY TRAFFIC BARRIER	621.95				
27									27		M	SLEEVES FOR UTILITIES (300 MM)	625.10				
600				1000					1600		HR	UNIFORMED TRAFFIC OFFICERS	630.10				
5500				2000					7500		HR	FLAGGERS	630.15				
			0.5					0.5	1		LS	FIELD OFFICE, ENGINEERS	631.10				
			0.5					0.5	1		LS	TESTING EQUIPMENT, CONCRETE	631.16				
			0.5					0.5	1		LS	TESTING EQUIPMENT, BITUMINOUS	631.17				
			3000					2000	5000		DL	FIELD OFFICE TELEPHONE (N.A.B.I.)	631.26				
	520				520				1040		HR	EMPLOYEE TRAINEESHIP	634.10				
0.5				0.5					1		LS	MOBILIZATION/DEMOBILIZATION	635.11				
				1					1		LS	TRAFFIC CONTROL (BRF 027-1(4))	641.10				
1									1		LS	TRAFFIC CONTROL (STP 030-2(27))	641.10				
0.5				0.5					1		LS	PUBLIC RELATIONS OFFICER	641.12				
4									4		EACH	PORTABLE CHANGEABLE MESSAGE SIGN	641.15				
800				830					1630		M	DURABLE 100 MM WHITE LINE, RECESSED TYPE I TAPE	646.407				
1100				830					1930		M	DURABLE 100 MM YELLOW LINE, RECESSED TYPE I TAPE	646.417				
50									50		M	DURABLE 200 MM YELLOW LINE, RECESSED TYPE I TAPE	646.457				
40									40		M	DURABLE 300 MM WHITE LINE, RECESSED TYPE I TAPE	646.467				
30									30		EACH	DURABLE LETTER OR SYMBOL, TYPE I TAPE	646.491				
70									70		M	TEMPORARY 100 MM WHITE LINE, PAINT	646.602				
40									40		M	TEMPORARY 100 MM YELLOW LINE, PAINT	646.612				
47				170					217		EACH	LINE STRIPING TARGETS	646.76				
600									600		SM	REMOVAL OF EXISTING PAVEMENT MARKINGS	646.85				
				190		350			540		SM	GEOTEXTILE FOR ROADBED SEPARATOR	649.11				
				360			1230		1590		SM	GEOTEXTILE UNDER STONE FILL	649.31				
		170				170			340		SM	GEOTEXTILE FOR SILT FENCE	649.51				

PROJECT NAME: CAMBRIDGE
PROJECT NUMBER: STP 030-2(27) / BRF 027-1(4)

FILE NAME: QuantitySheet.xls
PROJECT LEADER: J. SHULTZ
DESIGNED BY: J. DEVLIN / T. FILBACH
COMPOSITE QUANITITY SHEET #3

PLOT DATE: 06/13/2012
DRAWN BY: M.E-MONGEON
CHECKED BY: M.E-MONGEON
SHEET 5 OF 214

STATE OF VERMONT
AGENCY OF TRANSPORTATION

COMPOSITE QUANTITY SHEET 4

Metric

SUMMARY OF ESTIMATED QUANTITIES STP 030-2(27)					SUMMARY OF ESTIMATED QUANTITIES BRF 027-1(4)					TOTALS		DESCRIPTIONS				DETAILED SUMMARY OF QUANTITIES		
	ROADWAY	TRAINING	EROSION CONTROL	FULL C.E. ITEMS	ROADWAY	TRAINING	EROSION CONTROL	BRIDGE	FULL C.E. ITEMS	GRAND TOTAL	FINAL	UNIT	ITEMS	ITEM NUMBER	ROUND	QUANTITIES	UNIT	ITEMS
							360			360		SM	GEOTEXTILE FOR SILT FENCE, WOVEN WIRE REINFORCED	649.515				
							570			570		SM	GEOTEXTILE FOR FILTER CURTAIN	649.61				
			30				100			130		KG	SEED	651.15				
							100			100		KG	SEED, WINTER RYE	651.17				
			230				450			680		KG	FERTILIZER	651.18				
			2				4			6		T	AGRICULTURAL LIMESTONE	651.20				
			2				4			6		T	HAY MULCH	651.25				
			410				180			590		CM	TOPSOIL	651.35				
							640			640		SM	GRUBBING MATERIAL	651.40				
			0.5				0.5			1		LS	EPSC PLAN	652.10				
			80				350			430		HR	MONITORING EPSC PLAN	652.20				
			0.5				0.5			1		LU	MAINTENANCE OF EPSC PLAN (N.A.B.I.)	652.30				
			320				4600			4920		SM	TEMPORARY EROSION MATTING	653.20				
							3			3		CM	TEMPORARY STONE CHECK DAM, TYPE I	653.25				
			14							14		EACH	PREFABRICATED CHECK DAM	653.30				
			12				50			62		CM	VEHICLE TRACKING PAD	653.35				
			19							19		EACH	INLET PROTECTION DEVICE, TYPE I	653.40				
							670			670		M	BARRIER FENCE	653.50				
			520				230			750		M	PROJECT DEMARCATION FENCE	653.55				
	5				6					11		EACH	EVERGREEN TREES (PICEA GLAUCA)(B&B)(1.5 - 2.0 M HT)	656.20				
	83									83		EACH	EVERGREEN SHRUBS (JUNIPERUS CHINENSIS SEA GREEN)(CONTAINER)(600-800 MM HEIGHT)	656.25				
	48									48		EACH	EVERGREEN SHRUBS (JUNIPERUS CHINENSIS VIRIDIS SARGENT)(7.5 L CONTAINER)(300-450 MM SPREAD)	656.25				
	4									4		EACH	DECIDUOUS TREES (SYRINGA RETICULATUM)(B&B)(50-60 MM CAL.)	656.30				
	36									36		EACH	DECIDUOUS SHRUBS (HYDRANGEA ARBORESCENS "ANNABELLE")(B&B)(900-1200 MM HEIGHT)	656.35				
	15				24					39		EACH	GROUND COVERS AND VINES (VALIENT GRAPEVINE OR SUMMER GRAPEVINE)	656.40				
	60									60		EACH	PERENNIALS (HERMEROCALLIS STELLA D'ORO)(4 L. CONTAINER)(2 FANS, HEAVY)	656.41				
	200									200		EACH	PERENNIALS (NARCISSUS "KING ALFRED")(CONTAINER)(GRADE A BULBS)	656.41				
	100									100		CM	LANDSCAPE WATERING	656.65				
	6.25				16					22.25		CM	LANDSCAPE BACKFILL, TRUCK MEASUREMENT	656.80				
	29				2.41					31.41		SM	TRAFFIC SIGNS, TYPE A	675.20				
	34				11.32					45.32		SM	TRAFFIC SIGNS, TYPE B	675.21				
	595.2				244					839.2		KG	TUBULAR STEEL SIGN POST	675.33				
	191.9				26					217.9		M	SQUARE TUBE SIGN POST AND ANCHOR	675.341				
	6				2					8		EACH	FOUNDATION FOR TUBULAR STEEL POST	675.43				
	93				24					117		EACH	REMOVING SIGNS	675.50				
					5					5		EACH	ERECTING SALVAGED SIGNS	675.60				
					5					5		EACH	SETTING SALVAGED POSTS	675.61				
					6					6		EACH	DELINEATOR WITH STEEL POST	676.10				
	265									265		M	WIRED CONDUIT (50MM)(PVC)	678.23				

PROJECT NAME: CAMBRIDGE
PROJECT NUMBER: STP 030-2(27) / BRF 027-1(4)

FILE NAME: QuantitySheet.xls
PROJECT LEADER: J. SHULTZ
DESIGNED BY: J. DEVLIN / T. FILBACH
COMPOSITE QUANITITY SHEET #4

PLOT DATE: 06/21/2012
DRAWN BY: M.E-MONGEON
CHECKED BY: M.E-MONGEON
SHEET 6 OF 214

STATE OF VERMONT
AGENCY OF TRANSPORTATION

COMPOSITE QUANTITY SHEET 5

Metric

SUMMARY OF ESTIMATED QUANTITIES STP 030-2(27)				SUMMARY OF ESTIMATED QUANTITIES BRF 027-1(4)					TOTALS		DESCRIPTIONS				DETAILED SUMMARY OF QUANTITIES		
ROADWAY	TRAINING	EROSION CONTROL	FULL C.E. ITEMS	ROADWAY	TRAINING	EROSION CONTROL	BRIDGE	FULL C.E. ITEMS	GRAND TOTAL	FINAL	UNIT	ITEMS	ITEM NUMBER	ROUND	QUANTITIES	UNIT	ITEMS
265									265		M	WIRED CONDUIT (50MM)(PVC)	678.23				
8									8		EACH	PULL BOX, STANDARD	678.25				
75									75		M	ELECTRICAL CONDUIT SLEEVE (200MM)(PVC)	678.30				
1									1		EACH	REMOVAL OF EXISTING TRAFFIC CONTROL SIGNAL SYSTEM	678.45				
8									8		EACH	LIGHT POLE BASE	679.21				
8									8		EACH	BREAKAWAY FEATURE FOR LIGHT POLE	679.23				
8									8		EACH	LIGHT POLE	679.45				
8									8		EACH	BRACKET ARM	679.47				
8									8		EACH	LUMINAIRE	679.50				
2									2		EACH	POWER DROP STANCHION, STREET LIGHTING	679.55				
1				1					2		LU	PRICE ADJUSTMENT, FUEL (N.A.B.I.)	690.50				
							17		17		M	SPECIAL PROVISION (DRILLED SHAFT IN EARTH) (1.15 M)	900.640				
							18		18		M	SPECIAL PROVISION (DRILLED SHAFT IN ROCK) (1.0 M)	900.640				
							4		4		M	SPECIAL PROVISION (DRILLED SHAFT OBSTRUCTION DRILLING AND REMOVAL) (1.15 M)	900.640				
				50					50		M	SPECIAL PROVISION (REMOVABLE METAL HAND RAILING)	900.640				
60									60		M	SPECIAL PROVISION (VERTICAL GRANITE CURB, MOUNTABLE)	900.640				
							1		1		LS	SPECIAL PROVISION (MOBILIZATION OF DRILLED SHAFT EQUIPMENT)	900.645				
							1		1		LS	SPECIAL PROVISION (QC/QA CLEANING AND PAINTING STRUCTURAL COMPONENTS)	900.645				
1									1		LS	SPECIAL PROVISION (TEMPORARY ROADWAY WIDENING)(PHASE I)	900.645				
120				121					241		SM	SPECIAL PROVISION (HAND-PLACED BITUMINOUS CONCRETE MATERIAL, DRIVES)	900.675				
85									85		SM	SPECIAL PROVISION (PORTLAND CEMENT CONCRETE ISLAND TREATMENT, 100 MM)	900.675				
				480					480		SM	SPECIAL PROVISION (SCARIFYING PAVEMENT)	900.675				
425									425		SM	SPECIAL PROVISION (STAMPED COLORED CONCRETE APRON, 200MM)	900.675				

PROJECT NAME: CAMBRIDGE
PROJECT NUMBER: STP 030-2(27) / BRF 027-1(4)

FILE NAME: QuantitySheet.xls
PROJECT LEADER: J. SHULTZ
DESIGNED BY: J. DEVLIN / T. FILBACH
COMPOSITE QUANITITY SHEET #5

PLOT DATE: 06/13/2012
DRAWN BY: M.E-MONGEON
CHECKED BY: M.E-MONGEON
SHEET 7 OF 214

EROSION CONTROL NARRATIVE

1. PROJECT DESCRIPTION

CAMBRIDGE BRF 027-1 (4) WILL REPLACE BRIDGE 21 ON VT 108 OVER THE LAMOILLE RIVER IN THE TOWN OF CAMBRIDGE ON THE EXISTING ALIGNMENT. THIS PROJECT WILL BE BUILT IN CONJUNCTION WITH CAMBRIDGE STP 030 -2 (27) WHICH WILL RE-BUILD THE INTERSECTION OF VT 108 AND VT 15 IN CAMBRIDGE. STP 030-2 (27) INCLUDES CONSTRUCTION OF A ROUNDABOUT AND FULL-DEPTH RECONSTRUCTION OF THE APPROACHES TO THE INTERSECTION OF VT 15 AND VT 108 IN CAMBRIDGE.

THE NEW BRIDGE WILL BE A TWO LANE, THREE SPAN, CONCRETE DECK ON CURVED STEEL GIRDER. THE PROJECT WILL MAINTAIN TRAFFIC ON A TEMPORARY BRIDGE, LOCATED DOWNSTREAM OF THE EXISTING STRUCTURE, DURING CONSTRUCTION. THE EXISTING BRIDGE AND APPROACHES WILL BE REMOVED ONCE THE TEMPORARY BRIDGE IS IN PLACE AND PRIOR TO CONSTRUCTION OF THE NEW BRIDGE. THE TOTAL LENGTH OF WORK, INCLUDING APPROACHES AND INCLUDING THE WORK ASSOCIATED WITH BOTH BRF 027-1 (4) AND STP 030-2 (27), IS APPROXIMATELY 969 METERS (3179 FT).

IT IS ANTICIPATED THAT THIS PROJECT WILL LAST TWO CONSTRUCTION SEASONS.

2. AREA OF DISTURBANCE

AREA OF DISTURBANCE SHALL INCLUDE LIMITS OF EARTH DISTURBANCE WITHIN THE PROJECT AREA, INCLUDING ANY WASTE, STAGING AND BORROW AREAS WITHIN OR DIRECTLY ADJACENT TO THE PROJECT LIMITS.

TOTAL DISTURBED AREA (EXCLUDING WASTE, BORROW & STAGING AREAS) IS APPROX 2.98 HECTARES (7.36 ACRES). THIS IS THE TOTAL DISTURBED AREA FOR BOTH CAMBRIDGE BRF 027 -1 (4) AND CAMBRIDGE STP 030-2 (27) WHICH WILL BOTH BE BUILT AS PART OF THE SAME CONSTRUCTION CONTRACT.

3. CONSTRUCTION SEQUENCE

THE CONTRACTOR SHALL SEQUENCE CONSTRUCTION ACTIVITIES TO MINIMIZE THE EXTENT OF DISTURBED SOILS LEFT OPEN TO A MAXIMUM OF 5 DISTURBED ACRES AT ANY GIVEN TIME. CONSTRUCTION SEQUENCING PHASING AREAS ARE SHOWN AND DEFINED ON THE "CONSTRUCTION SEQUENCE PHASING" SHEET. A PROPOSED GENERAL SEQUENCE FOR EACH OF THE CONSTRUCTION ZONES IS AS FOLLOWS:

- ROUNDABOUT (STP 030-2(27) PROJECT)
  1) ESTABLISH PERIMETER CONTROLS AND MARK BOUNDARIES FOR SENSITIVE RESOURCE AREAS, INCLUDING WETLANDS.
  2) INSTALL SEDIMENT CONTROL MEASURES.
  3) CLEAR AND GRUB.
  4) CONSTRUCT TEMPORARY ROADWAY FOR PHASE IV TRAFFIC, STABILIZE TEMPORARY SLOPES, AND PLACE TEMPORARY PAVEMENT.
  5) BEGIN CUT AND FILL OPERATIONS, LIMITING TOTAL DISTURBED AREA TO 5 ACRES.
  6) FORM, ROUGH GRADE AND STABILIZE ANY DITCHES.
  7) CONCURRENTLY INSTALL TEMPORARY STABILIZATION AND EPSC MEASURES AS WORK PROGRESSES.
  8) INSTALL ANY APPLICABLE STORM DRAIN PIPES AND STRUCTURES.
  9) PLACE SUBBASE MATERIAL FOR ROADWAY, FINAL GRADE AND STABILIZE ALL EARTH DISTURBANCE AS WORK PROGRESSES.
  10) BEGIN PHASE V CONSTRUCTION, SHIFT TRAFFIC TO TEMPORARY ROADWAY.
  11) REPEAT STEPS 4 THROUGH 10 FOR PHASE V, VI,VII, AND VIII CONSTRUCTION.

- **SOUTH OF THE LAMOILLE RIVER (BRF 027-1(4) PROJECT)**
  1) ESTABLISH PERIMETER CONTROLS AND MARK BOUNDARIES FOR SENSITIVE RESOURCE AREAS, INCLUDING WETLANDS AND RIPARIAN BUFFER ZONES.
  2) INSTALL SEDIMENT CONTROL MEASURES.
  3) CLEAR AND GRUB.
  4) CONSTRUCT TEMPORARY ROADWAY FOR PHASE 1 TRAFFIC, STABILIZE TEMPORARY SLOPES, AND PLACE TEMPORARY PAVEMENT.
  5) BEGIN CUT AND FILL OPERATIONS, LIMITING TOTAL DISTURBED AREA TO 5 ACRES.
  6) FORM, ROUGH GRADE AND STABILIZE DITCHES.
  7) CONCURRENTLY INSTALL TEMPORARY STABILIZATION AND EPSC MEASURES AS WORK PROGRESSES.
  8) INSTALL STORM DRAIN PIPES AND STRUCTURES.
  9) PLACE SUBBASE MATERIAL FOR ROADWAY, FINAL GRADE AND STABILIZE ALL EARTH DISTURBANCE AS WORK PROGRESSES.
  10) PAVE ROADWAY.
  11) BEGIN PHASE 2 CONSTRUCTION, SHIFT TRAFFIC TO TEMPORARY ROADWAY PAVEMENT, SPLIT TRAFFIC FLOW AND CONSTRUCT FINAL ROADWAY BETWEEN EASTBOUND AND WESTBOUND TRAFFIC.
  12) REPEAT STEPS 5 THROUGH 10 CONCURRENT WITH PHASE 2 CONSTRUCTION.
  13) BEGIN PHASE III CONSTRUCTION, SHIFT TRAFFIC TO NEW ROADWAY PAVEMENT, REMOVE TEMPORARY ROADWAY, AND CONSTRUCT FINAL ROADWAY.
  14) REPEAT STEPS 5 THROUGH 10 CONCURRENT WITH PHASE III CONSTRUCTION.

- **NORTH OF THE LAMOILLE RIVER**
  1) ESTABLISH PERIMETER CONTROLS AND MARK BOUNDARIES FOR SENSITIVE RESOURCE AREAS, INCLUDING WETLANDS, RIPARIAN BUFFER ZONES, AND ARCHEOLOGICALLY SENSITIVE AREAS.
  2) INSTALL SEDIMENT CONTROL MEASURES.
  3) CLEAR AND GRUB.
  4) CONSTRUCT TEMPORARY ROADWAY FOR PHASE 1 TRAFFIC, STABILIZE TEMPORARY SLOPES, AND PLACE TEMPORARY PAVEMENT.
  5) BEGIN CUT AND FILL OPERATIONS, LIMITING TOTAL DISTURBED AREA TO 5 ACRES.
  6) FORM, ROUGH GRADE AND STABILIZE DITCHES.
  7) CONCURRENTLY INSTALL TEMPORARY STABILIZATION AND EPSC MEASURES AS WORK PROGRESSES.
  8) INSTALL STORM DRAIN PIPES AND STRUCTURES.
  9) PLACE SUBBASE MATERIAL FOR ROADWAY AND FINAL GRADE AND STABILIZE ALL EARTH DISTURBANCE AS WORK PROGRESSES.
  10) PAVE ROADWAY.
  11) BEGIN PHASE 2 CONSTRUCTION, SHIFT TRAFFIC TO TEMPORARY ROADWAY PAVEMENT, SPLIT TRAFFIC FLOW AND CONSTRUCT FINAL ROADWAY BETWEEN NORTHBOUND AND SOUTHBOUND TRAFFIC.
  12) REPEAT STEPS 5 THROUGH 10 CONCURRENT WITH PHASE 2 CONSTRUCTION.
  13) BEGIN PHASE 3 CONSTRUCTION, SHIFT TRAFFIC TO NEW ROADWAY PAVEMENT, REMOVE TEMPORARY ROADWAY, AND CONSTRUCT FINAL ROADWAY.
  14) REPEAT STEPS 5 THROUGH 10 CONCURRENT WITH PHASE 3 CONSTRUCTION.

- **LAMOILLE RIVER BRIDGE**
  1) ESTABLISH PERIMETER CONTROLS AND MARK BOUNDARIES FOR SENSITIVE RESOURCE AREAS (THE GIANT FLOATER AND THE CREEK HEELSPLITTER HAVE BEEN IDENTIFIED AND WILL BE DEALT WITH PER CONDITIONS IN THE PERMIT), INCLUDING WETLANDS AND RIPARIAN BUFFER ZONES.
  2) INSTALL SEDIMENT CONTROL MEASURES.
  3) CLEAR AND GRUB.
  4) BEGIN CUT AND FILL OPERATIONS, LIMITING TOTAL DISTURBED AREA TO 5 ACRES.
  5) FORM, ROUGH GRADE AND STABILIZE DITCHES.
  6) CONCURRENTLY INSTALL TEMPORARY STABILIZATION AND EPSC MEASURES AS WORK PROGRESSES.
  7) INSTALL TEMPORARY STABILIZATION AND EPSC MEASURES BEYOND 6-METER CLEARING OF OVERBURDEN.
  8) INSTALL STORM DRAIN PIPES AND STRUCTURES.
  9) PLACE SUBBASE MATERIAL FOR ROADWAY AND FINAL GRADE AND STABILIZE ALL EARTH DISTURBANCE AS WORK PROGRESSES.
  10) PAVE ROADWAY.
  11) BEGIN PHASE 2 CONSTRUCTION, SHIFT TRAFFIC TO NEW ROADWAY PAVEMENT, REMOVE TEMPORARY ROADWAY, AND CONSTRUCT FINAL ROADWAY.
  12) REPEAT STEPS 4 THROUGH 11 CONCURRENT WITH PHASE 2 CONSTRUCTION.

4. STABILIZATION OF EXPOSED SOILS

A DETAILED DESCRIPTION OF THE SOIL TYPES EXPECTED TO BE ENCOUNTERED IN THE PROJECT AREA IS INCLUDED IN THE PROJECT PLAN SHEET TITLED "EXISTING CONDITIONS SITE PLAN".

THREE SOILS ARE IDENTIFIED WITHIN THE PROJECT AREA. THEY ARE:
ADAMS LOAMY FINE SAND, 2 % TO 8% SLOPE. DEPTH IS 0 METERS TO 5 METERS. THIS SOIL IS NOT HIGHLY ERODIBLE. K (EROSION FACTOR) = 0.17.
BOOTHBAY SILT LOAM, 3 % TO 8% SLOPE. DEPTH IS 0 METERS TO 5 METERS. THIS SOIL HAS THE POTENTIAL TO BE HIGHLY ERODIBLE. K (EROSION FACTOR) = 0.32.
ONDAWA FINE SANDY LOAM. DEPTH IS 0 METERS TO 5 METERS. THIS SOIL IS NOT HIGHLY ERODIBLE. K (EROSION FACTOR) = 0.24.

NOTE: K-VALUES GENERALLY INDICATE THE FOLLOWING: 0.0-0.18 = LOW EROSION POTENTIAL; 0.18-0.36 = MODERATE EROSION POTENTIAL: 0.37 AND HIGHER = HIGH EROSION POTENTIAL.

- SEED AND MULCH WILL BE USED FOR BOTH TEMPORARY AND PERMANENT STABILIZATION MEASURES. ROLLED EROSION CONTROL PRODUCT (RECP) WILL BE USED IN PLACE OF MULCH FOR SLOPES GREATER THAN 1V:3H. MULCH IS TO BE APPLIED AT A MINIMUM APPLICATION RATE SHOWN ON THE EPSC DETAILS, UNLESS DIRECTED OTHERWISE BY THE ENGINEER.

- DISTURBED AREAS AND SOIL STOCKPILES THAT WILL NOT BE WORKED FOR MORE THAN 7 DAYS SHALL BE TEMPORARILY STABILIZED WITH MULCH/ROLLED EROSION CONTROL PRODUCT (RECP) WITHIN 48 HOURS.

- DISTURBED AREAS AND SOIL STOCKPILES THAT WILL NOT BE WORKED FOR MORE THAN 30 DAYS SHALL BE TEMPORARILY STABILIZED WITH SEED AND MULCH/ROLLED EROSION CONTROL PRODUCT (RECP) WITHIN 48 HOURS.

- EXPOSED AREAS THAT HAVE ACHIEVED FINAL GRADE SHALL BE PERMANENTLY STABILIZED WITHIN 48 HOURS.

- IN AREAS WHERE VEGETATIVE COVER WILL PROVIDE PERMANENT STABILIZATION, SEEDING SHALL BE COMPLETED BETWEEN APRIL 15 AND SEPTEMBER 15.

5. DRAINAGE AREAS AND DISCHARGE POINTS

THE LAND SURROUNDING THE PROJECT SITE CONSISTS OF WELL ESTABLISHED VEGETATION, WITH MODERATE TO STEEP SLOPES OF LAWN, HAYFIELDS, VARIOUS GRASSES, BRUSH, AND DECIDUOUS AND CONIFEROUS TREES LEADING DOWN TO FLAT FIELDS OR INTO DITCHES. ALONG VT 15 THERE ARE SEVERAL WELL VEGETATED DITCHES THAT RUN ALONG THE NORTHWEST, SOUTHWEST AND SOUTHEAST QUADRANT OF VT 15. THE TOPOGRAPHY GENERALLY RUNS TOWARD THE RIVER FROM THE NORTH AND SOUTH ALONG VT 108 AND RUNS TOWARD THE RIVER FROM THE SOUTH ON VT 15. RUNOFF GENERALLY LEAVES THE SITE THROUGH A COMBINATION OF OVERLAND FLOW, CULVERTS, AND DITCHES.

THE BRIDGE CROSSES THE LAMOILLE RIVER WHICH IS CHARACTERIZED AS PERENNIAL, SINOUS RIVER IN MODERATE RELIEF WITH A WIDE FLOODPLAIN AND HAS A STREAMBED OF GRAVEL WITH SAND AND COBBLES AND SOME LEDGE OUTCROPS. THE BREWSTER RIVER FLOWS INTO THE LAMOILLE RIVER JUST UPSTREAM OF THE RIVER CROSSING BUT IS NOT AFFECTED BY THE PROJECT. THREE AREAS OF DEFINED WETLANDS ARE PRESENT IN THE PROJECT AREA. THE WATERSHED AREA IS 1264 SQUARE KILOMETERS (488 SQUARE MILES).

- DRAINAGE AREA 1
  INCLUDES THE MAJORITY OF THE INTERSECTION OF VT ROUTE 15 AND VT ROUTE 108, FROM VT ROUTE 15 STA. 20+060 TO 20+303 AND VT ROUTE 108 STA. 9+915, RT. AND STA. 9+938, LT. TO 10+200. THE ASSOCIATED AREA OF DISTURBANCE IS 3.16 ACRES. RUNOFF FROM THE INTERSECTION AND ALONG THE APPROACHES WILL FLOW TO A CLOSED COLLECTION SYSTEM AND DISCHARGED TO THE LAMOILLE RIVER VIA A GRASS CHANNEL.

- DRAINAGE AREA 2
  LOCATED ON VT ROUTE 15, STA. 19+960 TO STA. 20+060. THE ASSOCIATED AREA OF DISTURBANCE IS 0.61 ACRES. RUNOFF IN THE AREA ALONG VT 15 WILL FLOW TO AN EXISITING CULVERT AND DITCH TO THE LAMOILLE RIVER.

- DRAINAGE AREA 3
  LOCATED ON VT ROUTE 108, STA. 9+869 TO STA. 9+915, RT. AND STA. 9+938, LT. THE ASSOCIATED AREA OF DISTURBANCE IS 0.15 ACRES. RUNOFF IN THIS AREA WILL SHEET FLOW OFF-PROJECT ULTIMATELY DISCHARGING TO THE LAMOILLE RIVER, VIA A LOW-LYING FIELD AND THE BREWSTER RIVER. THE MAJORITY OF THIS AREA IS COLD PLANING AND RESURFACING ONLY AND THEREFORE IS NON-JURISDICTIONAL.

- DRAINAGE AREA 4
  LOCATED TO THE LEFT OF VT ROUTE 108, STA. 10+059, LT. TO STA. 10+200. THE ASSOCIATED AREA OF DISTURBANCE IS 1.19 ACRES. RUNOFF ALONG VT 108 WILL SHEET FLOW AND DISCHARGE INTO THE LAMOILLE RIVER.

- DRAINAGE AREA 5
  LOCATED NORTH OF THE RIVER, ON VT 108, STA. 10+223 TO STA. 10+256. THE ASSOCIATED AREA OF DISTURBANCE IS 0.24 ACRES. RUNOFF FROM THIS DRAINAGE AREA WILL SHEET FLOW TO THE LAMOILLE RIVER.

- DRAINAGE AREA 6
  LOCATED ON VT 108, STA. 10+256, RT. TO STA. 10+308, RT. THE ASSOCIATED AREA OF DISTURBANCE IS 0.24 ACRES. RUNOFF FROM THE AREA SHEET FLOW TO THE LAMOILLE RIVER.

- DRAINAGE AREA 7
  LOCATED ON VT 108, STA. 10+256, LT. TO STA. 10+338. THE ASSOCIATED AREA OF DISTURBANCE IS 0.53 ACRES. RUNOFF FROM THIS AREA WILL SHEET FLOW TO THE LAMOILLE RIVER.

- DRAINAGE AREA 8
  LOCATED ON VT 108, STA. 10+308, RT. TO STA. 10+532, RT. THE ASSOCIATED AREA OF DISTURBANCE IS 0.69 ACRES. RUNOFF FROM THIS AREA WILL SHEET FLOW TO THE LAMOILLE RIVER.

- DRAINAGE AREA 9
  LOCATED ON VT 108, STA. 10+338, LT. TO STA. 10+519, LT. THE ASSOCIATED AREA OF DISTURBANCE IS 0.59 ACRES. RUNOFF FROM THIS AREA WILL SHEET FLOW TO THE LAMOILLE RIVER.

EPSC NARRATIVE SHEET 1

PROJECT NAME:	CAMBRIDGE
PROJECT NUMBER:	BRF 027-1(4) / STP 030-2 (27)

FILE NAME: s78f163ern.i	PLOT DATE: 05-JUN-2012
PROJECT LEADER: M.E-MONGEON/J.SCHULTZ	DRAWN BY: S. SCRIBNER
DESIGNED BY: S. SCRIBNER	CHECKED BY: M.EVANSMONGEON
	SHEET 8 OF 214

DRAINAGE AREA	TOTAL DISTURB. (ACRES)	RECEIVING WATER
1	3.16	LAMOILLE RIVER
2	0.61	LAMOILLE RIVER
3	0.15	LAMOILLE RIVER VIA BREWSTER RIVER
4	1.19	LAMOILLE RIVER
5	0.24	LAMOILLE RIVER
6	0.24	LAMOILLE RIVER
7	0.53	LAMOILLE RIVER
8	0.69	LAMOILLE RIVER
9	0.59	LAMOILLE RIVER

6. WASTE, BORROW AND STAGING AREAS

- OFF-SITE WASTE AREAS HAVE NOT BEEN IDENTIFIED FOR THIS PROJECT. IT WILL BE THE CONTRACTOR'S RESPONSIBILITY TO IDENTIFY AND PERMIT, AS NECESSARY, ANY OFF-SITE WASTE AREAS THAT WILL BE NEEDED. ALL EROSION PREVENTION AND SEDIMENT CONTROL MEASURES NECESSARY FOR WASTE AND STAGING AREAS OUTSIDE THE PROJECT LIMITS SHALL BE PAID FOR PER 105.29 OF THE STANDARD SPECIFICATIONS FOR CONSTRUCTION.
- LOCATE ADDITIONAL AREAS FOR DISPOSAL OF STUMPS, EXCESS SOILS AND COLLECTED SEDIMENT, IF NECESSARY. DISPOSE OF THESE MATERIALS IN A MANNER THAT WILL NOT RESULT IN SEDIMENTS ENTERING WATERS OF THE STATE.
- DISPOSAL SITES REQUIRE RELATIVELY LEVEL TERRAIN WITH AN ISOLATION DISTANCE OF AT LEAST 30 METERS FROM ANY SURFACE WATERS, INCLUDING WETLANDS.
- VEHICLE AND EQUIPMENT STORAGE AREAS OR AREAS ADJACENT TO CONSTRUCTION TRAILERS OR OTHER HIGH TRAFFIC AREAS SHALL BE COVERED WITH GEOTEXTILE FABRIC AND 300 MM OF GRAVEL. FOLLOWING COMPLETION OF CONSTRUCTION, ALL NON-NATIVE MATERIALS SHALL BE REMOVED FROM THE STAGING AREA. COMPACTED, RUTTED, OR OTHERWISE DISTURBED SOILS SHALL BE TILLED, RAKED, SEEDED AND MULCHED.
- ERODIBLE MATERIALS STOCKPILED WITHIN THE MATERIAL STORAGE AREAS SHALL BE ISOLATED WITH SILT FENCE OR OTHER ACCEPTABLE SEDIMENT BARRIER. SOIL STOCKPILED ON THE SITE SHALL BE SEEDED AND MULCHED.

7. WINTER CONSTRUCTION REQUIREMENTS

IT IS EXPECTED THAT CONSTRUCTION ACTIVITIES WILL CONTINUE INTO THE WINTER CONSTRUCTION SEASON, CONDITIONAL UPON ACTUAL FIELD AND WEATHER CONDITIONS. IF ACTIVITIES ARE ON-GOING BETWEEN OCTOBER 15 AND APRIL 15, THE CONTRACTOR SHALL FOLLOW REQUIREMENTS FOR WINTER CONSTRUCTION, AS DEFINED IN SPECIFIC PERMIT CONDITIONS AND AS FOLLOWS:

- ENLARGED ACCESS POINTS STABILIZED TO PROVIDE FOR SNOW STOCKPILING.
- LIMITS OF DISTURBANCE MOVED OR REPLACED TO REFLECT BOUNDARY OF WINTER WORK.
- DEVELOPMENT OF A SNOW MANAGEMENT PLAN THAT INCLUDES:
  - ADEQUATE STORAGE AND CONTROL OF MELT-WATER.
  - STORAGE OF CLEARED SNOW TO BE PLACED DOWN SLOPE OF DISTURBED AREAS AND OUT OF STORMWATER TREATMENT STRUCTURES.
- A MINIMUM 7.5 METER (25-FOOT) BUFFER SHALL BE MAINTAINED FROM PERIMETER CONTROLS.
- DRAINAGE STRUCTURES MUST BE KEPT OPEN AND FREE OF SNOW AND ICE DAMS.
- SILT FENCE AND OTHER PRACTICES REQUIRING EARTH DISTURBANCE MUST BE INSTALLED AHEAD OF FROZEN GROUND.
- MULCH TO BE APPLIED AT TWICE THE REGULAR RATE, AS SHOWN ON THE EPSC DETAILS, UNLESS DIRECTED OTHERWISE BY THE RESIDENT ENGINEER.
- AREAS OF DISTURBED SOILS MUST BE STABILIZED AT THE END OF EACH WORK DAY, WITH THE FOLLOWING EXCEPTIONS:
  - IF NO PRECIPITATION WITHIN 24 HOURS IS FORECAST AND WORK WILL RESUME IN THE SAME AREA WITHIN 24 HOURS.
  - DISTURBED AREAS THAT COLLECT AND RETAIN RUNOFF, SUCH AS OPEN UTILITY TRENCHES, MUST BE STABILIZED AT THE END OF EACH WORK WEEK.
- PRIOR TO STABILIZATION, SNOW OR ICE MUST BE REMOVED TO LESS THAN 25 MM (1") THICKNESS.

CONTRACTOR RESPONSIBILITIES, LIMITATIONS & PROHIBITIONS

1. GENERAL NOTES

- IT SHALL BE THE RESPONSIBILITY OF THE CONTRACTOR TO AMEND/UPDATE ALL PLANS AND EXISTING PERMITS WHEN ADDING DETAILED CONSTRUCTION PHASING OR MODIFYING ANYTHING THAT MAY DEVIATE FROM THE APPROVED PLANS, AS DIRECTED BY THE RESIDENT ENGINEER.
- OTHER THAN THOSE SHOWN ON THE PLANS, ALL LAND DISTURBANCES WITHIN 15 METERS OF ALL WATER BODIES, MEASURED FROM THE TOP OF BANK, AND WETLANDS ARE PROHIBITED WITHOUT FURTHER REGULATORY REVIEW.
- CONTRACTOR TO MAINTAIN ALL EXISTING STREAMS AND RIPARIAN BUFFER ZONES IN THEIR NATURAL CONDITION.
- OFF-SITE DISCHARGES OF ANY MATERIAL, OTHER THAN STORMWATER, SUCH AS VEHICLE AND EQUIPMENT MAINTENANCE SPILLS, FUEL, WASH WATER, CONSTRUCTION DEBRIS, OIL, WET CONCRETE (INCLUDING WASHOUT WATER FROM CONCRETE BATCH TRUCKS OR EQUIPMENT USED TO MIX CONCRETE) AND OTHER SUBSTANCES ARE PROHIBITED.
- THE FAILURE TO PROMPTLY ABATE THE DISCHARGE OF SEDIMENT OR ANY OTHER WASTE WHICH CAUSES A VISIBLE DISCOLORATION OF SURFACE WATERS (INCLUDING WETLANDS), OR IS FOUND TO BE IN VIOLATION OF WATER QUALITY STANDARDS BASED ON MONITORING IS PROHIBITED. ANY CORRECTIVE ACTION UNDERTAKEN TO REMOVE SEDIMENT FROM A WETLAND IS ALSO PROHIBITED.
- WEATHER CONDITIONS WILL BE MONITORED DURING THE CONSTRUCTION SEASON. IF AN EXTENDED RAIN PERIOD OR HEAVY RAIN IS PREDICTED, EXPOSED SOIL AREAS WILL BE MULCHED PRIOR TO AND DAILY DURING THE RAIN EVENT. IF DETERMINED NECESSARY BY THE RESIDENT ENGINEER, WORK MAY BE SUSPENDED OR LIMITED DURING THE STORM.

2. EPSC PLAN

THE CONTRACTOR SHALL SUBMIT AN EPSC PLAN IN ACCORDANCE WITH ITEM 652.10 - EPSC PLAN AND PROJECT PERMITS. THE PLAN AT A MINIMUM SHALL TAKE INTO CONSIDERATION THE FOLLOWING:

THE EPSC PLAN SHALL INCLUDE INFORMATION REGARDING:

- THE CONSTRUCTION STONE PADS AND CHECK DAMS,
- CONSTRUCTION OF TEMPORARY TRAFFIC CONTROL,
- STABILIZATION OF OPERATIONAL STORMWATER TREATMENT PRACTICES PRIOR TO DIRECTING RUNOFF TO THEM.

SEDIMENT SETTLING BASIN SIZING CRITERIA

PUMP FLOW RATE		REQUIRED SURACE AREA		LENGTH WIDTH = 2:1			
Q (gpm)	Q (m^3/s)	(ft^2)	(m^2)	L (ft)	W (ft)	L (m)	W (m)
50	0.0032	595	55	35.0	17.0	10.6	5.3
100	0.0063	1200	111	49.0	24.5	15.0	7.5
150	0.0095	1773	165	59.6	29.8	18.2	9.1
200	0.0126	2368	220	68.8	34.4	21.0	10.5
250	0.0158	2970	276	77.0	38.5	23.4	11.7
300	0.0189	3560	330	84.4	42.2	25.8	12.9
350	0.0221	4155	386	91.2	45.6	27.8	13.9

EPSC NARRATIVE SHEET 2

PROJECT NAME: CAMBRIDGE
PROJECT NUMBER: BRF 027-1(4) / STP 030-2(27)

FILE NAME: s78f163ern.1
PROJECT LEADER: M.E-MONGEON/J.SCHULTZ
DESIGNED BY: S. SCRIBNER
PLOT DATE: 05-JUN-2012
DRAWN BY: S. SCRIBNER
CHECKED BY: M.EVANSMONGEON
SHEET 9 OF 214

VAOT Metric

N

VT STATE PLANE GRID

ONDAWA FINE SANDY LOAM
K = 0.24
HYDROGROUP = B

ADAMS LOAMY FINE SAND
K = 0.17
HYDROGROUP = A

STA. 19+960.692
BEGIN APPROACH

STA. 20+002.182
END APPROACH
BEGIN PROJECT
STP 030-2(27)

R=459.044M(1,506.05')
L=51.67M(169.52')

R=432.224M(1,418.06')
L=51.298M(168.30')

VT ROUTE 15

19+920 19+940 19+960 19+980 20+000 20+020 20+040 20+

FLOOD PLAIN

MATCHLINE - STA. 20+060 - SEE EPSC EXISTING CONDITIONS PLAN 2

LEGEND	
-·-·-·-·-·-	SOIL BOUNDARY TYPE
—•—•—•—	WETLAND
ARCH ARCH ARCH	ARCHAEOLOGY
— FLOOD PLAIN -	FLOOD PLAIN

0 10 20 30
SCALE IN METERS

PROJECT NAME: CAMBRIDGE
PROJECT NUMBER: STP 030-2(27)

FILE NAME: t78f163bdr.dgn
PROJECT LEADER: JLS
DESIGNED BY: MBL
EPSC EXISTING CONDITIONS PLAN 1

PLOT DATE: 05-JUN-2012
DRAWN BY: MBL
CHECKED BY: JAD
SHEET 10 OF 214

VT STATE PLANE GRID

VT ROUTE 108 STA. 10+082.794
END ROADWAY PROJECT
STP 030-2(27)
BEGIN BRIDGE PROJECT
BRF 027-1(4)

MATCHLINE - STA. 10+082.794 - SEE EPSC EXISTING CONDITIONS PLAN 5

LEGEND	
	SOIL BOUNDARY TYPE
	WETLAND
ARCH ARCH ARCH	ARCHAEOLOGY
FLOOD PLAIN	FLOOD PLAIN

ONDAWA FINE SANDY LOAM
K = 0.24
HYDROGROUP = B

ADAMS LOAMY FINE SAND
K = 0.17
HYDROGROUP = A

VT ROUTE 15 STA. 20+130.638 =
VT ROUTE 108 STA. 10+000.000

MATCHLINE - STA. 20+060 - SEE EPSC EXISTING CONDITIONS PLAN 1

MATCHLINE - STA. 20+200 - SEE EPSC EXISTING CONDITIONS PLAN 3

MATCHLINE - SEE 9+970 - SEE EPSC EXISTING CONDITIONS PLAN 4

19
N 238638.2867
E 473846.3807

20
N 238629.6217
E 473849.6734

0 10 20 30
SCALE IN METERS

PROJECT NAME:	CAMBRIDGE
PROJECT NUMBER:	STP 030-2(27)
FILE NAME: t78f163bdr.dgn	PLOT DATE: 05-JUN-2012
PROJECT LEADER: JLS	DRAWN BY: MBL
DESIGNED BY: MBL	CHECKED BY: JAD
EPSC EXISTING CONDITIONS PLAN 2	SHEET 11 OF 214

N

VT STATE PLANE GRID

MATCHLINE - STA. 20+200 - SEE EPSC EXISTING CONDITIONS PLAN 2

STA. 20+261.702
END PROJECT
STP 030-2(27)
BEGIN APPROACH

STA. 20+303.192
END APPROACH

26
N 238745.6393
E 473967.6912

VT ROUTE 15

20+200 20+220 20+240 20+260 20+280 20+300 20+320 20+323

FLOOD PLAIN

15/8

5/8 REBAR UP 6 IN

ONDAWA FINE SANDY LOAM
K = 0.24
HYDROGROUP = B

ADAMS LOAMY FINE SAND
K = 0.17
HYDROGROUP = A

4F

4F

LEGEND	
	SOIL BOUNDARY TYPE
	WETLAND
ARCH ARCH ARCH	ARCHAEOLOGY
— FLOOD PLAIN -	FLOOD PLAIN

0 10 20 30

SCALE IN METERS

PROJECT NAME: CAMBRIDGE
PROJECT NUMBER: STP 030-2(27)

FILE NAME: t78f163bdr.dgn
PROJECT LEADER: JLS
DESIGNED BY: MBL
EPSC EXISTING CONDITIONS PLAN 3

PLOT DATE: 05-JUN-2012
DRAWN BY: MBL
CHECKED BY: JAD
SHEET 12 OF 214

VT STATE PLANE GRID

N

STA. 9+910.905
END APPROACH
BEGIN PROJECT
STP 030-2(27)

STA. 9+869.415
BEGIN APPROACH

9+833
9+840
9+860
VT ROUTE 108
9+880
9+900
9+920
9+940
9+960

FLOOD PLAIN
FLOOD PLAIN
FLOOD PLAIN
FLOOD PLAIN
FLOOD PLAIN
FLOOD PLAIN

S
S
S

31
CALC ROW
N 238648.9744
E 473891.3356

BELL GATES LUMBER CORP.

MATCHLINE - STA. 9+970 - SEE EPSC EXISTING CONDITIONS PLAN 2

LEGEND	
	SOIL BOUNDARY TYPE
	WETLAND
ARCH ARCH ARCH	ARCHAEOLOGY
— FLOOD PLAIN -	FLOOD PLAIN

0 10 20 30
SCALE IN METERS

PROJECT NAME: CAMBRIDGE
PROJECT NUMBER: STP 030-2(27)

FILE NAME: t78f163bdr.dgn
PROJECT LEADER: JLS
DESIGNED BY: MBL
EPSC EXISTING CONDITIONS PLAN 4
PLOT DATE: 05-JUN-2012
DRAWN BY: MBL
CHECKED BY: JAD
SHEET 13 OF 214

Metric

SOIL INFORMATION
ONDAWA FINE SANDY LOAM HYDROLOGIC SOIL GROUP B DEPTH TO BED ROCK: 18.0 DEPTH TO WATER TABLE: 1.8 NOT HIGHLY ERODIBLE

SOIL INFORMATION
SALMON VARIENT-SALMON VERY FINE SANDY LOAMS, ROCKY, 15-25% SLOPES HYDROLOGIC SOIL GROUP C DEPTH TO BED ROCK: 6.0 - 15.0 DEPTH TO WATER TABLE: 1.8 HIGHLY ERODIBLE

SOIL INFORMATION
BOOTHBAY SILT LOAM, 3-8% SLOPES HYDROLOGIC SOIL GROUP C DEPTH TO BED ROCK: 18.0 TO WATER TABLE: 0.3-0.6 POTENTIALLY HIGHLY ERODIBLE

N

VT STATE PLANE GRID

CLASS III WETLAND

LAMOILLE RIVER

EXISTING OUTFALL: STABLE, VEGETATED, OUTLETS ONTO STONES ON RIVER BANK

MATCH LINE STA 10+280

MATCH LINE EXISTING STA 10+082.794 SEE EPSC PLAN 2

LEGEND

- SOIL TYPE BOUNDARY
- FLOOD PLAIN
- WETLAND
- RIPARIAN BUFFER
- ARCH — ARCHAEOLOGY AREA
- T&E — HABITAT - FOR T & E SPECIES

NOTES:

1. SOIL PROPERTIES AND BOUNDARIES WERE APPROXIMATED BASED ON USDA SURVEY. ACTUAL FIELD SURVEY MAY VARY.

0 10 20 30

SCALE IN METERS

PROJECT NAME:	CAMBRIDGE
PROJECT NUMBER:	BRF 027-1(4)
FILE NAME: structures/s78f163bdr.dgn	PLOT DATE: 05-JUN-2012
PROJECT LEADER: M.EVANS-MONGEON	DRAWN BY: S. SCRIBNER
DESIGNED BY: S.SCRIBNER	CHECKED BY:M.EVANS-MONGEON
EPSC EXISTING CONDITIONS PLAN 5	SHEET 14 OF 214

EXISTING OUTFALL:
STABLE, WELL VEGETATED,
FLAT PERENNIAL STREAM,
NOT ERODED

CLASS III WETLAND

VT STATE PLANE GRID

SOIL INFORMATION
BOOTHBAY SILT LOAM, 3-8% SLOPES
HYDROLOGIC SOIL GROUP C
DEPTH TO BED ROCK: 18.0
TO WATER TABLE: 0.3-0.6
POTENTIALLY HIGHLY ERODIBLE

STA 10+280

MATCH LINE

STA 10+420

10+300 10+320 10+340 10+360 10+380 10+400

ARCHAEOLOGICAL SITE

ARCHAEOLOGICALLY SENSITIVE AREA

FLOOD PLAIN

AERIAL E&T

EXISTING ROW

EXISTING 1350 CMP

GRAVEL DRIVE

BROOK

BUSHES

GRASS

GRAVEL

WOODS

BRUSH

RIPRAP

SAND BAR

FIELD

LAMOILLE RIVER

LEGEND

- SOIL TYPE BOUNDARY
- FLOOD PLAIN — FLOOD PLAIN
- WETLAND
- RIPARIAN BUFFER
- ARCH — ARCH — ARCHAEOLOGY AREA
- T&E — T&E — HABITAT - FOR T & E SPECIES

NOTES:

1. SOIL PROPERTIES AND BOUNDARIES WERE APPROXIMATED BASED ON USDA SURVEY. ACTUAL FIELD SURVEY MAY VARY.

0 10 20 30
SCALE IN METERS

PROJECT NAME:	CAMBRIDGE
PROJECT NUMBER:	BRF 027-1(4)
FILE NAME: structures/s78fl63bdr.dgn	PLOT DATE: 05-JUN-2012
PROJECT LEADER: M.EVANS-MONGEON	DRAWN BY: S. SCRIBNER
DESIGNED BY: S. SCRIBNER	CHECKED BY:M.EVANS-MONGEON
EPSC EXISTING CONDITIONS PLAN 6	SHEET 15 OF 214

VAOT Metric

N

VT STATE PLANE GRID

SOIL INFORMATION
BOOTHBAY SILT LOAM, 3-8% SLOPES
HYDROLOGIC SOIL GROUP C
DEPTH TO BED ROCK: 18.0
DEPTH TO WATER TABLE: 0.3-0.6
POTENTIALLY HIGHLY ERODIBLE

STA 10+420

MATCH LINE

VT ROUTE 108

10+420 10+440 10+460 10+480 10+500 10+520 10+540 10+560 10+580 10+600

FLOOD PLAIN

EXISTING ROW

BARBED WIRE FENCE

FIELD

GRASS

WOODS

LEDGE OUTCROP

BM #2
REBAR FLUSH W/GROUND
ELEV. = 141.055

BOULDER

REBAR

DRILL HOLE

HUB

BM #3
DRILL HOLE IN LEDGE
ELEV. = 144.703

PICNIC TABLE

GRAVEL DRIVE

SHELTER W/ PICNIC TABLE

LAMOILLE RIVER

LEGEND

- SOIL TYPE BOUNDARY
- FLOOD PLAIN — FLOOD PLAIN
- WETLAND
- RIPARIAN BUFFER
- ARCHAEOLOGY AREA — ARCH — ARCH —
- HABITAT - FOR T & E SPECIES — T&E — T&E —

NOTES:

1. SOIL PROPERTIES AND BOUNDARIES WERE APPROXIMATED BASED ON USDA SURVEY. ACTUAL FIELD SURVEY MAY VARY.

0 10 20 30

SCALE IN METERS

PROJECT NAME: CAMBRIDGE
PROJECT NUMBER: BRF 027-1(4)

FILE NAME: strutures/s78f163bdr.dgn
PROJECT LEADER: M.EVANS-MONGEON
DESIGNED BY: S. SCRIBNER
EPSC EXISTING CONDITIONS PLAN 7

PLOT DATE: 05-JUN-2012
DRAWN BY: S. SCRIBNER
CHECKED BY: M.EVANS-MONGEON
SHEET 16 OF 214

653.55-PROJECT DEMARCATION FENCE
STA. 20+006.548 - STA. 20+060.000, RT.
STA. 20+006.548 - STA. 20+026.589, LT.
STA. 20+034.508 - STA. 20+052.713, LT.

649.51-GEOTEXTILE FOR SILT FENCE
STA. 20+006.548 - STA. 20+041.093, RT.
STA. 20+006.548 - STA. 20+020.939, LT.
STA. 20+034.706 - STA. 20+046.744, LT.

653.30-PREFABRICATED CHECK DAMS
STA. 20+040.000 - STA. 20+060.000, LT.

653.20-TEMPORARY EROSION MATTING
STA. 20+040.000 - STA. 20+060.000, LT.

N
VT STATE PLANE GRID

ONDAWA FINE SANDY LOAM
K = 0.24
HYDROGROUP = B

ADAMS LOAMY FINE SAND
K = 0.17
HYDROGROUP = A

STA. 19+960.692
BEGIN APPROACH

STA. 20+002.182
END APPROACH
BEGIN PROJECT
STP 030-2(27)

R=459.044M(1,506.05')
L=51.67M(169.52')

R=432.224M(1,418.06')
L=51.298M(168.30')

HD BND
52.769
43.674

VT ROUTE 15

19+920 19+940 19+960 19+980 20+000 20+020 20+040 20+

FLOOD PLAIN
PDF
CZ

MATCHLINE - STA. 20+060 - SEE EPSC PLAN 2

NOTES:

1. THESE PLANS SHOW A CONCEPTUAL EROSION CONTROL PLAN. THE CONTRACTOR MUST SUBMIT A TEMPORARY EROSION CONTROL PLAN FOR APPROVAL.
2. TEMPORARY EROSION CONTROL MEASURES ARE CONCEPTUALLY SHOWN. THE CONTRACTOR MAY RELOCATE TEMPORARY MEASURES TO IMPROVE EROSION CONTROL WITH APPROVAL OF THE RESIDENT ENGINEER AND ON SITE COORDINATOR. SILT FENCE SHALL NOT BE INSTALLED ACROSS CONTOURS.
3. THE CONTRACTOR SHALL USE OTHER TEMPORARY EROSION CONTROL MEASURES AS NECESSITATED BY THE SEQUENCE OF CONSTRUCTION OR AS DIRECTED BY THE RESIDENT ENGINEER AND ON SITE COORDINATOR.
4. REFER TO TEMPORARY EROSION CONTROL DETAIL SHEETS FOR ADDITIONAL DETAILS.

LEGEND

TURBIDITY CURTAIN		SOIL BOUNDARY TYPE	
PDF	PROJECT DEMARCATION FENCE		WETLAND
	SILT FENCE		PIPE INLET PROTECTION
	PERMANENT SLOPE LIMITS	FLOOD PLAIN	FLOOD PLAIN
	TEMPORARY EROSION MATTING	BF	BARRIER FENCE
CZ	TEMPORARY SLOPE LIMITS		TEMPORARY CHECK DAMS
	WOVEN WIRE SILT FENCE		STONE FILL, TYPE I
	STABILIZED CONSTRUCTION ENTRANCE		STONE FILL, TYPE IV

0 10 20 30
SCALE IN METERS

PROJECT NAME: CAMBRIDGE
PROJECT NUMBER: STP 030-2(27)

FILE NAME: t78f163bdr.dgn
PROJECT LEADER: JLS
DESIGNED BY: MBL
EPSC PLAN 1

PLOT DATE: 05-JUN-2012
DRAWN BY: MBL
CHECKED BY: JAD
SHEET 17 OF 214

VT STATE PLANE GRID

653.40-INLET PROTECTION DEVICE, TYPE I
STA. 20+091.689, LT.
STA. 20+091.309, RT.
STA. 20+112.400, RT.
STA. 9+984.526, LT.
STA. 9+981.999, RT.
STA. 20+147.920, RT.
STA. 20+147.380, LT.
STA. 9+971.689, LT.
STA. 10+050.015, LT.
STA. 10+034.955, LT.
STA. 10+020.496, LT.
STA. 10+018.140, LT.
STA. 10+054.393, RT.
STA. 10+034.398, RT.
STA. 10+019.795, RT.
STA. 20+155.000, RT.
STA. 20+196.650, LT.

653.30-PREFABRICATED CHECK DAMS
STA. 20+060.000 - STA. 20+062.597, LT.
STA. 20+155.000 - STA. 20+200.000, RT.
STA. 20+196.600 - STA. 20+200.000, RT.
STA. 10+013.668 - STA. 10+082.794, RT.
STA. 20+151.210 - STA. 20+160.687, LT.

653.20-TEMPORARY EROSION MATTING
STA. 20+060.000 - STA. 20+062.597, LT.
STA. 20+155.000 - STA. 20+200.000, RT.
STA. 20+196.600 - STA. 20+200.000, RT.
STA. 10+013.668 - STA. 10+082.794, RT.
STA. 20+151.210 - STA. 20+160.687, LT.

VT ROUTE 108 STA. 10+082.794
END ROADWAY PROJECT
STP 030-2(27)
BEGIN BRIDGE PROJECT
BRF 027-1(4)

649.51-GEOTEXTILE FOR SILT FENCE
STA. 20+075.689, RT. - STA. 9+970.000, LT.

653.55-PROJECT DEMARCATION FENCE
STA. 20+060.000, RT. - STA. 9+970.000, LT.
STA. 9+970.000, RT. - STA. 20+200.000, RT.
STA. 20+196.412 - STA. 20+200.000, LT.
STA. 10+063.090 - STA. 10+082.794, LT.
STA. 10+009.152 - STA. 10+082.794, RT.
STA. 10+009.152, RT. - STA. 20+172.140, LT.

MATCHLINE - STA. 10+082.794 - SEE EPSC PLAN 5

MATCHLINE - STA. 20+060 - SEE EPSC PLAN 1

MATCHLINE - STA. 20+200 - SEE EPSC PLAN 3

MATCHLINE - SEE 9+970 - SEE EPSC PLAN 4

ONDAWA FINE SANDY LOAM
K = 0.24
HYDROGROUP = B

ADAMS LOAMY FINE SAND
K = 0.17
HYDROGROUP = A

VT ROUTE 15 STA. 20+130.638 =
VT ROUTE 108 STA. 10+000.000

LEGEND
- TURBIDITY CURTAIN
- PDF — PROJECT DEMARCATION FENCE
- SILT FENCE
- PERMANENT SLOPE LIMITS
- TEMPORARY EROSION MATTING
- TEMPORARY SLOPE LIMITS
- WOVEN WIRE SILT FENCE
- STABILIZED CONSTRUCTION ENTRANCE
- SOIL BOUNDARY TYPE
- WETLAND
- PIPE INLET PROTECTION
- — FLOOD PLAIN - FLOOD PLAIN
- BF — BARRIER FENCE
- TEMPORARY CHECK DAMS
- STONE FILL, TYPE I
- STONE FILL, TYPE IV
- DI PROTECTION DEVICE, TYPE I

19
N 238638.2667
E 473846.3807

20
N 238629.6217
E 473849.6734

NOTES:
1. THESE PLANS SHOW A CONCEPTUAL EROSION CONTROL PLAN. THE CONTRACTOR MUST SUBMIT A TEMPORARY EROSION CONTROL PLAN FOR APPROVAL.
2. TEMPORARY EROSION CONTROL MEASURES ARE CONCEPTUALLY SHOWN. THE CONTRACTOR MAY RELOCATE TEMPORARY MEASURES TO IMPROVE EROSION CONTROL WITH APPROVAL OF THE RESIDENT ENGINEER AND ON SITE COORDINATOR. SILT FENCE SHALL NOT BE INSTALLED ACROSS CONTOURS.
3. THE CONTRACTOR SHALL USE OTHER TEMPORARY EROSION CONTROL MEASURES AS NECESSITATED BY THE SEQUENCE OF CONSTRUCTION OR AS DIRECTED BY THE RESIDENT ENGINEER AND ON SITE COORDINATOR.
4. REFER TO TEMPORARY EROSION CONTROL DETAIL SHEETS FOR ADDITIONAL DETAILS.

0 10 20 30
SCALE IN METERS

PROJECT NAME: CAMBRIDGE
PROJECT NUMBER: STP 030-2(27)

FILE NAME: t78f163bdr.dgn
PROJECT LEADER: JLS
DESIGNED BY: MBL
EPSC PLAN 2
PLOT DATE: 05-JUN-2012
DRAWN BY: MBL
CHECKED BY: JAD
SHEET 18 OF 214

653.20-TEMPORARY EROSION MATTING
STA. 20+200.000 - STA. 20+229.050, LT.
STA. 20+200.000 - STA. 20+250.100, RT.

653.30-PREFABRICATED CHECK DAMS
STA. 20+200.000 - STA. 20+229.050, LT.
STA. 20+200.000 - STA. 20+250.100, RT.

653.55-PROJECT DEMARCATION FENCE
STA. 20+200.000 - STA. 20+257.129, LT.
STA. 20+200.000 - STA. 20+257.129, RT.

649.51-GEOTEXTILE FOR SILT FENCE
STA. 20+229.098 - STA. 20+256.532, LT.

VAOT Metric

N

VT STATE PLANE GRID

MATCHLINE - STA. 20+200 - SEE EPSC PLAN 2

STA. 20+261.702
END PROJECT
STP 030-2(27)
BEGIN APPROACH

STA. 20+303.129
END APPROACH

26
N 238745.6393
E 473967.6912

PDF — PDF — PDF — PDF — PDF — PDF — PDF — PDF

CZ — CZ — CZ — CZ

200 20+220 20+240 20+260 20+280 20+300 20+320 20+323

PDF — PDF — PDF — PDF — PDF — PDF — PDF — PDF

19/8
5/8 REBAR UP 6 IN

ONDAWA FINE SANDY LOAM
K = 0.24
HYDROGROUP = B

ADAMS LOAMY FINE SAND
K = 0.17
HYDROGROUP = A

4F 4F 4F

NOTES:

1. THESE PLANS SHOW A CONCEPTUAL EROSION CONTROL PLAN. THE CONTRACTOR MUST SUBMIT A TEMPORARY EROSION CONTROL PLAN FOR APPROVAL.
2. TEMPORARY EROSION CONTROL MEASURES ARE CONCEPTUALLY SHOWN. THE CONTRACTOR MAY RELOCATE TEMPORARY MEASURES TO IMPROVE EROSION CONTROL WITH APPROVAL OF THE RESIDENT ENGINEER AND ON SITE COORDINATOR. SILT FENCE SHALL NOT BE INSTALLED ACROSS CONTOURS.
3. THE CONTRACTOR SHALL USE OTHER TEMPORARY EROSION CONTROL MEASURES AS NECESSITATED BY THE SEQUENCE OF CONSTRUCTION OR AS DIRECTED BY THE RESIDENT ENGINEER AND ON SITE COORDINATOR.
4. REFER TO TEMPORARY EROSION CONTROL DETAIL SHEETS FOR ADDITIONAL DETAILS.

LEGEND

TURBIDITY CURTAIN		SOIL BOUNDARY TYPE	
PDF	PROJECT DEMARCATION FENCE		WETLAND
	SILT FENCE		PIPE INLET PROTECTION
	PERMANENT SLOPE LIMITS	— FLOOD PLAIN -	FLOOD PLAIN
	TEMPORARY EROSION MATTING	BF	BARRIER FENCE
	TEMPORARY SLOPE LIMITS		TEMPORARY CHECK DAMS
	WOVEN WIRE SILT FENCE		STONE FILL, TYPE I
	STABILIZED CONSTRUCTION ENTRANCE		STONE FILL, TYPE IV

0 10 20 30
SCALE IN METERS

PROJECT NAME: CAMBRIDGE
PROJECT NUMBER: STP 030-2(27)

FILE NAME: t78f163bdr.dgn
PROJECT LEADER: JLS
DESIGNED BY: MBL
EPSC PLAN 3

PLOT DATE: 05-JUN-2012
DRAWN BY: MBL
CHECKED BY: JAD
SHEET 19 OF 214

653.40-INLET PROTECTION DEVICE, TYPE I
STA. 9+957.101, LT.
STA. 9+957.241, LT.

653.30-PREFABRICATED CHECK DAMS
STA. 9+915.415 - STA. 9+942.715, RT.

653.55-PROJECT DEMARCATION FENCE
STA. 9+915.415 - STA. 9+942.754, LT.
STA. 9+950.855 - STA. 9+970.000, LT.
STA. 9+940.064 - STA. 9+970.000, RT.

649.51-GEOTEXTILE FOR SILT FENCE
STA. 9+958.615 - STA. 9+970.000, LT.

VT STATE PLANE GRID
N

STA. 9+910.905
END APPROACH
BEGIN PROJECT
STP 030-2(27)

STA. 9+869.415
BEGIN APPROACH

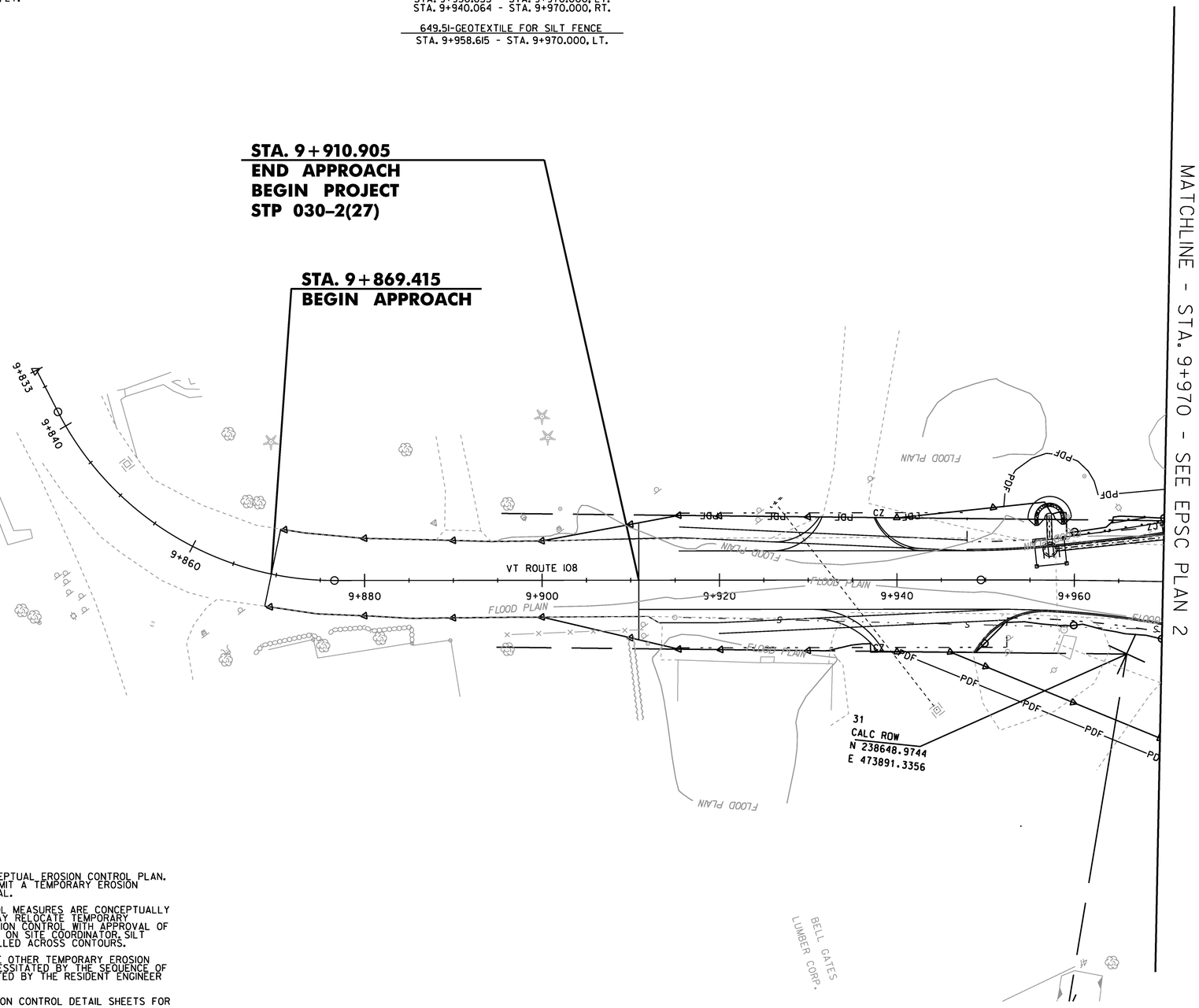

MATCHLINE - STA. 9+970 - SEE EPSC PLAN 2

NOTES:

1. THESE PLANS SHOW A CONCEPTUAL EROSION CONTROL PLAN. THE CONTRACTOR MUST SUBMIT A TEMPORARY EROSION CONTROL PLAN FOR APPROVAL.
2. TEMPORARY EROSION CONTROL MEASURES ARE CONCEPTUALLY SHOWN. THE CONTRACTOR MAY RELOCATE TEMPORARY MEASURES TO IMPROVE EROSION CONTROL WITH APPROVAL OF THE RESIDENT ENGINEER AND ON SITE COORDINATOR. SILT FENCE SHALL NOT BE INSTALLED ACROSS CONTOURS.
3. THE CONTRACTOR SHALL USE OTHER TEMPORARY EROSION CONTROL MEASURES AS NECESSITATED BY THE SEQUENCE OF CONSTRUCTION OR AS DIRECTED BY THE RESIDENT ENGINEER AND ON SITE COORDINATOR.
4. REFER TO TEMPORARY EROSION CONTROL DETAIL SHEETS FOR ADDITIONAL DETAILS.

LEGEND			
	TURBIDITY CURTAIN		SOIL BOUNDARY TYPE
PDF	PROJECT DEMARCATION FENCE		WETLAND
	SILT FENCE		PIPE INLET PROTECTION
	PERMANENT SLOPE LIMITS	FLOOD PLAIN	FLOOD PLAIN
	TEMPORARY EROSION MATTING	BF	BARRIER FENCE
	TEMPORARY SLOPE LIMITS		TEMPORARY CHECK DAMS
	WOVEN WIRE SILT FENCE		STONE FILL, TYPE I
	STABILIZED CONSTRUCTION ENTRANCE		STONE FILL, TYPE IV

0 10 20 30
SCALE IN METERS

PROJECT NAME: CAMBRIDGE
PROJECT NUMBER: STP 030-2(27)

FILE NAME: t78f163bdr.dgn
PROJECT LEADER: JLS
DESIGNED BY: MBL
EPSC PLAN 4
PLOT DATE: 05-JUN-2012
DRAWN BY: MBL
CHECKED BY: JAD
SHEET 20 OF 214

LEGEND

- TURBIDITY CURTAIN
- PROJECT DEMARCATION FENCE
- SILT FENCE
- PERMANENT SLOPE LIMITS
- ROLLED EROSION CONTROL PRODUCT (RECP)
- TEMPORARY SLOPE LIMITS
- WOVEN WIRE SILT FENCE
- STABILIZED CONSTRUCTION ENTRANCE
- FLOOD PLAIN
- RIPARIAN BUFFER ZONE
- WETLAND
- POTENTIAL SEDIMENT DE-WATERING LOCATION. CONTRACTOR TO PROVIDE DETAILS AND METHODOLOGY WITH COFFERDAM DETAILS
- ARCHAEOLOGY
- BARRIER FENCE
- TEMPORARY CHECK DAMS
- STONE FILL TYPE IV
- STONE FILL TYPE I
- SOIL TYPE BOUNDARY

VAOT Metric

653.20 TEMPORARY EROSION MATTING

STA 10+082.8, 9.4 to 13.6 LT - 10+171.3, 34.6 LT
STA 10+120.0, 19.0 to 25.0 LT - 10+171.0, 16.4 LT
STA 10+140.0, 5.7 to 10.4 LT - 10+172.0, 5.7 LT
STA 10+088.1, 11.0 to 21.0 RT - 10+095.0, 15.8 to 20.6 RT
STA 10+102.8, 16.7 to 21.1 RT - 10+171.5, 20.9 RT
STA 10+253.3, 19.6 to 21.8 LT - 10+280.0, 20.8 to 28.1 LT
STA 10+260.0, 6.1 to 14.9 RT - 10+280.0, 6.1 to 13.4 RT
STA 10+254.0, 8.0 to 12.3 LT - 10+280.0, 8.0 to 15.5 LT
STA 10+254.0, 5.8 to 15.6 LT - 10+280.0, 5.7 to 6.8 LT

653.25 TEMPORARY STONE CHECK DAM, TYPE I

STA 10+102 LT
STA 10+127 RT
STA 10+155 RT

653.55 PROJECT DEMARCATION FENCE

STA 10+082.794 - 10+158 LT
STA 10+082.794 - 10+100 RT

653.50 BARRIER FENCE

10+158 - 10+178 LT
10+100 - 10+184 RT
10+240 - 10+280 LT
10+260 - 10+280 RT

649.61 GEOTEXTILE FOR FILTER CURTAIN

STA 10+178 LT - 10+184 RT (SOUTH BANK)
STA 10+240 LT - 10+260 RT (NORTH BANK)

649.51 GEOTEXTILE FOR SILT FENCE

STA 10+082.794 - 10+085 LT
STA 10+087 - 10+095 LT
STA 10+102 - 10+158 LT

649.515 GEOTEXTILE FOR SILT FENCE, WOVEN WIRE REINFORCED

STA 10+180 - 10+184 RT
STA 10+240 - 10+280 LT
STA 10+260 - 10+280 RT

MATCH LINE SEE EPSC PLAN 2 STA 10+082.794

MATCH LINE STA 10+280

VT ROUTE 108 POC 10+171.116 = CHANNEL LINE STA 50+100.000 Δ = 90°-00'-00"

LAMOILLE RIVER

NOTES:

1. REFER TO THE CROSS SECTIONS FOR THE GRADE OF THE PROPOSED CONDITIONS.

0 10 20 30
SCALE IN METERS

PROJECT NAME:	CAMBRIDGE
PROJECT NUMBER:	BRF 027-1(4)
FILE NAME: structures/s78f163bdr.dgn	PLOT DATE: 05-JUN-2012
PROJECT LEADER: M.EVANS-MONGEON	DRAWN BY: S. SCRIBNER
DESIGNED BY: S.SCRIBNER	CHECKED BY:M.EVANS-MONGEON
EPSC PLAN 5	SHEET 21 OF 214

VAOT Metric

649.51 GEOTEXTILE FOR SILT FENCE
10+380 - 10+420 LT

649.515 GEOTEXTILE FOR SILT FENCE, WOVEN WIRE REINFORCED
10+280 - 10+315 LT
10+325 - 10+380 LT
10+280 - 10+420 RT

653.20 TEMPORARY EROSION MATTINGS
10+280, 22.0 to 30.0 - 10+328, 20.0 LT
10+280, 6.0 to 17.0 - 10+322, 6.0 to 14.0 LT
10+280, 8.5 to 14.5 - 10+355, 1.0 LT
10+280, 6.2 to 14.5 - 10+360, 5.8 to 13.1 LT

653.50 BARRIER FENCE
STA 10+280 - 10+315 LT
STA 10+325 - 10+380 LT
STA 10+280 - 10+420 RT

653.55 PROJECT DEMARCATION FENCE
STA 10+380 - 10+420 LT

STATE PLANE GRID

STA 10+280

MATCH LINE

STA 10+420

℄ VT 108

ARCHAEOLOGICAL SITE

ARCHAEOLOGICALLY SENSITIVE AREA

LAMOILLE RIVER

NOTES:

1. REFER TO THE CROSS SECTIONS FOR THE GRADE OF THE PROPOSED CONDITIONS.

LEGEND

- TURBIDITY CURTAIN
- PD PROJECT DEMARCATION FENCE
- SILT FENCE
- PERMANENT SLOPE LIMITS
- ROLLED EROSION CONTROL PRODUCT (RECP)
- TEMPORARY SLOPE LIMITS
- WOVEN WIRE SILT FENCE
- STABILIZED CONSTRUCTION ENTRANCE
- FLOOD PLAIN — FLOOD PLAIN
- RIPARIAN BUFFER ZONE
- WETLAND
- PIPE INLET PROTECTION
- ARCH — ARCHAEOLOGY
- BF — BARRIER FENCE
- TEMPORARY CHECK DAMS
- STONE FILL TYPE IV
- STONE FILL TYPE I
- SOIL TYPE BOUNDARY

0 10 20 30
SCALE IN METERS

PROJECT NAME: CAMBRIDGE	
PROJECT NUMBER: BRF 027-1 (4)	
FILE NAME: structures/s78f163bdr.dgn	PLOT DATE: 05-JUN-2012
PROJECT LEADER: M.EVANS-MONGEON	DRAWN BY: S. SCRIBNER
DESIGNED BY: S. SCRIBNER	CHECKED BY: M.EVANS-MONGEON
EPSC PLAN 6	SHEET 22 OF 214

VAOT Metric

653.50 BARRIER FENCE
STA 10+420 - 10+460 RT
STA 10+475 - 10+534 RT

653.55 PROJECT DEMARCATION FENCE
STA 10+420 - 10+495 LT

649.51 GEOTEXTILE FOR SILT FENCE
10+420 - 10+495 LT

649.515 GEOTEXTILE FOR SILT FENCE, WOVEN WIRE REINFORCED
10+420 - 10+460 RT
10+476 - 10+499 RT
10+501 - 10+526 RT

LEGEND	
TURBIDITY CURTAIN	RIPARIAN BUFFER ZONE
PROJECT DEMARCATION FENCE	WETLAND
SILT FENCE	PIPE INLET PROTECTION
PERMANENT SLOPE LIMITS	ARCHAEOLOGY
ROLLED EROSION CONTROL PRODUCT (RECP)	BARRIER FENCE
TEMPORARY SLOPE LIMITS	TEMPORARY CHECK DAMS
WOVEN WIRE SILT FENCE	STONE FILL TYPE IV
STABILIZED CONSTRUCTION ENTRANCE	STONE FILL TYPE I

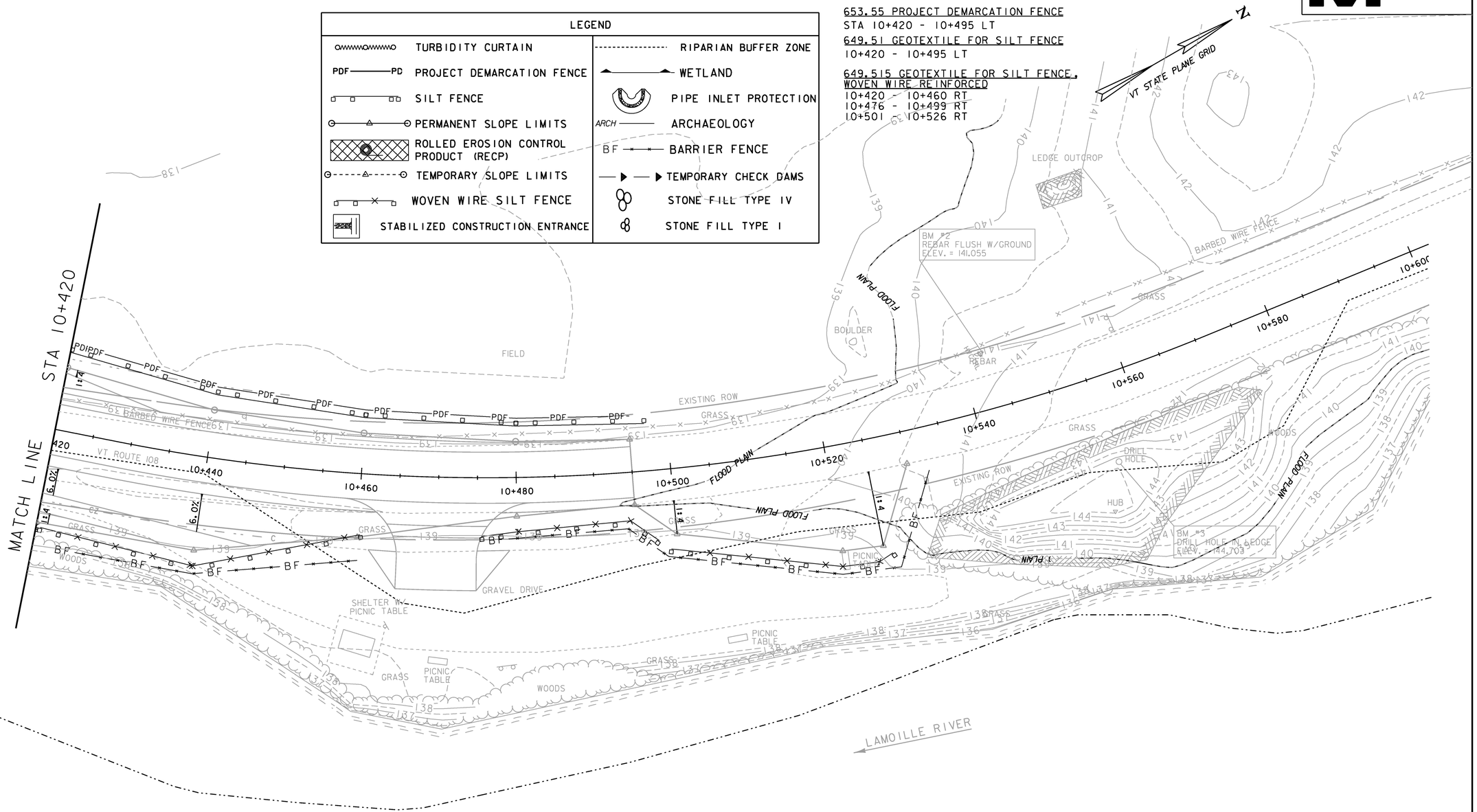

NOTES:

1. REFER TO THE CROSS SECTIONS FOR THE GRADE OF THE PROPOSED CONDITIONS.

0 10 20 30
SCALE IN METERS

PROJECT NAME:	CAMBRIDGE
PROJECT NUMBER:	BRF 027-1(4)
FILE NAME: strutures/s78f163bdr.dgn	PLOT DATE: 05-JUN-2012
PROJECT LEADER: M.EVANS-MONGEON	DRAWN BY: S. SCRIBNER
DESIGNED BY: S. SCRIBNER	CHECKED BY: M.EVANS-MONGEON
EPSC PLAN 7	SHEET 23 OF 214

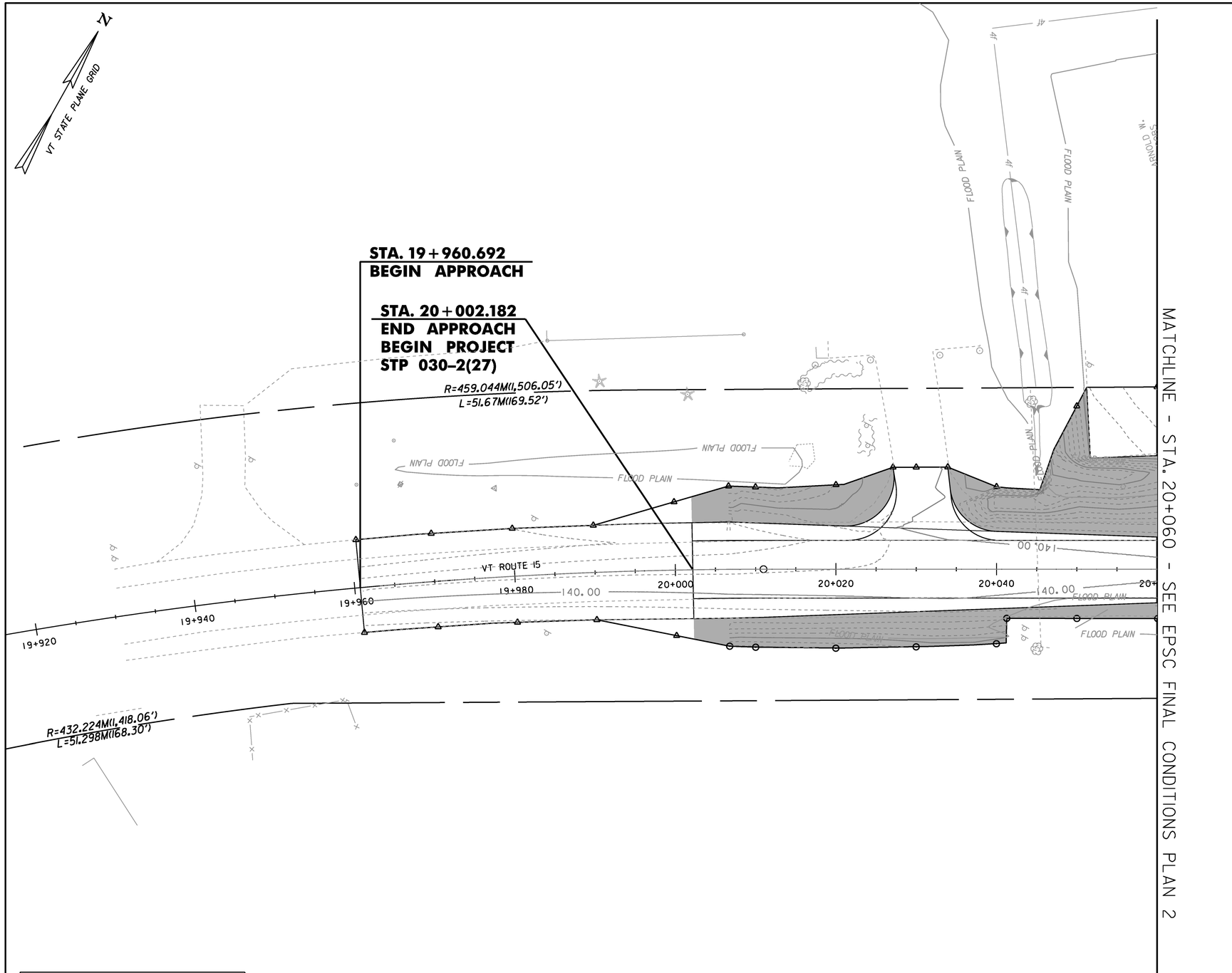

LEGEND

	PERM. SLOPE LIMITS
	SOIL BOUNDARY TYPE
	WETLAND
ARCH — ARCH — ARCH	ARCHAEOLOGY
— FLOOD PLAIN -	FLOOD PLAIN
	STONE FILL, TYPE I
	STONE FILL, TYPE IV
	TURF ESTABLISHED AREAS

0 10 20 30

SCALE IN METERS

PROJECT NAME: CAMBRIDGE	
PROJECT NUMBER: STP 030-2(27)	
FILE NAME: t78f163bdr.dgn	PLOT DATE: 05-JUN-2012
PROJECT LEADER: JLS	DRAWN BY: MBL
DESIGNED BY: MBL	CHECKED BY: JAD
EPSC FINAL CONDITIONS PLAN 1	SHEET 24 OF 214

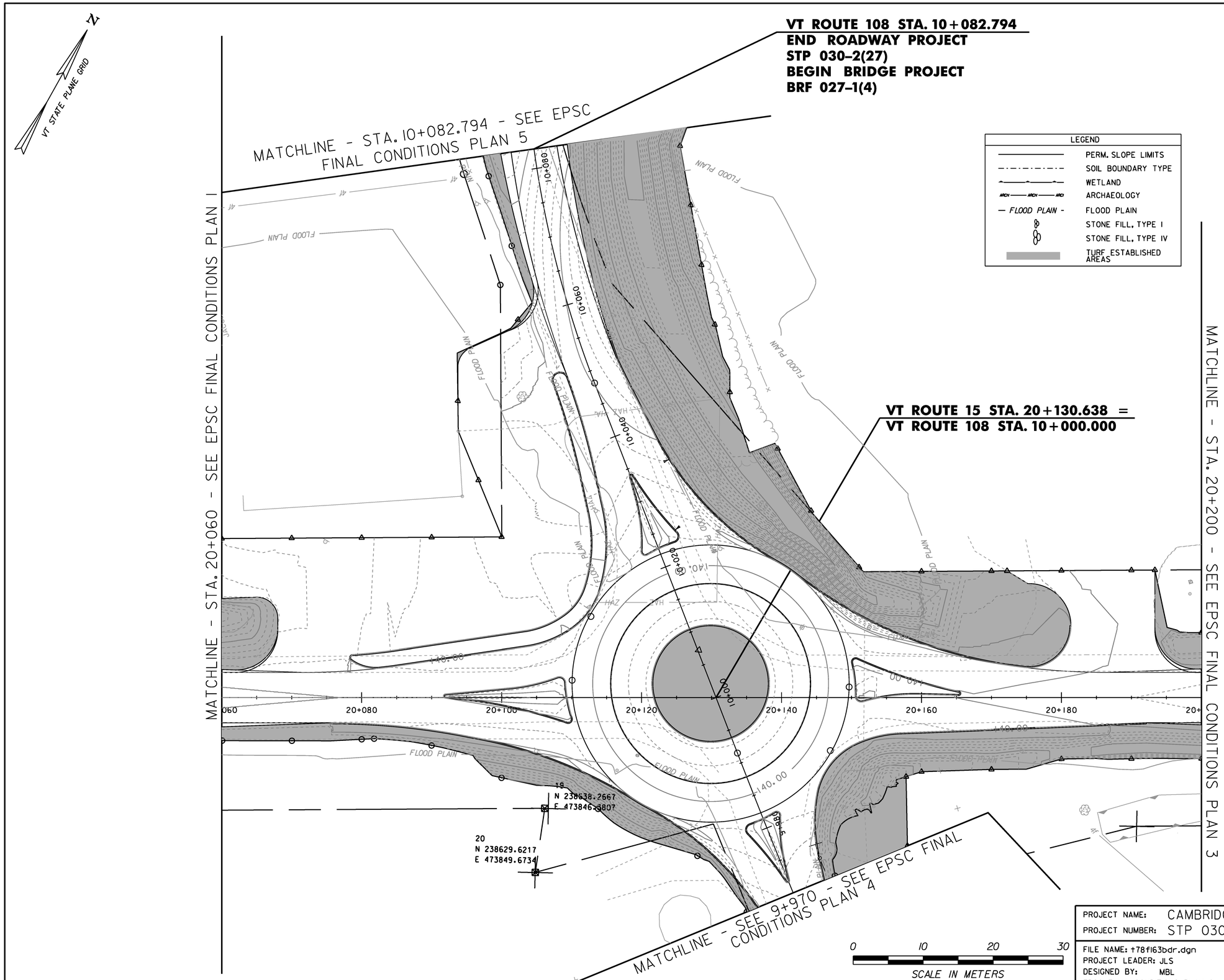

PROJECT NAME: CAMBRIDGE	
PROJECT NUMBER: STP 030-2(27)	
FILE NAME: t78f163bdr.dgn	PLOT DATE: 05-JUN-2012
PROJECT LEADER: JLS	DRAWN BY: MBL
DESIGNED BY: MBL	CHECKED BY: JAD
EPSC FINAL CONDITIONS PLAN 2	SHEET 25 OF 214

N

VT STATE PLANE GRID

MATCHLINE - STA. 20+200 - SEE EPSC FINAL CONDITIONS PLAN 2

STA. 20+261.702
END PROJECT
STP 030-2(27)
BEGIN APPROACH

STA. 20+303.192
END APPROACH

26
N 238745.6393
E 473967.6912

200 20+220 20+240 20+260 20+280 20+300 20+320 20+323

5/8 REBAR UP 6 IN

LEGEND	
	PERM. SLOPE LIMITS
	SOIL BOUNDARY TYPE
	WETLAND
ARCH ARCH ARCH	ARCHAEOLOGY
— FLOOD PLAIN -	FLOOD PLAIN
	STONE FILL, TYPE I
	STONE FILL, TYPE IV
	TURF ESTABLISHED AREAS

0 10 20 30

SCALE IN METERS

PROJECT NAME: CAMBRIDGE
PROJECT NUMBER: STP 030-2(27)

FILE NAME: t78f163bdr.dgn
PROJECT LEADER: JLS
DESIGNED BY: MBL
EPSC FINAL CONDITIONS PLAN 3

PLOT DATE: 05-JUN-2012
DRAWN BY: MBL
CHECKED BY: JAD
SHEET 26 OF 214

VT STATE PLANE GRID

N

STA. 9+910.905
END APPROACH
BEGIN PROJECT
STP 030-2(27)

STA. 9+869.415
END APPROACH

9+833
9+840
9+860
9+880
9+900
9+920
9+940
9+960

139.50

FLOOD PLAIN

31
CALC ROW
N 238648.9744
E 473891.3356

MATCHLINE - STA. 9+970 - SEE EPSC FINAL CONDITIONS PLAN 2

LEGEND	
———	PERM. SLOPE LIMITS
-·-·-·-·-·-	SOIL BOUNDARY TYPE
———	WETLAND
ARCH ——— ARCH ——— ARCH	ARCHAEOLOGY
— FLOOD PLAIN -	FLOOD PLAIN
	STONE FILL, TYPE I
	STONE FILL, TYPE IV
	TURF ESTABLISHED AREAS

0 10 20 30

SCALE IN METERS

PROJECT NAME: CAMBRIDGE
PROJECT NUMBER: STP 030-2(27)

FILE NAME: t78f163bdr.dgn
PROJECT LEADER: JLS
DESIGNED BY: MBL
EPSC FINAL CONDITIONS PLAN 4

PLOT DATE: 05-JUN-2012
DRAWN BY: MBL
CHECKED BY: JAD
SHEET 27 OF 214

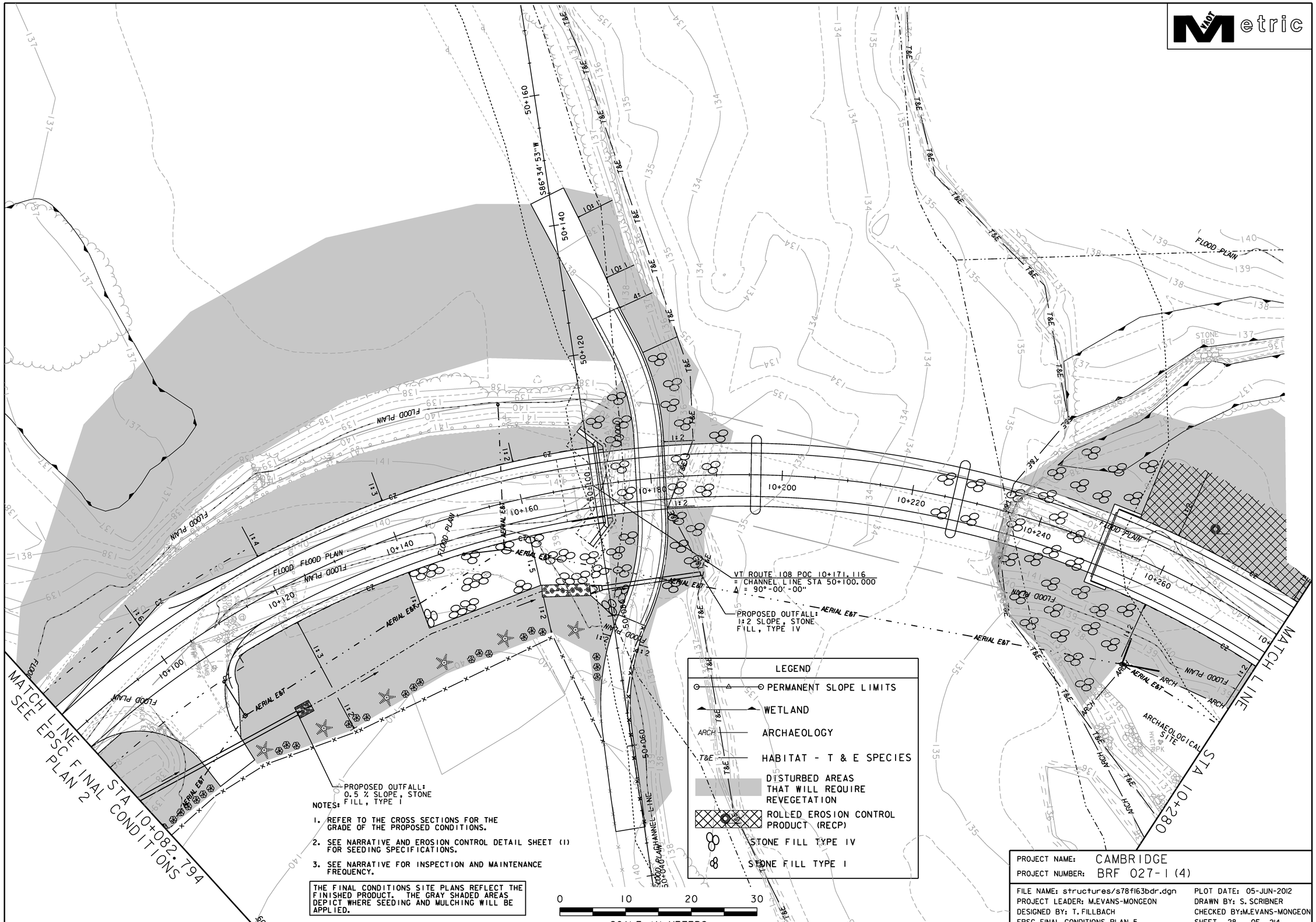

NOTES:

1. REFER TO THE CROSS SECTIONS FOR THE GRADE OF THE PROPOSED CONDITIONS.
2. SEE NARRATIVE AND EROSION CONTROL DETAIL SHEET (1) FOR SEEDING SPECIFICATIONS.
3. SEE NARRATIVE FOR INSPECTION AND MAINTENANCE FREQUENCY.

THE FINAL CONDITIONS SITE PLANS REFLECT THE FINISHED PRODUCT. THE GRAY SHADED AREAS DEPICT WHERE SEEDING AND MULCHING WILL BE APPLIED.

PROJECT NAME: CAMBRIDGE	
PROJECT NUMBER: BRF 027-1(4)	
FILE NAME: structures/s78f163bdr.dgn	PLOT DATE: 05-JUN-2012
PROJECT LEADER: M.EVANS-MONGEON	DRAWN BY: S. SCRIBNER
DESIGNED BY: T. FILLBACH	CHECKED BY: M.EVANS-MONGEON
EPSC FINAL CONDITIONS PLAN 5	SHEET 28 OF 214

VAOT Metric

STA 10+280

MATCH LINE

MATCH LINE STA 10+420

FLOOD PLAIN

AERIAL E&T

ARCHAEOLOGICAL SITE

ARCHAEOLOGICALLY SENSITIVE AREA

CZ

ARCH

T&E

1:2

1:4

10+300 10+320 10+340 10+360 10+380 10+400

VT STATE PLANE GRID

N

LEGEND

- PERMANENT SLOPE LIMITS
- WETLAND
- ARCH — ARCHAEOLOGY
- T&E — HABITAT - T & E SPECIES
- DISTURBED AREAS THAT WILL REQUIRE REVEGETATION
- ROLLED EROSION CONTROL PRODUCT (RECP)
- STONE FILL TYPE IV
- STONE FILL TYPE I

NOTES:

1. REFER TO THE CROSS SECTIONS FOR THE GRADE OF THE PROPOSED CONDITIONS.
2. SEE NARRATIVE AND EROSION CONTROL DETAIL SHEET (1) FOR SEEDING SPECIFICATIONS.
3. SEE NARRATIVE FOR INSPECTION AND MAINTENANCE FREQUENCY.

THE FINAL CONDITIONS SITE PLANS REFLECT THE FINISHED PRODUCT. THE GRAY SHADED AREAS DEPICT WHERE SEEDING AND MULCHING WILL BE APPLIED.

0 10 20 30

SCALE IN METERS

PROJECT NAME: CAMBRIDGE
PROJECT NUMBER: BRF 027-1 (4)

FILE NAME: structures/s78f163bdr.dgn
PROJECT LEADER: M.EVANS-MONGEON
DESIGNED BY: S. SCRIBNER
EPSC FINAL CONDITIONS PLAN 6

PLOT DATE: 05-JUN-2012
DRAWN BY: S. SCRIBNER
CHECKED BY: M.EVANS-MONGEON
SHEET 29 OF 214

Metric

LEGEND

- PERMANENT SLOPE LIMITS
- WETLAND
- ARCH — ARCHAEOLOGY AREA
- T&E — T&E HABITAT - T & E SPECIES
- DISTURBED AREAS THAT WILL REQUIRE REVEGETATION
- STONE FILL TYPE IV
- STONE FILL TYPE I

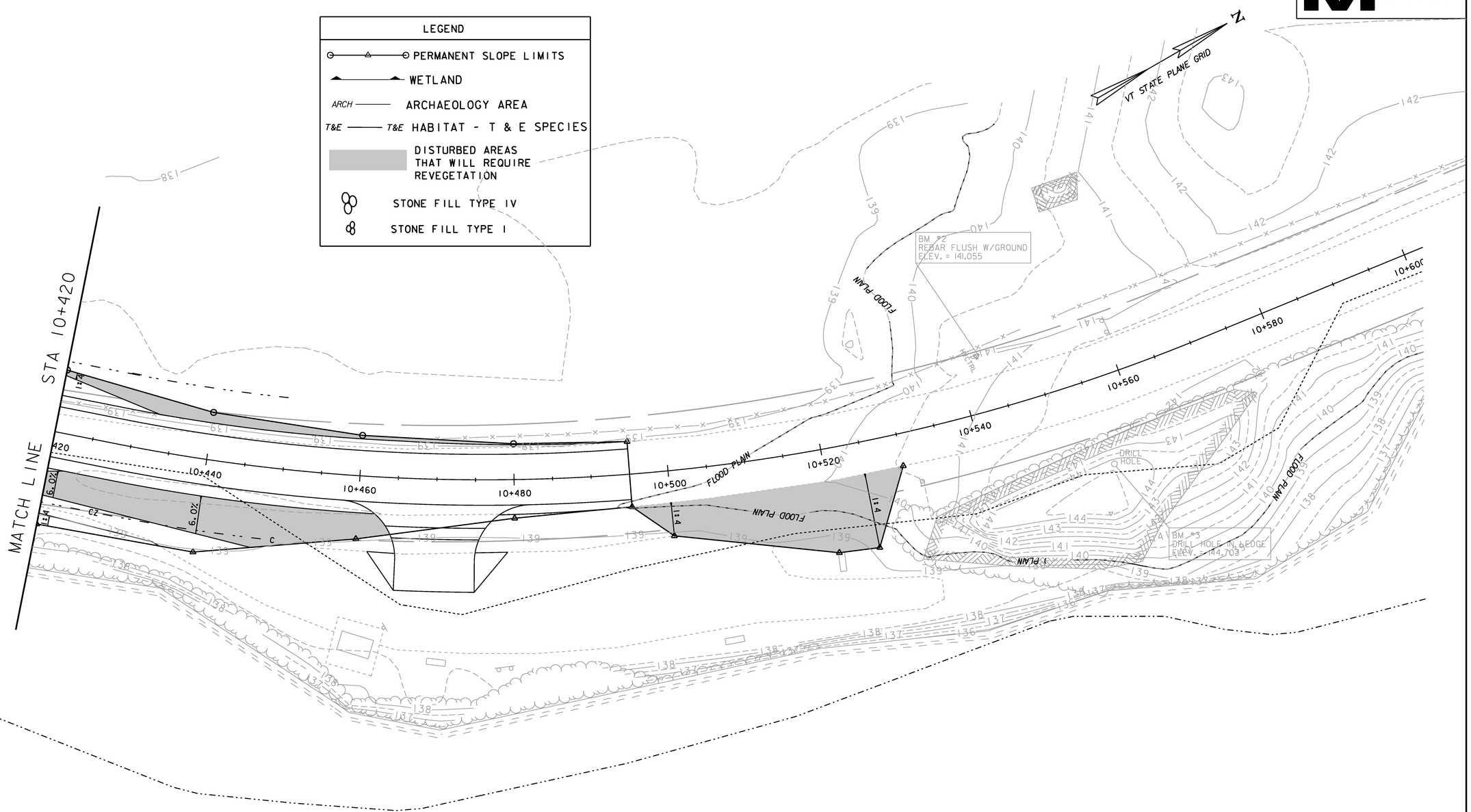

NOTES:

1. REFER TO THE CROSS SECTIONS FOR THE GRADE OF THE PROPOSED CONDITIONS.
2. SEE NARRATIVE AND EROSION CONTROL DETAIL SHEET (1) FOR SEEDING SPECIFICATIONS.
3. SEE NARRATIVE FOR INSPECTION AND MAINTENANCE FREQUENCY.

THE FINAL CONDITIONS SITE PLANS REFLECT THE FINISHED PRODUCT. THE GRAY SHADED AREAS DEPICT WHERE SEEDING AND MULCHING WILL BE APPLIED.

0 10 20 30

SCALE IN METERS

PROJECT NAME: CAMBRIDGE
PROJECT NUMBER: BRF 027-1(4)

FILE NAME: strutures/s78f163bdr.dgn
PROJECT LEADER: M.EVANS-MONGEON
DESIGNED BY: S. SCRIBNER
EPSC FINAL CONDITIONS PLAN 7

PLOT DATE: 05-JUN-2012
DRAWN BY: S. SCRIBNER
CHECKED BY: M.EVANS-MONGEON
SHEET 30 OF 214

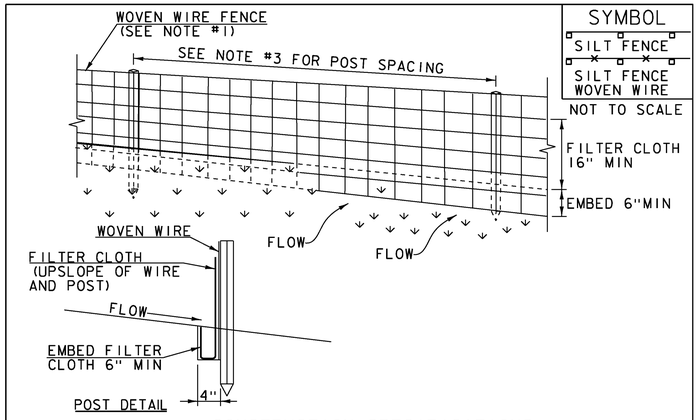

SYMBOL

SILT FENCE

SILT FENCE WOVEN WIRE

NOT TO SCALE

CONSTRUCTION SPECIFICATIONS

1. WOVEN WIRE REINFORCED FENCE IS REQUIRED WITHIN 100' UPSLOPE OF RECEIVING WATERS WHEN THE PROJECT FALLS UNDER A CONSTRUCTION STORMWATER PERMIT. WOVEN WIRE SHALL BE A MIN. 14 GAUGE WITH A 6" MAX. MESH OPENING.
2. FILTER CLOTH SHALL BE EITHER FILTER X, MIRAFI100X, STABILINKA T140N OR APPROVED EQUIVALENT.
3. POST SPACING FOR WIRE-BACKED FENCE SHALL BE 10' MAXIMUM. FOR FILTER-CLOTH FENCE, WHEN ELONGATION IS >50%, POST SPACING SHALL NOT EXCEED 4' AND WHEN ELONGATION IS <50%, POST SPACING SHALL NOT EXCEED 6'.
4. WOVEN WIRE FENCE IS TO BE FASTENED SECURELY TO FENCE POSTS WITH WIRE TIES. FILTER CLOTH IS TO BE FASTENED SECURELY TO WOVEN WIRE FENCE WITH TIES SPACED EVERY 24" AT TOP AND MID SECTION.
5. WHEN TWO SECTIONS OF FILTER CLOTH ADJOIN EACH OTHER THEY SHALL BE OVER-LAPPED BY 6" AND FOLDED.
6. MAINTENANCE SHALL BE PERFORMED AS NEEDED AND MATERIAL REMOVED WHEN SEDIMENT REACHES HALF OF FABRIC HEIGHT.

ADAPTED FROM DETAILS PROVIDED BY: NEW YORK STATE DEC ORIGINALLY DEVELOPED BY USDA-NRCS VERMONT DEPARTMENT OF ENVIRONMENTAL CONSERVATION

SILT FENCE

NOTES:
REFER TO "THE VERMONT STANDARDS & SPECIFICATIONS FOR EROSION PREVENTION & SEDIMENT CONTROL -2006- "FROM THE VT AGENCY OF NATURAL RESOURCES FOR ADDITIONAL GUIDANCE.

THIS WORK SHALL BE PERFORMED IN ACCORDANCE WITH SECTION 649 AND AS SHOWN IN THE PLANS FOR GEOTEXTILE FOR SILT FENCE (PAY ITEM 649.51) OR GEOTEXTILE FOR SILT FENCE, WOVEN WIRE REINFORCED (PAY ITEM 649.515).

REVISIONS	
MARCH 21, 2008	WHF
DECEMBER 11, 2008	WHF
JANUARY 13, 2009	WHF

VAOT RURAL AREA MIX

	LBS/AC				
% WEIGHT	BROADCAST	HYDROSEED	NAME	GERM %	PURITY %
37.5%	22.5	45	CREEPING RED FESCUE	85%	98%
37.5%	22.5	45	TALL FESCUE	90%	95%
5.0%	3	6	RED TOP	90%	95%
15.0%	9	18	BIRDSFOOT TREFOIL	85%	98%
5.0%	3	6	ANNUAL RYE GRASS	85%	95%
100%	60	120			

VAOT URBAN AREA MIX

	LBS/AC				
% WEIGHT	BROADCAST	HYDROSEED	NAME	GERM %	PURITY %
42.5%	34	68	CREEPING RED FESCUE	85%	98%
10.0%	8	16	PERENNIAL RYE GRASS	90%	95%
42.5%	34	68	KENTUCKY BLUE GRASS	85%	85%
5.0%	4	8	ANNUAL RYE GRASS	85%	95%
100%	80	160			

SOIL AMENDMENT GUIDANCE

FERTILIZER		LIME	
BROADCAST	HYDROSEED	BROADCAST	HYDROSEED
10-20-10	*FOLLOW*	PELLETIZED	*FOLLOW*
500 LBS/AC	*MANUFACTURER*	2 TONS/AC	*MANUFACTURER*

CONSTRUCTION GUIDANCE

1. RURAL SEED MIX: USE AS INDICATED IN THE PLANS AND/OR FOR ALL ESTABLISHED UPLAND (NON WETLAND) AREAS DISTURBED BY THE CONTRACTOR.
2. URBAN SEED MIX: USE AS INDICATED IN THE PLANS AND/OR FOR ALL ESTABLISHED LAWN AREAS DISTURBED BY THE CONTRACTOR.
3. ALL SEED MIXTURES: SHALL NOT HAVE A WEED CONTENT EXCEEDING 0.40% BY WEIGHT AND SHALL BE FREE OF ALL NOXIOUS SEED.
4. FERTILIZER AND LIMESTONE: SHALL FOLLOW RATES SHOWN ON PLAN OR AS DIRECTED BY THE ENGINEER
5. HAY MULCH: TO BE PLACED ON EARTH SLOPES AT THE RATE OF 2 TONS/ACRE, ACHIEVE 90% GROUND COVER OR AS DIRECTED BY THE ENGINEER.
6. TOPSOIL: TO BE USED WITH SEED AS INDICATED ON THE PLANS, OR AS DIRECTED BY THE ENGINEER.
7. HYDROSEEDING: ALTHOUGH GUIDANCE IS GIVEN ABOVE THE SITE CONDITIONS AND THE TYPE OF HYDROSEED WILL ULTIMATELY DICTATE THE AMOUNTS AND TYPES OF SOIL AMENDMENTS TO BE APPLIED
8. TURF ESTABLISHMENT: PLACING SEED, FERTILIZER, LIME AND MULCH PRIOR TO SEPTEMBER 15 AND AFTER APRIL 15 CAN BETTER ENSURE A VIGOROUS GROWTH OF GRASS.

ADAPTED FROM VTRANS TECHNICAL LANDSCAPE MANUAL FOR ROADWAYS AND TRANSPORTATION FACILITIES

TURF ESTABLISHMENT

REVISIONS	
JUNE 23, 2009	WHF
JANUARY 15, 2010	WHF
FEBRUARY 16, 2011	WHF

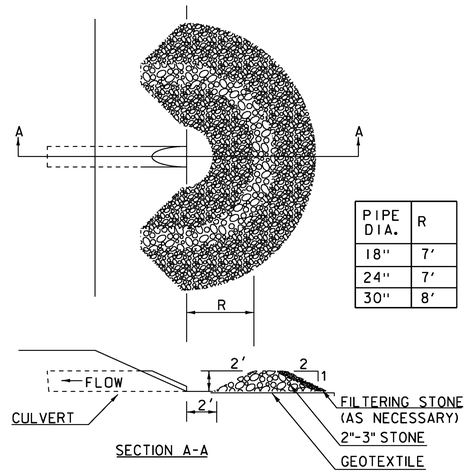

PIPE DIA.	R
18"	7'
24"	7'
30"	8'

SYMBOL

NOT TO SCALE

CONSTRUCTION SPECIFICATIONS

1. USE 2" TO 3" STONE. FILTERING STONE SHALL BE 3/4".
2. PLACE STONE OVER GEOTEXTILE.
3. ONCE THE AREAS UPSTREAM FROM THE CHECK DAM ARE STABILIZED WITH VEGETATION, THE SEDIMENT TRAPPED BEHIND THE DAM SHALL BE DISPOSED OF IN AN APPROVED WASTE AREA.
4. THE CHECK DAM(S) SHALL BE FLATTENED AND GRADED IN A MANNER WHICH PROTECTS THE AREA FROM EROSION AND CHANNEL BLOCKAGE . (GEOTEXTILE MUST BE REMOVED).
5. THE GEOTEXTILE MUST BE DISPOSED OF APPROPRIATELY.
6. THE AREA CONTRIBUTING TO THE CHECK DAM SHALL NOT EXCEED 4 ACRES.

ADAPTED FROM DETAILS PROVIDED BY: ILLINOIS USDA-NRCS ORIGINALLY DEVELOPED BY USDA-NRCS

PIPE INLET PROTECTION

THIS WORK SHALL BE PERFORMED IN ACCORDANCE WITH SECTION 653 FOR INLET PROTECTION DEVICE, TYPE I (PAY ITEM 653.40).

REVISIONS	
MARCH 6, 2008	WHF
JANUARY 13, 2009	WHF

EROSION CONTROL DETAIL SHEET(1)

PROJECT NAME: CAMBRIDGE
PROJECT NUMBER: STP 030-2(27)/BRF 027-1(4)

FILE NAME: structures/s78fl63ero.dgn
PROJECT LEADER: M. EVANS-MONGEON
DESIGNED BY: CONSTR.ENVIR.SECTION
PLOT DATE: 05-JUN-2012
DRAWN BY: CONST.ENVIR.SEC.
CHECKED BY: A. CABRAL
SHEET 31 OF 214

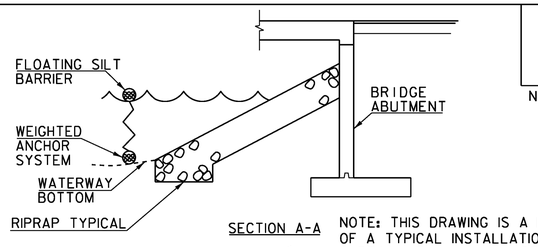

SYMBOL

NOT TO SCALE

SECTION A-A

NOTE: THIS DRAWING IS A DEPICTION OF A TYPICAL INSTALLATION OF FILTER CURTAIN. IT IN NO WAY DEFINES THE TYPE OR USE OF COFFERDAM IF USED.

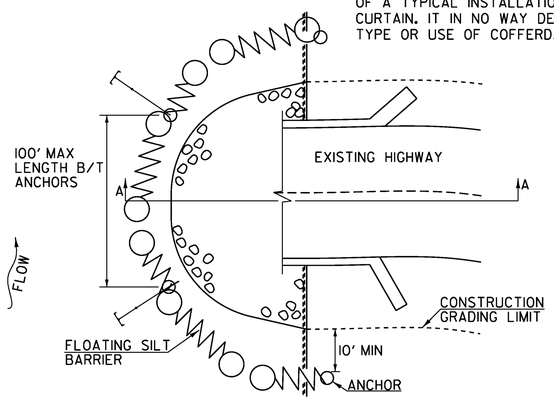

CONSTRUCTION SPECIFICATIONS

1. FILTER CURTAIN SHALL NOT BE PLACED ACROSS A FLOWING WATERWAY, OR IN A WATERWAY WITH STREAM VELOCITIES GREATER THAN 1.5 FEET/SECOND.
2. MAXIMUM 100' LENGTH BETWEEN ANCHORS.
3. LAST SECTION SHALL TERMINATE A MINIMUM OF 10' BEYOND LIMIT OF DISTURBANCE.
4. THE WEIGHTED ANCHOR SYSTEM SHALL BE A TYPE WHICH ALLOWS THE CURTAIN TO CONFORM TO THE BOTTOM OF THE WATERWAY.
5. THE CURTAIN SHALL BE REMOVED BY SLOWLY PULLING TOWARD THE SHORE MINIMIZING THE ESCAPE OF SEDIMENTS INTO WATERWAY.

FILTER CURTAIN

THIS WORK SHALL BE PERFORMED IN ACCORDANCE WITH SECTION 649 FOR GEOTEXTILE FOR FILTER CURTAIN (PAY ITEM 649.61).

REVISIONS	
APRIL 1, 2008	WHF
JANUARY 13, 2009	WHF
SEPTEMBER 4, 2009	WHF

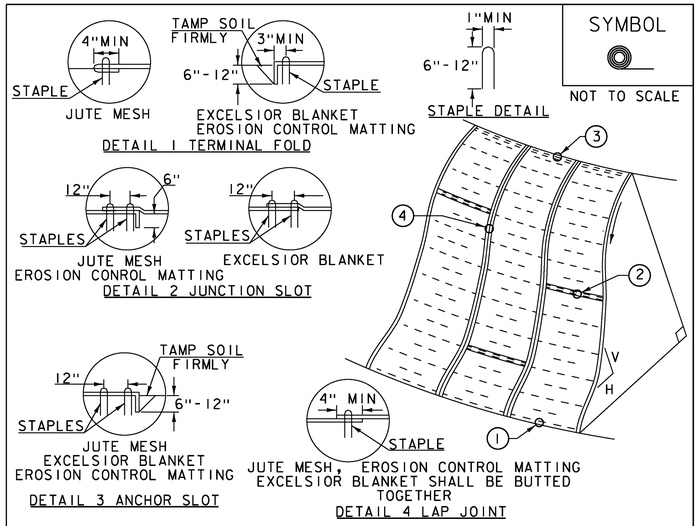

SYMBOL

NOT TO SCALE

CONSTRUCTION SPECIFICATIONS

1. APPLY TO SLOPES GREATER THAN 3H: 1V OR WHERE NECESSARY TO AID IN ESTABLISHING VEGETATION.
2. APPLY FERTILIZER, LIME SEED PRIOR TO PLACING MATTING.
3. STAPLES ARE TO BE PLACED ALTERNATELY, IN COLUMNS APPROXIMATELY 2' APART AND IN ROWS APPROXIMATELY 3' APART. APPROXIMATELY 175 STAPLES ARE REQUIRED PER 4'X225' ROLL OF MATERIAL AND 125 STAPLES ARE REQUIRED PER 4'X150' ROLL OF MATERIAL.
4. DISTURBED AREAS SHALL BE SMOOTHLY GRADED. EROSION CONTROL MATERIAL SHALL BE PLACED LOOSELY OVER GROUND SURFACE. DO NOT STRETCH.
5. ALL TERMINAL ENDS AND TRANSVERSE LAPS SHALL BE STAPLED AT APPROXIMATELY 12" INTERVALS.

ADAPTED FROM DETAILS PROVIDED BY: NEW YORK STATE DEC
ORIGINALLY DEVELOPED BY USDA-NRCS
VERMONT DEPARTMENT OF ENVIRONMENTAL CONSERVATION

ROLLED EROSION CONTROL PRODUCT (RECP) SIDE SLOPE

NOTES:
REFER TO "THE VERMONT STANDARDS & SPECIFICATIONS FOR EROSION PREVENTION & SEDIMENT CONTROL -2006- "FROM THE VT AGENCY OF NATURAL RESOURCES FOR ADDITIONAL GUIDANCE.
THIS WORK SHALL BE PERFORMED IN ACCORDANCE WITH SECTION 653 AND AS SHOWN IN THE PLANS FOR TEMPORARY EROSION MATTING (PAY ITEM 653.20) ~~OR PERMANENT EROSION MATTING (PAY ITEM 653.21).~~

REVISIONS	
APRIL 16, 2007	JMF
JANUARY 13, 2009	WHF

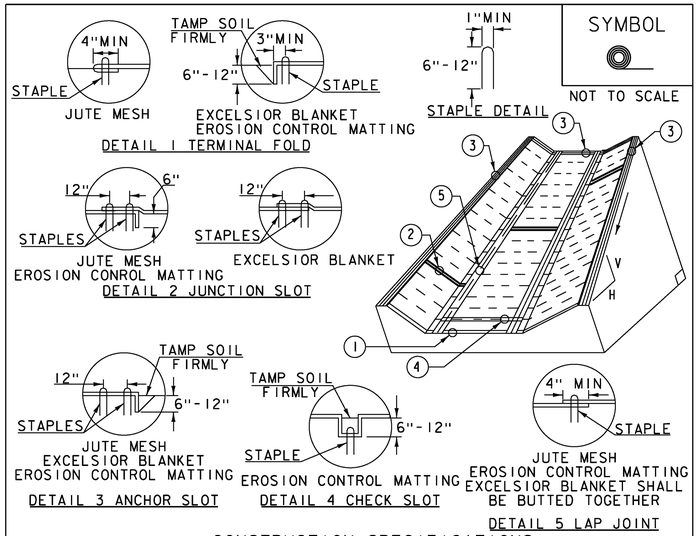

SYMBOL

NOT TO SCALE

CONSTRUCTION SPECIFICATIONS

1. EROSION MATTING, CHECK SLOTS, SHALL BE SPACED IN DITCH CHANNEL SO THAT ONE OCCURS WITHIN EACH 50' ON SLOPES OF MORE THAN 4% AND LESS THAN 6%. ON SLOPES OF 6% OR MORE, THEY SHALL BE SPACED SO THAT ONE OCCURS WITHIN EACH 25'.
2. APPLY FERTILIZER, LIME SEED PRIOR TO PLACING MATTING.
3. STAPLES ARE TO BE PLACED ALTERNATELY, IN COLUMNS APPROXIMATELY 2' APART AND IN ROWS APPROXIMATELY 3' APART. APPROXIMATELY 175 STAPLES ARE REQUIRED PER 4'X225' ROLL OF MATERIAL AND 125 STAPLES ARE REQUIRED PER 4'X150' ROLL OF MATERIAL.
4. DISTURBED AREAS SHALL BE SMOOTHLY GRADED. EROSION CONTROL MATERIAL SHALL BE PLACED LOOSELY OVER GROUND SURFACE. DO NOT STRETCH.
5. ALL TERMINAL ENDS AND TRANSVERSE LAPS SHALL BE STAPLED AT APPROXIMATELY 12" INTERVALS.

ADAPTED FROM DETAILS PROVIDED BY: NEW YORK STATE DEC
ORIGINALLY DEVELOPED BY USDA-NRCS
VERMONT DEPARTMENT OF ENVIRONMENTAL CONSERVATION

ROLLED EROSION CONTROL PRODUCT (RECP) DITCH

NOTES:
REFER TO "THE VERMONT STANDARDS & SPECIFICATIONS FOR EROSION PREVENTION & SEDIMENT CONTROL -2006- "FROM THE VT AGENCY OF NATURAL RESOURCES FOR ADDITIONAL GUIDANCE.
THIS WORK SHALL BE PERFORMED IN ACCORDANCE WITH SECTION 653 AND AS SHOWN IN THE PLANS FOR TEMPORARY EROSION MATTING (PAY ITEM 653.20) ~~OR PERMANENT EROSION MATTING (PAY ITEM 653.21).~~

REVISIONS	
MARCH 8, 2007	JMF
APRIL 16, 2007	WHF
JANUARY 13, 2009	WHF

EROSION CONTROL DETAIL SHEET(2)

PROJECT NAME: CAMBRIDGE
PROJECT NUMBER: STP 030-2(27)/BRF 027-1(4)

FILE NAME: /structures/s78f163ero.dgn
PROJECT LEADER: M. EVANS-MONGEON
DESIGNED BY: CONST. ENVIR. SECTION
PLOT DATE: 05-JUN-2012
DRAWN BY: CONST.ENVIR.SECTION
CHECKED BY: A. CABRAL
SHEET 32 OF 214

SYMBOL

NOT TO SCALE

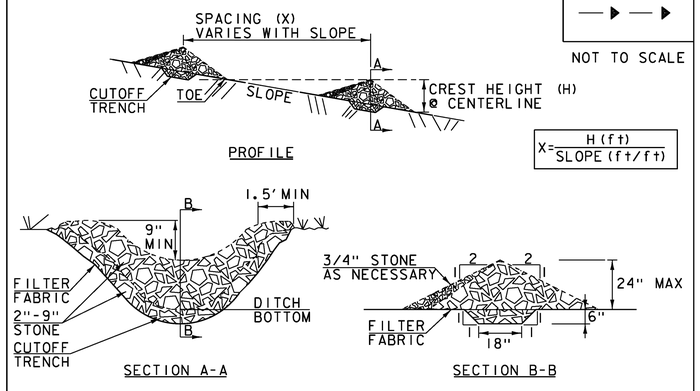

CONSTRUCTION SPECIFICATIONS

1. STONE WILL BE PLACED ON A FILTER FABRIC FOUNDATION.
2. CHECK DAMS SHALL BE SPACED SO THAT THE ELEVATION OF THE CREST OFTHE DOWNSTREAM DAM IS AT THE SAME ELEVATION AS THE TOE OF THE UPSTREAM DAM.
3. 3/4" FILTERING STONE MAY BE ADDED TO THE FACE OF THE CHECK DAM AS NECESSARY.
4. EXTEND THE STONE A MINIMUM OF 1.5' BEYOND THE DITCH BANKS TO PREVENT CUTTING AROUND THE DAM.
5. PROTECT CHANNEL DOWNSTREAM OF THE LOWEST CHECK DAM FROM SCOUR AND EROSION WITH STONE OR LINER AS APPROPRIATE.
6. ENSURE THAT CHANNEL APPURTENANCES SUCH AS CULVERT ENTRANCES BELOW CHECK DAMS ARE NOT SUBJECT TO DAMAGE OR BLOCKAGE FROM DISPLACED STONE.
7. MAXIMUM DRAINAGE AREA 2 ACRES.

ADAPTED FROM DETAILS PROVIDED BY: NEW YORK STATE DEC ORIGINALLY DEVELOPED BY USDA-NRCS VERMONT DEPARTMENT OF ENVIRONMENTAL CONSERVATION	CHECK DAM

NOTES:
REFER TO "THE VERMONT STANDARDS & SPECIFICATIONS FOR EROSION PREVENTION & SEDIMENT CONTROL -2006- " FROM THE VT AGENCY OF NATURAL RESOURCES FOR ADDITIONAL GUIDANCE.

THIS WORK SHALL BE PERFORMED IN ACCORDANCE WITH SECTION 653 FOR TEMPORARY STONE CHECK DAM, TYPE I (PAY ITEM 653.25)

REVISIONS	
MARCH 21, 2008	WHF
JANUARY 8, 2009	WHF

SYMBOL

NOT TO SCALE

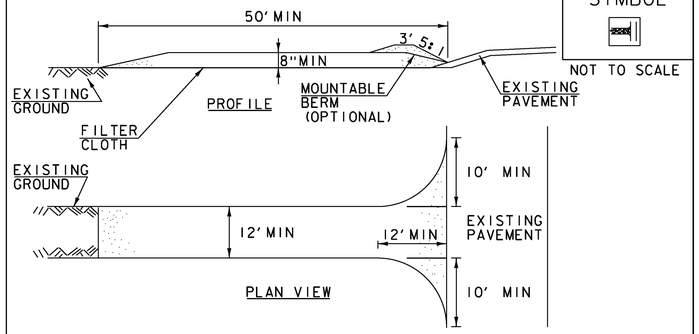

CONSTRUCTION SPECIFICATIONS

1. STONE SIZE- USE 1-4" STONE, RECLAIMED OR RECYCLED CONCRETE EQUIVALENT.
2. LENGTH- NOT LESS THAN 50' (EXCEPT ON A SINGLE RESIDENCE LOT WHERE A 30' MINIMUM LENGTH APPLIES).
3. THICKNESS- NOT LESS THAN 8".
4. WIDTH- 12' MINIMUM, BUT NOT LESS THAN THE FULL WIDTH AT POINTS WHERE INGRESS OR EGRESS OCCURS. 24' IF SINGLE ENTRANCE TO SITE.
5. GEOTEXTILE MUST BE PLACED OVER THE ENTIRE AREA PRIOR TO PLACING STONE.
6. SURFACE WATER- ALL SURFACE WATER FLOWING OR DIVERTED TOWARD CONSTRUCTION ENTRANCES SHALL BE PIPED BENEATH THE ENTRANCE. IF PIPING IS IMPRACTICAL, A MOUNTABLE BERM WITH 5:1 SLOPES WILL BE PERMITTED.
7. MAINTENANCE- THE ENTRANCE SHALL BE MAINTAINED IN A CONDITION WHICH WILL PREVENT TRACKING OR FLOWING OF SEDIMENT ONTO PUBLIC RIGHTS-OF-WAY, ALL SEDIMENT SPILLED, DROPPED, WASHED OR TRACKED ONTO PUBLIC RIGHTS-OF-WAY MUST BE REMOVED IMMEDIATELY.
8. WHEN WASHING IS REQUIRED, IT SHALL BE DONE ON AN AREA STABILIZED WITH STONE AND WHICH DRAINS INTO AN APPROVED SEDIMENT TRAPPING DEVICE.
9. PERIODIC INSPECTION AND NEEDED MAINTENANCE SHALL BE PROVIDED ACCORDING TO PERMIT REQUIREMENTS.

ADAPTED FROM DETAILS PROVIDED BY: NEW YORK STATE DEC ORIGINALLY DEVELOPED BY USDA-NRCS VERMONT DEPARTMENT OF ENVIRONMENTAL CONSERVATION	STABILIZED CONSTRUCTION ENTRANCE

NOTES:
REFER TO "THE VERMONT STANDARDS & SPECIFICATIONS FOR EROSION PREVENTION & SEDIMENT CONTROL -2006- " FROM THE VT AGENCY OF NATURAL RESOURCES FOR ADDITIONAL GUIDANCE.

THIS WORK SHALL BE PERFORMED IN ACCORDANCE WITH SECTION 653 FOR VEHICLE TRACKING PAD (PAY ITEM 653.35) OR AS SPECIFIED IN THE CONTRACT.

REVISIONS	
MARCH 24, 2008	WHF
JANUARY 13, 2009	WHF

EROSION CONTROL DETAIL SHEET(3)

PROJECT NAME: CAMBRIDGE
PROJECT NUMBER: STP 030-2(27)/BRF 027-1(4)

FILE NAME: structures/s78f163ero.dgn
PROJECT LEADER: M. EVANS-MONGEON
DESIGNED BY: CONSTR. ENVIR. SECTION
PLOT DATE: 05-JUN-2012
DRAWN BY: CONSTR.ENVIR.SEC.
CHECKED BY: A. CABRAL
SHEET 33 OF 214

STATE OF VERMONT
AGENCY OF TRANSPORTATION

TRAFFIC DATA	
VT ROUTE 15 (WEST)	**VT ROUTE 108 (NORTH)**
2012 AADT= 6400 2032 AADT= 7000 2032 DHV= 790 2032 %T= 14.5 2032 %D= 59 2012 ADTT= 660 2032 ADTT= 1100 FUNCTIONAL CLASS - MINOR ARTERIAL 2012 - 2032 ESAL'S = 4.923.000 2012 - 2052 ESAL'S = 11.273.000 POSTED SPEED = 70 KMH	2012 AADT= 1800 2032 AADT= 1900 2032 DHV= 240 2032 %T= 3.2 2032 %D= 56 2012 ADTT= 75 2032 ADTT= 130 FUNCTIONAL CLASS - MINOR ARTERIAL 2012 - 2032 ESAL'S = 512.000 2012 - 2052 ESAL'S = 1.244.000 POSTED SPEED = 80 KMH
VT ROUTE 15 (EAST)	**VT ROUTE 108 (SOUTH)**
2012 AADT= 6100 2032 AADT= 6700 2032 DHV= 760 2032 %T= 12.1 2032 %D= 56 2012 ADTT= 570 2032 ADTT= 960 FUNCTIONAL CLASS - MINOR ARTERIAL 2012 - 2032 ESAL'S = 4.694.000 2012 - 2052 ESAL'S = 10.747.000 POSTED SPEED = 70 KMH	2012 AADT= 2400 2032 AADT= 2600 2032 DHV= 290 2032 %T= 12.2 2032 %D= 65 2012 ADTT= 190 2032 ADTT= 330 FUNCTIONAL CLASS - MAJOR COLLECTOR 2012 - 2032 ESAL'S = 1.161.000 2012 - 2052 ESAL'S = 2.697.000 POSTED SPEED = 70 KMH

PROPOSED IMPROVEMENT

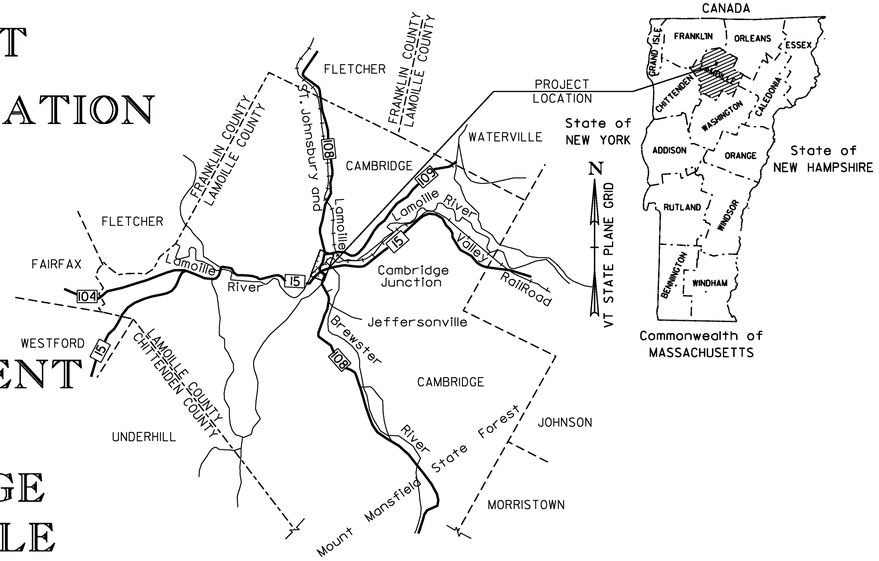

TOWN OF CAMBRIDGE
COUNTY OF LAMOILLE
VT ROUTE 15 AND VT ROUTE 108
MINOR ARTERIAL

PROJECT STP 030-2(27)

BEGINNING AT A POINT, IN THE TOWN OF CAMBRIDGE, ON VT ROUTE 15, APPROXIMATELY 128.456 M WEST OF THE VT ROUTE 15 AND VT ROUTE 108 INTERSECTION, AND EXTENDING EASTERLY FOR A DISTANCE OF APPROXIMATELY 259.520 M; THEN BEGINNING AT A POINT ON VT ROUTE 108, APPROXIMATELY 89.095 M SOUTHERLY OF THE VT ROUTE 15 AND VT ROUTE 108 INTERSECTION, AND EXTENDING NORTHERLY FOR A DISTANCE OF APPROXIMATELY 171.889 M, WHICH IS THE BEGINNING OF PROJECT BRF 027-1(4).

LENGTH OF ROADWAY (VT ROUTE 15) = 259.520 m
LENGTH OF ROADWAY (VT ROUTE 108) = 171.889 m
LENGTH OF PROJECT = 431.409 m

WORK TO BE PERFORMED UNDER THIS PROJECT CONSISTS OF CONSTRUCTION OF A ROUNDABOUT AT THE INTERSECTION OF VT ROUTE 15 AND VT ROUTE 108, SAND BORROW, SUBBASE, DRAINAGE, SIGNS AND OTHER HIGHWAY RELATED ITEMS.

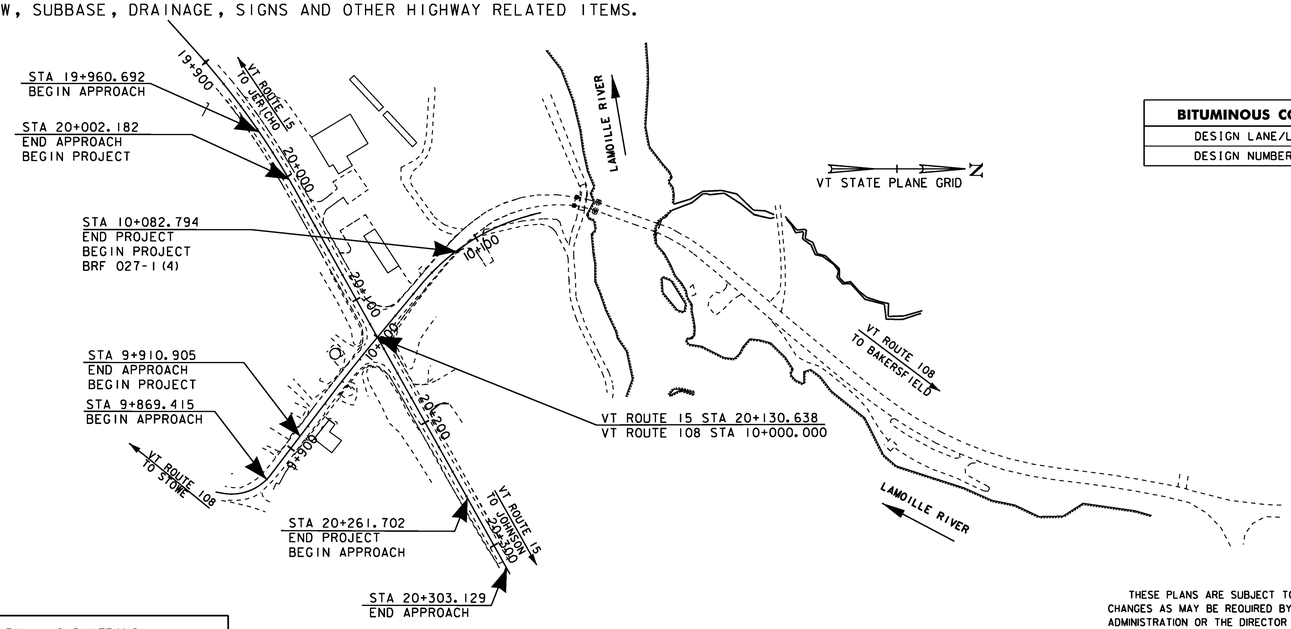

BITUMINOUS CONCRETE PAVEMENT SUPERPAVE MIXTURE DESIGN CRITERIA	
DESIGN LANE/LIFE ESALS (20 YEARS)	4.923.000
DESIGN NUMBER OF GYRATIONS	65

QUALITY ASSURANCE PROGRAM: LEVEL 2

CONVENTIONAL SYMBOLS

COUNTY LINE
TOWN LINE
LIMITS OF ACCESS
POINT OF ACCESS
FENCE LINE
STONE WALL
TRAVELED WAY
GUARD RAIL
RAILROAD
SURVEY LINE
CULVERT
POWER POLE
TELEPHONE POLE
TREES
CONTROL OF ACCESS
PROPERTY LINE
R.O.W. TAKING LINE
SLOPE RIGHTS
TOP OF CUT
TOE OF SLOPE

SURVEYED BY : CLD/VTRANS
SURVEYED DATE : 12/1998/2010

DATUM
VERTICAL NAVD 88
HORIZONTAL NAD 83/96

VAOT Metric
UNLESS NOTED OTHERWISE
STATIONS ARE IN KILOMETERS
ELEVATIONS ARE IN METERS
DIMENSIONS ARE IN MILLIMETERS

THESE PLANS ARE SUBJECT TO SUCH ENGINEERING CHANGES AS MAY BE REQUIRED BY THE FEDERAL HIGHWAY ADMINISTRATION OR THE DIRECTOR OF PROGRAM DEVELOPMENT.

CONSTRUCTION IS TO BE CARRIED ON IN ACCORDANCE WITH THESE PLANS AND THE STANDARD SPECIFICATIONS FOR CONSTRUCTION DATED 2011, AS APPROVED BY THE FEDERAL HIGHWAY ADMINISTRATION ON JULY 20, 2011 FOR USE ON THIS PROJECT, INCLUDING ALL SUBSEQUENT REVISIONS AND SUCH REVISED SPECIFICATIONS AND SPECIAL PROVISIONS AS ARE INCORPORATED IN THESE PLANS.

PROJECT MANAGER : J. SCHULTZ

PROJECT NAME : CAMBRIDGE
PROJECT NUMBER : STP 030 -2(27)

SHEET 34 OF 214 SHEETS

TRAVERSE TIES

HVCTRL #3	HVCTRL #5
N = 238763.052	N = 238666.410
E = 473762.023	E = 473837.888
Z = 140.995	Z = 139.547

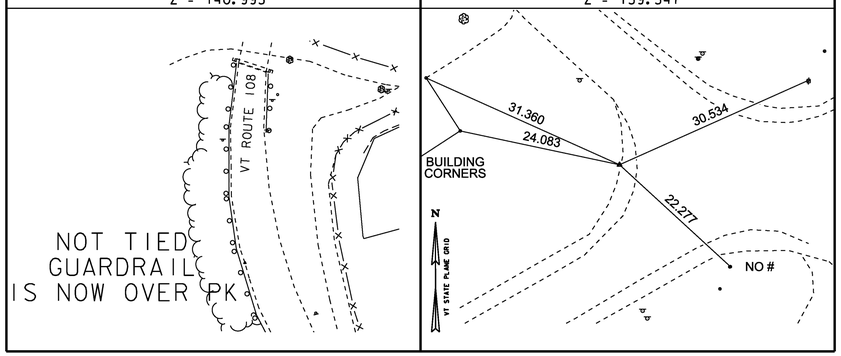

* MAIN TRAVERSE REVISED 7/2/2010 BY R.GILMAN P.C. & P. WINTERS

GPS CONTROL POINT

HVCTRL #1

W-20

N = 238967.432
E = 474966.801
Z = 140.786

SURFACE MARK REPORTED DESTROYED BY NATIONAL GEODETIC SURVEY 2009 (DJM)
THE MONUMENT IS SLIGHTLY LOOSE. TO REACH THE MARK FROM THE JUNCTION OF STATE HIGHWAY 108 AND 15 IN JEFFERSONVILLE, GO EAST ON HIGHWAY 15 FOR 0.65 MILE TO A FORK. TAKE THE LEFT FORK AND GO NORTHEAST ON A PAVED ROAD FOR 0.1 MILE TO TWO STORAGE TANKS ON THE LEFT AND THE MARK IN BETWEEN TWO SETS OF RAILROAD TRACKS. THE MARK IS A STANDARD DISK SET IN THE TOP OF A SQUARE CONCRETE MONUMENT THAT PROJECTS 2 INCHES. IT IS 58 FEET NORTHEAST OF THE NORTHEAST CORNER OF THE EAST STORAGE TANK, 17 FEET SOUTH OF THE SOUTH RAIL OF THE MAIN TRACKS, 13 FEET NORTH OF THE NORTH RAIL OF A SIDE TRACK, 2 FEET EAST OF A SMALL PINE TREE AND 1-FOOT WEST OF A METAL WITNESS POST.

TRAVERSE TIES

HVCTRL #6	HVCTRL #8	HVCTRL #15	HVCTRL #20	HVCTRL #25
N = 238883.910	N = 239116.886	N = 238731.144	N = 238590.036	N = 238598.035
E = 473815.461	E = 473944.081	E = 473965.834	E = 473944.611	E = 473721.432
Z = 138.290	Z = 141.073	Z = 140.227	Z = 139.390	Z = 139.939

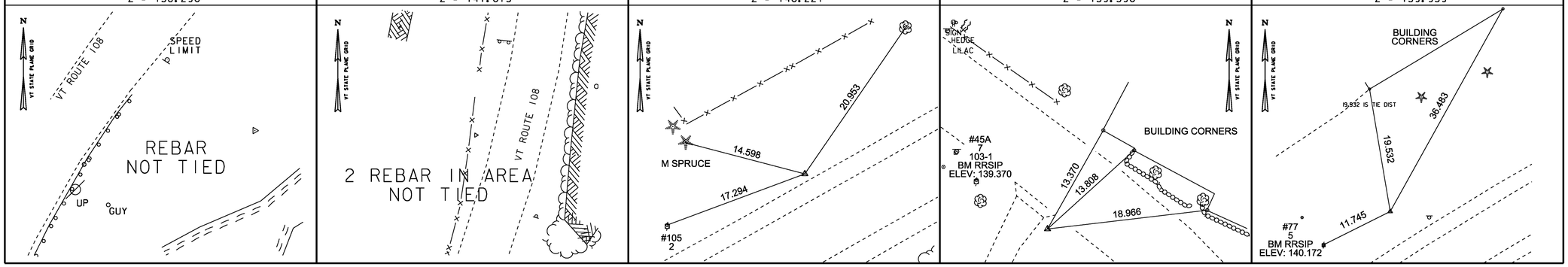

ALIGNMENT TIES

SEE LAYOUT PLANS FOR ALIGNMENT POINT INFORMATION.

DATUM

VERTICAL NAVD 88
HORIZONTAL NAD 83(96)

PROJECT NAME: CAMBRIDGE
PROJECT NUMBER: STP 030-2(27)

FILE NAME: t78f163frm.dgn
PROJECT LEADER: JLS
DESIGNED BY: MBL
TIE SHEET

PLOT DATE: 05-JUN-2012
DRAWN BY: MBL
CHECKED BY: JAD
SHEET 35 OF 214

STATE OF VERMONT
AGENCY OF TRANSPORTATION

QUANTITY SHEET 1

Metric

SUMMARY OF ESTIMATED QUANTITIES

ROADWAY	TRAINING	EROSION CONTROL	FULL C.E. ITEMS	GRAND TOTAL	FINAL	UNIT	ITEMS	ITEM NUMBER	ROUND
0.5				0.5		LS	CLEARING AND GRUBBING, INCLUDING INDIVIDUAL TREES AND STUMPS	201.10	--
7300				7300		CM	COMMON EXCAVATION	203.15	29.5
5				5		CM	SOLID ROCK EXCAVATION	203.16	EST.
1				1		CM	UNCLASSIFIED EXCAVATION	203.17	EST.
2700				2700		CM	SAND BORROW	203.31	80.2
1750				1750		CM	TRENCH EXCAVATION OF EARTH	204.20	58.7
1				1		CM	TRENCH EXCAVATION OF ROCK	204.21	--
425				425		CM	GRANULAR BACKFILL FOR STRUCTURES	204.30	4.2
1500				1500		SM	COLD PLANING, BITUMINOUS PAVEMENT	210.10	20.7
4650				4650		CM	SUBBASE OF DENSE GRADED CRUSHED STONE	301.35	39.2
1110				1110		KG	EMULSIFIED ASPHALT	404.65	4
200				200		T	BITUMINOUS CONCRETE PAVEMENT	406.25	34.1
1				1		LU	PRICE ADJUSTMENT, ASPHALT CEMENT (N.A.B.I.)	406.50	EST.
2300				2300		T	SUPERPAVE BITUMINOUS CONCRETE PAVEMENT	490.30	20.5
1				1		LU	AIR VOIDS PAY ADJUSTMENT (N.A.B.I.)	490.31	EST.
1				1		LU	MAT DENSITY PAY ADJUSTMENT (N.A.B.I.)	490.32	EST.
40				40		CM	CONCRETE, HIGH PERFORMANCE CLASS B	501.34	3.2
3525				3525		KG	REINFORCING STEEL, LEVEL I	507.11	26
37				37		M	375 CPEP(SL)	601.2610	0.7
190				190		M	450 CPEP(SL)	601.2615	2.2
40				40		M	600 CPEP(SL)	601.2620	1.5
1				1		EACH	375 CPEPES	601.7010	--
2				2		EACH	450 CPEPES	601.7015	--
2				2		EACH	600 CPEPES	601.7020	--
32				32		M	CLEANING CULV. PIPE, IN-PLACE [0 TO 600 MM, INCL.]	601.995	--
16				16		EACH	PRECAST REINFORCED CONCRETE CATCH BASIN WITH CAST IRON GRATE	604.20	--
3				3		EACH	CHANGING ELEVATION OF SEWER MANHOLES	604.42	--
500				500		M	200 MM UNDERDRAIN PIPE	605.11	29.3
30				30		M	200 MM UNDERDRAIN CARRIER PIPE	605.21	4.9
10				10		EACH	UNDERDRAIN FLUSHING BASIN	605.95	--
720				720		CM	DUST CONTROL WITH WATER	609.10	3.9
2				2		T	DUST AND ICE CONTROL WITH CALCIUM CHLORIDE	609.15	0.8
600				600		M	CAST-IN-PLACE CONCRETE CURB, TYPE B	616.28	54.2
13				13		EACH	STEEL MARKER POSTS	619.16	--
18				18		M	REMOVING AND RESETTING FENCE	620.50	--
9				9		EACH	ENERGY ABSORPTION ATTENUATOR	621.56	--
204				204		M	TEMPORARY TRAFFIC BARRIER	621.90	--
204				204		M	REMOVE AND RESET TEMPORARY TRAFFIC BARRIER	621.95	--
27				27		M	SLEEVES FOR UTILITIES (300 MM)	625.10	--
600				600		HR	UNIFORMED TRAFFIC OFFICERS	630.10	EST.

DETAILED SUMMARY OF QUANTITIES

QUANTITIES	UNIT	ITEMS
		203.15 - COMMON EXCAVATION
1804.3	CM	VT ROUTE 15 EB
1739.2	CM	VT ROUTE 15 WB
991.4	CM	VT ROUTE 108 NB
1029.1	CM	VT ROUTE 108 SB
1706.5	CM	ROUNDABOUT
29.5	CM	ROUNDING
7300	CM	TOTAL - COMMON EXCAVATION
		203.31 - SAND BORROW
493.8	CM	VT ROUTE 15 EB
437.5	CM	VT ROUTE 15 WB
314.8	CM	VT ROUTE 108 NB
363.8	CM	VT ROUTE 108 SB
1009.9	CM	ROUNDABOUT
80.2	CM	ROUNDING
2700	CM	TOTAL - SAND BORROW
		204.20 - TRENCH EXCAVATION OF EARTH
293.3	CM	NEW PIPES
416.8	CM	EXISTING PIPES
168.9	CM	STRUCTURES
812.3	CM	UNDERDRAIN
58.7	CM	ROUNDING
1750	CM	TOTAL - TRENCH EXCAVATION OF EARTH
		204.30 - GRANULAR BACKFILL FOR STRUCTURES
311.1	CM	PIPES
109.7	CM	STRUCTURES
4.2	CM	ROUNDING
425	CM	TOTAL - GRANULAR BACKFILL FOR STRUCTURES
		301.35 - SUBBASE OF DENSE GRADED CRUSHED STONE
886.7	CM	VT ROUTE 15 EB
760.4	CM	VT ROUTE 15 WB
549.8	CM	VT ROUTE 108 NB
364	CM	VT ROUTE 108 SB
2049.9	CM	ROUNDABOUT
39.2	CM	ROUNDING
4650	CM	TOTAL - SUBBASE OF DENSE GRADED CRUSHED STONE
		490.30 - SUPERPAVE BITUMINOUS CONCRETE PAVEMENT
		VT ROUTE 15 EB
163.9	T	-40 MM TYPE IVS
18.6	T	-80 MM TYPE IIS
581.1	T	-160 MM TYPE IIS
		VT ROUTE 15 WB
167.5	T	-40 MM TYPE IVS
18.2	T	-80 MM TYPE IIS
598.5	T	-160 MM TYPE IIS
		VT ROUTE 108 NB
105.2	T	-40 MM TYPE IVS
159.6	T	-65 MM TYPE IS
		VT ROUTE 108 SB
60.4	T	-40 MM TYPE IVS
98.2	T	-65 MM TYPE IS
		ROUNDABOUT
61.7	T	-40 MM TYPE IVS
246.6	T	-160 MM TYPE IIS
20.5	T	ROUNDING
2300	T	TOTAL - SUPERPAVE BITUMINOUS CONCRETE PAVEMENT

PROJECT NAME: CAMBRIDGE
PROJECT NUMBER: STP 030-2(27)

FILE NAME: t78f163frm.dgn
PROJECT LEADER: JLS
DESIGNED BY: MBL
QUANTITY SHEET 1

PLOT DATE: 05-JUN-2012
DRAWN BY: MBL
CHECKED BY: JAD
SHEET 36 OF 214

STATE OF VERMONT
AGENCY OF TRANSPORTATION

QUANTITY SHEET 2

Metric

SUMMARY OF ESTIMATED QUANTITIES				TOTALS		DESCRIPTIONS				DETAILED SUMMARY OF QUANTITIES		
ROADWAY	TRAINING	EROSION CONTROL	FULL C.E. ITEMS	GRAND TOTAL	FINAL	UNIT	ITEMS	ITEM NUMBER	ROUND	QUANTITIES	UNIT	ITEMS
5500				5500		HR	FLAGGERS	630.15	EST.			
			0.5	0.5		LS	FIELD OFFICE, ENGINEERS	631.10	--			
			0.5	0.5		LS	TESTING EQUIPMENT, CONCRETE	631.16	--			
			0.5	0.5		LS	TESTING EQUIPMENT, BITUMINOUS	631.17	--			
			3000	3000		DL	FIELD OFFICE TELEPHONE (N.A.B.I.)	631.26	EST.			
	520			520		HR	EMPLOYEE TRAINEESHIP	634.10	EST.			
0.5				0.5		LS	MOBILIZATION/DEMOBILIZATION	635.11	--			
1				1		LS	TRAFFIC CONTROL (STP 030-2(27))	641.10	--			
0.5				0.5		LS	PUBLIC RELATIONS OFFICER	641.12	--			
4				4		EACH	PORTABLE CHANGEABLE MESSAGE SIGN	641.15	EST.			
800				800		M	DURABLE 100 MM WHITE LINE, RECESSED TYPE I TAPE	646.407	67.9			
1100				1100		M	DURABLE 100 MM YELLOW LINE, RECESSED TYPE I TAPE	646.417	56.6			
50				50		M	DURABLE 200 MM YELLOW LINE, RECESSED TYPE I TAPE	646.457	3.7			
40				40		M	DURABLE 300 MM WHITE LINE, RECESSED TYPE I TAPE	646.467	4			
30				30		EACH	DURABLE LETTER OR SYMBOL, TYPE I TAPE	646.491	--			
70				70		M	TEMPORARY 100 MM WHITE LINE, PAINT	646.602	6.6			
40				40		M	TEMPORARY 100 MM YELLOW LINE, PAINT	646.612	0.9			
47				47		EACH	LINE STRIPING TARGETS	646.76	--			
600				600		SM	REMOVAL OF EXISTING PAVEMENT MARKINGS	646.85	168.2			
		170		170		SM	GEOTEXTILE FOR SILT FENCE	649.51	3.9			
		30		30		KG	SEED	651.15	3			
		230		230		KG	FERTILIZER	651.18	5			
		2		2		T	AGRICULTURAL LIMESTONE	651.20	0.2			
		2		2		T	HAY MULCH	651.25	0.3			
		410		410		CM	TOPSOIL	651.35	8.7			
		0.5		0.5		LS	EPSC PLAN	652.10	--			
		80		80		HR	MONITORING EPSC PLAN	652.20	EST.			
		0.5		0.5		LU	MAINTENANCE OF EPSC PLAN (N.A.B.I.)	652.30	--			
		320		320		SM	TEMPORARY EROSION MATTING	653.20	1			
		14		14		EACH	PREFABRICATED CHECK DAM	653.30	0.5			
		12		12		CM	VEHICLE TRACKING PAD	653.35	--			
		19		19		EACH	INLET PROTECTION DEVICE, TYPE I	653.40	--			
		520		520		M	PROJECT DEMARCATION FENCE	653.55	1.9			
5				5		EACH	EVERGREEN TREES (PICEA GLAUCA)(B&B)(1.5-2 M HT)	656.20	--			
83				83		EACH	EVERGREEN SHRUBS (JUNIPERUS CHINENSIS SEA GREEN)(CONTAINER)(600-800 MM HEIGHT)	656.25	--			
48				48		EACH	EVERGREEN SHRUBS (JUNIPERUS CHINENSIS VIRIDIS SARGENT)(7.5 L CONTAINER)(300-450 MM SPREAD)	656.25	--			
4				4		EACH	DECIDUOUS TREES (SYRINGA RETICULATUM)(B&B)(50-60 MM CAL.)	656.30	--			
36				36		EACH	DECIDUOUS SHRUBS (HYDRANGEA ARBORESCENS "ANNABELLE")(B&B)(900-1200 MM HEIGHT)	656.35	--			
15				15		EACH	GROUND COVERS AND VINES (VALIENT GRAPEVINE OR SUMMER GRAPEVINE)	656.40	--			

PROJECT NAME: CAMBRIDGE
PROJECT NUMBER: STP 030-2(27)

FILE NAME: t78f163frm.dgn
PROJECT LEADER: JLS
DESIGNED BY: MBL
QUANTITY SHEET 2

PLOT DATE: 13-JUN-2012
DRAWN BY: MBL
CHECKED BY: JAD
SHEET 37 OF 214

STATE OF VERMONT
AGENCY OF TRANSPORTATION

QUANTITY SHEET 3

Metric

SUMMARY OF ESTIMATED QUANTITIES									TOTALS		DESCRIPTIONS				DETAILED SUMMARY OF QUANTITIES		
						ROADWAY	TRAINING	EROSION CONTROL	FULL C.E. ITEMS	GRAND TOTAL	FINAL	UNIT	ITEMS	ITEM NUMBER	ROUND	QUANTITIES	UNIT	ITEMS
						60				60		EACH	PERENNIALS (HERMEROCALLIS STELLA D'ORO)(4 L CONTAINER)(2 FANS, HEAVY)	656.41	--			
						200				200		EACH	PERENNIALS (NARCISSUS "KING ALFRED")(CONTAINER)(GRADE A BULBS)	656.41	--			
						100				100		CM	LANDSCAPE WATERING	656.65	--			
						6.25				6.25		CM	LANDSCAPE BACKFILL, TRUCK MEASUREMENT	656.80	--			
						29				29		SM	TRAFFIC SIGNS, TYPE A	675.20	--			
						34				34		SM	TRAFFIC SIGNS, TYPE B	675.21	--			
						595.2				595.2		KG	TUBULAR STEEL SIGN POST	675.33	--			
						191.9				191.9		M	SQUARE TUBE SIGN POST AND ANCHOR	675.341	--			
						6				6		EACH	FOUNDATION FOR TUBULAR STEEL POST	675.43	--			
						93				93		EACH	REMOVING SIGNS	675.50	--			
						265				265		M	WIRED CONDUIT (50MM)(PVC)	678.23	--			
						8				8		EACH	PULL BOX, STANDARD	678.25	--			
						75				75		M	ELECTRICAL CONDUIT SLEEVE (200MM)(PVC)	678.30	--			
						1				1		EACH	REMOVAL OF EXISTING TRAFFIC CONTROL SIGNAL SYSTEM	678.45	--			
						8				8		EACH	LIGHT POLE BASE	679.21	--			
						8				8		EACH	BREAKAWAY FEATURE FOR LIGHT POLE	679.23	--			
						8				8		EACH	LIGHT POLE	679.45	--			
						8				8		EACH	BRACKET ARM	679.47	--			
						8				8		EACH	LUMINAIRE	679.50	--			
						2				2		EACH	POWER DROP STANCHION, STREET LIGHTING	679.55	--			
						1				1		LU	PRICE ADJUSTMENT, FUEL (N.A.B.I.)	690.50	--			
						60				60		M	SPECIAL PROVISION (VERTICAL GRANITE CURB, MOUNTABLE)	900.640	6.9			
						1				1		LS	SPECIAL PROVISION (TEMPORARY ROADWAY WIDENING)(PHASE I)	900.645	--			
						120				120		SM	SPECIAL PROVISION (HAND-PLACED BITUMINOUS CONCRETE MATERIAL, DRIVES)	900.675	--			
						85				85		SM	SPECIAL PROVISION (PORTLAND CEMENT CONCRETE ISLAND TREATMENT, 100 MM)	900.675	--			
						425				425		SM	SPECIAL PROVISION (STAMPED COLORED CONCRETE APRON, 200 MM)	900.675	--			

PROJECT NAME: CAMBRIDGE
PROJECT NUMBER: STP 030-2(27)

FILE NAME: t78f163frm.dgn
PROJECT LEADER: JLS
DESIGNED BY: MBL
QUANTITY SHEET 3

PLOT DATE: 13-JUN-2012
DRAWN BY: MBL
CHECKED BY: JAD
SHEET 38 OF 214

TYPICAL SECTIONS

MATERIAL TOLERANCES

MATERIAL ITEM	THICKNESS TOLERANCE (TOTAL DEPTH FOR EACH MATERIAL)
PAVEMENT	½ 5
SUBBASE	½ 30
SAND BORROW	½ 30

VT ROUTE 15 & VT ROUTE 108

40 BITUMINOUS CONCRETE PAVEMENT (TYPE IVS)
80 BITUMINOUS CONCRETE PAVEMENT (TYPE IIS)
80 BITUMINOUS CONCRETE PAVEMENT (TYPE IIS)
600 SUBBASE OF DENSE GRADED CRUSHED STONE
450 SAND BORROW

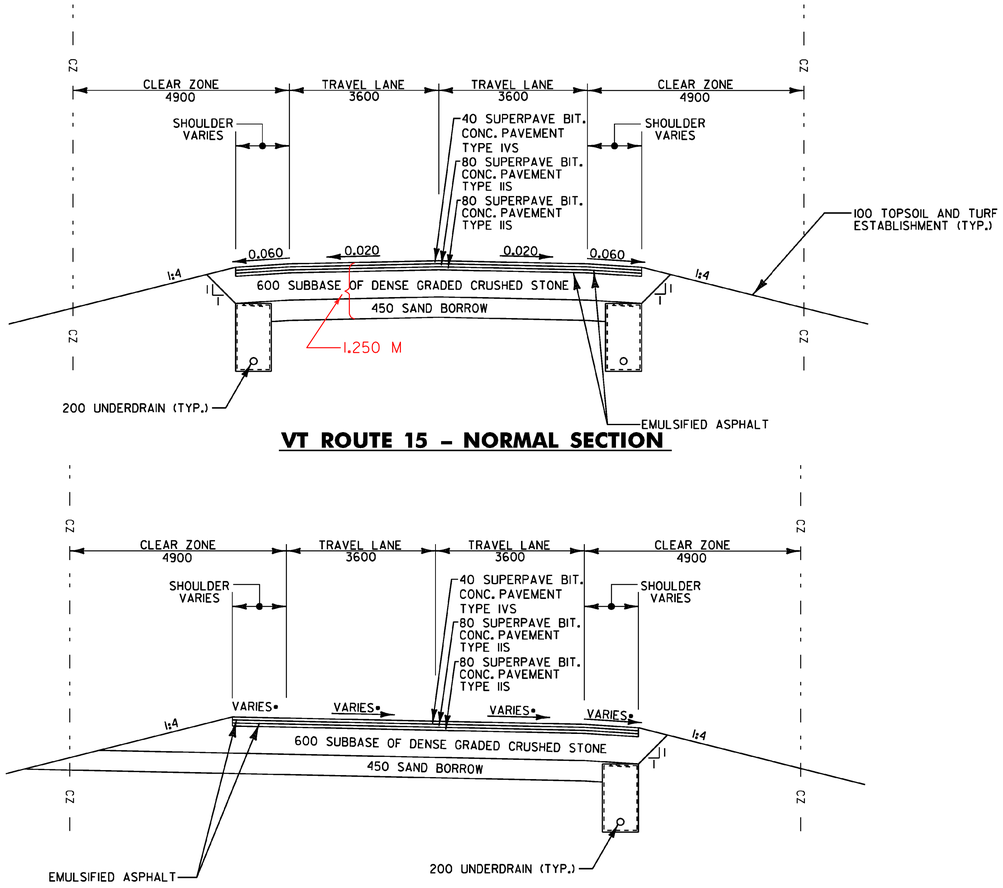

VT ROUTE 15 – NORMAL SECTION

VT ROUTE 15 – BANKED SECTION

• SEE PROFILE SHEETS 1 & 2 FOR BANKING DIAGRAMS. SHEETS 48 & 49.

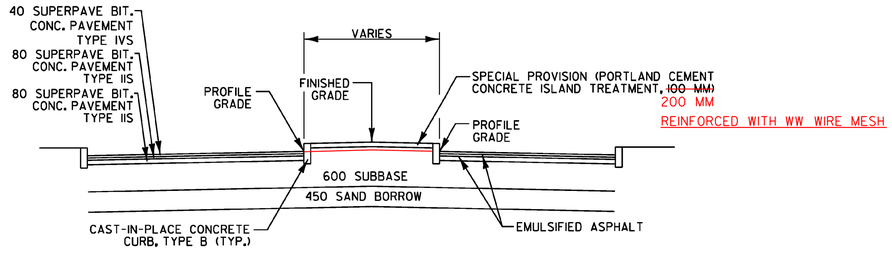

SPLITTER ISLAND DETAIL

~~VT ROUTE 108~~

~~40 BITUMINOUS CONCRETE PAVEMENT (TYPE IVS)~~
~~65 BITUMINOUS CONCRETE PAVEMENT (TYPE IS)~~
~~550 SUBBASE OF DENSE GRADED CRUSHED STONE~~
~~600 SAND BORROW~~

SEE W.O. #39
80MM TYPE IIS
80MM TYPE IIS
40MM TYPE IVS

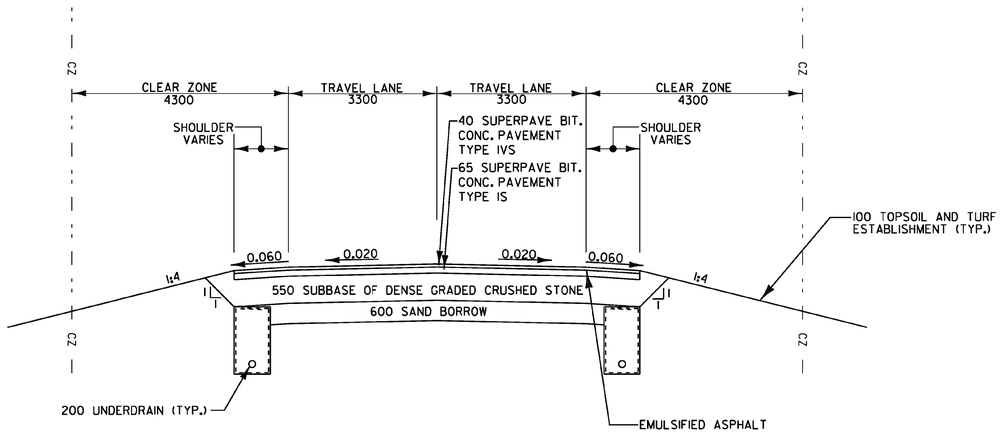

VT ROUTE 108 – NORMAL SECTION

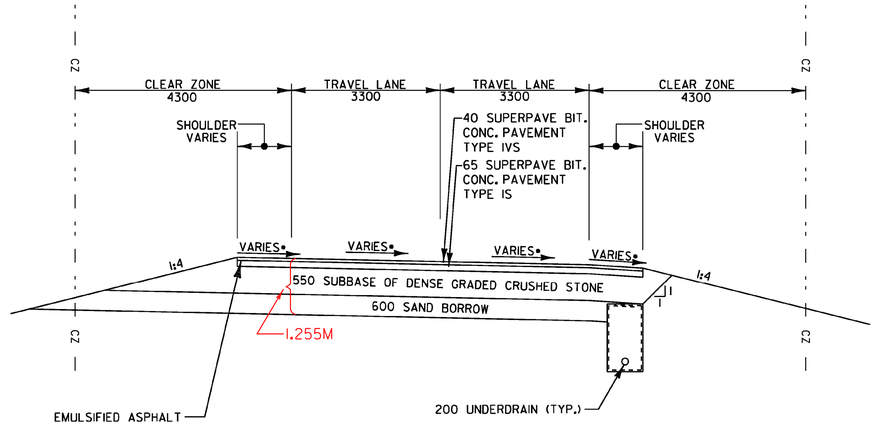

VT ROUTE 108 – BANKED SECTION

• SEE PROFILE SHEETS 3 & 4 FOR BANKING DIAGRAMS. SHEETS 50 & 51.

SEEDING FORMULA

SEE EROSION CONTROL DETAIL SHEET 1 FOR THE SEEDING FORMULA.

GENERAL NOTES

1. TACK COAT: EMULSIFIED ASPHALT IS TO BE APPLIED AT THE RATE OF 0.025 GAL/SY BETWEEN SUCCESSIVE COURSES OF PAVEMENT AS DIRECTED BY THE ENGINEER.
2. MARKER POSTS: TO BE PLACED AS INDICATED OR AS DIRECTED BY THE ENGINEER.
3. SLOPE ROUNDING: ALL CUT SLOPES TO BE ROUNDED IN ACCORDANCE WITH STANDARD B-5.
4. ALL MATERIALS AND CONSTRUCTION PRACTICES SHALL CONFORM TO THE STATE OF VERMONT AGENCY OF TRANSPORTATION'S 2011 STANDARD SPECIFICATIONS FOR CONSTRUCTION AND IT'S LATEST REVISIONS.

ALL DIMENSIONS IN MILLIMETERS, EXCEPT WHERE NOTED.

NOT TO SCALE

PROJECT NAME: CAMBRIDGE	
PROJECT NUMBER: STP 030-2(27)	
FILE NAME: t78f163frm.dgn	PLOT DATE: 05-JUN-2012
PROJECT LEADER: JLS	DRAWN BY: MBL
DESIGNED BY: MBL	CHECKED BY: JAD
TYPICAL SECTIONS SHEET 1	SHEET 39 OF 214

TYPICAL SECTIONS

VAOT Metric

VT ROUTE 15
40 BITUMINOUS CONCRETE PAVEMENT (TYPE IVS)
80 BITUMINOUS CONCRETE PAVEMENT (TYPE IIS)
80 BITUMINOUS CONCRETE PAVEMENT (TYPE IIS)
600 SUBBASE OF DENSE GRADED CRUSHED STONE
450 SAND BORROW

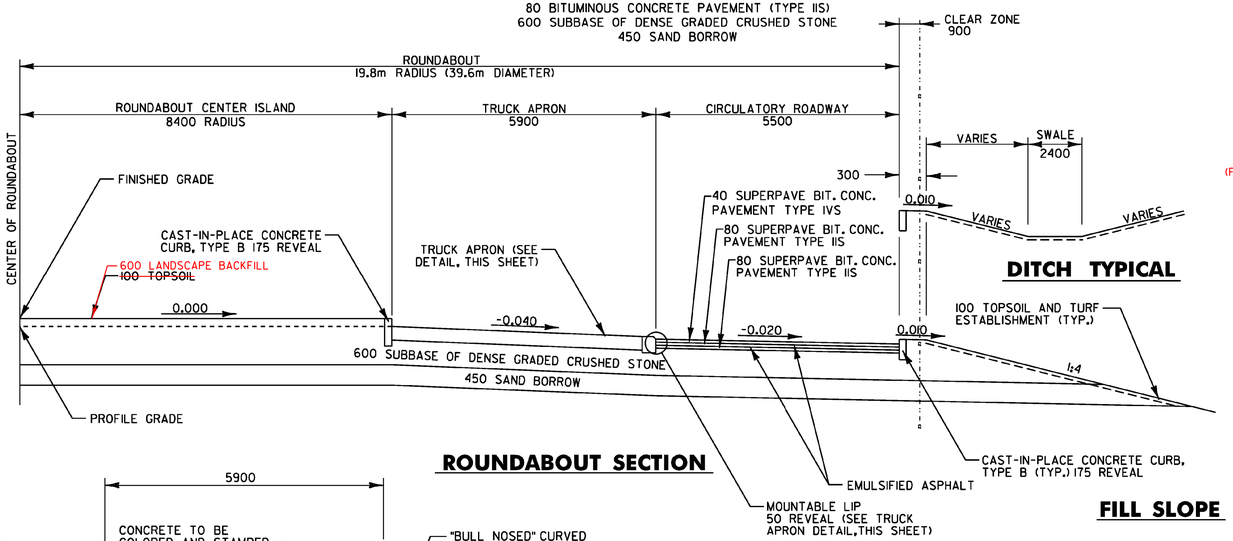

ROUNDABOUT SECTION

VT ROUTE 108
40 BITUMINOUS CONCRETE PAVEMENT (TYPE IVS)
65 BITUMINOUS CONCRETE PAVEMENT (TYPE IS)
550 SUBBASE OF DENSE GRADED CRUSHED STONE
600 SAND BORROW

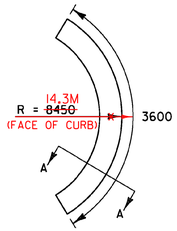

PLAN
NOT TO SCALE

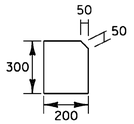

SECTION A–A
NOT TO SCALE

NOTE:
1. CURBING SHALL BE PAID FOR UNDER CONTRACT ITEM 900.640 - SPECIAL PROVISION (VERTICAL GRANITE CURB, MOUNTABLE)

MOUNTABLE VERTICAL GRANITE CURB DETAIL
NOT TO SCALE

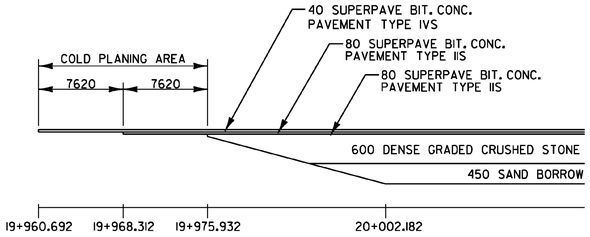

VT ROUTE 15 BEGIN APPROACH MATERIAL TRANSITION DETAIL

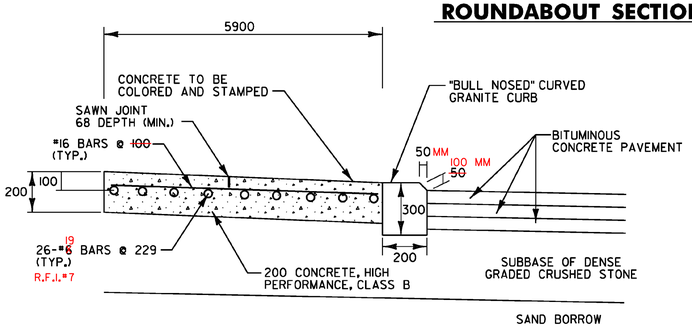

NOTE:
1. ALL REINFORCING STEEL SHALL BE EPOXY COATED AND PAID FOR UNDER CONTRACT ITEM 507.11.
2. THE COLOR OF THE CONCRETE AGGREGATE SHALL MATCH THAT OF THE COLORED CONCRETE.

TRUCK APRON DETAIL

FILL SLOPE

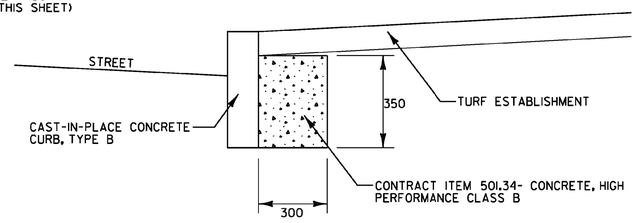

CONCRETE BEHIND CURB ON RADII DETAIL
NOT TO SCALE

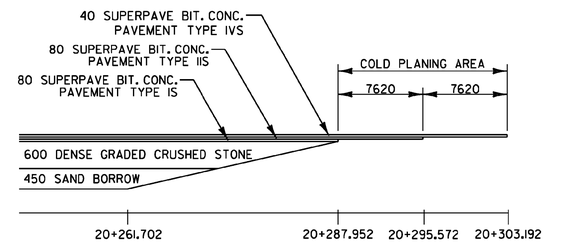

VT ROUTE 15 END APPROACH MATERIAL TRANSITION DETAIL

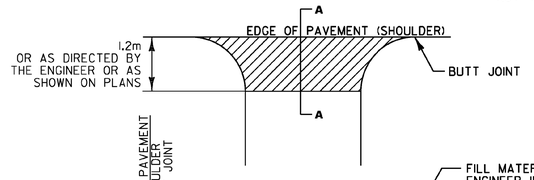

PLAN

SECTION A–A

STATION	QUANTITY (SM)
9+934.418, LT.	14.2 SM
9+943.594, RT.	24.9 SM
10+055.294, LT.	13.8 SM
20+030.517, LT.	16.9 SM
20+073.010, LT.	19.0 SM
20+187.354 LT.	23.9 SM

DRIVE LOCATION SUMMARY

AREAS FOR 900.675 - SPECIAL PROVISION (HAND-PLACED BIT. CONC. MATERIAL, DRIVES

ITEM NO. 900.675 – SPECIAL PROVISION (HAND-PLACED BITUMINOUS CONCRETE MATERIAL, DRIVES)

VT ROUTE 108 BEGIN APPROACH MATERIAL TRANSITION DETAIL

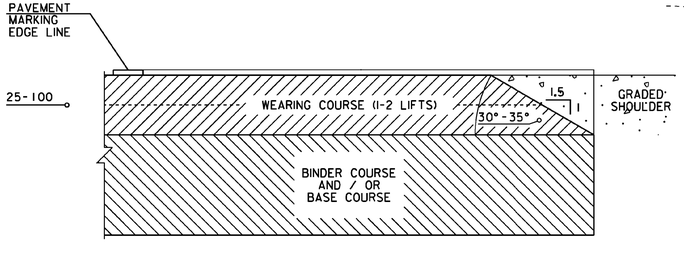

SAFETY EDGE DETAIL

SAFETY EDGE NOTE:
1. LEVELING COURSE MAY INCLUDE THE "SAFETY EDGE" AT THE CONTRACTOR'S CHOICE.

NOTES:
1. CONCRETE FOR THE SPLITTER ISLANDS SHALL BE PAID FOR UNDER ITEM NO. 900.675 - SPECIAL PROVISION (PORTLAND CEMENT CONCRETE ISLAND TREATMENT, 100 MM).
2. CONCRETE FOR THE TRUCK APRON SHALL BE PAID FOR UNDER ITEM NO. 900.675 - SPECIAL PROVISION (STAMPED COLORED CONCRETE APRON, 200 MM)

ALL DIMENSIONS IN MILLIMETERS, EXCEPT WHERE NOTED.

NOT TO SCALE

PROJECT NAME: CAMBRIDGE
PROJECT NUMBER: STP 030-2(27)

FILE NAME: t78f163frm.dgn
PROJECT LEADER: JLS
DESIGNED BY: MBL
TYPICAL SECTION SHEET 2

PLOT DATE: 07-JUN-2012
DRAWN BY: MBL
CHECKED BY: JAD
SHEET 40 OF 214

STATE OF VERMONT
AGENCY OF TRANSPORTATION

DRAINAGE DETAIL SHEET

STATION	STATION	POS.	PIPE #	INLET/OUTLET TYPE		DITCH		PIPE ARCH			PIPE		ALLOWABLE OPTIONS						PIPE ELBOW	ES	CB	DEPTH DI	CONC CLASS B	REINF STEEL	DI GRATE	CHAN ELEV	CRM	TRENCH EXCAVATION		COMM EXC	UNC CHAN EXC	STRUCT EXCAV	GRAN BKFILL STRUCT	GRAN BORR	EROS MATT	STONE FILL		MARKER POSTS				REMARKS
				INLET	OUTLET	IN	OUT	SPAN	RISE	L	D	L	PCCSP	CAAP	RCP CL	CSP	CPEP SL	PCCSP PI									EARTH	ROCK									LT	RT			
km + m	km + m							mm	mm	m	mm	m	mm	mm		mm	mm	mm	no. deg.	ea	ea	mm	m^3	kg	type	ea	m^3	m^3	m^3	m^3	m^3	m^3	m^3	m^2	m^3	type	ea	ea			
20+091.689	10+018.140	LT-RT	1	CB-1	CB-13						450	21.5					X				1				D		31.9					32.56								
20+091.309	20+112.400	RT	2	CB-2	CB-3						450	20.4					X				1				D		29.1					30.55								
20+112.400	9+984.526	RT-LT	3	CB-3	CB-4						450	15.8					X				1				D		29.5					25.28								
9+984.526	9+981.999	LT-RT	4	CB-4	CB-5						450	16.7					X				1				D		33.6					28.12								
9+981.999	20+147.920	RT	5	CB-5	CB-6						450	5.4					X				1				D		20.2					12.44								
20+147.920	20+147.380	RT-LT	6	CB-6	CB-7						600	18.9					X				1				D		45.3					33.42								
20+147.380	20+143.193	LT	7	CB-7	DITCH						600	10.8					X			1	1				D		16.8					22.66						1		
9+971.689	9+984.526	LT	8	CB-8	CB-4						450	12.3					X				1				D		22.1					20.43								
9+957.241	9+971.689	LT	9	CB-9	CB-8						450	13.4					X				1				D		16.9					21.42								
10+034.955	10+018.140	LT	11	CB-11	CB-13						450	17.0					X				1				D		26.3					26.09								
10+020.496	10+018.140	LT	12	CB-12	CB-13						450	1.6					X				1				D		11.9					6.87								
10+018.140	10+019.795	LT-RT	13	CB-13	CB-16						450	20.2					X				1				D		44.4					32.84								
10+054.393	10+034.398	RT	14	CB-14	CB-15						450	18.7					X				1				D		18.8					27.49								
10+034.398	10+019.795	RT	15	CB15	CB-16						450	14.2					X				1				D		26.7					22.64								
10+019.795	10+017.606	RT	16	CB-16	DITCH						600	9.1					X			1	1				D		12.9					20.25						1		
20+155.000	20+147.920	RT	17	DITCH	CB-6						450	7.3					X			1							15.2					8.3						1		
20+196.650	20+160.161	LT	18	CB-18	DITCH						375	36.3					X			1	1				A		56.5					45.91						1		
9+957.101	9+957.241	LT	19	DITCH	CB-9						450	3.3					X			1							4.1					3.2						1		
9+957.795	9+958.165	LT-RT	EX 1								380	10.6															43.3													REMOVE EXISTING CULVERT
9+958.031	9+978.201	RT	EX 2								460	20.2			X												121.0													REMOVE EXISTING CULVERT
9+979.540	20+151.897	RT-LT	EX 3								460	26.1			X												117.7													REMOVE EXISTING CULVERT
9+926.160	9+944.514	LT-RT	EX 4								460	29.9			X												134.8													REMOVE EXISTING CULVERT
TOTALS															3		18			5	16						879					420.81						5			

PROJECT NAME: CAMBRIDGE
PROJECT NUMBER: STP 030-2(27)

FILE NAME: t78f163frm.dgn
PROJECT LEADER: JLS
DESIGNED BY: MBL
DRAINAGE DETAIL SHEET

PLOT DATE: 05-JUN-2012
DRAWN BY: MBL
CHECKED BY: JAD
SHEET 41 OF 214

SEE REVISION SHEET

STATE OF VERMONT
AGENCY OF TRANSPORTATION

DRAINAGE DETAIL SHEET

Non-Metric

STATION	STATION	POS.	PIPE #	INLET/OUTLET TYPE		DITCH		PIPE ARCH			PIPE		ALLOWABLE OPTIONS						PIPE ELBOW	ES	CB	PRCDI	DEPTH DI	CONC CLASS B	REINF STEEL	DI GRATE	CHAN ELEV	CRM	TRENCH EXCAVATION		COMM EXC	UNC CHAN EXC	STRUCT EXCAV	GRAN BKFILL STRUCT	GRAN BORR	EROS MATT	STONE FILL		MARKER POSTS				REMARKS
km + m	km + m			INLET	OUTLET	IN	OUT	SPAN mm	RISE mm	L m	D mm	L m	PCCSP mm	CAAP mm	RCP CL	CSP mm	CPEP SL mm	PCCSP PI mm	no. deg.	ea	ea		mm	m^3	kg	type	ea	m^3	EARTH m^3	ROCK m^3	m^3	m^3	m^3	m^3	m^3	m^2	m^3	type	LT ea	RT ea			
20+091.689	10+018.140	LT-RT	1	CB-1	CB-13						450	21.5					X				1					D		31.9					32.56									
20+091.309	20+111.917	RT	2	CB-2	CB-3						450	20.2					X				1					D		29.1					30.55									
20+111.917	9+983.918	RT-LT	3	CB-3	CB-4						450	15.6					X				1					D		29.5					25.28									
9+983.918	9+982.000	LT-RT	4	CB-4	CB-5						450	17.6					X				1					D		33.6					28.12									
9+981.999	20+147.920	RT	5	CB-5	CB-6						450	5.4					X				1					D		20.2					12.44									
20+147.920	20+148.169	RT-LT	6	CB-6	CB-7						600	19.9					X				1					D		45.3					33.42									
20+148.169	10+016.639	LT-RT	7	CB-7	DITCH						600	10.3					X			1	1					D		16.8					22.66							1		
9+971.691	9+983.918	LT	8	CB-8	CB-4						450	12.1					X				1					D		22.1					20.43									
9+957.241	9+971.689	LT	9	CB-9	CB-8						450	13.4					X				1					D		16.9					21.42									
10+034.955	10+018.140	LT	11	CB-11	CB-13						450	17.0					X				1					D		26.3					26.09									
10+047.134	10+034.955	LT	12A	CB-12A	CB-11						450	12.3					X				1					D		39.8					20.72									6
10+018.140	10+020.172	LT-RT	13	CB-13	CB-16						450	21.5					X				1					D		44.4					32.84									
10+054.393	10+034.398	RT	14	CB-14	CB-15						450	18.7					X				1					D		18.8					27.49									
10+034.398	10+020.172	RT	15	CB15	CB-16						450	14.1					X				1					D		26.7					22.64									
10+020.172	10+017.606	RT	16	CB-16	DITCH						600	7.8					X			1	1					D		12.9					20.25							1		
20+155.000	20+147.920	RT	17	DITCH	CB-6						450	7.3					X			1								15.2					8.30							1		
20+175.600	20+166.370	LT	18A	CB-18A	CB-21						375	9.4					X				1					A		26.8					12.81							1		1 4
9+957.101	9+957.241	LT	19	DITCH	CB-9						450	3.3					X			1								4.1					3.20							1		
9+957.241	9+981.999	RT	20	CB-20	CB-5						450	23.9					X				1					D		56.0					33.75									2
20+166.370	20+148.169	LT	21	CB-21	CB-7						375	18.5					X				1					D		44.6					25.25									3 5
9+957.795	9+958.165	LT-RT	EX 1								380	10.6																43.3													REMOVE EXISTING CULVERT
9+958.031	9+978.201	RT	EX 2								460	20.2			X													121.0													REMOVE EXISTING CULVERT
9+979.540	20+151.897	RT-LT	EX 3								460	26.1			X													117.7													REMOVE EXISTING CULVERT
9+926.160	9+944.514	LT-RT	EX 4								460	29.9			X													134.8													REMOVE EXISTING CULVERT
TOTALS															3		20			4	18							977.8					460.22							5		

1 REPLACED CB-18 AND PIPE 18 WITH CB-18A AND PIPE 18A
2 ADDED CB-20 AND PIPE 20
3 ADDED CB-21 AND PIPE 21
4 REVISED PIPE 18A
5 REVISED PIPE 21
6 REMOVED CB-12 AND PIPE 12 AND ADDED CB-12A AND PIPE 12A

PROJECT NAME: CAMBRIDGE
PROJECT NUMBER: STP 030-2(27)

FILE NAME: t78f163frm.dgn
PROJECT LEADER: JLS
DESIGNED BY: MBL
DRAINAGE DETAIL SHEET

PLOT DATE: 6/24/13
DRAWN BY: MBL
CHECKED BY: JAD
SHEET 41 OF 214

STATE OF VERMONT
AGENCY OF TRANSPORTATION

EARTHWORKS

Metric

STATION km + m	DIST m	TOTAL EXCAVATION EARTH AND ROCK AREA m^2	TOTAL EXCAVATION EARTH AND ROCK VOLUME m^3	ROCK EXCAVATION AREA m^2	ROCK EXCAVATION VOLUME m^3	EMBANKMENT AREA m^2	EMBANKMENT VOLUME m^3	AREA m^2	VOLUME m^3
VT RT 15									
20+002.182		15				0			
	8		122				0		
20+010.00		16				0			
	10		158				0		
20+020.00		16				0			
	10		154				0		
20+030.00		15				0			
	10		151				0		
20+040.00		15				0			
	10		143				0		
20+050.00		13				0			
	10		129				0		
20+060.00		12				0			
	10		112				0		
20+070.00		10				0			
	10		104				1		
20+080.00		11				0			
	10		118				2		
20+090.00		13				0			
	10		145				4		
20+100.00		16				1			
	10		200				10		
20+110.00		24				1			
	10		268				17		
20+120.00		30				2			
	10		309				10		
20+130.00		32				0		CUT	4279
	10		244				0	ROCK	0
20+140.00		17				0		R.FAC	.495
	10		183				20	FILL	104
20+150.00		20				4		F.FAC	1.15
	10		200				22	EX. C	4159
20+160.00		20				0			
	10		169				8		
20+170.00		14				1			
	10		127				8		
20+180.00		12				1			
	10		123				3		
20+190.00		13				0			
	10		139				0		
20+200.00		15				0			
	10		153				0		
20+210.00		16				0			
	10		159				0		
20+220.00		16				0			
	10		160				0		
20+230.00		16				0			
	10		160				0		
20+240.00		16				0			
	10		162				0		
20+250.00		16				0			
	10		160				0		
20+260.00		16				0			
	2		27				0		
20+261.702		16				0			
VT RT 108									
9+910.905		13				0			
	9		120				0		
9+920.00		13				0			
	10		124				1		
9+930.00		12				0			
	10		111				1		
9+940.00		11				0			
	10		102				2		
9+950.00		10				0			
	10		102				2		
9+960.00		11				0			
	10		113				2		
9+970.00		12				0			
	10		141				12		
9+980.00		16				2			
	10		179				11		
9+990.00		20				0			
	10		338				0	CUT	2991
10+000.00		48				0		ROCK	0
	10		282				0	R.FAC	.495
10+010.00		9				0		FILL	203
	10		147				21	F.FAC	1.15
10+020.00		21				4		EX. C	2758
	10		204				42		
10+030.00		20				4			
	10		210				31		
10+040.00		22				2			
	10		110				10		

STATION km + m	DIST m	TOTAL EXCAVATION EARTH AND ROCK AREA m^2	TOTAL EXCAVATION EARTH AND ROCK VOLUME m^3	ROCK EXCAVATION AREA m^2	ROCK EXCAVATION VOLUME m^3	EMBANKMENT AREA m^2	EMBANKMENT VOLUME m^3	AREA m^2	VOLUME m^3
10+050.00		23				2			
	10		116				8		
10+060.00		20				3			
	10		182				20		
10+070.00		17				1			
	10		154				15		
10+080.00		14				2			
	3		42				5		
10+082.79		16				2			

STATION km + m	DIST m	TOTAL EXCAVATION EARTH AND ROCK AREA m^2	TOTAL EXCAVATION EARTH AND ROCK VOLUME m^3	ROCK EXCAVATION AREA m^2	ROCK EXCAVATION VOLUME m^3	EMBANKMENT AREA m^2	EMBANKMENT VOLUME m^3	AREA m^2	VOLUME m^3

SUMMARY AND BALANCES

STATION TO STATION km + m		TOT EXC. EARTH & ROCK m^3	ROCK EXCAV m^3	EMBANK m^3	EXCESSES CUT	EXCESSES FILL	ACUMULATIVE EXCESSES CUT	ACUMULATIVE EXCESSES FILL
20+002.182	20+261.702	4279		104	4159		4159	
9+910.905	10+082.79	2991		203	2758		6917	
	TOTALS	7270		307	6917			

REMARKS

EARTH AND ROCK EXCAVATION	7270
SOLID ROCK EXCAVATION	0
EARTH EXCAVATION	7270
PLANIMETERED FILL	307
LESS FACTORED SOLID ROCK	
LESS DISPLACEMENT OF ANY LARGE STRUCTURES	
NET PLANIMETERED FILL	307
FACTOR	1.15
PLANIMETERED FILL INCLUDING FACTOR	353
MATERIALS AVAILABLE FOR FILLS	
EARTH EXCAVATION	7270
CHANNEL EXCAVATION	
UNDERDRAIN EXCAVATION	812
STRUCTURE EXCAVATION	
TOTAL MATERIAL AVAILABLE FOR FILL	8082
TOTAL FILL INCLUDING FACTOR	353
TOTAL MATERIAL FOR FILL	8082
BORROW	
EXCESS EXCAVATION	7729

PROJECT NAME: CAMBRIDGE
PROJECT NUMBER: STP 030-2(27)

FILE NAME: t78f163frm.dgn
PROJECT LEADER: JLS
DESIGNED BY: MBL
EARTHWORKS SUMMARY SHEET

PLOT DATE: 05-JUN-2012
DRAWN BY: MBL
CHECKED BY: JAD
SHEET 42 OF 214

STATE OF VERMONT
AGENCY OF TRANSPORTATION

DRAINAGE DETAIL SHEET

STATION	STATION	POS.	PIPE #	INLET/OUTLET TYPE		DITCH		PIPE ARCH			PIPE		ALLOWABLE OPTIONS						PIPE ELBOW	ES	CB	DEPTH DI	CONC CLASS B	REINF STEEL	DI GRATE	CHAN ELEV	CRM	TRENCH EXCAVATION		COMM EXC	UNC CHAN EXC	STRUCT EXCAV	GRAN BKFILL STRUCT	GRAN BORR	EROS MATT	STONE FILL		MARKER POSTS				REMARKS
				INLET	OUTLET	IN	OUT	SPAN	RISE	L	D	L	PCCSP	CAAP	RCP CL	CSP	CPEP SL	PCCSP PI									EARTH	ROCK									LT	RT			
km + m	km + m							mm	mm	m	mm	m	mm	mm		mm	mm	mm	no. deg.	ea	ea	mm	m^3	kg	type	ea	m^3	m^3	m^3	m^3	m^3	m^3	m^3	m^2	m^3	type	ea	ea			
20+091.689	10+018.140	LT-RT	1	CB-1	CB-13						450	21.5					X				1				D		31.9					32.56								
20+091.309	20+112.400	RT	2	CB-2	CB-3						450	20.4					X				1				D		29.1					30.55								
20+112.400	9+984.526	RT-LT	3	CB-3	CB-4						450	15.8					X				1				D		29.5					25.28								
9+984.526	9+981.999	LT-RT	4	CB-4	CB-5						450	16.7					X				1				D		33.6					28.12								
9+981.999	20+147.920	RT	5	CB-5	CB-6						450	5.4					X				1				D		20.2					12.44								
20+147.920	20+147.380	RT-LT	6	CB-6	CB-7						600	18.9					X				1				D		45.3					33.42								
20+147.380	20+143.193	LT	7	CB-7	DITCH						600	10.8					X			1	1				D		16.8					22.66						1		
9+971.689	9+984.526	LT	8	CB-8	CB-4						450	12.3					X				1				D		22.1					20.43								
9+957.241	9+971.689	LT	9	CB-9	CB-8						450	13.4					X				1				D		16.9					21.42								
10+034.955	10+018.140	LT	11	CB-11	CB-13						450	17.0					X				1				D		26.3					26.09								
10+020.496	10+018.140	LT	12	CB-12	CB-13						450	1.6					X				1				D		11.9					6.87								
10+018.140	10+019.795	LT-RT	13	CB-13	CB-16						450	20.2					X				1				D		44.4					32.84								
10+054.393	10+034.398	RT	14	CB-14	CB-15						450	18.7					X				1				D		18.8					27.49								
10+034.398	10+019.795	RT	15	CB15	CB-16						450	14.2					X				1				D		26.7					22.64								
10+019.795	10+017.606	RT	16	CB-16	DITCH						600	9.1					X			1	1				D		12.9					20.25						1		
20+155.000	20+147.920	RT	17	DITCH	CB-6						450	7.3					X			1							15.2					8.3						1		
20+196.650	20+160.161	LT	18	CB-18	DITCH						375	36.3					X			1	1				A		56.5					45.91						1		
9+957.101	9+957.241	LT	19	DITCH	CB-9						450	3.3					X			1							4.1					3.2						1		
9+957.795	9+958.165	LT-RT	EX 1								380	10.6															43.3													REMOVE EXISTING CULVERT
9+958.031	9+978.201	RT	EX 2								460	20.2			X												121.0													REMOVE EXISTING CULVERT
9+979.540	20+151.897	RT-LT	EX 3								460	26.1			X												117.7													REMOVE EXISTING CULVERT
9+926.160	9+944.514	LT-RT	EX 4								460	29.9			X												134.8													REMOVE EXISTING CULVERT
TOTALS															3		18			5	16						879					420.81						5			

PROJECT NAME: CAMBRIDGE
PROJECT NUMBER: STP 030-2(27)

FILE NAME: t78f163frm.dgn
PROJECT LEADER: JLS
DESIGNED BY: MBL
DRAINAGE DETAIL SHEET

PLOT DATE: 05-JUN-2012
DRAWN BY: MBL
CHECKED BY: JAD
SHEET 41 OF 214

SEE REVISION SHEET

STATE OF VERMONT
AGENCY OF TRANSPORTATION

ITEM DETAIL SHEET

CURB

BEGIN STATION	END STATION	POSITION		
		LEFT	RIGHT	CENTERLINE
km + m	km + m	m	m	m
Splitter Island Curbing				
20+091.963	20+091.980			0.88
20+091.980	20+101.504	9.57		
20+101.504	20+107.930	6.62		
20+107.930	20+109.147	1.69		
20+109.147	20+109.404			2.30
20+109.404	20+110.077		2.86	
20+110.077	20+109.294		1.34	
20+109.294	20+091.963		17.74	
10+033.889	10+033.913			0.85
10+033.913	10+024.052			10.31
10+024.052	10+022.809		1.80	
10+022.809	10+022.756		2.49	
10+022.756	10+022.526			1.83
10+022.526	10+023.356	1.29		
10+023.356	10+030.780	7.71		
10+030.780	10+033.889	3.13		
20+165.373	20+165.309	0.89		
20+165.309	20+159.601	5.71		
20+159.601	20+151.656			8.05
20+151.656	20+150.501			1.68
20+150.501	20+150.442	1.81		
20+150.442	20+150.009	2.93		
20+150.009	20+155.889	1.35		
20+155.526	20+165.373	15.34		
9+971.903	9+971.929			0.89
9+971.929	9+980.306	8.72		
9+980.306	9+981.534	1.80		
9+981.534	9+981.521	2.07		
9+981.521	9+981.689			1.88
9+981.689	9+980.832		1.3	
9+980.832	9+974.039		7.17	
9+974.039	9+971.903		2.16	
Roundabout Central Island				
Central Island				53.09
Roadway Curbing				
20+082.669	20+078.448	4.47		
20+078.448	20+078.683	1.10		
20+078.683	20+084.220	5.57		
20+084.220	20+103.534	19.53		
20+103.534	20+109.059	6.07		
20+109.059	10+021.500	4.77		
10+021.500	10+031.295	10.83		
10+031.295	10+036.846	5.62		
10+036.846	10+050.294	13.59		
10+050.294	10+050.294	3.61		
10+050.294	10+036.495	13.91		
10+036.495	10+030.944	5.62		
10+030.944	10+020.055	12.04		
10+020.055	20+110.434	6.19		
20+110.434	20+103.872	7.20		
20+103.872	20+084.515	19.57		
20+084.515	20+082.669	1.86		
10+054.694	10+050.294		4.28	
10+050.294	10+046.567		3.68	
10+046.567	10+038.927		7.68	
10+038.927	10+014.727		26.58	
10+014.727	10+012.334		2.93	
10+012.334	20+173.379			34.39
20+173.379	20+178.620	5.26		
20+178.620	20+185.075	10.41		
20+185.075	20+175.300	9.78		
20+175.300	20+175.300	10.26		
20+165.800	20+157.221		7.97	
20+157.221	20+150.733		6.70	
20+150.733	9+981.826		9.67	
9+981.826	9+973.790		8.58	
9+973.790	9+972.605	Curb Cut		
9+972.605	9+957.180		15.47	
9+957.180	9+948.698		9.10	
9+947.915	9+957.060	9.16		
9+957.060	9+966.590	9.58		
9+966.590	9+989.84	25.44		
9+989.84	20+119.277			1.47
20+119.277	20+096.482		24.64	
20+096.482	20+075.659		20.97	
TOTALS		255.34	185.11	117.62

SIDEWALK

BEGIN STATION	END STATION	POSITION		REMARKS
		LEFT	RIGHT	
km + m	km + m	m^2	m^2	

GUARD RAIL

BEGIN STATION	END STATION	POSITION		END TREATMENT	
		LEFT	RIGHT	BEGIN	END
km + m	km + m	m	m	ea	ea

UNDERDRAIN

BEGIN STATION	END STATION	PIPE NO.	POSITION	DIA.	LENGTH	CARRIER PIPE LENGTH	TRENCH		GRAN BKFILL	FB	MKR PST
							EARTH	ROCK			
km + m	km + m			mm	m	m	m^3	m^3	m^3	ea	ea
20+046.892	20+091.689	U1	LT	200	40.1	4.5	58.9			1	1
20+047.566	20+091.309	U2	RT	200	40.5	3.9	59.9			1	1
20+091.689	10+018.140	U3	LT	200	22.0	1.5	33.1			1	1
20+091.309	20+111.917	U4	RT	200	19.7	1.5	38.0			1	1
20+255.331	20+148.167	U5	LT	200	106.2	3.1	231.6			1	1
20+255.331	20+147.920	U6	RT	200	105.3	2.5	217.0			1	1
9+913.839	9+957.241	U7	LT	200	41.3	2.3	32.8			1	1
9+913.839	9+946.408	U8	RT	200	66.7	2.8	89.3			1	1
9+983.918	9+971.689	U10	LT	200	11.5	1.5	22.3			1	
TOTALS					453.3	25.1	782.9			9	8

6

1
2
3
4
5

1 REVISED CURB STATIONING AND LENGTH
2 REVISED CURB STATIONING AND LENGTH
3 ADDED CURB RUN
4 ADDED CURB CURB RUN
5 REVISED CURB STATIONING AND LENGTH
6 REMOVED UNDERDRAIN 9

PROJECT NAME: CAMBRIDGE
PROJECT NUMBER: STP 030-2(27)

FILE NAME: t78f163frm.dgn
PROJECT LEADER: JLS
DESIGNED BY: MBL
ITEM DETAIL SHEET

PLOT DATE: 4/24/13
DRAWN BY: MBL
CHECKED BY: JAD
SHEET 43 OF 214

VAOT Metric

N

VT STATE PLANE GRID

CONSTRUCT DRIVE
STA. 20+030.517, LT. (6.82m PAVED)

STA. 19+960.692
BEGIN APPROACH
MATCH EXISTING
STA. 20+002.182
END APPROACH
BEGIN PROJECT
STP 030-2(27)

R=459.044M(1,506.05')
L=51.67M(169.52')

PI 19+950.120

+002.182

20+006

R=6m

CZ

R=6m

CZ

2.4m

3.6m

VT ROUTE 15 CURVE #1

TO JERICHO

19+920 19+940 19+960 19+980 20+000 20+020 20+040 20+

3.6m

2.4m

+010.981

20+010.981

PT

CZ

CZ

W

W

R=432.224M(1,418.06')
L=51.298M(168.30')

MATCHLINE - STA. 20+060 - SEE LAYOUT PLAN 2

CURVE DATA #1

R	=	550.000m
Δ	=	12° 43' 58.25" RT.
D	=	3° 10' 30.84"
L	=	122.227m
T	=	61.366m
C	=	121.975m
M	=	3.392m
E	=	3.413m
e	=	7.0 %

CURVE #1 POINTS

	STATION	NORTHING	EASTING
PC	19+888.754	238534.5812	473656.4165
PI	19+950.120	238575.6173	473702.0435
PT	20+010.981	238605.5879	473755.5931

0 10 20 30

SCALE IN METERS

PROJECT NAME: CAMBRIDGE
PROJECT NUMBER: STP 030-2(27)

FILE NAME: t78f163bdr.dgn
PROJECT LEADER: JLS
DESIGNED BY: MBL
LAYOUT PLAN 1

PLOT DATE: 05-JUN-2012
DRAWN BY: MBL
CHECKED BY: JAD
SHEET 44 OF 214

VT ROUTE 108 STA. 10+082.794
END ROADWAY PROJECT
STP 030-2(27)
BEGIN BRIDGE PROJECT
BRF 027-1(4)

604.42-CHANGING ELEVATION OF SEWER MANHOLES
STA. 9+973.180, RT.

CONSTRUCT DRIVE
STA. 10+055.294, LT. (8m PAVED)
STA. 20+073.010, LT. (10m PAVED)
STA. 20+187.354, LT. (12m PAVED)

620.50-REMOVING AND RESETTING FENCE
STA. 10+072.000 - STA. 10+082.794, RT.

CURVE #4 POINTS

	STATION	NORTHING	EASTING
PC	10+048.169	238694.7594	473822.9178
PI	10+202.302	238793.0980	473704.2320
PT	10+287.865	238909.0681	473805.7590

CURVE DATA #4

R	= 150.000m
Δ	= 9°33'24.93" RT.
D	= 11°38'33.09"
L	= 239.695m
T	= 154.132m
C	= 214.995m
M	= 45.385m
E	= 65.074m
e	= 7.8 %

678.45-REMOVAL OF EXISTING
TRAFFIC CONTROL SIGNAL SYSTEM
STA. 10+000.000

VT ROUTE 15 STA. 20+130.638 =
VT ROUTE 108 STA. 10+000.000

619.17 YEILDING MARKER POST

STA. 20+047,	7.6 LT	U1
STA. 20+047.5,	6.9 RT	U2
STA. 20+255.3,	7.8 LT	U5
STA. 20+255.3,	7.3 RT	U6
STA. 9+940,	6.1 LT	U7
STA. 9+932,	6.0 RT	U8
STA. 20+173,	7.3 LT	PB-6
STA. 20+171,	5.6 RT	PB-7
STA. 20+048,	4.7 LT	PB-1
STA. 10+036.5,	4.8 RT	PB-3
STA. 20+155,	6.0 RT	PB-5
STA. 10+016,	12.0 RT	P-17
STA. 017.6,	19.8 RT	P-7
STA. 9+957,	19.0 RT	P-16
	7.3 LT	P-19

629.24 DUCTILE IRON PIPE
CEMENT LINED
•STA. 20+093, RT 12M

629.27 GATE VALVE W/ BOX
8" VALVE
STA. 20+093, RT

900.540 CO/SA 2 508MM STEEL CASING
~~625.10 SLEEVE FOR UTILITIES~~
STA. 20+101.916, 11.356m - STA. 20+128.665, 11.078m, RT.
STA.20+099 - STA.20+126

900.520 8" IN-LINE
INSTA VALVE
STA.20+173, 10.7M RT
STA.20+1083, 10.7 RT

BM FP35
ELEV. 139.640
S.I.P.

PROPOSED WATER LINE SLEEVE EXTENSION

EXISTING WATER LINE SLEEVE

MATCHLINE - STA. 10+082.794 - SEE SHEET 142

MATCHLINE - STA. 20+060 - SEE LAYOUT PLAN 1

MATCHLINE - STA. 20+200 - SEE LAYOUT PLAN 3

MATCHLINE - SEE 9+970 - SEE LAYOUT PLAN 4

0 10 20 30
SCALE IN METERS

PROJECT NAME:	CAMBRIDGE
PROJECT NUMBER:	STP 030-2(27)
FILE NAME: t78f163bdr.dgn	PLOT DATE: 05-JUN-2012
PROJECT LEADER: JLS	DRAWN BY: MBL
DESIGNED BY: MBL	CHECKED BY: JAD
LAYOUT PLAN 2	SHEET 45 OF 214

N

VT STATE PLANE GRID

VAOT Metric

MATCHLINE - STA. 20+200 - SEE LAYOUT PLAN 2

STA. 20+261.702
END PROJECT
STP 030-2(27)
BEGIN APPROACH

STA. 20+303.129
END APPROACH
MATCH EXISTING

POE
20+323.182

AERIAL E&T

AERIAL E&T

CZ

CZ

CZ

+251.490

2.4m

3.6m

VT ROUTE 15

200

20+220

20+240

3.6m

20+260

20+280

20+300

20+320 20+323

2.4m

+257.129

CZ

CZ

CZ

CZ

0 10 20 30

SCALE IN METERS

PROJECT NAME:	CAMBRIDGE
PROJECT NUMBER:	STP 030-2(27)

FILE NAME: t78f163bdr.dgn	PLOT DATE: 05-JUN-2012
PROJECT LEADER: JLS	DRAWN BY: MBL
DESIGNED BY: MBL	CHECKED BY: JAD
LAYOUT PLAN 3	SHEET 46 OF 214

CURVE #2 POINTS

	STATION	NORTHING	EASTING
PC	9+838.190	238554.3709	473970.7648
PI	9+859.588	238575.4366	473974.5237
PT	9+876.602	238588.3846	473957.4871

CURVE DATA #2

R = 35.000m
Δ = 62°52'55.25" LT.
D = 49°53'47.54"
L = 38.412m
T = 21.398m
C = 36.513m
M = 5.139m
E = 6.023m
e = MATCH EXISTING

CURVE #3 POINTS

	STATION	NORTHING	EASTING
PC	9+949.467	238632.4740	473899.4754
PI	9+970.490	238645.1947	473882.7379
PT	9+991.506	238658.6076	473866.5497

CURVE DATA #3

R = 1000.000m
Δ = 02°24'31.30" RT.
D = 01°44'46.96"
L = 42.040m
T = 21.023m
C = 42.037m
M = 0.221m
E = 0.221m
e = NC

900.675-SPECIAL PROVISION (HAND-PLACED BITUMINOUS CONCRETE MATERIAL, DRIVES)
STA. 9+934.418, LT. (6.30m GRAVEL)

CONSTRUCT DRIVE
STA. 9+934.418, LT. (6.30m GRAVEL)
STA. 9+943.594, RT. (8.0m PAVED)

604.42-CHANGING ELEVATION OF SEWER MANHOLES
STA. 9+914.965, RT.
STA. 9+958.408, RT.

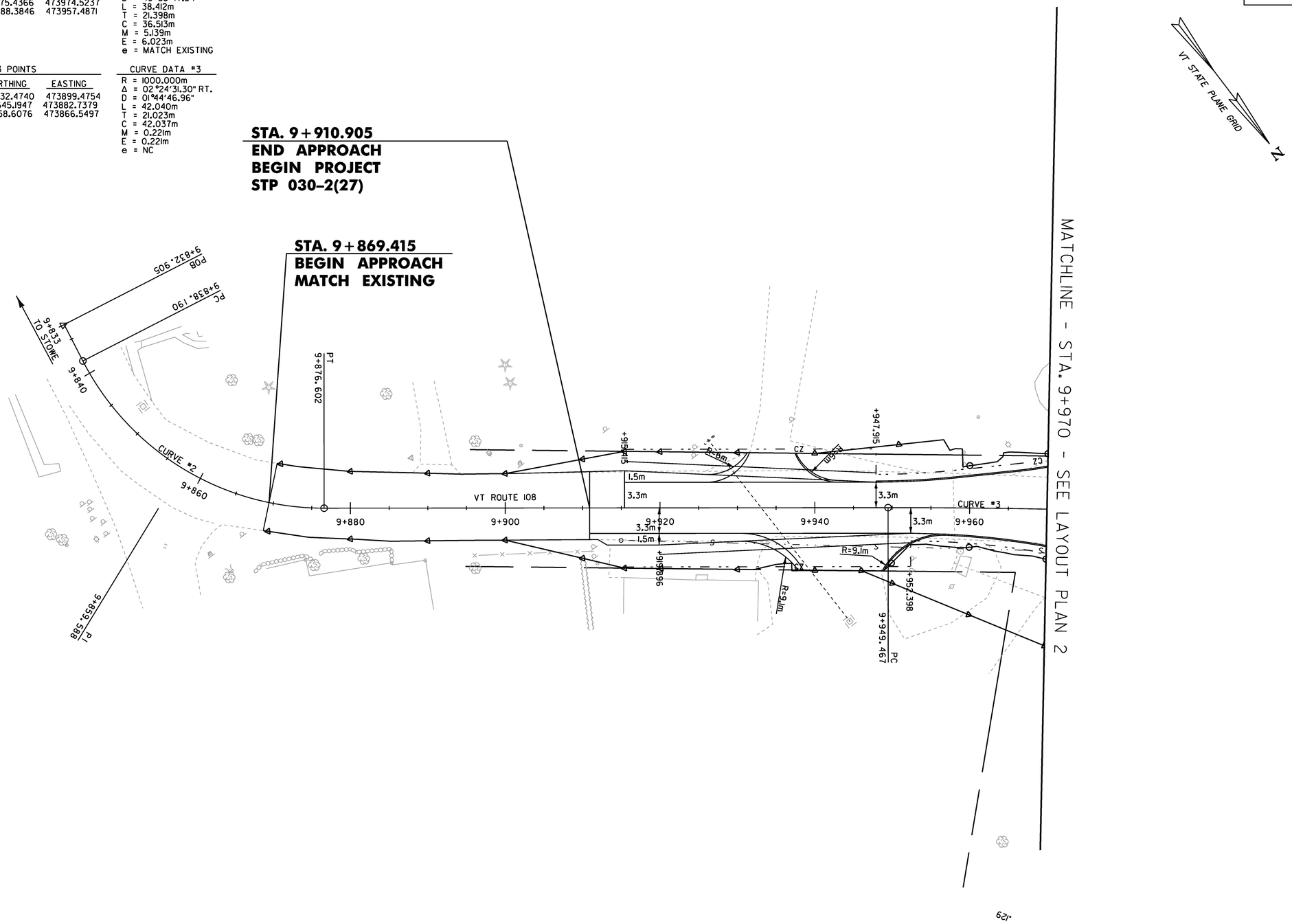

0 10 20 30
SCALE IN METERS

PROJECT NAME: CAMBRIDGE	
PROJECT NUMBER: STP 030-2(27)	
FILE NAME: t78f163bdr.dgn	PLOT DATE: 05-JUN-2012
PROJECT LEADER: JLS	DRAWN BY: MBL
DESIGNED BY: MBL	CHECKED BY: JAD
LAYOUT PLAN 4	SHEET 47 OF 214

VAOT Metric

VT ROUTE 15
BASELINE PROFILE

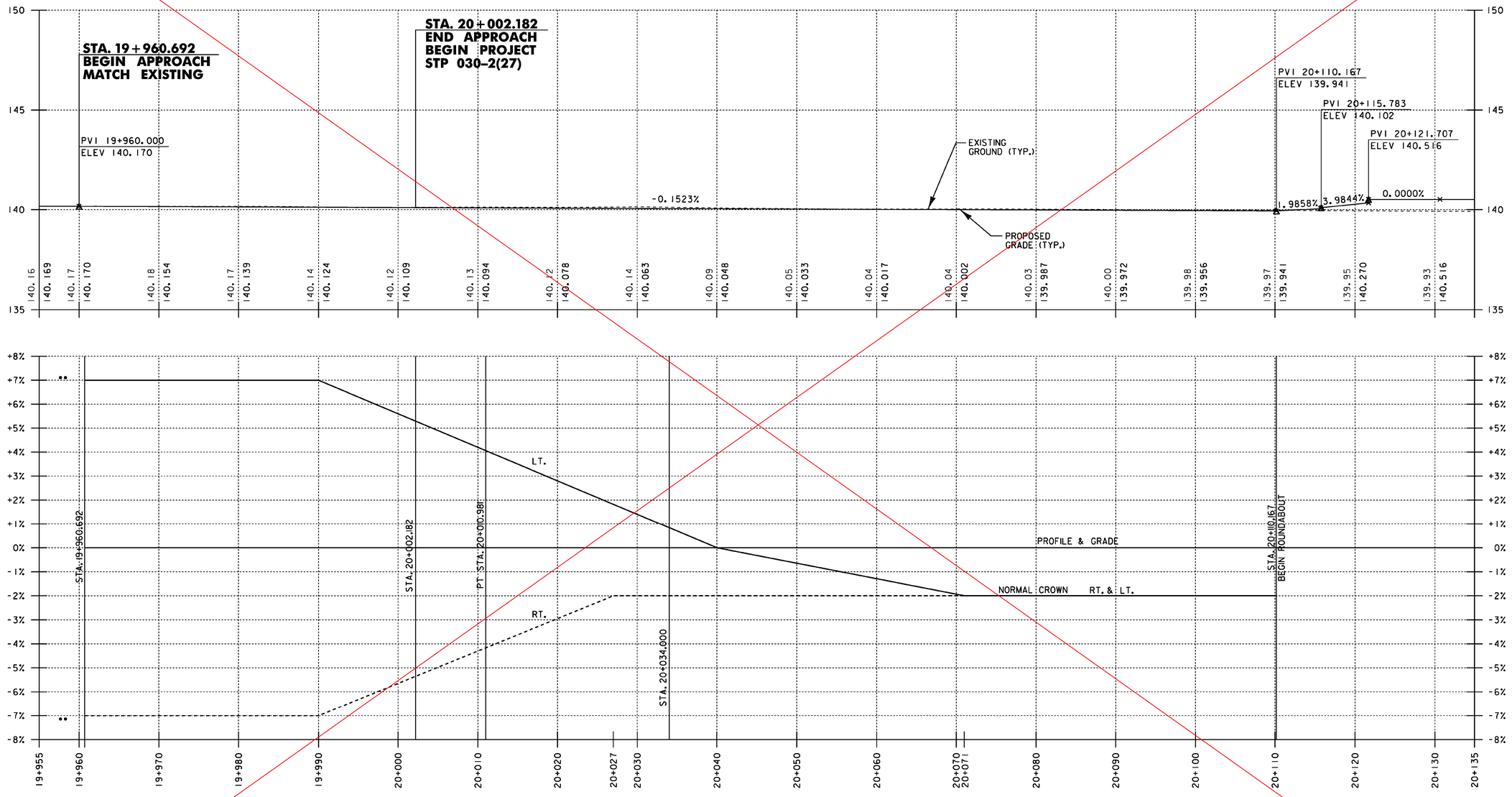

VT ROUTE 15
BANKING DIAGRAM

BANKING LEGEND

- LEFT LANE BANKING
- RIGHT LANE BANKING
- •• MATCH EXISTING BANKING

THE ELEVATIONS SHOWN TO THE NEAREST HUNDRETH ARE THE EXISTING GROUND ALONG REVISED CENTERLINE. THE ELEVATIONS SHOWN TO THE NEAREST THOUSANDTH ARE THE PROPOSED FINISHED GRADE ALONG REVISED CENTERLINE.

FOR PROFILE ONLY

SCALE IN METERS 0 10 20

5 4 3 2 1 0

HORIZONTAL SCALE = 1:250
VERTICAL SCALE = 1:125

PROJECT NAME: CAMBRIDGE
PROJECT NUMBER: STP 030-2(27)

FILE NAME: t78f163pro.dgn
PROJECT LEADER: MEM
DESIGNED BY: MBL
PROFILE SHEET 1

PLOT DATE: 05-JUN-2012
DRAWN BY: MBL
CHECKED BY: JAD
SHEET 48 OF 214

SEE REVISION SHEET

VT ROUTE 15
BASELINE PROFILE

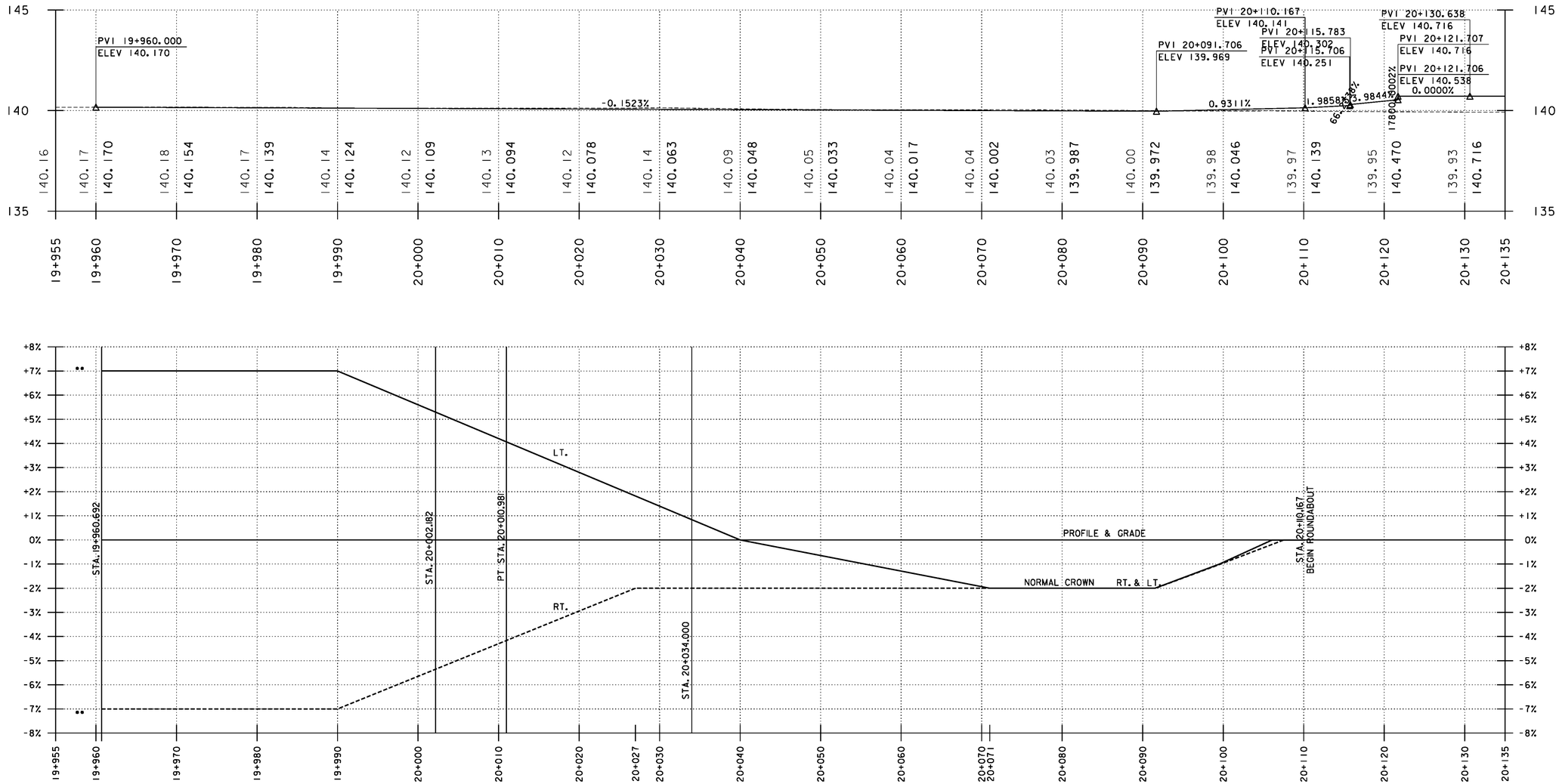

VT ROUTE 15
BANKING DIAGRAM ⚠1

BANKING LEGEND

- LEFT LANE BANKING
- RIGHT LANE BANKING
- •• MATCH EXISTING BANKING

THE ELEVATIONS SHOWN TO THE NEAREST HUNDRETH ARE THE EXISTING GROUND ALONG REVISED CENTERLINE. THE ELEVATIONS SHOWN TO THE NEAREST THOUSANDTH ARE THE PROPOSED FINISHED GRADE ALONG REVISED CENTERLINE.

FOR PROFILE ONLY

0 10 20

HORIZONTAL SCALE = 1:250
VERTICAL SCALE = 1:125

⚠1 REVISED BANKING DIAGRAM

PROJECT NAME:	CAMBRIDGE
PROJECT NUMBER:	STP 030-2(27)
FILE NAME: t78f163pro.dgn	PLOT DATE: 5/1/13
PROJECT LEADER: MEM	DRAWN BY: MBL
DESIGNED BY: MBL	CHECKED BY: JAD
PROFILE SHEET 1	SHEET 48 OF 214

Metric

VT ROUTE 15
BASELINE PROFILE

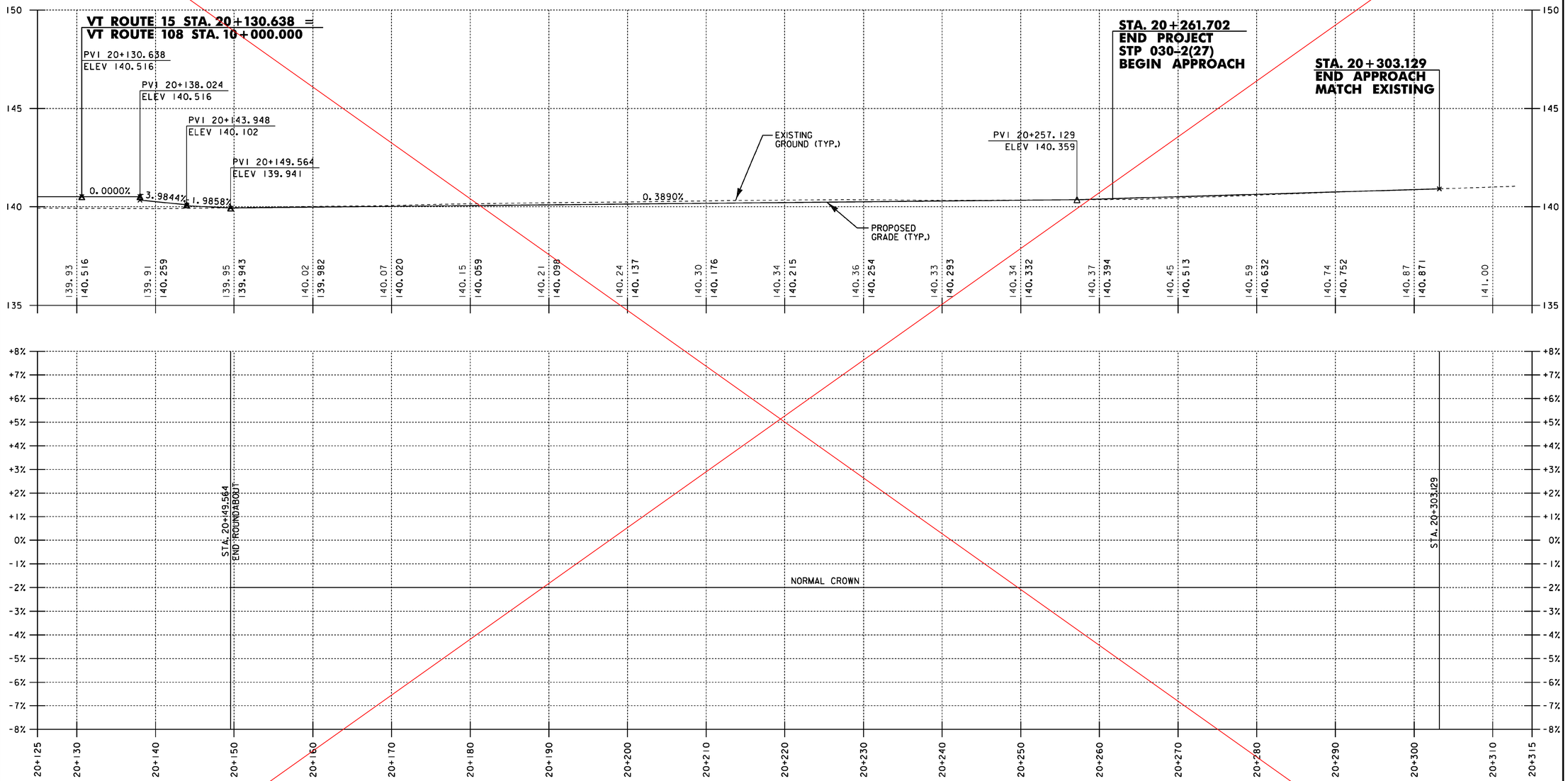

VT ROUTE 15
BANKING DIAGRAM

BANKING LEGEND

- LEFT LANE BANKING
- RIGHT LANE BANKING
- •• MATCH EXISTING BANKING

THE ELEVATIONS SHOWN TO THE NEAREST HUNDRETH ARE THE EXISTING GROUND ALONG REVISED CENTERLINE. THE ELEVATIONS SHOWN TO THE NEAREST THOUSANDTH ARE THE PROPOSED FINISHED GRADE ALONG REVISED CENTERLINE.

FOR PROFILE ONLY

0 10 20

HORIZONTAL SCALE = 1:250
VERTICAL SCALE = 1:125

5 4 3 2 1 0

PROJECT NAME: CAMBRIDGE
PROJECT NUMBER: STP 030-2(27)

FILE NAME: t78f163pro.dgn
PROJECT LEADER: MEM
DESIGNED BY: MBL
PROFILE SHEET 2

PLOT DATE: 05-JUN-2012
DRAWN BY: MBL
CHECKED BY: JAD
SHEET 49 OF 214

SEE REVISION SHEET

VT ROUTE 15
BASELINE PROFILE

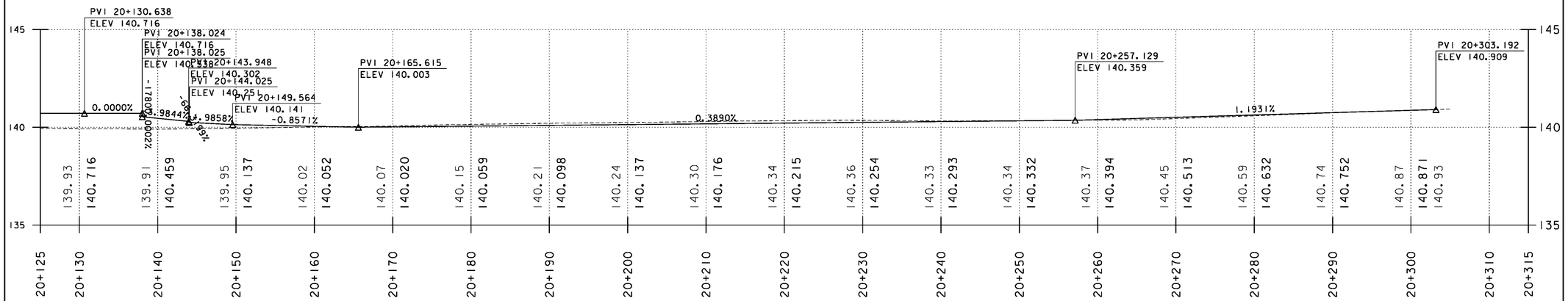

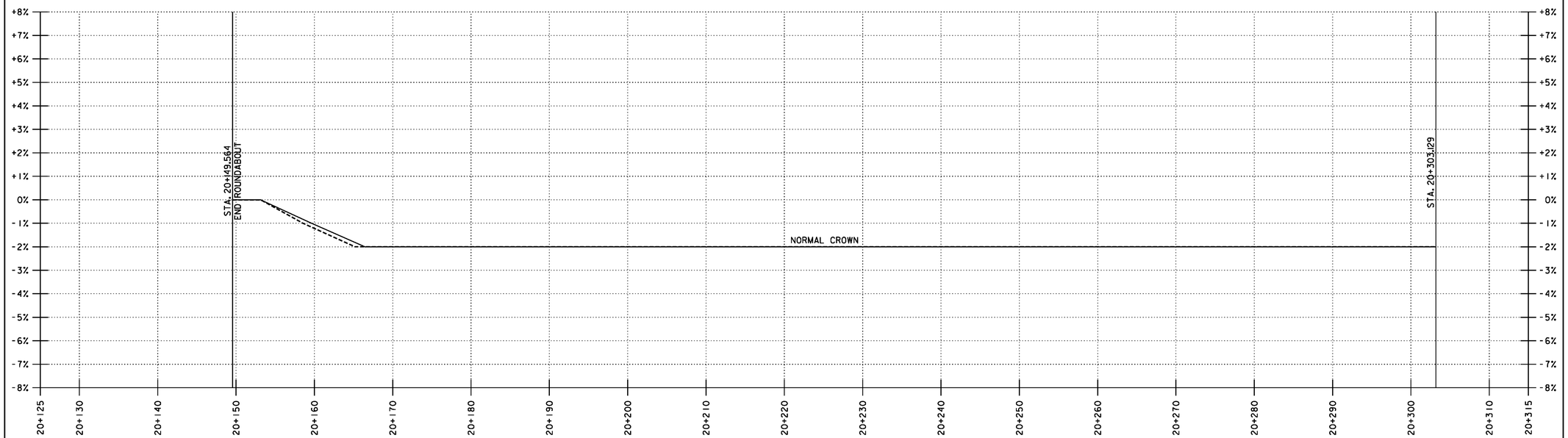

VT ROUTE 15
BANKING DIAGRAM ⚠1

BANKING LEGEND

- ——— LEFT LANE BANKING
- - - - - - - - - - RIGHT LANE BANKING
- •• MATCH EXISTING BANKING

THE ELEVATIONS SHOWN TO THE NEAREST HUNDRETH ARE THE EXISTING GROUND ALONG REVISED CENTERLINE. THE ELEVATIONS SHOWN TO THE NEAREST THOUSANDTH ARE THE PROPOSED FINISHED GRADE ALONG REVISED CENTERLINE.

FOR PROFILE ONLY

0 10 20

HORIZONTAL SCALE = 1:250
VERTICAL SCALE = 1:125

5 4 3 2 1 0

⚠1 REVISED BANKING DIAGRAM

PROJECT NAME:	CAMBRIDGE
PROJECT NUMBER:	STP 030-2(27)
FILE NAME: t78f163pro.dgn	PLOT DATE: 5/1/13
PROJECT LEADER: MEM	DRAWN BY: MBL
DESIGNED BY: MBL	CHECKED BY: JAD
PROFILE SHEET 2	SHEET 49 OF 214

VT ROUTE 108
BASELINE PROFILE

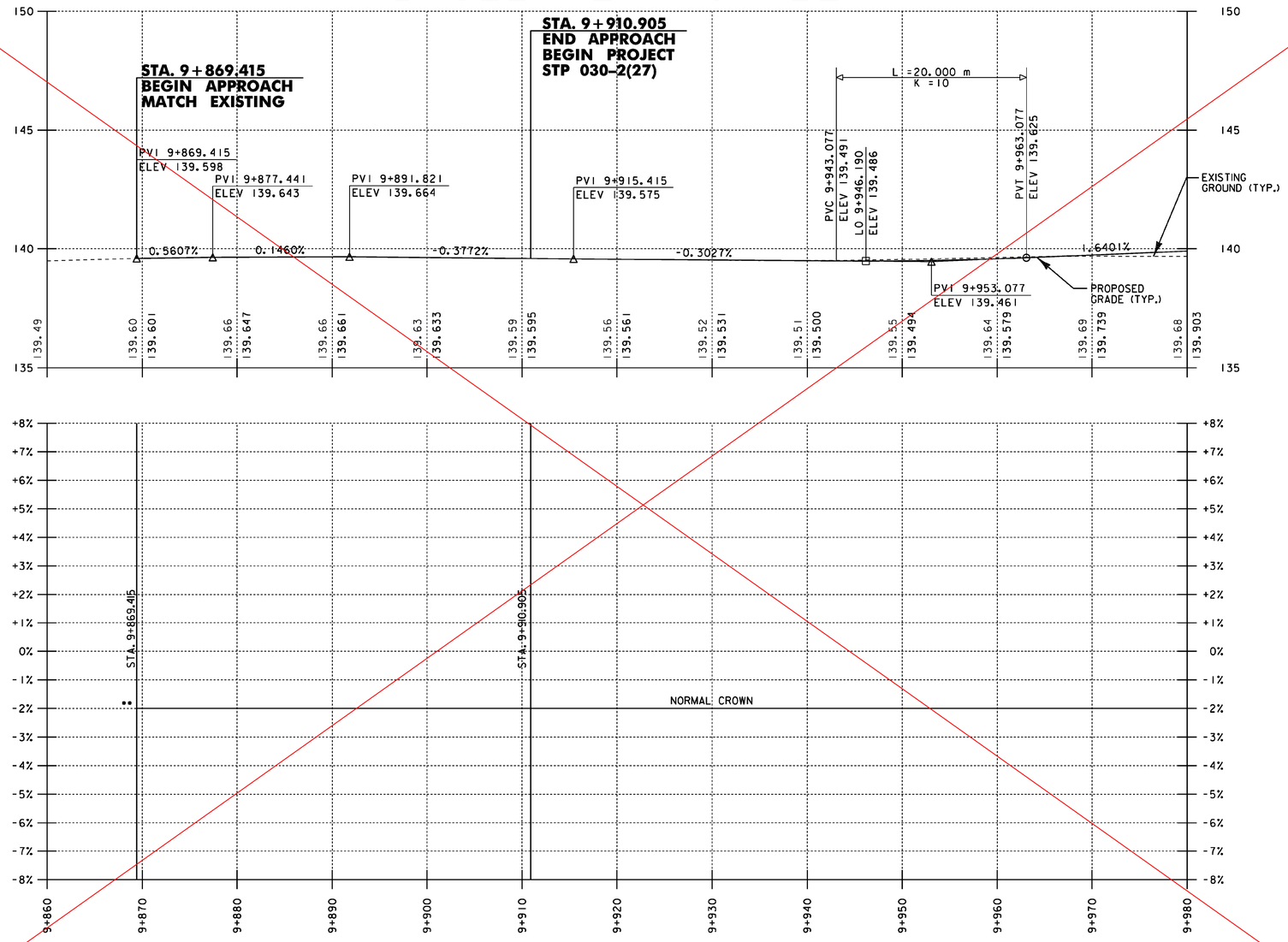

VT ROUTE 108
BANKING DIAGRAM

BANKING LEGEND

- LEFT LANE BANKING
- RIGHT LANE BANKING
- •• MATCH EXISTING BANKING

THE ELEVATIONS SHOWN TO THE NEAREST HUNDRETH ARE THE EXISTING GROUND ALONG REVISED CENTERLINE. THE ELEVATIONS SHOWN TO THE NEAREST THOUSANDTH ARE THE PROPOSED FINISHED GRADE ALONG REVISED CENTERLINE.

FOR PROFILE ONLY

0 10 20

5 4 3 2 1 0

HORIZONTAL SCALE = 1:250
VERTICAL SCALE = 1:125

PROJECT NAME: CAMBRIDGE
PROJECT NUMBER: STP 030-2(27)

FILE NAME: t78f163pro.dgn
PROJECT LEADER: MEM
DESIGNED BY: MBL
PROFILE SHEET 3

PLOT DATE: 05-JUN-2012
DRAWN BY: MBL
CHECKED BY: JAD
SHEET 50 OF 214

SEE REVISION SHEET

VT ROUTE 108
BASELINE PROFILE

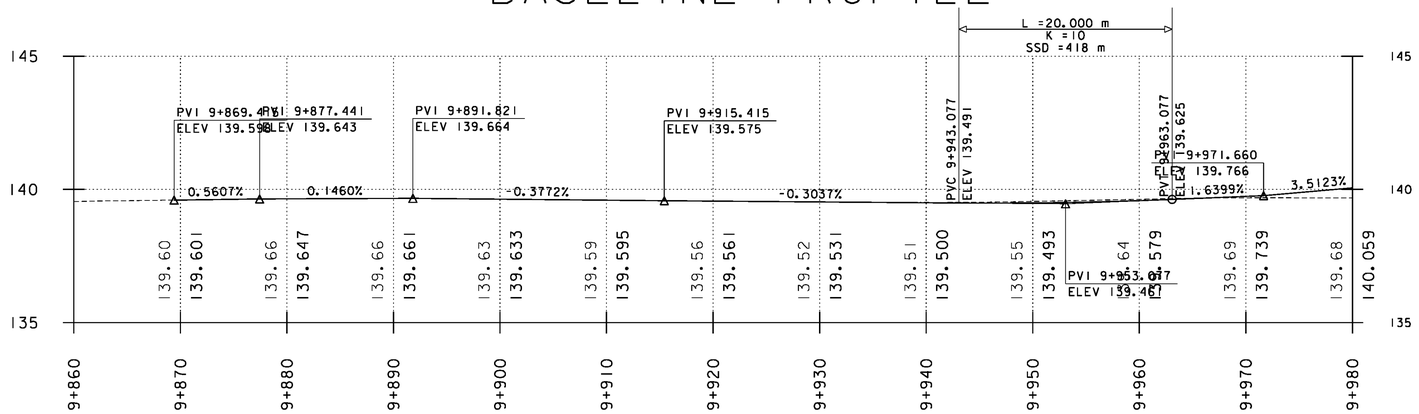

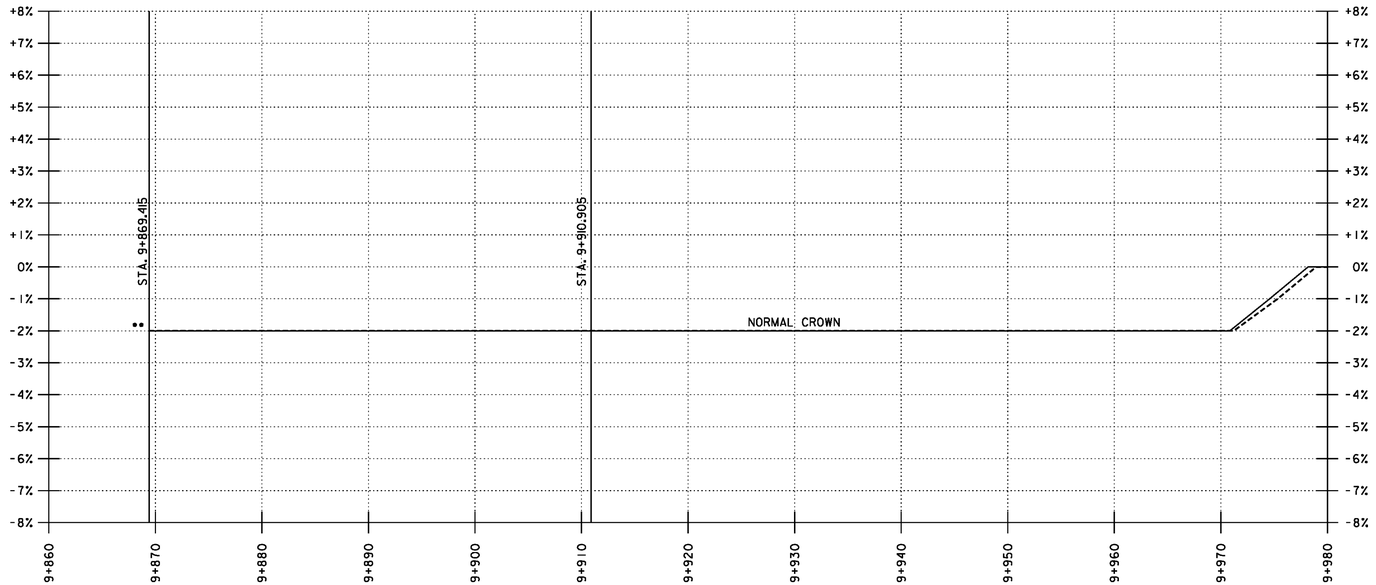

VT ROUTE 108
BANKING DIAGRAM

1

BANKING LEGEND

- ——— LEFT LANE BANKING
- - - - - - - - - - RIGHT LANE BANKING
- •• MATCH EXISTING BANKING

THE ELEVATIONS SHOWN TO THE NEAREST HUNDRETH ARE THE EXISTING GROUND ALONG REVISED CENTERLINE. THE ELEVATIONS SHOWN TO THE NEAREST THOUSANDTH ARE THE PROPOSED FINISHED GRADE ALONG REVISED CENTERLINE.

FOR PROFILE ONLY

0 10 20

5 4 3 2 1 0

HORIZONTAL SCALE = 1:250
VERTICAL SCALE = 1:125

1 REVISED BANKING DIAGRAM

PROJECT NAME:	CAMBRIDGE
PROJECT NUMBER:	STP 030-2(27)
FILE NAME: t78f163pro.dgn	PLOT DATE: 5/1/13
PROJECT LEADER: MEM	DRAWN BY: MBL
DESIGNED BY: MBL	CHECKED BY: JAD
PROFILE SHEET 3	SHEET 50 OF 214

VT ROUTE 108
BASELINE PROFILE

VT ROUTE 108 STA. 10+082.794
END ROADWAY PROJECT
STP 030-2(27)
BEGIN BRIDGE PROJECT
BRF 027-1(4)

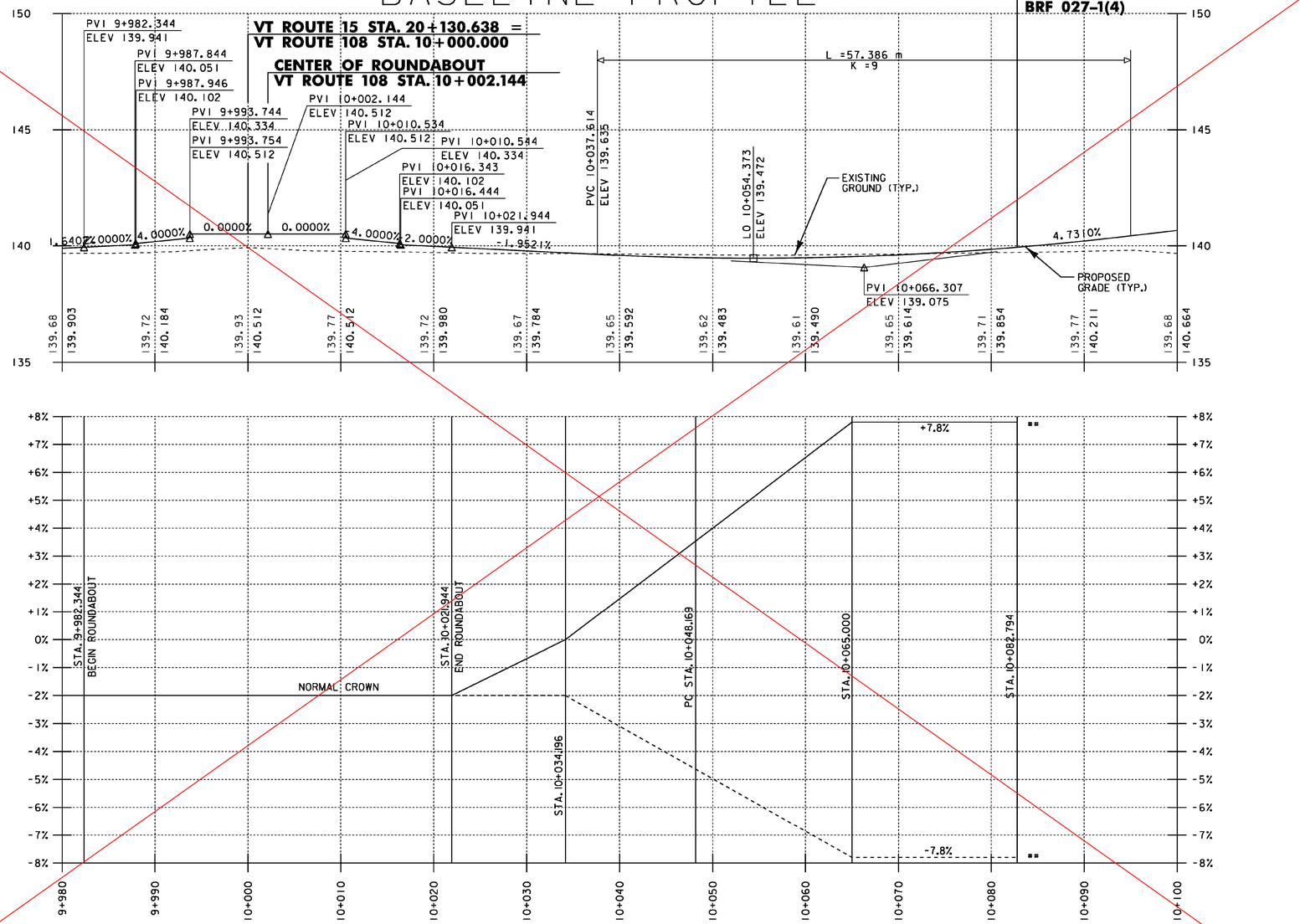

VT ROUTE 108
BANKING DIAGRAM

BANKING LEGEND

- LEFT LANE BANKING
- RIGHT LANE BANKING
- ** MATCH BRF 027-1(4)

THE ELEVATIONS SHOWN TO THE NEAREST HUNDRETH ARE THE EXISTING GROUND ALONG REVISED CENTERLINE. THE ELEVATIONS SHOWN TO THE NEAREST THOUSANDTH ARE THE PROPOSED FINISHED GRADE ALONG REVISED CENTERLINE.

FOR PROFILE ONLY

0 10 20

HORIZONTAL SCALE = 1:250
VERTICAL SCALE = 1:125

PROJECT NAME: CAMBRIDGE
PROJECT NUMBER: STP 030-2(27)

FILE NAME: t78f163pro.dgn
PROJECT LEADER: MEM
DESIGNED BY: MBL
PROFILE SHEET 4

PLOT DATE: 05-JUN-2012
DRAWN BY: MBL
CHECKED BY: JAD
SHEET 51 OF 214

SEE REVISION SHEET

VT ROUTE 108
BASELINE PROFILE

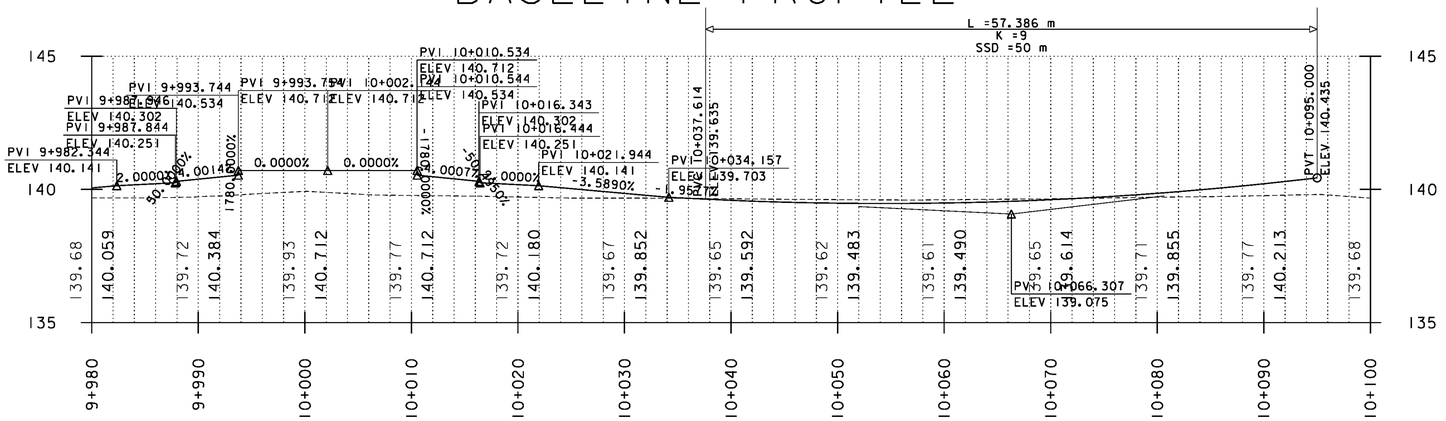

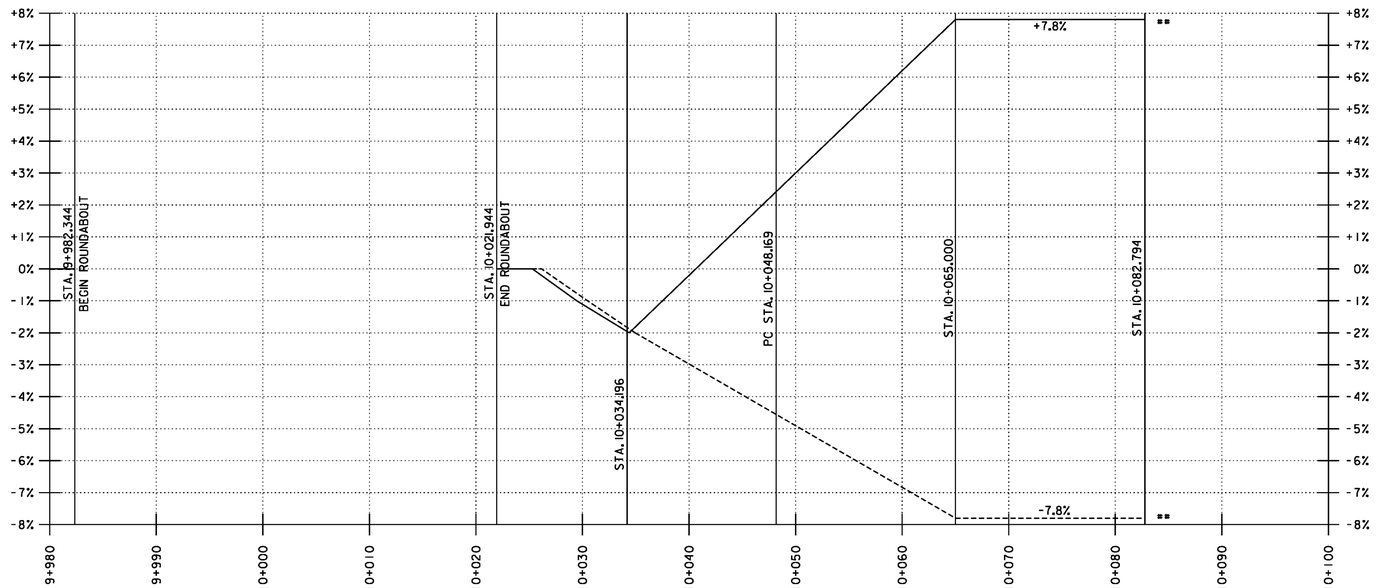

VT ROUTE 108
BANKING DIAGRAM ⚠1

BANKING LEGEND

———	LEFT LANE BANKING
- - - - - -	RIGHT LANE BANKING
**	MATCH EXISTING BANKING

THE ELEVATIONS SHOWN TO THE NEAREST HUNDRETH ARE THE EXISTING GROUND ALONG REVISED CENTERLINE. THE ELEVATIONS SHOWN TO THE NEAREST THOUSANDTH ARE THE PROPOSED FINISHED GRADE ALONG REVISED CENTERLINE.

FOR PROFILE ONLY

0 10 20

HORIZONTAL SCALE = 1:250
VERTICAL SCALE = 1:125

⚠1 REVISED BANKING DIAGRAM

PROJECT NAME: CAMBRIDGE
PROJECT NUMBER: STP 030-2(27)

FILE NAME: t78f163pro.dgn
PROJECT LEADER: MEM
DESIGNED BY: MBL
PROFILE SHEET 4

PLOT DATE: 5/1/13
DRAWN BY: MBL
CHECKED BY: JAD
SHEET 51 OF 214

N

VT STATE PLANE GRID

SPLITTER ISLAND CURB LOCATIONS

Curb ID	Type	Begin			End			Radius	Length	Remarks
		Station	Offset	Location	Station	Offset	Location			
Splitter Island Curbing										
B-1	C.I.P. CONCRETE	20+091.963	0.07	RT.	20+091.980	0.52	LT.	0.30	0.88	
B-2	C.I.P. CONCRETE	20+091.980	0.52	LT.	20+101.504	1.42	LT.	STRAIGHT	9.57	
B-3	C.I.P. CONCRETE	20+101.504	1.42	LT.	20+107.930	2.93	LT.	25.90	6.62	
B-4	C.I.P. CONCRETE	20+107.930	2.93	LT.	20+109.147	2.14	LT.	0.90	1.69	
B-5	C.I.P. CONCRETE	20+109.147	2.14	LT.	20+109.404	0.14	RT.	20.53	2.30	
B-6	C.I.P. CONCRETE	20+109.404	0.14	RT.	20+110.077	2.91	RT.	20.53	2.86	
B-7	C.I.P. CONCRETE	20+110.077	2.91	RT.	20+109.294	3.65	RT.	0.60	1.34	
B-8	C.I.P. CONCRETE	20+109.294	3.65	RT.	20+091.963	0.07	RT.	70.50	17.74	
C-1	C.I.P. CONCRETE	10+033.889	0.18	LT.	10+033.913	0.42	RT.	0.30	0.85	
C-2	C.I.P. CONCRETE	10+033.913	0.42	RT.	10+024.052	3.36	RT.	50.50	10.31	
C-3	C.I.P. CONCRETE	10+024.052	3.36	RT.	10+022.809	2.49	RT.	0.90	1.80	
C-4	C.I.P. CONCRETE	10+022.809	2.49	RT.	10+022.756	0.00	CL.	20.51	2.49	
C-5	C.I.P. CONCRETE	10+022.756	0.00	CL.	10+022.526	1.81	LT.	20.51	1.83	
C-6	C.I.P. CONCRETE	10+022.526	1.81	LT.	10+023.356	2.46	LT.	0.60	1.29	
C-7	C.I.P. CONCRETE	10+023.356	2.46	LT.	10+030.780	0.51	LT.	25.38	7.71	
C-8	C.I.P. CONCRETE	10+030.780	0.51	LT.	10+033.889	0.18	LT.	STRAIGHT	3.13	
D-1	C.I.P. CONCRETE	20+165.372	0.90	LT.	20+165.309	0.30	LT.	0.30	0.89	
D-2	C.I.P. CONCRETE	20+165.309	0.30	LT.	20+159.601	0.44	LT.	STRAIGHT	5.71	
D-3	C.I.P. CONCRETE	20+159.601	0.44	LT.	20+151.656	0.60	RT.	25.90	8.05	
D-4	C.I.P. CONCRETE	20+151.656	0.60	RT.	20+150.501	0.27	LT.	0.90	1.68	
D-5	C.I.P. CONCRETE	20+150.501	0.27	LT.	20+150.442	2.08	LT.	20.52	1.81	
D-6	C.I.P. CONCRETE	20+150.442	2.08	LT.	20+150.009	4.97	LT.	20.52	2.93	
D-7	C.I.P. CONCRETE	20+150.009	4.97	LT.	20+155.899	5.64	LT.	0.60	1.35	
D-8	C.I.P. CONCRETE	20+155.899	5.64	LT.	20+165.372	0.90	LT.	70.50	15.34	
E-1	C.I.P. CONCRETE	09+971.903	0.20	RT.	09+971.929	0.39	LT.	0.30	0.89	
E-2	C.I.P. CONCRETE	09+971.929	0.39	LT.	09+980.306	2.92	LT.	50.50	8.72	
E-3	C.I.P. CONCRETE	09+980.306	2.92	LT.	09+981.534	2.07	LT.	0.90	1.80	
E-4	C.I.P. CONCRETE	09+981.534	2.07	LT.	09+981.521	0.00	CL.	20.51	2.07	
E-5	C.I.P. CONCRETE	09+981.521	0.00	CL.	09+981.689	1.86	RT.	20.51	1.88	
E-6	C.I.P. CONCRETE	09+981.689	1.86	RT.	09+980.832	2.51	RT.	0.60	1.30	
E-7	C.I.P. CONCRETE	09+980.832	2.51	RT.	09+974.039	0.51	RT.	25.40	7.17	
E-8	C.I.P. CONCRETE	09+974.039	0.51	RT.	09+971.903	0.20	RT.	STRAIGHT	2.16	

*All Station and Offsets are at the face of curb.

ROADWAY CURB LOCATIONS

Curb ID	Type	Begin			End			Radius	Length	Remarks
		Station	Offset	Location	Station	Offset	Location			
Roundabout Central Island										
A-1	VERTICAL	--	--	--	--	--	--	8.45	53.09	
Roadway Curbing										
F-1	C.I.P. CONCRETE	20+082.669	4.20	LT.	20+078.448	4.28	LT.	6.00	4.47	
F-2	C.I.P. CONCRETE	20+078.448	4.28	LT.	20+078.683	6.15	LT.	0.45	1.10	
F-3	C.I.P. CONCRETE	20+078.683	6.15	LT.	20+084.220	6.71	LT.	97.70	5.57	
F-4	C.I.P. CONCRETE	20+084.220	6.71	LT.	20+103.534	9.57	LT.	STRAIGHT	19.53	
F-5	C.I.P. CONCRETE	20+103.534	9.57	LT.	20+109.059	11.95	LT.	12.81	6.07	
F-6	C.I.P. CONCRETE	20+109.059	11.95	LT.	10+021.500	11.91	LT.	7.70	4.77	
F-7	C.I.P. CONCRETE	10+021.500	11.91	LT.	10+031.295	7.58	LT.	20.60	10.83	
F-8	C.I.P. CONCRETE	10+031.295	7.58	LT.	10+036.846	6.72	LT.	STRAIGHT	5.62	
F-9	C.I.P. CONCRETE	10+036.846	6.72	LT.	10+050.294	5.60	LT.	97.70	13.59	
F-10	C.I.P. CONCRETE	10+050.294	5.60	LT.	10+050.294	3.30	LT.	1.15	3.61	
F-11	C.I.P. CONCRETE	10+050.294	3.30	LT.	10+036.495	4.45	LT.	100.00	13.91	
F-12	C.I.P. CONCRETE	10+036.495	4.45	LT.	10+030.944	5.30	LT.	STRAIGHT	5.62	
F-13	C.I.P. CONCRETE	10+030.944	5.30	LT.	10+020.055	10.12	LT.	22.90	12.04	
F-14	C.I.P. CONCRETE	10+020.055	10.12	LT.	20+110.434	10.10	LT.	10.00	6.19	
F-15	C.I.P. CONCRETE	20+110.434	10.10	LT.	20+103.872	7.30	LT.	15.20	7.20	
F-16	C.I.P. CONCRETE	20+103.872	7.30	LT.	20+084.515	4.43	LT.	STRAIGHT	19.57	
F-17	C.I.P. CONCRETE	20+084.515	4.43	LT.	20+082.669	4.20	LT.	100.00	1.86	
G-1	C.I.P. CONCRETE	10+054.694	4.27	RT.	10+050.294	4.19	RT.	STRAIGHT	4.28	Taper to 1" reveal per Std. C-10
G-2	C.I.P. CONCRETE	10+050.294	4.19	RT.	10+046.567	4.50	RT.	100.00	3.68	
G-3	C.I.P. CONCRETE	10+046.567	4.50	RT.	10+038.927	5.25	RT.	STRAIGHT	7.68	
G-4	C.I.P. CONCRETE	10+038.927	5.25	RT.	10+014.727	15.29	RT.	45.00	26.58	
G-5	C.I.P. CONCRETE	10+014.727	15.29	RT.	10+012.334	16.98	RT.	19.80	2.93	
G-6	C.I.P. CONCRETE	10+012.334	16.98	RT.	20+173.379	4.48	LT.	65.00	34.39	
G-7	C.I.P. CONCRETE	20+173.379	4.48	LT.	20+174.637	4.32	LT.	STRAIGHT	1.27	
G-8	C.I.P. CONCRETE	20+174.637	4.32	LT.	20+181.354	10.27	LT.	6.00	10.14	Taper to 1" reveal per Std. C-10
H-1	C.I.P. CONCRETE	20+192.129	3.60	RT.	20+157.221	5.03	RT.	STRAIGHT	34.94	Taper to 1" reveal per Std. C-10
H-2	C.I.P. CONCRETE	20+157.221	5.03	RT.	20+150.733	6.51	RT.	16.80	6.70	
H-3	C.I.P. CONCRETE	20+150.733	6.51	RT.	09+981.826	8.37	RT.	10.00	9.67	
H-4	C.I.P. CONCRETE	09+981.826	8.37	RT.	09+973.790	5.36	RT.	21.30	8.58	
CUT	None	09+973.790	5.36	RT.	09+972.605	5.14	RT.	--	--	Curb cut at Exist. Sewer MH
H-5	C.I.P. CONCRETE	09+972.605	5.14	RT.	09+957.180	3.40	RT.	100.00	15.47	
H-6	C.I.P. CONCRETE	09+957.180	3.40	RT.	09+948.698	8.18	RT.	10.23	9.10	
J-1	C.I.P. CONCRETE	09+947.915	3.30	LT.	09+957.060	3.72	LT.	100.00	9.16	Taper to 1" reveal per Std. C-10
J-2	C.I.P. CONCRETE	09+957.060	3.72	LT.	09+966.590	4.86	LT.	STRAIGHT	9.58	
J-3	C.I.P. CONCRETE	09+966.590	4.86	LT.	09+989.840	15.01	LT.	18.30	25.44	
J-4	C.I.P. CONCRETE	09+989.840	15.01	LT.	20+119.277	14.73	RT.	19.80	1.47	
J-5	C.I.P. CONCRETE	20+119.277	14.73	RT.	20+096.482	5.77	RT.	21.30	24.64	
J-6	C.I.P. CONCRETE	20+096.482	5.77	RT.	20+075.659	3.60	RT.	100.00	20.97	Taper to 1" reveal per Std. C-10

*All Station and Offsets are at the face of curb.

CONSTRUCT DRAINAGE CURB CUT AT EXISTING SEWER MANHOLE SEE STD. C-10

PROJECT NAME: CAMBRIDGE
PROJECT NUMBER: STP 030-2(27)

FILE NAME: t78f163crb.dgn
PROJECT LEADER: JLS
DESIGNED BY: MBL
CURBING PLAN

PLOT DATE: 05-JUN-2012
DRAWN BY: MBL
CHECKED BY: JAD
SHEET 52 OF 214

SEE REVISON SHEET

N

VT STATE PLANE GRID

SPLITTER ISLAND CURB LOCATIONS

Curb ID	Type	Begin			End			Radius	Length	Remarks
		Station	Offset	Location	Station	Offset	Location			
Splitter Island Curbing										
B-1	C.I.P. CONCRETE	20+091.963	0.07	RT.	20+091.980	0.52	LT.	0.30	0.88	
B-2	C.I.P. CONCRETE	20+091.980	0.52	LT.	20+101.504	1.42	LT.	STRAIGHT	9.57	
B-3	C.I.P. CONCRETE	20+101.504	1.42	LT.	20+107.930	2.93	LT.	25.90	6.62	
B-4	C.I.P. CONCRETE	20+107.930	2.93	LT.	20+109.147	2.14	LT.	0.90	1.69	
B-5	C.I.P. CONCRETE	20+109.147	2.14	LT.	20+109.404	0.14	RT.	20.53	2.30	
B-6	C.I.P. CONCRETE	20+109.404	0.14	RT.	20+110.077	2.91	RT.	20.53	2.86	
B-7	C.I.P. CONCRETE	20+110.077	2.91	RT.	20+109.294	3.65	RT.	0.60	1.34	
B-8	C.I.P. CONCRETE	20+109.294	3.65	RT.	20+091.963	0.07	RT.	70.50	17.74	
C-1	C.I.P. CONCRETE	10+033.889	0.18	LT.	10+033.913	0.42	RT.	0.30	0.85	
C-2	C.I.P. CONCRETE	10+033.913	0.42	RT.	10+024.052	3.36	RT.	50.50	10.31	
C-3	C.I.P. CONCRETE	10+024.052	3.36	RT.	10+022.809	2.49	RT.	0.90	1.80	
C-4	C.I.P. CONCRETE	10+022.809	2.49	RT.	10+022.756	0.00	CL.	20.51	2.49	
C-5	C.I.P. CONCRETE	10+022.756	0.00	CL.	10+022.526	1.81	LT.	20.51	1.83	
C-6	C.I.P. CONCRETE	10+022.526	1.81	LT.	10+023.356	2.46	LT.	0.60	1.29	
C-7	C.I.P. CONCRETE	10+023.356	2.46	LT.	10+030.780	0.51	LT.	25.38	7.71	
C-8	C.I.P. CONCRETE	10+030.780	0.51	LT.	10+033.889	0.18	LT.	STRAIGHT	3.13	
D-1	C.I.P. CONCRETE	20+165.372	0.90	LT.	20+165.309	0.30	LT.	0.30	0.89	
D-2	C.I.P. CONCRETE	20+165.309	0.30	LT.	20+159.601	0.44	LT.	STRAIGHT	5.71	
D-3	C.I.P. CONCRETE	20+159.601	0.44	LT.	20+151.656	0.60	RT.	25.90	8.05	
D-4	C.I.P. CONCRETE	20+151.656	0.60	RT.	20+150.501	0.27	LT.	0.90	1.68	
D-5	C.I.P. CONCRETE	20+150.501	0.27	LT.	20+150.442	2.08	LT.	20.52	1.81	
D-6	C.I.P. CONCRETE	20+150.442	2.08	LT.	20+150.009	4.97	LT.	20.52	2.93	
D-7	C.I.P. CONCRETE	20+150.009	4.97	LT.	20+155.899	5.64	LT.	0.60	1.35	
D-8	C.I.P. CONCRETE	20+155.899	5.64	LT.	20+165.372	0.90	LT.	70.50	15.34	
E-1	C.I.P. CONCRETE	09+971.903	0.20	RT.	09+971.929	0.39	LT.	0.30	0.89	
E-2	C.I.P. CONCRETE	09+971.929	0.39	LT.	09+980.306	2.92	LT.	50.50	8.72	
E-3	C.I.P. CONCRETE	09+980.306	2.92	LT.	09+981.534	2.07	LT.	0.90	1.80	
E-4	C.I.P. CONCRETE	09+981.534	2.07	LT.	09+981.521	0.00	CL.	20.51	2.07	
E-5	C.I.P. CONCRETE	09+981.521	0.00	CL.	09+981.689	1.86	RT.	20.51	1.88	
E-6	C.I.P. CONCRETE	09+981.689	1.86	RT.	09+980.832	2.51	RT.	0.60	1.30	
E-7	C.I.P. CONCRETE	09+980.832	2.51	RT.	09+974.039	0.51	RT.	25.40	7.17	
E-8	C.I.P. CONCRETE	09+974.039	0.51	RT.	09+971.903	0.20	RT.	STRAIGHT	2.16	

*All Station and Offsets are at the face of curb.

ROADWAY CURB LOCATIONS

Curb ID	Type	Begin			End			Radius	Length	Remarks
		Station	Offset	Location	Station	Offset	Location			
Roundabout Central Island										
A-1	VERTICAL	--	--	--	--	--	--	8.45	53.09	
Roadway Curbing										
F-1	C.I.P. CONCRETE	20+082.669	4.20	LT.	20+078.448	4.28	LT.	6.00	4.47	
F-2	C.I.P. CONCRETE	20+078.448	4.28	LT.	20+078.683	6.15	LT.	0.45	1.10	
F-3	C.I.P. CONCRETE	20+078.683	6.15	LT.	20+084.220	6.71	LT.	97.70	5.57	
F-4	C.I.P. CONCRETE	20+084.220	6.71	LT.	20+103.534	9.57	LT.	STRAIGHT	19.53	
F-5	C.I.P. CONCRETE	20+103.534	9.57	LT.	20+109.059	11.95	LT.	12.81	6.07	
F-6	C.I.P. CONCRETE	20+109.059	11.95	LT.	10+021.500	11.91	LT.	7.70	4.77	
F-7	C.I.P. CONCRETE	10+021.500	11.91	LT.	10+031.295	7.58	LT.	20.60	10.83	
F-8	C.I.P. CONCRETE	10+031.295	7.58	LT.	10+036.846	6.72	LT.	STRAIGHT	5.62	
F-9	C.I.P. CONCRETE	10+036.846	6.72	LT.	10+050.294	5.60	LT.	97.70	13.59	
F-10	C.I.P. CONCRETE	10+050.294	5.60	LT.	10+050.294	3.30	LT.	1.15	3.61	
F-11	C.I.P. CONCRETE	10+050.294	3.30	LT.	10+036.495	4.45	LT.	100.00	13.91	
F-12	C.I.P. CONCRETE	10+036.495	4.45	LT.	10+030.944	5.30	LT.	STRAIGHT	5.62	
F-13	C.I.P. CONCRETE	10+030.944	5.30	LT.	10+020.055	10.12	LT.	22.90	12.04	
F-14	C.I.P. CONCRETE	10+020.055	10.12	LT.	20+110.434	10.10	LT.	10.00	6.19	
F-15	C.I.P. CONCRETE	20+110.434	10.10	LT.	20+103.872	7.30	LT.	15.20	7.20	
F-16	C.I.P. CONCRETE	20+103.872	7.30	LT.	20+084.515	4.43	LT.	STRAIGHT	19.57	
F-17	C.I.P. CONCRETE	20+084.515	4.43	LT.	20+082.669	4.20	LT.	100.00	1.86	
G-1	C.I.P. CONCRETE	10+054.694	4.27	RT.	10+050.294	4.19	RT.	STRAIGHT	4.28	Taper to 1" reveal per Std. C-10
G-2	C.I.P. CONCRETE	10+050.294	4.19	RT.	10+046.567	4.50	RT.	100.00	3.68	
G-3	C.I.P. CONCRETE	10+046.567	4.50	RT.	10+038.927	5.25	RT.	STRAIGHT	7.68	
G-4	C.I.P. CONCRETE	10+038.927	5.25	RT.	10+014.727	15.29	RT.	45.00	26.58	
G-5	C.I.P. CONCRETE	10+014.727	15.29	RT.	10+012.334	16.98	RT.	19.80	2.93	
G-6	C.I.P. CONCRETE	10+012.334	16.98	RT.	20+173.379	4.48	LT.	65.00	34.39	
G-7	C.I.P. CONCRETE	20+173.379	4.48	LT.	20+178.620	3.92	LT.	STRAIGHT	5.26	Taper to 1" reveal per Std. C-10
G-8	C.I.P. CONCRETE	20+178.620	3.92	LT.	20+185.075	10.40	LT.	6.00	10.41	
G-9	C.I.P. CONCRETE	20+185.075	10.40	LT.	20+175.300	10.40	LT.	STRAIGHT	9.78	
G-10	C.I.P. CONCRETE	20+175.300	10.40	LT.	20+175.300	20.66	LT.	STRAIGHT	10.26	
H-1	C.I.P. CONCRETE	20+165.180	4.75	RT.	20+157.221	5.03	RT.	STRAIGHT	7.97	Taper to 1" reveal per Std. C-10
H-2	C.I.P. CONCRETE	20+157.221	5.03	RT.	20+150.733	6.51	RT.	16.80	6.70	
H-3	C.I.P. CONCRETE	20+150.733	6.51	RT.	09+981.826	8.37	RT.	10.00	9.67	
H-4	C.I.P. CONCRETE	09+981.826	8.37	RT.	09+973.790	5.36	RT.	21.30	8.58	
CUT	None	09+973.790	5.36	RT.	09+972.605	5.14	RT.	--	--	Curb cut at Exist. Sewer MH
H-5	C.I.P. CONCRETE	09+972.605	5.14	RT.	09+957.180	3.40	RT.	100.00	15.47	
H-6	C.I.P. CONCRETE	09+957.180	3.40	RT.	09+948.698	8.18	RT.	9.10	10.23	
J-1	C.I.P. CONCRETE	09+947.915	3.30	LT.	09+957.060	3.72	LT.	100.00	9.16	Taper to 1" reveal per Std. C-10
J-2	C.I.P. CONCRETE	09+957.060	3.72	LT.	09+966.590	4.86	LT.	STRAIGHT	9.58	
J-3	C.I.P. CONCRETE	09+966.590	4.86	LT.	09+989.840	15.01	LT.	45.00	25.44	
J-4	C.I.P. CONCRETE	09+989.840	15.01	LT.	20+119.277	14.73	RT.	19.80	1.47	
J-5	C.I.P. CONCRETE	20+119.277	14.73	RT.	20+096.482	5.77	RT.	65.00	24.64	
J-6	C.I.P. CONCRETE	20+096.482	5.77	RT.	20+075.659	3.60	RT.	100.00	20.97	Taper to 1" reveal per Std. C-10

*All Station and Offsets are at the face of curb.

CONSTRUCT DRAINAGE CURB CUT AT EXISTING SEWER MANHOLE SEE STD. C-10

1. LENGTH OF G-7 CHANGED FROM 1.27 M TO 5.26 M
2. LENGTH OF G-8 CHANGED FROM 10.14 M TO 10.41 M LOCATION OF G-8 20+174.637, 4.32 LT. - 20+181.354, 10.27 LT. TO 20+178.620, 3.92 LT. - 20+185.075, 10.40 LT
3. ADDED G-9 TO CURBING PLANS
4. ADDED G-10 TO CURBING PLANS
5. LENGTH OF H-1 CHANGED FROM 34.94 M TO 7.97 M

PROJECT NAME: CAMBRIDGE
PROJECT NUMBER: STP 030-2(27)

FILE NAME: t78f163crb.dgn
PROJECT LEADER: JLS
DESIGNED BY: MBL
CURBING PLAN

PLOT DATE: 4/23/13
DRAWN BY: MBL
CHECKED BY: JAD
SHEET 52 OF 214

VAOT Metric

N

VT STATE PLANE GRID

(U1) STA. 20+046.892, 7.309m, LT. - STA. 20+080, 3.657m, LT.
NEW 200mm X 40.1m UNDERDRAIN
NEW 200mm X 4.5m UNDERDRAIN CARRIER PIPE
NEW FLUSHING BASIN AT 20+046.892, 7.309m, LT.

(U2) STA. 20+047.566, 6.910m, RT. - STA. 20+080, 3.288m, RT.
NEW 200mm X 40.5m UNDERDRAIN
NEW 200mm X 3.9m UNDERDRAIN CARRIER PIPE
NEW FLUSHING BASIN AT 20+047.566, 6.910m, RT.

(EX5) STA. 20+044.222, 22.332m, LT. - STA. 20+045.542, 9.655m, RT.
CLEAN AND RETAIN EXISTING 600mm CULVERT

STA. 19+960.692
BEGIN APPROACH

STA. 20+002.182
END APPROACH
BEGIN PROJECT
STP 030-2(27)

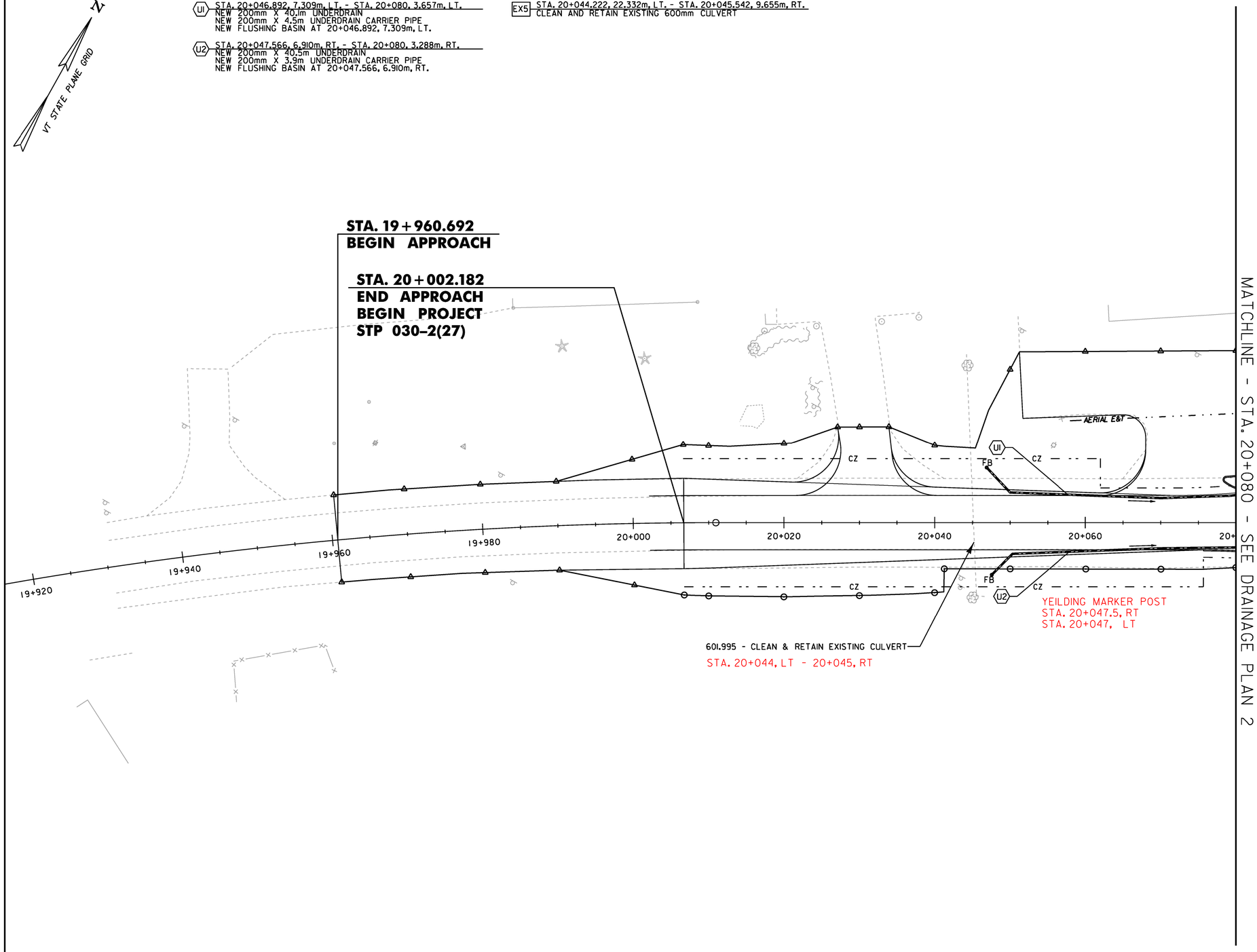

MATCHLINE - STA. 20+080 - SEE DRAINAGE PLAN 2

LEGEND

● FB FLUSHING BASIN

0 10 20 30
SCALE IN METERS

PROJECT NAME: CAMBRIDGE
PROJECT NUMBER: STP 030-2(27)

FILE NAME: t78f163bdr.dgn
PROJECT LEADER: JLS
DESIGNED BY: MBL
DRAINAGE PLAN 1

PLOT DATE: 05-JUN-2012
DRAWN BY: MBL
CHECKED BY: JAD
SHEET 53 OF 214

VAOT Metric

N

VT STATE PLANE GRID

MATCHLINE - STA. 20+080 - SEE DRAINAGE PLAN I

VT ROUTE 108

VT ROUTE 15

AERIAL E&T

CZ

FB

STA. 20+261.702
END PROJECT
STP 030-2(27)
BEGIN APPROACH

STA. 9+910.905
END APPROACH
BEGIN PROJECT
STP 030-2(27)

1 STA. 20+091.689, 5.185m, LT. - STA. 10+018.140, 4.528m, RT.
NEW 450mm X 21.5m CPEP (SL)
INV. IN = 138.560, INV. OUT = 138.300
NEW CB (CB-1), RIM = 139.871
WITH CAST IRON GRATE, TYPE D

2 STA. 20+091.309, 4.582m, RT. - STA. 20+112.400, 9.308m, RT.
NEW 450mm X 20.4m CPEP (SL)
INV. IN = 138.493, INV. OUT = 138.394
NEW CB (CB-2), RIM = 139.884
WITH CAST IRON GRATE, TYPE D

3 STA. 20+112.400, 9.308m, RT. - STA. 9+984.526, 9.715m, LT.
NEW 450mm X 15.8m CPEP (SL)
INV. IN = 138.369, INV. OUT = 138.292
NEW CB (CB-3), RIM = 138.899
WITH CAST IRON GRATE, TYPE D

4 STA. 9+984.526, 9.715m, LT. - STA. 9+981.999, 8.130m, RT.
NEW 450mm X 16.7m CPEP (SL)
INV. IN = 138.266, INV. OUT = 138.185
NEW CB (CB-4), 1.5m DIA., RIM = 139.911
WITH CAST IRON GRATE, TYPE D

5 STA. 9+981.999, 8.130m, RT. - STA. 20+147.920, 8.013m, RT.
NEW 450mm X 5.4m CPEP (SL)
INV. IN = 138.160, INV. OUT = 138.136
NEW CB (CB-5), RIM = 139.931
WITH CAST IRON GRATE, TYPE D

6 STA. 20+147.920, 8.013m, RT. - STA. 20+147.380, 12.084m, LT.
NEW 600mm X 18.9m CPEP (SL)
INV. IN = 138.111, INV. OUT = 138.019
NEW CB (CB-6), RIM = 139.958
WITH CAST IRON GRATE, TYPE D

7 STA. 20+147.380, 12.084m, LT. - STA. 10+016.639, 17.403m, RT.
NEW 600mm X 10.8m CPEP (SL)
INV. IN = 137.994, INV. OUT = 137.941
NEW CB (CB-7), RIM = 139.909
WITH CAST IRON GRATE, TYPE D
NEW END SECTION AT OUTLET

8 STA. 9+971.689, 5.208m, LT. - STA. 9+984.526, 9.715m, LT.
NEW 450mm X 12.3m CPEP (SL)
INV. IN = 138.329, INV. OUT = 138.270
NEW CB (CB-8), RIM = 139.666
WITH CAST IRON GRATE, TYPE D

9 STA. 9+957.241, 3.468m, LT. - STA. 9+971.689, 5.208m, LT.
NEW 450mm X 13.4m CPEP (SL)
INV. IN = 138.393, INV. OUT = 138.329
NEW CB (CB-9), RIM = 139.477
WITH CAST IRON GRATE, TYPE D

10 NOT USED ON THIS PROJECT

11 STA. 10+034.955, 4.381m, LT. - STA. 10+018.140, 11.657m, LT.
NEW 450mm X 17.0m CPEP (SL)
INV. IN = 138.331, INV. OUT = 138.248
NEW CB (CB-11), RIM = 139.611
WITH CAST IRON GRATE, TYPE D

12 STA. 10+020.496, 13.368m, LT. - STA. 10+018.140, 11.657m, LT.
NEW 450mm x 1.6m CPEP (SL)
INV. IN = 138.526, INV. OUT = 138.520
NEW CB (CB-12), RIM = 139.926
WITH CAST IRON GRATE, TYPE D

13 STA. 10+018.140, 11.657m, LT. - STA. 10+019.795, 9.866m, RT.
NEW 450mm X 20.2m CPEP (SL)
INV. IN = 138.223, INV. OUT = 138.124
NEW CB (CB-13), 1.5m DIA., RIM = 139.941
WITH CAST IRON GRATE, TYPE D

14 STA. 10+054.393, 3.968m, RT. - STA. 10+034.398, 5.392m, RT.
NEW 450mm X 18.7m CPEP (SL)
INV. IN = 138.256, INV. OUT = 138.166
NEW CB (CB-14), RIM = 139.241
WITH CAST IRON GRATE, TYPE D

15 STA. 10+034.398, 5.392m, RT. - STA. 10+019.795, 9.866m, RT.
NEW 450mm X 14.2m CPEP (SL)
INV. IN = 138.166, INV. OUT = 138.099
NEW CB (CB-15), RIM = 139.588
WITH CAST IRON GRATE, TYPE D

16 STA. 10+019.795, 9.866m, RT. - STA. 10+017.606, 19.107m, RT.
NEW 600mm X 9.1m CPEP (SL)
INV. IN = 138.08, INV. OUT = 137.96
NEW CB (CB-16), RIM = 139.902
WITH CAST IRON GRATE, TYPE D
NEW END SECTION AT OUTLET

17 STA. 20+155.000, 11.598m, RT. - STA. 20+147.920, 8.013m, RT.
NEW 450mm X 7.3m CPEP (SL)
INV. IN = 138.625, INV. OUT = 138.115
NEW END SECTION AT INLET

18 STA. 20+196.650, 7.582m, LT. - STA. 20+160.161, 13.026m, LT.
NEW 375mm X 36.3m CPEP (SL)
INV. IN = 138.945, INV. OUT = 138.765
NEW CB (CB-18), RIM = 139.704
WITH CAST IRON GRATE, TYPE A
NEW END SECTION AT OUTLET

19 STA. 9+957.101, 7.330m, LT. - STA. 9+957.241, 3.467m, LT.
NEW 450mm X 3.3m CPEP (SL)
INV. IN = 138.780, INV. OUT = 138.393
NEW END SECTION AT INLET

U1 STA. 20+080, 3.657m, LT. - STA. 20+091.689, 5.185m, LT.
NEW 200mm X 40.1m UNDERDRAIN
NEW 200mm X 4.5m UNDERDRAIN CARRIER PIPE
NEW FLUSHING BASIN AT 20+046.892, 7.309m, LT.

U2 STA. 20+080, 3.288m, RT. - STA. 20+091.309, 4.582m, RT.
NEW 200mm X 40.5m UNDERDRAIN
NEW 200mm X 3.9m UNDERDRAIN CARRIER PIPE
NEW FLUSHING BASIN AT 20+047.566, 6.910m, RT.

U3 STA. 20+091.689, 5.185m, LT. (CB-1) - STA. 10+018.140, 11.657m, LT. (CB-13)
NEW 200mm X 22.0m UNDERDRAIN
NEW 200mm X 1.5m UNDERDRAIN CARRIER PIPE
NEW FLUSHING BASIN AT 20+091.689, 5.185m, LT. (CB-1)

U4 STA. 20+091.309, 4.582m, RT. (CB-2) - STA. 20+112.400, 9.308m, RT. (CB-3)
NEW 200mm X 21.0m UNDERDRAIN
NEW 200mm X 1.5m UNDERDRAIN CARRIER PIPE
NEW FLUSHING BASIN AT 20+091.309, 4.582m, RT. (CB-2)

U5 STA. 20+255.331, 7.782m, LT. - STA. 20+147.380, 12.084m, LT. (CB-7)
NEW 200mm X 106.7m UNDERDRAIN
NEW 200mm X 3.1m UNDERDRAIN CARRIER PIPE
NEW FLUSHING BASIN AT 20+255.331, 7.782m, LT.

U6 STA. 20+255.331, 7.308m, RT. - STA. 20+147.920, 8.013m, RT. (CB-6)
NEW 200mm X 105.3m UNDERDRAIN
NEW 200mm X 2.5m UNDERDRAIN CARRIER PIPE
NEW FLUSHING BASIN AT 20+255.331, 7.308m, RT.

U7 STA. 9+913.839, 6.123m, LT. - STA. 9+957.241, 3.468m, LT. (CB-9)
NEW 200mm X 41.3m UNDERDRAIN
NEW 200mm X 2.3m UNDERDRAIN CARRIER PIPE
NEW FLUSHING BASIN AT 9+913.839, 6.123m, LT.

U8 STA. 9+913.839, 6.407m, RT. - STA. 9+946.408, 3.280m, RT. (CB-5)
NEW 200mm X 66.7m UNDERDRAIN
NEW 200mm X 2.8m UNDERDRAIN CARRIER PIPE
NEW FLUSHING BASIN AT 9+913.839, 6.407m, RT.

U9 STA. 9+971.689, 5.208m, LT. (CB-8) - STA. 9+957.241, 3.468m, LT. (CB-9)
NEW 200mm X 14.3m UNDERDRAIN
NEW 200mm X 1.5m UNDERDRAIN CARRIER PIPE
NEW FLUSHING BASIN AT 9+971.689, 5.208m, LT. (CB-8)

U10 STA. 9+984.526, 9.715m, LT. (CB-4) - STA. 9+971.689, 5.208m, LT. (CB-8)
NEW 200mm X 12.8m UNDERDRAIN
NEW 200mm X 1.5m UNDERDRAIN CARRIER PIPE
NEW FLUSHING BASIN AT 9+984.526, 9.715m, LT. (CB-4)

EX1 STA. 9+957.795, 5.049m, LT. - STA. 9+958.165, 5.568m, RT.
REMOVE EXISTING 380mm CGMP X 10.63m CULVERT AND HEADWALL AT OUTLET

EX2 STA. 9+958.031, 7.122m, RT. - STA. 9+978.201, 14.287m, RT.
REMOVE EXISTING 460mm RCP CULVERT AND HEADWALLS AT OUTLET AND INLET

EX3 STA. 9+979.540, 14.647m, RT. - STA. 20+151.897, 12.496m, LT.
REMOVE EXISTING 460mm RCP CULVERT AND HEADWALLS AT OUTLET AND INLET

EX4 STA. 9+926.160, 8.881m, LT. - STA. 9+944.514, 14.683m, RT.
REMOVE EXISTING XXXmm RCP CULVERT WITHIN R.O.W. ONLY

LEGEND

GRASS LINED CHANNEL FOR STORMWATER

•FB FLUSHING BASIN

0 10 20 30
SCALE IN METERS

PROJECT NAME: CAMBRIDGE	
PROJECT NUMBER: STP 030-2(27)	
FILE NAME: t78f163bdr.dgn	PLOT DATE: 05-JUN-2012
PROJECT LEADER: JLS	DRAWN BY: MBL
DESIGNED BY: MBL	CHECKED BY: JAD
DRAINAGE PLAN 2	SHEET 54 OF 214

SEE REVISION SHEET

MATCHLINE - STA. 20+080 - SEE DRAINAGE PLAN I

VT STATE PLANE GRID

VT ROUTE 108

VT ROUTE 15

AERIAL E&T

CZ

FB

STA. 20+261.702
END PROJECT
STP 030-2(27)
BEGIN APPROACH

STA. 9+910.905
END APPROACH
BEGIN PROJECT
STP 030-2(27)

1 (1) STA. 20+091.689, 5.185m, LT. - STA. 10+018.140, 4.528m, RT.
NEW 450mm X 215m CPEP (SL)
INV. IN = 138.560, INV. OUT = 138.300
NEW CB (CB-1), RIM = 139.874
WITH CAST IRON GRATE, TYPE D

2 (2) STA. 20+091.309, 4.528m, RT. - STA. 20+111.917, 10.374m, RT.
NEW 450mm X 20.2m CPEP (SL)
INV. IN = 138.493, INV. OUT = 138.394
NEW CB (CB-2), RIM = 139.876
WITH CAST IRON GRATE, TYPE D

3 (3) STA. 20+111.917, 10.374m, RT. - STA. 9+983.918, 10.688m, LT.
NEW 450mm X 15.6m CPEP (SL)
INV. IN = 138.369, INV. OUT = 138.292
NEW CB (CB-3), RIM = 140.136
WITH CAST IRON GRATE, TYPE D

4 (4) STA. 9+983.918, 10.688m, LT. - STA. 9+982.000, 8.130m, RT.
NEW 450mm X 17.6m CPEP (SL)
INV. IN = 138.266, INV. OUT = 138.185
NEW CB (CB-4), 1.5m DIA., RIM = 140.101
WITH CAST IRON GRATE, TYPE D

5 (5) STA. 9+981.999, 8.130m, RT. - STA. 20+147.920, 8.013m, RT.
NEW 450mm X 5.4m CPEP (SL)
INV. IN = 138.160, INV. OUT = 138.136
NEW CB (CB-5), RIM = 140.115
WITH CAST IRON GRATE, TYPE D

6 (6) STA. 20+147.920, 8.013m, RT. - STA. 20+148.169, 13.035m, LT.
NEW 600mm X 19.9m CPEP (SL)
INV. IN = 138.111, INV. OUT = 138.019
NEW CB (CB-6), RIM = 140.138
WITH CAST IRON GRATE, TYPE D

7 (7) STA. 20+148.169, 13.035m, LT. - STA. 10+016.639, 19.886m, RT.
NEW 600mm X 10.3m CPEP (SL)
INV. IN = 137.994, INV. OUT = 137.941
NEW CB (CB-7), RIM = 140.135
WITH CAST IRON GRATE, TYPE D
NEW END SECTION AT OUTLET

8 (8) STA. 9+971.691, 5.208m, LT. - STA. 9+983.918, 10.688m, LT.
NEW 450mm X 12.1m CPEP (SL)
INV. IN = 138.329, INV. OUT = 138.270
NEW CB (CB-8), RIM = 139.706
WITH CAST IRON GRATE, TYPE D

9 (9) STA. 9+957.241, 3.468m, LT. - STA. 9+971.689, 5.208m, LT.
NEW 450mm X 13.4m CPEP (SL)
INV. IN = 138.393, INV. OUT = 138.329
NEW CB (CB-9), RIM = 139.521
WITH CAST IRON GRATE, TYPE D

10 NOT USED ON THIS PROJECT

19 (10) (11) STA. 10+034.955, 4.381m, LT. - STA. 10+018.140, 11.657m, LT.
NEW 450mm X 17.0m CPEP (SL)
INV. IN = 138.331, INV. OUT = 138.248
NEW CB (CB-11), RIM = 139.602
WITH CAST IRON GRATE, TYPE D

U1 STA. 20+080. 3.657m, LT. - STA. 20+091.689, 5.185m, LT.
NEW 200mm X 40.1m UNDERDRAIN
NEW 200mm X 4.5m UNDERDRAIN CARRIER PIPE
NEW FLUSHING BASIN AT 20+046.892, 7.309m, LT.

U2 STA. 20+080. 3.288m, RT. - STA. 20+091.309, 4.582m, RT.
NEW 200mm X 40.5m UNDERDRAIN
NEW 200mm X 3.9m UNDERDRAIN CARRIER PIPE
NEW FLUSHING BASIN AT 20+047.566, 6.910m, RT.

U3 STA. 20+091.689, 5.185m, LT. (CB-1) - STA. 10+018.140, 11.657m, LT. (CB-13)
NEW 200mm X 22.0m UNDERDRAIN
NEW 200mm X 1.5m UNDERDRAIN CARRIER PIPE
NEW FLUSHING BASIN AT 20+091.689, 5.185m, LT. (CB-1)

U4 STA. 20+091.309, 4.582m, RT. (CB-2) - STA. 20+111.917, 10.374m, RT. (CB-3)
NEW 200mm X 19.7m UNDERDRAIN
NEW 200mm X 1.5m UNDERDRAIN CARRIER PIPE
NEW FLUSHING BASIN AT 20+091.309, 4.582m, RT. (CB-2)

U5 STA. 20+255.331, 7.782m, LT. - STA. 20+148.169, 13.035m, LT. (CB-7)
NEW 200mm X 106.2m UNDERDRAIN
NEW 200mm X 3.1m UNDERDRAIN CARRIER PIPE
NEW FLUSHING BASIN AT 20+255.331, 7.782m, LT.

U6 STA. 20+255.331, 7.308m, RT. - STA. 20+147.920, 8.013m, RT. (CB-6)
NEW 200mm X 105.3m UNDERDRAIN
NEW 200mm X 2.5m UNDERDRAIN CARRIER PIPE
NEW FLUSHING BASIN AT 20+255.331, 7.308m, RT.

U7 STA. 9+913.839, 6.123m, LT. - STA. 9+957.241, 3.468m, LT. (CB-9)
NEW 200mm X 41.3m UNDERDRAIN
NEW 200mm X 2.3m UNDERDRAIN CARRIER PIPE
NEW FLUSHING BASIN AT 9+913.839, 6.123m, LT.

U8 STA. 9+913.839, 6.407m, RT. - STA. 9+946.408, 3.280m, RT. (CB-5)
NEW 200mm X 66.7m UNDERDRAIN
NEW 200mm X 2.8m UNDERDRAIN CARRIER PIPE
NEW FLUSHING BASIN AT 9+913.839, 6.407m, RT.

18 U9 STA. 9+971.689, 5.208m, LT. (CB-8) - STA. 9+957.241, 3.468m, LT. (CB-9)
NEW 200mm X 14.3m UNDERDRAIN
NEW 200mm X 1.5m UNDERDRAIN CARRIER PIPE
NEW FLUSHING BASIN AT 9+971.689, 5.208m, LT. (CB-8)

U10 STA. 9+983.918, 10.688m, LT. (CB-4) - STA. 9+971.689, 5.208m, LT. (CB-8)
NEW 200mm X 11.5m UNDERDRAIN
NEW 200mm X 1.5m UNDERDRAIN CARRIER PIPE
NEW FLUSHING BASIN AT 9+984.526, 9.715m, LT. (CB-4)

22 (12A) STA. 10+047.134, 5.984m, LT. - STA. 10+034.955, 4.381m, RT.
NEW 450mm X 12.3m CPEP (SL)
INV. IN = 138.388, INV. OUT = 138.333
NEW CB (CB-12A), RIM = 139.576
WITH CAST IRON GRATE, TYPE D

11 (13) STA. 10+018.140, 11.657m, LT. - STA. 10+020.172, 11.098m, RT.
NEW 450mm X 21.5m CPEP (SL)
INV. IN = 138.223, INV. OUT = 138.124
NEW CB (CB-13), 1.5m DIA., RIM = 140.141
WITH CAST IRON GRATE, TYPE D

12 (14) STA. 10+054.393, 3.968m, RT. - STA. 10+034.398, 5.392m, RT.
NEW 450mm X 18.7m CPEP (SL)
INV. IN = 138.256, INV. OUT = 138.166
NEW CB (CB-14), RIM = 139.227
WITH CAST IRON GRATE, TYPE D

13 (15) STA. 10+034.398, 5.392m, RT. - STA. 10+020.172, 11.098m, RT.
NEW 450mm X 14.1m CPEP (SL)
INV. IN = 138.166, INV. OUT = 138.099
NEW CB (CB-15), RIM = 139.624
WITH CAST IRON GRATE, TYPE D

14 (16) STA. 10+020.172, 11.098m, RT. - STA. 10+017.606, 19.107m, RT.
NEW 600mm X 7.8m CPEP (SL)
INV. IN = 138.08, INV. OUT = 137.96
NEW CB (CB-16), RIM = 140.102
WITH CAST IRON GRATE, TYPE D
NEW END SECTION AT OUTLET

17 (17) STA. 20+155.000, 11.598m, RT. - STA. 20+147.920, 8.013m, RT.
NEW 450mm X 7.3m CPEP (SL)
INV. IN = 138.625, INV. OUT = 138.115
NEW END SECTION AT INLET

20 15 (18A) STA. 20+175.600, 10.700m, LT. - STA. 20+166.370, 5.497m, LT.
NEW 375mm X 9.4m CPEP (SL)
INV. IN = 138.828, INV. OUT = 138.680
NEW CB (CB-18A), RIM = 139.828
WITH CAST IRON GRATE, TYPE A

19 STA. 9+957.101, 7.330m, LT. - STA. 9+957.241, 3.467m, LT.
NEW 450mm X 3.3m CPEP (SL)
INV. IN = 138.780, INV. OUT = 138.393
NEW END SECTION AT INLET

16 20 STA. 9+957.241, 3.105m, RT. - STA. 9+981.999, 8.130m, RT.
NEW 450mm X 23.9m CPEP (SL)
INV. IN = 138.290, INV. OUT = 138.170
NEW CB (CB-20), RIM = 139.480
WITH CAST IRON GRATE, TYPE D

21 17 21 STA. 20+166.370, 5.497m, LT. - STA. 20+148.169, 13.035m, LT.
NEW 375mm X 18.5m CPEP (SL)
INV. IN = 138.580, INV. OUT = 138.395
NEW CB (CB-21), RIM = 139.905
WITH CAST IRON GRATE, TYPE D

1 REVISED CB-1 RIM ELEV. FROM 139.871 TO 139.874
2 REVISED CB-2 RIM ELEV. FROM 139.884 TO 139.876
3 REVISED CB-3 RIM ELEV. FROM 139.876 TO 140.136
4 REVISED CB-4 RIM ELEVATION FROM 139.888 TO 140.101
5 REVISED CB-5 RIM ELEVATION FROM 139.931 TO 140.115
6 REVISED CB-6 RIM ELEVATION FROM 139.958 TO 140.138
7 REVISED CB-7 RIM ELEVATION FROM 139.884 TO 140.135
8 REVISED CB-8 RIM ELEVATION FROM 139.666 TO 139.706
9 REVISED CB-9 RIM ELEVATION FROM 139.477 TO 139.521
10 REVISED CB-11 RIM ELEVATION FROM 139.611 TO 139.618
11 REVISED CB-13 RIM ELEVATION FROM 139.941 TO 140.141
12 REVISED CB-14 RIM ELEVATION FROM 139.241 TO 139.227
13 REVISED CB-15 RIM ELEVATION FROM 139.588 TO 139.624
14 REVISED CB-16 RIM ELEVATION FROM 139.876 TO 140.102
15 REMOVED CB-18 AND PIPE 18 AND REPLACED WITH CB-18A AND PIPE 18A
16 ADDED CB-20 AND PIPE 20
17 ADDED CB-21 AND PIPE 21
18 REMOVED U9
19 REVISED CB-11 RIM ELEVATION FROM 139.618 TO 139.602
20 REVISED PIPE 18A
21 REVISED PIPE 21
22 REMOVED CB-12 AND PIPE 12 AND ADDED CB-12A AND PIPE 12A

EX1 STA. 9+957.795, 5.049m, LT. - STA. 9+958.165, 5.568m, RT.
REMOVE EXISTING 380mm CGMP X 10.63m CULVERT AND HEADWALL AT OUTLET

EX2 STA. 9+958.031, 7.122m, RT. - STA. 9+978.201, 14.287m, RT.
REMOVE EXISTING 460mm RCP CULVERT AND HEADWALLS AT OUTLET AND INLET

EX3 STA. 9+979.540, 14.647m, RT. - STA. 20+151.897, 12.496m, LT.
REMOVE EXISTING 460mm RCP CULVERT AND HEADWALLS AT OUTLET AND INLET

EX4 STA. 9+926.160, 8.881m, LT. - STA. 9+944.514, 14.683m, RT.
REMOVE EXISTING XXXmm RCP CULVERT WITHIN R.O.W. ONLY RETAIN CATCH BASIN AT OUTLET

LEGEND

GRASS LINED CHANNEL FOR STORMWATER

•FB FLUSHING BASIN

0 10 20 30
SCALE IN METERS

PROJECT NAME:	CAMBRIDGE
PROJECT NUMBER:	STP 030-2(27)
FILE NAME: t78f163bdr.dgn	PLOT DATE: 6/21/13
PROJECT LEADER: JLS	DRAWN BY: MBL
DESIGNED BY: MBL	CHECKED BY: JAD
DRAINAGE PLAN 2	SHEET 54 OF 214

Metric

P1

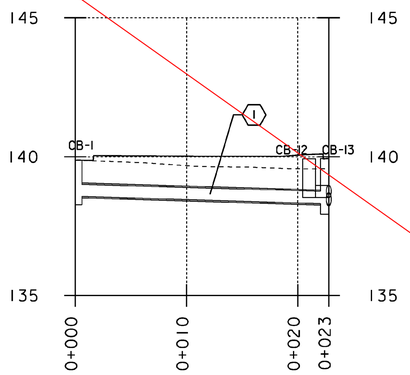

1
SLOPE = 1.21%
NEW PIPE
TYPE: CPEP(SL)
LENGTH = 21.5m
DIAMETER = 450mm
INV. IN = 138.56
INV. OUT = 138.30

CB-1
GRATE: TYPE D
RIM. EL. = 139.871
DEPTH = 1.61m

P2

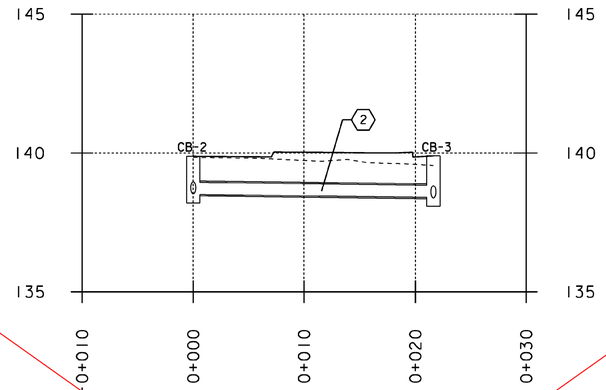

2
SLOPE = 0.50%
NEW PIPE
TYPE: CPEP(SL)
LENGTH = 20.4m
DIAMETER = 450mm
INV. IN = 138.49
INV. OUT = 138.39

CB-2
GRATE: TYPE D
RIM. EL. = 139.884
DEPTH = 1.69m

P3

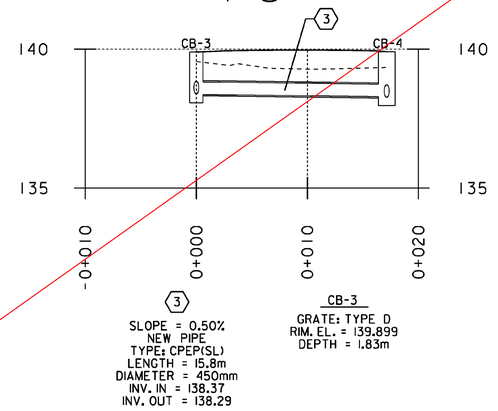

3
SLOPE = 0.50%
NEW PIPE
TYPE: CPEP(SL)
LENGTH = 15.8m
DIAMETER = 450mm
INV. IN = 138.37
INV. OUT = 138.29

CB-3
GRATE: TYPE D
RIM. EL. = 139.899
DEPTH = 1.83m

P4

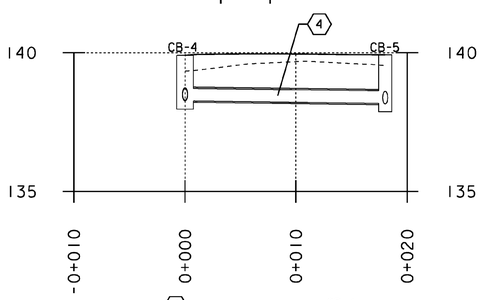

4
SLOPE = 0.50%
NEW PIPE
TYPE: CPEP(SL)
LENGTH = 16.7m
DIAMETER = 450mm
INV. IN = 138.27
INV. OUT = 138.18

CB-4
GRATE: TYPE D
RIM. EL. = 139.911
DEPTH = 1.94m

P5

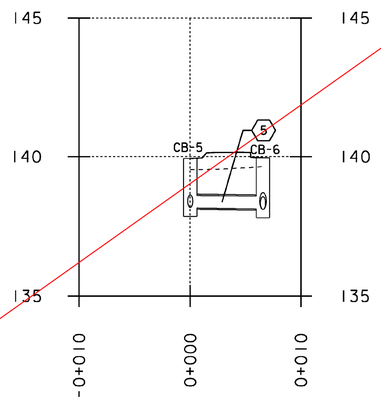

5
SLOPE = 0.50%
NEW PIPE
TYPE: CPEP(SL)
LENGTH = 5.4m
DIAMETER = 450mm
INV. IN = 138.16
INV. OUT = 138.13

CB-5
GRATE: TYPE D
RIM. EL. = 139.931
DEPTH = 2.07m

P6

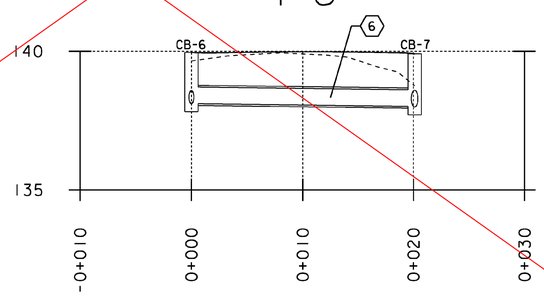

6
SLOPE = 0.50%
NEW PIPE
TYPE: CPEP(SL)
LENGTH = 18.9m
DIAMETER = 600mm
INV. IN = 138.11
INV. OUT = 138.02

CB-6
GRATE: TYPE D
RIM. EL. = 139.958
DEPTH = 2.15m

P7

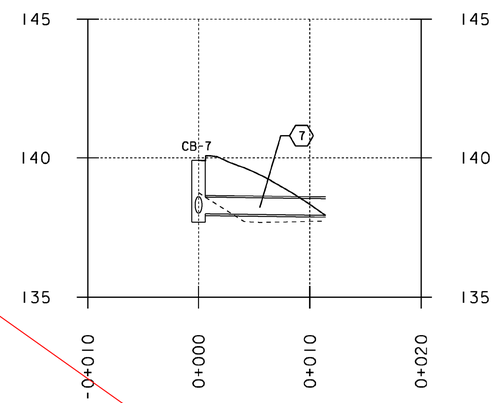

7
SLOPE = 0.50%
NEW PIPE
TYPE: CPEP(SL)
LENGTH = 10.8m
DIAMETER = 600mm
INV. IN = 138.00
INV. OUT = 137.94

CB-7
GRATE: TYPE D
RIM. EL. = 139.909
DEPTH = 2.21m

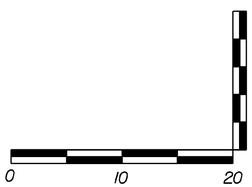

HORIZONTAL SCALE = 1:250
VERTICAL SCALE = 1:125

PROJECT NAME: CAMBRIDGE
PROJECT NUMBER: STP 030-2(27)

FILE NAME: t78f163pro-drn.dgn
PROJECT LEADER: JLS
DESIGNED BY: MBL
DRAINAGE PROFILE SHEET 1

PLOT DATE: 05-JUN-2012
DRAWN BY: MBL
CHECKED BY: JAD
SHEET 55 OF 214

SEE REVISION SHEET

Metric

P1

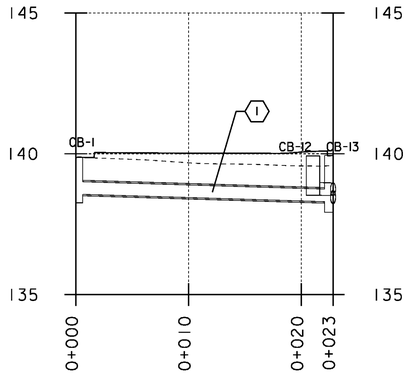

1
SLOPE = 1.21%
NEW PIPE
TYPE: CPEP(SL)
LENGTH = 21.5m
DIAMETER = 450mm
INV. IN = 138.560
INV. OUT = 138.300

CB-1
GRATE: TYPE D
RIM. EL. = 139.874
DEPTH = 1.61m
1

P2

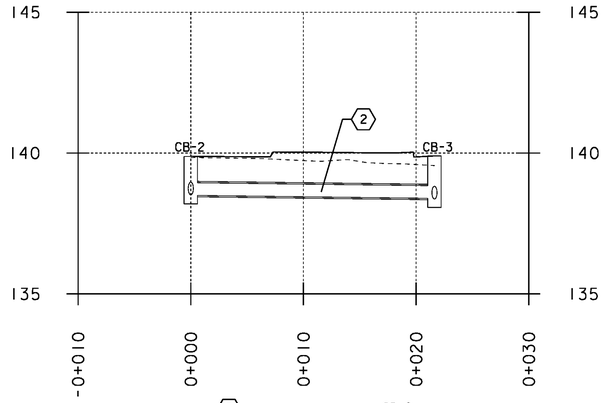

2
SLOPE = 0.50%
NEW PIPE
TYPE: CPEP(SL)
LENGTH = 20.2m
DIAMETER = 450mm
INV. IN = 138.493
INV. OUT = 138.394

CB-2
GRATE: TYPE D
RIM. EL. = 139.876
DEPTH = 1.68m
2

P3

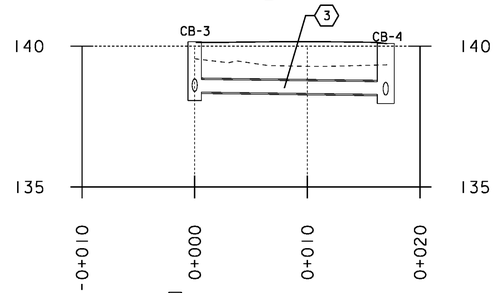

3
SLOPE = 0.51%
NEW PIPE
TYPE: CPEP(SL)
LENGTH = 15.6m
DIAMETER = 450mm
INV. IN = 138.369
INV. OUT = 138.292

CB-3
GRATE: TYPE D
RIM. EL. = 140.136
DEPTH = 2.09m
3

P4

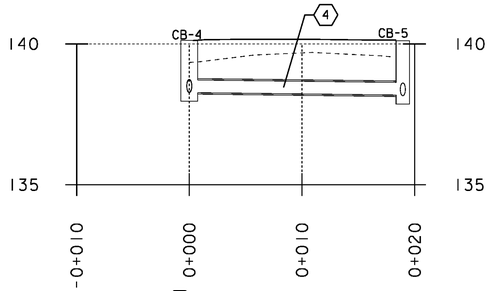

4
SLOPE = 0.50%
NEW PIPE
TYPE: CPEP(SL)
LENGTH = 17.6m
DIAMETER = 450mm
INV. IN = 138.266
INV. OUT = 138.185

CB-4
GRATE: TYPE D
RIM. EL. = 140.101
DEPTH = 2.16m
4

P5

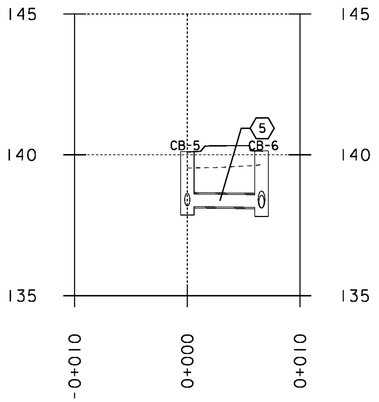

5
SLOPE = 0.50%
NEW PIPE
TYPE: CPEP(SL)
LENGTH = 5.4m
DIAMETER = 450mm
INV. IN = 138.160
INV. OUT = 138.136

CB-5
GRATE: TYPE D
RIM. EL. = 140.115
DEPTH = 2.25m
5

P6

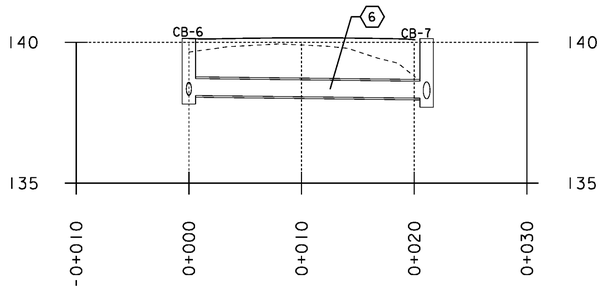

6
SLOPE = 0.45%
NEW PIPE
TYPE: CPEP(SL)
LENGTH = 19.9m
DIAMETER = 600mm
INV. IN = 138.111
INV. OUT = 138.019

CB-6
GRATE: TYPE D
RIM. EL. = 140.138
DEPTH = 2.33m
6

P7

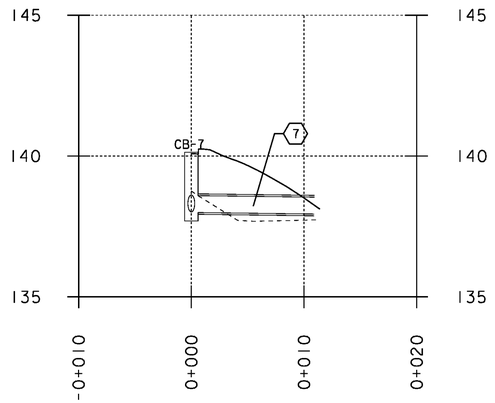

7
SLOPE = 0.58%
NEW PIPE
TYPE: CPEP(SL)
LENGTH = 10.3m
DIAMETER = 600mm
INV. IN = 137.994
INV. OUT = 137.941

CB-7
GRATE: TYPE D
RIM. EL. = 140.135
DEPTH = 2.44m
7

1 REVISED CB-1 RIM ELEVATION AND DEPTH
2 REVISED CB-2 RIM ELEVATION AND DEPTH
3 REVISED CB-3 RIM ELEVATION AND DEPTH
4 REVISED CB-4 RIM ELEVATION AND DEPTH
5 REVISED CB-5 RIM ELEVATION AND DEPTH
6 REVISED CB-6 RIM ELEVATION AND DEPTH
7 REVISED CB-7 RIM ELEVATION AND DEPTH

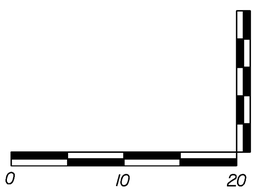

HORIZONTAL SCALE = 1:250
VERTICAL SCALE = 1:125

PROJECT NAME: CAMBRIDGE
PROJECT NUMBER: STP 030-2(27)

FILE NAME: t78f163pro-drn.dgn
PROJECT LEADER: JLS
DESIGNED BY: MBL
DRAINAGE PROFILE SHEET 1

PLOT DATE: 4/23/13
DRAWN BY: MBL
CHECKED BY: JAD
SHEET 55 OF 214

P8

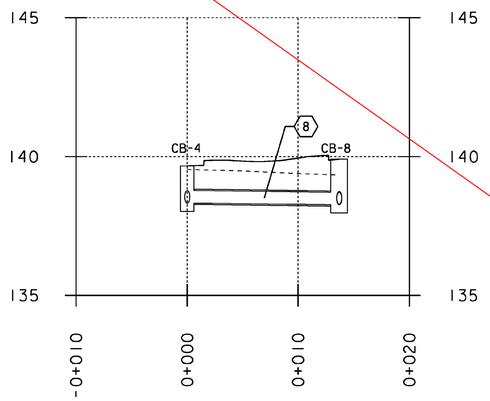

8
SLOPE = 0.50%
NEW PIPE
TYPE: CPEP(SL)
LENGTH = 12.3m
DIAMETER = 450mm
INV. IN = 138.33
INV. OUT = 138.27

CB-8
GRATE: TYPE D
RIM. EL. = 139.666
DEPTH = 1.64m

P9

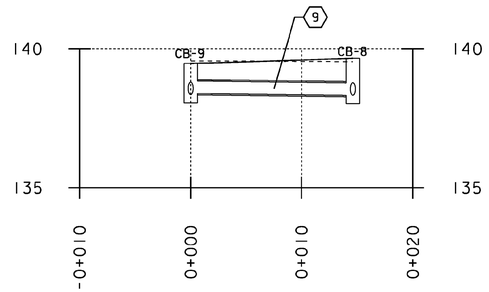

9
SLOPE = 0.50%
NEW PIPE
TYPE: CPEP(SL)
LENGTH = 13.4m
DIAMETER = 450mm
INV. IN = 138.39
INV. OUT = 138.33

CB-9
GRATE: TYPE D
RIM. EL. = 139.477
DEPTH = 1.42m

P11

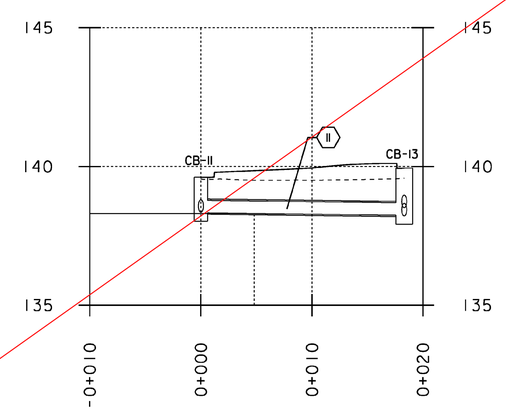

11
SLOPE = 0.50%
NEW PIPE
TYPE: CPEP(SL)
LENGTH = 17.0m
DIAMETER = 450mm
INV. IN = 138.33
INV. OUT = 138.25

CB-11
GRATE: TYPE D
RIM. EL. = 139.611
DEPTH = 1.58m

P12

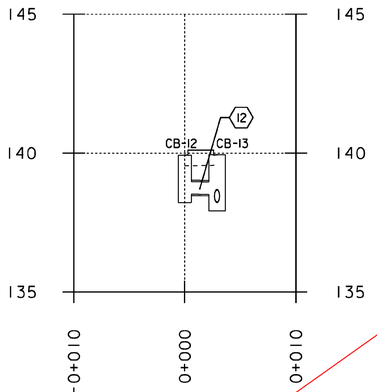

12
SLOPE = 0.50%
NEW PIPE
TYPE: CPEP(SL)
LENGTH = 1.6m
DIAMETER = 450mm
INV. IN = 138.53
INV. OUT = 138.52

CB-12
GRATE: TYPE D
RIM. EL. = 139.926
DEPTH = 1.70

P13

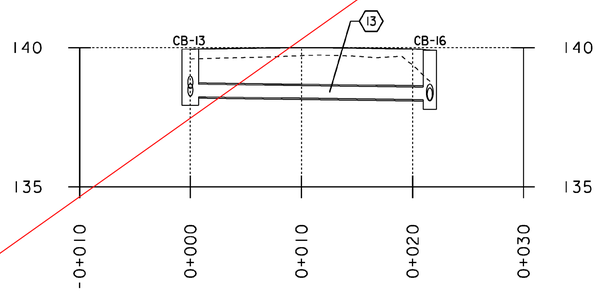

13
SLOPE = 0.50%
NEW PIPE
TYPE: CPEP(SL)
LENGTH = 20.2m
DIAMETER = 450mm
INV. IN = 138.22
INV. OUT = 138.12

CB-13
GRATE: TYPE D
RIM. EL. = 139.941
DEPTH = 2.02m

P14

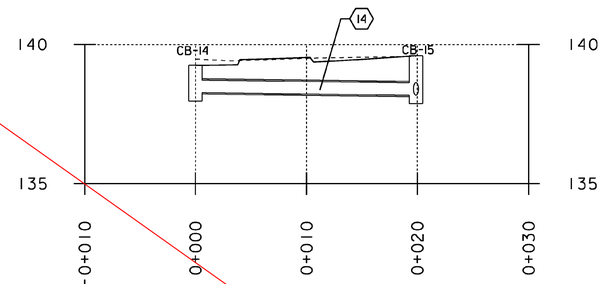

14
SLOPE = 0.50%
NEW PIPE
TYPE: CPEP(SL)
LENGTH = 18.7m
DIAMETER = 450mm
INV. IN = 138.25
INV. OUT = 138.16

CB-14
GRATE: TYPE D
RIM. EL. = 139.241
DEPTH = 1.28m



HORIZONTAL SCALE - 1:250
VERTICAL SCALE - 1:125

PROJECT NAME: CAMBRIDGE
PROJECT NUMBER: STP 030-2(27)

FILE NAME: t78f163pro-drn.dgn
PROJECT LEADER: JLS
DESIGNED BY: MBL
DRAINAGE PROFILE SHEET 2

PLOT DATE: 05-JUN-2012
DRAWN BY: MBL
CHECKED BY: JAD
SHEET 56 OF 214

SEE REVISION SHEET

Metric

P8

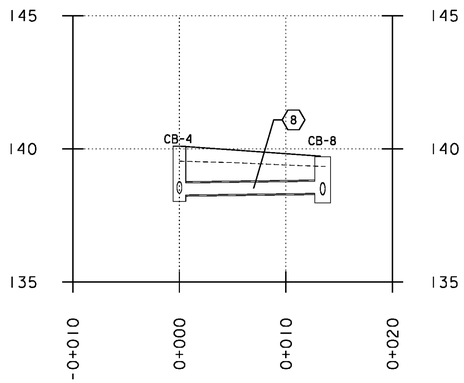

8
SLOPE = 0.50%
NEW PIPE
TYPE: CPEP(SL)
LENGTH = 12.1m
DIAMETER = 450mm
INV. IN = 138.329
INV. OUT = 138.270

CB-8
GRATE: TYPE D
RIM. EL. = 139.706
DEPTH = 1.74m (1)

P9

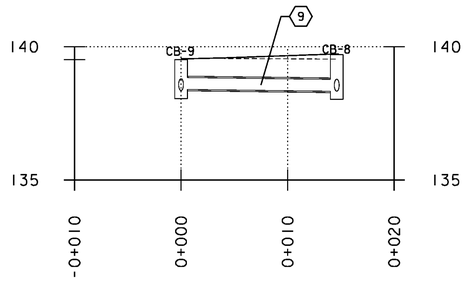

9
SLOPE = 0.50%
NEW PIPE
TYPE: CPEP(SL)
LENGTH = 13.4m
DIAMETER = 450mm
INV. IN = 138.393
INV. OUT = 138.329

CB-9
GRATE: TYPE D
RIM. EL. = 139.521
DEPTH = 1.47m (2)

P11

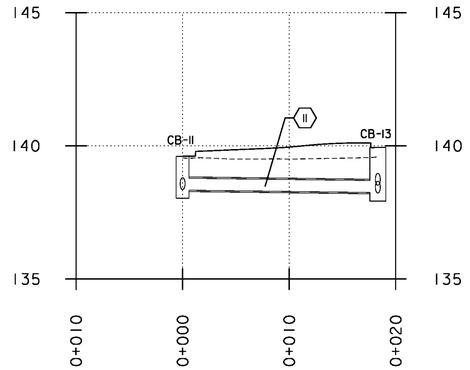

11
SLOPE = 0.50%
NEW PIPE
TYPE: CPEP(SL)
LENGTH = 17.0m
DIAMETER = 450mm
INV. IN = 138.331
INV. OUT = 138.248

CB-11
GRATE: TYPE D
RIM. EL. = 139.602
DEPTH = 1.57m (3) (6)

P12A

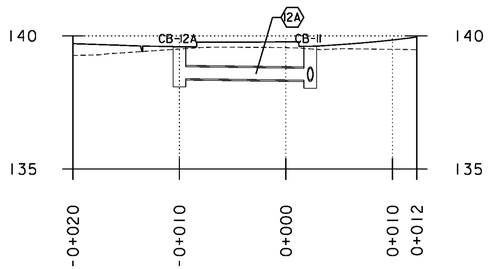

12A
SLOPE = 0.50%
NEW PIPE
TYPE: CPEP(SL)
LENGTH = 12.3m
DIAMETER = 450mm
INV. IN = 138.388
INV. OUT = 138.333

CB-12A
GRATE: TYPE D
RIM. EL. = 139.576
DEPTH = 1.49 (7)

P13

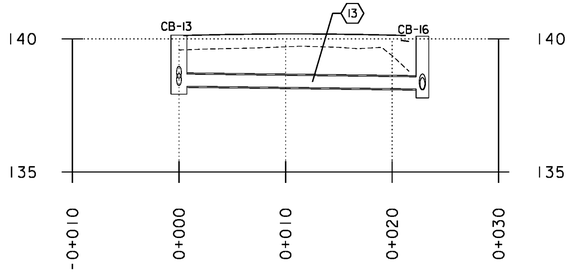

13
SLOPE = 0.47%
NEW PIPE
TYPE: CPEP(SL)
LENGTH = 21.5m
DIAMETER = 450mm
INV. IN = 138.223
INV. OUT = 138.124

CB-13
GRATE: TYPE D
RIM. EL. = 140.141
DEPTH = 2.22m (4)

P14

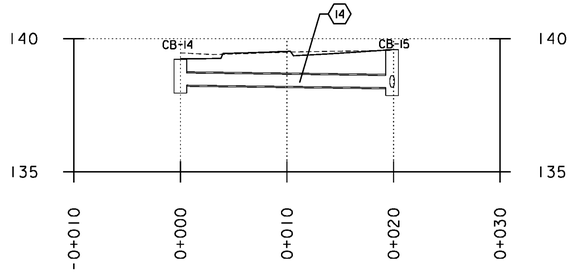

14
SLOPE = 0.50%
NEW PIPE
TYPE: CPEP(SL)
LENGTH = 18.7m
DIAMETER = 450mm
INV. IN = 138.256
INV. OUT = 138.166

CB-14
GRATE: TYPE D
RIM. EL. = 139.227
DEPTH = 1.27m (5)

(1) REVISED CB-8 RIM ELEVATION AND DEPTH
(2) REVISED CB-9 RIM ELEVATION AND DEPTH
(3) REVISED CB-11 RIM ELEVATION AND DEPTH
(4) REVISED CB-13 RIM ELEVATION AND DEPTH
(5) REVISED CB-14 RIM ELEVATION AND DEPTH
(6) REVISED CB-11 RIM ELEVATION TO 139.602 AND DEPTH TO 1.57 M
(7) REMOVED CB-12 AND PIPE 12 AND REPLACED WITH CB-12A AND PIPE 12A

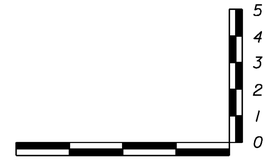

HORIZONTAL SCALE = 1:250
VERTICAL SCALE = 1:125

PROJECT NAME:	CAMBRIDGE
PROJECT NUMBER:	STP 030-2(27)
FILE NAME: t78f163pro-drn.dgn	PLOT DATE: 6/21/13
PROJECT LEADER: JLS	DRAWN BY: MBL
DESIGNED BY: MBL	CHECKED BY: JAD
DRAINAGE PROFILE SHEET 2	SHEET 56 OF 214

Metric

P15

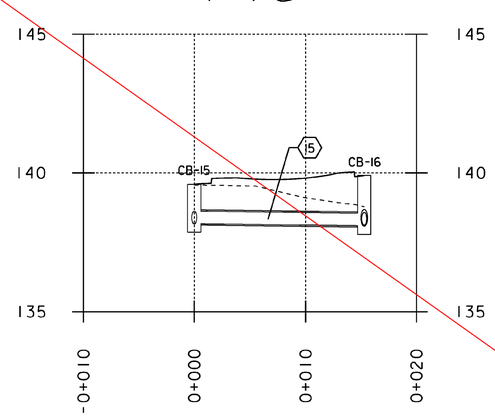

15
SLOPE = 0.50%
NEW PIPE
TYPE: CPEP(SL)
LENGTH = 14.2m
DIAMETER = 450mm
INV. IN = 138.17
INV. OUT = 138.10

CB-15
GRATE: TYPE D
RIM. EL. = 139.588
DEPTH = 1.72m

P16

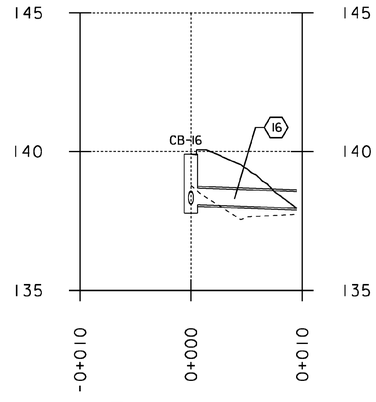

16
SLOPE = 1.40%
NEW PIPE
TYPE: CPEP(SL)
LENGTH = 9.1m
DIAMETER = 600mm
INV. IN = 138.08
INV. OUT = 137.96
NEW E.S. AT OUTLET

CB-16
GRATE: TYPE D
RIM. EL. = 139.902
DEPTH = 2.12m

P17

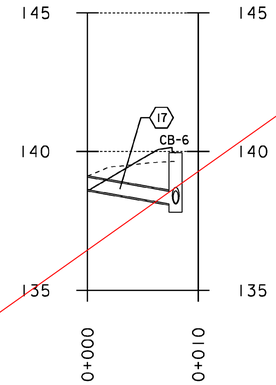

17
SLOPE = 6.95%
NEW PIPE
TYPE: CPEP(SL)
LENGTH = 7.3m
DIAMETER = 450mm
INV. IN = 138.63
INV. OUT = 138.12
NEW E.S. AT INLET

P18

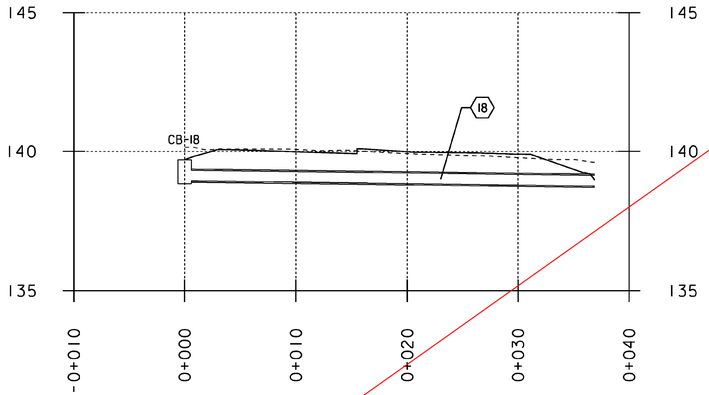

18
SLOPE = 0.50%
NEW PIPE
TYPE: CPEP(SL)
LENGTH = 36.3m
DIAMETER = 375mm
INV. IN = 138.95
INV. OUT = 138.76
NEW E.S. AT OUTLET

CB-18
GRATE: TYPE A
RIM. EL. = 139.704
DEPTH = 0.86m

P19

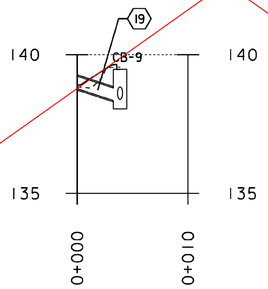

19
SLOPE = 13.05%
NEW PIPE
TYPE: CPEP(SL)
LENGTH = 3.3m
DIAMETER = 450mm
INV. IN = 138.78
INV. OUT = 138.393
NEW E.S. AT INLET

EX2

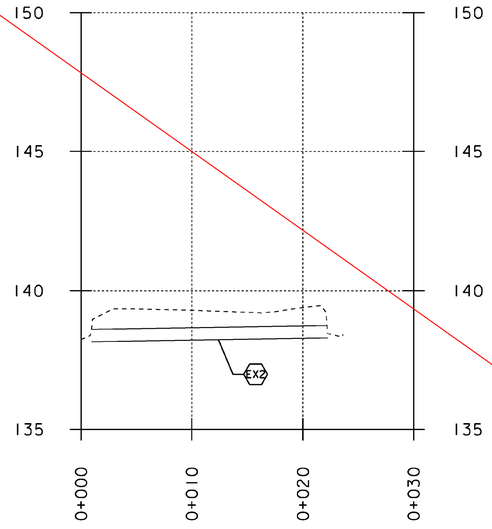

EX2
SLOPE = 0.65%
EXISTING PIPE
TYPE: RCP CULVERT
LENGTH = 21.02m
DIAMETER = 460mm
INV. IN = 138.29
INV. OUT = 138.15



HORIZONTAL SCALE = 1:250
VERTICAL SCALE = 1:125

PROJECT NAME:	CAMBRIDGE
PROJECT NUMBER:	STP 030-2(27)

FILE NAME: t78f163pro-drn.dgn	PLOT DATE: 05-JUN-2012
PROJECT LEADER: JLS	DRAWN BY: MBL
DESIGNED BY: MBL	CHECKED BY: JAD
DRAINAGE PROFILE SHEET B	SHEET 57 OF 214

SEE REVISION SHEET

P19

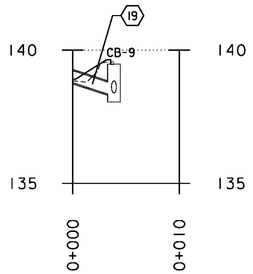

19
SLOPE = 13.05%
NEW PIPE
TYPE: CPEP(SL)
LENGTH = 3.3m
DIAMETER = 450mm
INV. IN = 138.780
INV. OUT = 138.393
NEW E.S. AT INLET

P20

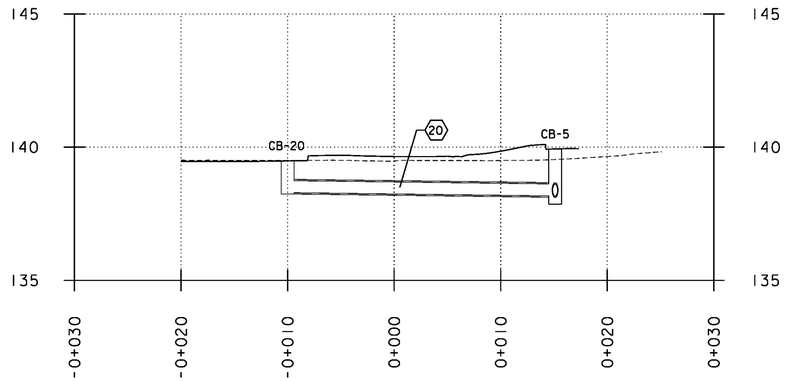

20
SLOPE = 0.50%
NEW PIPE
TYPE: CPEP(SL)
LENGTH = 23.9m
DIAMETER = 450mm
INV. IN = 138.290
INV. OUT = 138.170
NEW E.S. AT OUTLET

CB-20
GRATE: TYPE A
RIM. EL. = 139.480
DEPTH = 1.24m (1)

P21

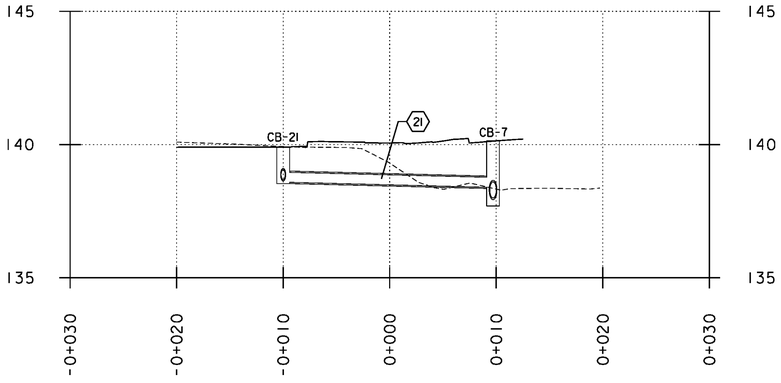

21
SLOPE = 1.00%
NEW PIPE
TYPE: CPEP(SL)
LENGTH = 18.5m
DIAMETER = 375mm
INV. IN = 138.580
INV. OUT = 138.395

CB-21
GRATE: TYPE A
RIM. EL. = 139.905
DEPTH = 1.37m (2) (3)

(1) ADDED PIPE PROFILE 20
(2) ADDED PIPE PROFILE 21
(3) REVISED PIPE PROFILE 21

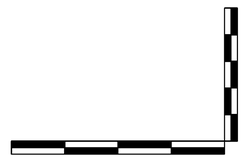

HORIZONTAL SCALE = 1:250
VERTICAL SCALE = 1:125

PROJECT NAME: CAMBRIDGE
PROJECT NUMBER: STP 030-2(27)

FILE NAME: t78f163pro-drn.dgn
PROJECT LEADER: JLS
DESIGNED BY: MBL
DRAINAGE PROFILE SHEET 4

PLOT DATE: 5/13/13
DRAWN BY: MBL
CHECKED BY: JAD
SHEET 57A OF 214

P15

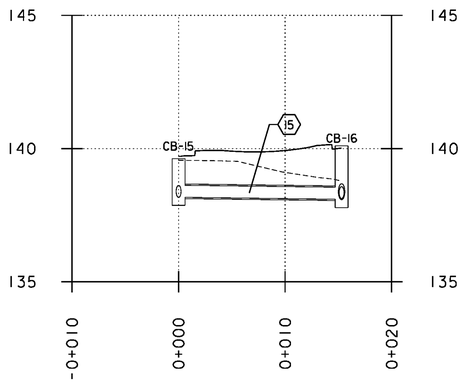

15
SLOPE = 0.50%
NEW PIPE
TYPE: CPEP(SL)
LENGTH = 14.1m
DIAMETER = 450mm
INV. IN = 138.166
INV. OUT = 138.099

CB-15
GRATE: TYPE D
RIM. EL. = 139.624
DEPTH = 1.76m 1

P16

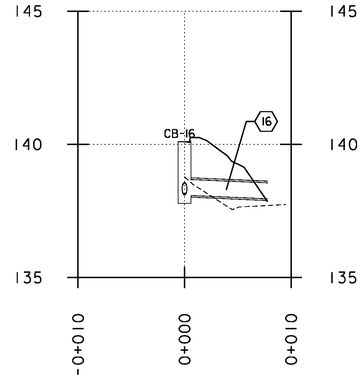

16
SLOPE = 1.54%
NEW PIPE
TYPE: CPEP(SL)
LENGTH = 7.8m
DIAMETER = 600mm
INV. IN = 138.08
INV. OUT = 137.96
NEW E.S. AT OUTLET

CB-16
GRATE: TYPE D
RIM. EL. = 140.102
DEPTH = 2.32m 2

P17

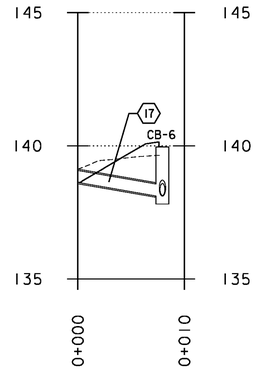

17
SLOPE = 6.95%
NEW PIPE
TYPE: CPEP(SL)
LENGTH = 7.3m
DIAMETER = 450mm
INV. IN = 138.625
INV. OUT = 138.115
NEW E.S. AT INLET

P18A

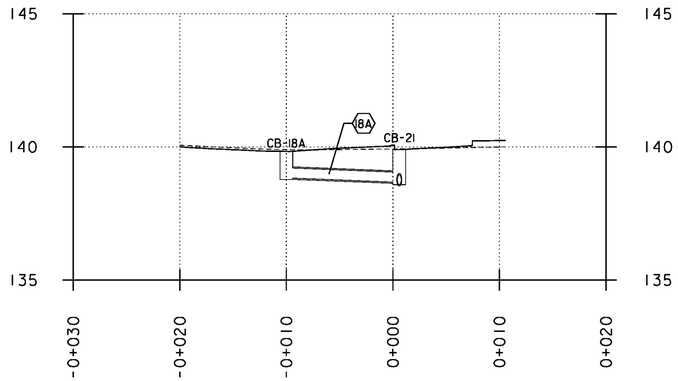

18A
SLOPE = 1.58%
NEW PIPE
TYPE: CPEP(SL)
LENGTH = 9.4m
DIAMETER = 375mm
INV. IN = 138.828
INV. OUT = 138.680

CB-18A
GRATE: TYPE A
RIM. EL. = 139.828
DEPTH = 1.00m 3 4

EX2

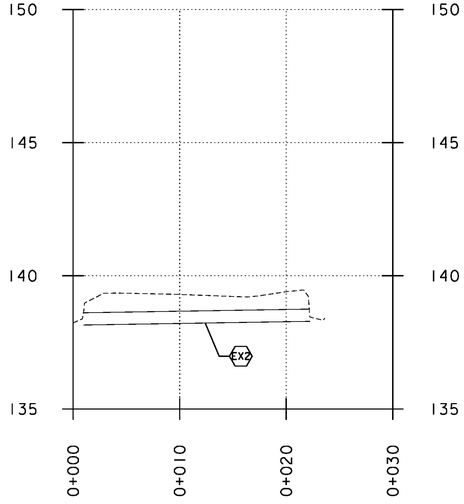

EX2
SLOPE = 0.65%
EXISTING PIPE
TYPE: RCP CULVERT
LENGTH = 21.02m
DIAMETER = 460mm
INV. IN = 138.29
INV. OUT = 138.15

1 REVISED CB-15 RIM ELEVATION
2 REVISED CB-16 RIM ELEVATION
3 REMOVED PIPE PROFILE 18 REPLACED WITH PIPE PROFILE 18A
4 REVISED PIPE PROFILE 18A

0 10 20
HORIZONTAL SCALE = 1:250
VERTICAL SCALE = 1:125

PROJECT NAME:	CAMBRIDGE
PROJECT NUMBER:	STP 030-2(27)
FILE NAME: t78fl63pro-drn.dgn	PLOT DATE: 5/13/13
PROJECT LEADER: JLS	DRAWN BY: MBL
DESIGNED BY: MBL	CHECKED BY: JAD
DRAINAGE PROFILE SHEET 3	SHEET 57 OF 214

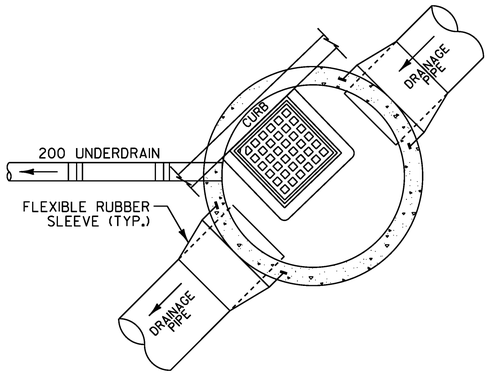

CATCH BASIN (PLAN) WITH UNDERDRAIN

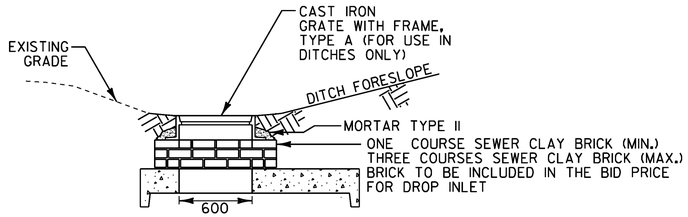

TYPICAL GRATE INSTALLATION IN DITCH (ELEVATION)

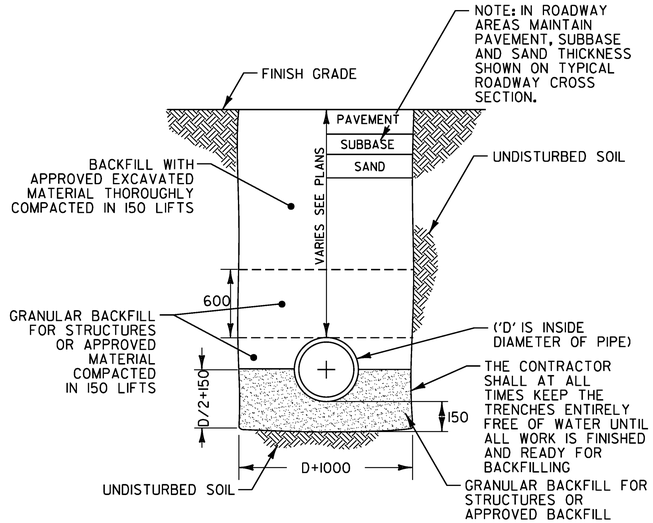

TYPICAL STORM DRAIN AND PIPE SLEEVE TRENCH

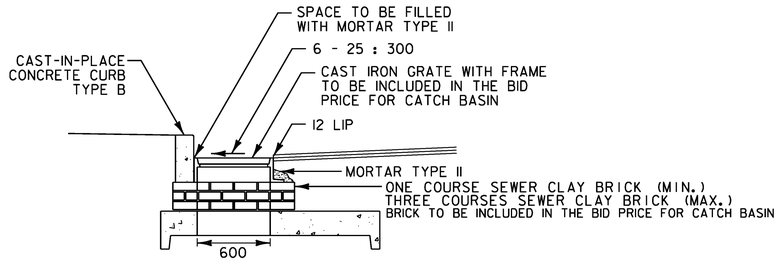

TYPICAL GRATE INSTALLATION WITH CAST-IN-PLACE CURB (ELEVATION)

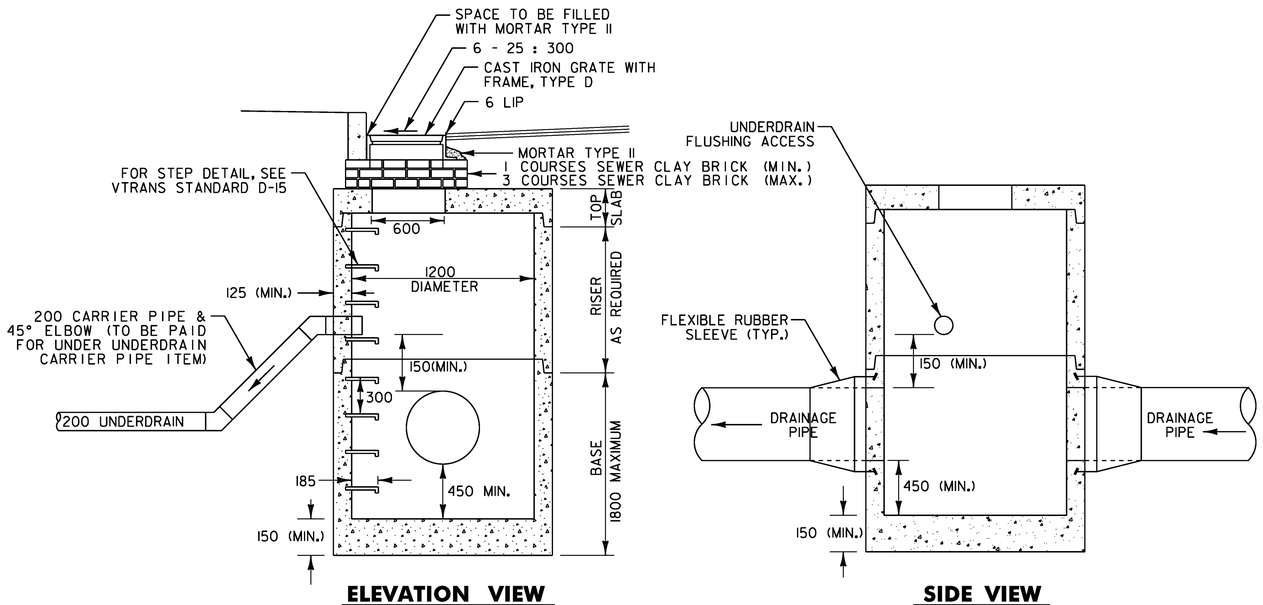

TYPICAL PRECAST CATCH BASIN OR MANHOLE WITH UNDERDRAIN FLUSHING ACCESS

PRECAST REINFORCED CONCRETE CATCH BASIN NOTES:

1. PRECAST CONCRETE SECTIONS SHALL CONFORM TO SUBSECTION 705.04 OF THE STANDARD SPECIFICATIONS.
2. MINIMUM CONCRETE COMPRESSIVE STRENGTH: 35MPa (5,000 PSI) AT 28-DAYS
3. STEEL REINFORCING SHALL CONFORM TO SUBSECTION 713.01 OF THE STANDARD SPECIFICATIONS.
4. MANHOLE STEPS SHALL BE 350MM WIDE STEEL REINFORCED COPOLYMER POLYPROPYLENE PLASTIC CONFORMING TO SUBSECTION 705.04 OF THE STANDARD SPECIFICATIONS AND SHALL BE CAST INTO MANHOLE SECTIONS BY THE PRECAST CONCRETE MANUFACTURER.
5. FACE OF PIPE SHALL NOT PROJECT MORE THAN 50MM OR LESS THAN 25MM FROM INSIDE WALL OF STRUCTURE.
6. ALL STRUCTURES WITH MULTIPLE PIPES SHALL HAVE A MINIMUM OF 300MM OF OUTSIDE SURFACE BETWEEN HOLES, NO MORE THAN 75% OF A HORIZONTAL CROSS-SECTION SHALL BE HOLES, AND THERE SHALL BE NO HOLES CLOSER THAN 75MM TO JOINTS.
7. FITTING FRAME TO FINAL GRADE MAY BE DONE WITH CLAY BRICK OR PRECAST CONCRETE GRADE RINGS OF APPROPRIATE THICKNESS (3 COURSES MAX).
8. FLAT SLAB TOPS SHALL BE USED FOR ALL CATCH BASINS UNLESS OTHERWISE PERMITTED BY THE ENGINEER.
9. ALL PIPE INVERTS AND PENETRATION ANGLES SHALL BE FIELD VERIFIED PRIOR TO PRECASTING.
10. PRECAST SECTIONS SHALL HAVE A TONGUE AND GROOVE JOINT AND BE ASSEMBLED USING A BUTYL RUBBER OR APPROVED EQUAL SEALANT.
11. PROVIDE FLEXIBLE RUBBER SLEEVES CONFORMING TO ASTM C-923, RESILIENT, OF SIZE REQUIRED, FOR EACH PIPE CONNECTING TO STRUCTURE. SLEEVES SHALL BE CAST INTO PRECAST STRUCTURE BY THE MANUFACTURER FOR ALL PIPE PENETRATIONS.
12. PAYMENT FOR INSTALLATION OF THE CATCH BASINS SHALL BE MADE UNDER THE PRECAST REINFORCED CONCRETE CATCH BASIN WITH CAST IRON GRATE ITEM (604.20).

NOT TO SCALE

PROJECT NAME: CAMBRIDGE
PROJECT NUMBER: STP 030-2(27)

FILE NAME: t78f163frm.dgn
PROJECT LEADER: JLS
DESIGNED BY: MBL
DRAINAGE DETAIL SHEET

PLOT DATE: 05-JUN-2012
DRAWN BY: MBL
CHECKED BY: JAD
SHEET 58 OF 214

WIRED CONDUIT SCHEDULE

LOCATION	WIRED CONDUIT 50 mm #6 CU. CIRCUIT 1	WIRED CONDUIT 50 mm #6 CU. CIRCUIT 2	WIRED CONDUIT 50 mm #6 CU. OTHER	REMARKS
POLE 6 TO PS-1	--	--	6.0m	POWER SUPPLY
PS-1 TO PB-8	9.1m	--	--	
PB-8 TO PB-2	43.5m	--	--	VIA SLEEVE S2
PB-2 TO LU-1	1.5m	--	--	
PS-1 TO PB-1	8.4m	--	--	
PB-1 TO PB-3	9.4m	--	--	VIA SLEEVE S1
PB-3 TO LU-2	34.2m	--	--	
LU-2 TO LU-3	28.1m			
POLE 7 TO PS-2	--	--	6.0m	POWER SUPPLY
PS-2 TO LU-5	--	9.1m	--	
LU-5 TO PB-5	--	23.5m	--	
PB-5 TO PB-4	--	11.2m	--	VIA SLEEVE S3
PB-4 TO LU-4	--	1.5m	--	
PS-2 TO PB-6	--	20.3m	--	
PB-6 TO LU-6	--	1.5m	--	
PB-6 TO PB-7	--	13.0m	--	VIA SLEEVE S4
PB-7 TO LU-7	--	19.5m	--	
LU-7 TO LU-8	--	15.5m	--	
SUBTOTAL	134.2m	115.1m	12.0m	
ROUNDING		3.7m		
TOTAL		265m		

PS = POWER STANCHION
PB = PULL BOX
LU = LUMINAIRE

VT ROUTE 108 STA. 10+082.794
END ROADWAY PROJECT
STP 030-2(27)
BEGIN BRIDGE PROJECT
BRF 027-1(4)

VT ROUTE 15 STA. 20+130.638 =
VT ROUTE 108 STA. 10+000.000

S1) ~~STA. 20+058.255, 4.67m LT. - STA. 20+058.255, 4.75m RT.~~ 20+048 5.0 / 20+048 5.0
NEW 9.2m X 200 ELECTRICAL CONDUIT SLEEVE

S2) STA. 20+066.193, 13.36m LT. - STA. 20+110.400, 12.51 LT.
NEW 43.2m X 200 ELECTRICAL CONDUIT SLEEVE

S3) STA. 10+036.530, 5.11m LT. - STA. 10+036.530, 6.07m RT.
NEW 11.2m X 200 ELECTRICAL CONDUIT SLEEVE

S4) ~~STA. 20+166.128, 7.29m LT. - STA. 20+166.128, 5.62m RT.~~ 20+173 7.5 / 20+171 5.5
NEW 11.4m X 200 ELECTRICAL CONDUIT SLEEVE

679.23-BREAKAWAY FEATURE FOR LIGHT POLE
STA. 20+111.167, 12.49m LT.
STA. 20+092.630, 6.27m RT.
STA. 9+989.627, 16.83m LT.
STA. 10+036.555, 5.68m LT.
STA. 10+014.848, 16.83m RT.
STA. 20+167.020, 6.77m LT.
STA. 20+147.419, 11.02m RT.
STA. 9+970.681, 6.15m RT.

679.50-LUMINAIRES ~~(250 HPS)~~ (LED BULBS)
STA. 20+111.167, 12.49m LT.
STA. 20+092.630, 6.27m RT.
STA. 9+989.627, 16.83m LT.
STA. 10+036.555, 5.68m LT.
STA. 10+014.848, 16.83m RT.
STA. 20+167.020, 6.77m LT.
STA. 20+147.419, 11.02m RT.
STA. 9+970.681, 6.15m RT.
CO/SA*3
NAVION ROADWAY LUMINATE

678.26-JUMCTION BOX
~~678.25-PULLBOX~~, STANDARD
STA. 20+058.255, 4.67m LT.
STA. 20+110.400, 12.51m LT.
STA. 20+058.255, 4.75m RT.
STA. 10+036.530, 5.11m LT.
STA. 10+036.530, 6.07 RT.
~~STA. 20+166.128, 7.29 LT.~~
~~STA. 20+166.128, 5.62 RT.~~
STA. 20+066.193, 13.36 LT.
SEE BELOW

679.47-BRACKET ARM (2.1m)
STA. 20+111.167, 12.49m LT.
STA. 20+092.630, 6.27m RT.
STA. 9+989.627, 16.83m LT.
STA. 10+036.555, 5.68m LT.
STA. 10+014.848, 16.83m RT.
STA. 20+167.020, 6.77m LT.
STA. 20+147.419, 11.02m RT.
STA. 9+970.681, 6.15m RT.

679.21-LIGHT POLE BASES
STA. 20+111.167, 12.49m LT.
STA. 20+092.630, 6.27m RT.
STA. 9+989.627, 16.83m LT.
STA. 10+036.555, 5.68m LT.
STA. 10+014.848, 16.83m RT.
STA. 20+167.020, 6.77m LT.
STA. 20+147.419, 11.02m RT.
STA. 9+970.681, 6.15m RT.

679.45-LIGHT POLE (9.1m)
STA. 20+111.167, 12.49m LT.
STA. 20+092.630, 6.27m RT.
STA. 9+989.627, 16.83m LT.
STA. 10+036.555, 5.68m LT.
STA. 10+014.848, 16.83m RT.
STA. 20+167.020, 6.77m LT.
STA. 20+147.419, 11.02m RT.
STA. 9+970.681, 6.15m RT.

679.55-POWER STANCHION
STA. 20+058, 13m LT.
STA. 10+009, 24m RT.

POLE 6
POLE 7
PS-1
PS-2
PB-1
PB-2
PB-3
PB-4
PB-5
PB-6
PB-7
PB-8
LU-1
LU-2
LU-3
LU-4
LU-5
LU-6
LU-7
LU-7A
LU-8
20+173, 7.5 M, LT
20+171, 5.7 M, RT
AERIAL E&T
CZ
10+080
10+040
10+020
10+000
9+960
20+020
20+040
20+060
20+080
20+100
20+120
20+140
20+160
20+180
20+200

VT STATE PLANE GRID

LIGHTING NOTES:
1. POLYMER CONCRETE AND REINFORCED FIBERGLASS U.L. LISTED PULLBOXES SHALL BE INSTALLED WITH HEAVY DUTY COVERS.
2. THE CONTRACTOR SHALL ACQUIRE ALL NECESSARY PERMITS AND MAKE ALL NECESSARY ARRANGEMENTS WITH THE UTILITY COMPANY TO PROVIDE PERMANENT POWER SUPPLIES TO THE STREET LIGHTING SYSTEM. THE ROUTING OF POWER TO THE INTERSECTION SHALL BE SUCH THAT THE AGENCY OF TRANSPORTATION HAS FULL RESPONSIBILITY FROM THE TRANSFORMER THROUGH THE LIGHTING SYSTEM. NO INTERVENING OWNERSHIP OR RESPONSIBLITY SHALL BE ALLOWED.

LEGEND
- WIRED CONDUIT
- ELECTRICAL CONDUIT SLEEVE
- PULLBOX
- LUMINAIRE

0 10 20 30
SCALE IN METERS

VAOT Metric

PROJECT NAME: CAMBRIDGE
PROJECT NUMBER: STP 030-2(27)

FILE NAME: t78f163bdr.dgn
PROJECT LEADER: JLS
DESIGNED BY: MBL
LIGHTING PLAN

PLOT DATE: 05-JUN-2012
DRAWN BY: MBL
CHECKED BY: JAD
SHEET 59 OF 214

STREET LIGHTING DETAILS

LUMINAIRE TYPE:
LENS FINISH: DROP LENS GLASS
HOUSING: ALUMINUM

LAMP TYPE:
TYPE: 250W HIGH PRESSURE SODIUM
LUMENS: 28500

ANSI/IES TYPE:
MEDIUM, TYPE III, FULL CUT-OFF OPTICS

LUMINAIRE:
AMERICAN ELECTRIC LIGHTING
125 25S R3 FG HP

LAMP:
250W HPS

MOUNTING HEIGHT:
9.0 M

ISOFOOTCANDLE PLOT

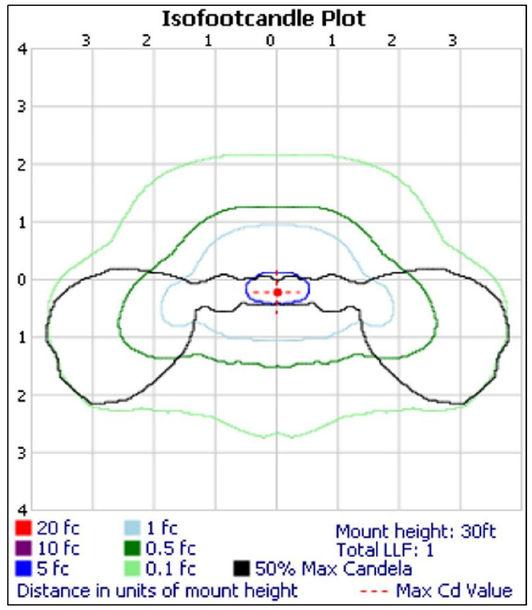

CONCRETE BASES

WHEN CONCRETE BASES ARE INSTALLED IN SLOPING GROUND, THE GREATEST EXPOSED HEIGHT TO KEEP ALL OF THE TOP ABOVE GROUND MUST BE DOUBLED AND THEN ADDED TO THE MINIMUM DEPTH FOR THE TOTAL BASE DEPTH.

CARE SHOULD BE TAKEN WHERE CONCRETE BASES, DRAINAGE STRUCTURES OR UTILITIES ARE CLOSE TOGETHER.

POLES, ANCHOR BASES AND ARM

ALL NEW STREET LIGHTS POLES AND LUMINAIRE ARMS SHOULD BE ALUMINUM IN ACCORDANCE WITH SUBSECTION 753.01(B).

ALL STREET LIGHT POLES SHALL HAVE A FRANGIBLE OR BREAKAWAY DEVICE (TRANSFORMER BASE, UNLESS NOTED ON THE PLANS.

LUMINAIRES

ALUMINUM, COBRA HEAD TYPE, 250 WATT HIGH PRESSURE SODIUM (HPS), TYPE X DISTRIBUTION, EQUIVALENT TO AMERICAN ELECTRIC LIGHTING CATALOG NO. 125 25S R3 FG HP.

LUMINAIRE SUBSTITUTIONS SHALL MEET THE ISOFOOTCANDLE DATA AND THE ILLUMINATION LEVELS AS SHOWN ON THIS PLAN.

PULLBOXES

POLYMER CONCRETE AND REINFORCED FIBERGLASS U.L. LISTED PULLBOXES SHALL BE INSTALLED WITH HEAVY DUTY COVERS.

CONDUIT SLEEVE

THE SLEEVE SHALL EXTEND TO WITHIN 600 MM OF THE SIDE OF A CONCRETE BASE OR PULLBOX. WHERE NO CONCRETE BASE OR PULLBOX IS PRESENT, THE SLEEVE SHALL EXTEND 1200 MM BEYOND THE OUTSIDE EDGE OF SHOULDER OR FACE OF CURB. BACKFILLING AROUND A SLEEVE SHALL BE IN ACCORDANCE WITH THE MANUFACTURER'S SPECIFICATIONS. THE SLEEVE SHALL BE SCHEDULE 80.

WIRE

ALL WIRING BETWEEN THE METER AND/OR POWER SOURCE AND THE FIRST POLE AND/OR PULLBOX AND BETWEEN POLES AND/OR PULLBOXES SHALL BE COPPER AND SIZE AS SPECIFIED ON THE PLANS. ALL WIRE SHALL HAVE TYPE XHHW INSULATION OR EQUIVALENT.

GROUNDING

ALL CONDUIT MUST INCLUDE A GROUNDING CONDUCTOR. RIGID STEEL CONDUIT SHALL BE PROPERLY CONNECTED AT THE JOINTS SO AS TO BE WATERTIGHT AND MAINTAIN ELECTRICAL CONTINUITY AND HAVE GROUNDING BUSHINGS SO AS TO ACT AS A GROUNDING CONDUCTOR. ALUMINUM WIRE SHALL NOT BE USED FOR GROUND WIRE.

GENERAL

THE LOAD ON EACH BRANCH OF A THREE WIRE CIRCUIT SHALL BE AS BALANCED AS POSSIBLE. LOAD TO NEUTRAL.

THE LAST CONCRETE POLE BASE AT THE END OF EACH CIRCUIT AND SOME PULLBOXES SHALL HAVE A CONDUIT SWEEP WITH CAP INSTALLED FOR FUTURE USE.

THE CONTRACTOR SHALL ACQUIRE ALL NECESSARY PERMITS AND MAKE ALL NECESSARY ARRANGEMENTS WITH THE BURLINGTON ELECTRIC DEPARTMENT TO PROVIDE A PERMANENT POWER SUPPLY TO THE STREET LIGHTING SYSTEM.

ALL CONNECTING HARDWARE (NUTS, BOLTS, ETC.) SHALL BE STAINLESS STEEL.

DETAIL FOR TAGS ATTACHED TO STREET LIGHT POLES

NOT TO SCALE

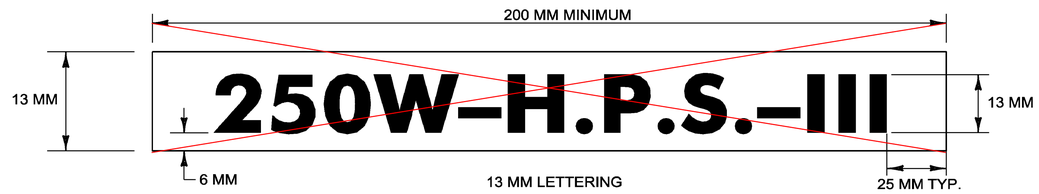

LEGEND: BLACK OR WHITE (NON-REFLECTIVE) - STAMPED PRIOR TO PRINTING/PAINTING.
BACKGROUND: NATURAL ALUMINUM OR FLAT BLACK SURFACE, THE SAME AS POLE FINISH.

NOTES:

1. THE TAG SHALL BE MOUNTED ON ALL STREET LIGHT POLES IN SUCH A MANNER AS NOT TO BE EASILY REMOVED, SUCH AS WELDED, RIVETED, OR BOLTED WITH VANDAL PROOF BOLTS.
2. THE LETTERS SHALL BE PUNCHED, STAMPED, ENGRAVED, OR PHOTO-ETCHED. PUNCHING, STAMPING OR ENGRAVING SHALL PENETRATE AT LEAST 1/2 THE BASE MATERIAL THICKNESS.
3. THE BASE MATERIAL FOR THE TAG SHALL BE ALUMINUM WITH A MINIMUM THICKNESS OF 2.5 MM.
4. THE TAG SHALL BE ATTACHED TO THE POLE ABOVE THE HANDHOLE, 150 MM MAXIMUM, IF THE POLE HAS A TRANSFORMER BASE, ATTACH TAG TO COVER.

PROJECT NAME: CAMBRIDGE
PROJECT NUMBER: STP 030-2(27)

FILE NAME: t78f163frm.dgn
PROJECT LEADER: JLS
DESIGNED BY: MBL
STREET LIGHTING DETAILS

PLOT DATE: 29-MAY-2012
DRAWN BY: MBL
CHECKED BY: JAD
SHEET 59A OF 214

VAOT Metric

N

VT STATE PLANE GRID

656.40-GROUND COVERS AND VINES
(VALIENT GRAPEVINE OR SUMMER GRAPEVINE)
STA. 10+025.542, 20.8, RT. (X3)
STA. 10+036.282, 16.7, RT. (X3)
STA. 10+050.887, 18.2, RT. (X3)
STA. 10+067.313, 19.8, RT. (X3)
STA. 10+081.027, 19.7, RT. (X3)

656.20-EVERGREEN TREES
(PICEA GLAUCA)(B&B)(1.5-2M HT.)
STA. 10+020.118, 20.5, RT.
STA. 10+030.147, 18.1, RT.
STA. 10+043.229, 18.1, RT.
STA. 10+059.844, 18.6, RT.
STA. 10+075.628, 19.4, RT.

656.25-EVERGREEN SHRUBS
(JUNIPERUS CHINENSIS SEA GREEN)
CENTRAL ISLAND

656.25-EVERGREEN SHRUBS
(JUNIPERUS CHINENSIS VIRIDIS SARGENT)
CENTRAL ISLAND

656.30-DECIDUOUS TREES
(SYRINGA RETICULATUM)
CENTRAL ISLAND

656.35-DECIDUOUS SHRUBS
(HYDRANGEA ARBORESCENS "ANNABELLE")
CENTRAL ISLAND

656.41-PERENNIALS
(NARCISSUS "KING ALFRED")
CENTRAL ISLAND

656.41-PERENNIALS
(HERMEROCALLIS STELLA D'ORO)
CENTRAL ISLAND

10+100
10+080
10+060
10+040
10+020
19+980

EVERGREEN TREE (TYP.)

GROUND COVERS
AND VINES (TYP.)

15 HERMEROCALLIS STELLA D'ORO &
50 NARCISSUS "KING ALFRED"
PER PLANTING BED.
1 GAL., 2 FANS; CONTAINER, 450MM O.C.
HEAVY, SPRING PLANTING (TYP.)

4 SYRINGA RETICULATA (TREE FORM)
45-50MM CALIPER; B&B, NO MIN. BRANCH HEIGHT
SPRING PLANTING (TYP.)

48 JUNIPERUS CHINENSIS VIRIDIS SARGENT
2'-0A. 300-450MM SPREAD; CONTAINER, 900MM O.C.
SPRING PLANTING (TYP.)

83 JUNIPERUS CHINENSIS SEA GREEN
600-800MM HEIGHT; CONTAINER, 900MM O.C.
SPRINGN PLANTING (TYP.)

36 HYDRANGEA ARBORESCENS "ANNABELLE"
900-1200MM HEIGHT; CONTAINER, 1500MM O.C.
SPRING PLANTING (TYP.)

CZ

20+040 20+060 20+080 20+100 20+120 20+140 20+160 20+180 20+200 20+220

NOTES:

1. EXACT PLACEMENT OF ALL PLANTING TO BE ADJUSTED IN THE FIELD WITH THE APPROVAL OF THE RESIDENT ENGINEER.
2. SEE SECTIONS 656 AND 755 FOR ADDITIONAL PLANTING INFORMATION.
3. WATER ALL PLANT MATERIAL THOROUGHLY AT TIME OF PLANTING AND DURING THE ONE YEAR WARRANTY PERIOD PER SUBSECTION 656.08(F).
4. SUBSITITUTIONS ARE NOT ALLOWED WITHOUT THE APPROVAL OF THE RESIDENT ENGINEER AND THE VTRANS LANDSCAPE ARCHITECT.
5. ALL PLANTING BEDS SHALL CONTAIN 2'-0" LANDSCAPE BACKFILL, MINIMUM.
6. DO NOT COMPACT NATIVE SOIL OUTSIDE CUT/FILL LIMITS. IF COMPACTED, REPLACE WITH LANDSCAPE BACKFILL UP TO ROW LIMITS.
7. PLANT SHRUBS IN OFFSET ROWS.
8. GROUND COVERS AND VINES SHALL BE PLANTED IN GROUPS OF THREE.

0 10 20 30
SCALE IN METERS

PROJECT NAME: CAMBRIDGE
PROJECT NUMBER: STP 030-2(27)

FILE NAME: t78f163lnd.dgn
PROJECT LEADER: JLS
DESIGNED BY: MBL
LANDSCAPING PLAN

PLOT DATE: 05-JUN-2012
DRAWN BY: MBL
CHECKED BY: JAD
SHEET 60 OF 214

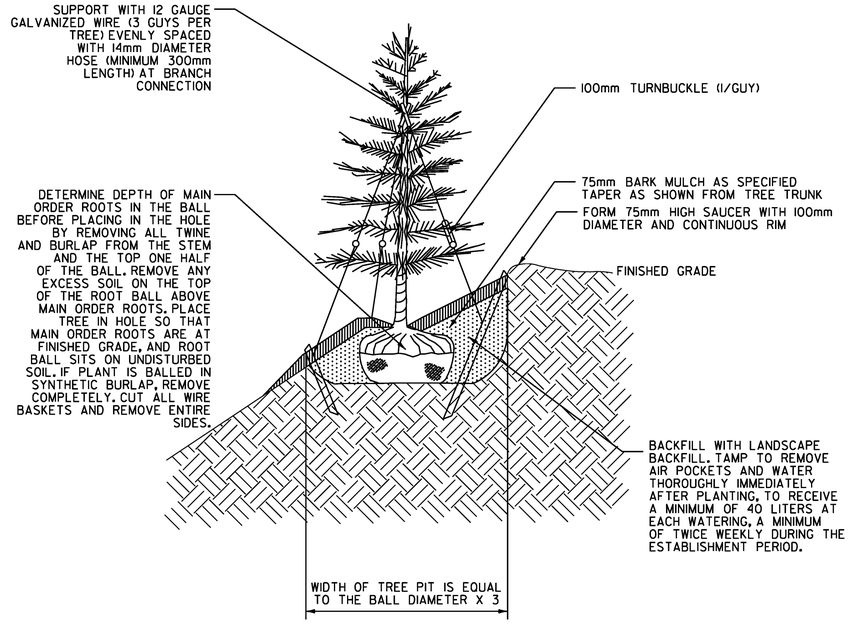

EVERGREEN TREE PLANTING DETAIL

NOT TO SCALE

EVERGREEN NOTES:

1. ANTI-DESICCANT SPRAY IS TO BE APPLIED TO ALL EVERGREENS PER MANUFACTURER SPECIFICATIONS.
2. COMPLETELY REMOVE ALL GUY WIRES AND TURNBUCKLES ONE YEAR AFTER PLANTING.

656.20-EVERGREEN TREES
(PICEA GLAUCA)(B&B)(1.5-2M HT.)

STA. 10+020.118, 20.5, RT.
STA. 10+030.147, 18.1, RT.
STA. 10+043.229, 18.1, RT.
STA. 10+059.844, 18.6, RT.
STA. 10+075.628, 19.4, RT.

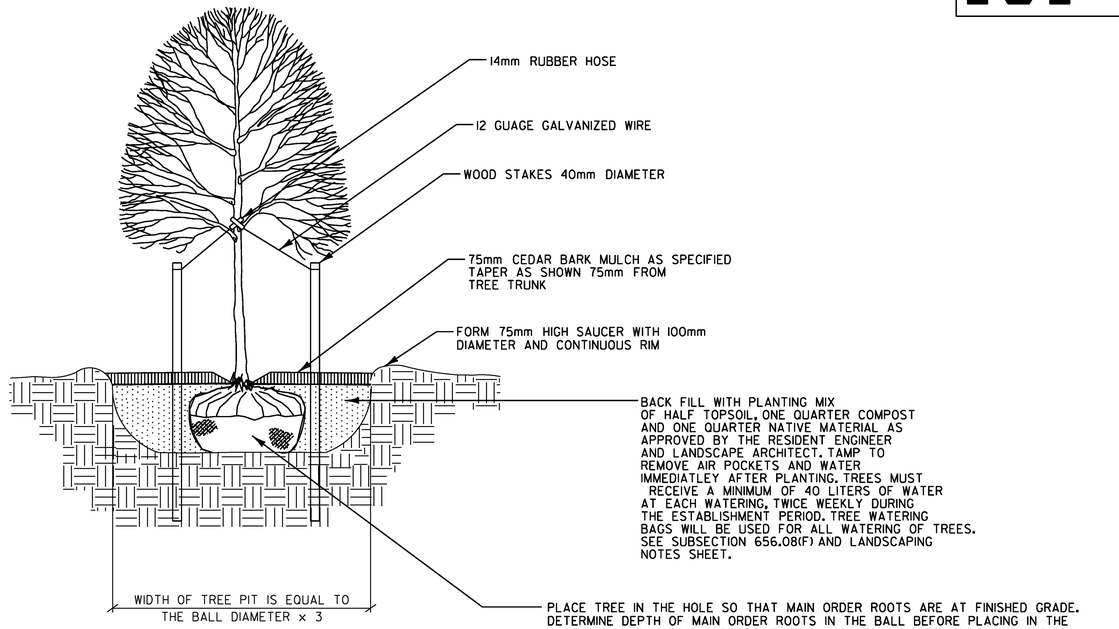

DECIDUOUS TREE PLANTING DETAIL

NOT TO SCALE

NOTES:

1. STAKE ONLY THOSE TREES PLANTED IN WINDY, EXPOSED LOCATION WHERE THEY MIGHT BE BLOWN OVER OR VANDALIZED AS DETERMINED BY RESIDENT ENGINEER OR LANDSCAPE ARCHITECT.
2. COMPLETELY REMOVE ALL GUY WIRES, RUBBER HOSE, AND STAKES ONE YEAR AFTER PLANTING.

656.30-DECIDUOUS TREES
(SYRINGA RETICULATUM)
CENTRAL ISLAND

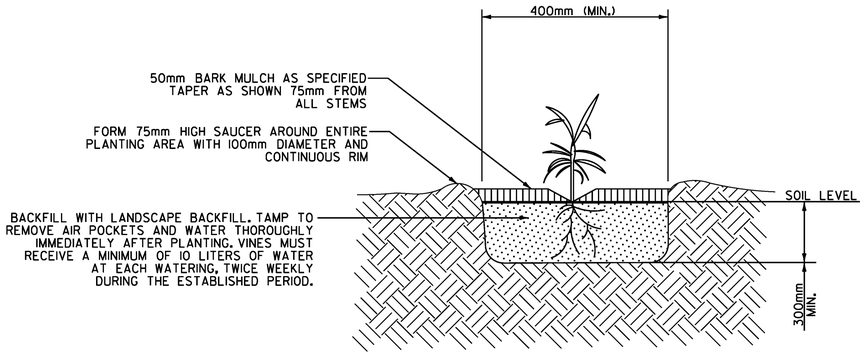

PERENNIAL & VINE PLANTING DETAIL

NOT TO SCALE

656.40-GROUND COVERS AND VINES
(VALIENT GRAPEVINE OR SUMMER GRAPEVINE)

STA. 10+025.542, 20.8, RT. (X3)
STA. 10+036.282, 16.7, RT. (X3)
STA. 10+050.887, 18.2, RT. (X3)
STA. 10+067.313, 19.8, RT. (X3)
STA. 10+081.027, 19.7, RT. (X3)

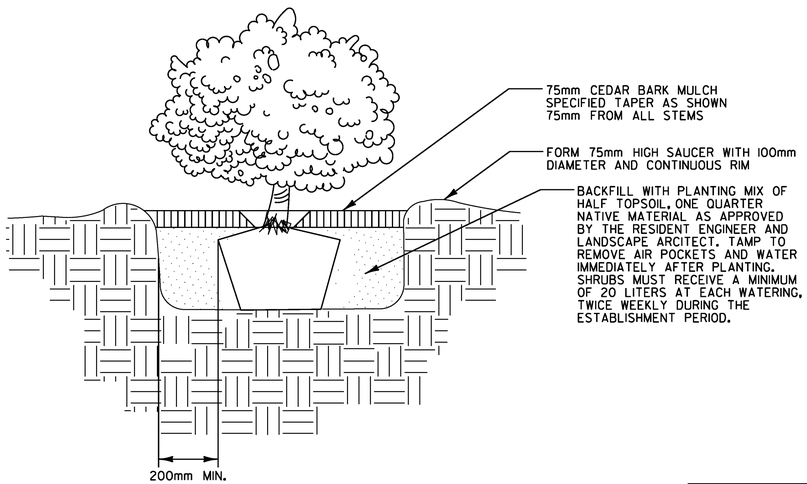

DECIDUOUS & EVERGREEN SHRUB PLANTING DETAIL

NOT TO SCALE

656.25-EVERGREEN SHRUBS
(JUNIPERUS CHINENSIS SEA GREEN)
CENTRAL ISLAND

656.25-EVERGREEN SHRUBS
(JUNIPERUS CHINENSIS VIRIDIS SARGENT)
CENTRAL ISLAND

656.35-DECIDUOUS SHRUBS
(HYDRANGEA ARBORESCENS "ANNABELLE")
CENTRAL ISLAND

PROJECT NAME:	CAMBRIDGE
PROJECT NUMBER:	STP 030-2(27)
FILE NAME: t78f163frm.dgn	PLOT DATE: 05-JUN-2012
PROJECT LEADER: JLS	DRAWN BY: MBL
DESIGNED BY: MBL	CHECKED BY: JAD
LANDSCAPING DETAILS	SHEET 61 OF 214

675.50-REMOVING SIGNS
AS SHOWN - 8

646.407-DURABLE 100 MM WHITE LINE, RECESSED TYPE I TAPE
STA. 19+960.692 - STA. 20+060.000, LT.
STA. 19+960.692 - STA. 20+060.000, RT.

646.417-DURABLE 100 MM YELLOW LINE, RECESSED TYPE I TAPE
STA. 19+960.692 - STA. 20+060.000, CL (DOUBLE)

NOTE:
TYPE I TAPE SHALL BE
STIMARK HIGH PERFORMANCE TAPE SERIES 3801
OR
ATM 400 EXTENDED GRADE TAPE
OR
DIRECTOR 60-HP.

VT STATE PLANE GRID

STA. 19+960.692
BEGIN APPROACH

STA. 20+002.182
END APPROACH
BEGIN PROJECT
STP 030-2(27)

STA. 19+980.000, LT.
SPEED LIMIT 40 (N)

STA. 19+982.720, LT.
SPEED LIMIT 40 (R)

STA. 20+020.000, LT.
WEST VERMONT 15 (N)

STA. 20+043.470, RT.
R JOHNSON
R MORRISVILLE 17
R BAKERSFIELD 10
R ENOSBURG FALLS 19

STA. 20+050.000, RT.
N, N, N, N
N 25 M.P.H.

STA. 19+983.590, RT.
R JCT
R VERMONT 108
R

APPROX. MM 4.980
R, R, R

STA. 19+990.00, RT. (GS-I)
N
EAST VERMONT 15
Johnson
NORTH VERMONT 108 Bakersfield
SOUTH VERMONT 108 Stowe
N, N

CZ

19+920 19+940 19+960 19+980 20+000 20+020 20+040 20+

MATCHLINE - STA. 20+060 - SEE SIGNING & PAVEMENT MARKING PLAN 2

LEGEND
R = REMOVE
N = NEW

0 10 20 30
SCALE IN METERS

PROJECT NAME: CAMBRIDGE	
PROJECT NUMBER: STP 030-2(27)	
FILE NAME: t78f163bdr.dgn	PLOT DATE: 13-JUN-2012
PROJECT LEADER: JLS	DRAWN BY: MBL
DESIGNED BY: MBL	CHECKED BY: JAD
SIGNING & PAVEMENT MARKING PLAN 1	SHEET 62 OF 214

VT ROUTE 108 STA. 10+082.794
END ROADWAY PROJECT
STP 030-2(27)
BEGIN BRIDGE PROJECT
BRF 027-1(4)

VAOT Metric

NOTE: TYPE ITAPE SHALL BE STAMARK HIGH PERFORMANCE TAPE SERIES 3801 OR ATM 400 EXTENDED GRADE TAPE OR DIRECTOR 60-HP.

675.50-REMOVING SIGNS AS SHOWN - ~~45~~ 42

646.457-DURABLE 200 MM YELLOW LINE, RECESSED TYPE ITAPE
STA. 20+087.038 - STA. 20+091.706, CL (DIAGONALS)
STA. 20+165.615 - STA. 20+174.805, CL (DIAGONALS)
STA. 9+970.000 - STA. 9+971.660, CL (DIAGONALS)
STA. 10+034.421 - STA. 10+045.407, CL (DIAGONALS)

646.407-DURABLE 100 MM WHITE LINE, RECESSED TYPE ITAPE
STA. 20+109.207, LT. - STA. 20+110.412, RT.
STA. 20+149.867, LT. - STA. 20+150.347, RT.
STA. 9+981.564, LT. - STA. 9+982.114, RT.
STA. 10+022.161, LT. - STA. 10+022.719, RT.
STA. 20+060.000 - STA. 20+082.669, LT.
STA. 20+060.000 - STA. 20+075.659, RT.
STA. 10+050.294 - STA. 10+082.794, LT.
STA. 10+050.294 - STA. 10+082.794, RT.

646.417-DURABLE 100 MM YELLOW LINE, RECESSED TYPE ITAPE
STA. 20+115.554 - STA. 20+144.176, LT. (TR. AP. EDGE)
STA. 20+115.554 - STA. 20+144.176, RT. (TR. AP. EDGE)
STA. 20+091.706, CL. - STA. 20+109.207, LT.
STA. 20+091.706, CL. - STA. 20+110.412, RT.
STA. 20+149.867, LT. - STA. 20+165.615, CL.
STA. 20+150.347, RT. - STA. 20+165.615, CL.
STA. 9+971.660, CL. - STA. 9+981.564, LT.
STA. 9+971.660, CL. - STA. 9+982.114, RT.
STA. 10+022.161, LT. - STA. 10+034.421, CL.
STA. 10+022.719, RT. - STA. 10+034.421, CL.
STA. 20+060.000 - STA. 20+091.706, CL (DOUBLE)
STA. 20+165.615 - STA. 20+200.000, CL (DOUBLE)
STA. 9+970.000 - STA. 9+971.660, CL (DOUBLE)
STA. 10+034.421 - STA. 10+082.794, CL (DOUBLE)

646.467-DURABLE 300 MM WHITE LINE, RECESSED TYPE ITAPE
STA. 20+110.412 - STA. 20+114.055, RT. (ENTRY DASHES)
STA. 20+149.867 - STA. 20+147.095, LT. (ENTRY DASHES)
STA. 9+982.114 - STA. 9+984.537, RT. (ENTRY DASHES)
STA. 10+022.161 - STA. 10+019.418, LT. (ENTRY DASHES)

646.491-DURABLE LETTER OR SYMBOL, TYPE ITAPE
STA. 20+110.412 - STA. 20+108.779, RT. (SHARK'S TEETH)
STA. 20+149.867 - STA. 20+152.040, LT. (SHARK'S TEETH)
STA. 9+982.114 - STA. 9+979.969, RT. (SHARK'S TEETH)
STA. 10+022.161 - STA. 10+024.295, LT. (SHARK'S TEETH)

N

VT STATE PLANE GRID

MATCHLINE - STA. 20+060 - SEE SIGNING & PAVEMENT AMRKING PLAN 1

SEE SHEET 148

STA. 10+076.630, LT.
R X3 EAST VERMONT 15 R
R X3 SOUTH VERMONT 108 R
R X3 WEST VERMONT 15 R

STA. 10+060.000, RT.
Bakersfield 10
Enosburg Falls 19
NORTH TO VERMONT 108 VERMONT 109

STA. 10+056.580, RT.
R, R, XING R

STA. 10+033.930, CL.

STA. 10+023.500, RT.
NORTH VERMONT 108

STA. 10+019.610, RT.
BAKERSFIELD 10 R
ENOSBURG FALLS 19 R
R NORTH TO VERMONT 108 VERMONT 109 R

STA. 10+031.070, LT.
STOP R

STA. 10+038.390, RT.
THROUGH WAY BEGINS HERE R
THROUGH WAY ENDS HERE R

STA. 10+023.140, LT.
STA. 10+025.560, LT.
YIELD N

STA. 20+135.910, LT.

STA. 20+123.560, LT.

STA. 20+150.840, LT.
STA. 20+153.210, LT.
YIELD N

STA. 20+161.970, LT.
R X3 SOUTH VERMONT 108 WEST VERMONT 15 NORTH VERMONT 108 R X3

STA. 20+165.130, CL.

STA. 20+180.000, RT.
EAST VERMONT 15 N

STA. 20+092.250, CL.

STA. 20+108.310, LT.
WEST VERMONT 15 N

STA. 20+174.290, RT.
EAST VERMONT 15 R

TRACTOR TRAILERS
WEST VERMONT 15

TRACTOR TRAILERS
EAST VERMONT 15

CZ

10+060, 10+080, 10+040, 10+020, 10+000

20+060, 20+080, 20+100, 20+120, 20+140, 20+160, 20+180, 20+

STA. 20+107.670, RT.
STA. 20+109.320, RT.
YIELD N

STA. 20+123.520, RT.

STA. 9+980.870, LT.
SOUTH VERMONT 108 N

STA. 9+972.020, CL.

STA. 20+104.930, RT.
R X3 NORTH VERMONT 108 EAST VERMONT 15 SOUTH VERMONT 108 R X3
R TO VERMONT 109 R

STA. 20+136.050, RT.
0150 0802 0513

STA. 20+151.290, R
EAST VERMONT 15 N

STA. 9+978.640, RT.
STA. 9+981.180, RT.
YIELD N

STA. 9+979.780, RT.
STOP R

MATCHLINE - SEE 9+970 - SEE SIGNING & PAVEMENT MARKING PLAN 4

MATCHLINE - STA. 20+200 - SEE SIGNING & PAVEMENT MARKING PLAN 3

LEGEND
R = REMOVE
N = NEW

0 10 20 30
SCALE IN METERS

PROJECT NAME:	CAMBRIDGE
PROJECT NUMBER:	STP 030-2(27)
FILE NAME: t78f163bdr.dgn	PLOT DATE: 13-JUN-2012
PROJECT LEADER: JLS	DRAWN BY: MBL
DESIGNED BY: MBL	CHECKED BY: JAD
SIGNING & PAVEMENT MARKING PLAN 2	SHEET 63 OF 214

VT ROUTE 108 STA. 10+082.794
END ROADWAY PROJECT
STP 030-2(27)
BEGIN BRIDGE PROJECT
BRF 027-1(4)

NOTE:
TYPE I TAPE SHALL BE
STAMARK HIGH PERFORMANCE TAPE SERIES 3801
OR
ATM 400 EXTENDED GRADE TAPE
OR
DIRECTOR 60-HP.

675.50-REMOVING SIGNS
AS SHOWN - 45

646.457-DURABLE 200 MM YELLOW LINE, RECESSED TYPE I TAPE
STA. 20+087.038 - STA. 20+091.706, CL (DIAGONALS)
STA. 20+165.615 - STA. 20+174.805, CL (DIAGONALS)
STA. 9+970.000 - STA. 9+971.660, CL (DIAGONALS)
STA. 10+034.421 - STA. 10+045.407, CL (DIAGONALS)

646.407-DURABLE 100 MM WHITE LINE, RECESSED TYPE I TAPE
STA. 20+109.207, LT. - STA. 20+110.412, RT.
STA. 20+149.867, LT. - STA. 20+150.347, RT.
STA. 9+981.564, LT. - STA. 9+982.114, RT.
STA. 10+022.161, LT. - STA. 10+022.719, RT.
STA. 20+060.000 - STA. 20+082.669, LT.
STA. 20+060.000 - STA. 20+075.659, RT.
STA. 10+050.294 - STA. 10+082.794, LT.
STA. 10+050.294 - STA. 10+082.794, RT.
⚠ STA. 20+165.183 - STA. 20+200.000, RT.
STA. 20+178.618 - STA. 20+200.000, LT.

646.417-DURABLE 100 MM YELLOW LINE, RECESSED TYPE I TAPE
STA. 20+115.554 - STA. 20+144.176, LT. (TR. AP. EDGE)
STA. 20+115.554 - STA. 20+144.176, RT. (TR. AP. EDGE)
STA. 20+091.706, CL. - STA. 20+109.207, LT.
STA. 20+091.706, CL. - STA. 20+110.412, RT.
STA. 20+149.867, LT. - STA. 20+165.615, CL.
STA. 20+150.347, RT. - STA. 20+165.615, CL.
STA. 9+971.660, CL. - STA. 9+981.564, LT.
STA. 9+971.660, CL. - STA. 9+982.114, RT.
STA. 10+022.161, LT. - STA. 10+034.421, CL.
STA. 10+022.719, RT. - STA. 10+034.421, CL.
STA. 20+060.000 - STA. 20+091.706, CL (DOUBLE)
STA. 20+165.615 - STA. 20+200.000, CL (DOUBLE)
STA. 9+970.000 - STA. 9+971.660, CL (DOUBLE)
STA. 10+034.421 - STA. 10+082.794, CL (DOUBLE)

646.467-DURABLE 300 MM WHITE LINE, RECESSED TYPE I TAPE
STA. 20+110.412 - STA. 20+114.055, RT. (ENTRY DASHES)
STA. 20+149.867 - STA. 20+147.095, LT. (ENTRY DASHES)
STA. 9+982.114 - STA. 9+984.537, RT. (ENTRY DASHES)
STA. 10+022.161 - STA. 10+019.418, LT. (ENTRY DASHES)

646.491-DURABLE LETTER OR SYMBOL, TYPE I TAPE
STA. 20+110.412 - STA. 20+108.779, RT. (SHARK'S TEETH)
STA. 20+149.867 - STA. 20+152.040, LT. (SHARK'S TEETH)
STA. 9+982.114 - STA. 9+979.969, RT. (SHARK'S TEETH)
STA. 10+022.161 - STA. 10+024.295, LT. (SHARK'S TEETH)

MATCHLINE - STA. 20+060 - SEE SIGNING & PAVEMENT AMRKING PLAN 1

MATCHLINE - STA. 20+200 - SEE SIGNING & PAVEMENT MARKING PLAN 3

MATCHLINE - SEE 9+970 - SEE SIGNING & PAVEMENT MARKING PLAN 4

SEE SHEET 148

VT STATE PLANE GRID

STA. 10+076.630, LT.
STA. 10+060.000, RT.
STA. 10+031.070, LT.
STA. 10+023.140, LT.
STA. 10+025.560, LT.
STA. 20+123.560, LT.
STA. 20+092.250, CL.
STA. 20+108.310, LT.
STA. 10+056.580, RT.
STA. 10+033.930, CL.
STA. 10+038.390, RT.
STA. 10+023.500, RT.
STA. 10+019.610, RT.
STA. 20+135.910, LT.
STA. 20+150.840, LT.
STA. 20+153.210, LT.
STA. 20+161.970, LT.
STA. 20+165.130, CL.
STA. 20+180.000, RT.
STA. 20+174.290, RT.
STA. 20+104.930, RT.
STA. 20+107.670, RT.
STA. 20+109.320, RT.
STA. 20+123.520, RT.
STA. 9+980.870, LT.
STA. 9+972.020, CL.
STA. 20+136.050, RT.
STA. 20+151.290, RT.
STA. 9+978.640, RT.
STA. 9+981.180, RT.
STA. 9+979.780, RT.

LEGEND
R = REMOVE
N = NEW

⚠ ADDED PAVEMENT MARKING NOTES

SCALE IN METERS 0 10 20 30

PROJECT NAME: CAMBRIDGE	
PROJECT NUMBER: STP 030-2(27)	
FILE NAME: t78fi63bdr.dgn	PLOT DATE: 12-AUG-2013
PROJECT LEADER: JLS	DRAWN BY: MBL
DESIGNED BY: MBL	CHECKED BY: JAD
SIGNING & PAVEMENT MARKING PLAN 2	SHEET 63 OF 214

646.407-DURABLE 100 MM WHITE LINE, RECESSED TYPE I TAPE

STA. 20+200.000 - STA. 20+303.192, LT.
STA. 20+200.000 - STA. 20+303.192, RT.

646.417-DURABLE 100 MM YELLOW LINE, RECESSED TYPE I TAPE

STA. 20+200.000 - STA. 20+303.192, CL (DOUBLE)

675.50-REMOVING SIGNS

AS SHOWN - 14

NOTE: TYPE I TAPE SHALL BE
STAMARK HIGH PERFORMANCE TAPE SERIES 3801
OR
ATM 400 EXTENDED GRADE TAPE
OR
DIRECTOR 60-HP.

N

VT STATE PLANE GRID

MATCHLINE - STA. 20+200 - SEE SIGNING & PAVEMENT MARKING PLAN 2

STA. 20+261.702
END PROJECT
STP 030-2(27)
BEGIN APPROACH

STA. 20+303.192
END APPROACH

STA. 20+210.000, LT.

N, N, N, N, N, 25 M.P.H.

STA. 20+221.840, LT.

CAMBRIDGE 3 R
JEFFERSONVILLE R
SMUGGLER'S NOTCH SKI AREA 7 R
BAKERSFIELD 10 R
JCT VERMONT 108 R
TO VERMONT 109 R
R, R, R

STA 20+280.990, LT.

R, R, R

STA. 20+280.000, LT. (GS-2)

WEST VERMONT 15
Cambridge
SOUTH VERMONT 108 Stowe
NORTH VERMONT 108 Bakersfield
N, N, N, N

VT ROUTE 15

200, 20+220, 20+240, 20+260, 20+280, 20+300, 20+320, 20+323

CZ

AERIAL E&T

STA. 20+219.720, RT.

SPEED LIMIT 40
R, R

STA. 20+200.000, RT.

SPEED LIMIT 40
N, N

STA. 20+249.00

0150
0802
0520
N, N

STA. 20+265.800, RT.

JOHNSON 9 R
MORRISVILLE 17 R
R, R

STA. 20+260.000, RT.

Johnson 9 N
Morrisville 17 N
N, N

LEGEND

R = REMOVE
N = NEW

0, 10, 20, 30

SCALE IN METERS

PROJECT NAME: CAMBRIDGE
PROJECT NUMBER: STP 030-2(27)

FILE NAME: t78f163bdr.dgn
PROJECT LEADER: JLS
DESIGNED BY: MBL
SIGNING & PAVEMENT MARKING PLAN 3

PLOT DATE: 13-JUN-2012
DRAWN BY: MBL
CHECKED BY: JAD
SHEET 64 OF 214

VAOT Metric

VT STATE PLANE GRID

STA. 9+910.905
END APPROACH
BEGIN PROJECT
STP 030-2(27)

646.407-DURABLE 100 MM WHITE LINE, RECESSED TYPE ITAPE
STA. 9+869.415 - STA. 9+947.915, LT.
STA. 9+869.415 - STA. 9+952.399, RT.

646.417-DURABLE 100 MM YELLOW LINE, RECESSED TYPE ITAPE
STA. 9+869.415 - STA. 9+970.000, CL (DOUBLE)

646.457-DURABLE 200 MM YELLOW LINE, RECESSED TYPE ITAPE
STA. 9+964.839 - STA. 9+970.000, CL (DIAGONALS)

NOTE: TYPE ITAPE SHALL BE
STAMARK HIGH PERFORMANCE TAPE SERIES 380I
OR
ATM 400 EXTENDED GRADE TAPE
OR
DIRECTOR 60-HP.

675.50-REMOVING SIGNS
AS SHOWN - ~~27~~ 25

STA. 9+901.910, LT.
B-B
R THROUGH WAY BEGINS HERE R
R THROUGH WAY ENDS HERE R
SPEED LIMIT 25

STA. 9+924.350, LT.
N Smuggler's Notch SKI AREA 7 N
N Stowe 18 N

STA. 9+924.350, LT.
R SMUGGLER'S NOTCH SKI AREA 7 R
R STOWE 18 R

STA. 9+959.230, LT.
N SOUTH VERMONT 108 N

STA. 9+959.230, LT.
R SOUTH VERMONT 108 R

STA. 9+901.910, LT.
N SPEED LIMIT 25 N

STA. 9+869.415
END APPROACH

9+833
9+840
9+860
VT ROUTE 108
9+880
9+900
9+920
9+940
9+960
CZ
CZ
CZ

MATCHLINE - STA. 9+970 - SEE SIGNING & PAVEMENT MARKING PLAN 2

STA. 9+867.140, RT.
JCT VERMONT 15 R

STA. 9+868.291, RT.
N N N N 25 M.P.H.

STA. 9+911.380, RT.
BAKERSFIELD 10 R
ENOSBURG FALLS 19 R
CAMBRIDGE 3 R
ESSEX JCT. 22 R
JOHNSON 9 R
MORRISVILLE 17 R

ADDITIONAL TREE TRIMMING IN THIS LOCATION REQUIRED FOR SIGNS.

STA. 9+900.00 RT.
1080
0802
0900
N

STA. 9+911.400, RT. (GS-3)
NORTH VERMONT 108 Bakersfield
WEST VERMONT 15 Cambridge
EAST VERMONT 15 Johnson
N N N

STA. 9+952.570, RT.
R TO VERMONT 109 R
R X3 EAST VERMONT 15
R X3 NORTH VERMONT 108
R X3 WEST VERMONT 15
R R

LEGEND
R = REMOVE
N = NEW

0 10 20 30
SCALE IN METERS

PROJECT NAME: CAMBRIDGE
PROJECT NUMBER: STP 030-2(27)

FILE NAME: t78f163bdr.dgn
PROJECT LEADER: JLS
DESIGNED BY: MBL
SIGNING & PAVEMENT MARKING PLAN 4

PLOT DATE: 13-JUN-2012
DRAWN BY: MBL
CHECKED BY: JAD
SHEET 65 OF 214

STATE OF VERMONT
AGENCY OF TRANSPORTATION

TRAFFIC SIGN SUMMARY SHEET

VAOT Metric

KILOMETER MARKER, STATION, OR SIGN NUMBER	SIGN LEGEND	SIGN DIMENSIONS EA	WIDTH (mm)	HEIGHT (mm)	NEW & SALVAGED SIGNS "A"	"B"	SALV SIGN	SALV TIS	EXIST POST RETAIN	EXIST POST SALVAGE	NEW SIGN POSTS NO. OF POSTS	FLANGED CHANNEL kg/m 1.7	3.0	4.5	SQUARE STEEL (mm) kg/m 44 2.8	50 3.6	63 5.0	ANCHOR	SLEEVE	TUBULAR ALUMINUM Ø (mm) kg/m 75 1.9	100 2.5	100 MOD 2.5	TUBULAR STEEL Ø (mm) FOUNDATION	kg/m 75 11.3	89 13.4	100 16.1	125 21.7	W-SHAPE STEEL FTG. SIZE 24"	30"	WEIGHT	POST SIZE	SIGN FRAME REQUIRED	REMARKS	SIGN DETAIL DETAIL ON SHEET NUMBER	STD. SHEET NUMBER
											OPTION ITEMS																									
STA. 19+980.000, LT.	SPEED LIMIT 40		600	750	0.46 ~~0.45~~	SOFT CONVERSION (TYPE)					1					X																	R2-1		SHS
STA. 19+990.000, RT.	EAST 15 Johnson NORTH 108 SOUTH 108 Bakersfield Stowe		3810	2972		11.32					2												2				X						71	
STA. 20+020.000, LT.	WEST VERMONT 15		600 600	300 600	.19 ~~.18~~ .37 ~~.36~~						1					X																M3-4 (GREEN ON WHITE) MI-6A		SHS E-136B
STA. 20+050.000, RT.	 25 MPH		900 900 450	900 900 450	.84 ~~.81~~ .84 ~~.81~~ .21 ~~.20~~						2					X																W3-2 W2-6 WI3-1		SHS SHS SHS
STA. 20+092.250, CL	 		600 450	750 450	.46 ~~.45~~ .21 ~~.20~~						1					X																R4-7 OMI-1		SHS SHS
STA. 20+107.670, RT.	YIELD		900	900	.84 ~~.81~~						1					X																RI-2		SHS
STA. 20+108.310, LT.	WEST VERMONT 15		600 600 525	300 600 375	.19 ~~.18~~ .37 ~~.36~~ .20						1					X																M3-4 (GREEN ON WHITE) MI-6A M6-2		SHS E-136B SHS
STA. 20+109.320, RT.	YIELD		900	900	.84 ~~.81~~						1					X																RI-2		SHS
					m²	m²	EA.	m²				m	m	m	m	m 36.6	m		EA	kg	kg	kg	EA.	kg	kg	kg	kg 198.4	EA.	EA.	kg					
TOTALS					m² ~~6.02~~ ~~5.82~~	m² 11.32	EA.	m²				m			m 36.6					kg			EA. 2	kg 198.4				EA.	EA.	kg					

SHS = MUTCD STANDARD HIGHWAY SIGNS

FINAL POST LENGTHS ARE TO BE DETERMINED IN THE FIELD. POST SIZES ARE COMPUTED BASED ON INFORMATION FURNISHED ON THE STANDARD SHEETS AND THE VTRANS "SIGN POST DESIGN GUIDELINE."

PROJECT NAME: CAMBRIDGE
PROJECT NUMBER: STP 030-2(27)

FILE NAME: t78f163frm.dgn
PROJECT LEADER: JLS
DESIGNED BY: MBL
TRAFFIC SIGN SUMMARY SHEET 1

PLOT DATE: 05-JUN-2012
DRAWN BY: MBL
CHECKED BY: JAD
SHEET 66 OF 214

STATE OF VERMONT
AGENCY OF TRANSPORTATION

TRAFFIC SIGN SUMMARY SHEET

VAOT Metric

KILOMETER MARKER, STATION, OR SIGN NUMBER	SIGN LEGEND	SIGN DIMENSIONS EA	WIDTH (mm)	HEIGHT (mm)	NEW & SALVAGED SIGNS "A"	"B"	SALV SIGN	SALV TIS	EXIST POST RETAIN	EXIST POST SALVAGE	NEW SIGN POSTS NO. OF POSTS	FLANGED CHANNEL kg/m 1.7	3.0	4.5	SQUARE STEEL (mm) kg/m 44 2.8	50 3.6	63 5.0	ANCHOR	SLEEVE	TUBULAR ALUMINUM Ø (mm) kg/m 75 1.9	100 2.5	100 MOD 2.5	FOUNDATION	TUBULAR STEEL Ø (mm) kg/m 75 11.3	89 13.4	100 16.1	125 21.7	W-SHAPE STEEL FTG. SIZE 24"	30"	WEIGHT	POST SIZE	SIGN FRAME REQUIRED	REMARKS	SIGN DETAIL DETAIL ON SHEET NUMBER	STD. SHEET NUMBER
											OPTION ITEMS																										
STA. 20+123.520, RT.			1500	600	.93 ~~.90~~						2					X																		R6-4b 1.2 M MOUNTING HEIGHT		SHS
STA. 20+123.560, LT.			1500	600	.93 ~~.90~~						2					X																		R6-4b 1.2 M MOUNTING HEIGHT		SHS
STA. 20+135.910, LT.			1500	600	.93 ~~.90~~						2					X																		R6-4b 1.2 M MOUNTING HEIGHT		SHS
STA. 20+136.050, RT.			1500	600	.93 ~~.90~~						2					X																		R6-4b 1.2 M MOUNTING HEIGHT		SHS
	0150 0802 0513		150	250	.04																														E-138
STA. 20+150.840, LT.	YIELD		900	900	.84 ~~.81~~						1					X																		RI-2		SHS
STA. 20+151.290, RT.	EAST VERMONT 15		600 600 525	300 600 375	.19 ~~.18~~ .37 ~~.36~~ .20						1					X																		M3-2 (GREEN ON WHITE) MI-6A M6-2		SHS E-136B SHS
STA. 20+153.210, LT.	YIELD		900	900	.81 ~~.81~~						1					X																		RI-2		SHS
STA. 20+165.130. CL.			600 450	750 450	.46 ~~.45~~ .21 ~~.20~~						1					X																		R4-7 OMI-1		SHS SHS
STA. 20+180.00, RT.	EAST VERMONT 15		600 600	300 600	.19 ~~.18~~ .37 ~~.36~~						1					X																		M3-2 (GREEN ON WHITE) MI-6A		SHS E-136B
STA. 20+249.00 LT.	0150 0802 0520		150	250	.04						1					X																				E-138
TOTALS					m² 7.43 ~~7.23~~	m²	EA.	m²				m	m	m	m	m 59.4	m		EA	kg	kg	kg		kg	kg	kg	kg	EA.	EA.	kg					

SHS = MUTCD STANDARD HIGHWAY SIGNS

FINAL POST LENGTHS ARE TO BE DETERMINED IN THE FIELD. POST SIZES ARE COMPUTED BASED ON INFORMATION FURNISHED ON THE STANDARD SHEETS AND THE VTRANS "SIGN POST DESIGN GUIDELINE."

PROJECT NAME: CAMBRIDGE
PROJECT NUMBER: STP 030-2(27)

FILE NAME: t78f163frm.dgn
PROJECT LEADER: JLS
DESIGNED BY: MBL
TRAFFIC SIGN SUMMARY SHEET 2

PLOT DATE: 05-JUN-2012
DRAWN BY: MBL
CHECKED BY: JAD
SHEET 67 OF 214

STATE OF VERMONT
AGENCY OF TRANSPORTATION

TRAFFIC SIGN SUMMARY SHEET

VAOT Metric

KILOMETER MARKER, STATION, OR SIGN NUMBER	SIGN LEGEND	SIGN DIMENSIONS EA	WIDTH (mm)	HEIGHT (mm)	NEW & SALVAGED SIGNS "A"	"B"	SALV SIGN	SALV TIS	EXIST POST RETAIN	EXIST POST SALVAGE	NEW SIGN POSTS NO. OF POSTS	FLANGED CHANNEL kg/m 1.7	3.0	4.5	SQUARE STEEL (mm) kg/m 44 2.8	50 3.6	63 5.0	ANCHOR	SLEEVE	TUBULAR ALUMINUM Ø (mm) kg/m 75 1.9	100 2.5	100 MOD 2.5	TUBULAR STEEL Ø (mm) FOUNDATION	kg/m 75 11.3	89 13.4	100 16.1	125 21.7	W-SHAPE STEEL FTG. SIZE 24"	30"	WEIGHT	POST SIZE	SIGN FRAME REQUIRED	REMARKS	SIGN DETAIL DETAIL ON SHEET NUMBER	STD. SHEET NUMBER
											OPTION ITEMS																									
STA. 20+210.000, LT.			900	900	.84 ~~.81~~						2					X																W3-2		SHS
			900	900	.84 ~~.81~~																										W2-6		SHS
			450	450	.21 ~~.20~~																										W13-1		SHS
STA. 20+200.000, RT.			600	750	.46 ~~.45~~						1					X																R2-1		SHS
STA. 20+260.000, RT.	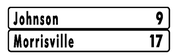		1800	300	.56 ~~.54~~						2					X																	71	
			1800	300	.56 ~~.54~~																														
STA. 20+280.000, LT.	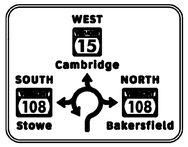		3810	2972		11.32					2												2				X							
STA. 9+911.400, RT.	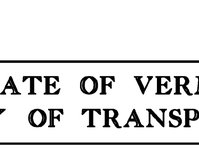		3810	2972		11.32					2												2				X						71	
STA. 9+868.291, RT.			900	900	.84 ~~.81~~						2					X																W3-2		SHS
			900	900	.84 ~~.81~~																										W2-6		SHS
			450	450	.21 ~~.20~~																										W13-1		SHS
STA. 9+900.00 RT.			150	250	.04						1					X																		E-138
STA. 9+901.910 RT.			600	750	.46 ~~.45~~						1					X																R2-1		SHS
STA. 9+924.350 LT.	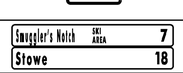		1800	300	.56 ~~.54~~						2					X																	71	
			1800	300	.56 ~~.54~~																														
												m	m	m	m	m 45.7	m		EA	kg	kg	kg		kg	kg	kg	kg 396.8						
TOTALS					m² ~~6.98~~ 6.74	m² 22.64	EA.	m²				m			m	45.7				kg			EA. 4	kg			396.8	EA.	EA.	kg			

SHS = MUTCD STANDARD HIGHWAY SIGNS

FINAL POST LENGTHS ARE TO BE DETERMINED IN THE FIELD. POST SIZES ARE COMPUTED BASED ON INFORMATION FURNISHED ON THE STANDARD SHEETS AND THE VTRANS "SIGN POST DESIGN GUIDELINE."

PROJECT NAME: CAMBRIDGE
PROJECT NUMBER: STP 030-2(27)

FILE NAME: t78f163frm.dgn
PROJECT LEADER: JLS
DESIGNED BY: MBL
TRAFFIC SIGN SUMMARY SHEET 3

PLOT DATE: 05-JUN-2012
DRAWN BY: MBL
CHECKED BY: JAD
SHEET 68 OF 214

STATE OF VERMONT
AGENCY OF TRANSPORTATION

TRAFFIC SIGN SUMMARY SHEET

VAOT Metric

KILOMETER MARKER, STATION, OR SIGN NUMBER	SIGN LEGEND	SIGN DIMENSIONS EA	WIDTH (mm)	HEIGHT (mm)	NEW & SALVAGED SIGNS "A"	"B"	SALV SIGN	SALV TIS	EXIST POST RETAIN	EXIST POST SALVAGE	NEW SIGN POSTS NO. OF POSTS	FLANGED CHANNEL kg/m 1.7	3.0	4.5	SQUARE STEEL (mm) kg/m 44 2.8	50 3.6	63 5.0	ANCHOR	SLEEVE	TUBULAR ALUMINUM Ø (mm) kg/m 75 1.9	100 2.5	100 MOD 2.5	FOUNDATION	TUBULAR STEEL Ø (mm) kg/m 75 11.3	89 13.4	100 16.1	125 21.7	W-SHAPE STEEL FTG. SIZE 24"	30"	WEIGHT	POST SIZE	SIGN FRAME REQUIRED	REMARKS	SIGN DETAIL DETAIL ON SHEET NUMBER	STD. SHEET NUMBER
												OPTION ITEMS																									
STA. 9+959.230, LT.	SOUTH VERMONT 108		600	300	.19 ~~.18~~						1					X																	M3-3		SHS
			750	600	.46 ~~.45~~																												MI-6B		E-136B
STA. 9+972.020, CL			600	750	.46 ~~.45~~						1					X																	R4-7		SHS
			450	450	.21 ~~.20~~																												OMI-1		SHS
STA. 9+978.640, RT.	YIELD		900	900	.84 ~~.81~~						1					X																	RI-2		SHS
STA. 9+980.870, LT.	SOUTH VERMONT 108		600	300	.19 ~~.18~~						1					X																	M3-3		SHS
			750	600	.46 ~~.45~~																												MI-6B		E-136B
			525	375	.20																												M6-2		SHS
STA. 9+981.180, RT.	YIELD		900	900	.84 ~~.81~~						1					X																	RI-2		SHS
STA. 10+023.140, LT.	YIELD		900	900	.84 ~~.81~~						1					X																	RI-2		SHS
STA. 10+023.500, RT.	NORTH VERMONT 108		600	300	.19 ~~.18~~						1					X																	M3-1		SHS
			750	600	.46 ~~.45~~																												MI-6B		E-136B
			525	375	.20																												M6-2		SHS
STA. 10+025.560, LT.	YIELD		900	900	.84 ~~.81~~						1					X																	RI-2		SHS
STA. 10+033.930, CL.			600	750	.46 ~~.45~~						1					X																	R4-7		SHS
			450	450	.20																												OMI-1		SHS
												m	m	m	m	m 41.1	m		EA	kg	kg	kg		kg	kg	kg	kg								
TOTALS					m² ~~6.83~~ 7.04	m²	EA.	m²				m			m 41.1					kg			EA.	kg				EA.	EA.	kg					

SHS = MUTCD STANDARD HIGHWAY SIGNS

FINAL POST LENGTHS ARE TO BE DETERMINED IN THE FIELD. POST SIZES ARE COMPUTED BASED ON INFORMATION FURNISHED ON THE STANDARD SHEETS AND THE VTRANS "SIGN POST DESIGN GUIDELINE."

PROJECT NAME: CAMBRIDGE
PROJECT NUMBER: STP 030-2(27)

FILE NAME: t78f163frm.dgn
PROJECT LEADER: JLS
DESIGNED BY: MBL
TRAFFIC SIGN SUMMARY SHEET 4

PLOT DATE: 05-JUN-2012
DRAWN BY: MBL
CHECKED BY: JAD
SHEET 69 OF 214

STATE OF VERMONT
AGENCY OF TRANSPORTATION

TRAFFIC SIGN SUMMARY SHEET

VAOT Metric

KILOMETER MARKER, STATION, OR SIGN NUMBER	SIGN LEGEND	SIGN DIMENSIONS EA	WIDTH (mm)	HEIGHT (mm)	NEW & SALVAGED SIGNS "A"	"B"	SALV SIGN	SALV TIS	EXIST POST RETAIN	EXIST POST SALVAGE	NEW SIGN POSTS NO. OF POSTS	FLANGED CHANNEL kg/m 1.7	3.0	4.5	SQUARE STEEL (mm) kg/m 44 2.8	50 3.6	63 5.0	ANCHOR	SLEEVE	TUBULAR ALUMINUM Ø (mm) kg/m 75 1.9	100 2.5	100 MOD 2.5	FOUNDATION	TUBULAR STEEL Ø (mm) kg/m 75 11.3	89 13.4	100 16.1	125 21.7	W-SHAPE STEEL FTG. SIZE 24"	30"	WEIGHT	POST SIZE	SIGN FRAME REQUIRED	REMARKS	SIGN DETAIL DETAIL ON SHEET NUMBER	STD. SHEET NUMBER
											OPTION ITEMS																										
STA. 10+060.000, RT.	Bakersfield 10 / Enosburg Falls 19 / NORTH TO VERMONT 108 VERMONT 109		1800	300	.56 ~~.54~~						2				2.8	3.6																	X		71	E-123
			1800	300	.56 ~~.54~~																															E-123
			600 600	300 300	.19 ~~.18~~	.19 ~~.18~~										X																		M3-1 M4-5		SHS
			750 750	600 600	.46 ~~.45~~	.46 ~~.45~~																												MI-6B MI-6B		E-136B
	TOTALS				2.42 ~~2.34~~											9.1																				
STA. 10+105.000, LT.	SOUTH 108 Stowe EAST 15 WEST 15 Johnson Cambridge																																	SEE CAMBRIDGE BRF 027-1(4) PROJECT FOR SIGN INFORMATION		
STA. 10+165.000, LT.	25 M.P.H.																																	SEE CAMBRIDGE BRF 027-1(4) PROJECT FOR SIGN INFORMATION		
TOTAL TSS SHEET 1					5.82	11.32										36.6							2				198.4								
TOTAL TSS SHEET 2					7.23											59.4																			
TOTAL TSS SHEET 3					6.74	22.64										45.7							4				396.8								
TOTAL TSS SHEET 4					6.83											41.1																			
TOTAL TSS SHEET 5					2.34											9.1																			
											m	m	m	m	m 191.9	m	EA	kg	kg	kg			kg	kg	kg	kg									
TOTALS					m² ~~29.89~~ ~~28.96~~	m² 33.96	EA.	m²			m			m 191.9				kg			EA. 6		kg 595.2				EA.	EA.	kg						

SHS = MUTCD STANDARD HIGHWAY SIGNS

FINAL POST LENGTHS ARE TO BE DETERMINED IN THE FIELD. POST SIZES ARE COMPUTED BASED ON INFORMATION FURNISHED ON THE STANDARD SHEETS AND THE VTRANS "SIGN POST DESIGN GUIDELINE."

PROJECT NAME: CAMBRIDGE
PROJECT NUMBER: STP 030-2(27)

FILE NAME: t78f163frm.dgn
PROJECT LEADER: JLS
DESIGNED BY: MBL
TRAFFIC SIGN SUMMARY SHEET 5

PLOT DATE: 05-JUN-2012
DRAWN BY: MBL
CHECKED BY: JAD
SHEET 70 OF 214

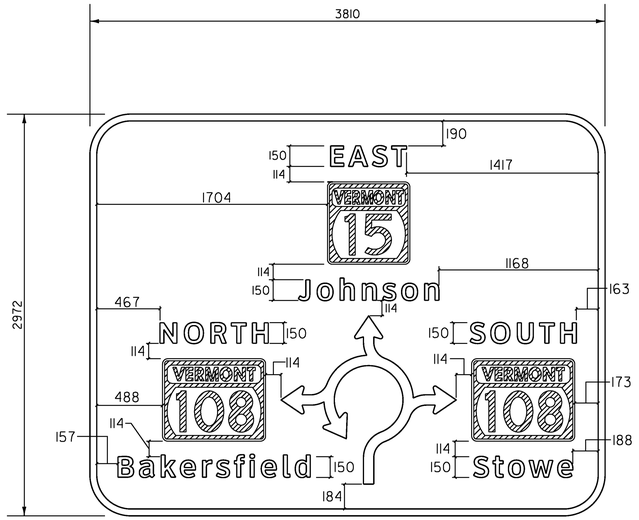

SIGN NUMBER	GS-1
WIDTH x HEIGHT	3810 x 2972 (150" x 117") (12.5' x 9.75')
BORDER WIDTH	50 (2")
CORNER RADIUS	300 (12")
BACKGROUND	TYPE: RETROREFLECTIVE
	COLOR: GREEN
LEGEND/BORDER	TYPE: REFLECTIVE
	TYPE: WHITE
	SERIES: CLEARVIEW HWY 5W

SYMBOL	X••	Y••	WID•	HT•
MI-6(15)	2062	2165	600	600
MI-6(108A)	919	857	750	600
MI-6(108B)	3205	857	750	600
RDA-AR-ALL	2062	857	1295	1245

•DIMENSIONS IN MILLIMETERS
••XY COORDINATES 0,0 IS AT BOTTOM-LEFT



MI-6(15) MI-6(108A) & MI-6(108B)

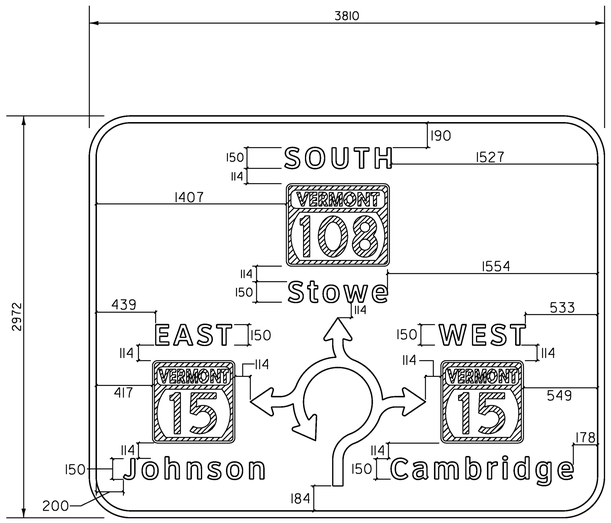

SIGN NUMBER	GS-4
WIDTH x HEIGHT	3810 x 2972 (150" x 117") (12.5' x 9.75')
BORDER WIDTH	50 (2")
CORNER RADIUS	300 (12")
BACKGROUND	TYPE: RETROREFLECTIVE
	COLOR: GREEN
LEGEND/BORDER	TYPE: REFLECTIVE
	TYPE: WHITE
	SERIES: CLEARVIEW HWY 5W

SYMBOL	X••	Y••	WID•	HT•
MI-6(15A)	772	857	600	600
MI-6(15B)	2906	857	600	600
MI-6(108)	1839	2165	750	600
RDA-AR-ALL	1839	857	1295	1245

•DIMENSIONS IN MILLIMETERS
••XY COORDINATES 0,0 IS AT BOTTOM-LEFT



MI-6(15A) & MI-6(15B) MI-6(108)

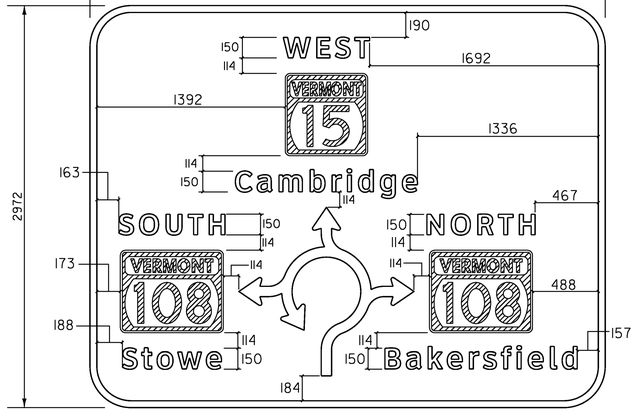

SIGN NUMBER	GS-2
WIDTH x HEIGHT	3810 x 2972 (150" x 117") (12.5' x 9.75')
BORDER WIDTH	50 (2")
CORNER RADIUS	300 (12")
BACKGROUND	TYPE: RETROREFLECTIVE
	COLOR: GREEN
LEGEND/BORDER	TYPE: REFLECTIVE
	TYPE: WHITE
	SERIES: CLEARVIEW HWY 5W

SYMBOL	X••	Y••	WID•	HT•
MI-6(15)	1748	2165	600	600
MI-6(108A)	605	857	750	600
MI-6(108B)	2891	857	750	600
RDA-AR-ALL	1748	857	1295	1245

•DIMENSIONS IN MILLIMETERS
••XY COORDINATES 0,0 IS AT BOTTOM-LEFT



MI-6(15) MI-6(108A) & MI-6(108B)

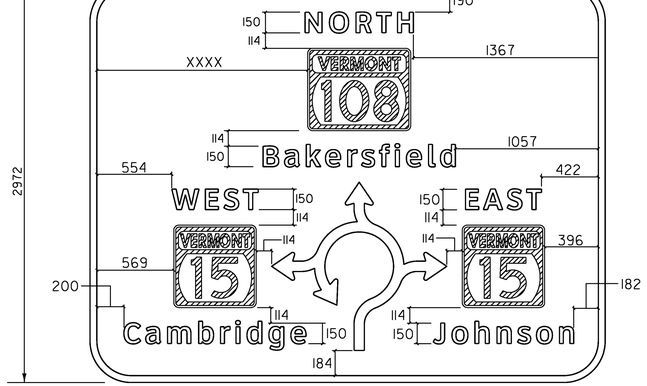

SIGN NUMBER	GS-3
WIDTH x HEIGHT	3810 x 2972 (150" x 117") (12.5' x 9.75')
BORDER WIDTH	50 (2")
CORNER RADIUS	300 (12")
BACKGROUND	TYPE: RETROREFLECTIVE
	COLOR: GREEN
LEGEND/BORDER	TYPE: REFLECTIVE
	TYPE: WHITE
	SERIES: CLEARVIEW HWY 5W

SYMBOL	X••	Y••	WID•	HT•
MI-6(15A)	925	857	600	600
MI-6(15B)	3058	857	600	600
MI-6(108)	1991	2165	750	600
RDA-AR-ALL	1991	857	1295	1245

•DIMENSIONS IN MILLIMETERS
••XY COORDINATES 0,0 IS AT BOTTOM-LEFT



MI-6(15A) & MI-6(15B) MI-6(108)

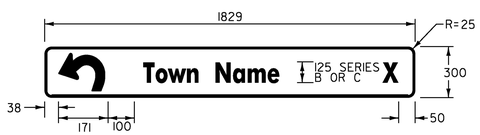

ROUNDABOUT DESTINATION BOARD

SEE STANDARD E-123 FOR APPLICATION, MATERIALS, COLORS, LETTERING, SPECIFICATIONS AND TEXT DESIGN

NOTES:

1. SEE STD. E-136B FOR DETAILS FOR STATE ROUTE MARKER FOR GUIDE SIGN USE (INTERSTATE TYPICAL): VT 15
2. SEE STD. E-136B FOR DETAILS FOR STATE ROUTE MARKER FOR GUIDE SIGN USE (INTERSTATE TYPICAL): VT 108
3. SEE THIS SHEET FOR DETAIL OF ROUNDABOUT SYMBOL.
4. THE CARDINAL DIRECTION AND TOWN NAME LETTERS SHALL BE WHITE AND CLEARVIEW HWY. 5W SERIES.
5. REFER TO THE "STANDARD HIGHWAY SIGNS AND MARKINGS", 2010 EDITION, FOR STANDARD ARROW HEAD DIMENSIONS BASED ON THE LINE WIDTH SPECIFIED.

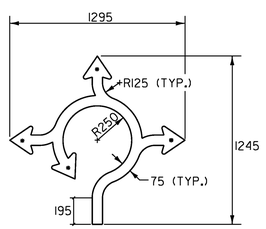

•SEE NOTE 5.

ROUNDABOUT ARROW FOR GUIDE SIGNS RDA-AR-ALL

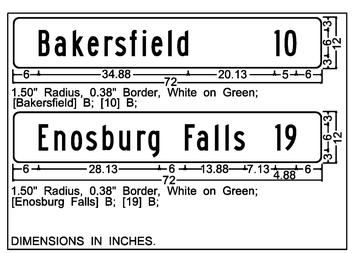

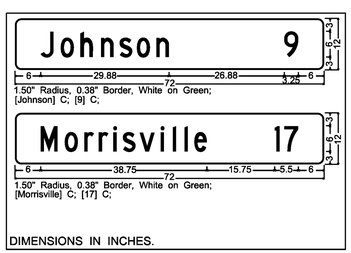

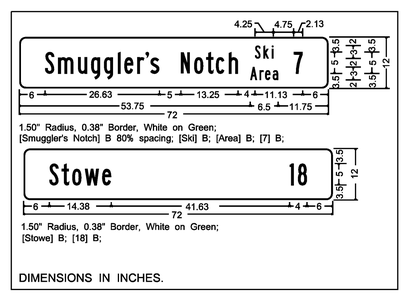

PROJECT NAME:	CAMBRIDGE
PROJECT NUMBER:	STP 030-2(27)

FILE NAME: t78f163frm.dgn	PLOT DATE: 05-JUN-2012
PROJECT LEADER: JLS	DRAWN BY: MBL
DESIGNED BY: MBL	CHECKED BY: JAD
SIGN DETAILS SHEET	SHEET 71 OF 214

VAOT Metric

TRAFFIC CONTROL GENERAL NOTES:

1. THE TRAFFIC CONTROL PHASE I PLAN IS SUGGESTED FOR CONSTRUCTION PURPOSES. THE CONTRACTOR SHALL HAVE THE OPTION OF SUBMITTING A SEPARATE TRAFFIC CONTROL PLAN TO THE ENGINEER FOR REVIEW AND APPROVAL.
2. REFER TO E-SERIES VERMONT STATE STANDARD DRAWINGS AND THE LATEST EDITION OF THE M.U.T.C.D. FOR DETAILED INFORMATION REGARDING CHANNELIZATION DEVICES, TAPER LENGTHS, BARRICADES, DETOURS, LONGITUDINAL DROP-OFFS AND MISCELLANEOUS TRAFFIC CONTROL DETAILS, IF APPLICABLE.
3. EXISTING SIGNS SHALL BE COVERED OR REMOVED WHEN THEY CONFLICT WITH CONSTRUCTION TRAFFIC OPERATIONS.
4. THE POSTED SPEED LIMIT FOR ALL PHASES OF WORK SHALL BE 30 M.P.H.
5. THE CONTRACTOR SHALL MAINTAIN ACCES TO ALL DRIVEWAYS DURING CONSTRUCTION.
6. FURNISHING, INSTALLING, MAINTENANCE OF, RELOCATING AND REMOVING REFLECTORIZED DRUMS AND CONSTRUCTION SIGNING FOR TRAFFIC SHIFTS SHALL BE PAID FOR UNDER CONTRACT ITEM 641.10 - TRAFFIC CONTROL.
7. FURNISHING AND PERFORMING ORIGINAL INSTALLATION AND FINAL REMOVAL FROM THE PROJECT OF TEMPORARY TRAFFIC BARRIER WILL BE PAID FOR UNDER CONTRACT ITEM 621.90 - TEMPORARY TRAFFIC BARRIER. PAYMENT FOR INTERMITTENT REMOVING AND RESETTING OF TEMPORARY TRAFFIC BARRIER TO ACCOMODATE PHASED CONSTRUCTION, AS ALLOWED UNDER SUBSECTION 621.14, WILL BE MADE UNDER CONTRACT ITEM 621.95 - REMOVE AND RESET TEMPORARY TRAFFIC BARRIER.
8. TEMPORARY SUBBASE AND SURFACE COURSE MATERIALS NOT INCORPORATED INTO THE COMPLETE AND ACCEPTED WORK WILL BE PAID FOR UNDER THE APPROPRIATE SECTION 900 (TEMPORARY ROADWAY WIDENING) PAY ITEM.
9. THE CONTRACTOR SHALL PROVIDE A MINIMUM OF FOUR (4) PORTABLE CHANGEABLE MESSAGE SIGNS FOR THE DURATION OF THE PROJECT. THE LOCATION AND MESSAGE CONTENT SHALL BE DETERMINED IN THE FIELD BY THE ENGINEER.

POTENTIAL CONSTRUCTION ACTIVITIES ASSOCIATED WITH TRAFFIC CONTROL, PHASE I

1. PRIOR TO THE COMMENCEMENT OF ANY WORK OR THE PLACEMENT OF EQUIPMENT ON THE ROADWAY, THE CONTRACTOR SHALL PROVIDE ADVANCED WARNING SIGNAGE IN ACCORDANCE WITH THE CONSTRUCTION SIGNING APPROACH PLAN AND THE LATEST EDITION OF THE M.U.T.C.D.
2. INSTALL AND MAINTAIN EROSION PREVENTION AND SEDIMENT CONTROL (EPSC) MEASURES IN ACCORDANCE WITH THE EPSC PLANS AND DETAILS.
3. REMOVE/COVER THE EXISTING FLASHING BEACON. IF REMOVED, THE CONTRACTOR SHALL REINSTALL THE FLASHING BEACON PRIOR TO WINTER SHUTDOWN. WORK PAID FOR UNDER CONTRACT ITEM 641.10 - TRAFFIC CONTROL.
4. OPEN CUT AND REMOVE CULVERTS AT STA. 20+152 AND STA. 9+958.
5. OPEN CUTS ASSOCIATED WITH THE REMOVAL OF CULVERTS SHALL BE PAVED OVER PRIOR TO WINTER SHUTDOWN. WORK PAID FOR UNDER CONTRACT ITEM 406.25 - BITUMINOUS CONCRETE PAVEMENT.
6. CONSTRUCT FILL AREAS FOR TEMPORARY ROADWAYS AS DETAILED IN THE PLAN. REMOVE THESE TEMPORARY FILL AREAS IN PHASE I. TEMPORARY SUBBASE AND SURFACE COURSE MATERIALS FOR ROADWAY WIDENING DETAILED ON THIS SHEET WILL BE PAID FOR UNDER CONTRACT ITEM 900.645 - SPECIAL PROVISION (TEMPORARY ROADWAY WIDENING)(PHASE I).
7. CONSTRUCT VT ROUTE 15 WEST TEMPORARY ROADWAY AS DETAILED IN THE PLAN.
8. CONSTRUCT VT ROUTE 108 SOUTH TEMPORARY ROADWAY AS DETAILED IN THE PLAN.
9. CONSTRUCT TO FINAL GRADE SOUTHERN INTERSECTION AREA AS DETAILED IN THE PLAN.
10. INSTALLATION OF TEMPORARY PAVEMENT MARKINGS ON THE GRAVEL WORKING SURFACE WILL BE ALLOWED AND PAID FOR UNDER CONTRACT ITEM 641.10 - TRAFFIC CONTROL. ALL OTHER TRAFFIC CONTROL DEVICES SHALL REMAIN IN PLACE AS PER ACCEPTED TRAFFIC CONTROL PLAN.

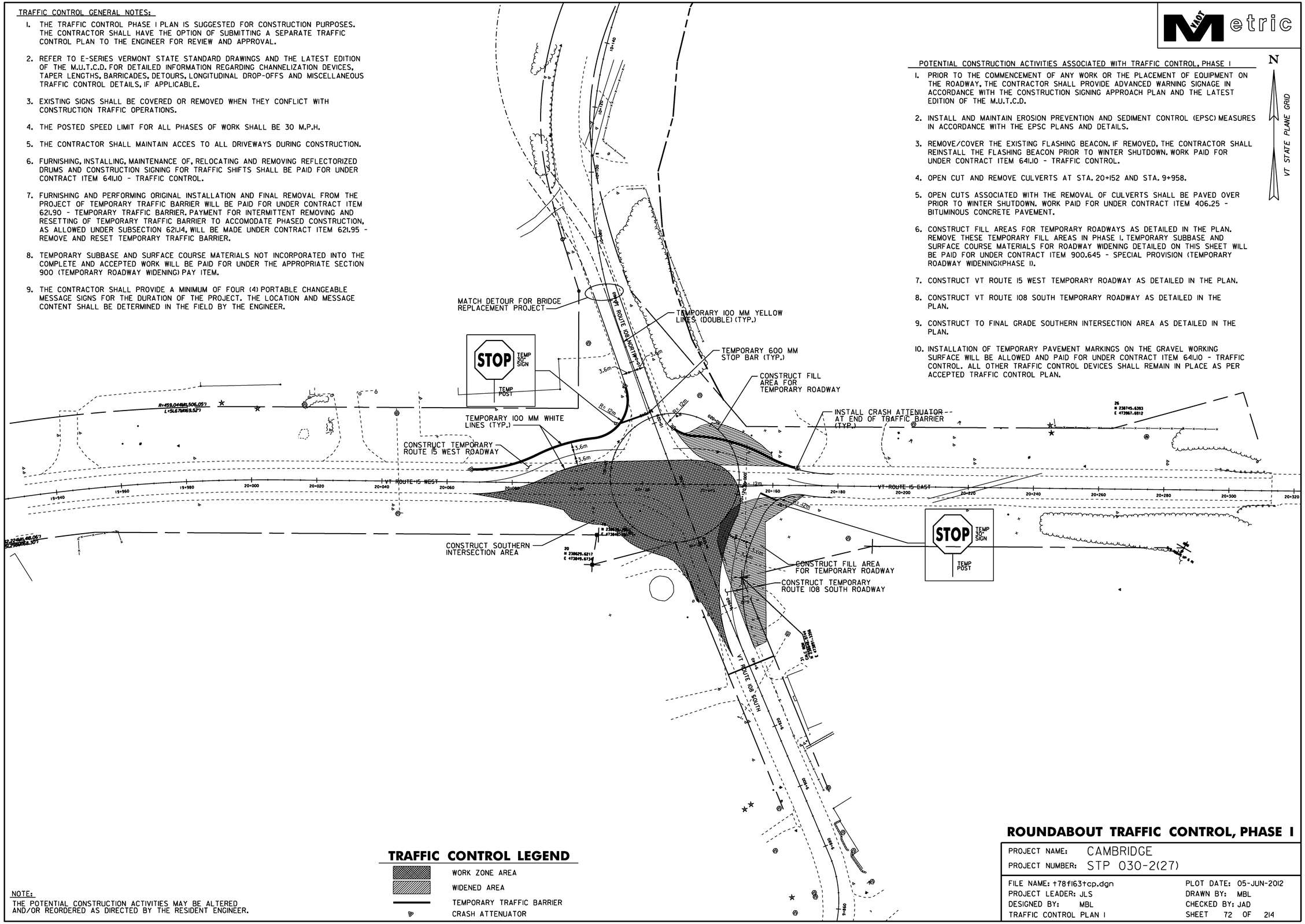

TRAFFIC CONTROL LEGEND

- WORK ZONE AREA
- WIDENED AREA
- TEMPORARY TRAFFIC BARRIER
- CRASH ATTENUATOR

NOTE:
THE POTENTIAL CONSTRUCTION ACTIVITIES MAY BE ALTERED AND/OR REORDERED AS DIRECTED BY THE RESIDENT ENGINEER.

ROUNDABOUT TRAFFIC CONTROL, PHASE I

PROJECT NAME:	CAMBRIDGE
PROJECT NUMBER:	STP 030-2(27)

FILE NAME: t78f163tcp.dgn	PLOT DATE: 05-JUN-2012
PROJECT LEADER: JLS	DRAWN BY: MBL
DESIGNED BY: MBL	CHECKED BY: JAD
TRAFFIC CONTROL PLAN I	SHEET 72 OF 214

TRAFFIC CONTROL GENERAL NOTES:

1. THE TRAFFIC CONTROL PHASE II PLAN IS SUGGESTED FOR CONSTRUCTION PURPOSES. THE CONTRACTOR SHALL HAVE THE OPTION OF SUBMITTING A SEPARATE TRAFFIC CONTROL PLAN TO THE RESIDENT ENGINEER FOR REVIEW AND APPROVAL.

2. SEE SHEET 72 FOR ADDITIONAL GENERAL NOTES

POTENTIAL CONSTRUCTION ACTIVITIES ASSOCIATED WITH TRAFFIC CONTROL, PHASE II

1. PRIOR TO THE COMMENCEMENT OF ANY WORK OR THE PLACEMENT OF EQUIPMENT ON THE ROADWAY, THE CONTRACTOR SHALL PROVIDE ADVANCED WARNING SIGNAGE IN ACCORDANCE WITH THE CONSTRUCTION SIGNING APPROACH PLAN AND THE LATEST EDITION OF THE M.U.T.C.D.

2. INSTALL AND MAINTAIN EROSION PREVENTION AND SEDIMENT CONTROL (EPSC) MEASURES IN ACCORDANCE WITH THE EPSC PLANS AND DETAILS.

3. SHIFT TRAFFIC FROM TEMPORARY ROADWAYS TO THEIR RESPECTIVE ORIGINAL ALIGNMENTS.

4. CONSTRUCT VT ROUTE 15 EAST ROADWAY AS DETAILED IN THE PLAN.

5. DURING THIS PHASE, IN WORK ZONE AREAS WHERE TRAFFIC WILL BE PRESENT, THE CONTRACTOR MAY TEMPORARILY REDUCE THE TRAVEL WAY TO ONE (1) 3.6m LANE DURING CONSTRUCTION AND BE UNDER FLAGGER'S CONTROL AT ALL TIMES TO ALLOW FOR COMPLETION OF WORK. ALL TRAVEL WAYS SHALL BE RESTORED TO TWO-WAY TRAFFIC PRIOR TO THE END OF CONSTRUCTION DAY.

6. INSTALLATION OF TEMPORARY PAVEMENT MARKINGS ON THE GRAVEL WORKING SURFACE WILL BE ALLOWED AND PAID FOR UNDER CONTRACT ITEM 641.10 - TRAFFIC CONTROL. ALL OTHER TRAFFIC CONTROL DEVICES SHALL REMAIN IN PLACE AS PER ACCEPTED TRAFFIC CONTROL PLAN.

N

VT STATE PLANE GRID

STOP TEMP 30" SIGN

TEMP POST

MAINTAIN DRIVE ACCESS AT ALL TIMES

CONSTRUCT ROUTE 15 EAST ROADWAY

VT ROUTE 15 WEST

VT ROUTE 108 NORTH

VT ROUTE 108 SOUTH

NOTE:
THE POTENTIAL CONSTRUCTION ACTIVITIES MAY BE ALTERED AND/OR REORDERED AS DIRECTED BY THE RESIDENT ENGINEER.

TRAFFIC CONTROL LEGEND

WORK ZONE AREA

ROUNDABOUT TRAFFIC CONTROL, PHASE II

PROJECT NAME:	CAMBRIDGE
PROJECT NUMBER:	STP 030-2(27)

FILE NAME: t78f163tcp.dgn	PLOT DATE: 05-JUN-2012
PROJECT LEADER: JLS	DRAWN BY: MBL
DESIGNED BY: MBL	CHECKED BY: JAD
TRAFFIC CONTROL PLAN 2	SHEET 73 OF 214

TRAFFIC CONTROL GENERAL NOTES:

1. THE TRAFFIC CONTROL PHASE III PLAN IS SUGGESTED FOR CONSTRUCTION PURPOSES. THE CONTRACTOR SHALL HAVE THE OPTION OF SUBMITTING A SEPARATE TRAFFIC CONTROL PLAN TO THE RESIDENT ENGINEER FOR REVIEW AND APPROVAL.

2. SEE SHEET 72 FOR ADDITIONAL GENERAL NOTES

VAOT Metric

POTENTIAL CONSTRUCTION ACTIVITIES ASSOCIATED WITH TRAFFIC CONTROL, PHASE III

1. PRIOR TO THE COMMENCEMENT OF ANY WORK OR THE PLACEMENT OF EQUIPMENT ON THE ROADWAY, THE CONTRACTOR SHALL PROVIDE ADVANCED WARNING SIGNAGE IN ACCORDANCE WITH THE CONSTRUCTION SIGNING APPROACH PLAN AND THE LATEST EDITION OF THE M.U.T.C.D.
2. INSTALL AND MAINTAIN EROSION PREVENTION AND SEDIMENT CONTROL (EPSC) MEASURES IN ACCORDANCE WITH THE EPSC PLANS AND DETAILS.
3. CONSTRUCT TEMPORARY VT ROUTE 108 NORTH ROADWAY.
4. REMOVE TEMPORARY ROADWAY WIDENING AREAS FROM PHASE I. THIS REMOVAL SHALL BE PAID FOR UNDER CONTRACT ITEM 900.645 - SPECIAL PROVISION (TEMPORARY ROADWAY WIDENING)(PHASE I).
5. CONSTRUCT PROPOSED VT ROUTE 108 NORTH ROADWAY AND STORMWATER CHANNEL AS DETAILED IN THE PLAN.
6. INSTALLATION OF TEMPORARY PAVEMENT MARKINGS ON THE GRAVEL WORKING SURFACE WILL BE ALLOWED AND PAID FOR UNDER CONTRACT ITEM 641.10 - TRAFFIC CONTROL. ALL OTHER TRAFFIC CONTROL DEVICES SHALL REMAIN IN PLACE AS PER ACCEPTED TRAFFIC CONTROL PLAN.
7. THE CONTRACTOR SHALL CONTACT THE OPERATOR OF THE BUSINESS AT LEAST TWO WEEKS IN ADVANCE OF CLOSING OFF AND CONSTRUCTING THE TEMPORARY ROADWAY FOR ROUTE 108 NORTH.

N

VT STATE PLANE GRID

MATCH DETOUR FOR BRIDGE REPLACEMENT PROJECT

TEMPORARY 100 MM YELLOW LINES (DOUBLE)

TEMPORARY 100 MM WHITE LINES

CONSTRUCT TEMPORARY ROUTE 108 NORTH ROADWAY

CONSTRUCT PROPOSED ROUTE 108 NORTH ROADWAY AND STORMWATER TREATEMENT GRASS CHANNEL

VT ROUTE 108 NORTH

VT ROUTE 108 SOUTH

VT ROUTE 15 WEST

VT ROUTE 15 EAST

STOP TEMP 30" SIGN TEMP POST

STOP TEMP 30" SIGN TEMP POST

19 N 230638.2881 E 473846.3807

20 N 230629.6217 E 473849.6734

26 N 238745.6393 E 473867.5812

R=459.044ML506.05'
L=5.67ML169.52'

TRAFFIC CONTROL LEGEND

- WORK ZONE AREA
- TEMPORARY TRAFFIC BARRIER
- CRASH ATTENUATOR

NOTE:
THE POTENTIAL CONSTRUCTION ACTIVITIES MAY BE ALTERED AND/OR REORDERED AS DIRECTED BY THE RESIDENT ENGINEER.

ROUNDABOUT TRAFFIC CONTROL, PHASE III

PROJECT NAME:	CAMBRIDGE
PROJECT NUMBER:	STP 030-2(27)

FILE NAME: t78f163tcp.dgn	PLOT DATE: 05-JUN-2012
PROJECT LEADER: JLS	DRAWN BY: MBL
DESIGNED BY: MBL	CHECKED BY: JAD
TRAFFIC CONTROL PLAN 3	SHEET 74 OF 214

TRAFFIC CONTROL GENERAL NOTES:

1. THE TRAFFIC CONTROL PHASE IV PLAN IS SUGGESTED FOR CONSTRUCTION PURPOSES. THE CONTRACTOR SHALL HAVE THE OPTION OF SUBMITTING A SEPARATE TRAFFIC CONTROL PLAN TO THE RESIDENT ENGINEER FOR REVIEW AND APPROVAL.

2. SEE SHEET 72 FOR ADDITIONAL GENERAL NOTES

VAOT Metric

POTENTIAL CONSTRUCTION ACTIVITIES ASSOCIATED WITH TRAFFIC CONTROL, PHASE IV

1. PRIOR TO THE COMMENCEMENT OF ANY WORK OR THE PLACEMENT OF EQUIPMENT ON THE ROADWAY, THE CONTRACTOR SHALL PROVIDE ADVANCED WARNING SIGNAGE IN ACCORDANCE WITH THE CONSTRUCTION SIGNING APPROACH PLAN AND THE LATEST EDITION OF THE M.U.T.C.D.

2. INSTALL AND MAINTAIN EROSION PREVENTION AND SEDIMENT CONTROL (EPSC) MEASURES IN ACCORDANCE WITH THE EPSC PLANS AND DETAILS.

3. COMPLETE CONSTRUCTION OF VT ROUTE 15 WEST AND VT ROUTE 108 SOUTH AND NORTH APPROACHES AS DETAILED ON THE PLAN.

4. CONSTRUCT NORTHERN HALF OF ROUNDABOUT AND CONCRETE TRUCK APRON.

5. DURING THIS PHASE, IN WORK ZONE AREAS WHERE TRAFFIC IS PRESENT, THE CONTRACTOR MAY TEMPORARILY REDUCE THE TRAVEL WAY TO ONE (1) 3.6m LANE DURING CONSTRUCTION AND BE UNDER FLAGGER'S CONTROL AT ALL TIMES TO ALLOW FOR COMPLETION OF WORK. ALL TRAVEL WAYS SHALL BE RESTORED TO TWO-WAY TRAFFIC PRIOR TO THE END OF THE CONSTRUCTION DAY.

6. INSTALLATION OF TEMPORARY PAVEMENT MARKINGS ON THE GRAVEL WORKING SURFACE WILL BE ALLOWED AND PAID FOR UNDER CONTRACT ITEM 641.10 - TRAFFIC CONTROL. ALL OTHER TRAFFIC CONTROL DEVICES SHALL REMAIN IN PLACE AS PER ACCEPTED TRAFFIC CONTROL PLAN.

N

VT STATE PLANE GRID

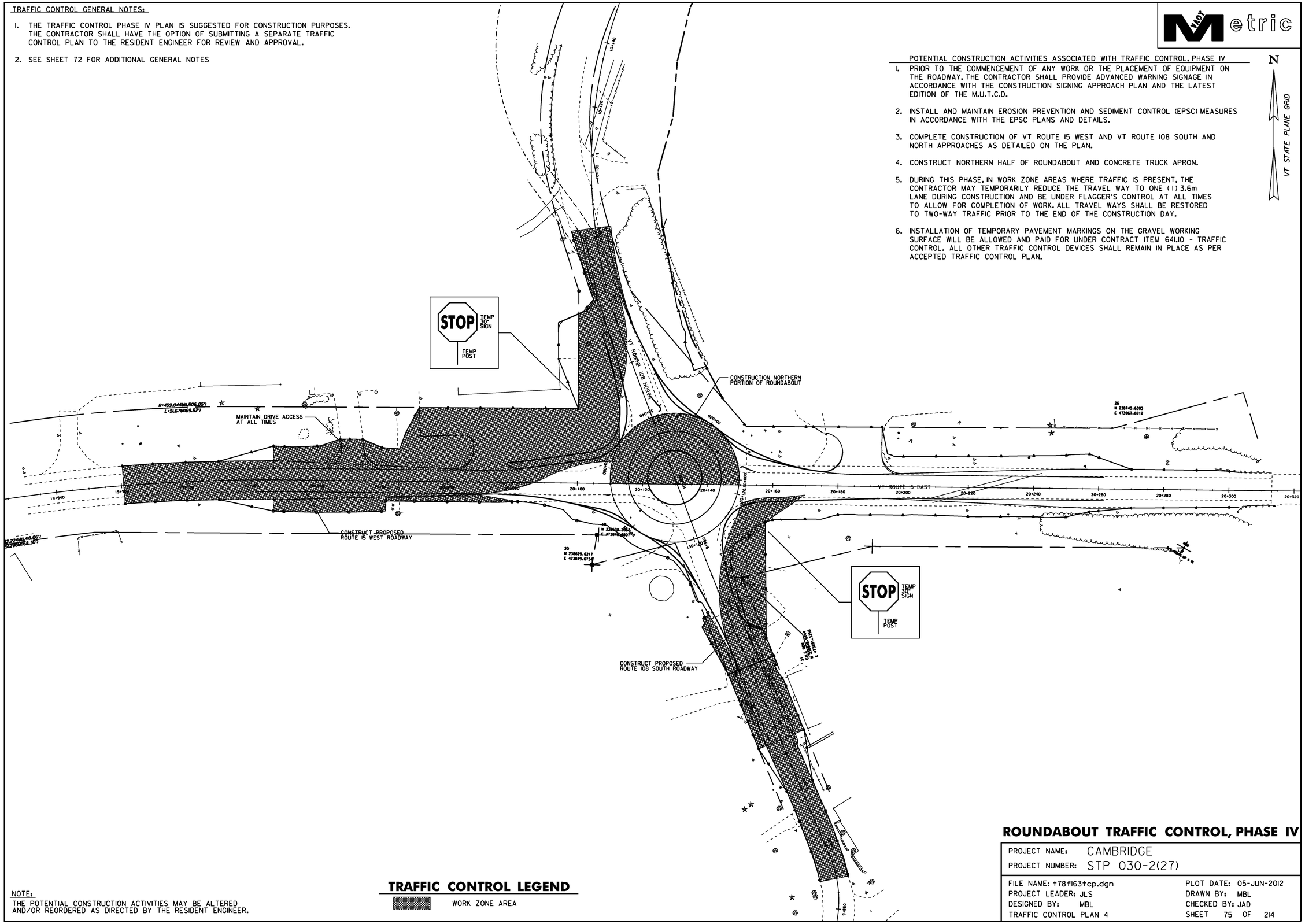

NOTE:
THE POTENTIAL CONSTRUCTION ACTIVITIES MAY BE ALTERED AND/OR REORDERED AS DIRECTED BY THE RESIDENT ENGINEER.

TRAFFIC CONTROL LEGEND

WORK ZONE AREA

ROUNDABOUT TRAFFIC CONTROL, PHASE IV

PROJECT NAME:	CAMBRIDGE
PROJECT NUMBER:	STP 030-2(27)

FILE NAME: t78f163tcp.dgn	PLOT DATE: 05-JUN-2012
PROJECT LEADER: JLS	DRAWN BY: MBL
DESIGNED BY: MBL	CHECKED BY: JAD
TRAFFIC CONTROL PLAN 4	SHEET 75 OF 214

TRAFFIC CONTROL GENERAL NOTES:

1. THE TRAFFIC CONTROL PHASE V PLAN IS SUGGESTED FOR CONSTRUCTION PURPOSES. THE CONTRACTOR SHALL HAVE THE OPTION OF SUBMITTING A SEPARATE TRAFFIC CONTROL PLAN TO THE RESIDENT ENGINEER FOR REVIEW AND APPROVAL.

2. SEE SHEET 72 FOR ADDITIONAL GENERAL NOTES.

POTENTIAL CONSTRUCTION ACTIVITIES ASSOCIATED WITH TRAFFIC CONTROL, PHASE V

1. PRIOR TO THE COMMENCEMENT OF ANY WORK OR THE PLACEMENT OF EQUIPMENT ON THE ROADWAY, THE CONTRACTOR SHALL PROVIDE ADVANCED WARNING SIGNAGE IN ACCORDANCE WITH THE CONSTRUCTION SIGNING APPROACH PLAN AND THE LATEST EDITION OF THE M.U.T.C.D.
2. INSTALL AND MAINTAIN EROSION PREVENTION AND SEDIMENT CONTROL (EPSC) MEASURES IN ACCORDANCE WITH THE EPSC PLANS AND DETAILS.
3. CONSTRUCT SOUTHERN HALF OF ROUNDABOUT AND CONCRETE TRUCK APRON.

   CONSTRUCT SPLITTER ISLANDS AND COMPLETE ANY REMAINING PROPOSED CURBING.
4. COMPLETE ALL FINAL GRADING, DRAINAGE, LIGHTING AND INITIAL LANDSCAPE PLANTINGS WITHIN THE PROJECT LIMITS IN ACCORDANCE WITH THE PLANS.
5. INSTALLATION OF TEMPORARY PAVEMENT MARKINGS ON THE GRAVEL WORKING SURFACE WILL BE ALLOWED AND PAID FOR UNDER CONTRACT ITEM 641.10 - TRAFFIC CONTROL. ALL OTHER TRAFFIC CONTROL DEVICES SHALL REMAIN IN PLACE AS PER ACCEPTED TRAFFIC CONTROL PLAN.
6. COMPLETE ALL PAVING OPERATIONS OF ALL TRAVELED PORTIONS OF THE PROJECT.
7. INSTALL PERMANENT SIGNING AND RECESSED AND NON-RECESSED DURABLE PAVEMENT MARKINGS IN ACCORDANCE WITH THE SIGNING AND PAVEMENT MARKING PLANS.

N

VT STATE PLANE GRID

CONSTRUCT SPLITTER ISLANDS (TYP.)

CONSTRUCT SOUTHERN PORTION OF ROUNDABOUT AND TRUCK APRON

YIELD TEMP 36" SIGN TEMP POST

VT ROUTE 15 WEST

VT ROUTE 15 EAST

VT ROUTE 108 SOUTH

NOTE:
THE POTENTIAL CONSTRUCTION ACTIVITIES MAY BE ALTERED AND/OR REORDERED AS DIRECTED BY THE RESIDENT ENGINEER.

TRAFFIC CONTROL LEGEND

WORK ZONE AREA

ROUNDABOUT TRAFFIC CONTROL, PHASE V

PROJECT NAME:	CAMBRIDGE
PROJECT NUMBER:	STP 030-2(27)

FILE NAME: t78f163tcp.dgn	PLOT DATE: 05-JUN-2012
PROJECT LEADER: JLS	DRAWN BY: MBL
DESIGNED BY: MBL	CHECKED BY: JAD
TRAFFIC CONTROL PLAN 5	SHEET 76 OF 214

STATE OF VERMONT
AGENCY OF TRANSPORTATION

RIGHT - OF - WAY DETAIL SHEET

Metric

TABLE OF PROPERTY ACQUISITION

PARCEL NO.	PROPERTY OWNER	SHEET NO.	BEGINNING STATION	ENDING STATION	TAKE	REMAINDER	RIGHT			RECORDING DATA					REMARKS
					AREA ±	AREA ±	TYPE	(T)/(P)	AREA ±	TITLE	DATE	TOWN / CITY	BOOK	PAGE	
1	NOT USED														
2	JOYCE ELIZABETH SELBY JACOBS	26, 27	VT 108 10+074.38 LT	VT 108 10+080.77 LT			CONST.	(T)	17.26 SM	GTR	2/29/2012	CAMBRIDGE	382	348-349	INCL. PDF & EROSION CONTROL 186 SF±
	TRUSTEE OF THE JOYCE ELIZABETH		VT 108 10+032.30 LT	VT 108 10+059.00 LT			DRIVE	(T)	125 SM						8.0 M PAVED (26.2') MM 0910, 1,345 SF±
	SELBY JACOBS 1993 REVOCABLE TRUST														INCL. PARKING AREA
			VT 108 10+079.71 LT	VT 108 10+080.71 LT			DETOUR	(T)	0.86 SM						10 SF±
3	JOLLEY ASSOCIATES	26, 27, 29	VT 15 20+121.25 RT	VT 15 20+137.22 RT			SLOPE	(T)	13.11 SM	WD	3/22/2012	CAMBRIDGE	383	168-170	141 SF± INCL. EC
			VT 15 20+124.99 RT	VT 15 20+135.38 RT			HWY	(P)	34.28 SM						369 SF±
			VT 15 20+116.56 RT	VT 15 20+143.02 RT			CONST.	(T)	140.87 SM						1,516 SF± INCL. PDF
			VT 15 20+137.52 RT	VT 15 20+140.00 RT			DITCH	(P)	17.80 SM						192 SF±
			VT 108 9+940.00 LT	VT 108 9+955.00 LT			SLOPE	(T)	19.0 SM						205 SF±
4	CENTRAL VERMONT PUBLIC SERVICE CORPORATION														UTILITY
5	TELEPHONE OPERATING COMPANY OF VERMONT LLC														UTILITY
6	VILLAGE OF JEFFERSONVILLE WATER & SEWER DEPARTMENT														UTILITY
7	JEFFERSONVILLE CABLE T.V. CORPORATION														UTILITY
8	UNION BANK - LESSOR	28, 29	VT 108 9+943.59 RT				DRIVE	(T)		GTR	3/23/2012	CAMBRIDGE	383	172	8 M PAVED MM
	ELLIOTT, RONALD		VT 108 9+940.00 RT	VT 15 20+160.59 RT			CONST	(T)	126.70 SM						0.03 A± INCL. PDF & EC, REMOVAL OF EXISTING
	ELLIOTT, JEREMY														DRIVES.
	d/b/a SMUGGLERS' NOTCH DISTILLERY,														
	LLC. - LESSEE														

TABLE OF REVISIONS

REVISION NO.	SHEET NO.	DESCRIPTION	DATE
1	20	PARCEL NO. 2 JACOBS - CHANGED MM FROM 0905 TO 0910	12/30/2008
		PER CHANGE ORDER 9548	
		COMPLETED BY: MT APPROVED BY: HP	
2	20, 21	PARCEL NO. 1 LITTLE GRAY RABBIT - ADDED "REMOVE (T)	02/10/2009
		SIGN" AT 20+020 LT SIGN IS IN EXISTING R.O.W.	
		PER CHANGE ORDER 9552	
		COMPLETED BY: MT APPROVED BY: HP	
3	20, 22	PARCEL NO. 3B BELL-GATES LUMBER CORPORATION -	02/10/2009
		REMOVE INSTALL (P), GUY WIRE & ANCHOR. NOT NEEDED	
		(EXISTING). PER CHANGE ORDER 9553	
		COMPLETED BY: MT APPROVED BY: HP	
		AS OF THIS DATE, THIS PROJECT HAS NOT BEEN GRANTED	02/10/2009
		NECESSITY.	
4	21	PARCEL NO. 1 LITTLE GRAY RABBIT - CHANGED CONST. (T)	06/30/2009
		BEGINNING STATION FROM 20+021.94 LT TO 20+032.97 LT;	
		CHANGED AREA FROM 144.08 SM TO 24 SM; ELIMINATED	
		CULVERT (P) AND DRIVE (T).	
		PER CHANGE ORDER 9560	
		COMPLETED BY: MT APPROVED BY: HP	
5	21, 22	PARCEL NO. 2 JOYCE ELIZABETH SELBY JACOBS, TRUSTEE	07/01/2009
		OF THE JOYCE ELIZABETH SELBY JACOBS 1993 REVOCABLE	
		TRUST - ELIMINATE DRIVE (T) BEGINNING STATION 20+046.00	
		LT, ELIMINATE REMOVE & RESET (T) SIGN POLE; ELIMINATE	
		CULV., DITCH & DRAIN (P). CHANGED CONST. (T) TO	
		BEGINNING STATION 20+044.72 LT AND ENDING STATION TO	
		20+051.31 LT	
		PER CHANGE ORDER 9561	
		COMPLETED BY: MT APPROVED BY: HP	
6	21, 22	PARCEL NO. 3A BELL-GATES LUMBER CORPORATION -	07/01/2009
		SOLD PART OF PROPERTY TO UNION BANK. PARCEL NO.	
		CHANGED TO PARCEL 3. ALL RIGHTS REMAIN THE SAME.	
		PER CHANGE ORDER 9562	
		COMPLETED BY: MT APPROVED BY: HP	
7	22	PARCEL NO. 3B BELL-GATES LUMBER CORPORATION -	07/01/2009
		SOLD TO UNION BANK. NOW BECOMES PARCEL NO. 8.	
		ALL RIGHTS REMAIN THE SAME, TRANSFERRED TO PARCEL 8	
		PER CHANGE ORDER 9563	
		COMPLETED BY: MT APPROVED BY: HP	
NOTE: DESIGN CHANGED TO A ROTARY AT INTERSECTION OF VT ROUTE 15 AND 108 IN 2010			
8	27	DESIGN CHANGED FROM INTERSECTION TO ROTARY WITH	03/31/2011
		VT ROUTE 15 & 108 IN 2010.	
		COMPLETED BY: MT C.O. 9709 APPROVED BY: HP	
9	25, 26	PARCEL 1 LITTLE GRAY RABBIT - DESIGN CHANGE, DRIVE	03/31/2011
		WORK NOW ENTIRELY IN R.O.W., GETTING SEPARATE DRIVE.	
		NO RIGHTS NEEDED. LITTLE GRAY RABBIT REMOVED FROM	
		PROJECT. PARCEL NOT USED.	
		COMPLETED BY: MT C.O. 9710 APPROVED BY: HP	
10	25, 26, 27, 29	PARCEL 3 BELL-GATES LUMBER - NAME CHANGED TO	04/29/2011
		API PROPERTIES 496, LLC	
		COMPLETED BY: MT C.O. 9713 APPROVED BY: HP	
11	25, 26, 27, 29	PARCEL 3 API PROPERTIES - PROPERTY SOLD, CHANGE NAME	06/01/2011
		TO JOLLEY ASSOCIATES.	
		COMPLETED BY: MT C.O. 9723 APPROVED BY: HP	
12	25	PARCEL 2 JACOBS - CORRECT RIGHT AREA FOR DRIVE (T) FROM	08/09/2011
		226 SM TO 125 SM; CORRECT REMARKS 2,433 SF± TO 1,345 SF±.	
		COMPLETED BY: MT C.O. 9741 APPROVED BY: HP	
13	25,28,29	PARCEL 8 UNION BANK - CHANGED TO UNION BANK - LESSOR,	08/18/2011
		ELLIOTT, RONALD & ELLIOTT, JEREMY, d/b/a SMUGGLER'S NOTCH	
		DISTILLERY, LLC - LESSEE	
		COMPLETED BY: MR C.O. 9742 APPROVED BY: HP	

PLAN LEGEND

- EXISTING RIGHT-OF-WAY
- TAKING WITH ACCESS
- TAKING WITHOUT ACCESS
- CLEAR ZONE (CZ)
- PROPERTY LINE (P / L)
- TOE OF SLOPE
- TOP OF CUT
- SLOPE RIGHT (SR (P))
- CONSTRUCTION RIGHT (CONST. (T))
- PROJECT DEMARCATION FENCE (PDF — PDF)

BF	-BARRIER FENCE
EC	-EROSION CONTROL
(P)	-PERMANENT
(T)	-TEMPORARY
DR.	-DRAINAGE RIGHT
DIT.	-DITCHING RIGHT
CH.	-CHANNEL RIGHT
DRIVE	-DRIVE RIGHT
CUL.	-CULVERT RIGHT
C&T	-CLEARING & TRIMMING RIGHT
SR	-SLOPE RIGHT
UE	-UTILITY EASEMENT

APPROVED: HARRY PETROVS DATE: 11-19-08
CHIEF, PLANS & TITLES

PROJECT NAME:	CAMBRIDGE		
PROJECT NUMBER:	STP 030-2(27)		
FILE NAME:	r78f163STPdetail.xls	PLOT DATE:	4/30/2012
PROJECT LEADER:	J. SHULTZ	DRAWN BY:	M. TROTTIER
DESIGNED BY:	TUS/SRB	CHECKED BY:	R. FERLAZO
R.O.W. DETAIL SHEET #1		SHEET	77 OF 214

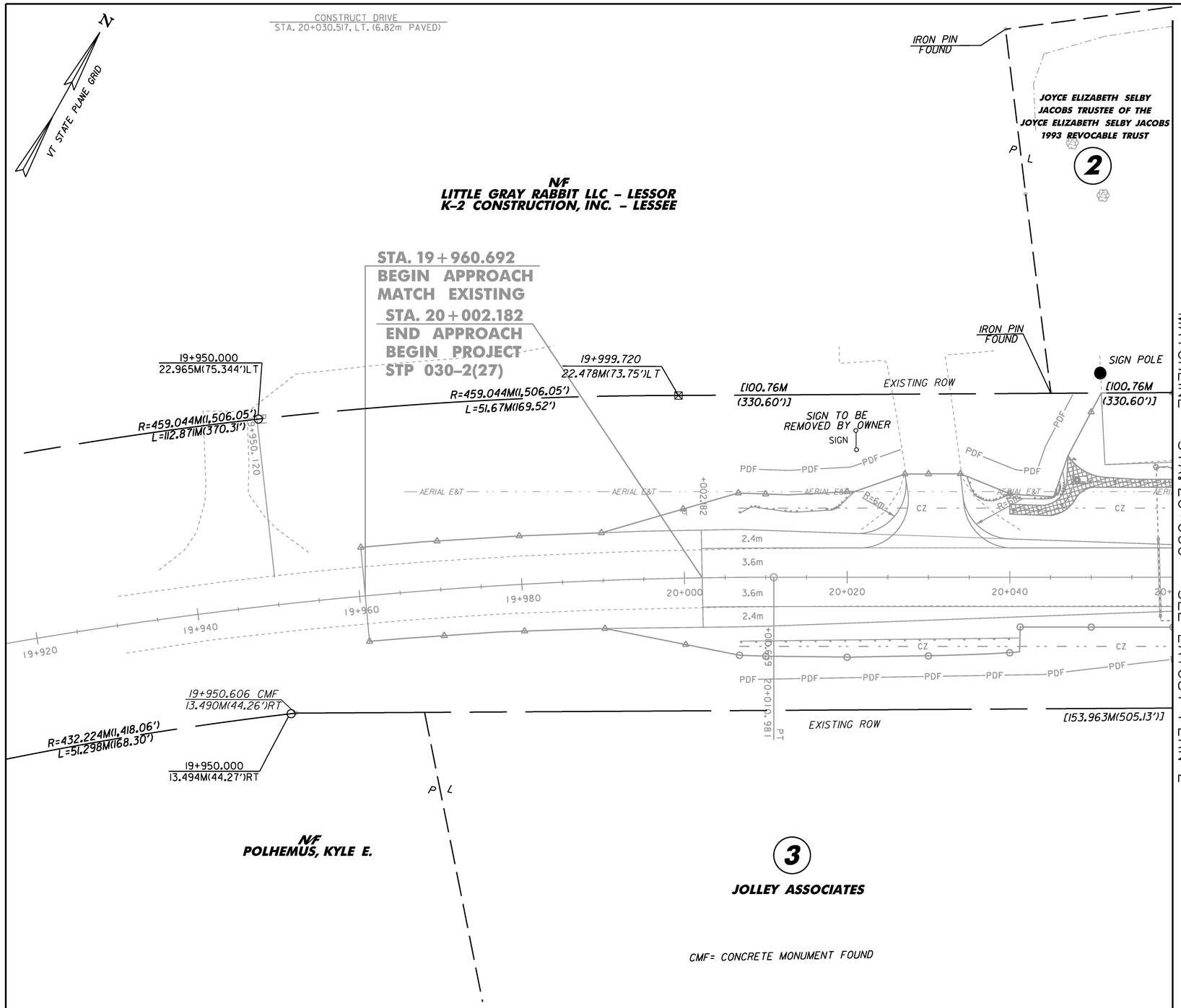

LINE SHOWN ON THIS PLAN AS EXISTING PROPERTY LINES P/L ARE BELIEVED TO BE ACCURATE BUT SHOULD NOT BE RELIED UPON FOR PURPOSES UNRELATED TO THE STATE OF VERMONT'S AQUISITION OF LAND AND RIGHTS FOR THIS PROJECT.

FOR R.O.W. USE ONLY

STP LAYOUT #1

PROJECT NAME: CAMBRIDGE	
PROJECT NUMBER: STP 030-2(27)	
FILE NAME: r78f163STPlay1.dgn	PLOT DATE: 05-JUN-2012
PROJECT LEADER: JLS	DRAWN BY: B. FERLAZO
DESIGNED BY: MBL	CHECKED BY: H. PETROVS
ROW STP LAYOUT SHEET 1	SHEET 78 OF 214

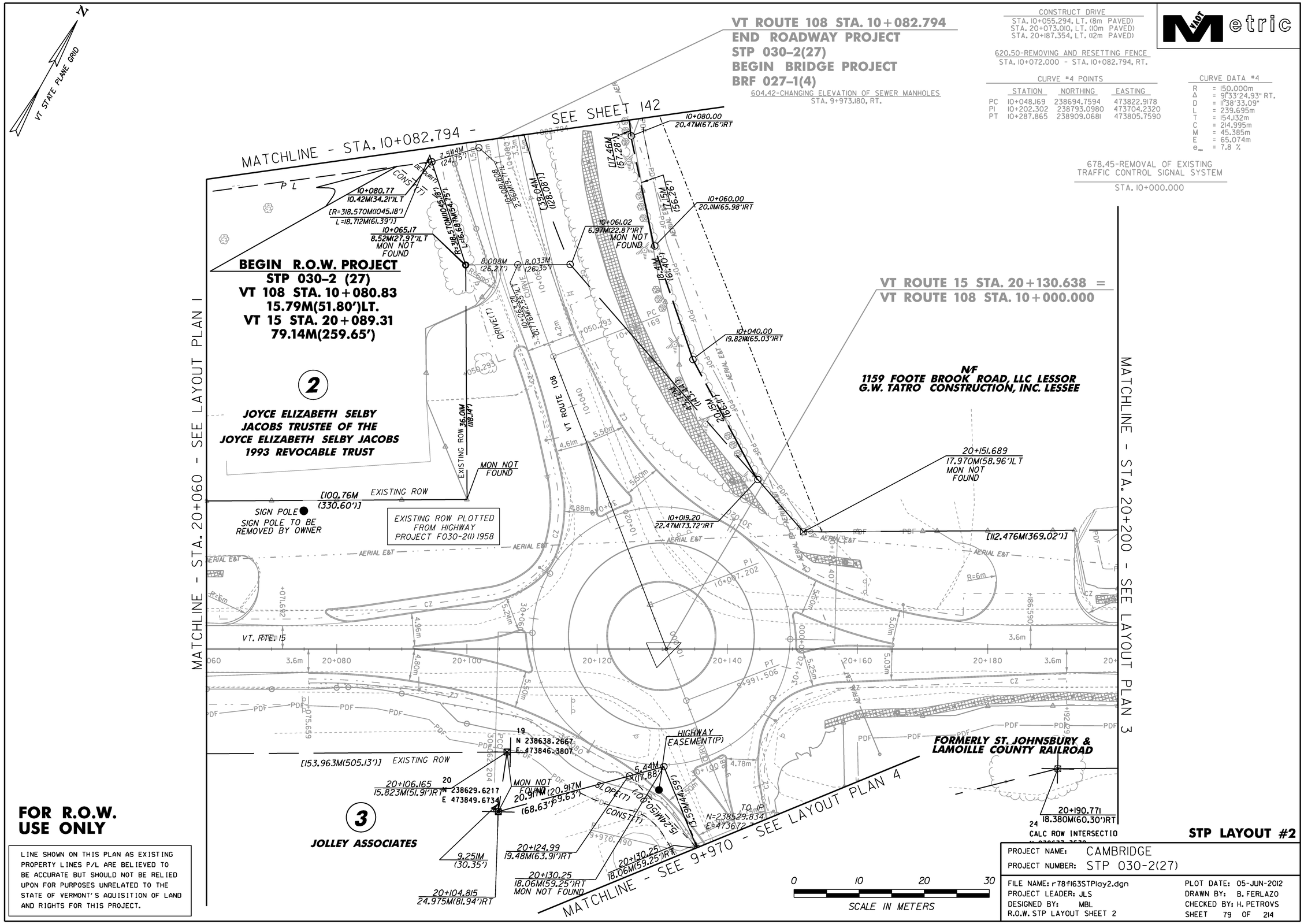

FOR R.O.W. USE ONLY

LINE SHOWN ON THIS PLAN AS EXISTING PROPERTY LINES P/L ARE BELIEVED TO BE ACCURATE BUT SHOULD NOT BE RELIED UPON FOR PURPOSES UNRELATED TO THE STATE OF VERMONT'S AQUISITION OF LAND AND RIGHTS FOR THIS PROJECT.

STP LAYOUT #2

PROJECT NAME: CAMBRIDGE	
PROJECT NUMBER: STP 030-2(27)	
FILE NAME: r78f163STPlay2.dgn	PLOT DATE: 05-JUN-2012
PROJECT LEADER: JLS	DRAWN BY: B. FERLAZO
DESIGNED BY: MBL	CHECKED BY: H. PETROVS
R.O.W. STP LAYOUT SHEET 2	SHEET 79 OF 214

VTrans Metric

N

VT STATE PLANE GRID

MATCHLINE - STA. 20+200 - SEE LAYOUT PLAN 2

STA. 20+261.702
END PROJECT
STP 030-2(27)
BEGIN APPROACH

STA. 20+303.129
END APPROACH
MATCH EXISTING

1

1159 FOOTE BROOK ROAD, LLC LESSOR
G.W. TATRO CONSTRUCTION, INC. LEASEE

SIGN TO BE REMOVED BY OWNER

EXISTING ROW [112.476M(369.02')]

26
N 238745.6393
E 473967.6912

MON NOT FOUND

20+264.163
18.624M(61.10')LT

POE
20+323.182

AERIAL E&T

PDF

CZ

2.4m

3.6m

VT. RTE. 15

VT ROUTE 15

20+200 20+220 20+240 20+260 20+280 20+300 20+320 20+323

EXISTING ROW [95.655M(313.83')] EXISTING ROW

5/8 REBAR UP 6 IN

20+286.425
17.823M(58.47')RT

8

UNION BANK, LESSOR
ELLIOTT, RONALD
ELLIOTT, JEREMY
D/B/A SMUGGLERS' NOTCH
DISTILLERY, LLC., LESSEE

FOR R.O.W. USE ONLY

LINE SHOWN ON THIS PLAN AS EXISTING PROPERTY LINES P/L ARE BELIEVED TO BE ACCURATE BUT SHOULD NOT BE RELIED UPON FOR PURPOSES UNRELATED TO THE STATE OF VERMONT'S AQUISITION OF LAND AND RIGHTS FOR THIS PROJECT.

0 10 20 30
SCALE IN METERS

STP LAYOUT #3

PROJECT NAME: CAMBRIDGE
PROJECT NUMBER: STP 030-2(27)

FILE NAME: r78f163STPlay3.dgn
PROJECT LEADER: JLS
DESIGNED BY: MBL
R.O.W. STP LAYOUT SHEET 3

PLOT DATE: 05-JUN-2012
DRAWN BY: B. FERLAZO
CHECKED BY: H. PETROVS
SHEET 80 OF 214

CURVE #2 POINTS

	STATION	NORTHING	EASTING
PC	9+838.190	238554.3709	473970.7648
PI	9+859.588	238575.4366	473974.5237
PT	9+876.602	238588.3846	473957.4871

CURVE DATA #2

R = 35.000m
Δ = 62°52'55.25" LT.
D = 49°53'47.54"
L = 38.412m
T = 21.398m
C = 36.513m
M = 5.139m
E = 6.023m
e = MATCH EXISTING

CURVE #3 POINTS

	STATION	NORTHING	EASTING
PC	9+949.467	238632.4740	473899.4754
PI	9+970.490	238645.1947	473882.7379
PT	9+991.506	238658.6076	473866.5497

CURVE DATA #3

R = 1000.000m
Δ = 02°24'31.30" RT.
D = 01°44'46.96"
L = 42.040m
T = 21.023m
C = 42.037m
M = 0.221m
E = 0.221m
e = NC

900.675-SPECIAL PROVISION (HAND-PLACED BITUMINOUS CONCRETE MATERIAL, DRIVES)
STA. 9+934.418, LT. (6.30m GRAVEL)

CONSTRUCT DRIVE
STA. 9+934.418, LT. (6.30m GRAVEL)
STA. 9+943.594, RT. (8.0m PAVED)

604.42-CHANGING ELEVATION OF SEWER MANHOLES
STA. 9+914.965, RT.
STA. 9+958.408, RT.

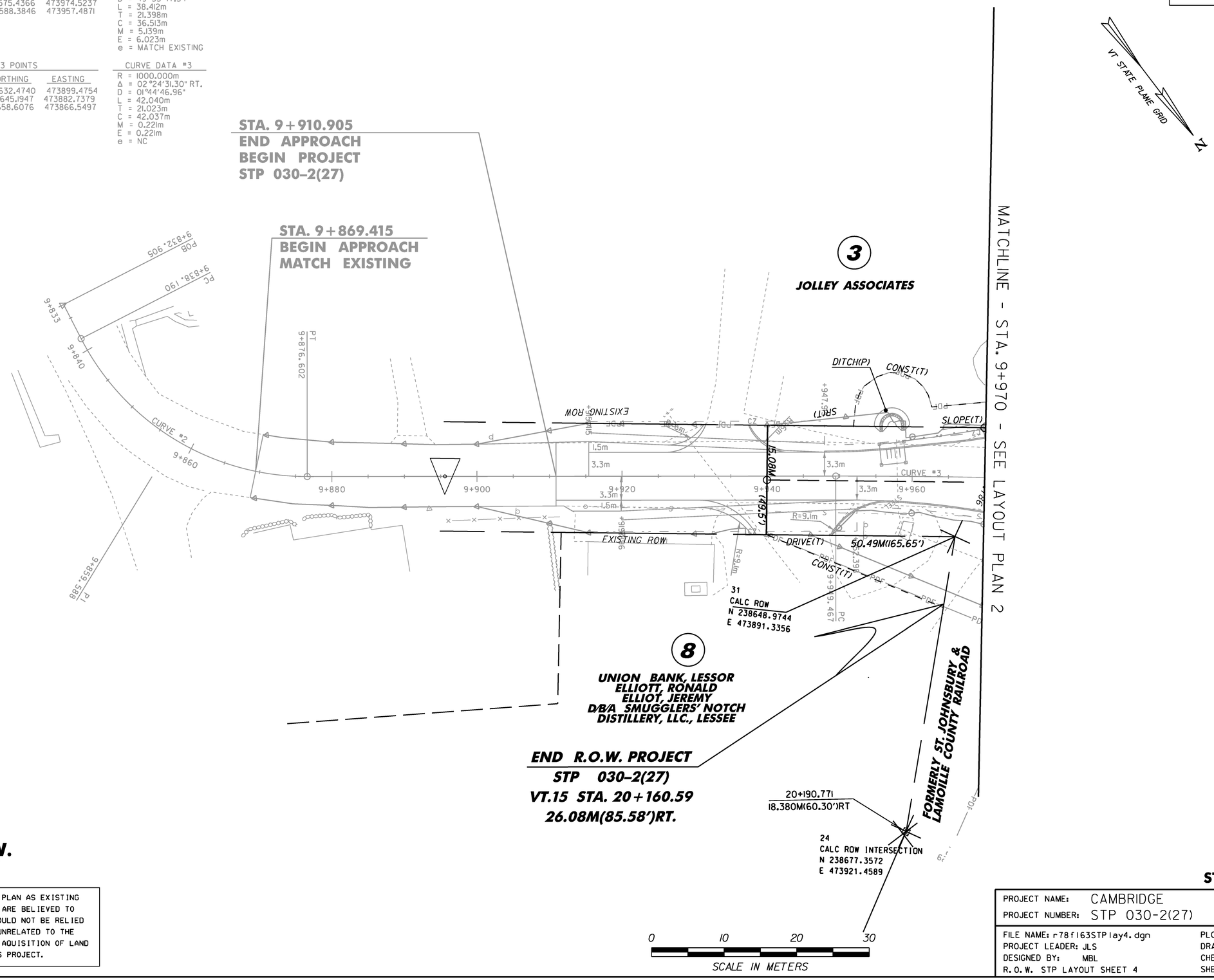

FOR R.O.W. USE ONLY

LINE SHOWN ON THIS PLAN AS EXISTING PROPERTY LINES P/L ARE BELIEVED TO BE ACCURATE BUT SHOULD NOT BE RELIED UPON FOR PURPOSES UNRELATED TO THE STATE OF VERMONT'S AQUISITION OF LAND AND RIGHTS FOR THIS PROJECT.

STP LAYOUT #4

PROJECT NAME: CAMBRIDGE
PROJECT NUMBER: STP 030-2(27)

FILE NAME: r78f163STPlay4.dgn
PROJECT LEADER: JLS
DESIGNED BY: MBL
R.O.W. STP LAYOUT SHEET 4

PLOT DATE: 05-JUN-2012
DRAWN BY: B. FERLAZO
CHECKED BY: H. PETROVS
SHEET 81 OF 214

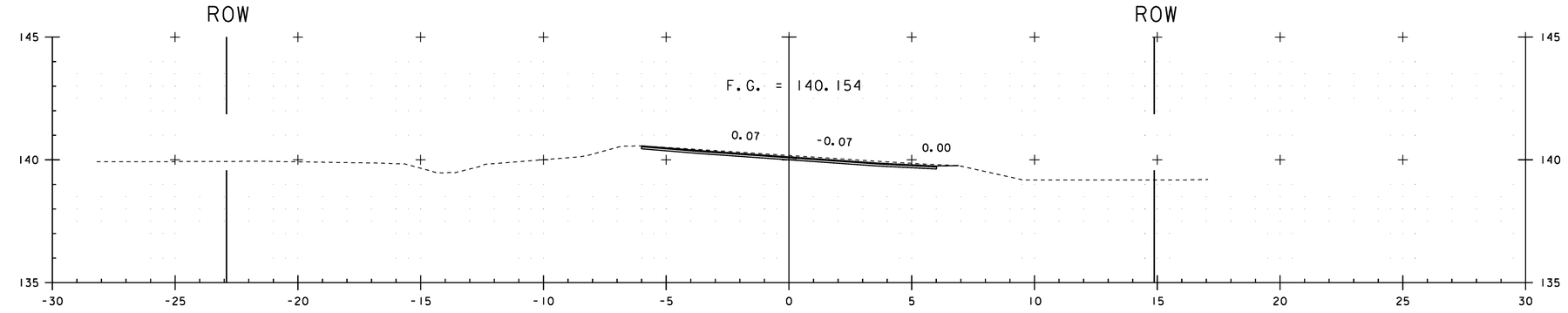

19+970.00

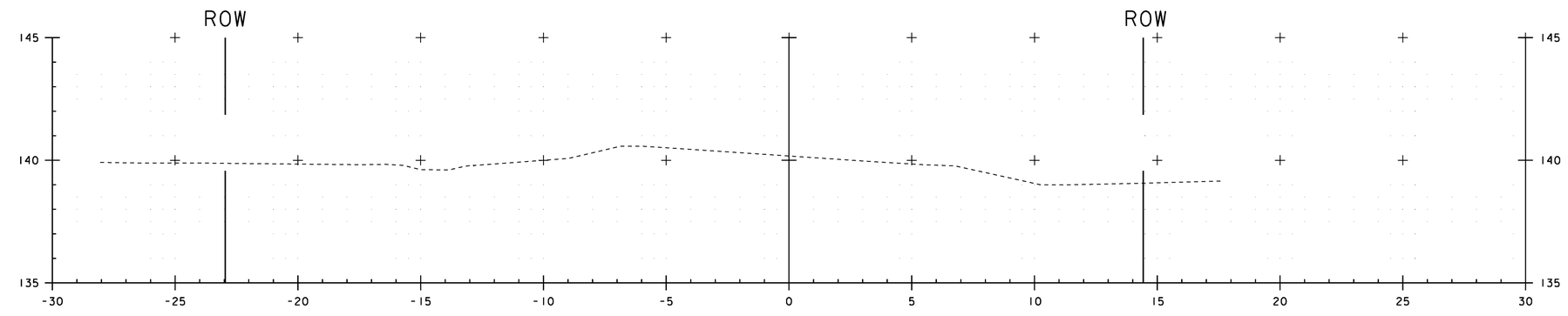

19+960.69
BEGIN APPROACH
MATCH EXISTING

VT ROUTE 15

STA. 19+961 TO STA. 19+970

PROJECT NAME:	CAMBRIDGE
PROJECT NUMBER:	STP 030-2(27)

FILE NAME: t78f163xsl.dgn	PLOT DATE: 05-JUN-2012
PROJECT LEADER: JLS	DRAWN BY: MBL
DESIGNED BY: MBL	CHECKED BY: JAD
CROSS SECTION SHEET 1	SHEET 82 OF 214

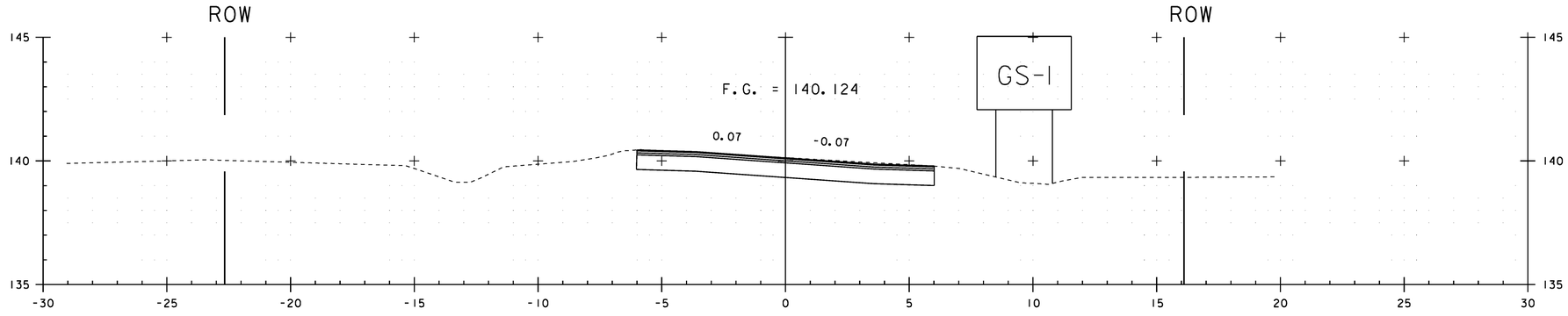

19+990.00

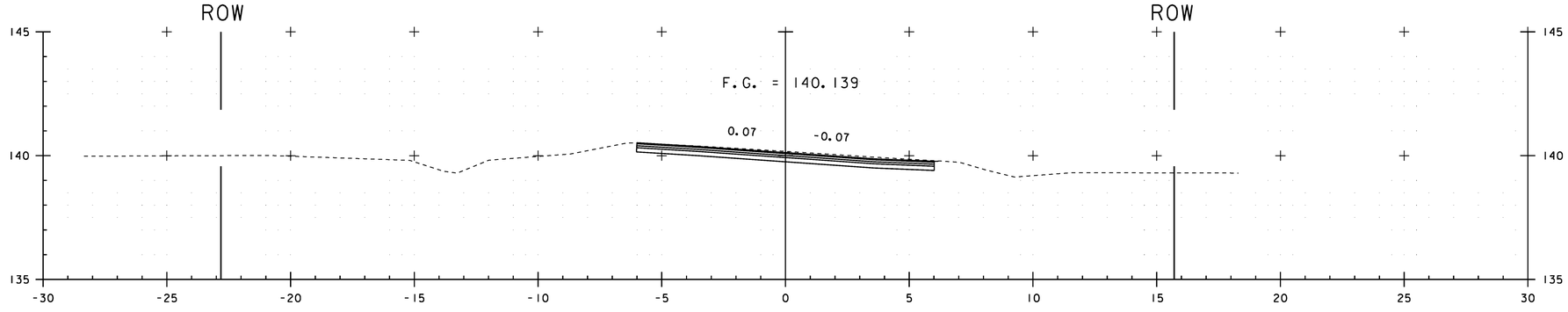

19+980.00

VT ROUTE 15

STA. 19+980 TO STA. 19+990

PROJECT NAME:	CAMBRIDGE
PROJECT NUMBER:	STP 030-2(27)

FILE NAME: t78f163xsl.dgn	PLOT DATE: 05-JUN-2012
PROJECT LEADER: JLS	DRAWN BY: MBL
DESIGNED BY: MBL	CHECKED BY: JAD
CROSS SECTION SHEET 2	SHEET 83 OF 214

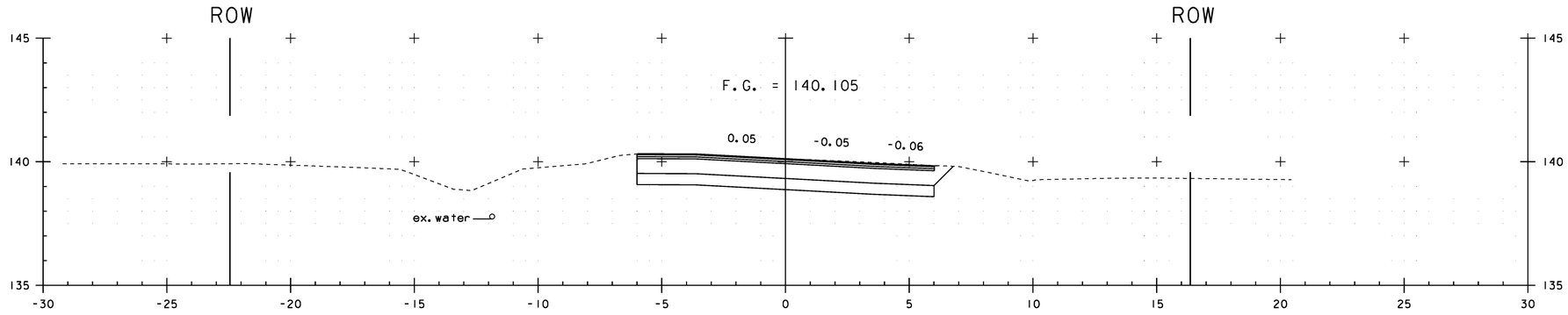

20+002. 182
END APPROACH
BEGIN PROJECT

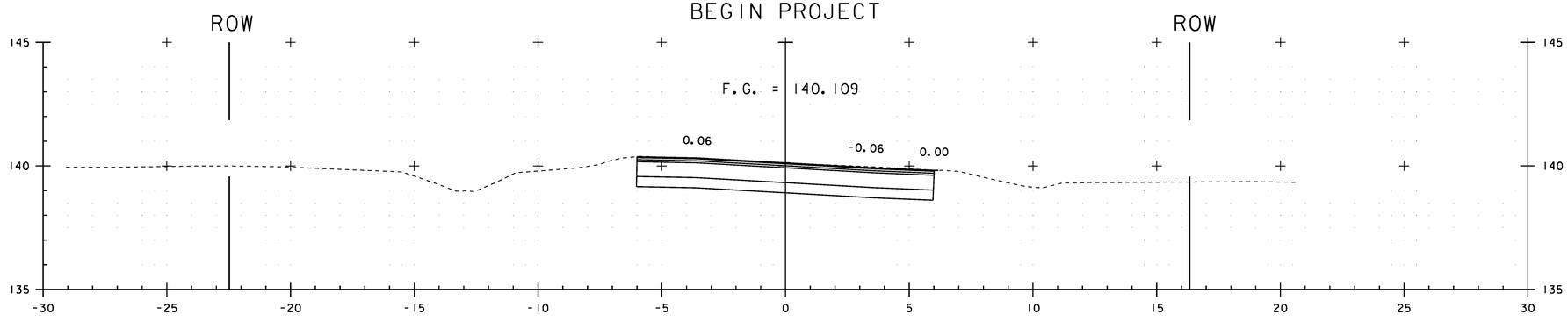

20+000. 00

VT ROUTE 15

PROJECT NAME: CAMBRIDGE
PROJECT NUMBER: STP 030-2(27)

FILE NAME: t78f163xsl.dgn
PROJECT LEADER: JLS
DESIGNED BY: MBL
CROSS SECTION SHEET 3

PLOT DATE: 05-JUN-2012
DRAWN BY: MBL
CHECKED BY: JAD
SHEET 84 OF 214

STA. 20+000 TO STA. 20+003

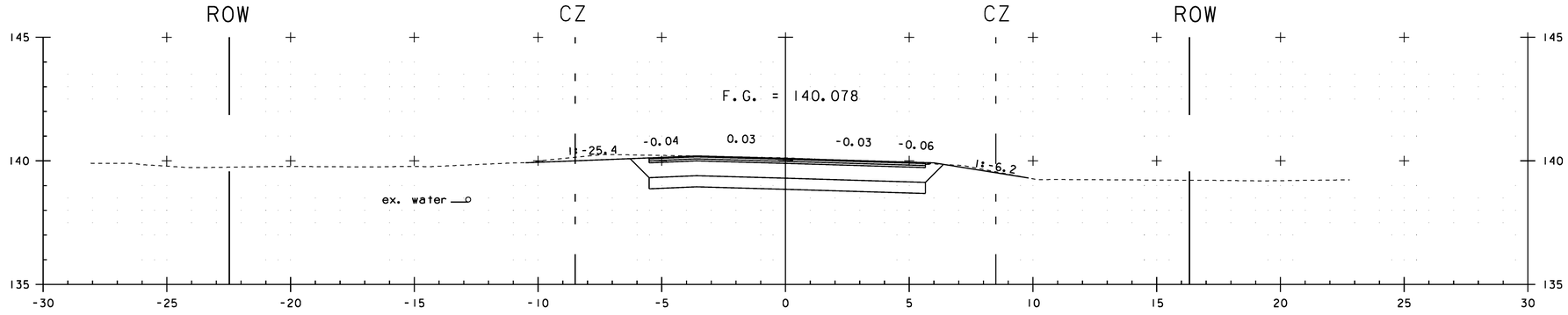

20+020.00

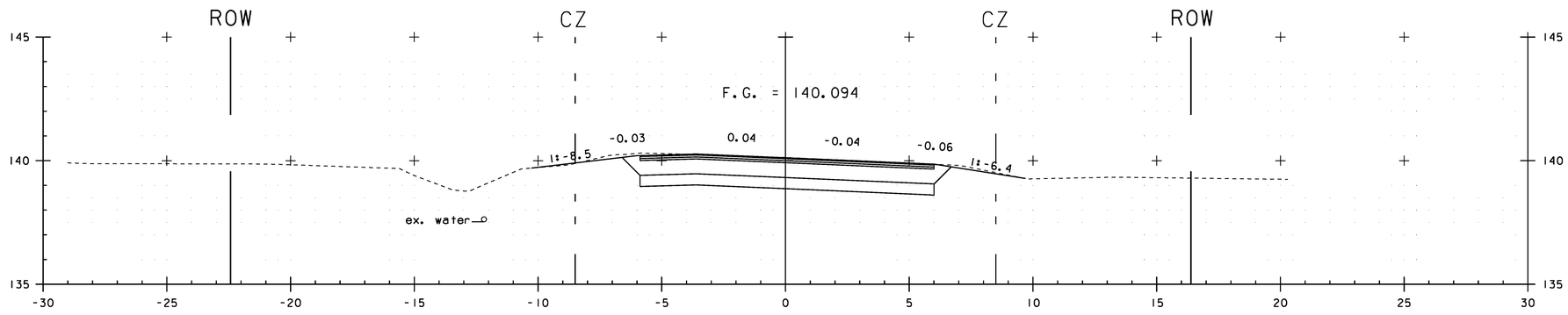

20+010.00

VT ROUTE 15

PROJECT NAME:	CAMBRIDGE
PROJECT NUMBER:	STP 030-2(27)

FILE NAME: t78f163xsl.dgn	PLOT DATE: 05-JUN-2012
PROJECT LEADER: JLS	DRAWN BY: MBL
DESIGNED BY: MBL	CHECKED BY: JAD
CROSS SECTION SHEET 4	SHEET 85 OF 214

STA. 20+010 TO STA. 20+020

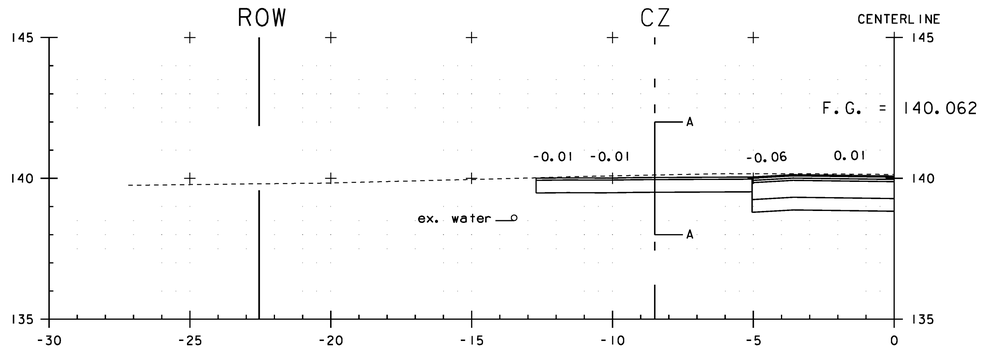

20+030.52
DRIVE LT.

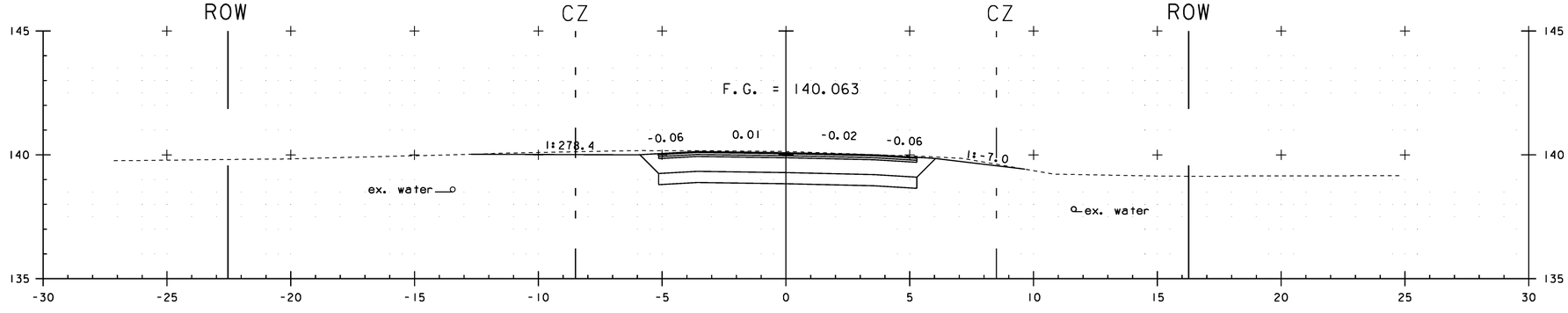

20+030.00

VT ROUTE 15

PROJECT NAME:	CAMBRIDGE
PROJECT NUMBER:	STP 030-2(27)

FILE NAME: t78f163xsl.dgn	PLOT DATE: 05-JUN-2012
PROJECT LEADER: JLS	DRAWN BY: MBL
DESIGNED BY: MBL	CHECKED BY: JAD
CROSS SECTION SHEET 5	SHEET 86 OF 214

STA. 20+030 TO STA. 20+031

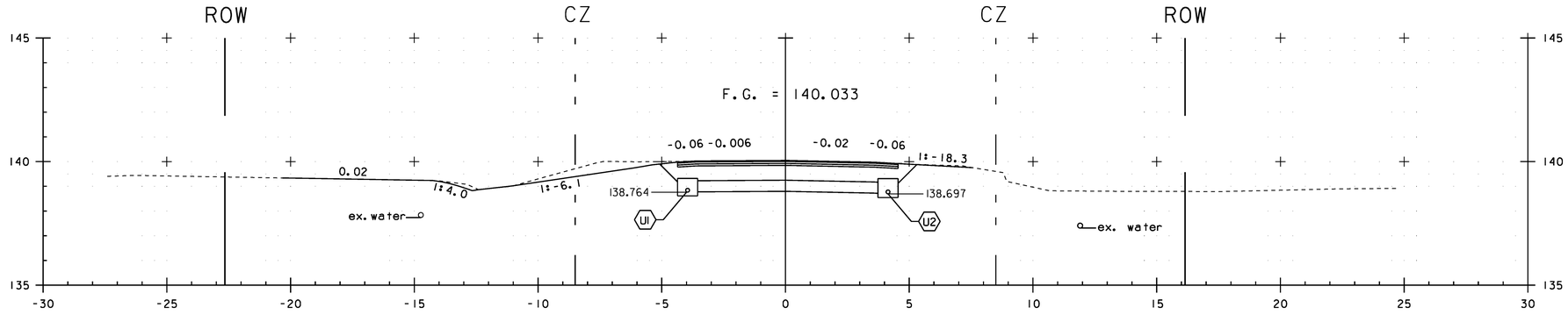

20+050.00

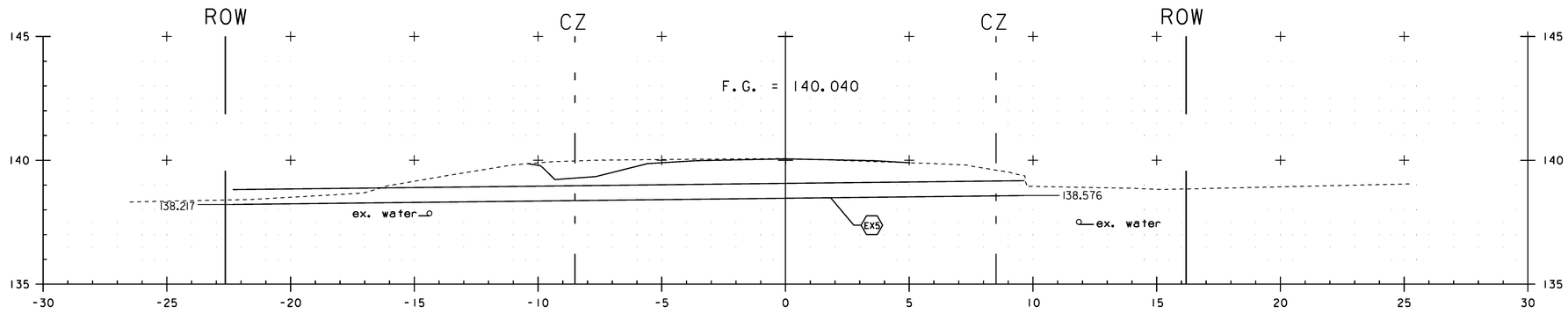

20+045.14

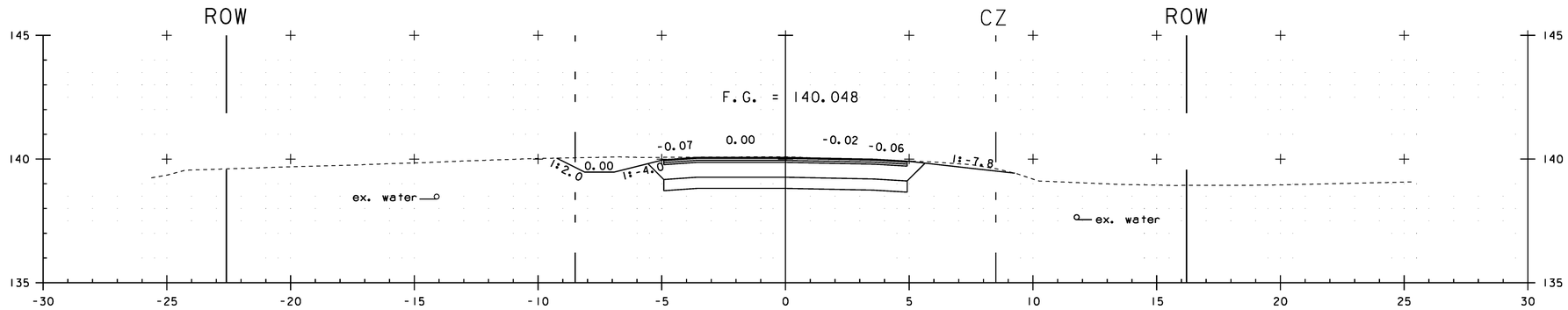

20+040.00

VT ROUTE 15

PROJECT NAME: CAMBRIDGE
PROJECT NUMBER: STP 030-2(27)

FILE NAME: t78f163xsl.dgn
PROJECT LEADER: JLS
DESIGNED BY: MBL
CROSS SECTION SHEET 6

PLOT DATE: 05-JUN-2012
DRAWN BY: MBL
CHECKED BY: JAD
SHEET 87 OF 214

STA. 20+040 TO STA. 20+050

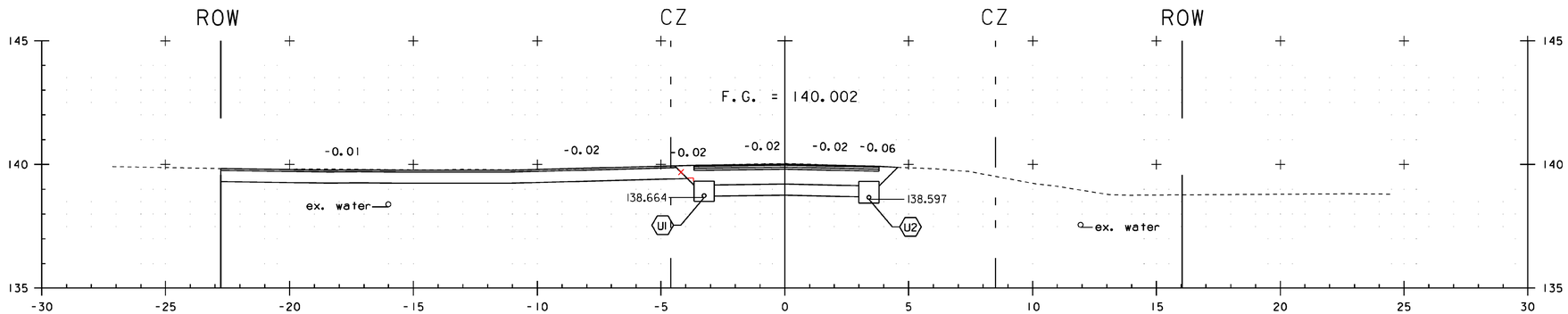

20+070.00

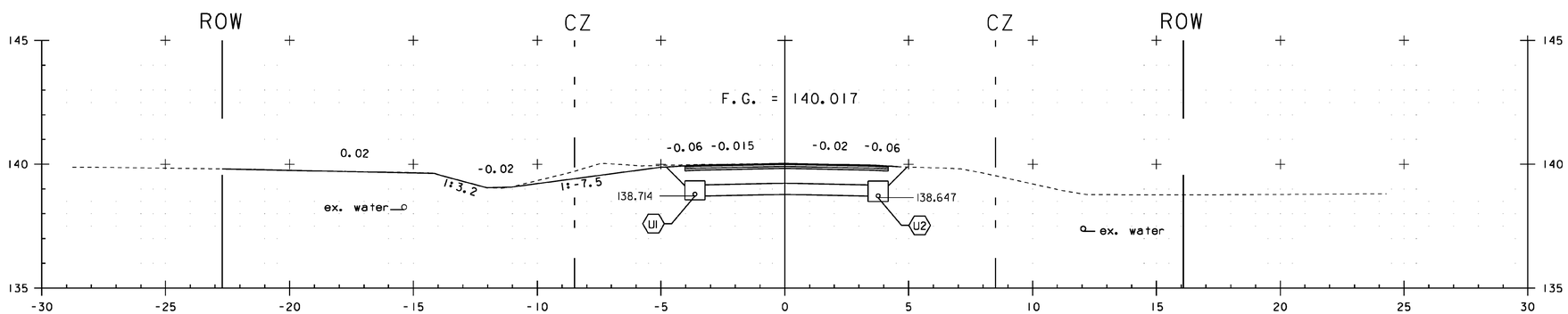

20+060.00

VT ROUTE 15

PROJECT NAME:	CAMBRIDGE
PROJECT NUMBER:	STP 030-2(27)

FILE NAME: t78f163xsl.dgn	PLOT DATE: 05-JUN-2012
PROJECT LEADER: JLS	DRAWN BY: MBL
DESIGNED BY: MBL	CHECKED BY: JAD
CROSS SECTION SHEET 7	SHEET 88 OF 214

STA. 20+060 TO STA. 20+070

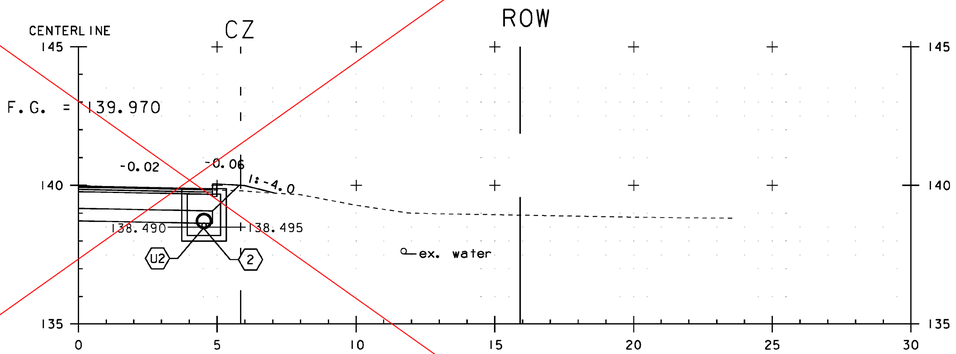

20+091.31

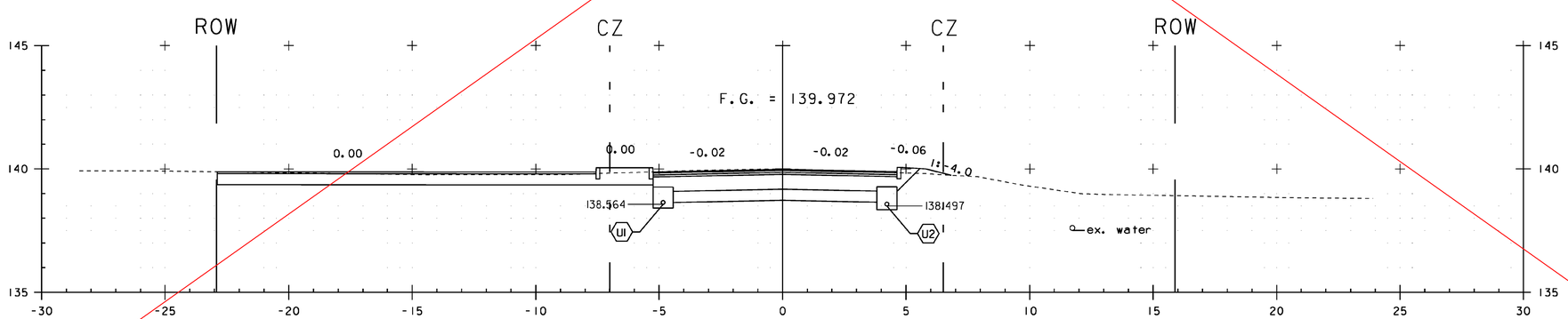

20+090.00

VT ROUTE 15

PROJECT NAME: CAMBRIDGE
PROJECT NUMBER: STP 030-2(27)

FILE NAME: t78f163xsl.dgn
PROJECT LEADER: JLS
DESIGNED BY: MBL
CROSS SECTION SHEET 9

PLOT DATE: 05-JUN-2012
DRAWN BY: MBL
CHECKED BY: JAD
SHEET 90 OF 214

STA. 20+090 TO STA. 20+091

SEE REVISION SHEET

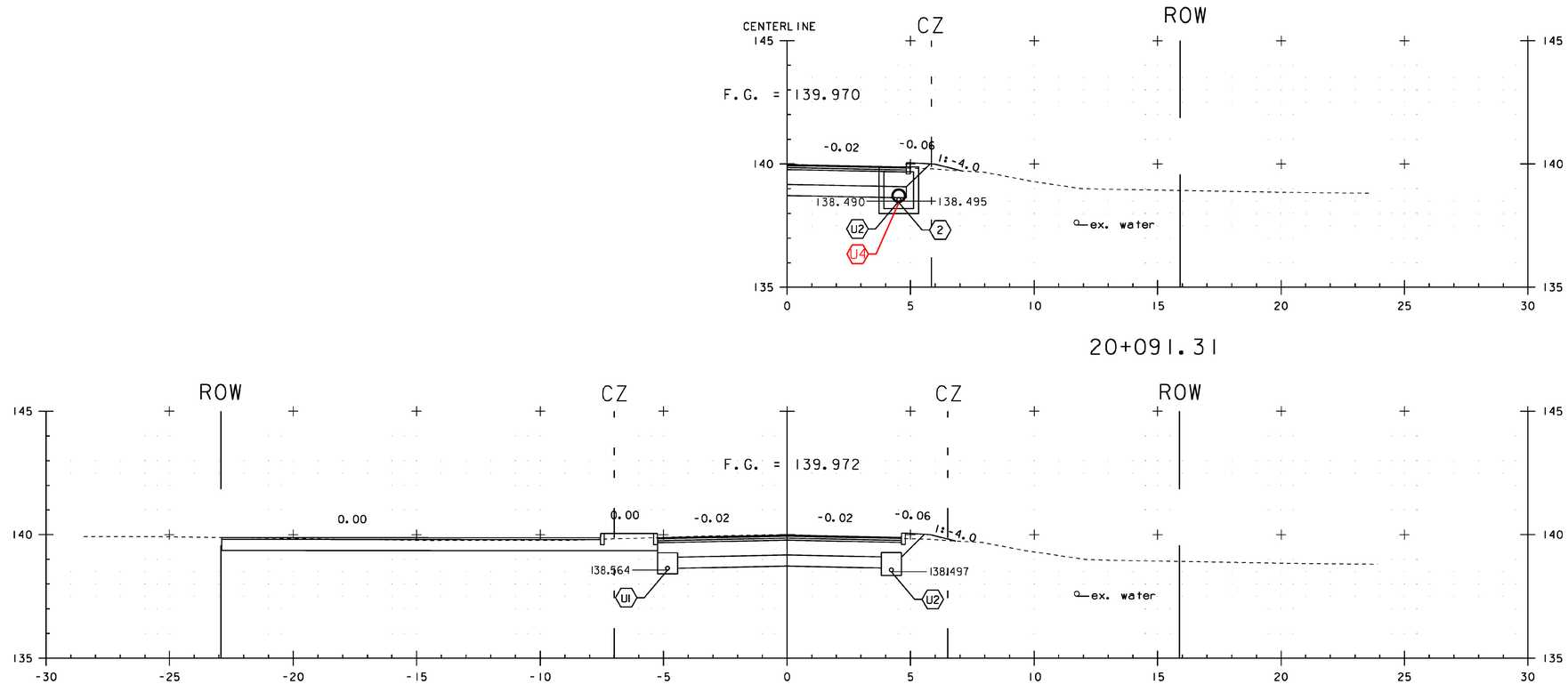

20+091.31

20+090.00

VT ROUTE 15

STA. 20+090 TO STA. 20+091

PROJECT NAME: CAMBRIDGE
PROJECT NUMBER: STP 030-2(27)

FILE NAME: t78f163xsl.dgn
PROJECT LEADER: JLS
DESIGNED BY: MBL
CROSS SECTION SHEET 9

PLOT DATE: 05-JUN-2012
DRAWN BY: MBL
CHECKED BY: JAD
SHEET 90 OF 214

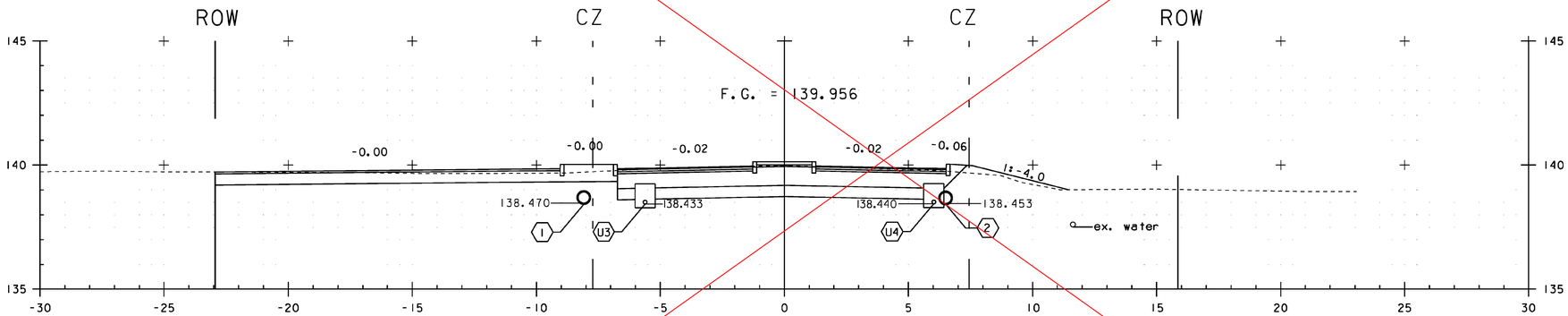

20+100.00

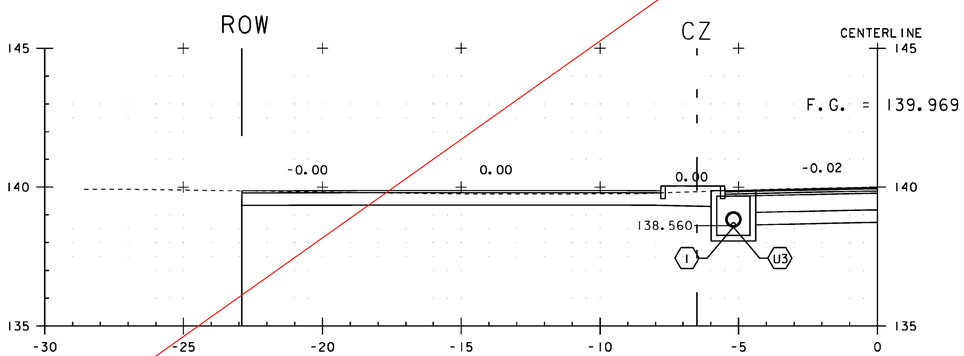

20+091.69

VT ROUTE 15

PROJECT NAME: CAMBRIDGE
PROJECT NUMBER: STP 030-2(27)

FILE NAME: t78f163xsl.dgn
PROJECT LEADER: JLS
DESIGNED BY: MBL
CROSS SECTION SHEET 10

PLOT DATE: 05-JUN-2012
DRAWN BY: MBL
CHECKED BY: JAD
SHEET 91 OF 214

STA. 20+092 TO STA. 20+100

SEE REVISION SHEET

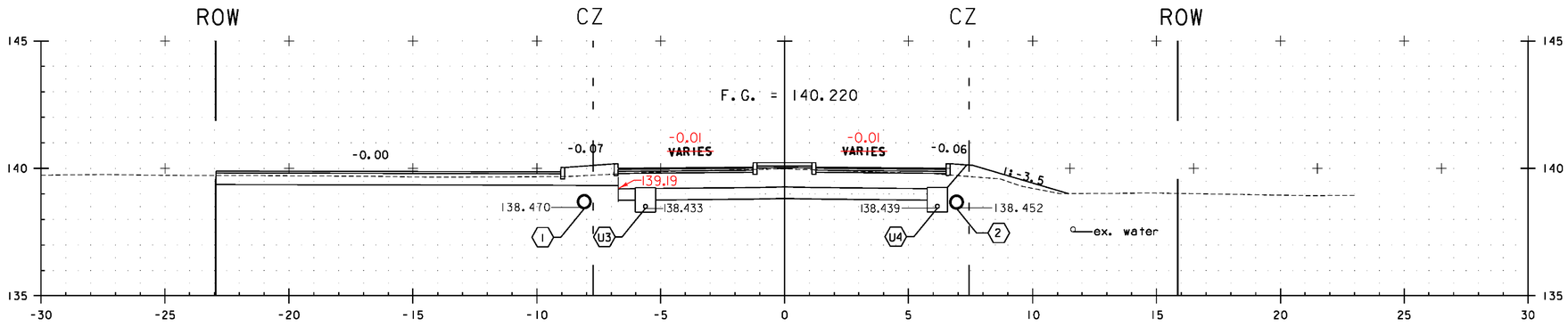

20+100.00 △2

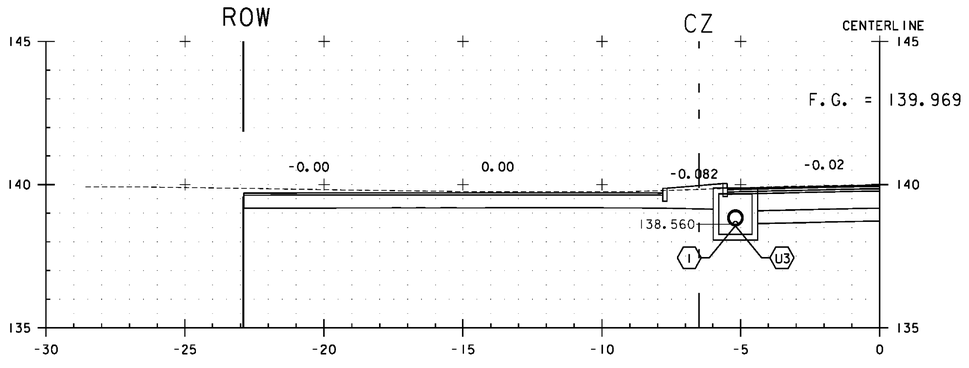

20+091.69 △1

0 5 10

SCALE IN METERS

△1 REVISED 20+091.69 FINISH GRADE, SUBGRADE, AND RIM ELEVATION

△2 REVISED 20+100.00 FINISH GRADE, AND SUBGRADE

STA. 20+092 TO STA. 20+100

VT ROUTE 15

PROJECT NAME: CAMBRIDGE
PROJECT NUMBER: STP 030-2(27)

FILE NAME: t78f163xsl.dgn
PROJECT LEADER: JLS
DESIGNED BY: MBL
CROSS SECTION SHEET 10 - REVISED

PLOT DATE: 4/22/13
DRAWN BY: MBL
CHECKED BY: JAD
SHEET 91R OF 214

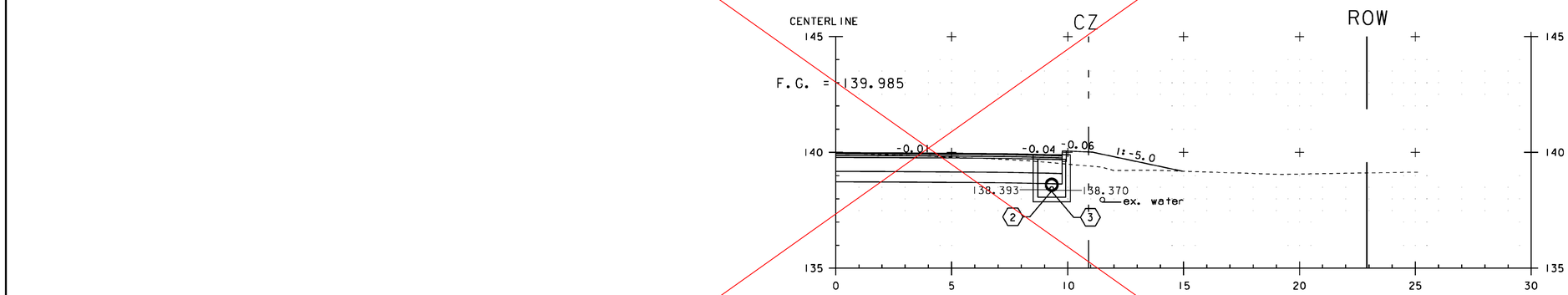

20+112.40

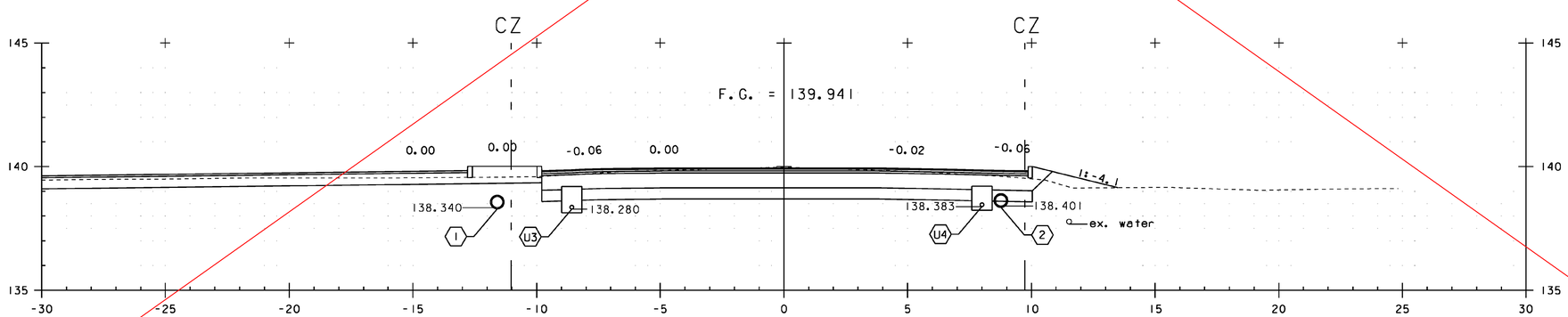

20+110.00

VT ROUTE 15

PROJECT NAME:	CAMBRIDGE
PROJECT NUMBER:	STP 030-2(27)

FILE NAME: t78f163xsl.dgn	PLOT DATE: 05-JUN-2012
PROJECT LEADER: JLS	DRAWN BY: MBL
DESIGNED BY: MBL	CHECKED BY: JAD
CROSS SECTION SHEET II	SHEET 92 OF 214

STA. 20+110 TO STA. 20+112

SEE REVISION SHEET

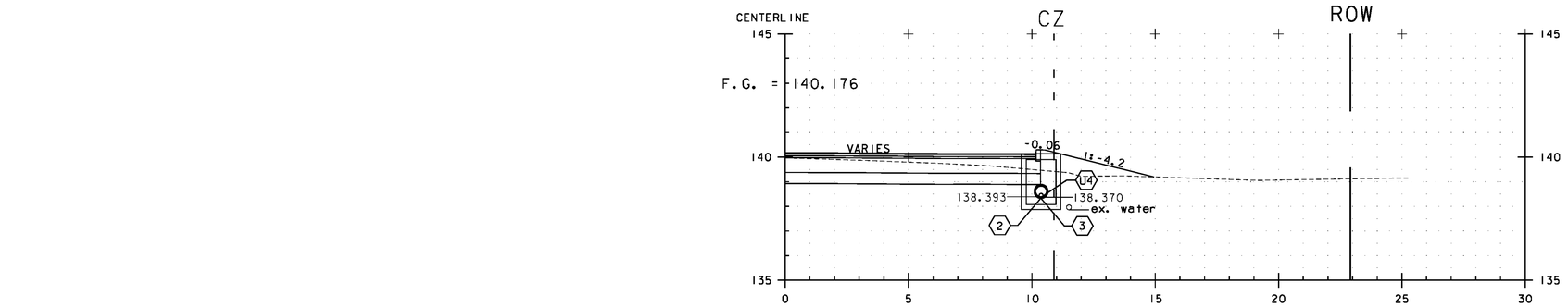

20+111.92 ⚠2

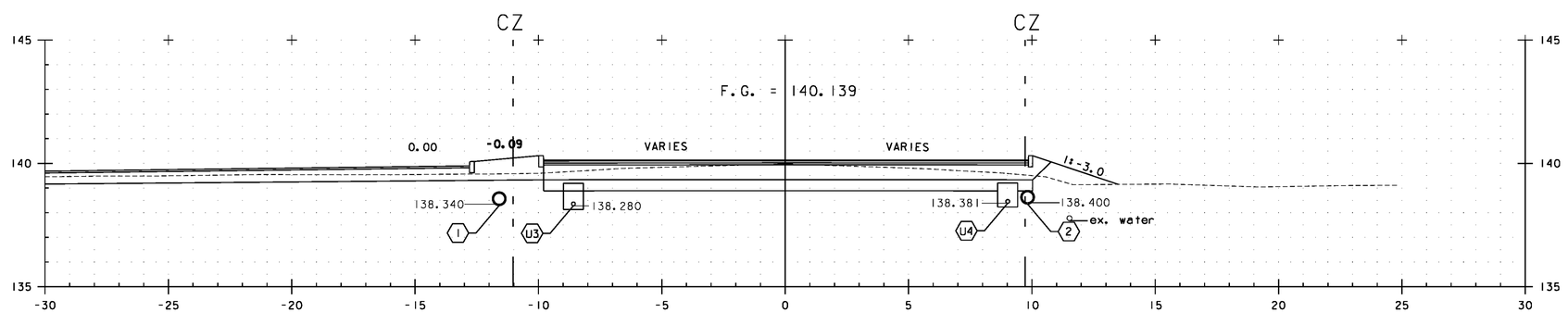

20+110.00 ⚠1

VT ROUTE 15

0 5 10

SCALE IN METERS

⚠1 REVISED 20+110.00 FINISH GRADE, AND SUBGRADE

⚠2 REVISED 20.11.92 FINISH GRADE, SUBGRADE, AND RIM ELEVATION

STA. 20+110 TO STA. 20+112

PROJECT NAME: CAMBRIDGE
PROJECT NUMBER: STP 030-2(27)

FILE NAME: t78f163xsl.dgn
PROJECT LEADER: JLS
DESIGNED BY: MBL
CROSS SECTION SHEET 11- REVISED

PLOT DATE: 4/22/13
DRAWN BY: MBL
CHECKED BY: JAD
SHEET 92 OF 214

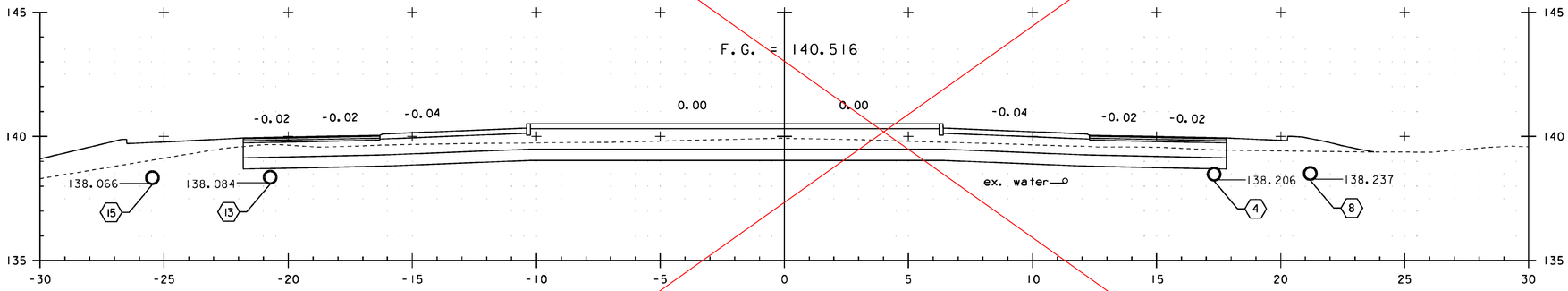

20+130.00

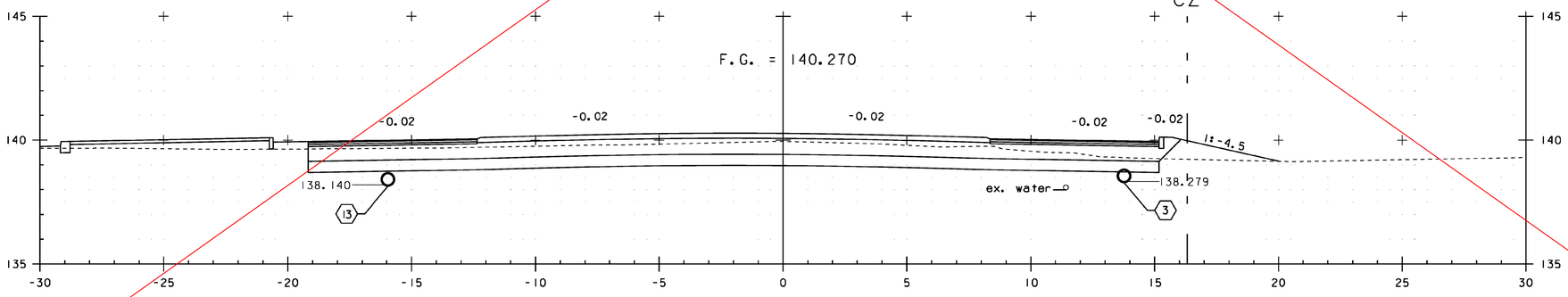

20+120.00

VT ROUTE 15

PROJECT NAME: CAMBRIDGE
PROJECT NUMBER: STP 030-2(27)

FILE NAME: t78f163xsl.dgn
PROJECT LEADER: JLS
DESIGNED BY: MBL
CROSS SECTION SHEET 12

PLOT DATE: 05-JUN-2012
DRAWN BY: MBL
CHECKED BY: JAD
SHEET 93 OF 214

STA. 20+120 TO STA. 20+130

SEE REVISION SHEET

Metric

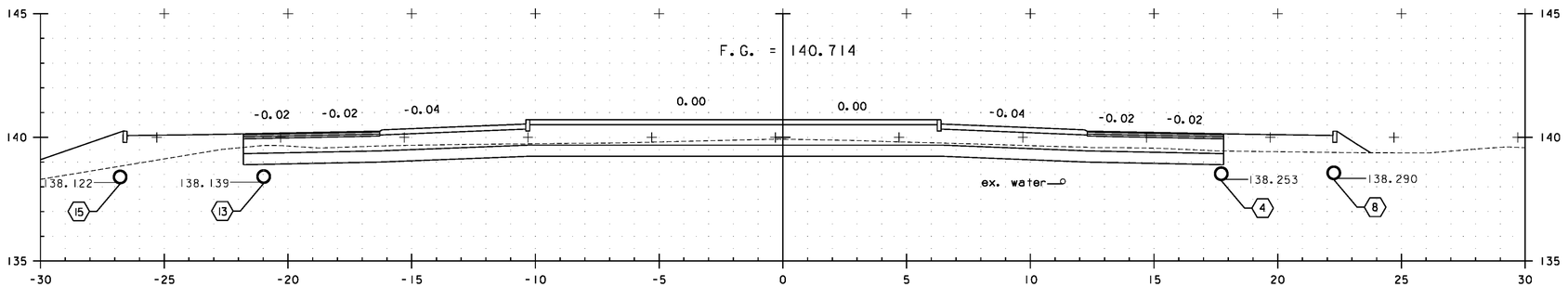

20+130.00 (2)

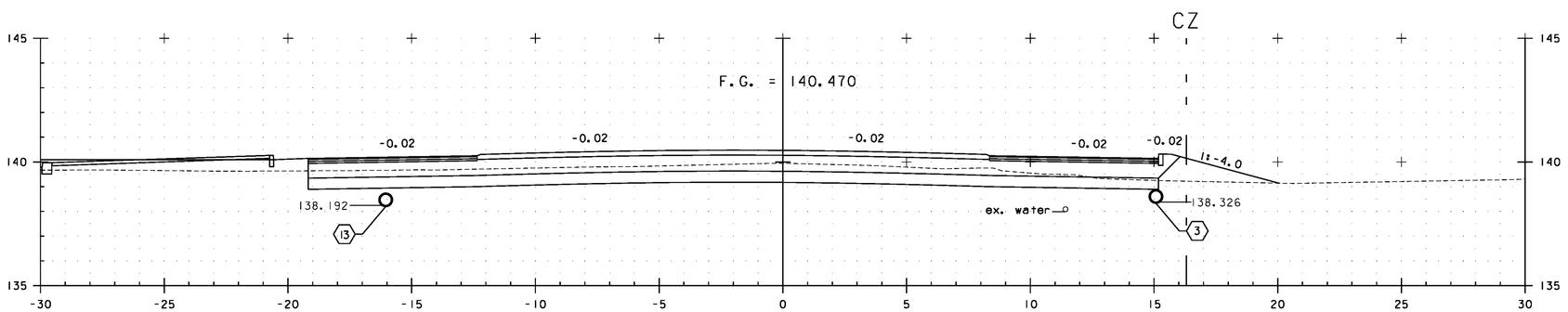

20+120.00 (1)

VT ROUTE 15

0 5 10

SCALE IN METERS

(1) REVISED 20+120.00 FINISH GRADE AND SUBGRADE

(2) REVISED 20+130.00 FINISH GRADE AND SUBGRADE

STA. 20+120 TO STA. 20+130

PROJECT NAME: CAMBRIDGE
PROJECT NUMBER: STP 030-2(27)

FILE NAME: t78f163xsl.dgn
PROJECT LEADER: JLS
DESIGNED BY: MBL
CROSS SECTION SHEET 12 - REVISED

PLOT DATE: 4/22/13
DRAWN BY: MBL
CHECKED BY: JAD
SHEET 93 OF 214

CZ

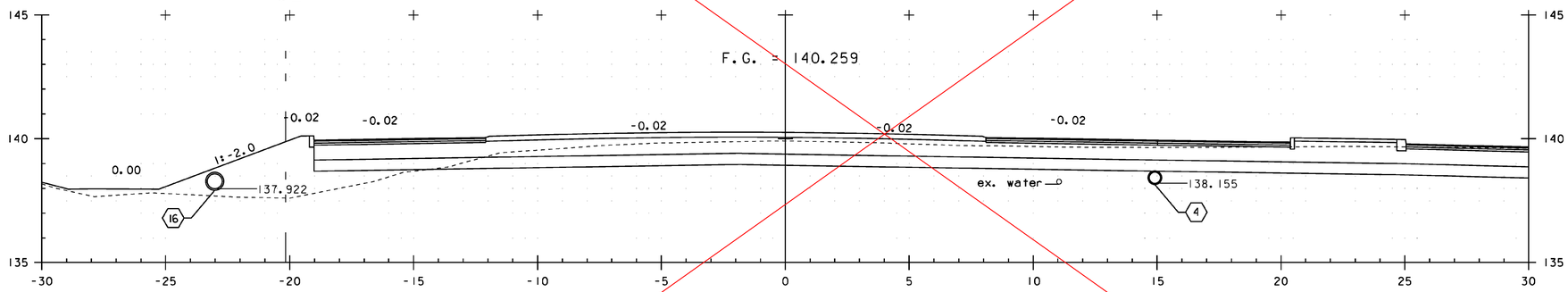

20+140.00

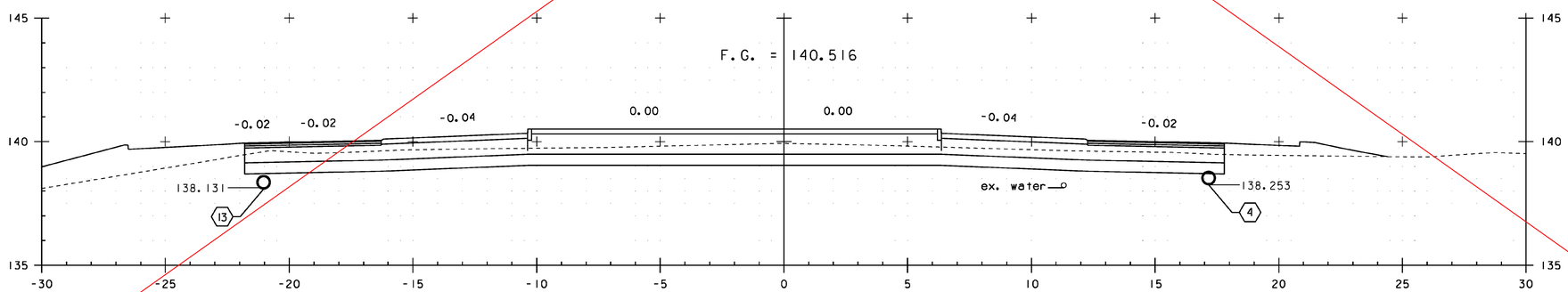

20+130.64

VT ROUTE 15

PROJECT NAME:	CAMBRIDGE
PROJECT NUMBER:	STP 030-2(27)

FILE NAME: t78f163xsl.dgn	PLOT DATE: 05-JUN-2012
PROJECT LEADER: JLS	DRAWN BY: MBL
DESIGNED BY: MBL	CHECKED BY: JAD
CROSS SECTION SHEET 13	SHEET 94 OF 214

STA. 20+131 TO STA. 20+140

SEE REVISION SHEET

Metric

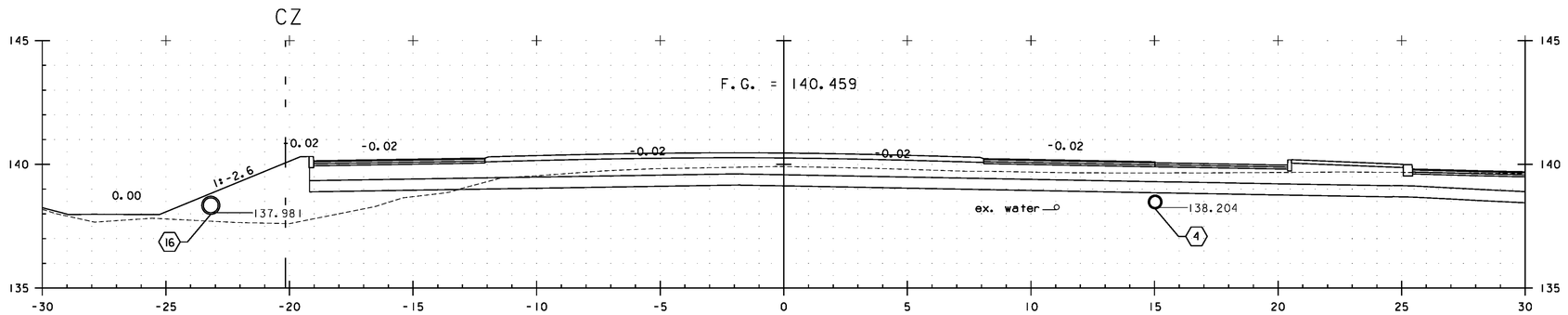

20+140.00 △2

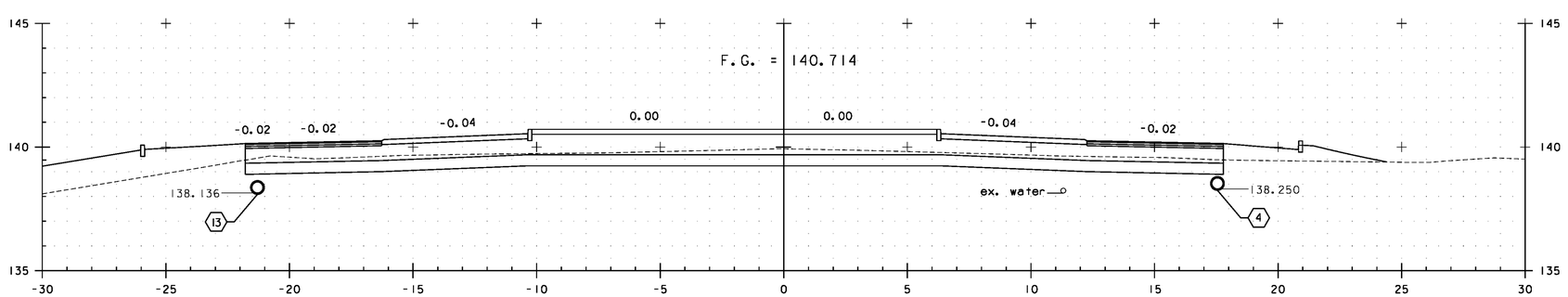

20+130.64 △1

VT ROUTE 15

0 5 10

SCALE IN METERS

△1 REVISED 20+130.64 FINISH GRADE AND SUBGRADE

△2 REVISED 20+140.00 FINISH GRADE AND SUBGRADE

STA. 20+131 TO STA. 20+140

PROJECT NAME: CAMBRIDGE	
PROJECT NUMBER: STP 030-2(27)	
FILE NAME: t78f163xsl.dgn	PLOT DATE: 4/22/13
PROJECT LEADER: JLS	DRAWN BY: MBL
DESIGNED BY: MBL	CHECKED BY: JAD
CROSS SECTION SHEET 13 - REVISED	SHEET 94 OF 214

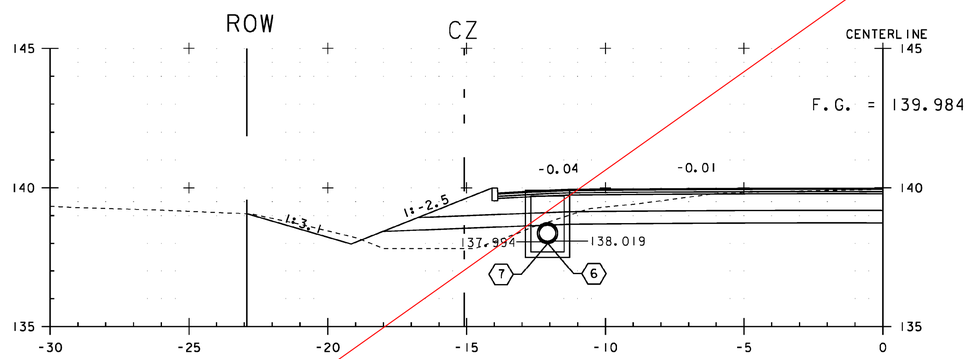

20+147.38

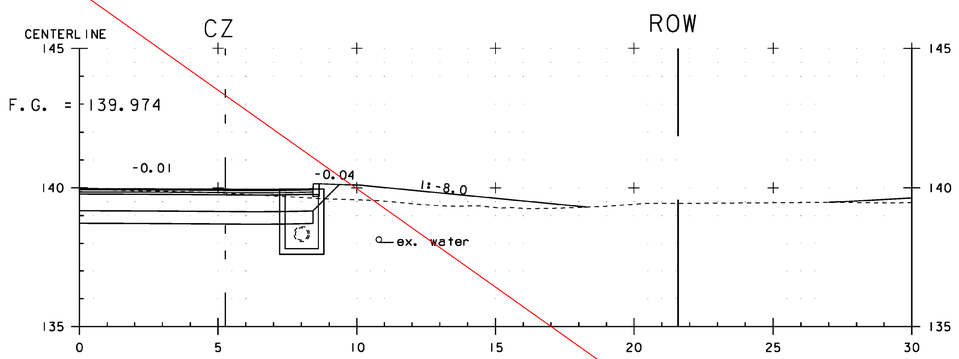

20+147.92

VT ROUTE 15

PROJECT NAME:	CAMBRIDGE
PROJECT NUMBER:	STP 030-2(27)

FILE NAME: t78f163xsl.dgn	PLOT DATE: 05-JUN-2012
PROJECT LEADER: JLS	DRAWN BY: MBL
DESIGNED BY: MBL	CHECKED BY: JAD
CROSS SECTION SHEET 14	SHEET 95 OF 214

STA. 20+147 TO STA. 20+148

SEE REVISION SHEET

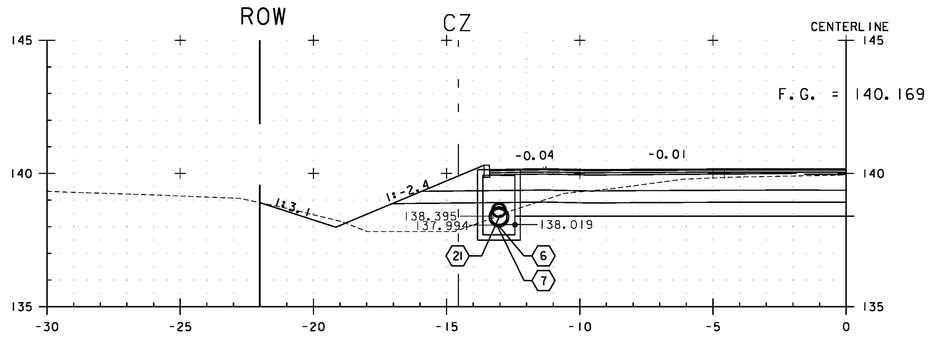

20+148.17 1 3

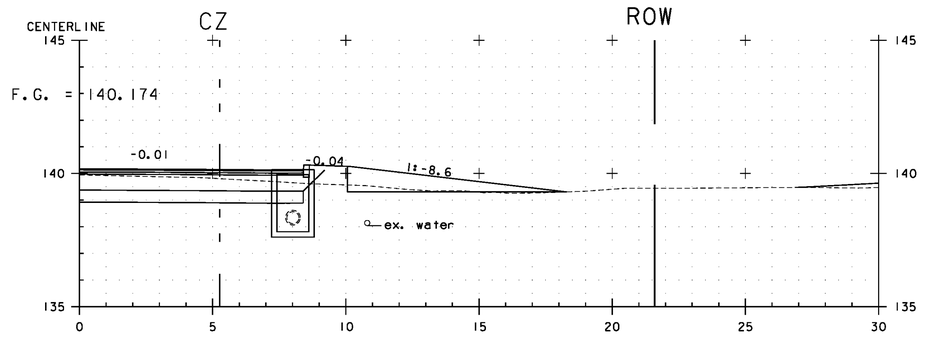

20+147.92 2

VT ROUTE 15

0 5 10

SCALE IN METERS

1 REVISED 20+148.17 FINISH GRADE, SUBGRADE, AND RIM ELEVATION

2 REVISED 20+147.92 FINISH GRADE, SUBGRADE, AND RIM ELEVATION

3 REVISED 20+148.17 PIPE 21 ELEVATION AND OFFSET

STA. 20+147 TO STA. 20+148

PROJECT NAME: CAMBRIDGE	
PROJECT NUMBER: STP 030-2(27)	
FILE NAME: t78f163xsl.dgn	PLOT DATE: 5/13/13
PROJECT LEADER: JLS	DRAWN BY: MBL
DESIGNED BY: MBL	CHECKED BY: JAD
CROSS SECTION SHEET 14	SHEET 95 OF 214

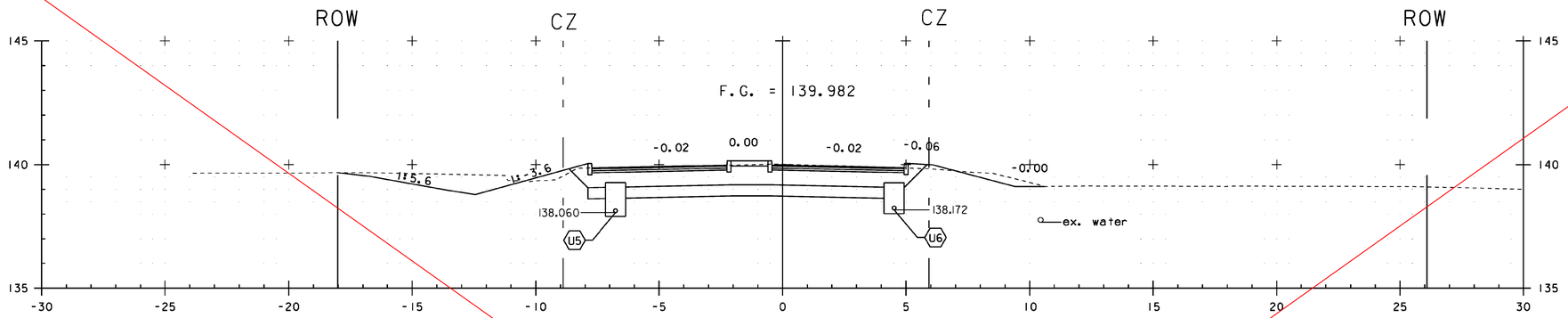

20+160.00

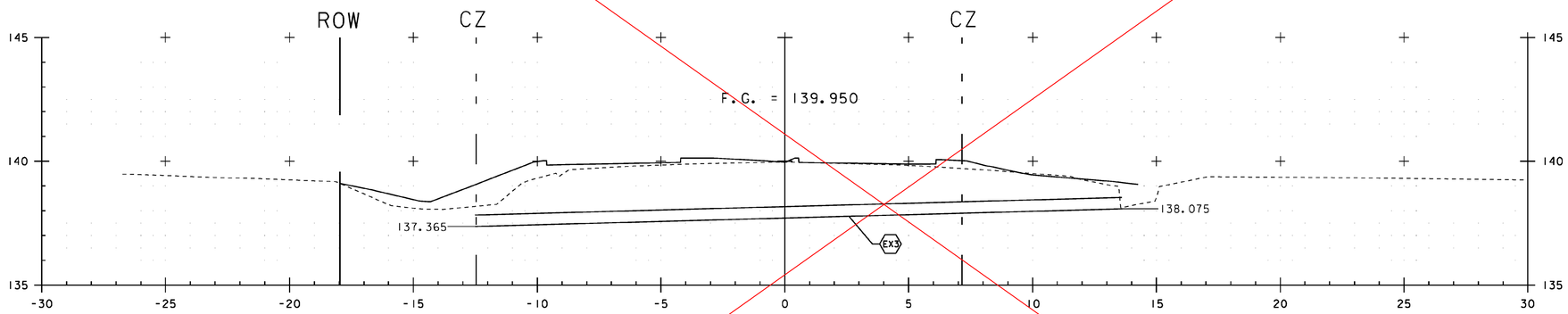

20+151.79

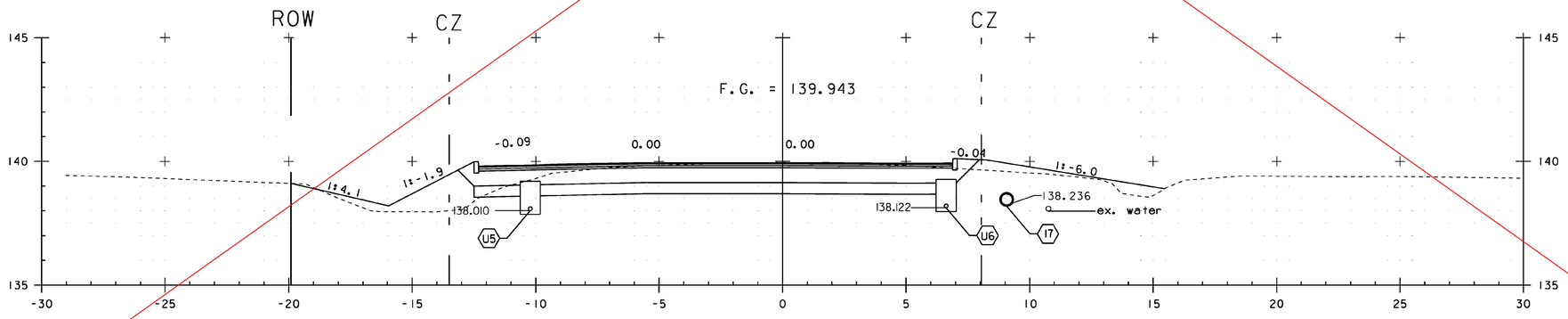

20+150.00

VT ROUTE 15

PROJECT NAME:	CAMBRIDGE
PROJECT NUMBER:	STP 030-2(27)

FILE NAME: t78f163xsl.dgn	PLOT DATE: 05-JUN-2012
PROJECT LEADER: JLS	DRAWN BY: MBL
DESIGNED BY: MBL	CHECKED BY: JAD
CROSS SECTION SHEET 15	SHEET 96 OF 214

STA. 20+150 TO STA. 20+160

SEE REVISION SHEET

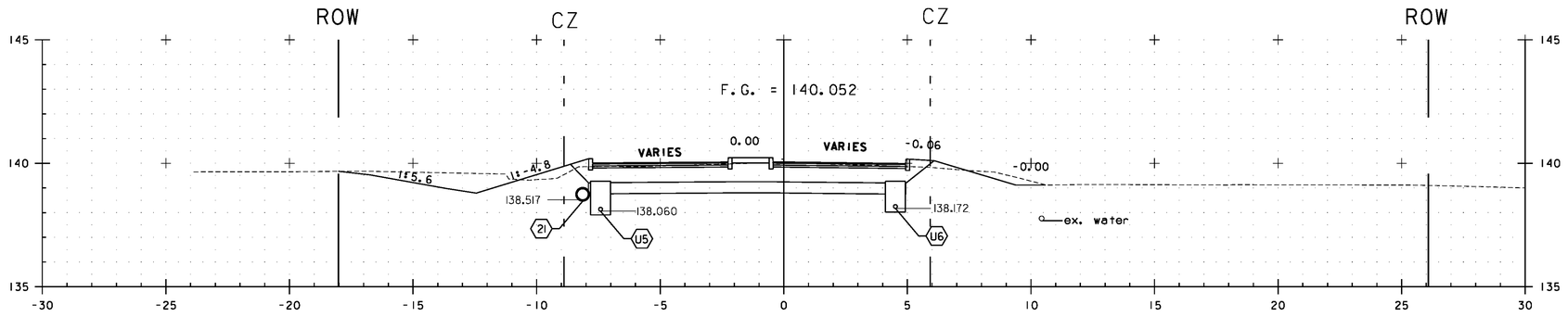

20+160.00 △3 △5

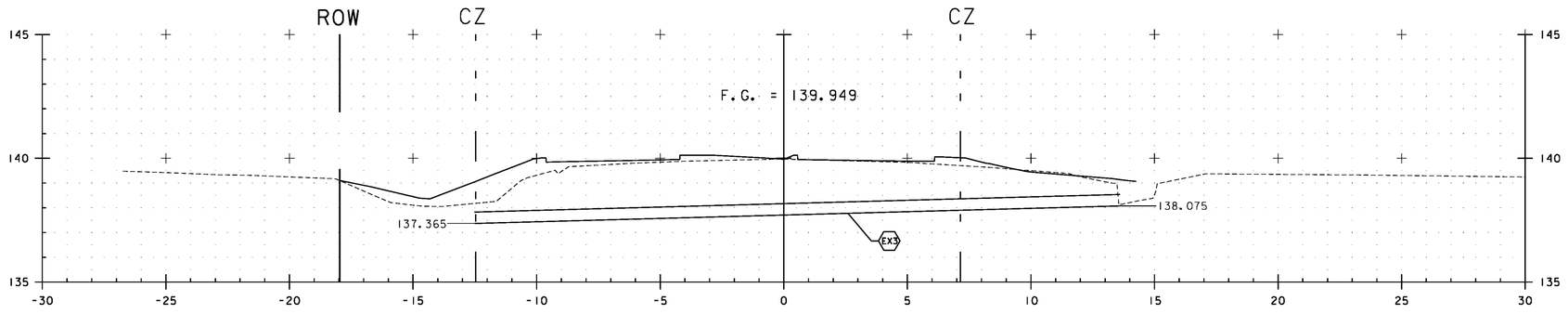

20+151.79 △2

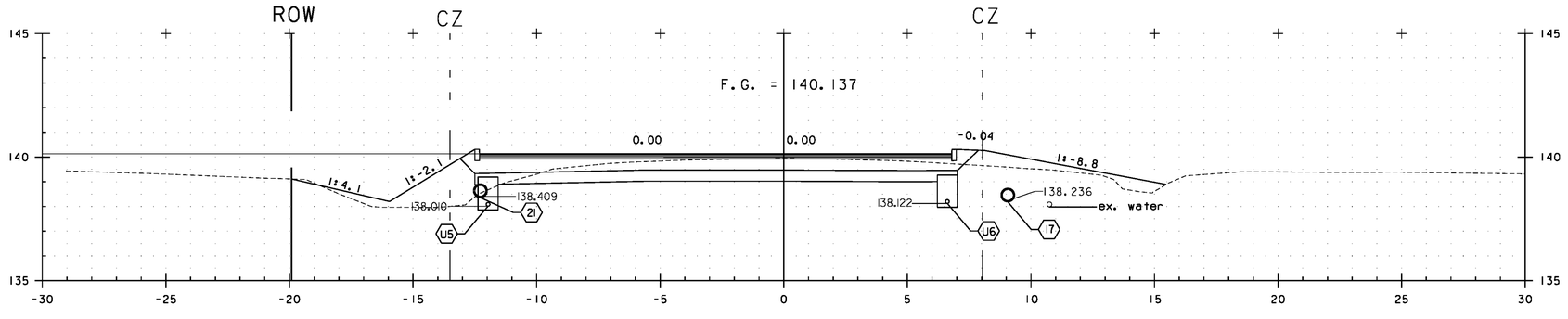

20+150.00 △1 △4

△1 REVISED 20+150.00 FINISH GRADE AND SUBGRADE

△2 REVISED 20+151.79 FINISH GRADE AND SUBGRADE

△3 REVISED 20+160.00 FINISH GRADE AND SUBGRADE

△5 REVISED 20+160.00 PIPE 21 ELEVATION AND OFFSET

△4 REVISED 20+151.79 FINISH GRADE AND SUBGRADE

0 5 10

SCALE IN METERS

STA. 20+150 TO STA. 20+160

VT ROUTE 15

PROJECT NAME: CAMBRIDGE
PROJECT NUMBER: STP 030-2(27)

FILE NAME: t78fi63xsl.dgn
PROJECT LEADER: JLS
DESIGNED BY: MBL
CROSS SECTION SHEET 15

PLOT DATE: 5/13/13
DRAWN BY: MBL
CHECKED BY: JAD
SHEET 96 OF 214

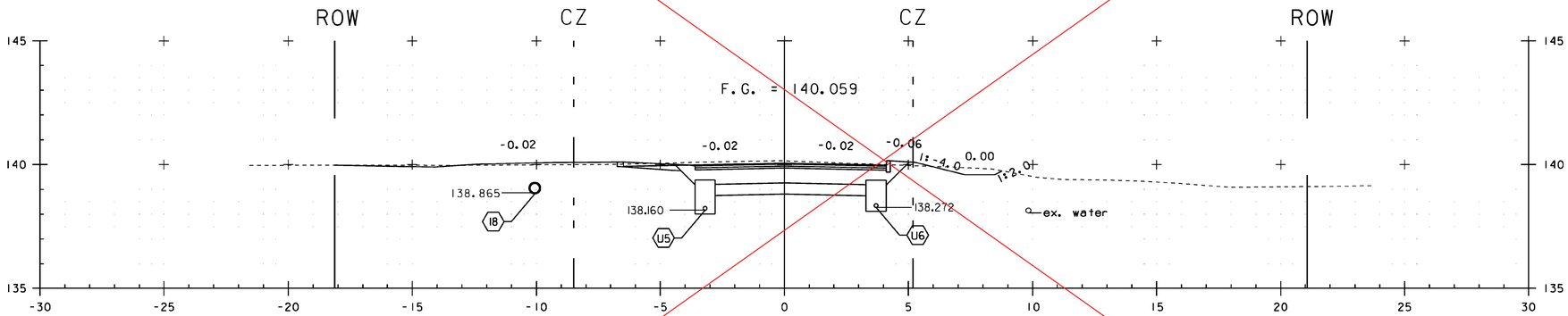

20+180.00

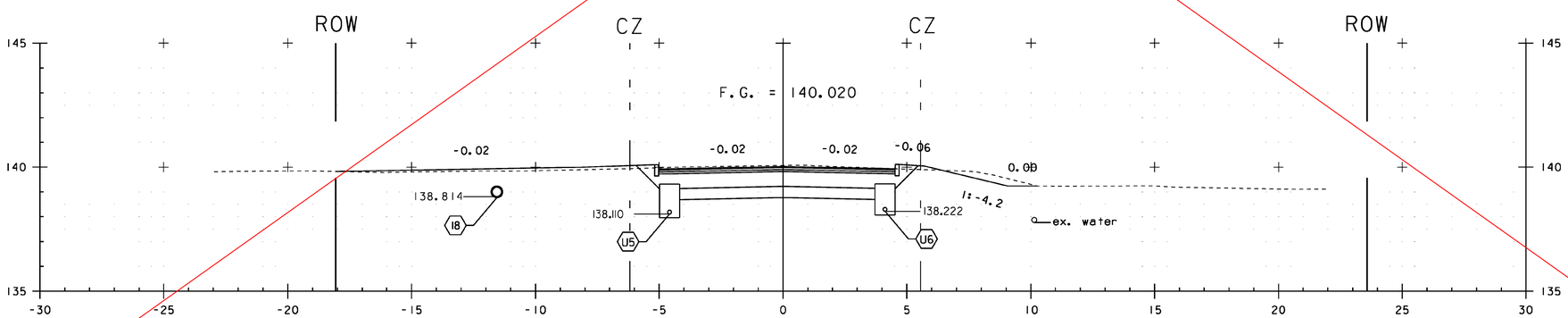

20+170.00

VT ROUTE 15

PROJECT NAME: CAMBRIDGE
PROJECT NUMBER: STP 030-2(27)

FILE NAME: t78f163xsl.dgn
PROJECT LEADER: JLS
DESIGNED BY: MBL
CROSS SECTION SHEET 16

PLOT DATE: 05-JUN-2012
DRAWN BY: MBL
CHECKED BY: JAD
SHEET 97 OF 214

STA. 20+170 TO STA. 20+180

SEE REVISION SHEET

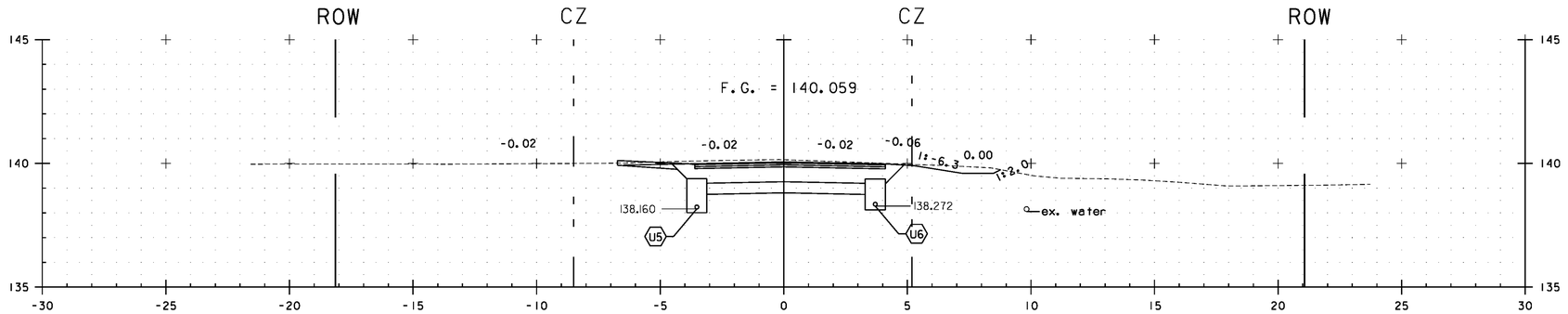

20+180.00 ② ④

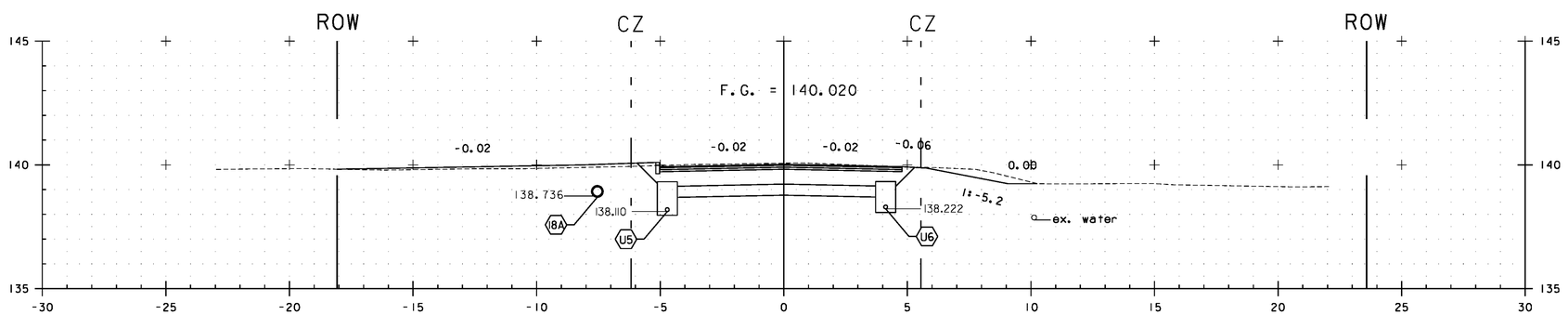

20+170.00 ① ③

VT ROUTE 15

0 5 10

SCALE IN METERS

① REVISED 20+170.00 FINISH GRADE AND SUBGRADE

② REVISED 20+180.00 FINISH GRADE AND SUBGRADE

③ REVISED 20+170.00 PIPE 18A ELEVATION AND OFFSET

④ REVISED 20+180.00 REMOVED PIPE 18A

STA. 20+170 TO STA. 20+180

PROJECT NAME: CAMBRIDGE
PROJECT NUMBER: STP 030-2(27)

FILE NAME: t78f163xsl.dgn
PROJECT LEADER: JLS
DESIGNED BY: MBL
CROSS SECTION SHEET 16

PLOT DATE: 5/13/13
DRAWN BY: MBL
CHECKED BY: JAD
SHEET 97 OF 214

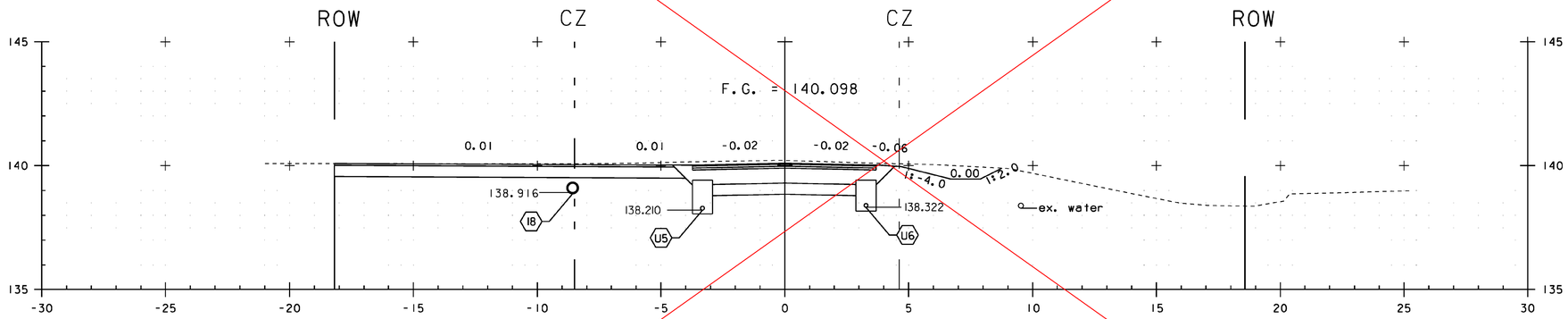

20+190.00

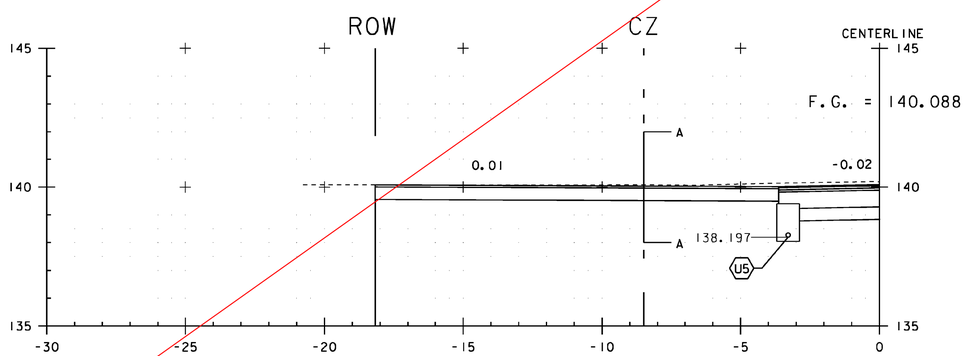

20+187.35
DRIVE LT.

VT ROUTE 15

STA. 20+187 TO STA. 20+190

PROJECT NAME: CAMBRIDGE	
PROJECT NUMBER: STP 030-2(27)	
FILE NAME: t78f163xsl.dgn	PLOT DATE: 05-JUN-2012
PROJECT LEADER: JLS	DRAWN BY: MBL
DESIGNED BY: MBL	CHECKED BY: JAD
CROSS SECTION SHEET 17	SHEET 98 OF 214

SEE REVISION SHEET

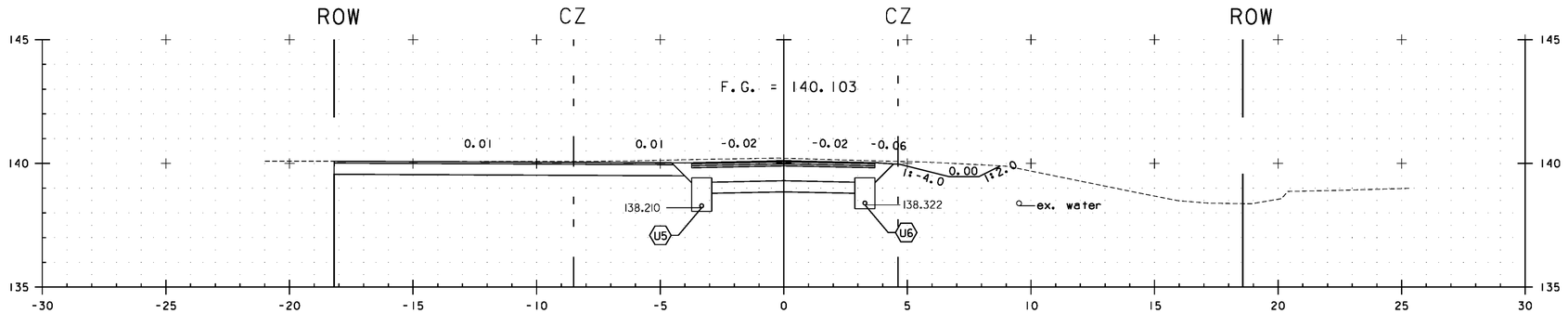

20+190.00 (2) (3)

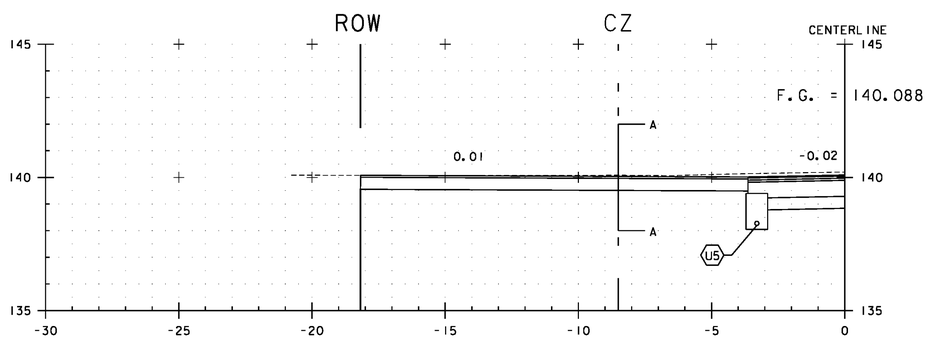

20+191.21
DRIVE LT. (1)

0 5 10

SCALE IN METERS

(1) REVISED 20+191.21 FINISH GRADE

(2) REVISED 20+190.00 FINISH GRADE AND SUBGRADE

(3) REVISED 20+190.00 REMOVED PIPE 18A

STA. 20+187 TO STA. 20+190

VT ROUTE 15

PROJECT NAME: CAMBRIDGE
PROJECT NUMBER: STP 030-2(27)

FILE NAME: t78f163xsl.dgn
PROJECT LEADER: JLS
DESIGNED BY: MBL
CROSS SECTION SHEET 17

PLOT DATE: 5/13/13
DRAWN BY: MBL
CHECKED BY: JAD
SHEET 98 OF 214

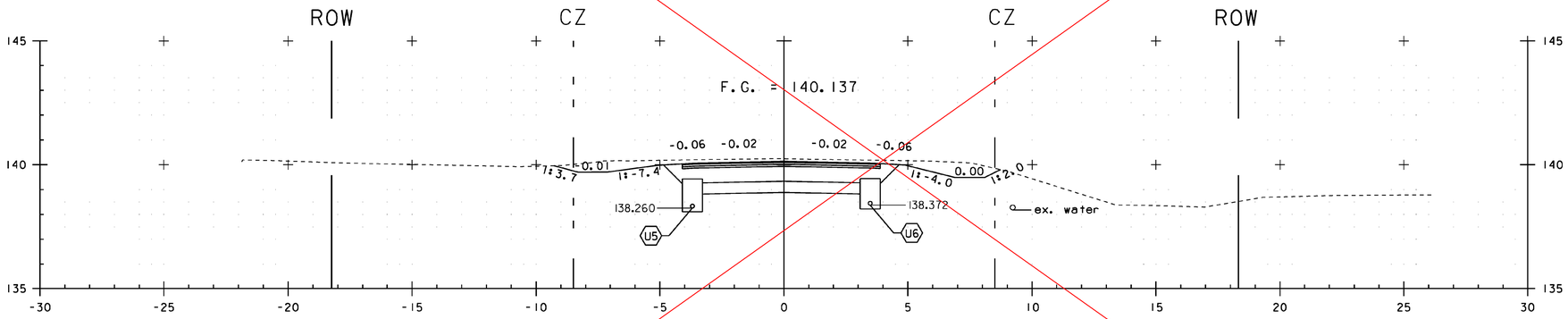

20+200.00

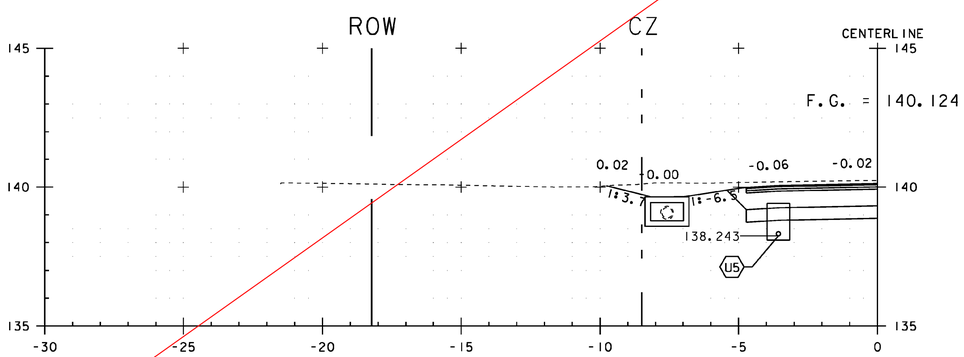

20+196.65

VT ROUTE 15

PROJECT NAME:	CAMBRIDGE
PROJECT NUMBER:	STP 030-2(27)
FILE NAME: t78f163xsl.dgn	PLOT DATE: 05-JUN-2012
PROJECT LEADER: JLS	DRAWN BY: MBL
DESIGNED BY: MBL	CHECKED BY: JAD
CROSS SECTION SHEET 18	SHEET 99 OF 214

STA. 20+197 TO STA. 20+200

SEE REVISION SHEET

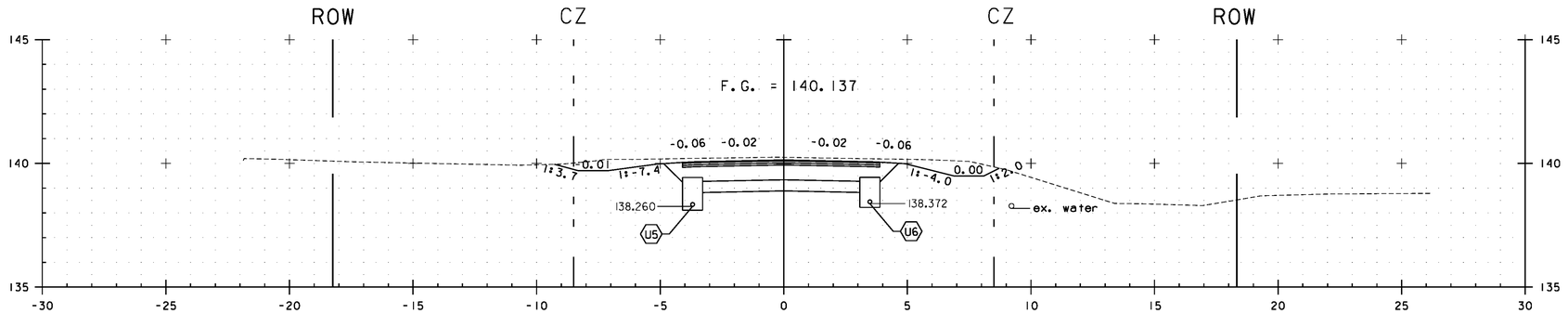

20+200.00 1 2

VT ROUTE 15

0 5 10

SCALE IN METERS

1 REVISED 20+200.00 FINISH GRADE AND SUBGRADE

2 REVISED 20+200.00 REMOVED PIPE 18A

STA. 20+197 TO STA. 20+200

PROJECT NAME: CAMBRIDGE	
PROJECT NUMBER: STP 030-2(27)	
FILE NAME: t78f163xsl.dgn	PLOT DATE: 5/13/13
PROJECT LEADER: JLS	DRAWN BY: MBL
DESIGNED BY: MBL	CHECKED BY: JAD
CROSS SECTION SHEET 18	SHEET 99 OF 214

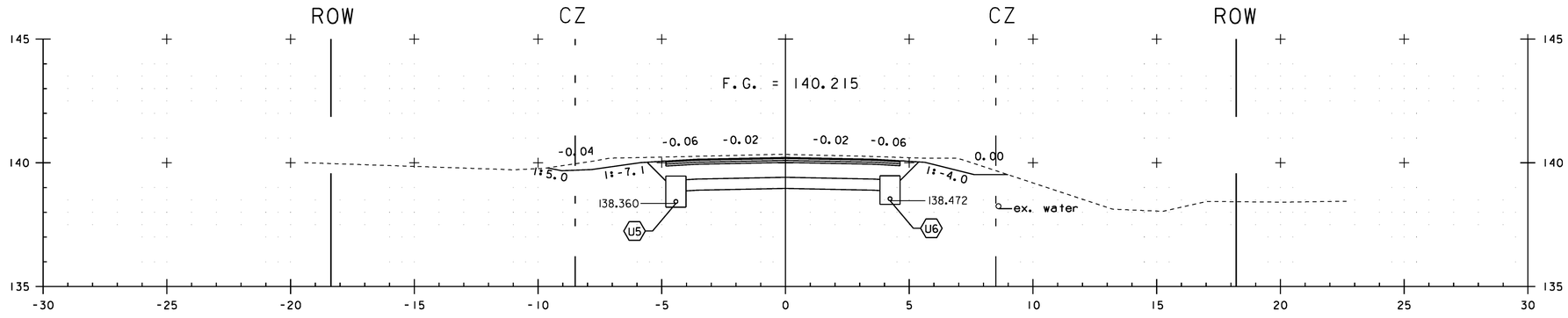

20+220.00

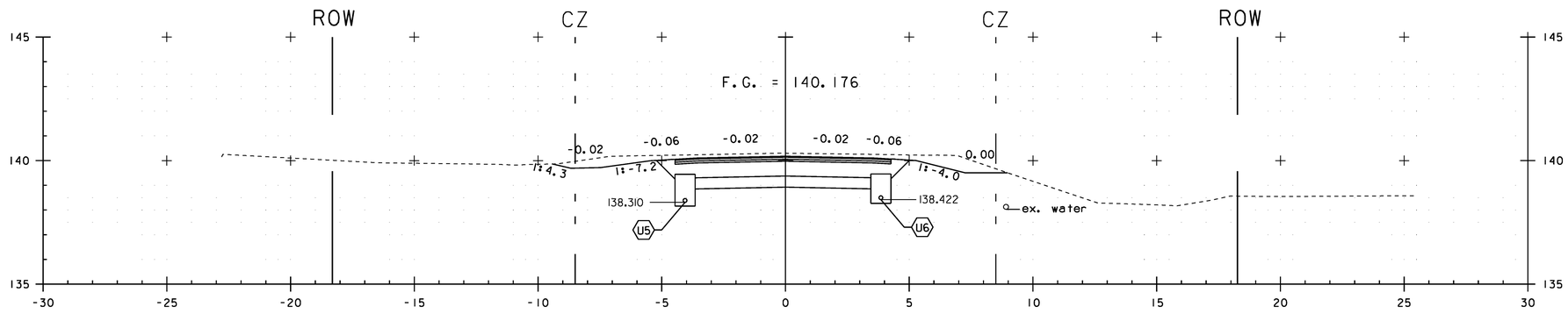

20+210.00

VT ROUTE 15

STA. 20+210 TO STA. 20+220

PROJECT NAME:	CAMBRIDGE
PROJECT NUMBER:	STP 030-2(27)
FILE NAME: t78f163xsl.dgn	PLOT DATE: 05-JUN-2012
PROJECT LEADER: JLS	DRAWN BY: MBL
DESIGNED BY: MBL	CHECKED BY: JAD
CROSS SECTION SHEET 19	SHEET 100 OF 214

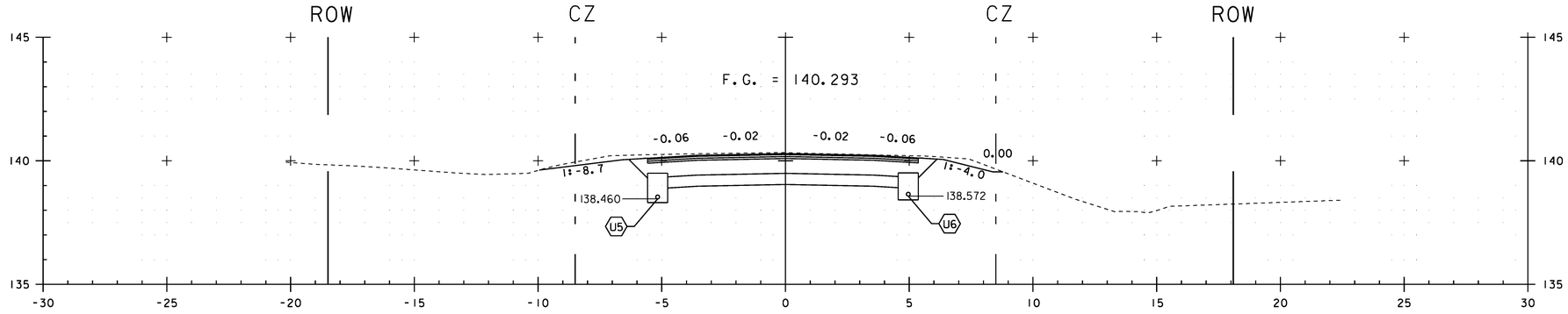

20+240.00

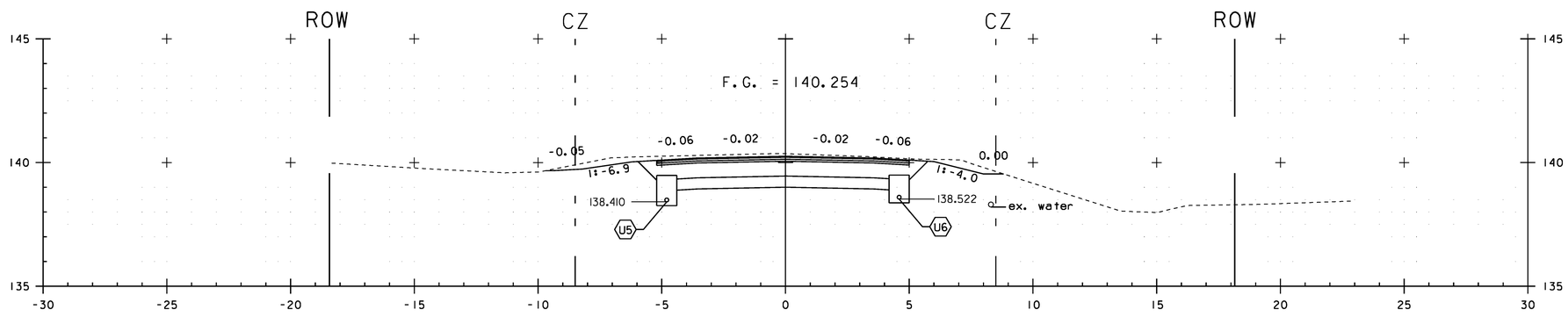

20+230.00

VT ROUTE 15

PROJECT NAME:	CAMBRIDGE
PROJECT NUMBER:	STP 030-2(27)

FILE NAME: t78f163xsl.dgn	PLOT DATE: 05-JUN-2012
PROJECT LEADER: JLS	DRAWN BY: MBL
DESIGNED BY: MBL	CHECKED BY: JAD
CROSS SECTION SHEET 20	SHEET 101 OF 214

STA. 20+230 TO STA. 20+240

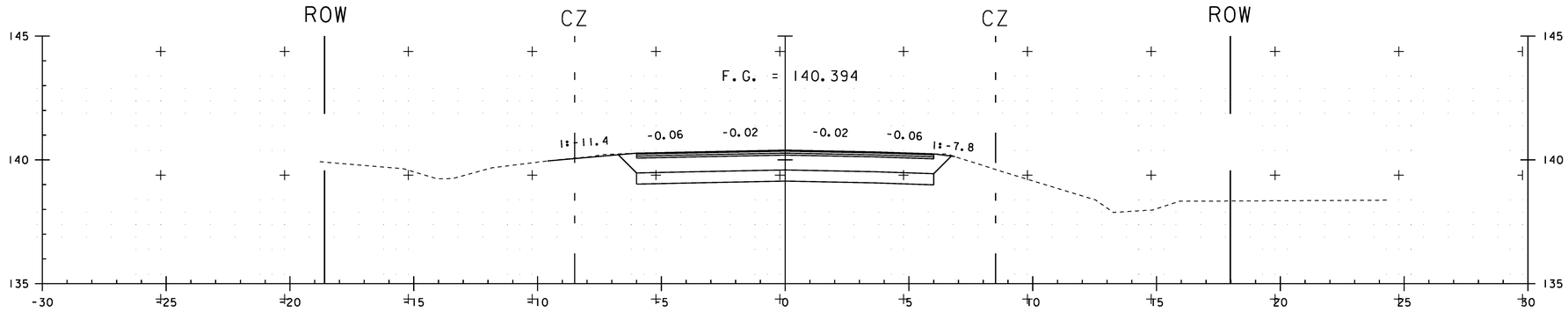

20+260.00

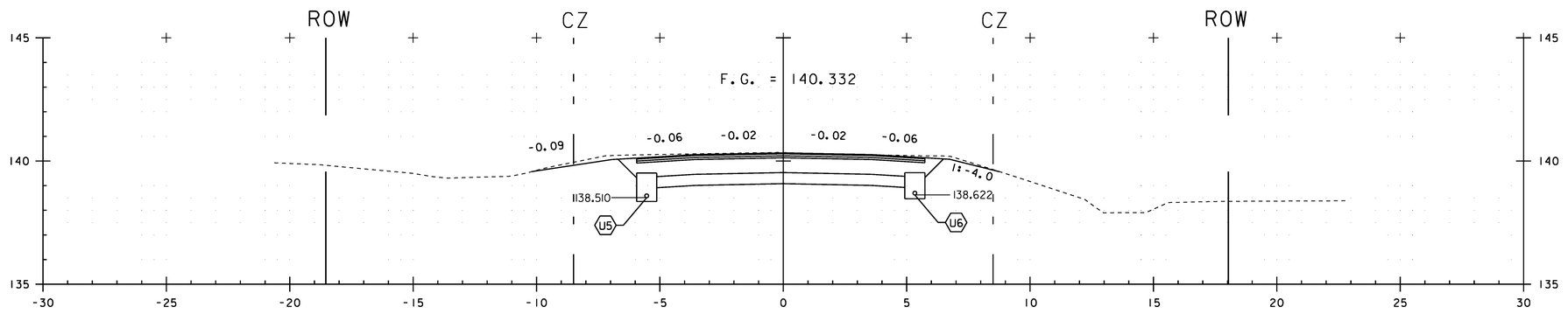

20+250.00

VT ROUTE 15

NOTE:
UNDERDRAIN ENDS AT FLUSHING BASIN
AT STA. 20+255.331 LT & RT

STA. 20+250 TO STA. 20+260

PROJECT NAME: CAMBRIDGE	
PROJECT NUMBER: STP 030-2(27)	
FILE NAME: t78f163xsl.dgn	PLOT DATE: 05-JUN-2012
PROJECT LEADER: JLS	DRAWN BY: MBL
DESIGNED BY: MBL	CHECKED BY: JAD
CROSS SECTION SHEET 21	SHEET 102 OF 214

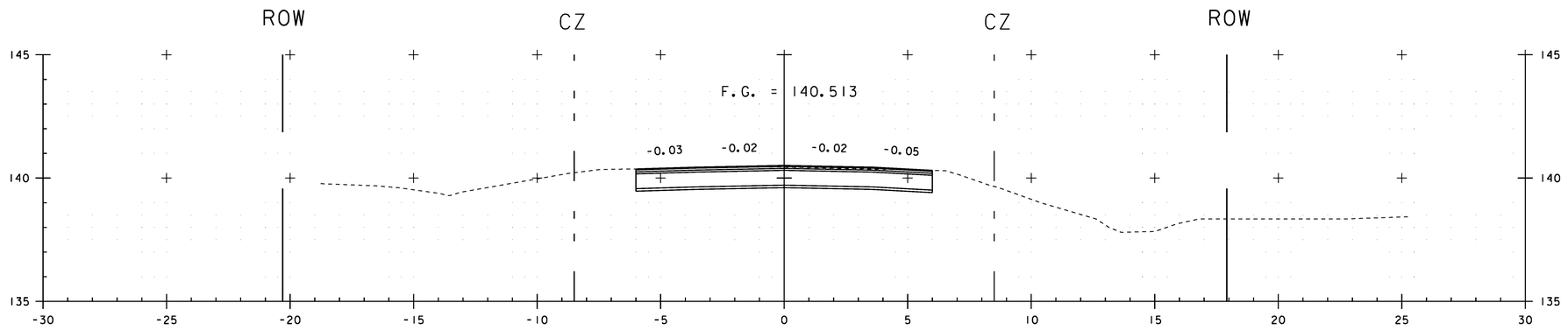

20+270.00

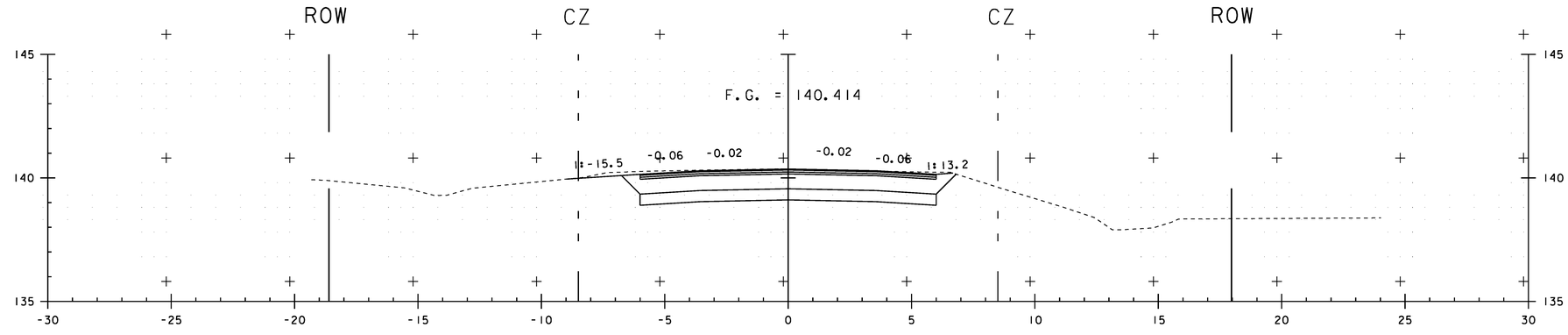

20+261.702
END PROJECT
BEGIN APPROACH

STA. 20+262 TO STA. 20+270

VT ROUTE 15

PROJECT NAME: CAMBRIDGE
PROJECT NUMBER: STP 030-2(27)

FILE NAME: t78f163xsl.dgn
PROJECT LEADER: JLS
DESIGNED BY: MBL
CROSS SECTION SHEET 22

PLOT DATE: 05-JUN-2012
DRAWN BY: MBL
CHECKED BY: JAD
SHEET 103 OF 214

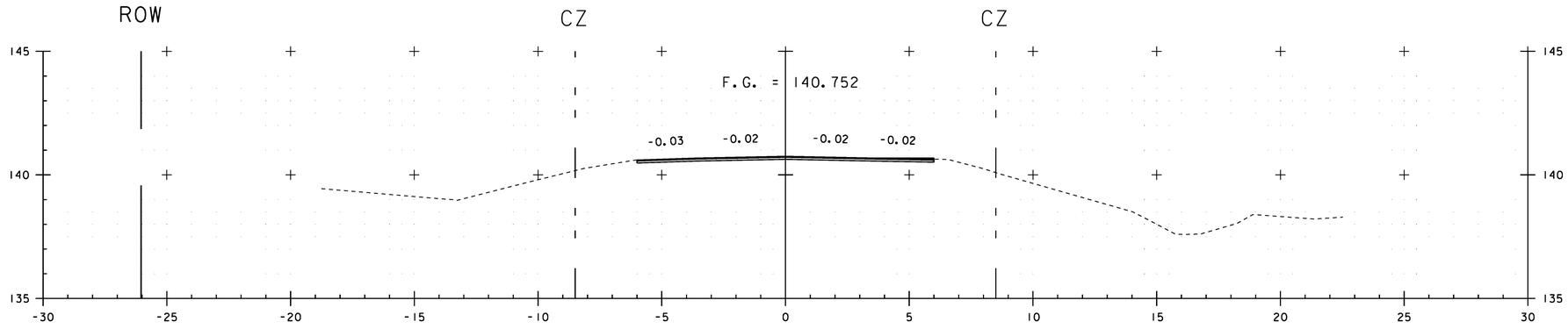

20+290.00

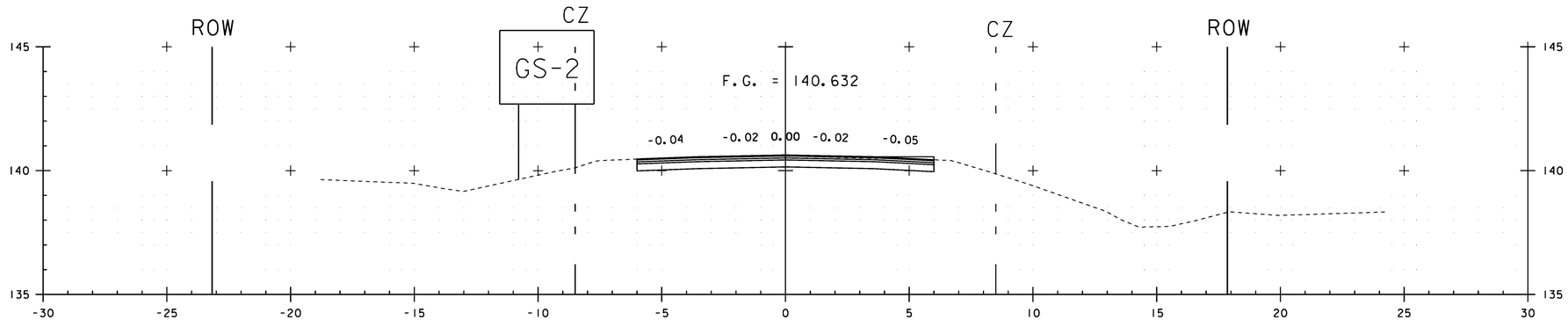

20+280.00

VT ROUTE 15

PROJECT NAME:	CAMBRIDGE
PROJECT NUMBER:	STP 030-2(27)

FILE NAME: t78f163xsl.dgn	PLOT DATE: 05-JUN-2012
PROJECT LEADER: JLS	DRAWN BY: MBL
DESIGNED BY: MBL	CHECKED BY: JAD
CROSS SECTION SHEET 23	SHEET 104 OF 214

STA. 20+280 TO STA. 20+290

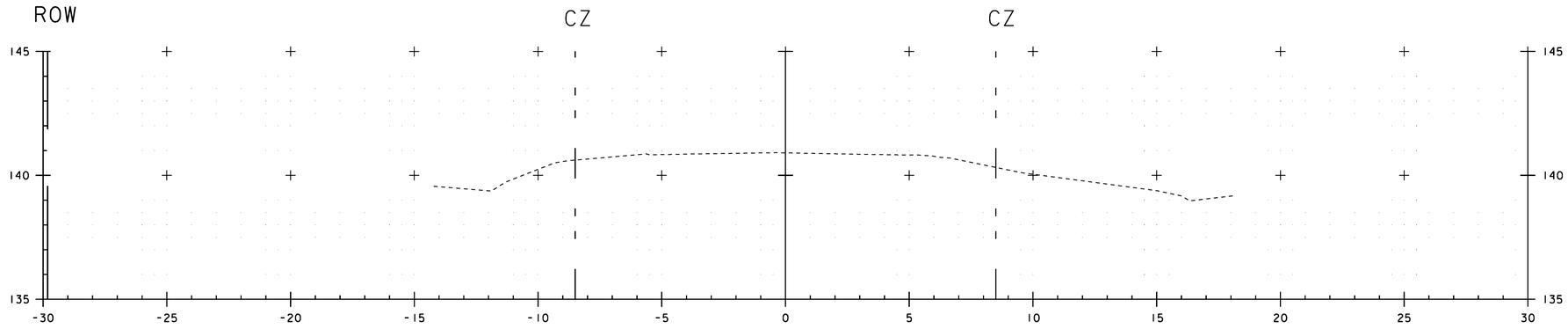

20+303.129
END APPROACH
MATCH EXISTING

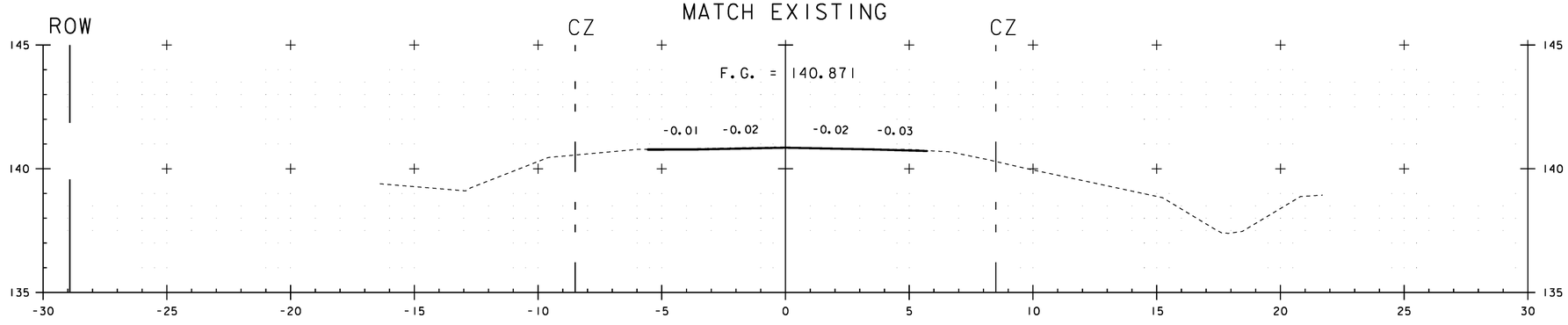

20+300.00

VT ROUTE 15

STA. 20+300 TO STA. 20+303

PROJECT NAME:	CAMBRIDGE
PROJECT NUMBER:	STP 030-2(27)

FILE NAME: t78f163xsl.dgn	PLOT DATE: 05-JUN-2012
PROJECT LEADER: JLS	DRAWN BY: MBL
DESIGNED BY: MBL	CHECKED BY: JAD
CROSS SECTION SHEET 24	SHEET 105 OF 214

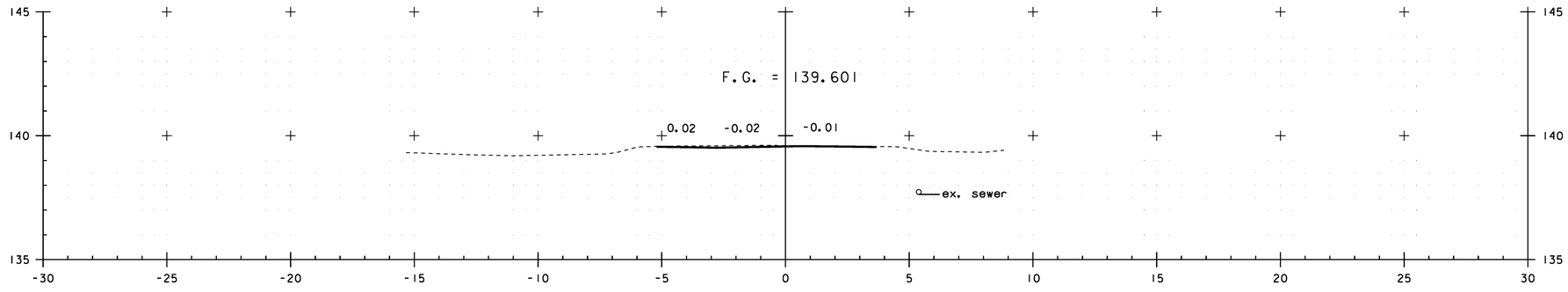

9+870.00

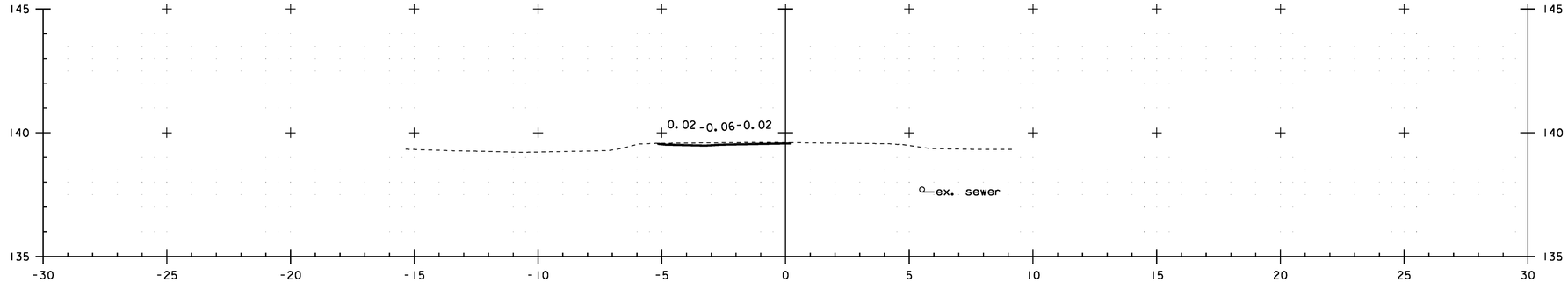

9+869.42
BEGIN APPROACH
MATCH EXISTING

VT ROUTE 108

STA. 9+869 TO STA. 9+870

PROJECT NAME: CAMBRIDGE	
PROJECT NUMBER: STP 030-2(27)	
FILE NAME: t78f163xsl.dgn	PLOT DATE: 05-JUN-2012
PROJECT LEADER: JLS	DRAWN BY: MBL
DESIGNED BY: MBL	CHECKED BY: JAD
CROSS SECTION SHEET 25	SHEET 106 OF 214

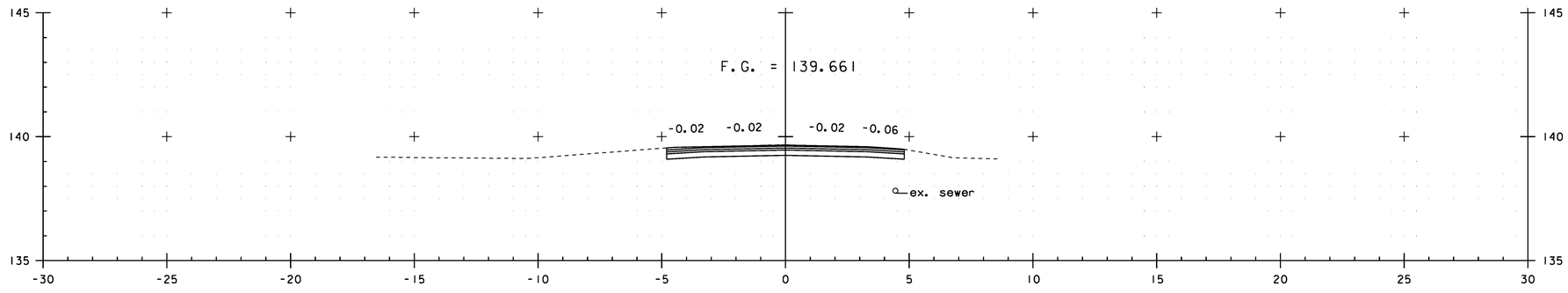

9+890.00

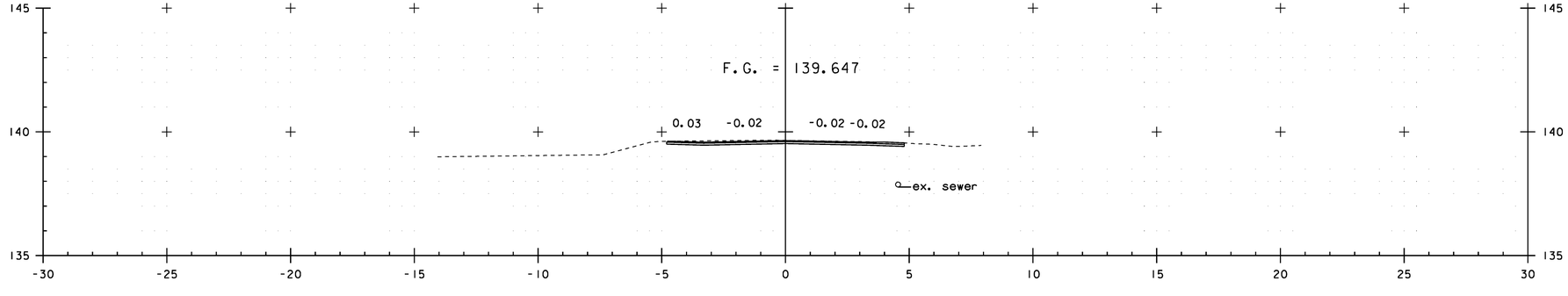

9+880.00

VT ROUTE 108

STA. 9+880 TO STA. 9+890

PROJECT NAME:	CAMBRIDGE
PROJECT NUMBER:	STP 030-2(27)

FILE NAME: t78f163xsl.dgn	PLOT DATE: 05-JUN-2012
PROJECT LEADER: JLS	DRAWN BY: MBL
DESIGNED BY: MBL	CHECKED BY: JAD
CROSS SECTION SHEET 26	SHEET 107 OF 214

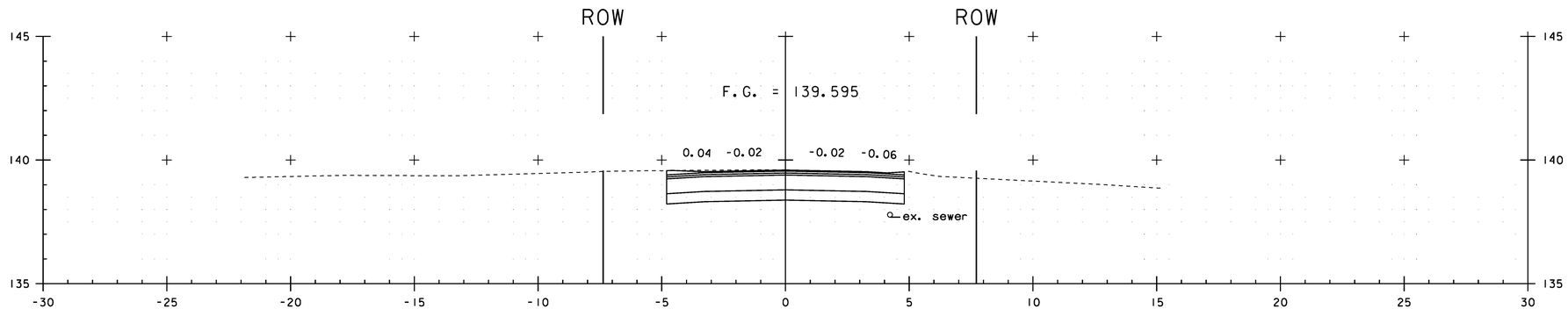

9+910.00

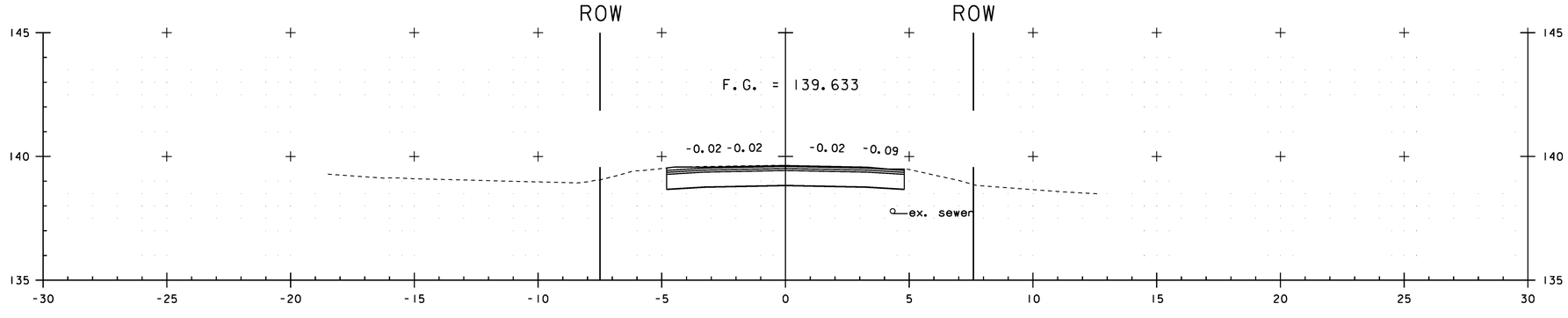

9+900.00

VT ROUTE 108

STA. 9+900 TO STA. 9+910

PROJECT NAME: CAMBRIDGE
PROJECT NUMBER: STP 030-2(27)

FILE NAME: t78f163xsl.dgn
PROJECT LEADER: JLS
DESIGNED BY: MBL
CROSS SECTION SHEET 27

PLOT DATE: 05-JUN-2012
DRAWN BY: MBL
CHECKED BY: JAD
SHEET 108 OF 214

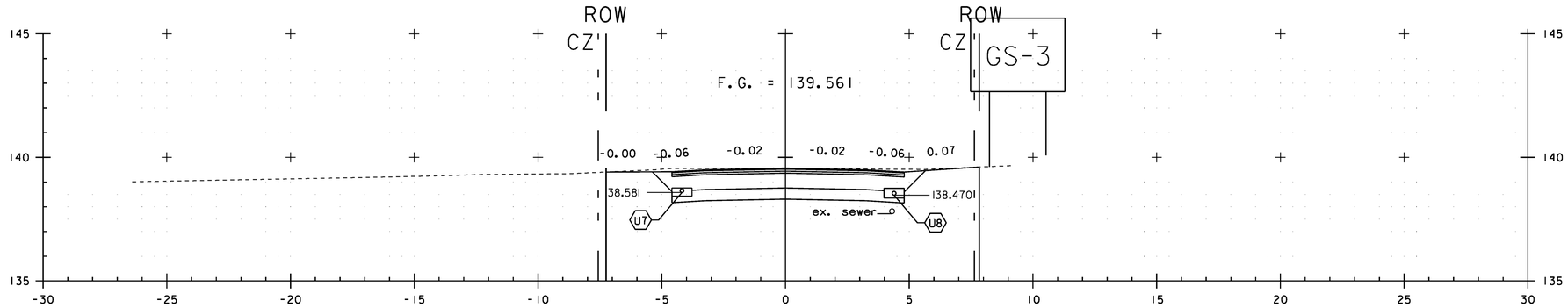

9+920.00

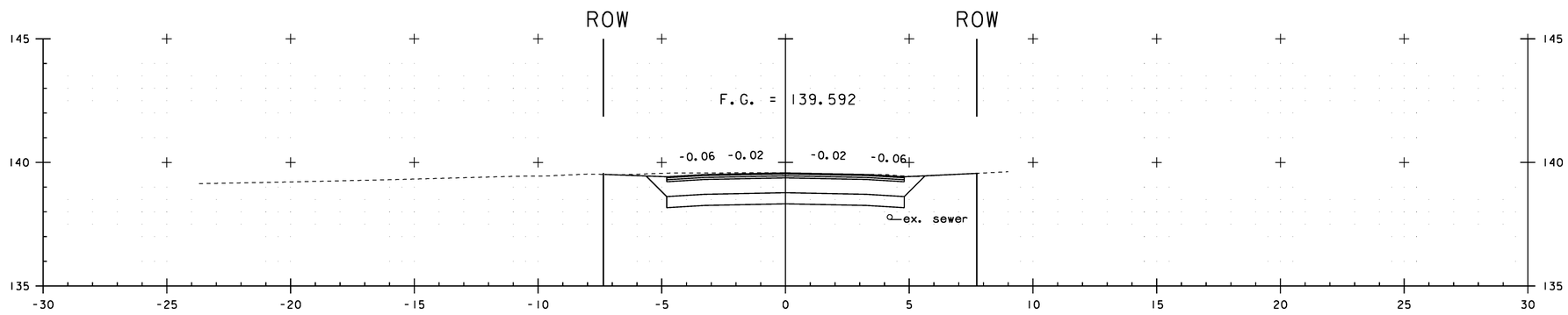

9+910.905
END APPROACH
BEGIN PROJECT

VT ROUTE 108

NOTE:
UNDERDRAIN BEGINS WITH FLUSHING BASIN AT STA. 9+913.839 LT & RT

STA. 9+911 TO STA. 9+920

PROJECT NAME: CAMBRIDGE
PROJECT NUMBER: STP 030-2(27)

FILE NAME: t78f163xsl.dgn
PROJECT LEADER: JLS
DESIGNED BY: MBL
CROSS SECTION SHEET 28

PLOT DATE: 05-JUN-2012
DRAWN BY: MBL
CHECKED BY: JAD
SHEET 109 OF 214

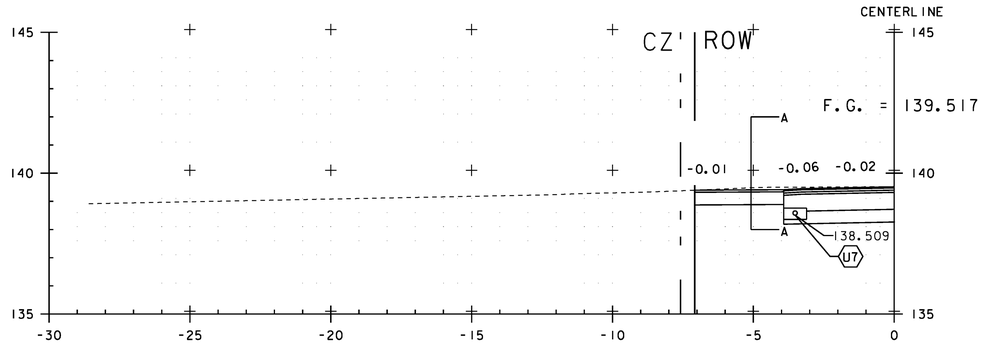

9+934.42
DRIVE LT.

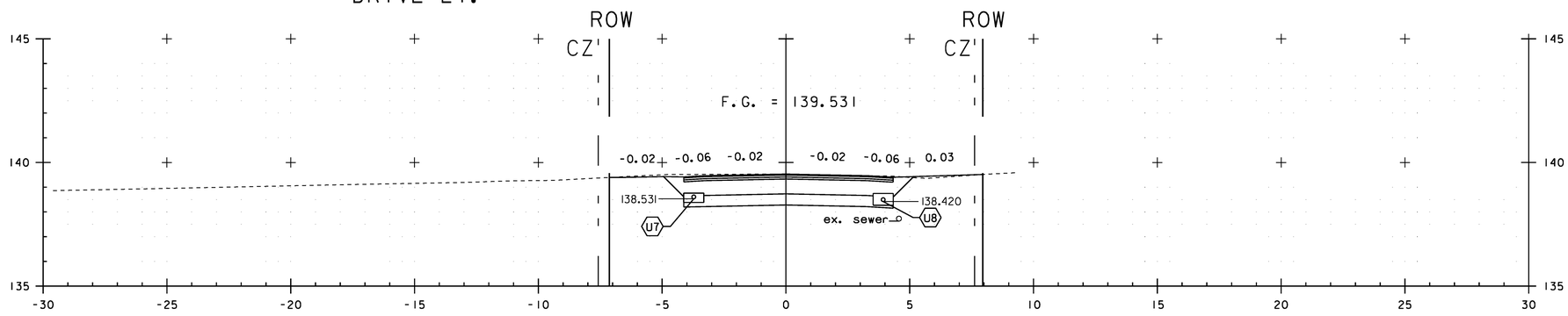

9+930.00

VT ROUTE 108

STA. 9+930 TO STA. 9+934

PROJECT NAME: CAMBRIDGE
PROJECT NUMBER: STP 030-2(27)

FILE NAME: t78f163xsl.dgn
PROJECT LEADER: JLS
DESIGNED BY: MBL
CROSS SECTION SHEET 29

PLOT DATE: 05-JUN-2012
DRAWN BY: MBL
CHECKED BY: JAD
SHEET 110 OF 214

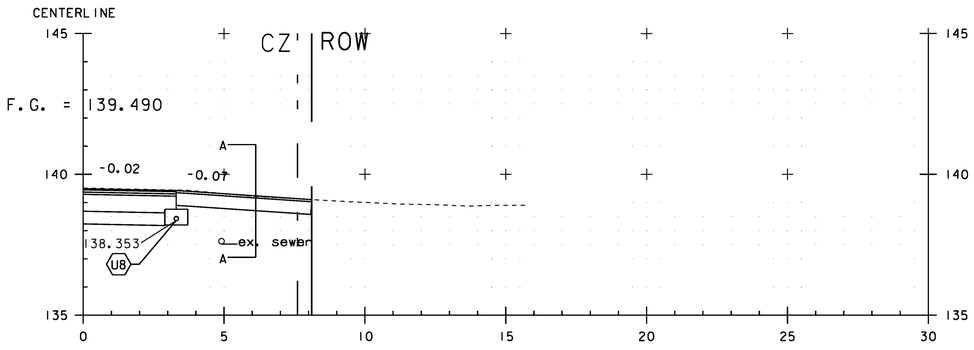

9+943.48
DRIVE RT.

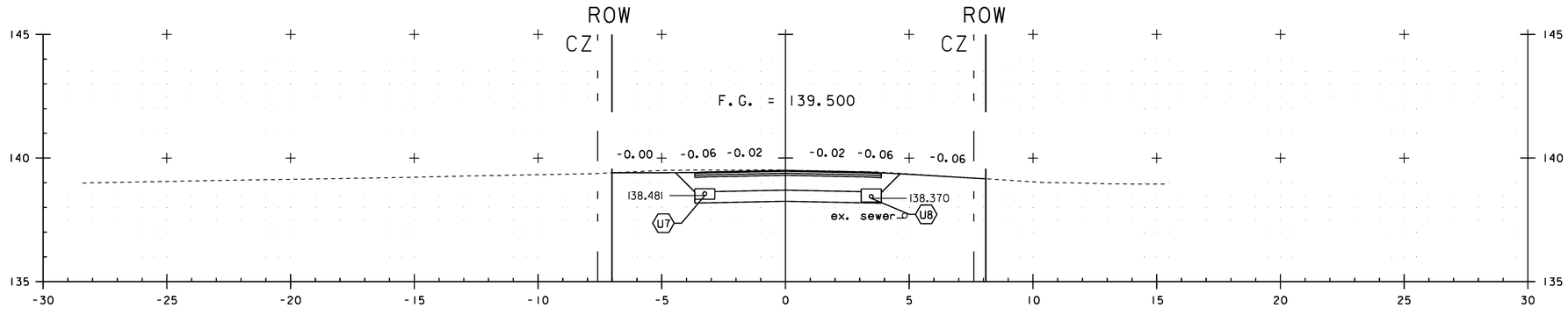

9+940.00

VT ROUTE 108

STA. 9+940 TO STA. 9+943

PROJECT NAME:	CAMBRIDGE
PROJECT NUMBER:	STP 030-2(27)
FILE NAME: t78f163xsl.dgn	PLOT DATE: 05-JUN-2012
PROJECT LEADER: JLS	DRAWN BY: MBL
DESIGNED BY: MBL	CHECKED BY: JAD
CROSS SECTION SHEET 30	SHEET 111 OF 214

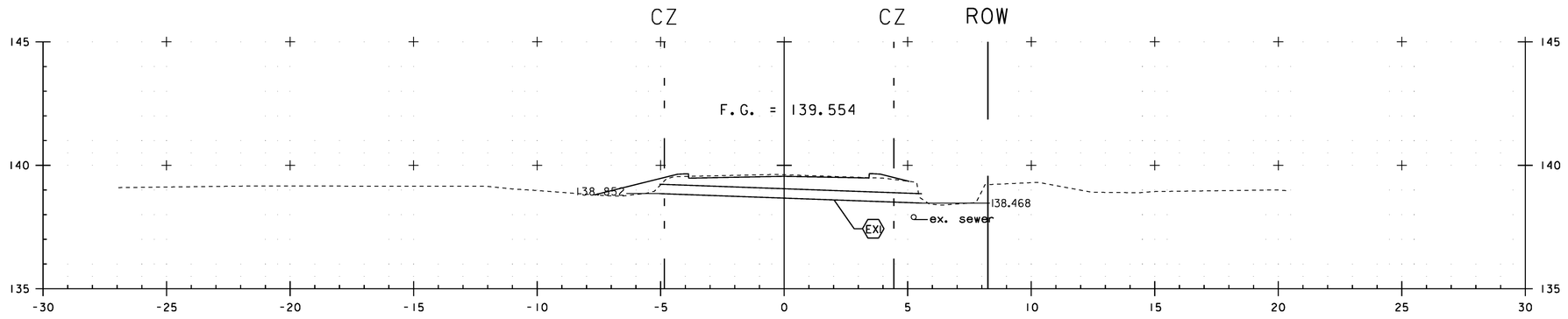

9+957.97

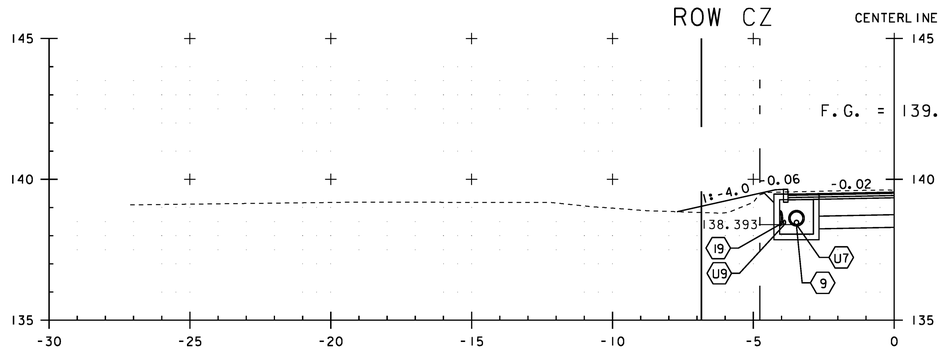

9+957.24

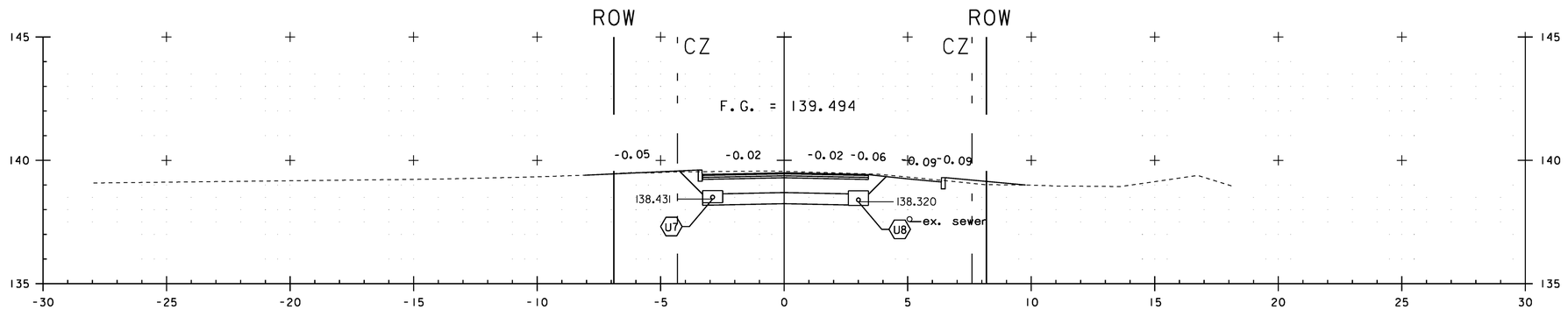

9+950.00

VT ROUTE 108

PROJECT NAME: CAMBRIDGE
PROJECT NUMBER: STP 030-2(27)

FILE NAME: t78f163xsl.dgn
PROJECT LEADER: JLS
DESIGNED BY: MBL
CROSS SECTION SHEET 31

PLOT DATE: 05-JUN-2012
DRAWN BY: MBL
CHECKED BY: JAD
SHEET 112 OF 214

STA. 9+950 TO STA. 9+958

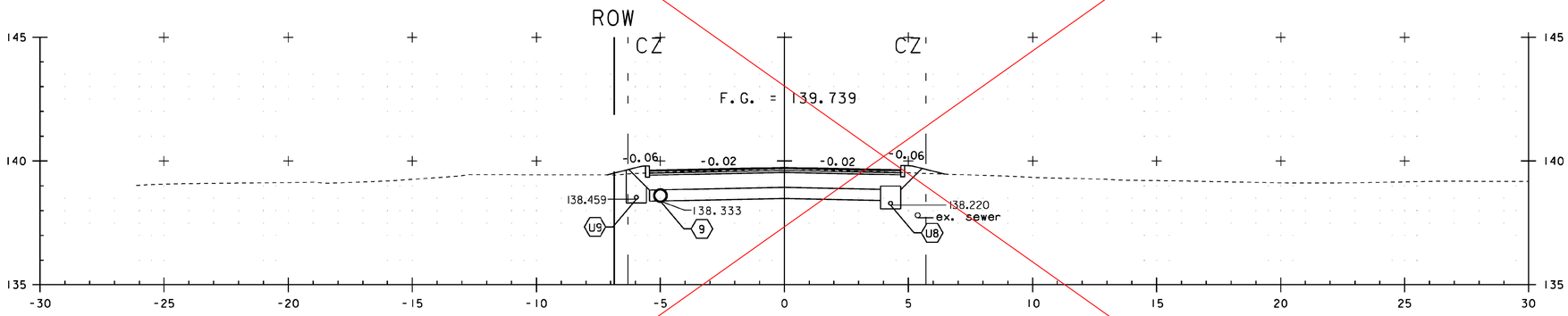

9+970.00

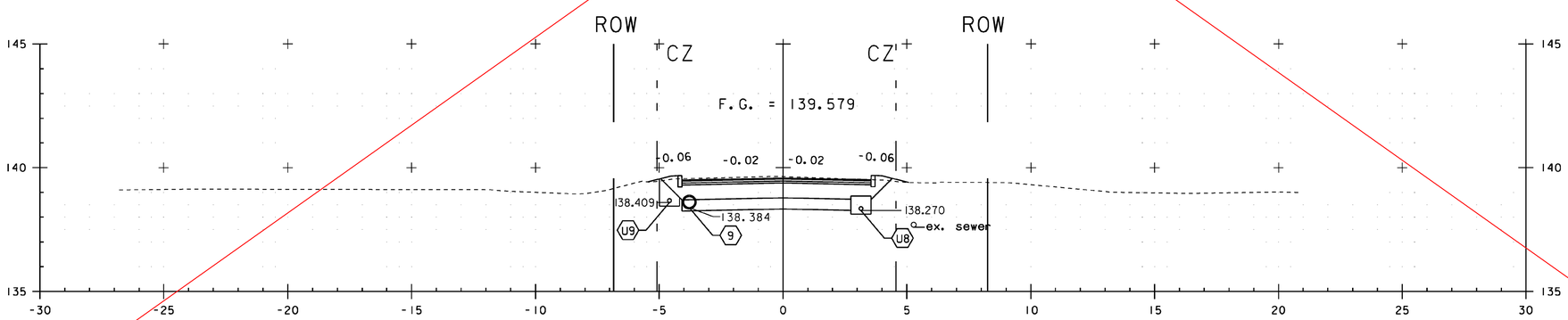

9+960.00

VT ROUTE 108

STA. 9+960 TO STA. 9+970

PROJECT NAME: CAMBRIDGE
PROJECT NUMBER: STP 030-2(27)

FILE NAME: t78f163xsl.dgn
PROJECT LEADER: JLS
DESIGNED BY: MBL
CROSS SECTION SHEET 32

PLOT DATE: 05-JUN-2012
DRAWN BY: MBL
CHECKED BY: JAD
SHEET 113 OF 214

SEE REVISION SHEET

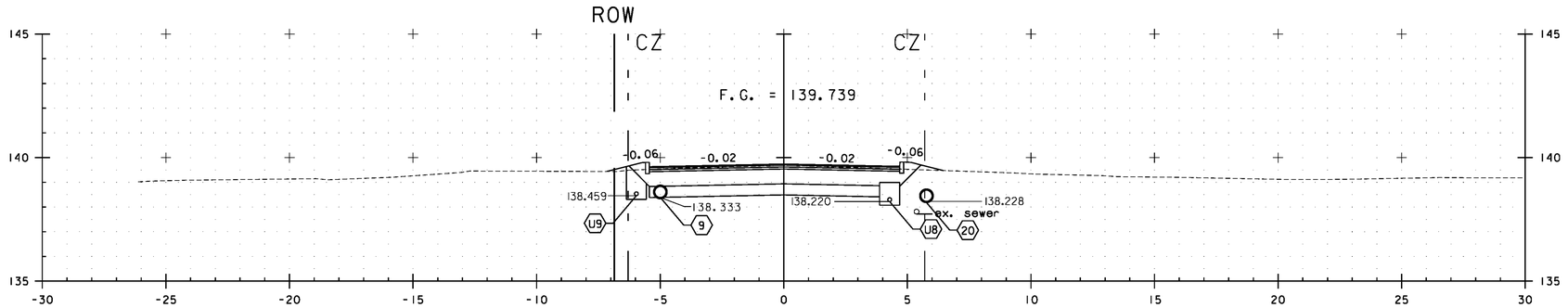

9+970.00 (1)

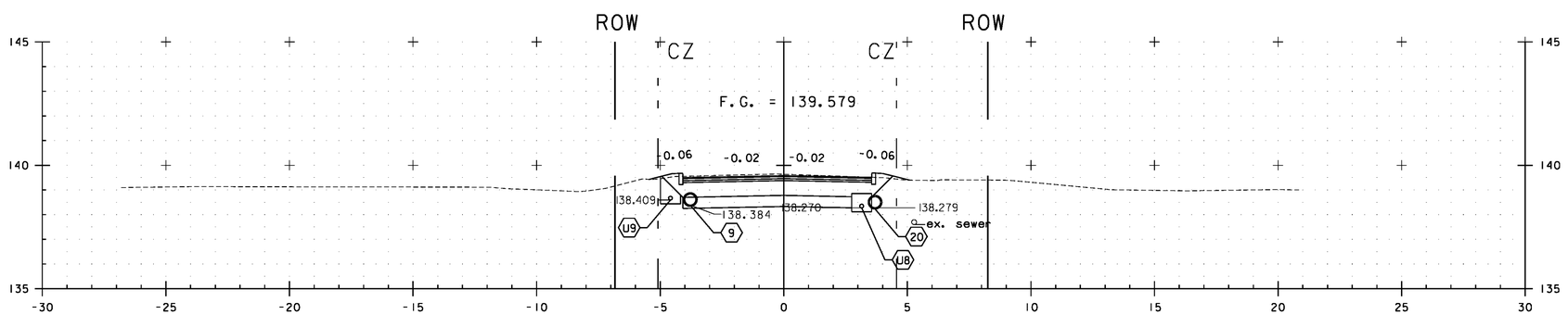

9+960.00

VT ROUTE 108

0 5 10

SCALE IN METERS

(1) REVISED 9+970 FINISH GRADE AND SUBGRADE

STA. 9+960 TO STA. 9+970

PROJECT NAME: CAMBRIDGE
PROJECT NUMBER: STP 030-2(27)

FILE NAME: t78fi63xsl.dgn
PROJECT LEADER: JLS
DESIGNED BY: MBL
CROSS SECTION SHEET 32 - REVISED

PLOT DATE: 4/22/13
DRAWN BY: MBL
CHECKED BY: JAD
SHEET 113 OF 214

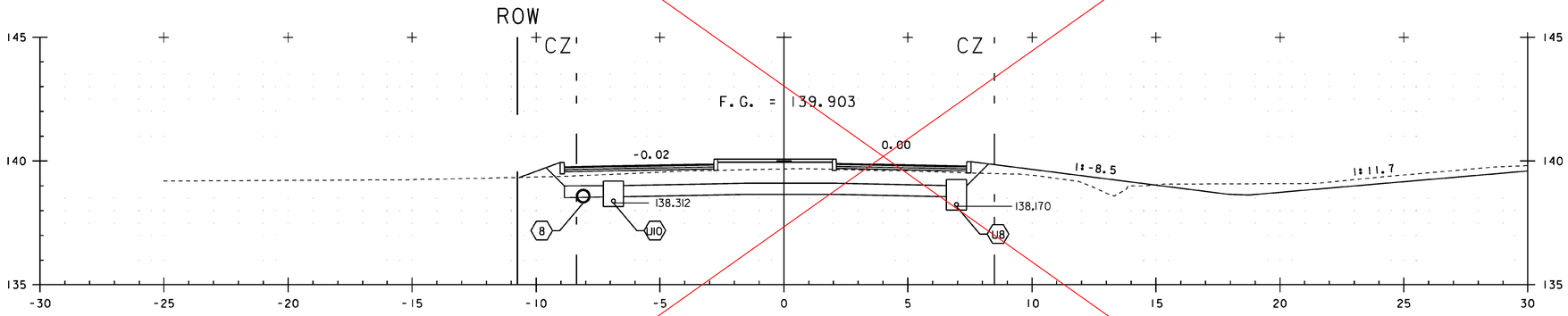

9+980.00

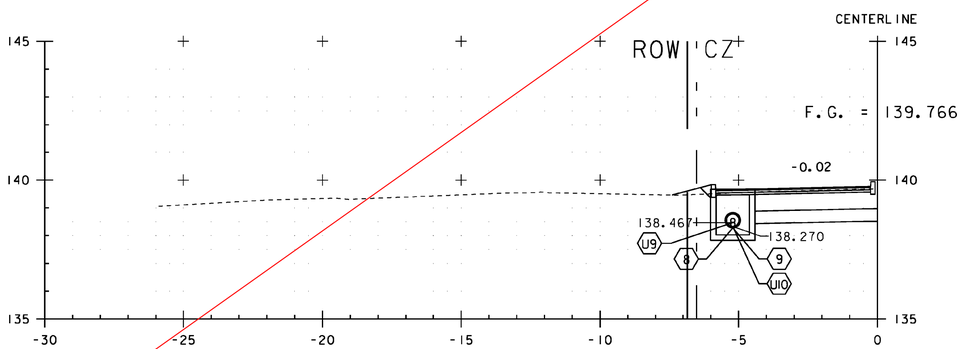

9+971.69

VT ROUTE 108

PROJECT NAME:	CAMBRIDGE
PROJECT NUMBER:	STP 030-2(27)

FILE NAME: t78f163xsl.dgn	PLOT DATE: 05-JUN-2012
PROJECT LEADER: JLS	DRAWN BY: MBL
DESIGNED BY: MBL	CHECKED BY: JAD
CROSS SECTION SHEET 33	SHEET 114 OF 214

STA. 9+972 TO STA. 9+980

SEE REVISION SHEET

Metric

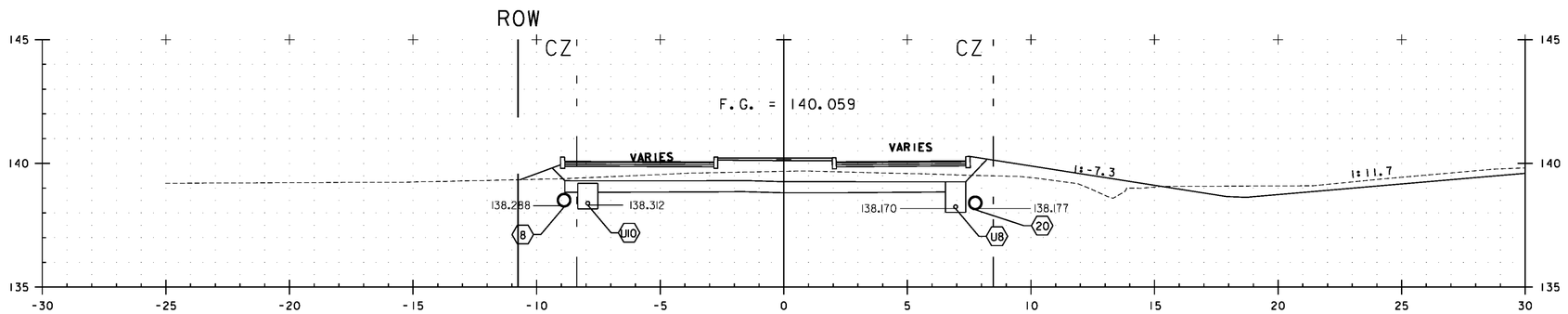

9+980.00 △1

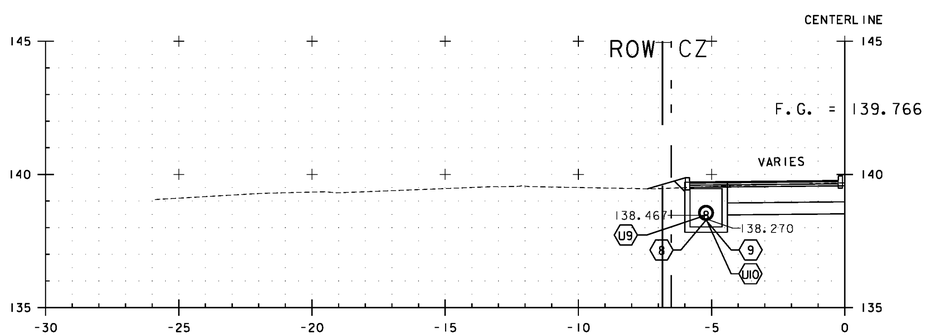

9+971.69 △2

VT ROUTE 108

0 5 10
SCALE IN METERS

△1 REVISED 9+980 FINISH GRADE AND SUBGRADE

△2 REVISED REVISED FINISH GRADE, SUBGRADE, AND RIM ELEVATION STA. 9+972 TO STA. 9+980

PROJECT NAME: CAMBRIDGE	
PROJECT NUMBER: STP 030-2(27)	
FILE NAME: t78f163xsl.dgn	PLOT DATE: 4/22/13
PROJECT LEADER: JLS	DRAWN BY: MBL
DESIGNED BY: MBL	CHECKED BY: JAD
CROSS SECTION SHEET 33 - REVISED	SHEET 114 OF 214

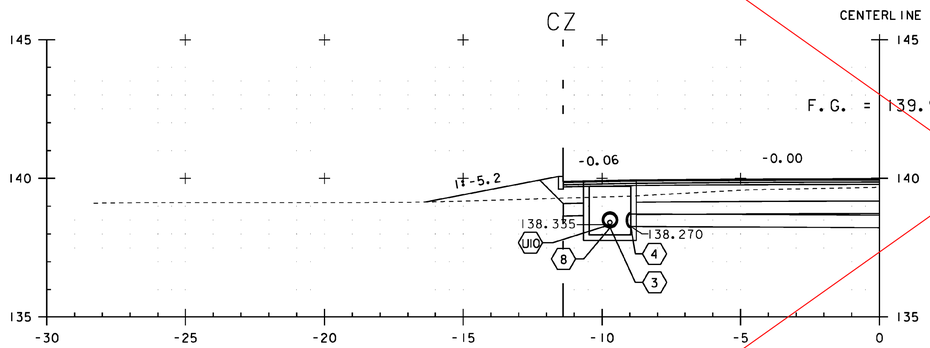

9+984.53

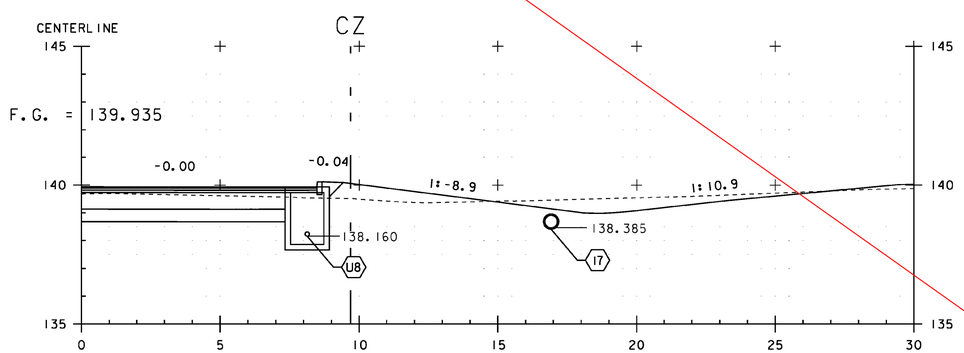

9+982.00

VT ROUTE 108

PROJECT NAME:	CAMBRIDGE
PROJECT NUMBER:	STP 030-2(27)

FILE NAME: t78f163xsl.dgn	PLOT DATE: 05-JUN-2012
PROJECT LEADER: JLS	DRAWN BY: MBL
DESIGNED BY: MBL	CHECKED BY: JAD
CROSS SECTION SHEET 34	SHEET 115 OF 214

STA. 9+982 TO STA. 9+985

SEE REVISION SHEET

Metric

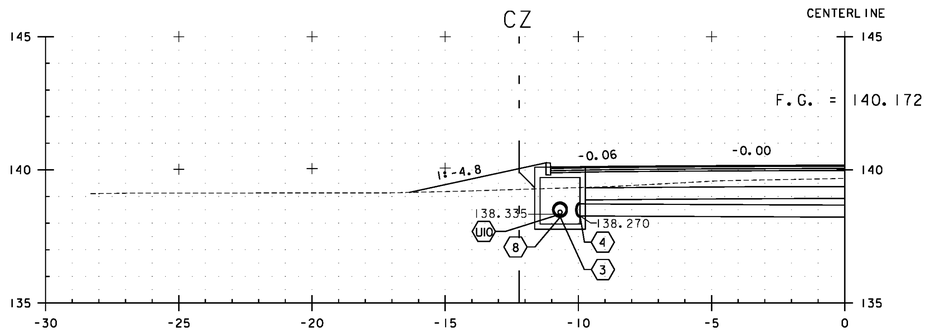

9+983.92 (1)

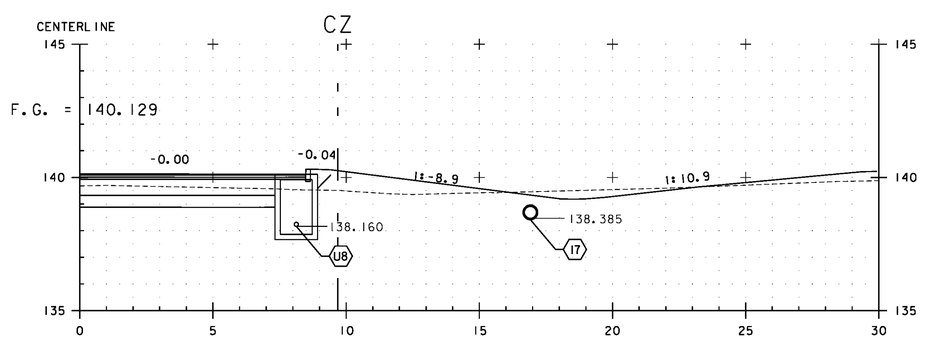

9+982.00 (2)

VT ROUTE 108

0 5 10

SCALE IN METERS

(1) REVISED 9+983.92 FINISH GRADE, SUBGRADE AND RIM ELEVATION

(2) REVISED 9+982 FINISH GRADE AND SUBGRADE

STA. 9+982 TO STA. 9+985

PROJECT NAME: CAMBRIDGE
PROJECT NUMBER: STP 030-2(27)

FILE NAME: t78fi63xsl.dgn
PROJECT LEADER: JLS
DESIGNED BY: MBL
CROSS SECTION SHEET 34

PLOT DATE: $$$$DATE$$$
DRAWN BY: MBL
CHECKED BY: JAD
SHEET $S*$ OF $T*$

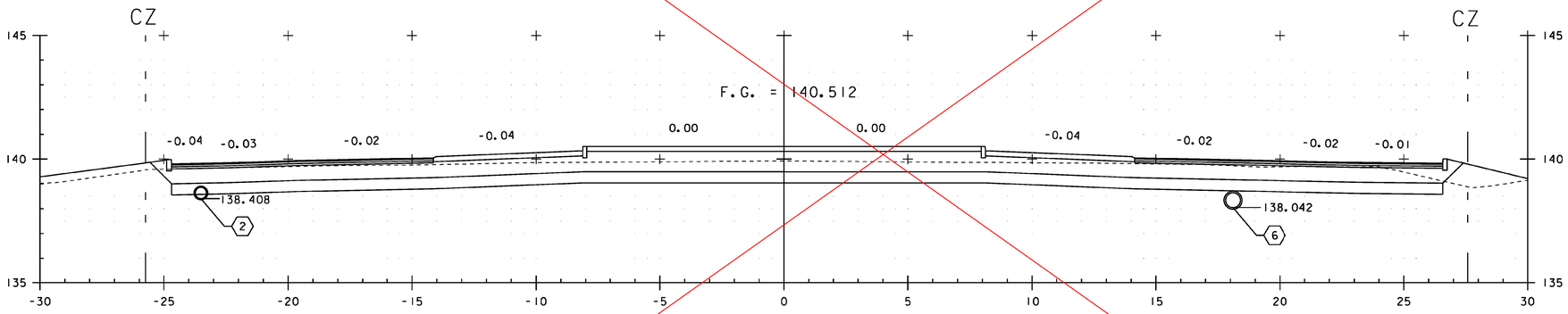

10+000.00

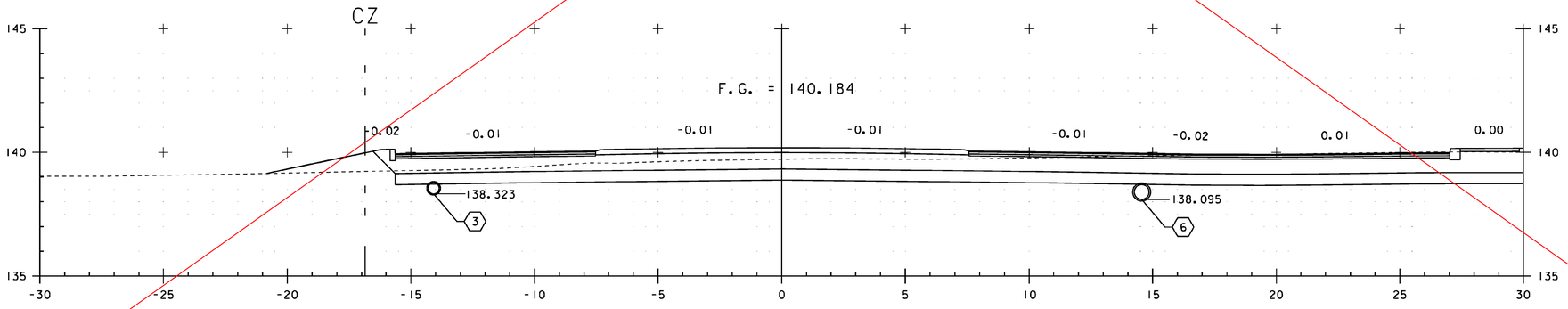

9+990.00

VT ROUTE 108

STA. 9+990 TO STA. 10+000

PROJECT NAME: CAMBRIDGE
PROJECT NUMBER: STP 030-2(27)

FILE NAME: t78f163xsl.dgn
PROJECT LEADER: JLS
DESIGNED BY: MBL
CROSS SECTION SHEET 35

PLOT DATE: 05-JUN-2012
DRAWN BY: MBL
CHECKED BY: JAD
SHEET 116 OF 214

SEE REVISION SHEET

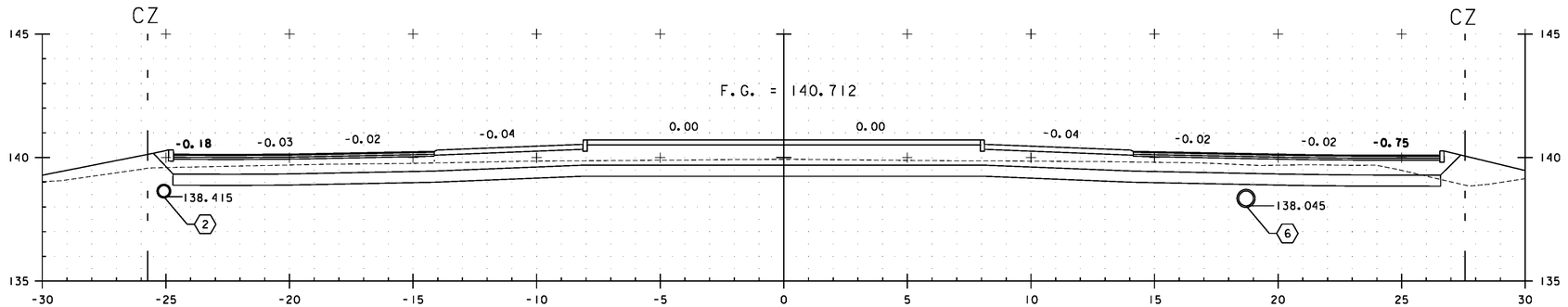

10+000.00 △1

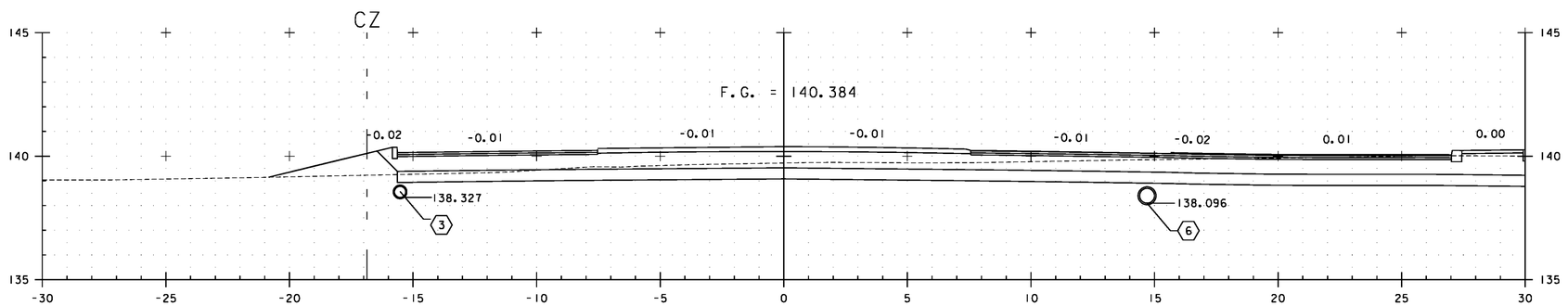

9+990.00 △2

△1 REVISED CROSS SECTIONS

VT ROUTE 108

0 5 10

SCALE IN METERS

△1 REVISED 10+000 FINISH GRADE AND SUBGRADE

△2 REVISED 9+990 FINISH GRADE AND SUBGRADE

STA. 9+990 TO STA. 10+000

PROJECT NAME: CAMBRIDGE
PROJECT NUMBER: STP 030-2(27)

FILE NAME: t78f163xsl.dgn
PROJECT LEADER: JLS
DESIGNED BY: MBL
CROSS SECTION SHEET 35 - REVISED

PLOT DATE: 4/22/13
DRAWN BY: MBL
CHECKED BY: JAD
SHEET 116 OF 214

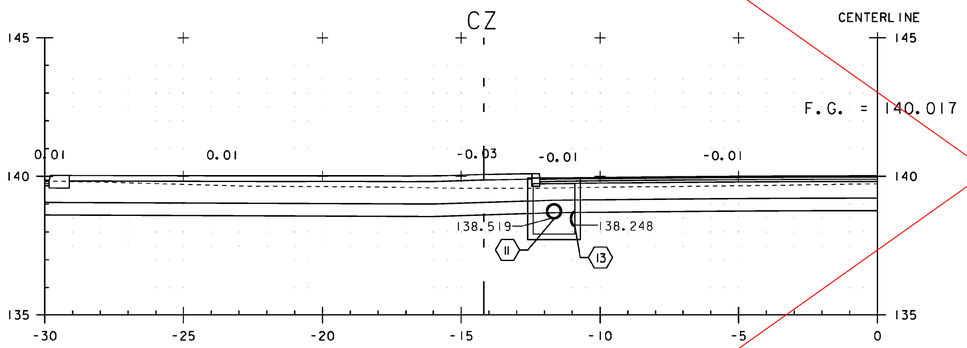

10+018.14

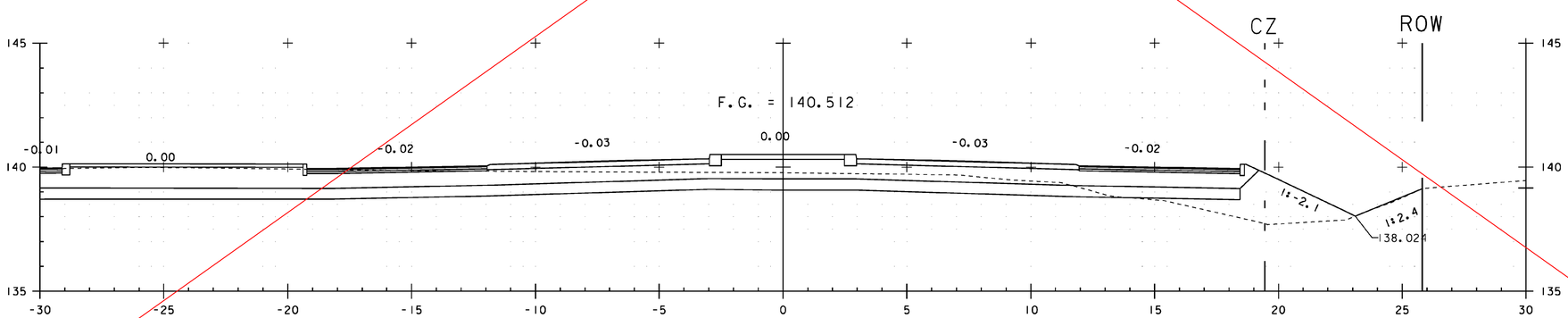

10+010.00

VT ROUTE 108

PROJECT NAME:	CAMBRIDGE
PROJECT NUMBER:	STP 030-2(27)

FILE NAME: t78f163xsl.dgn	PLOT DATE: 05-JUN-2012
PROJECT LEADER: JLS	DRAWN BY: MBL
DESIGNED BY: MBL	CHECKED BY: JAD
CROSS SECTION SHEET 36	SHEET 117 OF 214

STA. 10+010 TO STA. 10+018

SEE REVISION SHEET

Metric

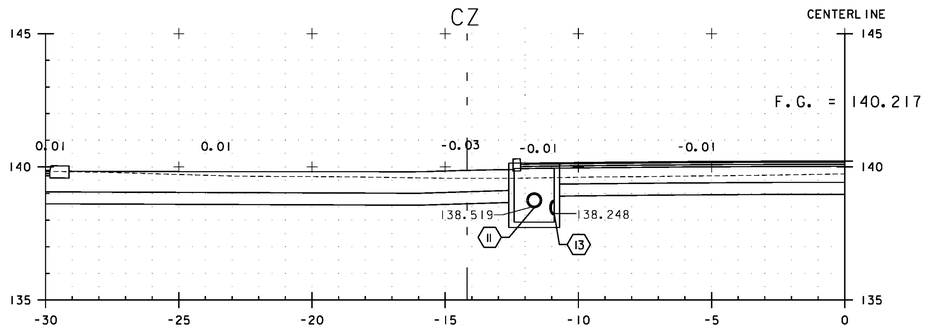

10+018.14 ⚠1

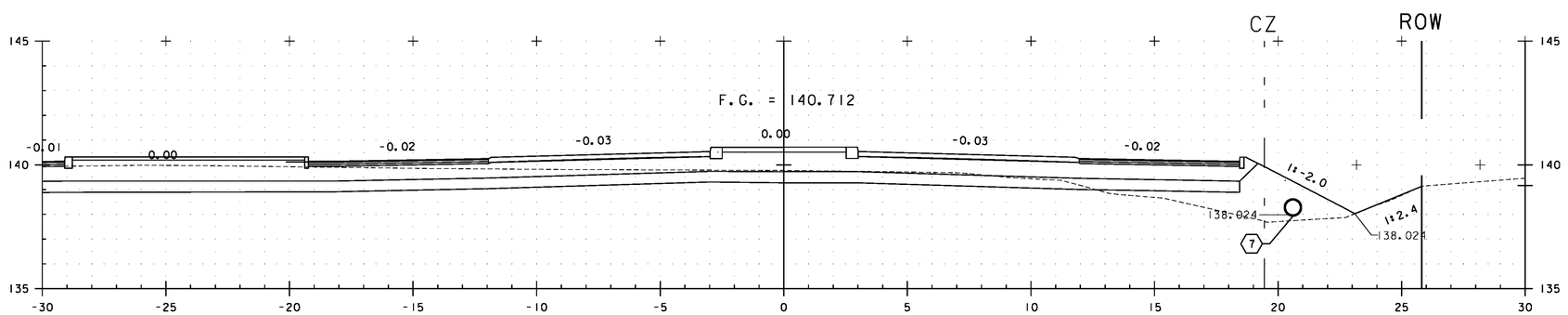

10+010.00 ⚠2

VT ROUTE 108

0 5 10

SCALE IN METERS

⚠1 REVISED 10+018.14 FINISH GRADE, SUBGRADE, AND RIM ELEVATION

⚠2 REVISED 10+010 FINISH GRADE AND SUBGRADE

STA. 10+010 TO STA. 10+018

PROJECT NAME: CAMBRIDGE
PROJECT NUMBER: STP 030-2(27)

FILE NAME: t78f163xsl.dgn
PROJECT LEADER: JLS
DESIGNED BY: MBL
CROSS SECTION SHEET 36 - REVISED

PLOT DATE: 4/22/13
DRAWN BY: MBL
CHECKED BY: JAD
SHEET 117 OF 214

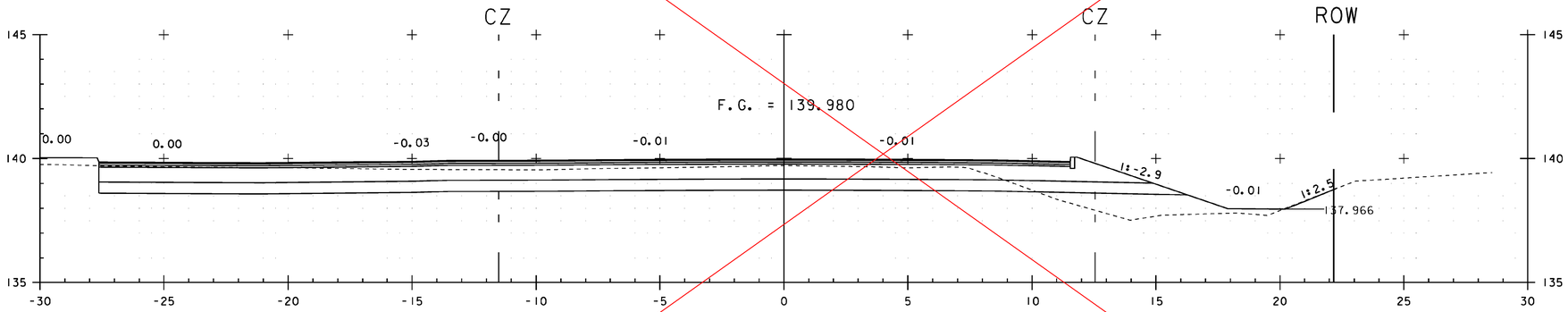

10+020.00

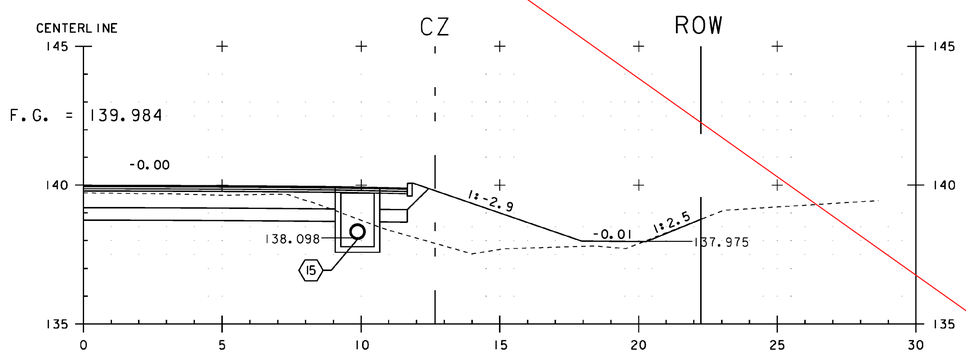

10+019.80

VT ROUTE 108

PROJECT NAME:	CAMBRIDGE
PROJECT NUMBER:	STP 030-2(27)

FILE NAME: t78f163xsl.dgn	PLOT DATE: 05-JUN-2012
PROJECT LEADER: JLS	DRAWN BY: MBL
DESIGNED BY: MBL	CHECKED BY: JAD
CROSS SECTION SHEET 37	SHEET 118 OF 214

STA. 10+020 TO STA. 10+020

SEE REVISION SHEET

Metric

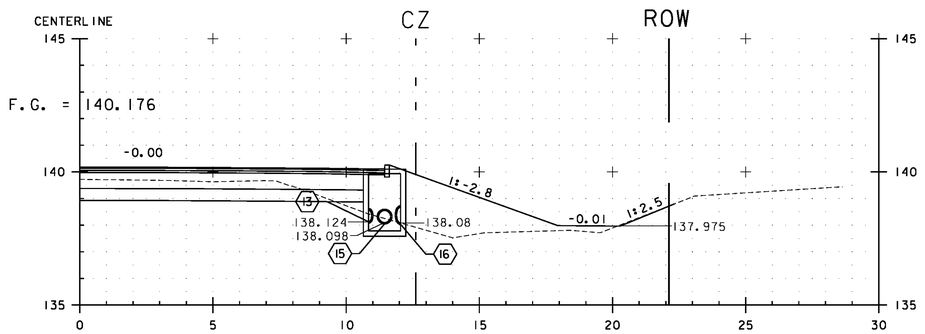

10+020.17 (1)

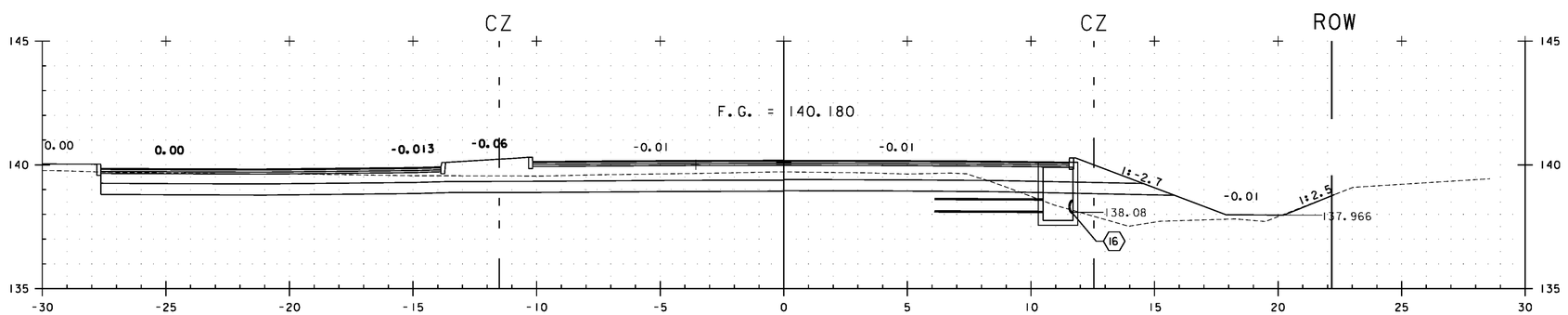

10+020.00 (2)

VT ROUTE 108

0 5 10

SCALE IN METERS

(1) REVISED 10+020.17 FINISH GRADE, SUBGRADE, AND RIM ELEVATION

(2) REVISED 10+020 FINISH GRADE, SUBGRADE, AND RIM ELEVATION

STA. 10+020 TO STA. 10+020

PROJECT NAME: CAMBRIDGE	
PROJECT NUMBER: STP 030-2(27)	
FILE NAME: t78fi63xsl.dgn	PLOT DATE: 4/22/13
PROJECT LEADER: JLS	DRAWN BY: MBL
DESIGNED BY: MBL	CHECKED BY: JAD
CROSS SECTION SHEET 37 - REVISED	SHEET 118 OF 214

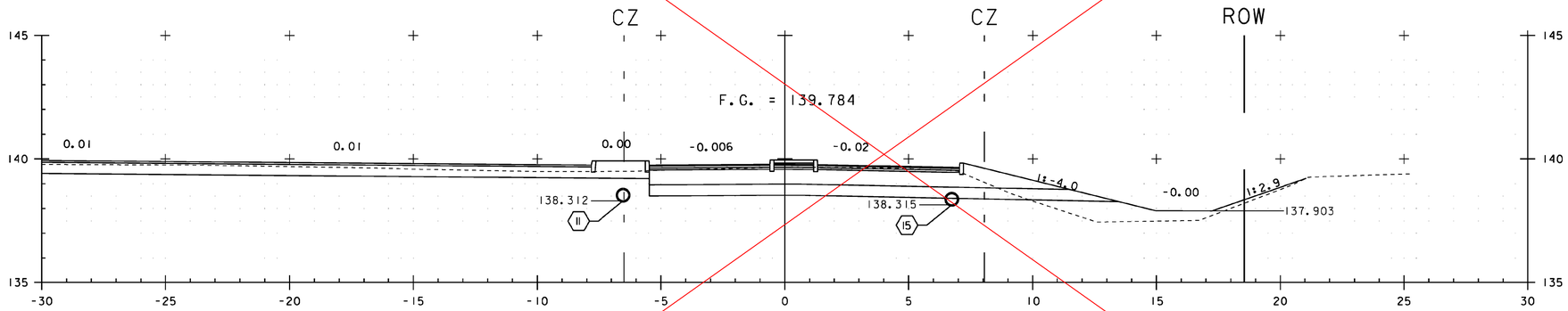

10+030.00

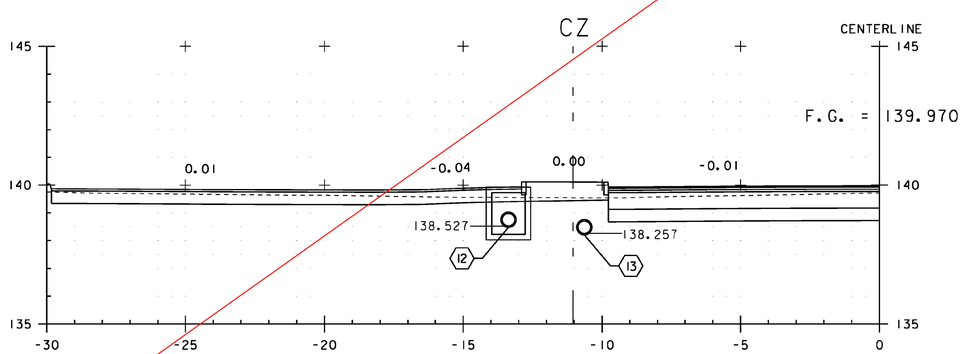

10+020.50

VT ROUTE 108

PROJECT NAME:	CAMBRIDGE
PROJECT NUMBER:	STP 030-2(27)

FILE NAME: t78f163xsl.dgn	PLOT DATE: 05-JUN-2012
PROJECT LEADER: JLS	DRAWN BY: MBL
DESIGNED BY: MBL	CHECKED BY: JAD
CROSS SECTION SHEET 38	SHEET 119 OF 214

STA. 10+020 TO STA. 10+030

SEE REVISION SHEET

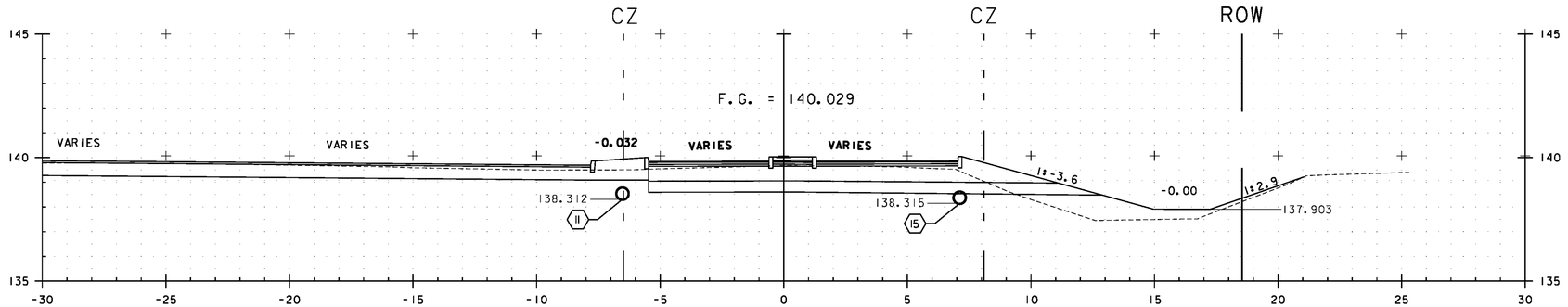

10+030.00 △1

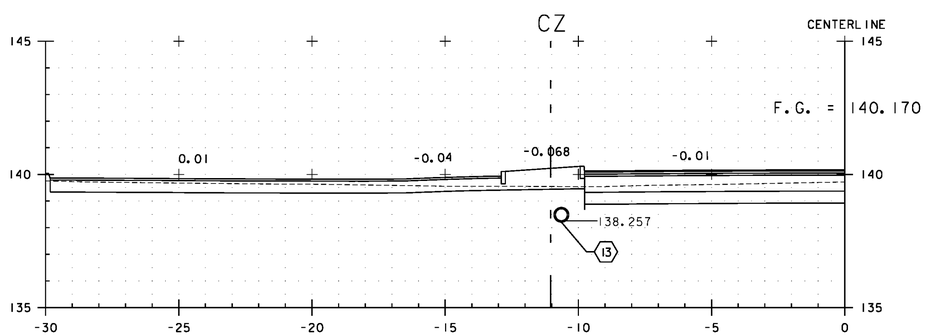

10+020.50 △2 △3

VT ROUTE 108

0 5 10

SCALE IN METERS

△1 REVISED FINISH GRADE AND SUBGRADE

△2 REVISED FINISH GRADE AND SUBGRADE

△3 REMOVED CB-12 AND PIPE 12

STA. 10+020 TO STA. 10+030

PROJECT NAME: CAMBRIDGE
PROJECT NUMBER: STP 030-2(27)

FILE NAME: t78f163xsl.dgn
PROJECT LEADER: JLS
DESIGNED BY: MBL
CROSS SECTION SHEET 38 - REVISED

PLOT DATE: 6/24/13
DRAWN BY: MBL
CHECKED BY: JAD
SHEET 119 OF 214

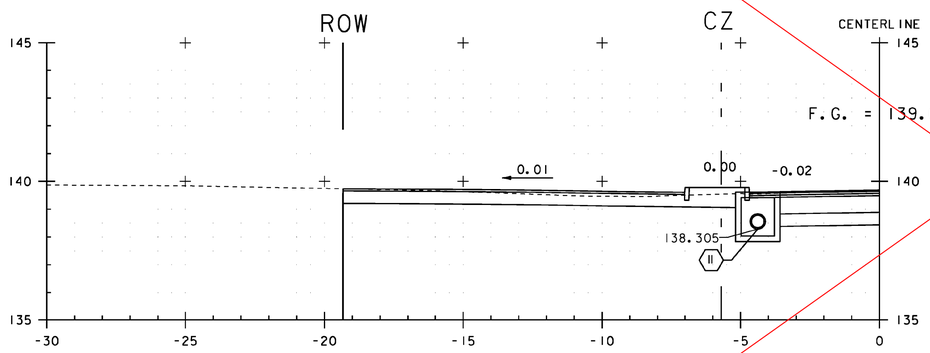

10+034.95

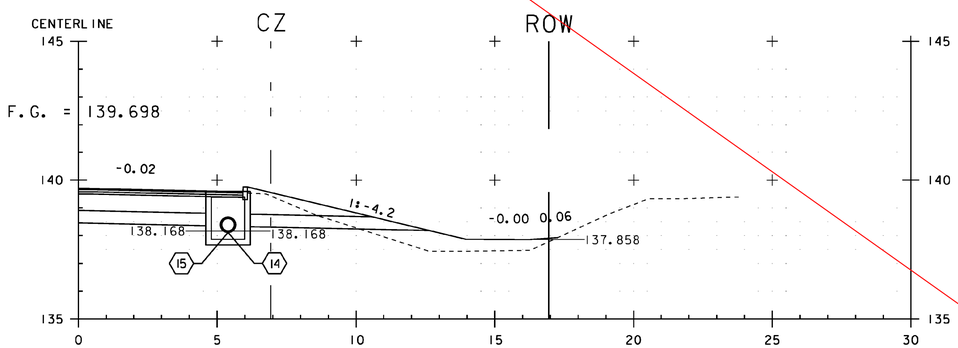

10+034.40

VT ROUTE 108

PROJECT NAME:	CAMBRIDGE
PROJECT NUMBER:	STP 030-2(27)

FILE NAME: t78f163xsl.dgn	PLOT DATE: 05-JUN-2012
PROJECT LEADER: JLS	DRAWN BY: MBL
DESIGNED BY: MBL	CHECKED BY: JAD
CROSS SECTION SHEET 39	SHEET 120 OF 214

STA. 10+034 TO STA. 10+035

SEE REVISION SHEET

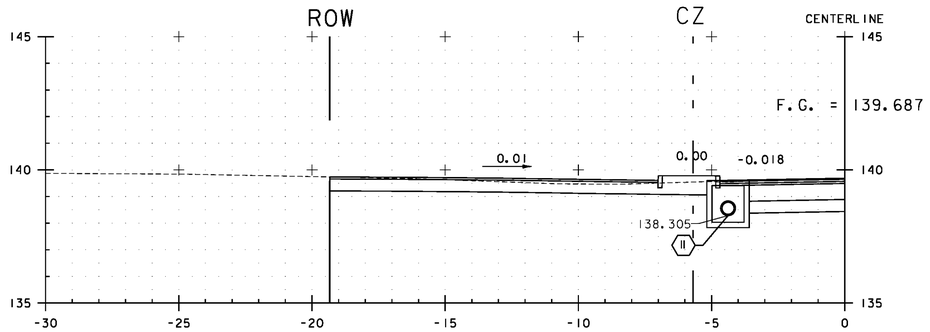

10+034.95 (1)

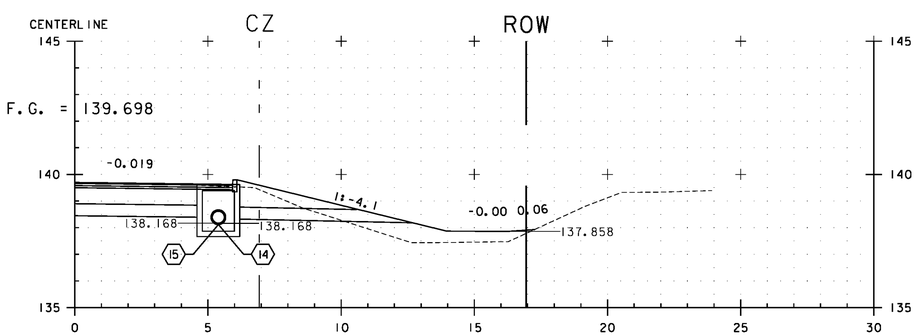

10+034.40 (2)

VT ROUTE 108

0 5 10

SCALE IN METERS

(1) REVISED CB-11 RIM ELEVATION, BANKING AND SUBGRADE

(2) REVISED CB-15 RIM ELEVATION, BANKING AND SUBGRADE

STA. 10+034 TO STA. 10+035

PROJECT NAME: CAMBRIDGE
PROJECT NUMBER: STP 030-2(27)

FILE NAME: t78f163xsl.dgn
PROJECT LEADER: JLS
DESIGNED BY: MBL
CROSS SECTION SHEET 39

PLOT DATE: 5/6/13
DRAWN BY: MBL
CHECKED BY: JAD
SHEET 120 OF 214

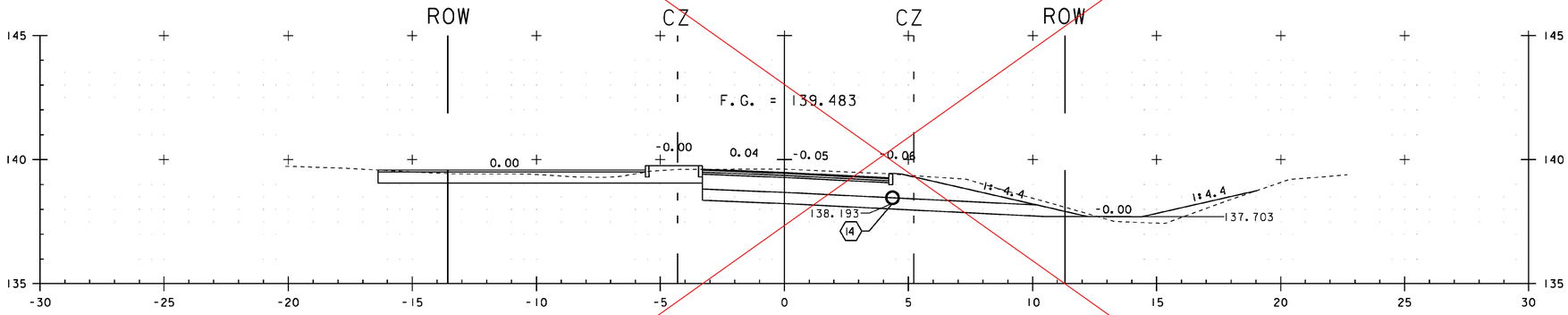

10+050.00

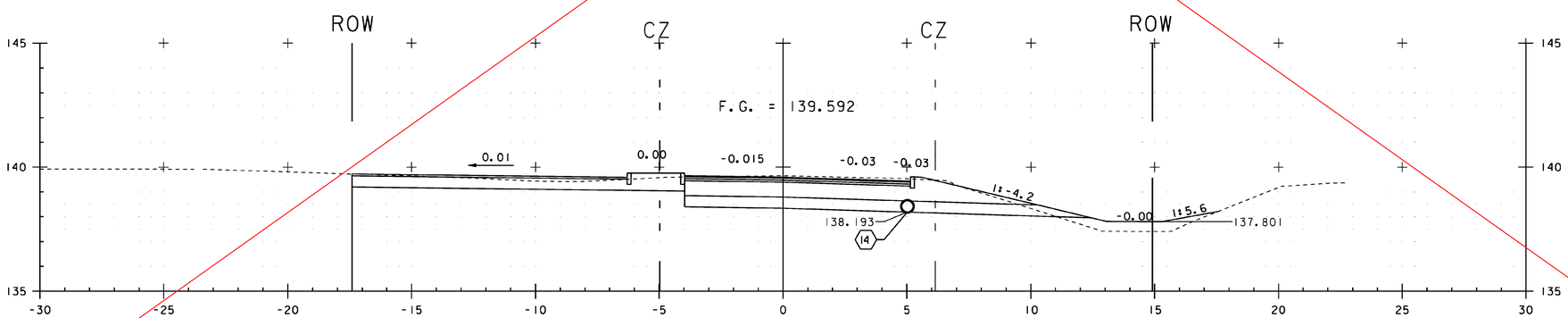

10+040.00

VT ROUTE 108

PROJECT NAME:	CAMBRIDGE
PROJECT NUMBER:	STP 030-2(27)

FILE NAME: t78f163xsl.dgn	PLOT DATE: 05-JUN-2012
PROJECT LEADER: JLS	DRAWN BY: MBL
DESIGNED BY: MBL	CHECKED BY: JAD
CROSS SECTION SHEET 40	SHEET 121 OF 214

STA. 10+040 TO STA. 10+050

SEE REVISION SHEET

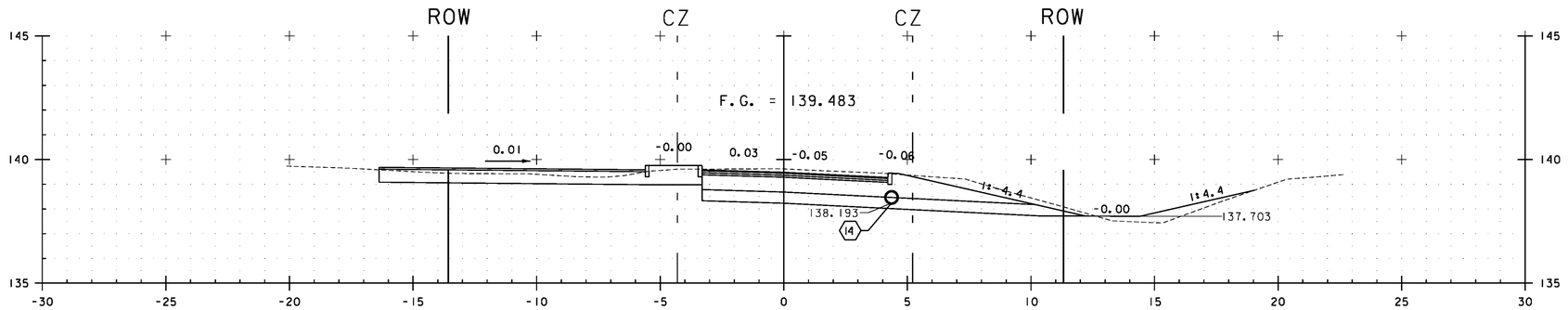

10+050.00 △1 △4

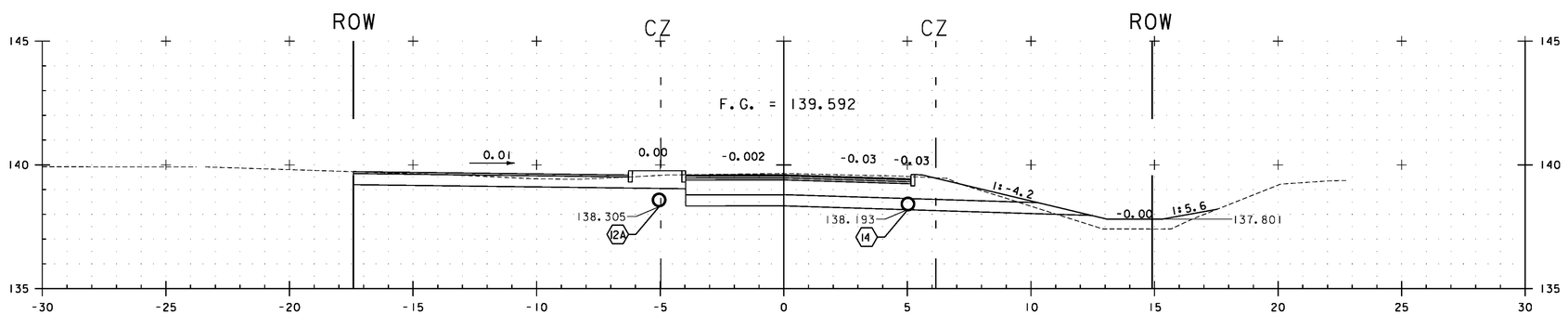

10+040.00 △2 △3

VT ROUTE 108

0 5 10

SCALE IN METERS

△1 REVISED BANKING AND SUBGRADE ON LEFT SIDE

△2 REVISED BANKING AND SUBGRADE ON LEFT SIDE

△3 ADDED PIPE 12A

△4 REVISED BANKING AND SUBGRADE OF PARKING LOT

STA. 10+040 TO STA. 10+050

PROJECT NAME: CAMBRIDGE
PROJECT NUMBER: STP 030-2(27)

FILE NAME: t78f163xsl.dgn
PROJECT LEADER: JLS
DESIGNED BY: MBL
CROSS SECTION SHEET 40

PLOT DATE: 6/24/13
DRAWN BY: MBL
CHECKED BY: JAD
SHEET 121 OF 214

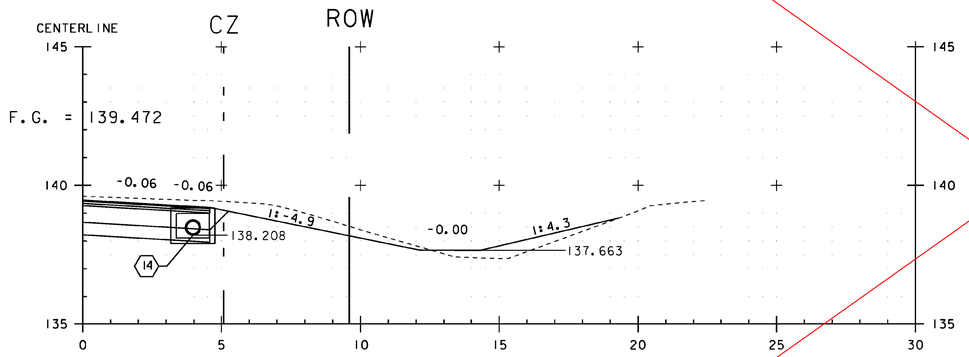

10+054.39

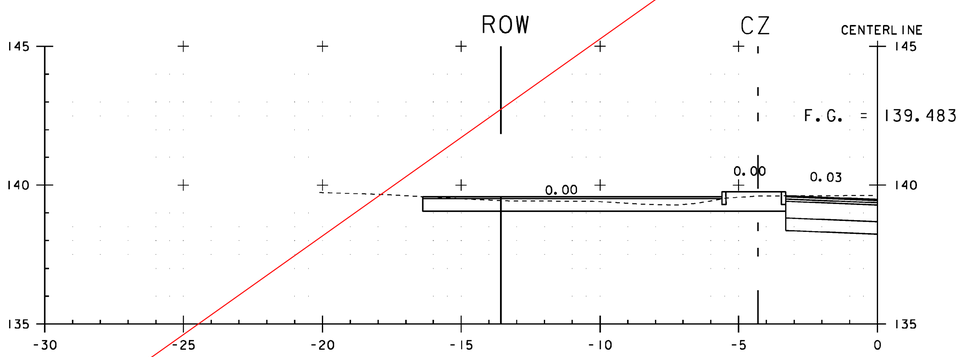

10+050.01

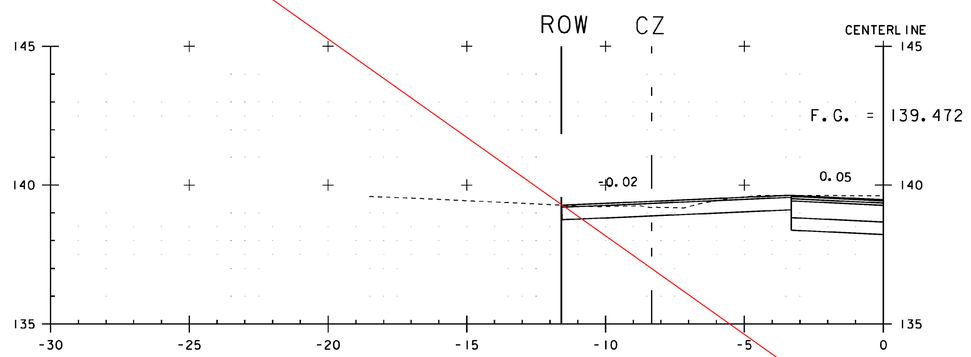

10+055.29

VT ROUTE 108

STA. 10+050 TO STA. 10+055

PROJECT NAME: CAMBRIDGE
PROJECT NUMBER: STP 030-2(27)

FILE NAME: t78f163xsl.dgn
PROJECT LEADER: JLS
DESIGNED BY: MBL
CROSS SECTION SHEET 41

PLOT DATE: 05-JUN-2012
DRAWN BY: MBL
CHECKED BY: JAD
SHEET 122 OF 214

SEE REVISION SHEET

Metric

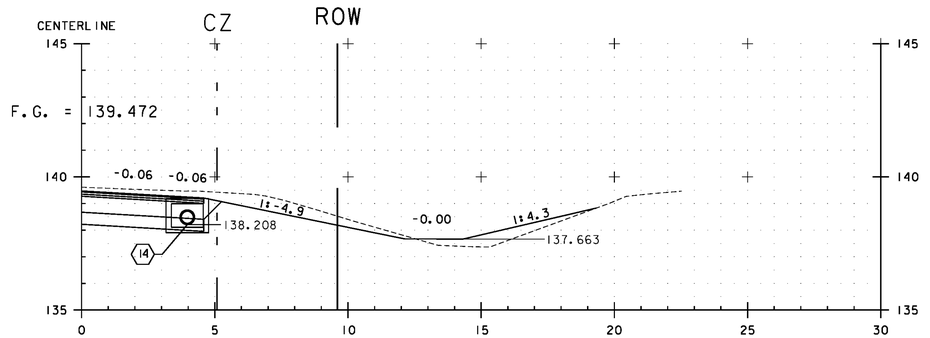

10+054.39

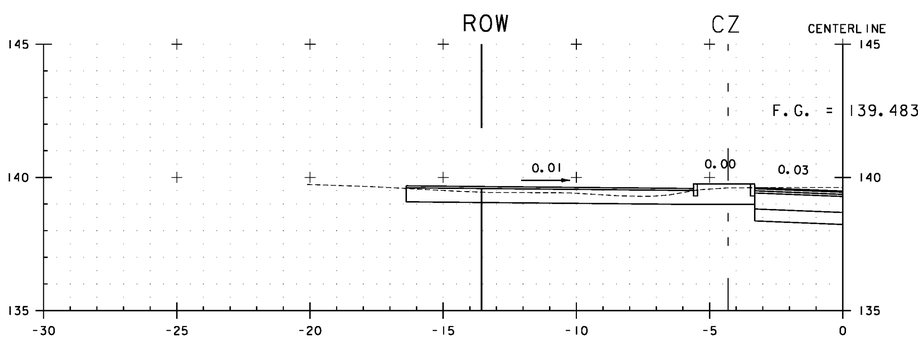

10+050.01 (1)

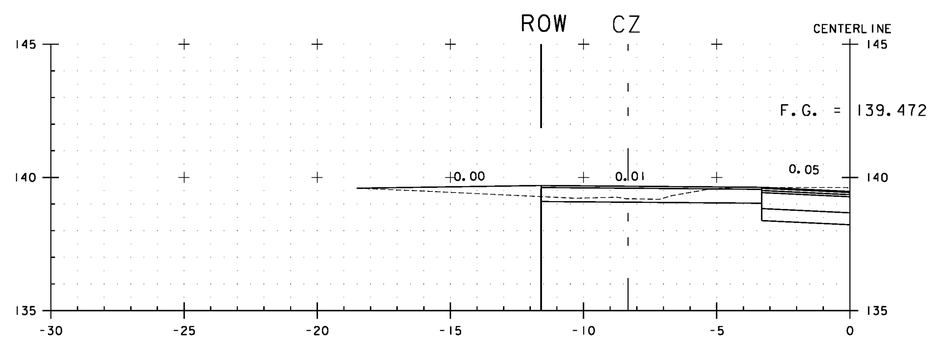

(2) 10+055.29

VT ROUTE 108

0 5 10

SCALE IN METERS

(1) REVISED BANKING AND SUBGRADE OF PARKING LOT

(2) REVISED BANKING AND SUBGRADE OF PARKING LOT

STA. 10+050 TO STA. 10+055

PROJECT NAME: CAMBRIDGE
PROJECT NUMBER: STP 030-2(27)

FILE NAME: t78fi63xsl.dgn
PROJECT LEADER: JLS
DESIGNED BY: MBL
CROSS SECTION SHEET 41

PLOT DATE: 6/24/13
DRAWN BY: MBL
CHECKED BY: JAD
SHEET 122 OF 214

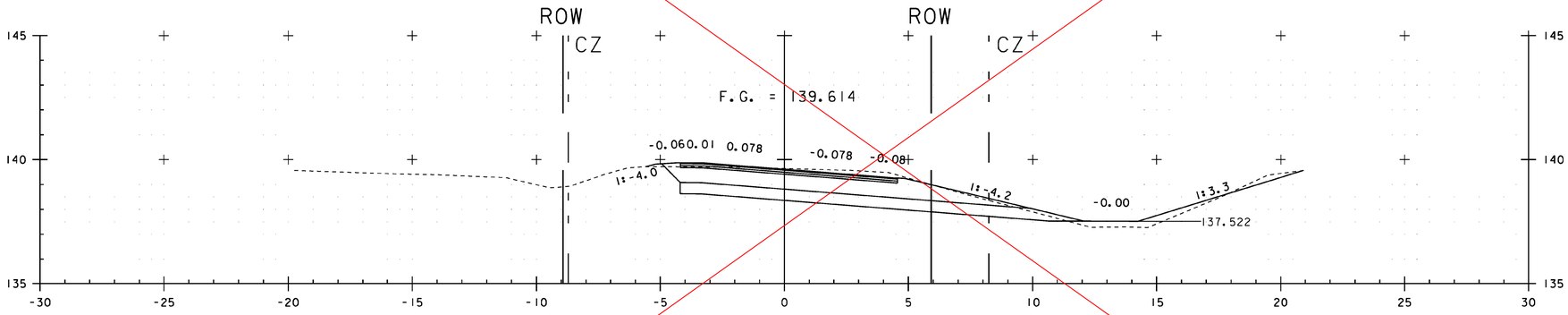

10+070.00

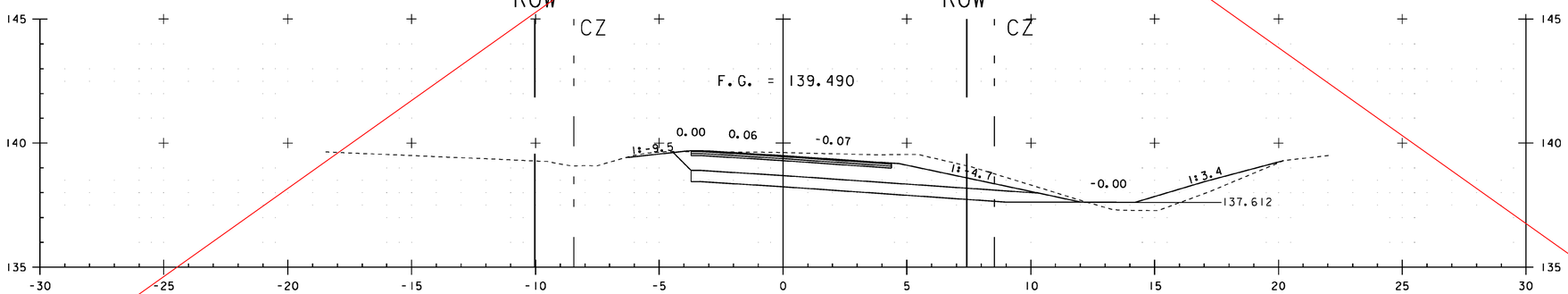

10+060.00

VT ROUTE 108

PROJECT NAME:	CAMBRIDGE
PROJECT NUMBER:	STP 030-2(27)

FILE NAME: t78f163xsl.dgn	PLOT DATE: 05-JUN-2012
PROJECT LEADER: JLS	DRAWN BY: MBL
DESIGNED BY: MBL	CHECKED BY: JAD
CROSS SECTION SHEET 42	SHEET 123 OF 214

STA. 10+060 TO STA. 10+070

SEE REVISION SHEET

Metric

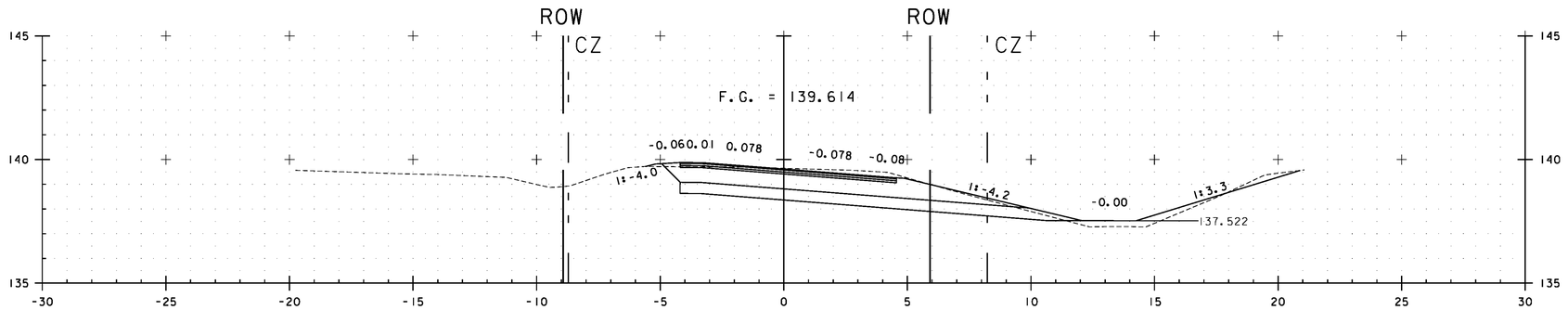

10+070.00

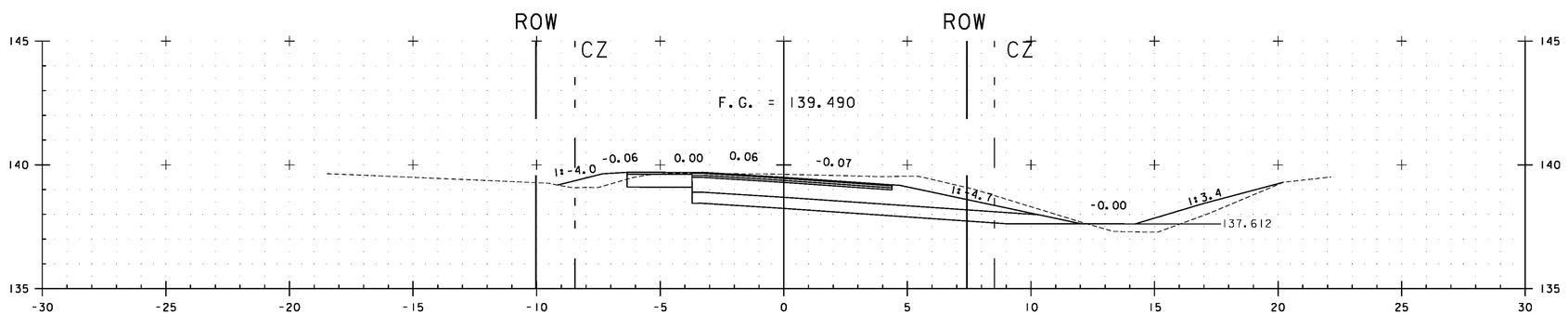

10+060.00 △1

VT ROUTE 108

0 5 10

SCALE IN METERS

△1 REVISED BANKING AND SUBGRADE OF PARKING LOT

STA. 10+060 TO STA. 10+070

PROJECT NAME: CAMBRIDGE
PROJECT NUMBER: STP 030-2(27)

FILE NAME: t78f163xsl.dgn
PROJECT LEADER: JLS
DESIGNED BY: MBL
CROSS SECTION SHEET 42

PLOT DATE: 6/24/13
DRAWN BY: MBL
CHECKED BY: JAD
SHEET 123 OF 214

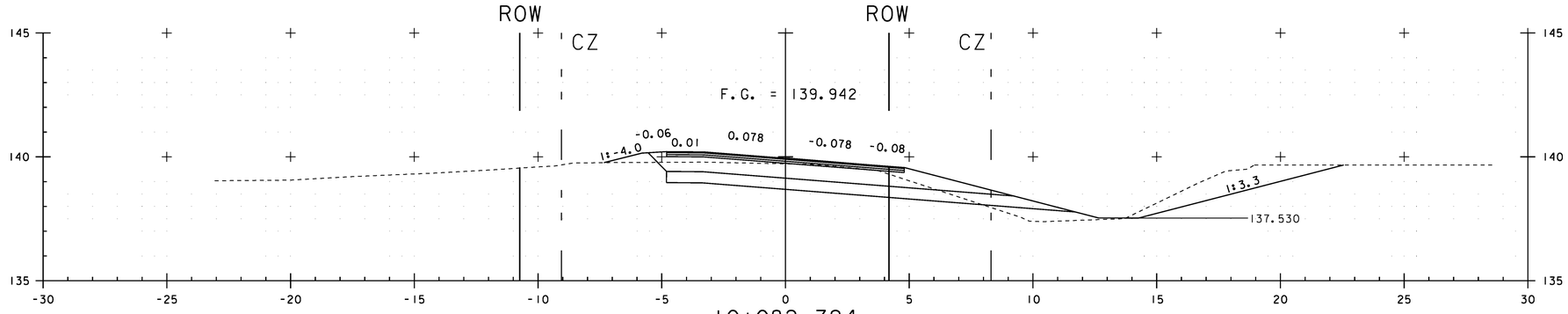

10+082.794
END PROJECT STP 030-2(27)
BEGIN PROJECT BRF 027-1(4)

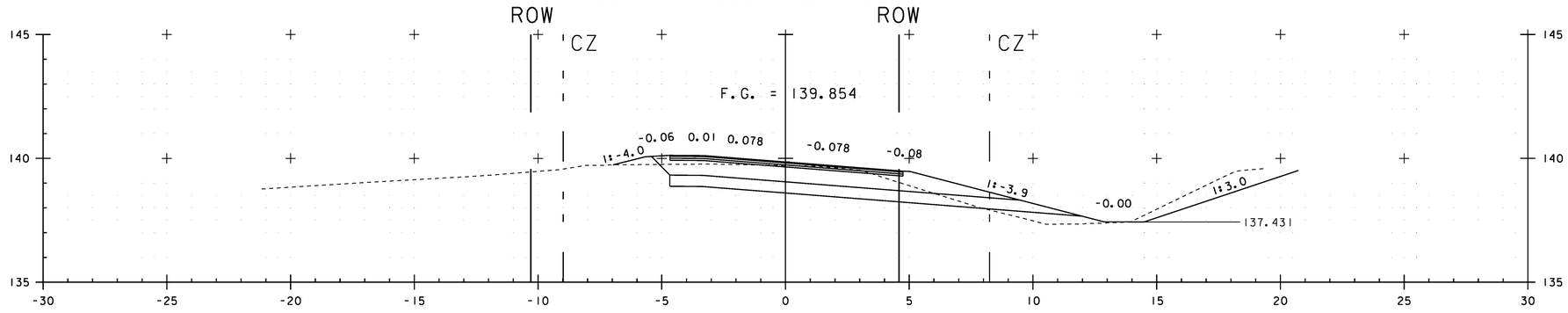

10+080.00

VT ROUTE 108

PROJECT NAME:	CAMBRIDGE
PROJECT NUMBER:	STP 030-2(27)

FILE NAME: t78f163xsl.dgn	PLOT DATE: 05-JUN-2012
PROJECT LEADER: JLS	DRAWN BY: MBL
DESIGNED BY: MBL	CHECKED BY: JAD
CROSS SECTION SHEET 43	SHEET 124 OF 214

STA. 10+080 TO STA. 10+083

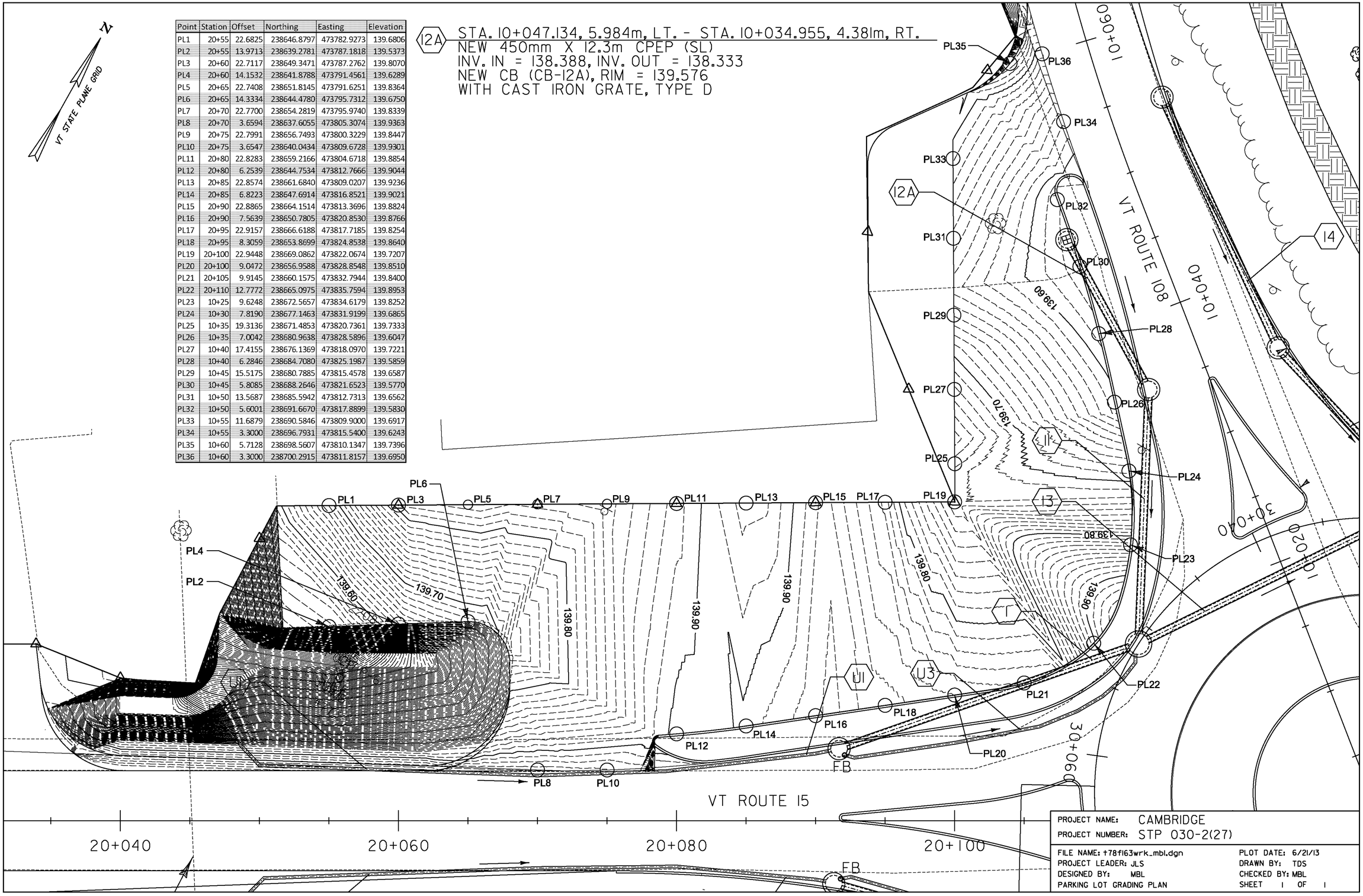

Point	Station	Offset	Northing	Easting	Elevation
PL1	20+55	22.6825	238646.8797	473782.9273	139.6806
PL2	20+55	13.9713	238639.2781	473787.1818	139.5373
PL3	20+60	22.7117	238649.3471	473787.2762	139.8070
PL4	20+60	14.1532	238641.8788	473791.4561	139.6289
PL5	20+65	22.7408	238651.8145	473791.6251	139.8364
PL6	20+65	14.3334	238644.4780	473795.7312	139.6750
PL7	20+70	22.7700	238654.2819	473795.9740	139.8339
PL8	20+70	3.6594	238637.6055	473805.3074	139.9363
PL9	20+75	22.7991	238656.7493	473800.3229	139.8447
PL10	20+75	3.6547	238640.0434	473809.6728	139.9301
PL11	20+80	22.8283	238659.2166	473804.6718	139.8854
PL12	20+80	6.2539	238644.7534	473812.7666	139.9044
PL13	20+85	22.8574	238661.6840	473809.0207	139.9236
PL14	20+85	6.8223	238647.6914	473816.8521	139.9021
PL15	20+90	22.8865	238664.1514	473813.3696	139.8824
PL16	20+90	7.5639	238650.7805	473820.8530	139.8766
PL17	20+95	22.9157	238666.6188	473817.7185	139.8254
PL18	20+95	8.3059	238653.8699	473824.8538	139.8640
PL19	20+100	22.9448	238669.0862	473822.0674	139.7207
PL20	20+100	9.0472	238656.9588	473828.8548	139.8510
PL21	20+105	9.9145	238660.1575	473832.7944	139.8400
PL22	20+110	12.7772	238665.0975	473835.7594	139.8953
PL23	10+25	9.6248	238672.5657	473834.6179	139.8252
PL24	10+30	7.8190	238677.1463	473831.9199	139.6865
PL25	10+35	19.3136	238671.4853	473820.7361	139.7333
PL26	10+35	7.0042	238680.9638	473828.5896	139.6047
PL27	10+40	17.4155	238676.1369	473818.0970	139.7221
PL28	10+40	6.2846	238684.7080	473825.1987	139.5859
PL29	10+45	15.5175	238680.7885	473815.4578	139.6587
PL30	10+45	5.8085	238688.2646	473821.6523	139.5770
PL31	10+50	13.5687	238685.5942	473812.7313	139.6562
PL32	10+50	5.6001	238691.6670	473817.8899	139.5830
PL33	10+55	11.6879	238690.5846	473809.9000	139.6917
PL34	10+55	3.3000	238696.7931	473815.5400	139.6243
PL35	10+60	5.7128	238698.5607	473810.1347	139.7396
PL36	10+60	3.3000	238700.2915	473811.8157	139.6950

PROJECT NAME: CAMBRIDGE
PROJECT NUMBER: STP 030-2(27)

FILE NAME: t78f163wrk_mbl.dgn
PROJECT LEADER: JLS
DESIGNED BY: MBL
PARKING LOT GRADING PLAN

PLOT DATE: 6/21/13
DRAWN BY: TDS
CHECKED BY: MBL
SHEET 1 OF 1

STATE OF VERMONT
AGENCY OF TRANSPORTATION

TRAFFIC DATA	
VT ROUTE 108	
2012 AADT= 1800	2032 AADT= 1900
	2032 DHV= 240
	2032 %T= 3.2
	2032 %D= 56
2012 ADTT= 75	2032 ADTT= 130
FUNCTIONAL CLASS - MINOR ARTERIAL	
2012 - 2032 ESAL'S =	512.000
2012 - 2052 ESAL'S =	1,244.000
POSTED SPEED = 80 KMH	

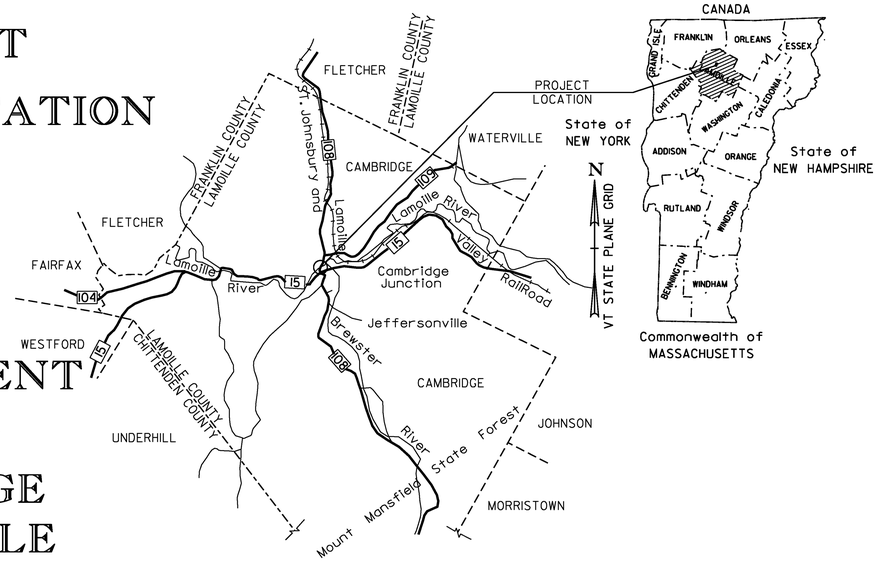

PROPOSED IMPROVEMENT
BRIDGE PROJECT
TOWN OF CAMBRIDGE
COUNTY OF LAMOILLE
VT ROUTE 108, BRIDGE #21
MAJOR COLLECTOR

PROJECT BRF 027-1(4)

BEGINNING AT A POINT, IN THE TOWN OF CAMBRIDGE, ON VT ROUTE 108, APPROXIMATELY 82.794 M NORTHERLY OF THE VT ROUTE 15 AND VT ROUTE 108 INTERSECTION AND EXTENDING NORTHERLY FOR A DISTANCE OF APPROXIMATELY 367.206 M.

LENGTH OF ROADWAY = 289.156 m
LENGTH OF BRIDGE = 78.040 m
LENGTH OF PROJECT = 367.206 m

WORK TO BE PERFORMED UNDER THIS PROJECT INCLUDES REMOVAL OF EXISTING BRIDGE NO. 21 AND CONSTRUCTION OF A NEW BRIDGE AND APPROACHES ON AN IMPROVED HORIZONTAL ALIGNMENT, CONSTRUCTION OF VT ROUTE 108, SAND BORROW, SUBBASE, PAVEMENT, DRAINAGE, SIGNS AND OTHER HIGHWAY RELATED ITEMS.

BITUMINOUS CONCRETE PAVEMENT SUPERPAVE MIXTURE DESIGN CRITERIA	
DESIGN LANE/LIFE ESALS (20 YEARS)	512.000
DESIGN NUMBER OF GYRATIONS	65

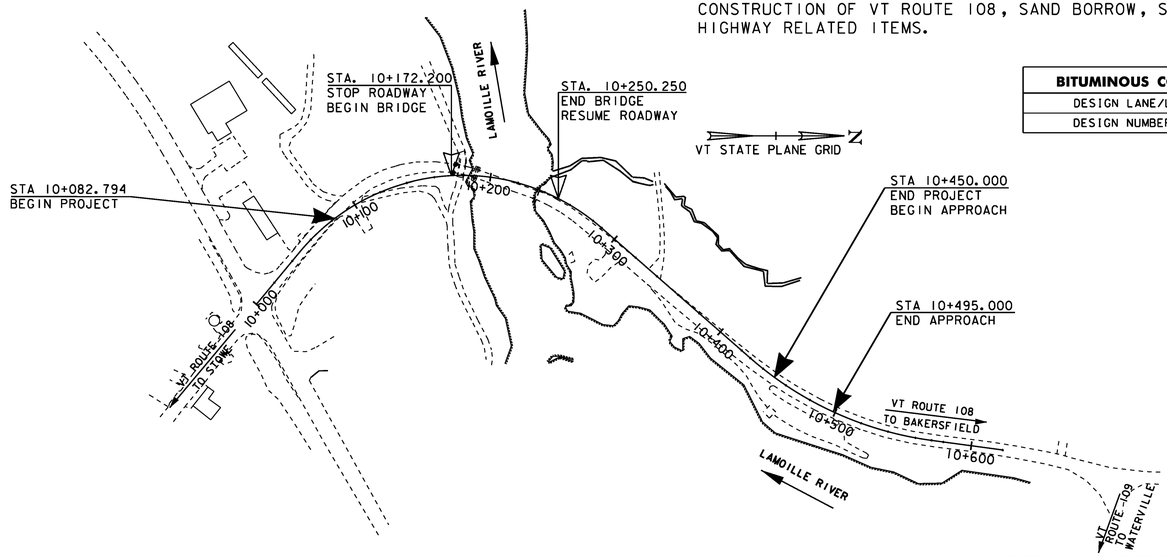

QUALITY ASSURANCE PROGRAM: LEVEL 2

CONVENTIONAL SYMBOLS

COUNTY LINE
TOWN LINE
LIMITS OF ACCESS
POINT OF ACCESS
FENCE LINE
STONE WALL
TRAVELED WAY
GUARD RAIL
RAILROAD
SURVEY LINE
CULVERT
POWER POLE
TELEPHONE POLE
TREES
CONTROL OF ACCESS
PROPERTY LINE
R.O.W. TAKING LINE
SLOPE RIGHTS
TOP OF CUT
TOE OF SLOPE

SURVEYED BY : CLD/VTRANS
SURVEYED DATE : 12/1998/2010

DATUM
VERTICAL NAVD 88
HORIZONTAL NAD 83/96

SCALE IN METERS
0 50 100 200

THESE PLANS ARE SUBJECT TO SUCH ENGINEERING CHANGES AS MAY BE REQUIRED BY THE FEDERAL HIGHWAY ADMINISTRATION OR THE DIRECTOR OF PROGRAM DEVELOPMENT.

CONSTRUCTION IS TO BE CARRIED ON IN ACCORDANCE WITH THESE PLANS AND THE STANDARD SPECIFICATIONS FOR CONSTRUCTION DATED 2011, AS APPROVED BY THE FEDERAL HIGHWAY ADMINISTRATION ON JULY 20, 2011 FOR USE ON THIS PROJECT, INCLUDING ALL SUBSEQUENT REVISIONS AND SUCH REVISED SPECIFICATIONS AND SPECIAL PROVISIONS AS ARE INCORPORATED IN THESE PLANS.

MDOT Metric

UNLESS NOTED OTHERWISE
STATIONS ARE IN KILOMETERS
ELEVATIONS ARE IN METERS
DIMENSIONS ARE IN MILLIMETERS

PROJECT MANAGER : M. EVANS-MONGEON

PROJECT NAME : CAMBRIDGE
PROJECT NUMBER : BRF 027-1(4)

SHEET 125 OF 214 SHEETS

GPS CONTROL POINTS

W-20

CGS BENCH MARK DISK SET IN TOP OF CONCRETE MONUMENT

"W-20 1935"

N = 1342827.008
E = 4342155.375
ELEV = 140.786

STATION RECOVERY (1994)
TO REACH THE MARK FROM THE JUNCTION OF STATE HIGHWAY 108 AND 15 IN JEFFERSONVILLE, GO EAST ON HIGHWAY 15 FOR 1.05 KM (0.65 MILE) TO A FORK. TAKE THE LEFT FORK AND GO NORTHEAST ON A PAVED ROAD FOR 0.16 KM (0.1 MILE) TO TWO STORAGE TANKS ON THE LEFT AND THE MARK IS IN BETWEEN TWO SETS OF RAILROAD TRACKS. THE MARK IS A STANDARD DISK SET IN THE TOP OF A SQUARE CONCRETE MONUMENT THAT PROJECTS 51 MM (2 INCHES). IT IS 17.68 M (58 FEET) NORTHEAST OF THE NORTHEAST CORNER OF THE EAST STORAGE TANK, 5.18 M (17 FEET) SOUTH OF THE SOUTH RAIL OF THE MAIN TRACKS, 3.96 M (13 FEET) NORTH OF THE NORTH RAIL OF A SIDE TRACK, 0.61 M (2 FEET) EAST OF A SMALL PINE TREE AND 0.31 M (1 FOOT) WEST OF A METAL WITNESS POST.

* GPS CONTROL POINT INFORMATION FROM THE NATIONAL OCEANIC & ATMOSPHERIC ADMINISTRATION - NATIONAL GEODETIC SURVEY DATA SHEETS

TRAVERSE TIES

TRAVERSE TIE #3

N = 238763.052
E = 473762.023
Z = 140.995

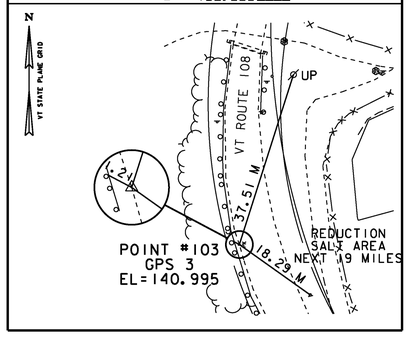

TRAVERSE TIE #5

N = 238666.410
E = 473837.888
Z = 139.547

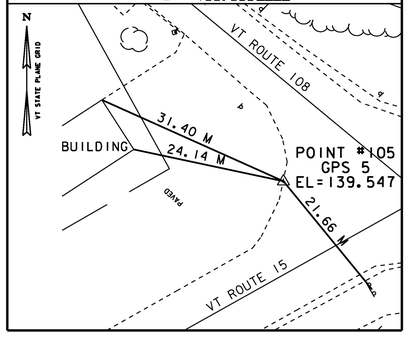

TRAVERSE TIE #6

N = 238883.910
E = 473815.461
Z = 138.290

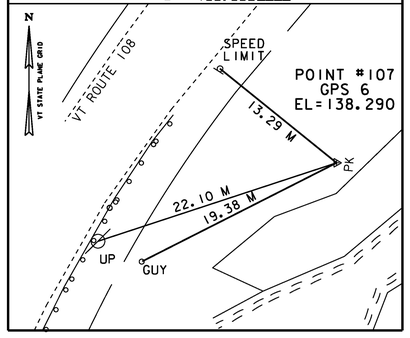

TRAVERSE TIE #8

N = 239116.886
E = 473944.081
Z = 141.073

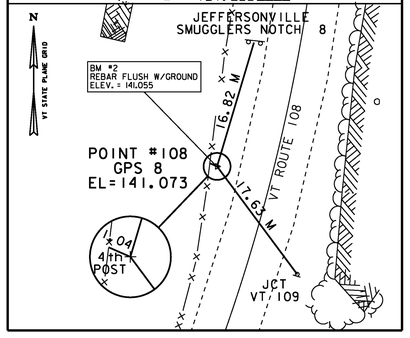

ALIGNMENT TIES

STA 20+130.638 =
POC 10+000.000 BK =

N = 238664.027
E = 473860.009

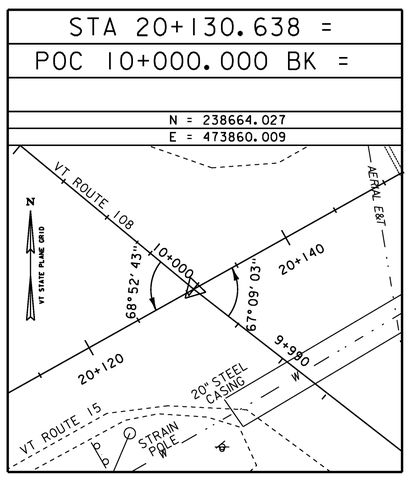

PC 10+048.169

N = 238694.759
E = 473822.918

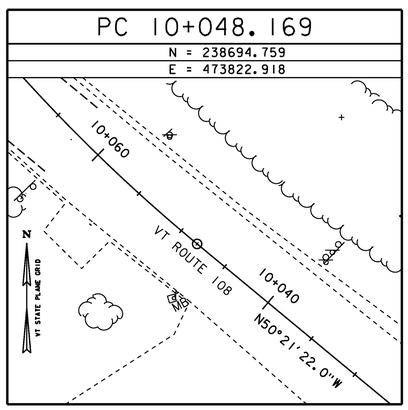

PT 10+287.864

N = 238909.068
E = 473805.759

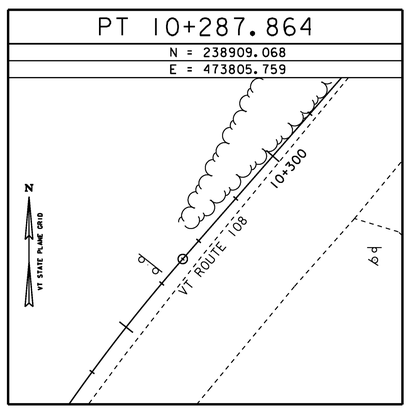

PC 10+428.165

N = 239014.631
E = 473898.175

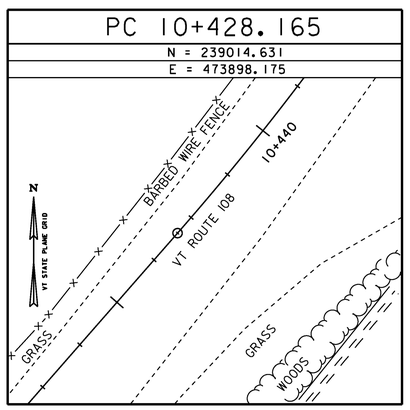

PROJECT NAME:	CAMBRIDGE
PROJECT NUMBER:	BRF 027-1(4)
FILE NAME: S78FI63TIE.DGN	PLOT DATE: 05-JUN-2012
PROJECT LEADER: M. EVANS-MONGEON	DRAWN BY: SURVEY
DESIGNED BY: SURVEY	CHECKED BY: SURVEY
TIE SHEET #1	SHEET 126 OF 214

Metric

ALIGNMENT TIES

POB 50+000.000
N = 238807.346
E = 473868.705

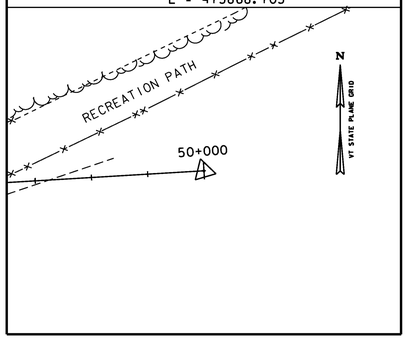

POE 50+200.000
N = 238795.420
E = 473669.061

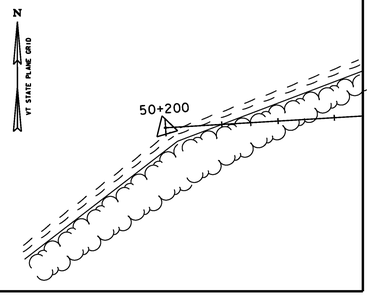

POB 10+450.000
N = 239031.678
E = 473911.807

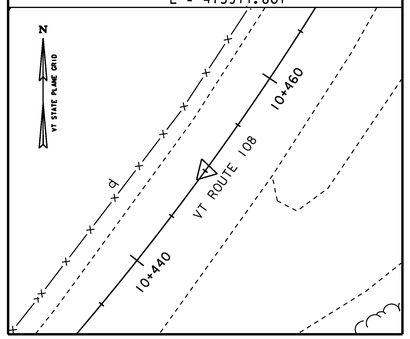

ALIGNMENT TIES

POE 10+495.000
N = 239070.264
E = 473934.839

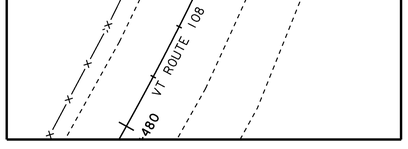

PT 10+571.518
N = 239143.287
E = 473956.640

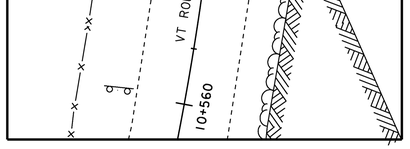

PROJECT NAME:	CAMBRIDGE
PROJECT NUMBER:	BRF 027-1(4)

FILE NAME: S78F163TIE.DGN	PLOT DATE: 05-JUN-2012
PROJECT LEADER: M. EVANS-MONGEON	DRAWN BY: SURVEY
DESIGNED BY: SURVEY	CHECKED BY: SURVEY
TIE SHEET #2	SHEET 127 OF 214

STATE OF VERMONT
AGENCY OF TRANSPORTATION

QUANTITY SHEET 1

Metric

SUMMARY OF ESTIMATED QUANTITIES

ROADWAY	TRAINING	EROSION CONTROL	BRIDGE	FULL C.E. ITEMS	GRAND TOTAL	FINAL	UNIT	ITEMS	ITEM NUMBER	ROUND
0.5					0.5		LS	CLEARING AND GRUBBING, INCLUDING INDIVIDUAL TREES AND STUMPS	201.10	
1590					1590		CM	COMMON EXCAVATION	203.15	7
			2690		2690		CM	UNCLASSIFIED CHANNEL EXCAVATION	203.27	3
520					520		CM	EARTH BORROW	203.30	6
2430					2430		CM	SAND BORROW	203.31	33
1350					1350		CM	TRENCH EXCAVATION OF EARTH	204.20	2
50					50		CM	TRENCH EXCAVATION OF ROCK	204.21	
1					1		CM	TRENCH EXCAVATION OF EARTH, EXPLORATORY (N.A.B.I.)	204.22	
			400		400		CM	STRUCTURE EXCAVATION	204.25	8
90			360		450		CM	GRANULAR BACKFILL FOR STRUCTURES	204.30	11
			110		110		CM	COFFERDAM EXCAVATION, EARTH	208.30	
			50		50		CM	COFFERDAM EXCAVATION, ROCK	208.35	
			1		1		LS	COFFERDAM (PIER #1)	208.40	
			1		1		LS	COFFERDAM (PIER #2)	208.40	
170					170		SM	COLD PLANING, BITUMINOUS PAVEMENT	210.10	
2270					2270		CM	SUBBASE OF DENSE GRADED CRUSHED STONE	301.35	2
70					70		CM	AGGREGATE SURFACE COURSE	401.10	6
850			90		940		KG	EMULSIFIED ASPHALT	404.65	5
1					1		LU	PRICE ADJUSTMENT, ASPHALT CEMENT (N.A.B.I.)	406.50	
757			163		920		T	SUPERPAVE BITUMINOUS CONCRETE PAVEMENT	490.30	8
1					1		LU	AIR VOIDS PAY ADJUSTMENT (N.A.B.I.)	490.31	
1					1		LU	MAT DENSITY PAY ADJUSTMENT (N.A.B.I.)	490.32	
			333		333		CM	CONCRETE, HIGH PERFORMANCE CLASS A	501.33	
			344		344		CM	CONCRETE, HIGH PERFORMANCE CLASS B	501.34	
			1		1		LS	FURNISHING EQUIPMENT FOR DRIVING PILING	504.10	
			56		56		M	STEEL PILING, HP 310 X 125	505.165	
			1		1		EACH	DYNAMIC PILE LOADING TEST	505.45	
			95078		95078		KG	STRUCTURAL STEEL, CURVED PLATE GIRDER	506.56	
			119		119		KG	STRUCTURAL STEEL	506.60	
			89003		89003		KG	REINFORCING STEEL, LEVEL I	507.11	
			30		30		M	DRILLING AND GROUTING DOWELS	507.16	
			1		1		LS	SHEAR CONNECTORS (3034 - 22 X 180)	508.15	
			200		200		L	WATER REPELLENT, SILANE	514.10	
			9.3		9.3		M	BRIDGE EXPANSION JOINT, ASPHALTIC PLUG	516.10	
			9.9		9.9		M	BRIDGE EXPANSION JOINT, VERMONT	516.11	
			729		729		SM	SHEET MEMBRANE WATERPROOFING, TORCH APPLIED	519.20	
			157		157		M	BRIDGE RAILING, GALVANIZED 2 RAIL BOX BEAM	525.33	
			1		1		LS	TWO-WAY TEMPORARY BRIDGE (599 SM - EST.)	528.11	
			1		1		EACH	REMOVAL OF STRUCTURE (378 SM - EST.)	529.15	
			8		8		EACH	BEARING DEVICE ASSEMBLY, HIGH LOAD MULTI-ROTATIONAL	531.15	

DETAILED SUMMARY OF QUANTITIES

QUANTITIES	UNIT	ITEMS
		TRENCH EXCAVATION OF EARTH
103	CM	NEW PIPES
89	CM	EXISTING PIPES
1153	CM	DITCH
5	CM	ROUNDING
1350	CM	TOTAL
		SUPERPAVE BITUMINOUS CONCRETE PAVEMENT
		VT 108
286	T	40 MM TYPE IVS
464	T	65 MM TYPE IIS
		BRIDGE
81	T	40 MM TYPE IVS
81	T	40 MM TYPE IVS
8	T	ROUNDING
920	T	TOTAL
		SPECIAL PROVISION (HAND- PLACED BITUMINOUS CONCRETE MATERIAL DRIVES)
		DRIVES
121	SM	40 MM TYPE IVS, OVER 65 MM TYPE IIS

PROJECT NAME: Cambridge
PROJECT NUMBER: BRF 027-1 (4)

FILE NAME: 78f163quantity.dgn
PROJECT LEADER: M.Evans-Mongeon
DESIGNED BY: T.Filbach
QUANTITY SHEET #1

PLOT DATE: 05/22/2012
DRAWN BY: Evans-Mongeon
CHECKED BY: S. Scribner
SHEET 128 OF 214

STATE OF VERMONT
AGENCY OF TRANSPORTATION

QUANTITY SHEET 2

Metric

SUMMARY OF ESTIMATED QUANTITIES										TOTALS		DESCRIPTIONS				DETAILED SUMMARY OF QUANTITIES		
					ROADWAY	TRAINING	EROSION CONTROL	BRIDGE	FULL C.E. ITEMS	GRAND TOTAL	FINAL	UNIT	ITEMS	ITEM NUMBER	ROUND	QUANTITIES	UNIT	ITEMS
								4		4		EACH	BEARING DEVICE ASSEMBLY, STEEL REINFORCED ELASTOMERIC PAD (ABUTMENT 1)	531.17				
								4		4		EACH	BEARING DEVICE ASSEMBLY, STEEL REINFORCED ELASTOMERIC PAD (ABUTMENT 2)	531.17				
													BEGIN OPTION AA					
					15.1					15.1		M	600 CAAP 1.52 (68 X 12)	601.0225				
					15.1					15.1		M	600 PCCSP 1.63 (68 X 12)	601.0425				
													END OPTION AA					
													BEGIN OPTION BB					
					28.3					28.3		M	600 RCP CLASS III	601.0825				
					28.3					28.3		M	600 CPEP(SL)	601.2620				
													END OPTION BB					
													BEGIN OPTION CC					
					1					1		EACH	600 CSPES 1.63 (68 X 12)	601.6025				
					1					1		EACH	600 CAAPES 1.52 (68 X 12)	601.6225				
													END OPTION CC					
													BEGIN OPTION DD					
					1					1		EACH	600 RCPES CLASS III	601.6825				
					1					1		EACH	600 CPEPES	601.7020				
													END OPTION DD					
					500					500		CM	DUST CONTROL WITH WATER	609.10				
					1					1		T	DUST AND ICE CONTROL WITH CALCIUM CHLORIDE	609.15				
							10			10		CM	STONE FILL, TYPE I	613.10				
								1730		1730		CM	STONE FILL, TYPE IV	613.13				
					50					50		M	CAST-IN-PLACE CONCRETE CURB, TYPE B	616.28	1			
					2					2		EACH	RELOCATE MAILBOX, SINGLE SUPPORT	617.10				
					140					140		SM	PORTLAND CEMENT CONCRETE SIDEWALK, 125 MM	618.10	5			
					6					6		EACH	YIELDING MARKER POSTS	619.17				
					4					4		EACH	BRACING ASSEMBLY FOR CHAIN-LINK FENCE, 2.4 M	620.22				
					40					40		M	WOVEN WIRE FENCE WITH WOOD POSTS	620.26				
					2					2		EACH	WOOD BRACE FOR WOVEN WIRE FENCE	620.41				
					90					90		M	REMOVING AND RESETTING FENCE	620.50				
					230					230		M	REMOVAL OF EXISTING FENCE	620.55				
					370					370		M	STEEL BEAM GUARDRAIL, GALVANIZED	621.20				
					5					5		EACH	MANUFACTURED TERMINAL SECTION, FLARED	621.50				
					1					1		EACH	ANCHOR FOR STEEL BEAM RAIL	621.60				
					4					4		EACH	GUARDRAIL APPROACH SECTION, GALVANIZED 2 RAIL BOX BEAM	621.72				
					141					141		M	REMOVAL AND DISPOSAL OF GUARDRAIL	621.80				
					1000					1000		HR	UNIFORMED TRAFFIC OFFICERS	630.10				
					2000					2000		HR	FLAGGERS	630.15				
									0.5	0.5		LS	FIELD OFFICE, ENGINEERS	631.10				
									0.5	0.5		LS	TESTING EQUIPMENT, CONCRETE	631.16				

PROJECT NAME: Cambridge
PROJECT NUMBER: BRF 027-1 (4)

FILE NAME: 78f163quantity.dgn
PROJECT LEADER: M.Evans-Mongeon
DESIGNED BY: T.Filbach
QUANTITY SHEET #2

PLOT DATE: 05/22/2012
DRAWN BY: Evans-Mongeon
CHECKED BY: S. Scribner
SHEET 129 OF 214

STATE OF VERMONT
AGENCY OF TRANSPORTATION

QUANTITY SHEET 3

Metric

SUMMARY OF ESTIMATED QUANTITIES									TOTALS		DESCRIPTIONS				DETAILED SUMMARY OF QUANTITIES		
					ROADWAY	TRAINING	EROSION CONTROL	BRIDGE	FULL C.E. ITEMS	GRAND TOTAL	FINAL	UNIT	ITEMS	ITEM NUMBER	ROUND	QUANTITIES	UNIT	ITEMS
									0.5	0.5		LS	TESTING EQUIPMENT, BITUMINOUS	631.17				
									2000	2000		DL	FIELD OFFICE TELEPHONE (N.A.B.I.)	631.26				
						520				520		HR	EMPLOYEE TRAINEESHIP	634.10				
					0.5					0.5		LS	MOBILIZATION/DEMOBILIZATION	635.11				
					1					1		LS	TRAFFIC CONTROL (BRF 027-1(4))	641.10				
					0.5					0.5		LS	PUBLIC RELATIONS OFFICER	641.12				
					830					830		M	DURABLE 100 MM WHITE LINE, RECESSED TYPE I TAPE	646.407				
					830					830		M	DURABLE 100 MM YELLOW LINE, RECESSED TYPE I TAPE	646.417				
					170					170		EACH	LINE STRIPING TARGETS	646.76				
					190		350			540		SM	GEOTEXTILE FOR ROADBED SEPARATOR	649.11				
					360			1230		1590		SM	GEOTEXTILE UNDER STONE FILL	649.31				
							170			170		SM	GEOTEXTILE FOR SILT FENCE	649.51				
							360			360		SM	GEOTEXTILE FOR SILT FENCE, WOVEN WIRE REINFORCED	649.515				
							570			570		SM	GEOTEXTILE FOR FILTER CURTAIN	649.61				
							100			100		KG	SEED	651.15				
							100			100		KG	SEED, WINTER RYE	651.17				
							450			450		KG	FERTILIZER	651.18				
							4			4		T	AGRICULTURAL LIMESTONE	651.20				
							4			4		T	HAY MULCH	651.25				
							180			180		CM	TOPSOIL	651.35				
							640			640		SM	GRUBBING MATERIAL	651.40				
							0.5			0.5		LS	EPSC PLAN	652.10				
							350			350		HR	MONITORING EPSC PLAN	652.20				
							0.5			0.5		LU	MAINTENANCE OF EPSC PLAN (N.A.B.I.)	652.30				
							4600			4600		SM	TEMPORARY EROSION MATTING	653.20				
							3			3		CM	TEMPORARY STONE CHECK DAM, TYPE I	653.25				
							50			50		CM	VEHICLE TRACKING PAD	653.35				
							670			670		M	BARRIER FENCE	653.50				
							230			230		M	PROJECT DEMARCATION FENCE	653.55				
					6					6		EACH	EVERGREEN TREES (PICEA GLAUCA) (B&B) (1.5 - 2.0 M HT)	656.20				
					24					24		EACH	GROUND COVERS AND VINES (VALIENT GRAPEVINE OR SUMMER GRAPEVINE)	656.40				
					16					16		CM	LANDSCAPE BACKFILL, TRUCK MEASUREMENT	656.80				
					2.41					2.41		SM	TRAFFIC SIGNS, TYPE A	675.20				
					11.32					11.32		SM	TRAFFIC SIGNS, TYPE B	675.21				
					244					244		KG	TUBULAR STEEL SIGN POST	675.33				
					26					26		M	SQUARE TUBE SIGN POST AND ANCHOR	675.341	0.6			
					2					2		EACH	FOUNDATION FOR TUBULAR STEEL POST	675.43				
					24					24		EACH	REMOVING SIGNS	675.50				
					5					5		EACH	ERECTING SALVAGED SIGNS	675.60				
					5					5		EACH	SETTING SALVAGED POSTS	675.61				

PROJECT NAME: Cambridge
PROJECT NUMBER: BRF 027-1 (4)

FILE NAME: 78f163quantity.dgn
PROJECT LEADER: M.Evans-Mongeon
DESIGNED BY: T.Filbach
QUANTITY SHEET #3

PLOT DATE: 06/13/2012
DRAWN BY: Evans-Mongeon
CHECKED BY: S. Scribner
SHEET 130 OF 214

STATE OF VERMONT
AGENCY OF TRANSPORTATION

QUANTITY SHEET 4

Metric

SUMMARY OF ESTIMATED QUANTITIES										TOTALS		DESCRIPTIONS				DETAILED SUMMARY OF QUANTITIES		
					ROADWAY	TRAINING	EROSION CONTROL	BRIDGE	FULL C.E. ITEMS	GRAND TOTAL	FINAL	UNIT	ITEMS	ITEM NUMBER	ROUND	QUANTITIES	UNIT	ITEMS
					6					6		EACH	DELINEATOR WITH STEEL POST	676.10				
					1					1		LU	PRICE ADJUSTMENT, FUEL (N.A.B.I.)	690.50				
								17		17		M	SPECIAL PROVISION (DRILLED SHAFT IN EARTH) (1.15 M)	900.640				
								18		18		M	SPECIAL PROVISION (DRILLED SHAFT IN ROCK) (1.0 M)	900.640				
								4		4		M	SPECIAL PROVISION (DRILLED SHAFT OBSTRUCTION DRILLING AND REMOVAL) (1.15 M)	900.640				
					50					50		M	SPECIAL PROVISION (REMOVABLE METAL HAND RAILING)	900.640	5			
								1		1		LS	SPECIAL PROVISION (MOBILIZATION OF DRILLED SHAFT EQUIPMENT)	900.645				
								1		1		LS	SPECIAL PROVISION (QC/QA CLEANING AND PAINTING STRUCURAL COMPONENTS)	900.645				
					121					121		SM	SPECIAL PROVISION (HAND-PLACED BITUMINOUS CONCRETE MATERIAL, DRIVES)	900.675				
					480					480		SM	SPECIAL PROVISION (SCARIFYING PAVEMENT)	900.675				

PROJECT NAME: Cambridge
PROJECT NUMBER: BRF 027-1 (4)

FILE NAME: 78f163quantity.dgn
PROJECT LEADER: M.Evans-Mongeon
DESIGNED BY: T.Filbach
QUANTITY SHEET #4

PLOT DATE: 06/13/2012
DRAWN BY: Evans-Mongeon
CHECKED BY: S. Scribner
SHEET 131 OF 214

STATE OF VERMONT
AGENCY OF TRANSPORTATION

BRIDGE QUANTITY SHEET

Metric

SUMMARY OF BRIDGE QUANTITIES

SUPER-STRUCTURE	ABUTMENT 1	ABUTMENT 2	PIER 1	PIER 2	APPROACH SLAB 1	APPROACH SLAB 2	BRIDGE TOTAL
	854	1836					2690
	350	50					400
	300	60					360
				110			110
			25	25			50
			1				1
				1			1
78					6	6	90
141					11	11	163
206	1	52	37	37			333
	150		72	80	21	21	344
		1					1
		56					56
		1					1
95078							95078
119							119
29157	9380	5394	19891	22170	1551	1460	89003
	30						30
1							1
70	30	20	50	30			200
9.3							9.3
9.9							9.9
729							729
157							157
1							1
1							1
			4	4			8
	4						4
		4					4
	1020	710					1730
	614	616					1230
				17			17
			6	12			18
				4			4
			0.5	0.5			1
1							1

TOTALS

DESCRIPTIONS

UNIT	ITEMS	ITEM NUMBER
CM	UNCLASSIFIED CHANNEL EXCAVATION	203.27
CM	STRUCTURE EXCAVATION	204.25
CM	GRANULAR BACKFILL FOR STRUCTURES	204.30
CM	COFFERDAM EXCAVATION, EARTH	208.30
CM	COFFERDAM EXCAVATION, ROCK	208.35
LS	COFFERDAM (PIER #1)	208.40
LS	COFFERDAM (PIER #2)	208.40
KG	EMULSIFIED ASPHALT	404.65
T	SUPERPAVE BITUMINOUS CONCRETE PAVEMENT	490.30
CM	CONCRETE, HIGH PERFORMANCE CLASS A	501.33
CM	CONCRETE, HIGH PERFORMANCE CLASS B	501.34
LS	FURNISHING EQUIPMENT FOR DRIVING PILING	504.10
M	STEEL PILING, HP 310 X 125	505.165
EACH	DYNAMIC PILE LOADING TEST	505.45
KG	STRUCTURAL STEEL, CURVED PLATE GIRDER	506.56
KG	STRUCTURAL STEEL	506.60
KG	REINFORCING STEEL, LEVEL I	507.11
M	DRILLING AND GROUTING DOWELS	507.16
LS	SHEAR CONNECTORS (3034 - 22 X 180)	508.15
L	WATER REPELLENT, SILANE	514.10
M	BRIDGE EXPANSION JOINT, ASPHALTIC PLUG	516.10
M	BRIDGE EXPANSION JOINT, VERMONT	516.11
SM	SHEET MEMBRANE WATERPROOFING, TORCH APPLIED	519.20
M	BRIDGE RAILING, GALVANIZED 2 RAIL BOX BEAM	525.33
LS	TWO-WAY TEMPORARY BRIDGE (599 SM - EST.)	528.11
EACH	REMOVAL OF STRUCTURE (378 SM - EST.)	529.15
EACH	BEARING DEVICE ASSEMBLY, HIGH LOAD MULTI-ROTATIONAL	531.15
EACH	BEARING DEVICE ASSEMBLY, STEEL REINFORCED ELASTOMERIC PAD (ABUTMENT 1)	531.17
EACH	BEARING DEVICE ASSEMBLY, STEEL REINFORCED ELASTOMERIC PAD (ABUTMENT 2)	531.17
CM	STONE FILL, TYPE IV	613.13
SM	GEOTEXTILE UNDER STONE FILL	649.31
M	SPECIAL PROVISION (DRILLED SHAFT IN EARTH) (1.15 M)	900.640
M	SPECIAL PROVISION (DRILLED SHAFT IN ROCK) (1.0 M)	900.640
M	SPECIAL PROVISION (DRILLED SHAFT OBSTRUCTION DRILLING AND REMOVAL) (1.15 M)	900.640
LS	SPECIAL PROVISION (MOBILIZATION OF DRILLED SHAFT EQUIPMENT)	900.645
LS	SPECIAL PROVISION (QC/QA CLEANING AND PAINTING STRUCURAL COMPONENTS)	900.645

DETAILED SUMMARY OF QUANTITIES

QUANTITIES	UNIT	ITEMS

PROJECT NAME: Cambridge
PROJECT NUMBER: BRF 027-1 (4)

FILE NAME: 78f163quantity.dgn
PROJECT LEADER: M.Evans-Mongeon
DESIGNED BY: T.Filbach
BRIDGE QUANTITY SHEET

PLOT DATE: 05/22/2012
DRAWN BY: Evans-Mongeon
CHECKED BY: S. Scribner
SHEET 132 OF 214

TYPICAL SECTIONS

MATERIAL ITEM	THICKNESS TOLERANCE (TOTAL DEPTH FOR EACH MATERIAL)
PAVEMENT (TOTAL DEPTH ALL LAYERS)	+/- 5
SUBBASE	+/- 30
SAND BORROW	+/- 30

SEE W.O.#39

PAVEMENT: 40 SUPERPAVE BITUMINOUS CONCRETE PAVEMENT TYPE IVS — 80 MM TYPE IIS
160 ~~65~~ SUPERPAVE BITUMINOUS CONCRETE PAVEMENT TYPE IIS — 80 MM TYPE IIS
550 SUBBASE OF DENSE GRADED CRUSHED STONE — 40 MM TYPE IVS
600 SAND BORROW

SHOULDERS: 40 SUPERPAVE BITUMINOUS CONCRETE PAVEMENT TYPE IVS
65 SUPERPAVE BITUMINOUS CONCRETE PAVEMENT TYPE IIS

TACK COAT: EMULSIFIED ASPHALT IS TO BE APPLIED AT THE RATE OF 0.025 GAL/SY BETWEEN SUCCESSIVE COURSES OF PAVEMENT AS DIRECTED BY THE ENGINEER.

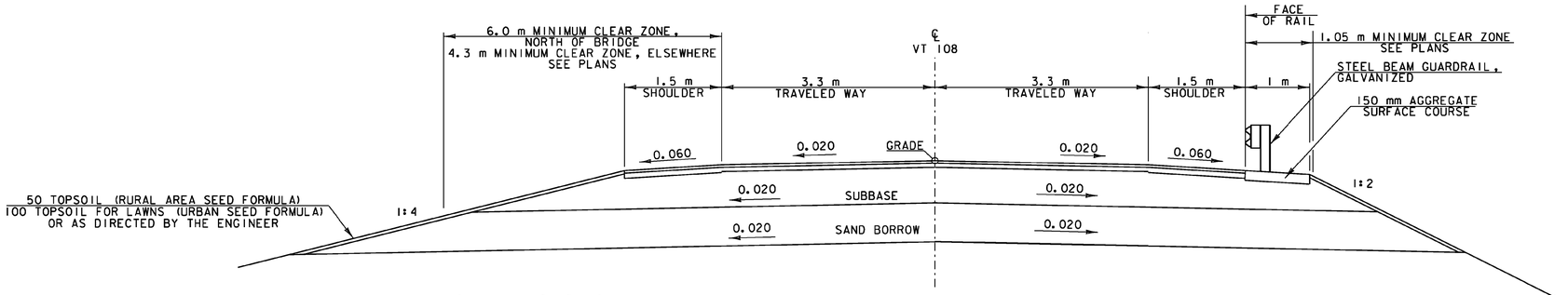

NORMAL SECTION WITHOUT GUARDRAIL

NORMAL SECTION WITH GUARDRAIL

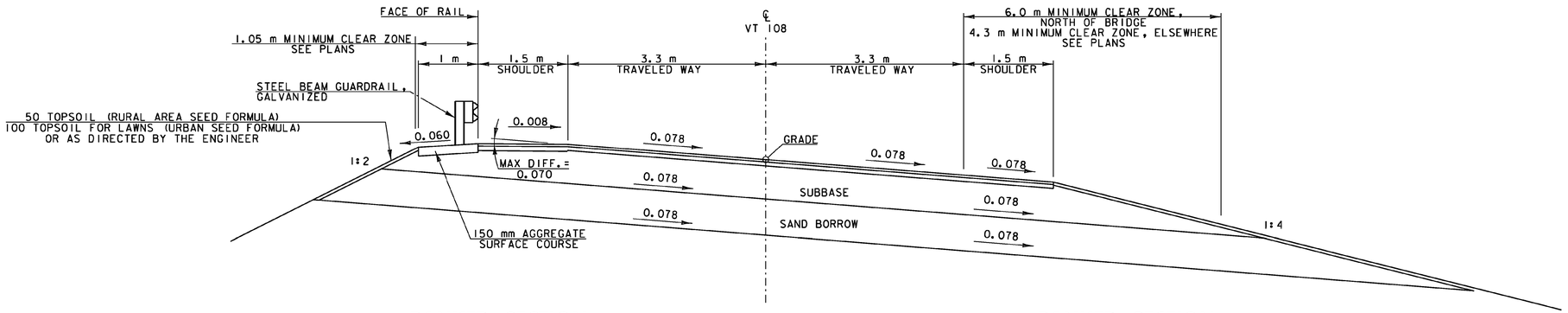

BANKED SECTION WITH GUARDRAIL

BANKED SECTION WITHOUT GUARDRAIL

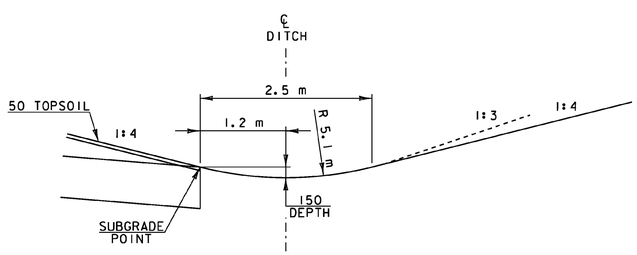

TYPICAL DITCH DETAIL ROUNDED

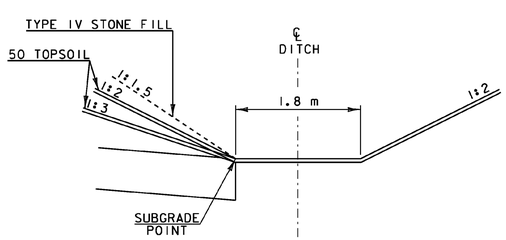

TYPICAL DITCH DETAIL TRAPEZOIDAL

0 1 2 3 4
SCALE IN METERS

PROJECT NAME: CAMBRIDGE	
PROJECT NUMBER: BRF 027-1 (4)	
FILE NAME: s78f163typ.dgn	PLOT DATE: 05-JUN-2012
PROJECT LEADER: M. EVANS-MONGEON	DRAWN BY: G. ROKES
DESIGNED BY: T. FILBACH	CHECKED BY: M.EVANSMONGEON
TYPICAL ROADWAY SECTIONS	SHEET 133 OF 214

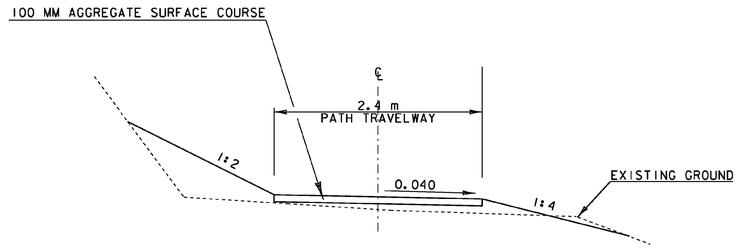

RECREATION PATH
NORMAL SECTION

STA. 10+310 TO 10+447 RT

RECREATION PATH TYPICAL SECTIONS

CHL 50+047 - 50+080 & CHL 50+125 - 50+145

TRAVELWAY: 100 AGGREGATE SURFACE COURSE
200 SUBBASE OF DENSE GRADED CRUSHED STONE

SHOULDERS: 300 SUBBASE OF DENSE GRADED CRUSHED STONE

CHL 50+080 - 50+125

TRAVELWAY: ~~PORTLAND CEMENT CONCRETE SIDEWALK, 125 MM~~ 200 MM
150 SUBBASE OF DENSE GRADED CRUSHED STONE

SHOULDERS: ~~275~~ 350 SUBBASE OF DENSE GRADED CRUSHED STONE

MATERIAL ITEM	THICKNESS TOLERANCE (TOTAL DEPTH FOR EACH MATERIAL)
CONCRETE	+/- 5
AGGREGATE SURFACE COURSE	+/- 12
SUBBASE	+/- 30

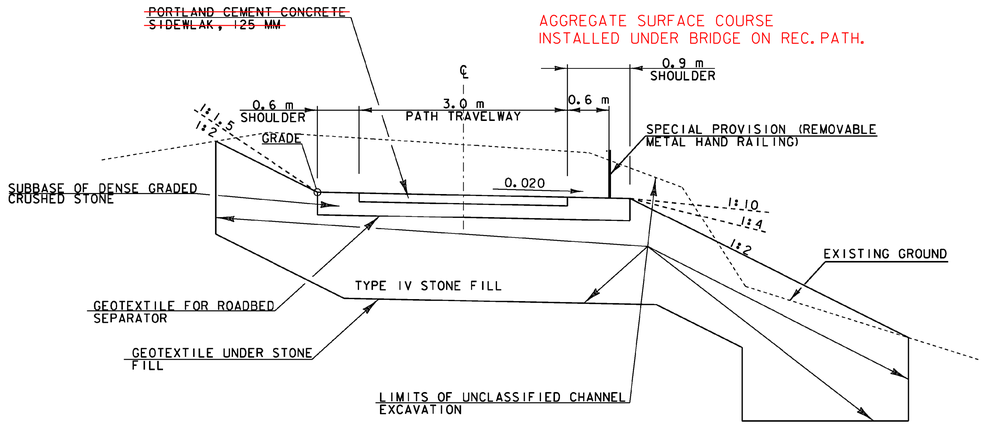

RECREATION PATH
CONCRETE SECTION

CHANNEL STA. 50+080 TO 50+125

REMOVABLE METAL HAND RAILING NOTES:

1. ALL WELDED JOINTS SHALL BE FINISHE BY GRINDING OR FILING TO GIVE A NEAT APPEARANCE.

2. RAIL TO BE PAINTED BLACK AFTER ERECTION. THIS WORK SHALL CONFORM TO SPECIAL PROVISION (QC/QA CLEANING AND PAINTING STRUCTURAL COMPONENTS). PAYMENT FOR THIS WORK SHALL BE CONSIDERED INCIDENTAL TO SPECIAL PROVISION (REMOVABLE METAL HAND RAILING).

3. PAY ITEM FOR REMOVABLE METAL HAND RAILING IS 900.640, SPECIAL PROVISION (REMOVABLE METAL HAND RAILING)

4. CONCRETE SHALL BE CONCRETE, HIGH PERFORMANCE CLASS "B", OR AS DIRECTED BY THE ENGINEER. PAYMENT FOR THE CONCRETE SHALL BE CONSIDERED INCIDENTAL TO SPECIAL PROVISION (REMOVABLE METAL HAND RAILING).

5. SPECIAL PROVISION (REMOVABLE METAL HAND RAILING) SHALL BE REMOVED FOR WINTER AND AN INSERT, CONSISTING OF A PLATE WELDED TO A SECTION OF PIPE SHALL BE BOLTED IN ITS PLACE TO ENSURE SLEEVES REMAIN CLEAR. PAYMENT FOR THIS WORK SHALL BE CONSIDERED INCIDENTAL TO SPECIAL PROVISION (REMOVABLE METAL HAND RAILING).

HAND RAIL ELIMINATED FOLLOWING FLOODING IN SPRING OF 2014

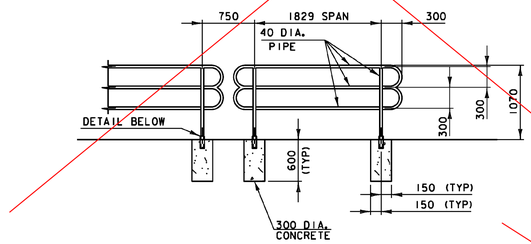

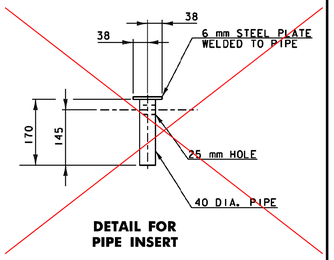

DETAIL FOR PIPE INSERT

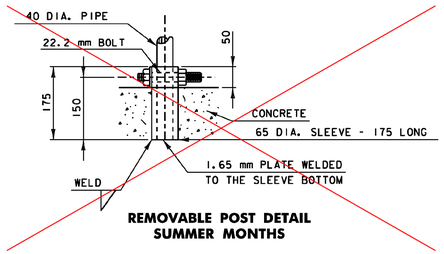

REMOVABLE POST DETAIL
SUMMER MONTHS

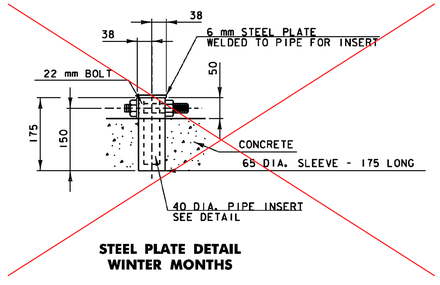

STEEL PLATE DETAIL
WINTER MONTHS

SPECILA PROVISION (REMOVABLE METAL HAND RAILING) DETAILS
NTS

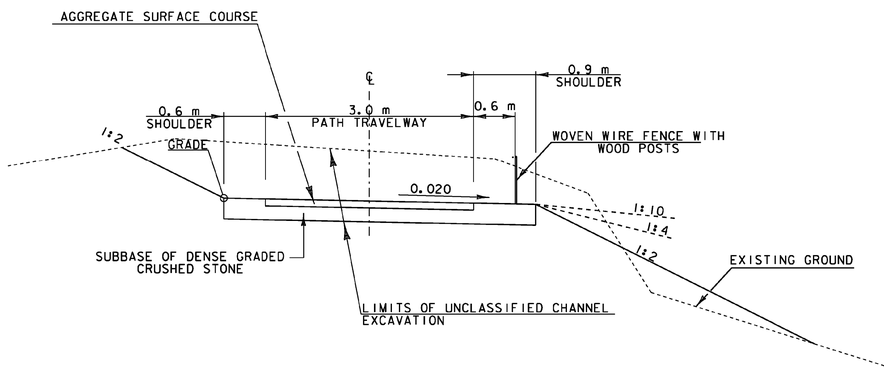

RECREATION PATH
NORMAL SECTION

CHANNEL STA. 50+047 TO 50+080
AND CHANNEL STA. 50+125 TO 50+145

PROJECT NAME:	CAMBRIDGE
PROJECT NUMBER:	BRF 027-1(4)
FILE NAME: s78f163typ.dgn	PLOT DATE: 05-JUN-2012
PROJECT LEADER: M. EVANS-MONGEON	DRAWN BY: G. ROKES
DESIGNED BY: T. FILBACH	CHECKED BY: M.EVANSMONGEON
TYPICAL SECTIONS - RECREATION PATH	SHEET 134 OF 214

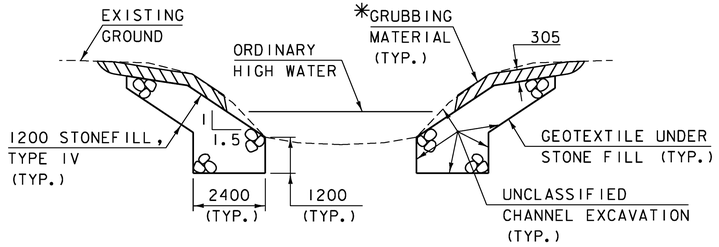

TYPICAL CHANNEL SECTION
(NOT TO SCALE)

*GRUBBING MATERIAL SHALL NOT BE PLACED ON THE STONE FILL IN THE AREA UNDER THE BRIDGE. WHENEVER CHANNEL SLOPE INTERSECTS ROADWAY SUBBASE, GRUBBING MATERIAL SHALL BEGIN AT THE BOTTOM OF SUBBASE.

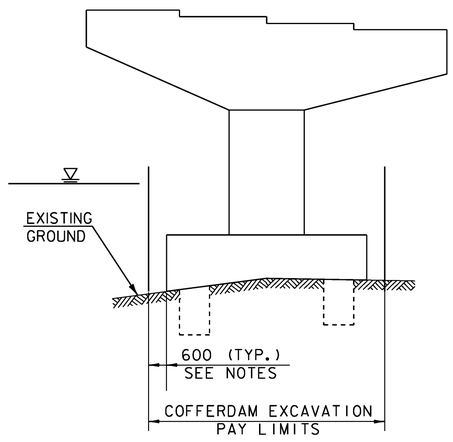

PIER 1 TYPICAL SECTION
(NOT TO SCALE)

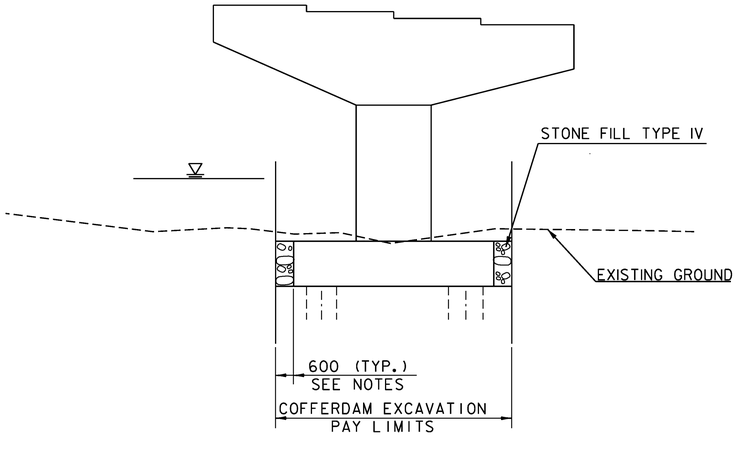

PIER 2 TYPICAL SECTION
(NOT TO SCALE)

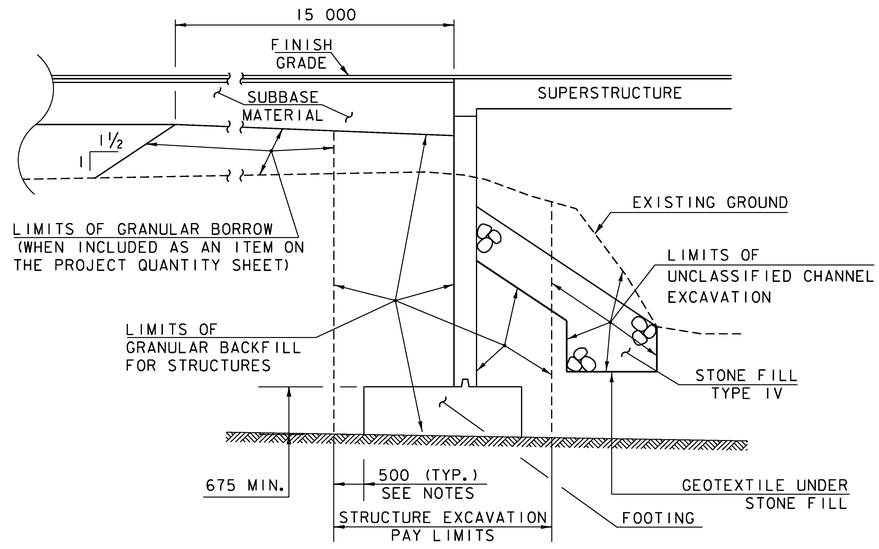

ABUTMENT 1 TYPICAL SECTION
(NOT TO SCALE)

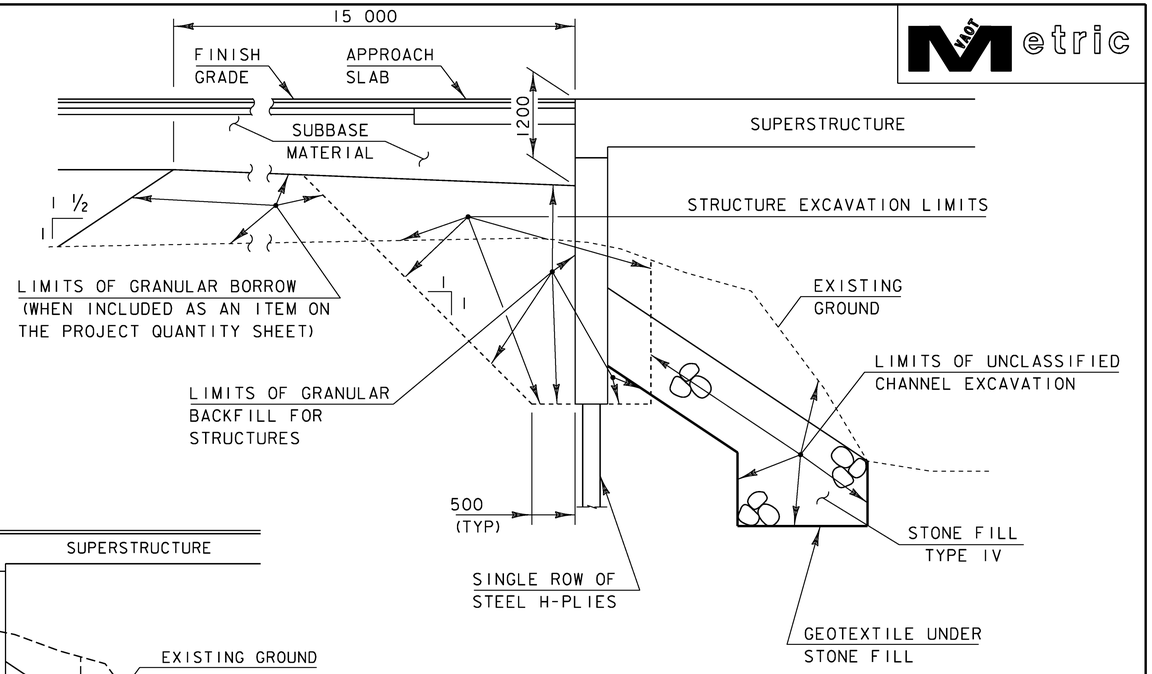

ABUTMENT 2 TYPICAL SECTION
NOT TO SCALE

ACTUAL LIMITS OF STRUCTURE EXCAVATION SHALL BE DETERMINED BY THE CONTRACTOR. HOWEVER, ONLY THE EXCAVATION BETWEEN THE LIMITS SHOWN WILL BE PAID FOR UNDER ITEM 204.25 "STRUCTURE EXCAVATION". EXCAVATION BY THE CONTRACTOR OUTSIDE OF THESE LIMITS WILL BE AT THE EXPENSE OF THE CONTRACTOR.

COFFERDAM NOTES

1. COFFERDAM DIMENSIONS TO BE DETERMINED BY THE CONTRACTOR.
2. THE PAY LIMITS OF EITHER "COFFERDAM EXCAVATION, EARTH" OR "COFFERDAM EXCAVATION, ROCK" SHALL BE 600 MM OUTSIDE THE PERIMETER OF THE FOOTING AND FROM BOTTOM OF THE FOOTING UP TO THE EXISTING GROUND OR BOTTOM OF SUBBASE, WHICHEVER IS LOWER.
3. IF A COFFERDAM IS CONSTRUCTED WHICH IS LARGER THAN THE INDICATED COFFERDAM EXCAVATION PAY LIMITS, PAYMENT FOR ALL UNCLASSIFIED CHANNEL EXCAVATION, INCLUDING THAT PORTION WHICH IS INSIDE THE COFFERDAM BUT OUTSIDE THE COFFERDAM PAY LIMITS, WILL BE MADE AT THE CONTRACT UNIT PRICE FOR UNCLASSIFIED CHANNEL EXCAVATION. NO MEASUREMENT AND PAYMENT WILL BE MADE FOR COFFERDAM EXCAVATION AND GRANULAR BACKFILL FOR STRUCTURES OUTSIDE THE PAY LIMITS DEFINED IN NOTE 2.

PROJECT NAME:	CAMBRIDGE		
PROJECT NUMBER:	BRF 027-1(4)		
FILE NAME:	s78f163btyp.dgn	PLOT DATE:	05-JUN-2012
PROJECT LEADER:	M. EVANS-MONGEON	DRAWN BY:	R. PELLETT
DESIGNED BY:	T. FILLBACH	CHECKED BY:	T. FILLBACH
EARTHWORK SECTIONS		SHEET	135 OF 214

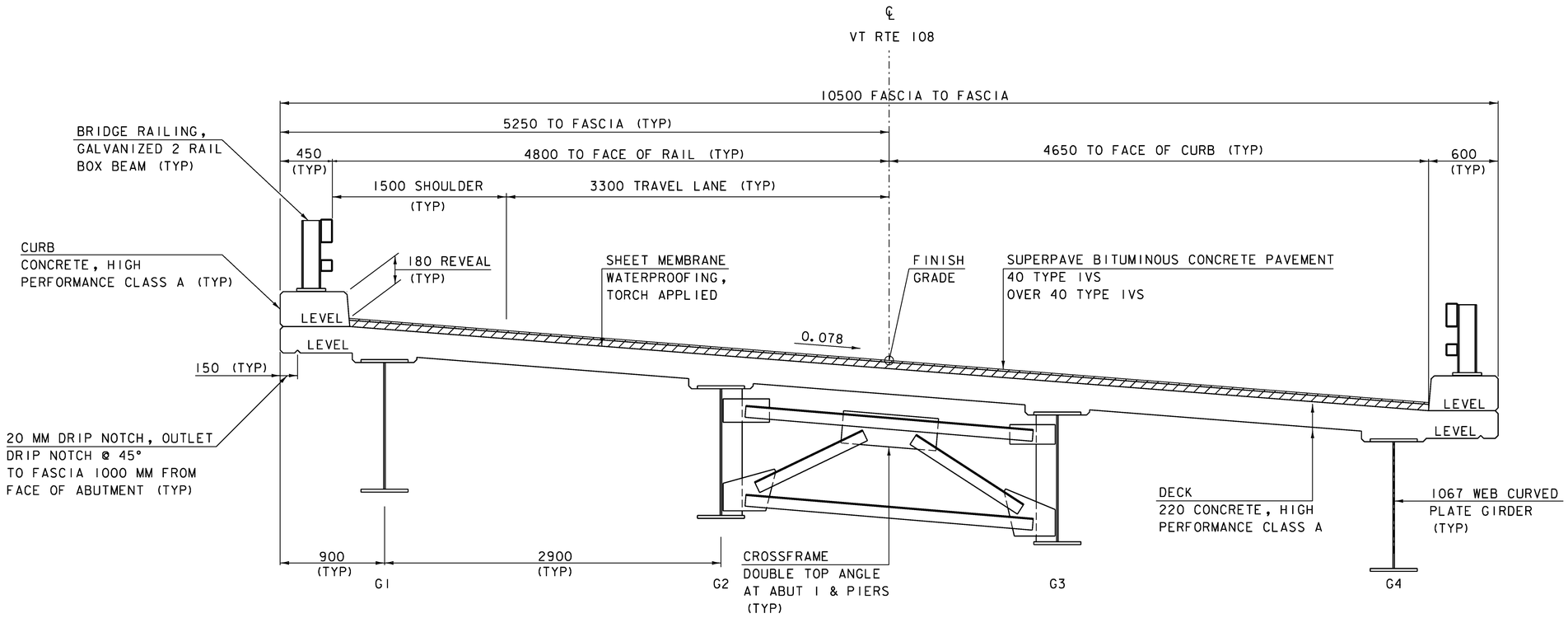

TYPICAL BRIDGE SECTION

0 1 2

SCALE = 1:20

PROJECT NAME:	CAMBRIDGE
PROJECT NUMBER:	BRF 027-1(4)
FILE NAME: s78f163typ.dgn	PLOT DATE: 05-JUN-2012
PROJECT LEADER: M. EVANS-MONGEON	DRAWN BY: G. ROKES
DESIGNED BY: T. FILBACH	CHECKED BY: M.EVANS-MONGEON
TYPICAL BRIDGE SECTION	SHEET 136 OF 214

STATE OF VERMONT
AGENCY OF TRANSPORTATION

PRELIMINARY INFORMATION SHEET (BRIDGE)

Version 09.02.01
LRFD Metric

FINAL HYDRAULIC REPORT

HYDROLOGIC DATA

Date: February 2010

DRAINAGE AREA : 1262.8 sq. kilometers
CHARACTER OF TERRAIN : Moderate relief with wide floodplain, medium size
STREAM CHARACTERISTICS : Perennial and sinuous
NATURE OF STREAMBED : Gravel with sand and cobbles, some ledge outcrops

PEAK FLOW DATA

Q 2.33 =	312 cm/s	Q 50 =	630 cm/s
Q 10 =	425 cm/s	Q 100 =	743 cm/s
Q 25 =	524 cm/s	Q 500 =	1076 cm/s

DATE OF FLOOD OF RECORD : November 1927
ESTIMATED DISCHARGE: 1642 cm/s
WATER SURFACE ELEV.: 141.35 m - 141.50 m
NATURAL STREAM VELOCITY : @ Q50 = 2.5 m/s
ICE CONDITIONS : Moderate
DEBRIS: Moderate
DOES THE STREAM REACH MAXIMUM HIGHWATER ELEV. RAPIDLY? No
IS ORDINARY RISE RAPID? No
IS STAGE AFFECTED BY UPSTREAM OR DOWNSTREAM CONDITIONS? No
IF YES, DESCRIBE:

WATERSHED STORAGE: 1% HEADWATERS:
UNIFORM: X
IMMEDIATELY ABOVE SITE:

EXISTING STRUCTURE INFORMATION

STRUCTURE TYPE: Steel Truss; Slab on girder approach
YEAR BUILT: 1931
CLEAR SPAN(NORMAL TO STREAM): 56 m
VERTICAL CLEARANCE ABOVE STREAMBED: 6.2 m +/- Avg. low beam = 140 m
WATERWAY OF FULL OPENING: 262 sq. m
DISPOSITION OF STRUCTURE: Remove and replace
TYPE OF MATERIAL UNDER SUBSTRUCTURE: See boring logs

WATER SURFACE ELEVATIONS AT:

Q2.33 =	138.03 m	VELOCITY =	2.40 m/s
Q10 =	138.47 m	"	3.02 m/s
Q25 =	138.91 m	"	3.41 m/s
Q50 =	139.35 m	"	3.80 m/s
Q100 =	139.80 m	"	4.19 m/s

LONG TERM STREAMBED CHANGES: Bank erosion just upstream of bridge.
Change in confluence with Brewster River.

IS THE ROADWAY OVERTOPPED BELOW Q100: Yes
FREQUENCY: Q50
RELIEF ELEVATION: 139.0 m
DISCHARGE OVER ROAD @Q100: 49 cm/s

UPSTREAM STRUCTURE

TOWN: Cambridge — DISTANCE: 1.610 km
HIGHWAY # : TH 23 — STRUCTURE #: 29
CLEAR SPAN: 43.0 m — CLEAR HEIGHT: 8.2 m
YEAR BUILT: 1887, reconstructed 2004 — FULL WATERWAY: 260 sq. m.
STRUCTURE TYPE: Covered Bridge

DOWNSTREAM STRUCTURE

TOWN: Cambridge — DISTANCE: 0.701 km
HIGHWAY # : VT 15 — STRUCTURE #: 21
CLEAR SPAN: 76.8 m — CLEAR HEIGHT: 6.71 m
YEAR BUILT: 1991 — FULL WATERWAY: 307 sq. m.
STRUCTURE TYPE: 3 span continuous girder

LRFR LOAD RATING FACTORS

LOADING LEVELS	TRUCK						
	M-18	HL-93	3S2	6 AXLE	3A STR.	4A STR.	5A SEMI
TONNAGE	18	33	33	60	27	31	34
INVENTORY	2.08	1.08					
POSTING							
OPERATING	2.69	1.40	2.21	1.73	2.29	2.15	2.08
COMMENTS:							

PROPOSED STRUCTURE

STRUCTURE TYPE: 3 span composite deck on continuous curved steel girders

CLEAR SPAN(NORMAL TO STREAM): 70.9 m
VERTICAL CLEARANCE ABOVE STREAMBED: 6.89 m
WATERWAY OF FULL OPENING: 370 sq. m

WATER SURFACE ELEVATIONS AT:

Q2.33 =	138.01 m	VELOCITY=	2.09 m/s
Q10 =	138.43 m	"	2.58m/s
Q25 =	138.86 m	"	2.83m/s
Q50 =	139.30 m	"	3.09 m/s
Q100 =	139.74 m	"	3.34 m/s

IS THE ROADWAY OVERTOPPED BELOW Q100: Yes
FREQUENCY: Q100
RELIEF ELEVATION: 139.27 m
DISCHARGE OVER ROAD @Q100: Minimal flow

AVERAGE LOW ELEVATION OF SUPERSTRUCTURE: 141.3 m
VERTICAL CLEARANCE: @ Q50 = 2.0 m

SCOUR: At Q500, 0.5 m Contraction Scour; 6.0 m pier scour

REQUIRED CHANNEL PROTECTION: Stone fill type IV

PERMIT INFORMATION

		DEPTH OR ELEVATION:
AVERAGE DAILY FLOW:	28.5 cm/s	
ORDINARY LOW WATER:	12.2 cm/s	1.2 m
ORDINARY HIGH WATER:	134.0 cm/s	2.4 m

TEMPORARY BRIDGE REQUIREMENTS

STRUCTURE TYPE: 3 span Mabey bridge
CLEAR SPAN (NORMAL TO STREAM): 82 m
VERTICAL CLEARANCE ABOVE STREAMBED: 5.0 m
WATERWAY AREA OF FULL OPENING: 260 sq. m.

ADDITIONAL INFORMATION

TRAFFIC MAINTENANCE NOTES

1. MAINTAIN TWO-WAY TRAFFIC ON A TEMPORARY BRIDGE.
2. TRAFFIC SIGNALS ARE NOT NECESSARY.
3. SIDEWALKS ARE NOT NECESSARY
4. THE APPROACHES FOR THE TEMPORARY BRIDGE SHALL BE PAVED.

DESIGN VALUES

1. DESIGN LIVE LOAD		HL-93
2. FUTURE PAVEMENT	d_p:	---
3. ABUTMENT BEARING TO BEARING LENGTH (THREE SPANS) (23.00 - 31.00 - 23.00) M	L:	77.00 M
4. MIN. MID-SPAN POS. CAMBER @ RELEASE (PRESTRESSED UNITS)	Δ:	---
5. PRESTRESSING STRAND	f_y:	---
6. PRESTRESSED CONCRETE STRENGTH	f'_c:	---
7. PRESTRESSED CONCRETE RELEASE STRENGTH	f'_{ci}:	---
8. CONCRETE, HIGH PERFORMANCE CLASS AA	f'_c:	30.0 MPa
9. CONCRETE, HIGH PERFORMANCE CLASS A	f'_c:	30.0 MPa
10. CONCRETE, HIGH PERFORMANCE CLASS B	f'_c:	25.0 MPa
11. CONCRETE, CLASS C	f'_c:	20.0 MPa
12. REINFORCING STEEL	f_y:	420 MPa
13. STRUCTURAL STEEL AASHTO M270 (WEATHERING)	f_y:	345 MPa
14. SOIL UNIT WEIGHT	γ:	22 kN/m^3
15. NOMINAL BEARING RESISTANCE OF SOIL	q_n:	---
16. SOIL BEARING RESISTANCE FACTOR (REFER TO AASHTO LRFD)	ϕ:	---
17. NOMINAL BEARING RESISTANCE OF ROCK	q_n:	3.4 MPa
18. ROCK BEARING RESISTANCE FACTOR (REFER TO AASHTO LRFD)	ϕ:	0.45
19. NOMINAL AXIAL PILE RESISTANCE	q_p:	SEE NOTES
20. PILE YIELD STRENGTH ASTM A572	f_y:	345 MPa
21. PILE SIZE		HP 310X 125
22. EST. PILE LENGTH	L_p:	14 M
23. PILE RESISTANCE FACTOR	ϕ:	0.65
24. LATERAL PILE DEFLECTION	Δ:	22.00 mm
25. BASIC WIND SPEED	V_{3s}:	---
26. MINIMUM GROUND SNOW LOAD	P_g:	---
27. SEISMIC DATA PGA: ---	S_s:	---
	S_1:	---

TRAFFIC DATA

SEE TITLE SHEET FOR TRAFFIC DATA

YEAR	ADT	DHV	% D	% T	ADTT

20 year ESAL for flexible pavement from to :
40 year ESAL for flexible pavement from to :
Design Speed : km/hr

TEMPORARY BRIDGE PROFILE ALONG TEMP CL

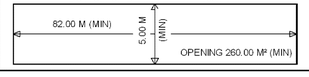

PROJECT NAME: CAMBRIDGE
PROJECT NUMBER: BRF 027-1(4)

FILE NAME: s78f163bridgeexcelpi.dgn
PROJECT LEADER: EVANS-MONGEON
DESIGNED BY: T. FILLBACH
PRELIMINARY INFORMATION SHEET 1

PLOT DATE: 05-JUN-2012
DRAWN BY: R. PELLETT
CHECKED BY: T. FILLBACH
SHEET 137 OF 214

VAOT Metric

GENERAL

1. ALL MATERIALS AND CONSTRUCTION SHALL CONFORM TO THE STATE OF VERMONT AGENCY OF TRANSPORTATION STANDARD SPECIFICATIONS FOR CONSTRUCTION DATED 2011, AND ITS LATEST REVISIONS, AND THE AASHTO LRFD BRIDGE DESIGN SPECIFICATIONS, 4TH EDITION, DATED 2008 AND ITS LATEST REVISIONS.

2. THE BRIDGE IS DESIGNED FOR HL-93 LIVE LOAD WITH NO ALLOWANCE FOR ADDITIONAL FUTURE PAVEMENT.

3. ALL DIMENSIONS ARE HORIZONTAL OR VERTICAL AND ARE GIVEN AT 20 DEGREES CELSIUS UNLESS NOTED OTHERWISE.

4. THE DETAILS AND DIMENSIONS ON THE PROJECT SPECIFIC PLAN AND DETAIL SHEETS SHALL TAKE PRECEDENCE OVER THE MORE GENERAL "STRUCTURES DETAIL SHEETS" PROVIDED AT THE END OF THIS PLAN SET.

5. THE CONTRACTOR MAY SUBSTITUTE SUBBASE MATERIAL FOR THE SAND BORROW SHOWN IN THE PLANS. THE SUBBASE MATERIAL SHALL BE THE TYPE SPECIFIED, AND IT SHALL BE PLACED AS REQUIRED FOR THAT TYPE OF MATERIAL. IF THIS SUBSTITUTION IS MADE, A GEOTEXTILE MEETING THE REQUIREMENTS OF SECTION 649 FOR GEOTEXTILE FOR ROADBED SEPARATOR SHALL BE PLACED BETWEEN THE SUBGRADE AND THE SUBBASE MATERIAL. THE SUBSTITUTED SUBBASE WILL BE PAID FOR AT THE UNIT PRICE BID FOR 203.31, SAND BORROW AND THE COST OF THE GEOTEXTILE FABRIC SHALL BE INCIDENTAL TO THE ITEM 203.31, SAND BORROW.

6. ITEM 529.15 REMOVAL OF STRUCTURE IS FOR THE REMOVAL AND DISPOSAL OF THE EXISTING STRUCTURE, INCLUDING THE SUPERSTRUCTURE FOR BOTH SPANS AND THOSE PARTS OF THE SUBSTRUCTURE ABOVE THE ELEVATIONS SHOWN ON THE PLANS AND PERMITS, WHICH ARE OUTSIDE THE LIMITS FOR OTHER EXCAVATION ITEMS.

7. THE COST FOR THE PLACEMENT AND REMOVAL OF ANY TEMPORARY FILLS THAT MAY BE NEEDED TO CONSTRUCT ANY PARTS OF THE TEMPORARY SHALL BE CONSIDERED INCIDENTAL TO ITEM 528.11, TEMPORARY BRIDGE.

TRAFFIC MAINTENANCE DURING CONSTRUCTION

8. TRAFFIC WILL BE MAINTAINED ON A TWO-WAY TEMPORARY BRIDGE.

9. THE DETOUR ALIGNMENT SHALL BE DESIGNED FOR A MINIMUM DESIGN SPEED OF 25 MPH. ALL WORK ASSOCIATED WITH THE INSTALLATION AND REMOVAL OF THE TEMPORARY BRIDGE AND ITS APPROACHES, INCLUDING TEMPORARY TRAFFIC BARRIER, PAVEMENT, AND PAVEMENT MARKINGS WILL BE INCLUDED IN THE UNIT PRICE BID FOR CONTRACT ITEM 528.11. ADVISORY SIGNS SHALL BE POSTED IN ACCORDANCE WITH VAOT STANDARD E-107. PAYMENT FOR ALL ON AND OFF PROJECT SIGNING AND TRAFFIC CONTROL DEVICES, INCLUDING DRUMS AND BARRICADES WILL BE PAID FOR UNDER CONTRACT ITEM 641.10 TRAFFIC CONTROL.

10. LIMITS OF THE TEMPORARY DETOUR MUST BE WITHIN THE RIGHT-OF-WAY ACQUIRED FOR THIS PURPOSE. ALL WORK NECESSARY TO MEET THIS CONDITION WILL BE INCIDENTAL TO ITEM 528.11 "TWO-WAY TEMPORARY BRIDGE". SEE ROW SHEETS.

11. THE AREA DISTURBED BY THE TEMPORARY DETOUR SHALL BE SEEDED AND MULCHED AFTER ALL THE FILL IS REMOVED TO THE FINAL GROUND ELEVATION. THE COST OF THE SEED, FERTILIZER AND MULCH WILL BE PAID UNDER THEIR RESPECTIVE ITEMS.

PILES - ABUT #2

12. THE PILES SHALL BE HP 310 X 125.

13. THE PILES SHALL BE DRIVEN TO A NOMINAL RESISTANCE OF 2135 KN AND SHALL BE EMBEDDED IN THE GROUND A MINIMUM OF 6.6 M. TO PREVENT DAMAGE TO THE PILES, PILE SHOES SHALL BE REQUIRED AND SHALL CONFORM TO SECTION 505.

14. A MINIMUM OF ONE DYNAMIC PILE TEST SHALL BE CONDUCTED. MORE TESTS MAY BE REQUIRED BY THE RESIDENT ENGINEER.

15. FOR ESTIMATING PURPOSES, THE PILE TIP ELEVATIONS WERE ASSUMED TO COINCIDE WITH THE TOP OF BEDROCK ELEVATIONS SHOWN ON THE BORING LOGS. THE ACTUAL IN-PLACE LENGTHS MAY VARY.

BEDROCK

16. FOOTING OR SUBFOOTINGS FOR SUBSTRUCTURES ON BEDROCK SHALL BE PLACED ON CLEAN, COMPETENT ROCK. ALL LOOSE ROCK AND DEBRIS SHALL BE REMOVED.

17. UPON COMPLETION OF EXCAVATION, AND PRIOR TO PLACING OF FORMWORK, FOR SUBSTRUCTURES FOUNDED ON BEDROCK, THE RESIDENT ENGINEER SHALL CONTACT THE PROJECT MANAGER AND THE SOILS AND FOUNDATIONS ENGINEER. THE SOILS AND FOUNDATIONS ENGINEER SHALL DETERMINE IF THE BEDROCK IS COMPETENT TO OBTAIN THE NOMINAL BEARING RESISTANCE OF ROCK SHOWN ON THE PLANS. A MINIMUM OF FIVE (5) WORKING DAYS, FROM THE DATE OF NOTIFICATION, SHALL BE ALLOWED, TO MAKE THE INSPECTION AND DETERMINATION OF THE COMPETENCY OF THE BEDROCK.

18. SHOULD COMPETENT BEDROCK BE ENCOUNTERED ABOVE THE DESIGN BOTTOM OF FOOTING ELEVATION, IT SHALL BE REMOVED, AND PAID USING APPLICABLE CONTRACT PAY ITEMS, OR THE CONTRACTOR MAY PROVIDE A BEDROCK PROFILE TO THE PROJECT MANAGER, SO THAT THE PROJECT MANAGER CAN DETERMINE WHETHER THE DESIGN BOTTOM OF FOOTING ELEVATION CAN BE RAISED. THREE (3) WORKING DAYS FROM THE RECEIPT OF THE BEDROCK PROFILE SHALL BE ALLOWED FOR DETERMINATION OF THE FINAL BOTTOM OF FOOTING ELEVATION. NO ADJUSTMENTS OF THE FOOTING ELEVATION SHALL BE MADE WITHOUT APPROVAL OF THE PROJECT MANAGER.

19. ANY BEDROCK THAT NEEDS TO BE REMOVED SHALL BE PAID FOR UNDER THE APPLICABLE EXCAVATION ITEM. OVERBREAKAGE BEYOND THE MAXIMUM ALLOWANCE SPECIFIED IN SUBSECTION 204.09(B) WILL BE AT THE CONTRACTOR'S EXPENSE.

20. IF BEDROCK IS ENCOUNTERED MORE THAN 600 MM BELOW THE INDICATED BOTTOM OF FOOTING ELEVATIONS FOR PIER #1 OR FOR ABUTMENT #1, AS SHOWN ON THE PLANS, THE PROJECT MANAGER SHALL BE CONTACTED. PROFILES OF THE BEDROCK MAY BE REQUIRED TO ADJUST THE FOOTING ELEVATIONS AND SIZE. THREE (3) WORKING DAYS FROM THE RECEIPT OF THE BEDROCK PROFILE SHALL BE ALLOWED FOR DETERMINATION OF THE FINAL BOTTOM OF FOOTING ELEVATION. NO FURTHER WORK SHALL BE DONE ON THE FOOTINGS UNTIL A REPLY IS RECEIVED FROM THE STRUCTURES SECTION.

21. ALL OVERBREAKAGE BELOW INDICATED BOTTOM OF FOOTING SHALL BE REPLACED WITH HPC CONCRETE, CLASS B. A MAXIMUM OF 150 MM OF AVERAGE DEPTH SHALL BE PAID FOR AS HPC CONCRETE, CLASS B AND ANY ADDITIONAL CONCRETE REQUIRED SHALL BE PLACED AT THE CONTRACTOR'S EXPENSE.

22. IF A SUB-FOOTING IS REQUIRED, THE LIMITS OF THE SUB-FOOTING SHALL BE 300 MM OUTSIDE THE LIMITS OF THE FOOTING. #25 DOWELS SHALL BE DRILLED AND GROUTED INTO THE BEDROCK UNDER THE SUB-FOOTING AT 600 MM SPACING EACH WAY AS SHOWN ON THESE PLANS. THIS WORK SHALL BE PAID FOR UNDER ITEM 507.16 "DRILLING AND GROUTING DOWELS." THE CONCRETE IN THE SUBFOOTING SHALL BE CONCRETE, HIGH PERFORMANCE CLASS B.

CONCRETE

23. ALL EXPOSED EDGES OF CONCRETE SHALL BE CHAMFERED 25 MM BY 25 MM.

24. JOINTS AND SCORE MARKS IN CONCRETE SHALL BE CONSTRUCTED AS INDICATED ON THE PLANS OR AS DIRECTED BY THE ENGINEER.

25. REINFORCING PLACEMENT TOLERANCES SHALL BE:

SPACING	± 25 MM
CLEARANCE	± 6 MM

26. THE DECK, BRIDGE CURBS, PIER HEADS AND ABUTMENT #2 (INCLUDING ITS WINGWALLS), AND THE PORTIONS OF ABUTMENT # 1 ABOVE THE CONSTRUCTION JOINT IN THE BACKWALL (SEE EXPANSION JOINT DETAILS), SHALL BE CONCRETE, HIGH PERFORMANCE CLASS A. REFER TO THE SPECIAL PROVISIONS FOR SPECIFICATIONS FOR THE CONCRETE TO BE USED IN THE DRILLED SHAFTS. ALL OTHER SUBSTRUCTURE CONCRETE SHALL BE CONCRETE, HIGH PERFORMANCE CLASS B.

27. FOR BRIDGE DECK PLACEMENT, THE MAXIMUM TIME LIMIT FOR ANY COMBINATION OF PLACEMENTS DONE IN ANY ONE DAY SHALL BE EIGHT HOURS. THERE SHALL BE A MINIMUM OF 96 HOURS BETWEEN THE COMPLETION OF ONE DAY'S PLACEMENT AND THE BEGINNING OF OTHER ADJACENT PLACEMENT. ALL INDIVIDUAL DECK PLACEMENTS SHALL START FROM THE LOW END OF THE SECTION BEING PLACED.

28. NO CONCRETE IN THE ABUTMENTS OR WINGWALLS SHALL BE PLACED ABOVE THE BRIDGE SEAT CONSTRUCTION JOINT UNTIL THE GIRDERS HAVE BEEN PROFILED AND THE FINISHED GRADE OF THE DECK HAS BEEN DETERMINED.

29. SURFACES OF BRIDGE SEATS UNDER BEARING DEVICES SHALL BE LEVEL. ALL OTHER AREAS OF THE BRIDGE SEATS SHALL BE SLOPED AWAY FROM THE BEARING DEVICES AT A RATE OF 80 MM PER METER. THE ENTIRE BRIDGE SEAT SURFACE SHALL BE GIVEN A MAGNESIUM FLOAT FINISH.

30. WATER REPELLENT, SILANE SHALL BE APPLIED TO ALL EXPOSED CONCRETE SURFACES EXCEPT THE UNDERSIDE OF THE DECK BETWEEN THE DRIP NOTCHES.

31. ALL REINFORCING STEEL SHALL BE ITEM 507.11, REINFORCING STEEL, LEVEL I. ALL BARS WHOSE MARK CONTAINS AN "E", ON THE REINFORCING STEEL SCHEDULE, SHALL BE EPOXY COATED. ALL OTHER REINFORCING SHALL BE PLAIN REINFORCING.

32. PAYMENT FOR THE REINFORCING STEEL IN THE DRILLED SHAFT IS INCLUDED IN THE PAY ITEMS SPECIAL PROVISION (DRILLED SHAFT IN EARTH) (1.15M) AND SPECIAL PROVISION (DRILLED SHAFT IN ROCK) (1.0M). THE REINFORCING BARS HAVE BEEN INCLUDED IN THE REINFORCING STEEL SCHEDULE, FOR THE CONTRACTOR'S CONVENIENCE.

33. CONCRETE FORMWORK AND SUPPORTS.
    A. FLEMING BRACKETS OR SIMILAR FALSE WORK SHALL BE PLACED AT A MAXIMUM SPACING OF 4'-0". THE BRACKETS SHALL BEAR NEAR THE BOTTOM FLANGE AND IN NO CASE SHALL THEY BEAR ABOVE THE BOTTOM QUARTER OF THE WEB DEPTH.

    B. PER SUBSECTION 501.09, THE CONTRACTOR SHALL SUBMIT A CONCRETE FORMWORK DESIGN FOR THE PIER.

STRUCTURAL STEEL

34. THE EXISTING STRUCTURAL STEEL IS PAINTED WITH A MATERIAL THAT MAY CONTAIN LEAD. THE CONTRACTOR SHALL FOLLOW ALL APPLICABLE REGULATIONS WHEN HANDLING AND WORKING WITH THIS STEEL. THE REMOVED STRUCTURAL STEEL SHALL BECOME THE PROPERTY OF THE CONTRACTOR. THE CONTRACTOR SHALL INDEMNIFY AND HOLD HARMLESS THE STATE, ITS OFFICERS AND EMPLOYEES CONCERNING THE CONTRACTOR'S USE OR DISPOSITION OF THE REMOVED STRUCTURAL STEEL.

35. UNLESS OTHERWISE NOTED, ALL NEW STRUCTURAL STEEL SHALL CONFORM TO AASHTO M270/M270M GRADE 50W AND SHALL BE PAID FOR UNDER ITEM 506.56, STRUCTURAL STEEL, CURVED PLATE GIRDER. THE STRUCTURAL STEEL FOR THE DOWNSPOUT AND HARDWARE SHALL BE AS SPECIFIED ON DOWNSPOUT DETAILS SHEET AND SHALL BE PAID FOR UNDER ITEM 506.60, STRUCTURAL STEEL.

36. THE SOUTHERN ENDS OF ALL FOUR GIRDERS SHALL BE PAINTED FOR A DISTANCE OF 3.0 METERS FROM THE CENTERLINE OF BEARING AT ABUTMENT 1. ALL CROSS-FRAMES, DIAPHRAGMS AND CONNECTION OR STIFFENER PLATES IN THIS AREA SHALL ALSO BE PAINTED. THE FINAL COLOR SHALL BE BROWN IN CONFORMANCE WITH SUBSECTION 708.03 OF THE STANDARD SPECIFICATIONS. BROWN GREASE, CONFORMING TO SECTION 708.04 SHALL BE APPLIED TO ALL PAINTED AREAS. PAYMENT WILL BE MADE UNDER CONTRACT ITEM 900.645 SPECIAL PROVISION (QC/QA CLEANING AND PAINTING STRUCTURAL COMPONENTS).

STONE FILL

37. THE STONE FILL, TYPE IV SHALL BE PLACED IN FRONT OF THE ABUTMENTS AND PIERS BEFORE THE STRUCTURAL STEEL HAS BEEN SET.

BACKFILL

38. HEIGHT OF FILL BEHIND THE ABUTMENTS WILL BE LIMITED TO THE BRIDGE SEAT ELEVATION UNTIL THE DECK HAS BEEN PLACED AND THE CURING PERIOD IS COMPLETE.

PROJECT NAME:	CAMBRIDGE
PROJECT NUMBER:	BRF 027-1(4)

FILE NAME: s78f163bridgeexcel.dgn	PLOT DATE: 05-JUN-2012
PROJECT LEADER: M. EVANS-MONGEON	DRAWN BY: R. PELLETT
DESIGNED BY: T. FILLBACH	CHECKED BY: T. FILLBACH
PROJECT NOTES	SHEET 138 OF 214

STATE OF VERMONT
AGENCY OF TRANSPORTATION

DRAINAGE DETAIL SHEET

Metric

STATION km + m	STATION km + m	POS.	DRAINAGE ITEM #	INLET/OUTLET TYPE		DITCH		PIPE ARCH			PIPE		ALLOWABLE OPTIONS						PIPE ELBOW no. deg.	ES ea	CB ea	. . .	DEPTH DI mm	CONC CLASS B m^3	REINF STEEL kg	DI GRATE type	CHAN ELEV ea	CRM m^3	TRENCH EXCAVATION		COMM EXC m^3	UNC CHAN EXC m^3	STRUCT EXCAV m^3	GRAN BKFILL STRUCT m^3	GRAN BORR m^3	EROS MATT m^2	STONE FILL		MARKER POSTS		GEOTEXT UNDER SF m^2		REMARKS
				INLET	OUTLET	IN	OUT	SPAN mm	RISE mm	L m	D mm	L m	PCCSP mm	CAAP mm	RCP CL	CSP mm	CPEP SL mm	PCCSP PI mm											EARTH m^3	ROCK m^3									LT ea	RT ea			
10+089.4	10+186.3	RT	B1																									89.0													REMOVE EXISTING CULVERT
10+121.7	10+125.6	RT	B2																									3.0													REMOVE EXISTING CULVERT
10+082.0	10+113.4	RT	B3	ES		X	X				600	28.3			III		X			1							73.0					64.2			0.9	I		2	5.4	INSTALL NEW CULVERT W/ END SECTION AT INLET
10+113.4	10+160.0	RT	B4																									1153.0													& STONE PAD AT OUTLET CONSTRUCT GRASS LINED DITCH
10+170.1	10+189.6	RT	B5	ES		X					600	15.1	1.63	1.52						1							30.0					25.4			3.9	I		1	19.0	INSTALL NEW CULVERT W/ END SECTION & STONE LINED DITCH AT INLET
PROJECT TOTALS																				2							A D	1348.0					89.6			4.8	I		3	24.4	
											600 600	28.3 15.1	1.63	1.52	III		X						1.8 2.1					COVER STEEL													

PROJECT NAME:	**CAMBRIDGE**
PROJECT NUMBER:	**BRF 027-1(4)**
FILE NAME:	**s78f163forms.dgn**
PROJECT LEADER:	**M.EVANS-MONGEON**
DESIGNED BY:	**S.SCRIBNER**
DRAINAGE DETAIL SHEET	
PLOT DATE:	**4/26/2012**
DRAWN BY:	**EVANS-MONGEO**
CHECKED BY:	**EVANS-MONGEO**
SHEET	**139** OF **214**

STATE OF VERMONT
AGENCY OF TRANSPORTATION

EARTHWORKS

Metric

		TOTAL EXCAVATION EARTH AND ROCK		ROCK EXCAVATION		EMBANKMENT			
STATION	DIST	AREA	VOLUME	AREA	VOLUME	AREA	VOLUME	AREA	VOLUME
km + m	m	m^2	m^3	m^2	m^3	m^2	m^3	m^2	m^3
10+083		2.02				0			
	17		34.8				0		
10+100		2.02				0			
	20		50.4				112		
10+120		3.02				11			
	20		113.8				272		
10+140		8.36				16			
	20		133.1				309		
10160.000		4.95				15		CUT	376
	8.000		26.4				137	ROCK	0
10+168		1.65				19		R.FAC	0.495
	4		17.7				81	FILL	911
10+172		6.78				19		F.FAC	1.15
							0	EX. F	672
BRIDGE									
10+250		0.00				40			
	10		0.0				394		
10+260		0.00				40			
	20		0.0				937		
10+280		0.00				54			
	20		0.0				1068		
10+300		0.00				53			
	20		0.9				826		
10+320		0.09				29			
	20		0.9				398		
10+340		0.00				10			
	20		26.4				133		
10+360		2.64				3			
	20		82.0				34		
10+380		5.56				0			
	20		161.1				6		
10+400		10.55				0		CUT	1159
	20		228.6				1	ROCK	0
10+420		12.31				0		R.FAC	0.495
	20		258.8				0	FILL	3797
10+440		13.57				0		F.FAC	1.15
	20		230.0				0	EX. F	3208
10+460		9.43				0			
	20		106.0				0		
10+480		1.17				0			
	20		17.1				0		
10+500		0.54				0			
	20		33.1				0		
10+520		2.77				0			
	10		13.9				0		
10+530		0.00				0			
OLUMN TOTAL			1535.0				4708		
DRIVES									
								CUT	48
10+100	RT		43.7				0	ROCK	0
								R.FAC	0.495
								FILL	43
								F.FAC	1.15
10+338	LT		4				43	EX. F	2

		TOTAL EXCAVATION EARTH AND ROCK		ROCK EXCAVATION		EMBANKMENT			
STATION	DIST	AREA	VOLUME	AREA	VOLUME	AREA	VOLUME	AREA	VOLUME
km + m	m	m^2	m^3	m^2	m^3	m^2	m^3	m^2	m^3

		TOTAL EXCAVATION EARTH AND ROCK		ROCK EXCAVATION		EMBANKMENT			
STATION	DIST	AREA	VOLUME	AREA	VOLUME	AREA	VOLUME	AREA	VOLUME
km + m	m	m^2	m^3	m^2	m^3	m^2	m^3	m^2	m^3

SUMMARY AND BALANCES

STATION TO STATION		TOT EXC. EARTH & ROCK	ROCK EXCAV	EMBANK	EXCESSES		ACUMULATIVE EXCESSES	
km + m	km + m	m^3	m^3	m^3	CUT	FILL	CUT	FILL
10+083	10+174	376	0	911		672		672
10+250	10+450	1159	0	3797		3208		3879
DRIVES		48	0	43		2		3881
Subtotal		1583	0	4751			0	3881

REMARKS

EARTH AND ROCK EXCAVATION	1583
SOLID ROCK EXCAVATION	0
EARTH EXCAVATION	1583
PLANIMETERED FILL	4751
LESS FACTORED SOLID ROCK	0
LESS DISPLACEMENT OF ANY LARGE STRUCTURES	0
NET PLANIMETERED FILL	4751
FACTOR	1.15
PLANIMETERED FILL INCLUDING FACTOR	5464
MATERIALS AVAILABLE FOR FILLS	
EARTH EXCAVATION	1583
CHANNEL EXCAVATION x 0.90	2418
COFFERDAM EXCAVATION x 0.50	80
TRENCH EXCAVATION X 0.50	673
STRUCTURE EXCAVATION x 0.50	196
TOTAL MATERIAL AVAILABLE FOR FILL	4949
TOTAL FILL INCLUDING FACTOR	5464
TOTAL MATERIAL FOR FILL	4949
BORROW	514
EXCESS EXCAVATION	

PROJECT NAME: **CAMBRIDGE**
PROJECT NUMBER: **BRF 027-1(4)**

FILE NAME: **s78f163forms.xls**
PROJECT LEADER: **M.EVANS-MONGEON**
DESIGNED BY: **S.SCRIBNER**
EARTHWORK SHEET

PLOT DATE: **2/28/2012**
DRAWN BY: **EVANS-MONGEO**
CHECKED BY: **EVANS-MONGEO**
SHEET **140** OF **214**

STATE OF VERMONT
AGENCY OF TRANSPORTATION

ITEM DETAIL SHEET

Metric

CURB

BEGIN STATION km + m	END STATION km + m	POSITION LEFT m	POSITION RIGHT m	REMARKS
CAST-IN-PLACE CONCRETE CURB TYPE B				
10+160.39	10+172.20	12.18792		
10+159.60	10+172.20		12.1968	
10+250.25	10+262.06	12.18792		
10+250.25	10+262.84		12.18712	
	SUBTOTAL	49		
	ROUNDING	1		
	TOTAL	50		

SIDEWALK

BEGIN STATION km + m	END STATION km + m	POSITION LEFT m^2	POSITION RIGHT m^2	REMARKS
PORTLAND CEMENT CONCRETE SIDEWALK,125 mm				
50+080.00	50+125.00		135	REC PATH
	SUBTOTAL	135		
	ROUNDING	5		
	TOTAL	140		

GUARD RAIL

BEGIN STATION km + m	END STATION km + m	POSITION LEFT m	POSITION RIGHT m	END TREATMENT BEGIN ea	END TREATMENT END ea
STEEL BEAM GUARDRAIL, GALVANIZED					
10+111.93	10+163.61	53.34		MTS	APPR RAIL
10+104.13	10+163.05		57.15	ANCHOR	APPR RAIL
10+258.84	10+322.66	64.77		APPR RAIL	MTS
10+259.40	10+397.57		137.16	APPR RAIL	MTS
10+352.00	10+409.15	57.15		MTS	MTS
	SUBTOTAL	370			
	ROUNDING	0			
	TOTAL	370			
GUARDRAIL APPROACH SECTION, GALVANIZED 2 RAIL BOX BEAM					
10+163.61	10+172.20	1		SBGR	BR RAIL
10+163.05	10+172.20		1	SBGR	BR RAIL
10+250.25	10+258.84	1		BR RAIL	SBGR
10+250.25	10+259.40		1	BR RAIL	SBGR
	SUBTOTAL	4			
	ROUNDING	0			
	TOTAL	4			
MANUFACTURED TERMINAL SECTION, FLARED					
10+111.93		1			
10+322.66		1			
10+397.57			1		
10+352.00		1			
10+409.15		1			
	SUBTOTAL	5			
	ROUNDING	0			
	TOTAL	5			
ANCHOR FOR STEEL BEAM RAIL					
10+104.13			1		
	SUBTOTAL	1			
	ROUNDING	0			
	TOTAL	1			
REMOVABLE METAL HAND RAILING					
50+080.00	50+125.00		45		
	SUBTOTAL	45			
	ROUNDING	5			
	TOTAL	50			

UNDERDRAIN

BEGIN STATION km + m	END STATION km + m	TYPE	POSITION	DIA. mm	LENGTH m	TRENCH EARTH m^3	TRENCH ROCK m^3	GRAN BKFILL m^3	FB ea	MKR PST ea

PROJECT NAME: CAMBRIDGE
PROJECT NUMBER: BRF 027-1(4)

FILE NAME: s78f163forms.dgn
PROJECT LEADER: M.EVANS-MONGEON
DESIGNED BY: M.EVANS-MONGEON
ITEM DETAIL SHEET

PLOT DATE: 2/29/2012
DRAWN BY: M.EVANS-MONGE
CHECKED BY: S.SCRIBNER
SHEET 141 OF 214

10+072 - 10+093, RT
10+072 - 10+164, RT
10+151 - 10+159, RT

B1 EXISTING DRAINAGE
STA 10+089.4 RT 12.0m - STA 10+186.3 RT 7.8m
EXISTING 450 CULVERT - REMOVE

B2 STA 10+121.7 RT 4.8 m - STA 10+125.6 RT 0.2 m
EXISTING 300 CULVERT - REMOVE

B3 NEW DRAINAGE 14.6M 10+116.049 18.2M
STA 10+082.0 RT ~~13.9m~~ - STA ~~10+113.4~~ RT ~~17.9m~~
NEW 600mm X 28.3m RCP CL. III OR CPEP(SL)
W/ 600mm ES AT INLET AND TYPE I STONE PAD
AT OUTLET 137.487
INLET INV. EL. ~~137.461~~
OUTLET INV. EL. ~~137.320~~

B4 10+116.049 137.337
STA ~~10+113.4~~ RT 17.9m - STA 10+160.0 RT 14.4m
CONSTRUCT GRASS LINED DITCH

B5 STA 10+170.1 RT 15.6m - STA 10+186.9 RT 15.0m
NEW 600mm X 15.1m CAAP(1.52) OR PCCSP(1.63)
W/ 600mm ES AT INLET
INLET INV. EL. 136.472
OUTLET INV. EL. 136.018
CONSTRUCT 7.3m TYPE I STONE LINED DITCH AT
INLET OF PIPE

WOVEN WIRE FENCE WITH WOOD POSTS
CHL ~~50+047~~ 50+046 - ~~50+080~~ 50+068 RT
WOOD BRACE FOR WOVEN WIRE FENCE
CHL 50+047 RT
CHL ~~50+080 RT~~ 50+068 RT
CONSTRUCT RECREATION PATH
(SEE CHANNEL SECTIONS)
CHL 50+047 - 50+145 LT
~~PORTLAND CEMENT CONCRETE SIDEWALK, 125mm~~
~~CHL 50+080 - 50+135 RT~~

CURVE #1 DATA
PI = 10+202.301 BK
= 10+133.732 AHD
Δ = 91°33'25" RT
R = 150.000
T = 154.132
L = 239.695
E = 65.074
BANK = 0.078

REMOVING AND RESETTING FENCE
~~STA 10+082.794 - 10+094 RT~~
~~STA 10+094 - 10+104 RT (GATE)~~
~~STA 10+104 - 10+164 RT~~

REMOVAL OF EXISTING FENCE
~~STA 10+237 - 10+250 LT~~
CHL 50+047 - 50+127 RT

BRACING ASSEMBLY FOR CHAIN-LINK FENCE, 2.4m
~~STA 10+093 RT~~
~~STA 10+104 RT~~
~~STA 10+160 RT~~
~~STA 10+165 RT~~

STEEL BEAM GUARDRAIL, GALVANIZED
10+120 STA ~~10+123.36~~ - 10+163.61 LT
STA 10+104.13 - 10+163.05 RT
STA 10+258.84 - 10+280 LT
STA 10+259.40 - 10+280 RT

MANUFACTURED TERMINAL SECTION, FLARED
STA ~~10+111.93 - 10+123.36 LT~~ 10+188.57 - 10+120, LT
ANCHOR FOR STEEL BEAM RAIL
STA 10+104.13 RT

REMOVAL AND DISPOSAL OF GUARDRAIL
STA 10+098 - 10+175 LT
STA 10+161 - 10+173 LT
STA 10+236 - 10+268 RT
STA 10+236 - 10+256 RT

~~SPECIAL PROVISION~~
~~(REMOVABLE METAL HAND RAILING)~~
~~CHL 50+080 - 50+125 RT~~

LEGEND
ARCHAEOLOGICALLY SENSITIVE AREA
WETLAND
STONE FILL, TYPE I
STONE FILL, TYPE IV
HABITAT FOR THREATENED AND ENDANGERED SPECIES
APPROXIMATE AERIAL UTILITY RELOCATION
BY: CENTRAL VERMONT PUBLIC SERVICE CORP.
VERIZON -NEW ENGLAND
JEFFERSONVILLE CABLE
T.V. CORPORATION

619.17
YEILDING MARKER POST
STA. 10+082, RT
STA. 10+116, RT
STA. 10+170, RT

DETOUR CONSTRUCTION LIMITS
RE-CONSTRUCT RECREATION PATH
INSTALL GEOTEXTILE FOR ROADBED SEPERATOR PRIOR TO PLACING TEMPORARY FILL IN WETLAND AREA
DETOUR CENTERLINE
TEMPORARY RECREATION PATH (SEE DETOUR DETAILS)
PILE OF DIRT
LAMOILLE RIVER
END BRIDGE
RESUME ROADWAY
STA. 10+250.250
STOP ROADWAY
BEGIN BRIDGE
STA. 10+172.200
TEMPORARY BRIDGE
SHALL SPAN BROOK AT NORTH END OF BRIDGE
STONE BED
BROOK
VT STATE PLANE GRID
BUSHES
VT ROUTE 108 POC 10+171.116
= CHANNEL LINE STA 50+100.000
Δ = 90°-00'-00"
BM 7-2
GMP 94/FP1
ELEV.= 140.052'
S.I.P.
BM
GMP FP6
ELEV.= 138.633
S.I.P.
TYPE I
STA 10+260, RT
SLOPE SWALE

CAST-IN-PLACE CONCRETE CURB, TYPE B
STA 10+160.39 - 10+172.20 LT
STA 10+159.60 - 10+172.20 RT
10+250.45 STA ~~10+250.25~~ - 10+262.06 LT
10+250.45 STA ~~10+250.25~~ - 10+262.84 RT

GUARDRAIL APPROACH SECTION, GALVANIZED 2 RAIL BOX BEAM
STA 10+163.61 - 10+172.20 LT
STA 10+163.05 - 10+172.20 RT
STA 10+250.25 - 10+258.84 LT
STA 10+250.25 - 10+259.40 RT

BRIDGE RAILING, GALVANIZED 2 RAIL BOX BEAM
STA 10+172.20 - 10+250.25 LT
STA 10+172.20 - 10+250.25 RT

BARRIER FENCE
TO PROTECT ARCH. SENSITIVE AREA

STONE FILL, TYPE IV
STA 10+140 - ~~10+170 RT~~ 10+168 RT
STA 10+223 - 10+232 LT/RT (PIER)
STA 10+235 - ~~10+253 LT~~ 10+254 LT
STA 10+235 - 10+260 RT
CHL 50+080 - 50+115 RT
CHL 50+080 - 50+115 RT (ALONG RIVER)

CONSTRUCT DRIVE
STA 10+100 RT - 7.0m WIDE, 17.2 m LONG PAVED

STA. 10+082.794
END PROJECT
STP 030-2(27)
BEGIN PROJECT
BRF 027-1(4)

GROUND COVERS AND VINES (VALIANT GRAPEVINE OR SUMMER GRAPEVINE)
STA 10+082.794 - 10+167 RT
SEE LANDSCAPING DETAIL SHEET

EVERGREEN TREES (PICEA GLAUCA)
STA 10+082.794 - 10+164 RT
SEE LANDSCAPING DETAIL SHEET

LEGEND
EVERGREEN TREE (PICEA GLAUCA)
GROUND COVERS AND VINES (VALIANT GRAPEVINE OR SUMMER GRAPEVINE)

0 10 20 30
SCALE IN METERS

MATCH LINE ROADWAY LAYOUT SHEET 45 STA 10+082.794
MATCH LINE ROADWAY LAYOUT SHEET 1 STA 10+280

PROJECT NAME:	CAMBRIDGE
PROJECT NUMBER:	BRF 027-1(4)
FILE NAME: structures/s78f163bdr.dgn	PLOT DATE: 05-JUN-2012
PROJECT LEADER: M.EVANS-MONGEON	DRAWN BY: S. SCRIBNER
DESIGNED BY: T. FILLBACH	CHECKED BY: M.EVANS-MONGEON
ROADWAY LAYOUT SHEET 1	SHEET 142 OF 214

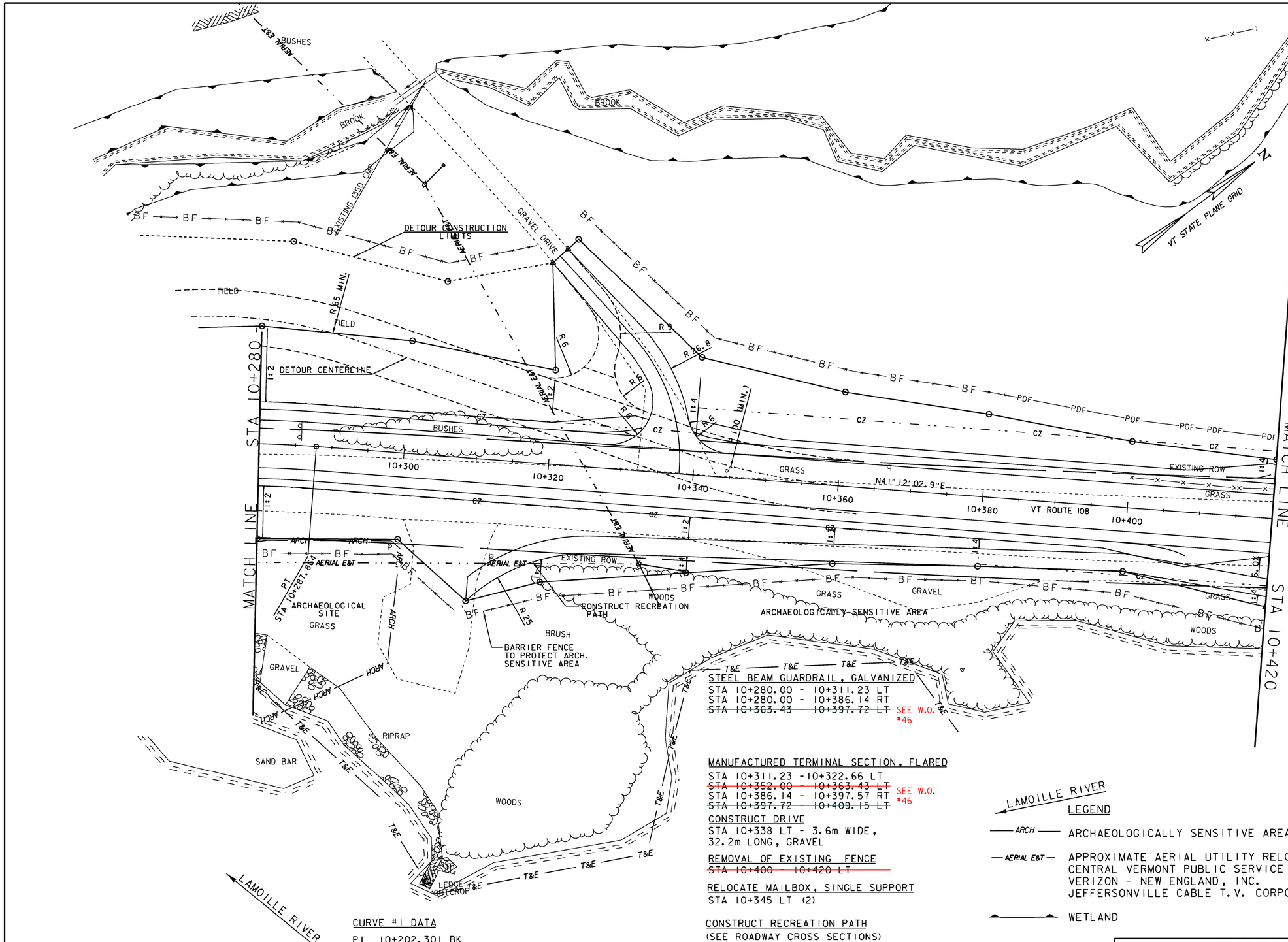

STEEL BEAM GUARDRAIL, GALVANIZED
STA 10+280.00 - 10+311.23 LT
STA 10+280.00 - 10+386.14 RT
~~STA 10+363.43 - 10+397.72 LT~~ SEE W.O. #46

MANUFACTURED TERMINAL SECTION, FLARED
STA 10+311.23 - 10+322.66 LT
~~STA 10+352.00 - 10+363.43 LT~~ SEE W.O. #46
STA 10+386.14 - 10+397.57 RT
~~STA 10+397.72 - 10+409.15 LT~~

CONSTRUCT DRIVE
STA 10+338 LT - 3.6m WIDE, 32.2m LONG, GRAVEL

REMOVAL OF EXISTING FENCE
~~STA 10+400 - 10+420 LT~~

RELOCATE MAILBOX, SINGLE SUPPORT
STA 10+345 LT (2)

CONSTRUCT RECREATION PATH
(SEE ROADWAY CROSS SECTIONS)
STA 10+310 - 10+420 RT - 2.4m WIDE, GRAVEL FOOT PATH

LAMOILLE RIVER

LEGEND

ARCH — ARCHAEOLOGICALLY SENSITIVE AREA

AERIAL E&T — APPROXIMATE AERIAL UTILITY RELOCATION BY:
CENTRAL VERMONT PUBLIC SERVICE CORPORATION
VERIZON - NEW ENGLAND, INC.
JEFFERSONVILLE CABLE T.V. CORPORATION

WETLAND

CURVE #1 DATA

PI 10+202.301 BK
= 10+133.732 AHD
Δ = 91°33'25" RT
R = 150.000
T = 154.132
L = 239.695
E = 65.074
BANK = 0.078

0 10 20 30
SCALE IN METERS

PROJECT NAME: CAMBRIDGE	
PROJECT NUMBER: BRF 027-1 (4)	
FILE NAME: structures/s78f163bdr.dgn	PLOT DATE: 05-JUN-2012
PROJECT LEADER: M.EVANS-MONGEON	DRAWN BY: G. ROKES
DESIGNED BY: S. SCRIBNER	CHECKED BY: M.EVANS-MONGEON
ROADWAY LAYOUT SHEET 2	SHEET 143 OF 214

VAOT Metric

COLD PLANING, BITUMINOUS PAVEMENT
~~STA 10+476 - 10+495 CL~~

CONSTRUCT DRIVE
STA 10+470 RT - 10.3m WIDE,
11.3 m LONG, GRAVEL

REMOVAL OF EXISTING FENCE
~~STA 10+420 - 10+495 LT~~

CONSTRUCT RECREATION PATH
(SEE ROADWAY CROSS SECTIONS)
STA 10+420 - 10+447 RT - 2.4m WIDE, GRAVEL FOOT PATH

CURVE ~~#2~~ #5 DATA
Δ = 33°31'28" LT
R = 245.000
T = 73.794
L = 143.353
E = 10.872
BANK = 0.060

N
VT STATE PLANE GRID

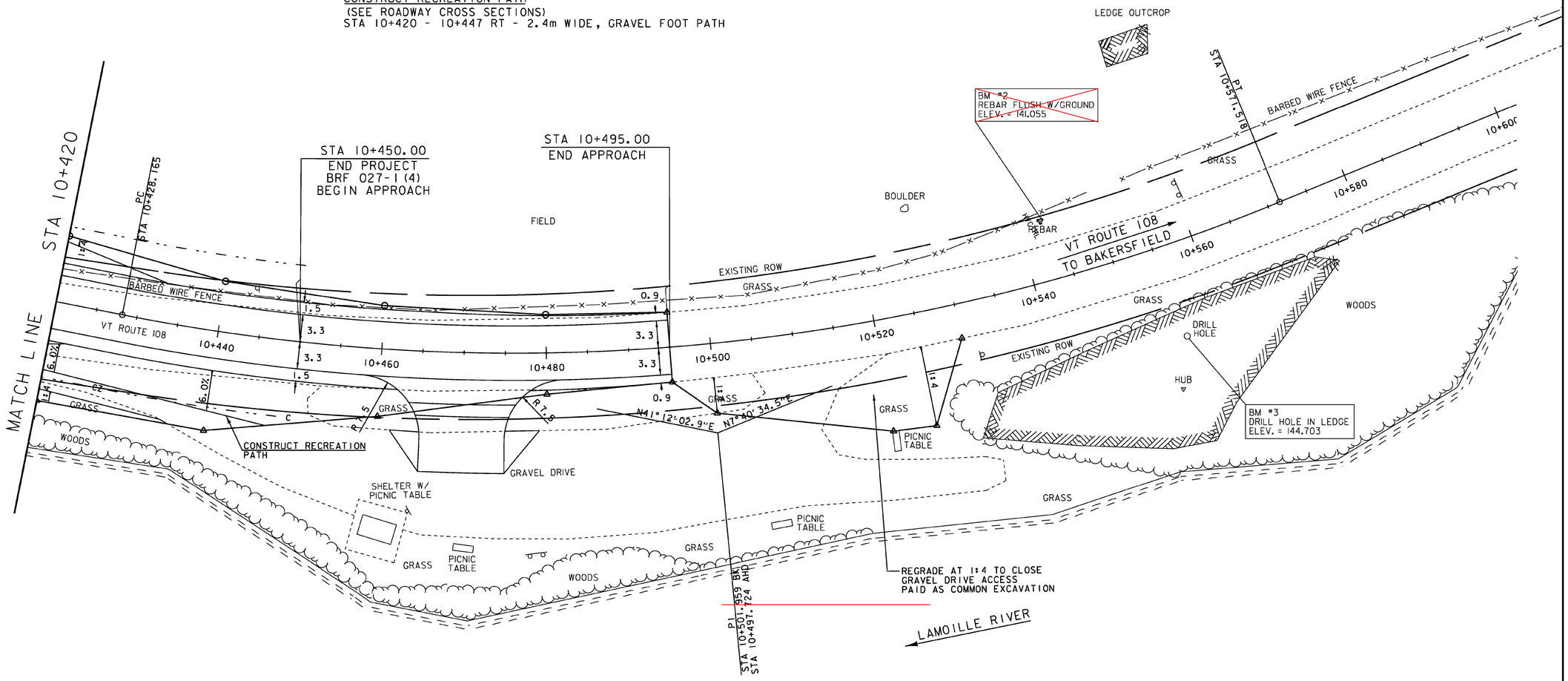

0 10 20 30
SCALE IN METERS

PROJECT NAME:	CAMBRIDGE
PROJECT NUMBER:	BRF 027-1(4)
FILE NAME: strutures/s78f163bdr.dgn	PLOT DATE: 05-JUN-2012
PROJECT LEADER: M.EVANS-MONGEON	DRAWN BY: S. SCRIBNER
DESIGNED BY: S. SCRIBNER	CHECKED BY:M.EVANS-MONGEON
ROADWAY LAYOUT SHEET 3	SHEET 144 OF 214

VT ROUTE 108 STA 10+082.794
END PROJECT STP 030 -2 (27)
BEGIN PROJECT BRF 027 -1 (4)

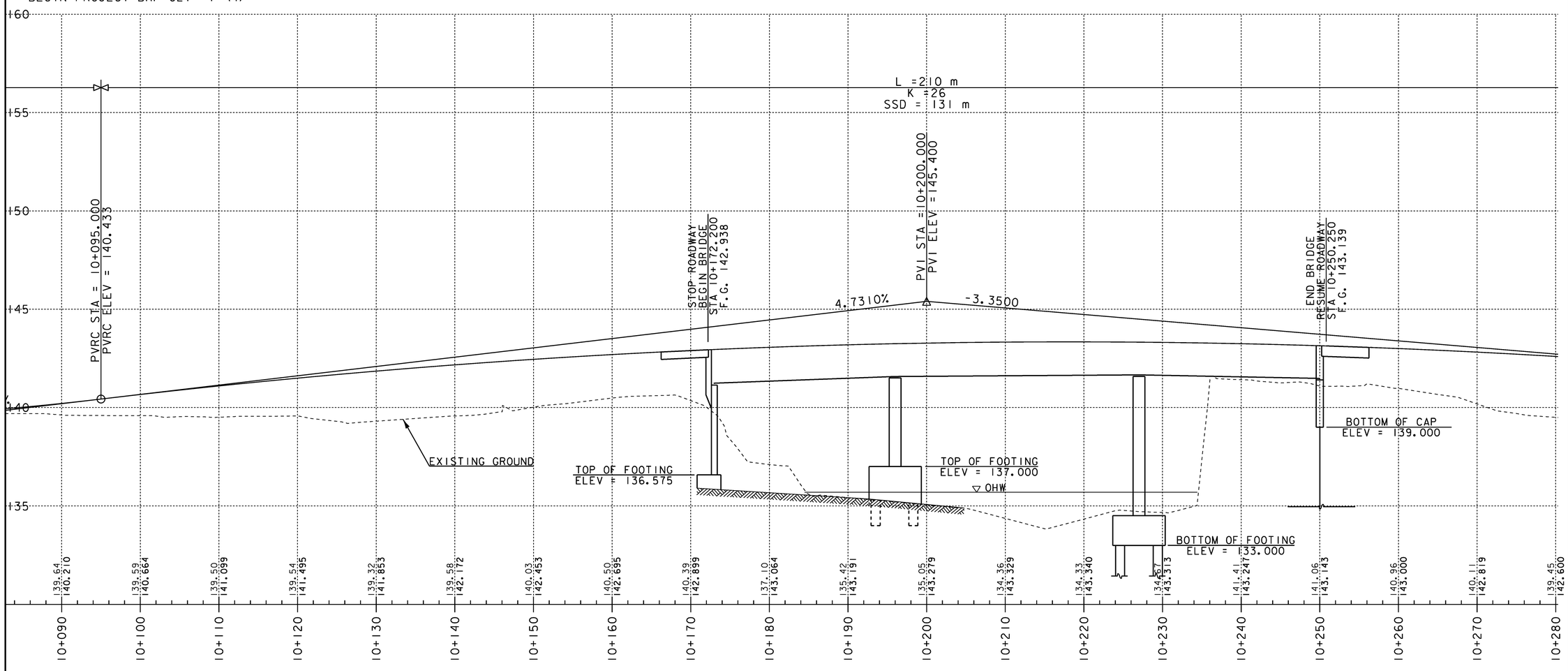

PROFILE NOTES:
EXISTING ELEVATIONS ARE SHOWN TO 0.01 METERS.
PROPOSED ELEVATIONS ARE SHOWN TO 0.001 METERS.

PROJECT NAME:	CAMBRIDGE
PROJECT NUMBER:	BRF 027-1(4)
FILE NAME: s78f163probdr.dgn	PLOT DATE: 05-JUN-2012
PROJECT LEADER: M. EVANS-MONGEON	DRAWN BY: G. ROKES
DESIGNED BY: T. FILBACH	CHECKED BY: M. EVANS-MONGEON
PROFILE SHEET 1	SHEET 145 OF 214

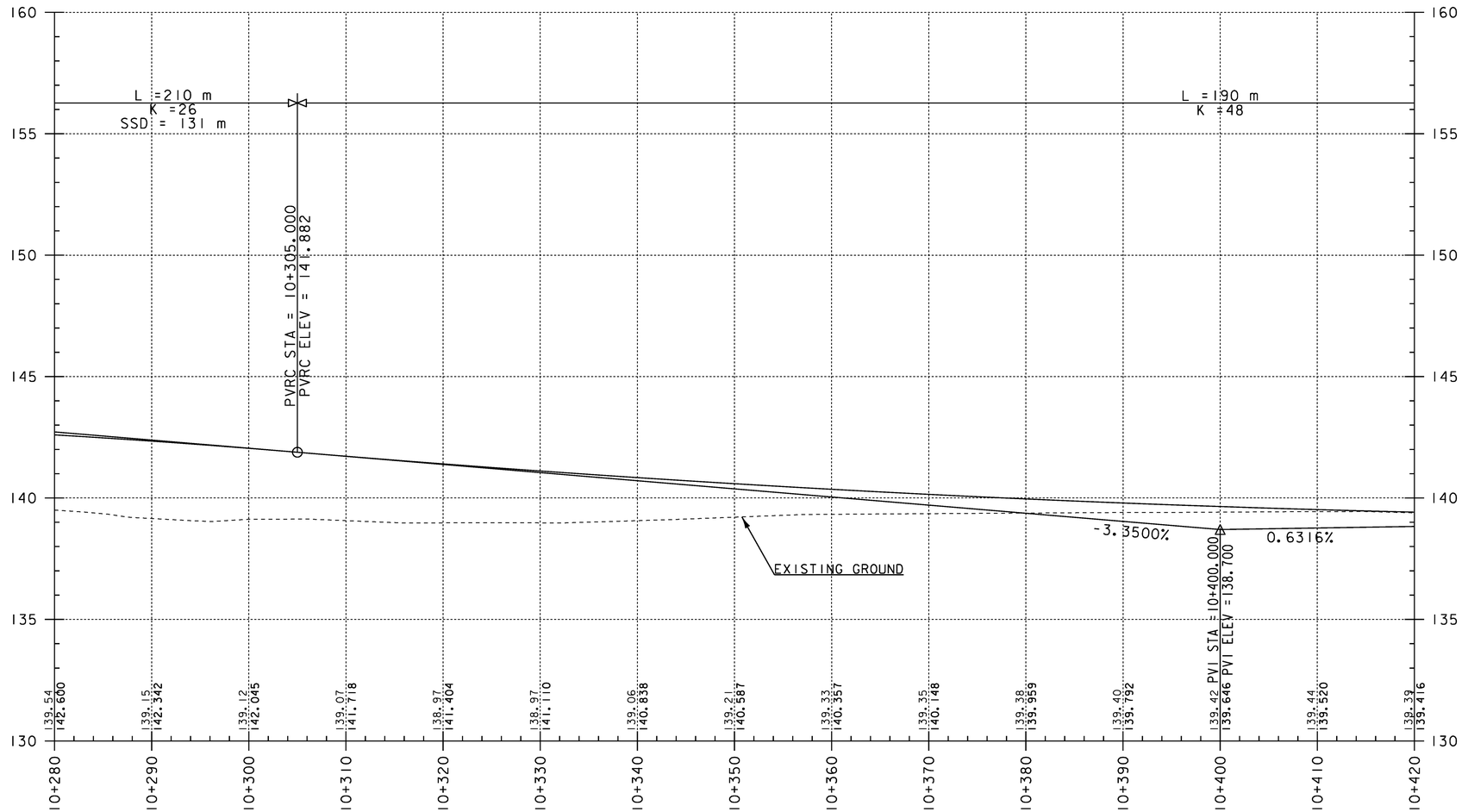

PROFILE NOTES:
EXISTING ELEVATIONS ARE SHOWN TO 0.01 METERS.
PROPOSED ELEVATIONS ARE SHOWN TO 0.001 METERS.

PROJECT NAME: CAMBRIDGE	
PROJECT NUMBER: BRF 027-1(4)	
FILE NAME: s78f163probdr.dgn	PLOT DATE: 05-JUN-2012
PROJECT LEADER: M. EVANS-MONGEON	DRAWN BY: G. ROKES
DESIGNED BY: T. FILBACH	CHECKED BY: M.EVANS-MONGEON
PROFILE SHEET 2	SHEET 146 OF 214

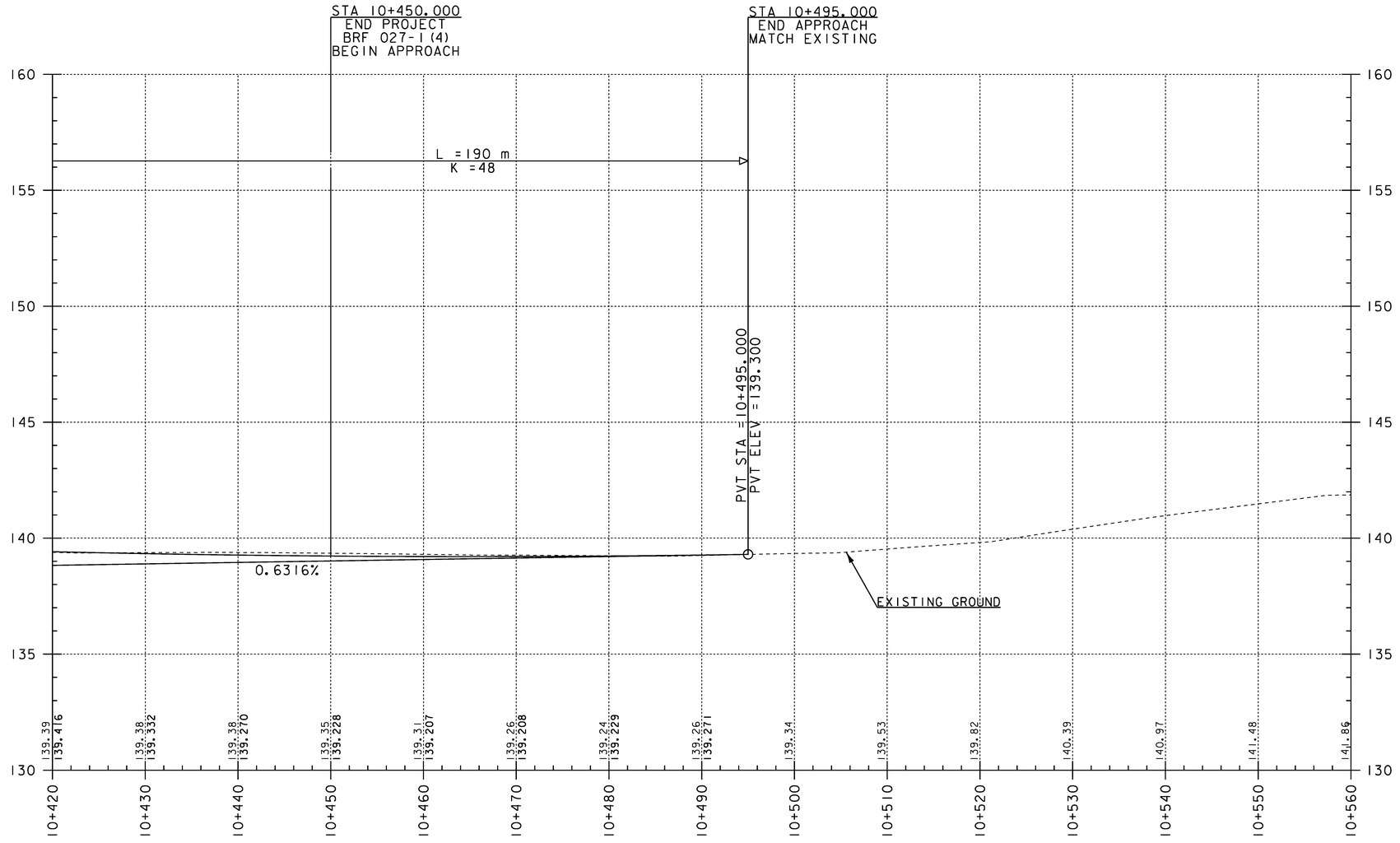

PROFILE NOTES:
EXISTING ELEVATIONS ARE SHOWN TO 0.01 METERS.
PROPOSED ELEVATIONS ARE SHOWN TO 0.001 METERS.

PROJECT NAME:	CAMBRIDGE
PROJECT NUMBER:	BRF 027-1(4)
FILE NAME: s78f163probdr.dgn	PLOT DATE: 05-JUN-2012
PROJECT LEADER: M. EVANS-MONGEON	DRAWN BY: G. ROKES
DESIGNED BY: T. FILBACH	CHECKED BY:M.EVANS-MONGEON
PROFILE SHEET 3	SHEET 147 OF 214

MATERIAL TRANSITION DETAILS & BANKING DIAGRAM

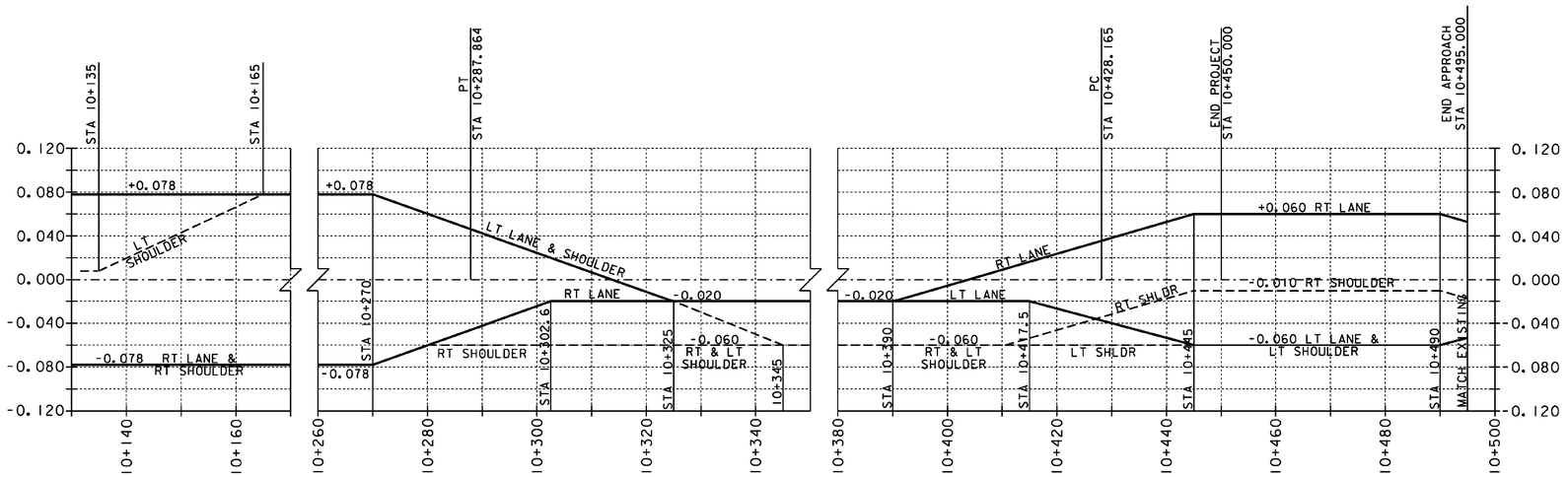

VT ROUTE 108

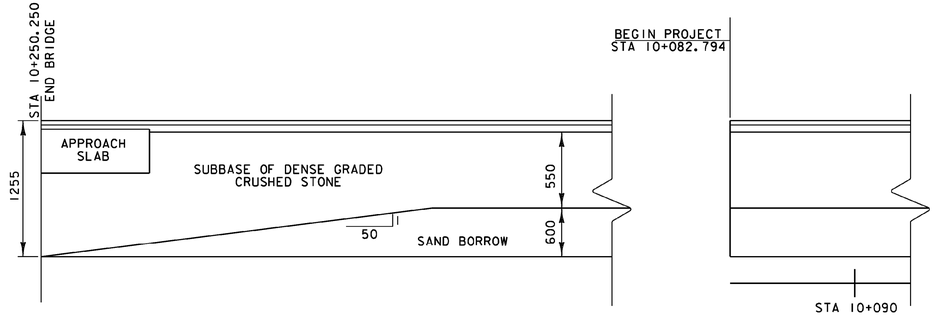

END OF BRIDGE TRANSITION (BEGIN BRIDGE SIMILAR)

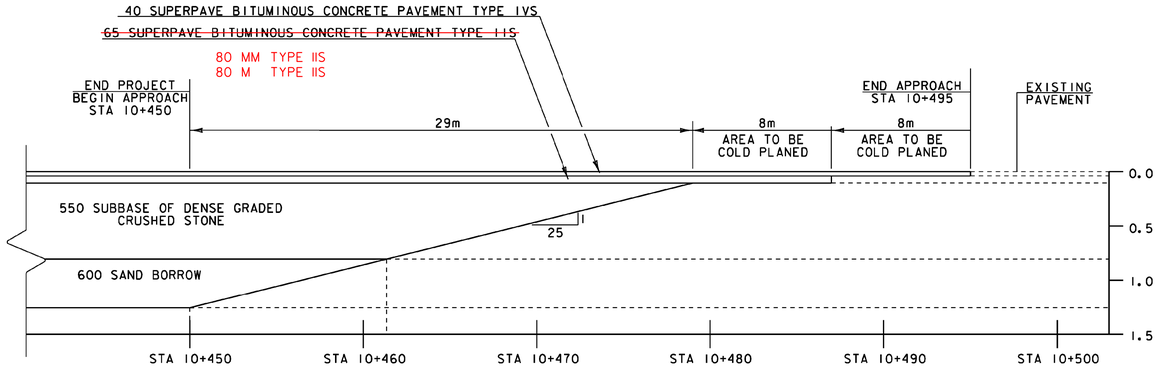

VT ROUTE 108 TRANSITION

PROJECT NAME: CAMBRIDGE	
PROJECT NUMBER: BRF 027-1 (4)	
FILE NAME: s78f163typ.dgn	PLOT DATE:
PROJECT LEADER: M.EVANSMONGEON	DRAWN BY: G. ROKES
DESIGNED BY: T. FILBACH	CHECKED BY: M.EVANSMONGEON
MATERIAL TRANSITION DETAILS & BANKING DIAGRAM	SHEET 148 OF 214

Metric

DURABLE 100 MM WHITE LINE, RECESSED TYPE I TAPE
STA 10+082.794 - STA 10+210 FAR RT
STA 10+082.794 - STA 10+210 FAR LT

DURABLE 100 MM YELLOW LINE, RECESSED TYPE I TAPE
STA 10+082.794 - STA 10+210 CL (DOUBLE)

NOTE: TYPE I TAPE SHALL BE STAMARK HIGH PERFORMANCE TAPE SERIES 3801 OR ATM 400 EXTENDED GRADE TAPE OR DIRECTOR 60-HP.

STA 10+125 LT
REMOVE (6)
JEFFERSONVILLE R
SMUGGLERS NOTCH 7 R
STOWE 18 R
JOHNSON 9 R
MORRISVILLE 19 R
CAMBRIDGE 3 R
R R

STA 10+089 LT
BOLLARD & SIGN R&S

STA 10+105 LT (GS-4)
SEE SIGNS DETAIL SHEET, PROJECT STP 030-2(27)

STA 10+086 LT
BOLLARD & SIGN S

STA 10+165 LT

STA 10+167 LT
NARROW BRIDGE R

STA 10+158 LT
JCT VERMONT 15 R

VT STATE PLANE GRID N

VT ROUTE 15

MATCH LINE

PROJECT STP 030-2(27)
PROJECT BRF 027-1(4)
STA 10+082.794

10+100 10+120 10+140 10+160 10+180 10+200

BOLLARD & SIGN R
STA 10+114 RT

STA 10+210

MATCH LINE

BRIDGE 21 VT 108 N N
STA 10+170 RT

VT ROUTE 108

VT ROUTE 15

VT ROUTE 9

LEGEND
R - REMOVE
R&S - REMOVE & SALVAGE
S - SALVAGE
RET - RETAIN
N - NEW

TRAFFIC SIGNS, TYPE A
STA 10+165 LT (2)
STA 10+170 RT (1)

TRAFFIC SIGNS, TYPE B
STA 10+105 LT (1)

ERECTING SALVAGED SIGNS
STA 10+086 LT (1)

REMOVING SIGNS
STA 10+089 LT (1)
STA 10+114 RT (1)
STA 10+125 LT (6)
STA 10+158 LT (2)
STA 10+167 LT (1)

0 20 40 60
SCALE IN METERS

PROJECT NAME: CAMBRIDGE
PROJECT NUMBER: BRF 027-1(4)

FILE NAME: structures\s78f163bdr.dgn
PROJECT LEADER: M. EVANS-MONGEON
DESIGNED BY: T. FILLBACH
SIGNING AND PAVEMENT MARKING PLAN 1

PLOT DATE: 13-JUN-2012
DRAWN BY: G. ROKES
CHECKED BY: M.EVANS-MONGEON
SHEET 149 OF 214

DURABLE 100 MM WHITE LINE, RECESSED TYPE I TAPE
STA 10+210 - STA 10+495 LT & RT

DURABLE 100 MM YELLOW LINE, RECESSED TYPE I TAPE
STA 10+210 - STA 10+495 CL (DOUBLE)

NOTE: TYPE I TAPE SHALL BE STAMARK HIGH PERFORMANCE TAPE SERIES 3801 OR ATM 400 EXTENDED GRADE TAPE OR DIRECTOR 60-HP.

TRAFFIC SIGNS, TYPE A
STA 10+252 LT (1)
STA 10+350 LT (2)
STA 10+350 RT (1)

REMOVING SIGNS

STA 10+252 LT (1)
STA 10+313 RT (2)
STA 10+285 LT (2)
STA 10+274 RT (1)
STA 10+300 RT (1)
STA 10+330 LT (1)
STA 10+367 LT (2)
STA 10+444 LT (2)
STA 10+478 LT (1)

ERECTING SALVAGED SIGNS
STA 10+285 LT (2)
STA 10+330 LT (1)
STA 10+480 RT (1)

VT STATE PLANE GRID

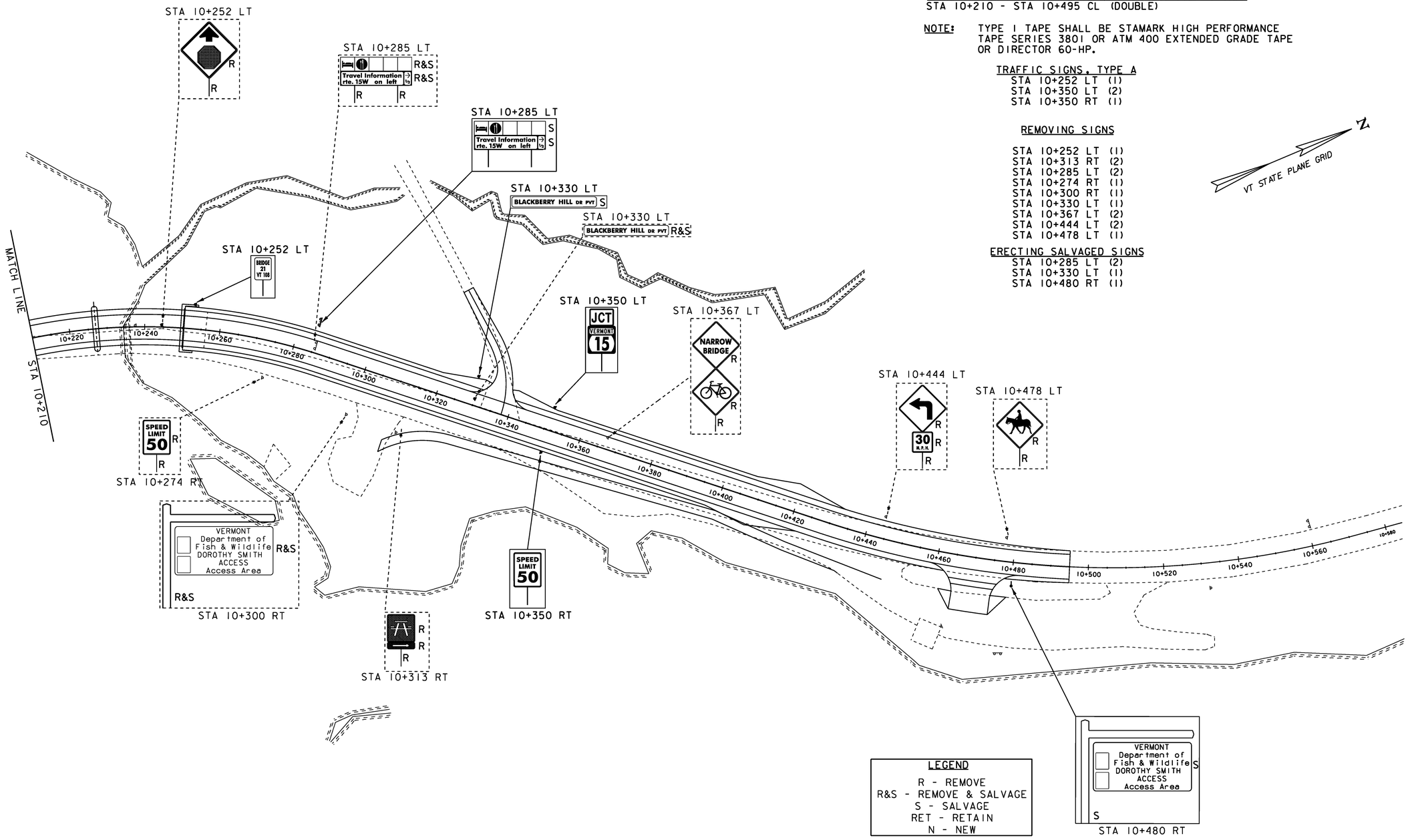

LEGEND
R - REMOVE
R&S - REMOVE & SALVAGE
S - SALVAGE
RET - RETAIN
N - NEW

0 20 40 60
SCALE IN METERS

PROJECT NAME: CAMBRIDGE
PROJECT NUMBER: BRF 027-1 (4)

FILE NAME:structures\s78f163bdr.dgn
PROJECT LEADER: M. EVANS-MONGEON
DESIGNED BY: T. FILLBACH
SIGNING AND PAVEMENT MARKING PLAN 2

PLOT DATE: 13-JUN-2012
DRAWN BY: G. ROKES
CHECKED BY:M.EVANS-MONGEON
SHEET 150 OF 214

STATE OF VERMONT
AGENCY OF TRANSPORTATION

TRAFFIC SIGN SUMMARY SHEET

Metric

KILOMETER MARKER, STATION, OR SIGN NUMBER	SIGN LEGEND	SIGN DIMENSIONS EA	WIDTH (mm)	HEIGHT (mm)	NEW & SALVAGED SIGNS "A"	"B"	SALV SIGN	SALV TIS	EXIST POST RETAIN	EXIST POST SALVAGE	NO. OF POSTS	FLANGED CHANNEL kg/m 1.7	3.0	4.5	SQUARE STEEL (mm) 44 kg/m 2.8	50 kg/m 3.6	63 kg/m 5.0	ANCHOR	SLEEVE	TUBULAR ALUMINUM Ø (mm) 75 kg/m 1.9	100 kg/m 2.5	100 MOD kg/m 2.5	TUBULAR STEEL Ø (mm) FOUNDATION	75 kg/m 11.3	89 kg/m 13.6	100 kg/m 16.1	125 kg/m 21.8	W-SHAPE STEEL FTG. SIZE 600 mm	750 mm	WEIGHT	POST SIZE	SIGN FRAME REQUIRED	REMARKS	SIGN DETAIL DETAIL ON SHEET NUMBER	STD. SHEET NUMBER
												OPTION ITEMS																							
10+086 LT	BOLLARD & SIGN						X			1																									
10+105 LT	SOUTH 108 Stowe EAST 15 Johnson WEST 15 Cambridge	1	3810	2972		11.32					2												2				X							71	
		1	750	750	~~0.5625~~ .58																												W3-2		SHS
10+165 LT		1	750	750	~~0.5625~~ .58						2					X		X															W2-6		SHS
	25 M.P.H.	1	460	460	0.210																												W13-1		SHS
10+170 RT	BRIDGE 21 VT 108	1	150	200	0.030						1				X			X															VD-701		E-134
					~~1.37~~ 1.40	11.32	1				5	m	m	m	m 3.2	m 9.8	m		EA 3	kg	kg	kg		kg	kg	kg	kg 244.2								
															13.0								2	244.2											
					m²	m²	EA.	m²				m			m					kg			EA.	kg				EA.	EA.	kg					

FINAL POST LENGTHS ARE TO BE DETERMINED IN THE FIELD. POST SIZES ARE COMPUTED BASED ON INFORMATION FURNISHED ON THE STANDARD SHEETS AND THE VTRANS "SIGN POST DESIGN GUIDELINE."

PROJECT NAME: CAMBRIDGE
PROJECT NUMBER: BRF 027-1 (4)

FILE NAME: structures\s78f163tss.dgn
PROJECT LEADER: M. EVANS-MONGEON
DESIGNED BY: M. EVANS-MONGEON
TRAFFIC SIGN SUMMARY SHEET 1
PLOT DATE: 05-JUN-2012
DRAWN BY: N.VANDENBERG
CHECKED BY: M.EVANS-MONGEON
SHEET 151 OF 214

STATE OF VERMONT
AGENCY OF TRANSPORTATION

TRAFFIC SIGN SUMMARY SHEET

Metric

KILOMETER MARKER, STATION, OR SIGN NUMBER	SIGN LEGEND	SIGN DIMENSIONS EA	WIDTH (mm)	HEIGHT (mm)	NEW & SALVAGED SIGNS "A"	"B"	SALV SIGN	SALV TIS	EXIST POST RETAIN	EXIST POST SALVAGE	NO. OF POSTS	FLANGED CHANNEL kg/m 1.7	3.0	4.5	SQUARE STEEL (mm) kg/m 44 2.8	50 3.6	63 5.0	ANCHOR	SLEEVE	NEW SIGN POSTS TUBULAR ALUMINUM Ø (mm) kg/m 75 1.9	100 2.5	100 MOD 2.5	TUBULAR STEEL Ø (mm) FOUNDATION	kg/m 75 11.3	89 13.6	100 16.1	125 21.8	W-SHAPE STEEL FTG. SIZE 600 mm	750 mm	WEIGHT	POST SIZE	SIGN FRAME REQUIRED	REMARKS	SIGN DETAIL DETAIL ON SHEET NUMBER	STD. SHEET NUMBER
											OPTION ITEMS																									
10+252 LT	BRIDGE 21 VT 108	1	150	200	0.030						1				X			X																VD-701		E-134
10+285 LT	1	1						X		2																									
	Travel Information rte. 15W on left → 1/2	1						X																											
10+330 LT	BLACKBERRY HILL DR PVT	1					X			1																									
10+350 LT	JCT	1	525	375	0.200						1					X		X																M2-1 (GREEN ON WHITE)		E-136B
	VERMONT 15	1	600	600	~~0.360~~ .37																													M1-5 (GREEN ON WHITE)		E-136B
10+350 RT	SPEED LIMIT 50	1	600	750	~~0.450~~ .46						1					X		X																R2-1		E-142
10+480 RT	VERMONT Department of Fish & Wildlife DOROTHY SMITH ACCESS Access Area	1					X			1																									

FINAL POST LENGTHS ARE TO BE DETERMINED IN THE FIELD. POST SIZES ARE COMPUTED BASED ON INFORMATION FURNISHED ON THE STANDARD SHEETS AND THE VTRANS "SIGN POST DESIGN GUIDELINE."

	~~1.04~~ 1.06		2			3	m	m	m	m 3.2	m 9.2	m		EA 3	kg	kg	kg	0	kg	kg	kg	kg 0												
												12.4																							
TOTALS	m² ~~2.41~~ 2.46	m² 11.32	EA. 3	m²		m			m 25.4				EA 6	kg			EA. 2	kg 244.2				EA.	EA.	kg											

PROJECT NAME: CAMBRIDGE
PROJECT NUMBER: BRF 027-1 (4)

FILE NAME: structures\s78f163tss.dgn PLOT DATE: 05-JUN-2012
PROJECT LEADER: M. EVANS-MONGEON DRAWN BY: N.VANDENBERG
DESIGNED BY: M. EVANS-MONGEON CHECKED BY: M.EVANS-MONGEON
TRAFFIC SIGN SUMMARY SHEET 2 SHEET 152 OF 214

VAOT Metric

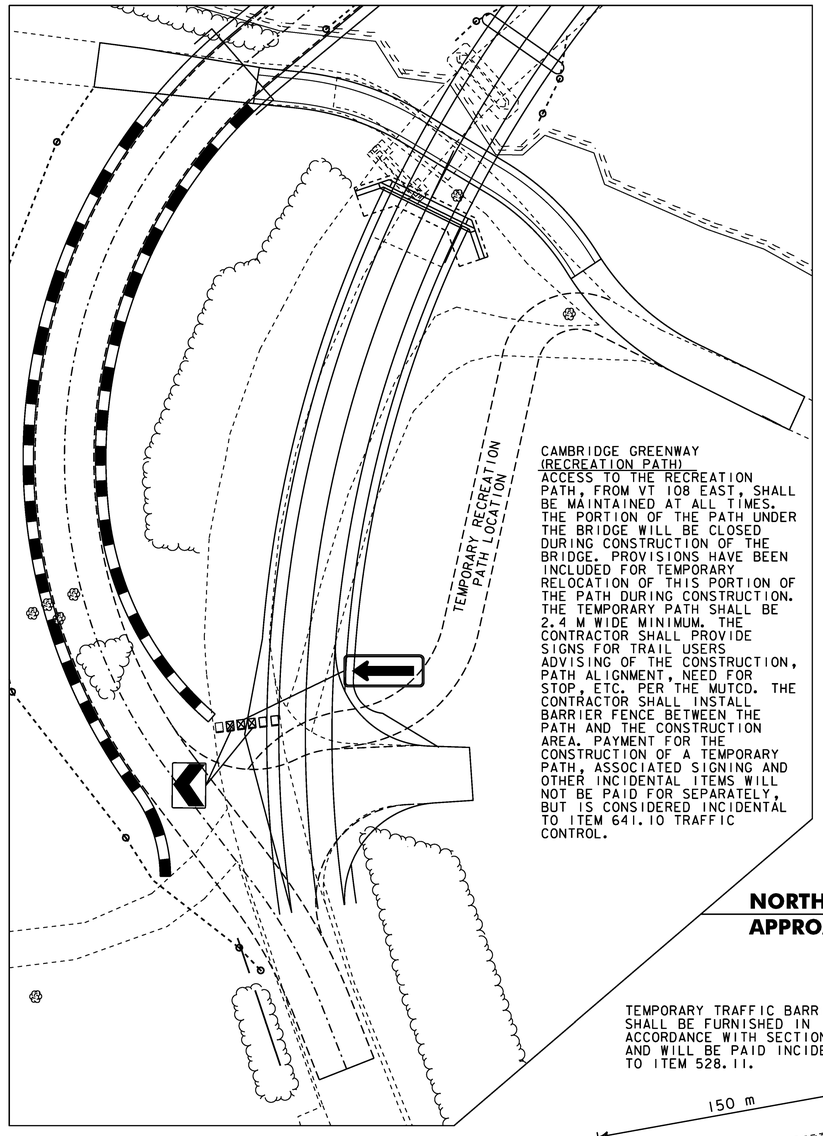

CAMBRIDGE GREENWAY
(RECREATION PATH)
ACCESS TO THE RECREATION PATH, FROM VT 108 EAST, SHALL BE MAINTAINED AT ALL TIMES. THE PORTION OF THE PATH UNDER THE BRIDGE WILL BE CLOSED DURING CONSTRUCTION OF THE BRIDGE. PROVISIONS HAVE BEEN INCLUDED FOR TEMPORARY RELOCATION OF THIS PORTION OF THE PATH DURING CONSTRUCTION. THE TEMPORARY PATH SHALL BE 2.4 M WIDE MINIMUM. THE CONTRACTOR SHALL PROVIDE SIGNS FOR TRAIL USERS ADVISING OF THE CONSTRUCTION, PATH ALIGNMENT, NEED FOR STOP, ETC. PER THE MUTCD. THE CONTRACTOR SHALL INSTALL BARRIER FENCE BETWEEN THE PATH AND THE CONSTRUCTION AREA. PAYMENT FOR THE CONSTRUCTION OF A TEMPORARY PATH, ASSOCIATED SIGNING AND OTHER INCIDENTAL ITEMS WILL NOT BE PAID FOR SEPARATELY, BUT IS CONSIDERED INCIDENTAL TO ITEM 641.10 TRAFFIC CONTROL.

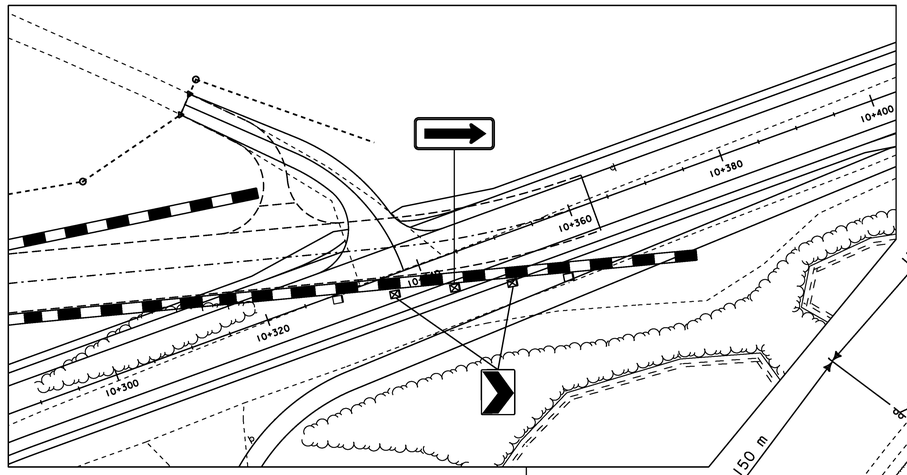

LEGEND
- TYPE III BARRICADES
- TYPE III BARRICADES (MOD.)
- TEMP. TRAFFIC BARRIER
- SIGN AND POSTS

NOTE:
DETOUR SHALL BE PAVED AND WILL BE PAID FOR UNDER CONTRACT ITEM 528.11, TWO-WAY TEMPORARY BRIDGE

SEE STANDARDS E-100 AND E-107 FOR DETAILS

NOT TO SCALE

PROJECT NAME: CAMBRIDGE
PROJECT NUMBER: BRF 027-1(4)/STP 030-2(27)

FILE NAME: s78f163cas.dgn
PROJECT LEADER: M.E-MONGEON/J.SCHULTZ
DESIGNED BY: M. EVANS-MONGEON
DETOUR DETAILS / CONSTRUCTION APPROACH SIGNING

PLOT DATE: 05-JUN-2012
DRAWN BY: M. EVANS-MONGEON
CHECKED BY: S. SCRIBNER
SHEET 153 OF 214

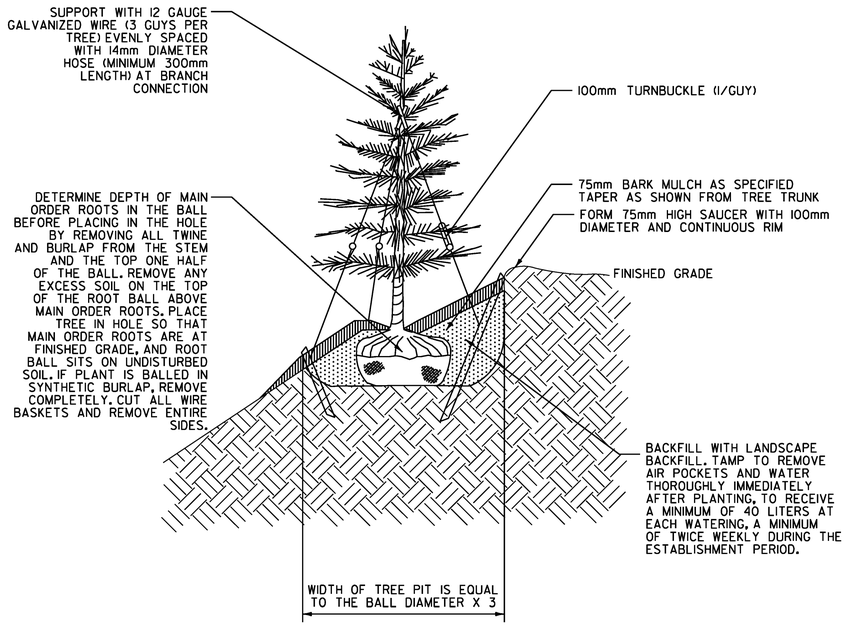

EVERGREEN TREE PLANTING DETAIL

NOT TO SCALE

EVERGREEN NOTES:

1. ANTI-DESICCANT SPRAY IS TO BE APPLIED TO ALL EVERGREENS PER MANUFACTURER SPECIFICATIONS.
2. COMPLETELY REMOVE ALL GUY WIRES AND TURNBUCKLES ONE YEAR AFTER PLANTING.

656.20-EVERGREEN TREES
(PICEA GLAUCA)(B&B) (1.5 - 2.0 M HT.)

STA. 10+105.000, 20.0, RT.
STA. 10+116.000, 22.0, RT.
STA. 10+129.000, 22.0, RT.
STA. 10+140.000, 20.5, RT.
STA. 10+152.000, 20.0, RT.
STA. 10+164.000, 21.0, RT.

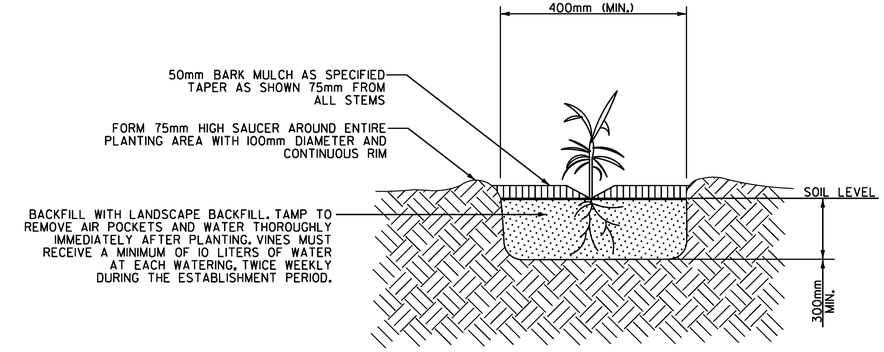

VINE PLANTING DETAIL

NOT TO SCALE

656.40-GROUND COVERS AND VINES
(VALIENT GRAPEVINE OR SUMMER GRAPEVINE)

STA. 10+088.000, 20.0, RT.
STA. 10+092.000, 20.0, RT.
STA. 10+109.000, 21.5, RT.
STA. 10+122.000, 23.0, RT.
STA. 10+134.000, 22.5, RT.
STA. 10+147.000, 21.0, RT.
STA. 10+157.000, 21.0, RT.
STA. 10+167.000, 21.0, RT.

- EACH OF THESE STATION LOCATIONS WILL HAVE A GROUP OF THREE VALIENT GRAPEVINE OR SUMMERGRAPEVINE PLANTS IN THE SAME PLANTING AREA

PROJECT NAME:	CAMBRIDGE
PROJECT NUMBER:	BRF 027-1(4)
FILE NAME: s78f163ldsc.dgn	PLOT DATE: 05-JUN-2012
PROJECT LEADER: M.E-MONGEON	DRAWN BY: M.EVANS-MONGEON
DESIGNED BY: M.EVANS-MONGEON	CHECKED BY: S.SCRIBNER
LANDSCAPING DETAILS	SHEET 154 OF 214

SOIL CLASSIFICATION

AASHTO	
A1	Gravel and Sand
A3	Fine Sand
A2	Silty or Clayey Gravel and Sand
A4	Silty Soil - Low Compressibility
A5	Silty Soil - Highly Compressible
A6	Clayey Soil - Low Compressibility
A7	Clayey Soil - Highly Compressible

ROCK QUALITY DESIGNATION

R.Q.D. (%)	ROCK DESCRIPTION
<25	Very Poor
25 to 50	Poor
51 to 75	Fair
76 to 90	Good
>90	Excellent

SHEAR STRENGTH

UNDRAINED SHEAR STRENGTH IN kPa	CONSISTENCY
<12	Very Soft
12-24	Soft
24-48	Med. Stiff
48-96	Stiff
96-192	Very Stiff
>192	Hard

CORRELATION GUIDE OF "N" TO DENSITY/CONSISTENCY

DENSITY (GRANULAR SOILS)		CONSISTENCY (COHESIVE SOILS)	
N	DESCRIPTIVE TERM	N	DESCRIPTIVE TERM
<5	Very Loose	<2	Very Soft
5-10	Loose	2-4	Soft
11-24	Med. Dense	5-8	Med. Stiff
25-50	Dense	9-15	Stiff
>50	Very Dense	16-30	Very Stiff
		31-60	Hard
		>60	Very Hard

COMMONLY USED SYMBOLS

▼	Water Elevation
⊗	Standard Penetration Boring
⊕	Auger Boring
⊙	Rod Sounding
S	Sample
N	Standard Penetration Test Blow Count Per 300 mm For: 50.8 mm O.D. Sampler 35.0 mm I.D. Sampler Hammer Weight Of 63.5 kg. Hammer Fall Of 762 mm
VS	Field Vane Shear Test
US	Undisturbed Soil Sample
B	Blast
DC	Diamond Core
MD	Mud Drill
WA	Wash Ahead
HSA	Hollow Stem Auger
AX	Core Size 30.1mm
BX	Core Size 42.0 mm
NX	Core Size 54.7 mm
M	Double Tube Core Barrel Used
LL	Liquid Limit
PL	Plastic Limit
PI	Plasticity Index
NP	Non Plastic
w	Moisture Content (Dry Wgt. Basis)
D	Dry
M	Moist
MTW	Moist To Wet
W	Wet
Sat	Saturated
Bo	Boulder
Gr	Gravel
Sa	Sand
Si	Silt
Cl	Clay
HP	Hardpan
Le	Ledge
NLTD	No Ledge To Depth
CNPF	Can Not Penetrate Further
TLOB	To Ledge Or Boulder
NR	No Recovery
Rec.	Recovery
%Rec.	Percent Recovery
ROD	Rock Quality Designation
CBR	California Bearing Ratio
<	Less Than
>	Greater Than
R	Refusal (N > 100)

COLOR

blk	Black	pnk	Pink
bl	Blue	pu	Purple
brn	Brown	rd	Red
dk	Dark	tn	Tan
gry	Gray	wh	White
gn	Green	yel	Yellow
lt	Light	mltc	Multicolored
or	Orange		

DEFINITIONS (AASHTO)

BEDROCK (LEDGE) - Rock in its native location of indefinite thickness.

BOULDER - A rock fragment with an average dimension > 304.8 mm.

COBBLE - Rock fragments with an average dimension between 76.2 and 304.8 mm.

GRAVEL - Rounded particles of rock < 76.2 mm and > 2 mm (#10 sieve).

SAND - Particles of rock < 2 mm (#10 sieve) and > 75 μm (#200 sieve).

SILT - Soil < 75 μm (#200 sieve), non or slightly plastic and exhibits no strength when air-dried.

CLAY - Fine grained soil, exhibits plasticity when moist and considerable strength when air-dried.

VARVED - Alternate layers of silt and clay.

HARDPAN - Extremely dense soil, cemented layer, not softened when wet.

MUCK - Soft organic soil (containing > 10% organic material.

MOISTURE CONTENT - Weight of water divided by dry weight of soil.

FLOWING SAND - Granular soil so saturated (loose) that it flows into drill casing during extraction of wash rod.

STRIKE - Angle from magnetic north to line of intersection of bed with a horizontal plane.

DIP - Inclination of bed with a horizontal plane.

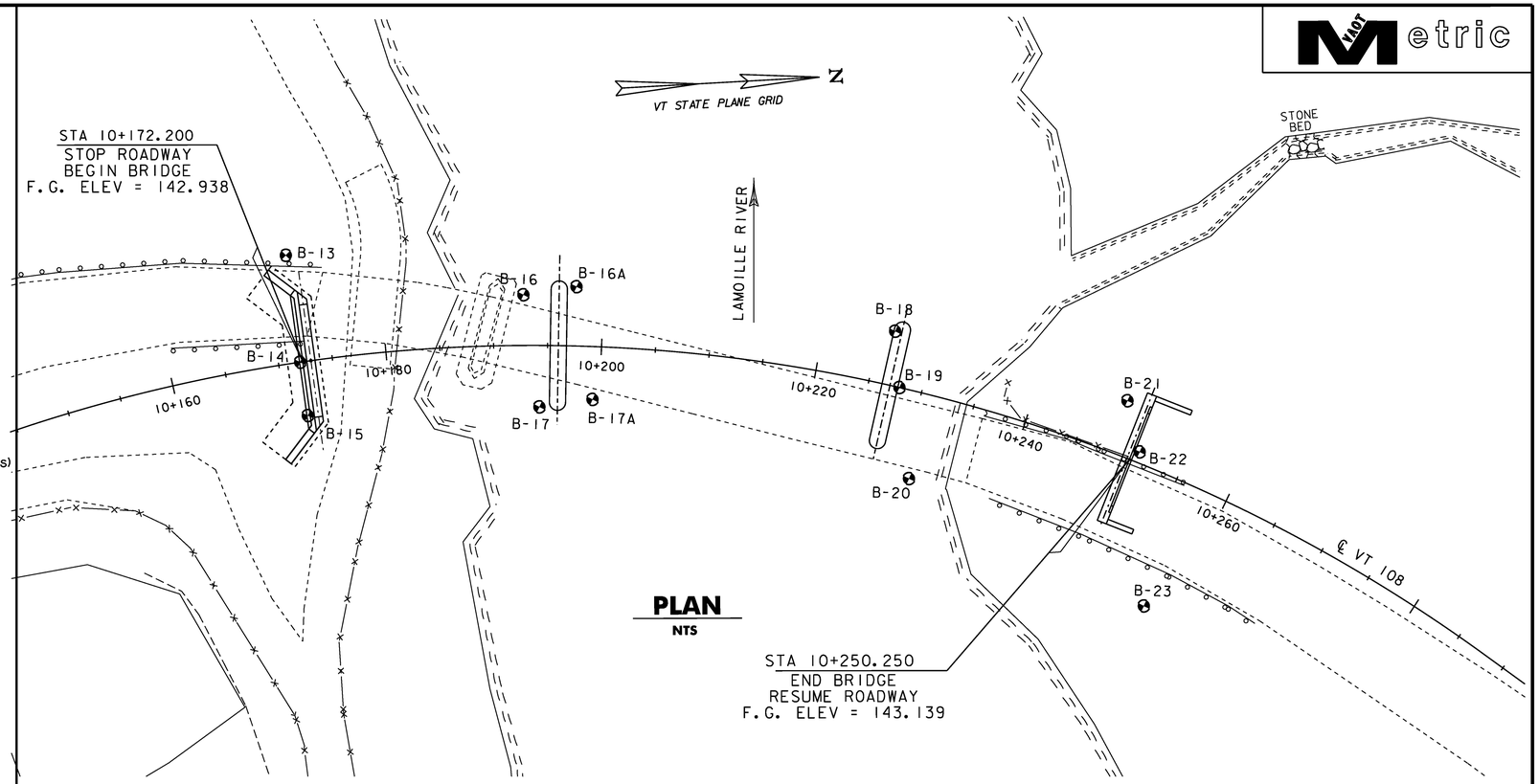

PLAN
NTS

BORING CHART

	HOLE NO.	STATION	OFFSET	GROUND LEVEL	ELEV. TLOB
	B-13	10+172.10	10.0m LT	141.366	134.166
	B-14	10+172.20	℄	140.068	135.658
	B-15	10+172.30	5.00m RT	138.742	135.942
*	B-16	10+192.77	4.7m LT	135.387	135.387
*	B-16A	10+197.55	5.5m LT	134.215	134.215
*	B-17	10+194.31	5.7m RT	134.044	134.044
*	B-17A	10+199.42	4.9m RT	134.922	134.922

* NO BORINGS WERE TAKEN AT LOCATIONS 16, 16A, 17, AND 17A. LEDGE IS EXPOSED AT THE SURFACE.

BORING CHART

HOLE NO.	STATION	OFFSET	GROUND LEVEL	ELEV. TLOB
B-18	10+226.40	5.0m LT	134.956	129.706
B-19	10+227.90	℄	134.983	129.653
B-20	10+230.80	8.0m RT	134.832	126.152
B-21	10+248.20	5.0m LT	138.535	126.635
B-22	10+250.70	1.0m LT	140.531	125.751
B-23	10+257.00	12.0m RT	138.766	125.506

GENERAL NOTES

1. The subsurface explorations shown herein were made between 04/28/00 and 06/20/00 by the Agency.
2. Soil and rock classifications, properties and descriptions are based on engineering interpretation from available subsurface information by the Agency and may not necessarily reflect actual variations in subsurface conditions that may be encountered between individual boring or sample locations.
3. Observed water levels and/or conditions indicated are as recorded at the time of exploration and may vary according to the prevailing rainfall, methods of exploration and other factors.
4. Engineering judgement was exercised in preparing the subsurface information presented herein. Analysis and interpretation of subsurface data was performed and interpreted for Agency design and estimating purposes. Presentation of the information in the Contract is intended to provide the Contractor access to the same data available to the Agency. The subsurface information is presented in good faith and is not intended as a substitute for personal investigation, independent interpretation, independent analysis or judgement by the Contractor.
5. Pictorial structure details shown on the boring plan layout or soils profile are for illustrative purposes only and may not accurately portray final contract details.
6. Terminology used on boring logs to describe the hardness, degree of weathering, and spacing of fractures, joints and other discontinuities in the bedrock is defined in the AASHTO Manual on Subsurface Investigations, 1988.

BORING INFORMATION SHEET

PROJECT:	PROJECT NO.:
CAMBRIDGE	BRF 027-1(4)

DESIGN FILE NAME: structures\s78f163borplan.dgn
IPARM FILE NAME: PLOT DATE: 05-JUN-2012

SHEET: 155 OF 214

STATE OF VERMONT
AGENCY OF TRANSPORTATION
MATERIALS & RESEARCH DIVISION
SUBSURFACE INFORMATION

HOLE NO.: B-13
SHEET 1 OF 1
DATE STARTED: 5/8/00
DATE COMPLETED: 5/12/00

PROJECT NAME: CAMBRIDGE
SITE NAME: BR 21
STATION: 10+172.10
GROUND EL.: 141.366

PROJECT NUMBER: BRF 027-1(4)
SITE NO.: VT 108
OFFSET: -10.00
G.W. DEPTH:

BORING CREW
CREW CHIEF: TALLMAN
DRILLER: TALLMAN
LOGGER: RUSSELL
ADDITIONAL CREW:

BORING RIG: SKID RIG
BORING TYPE: WASH BORE
SAMPLE TYPE: SPLIT BARREL

WW. NO.1 EST. B.O.F. EL.134.9

DEPTH	CLASSIFICATION OF MATERIALS (Description)	BLOWS PER 0.3 m	M.C. %	GRAVEL %	SAND %	FINES %	LL	PI
	A-2-4, SiSa, brn, Moist, Rec. = 0.28m	4	17	13.9	57.8	28.3		
	No Rec., Stone in sampler	R						
	BXDC, 3.20m-3.65m, Boulder							
	A-2-4, Sa, brn, MTW, Rec. = 0.18m	7	24.7	19.6	61.1	19.3		
	BXDC, 5.50m-6.50m, Boulders, No Sample							
	Top of bedrock @ 7.20 m							
	Run#1: BXMDC, 7.20m-8.72m, Rec. = 1.50m, See Geologist's Report.	RUN 1	REC% 99	RQD% 99	Dip° 50			
	Run#2: BXMDC, 8.72m-10.24m, Rec. = 1.50m, See Geologist's Report.	2	99	98	50			
	Hole stopped @ 10.24m							

GEOLOGISTS REPORT:

Run #1: Gray quartz-albite-muscovite schist, Moderately hard, Unweathered, Competent

Run #2: Same as Run #1 but contains biotite porphyroblasts and some quartz veins. Competent

STATE OF VERMONT
AGENCY OF TRANSPORTATION
MATERIALS & RESEARCH DIVISION
SUBSURFACE INFORMATION

HOLE NO.: B-14
SHEET 1 OF 1
DATE STARTED: 5/3/00
DATE COMPLETED: 5/4/00

PROJECT NAME: CAMBRIDGE
SITE NAME: BR 21
STATION: 10+172.20
GROUND EL.: 140.068

PROJECT NUMBER: BRF 027-1(4)
SITE NO.: VT 108
OFFSET: 0.00
G.W. DEPTH:

BORING CREW
CREW CHIEF: TALLMAN
DRILLER: TALLMAN
LOGGER: RUSSELL
ADDITIONAL CREW:

BORING RIG: SKID RIG
BORING TYPE: WASH BORE
SAMPLE TYPE: SPLIT BARREL

ABUT. NO.1 EST. B.O.F. EL.135.9

DEPTH	CLASSIFICATION OF MATERIALS (Description)	BLOWS PER 0.3 m	M.C. %	GRAVEL %	SAND %	FINES %	LL	PI
	No Rec.	5						
	No Rec.	7						
	Top of bedrock @ 4.41 m							
	Run#1: BXMDC, 4.41m-5.93m, Rec. = 1.50m, See Geologist's Report.	RUN 1	REC% 99	RQD% 92	Dip° 50			
	Run#2: BXMDC, 5.93m-7.45m, Rec. = 1.33m, See Geologist's Report.	2	88	88	50			
	Hole stopped @ 7.45m							

GEOLOGISTS REPORT:

Run #1: Gray quartz-albite-muscovite schist withquartz veins and biotite porphyroblasts, Moderately hard, Unweathered, Competent.

Run #2: Same as Run #1, Competent

STATE OF VERMONT
AGENCY OF TRANSPORTATION
MATERIALS & RESEARCH DIVISION
SUBSURFACE INFORMATION

HOLE NO.: B-15
SHEET 1 OF 1
DATE STARTED: 4/28/00
DATE COMPLETED: 5/1/00

PROJECT NAME: CAMBRIDGE
SITE NAME: BR 21
STATION: 10+172.30
GROUND EL.: 138.742

PROJECT NUMBER: BRF 027-1(4)
SITE NO.: VT 108
OFFSET: 5.00
G.W. DEPTH:

BORING CREW
CREW CHIEF: TALLMAN
DRILLER: TALLMAN
LOGGER: RUSSELL
ADDITIONAL CREW:

BORING RIG: SKID RIG
BORING TYPE: WASH BORE
SAMPLE TYPE: SPLIT BARREL

ABUT. NO.2 EST. B.O.F. EL.135.9

DEPTH	CLASSIFICATION OF MATERIALS (Description)	BLOWS PER 0.3 m	M.C. %	GRAVEL %	SAND %	FINES %	LL	PI
	Visual Class.: A-4, SaSi Trace of Organic, brn, MTW, Rec. = 0.04m, 8.12% Organic	4	24.1					
	No Sample, Into Stone Fill							
	Top of bedrock @ 2.80 m							
	Run #1: BXMDC, 2.80m-4.32m, Rec. = 1.52m, See Geologist's Report.	RUN 1	REC% 100	RQD% 100	Dip° 50			
	Run #2: BXMDC, 4.32m-5.84m, Rec. = 1.43m, See Geologist's Report.	2	94	94	50			
	Hole stopped @ 5.84m							

GEOLOGISTS REPORT:

Run #1: Gray quartz-albite-muscovite schist, Moderately hard, Unweathered, Competent.

Run #2: Same as Run #1, Competent

STATE OF VERMONT
AGENCY OF TRANSPORTATION
MATERIALS & RESEARCH DIVISION
SUBSURFACE INFORMATION

HOLE NO.: B-18
SHEET 1 OF 1
DATE STARTED: 6/19/00
DATE COMPLETED: 6/20/00

PROJECT NAME: CAMBRIDGE
SITE NAME: BR 21
STATION: 10+226.40
GROUND EL.: 134.956

PROJECT NUMBER: BRF 027-1(4)
SITE NO.: VT 108
OFFSET: -5.00
G.W. DEPTH:

BORING CREW
CREW CHIEF: TALLMAN
DRILLER: RUSSELL
LOGGER: DAVIS
ADDITIONAL CREW:

BORING RIG: SKID RIG
BORING TYPE: WASH BORE
SAMPLE TYPE: SPLIT BARREL

PIER NO.2 B.O.F. EL.133.0

PIER NO.2 B.O. DRILLED SHAFT EL. 125.75

DEPTH	CLASSIFICATION OF MATERIALS (Description)	BLOWS PER 0.3 m	M.C. %	GRAVEL %	SAND %	FINES %	LL	PI
	BXDC, 0.60m-1.45m, Boulders							
	A-1-b, Sa, gry, MTW, Rec. = 0.03m	8	26.1	19.8	76.2	4		
	A-1-b, GrSa, brn-gry, Moist, Rec. = 0.33m	10	12.4	43.9	47.8	8.3		
	A-2-4, SiSa, gry, Moist, Rec. = 0.07m	13	18.1	19.3	54.5	26.2		
	Top of bedrock @ 5.25 m							
	Run#1: BXMDC, 5.25m-6.77m, Rec. = 1.46m, See Geologist's Report.	RUN 1	REC% 96	RQD% 96	Dip° 60			
	Run#2: BXMDC, 6.77m-8.29m, Rec. = 1.49m, See Geologist's Report.	2	98	98	60-80			
	Hole stopped @ 8.29m							

Drillers Note:
On Run #1, lost core from barrel, went back down to retrieve it.

GEOLOGISTS REPORT:

Run #1: Gray quartz-albite-muscovite schist, Competent, Core broken due to mechanical.

Run #2: Same as Run #1, Competent

PROJECT NAME:	CAMBRIDGE
PROJECT NUMBER:	BRF 027-1(4)
FILE NAME:	s78f163bor.dgn
PROJECT LEADER:	M. EVANS-MONGEON
DESIGNED BY:	T. FILLBACH
BORING LOG 1	
PLOT DATE:	05-JUN-2012
DRAWN BY:	R. PELLETT
CHECKED BY:	T. FILLBACH
SHEET	156 OF 214

STATE OF VERMONT
AGENCY OF TRANSPORTATION
MATERIALS & RESEARCH DIVISION
SUBSURFACE INFORMATION

HOLE NO.: B-19
SHEET 1 OF 1
DATE STARTED: 6/12/00
DATE COMPLETED: 6/13/00

PROJECT NAME: CAMBRIDGE
SITE NAME: BR 21
STATION: 10+227.90
GROUND EL.: 134.983

PROJECT NUMBER: BRF 027-1(4)
SITE NO.: VT 108
OFFSET: 0.00
G.W. DEPTH:

BORING CREW
CREW CHIEF: TALLMAN
DRILLER: RUSSELL
LOGGER: DAVIS
ADDITIONAL CREW:

BORING RIG: SKID RIG
BORING TYPE: WASH BORE
SAMPLE TYPE: SPLIT BARREL

PIER NO.2 B.O.F. EL.133.0

PIER NO.2 B.O. DRILLED SHAFT EL. 125.75

DEPTH	SYMBOL	CLASSIFICATION OF MATERIALS (Description)	BLOWS PER 0.3 m	M.C. %	GRAVEL %	SAND %	FINES %	LL	PI
		No Rec.	8						
		BXDC, 2.05m-2.36m, Boulder							
		A-1-b, GrSa, gry, Moist, Rec. = 0.07m	14	14.3	31	57.6	11.4		
		No Rec.	17						
5		Top of bedrock @ 5.33 m							
		Run#1: BXWDC, 5.33m-6.85m, Rec. = 1.52m, See Geologist's Report.	RUN 1	REC% 100	RQD% 100	Dip° 70			
		Run#2: BXWDC, 6.85m-8.37m, Rec. = 1.52m, See Geologist's Report.	2	100	100	70			
		Hole stopped @ 8.37m							
10									

GEOLOGISTS REPORT:

Run #1: Silver/gray quartz-albite-muscovite schist with some biotite porphyblasts and quartz veins, Moderately hard, Unweathered, Competent.

Run #2: Same as Run #1, Competent

STATE OF VERMONT
AGENCY OF TRANSPORTATION
MATERIALS & RESEARCH DIVISION
SUBSURFACE INFORMATION

HOLE NO.: B-20
SHEET 1 OF 1
DATE STARTED: 6/8/00
DATE COMPLETED: 6/9/00

PROJECT NAME: CAMBRIDGE
SITE NAME: BR 21
STATION: 10+230.80
GROUND EL.: 134.832

PROJECT NUMBER: BRF 027-1(4)
SITE NO.: VT 108
OFFSET: 8.00
G.W. DEPTH:

BORING CREW
CREW CHIEF: TALLMAN
DRILLER: RUSSELL
LOGGER: DAVIS
ADDITIONAL CREW:

BORING RIG: SKID RIG
BORING TYPE: WASH BORE
SAMPLE TYPE: SPLIT BARREL

PIER NO.2 B.O.F. EL.133.0

PIER NO.2 B.O. DRILLED SHAFT EL. 125.75

DEPTH	SYMBOL	CLASSIFICATION OF MATERIALS (Description)	BLOWS PER 0.3 m	M.C. %	GRAVEL %	SAND %	FINES %	LL	PI
		A-1-b, GrSa, brn, Moist, Rec. = 0.29m	8	14.6	44.6	46.3	9.1		
		A-1-a, SaGr, brn, Moist, Rec. = 0.28m	16	15.4	49.7	41.4	8.9		
		A-4, Si, gry, MTW, Rec. = 0.33m	7	30.9	1.8	5.9	92.3		
5		A-4, Si, gry, MTW, Rec. = 0.21m	16	26.3	4.7	8.4	86.9		
		A-4, SiSa, gry, Moist, Rec. = 0.03m	16	19.6	12.9	45.1	42		
		Top of bedrock @ 8.68 m							
		Run#1: BXWDC, 8.68m-10.20m, Rec. = 1.36m, See Geologist's Report.	RUN 1	REC% 89	RQD% 89	Dip° 70			
10		Run#2: BXWDC, 10.20-11.72m, Rec. = 1.50m, See Geologist's Report.	2	99	95	70			
		Hole stopped @ 11.72m							

GEOLOGISTS REPORT:

Run #1: Silver/gray quartz-albite-muscovite schist with some biotite porphyblasts and quartz veins, Moderately hard, Unweathered, Competent.

Run #2: Same as Run #1, Competent

STATE OF VERMONT
AGENCY OF TRANSPORTATION
MATERIALS & RESEARCH DIVISION
SUBSURFACE INFORMATION

HOLE NO.: B-21
SHEET 1 OF 1
DATE STARTED: 6/1/00
DATE COMPLETED: 6/2/00

PROJECT NAME: CAMBRIDGE
SITE NAME: BR 21
STATION: 10+248.20
GROUND EL.: 138.535

PROJECT NUMBER: BRF 027-1(4)
SITE NO.: VT 108
OFFSET: -5.00
G.W. DEPTH: 2.70

BORING CREW
CREW CHIEF: TALLMAN
DRILLER: RUSSELL
LOGGER: DAVIS
ADDITIONAL CREW:

BORING RIG: SKID RIG
BORING TYPE: WASH BORE
SAMPLE TYPE: SPLIT BARREL

ABUT. NO.2 B.O.F. EL.139.0

EST. PILE TIP ELEV. 125.60

DEPTH	SYMBOL	CLASSIFICATION OF MATERIALS (Description)	BLOWS PER 0.3 m	M.C. %	GRAVEL %	SAND %	FINES %	LL	PI
		No Rec.	9						
▽		Water Table = 2.70m (6/02/00)							
		A-2-4, GrSa, brn-gry, Moist, Rec. = 0.30m	17	18.6	31.6	50.7	17.7		
		A-1-a, SaGr, gry, Moist, Rec. = 0.32m	14	12.7	55.8	33.5	10.7		
5		No Rec.	18						
		A-4, Si, gry, MTW, Rec. = 0.29m	8	26.7	9.4	4.9	85.7		
		A-4, GrSi, gry, Moist, Rec. = 0.16m	12	18.9	36.2	5.5	58.3		
10		Visual Class.: Broken Rock, Rec. = 0.04m	30						
		Top of bedrock @ 11.90 m							
		Run#1: BXWDC, 11.90m-13.42m, Rec. = 1.35m, First 0.15m seamy See Geologist's Report.	RUN 1	REC% 89	RQD% 89	Dip° 40-60			
		Run#2: BXWDC, 13.42m-14.94m, Rec. = 1.50m, See Geologist's Report.	2	99	99	60-80			
		Hole stopped @ 14.94m							

GEOLOGISTS REPORT:

Run #1: Silver/gray quartz-albite-muscovite schist with some biotite porphyblasts and quartz veins, Moderately hard, Unweathered, Competent.

Run #2: Same as Run #1, Competent

PROJECT NAME: CAMBRIDGE
PROJECT NUMBER: BRF 027-1(4)

FILE NAME: s78f163bor.dgn
PROJECT LEADER: M. EVANS-MONGEON
DESIGNED BY: T. FILLBACH
BORING LOG 2

PLOT DATE: 05-JUN-2012
DRAWN BY: R. PELLETT
CHECKED BY: T. FILLBACH
SHEET 157 OF 214

STATE OF VERMONT
AGENCY OF TRANSPORTATION
MATERIALS & RESEARCH DIVISION
SUBSURFACE INFORMATION

HOLE NO.: B-22
SHEET 1 OF 2
DATE STARTED: 5/25/00
DATE COMPLETED: 5/31/00

PROJECT NAME: CAMBRIDGE
SITE NAME: BR 21
STATION: 10+250.70
GROUND EL.: 140.531

PROJECT NUMBER: BRF 027-1(4)
SITE NO.: VT 108
OFFSET: -L00
G.W. DEPTH:

BORING CREW
CREW CHIEF: TALLMAN
DRILLER: RUSSELL
LOGGER: HOLT
ADDITIONAL CREW:

BORING RIG: SKID RIG
BORING TYPE: WASH BORE
SAMPLE TYPE: SPLIT BARREL

ABUT. NO.2 B.O.F. EL.139.0

EST. PILE TIP ELEV. 125.60

DEPTH	SYMBOL	CLASSIFICATION OF MATERIALS (Description)	BLOWS PER 0.3 m	M.C. %	GRAVEL %	SAND %	FINES %	LL	PI
		No Sample, Stone in end of sampler.	6						
		A-3, Sa, brn, WTW, Rec. = 0.15m	6	22.5	15	76	9		
5		A-2-4, GrSiSa, Lt/gry, WTW, Rec. = 0.29m	4	22.4	26.8	39.6	33.6		
		A-1-b, GrSa, yel-brn, Moist, Rec. = 0.19m	23	13.1	23.7	57.7	18.6		
		A-1-b, Sa, Lt/gry, WTW, Rec. = 0.07m	13	22.2	13.8	81.2	5		
		A-4, Si, gry, WTW, Rec. = 0.16m	6	32.2	1.8	2.8	95.4		
10		A-4, Si, gry, WTW, Rec. = 0.42m	8	23.7		7.3	92.7		
		A-4, GrSi, gry, Moist, Rec. = 0.33m	8	19.6	20.9	12.5	66.6		
		BXWDC, 13.40m-14.16m, Boulders Advanced casing to 14.78m							
		Top of bedrock @ 14.78 m							
		Bedrock continued on next page.							

GEOLOGISTS REPORT:

STATE OF VERMONT
AGENCY OF TRANSPORTATION
MATERIALS & RESEARCH DIVISION
SUBSURFACE INFORMATION

HOLE NO.: B-22
SHEET 2 OF 2
DATE STARTED: 5/25/00
DATE COMPLETED: 5/31/00

PROJECT NAME: CAMBRIDGE
SITE NAME: BR 21
STATION: 10+250.70
GROUND EL.: 140.531

PROJECT NUMBER: BRF 027-1(4)
SITE NO.: VT 108
OFFSET: -L00
G.W. DEPTH:

BORING CREW
CREW CHIEF: TALLMAN
DRILLER: RUSSELL
LOGGER: HOLT
ADDITIONAL CREW:

BORING RIG: SKID RIG
BORING TYPE: WASH BORE
SAMPLE TYPE: SPLIT BARREL

DEPTH	SYMBOL	CLASSIFICATION OF MATERIALS (Description)	BLOWS PER 0.3 m	M.C. %	GRAVEL %	SAND %	FINES %	LL	PI
		Continued from sheet 1	RUN	REC%	ROD%	Dip°			
		Run#1: BXWDC, 14.78m-16.30m, Rec. = 1.37m, See Geologist's Report.	1	90	90	60			
		Run#2: BXWDC, 16.30m-17.82m, Rec. = 1.32m, See Geologist's Report.	2	87	87	60			
		Hole stopped @ 17.82m							
20									
25									

GEOLOGISTS REPORT:

Run #1: Silver/gray quartz-albite-muscovite schist with numerous quartz veins, Moderately hard, Unweathered, Competent.

Run #2: Same as Run #1, but no quartz veins, Competent

STATE OF VERMONT
AGENCY OF TRANSPORTATION
MATERIALS & RESEARCH DIVISION
SUBSURFACE INFORMATION

HOLE NO.: B-23
SHEET 1 OF 2
DATE STARTED: 5/16/00
DATE COMPLETED: 5/24/00

PROJECT NAME: CAMBRIDGE
SITE NAME: BR 21
STATION: 10+257.00
GROUND EL.: 138.766

PROJECT NUMBER: BRF 027-1(4)
SITE NO.: VT 108
OFFSET: 12.00
G.W. DEPTH: 4.10

BORING CREW
CREW CHIEF: TALLMAN
DRILLER: TALLMAN
LOGGER: RUSSELL
ADDITIONAL CREW:

BORING RIG: SKID RIG
BORING TYPE: WASH BORE
SAMPLE TYPE: SPLIT BARREL

ABUT. NO.2 B.O.F. EL.139.0

EST. PILE TIP ELEV. 125.60

DEPTH	SYMBOL	CLASSIFICATION OF MATERIALS (Description)	BLOWS PER 0.3 m	M.C. %	GRAVEL %	SAND %	FINES %	LL	PI
		A-3, Sa, brn, WTW, Rec. = 0.13m	7	27.7	0.8	91.6	7.6		
		A-1-b, Sa, brn, Moist, Rec. = 0.29m	8	17.5	7.2	86.2	6.6		
		BXDC, 3.81m-4.41m, Boulder							
		No Sample, Boulder							
5		A-1-b, GrSa, Lt/gry, Moist, Rec. = 0.33m	29	12.4	40.7	46	13.3		
		A-4, Si, gry, WTW, Rec. = 0.51m	4	25.9		17.4	82.6		
		A-4, Si, gry, WTW, Rec. = 0.55m	4	31.1	0.2	6.3	93.5		
10		A-4, Si, gry, WTW, Rec. = 0.42m	6	25.5		4.5	95.5		
		A-4, Si, gry, WTW, Rec. = 0.49m	6	28.4	2.1	3.9	94		
		Top of bedrock @ 13.26 m							
		Run#1: BXWDC, 13.26m-14.78m, Rec. = 1.50m, See Geologist's Report.	RUN 1	REC% 99	RQD% 86	Dip° 60			
		Run#2: Continued on next sheet.	2	99	92	60			

GEOLOGISTS REPORT:

STATE OF VERMONT
AGENCY OF TRANSPORTATION
MATERIALS & RESEARCH DIVISION
SUBSURFACE INFORMATION

HOLE NO.: B-23
SHEET 2 OF 2
DATE STARTED: 5/16/00
DATE COMPLETED: 5/24/00

PROJECT NAME: CAMBRIDGE
SITE NAME: BR 21
STATION: 10+257.00
GROUND EL.: 138.766

PROJECT NUMBER: BRF 027-1(4)
SITE NO.: VT 108
OFFSET: 12.00
G.W. DEPTH: 4.10

BORING CREW
CREW CHIEF: TALLMAN
DRILLER: TALLMAN
LOGGER: RUSSELL
ADDITIONAL CREW:

BORING RIG: SKID RIG
BORING TYPE: WASH BORE
SAMPLE TYPE: SPLIT BARREL

DEPTH	SYMBOL	CLASSIFICATION OF MATERIALS (Description)	BLOWS PER 0.3 m	M.C. %	GRAVEL %	SAND %	FINES %	LL	PI
		Continued from sheet 1	RUN	REC%	ROD%	Dip°			
		Run#2: BXWDC, 14.78m-16.30m, Rec. = 1.50m, See Geologist's Report.	2	99	92	60			
		Hole stopped @ 16.30m							
		Note: Water table 4.10m							
20									
25									

GEOLOGISTS REPORT:

Run #1: Gray quartz-albite-muscovite schist with biotite porphyroblasts and quartz veins, Moderately hard, Unweathered, Competent.

Run #2: Same as Run #1, Competent

PROJECT NAME: CAMBRIDGE
PROJECT NUMBER: BRF 027-1(4)

FILE NAME: s78f163bor.dgn
PROJECT LEADER: M. EVANS-MONGEON
DESIGNED BY: T. FILLBACH
BORING LOG 3

PLOT DATE: 05-JUN-2012
DRAWN BY: R. PELLETT
CHECKED BY: T. FILLBACH
SHEET 158 OF 214

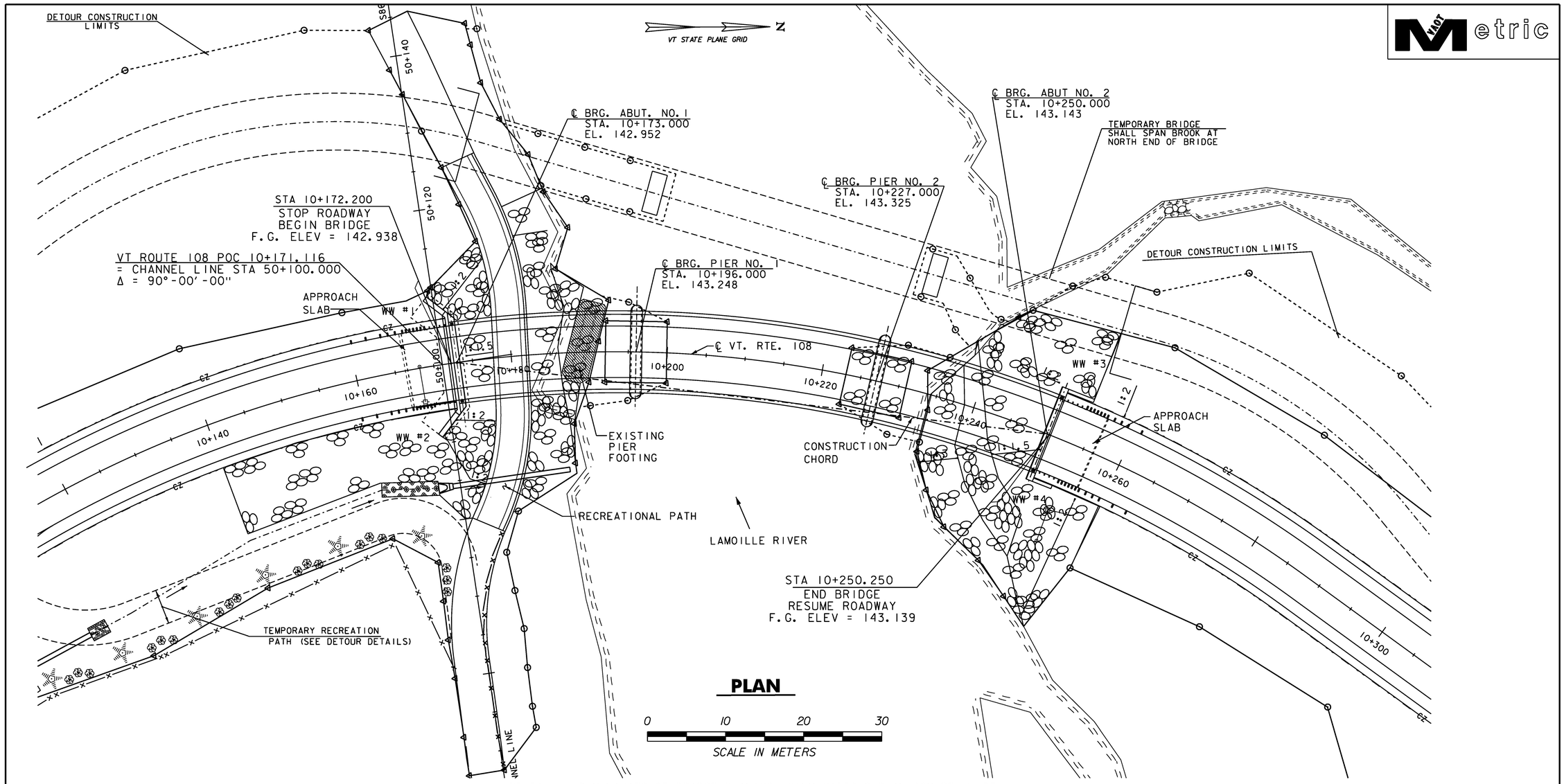

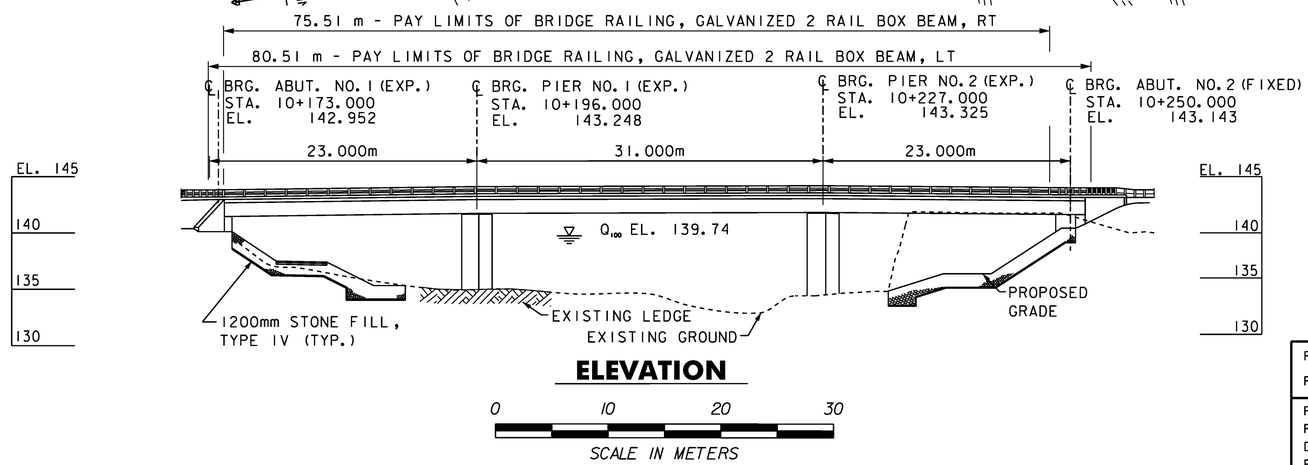

LEGEND

- STONE FILL, TYPE I
- STONE FILL, TYPE IV

APPROACH RAIL LENGTH		
LOCATION	LENGTH	RADIUS
WW #1	8814	154800
WW #2	8814	145200
WW #3	8814	154800
WW #4	8814	145200

PLAN AND ELEVATION

PROJECT NAME:	CAMBRIDGE
PROJECT NUMBER:	BRF 027-1(4)

FILE NAME:	s78f163pe.dgn	PLOT DATE: 05-JUN-2012
PROJECT LEADER:	M. EVANS-MONGEON	DRAWN BY: R. PELLETT
DESIGNED BY:	T. FILLBACH	CHECKED BY: T. FILLBACH
PLAN AND ELEVATION		SHEET 159 OF 214

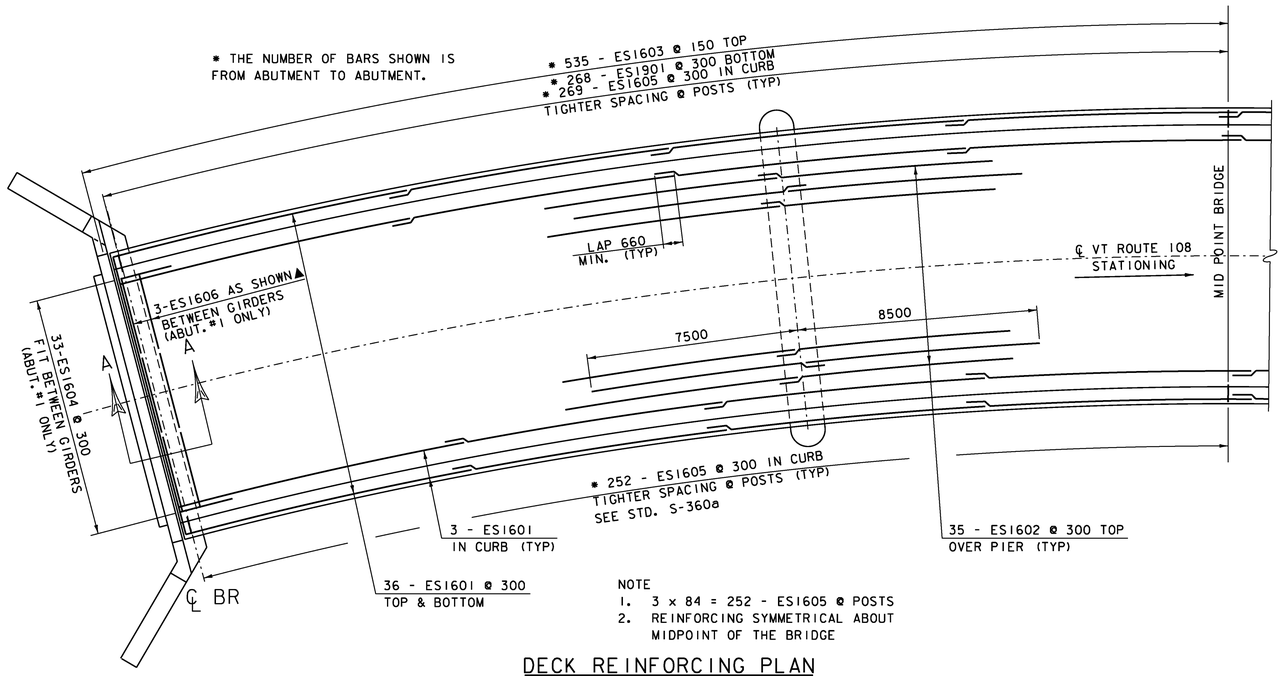

NOTE
1. 3 x 84 = 252 - ES1605 @ POSTS
2. REINFORCING SYMMETRICAL ABOUT MIDPOINT OF THE BRIDGE

DECK REINFORCING PLAN

0 50 100

SCALE = 1:100

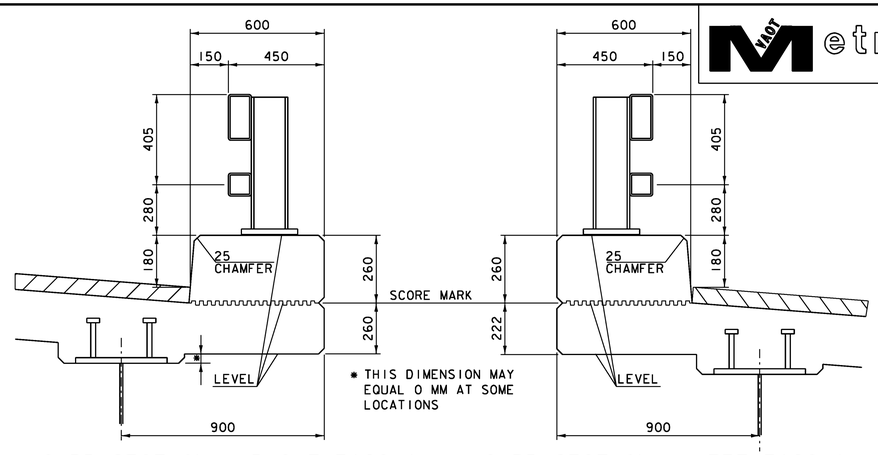

CURB SECTION - RIGHT FASCIA

NTS

CURB SECTION - LEFT FASCIA

NTS

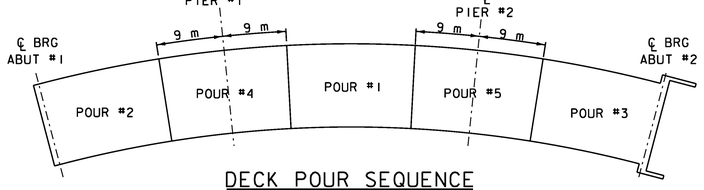

DECK POUR SEQUENCE

NTS

DECK POUR SEQUENCE NOTES:

1. ANY POUR SEQUENCE OTHER THAN INDICATED SHALL BE SUBMITTED IN WRITING TO THE ENGINEER FOR APPROVAL
2. IF APPROVED BY THE ENGINEER, POURS 1, 2 AND 3 MAY BE POURED THE SAME DAY, PROVIDED THAT THE MAXIMUM TIME SPAN OF THE POUR IS EIGHT HOURS. THE SAME IS TRUE OF POURS 4 AND 5.
3. THE INDICATED POUR SEQUENCE SHALL BE FOLOWED AND A RETARDING ADMIXTURE USED SO THAT THE DECK CONCRETE WILL NOT SET UP UNTIL ALL OF THE POUR HAS BEEN MADE. THE RETARDING ADMIXTURE SHALL BE INCIDENTAL TO ITEM 501.33 CONCRETE, HIGH PERFORMANCE CLASS A.
4. TRANSVERSE BRIDGE SLAB CONSTRUCTION JOINTS, AS SHOWN ON DETAIL SHEET SD-501.00, SHALL BE USED BETWEEN ADJACENT DECK POURS.
5. THERE SHALL BE MINIMUM DELAY PERIOD OF 96 HOURS BETWEEN ADJACENT POURS.
6. ALL INDIVIDUAL DECK POURS SHALL START FROM THE THE LOW END (RELATIVE TO GRADE)

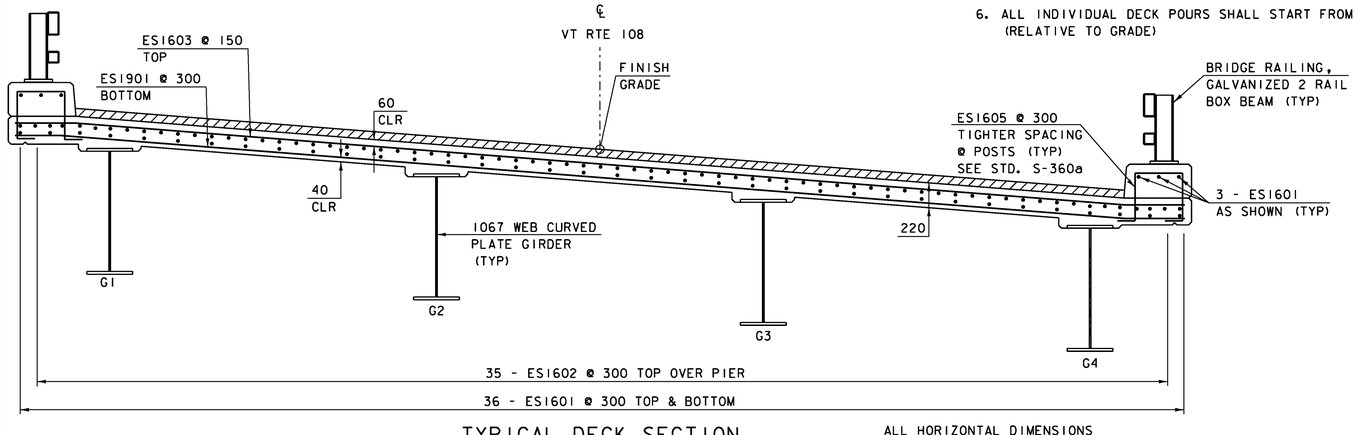

TYPICAL DECK SECTION

NTS

ALL HORIZONTAL DIMENSIONS ARE RADIAL

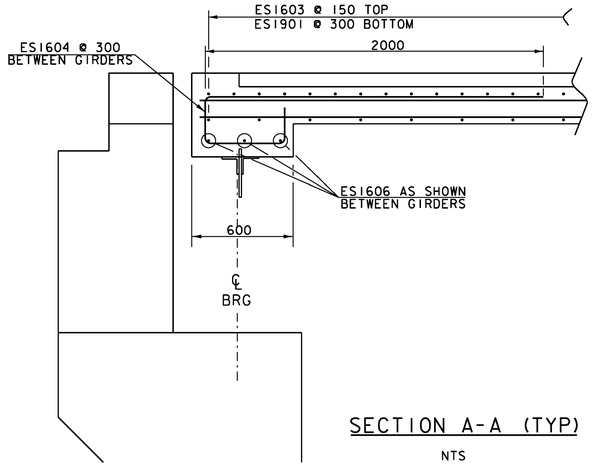

SECTION A-A (TYP)

NTS

NOTE:

NF - NEAR FACE
FF - FAR FACE
EF - EACH FACE
▲ - CUT TO FIT IN FIELD
75 CLR. UNLESS OTHERWISE SPECIFIED ON THE PLANS.

PROJECT NAME:	CAMBRIDGE		
PROJECT NUMBER:	BRF 027-1(4)		
FILE NAME:	78f163super.dgn	PLOT DATE:	05-JUN-2012
PROJECT LEADER:	M. EVANS-MONGEON	DRAWN BY:	R. PELLETT
DESIGNED BY:	T. FILLBACH	CHECKED BY:	T. FILLBACH
DECK REINFORCING		SHEET	160 OF 214

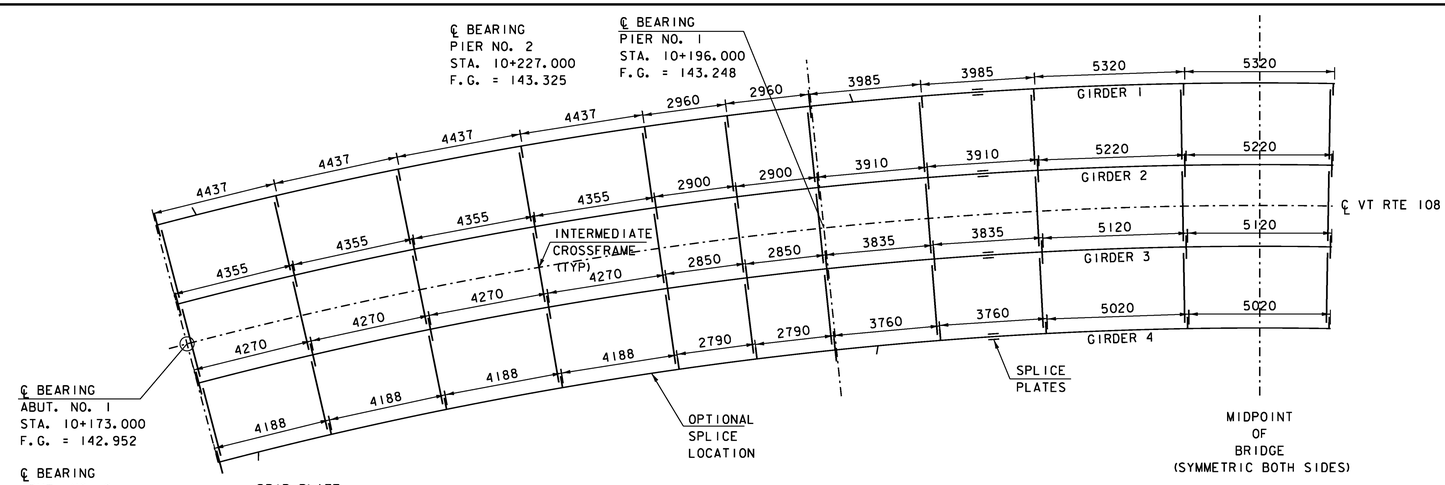

FRAMING PLAN

0 50 100

SCALE = 1:100

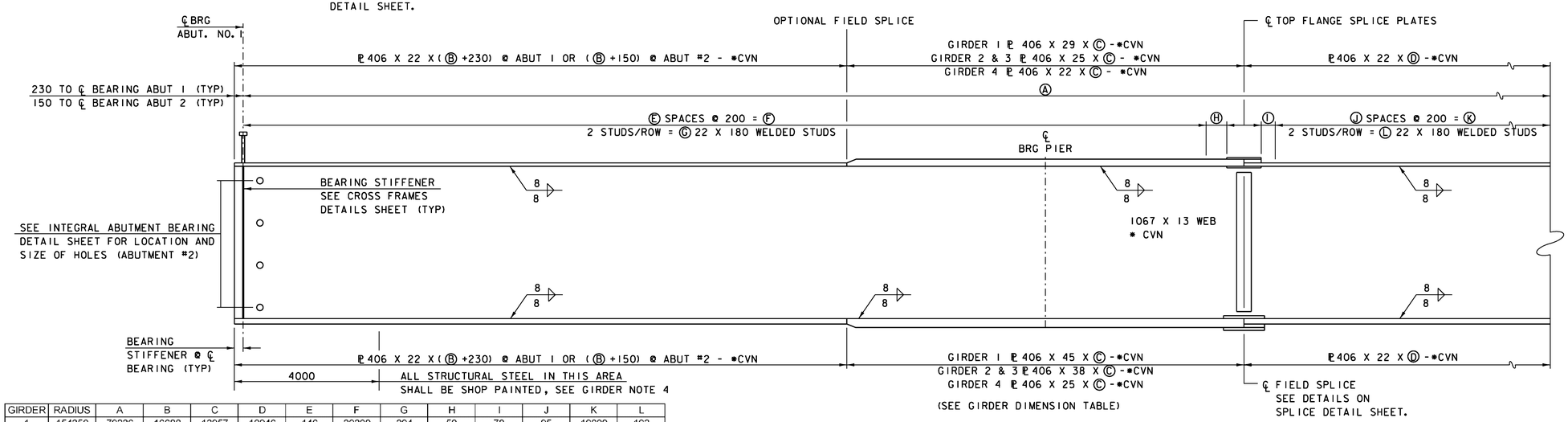

GIRDER	RADIUS	A	B	C	D	E	F	G	H	I	J	K	L
1	154350	79236	16688	12957	19946	146	29200	294	50	78	95	19000	192
2	151450	77740	16380	12705	19570	143	28600	288	90	90	93	18600	188
3	148550	76260	16060	12472	19196	140	28000	282	137	103	91	18200	184
4	145650	74764	15752	12220	18820	137	27400	276	177	115	89	17800	180

TYPICAL GIRDER ELEVATION

N.T.S.

* CVN DENOTES THAT CHARPY V-NOTCH (CVN) TEST IS REQUIRED

GIRDER NOTES:

1. DIMENSIONS SHOWN ARE ALONG THE ARC OF THE C OF THE GIRDER.
2. ENDS OF GIRDERS SHALL BE FABRICATED SO THAT THEY WILL BE PLUMB UNDER FULL DEAD LOAD.
3. BEARING STIFFENERS SHALL BE PLUMB AND PERPENDICULAR TO THE WEB IN THEIR FINAL POSITION.
4. SEE DEAD LOADS & CAMBER DIAGRAMS SHEET FOR ADDITIONAL NOTES

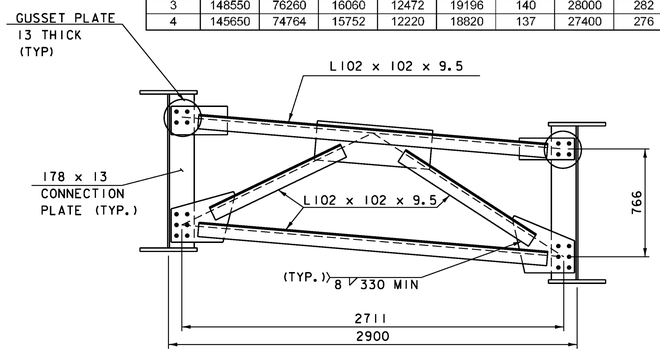

INTERMEDIATE CROSSFRAMES

0 10 20

SCALE = 1:20

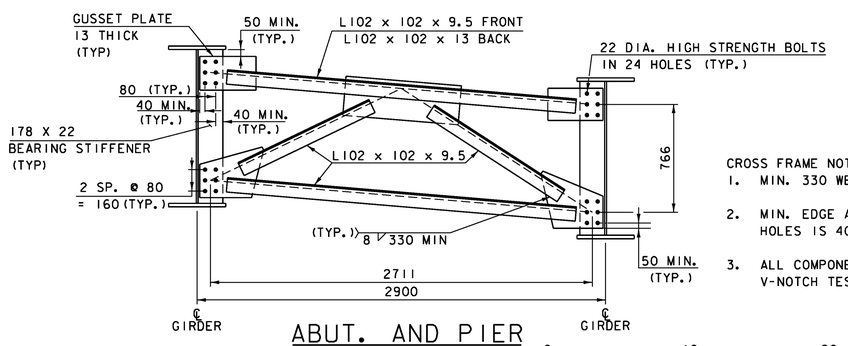

ABUT. AND PIER CROSSFRAMES

0 10 20

SCALE = 1:20

CROSS FRAME NOTES:

1. MIN. 330 WELD ON OUTSTANDING LEG OF ANGLE (TYP)
2. MIN. EDGE AND END DISTANCE FROM CENTER OF BOLT HOLES IS 40. CENTER TO CENTER BOLT SPACING IS 80.
3. ALL COMPONENTS OF THE CROSSFRAMES SHALL BE CHARPY V-NOTCH TESTED.

PROJECT NAME:	CAMBRIDGE		
PROJECT NUMBER:	BRF 027-1 (4)		
FILE NAME:	78f163super.dgn	PLOT DATE:	05-JUN-2012
PROJECT LEADER:	M. EVANS-MONGEON	DRAWN BY:	R. PELLETT
DESIGNED BY:	T. FILLBACH	CHECKED BY:	T. FILLBACH
FRAMING PLAN & GIRDER DETAILS		SHEET 161	OF 214

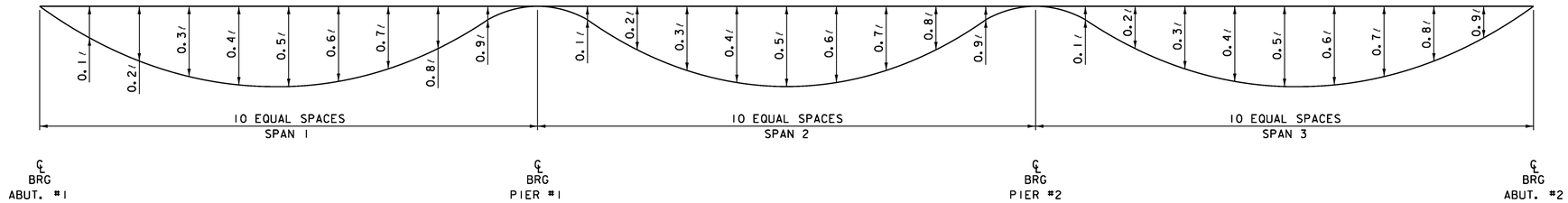

DEFLECTION DIAGRAM

NOT TO SCALE - SEE TABLE BELOW

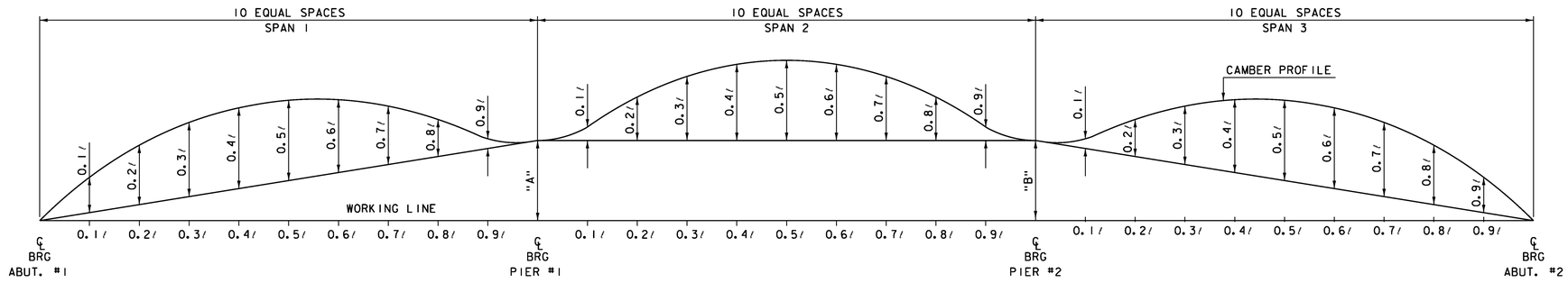

CAMBER DIAGRAM

NOT TO SCALE - SEE TABLE BELOW

			SPAN 1										SPAN 2										SPAN 3										
GIRDER		0.0	0.1	0.2	0.3	0.4	0.5	0.6	0.7	0.8	0.9	0.0	0.1	0.2	0.3	0.4	0.5	0.6	0.7	0.8	0.9	0.0	0.1	0.2	0.3	0.4	0.5	0.6	0.7	0.8	0.9	1.0
1	STEEL	0.0	-1.2	-2.1	-2.7	-2.9	-2.7	-2.1	-1.3	-0.6	-0.1	0.0	-1.0	-2.6	-4.4	-5.7	-6.1	-5.7	-4.4	-2.6	-1.0	0.0	-0.1	-0.6	-1.3	-2.1	-2.6	-2.9	-2.7	-2.1	-1.2	0.0
	SLAB & SUPER	0.0	-7.0	-12.2	-15.7	-16.8	-15.3	-11.9	-7.4	-3.0	-0.2	0.0	-6.1	-16.1	-27.3	-34.8	-37.3	-34.8	-27.3	-16.1	-6.1	0.0	-0.2	-3.0	-7.4	-11.9	-15.1	-16.5	-15.7	-12.2	-7.0	0.0
	RESIDUAL CAMBER	0.0	9.0	17.0	21.0	25.0	26.0	22.0	22.0	16.0	10.0	0.0	16.0	30.0	39.0	44.0	47.0	45.0	39.0	29.0	17.0	0.0	9.0	16.0	22.0	25.0	25.0	24.0	21.0	17.0	9.0	0.0
	TOTAL CAMBER	0.0	17.2	31.3	39.4	44.7	44.0	36.0	30.7	19.6	10.3	0.0	23.1	48.7	70.7	84.5	90.4	85.5	70.7	47.7	24.1	0.0	9.3	19.6	30.7	39.0	42.7	43.4	39.4	31.3	17.2	0.0
											"A" DIST	232.2									"B" DIST	232.2										
2	STEEL	0.0	-1.1	-1.9	-2.4	-2.6	-2.4	-2.0	-1.3	-0.6	-0.1	0.0	-0.9	-2.5	-4.1	-5.3	-5.6	-5.3	-4.1	-2.5	-0.9	0.0	-0.1	-0.6	-1.3	-2.1	-2.6	-2.9	-2.7	-2.1	-1.2	0.0
	SLAB & SUPER	0.0	-6.6	-11.6	-15.1	-16.1	-14.9	-11.7	-7.4	-3.2	-0.2	0.0	-6.0	-15.7	-26.2	-33.1	-35.6	-33.1	-26.2	-15.7	-6.0	0.0	-0.2	-3.2	-7.4	-11.6	-14.5	-15.7	-14.8	-11.4	-6.5	0.0
	RESIDUAL CAMBER	0.0	9.0	17.0	21.0	25.0	26.0	22.0	22.0	16.0	10.0	0.0	16.0	30.0	39.0	44.0	47.0	45.0	39.0	29.0	17.0	0.0	9.0	16.0	22.0	25.0	25.0	24.0	21.0	17.0	9.0	0.0
	TOTAL CAMBER	0.0	16.7	30.5	38.5	43.7	43.3	35.7	30.7	19.8	10.3	0.0	22.9	48.2	69.3	82.4	88.2	83.4	69.3	47.2	23.9	0.0	9.3	19.8	30.7	38.7	42.1	42.6	38.5	30.5	16.7	0.0
											"A" DIST	236.2									"B" DIST	236.2										
3	STEEL	0.0	-1.0	-1.7	-2.2	-2.4	-2.3	-1.8	-1.2	-0.5	-0.1	0.0	-0.9	-2.3	-3.9	-4.9	-5.3	-4.9	-3.9	-2.3	-0.9	0.0	-0.1	-0.5	-1.2	-1.8	-2.2	-2.4	-2.2	-1.7	-1.0	0.0
	SLAB & SUPER	0.0	-6.2	-11.0	-14.1	-15.1	-14.0	-11.2	-7.0	-3.1	-0.2	0.0	-5.6	-14.8	-24.6	-31.3	-33.4	-31.3	-24.6	-14.8	-5.6	0.0	-0.2	-3.1	-7.0	-11.2	-13.9	-15.0	-14.1	-11.0	-6.2	0.0
	RESIDUAL CAMBER	0.0	9.0	17.0	21.0	25.0	26.0	22.0	22.0	16.0	10.0	0.0	16.0	30.0	39.0	44.0	47.0	45.0	39.0	29.0	17.0	0.0	9.0	16.0	22.0	25.0	25.0	24.0	21.0	17.0	9.0	0.0
	TOTAL CAMBER	0.0	16.2	29.7	37.3	42.5	42.3	35.0	30.2	19.6	10.3	0.0	22.5	47.1	67.5	80.2	85.7	81.2	67.5	46.1	23.5	0.0	9.3	19.6	30.2	38.0	41.1	41.4	37.3	29.7	16.2	0.0
											"A" DIST	236.2									"B" DIST	236.2										
4	STEEL	0.0	-0.9	-1.6	-2.0	-2.2	-2.1	-1.7	-1.1	-0.5	-0.1	0.0	-0.9	-2.2	-3.7	-4.6	-4.9	-4.6	-3.7	-2.2	-0.9	0.0	-0.1	-0.5	-1.1	-1.7	-2.0	-2.2	-2.0	-1.6	-0.9	0.0
	SLAB & SUPER	0.0	-5.4	-9.5	-12.4	-13.4	-12.5	-10.1	-6.6	-3.0	-0.3	0.0	-5.3	-13.8	-22.5	-28.4	-30.5	-28.5	-22.5	-13.9	-5.3	0.0	-0.3	-3.0	-6.6	-10.1	-12.4	-13.3	-12.4	-9.5	-5.4	0.0
	RESIDUAL CAMBER	0.0	9.0	17.0	21.0	25.0	26.0	22.0	22.0	16.0	10.0	0.0	16.0	30.0	39.0	44.0	47.0	45.0	39.0	29.0	17.0	0.0	9.0	16.0	22.0	25.0	25.0	24.0	21.0	17.0	9.0	0.0
	TOTAL CAMBER	0.0	15.3	28.1	35.4	40.6	40.6	33.8	29.7	19.5	10.4	0.0	22.2	46.0	65.2	77.0	82.4	78.1	65.2	45.1	23.2	0.0	9.4	19.5	29.7	36.8	39.4	39.5	35.4	28.1	15.3	0.0
											"A" DIST	239.2									"B" DIST	239.2										

NOTES:

1. DIMENSIONS SHOWN ARE ALONG THE ARC OF THE ℄ OF THE WEB.
2. ENDS OF GIRDERS SHALL BE FABRICATED SO THAT THEY WILL BE PLUMB UNDER FULL DEAD LOAD.
3. BEARING STIFFENERS SHALL BE PLUMB AND PERPENDICULAR TO THE WEB IN THEIR FINAL POSITION.
4. STEEL DEFLECTION IS DUE TO GIRDERS AND CROSSFRAMES.
5. SLAB & SUPER DEFLECTION IS DUE TO DECK, CURB, RAILING AND PAVEMENT.
6. WORKING LINE IS A STRAIGHT LINE BASED ON THE ELEVATION AT THE BOTTOM OF THE WEB AT THE CENTERLINE OF BEARING AT THE ABUTMENTS.

PROJECT NAME:	CAMBRIDGE		
PROJECT NUMBER:	BRF 027-1(4)		
FILE NAME:	78f163super.dgn	PLOT DATE:	05-JUN-2012
PROJECT LEADER:	M. EVANS-MONGEON	DRAWN BY:	R. PELLETT
DESIGNED BY:	T. FILLBACH	CHECKED BY:	T. FILLBACH
DEAD LOADS & CAMBER DIAGRAMS		SHEET 162	OF 214

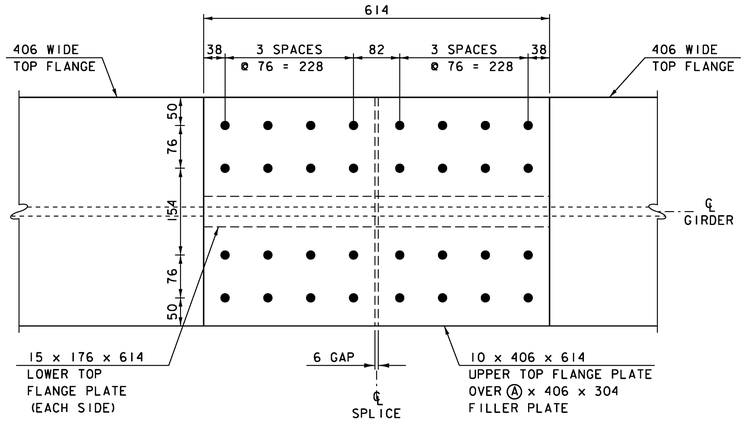

TOP FLANGE PLAN

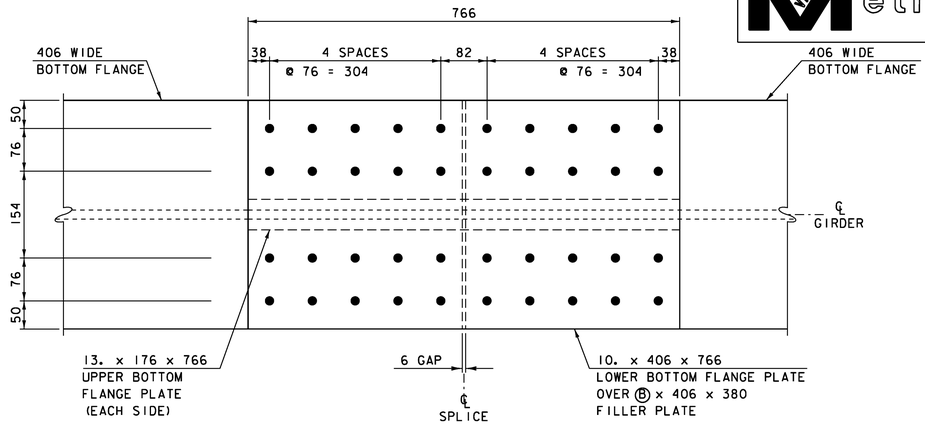

BOTTOM FLANGE PLAN

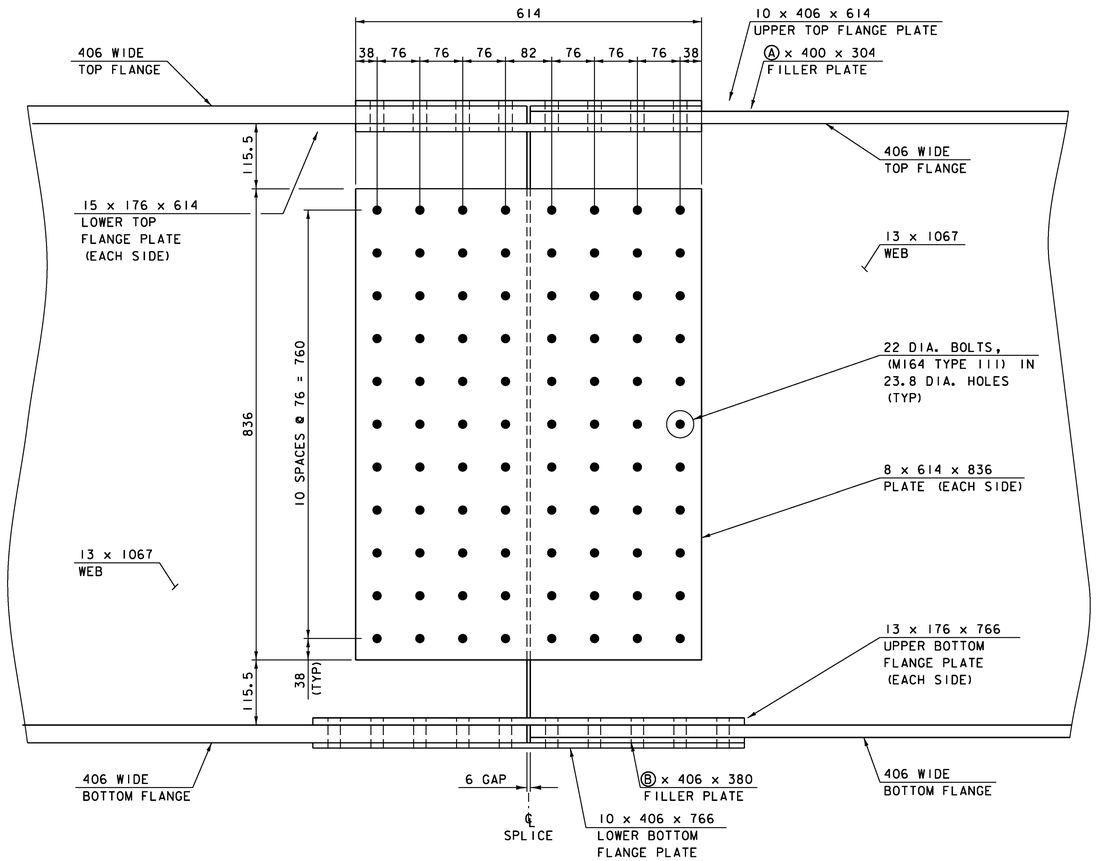

SPLICE ELEVATION

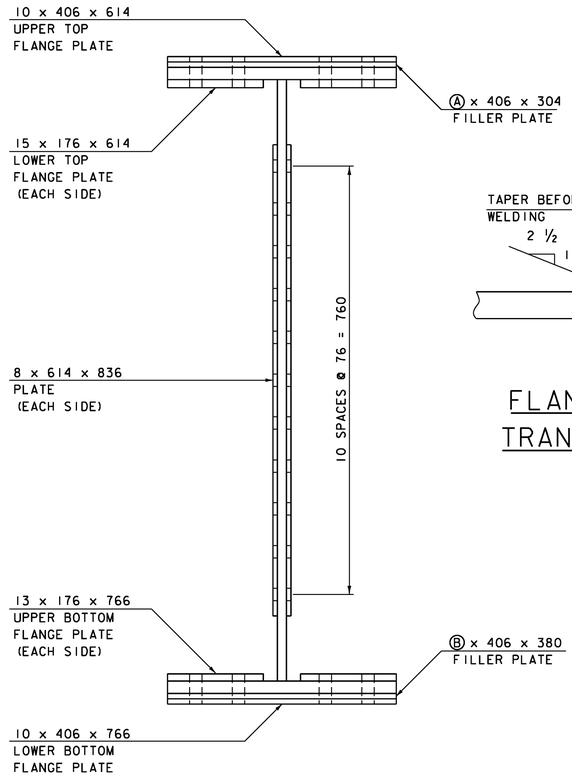

SPLICE SECTION

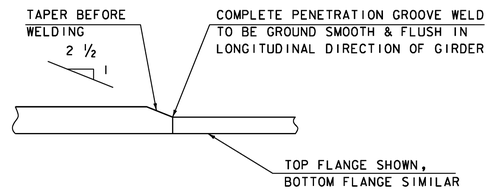

FLANGE THICKNESS TRANSITION DETAIL

N. T. S.

FILLER PLATE		
	A	B
G1	7	23
G2	3	16
G3	3	16
G4	0	3

ALL SPLICE PLATES SHALL BE CVN (CHARPY V-NOTCH) TESTED, INCLUDING THE FILLER PLATES

0 2.5 5

SCALE = 1:5

PROJECT NAME:	CAMBRIDGE		
PROJECT NUMBER:	BRF 027-1(4)		
FILE NAME:	78f163super.dgn	PLOT DATE:	05-JUN-2012
PROJECT LEADER:	M. EVANS-MONGEON	DRAWN BY:	R. PELLETT
DESIGNED BY:	T. FILLBACH	CHECKED BY:	T. FILLBACH
SPLICE DETAIL		SHEET	163 OF 214

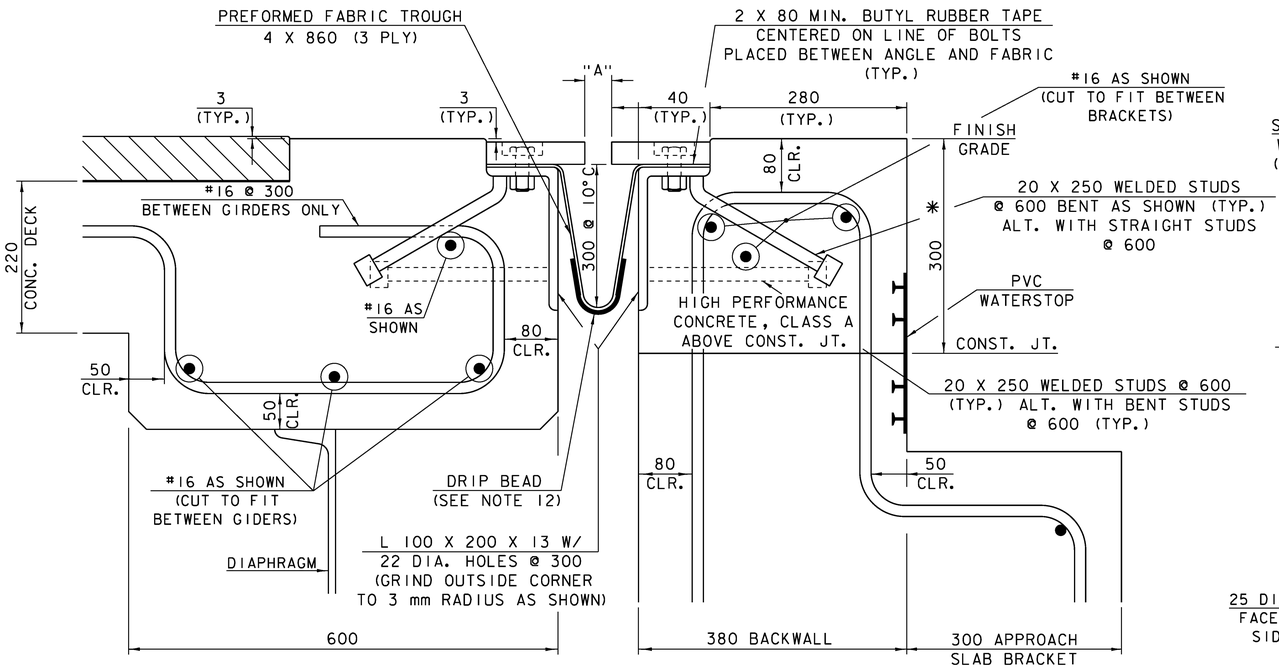

TYPICAL SECTION BETWEEN GIRDERS

(NORMAL TO ℄ BEARING)
NTS

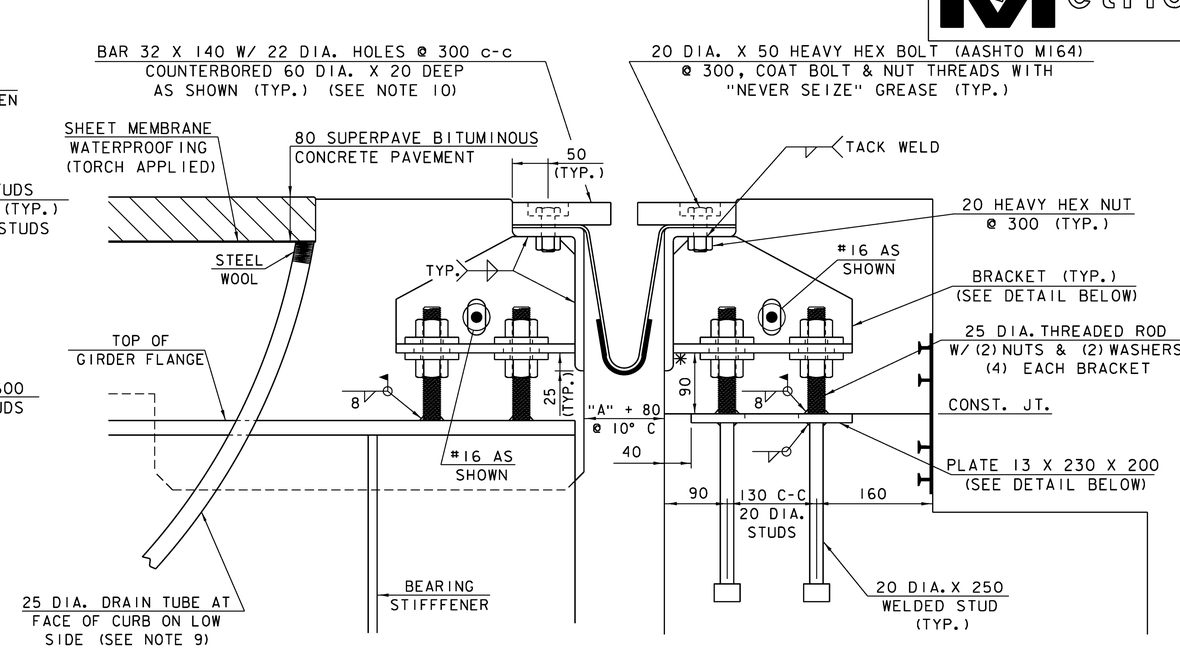

TYPICAL SECTION AT GIRDERS

(NORMAL TO ℄ BEARING)
NTS

* THESE DIMENSIONS ARE THEORETICAL AND MAY CHANGE DEPENDING UPON THE OUTCOME OF THE BEAM PROFILES.

1. DETAILS ON THIS SHEET ARE FOR ITEM 516.11, BRIDGE EXPANSION JOINT, VERMONT.
2. PREFORMED FABRIC MATERIAL SHALL BE CONTINUOUS AND SHALL CONFORM TO SUBSECTION 707.07 OF THE STANDARD SPECIFICATIONS.
3. BUTYL RUBBER TAPE SHALL MEET THE REQUIREMENTS OF SUBSECTION 707.12.
4. THE FINAL FINISH OF THE EXPANSION DEVICE SHALL BE COVERED DURING THE PLACING OF BRIDGE DECK CONCRETE.
5. ALL STEEL COMPONENTS SHALL BE AASHTO M270 GRADE 36 GALVANIZED OR METALIZED AS PER SUBSECTION 516.02 OF THE STANDARD SPECIFICATIONS AS MODIFIED BY THE GENERAL SPECIAL PROVISIONS UNLESS OTHERWISE SPECIFIED.
6. THE ITEM BRIDGE EXPANSION JOINT, VERMONT SHALL INCLUDE THE FABRICATION AND ERECTION OF THE COMPLETE JOINT ASSEMBLY INCLUDING ALL STEEL PLATES, BRACKETS, ANGLES, WELDED STUDS OR RODS, PREFORMED FABRIC DRAIN TROUGH MATERIAL AND PLASTIC DRAIN TUBES, BUTYL RUBBER TAPE AND ANY OTHER MISCELLANEOUS MATERIAL NECESSARY TO INSTALL JOINT.
7. THE 100 X 200 X 13 ANGLES SHALL BE FURNISHED AS ONE CONTINUOUS PIECE. THE 32 X 140 BARS EACH SIDE OF THE JOINT SHALL BE PROVIDED IN TWO EQUAL LENGTHS.
8. COAT CONCRETE CONTACT SURFACES WITH EPOXY BONDING COMPOUND MEETING THE REQUIREMENTS OF SUBSECTION 719.02 OF THE STANDARD SPECIFICATIONS. PAYMENT SHALL BE INCIDENTAL TO ITEM 516.11, BRIDGE EXPANSION JOINT, VERMONT.
9. A 25 DIAMETER PLASTIC DRAIN TUBE (PER STD. SPEC. 740.06) SHALL BE INSTALLED AS SHOWN AT THE FACE OF CURB. THE UPPER END IS TO BE PLUGGED WITH STEEL WOOL AND THE LOWER END IS TO EXTEND BELOW THE BOTTOM OF THE ADJACENT BEAM. THE DRAIN TUBES SHALL BE FASTENED TO THE BEAMS USING A METHOD APPROVED BY THE ENGINEER.
10. FILL COUNTERBORED HOLES WITH HOT POURED JOINT SEALER SUBSECTION 707.04 AFTER BOLT INSTALLATION. PAYMENT FOR THE WORK SHALL BE INCIDENTAL TO ITEM 516.11.
11. PAYMENT FOR WATERSTOP SHALL BE INCIDENTAL TO ITEM 501.34, HIGH PERFORMANCE CONCRETE, CLASS B.
12. A DRIP BEAD OF 6 X 180 STRIP OF PREFORMED MATERIAL SHALL BE CEMENTED TO THE BOTTOM OF THE FABRIC TROUGH USING AN ADHESIVE APPROVED BY THE MANUFACTURER. THE DRIP BEAD SHALL BE APPLIED 25 FROM THE DOWNSPOUT END OF THE TROUGH.
13. FABRIC TROUGH SHALL BE THOROUGHLY CLEANED AND FLUSHED AFTER PAVING OPERATION.
14. THE EXPANSION JOINT SHALL BE SHOP ASSEMBLED AND SHIPPED AS ONE UNIT.

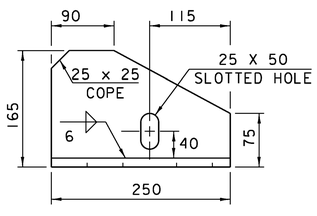

BRACKET ELEVATION

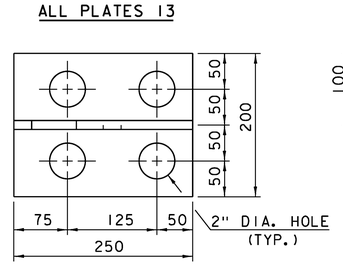

BRACKET PLAN

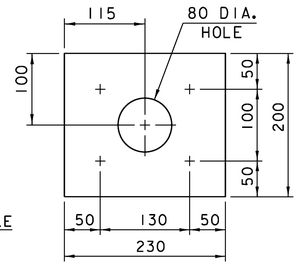

PLATE PLAN

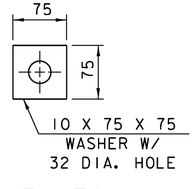

WASHER FOR BRACKET

TEMP	"A" DIST.
-30° C	57
-20° C	51
-10° C	44
0° C	38
10° C	31
20° C	25
30° C	18
40° C	12

"A" IS THE SETTING BEFORE DEAD LOADS ARE IN PLACE.

0 0.25 0.5

SCALE = 1:3

PROJECT NAME: CAMBRIDGE
PROJECT NUMBER: BRF 027-1(4)

FILE NAME: s78f163dwspt.dgn
PROJECT MANAGER M. EVANS-MONGEON
DESIGNED BY: VAOT
EXPANSION JOINT DETAILS

PLOT DATE: 05-JUN-2012
DRAWN BY: R. PELLETT
CHECKED BY: T. FILLBACH
SHEET 164 OF 214

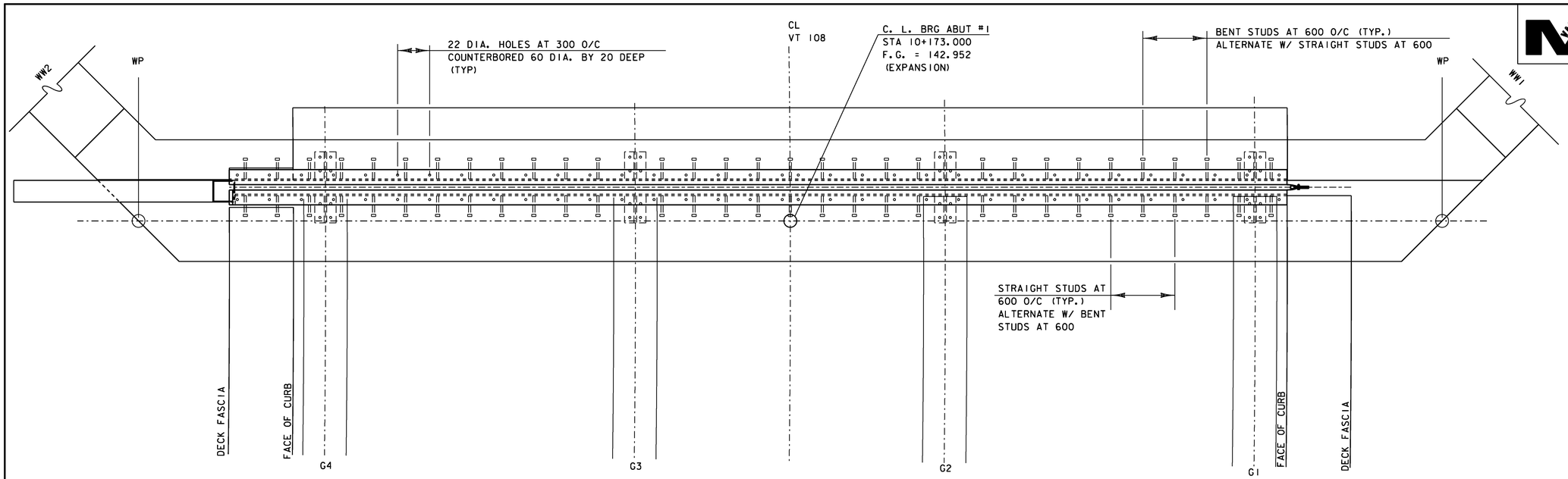

EXPANSION JOINT PLAN VIEW

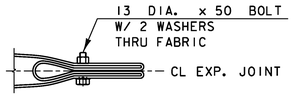

VIEW A-A

NTS

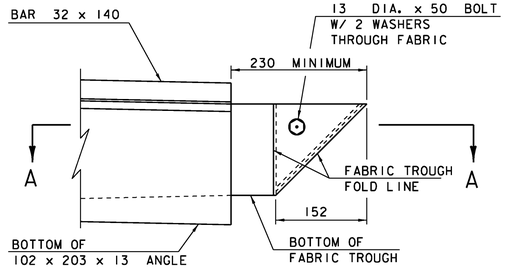

ELEVATION
FOLDED TROUGH END DETAILS

NTS

PROJECT NAME:	CAMBRIDGE
PROJECT NUMBER:	BRF 027-1(4)

FILE NAME: s78f163dwspt.dgn	PLOT DATE: 05-JUN-2012
PROJECT LEADER: M. EVANS-MONGEON	DRAWN BY: R. PELLETT
DESIGNED BY: T. FILLBACH	CHECKED BY: T. FILLBACH
EXPANSION JOINT LAYOUT	SHEET 165 OF 214

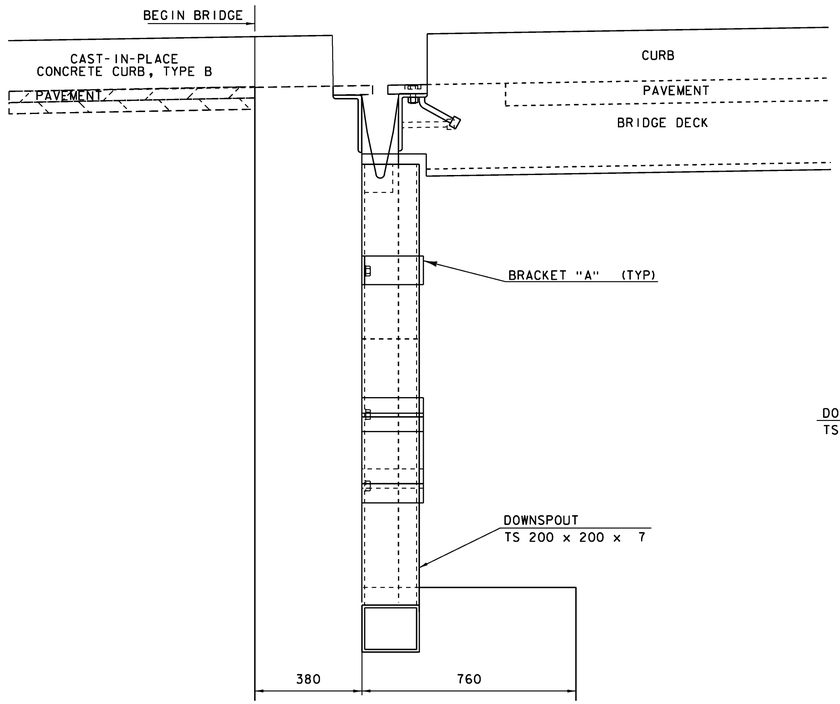

DOWNSPOUT SIDE ELEVATION

NTS

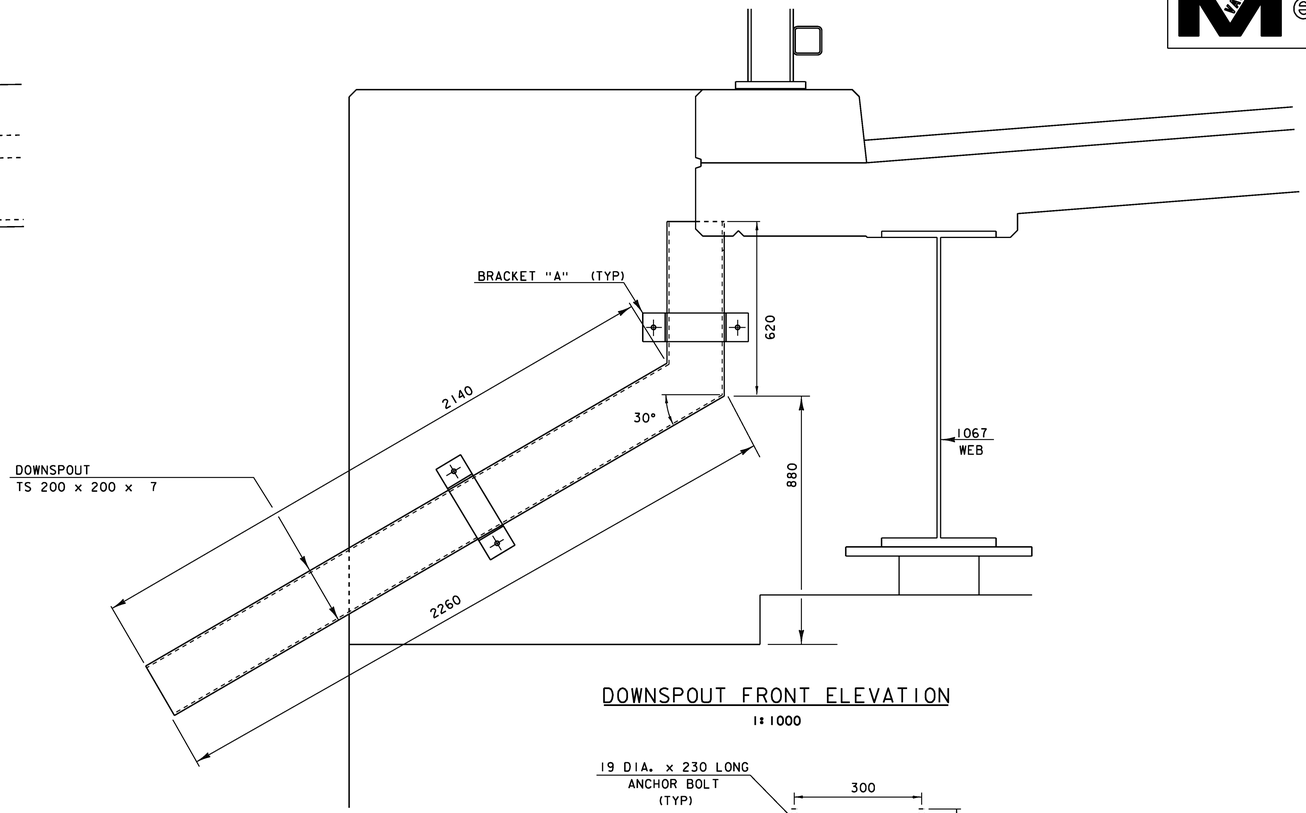

DOWNSPOUT FRONT ELEVATION

1:1000

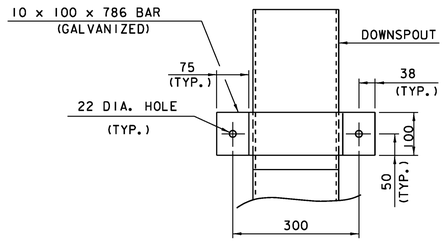

ELEVATION VIEW OF BRACKET "A"

NTS

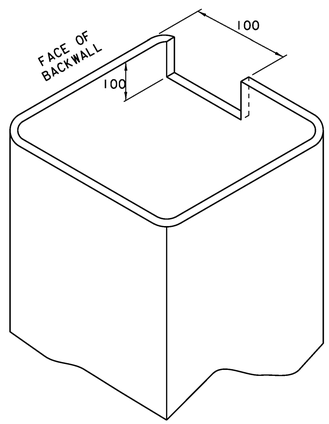

DOWNSPOUT CUTOUT
FOR TROUGH

NTS

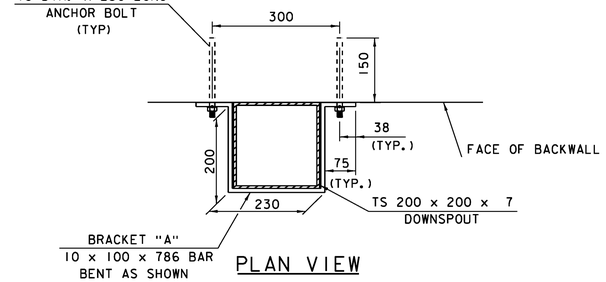

PLAN VIEW

DETAILS FOR ATTACHING
DOWNSPOUT TO BACKWALL

NTS

DOWNSPOUT NOTES

1. HOLLOW STRUCTURAL STEEL TUBING SHALL CONFORM TO ASTM A-500 OR A-501.
2. ALL PLATES, BARS, AND ANGLES SHALL CONFORM TO AASHTO M270M/M270 GR. 36.
3. DOWNSPOUT SHALL BE GALVANIZED IN ACCORDANCE WITH AASHTO M111M/M111 AFTER FABRICATION.
4. ALL BOLTS AND RELATED HARDWARE SHALL BE ASTM A-307 AND SHALL BE GALVANIZED IN ACCORDANCE WITH AASHTO M232M/M232.
5. ANY PLACE WHERE THE GALVANIZING HAS BEEN DAMAGED ON THE DOWNSPOUT EITHER BY CUTTING, BURNING, WELDING, PLACING, OR ANY OTHER MEANS, IT SHALL BE REPAIRED BY THOROUGHLY CLEANING THE DAMAGED AREAS WITH A WIRE BRUSH AND PAINTING THE DAMAGED AREAS WITH TWO COATS OF AN APPROVED SEALANT.
6. DOWNSPOUT AND ALL ANCHOR BOLTS WITH RELATED HARDWARE SHALL BE PAID FOR UNDER THE ITEM 506.60 "STRUCTURAL STEEL".

0 500 1000

SCALE = 1:1000

PROJECT NAME: CAMBRIDGE	
PROJECT NUMBER: BRF 027-1(4)	
FILE NAME: s78f163dwspt.dgn	PLOT DATE: 05-JUN-2012
PROJECT LEADER: M. EVANS-MONGEON	DRAWN BY: R. PELLETT
DESIGNED BY: T. FILLBACH	CHECKED BY: T. FILLBACH
DOWNSPOUT DETAILS	SHEET 166 OF 214

STEEL REINFORCED ELASTOMERIC BEARING NOTES

1) ELASTOMERIC BEARINGS SHALL BE PAID FOR UNDER THE ITEM 531.17 "BEARING DEVICE ASSEMBLY, STEEL REINFORCED ELASTOMERIC PAD" AND SHALL CONFORM TO APPLICABLE SUBSECTIONS OF SECTIONS 531 AND 731.

2) ALL MATERIALS SHALL CONFORM TO SECTION 14 OF THE AASHTO LRFD BRIDGE DESIGN SPECIFICATIONS, SECTION 18 OF AASHTO LRFD BRIDGE CONSTRUCTION SPECIFICATIONS AND ALL AASHTO OR ASTM SPECIFICATIONS REFERENCED IN THE CONTRACT DOCUMENTS.

3) THE ELASTOMERIC COMPOUND SHALL BE VIRGIN CRYSTALLIZATION RESISTANT POLYCHLOROPENE (NEOPRENE) OR VIRGIN NATURAL POLYISOPRENE (NATURAL RUBBER) AS THE RAW POLYMER, EXCEPT WHEN USING A DISC THE COMPOUND SHALL BE BASED ON POLYETHER URETHANE, USING ONLY VIRGIN MATERIALS. THE RESULTING PRODUCT SHALL BE FREE OF POROUS AREAS, WEAK SECTIONS, BUBBLES, FOREIGN MATTER, OR OTHER DEFECTS AFFECTING SERVICEABILITY. IT SHALL CONFORM TO THE REQUIREMENTS OF AASHTO M 251.

4) ALTERNATE CONFIGURATIONS FOR BEARINGS MAY BE SUBMITTED FOR APPROVAL. ANY ALTERNATE SUBMITTED SHALL BE DESIGNED AND CERTIFIED TO MEET THE DESIGN LOADS AND CRITERIA SHOWN ON THIS SHEET. THE ALTERNATE SHALL MAINTAIN THE ANCHORAGE SYSTEM SHOWN AND SHALL BE DESIGNED PER THE LATEST AASHTO LRFD BRIDGE DESIGN SPECIFICATION. BRIDGE SEAT ELEVATIONS MAY BE REVISED TO ACCOMMODATE AN ALTERNATIVE CONFIGURATION.

5) STEEL REINFORCED ELASTOMERIC PADS SHALL BE WITHIN THE TOLERANCES LISTED IN TABLE 2 IN AASHTO M251. EXTERNAL LOAD PLATES SHALL BE WITHIN THE TOLERANCES GIVEN IN SECTION 18 OF THE AASHTO LRFD BRIDGE CONSTRUCTION SPECIFICATIONS.

6) THE PREFORMED BEARING PAD BENEATH THE MASONRY PLATE SHALL HAVE THE SAME SIZE AND ANCHOR BOLT HOLE LAYOUT AS THE CORRESPONDING MASONRY PLATE.

7) BEARING SHALL BE SET LEVEL AND PARALLEL WITHIN 3 MM PER METER, WITH FULL AND UNIFORM BEARING. THE CONCRETE UNDER THE BEARING DEVICE SHALL BE LEVEL.

8) DURING ANY WELDING, SURFACES IN CONTACT WITH THE ELASTOMER SHALL BE RESTRICTED TO 200 DEGREES FAHRENHEIT, AND SURFACES IN CONTACT WITH PTFE SHALL BE RESTRICTED TO 300 DEGREES FAHRENHEIT. TEMPERATURE SHALL BE DETERMINED BY TEMPERATURE INDICATING WAX PENCILS OR OTHER SUITABLE MEANS.

9) PRIOR TO ORDERING MATERIALS AND STARTING THE WORK, THE CONTRACTOR SHALL SUBMIT A DRILLING AND MORTARING PROPOSAL TO THE ENGINEER FOR APPROVAL, INCLUDING A PREMIXED MORTAR MATERIAL BRAND NAME.

10) THE DRILLED HOLES TO BE MORTARED SHALL BE THOROUGHLY CLEANED, WETTED, AND FREE OF STANDING WATER.

11) THE MORTAR SHALL BE MIXED IN A MECHANICAL MIXER ACCORDING TO THE MANUFACTURER'S RECOMMENDATIONS AND SHALL BE READILY POURABLE SO THAT WHEN POURED IT COMPLETELY FILLS THE REMAINING HOLE CAVITIES. THE PLACEMENT OF MORTAR FOR EACH BEARING SHALL BE CONTINUOUS AND COMPLETE AT ALL HOLE LOCATIONS.

12) ALL EXPOSED MORTAR SHALL BE CURED FOR A PERIOD OF NOT LESS THAN THREE (3) DAYS BY THE WETTED BURLAP METHOD IN ACCORDANCE WITH SECTION 501. CURING SHALL COMMENCE AS SOON AS PRACTICAL AFTER MORTAR PLACEMENT. THE CONTRACTOR SHALL NOT APPLY ANY FORCES TO THE ANCHOR BOLTS DURING THE CURING PERIOD.

13) USE THE FOLLOWING PROCEDURE FOR INSTALLING DOUBLE-NUTTED ANCHOR BOLTS : INSTALL THE LOWER NUT IN CONTACT WITH TOP OF SOLE PLATE, AND THEN BACK OFF ½ TURN. INSTALL UPPER NUT SNUG TIGHT TO PREVENT LOWER NUTS FROM LOOSENING.

14) THE BEARING MANUFACTURER SHALL INCLUDE A TEMPERATURE SETTING TABLE ON THE FABRICATION DRAWINGS.

15) BRIDGE SEAT ELEVATIONS ARE BASED ON THE BEARING HEIGHTS SHOWN. PRIOR TO CONSTRUCTING EITHER ABUTMENT, THE CONTRACTOR SHALL SUBMIT TO THE ENGINEER THE PROPOSED BEARING HEIGHT AS PROVIDED BY THE MANUFACTURER AND ANY ELEVATION MODIFICATIONS REQUIRED.

16) BOLTS INSTALLED IN PAINTED STRUCTURAL COMPONENTS SHALL BE TYPE 1, SHALL BE PROVIDED WITH APPROPRIATE NUTS AND WASHERS, AS REQUIRED, AND THE COMBINATION OF BOLT, NUT, AND WASHER SHALL BE MECHANICALLY GALVANIZED IN ACCORDANCE WITH SUBSECTION 726.08.

17) BOLTS FURNISHED FOR BEARINGS SHALL CONFORM TO SUBSECTION 714.08. THE BOLTS, NUTS, AND WASHERS FURNISHED SHALL BE TESTED AND CERTIFIED AS MEETING THE REQUIREMENTS OF THE ZINC THICKNESS TEST AS SPECIFIED IN SUBSECTION 714.05, IN ADDITION TO ANY OTHER TEST AND CERTIFICATION REQUIREMENTS.

18) THE WELDS FOR THE SOLE PLATE CONNECTION SHOULD ONLY BE ALONG THE LONGITUDINAL GIRDER AXIS. TRANSVERSE JOINTS SHOULD BE SEALED WITH AN ACCEPTABLE CAULKING MATERIAL.

19) GALVANIZING THAT HAS BEEN DAMAGED SHALL BE REPAIRED IN ACCORDANCE WITH ASTM A780, STANDARD PRACTICE FOR REPAIR OF DAMAGED HOT DIPPED GALVANIZED COATINGS, ANNEX A2. THE PAINT USED IN THE REPAIR SHALL BE ORGANIC-RICH, CONTAINING 92 PERCENT(MIN.) ZINC BY WEIGHT IN THE DRY FILM. THE PAINT SHALL BE APPLIED PER MANUFACTURER'S RECOMMENDATIONS TO A THICKNESS EQUIVALENT TO THE SURROUNDING GALVANIZING.

20) METALIZING THAT HAS BEEN DAMAGED SHALL BE REPAIRED USING THE METHODS DESCRIBED IN NOTE 19.

21) STEEL REINFORCED ELASTOMERIC BEARINGS SHALL HAVE A MINIMUM 4MM EDGE SEAL OF ELASTOMER INTEGRAL WITH BEARING OVER ALL INTERNAL PLATES.

BEARING DESIGN CRITERIA:

A) MASONRY PLATE TO CONCRETE DESIGN PRESSURE = **7.5 MPa** Max
B) DESIGN ROTATION = **0.008 RAD**
C) HORIZONTAL CAPACITY SHALL BE MINIMUM OF 20% VERTICAL LOAD IN ANY UNRESTRAINED DIRECTION.
D) NO FABRIC REINFORCEMENT WILL BE ALLOWED IN ELASTOMERIC PADS

PROJECT NAME: CAMBRIDGE
PROJECT NUMBER: BRF 027-1(4)

FILE NAME: s78f163brg.dgn
PROJECT LEADER: M. EVANS-MONGEON
DESIGNED BY: T. FILLBACH
ELASTOMERIC BEARING NOTES

PLOT DATE: 05-JUN-2012
DRAWN BY: R. PELLETT
CHECKED BY: T. FILLBACH
SHEET 167 OF 214

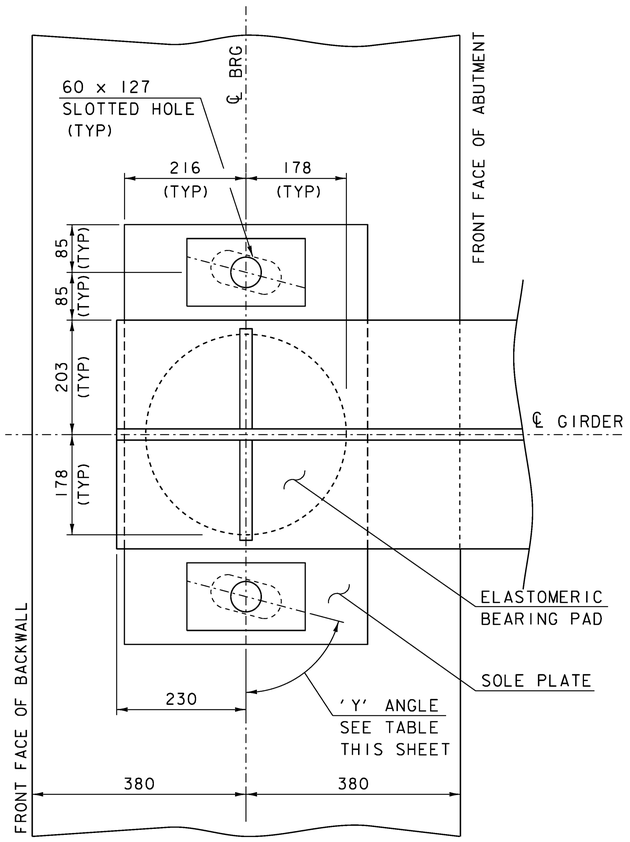

PLAN

GIRDER	'Y' ANGLE
1	75°-10'
2	78°-10'
3	81°-15'
4	84°-20'

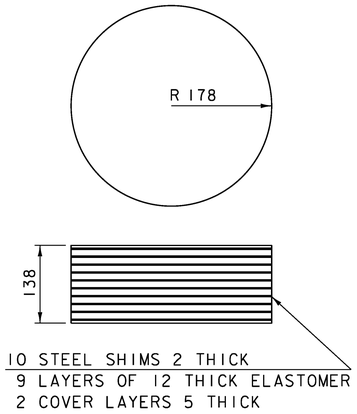

REINFORCED ELASTOMERIC PAD

Design Load (kN)	Service Limit State	Vertical	Max	507
			Min	158
			Permanent	197
			Transverse	60
			Longitudinal	40
	Strength Limit State		Vertical	803
			Transverse	90
			Longitudinal	70
Translation (mm)	Service Limit State	Irreversible	Transverse	0
			Longitudinal	6
		Reversible	Transverse	13
			Longitudinal	49
Rotation (rad)	Service Limit State	Irreversible	Transverse	0.005
			Longitudinal	0.008
		Reversible	Transverse	0.000
			Longitudinal	0.004

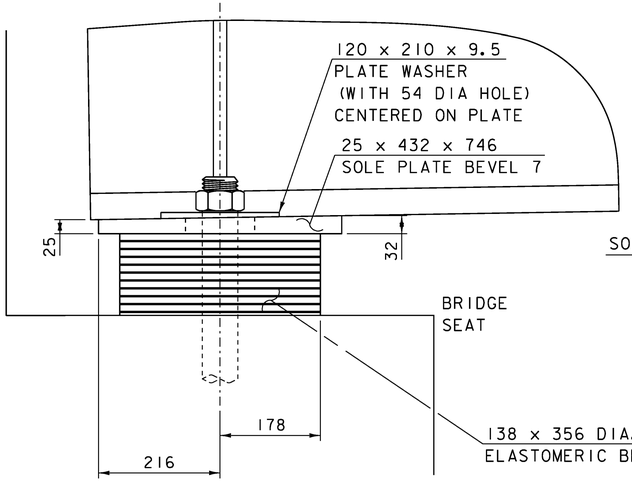

ELEVATION

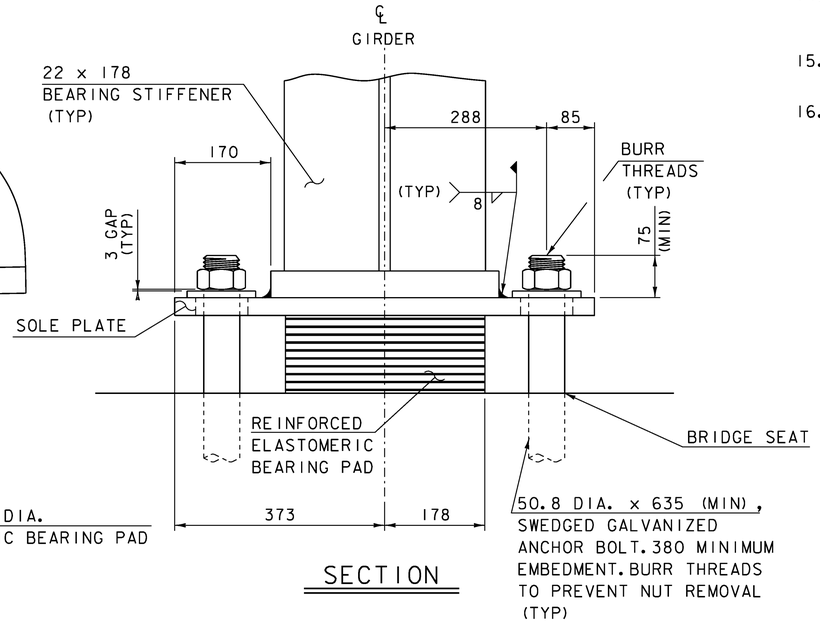

SECTION

BEARING NOTES

1. BEARINGS SHALL CONFORM TO APPLICABLE SUBSECTIONS OF SECTIONS 531 AND 731.
2. ABUTMENT BEARINGS SHALL BE PAID FOR UNDER THE APPLICABLE ITEM 531.17 "BEARING DEVICE ASSEMBLY, STEEL REINFORCED ELASTOMERIC PAD."
3. PIER BEARINGS SHALL BE PAID FOR UNDER ITEM 531.15 "BEARING DEVICE ASSEMBLY, HIGH LOAD MULTI-ROTATIONAL."
4. ANCHOR BOLTS, INCLUDING DRILLING AND GROUTING, WASHERS AND NUTS SHALL BE INCLUDED IN THE UNIT PRICE BID FOR THE CORRESPONDING BEARING DEVICE ITEM.
5. ALL WASHERS SHALL BE 9.5MM PLATE (MINIMUM).
6. ALL POTS, PLATES, NUTS, WASHERS AND ANCHOR BOLTS, UNLESS NOTED OTHERWISE, SHALL BE GALVANIZED OR METALIZED AS PER SUBSECTION 531.04(B). IF THE BEARINGS ARE METALIZED, THEY SHALL BE SEALED WITH AN APPROVED SEALER AS SPECIFIED IN SUBSECTION 726.09(d. AREAS OF GALVANIZING OR METALIZING DAMAGED BY FIELD WELDING OR HANDLING SHALL BE REPAIRED IN CONFORMANCE WITH SUBSECTION 726.08. THE INSIDE OF THE POTS SHALL NOT BE GALVANIZED OR METALIZED. ABUTMENT 2 BEARING COMPONENTS NEED NOT BE GALVANIZED OR METALIZED.
7. THE STEEL SOLE PLATES SHALL BE HOT BONDED TO THE REINFORCED ELASTOMERIC PAD DURING THE VULCANIZATION PROCESS. ALL REQUIRED FABRICATION OF BEARINGS SHALL OCCUR BEFORE THE VULCANIZATION PROCESS. THE STEEL SURFACES TO BE BONDED TO THE PAD SHALL NOT BE METALIZED.
8. ALL STEEL IN BEARING DEVICES SHALL BE AASHTO M270M/M270 GRADE 345, UNLESS NOTED OTHERWISE.
9. ANCHOR BOLTS SHALL BE ASTM A-449, TYPE I WITH A YIELD STRENGTH OF 400 MPA AND HAVE A MINIMUM EMBEDMENT OF 380MM INTO THE CONCRETE AND SHALL CONFORM TO SUBSECTION 714.08.
10. ALL REINFORCEMENT BETWEEN LAYERS OF ELASTOMERIC SHALL BE STEEL AASHTO M270M/M270 GRADE 250. ALL INTERNAL STEEL PLATES SHALL BE SAND BLASTED AND FREE OF COATINGS, RUST AND MILL SCALE. THE PLATES SHALL BE FREE OF SHARP EDGES AND BURRS.
11. THE ELASTOMER WAS DESIGNED WITH A SHEAR MODULUS RANGE = 0.65 TO 0.90 MPa.
12. THE ELASTOMER AT ABUTMENT 1 SHALL MEET THE REQUIREMENTS OF LOW TEMPERATURE ZONE D, GRADE 4.
13. THE CONCRETE UNDER THE BEARING DEVICE SHALL BE LEVEL.
14. THE CONNECTION BETWEEN THE HIGH LOAD MULTI-ROTATIONAL BEARING AND SOLE PLATE AND THE HIGH LOAD MULTI-ROTATIONAL BEARING AND THE MASONRY PLATE SHALL BE DESIGNED AND DETAILED BY THE BEARING SUPPLIER.
15. ALL DESIGNS DONE FOR THE BEARINGS SHALL BE PER THE AASHTO LRFD BRIDGE DESIGN SPECIFICATIONS 4TH EDITION AND ITS LATEST REVISIONS.
16. ALL BEARINGS SHALL BE MARKED PRIOR TO SHIPPING. THE MARKS SHALL INCLUDE THE BEARING LOCATION ON THE BRIDGE AND A DIRECTION ARROW THAT POINTS UP-STATION. ALL MARKS SHALL BE PERMANENT AND BE VISIBLE AFTER THE BEARING IS INSTALLED.

0 0.25 0.50

SCALE = 1:5

PROJECT NAME: CAMBRIDGE
PROJECT NUMBER: BRF 027-1(4)

FILE NAME: \s78f163brg.dgn
PROJECT LEADER: M. EVANS-MONGEON
DESIGNED BY: T. FILLBACH
EXPANSION BEARING ABUTMENT #1

PLOT DATE: 05-JUN-2012
DRAWN BY: R. PELLETT
CHECKED BY: T. FILLBACH
SHEET 168 OF 214

Metric

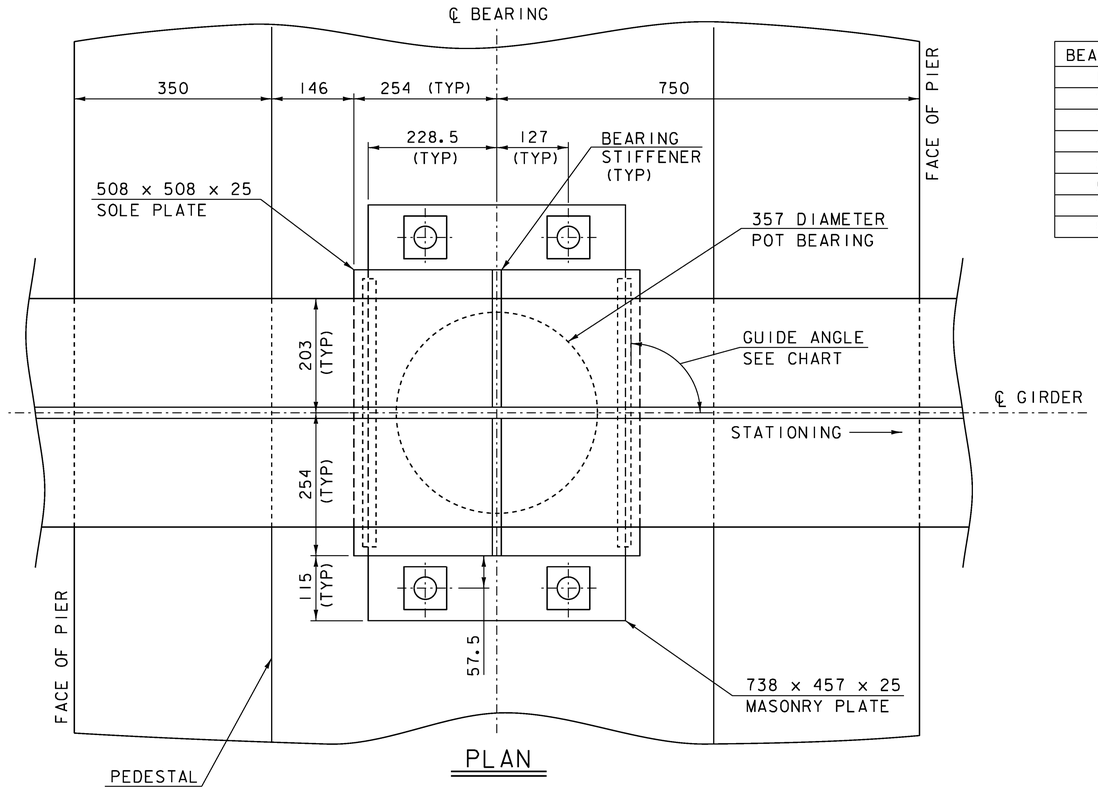

PLAN

BEARING	GUIDE ANGLE
1	166°-15′
2	171°-25′
3	176°-45′
4	182°-10′
5	90°-00′
6	NONE
7	NONE
8	90°-00′

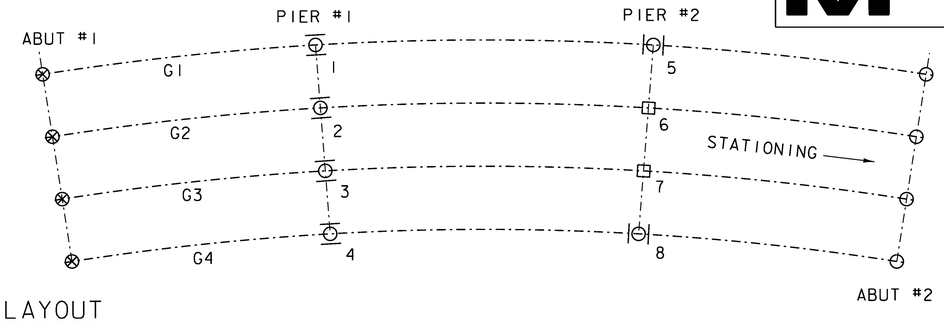

BEARING LAYOUT

LEGEND	
□	FIXED POT BEARING
⊙	GUIDED POT BEARING
○	INTEGRAL ABUTMENT BEARING
⊗	ELASTOMERIC BEARING

Design Load (kN)	Service Limit State	Vertical	Max	1807
			Min	621
			Permanent	651
			Transverse	314
			Longitudinal	40
	Strength Limit State		Vertical	2840
			Transverse	550
			Longitudinal	168
Translation (mm)	Service Limit State	Irreversible	Transverse	0
			Longitudinal	3
		Reversible	Transverse	7
			Longitudinal	29
Rotation (rad)	Service Limit State	Irreversible	Transverse	0.005
			Longitudinal	0.006
		Reversible	Transverse	0.000
			Longitudinal	0.003

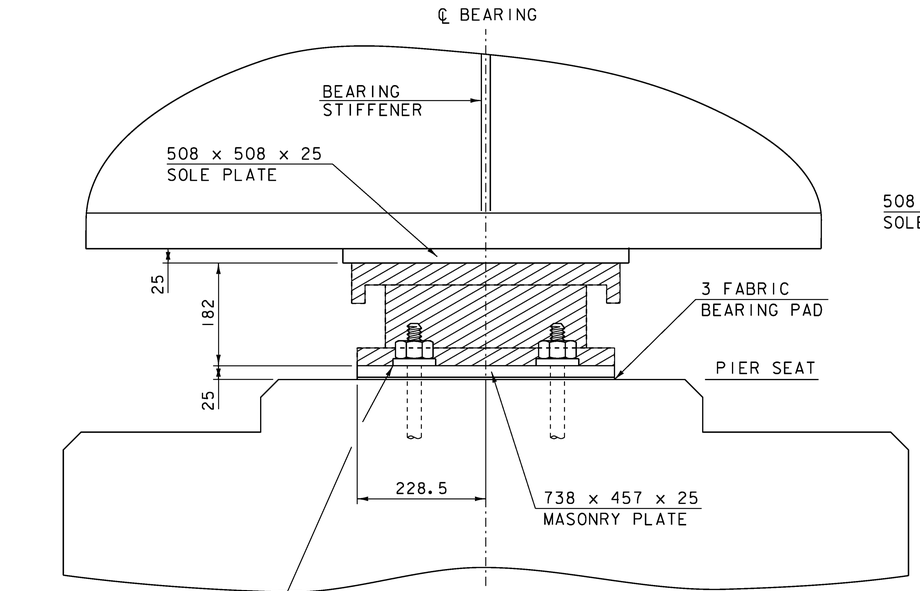

ELEVATION

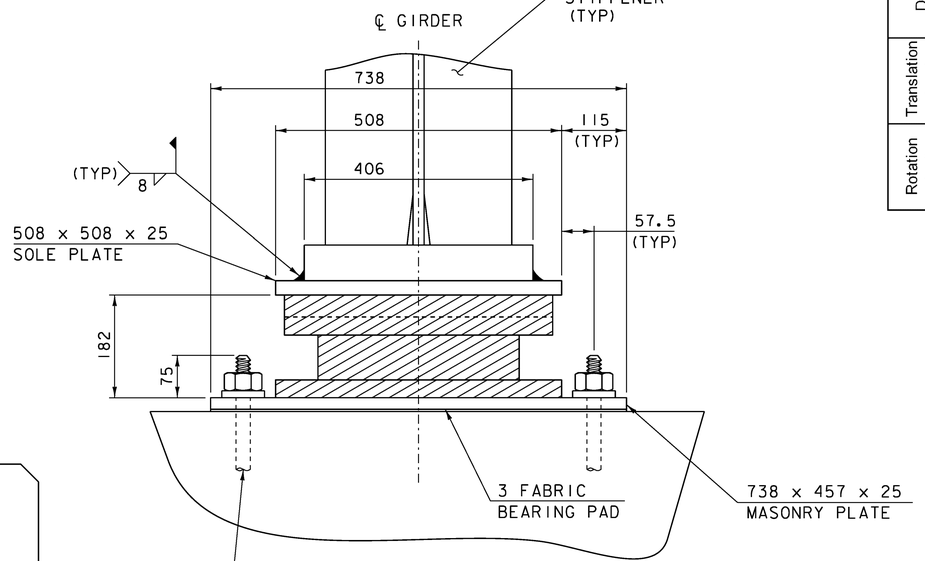

SECTION

* THE CROSS HATCHED COMPONENTS OF THE POT BEARINGS ARE SHOWN FOR REPRESENTATIVE PURPOSES ONLY. THE ACTUAL CONFIGURATION OF THE COMPONENTS WILL BE DEPENDENT UPON THE BEARING FABRICATOR.

SEE ABUTMENT #1 BEARING SHEET FOR ADDITIONAL NOTES.

0 0.25 0.50

SCALE = 1:5

PROJECT NAME: CAMBRIDGE
PROJECT NUMBER: BRF 027-1(4)

FILE NAME: s78f163brg.dgn
PROJECT LEADER: M. EVANS-MONGEON
DESIGNED BY: T. FILLBACH
HIGH LOAD MULTI-ROTATIONAL BEARING

PLOT DATE: 05-JUN-2012
DRAWN BY: R. PELLETT
CHECKED BY: T. FILLBACH
SHEET 169 OF 214

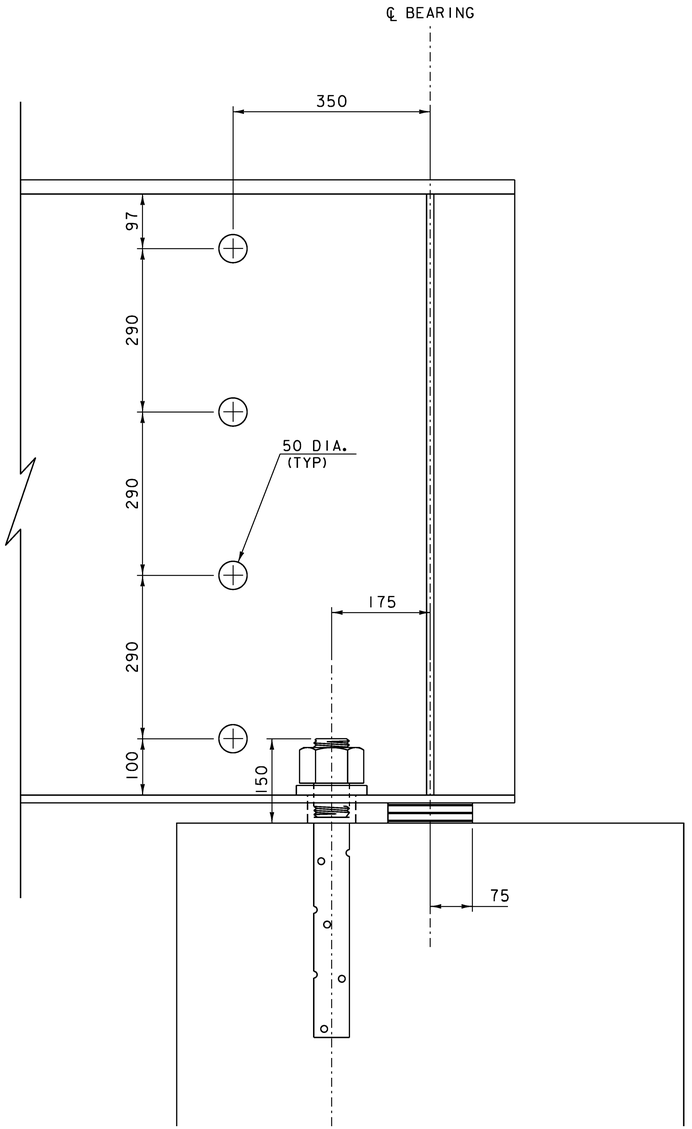

BEARING ELEVATION

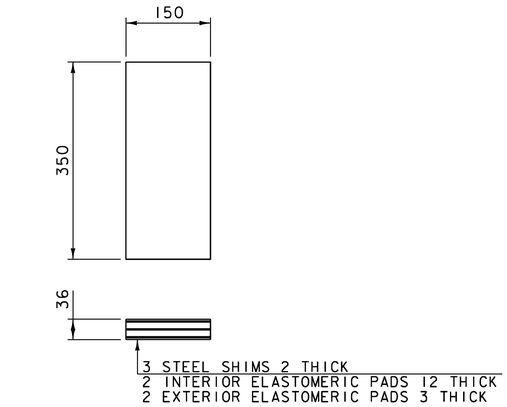

BEARING PAD DETAIL

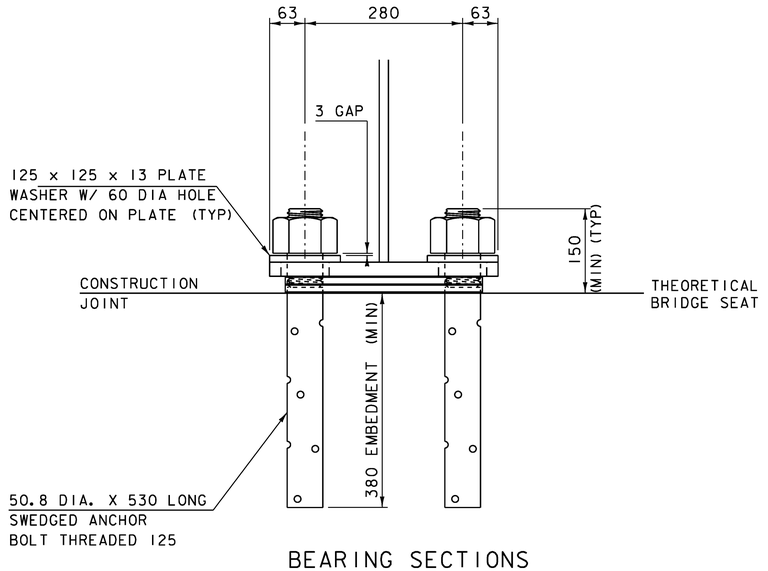

BEARING SECTIONS

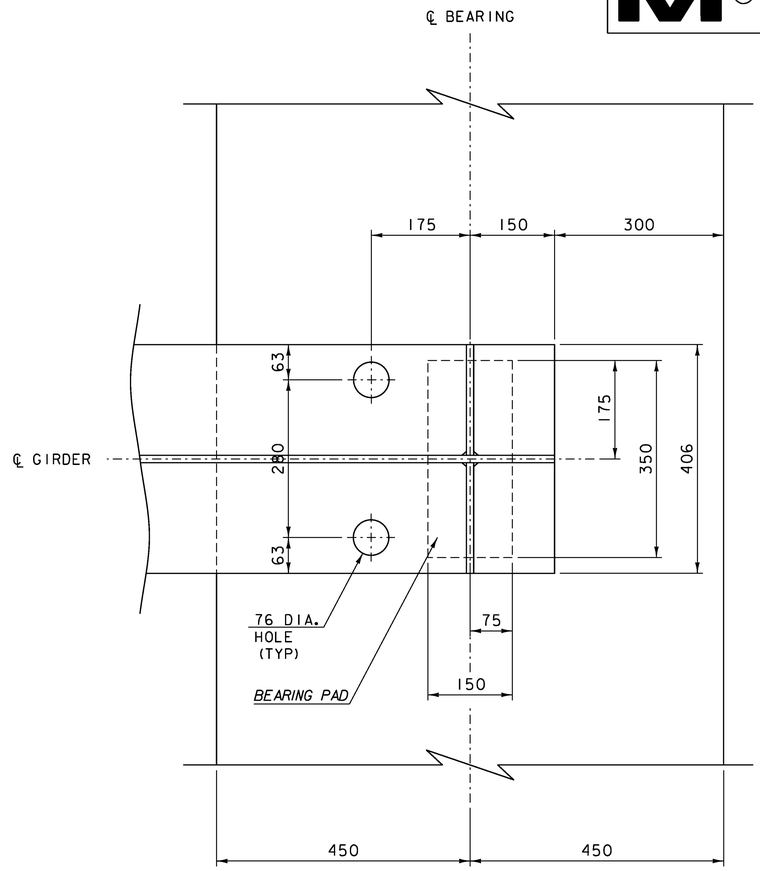

BEARING PLAN

SEE ABUTMENT #1 BEARING SHEET FOR NOTES.

0 0.25 0.50

SCALE = 1:5

PROJECT NAME: CAMBRIDGE	
PROJECT NUMBER: BRF 027-1(4)	
FILE NAME: s78f163brg.dgn	PLOT DATE: 05-JUN-2012
PROJECT LEADER: M. EVANS-MONGEON	DRAWN BY: R. PELLETT
DESIGNED BY: T. FILLBACH	CHECKED BY: T. FILLBACH
INTEGRAL ABUTMENT BEARING DETAILS	SHEET 170 OF 214

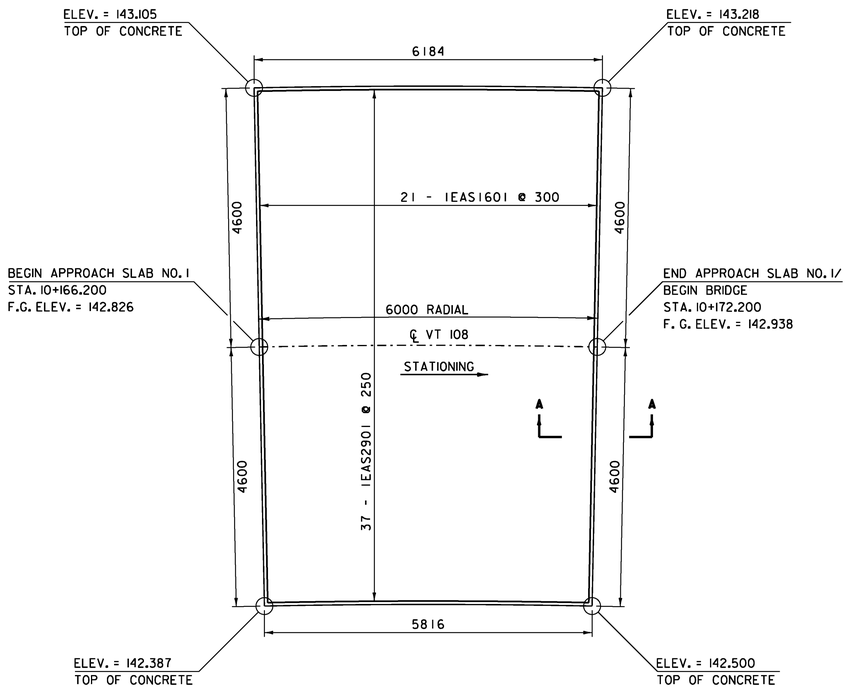

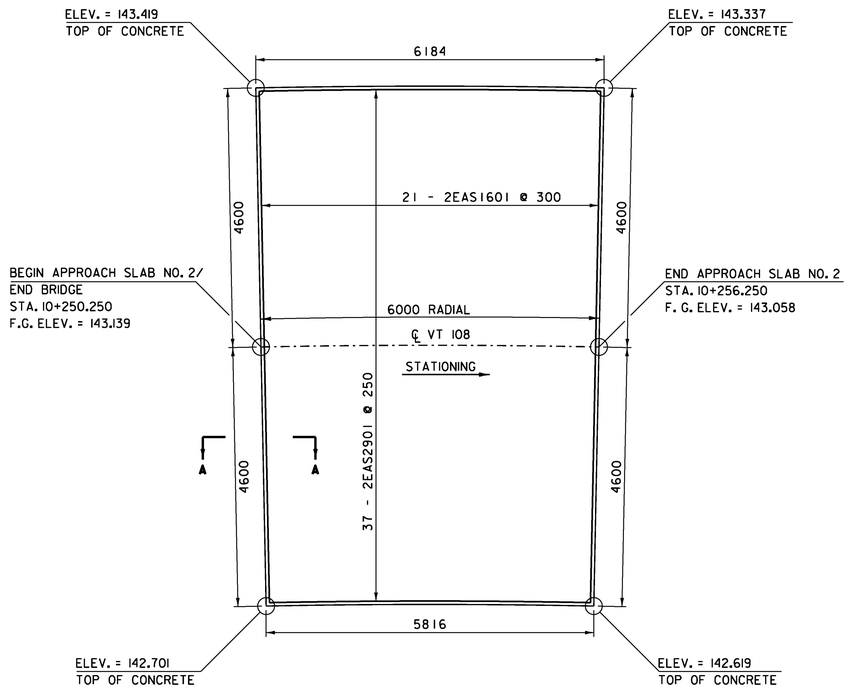

APPROACH SLAB NO. 1

0 1 2 3 4 5

SCALE = 1:50

APPROACH SLAB NO. 2

0 1 2 3 4 5

SCALE = 1:50

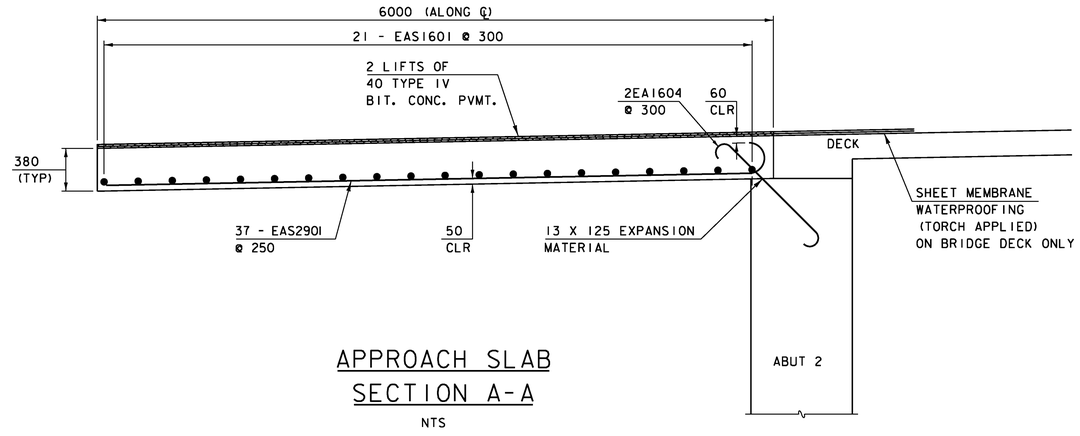

APPROACH SLAB SECTION A-A

NTS

NOTE:

NF = NEAR FACE
FF = FAR FACE
EF = EACH FACE
▲ = CUT TO FIT IN FIELD
60 CLR. UNLESS OTHERWISE SPECIFIED ON THE PLANS.

PROJECT NAME:	CAMBRIDGE
PROJECT NUMBER:	BRF 027-1(4)

FILE NAME:	78f163super.dgn	PLOT DATE: 05-JUN-2012
PROJECT LEADER:	M. EVANS-MONGEON	DRAWN BY: R. PELLETT
DESIGNED BY:	T. FILLBACH	CHECKED BY: T. FILLBACH
APPROACH SLAB		SHEET 171 OF 214

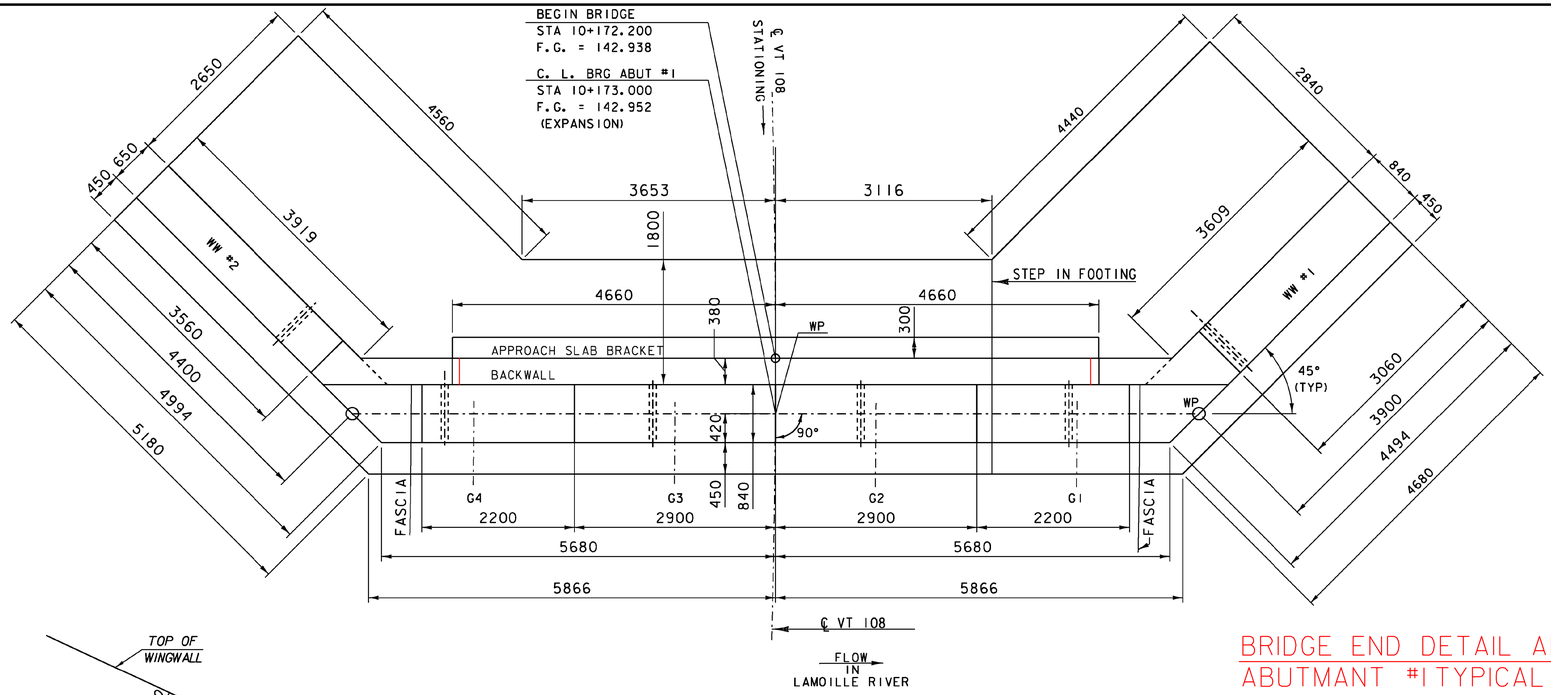

ABUTMENT #1 PLAN

0 1 2 3 4

SCALE = 1:40

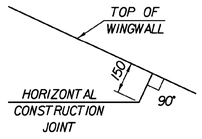

DETAIL A

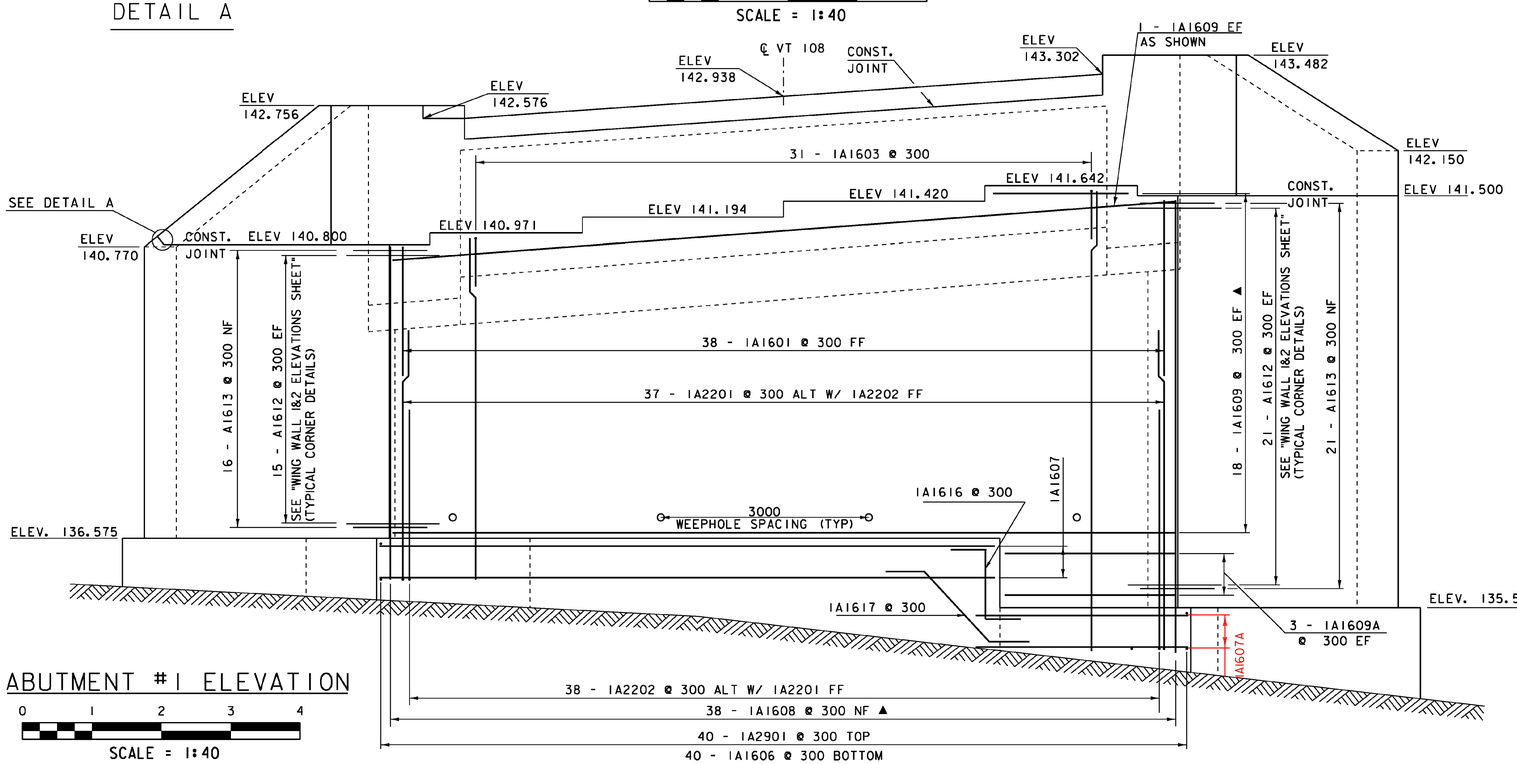

ABUTMENT #1 ELEVATION

0 1 2 3 4

SCALE = 1:40

BRIDGE END DETAIL AND ABUTMANT #1 TYPICAL SECTION

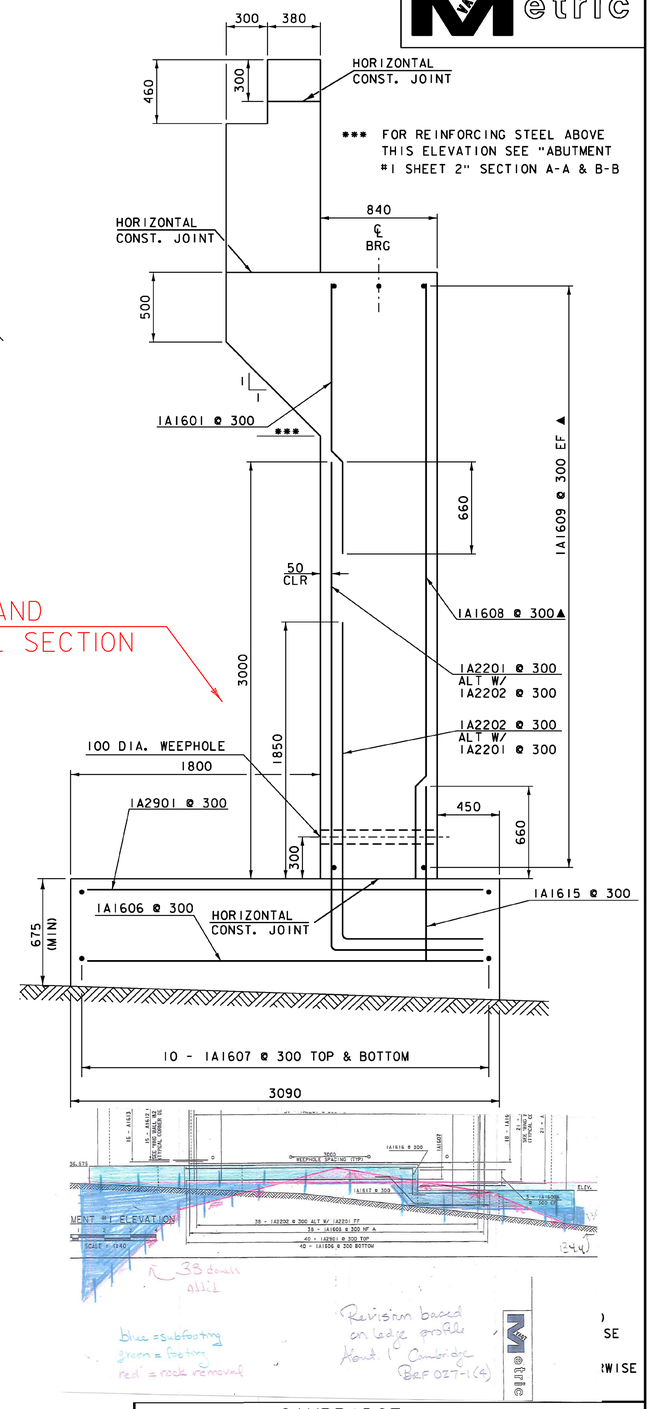

PROJECT NAME:	CAMBRIDGE
PROJECT NUMBER:	BRF 027-1(4)

FILE NAME:	78f163subst.dgn	PLOT DATE:	05-JUN-2012
PROJECT LEADER:	M. EVANS-MONGEON	DRAWN BY:	R. PELLETT
DESIGNED BY:	T. FILLBACH	CHECKED BY:	T. FILLBACH
ABUTMENT #1 SHEET 1		SHEET 172	OF 214

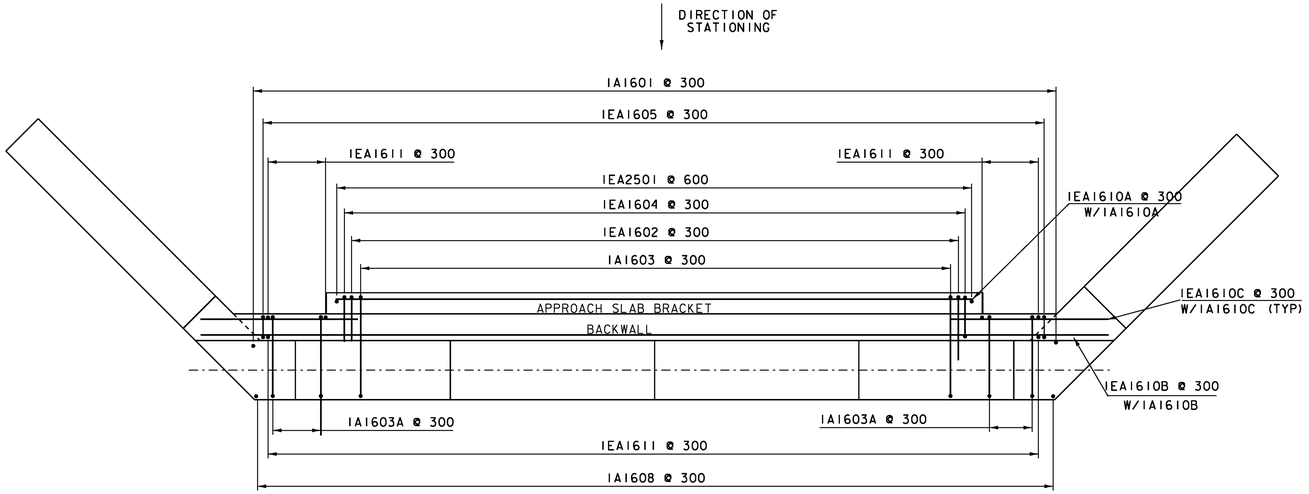

ABUTMENT #1 BACKWALL PLAN

0 1 2 3 4

SCALE = 1:40

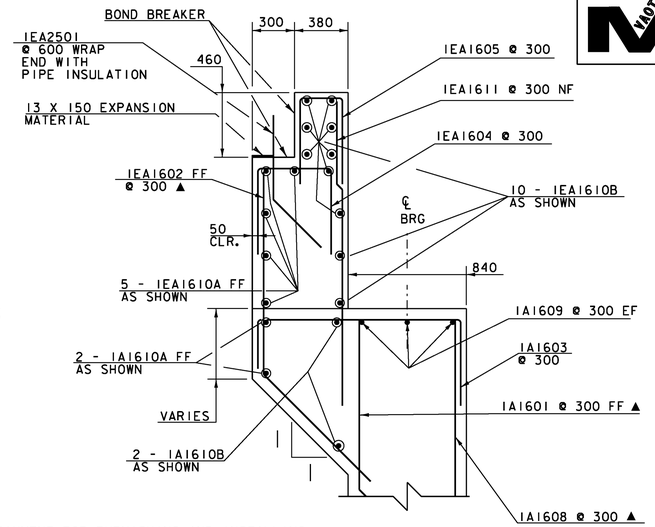

NOTE: PAYMENT FOR FURNISHING AND INSTALLING BOND BREAKER, PIPE INSULATION, AND EXPANSION MATERIAL WILL BE INCIDENTAL TO THE ADJACENT CONCRETE ITEM.

SECTION A-A BACKWALL

0 1 2

SCALE = 1:20

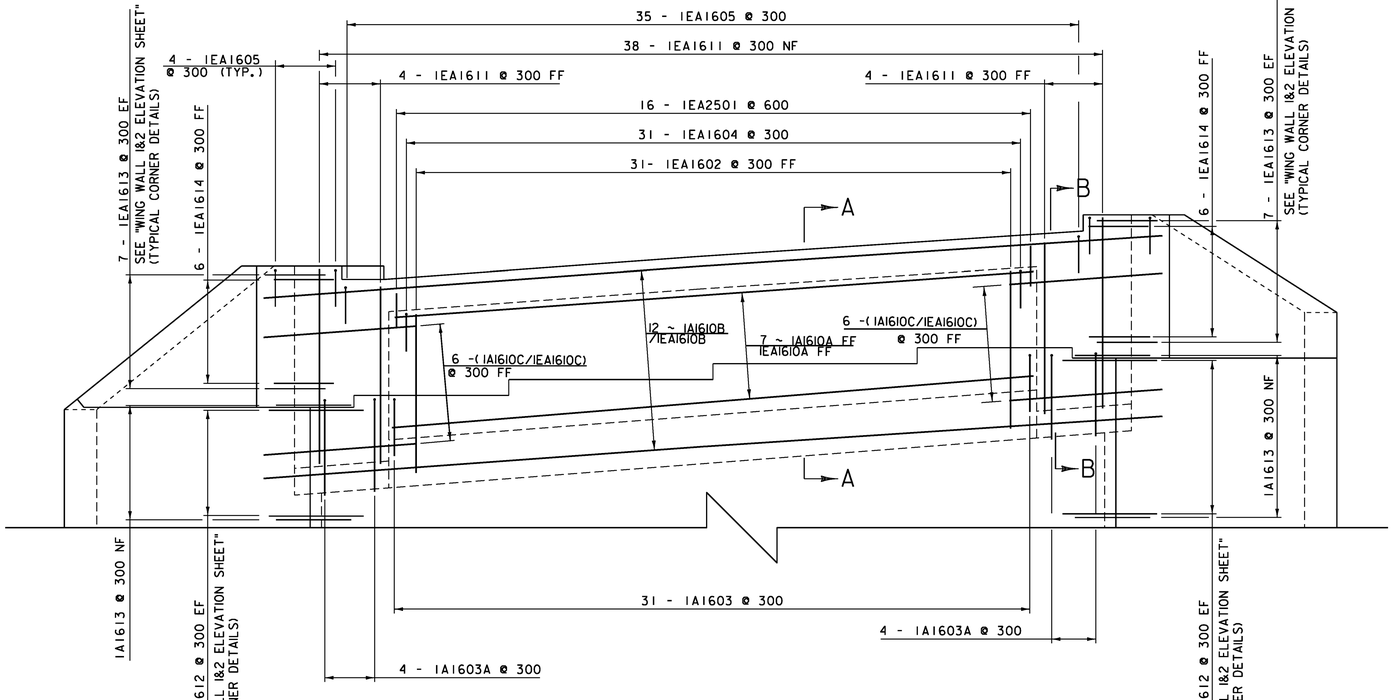

ABUTMENT #1 BACKWALL ELEVATION

0 1 2 3 4

SCALE = 1:40

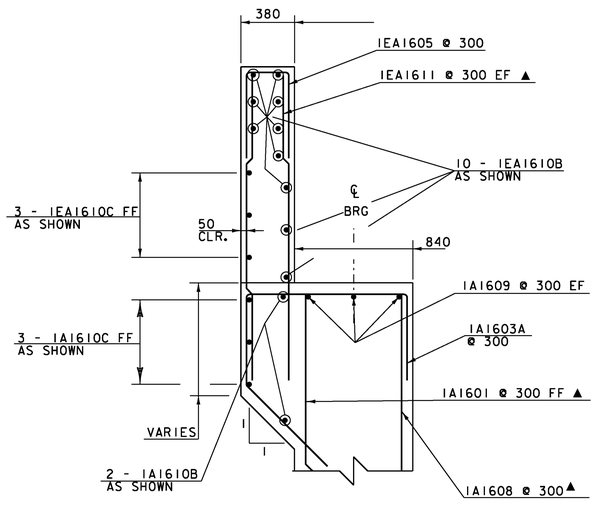

SECTION B-B BACKWALL

0 1 2

SCALE = 1:20

NOTE:

NF = NEAR FACE
FF = FAR FACE
EF = EACH FACE
▲ = CUT TO FIT IN FIELD
80 CLEAR, UNLESS OTHERWISE SPECIFIED ON THE PLANS.
660 BAR LAP UNLESS OTHERWISE SPECIFIED ON THE PLANS.

PROJECT NAME:	CAMBRIDGE		
PROJECT NUMBER:	BRF 027-1(4)		
FILE NAME:	78f163subst.dgn	PLOT DATE:	05-JUN-2012
PROJECT LEADER:	M. EVANS-MONGEON	DRAWN BY:	R. PELLETT
DESIGNED BY:	T. FILLBACH	CHECKED BY:	T. FILLBACH
ABUTMENT #1SHEET 2		SHEET 173	OF 214

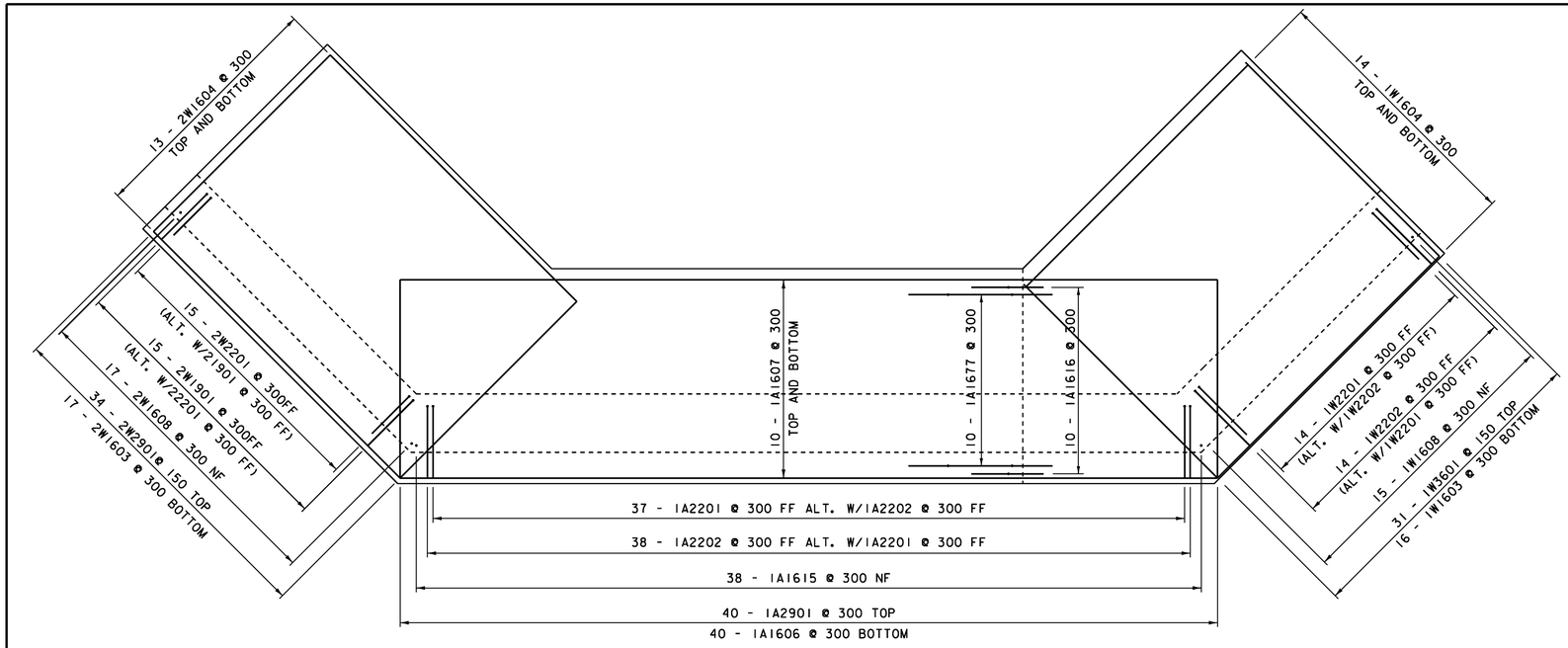

ABUTMENT #1 FOOTING REINFORCING PLAN

0 1 2 3 4
SCALE = 1:40

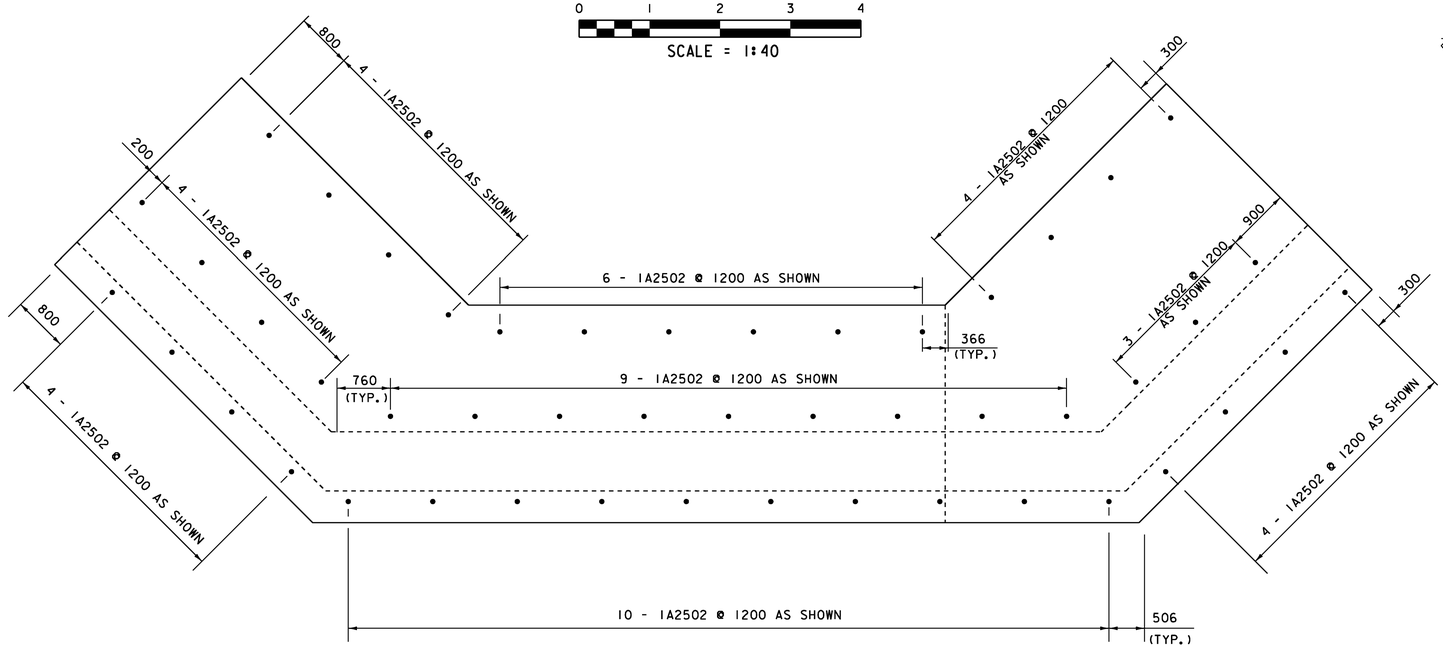

ABUTMENT #1 DOWEL PLAN

0 1 2 3 4
SCALE = 1:40

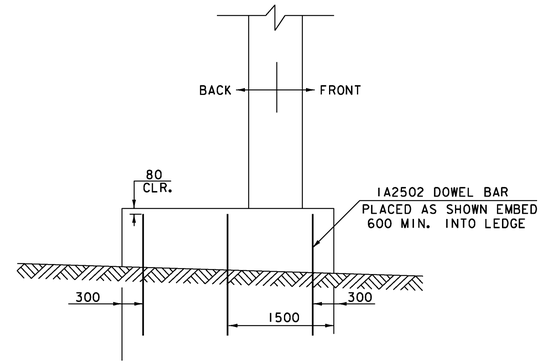

SUBSTRUCTURE FOOTING ANCHORAGE DETAIL

0 1 2 3 4
SCALE = 1:40

NOTE:
NF = NEAR FACE
FF = FAR FACE
EF = EACH FACE
▲ = CUT TO FIT IN FIELD
80 CLEAR, UNLESS OTHERWISE SPECIFIED ON THE PLANS.
660 BAR LAP UNLESS OTHERWISE SPECIFIED ON THE PLANS.

PROJECT NAME:	CAMBRIDGE		
PROJECT NUMBER:	BRF 027-1(4)		
FILE NAME:	78f163subst.dgn	PLOT DATE:	05-JUN-2012
PROJECT LEADER:	M. EVANS-MONGEON	DRAWN BY:	R. PELLETT
DESIGNED BY:	T. FILLBACH	CHECKED BY:	T. FILLBACH
ABUTMENT #1SHEET	3	SHEET	174 OF 214

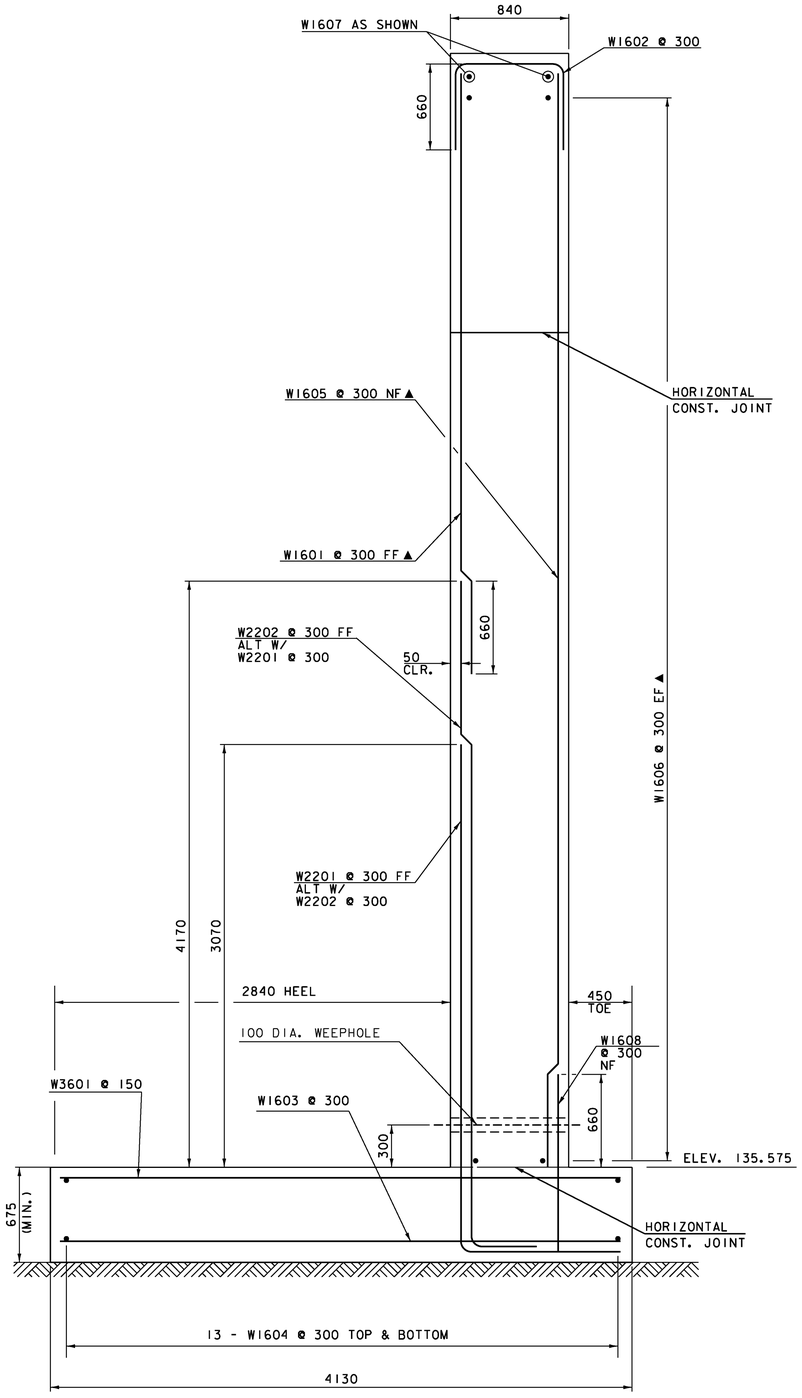

WINGWALL #1
TYPICAL SECTION

0 1 2

SCALE = 1:20

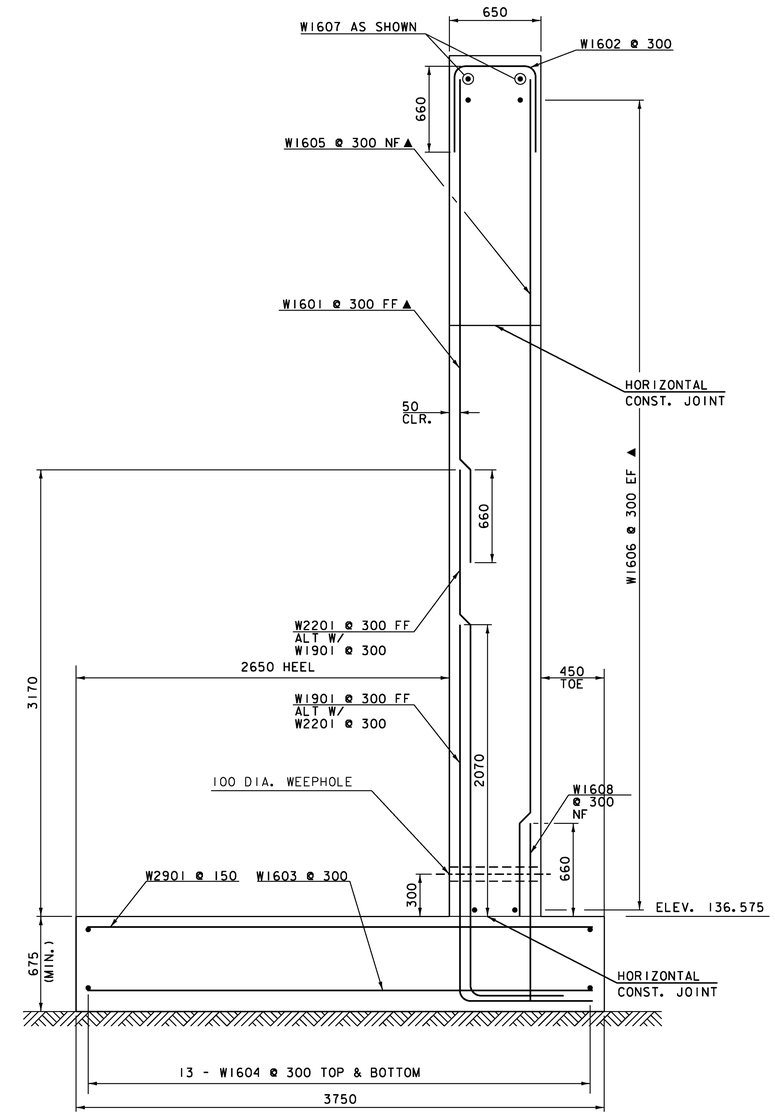

WINGWALL #2
TYPICAL SECTION

0 1 2

SCALE = 1:20

NOTE:

NF = NEAR FACE
FF = FAR FACE
EF = EACH FACE
▲ = CUT TO FIT IN FIELD
80 CLEAR, UNLESS OTHERWISE SPECIFIED ON THE PLANS.
660 BAR LAP UNLESS OTHERWISE SPECIFIED ON THE PLANS.

PROJECT NAME:	CAMBRIDGE		
PROJECT NUMBER:	BRF 027-1 (4)		
FILE NAME:	78f163subst.dgn	PLOT DATE:	05-JUN-2012
PROJECT LEADER:	M. EVANS-MONGEON	DRAWN BY:	R. PELLETT
DESIGNED BY:	T. FILLBACH	CHECKED BY:	T. FILLBACH
WINGWALLS #1 AND #2 TYPICAL SECTIONS		SHEET 175	OF 214

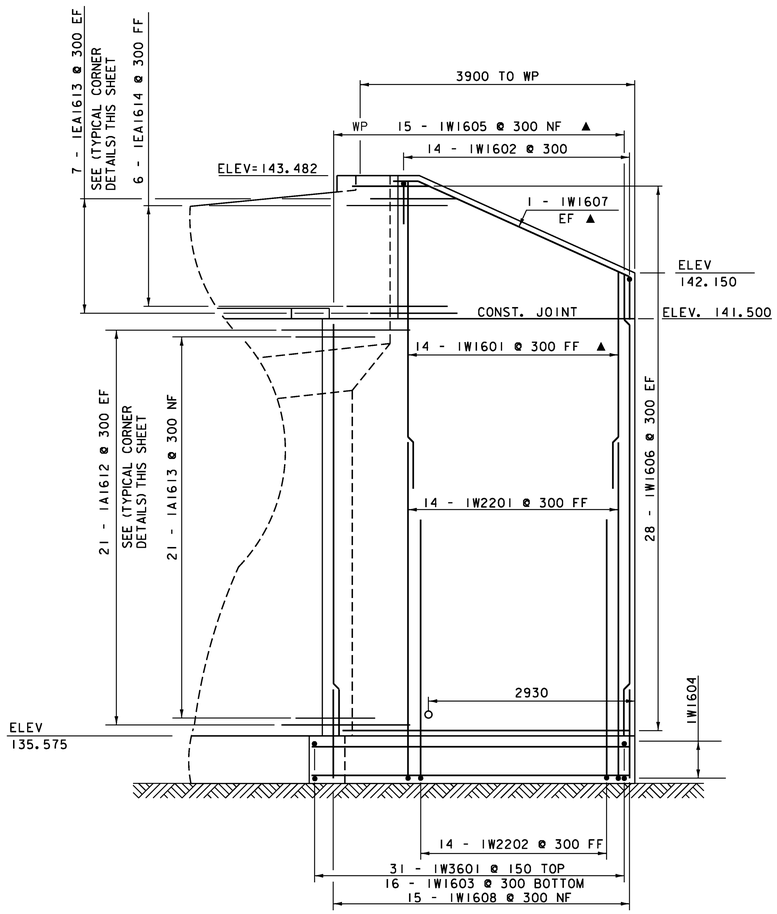

WINGWALL #1

0 1 2 3 4

SCALE = 1:40

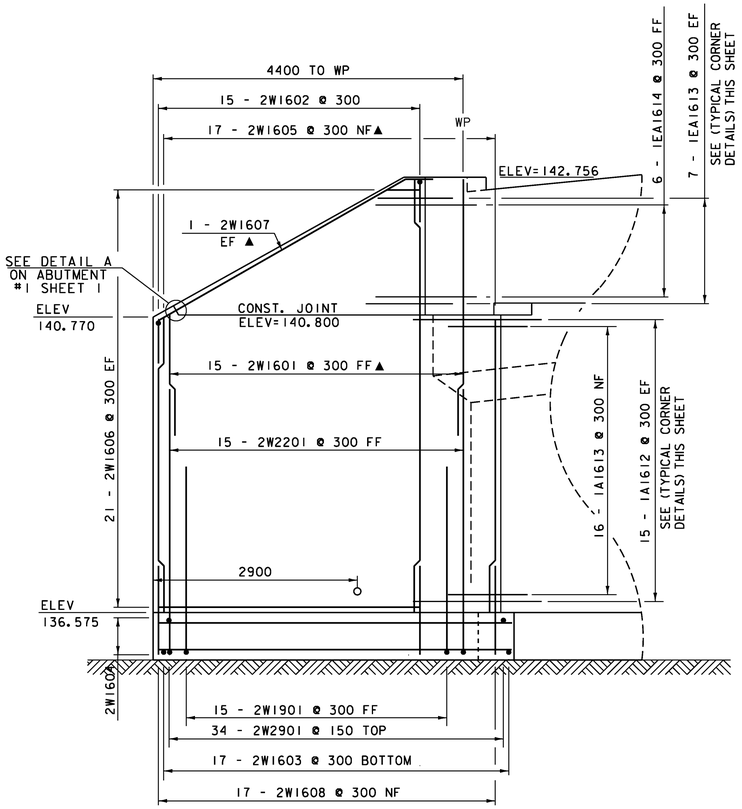

WINGWALL #2

0 1 2 3 4

SCALE = 1:40

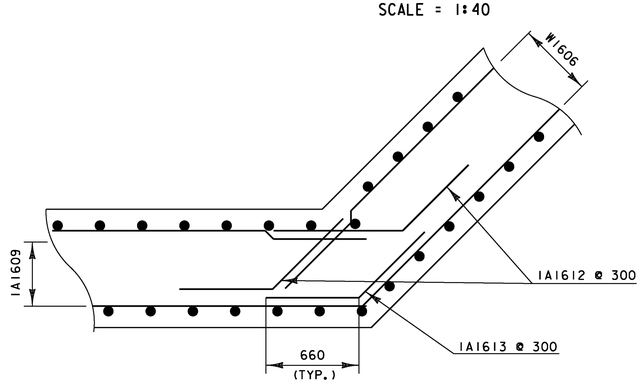

TYPICAL CORNER DETAIL (BELOW BRIDGE SEAT)

NTS

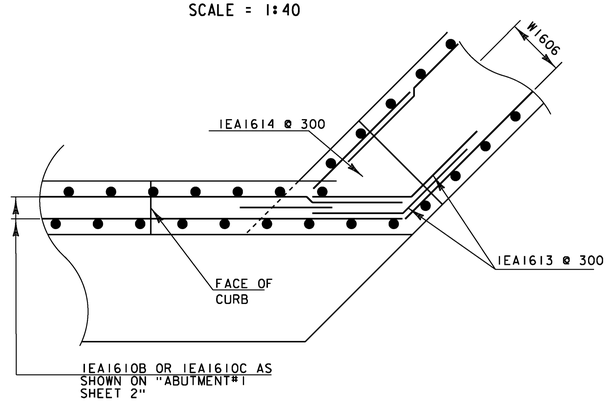

TYPICAL CORNER DETAIL (ABOVE BRIDGE SEAT)

NTS

0 1 2 3 4

SCALE = 1:40

NOTE:

NF = NEAR FACE
FF = FAR FACE
EF = EACH FACE
▲ = CUT TO FIT IN FIELD
80 CLEAR, UNLESS OTHERWISE SPECIFIED ON THE PLANS.
660 BAR LAP UNLESS OTHERWISE SPECIFIED ON THE PLANS.

PROJECT NAME:	CAMBRIDGE		
PROJECT NUMBER:	BRF 027-1(4)		
FILE NAME:	78f163subst.dgn	PLOT DATE:	05-JUN-2012
PROJECT LEADER:	M. EVANS-MONGEON	DRAWN BY:	R. PELLETT
DESIGNED BY:	T. FILLBACH	CHECKED BY:	T. FILLBACH
WINGWALLS #1 AND #2 ELEVATIONS		SHEET	176 OF 214

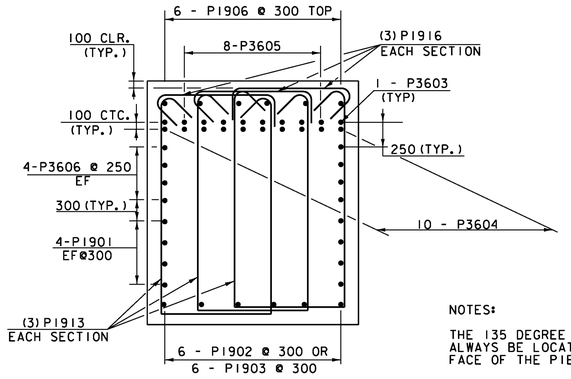

NOTES:

THE 135 DEGREE BEND ON BAR "P1916" SHALL ALWAYS BE LOCATED CLOSEST TO THE EXTERIOR FACE OF THE PIER CAP

SECTION B-B
PIER HEAD

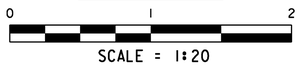

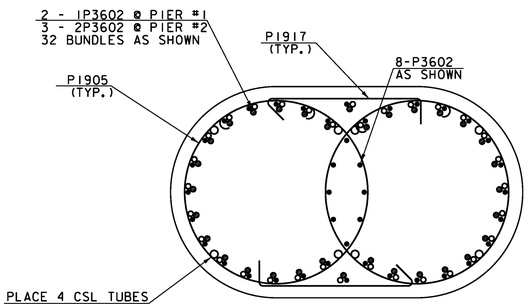

SECTION A-A
PIER STEM REINFORCING (TYP)

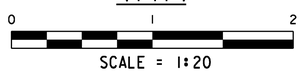

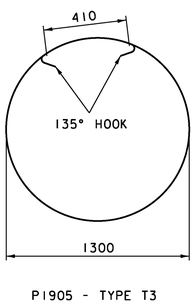

P1905 - TYPE T3

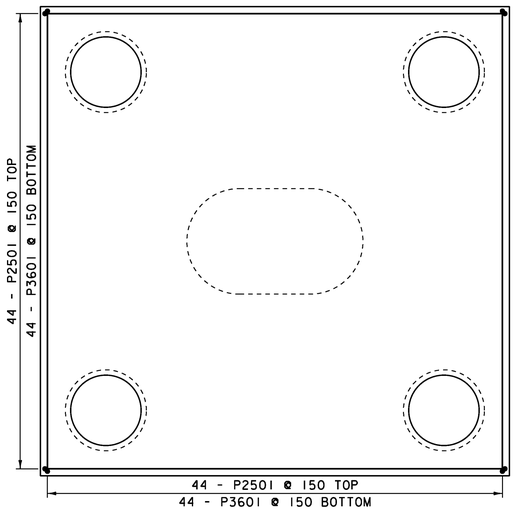

PIER FOOTING REINFORCING

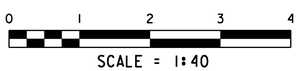

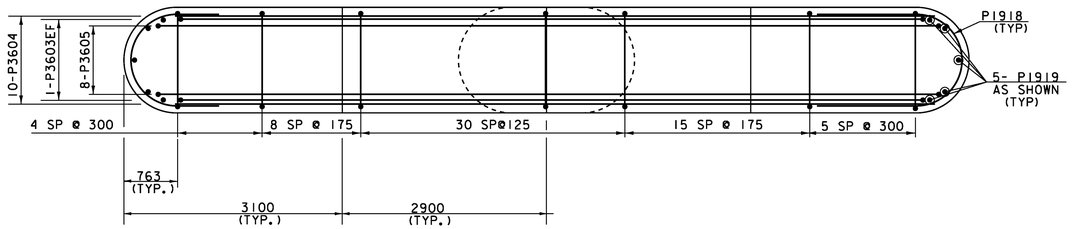

PIER HEAD REINFORCING

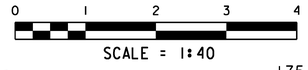

PIER ELEVATION REINFORCING

SEE PIER FOOTING AND SHAFTS SHEET FOR REINFORCING DETAILS

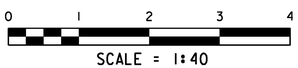

NOTE:

NF = NEAR FACE
FF = FAR FACE
EF = EACH FACE
▲ = CUT TO FIT IN FIELD
80 CLEAR, UNLESS OTHERWISE SPECIFIED ON THE PLANS.
660 BAR LAP UNLESS OTHERWISE SPECIFIED ON THE PLANS.

PROJECT NAME:	CAMBRIDGE		
PROJECT NUMBER:	BRF 027-1(4)		
FILE NAME:	78f163subst.dgn	PLOT DATE:	05-JUN-2012
PROJECT LEADER:	M. EVANS-MONGEON	DRAWN BY:	R. PELLETT
DESIGNED BY:	T. FILLBACH	CHECKED BY:	T. FILLBACH
PIER TYPICAL		SHEET	177 OF 214

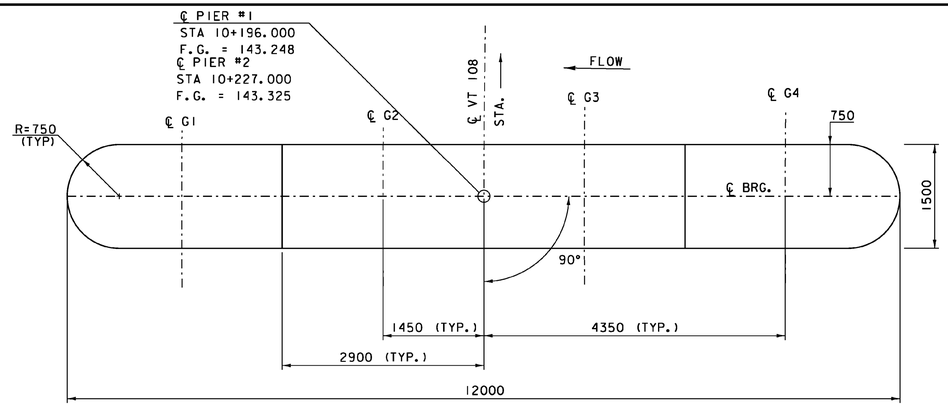

PIER HEAD

0 1 2 3 4

SCALE = 1:40

PIER #1 SEAT ELEVATIONS CHANGED VIA W.O. #35

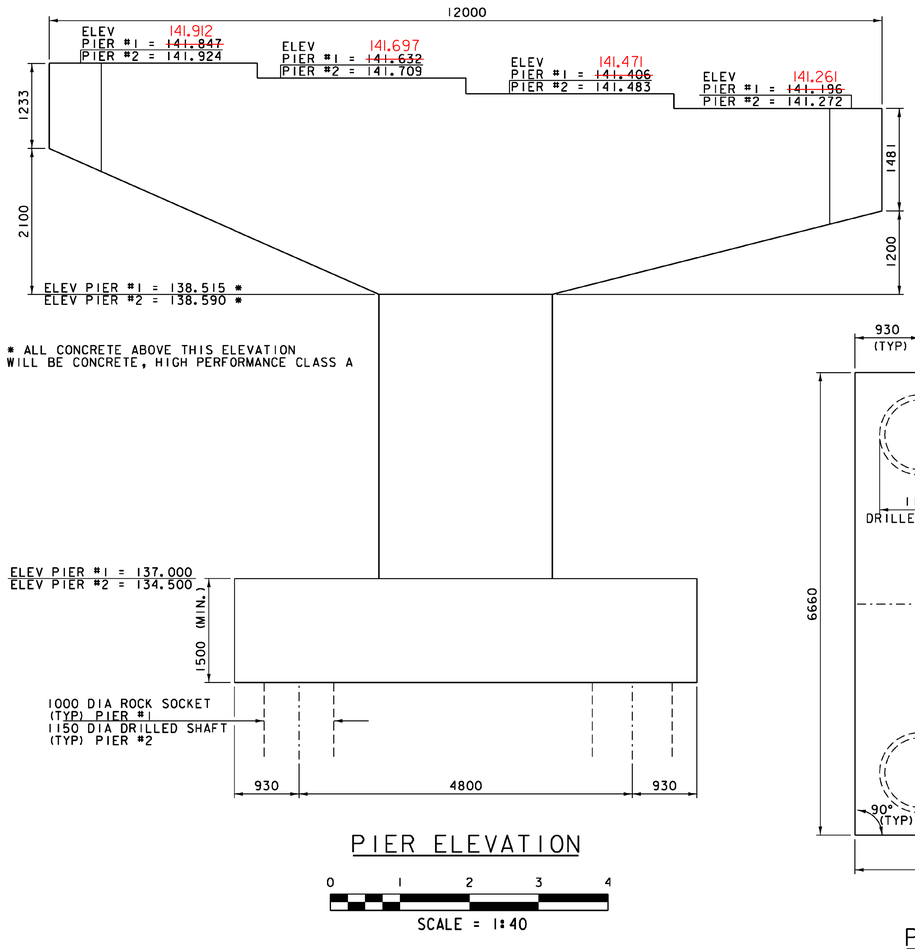

PIER ELEVATION

0 1 2 3 4

SCALE = 1:40

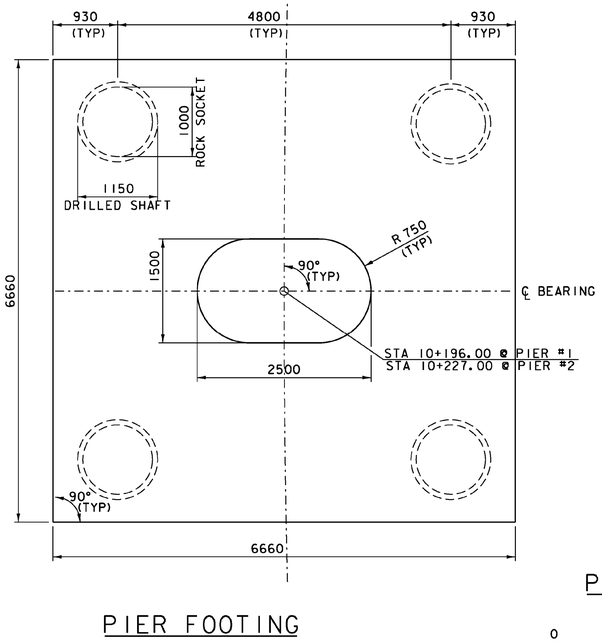

PIER FOOTING

0 1 2 3 4

SCALE = 1:40

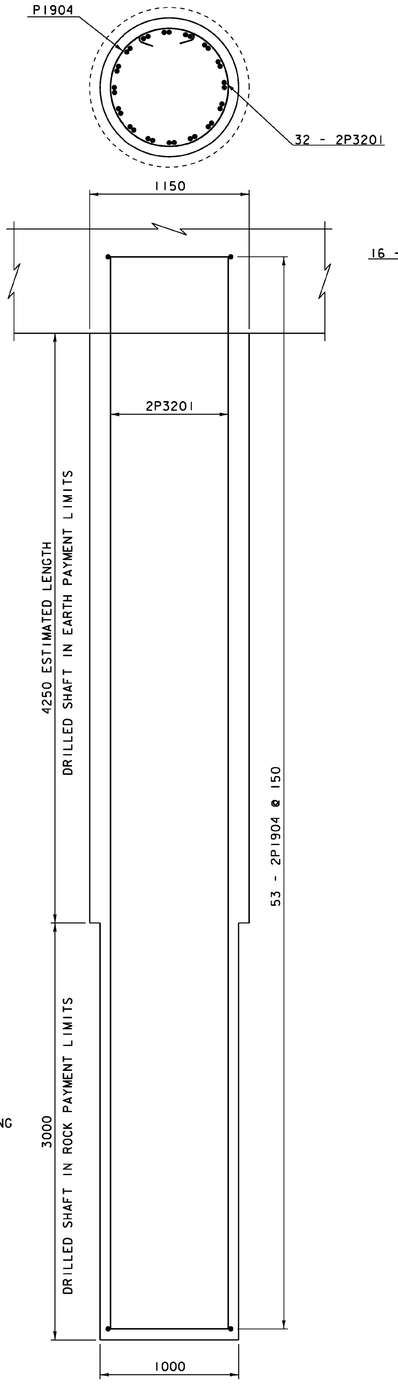

PIER #2 SHAFT REINFORCING

0 1 2

SCALE = 1:20

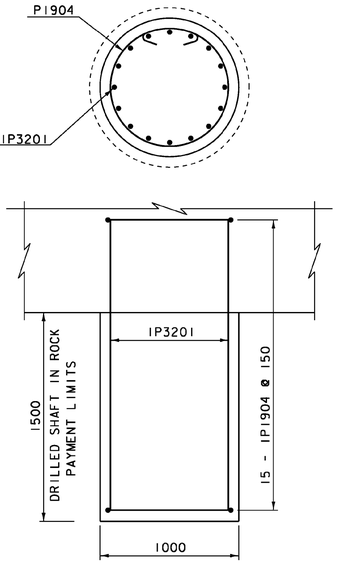

PIER #1 SHAFT REINFORCING

0 1 2

SCALE = 1:20

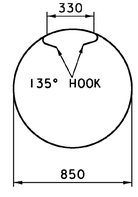

P1904 - TYPE T3

NOTE:

NF = NEAR FACE
FF = FAR FACE
EF = EACH FACE
▲ = CUT TO FIT IN FIELD
80 CLEAR, UNLESS OTHERWISE SPECIFIED ON THE PLANS.
660 BAR LAP UNLESS OTHERWISE SPECIFIED ON THE PLANS.

PROJECT NAME:	CAMBRIDGE
PROJECT NUMBER:	BRF 027-1(4)

FILE NAME:	78f163subst.dgn	PLOT DATE:	05-JUN-2012
PROJECT LEADER:	M. EVANS-MONGEON	DRAWN BY:	R. PELLETT
DESIGNED BY:	T. FILLBACH	CHECKED BY:	T. FILLBACH
PIER FOOTING & SHAFTS		SHEET	178 OF 214

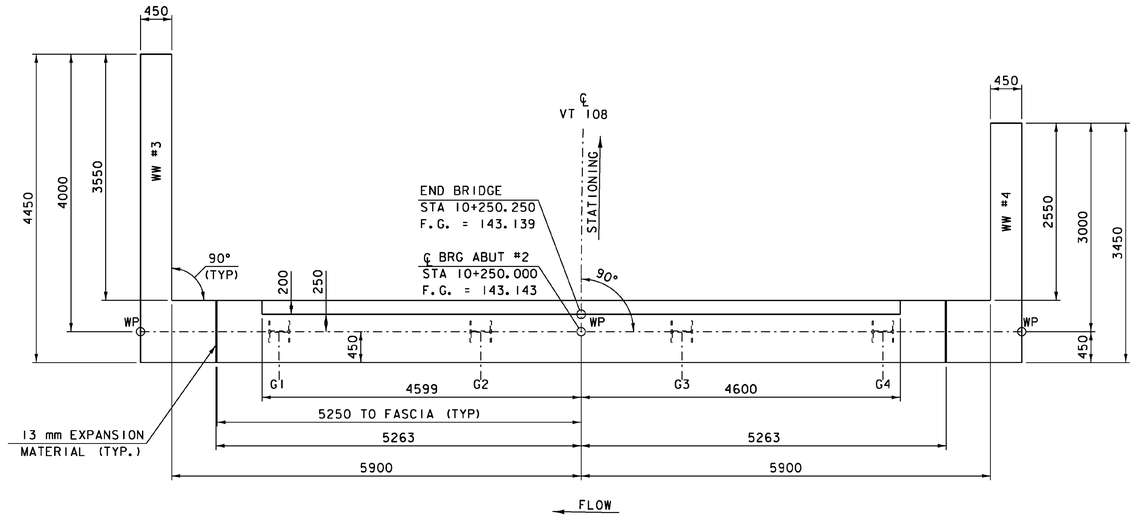

ABUTMENT #2 PLAN

0 1 2 3 4

SCALE = 1:40

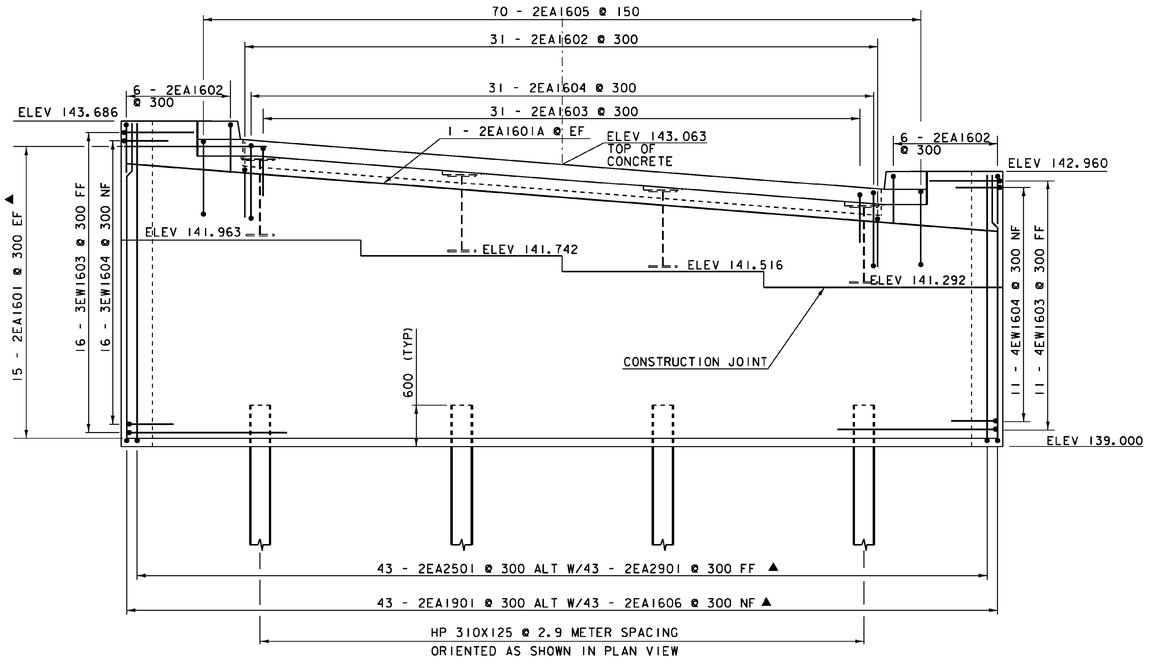

ABUTMENT #2 ELEVATION

0 1 2 3 4

SCALE = 1:40

*PLUG JOING MOVED TO END OF APPROACH SLAB STA.10+256.250
HOT POURED JOINT USED AT END OF BRIDGE

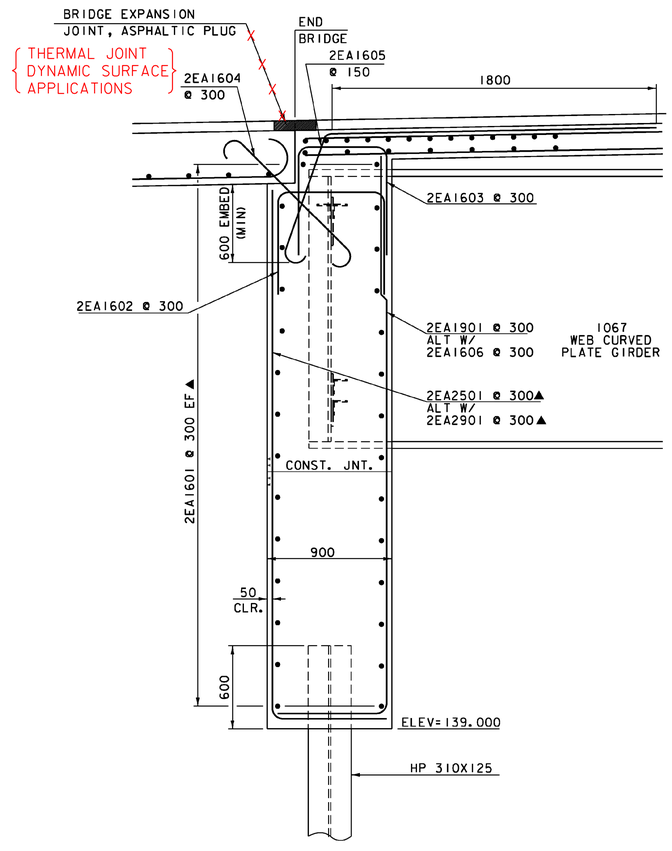

BRIDGE END DETAIL AND ABUTMENT #2 TYPICAL SECTION

0 1 2

SCALE = 1:20

NOTE:

NF = NEAR FACE
FF = FAR FACE
EF = EACH FACE
= CUT TO FIT IN FIELD
80 CLEAR, UNLESS OTHERWISE SPECIFIED ON THE PLANS.
▲ 660 BAR LAP UNLESS OTHERWISE SPECIFIED ON THE PLANS.

PROJECT NAME:	CAMBRIDGE		
PROJECT NUMBER:	BRF 027-1 (4)		
FILE NAME:	78f163subst.dgn	PLOT DATE:	05-JUN-2012
PROJECT LEADER:	M. EVANS-MONGEON	DRAWN BY:	R. PELLETT
DESIGNED BY:	T. FILLBACH	CHECKED BY:	T. FILLBACH
ABUTMENT #2		SHEET 179	OF 214

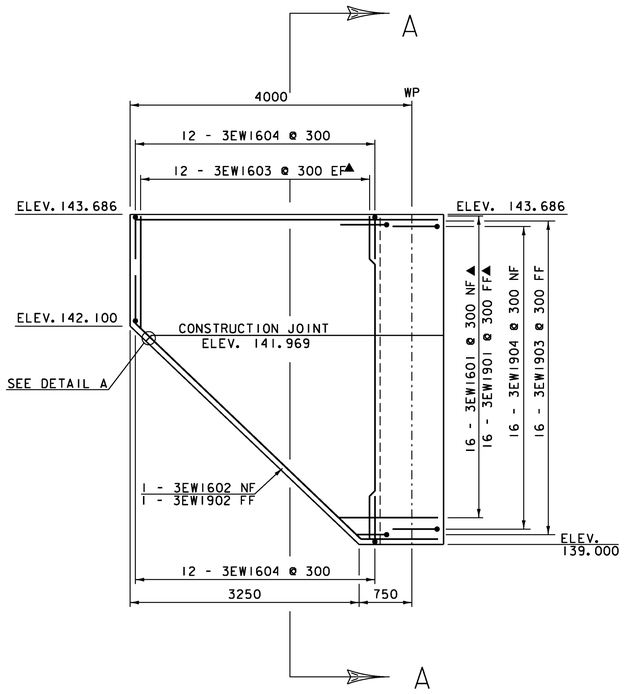

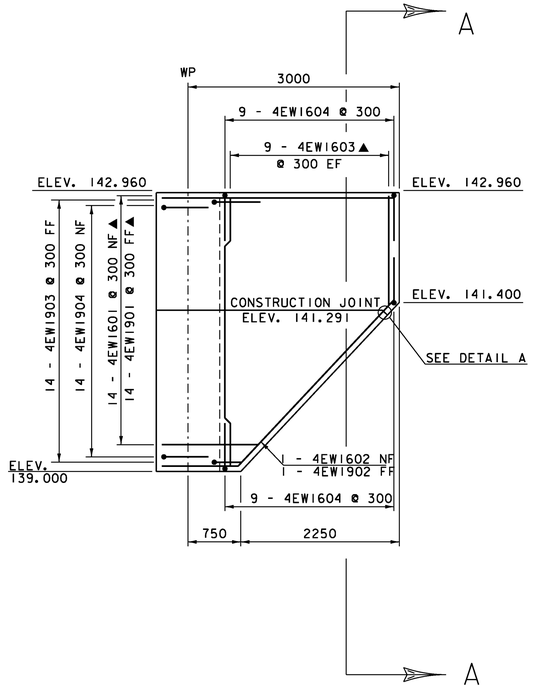

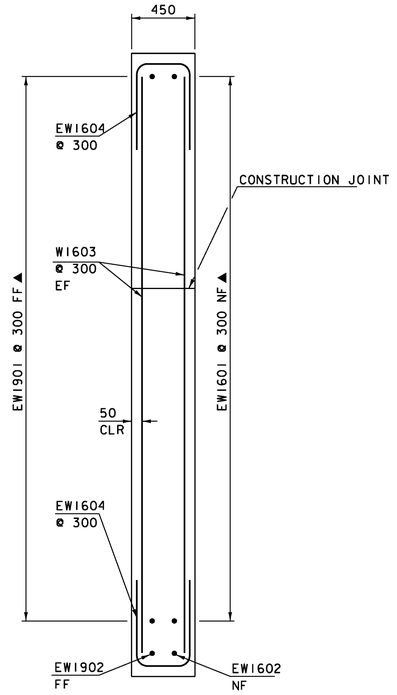

WINGWALL #3

0 1 2 3 4

SCALE = 1:40

WINGWALL #4

0 1 2 3 4

SCALE = 1:40

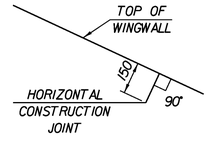

DETAIL A

WINGWALL
TYPICAL SECTION A-A

0 1 2

SCALE = 1:20

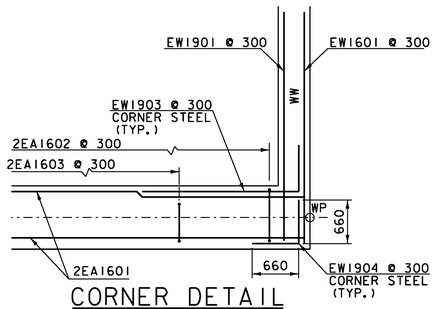

CORNER DETAIL
below approach slab bracket

0 1 2 3 4

SCALE = 1:40

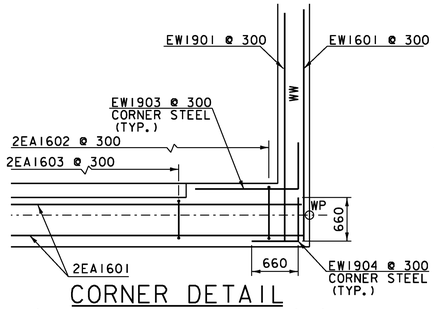

CORNER DETAIL
above approach slab bracket

0 1 2 3 4

SCALE = 1:40

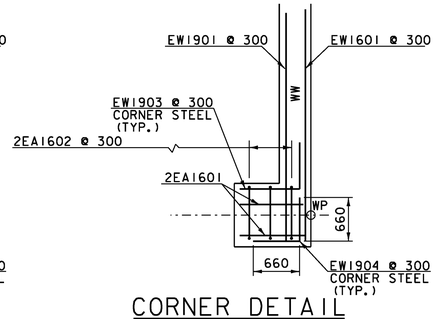

CORNER DETAIL
above TOP OF deck

0 1 2 3 4

SCALE = 1:40

NOTE:

NF = NEAR FACE
FF = FAR FACE
EF = EACH FACE
▲ = CUT TO FIT IN FIELD
80 CLEAR, UNLESS OTHERWISE SPECIFIED ON THE PLANS.
660 BAR LAP UNLESS OTHERWISE SPECIFIED ON THE PLANS.

PROJECT NAME:	CAMBRIDGE
PROJECT NUMBER:	BRF 027-1(4)

FILE NAME:	78f163subst.dgn	PLOT DATE:	05-JUN-2012
PROJECT LEADER:	M. EVANS-MONGEON	DRAWN BY:	R. PELLETT
DESIGNED BY:	T. FILLBACH	CHECKED BY:	T. FILLBACH
WINGWALLS #3 & #4		SHEET 180	OF 214

STATE OF VERMONT
AGENCY OF TRANSPORTATION

REINFORCING STEEL SCHEDULE

Metric

ITEM	EACH	SIZE	LENGTH	MARK	TYPE	A	B	C	D	E	F	G	H	J	K	R	O
BRIDGE DECK																	
	624	16	10810	ES1601	STR	10810											
	140	16	8330	ES1602	STR	8330											
✳	536	16	10340	ES1603	STR	10340											
✳	34	16	3190	ES1604	S5	150	740	300	2000								
	773	16	1525	ES1605	S5	250	300	425	300			250					
	9	16	2750	ES1606	STR	2750											
△	270	19	10340	ES1901	STR	10340											
APPROACH SLAB #1																	
△	23	16	9040	1EAS1601	STR	9040											
△	39	29	6220	1EAS2901	1	380	5840					---		300			
APPRAOCH SLAB #2																	
	21	16	9040	2EAS1601	STR	9040											
	37	29	6220	2EAS2901	1	380	5840					---		300			
ABUTMENT #1																	
▲	38	16	2660	1A1601	STR	2660											
▲	31	16	2680	1EA1602	22		1530	1150	---				---	---	---	---	
	31	16	2360	1A1603	17		340	1360	660								
	8	16	3070	1A1603A	16	660	1060	640	710				---		---		
	31	16	1840	1EA1604	S10		660	520	660								
	43	16	1540	1EA1605	S10		660	220	660								
	40	16	2930	1A1606	STR	2930											
	20	16	8790	1A1607	STR	8790											
	20	16	2930	1A1607A	STR	2930											
▲	38	16	5590	1A1608	STR	5590											
	36	16	11280	1A1609	STR	11280											
	6	16	2670	1A1609A	STR	2670											
	2	16	9040	1A1610A	STR	9040											
	5	16	9040	1EA1610A	STR	9040											
	2	16	12800	1A1610B	STR	12800											
	10	16	12800	1EA1610B	STR	12800											
	6	16	2190	1A1610C	STR	2190											
✳	7	16	2190	1EA1610C	STR	2190											
	46	16	2380	1EA1611	STR	2380											
	72	16	1890	1A1612	22		1230	660	---				---	---	---	---	
	37	16	1320	1A1613	22		660	660	---				---	---	---	---	
	28	16	1320	1EA1613	22		660	660	---				---	---	---	---	
	12	16	1780	1EA1614	22		1120	660	---				---	---	---	---	
	38	16	1260	1A1615	STR	1260											
	37	22	4755	1A2201	17		1160	3595	---								
	38	22	3605	1A2202	17		1160	2445	---								
✳	17	25	1100	1EA2501	22		600	500	---				---	---	---	---	
✳	49	25	1195	1A2502	STR	1195											
	40	29	2930	1A2901	STR	2930											
WINGWALL #1																	
▲	14	16	4320	1W1601	STR	4320											
	14	16	2000	1W1602	S10		660	680	660								
	16	16	3940	1W1603	STR	3940											
	28	16	4510	1W1604	STR	4510											
▲	15	16	7830	1W1605	STR	7830											
▲	56	16	1260	1W1606	STR	4270											
✳	16	16	1260	1W1608	STR	1260											
▲	2	16	3630	1W1607	22		360	3270	---				146	---	323	---	
✳	15	22	5895	1W2201	17		1130	4765	---								
	14	22	4795	1W2202	17		1130	3665	---								
✳	32	36	3940	1W3601	STR	3940											

ITEM	EACH	SIZE	LENGTH	MARK	TYPE	A	B	C	D	E	F	G	H	J	K	R	O
WINGWALL #2																	
▲	15	16	3590	2W1601	STR	3590											
	15	16	1810	2W1602	S10		660	490	660								
	17	16	3590	2W1603	STR	3590											
	26	16	5010	2W1604	STR	5010											
▲	17	16	6100	2W1605	STR	6100											
✳	18	16	1260	2W1608	STR	1260											
▲	42	16	4780	2W1606	STR	4780											
▲	2	16	4405	2W1607	22		395	4010	---				196	---	342	---	
✳	16	19	3605	2W1901	17		940	2665	---								
✳	16	22	4705	2W2201	17		940	3765	---								
✳	35	29	3590	2W2901	STR	3590											
ABUTMENT #2																	
▲	30	16	12540	2EA1601	STR	12540											
	2	16	12590	2EA1601A	STR	12590											
	43	16	2090	2EA1602	S10		660	770	660								
	31	16	1860	2EA1603	S10		660	540	660								
	31	16	1620	2EA1604	1	175	1270					175		125			
	70	16	2935	2EA1605	3	175	960	1800	---	---	---	---	1720	125	650		---
✳ ▲	44	16	5270	2EA1606	17		770	4500	---								
▲	43	19	5270	2EA1901	17		770	4500	---								
△ ▲	45	25	5270	2EA2501	17		770	4500	---								
△ ▲	45	29	5270	2EA2901	17		770	4500	---								
WINGWALL #3																	
▲	16	16	4290	3EW1601	STR	4290											
▲	24	16	4530	3EW1603	STR	4530											
	1	16	5515	3EW1602	22		1090	4425	---				790	---	755	---	
	24	16	1610	3EW1604	S10		660	290	660								
✳ ▲	17	19	4290	3EW1901	STR	4290											
	1	19	5515	3EW1902	22		1090	4425	---				790	---	755	---	
	16	19	3040	3EW1903	17		660	2380	---								
	16	19	1320	3EW1904	17		660	660	---								
WINGWALL #4																	
✳ ▲	15	16	3290	4EW1601	STR	3290											
▲	18	16	3780	4EW1603	STR	3780											
	1	16	4310	4EW1602	22		1085	3225	---				790	---	740	---	
	18	16	1610	4EW1604	S10		660	290	660								
✳ ▲	15	19	3290	4EW1901	STR	3290											
	1	19	4310	4EW1902	22		1085	3225	---				790	---	740	---	
	11	19	3040	4EW1903	17		660	2380	---								
	11	19	1320	4EW1904	17		660	660	---								

~ NOTES ~

1. UNLESS OTHERWISE DESIGNATED, ALL BAR REINFORCEMENT FOR CONCRETE IN SIZES UP TO AND INCLUDING 55M SHALL CONFORM TO THE REQUIREMENTS OF THE "SPECIFICATIONS FOR DEFORMED BILLET-STEEL BARS FOR CONCRETE REINFORCEMENT", AASHTO M 31M (ASTM A 615M-SI). ALL BARS SHALL BE GRADE 420, UNLESS OTHERWISE DESIGNATED.
2. FOR TYPICAL BENDING DETAILS, RECOMMENDED PIN DIAMETER "D" OF BENDS AND HOOKS, AND OTHER STANDARD PRACTICE, SEE CURRENT CONCRETE REINFORCING STEEL INSTITUTE "MANUAL OF STANDARD PRACTICE".
3. BARS WHICH REQUIRE MORE ACCURATE BENDING THAN STANDARD PRACTICES SHOULD HAVE LIMITS INDICATED.
4. ALL DIMENSIONS ARE OUT TO OUT OF BAR EXCEPT "A" AND "G" ON STANDARD 180 DEGREE AND 135 DEGREE HOOKS.
5. "J" DIMENSION ON 180 DEGREE HOOKS TO BE SHOWN ONLY WHERE NECESSARY TO RESTRICT HOOK SIZE. OTHERWISE, STANDARD HOOKS ARE TO BE USED.
6. "H" DIMENSION ON STIRRUPS TO BE SHOWN ONLY WHEN NECESSARY TO MAINTAIN CLEARANCES.
7. WHERE SLOPE DIFFERS FROM 45 DEGREES, DIMENSIONS "H" AND "K" MUST BE SHOWN.
8. ▲ DENOTES BARS TO BE CUT IN FIELD.
9. ✳ DENOTES ONE EXTRA BAR ADDED FOR TESTING PURPOSES.
10. △ DENOTES TWO EXTRA BARS ADDED FOR TESTING PURPOSES.
11. E IN BAR MARK PREFIX DENOTES EPOXY COATED REINFORCING STEEL.

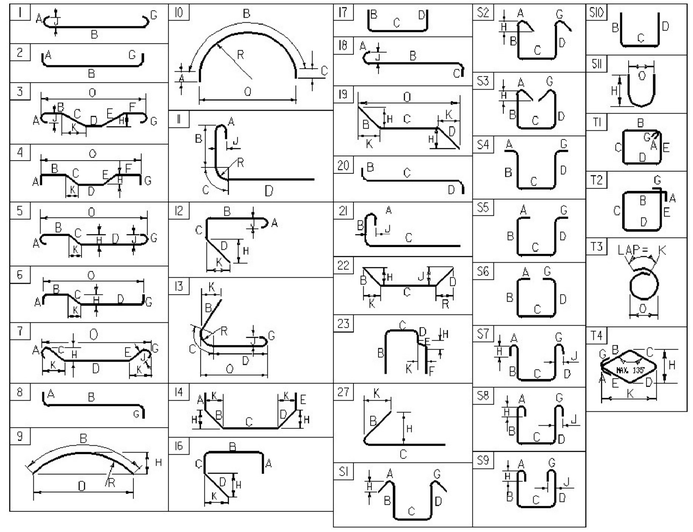

ASTM STANDARD REINFORCING BARS

BAR SIZE	NOMINAL MASS (Kg/m)	NOMINAL DIMENSIONS ROUND SECTION		
		DIAMETER (mm)	CROSS SECTIONAL AREA (mm^2)	PERIMETER (mm)
#10	0.560	9.5	71	29.84
#13	0.994	12.7	129	39.90
#16	1.552	15.9	199	49.95
#19	2.235	19.1	284	60.00
#22	3.042	22.2	387	69.74
#25	3.973	25.4	510	79.80
#29	5.060	28.7	645	90.16
#32	6.404	32.3	819	101.47
#36	7.907	35.8	1006	112.47
#43	11.380	43.0	1452	135.09
#57	20.240	57.3	2581	180.01

PROJECT NAME: **CAMBRIDGE**
PROJECT NUMBER: **BRF 027-1(4)**

FILE NAME: **s78f163BRFRein.xls** PLOT DATE: **3/1/2012**
PROJECT MANAGER: **M. EVANS-MONGEON** DRAWN BY: **R. PELLETT**
DESIGNED BY: **T. FILLBACH** CHECKED BY: **T. FILLBACH**
REINFORCING STEEL SCHEDULE SHEET #1 SHEET 181 OF 214

STATE OF VERMONT
AGENCY OF TRANSPORTATION

REINFORCING STEEL SCHEDULE

Metric

ITEM		EACH	SIZE	LENGTH	MARK	TYPE	A	B	C	D	E	F	G	H	J	K	R	O
		PIER #1																
	▲	8	19	11790	1P1901	STR	11790											
		6	19	6754	1P1902	22		1540	5214	---				620	---	1405	---	
		6	19	6728	1P1903	22		1545	5183	---				375	---	1500	---	
✳		73	19	3410	1P1904	T3												
		58	19	5000	1P1905	T3												
	▲	24	19	3885	1P1906	17		305	3580									
								SEE DIMENSIONS ON 'PIER FOOTING & PILES' SHEET										
		15	19	3801	1P1907A	S3	205	1293	805	1293			205	130				
								B&D VARIES 1293 TO 1824 INCREASE BY 133										
		18	19	5017	1P1908A	S3	205	1901	805	1901			205	130				
								B&D VARIES 1901 TO 2288 INCREASE BY 77										
		6	19	5515	1P1909A	S3	205	2150	805	2150			205	130				
								B&D VARIES 2150 TO 2227 INCREASE BY 77										
		33	19	5779	1P1910A	S3	205	2282	805	2282			205	130				
								B&D VARIES 2282 TO 2834 INCREASE BY 55										
		27	19	6897	1P1911A	S3	205	2841	805	2841			205	130				
		30	19	6355	1P1912A	S3	204	2615	805	2615			205	130				
		27	19	5717	1P1913A	S3	205	2251	805	2251			205	130				
								B&D VARIES 2251 TO 2605 INCREASE BY 44										
		18	19	4767	1P1914A	S3	205	1776	805	1776			205	130				
								B&D VARIES 1776 TO 1997 INCREASE BY 44										
		15	19	4009	1P1915A	S3	205	1397	805	1397			205	130				
								B&D VARIES 1397 TO 1700 INCREASE BY 76										
✳		169	19	1315	1P1916	S3	205	---	805	305			---	265				
		58	19	2660	1P1917	S3	205	---	2150	305			---	265				
		10	19	3640	1P1918	S11								1450				1300
	▲	10	19	1280	1P1919	STR	1280											
△		90	25	1280	1P2501	17		405	6500	405								
△		66	32	7310	1P3201	STR	2520											
✳		89	36	7720	1P3601	17		610	6500	610								
✳		73	36	7720	1P3602	17		610	4685	---								
		2	36	5295	1P3603	17		550	9780	550								
		10	36	10880	1P3604	STR	9827											
		8	36	9827	1P3605	17		550	9780	550								
		8	36	10880	1P3606	STR	9827											
		PIER #2																
	▲	8	19	11790	2P1901	STR	11790											
	▲	10	19	1280	2P1919	STR	1280											
		6	19	6754	2P1902	22		1540	5214	---				620	---	1405	---	
✳		7	19	6728	2P1903	22		1545	5183	---				330	---	1300	---	
		228	19	3410	2P1904	T3												
		92	19	5000	2P1905	T3												
	▲	24	19	3885	2P1906	17		305	3580									
								SEE DIMENSIONS ON 'PIER FOOTING & PILES' SHEET										
		15	19	3801	2P1907A	S3	205	1293	805	1293			205	130				
								B&D VARIES 1293 TO 1824 INCREASE BY 133										
		18	19	5017	2P1908A	S3	205	1901	805	1901			205	130				
								B&D VARIES 1901 TO 2288 INCREASE BY 77										
		6	19	5515	2P1909A	S3	205	2150	805	2150			205	130				
								B&D VARIES 2150 TO 2227 INCREASE BY 77										
		33	19	5779	2P1910A	S3	205	2282	805	2282			205	130				
								B&D VARIES 2282 TO 2834 INCREASE BY 55										
		27	19	6897	2P1911A	S3	205	2841	805	2841			205	130				
		30	19	6445	2P1912A	S3	205	2615	805	2615			205	130				
		27	19	5717	2P1913A	S3	205	2251	805	2251			205	130				
								B&D VARIES 2251 TO 2605 INCREASE BY 44										
		18	19	4767	2P1914A	S3	205	1776	805	1776			205	130				
								B&D VARIES 1776 TO 1997 INCREASE BY 44										
		15	19	4009	2P1915A	S3	205	1397	805	1397			205	130				
								B&D VARIES 1397 TO 1700 INCREASE BY 76										
✳		169	19	1315	2P1916	S3	205	---	805	305			---	265				
		92	19	2660	2P1917	S3	205	---	2150	305			---	265				
		10	19	3640	2P1918	S11								1450				1300
	▲	10	19	1280	291919	STR	1280											
△		90	25	7310	2P2501	17		405	6500	405								
△		130	32	8270	2P3201	STR	8270											
		88	36	7720	2P3601	17		610	6500	610								
		104	36	7870	2P3602	17		610	7260	---								
✳		3	36	10880	2P3603	17		550	9780	550								
		10	36	9827	2P3604	STR	9827											
		8	36	10880	2P3605	17		550	9780	550								
✳		9	36	9827	2P3606	STR	9827											

~ NOTES ~

1. UNLESS OTHERWISE DESIGNATED, ALL BAR REINFORCEMENT FOR CONCRETE IN SIZES UP TO AND INCLUDING 55M SHALL CONFORM TO THE REQUIREMENTS OF THE "SPECIFICATIONS FOR DEFORMED BILLET-STEEL BARS FOR CONCRETE REINFORCEMENT", AASHTO M 31M (ASTM A 615M-SI). ALL BARS SHALL BE GRADE 420, UNLESS OTHERWISE DESIGNATED.
2. FOR TYPICAL BENDING DETAILS, RECOMMENDED PIN DIAMETER "D" OF BENDS AND HOOKS, AND OTHER STANDARD PRACTICE, SEE CURRENT CONCRETE REINFORCING STEEL INSTITUTE "MANUAL OF STANDARD PRACTICE".
3. BARS WHICH REQUIRE MORE ACCURATE BENDING THAN STANDARD PRACTICES SHOULD HAVE LIMITS INDICATED.
4. ALL DIMENSIONS ARE OUT TO OUT OF BAR EXCEPT "A" AND "G" ON STANDARD 180 DEGREE AND 135 DEGREE HOOKS.
5. "J" DIMENSION ON 180 DEGREE HOOKS TO BE SHOWN ONLY WHERE NECESSARY TO RESTRICT HOOK SIZE. OTHERWISE, STANDARD HOOKS ARE TO BE USED.
6. "H" DIMENSION ON STIRRUPS TO BE SHOWN ONLY WHEN NECESSARY TO MAINTAIN CLEARANCES.
7. WHERE SLOPE DIFFERS FROM 45 DEGREES, DIMENSIONS "H" AND "K" MUST BE SHOWN.
8. ▲ DENOTES BARS TO BE CUT IN FIELD.
9. ✳ DENOTES ONE EXTRA BAR ADDED FOR TESTING PURPOSES.
10. △ DENOTES TWO EXTRA BARS ADDED FOR TESTING PURPOSES.
11. E DENOTES EPOXY COATED REINFORCING STEEL.

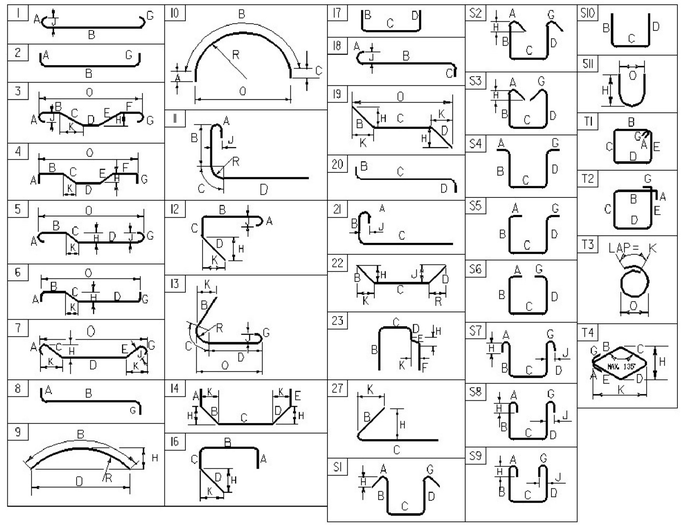

ASTM STANDARD REINFORCING BARS

BAR SIZE	NOMINAL MASS (Kg/m)	NOMINAL DIMENSIONS ROUND SECTION		
		DIAMETER (mm)	CROSS SECTIONAL AREA (mm²)	PERIMETER (mm)
#10	0.560	9.5	71	29.84
#13	0.994	12.7	129	39.90
#16	1.552	15.9	199	49.95
#19	2.235	19.1	284	60.00
#22	3.042	22.2	387	69.74
#25	3.973	25.4	510	79.80
#29	5.060	28.7	645	90.16
#32	6.404	32.3	819	101.47
#36	7.907	35.8	1006	112.47
#43	11.380	43.0	1452	135.09
#57	20.240	57.3	2581	180.01

PROJECT NAME: **CAMBRIDGE**
PROJECT NUMBER: **BRF 027-1(4)**

FILE NAME: **s78f163BRFRein.xls**
PROJECT MANAGER: **M. EVANS-MONGEON**
DESIGNED BY: **T. FILLBACH**
REINFORCING STEEL SCHEDULE SHEET #2

PLOT DATE: **3/9/2012**
DRAWN BY: **R. PELLETT**
CHECKED BY: **T. FILLBACH**
SHEET 182 OF 214

STATE OF VERMONT
AGENCY OF TRANSPORTATION

RIGHT - OF - WAY DETAIL SHEET

Metric

TABLE OF PROPERTY ACQUISITION

PARCEL NO.	PROPERTY OWNER	SHEET NO.	BEGINNING STATION	ENDING STATION	TAKE	REMAINDER	RIGHT			RECORDING DATA					REMARKS
					AREA ±	AREA ±	TYPE	(T)/(P)	AREA ±	TITLE	DATE	TOWN / CITY	BOOK	PAGE	
1	1159 FOOTE BROOK ROAD, LLC - LESSOR	14, 15	10+019.20 RT	10+187.57 RT	2,566.78 SM					WDIF	4/3/2012	CAMBRIDGE	383	294-296	0.63 A ±
	G.W. TATRO CONSTRUCTION, INC - LESSEE		10+008.17 RT	10+100.00 RT			UTILITY	(P)	519.14 SM						0.13 A ±
			10+008.73 RT	10+160.00 RT			CONST.	(T)	340 SM						3,660 SF±; INCL. PDF, BF & EC
			10+075.43 RT	10+164.00 RT			REMOVE & RESET	(T)							FENCE LINE & GATE
			10+160.00 RT	10+186.70 RT			CONST.	(T)	435 SM						4,682 SF± REC PATH, BF, CHAIN LINK FENCE
															& PLANT GROUND COVER
			10+100.00 RT												7M PAVED; 22.96' DRIVE
2	STATE OF VERMONT AGENCY OF NATURAL	15, 16	10+235.00 RT	10+344.06 RT			UTILITY	(P)	1057.65 SM	EO	7/2/2010	CAMBRIDGE	362	420-422	0.26 A ±
	RESOURCES DEPARTMENT OF FISH AND		10+235.00 RT	10+280.00 RT			SLOPE	(P)	166.58 SM						0.04 A ±
	WILDLIFE		10+259.55 RT	10+344.06 RT			INSTALL	(T)							BARRIER FENCE
			10+260.00 RT	10+344.06 RT			CONST.	(T)	78.72 SM						847 SF ± INCL. EROSION CONTROL
			10+300.67 RT	10+344.06 RT			SLOPE	(T)	151.82 SM						1,634 SF ±
			10+310.00 RT	10+323.50 RT			INSTALL	(T)	13.87 SM						SIDEWALK 149 SF ±
			10+343.42 RT				INSTALL & MAINT	(P)							GUY WIRE & ANCHOR
			10+308.00 RT	10+314.00 RT			INSTALL & MAINT	(P)							GUARDRAIL
			10+300.00 RT				REMOVE & RESET	(T)							FISH & WILDLIFE SIGN
			10+313.00 RT				REMOVE	(T)							PICNIC SIGN
3	CLARKE, PAUL	16, 17	10+400.00 LT	10+449.89 LT	195.99 SM					WD	2/18/2010	CAMBRIDGE	360	68-69	2,109 SF ±
			10+400.00 LT	10+436.09 LT			CONST.	(T)	49.50 SM						533 SF±; INCL. PDF & EROSION CONTROL
			10+400.00 LT	10+495.00 LT			REMOVE	(T)							FENCE
			10+449.89 LT	10+492.57 LT			CONST.	(T)	45.76 SM						493 SF±; INCL. PDF & EROSION CONTROL
4	POWELL, JERRY D. & DONNA M.	16	10+346.60 LT	10+400.00 LT	310.63 SM					WD	10/18/2011	CAMBRIDGE	372	237	0.08 ACRE
			10+344.27 LT	10+400.00 LT			CONST.	(T)	166.61 SM						1,793 SF±; INCL. BF, PDF & EC
			10+345.00 LT	10+394.18 LT			SLOPE	(T)	125.12 SM						1,347 SF ±
5	PAYNTER, ROBERT J. & MARIE B.	15,16	10+234.91 LT	10+348.17 LT	545.30 SM					WD	4/14/2010	CAMBRIDGE	361	35-38	0.13 A ±
			10+236.73 LT	10+345.10 LT			CONST.	(T)	377.02 SM						INCL. PDF & EROSION CONTROL;
															0.09 A ±
			10+236.73 LT	10+340.00 LT			DETOUR	(T)	0.16 HA						0.40 A ±
			10+236.73 LT	10+346.60 LT			SLOPE	(P)	822.06 SM						0.2 A ±
			10+256.92 LT	10+329.27 LT			UTILITY	(P)	1030.00 SM						0.25 A ±
			10+325.00 LT				ACCESS	(T)							INGRESS & EGRESS DETOUR
			10+338.00 LT				DRIVE	(T)							3.6M (11.8') GRAVEL MM 0921
6	LITTLE GRAY RABBIT LLC - LESSOR	14, 15	10+080.77 LT	10+168.06 LT			CONST.	(T)	374.41 SM	GTR	3/20/2012	CAMBRIDGE	383	152-155	4,030 SF ± INCL. BF, PDF & EC
	K-2 CONSTRUCTION, INC. - LESSEE		10+080.77 LT	10+187.10 LT			DETOUR	(T)	0.28 HA						0.70 A ±
			10+168.06 LT	10+187.07 LT			CONST.	(T)	441 SM						RECREATIONAL PATH; BF, CHAIN LINK
															FENCE & HANDRAIL 4,747 SF±
			10+080.00 LT	10+085.00 LT			REMOVE & RESET	(T)							5 WOODEN BOLLARDS
7	CENTRAL VERMONT PUBLIC SERVICE		10+008.17 RT	10+530.00 RT			ALL R. T. & I.								EXISTING UTILITY EASEMENT WITHIN
	CORPORATION														PROPOSED VERMONT ROUTE 108
															RIGHT OF WAY
8	TELEPHONE OPERATING COMPANY		10+008.17 RT	10+530.00 RT			ALL R. T . & I.								EXISTING UTILITY EASEMENTS WITHIN
	OF VERMONT LLC														PROPOSED VERMONT ROUTE 108
															RIGHT OF WAY
9	VILLAGE OF JEFFERSONVILLE WATER &		10+008.17 RT	10+530.00 RT			ALL R.T. & I.								EXISTING UTILITY EASEMENTS WITHIN
	SEWER DEPARTMENT														PROPOSED VERMONT ROUTE 108
															RIGHT OF WAY
10	JEFFERSONVILLE CABLE T.V.		10+008.17 RT	10+530.00 RT			ALL R. T. & I.								EXISTING UTILITY EASEMENTS WITHIN
	CORPORATION														PROPOSED VERMONT ROUTE 108
															RIGHT OF WAY

TABLE OF REVISIONS

REVISION NO.	SHEET NO.	DESCRIPTION	DATE
1	23, 26	PARCEL NO. 3 CLARKE - CORRECTED REMOVE (P) TO	02/06/2009
		REMOVE (T) FOR BARBED WIRE FENCE AND CHANGED	
		ENDING STATION FROM 10+540.00 LT TO 10+495 LT	
		PER C.O. 9554	
		COMPLETED BY: MT APPROVED BY: HP	
2	23, 26	PARCEL NO. 4 POWELL - REMOVED BARBED WIRE FENCE	02/06/2009
		AND REMOVE (P). PER C.O. 9555	
		COMPLETED BY: MT APPROVED BY: HP	
		AS OF THIS DATE, THIS PROJECT HAS NOT BEEN GRANTED	02/10/2009
		NECESSITY.	
3	23	PARCEL NO. 1 FOOTE BROOK ROAD - CORRECTED AREA OF	10/20/2009
		771.25 SM TO 340 SM; 3,660 SF± AND 501 SM TO 435 SM; 4,682 SF±	
		PER C.O. 9571	
		COMPLETED BY: MT APPROVED BY: HP	
4		PARCEL NO. 1 FOOTE BROOK ROAD. REQUEST TO STRUCTURES	12/29/2009
		TO ADD COMMERCIAL SIGN TO EXISTING TOPO IN THE FIELD.	
		PER C.O. 9586	
		COMPLETED BY: STRUCTURES APPROVED BY: HP	
5	22, 23	PARCEL NO. 1 FOOTE BROOK ROAD. ADD LAYOUT SHEET 22 FROM	12/29/2009
		THE STP PORTION OF THIS PROJECT, TO THE LIST OF DESIGN	
		SHEETS THAT AFFECT THIS PARCEL. ADD SHEET 22 TO THE	
		PROPERTY OWNER PLAT.	
		ADD REMOVE (T) FOR SIGN AT STA. VT. RTE. 15 20+221.47 LT	
		PER C.O. 9591	
		COMPLETED BY: MR APPROVED BY: HP	
6	23, 26	PARCEL NO. 2 AGENCY OF NATURAL RESOURCES. ADD REMOVE	02/23/2010
		& RESET (T) FOR FISH & WILDLIFE SIGN AT STA. 10+300.00 RT	
		ADD REMOVE (T) FOR PICNIC SIGN AT STA. 10+313.00 RT	
		PER C.O. 9604	
		COMPLETED BY: MR APPROVED BY: HP	
7	1, 25, 26,	CHANGE ENDING STATION OF PROJECT TO 10+530.00; 26.23M; RT	02/23/2010
	27	CHANGE LENGTH OF ROW PROJECT TO 521.83 M	
		CHANGE RUNNING DISTANCES AS SHOWN ON PLANS.	
		PER C.O. 9603	
		COMPLETED BY: MR APPROVED BY: HP	
		NOTE: DESIGN CHANGED TO A ROTARY AT INTERSECTION WITH VT ROUTE 15 AND 108 IN 2010	
8	16	PARCEL NO. 3 CLARK - NOW TO READ STATE OF VERMONT F/N	03/31/2011
		CLARKE, PAUL.	
		COMPLETED BY: MT C.O. 9711 APPROVED BY: HP	
9	15, 16	PARCEL NO. 5 PAYNTER - NOW TO READ STATE OF VERMONT F/N	03/31/2011
		PAYNTER, ROBERT J. & MARIE B.	
		COMPLETED BY: MT C.O. 9712 APPROVED BY: HP	

PLAN LEGEND

EXISTING RIGHT-OF-WAY		TOE OF SLOPE	
TAKING WITH ACCESS		TOP OF CUT	
TAKING WITHOUT ACCESS	SR (P)	SLOPE RIGHT	
CLEAR ZONE	CONST. (T)	CONSTRUCTION RIGHT	
PROPERTY LINE	PDF PDF	PROJECT DEMARCATION FENCE	

BF	-BARRIER FENCE
EC	-EROSION CONTROL
(P)	-PERMANENT
(T)	-TEMPORARY
DR.	-DRAINAGE RIGHT
DIT.	-DITCHING RIGHT
CH.	-CHANNEL RIGHT
DRIVE	-DRIVE RIGHT
CUL.	-CULVERT RIGHT
C&T	-CLEARING & TRIMMING RIGHT
SR	-SLOPE RIGHT
UE	-UTILITY EASEMENT

APPROVED: HARRY PETROVS DATE: 11-19-08
CHIEF, PLANS & TITLES

PROJECT NAME: **CAMBRIDGE**
PROJECT NUMBER: **BRF 027-1(4)**

FILE NAME: **r78f163BRFdetail.xls**
PROJECT LEADER: **J. SHULTZ**
DESIGNED BY: **TUS/SRB**
R.O.W. DETAIL SHEET

PLOT DATE: **4/30/2012**
DRAWN BY: **M. TROTTIER**
CHECKED BY: **R. FERLAZO**
SHEET **183** OF **214**

VT STATE PLANE GRID

VT ROUTE 108 STA. 10+082.794
END ROADWAY PROJECT
STP 030-2(27)
BEGIN BRIDGE PROJECT
BRF 027-1(4)

CONSTRUCT DRIVE
STA. 10+055.294, LT. (8m PAVED)
STA. 20+073.010, LT. (10m PAVED)
STA. 20+187.354, LT. (12m PAVED)

620.50-REMOVING AND RESETTING FENCE
STA. 10+072.000 - STA. 10+082.794, RT.

CURVE #4 POINTS

	STATION	NORTHING	EASTING
PC	10+048.169	238694.7594	473822.9178
PI	10+202.302	238793.0980	473704.2320
PT	10+287.865	238909.0681	473805.7590

CURVE DATA #4

R = 150.000m
Δ = 9°33'24.93" RT.
D = 11°38'33.09"
L = 239.695m
T = 154.132m
C = 214.995m
M = 45.385m
E = 65.074m
e = 7.8 %

678.45-REMOVAL OF EXISTING TRAFFIC CONTROL SIGNAL SYSTEM
STA. 10+000.000

RANGING ELEVATION OF SEWER MANHOLES
STA. 9+973.180, RT.

6

LITTLE GRAY RABBIT LLC - LESSOR
K-2 CONSTRUCTION, INC. - LESSEE

SEE SHEET 142

MATCHLINE - STA. 10+082.794 - P L

DETOUR(T)
CONST(T)

10+080.00
20.47M(67.16')RT

10+080.77
10.42M(34.21')LT
[R=318.570M(1045.18')
L=18.712M(61.39')]

10+065.17
8.52M(27.97')LT
MON NOT FOUND

R=318.570M(1045.18')
L=16.681M(54.75')

7.544M (24.75')

10+080.77 TL 10+096.96
2.196M(7.20')

L39.044M (128.08')

L17.46M (57.28')

10+061.02
6.97M(22.87')RT
MON NOT FOUND

10+060.00
20.11M(65.98')RT

R=318.570M(1045.18')

8.008M (26.27')
8.033M (26.35')

18.41M (61.40')

UE(P)

10+040.00
19.82M(65.03')RT

N/F
JOYCE ELIZABETH SELBY JACOBS
TRUSTEE OF THE JOYCE ELIZABETH
SELBY JACOBS 1993 REVOCABLE TRUST

10+050.293

VT ROUTE 108

EXISTING ROW 36.0M (118.14')

MON NOT FOUND

[100.76M (330.60')] EXISTING ROW

SIGN POLE
SIGN POLE TO BE REMOVED BY OWNER

EXISTING ROW PLOTTED FROM HIGHWAY PROJECT F030-2(1) 1958

10+019.20
22.47M(73.72')RT

AERIAL E&T

PBF

[112.476M(369.02')]

PI 10+087.202

VT. RTE. 15

VT ROUTE 15 STA. 20+130.638 =
VT ROUTE 108 STA. 10+000.000

BEGIN R.O.W. PROJECT
BRF 027-1 (4)
STA. 10+008.17
28.86M(94.68') RT.

1

1159 FOOTE BROOK ROAD ,LLC LESSOR
G.W. TATRO CONSTRUCTION, INC. LESSEE

20+151.689
17.970M(58.96')LT
MON NOT FOUND

FOR R.O.W. USE ONLY

LINE SHOWN ON THIS PLAN AS EXISTING PROPERTY LINES P/L ARE BELIEVED TO BE ACCURATE BUT SHOULD NOT BE RELIED UPON FOR PURPOSES UNRELATED TO THE STATE OF VERMONT'S AQUISITION OF LAND AND RIGHTS FOR THIS PROJECT.

0 10 20 30
SCALE IN METERS

BRF LAYOUT #1

PROJECT NAME: CAMBRIDGE
PROJECT NUMBER: BRF 027-1(4)

FILE NAME: r78f163BRFlayl.dgn
PROJECT LEADER: JLS
DESIGNED BY: MBL
R.O.W. BRF LAYOUT SHEET 1

PLOT DATE: 05-JUN-2012
DRAWN BY: B. FERLAZO
CHECKED BY: H. PETROVS
SHEET 184 OF 214

VAOT Metric

B1 EXISTING DRAINAGE
STA 10+089.4 RT 12.0m - STA 10+186.3 RT 7.8m
EXISTING 450 CULVERT - REMOVE

B2 STA 10+121.7 RT 4.8 m - STA 10+125.6 RT 0.2 m
EXISTING 300 CULVERT - REMOVE

NEW DRAINAGE
B3 STA 10+082.0 RT 13.9m - STA 10+113.4 RT 17.9m
NEW 600mm X 28.3m RCP CL. III OR CPEP(SL)
W/ 600mm ES AT INLET AND TYPE I STONE PAD
AT OUTLET
INLET INV. EL. 137.461
OUTLET INV. EL. 137.320

B4 STA 10+113.4 RT 17.9m - STA 10+160.0 RT 14.4m
CONSTRUCT GRASS LINED DITCH

B5 STA 10+170.1 RT 15.6m - STA 10+186.9 RT 15.0m
NEW 600mm X 15.1m CAAP(1.52) OR HDPE/CSP(1.63)
W/ 600mm ES AT INLET
INLET INV. EL. 136.472
OUTLET INV. EL. 136.018
CONSTRUCT 7.3m TYPE I STONE LINED DITCH AT
INLET OF PIPE

WOVEN WIRE FENCE WITH WOOD POSTS
CHL 50+047 - 50+080 RT

WOOD BRACE FOR WOVEN WIRE FENCE
CHL 50+047 RT
CHL 50+080 RT

CONSTRUCT RECREATION PATH
(SEE CHANNEL SECTIONS)
CHL 50+047 - 50+145 LT

PORTLAND CEMENT CONCRETE SIDEWALK, 125mm
CHL 50+080 - 50+135 RT

CURVE #1 DATA
PI 10+202.301 BK
= 10+133.732 AHD
Δ = 91°33'25" RT
R = 150.000
T = 154.132
L = 239.695
E = 65.074
BANK = 0.078

LITTLE GRAY RABBIT LLC - LESSOR
K-2 CONSTRUCTION, INC. - LESSEE
6

REMOVING AND RESETTING FENCE
STA 10+082.794 - 10+110+094 RT
STA 10+094 - 10+104 RT (GATE)
STA 10+104 - 10+164 RT

REMOVAL OF EXISTING FENCE
STA 10+237 - 10+250 LT
CHL 50+047 - 50+127 RT

BRACING ASSEMBLY FOR CHAIN-LINK FENCE, 2.4m
STA 10+093 RT
STA 10+104 RT
STA 10+160 RT
STA 10+165 RT

STEEL BEAM GUARDRAIL, GALVANIZED
STA 10+123.36 - 10+163.61 LT
STA 10+104.13 - 10+163.05 RT
STA 10+258.84 - 10+280 LT
STA 10+259.40 - 10+280 RT

MANUFACTURED TERMINAL SECTION, FLARED
STA 10+111.93 - 10+123.36 LT
ANCHOR FOR STEEL BEAM RAIL
STA 10+104.13 RT

REMOVAL AND DISPOSAL OF GUARDRAIL
STA 10+098 - 10+175 LT
STA 10+161 - 10+173 LT
STA 10+236 - 10+268 RT
STA 10+236 - 10+256 RT

SPECIAL PROVISION
(REMOVABLE METAL HAND I
CHL 50+080 - 50+125 R

CAST-IN-PLACE CONCRETE CURB, TYPE B
STA 10+160.39 - 10+172.20 LT
STA 10+159.60 - 10+172.20 RT
STA 10+250.25 - 10+262.06 LT
STA 10+250.25 - 10+262.84 RT

GUARDRAIL APPROACH SECTION, GALVANIZED 2 RAIL BOX BEAM
STA 10+163.61 - 10+172.20 LT
STA 10+163.05 - 10+172.20 RT
STA 10+250.25 - 10+258.84 RT
STA 10+250.25 - 10+259.40 RT

BRIDGE RAILING, GALVANIZED 2 RAIL BOX BEAM
STA 10+172.20 - 10+250.25 LT
STA 10+172.20 - 10+250.25 RT

STONE FILL, TYPE IV
STA 10+140 - 10+170 RT
STA 10+223 - 10+232 LT/RT (PIER)
STA 10+235 - 10+253 LT
STA 10+235 - 10+260 RT
CHL 50+080 - 50+115 RT
CHL 50+080 - 50+115 RT (ALONG RIVER)

CONSTRUCT DRIVE
STA 10+100 RT - 7.0m WIDE,
17.2 m LONG PAVED

STATE OF VERMONT
FORMERLY PAYNTER,
ROBERT J. & MARIE B.

1159 FOOTE BROOK ROAD, LLC LESSOR
G.W. TATRO CONSTRUCTION, INC. LESSEE
1

STATE OF VERMONT
AGENCY OF NATURAL RESOURCES
DEPARTMENT OF FISH & WILDLIFE
2

END BRIDGE
RESUME ROADWAY
STA. 10+250

TEMPORARY BRIDGE
SHALL SPAN BROOK AT
NORTH END OF BRIDGE

STA. 10+082.794
END PROJECT
STP 030-2 (2)
BEGIN PROJECT
BRF 027-1 (4)

MATCH LINE - TO ROW LAYOUT 3

MATCH LINE
SEE ON SHEET
45
ROADWAY LAYOUT SHEET 2

STA 10+280

FOR R.O.W. USE ONLY

LINE SHOWN ON THIS PLAN AS EXISTING PROPERTY LINES P/L ARE BELIEVED TO BE ACCURATE BUT SHOULD NOT BE RELIED UPON FOR PURPOSES UNRELATED TO THE STATE OF VERMONT'S AQUISITION OF LAND AND RIGHTS FOR THIS PROJECT.

LEGE
EVERGREEN TREE (PICEA GLAUCA)
GROUND COVERS AND VINES (VALIANT GRAPEVINE OR SUMMER GRAPEVINE)

0 10 20 30
SCALE IN METERS

VT STATE PLANE GRID

BRF LAYOUT #2

PROJECT NAME: CAMBRIDGE
PROJECT NUMBER: BRF 027-1 (4)

FILE NAME: r78fl63BRFlay2.dgn
PROJECT LEADER: M.EVANS-MONGEON
DESIGNED BY: T. FILLBACH
R.O.W. BRF LAYOUT SHEET 2
PLOT DATE: 05-JUN-2012
DRAWN BY: B. FERLAZO
CHECKED BY: H. PETROVS
SHEET 185 OF 214

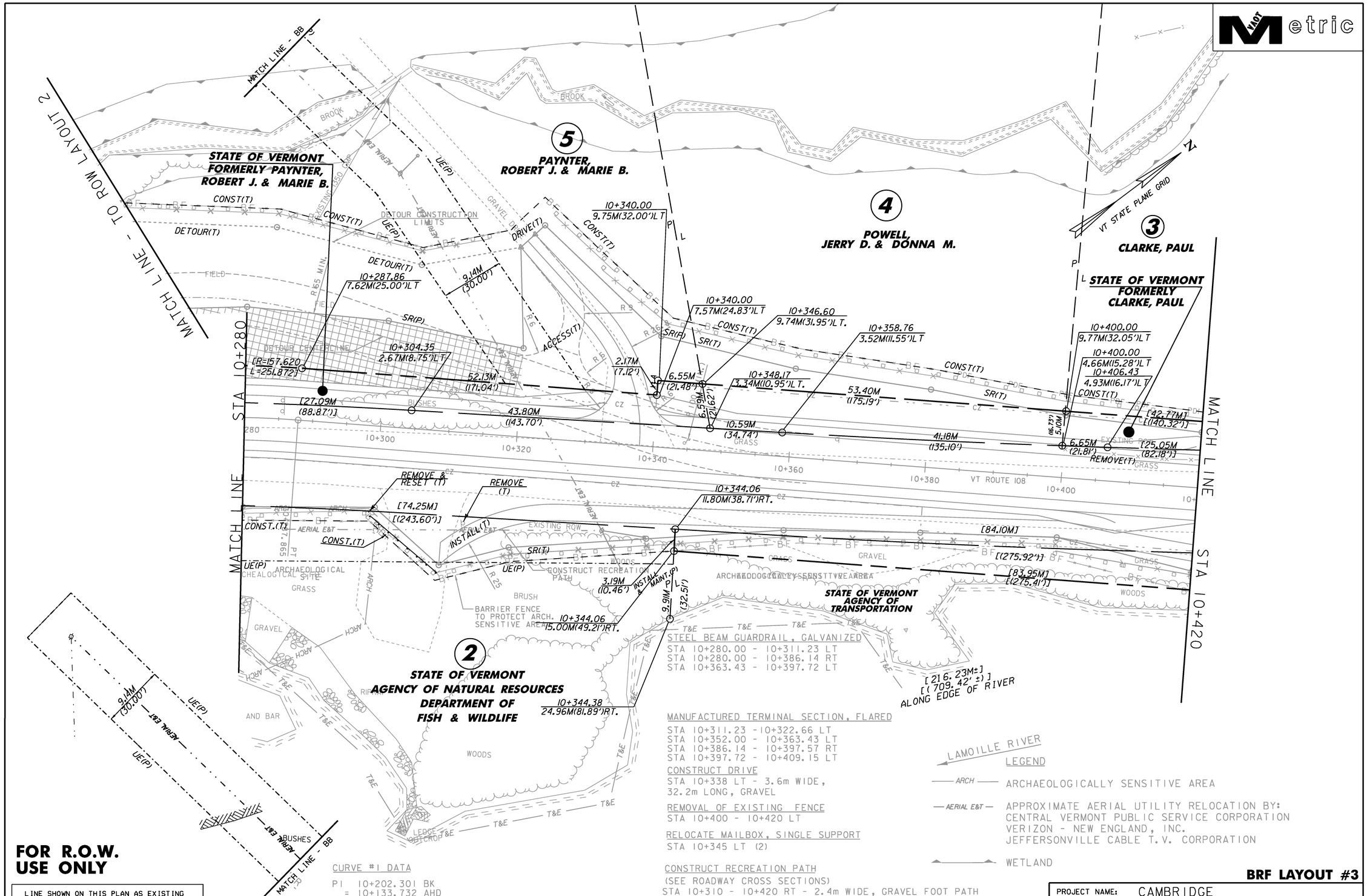

STEEL BEAM GUARDRAIL, GALVANIZED
STA 10+280.00 - 10+311.23 LT
STA 10+280.00 - 10+386.14 RT
STA 10+363.43 - 10+397.72 LT

MANUFACTURED TERMINAL SECTION, FLARED
STA 10+311.23 -10+322.66 LT
STA 10+352.00 - 10+363.43 LT
STA 10+386.14 - 10+397.57 RT
STA 10+397.72 - 10+409.15 LT

CONSTRUCT DRIVE
STA 10+338 LT - 3.6m WIDE,
32.2m LONG, GRAVEL

REMOVAL OF EXISTING FENCE
STA 10+400 - 10+420 LT

RELOCATE MAILBOX, SINGLE SUPPORT
STA 10+345 LT (2)

CONSTRUCT RECREATION PATH
(SEE ROADWAY CROSS SECTIONS)
STA 10+310 - 10+420 RT - 2.4m WIDE, GRAVEL FOOT PATH

LEGEND

ARCH — ARCHAEOLOGICALLY SENSITIVE AREA

AERIAL E&T — APPROXIMATE AERIAL UTILITY RELOCATION BY:
CENTRAL VERMONT PUBLIC SERVICE CORPORATION
VERIZON - NEW ENGLAND, INC.
JEFFERSONVILLE CABLE T.V. CORPORATION

WETLAND

CURVE #1 DATA

PI 10+202.301 BK
= 10+133.732 AHD
Δ = 91°33'25" RT
R = 150.000
T = 154.132
L = 239.695
E = 65.074
BANK = 0.078

0 10 20 30
SCALE IN METERS

FOR R.O.W. USE ONLY

LINE SHOWN ON THIS PLAN AS EXISTING PROPERTY LINES P/L ARE BELIEVED TO BE ACCURATE BUT SHOULD NOT BE RELIED UPON FOR PURPOSES UNRELATED TO THE STATE OF VERMONT'S AQUISITION OF LAND AND RIGHTS FOR THIS PROJECT.

BRF LAYOUT #3

PROJECT NAME: CAMBRIDGE	
PROJECT NUMBER: BRF 027-1 (4)	
FILE NAME: r78f163BRFlay3.dgn	PLOT DATE: 05-JUN-2012
PROJECT LEADER: M.EVANS-MONGEON	DRAWN BY: B. FERLAZO
DESIGNED BY: S. SCRIBNER	CHECKED BY: H. PETROVS
R.O.W. BRF LAYOUT SHEET 3	SHEET 186 OF 214

Metric

COLD PLANING, BITUMINOUS PAVEMENT
STA 10+476 - 10+495 CL

CONSTRUCT DRIVE
STA 10+470 RT - 10.3m WIDE,
11.3 m LONG, GRAVEL

REMOVAL OF EXISTING FENCE
STA 10+420 - 10+495 LT

CONSTRUCT RECREATION PATH
(SEE ROADWAY CROSS SECTIONS)
STA 10+420 - 10+447 RT - 2.4m WIDE, GRAVEL FOOT PATH

CURVE #2 DATA
Δ = 33°31'28" LT
R = 245.000
T = 73.794
L = 143.353
E = 10.872
BANK = 0.060

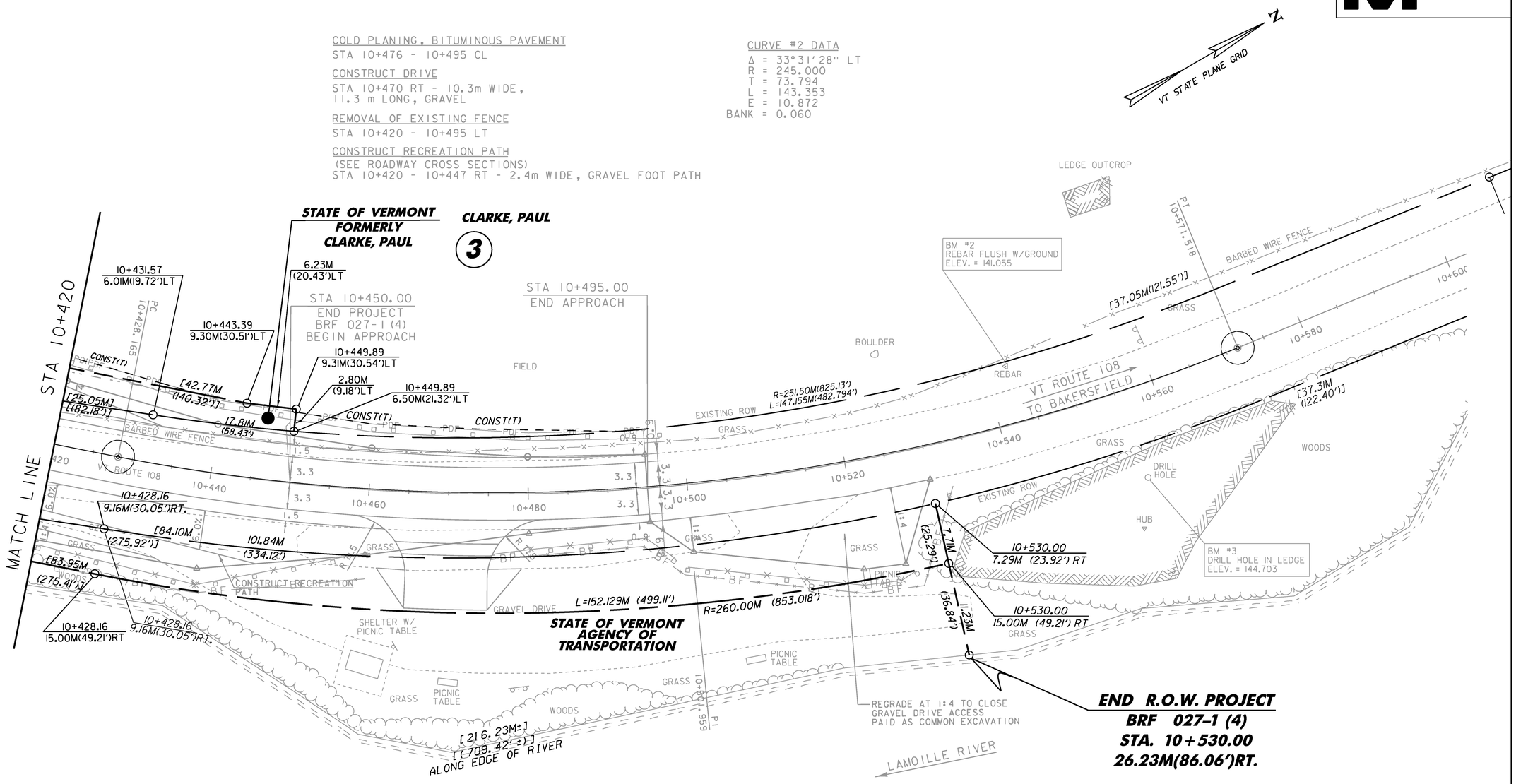

LINE SHOWN ON THIS PLAN AS EXISTING PROPERTY LINES P/L ARE BELIEVED TO BE ACCURATE BUT SHOULD NOT BE RELIED UPON FOR PURPOSES UNRELATED TO THE STATE OF VERMONT'S AQUISITION OF LAND AND RIGHTS FOR THIS PROJECT.

FOR R.O.W. USE ONLY

0 10 20 30
SCALE IN METERS

BRF LAYOUT #4

PROJECT NAME: CAMBRIDGE	
PROJECT NUMBER: BRF 027-1 (4)	
FILE NAME: r78f163BRFlay4.dgn	PLOT DATE: 05-JUN-2012
PROJECT LEADER: M.EVANS-MONGEON	DRAWN BY: B. FERLAZO
DESIGNED BY: S. SCRIBNER	CHECKED BY: H. PETROVS
R.O.W. BRF LAYOUT SHEET 4	SHEET 187 OF 214

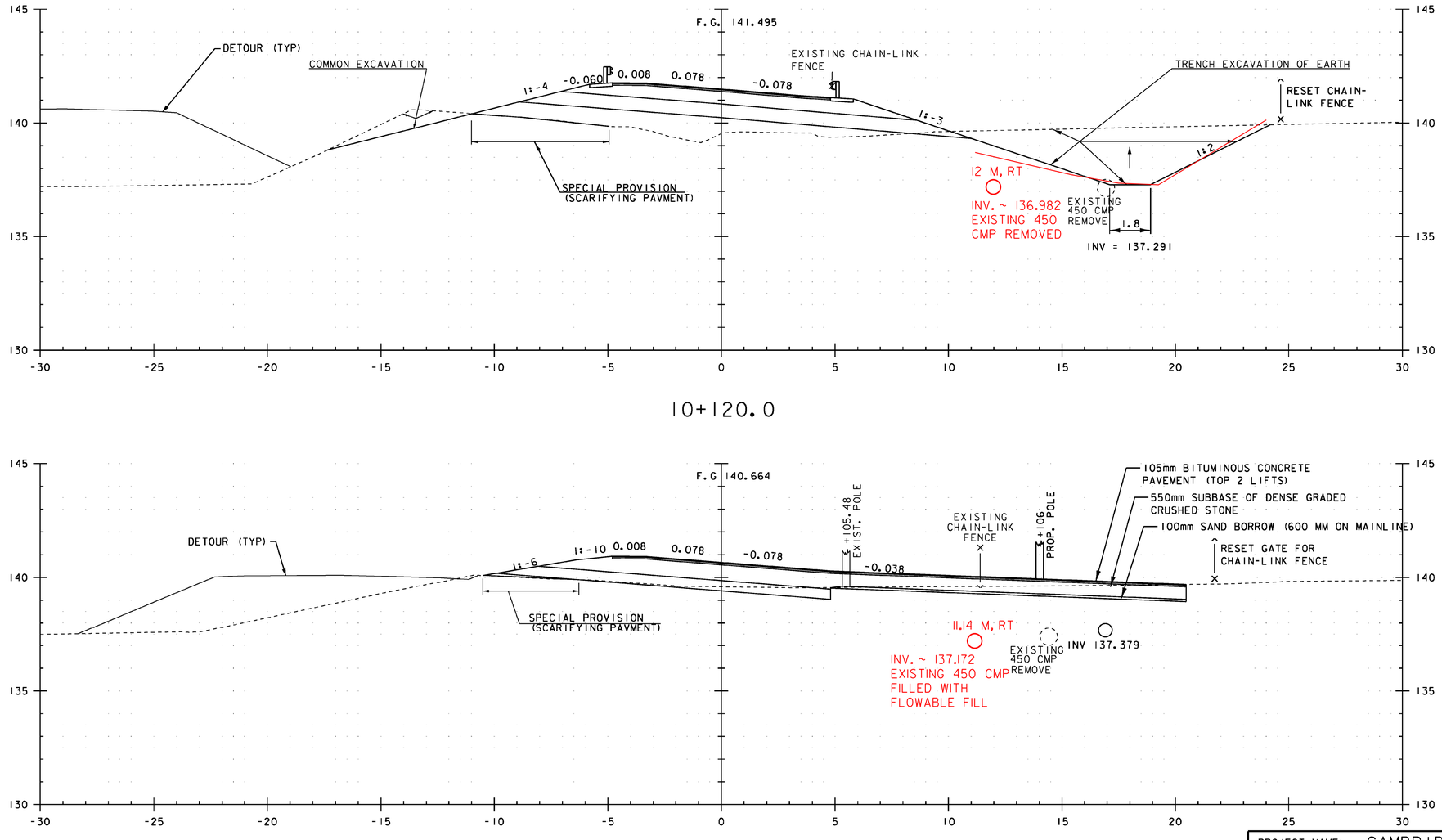

10+120.0

10+100.0
DRIVE RIGHT

10+082.794 BEGIN PROJECT

0 2 4 6 8 10
SCALE IN METERS

STA 10+100.0 TO STA 10+120.0

PROJECT NAME: CAMBRIDGE
PROJECT NUMBER: BRF 027-1 (4)

FILE NAME: s78f163xs1dgn
PROJECT LEADER: M. EVANS-MONGEON
DESIGNED BY: EVANS-MONGEON
VT 108 - CROSS SECTION 1

PLOT DATE: 05-JUN-2012
DRAWN BY: G. ROKES
CHECKED BY: S. SCRIBNER
SHEET 188 OF 214

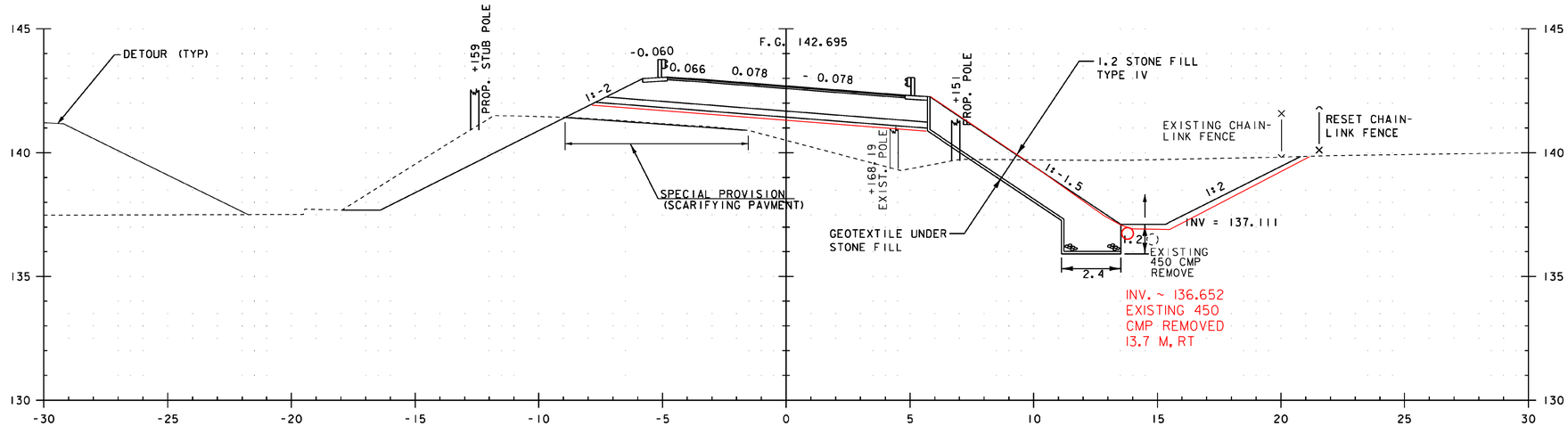

10+160.0

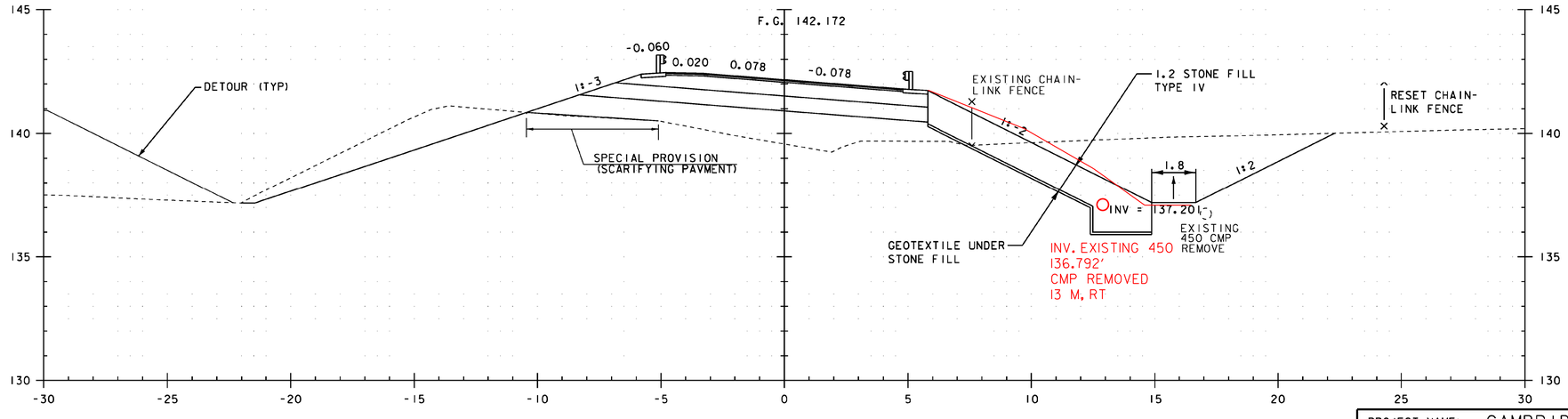

10+140.0

0 2 4 6 8 10
SCALE IN METERS

FROM STA 10+140.0 TO STA 10+160.0

PROJECT NAME: CAMBRIDGE
PROJECT NUMBER: BRF 027-1 (4)

FILE NAME: s78f163xs1dgn
PROJECT LEADER: M. EVANS-MONGEON
DESIGNED BY: EVANS-MONGEON
VT 108 - CROSS SECTION 2

PLOT DATE: 05-JUN-2012
DRAWN BY: G. ROKES
CHECKED BY: S. SCRIBNER
SHEET 189 OF 214

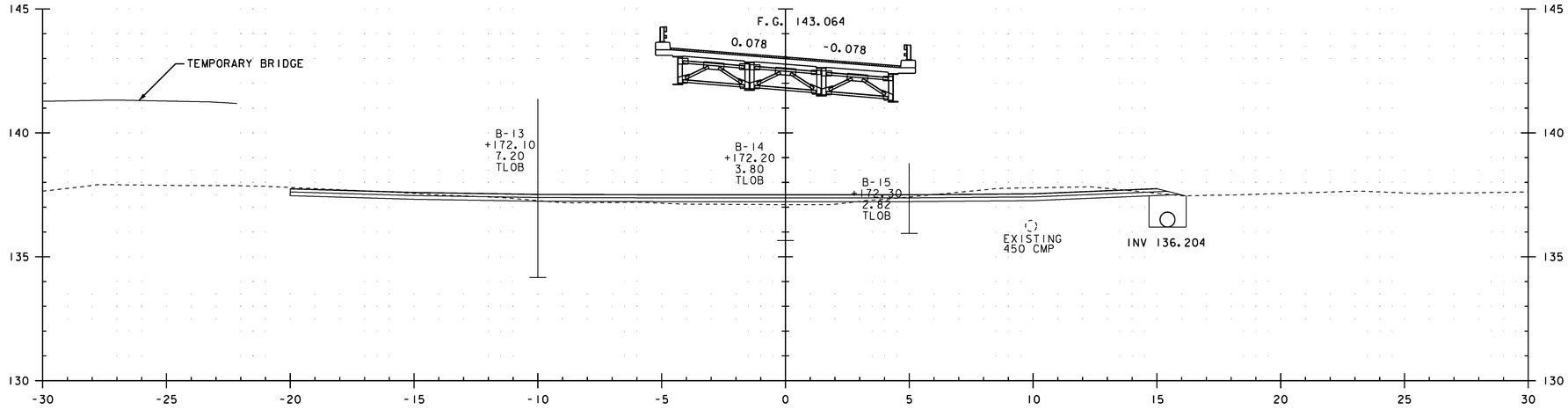

10+180.0

STA. 10+172.200 BEGIN BRIDGE

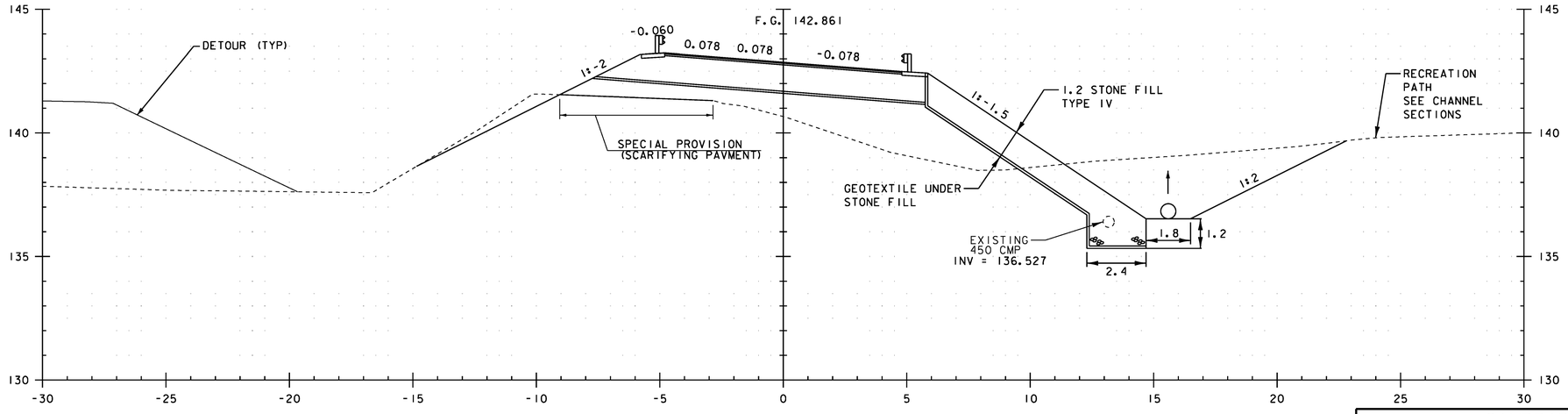

10+168.0

0 2 4 6 8 10
SCALE IN METERS

FROM STA 10+168.0 TO STA 10+180.0

PROJECT NAME: CAMBRIDGE	
PROJECT NUMBER: BRF 027-1 (4)	
FILE NAME: s78f163xsIdgn	PLOT DATE: 05-JUN-2012
PROJECT LEADER: M. EVANS-MONGEON	DRAWN BY: G. ROKES
DESIGNED BY: EVANS-MONGEON	CHECKED BY: S. SCRIBNER
VT 108 - CROSS SECTION 3	SHEET 190 OF 214

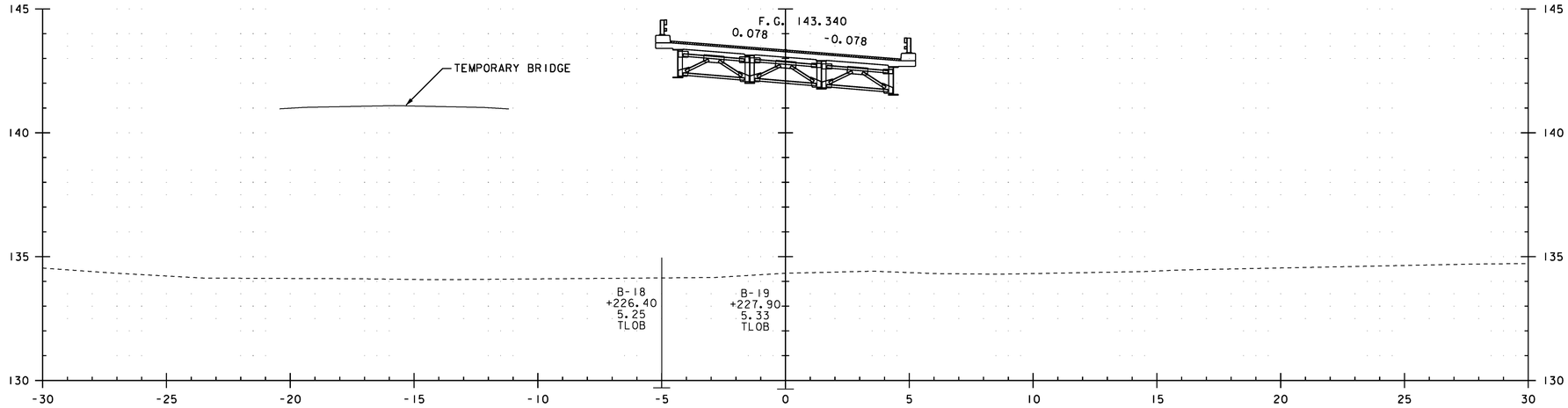

10+220.0

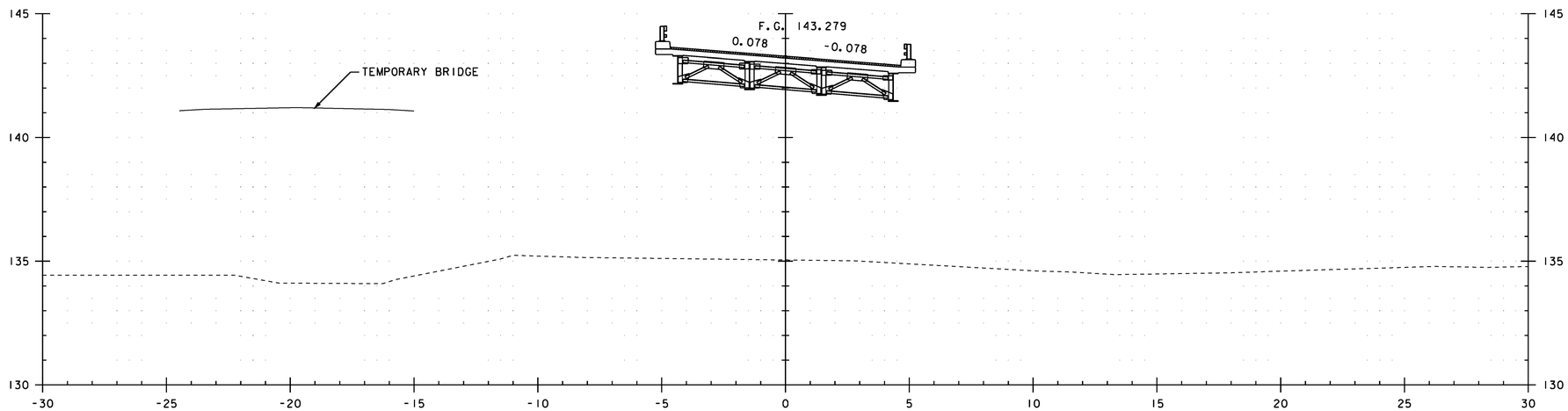

10+200.0

0 2 4 6 8 10
SCALE IN METERS

FROM STA 10+200.0 TO STA 10+220.0

PROJECT NAME: CAMBRIDGE
PROJECT NUMBER: BRF 027-1(4)

FILE NAME: s78f163xsldgn
PROJECT LEADER: M. EVANS-MONGEON
DESIGNED BY: EVANS-MONGEON
VT 108 - CROSS SECTION 4

PLOT DATE: 05-JUN-2012
DRAWN BY: G. ROKES
CHECKED BY: S. SCRIBNER
SHEET 191 OF 214

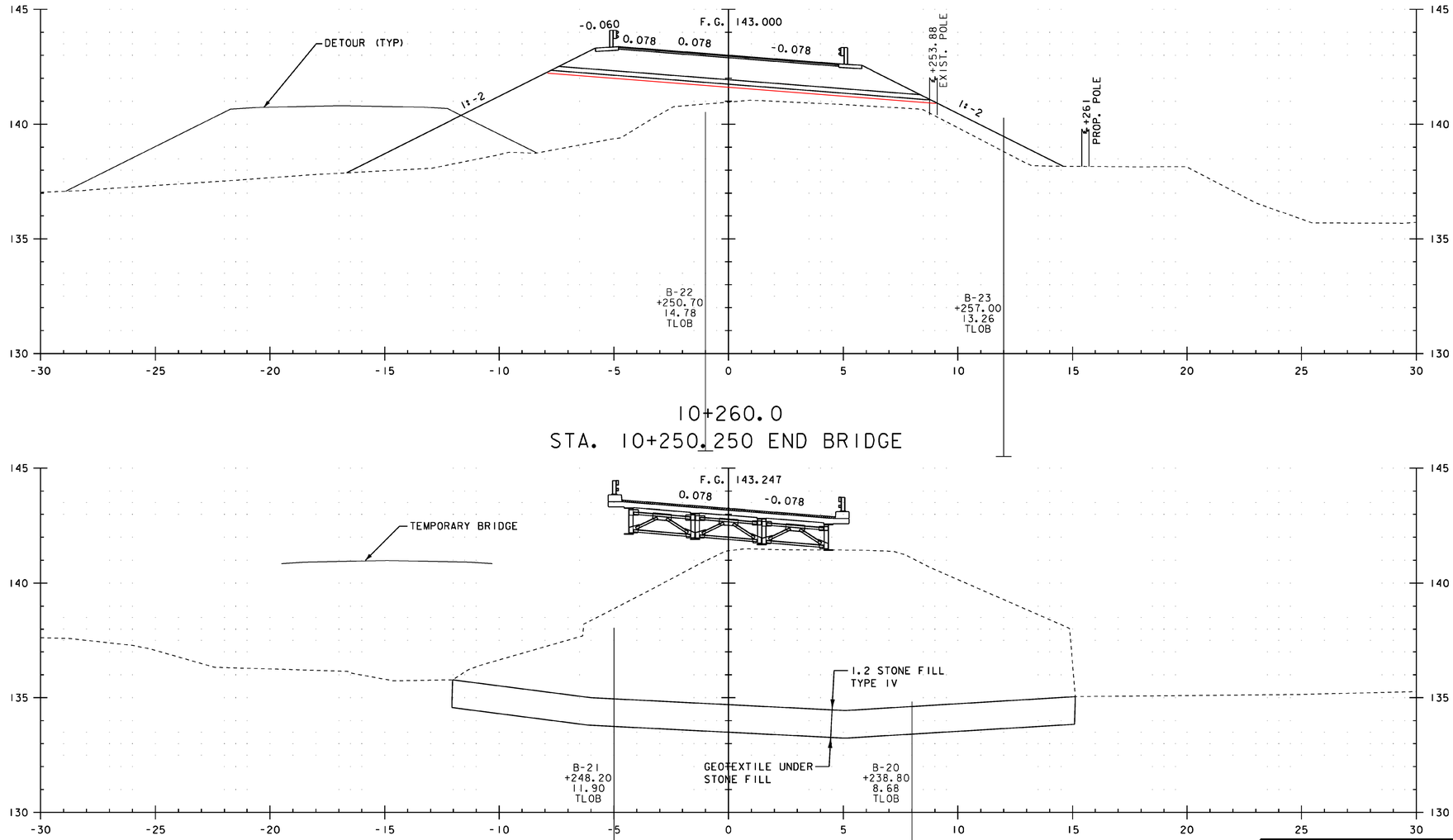

FROM STA 10+240.0 TO STA 10+260.0

PROJECT NAME: CAMBRIDGE
PROJECT NUMBER: BRF 027-1 (4)

FILE NAME: s78f163xs1dgn
PROJECT LEADER: M. EVANS-MONGEON
DESIGNED BY: EVANS-MONGEON
VT 108 - CROSS SECTION 5

PLOT DATE: 05-JUN-2012
DRAWN BY: G. ROKES
CHECKED BY: S. SCRIBNER
SHEET 192 OF 214

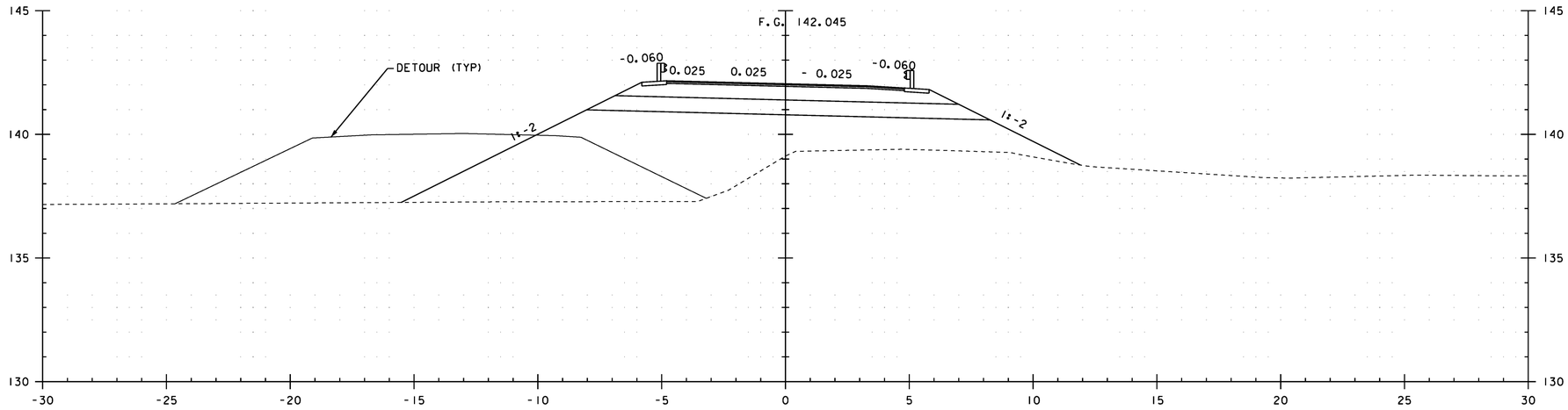

10+300.0

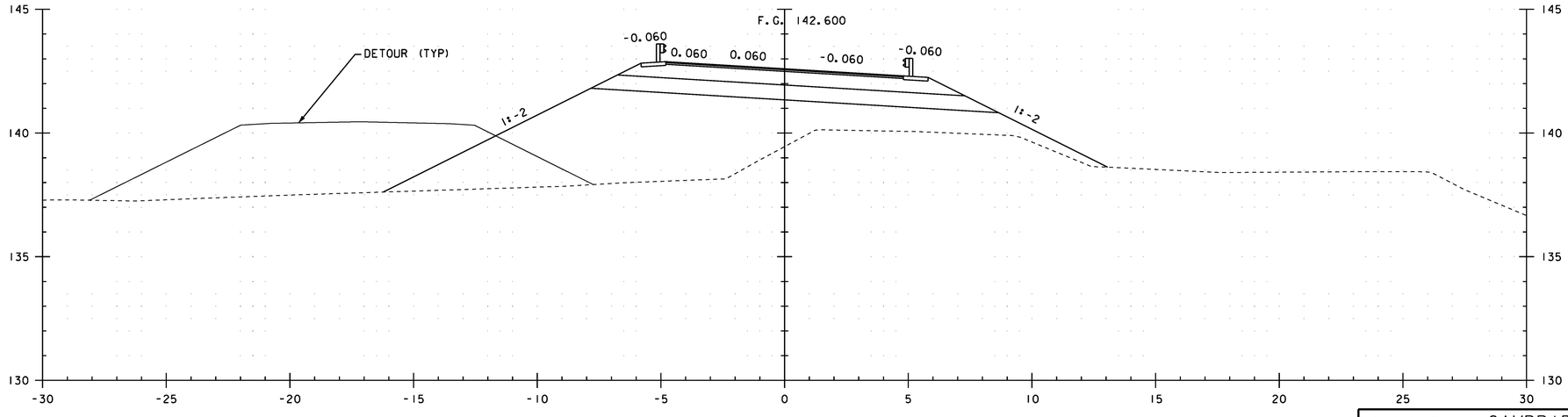

10+280.0

0 2 4 6 8 10
SCALE IN METERS

FROM STA 10+280.0 TO STA 10+300.0

PROJECT NAME: CAMBRIDGE
PROJECT NUMBER: BRF 027-1(4)

FILE NAME: s78f163xsIdgn
PROJECT LEADER: M. EVANS-MONGEON
DESIGNED BY: EVANS-MONGEON
VT 108 - CROSS SECTION 6

PLOT DATE: 05-JUN-2012
DRAWN BY: G. ROKES
CHECKED BY: S. SCRIBNER
SHEET 193 OF 214

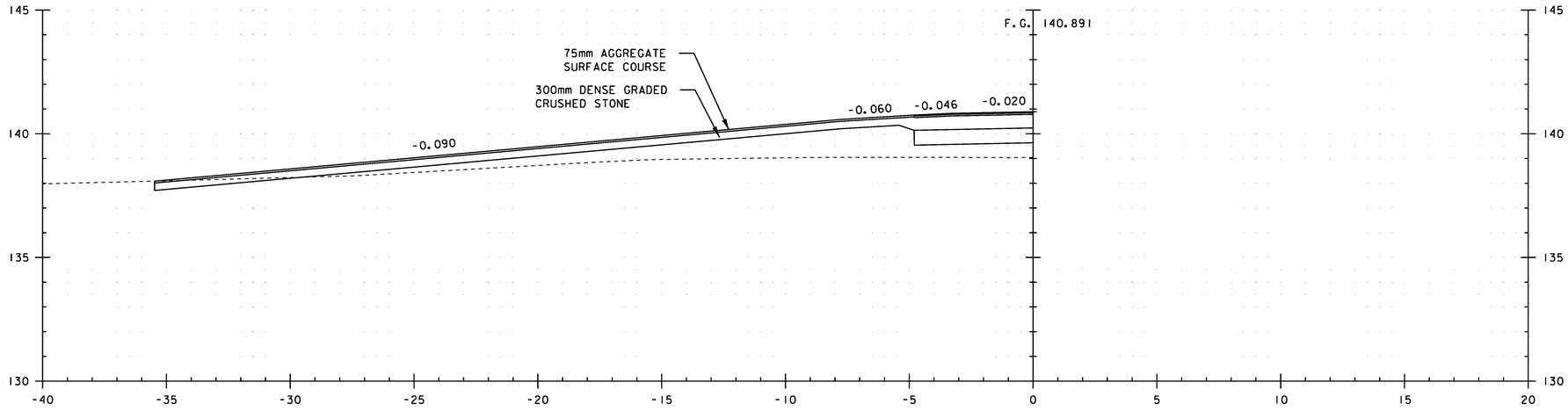

10+338.0
DRIVE LEFT ALONG CENTERLINE

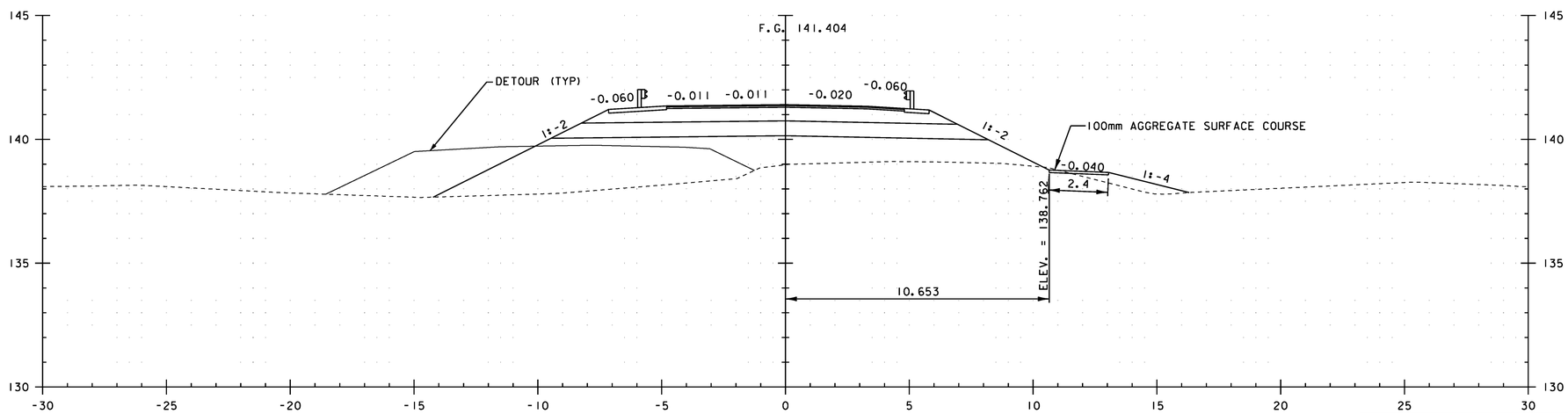

10+320.0

0 2 4 6 8 10
SCALE IN METERS

FROM STA 10+320.0 TO STA 10+338.0

PROJECT NAME: CAMBRIDGE
PROJECT NUMBER: BRF 027-1(4)

FILE NAME: s78f163xs1dgn
PROJECT LEADER: M. EVANS-MONGEON
DESIGNED BY: EVANS-MONGEON
VT 108 - CROSS SECTION 7

PLOT DATE: 05-JUN-2012
DRAWN BY: G. ROKES
CHECKED BY: S. SCRIBNER
SHEET 194 OF 214

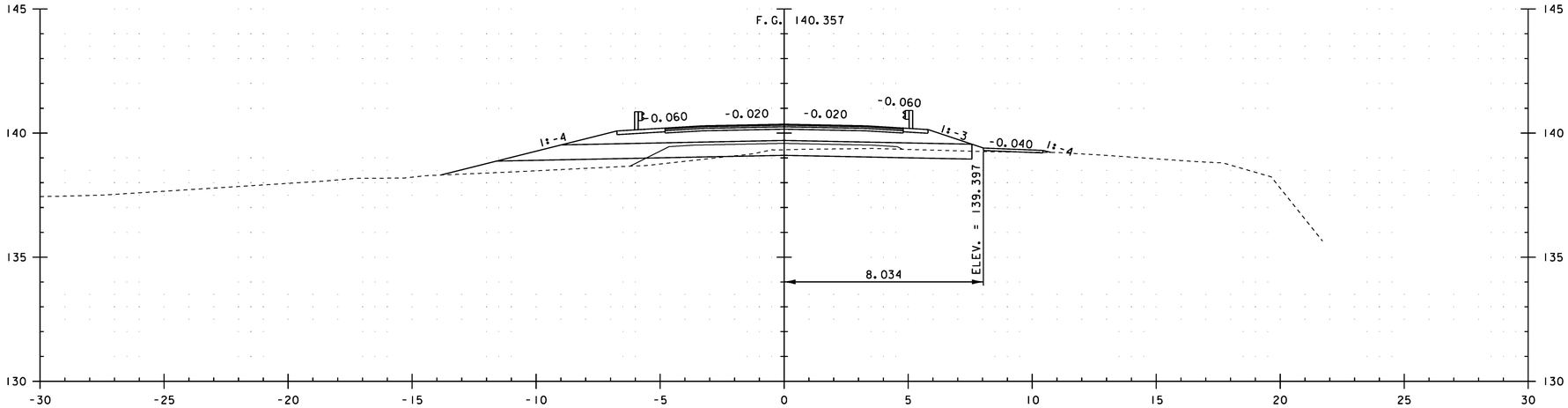

10+360.0

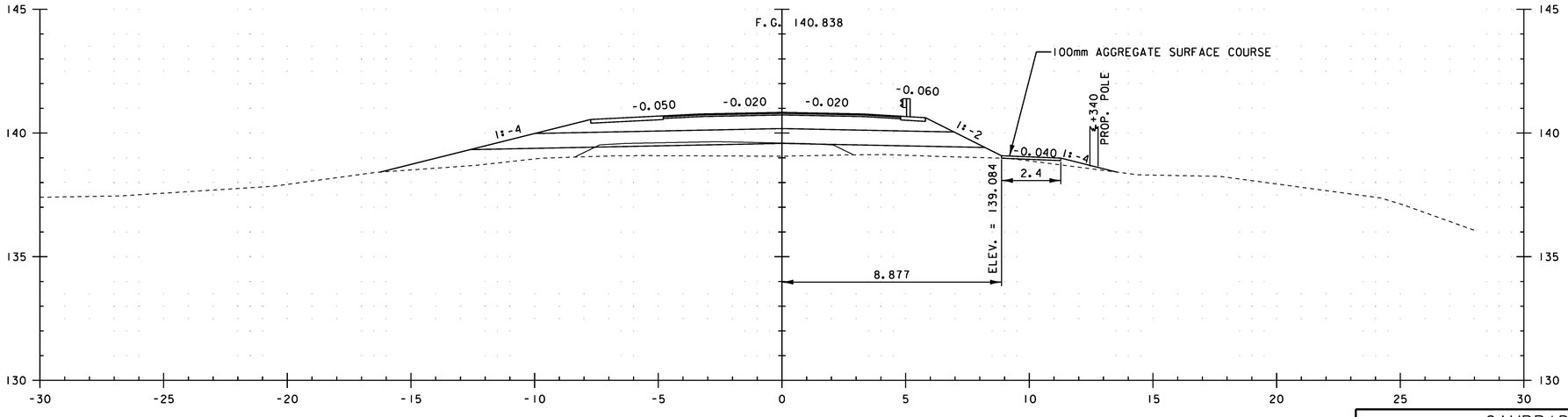

10+340.0

0 2 4 6 8 10
SCALE IN METERS

FROM STA 10+340.0 TO STA 10+360.0

PROJECT NAME: CAMBRIDGE
PROJECT NUMBER: BRF 027-1(4)

FILE NAME: s78f163xsldgn
PROJECT LEADER: M. EVANS-MONGEON
DESIGNED BY: EVANS-MONGEON
VT 108 - CROSS SECTION 8

PLOT DATE: 05-JUN-2012
DRAWN BY: G. ROKES
CHECKED BY: S. SCRIBNER
SHEET 195 OF 214

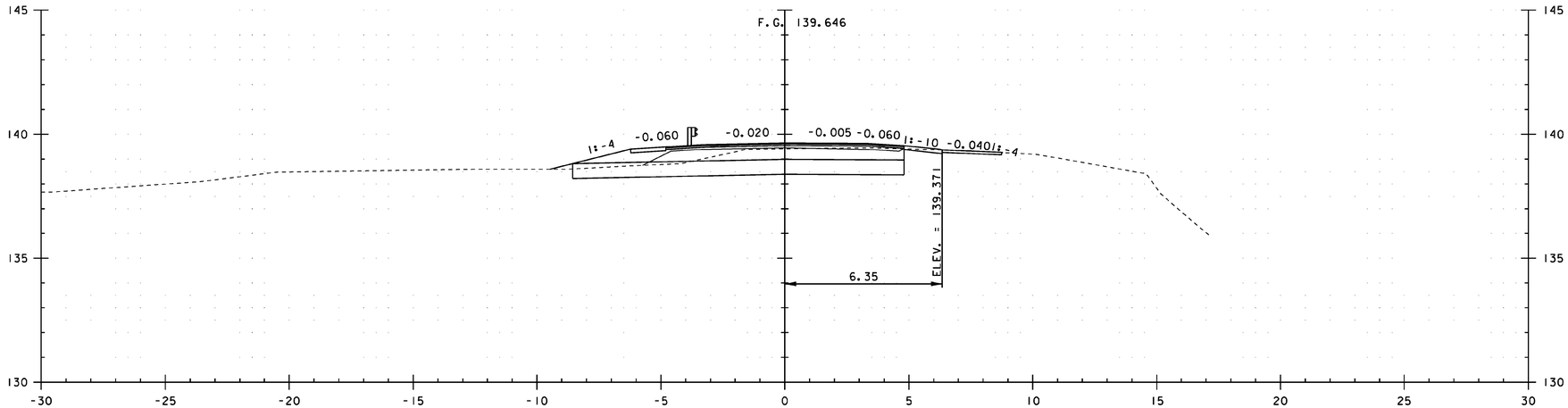

10+400.0

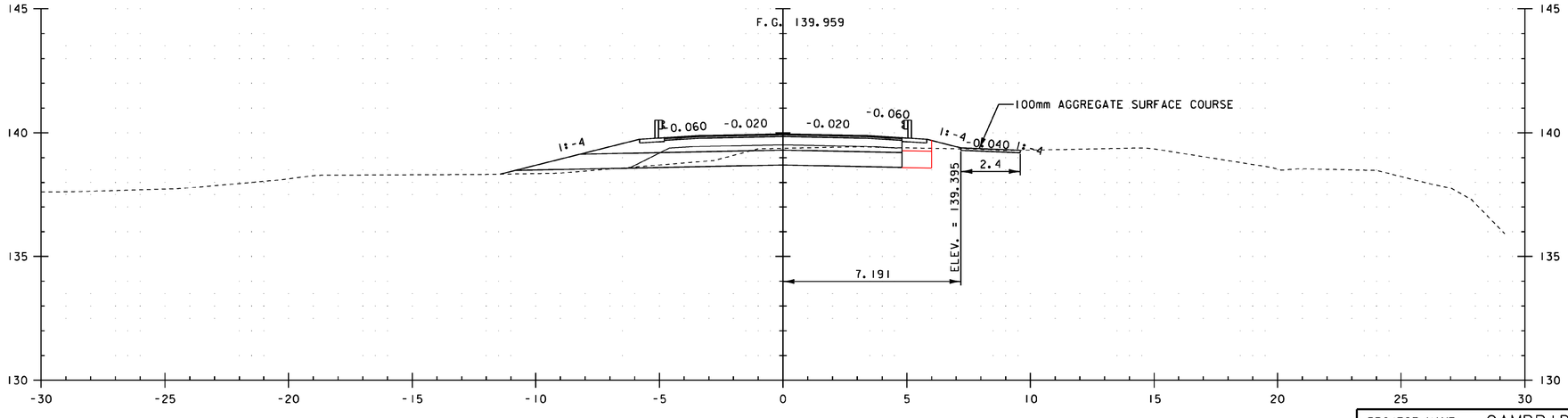

10+380.0

0 2 4 6 8 10
SCALE IN METERS

FROM STA 10+380.0 TO STA 10+400.0

PROJECT NAME: CAMBRIDGE
PROJECT NUMBER: BRF 027-1(4)

FILE NAME: s78f163xs1dgn
PROJECT LEADER: M. EVANS-MONGEON
DESIGNED BY: EVANS-MONGEON
VT 108 - CROSS SECTION 9

PLOT DATE: 05-JUN-2012
DRAWN BY: G. ROKES
CHECKED BY: S. SCRIBNER
SHEET 196 OF 214

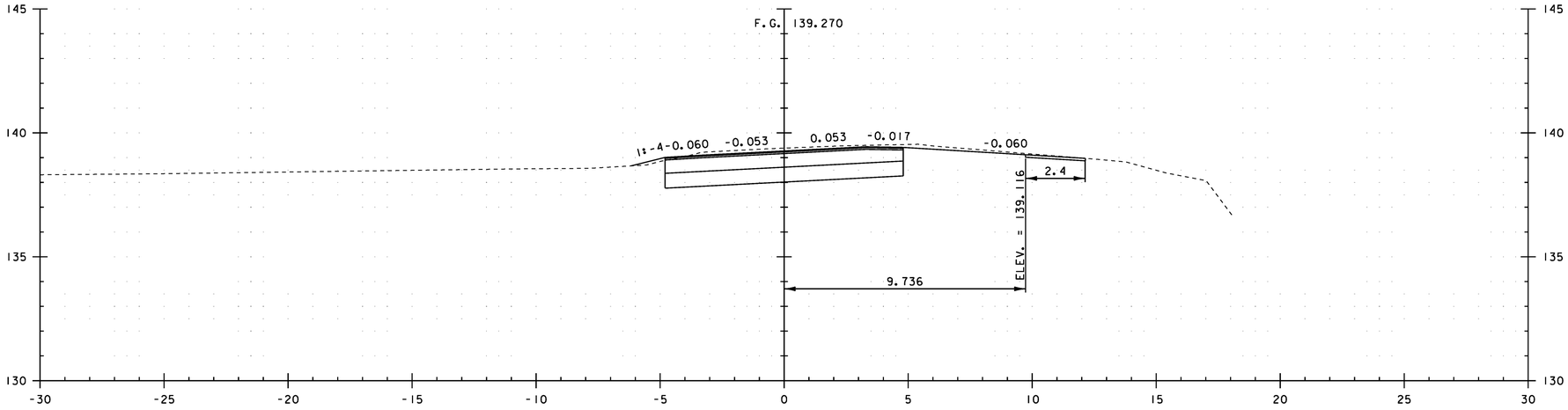

10+440.0

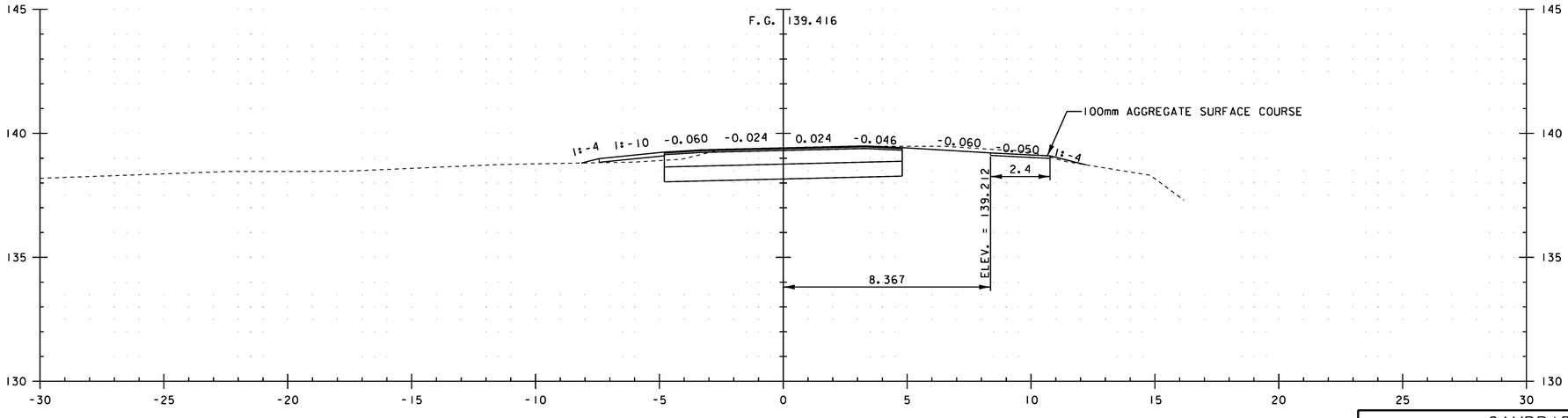

10+420.0

0 2 4 6 8 10
SCALE IN METERS

FROM STA 10+420.0 TO STA 10+440.0

PROJECT NAME: CAMBRIDGE	
PROJECT NUMBER: BRF 027-1(4)	
FILE NAME: s78f163xsldgn	PLOT DATE: 05-JUN-2012
PROJECT LEADER: M. EVANS-MONGEON	DRAWN BY: G. ROKES
DESIGNED BY: EVANS-MONGEON	CHECKED BY: S. SCRIBNER
VT 108 - CROSS SECTION 10	SHEET 197 OF 214

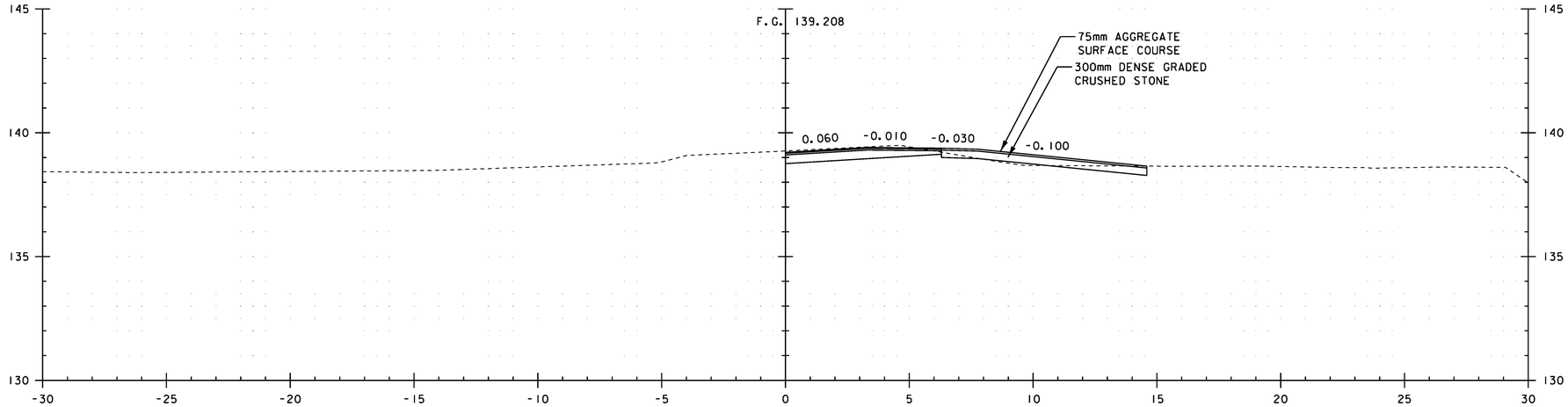

10+470.0
DRIVE RIGHT

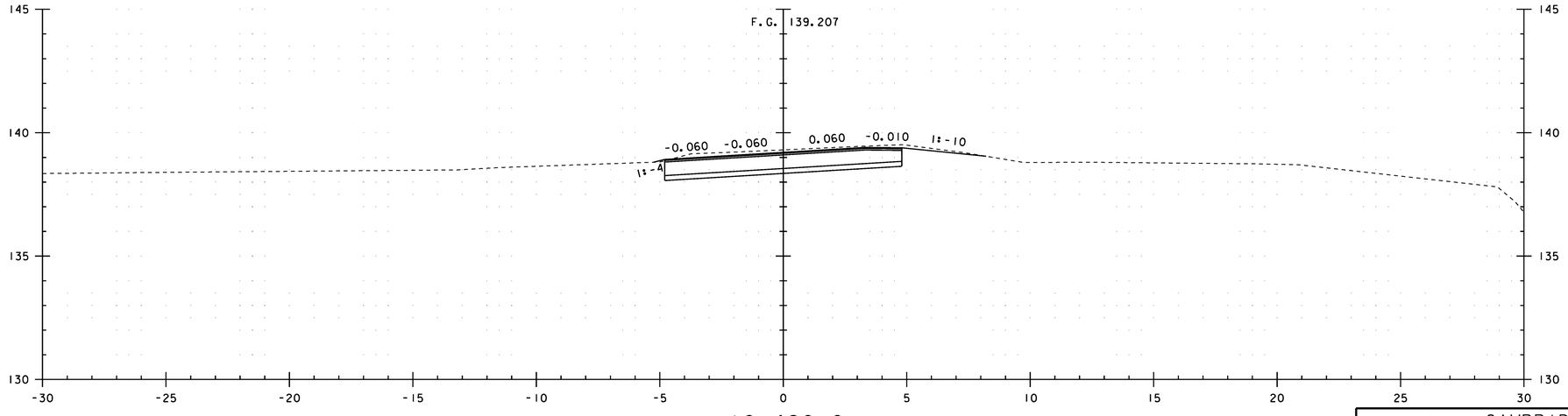

10+460.0
STA. 10+450.0 END PROJECT
BEGIN APPROACH

0 2 4 6 8 10
SCALE IN METERS

FROM STA 10+460.0 TO STA 10+470.0

PROJECT NAME: CAMBRIDGE
PROJECT NUMBER: BRF 027-1(4)

FILE NAME: s78f163xsldgn
PROJECT LEADER: M. EVANS-MONGEON
DESIGNED BY: EVANS-MONGEON
VT 108 - CROSS SECTION 11

PLOT DATE: 05-JUN-2012
DRAWN BY: G. ROKES
CHECKED BY: S. SCRIBNER
SHEET 198 OF 214

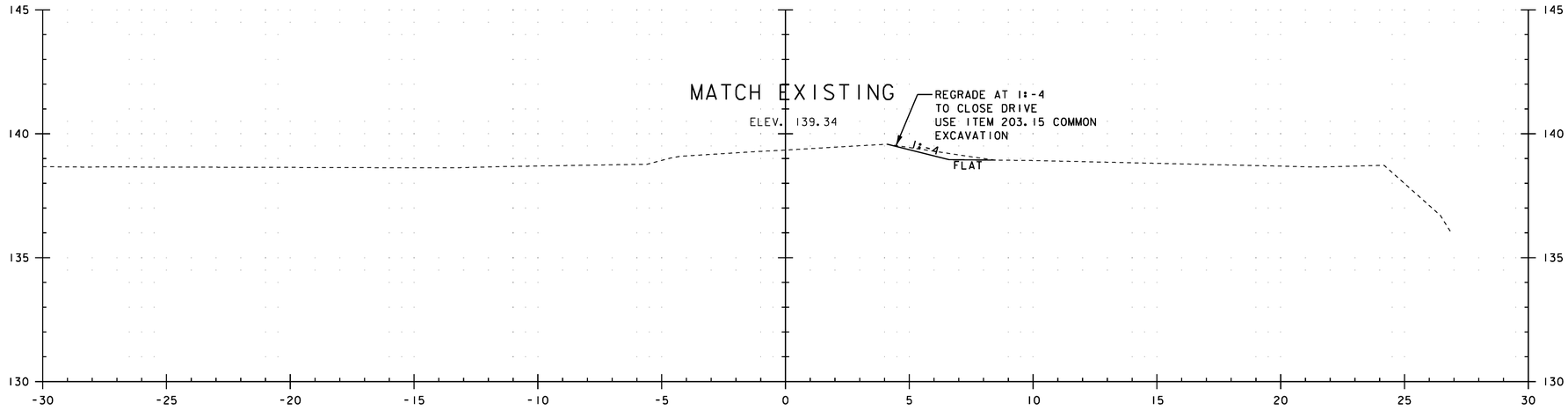

10+500.0

STA. 10+495.0 END APPROACH

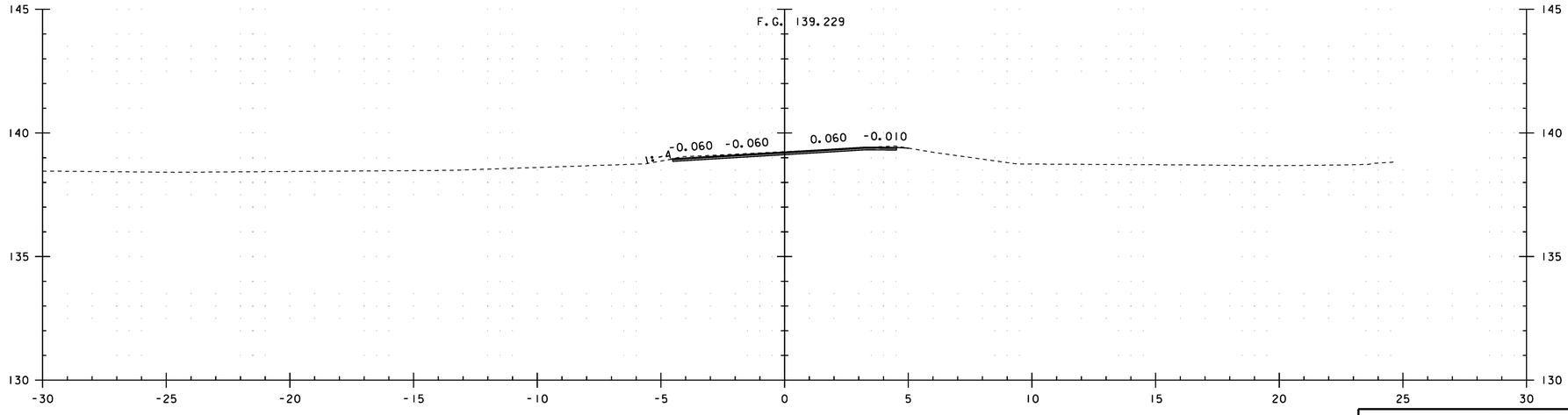

10+480.0

0 2 4 6 8 10
SCALE IN METERS

FROM STA 10+480.0 TO STA 10+500.0

PROJECT NAME: CAMBRIDGE
PROJECT NUMBER: BRF 027-1(4)

FILE NAME: s78f163xs1dgn
PROJECT LEADER: M. EVANS-MONGEON
DESIGNED BY: EVANS-MONGEON
VT 108 - CROSS SECTION 12

PLOT DATE: 05-JUN-2012
DRAWN BY: G. ROKES
CHECKED BY: S. SCRIBNER
SHEET 199 OF 214

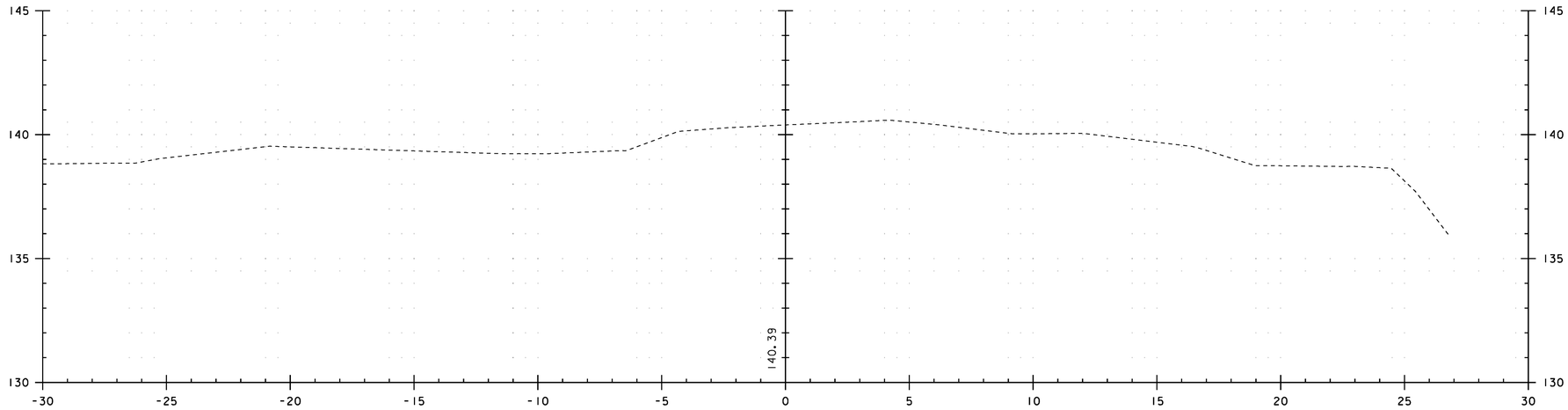

10+530.0

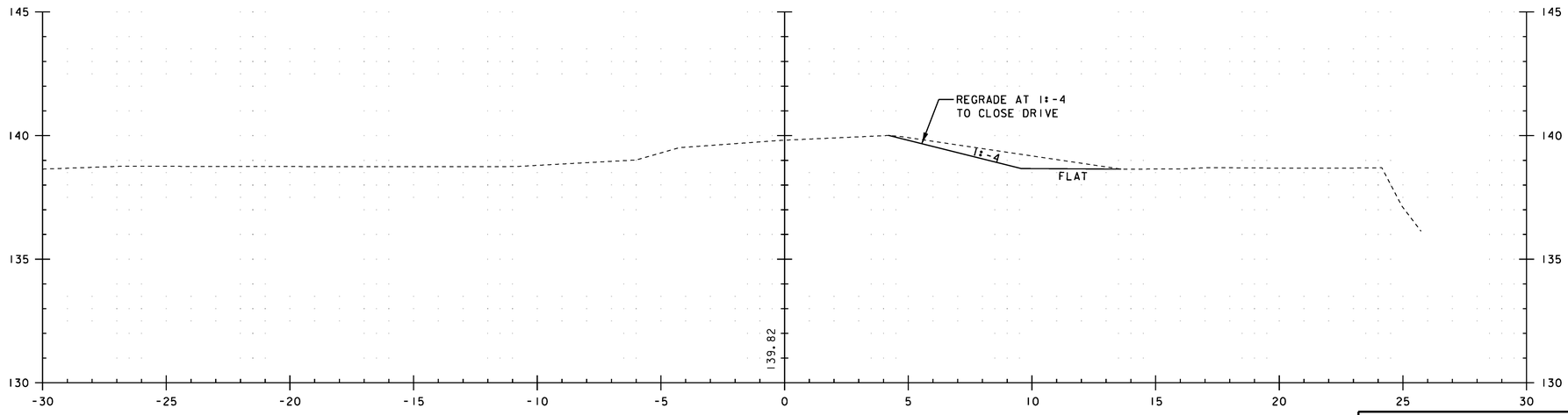

10+520.0

0 2 4 6 8 10
SCALE IN METERS

FROM STA 10+520.0 TO STA 10+530.0

PROJECT NAME: CAMBRIDGE
PROJECT NUMBER: BRF 027-1(4)

FILE NAME: s78f163xs1dgn
PROJECT LEADER: M. EVANS-MONGEON
DESIGNED BY: EVANS-MONGEON
VT 108 - CROSS SECTION 13

PLOT DATE: 05-JUN-2012
DRAWN BY: G. ROKES
CHECKED BY: S. SCRIBNER
SHEET 200 OF 214

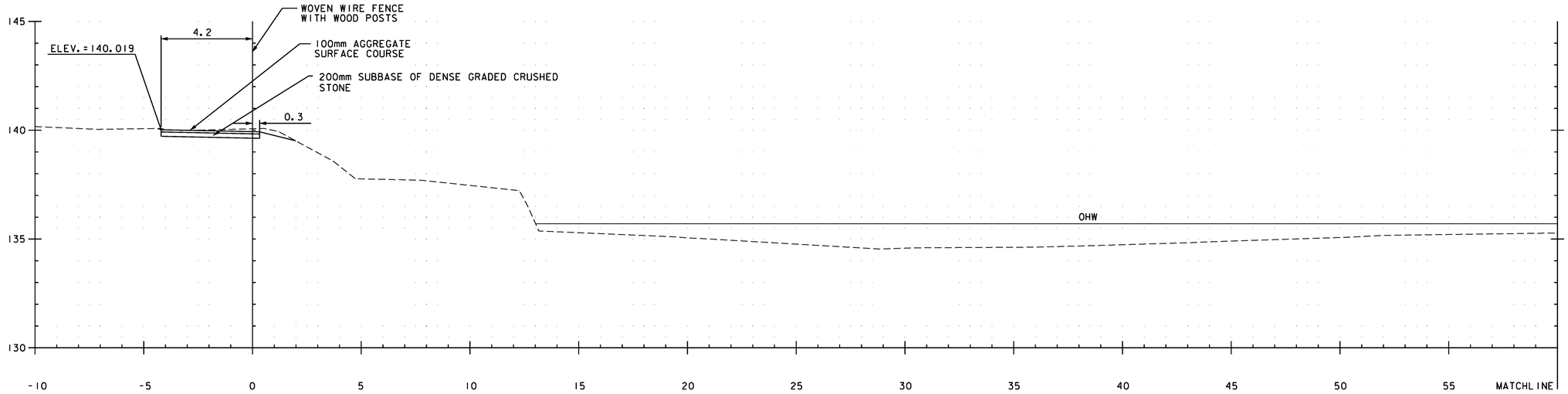

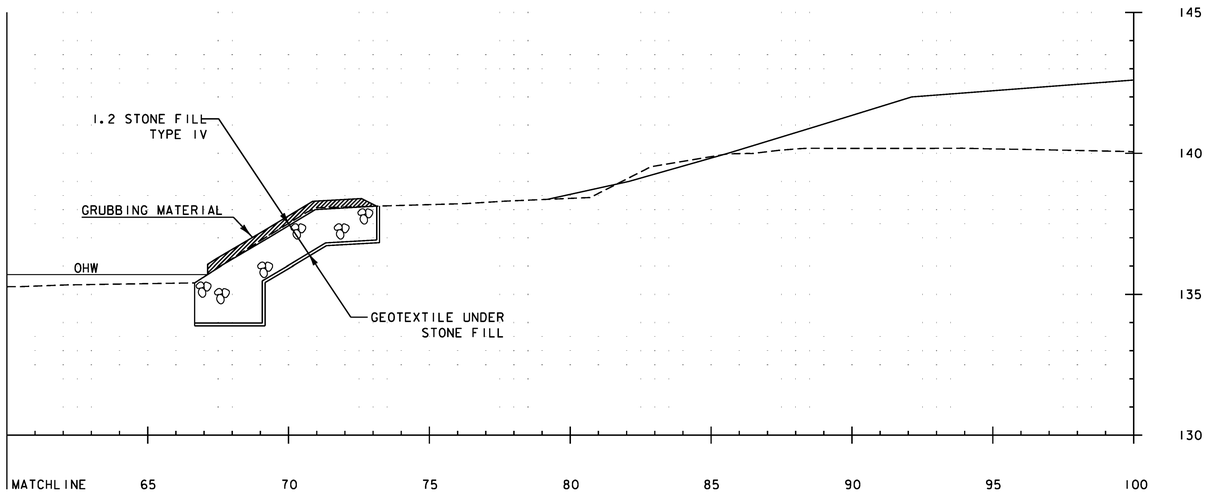

50+060.000

NOTE:

STATION 50+056 RT. ABUT. NO. 2
BEGIN UNCLASSIFIED CHANNEL EXCAVATION
BEGIN STONE FILL TYPE IV
BEGIN GEOTEXTILE UNDER STONE FILL
BEGIN GRUBBING MATERIAL

STATION 50+047 LT. RECREATION PATH
BEGIN UNCLASSIFIED CHANNEL EXCAVATION
BEGIN AGGREGATE SURFACE COURSE
BEGIN SUBBASE OF DENSE GRADED CRUSHED STONE
BEGIN WOVEN WIRE FENCE WITH WOOD POSTS

0 2 4 6 8 10
SCALE 1:100

STA 50+060.000

PROJECT NAME:	CAMBRIDGE
PROJECT NUMBER:	BRF 027-1(4)

FILE NAME: s78f163chxs.dgn	PLOT DATE: 05-JUN-2012
PROJECT LEADER: M. EVANS-MONGEON	DRAWN BY: EVANS-MONGEON
DESIGNED BY: T. FILBACH	CHECKED BY: S. SCRIBNER
CHANNEL SECTION 1	SHEET 201 OF 214

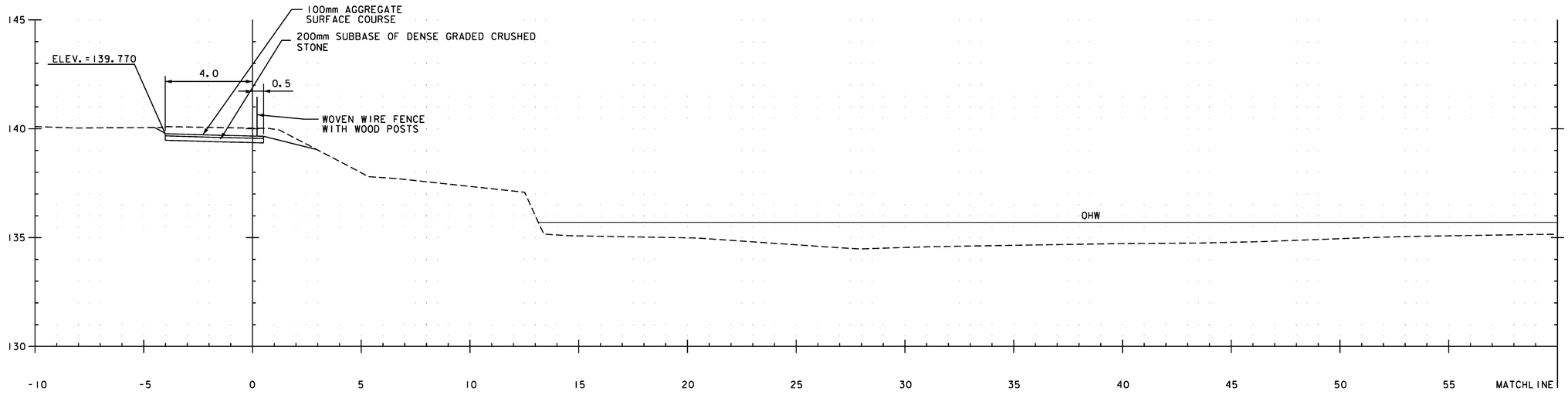

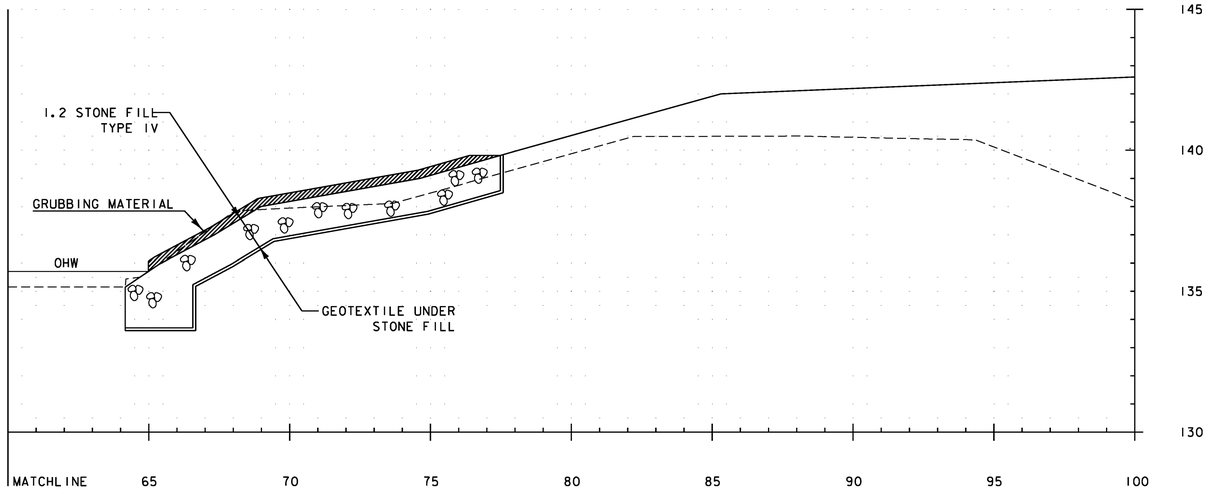

50+065.000

0 2 4 6 8 10
SCALE 1:100

STA 50+065.000

PROJECT NAME: CAMBRIDGE
PROJECT NUMBER: BRF 027-1(4)

FILE NAME: s78f163chxs.dgn
PROJECT LEADER: M. EVANS-MONGEON
DESIGNED BY: T. FILBACH
CHANNEL SECTION 2

PLOT DATE: 05-JUN-2012
DRAWN BY: EVANS-MONGEON
CHECKED BY: S. SCRIBNER
SHEET 202 OF 214

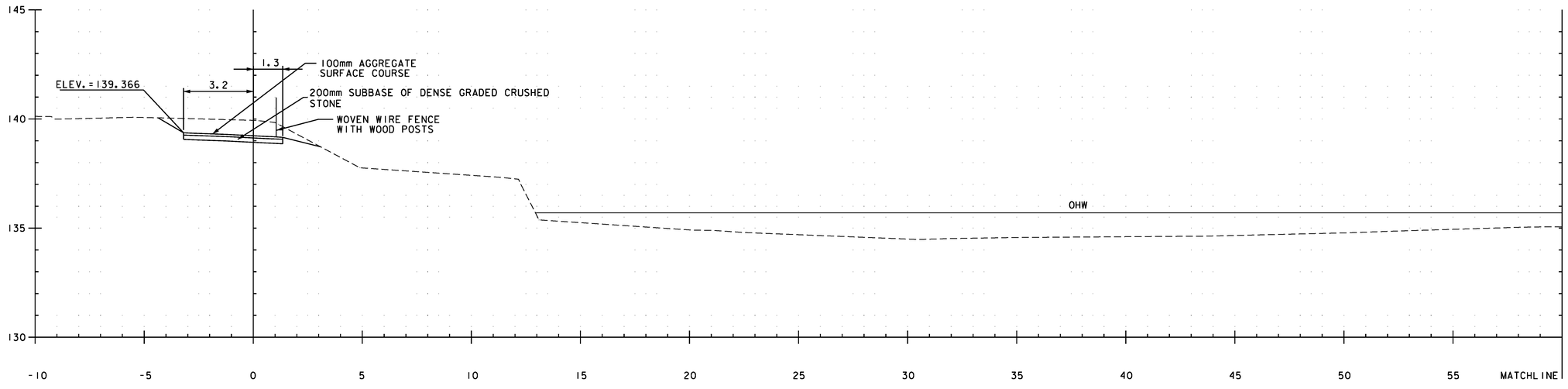

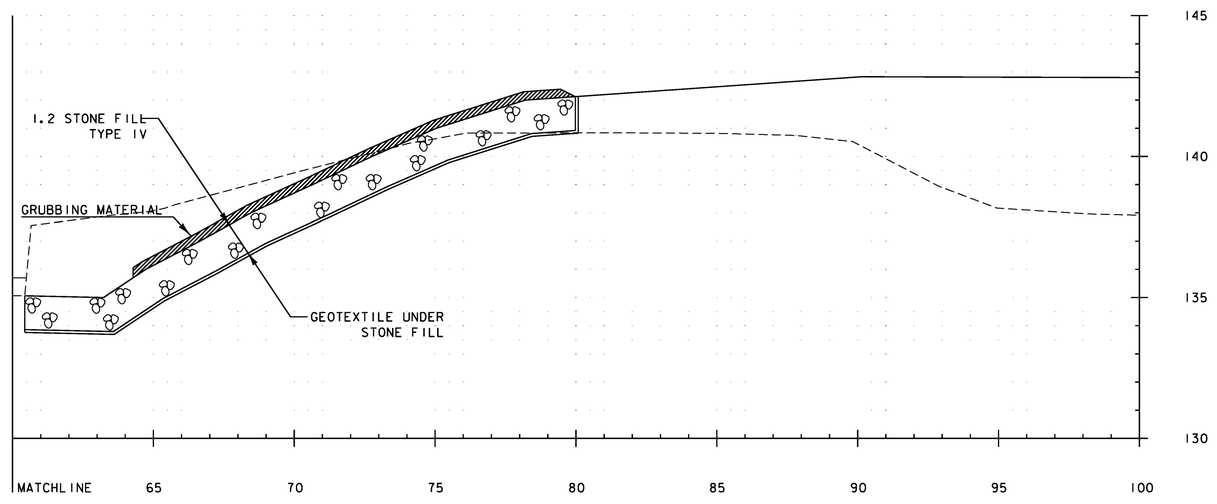

50+070.000

0 2 4 6 8 10
SCALE 1:100

STA 50+070.000

PROJECT NAME: CAMBRIDGE
PROJECT NUMBER: BRF 027-1(4)

FILE NAME: s78f163chxs.dgn
PROJECT LEADER: M. EVANS-MONGEON
DESIGNED BY: T. FILBACH
CHANNEL SECTION 3

PLOT DATE: 05-JUN-2012
DRAWN BY: EVANS-MONGEON
CHECKED BY: S. SCRIBNER
SHEET 203 OF 214

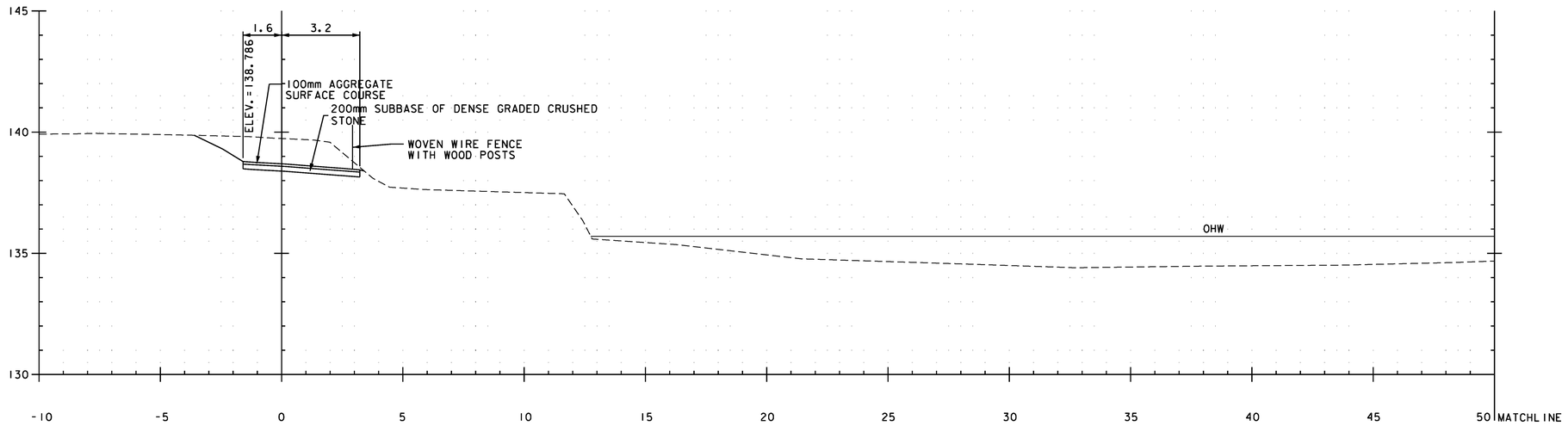

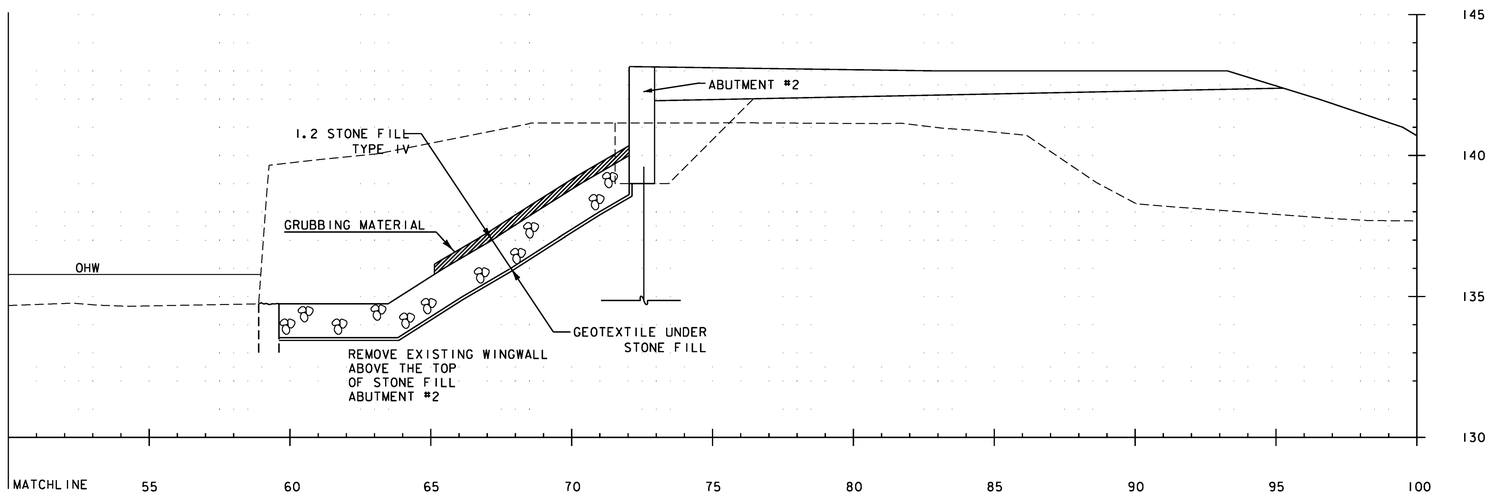

50+075.000

0 2 4 6 8 10
SCALE 1:100

STA 50+075.000

PROJECT NAME:	CAMBRIDGE
PROJECT NUMBER:	BRF 027-1(4)

FILE NAME: s78f163chxs.dgn	PLOT DATE: 05-JUN-2012
PROJECT LEADER: M. EVANS-MONGEON	DRAWN BY: EVANS-MONGEON
DESIGNED BY: T. FILBACH	CHECKED BY: S. SCRIBNER
CHANNEL SECTION 4	SHEET 204 OF 214

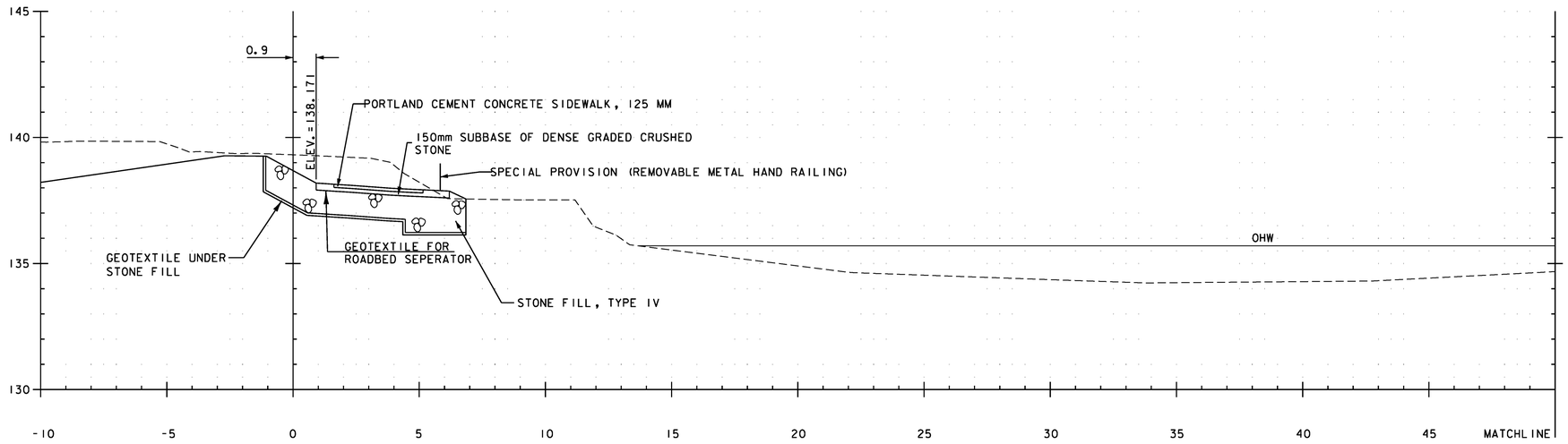

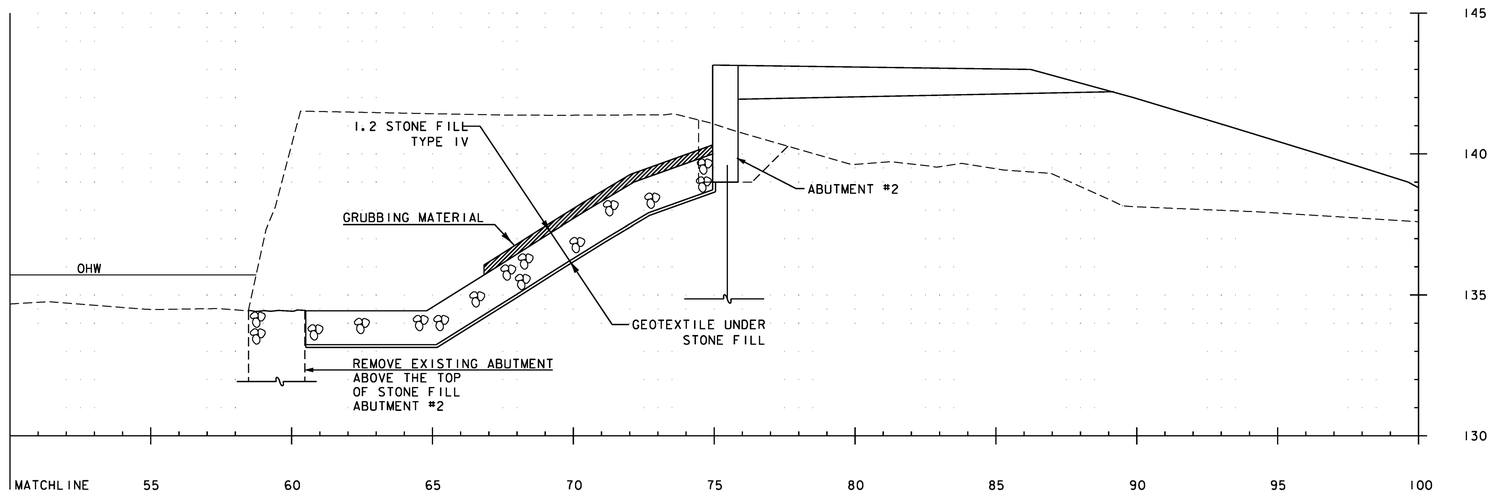

50+080.000

NOTE:
STATION 50+080 RT. RECREATION PATH
END AGGREGATE SURFACE COURSE
END WOVEN WIRE FENCE WITH WOOD POSTS
BEGIN PORTLAND CEMENT CONCRETE SIDEWALK, 125mm
BEGIN SPECIAL PROVISION (REMOVABLE METAL HAND RAILING)
BEGIN STONE FILL, TYPE IV
BEGIN GRUBBING MATERIAL
BEGIN GEOTEXTILE UNDER STONE FILL
BEGIN GEOTEXTILE FOR ROADBED SEPARATOR

STA 50+080.000

0 2 4 6 8 10
SCALE 1:100

PROJECT NAME: CAMBRIDGE	
PROJECT NUMBER: BRF 027-1(4)	
FILE NAME: s78f163chxs.dgn	PLOT DATE: 05-JUN-2012
PROJECT LEADER: M. EVANS-MONGEON	DRAWN BY: EVANS-MONGEON
DESIGNED BY: T. FILBACH	CHECKED BY: S. SCRIBNER
CHANNEL SECTION 5	SHEET 205 OF 214

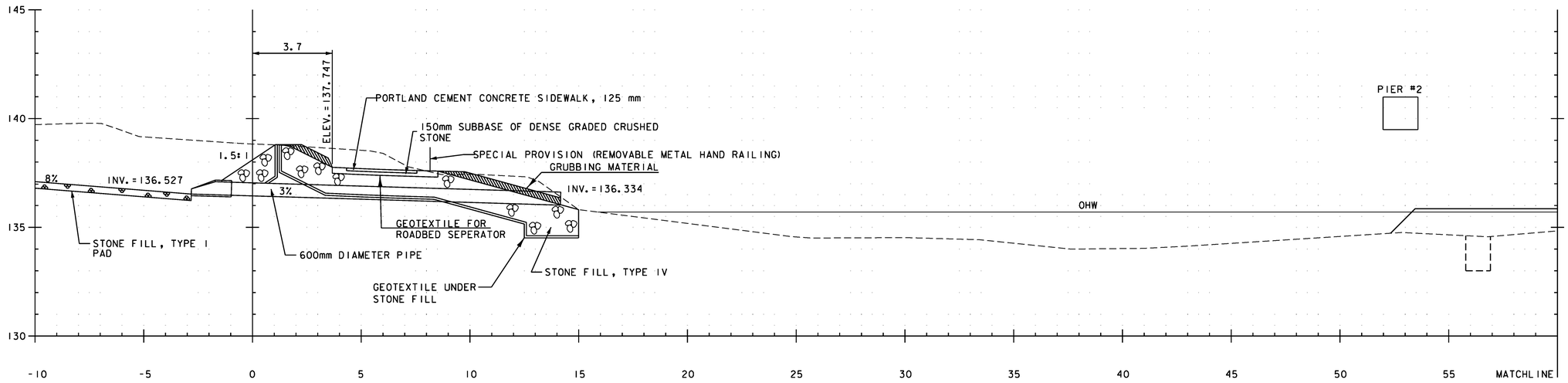

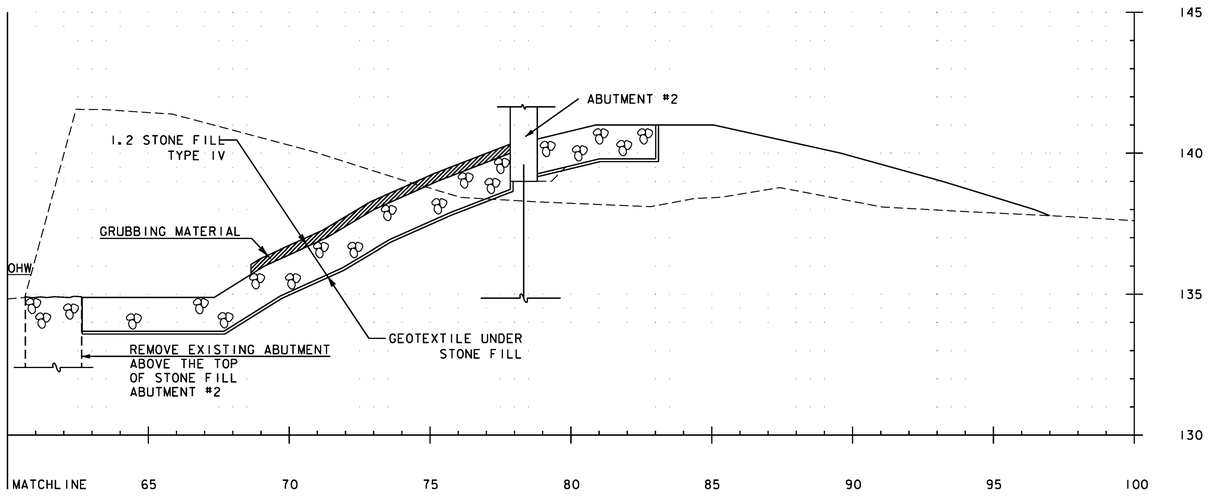

50+085.000

NOTE:

STATION 50+084 RT. PIER NO. 2
BEGIN COFFERDAM EXCAVATION
BEGIN STONE FILL, TYPE IV

0 2 4 6 8 10
SCALE 1:100

STA 50+085.000

PROJECT NAME:	CAMBRIDGE
PROJECT NUMBER:	BRF 027-1(4)

FILE NAME: s78f163chxs.dgn	PLOT DATE: 05-JUN-2012
PROJECT LEADER: M. EVANS-MONGEON	DRAWN BY: EVANS-MONGEON
DESIGNED BY: T. FILBACH	CHECKED BY: S. SCRIBNER
CHANNEL SECTION 6	SHEET 206 OF 214

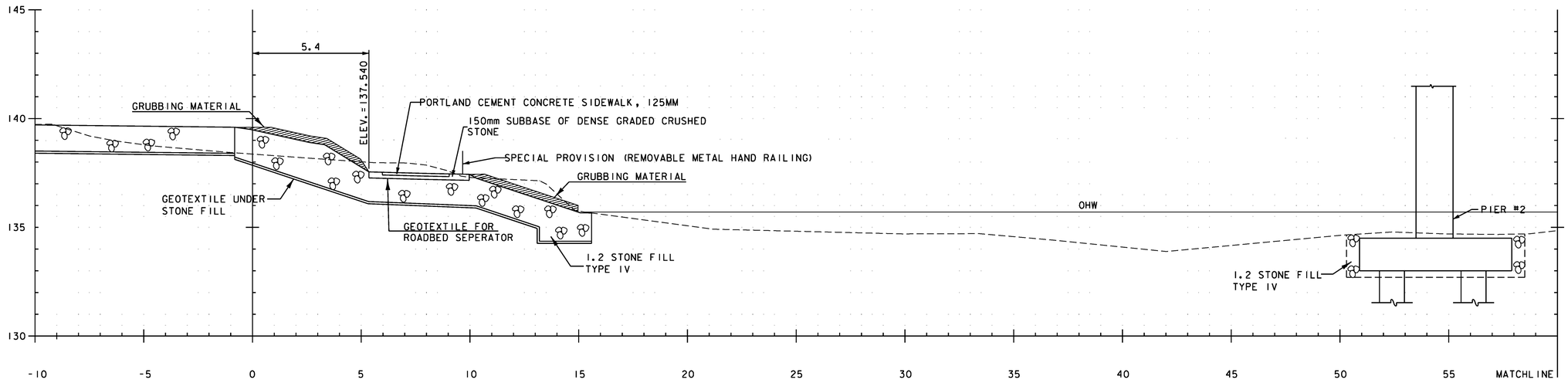

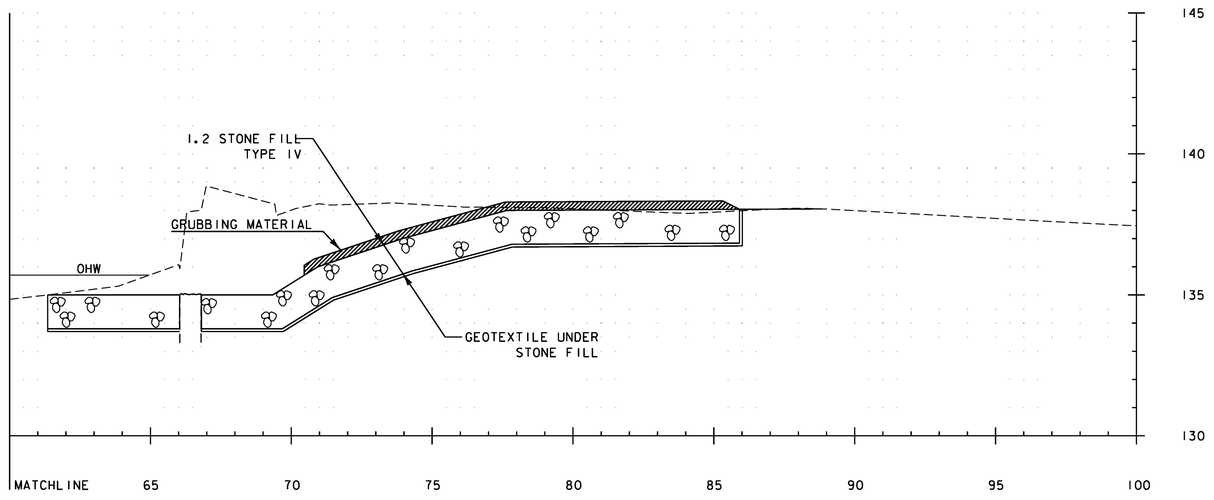

50+090.000

0 2 4 6 8 10
SCALE 1:100

STA 50+090.000

PROJECT NAME:	CAMBRIDGE
PROJECT NUMBER:	BRF 027-1(4)

FILE NAME: s78f163chxs.dgn	PLOT DATE: 05-JUN-2012
PROJECT LEADER: M. EVANS-MONGEON	DRAWN BY: EVANS-MONGEON
DESIGNED BY: T. FILBACH	CHECKED BY: S. SCRIBNER
CHANNEL SECTION 7	SHEET 207 OF 214

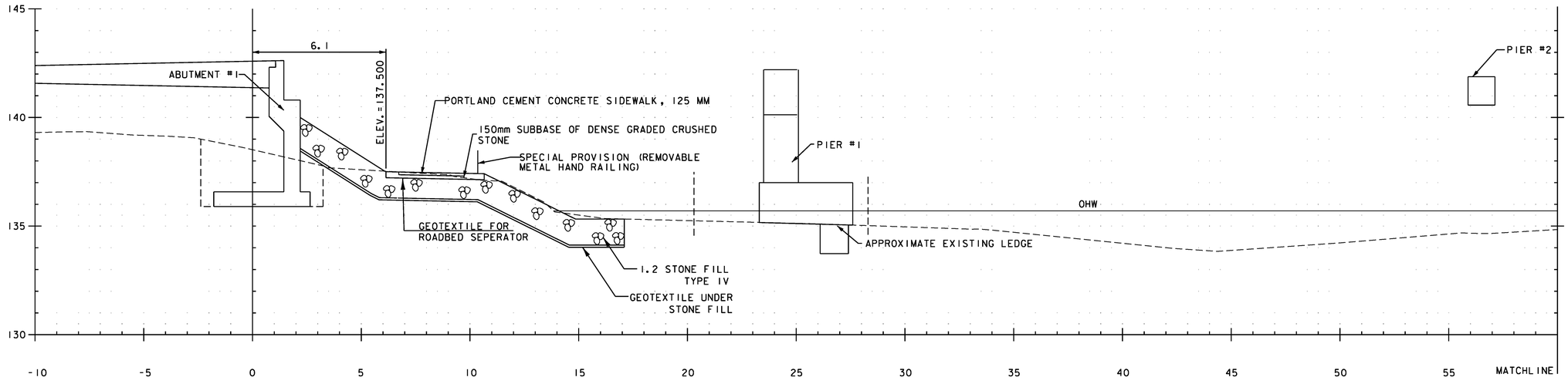

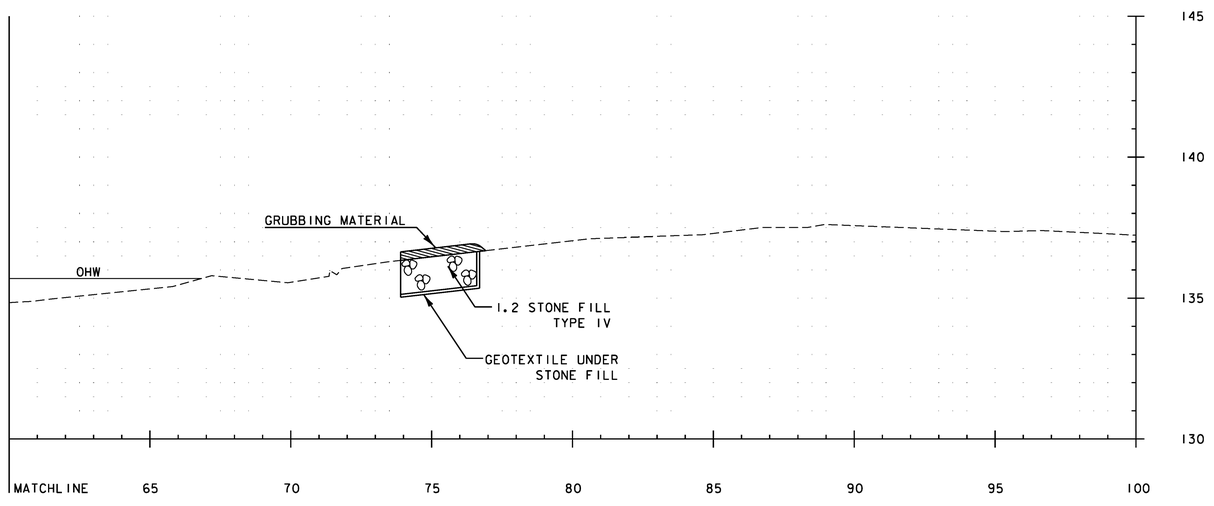

50+095.000

NOTE:

STATION 50+095 RT. PIER NO. 2
END COFFERDAM EXCAVATION
END STONE FILL, TYPE IV

STATION 50+095 RT. ABUT. NO. 1
END GRUBBING MATERIAL

STATION 50+094 RT. PIER NO. 1
BEGIN COFFERDAM EXCAVATION

0 2 4 6 8 10
SCALE 1:100

STA 50+095.000

PROJECT NAME:	CAMBRIDGE
PROJECT NUMBER:	BRF 027-1(4)
FILE NAME: s78f163chxs.dgn	PLOT DATE: 05-JUN-2012
PROJECT LEADER: M.EVANS-MONGEON	DRAWN BY: EVANS-MONGEON
DESIGNED BY: T. FILBACH	CHECKED BY: S. SCRIBNER
CHANNEL SECTION 8	SHEET 208 OF 214

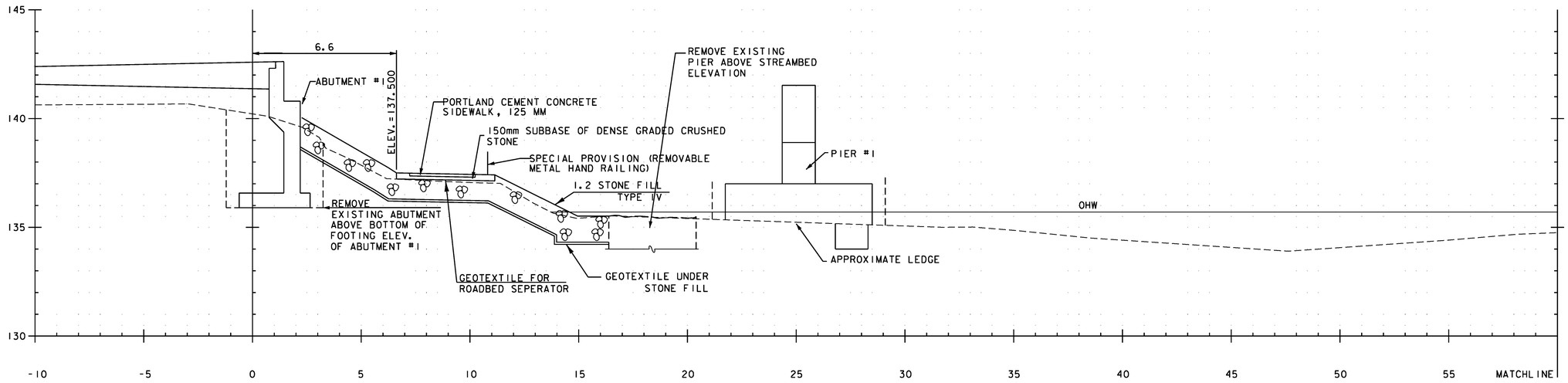

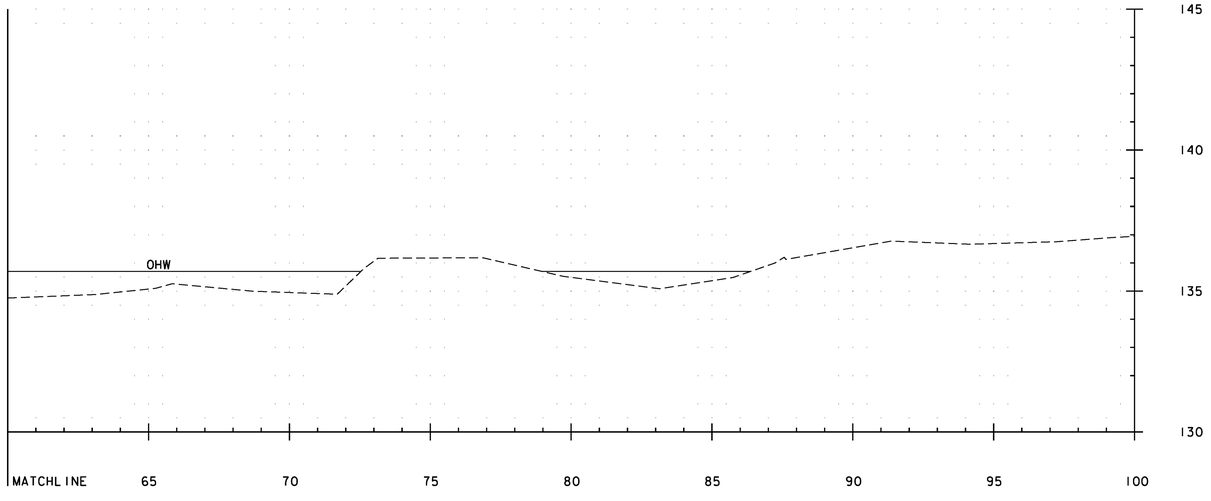

50+100.000

NOTE:

STATION 50+096 RT. ABUT. NO. 2
END UNCLASSIFIED CHANNEL EXCAVATION
END STONE FILL, TYPE IV
END GEOTEXTILE UNDER STONE FILL
END GRUBBING MATERIAL

0 2 4 6 8 10
SCALE 1:100

STA 50+100.000

PROJECT NAME:	CAMBRIDGE
PROJECT NUMBER:	BRF 027-1(4)
FILE NAME: s78f163chxs.dgn	PLOT DATE: 05-JUN-2012
PROJECT LEADER: M. EVANS-MONGEON	DRAWN BY: EVANS-MONGEON
DESIGNED BY: T. FILBACH	CHECKED BY: S. SCRIBNER
CHANNEL SECTION 9	SHEET 209 OF 214

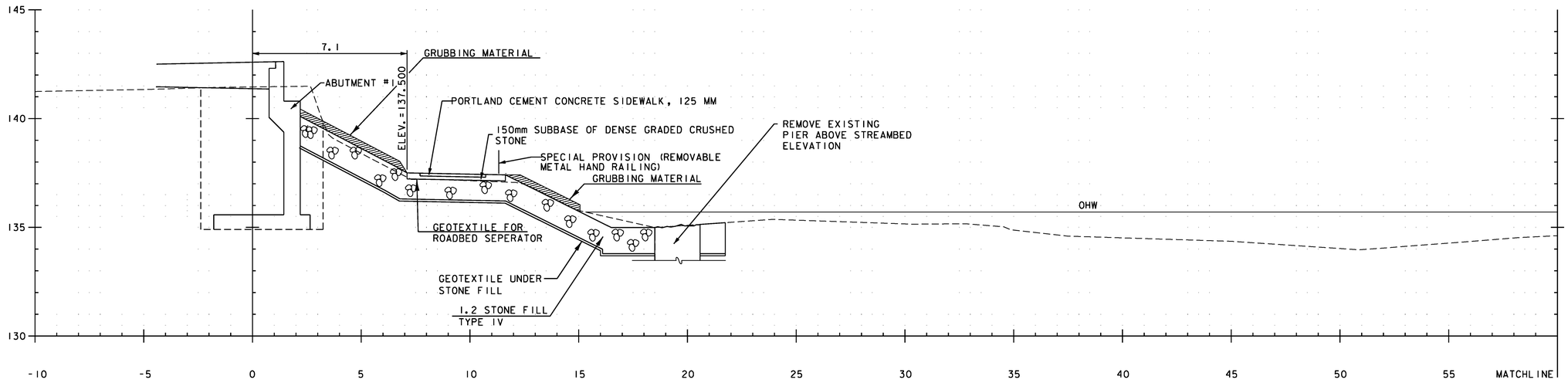

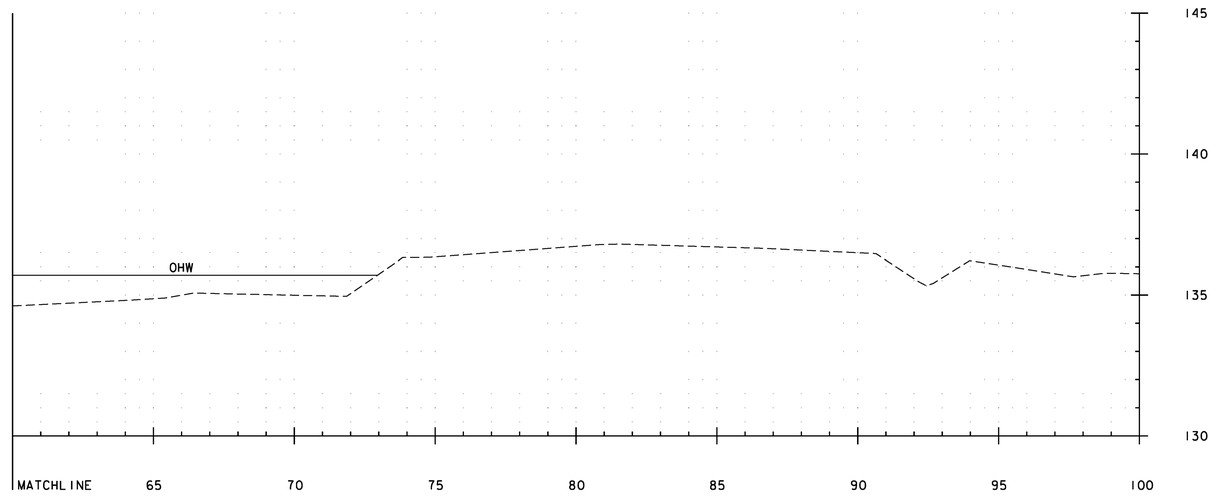

50+105.000

NOTE:

STATION 50+102 RT. PIER NO. 1
END COFFERDAM EXCAVATION

STATION 50+105 RT. ABUT. NO. 1
BEGIN GRUBBING MATERIAL

0 2 4 6 8 10
SCALE 1:100

STA 50+105.000

PROJECT NAME: CAMBRIDGE
PROJECT NUMBER: BRF 027-1(4)

FILE NAME: s78f163chxs.dgn
PROJECT LEADER: M.EVANS-MONGEON
DESIGNED BY: T. FILBACH
CHANNEL SECTION 10

PLOT DATE: 05-JUN-2012
DRAWN BY: EVANS-MONGEON
CHECKED BY: S. SCRIBNER
SHEET 210 OF 214

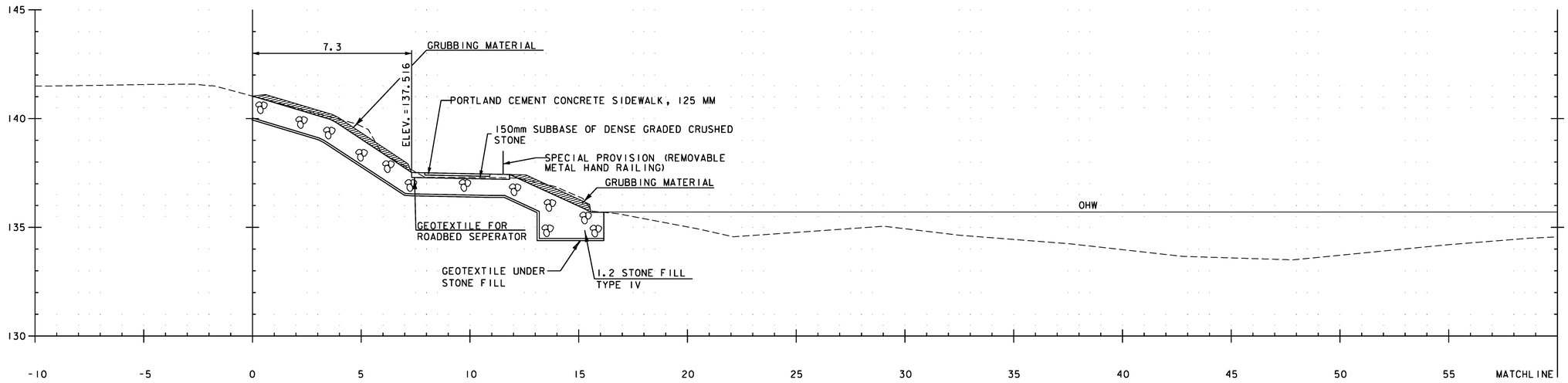

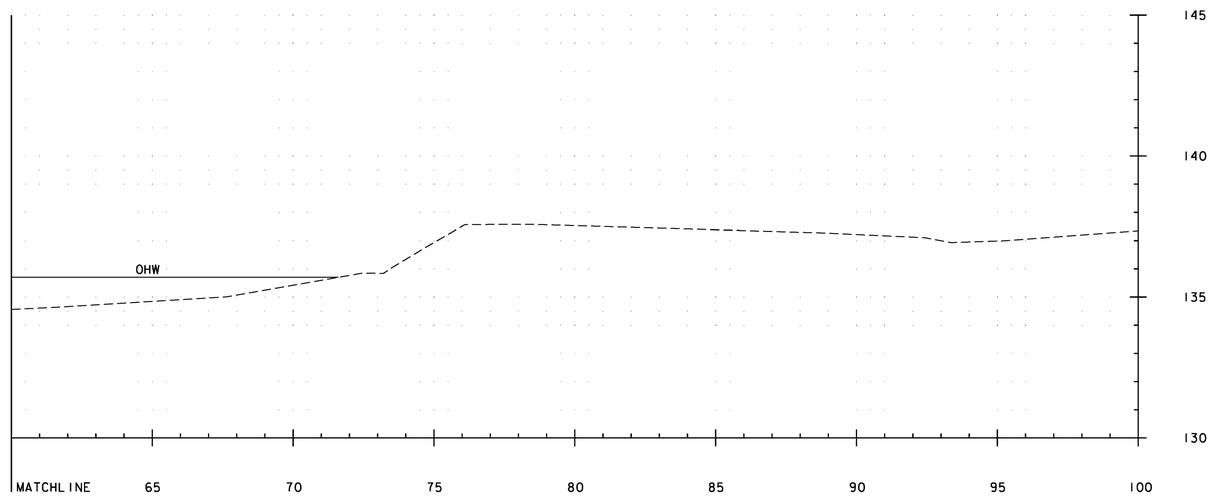

50+110.000

STA 50+110.000

0 2 4 6 8 10
SCALE 1:100

PROJECT NAME:	CAMBRIDGE
PROJECT NUMBER:	BRF 027-1(4)

FILE NAME: s78f163chxs.dgn	PLOT DATE: 05-JUN-2012
PROJECT LEADER: M.EVANS-MONGEON	DRAWN BY: EVANS-MONGEON
DESIGNED BY: T. FILBACH	CHECKED BY: S. SCRIBNER
CHANNEL SECTION 11	SHEET 211 OF 214

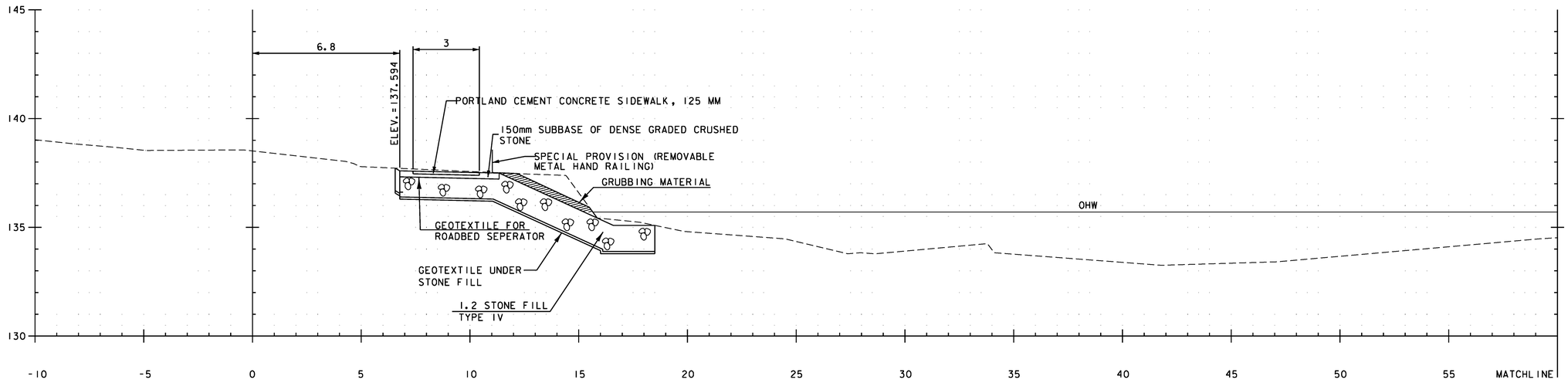

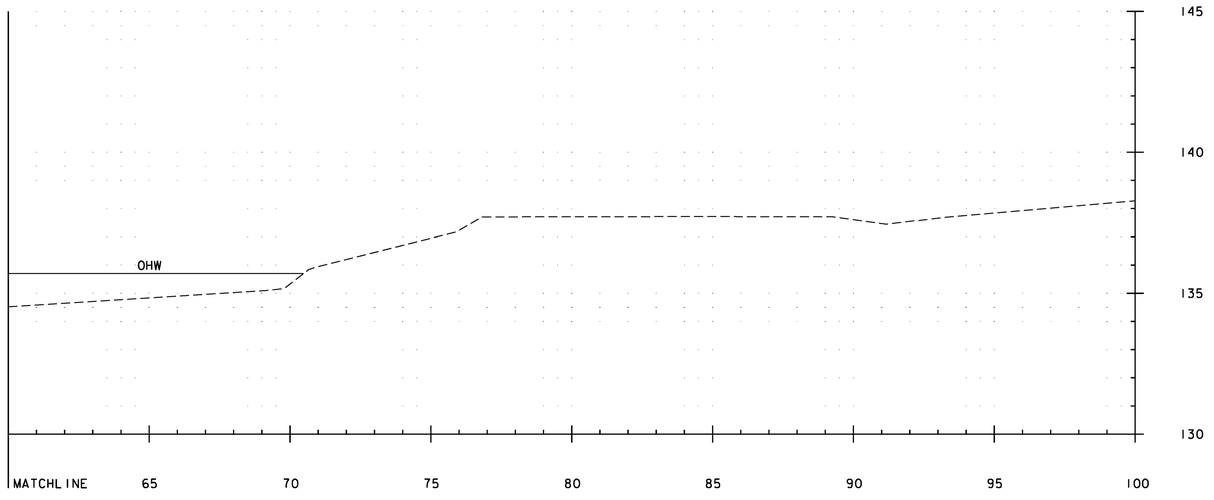

50+115.000

STA 50+115.000

0 2 4 6 8 10
SCALE 1:100

PROJECT NAME:	CAMBRIDGE
PROJECT NUMBER:	BRF 027-1(4)

FILE NAME: s78f163chxs.dgn	PLOT DATE: 05-JUN-2012
PROJECT LEADER: M. EVANS-MONGEON	DRAWN BY: EVANS-MONGEON
DESIGNED BY: T. FILBACH	CHECKED BY: S. SCRIBNER
CHANNEL SECTION 12	SHEET 212 OF 214

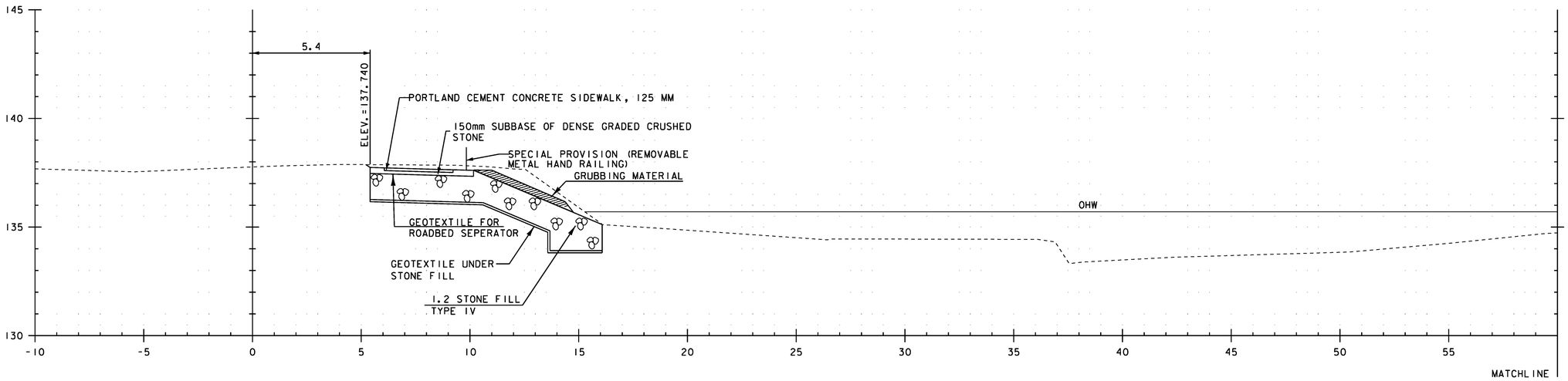

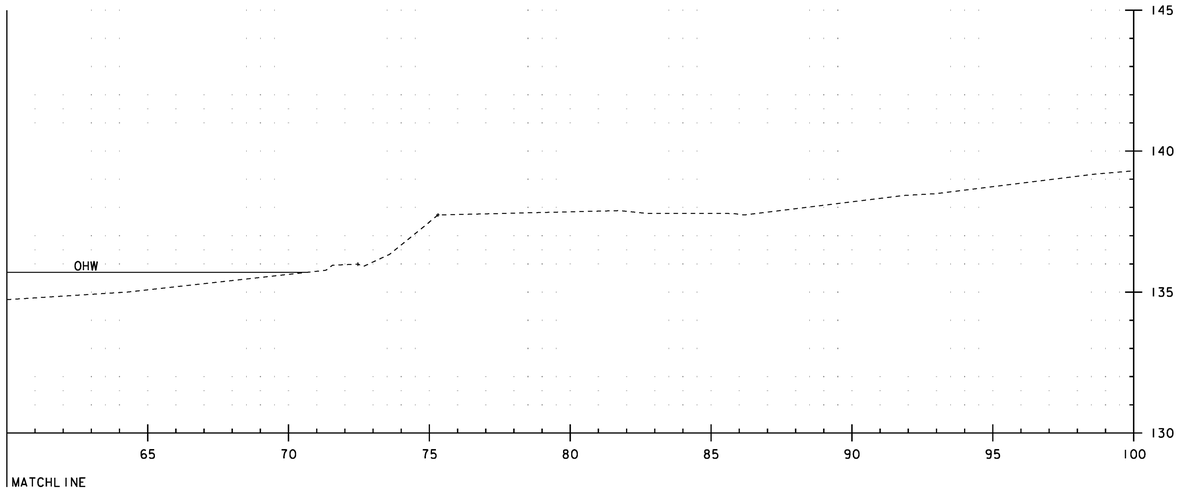

STATION 50+120 RT. ABUTMENT #1
END GEOTEXTILE FOR ROADBED SEPARATOR
END STONE FILL TYPE IV
END GRUBBING MATERIAL
END GEOTEXTILE UNDER STONE FILL

50+120.000

0 2 4 6 8 10
SCALE 1:100

STA 50+120.000

PROJECT NAME:	CAMBRIDGE
PROJECT NUMBER:	BRF 027-1(4)
FILE NAME: s78f163chxs.dgn	PLOT DATE: 05-JUN-2012
PROJECT LEADER: M.EVANS-MONGEON	DRAWN BY: EVANS-MONGEON
DESIGNED BY: T. FILBACH	CHECKED BY: S. SCRIBNER
CHANNEL SECTION 13	SHEET 213 OF 214

STATION 50+145 RT. RECREATION PATH
END AGGREGATE SURFACE COURSE
END SUBBASE OF DENSE GRADED CRUSHED STONE
END UNCLASSIFIED CHANNEL EXCAVATION

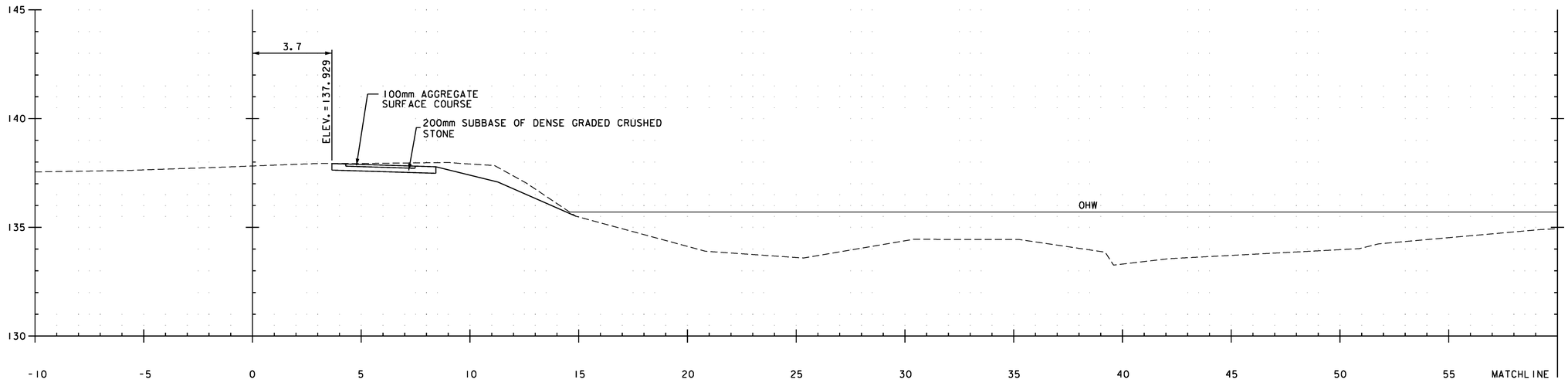

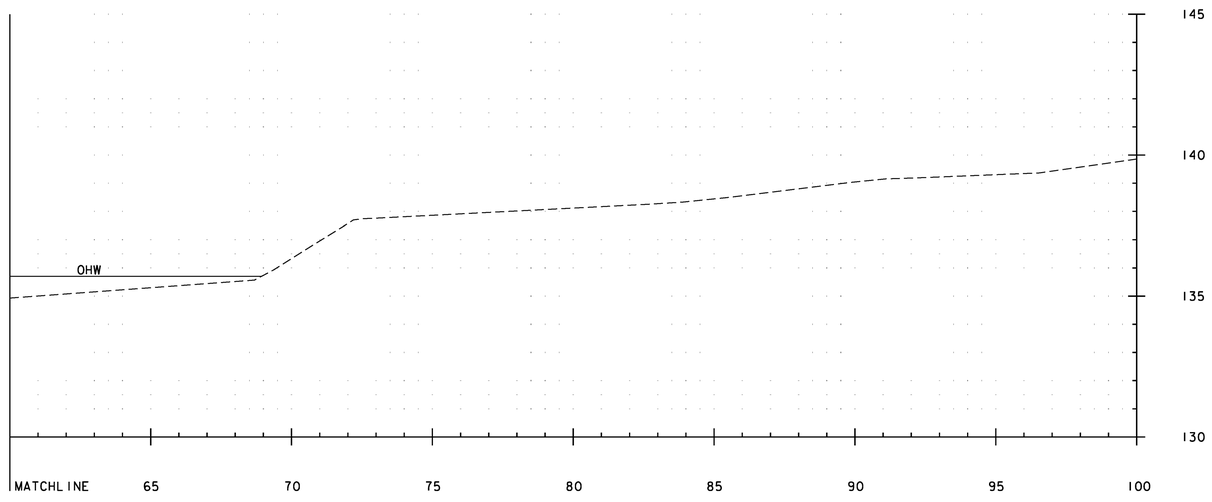

50+125.000

NOTE:
STATION 50+125 RT. RECREATION PATH
BEGIN AGGREGATE SURFACE COURSE
END PORTLAND CEMENT CONCRETE SIDEWALK, 125mm
END SPECIAL PROVISION (REMOVABLE METAL HAND RAILING)

0 2 4 6 8 10
SCALE 1:100

STA 50+125.000

PROJECT NAME: CAMBRIDGE
PROJECT NUMBER: BRF 027-1(4)

FILE NAME: s78f163chxs.dgn
PROJECT LEADER: M. EVANS-MONGEON
DESIGNED BY: T. FILBACH
CHANNEL SECTION 14

PLOT DATE: 05-JUN-2012
DRAWN BY: EVANS-MONGEON
CHECKED BY: S. SCRIBNER
SHEET 214 OF 214

CONCRETE GENERAL NOTES

1. ALL EXPOSED EDGES OF CONCRETE SHALL BE CHAMFERED 1" x 1"

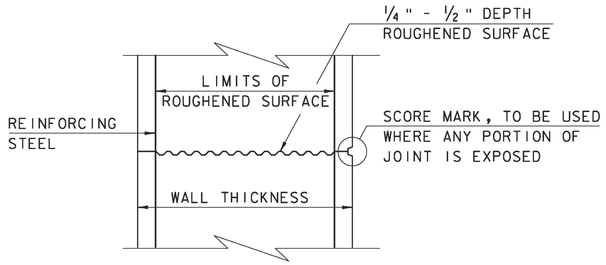

TYPICAL HORIZONTAL CONSTRUCTION JOINT
(NOT TO SCALE)

1. THE SURFACE OF THE CONCRETE CONSTRUCTION JOINTS SHALL BE CLEANED AND FREE OF LAITANCE.

2. IMMEDIATELY BEFORE NEW CONCRETE IS PLACED, ALL CONSTRUCTION JOINTS SHALL BE WETTED AND STANDING WATER REMOVED.

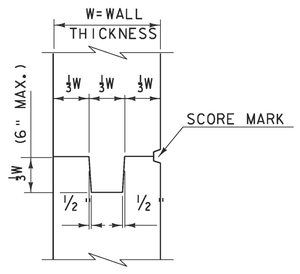

TYPICAL CONCRETE CONSTRUCTION JOINT
(NOT TO SCALE)

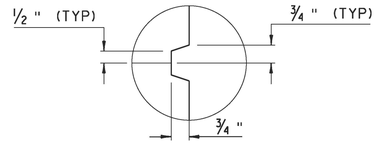

SCORE MARK DETAIL
(NOT TO SCALE)

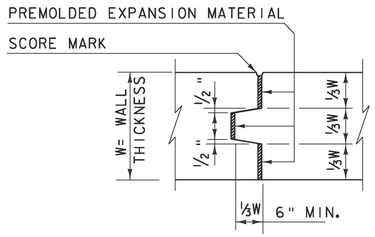

TYPICAL CONCRETE EXPANSION JOINT
(NOT TO SCALE)

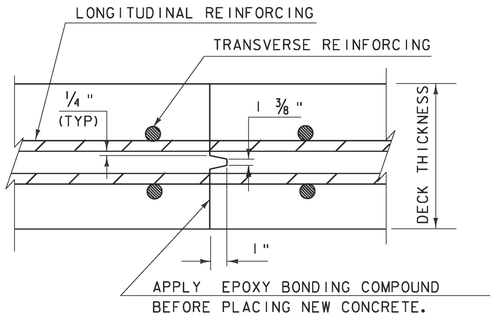

TRANSVERSE BRIDGE SLAB CONSTRUCTION JOINT DETAILS
(NOT TO SCALE)

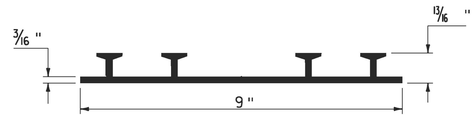

P.V.C. WATERSTOP FOR CONSTRUCTION JOINTS
(NOT TO SCALE)

PAYMENT FOR THE P.V.C. WATERSTOP SHALL BE INCIDENTAL TO THE UNIT BID PRICE FOR THE ADJACENT CONCRETE.

OTHER CONFIGURATIONS OF WATERSTOP MAY BE USED UPON APPROVAL OF THE ENGINEER.

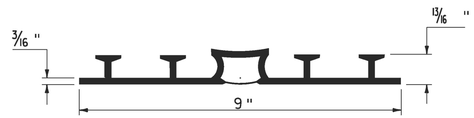

P.V.C. WATERSTOP FOR EXPANSION JOINTS
(NOT TO SCALE)

PAYMENT FOR THE P.V.C. WATERSTOP SHALL BE INCIDENTAL TO THE UNIT BID PRICE FOR THE ADJACENT CONCRETE.

OTHER CONFIGURATIONS OF WATERSTOP MAY BE USED UPON APPROVAL OF THE ENGINEER.

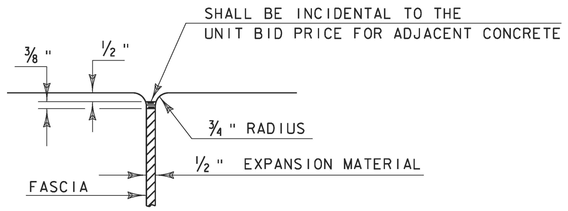

JOINT BETWEEN FASCIA AND WINGWALL
(NOT TO SCALE)

REVISIONS	
MAY 7, 2010	APPROVED FOR USE BY VAOT STRUCTURES SECTION

CONCRETE DETAILS AND NOTES

VERMONT AGENCY OF TRANSPORTATION
STRUCTURES - SECTION

STRUCTURES DETAIL SD-501.00

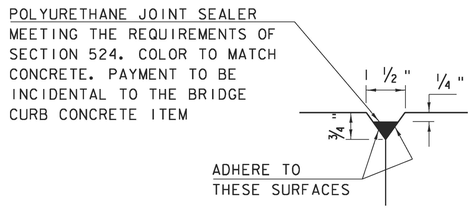

DETAIL "B"
(NOT TO SCALE)

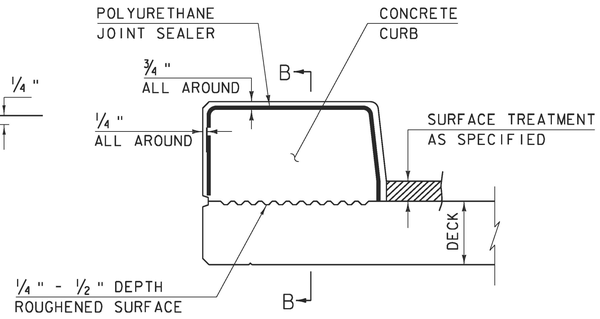

CONCRETE CURB JOINT SECTION
(NOT TO SCALE)

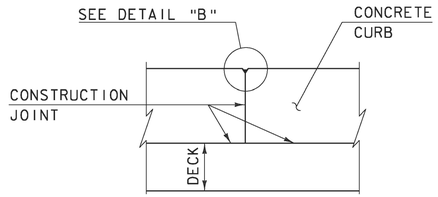

SECTION B - B
(NOT TO SCALE)

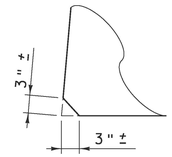

ACUTE ANGLE CLIP DETAIL
(NOT TO SCALE)

1. SEE TYPICAL HORIZONTAL CONSTRUCTION JOINT DETAIL FOR ADDITIONAL INFORMATION

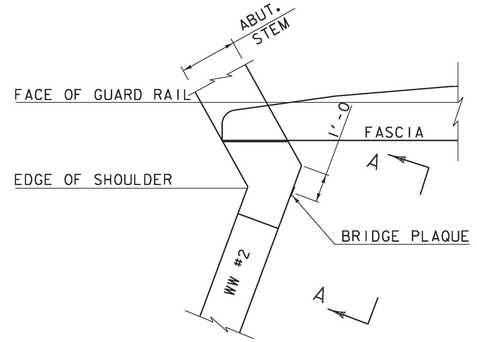

PLAN

CONCRETE CURB JOINT NOTES

1. CONCRETE CURBS MAY BE PLACED IN ONE CONTINUOUS OPERATION IF AN APPROVED SHRINKAGE REDUCING ADMIXTURE LISTED IN THE SPECIAL PROVISIONS IS USED WITH THE CONCRETE MIX DESIGN. PAYMENT FOR THE SHRINKAGE REDUCING ADMIXTURE WILL BE INCIDENTAL TO THE BRIDGE CURB CONCRETE ITEM.

2. IF THE CONTRACTOR CHOOSES NOT TO USE AN APPROVED SHRINKAGE REDUCING ADMIXTURE, THE CURBS SHALL BE CONSTRUCTED WITH CONSTRUCTION JOINTS SPACED AT A MAXIMUM OF 15'-0" CENTER TO CENTER AND 2'-0" MINIMUM FROM THE CENTER OF NEAREST BRIDGE RAILING POST.

3. ON MULTI-SPAN CONTINUOUS SUPERSTRUCTURES, REGARDLESS OF WHETHER APPROVED SHRINKAGE REDUCING ADMIXTURE IS USED, CURB JOINTS SHALL BE LOCATED OVER THE CENTERLINE OF PIERS AND 7'-0" EACH SIDE OF THE CENTERLINE OF EACH PIER.

4. WHEN CURB JOINTS ARE USED THE CURBS SHALL BE PLACED IN ALTERNATE SECTIONS WITH A MINIMUM OF 48 HOUR DELAY BETWEEN ADJACENT PLACEMENTS.

5. LONGITUDINAL REINFORCING SHALL BE CONTINUOUS THROUGH CURB CONSTRUCTION JOINTS. CURB STIRRUP BARS SHALL BE TURNED AS NECESSARY TO MAINTAIN COVER IN THE FLARED CURB ENDS.

6. THE JOINT SPACING AND DETAILS SHOWN SHALL APPLY TO SIDEWALKS WHEN SHOWN IN THE PLANS.

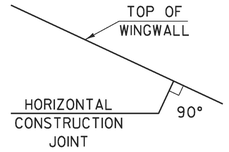

HORIZONTAL WINGWALL CONSTRUCTION JOINT
(NOT TO SCALE)

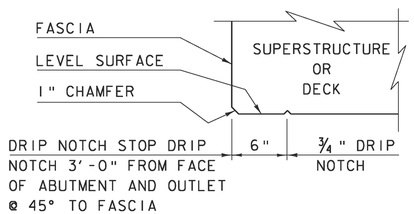

DRIP NOTCH DETAIL
(NOT TO SCALE)

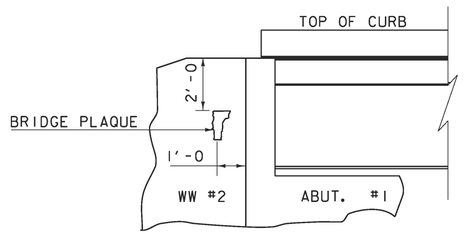

VIEW "A - A"

BRIDGE PLAQUE
(NOT TO SCALE)

THE BRIDGE PLAQUE WILL BE SUPPLIED BY THE AGENCY OF TRANSPORTATION AND SHALL BE INSTALLED BY THE CONTRACTOR AT ABUTMENT #1 ON THE RIGHT SIDE AS SHOWN OR AS DIRECTED BY THE ENGINEER.

PAYMENT FOR INSTALLATION OF THE BRIDGE PLAQUE SHALL BE INCIDENTAL TO THE ADJACENT CONCRETE.

REVISIONS	
MAY 7, 2010	APPROVED FOR USE BY VAOT STRUCTURES SECTION
JUNE 4, 2010	MODIFIED AND ADDED TWO DETAILS

CONCRETE DETAILS AND NOTES

VERMONT AGENCY OF TRANSPORTATION
STRUCTURES - SECTION

STRUCTURES DETAIL
SD-502.00

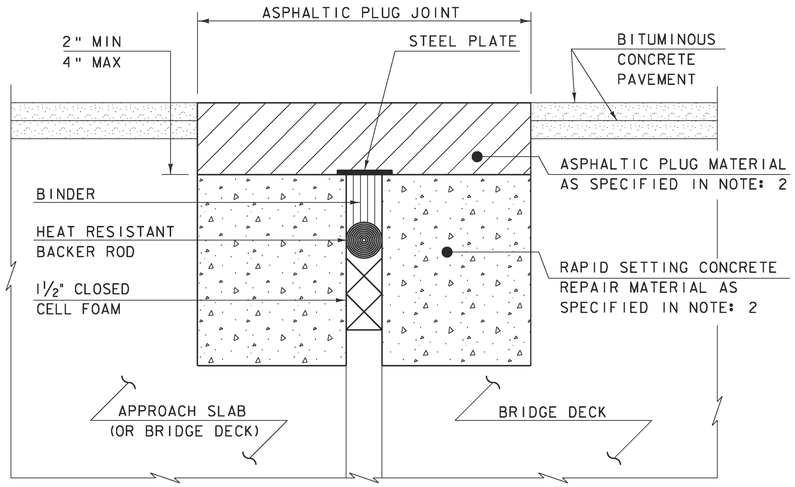

ASPHALTIC PLUG-TYPE JOINT DETAIL - REHAB

(NOT TO SCALE)

NOTES:

1. THE CONTRACTOR SHALL REMOVE ALL ASPHALTIC PLUG JOINT MATERIAL AND DETERIORATED CONCRETE AS DIRECTED BY THE ENGINEER. REMOVAL OF THE FIRST 4 INCHES OF MATERIAL SHALL BE INCLUDED IN THE BID PRICE FOR ITEM 516.10 BRIDGE EXPANSION JOINT, ASPHALTIC PLUG. ANY REMOVAL OF MATERIAL GREATER THAN 4 INCHES SHALL BE INCLUDED IN THE BID PRICE OF ITEM 580.20 RAPID SETTING CONCRETE REPAIR MATERIAL WITH COURSE AGGREGATE.

2. THE CONTRACTOR SHALL REPLACE REMOVED MATERIAL THAT IS LESS THAN 4" FROM FINISHED GRADE WITH ASPHALTIC PLUG JOINT MATERIAL MEETING THE REQUIREMENTS OF SUBSECTION 707.15. ALL REMOVED MATERIAL THAT IS GREATER THAN 4 INCHES FROM FINISHED GRADE SHALL BE REPLACED WITH RAPID SETTING CONCRETE REPAIR MATERIAL WITH COARSE AGGREGATE MEETING THE REQUIREMENTS OF SUBSECTION 780.04.

3. REINFORCING STEEL NOT SHOWN FOR CLARITY.

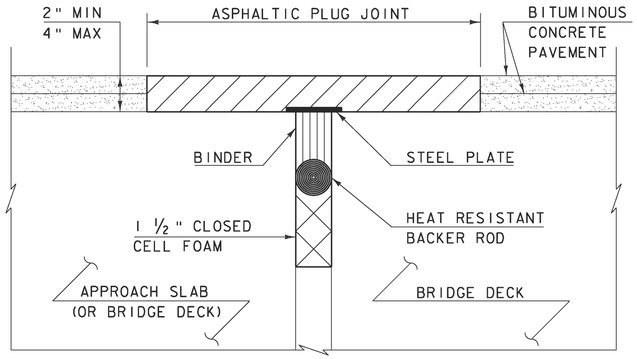

ASPHALTIC PLUG-TYPE JOINT DETAIL - NEW

(NOT TO SCALE)

ASPHALTIC PLUG JOINT NOTES

INSTALLATION:

1. LOCATE THE JOINT CENTRALLY OVER THE DECK OVERLAY EXPANSION GAP OR FIXED JOINT, MARKED OUT TO THE MANUFACTURER'S RECOMMENDED WIDTH.
2. REMOVE THE BITUMINOUS CONCRETE PAVEMENT FULL DEPTH AS SHOWN ON THE PLANS. THE PAVEMENT SHALL BE DRY AND SAW CUT TO THE LIMITS REQUIRED TO PLACE THE JOINT. A PNEUMATIC HAMMER AND CHISEL MAY BE USED ADJACENT TO THE CURB ONLY WHEN SAW CUTTING IS NOT POSSIBLE.
3. BLAST CLEAN THE JOINT AREA OF DEBRIS, ASPHALT AND SHEET MEMBRANE. THOROUGHLY DRY THE JOINT AREA WITH COMPRESSED AIR PRIOR TO APPLYING BINDER MATERIAL.
4. REPAIR MATERIAL GREATER THAN 4 INCHES FROM FINISHED GRADE WITH RAPID SETTING CONCRETE REPAIR MATERIAL WITH COARSE AGGREGATE MEETING THE REQUIREMENTS OF SUBSECTION 780.04.
5. PLACE PROPERLY SIZED HEAT RESISTANT BACKER ROD IN THE MOVEMENT GAP ALLOWING FOR 1" +/- OF BINDER ABOVE THE ROD.
6. HEAT AND PLACE THE BINDER MATERIAL AS RECOMMENDED BY THE MANUFACTURER.
7. PLACE 1/4" THICK BY 8" WIDE SECTIONS OF STEEL PLATE OVER THE CENTER OF THE MOVEMENT GAP. SECURE THE PLATES FROM MOVING BY INSERTING LOCATING PINS THROUGH THE PRE-STAMPED HOLES INTO BACKER ROD AND COVER WITH HOT BINDER. THE STEEL PLATES MAY BE OMITTED WHERE THE ENGINEER DETERMINES THAT THE APPROACH SLAB OR BRIDGE DECK WILL PROVIDE INADEQUATE SUPPORT AND WHERE VERTICAL MOVEMENT OF THE PLATES MIGHT OCCUR.
8. HEAT AND MIX THE BINDER MATERIAL AND AGGREGATE AS RECOMMENDED BY THE MANUFACTURER.
9. INSTALLATION OF MATERIAL, COMPACTION, AND TOP COATING SHALL BE AS RECOMMENDED BY THE MANUFACTURER.
10. IMMEDIATELY AFTER TOP COATING, CAST AN ANTI-SKID MATERIAL OVER THE JOINT TO REDUCE THE RISK OF TRACKING.
11. ONCE THE JOINT REACHES 82 DEG C (180 DEG F) +/-, WATER MAY BE USED TO EXPEDITE THE COOLING PROCESS.
12. PROTECT JOINT FROM TRAFFIC UNTIL THE MATERIAL HAS COOLED TO 51 DEG C (125 DEG F) +/-.

WEATHER LIMITATIONS

APPLY BINDER MATERIAL ONLY WHEN THE FOLLOWING CONDITIONS PREVAIL OR AS RECOMMENDED BY THE MANUFACTURER:

1. THE AMBIENT AIR TEMPERATURE IS AT LEAST 10 DEG C (50 DEG F) AND RISING.
2. THE ROAD SURFACE IS DRY.
3. WEATHER CONDITIONS OR OTHER CONDITIONS ARE FAVORABLE AND ARE EXPECTED TO REMAIN SO FOR THE PERFORMANCE OF SATISFACTORY WORK.

REVISIONS	
MAY 7, 2010	APPROVED FOR USE BY VAOT STRUCTURES SECTION

BRIDGE JOINT
ASPHALTIC PLUG

VERMONT AGENCY OF TRANSPORTATION
STRUCTURES - DIVISION

STRUCTURES DETAIL
SD-516.10

STRUCTURAL STEEL GENERAL NOTES:

1. ALL FIELD CONNECTIONS SHALL BE MADE WITH 7/8" DIAMETER HIGH-STRENGTH BOLTS IN 15/16" DIAMETER HOLES, PER SUBSECTION 506.19, UNLESS OTHERWISE SPECIFIED.
2. ALL HOLES IN THE WEBS OF THE FASCIA GIRDERS THAT ARE NOT OTHERWISE FILLED, SHALL BE FILLED WITH EITHER BUTTON HEAD OR HEX HEAD BOLTS. THESE BOLTS SHALL BE TIGHTENED IN ACCORDANCE WITH SUBSECTION 506.19.
3. ALL WELDING SHALL CONFORM TO THE PROVISIONS OF SUBSECTION 506.10.
4. ANY CONNECTIONS THAT ARE NOT DETAILED ON THE PLANS SHALL BE DETAILED BY THE FABRICATOR AND SUBMITTED TO THE STRUCTURES ENGINEER FOR APPROVAL.
5. STRUCTURAL STEEL MEMBERS DESIGNATED "CVN" IN THE PLANS SHALL BE CHARPY V-NOTCH TESTED IN ACCORDANCE WITH SUBSECTION 714.01 OF THE STANDARD SPECIFICATIONS.
6. ENDS OF GIRDERS ARE TO BE VERTICAL IN THEIR FINAL POSITION.
7. AFTER SUPERSTRUCTURE STEEL HAS BEEN ERECTED, ELEVATIONS ALONG THE TOP OF THE GIRDERS SHALL BE TAKEN AS DIRECTED BY THE RESIDENT ENGINEER FOR USE IN DETERMINING FINISHED GRADES.

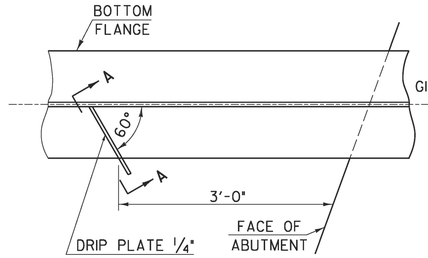

PLAN DRIP PLATE

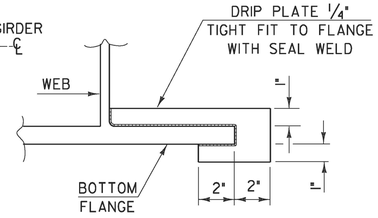

SECTION A - A

NOTE: DRIP PLATES SHALL BE PLACED ON OUTSIDE EDGE OF FASCIA GIRDERS ON THE HIGH SIDE OF ALL PIERS AND ABUTMENTS OR AS INDICATED ON PROJECT PLANS.

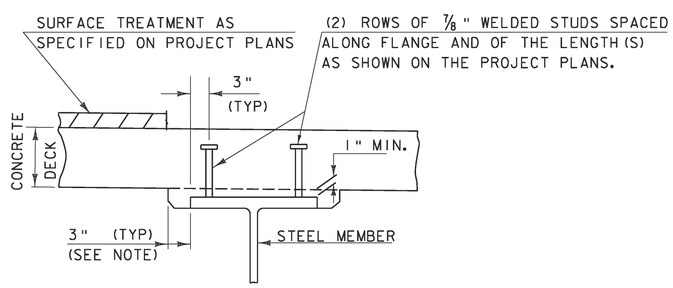

NOTE:
THE 3" HORIZONTAL SECTION MAY BE ELIMINATED FOR FORMING SYSTEMS DESIGNED FOR THE CONSTRUCTION OF VERTICAL HAUNCHES. ANY VOIDS RESULTING FROM FORMING SYSTEM ELEMENTS SHALL BE FILLED WITH JOINT SEALER, POLYURETHANE MEETING THE REQUIREMENTS OF SECTION 524. THE COST OF THE JOINT SEALER, POLYURETHANE SHALL BE INCIDENTAL TO THE ADJACENT CONCRETE.

HAUNCH AND SHEAR CONNECTOR DETAIL

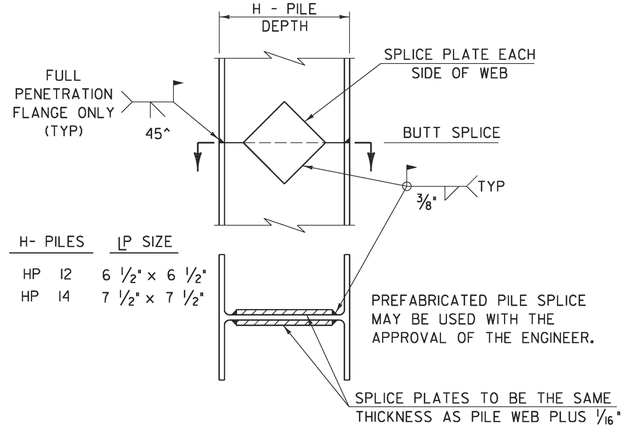

H- PILES	LP SIZE
HP 12	6 1/2" x 6 1/2"
HP 14	7 1/2" x 7 1/2"

DETAIL OF PILE SPLICE

DETAILS ON THIS SHEET ARE "NOT TO SCALE" UNLESS NOTED OTHERWISE.

REVISIONS	
MAY 7, 2010	APPROVED FOR USE BY VAOT STRUCTURES SECTION
JUNE 4, 2010	MODIFIED NOTES

STRUCTURAL STEEL DETAILS & NOTES

VERMONT AGENCY OF TRANSPORTATION
STRUCTURES - SECTION

STRUCTURES DETAIL
SD-601.00

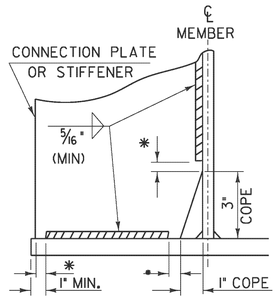

WELD TERMINATION AND COPING DETAILS FOR STEEL MEMBERS

*NO WELD FOR 3/8" MIN. 7/8" MAX. (EXCEPT MUST MAINTAIN 1" MINIMUM FROM EDGE OF FLANGE)

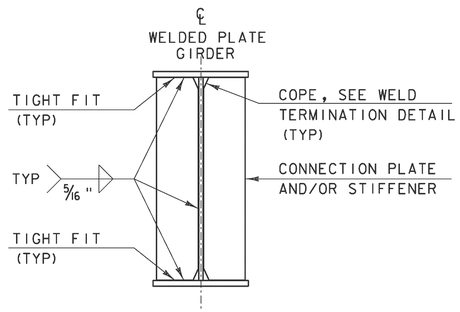

INTERMEDIATE CONNECTION PLATES AND/OR STIFFENERS FOR WELDED PLATE GIRDERS

INTERMEDIATE DETAIL IS ONLY USED WHEN PLATE DOES NOT OCCUR AT AN ABUTMENT OR PIER.

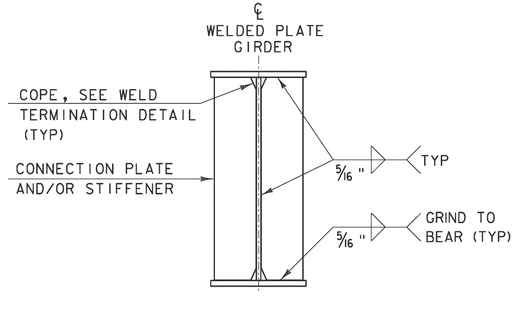

ABUTMENT BEARING STIFFENERS AND/OR CONNECTION PLATES FOR WELDED PLATE GIRDERS

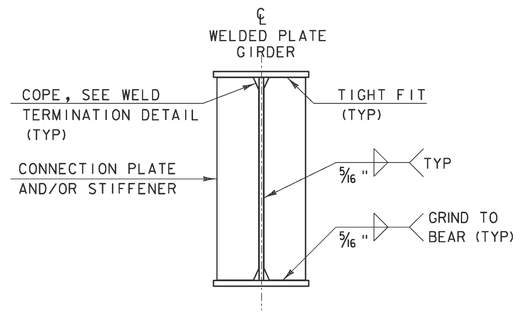

PIER BEARING STIFFENERS AND/OR CONNECTION PLATES FOR WELDED PLATE GIRDERS

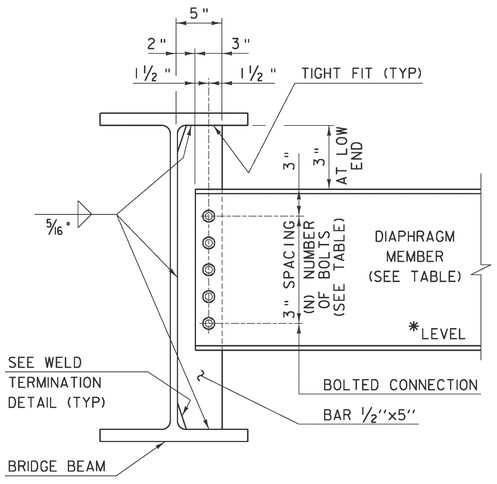

DEPTH		DIAPHRAGM MEMBER	(N) BOLTS
ROLLED BEAM	24" 30"	C15x33.9	4
	31" 36"	MC18x42.7	5
	37" 42"	W21x44	6
PLATE GIRDER WEB	31" 36"	W27x84	7
	37" 42"	W33x118	9
	43" 48"	W36x135	10

INTERMEDIATE DIAPHRAGMS FOR 24" TO 48" BRIDGE BEAMS

*IF CLEARANCE CANNOT BE MET, DIAPHRAGM MAY BE SLOPED.

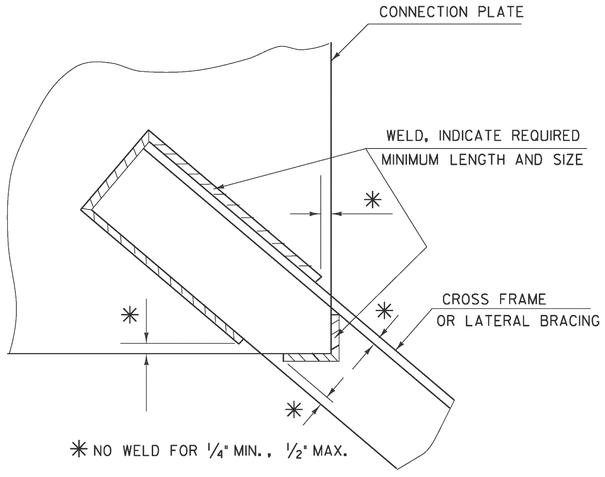

WELD LOCATION DETAIL AT CROSS FRAMES AND LATERAL BRACING

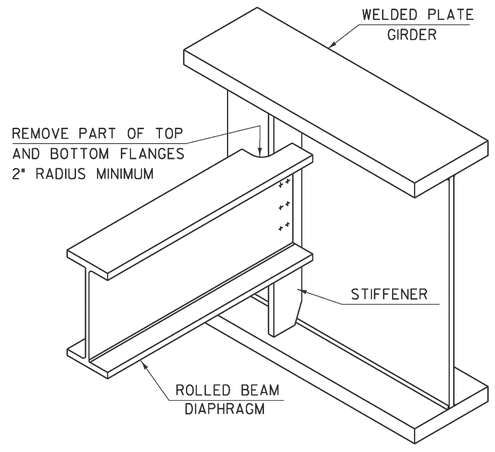

SEE CONTRACT DRAWINGS FOR SIZES OF MEMBERS AND CONNECTION DETAILS

ROLLED BEAM USED AS DIAPHRAGM

DETAILS ON THIS SHEET ARE "NOT TO SCALE" UNLESS NOTED OTHERWISE.

REVISIONS	
MAY 7, 2010	APPROVED FOR USE BY VAOT STRUCTURES SECTION
MAY 2, 2011	ADD INTERMEDIATE DIAPHRAGMS DETAIL & ADD NOT TO SCALE NOTE

STRUCTURAL STEEL PLATE GIRDER DETAILS AND NOTES

VERMONT AGENCY OF TRANSPORTATION
STRUCTURES - SECTION

STRUCTURES DETAIL
SD-602.00

REVISIONS					
ZONE	REV	DESCRIPTION	REVISED BY	DATE	APPROVED

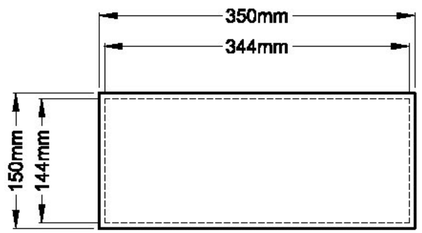

PLAN VIEW

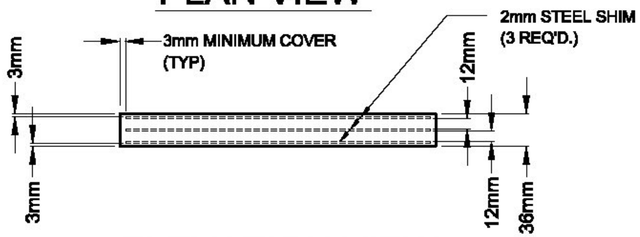

ELEVATION VIEW

QTY. REQ'D. = 4
LOCATION= ABUTMENT 2

NOTES FOR LAMINATED ELASTOMERIC BEARING PADS (ITEM NO. 531.12):

1. ALL STEEL SOLE PLATES SHALL BE AASHTO M270 GRADE 345.
2. ALL SOLE PLATES SHALL BE GALVANIZED AS PER STANDARD SPECIFICATIONS 506.15 AND 531.04(b), AS MODIFIED BY THE GENERAL SPECIAL PROVISIONS.
3. BEARINGS TO BE MANUFACTURED ACCORDING TO AASHTO LRFD STANDARD SPECIFICATIONS FOR HIGHWAY BRIDGES, SECTION 14 & 18, 17th. EDITION, 2002 AND 2010 INTERIMS.
4. ELASTOMERIC NATURAL RUBBER MATERIAL TO BE 50+/-5 DUROMETER HARDNESS, GR. 4
5. ALL STEEL PRODUCED IN THE U.S.A.
6. THE BEARINGS ARE DESIGNED SO THAT THE SUPERSTRUCTURE MAY BE ERECTED WHEN THE AMBIENT AIR TEMPERATURE IS WITHIN THE RANGE OF 40 DEG. F. TO 90 DEG. F.
7. ALL SWEDGED ANCHOR BOLTS A449, HH NUTS A-563, AND PLATE WASHERS A36, SHALL BE GALVANIZED
8. PRIOR TO GALVANIZING, ALL CORNERS AND EDGES OF STEEL PLATES, SHAPES, ETC. SHALL BE GROUND TO A 1/16" MIN. RADIUS (TYP).

Vermont Agency of Transportation
RECEIVED
CK'D BY M.E.M OK'D BY
Oct. 10, 2012
RESUBMIT APPROVED ✓
BY M.Evans-Mongeon DATE Nov. 01, 2012

CAMBRIDGE
PROJECT NUMBER: BRF-027-1 (4)

STEEL LAMINATED ELASTOMERIC BEARING PAD DETAILS

AMSCOT
STRUCTURAL PRODUCTS CORP.

SCALE: N.T.S.	APPRV'D:	DRAWN BY: E.J.G.
DATE: 9/25/12	BF	REVISION: 0
FOR: A. L. ST. ONGE CONTRACTOR, INC.		
DWG NO: AL012B1RO		SHEET 1 OF 5

REVISIONS					
ZONE	REV	DESCRIPTION	REVISED BY	DATE	APPROVED
--	A	DESCRIPTION	EJG	10/8/12	BF

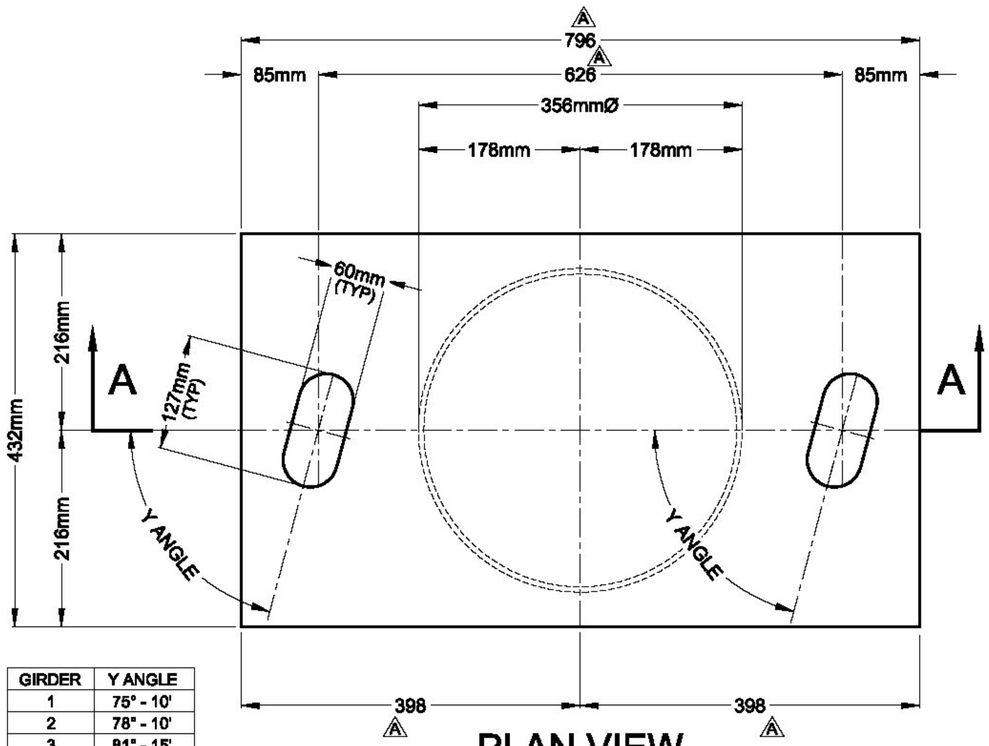

GIRDER	Y ANGLE
1	75° - 10'
2	78° - 10'
3	81° - 15'
4	84° - 20'

PLAN VIEW

QTY. REQ'D. = 4 ASSY.

LOCATION= ABUTMENT 1

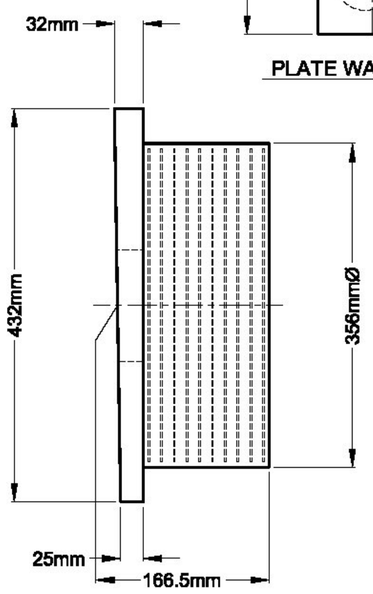

SIDE VIEW

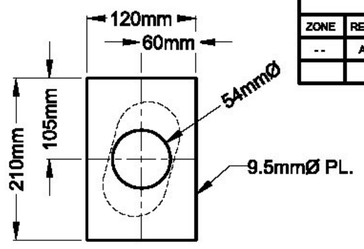

PLATE WASHER DETAIL

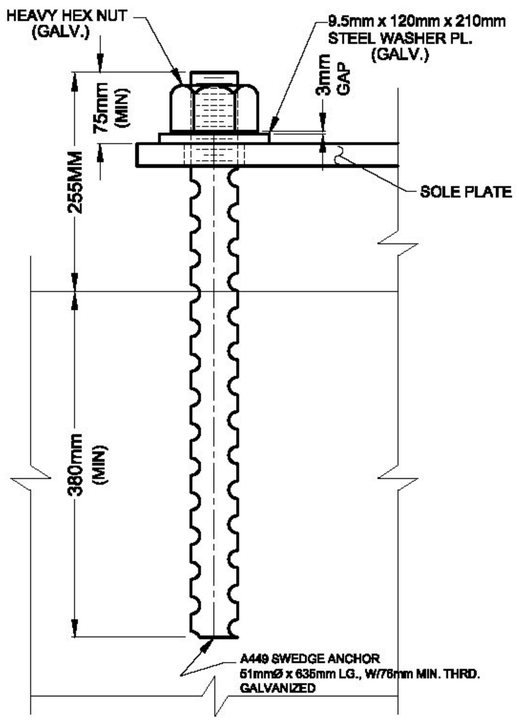

ANCHOR BOLT DETAIL

QTY. REQ'D = 8

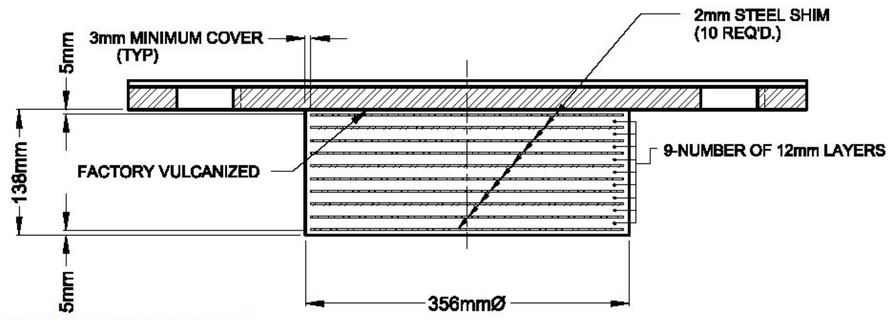

SECTION A-A

Design Load (Kn)	Service Limit State	Vertical	Max.	507
			Min.	158
			Permanent	197
			Transverse	60
			Longitudinal	40
	Strength Limit State		Vertical	803
			Transverse	90
			Longitudinal	70
Translation (mm)	Service Limit State	Irreversible	Transverse	0
			Longitudinal	6
		Reversible	Transverse	13
			Longitudinal	49
Rotation (rad)	Service Limit State	Irreversible	Transverse	0.005
			Longitudinal	0.008
		Reversible	Transverse	0.000
			Longitudinal	0.004

SEE SHEET 1 OF 5 FOR NOTES.

CAMBRIDGE

PROJECT NUMBER: BRF-027-1 (4)

STEEL LAMINATED ELASTOMERIC BEARING PAD DETAILS

AMSCOT

STRUCTURAL PRODUCTS CORP.

SCALE: N.T.S.	APPRV'D:	DRAWN BY: E.J.G.
DATE: 9/25/12	BF	REVISION: A
FOR: A. L. ST. ONGE CONTRACTOR, INC.		
DWG NO: ALO12B2RA		SHEET 2 OF 5

Vermont Agency of Transportation
RECEIVED
CK'D BY M.E.M OK'D BY
Oct. 10, 2012
RESUBMIT APPROVED ✓
BY M.Evans-Mongeon DATE Nov. 01, 2012

REVISIONS					
ZONE	REV	DESCRIPTION	REVISED BY	DATE	APPROVED
--	A	PER ENGINEERS MARKS	EJG	10/8/12	BF

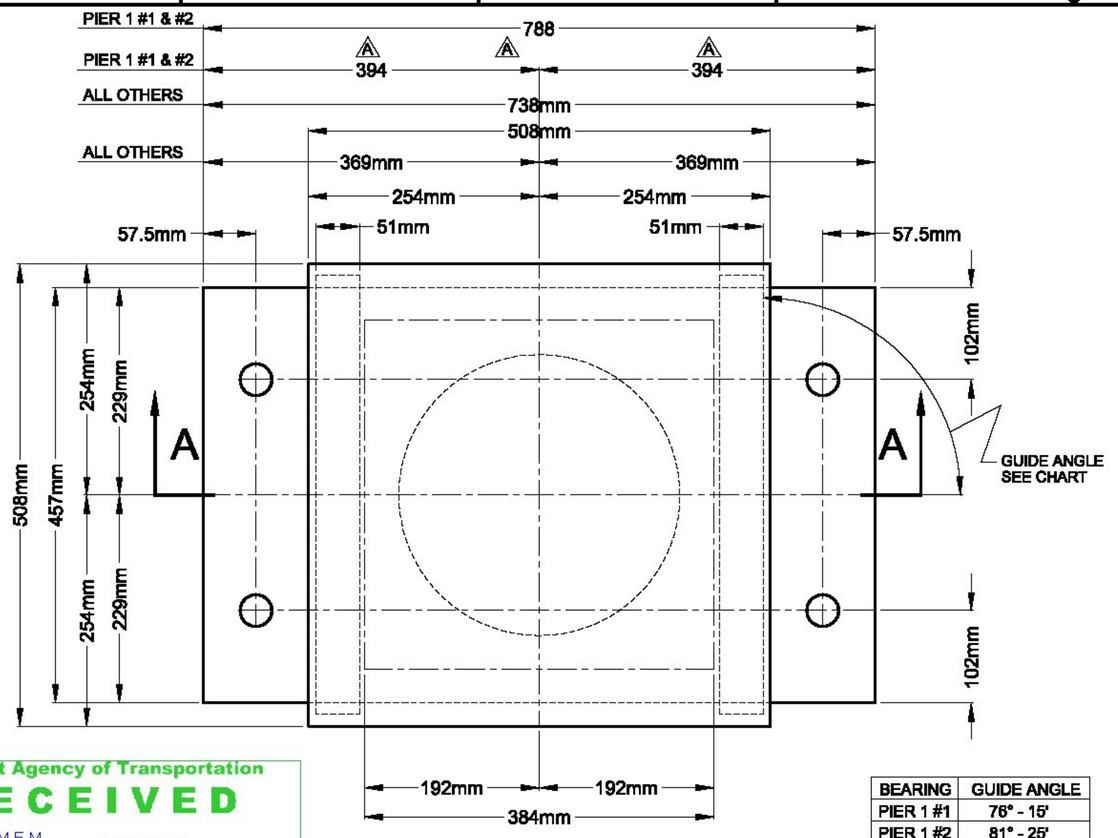

PLAN VIEW

QTY. REQ'D. = 6 ASSY.

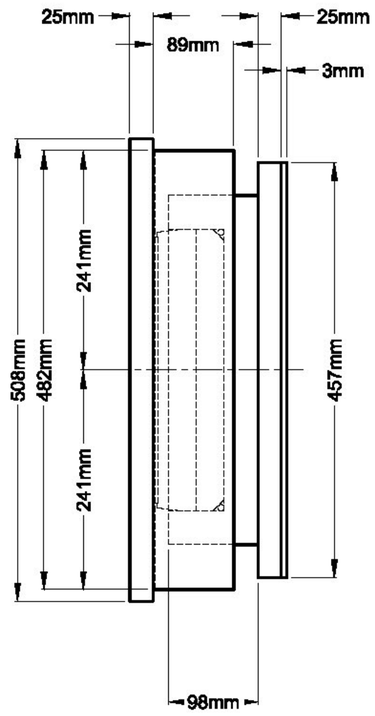

SIDE VIEW

BEARING	GUIDE ANGLE
PIER 1 #1	76° - 15'
PIER 1 #2	81° - 25'
PIER 1 #3	86° - 45'
PIER 1 #4	92° - 10'
PIER 2 #5	0° - 0'
PIER 2 #8	0° - 0'

Design Load (Kn)	Service Limit State	Vertical	Max.	1807
			Min.	621
			Permanent	651
			Transverse	314
			Longitudinal	40
	Strength Limit State		Vertical	2840
			Transverse	550
			Longitudinal	168
Translation (mm)	Service Limit State	Irreversible	Transverse	0
			Longitudinal	3
		Reversible	Transverse	7
			Longitudinal	29
Rotation (rad)	Service Limit State	Irreversible	Transverse	0.005
			Longitudinal	0.006
		Reversible	Transverse	0.000
			Longitudinal	0.003

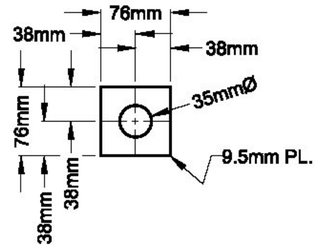

PLATE WASHER DETAIL

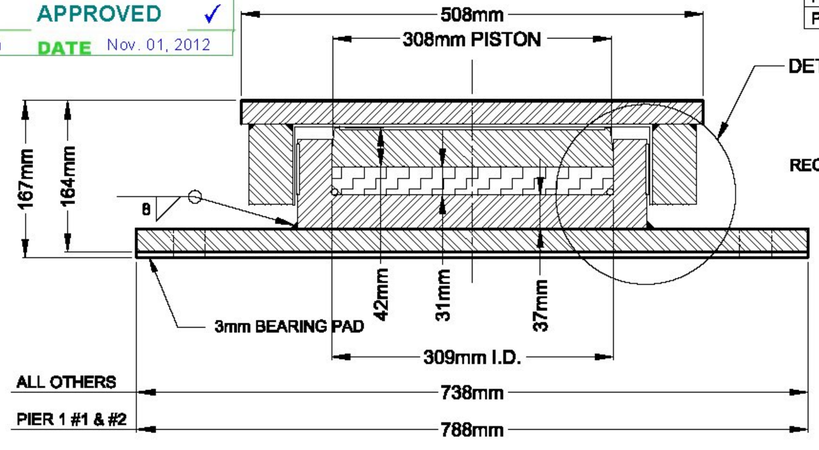

SECTION A-A

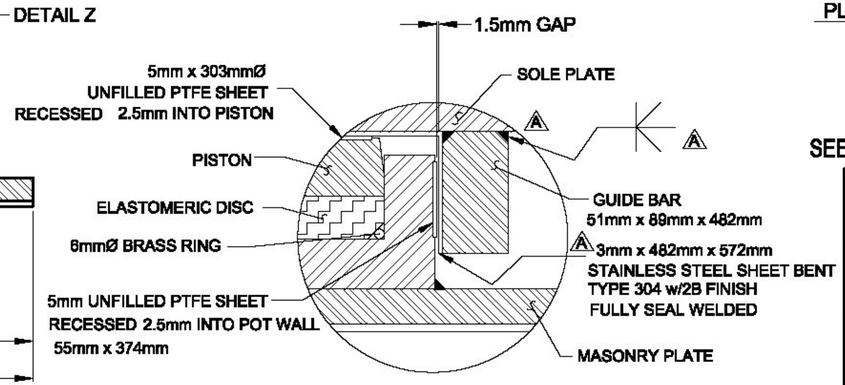

DETAIL Z

SEE SHEET 5 OF 5 FOR NOTES & ANCHOR BOLT DETAIL.

Vermont Agency of Transportation
RECEIVED
CK'D BY M.E.M OK'D BY
Oct. 10, 2012
RESUBMIT APPROVED ✓
BY M.Evans-Mongeon DATE Nov. 01, 2012

CAMBRIDGE
PROJECT NUMBER: BRF-027-1 (4)

HIGH LOAD MULTI-ROTATIONAL GUIDED BEARING DETAILS

AMSCOT
STRUCTURAL PRODUCTS CORP.

SCALE: N.T.S.	APPRV'D:	DRAWN BY: E.J.G.
DATE: 9/25/12	BF	REVISION: A
FOR: A. L. ST. ONGE CONTRACTOR, INC.		
DWG NO: ALO12B3RA		SHEET 3 OF 5

REVISIONS					
ZONE	REV	DESCRIPTION	REVISED BY	DATE	APPROVED
--	A	ADD DIMS., ADJUST QUANTITY & CHANGE DIM.	EJG	10/8/12	BF

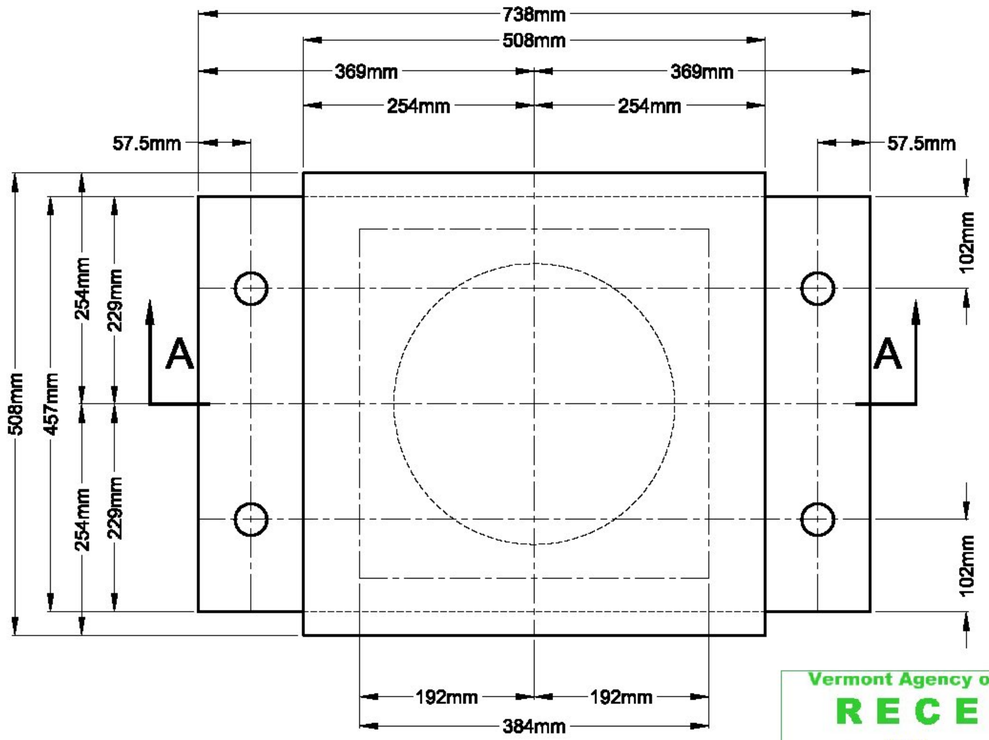

PLAN VIEW

QTY. REQ'D. = 2 ASSY. (A)

PIER 2 # 6 & 7

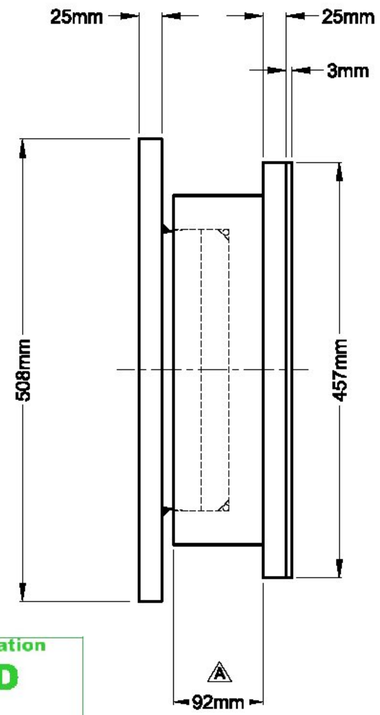

SIDE VIEW

Design Load (Kn)	Service Limit State	Vertical	Max.	1807
			Min.	621
			Permanent	651
			Transverse	314
			Longitudinal	40
	Strength Limit State		Vertical	2840
			Transverse	550
			Longitudinal	168
Translation (mm)	Service Limit State	Irreversible	Transverse	0
			Longitudinal	3
		Reversible	Transverse	7
			Longitudinal	29
Rotation (rad)	Service Limit State	Irreversible	Transverse	0.005
			Longitudinal	0.006
		Reversible	Transverse	0.000
			Longitudinal	0.003

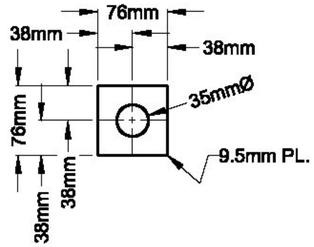

PLATE WASHER DETAIL

Vermont Agency of Transportation
RECEIVED
CK'D BY M.E.M OK'D BY
Oct. 10, 2012
RESUBMIT APPROVED ✓
BY M.Evans-Mongeon DATE Nov. 01, 2012

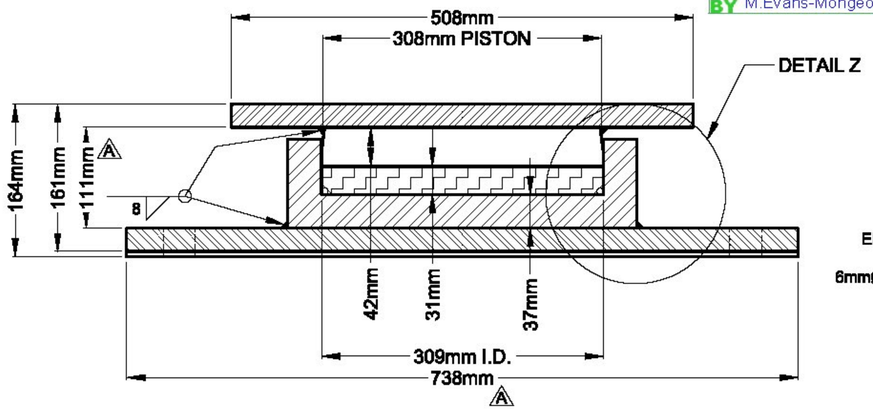

SECTION A-A

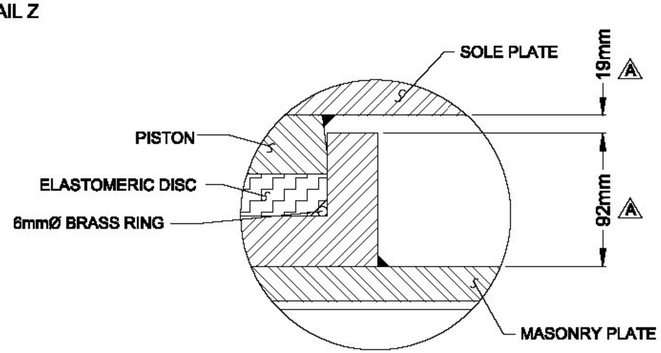

DETAIL Z

SEE SHEET 5 OF 5 FOR NOTES & ANCHOR BOLT DETAIL.

CAMBRIDGE
PROJECT NUMBER: BRF-027-1 (4)

HIGH LOAD MULTI-ROTATIONAL FIXED BEARING DETAILS

AMSCOT
STRUCTURAL PRODUCTS CORP.

SCALE: N.T.S.	APPRV'D:	DRAWN BY: E.J.G.
DATE: 9/25/12	BF	REVISION: A
FOR: A. L. ST. ONGE CONTRACTOR, INC.		
DWG NO: ALO12B4RA		SHEET 4 OF 5

REVISIONS					
ZONE	REV	DESCRIPTION	REVISED BY	DATE	APPROVED
--	A	PER ENGINEERS MARKS	EJG	10/9/12	BF

NOTES FOR HLMR POT BEARING ASSEMBLY (ITEM NO. 531.12):

1. ELASTOMERIC DISC.
(A)-ELASTOMERIC DISCS SHALL HAVE THE MINIMUM THICKNESS PER AASHTO LRFD 14.7.4.3

(B)-AREAS OF ELASTOMERIC DISCS SHALL BE DESIGNED FOR A MAXIMUM AVERAGE STRESS OF 3500 PSI AT THE TOTAL DEAD AND LIVE LOADS OF THE STRUCTURE PER AASHTO LRFD 14.7.4.4

(C)-ELASTOMERIC DISC TO BE OF 50 SHORE "A" DUROMETER HARDNESS PER AASHTO LRFD 14.7.4.2.

2. POT

(A)-ALL STEEL USED IN POT BEARING TO BE AASHTO M270, GR. 345, AND SHALL BE GALVANIZED EXCEPT INSIDE POT BEARING SURFACES SHALL NOT BE GALVANIZED.

(B)-DEPTH OF THE POT CAVITY SHALL BE EQUAL TO OR GREATER THAN: (POT ID/2) X DESIGN ROTATION (03 RADIANS) +.1 + THE THICKNESS OF THE ELASTOMERIC DISC. + THE PISTON FACE WIDTH.

(C)-INSIDE DIAMETERS SHALL BE THE SAME AS THE ELASTOMERIC DISC.

3. PISTON

(A)-PISTONS SHALL BE DESIGNED AS FOLLOWS FOR THICKNESS AND CLEARANCE PER AASHTO LRFD 14.7.4.7.

(B)-PISTON FOR ROUND CROSS SECTION SEALING RINGS SHALL HAVE THE LOWER OUTSIDE EDGE BEVELED TO ACCEPT AND RETAIN THE RING AND PERMIT FULL DESIGN ROTATION.

4. ELASTOMERIC SEAL RINGS
(A)-ROUND CROSS SECTION BRASS SEALING RINGS SHALL MEET THE FOLLOWING DESIGN REQUIREMENTS PER AASHTO LRFD 14.7.4.5
(1) RINGS SHALL FIT THE POT ID SNUGLY, 5/16"Ø MIN.

(2) RINGS SHALL BE ROLLED INTO A CIRCLE AND BRAZED. (TO BE MADE FROM ONE PIECE).

5. PTFE SLIDING SURFACE
(A)-THE AREA OF THE PTFE SHALL BE DESIGNED FOR A CONTACT STRESS AS PER AASHTO LRFD 14.7.2.4, AT THE FULL DEAD AND LIVE LOAD OF THE STRUCTURE.

(B)-UNFILLED PTFE SHALL MEET THE FOLLOWING REQUIREMENTS:
(1) BONDED TO THE PISTON IT SHALL HAVE A MINIMUM THICKNESS OF 1/8" AND SHALL BE RECESSED ONE-HALF OF ITS THICKNESS INTO STEEL PISTON. TO CONFORM TO AASHTO LRFD 14.7.2.8.1.

(C)-PTFE SURFACE SHALL BE ASTM D 4894 AASHTO LRFD S14.7.2.1.

(D)-EXPOSED PTFE SLIDING SURFACES SHALL BE PIGMENTED TO INCREASE RESISTANCE TO DAMAGE FROM UV LIGHT.

6. STAINLESS STEEL SLIDING SURFACE
(A)-THE STAINLESS STEEL SLIDING SURFACE SHALL COVER THE PTFE SURFACE IN ALL OPERATING POSITIONS PLUS ONE ADDITIONAL INCH IN EVERY DIRECTION OF MOVEMENT.

(B)-STAINLESS STEEL SHALL BE 11ga. (AASHTO LRFD 14.7.2.3.2) THICKNESS AND SHALL BE CONNECTED TO THE TOP PLATE BY MEANS OF AN EPOXY BOND & SEAL WELDED AROUND THE ENTIRE PERIMETER (AS PER AASHTO SUBSECTION 14.7.2.8.2)

(C)-WELDING PROCEDURES SHALL BE CHOSEN SUCH THAT THE STAINLESS STEEL IN SERVICE IS IN CONTACT WITH THE TOP PLATE AND THE SURFACE IS SMOOTH AND FLAT.

(D)-STAINLESS STEEL SLIDING SURFACES SHALL BE PREFERABLY FACE DOWN.

7. GUIDE BARS
(A)-GUIDE BARS AND THEIR CONNECTIONS TO THE TOP PLATE SHALL BE DESIGNED FOR THE HORIZONTAL STRENGTH FORCES ON THE BEARING AND NOT LESS THAN 19% OF THE TOTAL VERTICAL LOAD CAPACITY OF THE BEARING.

(B)-UNLESS THE GUIDE BAR CLEARANCE IS SPECIFIED IT SHALL BE A TOTAL OF 3mm (MAX.) PER 14.7.9.4.

(C)-GUIDING ARRANGEMENTS SHALL BE DESIGNED SO THAT GUIDING MEMBER IS ALWAYS WITHIN THE GUIDES AT ALL POINTS OF TRANSLATION OF THE BEARING.

(D)-GUIDE BAR MATERIAL SHALL CONFORM TO THE REQUIREMENTS OF ASTM M270 GR. 345 AND SHALL BE GALVANIZED. SEE NOTE 9 (I).

7. GUIDE BARS
(A)-STRUCTURE STEEL SHALL CONFORM TO THE REQUIREMENTS OF AASHTO M270 GR. 345 AND SHALL BE GALVANIZED.

(B)-ELASTOMERS SHALL CONFORM TO AASHTO LRFD SUBSECTION 14.7.4.2.

(C)-ELASTOMER SEALS MAY ONLY BE MADE OF METAL AS FOLLOWS:
(1)-ROUND CROSS SECTION BRASS RINGS SHALL CONFORM TO ASTM B16 STANDARD TEMPER H02

(D)-PTFE SLIDING SURFACES SHALL CONFORM TO THE REQUIREMENTS OF AASHTO LRFD SECTION 14.7.2.

(E)-STAINLESS STEEL SLIDING SURFACES SHALL CONFORM TO ASTM A-240 TYPE 304 WITH A SURFACE FINISH OF #8 MIRROR (AASHTO LRFD 14.7.2.2)

9. MANUFACTURING REQUIREMENTS
(A)-POTS AND PISTONS SHALL BE MACHINED FROM A SOLID PIECE OF STEEL AS PER AASHTO LRFD SECTION 18.3.3.2.1 POT BEARINGS.

(B)-ELASTOMERIC DISC TOLERANCES SHALL BE PER AASHTO LRFD BRIDGE CONSTRUCTION SPECIFICATIONS 18.1.4.2.

(C)-PTFE SLIDING SURFACE TOLERANCES SHALL BE PER AASHTO LRFD BRIDGE CONSTRUCTION SPECIFICATIONS 18.1.4.2.

(D)-STAINLESS STEEL SLIDING SURFACES SHALL BE EPOXY BONDED & SEAL WELDED. CONFORMING TO THE AMERICAN WELDING SOCIETY REQUIREMENTS FOR STAINLESS STEEL, AROUND IT'S PERIMETER USING TECHNIQUES WHICH WILL ENSURE IT REMAINS IN CONTACT WITH THE BACKING PLATE. FINISH SHALL BE #8 MIRROR (AASHTO 14.7.2.2). FLATNESS SHALL CONFORM TO CLASS "A" OR BETTER.

(E)-SOLE PLATE TOLERANCES SHALL CONFORM TO AASHTO LRFD BRIDGE CONSTRUCTION SPECIFICATIONS 18.1.4.2.

(F)-GUIDE BAR TOLERANCES SHALL CONFORM TO AASHTO LRFD BRIDGE CONSTRUCTION SPECIFICATIONS 18.1.4.2.

(G)-OVERALL HEIGHT OF BEARING SHALL NOT EXCEED THE NOMINAL HEIGHT BY MORE THAN 6mm.

(H)-THE EDGES OF ALL PARTS SHALL BE BROKEN BY GRINDING SO THAT THERE ARE NO SHARP EDGES.

(I)-EXTERNAL STEEL PLATE SURFACES TO BE HOT DIP GALVANIZED AS PER SPECIFICATIONS.

10. TOLERANCES FOR FLATNESS
(A)-FLATNESS OF BEARING SURFACES SHALL BE DETERMINED BY THE FOLLOWING METHOD:
(1)-A PRECISION STRAIGHT EDGE LONGER THAN THE NOMINAL DIMENSION TO BE MEASURED SHALL BE PLACED IN CONTACT WITH THE SURFACE TO BE MEASURED AS PARALLEL TO IT AS POSSIBLE.

(2)-SELECT A FEELER GAUGE HAVING AN ACCURACY OF ±.001" EQUAL TO THE TOLERANCE ALLOWED AND ATTEMPT TO INSERT IT UNDER THE STRAIGHT EDGE.

(3)-PLATES ARE "ACCEPTABLE" IF THE FEELER GAUGE DOES NOT PASS UNDER THE STRAIGHT EDGE.

(B)-FLATNESS TOLERANCES SHALL BE AS FOLLOWS:
(1)-CLASS "A" 0.001 X NOMINAL DIMENSION PER AASHTO LRFD BRIDGE CONSTRUCTION SPECIFICATION 18.1.4.2-1.

(C)-"NOMINAL DIMENSIONS" SHALL BE INTERPRETED AS THE ACTUAL DIMENSION OF THE PLATE UNDER THE STRAIGHT EDGE WHERE THE STRAIGHT EDGE IS NOT PARALLEL TO ANY PLAN DIMENSION OF THE PLATE BEING MEASURED.

(D)-IN DETERMINING THE FLATNESS THE STRAIGHT EDGE MAY BE LOCATED IN ANY POSITION ON THE SURFACE BEING MEASURED.

11. REFERENCE
(A)-AASHTO LRFD STANDARD SPECIFICATIONS FOR HIGHWAY BRIDGES, 4TH. EDITION 2007 WITH CURRENT INTERIMS, AS MODIFIED BY THE 2006 STANDARD SPECIFICATIONS FOR CONSTRUCTION, AS MODIFIED BY THE SPECIAL PROVISIONS.

12. ADDITIONAL COMMENTS
(A)-BEARINGS SHALL BE TESTED ACCORDING TO SECTION 531 OF VERMONT'S 2006 STANDARD SPECIFICATION FOR CONSTRUCTION.

(B)-ALL WELDERS SHALL BE QUALIFIED AS PER AWS D1.5.

(C)-ALL BEARINGS SHALL BE PLACED ON A 1/8" THK. BEARING PAD SAME SIZE AS MASONRY PLATE.

(D) ALL DIMENSIONS ARE IN INCHES UNLESS OTHERWISE NOTED.

(E) SCALE = N.T.S.

(E) NEW BRIDGE SEAT ELEVATIONS SHALL BE ADJUSTED BY THE G/C BASED ON THE FINAL CONFIGURATION OF THE BEARINGS.

(F) MANUFACTURING LOCATION:
AMSCOT STRUCTURAL PRODUCTS CORP. INC.
241 EAST BLACKWELL STREET
DOVER, NJ 07801
PH: (973) 989-8900
FX: (973) 989-5851
CONTACT: PETER SOMOGYI

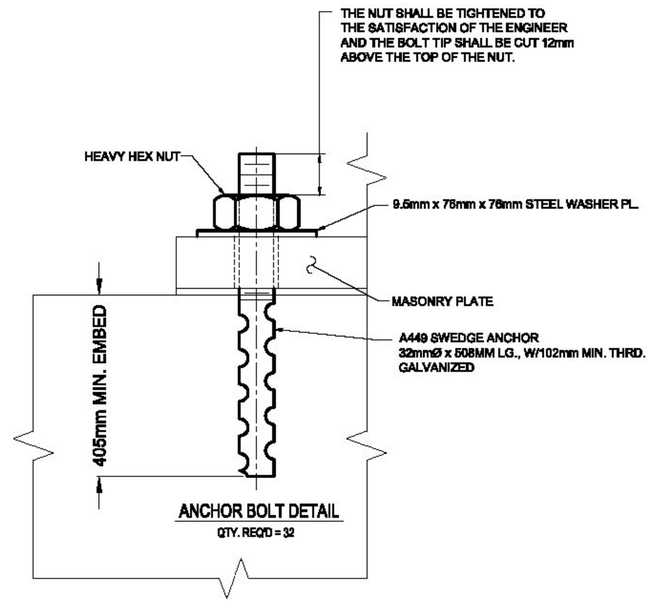

ANCHOR BOLT DETAIL
QTY. REQ'D = 32

Vermont Agency of Transportation
RECEIVED
CK'D BY M.E.M OK'D BY
Oct. 10, 2012
RESUBMIT APPROVED ✓
BY M.Evans-Mongeon DATE Nov. 01, 2012

CAMBRIDGE
PROJECT NUMBER: BRF-027-1 (4)

HIGH LOAD MULTI-ROTATIONAL BEARING NOTES & ANCHOR BOLT DETAIL

AMSCOT
STRUCTURAL PRODUCTS CORP.

SCALE: N.T.S.	APPRV'D:	DRAWN BY: E.J.G.
DATE: 9/25/12	BF	REVISION: A
FOR: A. L. ST. ONGE CONTRACTOR, INC.		
DWG NO: ALO12B5RA		SHEET 5 OF 5

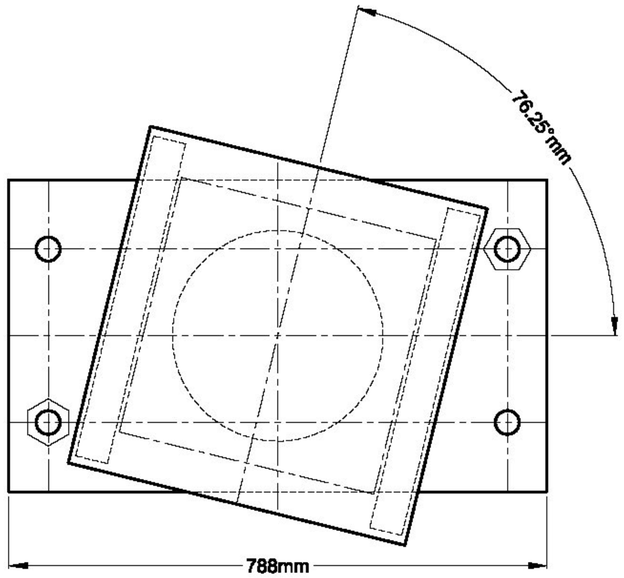

PIER 1 #1

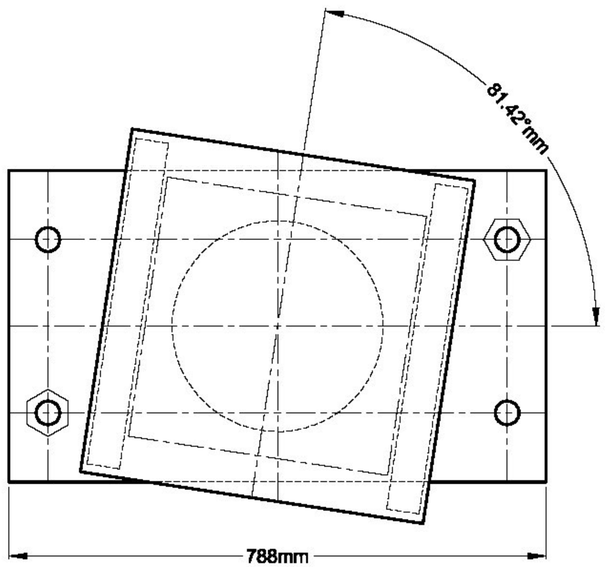

PIER 1 #2

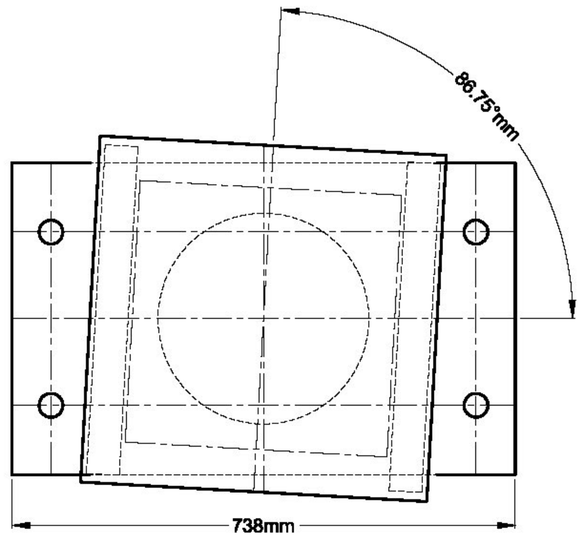

PIER 1 #3

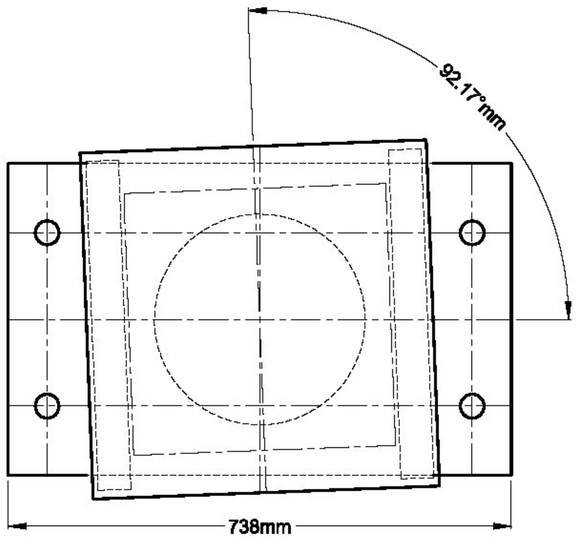

PIER 1 #4

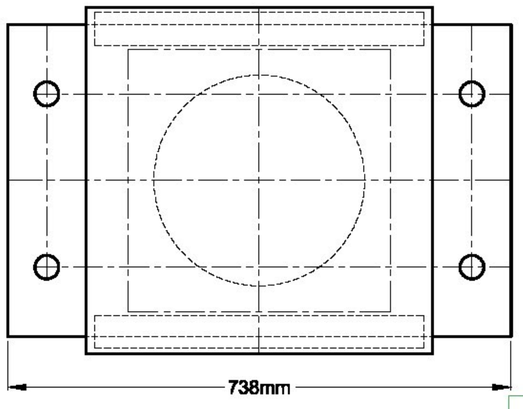

PIER 2 #5
PIER 2 #8

Vermont Agency of Transportation
RECEIVED
CK'D BY M.E.M OK'D BY
Oct. 10, 2012
RESUBMIT APPROVED ✓
BY M.Evans-Mongeon DATE Nov. 01, 2012

CAMBRIDGE
PROJECT NUMBER: BRF-027-1 (4)

HLMR BEARING
ANGLE GUIDE POSITIONS

AMSCOT
STRUCTURAL PRODUCTS CORP.

DRAWN BY: E.J.G.	SCALE: N.T.S.
DATE: 9/25/12	

FOR: A. L. ST. ONGE

ERECTION AID DRAWING

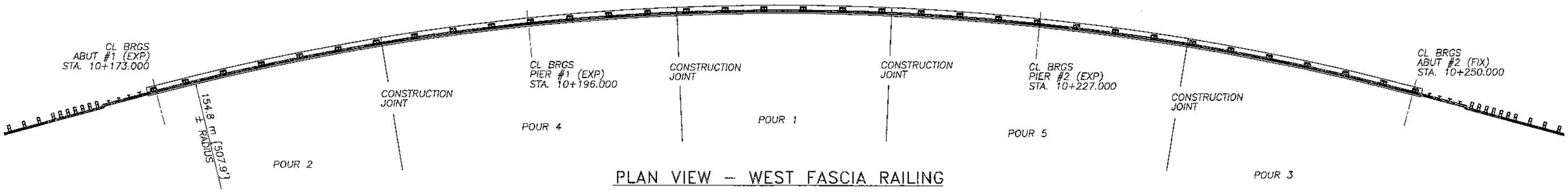

PLAN VIEW – WEST FASCIA RAILING

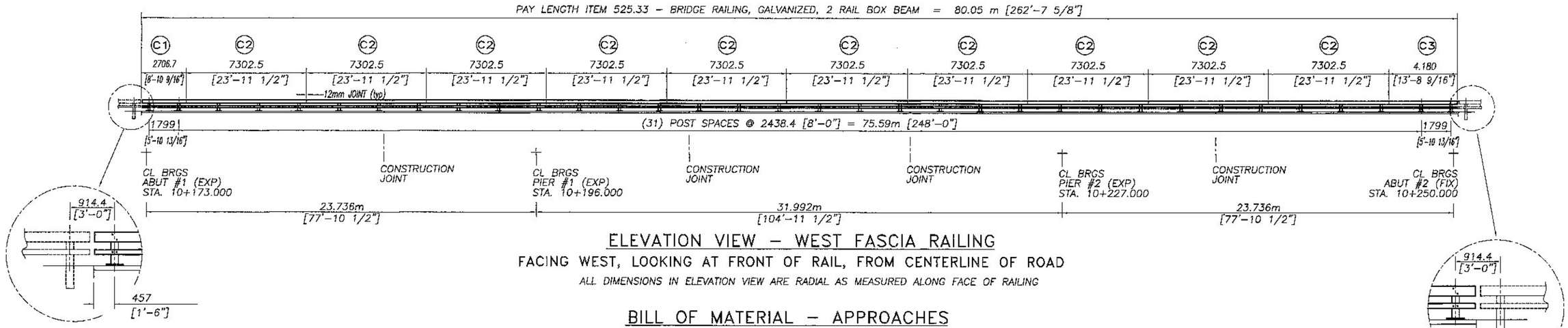

ELEVATION VIEW – WEST FASCIA RAILING

FACING WEST, LOOKING AT FRONT OF RAIL, FROM CENTERLINE OF ROAD

ALL DIMENSIONS IN ELEVATION VIEW ARE RADIAL AS MEASURED ALONG FACE OF RAILING

BILL OF MATERIAL – BRIDGE RAIL (BOTH SIDES)

Qty	mk	Description	Spec.
86		BRIDGE RAILING POST W6 x 25 x 2'-2.375" OAH WITH 1 x 10 x 14 BASE PLATE (GLV)	A709 gr 50
21		SPLICE TUBE (FOR 8X4 RAIL) HSS 7 x 3x 3/8 x 1'-8.000" OAL w/ TAPPED HOLES & 2 WELDED NUTS (GLV)	A500 gr B
21		SPLICE TUBE (FOR 4X4 RAIL) HSS 3 x 3x 5/16 x 1'-8.000" OAL w/ TAPPED HOLES & 2 WELDED NUTS (GLV)	A500 gr B
1	C1	RAIL TUBE HSS 8 x 4 x 5/16 x 8 ft - 10.5625 in OAL - FIX splice 1 end, EXP splice 1 end (GLV) - **155m CONCAVE**	A500 gr B
10	C2	RAIL TUBE HSS 8 x 4 x 5/16 x 23 ft - 11.5 in OAL - FIX splice both ends (GLV) - **155 m CONCAVE**	A500 gr B
1	C3	RAIL TUBE HSS 8 x 4 x 5/16 x 13 ft - 8.5625 in OAL - FIX splice 1 end, EXP splice 1 end (GLV) - **155 m CONCAVE**	A500 gr B
1	C4	RAIL TUBE HSS 8 x 4 x 5/16 x 10 ft - 9.75 in OAL - FIX splice 1 end, EXP splice 1 end (GLV) - **145 m CONVEX**	A500 gr B
8	C5	RAIL TUBE HSS 8 x 4 x 5/16 x 23 ft - 11.5 in OAL - FIX splice both ends (GLV) - **145 m CONVEX**	A500 gr B
1	C6	RAIL TUBE HSS 8 x 4 x 5/16 x 19 ft - 5.500 in OAL - FIX splice both ends (GLV) - **145 m CONVEX**	A500 gr B
1	C7	RAIL TUBE HSS 8 x 4 x 5/16 x 23 ft - 9.75 in OAL - FIX splice 1 end, EXP splice 1 end (GLV) - **145 m CONVEX**	A500 gr B
1	C1	RAIL TUBE HSS 4 x 4 x 1/4 x 8 ft - 10.5625 in OAL - FIX splice 1 end, EXP splice 1 end (GLV) - **155m CONCAVE**	A500 gr B
10	C2	RAIL TUBE HSS 4 x 4 x 1/4 x 23 ft - 11.5 in OAL - FIX splice both ends (GLV) - **155 m CONCAVE**	A500 gr B
1	C3	RAIL TUBE HSS 4 x 4 x 1/4 x 13 ft - 8.5625 in OAL - FIX splice 1 end, EXP splice 1 end (GLV) - **155 m CONCAVE**	A500 gr B
1	C4	RAIL TUBE HSS 4 x 4 x 1/4 x 10 ft - 9.75 in OAL - FIX splice 1 end, EXP splice 1 end (GLV) - **145 m CONVEX**	A500 gr B
8	C5	RAIL TUBE HSS 4 x 4 x 1/4 x 23 ft - 11.5 in OAL - FIX splice both ends (GLV) - **145 m CONVEX**	A500 gr B
1	C6	RAIL TUBE HSS 4 x 4 x 1/4 x 19 ft - 5.500 in OAL - FIX splice both ends (GLV) - **145 m CONVEX**	A500 gr B
1	C7	RAIL TUBE HSS 4 x 4 x 1/4 x 23 ft - 9.75 in OAL - FIX splice 1 end, EXP splice 1 end (GLV) - **145 m CONVEX**	A500 gr B
66		ANCHOR SPACER PLATE PL 0.375 x 13.000 x 9.375	A709 gr 36
266		ANCHOR STUD DBL END PART THREAD- 1" DIA x 12.000 w/ 2.250" THD EACH END (GLV)	A449
532		HEAVY HEX NUT 1" (GLV)	A563 DH
266		ROUND WASHER (SAE) - 1" DIA SMALL (GLV)	F436
266		JAM NUT 1" (GALV)	A563 DH
264		ROUND HEAD POST BOLT slot or wrench head - no shoulder 3/4" DIA x 6" LG. FULL BODY (GLV)	A449 / A325
264		LOCK NUT 3/4" (GLV)	A563 DH
264		ROUND WASHER (SAE) 3/4" (GLV)	F436
168		HEX HEAD BOLT 5/8" DIA x 1.75" LG. (GLV)	A325
168		ROUND WASHER (SAE) 5/8" (GLV)	F436
66		BEARING PAD 0.125" THICK x 10.000 x 14.000 (NEOPRENE 60 duro +/-10)	aashto M251

BILL OF MATERIAL – APPROACHES

Qty	mk	Description	Spec.
4	01	W6x25 APPROACH POST - #1 x 8'-0" OAL (GALV)	A709 gr 50
4	02	W6x25 APPROACH POST - #2 x 8'-0" OAL (GALV)	A709 gr 50
4	03	W6x25 APPROACH POST - #3 x 8'-0" OAL (GALV)	A709 gr 50
4	04	W6x25 APPROACH POST - #4 x 8'-0" OAL (GALV)	A709 gr 50
4		UPPER RAIL APPROACH TUBE HSS 8 x 4 x 5/16 x 9'-4.000" w/ 3.500 SLOTS FOR 4" EXP GAP (GALV)	A500 gr B
4		LOWER RAIL APPROACH TUBE HSS 4 x 4 x 5/16 x 9'-4.000" w/ 3.500 SLOTS FOR 4" EXP GAP (GALV)	A500 gr B
4		CONNECTION PLATE PL 0.375" x 20.000" x 27.000" (GALV)	A709 gr 36
2		DEFLECTOR PLATE (RIGHT) PL 0.375 x 4.000 x 13.375 (GALV)	A709 gr 36
2		DEFLECTOR PLATE (LEFT) PL 0.375 x 4.000 x 13.375 (GALV)	A709 gr 36
4		END CAP FOR 8x4 TUBE 0.187 THICK PLATE 8.000 x 4.000 w/ WELDED TABS (GALV)	A709 gr 36
4		END CAP FOR 4x4 TUBE 0.187 THICK PLATE 4.000 x 4.000 w/ WELDED TABS (GALV)	A709 gr 36
4		(ANGLED) SPLICE TUBE (EXPANSION) FOR 8x4 UPPER RAIL HSS 7 x 3 x 3/8 x 1'-11.750" OAL (GALV)	A500 gr B
4		SPLICE TUBE (EXPANSION) FOR 4x4 LOWER RAIL HSS 3 x 3 x 5/16 x 1'-11.750" OAL (GALV)	A500 gr B
32		WOOD POST (WP1) 6 x 8 x 7'-0"	TIMBER
32		WOOD BLOCKOUT (WB1) 6 x 8 x 1'-8"	TIMBER
4		WOOD POST (WP2) 6 x 8 x 7'-0"	TIMBER
4		WOOD BLOCKOUT (WB2) 6 x 8 x 1'-6"	TIMBER
4		WOOD POST (WP3) 6 x 8 x 7'-0"	TIMBER
4		WOOD BLOCKOUT (WB3) 6 x 8 x 1'-2"	TIMBER
4		THRIE FLAT LIP BRIDGE SHOE (MODIFIED) 10 GA. GALV	aashto M180 B2
4		THRIE TRANSITION PANEL 6'-3" / 3'-1 1/2" 10 GA. GALV.	aashto M180 B2
8		THRIE PANEL 12'-6" / 1'-6 3/4" 12 GA. GALV.	aashto M180 A2
92		ROUND HEAD POST BOLT slot or wrench head - no shoulder 3/4" DIA x 6" LG. (GLV) w/ LOCK NUT & FLAT WASHER	A449
4		ROUND HEAD POST BOLT slot or wrench head - no shoulder 3/4" DIA x 2" LG. (GLV) w/ HEX NUT	A449
8		ROUND HEAD POST BOLT - oval shoulder 5/8" DIA x 1'-8" LG. (GALV) w/ DBL RECESS NUT, FLAT WASHER	A307
66		ROUND HEAD POST BOLT - oval shoulder 5/8" DIA x 1'-0" LG. (GALV) w/ DBL RECESS NUT, FLAT WASHER	A307
32		HEX HEAD BOLT 5/8 x 1-3/4" (GALV) w/ FLAT WASHER	A325
128		PANEL SPLICE BOLT 5/8 x 1-1/4" (GALV) w/ DOUBLE RECESSED NUT	A307
76		RECTANGULAR PLATE WASHER 0.187 x 1.750 x 3.000 (GALV)	A709 gr 36
32		SPACER PIPE - GALVANIZED 3/4" SCH. 40 x 1/2" LONG (GLV)	A53 gr B

* – ANCHOR QTY INCLUDES (2) ADDITIONAL SETS FOR TESTING

No.	Remarks	Date
A	miscellaneous corrections	5/23/13
0	initial submittal	4/24/13

REVISIONS – applies to set

NOTE:

BRIDGE RAIL TUBES WILL BE SHOP CURVED TO THE REQUIRED RADIUS [155 m ± CONCAVE]

APPROACH RAILS WILL BE PROVIDED STRAIGHT AND WILL FLEX TO REQUIRED RADIUS DURING INSTALLATION

Vermont Agency of Transportation

RECEIVED

CK'D BY MEM OK'D BY

May 31, 2013

RESUBMIT APPROVED ✓

BY MEM DATE 5-31-2013

HIGHWAY SAFETY CORP
GLASTONBURY, CT
860-633-9445

ITEM 525.33 BRIDGE RAILING GALVANIZED 2 RAIL BOX BEAM (S-3608)
ITEM 621.72 GUARDRAIL APPROACH GALVANIZED 2 RAIL BOX BEAM (S-3608)

CERTIFIED FABRICATOR

TOWN OF CAMBRIDGE, LAMOILLE COUNTY
VT 108 BRIDGE #21 BRF 027-1(4)

GENERAL CONTRACTOR

SUB CONTRACTOR LAFAYETTE

ASC JOB NO. 1912

SHEET NO. 1 of 4

DRAWN	CHECKED	DATE	SCALE	SIZE
PAR		04-24-13	NONE	D

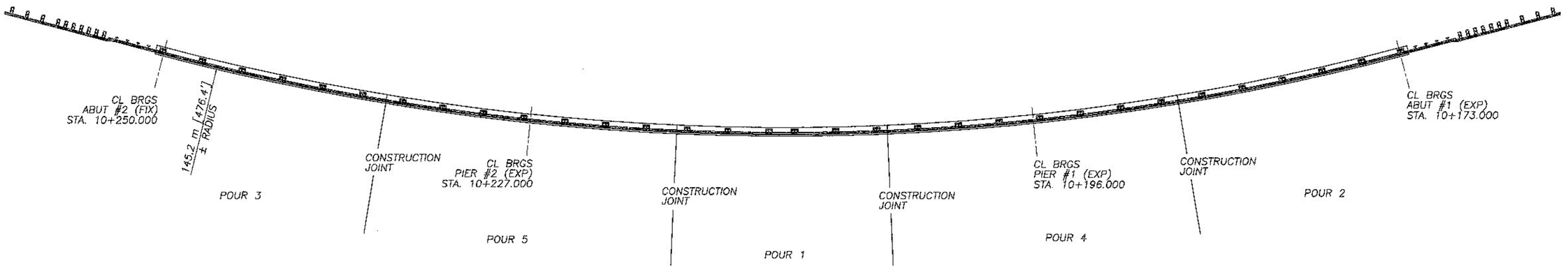

PLAN VIEW – EAST FASCIA RAILING

PAY LENGTH ITEM 525.33 – BRIDGE RAILING, GALVANIZED, 2 RAIL BOX BEAM = 75.03 m [246'–2"]

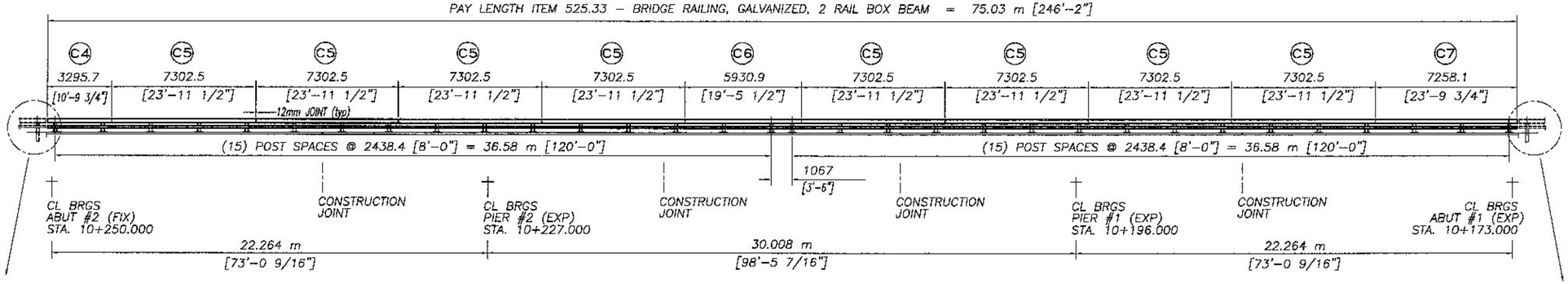

ELEVATION VIEW – EAST FASCIA RAILING

FACING EAST, LOOKING AT FRONT OF RAIL, FROM CENTERLINE OF ROAD

ALL DIMENSIONS IN ELEVATION VIEW ARE RADIAL AS MEASURED ALONG FACE OF RAILING

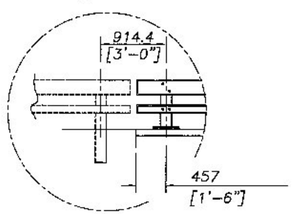

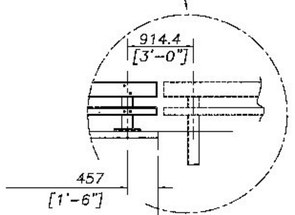

75.134 END OF DECK TO END OF DECK

NOTE:

BRIDGE RAIL TUBES WILL BE SHOP CURVED TO THE REQUIRED RADIUS [145 m ± CONVEX]

APPROACH RAILS WILL BE PROVIDED STRAIGHT AND WILL FLEX TO REQUIRED RADIUS DURING INSTALLATION

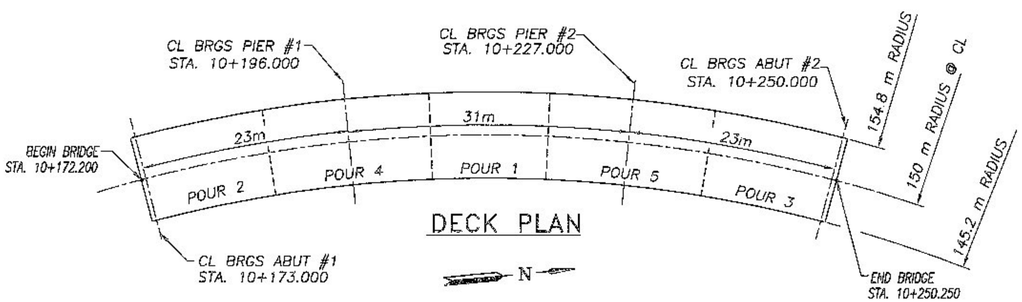

DECK PLAN

Vermont Agency of Transportation
RECEIVED
CK'D BY MEM OK'D BY
May 31, 2013
RESUBMIT APPROVED ✓
BY MEM DATE 5-31-2013

HIGHWAY SAFETY CORP
GLASTONBURY, CT
860-633-9445

ITEM 525.33 BRIDGE RAILING GALVANIZED 2 RAIL BOX BEAM (S-350A)
ITEM 621.72 GUARDRAIL APPROACH GALVANIZED 2 RAIL BOX BEAM (S-360B)

CERTIFIED FABRICATOR

TOWN OF CAMBRIDGE, LAMOILLE COUNTY
VT 108 BRIDGE #21 BRF 027-1(4)

HSC JOB NO. 1912

GENERAL CONTRACTOR
SUB CONTRACTOR LAFAYETTE

SHEET NO. 2 of 4

DRAWN	CHECKED	DATE	SCALE	SIZE
PAR		04-24-13	NONE	D

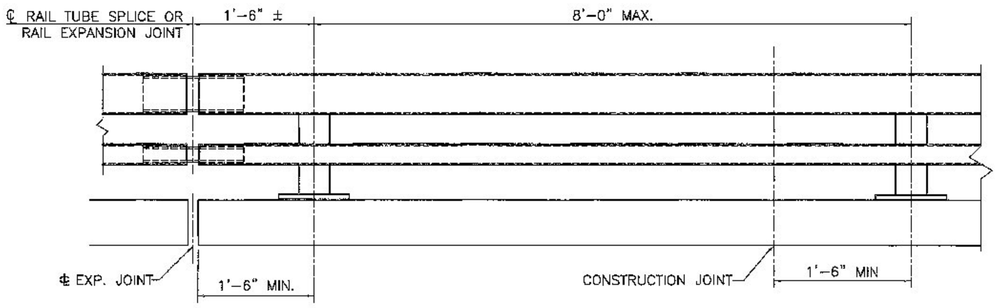

BRIDGE RAILING ELEVATION

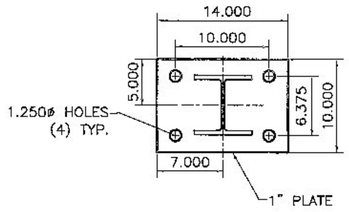

POST AND BASE PLATE

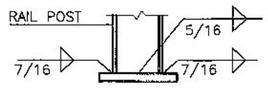

BASE WELD DETAIL

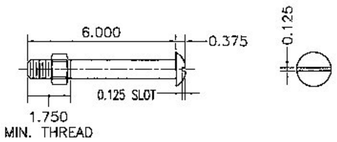

3/4" DIA. A449
ROUND HEAD BOLT

(WITH WASHER AND PREVAILING TORQUE TYPE LOCK NUT)
(SEE NOTE #8)
ONLY FULL DIAMETER BODY BOLTS WILL BE ALLOWED.

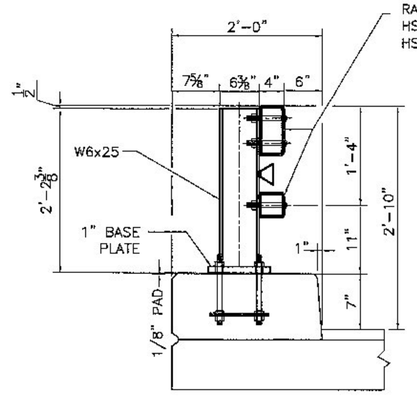

TYPICAL SECTION

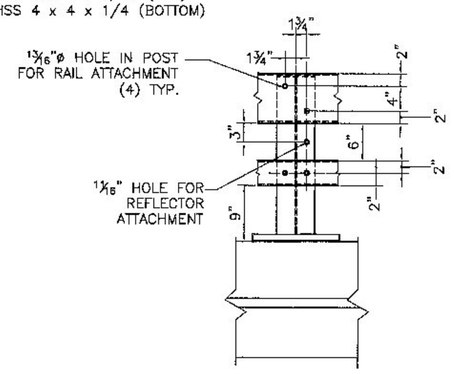

ELEVATION

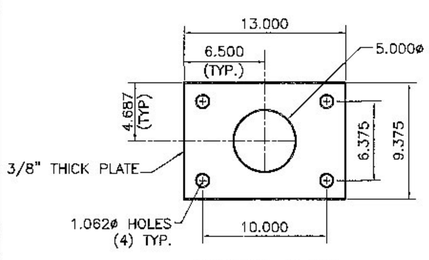

ANCHOR PLATE

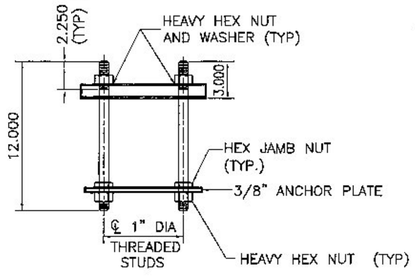

RAIL POST ANCHORAGE

FIXED SPLICE JOINT DETAIL
BOTTOM VIEW

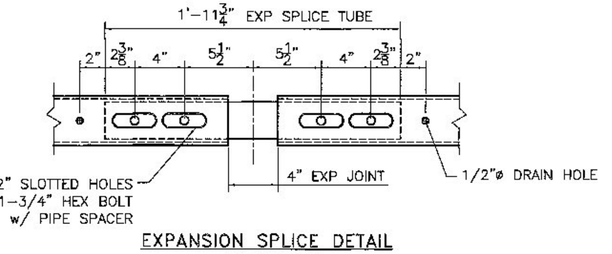

EXPANSION SPLICE DETAIL
BOTTOM VIEW

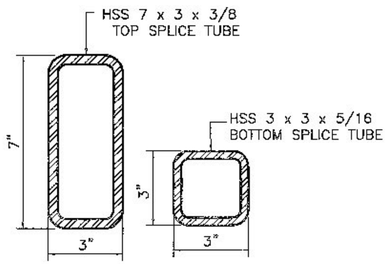

RAIL TUBE SPLICE SECTION

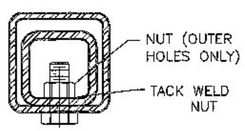

5/8"ø TAPPED HOLE IN SPLICE TUBE &
3/4"ø HOLE IN RAIL TUBE FOR BOLT &
PLAIN HARDENED WASHER

FIXED SPLICE JOINT SECTION

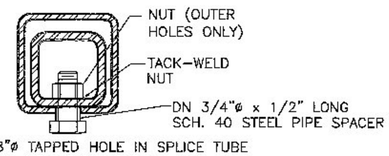

5/8"ø TAPPED HOLE IN SPLICE TUBE
AND 1 1/8" x 'C' SLOT IN RAIL TUBE FOR
BOLT AND PLAIN HARDENED WASHER

EXPANSION JOINT SECTION

NOTES:

1. ALL WORK AND MATERIALS SHALL CONFORM TO SECTION 525.

2. PRIOR TO GALVANIZING, ALL EXPOSED CUT OR SHEARED EDGES SHALL BE ROUNDED TO A 1/16" RADIUS AND BE FREE OF BURRS.

3. ALL POSTS SHALL BE SET NORMAL TO GRADE.

4. SECTIONS OF RAIL TUBE SHALL BE ATTACHED TO A MINIMUM OF TWO (2) RAIL POSTS AND PREFERABLY TO AT LEAST FOUR (4) POSTS.

5. RAIL TUBE EXPANSION JOINT SHALL BE PROVIDED IN ANY RAIL BAY SPANNING THE END OF AN INTEGRAL ABUTMENT BRIDGE AND AT ALL SUPERSTRUCTURE EXPANSION JOINTS. EXPANSION JOINT WIDTH SHALL BE 4" AT 45°F AND WILL BE ADJUSTED IN THE FIELD BY THE ENGINEER FOR OTHER TEMPERATURES.

6. HOLES IN RAILS FOR RAIL TUBE ATTACHMENT SHALL BE FIELD-DRILLED. HOLES SHALL BE COATED WITH AND APPROVED ZINC-RICH PAINT DURING INSTALLATION.

7. RAIL POST ANCHORING NUTS SHALL BE TIGHTENED TO A SNUG FIT AND GIVEN AN ADDITIONAL ONE-EIGHTH TURN.

8. RAIL TUBES SHALL BE ATTACHED USING 3/4" FULL DIAMETER BODY ASTM A449 ROUND HEAD BOLTS INSERTED THROUGH THE FACE OF THE TUBE. HOLES IN POSTS SHALL BE 1/16" LARGER THAN THE BOLT SIZE.

9. ANY BENDING OR CURVING OF RAIL SHALL BE DONE IN A FABRICATION PLANT IN ACCORDANCE WITH SUBMITTED PROCEDURES.

10. THE MINIMUM DISTANCE FROM A POST TO AN EXPANSION JOINT SHALL BE SUCH TO MAINTAIN MINIMUM EDGE DISTANCE OF 5" FROM ANY ANCHOR STUD TO THE END OF THE SLAB, OR TO THE EXPANSION JOINT RECESS POUR, IF ONE IS USED.

11. A DELINEATOR (SEE VAOT STANDARD DRAWING G-1 FOR DETAILS) SHALL BE INSTALLED AT NEAREST POST TO 30 FT SPACING. WHITE IS TO BE INSTALLED ON THE DRIVER'S RIGHT. FOR ONE WAY BRIDGES, YELLOW IS TO BE INSTALLED ON THE DRIVER'S LEFT. PAYMENT SHALL BE INCIDENTAL TO OTHER ITEMS.

12. THIS RAILING MEETS THE REQURIEMENTS FOR A TL-4 SERVICE LEVEL.

MATERIALS

RAIL TUBES	ASTM A500 GRADE B OR ASTM A501
RAIL POSTS AND BASE PLATES	ASTM A709/A709M, GRADE 50
ALL OTHER SHAPES AND PLATES	ASTM A709/A709M, GARDE 36
ANCHOR STUDS	ASTM A449
ALL OTHER BOLTS (UNLESS NOTED)	AASHTO M164, TYPE1

NUTS FOR AASHTO M164 BOLTS AND FOR ANCHOR STUDS SHALL COMPLY WITH AASTHO M291 (ASTM A563).

WASHERS SHALL COMPLY WITH AASHTO M293 (ASTM F436) SPECIFCATIONS.

1/8" PAD SHALL COMPLY WITH STANDARD SPECIFICATION SUBSECTION 731.01 OR 731.02.

RAIL POSTS AND BASE PLATES SHALL BE TESTED FOR IMPACT PROPERTIES IN ACCORDANCE WITH ASTM A370 CHARPY IMPACT TESTING USING TYPE A SPECIMEN.

Vermont Agency of Transportation
RECEIVED
CK'D BY MEM OK'D BY
May 31, 2013
RESUBMIT APPROVED ✓
BY MEM DATE 5-31-2013

HIGHWAY SAFETY CORP
GLASTONBURY, CT
860-633-9445

ITEM 525.33 BRIDGE RAILING, GALVANIZED 2 RAIL BOX BEAM (S-360A)

NSBA CERTIFIED FABRICATOR

TOWN OF CAMBRIDGE, LAMOILLE COUNTY
VT 108 BRIDGE #21 BRF 027-1(4)

GENERAL CONTRACTOR

SUB CONTRACTOR LAFAYETTE

JOB NO. 1912

SHEET NO. 3 of 4

DRAWN	CHECKED	DATE	SCALE	SIZE
PAR		04-24-13	NONE	D

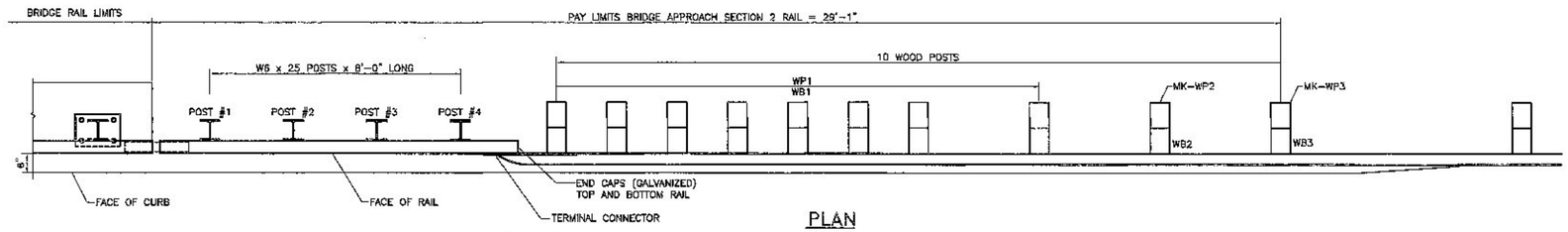

PLAN

SHOWN STRAIGHT – SEE SHEETS 1 & 2 FOR RADIUS INSTALLATION

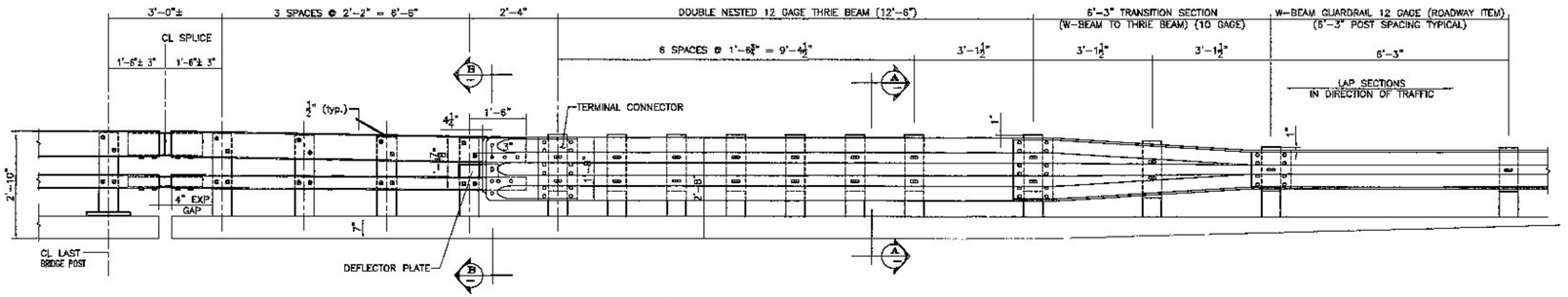

APPROACH RAIL ELEVATION

LEADING END SHOWN (RIGHT) – DEPARTURE END (LEFT) OPPOSITE HAND

QTY = 4 UNITS

NOTES:
1. PAYMENT FOR GUARDRAIL APPROACH SECTION – GALVANIZED 2 RAIL, SHALL INCLUDE THE TERMINAL CONNECTOR, THE CONNECTION PLATE, THE DEFLECTOR PLATE, RAIL, POSTS, BLOCKS AND ATTACHMENT HARDWARE.

2. ALL APPROACH RAIL SPLICES SHALL BE LAPPED IN THE DIRECTION OF TRAFFIC FLOW.

3. TUBE AND STEEL POST MATERIALS, DIMENSION SIZES AND NOTES SHALL BE THE SAME AS THOSE OF THE BRIDGE RAIL UNLESS OTHERWISE NOTED.

4. APPROACH RAIL BOLTS SHALL BE ASTM A307 GRADE A AND NUTS SHALL BE AASHTO M291 (ASTM 563 GRADE A OR BETTER (GALVANIZED). WASHERS SHALL BE ASTM F844.

5. WELD TOP SPLICE BAR TO FIT BEND. USE COMPLETE PENETRATION WELD (B-U2).

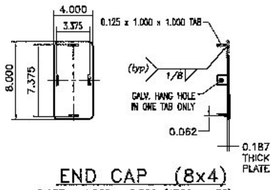

END CAP (8x4)

0.187 x 4.000 x 8.000 (A709 gr 36)

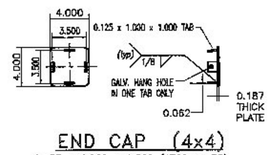

END CAP (4x4)

0.187 x 4.000 x 4.000 (A709 gr 36)

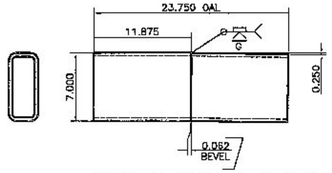

ANGLED SPLICE DETAIL

HSS 7 x 3 x 3/8 – FOR UPPER RAIL SPLICE

SEE BRIDGE RAIL SHEET FOR DETAIL ON LOWER RAIL SPLICE TUBE

BILL OF MATERIAL

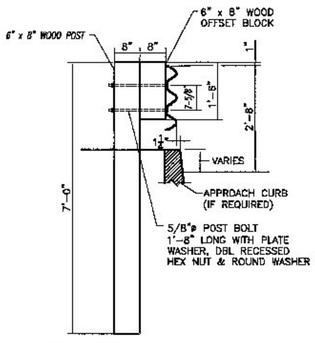

SECTION A–A

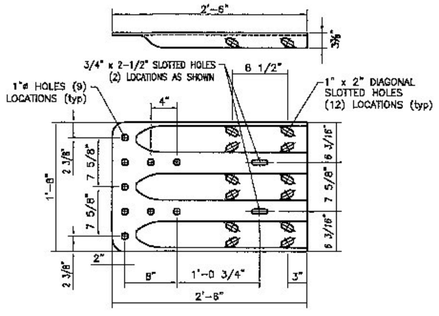

TERMINAL CONNECTOR

10 GAUGE (AASHTO M180 B2)

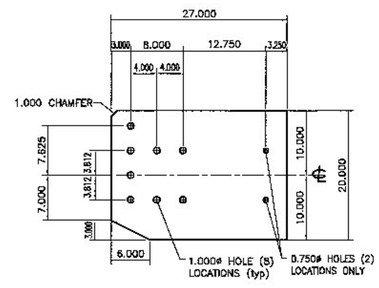

CONNECTION PLATE

0.375 x 20.000 x 27.000 (A709 gr 36)

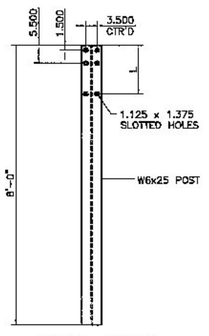

STEEL POST

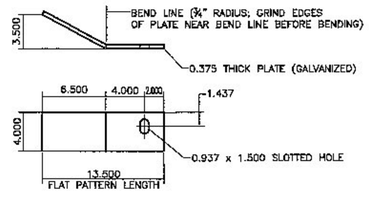

DEFLECTOR PLATE

0.375 x 4.000 x 13.500 (A709 gr 36)

RIGHT HAND APPROACH SHOWN – LEFT HAND BENT OPPOSITE

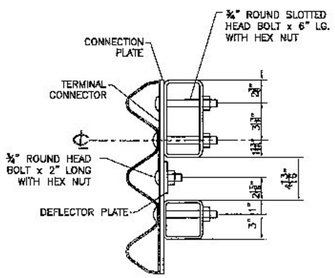

SECTION B–B

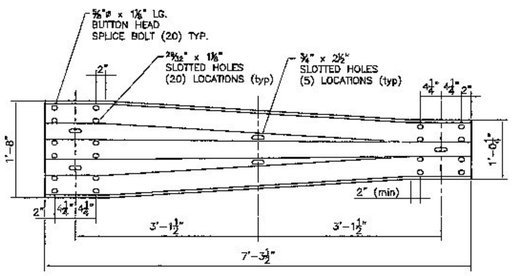

THRIE TRANSITION PANEL

10 GAUGE (AASHTO M180 B2)

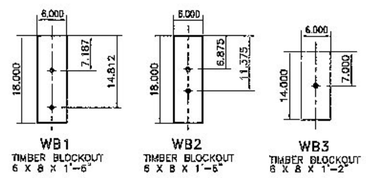

WOOD BLOCK DETAILS

STEEL POST CHART

No.	L
#1	1'-3.250"
#2	1'-3.000"
#3	1'-2.687"
#4	1'-2.375"

Vermont Agency of Transportation

RECEIVED

CK'D BY MEM OK'D BY

May 31, 2013

RESUBMIT APPROVED ✓

BY MEM DATE 5-31-2013

HIGHWAY SAFETY CORP

GLASTONBURY, CT

860-633-9445

ITEM 621.72 GUARDRAIL APPROACH, GALVANIZED 2 RAIL BOX BEAM (S-36GB)

TOWN OF CAMBRIDGE, LAMOILLE COUNTY

VT 108 BRIDGE #21 BRF 027-1(4)

GENERAL CONTRACTOR

SUB CONTRACTOR LAFAYETTE

DRAWN PAR | CHECKED | DATE 04-24-13 | SCALE NONE | SIZE D

AISC CERTIFIED FABRICATOR

AISC JOB NO. 1912

SHEET NO. 4 of 4

PIER 1 DRILLED SHAFTS REINF. SCHEDULE: FOUR CAGES										
MARK	QUANTITY	SIZE	TYPE	A	B	C	D	E	J	WEIGHT kg
1FS201	66	32M	STR.		2520					1065
1F1904	4	19M	SPI	5000	850	150	2.5	1.5	37 1/2	889

TWO EXTRA BARS ADDED FOR TESTING

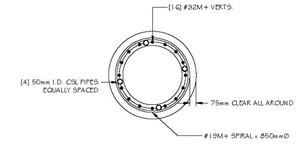

SECTION P1 01

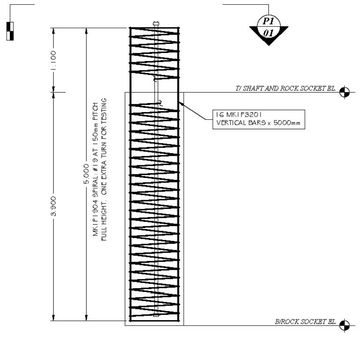

PIER 1 DRILLED SHAFT CAGES
FOUR REQUIRED

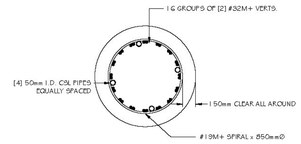

SECTION P2 01

PIER 2 DRILLED SHAFT REINF. SCHEDULE: TWO CAGES										
MARK	QUANTITY	SIZE	TYPE	A	B	C	D	E	J	WEIGHT kg
2FS201	66	32M	STR		8250					3485
2F1904	2	19M	SPI	8250	850	150	2.5	1.5	59	703

TWO EXTRA BARS ADDED FOR TESTING

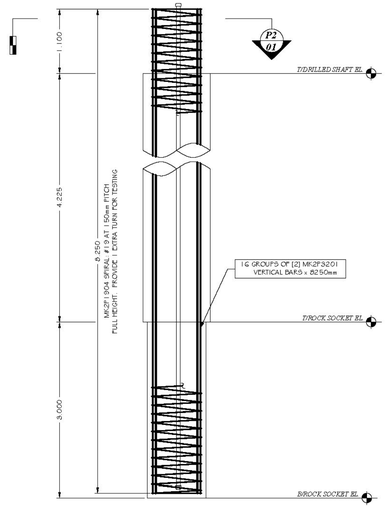

PIER 2 DRILLED SHAFT CAGES
TWO REQUIRED

PIER 2 DRILLED SHAFT REINF. SCHEDULE: TWO CAGES										
MARK	QUANTITY	SIZE	TYPE	A	B	C	D	E	J	WEIGHT kg
2FS205	64	32M	STR.		9600					3934
2F1907	2	19M	SPI	9600	850	150	2.5	1.5	68	810

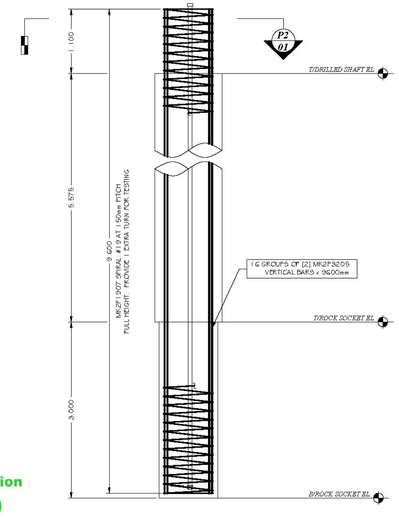

PIER 2 DRILLED SHAFT CAGES
TWO REQUIRED

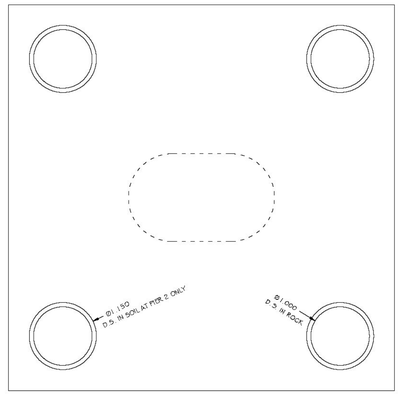

TYPICAL PIER FOOTING
WITH FOUR DRILLED SHAFTS
ONE EACH AT PIER 1 AND PIER 2

Vermont Agency of Transportation
RECEIVED
CK'D BY MEM OK'D BY
Apr. 10, 2013
RESUBMIT APPROVED ✓
BY M. Evans-Mongeon DATE 4-12-2013

Construction Notes

1. ALL REINFORCING STEEL ON THIS DRAWING IS TO BE OF ASTM A615 Gr. 60 UNCOATED MATERIAL.
2. DISCONTINUOUS ENDS OF #19 SPIRAL WILL BE TERMINATED BY MINIMUM 1½ TURN AT 0" PITCH.
3. SPLICES OF #19 SPIRAL, WHERE REQUIRED, SHALL BE MADE BY AN OVERLAP SPLICE OF 2 TURN MINIMUM.
4. INTERSECTIONS OF SPIRAL BARS AND VERTICAL BARS SHALL BE SECURED BY WIRE TIES.
5. CSL PIPES SHALL BE OF ASTM A53 GRADE B SCHEDULE 40 STEEL MATERIAL SIZE SHALL BE 2" (50mm) INSIDE DIAMETER. BOTTOM OF CSL PIPES SHALL BE FITTED WITH A WATERTIGHT CAP. TOP OF PIPES SHALL BE FITTED WITH A REMOVEABLE SLIP CAP FOR TESTING EQUIPMENT ACCESS IN THE FIELD. CSL PIPES SHALL EXTEND FROM 150mm ABOVE THE BOTTOM OF THE EXCAVATION TO THE TOP OF DRILLED SHAFT REBAR CAGE.

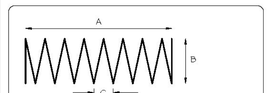

D,E: EXTRA TURNS T&B
J: TOTAL TURNS

TYPE SPI



TYPE STR

DRILLED SHAFTS

No.	Revision/Issue	Date

DIMENSION

DIMENSION FABRICATORS, INC.
2000 SEVENTH STREET
SCOTIA, NY 12302
www.dimensionfab.com

Project Name and Address
A.L. St. Onge Contractor, Inc.
VT-AOT Cambridge BRF 027-1(4)
Cambridge, VT
State of Vermont AOT

Project	Sheet
8341	DSR-01
Date: 09 APR 13	
BY: GBS	

FNAME
REVDATE
USER

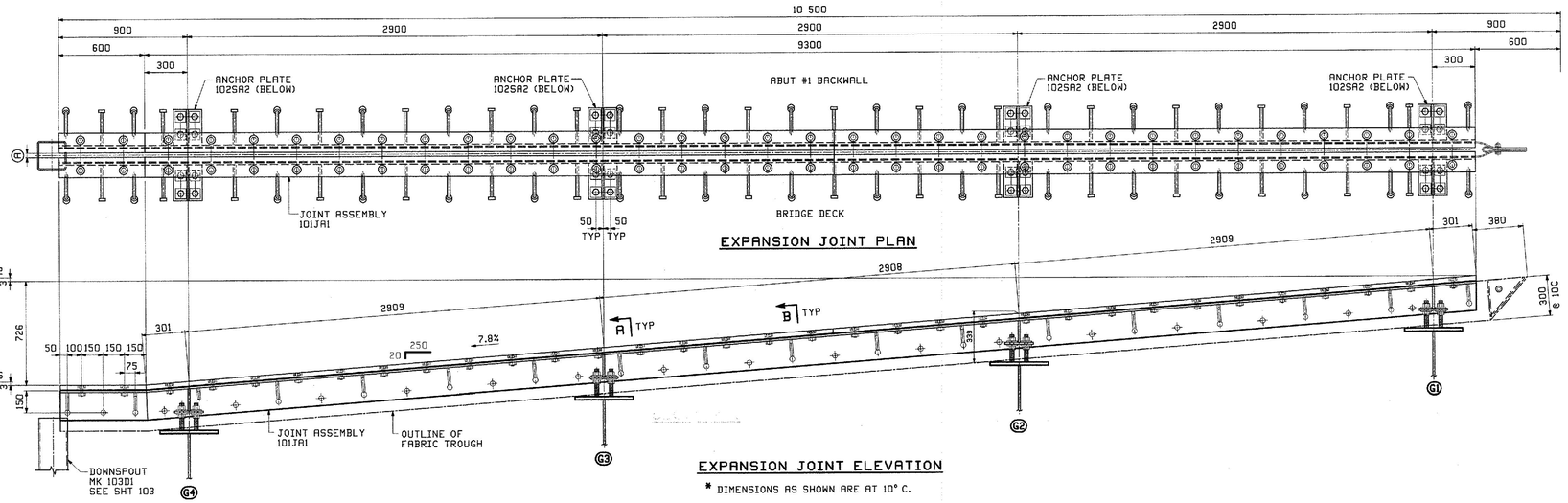

* DIMENSIONS AS SHOWN ARE AT 10° C.

TEMP	Ⓐ	Ⓑ
-30° C	57	137
-20° C	51	131
-10° C	44	124
0° C	38	118
10° C	31	111
20° C	25	105
30° C	18	98
40° C	12	92

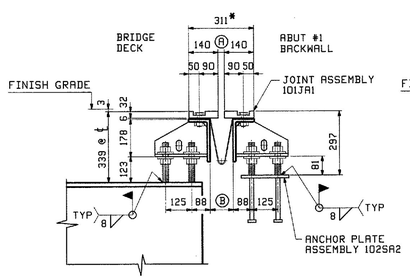

SECTION A

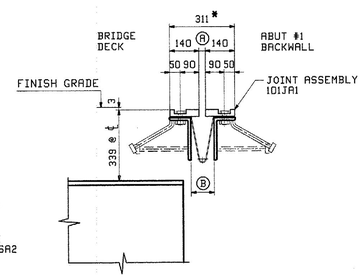

SECTION B

Vermont Agency of Transportation

RECEIVED

CK'D BY J. Griffin OK'D BY M. Umberger

Apr. 3, 2013

RESUBMIT APPROVED ✓

BY M. Evans-Mongeon DATE 4-10-2013

REV.	DATE	REMARKS	DWN	CHK	APVL	SHOP
0					MAR 28 2013	

MATERIAL:	SURFACE PREP. & PAINT:	HOLES:	SHOP BOLTS:
M270M-250 UN	GALV	AS NOTED	AS NOTED

DESCRIPTION: EXPANSION JOINT PLAN

CASCO BAY STEEL STRUCTURES, INC.
1 WALLACE AVE. PHONE (207) 780-6722
SOUTH PORTLAND, ME 04106 FAX. (207) 780-6726

STRUCTURE: VT ROUTE 108, BRIDGE #21
MAJOR COLLECTOR
TOWN OF CAMBRIDGE
COUNTY OF LAMOILLE, VERMONT

DRAWN:	DATE:
TJB	03/16
CHKD:	DATE:
DH	03/25

LOCATION: CAMBRIDGE, VERMONT

PROJ NO. BRF 027-1(4)

CUSTOMER: A. L. ST. ONGE CONTRACTING

JOB NO. 524

DWG NO. E101

REV. △

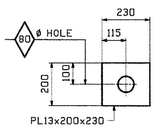

8 ~ x10a
(NO COATING)

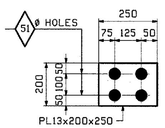

8 ~ x10b

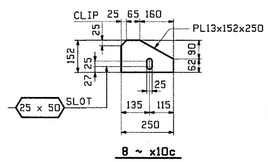

8 ~ x10c

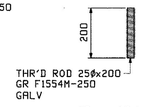

16 ~ x10d
GDR

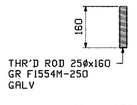

16 ~ x10f
ABUT

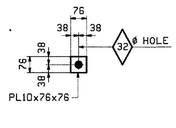

64 ~ x10g

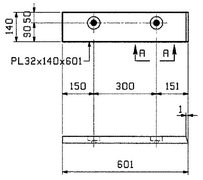

1 ~ x10k
ABUT

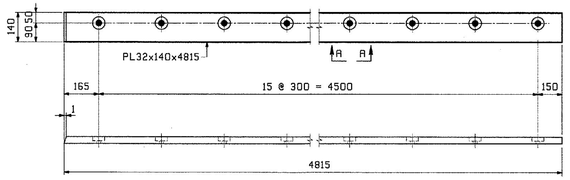

1 ~ x10m
ABUT

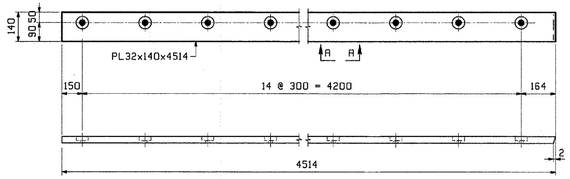

1 ~ x10ma
ABUT

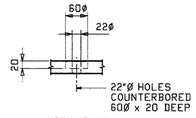

VIEW "A-A"

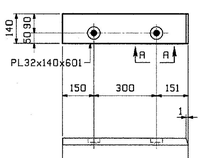

1 ~ x10n
GDR

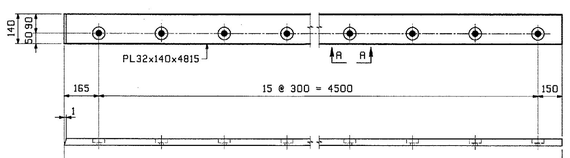

1 ~ x10p
GDR

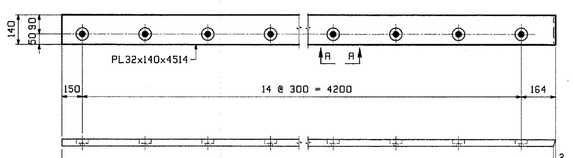

1 ~ x10pa
GDR

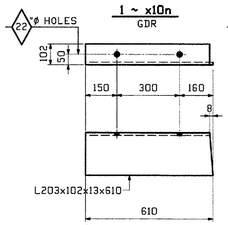

1 ~ x10s
ABUT

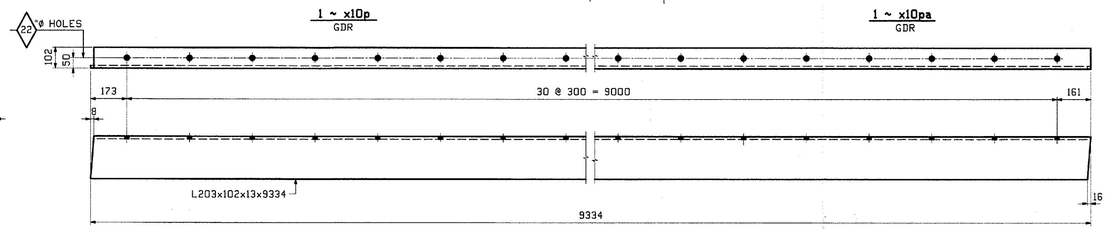

1 ~ x10t
ABUT

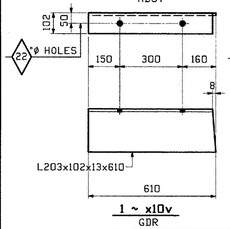

1 ~ x10v
GDR

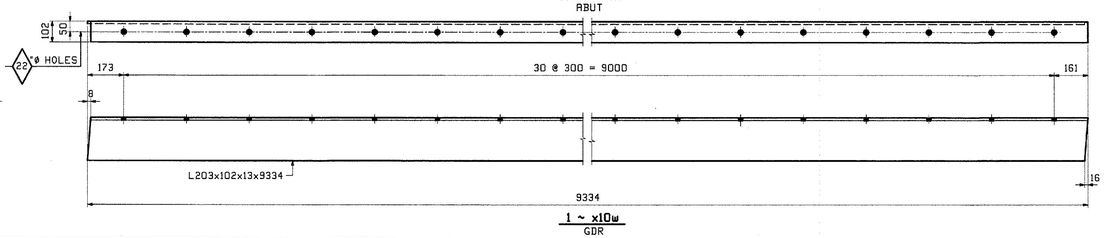

1 ~ x10w
GDR

Vermont Agency of Transportation

RECEIVED

CK'D BY J. Griffin OK'D BY M. Umberger

Apr. 3, 2013

RESUBMIT _____ APPROVED ✓

BY M. Evans-Mongeon DATE 4-10-2013

NOTE:
ALL CORNERS AND EDGES OF STEEL PLATES AND SHAPES SHALL BE GROUND TO A 3mm RADIUS PRIOR TO GALVANIZING

REV.	DATE	REMARKS	DWN	CHK	APVL	SHOP
0					MAR 28 2013	

MATERIAL:	SURFACE PREP. & PAINT:	HOLES:	SHOP BOLTS:
M270M-250 UN	GALV	AS NOTED	AS NOTED

DESCRIPTION: STANDARD DETAILS

CASCO BAY STEEL STRUCTURES, INC.
1 WALLACE AVE. PHONE (207) 780-6722
SOUTH PORTLAND, ME 04106 FAX. (207) 780-6726

STRUCTURE: VT ROUTE 108, BRIDGE #21
MAJOR COLLECTOR
TOWN OF CAMBRIDGE
COUNTY OF LAMOILLE, VERMONT

DRAWN:	DATE:
TJB	03/16
CHK'D:	DATE:
DH	03/25

LOCATION:	CAMBRIDGE, VERMONT	JOB NO.	DWG NO.
PROJ NO.	BRF 027-1(4)	524	X10
CUSTOMER:	A. L. ST. ONGE CONTRACTING		REV. △

File: Tue Mar 26 2013 09:24:41 PM //casco/jobs/524/dgn/X10.dgn

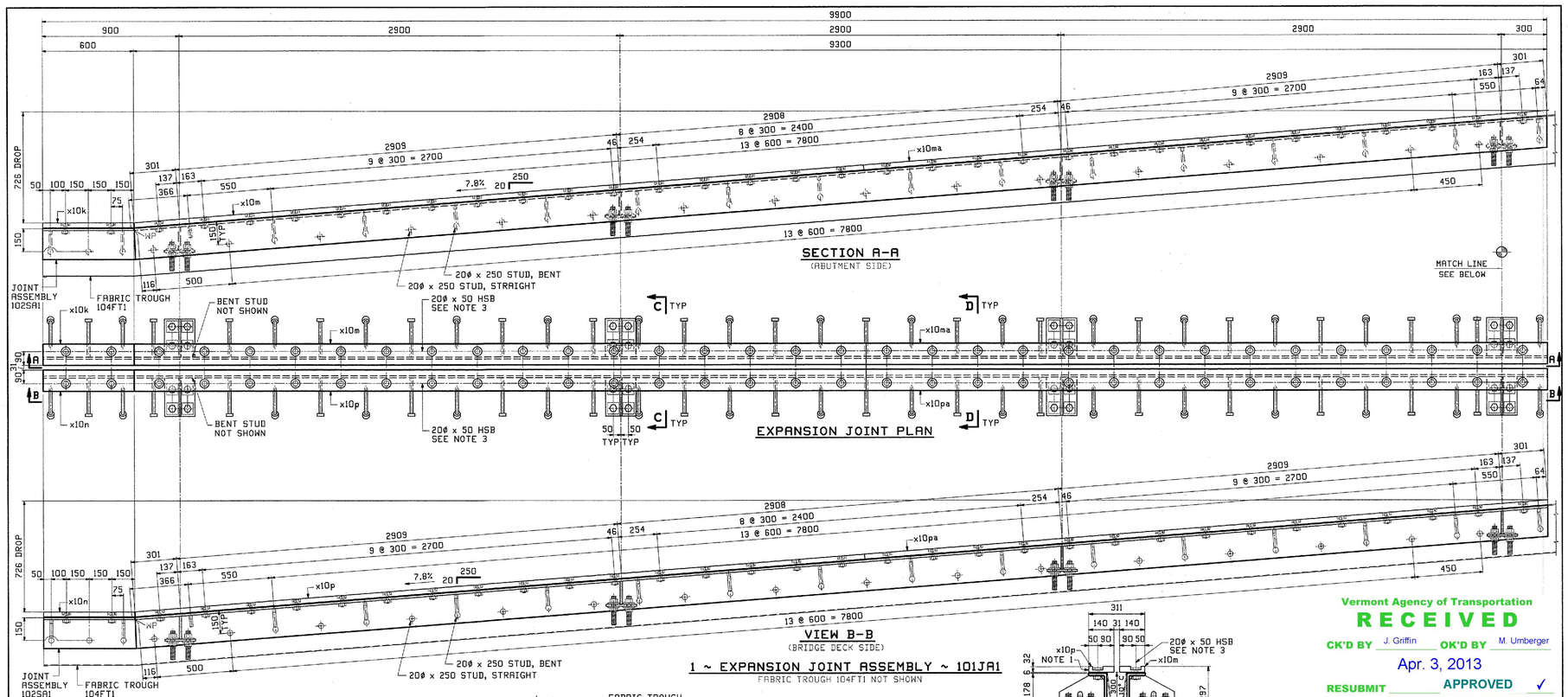

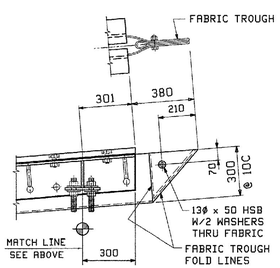

VIEW B-B, CONT'D

SECTION C
ROTATED

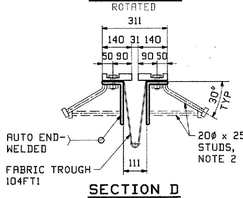

SECTION D
ROTATED

NOTES:

1). 2x80 BUTYL RUBBER TAPE MK 101TP1 STANDARD SPEC SUBSECTION 707.12 CENTERED ON LINE OF BOLTS AND PLACED BETWEEN ANGLE AND FABRIC.
2.) STUDS WELDED @ 300 O/C. BENT AS SHOWN, ALTERNATE WITH STRAIGHT STUDS @ 300 O/C.
3.) WELD NUTS UNDERNEATH ON (3) SIDES COAT BOLT & NUT THREADS WITH NICKEL BASED NEVER SEIZE LUBE.

Vermont Agency of Transportation

RECEIVED

CK'D BY J. Griffin OK'D BY M. Umberger

Apr. 3, 2013

RESUBMIT APPROVED ✓

BY M. Evans-Mongeon DATE 4-10-2013

MAR 28 2013

BILL OF MATERIAL

ABM INFO PAGE	LINE	SHIP MARK	QTY	MARK	MATERIAL	LENGTH m	LENGTH mm	REMARKS	WT	PROCUREMENT NOTES
		101JA1	1		EXP JOINT ASSEMBLY				1529 kg 3370 lbs	
7	F		1	x10k	PL 32x140	0	601	GALV	21 kg 47 lbs	
7	G		1	x10n	PL 32x140	4	815	GALV	165 kg 365 lbs	
7	G		1	x10ma	PL 32x140	4	514	GALV	159 kg 350 lbs	
7	H		1	x10n	PL 32x140	0	601	GALV	21 kg 47 lbs	
7	J		1	x10p	PL 32x140	4	815	GALV	165 kg 365 lbs	
7	J		1	x10pa	PL 32x140	4	514	GALV	159 kg 350 lbs	
9	B		66		20ø HSB	0	50	GALV, ASTM F-3125	.24 kg .53 lbs	
9	C		66		20ø HHN			GALV. GR DH A563	.08 kg .18 lbs	
9	K		70		STUD 20ø	0	250	3/4 DIA x ID AWSD1	.33 kg .73 lbs	
			1	102SA1	LOWER JOINT SUB-ASSY				788 kg 1733 lbs	
9	M		2	101TP1	2mm x 80 x 9930 TAPE			BUTYL RUBBER TAPE SPEC 707.12	.00 kg .00 lbs	
			1	104FT1	FABRIC TROUGH			3 PLY FABRIC	.00 kg .00 lbs	
9	Q		1		13ø HSE	0	50	GALV, ASTM F-3125	.09 kg .20 lbs	
9	R		1		13ø HHN			GALV. GR DH A563	.03 kg .07 lbs	
9	S		2		13ø HSW			GALV. F436	.01 kg .02 lbs	

0					
REV.	DATE	REMARKS	DWN	CHK	APVL SHOP

MATERIAL:	SURFACE PREP. & PAINT:	HOLES:	SHOP BOLTS:
M270M-250 UN	GALV	AS NOTED	AS NOTED

DESCRIPTION: EXPANSION JOINT ASSEMBLY

CASCO BAY STEEL STRUCTURES, INC.
1 WALLACE AVE. PHONE (207) 780-6722
SOUTH PORTLAND, ME 04106 FAX. (207) 780-6726

STRUCTURE:	VT ROUTE 108, BRIDGE #21 MAJOR COLLECTOR TOWN OF CAMBRIDGE COUNTY OF LAMOILLE, VERMONT	DRAWN: TJB	DATE: 03/19
		CHK'D: DH	DATE: 03/25
LOCATION:	CAMBRIDGE, VERMONT	JOB NO. 524	DWG NO. 101
PROJ NO.	BRF 027-1(4)		
CUSTOMER:	A. L. ST. ONGE CONTRACTING		REV. △

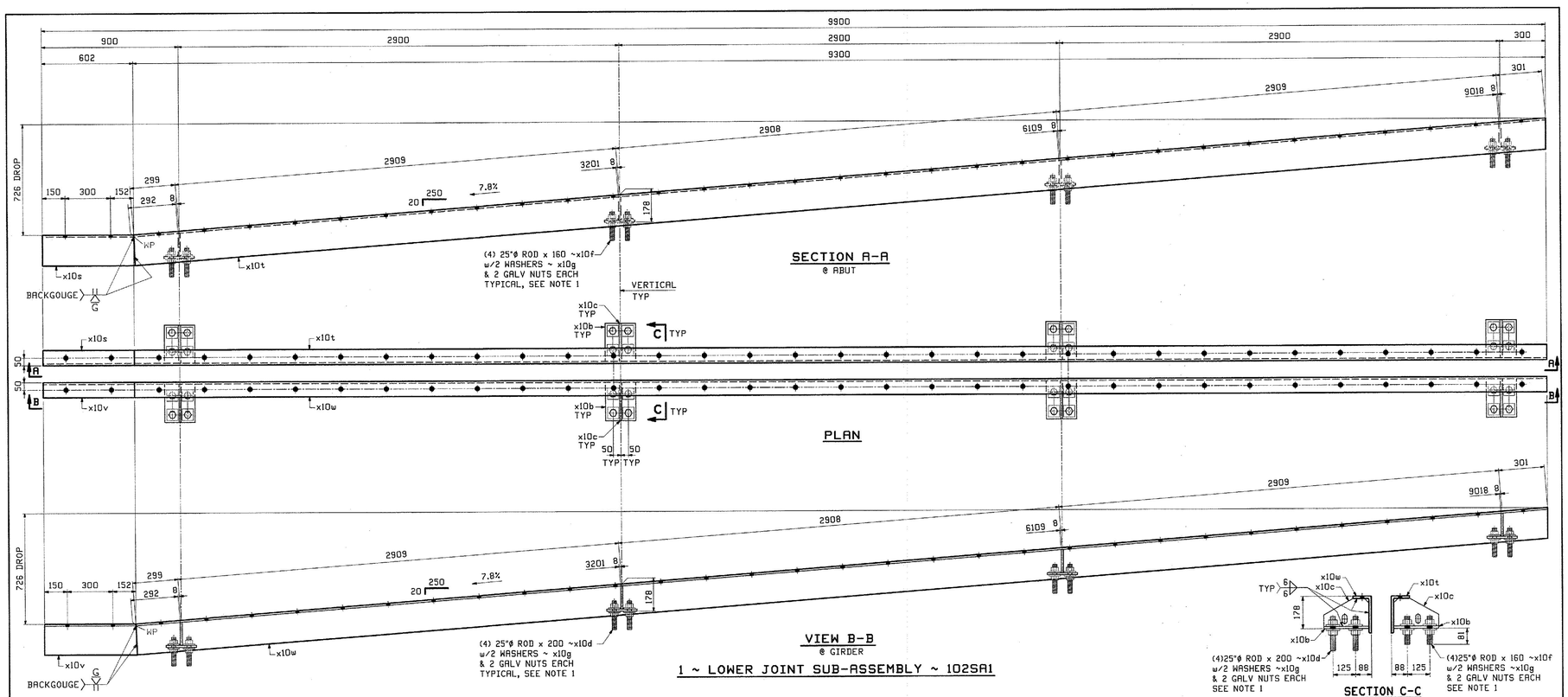

SECTION A-A
@ ABUT

PLAN

VIEW B-B
@ GIRDER

1 ~ LOWER JOINT SUB-ASSEMBLY ~ 102SA1

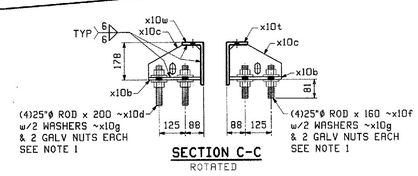

SECTION C-C
ROTATED

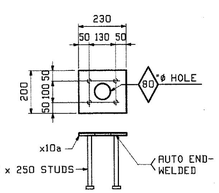

4 ~ ANCHOR SUB-ASSEMBLIES ~ 102SA2

ABM INFO		SHIP	BILL OF MATERIAL					JOB NO.	DRAWING NO.	REV.
								524	102	
PAGE	LINE	MARK	QTY	MARK	MATERIAL	LENGTH m	LENGTH mm	REMARKS	WT	PROCUREMENT NOTES
		102SA1	1		LOWER JOINT SUB-ASSY				786 kg 1732 lbs	
7	C		8	x10a	PL 13x200	0	250	GALV	5 kg 11 lbs	
7	D		8	x10c	PL 13x152	0	250	GALV	4 kg 9 lbs	
7	K		1	x10s	L 203x102x13	0	610	GALV	20 kg 44 lbs	
7	L		1	x10t	L 203x102x13	9	334	GALV	304 kg 671 lbs	
7	M		1	x10v	L 203x102x13	0	610	GALV	20 kg 44 lbs	
7	N		1	x10w	L 203x102x13	9	334	GALV	304 kg 671 lbs	
9	E		16	x10d	ROD 25	0	200	THRD ROD GALV F1554M-250	.77 kg .70 lbs	
9	F		16	x10f	ROD 25	0	160	THRD ROD GALV F1554M-250	.77 kg .70 lbs	
7	E		64	x10g	PL 10x76	0	076	GALV WASHERS	.45 kg .00 lbs	
9	G		64		25 ø HHN			GALV GR DH M563	.19 kg .43 lbs	
		102SA2	4		ANCHOR PL SUB-ASSY				6 kg 13 lbs	
7	B		4	x10a	PL 13x200	0	230	GALV	5 kg 10 lbs	
9	K		16		STUD 20 ø	0	250	3/4 DIA x 10 A108M	.33 kg .72 lbs	

NOTES:

1.) COAT BOLT & NUT THREADS WITH NICKEL BASED NEVER SEIZE LUBE.

Vermont Agency of Transportation
RECEIVED
CK'D BY J. Griffin OK'D BY M. Umberger
Apr. 3, 2013
RESUBMIT APPROVED ✓
BY M. Evans-Mongeon DATE 4-10-2013

REV.	DATE	REMARKS	DWN	CHK	APVL	SHOP
0					MAR 28 2013	

MATERIAL:	SURFACE PREP. & PAINT:	HOLES:	SHOP BOLTS:
M270M-250 UN	GALV	AS NOTED	AS NOTED

DESCRIPTION: EXPANSION JOINT

CASCO BAY STEEL STRUCTURES, INC.
1 WALLACE AVE. PHONE (207) 780-6722
SOUTH PORTLAND, ME 04106 FAX. (207) 780-6726

STRUCTURE: VT ROUTE 108, BRIDGE #21
MAJOR COLLECTOR
TOWN OF CAMBRIDGE
COUNTY OF LAMOILLE, VERMONT

		DRAWN:	DATE:
		TJB	03/20
		CHK'D: DH	DATE: 03/25
LOCATION:	CAMBRIDGE, VERMONT	JOB NO.	DWG NO.
PROJ NO.	BRF 027-1(4)	524	102
CUSTOMER:	A. L. ST. ONGE CONTRACTING		REV. △

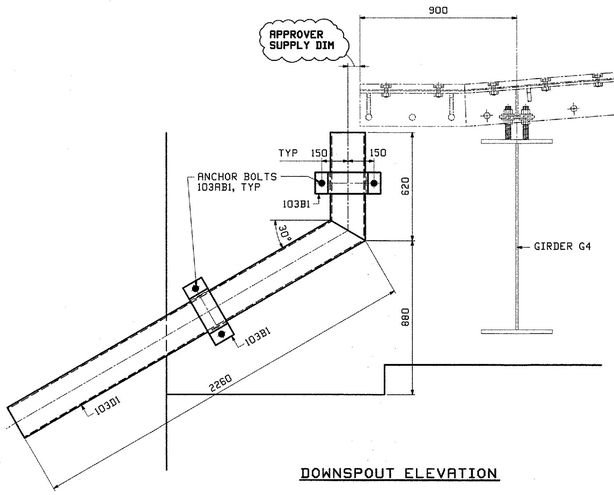

DOWNSPOUT ELEVATION

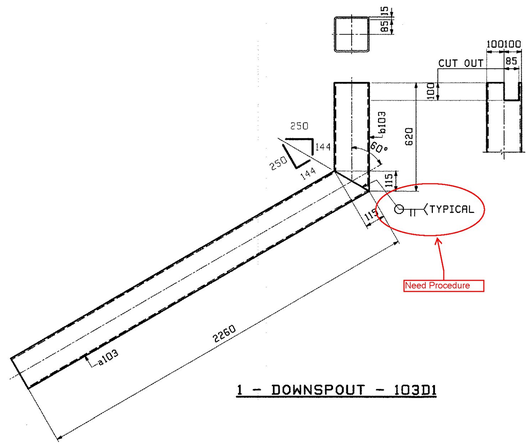

1 - DOWNSPOUT - 103D1

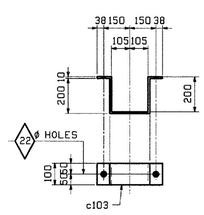

2 - BARS - 103B1

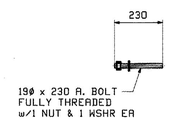

4 - ANCHOR BOLTS - 103AB1

ABM INFO		SHIP	BILL OF MATERIAL					JOB NO.	DRAWING NO.	REV.
						LENGTH		524	103	
PAGE	LINE	MARK	QTY	MARK	MATERIAL	m	mm	REMARKS	WT	PROCUREMENT NOTES
		103D1	1		DOWNSPOUT				111 kg 244 lbs	
8	B		1	s103	HSS 200x200x7	2	260	GALV 9Ø0	87 kg 191 lbs	
8	C		1	e103	HSS 200x200x7	0	620	GALV M90	24 kg 53 lbs	
		103B1	2		BARS				7 kg 15 lbs	
8	D		2	s103	PL 10x100	0	786	BAR, GALV BENT M270M-250	9 kg 14 lbs	
					ANCHOR BOLTS					
8	E		4	103AB1	M20 192	0	230	ANCHOR BOLT A307	.51 kg 1.1 lbs	
8	F		4		19Ø HHN			GALV, GR DH M563		
8	G		4		19Ø HSW			GALV. F436		

Vermont Agency of Transportation
RECEIVED
CK'D BY J. Griffin OK'D BY M. Umberger
Apr. 3, 2013
RESUBMIT APPROVED AS NOTED ✓
BY M. Evans-Mongeon DATE 4-10-2013

REV.	DATE	REMARKS	DWN	CHK	APVL	SHOP
0					MAR 28 2013	

MATERIAL:	SURFACE PREP. & PRINT:	HOLES:	SHOP BOLTS:
M270M-250 UN	GALV	AS NOTED	AS NOTED

DESCRIPTION: DOWNSPOUT

CASCO BAY STEEL STRUCTURES, INC.
1 WALLACE AVE. PHONE (207) 780-6722
SOUTH PORTLAND, ME 04106 FAX. (207) 780-6726

STRUCTURE:	VT ROUTE 108, BRIDGE #21 MAJOR COLLECTOR TOWN OF CAMBRIDGE COUNTY OF LAMOILLE, VERMONT	DRAWN: TJB	DATE: 03/22
		CHKD: DH	DATE: 03/25
LOCATION:	CAMBRIDGE, VERMONT	JOB NO.	DWG NO.
PROJ NO.	BRF 027-1(4)	524	103
CUSTOMER:	A. L. ST. ONGE CONTRACTING		REV. △

Tue, Mar 26, 2013 08:58:52 PM J:\casco\jobs\524\103.dwg

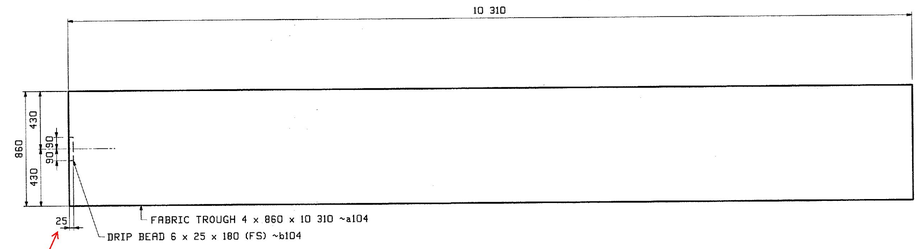

Begin Application of the Drip Bead 25 away from end of trough

1 - FABRIC TROUGH - 104FT1

1.) FABRIC DRAIN TROUGH SHALL BE 3-PLY PREFORMED FABRIC MATERIAL CONFORMING TO SECTION 707.07 AND SHALL BE CUT PRE-ASSEMBLY FROM ONE PIECE.

2.) DRIP BEAD OF FABRIC MATERIAL SHALL BE CEMENTED TO THE BOTTOM OF THE FABRIC TROUGH.

RBM INFO		SHIP	BILL OF MATERIAL					JOB NO.	BRAKING NO.	REV.
						LENGTH		524	104	
PAGE	LINE	MARK	QTY	MARK	MATERIAL	m	ss	REMARKS	WT	PROCUREMENT NOTES
		104FT1	1		FABRIC TROUGH					
9	N		1	a104	4en x 860 x10 310 TROUGH			3 PLY FABRIC		
9	P		1	b104	6en x 25 x 180 DRIP BEAD			3 PLY FABRIC		

Vermont Agency of Transportation

RECEIVED

CK'D BY J. GRIFFIN OK'D BY M.UMBERGER

APR. 03, 2013

RESUBMIT APPROVED AS NOTED ✓

BY J. LACROIX DATE 04-10-2013

REV.	DATE	REMARKS	DWN	CHK	APVL	SHOP
0					MAR 28 2013	

MATERIAL:	SURFACE PREP. & PAINT:	HOLES:	SHOP BOLTS:
		AS NOTED	AS NOTED

DESCRIPTION: FABRIC TROUGH

CASCO BAY STEEL STRUCTURES, INC.
1 WALLACE AVE. PHONE (207) 780-6722
SOUTH PORTLAND, ME 04106 FAX. (207) 780-6726

STRUCTURE: VT ROUTE 108, BRIDGE #21
MAJOR COLLECTOR
TOWN OF CAMBRIDGE
COUNTY OF LAMOILLE, VERMONT

DRAWN: TJB DATE: 03/22
CHK'D: DH DATE: 03/25

LOCATION: CAMBRIDGE, VERMONT
PROJ NO. BRF 027-1(4)
CUSTOMER: A. L. ST. ONGE CONTRACTING

JOB NO. 524
DWG NO. 104
REV. △

Highway Safety Corporation

Glastonbury, CT

Welding Procedure Specification

Material specification **A572 gr 50, A709 Gr 50**

Welding process **Gas Metal Arc Welding (GMAW) Spray Transfer**

Manual, semi-automatic, or automatic **Semi-Automatic**

Position of welding **Flat (1F) or Horizontal (2F)**

Filler metal specification **AWS A5.18**

Filler metal classification **ER70S-6**

Electrode and manufacturer **Lincoln Electric Lincoln Weld L-56**

Flux and manufacturer **N/A**

Shielding gas **86% Argon / 14% CO2** Flow rate **35-45 CFM**

Single or multiple pass **Single or Multiple**

Single or multiple arc **Single**

Welding current **DCEP**

Polarity **Reverse - electrode positive**

Welding progression **Stringers**

Root treatment **clean base metal**

Preheat and interpass temperature **base metal up to 3/4" (50°F) ; over 3/4 thru 1-1/2" (150°F) : over 1-1/2" thru 2-1/2" (225°F)**

Postheat treatment **None**

Electrode extension **3/4" ± 1/4"**

WELDING PROCEDURE

Weld size	Pass no.	Electrode size	Welding parameters Amperes	Welding parameters Volts	Travel speed	Joint detail
5/16"	1	0.062"	300 A ± 30	29 V ± 2	15 ipm ± 2	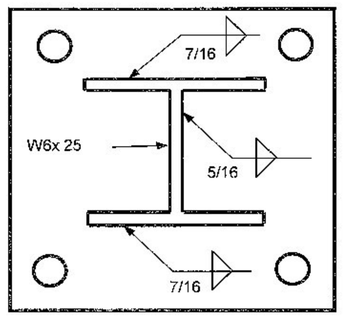
7/16"	1 & 2	0.062"	↓	↓	15 ipm ± 2	

Vermont Agency of Transportation
RECEIVED
CK'D BY JC OK'D BY
May 13, 2013
RESUBMIT APPROVED ✓
BY MEM DATE 5-13-2013

This procedure may vary due to fabrication sequence, fit-up, pass size, etc. within the limitation of variables given in section 5 of latest edition AWS D1.5

WPS no. **W-VTPEDPOST1**

Revision no. **0**

Supporting PQR no. **Pre-Qualified**

Project Name **Cambridge, VT**

Fabricator **Highway Safety Corporation**

Prepared By: **Paul Radice**

Date **4/24/13**

Project Number **BRF 027-1(4)**

Paul A Radice
CERT. 0607021
SCI EXP. 7/1/2013

Highway Safety Corporation

Glastonbury, CT

Welding Procedure Specification

Material specification **ASTM A500 gr B**

Welding process **Gas Metal Arc Welding (GMAW)**

Manual, semi-automatic, or automatic **Semi-Automatic**

Position of welding **Flat (1F) or Horizontal (2F)**

Filler metal specification **AWS A5.18**

Filler metal classification **ER70S-6**

Electrode and manufacturer **Lincoln Electric Lincoln Weld L-56**

Flux and manufacturer **N/A**

Shielding gas **86% Argon / 14% CO2** Flow rate **35-45 CFM**

Single or multiple pass **Single**

Single or multiple arc **Single**

Welding current **DCEP**

Polarity **Reverse - electrode positive**

Welding progression **Stringers**

Root treatment **clean base metal**

Preheat and interpass temperature **base metal up to 3/4" (50°F)**

Postheat treatment **None**

Electrode extension **3/4" ± 1/4"**

WELDING PROCEDURE

Weld size	Pass no.	Electrode size	Welding parameters Amperes	Welding parameters Volts	Travel speed	Joint detail
	1	0.063"	300 A ± 30	29 V ± 2	15 ipm ± 2	B-U2a-GF 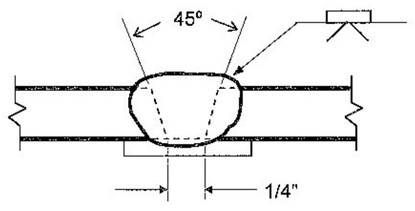

Vermont Agency of Transportation
RECEIVED
CK'D BY JC OK'D BY
May 13, 2013
RESUBMIT APPROVED ✓
BY MEM DATE 5-13-2013

This procedure may vary due to fabrication sequence, fit-up, pass size, etc. within the limitation of variables given in section 5 of latest edition AWS D1.1

WPS no. **W-VGwBCK**

Revision no. **0**

Supporting PQR no. **Pre-Qualified**

Project Name **Cambridge, VT**

Fabricator **Highway Safety Corporation**

Prepared By: **Paul Radice**

Date **4/24/13**

Project Number **BRF 027-1(4)**

Paul A Radice
CWI 08070221
QC1 Exp: 7/1/2013

WELDING PROCEDURE SPECIFICATION ☒
OR
PROCEDURE QUALIFICATION RECORD ☐

Specification No.: 55928

Customer: Standard Fillet Weld Customer P.O.#: A.L.St. Onge P.O. Signed Quote

Base Metals: ASTM A709 P-NO.: 1 Group NO.: 1 to P-NO.: 1 Group NO.: 1

Material Specification Type & Grade: AASHTO M270 Gr. 345 to M270 Gr. 345

Welding Process: F.C.A.W.

Manual or Machine: Manual

Position of Welding: Flat 1-F

Filler Metal Specification: A 5.29

Filler Metal Classification: E-80T1-W, Esab Dual Shield 8100-W

Shielding Gas: CO^2 Rate: 25 CFH

Single or Multiple Pass: Single Vitrate Received DATE JWC

Single or Multiple Arc: Single OCT 01 2012

Welding Current: Direct

Polarity: Reverse Reviewed BY APPROVED DATE 10/3/12

Root Treatment: Remove all scale, grease, etc. from weld preparation face

Preheat and Interpass Temp: 200 Deg F. to 250 Deg F.

Post weld Heat Treatment: N/A

Travel Speed: 13-15 ipm

AMSCOT STRUCTURAL PRODUCTS CORP.
241 EAST BLACKWELL ST.
DOVER, NJ 07801
(973) 969-8800

CERTIFIED FOR CONSTRUCTION

Pass No.	Electrode Size	Welding Current Amperes	Welding Current Volts	Weld Size
1	.06	300-310	30-31	5/16"

Joint Detail

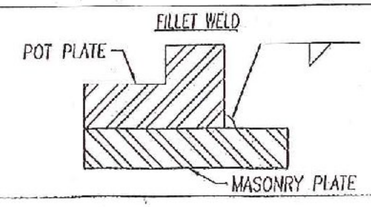

This procedure may vary due to fabrication sequence, fit-up, pass size, etc., within the limitation of variables given in Section 5.

Manufacturer: Amscot Structural Products Authorized By:

Date: 10/1/12

WELDPROD.DWG

WELDING PROCEDURE SPECIFICATION ☒
OR
PROCEDURE QUALIFICATION RECORD ☐

Specification No.: 55928 A.L.St. Onge

Customer: Standard Fillet Weld Customer P.O.#: P.O. Signed Quote

Base Metals: ASTM A709 P-NO.: 1 Group NO.: 1 to P-NO.: 1 Group NO.: 1

Material Specification Type & Grade: AASHTO M270 Gr. 345 to M270 Gr. 345

Welding Process: F.C.A.W.

Manual or Machine: Manual

Position of Welding: Flat 1-F

Filler Metal Specification: A 5.29

Filler Metal Classification: E-80T1-W, Esab Dual Shield 8100-W

Shielding Gas: CO^2 Rate: 25 CFH

Single or Multiple Pass: Single

Single or Multiple Arc: Single

Welding Current: Direct

Polarity: Reverse

Root Treatment: Remove all scale, grease, etc. from weld preparation face

Preheat and Interpass Temp: 200 Deg F. to 250 Deg F.

Post weld Heat Treatment: N/A

Travel Speed: 13-15 ipm

AMSCOT STRUCTURAL PRODUCTS CORP.
244 EAST BLACKWELL ST.
DOVER, NJ 07801
(973) 989-3800

ACCEPTED FOR CONSTRUCTION

OCT 0 1 2012

Pass No.	Electrode Size	Welding Current Amperes	Welding Current Volts	Weld Size	Joint Detail
1	.06	300-310	30-31	5/16"	

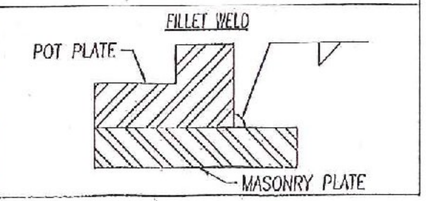

This procedure may vary due to fabrication sequence, fit-up, pass size, etc., within the limitation of variables given in Section 5.

Manufacturer: Amscot Structural Products Authorized By:

Date: 10/1/12

WELDPROC.DWG

WELDING PROCEDURE SPECIFICATION ☒
OR
PROCEDURE QUALIFICATION RECORD ☐

Specification No.: 402919 A.L.St. Onge

Customer: Single Bevel Groove Partial Joint Penn. Customer P.O.#: Signed Quote

Base Metals: A709 Gr345 P-NO.: 1 Group NO.: 1 to P-NO.: 1 Group NO.: 1

Material Specification Type & Grade: A709 Gr345 to A709 Gr345

Welding Process: F.C.A.W.

Manual or Machine: Manual

Position of Welding: Flat 1-F

Filler Metal Specification: A 5.29

Filler Metal Classification: E-80T1-W, Esab Dual Shield 8100-W

Shielding Gas: CO^2 Rate: 25 CFH

Single or Multiple Pass: Single

Single or Multiple Arc: Single

Welding Current: Direct

Polarity: Reverse

Root Treatment: Remove all scale, grease, etc. from weld preparation face

Preheat and Interpass Temp: 200 Deg F. to 250 Deg F.

Post weld Heat Treatment: N/A

Travel Speed: 13-15 ipm

VTrans Received CK'D OK'd BY JWC

OCT 10 2012

Resubmit APPROVED BY DATE 10/12/12

Pass No.	Electrode Size	Welding Current Amperes	Welding Current Volts	Weld Size	Joint Detail
1	.06	300-310	30-31	5/16"	SINGLE BEVEL GROOVE WELD - TC-P4-GF

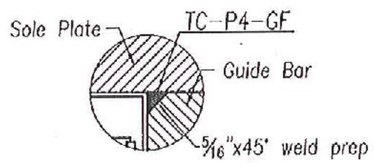

This procedure may vary due to fabrication sequence, fit-up, pass size, etc., within the limitation of variables given in Section 5.

Manufacturer: Amscot Structural Products Authorized By: Peter Somogyi

Date: 10/9/12

WELDPROS_SAR-1.dwg

WELDING PROCEDURE SPECIFICATION ☒
OR
PROCEDURE QUALIFICATION RECORD ☐

Specification No.: 57948

A.L.St. Onge

Customer: Standard Fusion of T-304 to CS Backing Plate Customer P.O.#: Signed Quote

Base Metals: A709 Gr345 P-NO.: 1 Group NO.: 1 to P-NO.: 8 Group NO.: 1

Material Specification Type & Grade: T-304 S.S. to Carbon Steel Backing Plate A709 Gr345

Welding Process: G.T.A.W. 1/2" dia. nozzle w/gas lens

Manual or Machine: Manual

Position of Welding: 1G Flat

Filler Metal Specification: N/A

Filler Metal Classification: N/A

VTrans Received JWC
CK'D OK'd BY

Shielding Gas: Argon 20-30 cfh

Single or Multiple Pass: Single

OCT 10 2012

Single or Multiple Arc: Single

Resubmit APPROVED
BY DATE 10/29/12

Welding Current: Direct

Polarity: Straight

Root Treatment: Remove all oil, grease, scale etc. on weld preparation face and adjacent plate surface

Preheat and Interpass Temp: N/A

Post weld Heat Treatment: N/A

Filler Metal			Pass	Process	Welding Current		Travel
Class	Dia.	F No.	No.		Amperes	Voltage	Speed
N/A	N/A		1	G.T.A.W.	100-170	19-23	5-7 ipm

JOINT DETAIL

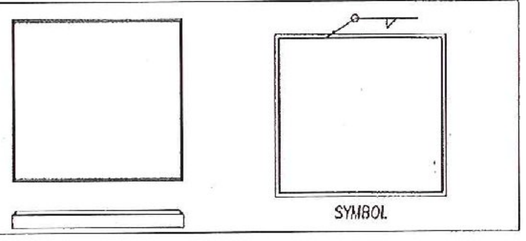

Manufacturer: Amscot Structural Products Authorized By: Peter Somogyi

Date: 10/9/12

Casco Bay Steel Structures, Inc.

WELDING PROCEDURE SPECIFICATION

Material specification ASTM Gr 50-50W
Welding process Shielded Metal ARC
Manual or machine Manual
Position of welding Flat, Horizontal
Filler metal specification ANSI/AWS A5.1-A5-5
Filler metal classification E 7018 - E8018 C1/C3
Flux NA
Shielding gas NA Flow rate NA
Single or multiple pass Single & Multiple
Single or multiple arc Single
Welding current AC / DC
Polarity STraight & Reverse
Welding progression See Detail
Root treatment Grind-Wire brush-Area Free of Slag-RUST-Moisture
Preheat and interpass temperature
Postheat temperature NA
Heat Input Min NA Max NA

VTrans Received CK'D OK'd BY JWC
APR 05 2013
Resubmit APPROVED BY DATE 4/5/13

Vermont DOT
Cambridge Br # 21
Proj NO. BRF-022-1(4)
CB55-524

Minimum Preheat and Interpass Temperature, °C [°F]

Welding Process (Base Metal)	Thickness of Thickest Part at Point of Welding, mm [in]			
	To 20 mm [3/4 in] Incl.	Over 20 mm [3/4 in] to 40 mm [1-1/2 in] Incl.	Over 40 mm [1-1/2 in] to 65 mm [2-1/2 in] Incl.	Over 65 mm [2-1/2 in]
SAW; GMAW; FCAW; SMAW (M270M [M270] [A 709M (A 709)] Gr. 250 [36], 345 [50], 345W [50W], HPS 345W [HPS 50W])	10 [50]	20 [70]	65 [150]	110 [225]

WELDING PROCEDURE

Pass no.	Electrode size	Welding current: Amperes	Welding current: Volts	Travel speed
	7018			
AS	1/8	70 To 190	22-26	
	5/32	120 To 225	22-26	AS
Req	3/16	170 To 300	24-27	
	8018			Req
	1/8	90 To 160	22-26	
	5/32	120 To 225	22-26	
	3/16	180 To 290	24-27	

Joint detail AWS D1-5 Fillet

2F



3/16 To 5/16

1F



3/16 To 3/8

This procedure may vary due to fabrication sequence, fit up, pass size, etc., within the limitation of variables given in applicable A.W.S. codes or contract specifications.

Procedure no. 4P1
Test coupon
Contractor
Authorized
Date

Casco Bay Steel Structures, Inc.

WELDING PROCEDURE SPECIFICATION

Material specification ASTM Gr 50 (345) (FCAW)
Welding process Flux Core Arc Welding
Manual or machine Semi AUTO
Position of welding Flat & Horizontal
Filler metal specification AWS 5-21
Filler metal classification E71T-1 - Lincoln Ultracore 71A75 Dule
Flux ~A
Shielding gas 75% AR / 25% CO2 Flow rate 35 CFH +8/-4, Elec. stickout 5/8 +-
Single or multiple pass Single & Multiple
Single or multiple arc Single
Welding current DC
Polarity DC EP
Welding progression See Detail
Root treatment blast Clean - wirebrush - area free of slag - Rust & Moisture
Preheat and interpass temperature See Table
Postheat temperature As Req.
Heat Input Min 22.4 KJ/in Max 35.2 KJ/in PQR # FCM-SP2, 32 KJ/in

Minimum Preheat and Interpass Temperature, °C [°F]

Welding Process (Base Metal)	To 20 mm [3/4 in] Incl.	Thickness of Thickest Part at Point of Welding, mm [in]: Over 20 mm [3/4 in] to 40 mm [1-1/2 in] Incl.	Over 40 mm [1-1/2 in] to 65 mm [2-1/2 in] Incl.	Over 65 mm [2-1/2 in]
AW; OMAW; FCAW; SMAW (M270M [M270] 709M [A 709]) Gr. 250 [36], 345 [50], 345W OW; HPS 345W [HPS 50W])	10 [50]	20 [70]	65 [150]	110 [225]
FCM Gr50	150°F	200°F	225°F	325°F - H8

Vermont AOT
Cambridge Br # 21
Proj NO. BRF-027-1(4)
CBSS-524

WELDING PROCEDURE

Max Interpass 400°F

Pass no.	Electrode size	Welding current: Amperes	Welding current: Volts	Travel speed
		297	29	16.4
1 To 4	1/16	326 To 267.3	31 To 27	18.9 To 13.9

Sec. 5.12.4.2
AWS D1-5
Joint detail Fillet

2F



5/16 To 5/8*

1F



5/16 To 5/8*

* Weld Size May use Multiple Pass

VTrans Received
CK'D _____ OK'D BY JWC
APR 05 2013

Resubmit _____ APPROVED ✓
BY _____ DATE 4/5/13

This procedure may vary due to labor and sequence of sp pass size, etc. within the limitation of variables given in [illegible] codes or contract specifications

[illegible] VT AOT
[illegible]

Casco Bay Steel
[illegible]
1-11-2013

Casco Bay Steel Structures, Inc.

WELDING PROCEDURE SPECIFICATION

Material specification ASTM Gr 50 - 50W
Welding process Shielded Metal ARC
Manual or machine Manual
Position of welding Flat, Horizontal
Filler metal specification ANSI/AWS A5.1 - A5-5
Filler metal classification E 7018 - E 8018 C/C3
Flux NA
Shielding gas NA Flow rate NA
Single or multiple pass Single & Multiple
Single or multiple arc Single
Welding current AC / DC
Polarity Straight & Reverse
Welding progression See Detail
Root treatment Grind - Wire brush - Area Free of Slag - Rust - Moisture
Preheat and interpass temperature
Postheat temperature NA
Heat Input Min NA Max NA

VTrans Received CK'D OK'd BY JWC
APR 05 2013
Resubmit APPROVED BY DATE 4/5/13

Minimum Preheat and Interpass Temperature, °C [°F]

Welding Process (Base Metal)	To 20 mm [3/4 in] Incl.	Over 20 mm [3/4 in] to 40 mm [1-1/2 in] Incl.	Over 40 mm [1-1/2 in] to 65 mm [2-1/2 in] Incl.	Over 65 mm [2-1/2 in]
		Thickness of Thickest Part at Point of Welding, mm [in]		
SAW; GMAW; FCAW; SMAW (M270M [M270] [A 709M (A 709)] Gr. 250 [36], 345 [50], 345W [50W], HPS 345W (HPS 50W))	10 [50]	20 [70]	65 [150]	110 [225]

Vermont AOT
Cambridge Br # 21
Proj NO. BRF-022-1(4)
CBSS-524

WELDING PROCEDURE

Pass no.	Electrode size	Welding current: Amperes	Welding current: Volts	Travel speed
	7018			
AS	1/8	70 To 190	22-26	
	5/32	120 To 225	22-26	AS
Req	3/16	140 To 300	24-29	
	8018			Req
	1/8	90 To 160	22-26	
	5/32	120 To 225	22-26	
	3/16	180 To 290	24-29	

Joint detail AWS D1-5 Fillet

2F



3/16 To 5/16

1F



3/16 To 3/8

This procedure may vary due to fabrication sequence, fit up, pass size, etc., within the limitation of variables given in applicable A.W.S. codes or contract specifications

Procedure no. 401
Contractor Casco Bay Steel

Metric

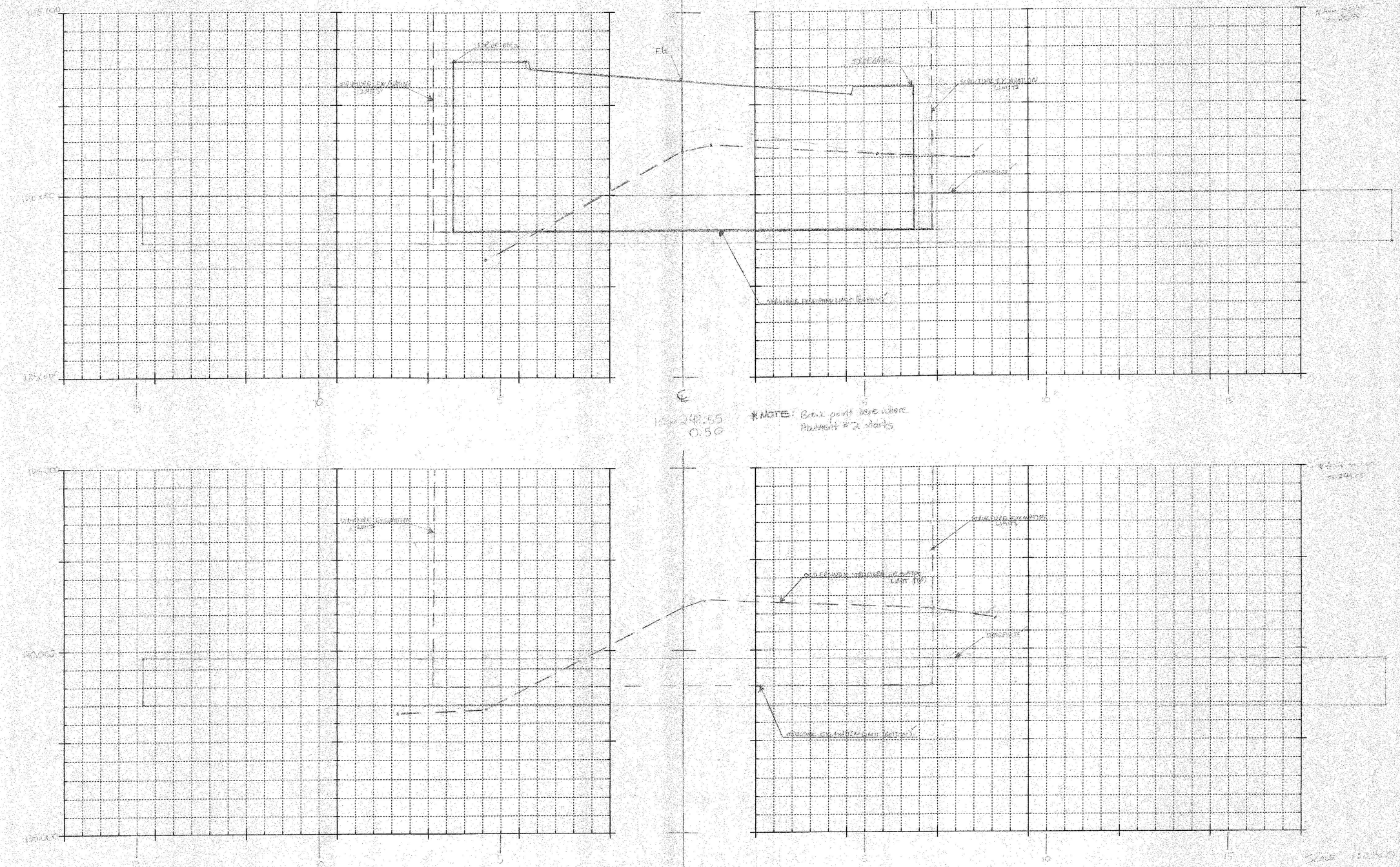

*NOTE: Break point slope where Pavement #2 starts

ORIGINAL SECTIONS PLOTTED BY MCE
PROPOSED TEMPLATE MCE

SEE SHEET 5 FOR ORIGINAL SECTIONS

PROJECT:	PROJECT NO.:
DESIGN FILE NAME: MCE IPARM FILE NAME:	PLOT DATE:
MAINLINE ROADWAY SECTIONS	
	SHEET: 4 OF 5

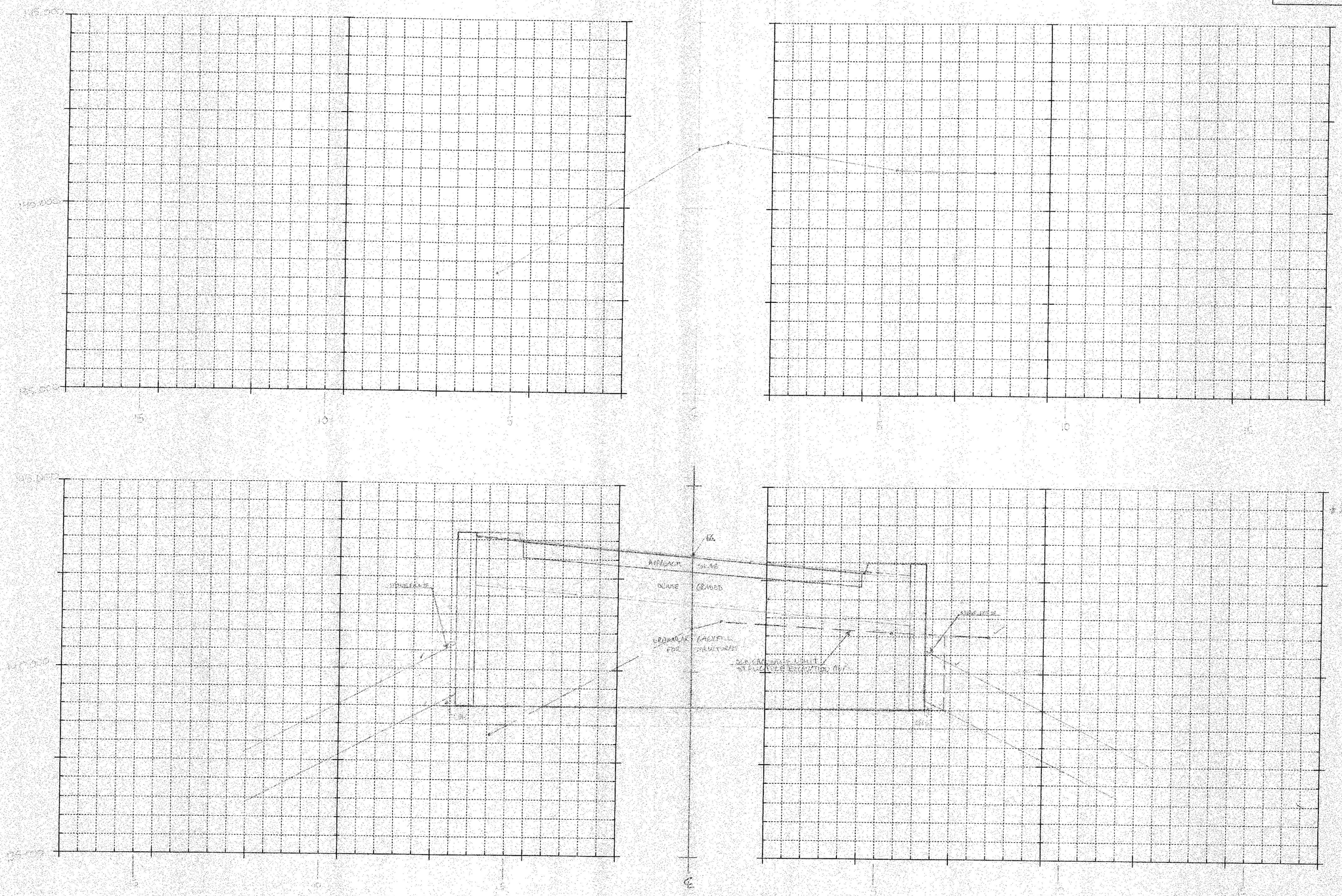

ORIGINAL SECTIONS PRINTED BY MGI
PROPOSED TEMPLATES MGI

*NOTE: Break where subbase and granular backfill begins at back face of Abutment #2. Zero station for sound barrier.

0 2 4 6 8 10
SCALE 1:100

PROJECT:	PROJECT NO.:
DESIGN FILE NAME:	
IPARM FILE NAME:	PLOT DATE:
MAINLINE ROADWAY SECTIONS	
	SHEET: OF 5

Metric

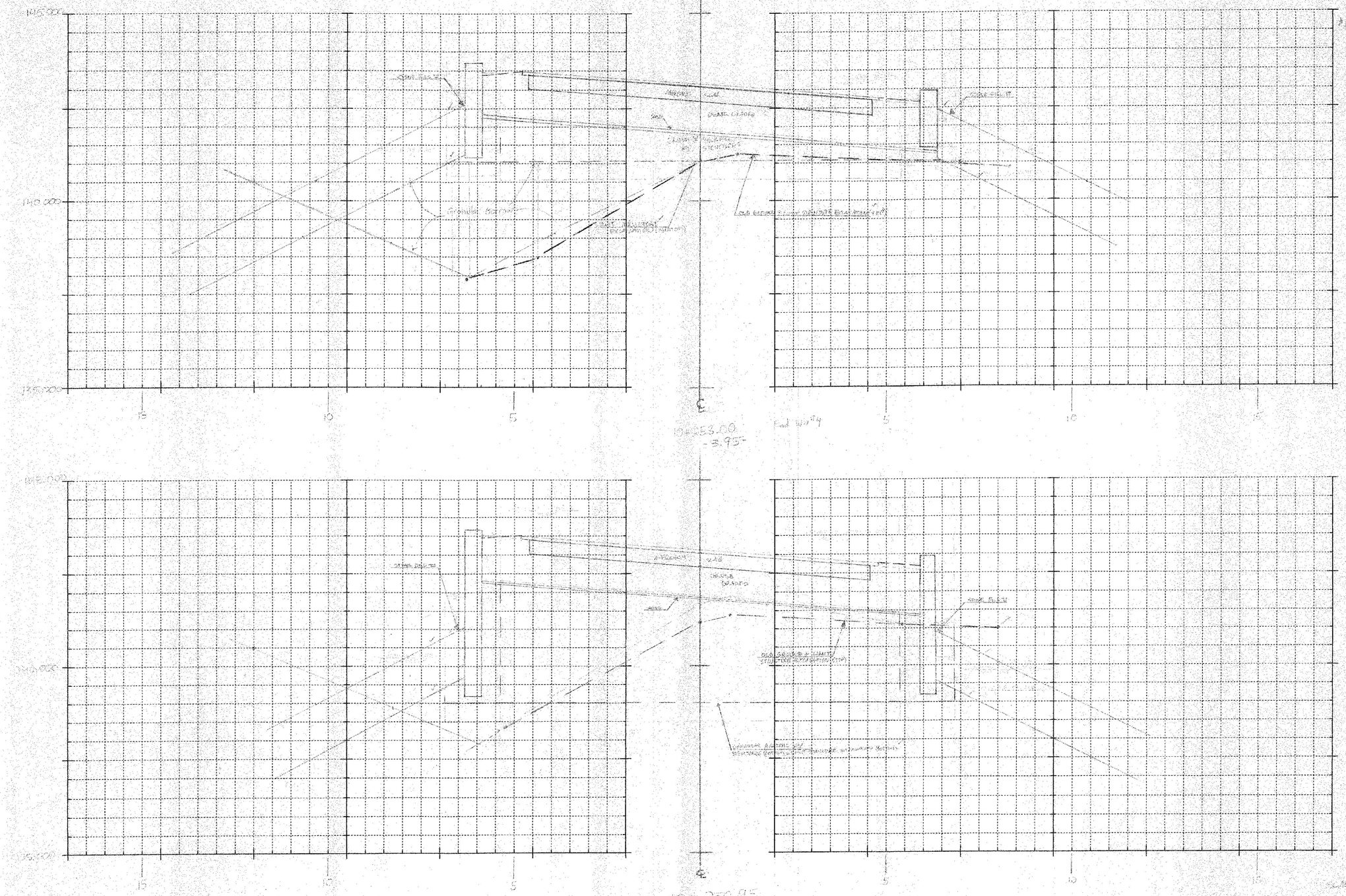

ORIGINAL SECTIONS PLOTTED BY MGI
PROPOSED TEMPLATES " " MGI

✓ TPD 09-24-13
✓ DPB 09-24-13

0 2 4 6 8 10
SCALE 1:100

PROJECT:	PROJECT NO.:
DESIGN FILE NAME:	
IPARM FILE NAME:	PLOT DATE:
MAINLINE ROADWAY SECTIONS	
	SHEET: OF

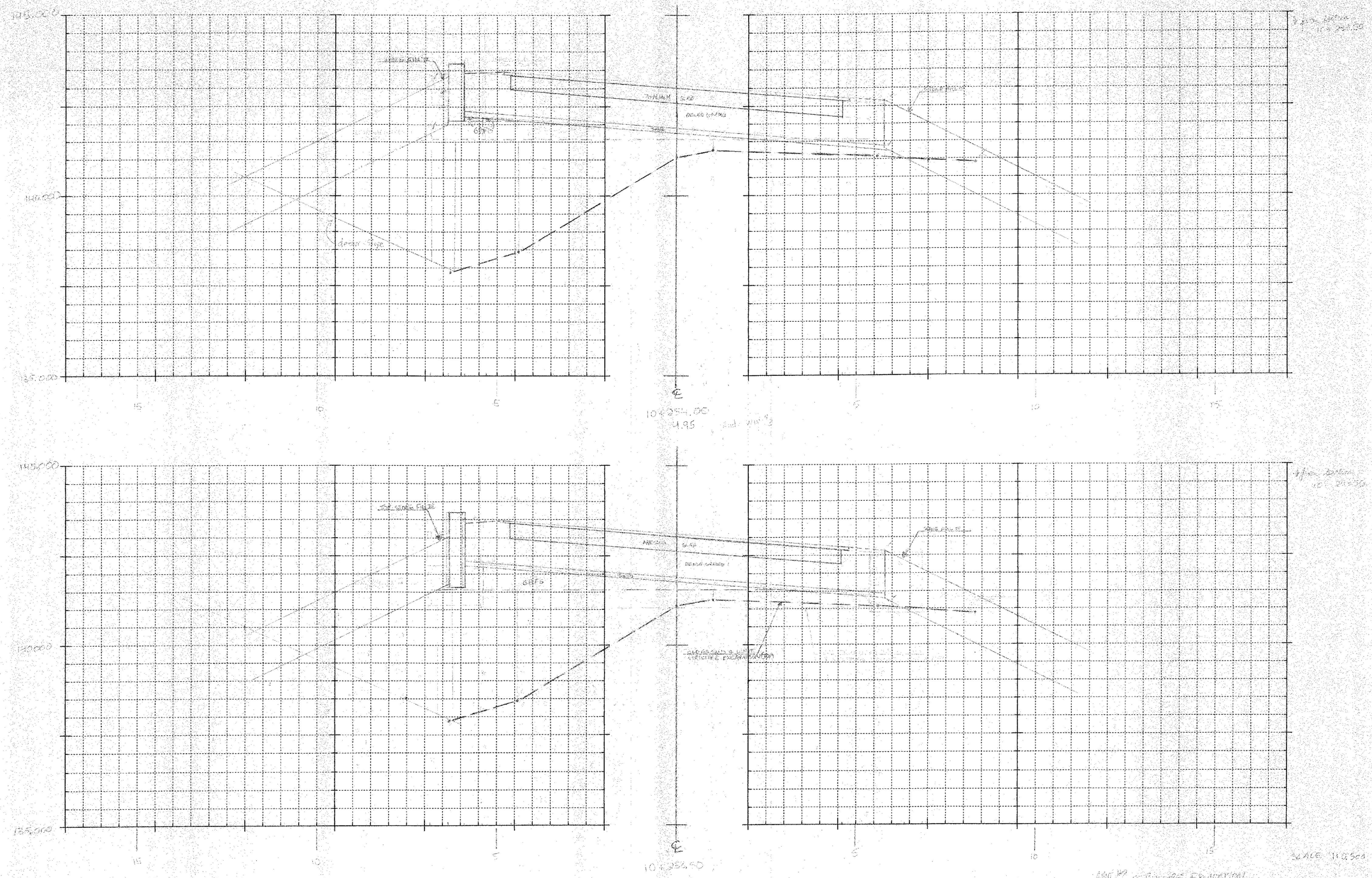

ORIGINAL SECTIONS PLOTTED BY MEE 1/22/13
PROPOSED TEMPLATES " " MEE 1/22/13

0 2 4 6 8 10
SCALE 1:100

PROJECT: CAMBRIDGE	PROJECT NO.: [illegible]
DESIGN FILE NAME: [illegible]	
IPARM FILE NAME: [illegible]	PLOT DATE: [illegible]
MAINLINE ROADWAY SECTIONS	
	SHEET: [illegible] OF [illegible]

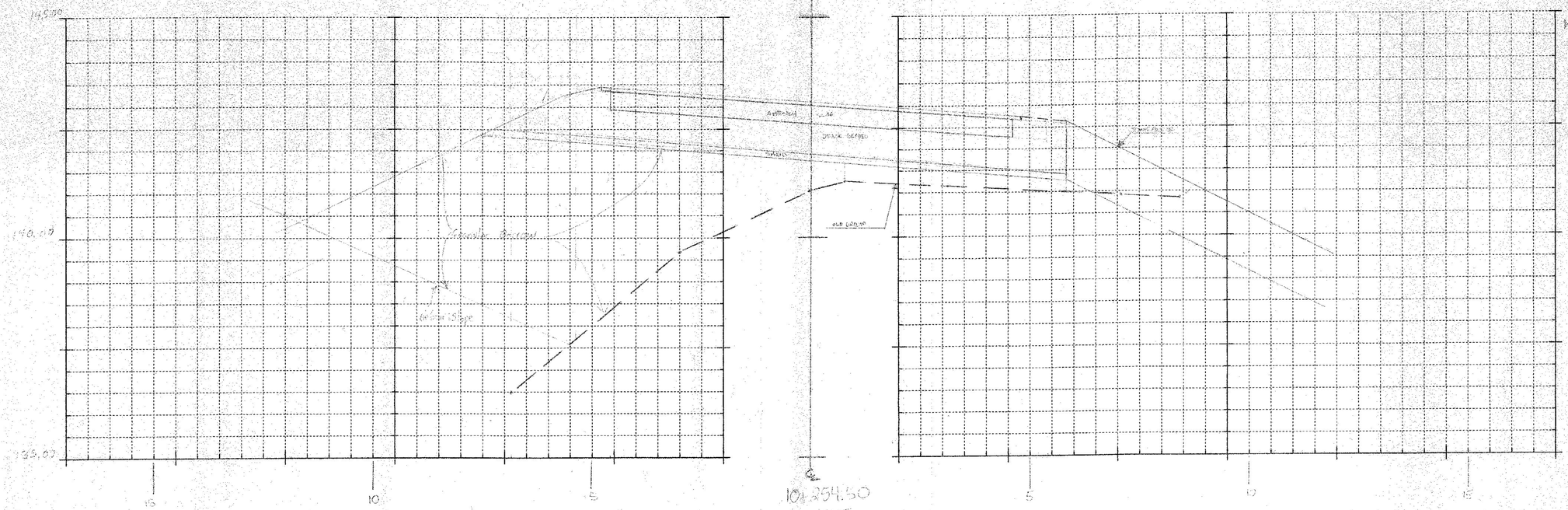

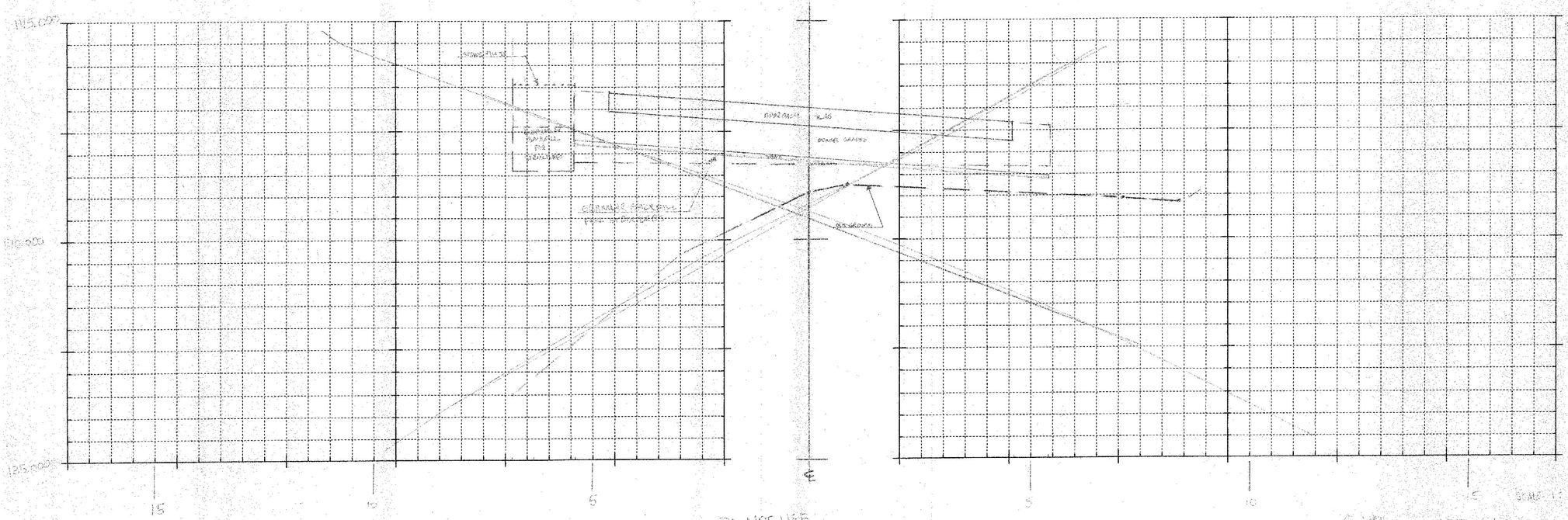

DO NOT USE

ORIGINAL SECTIONS PLOTTED BY MDOT
PROPOSED TEMPLATES "

0 2 4 6 8 10
SCALE 1:100

PROJECT:	PROJECT NO.:
DESIGN FILE NAME:	
IPARM FILE NAME:	PLOT DATE:
MAINLINE ROADWAY SECTIONS	
	SHEET: OF

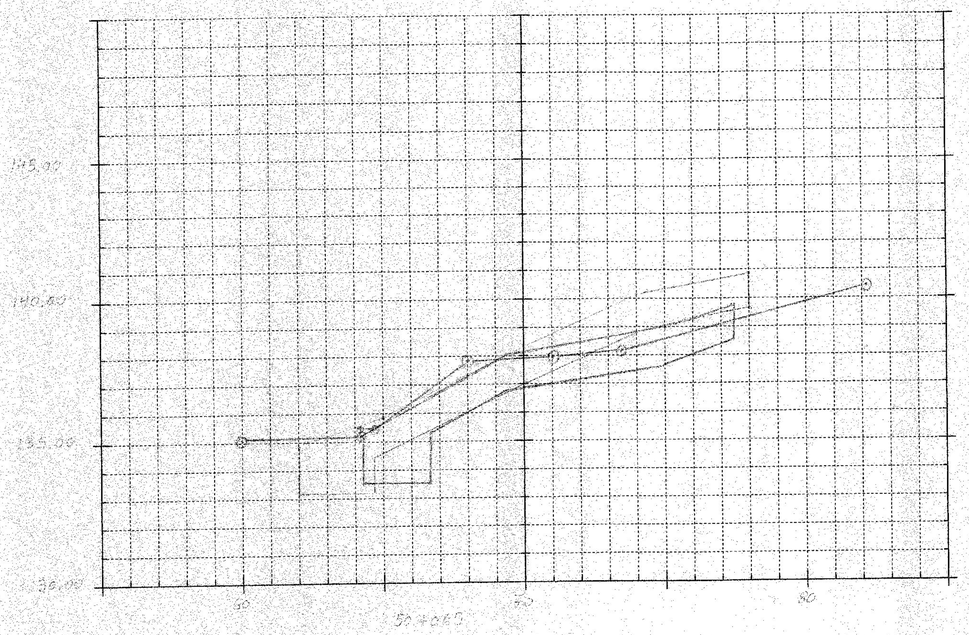

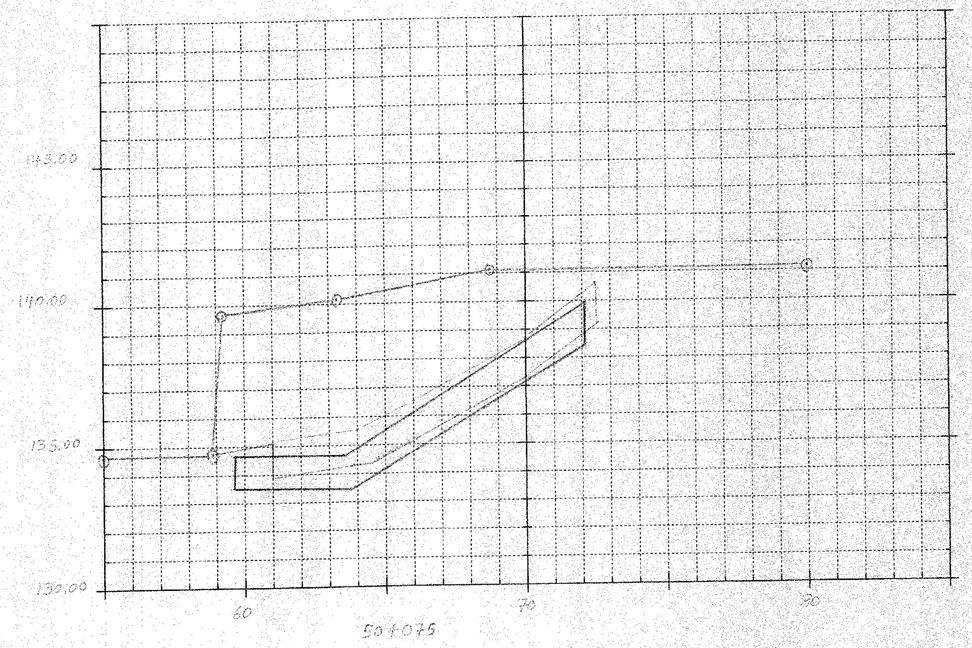

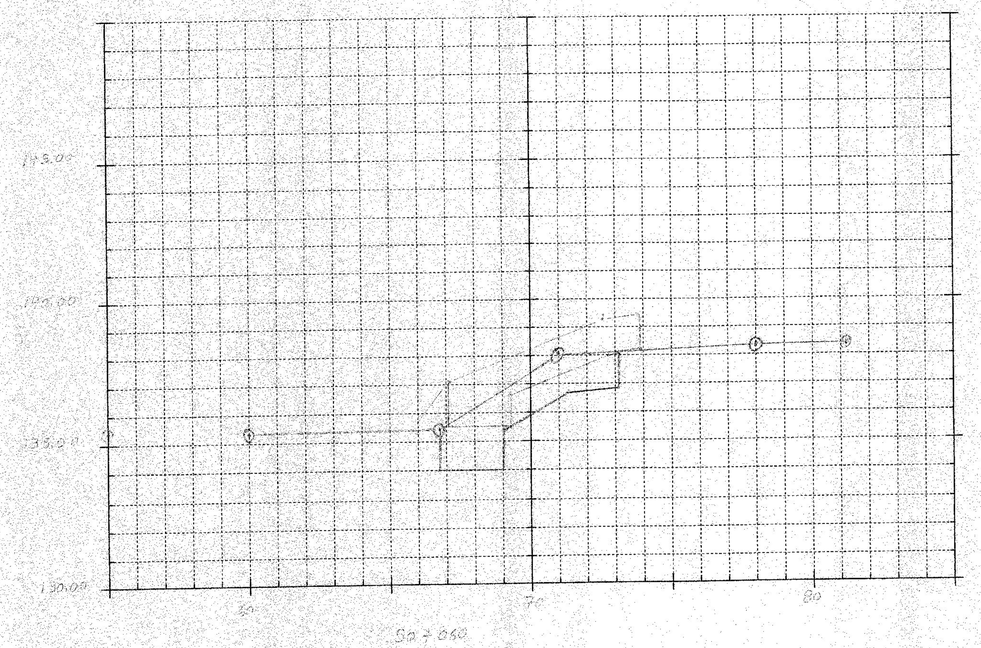

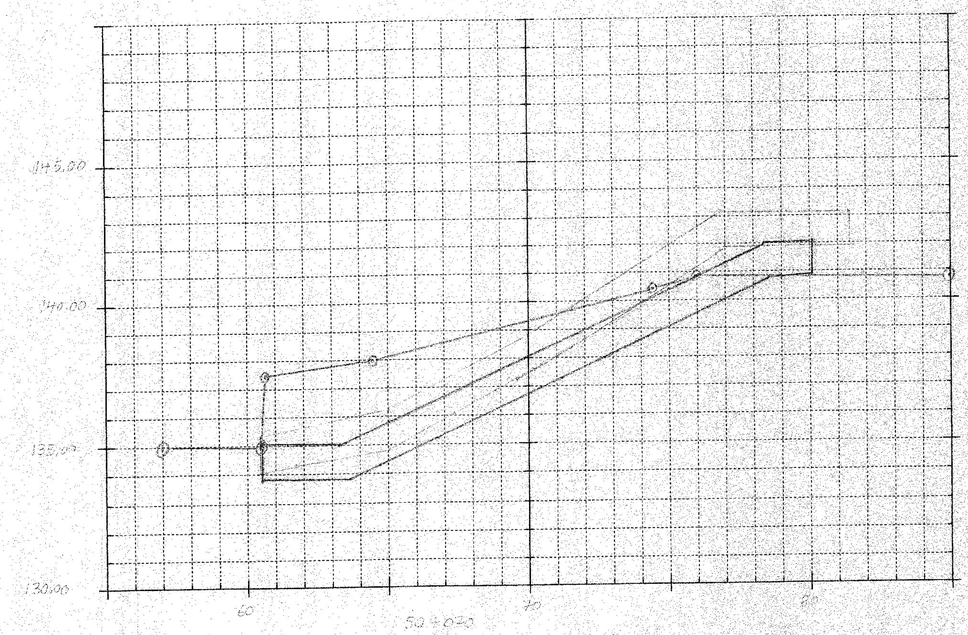

MGE 11-19-13 Original Sections Plotted JPD 07-31-13
MGE 11-19-13 Proposed Templates " " "
MGE 11-19-13 Final Sections " JPD 09-18-13

0 2 4 6 8 10
SCALE 1:100

PROJECT: CLOBBIDGE	PROJECT NO.: [illegible]
DESIGN FILE NAME: IPARM FILE NAME:	PLOT DATE:
MAINLINE ROADWAY SECTIONS	
CHANNEL LINE ALIGNMENT #2	SHEET: 1 OF 1

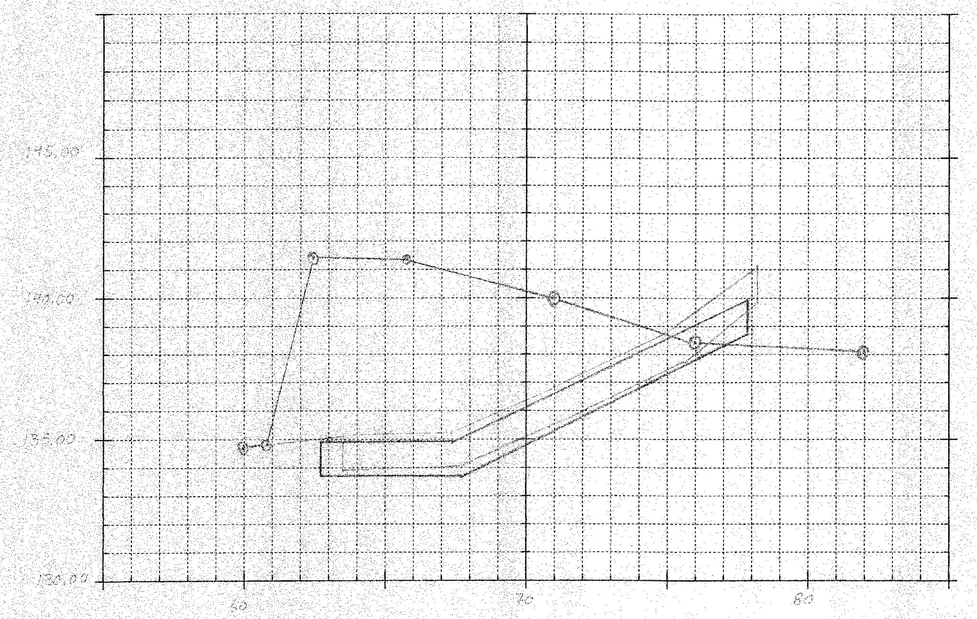

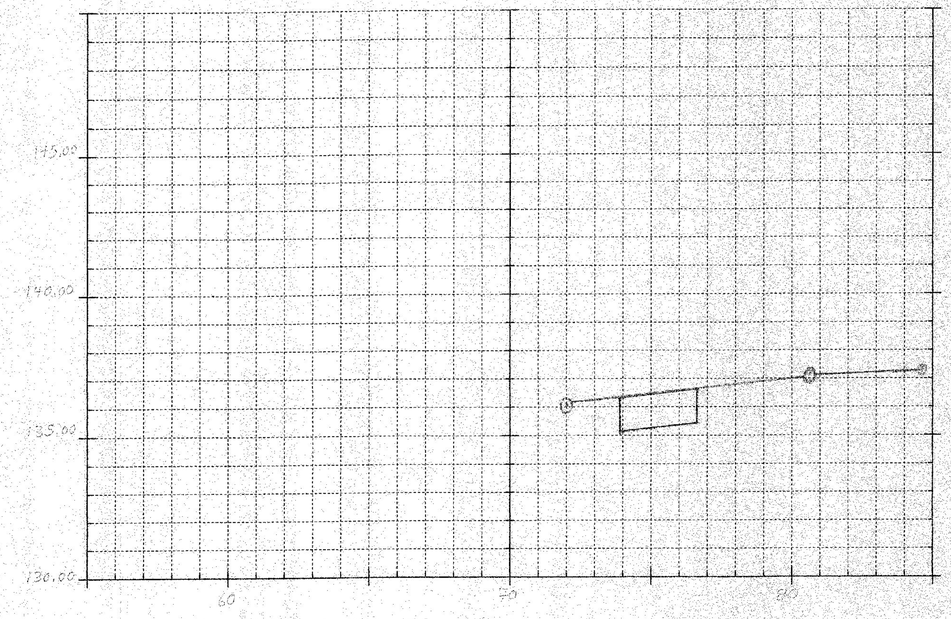

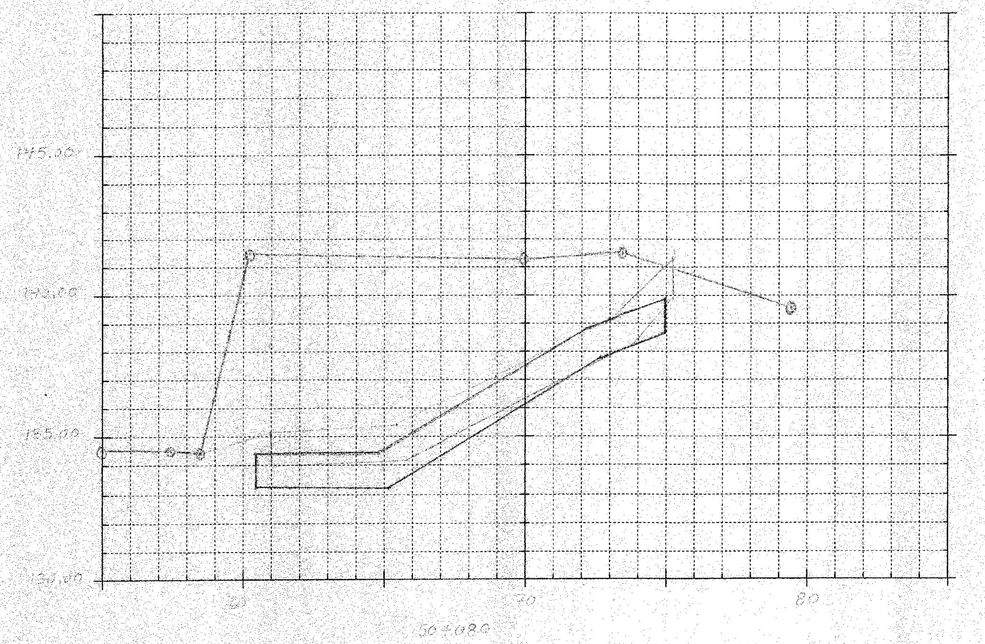

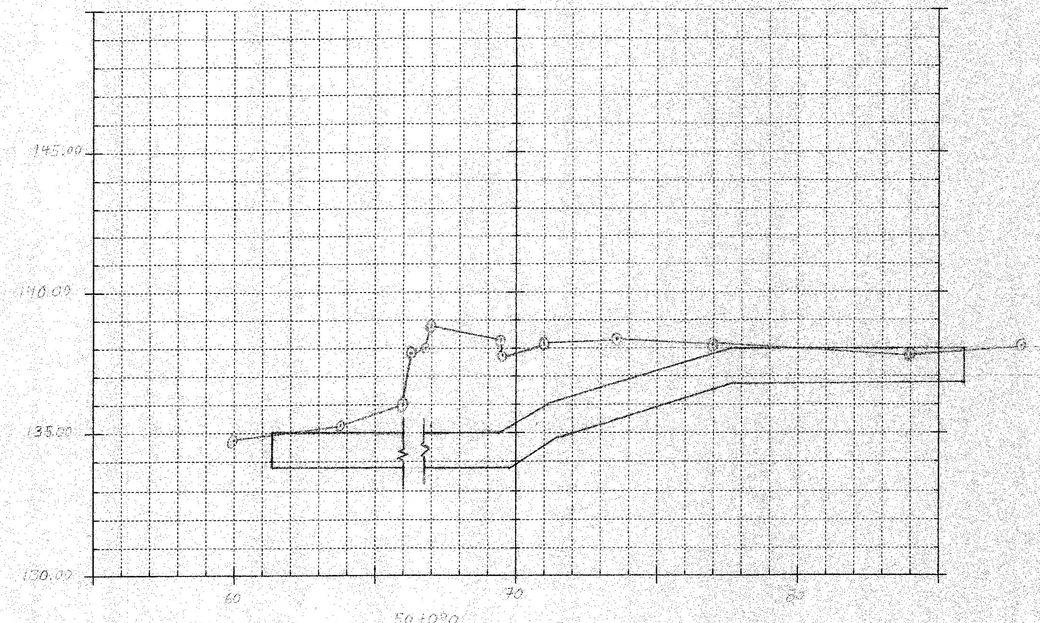

MGI 11-19-13 Original Sections Plotted JPD 07-31-13
MGI 11-19-13 Proposed Templates " "
Final Sections Plotted JPD 09-18-13

0 2 4 6 8 10
SCALE 1:100

PROJECT: CAMBRIDGE	PROJECT NO.: [illegible]
DESIGN FILE NAME: IPARM FILE NAME:	PLOT DATE:
MAINLINE ROADWAY SECTIONS	
CHANNEL LINE - ALIGNMENT #2	SHEET: ___ OF ___

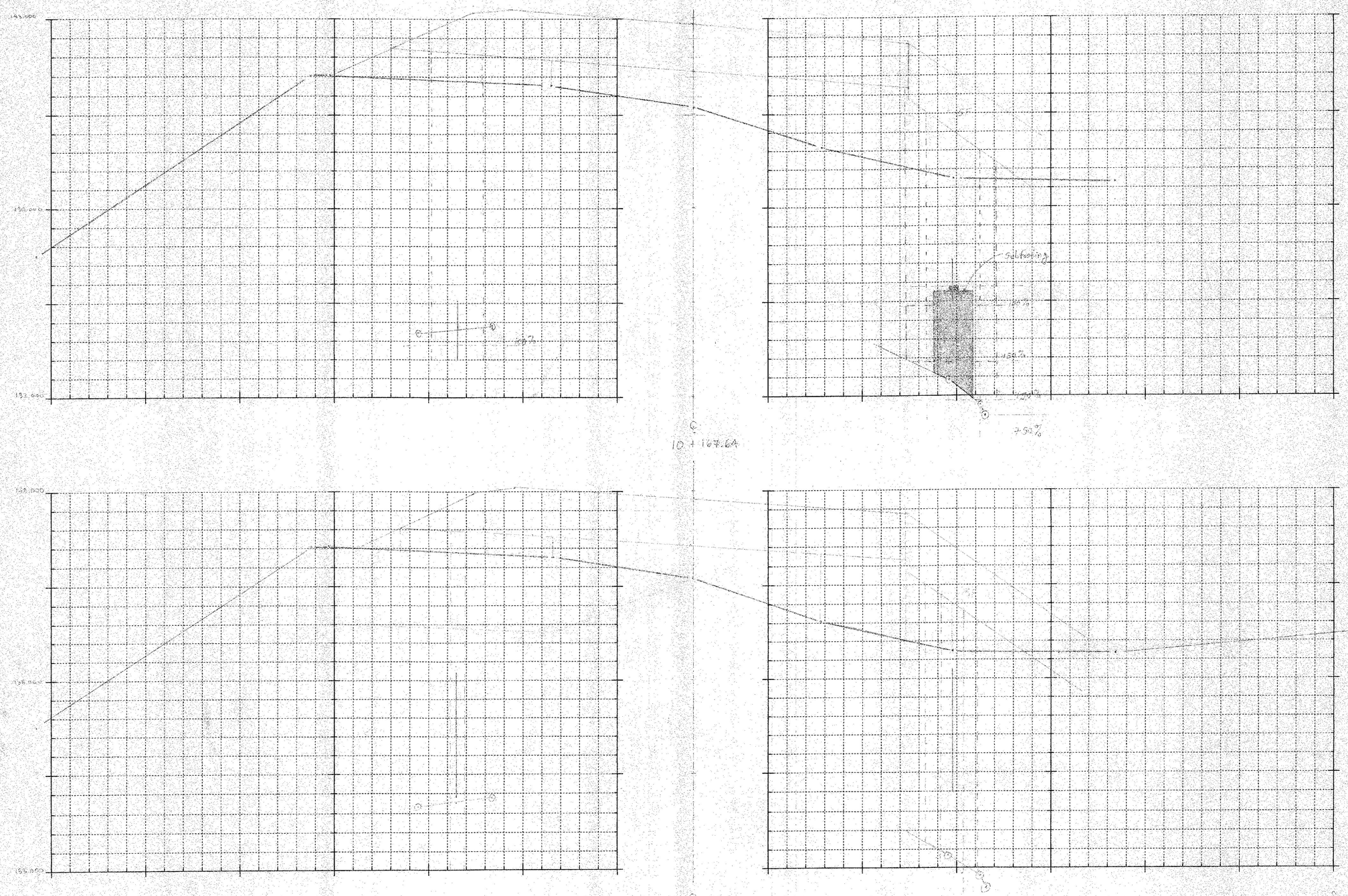

ORIGINAL SECTIONS PLOTTED BY STW 10/30/12 ✓ MGE 7/5/13
PROPOSED TEMPLATES PLOTTED BY JPD 7/1/13 ✓ MGE 7/5/13
FINAL SECTIONS " " ✓ MGE 7/5/13

10 + 167.01 (ZERO SUBFOOTING STATION)
10 + 166.85
10 + 166.45 (ZERO STATION)

0 2 4 6 8 10
SCALE 1:100

SCALE 1:500

ABUT #1 STRUCTURE EXCAVATION

PROJECT: CAMBRIDGE	PROJECT NO.: [illegible]
DESIGN FILE NAME: ABUT 1	
IPARM FILE NAME: STRUCTURE SECTIONS	PLOT DATE: [illegible]
MAINLINE ROADWAY SECTIONS	
	SHEET: 1 OF 6

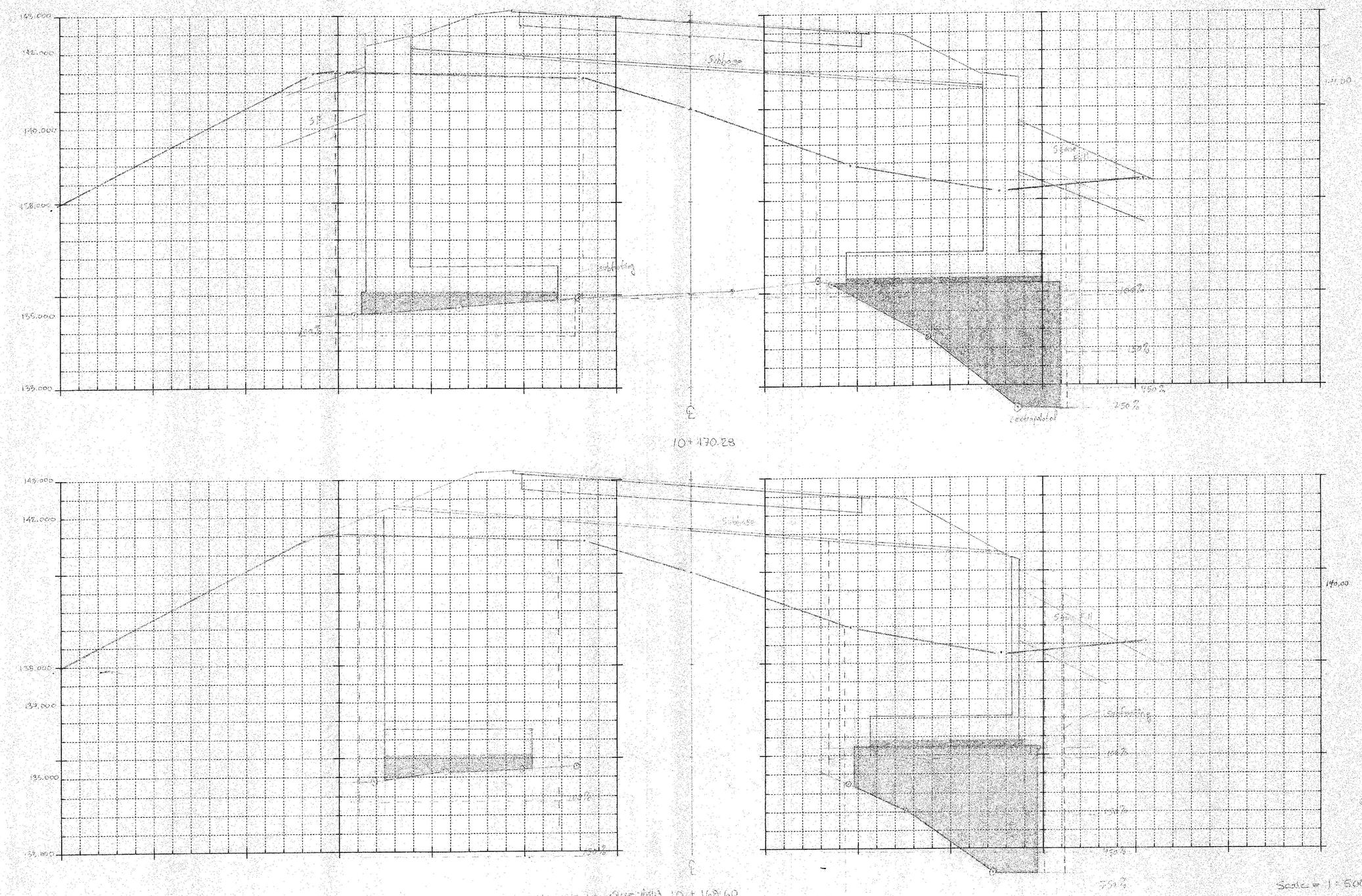

ORIGINAL SECTIONS PLOTTED BY STW 10/30/12 ✓MGE 7/3/13 10+169.60
PROPOSED TEMPLATES PLOTTED BY JPD 7/1/13 ✓MGE 7/3/13
FINAL SECTIONS " " ✓MGE 7/3/13

0 2 4 6 8 10
SCALE 1:100

PROJECT: CAMBRIDGE	PROJECT NO.: SBE 027-1(4)
DESIGN FILE NAME: ABUT. 1	
IPARM FILE NAME: STRUCTURE SECTIONS	PLOT DATE: 10-30-12
MAINLINE ROADWAY SECTIONS	
	SHEET: 2 OF 8

Metric

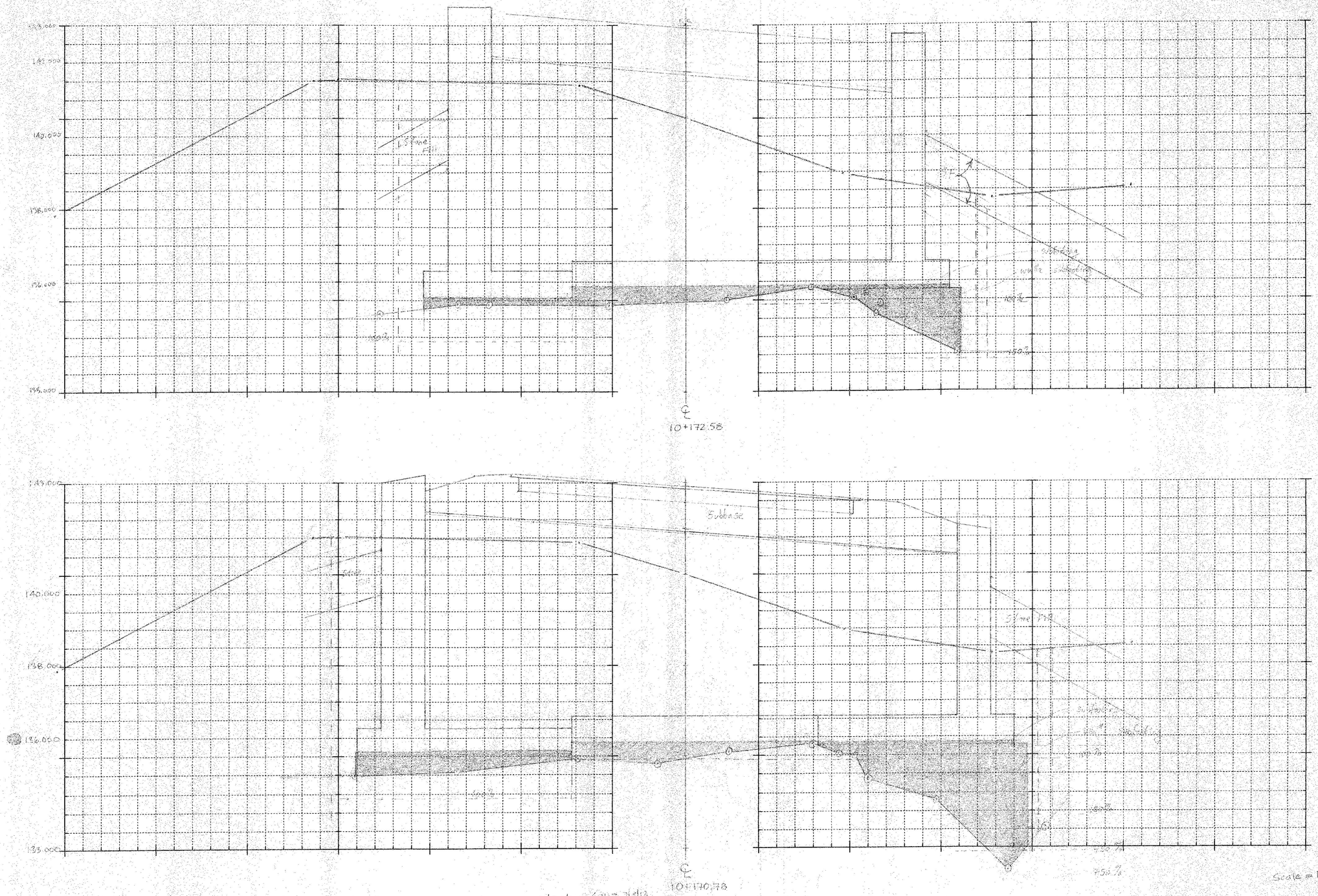
143.000
141.500
140.000
138.000
136.000
135.000
Subbase
10%
10%
10%

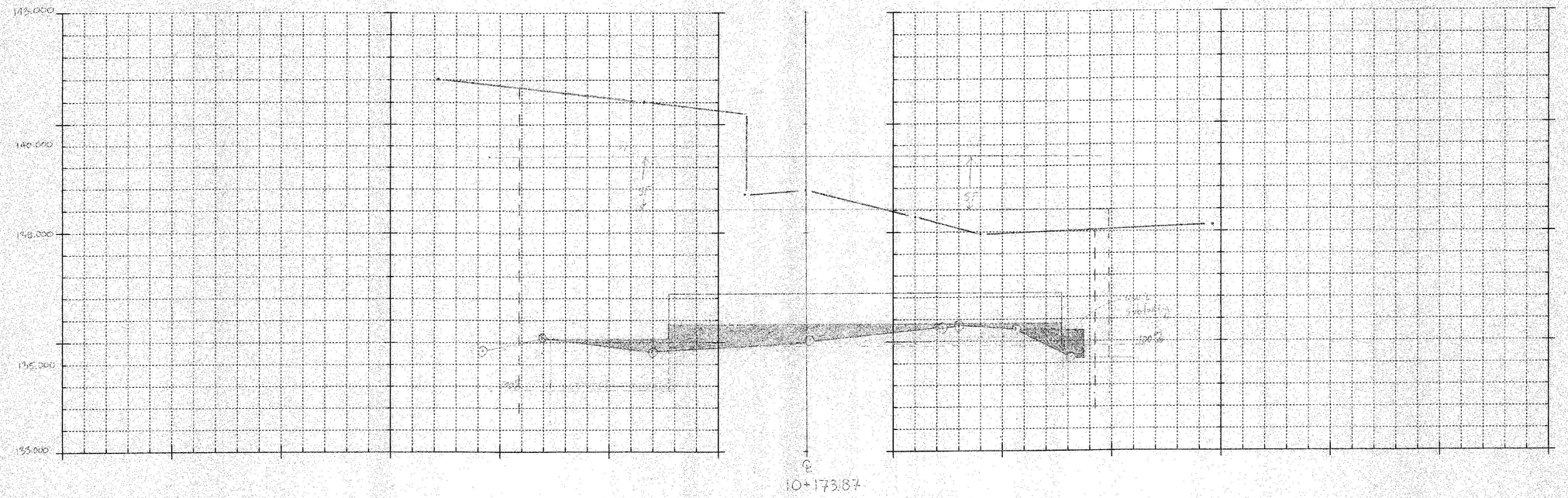

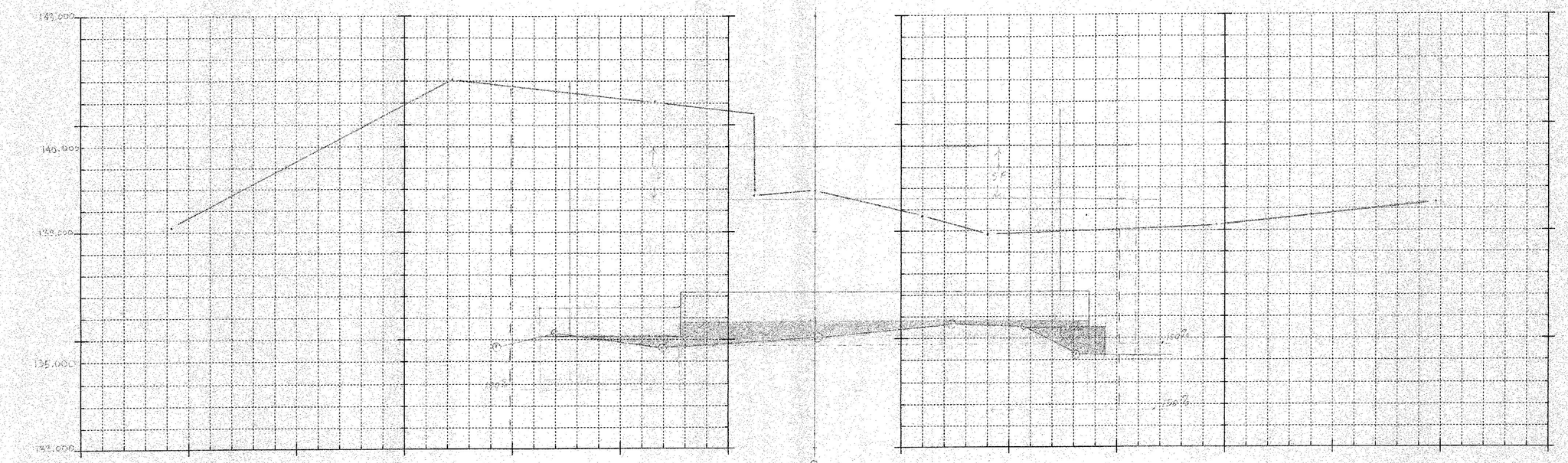

ORIGINAL SECTIONS PLOTTED BY STW 10/30/12 ✓NGE 7/5/13
PROPOSED TEMPLATES PLOTTED BY JPD 7/11/13 ✓NGE 7/5/13
FINAL SECTIONS " ✓NGE 7/5/13

Scale 1:500

0 2 4 6 8 10
SCALE 1:100

PROJECT: Cambridge	PROJECT NO.: BRF 022-1(4)
DESIGN FILE NAME: ABUT 1	
IPARM FILE NAME: Structure Sections	PLOT DATE: 10 31 12
MAINLINE ROADWAY SECTIONS	
	SHEET: 4 OF 5

Metric

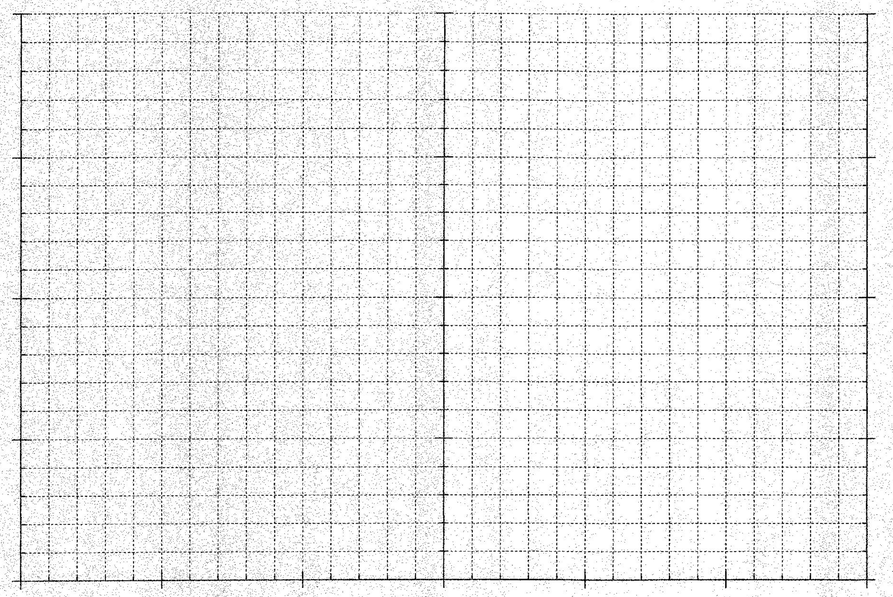

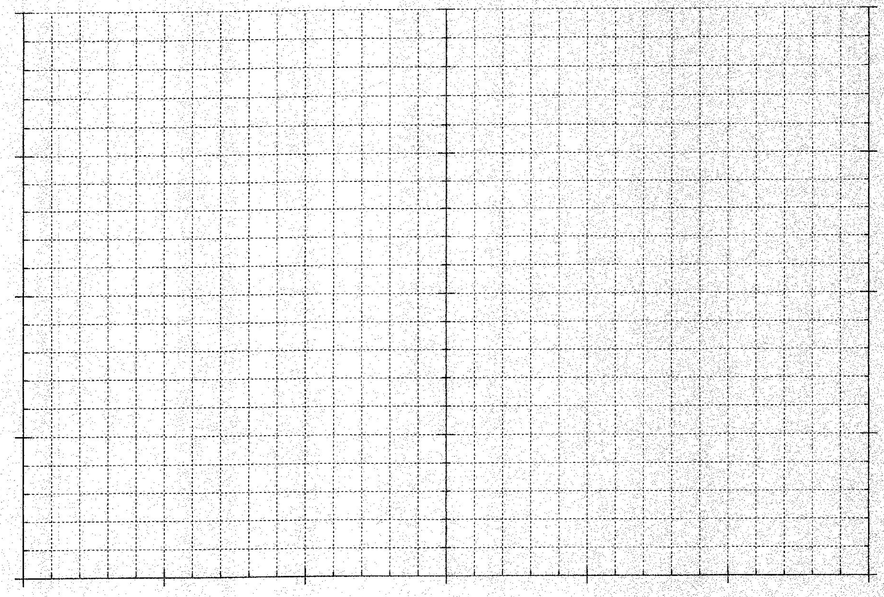

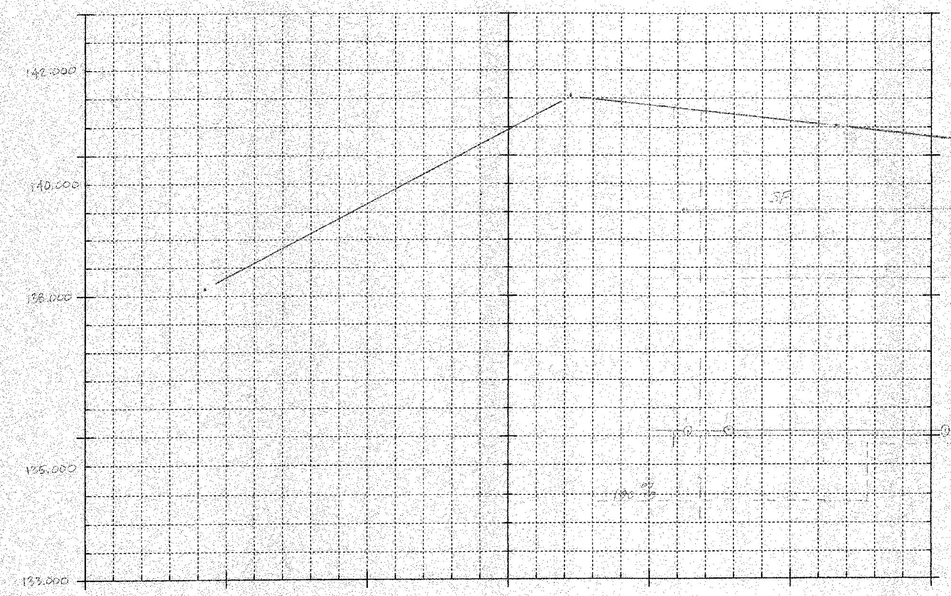

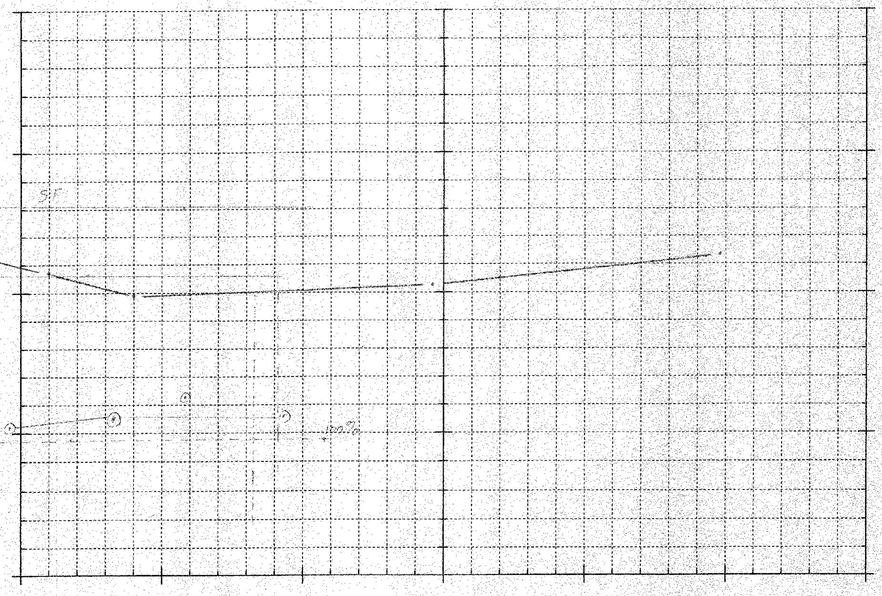

ORIGINAL SECTIONS PLOTTED BY STW 10/30/12 ✓MGB 7/5/13
PROPOSED SECTIONS PLOTTED BY JPD 7/11/13 ✓MGB 7/5/13
FINAL SECTIONS " ✓MGB 7/5/13

℄

10+174.37

Scale = 1:500

0 2 4 6 8 10
SCALE 1:100

PROJECT: CAMBRIDGE	PROJECT NO.: BRF 027-1(A)
DESIGN FILE NAME: ABUT 1	
IPARM FILE NAME: STRUCTURE SECTIONS	PLOT DATE: 10-31-12
MAINLINE ROADWAY SECTIONS	
	SHEET: 5 OF 5

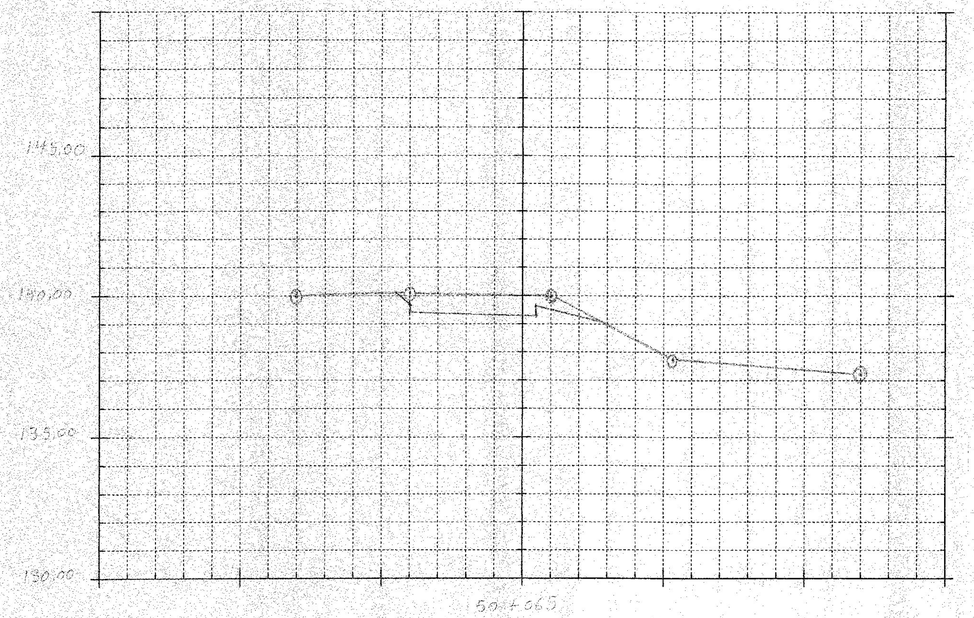



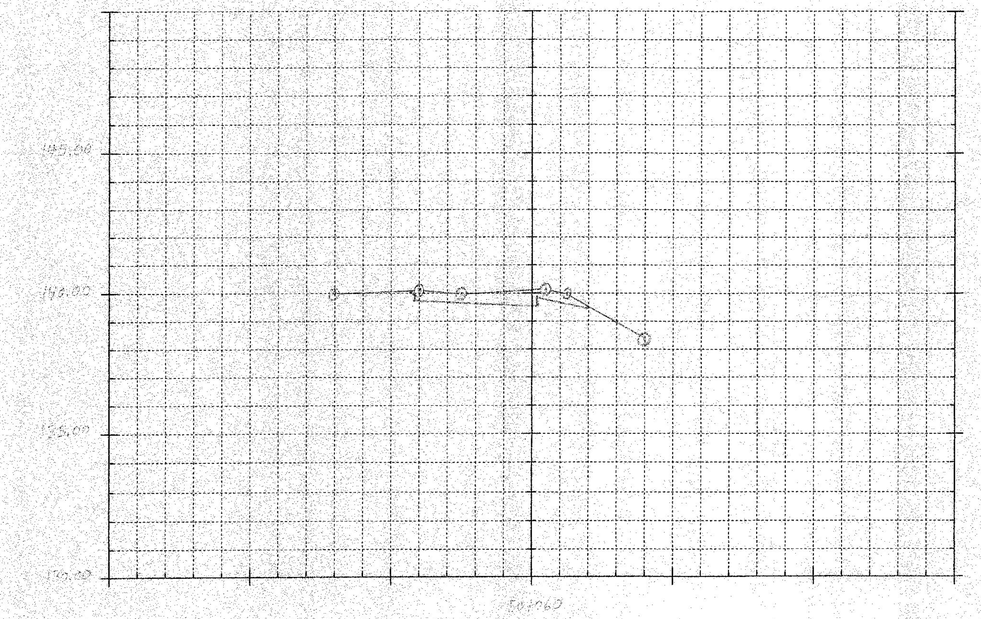

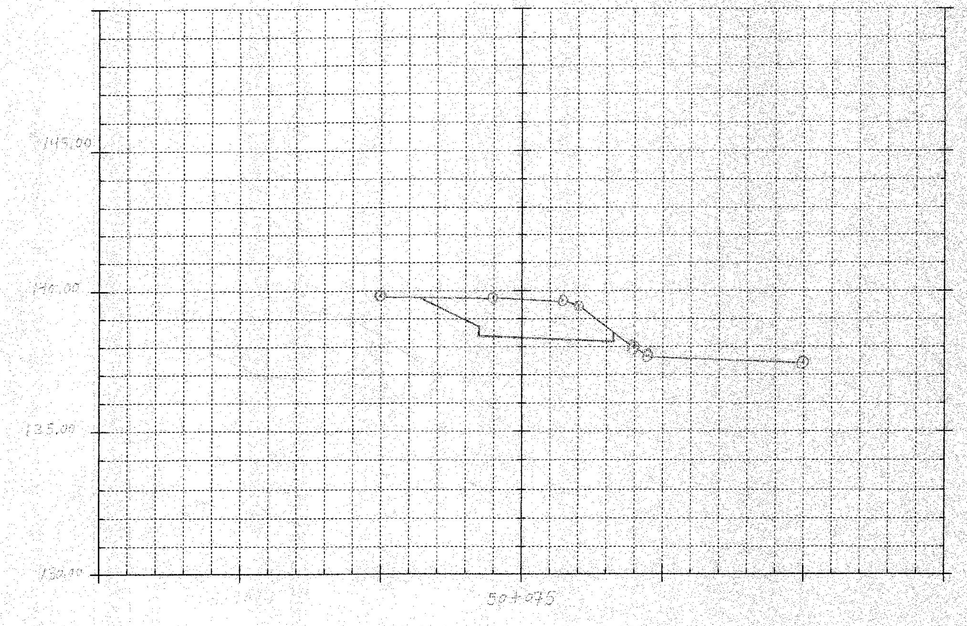

ORIGINAL SECTIONS PLOTTED BY JDD 7/26/13 / MGZ 11-18-13
PROPOSED TEMPLATES " " JDD 7/26/13 / MGZ 11-18-13
FINAL SECTIONS " "

1 Block = 1 METER

0 2 4 6 8 10
SCALE 1:100

PROJECT:	PROJECT NO.:
DESIGN FILE NAME:	PLOT DATE:
IPARM FILE NAME:	
MAINLINE ROADWAY SECTIONS	SHEET: ___ OF ___

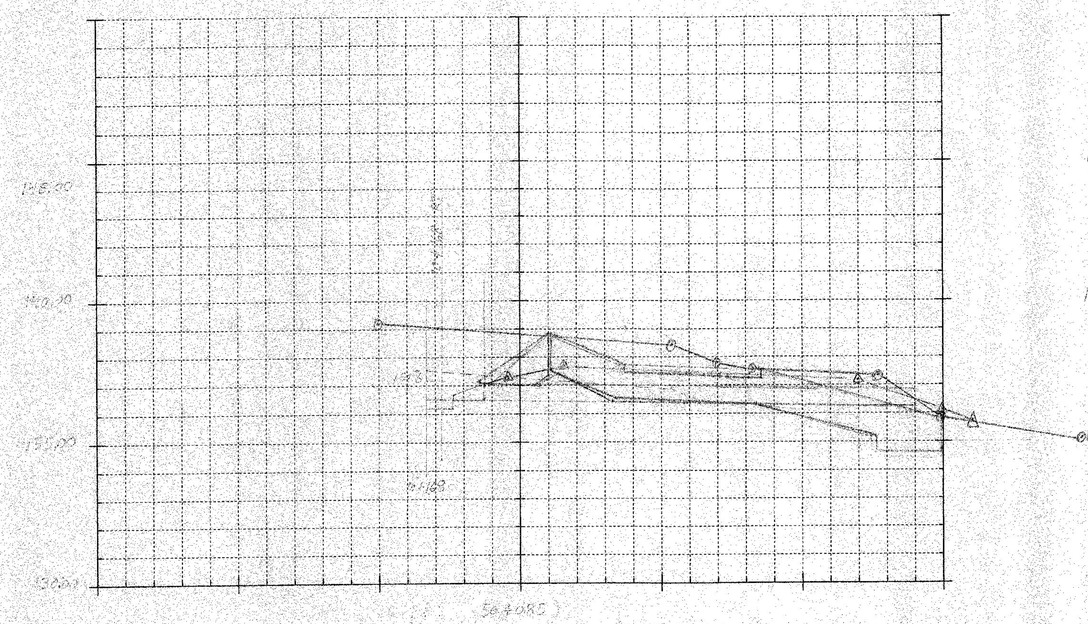

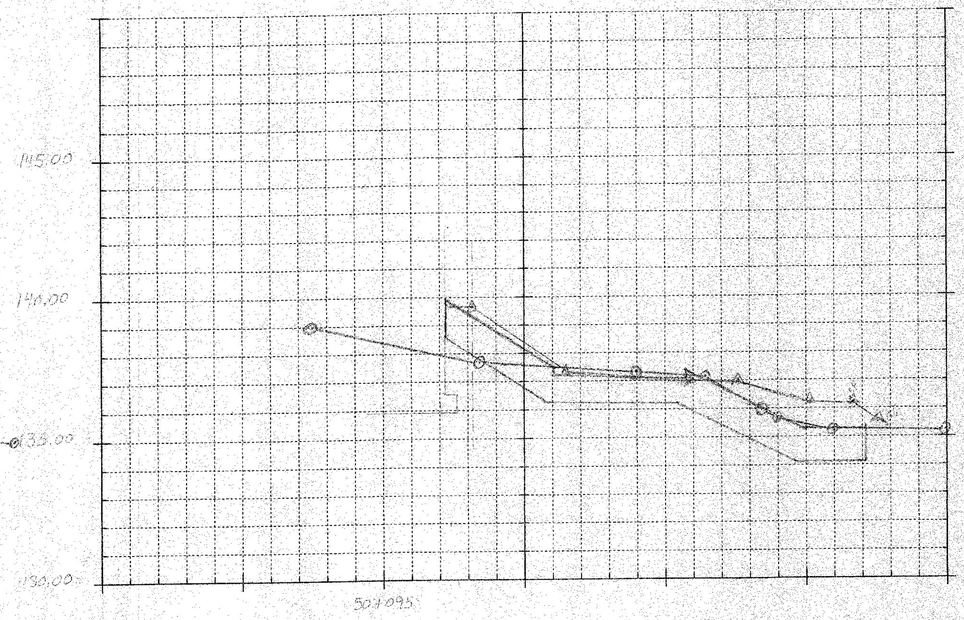

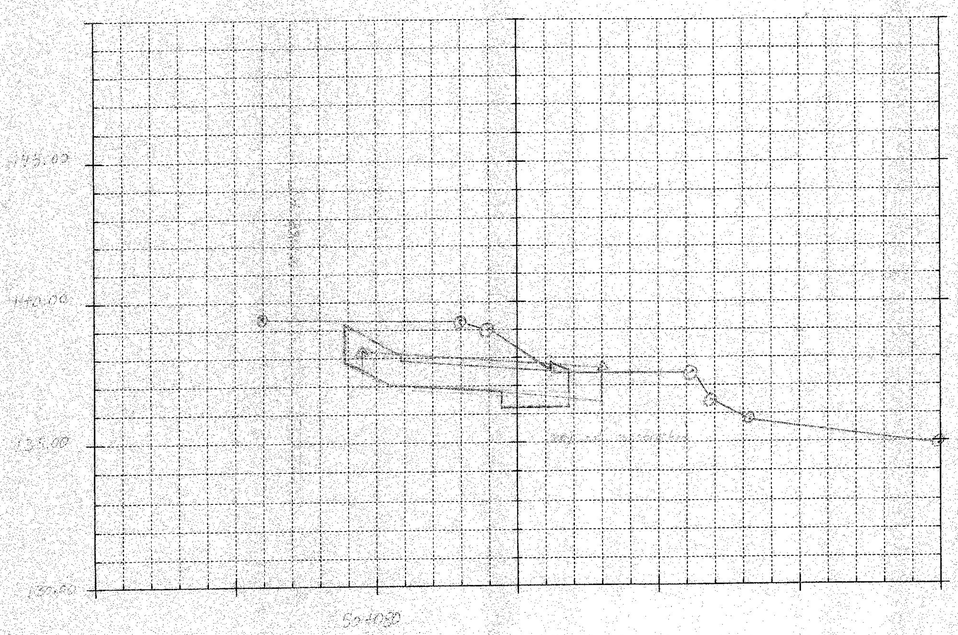

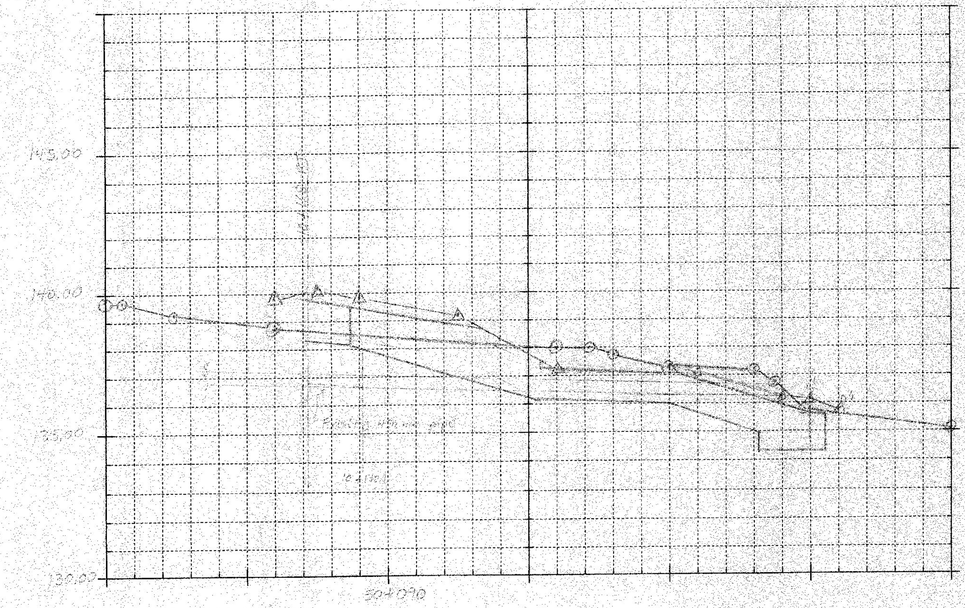

1 BLOCK = 1 METER

0 2 4 6 8 10
SCALE 1:100

MOT 11-14-14 ⊙ Original Section plotted STPD 07-23-13
MOT 11-14-14 ⊙ Proposed Templates plotted by
MOT 11-14-14 △ Final sections plotted by

PROJECT: CAMBRIDGE	PROJECT NO.: BRE-[illegible]
DESIGN FILE NAME: IPARM FILE NAME:	PLOT DATE:
MAINLINE ROADWAY SECTIONS	SHEET: ___ OF ___

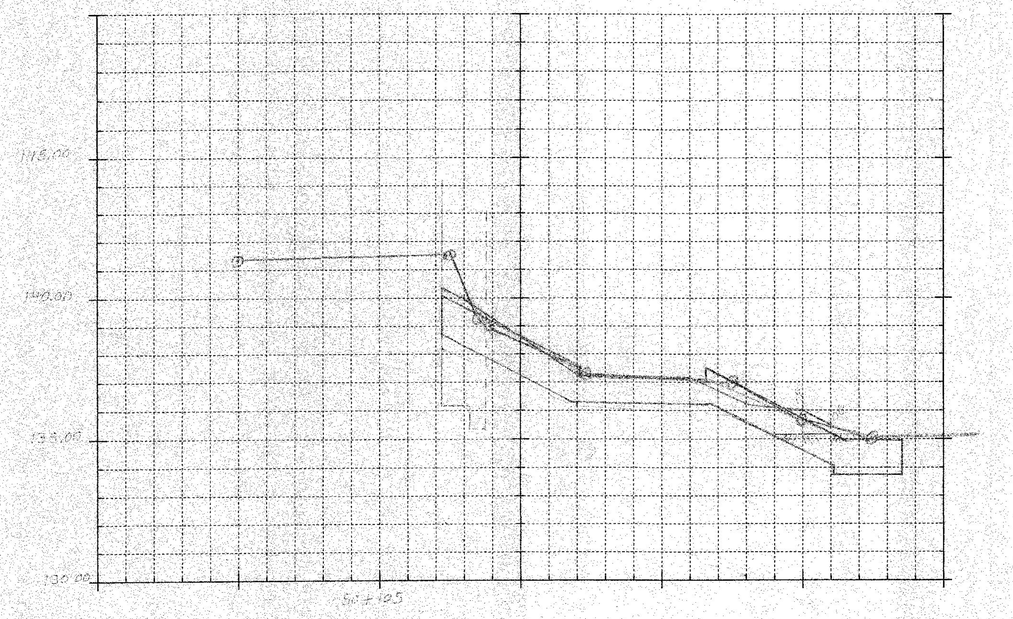

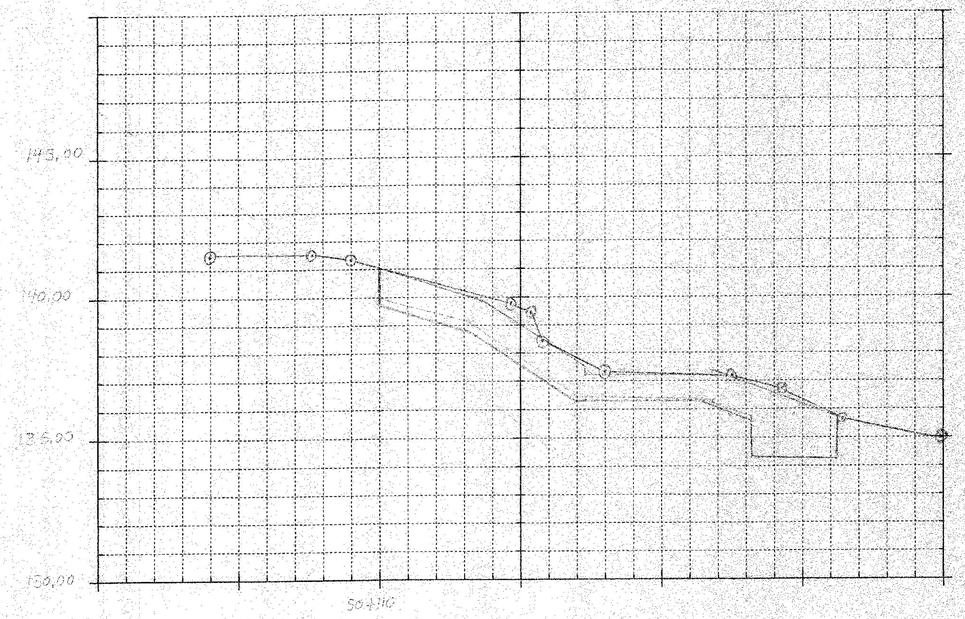

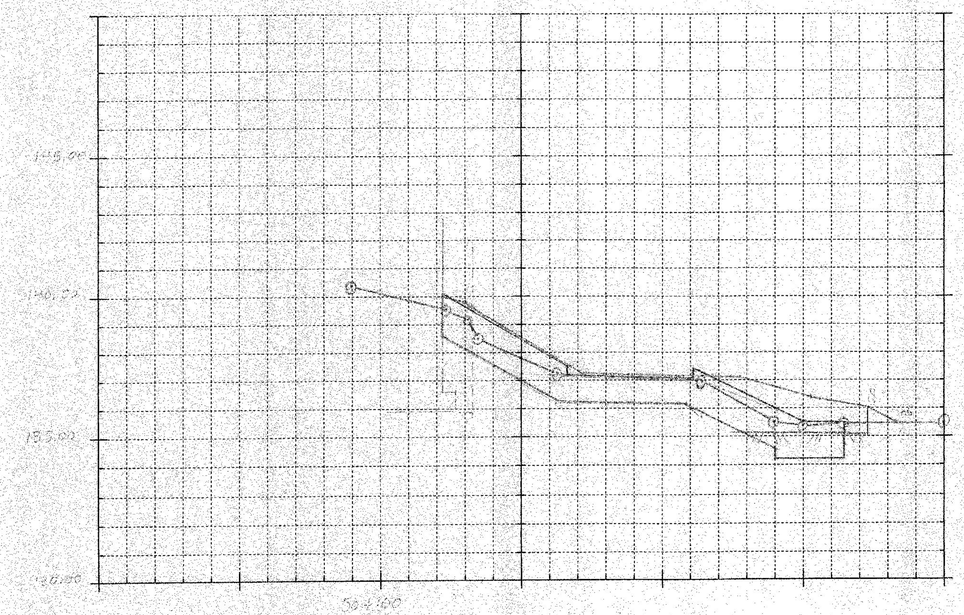

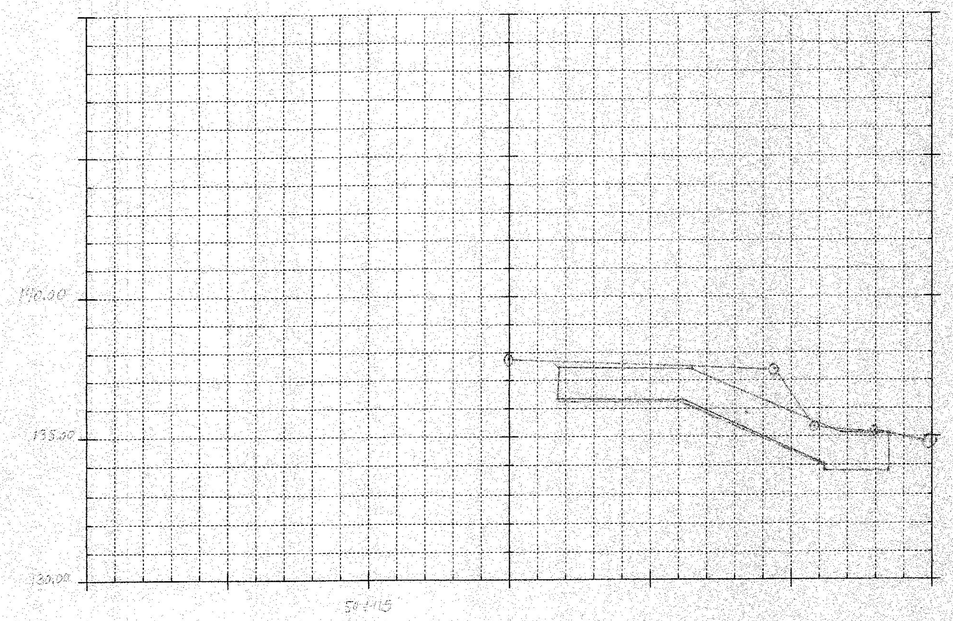

1 Proposed templates plotted by
Final sections plotted by

1 BLOCK = 1 METER

0 2 4 6 8 10
SCALE 1:100

PROJECT: CAMBRIDGE	PROJECT NO.: [illegible]
DESIGN FILE NAME:	
IPARM FILE NAME:	PLOT DATE:
MAINLINE ROADWAY SECTIONS CHANNEL SECTIONS - [illegible] #1	
	SHEET: 3 OF [illegible]

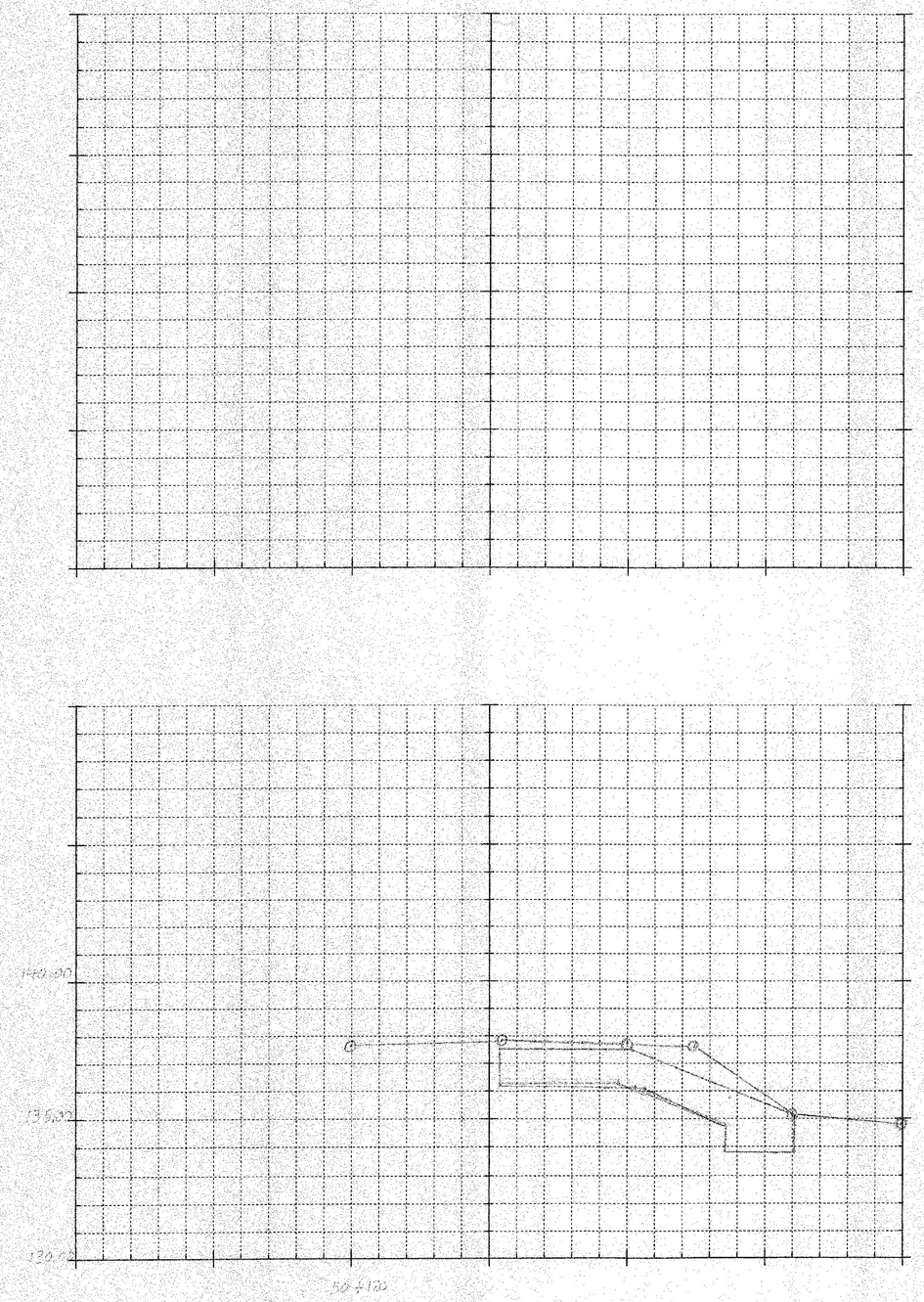

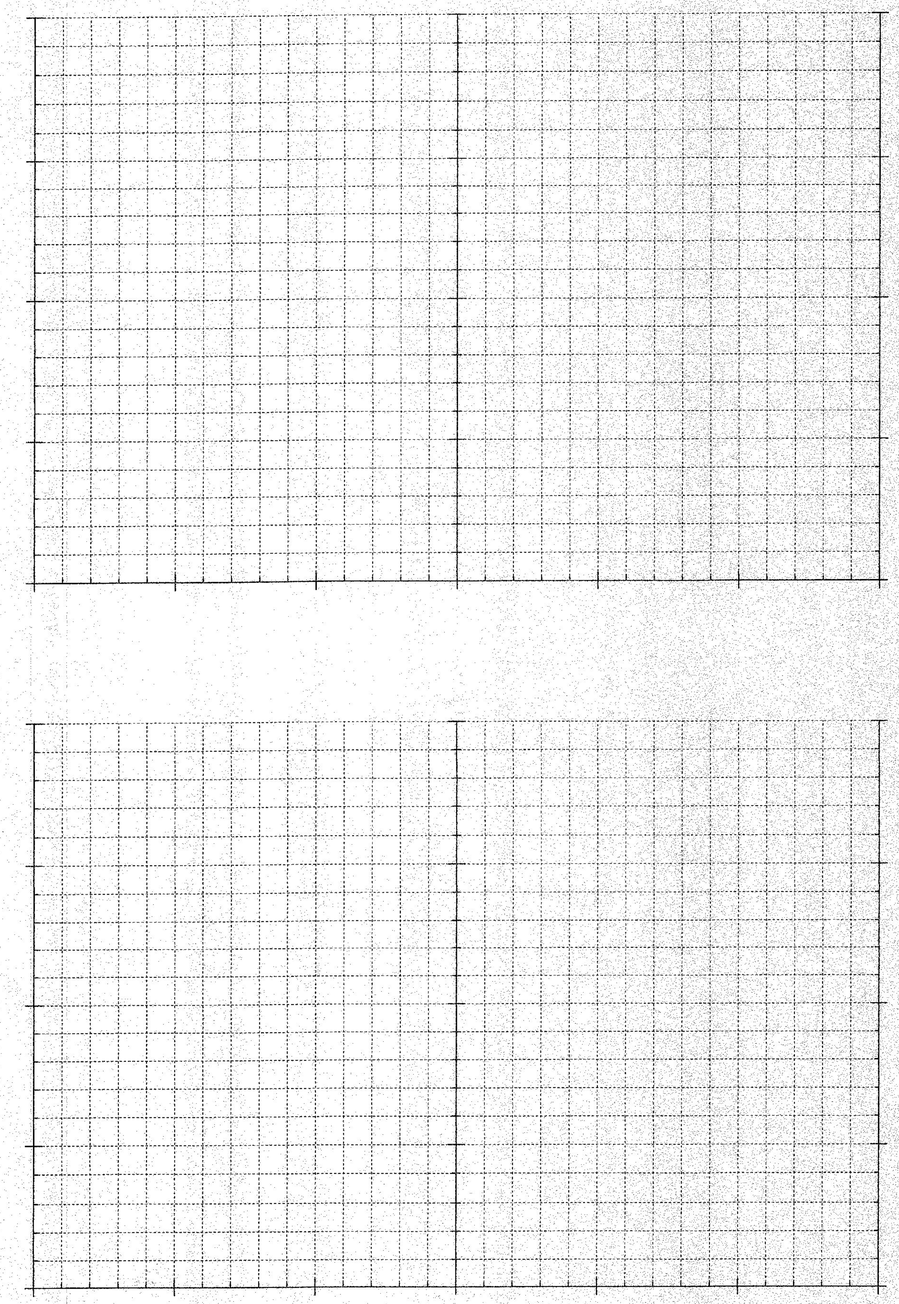

MGI 11-20-13 ⊗ Original Sections Plotted by JPD 09-18-13
MGI 11-20-13 ✓ Proposed Templated "
Final Sections plotted by

1 BLOCK = 1 METER

0 2 4 6 8 10
SCALE 1:100

PROJECT: CAMBRIDGE	PROJECT NO.: [illegible]
DESIGN FILE NAME:	
IPARM FILE NAME:	PLOT DATE:
MAINLINE ROADWAY SECTIONS CHANNEL SECTIONS - ALIGNMENT #1	
	SHEET: [illegible] OF [illegible]

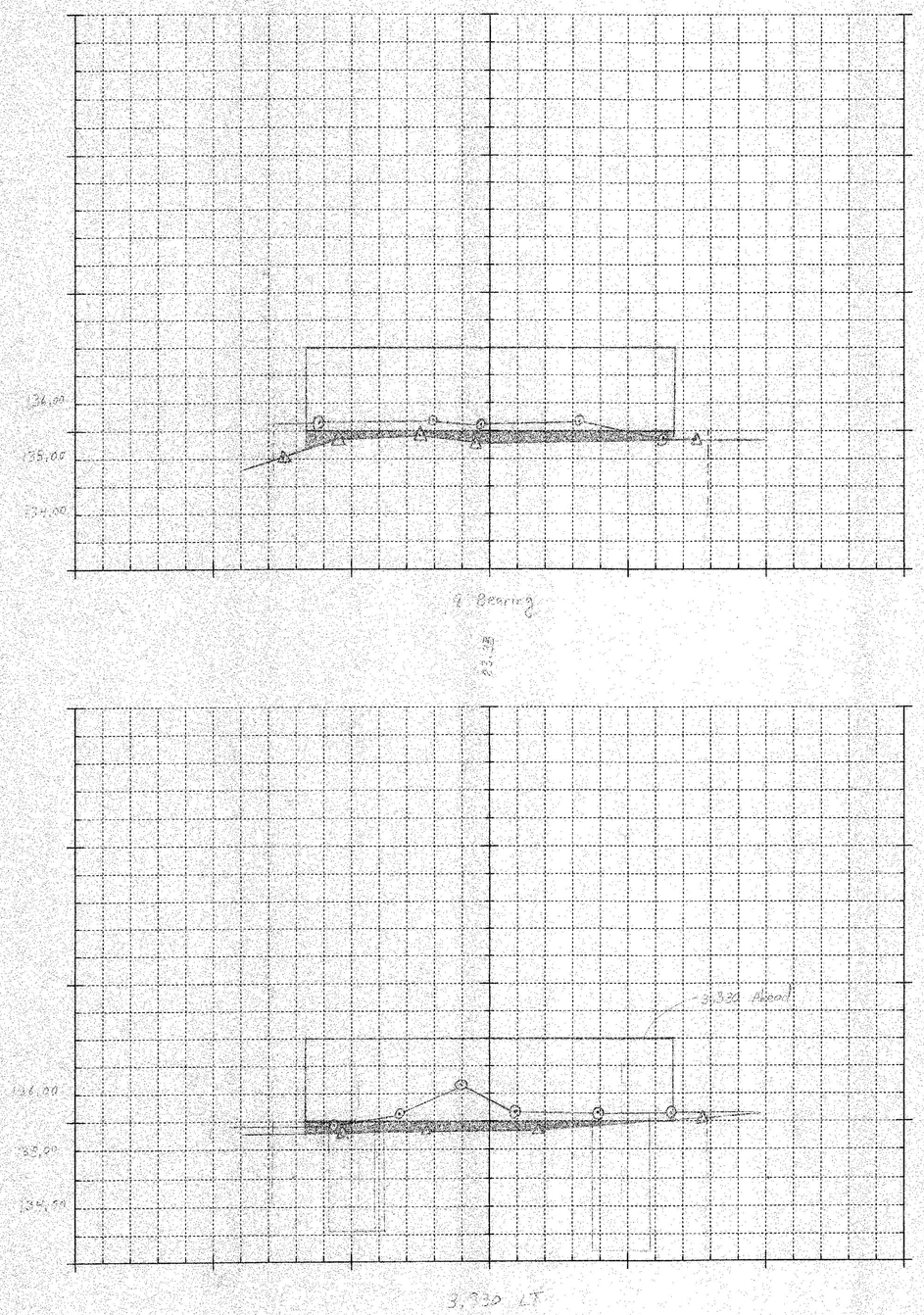

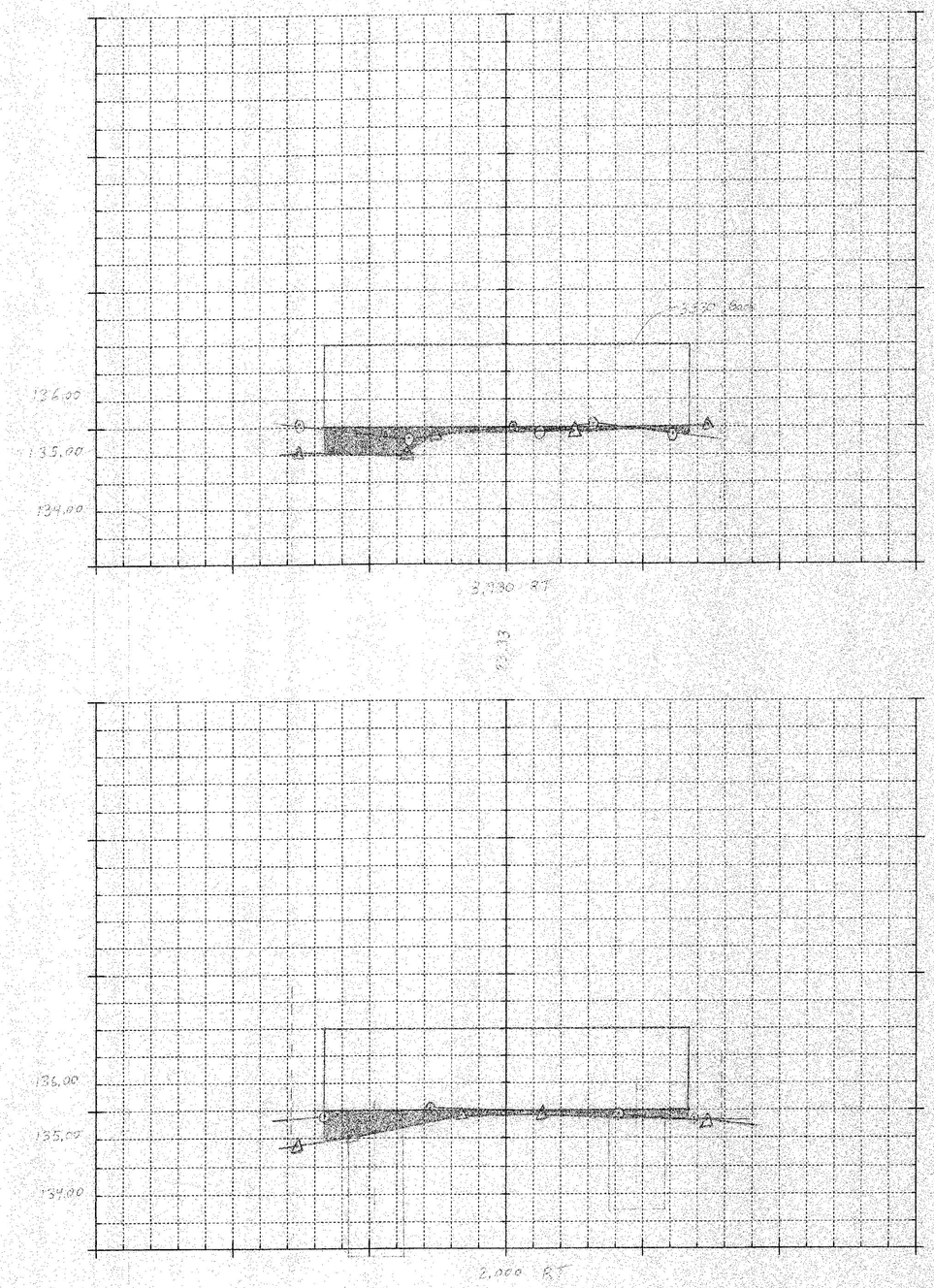

Plotted by [illegible]
Checked by [illegible]

⊙ original (Survey sections in Survey File)
△ final (Gregs Field Book May 31, 2013)
▭ subtracting

0 2 4 6 8 10
SCALE 1:100

PROJECT: [illegible]	PROJECT NO.: [illegible]
DESIGN FILE NAME: [illegible]	
IPARM FILE NAME: STRUCTURE SECTIONS	PLOT DATE: [illegible]
MAINLINE ROADWAY SECTIONS	
	SHEET: ____ OF ____

GENERAL NOTES

NOTE TO ENGINEER:
THESE NOTES ARE NOT INTENDED TO BE ALL INCLUSIVE AND COMPLIANCE WITH RELEVANT SPECIFICATIONS REMAIN UNCHANGED.

CONSTRUCTION SPECIFICATIONS

1) ALL MATERIAL AND WORKMANSHIP TO BE IN ACCORDANCE WITH THE STATE OF VERMONT AGENCY OF TRANSPORTATION STANDARD SPECIFICATIONS FOR CONSTRUCTION DATED 2011 WITH LATEST REVISIONS AND THE AASHTO LRFD BRIDGE CONSTRUCTION SPECIFICATIONS FOR HIGHWAY BRIDGES DATED 2008.

MATERIAL SPECIFICATIONS

1) UNLESS OTHERWISE NOTED, ALL STEEL TO BE AASHTO M270M GRADE 345W.

2) MATERIAL NOTED "CVN" OR "T2" ON DETAIL DRAWINGS SHALL BE CHARPY V-NOTCH TESTED IN ACCORDANCE WITH THE REQUIREMENTS OF VERMONT STANDARD SPECIFICATIONS SECTION 714.01.

3) HIGH STRENGTH BOLTS: ASTM A325 (AASHTO M164) 7/8" DIA., TYPE 3.
NUTS SHALL BE A563 (TYPE 3) GRADE C3.
IN PAINTED AREAS USE ASTM A325 (AASHTO M164) TYPE 1 GALVANIZED (PER AASHTO M298) BOLTS, NUTS, AND WASHERS.

BOLTS & NUTS SHALL BE ROTATIONAL CAPACITY TESTED.
DO NOT MIX NUTS & BOLTS FROM DIFFERENT CONTAINERS UNLESS ALL BOLTS & NUTS HAVE THE SAME LOT NUMBER.

FABRICATION

1) ALL HOLES SHALL BE DRILLED FULL SIZE (UN).

WELDING

1) THE CONFIGURATION OF THE WELD JOINTS AND ALL WELDING PROCEDURES SHALL BE IN ACCORDANCE WITH AASHTO/AWS D1.5-2010 BRIDGE WELDING CODE AND IN ADDITION TO SPECIFICATIONS SHOWN ABOVE. ALL WELDING WILL BE DETAILED TO PRE-QUALIFIED JOINTS, UNLESS PROHIBITED BY THE DESIGNER.

2) WELDING OF MAIN LOAD CARRYING MEMBERS AND ATTACHMENTS SHALL BE PERFORMED USING THE AUTOMATIC SUBMERGED ARC & SHIELDED METAL ARC PROCESSES. ALL WELDS ARE CONTINUOUS U.N.

3) NON DESTRUCTIVE TESTING OF WELDS SHALL BE IN ACCORDANCE WITH THE REFERENCED SPECIFICATION.

4) SEE DETAIL "WS1" & "WS2" ON THIS DRAWING FOR WELD TERMINATION DETAIL.

FIELD CONNECTIONS

1) ALL FIELD CONNECTIONS SHALL BE MADE WITH 7/8" DIAMETER HIGH STRENGTH A-325 BOLTS (UN), INSTALLED PER SECTION 506.19(c). SEE DWG E1 FOR FIELD BOLT SIZES.

2) BOLTS SHALL HAVE HEAVY HEX NUT, HEAVY HEX HEAD, AND AT LEAST ONE FLAT WASHER EACH. WASHER TO BE PLACED UNDER TURNED ELEMENT.

3) PIECE MARKS WILL BE LOCATED AS SHOWN ON ERECTION DRAWINGS.

CLEANING

1) ALL STEEL SHALL BE BLAST CLEANED IN ACCORDANCE WITH SSPC SP-10.

PAINTING

1) THE GIRDER ENDS & ABUTMENT CROSSFRAMES WITHIN 4000mm OF THE ENDS OF STEEL AT ABUT 1 SHALL BE PAINTED, EXCEPT AS NOTED (SEE SKETCH "P").

⚠ 2) THE PAINT SYSTEM AND ITS APPLICATION SHALL CONFORM TO SECTION 900.645 OF THE PROJECT SPECIAL PROVISIONS (QC/QA CLEANING AND PAINTING STRUCTURAL COMPONENTS). ✓

3) PAINT SYSTEM SHALL BE AS FOLLOWS:
PRIMER: CARBOLINE 859 ORGANIC ZINC RICH PRIMER - 3.0 - 5.0 MILS DFT.
INTERMEDIATE: CARBOLINE 888 EPOXY 4.0-6.0 MILS DFT.
TOPCOAT: CARBOLINE 133 LH ALIPHATIC POLYURETHANE - 3.0-5.0 MILS DFT.
TOPCOAT COLOR: BROWN FED. COLOR #20059. - SUBMIT COLOR SAMPLE TO DEPARTMENT.

⚠ 4) BROWN GREASE CONFORMING TO SECTION 708.04 SHALL BE APPLIED TO ALL PAINTED AREAS IN THE FIELD FOLLOWING ERECTION. ✓

5) PRIME COAT ONLY WITHIN 3" OF OPEN HOLES WITHIN THE PAINTED AREA.

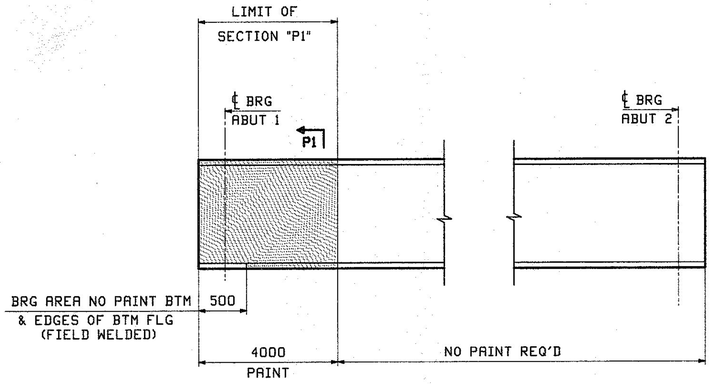

SKETCH "P"

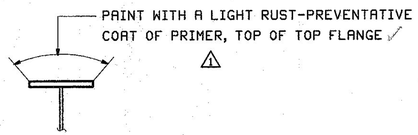

SECTION "P1"

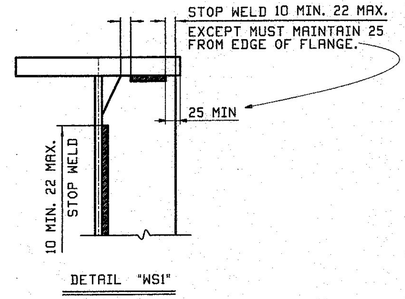

DETAIL "WS1"

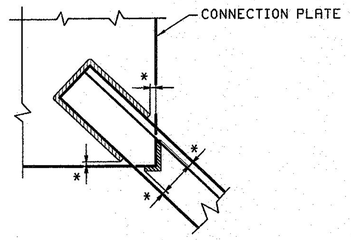

* NO WELD 7 MIN, 12 MAX.

DETAIL "WS2"

TYP. CROSSFRAME WELD TERMINATION

VTrans Received and Reviewed
DEC 26 2012

Approved by MSM APPROVED DATE 1/08/13

REV.	DATE	REMARKS	DWN	CHK	APVL	SHOP
⚠ 0	12/18	APPROVAL COMMENTS	CRK	PCP	12/19/12	

MATERIAL:	SURFACE PREP. & PAINT:	HOLES:	SHOP BOLTS:
		AS NOTED	AS NOTED

DESCRIPTION: GENERAL NOTES

CASCO BAY STEEL STRUCTURES, INC.
1 WALLACE AVE. PHONE (207) 780-6722
SOUTH PORTLAND, ME 04106 FAX. (207) 780-6726
TENSOR 3146

STRUCTURE: VT ROUTE 108, BRIDGE #21 MAJOR COLLECTOR TOWN OF CAMBRIDGE COUNTY OF LAMOILLE, VERMONT		DRAWN: CRK	DATE: 10/04
		CHKD: RLA	DATE: 10/05
LOCATION: CAMBRIDGE, VERMONT		JOB NO.	DWG NO.
PROJ NO.	BRF 027-1(4)	524	GN1
CUSTOMER:	A. L. ST. ONGE CONTRACTING		REV. ⚠

PCP Wed, Dec 19, 2012 10:58:55 AM //ussrv/jobs/2012/GN1.dgn

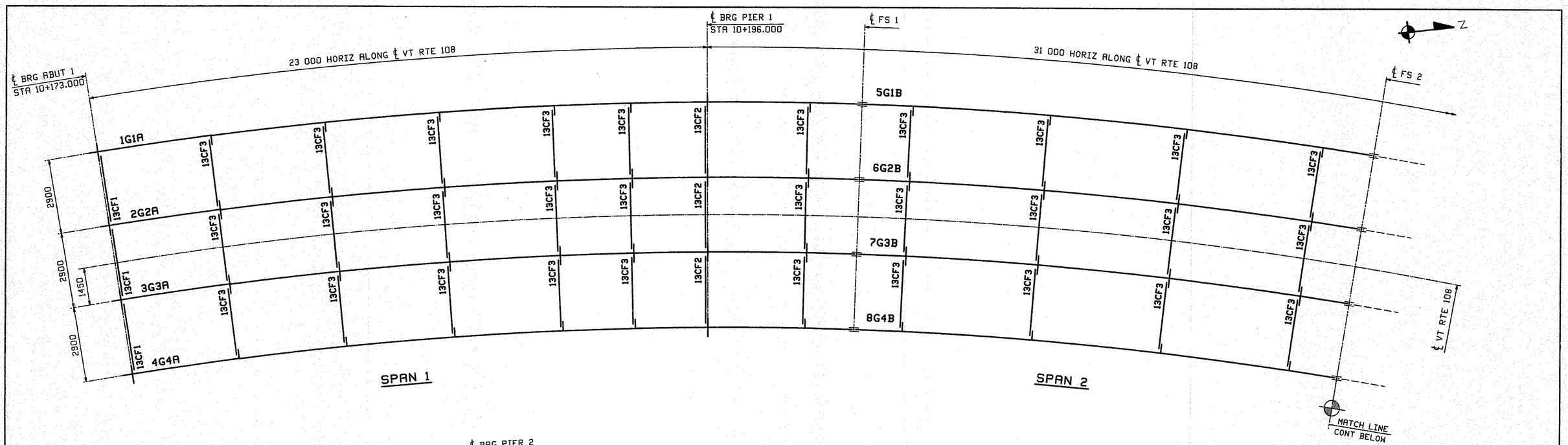

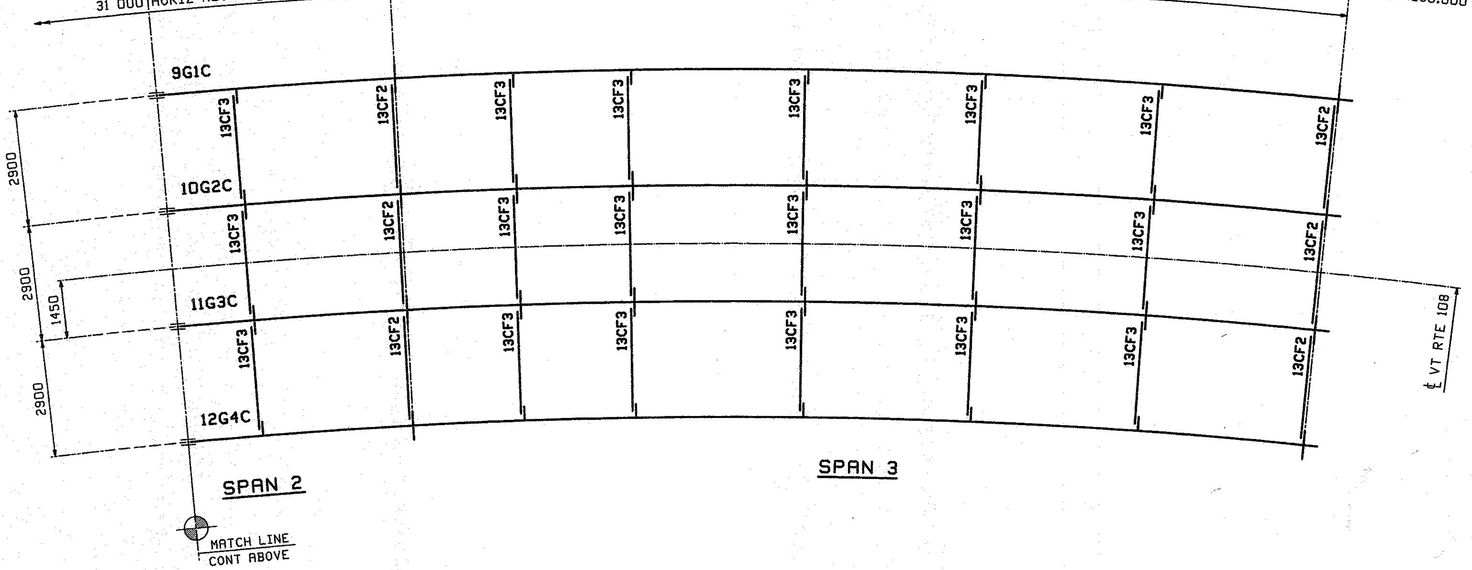

FRAMING PLAN

VTrans received 10/30 BY
NOV 01 2012
REVISOR BY ____ APPROVED DATE 11/2/12

REV.	DATE	REMARKS	DWN	CHK	APVL	SHOP
0					10/22/12	

MATERIAL:	SURFACE PREP. & PAINT:	HOLES:	SHOP BOLTS:

DESCRIPTION: FRAMING PLAN

CASCO BAY STEEL STRUCTURES, INC.
1 WALLACE AVE. PHONE (207) 780-6722
SOUTH PORTLAND, ME 04106 FAX. (207) 780-6726
TENSOR 3146

STRUCTURE: VT ROUTE 108, BRIDGE #21 MAJOR COLLECTOR TOWN OF CAMBRIDGE COUNTY OF LAMOILLE, VERMONT		DRAWN: CRK	DATE: 10/10
		CHKD: PCP	DATE: 10/16
LOCATION: CAMBRIDGE, VERMONT		JOB NO.	DWG NO.
PROJ NO. BRF 027-1(4)		524	E1
CUSTOMER: A. L. ST. ONGE CONTRACTING			REV. △

PCP Thu, Oct 18, 2012 09:08:38 AM J:\cadd\jobs\524\e1.dwg

FIELD BOLT LIST — A325 Type 3 BOLTS

LINE	NO REQ'D.	BOLT DIAM.	BOLT LEN.	BOLTS /CONN.	# OF CONN.	GRIP	THICKNESS OF PCS. CONNECTED						WASH CODE	PIECES CONNECTED AND REMARKS
1														**FIELD SPL 1 & 2 - LN 1**
2	64	7/8	3 1/2	32	2	54	10	29	15				1	TOP FLANGE SPLICE
3	176	7/8	2 1/2	88	2	29	8	13	8				1	WEB SPLICE
4	80	7/8	4	40	2	58	10	45	13				1	BOTTOM FLANGE SPLICE
5														
6														**FIELD SPL 1 & 2 - LN 2 & 3**
7	128	7/8	3 1/4	32	4	50	10	25	15				1	TOP FLANGE SPLICE
8	352	7/8	2 1/2	88	4	29	8	13	8				1	WEB SPLICE
9	160	7/8	3 3/4	40	4	61	10	38	13				1	BOTTOM FLANGE SPLICE
10														
11														**FIELD SPL 1 & 2 - LN 4**
12	64	7/8	3 1/4	32	2	47	10	22	15				1	TOP FLANGE SPLICE
13	176	7/8	2 1/2	88	2	29	8	13	8				1	WEB SPLICE
14	80	7/8	3 1/4	40	2	48	10	25	13				1	BOTTOM FLANGE SPLICE
15														
16														**ABUTMENT 2 CROSSFRAMES**
17	36	7/8	2 3/4	6	6	35	13	22					1	TOP GUSSET TO BRG STIFF
18	36	7/8	2 3/4	6	6	35	13	22					1	BTM GUSSET TO BRG STIFF
19														
20														**PIER CROSSFRAMES**
21	72	7/8	2 3/4	6	12	35	13	22					1	TOP GUSSET TO BRG STIFF
22	72	7/8	2 3/4	6	12	35	13	22					1	BTM GUSSET TO BRG STIFF
23														
24														**INT. CROSSFRAMES**
25	384	7/8	2 1/2	4	96	26	13	13					1	TOP GUSSET TO STIFF
26	576	7/8	2 1/2	6	96	26	13	13					1	BTM GUSSET TO STIFF
27														

WASHER CODES

1: 1 Hard Flat Washer

FIELD BOLT LIST — A325 Type 1 BOLTS

LINE	NO REQ'D.	BOLT DIAM.	BOLT LEN.	BOLTS /CONN.	# OF CONN.	GRIP	THICKNESS OF PCS. CONNECTED						WASH CODE	PIECES CONNECTED AND REMARKS
28														**ABUTMENT 1 CROSSFRAMES**
29	36	7/8	2 3/4	6	6	35	13	22					1	TOP GUSSET TO BRG STIFF
30	36	7/8	2 3/4	6	6	35	13	22					1	BTM GUSSET TO BRG STIFF
31														

WASHER CODES

1: 1 Hard Flat Washer

FIELD BOLT SUMMARY — EXACT COUNT - NONE EXTRA

LINE	NO. OF BOLTS	BOLT DIAM.	TYPE	BOLT LEN	ACTUAL COUNT	REMARKS
1	72	7/8	A325 Type 1	2 3/4	72	(RCT) GALVANIZED
2						
3	72	Hard Flat Washers	for 7/8 ø	BOLT		GALVANIZED
4						
5						
6	1664	7/8	A325 Type 3	2 1/2	1664	(RCT)
7	216	7/8		2 3/4	216	(RCT)
8	272	7/8		3 1/4	272	(RCT)
9	64	7/8		3 1/2	64	(RCT)
10	160	7/8		3 3/4	160	(RCT)
11	80	7/8	A325 Type 3	4	80	(RCT)
12						
13	2456	Hard Flat Washers	for 7/8 ø	BOLT		
14						
15						
16						

Type 3 weathering Steel

NOTES:
1. All bolt diameters and lengths are shown in inches (english unit of measurement).
2. All grip values are shown in metric units.

REV.	DATE	REMARKS	DWN	CHK	APVL	SHOP
0					10/22/12	

MATERIAL:	SURFACE PREP. & PAINT:	HOLES:	SHOP BOLTS:
		AS NOTED	AS NOTED

DESCRIPTION: FIELD BOLTS

CASCO BAY STEEL STRUCTURES, INC.
1 WALLACE AVE. PHONE (207) 780-6722
SOUTH PORTLAND, ME 04106 FAX. (207) 780-6726

TENSOR 3146

STRUCTURE: VT ROUTE 108, BRIDGE #21 MAJOR COLLECTOR TOWN OF CAMBRIDGE COUNTY OF LAMOILLE, VERMONT		DRAWN: CRK	DATE: 10/10
		CHKD: PCP	DATE: 10/16
LOCATION: CAMBRIDGE, VERMONT		JOB NO.	DWG NO.
PROJ NO. BRF 027-1(4)		524	E2
CUSTOMER: A. L. ST. ONGE CONTRACTING			REV. △

VTrans Received CK'D. OK'd BY
NOV 6 2012
Restrictions APPROVED BY CK'D. DATE 11/27/12

PCP Thu, Oct 18, 2012 08:54:45 PM J:\Users\jbs\2516\E2 - fld.dgn

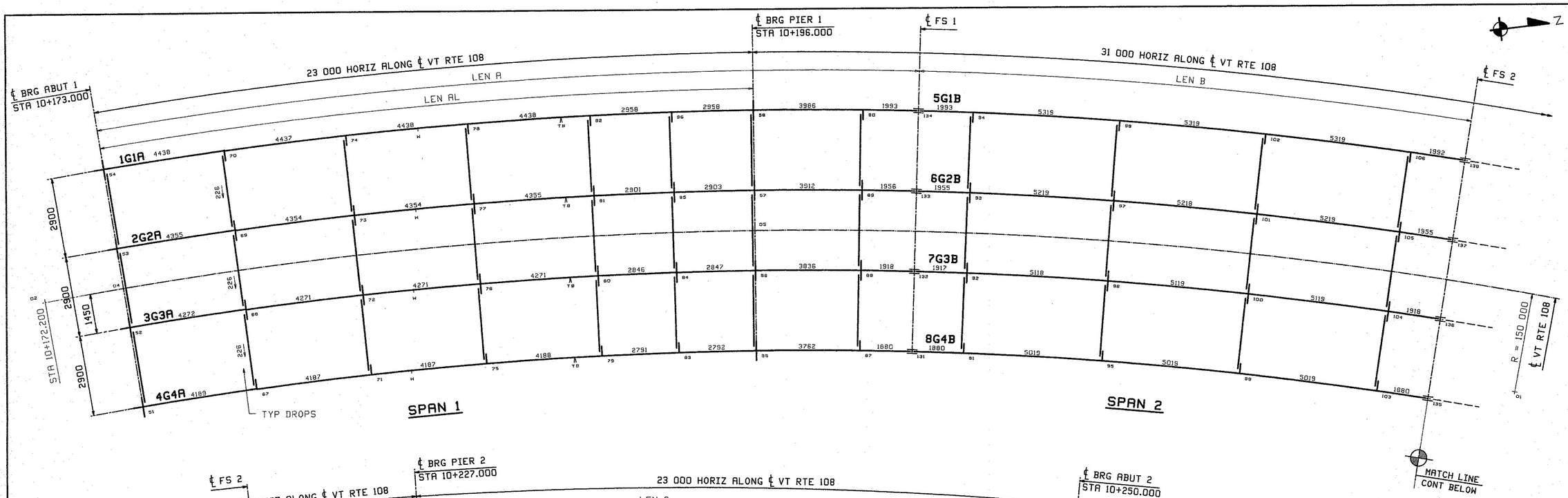

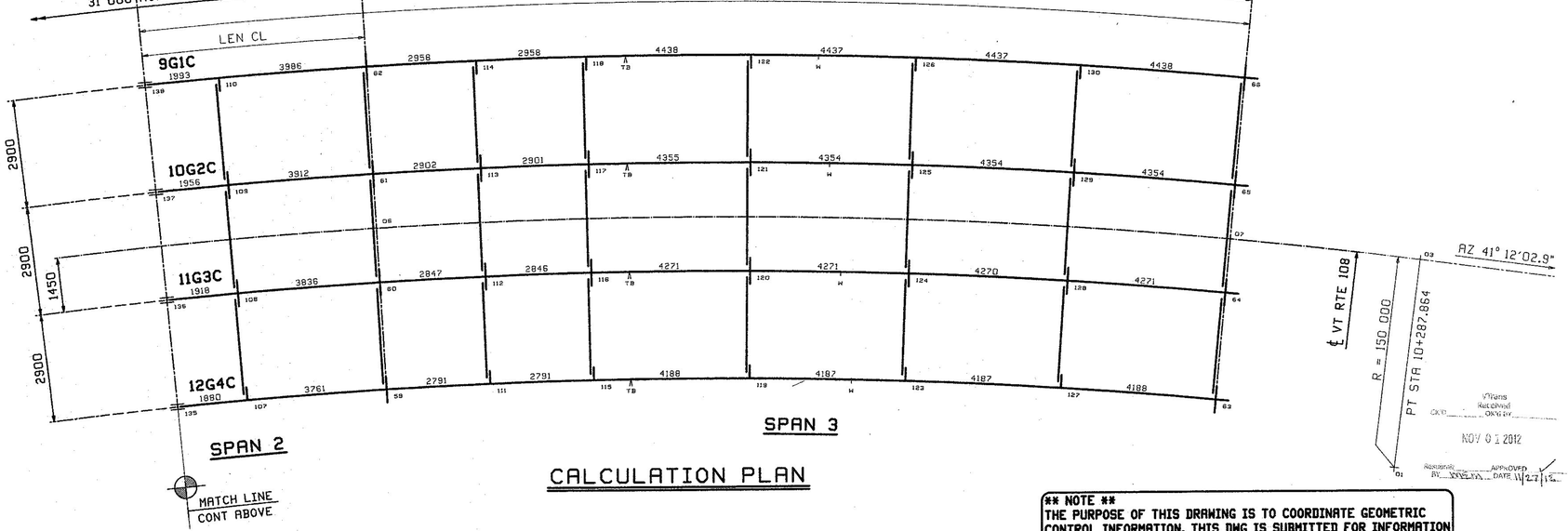

CALCULATION PLAN

Line	LEN AL	LEN A	LEN B	LEN CL	LEN C	GRADE Abut 1	GRADE Pier 1	GRADE Pier 2	GRADE Abut 2
1	23 667	29 646	19 942	5979	29 645	.0166	.0082	-.0034	-.0118
2	23 222	29 090	19 566	5868	29 088	.0169	.0084	-.0035	-.0120
3	22 778	28 532	19 191	5754	28 530	.0172	.0085	-.0035	-.0122
4	22 334	27 976	18 817	5641	27 973	.0176	.0087	-.0036	-.0125

**** NOTE ****
THE PURPOSE OF THIS DRAWING IS TO COORDINATE GEOMETRIC CONTROL INFORMATION. THIS DWG IS SUBMITTED FOR INFORMATION ONLY AND IS NOT INTENDED FOR SHOP FABRICATION.

NOTES
1. LONGITUDINAL DIMENSIONS ARE SLOPING ALONG BOTT OF WEB WITH CORRECTIONS MADE FOR VERTICAL CURVE, GRADE & DL CAMBER (UN).
2. TRANSVERSE DIMENSIONS ARE IN A HORIZ. PLANE (UN).
3. DROP ARROW POINTS TOWARDS LOW END OF MEMBER.
4. ENDS OF GIRDERS AND BRG. STIFF'S ARE VERTICAL AFTER DL ROTATION.
5. CF STIFF, INT STIFF & FIELD SPLICES ARE NORMAL TO GRADE.
6. BOTT PT NUMBERS =TOP PT NUMBERS + 200.
7. FOR LAYOUTS SEE "TD' SHEETS.
8. CROSSFRAME DROPS ARE CALCULATED IN THEIR FINAL POSITION.

Plans Approved
Okd By
NOV 0 1 2012
Approved By ____ Date 11/2/12

REV.	DATE	REMARKS	DWN	CHK	APVL	SHOP
0					10/22/12	

MATERIAL:	SURFACE PREP. & PAINT:	HOLES:	SHOP BOLTS:
		AS NOTED	AS NOTED

DESCRIPTION: CALCULATION PLAN

CASCO BAY STEEL STRUCTURES, INC.
1 WALLACE AVE. PHONE (207) 780-6722
SOUTH PORTLAND, ME 04106 FAX. (207) 780-6726
TENSOR 3146

STRUCTURE: VT ROUTE 108, BRIDGE #21 MAJOR COLLECTOR TOWN OF CAMBRIDGE COUNTY OF LAMOILLE, VERMONT	DRAWN: SOB	DATE: 09/28	
	CHKD: RLA	DATE: 10/03	
LOCATION: CAMBRIDGE, VERMONT	JOB NO. 524	DWG NO. WS1	
PROJ NO. BRF 027-1(4)		REV. △	
CUSTOMER: A. L. ST. ONGE CONTRACTING			

RLA Thu, Oct 4, 2012 09:23:53 PM J:\stee\jobs\3146\001 | Rev0

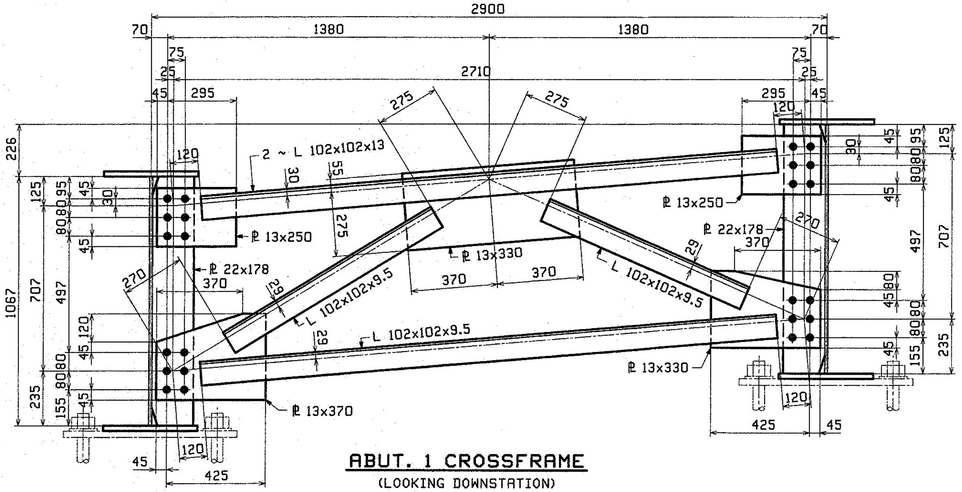

ABUT. 1 CROSSFRAME

(LOOKING DOWNSTATION)
(PAINTED)

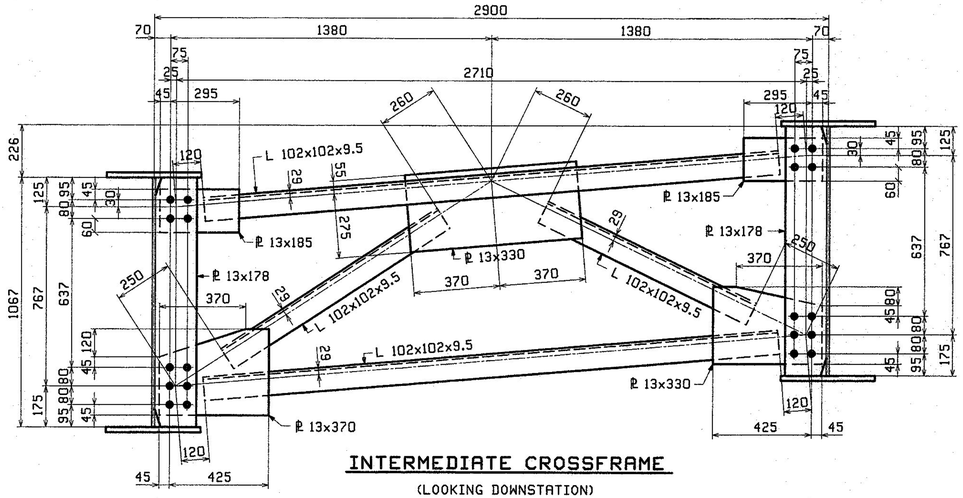

INTERMEDIATE CROSSFRAME

(LOOKING DOWNSTATION)

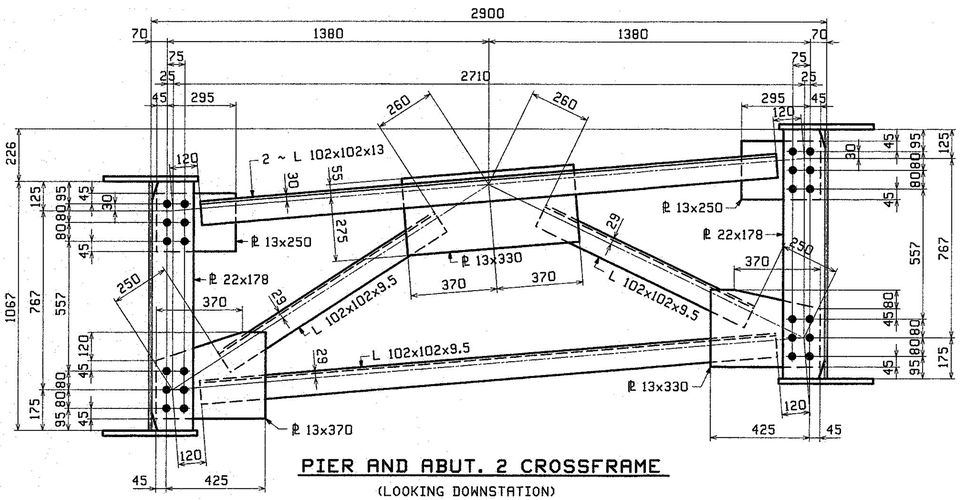

PIER AND ABUT. 2 CROSSFRAME

(LOOKING DOWNSTATION)

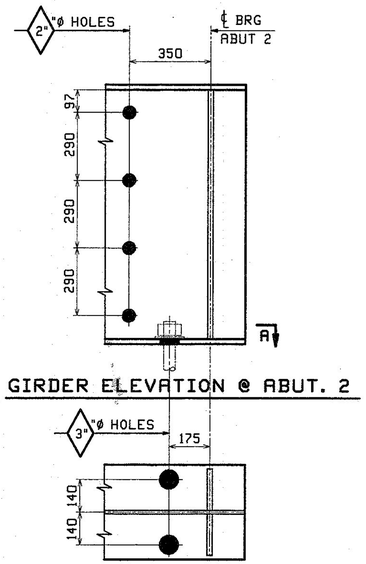

GIRDER ELEVATION @ ABUT. 2

SECT. A

NOTE:
BOLTS : $\frac{7}{8}$"ø A325-TYPE 3 (TYP UN).
BOLTS : $\frac{7}{8}$"ø A325-TYPE 1 (GALV) AT ABUTMENT 1 (PAINTED).

** NOTE **
THE PURPOSE OF THIS DRAWING IS TO COORDINATE GEOMETRIC CONTROL INFORMATION AND CONNECTION SPACING. THIS DWG IS SUBMITTED FOR INFORMATION ONLY & IS NOT INTENDED FOR SHOP FABRICATION. DETAIL DWGS WILL SHOW ALL WELDING AND DIMENSIONS REQ'D FOR FABRICATION.

REV.	DATE	REMARKS	DWN	CHK	APVL	SHOP
0					10/22/12	

MATERIAL:	SURFACE PREP. & PAINT:	HOLES:	SHOP BOLTS:
M270M-345W	SEE DWG GN1	$\frac{15}{16}$"ø	NONE

DESCRIPTION: LAYOUTS

CASCO BAY STEEL STRUCTURES, INC.
1 WALLACE AVE. PHONE (207) 780-6722
SOUTH PORTLAND, ME 04106 FAX. (207) 780-6726

TENSOR 3146

STRUCTURE: VT ROUTE 108, BRIDGE #21 MAJOR COLLECTOR TOWN OF CAMBRIDGE COUNTY OF LAMOILLE, VERMONT		DRAWN: SOB	DATE: 09/26
		CHKD: RLA	DATE: 10/03
LOCATION: CAMBRIDGE, VERMONT		JOB NO. 524	DWG NO. TD1
PROJ NO. BRF 027-1(4)			REV. △
CUSTOMER: A. L. ST. ONGE CONTRACTING			

Agency Approval Required
NOV 01 2012
Regional Engineer BY [illegible] APPROVED DATE 11/2/12

BAR Tue, Oct 9, 2012 03:58:04 PM J:\projects\2012\12-0104\TD1.dwg

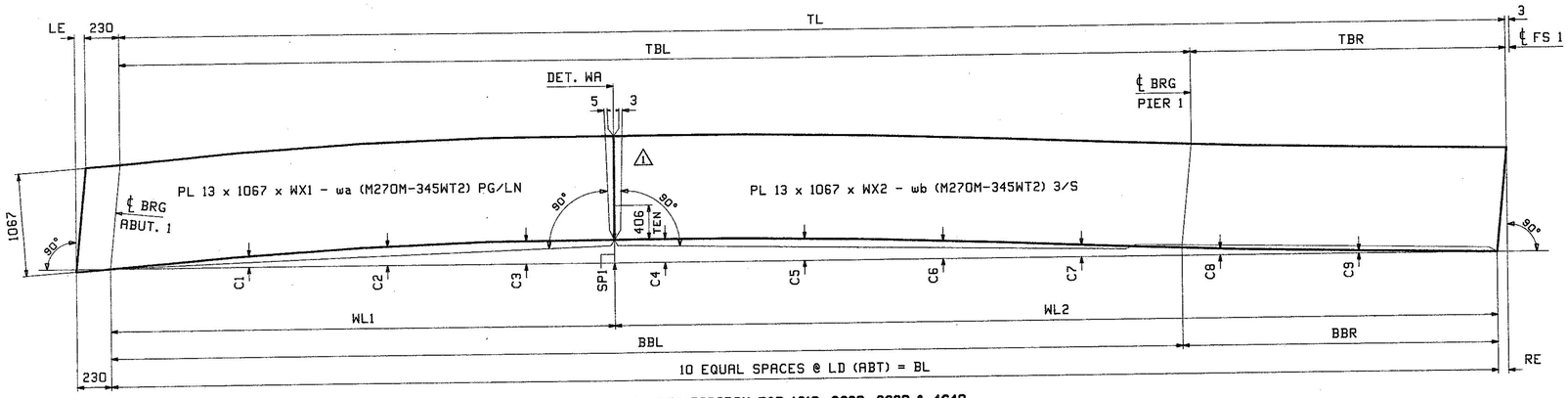

CAMBER DIAGRAM FOR 1G1A, 2G2A, 3G3A & 4G4A

MARK	TL	BL	LE	RE	WL1	WL2	WX1	WX2	SP1	TBL	TBR	BBL	BBR	LD	C1	C2	C3	C4	C5	C6	C7	C8	C9	PG/LN
1G1A	29 636	29 643	9	2	11 496	18 147	11 731	18 150	50	23 670	5966	23 667	5976	2964	22	39	48	49	44	34	22	12	5	3/ A
2G2A	29 080	29 087	9	2	10 939	18 148	11 174	18 151	49	23 225	5855	23 222	5865	2909	22	38	47	49	44	34	22	12	5	3/ E
3G3A	28 523	28 529	9	3	10 382	18 147	10 617	18 150	48	22 781	5742	22 778	5751	2853	22	37	46	48	44	35	23	13	7	3/ J
4G4A	27 966	27 973	10	3	9825	18 148	10 060	18 151	46	22 336	5630	22 334	5639	2797	22	36	44	47	44	35	24	14	7	3/ N

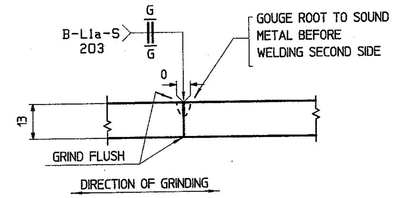

WEB PLATE SPLICE DETAIL "WA"

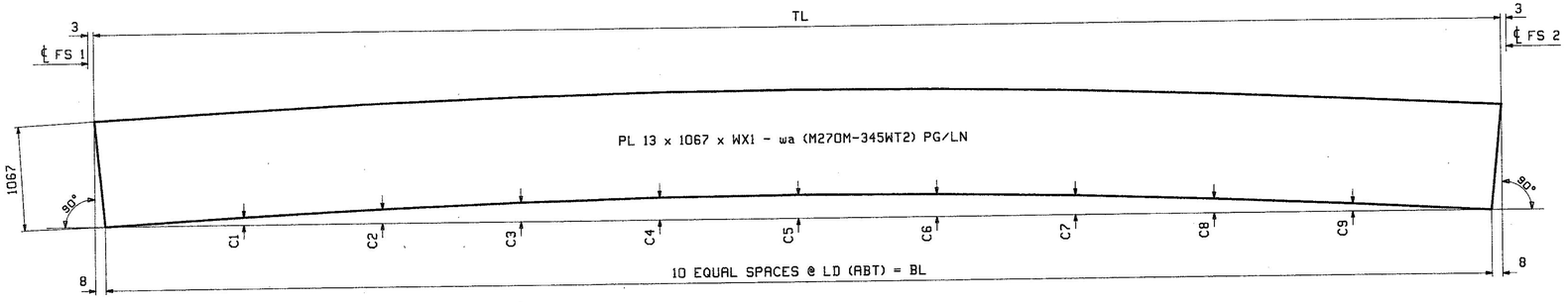

CAMBER DIAGRAM FOR 5G1B, 6G2B, 7G3B & 8G4B

MARK	TL	BL	WX1	LD	C1	C2	C3	C4	C5	C6	C7	C8	C9	PG/LN
5G1B	19 952	19 936	19 952	1994	15	27	37	43	44	43	37	27	15	2/ S
6G2B	19 576	19 560	19 576	1956	14	25	34	40	41	40	34	25	14	2/ U
7G3B	19 201	19 185	19 201	1919	14	26	34	39	41	39	34	26	14	2/ W
8G4B	18 827	18 811	18 827	1881	14	24	32	37	39	38	33	25	14	2/ Y

NOTES:
1. FOR GENERAL NOTES SEE DRAWING GN1.
2. T2 - DENOTES MATERIAL SUBJECT TO CHARPY V-NOTCH TEST AT H FREQ. FOR ZONE 2.

REV.	DATE	REMARKS	DWN	CHK	APVL	SHOP
1	12/18	APPROVAL COMMENTS	CRK	PCP	12/19/12	
0						

MATERIAL:	SURFACE PREP. & PAINT:	HOLES:	SHOP BOLTS:
M270M-345WT2	SEE GN1	AS NOTED	AS NOTED

DESCRIPTION: CAMBER DIAGRAMS

CASCO BAY STEEL STRUCTURES, INC.
1 WALLACE AVE. PHONE (207) 780-6722
SOUTH PORTLAND, ME 04106 FAX. (207) 780-6726
TENSOR 3146

STRUCTURE: VT ROUTE 108, BRIDGE #21
MAJOR COLLECTOR
TOWN OF CAMBRIDGE
COUNTY OF LAMOILLE, VERMONT

DRAWN:	DATE:
CRK	10/03
CHKD: RLA	DATE: 10/03

LOCATION: CAMBRIDGE, VERMONT
PROJ NO. BRF 027-1(4)
CUSTOMER: A. L. ST. ONGE CONTRACTING

JOB NO. 524
DWG NO. C1
REV. 1

VTrans Received CKD ___ DWN BY ___
DEC 28 2012
Republic APPROVED BY ___ DATE 1/05/13

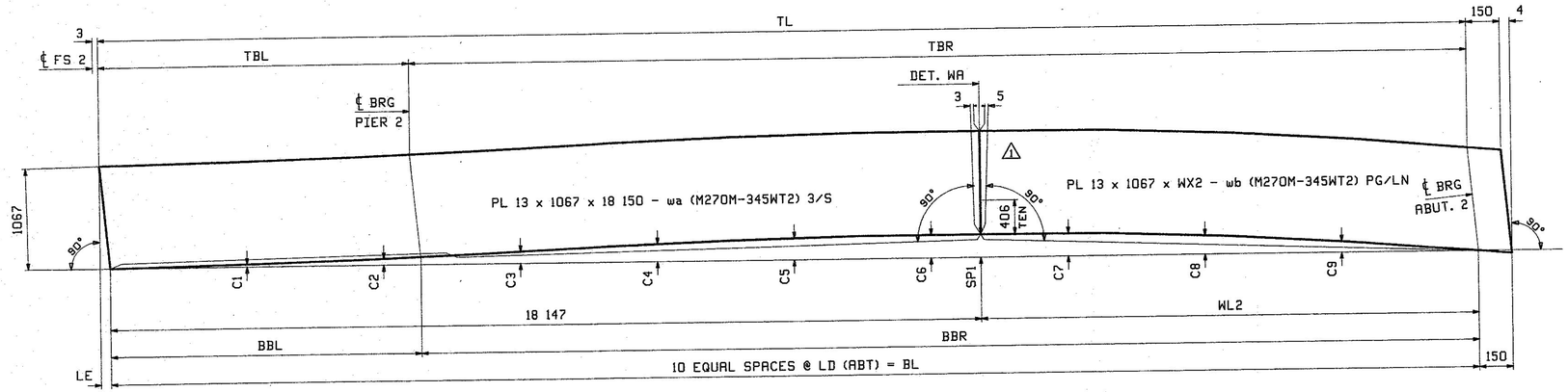

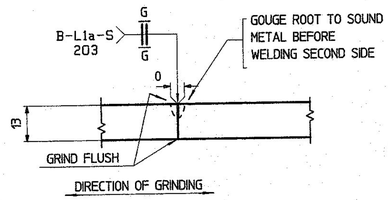

WEB PLATE SPLICE DETAIL "WA"

CAMBER DIAGRAM FOR 9G1C, 10G2C, 11G3C & 12G4C

MARK	TL	BL	LE	WL2	WX2	SP1	TBL	TBR	BBL	BBR	LD	C1	C2	C3	C4	C5	C6	C7	C8	C9	PG/LN
9G1C	29 640	29 642	2	11 495	11 650	50	5971	23 669	5976	23 666	2964	5	12	22	34	44	49	48	39	22	3/ C
10G2C	29 083	29 085	2	10 938	11 093	49	5860	23 223	5865	23 220	2908	5	12	22	34	44	49	47	38	21	3/ G
11G3C	28 526	28 527	3	10 380	10 535	48	5747	22 779	5751	22 776	2853	7	13	23	35	44	49	46	37	22	3/ L
12G4C	27 969	27 970	3	9823	9978	46	5634	22 335	5638	22 332	2797	7	14	24	35	44	47	44	36	22	3/ Q

NOTES:
1. FOR GENERAL NOTES SEE DRAWING GN1.
2. T2 - DENOTES MATERIAL SUBJECT TO CHARPY V-NOTCH TEST AT H FREQ. FOR ZONE 2.

REV.	DATE	REMARKS	DWN	CHK	APVL	SHOP
1	12/18	APPROVAL COMMENTS	CRK	PCP	12/19/12	
0						

MATERIAL:	SURFACE PREP. & PAINT:	HOLES:	SHOP BOLTS:
M270M-345WT2	SEE GN1	AS NOTED	AS NOTED

DESCRIPTION: CAMBER DIAGRAMS

CASCO BAY STEEL STRUCTURES, INC.
1 WALLACE AVE.
SOUTH PORTLAND, ME 04106
PHONE (207) 780-6722
FAX. (207) 780-6726
TENSOR 3146

STRUCTURE: VT ROUTE 108, BRIDGE #21 MAJOR COLLECTOR TOWN OF CAMBRIDGE COUNTY OF LAMOILLE, VERMONT	DRAWN: CRK	DATE: 10/03	
	CHKD: RLA	DATE: 10/03	
LOCATION: CAMBRIDGE, VERMONT	JOB NO.	DWG NO.	
PROJ NO. BRF 027-1(4)	524	C2	
CUSTOMER: A. L. ST. ONGE CONTRACTING		REV. 1	

Vtrans Received
CK'D. ____ DK'D BY mem
DEC 28 2012
Resubmit BY ____ APPROVED DATE 1/03/13

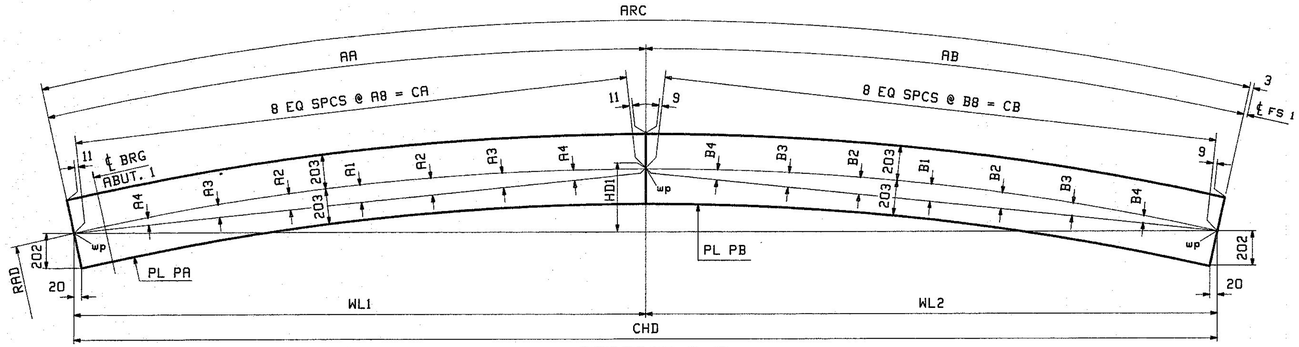

SECTION A-A

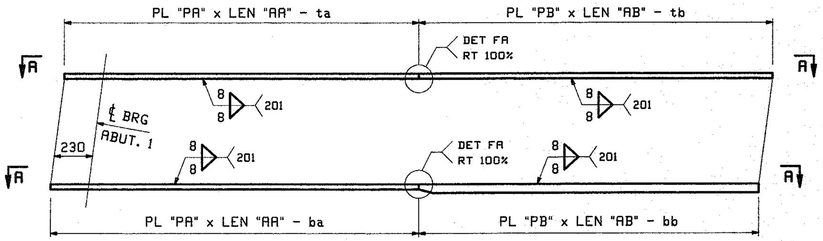

FLANGE DIAGRAM FOR 1G1A, 2G2A, 3G3A & 4G4A

LOCATION	RAD	ARC	CHD	AA	AB	A1	A2	A3	A4	A8	CA	B1	B2	B3	B4	B8	CB	WL1	WL2	HD1	PL PA (M270M-345WT2)	PL PB (M270M-345WT2)
1G1A TOP FLG	154 350	29 866	29 819	16 912	12 954	232	217	174	101	2113	16 904	136	127	102	59	1619	12 950	16 889	12 930	709	PL 22 x 406-ta (1/Y)	PL 29 x 406-tb (1/G)
1G1A BTM FLG	154 350	29 873	29 826	16 920	12 953	232	217	174	101	2114	16 911	136	127	102	59	1619	12 950	16 896	12 930	709	PL 22 x 406-ba (1/Y)	PL 45 x 406-bb (1/A)
2G2A TOP FLG	151 450	29 310	29 264	16 608	12 702	228	213	171	100	2075	16 599	133	125	100	58	1587	12 699	16 584	12 680	696	PL 22 x 406-ta (2/C)	PL 25 x 406-tb (1/J)
2G2A BTM FLG	151 450	29 317	29 271	16 615	12 702	228	214	171	100	2076	16 606	133	125	100	58	1587	12 699	16 591	12 680	696	PL 22 x 406-ba (2/C)	PL 38 x 406-bb (1/C)
3G3A TOP FLG	148 550	28 753	28 708	16 284	12 469	223	209	167	98	2034	16 275	131	123	98	57	1558	12 466	16 261	12 447	683	PL 22 x 406-ta (2/G)	PL 25 x 406-tb (1/L)
3G3A BTM FLG	148 550	28 759	28 714	16 291	12 468	223	209	167	98	2035	16 282	131	123	98	57	1558	12 465	16 268	12 446	683	PL 22 x 406-ba (2/G)	PL 38 x 406-bb (1/E)
4G4A TOP FLG	145 650	28 196	28 152	15 978	12 218	219	205	164	96	1996	15 970	128	120	96	56	1527	12 214	15 956	12 196	670	PL 22 x 406-ta (2/L)	PL 22 x 406-tb (2/Q)
4G4A BTM FLG	145 650	28 203	28 159	15 985	12 218	219	206	164	96	1997	15 977	128	120	96	56	1527	12 214	15 963	12 196	670	PL 22 x 406-ba (2/L)	PL 25 x 406-bb (1/N)

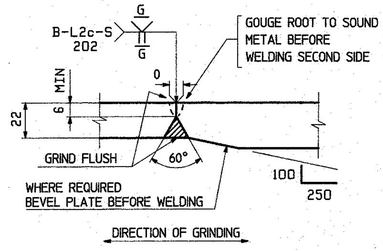

FLANGE PLATE SPLICE DETAIL "FA"

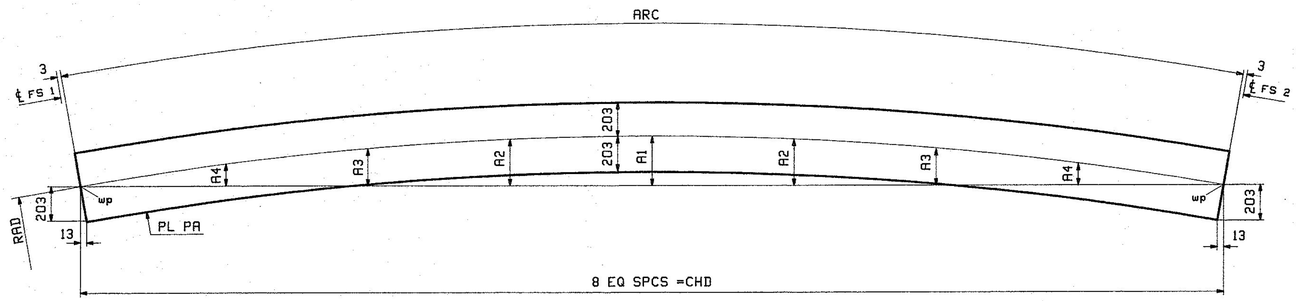

SECTION B-B

LOCATION	RAD	ARC	CHD	A1	A2	A3	A4	PL PA (M270M-345WT2)
5G1B TOP FLG	154 350	19 952	19 938	322	302	242	141	PL 22 x 406-ta (1/Q)
5G1B BTM FLG	154 350	19 936	19 922	322	302	241	141	PL 22 x 406-ba (1/Q)
6G2B TOP FLG	151 450	19 576	19 562	316	296	237	138	PL 22 x 406-ta (1/S)
6G2B BTM FLG	151 450	19 560	19 546	316	296	237	138	PL 22 x 406-ba (1/S)
7G3B TOP FLG	148 550	19 201	19 188	310	291	233	136	PL 22 x 406-ta (1/U)
7G3B BTM FLG	148 550	19 185	19 172	310	290	232	136	PL 22 x 406-ba (1/U)
8G4B TOP FLG	145 650	18 827	18 814	304	285	228	133	PL 22 x 406-ta (1/W)
8G4B BTM FLG	145 650	18 811	18 798	304	285	228	133	PL 22 x 406-ba (1/W)

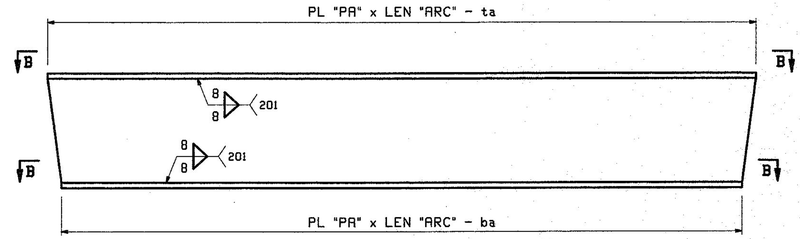

FLANGE DIAGRAM FOR 5G1B, 6G2B, 7G3B & 8G4B

NOTES:
1. FOR GENERAL NOTES SEE DRAWING GN1.
2. T2 - DENOTES MATERIAL SUBJECT TO CHARPY V-NOTCH TEST AT H FREQ. FOR ZONE 2.

Y:\Trans
Received
CK'D: _____ CK'd'd BY: _____
NOV 9 1 2012
RESEARCH BY: _____ APPROVED DATE: 11/7/12

REV.	DATE	REMARKS	DWN	CHK	APVL	SHOP
0					10/22/12	

MATERIAL:	SURFACE PREP. & PAINT:	HOLES:	SHOP BOLTS:
M270M-345WT2	SEE GN1	AS NOTED	AS NOTED

DESCRIPTION: FLANGE DIAGRAMS

CASCO BAY STEEL STRUCTURES, INC.
1 WALLACE AVE. PHONE (207) 780-6722
SOUTH PORTLAND, ME 04106 FAX. (207) 780-6726
TENSOR 3146

STRUCTURE: VT ROUTE 108, BRIDGE #21 MAJOR COLLECTOR TOWN OF CAMBRIDGE COUNTY OF LAMOILLE, VERMONT	DRAWN: CRK	DATE: 10/03	
	CHK'D: RLA	DATE: 10/04	
LOCATION: CAMBRIDGE, VERMONT	JOB NO. 524	DWG NO. F1	
PROJ NO. BRF 027-1(4)			
CUSTOMER: A. L. ST. ONGE CONTRACTING		REV. △	

RLA Fri, Oct 5, 2012 08:05:04 AM //server/jobs/3146/F1.1.dwg

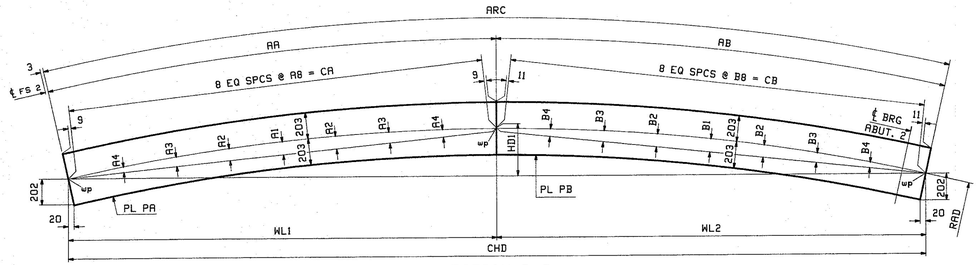

SECTION A-A

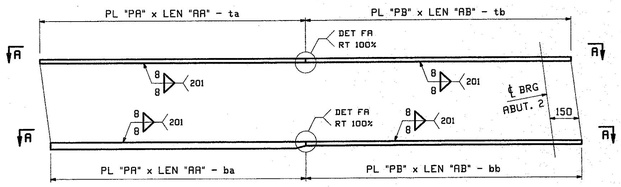

FLANGE DIAGRAM FOR 9G1C, 10G2C, 11G3C & 12G4C

LOCATION	RAD	ARC	CHD	AA	AB	A1	A2	A3	A4	A8	CA	B1	B2	B3	B4	B8	CB	WL1	WL2	HD1	PL PA (M270M-345WT2)	PL PB (M270M-345WT2)
9G1C TOP FLG	154 350	29 790	29 744	12 954	16 836	136	127	102	59	1619	12 950	229	215	172	100	2103	16 828	12 931	16 813	706	PL 29 x 406-ta (1/G)	PL 22 x 406-tb (2/A)
9G1C BTM FLG	154 350	29 792	29 746	12 954	16 838	136	127	102	59	1619	12 950	230	215	172	100	2104	16 830	12 931	16 815	706	PL 45 x 406-ba (1/A)	PL 22 x 406-bb (2/A)
10G2C TOP FLG	151 450	29 233	29 188	12 702	16 531	133	125	100	58	1587	12 698	225	211	169	99	2065	16 523	12 680	16 508	693	PL 25 x 406-ta (1/J)	PL 22 x 406-tb (2/E)
10G2C BTM FLG	151 450	29 235	29 190	12 702	16 533	133	125	100	58	1587	12 698	226	211	169	99	2066	16 525	12 680	16 510	693	PL 38 x 406-ba (1/C)	PL 22 x 406-bb (2/E)
11G3C TOP FLG	148 550	28 676	28 632	12 469	16 207	131	123	98	57	1558	12 465	221	207	166	97	2025	16 199	12 447	16 185	680	PL 25 x 406-ta (1/L)	PL 22 x 406-tb (2/J)
11G3C BTM FLG	148 550	28 677	28 633	12 469	16 208	131	123	98	57	1558	12 465	221	207	166	97	2025	16 200	12 447	16 186	680	PL 38 x 406-ba (1/E)	PL 22 x 406-bb (2/J)
12G4C TOP FLG	145 650	28 119	28 075	12 217	15 902	128	120	96	56	1527	12 213	217	203	163	95	1987	15 894	12 195	15 880	666	PL 22 x 406-ta (2/Q)	PL 22 x 406-tb (2/N)
12G4C BTM FLG	145 650	28 120	28 076	12 217	15 903	128	120	96	56	1527	12 213	217	203	163	95	1987	15 895	12 195	15 881	666	PL 25 x 406-ba (1/N)	PL 22 x 406-bb (2/N)

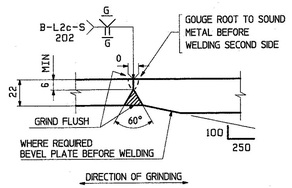

FLANGE PLATE SPLICE DETAIL "FA"

Received
NOV 05 2012
Approved
Date
By

NOTES:
1. FOR GENERAL NOTES SEE DRAWING GN1.
2. T2 - DENOTES MATERIAL SUBJECT TO CHARPY V-NOTCH TEST AT H FREQ. FOR ZONE 2.

REV.	DATE	REMARKS	DWN	CHK	APVL	SHOP
0					10/22/12	

MATERIAL: M270M-345WT2	SURFACE PREP. & PAINT: SEE GN1	HOLES: AS NOTED	SHOP BOLTS: AS NOTED

DESCRIPTION: FLANGE DIAGRAMS

CASCO BAY STEEL STRUCTURES, INC.
1 WALLACE AVE. PHONE (207) 780-6722
SOUTH PORTLAND, ME 04106 FAX. (207) 780-6726
TENSOR 3140

STRUCTURE: VT ROUTE 108, BRIDGE #21
MAJOR COLLECTOR
TOWN OF CAMBRIDGE
COUNTY OF LAMOILLE, VERMONT

DRAWN: CRK	DATE: 10/03
CHK'D: RLA	DATE: 10/04
JOB NO. 524	DWG NO. F2
REV. △	

LOCATION: CAMBRIDGE, VERMONT
PROJ NO. BRF 027-1(4)
CUSTOMER: A. L. ST. ONGE CONTRACTING

F2_DWG_BRIDGE.dgn Jobnumber(1).dwg

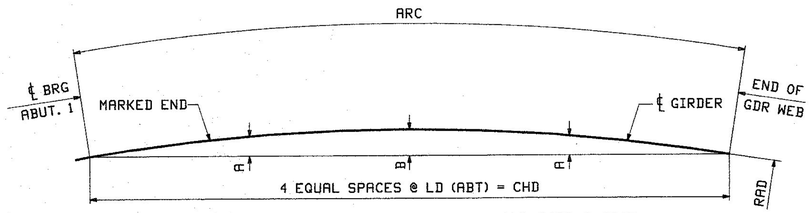

HORIZ. CURVING DIAGRAM FOR 1G1A, 2G2A, 3G3A, & 4G4A

MARK	ARC	CHD	RAD	LD	A	B
1G1A	29 643	29 597	154 350	7399	534	711
2G2A	29 087	29 042	151 450	7261	524	698
3G3A	28 529	28 485	148 550	7121	514	684
4G4A	27 973	27 930	145 650	6983	504	671

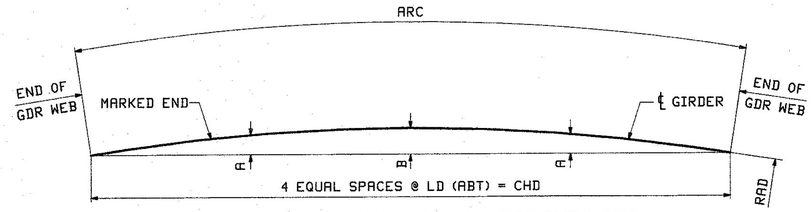

HORIZ. CURVING DIAGRAM FOR 5G1B, 6G2B, 7G3B & 8G4B

MARK	ARC	CHD	RAD	LD	A	B
5G1B	19 936	19 922	154 350	4981	241	322
6G2B	19 560	19 546	151 450	4887	237	316
7G3B	19 185	19 172	148 550	4793	232	310
8G4B	18 811	18 798	145 650	4699	228	304

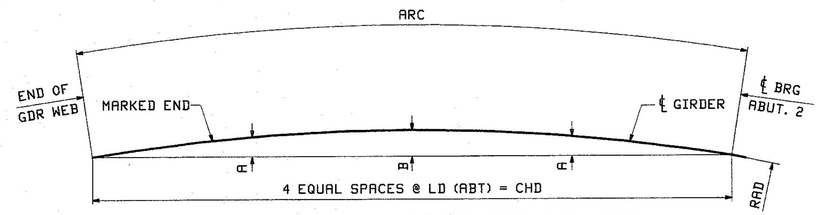

HORIZ. CURVING DIAGRAM FOR 9G1C, 10G2C, 11G3C & 12G4C

MARK	ARC	CHD	RAD	LD	A	B
9G1C	29 642	29 596	154 350	7399	534	711
10G2C	29 085	29 040	151 450	7260	524	698
11G3C	28 527	28 483	148 550	7121	514	684
12G4C	27 970	27 927	145 650	6982	504	671

Transcribed
Received
DEPT. _____ CKD'd BY _____

NOV 5 2012

Reviewed BY _____ APPROVED DATE 11/27/12

NOTES:
- ALL DIMENSIONS APPLY AT THE BTM OF WEB PLATE.

REV.	DATE	REMARKS	DWN	CHK	APVL	SHOP
0					10/22/12	

MATERIAL:	SURFACE PREP. & PAINT:	HOLES:	SHOP BOLTS:
		AS NOTED	AS NOTED

DESCRIPTION: HORIZONTAL CURVING DIAGRAM

CASCO BAY STEEL STRUCTURES, INC.
1 WALLACE AVE. PHONE (207) 780-6722
SOUTH PORTLAND, ME 04106 FAX. (207) 780-6726

TENSOR 3146

STRUCTURE:	DRAWN:	DATE:
VT ROUTE 108, BRIDGE #21 MAJOR COLLECTOR TOWN OF CAMBRIDGE COUNTY OF LAMOILLE, VERMONT	CRK	10/03
	CHKD: RLA	DATE: 10/04
LOCATION: CAMBRIDGE, VERMONT	JOB NO.	DWG NO.
PROJ NO. BRF 027-1(4)	524	HC1
CUSTOMER: A. L. ST. ONGE CONTRACTING		REV. △

RLA Fri, Oct 5, 2012 10:34:42 PM J:\JOBS\3146\HC1.1.dwg

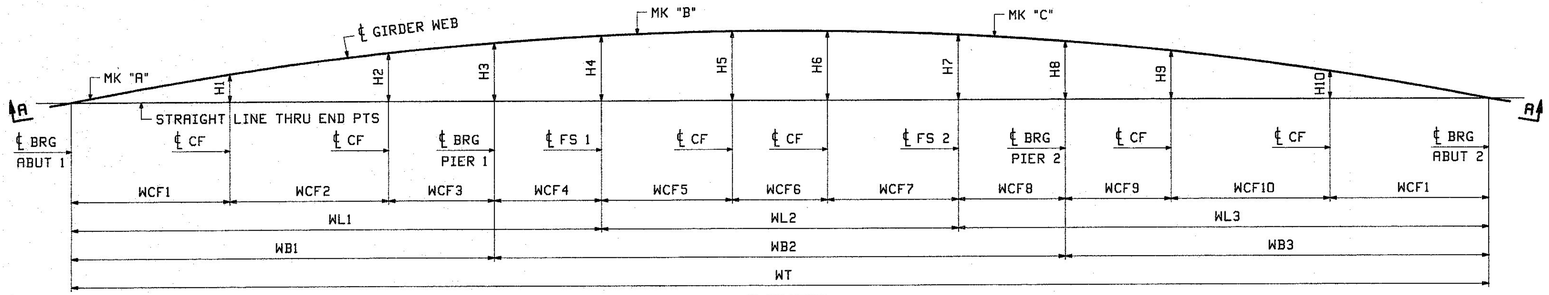

PLAN VIEW

GIRDER @ BTM OF WEB

LINE	WT	WL1	WL2	WL3	H1	H2	H3	H4	H5	H6	H7	H8	H9	H10	WB1	WB2	WB3	WCF1	WCF2	WCF3	WCF4	WCF5	WCF6	WCF7	WCF8	WCF9	WCF10	WCF11
1	78 363	29 219	19 927	29 217	2005	3510	4233	4734	5033	5033	4734	4233	3510	2005	23 261	31 842	23 260	8644	8746	5871	5958	7304	5319	7304	5957	5871	8745	8644
2	76 890	28 669	19 553	28 668	1967	3444	4153	4645	4938	4938	4645	4153	3444	1967	22 824	31 243	22 823	8482	8581	5761	5845	7168	5218	7167	5845	5761	8581	8481
3	75 418	28 120	19 179	28 119	1929	3378	4073	4556	4844	4844	4556	4073	3378	1929	22 387	30 645	22 386	8319	8417	5651	5733	7030	5119	7030	5733	5650	8417	8319
4	73 945	27 571	18 804	27 570	1892	3312	3994	4467	4749	4749	4467	3994	3312	1892	21 950	30 047	21 948	8157	8253	5540	5621	6893	5019	6892	5622	5540	8252	8156

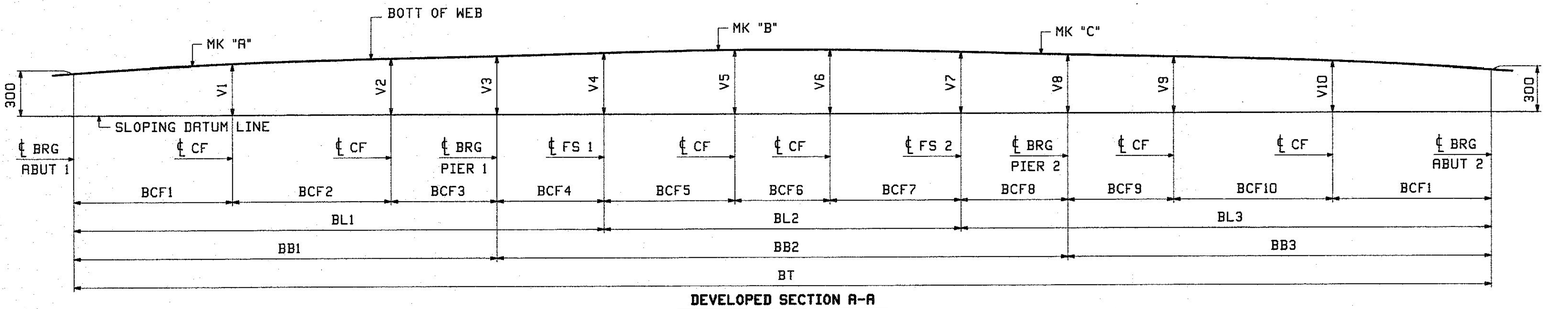

DEVELOPED SECTION A-A

DIMENSIONS GIVEN ALONG ℄ WEB

LINE	BT	BL1	BL2	BL3	V1	V2	V3	V4	V5	V6	V7	V8	V9	V10	BB1	BB2	BB3	BCF1	BCF2	BCF3	BCF4	BCF5	BCF6	BCF7	BCF8	BCF9	BCF10	BCF11
1	79 230	29 645	19 941	29 644	434	505	539	585	626	626	585	539	505	434	23 666	31 898	23 666	8875	8875	5916	5979	7311	5319	7311	5978	5916	8875	8875
2	77 741	29 088	19 566	29 087	433	505	539	585	623	623	585	539	505	433	23 222	31 298	23 221	8708	8709	5805	5866	7174	5218	7174	5866	5805	8708	8708
3	76 252	28 531	19 192	28 529	430	504	539	583	621	621	583	539	504	430	22 777	30 699	22 776	8541	8542	5694	5754	7036	5119	7037	5753	5694	8541	8541
4	74 764	27 974	18 817	27 973	428	504	539	582	618	619	582	539	504	428	22 332	30 100	22 332	8375	8375	5582	5642	6899	5019	6899	5641	5583	8375	8374

LINE	"A"	"B"	"C"
1	1G1A	5G1B	9G1C
2	2G2A	6G2B	10G2C
3	3G3A	7G3B	11G3C
4	4G4A	8G4B	12G4C

VTrans Received CHKD _____ OK'd BY _____
NOV 0 1 2012
Resubmit _____ APPROVED BY _____ DATE _____

NOTES

FOR GENERAL NOTES SEE DWG GN1

ALL DIMENSIONS GIVEN AT BTM OF WEB

REV.	DATE	REMARKS	DWN	CHK	APVL	SHOP
0					10/22/12	

MATERIAL: | SURFACE PREP. & PAINT: | HOLES: AS NOTED | SHOP BOLTS: AS NOTED

DESCRIPTION: SHOP ASSEMBLY

CASCO BAY STEEL STRUCTURES, INC.
1 WALLACE AVE. PHONE (207) 780-6722
SOUTH PORTLAND, ME 04106 FAX. (207) 780-6726

TENSOR 3146

STRUCTURE: VT ROUTE 108, BRIDGE #21
MAJOR COLLECTOR
TOWN OF CAMBRIDGE
COUNTY OF LAMOILLE, VERMONT

DRAWN: CRK DATE: 10/11

CHKD: PCP DATE: 10/16

LOCATION: CAMBRIDGE, VERMONT | JOB NO. 524 | DWG NO. SA1

PROJ NO. BRF 027-1(4) | REV. △

CUSTOMER: A. L. ST. ONGE CONTRACTING

PCP Thu, Oct 18, 2012 08:08:24 PM J:\users\pkc\3146\SA1 - Rev0

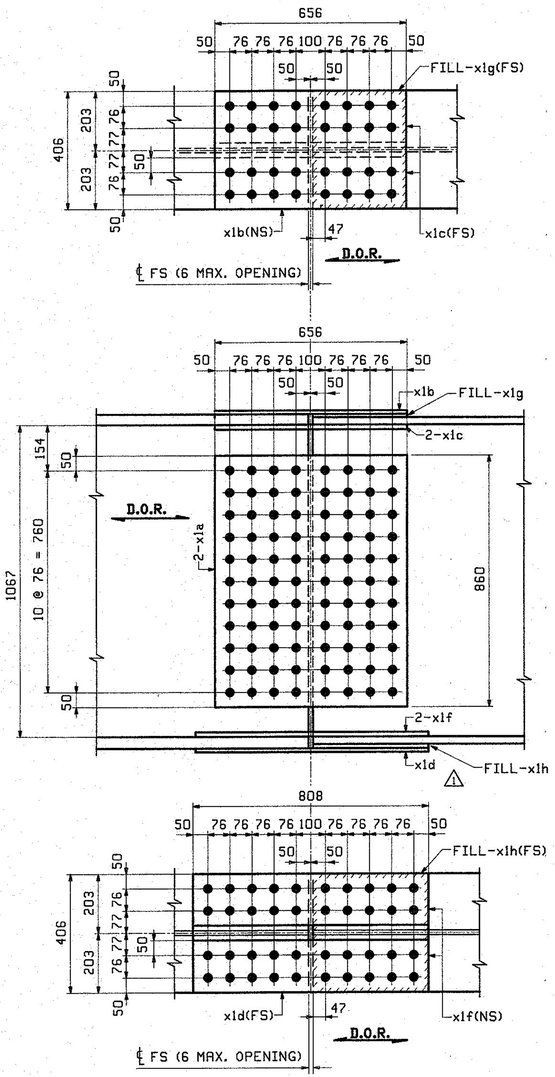

2 ~ FIELD SPLICE DETAIL ~ X1M1

FS1 & FS2 - G1

FIELD SPLICE 1 SHOWN
FIELD SPLICE 2 ROTATED 180°

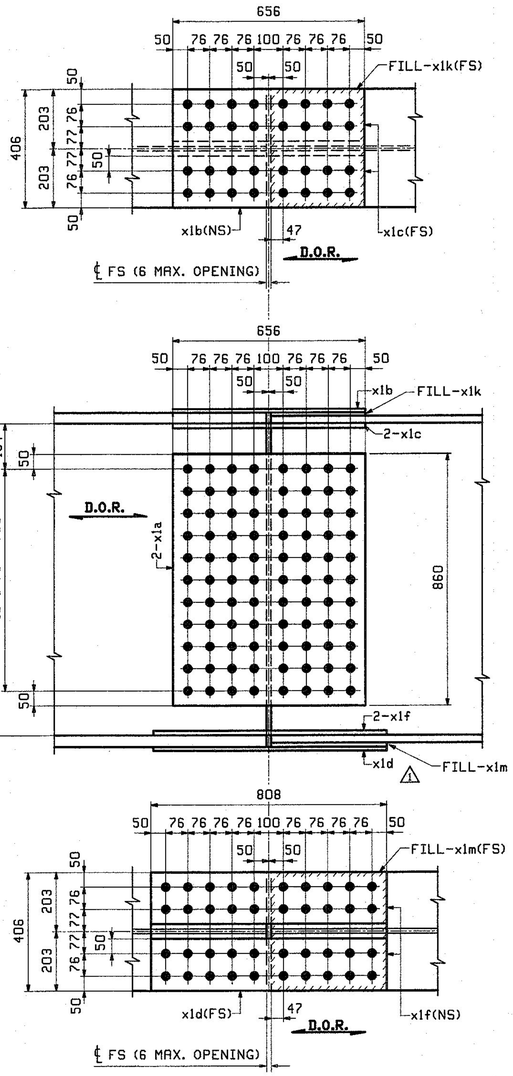

4 ~ FIELD SPLICE DETAIL ~ X1M2

FS1 & FS2 - G2 & G3

FIELD SPLICE 1 SHOWN
FIELD SPLICE 2 ROTATED 180°

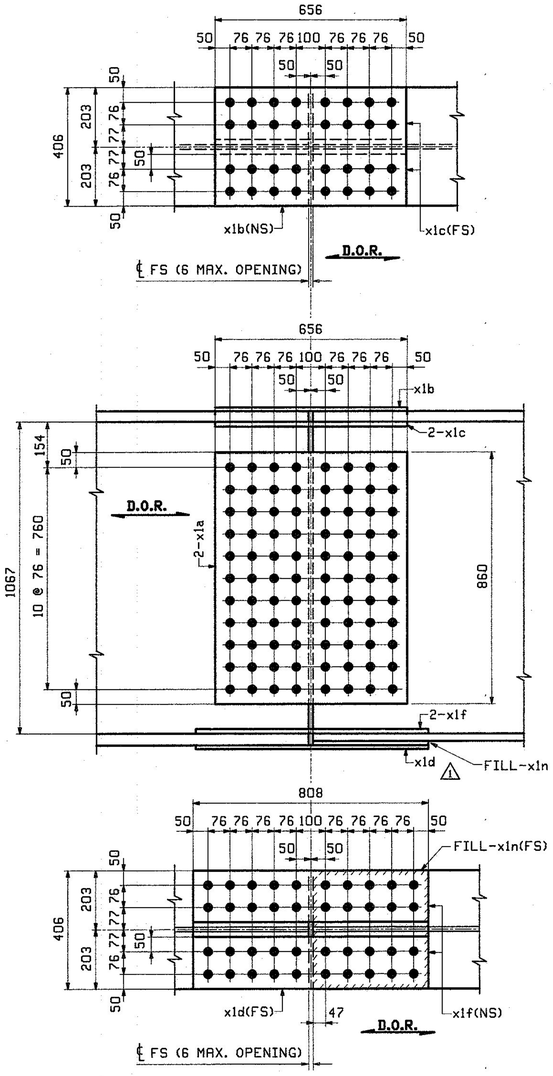

2 ~ FIELD SPLICE DETAIL ~ X1M3

FS1 & FS2 - G4

FIELD SPLICE 1 SHOWN
FIELD SPLICE 2 ROTATED 180°

ABM INFO		SHIP	BILL OF MATERIAL					JOB NO.	DRAWING NO.	REV.
								S24	X1	⚠
PAGE	LINE	MARK	QTY	MARK	MATERIAL	LENGTH m	LENGTH mm	REMARKS	WT	PROCUREMENT NOTES
		X1M1	2		FIELD SPLICE				210 kg 462 lbs	
4	B		4	x1a	PL 8x860	0	656	M270M-345WT2	35 kg 78 lbs	
4	C		2	x1b	PL 10x406	0	656	M270M-345WT2	21 kg 46 lbs	
4	D		4	x1c	PL 15x176	0	656	M270M-345WT2	14 kg 30 lbs	
4	G		2	x1d	PL 10x406	0	808	M270M-345WT2	26 kg 57 lbs	
4	H		4	x1f	PL 13x176	0	808	M270M-345WT2	15 kg 32 lbs	
4	E		2	x1g	PL 7x406	0	325	FILL M270M-345WT2	7 kg 16 lbs	
4	J		2	x1h	PL 23x406	0	401	FILL M270M-345WT2	29 kg 63 lbs	
		X1M2	4		FIELD SPLICE				198 kg 436 lbs	
4	B		8	x1a	PL 8x860	0	656	M270M-345WT2	35 kg 78 lbs	
4	C		4	x1b	PL 10x406	0	656	M270M-345WT2	21 kg 46 lbs	
4	D		8	x1c	PL 15x176	0	656	M270M-345WT2	14 kg 30 lbs	
4	G		4	x1d	PL 10x406	0	808	M270M-345WT2	26 kg 57 lbs	
4	H		8	x1f	PL 13x176	0	808	M270M-345WT2	15 kg 32 lbs	
4	F		4	x1k	PL 10 GR x 406	0	325	FILL M60BM-4	4 kg 8 lbs	
4	K		4	x1m	PL 16x406	0	401	FILL M270M-345WT2	20 kg 45 lbs	
		X1M3	2		FIELD SPLICE				178 kg 392 lbs	
4	B		4	x1a	PL 8x860	0	656	M270M-345WT2	35 kg 78 lbs	
4	C		2	x1b	PL 10x406	0	656	M270M-345WT2	21 kg 46 lbs	
4	D		4	x1c	PL 15x176	0	656	M270M-345WT2	14 kg 30 lbs	
4	G		2	x1d	PL 10x406	0	808	M270M-345WT2	26 kg 57 lbs	
4	H		4	x1f	PL 13x176	0	808	M270M-345WT2	15 kg 32 lbs	
4	L		2	x1n	PL 10 GR x 406	0	401	FILL M60BM-4	4 kg 10 lbs	

NOTES:
- FOR GENERAL NOTES SEE DRAWING GN1.
- HOLES IN SPLICE PLATES ARE PRE-DRILLED. ENDS OF GIRDERS ARE DRILLED FROM SOLID USING SPLICE PLATES AS A TEMPLATE.
- D.O.R. DENOTES DIRECTION OF MILL ROLLING
- T2 DENOTES CHARPY V-NOTCH TESTING REQUIRED.

REV.	DATE	REMARKS	DWN	CHK	APVL	SHOP
⚠	12/18	APPROVAL COMMENTS	CRK	PCP	12/19/12	
0						

MATERIAL:	SURFACE PREP. & PAINT:	HOLES:	SHOP BOLTS:
AS NOTED	SEE GN1	15/16"Ø	NONE

DESCRIPTION: STANDARD DETAILS

CASCO BAY STEEL STRUCTURES, INC.
1 WALLACE AVE. PHONE (207) 780-6722
SOUTH PORTLAND, ME 04106 FAX. (207) 780-6726

TENSOR 3146

STRUCTURE: VT ROUTE 108, BRIDGE #21 MAJOR COLLECTOR TOWN OF CAMBRIDGE COUNTY OF LAMOILLE, VERMONT	DRAWN: CRK	DATE: 10/04	
	CHKD: PCP	DATE: 10/16	
LOCATION: CAMBRIDGE, VERMONT	JOB NO. 524	DWG NO. X1	
PROJ NO. BRF 027-1(4)			
CUSTOMER: A. L. ST. ONGE CONTRACTING		REV. ⚠	

Vtrans Received DEC 28 2012 CKD MG M
Recd/ck BY APPROVED DATE 1/02/13

PCP Wed, Dec 19, 2012 09:08:54 AM //users/jobs/3146/X1.dwg

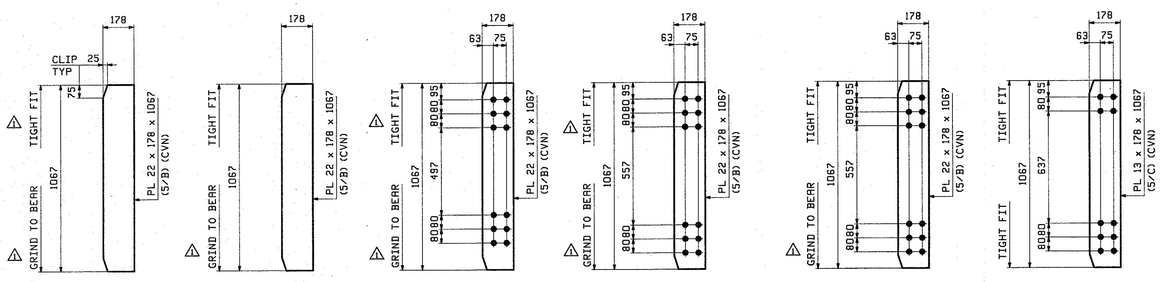

4 ~ BRG STIFF ~ x2a
FASCIA ABUTMENTS

4 ~ BRG STIFF ~ x2b
FASCIA PIERS

6 ~ BRG STIFF ~ x2c
ABUTMENT 1

6 ~ BRG STIFF ~ x2d
ABUTMENT 2

12 ~ BRG STIFF ~ x2f
PIERS

96 ~ CONN PL ~ x2g
INT. CF'S

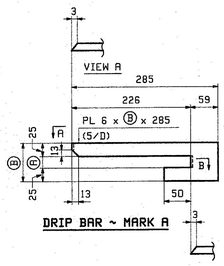

DRIP BAR ~ MARK A

SECTION B

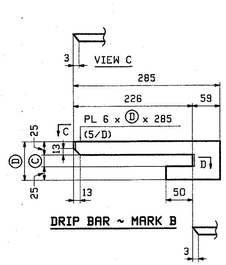

DRIP BAR ~ MARK B

SECTION D

MARK A	QTY	Ⓐ	Ⓑ	
x2h	2	22	72	ABUT 1/LINE 1 ABUT 2/LINE 4
x2k	1	25	75	PIER 2/LINE 4
x2m	1	45	95	PIER 1/LINE 1

MARK B	QTY	Ⓒ	Ⓓ	
x2n	2	22	72	ABUT 1/LINE 4 ABUT 2/LINE 1
x2p	1	25	75	PIER 1/LINE 4
x2s	1	45	95	PIER 2/LINE 1

NOTES:
- FOR GENERAL NOTES SEE DRAWING GN1.
- CVN DENOTES CHARPY V-NOTCH TESTING REQUIRED.

REV.	DATE	REMARKS	DWN	CHK	APVL	SHOP
1	12/18	APPROVAL COMMENTS	CRK	PCP	12/19/12	
0						

MATERIAL:	SURFACE PREP. & PAINT:	HOLES:	SHOP BOLTS:
AS NOTED	SEE GN1	15/16"Ø	NONE

DESCRIPTION: STANDARD DETAILS

CASCO BAY STEEL STRUCTURES, INC.
1 WALLACE AVE. PHONE (207) 780-6722
SOUTH PORTLAND, ME 04106 FAX. (207) 780-6726
TENSOR 3146

STRUCTURE: VT ROUTE 108, BRIDGE #21
MAJOR COLLECTOR
TOWN OF CAMBRIDGE
COUNTY OF LAMOILLE, VERMONT

DRAWN: CRK	DATE: 10/08	
CHKD: PCP	DATE: 10/16	
LOCATION: CAMBRIDGE, VERMONT	JOB NO.	DWG NO.
PROJ NO. BRF 027-1(4)	524	X2
CUSTOMER: A. L. ST. ONGE CONTRACTING		REV. 1

Vittors Received
CK'D ____ DATE 12/19/12
DEC 28 2012
Received BY ____ APPROVED ✓ DATE 1/23/12

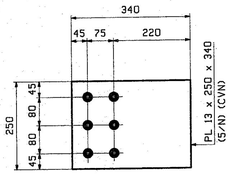

24 ~ GUSSET PL ~ mla
ABUT. & PIER - TOP

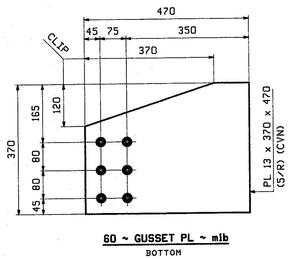

60 ~ GUSSET PL ~ mlb
BOTTOM

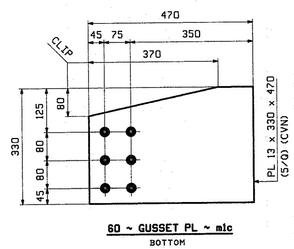

60 ~ GUSSET PL ~ mlc
BOTTOM

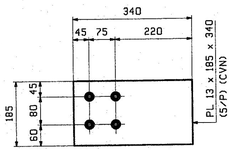

96 ~ GUSSET PL ~ mld
INT. CF - TOP

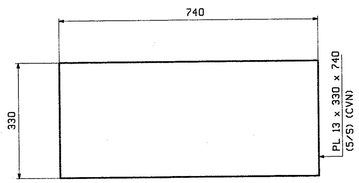

60 ~ GUSSET PL ~ mlf
CENTER

NOTES:
- FOR GENERAL NOTES SEE DRAWING GN1.
- CVN & T2 DENOTE CHARPY V-NOTCH TESTING REQUIRED.

REV.	DATE	REMARKS	DWN	CHK	APVL	SHOP
0					10/22/12	

MATERIAL:	SURFACE PREP. & PAINT:	HOLES:	SHOP BOLTS:
M270M-345WT2	SEE GN1	15 @ 18 ø	NONE

DESCRIPTION: CROSSFRAME STANDARDS

CASCO BAY STEEL STRUCTURES, INC.
1 WALLACE AVE. PHONE (207) 780-6722
SOUTH PORTLAND, ME 04106 FAX. (207) 780-6726

TENSOR 3146

STRUCTURE:	DRAWN:	DATE:
VT ROUTE 108, BRIDGE #21 MAJOR COLLECTOR TOWN OF CAMBRIDGE COUNTY OF LAMOILLE, VERMONT	CRK	10/09
	CHKD: PCP	DATE: 10/16
LOCATION: CAMBRIDGE, VERMONT	JOB NO.	DWG NO.
PROJ NO. BRF 027-1(4)	524	M1
CUSTOMER: A. L. ST. ONGE CONTRACTING		REV. △

Transmitted NOV 6 2012 APPROVED DATE 11/2/12

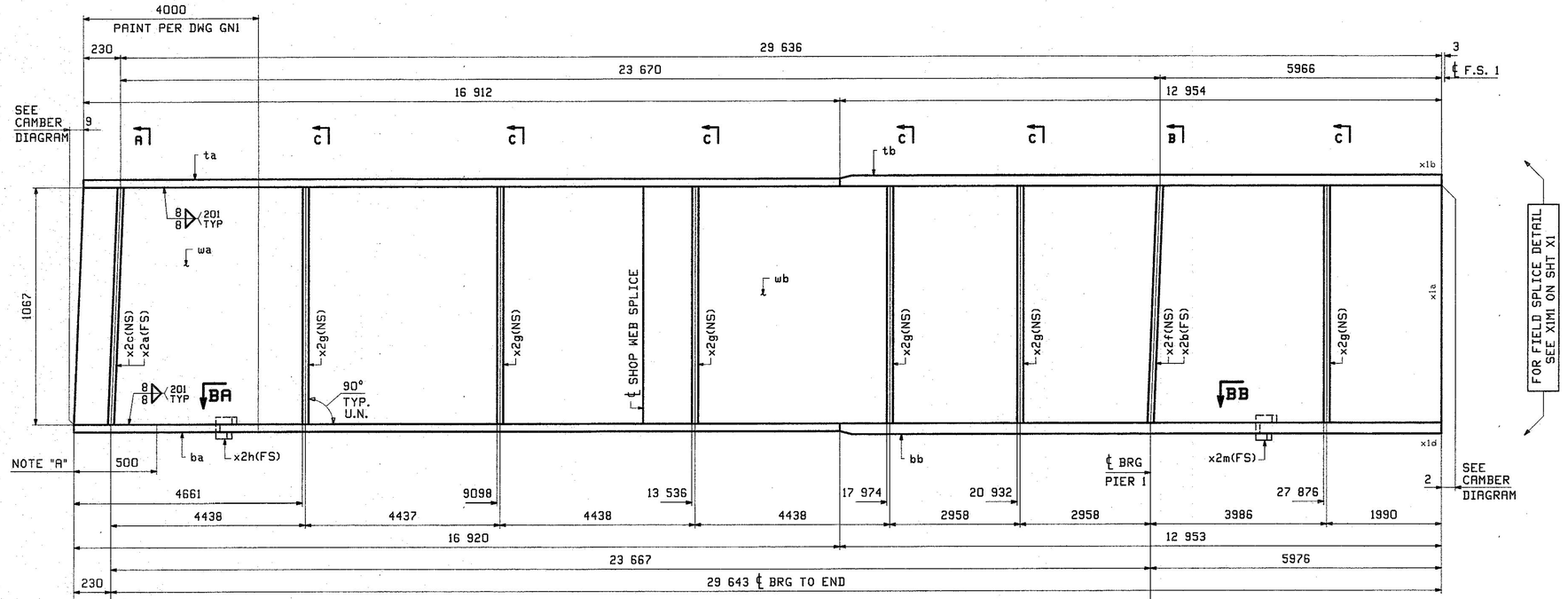

ONE - GIRDER - 1G1A

FOR GIRDER STANDARD DETAILS SEE DRAWING X2.
FOR FIELD SPLICE DETAIL SEE DRAWING X1.
FOR WEB CUTTING DIAGRAM SEE DRAWING C1.
FOR FLANGE DIAGRAM SEE DRAWING F1.
FOR GENERAL NOTES SEE DRAWING GN1.
FOR TYPICAL WELD TERMINATION DETAILS SEE DRAWING GN1.
ALL STIFFENERS ARE NORMAL TO WEB.
"T2" DENOTES MATERIAL SUBJECT TO CHARPY V-NOTCH TESTING.

NOTE "A"
BEARING AREA TO RECEIVE FIELD WELDED SOLE PLATE.
⚠1 PRIMER ONLY BTM & EDGES OF BTM FLG.

SECTION BA

SECTION BB

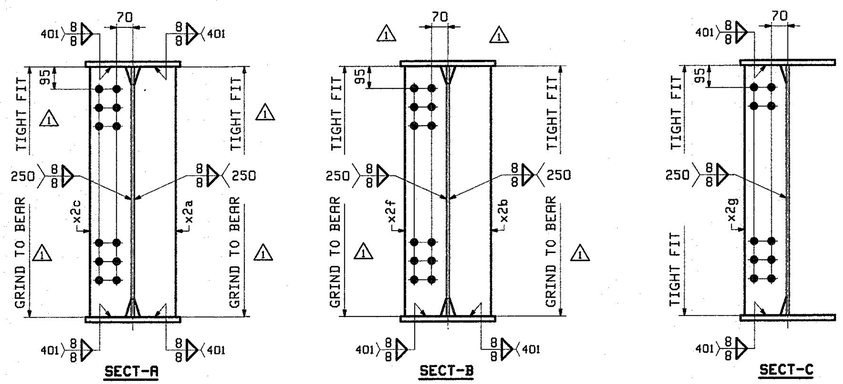

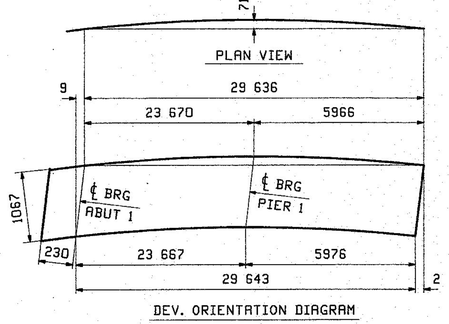

DEV. ORIENTATION DIAGRAM

ABM INFO		SHIP	BILL OF MATERIAL					JOB NO. 524	DRAWING NO. 1	REV. ⚠1
PAGE	LINE	MARK	QTY	MARK	MATERIAL	LENGTH m	LENGTH mm	REMARKS	WT	PROCUREMENT NOTES
		1G1A	1		GIRDER				8931 kg 19689 lbs	
3	A		1	wa	PL 13x1067	11	731	M270M-345WT2	1277 kg 2816 lbs	
3	S		1	wb	PL 13x1067	18	150	M270M-345WT2	1976 kg 4357 lbs	
1	Y		1	ta	PL 22x406	16	912	M270M-345WT2	1186 kg 2614 lbs	
1	G		1	tb	PL 29x406	12	954	M270M-345WT2	1197 kg 2640 lbs	
1	Y		1	ba	PL 22x406	16	920	M270M-345WT2	1186 kg 2615 lbs	
1	A		1	bb	PL 45x406	12	953	M270M-345WT2	1858 kg 4096 lbs	
5	B		1	x2a	PL 22x178	1	067	M1E M270M-345WT2	33 kg 72 lbs	
5	B		1	x2b	PL 22x178	1	067	M1E M270M-345WT2	33 kg 72 lbs	
5	B		1	x2c	PL 22x178	1	067	M1E M270M-345WT2	33 kg 72 lbs	
5	B		1	x2f	PL 22x178	1	067	M1E M270M-345WT2	33 kg 72 lbs	
5	C		6	x2g	PL 13x178	1	067	M1E M270M-345WT2	19 kg 43 lbs	
5	D		1	x2h	PL 6x72	0	285		xxxx kg .00 lbs	
5	D		1	x2m	PL 6x95	0	285		1 kg 3 lbs	

REV.	DATE	REMARKS	DWN	CHK	APVL	SHOP
⚠1	12/18	APPROVAL COMMENTS	CRK	PCP	12/19/12	
0						

MATERIAL:	SURFACE PREP. & PAINT:	HOLES:	SHOP BOLTS:
M270M-345W UN	SEE GN1	15/16"ø	NONE

DESCRIPTION: GIRDER 1G1A

CASCO BAY STEEL STRUCTURES, INC.
1 WALLACE AVE. SOUTH PORTLAND, ME 04106
PHONE (207) 780-6722 FAX. (207) 780-6726

TENSOR 3146

STRUCTURE:	VT ROUTE 108, BRIDGE #21 MAJOR COLLECTOR TOWN OF CAMBRIDGE COUNTY OF LAMOILLE, VERMONT	DRAWN: CRK	DATE: 10/08
		CHKD: PCP	DATE: 10/16
LOCATION:	CAMBRIDGE, VERMONT	JOB NO.	DWG NO.
PROJ NO.	BRF 027-1(4)	524	1
CUSTOMER:	A. L. ST. ONGE CONTRACTING		REV. ⚠1

VTrans Received CKD DEC 28 2012 CKD BY

Roadbrk APPROVED BY DATE 1/02/13

PCP Wed, Dec 19, 2012 10:52:01 PM C:\steel\jobs\524\G1 | Rev1

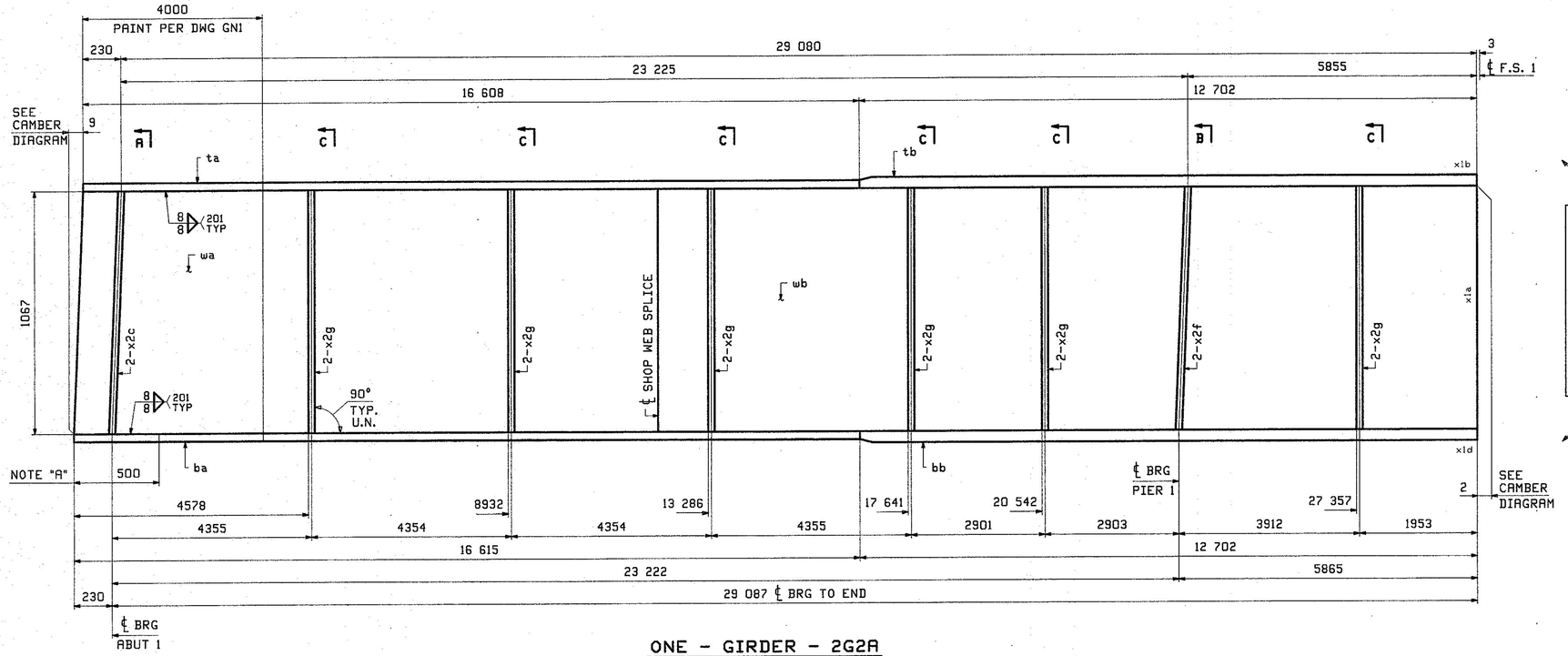

FOR FIELD SPLICE DETAIL SEE X1M2 ON SHT X1

ONE - GIRDER - 2G2A

FOR GIRDER STANDARD DETAILS SEE DRAWING X2.
FOR FIELD SPLICE DETAIL SEE DRAWING X1.
FOR WEB CUTTING DIAGRAM SEE DRAWING C1.
FOR FLANGE DIAGRAM SEE DRAWING F1.
FOR GENERAL NOTES SEE DRAWING GN1.
FOR TYPICAL WELD TERMINATION DETAILS SEE DRAWING GN1.
ALL STIFFENERS ARE NORMAL TO WEB.
"T2" DENOTES MATERIAL SUBJECT TO CHARPY V-NOTCH TESTING.

NOTE "A"
BEARING AREA TO RECEIVE FIELD WELDED SOLE PLATE.
⚠ PRIMER ONLY BTM & EDGES OF BTM FLG.

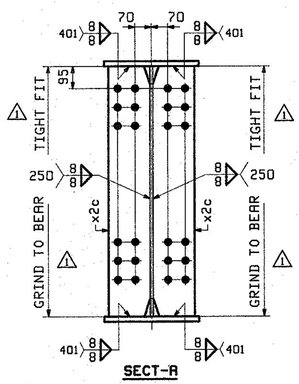

SECT-A

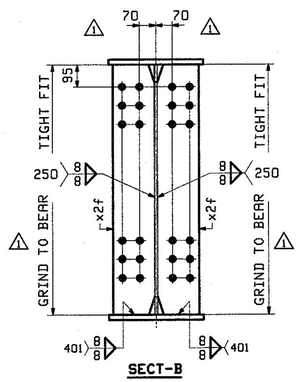

SECT-B

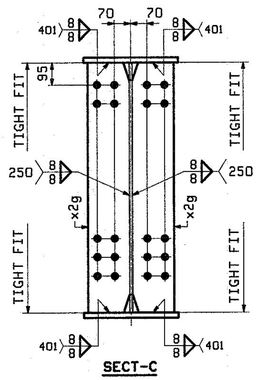

SECT-C

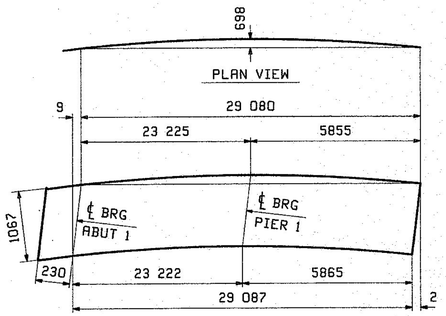

DEV. ORIENTATION DIAGRAM

ABM INFO		SHIP	BILL OF MATERIAL					JOB NO.	DRAWING NO.	REV.
								524	2	⚠
PAGE	LINE	MARK	QTY	MARK	MATERIAL	LENGTH m	LENGTH mm	REMARKS	WT	PROCUREMENT NOTES
		2G2A	1		GIRDER				8437 kg 18600 lbs	
3	E		1	wa	PL 13x1067	11	174	M270M-345WT2	1217 kg 2682 lbs	
3	S		1	wb	PL 13x1067	18	151	M270M-345WT2	1876 kg 4357 lbs	
2	C		1	ta	PL 22x406	16	608	M270M-345WT2	1164 kg 2567 lbs	
1	J		1	tb	PL 25x406	12	702	M270M-345WT2	1012 kg 2231 lbs	
2	C		1	ba	PL 22x406	16	615	M270M-345WT2	1165 kg 2568 lbs	
1	C		1	bb	PL 38x406	12	702	M270M-345WT2	1538 kg 3391 lbs	
5	B		2	x2c	PL 22x178	1	067	M1E M270M-345WT2	33 kg 72 lbs	
5	B		2	x2f	PL 22x178	1	067	M1E M270M-345WT2	33 kg 72 lbs	
5	C		12	x2g	PL 13x178	1	067	M270M-345WT2	19 kg 43 lbs	

REV.	DATE	REMARKS	DWN	CHK	APVL	SHOP
⚠	12/18	APPROVAL COMMENTS	CRK	PCP	12/19/12	
0						

MATERIAL:	SURFACE PREP. & PAINT:	HOLES:	SHOP BOLTS:
M270M-345W UN	SEE GN1	15/16 ø	NONE

DESCRIPTION: GIRDER 2G2A

CASCO BAY STEEL STRUCTURES, INC.
1 WALLACE AVE. PHONE (207) 780-6722
SOUTH PORTLAND, ME 04106 FAX. (207) 780-6726

TENSOR 3146

STRUCTURE:	DRAWN:	DATE:
VT ROUTE 108, BRIDGE #21 MAJOR COLLECTOR TOWN OF CAMBRIDGE COUNTY OF LAMOILLE, VERMONT	CRK	10/08
	CHKD: PCP	DATE: 10/16
LOCATION: CAMBRIDGE, VERMONT	JOB NO. 524	DWG NO. 2
PROJ NO. BRF 027-1(4)		REV. ⚠
CUSTOMER: A. L. ST. ONGE CONTRACTING		

VTrans Receives Only

DEC 23 2012

Reviewed BY: APPROVED DATE: 12/19/12

PCP Wed, Dec 19, 2012 10:32:53 AM J:\acad\jobs\21462\ Revit

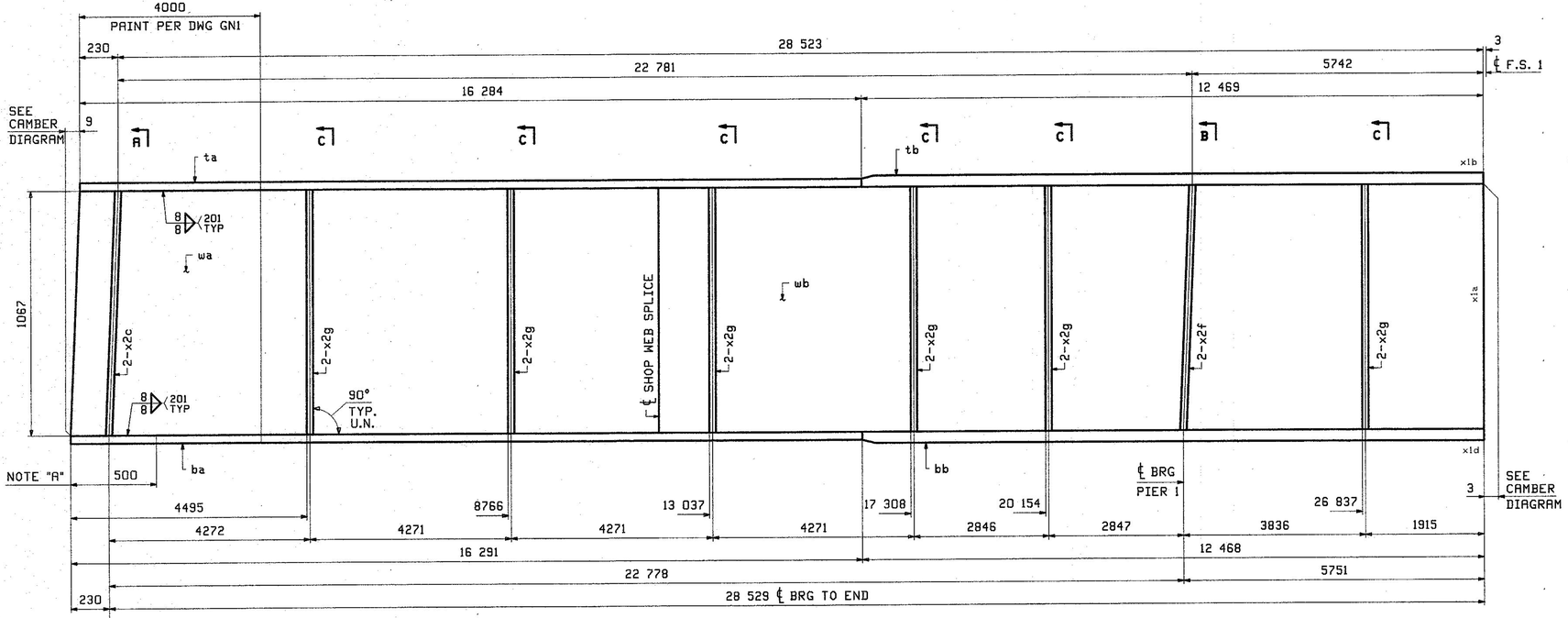

FOR FIELD SPLICE DETAIL SEE X1M2 ON SHT X1

ABM INFO		SHIP	BILL OF MATERIAL					JOB NO.	DRAWING NO.	REV.
								524	3	⚠
PAGE	LINE	MARK	QTY	MARK	MATERIAL	LENGTH m	LENGTH mm	REMARKS	WT	PROCUREMENT NOTES
		3G3A	1		GIRDER				8284 kg 18263 lbs	
3	J		1	wa	PL 13x1067	10	617	M270M-345WT2	1156 kg 2549 lbs	
3	S		1	wb	PL 13x1067	18	150	M270M-345WT2	1976 kg 4357 lbs	
2	G		1	ta	PL 22x406	16	284	M270M-345WT2	1142 kg 2517 lbs	
1	L		1	tb	PL 25x406	12	469	M270M-345WT2	894 kg 2190 lbs	
2	G		1	ba	PL 22x406	16	291	M270M-345WT2	1142 kg 2518 lbs	
1	E		1	bb	PL 38x406	12	468	M270M-345WT2	1510 kg 3329 lbs	
5	B		2	x2c	PL 22x178	1	067	M1E M270M-345WT2	33 kg 72 lbs	
5	B		2	x2f	PL 22x178	1	067	M1E M270M-345WT2	33 kg 72 lbs	
5	C		12	x2g	PL 13x178	1	067	M270M-345WT2	19 kg 43 lbs	

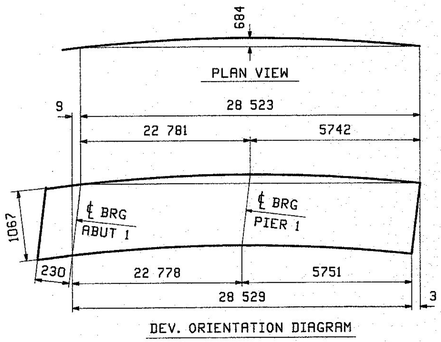

DEV. ORIENTATION DIAGRAM

ONE - GIRDER - 3G3A

FOR GIRDER STANDARD DETAILS SEE DRAWING X2.
FOR FIELD SPLICE DETAIL SEE DRAWING X1.
FOR WEB CUTTING DIAGRAM SEE DRAWING C1.
FOR FLANGE DIAGRAM SEE DRAWING F1.
FOR GENERAL NOTES SEE DRAWING GN1.
FOR TYPICAL WELD TERMINATION DETAILS SEE DRAWING GN1.
ALL STIFFENERS ARE NORMAL TO WEB.
"T2" DENOTES MATERIAL SUBJECT TO CHARPY V-NOTCH TESTING.

NOTE "A"
BEARING AREA TO RECEIVE FIELD WELDED SOLE PLATE.
⚠ PRIMER ONLY BTM & EDGES OF BTM FLG.

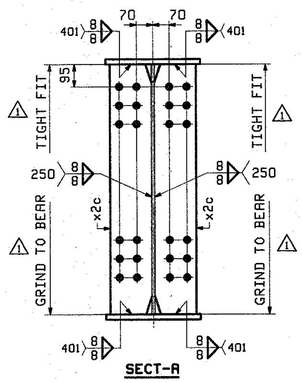

SECT-A

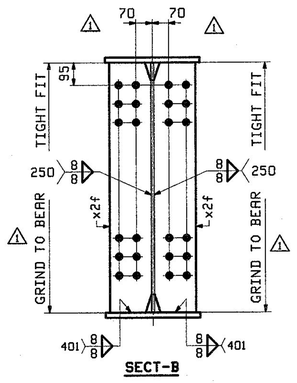

SECT-B

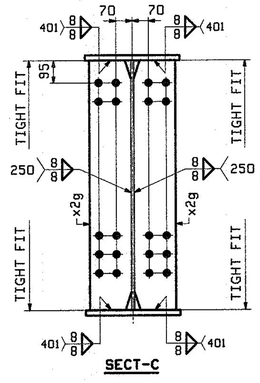

SECT-C

Visions Associates Inc.
DEC 2 3 2012
Received APPROVED
BY DATE 01/02/13

REV.	DATE	REMARKS	DWN	CHK	APVL	SHOP
⚠	12/18	APPROVAL COMMENTS	CRK	PCP	12/19/12	
0						

MATERIAL:	SURFACE PREP. & PAINT:	HOLES:	SHOP BOLTS:
M270M-345W UN	SEE GN1	15/16 ø	NONE

DESCRIPTION: GIRDER 3G3A

CASCO BAY STEEL STRUCTURES, INC.
1 WALLACE AVE. PHONE (207) 780-6722
SOUTH PORTLAND, ME 04106 FAX. (207) 780-6726

TENSOR 3146

STRUCTURE: VT ROUTE 108, BRIDGE #21 MAJOR COLLECTOR TOWN OF CAMBRIDGE COUNTY OF LAMOILLE, VERMONT		DRAWN: CRK	DATE: 10/08
		CHK'D: PCP	DATE: 10/16
LOCATION: CAMBRIDGE, VERMONT		JOB NO. 524	DWG NO. 3
PROJ NO. BRF 027-1(4)			REV. ⚠
CUSTOMER: A. L. ST. ONGE CONTRACTING			

PCP Wed, Dec 19, 2012 10:20:49 AM //users/jobs/3146/3 | 3.dwg

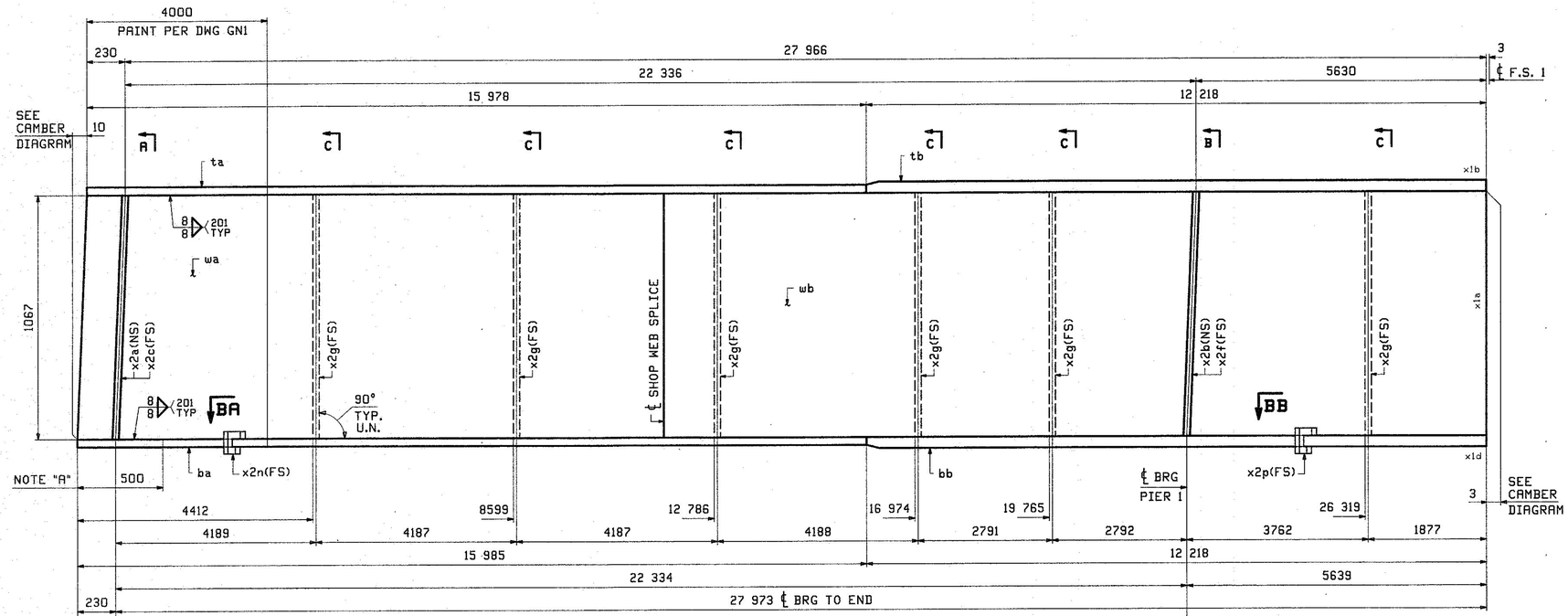

FOR FIELD SPLICE DETAIL SEE X1M3 ON SHT X1

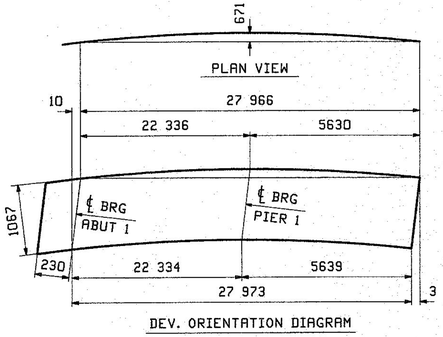

DEV. ORIENTATION DIAGRAM

ONE - GIRDER - 4G4A

FOR GIRDER STANDARD DETAILS SEE DRAWING X2.
FOR FIELD SPLICE DETAIL SEE DRAWING X1.
FOR WEB CUTTING DIAGRAM SEE DRAWING C1.
FOR FLANGE DIAGRAM SEE DRAWING F1.
FOR GENERAL NOTES SEE DRAWING GN1.
FOR TYPICAL WELD TERMINATION DETAILS SEE DRAWING GN1.
ALL STIFFENERS ARE NORMAL TO WEB.
"T2" DENOTES MATERIAL SUBJECT TO CHARPY V-NOTCH TESTING.

NOTE "A"
BEARING AREA TO RECEIVE FIELD WELDED SOLE PLATE.
⚠1 PRIMER ONLY BTM & EDGES OF BTM FLG.

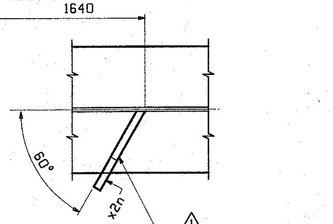

SECTION BA

TIGHT FIT TO FLG WITH SEAL WELD ALL AROUND (TYP) 401

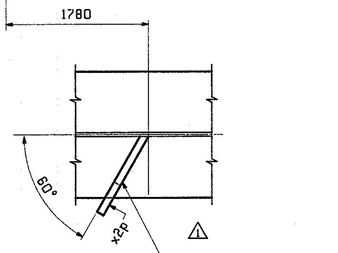

SECTION BB

TIGHT FIT TO FLG WITH SEAL WELD ALL AROUND (TYP) 401

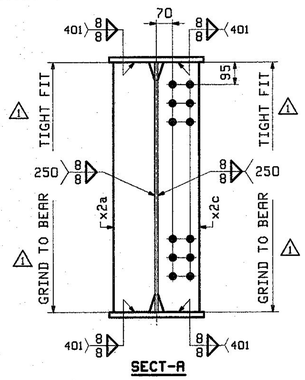

SECT-A

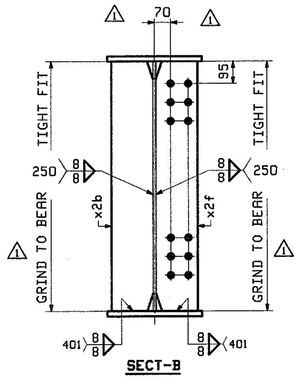

SECT-B

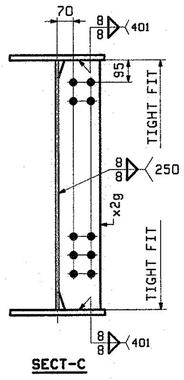

SECT-C

ABM INFO		SHIP	BILL OF MATERIAL					JOB NO.	DRAWING NO.	REV.
								524	4	⚠1
PAGE	LINE	MARK	QTY	MARK	MATERIAL	LENGTH m	LENGTH mm	REMARKS	WT	PROCUREMENT NOTES
		4G4A	1		GIRDER				7383 kg 16298 lbs	
3	N		1	wa	PL 13x1067	10	060	M270M-345WT2	1095 kg 2415 lbs	
3	S		1	wb	PL 13x1067	18	151	M270M-345WT2	1976 kg 4357 lbs	
2	L		1	ta	PL 22x406	15	978	M270M-345WT2	1120 kg 2470 lbs	
2	Q		1	tb	PL 22x406	12	218	M270M-345WT2	857 kg 1889 lbs	
2	L		1	ba	PL 22x406	15	985	M270M-345WT2	1121 kg 2471 lbs	
1	N		1	bb	PL 25x406	12	218	M270M-345WT2	974 kg 2146 lbs	
5	B		1	x2a	PL 22x178	1	067	MIE M270M-345WT2	33 kg 72 lbs	
5	B		1	x2b	PL 22x178	1	067	MIE M270M-345WT2	33 kg 72 lbs	
5	B		1	x2c	PL 22x178	1	067	MIE M270M-345WT2	33 kg 72 lbs	
5	B		1	x2f	PL 22x178	1	067	MIE M270M-345WT2	33 kg 72 lbs	
5	C		6	x2g	PL 13x178	1	067	M270M-345WT2	19 kg 43 lbs	
5	D		1	x2n	PL 6x72	0	285		**** kg 20 lbs	
5	D		1	x2p	PL 6x75	0	285		1 kg 2 lbs	

REV.	DATE	REMARKS	DWN	CHK	APVL	SHOP
⚠1	12/18	APPROVAL COMMENTS	CRK	PCP	12/19/12	
0						

MATERIAL:	SURFACE PREP. & PAINT:	HOLES:	SHOP BOLTS:
M270M-345W UN	SEE GN1	15/16"ø	NONE

DESCRIPTION: GIRDER 4G4A

CASCO BAY STEEL STRUCTURES, INC.
1 WALLACE AVE. SOUTH PORTLAND, ME 04106
PHONE (207) 780-6722 FAX. (207) 780-6726
TENSOR 3146

STRUCTURE: VT ROUTE 108, BRIDGE #21 MAJOR COLLECTOR TOWN OF CAMBRIDGE COUNTY OF LAMOILLE, VERMONT	DRAWN: CRK	DATE: 10/08	
	CHKD: PCP	DATE: 10/16	
LOCATION: CAMBRIDGE, VERMONT	JOB NO. 524	DWG NO. 4	
PROJ NO. BRF 027-1(4)		REV. ⚠1	
CUSTOMER: A. L. ST. ONGE CONTRACTING			

Vtrans Received DEC 28 2012

APPROVED BY [signature] DATE 01/03/13

PCP Wed, Dec 19, 2012 10:33:38 PM //users/jobs/524/4.1.dwg

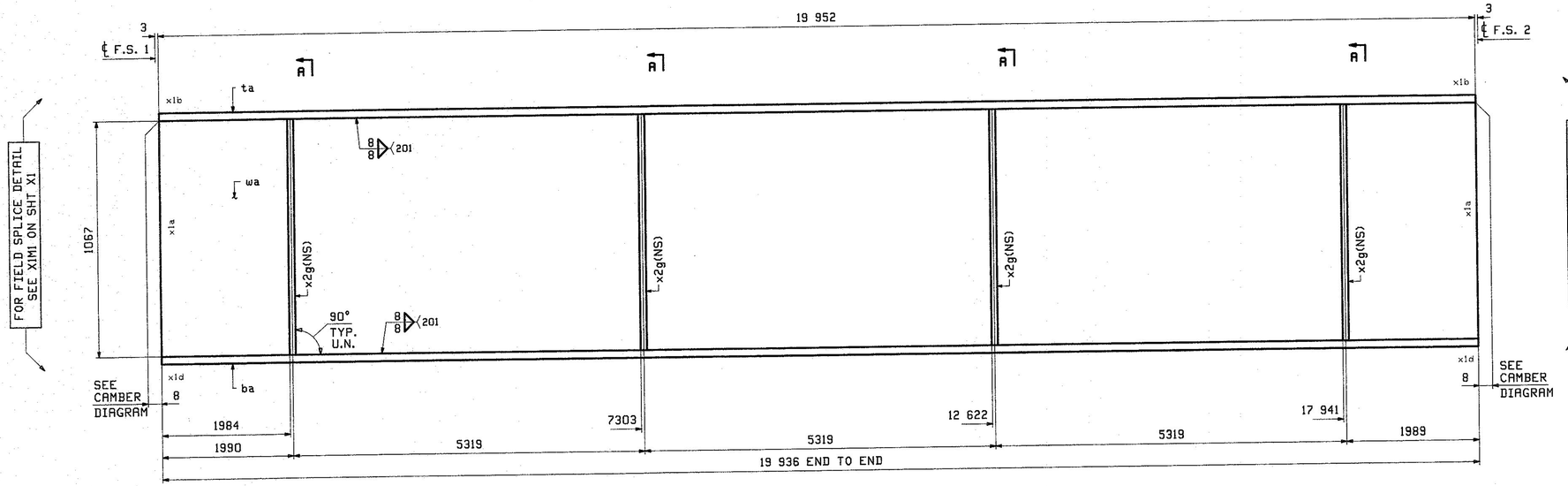

ONE - GIRDER - 5G1B

FOR GIRDER STANDARD DETAILS SEE DRAWING X2.
FOR FIELD SPLICE DETAIL SEE DRAWING X1.
FOR WEB CUTTING DIAGRAM SEE DRAWING C1.
FOR FLANGE DIAGRAM SEE DRAWING F1.
FOR GENERAL NOTES SEE DRAWING GN1.
FOR TYPICAL WELD TERMINATION DETAILS SEE DRAWING GN1.
ALL STIFFENERS ARE NORMAL TO WEB.
"T2" DENOTES MATERIAL SUBJECT TO CHARPY V-NOTCH TESTING.

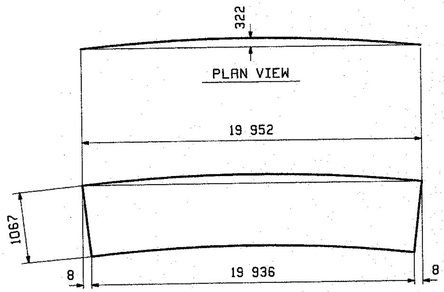

DEV. ORIENTATION DIAGRAM

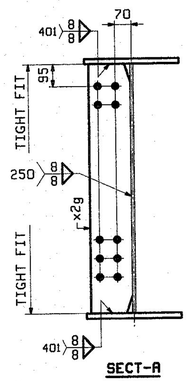

SECT-A

ABM INFO		SHIP	BILL OF MATERIAL					JOB NO.	DRAWING NO.	REV.
								524	5	
PAGE	LINE	MARK	QTY	MARK	MATERIAL	LENGTH m	LENGTH mm	REMARKS	WT	PROCUREMENT NOTES
		5G1B	1		GIRDER				5047 kg 11126 lbs	
2	S		1	wa	PL 13x1067	19	952	M270M-345WT2	2173 kg 4790 lbs	
1	Q		1	ta	PL 22x406	19	952	M270M-345WT2	1399 kg 3084 lbs	
1	Q		1	ba	PL 22x406	19	936	M270M-345WT2	1398 kg 3082 lbs	
5	C		4	x2g	PL 13x178	1	067	M270M-345WT2	19 kg 43 lbs	

REV.	DATE	REMARKS	DWN	CHK	APVL	SHOP
0		~			10/22/12	

MATERIAL:	SURFACE PREP. & PAINT:	HOLES:	SHOP BOLTS:
M270M-345W UN	SEE GN1	15/16"ø	NONE

DESCRIPTION: GIRDER 5G1B

CASCO BAY STEEL STRUCTURES, INC.
1 WALLACE AVE. PHONE (207) 780-6722
SOUTH PORTLAND, ME 04106 FAX. (207) 780-6726
TENSOR 3146

STRUCTURE: VT ROUTE 108, BRIDGE #21
MAJOR COLLECTOR
TOWN OF CAMBRIDGE
COUNTY OF LAMOILLE, VERMONT

DRAWN: CRK	DATE: 10/08		
CHKD: PCP	DATE: 10/16		
LOCATION: CAMBRIDGE, VERMONT	JOB NO.	DWG NO.	
PROJ NO. BRF 027-1(4)	524	5	
CUSTOMER: A. L. ST. ONGE CONTRACTING		REV. △	

VTrans Received
Ck'd: OKM 87
NOV 0 1 2012
Resubmit APPROVED ✓
BY: [illegible] DATE: 11/27/12

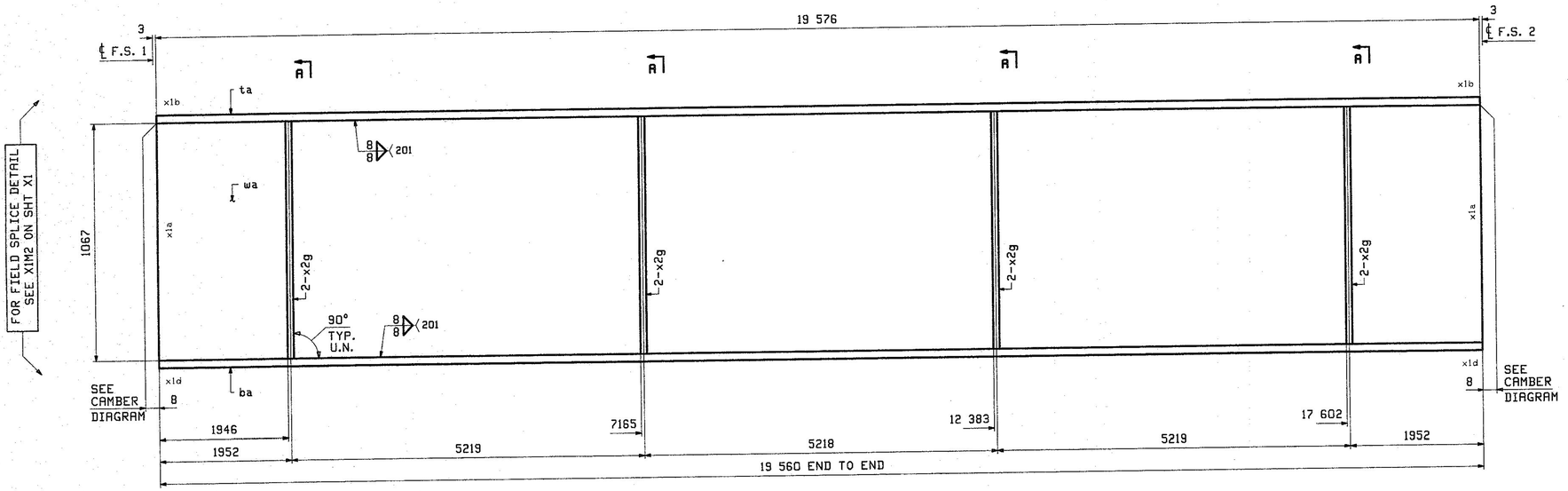

ABM INFO		SHIP	BILL OF MATERIAL					JOB NO.	DRAWING NO.	REV.
								524	6	
PAGE	LINE	MARK	QTY	MARK	MATERIAL	LENGTH m	LENGTH mm	REMARKS	WT	PROCUREMENT NOTES
		6G2B	1		GIRDER				5031 kg 11081 lbs	
2	U		1	wa	PL 13x1067	19	576	M270M-345WT2	2132 kg 4699 lbs	
1	S		1	ta	PL 22x406	19	576	M270M-345WT2	1373 kg 3026 lbs	
1	S		1	ba	PL 22x406	19	560	M270M-345WT2	1371 kg 3024 lbs	
5	C		8	x2g	PL 13x178	1	067	M270M-345WT2	19 kg 43 lbs	

ONE - GIRDER - 6G2B

FOR GIRDER STANDARD DETAILS SEE DRAWING X2.
FOR FIELD SPLICE DETAIL SEE DRAWING X1.
FOR WEB CUTTING DIAGRAM SEE DRAWING C1.
FOR FLANGE DIAGRAM SEE DRAWING F1.
FOR GENERAL NOTES SEE DRAWING GN1.
FOR TYPICAL WELD TERMINATION DETAILS SEE DRAWING GN1.
ALL STIFFENERS ARE NORMAL TO WEB.
"T2" DENOTES MATERIAL SUBJECT TO CHARPY V-NOTCH TESTING.

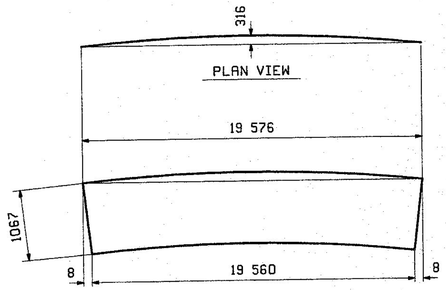

DEV. ORIENTATION DIAGRAM

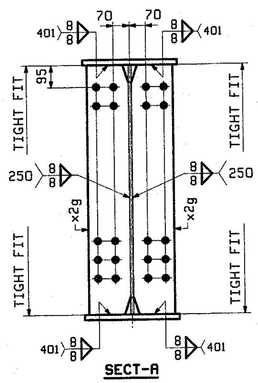

REV.	DATE	REMARKS	DWN	CHK	APVL.	SHOP
0					10/22/12	

MATERIAL:	SURFACE PREP. & PAINT:	HOLES:	SHOP BOLTS:
M270M-345W UN	SEE GN1	15/16"ø	NONE

DESCRIPTION: GIRDER 6G2B

CASCO BAY STEEL STRUCTURES, INC.
1 WALLACE AVE. PHONE (207) 780-6722
SOUTH PORTLAND, ME 04106 FAX. (207) 780-6726

TENSOR 3146

STRUCTURE:	DRAWN:	DATE:
VT ROUTE 108, BRIDGE #21 MAJOR COLLECTOR TOWN OF CAMBRIDGE COUNTY OF LAMOILLE, VERMONT	CRK	10/08
	CHKD: PCP	DATE: 10/16
LOCATION: CAMBRIDGE, VERMONT	JOB NO. 524	DWG NO. 6
PROJ NO. BRF 027-1(4)		REV. △
CUSTOMER: A. L. ST. ONGE CONTRACTING		

VTrans Received NOV 01 2012

Reviewed BY YY/CH APPROVED DATE 11/27/12

PCP Thu, Oct 18, 2012 05:07:05 PM //users/pbw/2045/1.Rev3

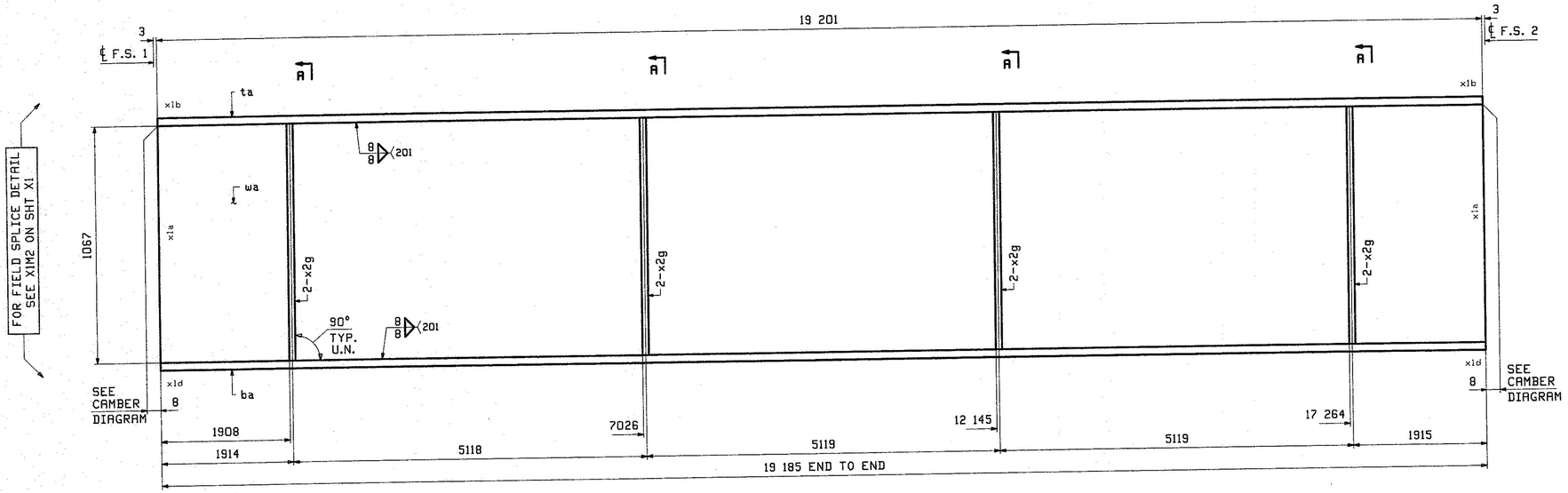

ABM INFO		SHIP	QTY	MARK	MATERIAL	LENGTH m	LENGTH mm	REMARKS	WT	PROCUREMENT NOTES
PAGE	LINE	MARK								
		7G3B	1		GIRDER				4937 kg 10884 lbs	
2	W		1	wa	PL 13x1067	19	201	M270M-345WT2	2091 kg 4609 lbs	
1	U		1	ta	PL 22x406	19	201	M270M-345WT2	1346 kg 2968 lbs	
1	U		1	ba	PL 22x406	19	185	M270M-345WT2	1345 kg 2966 lbs	
5	C		8	x2g	PL 13x178	1	067	M270M-345WT2	18 kg 43 lbs	

BILL OF MATERIAL

JOB NO. 524 | DRAWING NO. 7 | REV.

ONE - GIRDER - 7G3B

FOR GIRDER STANDARD DETAILS SEE DRAWING X2.
FOR FIELD SPLICE DETAIL SEE DRAWING X1.
FOR WEB CUTTING DIAGRAM SEE DRAWING C1.
FOR FLANGE DIAGRAM SEE DRAWING F1.
FOR GENERAL NOTES SEE DRAWING GN1.
FOR TYPICAL WELD TERMINATION DETAILS SEE DRAWING GN1.
ALL STIFFENERS ARE NORMAL TO WEB.
"T2" DENOTES MATERIAL SUBJECT TO CHARPY V-NOTCH TESTING.

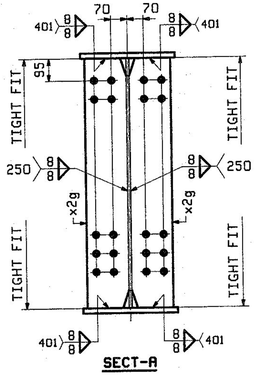

SECT-A

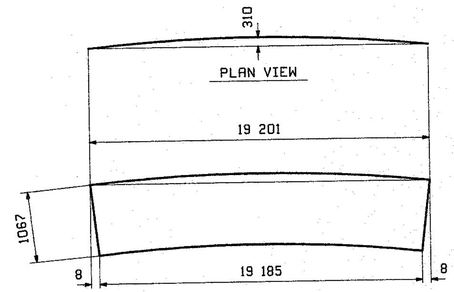

DEV. ORIENTATION DIAGRAM

VTRANS
Received
Date NOV 0 1 2012
Reviewed By
APPROVED
DATE 11/27/12

REV.	DATE	REMARKS	DWN	CHK	APVL	SHOP
0					10/22/12	

MATERIAL: M270M-345W UN | SURFACE PREP. & PAINT: SEE GN1 | HOLES: 15 16"ø | SHOP BOLTS: NONE

DESCRIPTION: GIRDER 7G3B

CASCO BAY STEEL STRUCTURES, INC.
1 WALLACE AVE. PHONE (207) 780-6722
SOUTH PORTLAND, ME 04106 FAX. (207) 780-6726

TENSOR 3146

STRUCTURE: VT ROUTE 108, BRIDGE #21
MAJOR COLLECTOR
TOWN OF CAMBRIDGE
COUNTY OF LAMOILLE, VERMONT

		DRAWN: CRK	DATE: 10/09
		CHKD: PCP	DATE: 10/16
LOCATION:	CAMBRIDGE, VERMONT	JOB NO. 524	DWG NO. 7
PROJ NO.	BRF 027-1(4)		REV. △
CUSTOMER:	A. L. ST. ONGE CONTRACTING		

PCP Thu, Oct 18, 2012 08:07:32 PM c:\users\pcp\24x9\7-1.dwg

ABM INFO		SHIP	BILL OF MATERIAL					JOB NO.	DRAWING NO.	REV.
								524	8	
PAGE	LINE	MARK	QTY	MARK	MATERIAL	LENGTH m	LENGTH mm	REMARKS	WT	PROCUREMENT NOTES
		8G4B	1		GIRDER				4767 kg 10509 lbs	
2	Y		1	wa	PL 13x1067	18	827	M270M-345WT2	2050 kg 4520 lbs	
1	W		1	ta	PL 22x406	18	827	M270M-345WT2	1320 kg 2910 lbs	
1	W		1	ba	PL 22x406	18	811	M270M-345WT2	1319 kg 2908 lbs	
5	C		4	x2g	PL 13x178	1	067	M270M-345WT2	19 kg 43 lbs	

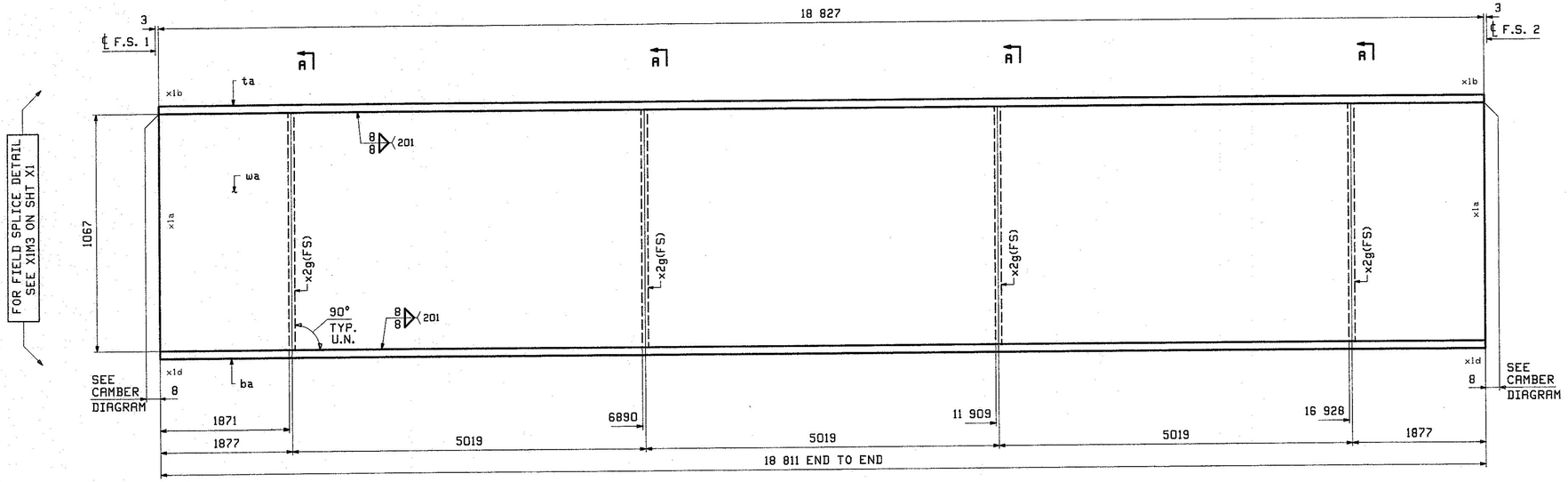

ONE - GIRDER - 8G4B

FOR GIRDER STANDARD DETAILS SEE DRAWING X2.
FOR FIELD SPLICE DETAIL SEE DRAWING X1.
FOR WEB CUTTING DIAGRAM SEE DRAWING C1.
FOR FLANGE DIAGRAM SEE DRAWING F1.
FOR GENERAL NOTES SEE DRAWING GN1.
FOR TYPICAL WELD TERMINATION DETAILS SEE DRAWING GN1.
ALL STIFFENERS ARE NORMAL TO WEB.
"T2" DENOTES MATERIAL SUBJECT TO CHARPY V-NOTCH TESTING.

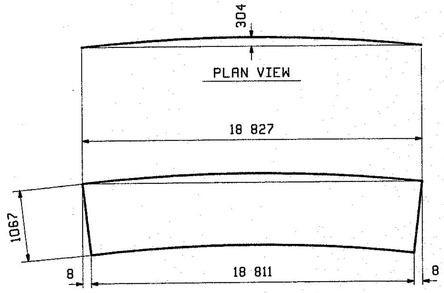

DEV. ORIENTATION DIAGRAM

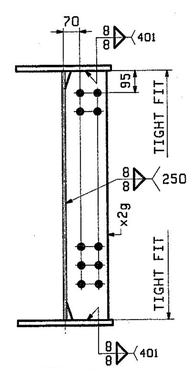

SECT-A

REV.	DATE	REMARKS	DWN	CHK	APVL	SHOP
0					10/22/12	

MATERIAL:	SURFACE PREP. & PAINT:	HOLES:	SHOP BOLTS:
M270M-345W UN	SEE GN1	15/16"ø	NONE

DESCRIPTION: GIRDER 8G4B

CASCO BAY STEEL STRUCTURES, INC.
1 WALLACE AVE. PHONE (207) 780-6722
SOUTH PORTLAND, ME 04106 FAX. (207) 780-6726
TENSOR 3146

STRUCTURE: VT ROUTE 108, BRIDGE #21 MAJOR COLLECTOR TOWN OF CAMBRIDGE COUNTY OF LAMOILLE, VERMONT	DRAWN: CRK	DATE: 10/09	
	CHKD: PCP	DATE: 10/16	
LOCATION: CAMBRIDGE, VERMONT	JOB NO.	DWG NO.	
PROJ NO. BRF 027-1(4)	524	8	
CUSTOMER: A. L. ST. ONGE CONTRACTING		REV. △	

Vtrans Received
CK'D ____ OK'D BY ____
NOV 0 1 2012
Resubmit BY ____ APPROVED ✓ DATE 11/27/12

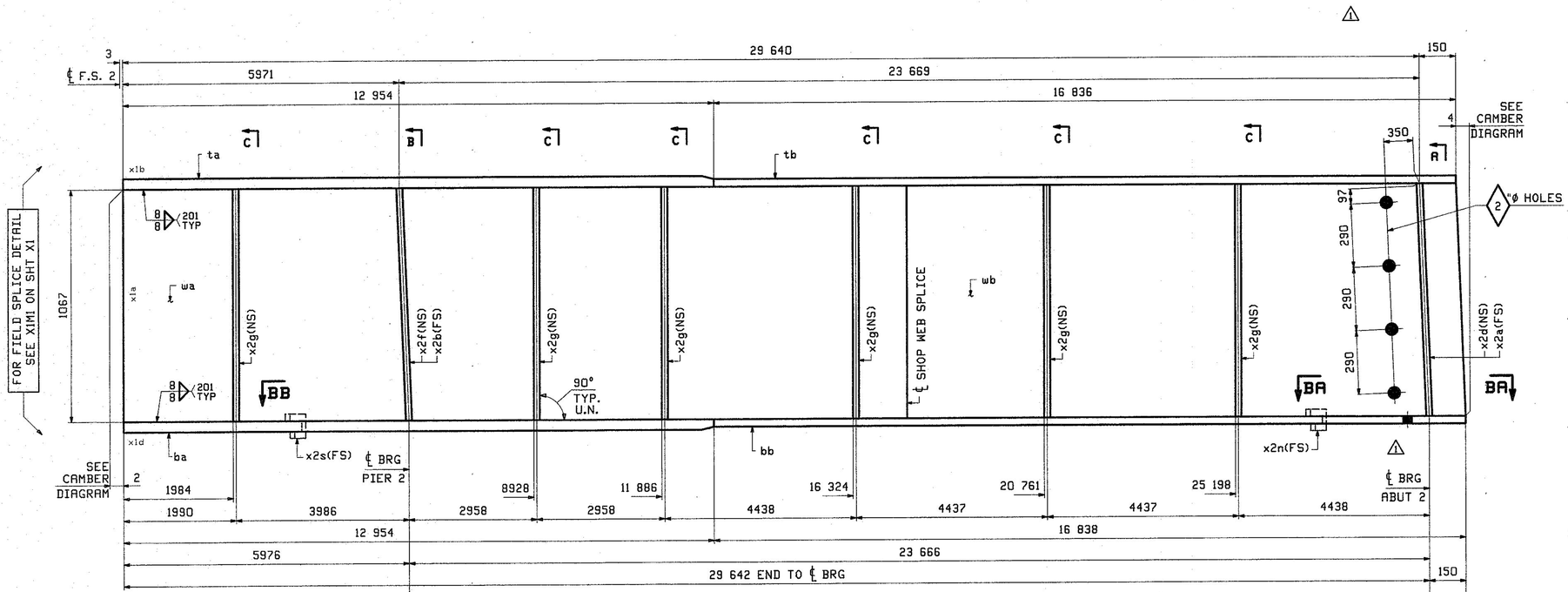

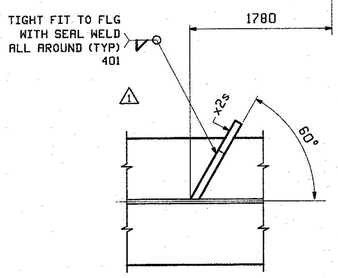

SECTION BB

ONE - GIRDER - 9G1C

FOR GIRDER STANDARD DETAILS SEE DRAWING X2.
FOR FIELD SPLICE DETAIL SEE DRAWING X1.
FOR WEB CUTTING DIAGRAM SEE DRAWING C2.
FOR FLANGE DIAGRAM SEE DRAWING F2.
FOR GENERAL NOTES SEE DRAWING GN1.
FOR TYPICAL WELD TERMINATION DETAILS SEE DRAWING GN1.
ALL STIFFENERS ARE NORMAL TO WEB.
"T2" DENOTES MATERIAL SUBJECT TO CHARPY V-NOTCH TESTING.

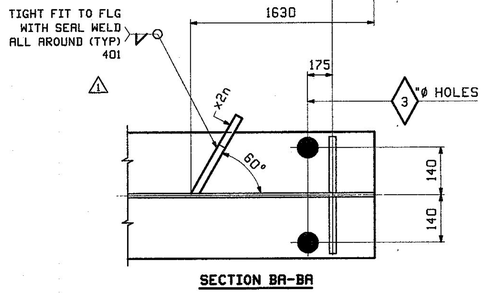

SECTION BA-BA

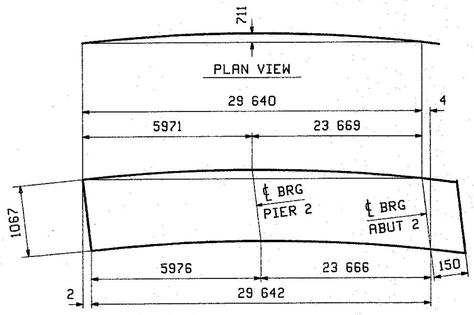

DEV. ORIENTATION DIAGRAM

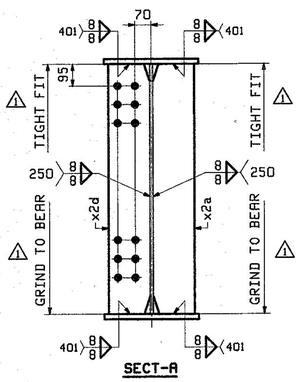

SECT-A

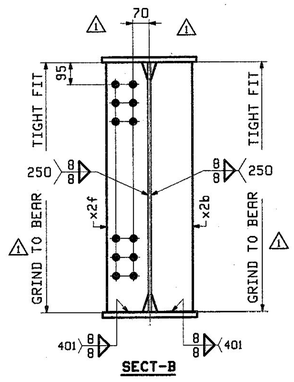

SECT-B

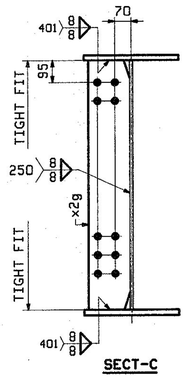

SECT-C

ABM INFO		SHIP	BILL OF MATERIAL					JOB NO.	DRAWING NO.	REV.
								524	9	⚠1
PAGE	LINE	MARK	QTY	MARK	MATERIAL	LENGTH m	LENGTH mm	REMARKS	WT	PROCUREMENT NOTES
		9G1C	1		GIRDER				8811 kg 19645 lbs	
3	S		1	wa	PL 13x1067	18	150	M270M-345WT2	1976 kg 4357 lbs	
3	C		1	wb	PL 13x1067	11	650	M270M-345WT2	1269 kg 2797 lbs	
1	G		1	ta	PL 29x406	12	954	M270M-345WT2	1197 kg 2640 lbs	
2	A		1	tb	PL 22x406	16	836	M270M-345WT2	1180 kg 2603 lbs	
1	A		1	ba	PL 45x406	12	954	M270M-345WT2	1658 kg 4096 lbs	
2	A		1	bb	PL 22x406	16	838	M270M-345WT2	1181 kg 2603 lbs	
5	B		1	x2a	PL 22x178	1	067	M1E M270M-345WT2	33 kg 72 lbs	
5	B		1	x2b	PL 22x178	1	067	M1E M270M-345WT2	33 kg 72 lbs	
5	B		1	x2d	PL 22x178	1	067	M1E M270M-345WT2	33 kg 72 lbs	
5	B		1	x2f	PL 22x178	1	067	M1E M270M-345WT2	33 kg 72 lbs	
5	C		6	x2g	PL 13x178	1	067	M270M-345WT2	19 kg 43 lbs	
5	D		1	x2n	PL 6x72	0	285		xxxx kg .00 lbs	
5	D		1	x2s	PL 6x95	0	285		1 kg 3 lbs	

REV.	DATE	REMARKS	DWN	CHK	APVL	SHOP
⚠1	12/18	APPROVAL COMMENTS	CRK	PCP	12/19/12	
0						

MATERIAL:	SURFACE PREP. & PAINT:	HOLES:	SHOP BOLTS:
M270M-345W UN	SEE GN1	15/16"ø UN	NONE

DESCRIPTION: GIRDER 9G1C

CASCO BAY STEEL STRUCTURES, INC.
1 WALLACE AVE. PHONE (207) 780-6722
SOUTH PORTLAND, ME 04106 FAX. (207) 780-6726

TENSOR 3146

STRUCTURE:	VT ROUTE 108, BRIDGE #21 MAJOR COLLECTOR TOWN OF CAMBRIDGE COUNTY OF LAMOILLE, VERMONT	DRAWN: CRK	DATE: 10/09
		CHKD: PCP	DATE: 10/16
LOCATION:	CAMBRIDGE, VERMONT	JOB NO. 524	DWG NO. 9
PROJ NO.	BRF 027-1(4)		REV. ⚠1
CUSTOMER:	A. L. ST. ONGE CONTRACTING		

Received DEC 2 8 2012
Reviewed by ... APPROVED ... Date 01/02/13

PCP Wed, Dec 19, 2012 10:33:15 AM //users/pcp/2548/9.dwg

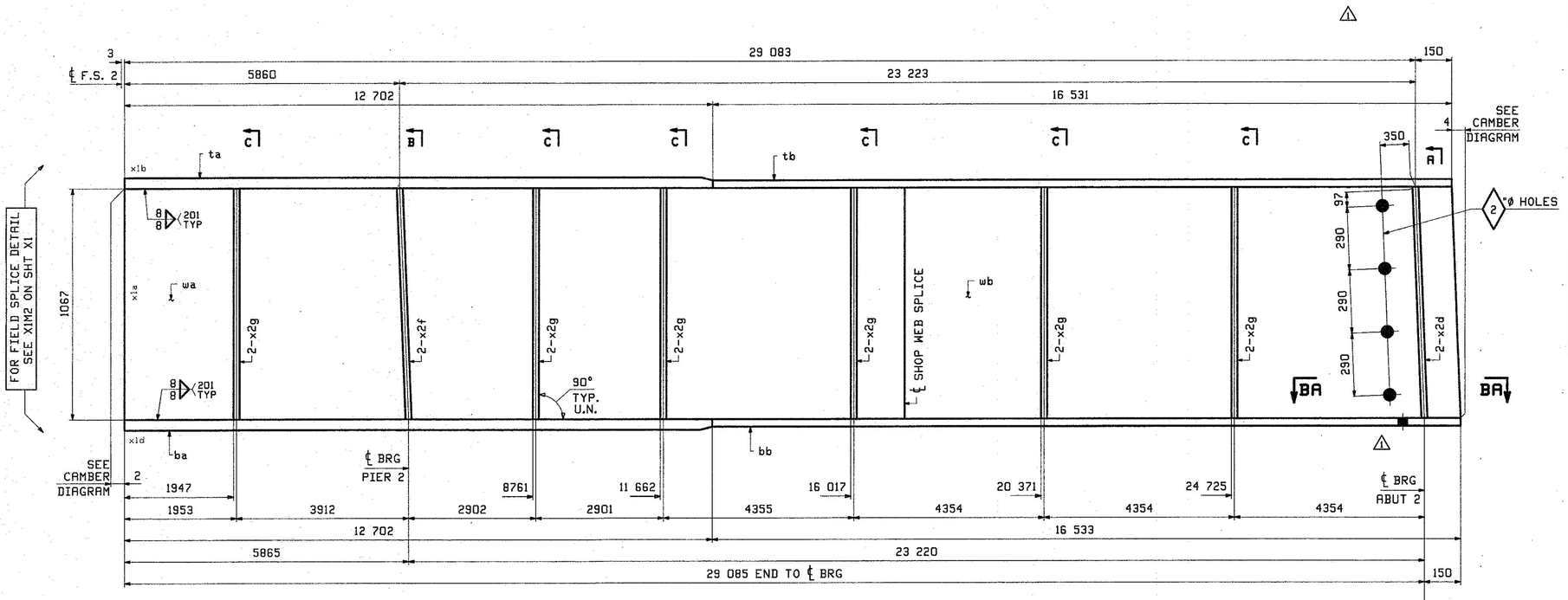

ABM INFO		SHIP	BILL OF MATERIAL					JOB NO.	DRAWING NO.	REV.
								524	10	1
PAGE	LINE	MARK	QTY	MARK	MATERIAL	LENGTH m	LENGTH mm	REMARKS	WT	PROCUREMENT NOTES
		10G2C	1		GIRDER				8417 kg 18556 lbs	
3	S		1	wa	PL 13x1067	19	150	M270M-345WT2	1976 kg 4357 lbs	
3	G		1	wb	PL 13x1067	11	093	M270M-345WT2	1208 kg 2663 lbs	
1	J		1	ta	PL 25x406	12	702	M270M-345WT2	1012 kg 2231 lbs	
2	E		1	tb	PL 22x406	16	531	M270M-345WT2	1159 kg 2555 lbs	
1	C		1	ba	PL 38x406	12	702	M270M-345WT2	1538 kg 3391 lbs	
2	E		1	bb	PL 22x406	16	533	M270M-345WT2	1159 kg 2556 lbs	
5	B		2	x2d	PL 22x178	1	067	MIE M270M-345WT2	33 kg 72 lbs	
5	B		2	x2f	PL 22x178	1	067	MIE M270M-345WT2	33 kg 72 lbs	
5	C		12	x2g	PL 13x178	1	067	M270M-345WT2	19 kg 43 lbs	

ONE - GIRDER - 10G2C

FOR GIRDER STANDARD DETAILS SEE DRAWING X2.
FOR FIELD SPLICE DETAIL SEE DRAWING X1.
FOR WEB CUTTING DIAGRAM SEE DRAWING C2.
FOR FLANGE DIAGRAM SEE DRAWING F2.
FOR GENERAL NOTES SEE DRAWING GN1.
FOR TYPICAL WELD TERMINATION DETAILS SEE DRAWING GN1.
ALL STIFFENERS ARE NORMAL TO WEB.
"T2" DENOTES MATERIAL SUBJECT TO CHARPY V-NOTCH TESTING.

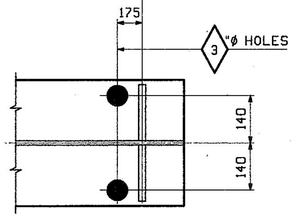

SECTION BA-BA

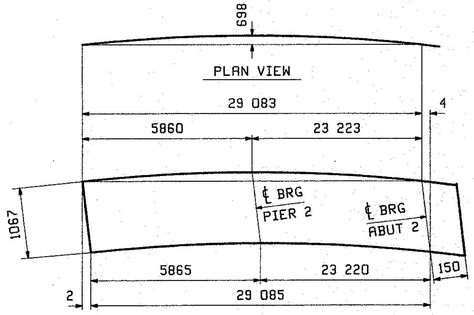

DEV. ORIENTATION DIAGRAM

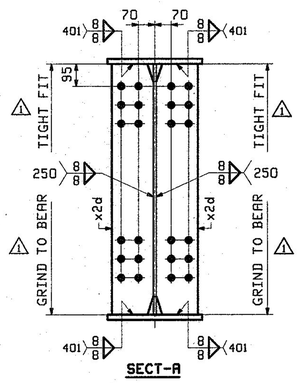

SECT-A

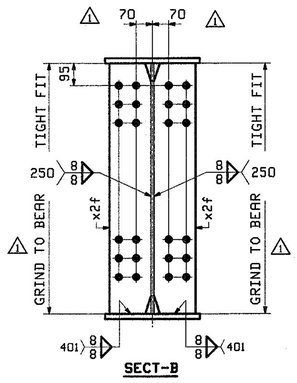

SECT-B

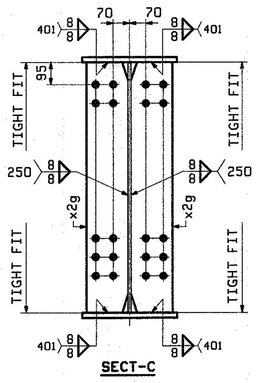

SECT-C

RECEIVED BY VTrans DEC 13 2012 APPROVED DATE 12/12/12

REV.	DATE	REMARKS	DWN	CHK	APVL	SHOP
1	12/18	APPROVAL COMMENTS	CRK	PCP	12/13/12	
0						

MATERIAL:	SURFACE PREP. & PRINT:	HOLES:	SHOP BOLTS:
M270M-345W UN	SEE GN1	15/16"ø UN	NONE

DESCRIPTION: GIRDER 10G2C

CASCO BAY STEEL STRUCTURES, INC.
1 WALLACE AVE. PHONE (207) 780-6722
SOUTH PORTLAND, ME 04106 FAX. (207) 780-6726
TENSOR 3146

STRUCTURE: VT ROUTE 108, BRIDGE #21 MAJOR COLLECTOR TOWN OF CAMBRIDGE COUNTY OF LAMOILLE, VERMONT	DRAWN: CRK	DATE: 10/09	
	CHKD: PCP	DATE: 10/16	
LOCATION: CAMBRIDGE, VERMONT	JOB NO. 524	DWG NO. 10	
PROJ NO. BRF 027-1(4)		REV. 1	
CUSTOMER: A. L. ST. ONGE CONTRACTING			

Wed, Dec 19, 2012 @ 08:08 AM C:\Users\pbs\Desktop\10G2C.dgn PCP

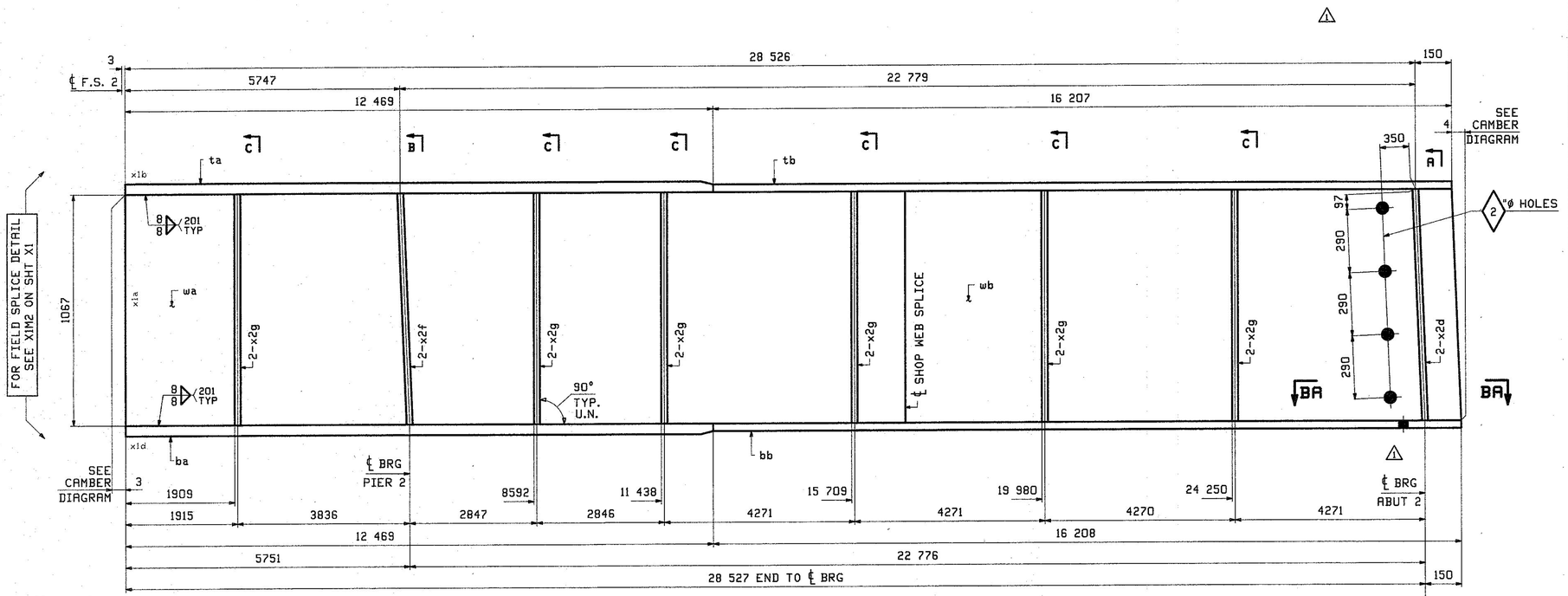

ONE - GIRDER - 11G3C

FOR GIRDER STANDARD DETAILS SEE DRAWING X2.
FOR FIELD SPLICE DETAIL SEE DRAWING X1.
FOR WEB CUTTING DIAGRAM SEE DRAWING C2.
FOR FLANGE DIAGRAM SEE DRAWING F2.
FOR GENERAL NOTES SEE DRAWING GN1.
FOR TYPICAL WELD TERMINATION DETAILS SEE DRAWING GN1.
ALL STIFFENERS ARE NORMAL TO WEB.
"T2" DENOTES MATERIAL SUBJECT TO CHARPY V-NOTCH TESTING.

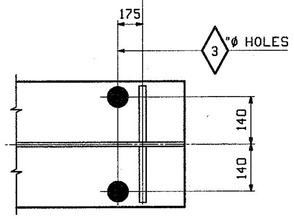

SECTION BA-BA

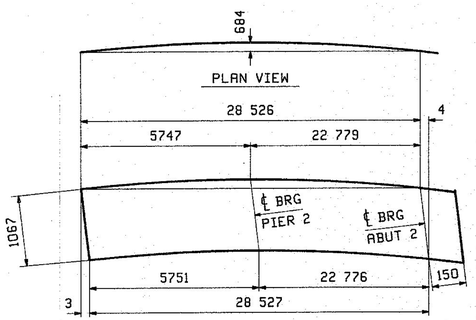

DEV. ORIENTATION DIAGRAM

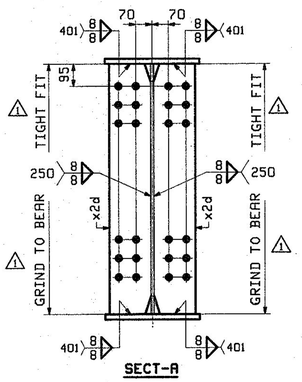

SECT-A

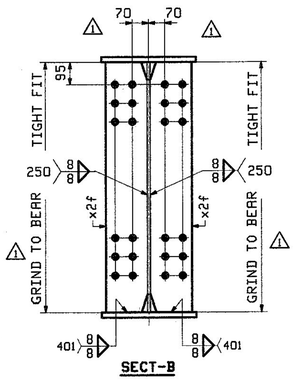

SECT-B

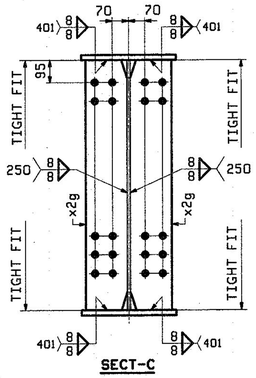

SECT-C

ABM INFO		SHIP	BILL OF MATERIAL					JOB NO.	DRAWING NO.	REV.
								524	11	⚠
PAGE	LINE	MARK	QTY	MARK	MATERIAL	LENGTH m	LENGTH mm	REMARKS	WT	PROCUREMENT NOTES
		11G3C	1		GIRDER				8264 kg 18219 lbs	
3	S		1	wa	PL 13x1067	18	150	M270M-345WT2	1976 kg 4357 lbs	
3	L		1	wb	PL 13x1067	10	535	M270M-345WT2	1147 kg 2368 lbs	
1	L		1	ta	PL 25x406	12	469	M270M-345WT2	994 kg 2190 lbs	
2	J		1	tb	PL 22x406	16	207	M270M-345WT2	1136 kg 2505 lbs	
1	E		1	ba	PL 38x406	12	469	M270M-345WT2	1510 kg 3329 lbs	
2	J		1	bb	PL 22x406	16	208	M270M-345WT2	1136 kg 2505 lbs	
5	B		2	x2d	PL 22x178	1	067	M1E M270M-345WT2	33 kg 72 lbs	
5	B		2	x2f	PL 22x178	1	067	M1E M270M-345WT2	33 kg 72 lbs	
5	C		12	x2g	PL 13x178	1	067	M270M-345WT2	19 kg 43 lbs	

Plans Received DEC 28 2012 By

Reviewed By [illegible] Approved Date 01/02/13

REV.	DATE	REMARKS	DWN	CHK	APVL	SHOP
⚠	12/18	APPROVAL COMMENTS	CRK	PCP	12/19/12	
0						

MATERIAL:	SURFACE PREP. & PAINT:	HOLES:	SHOP BOLTS:
M270M-345W UN	SEE GN1	15/16"ø UN	NONE

DESCRIPTION: GIRDER 11G3C

CASCO BAY STEEL STRUCTURES, INC.
1 WALLACE AVE. SOUTH PORTLAND, ME 04106
PHONE (207) 780-6722 FAX. (207) 780-6726
TENSOR 3146

STRUCTURE:	VT ROUTE 108, BRIDGE #21 MAJOR COLLECTOR TOWN OF CAMBRIDGE COUNTY OF LAMOILLE, VERMONT	DRAWN: CRK	DATE: 10/09
		CHKD: PCP	DATE: 10/16
LOCATION:	CAMBRIDGE, VERMONT	JOB NO.	DWG NO.
PROJ NO.	BRF 027-1(4)	524	11
CUSTOMER:	A. L. ST. ONGE CONTRACTING		REV. ⚠

Wed, Dec 19, 2012 10:34:27 AM J:\casco\jobs\2146\11.dwg PCP

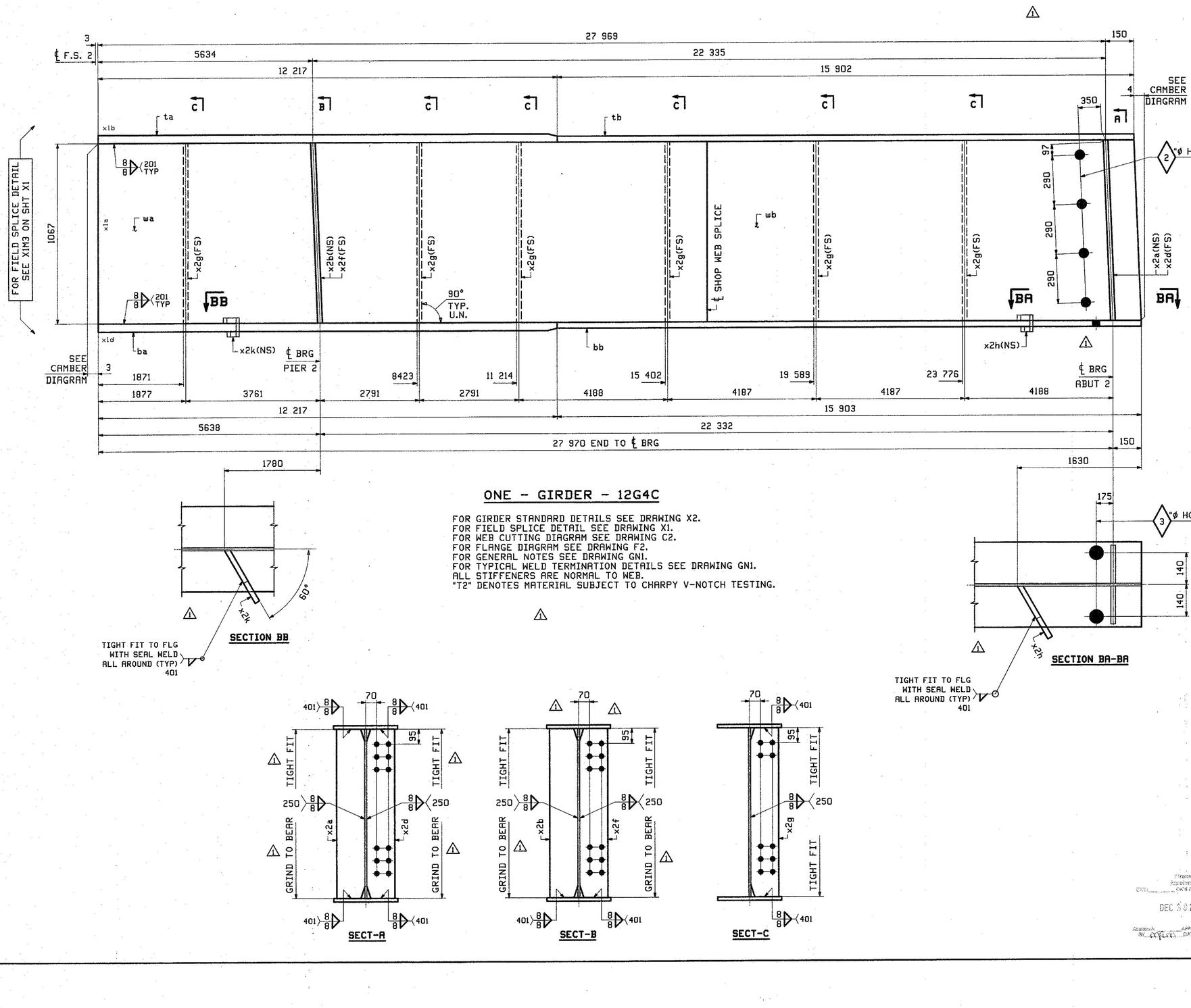

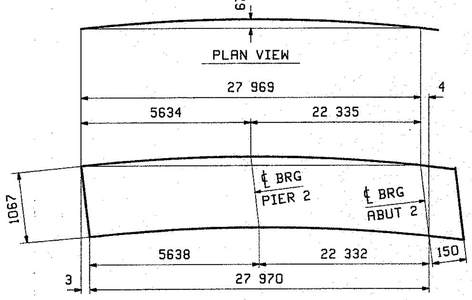

DEV. ORIENTATION DIAGRAM

ONE - GIRDER - 12G4C

FOR GIRDER STANDARD DETAILS SEE DRAWING X2.
FOR FIELD SPLICE DETAIL SEE DRAWING X1.
FOR WEB CUTTING DIAGRAM SEE DRAWING C2.
FOR FLANGE DIAGRAM SEE DRAWING F2.
FOR GENERAL NOTES SEE DRAWING GN1.
FOR TYPICAL WELD TERMINATION DETAILS SEE DRAWING GN1.
ALL STIFFENERS ARE NORMAL TO WEB.
"T2" DENOTES MATERIAL SUBJECT TO CHARPY V-NOTCH TESTING.

SECT-A

SECT-B

SECT-C

ABM INFO		SHIP	BILL OF MATERIAL					JOB NO.	DRAWING NO.	REV.
								524	12	⚠1
PAGE	LINE	MARK	QTY	MARK	MATERIAL	LENGTH m	LENGTH mm	REMARKS	WT	PROCUREMENT NOTES
		12G4C	1		GIRDER				7372 kg 16252 lbs	
3	S		1	wa	PL 13x1067	18	150	M270M-345WT2	1976 kg 4357 lbs	
3	Q		1	wb	PL 13x1067	9	978	M270M-345WT2	1086 kg 2395 lbs	
2	Q		1	ta	PL 22x406	12	217	M270M-345WT2	857 kg 1889 lbs	
2	N		1	tb	PL 22x406	15	902	M270M-345WT2	1115 kg 2458 lbs	
1	N		1	ba	PL 25x406	12	217	M270M-345WT2	979 kg 2146 lbs	
2	N		1	bb	PL 22x406	15	903	M270M-345WT2	1115 kg 2458 lbs	
5	B		1	x2a	PL 22x178	1	067	M1E M270M-345WT2	33 kg 72 lbs	
5	B		1	x2b	PL 22x178	1	067	M1E M270M-345WT2	33 kg 72 lbs	
5	B		1	x2d	PL 22x178	1	067	M1E M270M-345WT2	33 kg 72 lbs	
5	B		1	x2f	PL 22x178	1	067	M1E M270M-345WT2	33 kg 72 lbs	
5	C		6	x2g	PL 13x178	1	067	M270M-345WT2	19 kg 43 lbs	
5	D		1	x2h	PL 6x72	0	285		**** kg .00 lbs	
5	D		1	x2k	PL 6x75	0	285		1 kg 2 lbs	

REV.	DATE	REMARKS	DWN	CHK	APVL	SHOP
⚠1	12/18	APPROVAL COMMENTS	CRK	PCP	12/19/12	
0						

MATERIAL:	SURFACE PREP. & PAINT:	HOLES:	SHOP BOLTS:
M270M-345W UN	SEE GN1	15/16"ø UN	NONE

DESCRIPTION: GIRDER 12G4C

CASCO BAY STEEL STRUCTURES, INC.
1 WALLACE AVE. PHONE (207) 780-6722
SOUTH PORTLAND, ME 04106 FAX. (207) 780-6726

TENSOR 3146

STRUCTURE:	VT ROUTE 108, BRIDGE #21 MAJOR COLLECTOR TOWN OF CAMBRIDGE COUNTY OF LAMOILLE, VERMONT	DRAWN: CRK	DATE: 10/09
		CHKD: PCP	DATE: 10/16
LOCATION:	CAMBRIDGE, VERMONT	JOB NO.	DWG NO.
PROJ NO.	BRF 027-1(4)	524	12
CUSTOMER:	A. L. ST. ONGE CONTRACTING		REV. ⚠1

Trans Received DEC 3 0 2012

Reviewed by APPROVED DATE 01/04/13

PCP Wed, Dec 19, 2012 10:51:03 AM J:\steel\jobs\3146\12 Rev1

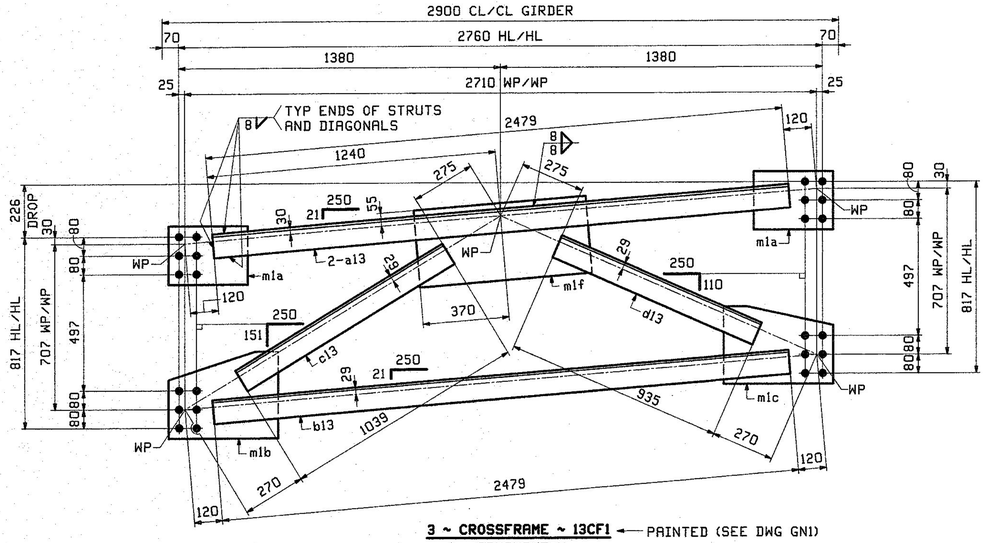

3 ~ CROSSFRAME ~ 13CF1 ← PAINTED (SEE DWG GN1)
ABUTMENT 1
(LOOKING DOWNSTATION)

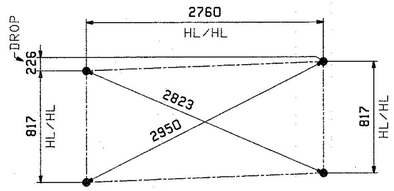

CROSS CHECK - 13CF1

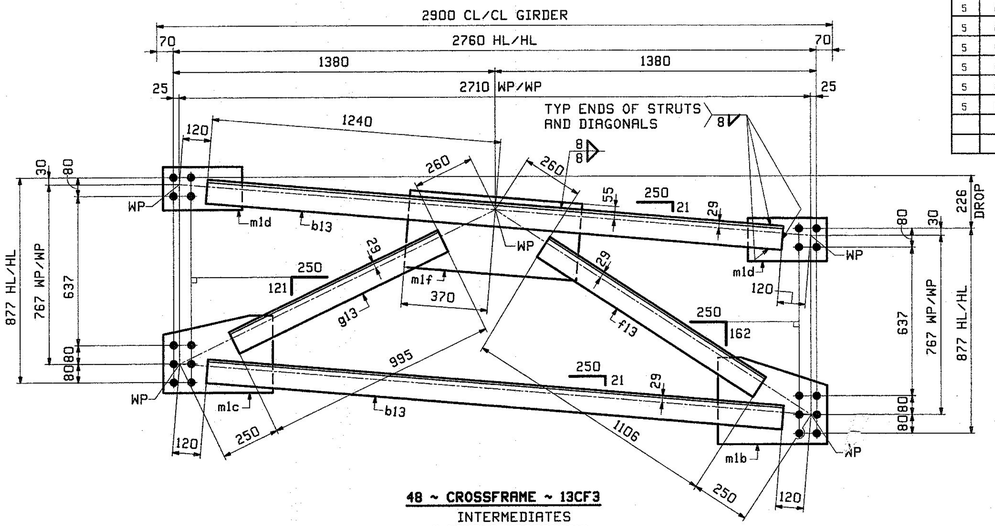

48 ~ CROSSFRAME ~ 13CF3
INTERMEDIATES
(LOOKING UPSTATION)

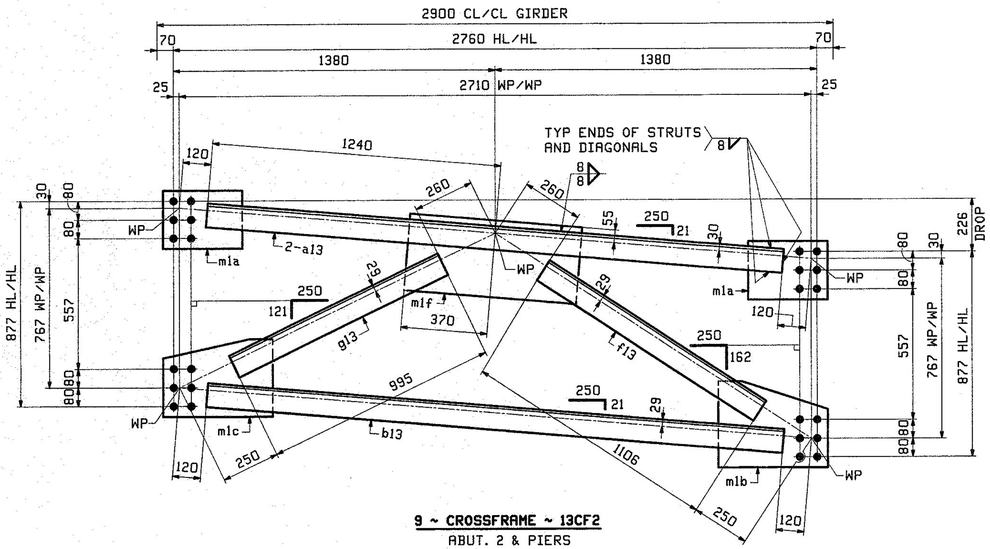

9 ~ CROSSFRAME ~ 13CF2
ABUT. 2 & PIERS
(LOOKING UPSTATION)

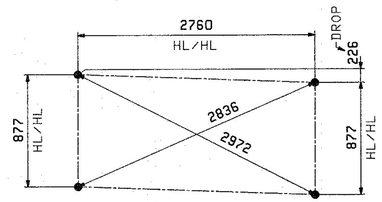

CROSS CHECK - 13CF2
CROSS CHECK - 13CF3

ABM INFO		SHIP	BILL OF MATERIAL				LENGTH		JOB NO.	DRAWING NO.	REV.
									524	13	
PAGE	LINE	MARK	QTY	MARK	MATERIAL	m	mm	REMARKS	WT	PROCUREMENT NOTES	
		13CF1	3		CROSSFRAMES			PAINTED	257 kg 566 lbs		
5	K		6	a13	L 102x102x13	2	479	M270M-345WT2	58 kg 128 lbs		
5	L		3	b13	L 102x102x9.5	2	479	M270M-345WT2	36 kg 80 lbs		
5	M		3	c13	L 102x102x9.5	1	039	M270M-345WT2	15 kg 33 lbs		
5	M		3	d13	L 102x102x9.5	0	935	M270M-345WT2	14 kg 30 lbs		
5	N		6	m1a	PL 13x250	0	340	M270M-345WT2	9 kg 19 lbs		
5	R		3	m1b	PL 13x370	0	470	M270M-345WT2	18 kg 39 lbs		
5	Q		3	m1c	PL 13x330	0	470	M270M-345WT2	16 kg 35 lbs		
5	S		3	m1f	PL 13x330	0	740	M270M-345WT2	25 kg 55 lbs		
		13CF2	9		CROSSFRAMES				259 kg 570 lbs		
5	K		18	a13	L 102x102x13	2	479	M270M-345WT2	58 kg 128 lbs		
5	L		9	b13	L 102x102x9.5	2	479	M270M-345WT2	36 kg 80 lbs		
5	M		9	f13	L 102x102x9.5	1	106	M270M-345WT2	16 kg 36 lbs		
5	M		9	g13	L 102x102x9.5	0	995	M270M-345WT2	15 kg 32 lbs		
5	N		18	m1a	PL 13x250	0	340	M270M-345WT2	9 kg 19 lbs		
5	R		9	m1b	PL 13x370	0	470	M270M-345WT2	18 kg 39 lbs		
5	Q		9	m1c	PL 13x330	0	470	M270M-345WT2	16 kg 35 lbs		
5	S		9	m1f	PL 13x330	0	740	M270M-345WT2	25 kg 55 lbs		
		13CF3	48		CROSSFRAMES				174 kg 383 lbs		
5	L		96	b13	L 102x102x9.5	2	479	M270M-345WT2	36 kg 80 lbs		
5	M		48	f13	L 102x102x9.5	1	106	M270M-345WT2	16 kg 36 lbs		
5	M		48	g13	L 102x102x9.5	0	995	M270M-345WT2	15 kg 32 lbs		
5	R		48	m1b	PL 13x370	0	470	M270M-345WT2	18 kg 39 lbs		
5	Q		48	m1c	PL 13x330	0	470	M270M-345WT2	16 kg 35 lbs		
5	P		96	m1d	PL 13x185	0	340	M270M-345WT2	6 kg 14 lbs		
5	S		48	m1f	PL 13x330	0	740	M270M-345WT2	25 kg 55 lbs		

NOTES:
- FOR GENERAL NOTES SEE DRAWING GN1.
- T2 DENOTES CHARPY V-NOTCH TESTING REQUIRED.

REV.	DATE	REMARKS	DWN	CHK	APVL	SHOP
0					10/22/12	

MATERIAL:	SURFACE PREP. & PRINT:	HOLES:	SHOP BOLTS:
M240M-345WT2	SEE GN1	15 16 ø	NONE

DESCRIPTION: CROSSFRAMES

CASCO BAY STEEL STRUCTURES, INC.
1 WALLACE AVE. PHONE (207) 780-6722
SOUTH PORTLAND, ME 04106 FAX. (207) 780-6726
TENSOR 3146

STRUCTURE:	DRAWN:	DATE:
VT ROUTE 108, BRIDGE #21 MAJOR COLLECTOR TOWN OF CAMBRIDGE COUNTY OF LAMOILLE, VERMONT	CRK	10/09
	CHKD: PCP	DATE: 10/16
LOCATION: CAMBRIDGE, VERMONT	JOB NO.	DWG NO.
PROJ NO. BRF 027-1(4)	524	13
CUSTOMER: A. L. ST. ONGE CONTRACTING		REV. △

Vtrans Received Date NOV 5 2012

Reviewer BY KWS APPROVED DATE 11/7/12

PCP Thu, Oct 18, 2012 08:03:13 PM //users/jobs/3145/13 - Rev0