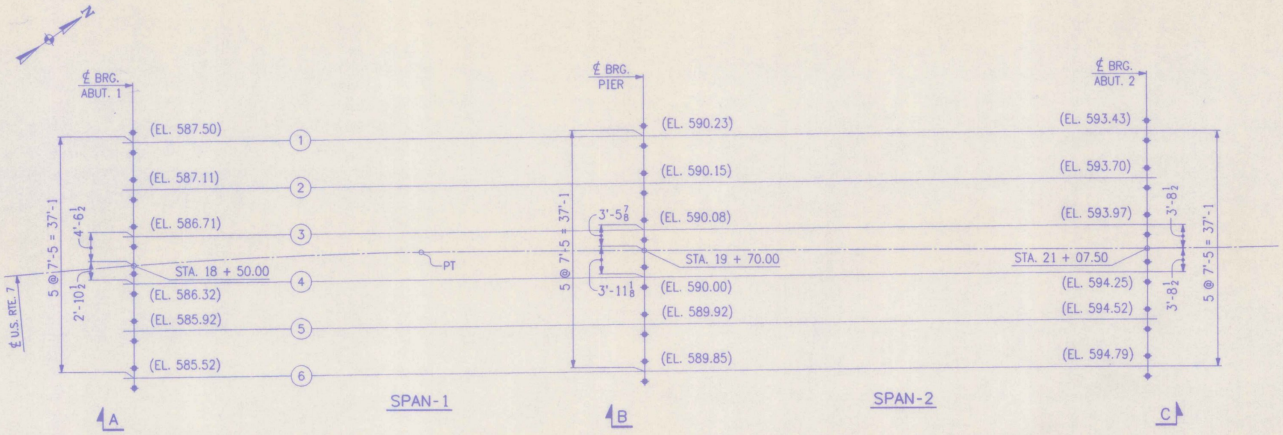
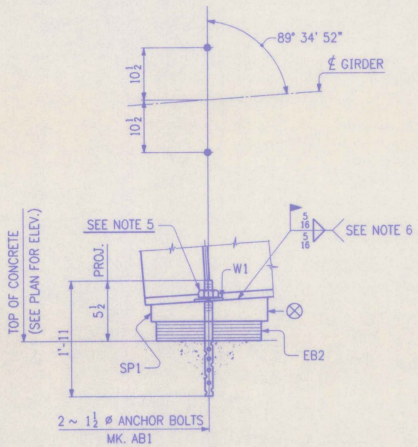
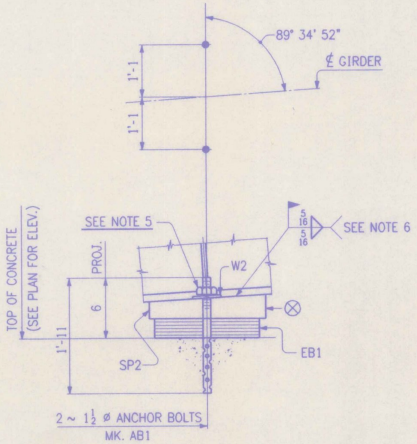


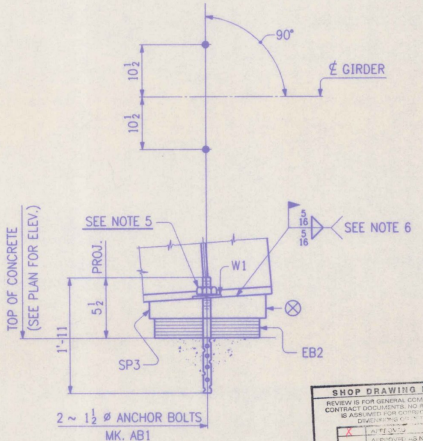
ANCHOR BOLT PLAN



SECT. A
(TYP. @ ABUT. 1)



SECT. B
(TYP. @ PIER)



SECT. C
(TYP. @ ABUT. 2)

NOTES:

1. ALL DIME
2. ELEVATIO
3. ANCHOR
DETAIL IN
4. ANCHOR
STRUCTU
5. BACK NU
BURR TH
6. AREAS OF
SHALL BE
ACCORDA
7. ⊗ DENO

SHOP DRAWING REVIEW
REVIEW IS FOR GENERAL COMPLIANCE WITH CONTRACT DOCUMENTS. NO RESPONSIBILITY IS ASSUMED FOR CONSTRUCTION OF DIMENSIONS OR PLANS.
A - APPROVED
APPROVED AS NOTED
AMEND AND RESUBMIT
REJECTED - SEE REMARKS
Barnes and Jarris, Inc.
80 Boylston Street
Boston, Massachusetts 02116
DATE 8-30-18 BY JBJ

NO.

HIGH

STATE
OR REF

CONTRA

IN CHA

CONTRA
NUMBE