SPECIAL MARKING DETAILS

Painted Island Detail

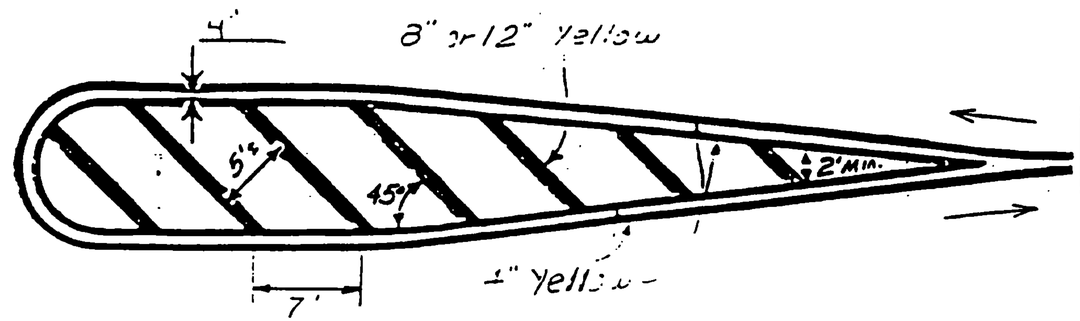

Not to Scale

Gore Marking Detail - Exit

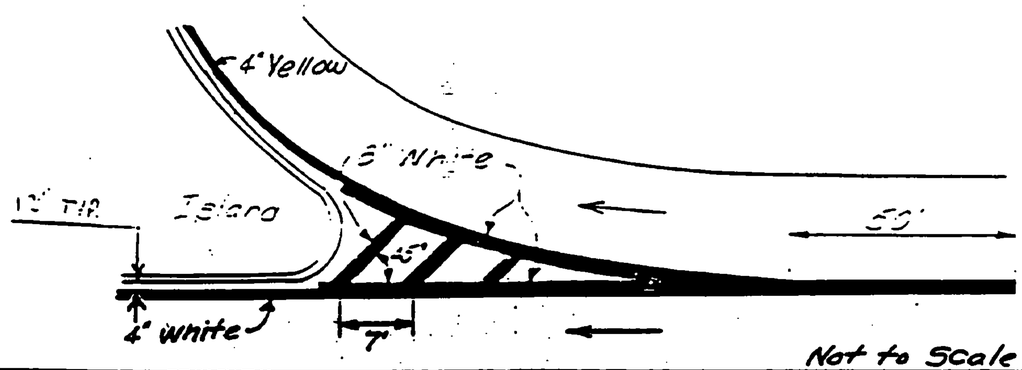

Not to Scale

Turn Lane and Painted Curb Detail

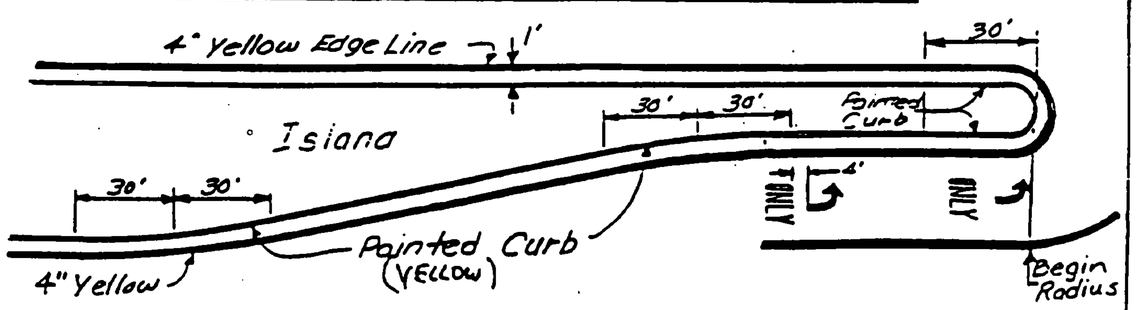

Not to Scale

GEORGIA RS 0285(8)